GENERAL INFORMATION SECTION

FOREWORD	FW
HOW TO USE THIS MANUAL	HU
SPECIFICATIONS	SPC
PRECAUTION	PC
NOTE	NT
IDENTIFICATION	ID
RECOMMENDED MATERIALS	RM
PRE-DELIVERY INSPECTION	PI
PERIODIC MAINTENANCE SERVICES	PM

This service manual has been prepared to provide SUBARU service personnel with the necessary information and data for the correct maintenance and repair of SUBARU vehicles.
This manual includes the procedures for maintenance, disassembling, reassembling, inspection and adjustment of components and diagnostics for guidance of experienced mechanics.
Please peruse and utilize this manual fully to ensure complete repair work for satisfying our customers by keeping their vehicle in optimum condition. When replacement of parts during repair work is needed, be sure to use SUBARU genuine parts.

All information, illustration and specifications contained in this manual are based on the latest product information available at the time of publication approval.

FOREWORD

FW

Page

1. Foreword 2

1. Foreword

A: FOREWORD

These manuals are used when performing maintenance, repair or diagnosis of SUBARU WRX and SUBARU WRX STI.
Applicable model: 2017 MY VAG**** and VAF****
The manuals contain the latest information at the time of publication. Changes in the specifications, methods, etc. may be made without notice.

HOW TO USE THIS MANUAL

HU

Page
1. How to Use This Manual 2

1. How to Use This Manual

A: HOW TO USE THIS MANUAL

1. STRUCTURE

Each section consists of SCT that are broken down into SC that are divided into sections for each component. The specification, maintenance and other information for the components are included, and the diagnostic information has also been added where necessary.

2. CONTENTS

The first page has an index with tabs.

3. COMPONENT

Illustrations are provided for each component. The information necessary for repair work (tightening torque, grease up points, etc.) is described on these illustrations. Information is described using symbol.
To order parts, refer to parts catalogue.

Example:

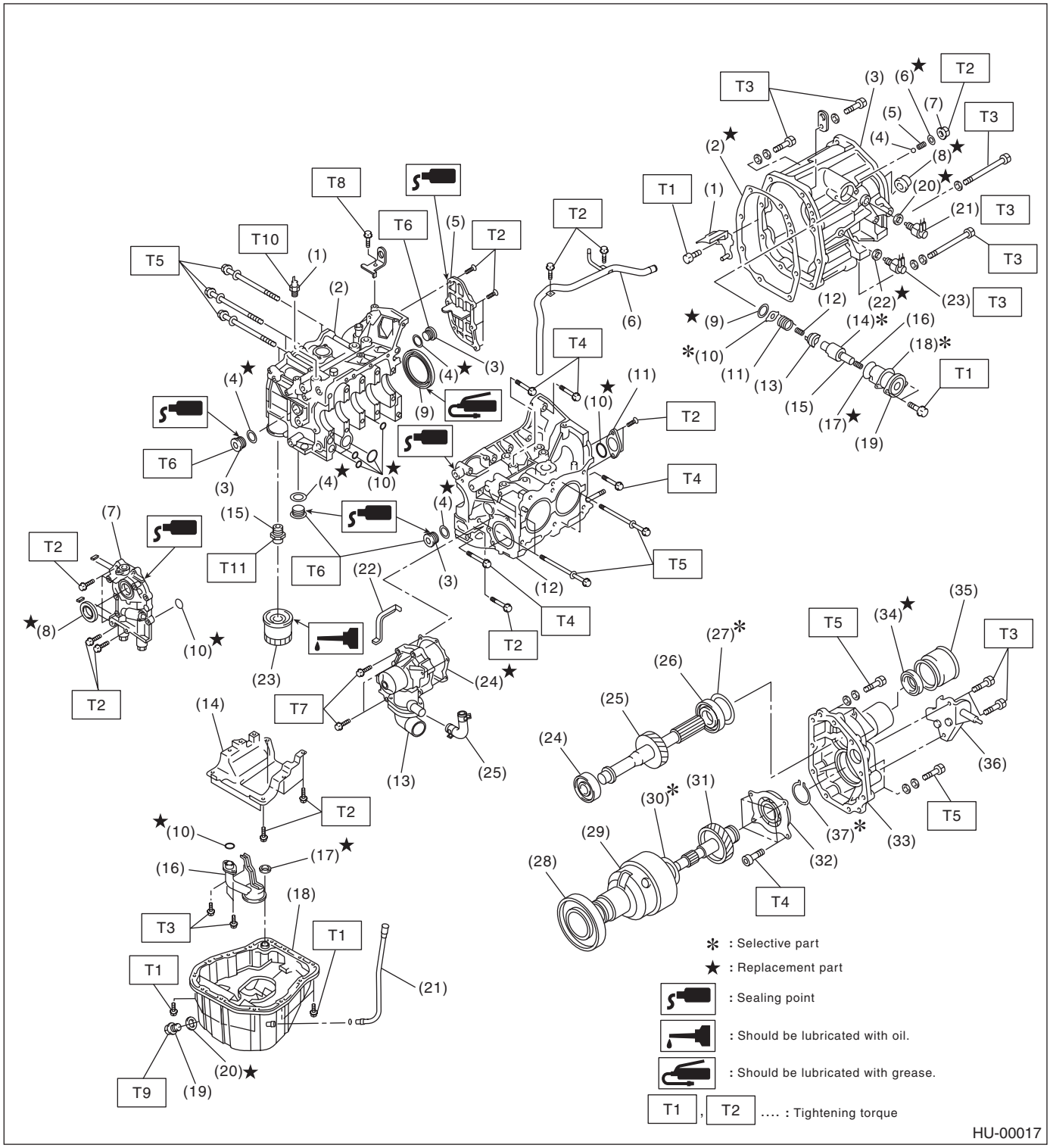

4. DEFINITIONS OF “NOTE”, “CAUTION” AND “WARNING”

- NOTE:

Describes additional information to make works easier.

- CAUTION:

Describes prohibited matters to prevent vehicle or parts damage, or matters that requires special attention during work.

- WARNING:

Describes matters that may cause serious damage to the operator or other person, or that may cause damage or accident.

5. SPECIFICATION

If necessary, specifications are also included.

6. INSPECTION

Inspections to be carried out before and after maintenance are included.

7. MAINTENANCE

• Maintenance instructions for serviceable parts describe work area and detailed step with illustration. It also describes the use of special tool, tightening torque, caution for each procedure.
• If many serviceable parts are included in one service procedure, appropriate reference is provided for each part.

Example:

15.Main Shaft ← (A)

A: REMOVAL ← (B)

1) Remove the manual transmission assembly from vehicle. <Ref. to MT-33, REMOVAL, Manual Transmission Assembly.> ← (C)

---

11) Tighten the lock nuts to the specified torque using ST1 and ST2.

NOTE: ← (D)
Secure the lock nuts in two places after tightening.

ST1 498937000 TRANSMISSION HOLDER
ST2 499987003 (E) SOCKET WRENCH (35) (F)

Tightening torque:
118 N·m (12.0 kgf-m, 86.8 ft-lb) ← (G)

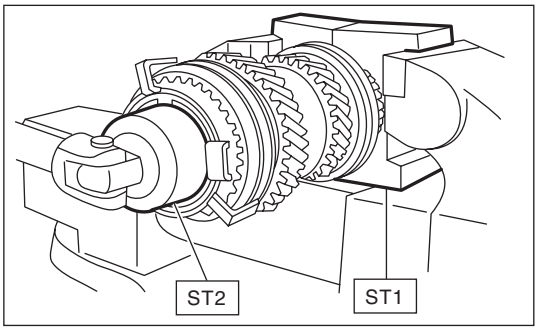

← (H)

HU-00020

(A) Component
(B) Process
(C) Reference
(D) Cautions
(E) Tool number of special tool
(F) Name of special tool
(G) Tightening torque
(H) Illustration

8. DIAGNOSIS

Step-by-step process is employed for easier diagnosis.

9. SI UNITS

Measurements in these manuals are according to the SI units. Metric and yard/pound measurements are also included.

Example:

Tightening torque:
44 N·m (4.5 kgf-m, 33 ft-lb)

List of SI unit

Item	SI units	Conventional unit	Remarks
Force	N (Newton)	kgf	1 kgf = 9.807 N
Mass (weight)	kg, g	kg, g	
Capacity	L, mL or cm^3	L or cc	1 cc = 1 cm^3 = 1 mL
Torque	N·m	kgf-m, kgf-cm	1 kgf-m = 9.807 N·m
Rotating speed	r/min	rpm	
Pressure	kPa (Kilopascal)	kgf/cm^2	1 kgf/cm^2 = 98.07 kPa
		mmHg	1 mmHg = 0.1333 kPa
Power	W	PS	1 PS = 0.7355 kW
Calorie	W·h	cal	1 kcal = 1.163 W·h
Fuel consumption rate	g/kW·h	g/PS·h	1 g/PS·h = 1.3596 g/kW·h

The figure used in these manuals are described in the SI units and conventional units are described in ( ).

10.EXPLANATION OF TERMINOLOGY

List

2ndr	Secondary
AAI	Air Assist Injection
AAR	Angular Adjusted Roller
A/B	Airbag
ABS	Anti-lock Brake System
A/C	Air Conditioner
AC	Angular Contact
ACC	Accessory
A/F	Air Fuel Ratio
ALT	Generator
API	American Petroleum Institute
APS	Accessory Power Supply Socket
ASSY	Assembly
AT	Automatic Transmission
ATF	Automatic Transmission Fluid
AUX	Auxiliary Storage Unit (External storage)
AVCS	Active Valve Control System
AWD	All Wheel Drive
BATT	Battery
BCM	Brake Control Module
BECM	Battery Energy Control Module
BJ	Bell Joint
BRKT	Bracket
BSD/RCTA	Blind Spot Detection / Rear Cross Traffic Alert
CAN	Controller Area Network
CCA	Cold Cranking Ampere
CD	Compact Disc
CD-R/RW	CD Recordable/Rewritable
COMPL	Complete
CPC	Canister Purge Control Solenoid Valve
CPU	Central Processing Unit
CTR	Center
CM	Control Module
CVT	Continuously Variable Transmission
CVTF	Continuously Variable Transmission Fluid
CWP	Cold Weather Package
DCCD	Driver's Control Center Differential
DMCM	Drive Motor Control Module
DOHC	Double Overhead Camshaft
DOJ	Double Offset Joint
D/R	Dual-range
DTC	Diagnosis Trouble Code
DU	Drive Unit
DVD	Digital Versatile Disc or Digital Video Disc
EBD	Electronic Brake Distribution
EBJ	High-Efficiency Compact Ball Fixed Joint
ECM	Engine Control Module
ECV	Exhaust Pressure Control Valve

EDJ	High-Efficiency Compact Double Offset Joint
E/G	Engine
EGI	Electronic Gasoline Injection
EGR	Exhaust Gas Recirculation
ELR	Emergency Locking Retractor
EPB	Electronic Parking Brake
ETC	Electronic Throttle Control
EX	Exhaust
F/B	Fuse & Joint Box
FL	Fusible Link
Ft	Front
FWD	Front Wheel Drive
GPS	Global Positioning System
HBA	High Beam Assist
HI	High
HID	High-Intensity Discharge
H/K	Harman/Kardon Audio
HPCM	Hybrid Powertrain Control Module
H/L	Headlight
H/U	Hydraulic Unit
HVAC	Heater, Ventilator and Air Conditioner
I/F	Interface
IG	Ignition
ILSAC	International Lubricants Standardization and Approval Committee
IN	Intake
INT	Intermittent
I/O	Input/Output
IR	Infrared Ray
ISC	Idle Speed Control
ISG	Integrated Starter Generator
K/A	Keyless Access
LAN	Local Area Network
LCD	Liquid Crystal Display
LED	Light Emitting Diode
LH	LH (Left Hand)
LHD	Left Hand Drive
Lo	Low
LSD	Limited Slip Differential
LWR	Lower
M/B	Main Fuse & Relay Box
MD	Mini Disc
MID	Multi Information Display
MFI	Multi-Point Fuel Injection
MP-T	Multi-Plate Transfer
M/R	Moon Roof
MT	Manual Transmission
NA	Natural Aspiration
NC	Normal Close (Relay)
NO	Normal Open (Relay)
OBD	On-Board Diagnosis
OP	Option Parts

PC	Personal Computer
PCD	Pitch Circle Diameter
PCV	Positive Crankcase Ventilation
PID	Parameter Identification
Pr	Primary
PRG	Power Rear Gate
P/S	Power Steering
PTJ	Pillow Tripod Joint
P/W	Power Window
RAB	Reverse Automatic Braking
RAM	Random Access Memory
RH	RH (Right Hand)
RHD	Right Hand Drive
ROM	Read Only Memory
Rr	Rear
SDI	Subaru Diagnostic Interface
SI	Subaru Intelligent
SOHC	Single Overhead Camshaft
SRH	Steering Responsive Headlight
SRS	Supplemental Restraint System
SSM	Subaru Select Monitor
ST	Special Tool
STD	Standard
SW	Switch
T/B	Turbocharger
TCS	Traction Control System
TCM	Transmission Control Module
TGV	Tumble Generator Valve
T/M	Transmission
TPMS	Tire Pressure Monitoring System
UJ	Universal Joint
UPR	Upper
UV	Ultraviolet
VDC	Vehicle Dynamics Control
V.I.N.	Vehicle Identification Number
ViS-C	Viscous Coupling
VSV	Vacuum Switching Valve
VTD	Variable Torque Distribution
W/H	Wiring Harness

SPECIFICATIONS

SPC

Page

1. WRX 2
2. WRX STI 8

1. WRX

A: DIMENSION

Model			2.0 L DOHC turbo
Overall length		mm (in)	4,595 (180.9)
Overall width		mm (in)	1,795 (70.7)
Overall height		mm (in)	1,475 (58.1)
Compartment	Length	mm (in)	2,005 (78.9)
	Width	mm (in)	1,490 (58.7)
	Height	mm (in)	1,205 (47.4), 1,180 (46.5)*
Wheelbase		mm (in)	2,650 (104.3)
Tread	Front	mm (in)	1,530 (60.2)
	Rear	mm (in)	1,540 (60.6)
Minimum road clearance		mm (in)	125 (4.9)

*: With sunroof

B: ENGINE

Model		2.0 L DOHC turbo
Engine type		Horizontally opposed, liquid cooled, 4-cylinder, 4-stroke gasoline engine
Valve arrangement		DOHC
Bore × stroke	mm (in)	86.0 × 86.0 (3.39 × 3.39)
Displacement	cm^3 (cu in)	1,998 (122)
Compression ratio		10.6
Ignition order		1 — 3 — 2 — 4
Idle speed at parking or neutral position	r/min	700±100
Maximum output	kW (HP)/(r/min)	200 (268)/5,600
Maximum torque	N·m (kgf-m, ft-lb)/(r/min)	350 (35.7, 258)/2,000 — 5,200

C: ELECTRICAL

Model		2.0 L DOHC turbo	
		CVT	6MT
Ignition timing (at idling)	BTDC	8°±10°	6°±10°
Spark plug	Type and manufacturer	NGK: ILKAR8H6	
Generator		12 V — 130 A	
Battery	Type	55D23L	
	Nominal capacity	5 HR: 40 Ah [25°C (77°F)]	
	Nominal voltage	12 V	
	CCA	390 A	

D: TRANSMISSION

1. MT

Model		2.0 L DOHC turbo
Transmission type		6MT
Clutch type		DSPD
Gear ratio	1st	3.454
	2nd	1.947
	3rd	1.296
	4th	0.972
	5th	0.780
	6th	0.666
	Rev.	3.636
Reduction gear (front)	Type of gear	Hypoid
	Gear ratio	4.111
Transfer reduction	Type of gear	Helical
	Gear ratio	1.000
Reduction gear (rear)	Type of gear	Hypoid
	Gear ratio	4.111

6MT: 6-forward speeds and 1-reverse with synchromesh
DSPD: Dry Single Plate Diaphragm

2. CVT

Model		2.0 L DOHC turbo
Transmission type		CVT
Clutch type		TCC
Gear ratio	Forward	3.505 — 0.544
	Reverse	2.345
Reduction gear (front)	Type of gear	Hypoid
	Gear ratio	3.900
Transfer reduction ratio		1.000
Reduction gear (rear)	Type of gear	Hypoid
	Gear ratio	3.900

CVT: Forward continuously variable speed change, 1-reverse
TCC: Torque Converter Clutch

E: STEERING

Model	2.0 L DOHC turbo	
Type	Rack and pinion	
	Electric power steering	
Turns, lock to lock	2.8[*1]	2.7[*2]
Minimum turning radius m (ft)	5.4 (17.72)[*1]	5.5 (18.05)[*2]

[*1]: When 235/45R17 are attached
[*2]: When 245/40R18 are attached

F: SUSPENSION

Model	2.0 L DOHC turbo
Front	Macpherson strut type suspension
Rear	Double-wishbone type suspension

G: BRAKE

Model	2.0 L DOHC turbo	
Service brake system	Dual circuit hydraulic with vacuum suspended power unit	
Front	Ventilated disc brake	
Rear	Solid disc brake	Ventilated disc brake
Parking brake	Mechanical on rear brakes	Electrical on rear brakes

H: TIRE

Model	2.0 L DOHC turbo	
Wheel size	17 × 8 J	18 × 8 1/2 J
Tire size	235/45R17 94W	245/40R18 97W
Type	Tubeless, steel belted radial	

I: CAPACITY

Model			2.0 L DOHC turbo	
			CVT	6MT
Fuel tank		L (US gal, Imp gal)	60 (15.9, 13.2)	
Engine oil	Total capacity (at overhaul)	L (US qt, Imp qt)	6.0 (6.3, 5.3)	
	Filling amount of engine oil L (US qt, Imp qt)	When replacing engine oil and oil filter	5.1 (5.4, 4.5)	
		When replacing engine oil only	4.9 (5.2, 4.3)	
Transmission gear oil		L (US qt, Imp qt)	—	3.3 (3.5, 2.9)
CVTF		L (US qt, Imp qt)	12.11 — 12.61 (12.8 — 13.3, 10.7 — 11.1)	—
CVT front differential gear oil		L (US qt, Imp qt)	1.3 — 1.5 (1.4 — 1.6, 1.1 — 1.3)	—
Rear differential gear oil		L (US qt, Imp qt)	0.8 (0.8, 0.7)	
Engine coolant		L (US qt, Imp qt)	8.4 (8.9, 7.4)	8.2 (8.7, 7.2)

J: WEIGHT

Model			Sedan								
			2.0 L DOHC turbo								
			WRX		WRX+L			WRX-Pre			
			6MT	CVT	6MT		CVT	6MT			
OP code			C0	C0	U4	U4	U4	C0	C0	C0	U4
			TW	TW	4X	TX	4G	TW	TO	JY	2W
Curb weight (C.W.)	Total	kg (lb)	1,484 (3,272)	1,543 (3,402)	1,487 (3,278)	1,484 (3,272)	1,552 (3,422)	1,485 (3,274)	1,488 (3,280)	1,506 (3,320)	1,507 (3,322)
	Front	kg (lb)	887 (1,955)	940 (2,072)	889 (1,960)	887 (1,955)	945 (2,083)	887 (1,955)	888 (1,958)	898 (1,980)	897 (1,978)
	Rear	kg (lb)	597 (1,317)	603 (1,330)	598 (1,318)	597 (1,317)	607 (1,3389)	598 (1,319)	600 (1,322)	608 (1,340)	610 (1,344)
Gross vehicle weight (G.V.W.)		kg (lb)	2,000 (4,409)	2,000 (4,409)	2,000 (4,409)	2,000 (4,409)	2,000 (4,409)	2,000 (4,409)	2,000 (4,409)	2,000 (4,409)	2,000 (4,409)
Maximum permissible axle weight (G.A.W.)	Front	kg (lb)	1,075 (2,370)	1,075 (2,370)	1,075 (2,370)	1,075 (2,370)	1,075 (2,370)	1,075 (2,370)	1,075 (2,370)	1,075 (2,370)	1,075 (2,370)
	Rear	kg (lb)	1,040 (2,293)	1,040 (2,293)	1,040 (2,293)	1,040 (2,293)	1,040 (2,293)	1,040 (2,293)	1,040 (2,293)	1,040 (2,293)	1,040 (2,293)
Option	18 inch tire & aluminum wheel (BBS)		—	—	—	—	—	—	—	—	—
	Keyless access with push button start		—	—	○	—	○	—	—	—	—
	Harman system + navigation		—	—	—	—	—	—	—	—	—
	Rearview camera		○	○	○	○	○	○	○	○	○
	LED headlight		—	—	○	—	○	—	—	○	—
	Front fog light		—	—	○	—	○	—	—	○	○
	Sunroof		—	—	—	—	—	—	—	○	○
	Auto light & auto wiper		—	—	—	—	—	—	—	○	—
	Genuine leather seat		—	—	—	—	○	—	—	—	—
	Driver seat power seat		—	—	—	—	○	—	—	○	—
	Seat heater		○	○	—	—	—	○	○	○	○
	Clear view package		○	○	—	—	—	○	○	○	○
	Advanced package		—	—	—	—	—	—	○	○	—

SPECIFICATIONS

Model			Sedan									
			2.0 L DOHC turbo									
			WRX-Pre				WRX-PreH/K	WRX-LTD				
			CVT				6MT	6MT				
OP code			C0	C0	C0	U4	U4	C0	U4	U4	C4	C4
			TW	TO	JY	2W	2W	5M	JT	5M	UL	5 L
Curb weight (C.W.)	Total	kg (lb)	1,544 (3,404)	1,547 (3,411)	1,565 (3,450)	1,566 (3,452)	1,520 (3,351)	1,531 (3,375)	1,515 (3,340)	1,531 (3,375)	1,525 (3,362)	1,538 (3,391)
	Front	kg (lb)	940 (2,072)	941 (2,075)	951 (2,097)	950 (2,094)	900 (1,984)	907 (2,000)	901 (1,986)	907 (2,000)	901 (1,986)	905 (1,995)
	Rear	kg (lb)	604 (1,332)	606 (1,336)	614 (1,353)	616 (1,358)	620 (1,367)	624 (1,375)	614 (1,354)	624 (1,375)	624 (1,376)	633 (1,396)
Gross vehicle weight (G.V.W.)		kg (lb)	2,000 (4,409)	2,000 (4,409)	2,000 (4,409)	2,000 (4,409)	2,000 (4,409)	2,000 (4,409)	2,000 (4,409)	2,000 (4,409)	2,000 (4,409)	2,000 (4,409)
Maximum permissible axle weight (G.A.W.)	Front	kg (lb)	1,075 (2,370)	1,075 (2,370)	1,075 (2,370)	1,075 (2,370)	1,075 (2,370)	1,075 (2,370)	1,075 (2,370)	1,075 (2,370)	1,075 (2,370)	1,075 (2,370)
	Rear	kg (lb)	1,040 (2,293)	1,040 (2,293)	1,040 (2,293)	1,040 (2,293)	1,040 (2,293)	1,040 (2,293)	1,040 (2,293)	1,040 (2,293)	1,040 (2,293)	1,040 (2,293)
Option	18 inch tire & aluminum wheel (BBS)		—	—	—	—	—	—	—	—	—	—
	Keyless access with push button start		—	—	—	—	—	○	—	○	○	○
	Harman system + navigation		—	—	—	—	—	○	—	○	—	○
	Rearview camera		○	○	○	○	○	○	○	○	○	○
	LED headlight		—	—	○	—	—	○	○	○	○	○
	Front fog light		—	—	○	○	○	○	○	○	○	○
	Sunroof		—	—	○	○	○	○	○	○	○	○
	Auto light & auto wiper		—	—	○	—	—	○	○	○	○	○
	Genuine leather seat		—	—	—	—	—	○	○	○	○	○
	Driver seat power seat		—	—	○	—	—	○	○	○	○	○
	Seat heater		○	○	○	○	○	○	○	○	—	—
	Clear view package		○	○	○	○	○	○	○	○	—	—
	Advanced package		—	○	○	—	—	○	—	○	○	○

Model			Sedan					
			2.0 L DOHC turbo					
			WRX-LTD					WRX-LTD ES
			CVT					CVT
OP code			C0	U4	U4	C4	C4	U4
			5M	JT	UG	UL	5 L	5M
Curb weight (C.W.)	Total	kg (lb)	1,590 (3,505)	1,574 (3,470)	1,574 (3,470)	1,584 (3,492)	1,597 (3,521)	1,599 (3,525)
	Front	kg (lb)	960 (2,116)	954 (2,103)	955 (2,105)	954 (2,103)	958 (2,112)	963 (2,123)
	Rear	kg (lb)	630 (1,389)	620 (1,367)	619 (1,365)	630 (1,389)	639 (1,409)	636 (1,402)
Gross vehicle weight (G.V.W.)		kg (lb)	2,000 (4,409)	2,000 (4,409)	2,000 (4,409)	2,000 (4,409)	2,000 (4,409)	2,000 (4,409)
Maximum permissible axle weight (G.A.W.)	Front	kg (lb)	1,075 (2,370)	1,075 (2,370)	1,075 (2,370)	1,075 (2,370)	1,075 (2,370)	1,075 (2,370)
	Rear	kg (lb)	1,040 (2,293)	1,040 (2,293)	1,040 (2,293)	1,040 (2,293)	1,040 (2,293)	1,040 (2,293)
Option	18 inch tire & aluminum wheel (BBS)		—	—	—	—	—	—
	Keyless access with push button start		○	—	○	○	○	○
	Harman system + navigation		○	—	—	—	○	○
	Rearview camera		○	○	○	○	○	○
	LED headlight		○	○	○	○	○	○
	Front fog light		○	○	○	○	○	○
	Sunroof		○	○	○	○	○	○
	Auto light & auto wiper		○	○	○	○	○	○
	Genuine leather seat		○	○	○	○	○	○
	Driver seat power seat		○	○	○	○	○	○
	Seat heater		○	○	—	—	—	○
	Clear view package		○	○	—	—	—	○
	Advanced package		○	—	—	○	○	○

2. WRX STI

A: DIMENSION

Model			2.5 L DOHC high power turbo
Overall length		mm (in)	4,595 (180.9)
Overall width		mm (in)	1,795 (70.7)
Overall height		mm (in)	1,475 (58.1)
Compartment	Length	mm (in)	2,005 (78.9)
	Width	mm (in)	1,490 (58.7)
	Height	mm (in)	1,205 (47.4), 1,180 (46.5)*
Wheelbase		mm (in)	2,650 (104.3)
Tread	Front	mm (in)	1,530 (60.2)
	Rear	mm (in)	1,540 (60.6)
Minimum road clearance		mm (in)	125 (4.9)

*: With sunroof

B: ENGINE

Model		2.5 L DOHC high power turbo
Engine type		Horizontally opposed, liquid cooled, 4-cylinder, 4-stroke gasoline engine
Valve arrangement		DOHC
Bore × stroke	mm (in)	99.5 × 79.0 (3.92 × 3.11)
Displacement	cm^3 (cu in)	2,457 (150)
Compression ratio		8.2
Ignition order		1 — 3 — 2 — 4
Idle speed at parking or neutral position	r/min	700±100
Maximum output	kW (HP)/(r/min)	227 (305)/6,000
Maximum torque	N·m (kgf-m, ft-lb)/(r/min)	393 (40.2, 290)/4,000

C: ELECTRICAL

Model			2.5 L DOHC high power turbo
Ignition timing (at idling)		BTDC	15°±10°
Spark plug	Type and manufacturer		NGK: SILFR6A
Generator			12 V — 110 A
Battery	Type		55D23L
	Nominal capacity		5 HR: 40 Ah [25°C (77°F)]
	Nominal voltage		12 V
	CCA		390 A

D: TRANSMISSION

1. MT

Model		2.5 L DOHC high power turbo
Transmission type		6MT
Clutch type		DSPD
Gear ratio	1st	3.636
	2nd	2.235
	3rd	1.521
	4th	1.137
	5th	0.971
	6th	0.756
	Rev.	3.545
Reduction gear (front)	Type of gear	Hypoid
	Gear ratio	3.900
Transfer reduction	Type of gear	Helical
	Gear ratio	1.103
Reduction gear (rear)	Type of gear	Hypoid
	Gear ratio	3.545

6MT: 6-forward speeds and 1-reverse with synchromesh
DSPD: Dry Single Plate Diaphragm

E: STEERING

Model	2.5 L DOHC high power turbo
Type	Rack and pinion
	Hydraulic power steering
Turns, lock to lock	2.5
Minimum turning radius m (ft)	5.5 (18.05)

F: SUSPENSION

Model	2.5 L DOHC high power turbo
Front	Macpherson strut type suspension
Rear	Double-wishbone type suspension

G: BRAKE

Model	2.5 L DOHC high power turbo
Service brake system	Dual circuit hydraulic with vacuum suspended power unit
Front	Ventilated disc brake
Rear	Ventilated disc brake
Parking brake	Mechanical on rear brakes

H: TIRE

Model	2.5 L DOHC high power turbo
Wheel size	18 × 8 1/2J
Tire size	245/40R18 97W
Type	Tubeless, steel belted radial

I: CAPACITY

Model			2.5 L DOHC high power turbo
Fuel tank		L (US gal, Imp gal)	60 (15.9, 13.2)
Engine oil	Total capacity (at overhaul) L (US qt, Imp qt)		5.0 (5.3, 4.4)
	Filling amount of engine oil L (US qt, Imp qt)	When replacing engine oil and oil filter	4.3 (4.5, 3.8)
		When replacing engine oil only	4.0 (4.2, 3.5)
Transmission gear oil		L (US qt, Imp qt)	4.1 (4.3, 3.6)
Rear differential gear oil		L (US qt, Imp qt)	1.0 (1.1, 0.9)
Power steering fluid		L (US qt, Imp qt)	0.7 (0.7, 0.6)
Engine coolant		L (US qt, Imp qt)	7.7 (8.2, 6.8)

J: WEIGHT

Model			Sedan								
			2.5 L DOHC high power turbo								
			STI	STI+W							
			6MT								
OP code			C0	C0	C0	C0	C0	C0	U4	U4	U4
			TW	WW	TW	JY	5M	5T	1 W	FO	4X
Curb weight (C.W.)	Total	kg (lb)	1,528 (3,369)	1,537 (3,388)	1,536 (3,386)	1,557 (3,433)	1,571 (3,463)	1,568 (3,457)	1,538 (3,391)	1,555 (3,428)	1,538 (3,391)
	Front	kg (lb)	907 (2,000)	907 (2,000)	905 (1,995)	916 (2,019)	920 (2,028)	918 (2,024)	908 (2,002)	913 (2,013)	907 (2,000)
	Rear	kg (lb)	621 (1,369)	630 (1,388)	631 (1,391)	641 (1,414)	651 (1,435)	650 (1,433)	630 (1,389)	642 (1,415)	631 (1,391)
Gross vehicle weight (G.V.W.)		kg (lb)	2,000 (4,409)	2,000 (4,409)	2,000 (4,409)	2,000 (4,409)	2,000 (4,409)	2,000 (4,409)	2,000 (4,409)	2,000 (4,409)	2,000 (4,409)
Maximum permissible axle weight (G.A.W.)	Front	kg (lb)	1,075 (2,370)	1,075 (2,370)	1,075 (2,370)	1,075 (2,370)	1,075 (2,370)	1,075 (2,370)	1,075 (2,370)	1,075 (2,370)	1,075 (2,370)
	Rear	kg (lb)	1,040 (2,293)	1,040 (2,293)	1,040 (2,293)	1,040 (2,293)	1,040 (2,293)	1,040 (2,293)	1,040 (2,293)	1,040 (2,293)	1,040 (2,293)
Option	18 inch tire & aluminum wheel (BBS)		—	—	—	—	—	—	—	—	—
	Keyless access with push button start		—	—	—	—	○	○	—	○	○
	Harman system + navigation		—	—	—	—	○	○	—	○	—
	Rearview camera		○	○	○	○	○	○	○	○	○
	LED headlight		—	○	—	○	○	○	○	○	○
	Front fog light		—	○	—	○	○	○	○	○	○
	Sunroof		—	—	—	○	○	○	—	—	—
	Auto light & auto wiper		—	—	—	○	○	○	○	○	—
	Genuine leather seat		—	—	—	—	○	○	—	—	—
	Driver seat power seat		—	—	—	○	○	○	—	—	—
	Seat heater		○	○	○	○	○	○	○	○	—
	Clear view package		○	○	○	○	○	○	○	○	—
	Advanced package		—	—	—	○	○	—	—	○	—

Model			Sedan					
			2.5 L DOHC high power turbo					
			STI-LTD+W					STI-LTD+L
			6MT					
OP code			U4	U4	C0	C4	C4	U4
			ZM	RL	ZM	RL	ZL	ZM
Curb weight (C.W.)	Total	kg (lb)	1,567 (3,455)	1,566 (3,452)	1,567 (3,455)	1,574 (3,470)	1,574 (3,470)	1,561 (3,441)
	Front	kg (lb)	918 (2,024)	917 (2,022)	918 (2,024)	916 (2,019)	916 (2,019)	920 (2,028)
	Rear	kg (lb)	649 (1,431)	649 (1,430)	649 (1,431)	658 (1,451)	658 (1,451)	641 (1,413)
Gross vehicle weight (G.V.W.)		kg (lb)	2,000 (4,409)	2,000 (4,409)	2,000 (4,409)	2,000 (4,409)	2,000 (4,409)	2,000 (4,409)
Maximum permissible axle weight (G.A.W.)	Front	kg (lb)	1,075 (2,370)	1,075 (2,370)	1,075 (2,370)	1,075 (2,370)	1,075 (2,370)	1,075 (2,370)
	Rear	kg (lb)	1,040 (2,293)	1,040 (2,293)	1,040 (2,293)	1,040 (2,293)	1,040 (2,293)	1,040 (2,293)
Option	18 inch tire & aluminum wheel (BBS)		○	○	○	○	○	○
	Keyless access with push button start		○	○	○	○	○	○
	Harman system + navigation		○	—	○	—	○	○
	Rearview camera		○	○	○	○	○	○
	LED headlight		○	○	○	○	○	○
	Front fog light		○	○	○	○	○	○
	Sunroof		○	○	○	○	○	○
	Auto light & auto wiper		○	○	○	○	○	○
	Genuine leather seat		○	○	○	○	○	○
	Driver seat power seat		○	○	○	○	○	○
	Seat heater		○	—	○	—	—	○
	Clear view package		○	—	○	—	—	○
	Advanced package		○	○	○	○	○	○

PRECAUTION

PC

Page
1. Precaution 2

1. Precaution

A: CAUTION

Please clearly understand and adhere to the following general precautions. They must be strictly followed to avoid minor or serious injury to the person doing the work or people in the area.

1. VEHICLE DYNAMICS CONTROL (VDC)

Handle the VDC as a total system. Do not disassemble or attempt to repair parts which are not instructed in this manual. Follow the directions in this manual when performing maintenance on the VDCCM&H/U. When parts other than those specified are disassembled, it could prevent the VDC system from operating when needed or cause it to operate incorrectly and result in injury.

2. ELECTRONIC PARKING BRAKE

Handle the electronic parking brake as a total system. Do not disassemble or attempt to repair individual parts. When parts are disassembled, it is possible that the electronic parking brake will not operate when needed or cause it to operate incorrectly and result in injury.

3. BRAKE FLUID

If brake fluid gets in your eyes or on your skin, do the following:
- Wash eyes and seek immediate medical attention.
- Wash your skin with soap and then rinse thoroughly with water.

4. RADIATOR FAN

The radiator fan may rotate without warning, even when the engine is not ON. Do not place your hand, cloth, tools or other items near the fan at any time.

5. ROAD TEST

Always conduct road tests in accordance with traffic rules and regulations to avoid bodily injury and interrupting traffic.

6. AIRBAG

To prevent bodily injury from unexpected deployment of airbags and unnecessary maintenance, follow the instructions in this manual when performing maintenance on the airbag components and nearby, around front of the vehicle (radiator panel, front wheel apron, front side frame, front bumper, front hood panel, front fender panel), around side of the vehicle (front door panel, rear door panel, center pillar, rear fender panel, side sill, rear wheel apron), around rear of the vehicle (the rear seat cushion, rear floor pan, rear sub frame assembly) and the airbag wiring harnesses and nearby.
To prevent unexpected deployment, turn the ignition switch to OFF and disconnect the ground cable from battery, then wait at least 60 seconds to discharge electricity before starting work. Removing or installing the components or the connectors with the ignition switch ON will electrically impair them.

7. AIRBAG AND SEAT BELT PRETENSIONER DISPOSAL

To prevent bodily injury from unexpected airbag deployment, do not dispose the airbag modules or seat belt pretensioner in the same way as other waste. Follow the special instructions for disposal in this manual. Follow all government regulations concerning disposal of refuse.

8. AIRBAG MODULE

Adhere to the following when handing and storing the airbag module to prevent bodily injury from unexpected deployment:
- Do not hold the harnesses or connectors to carry the module.
- Do not face the bag in the direction that it opens towards yourself or other people.
- Do not face the bag in the direction that it opens towards the floor or walls.

9. AIRBAG SPECIAL TOOL

To prevent unexpected deployment, always use special tools for the area where the operation with special tools are required.

10.WINDOW

Always wear protective goggles when working around any glass to prevent glass fragments from damaging your eyes.

11.WINDOW ADHESIVE

Always use the recommended or equivalent adhesive when attaching glass to prevent it from coming off and being removed, resulting in accidents and injury.

12.OIL

When handling oil, adhere to the following to prevent unexpected accident.

- Prepare a container and cloth to prevent scattering of oil when performing work where oil can be spilled. If the oil spills, wipe it off immediately to prevent from penetrating into floor or flowing out for environmental protection.
- Follow all government and local regulations concerning disposal of refuse when disposing.

13.FUEL

When handling and storing fuel, adhere to the following to prevent from unexpected accident.

- The fuel is flammable. Do not put it close to a fire or spark.
- Prepare a container and cloth to prevent scattering of fuels when performing work where fuels can be spilled. If the oil spills, wipe it off immediately to prevent from penetrating into floor or flowing out for environmental protection.
- Follow all government and local regulations concerning disposal of refuse when disposing.

14.ENGINE COOLANT

When handling engine coolant, adhere to the following to prevent from unexpected accident.

- Never remove the radiator cap since engine coolant may blow out when the engine is hot.
- Prepare a container and cloth to prevent scattering of engine coolant when performing work where engine coolant can be spilled. If the oil spills, wipe it off immediately to prevent from penetrating into floor or flowing out for environmental protection.
- Follow all government and local regulations concerning disposal of refuse when disposing.

15.AIR CONDITIONER REFRIGERANT

In order to prevent from global warming, avoid releasing air conditioner refrigerant into the atmosphere. Using a refrigerant recovery system, discharge and recycle it.

16.REMOVAL AND INSTALLATION OPERATION OF HOSES, ETC.

1. Before the removal and installation operation of hoses, etc.

• If you keep using the damaged or deformed hose, it results bleeds or leakage of the fat adheres or disconnection of the hose. Be careful not to spill fat adheres on exhaust pipes, etc. during maintenance to prevent emitting smoke or causing fires.
• Perform the operation with the hose removed. If the operation is performed without removing the hose, it may damage inner surface of the hose.

2. Removal and installation operation of hoses, etc. during the inspection

• Follow the instructions below when removing hose.
• When removing the hose, do not use a pointed hose remover (hose plucker). Inner portion of the hose can be damaged.

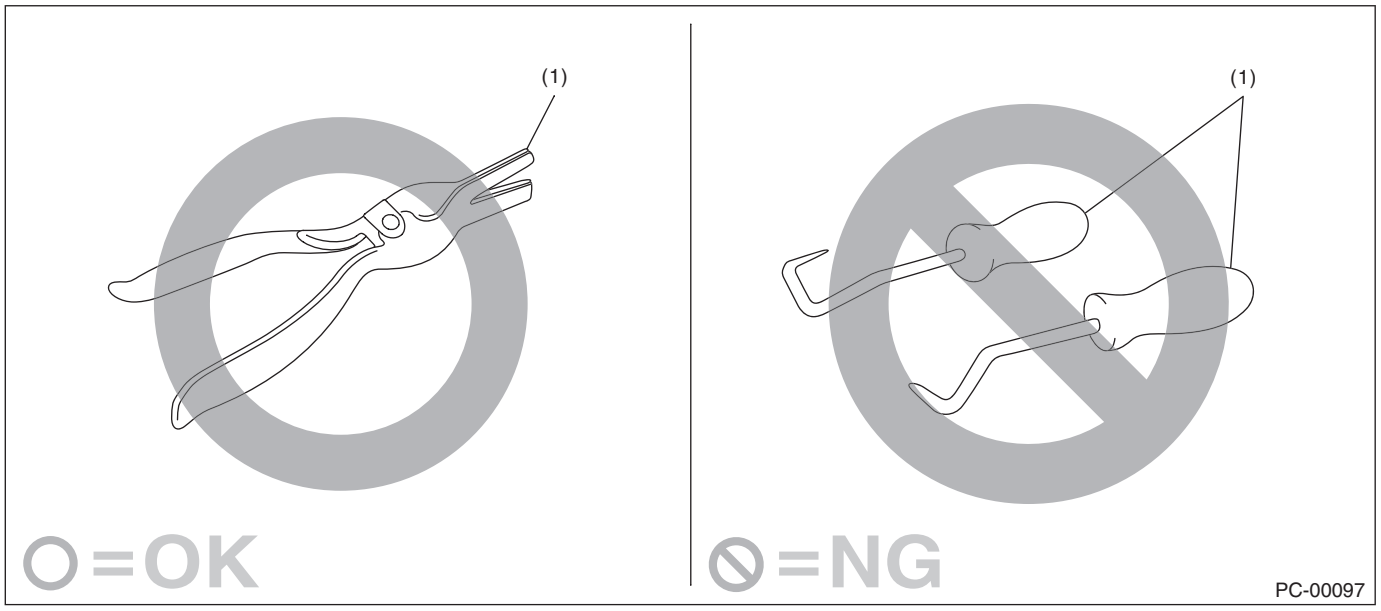

(1) Hose remover

• When removing the hose using pliers, be sure to cover the hose with cloth and rotate the hose slightly to extract straight.

• If you keep using the hose, perform the inspection below and replace the hose with a new part if faulty.

- Replace the hose with a new part if it rides over the stay or the top of spool.

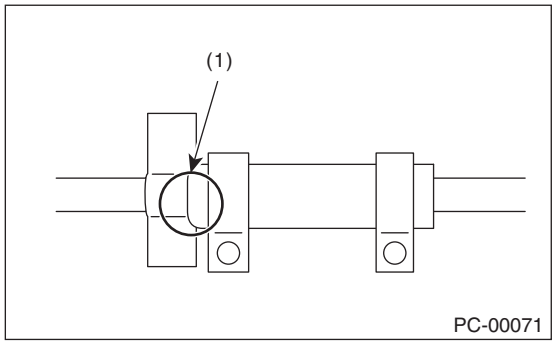

(1) Hose rides over the stay

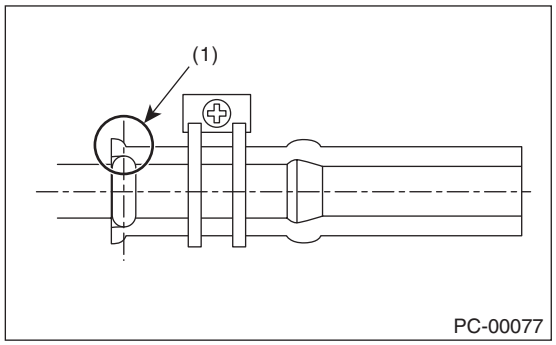

(1) Hose rides over the top of spool

- Check if the surface and the inner surface of the hose are damaged, cracked, bend, hardened, softened, swelled, peeled or deformed due to the adherence or the entry of the foreign matter by bending the hose. Replace with the new part if faulty.

• Follow the instructions below during installation.

- Check carefully for assembling position.
- Never use lubricants.
- Insert the hose to the specified position (stopper or spool) securely. (The hose should stop at the position between the spool top and root.)

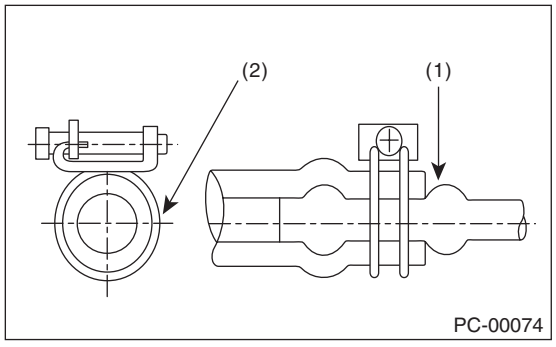

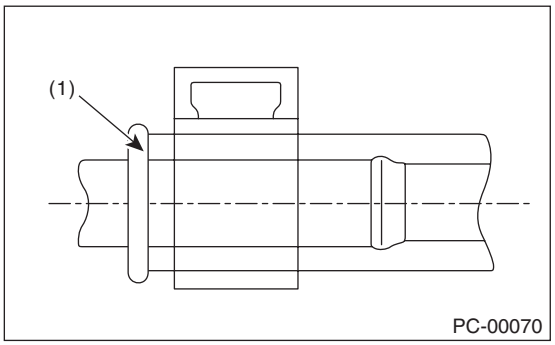

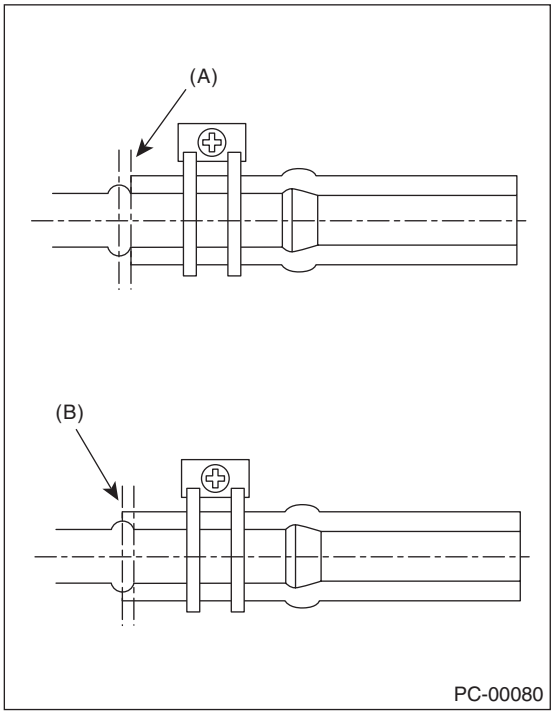

(1) Push against the spool. (Insert the hose and prevent it from becoming wrinkled.)
(2) Fully tighten the hose clamp.
(A) OK position (bottom of spool)
(B) OK position (top of spool)

- Check if the position, direction and hose layout of the hose clamp are correct. (Check if the position, direction, length and the gap around are correct, or if it is different from the condition before the work)
- After the installation, check that the hose is installed securely and there is no leakage. (Check if it is fixed securely with the clamp)

• For hose clips and hose clamps, perform the inspection below and replace them with a new part if faulty.

- Check for deformation, rust, damage or foreign matters.
- For hose clip, check if it works and has clamping force.
- For hose clamp, check if it can tighten screw, not ovalized or the screw is not damaged.

• For hose pipes, perform the inspection below and replace with a new part if faulty.

Check if the pipe is not damaged, rusted, peeled (peeled plates included), covered with foreign matter, bent, compressed or cracked.

• For the parts below, replaces with a new part when the hose is removed or the installation position is changed.

CVTF oil cooler hose, engine oil cooler hose, power steering suction hose, power steering return hose, fuel hose (delivery/return) (except for those with quick connector)

17.HANDLING PRECAUTIONS FOR SILICON-CONTAINING SPRAY

When a silicon-containing lubricant is used, rust inhibitor or glazing agent adheres to the electrical contact of the relay or switch, which may produce silica dioxide (SiO_2). This may cause poor connection.

- Never spray directly to the electrical equipment.
- When using the spray close to the electrical equipment, always put the cover on it. Special care must be exercised especially when using the spray to the locations shown in the figure below and their surrounding areas.

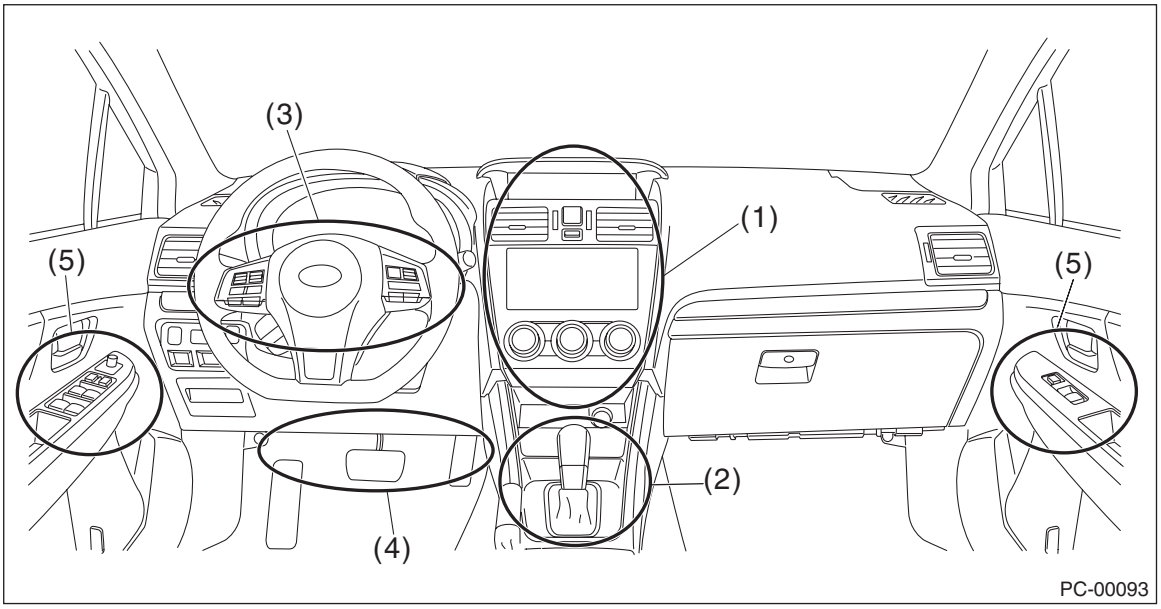

(1)	Audio, heater control switch	(3)	Combination switch, steering switch, paddle shift switch	(5)	Power window switch
(2)	Shift/select lever switch, parking switch	(4)	Stop light switch, brake light switch, clutch switch, clutch start switch		

- If the residual silicon remains in the vicinity of the electrical equipment after the spray has been used, the vaporized silicon stands around the electrical equipment and it may adhere to electrical contact. After using the spray, be sure to wipe the silicon off with a cloth.
- Even when using the spray to the place away from the electrical equipment, the droplet of the spray may be splashed to the periphery. Use as small amount of spray as possible, and take care not to splash the silicon to the periphery.

NOTE:
The “silicon” used in this section refers to “silicone”, that is, silicon polymer.

NOTE

NT

Page
1. Note 2

1. Note

A: BASIC REPAIR HINT

This section describes basic points that the service operator must understand before performing the service operation.

1. APPEARANCE

- Always wear clean work clothing.
- Wear a cap and protective shoes.

2. PROTECTION OF VEHICLE UNDER MAINTENANCE AND PREPARATION OF TOOLS/ EQUIPMENT

- Before work, cover the vehicle body. (Ex. grille cover, fender cover, seat cover and floor mat cover)
- Before performing the service operation, prepare tools, equipment, container box, grease and cloth etc.

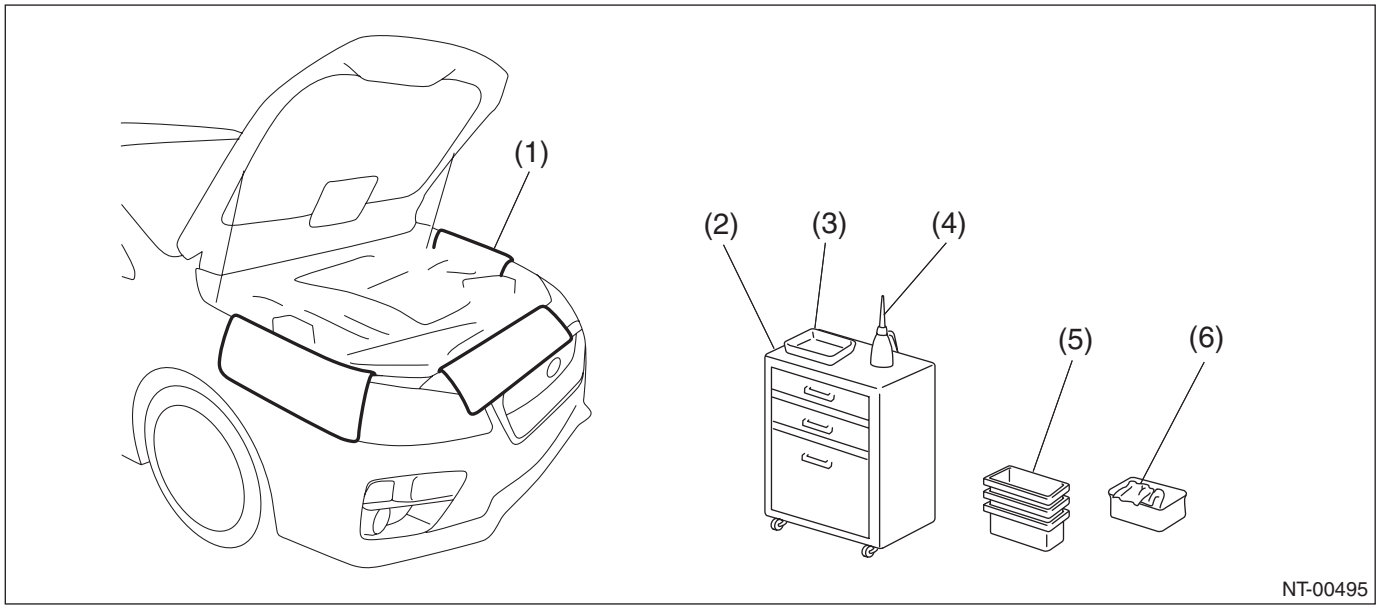

(1)	Fender cover	(3)	Tray	(5)	Container box
(2)	Tools/equipment case	(4)	Oil	(6)	Cloth

3. SAFETY

- Before work, set the wheel stoppers to secure the vehicle.
- When performing work by multiple workers, call to each other to make sure that service operation is performed safely.
- Ventilate the room when starting the engine.
- When performing the service operation of high-temperature parts like muffler, or rotating parts like fan and other movable parts, be careful not to get burned or injured.
- For the jack-up and lift up, set the tool to the proper location to support the vehicle correctly. And use the safety device properly when lifting up.

4. SERVICE OPERATION

• By identifying the vehicle problems thoroughly before service operation, diagnostics work will be performed effectively.
• Before removing parts, confirm the installation condition or the damage of the parts.
• To reinstall parts properly, leave a note of the condition before work as necessary.
• For a part which needs positioning, take appropriate action such as putting alignment marks.
• For a removed part, clean it as necessary and check for damage and defect before installation. If a part is damaged or does not work properly, replace it with a new part.
• Reconnect the harness connectors for each control module one or more minutes after disconnecting them.
• For installation of the bolt, nut, and screws, use tools suitable for each dimension, and use them vertically and securely.
• Removing or installing the components or the connectors with the ignition switch ON will electrically impair them.

5. REMOVED PART

• A removed part must be organized to avoid mixing up with similar parts. When same parts are used in multiple locations, such as pistons in engine, manage the parts by using labels with cylinder No. so that the parts are not installed to the wrong location.
• Always replace nonreusable parts such as gasket and O-ring with new parts.
• After work, have a customer confirm the replaced part.

6. WHEN REMOVING BATTERY

When removing battery, power supply is cut off and the information stored in the computer memory is volatilized. Therefore, setting information of some devices is initialized to the factory default. The device and functions initialized by removing battery are as follows.

No.	Item	Job contents when connecting battery
1	MFD	Set to the date checked before disconnecting the battery.
2	Audio (settings that the customer set)	Set to the contents checked before disconnecting the battery.
3	Navigation system (settings that the customer set)	• Time setting is not necessary because the time information is received via GPS. • Set the sound and other settings (items that were set in the selection) to the contents checked before disconnecting the battery.
4	Temperature setting of fully automatic air conditioner (settings that the customer set)	Set to the contents checked before disconnecting the battery.
5	Power window system	Initialize automatic full open/close of driver's window (power window system). For the initialization procedure, refer to "GW" section. <Ref. to GW-9, OPERATION, Power Window System.>
6	Steering lock system (model with keyless access with push button start)	If the engine does not start, initialize the steering lock system. For the initialization procedure, refer to "KPS" section. <Ref. to KPS(diag)-141, ENGINE DOES NOT START, INSPECTION, Diagnostics with Phenomenon.>
7	EyeSight (model with EyeSight)	Set to the contents checked before disconnecting the battery.
8	Electronic throttle system	Turn the ignition switch to ON, wait for 10 seconds or more, and start the engine.
9	Engine control system	Let the engine run at idle until it fully warms up (the radiator fan turns 2 times or more) under no electrical load condition.
10	Past trouble history (memory code)	—

NOTE

7. OTHER ADJUSTMENT OPERATIONS BEFORE DELIVERING THE VEHICLE TO CUSTOMER

Due to service and parts replacement convenience, perform the following operations before delivering the vehicle to the customer.

No.	Item	Check operation	Adjustment operation	Additional adjustment operations when replacing parts
1	Positions of devices • Steering • Room mirror • Door mirror • Seat • Air conditioner vent grille	Is the device set to the same position when the vehicle was received from the customer?	Adjust the device to the similar position when the vehicle was received from the customer.	When removing/installing each device • Meter, instrument panel, steering column, etc. • Room mirror, roof trim, sunroof assembly, etc. • Door mirror, door panel, etc. • Seat, floor carpet, parking brake lever, etc. • Vent grille, instrument panel, console box, etc.
2	Positions of switches • SI-DRIVE • Wiper, light (AUTO or OFF) • Headlight beam leveler • Illumination control • Room light • Seat heater, etc.	Is the switch set to the same position when the vehicle was received from the customer?	Set the switch to the same position when the vehicle was received from the customer.	When removing/installing each switch

B: NOTE

This information will improve the efficiency of maintenance and assure the sound work.

1. CLEANING

- Perform the operation in a clean location and use extra caution in dust proofing.
- Clean the items (except for assembly components) with steam, etc. before disassembly. During steam cleaning, wrap the air breather, oil level gauge, connectors, etc. with vinyl tape to prevent steam from entering inside the parts.
- Use an appropriate cleaning solvent.
- Do not clean rubber parts such as O-ring, gasket and oil seal with cleaning solution.

2. FASTENERS NOTICE

Fasteners must be tightened to the specified torque.
Do not apply paint, lubricant, rust retardant or other substance to the surface around bolts, nuts, etc. Doing so will cause such a malfunction as looseness of bolts and nuts, power change, etc. even if tightening the bolts and nuts to the specified torque.

3. ABOUT SCREWS

Use an appropriate sized tool. Insert a screw vertically into the hole. Check for any loose screws after installation.
If improper tools are used or screws are inserted obliquely to the hole, the screws cannot be installed correctly, which may result in insufficient tightening force or damage on the hole.

4. STATIC ELECTRICITY DAMAGE

Do not touch the control modules, connectors, logic boards and other such parts when there is a risk of static electricity. Always use a static electricity prevention cord or touch grounded metal for the elimination of static electricity before conducting work.

5. TROUBLESHOOTING OF ELECTRICAL SYSTEM

1) Always refer to “CAUTION” of “General Description” in the same models service manual before starting the diagnostics and repair.
2) Always refer to the cautions of each section when diagnosing and repairing each system and component.
3) The battery cable must be disconnected from the negative terminal after the ignition switch is set to the OFF position, unless otherwise required by the diagnostics.
4) When disconnecting a connector, do not pull the harness, but pull while holding the connector housing.

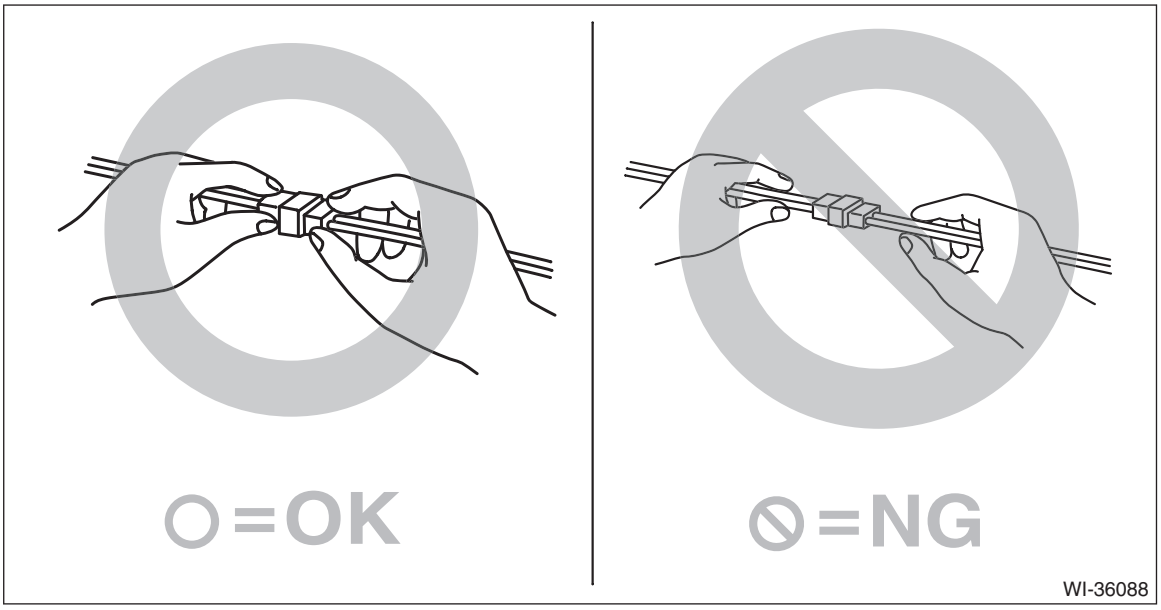

5) Confirm the locking shape completely before disconnecting a connector. In addition, firmly push in the connector until a click sounds when connecting a connector.
6) When checking continuity between connector terminals, or measuring voltage across the terminal and ground, always touch tester probe(s) to terminals from the harness side.
If the probe is too thick to gain access to the terminal, do not push it in forcibly but use a mini test lead.
7) When measuring the voltage or resistance of individual sensor or all electrical control modules, use a tapered pin with a diameter of 0.6 mm (0.024 in) or less and touch it to the tip of terminal. Never insert the tapered pin into the terminal at this time. Doing so may cause internal deformation and a malfunction can occur.
8) To check water-proof connectors (which are not measurable from the harness side), touch tester probes on the terminal side and be very careful not to bend or damage the terminals.

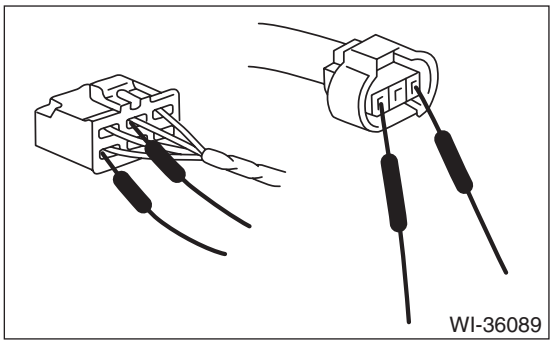

9) Securely fasten the harness with clamps and clips so that the harness does not interfere with the body end parts, edges, bolts or screws.
10) When installing a harness and a component, be careful not to catch them on the harness.
11) Sensors, relays, units, etc., are sensitive to strong impacts. Handle them with extra care so that they are not dropped or mishandled.
12) When inspecting the airbag system, in order to avoid malfunction, always refer to “CAUTION” of “General Description” of the airbag system in the same model’s service manual.

NOTE

6. BATTERY

When removing the battery terminal, always be sure to turn the ignition switch to OFF and disconnect the battery ground terminal first.

- **Ground terminal removal or installation (model without battery sensor)**

1) Disconnect the ground terminal from the battery.

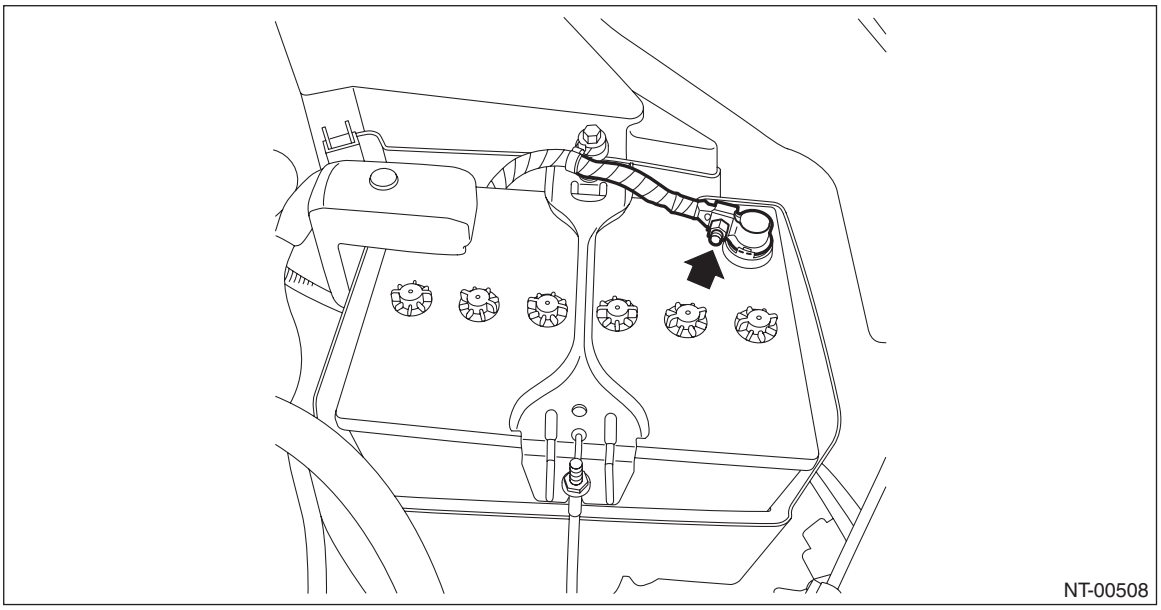

2) Install the ground terminal to the battery.

NOTE:
- Clean the battery cable terminals and apply grease to retard the formation of corrosion.
- Connect the positive (+) terminal, and then connect the negative (-) terminal of the battery.
- Since DTCs may be detected, after the battery ground terminal is connected, wait for 10 seconds or more to turn the ignition switch to ON.
- After the battery is installed, initial diagnosis of the electronic throttle control is performed. Wait for 10 seconds or more after turning the ignition switch to ON, and then start the engine.
- For battery replacement procedures, refer to the “SC” section. <Ref. to SC(STI)-24, REMOVAL, Battery.>

Tightening torque:
6.0 N·m (0.6 kgf-m, 4.4 ft-lb)

• **Ground terminal removal or installation (model with battery sensor)**

1) Disconnect the ground terminal from battery sensor.

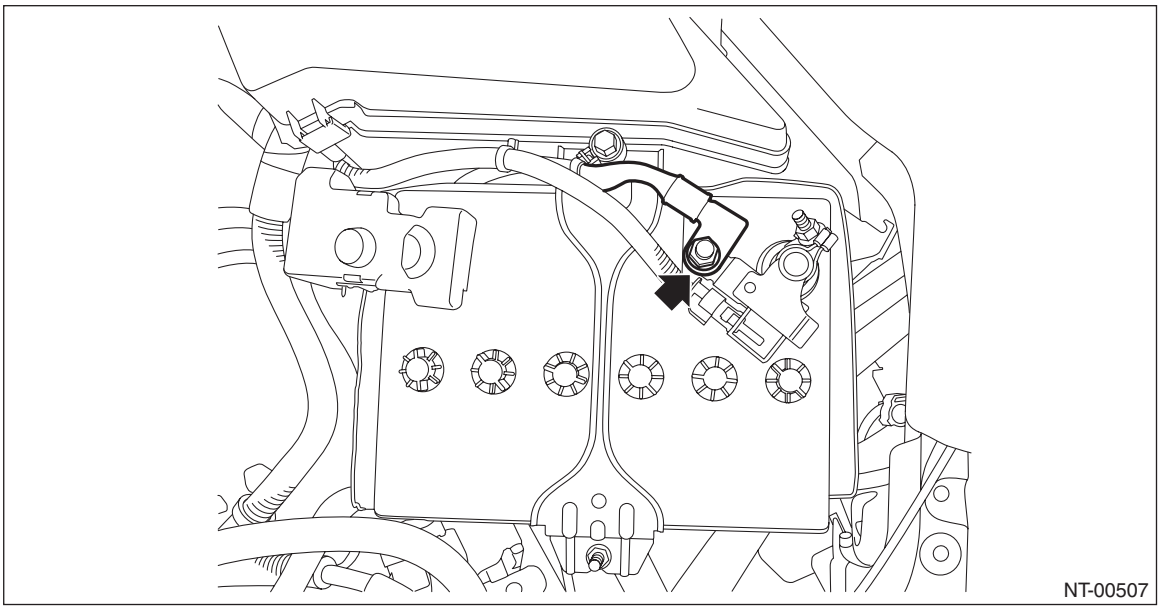

2) Install the ground terminal to the battery sensor.

NOTE:
- Install the battery sensor while holding it by hand to prevent rotating.
- Clean the battery cable terminals and apply grease to retard the formation of corrosion.
- Connect the positive (+) terminal, and then connect the negative (-) terminal of the battery.
- Since DTCs may be detected, after the battery ground terminal is connected, wait for 10 seconds or more to turn the ignition switch to ON.
- After the battery is installed, initial diagnosis of the electronic throttle control is performed. Wait for 10 seconds or more after turning the ignition switch to ON, and then start the engine.
- For battery replacement procedures, refer to the “SC” section. <Ref. to SC(w/o STI)-50, REMOVAL, Battery.>

Tightening torque:
7.5 N·m (0.8 kgf-m, 5.5 ft-lb)

NOTE

7. BACKUP/POWER SUPPLY FUSE

Backup fuse (20A) remains removed to prevent the battery consumption when vehicles are delivered. Install the backup fuse by following the illustration.

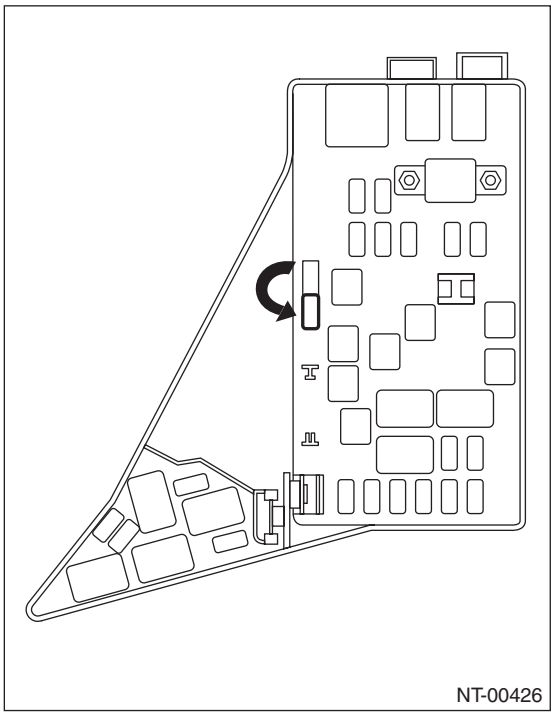

8. IMMOBILIZER RELATED PART

- Do not replace the immobilizer related parts with the parts from other vehicle.
- Registration of the immobilizer is necessary when a immobilizer-related control module has been replaced. For detailed operation procedure, refer to the “REGISTRATION MANUAL FOR IMMOBILIZER” provided as a separate volume.

9. SERVICE PARTS

Use genuine parts for maximum performance and maintenance when conducting repairs. Subaru/FHI will not be responsible for poor performance resulting from the use of parts except for genuine parts.

10.PROTECTING VEHICLE UNDER MAINTENANCE

Make sure to attach the fender cover, seat covers, etc. before work.

11.ENSURING SECURITY DURING WORK

When working in a group of two or more, perform the work with calling each other to ensure mutual safety.

12.LIFT AND JACK

When using a lift or shop jack to raise a vehicle or using rigid rack to support a vehicle, always follow instructions concerning jack-up points and weight limits to prevent the vehicle from falling, which could result in injury. Be especially careful that the vehicle is balanced before raising it. Be sure to set the wheel stoppers when jacking-up only the front or rear side of the vehicle.

CAUTION:
Select the lift attachment so that the spoiler assembly side does not contact the lift arm.

NOTE:
- When using a lift, follow its operation manual.
- When the spoiler assembly side contacts the lift arm, use a lift attachment.
- Do not work or leave unattended while the vehicle is supported with jack, support it with rigid racks.
- Be sure to use the rigid racks with rubber attached to cradle to support the vehicle.
- When using a lift, use an attachment or something similar.
- When using a plate lift, use a rubber attachment. Place the attachment to the specified position of the vehicle, by adjusting front/rear and left/right sides accordingly.

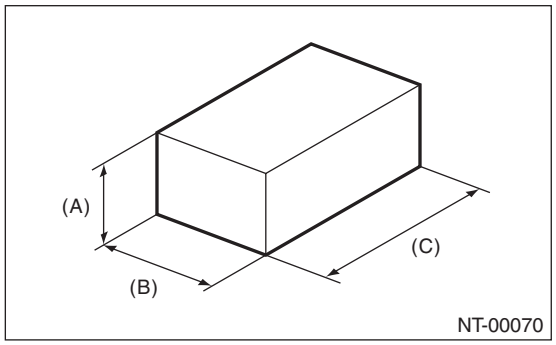

(A) 80 mm (3.1 in) or more
(B) 80 — 100 mm (3.15 — 3.94 in)
(C) 120 — 200 mm (4.72 — 7.87 in)

- Align the cushion rubber center part of plate lift with the center part of rubber attachment.
- Do not use the plate lift whose attachment does not reach the supporting locations.

• Support locations

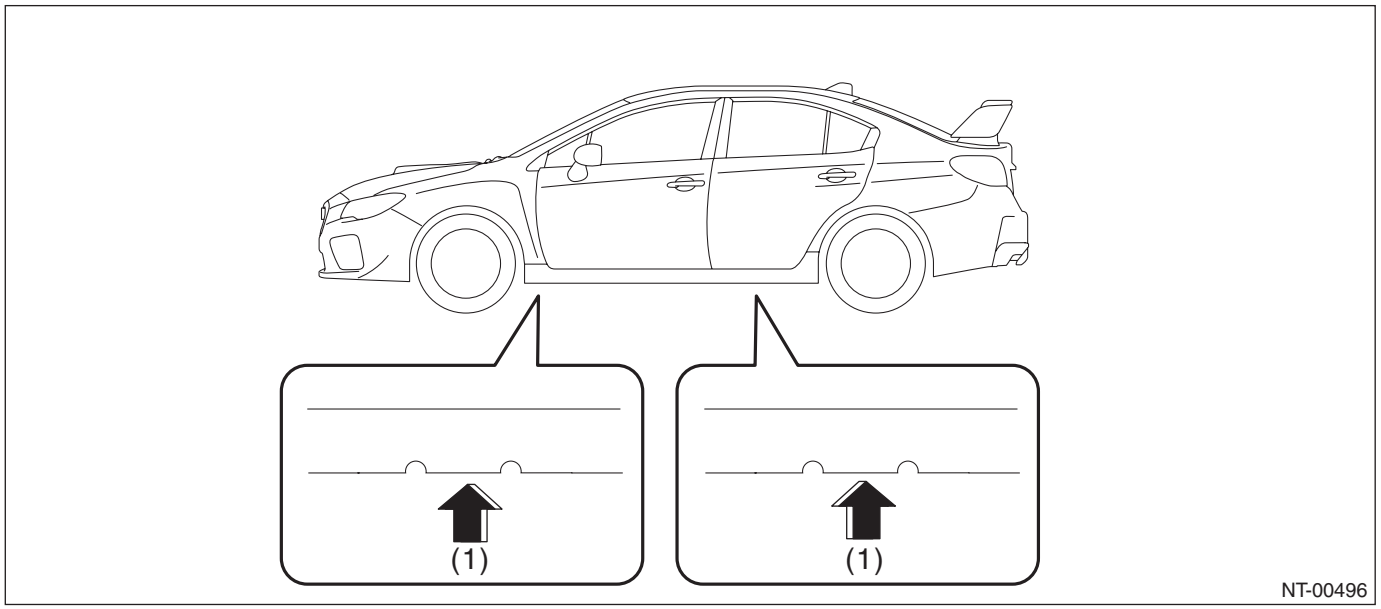

(1) Jack-up point

NOTE

- **Pantograph jack**

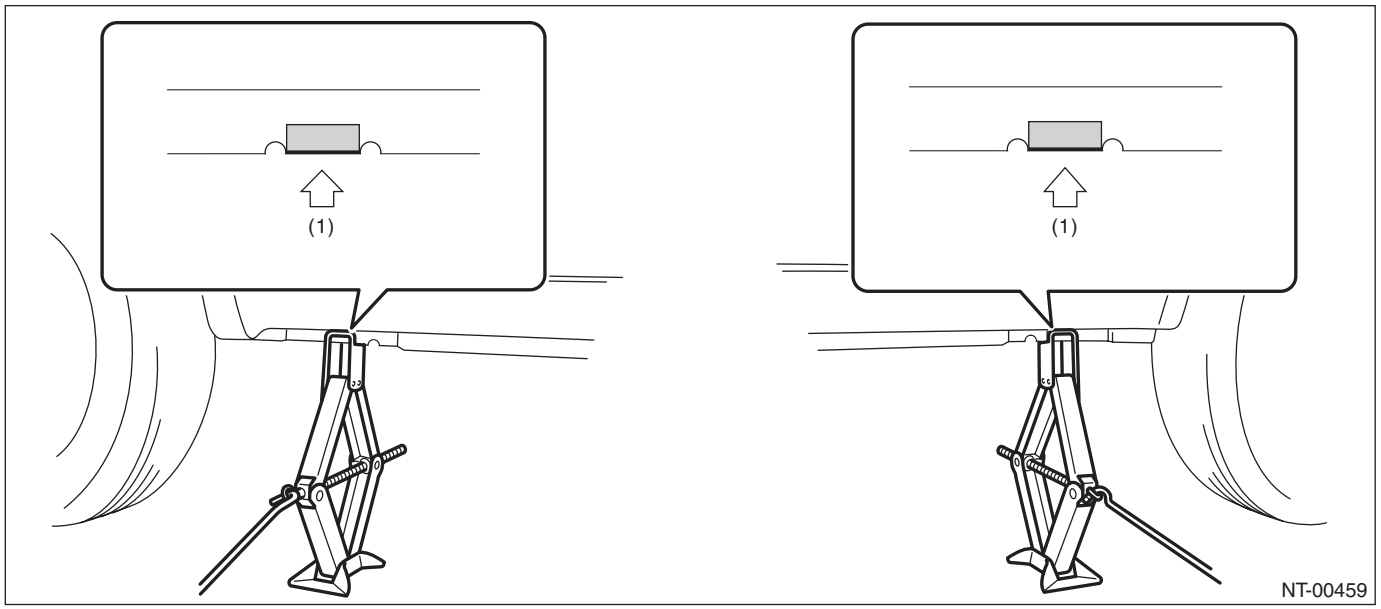

(1) Jack-up point

- **Lift**

CAUTION:
• Depending on the type of the two-post lift, the spoiler assembly side may contact the arm. In such a case, use the attachment of the regular option for the two-post lift.
• Adjust the rear jack-up point so that the attachment should not contact the chipping guard on the spoiler assembly side.

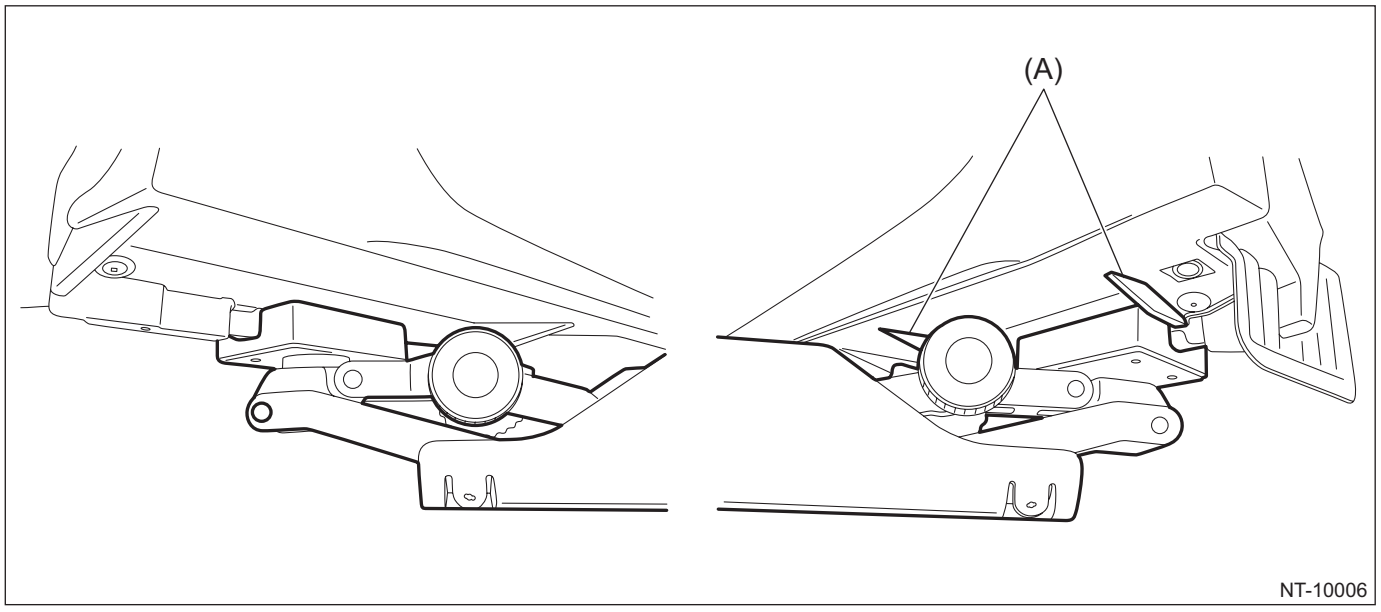

(A) Chipping guard

- **Rigid rack**

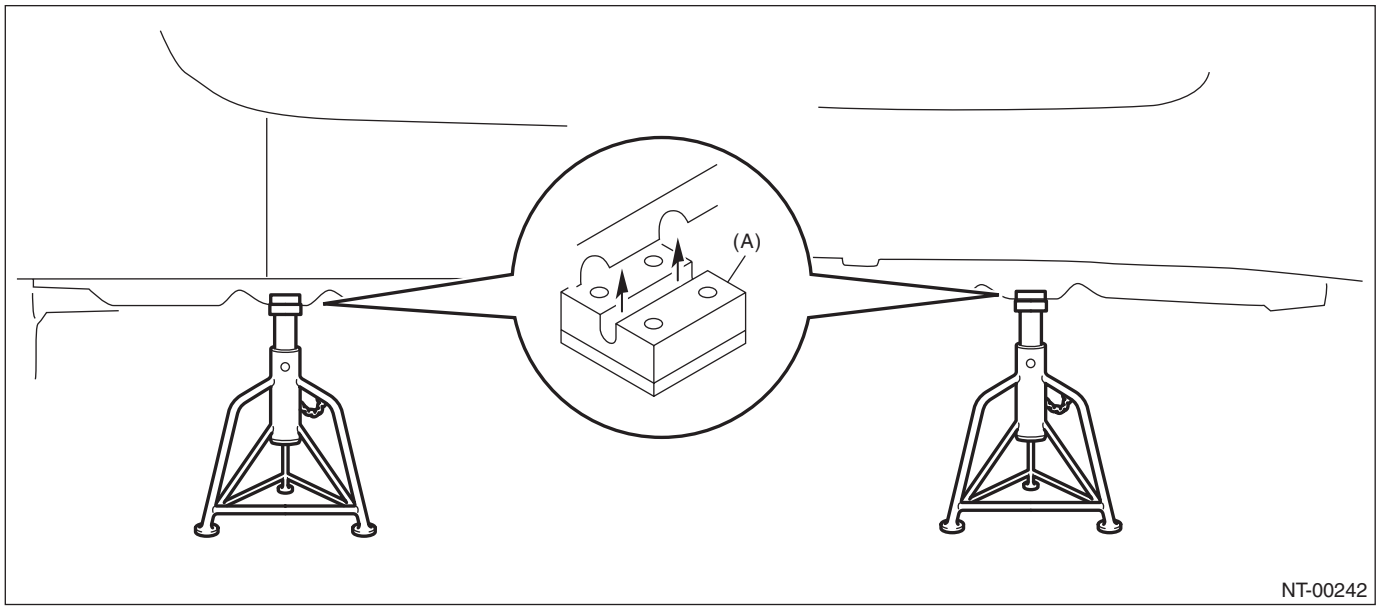

(A) Attachment

- **Plate lift**

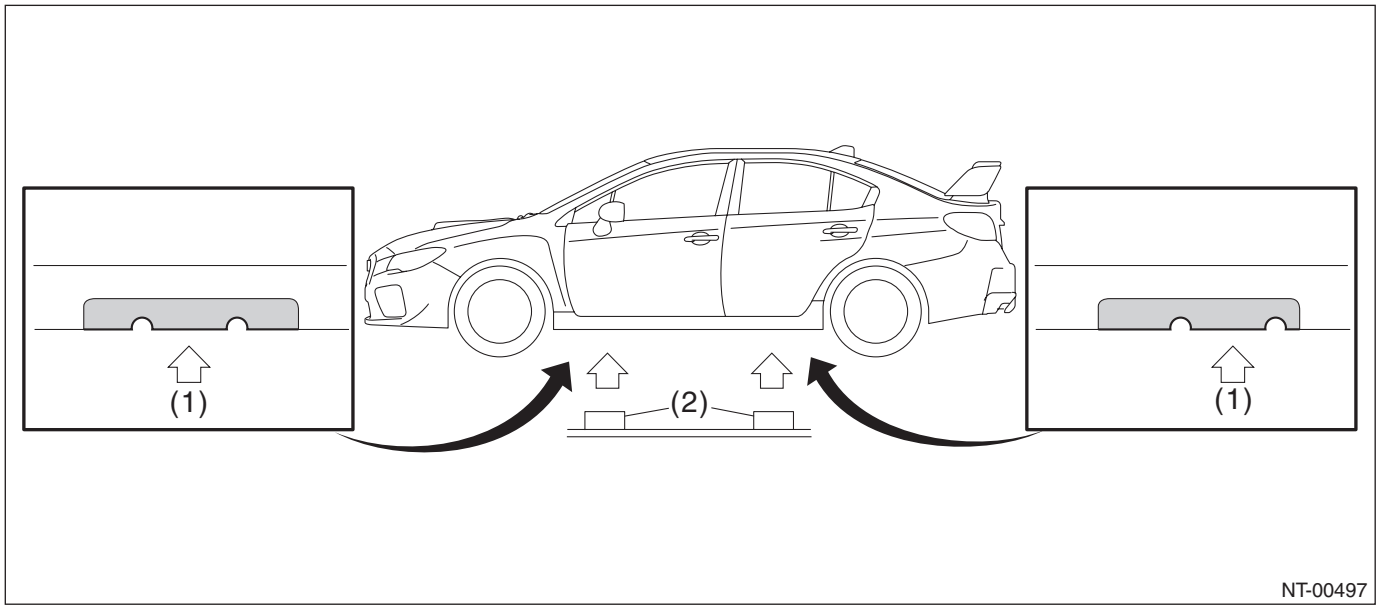

(1) Jack-up point

(2) Attachment

NOTE

- **Jack-up point (when using a garage jack)**

CAUTION:
If jacking up the front side of the vehicle, make sure that the jack is attached at the center of the jack-up plate not at the sides.

STI model

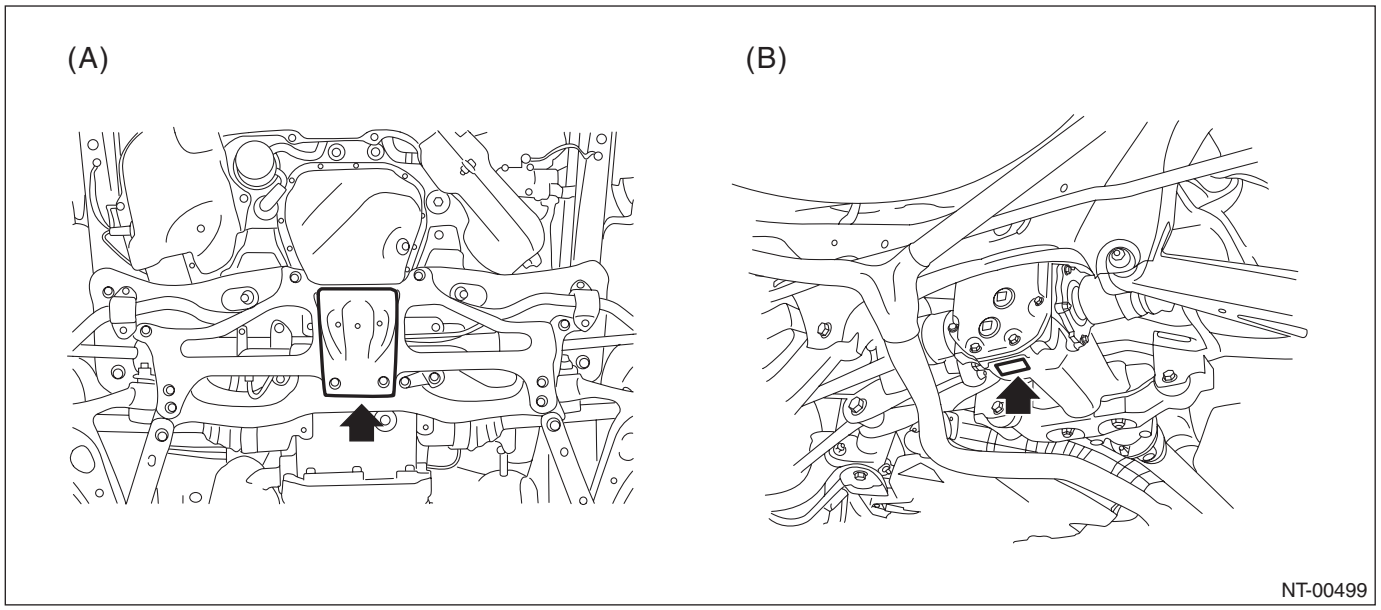

(A) Front (B) Rear

Except for STI model

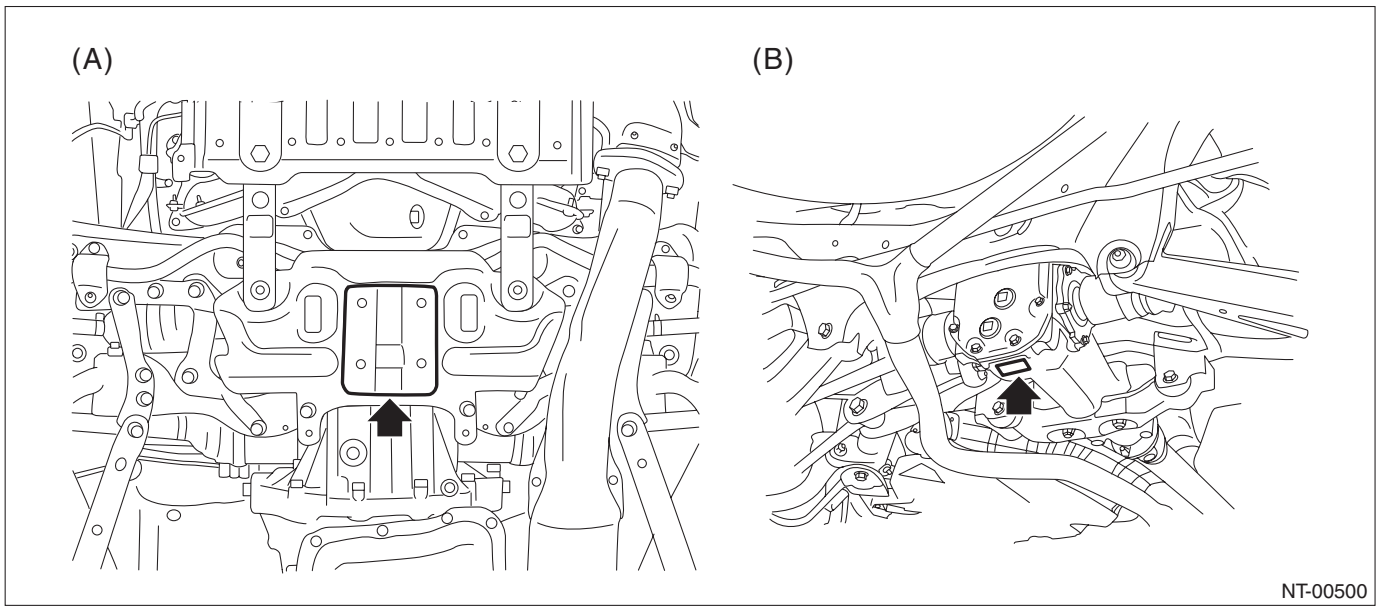

(A) Front (B) Rear

13.TIE-DOWNS

Tie-downs are used when transporting vehicles and when using the chassis dynamo. Remove the grommet of the tie-down hole and install the tie-down only to the specified locations on the vehicle.

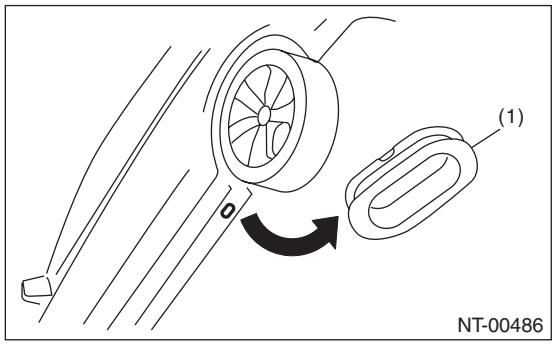

(1) Grommet

- **Tie-down location**

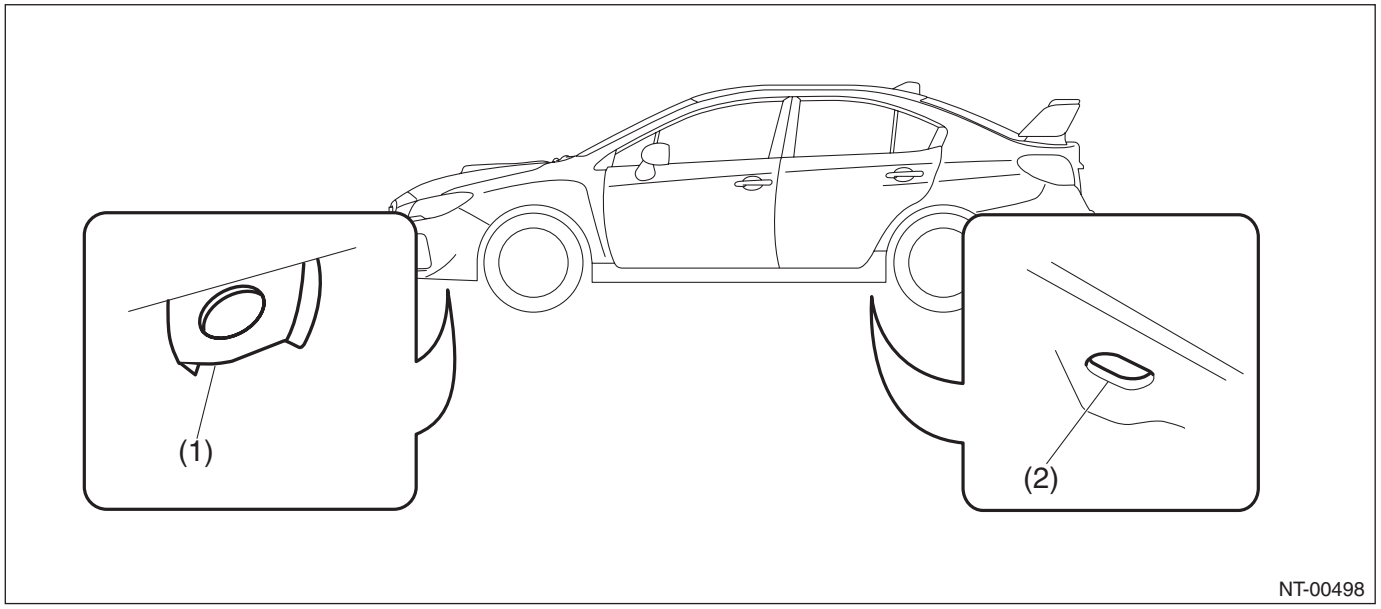

(1) Hook for tie-down

(2) Tie-down hole

NOTE

• Chain direction at tie-down condition

CAUTION:

• Pull the front and rear of the vehicle in the opposite direction, and pull the left and right of the vehicle in the same direction.

• Patterns except for the followings (recommended) are not allowed.

	Recommended
Tie-down direction	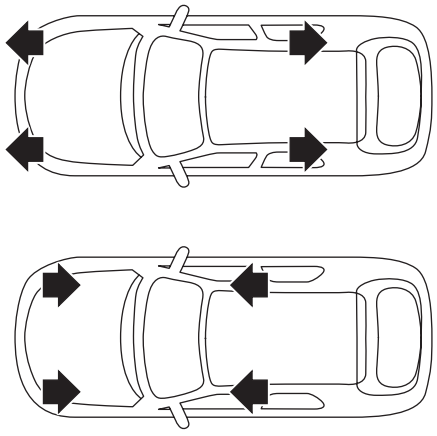 NT-00214

- **Tie-down range**

For ground transportation

CAUTION:

When the vehicle is tied down from vehicle inside, hook the hooks of tie-down chain on the rear tie-down holes from vehicle inside. When the vehicle is tied down from vehicle outside, hook the hooks of tie-down chain on the rear tie-down hooks from vehicle outside.

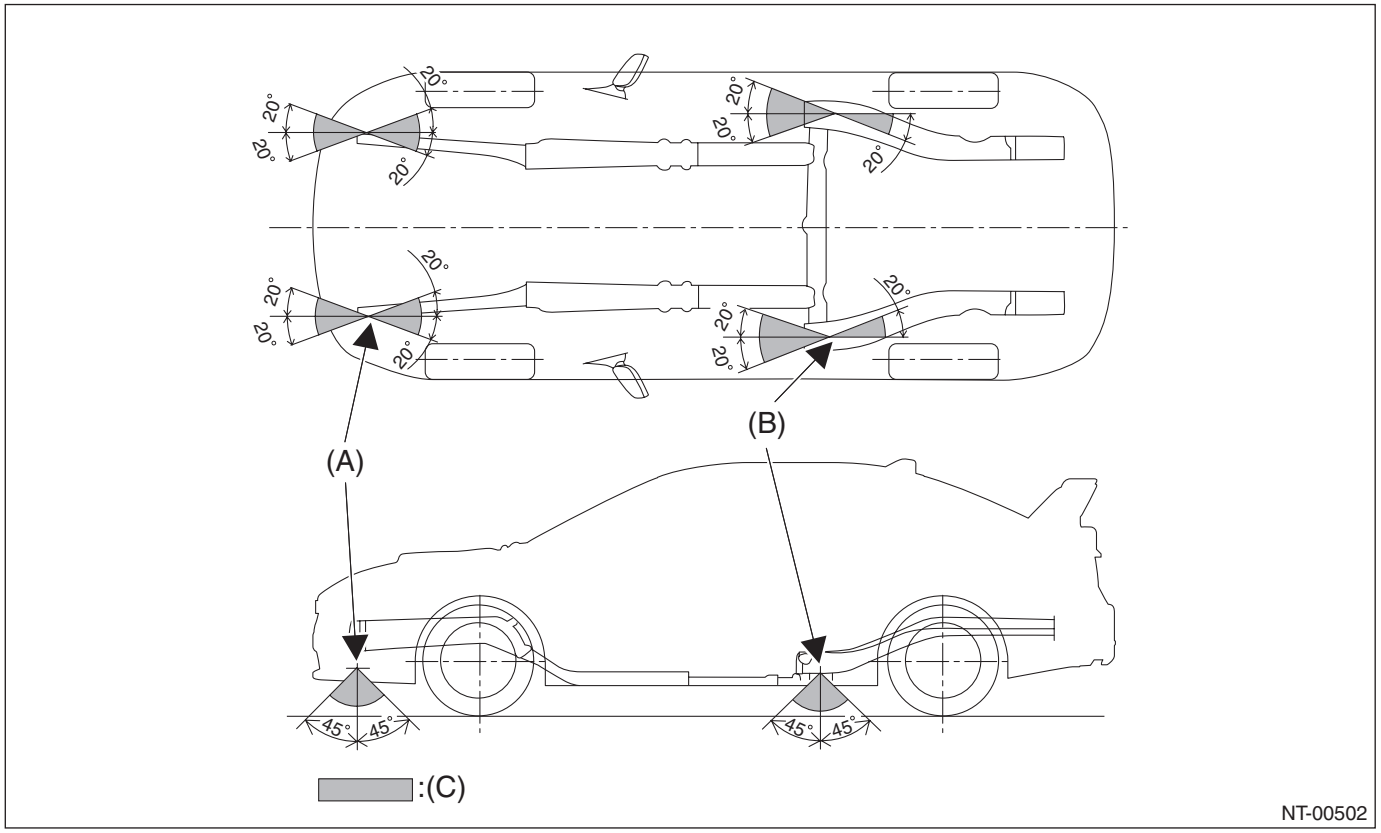

(A) Front tie-down hook

(B) Rear tie-down hole

(C) Chain pulling range at tie-down condition

NOTE

For sea transportation

CAUTION:
The eyebolts are exclusively used for towing and sea transportation tie-down, and do not use them for ground and freight transportation.

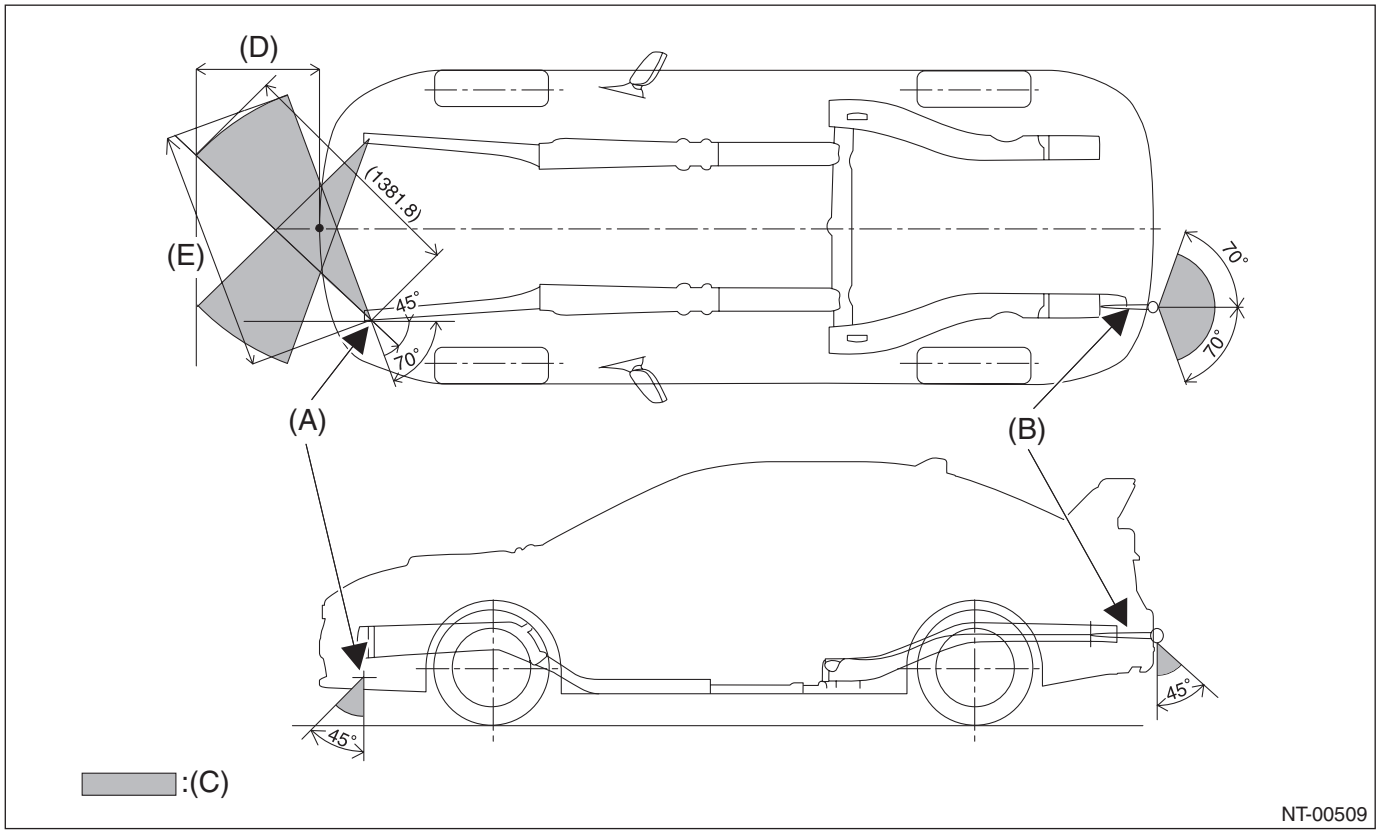

(A)	Front tie-down hook	(C)	Chain pulling range at tie-down condition	(E)	1,320 mm (52.0 in)
(B)	Eyebolt	(D)	400 mm (15.7 in)		

- **Vehicle sinking volume at tie-down condition**

CAUTION:
The vehicle sinking volume at tie-down condition should be less than 50 mm (1.97 in) and make sure to fix the vehicle securely.
Check to see if the tensions of chains or belts at tie-down condition are appropriate in the following procedures.
1) Before tie-down, measure the distance between the highest tire point and highest arch point at the center of wheel.
2) After tie-down, measure the distance between the highest tire point and highest arch point at the center of wheel.
3) If the distance (A) between the measured value of 1) and 2) above, is less than 50 mm (1.97 in), it is judged as OK. If the distance is 50 mm (1.97 in) or more, it is judged as NG because the tension is too high.

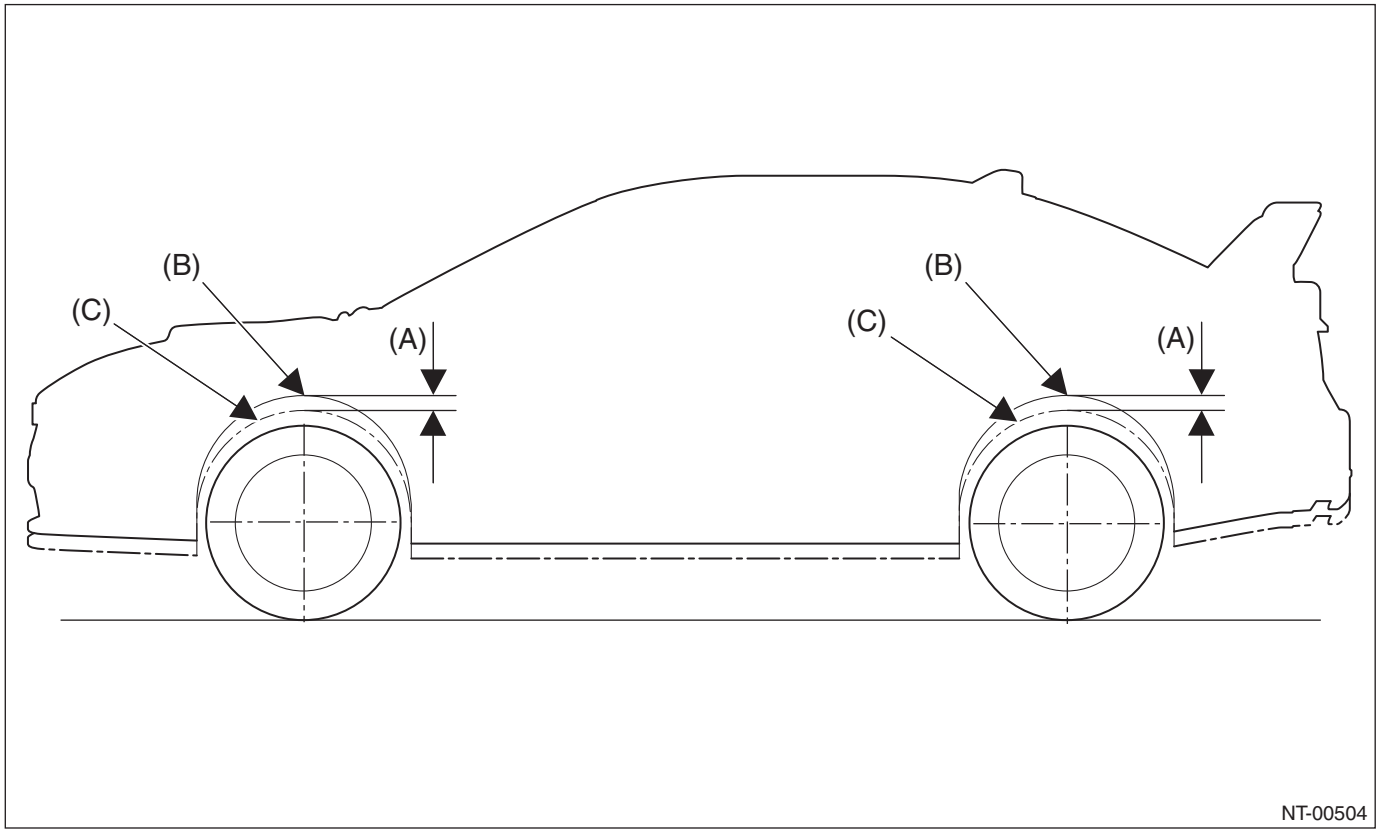

(B) Arch position before tie-down (C) Arch position after tie-down

- **Notes for the use of tie-down hook**

When the vehicle is tied down from vehicle inside, hook the hooks of tie-down chain from vehicle inside, and when the vehicle is tied down from vehicle outside, hook the hooks of tie-down chain from vehicle outside.
For front tie-down hook, use S hook and J hook, and for rear tie-down hole, use S hook, J hook and T hook. T hook can be used only for rear tie-down hole.

14.TOWING

Avoid towing vehicles except when the vehicle cannot be driven. Use a loader instead of towing. When towing other vehicles, pay attention to the following to prevent hook or vehicle damage resulting from excessive weight.

- Do not tow other vehicles with a front tie-down hook.
- Make sure the vehicle towing is heavier than the vehicle being towed.
- When towing the vehicle equipped with Subaru EyeSight, be sure to hold down the pre-collision brake OFF switch to turn OFF the pre-collision brake function. (Check that the pre-collision brake OFF indicator light in the meter lights up.)
- Front

Remove the hook cover, and install the towing hook (eyebolt).

CAUTION:
Make sure to detach the towing hook (eyebolt) after towing. If the hook remains attached, airbag may not operate properly when receiving a shock from front side. And it may also affect the crash performance of the vehicle.

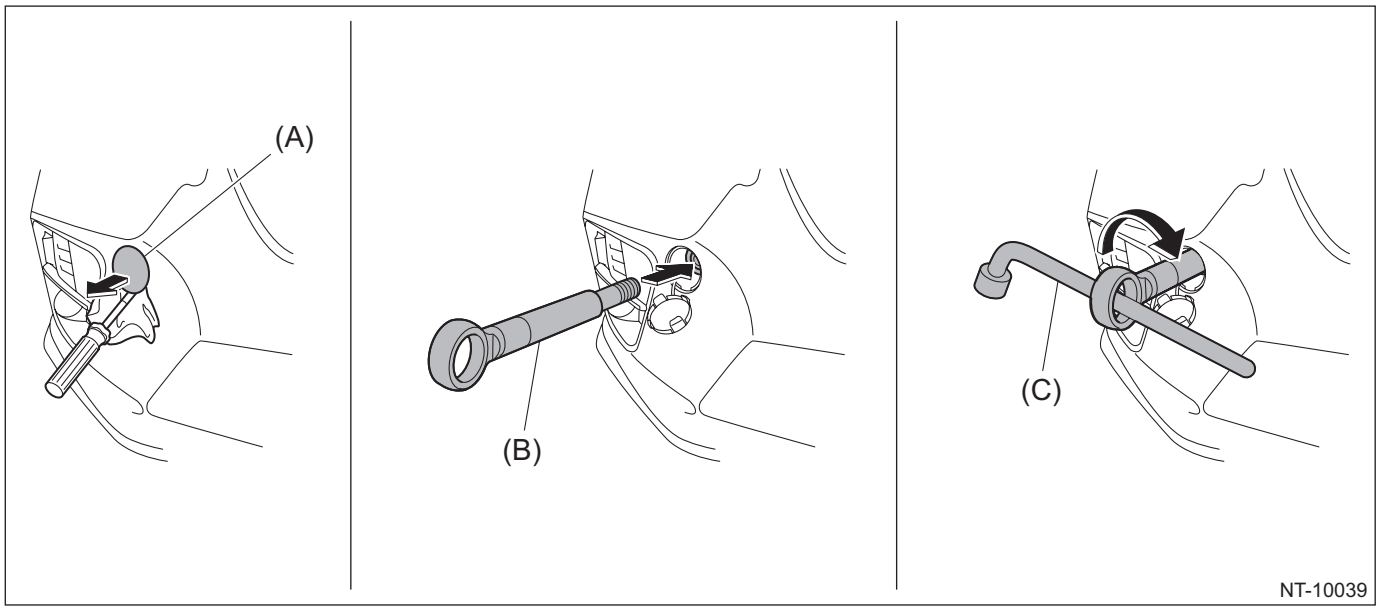

(A) Hook cover (B) Towing hook (eyebolt) (C) Wheel nut wrench

- Rear

Remove the hook cover, and install the towing hook (eyebolt).

CAUTION:

Make sure to detach the towing hook (eyebolt) after towing. If the hook remains attached, the fuel leakage control function of the fuel pump may not operate properly when receiving a shock from rear side. And it may also affect the crash performance of the vehicle.

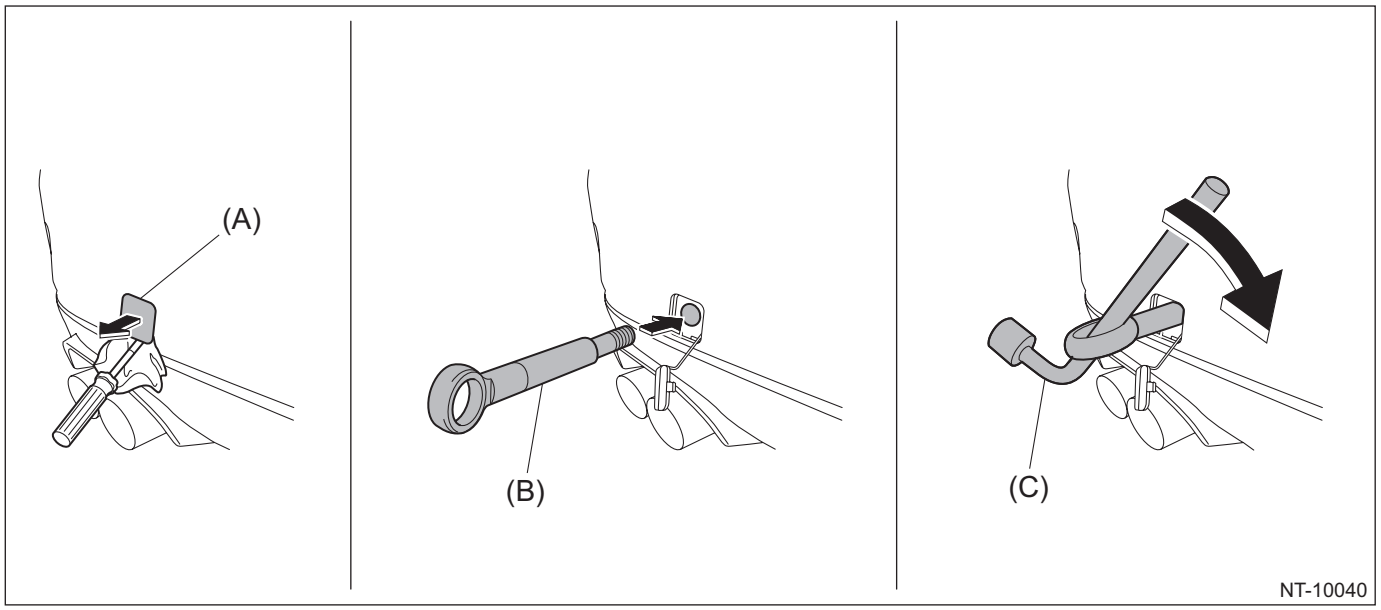

(A) Hook cover

(B) Towing hook (eyebolt)

(C) Wheel nut wrench

NOTE

- Precautions

Towing	Precautions	AWD	
		MT	CVT
Lifting up four wheels (on a trailer) 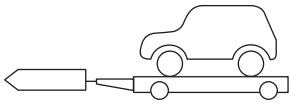 NT-00023	Towing the vehicle after lifting up all four wheels is a basic rule for AWD model. **CAUTION:** **When loading on a carrier transport, make sure to follow the procedures for "LOADING ONTO CAR CARRIER TRUCK". <Ref. to NT-23, FRONT HOOD DAMPER STAY, NOTE, Note.>**	❍	❍
Rope  NT-00024	• Check if both front and rear wheels are rotated normally. • CVT model driving conditions: Driving speed of 30 km/h (19 MPH) or less Allow driving distance 50 km (31 miles) or less	❍	▲
Raising the front wheels 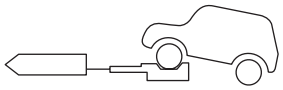 NT-00025	Prohibited for full-time AWD model.	×	×
Lifting up the front wheels  NT-00026	• Prohibited, due to damage on bumper, front grille, etc. • Do not raise the vehicle with bumper.	×	×

Marked ○: OK, Marked ×: Prohibited, Marked ▲: Conditionally OK

CAUTION:

- **Place the shift lever in "N" position during towing.**
- **Do not lift up the rear wheels to avoid unsteady rotation.**
- **Turn the ignition key to "ACC", then check the steering wheel moves freely. (Models without the keyless access with push button start)**
- **Turn the ignition switch to "ACC" or "ON" position, and check that the steering wheel moves freely. (Model with keyless access with push button start)**
- **Release the parking brake to avoid tire dragging.**
- **Since the power steering does not work, be careful for the heavy steering effort. (When engine is stopped)**
- **Since the servo brake does not work, be careful that the brake is not applied effectively. (When engine is stopped)**
- **In case of the malfunction of internal transmission or drive system, lift up four wheels (on a trailer) for towing.**
- **Do not use towing hook (eyebolt) except when towing.**
- **While being towed with all four wheels on the ground, turn the engine switch to ON but do not start the engine.**

15.LOADING ONTO CAR CARRIER TRUCK

When carrying the vehicle onto a car carrier truck, observe the following precautions.

CAUTION:

• When carrying the vehicle onto a car carrier truck, perform the operation being careful with the gap between the height of the carrier's floor and the vehicle lower side because of little clearance under the front bumper.

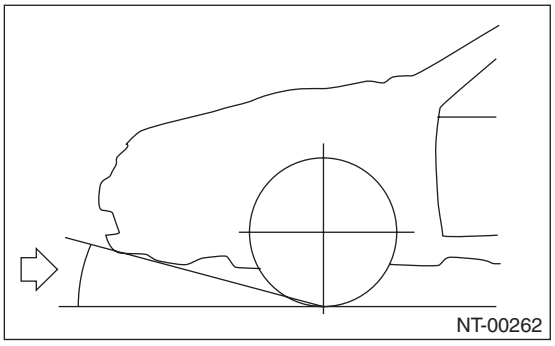

• Use a supporting board (rubber) where the clearance is too small.

• Perform the operation being careful with the position shown in the figure below.

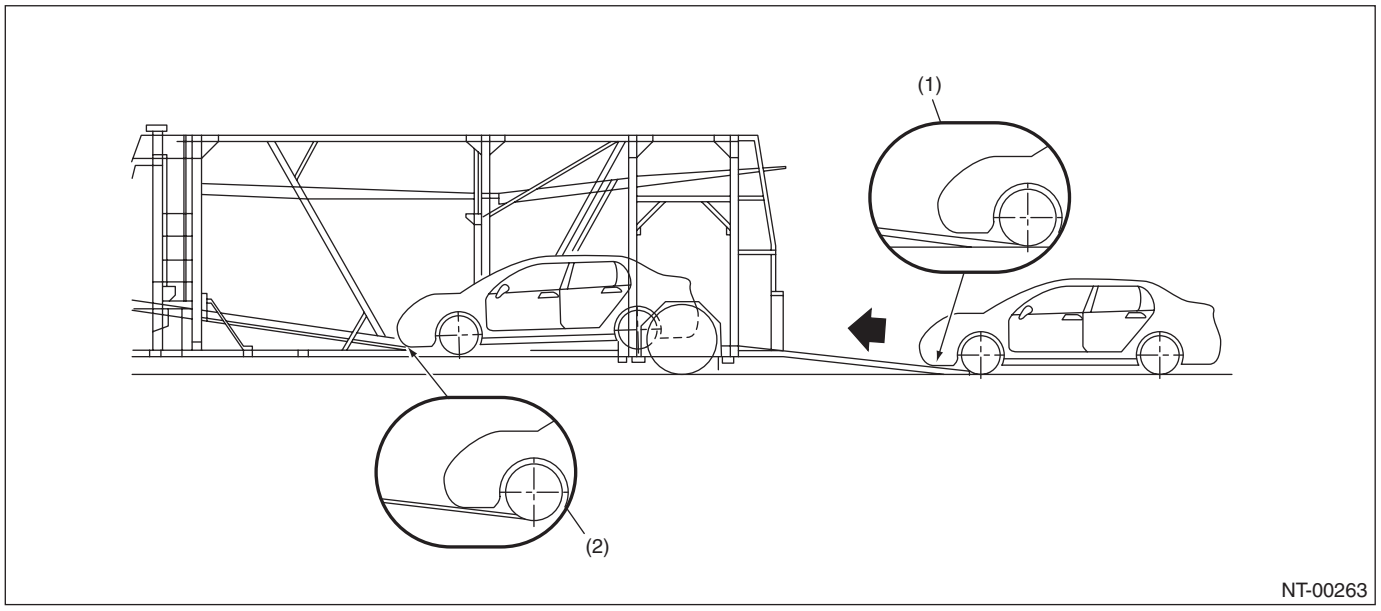

(1) Use a supporting board (rubber) to ensure clearance from the ramp.

(2) Before carrying the vehicle completely, lower the lower center floor until it is level to make clearance.

Before lowering the vehicle from the carrier car, perform the following operations.

CAUTION:

Always perform the following operations before lowering the vehicle from the carrier car. Otherwise, the power unit will rotate reversely, which may cause the damage to the engine, vacuum pump, and transmission.

1) Start the engine.

2) Set the transmission shift position into driving direction of the vehicle. (When the vehicle drives forward, do not set the transmission into R range. When the vehicle drives rearward, do not set the transmission into 1 — 6 speed.)

CAUTION:

Be sure to perform 2) mentioned above even if the engine cannot be started in some reasons.

16.FRONT HOOD DAMPER STAY

1) Always perform works such as inspections and maintenance with both damper stays attached.

CAUTION:
At the inspection and general maintenance, do not detach the damper stays.

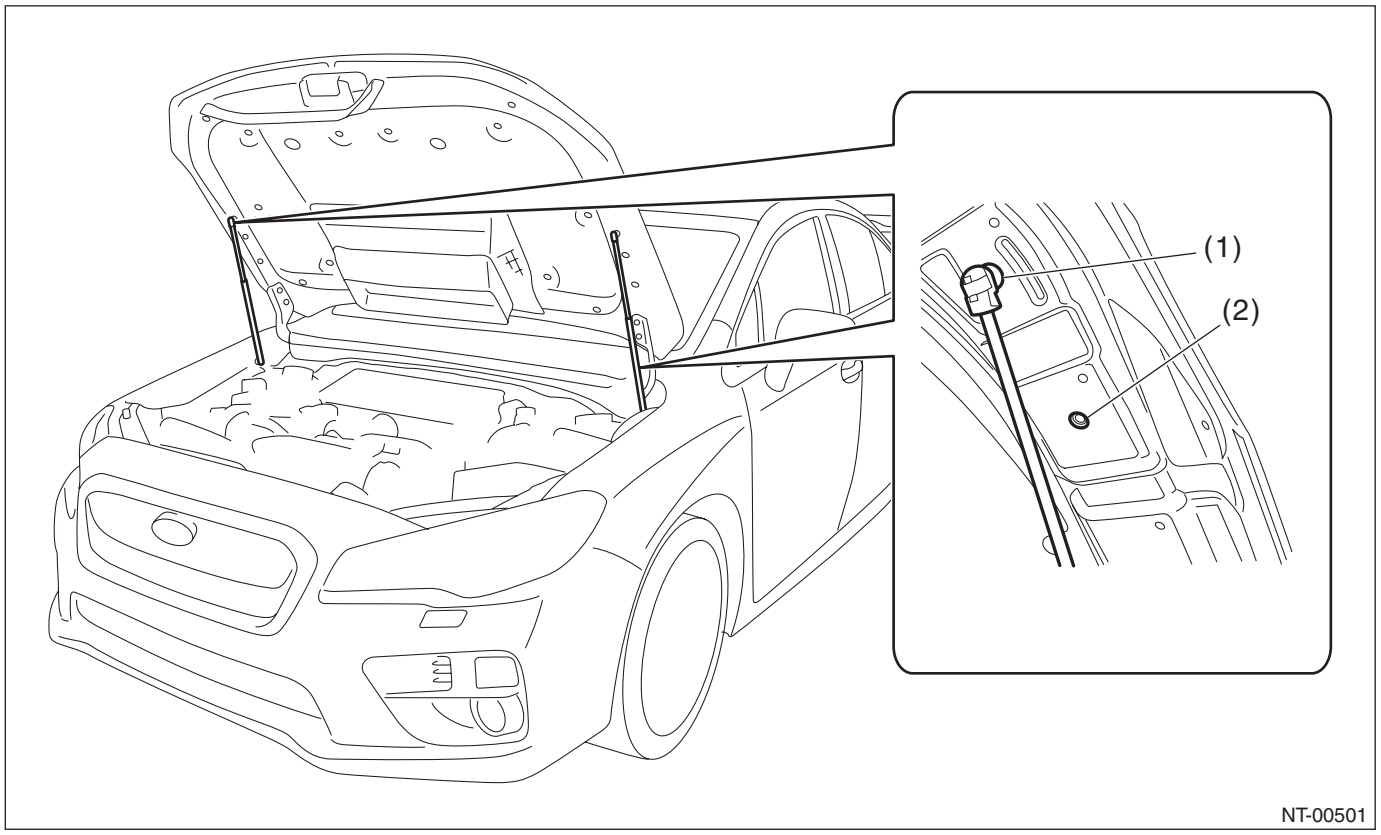

(1) Normal attached position (2) Installation position at full open

2) When wider hood opening is necessary, set the damper stay below as shown in the figure.

Tightening torque:
<Ref. to EB-2, FRONT HOOD, COMPONENT, General Description.>

CAUTION:
• The hood cannot be closed with the hood damper on the full open side. When it is necessary to close, tie the hood striker and the radiator panel with a string etc. to fix them.
• After work, set the damper stays back to the normal position and tighten the bolts to the specified torque.

17.GENERAL SCAN TOOL

Using general scan tools will greatly improve the efficiency of repairing engine electronic controls. Subaru Select Monitor can be used to diagnose the engine, VDC, air conditioner and other electrically controlled parts.

18.AWD CIRCUIT MEASURES

1) Full time AWD 6MT (STI model)
Since the driver's control center differential (DCCD) is used in the center differential, cut-off of AWD circuit cannot be carried out.
2) Full time AWD 6MT (except for STI model)
Since viscous coupling (limited slip differential) is used in the center differential, cut-off of AWD circuit cannot be carried out.
3) Full-time AWD CVT model
Since VTD type is used in the center differential, cut-off of AWD circuit cannot be carried out.

NOTE

19.SPEEDOMETER TEST

1) Rear wheel free roller system
   (1) Set the free roller on the floor of rear wheel side securely according to the wheel base and rear tread of the vehicle.
   (2) Let the vehicle ride on the tester and free roller gently.

CAUTION:
Fix the vehicle using a pulling metal (chain or wire) to the front and rear towing hooks or tie-down hook to prevent the lateral runout of front wheels and springing out of vehicle.

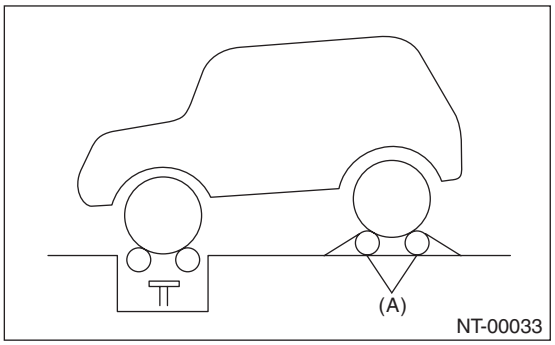

(A) Free roller

   (3) Set the speedometer tester.
   (4) Conduct the speedometer test work.

CAUTION:
Do not operate the clutch quickly and do not accelerate or decelerate suddenly during work.

2) Rear wheel jack-up system
   (1) Set the vehicle on speedometer tester.

CAUTION:
Fix the vehicle using a pulling metal (chain or wire) to the front and rear towing hooks or tie-down hook to prevent the lateral runout of front wheels and springing out of vehicle.

   (2) Jack up the rear wheels and set the rigid racks to the specified locations of side sill.

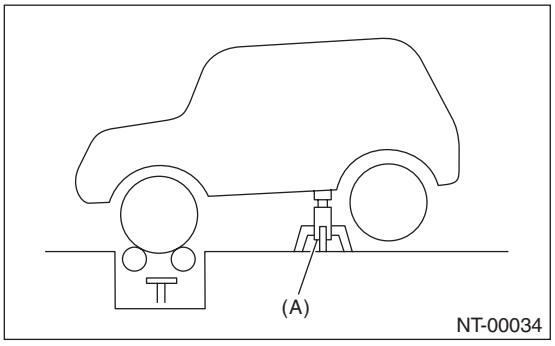

(A) Rigid rack

   (3) Conduct the speedometer test work.

CAUTION:
Do not operate the clutch quickly and do not accelerate or decelerate suddenly during work.

20.BRAKE TEST

1) Full time AWD 6MT (except for STI model)
   (1) Perform this test after driving the vehicle 2 to 3 km (1.24 to 1.86 miles) on road in order to stabilize the viscous torque of viscous coupling.
   (2) Keep the front or rear wheels on the ground for this test.

NOTE:
Effect of the viscous torque on braking force will be added approx. 25 kg compared with FWD model.

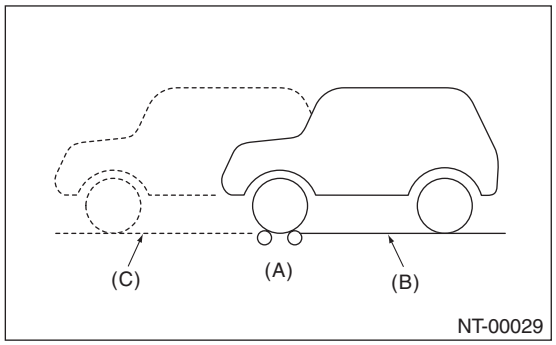

(A) Brake tester
(B) Position for measuring front wheel
(C) Position for measuring rear wheel

   (3) When the brake dragging force is large.
   • Check the dragging of brake pad or brake shoe.
   • Since it may be affected by the viscosity of viscous coupling, jack up either of the front or rear two wheels to check the each wheel rotation condition with the viscous coupling affection removed.

2) Full time AWD 6MT (STI model) and CVT model
   (1) Keep the front or rear wheels on the ground during measurement.

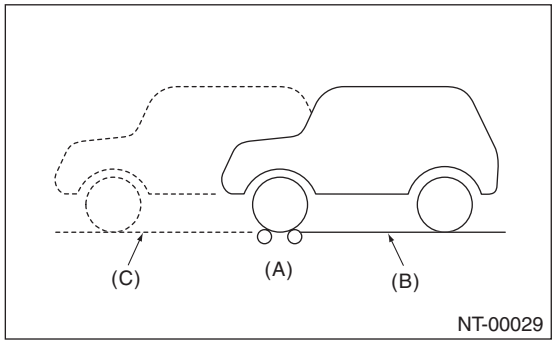

(A) Brake tester
(B) Position for measuring front wheel
(C) Position for measuring rear wheel

   (2) When the brake dragging force is large.
   • Check the dragging of brake pad or brake shoe.

Specifications:

	Braking force
Rear wheel total	10% or more of load on front or rear wheels
Difference between right and left wheels	8% or less of load on front or rear wheels
Grand total	50% or more of vehicle weight at the time of test

   • When measurement is difficult to carry out because both of front wheels are locked, brake force measurement in this condition conforms to standard grand total.

NOTE

21.ON THE CAR WHEEL BALANCING

CAUTION:
- **Carry out the procedures after measuring the balance of each single tire.**
- **Set the vehicle so that the front and rear wheels are the same height.**
- **Make sure that the VDC is deactivated.**
- **Release the parking brake during measurement.**
- **Rotate each wheel by hands, and make sure it rotates without dragging.**
- **Do not operate the clutch quickly and do not accelerate or decelerate suddenly during work.**
- **When an error is indicated during engine drive, do not use the motor drive together.**

1) Set the rigid rack to the specified locations of side sill, jack up the front or rear two wheels of non-measuring side and set the pickup stands to two wheels of measuring side.

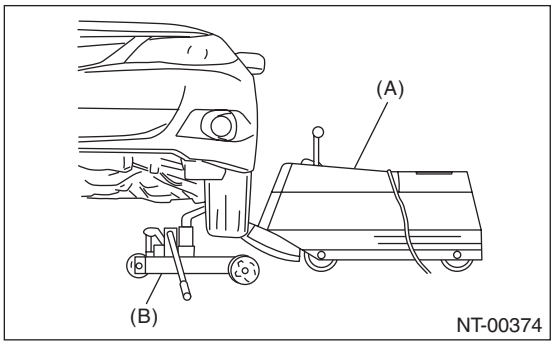

(A) Balancer body
(B) Pickup stand (left and right)

2) For drive wheel, drive the tires with engine for measurement.
3) For non-drive wheel, drive the tires from the on the car wheel balancer for measurement.

IDENTIFICATION

ID

Page
1. Identification 2

1. Identification

A: IDENTIFICATION

1. IDENTIFICATION NUMBER AND LABEL LOCATIONS

The V.I.N. (Vehicle Identification Numbers) is used to classify the vehicle.

- **Positioning of the plate label for identification**

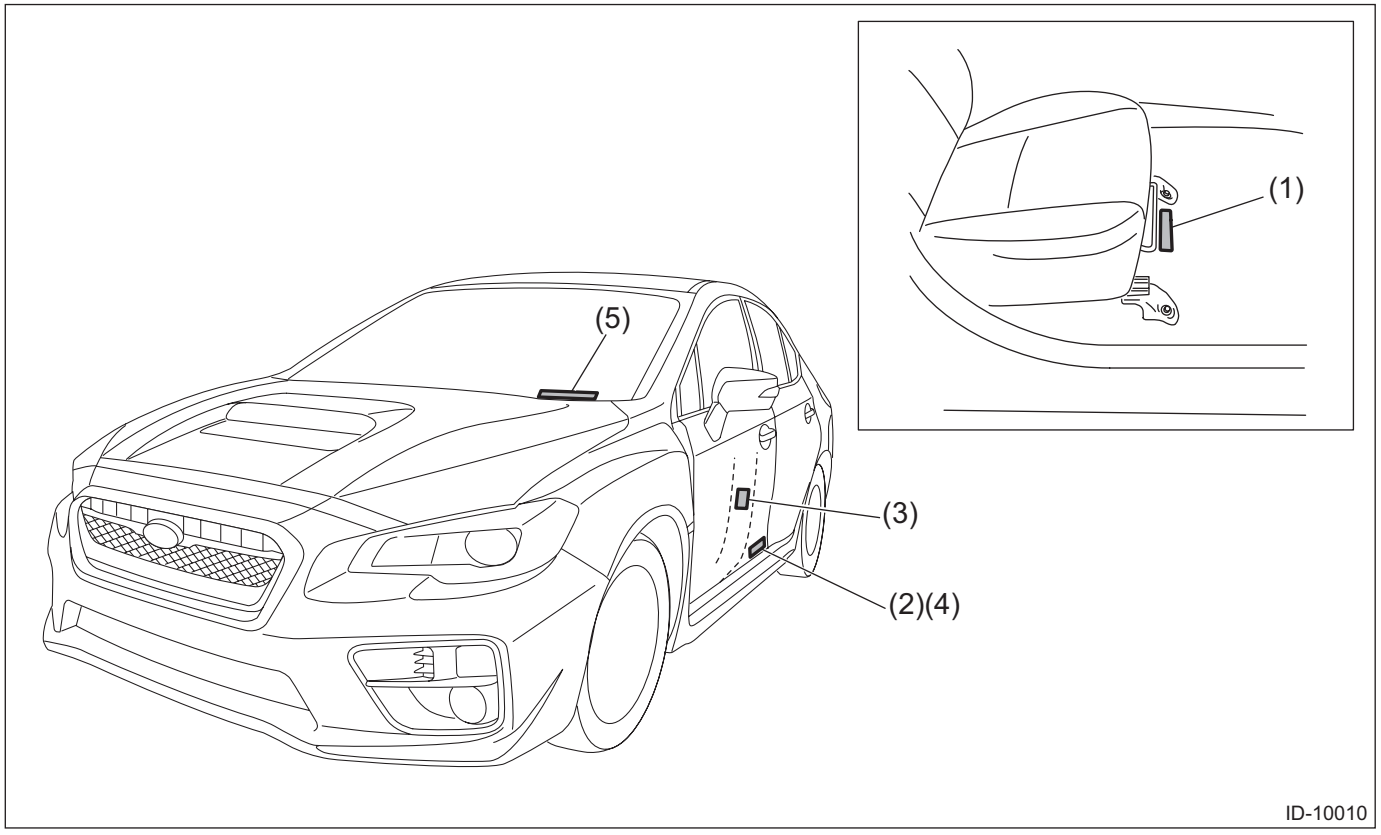

(1) VIN (Vehicle Identification Number) (below right front floor carpet)
(2) MVSS and CMVSS label
(3) Tire inflation pressure label (driver's side)
(4) Model number label (attached to right side of vehicle)
(5) VIN plate

- **Engine**

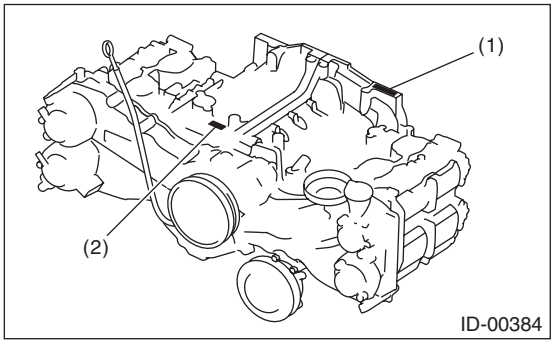

(1) Engine serial number (punch mark)
(2) Engine type (casting) crankcase upper side

- **Automatic transmission**
  CVT

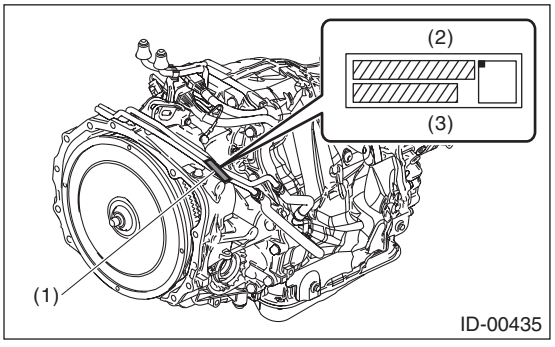

(1) Label
(2) CVT type label
(3) Transmission serial No. label

- **Manual transmission**

Except for STI model

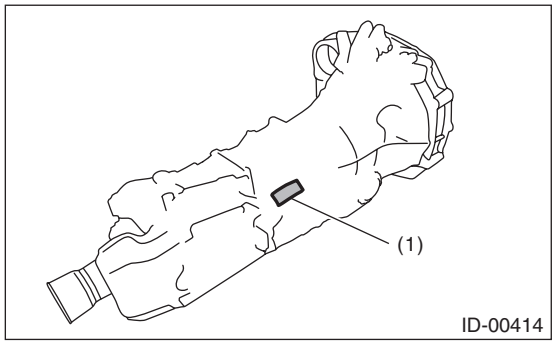

(1) MT type label and transmission serial number label

STI model

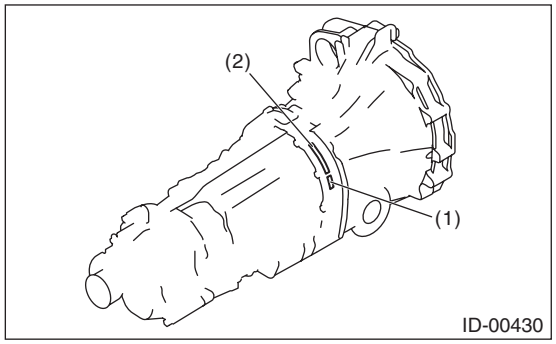

(1) Transmission serial No. label
(2) MT type label

- **Rear differential**

T-type

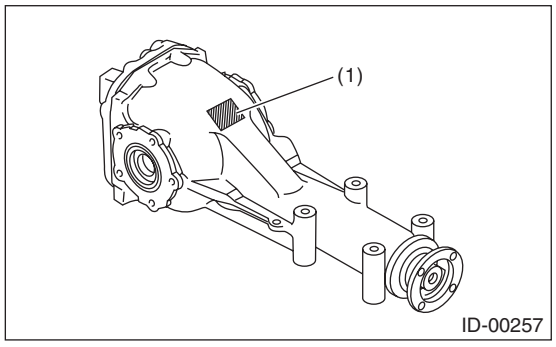

(1) Identification (white paint)

- **MVSS label**

For U4

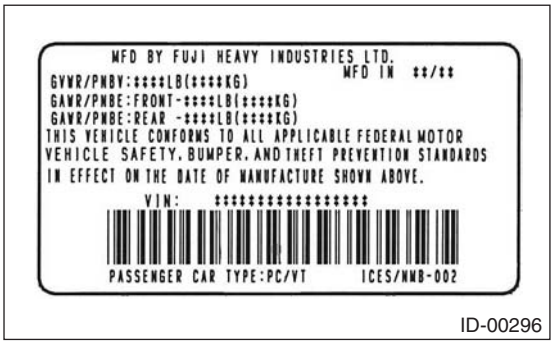

- **CMVSS label**

For C0

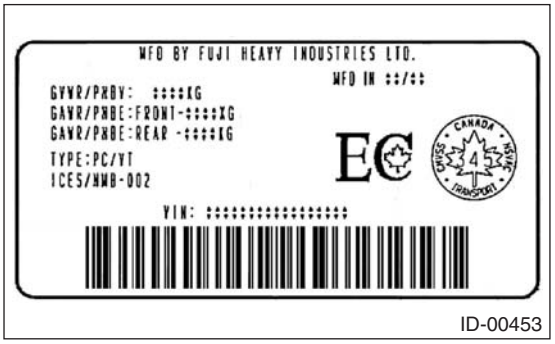

- **Model number label**

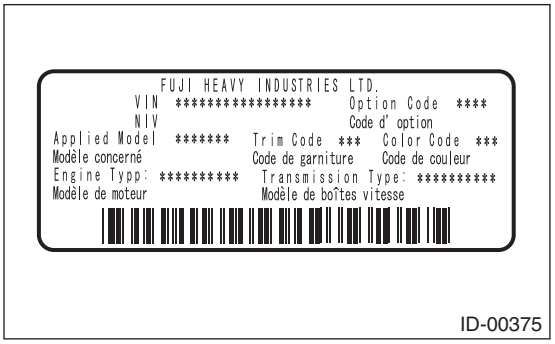

2. MEANING OF V.I.N.

The meaning of the V.I.N. is as follows:
]JF1VA1A6XH9800001[
The starting and ending brackets ( ] [ ) are stop marks.

Digits	Code	Meaning	Details
1 — 3	JF1	Manufacturer body area	JF1: Passenger car, FHI made
4	V	Car line	V: WRX
5	A	Body type	A: Sedan
6	1	Displacement class	1: 2.0 L AWD DI turbo 2: 2.5 L AWD high power turbo
7	A	Grade	A: WRX (Lip-spoiler less) B: WRX C: WRX keyless access D: WRX Premium E: WRX Premium moon roof F: WRX Premium moon roof Harman/Kardon G: WRX Premium moon roof Blind Spot Detection H: WRX Premium Blind Spot Detection J: WRX LTD moon roof K: WRX LTD moon roof keyless access L: WRX LTD moon roof keyless access Harman/Kardon and navi Blind Spot Detection M: STI N: WRX LTD Moon Roof keyless access Harman/Kardon and navi Blind Spot Detection EyeSight P: STI (Wing spoiler less) R: STI moon roof keyless access Harman/Kardon and navi S: STI moon roof keyless access Harman/Kardon and navi Blind Spot Detection T: STI moon roof Blind Spot Detection U: STI keyless access V: STI keyless access Harman/Kardon & navi Blind Spot Detection W: STI LTD moon roof keyless access Harman/Kardon Blind Spot Detection X: WRX LTD moon roof keyless access Blind Spot Detection Y: STI LTD moon roof keyless access Harman/Kardon and navi Blind Spot Detection Z: STI LTD moon roof keyless access Harman/Kardon and navi Blind Spot Detection lip spoiler
8	6	Restraint	6: Manual belts, dual airbag, side airbag for seat back, curtain airbag for roof and driver's knee airbag
9	X	Check digit	X or 0 — 9
10	H	Model year	H: 2017MY
11	9	Transmission type	8: Full-time AWD CVT 9: Full-time AWD 6 speed MT
12 — 17	800001	Serial number	800001 — 899999

3. MODEL NUMBER LABEL

The model number label indicates: the applied model, the option code, the trim code, the engine type, the transmission type, and the exterior color code. This information is helpful when placing orders for parts.

VAGCYA6

Digits	Code	Meaning	Details
1	V	Series	V: WRX
2	A	Body type	A: Sedan
3	G	Total engine displacement / drive system	F: 2.5 L AWD high power turbo G: 2.0 L AWD DI turbo
4	C	Model year	C: 2017MY
5	Y	Destination	Y: U.S., Canada
6	A	Grade	A: WRX B: WRX+L C: WRX-Pre D: WRX-LTD E: STI F: STI+W H: STI-LTD+W N: STI-LTD+L S: WRX-LTD EyeSight T: WRX-Pre H/K
7	6	Fuel feed system / transmission	6: DI turbo 6 speed MT AWD 8: DI turbo high torque CVT AWD H: MFI High power turbo 6 speed MT AWD

The engine and transmission type are as follows.

- **Engine**

EJ257AG7LB

Digits	Code	Meaning	Details
1 and 2	EJ	Engine type symbol	EJ: 4 cylinders
3 and 4	25	Displacement	25: 2.5 L
5	7	Fuel feed device	7: MFI - high power turbo
6	A	Exhaust regulations	A: U.S. (FED)
7	G	Mounted transmission	G: 6MT
8 — 10	7LB	Detailed specifications	Used when ordering parts. For details, refer to the parts catalog.

FA20FAZB7A

Digits	Code	Meaning	Details
1 and 2	FA	Engine type symbol	FA: 4 cylinder
3 and 4	20	Displacement	20: 2.0 L
5	F	Valve train/fuel supply system/steering	F: DOHC DIT (LH)
6	A	Exhaust regulations	A: For states not using California emission standards
7	Z	Intake and exhaust system	Z: Intake AVCS, exhaust AVCS, TGV, EGR
8	B	Mounted transmission	B: 6MT H: CVT
9 and 10	7 A	Detailed specifications	Used when ordering parts. For details, refer to the parts catalog.

• Transmission

1. MT
TY751VB9CA

Digits	Code	Meaning	Details
1	T	Transmission	T: Transmission
2	Y	Transmission system	Y: Full-time AWD MT center differential
3 and 4	75	Distance between gear center	75: Between main shaft and drive pinion
5	1	Classification	1: 6MT
6	V	Transmission specifications	V: Full-time AWD single range 6MT with viscous coupling center differential (without Auto Start Stop)
7	B	Mounted engine	B: 2.0 L DOHC turbo
8 — 10	9CA	Detailed specifications	Used when ordering parts. For details, refer to the parts catalog.

TY856UW9AA

Digits	Code	Meaning	Details
1	T	Transmission	T: Transmission
2	Y	Transmission system	Y: Full-time AWD MT center differential
3 and 4	85	Distance between gear center	85: Between main shaft and drive pinion
5	6	Classification	6: 6MT
6	U	Transmission specifications	U: Full-time AWD single range 6MT with driver's control center differential
7	W	Mounted engine	W: 2.5 L DOHC turbo
8 — 10	9AA	Detailed specifications	Used when ordering parts. For details, refer to the parts catalog.

2. CVT
TR690GB9BA

Digits	Code	Meaning	Details
1	T	Transmission	T: Transmission
2	R	Transmission system	R: Full-time AWD CVT
3 and 4	69	Distance between pulley centers	69: Between pulley centers
5	0	Classification	0: CVT
6	G	Transmission specifications	G: Without Auto Start Stop, with CVTF cooler (with warmer feature), without CVTF cooler (air cooler)
7	B	Mounted engine	B: 2.0 L DOHC turbo
8 — 10	9BA	Detailed specifications	Used when ordering parts. For details, refer to the parts catalog.

• Rear differential

Identification	Reduction gear ratio	LSD
B1	4.111	None
B2	3.900	None
H5	3.545	Torsen

• Option code

TW

• 1-digit number

OP code	F	J	R	T	U	W	Z	1	2	4	5
18 inch tire & aluminum wheel (BBS)	—	—	○	—	—	—	○	—	—	—	—
Keyless access with push button start	○	—	○	—	○	—	○	—	—	○	○
Harman system + navigation	○	—	—	—	—	—	○	—	—	—	○
Rearview camera	○	○	○	○	○	○	○	○	○	○	○
LED headlight	○	○	○	—	○	○	○	○	—	○	○
Front fog light	○	○	○	—	○	○	○	○	○	○	○
Sunroof	—	○	○	—	○	—	○	—	○	—	○
Auto light & auto wiper	○	○	○	—	○	—	○	○	—	—	○

• 2-digit number

OP code	G	L	M	O	T	W	X	Y
Genuine leather seat	○	○	○	—	○	—	—	—
Driver seat power seat	○	○	○	—	○	—	—	○
Driver's seat and passenger's seat power seat	—	—	—	—	—	—	—	—
Seat heater	—	—	○	○	○	○	—	○
Clear view package	—	—	○	○	○	○	—	○
Advanced package	—	○	○	○	—	—	—	○

4. IMMOBILIZER REGISTRATION TYPE

• Model without keyless access with push button start

Refer to "Type B" described in "REGISTRATION MANUAL FOR IMMOBILIZER".

• Model with keyless access with push button start

Refer to "Type D" described in "REGISTRATION MANUAL FOR IMMOBILIZER".

RECOMMENDED MATERIALS

RM

Page
1. Recommended Materials 2

1. Recommended Materials

A: RECOMMENDED MATERIALS

1. GENERAL

To insure the best performance, always use the specified oil, gasoline, adhesive, sealant, etc. or a substitute of equivalent quality.

2. FUEL

- Use unleaded gasoline because using leaded gasoline may cause a malfunction.
- Do not use the low quality gasoline, or improper fuel such as diesel fuel, fuel alcohol, or gasoline additive because they will adversely affect on engine components and fuel system components.
- Always use gasoline that is equivalent to that prescribed in the owner's manual or that of high octane value. There is the possibility of damaging or improper operation of the engine and fuel injection system if the specifications are not observed. Use the prescribed gasoline type to maintain proper vehicle performance.

3. LUBRICANTS

Use the lubricants shown in the table below, or equivalent. See the table below to choose the correct SAE viscosity.

<table>
<tr><td rowspan="2">Lubricant</td><td colspan="2">Recommended materials</td></tr>
<tr><td colspan="2">Engine oil standard</td></tr>
<tr><td>Engine oil
Choose oil suitable for the standard from the right.</td><td> 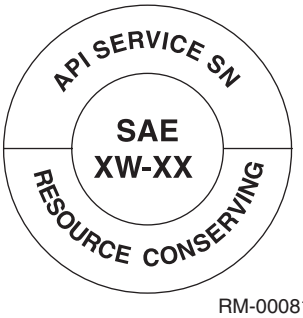

RM-00081
Those with SN “Resource Conserving” logo in case of API standard.</td><td>or
 

RM-00002
Those with GF-5 “starburst mark” displayed on top of the container in case of ILSAC standard.</td></tr>
<tr><td colspan="3">SAE viscosity No. and applicable temperature</td></tr>
<tr><td colspan="3"> 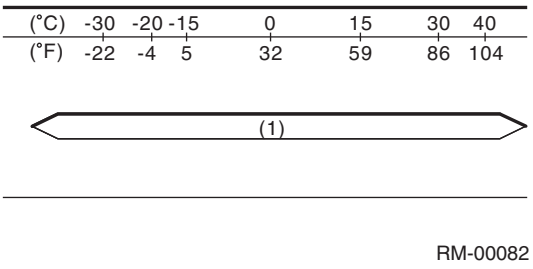

RM-00082
(1) 5W-30 (synthetic oil) Specified</td></tr>
</table>

Lubricant	Recommended materials
	API standard
Manual transmission gear oil (TY85)*1 and rear differential gear oil*2	GL-5
SAE viscosity No. and applicable temperature	

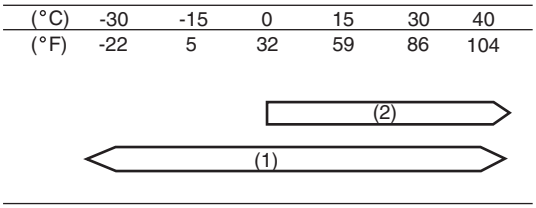

(1) 75W-90 (recommended)
(2) 90

*1

CAUTION:
Applicable to TY85 only.

*2

CAUTION:
Do not mix two different kinds or makes of gear oil.

4. FLUID

Use the fluids specified in the table below. Do not mix two different kinds or makes of fluid.

CAUTION:
• Be sure to use the recommended CVTF. Using material except recommended one would cause trouble.
• If an alternative transmission gear oil (TY75) is used, expected functionality and performance may not be obtained.

Fluid	Recommended materials	Item number	Alternative
Transmission fluid	Subaru High Torque CVT Fluid	K0421Y0700	—
Transmission gear oil (TY75)	SUBARU GEAR OIL EXTRA MT	—	GL-5 (75W-90)
CVT front differential gear oil	SUBARU GEAR OIL EXTRA MT	—	GL-5 (75W-90)
Power steering fluid	SUBARU ATF	K0410Y0700	DEXRON III
Brake fluid and clutch fluid	FMVSS No. 116 DOT3, or DOT4	—	—

5. ENGINE COOLANT

Use genuine engine coolant to protect the engine.

Engine coolant	Recommended materials	Item number	Alternative
Coolant	SUBARU SUPER COOLANT (Concentrated type)	—	—
	SUBARU SUPER COOLANT (Diluted type)	K0670Y0001	—
Water for dilution	Distilled water	—	Soft water or tap water
Cooling system protective agent	Cooling system conditioner	SOA345001	—

6. REFRIGERANT

Standard air conditioners installed on vehicles use HFC134a refrigerant. Do not mix it with other refrigerants. Also, do not use any air compressor oil except for DH-PR (ZXL200PG).

Air Conditioner	Recommended materials	Item number	Alternative
Refrigerant	HFC134a	—	—
Compressor oil	DH-PR (ZXL200PG)	—	—

7. GREASE

Use grease and supplementary lubricants shown in the table below.

Grease	Application point	Application point	Recommended materials (Item number)	Alternative
Supplementary lubricants	Exhaust	Oxygen sensor	Spray type lubricant (004301003)	—
Grease	MT	MT main shaft (spline parts)	NICHIMOLY N-130	—
		MT main shaft (oil seal lip)		
		Transfer driven gear (front roller bearing, rear roller bearing) (TY75)		
		Clutch operating cylinder		
		Release bearing (inner circumference)		
		Clutch release lever		
		Clutch master cylinder push rod	SILICONE GREASE G-40M	—
		Gear shift lever (cable type)	Multemp HL-D	—
		Gear shift lever (rod type)	NIGTIGHT LYW No. 2 grease	—
		Clutch pedal		
	Brake	Brake pedal		
	CVT	Select lever	Multemp D	—
	Door	Door latch	SILICONE GREASE G-30M (004404002)	—
		Door striker		
	Steering	Steering gearbox (hydraulic power steering)	One-Luber SG	—
		Steering gearbox (electric power steering) (rack and pinion)	Molywhite LS-G	—
		Steering gearbox (electric power steering) (boot and tie-rod installation parts)	One-Luber 2128	—
	Brake	Disc brake (lock pin, guide pin, piston boot)	NIGLUBE RX-2 (000041000)	—
		Between brake pad and shim	Molykote AS-880N (K0777YA010)	—
		Brake pad clip	Molykote M7439 (K0770YA000)	—
		Parking brake	Molykote 44MA	—
	Drive shaft	Front axle PTJ	NKG302	—
		Front axle EBJ	NKG814	—
		Rear axle EBJ		
		Rear axle EDJ		
		Rear axle DOJ		
		Front axle AC	Olistamoly 2LN584/Lo	—
		Front axle AAR	One-Luber GKN-C	—

8. ADHESIVE

Use the adhesives shown in the table below, or equivalent.

Adhesive	Application point	Application point	Recommended materials	Alternative
Adhesive	Glass and body	Windshield glass, rear window glass, and body	• Dow Automotive's adhesive: ESSEX U-400HV or the equivalent • Glass primer: U-401 and U-402 • Painted surface primer: U-413	—

9. SEAL MATERIAL

Use the seal material shown in the table below, or an alternative.

Seal material	Application point		Application point	Recommended materials (Item number)	Alternative (Item number)
Seal material	Engine	FA/EJ	Engine oil pressure switch	THREE BOND 1324 (004403042)	—
			PCV valve		
			Engine oil pan	THREE BOND 1217G (K0877Y0100) THREE BOND 1217H	—
			Separator cover		
			Cylinder block		
			Rocker cover		
			Cylinder head		
		FA	Chain cover		
			Oil pan upper		
			Camshaft carrier		
			Cylinder head gasket		
			Scavenge pump		
			Camshaft bearing cap		
		EJ	Camshaft cap		
			Oil pump		
			Oil return cover bolt (when reusing bolts)	THREE BOND 1324 (004403042)	—
			Engine oil separator cover mounting bolt (when reusing bolts)		
			Engine oil pump mounting bolt (when reusing bolts)		
			Timing belt guide cam sprocket side mounting bolt (when reusing bolts)		
			Service hole plug	THREE BOND 1105 (004403010)	DOW CORNING No. 7038
			Intake manifold nipple		
	MT	TY75/ TY85	MT transmission case	THREE BOND 1215B	DOW CORNING No. 7038 THREE BOND 1215 (004403007)
			MT transfer case		
		TY75	Transmission cover		
		TY85	Transmission oil pan		
			Clutch housing		
	CVT		CVT transmission case		
			CVT extension case		
			CVT intermediate case		
			CVT converter case cover		
			CVT oil pump chain cover		
			CVT drive pinion retainer		
			Transmission oil pan	THREE BOND 1217B (K0877YA020)	—
	Steer-ing	Hydraulic	Steering adjusting screw	THREE BOND 1102 (004403006)	—
		Electric		SEAL END No. 22	—
	Door	Front	Sealing cover	3M Butyl Tape 8626	—
		Rear			
	Rear differential		Drive pinion shaft and self-locking nut (seating face)	THREE BOND 1324 (004403042)	—
			Hypoid driven gear bolt		
			Filler plug, drain plug	THREE BOND 1105 (004403010)	DOW CORNING No. 7038
			Side retainer bolt	THREE BOND 1110F	THREE BOND 1110B

PRE-DELIVERY INSPECTION

PI

Page
1. Pre-delivery Inspection 2

1. Pre-delivery Inspection

A: GENERAL DESCRIPTION

The purposes of the pre-delivery inspection (PDI) are as follows.
- Remove the vehicle protective parts for transportation.
- Check that the vehicle or parts before delivery are not damaged during transportation or storage.
- Check that the vehicle after repair is normal.
- Make sure to provide a complete vehicle to customer.

For above reasons, all SOA service center must carry out the PDIs before delivery of vehicle.
Besides, all SOA service center and PDI center check the condition of all vehicles to make sure to take responsibility.

B: PRE-DELIVERY INSPECTION (PDI) PROCEDURE

Static checks just after vehicle receipt

Item	Check point
1. Appearance	1. If the vehicle is covered with protective coating, visually check the vehicle body for damage and dents. If the protective coating has been removed, visually check the painted body surfaces in detail for damage or rust. 2. Visually check the glass and light lenses for any damage, cracks or excessive gaps between body panels. 3. Visually check the plated parts for any damage. 4. Check the instrument panel, console and trim for stains or dirt.
2. Tire	1. Check the tires for damage, defective, and dents on wheels. 2. Check the tire air pressure.
3. Fuses	If the vehicle is about to be delivered to customer, attach a back-up fuse.
4. Lock/unlock and open/close operation checks of doors	1. Using the key, check the door can be locked or unlocked normally. 2. Open and close all doors to check that there are no defective. 3. Operate the power door lock switch to check that all doors lock and unlock normally.
5. Child safety lock	Check the child safety lock system operates normally.
6. Trunk lid open/close operations	1. Operate the trunk opener button to check that the trunk lid opens normally. 2. Open and close the trunk lid to see that there are no abnormal conditions.
7. Operation check of trunk lid release lever	Operate the trunk lid release lever to check that the trunk lock is unlocked normally.
8. Fuel lid opener lever	Operate the fuel lid opener to check that the fuel lid is unlocked normally.
9. Towing hook (eyebolt)	At factory shipment, the towing hook (eyebolt) is installed to the rear bumper. Remove the towing hook (eyebolt), store it in the holder.
10. Accessory	Check that the following accessories are provided. • Owner's manual • Warranty booklet • Maintenance note • Spare key • Key number plate • Jack • Tool set • Spare tire • Towing hook (eyebolt)
11. Front hood lock release system	Operate the front hood lock release lever to check that the front hood opens normally.
12. Battery	Check the battery for any abnormal conditions such as rust or traces of battery fluid leaks.
13. Brake fluid	Check the brake fluid amount.
14. Engine oil	Check the engine oil amount.
15. CVTF	Check for leakage of CVTF.

Item	Check point
16. Transmission gear oil	• Check that the transmission gear oil level is normal. (Except for STI model) • Check for leakage of the transmission gear oil. (STI model)
17. CVT front differential gear oil	Check for no leakage of CVT front differential gear oil.
18. Rear differential gear oil	Check for leakage of gear oil from the rear differential.
19. Engine coolant	Check the engine coolant level.
20. Clutch fluid	Check the clutch fluid amount.
21. Window washer fluid	Check the window washer fluid amount.
22. Front hood latch	Check that the front hood is closed normally and locked securely.
23. Keyless entry system	Check that the keyless entry system operates normally.
24. Keyless access system	Check that the keyless access system operates normally.
25. Alarm system	Check that the alarm system operates normally.
26. Seat	1. Check the seat surfaces for stains or dirt. 2. Check the seat installation conditions and functionality.
27. Seat belt	1. Check the seat belt installation conditions and functionality. 2. Check the seat belt warning system operates normally.
28. TPMS (U.S. model)	If the display of TPMS warning light does not operate normally, perform the diagnosis by referring to TPMS (Diagnosis).
29. Grommet installation	Install the grommet provided in the glove box to the tie-down hole.

Checks with the engine running

Item	Check point
30. Delivery (test) mode	Turn the ignition switch to ON and check that the malfunction indicator light starts blinking.
31. Immobilizer system	1. Check that the engine starts with all keys that are equipped on vehicle. 2. Check that the security indicator light operates normally.
32. Push button start	Using the push button start function of the access key equipped with the vehicle, check that the engine starts and stops.
33. Starting condition	Start the engine and check that the engine starts smoothly.
34. Exhaust system	Check that the exhaust noise is normal and no leaks are found.
35. Indicator and warning lights	Check that all indicator lights and warning lights are operating correctly.
36. Heater & ventilation	Check that the heater & ventilation system operates normally.
37. Air conditioner	Check that the air conditioner operates normally.
38. Multi-function display (MFD)	Check that the Multi-Function Display (MFD) function operates normally.
39. Audio	Check that all audio functions operate normally.
40. Navigation system	1. Check all display functions for normal operation. 2. Check that the navigation, audio and AUX systems operate normally. 3. Check that the rearview camera operates normally.
41. Telematics system	Check that the indicator light on the overhead console or on the stereo camera cover assembly goes off.
42. Accessory power supply socket	Check that the accessory power supply socket operates normally.
43. Lighting system	Check that the lighting system operates normally.
44. Wiper deicer	Check that the wiper deicer operates normally.
45. Illumination control	Check that the illumination control operates normally.
46. Window washer system	Check that the window washer system operates normally.
47. Wiper system	Check that the wiper system operates normally.
48. Power window	Check that the power window operates normally.
49. Sunroof	Check that the sunroof operates normally.
50. Rear defogger system	Check that the rear defogger system operates normally.
51. Door mirror	Check that the mirror heater and remote control mirror operate normally.
52. Parking brake	Check that the parking brake operates normally.

Item	Check point
53. Blind Spot Detection / Rear Cross Traffic Alert (BSD/RCTA)	1. Press the BSD/RCTA OFF switch several times to check that the system is activated and deactivated correctly. 2. Check the rear bumper around the sensor for dirt, scratch, affixed stickers and poor paint coating.
54. Reverse Automatic Braking (RAB)	1. Check that the RAB system is activated and deactivated correctly. 2. Check the sonar sensor installed on the rear bumper for parts missing, dirt, scratch, foreign objects, etc.
55. Diagnostic trouble code (DTC) check	Check that the diagnostic trouble code (DTC) is not detected.

Dynamic test with the vehicle running

Item	Check point
56. Brake test	Check the foot brake for normal operations.
57. Shift control	Check that the MT, CVT shifts normally.
58. Cruise control	Check that the cruise control system operates normally.
59. Subaru EyeSight	Check that the Subaru EyeSight operates normally.

Checks after dynamic test

Item	Check point
60. Power steering system (hydraulic power steering model)	Check that the power steering fluid level is normal.
61. Power steering system (electric power steering model)	Check the steering warning light operation.
62. Fluid leakage	Check for fluid/oil leaks.
63. Water leakage	Spray the vehicle with water and check for water leaks.
64. Appearance 2	1. Remove the protective coat. (If attached) 2. Check the body paints for damage and stain. 3. Check the plated parts for damage and rust.

1. APPEARANCE

- If the vehicle is covered with protective coating, visually check the vehicle body for damage and dents.
- If the protective coating has been removed, visually check the body painted area for damage or stains in detail and repair as necessary.
- Visually check the windshield glass, door glasses and light lenses for any damage, cracks or excessive gaps to the body panel and repair as necessary.
- Visually check the plated parts, such as the grilles and door knobs, for damage or loss of gloss and replace the parts as necessary.
- Check the instrument panel, console and trim for stains or dirt.
- Check the keyless key or access key for dirt, and wipe off if necessary.

2. TIRE

- Check the tires for damage, defective, and dents on wheels.
- Check and correct the tire size, spare tire and tire air pressure described on the tire air pressure label (driver's side).

3. FUSE

Fuses for the back-up circuit on initially delivered vehicles are removed to prevent battery discharge. Attach the 20 A fuse as shown in the figure.

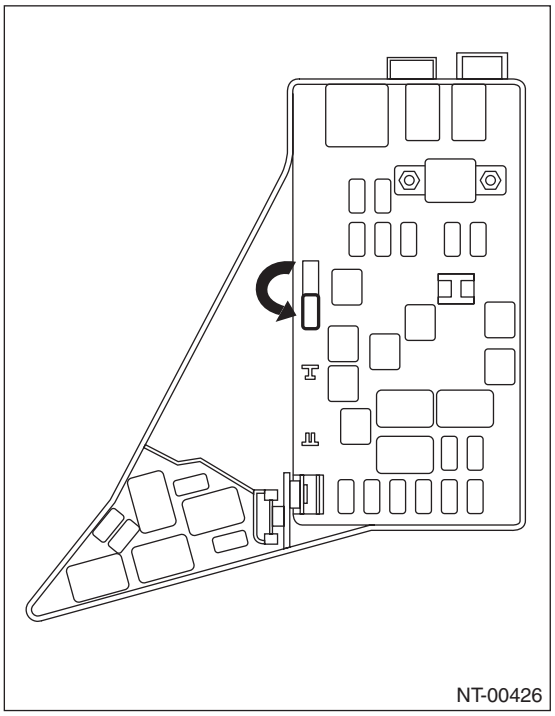

4. LOCK/UNLOCK AND OPEN/CLOSE OPERATION CHECKS OF DOORS

1) Using the key, lock and unlock the door several times to check for normal operation. Open and close the door several times for smooth movement.

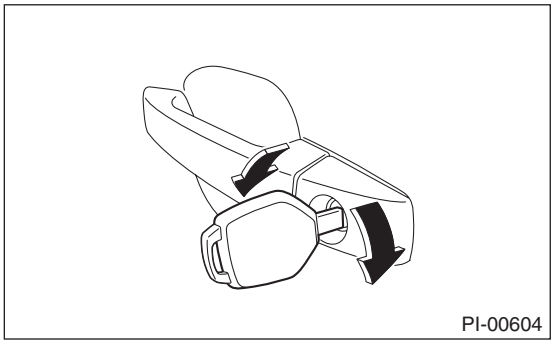

2) Completely close the driver's door, and then check the smooth movement with operating door lock knob from lock to unlock several times. Set the door lock knob (A) to lock position. Then pull the inner remote (B) to ensure that doors will not open.
For other doors, place the door lock knob (A) to lock position and then pull the inner remote (B) to ensure that doors will not open.

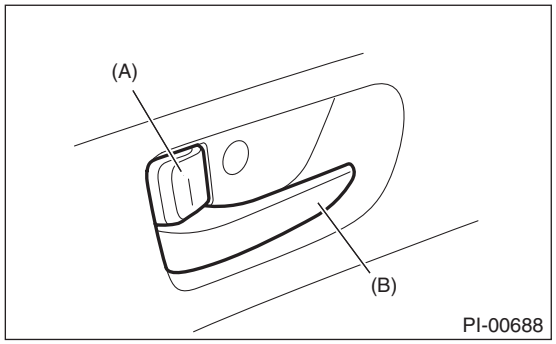

(A) Door lock knob
(B) Inner remote

3) Close all the doors, and then press the lock on power door lock switch at driver's side. Check that all doors lock.

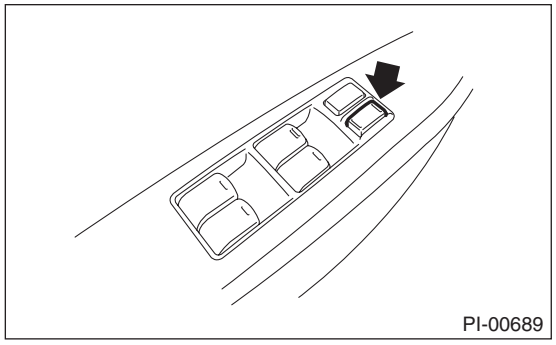

4) Press the driver's side power door lock switch to unlock side. Check that all doors are unlocked.

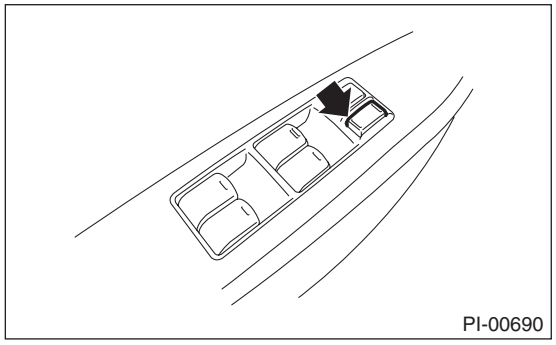

5) Check that the passenger's power door lock switch locks and unlocks normally in the same manner.

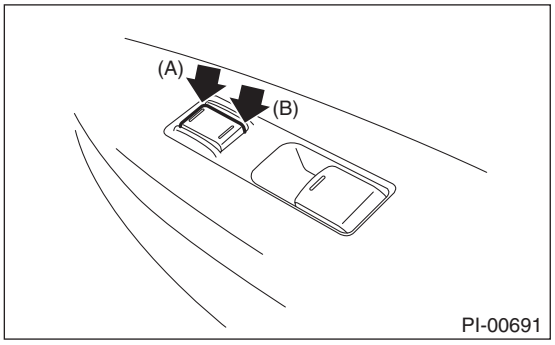

(A) Lock
(B) Unlock

6) With ACC ON or IGN ON, open the driver's door. Press lock on power door lock. Check that the door is not locked.

5. CHILD SAFETY LOCK SYSTEM

1) Set the child safety lock on both rear doors to the lock position.
2) Close the rear doors completely.
3) Check that the lock levers of the rear doors are in the unlock position. Then, pull inner remote of rear doors to ensure that the doors will not open.

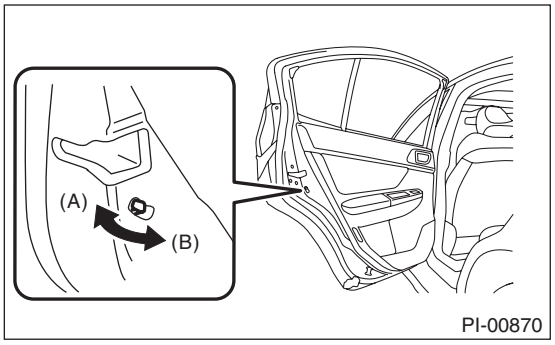

(A) Unlock
(B) Lock

4) Pull the outer handles of rear doors to ensure that the doors will open.

6. TRUNK LID OPEN/CLOSE OPERATIONS

1) Operate the trunk opener button to check that the trunk lid opens.
2) Open and close the trunk lid several times for smooth movement.

7. OPERATION CHECK OF TRUNK LID RELEASE HANDLE

CAUTION:
Do not check the trunk lid release handle when in the trunk. If the trunk lid release handle is defective, you may be trapped in.

1) Use a flat tip screwdriver. Slide the screwdriver blade from the slit aperture of the lock assembly fully to the end until you hear a click. This places the latch in the locked position.

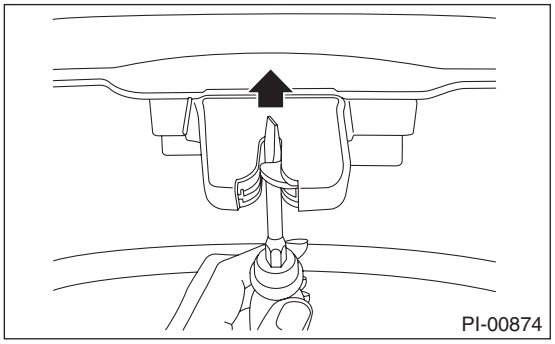

2) Make sure the latch is released by pulling the yellow trunk lid release handle in the direction of arrow.

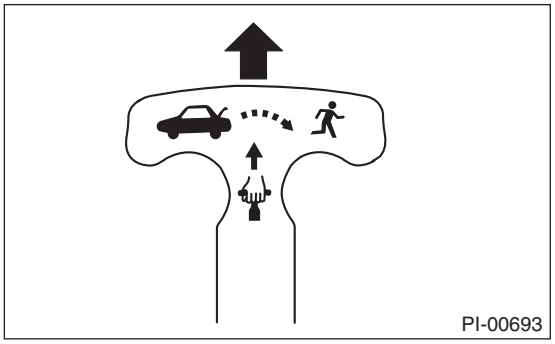

8. FUEL LID OPENER LEVER

Operate the fuel lid opener to check that the fuel filler lid can be unlocked normally. Check that the filler cap is securely closed.

9. TOWING HOOK (EYEBOLT)

NOTE:
At factory shipment, the towing hook (eyebolt) is installed to the rear bumper for securing the vehicle during transportation. Follow the procedure below to store the towing hook (eyebolt) to the holder in the spare tire.
1) Remove the towing hook (eyebolt) from the rear bumper.

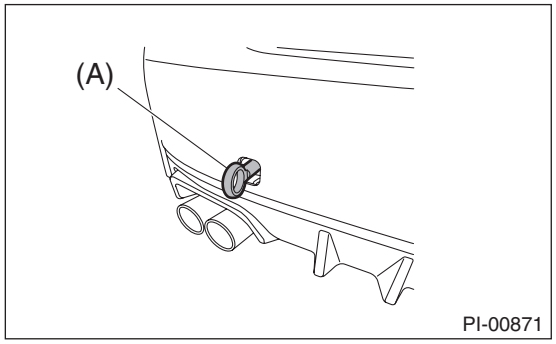

(A) Towing hook (eyebolt)

2) Store the towing hook (eyebolt) to the holder in the spare tire.

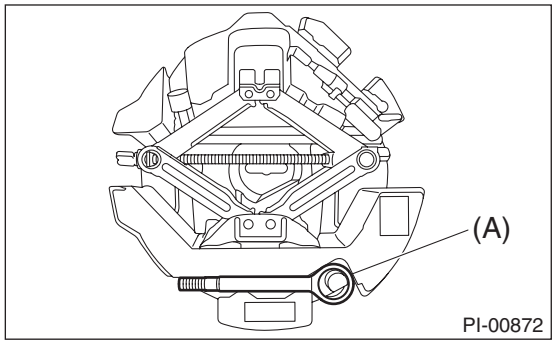

(A) Towing hook (eyebolt)

3) Install the supplied rear hook cover to rear bumper.

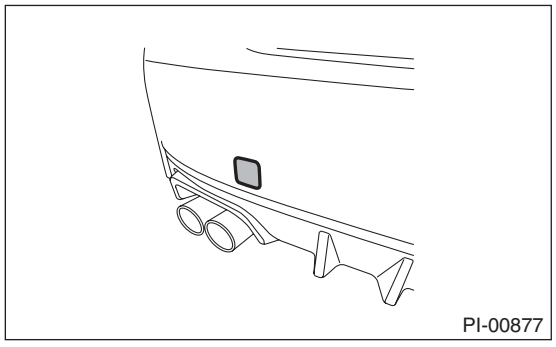

10.ACCESSORY

Check that the following accessories are provided.

- Owner's manual
- Warranty booklet
- Maintenance note
- Spare key
- Key number plate
- Jack
- Tool set
- Spare tire
- Towing hook (eyebolt)

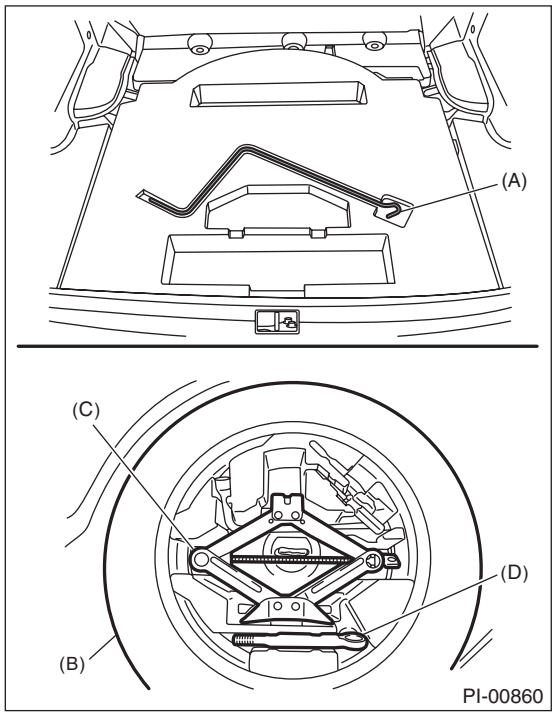

(A) Jack handle
(B) Spare tire
(C) Jack
(D) Towing hook (eyebolt)

11.FRONT HOOD LOCK RELEASE SYSTEM

Operate the front hood lock release lever to check that the front hood is unlocked normally.

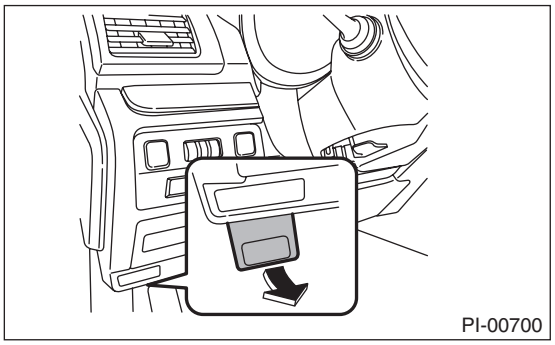

Operate the lever (A) and check that the front hood is opened normally. Check that the front hood can be supported by damper stay.

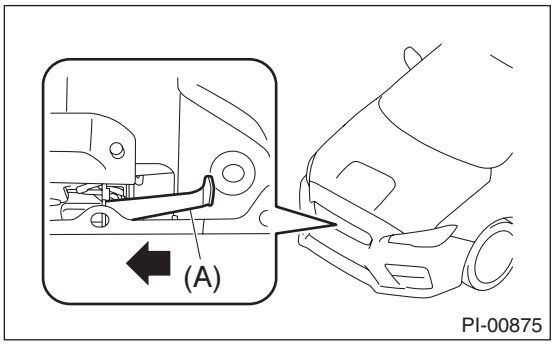

12.BATTERY

Check the battery terminals to make sure that there are no rust or corrosion due to fluid leaks. Check that the battery caps are securely tightened.

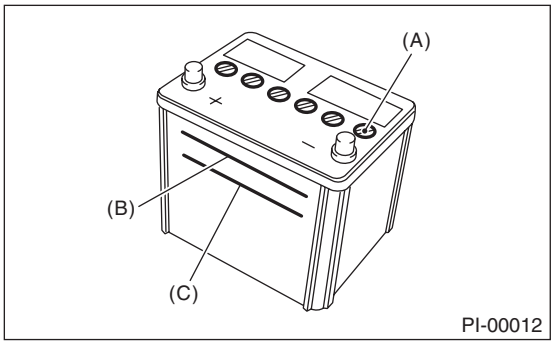

(A) Cap
(B) Upper level
(C) Lower level

13.BRAKE FLUID

CAUTION:
• If the brake fluid is spilt over exhaust pipe, wipe it off with cloth to avoid emitting smoke or causing a fire.
• Always check the level using the specified direction because there is a partition in the reservoir tank.
Check that the brake fluid level is normal from a straight view or within 90° to the right and left forward. If the amount is insufficient, carry out a brake line test to identify brake fluid leaks and check the brake operation. After that, refill the brake fluid tank with the specified type of fluid.

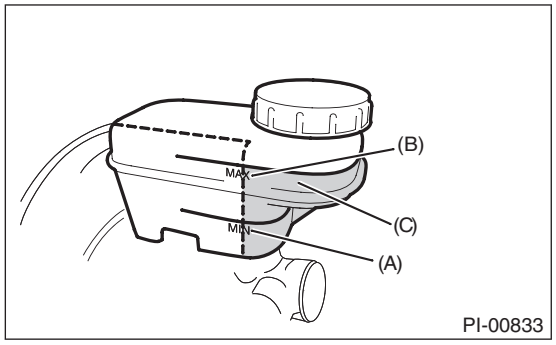

(A) MIN. level
(B) MAX. level
(C) Brake fluid

14.ENGINE OIL

CAUTION:
If the engine oil is spilt over exhaust pipe or the under cover, wipe it off with cloth to avoid emission of smoke or causing a fire.
1) Park the vehicle on a level surface.
2) Remove the oil level gauge and wipe away the oil.
3) Reinsert the oil level gauge all the way. Be sure that the oil level gauge is correctly inserted and properly orientated.
4) Pull out the oil level gauge again, and check both sides of the oil level gauge. Use a lower side to determine the engine oil level. If the engine oil level is below “L” line, add oil to bring the level up to “F” line.
5) Start the engine, and spread the oil in engine room.

6) After turning off the engine, wait a few minutes for the oil to return to the oil pan before checking the oil level.

NOTE:
To prevent overfilling of engine oil, do not add oil above “F” line when the engine is cold.

- Except for STI model

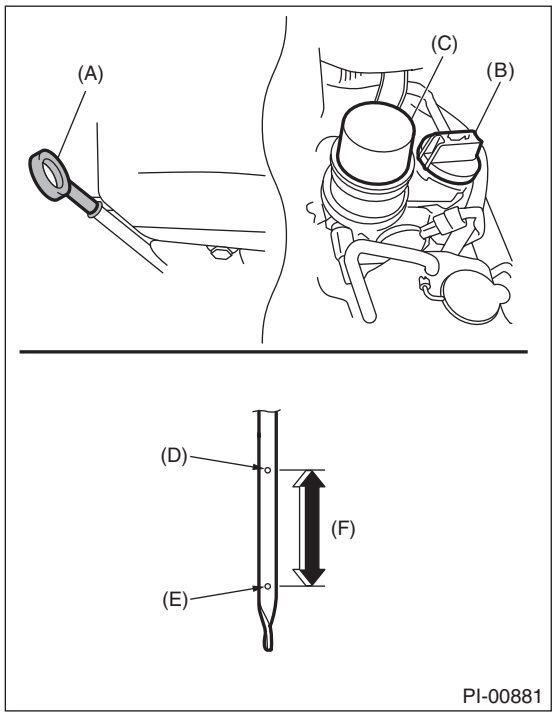

(A) Engine oil level gauge
(B) Engine oil filler cap
(C) Engine oil filter
(D) “F” line
(E) “L” line
(F) Approx. 1.0 L (1.1 US qt, 0.9 Imp qt)

- STI model

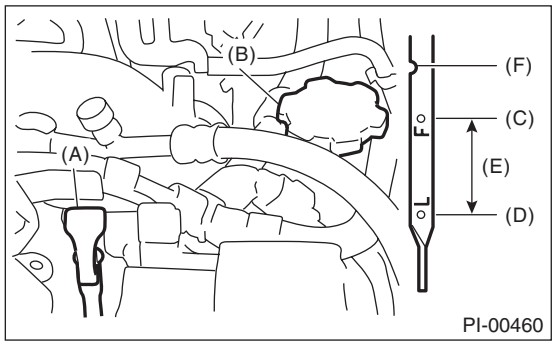

(A) Engine oil level gauge
(B) Engine oil filler cap
(C) “F” line
(D) “L” line
(E) Approx. 1.0 L (1.1 US qt, 0.9 Imp qt)
(F) Notch mark

15.CVTF

CAUTION:
If the CVTF is spilt over exhaust pipe, wipe it off completely with cloth to avoid emitting smoke or causing a fire.
Check for leakage of CVTF.

16.TRANSMISSION GEAR OIL

CAUTION:
If transmission gear oil is spilt over the exhaust pipe, wipe it off with a cloth to avoid emitting smoke or causing a fire.

Except for STI model

Check that the transmission gear oil level is normal. If the amount of gear oil is insufficient, check that no leaks are found. Then add the necessary amount of the specified transmission gear oil.
Refer to “6MT” section for transmission gear oil inspection. <Ref. to 6MT(TY75), INSPECTION, Transmission Gear Oil.>

STI model

Check for leakage of the transmission gear oil.

17.CVT FRONT DIFFERENTIAL GEAR OIL

CAUTION:
If gear oil is spilt over the exhaust pipe, wipe it off with a cloth to avoid emitting smoke or causing a fire.
Check for no leakage of CVT front differential gear oil.

18.REAR DIFFERENTIAL GEAR OIL

CAUTION:
If the rear differential gear oil is spilt over exhaust pipe, wipe it off with cloth to avoid emitting smoke or causing a fire.
Check for leakage of gear oil from the rear differential.

19.ENGINE COOLANT

CAUTION:
If the engine coolant is spilt over exhaust pipe, wipe it off with cloth to avoid emitting smoke or causing a fire.
Check that the engine coolant level on the reservoir tank is normal. If the amount of engine coolant is insufficient, check that no leaks are found. Then, add the necessary amount of coolant with the specified concentration.

20.CLUTCH FLUID

CAUTION:
• If any clutch fluid is spilt on the exhaust pipe, wipe it off with a cloth to avoid emitting smoke or causing a fire.
• This reservoir tank has the brake fluid chamber and the clutch fluid chamber. When checking the fluid level, always check the fluid from the clutch fluid chamber side where the tank hose is connected.
Check that the clutch fluid level is normal. If the amount of fluid is insufficient, check that no leaks are found. Then, add the necessary amount of specified fluid.

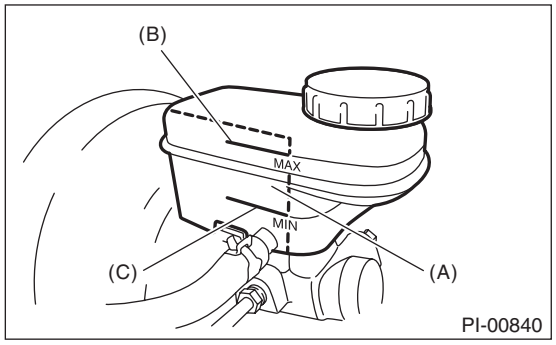

(A) Clutch fluid chamber
(B) MAX. level
(C) MIN. level

21.WINDOW WASHER FLUID

Check that the window washer fluid level is normal. If the amount of washer fluid is insufficient, check that no leaks are found. Then, add the necessary amount of washer fluid.

NOTE:
If there is the vibration, water comes into the layer of air in the washer tank and the water level may drop. This is not a malfunction.

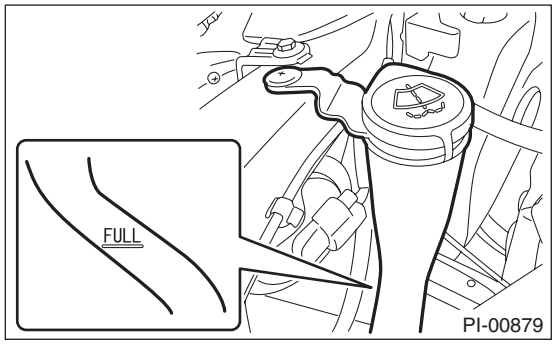

22.FRONT HOOD LATCH

Close the front hood. Check that the front hood is securely latched.

23.KEYLESS ENTRY SYSTEM

Check the keyless entry system operations as follows:

- Fully open all the door windows.
- Remove the key from ignition switch, and then close all doors.
- Press the “LOCK” button momentarily. Check that all the doors become locked, the buzzer sounds once, and the hazard lights flash once.

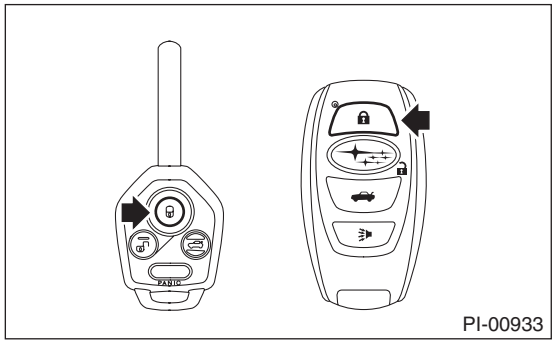

- Press the “UNLOCK” button momentarily. Check that the driver’s door is unlocked, the buzzer sounds twice, and the hazard lights flash twice.

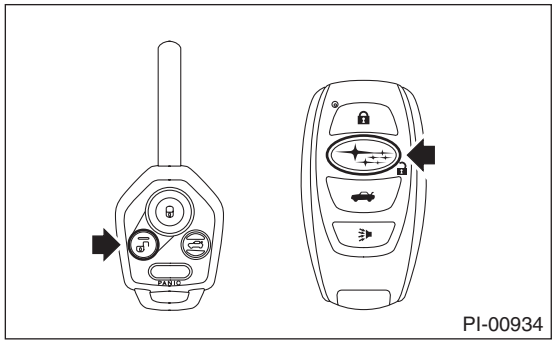

- Within 5 seconds, press the “UNLOCK” button momentarily. Check that all doors are unlocked, the buzzer sounds twice, and the hazard lights flash twice.
- Check that the buzzer sounds twice, and the hazard lights flash twice, when the trunk lid unlock button is held down to unlock the trunk lid.

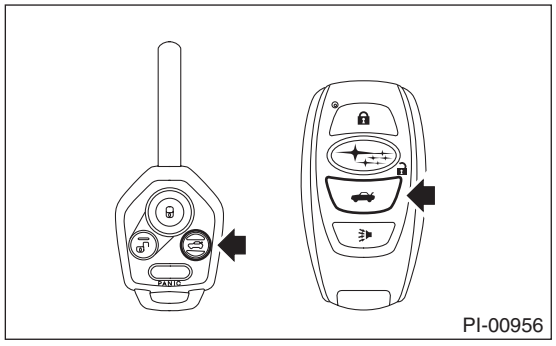

• Press the “PANIC” button. Check that the panic mode (the horn keeps sounding) is initiated. Also, check that this condition continues for 30 seconds or until when any of the buttons on the key are pressed.

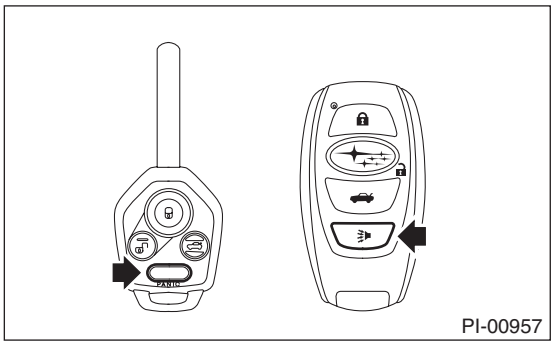

• Press the “LOCK” button momentarily with one of the doors opened. Check that the buzzer sounds 5 times, and the hazard light flashes 5 times to notify the door not being fully closed. Then, close all doors. Check if all doors are locked and buzzer sounds once and the hazard light flashes once.
• With one of the doors open, press the “LOCK” side of the power door lock switch. Then, close all doors. Check if all doors are locked and buzzer sounds once and the hazard light flashes once.
  • Driver’s side

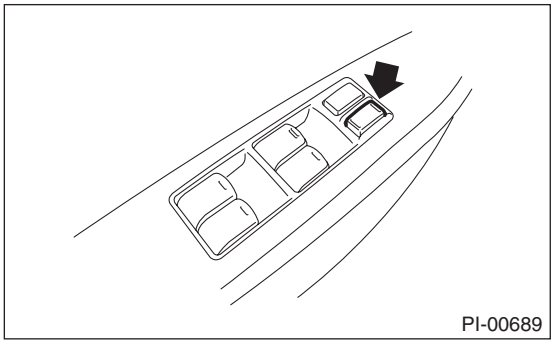

  • Passenger’s side

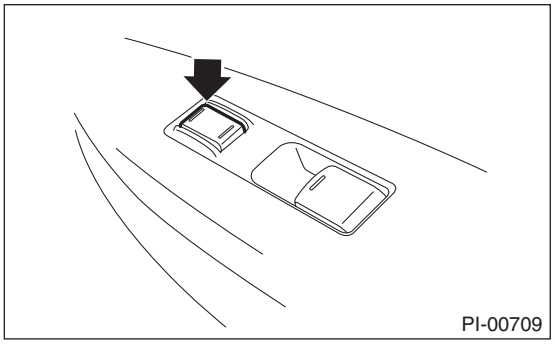

Check keyless answer-back buzzer operation
• The system uses the buzzer and sounds the keyless answer-back buzzer when the door is locked or unlocked. The keyless answer-back buzzer can be turned OFF. To turn the keyless answer-back buzzer from ON to OFF, close all doors, (with the key not inserted into the key cylinder), hold down the “UNLOCK” side of the power door lock switch and insert the key into the key cylinder. Within 10 seconds, insert and take out the key for 5 times or more, and within 10 seconds after that, open and close the driver’s door. With the door closed, the hazard light will flash 3 times, indicating that the keyless answer-back buzzer has been turned OFF. To turn the keyless answer-back buzzer from OFF to ON, perform this procedure again. The hazard light will flash 3 times, indicating that the keyless answer-back buzzer has been turned ON.

24.KEYLESS ACCESS SYSTEM

CAUTION:
- **When performing the check, check one access key at a time, separating individual keys.**
- **Do not leave any separated access keys in the vehicle.**
- **Fully open all the door windows.**

NOTE:
The following inspections show the initial settings. When the settings are different from the initial settings, use Subaru Select Monitor to check the details of each setting for inspections. <Ref. to BC(diag)-17, OPERATION, Read Current Data.>

- While carrying the access key, check that the room light illuminates when you move close to the front door handles of the vehicle whose doors are all locked.
- While carrying the access key, check that the driver's door is unlocked, the buzzer sounds, and the hazard light blinks by grasping the front door knob (touching the touch sensor on the driver's side (unlock)).
- While carrying the access key, check that all doors are unlocked, the buzzer sounds, and the hazard light blinks by grasping the front door knob (touching the touch sensor on the passenger's side (unlock)).
- While carrying the access key, check that all doors are locked, the buzzer sounds, and the hazard light blinks by touching the touch sensor (lock) of the front door.

NOTE:
- The hazard lights flash twice and the buzzer sounds twice when unlocking.
- The hazard lights flash once and the buzzer sounds once when locking.

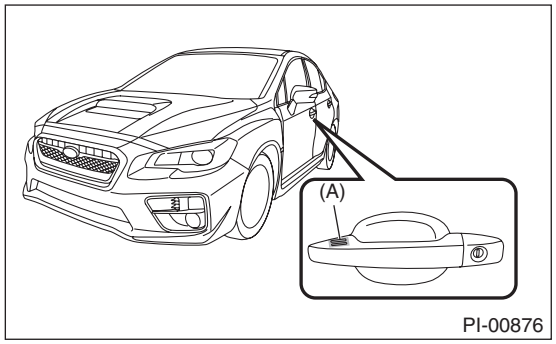

(A) Touch sensor (lock)

- While carrying the access key, check that the trunk unlocks and the hazard lights flash twice when you press the trunk opener button.

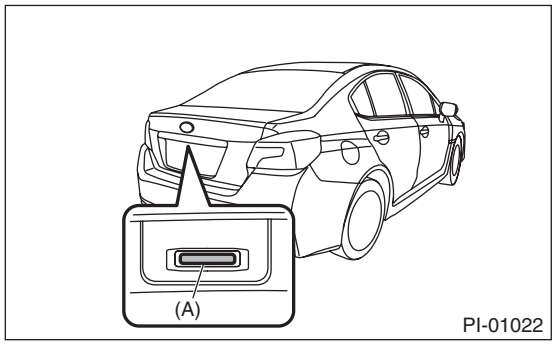

(A) Trunk opener button

- Manually operate the access key button to check the lock/unlock of doors, and the flashing of hazard lights.
- Check the mechanical key attached to the access key can be used for locking/unlocking.

CAUTION:
The mechanical key is a single groove type. Insert the mechanical key with the groove side facing the front side of the vehicle.

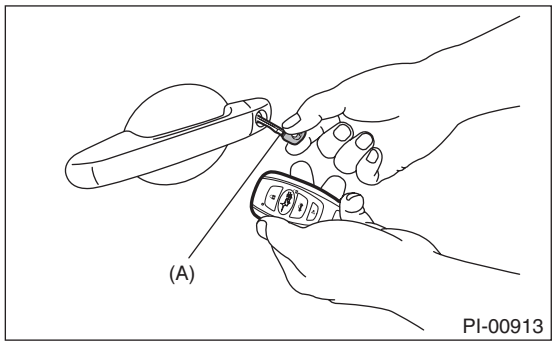

(A) Mechanical key

- With the access key in the vehicle, check that warning buzzer sounds and locking does not occur when you touch the touch sensor on the door (lock).

CAUTION:
Remove the mechanical key from the access key and hold the mechanical key.
- With the access key in the trunk, check that the warning buzzer sounds and the trunk unlocks when you press the trunk opener button.

25.ALARM SYSTEM

- **Model without keyless access with push button start**

NOTE:
The following inspections show the initial settings. When the settings are different from the initial settings, use Subaru Select Monitor to check the details of each setting for inspections. <Ref. to BC(diag)-26, OPERATION, Registration Body Integrated Unit.>
1) Fully open all the door windows.
2) Remove the key from ignition switch, and then close all doors.
3) Press the “LOCK” button momentarily on the keyless transmitter. All doors are locked, and the security indicator light blinks faster for 30 seconds and blinks slowly twice repeatedly, then the alarm system is in set condition.

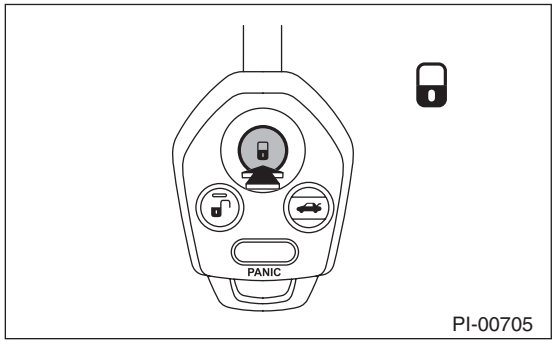

4) Press the “UNLOCK” button momentarily on the keyless transmitter. When the door of the driver’s seat is unlocked, the security indicator light blinks, and the alarm system enters the release mode.

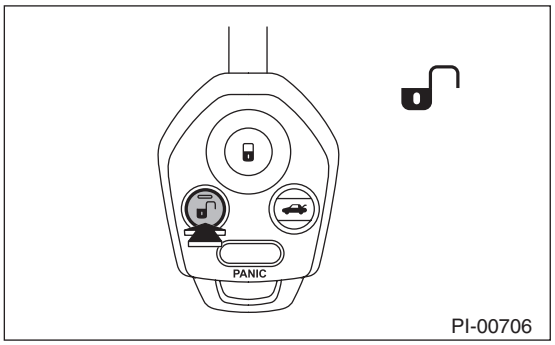

5) Press the “LOCK” button once on the keyless transmitter with one of the doors open. Check that the buzzer sounds 5 times to give the door not fully closed warning. All doors are locked when they are closed, and the security indicator light blinks faster for 30 seconds and blinks slowly twice repeatedly, then the alarm system is in set condition.
6) Press the “UNLOCK” button momentarily on the keyless transmitter. When the door of the driver’s seat is unlocked, the security indicator blinks, and the alarm system enters the release mode.
7) With one of the doors open, press the “LOCK” side of the power door lock switch. All doors are locked when they are closed, and the security indicator light blinks faster for 30 seconds and blinks slowly twice repeatedly, then the alarm system is in set condition.

- Driver’s side

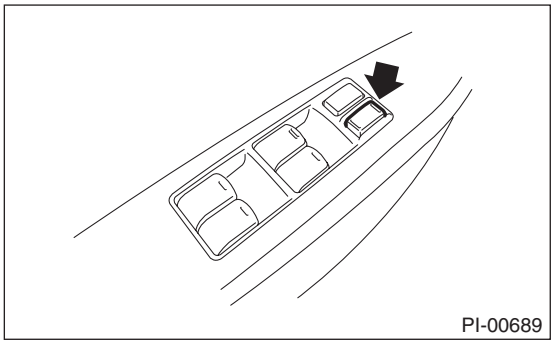

- Passenger’s side

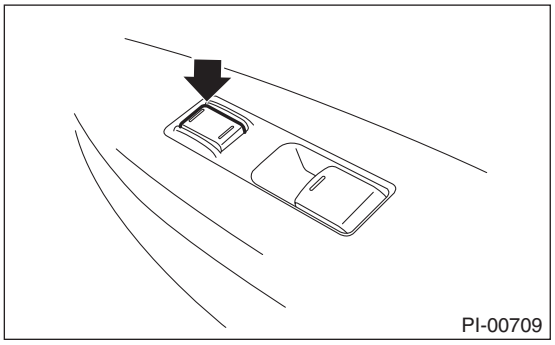

8) Unlock a door using the inner lock knob or the key and open the door while the security system is in the set mode. Check if the alarm condition occurs (horn sounds continuously, hazard light blinks, security indicator light illuminates). Check if this condition lasts until any button of the keyless transmitter is pressed or until the ignition switch is turned to IGN ON after inserting the key into the ignition switch.

NOTE:
The alarm sounds for three minutes with the door open.

9) On models equipped with an impact sensor, hit the windshield glass with your hand with the alarm system in the monitoring condition, to check that the alarm condition occurs.
10) Turn the ignition switch to ON and check that the security indicator light indicates the alarm history.

NOTE:
• When alarm history for the opening of door is present, the security indicator light illuminates for one second and then blinks 5 times.
• When alarm history for the opening of trunk is present, the security indicator light illuminates for one second and then blinks 4 times.
• When alarm history for the impact sensor is present, the security indicator light illuminates for one second and then blinks twice.
• When warning history for the impact sensor is present, the security indicator light illuminates for one second and then blinks once.
• When more than one histories are present, the alarm history with higher priority is indicated. (Items with higher priority are listed above.)
11) Press the “LOCK” button on the keyless transmitter momentarily to arm the alarm system. Press the “UNLOCK” button on the keyless transmitter momentarily to disarm the alarm system.
12) Turn the ignition switch to ON and check that the security indicator light does not indicate the alarm history. (The security indicator light remains OFF.)
13) When none of above is applicable, perform troubleshooting for the security system.

• Model with keyless access with push button start

NOTE:
The following inspections show the initial settings. When the settings are different from the initial settings, use Subaru Select Monitor to check the details of each setting for inspections. <Ref. to BC(diag)-26, OPERATION, Registration Body Integrated Unit.>
1) Fully open all the door windows.
2) Turn the ignition switch to OFF and close all doors.
3) Press the “LOCK” button momentarily on the access key. All doors are locked, and the security indicator light blinks faster for 30 seconds and blinks slowly twice repeatedly, then the alarm system is in set condition.

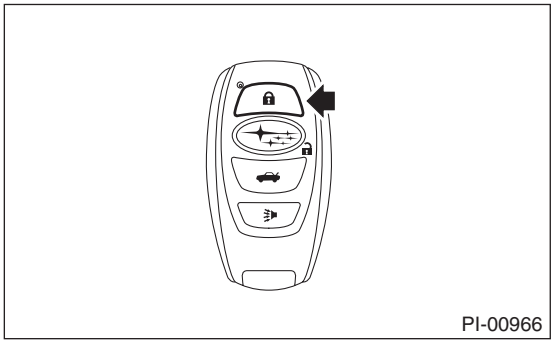
PI-00966

4) Press the “UNLOCK” button momentarily on the access key. When the door of the driver’s seat is unlocked, the security indicator light blinks, and the alarm system enters the release mode.

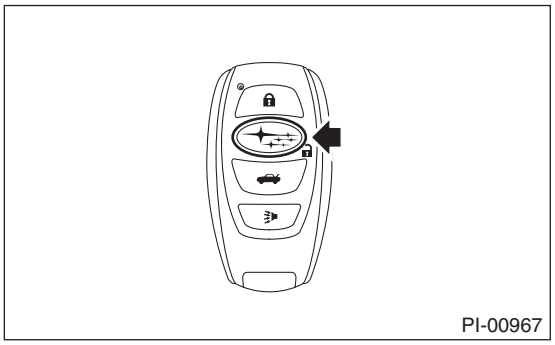
PI-00967

5) Press the “LOCK” button once on the access key with one of the doors open. Check that the buzzer sounds 5 times to give the door not fully closed warning. All doors are locked when they are closed, and the security indicator light blinks faster for 30 seconds and blinks slowly twice repeatedly, then the alarm system is in set condition.
6) Press the “UNLOCK” button momentarily on the access key. When the door of the driver’s seat is unlocked, the security indicator blinks, and the alarm system enters the release mode.
7) With one of the doors open, press the “LOCK” side of the power door lock switch. All doors are locked when they are closed, and the security indicator light blinks faster for 30 seconds and blinks slowly twice repeatedly, then the alarm system is in set condition.

- Driver’s side

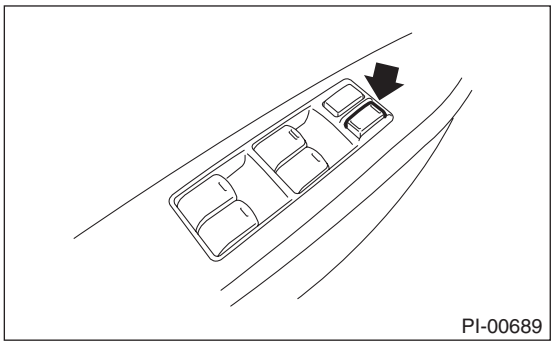
PI-00689

- Passenger’s side

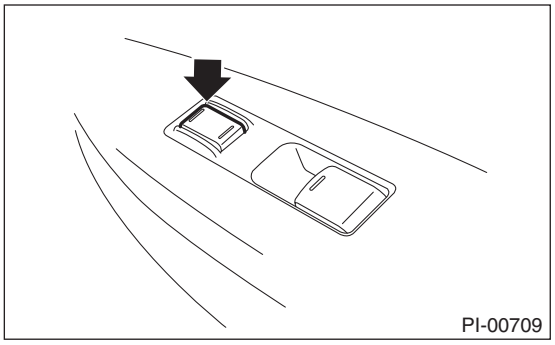
PI-00709

8) Unlock a door using the mechanical key and open the door while the security system is in the set mode. Check if the alarm condition occurs (horn sounds continuously, hazard light blinks, security indicator light illuminates). Check if this condition lasts until any button on the access key is pressed or until the ignition switch is turned to ACC.

CAUTION:
The mechanical key is a single groove type. Insert the mechanical key with the groove side facing the vehicle forwarding direction.

NOTE:
The alarm sounds for three minutes with the door open.

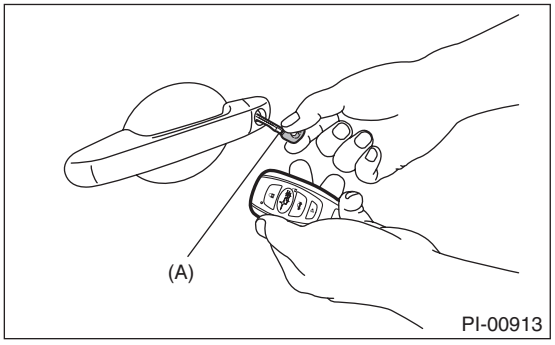

PI-00913

(A) Mechanical key

9) On models equipped with an impact sensor, hit the windshield glass with your hand with the alarm system in the monitoring condition, to check that the alarm condition occurs.
10) Turn the ignition switch to ON and check that the security indicator light indicates the alarm history.

NOTE:
• When alarm history for the opening of door is present, the security indicator light illuminates for one second and then blinks 5 times.
• When alarm history for the opening of trunk is present, the security indicator light illuminates for one second and then blinks 4 times.
• When alarm history for the impact sensor is present, the security indicator light illuminates for one second and then blinks twice.
• When warning history for the impact sensor is present, the security indicator light illuminates for one second and then blinks once.
• When more than one histories are present, the alarm history with higher priority is indicated. (Items with higher priority are listed above.)
11) Press the “LOCK” button on the access key momentarily to arm the alarm system. Press the “UNLOCK” button on the access key momentarily to disarm the alarm system.
12) Turn the ignition switch to ON and check that the security indicator light does not indicate the alarm history. (The security indicator light remains OFF.)
13) When none of above is applicable, perform troubleshooting for the security system.

26.SEAT

1) Check the seat surfaces for stains or dirt.
2) Check that each seat provides full functionality in sliding, reclining, lifter, and tilting. Check all available functions of the rear seat such as backrest tilt knob.
3) Check the passenger’s seat occupant detection system.
(1) Empty the passenger’s seat and turn the ignition switch to ON.
(2) Check that the passenger airbag ON/OFF indicator lights both turn on simultaneously for approximately six seconds, and after turning off for two seconds, only the OFF light illuminates.

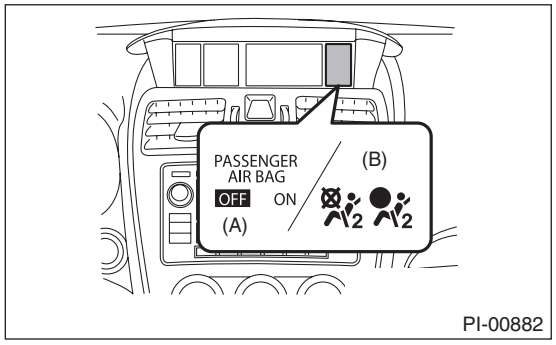

(A) Airbag ON/OFF indicator light (U.S. (U5) model)
(B) Airbag ON/OFF indicator light (Canada (C0), Mexico (C4) models)

4) With a person weighing approximately 70 kg (155 lb) or more sitting in the passenger’s seat, check whether the ON light of the passenger’s airbag ON/OFF indicator illuminates or not.
5) Have the passenger get out of the passenger’s seat, and check whether the OFF light of the passenger side airbag ON/OFF indicator illuminates.

27.SEAT BELT

1) Check installation condition of seat belt.
2) Pull out the seat belt and then release it. Check that the belt retracts smoothly.
3) Check seat belt warning function.
   (1) Turn the ignition switch to ON with the driver's and passenger's seat belt detached.
   (2) Check the driver's and passenger's seat belt warning light blink for approx. 6 seconds and the buzzer sounds intermittently.
   (3) Then, check the seat belt warning light illuminates and blinks repeatedly at a cycle of approx. 15 seconds. (If no passenger is on the passenger's seat, the seat belt warning light on passenger's seat does not operate.)

28.TPMS (U.S. MODEL)

1) Turn the ignition switch to ON, and check that the TPMS warning light is in a normal operation condition.
- Normal operation (IG ON (light check))

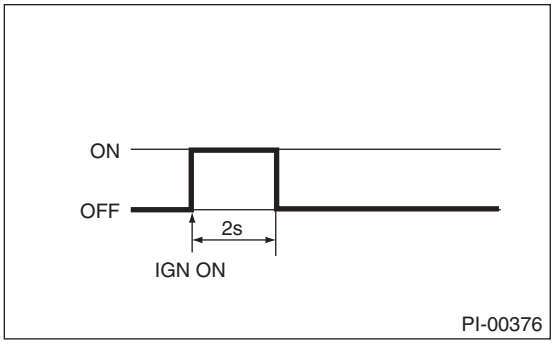

2) If the TPMS warning light display does not operate normally, check and repair the system. <Ref. to TPM(diag)-2, Basic Diagnostic Procedure.>

29.GROMMET INSTALLATION

Install the grommet provided in the glove box to the tie-down hole.

CAUTION:
Make sure that the tie-down hole is firmly plugged with the grommet. Otherwise, dust, smell, etc. may come into the passenger compartment indirectly from the rear quarter, via the side sill from the tie-down hole.

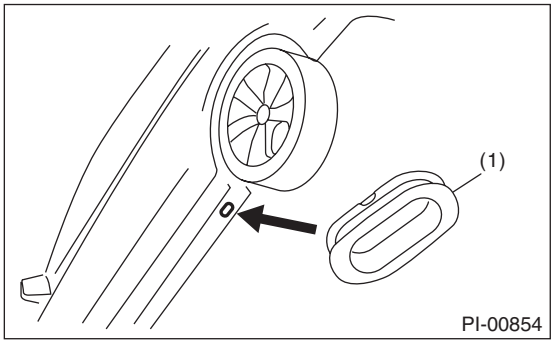

(1) Grommet

30.DELIVERY (TEST) MODE

1) Install the delivery (test) mode fuse with ignition switch to OFF.

CAUTION:
Do not use any fuses that are installed on the vehicle.

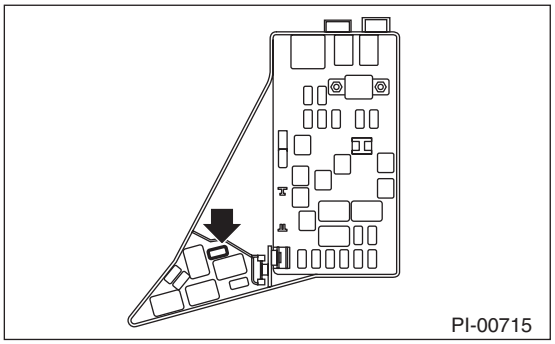

2) Turn the ignition switch to ON and check that the malfunction indicator light starts blinking.
3) If the malfunction indicator light blinks, return the ignition key to LOCK.
4) Remove the delivery (test) mode fuse and attach it to the spare fuse holder provided on the fuse box cover.
5) Then, turn the ignition key to ON again.
6) Make sure that the malfunction indicator light is off. If the malfunction indicator light blinks, carry out an engine diagnosis.

31.IMMOBILIZER SYSTEM

1) Check that the engine starts with all keys that are equipped on vehicle.
2) When starting the engine, check that the security indicator light goes off.
3) Check that the security indicator light blinks in 60 seconds after turning the ignition switch from ON to ACC or to OFF, or immediately after removing the key. (Models without the keyless access with push button start)
4) Immediately after turning ignition switch from ON to OFF, or with the key not in the vehicle and when opening/closing a door while the ignition switch is in ON or ACC with the engine stopped, check that the security indicator light is blinking. (Model with keyless access with push button start)

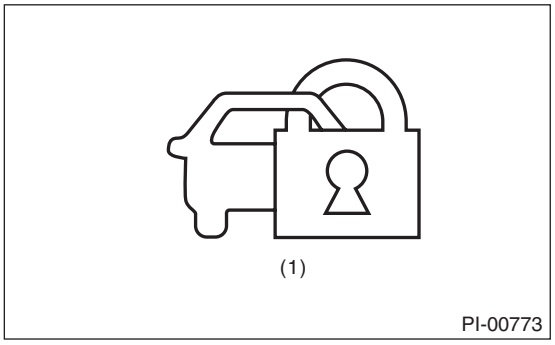

(1) Security indicator light

NOTE:
If malfunctions occur, refer to “IMMOBILIZER (DIAGNOSTICS)”. <Ref. to IM(diag)-2, Basic Diagnostic Procedure.>

32.PUSH BUTTON START FUNCTION

• CVT model

1) Get into the vehicle while carrying the access key, with the vehicle in P range and the brake pedal OFF, and check that every time the push button ignition switch is pressed, that it cycles through ACC → IGN ON → IGN OFF, and the indicator light for the push button ignition switch is illuminated in orange.
2) Get into the vehicle while carrying the access key, with the vehicle in P range and the brake pedal ON, check that the indicator light for the push button ignition switch is illuminated in green.

NOTE:
While the select lever button is being pressed, the indicator light of the push button ignition switch does not illuminate in green even if the shift position is in the P range.
3) Get into the vehicle while carrying the access key, with the vehicle in P range and the brake pedal ON, check that the engine starts when you press the push button ignition switch.
4) With the vehicle stopped, the engine running and in P range, check that the engine stops when you press the push button ignition switch.
5) With the vehicle stopped, the engine running and in N range, check that the engine stops when you press the push button ignition switch, and cycles through ACC → IGN ON each time you press the push button ignition switch.

• MT model

1) Get into the vehicle while carrying the access key, with the clutch pedal OFF, and check that every time the push button ignition switch is pressed, that it cycles through ACC → IGN ON → IGN OFF, and the indicator light for the push button ignition switch is illuminated in orange.
2) Get into the vehicle while carrying the access key, with the clutch pedal ON, check that the indicator light for the push button ignition switch is illuminated in green.
3) Get into the vehicle while carrying the access key, with the clutch pedal ON, check that the engine starts when you press the push button ignition switch.
4) With the vehicle stopped and the engine running, check that the engine stops when you press the push button ignition switch.

33.STARTING CONDITION

Start the engine and check that the engine starts smoothly. If the battery voltage is low, recharge or replace the battery. If any noises are observed, immediately stop the engine and check and repair the abnormal components.

34.EXHAUST SYSTEM

Listen to the exhaust noise to see if no exhaust gas leak or abnormal noises are observed.

35.INDICATOR LIGHT AND WARNING LIGHT

Check that all indicator lights and warning lights operate normally.

36.HEATER & VENTILATION

Operate the heater & ventilation system to check for normal airflow outlet control, air inlet control, airflow capacity and heating performance.

37.AIR CONDITIONER

Operate the air conditioner. Check that the A/C compressor operates normally and enough cooling is provided.

NOTE:
To prevent the insufficient lubrication of the air conditioner, operate the air conditioner for five minutes at idling.

38.MULTI-FUNCTION DISPLAY (MFD)

Check that the Multi-Function Display (MFD) function operates normally. (Refer to the owner's manual for the operation procedures.)

39.AUDIO

Check that all radio functions operate, the speakers emit sound properly and the noise is at an acceptable level. Also check the CD unit and AUX unit operations.

40.NAVIGATION SYSTEM

1) Check all display functions for normal operation. (Refer to the owner's manual for the operation procedures.)
2) Check that the navigation system operates normally.
3) Check that the rearview camera operates normally.

41.TELEMATICS SYSTEM

Check that the indicator light on the overhead console or on the stereo camera cover assembly goes off.

42.ACCESSORY POWER SUPPLY SOCKET

1) Check the operation of the front accessory power supply socket.
2) Check operation of the accessory power supply socket in console box.

43.LIGHTING SYSTEM

1) Check the headlight operations.
2) Check the stop light operation.
3) Check other lights for normal operations.

44.WIPER DEICER

Check that the wiper deicer operates normally.

NOTE:
When an ambient temperature is 5°C or more, wiper deicer operation is cancelled. Press the switch for 3 seconds or more to perform the compulsory operation.

45.ILLUMINATION CONTROL

Check that the illumination control operates normally.

46.WINDOW WASHER SYSTEM

Check that the window washer system injects the washer fluid to the specified area of the windshield. <Ref. to WW-34, ADJUSTMENT, Front Washer Nozzle and Hose.>

47.WIPER SYSTEM

Check that the front wiper operates normally.

48.POWER WINDOW

• Operate the power window switches one by one to check that each of the power windows goes up and down without noises.
• Check AUTO UP/AUTO DOWN operate properly by operating the power window switch on driver's seat side.

CAUTION:
If battery has been removed, AUTO UP does not operate properly because initialized. In this case, perform the initial setting (reset A) and check AUTO UP operates properly.

NOTE:
Check the power window if the door glass of the driver's seat does not open/close automatically. <Ref. to GW-9, INSPECTION, Power Window System.>

49.SUNROOF

Check that the sunroof operates normally.

NOTE:
For details concerning sunroof initialization, refer to the “SR” section. <Ref. to SR-6, INITIALIZE OPERATION, OPERATION, Sunroof Control System.>

50.REAR DEFOGGER SYSTEM

Check that the rear defogger system operates normally.

51.DOOR MIRROR

Check that the mirror heater and remote control mirror operate normally.

52.PARKING BRAKE

• Check that the parking brake operates normally. When pulling the parking brake lever with a force of 200 N (20 kgf, 45 lb), check that the lever stroke of parking brake lever is 7 to 8 notches.
• Check that the electronic parking brake operates properly by pressing the electronic parking brake switch while depressing the brake pedal.

53.BLIND SPOT DETECTION / REAR CROSS TRAFFIC ALERT (BSD/RCTA)

1) Check that the BSD/RCTA system is activated and deactivated correctly.
   (1) Press the BSD/RCTA OFF switch to check that “BSD/RCTA OFF” is displayed in the combination meter.
   (2) Press the BSD/RCTA OFF switch again to check that the indicators of the right and left side door mirrors illuminate → go off and “BSD/RCTA OFF” is displayed in the combination meter.
   (3) Check that the BSD/RCTA error message is not displayed.
2) Check the rear bumper around the radar sensor for dirt, scratch, affixed stickers and poor paint coating.
• If any dirt is found, clean it off so that the rear bumper is not damaged.
• If any stickers are affixed, remove it so that the rear bumper is not damaged.
• If the bumper is damaged or has poor paint coating, refer to “CAUTION” in “Blind Spot Detection/Rear Cross Traffic Alert (DIAGNOSTICS)”. <Ref. to RVD(diag)-4, CAUTION, General Description.>

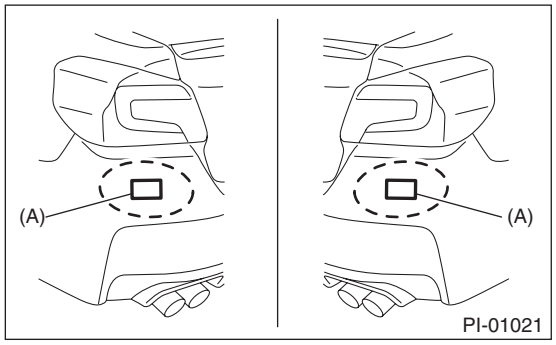

(A) Radar sensor

54.Reverse Automatic Braking (RAB)

1) Check that the RAB system is activated and deactivated correctly.
   (1) Start the engine and let the engine idle for 6 seconds or more, and then shift the select lever to “R” range.
   (2) Check that “RAB” and “RAB OFF” turn off in the combination meter.
   (3) Check that the RAB warning screen is displayed on the MFD and “RAB” and “P△” indicators illuminate in green.
   (4) Select “RAB” displayed on the screen, and check that “RAB OFF” is displayed in the combination meter when “RAB OFF/ON” is switched and “RAB OFF” is conducted.
   (5) Select “P△” displayed on the screen, and check that “P△ OFF/ON” can be switched.
2) Check the sonar sensor installed on the rear bumper for parts missing, dirt, scratch, foreign objects, etc.
- The sensor surface must not stick out or sink in at 0.5 mm or more from the rear bumper surface.

If the sensor surface largely sinks in, the sensor may not engaged in the holder behind the bumper. In this case, check the installation condition of the sensor after removing the bumper.
- Make sure that there are no foreign objects (tape, stickers, dust or dirt) on the sonar sensor surface.

If there is a layer of foreign objects on the sensor surface, remove completely so that no residue remains.

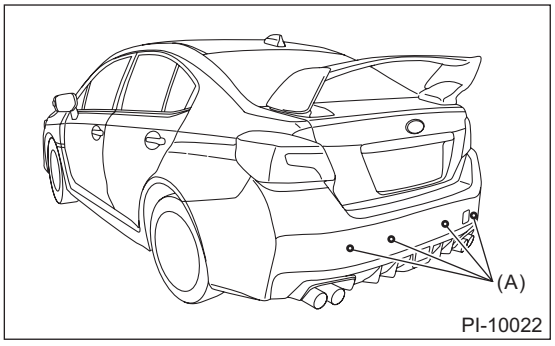

(A) Sonar sensor

55.DIAGNOSTIC TROUBLE CODE (DTC) CHECK

Read the diagnostic trouble code and check that the diagnostic trouble code is not detected.
If any diagnostic trouble code is detected, clear all.
1) Read Diagnostic Trouble Code

NOTE:
For detailed operation procedures, refer to “Application help”.
2) Clear Memory Mode

NOTE:
For detailed operation procedures, refer to “Application help”.

56.BRAKE TEST

Check the foot brake for normal operations.

NOTE:
On the model with brake assist mechanism, the brake pedal feels lighter when the brake pedal is depressed hard or quickly. However, those are not malfunction but the phenomena that occur when the brake assist mechanism functions properly.

57.SHIFT CONTROL

• CVT

1) Turn the ignition switch to ON.
2) While brake pedal is not depressed, check if the select lever does not move from “P” range.
3) While brake pedal is depressed, check if the select lever moves from “P” range.
4) Set the selector lever to each gear position and check the shifting while driving the vehicle. Operate the paddle shift at manual mode and check the shifting while driving the vehicle.

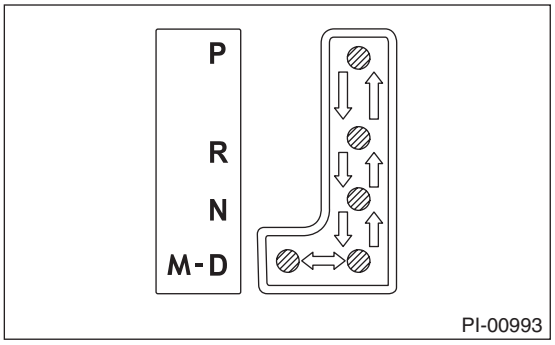

Selector position	Gear position							
	1st	2nd	3rd	4th	5th	6th	7th*1	8th*1
D	Continuously variable speed change							
Manual mode	OK	OK	OK	OK	OK	OK	OK	OK

*1: In S# mode

5) Set the select lever to other than “P” range. (Models without the keyless access with push button start)
6) When the ignition switch is turned to OFF, check if the ignition key switch cannot be removed. (Models without the keyless access with push button start)

• 6MT (Except for STI model)

1) Check for smooth operation to each position. Especially, shift to 5th ←→ 6th and to Rev, and check for stuck.
2) Check the slider returns to the original position by shifting to the Rev and then back in neutral while pulling up the slider.

3) If the shifting operation is not smooth, readjust the exposed length (a) of MT gear select cable by referring to the following figure.

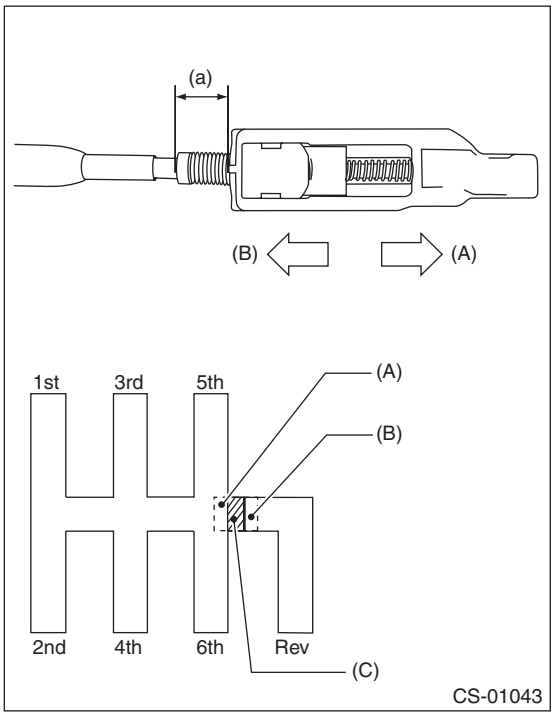

(a) Exposed length of MT gear select cable
(A) Extend direction of exposed length of MT gear select cable
(B) Shorten direction of exposed length of MT gear select cable
(C) Specification of exposed length (a)

- If the shift cannot be inserted to push the reverse lock bracket 5th and 6th.

→ Extend the exposed length (a) of MT gear select cable.

- When operate the select lever to 4th → 5th, it cannot be operated at select lever crank line.

→ Shorten the exposed length (a) of MT gear select cable.

• 6MT (STI model)

1) Check for smooth operation to each position.
2) Check that the lever cannot be moved to the reverse position unless the slider is pulled up.
3) Check that the lever can be moved to the reverse position when the slider is pulled up.

58.CRUISE CONTROL

Operate the cruise control system. Check that the system is activated and deactivated correctly.

59.SUBARU EyeSight

- Operate the EyeSight system. Check that the system is activated and deactivated correctly.
- Check the stereo camera cover opening for foreign matter.
- Check the glass in front of stereo camera for dirt and stickers.
- Check the lens and filter of the stereo camera for dirt such as fingerprints.
- Check the filter at lens portion of stereo camera for damage.
- According to the “ES(diag)” section, check the windshield glass and dashboard in front of stereo camera to make sure that no aftermarket part is adhered or attached in the prohibited area. <Ref. to ES(diag)-8, WINDSHIELD GLASS AND DASHBOARD, INSPECTION, General Description.>
- When delivering the vehicle, explain to the customer to make sure not to touch the filter at lens portion of the stereo camera.

60.POWER STEERING FLUID LEVEL (HYDRAULIC POWER STEERING MODEL)

CAUTION:
If any power steering fluid is spilt over the exhaust pipe, wipe it off with a cloth to avoid emitting smoke or causing a fire.
Check that the power steering fluid level is normal. If the amount of power steering fluid is insufficient, check that no leaks are found. Then add the necessary amount of the specified power steering fluid.

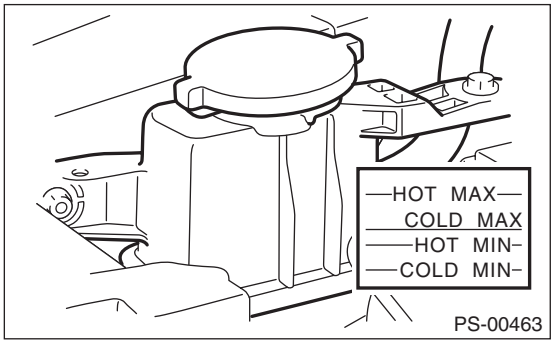

61.POWER STEERING SYSTEM (ELECTRIC POWER STEERING MODEL)

Check that the electric power steering warning light illuminates when the ignition switch is turned to ON, and that the electric power steering warning light goes off after the engine is started.

62.FLUID LEAKAGE

Check entire areas of the vehicle for any trace of coolant/oil (such as engine and gear oil)/fluid (such as transmission and brake) leaks.

63.WATER LEAK TEST

Spray the vehicle with water using a hose and check that no water enters the passenger compartment.
- Before performing the water leakage test, remove anything that may obstruct the operation or which must be kept dry.
- Close all the windows and doors securely. Close the front hood and trunk lid before starting the test.
- Spray the vehicle with water using a hose. The rate of water spray must be approx. 20 to 25 L (5.3 — 6.6 US gal, 4.4 — 5.5 Imp gal) per minute.

When spraying water on areas adjacent to the floor and wheel house, increase the pressure. When spraying water on areas other than the floor and wheel house, decrease the pressure. But the force of water must be made strong occasionally by pressing the end of the hose.

NOTE:
Be sure to keep the hose at least 10 cm (3.9 in) away from vehicle.
Check the following areas.
- Front window and body framework mating portion
- Door mating portions
- Glass mating portions
- Rear quarter window mating portions
- Rear window and body framework mating portion
- Around roof drips

If any dampness in the compartments is discovered after the water has been applied, carefully check all the areas that may have possibly contributed to the leak.

64.APPEARANCE 2

1) If protective coating (wrap guard) is applied, remove it.

NOTE:
- It is easier to remove the wrap guard using steam.
- For a vehicle left for a long time or at low temperature, sprinkle some water heated to 50 — 60°C (122 — 140°F) over the vehicle to raise its surface temperature before peeling off the wrap guard. Do not use the water heated to over 60°C (140°F).
- If the adhesive remains exist on the coated surface, soak a flannel rag, etc. with a small amount of coating wax or solvent such as oil benzene and IPA, put the soaked cloth on the remains lightly, and then wipe them off with a flannel rag etc.
- Keep solvent from touching the resin or rubber parts. Do not use coating wax or solvent while the component surface temperature is high due to hot weather etc.
- If the coated surface is swollen out due to seams or moisture, expose the vehicle to the sunlight for a few hours or heat the seam and swollen portions using a dryer etc.
- Dispose of the peeled wrap guard as burnable industrial garbage.
- If any label is attached to the fog light lens, remove it.

2) Check the whole vehicle body for flaking paint, damage by transportation, corrosion, dirt, cracks or blisters.

NOTE:
- It is better to determine an inspection pattern in order to avoid missing an area, since the total inspection area is wide.
- Do not repair the body paint unless absolutely necessary. Also, if the vehicle is in need of repair to remove scratches or corroded paint, the repair area must be limited to the minimum. Re-painting and spray painting must be avoided as much as possible.

3) Check each window glass for scratches carefully. Slight damage may be removed by polishing with cerium oxide. (Fill a cup half with cerium oxide, and add warm water to it. Then agitate the content until it turns to wax. Apply this wax to a soft cloth, and polish the glass with it.)

4) Check each portion of the vehicle body and underside components for the formation of rust. If rust is discovered, remove it with sandpaper of #80 to #180 and treat the surface with rust preventive. After this treatment is completed, flush the portion thoroughly, and prepare the surface for repair painting.

5) Check each portion of body and all of the exterior parts for deformation or distortion. Also, check each light lens for cracks.

6) Peel the protective tape, vinyl wrapping and identification seal attached to the following places.
- Seat
- Door trim
- Floor carpet
- Side sill (with SUS plate RH/LH)
- Fuel opener lever
- Door mirror
- Front fog light
- Rear shelf
- Aluminum pedal

PERIODIC MAINTENANCE SERVICES

PM

		Page
1.	General Description	2
2.	Schedule	3
3.	Engine Oil	6
4.	Engine Oil Filter	7
5.	Spark Plug	8
6.	V-belt	9
7.	Timing Belt	10
8.	Fuel Line	11
9.	Fuel Filter	12
10.	Air Cleaner Element	13
11.	Cooling System	14
12.	Engine Coolant	15
13.	Clutch System	16
14.	Transmission Gear Oil	17
15.	CVTF	18
16.	Front & Rear Differential Gear Oil	19
17.	Brake Line	20
18.	Brake Fluid	22
19.	Disc Brake Pad and Disc	23
20.	Parking Brake	24
21.	Suspension	25
22.	Wheel Bearing	29
23.	Axle Boots & Joints	30
24.	Tire Inspection and Rotation	31
25.	Steering System (Power Steering)	32
26.	A/C Filter	37

1. General Description

A: GENERAL DESCRIPTION

Be sure to perform periodic maintenance in order to maintain vehicle performance and find problems before they occur.

2. Schedule

A: MAINTENANCE SCHEDULE

1. MODEL WITH US SPECIFICATION

	Maintenance item	Maintenance interval [Number of months or km (miles), whichever occurs first]													
	Months	3	6	12	18	24	30	36	42	48	54	60	66	To be continued to the next table.	Remarks
	× 1,000 km	4.8	9.6	19.2	28.8	38.4	48	57.6	67.2	76.8	86.4	96	105.6		
	× 1,000 miles	3	6	12	18	24	30	36	42	48	54	60	66		
1	Engine oil		R	R	R	R	R	R	R	R	R	R	R		Note 1.
2	Engine oil filter		R	R	R	R	R	R	R	R	R	R	R		Note 1.
3	Spark plug											R			
4	V-belt						I					I			
5	Timing belt														STI model
6	Fuel line						I					I			Note 6. Note 7.
7	Fuel filter														Note 2. Note 7.
8	Air cleaner element						R					R			Note 8.
9	Cooling system						I					I			Note 10.
10	Engine coolant	Replace after the first 11 years or 220,000 km (137,500 miles), and every six years or 120,000 km (75,000 miles) thereafter													Note 10.
11	Clutch system			I		I		I		I		I			
12	Transmission gear oil						I					I			
13	CVTF						I					I			
14	Front & rear differential gear oil						I					I			
15	Brake line			I		I		I		I		I			Note 6.
16	Brake fluid / clutch fluid (MT model only)						R					R			Note 5.
17	Disc brake pad and disc			I		I		I		I		I			Note 6.
18	Parking brake			I		I		I		I		I			Note 6.
19	Suspension			I		I		I		I		I			Note 6.
20	Wheel bearing											I			
21	Axle boots and joints			I		I		I		I		I			Note 6.
22	Tire rotation		P	P	P	P	P	P	P	P	P	P	P		Note 9.
23	Steering system (Power steering)			I		I		I		I		I			Note 6.
24	A/C filter	Replace every 12 months or 19,200 km (12,000 miles)													Note 8.

PERIODIC MAINTENANCE SERVICES

Maintenance item		Maintenance interval [Number of months or km (miles), whichever occurs first]												
	Months	Continued from previous table	72	78	84	90	96	102	108	114	120	126	132	Remarks
	× 1,000 km		115.2	124.8	134.4	144	153.6	163.2	172.8	182.4	192	201.6	211.2	
	× 1,000 miles		72	78	84	90	96	102	108	114	120	126	132	
1	Engine oil		R	R	R	R	R	R	R	R	R	R	R	Note 1.
2	Engine oil filter		R	R	R	R	R	R	R	R	R	R	R	Note 1.
3	Spark plug										R			
4	V-belt					I					I			
5	Timing belt						R							STI model
6	Fuel line					I					I			Note 6. Note 7.
7	Fuel filter		R											Note 2. Note 7.
8	Air cleaner element					R					R			Note 8.
9	Cooling system					I					I			Note 10.
10	Engine coolant	Replace after the first 11 years or 220,000 km (137,500 miles), and every six years or 120,000 km (75,000 miles) thereafter												Note 10.
11	Clutch system		I		I		I		I		I		I	
12	Transmission gear oil					I					I			
13	CVTF					I					I			
14	Front & rear differential gear oil					I					I			
15	Brake line		I		I		I		I		I		I	Note 6.
16	Brake fluid / clutch fluid (MT model only)					R					R			Note 5.
17	Disc brake pad and disc		I		I		I		I		I		I	Note 6.
18	Parking brake		I		I		I		I		I		I	Note 6.
19	Suspension		I		I		I		I		I		I	Note 6.
20	Wheel bearing										I			
21	Axle boots and joints		I		I		I		I		I		I	Note 6.
22	Tire rotation		P	P	P	P	P	P	P	P	P	P	P	Note 9.
23	Steering system (Power steering)		I		I		I		I		I		I	Note 6.
24	A/C filter	Replace every 12 months or 19,200 km (12,000 miles)												Note 8.

Symbol
R: Replace
I: Inspection
P: Perform

NOTE:
1. When the vehicle is used under severe conditions, replace the engine oil and engine oil filter every 3 months or 4,800 km (3,000 miles).
2. When the vehicle is used under extremely low or high temperature conditions, the fuel filter may become dirty. Therefore, it should be replaced frequently.
3. When the vehicle is used in high humidity area or mountain area, replace the brake fluid every 15 months or 24,000 km (15,000 miles).
4. When the vehicle is used under severe conditions, replace every 6 months or 9,600 km (6,000 miles).
5. This inspection is not required to maintain emission warranty eligibility and it does not affect the manufacturer's obligations under EPA's in-use compliance program.
6. When the vehicle is used in extremely dusty conditions, it should be replaced more often.
7. A tire should be replaced when the tread wear indicator appears as a solid band across the tread. The indicators appear when the remaining tread has been worn to 1.6 mm (0.063 in) or less.
8. To prevent cooling system leakage, be sure to add SUBARU genuine cooling system conditioner when replacing coolant.

Examples of severe conditions

a. Drive repeatedly at short distance. (Maintenance items 1 and 2)
b. Drive repeatedly on bumpy muddy road. (Maintenance items 15 and 17)
c. Drive repeatedly in dusty conditions. (Maintenance items 7 and 23)
d. Drive in extremely cold weather. (Maintenance items 1, 2, 16, 18, 20 and 22)
e. Area where salt or other corrosive used. (Maintenance items 5, 15, 16, 17 and 20)
f. Coastal area. (Maintenance item 5)

3. Engine Oil

A: INSPECTION

Refer to “LU” section for engine oil inspection. <Ref. to LU(STI)-10, INSPECTION, Engine Oil.> <Ref. to LU(w/o STI)-10, INSPECTION, Engine Oil.>

B: REPLACEMENT

Refer to “LU” section for engine oil replacement. <Ref. to LU(STI)-10, REPLACEMENT, Engine Oil.> <Ref. to LU(w/o STI)-11, REPLACEMENT, Engine Oil.>

4. Engine Oil Filter

A: REPLACEMENT

Refer to “LU” section for engine oil filter replacement. <Ref. to LU(STI)-27, REMOVAL, Engine Oil Filter.> <Ref. to LU(w/o STI)-48, REMOVAL, Engine Oil Filter.>

5. Spark Plug

A: REPLACEMENT

Refer to “IG” section for spark plug replacement. <Ref. to IG(STI)-4, REMOVAL, Spark Plug.> <Ref. to IG(w/o STI)-4, REMOVAL, Spark Plug.>

6. V-belt

A: INSPECTION

Refer to “ME” section for V-belt inspection. <Ref. to ME(STI)-47, INSPECTION, V-belt.> <Ref. to ME(w/o STI)-80, INSPECTION, V-belt.>

B: REPLACEMENT

Refer to “ME” section for V-belt replacement. <Ref. to ME(STI)-41, REMOVAL, V-belt.> <Ref. to ME(w/o STI)-75, REMOVAL, V-belt.>

7. Timing Belt

A: INSPECTION

Refer to “ME” section for timing belt inspection. <Ref. to ME(STI)-60, INSPECTION, Timing Belt.>

B: REPLACEMENT

Refer to “ME” section for timing belt replacement. <Ref. to ME(STI)-52, REMOVAL, Timing Belt.>

8. Fuel Line

A: INSPECTION

The fuel line is located mostly internally, so check pipes, areas near pipes, and engine compartment piping for rust, hose damage, loose band, etc. If faulty parts are found, repair or replace them. <Ref. to FU(STI)-104, INSPECTION, Fuel Delivery, Return and Evaporation Lines.> <Ref. to FU(w/o STI)-196, INSPECTION, Fuel Delivery and Evaporation Lines.>

9. Fuel Filter

A: REPLACEMENT

For fuel filter replacement procedure, refer to “FU” section. <Ref. to FU(STI)-93, REMOVAL, Fuel Filter.> <Ref. to FU(w/o STI)-180, REMOVAL, Fuel Filter.>

B: INSPECTION

If the filter is clogged, or if the replacement interval has been reached, replace it.

10.Air Cleaner Element

A: REPLACEMENT

Refer to “IN” section for air cleaner element replacement. <Ref. to IN(STI)-7, REMOVAL, Air Cleaner Element.> <Ref. to IN(w/o STI)-11, REMOVAL, Air Cleaner Element.>

11.Cooling System

A: INSPECTION

1. RADIATOR

Check that there are no engine coolant leaks from the hose connections. Refer to “CO” section for radiator inspection. <Ref. to CO(STI)-20, INSPECTION, Radiator.> <Ref. to CO(w/o STI)-42, INSPECTION, Radiator.>

2. RADIATOR CAP

Refer to “CO” section for radiator cap inspection. <Ref. to CO(STI)-21, INSPECTION, Radiator Cap.> <Ref. to CO(w/o STI)-43, INSPECTION, Radiator Cap.>

3. COOLING FAN

Refer to “CO” section for cooling fan inspection. <Ref. to CO(STI)-8, INSPECTION, Radiator Fan System.> <Ref. to CO(w/o STI)-9, INSPECTION, Radiator Fan System.>

4. COOLING SYSTEM

Start the engine, and then inspect that it does not overheat or it is not cooled excessively. If it overheats or it is cooled excessively, check the cooling system.

12.Engine Coolant

A: INSPECTION

CAUTION:
- **Do not use water instead of coolant.**
- **Refer to "RM" section for the recommended engine coolant. <Ref. to RM-3, ENGINE COOLANT, RECOMMENDED MATERIALS, Recommended Materials.>**

1) Park the vehicle on a level surface.
2) Make sure the engine coolant level in the reservoir tank is between "FULL" and "LOW" when the engine is cold.

NOTE:
If the engine coolant level drops, make sure that there are no engine coolant leakage, and add engine coolant to the "FULL" line.

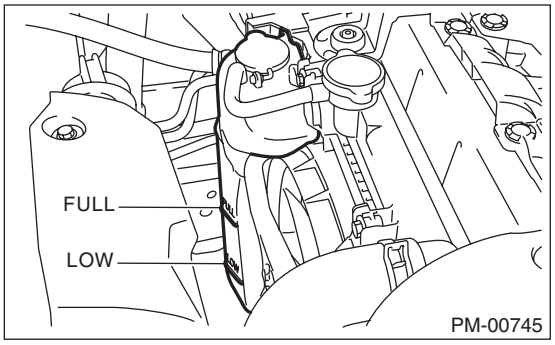

3) Remove the radiator cap and make sure that the radiator is filled with engine coolant up to the filler neck position.

B: REPLACEMENT

Refer to "CO" section for engine coolant replacement. <Ref. to CO(STI)-12, DRAINING OF ENGINE COOLANT, REPLACEMENT, Engine Coolant.> <Ref. to CO(w/o STI)-13, DRAINING OF ENGINE COOLANT, REPLACEMENT, Engine Coolant.>

13.Clutch System

A: INSPECTION AND ADJUSTMENT

Refer to “CL” section for inspection and adjustment of clutch system. <Ref. to CL-32, INSPECTION, Clutch Pedal.> <Ref. to CL-33, ADJUSTMENT, Clutch Pedal.>

14.Transmission Gear Oil

A: INSPECTION

Refer to “6MT (TY75)” or “6MT (TY85)” section for transmission gear oil inspection. <Ref. to 6MT(TY75)-24, INSPECTION, Transmission Gear Oil.> <Ref. to 6MT(TY85)-27, INSPECTION, Transmission Gear Oil.>

B: REPLACEMENT

Refer to “6MT (TY75)” or “6MT (TY85)” section for transmission gear oil replacement. <Ref. to 6MT(TY75)-25, REPLACEMENT, Transmission Gear Oil.> <Ref. to 6MT(TY85)-27, REPLACEMENT, Transmission Gear Oil.>

15.CVTF

A: INSPECTION

Refer to “CVT (TR690)” section for CVTF inspection. <Ref. to CVT(TR690)-36, INSPECTION, CVTF.>

B: REPLACEMENT

Refer to “CVT (TR690)” section for CVTF replacement. <Ref. to CVT(TR690)-38, REPLACEMENT, CVTF.>

16.Front & Rear Differential Gear Oil

A: INSPECTION

1. FRONT DIFFERENTIAL (MT MODEL)

Front differential gear oil of MT model lubricates the transmission and differential together. Refer to “6MT (TY75)” or “6MT (TY85)” section for inspection. <Ref. to 6MT(TY75)-24, INSPECTION, Transmission Gear Oil.> <Ref. to 6MT(TY85)-27, INSPECTION, Transmission Gear Oil.>

2. FRONT DIFFERENTIAL (CVT MODEL)

Refer to “CVT (TR690)” section for inspection of CVT model front differential gear oil. <Ref. to CVT(TR690)-41, INSPECTION, Differential Gear Oil.>

3. REAR DIFFERENTIAL

Refer to “DI” section for rear differential gear oil inspection. <Ref. to DI-17, INSPECTION, Differential Gear Oil.>

B: REPLACEMENT

1. FRONT DIFFERENTIAL (MT MODEL)

Front differential gear oil of MT model lubricates the transmission and differential together. Refer to “6MT (TY75)” or “6MT (TY85)” section for replacement. <Ref. to 6MT(TY75)-25, REPLACEMENT, Transmission Gear Oil.> <Ref. to 6MT(TY85)-27, REPLACEMENT, Transmission Gear Oil.>

2. FRONT DIFFERENTIAL (CVT MODEL)

Refer to “CVT (TR690)” section for front differential gear oil replacement. <Ref. to CVT(TR690)-42, REPLACEMENT, Differential Gear Oil.>

3. REAR DIFFERENTIAL

Refer to “DI” section for rear differential gear oil replacement. <Ref. to DI-18, REPLACEMENT, Differential Gear Oil.>

17.Brake Line

A: INSPECTION

1. BRAKE LINE

1) Check for scratches, swelling, corrosion, traces of fluid leakage on the brake hoses or pipe joints.
2) Make sure that brake pipes/hoses do not interfere with adjacent parts and there is no loose connector/clamp during driving.
3) Check any trace of fluid leakage, scratches, etc. on master cylinder, wheel cylinder and hydraulic unit.

NOTE:
• When the brake fluid level in the reservoir tank is lower than specified limit, the brake warning light on the combination meter will illuminate.
• Visually check the brake hose for damage. (Use a mirror where it is difficult to see)

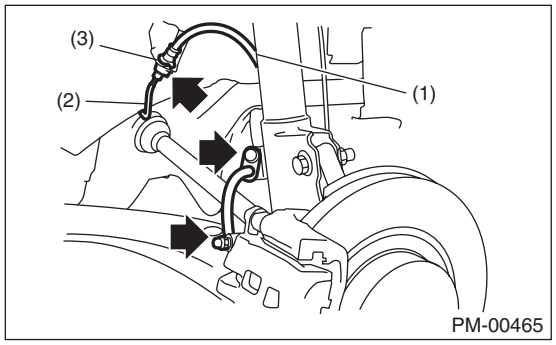

(1) Front brake hose
(2) Front brake pipe
(3) Clamp

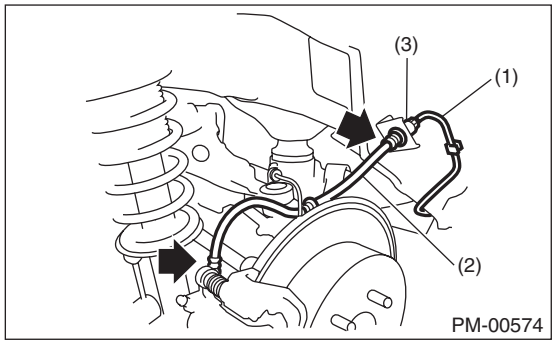

(1) Brake pipe
(2) Rear brake hose
(3) Clamp

2. SERVICE BRAKE

Refer to “BR” section for foot brake inspection. <Ref. to BR-98, INSPECTION, Brake Pedal.>

3. BRAKE SERVO SYSTEM

1) With the engine off, depress the brake pedal several times applying the same pedal force. Check that the travel distance should not change.
2) With the brake pedal depressed, start the engine. Check that the pedal moves slightly toward the floor.
3) With the brake pedal depressed, stop the engine and keep the pedal depressed for 30 seconds. Check that the pedal height does not change.
4) A check valve is built into the brake booster nipple. Disconnect the vacuum hose to inspect function of check valve.
Check that check valve ventilates from booster side to engine side. Also, check that there is no ventilation from engine side to booster side.

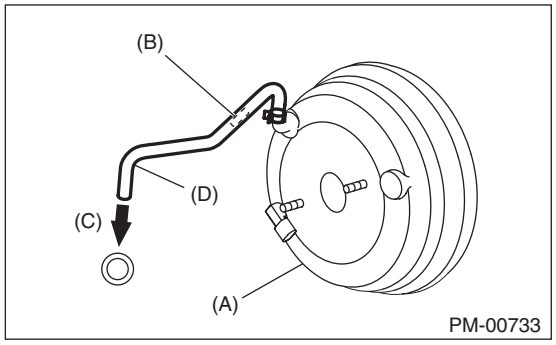

(A) Brake booster
(B) Check valve
(C) Engine side
(D) Brake booster side

5) Check the vacuum hose for cracks or other damage.

CAUTION:
When installing the vacuum hose on the engine and brake booster, do not use soapy water or lubricating oil on their connections.
6) Check that the vacuum hose is securely tightened.

18.Brake Fluid

A: INSPECTION

Refer to “BR” section for brake fluid inspection. <Ref. to BR-85, INSPECTION, Brake Fluid.>

B: REPLACEMENT

Refer to “BR” section for brake fluid replacement. <Ref. to BR-86, REPLACEMENT, Brake Fluid.>

19.Disc Brake Pad and Disc

A: INSPECTION

Refer to “BR” section for disc brake pad and disc inspection. <Ref. to BR-24, INSPECTION, Front Brake Pad.> <Ref. to BR-44, INSPECTION, Rear Brake Pad.> <Ref. to BR-26, INSPECTION, Front Disc Rotor.> <Ref. to BR-52, INSPECTION, Rear Disc Rotor.>

20.Parking Brake

A: INSPECTION

Refer to “PB” section for parking brake inspection. <Ref. to PB-19, INSPECTION, Parking Brake Assembly (Rear Disc Brake).>

B: ADJUSTMENT

Refer to “PB” section for parking brake adjustment. <Ref. to PB-19, ADJUSTMENT, Parking Brake Assembly (Rear Disc Brake).>

21.Suspension

A: INSPECTION

1. FRONT SUSPENSION BALL JOINT

1) Lift up the vehicle until front wheels are off ground.
2) Grasp the bottom of tire and move it in and out in axial direction. If movement (B) is observed between the brake disc cover (A) and end of front arm (D), ball joint (C) may be excessively worn.

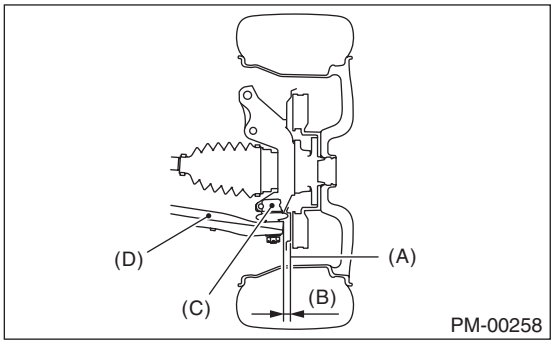

3) Next, grasp the end of front arm (C) and move it up and down. If movement (A) between the housing (D) and front arm (C) boss is observed, ball joint (B) may be excessively worn.

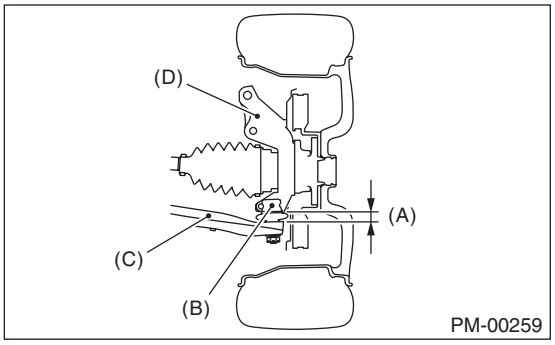

4) If the relative movement is observed in the preceding two steps, remove and inspect the ball joint. If the free play exceeds standard value, replace the ball joint. <Ref. to FS-31, Front Ball Joint.>
5) Damage of dust boots
Visually inspect the ball joint dust boots. Replace if ball joint is damaged.

2. REAR SUSPENSION BALL JOINT

1) Lift up the vehicle until rear wheels are off ground.
2) Grasp the bottom of tire and move it in and out in axial direction.
3) If movement is observed between the brake disc cover (A) and end of front lateral link (B), ball joint may be excessively worn.

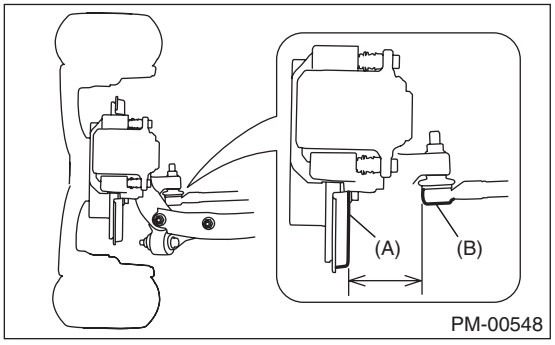

4) Grasp the end of front lateral link (B) and move it up and down. If movement is observed between the housing (C) and front lateral link (B) boss, ball joint may be excessively worn.

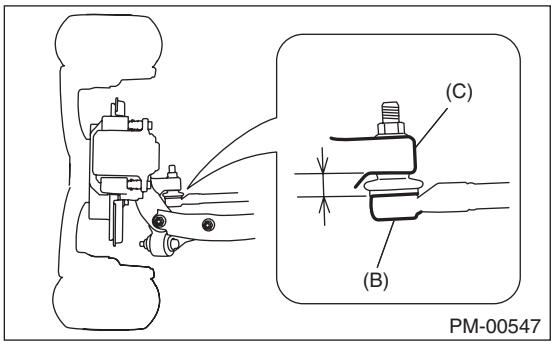

5) If the movement related to the previous two steps is observed, replace the front lateral link. <Ref. to RS-21, Front Lateral Link.>
6) Damage of dust boots
Visually inspect the ball joint dust boots. Replace if front lateral link is damaged.
7) Check the upper arm ball joint (D) and the pillow ball bushing (E) of housing in the same manner.

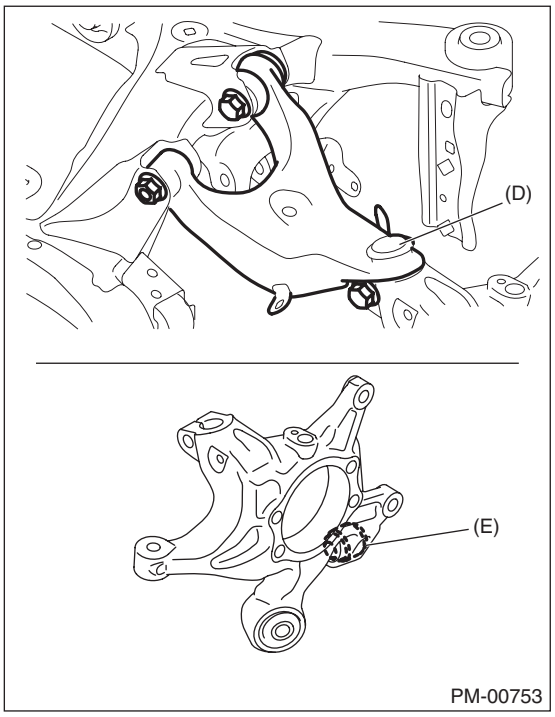

(D) Upper arm ball joint
(E) Pillow ball bushing

3. FRONT, REAR SUSPENSION BUSHING

Apply pressure with tire lever etc, and inspect the bushing for excessive wear or damage. If defective, replace the bushing.

- Front suspension bushing

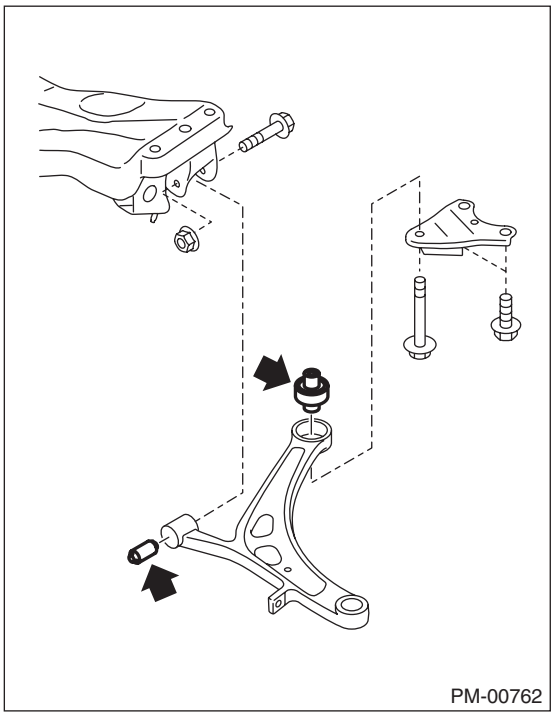

- Rear suspension bushing

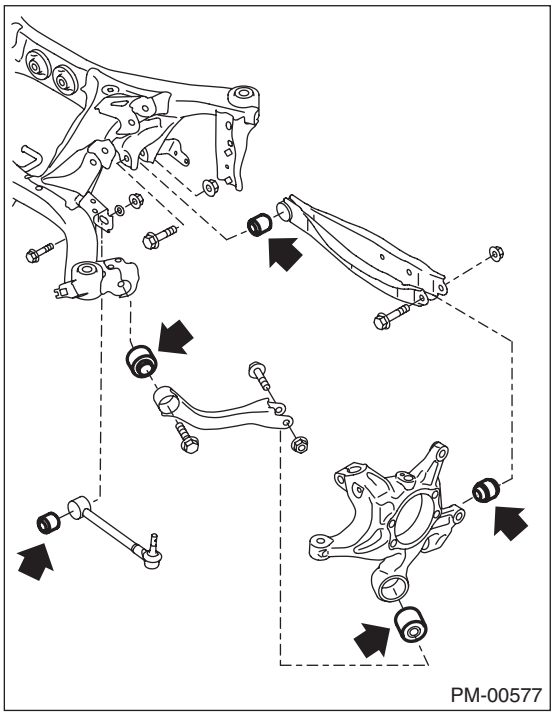

4. WHEEL ARCH HEIGHT

Refer to “FS” section for wheel arch height inspection. <Ref. to FS-11, WHEEL ARCH HEIGHT, INSPECTION, Wheel Alignment.>

5. WHEEL ALIGNMENT

Measure and adjust the front and rear wheel alignment at a time. Refer to “FS” section for measurement and adjustment of wheel alignment. <Ref. to FS-10, INSPECTION, Wheel Alignment.>

6. OIL LEAKAGE OF STRUT AND SHOCK ABSORBER

Visually inspect the front strut and rear shock absorber for oil leakage. Replace the front strut and rear shock absorber if oil leaks excessively.

7. TIGHTNESS OF BOLTS AND NUTS

Check the bolts and nuts for looseness. Retighten the bolts and nuts to specified torque. If the self-locking nuts and bolts are removed, replace them with new parts. <Ref. to FS-2, General Description.> <Ref. to RS-2, General Description.>

8. DAMAGE TO SUSPENSION PARTS

Check the following parts and the fastening portion of the vehicle body for deformation or excessive rusting which impairs the suspension. Thoroughly remove the deposits of the lower spring seat of strut where dust or mud are likely piled up. If necessary, replace the damaged parts with new parts. If minor rust formation, pitting, etc. are noted, remove the rust and take rust prevention measure.

- Front suspension
  - Front arm
  - Front crossmember
  - Strut
- Rear suspension
  - Sub frame
  - Front lateral link
  - Rear lateral link
  - Upper arm
  - Trailing link
  - Shock absorber
- In the area where salt is sprayed to melt snow on a road in winter, check suspension parts for damage caused by rust every 12 months after lapse of 60 months. Take rust prevention measures as required.

22.Wheel Bearing

A: INSPECTION

1. FRONT WHEEL BEARING

NOTE:
Inspect the condition of front wheel bearing grease.
1) Jack-up the front side of vehicle.
2) While holding the front wheel by hand, swing it in and out to check bearing free play.
3) Loosen the wheel nuts, and remove the front wheel.
4) If the bearing free play exists in step 2) above, attach a dial gauge to the hub and measure axial play in axial direction.

Service limit:
Straight-ahead position within 0.05 mm (0.0020 in)
5) Remove the bolts and self-locking nuts, and extract the front arm from front crossmember.
6) Remove the joint of front drive shaft from transmission. <Ref. to DS-18, Front Axle.>
7) While supporting the front drive shaft horizontally with one hand, turn the hub with the other hand to check for noise or binding.
If the hub is noisy or binds, replace the front axle.

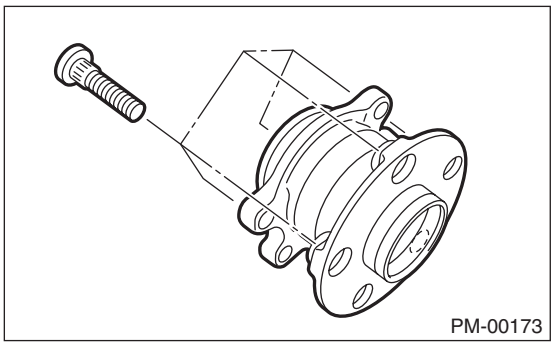
PM-00173

2. REAR WHEEL BEARING

1) Jack-up the rear side of vehicle.
2) While holding the rear wheel by hand, swing it in and out to check bearing free play.
3) Loosen the wheel nuts, and remove the rear wheel.
4) If the bearing free play exists in step 2) above, attach a dial gauge to the hub and measure axial play in axial direction.

Service limit:
Straight-ahead position within 0.05 mm (0.0020 in)
5) Remove the joint of rear drive shaft from rear differential. <Ref. to DS-61, Rear Drive Shaft.>
6) While supporting rear drive shaft horizontally with one hand, turn the hub with the other hand to check for noise or binding.
If the hub is noisy or binds, replace the rear axle.

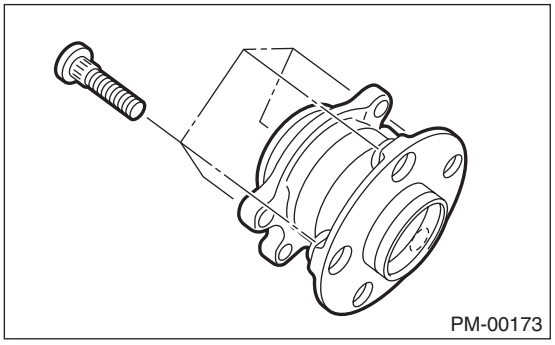
PM-00173

23.Axle Boots & Joints

A: INSPECTION

1. FRONT AND REAR AXLE BOOTS

Inspect the front axle boots (A) and rear axle boots (B) for deformation, damage or failure. If faulty, replace with new part. <Ref. to DS-45, Front Drive Shaft.> <Ref. to DS-61, Rear Drive Shaft.>

- Front

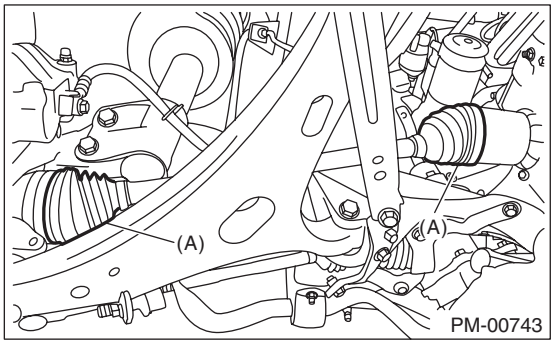

- Rear

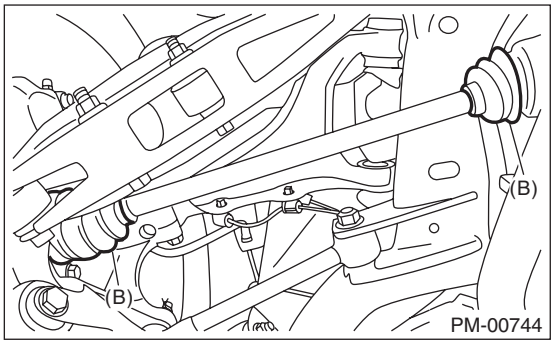

2. PROPELLER SHAFT

Inspect the propeller shaft for damage or failure. If faulty, replace with new part. <Ref. to DS-12, Propeller Shaft.>

24.Tire Inspection and Rotation

A: INSPECTION

Refer to “WT” section for tire inspection and rotation. <Ref. to WT-5, TIRE ROTATION, INSPECTION, Tire and Wheel.>

25.Steering System (Power Steering)

A: INSPECTION

1. STEERING WHEEL

1) Set the steering wheel in a straight-ahead position, and check the wheel spokes to make sure they are correctly set in their specified positions.
2) Lightly turn the steering wheel to the left and right to determine the point where front wheels start to move. Measure the distance of the movement of steering wheel (periphery).

Steering wheel free play:
0 — 17 mm (0 — 0.67 in)

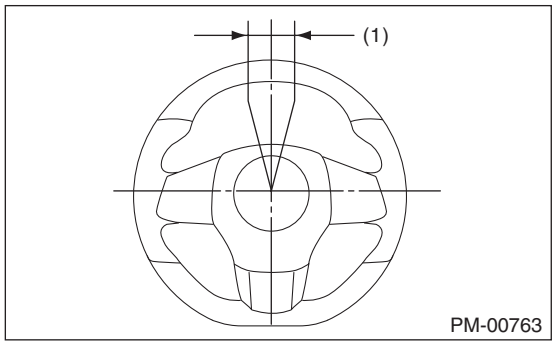

(1) Steering wheel free play

Move the steering wheel toward the shaft to check if there is play in the direction.

Play limit:
0.5 mm (0.020 in)

3) Drive the vehicle and check the following items.
(1) Steering force:
The effort required for steering should be smooth and even at all points, and should not vary.
(2) Pulled to one side:
Steering wheel should not be pulled to one side while driving on a level surface.
(3) Wheel runout:
Steering wheel should not show any sign of runout.
(4) Return status:
Steering wheel should return to its original position after it has been turned and then released.

2. STEERING SHAFT JOINT

If steering wheel play is excessive, disconnect the universal joint of steering shaft and then check the play where the joints cross and yawing torque. Also, check the seal for damage or serrations for wear. If the joint is loose, retighten the mounting bolts to the specified torque. <Ref. to PS-21, Universal Joint.>

Tightening torque:
24 N·m (2.4 kgf-m, 17.4 ft-lb)

3. GEARBOX

1) Set the steering wheel in the straight position, then rotate it 90° in both the left and right directions.
While steering wheel is being rotated, check the looseness of the gearbox.

Tightening torque:
60 N·m (6.1 kgf-m, 44.3 ft-lb)

- Hydraulic power steering

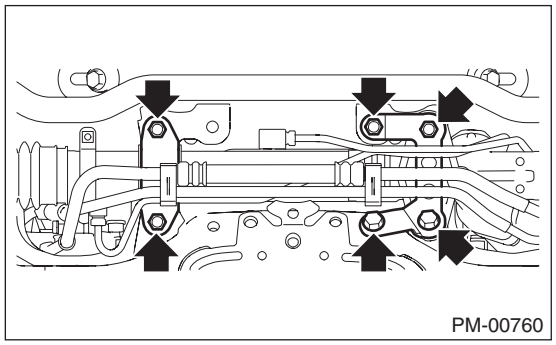

- Electric power steering

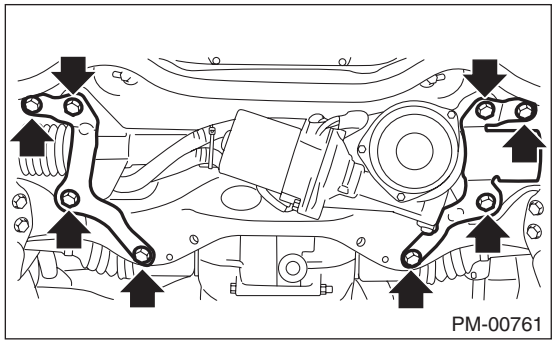

2) Check the boot for damage, cracks or deterioration.
3) With the vehicle stopped on a level surface, quickly turn the steering wheel to the left and right.
While steering wheel is being rotated, check the gear backlash. If any noise is noticed, adjust the gear backlash. <Ref. to PS-78, GEARBOX BACKLASH ADJUSTMENT, ADJUSTMENT, Electric Power Steering Gearbox.>
Adjust the hydraulic power steering as follows.

(1) Loosen the adjusting screw, and apply liquid gasket to at least 1/3 of the entire perimeter of adjusting screw thread.

Liquid gasket:
THREE BOND 1102

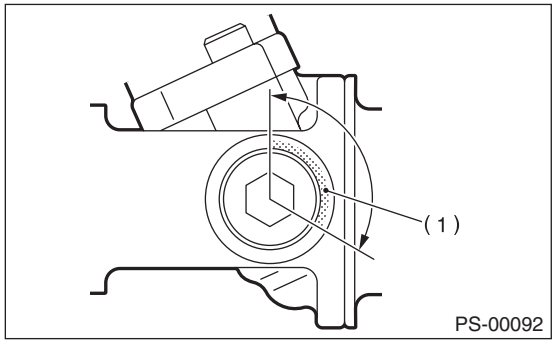

(1) Apply liquid gasket to 1/3 or more of the entire perimeter.

(2) Tighten the adjusting screw, then loosen it.

CAUTION:
Adjust the steering rack to the straight forward position.

Tightening torque:
25 N·m (2.5 kgf-m, 18 ft-lb)

(3) Tighten the adjusting screw, then loosen it.
(4) Tighten the adjusting screw.

Tightening torque:
5.9 N·m (0.6 kgf-m, 4.2 ft-lb)

(5) Then, return the adjusting screw by 5° and fix it.
(6) Install the lock nut. While holding the adjusting screw with wrench, tighten the lock nut using ST.

ST 926230000 SPANNER

Tightening torque (lock nut):
25 N·m (2.5 kgf-m, 18 ft-lb)

Hold the adjusting screw with wrench to prevent it from turning while tightening the lock nut.

4. TIE-ROD

1) Check the tie-rod and tie-rod end for bend, cracks or other damages.

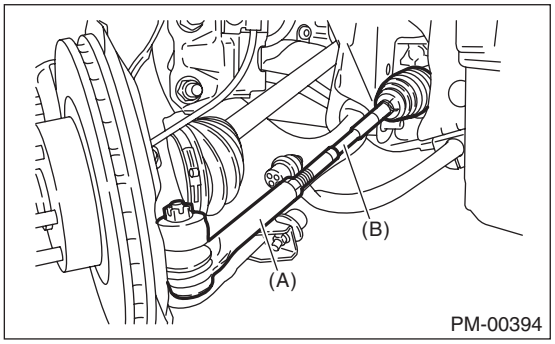

(A) Tie-rod end
(B) Tie-rod

2) Confirm that the connections of knuckle ball joints for play, and then check for damage on dust boots and free play of ball studs. If castle nut is loose, retighten it to the specified torque, then tighten further up to a maximum of 60° until the cotter pin hole is aligned.

Tightening torque:
27 N·m (2.75 kgf-m, 19.9 ft-lb)

3) Check the tightening of tie-rod end lock nut. If it is loose, tighten it to the specified torque.

Tightening torque:
85 N·m (8.7 kgf-m, 62.7 ft-lb)

5. POWER STEERING FLUID LEVEL

CAUTION:
If any power steering fluid is spilt over the exhaust pipe, wipe it off with a cloth to avoid emitting smoke or causing a fire.

NOTE:
- For electric power steering model, inspection is not necessary.
- When the power steering fluid temperature is 20°C (68°F), check the fluid level on the “COLD” side.
- When the power steering fluid temperature is 80°C (176°F), check the fluid level on the “HOT” side.

1) Stop the engine to park the vehicle on a level surface.
2) Check the fluid level using the scale on the outside of the reservoir tank. If the level is below “MIN”, fill fluid up to “MAX” level.

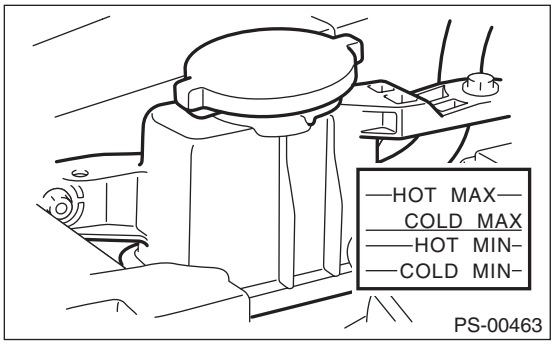

NOTE:
If fluid level is at “MAX” level or above, drain fluid to keep the level in the specified range of indicator by using a syringe or the like.

Recommended fluid:
<Ref. to RM-3, FLUID, RECOMMENDED MATERIALS, Recommended Materials.>

Fluid capacity:
<Ref. to SPC-10, CAPACITY, WRX STI.>

6. POWER STEERING FLUID FOR LEAKS

CAUTION:
- **Wipe the leaked fluid off after correcting fluid leaks.**
- **Also pay attention to interference between hoses or pipes and other parts when inspecting fluid leaks.**
- **If any power steering fluid is spilt over the exhaust pipe, wipe it off with a cloth to avoid emitting smoke or causing a fire.**

For hydraulic power steering model, inspect the underside of oil pump, gearbox of power steering system, hoses, pipes and their couplings for fluid leaks.
If fluid leakage is found, tighten the mounting bolt (or nut) again or replace with a new part.

7. HOSES OF OIL PUMP FOR DAMAGES

For model with hydraulic power steering, check the pressure hose or return hose of the oil pump for cracks, swelling, damages. Replace the hose with a new part if necessary.

CAUTION:
When installing the hose, do not twist or bend.

8. POWER STEERING PIPES FOR DAMAGES

For model with hydraulic power steering, check the power steering pipe for corrosion or damages.
Replace the pipe with a new part if necessary.

9. GEARBOX BOOTS

Inspect both sides of the gearbox boot as follows, and correct the defects if necessary.
1) The (A) and (B) positions of the gearbox boot are fitted in (A) and (C) grooves of gearbox and the rod.
2) Clips are fitted onto the boot grooves to the positions (A) and (B) of the boot.
3) Check that there is no cracks or holes in the boot.

NOTE:
Rotate (B) position of gearbox boot against the torsion produced by the adjustment of toe-in etc.

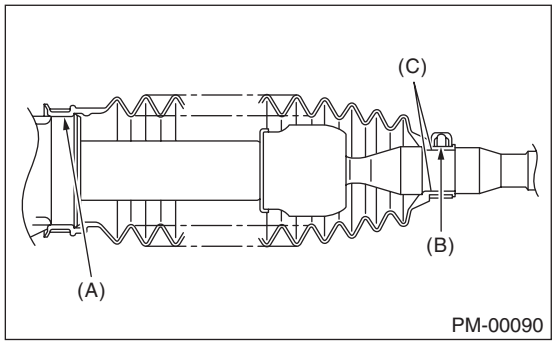

10.MOUNTING BOLT & NUT

Inspect the fitting bolts and nuts of oil pump and bracket for looseness, and retighten them if necessary.

11.HARNESS INSPECTION (ELECTRIC POWER STEERING MODEL)

Check the harness of the electric power steering for cracks or damages.
Replace the electric power steering gear box with a new part if necessary.

12.ELECTRIC POWER STEERING CONTROL MODULE INSPECTION (ELECTRIC POWER STEERING MODEL)

Check for the electric power steering diagnostic trouble codes. If the diagnostic trouble code is detected, perform the diagnosis. <Ref. to PS(diag)-2, Basic Diagnostic Procedure.>
Replace the control module, steering gear box with new parts if necessary.

26.A/C Filter

A: REPLACEMENT

Refer to “AC” section for A/C filter replacement. <Ref. to AC-96, REPLACEMENT, A/C Filter.>

ENGINE 1 SECTION

FUEL INJECTION (FUEL SYSTEMS)	FU(STI)
EMISSION CONTROL (AUX. EMISSION CONTROL DEVICES)	EC(STI)
INTAKE (INDUCTION)	IN(STI)
MECHANICAL	ME(STI)
EXHAUST	EX(STI)
COOLING	CO(STI)
LUBRICATION	LU(STI)
SPEED CONTROL SYSTEMS	SP(STI)
IGNITION	IG(STI)
STARTING/CHARGING SYSTEMS	SC(STI)
ENGINE (DIAGNOSTICS)	EN(STI) (diag)

This service manual has been prepared to provide SUBARU service personnel with the necessary information and data for the correct maintenance and repair of SUBARU vehicles.
This manual includes the procedures for maintenance, disassembling, reassembling, inspection and adjustment of components and diagnostics for guidance of experienced mechanics.
Please peruse and utilize this manual fully to ensure complete repair work for satisfying our customers by keeping their vehicle in optimum condition. When replacement of parts during repair work is needed, be sure to use SUBARU genuine parts.

All information, illustration and specifications contained in this manual are based on the latest product information available at the time of publication approval.

FUJI HEAVY INDUSTRIES LTD. G1270BE2

FUEL INJECTION (FUEL SYSTEMS)

FU(STI)

		Page
1.	General Description	2
2.	Throttle Body	15
3.	Intake Manifold	17
4.	Engine Coolant Temperature Sensor	33
5.	Crankshaft Position Sensor	35
6.	Camshaft Position Sensor	36
7.	Knock Sensor	38
8.	Throttle Position Sensor	39
9.	Mass Air Flow and Intake Air Temperature Sensor	40
10.	Manifold Absolute Pressure Sensor	41
11.	Fuel Injector	43
12.	Tumble Generator Valve Assembly	46
13.	Tumble Generator Valve Actuator	47
14.	Oil Flow Control Solenoid Valve	48
15.	Wastegate Control Solenoid Valve	50
16.	Front Oxygen (A/F) Sensor	52
17.	Rear Oxygen Sensor	54
18.	SI-DRIVE (SUBARU Intelligent Drive) Selector	55
19.	Engine Control Module (ECM)	56
20.	Main Relay	57
21.	Oxygen Sensor Relay	58
22.	Electronic Throttle Control Relay	60
23.	Fuel Pump Relay	62
24.	Fuel Pump Control Unit	63
25.	Fuel	64
26.	Fuel Tank Protector	66
27.	Fuel Tank	67
28.	Fuel Filler Pipe	78
29.	Fuel Pump	83
30.	Fuel Level Sensor	88
31.	Fuel Sub Level Sensor	89
32.	Fuel Filter	93
33.	Pulsation Damper Assembly	97
34.	Pressure Regulator & Damper Assembly	98
35.	Fuel Delivery, Return and Evaporation Lines	100
36.	Fuel System Trouble in General	105

1. General Description

A: SPECIFICATION

Fuel tank	Capacity	60 L (15.9 US gal, 13.2 Imp gal)
	Location	Under rear seat
Fuel pump	Type	Impeller
	Shutoff discharge pressure	900 kPa (9.18 kg/cm^2, 130.5 psi) or less
	Discharge rate	175 L (46.2 US gal, 38.5 Imp gal)/h or more [12 V at 300 kPa (3.06 kg/cm^2, 43.5 psi)]
Fuel filter		In-tank type

B: COMPONENT

1. INTAKE MANIFOLD

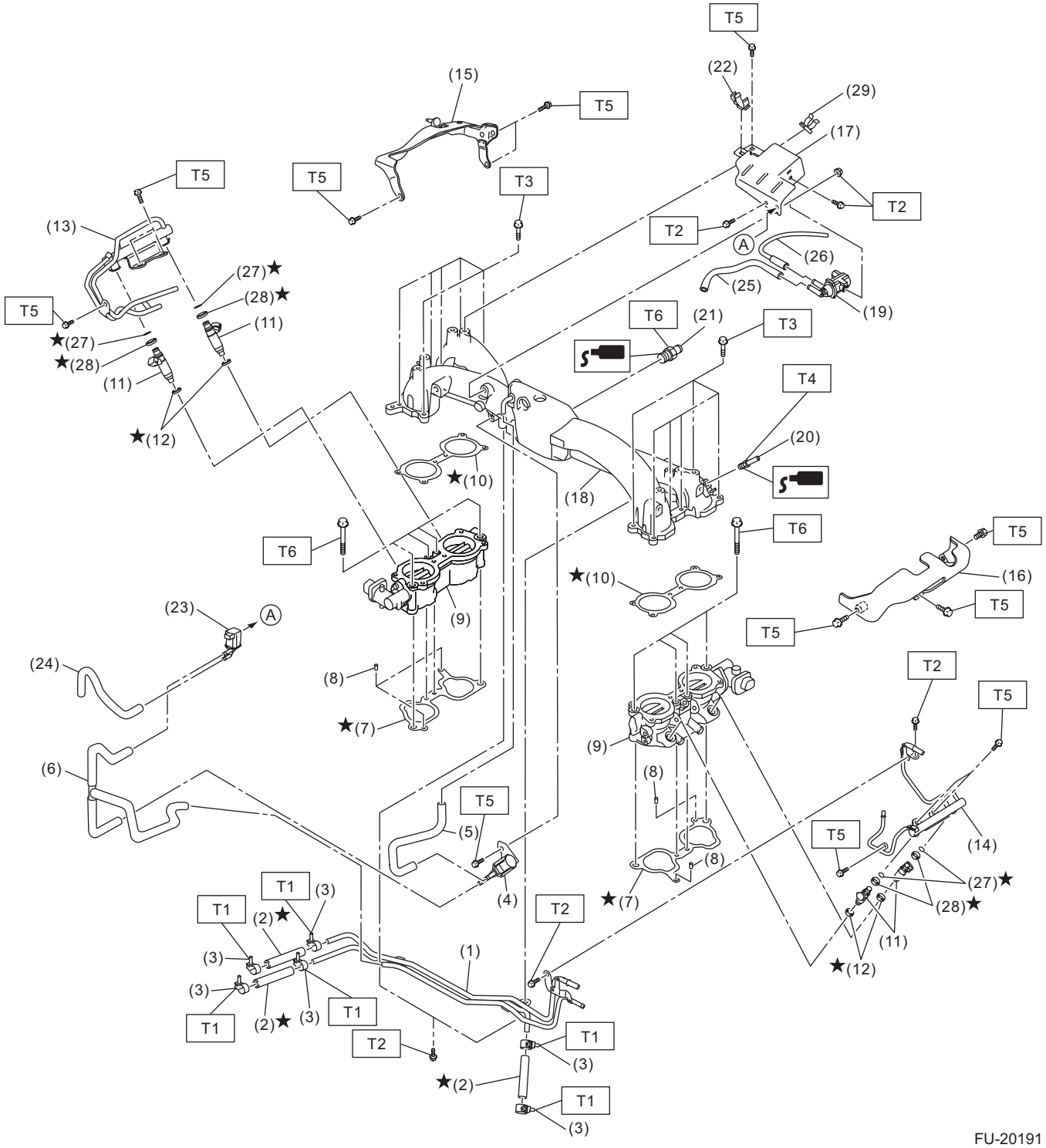

FU-20191

(1) Fuel pipe ASSY
(2) Fuel hose
(3) Clamp
(4) Purge control solenoid valve 1
(5) Vacuum hose A
(6) Vacuum control hose
(7) Intake manifold gasket
(8) Guide pin
(9) Tumble generator valve ASSY
(10) Tumble generator valve gasket
(11) Fuel injector
(12) Seal ring
(13) Fuel injector pipe RH
(14) Fuel injector pipe LH
(15) Fuel pipe protector RH
(16) Fuel pipe protector LH
(17) Solenoid valve bracket
(18) Intake manifold
(19) Wastegate control solenoid valve
(20) Nipple
(21) Nipple
(22) Clip
(23) Purge control solenoid valve 2
(24) Vacuum hose
(25) Vacuum hose
(26) Air control hose
(27) O-ring
(28) Rubber
(29) Clip

Tightening torque: N·m (kgf-m, ft-lb)
T1: 1.25 (0.1, 0.9)
T2: 6.4 (0.7, 4.7)
T3: 8.3 (0.8, 6.1)
T4: 17 (1.7, 12.5)
T5: 19 (1.9, 14.0)
T6: 25 (2.5, 18.4)

2. AIR INTAKE SYSTEM

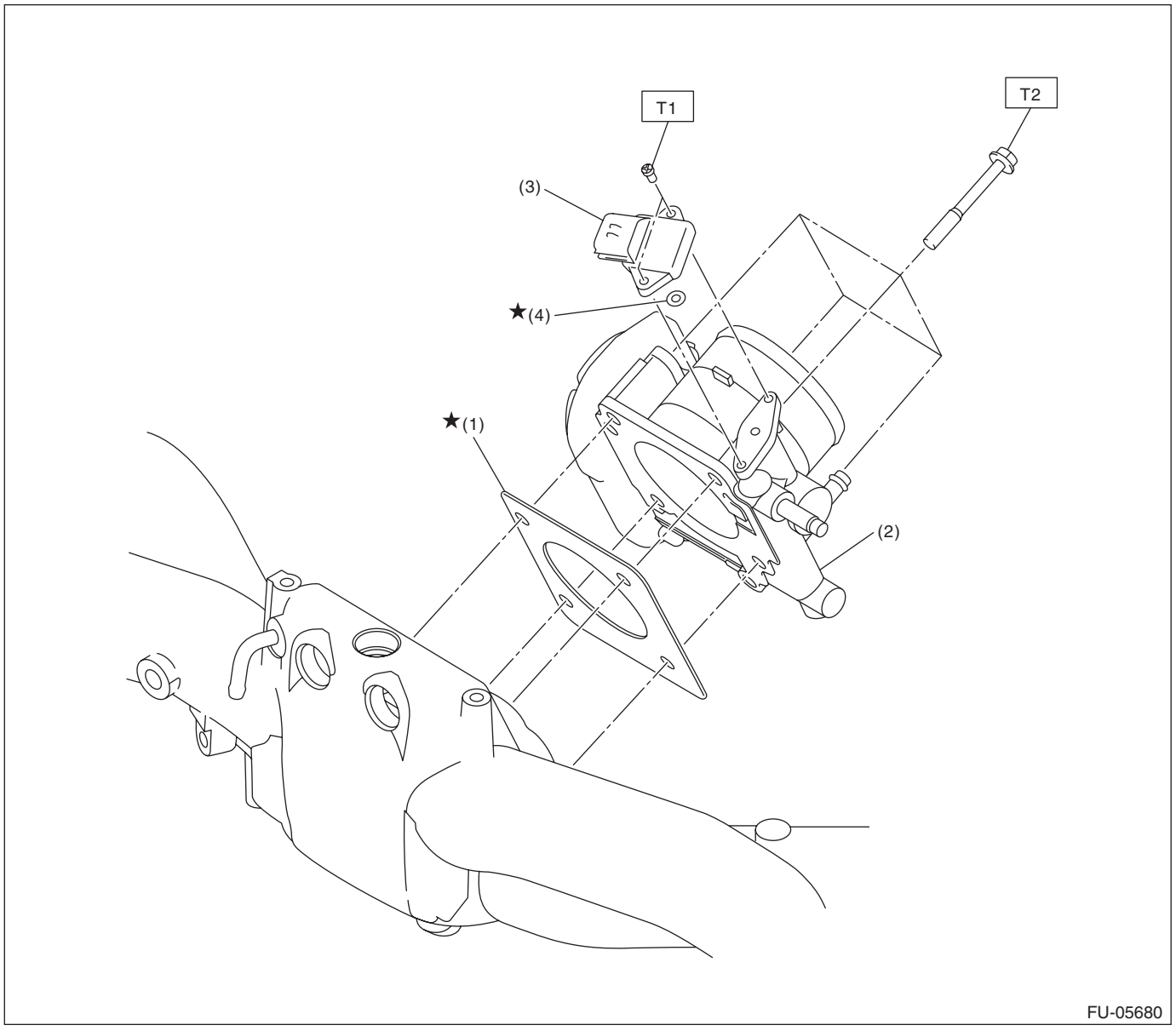

(1)	Gasket	(3)	Manifold absolute pressure sensor	***Tightening torque: N·m (kgf-m, ft-lb)***
(2)	Throttle body	(4)	O-ring	***T1: 2 (0.2, 1.5)***
				T2: 8 (0.8, 5.9)

3. CRANKSHAFT POSITION, CAMSHAFT POSITION AND KNOCK SENSORS

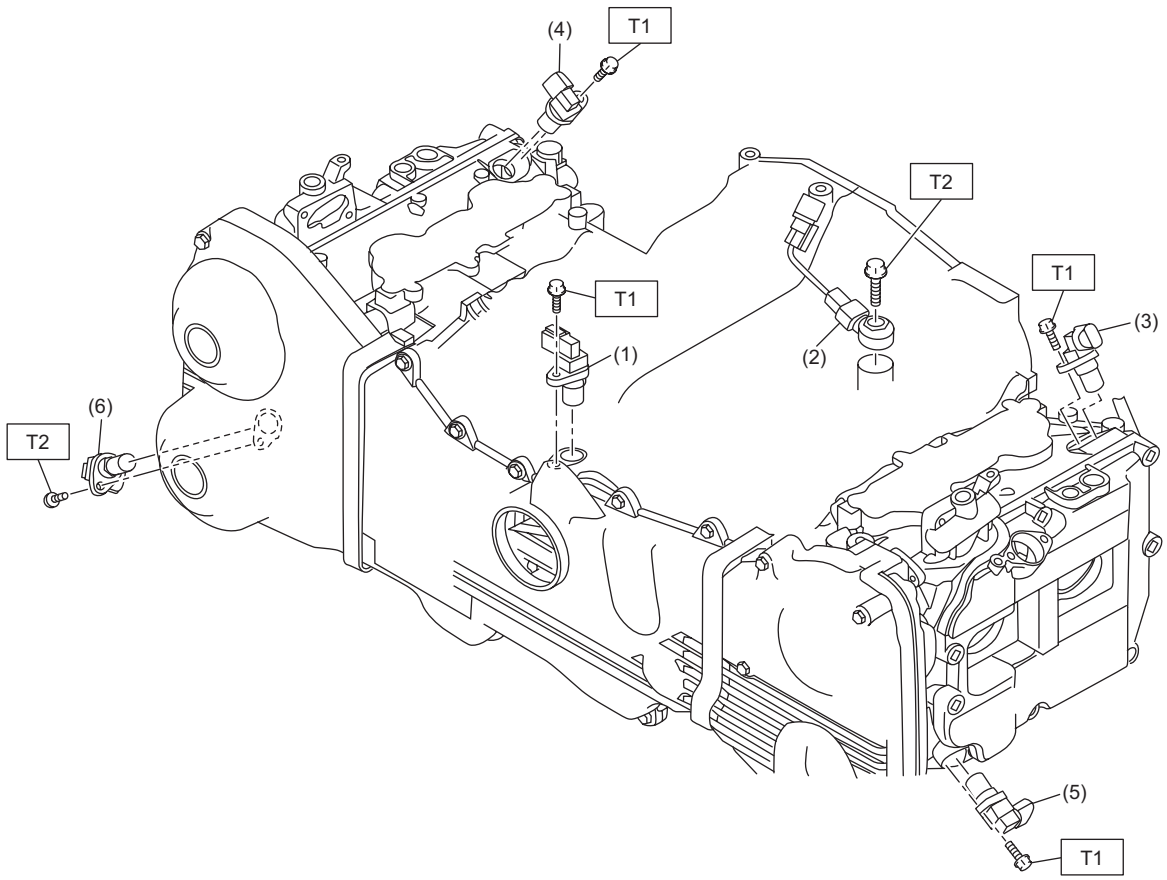

(1)	Crankshaft position sensor	(4)	Intake camshaft position sensor RH	***Tightening torque: N·m (kgf-m, ft-lb)***
(2)	Knock sensor	(5)	Exhaust camshaft position sensor LH	***T1: 6.4 (0.7, 4.7)***
(3)	Intake camshaft position sensor LH	(6)	Exhaust camshaft position sensor RH	***T2: 24 (2.4, 17.7)***

4. FUEL TANK

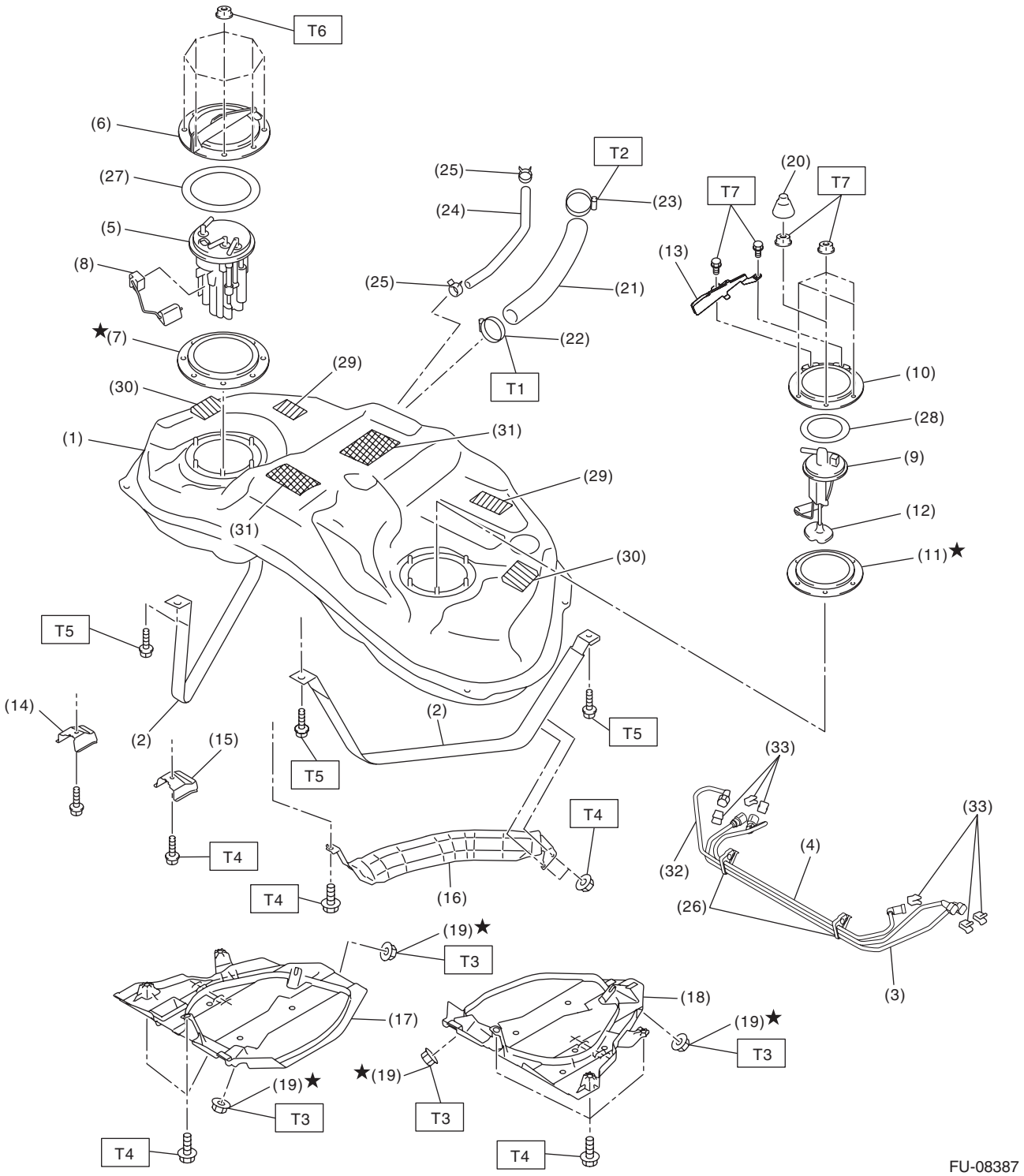
T6
(6)
(27)
(5)
(8)
★(7)
(29)
(30)
(1)
(31)
(25)
(24)
(25)
T2
(23)
(21)
(22)
T1
(20)
T7
T7
(13)
(10)
(28)
(9)
(12)
(11)★
(29)
(31)
(30)
T5
(14)
(2)
(2)
(15)
T5
T5
T4
T4
T4
(16)
(33)
(33)
(4)
(32)
(26)
(3)
(19)★
T3
(17)
(18)
(19)★
T3
★(19)
T3
(19)★
T3
T4
T4
FU-08387

(1) Fuel tank
(2) Fuel tank band
(3) Fuel delivery tube
(4) Jet pump tube
(5) Fuel pump ASSY
(6) Fuel pump upper plate
(7) Fuel pump gasket
(8) Fuel level sensor
(9) Fuel sub level sensor
(10) Fuel sub level sensor upper plate
(11) Fuel sub level sensor gasket
(12) Fuel sub level sensor filter
(13) Fuel sub level sensor protector
(14) Stopper RH
(15) Stopper LH
(16) Heat shield cover
(17) Fuel tank protector RH
(18) Fuel tank protector LH
(19) Self-locking nut
(20) Rubber cap
(21) Fuel filler hose
(22) Clamp
(23) Clamp
(24) Evaporation hose
(25) Clip
(26) Tube clamp
(27) Fuel pump upper plate cushion
(28) Fuel sub level sensor upper plate cushion
(29) Cushion
(30) Cushion
(31) Cushion
(32) Return tube
(33) Retainer

Tightening torque: N·m (kgf-m, ft-lb)
T1: 2 (0.2, 1.5)
T2: 2.5 (0.3, 1.8)
T3: 9 (0.9, 6.6)
T4: 18 (1.8, 13.3)
T5: <Ref. to FU(w/o STI)-150, INSTALLATION, Fuel Tank.>
T6: <Ref. to FU(w/o STI)-163, INSTALLATION, Fuel Pump.>
T7: <Ref. to FU(w/o STI)-174, INSTALLATION, Fuel Sub Level Sensor.>

5. FUEL LINE

- Fuel line 1

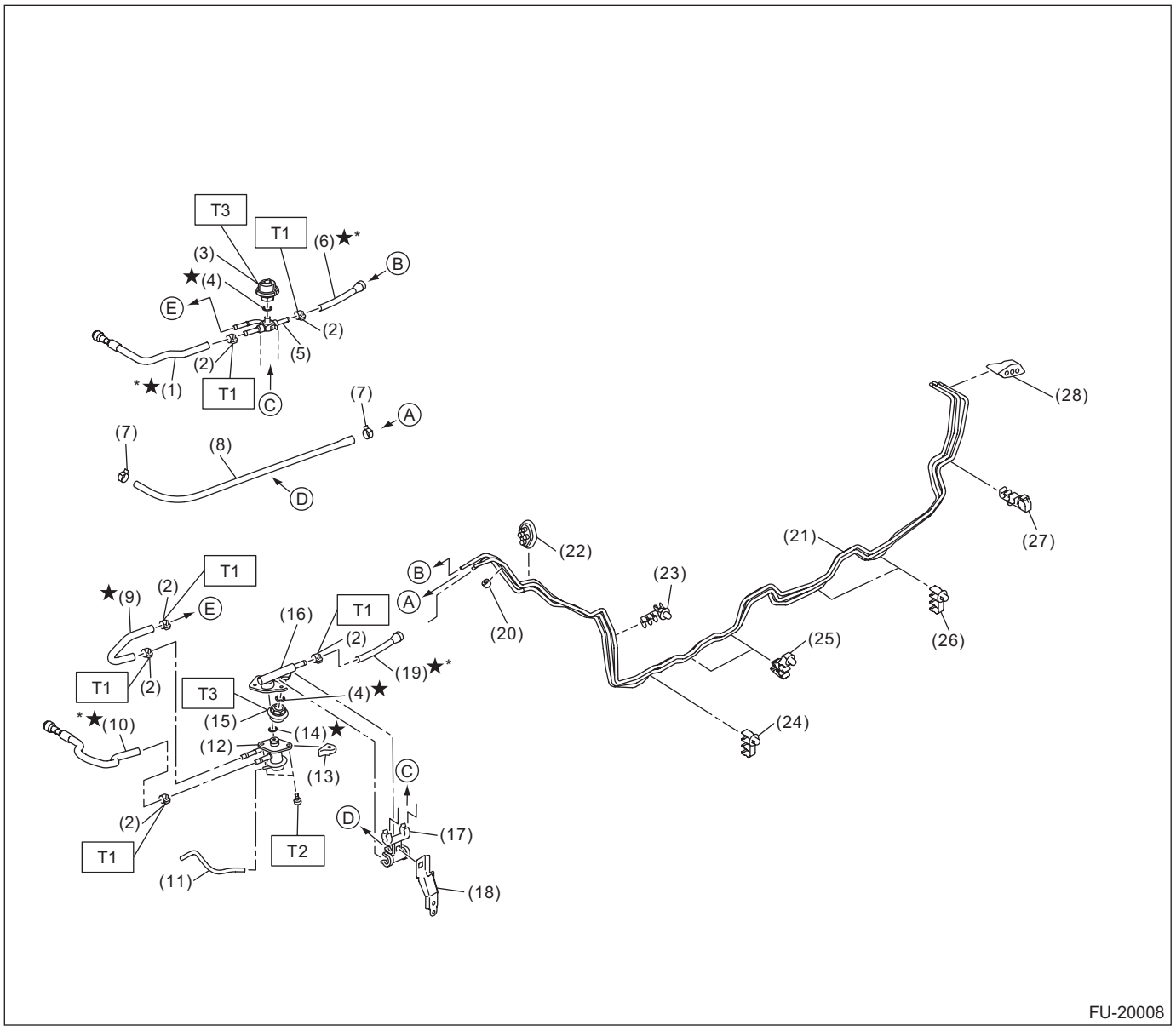

(1)	Fuel delivery hose A	(12)	Pressure regulator	(23)	Pipe clamp
(2)	Clamp	(13)	Fuel pipe protector	(24)	Pipe clamp
(3)	Pulsation damper A	(14)	O-ring	(25)	Pipe clamp
(4)	Fuel pipe gasket	(15)	Pulsation damper B	(26)	Pipe clamp
(5)	Fuel by-pass pipe	(16)	Fuel holder ASSY	(27)	Pipe clamp
(6)	Fuel delivery hose B	(17)	Hose clamp	(28)	Fuel pipe rear grommet
(7)	Clip	(18)	Hose clamp bracket		
(8)	Evaporation hose	(19)	Fuel return hose B		
(9)	Fuel hose	(20)	Bushing		
(10)	Fuel return hose A	(21)	Fuel pipe ASSY		
(11)	Vacuum hose	(22)	Fuel pipe front grommet		

Tightening torque: N·m (kgf-m, ft-lb)	
T1:	*1.25 (0.1, 0.9)*
T2:	*6.4 (0.7, 4.7)*
T3:	*21.6 (2.2, 15.9)*

* It can be reused if the quick connector side is disconnected.

- Fuel line 2

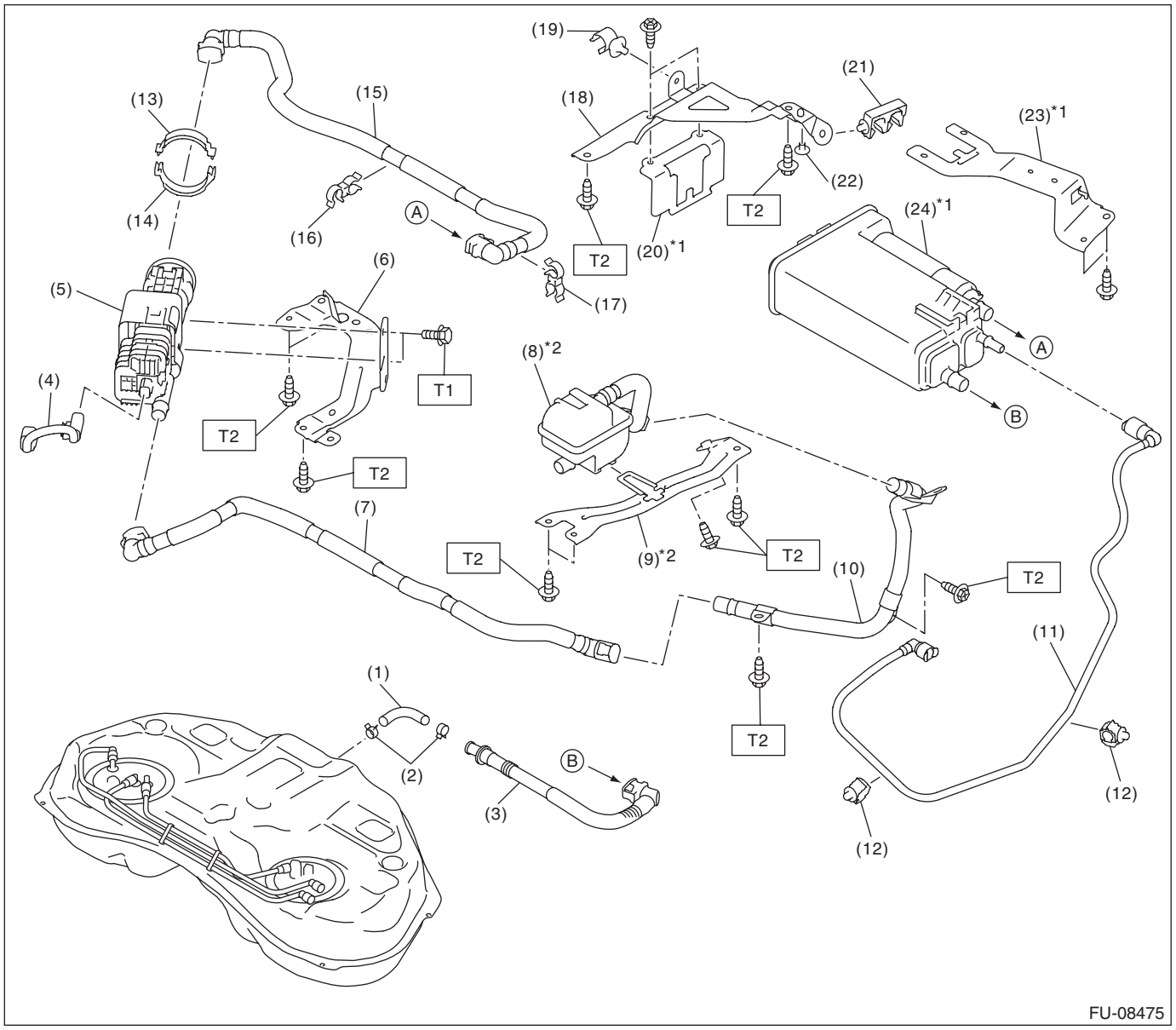

(1) Vent hose
(2) Clip
(3) Vent tube
(4) Harness
(5) Leak check valve ASSY
(6) Leak check valve bracket
(7) Drain tube A
(8) Drain filter
(9) Drain bracket
(10) Drain pipe
(11) Purge tube
(12) Tube clamp
(13) Clamp B
(14) Clamp A
(15) Drain tube B
(16) Tube clamp
(17) Tube clamp
(18) Canister bracket A
(19) Tube clamp
(20) Canister bracket B
(21) Tube clamp
(22) Clip
(23) Canister bracket C
(24) Canister

Tightening torque: N·m (kgf-m, ft-lb)
T1: 5.4 (0.6, 4.0)
T2: 7.5 (0.8, 5.5)

*1 The canister bracket cannot be separated from the canister. Therefore, be sure to replace both of them with new ones when replacing the canister or canister bracket.

*2 The drain filter cannot be separated from the drain bracket. Therefore, be sure to replace both of them with new ones when replacing the drain bracket or drain filter.

6. FUEL FILLER PIPE

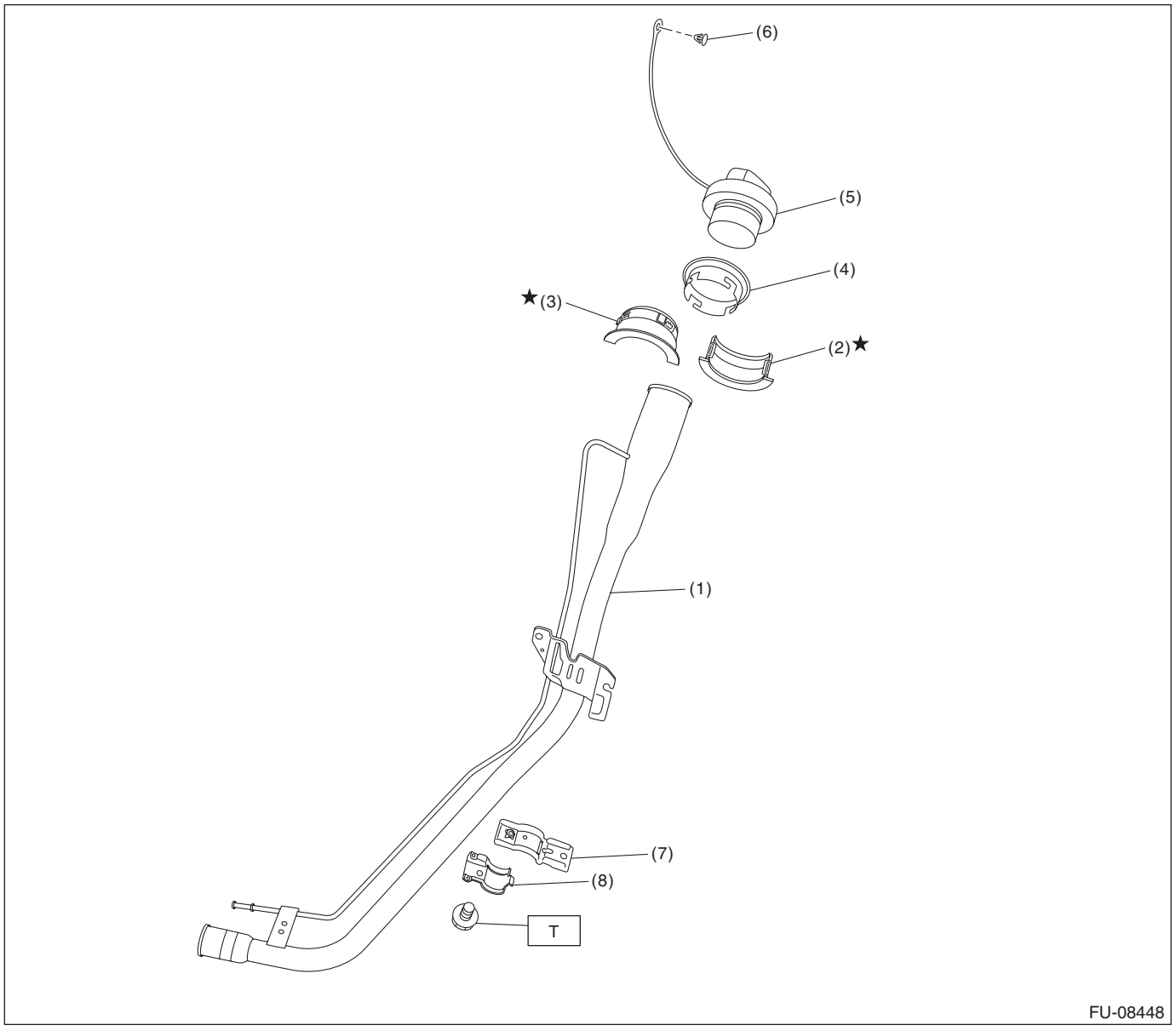

(1) Fuel filler pipe ASSY
(2) Neck holder A
(3) Neck holder B
(4) Fuel filler pipe protector
(5) Fuel filler cap
(6) Clip
(7) Upper bracket
(8) Lower bracket

Tightening torque: N·m (kgf-m, ft-lb)
T: 7.5 (0.8, 5.5)

7. FUEL PUMP

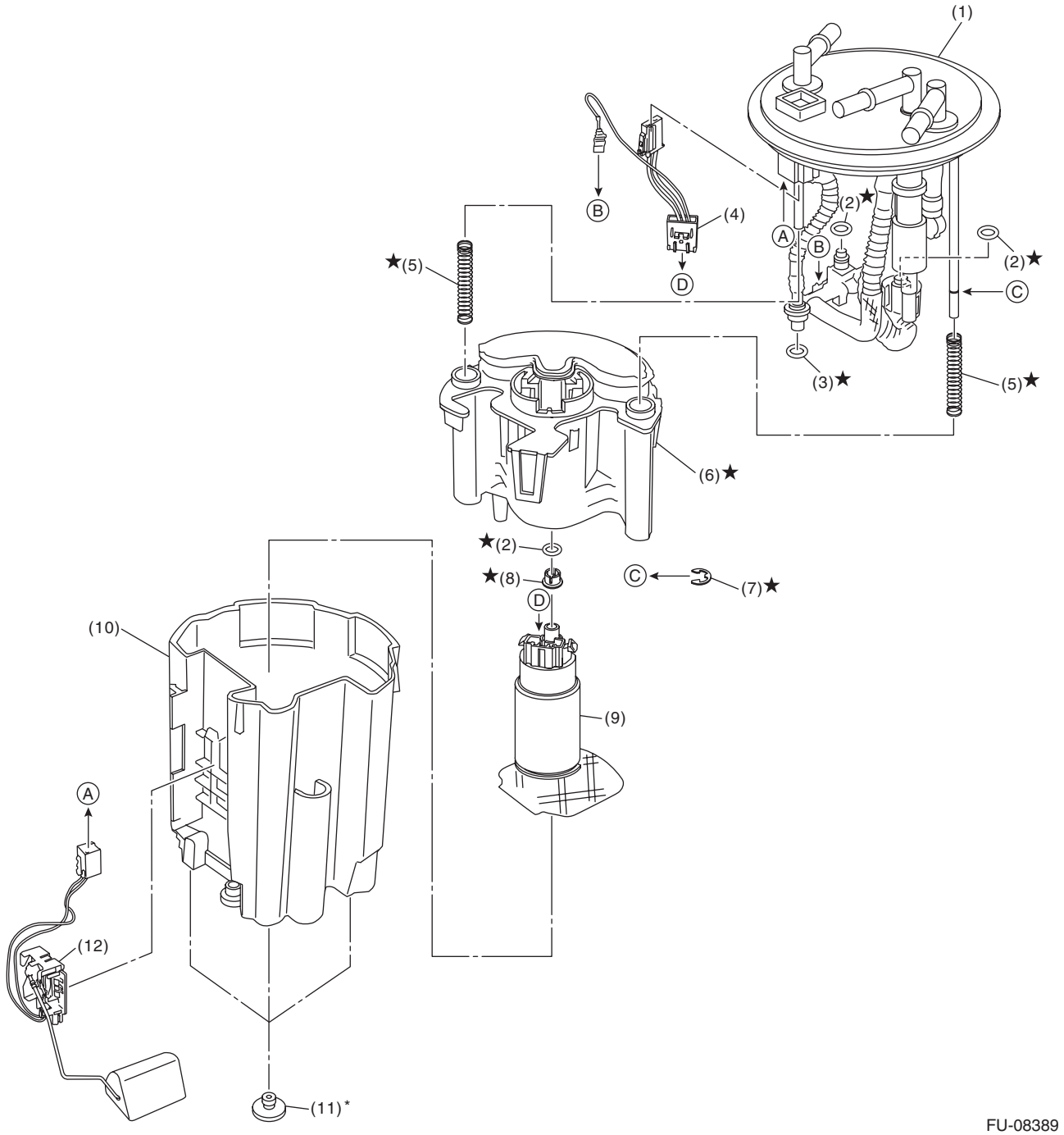

FU-08389

(1)	Sub tank bracket ASSY	(5)	Spring	(9)	Pump ASSY
(2)	O-ring	(6)	Fuel filter	(10)	Sub tank
(3)	O-ring	(7)	Clip	(11)	Cushion
(4)	Fuel pump harness	(8)	Spacer	(12)	Fuel level sensor

* When removing the cushion from the fuel chamber assembly, replace it with a new part.

C: CAUTION

- Prior to starting work, pay special attention to the following:
  1. Always wear work clothes, a work cap, and protective shoes. Additionally, wear a helmet, protective goggles, etc. if necessary.
  2. Protect the vehicle using a seat cover, fender cover, etc.
  3. Prepare the service tools, clean cloth, containers to catch grease and oil, etc.
- Place “NO OPEN FLAMES” signs near the working area.
- Prepare a container and cloth to prevent scattering of fuels when performing work where fuels can be spilled. If the oil spills, wipe it off immediately to prevent from penetrating into floor or flowing out for environmental protection.
- Vehicle components are extremely hot immediately after driving. Be wary of receiving burns from heated parts.
- When performing a repair, identify the cause of trouble and avoid unnecessary removal, disassembly and replacement.
- Before disconnecting connectors of sensors or units, be sure to disconnect the ground cable from battery.
- Always use the jack-up point when the shop jacks or rigid racks are used to support the vehicle.
- Remove contamination including dirt and corrosion before removal, installation, disassembly or assembly.
- Keep the removed parts in order and protect them from dust and dirt.
- All removed parts, if to be reused, should be reinstalled in the original positions with attention to the correct directions, etc.
- Bolts, nuts and washers should be replaced with new parts as required.
- Always inspect for fuel leaks after removing/installing the fuel system components.
- Follow all government and local regulations concerning disposal of refuse when disposing fuel.

D: PREPARATION TOOL

1. SPECIAL TOOL

ILLUSTRATION	TOOL NUMBER	DESCRIPTION	REMARKS
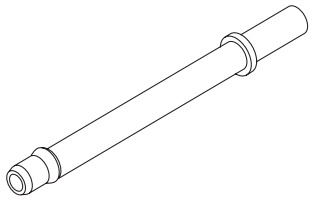 ST18471AA000	18471AA000	FUEL PIPE ADAPTER	Used for draining fuel.
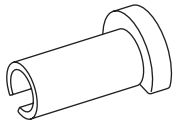 ST42099AE000	42099AE000	QUICK CONNECTOR RELEASE	Used for removing the quick connector.

ILLUSTRATION	TOOL NUMBER	DESCRIPTION	REMARKS
 STSSM4	—	SUBARU SELECT MONITOR 4	Used for setting of each function and trouble-shooting for electrical system. NOTE: For detailed operation procedures of Subaru Select Monitor 4, refer to “Application help”.

2. GENERAL TOOL

TOOL NAME	REMARKS
Circuit tester	Used for measuring resistance, voltage and current.
Oscilloscope	Used for inspecting the waveform of each sensor.
Mighty Vac	Used for inspecting the manifold absolute pressure sensor.
DST-i	Used together with Subaru Select Monitor 4.

2. Throttle Body

A: REMOVAL

1) Disconnect the ground cable from battery.
2) Lift up the vehicle.
3) Remove the under cover. <Ref. to EI-22, REMOVAL, Front Under Cover.>
4) Drain approximately 3.0 L (3.2 US qt, 2.6 Imp qt) of coolant. <Ref. to CO(STI)-12, DRAINING OF ENGINE COOLANT, REPLACEMENT, Engine Coolant.>
5) Remove the intercooler. <Ref. to IN(STI)-13, REMOVAL, Intercooler.>
6) Disconnect the connector (A) from the throttle position sensor, and the connector (B) from the manifold pressure sensor.

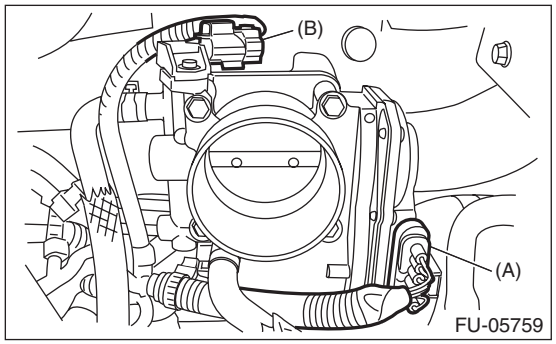

7) Disconnect the engine coolant hose from throttle body.

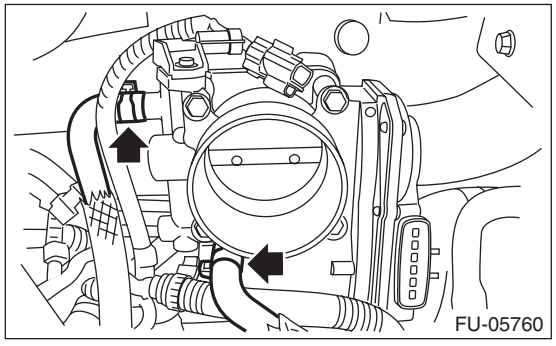

8) Remove the throttle body from the intake manifold.

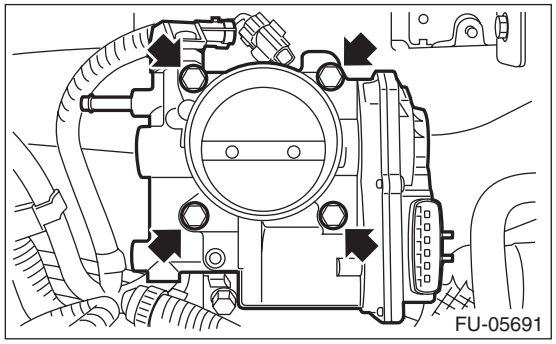

B: INSTALLATION

Install in the reverse order of removal.

NOTE:
Use a new gasket.

Tightening torque:
8 N·m (0.8 kgf-m, 5.9 ft-lb)

C: INSPECTION

1. THROTTLE SENSOR INSPECTION (METHOD WITH CIRCUIT TESTER)

1) Remove the glove box. <Ref. to EI-64, REMOVAL, Glove Box.>
2) Start and warm up the engine.
3) Measure the voltage between ECM connector terminals at idling.

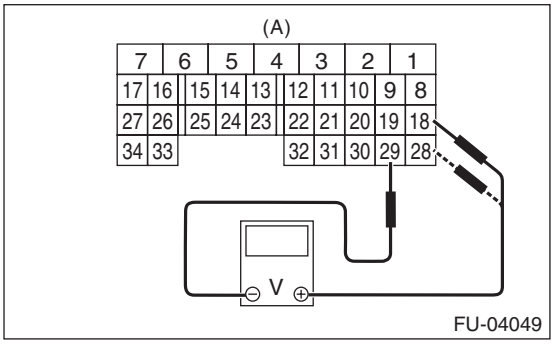

(A) To ECM connector

Throttle sensor	Accelerator pedal	Terminal No.	Standard
Main	Not depressed (full closed)	18 (+) and 29 (–)	Approx. 0.6 V
	Depressed (full opened)		Approx. 4.0 V
Sub	Not depressed (full closed)	28 (+) and 29 (–)	Approx. 1.48 V
	Depressed (full opened)		Approx. 4.17 V

4) After inspection, install the related parts in the reverse order of removal.

2. THROTTLE SENSOR INSPECTION (METHOD WITH SUBARU SELECT MONITOR)

1) Turn the ignition switch to ON. (engine OFF)
2) Read the throttle opening angle signal and voltage of throttle sensor using Subaru Select Monitor. <Ref. to EN(STI)(diag)-36, DISPLAY CURRENT ENGINE DATA (NORMAL MODE), OPERATION, Subaru Select Monitor.>

Throttle sensor	Throttle opening angle signal	Standard
Main	0.0%	Approx. 0.6 V
	100.0%	Approx. 3.96 V
Sub	0.0%	Approx. 1.48 V
	100.0%	Approx. 4.17 V

3. OTHER INSPECTIONS

1) Check that the throttle body has no deformation, cracks or other damages.
2) Check that the engine coolant hose has no cracks, damage or loose part.

3. Intake Manifold

A: REMOVAL

1) Remove the V-belt covers.

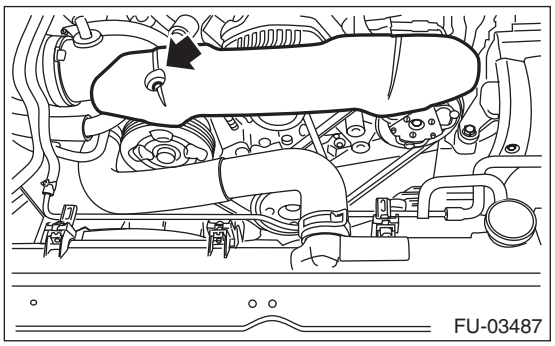

2) Collect the refrigerant from A/C system. <Ref. to AC-26, PROCEDURE, Refrigerant Recovery Procedure.>
3) Release the fuel pressure. <Ref. to FU(STI)-64, RELEASING OF FUEL PRESSURE, PROCEDURE, Fuel.>
4) Disconnect the ground cable from battery.
5) Open the fuel filler lid and remove the fuel filler cap.

NOTE:
This operation is required to release the inner pressure of the fuel tank.

6) Lift up the vehicle.
7) Remove the under cover. <Ref. to EI-22, REMOVAL, Front Under Cover.>
8) Drain approximately 3.0 L (3.2 US qt, 2.6 Imp qt) of coolant. <Ref. to CO(STI)-12, DRAINING OF ENGINE COOLANT, REPLACEMENT, Engine Coolant.>
9) Remove the air intake duct. <Ref. to IN(STI)-11, REMOVAL, Air Intake Duct.>
10) Remove the chamber assembly. <Ref. to IN(STI)-23, REMOVAL, Chamber Assembly.>
11) Remove the intercooler. <Ref. to IN(STI)-13, REMOVAL, Intercooler.>
12) Remove the air intake boot.

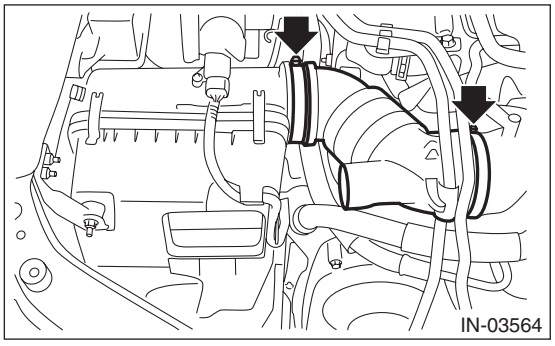

13) Remove the air by-pass valve. <Ref. to IN(STI)-21, REMOVAL, Air By-pass Valve.>
14) Remove the generator. <Ref. to SC(STI)-18, REMOVAL, Generator.>
15) Remove the coolant filler tank. <Ref. to CO(STI)-27, REMOVAL, Coolant Filler Tank.>
16) Disconnect the A/C pressure hoses from A/C compressor. <Ref. to AC-63, REMOVAL, Hose and Pipe.>
17) Disconnect the engine coolant hose from throttle body.

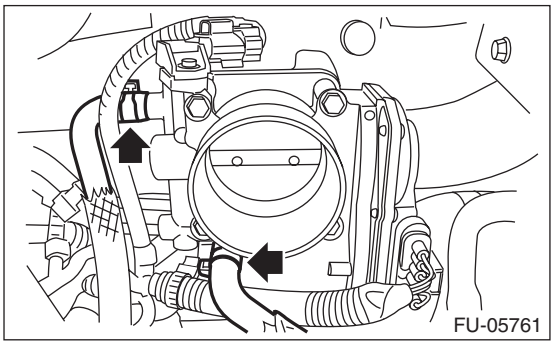

18) Disconnect the brake booster vacuum hose (A) and pressure regulator vacuum hose (B) from the intake manifold.

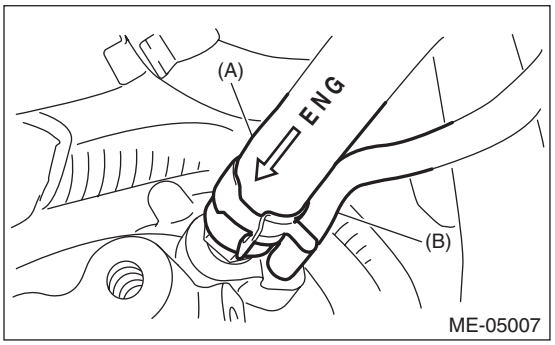

19) Remove the PCV hose from the clip.

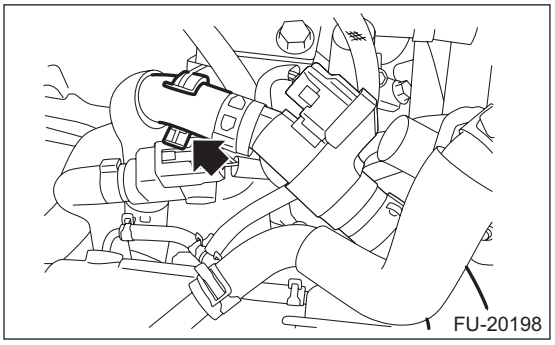

20) Disconnect the vacuum hose (A) and the connector (B) from the PCV hose assembly B.

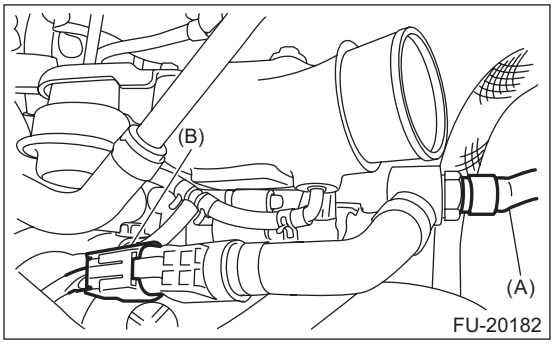

21) Disconnect the air control hose (A) from the waste gate actuator, and loosen the clamp which holds the intake duct to the turbocharger.

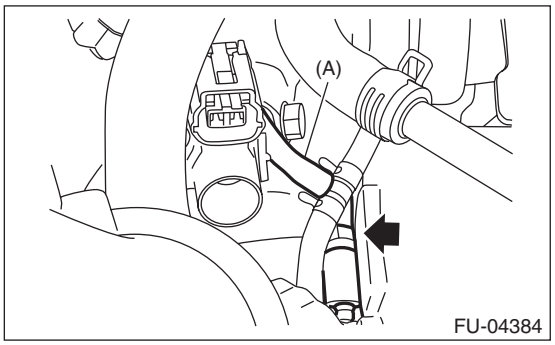

22) Remove the engine coolant hose from the water tank pipe.

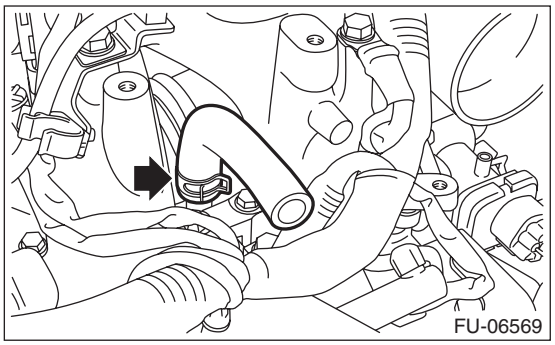

23) Remove the harness fixing tape (A) and disconnect the leak diagnosis connector harness from the engine harness.

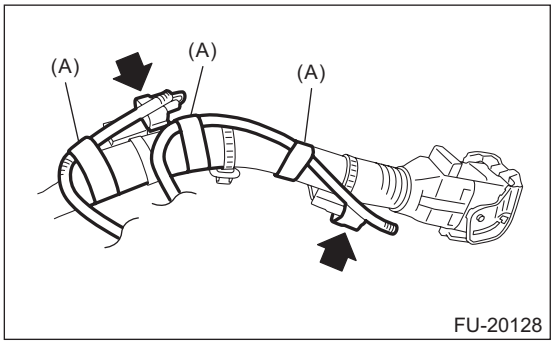

24) Disconnect the leak diagnosis connector.

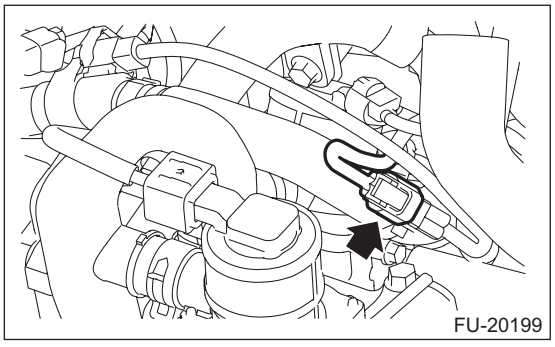

25) Remove the engine harness from clip (A).

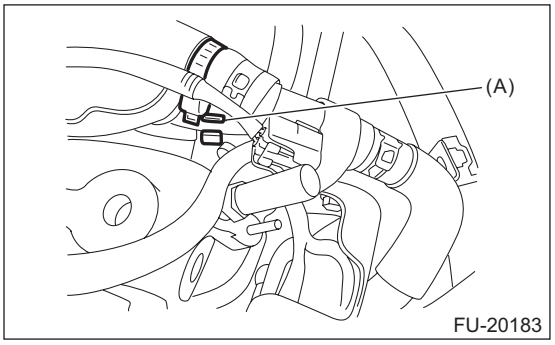

26) Disconnect the bulkhead harness connectors from the engine harness connectors.
27) Lift the claw (A) and remove the engine harness connector from the engine harness bracket.

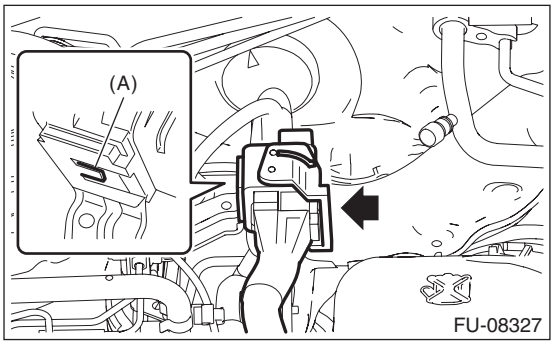

28) Disconnect the connector (A) from the engine coolant temperature sensor, connector (B) from the oil pressure switch, and connector (C) from the crankshaft position sensor.

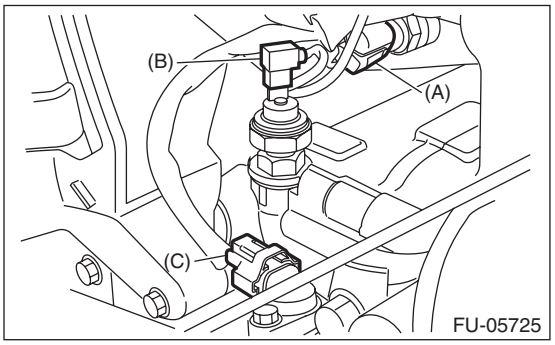

29) Disconnect the connector from power steering pump switch.

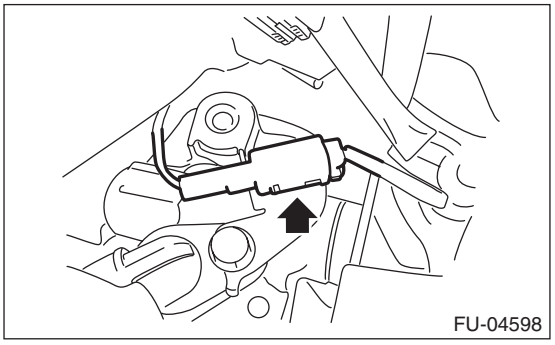

30) Disconnect the connector from the knock sensor.

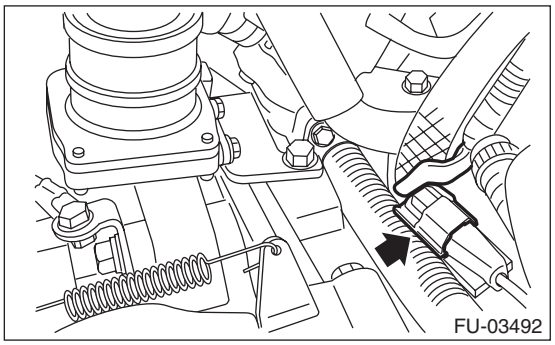

31) Disconnect the connector from the secondary air combination valve.

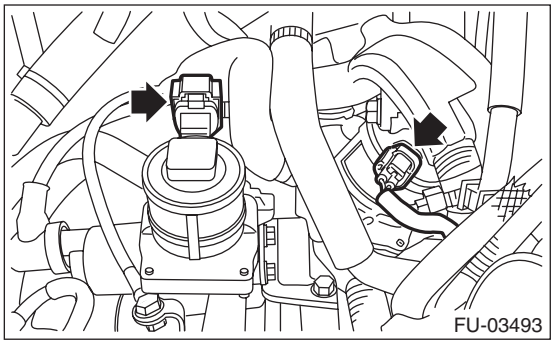

32) Disconnect the connector from the intake camshaft position sensor.

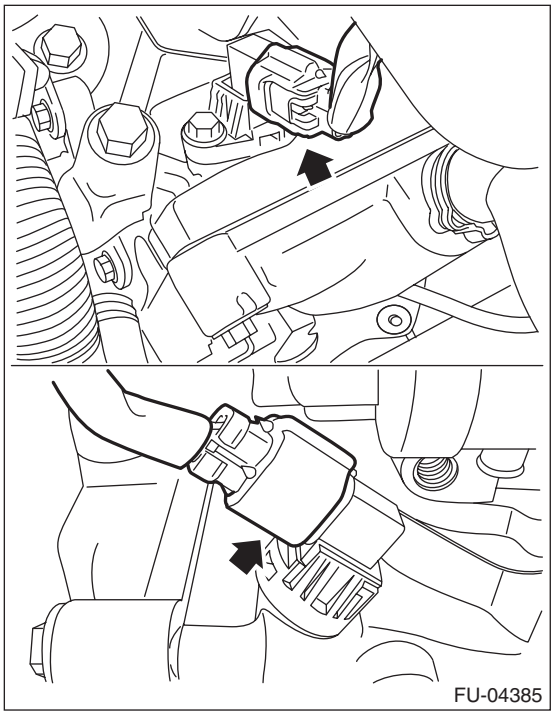

33) Disconnect the connector from the intake oil flow control solenoid valve.

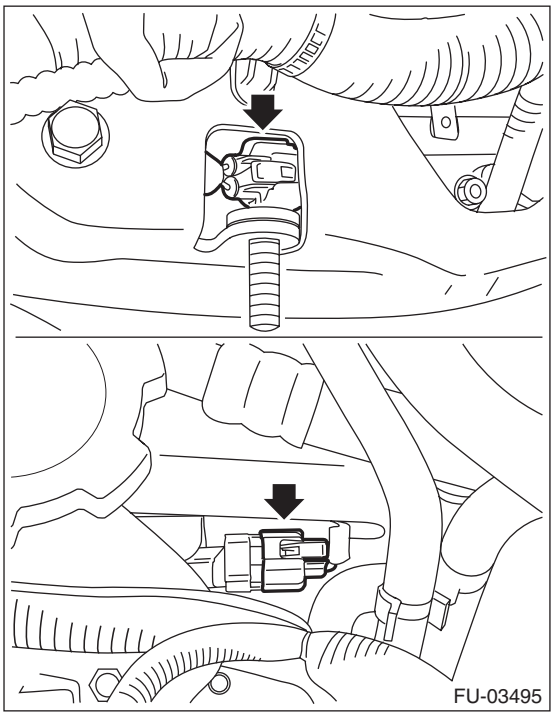

34) Remove the air cleaner case. <Ref. to IN(STI)-8, REMOVAL, Air Cleaner Case.>

35) Disconnect the connector (A) from the exhaust oil flow control solenoid valve. (right side only.)

36) Remove the engine harness fixing clip (B), clip (C) and clip (D) from the engine harness stay. (right side only.)

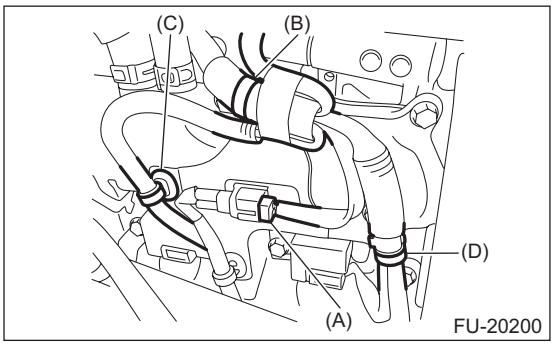

37) Lift up the vehicle.

38) Disconnect the connector from the exhaust camshaft position sensor. (right side only.)

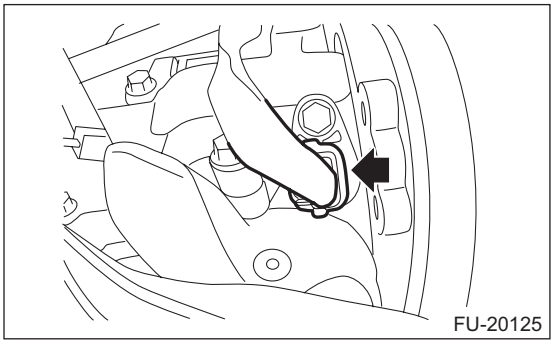

39) Remove the clip holding the engine harness. (Left side only)

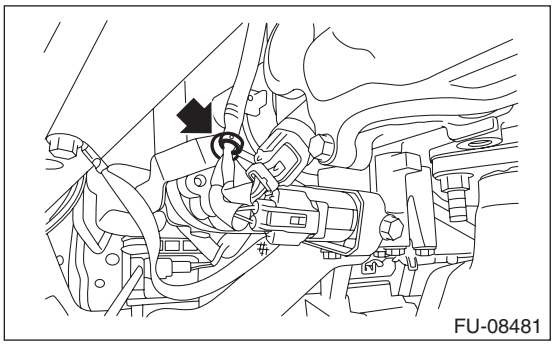

40) Disconnect connector (A) from the exhaust camshaft position sensor, connector (B) from the exhaust oil flow control solenoid valve, and connector (C) from the ignition coil. (Left side only)

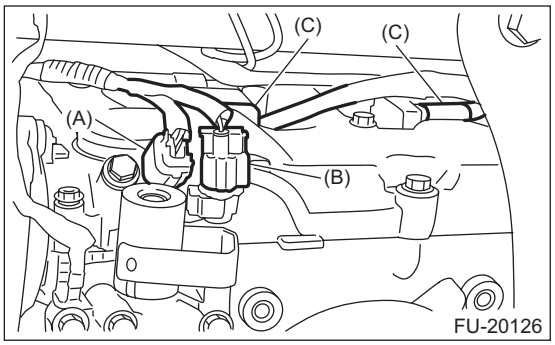

41) Lower the vehicle.

42) Remove the bolts that secure the air duct to the rocker cover LH, and remove the engine harness.

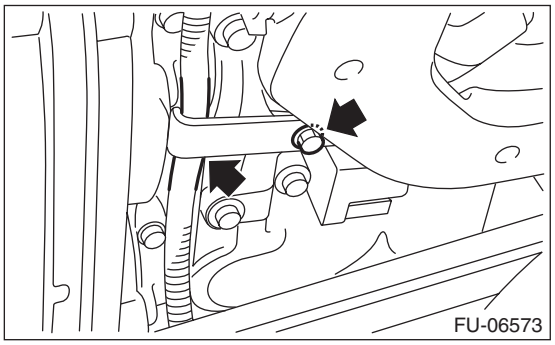

43) Disconnect the fuel delivery hose, fuel return hose and evaporation hose.

CAUTION:
- **Be careful not to spill fuel.**
- **Catch the fuel from hoses using a container or cloth.**

(1) Set the ST to the fuel pipe.

ST 42099AE000 QUICK CONNECTOR RELEASE

(2) Disconnect the quick connector of the fuel delivery hose and fuel return hose by pushing the ST in the direction of the arrow.

(3) Remove the clip and disconnect the evaporation hose from the fuel pipe.

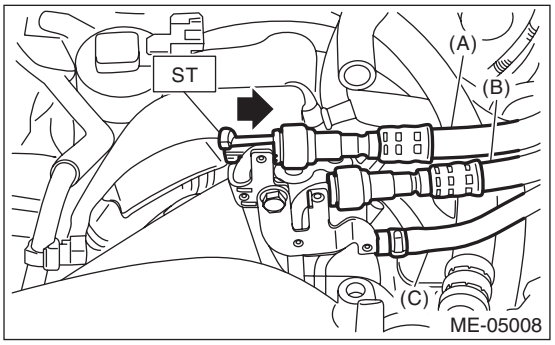

(A) Fuel delivery hose
(B) Fuel return hose
(C) Evaporation hose

44) Remove the intake manifold from cylinder head.

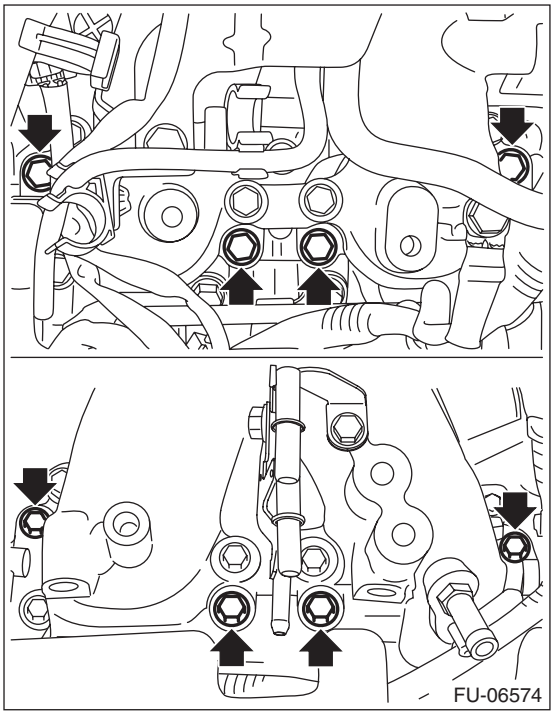

B: INSTALLATION

1) Install the intake manifold onto cylinder heads.

NOTE:
Use a new gasket.

Tightening torque:
25 N·m (2.5 kgf-m, 18.4 ft-lb)

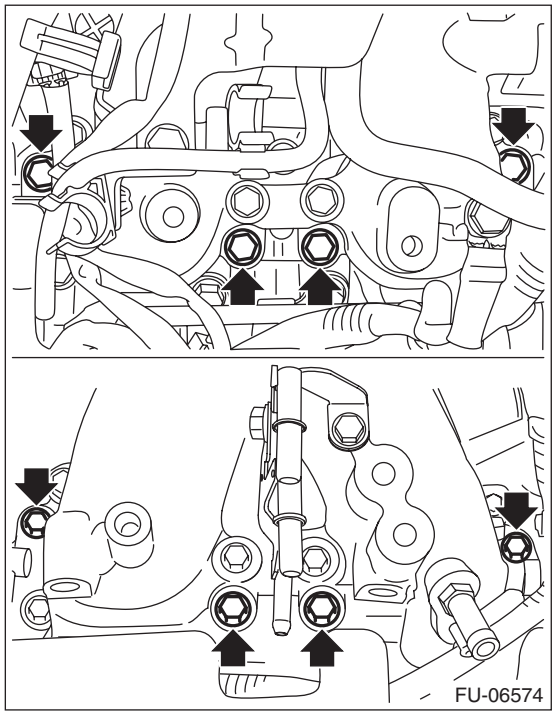

2) Connect the fuel delivery hose, fuel return hose, and evaporation hose.

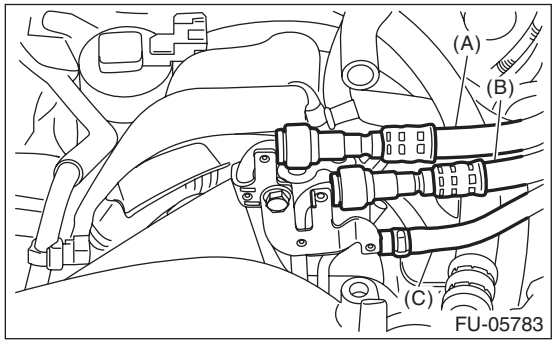

(A) Fuel delivery hose
(B) Fuel return hose
(C) Evaporation hose

3) Fix the engine harness to the rocker cover LH with the air duct.

Tightening torque:
6.4 N·m (0.7 kgf-m, 4.7 ft-lb)

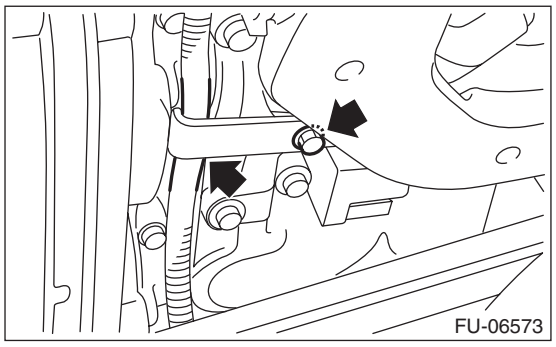

4) Lift up the vehicle.
5) Connect connector (A) to the exhaust camshaft position sensor, connector (B) to the exhaust oil flow control solenoid valve, connector (C) to the ignition coil. (Left side only)

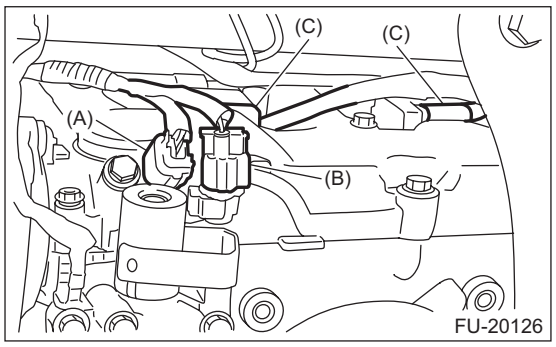

6) Install the clip securing the engine harness. (Left side only)

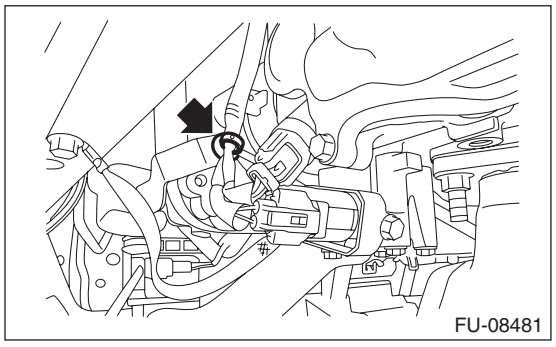

7) Connect the connectors to the exhaust camshaft position sensor. (right side only.)

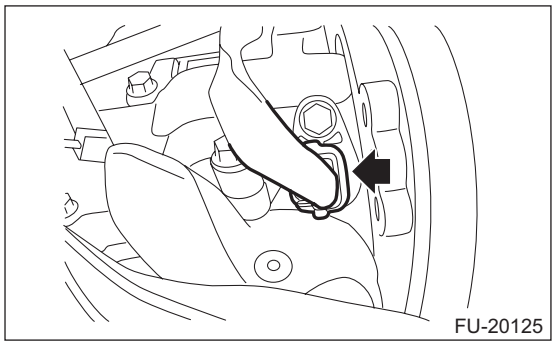

8) Lower the vehicle.
9) Install the engine harness fixing clip (B), clip (C) and clip (D) to the engine harness stay. (right side only.)
10) Connect the connector (A) to the exhaust oil flow control solenoid valve. (right side only.)

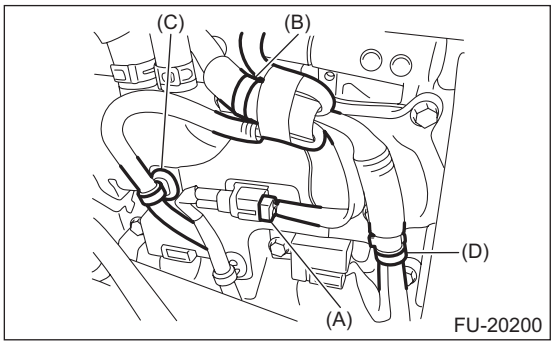

11) Install the air cleaner case. <Ref. to IN(STI)-8, INSTALLATION, Air Cleaner Case.>
12) Connect the connector to the intake oil flow control solenoid valve.

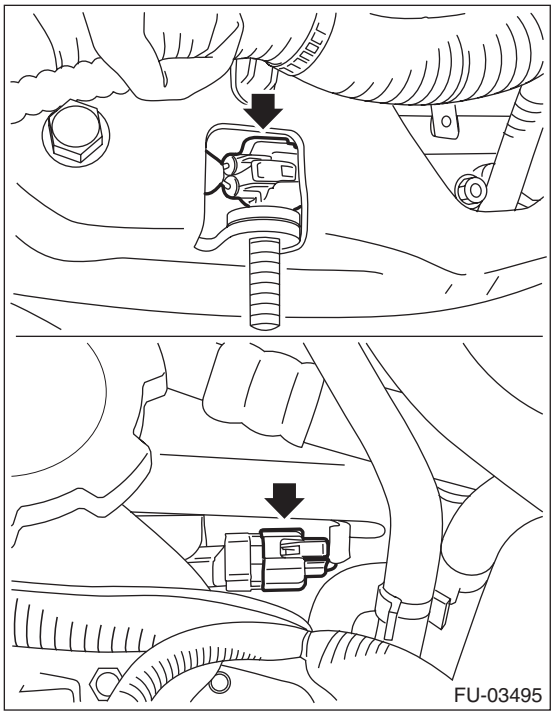

13) Connect the connector to the intake camshaft position sensor.

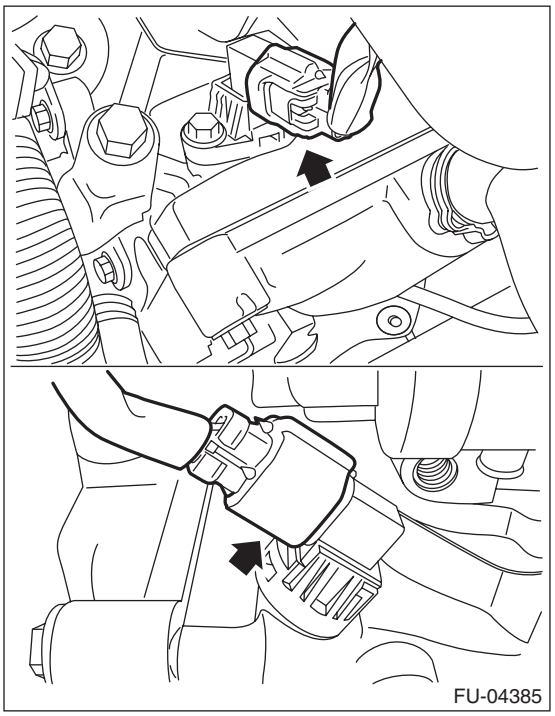

14) Connect the connector to the secondary air combination valve.

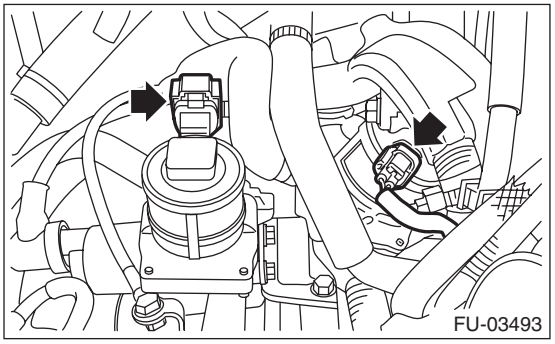

15) Connect the connector to the knock sensor.

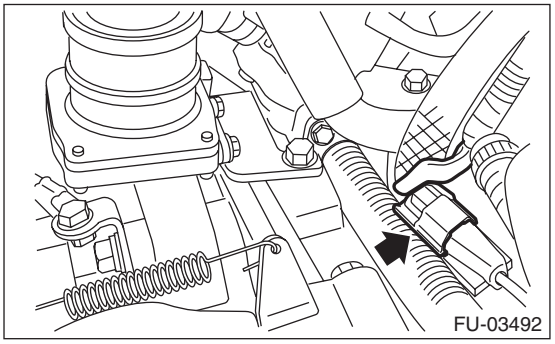

16) Connect the connector to the power steering pump switch.

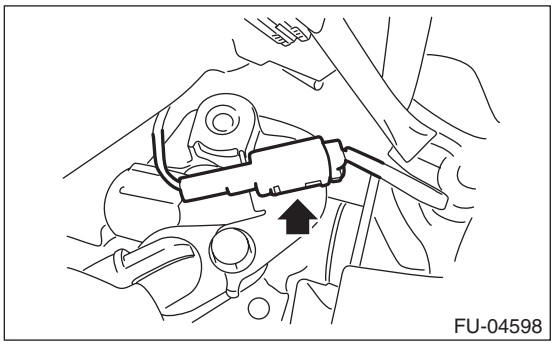

17) Connect the connector (A) to the engine coolant temperature sensor, connector (B) to the oil pressure switch, and the connector (C) to the crankshaft position sensor.

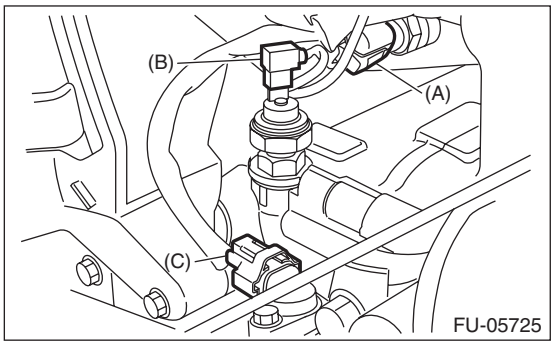

18) Install the engine harness connector to engine harness bracket, then connect the bulkhead harness connector to the engine harness connector.

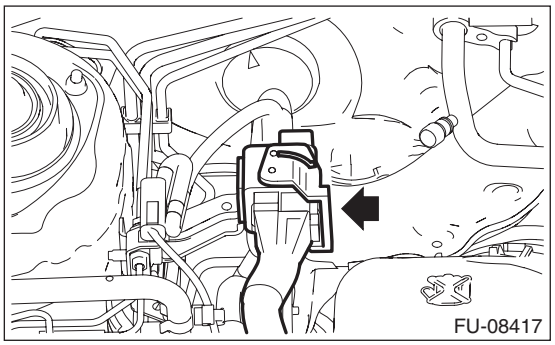

19) Install the engine harness to clip (A).

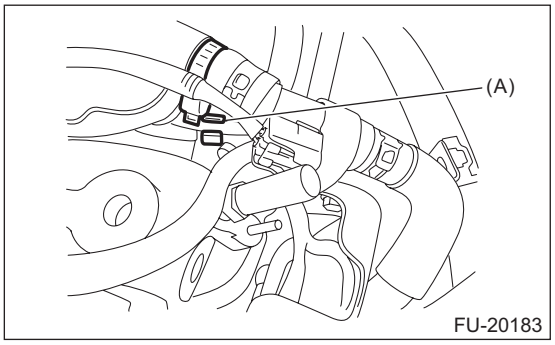

20) Connect the leak diagnosis connector harness.

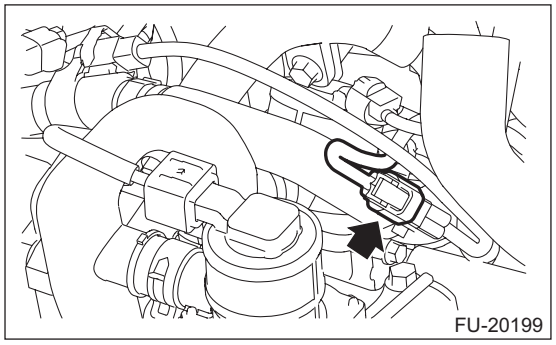

21) Connect the leak diagnosis connector harness to the engine harness, and secure it with the tape (A) as shown in the figure below.

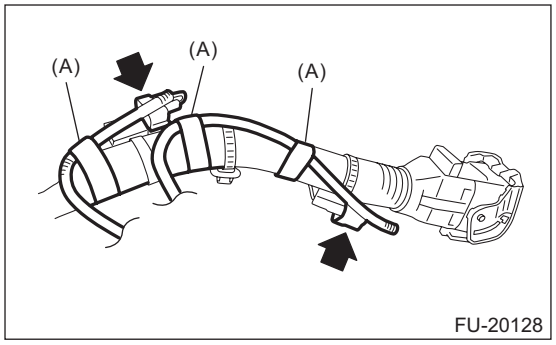

22) Install the engine coolant hose to the water tank pipe.

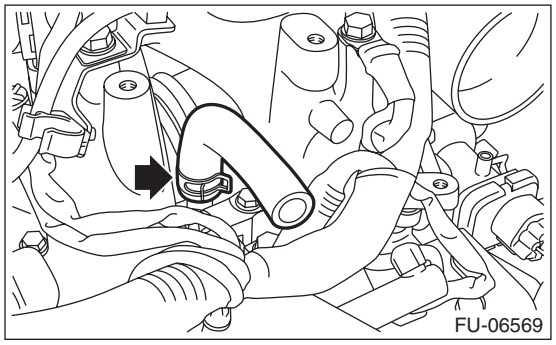

23) Connect the air control hose (A) to the wastegate actuator, and install the turbocharger to the intake duct.

Tightening torque:
3 N·m (0.3 kgf-m, 2.2 ft-lb)

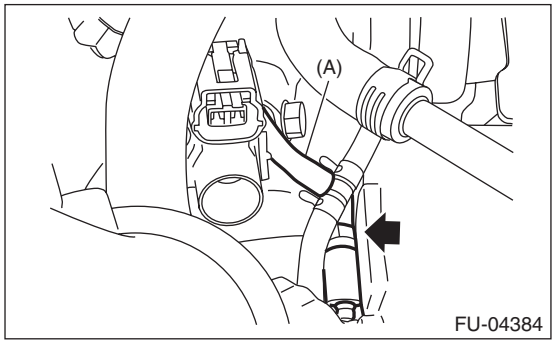

24) Connect the vacuum hose (A) and connector (B) to the PCV hose assembly B.

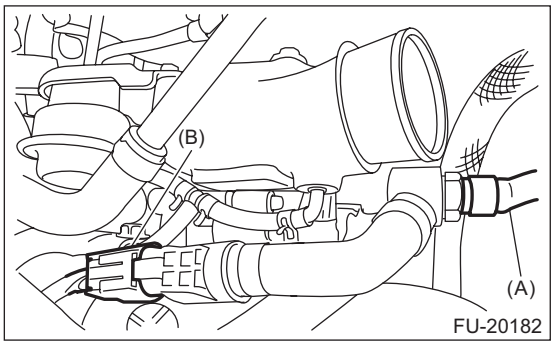

25) Install the PCV hose to the clip.

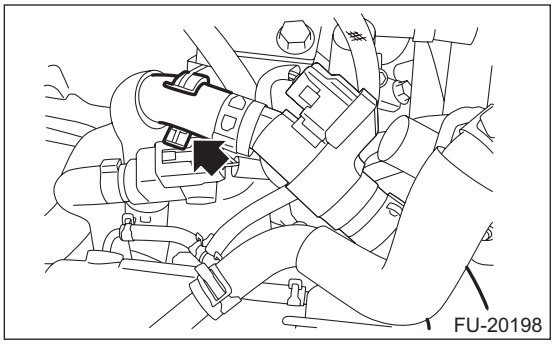

26) Connect the brake booster vacuum hose (A) and pressure regulator vacuum hose (B) to the intake manifold.

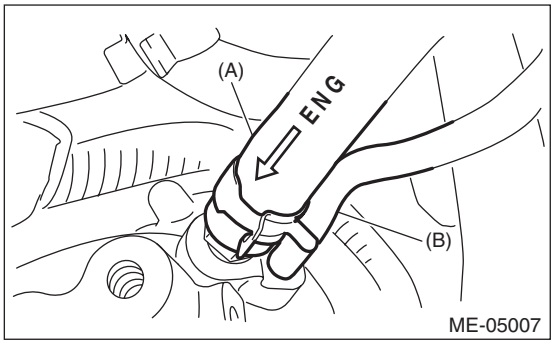

27) Connect the engine coolant hoses to throttle body.

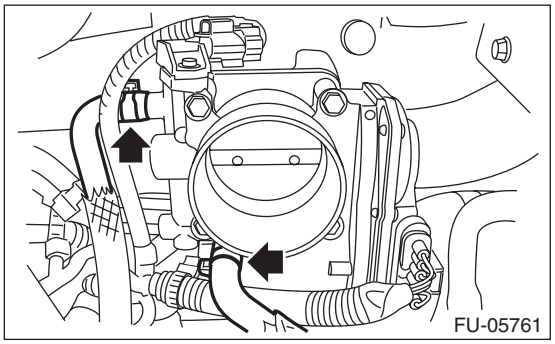

28) Install the A/C pressure hoses to A/C compressor. <Ref. to AC-67, INSTALLATION, Hose and Pipe.>
29) Install the coolant filler tank. <Ref. to CO(STI)-27, INSTALLATION, Coolant Filler Tank.>
30) Install the generator. <Ref. to SC(STI)-18, INSTALLATION, Generator.>
31) Install the air by-pass valve. <Ref. to IN(STI)-21, INSTALLATION, Air By-pass Valve.>
32) Install the air intake boot.

Tightening torque:
2.5 N·m (0.3 kgf-m, 1.8 ft-lb)

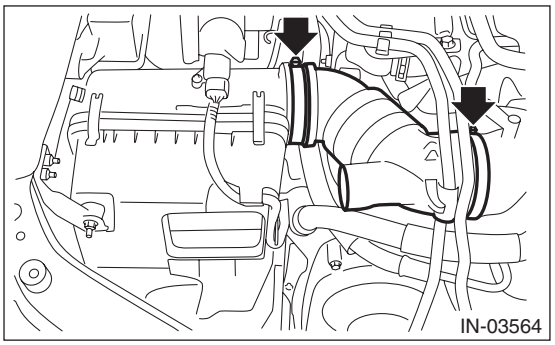

33) Install the intercooler. <Ref. to IN(STI)-14, INSTALLATION, Intercooler.>
34) Install the chamber assembly. <Ref. to IN(STI)-23, INSTALLATION, Chamber Assembly.>
35) Install the air intake duct. <Ref. to IN(STI)-11, INSTALLATION, Air Intake Duct.>
36) Connect the battery ground terminal.
37) Lift up the vehicle.
38) Install the under cover. <Ref. to EI-23, INSTALLATION, Front Under Cover.>
39) Lower the vehicle.
40) Install the V-belt cover.

Tightening torque:
13 N·m (1.3 kgf-m, 9.6 ft-lb)

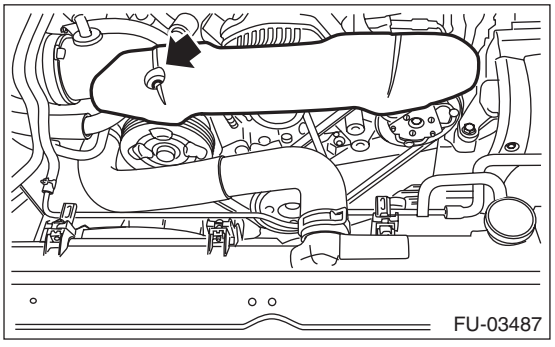

41) Fill engine coolant. <Ref. to CO(STI)-12, FILLING OF ENGINE COOLANT, REPLACEMENT, Engine Coolant.>
42) Charge the A/C system with refrigerant. <Ref. to AC-27, PROCEDURE, Refrigerant Charging Procedure.>

C: DISASSEMBLY

1) Remove clamp (A) holding the fuel pipe protector RH to the engine harness, and remove the fuel pipe protector RH.

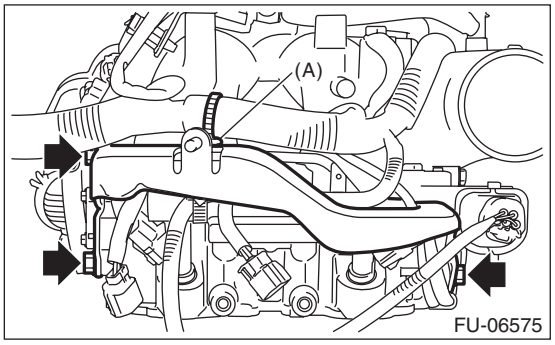

2) Remove the fuel pipe protector LH.

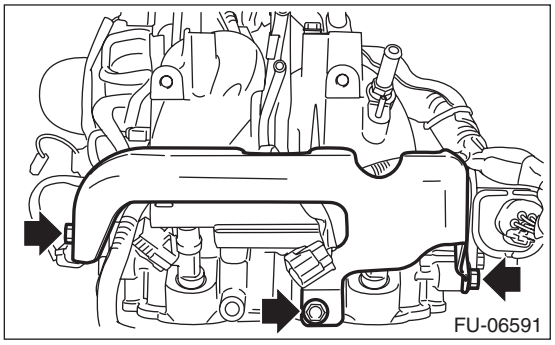

3) Remove the connector from the intake duct.

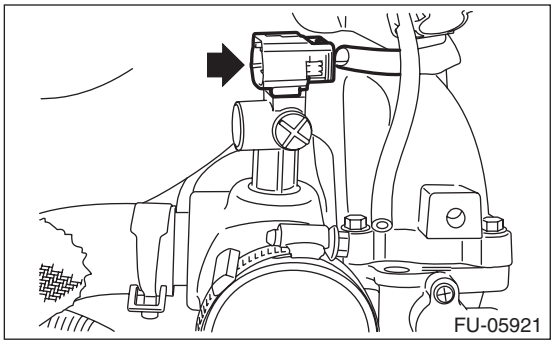

4) Remove the connector from the PCV hose assembly.

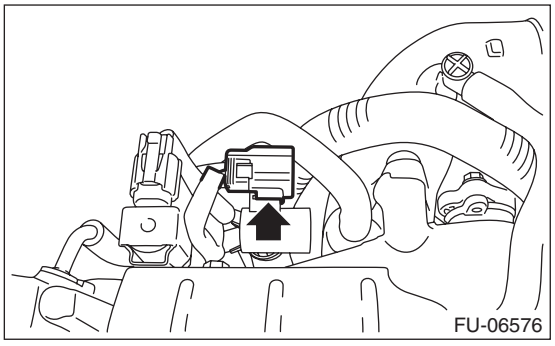

5) Remove purge control solenoid valve 1 (A) and purge control solenoid valve 2 (B).

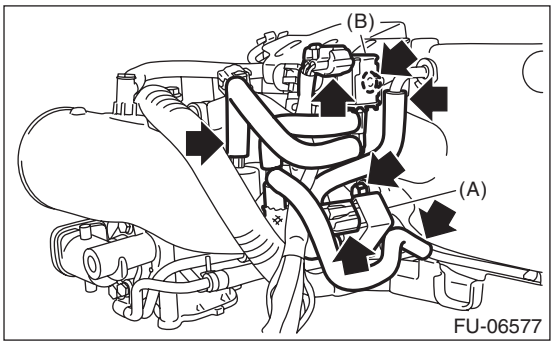

6) Disconnect the connector (A) from the wastegate control solenoid valve, and disconnect the vacuum hose (B) from the intake duct.

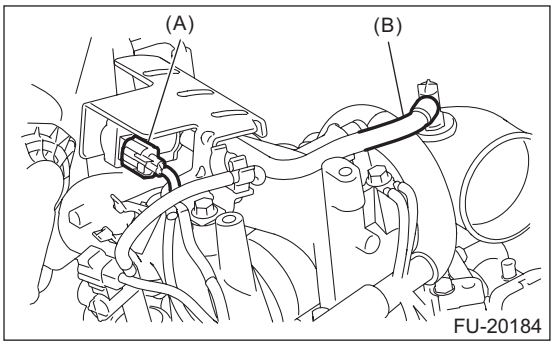

7) Remove the solenoid valve bracket together with the wastegate control solenoid valve.

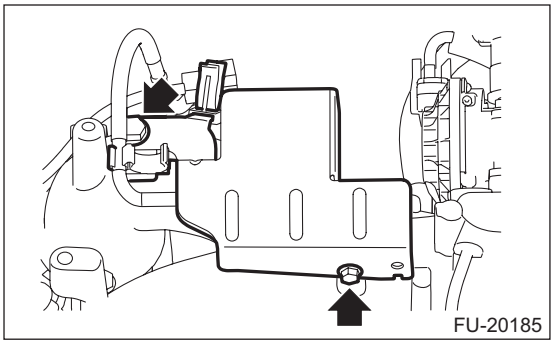

8) Remove the engine ground terminals from the intake manifold.

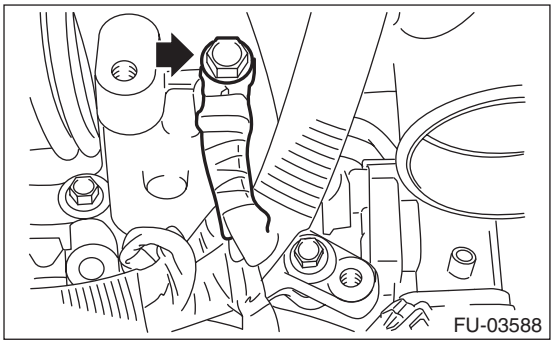

9) Disconnect the connector (A) from the throttle position sensor, and the connector (B) from the manifold pressure sensor.

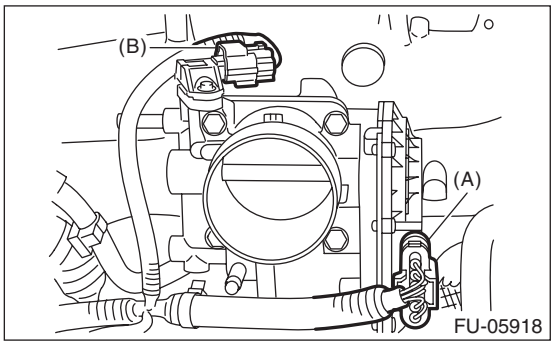

10) Remove clip (A) holding the engine harness and vacuum hose, clip (B) holding the engine harness to the engine harness stay, and the bolt holding the engine harness to the intake manifold.

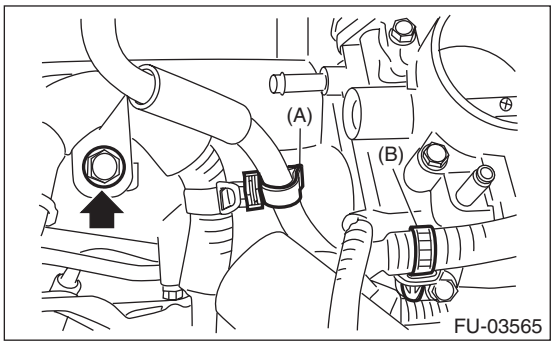

11) Remove the throttle body from the intake manifold.

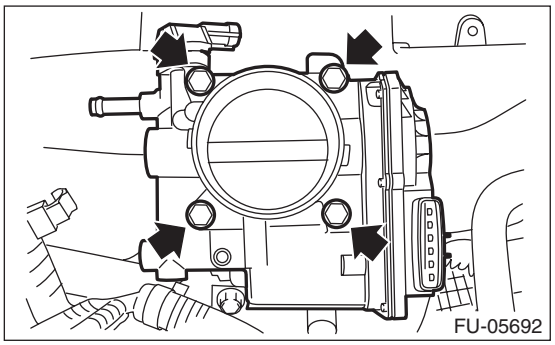

12) Remove the harness band (A) which holds the engine harness to the fuel injector pipe.

- RH side

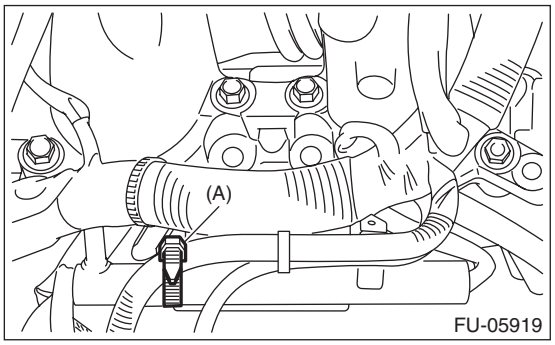

- LH side

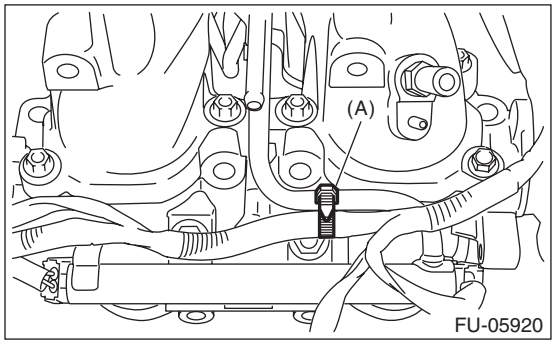

13) Disconnect the connector from fuel injector.

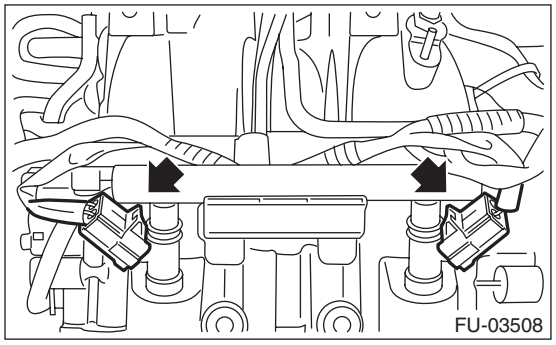

14) Disconnect the connector from the tumble generator valve assembly.

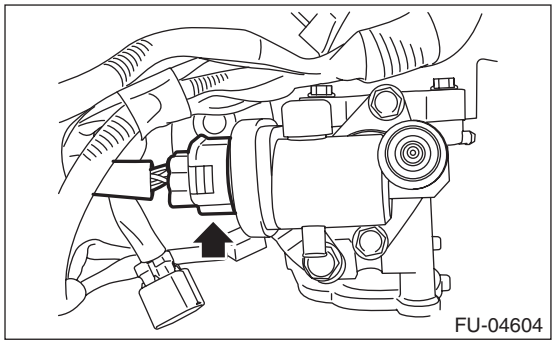

15) Remove the bolts which hold fuel injector pipe.

- RH side

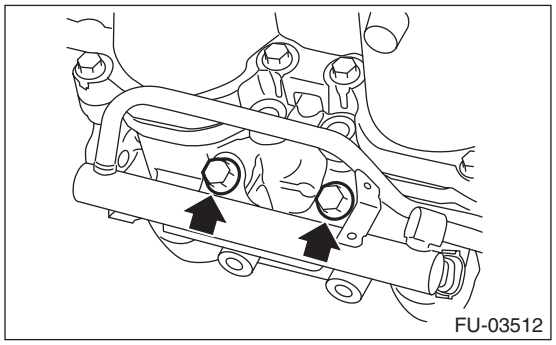

- LH side

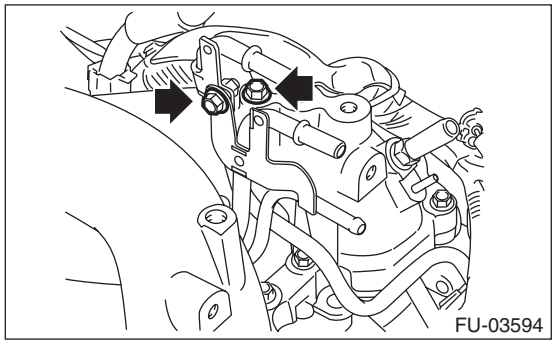

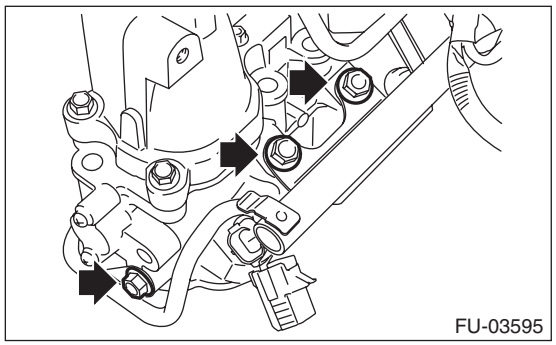

16) Remove the fuel injector.

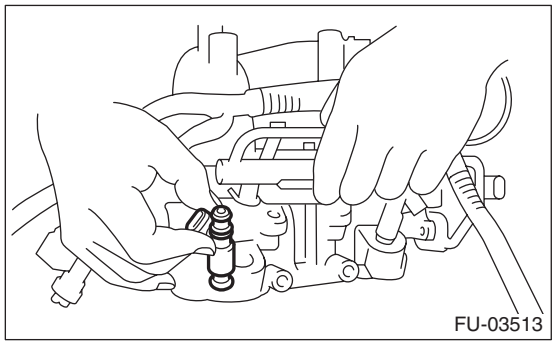

17) Remove the harness brackets holding the engine harness to the intake manifold, and remove the engine harness.

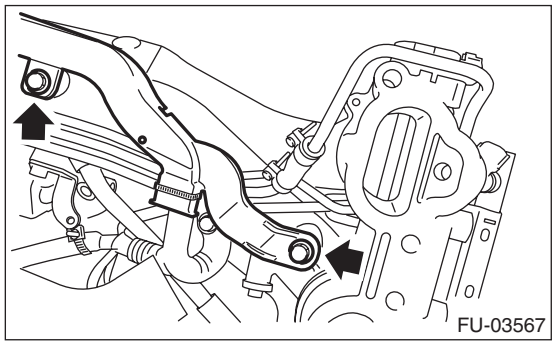

18) Loosen the clamp holding the RH side fuel hose to the fuel injector pipe RH, and remove the fuel injector pipe RH.

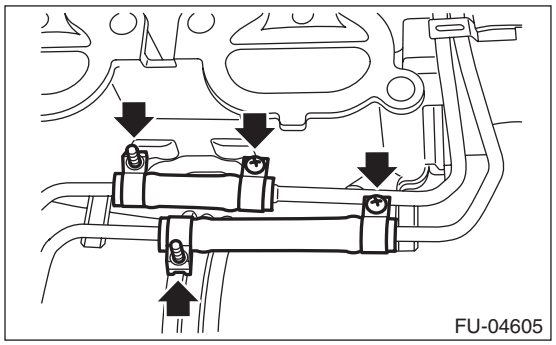

19) Loosen the clamp holding the LH side fuel hose to the fuel injector pipe LH, and remove the fuel injector pipe LH.

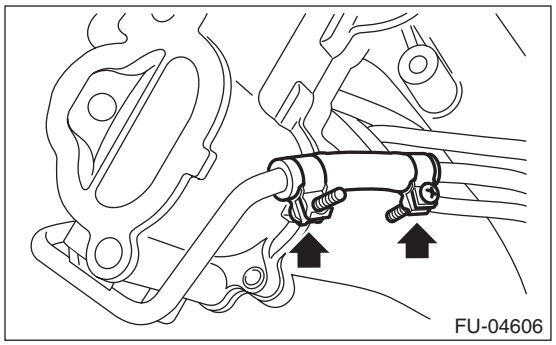

20) Remove the bolts holding the fuel pipe assembly to the intake manifold, and remove the fuel pipe assembly.

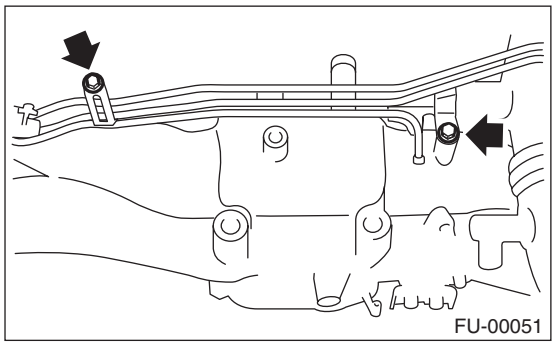

21) Remove the intake duct from intake manifold.

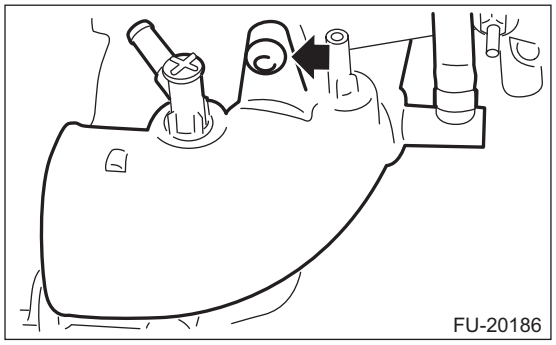

22) Remove the tumble generator valve assembly from the intake manifold.

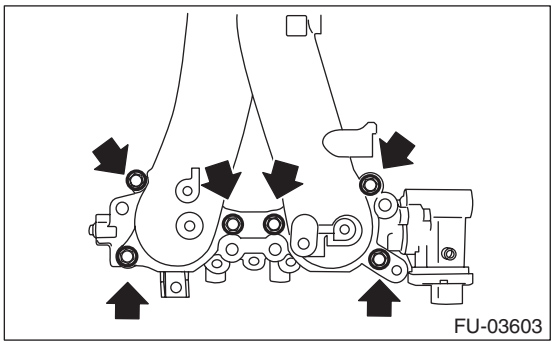

23) Remove the nipple from the intake manifold.

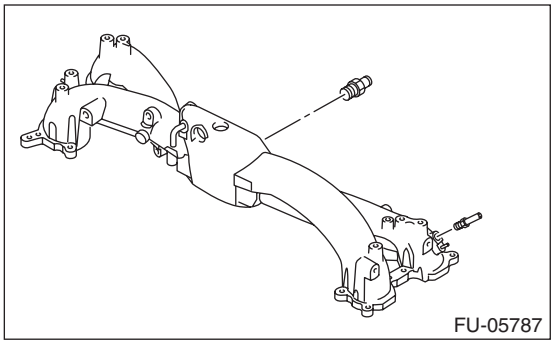

D: ASSEMBLY

1) Apply liquid gasket to the nipple threads, and install the nipple to the intake manifold.

Liquid gasket:
THREE BOND 1105 (Part No. 004403010) or equivalent

Tightening torque:
T1: 17 N·m (1.7 kgf-m, 12.5 ft-lb)
T2: 25 N·m (2.5 kgf-m, 18.4 ft-lb)

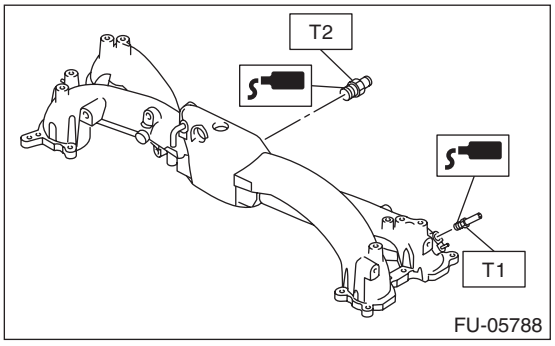

2) Install the tumble generator valve assembly onto intake manifold.

NOTE:
Use a new gasket.

Tightening torque:
8.3 N·m (0.8 kgf-m, 6.1 ft-lb)

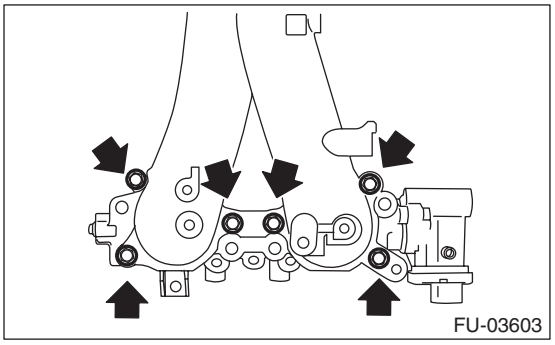

3) Install the air intake duct to the intake manifold.

Tightening torque:
17 N·m (1.7 kgf-m, 12.5 ft-lb)

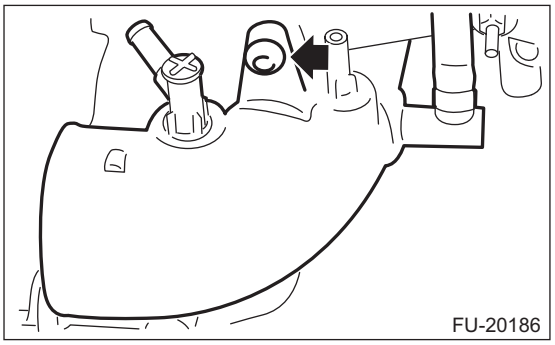

4) Install the fuel pipe assembly to the intake manifold.

Tightening torque:
6.4 N·m (0.7 kgf-m, 4.7 ft-lb)

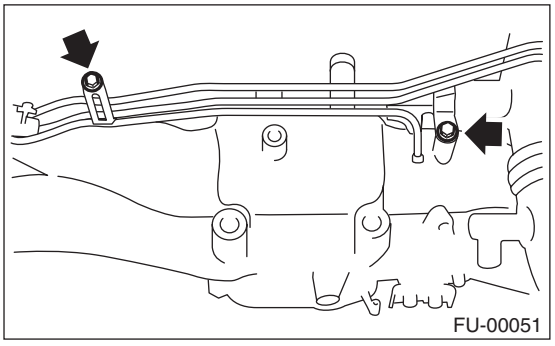

5) Install the fuel injector pipe LH and connect the LH side fuel hose to the fuel injector pipe LH. <Ref. to FU(STI)-104, CONNECTING FUEL DELIVERY HOSE, FUEL RETURN HOSE AND FUEL HOSE, INSTALLATION, Fuel Delivery, Return and Evaporation Lines.>

NOTE:
Use a new fuel hose.

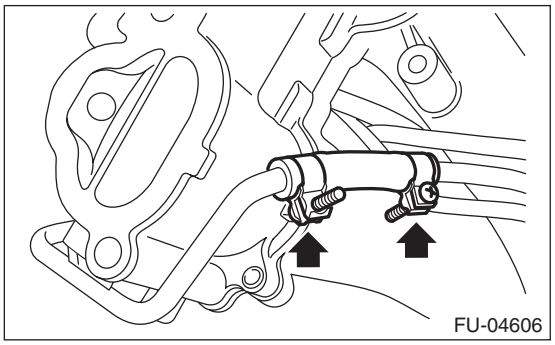
FU-04606

6) Install the fuel injector pipe RH and connect the RH side fuel hose to the fuel injector pipe RH. <Ref. to FU(STI)-104, CONNECTING FUEL DELIVERY HOSE, FUEL RETURN HOSE AND FUEL HOSE, INSTALLATION, Fuel Delivery, Return and Evaporation Lines.>

NOTE:
Use a new fuel hose.

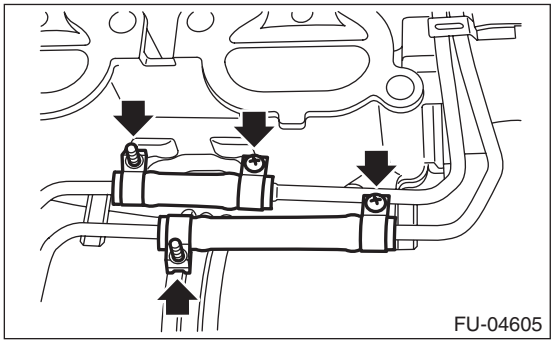
FU-04605

7) Install the engine harness to the intake manifold and attach the harness brackets holding the engine harness.

Tightening torque:
19 N·m (1.9 kgf-m, 14.0 ft-lb)

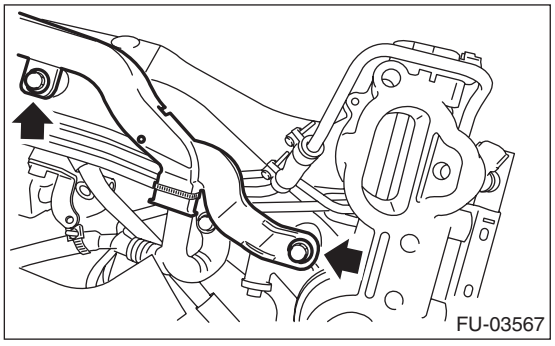
FU-03567

8) Install the fuel injector.

NOTE:
Use new O-rings, rubbers and seal rings.

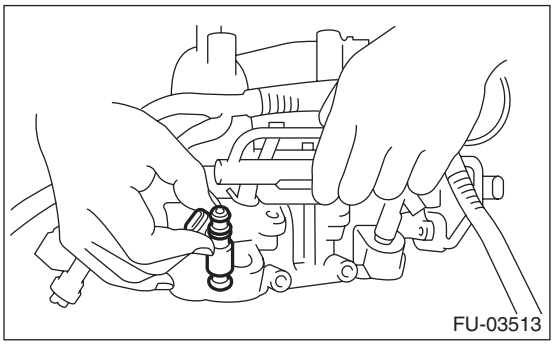
FU-03513

9) Install the bolts which hold fuel injector pipe.
- RH side

Tightening torque:
19 N·m (1.9 kgf-m, 14.0 ft-lb)

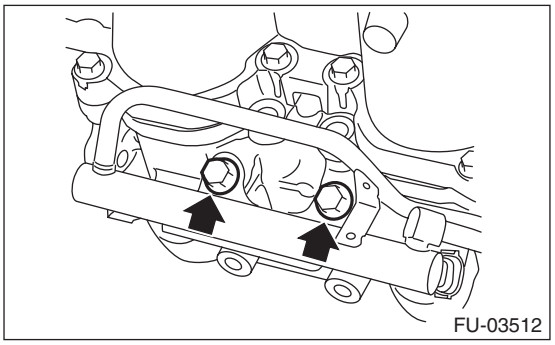
FU-03512

- LH side

Tightening torque:
6.4 N·m (0.7 kgf-m, 4.7 ft-lb)

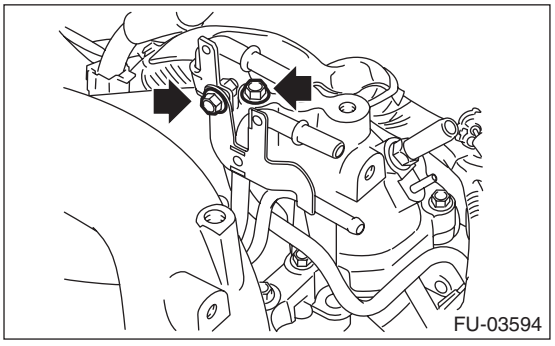
FU-03594

Tightening torque:
19 N·m (1.9 kgf-m, 14.0 ft-lb)

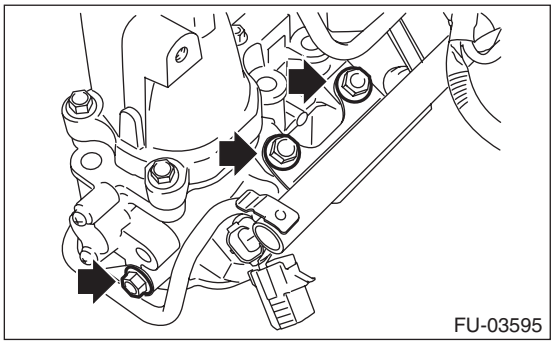

10) Connect the connector to the tumble generator valve assembly.

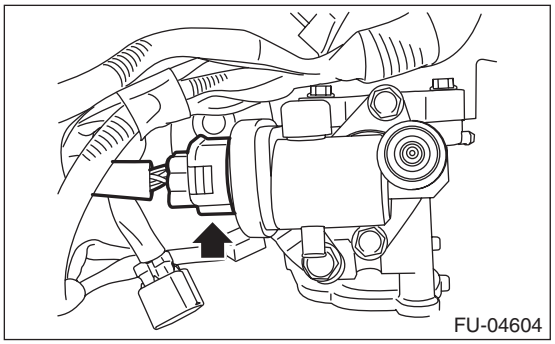

11) Connect the connectors to the fuel injector.

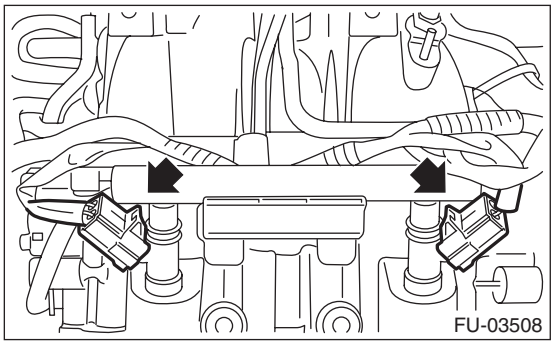

12) Secure the engine harness to the fuel injector pipe with the harness band (A).

- RH side

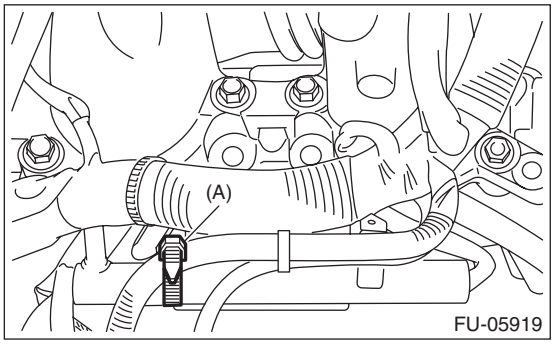

- LH side

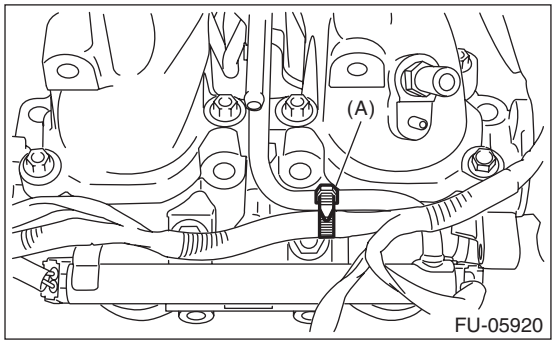

13) Install the throttle body to the intake manifold.

NOTE:
Use a new gasket.

Tightening torque:
8 N·m (0.8 kgf-m, 5.9 ft-lb)

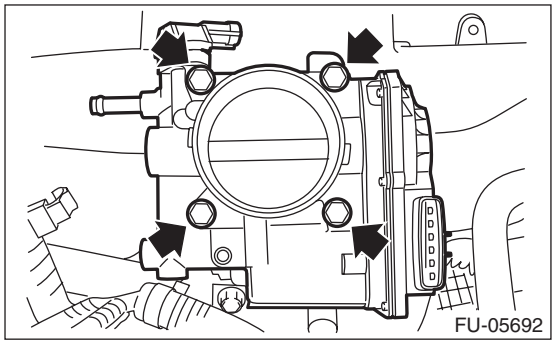

14) Secure the engine harness and vacuum hose using the clip (A), and secure the engine harness to the engine harness stay using the clip (B), and install the bolt which holds the engine harness to the intake manifold.

Tightening torque:
19 N·m (1.9 kgf-m,14.0 ft-lb)

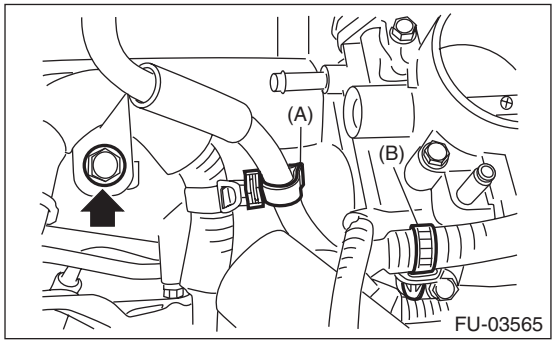

15) Connect connector (A) to the throttle position sensor and connector (B) to the manifold pressure sensor.

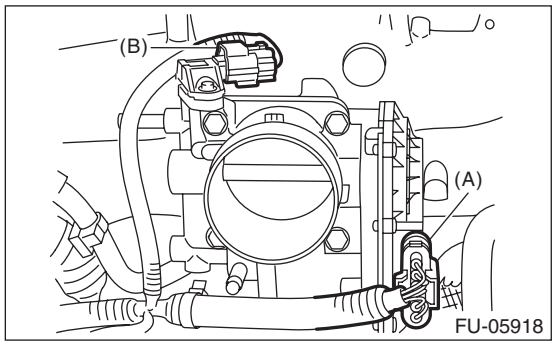

16) Install the engine ground terminal to intake manifold.

Tightening torque:
19 N·m (1.9 kgf-m, 14.0 ft-lb)

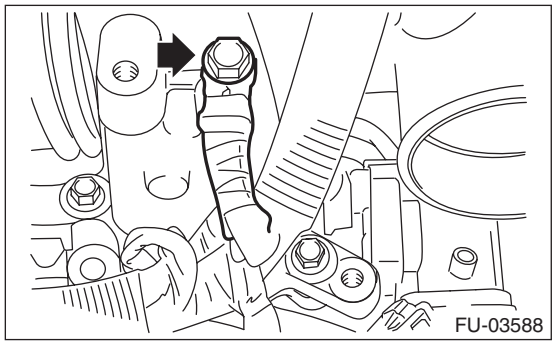

17) Install the solenoid valve bracket together with the wastegate control solenoid valve.

Tightening torque:
T1: 6.4 N·m (0.7 kgf-m, 4.7 ft-lb)
T2: 19 N·m (1.9 kgf-m, 14.0 ft-lb)

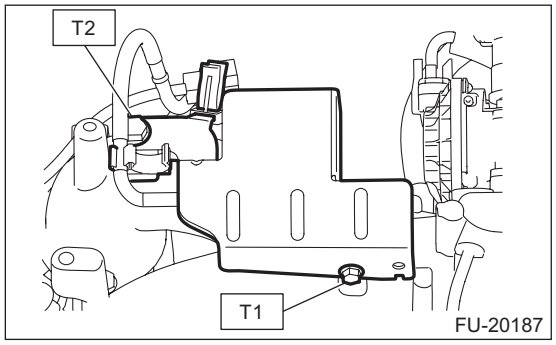

18) Connect the vacuum hose (B) to the intake duct, then connect the connector (A) to the wastegate control solenoid valve.

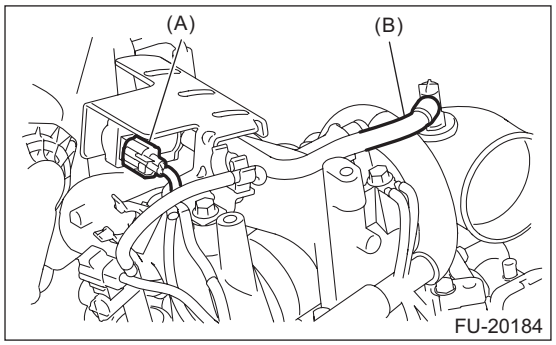

19) Install purge control solenoid valve 1 and purge control solenoid valve 2.

NOTE:
Connect the vacuum hose and vacuum control hose as shown in the figure.

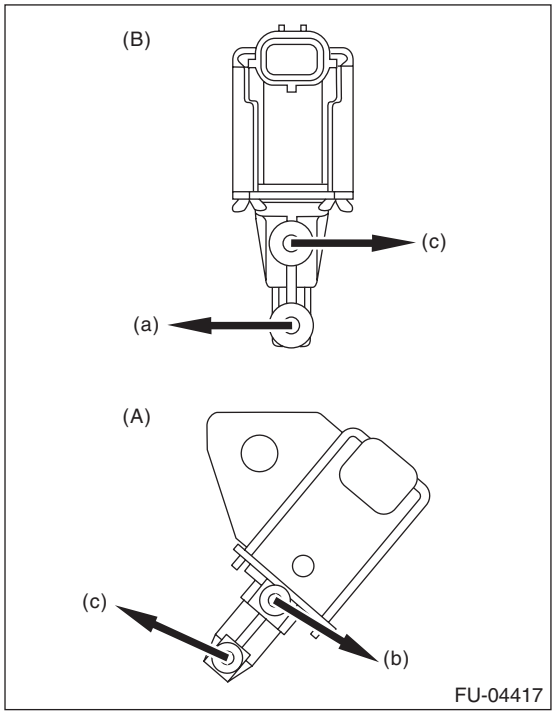

(A) Purge control solenoid valve 1
(B) Purge control solenoid valve 2
(a) To intake duct
(b) To intake manifold
(c) To branching pipe → fuel pipe

Tightening torque:
T1: 6.4 N·m (0.7 kgf-m, 4.7 ft-lb)
T2: 19 N·m (1.9 kgf-m, 14.0 ft-lb)

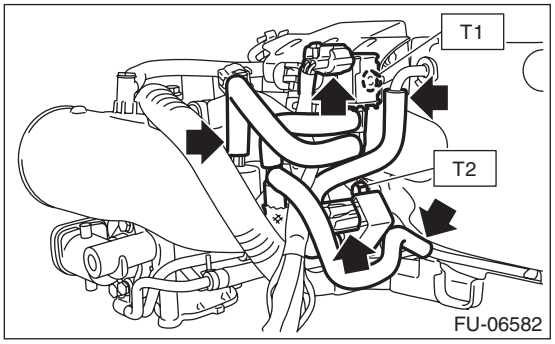

20) Attach the connector to the PCV hose assembly.

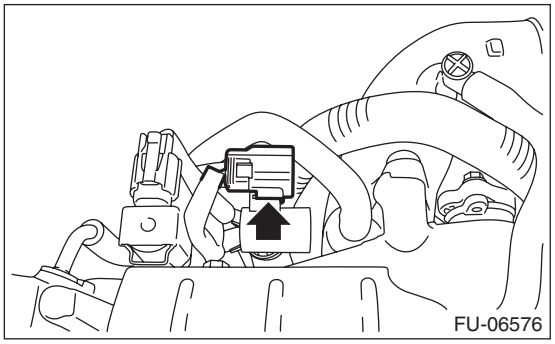

21) Install the connector to the intake duct.

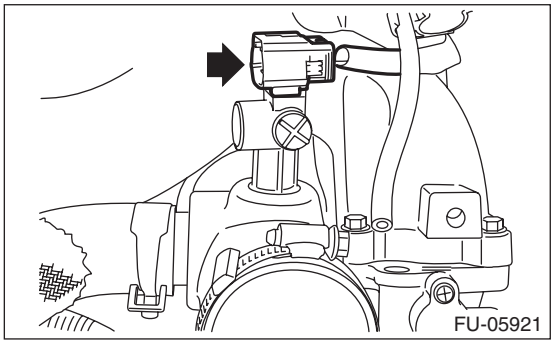

22) Install the fuel pipe protector LH.

Tightening torque:
19 N·m (1.9 kgf-m, 14.0 ft-lb)

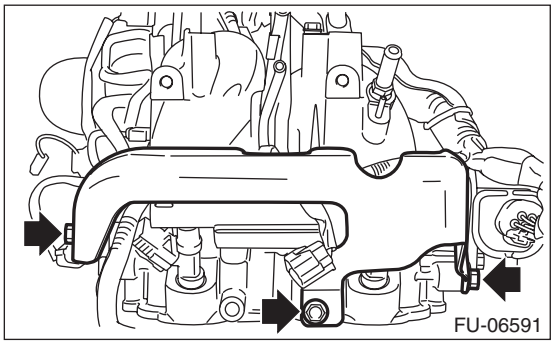

23) Install the fuel pipe protector RH, and secure the engine harness to the fuel pipe protector RH using the clip (A).

Tightening torque:
19 N·m (1.9 kgf-m, 14.0 ft-lb)

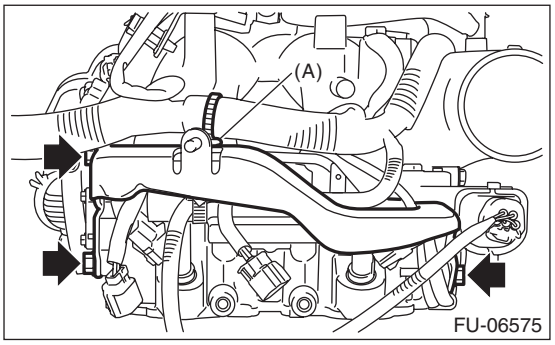

E: INSPECTION

1) Check that the intake manifold and fuel pipe have no deformation, cracks and other damages.
2) Check that the hose has no cracks, damage or loose part.

4. Engine Coolant Temperature Sensor

A: REMOVAL

1) Disconnect the ground cable from battery.
2) Remove the generator. <Ref. to SC(STI)-18, REMOVAL, Generator.>
3) Drain engine coolant. <Ref. to CO(STI)-12, DRAINING OF ENGINE COOLANT, REPLACEMENT, Engine Coolant.>
4) Disconnect the connector (A) from the engine coolant temperature sensor, and remove the engine coolant temperature sensor.

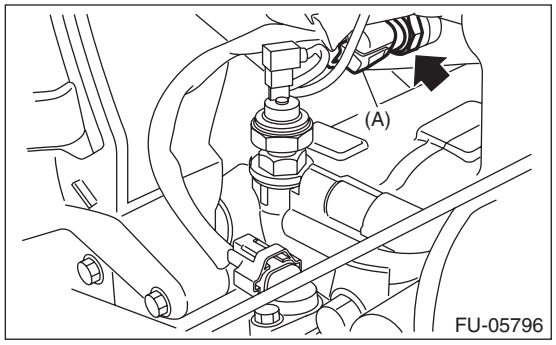

B: INSTALLATION

Install in the reverse order of removal.

NOTE:
Use a new gasket.

Tightening torque:
18 N·m (1.8 kgf-m, 13.3 ft-lb)

C: INSPECTION

1) Check that the engine coolant temperature sensor has no deformation, cracks or other damages.
2) Immerse the engine coolant temperature sensor and a thermometer in water.

CAUTION:
Take care not to allow water to get into the engine coolant temperature sensor connector. Completely remove any water inside.

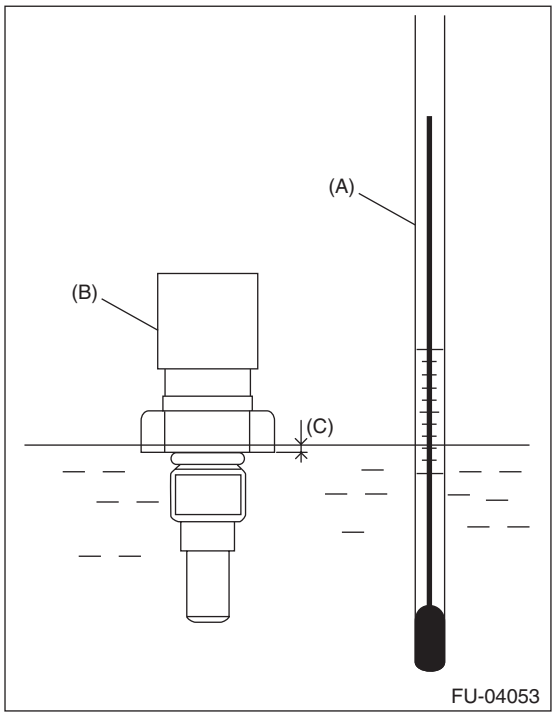

(A) Thermometer
(B) Engine coolant temperature sensor
(C) Hexagonal part height: To approx. $^{1}/_{3}$

3) Raise water temperature gradually, measure the resistance between the engine coolant temperature sensor terminals when the temperature is 20°C (68°F) and 80°C (176°F).

NOTE:
Agitate the water for even temperature distribution.

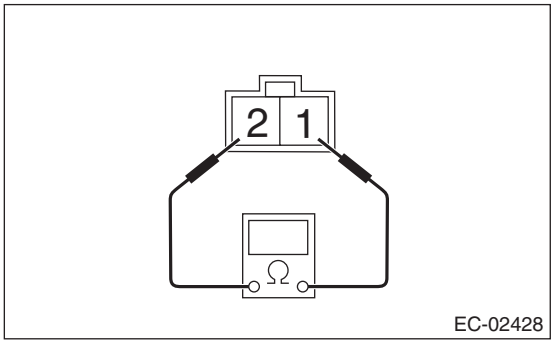

Water temperature	Terminal No.	Standard
20°C (68°F)	1 and 2	2.45±0.2 kΩ
80°C (176°F)		0.318±0.013 kΩ

5. Crankshaft Position Sensor

A: REMOVAL

1) Disconnect the ground cable from battery.
2) Remove the bolt which secures crankshaft position sensor to oil pump.

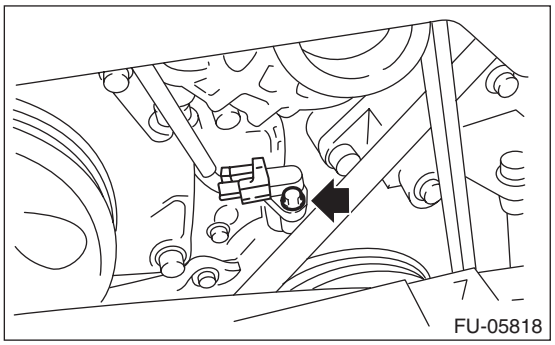

3) Remove the crankshaft position sensor, and disconnect the connector from the crankshaft position sensor.

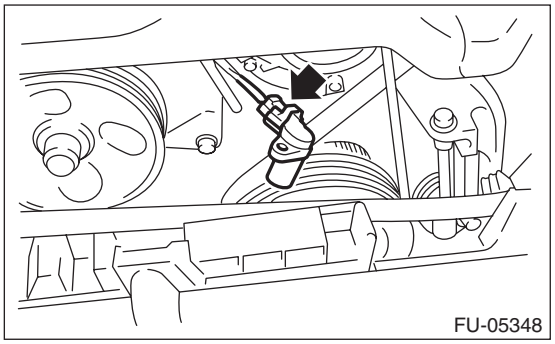

B: INSTALLATION

Install in the reverse order of removal.

Tightening torque:
6.4 N·m (0.7 kgf-m, 4.7 ft-lb)

C: INSPECTION

1. CRANKSHAFT POSITION SENSOR (METHOD WITH CIRCUIT TESTER)

Measure the resistance between crankshaft position sensor terminals.

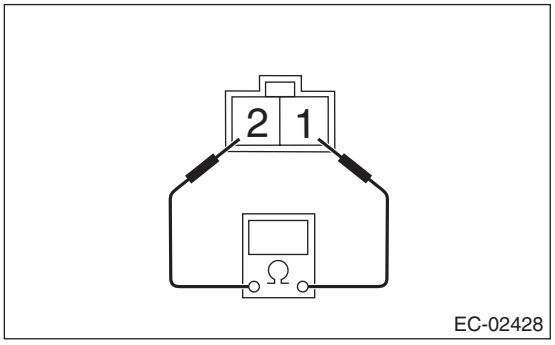

Terminal No.	Standard
1 and 2	2.04±0.204 kΩ

2. CRANKSHAFT POSITION SENSOR (METHOD WITH OSCILLOSCOPE)

1) Prepare an oscilloscope.
2) Remove the glove box. <Ref. to EI-64, REMOVAL, Glove Box.>
3) Connect the probe to ECM connector.

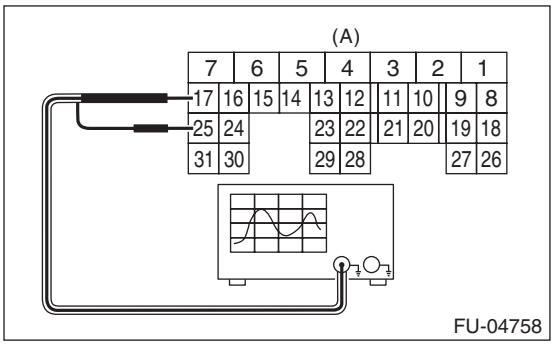

(A) To ECM connector

Terminal No.	Probe
17	+
25	–

4) Start the engine and let it idle.
5) Check the waveforms and voltage.

NOTE:
For waveform and voltage, refer to “Engine Control Module (ECM) I/O Signal”. <Ref. to EN(STI)(diag)-20, ELECTRICAL SPECIFICATION, Engine Control Module (ECM) I/O Signal.>
6) After inspection, install the related parts in the reverse order of removal.

3. OTHER INSPECTIONS

Check that the crankshaft position sensor has no deformation, cracks or other damages.

6. Camshaft Position Sensor

A: REMOVAL

1. INTAKE SIDE

• Camshaft position sensor RH

1) Disconnect the ground cable from battery.
2) Disconnect the connector (A) from the camshaft position sensor RH, and remove the camshaft position sensor RH from the rear side of the cylinder head.

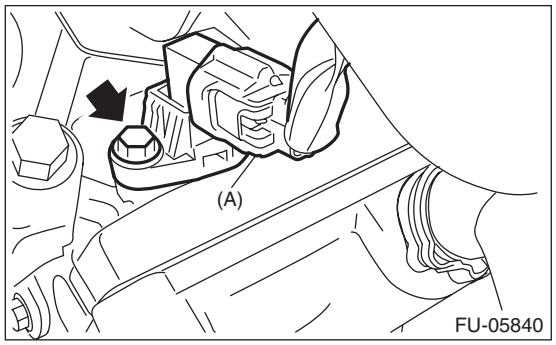

• Camshaft position sensor LH

1) Disconnect the ground cable from battery.
2) Remove the intake manifold. <Ref. to FU(STI)-17, REMOVAL, Intake Manifold.>
3) Remove the camshaft position sensor LH.

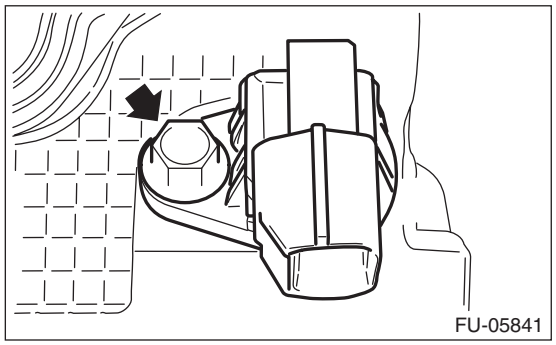

2. EXHAUST SIDE

1) Disconnect the ground cable from battery.
2) Lift up the vehicle.
3) Remove the under cover. <Ref. to EI-22, REMOVAL, Front Under Cover.>
4) Remove the clip holding the engine harness. (Left side only)

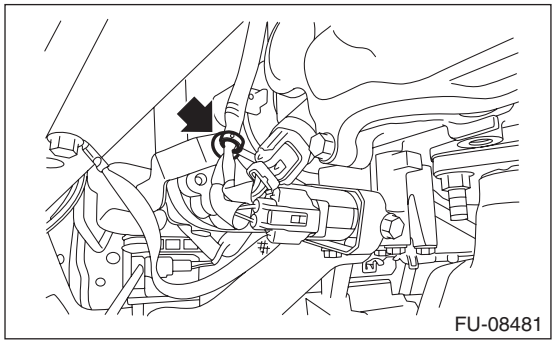

5) Disconnect connector (A) from the camshaft position sensor, and remove the camshaft position sensor from under the cylinder head.

• RH side

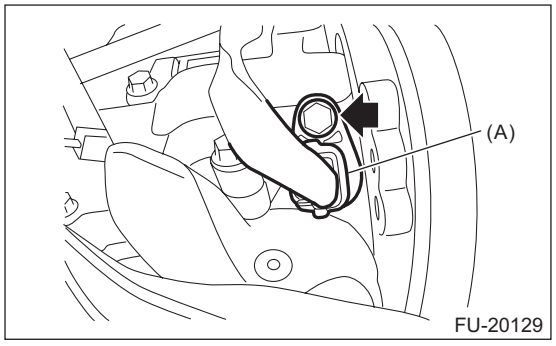

• LH side

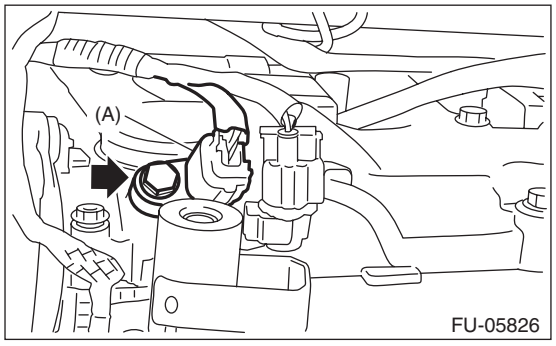

B: INSTALLATION

1. INTAKE SIDE

Install in the reverse order of removal.

Tightening torque:
6.4 N·m (0.7 kgf-m, 4.7 ft-lb)

2. EXHAUST SIDE

Install in the reverse order of removal.

Tightening torque:
6.4 N·m (0.7 kgf-m, 4.7 ft-lb)

- RH side

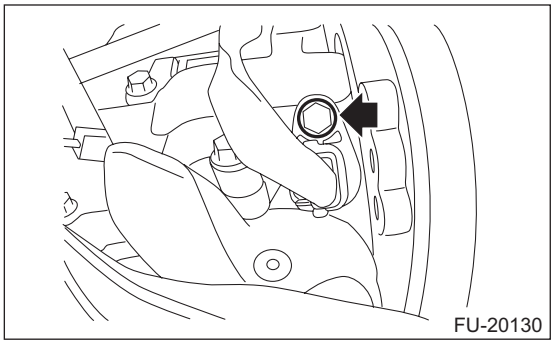

- LH side

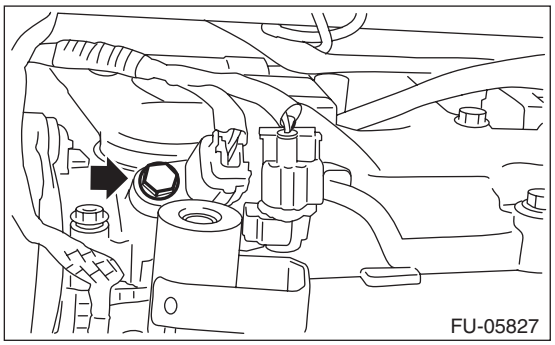

C: INSPECTION

1. CAMSHAFT POSITION SENSOR (METHOD WITH OSCILLOSCOPE)

1) Prepare an oscilloscope.
2) Remove the glove box. <Ref. to EI-64, REMOVAL, Glove Box.>
3) Connect the probe to ECM connector.
- Intake camshaft position sensor

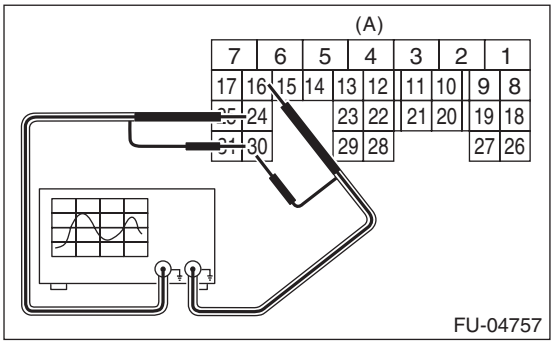

(A) To ECM connector

- Exhaust camshaft position sensor

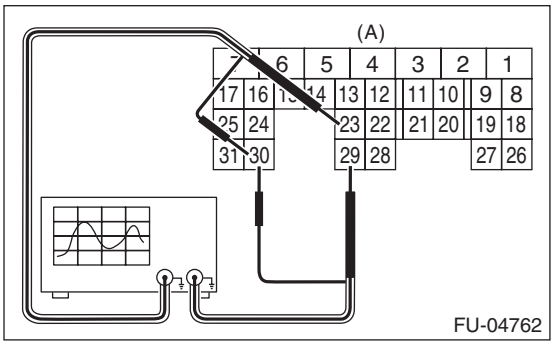

(A) To ECM connector

Camshaft position sensor		Terminal No.	Probe
Intake	RH	24	+
	LH	16	+
Exhaust	RH	23	+
	LH	29	+
RH and LH		30	–

4) Start the engine and let it idle.
5) Check the waveforms and voltage.

NOTE:
For waveform and voltage, refer to “Engine Control Module (ECM) I/O Signal”. <Ref. to EN(STI)(diag)-20, ELECTRICAL SPECIFICATION, Engine Control Module (ECM) I/O Signal.>
6) After inspection, install the related parts in the reverse order of removal.

2. OTHER INSPECTIONS

Check that the camshaft position sensor has no deformation, cracks or other damages.

7. Knock Sensor

A: REMOVAL

1) Disconnect the ground cable from battery.
2) Remove the intercooler. <Ref. to IN(STI)-13, REMOVAL, Intercooler.>
3) Remove the intake manifold. <Ref. to FU(STI)-17, REMOVAL, Intake Manifold.>
4) Remove the secondary air combination valve RH. <Ref. to EC(STI)-56, REMOVAL, Secondary Air Combination Valve.>
5) Remove the knock sensor from cylinder block.

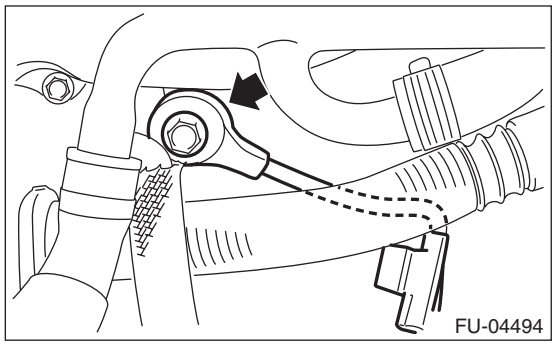

B: INSTALLATION

1) Install the knock sensor to the cylinder block.

NOTE:
The portion of the knock sensor cord that is pulled out must be positioned at a 60° angle relative to the engine rear.

Tightening torque:
24 N·m (2.4 kgf-m, 17.7 ft-lb)

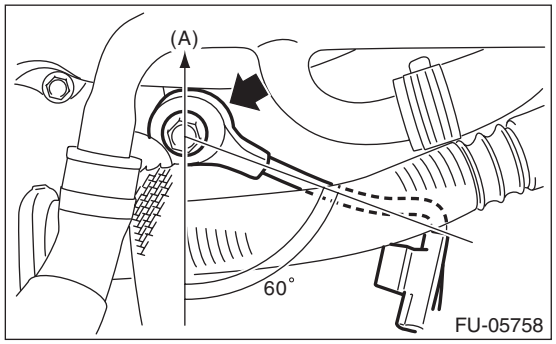

(A) Front side of vehicle

2) Install the secondary air combination valve RH. <Ref. to EC(STI)-57, SECONDARY AIR COMBINATION VALVE RH, INSTALLATION, Secondary Air Combination Valve.>
3) Install the intake manifold. <Ref. to FU(STI)-21, INSTALLATION, Intake Manifold.>
4) Install the intercooler. <Ref. to IN(STI)-14, INSTALLATION, Intercooler.>
5) Connect the battery ground terminal.

C: INSPECTION

1) Check that the knock sensor has no deformation, cracks or other damages.
2) Measure the resistance between knock sensor terminals.

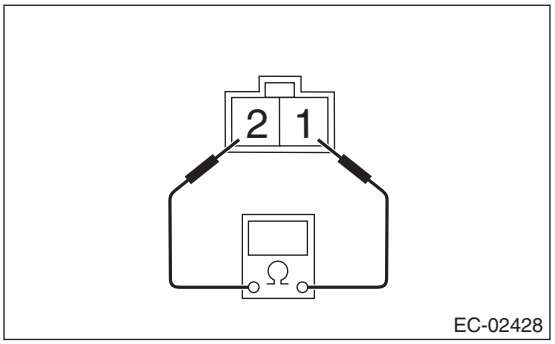

Terminal No.	Standard
1 and 2	560±28 kΩ

8. Throttle Position Sensor

A: SPECIFICATION

Throttle body is a non-disassembled part, so do not remove the throttle position sensor from throttle body.
Refer to “Throttle Body” for removal and installation procedure. <Ref. to FU(STI)-15, REMOVAL, Throttle Body.> <Ref. to FU(STI)-15, INSTALLATION, Throttle Body.>

9. Mass Air Flow and Intake Air Temperature Sensor

A: REMOVAL

1) Disconnect the ground cable from battery.
2) Disconnect the connector (A) from the mass air flow and intake air temperature sensor, and remove the mass air flow and intake air temperature sensor.

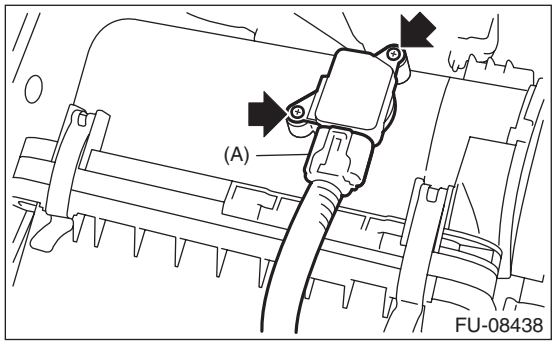

B: INSTALLATION

Install in the reverse order of removal.

Tightening torque:
1 N·m (0.1 kgf-m, 0.7 ft-lb)

C: INSPECTION

1. CHECK THE MASS AIR FLOW SENSOR UNIT

1) Connect the battery positive terminal to terminal No. 3 and the battery ground terminal to terminal No. 4, the circuit tester positive terminal to terminal No. 5 and the circuit tester ground terminal to terminal No. 4.

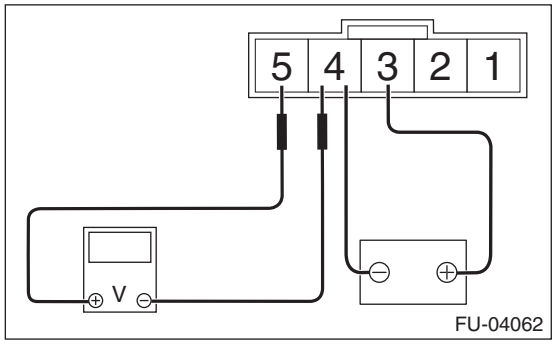

2) Check the voltage changes when air is blown to the mass air flow sensor unit in arrow direction.

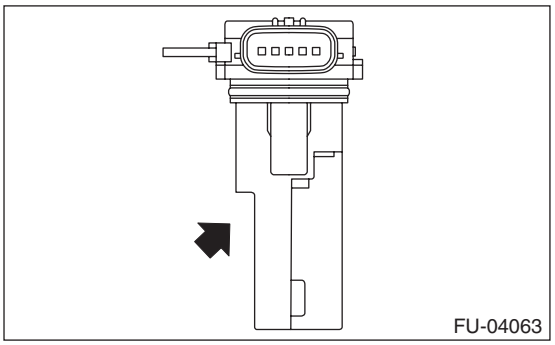

2. CHECK THE INTAKE AIR TEMPERATURE SENSOR UNIT

Measure the resistance between intake air temperature sensor terminals.

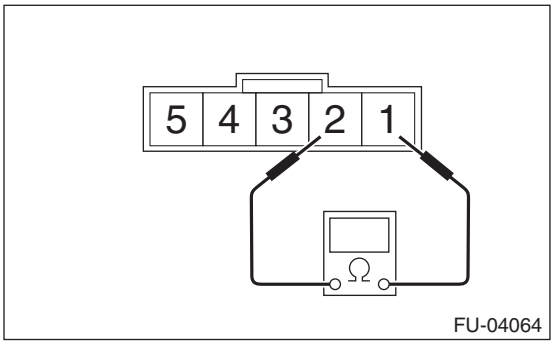

Temperature	Terminal No.	Standard
–20°C (–4°F)	1 and 2	16.0±2.4 kΩ
20°C (68°F)		2.45±0.24 kΩ
60°C (140°F)		0.580±0.087 kΩ

3. OTHER INSPECTIONS

1) Check that the mass air flow and intake air temperature sensor has no deformation, cracks or other damages.
2) Check that the mass air flow and intake air temperature sensor has no dirt.

10.Manifold Absolute Pressure Sensor

A: REMOVAL

1) Disconnect the ground cable from battery.
2) Disconnect the connector (A) from the manifold absolute pressure sensor, and remove the manifold absolute pressure sensor from throttle body.

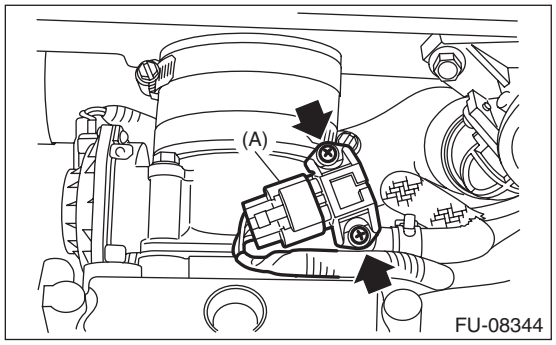

B: INSTALLATION

Install in the reverse order of removal.

NOTE:
Use new O-rings.

Tightening torque:
2 N·m (0.2 kgf-m, 1.5 ft-lb)

C: INSPECTION

1) Check that the manifold absolute pressure sensor has no deformation, cracks or other damages.
2) Connect dry-cell battery positive terminal to terminal No. 3 and dry-cell battery ground terminal to terminal No. 2, circuit tester positive terminal to terminal No. 1 and the circuit tester ground terminal to terminal No. 2.

NOTE:
- Use new dry-cell batteries.
- Using a circuit tester, check that the initial voltage of each dry-cell battery is 1.6 V or more. And also check that the voltage of three batteries in series is between 4.8 V and 5.2 V.
- For power supply, 5 V DC constant voltage power source can also be used.

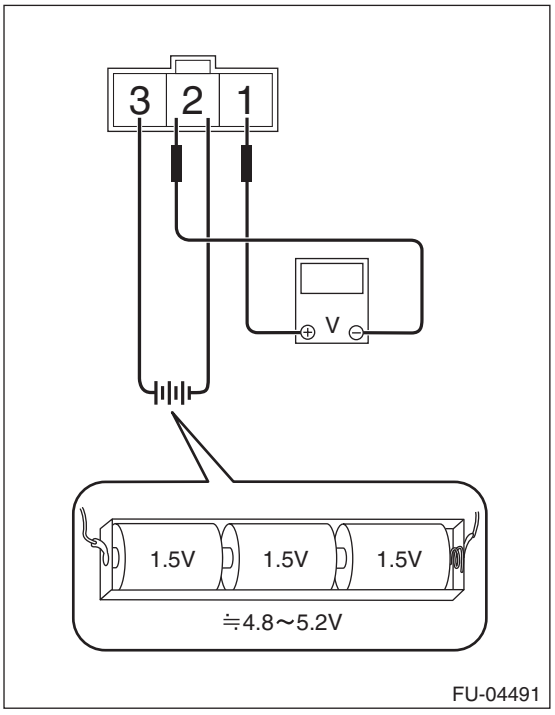

3) Check the voltage at a normal atmospheric pressure.

NOTE:
The atmospheric pressure at higher altitude is lower than normal. Therefore, the voltage is lower than the standard value.

Terminal No.	Standard
1 (+) and 2 (–)	Approx. 2.0 V (when 25°C (77°F))

4) Connect the Mighty Vac to the pressure port (A) of manifold absolute pressure sensor.

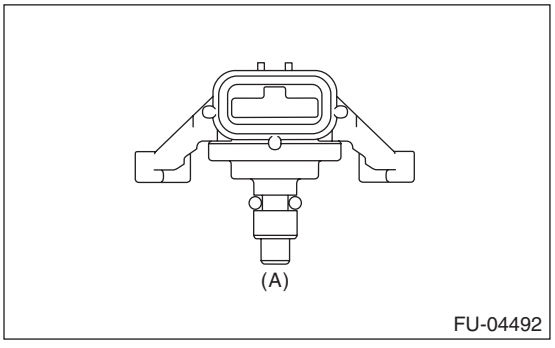

5) Check the voltage when generating vacuum and positive pressure using Mighty Vac.

CAUTION:
Do not apply pressure out of the range of –88 — 200 kPa (–0.9 — 2.04 kgf/cm^2, –12.8 — 29.0 psi). Doing so may damage the manifold absolute pressure sensor.

NOTE:
When vacuum occurs at the pressure port of manifold absolute pressure sensor, the voltage will drop from the value as in step 3). When positive pressure occurs, on the other hand, the voltage will rise.

Pressure	Terminal No.	Standard
–88 kPa (–0.9 kgf/cm^2, –12.8 psi)	1 (+) and 2 (–)	Approx. 0.8 V (when 25°C (77°F))
181 kPa (1.85 kgf/cm^2, 26.2 psi)		Approx. 4.7 V (when 25°C (77°F))

11.Fuel Injector

A: REMOVAL

1. RH SIDE

1) Disconnect the ground cable from battery.
2) Remove the intake manifold. <Ref. to FU(STI)-17, REMOVAL, Intake Manifold.>
3) Remove clip (A) holding the engine harness to the fuel pipe protector RH, and remove the fuel pipe protector RH from the intake manifold.

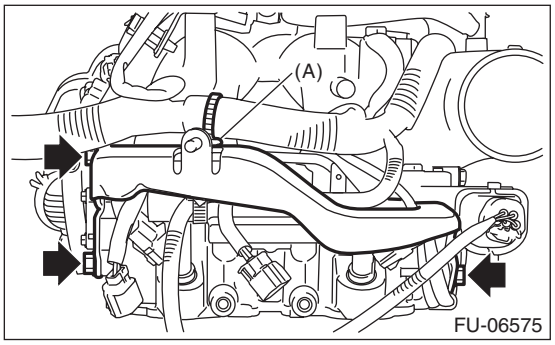

4) Remove the harness band (A) which holds the engine harness to the fuel injector pipe RH.

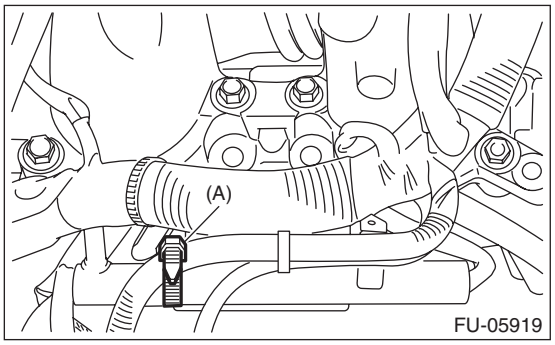

5) Disconnect the connector from fuel injector.

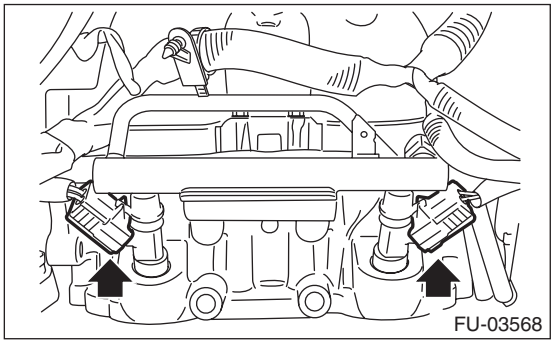

6) Remove the bolts which hold fuel injector pipe RH.

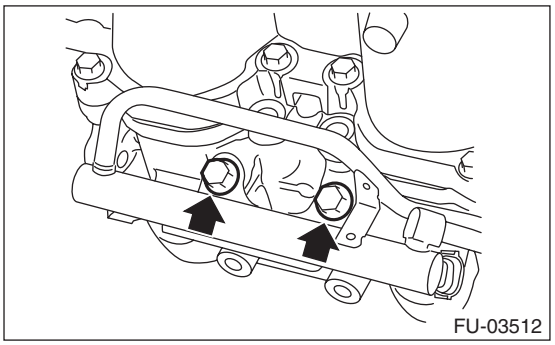

7) Remove the fuel injector.

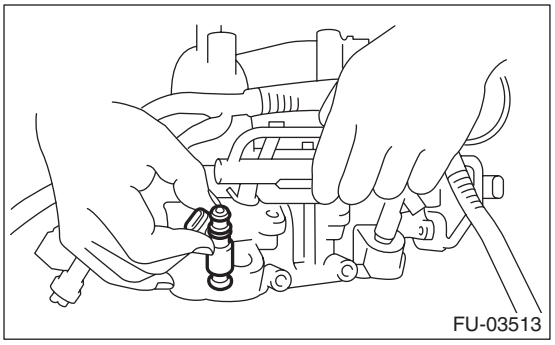

2. LH SIDE

1) Disconnect the ground cable from battery.
2) Remove the intake manifold. <Ref. to FU(STI)-17, REMOVAL, Intake Manifold.>
3) Remove the fuel pipe protector LH from the intake manifold.

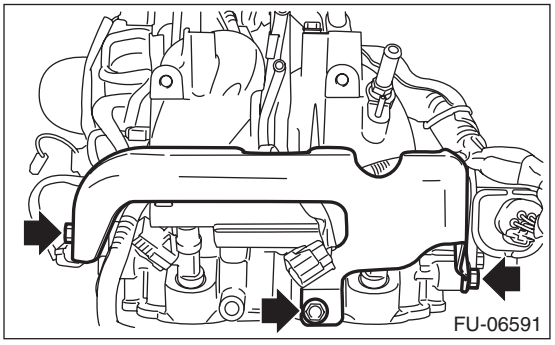

4) Remove the harness band (A) which holds the engine harness to the fuel injector pipe LH.

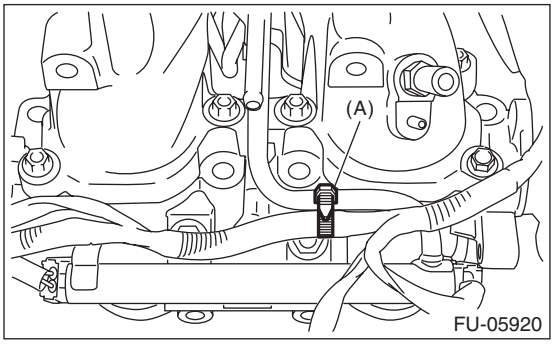

5) Disconnect the connector from fuel injector.

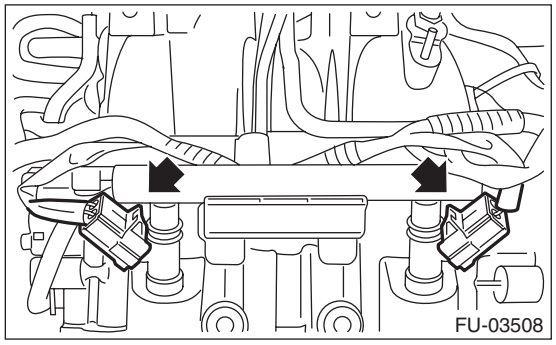

6) Remove the bolts which hold fuel injector pipe LH.

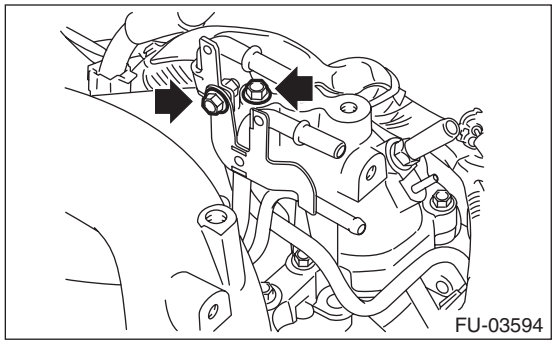

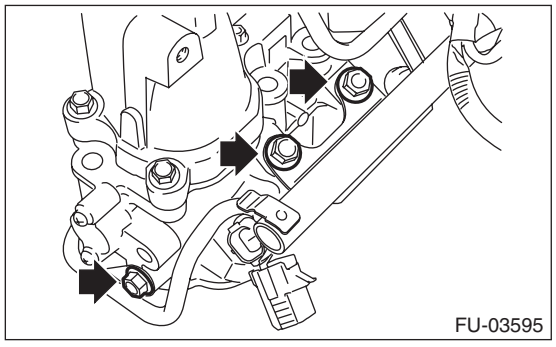

7) Remove the fuel injector.

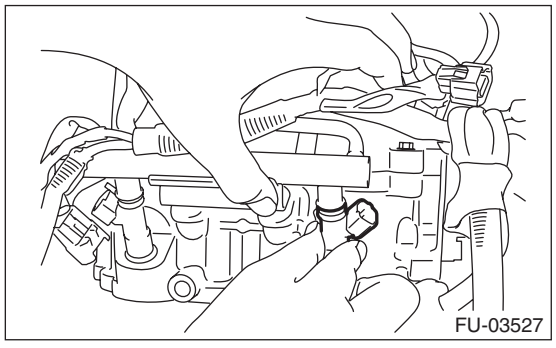

B: INSTALLATION

1. RH SIDE

Install in the reverse order of removal.

NOTE:
Use new O-rings, rubbers and seal rings.

Tightening torque:
19 N·m (1.9 kgf-m, 14.0 ft-lb)

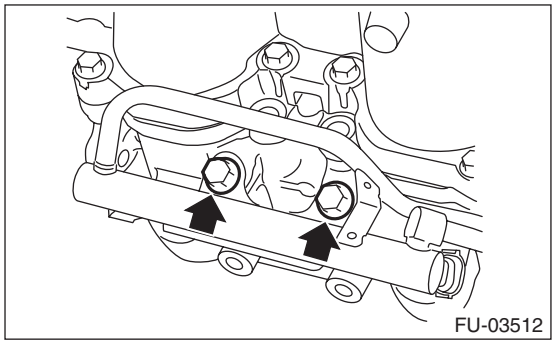

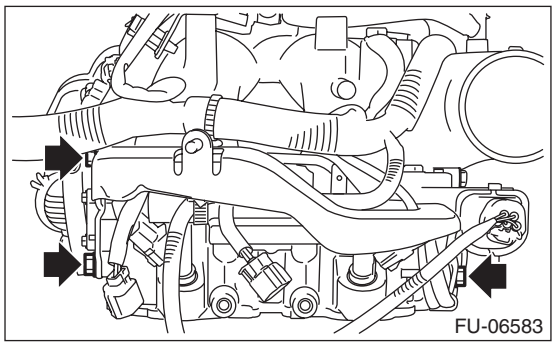

2. LH SIDE

Install in the reverse order of removal.

NOTE:
Use new O-rings, rubbers and seal rings.

Tightening torque:
6.4 N·m (0.7 kgf-m, 4.7 ft-lb)

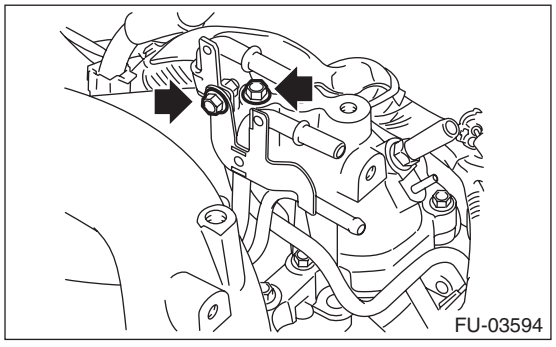

Tightening torque:
19 N·m (1.9 kgf-m, 14.0 ft-lb)

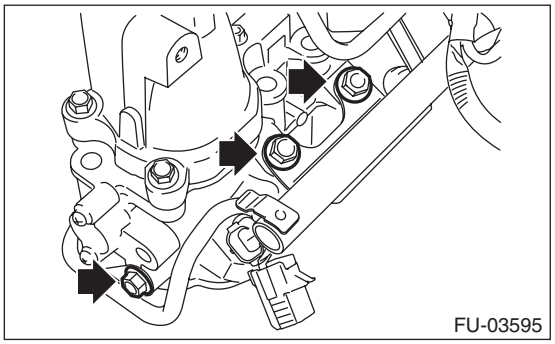
FU-03595

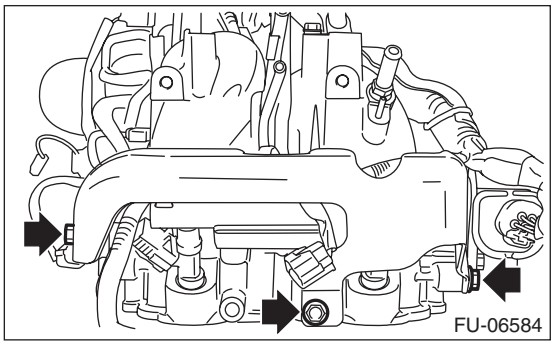
FU-06584

C: INSPECTION

1) Check that the fuel injector has no deformation, cracks or other damages.
2) Measure the resistance between fuel injector terminals.

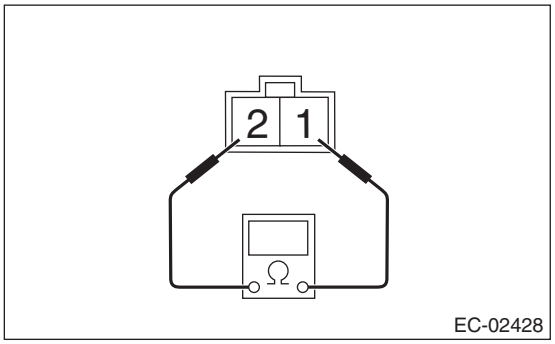

EC-02428

Terminal No.	Standard
1 and 2	Approx. 12.0 Ω (when 20°C (68°F))

12. Tumble Generator Valve Assembly

A: REMOVAL

1) Disconnect the ground cable from battery.
2) Remove the intake manifold. <Ref. to FU(STI)-17, REMOVAL, Intake Manifold.>
3) Disconnect the connector from the tumble generator valve assembly.

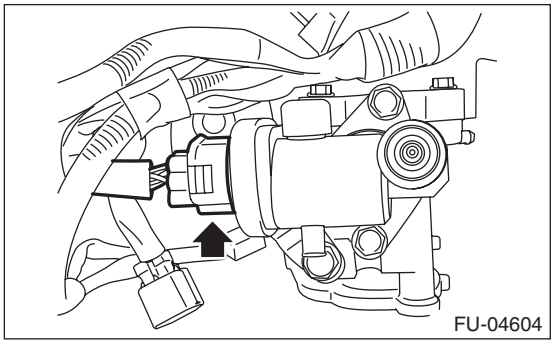
FU-04604

4) Remove the fuel injector. <Ref. to FU(STI)-43, REMOVAL, Fuel Injector.>
5) Remove the tumble generator valve assembly from the intake manifold.

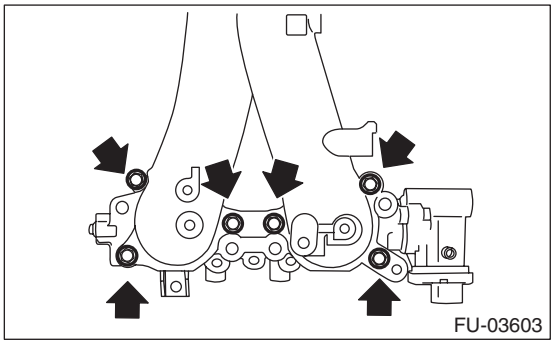
FU-03603

B: INSTALLATION

Install in the reverse order of removal.

NOTE:
Use a new gasket.

Tightening torque:
8.3 N·m (0.8 kgf-m, 6.1 ft-lb)

C: INSPECTION

1) Check that the tumble generator valve assembly has no deformation, cracks or other damages.
2) Check tumble generator valve for contamination or clogging.

13. Tumble Generator Valve Actuator

A: SPECIFICATION

The tumble generator valve assembly cannot be disassembled.
Refer to “Tumble Generator Valve Assembly” for removal and installation procedures. <Ref. to FU(STI)-46, REMOVAL, Tumble Generator Valve Assembly.> <Ref. to FU(STI)-46, INSTALLATION, Tumble Generator Valve Assembly.>

14. Oil Flow Control Solenoid Valve

A: REMOVAL

1. INTAKE SIDE

Oil flow control solenoid valve is a unit with front camshaft cap.
Refer to “Camshaft” for removal procedures. <Ref. to ME(STI)-63, REMOVAL, Camshaft.>

2. EXHAUST SIDE

1) Disconnect the ground cable from battery.
2) Remove the air cleaner case. <Ref. to IN(STI)-8, REMOVAL, Air Cleaner Case.>
3) Disconnect the connector (A) from the exhaust oil flow control solenoid valve. (right side only.)
4) Remove the engine harness fixing clip (B) and clip (C) from the engine harness stay. (right side only.)
5) Remove the engine harness stay fixing bolt, and remove the engine harness stay fixing clip (D) and the exhaust oil flow control solenoid valve harness fixing clip (E). (right side only.)
6) Remove the exhaust oil flow control solenoid valve connector (F) from the engine harness stay. (right side only.)

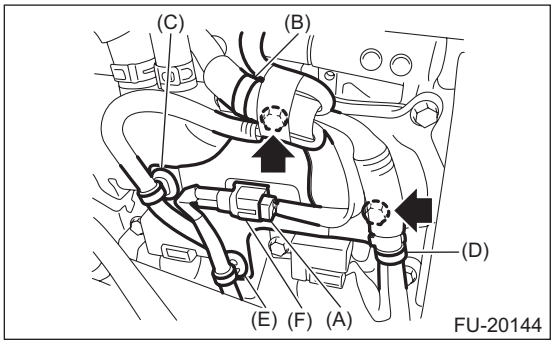

7) Lift up the vehicle.
8) Remove the under cover. <Ref. to EI-22, REMOVAL, Front Under Cover.>
9) Remove the front exhaust pipe. (right side only.) <Ref. to EX(STI)-5, REMOVAL, Front Exhaust Pipe.>
10) Remove the clip holding the engine harness. (Left side only)

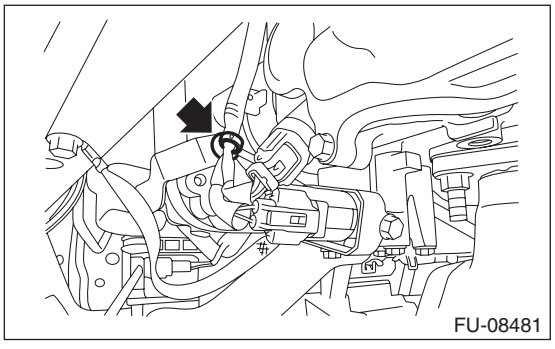

11) Disconnect the ground cable (A). (Left side only)
12) Disconnect the connector (B) from the oil flow control solenoid valve (left side only), and remove the oil flow control solenoid valve from the cylinder head.

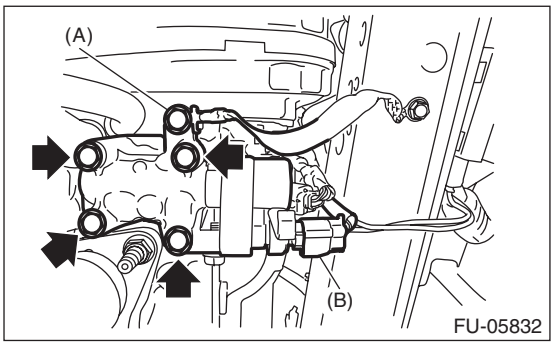

B: INSTALLATION

1. INTAKE SIDE

Refer to “Camshaft” for installation procedure. <Ref. to ME(STI)-66, INSTALLATION, Camshaft.>

2. EXHAUST SIDE

Install in the reverse order of removal.

NOTE:
Use a new gasket.

Tightening torque:
T1: 7.5 N·m (0.8 kgf-m, 5.5 ft-lb)
T2: 10 N·m (1.0 kgf-m, 7.4 ft-lb)

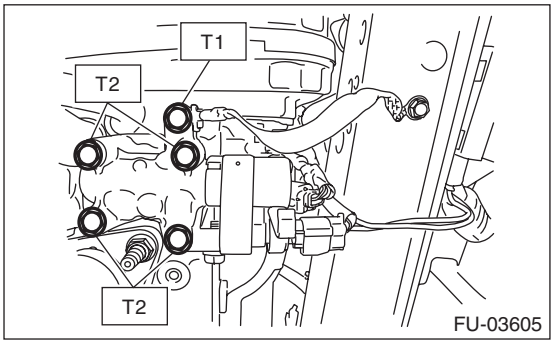

Tightening torque:
6.4 N·m (0.7 kgf-m, 4.7 ft-lb)

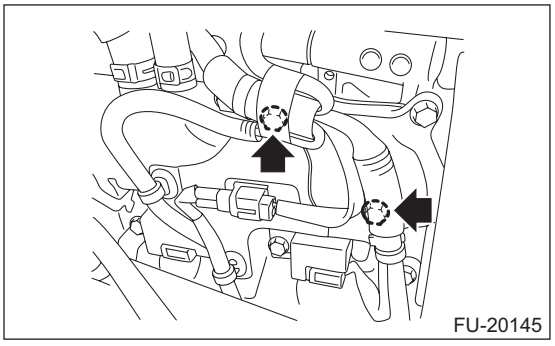

C: DISASSEMBLY

1. INTAKE SIDE

1) Remove the two mounting bolts securing oil return cover, and remove the oil return cover and gasket.
2) Remove the bolt securing oil flow control solenoid valve, and remove the oil flow control solenoid valve.

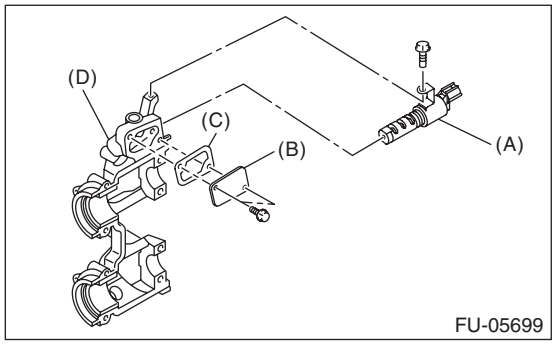

(A) Oil flow control solenoid valve
(B) Oil return cover
(C) Gasket
(D) Front camshaft cap

2. EXHAUST SIDE

The oil flow control solenoid valve on the exhaust side cannot be disassembled.

D: ASSEMBLY

1. INTAKE SIDE

1) Install the oil flow control solenoid valve.

Tightening torque:
6.4 N·m (0.7 kgf-m, 4.7 ft-lb)

2) Apply liquid gasket to the two bolts securing oil return cover.

Liquid gasket:
THREE BOND 1324 (Part No. 004403042) or equivalent

3) Attach the oil return cover and gasket.

Tightening torque:
9 N·m (0.9 kgf-m, 6.6 ft-lb)

NOTE:
Use a new gasket.

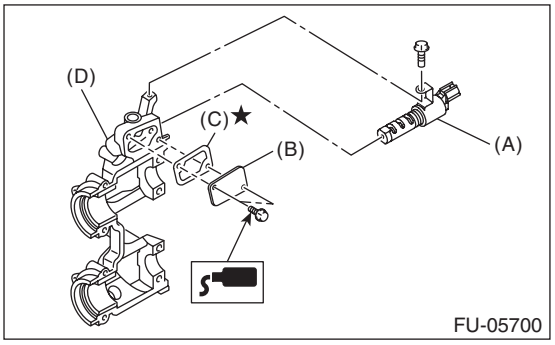

(A) Oil flow control solenoid valve
(B) Oil return cover
(C) Gasket
(D) Front camshaft cap

2. EXHAUST SIDE

The oil flow control solenoid valve on the exhaust side cannot be disassembled.

E: INSPECTION

1) Check that the oil flow control solenoid valve has no deformation, cracks or other damages.
2) Measure the resistance between the oil flow control solenoid valve terminals.

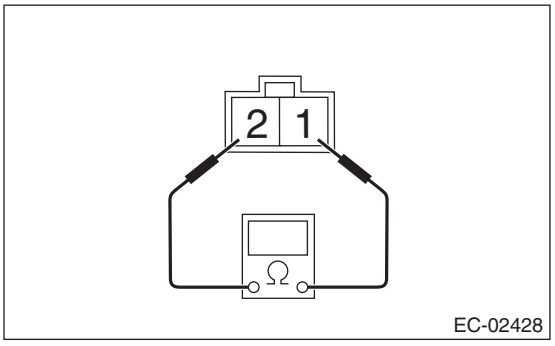

Terminal No.	Standard
1 and 2	7.4±0.5 Ω (when 20°C (68°F))

15. Wastegate Control Solenoid Valve

A: REMOVAL

1) Disconnect the ground cable from battery.
2) Remove the vacuum hose from clip (A), and remove the bolt (B) which secures the wastegate control solenoid valve.
3) Remove the bolts (C) which secure solenoid valve bracket onto intake manifold.

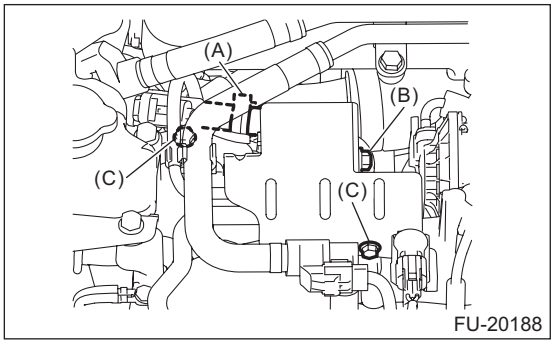

4) Disconnect the connector (A) from the wastegate control solenoid valve.
5) Disconnect the vacuum hose (B) and air control hose (C) from the wastegate control solenoid valve, and remove the wastegate control solenoid valve.

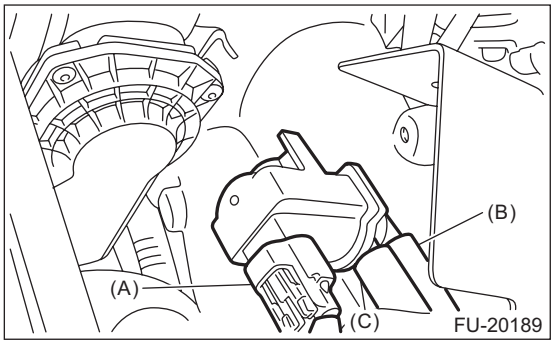

B: INSTALLATION

Install in the reverse order of removal.

Tightening torque:
T1: 6.4 N·m (0.7 kgf-m, 4.7 ft-lb)
T2: 19 N·m (1.9 kgf-m, 14.0 ft-lb)

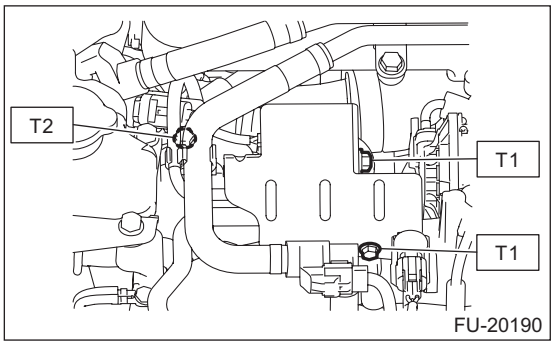

C: INSPECTION

1. WASTEGATE CONTROL SOLENOID VALVE

1) Check that the wastegate control solenoid valve has no deformation, cracks or other damages.
2) Check the resistance between the wastegate control solenoid valve terminals.

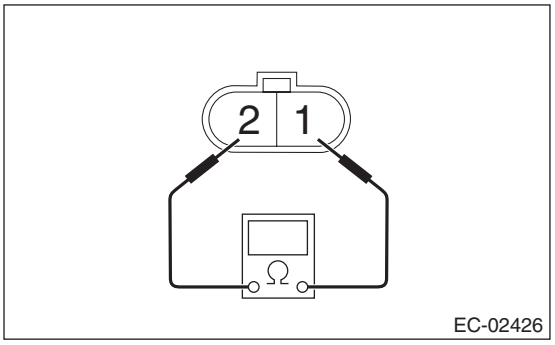

Terminal No.	Standard
1 and 2	28±2 Ω (when 20°C (68°F))

3) Check that air does not come out from (B) when air is blown into (A).

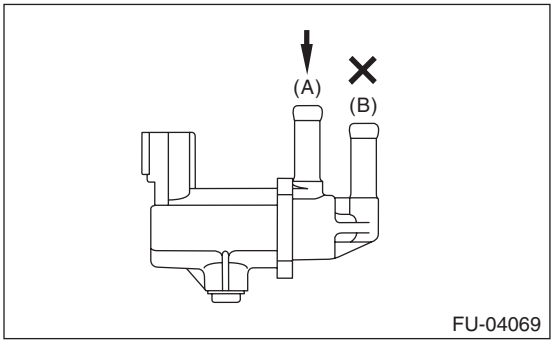

4) Connect the battery positive terminal to the terminal No. 1 and the battery ground terminal to the terminal No. 2. Check that air is discharged from (B), when supplying air to (A).

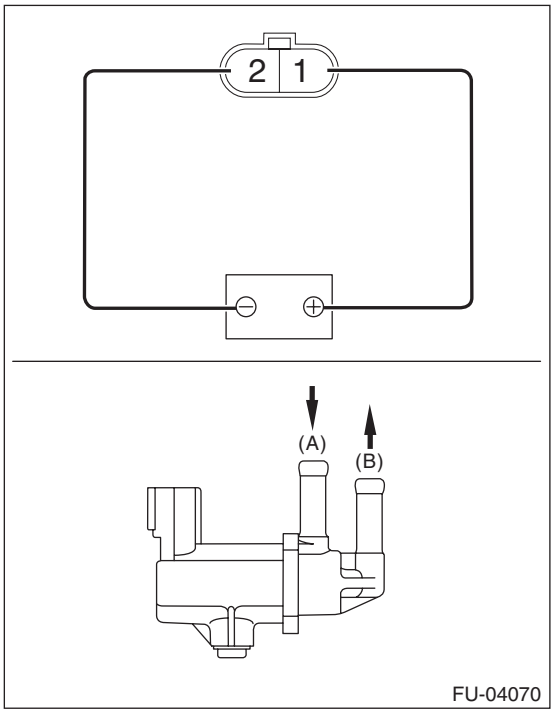

2. OTHER INSPECTIONS

Check that the vacuum hose and air control hose have no cracks, damage or loose part.

16.Front Oxygen (A/F) Sensor

A: REMOVAL

1) Disconnect the ground cable from battery.
2) Disconnect the connector from the front oxygen (A/F) sensor, and remove the clip (A) holding the return hose and front oxygen (A/F) sensor harness.

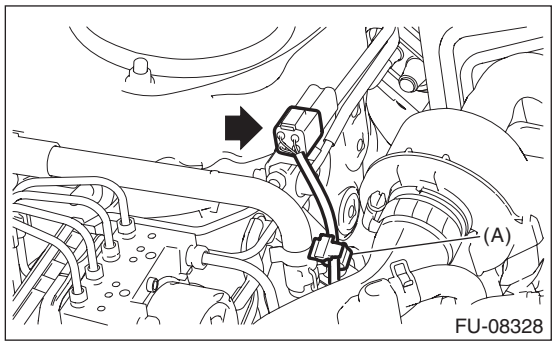

3) Remove the clips (A) holding the front oxygen (A/F) sensor harness to the engine harness stay.

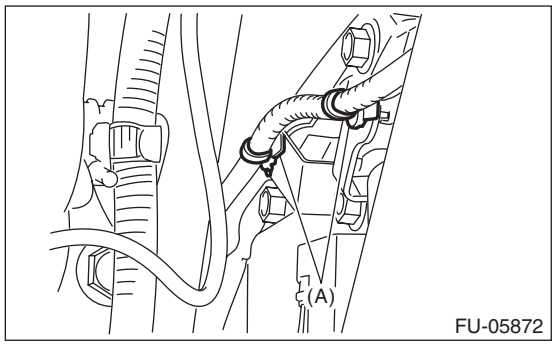

4) Lift up the vehicle.
5) Remove the under cover. <Ref. to EI-22, REMOVAL, Front Under Cover.>
6) Apply spray-type lubricant (004301003) to the threaded portion of front oxygen (A/F) sensor, and leave it for one minute or more.
7) Remove the front oxygen (A/F) sensor.

CAUTION:
When removing the front oxygen (A/F) sensor, wait until exhaust pipe cools, otherwise it will damage the exhaust pipe.

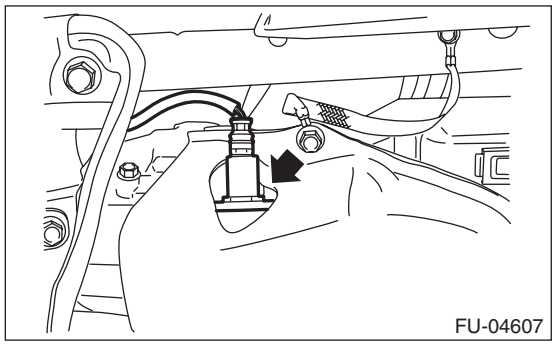

B: INSTALLATION

CAUTION:
If lubricant is spilt onto the exhaust pipe, wipe it off completely with cloth to avoid emission of smoke or causing a fire.
1) Before installing front oxygen (A/F) sensor, apply anti-seize compound only to the threaded portion of front oxygen (A/F) sensor to make the next removal easier.

CAUTION:
Never apply anti-seize compound to the protector of front oxygen (A/F) sensor.

Anti-seize compound:
NEVER-SEEZ NSN, JET LUBE SS-30 or equivalent
2) Install the front oxygen (A/F) sensor.

Tightening torque:
30 N·m (3.1 kgf-m, 22.1 ft-lb)

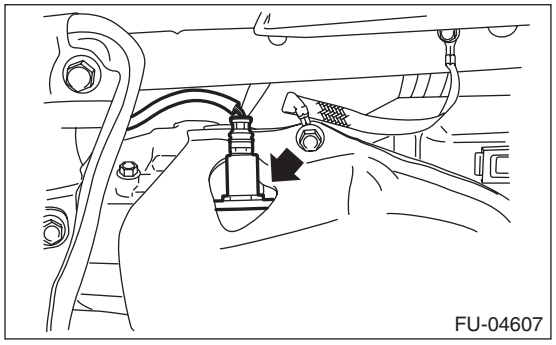

3) Install the under cover. <Ref. to EI-23, INSTALLATION, Front Under Cover.>
4) Lower the vehicle.
5) Secure the front oxygen (A/F) sensor harness to the engine harness stay using the clips (A).

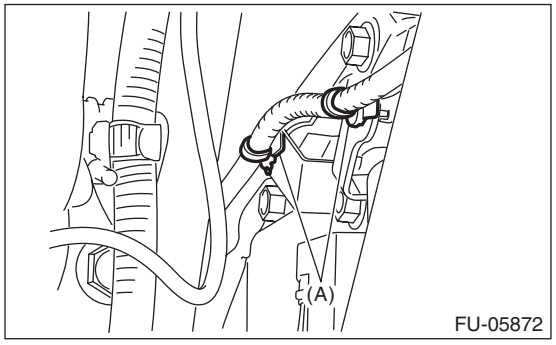

6) Connect the connector to the front oxygen (A/F) sensor, and secure the return hose and front oxygen (A/F) sensor harness using the clip (A).

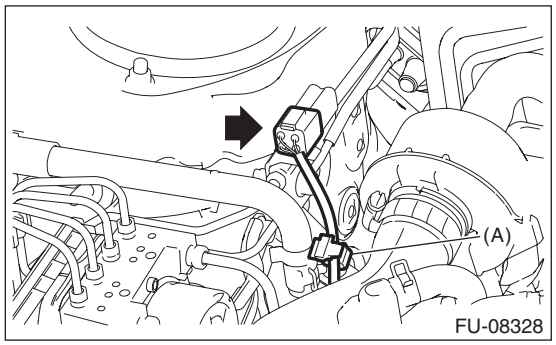

7) Connect the battery ground terminal.

C: INSPECTION

1) Check that the front oxygen (A/F) sensor has no deformation, cracks or other damages.
2) Measure the resistance between front oxygen (A/F) sensor terminals.

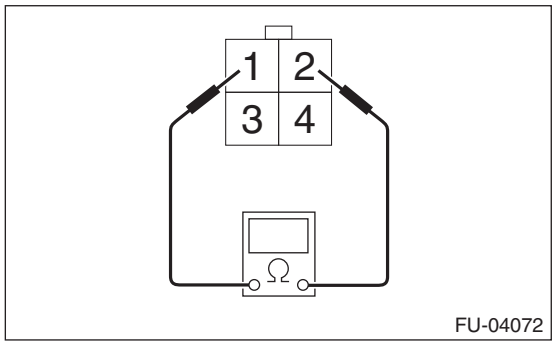

Terminal No.	Standard
1 and 2	2.4±0.24 Ω (when 20°C (68°F))

17.Rear Oxygen Sensor

A: REMOVAL

1) Disconnect the ground cable from battery.
2) Lift up the vehicle.
3) Remove the transmission under cover.
4) Disconnect the connector from the rear oxygen sensor, and remove the clip (A) holding the rear oxygen sensor harness.

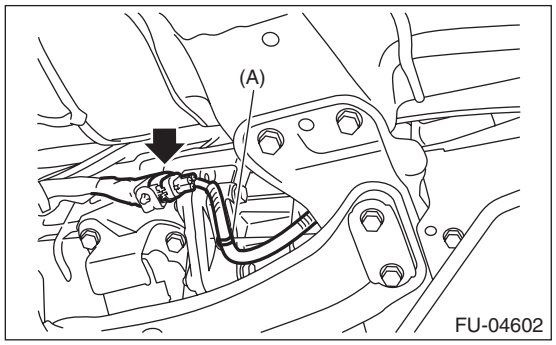

5) Apply spray-type lubricant (004301003) to the threaded portion of rear oxygen sensor, and leave it for one minute or more.
6) Remove the rear oxygen sensor.

CAUTION:
When removing the rear oxygen sensor, wait until exhaust pipe cools, otherwise it will damage the exhaust pipe.

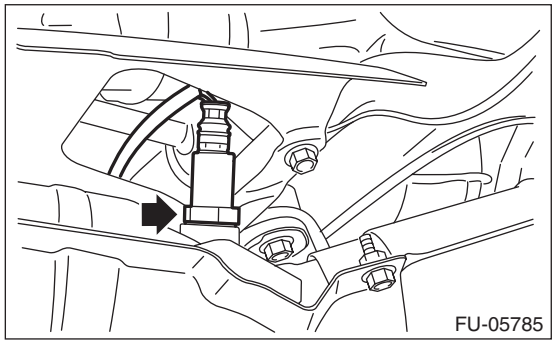

B: INSTALLATION

CAUTION:
If lubricant is spilt onto the exhaust pipe, wipe it off completely with cloth to avoid emission of smoke or causing a fire.
1) Before installing rear oxygen sensor, apply the anti-seize compound only to the threaded portion of rear oxygen sensor to make the next removal easier.

CAUTION:
Never apply anti-seize compound to the protector of rear oxygen sensor.

Anti-seize compound:
NEVER-SEEZ NSN, JET LUBE SS-30 or equivalent

2) Install the rear oxygen sensor.

Tightening torque:
21 N·m (2.1 kgf-m, 15.5 ft-lb)

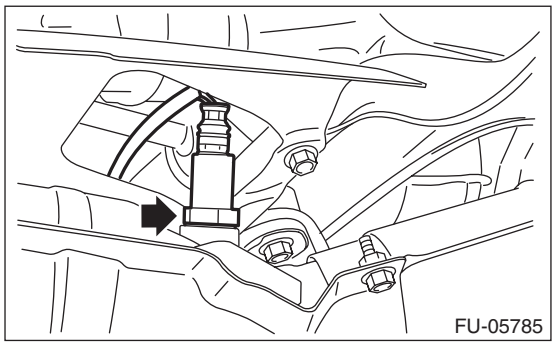

3) Connect the connector to the rear oxygen sensor, and hold the rear oxygen sensor harness with the clip (A).

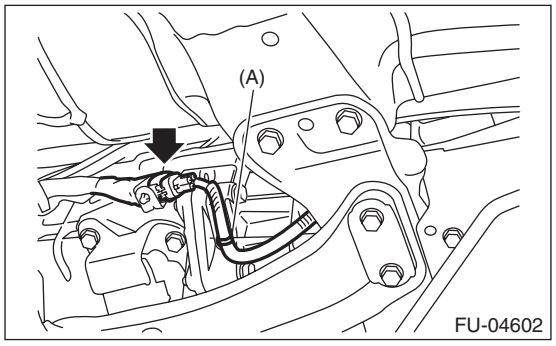

4) Install the transmission under cover.

Tightening torque:
18 N·m (1.8 kgf-m, 13.3 ft-lb)
5) Lower the vehicle.
6) Connect the battery ground terminal.

C: INSPECTION

1) Check that the rear oxygen sensor has no deformation, cracks or other damages.
2) Measure the resistance between rear oxygen sensor terminals.

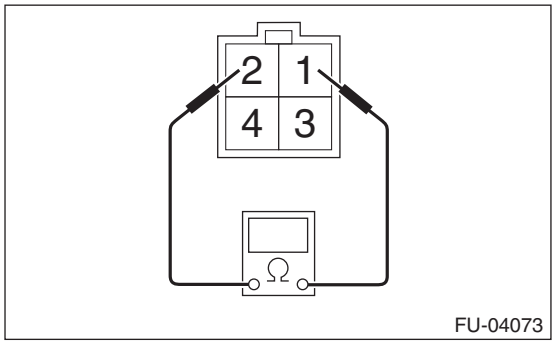

Terminal No.	Standard
1 and 2	$5.6^{+0.8}_{-0.6}$ Ω (when 20°C (68°F))

18.SI-DRIVE (SUBARU Intelligent Drive) Selector

A: REMOVAL

1) Disconnect the ground cable from battery.
2) Remove the console box. <Ref. to EI-67, REMOVAL, Console Box.>
3) Remove the multi-selector switch connector from the console box.
4) Remove the screws and tabs holding the multi-selector switch to the console box and the multi-selector switch.

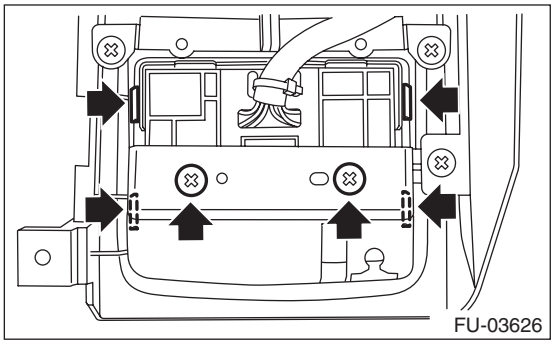

B: INSTALLATION

Install in the reverse order of removal.

Tightening torque:
1.5 N·m (0.2 kgf-m, 1.1 ft-lb)

C: INSPECTION

1) Check that the multi select switch does not have deformation, cracks, or damage.
2) Check the resistance between the terminals at the SI-DRIVE selector.

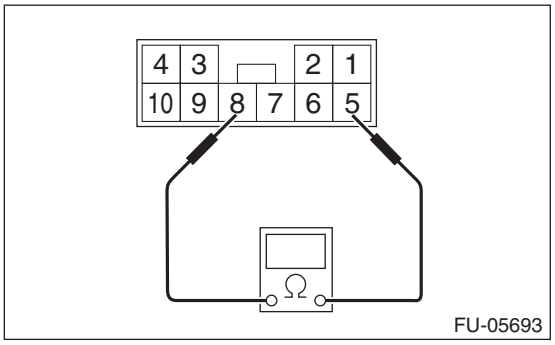

Switch position	Terminal No.	Standard
Sport (When turning the SI-DRIVE selector to the left)	5 and 8	Less than 1 Ω
Intelligent (When pressing the SI-DRIVE selector)		1±0.05 kΩ
Sport Sharp (When turning the SI-DRIVE selector to the right)		3.67±0.1835 kΩ

19.Engine Control Module (ECM)

A: REMOVAL

1) Disconnect the ground cable from battery.
2) Remove the glove box. <Ref. to EI-64, REMOVAL, Glove Box.>
3) Disconnect the connectors from the ECM and driver's control center differential control module.

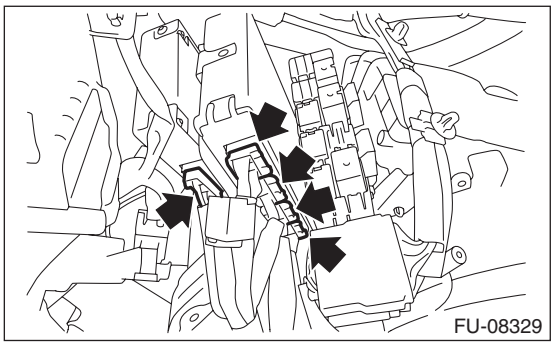

4) Push down the claws, and remove the relay block.
5) Remove the bolts and nuts, and remove the ECM.

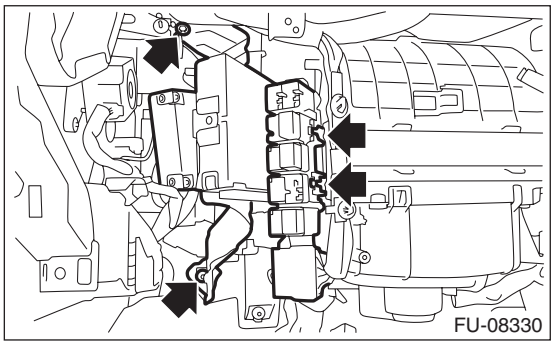

6) Remove the driver's control center differential control module.

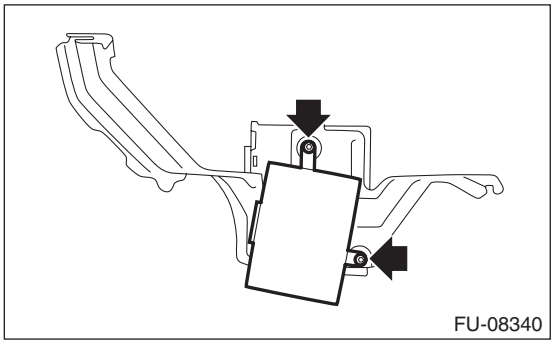

B: INSTALLATION

Install in the reverse order of removal.

CAUTION:
• When the ECM of model with immobilizer has been replaced, be sure to perform the registration of immobilizer system.
• For model without keyless access with push button start, refer to the Type B in "REGISTRATION MANUAL FOR IMMOBILIZER".
• For model with keyless access with push button start, refer to the Type D in "REGISTRATION MANUAL FOR IMMOBILIZER".
• If replacing ECM or the bracket, replace both parts with new parts at a time.
• After installing the bracket to ECM, do not separate the bracket.
• If the bracket has been installed to ECM in the wrong direction, replace both parts to new parts.

NOTE:
When replacing the ECM, be careful not to use the ECM of wrong specification to avoid any damage on the fuel injection system.

Tightening torque:
7.5 N·m (0.8 kgf-m, 5.5 ft-lb)

C: INSPECTION

Check that the ECM has no deformation, cracks or other damages.

20.Main Relay

A: REMOVAL

1) Disconnect the ground cable from battery.
2) Remove the glove box. <Ref. to EI-64, REMOVAL, Glove Box.>
3) Remove the main relay from relay block.

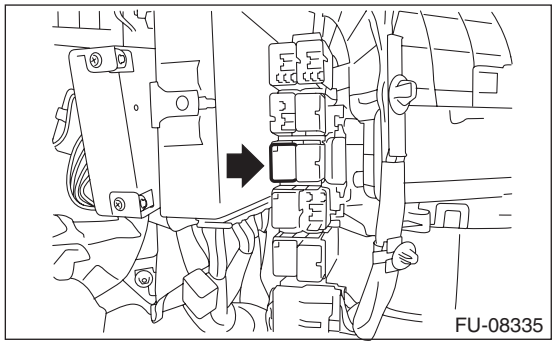

B: INSTALLATION

Install in the reverse order of removal.

C: INSPECTION

1) Check that the main relay has no deformation, cracks or other damages.
2) Measure the resistance between main relay terminals.

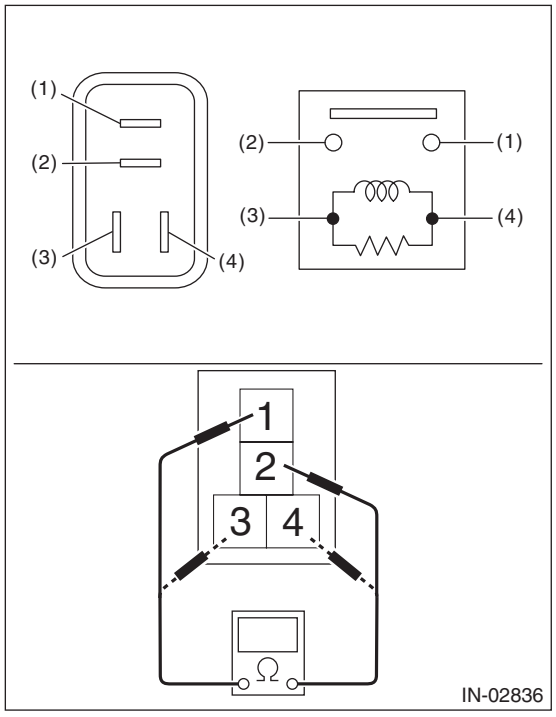

Terminal No.	Standard
1 and 2	1 MΩ or more
3 and 4	130.4 — 230.8 Ω (when 20°C (68°F))

3) Connect battery positive terminal to terminal No. 3 and battery ground terminal to terminal No. 4, and measure the resistance between the main relay terminals.

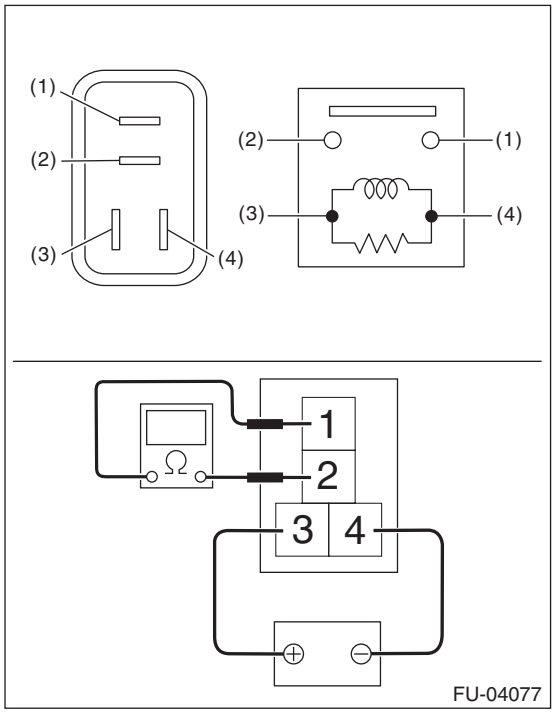

Terminal No.	Standard
1 and 2	Less than 1 Ω

21.Oxygen Sensor Relay

A: REMOVAL

1) Disconnect the ground cable from battery.
2) Remove the instrument panel lower cover. <Ref. to EI-62, REMOVAL, Instrument Panel Lower Cover.>
3) Remove the bolts and nuts securing the fuse block and move down the fuse block.

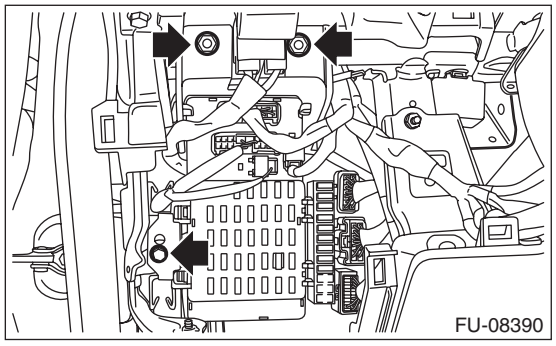

4) Remove the oxygen sensor relay from the relay block.

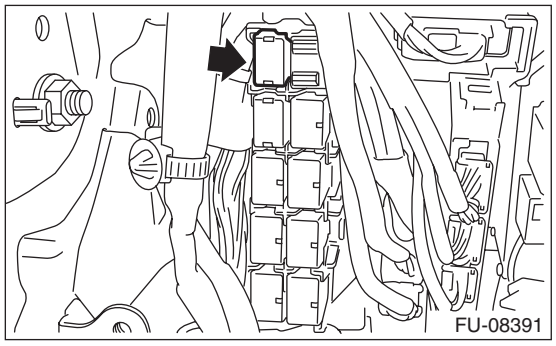

B: INSTALLATION

Install in the reverse order of removal.

Tightening torque:
7.5 N·m (0.8 kgf-m, 5.5 ft-lb)

C: INSPECTION

1) Check that the oxygen sensor relay has no deformation, cracks or other damages.
2) Measure the resistance between oxygen sensor relay terminals.

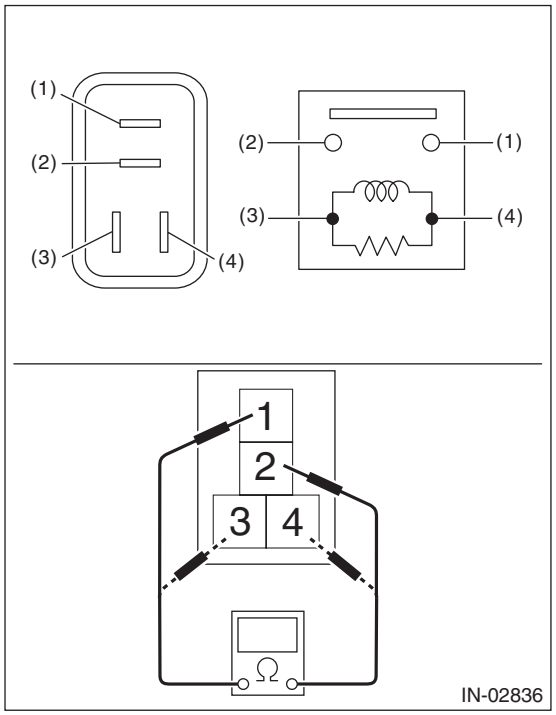

Terminal No.	Standard
1 and 2	1 MΩ or more
3 and 4	130.4 — 230.8 Ω (when 20°C (68°F))

3) Connect battery positive terminal to terminal No. 3 and battery ground terminal to terminal No. 4, and measure the resistance between oxygen sensor relay terminals.

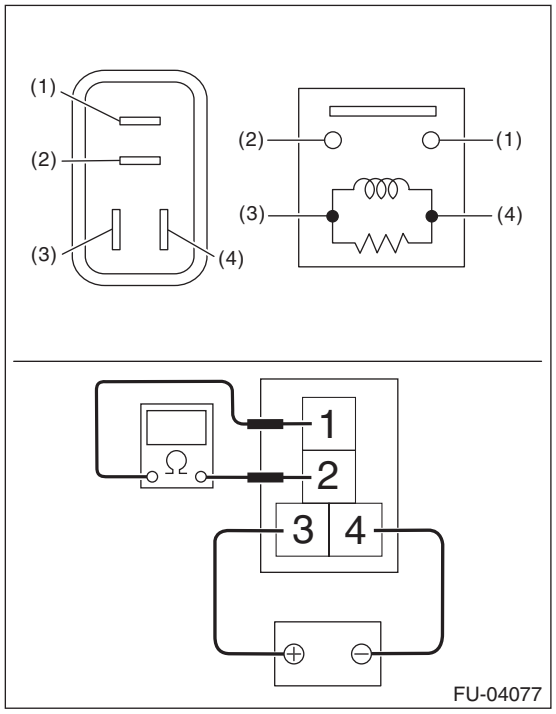

Terminal No.	Standard
1 and 2	Less than 1 Ω

22. Electronic Throttle Control Relay

A: REMOVAL

1) Disconnect the ground cable from battery.
2) Remove the instrument panel lower cover. <Ref. to EI-62, REMOVAL, Instrument Panel Lower Cover.>
3) Remove the bolts and nuts securing the fuse block and move down the fuse block.

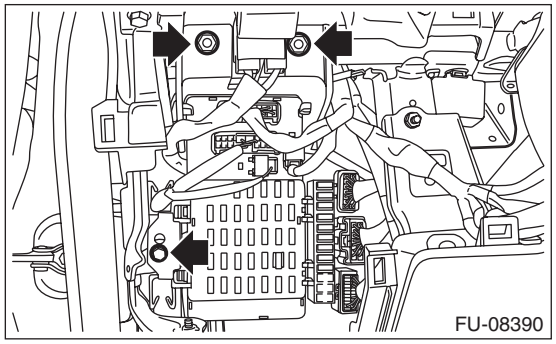

4) Remove the electronic throttle control relay from the relay block.

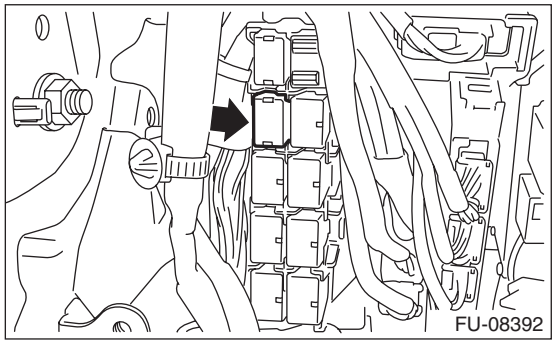

B: INSTALLATION

Install in the reverse order of removal.

Tightening torque:
7.5 N·m (0.8 kgf-m, 5.5 ft-lb)

C: INSPECTION

1) Check that the electronic throttle control relay has no deformation, cracks or other damages.
2) Measure the resistance between electronic throttle control relay terminals.

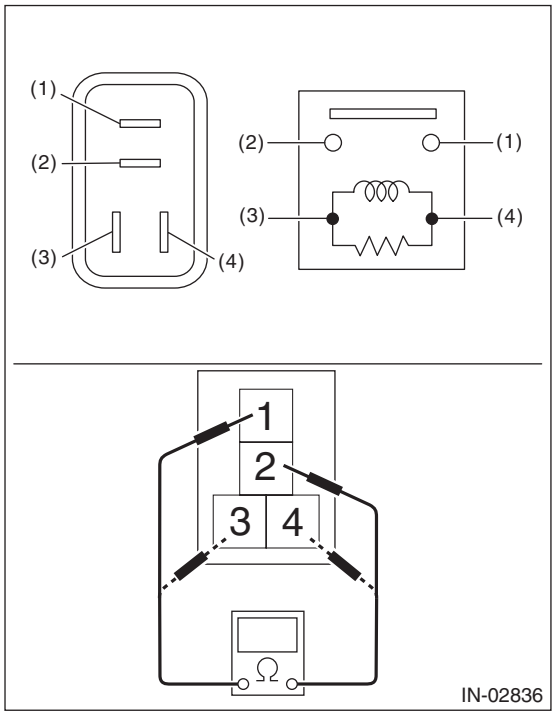

Terminal No.	Standard
1 and 2	1 MΩ or more
3 and 4	93.8 — 136.4 Ω (when 20°C (68°F))

3) Connect battery positive terminal to terminal No. 3 and battery ground terminal to terminal No. 4, and measure the resistance between the electronic throttle control relay terminals.

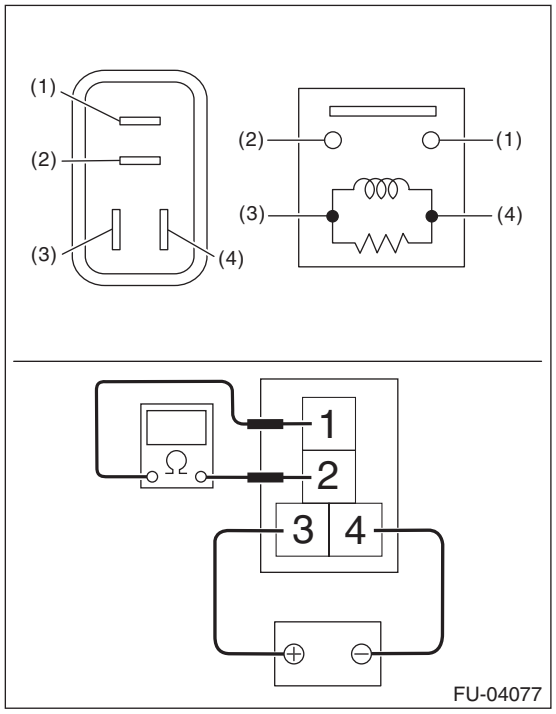

Terminal No.	Standard
1 and 2	Less than 1 Ω

23.Fuel Pump Relay

A: REMOVAL

1) Disconnect the ground cable from battery.
2) Remove the glove box. <Ref. to EI-64, REMOVAL, Glove Box.>
3) Remove the fuel pump relay from relay block.

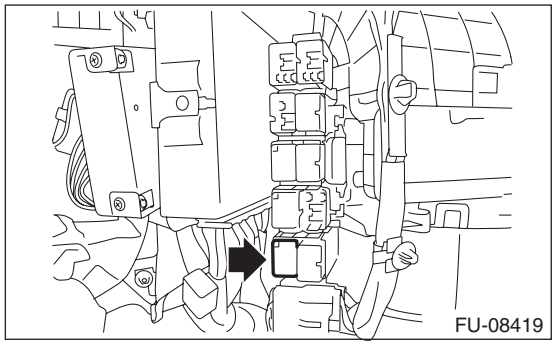

B: INSTALLATION

Install in the reverse order of removal.

C: INSPECTION

1) Check that the fuel pump relay has no deformation, cracks or other damages.
2) Measure the resistance between fuel pump relay terminals.

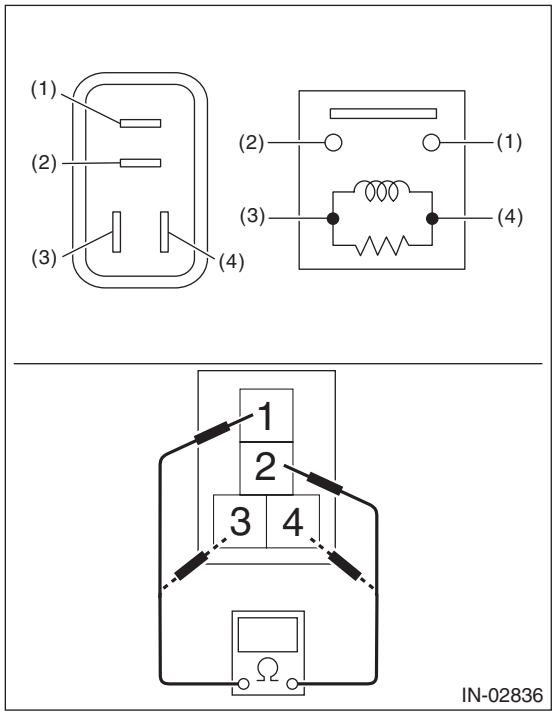

Terminal No.	Standard
1 and 2	1 MΩ or more
3 and 4	93.8 — 136.4 Ω (when 20°C (68°F))

3) Connect battery positive terminal to terminal No. 3 and battery ground terminal to terminal No. 4, and measure the resistance between the fuel pump relay terminals.

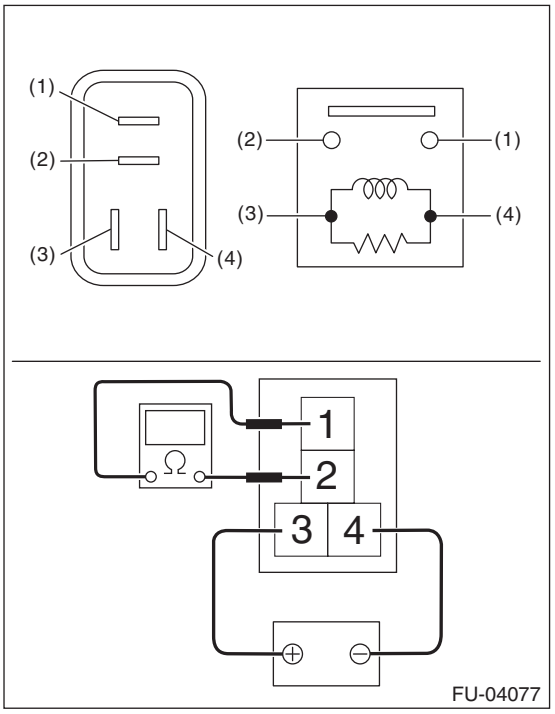

Terminal No.	Standard
1 and 2	Less than 1 Ω

24.Fuel Pump Control Unit

A: REMOVAL

1) Disconnect the ground cable from battery.
2) Remove the right side trunk side trim. <Ref. to EI-98, REMOVAL, Trunk Room Trim.>
3) Disconnect the connector (A) from the fuel pump control unit, and remove the fuel pump control unit.

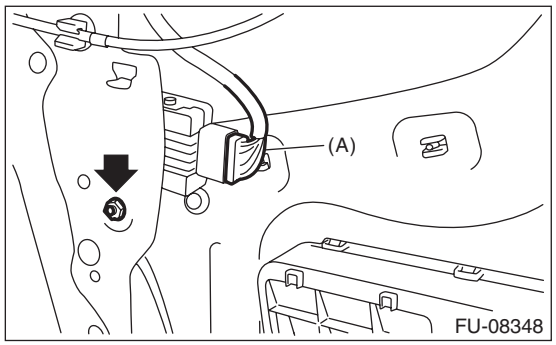

B: INSTALLATION

Install in the reverse order of removal.

Tightening torque:
5 N·m (0.5 kgf-m, 3.7 ft-lb)

C: INSPECTION

Check that the fuel pump control unit has no deformation, cracks or other damages.

25.Fuel

A: PROCEDURE

1. RELEASING OF FUEL PRESSURE

WARNING:
Place "NO OPEN FLAMES" signs near the working area.

CAUTION:
Be careful not to spill fuel.
1) Remove the fuse of fuel pump from main fuse box.

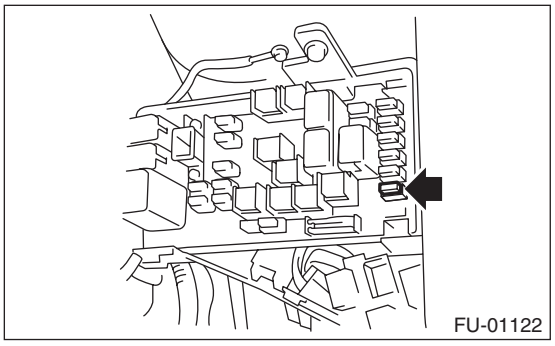

2) Start the engine and run it until it stalls.
3) After the engine stalls, crank it for five more seconds.
4) Turn the ignition switch to OFF.
5) Install the fuse of fuel pump to the main fuse box.

2. DRAINING FUEL (WITH SUBARU SELECT MONITOR)

WARNING:
Place "NO OPEN FLAMES" signs near the working area.

CAUTION:
Be careful not to spill fuel.

NOTE:
• If the fuel pump cannot be driven, refer to the procedures for draining from the fuel filler hose. <Ref. to FU(STI)-64, DRAINING FUEL (THROUGH THE FUEL FILLER HOSE), PROCEDURE, Fuel.>
• Be careful not to let the battery run-out.
• Be aware that the fuel may remain in the fuel tank after draining the fuel.
1) Release the fuel pressure. <Ref. to FU(STI)-64, RELEASING OF FUEL PRESSURE, PROCEDURE, Fuel.>
2) Attach ST to the fuel delivery pipe and push ST in the direction of arrow mark to disconnect the fuel delivery hose.
ST 42099AE000 QUICK CONNECTOR RELEASE

CAUTION:
• Be careful not to spill fuel.
• Catch the fuel from hoses using a container or cloth.

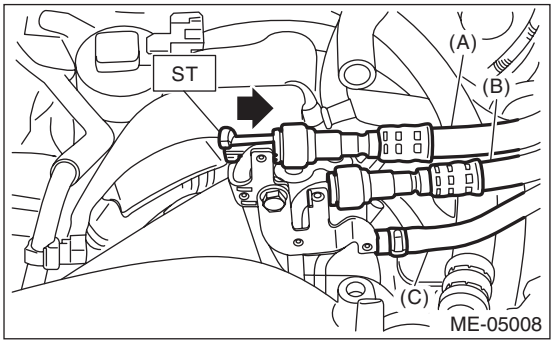

(A) Fuel delivery hose
(B) Fuel return hose
(C) Evaporation hose

3) Connect ST to the fuel delivery hose.
ST 18471AA000 FUEL PIPE ADAPTER
4) Connect the gasoline proof hose to ST and put the end of the hose in the container.
5) Drive the fuel pump and drain the fuel using Subaru Select Monitor. <Ref. to EN(STI)(diag)-69, OPERATION, Active Test.>

CAUTION:
Be careful not to spill fuel.
6) Install the related parts in the reverse order after draining the fuel.

3. DRAINING FUEL (THROUGH THE FUEL FILLER HOSE)

WARNING:
Place "NO OPEN FLAMES" signs near the working area.

CAUTION:
• Be careful not to spill fuel.
• Fuel may remain in the fuel filler pipe. Drain the fuel from the fuel filler pipe through the fill opening using the gasoline proof pump and the gasoline proof hose (ø10 or less) before the operation.

NOTE:
Be aware that the fuel may remain in the fuel tank after draining the fuel.
1) Lift up the vehicle.
2) Open the fuel filler lid and remove the fuel filler cap.

NOTE:
This operation is required to release the inner pressure of the fuel tank.

3) Drain the fuel from the fuel filler pipe through the filler opening using the gasoline proof pump and the gasoline proof hose (ø10 or less).
4) Disconnect the fuel filler hose from the fuel filler pipe assembly.

CAUTION:
- **Be careful not to spill fuel.**
- **Catch the fuel from hoses using a container or cloth.**

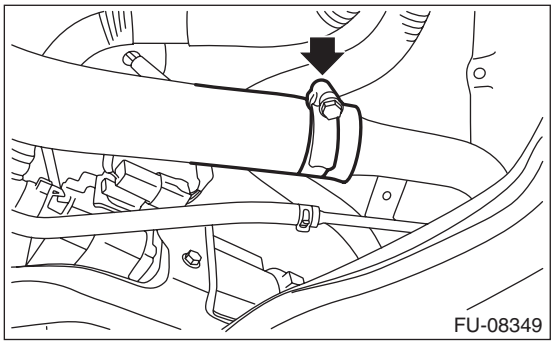

5) Set the container under the vehicle and insert the gasoline proof hose (ø10 or less) into the fuel filler hose to drain the fuel.

CAUTION:
Be careful not to spill fuel.
6) Install the related parts in the reverse order after draining the fuel.

NOTE:
Correctly insert the fuel filler hose to the spool, and then install the clamp as shown.

Tightening torque:
2.5 N·m (0.3 kgf-m, 1.8 ft-lb)

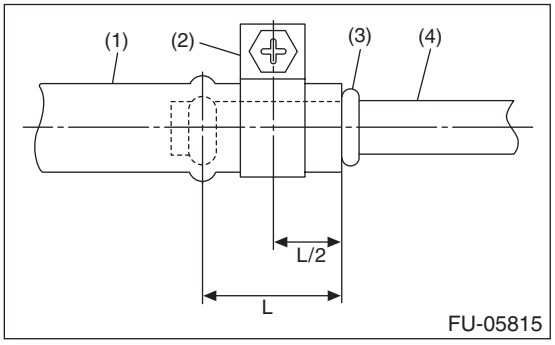

(1) Fuel filler hose
(2) Clamp
(3) Spool
(4) Fuel filler pipe

26.Fuel Tank Protector

A: REMOVAL

1) Lift up the vehicle.
2) Remove the bolt and nuts and remove the fuel tank protector.

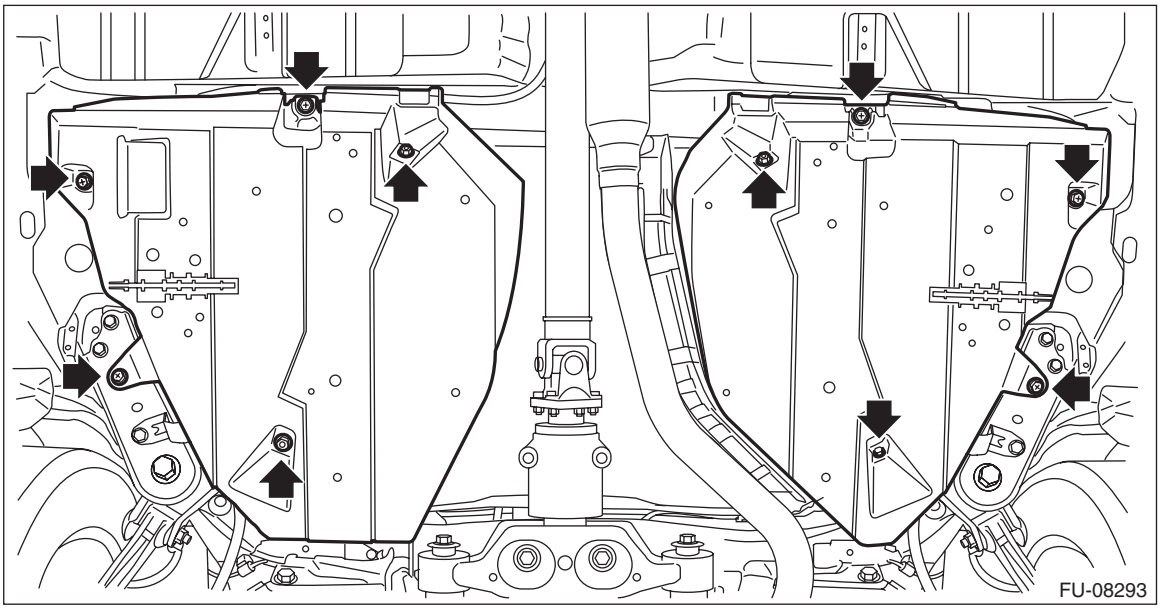

B: INSTALLATION

Install in the reverse order of removal.

NOTE:
Use a new self-locking nut.

Tightening torque:
T1: 9 N·m (0.9 kgf-m, 6.6 ft-lb)
T2: 18 N·m (1.8 kgf-m, 13.3 ft-lb)

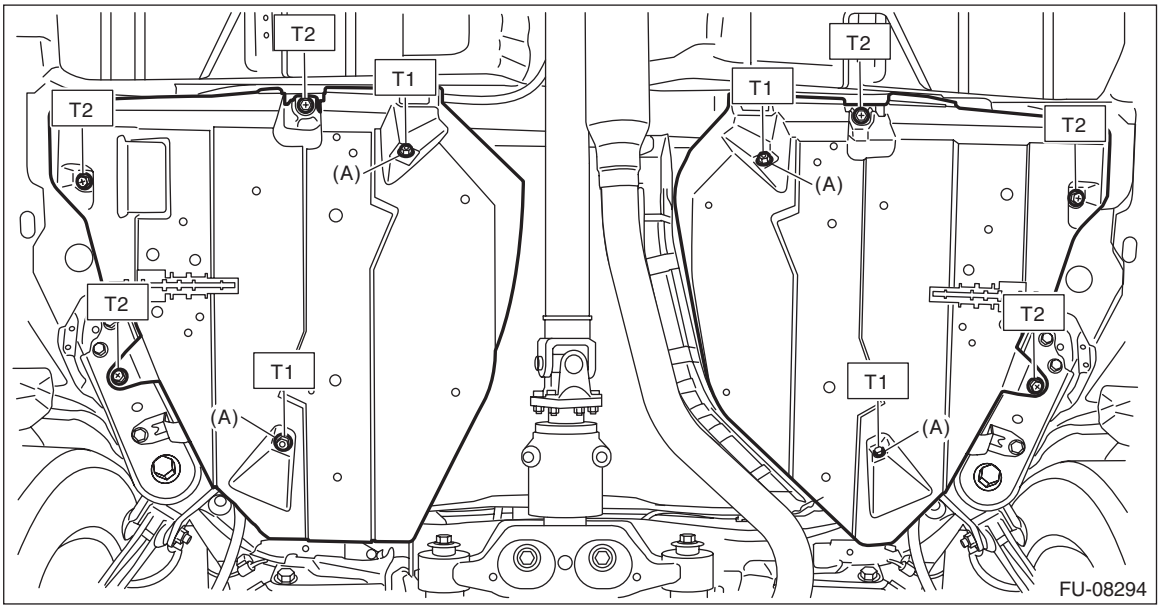

(A) Self-locking nut

27.Fuel Tank

A: REMOVAL

WARNING:
Place “NO OPEN FLAMES” signs near the working area.

CAUTION:
- **Be careful not to spill fuel.**
- **Catch the fuel from the tubes using a container or cloth.**

1) Release the fuel pressure. <Ref. to FU(STI)-64, RELEASING OF FUEL PRESSURE, PROCEDURE, Fuel.>
2) Drain fuel. <Ref. to FU(STI)-64, DRAINING FUEL (WITH SUBARU SELECT MONITOR), PROCEDURE, Fuel.>
3) Disconnect the ground cable from battery.
4) Remove the rear seat cushion. <Ref. to SE-30, REMOVAL, Rear Seat.>
5) Remove the service hole cover of fuel pump.

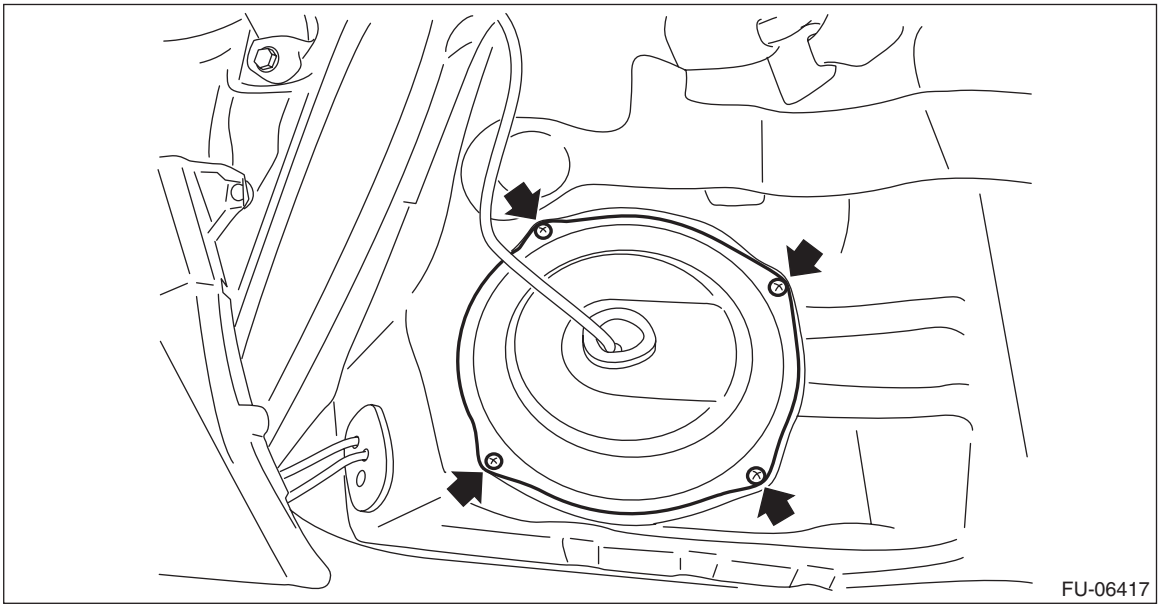

6) Disconnect connectors from the fuel pump, and move aside the service hole cover.

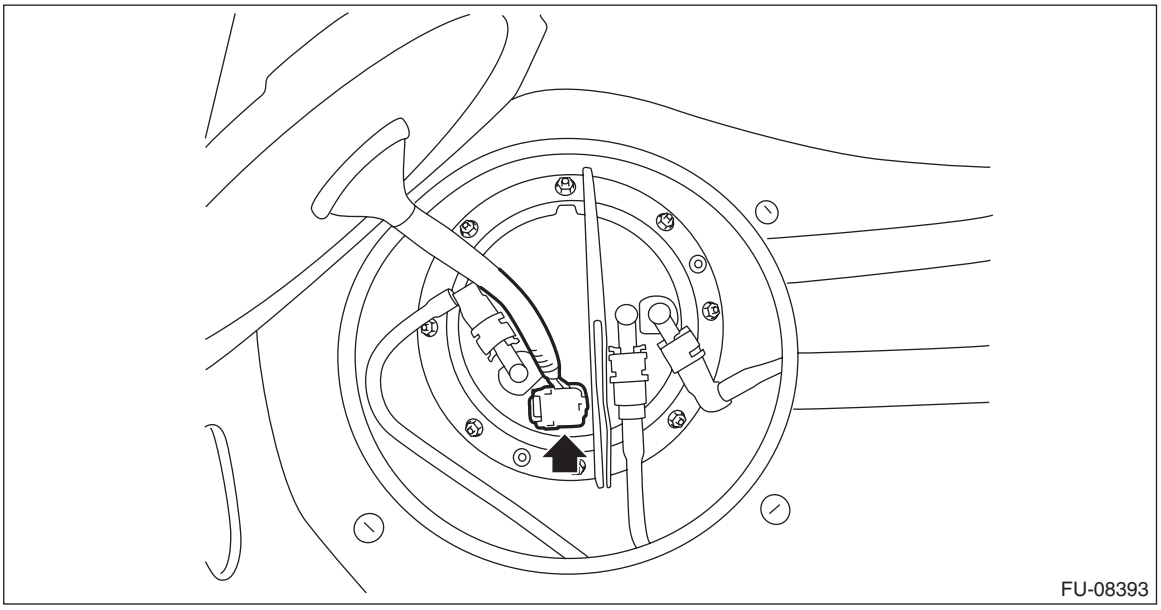

7) Remove the service hole cover of fuel sub level sensor.

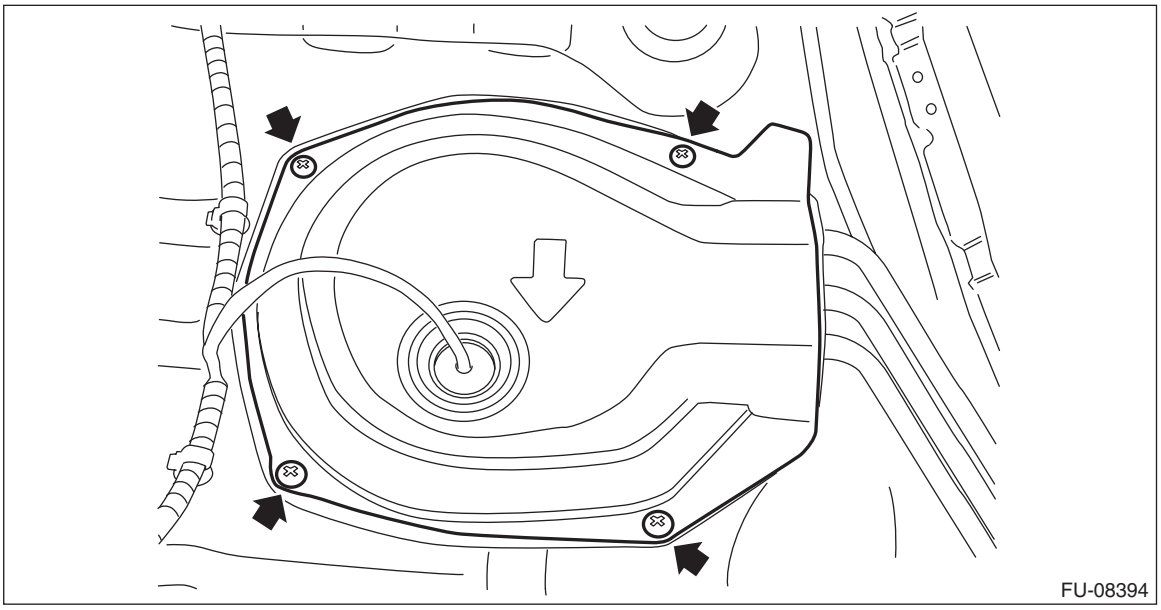

8) Disconnect the connector from the fuel sub level sensor, and move aside the service hole cover.

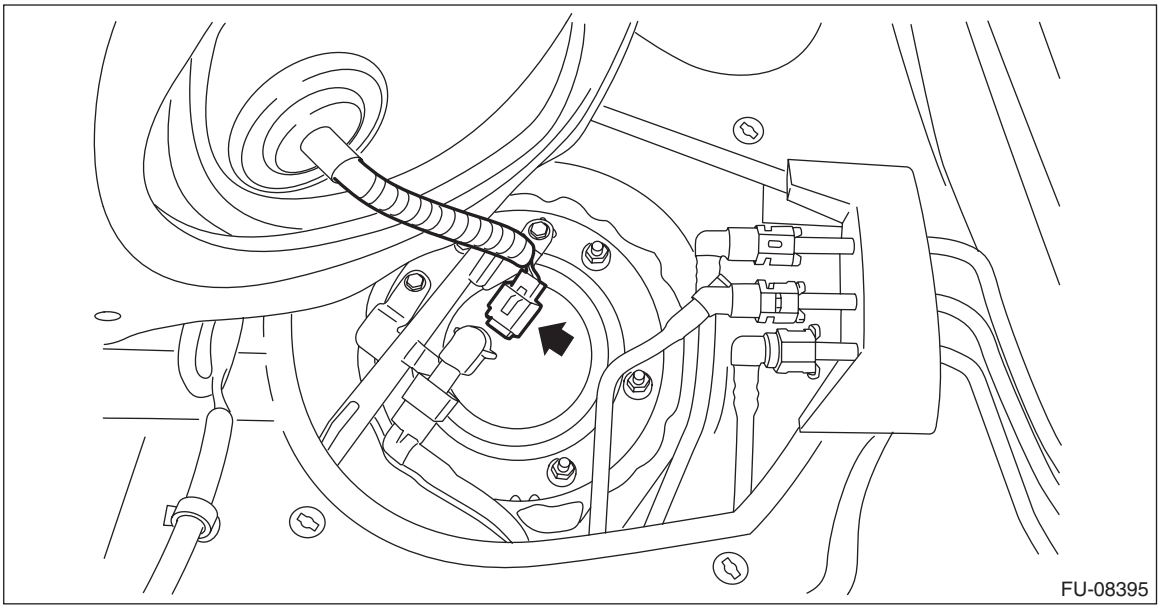

9) Disconnect the quick connector of fuel delivery tube (A) and fuel return tube (B). <Ref. to FU(STI)-100, REMOVAL, Fuel Delivery, Return and Evaporation Lines.>

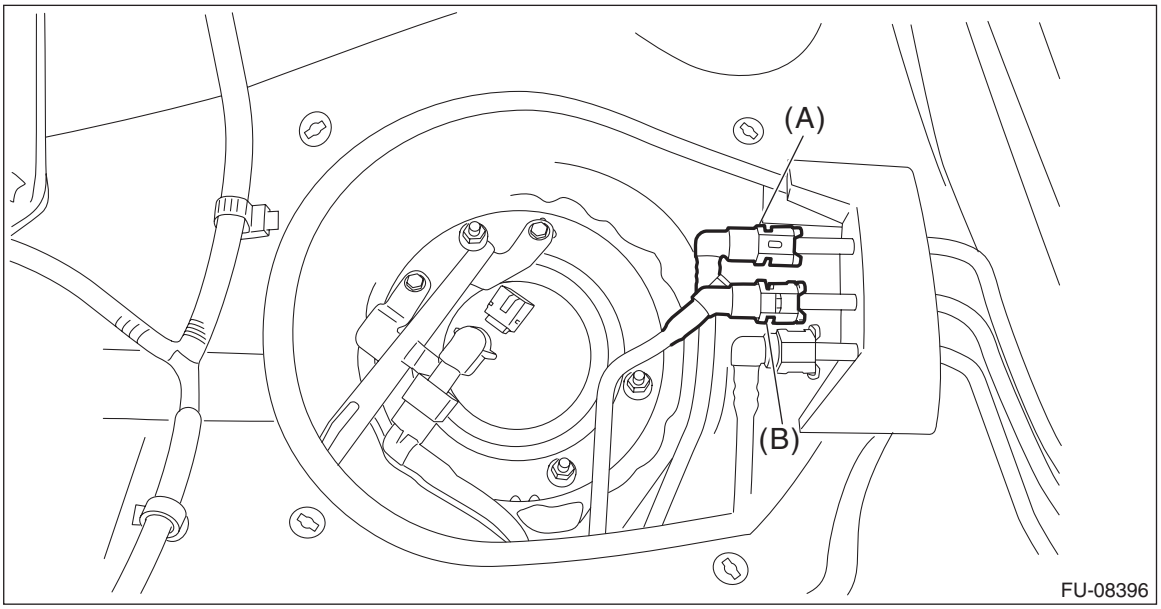

10) Lift up the vehicle.
11) Remove the rear exhaust pipe. <Ref. to EX(STI)-12, REMOVAL, Rear Exhaust Pipe.>
12) Remove the rear differential. <Ref. to DI-21, REMOVAL, Rear Differential (T-type).>
13) Disconnect the fuel filler hose (A) and evaporation hose (B) from the fuel filler pipe assembly.

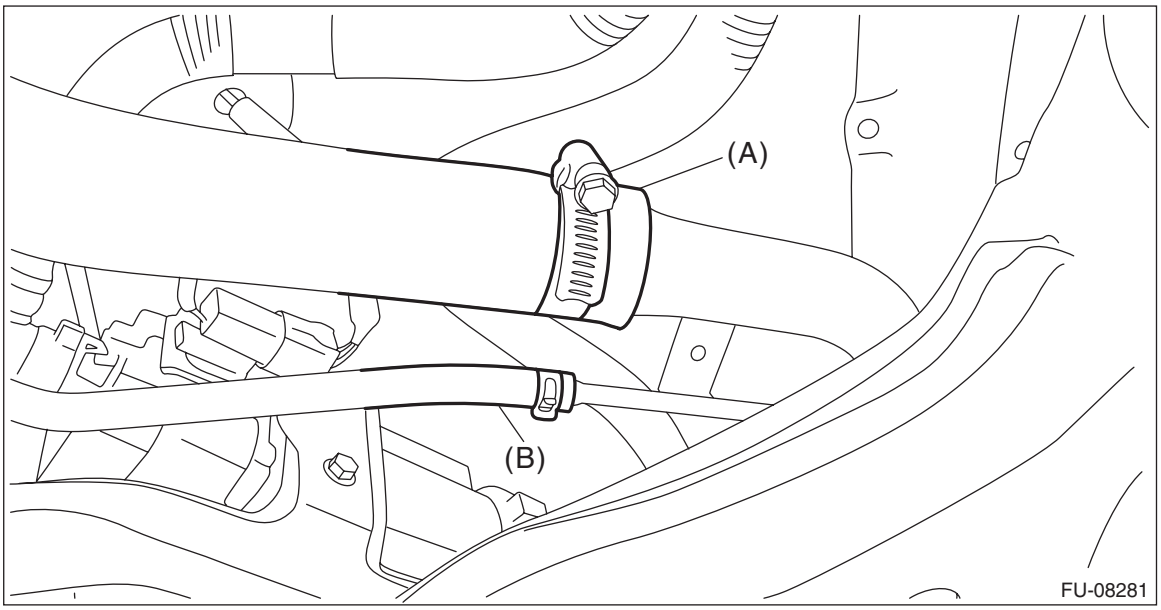

14) Disconnect the vent tube from vent hose.

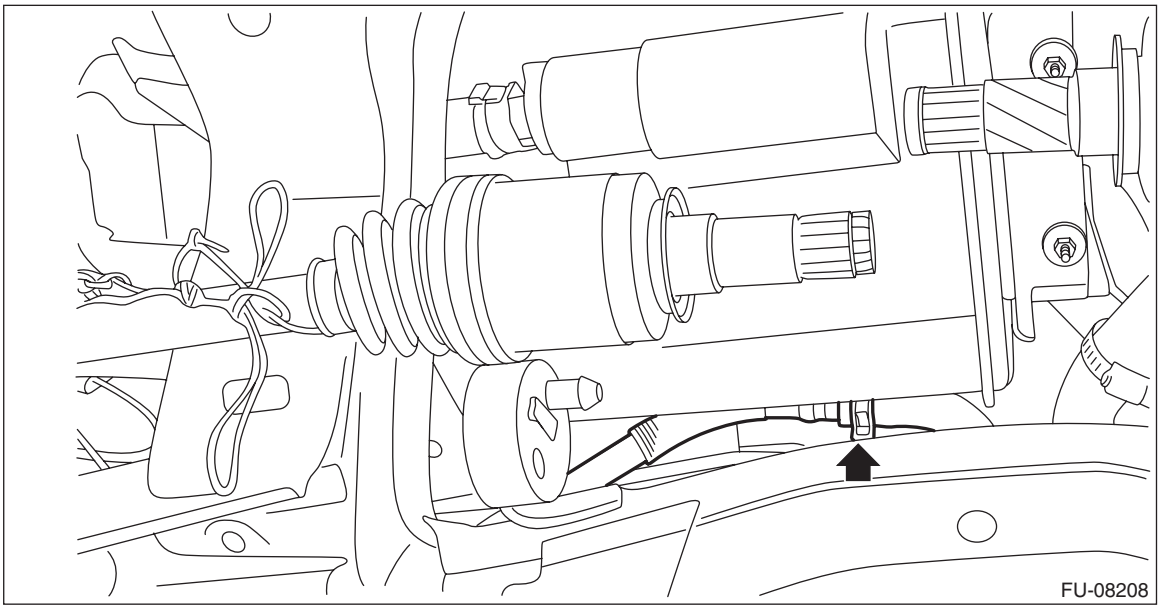

15) Remove the fuel tank protector. <Ref. to FU(STI)-66, REMOVAL, Fuel Tank Protector.>
16) Remove the heat shield cover and stopper.

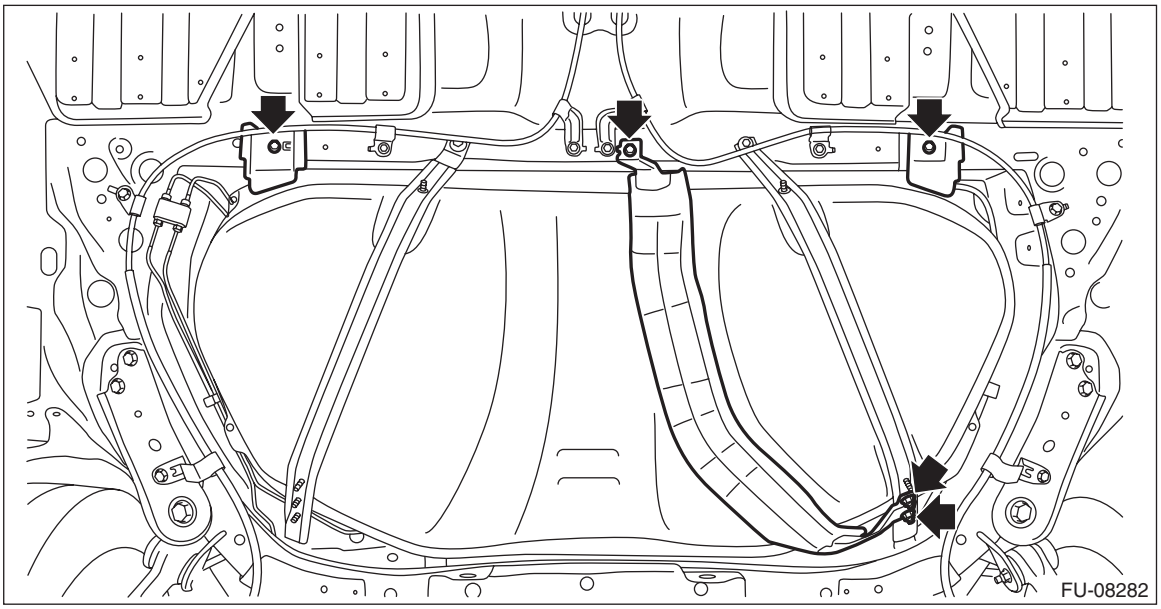

17) Support the fuel tank with a transmission jack, remove the bolts from the fuel tank band, and remove the fuel tank from the vehicle.

WARNING:
- **A helper is required to perform this work.**
- **Fuel may remain in the fuel tank. This will cause the left and right sides to be unbalanced. Be careful not to drop the fuel tank.**

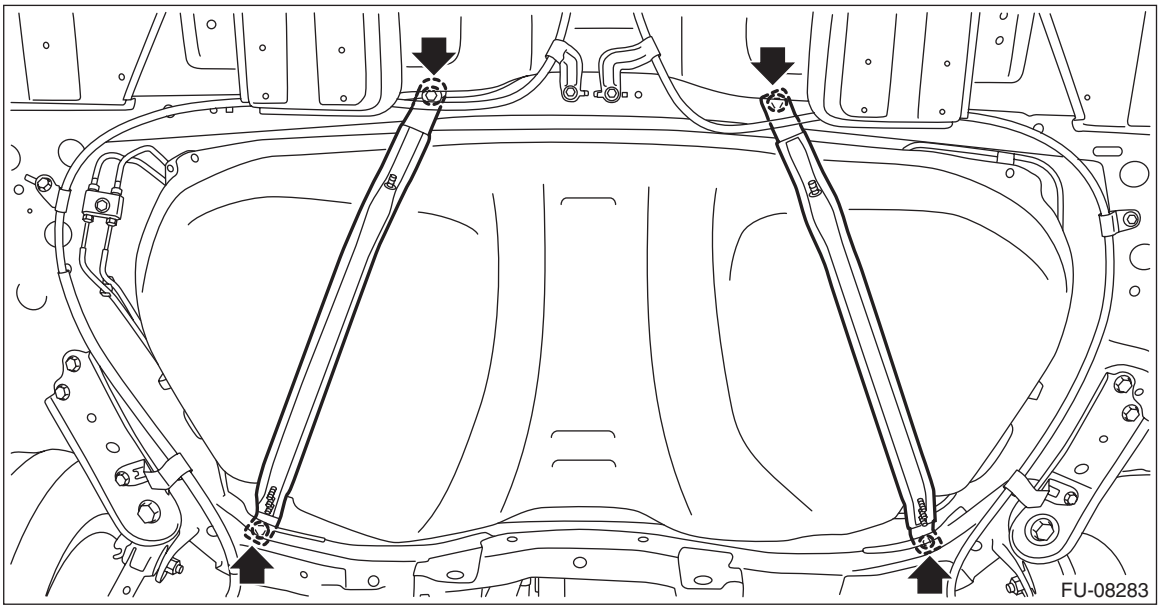

B: INSTALLATION

1) Support the fuel tank with a transmission jack, set the fuel tank in place, and temporarily tighten the bolts of the fuel tank band.

WARNING:
A helper is required to perform this work.

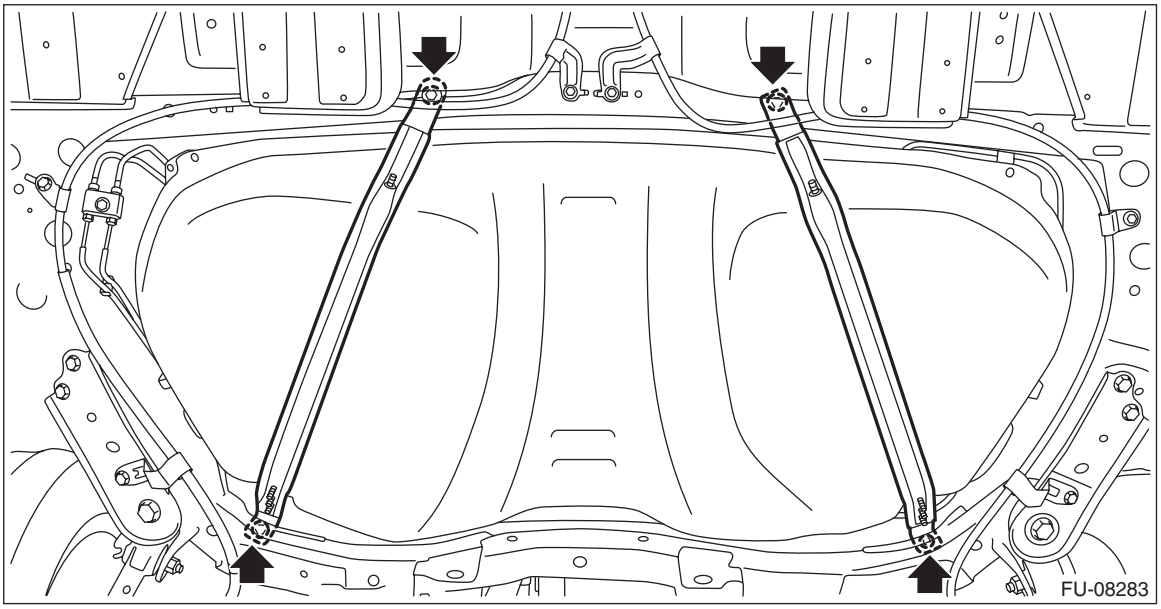

2) Tighten the bolts of the fuel tank band in the order shown in the figure.

Tightening torque:
33 N·m (3.4 kgf-m, 24.3 ft-lb)

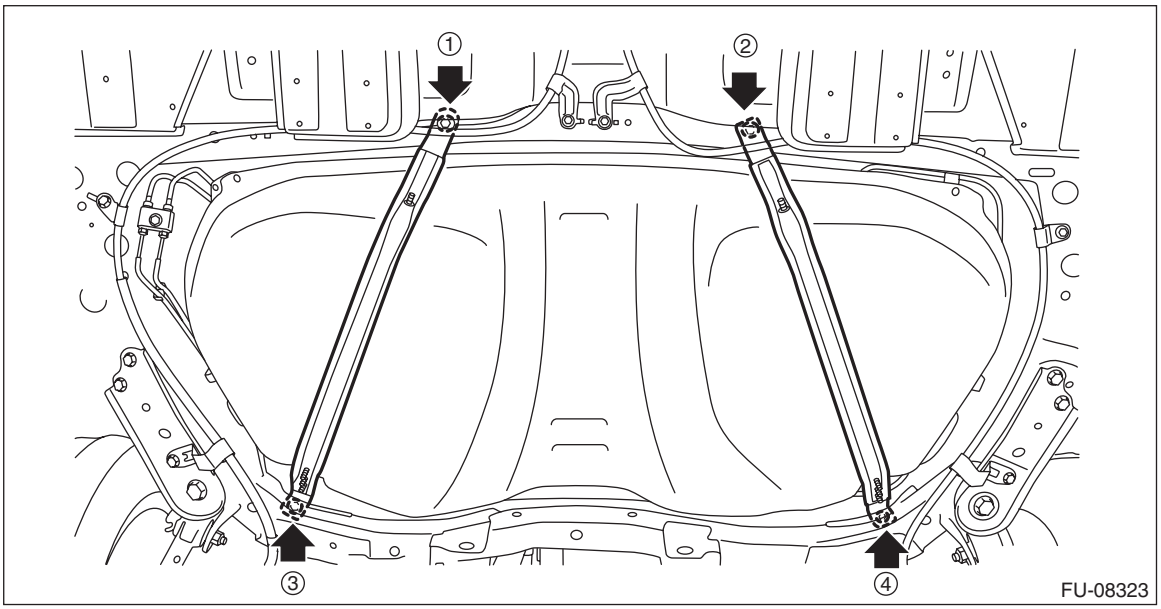

3) Install the heat shield cover and stopper.

Tightening torque:
18 N·m (1.8 kgf-m, 13.3 ft-lb)

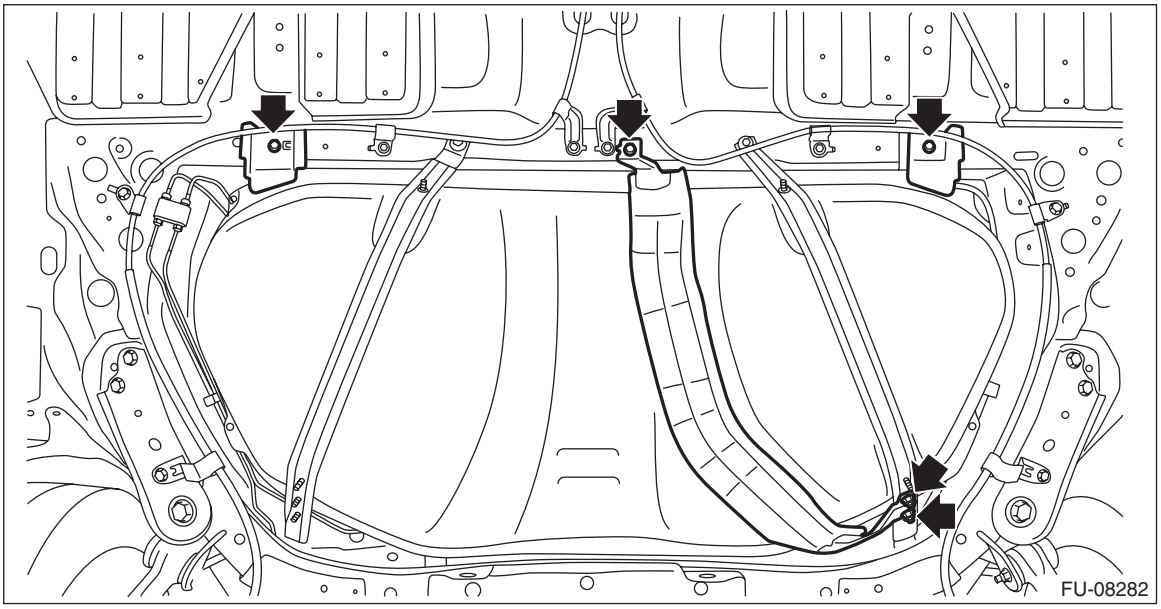

4) Install the fuel tank protector. <Ref. to FU(STI)-66, INSTALLATION, Fuel Tank Protector.>
5) Connect the vent tube to the vent hose.

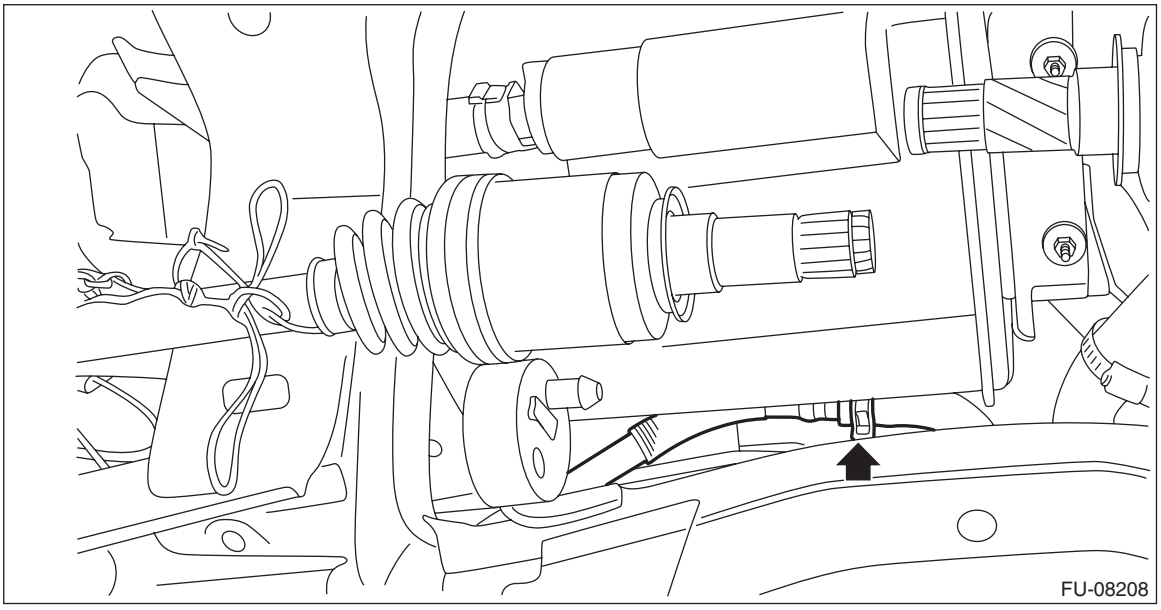

6) Securely insert the fuel filler hose (A) and evaporation hose (B) until the hose end contacts the spool, then attach the clamp or clip as shown in the figure.

Tightening torque:
2.5 N·m (0.3 kgf-m, 1.8 ft-lb)

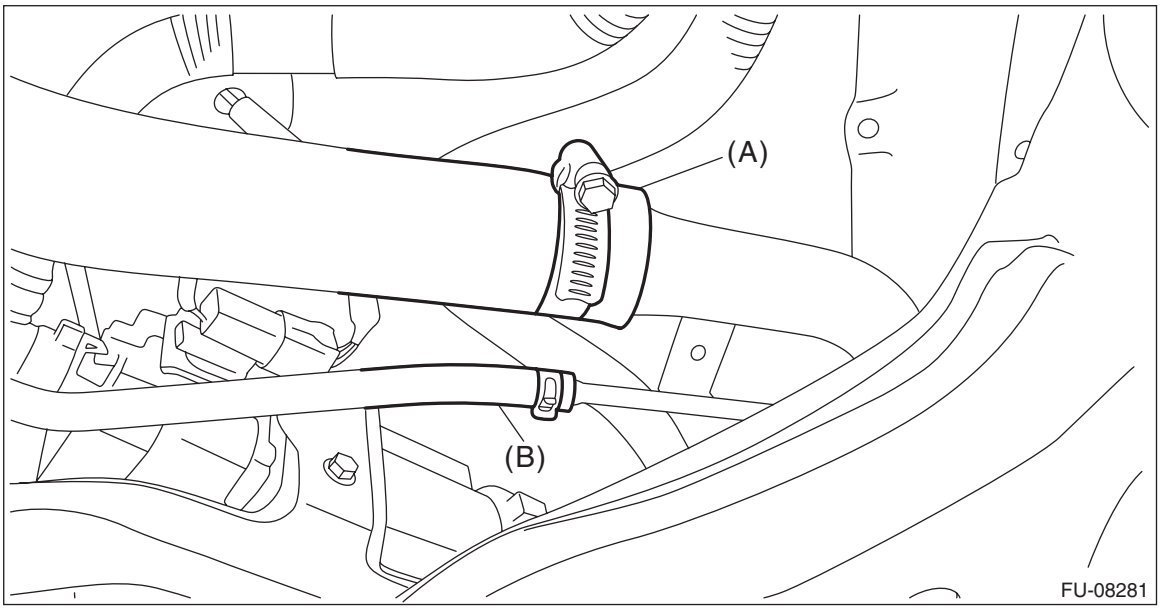

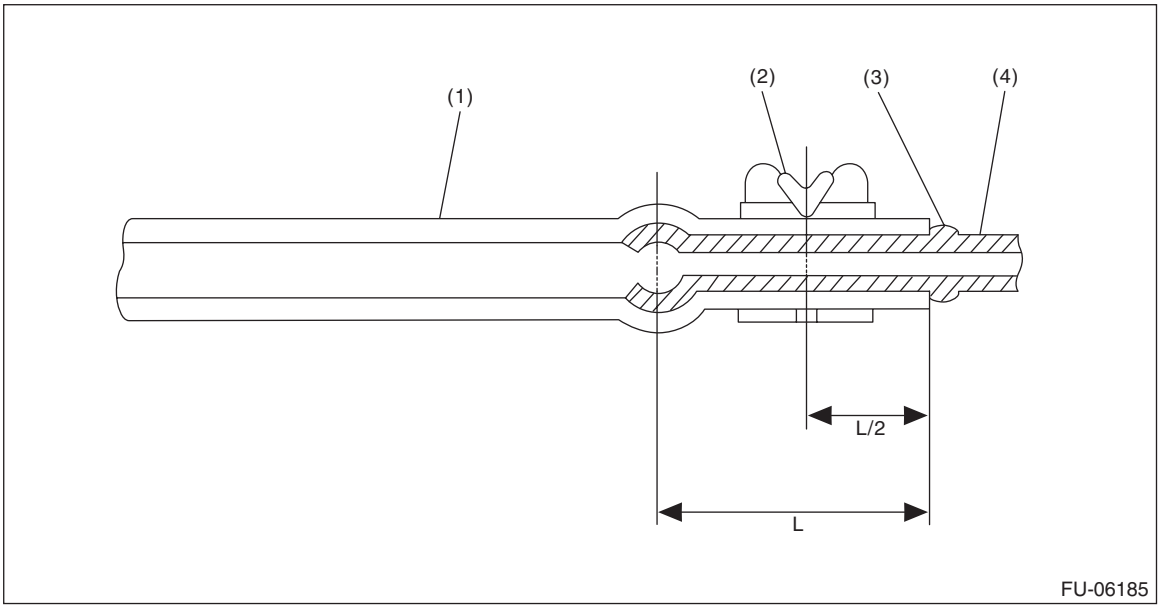

(1) Hose
(2) Clamp or clip
(3) Spool
(4) Pipe

7) Install the rear differential. <Ref. to DI-23, INSTALLATION, Rear Differential (T-type).>
8) Install the rear exhaust pipe. <Ref. to EX(STI)-12, INSTALLATION, Rear Exhaust Pipe.>
9) Connect the quick connector of fuel delivery tube (A) and fuel return tube (B). <Ref. to FU(STI)-102, INSTALLATION, Fuel Delivery, Return and Evaporation Lines.>

NOTE:
When connecting, be careful not to reverse the delivery side and return side.

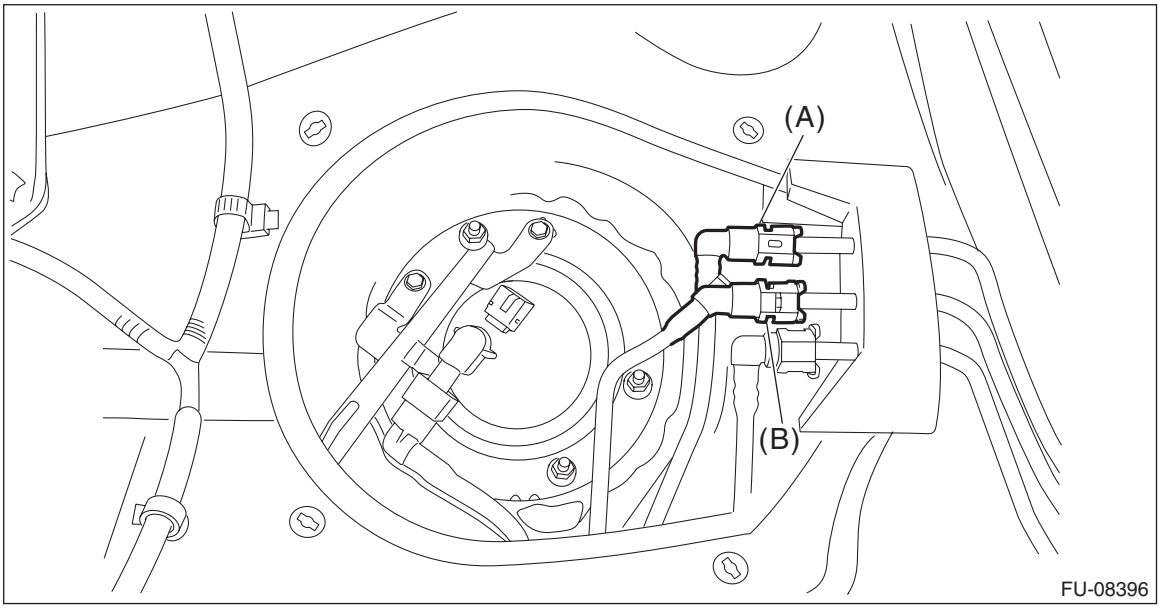

10) Connect the connector to the fuel sub level sensor.

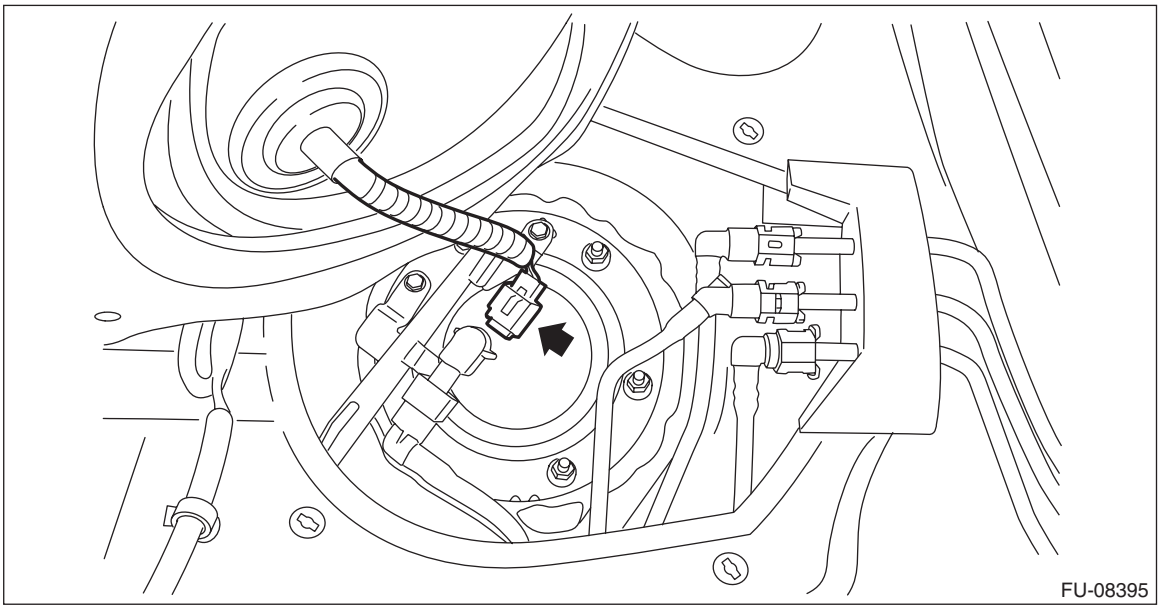

11) Install the service hole cover of fuel sub level sensor.

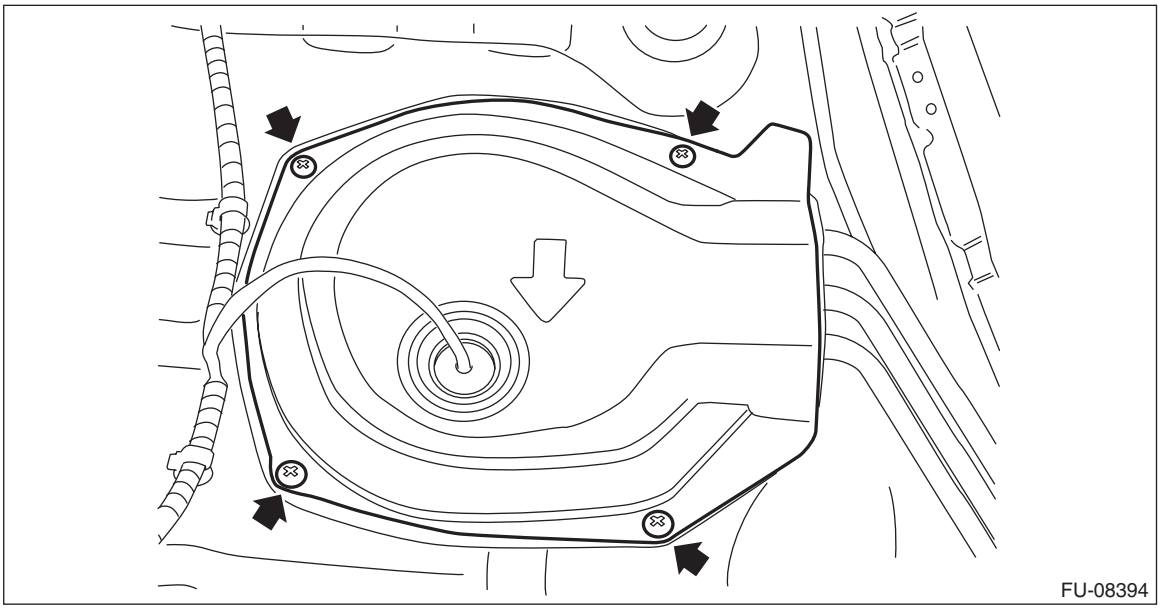

12) Connect the connector to the fuel pump.

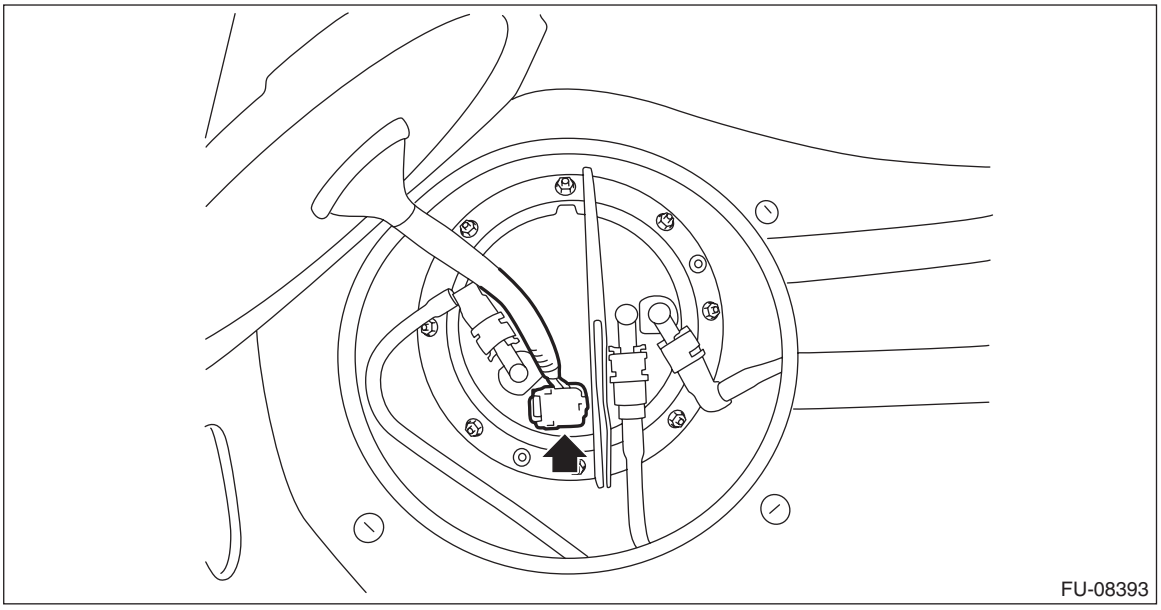

13) Install the service hole cover of fuel pump.

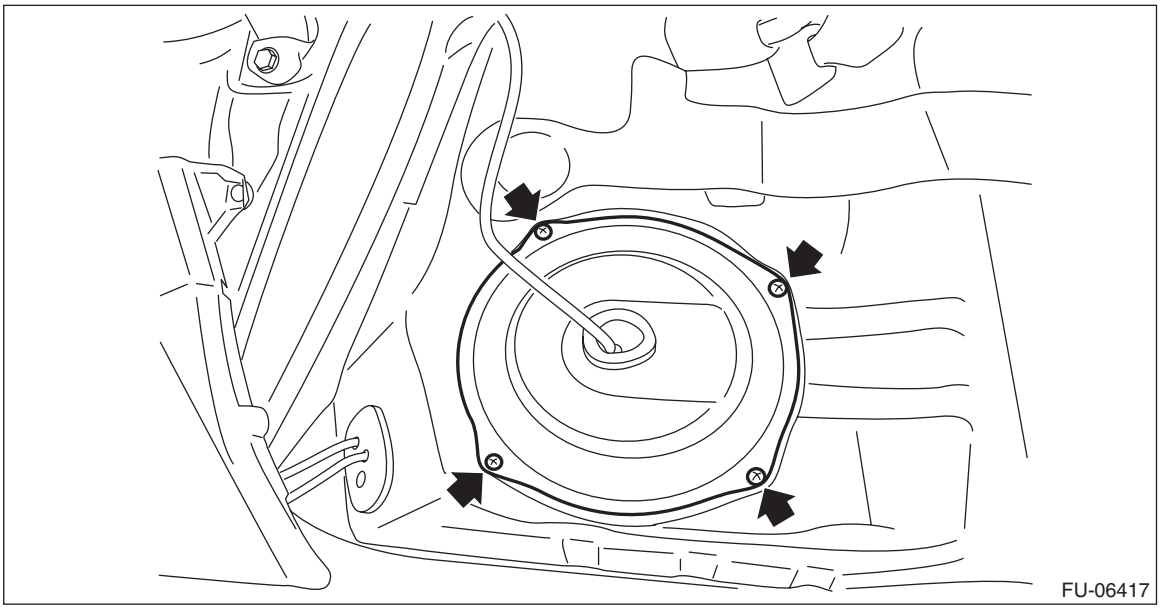

14) Install the rear seat cushion. <Ref. to SE-33, INSTALLATION, Rear Seat.>
15) Connect the battery ground terminal.

C: INSPECTION

1) Check that the fuel tank and fuel pipe have no deformation, cracks and other damages.
2) Check that the fuel hose and tube have no cracks, damage or loose part.

28.Fuel Filler Pipe

A: REMOVAL

WARNING:
Place “NO OPEN FLAMES” signs near the working area.

CAUTION:
Be careful not to spill fuel.

1) Release the fuel pressure. <Ref. to FU(STI)-64, RELEASING OF FUEL PRESSURE, PROCEDURE, Fuel.>
2) Drain fuel. <Ref. to FU(STI)-64, DRAINING FUEL (WITH SUBARU SELECT MONITOR), PROCEDURE, Fuel.>
3) Disconnect the ground cable from battery.
4) Open the fuel filler lid and remove the fuel filler cap.
5) Turn the fuel filler pipe protector in the direction of the arrow to unlock and remove it.

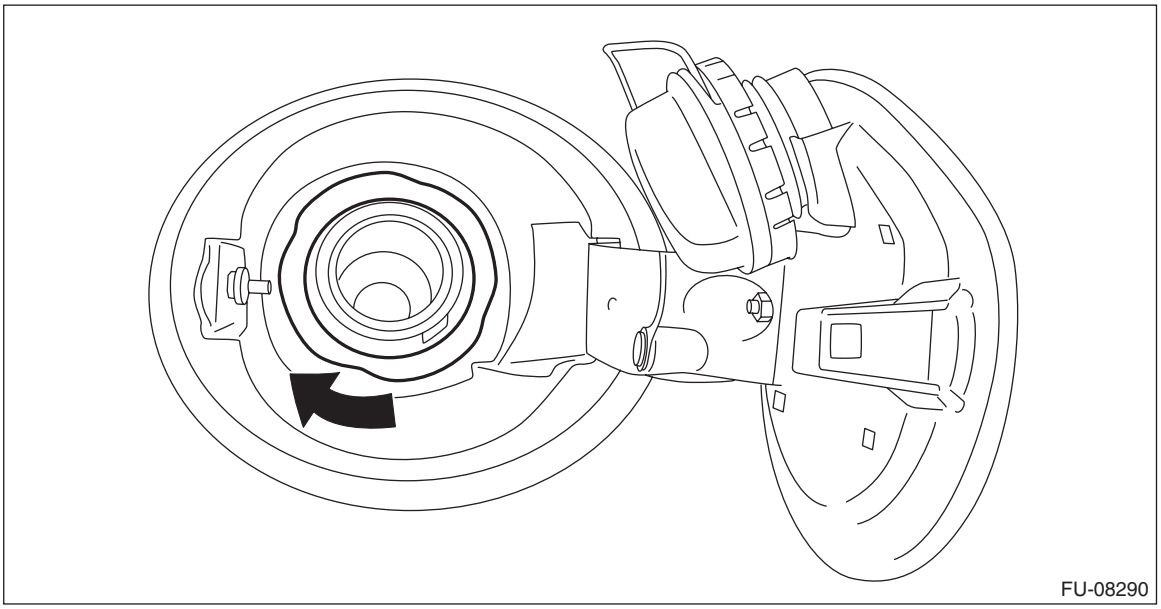
FU-08290

6) Remove the rear sub frame assembly. <Ref. to RS-9, REMOVAL, Rear Sub Frame.>
7) Remove the rear mud guard RH. <Ref. to EI-24, REMOVAL, Mud Guard.>
8) Disconnect the fuel filler hose (A) and evaporation hose (B) from the fuel filler pipe assembly.

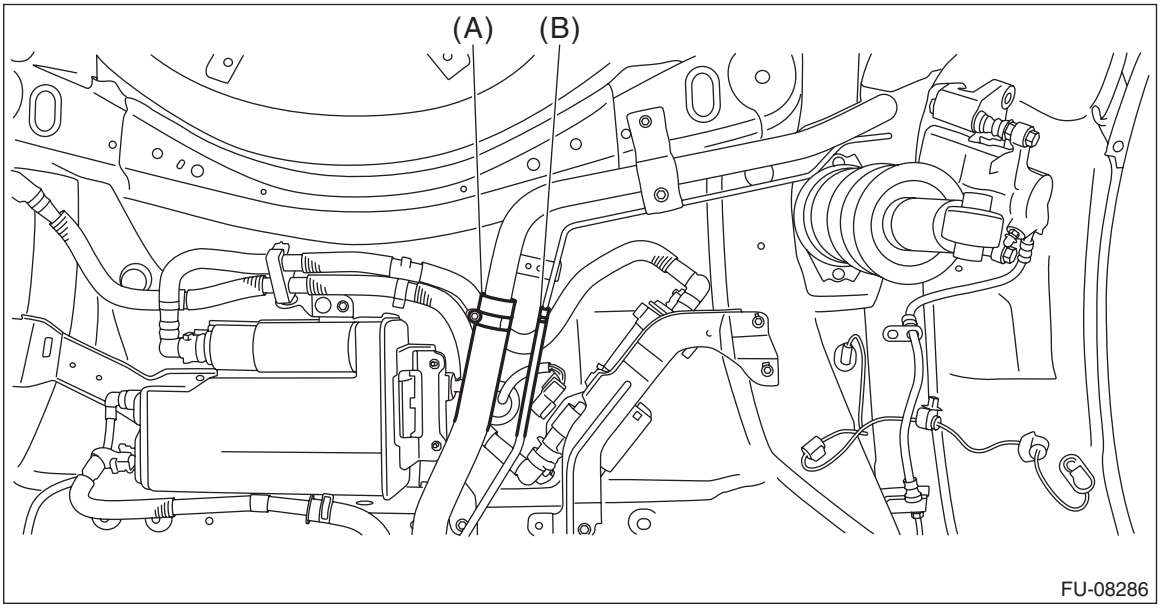

FU-08286

9) Remove the bolts and nuts which secure the fuel filler pipe assembly to the vehicle.

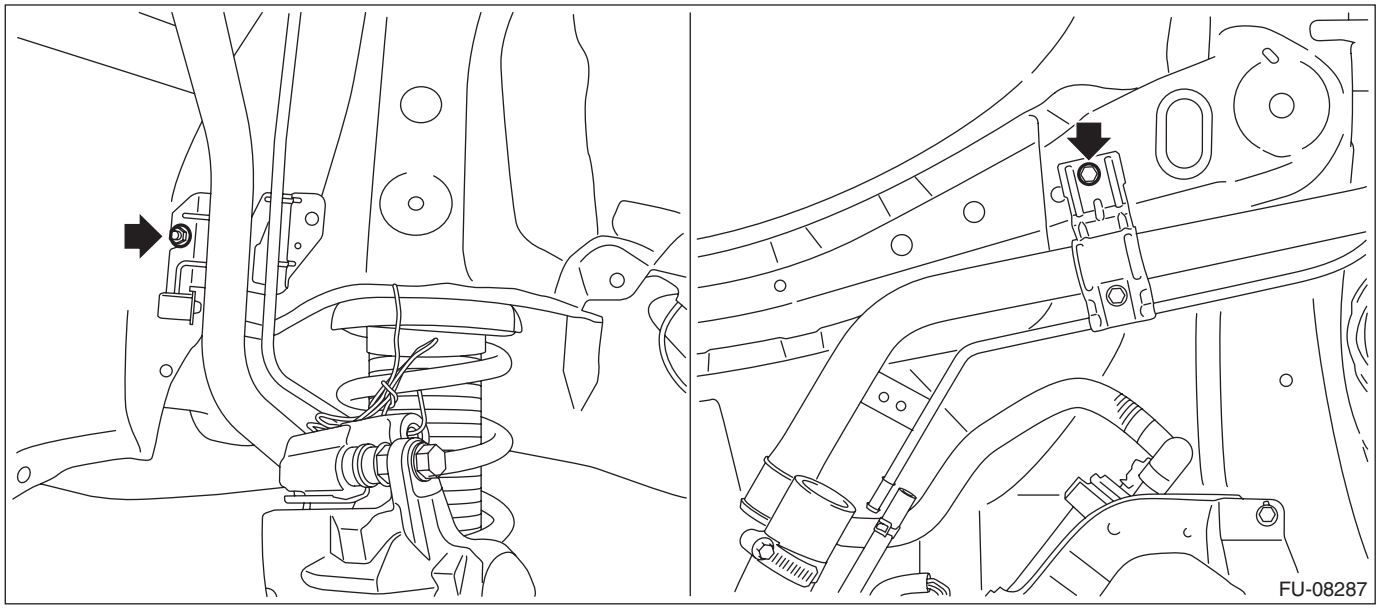

10) Remove the fuel filler pipe assembly from the underside of the vehicle.

B: INSTALLATION

1) Open the fuel filler lid.
2) Insert the fuel filler pipe assembly from inside of the rear fender.
3) Install the fuel filler pipe assembly to the vehicle.

Tightening torque:
7.5 N·m (0.8 kgf-m, 5.5 ft-lb)

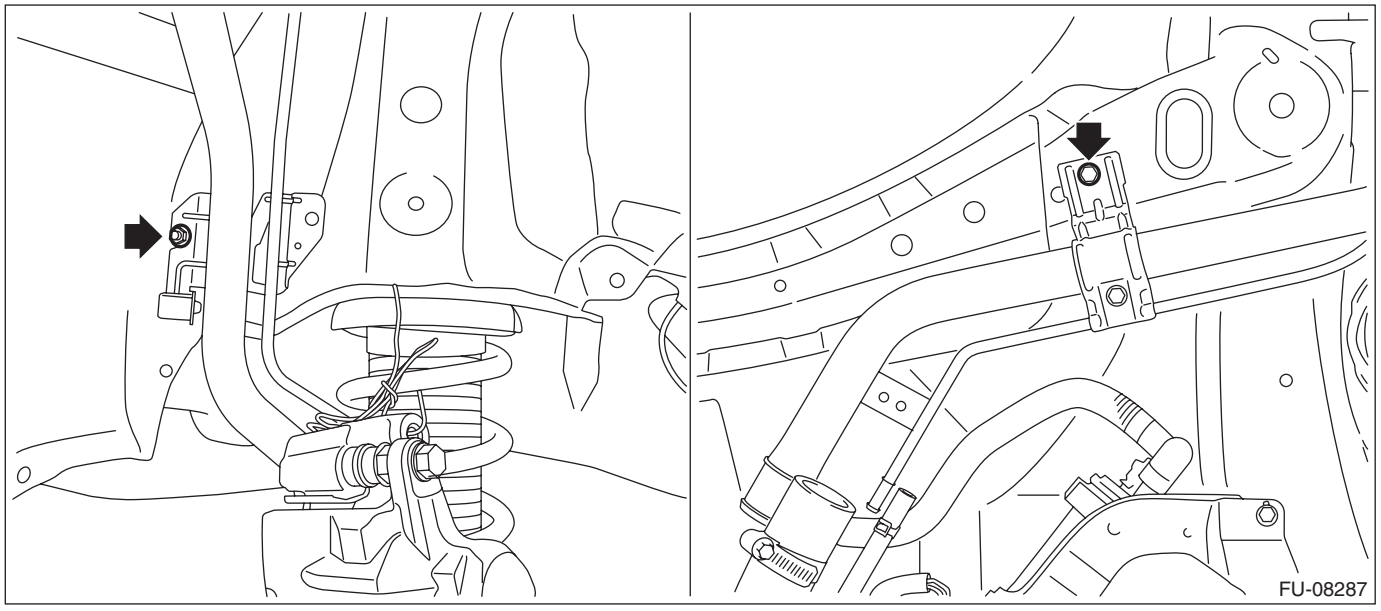

4) Align the cutout on the fuel filler pipe protector and the protrusion of the neck holder and insert them all the way, and then turn the fuel filler pipe protector in the direction of the arrow until it is locked.

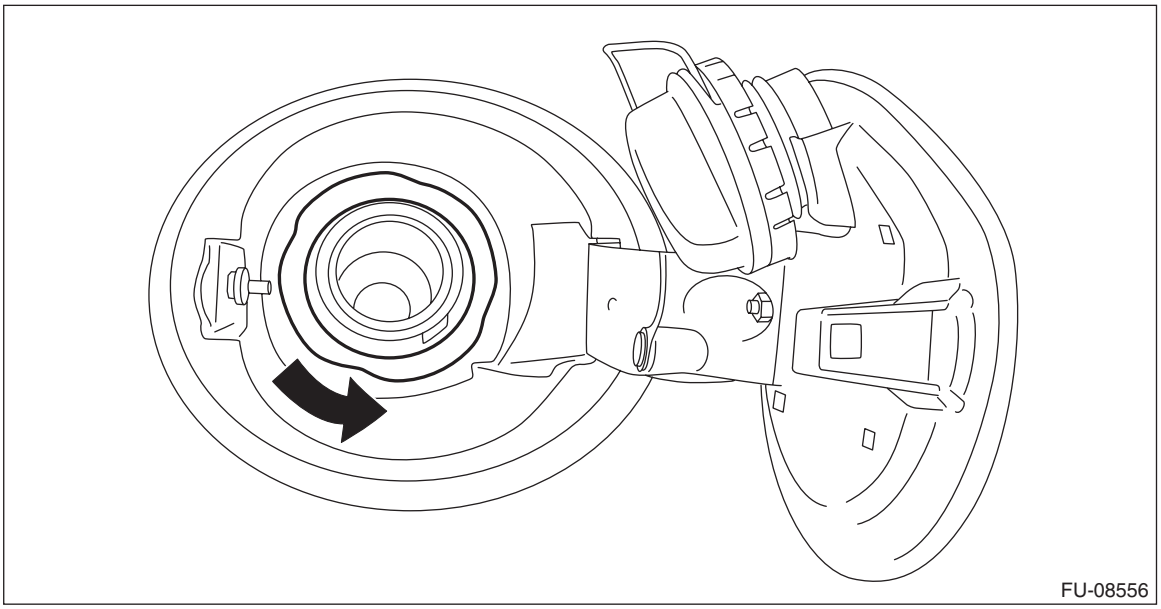

5) Securely insert the fuel filler hose (A) and evaporation hose (B) until the hose end contacts the spool, then attach the clamp or clip as shown in the figure.

Tightening torque:
2.5 N·m (0.3 kgf-m, 1.8 ft-lb)

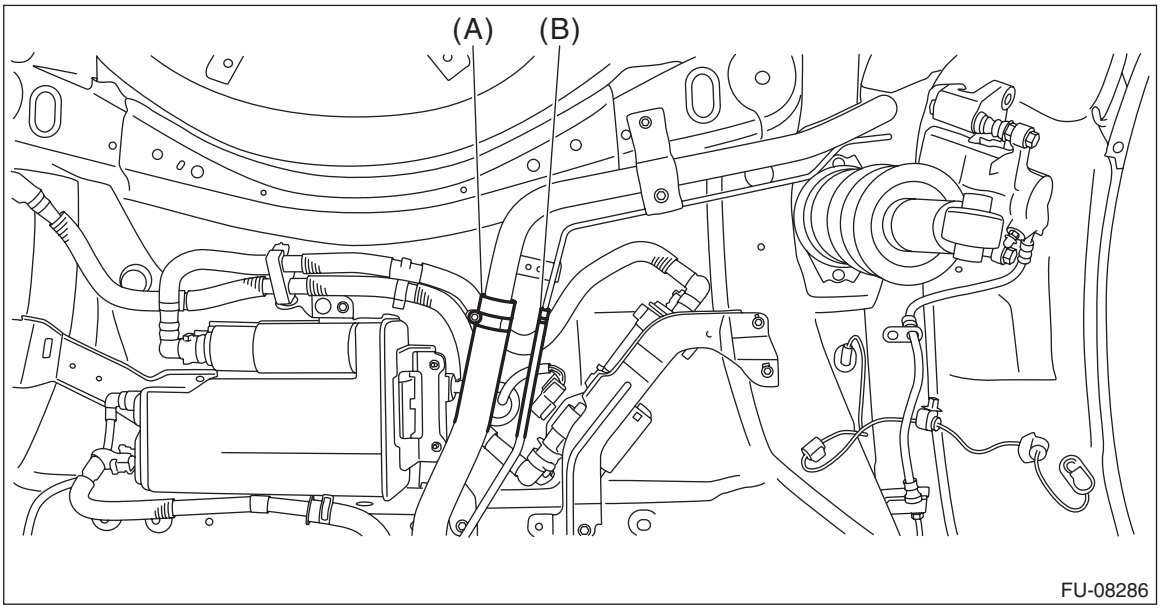

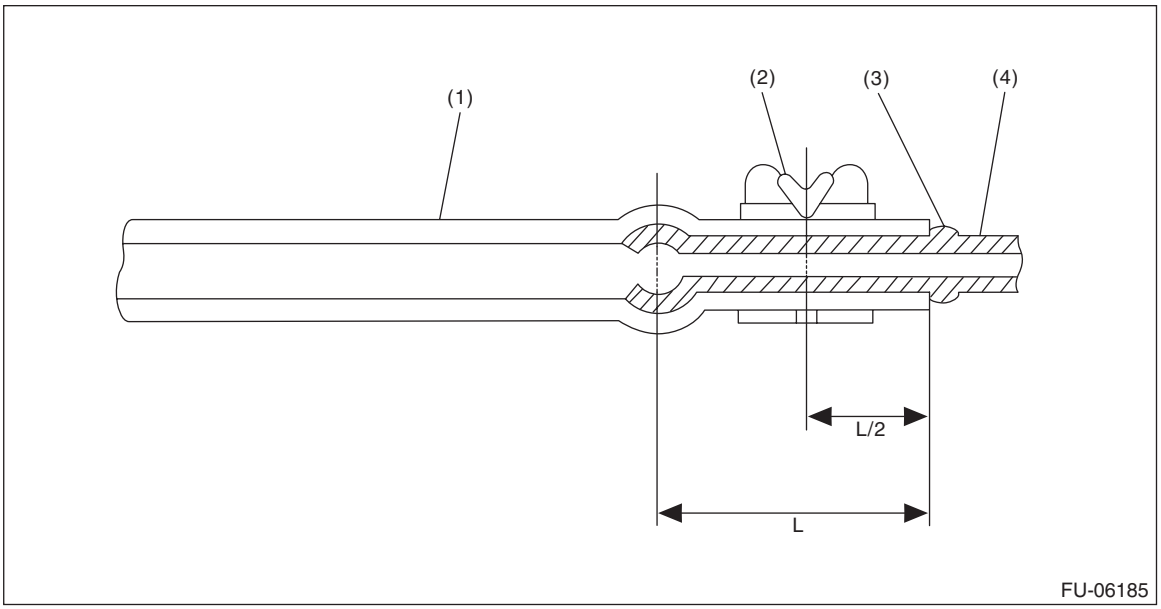

(1) Hose
(2) Clamp or clip
(3) Spool
(4) Pipe

6) Install the rear mud guard RH. <Ref. to EI-25, INSTALLATION, Mud Guard.>
7) Install the rear sub frame assembly. <Ref. to RS-12, INSTALLATION, Rear Sub Frame.>
8) Connect the battery ground terminal.

C: DISASSEMBLY

1) Using a marker pen, make alignment marks (A) on the fuel filler pipe and the bracket.
2) Remove the bracket bolt (B) which secures the fuel filler pipe.
3) Remove the neck holder from the fuel filler pipe.

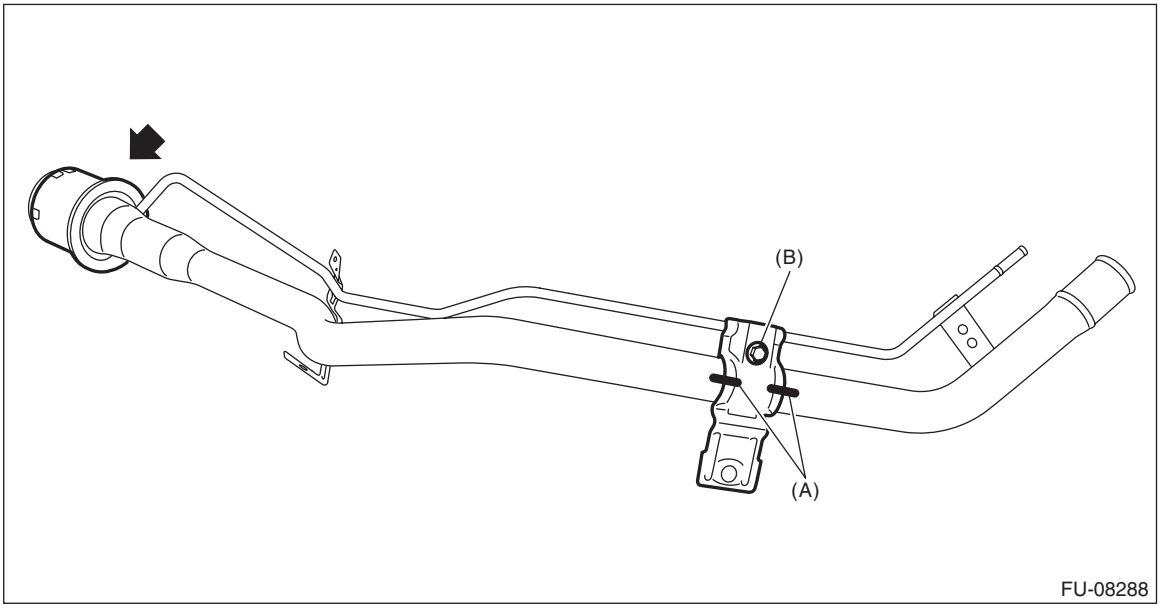

D: ASSEMBLY

Assemble in the reverse order of disassembly.

NOTE:
- Use a new neck holder.
- Install the bracket to the fuel filler pipe by aligning the alignment marks (A).

Tightening torque:
7.5 N·m (0.8 kgf-m, 5.5 ft-lb)

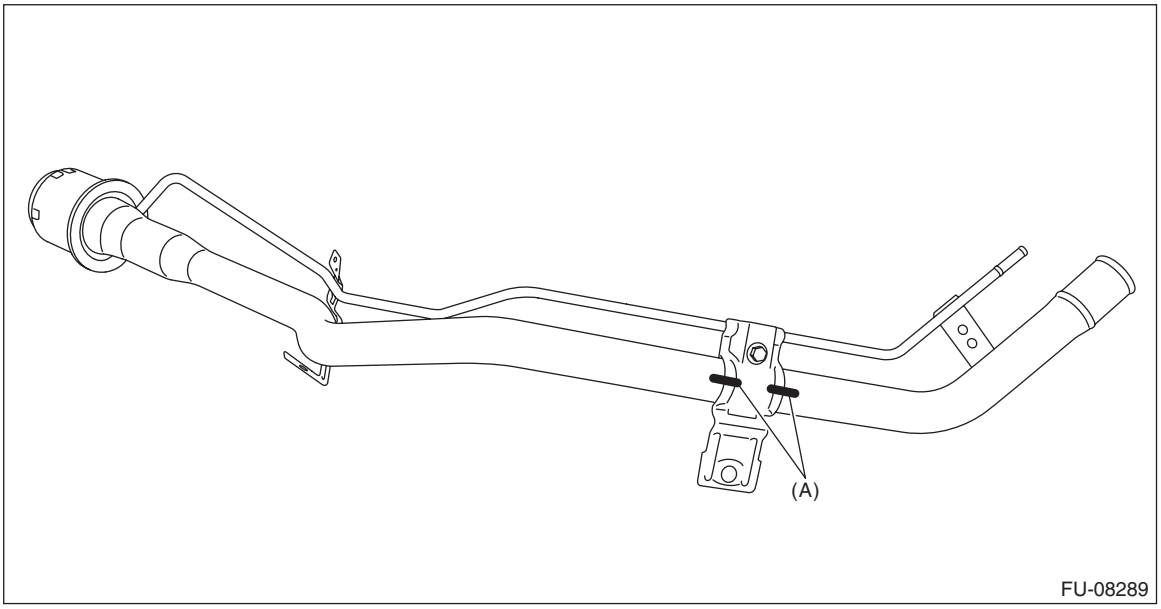

E: INSPECTION

1) Check that the fuel filler pipe assembly has no deformation, cracks or other damages.
2) Check that the fuel hose has no cracks, damage or loose part.

29.Fuel Pump

A: REMOVAL

WARNING:
Place "NO OPEN FLAMES" signs near the working area.

CAUTION:
- **Be careful not to spill fuel.**
- **Catch the fuel from the tubes using a container or cloth.**
- **If the fuel gauge indicates that two thirds or more of the fuel is remaining, be sure to drain fuel before starting work to avoid the fuel to spill.**

NOTE:
Fuel pump assembly consists of fuel pump, fuel filter and fuel level sensor.

1) Release the fuel pressure. <Ref. to FU(STI)-64, RELEASING OF FUEL PRESSURE, PROCEDURE, Fuel.>
2) Drain fuel. <Ref. to FU(STI)-64, DRAINING FUEL (WITH SUBARU SELECT MONITOR), PROCEDURE, Fuel.>
3) Disconnect the ground cable from battery.
4) Remove the rear seat cushion. <Ref. to SE-30, REMOVAL, Rear Seat.>
5) Remove the service hole cover.

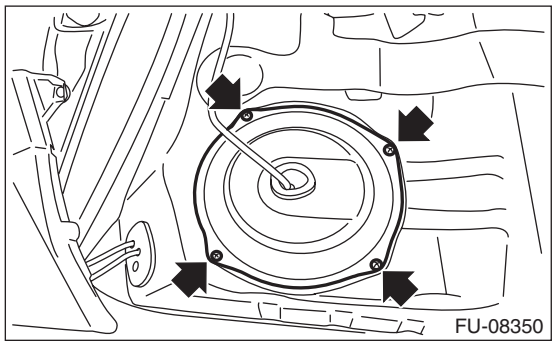
FU-08350

6) Disconnect the connector from fuel pump.

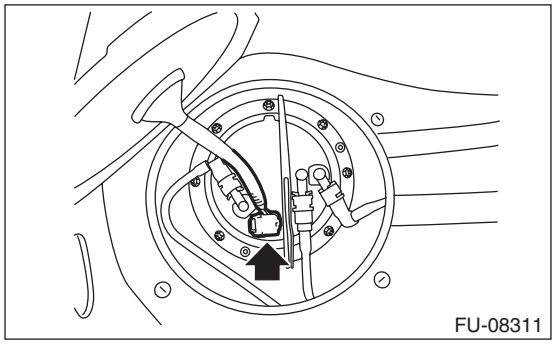
FU-08311

7) Disconnect the quick connectors of fuel delivery tube (A), fuel return tube (B), and jet pump tube (C). <Ref. to FU(STI)-100, REMOVAL, Fuel Delivery, Return and Evaporation Lines.>

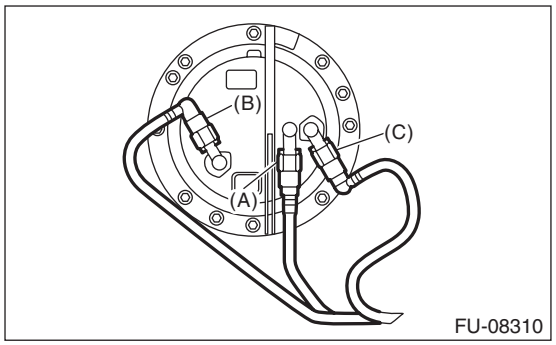

FU-08310

8) Remove the nuts which hold the fuel pump upper plate to the fuel tank.

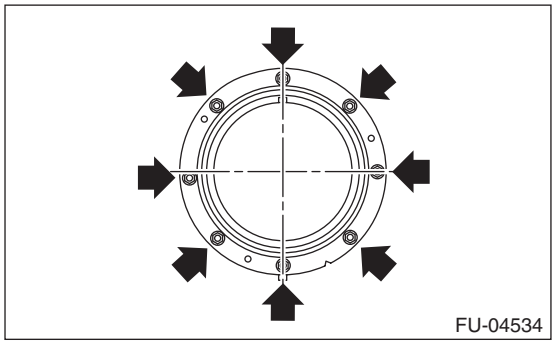
FU-04534

9) Remove the fuel pump assembly from the fuel tank.

B: INSTALLATION

1) Install the fuel pump assembly to the fuel tank.
   (1) Make sure the sealing portion is free from fuel or foreign matter before installation.
   (2) Align the protrusion (A) of the gasket to the position shown in the figure, and install the gasket from the lower side of the fuel pump assembly.

NOTE:
Use a new gasket.

   (3) Align the protrusion (C) of fuel pump upper plate cushion with the protrusion (C) of the fuel pump assembly as shown in the figure, and install the fuel pump upper plate cushion from the upper side of the fuel pump assembly.
   (4) Align the cutout of the fuel pump upper plate with the protrusion (C), and install the fuel pump upper plate from the upper side of the fuel pump assembly so that the protrusions (B) (3 places) of the gasket fit the holes of the fuel pump upper plate.
   (5) Install the fuel pump assembly to the fuel tank in the direction shown in the figure, and tighten the nuts to the specified torque in the order as shown in the figure.

CAUTION:
Set the arm and float of the fuel level sensor while paying attention to prevent them from contacting the fuel tank. If the arm of the fuel level sensor is bent, the fuel gauge may not read correctly.

Tightening torque:
4.4 N·m (0.4 kgf-m, 3.2 ft-lb)

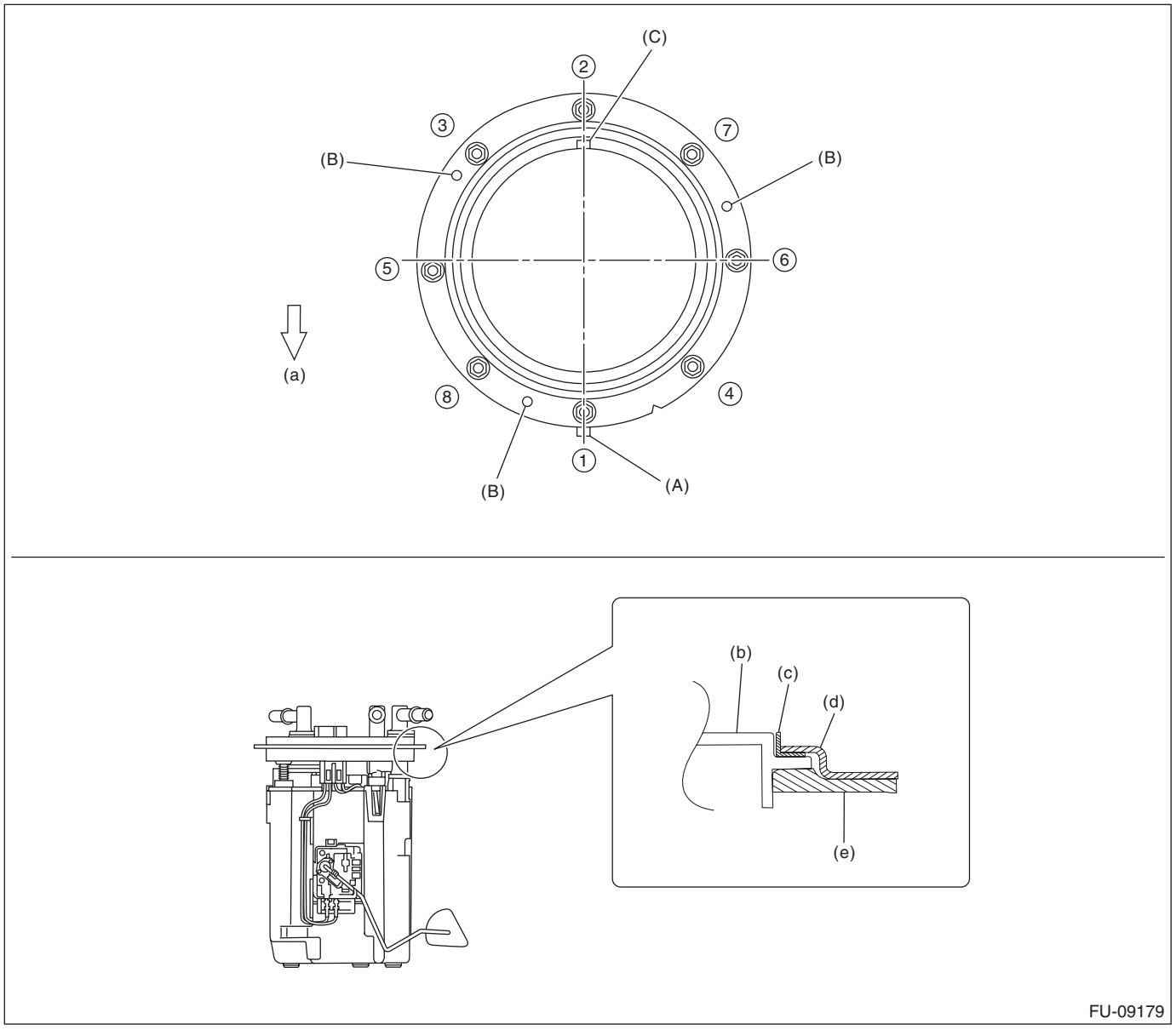

(a) Front side of vehicle
(b) Fuel pump ASSY
(c) Fuel pump upper plate cushion
(d) Fuel pump upper plate
(e) Gasket

2) Connect the quick connectors of fuel delivery tube (A), fuel return tube (B), and jet pump tube (C). <Ref. to FU(STI)-102, INSTALLATION, Fuel Delivery, Return and Evaporation Lines.>

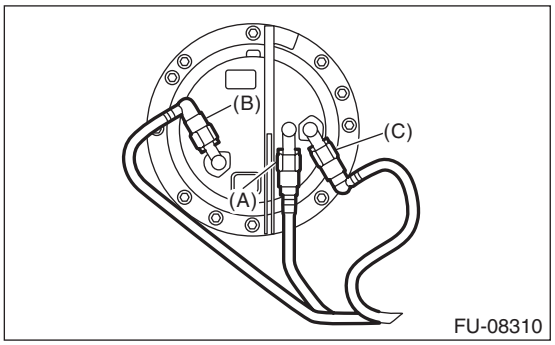

3) Connect the connector to the fuel pump.

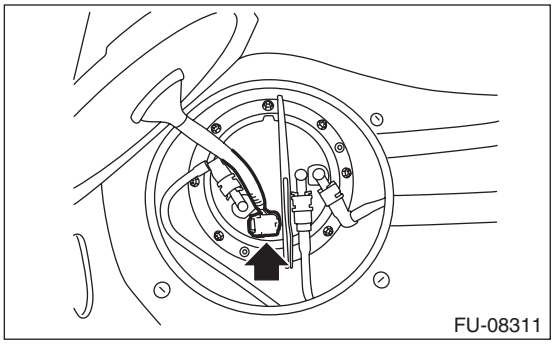

4) Install the service hole cover.

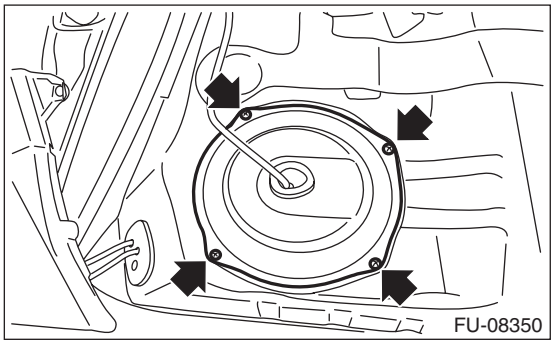

5) Install the rear seat cushion. <Ref. to SE-33, INSTALLATION, Rear Seat.>
6) Connect the battery ground terminal.

C: INSPECTION

1) Check that the fuel pump has no deformation, cracks or other damages.
2) Connect the battery positive terminal to terminal No. 5 and the battery ground terminal to terminal No. 6, and inspect the fuel pump operation.

WARNING:
- **Wipe off fuel completely.**
- **Keep the battery as far apart from fuel pump as possible.**
- **Do not run the fuel pump for a long time under non-load condition.**

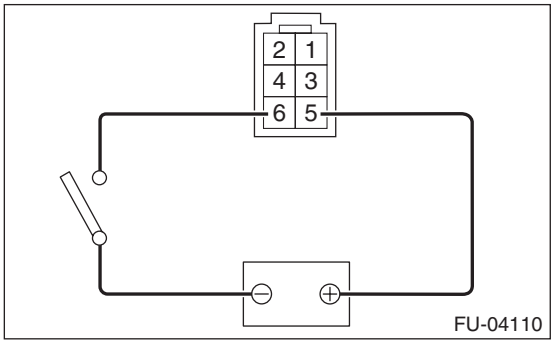

30.Fuel Level Sensor

A: REMOVAL

WARNING:
Place "NO OPEN FLAMES" signs near the working area.

CAUTION:
- **Be careful not to spill fuel.**
- **If the fuel gauge indicates that two thirds or more of the fuel is remaining, be sure to drain fuel before starting work to avoid the fuel to spill.**

NOTE:
The fuel level sensor is built in fuel pump assembly.
1) Remove the fuel pump assembly. <Ref. to FU(STI)-83, REMOVAL, Fuel Pump.>
2) Disconnect the fuel level sensor connector.

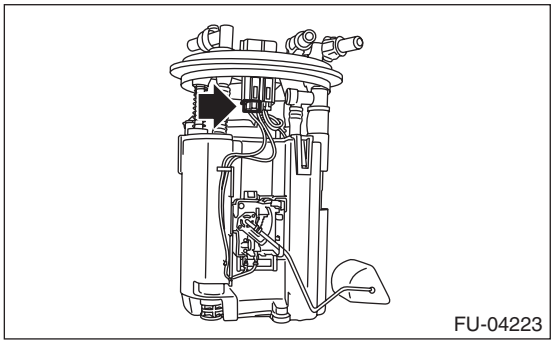
FU-04223

3) Slide the fuel level sensor in the direction of the arrow and remove the fuel level sensor by pressing the claw (A) of the fuel level sensor.

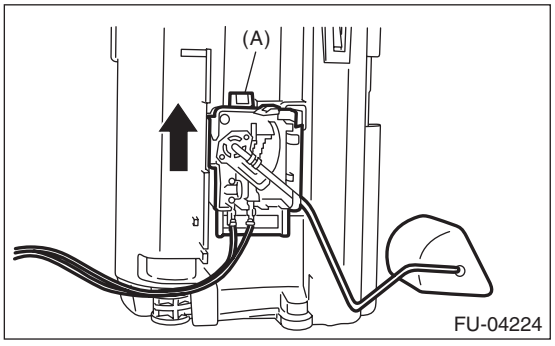

FU-04224

B: INSTALLATION

Install in the reverse order of removal.

C: INSPECTION

1) Check that the fuel level sensor has no damage.
2) Measure the fuel level sensor float position.

NOTE:
When inspecting the fuel level sensor, perform the work with the sensor installed to the fuel pump.

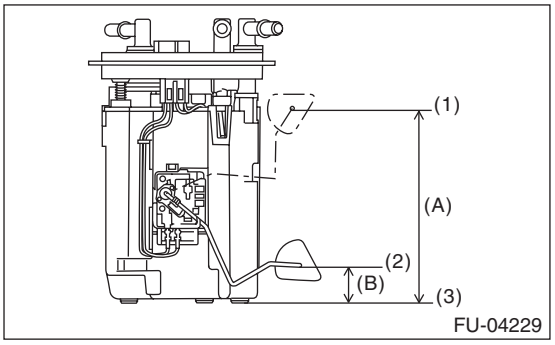

FU-04229

(1) FULL
(2) EMPTY
(3) Fuel tank seating surface

Float position	Standard
FULL to Fuel tank seating surface (A)	135±4 mm (5.315±0.157 in)
EMPTY to Fuel tank seating surface (B)	23.7±4 mm (0.933±0.157 in)

3) Measure the resistance between fuel level sensor terminals.

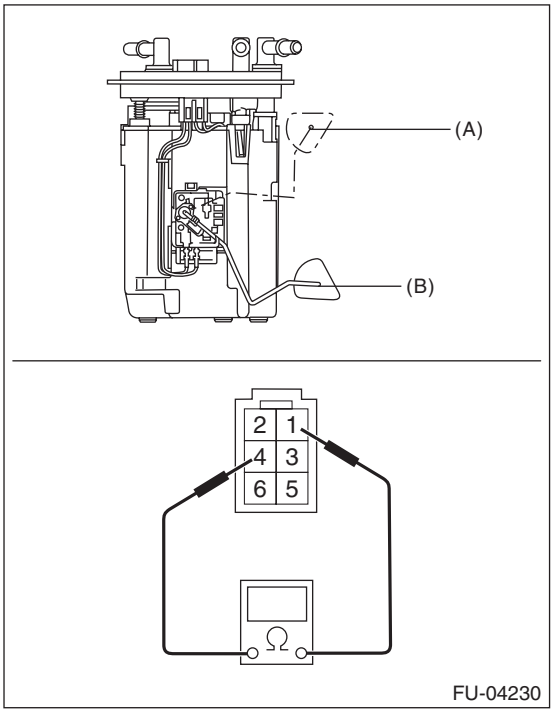

FU-04230

Float position	Terminal No.	Standard
FULL (A)	1 and 4	8.7±1.0 Ω
EMPTY (B)		139.1±2.0 Ω

31.Fuel Sub Level Sensor

A: REMOVAL

WARNING:
Place "NO OPEN FLAMES" signs near the working area.

CAUTION:
- **Be careful not to spill fuel.**
- **Catch the fuel from the tubes using a container or cloth.**
- **If the fuel gauge indicates that two thirds or more of the fuel is remaining, be sure to drain fuel before starting work to avoid the fuel to spill.**

1) Release the fuel pressure. <Ref. to FU(STI)-64, RELEASING OF FUEL PRESSURE, PROCEDURE, Fuel.>
2) Drain fuel. <Ref. to FU(STI)-64, DRAINING FUEL (WITH SUBARU SELECT MONITOR), PROCEDURE, Fuel.>
3) Disconnect the ground cable from battery.
4) Remove the rear seat cushion. <Ref. to SE-30, REMOVAL, Rear Seat.>
5) Remove the service hole cover.

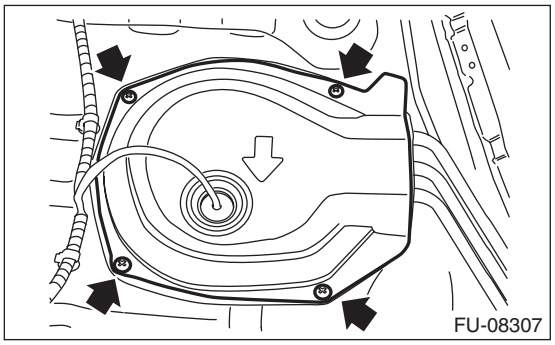
FU-08307

6) Disconnect the connector from the fuel sub level sensor.

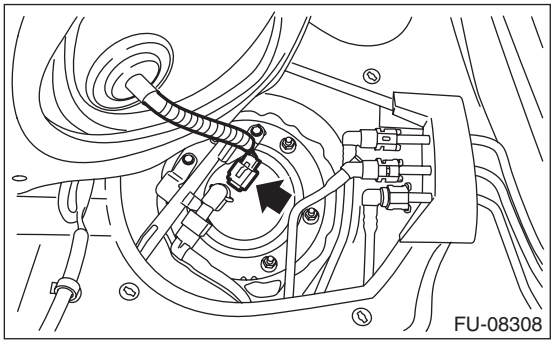
FU-08308

7) Disconnect the quick connectors of fuel delivery tube (A), fuel return tube (B), and jet pump tube (C). <Ref. to FU(STI)-100, REMOVAL, Fuel Delivery, Return and Evaporation Lines.>
8) Remove the rubber cap (D) from the nut.

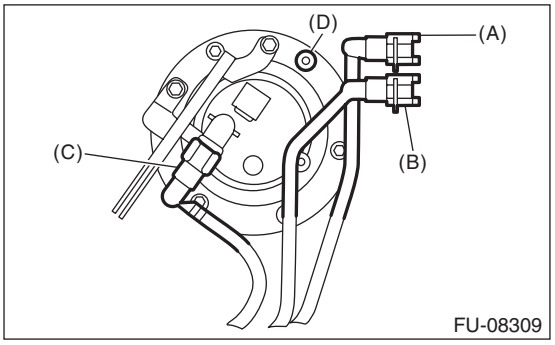

FU-08309

9) Remove the bolts and nuts which hold fuel sub level sensor protector and fuel sub level sensor upper plate to the fuel tank.

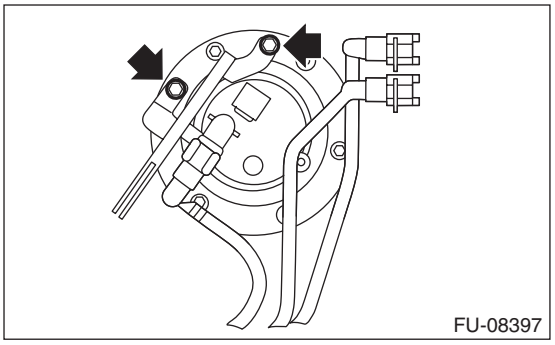
FU-08397

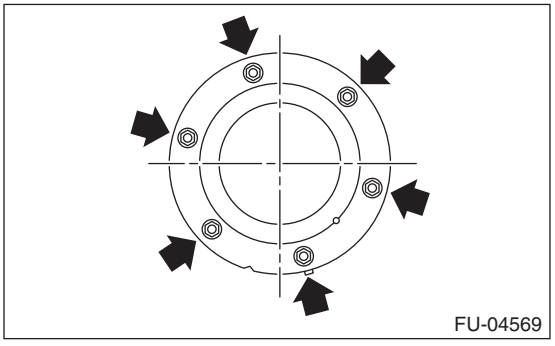
FU-04569

10) Remove the fuel sub level sensor from the fuel tank.

B: INSTALLATION

1) Install the fuel sub level sensor to the fuel tank.
   (1) Make sure the sealing portion is free from fuel or foreign matter before installation.
   (2) Align the cutout (B) as shown in the figure, and install the fuel sub level sensor upper plate cushion to the fuel sub level sensor upper plate.
   (3) Align the cutout of the fuel sub level sensor upper plate with the protrusion (B) of the fuel sub level sensor as shown in the figure, and install the fuel sub level sensor upper plate from the upper side of the fuel sub level sensor.
   (4) Install the gasket from the lower side of the fuel sub level sensor so that the protrusion (B) of the fuel sub level sensor and the protrusion (A) of the gasket are positioned as shown in the figure.

NOTE:
Use a new gasket.

   (5) Install the fuel sub level sensor to the fuel tank in the direction shown in the figure, and tighten the nuts to the specified torque in the order as shown in the figure.

CAUTION:
Set the arm and float of the fuel sub level sensor while paying attention to prevent them from contacting the fuel tank. If the arm of the fuel sub level sensor is bent, the fuel gauge may not read correctly.

Tightening torque:
4.4 N·m (0.4 kgf-m, 3.2 ft-lb)

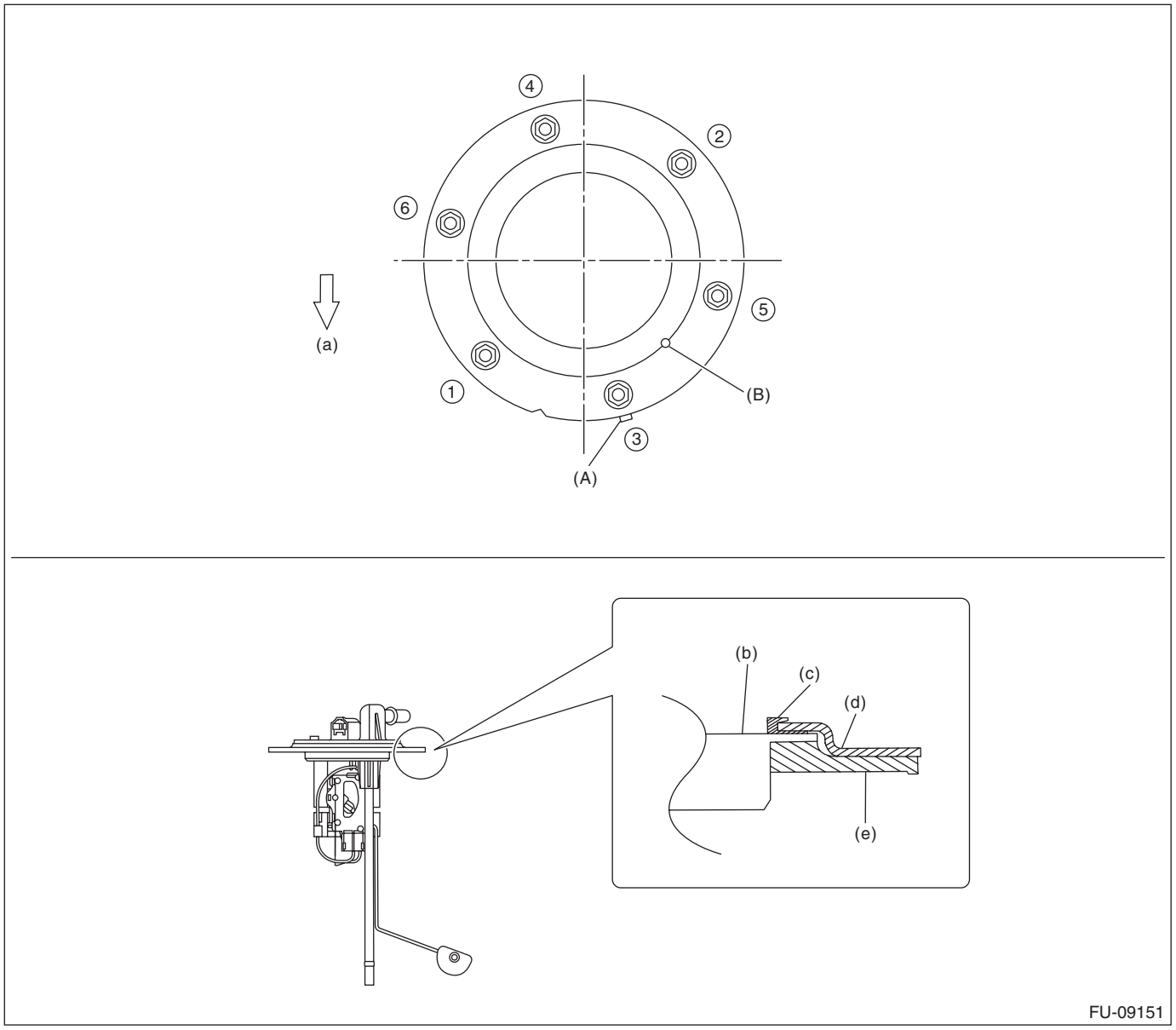

(a) Front side of vehicle
(b) Fuel sub level sensor
(c) Fuel sub level sensor upper plate cushion
(d) Fuel sub level sensor upper plate
(e) Gasket

2) Install the bolt which secures the fuel sub level sensor protector to the fuel tank.

Tightening torque:
4.4 N·m (0.4 kgf-m, 3.2 ft-lb)

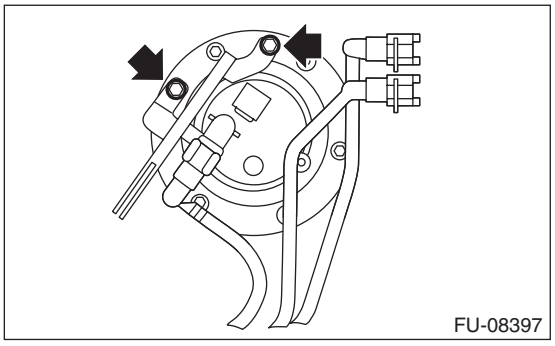

3) Connect the quick connectors of fuel delivery tube (A), fuel return tube (B), and jet pump tube (C). <Ref. to FU(STI)-102, INSTALLATION, Fuel Delivery, Return and Evaporation Lines.>
4) Attach the rubber cap (D) to the nut.

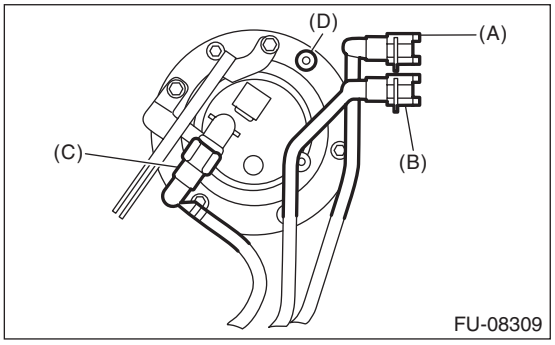

5) Connect the connector to the fuel sub level sensor.

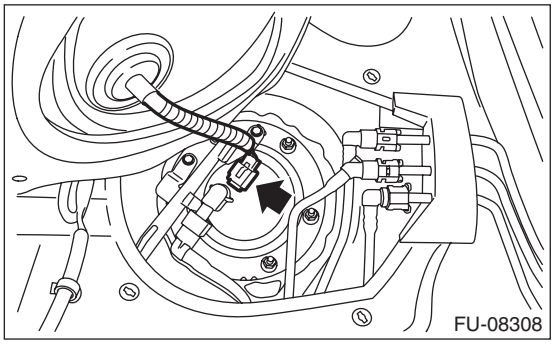

6) Install the service hole cover.

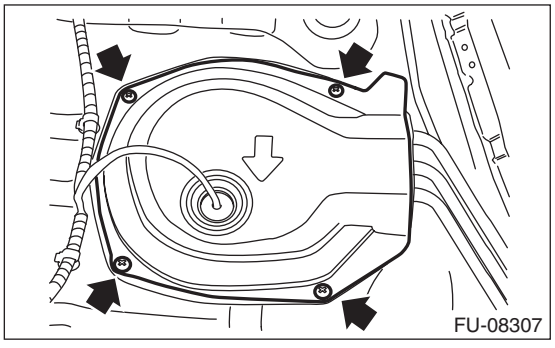

7) Install the rear seat cushion. <Ref. to SE-33, INSTALLATION, Rear Seat.>
8) Connect the battery ground terminal.

C: INSPECTION

1) Check that the fuel sub level sensor has no damage.
2) Measure the fuel sub level sensor float position.

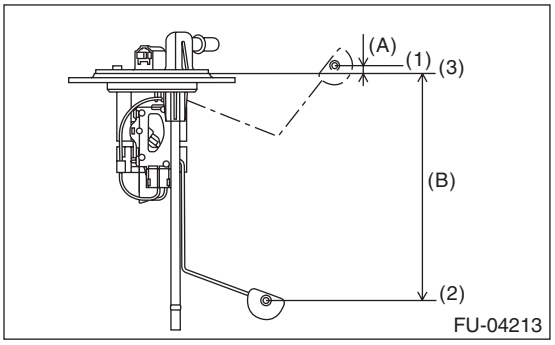

(1) FULL
(2) EMPTY
(3) Datum points

Float position	Standard
FULL to Datum point (A)	5.31±3.5 mm (0.209±0.138 in)
EMPTY to Datum point (B)	160.6±3.5 mm (6.323±0.138 in)

3) Measure the resistance between fuel sub level sensor terminals.

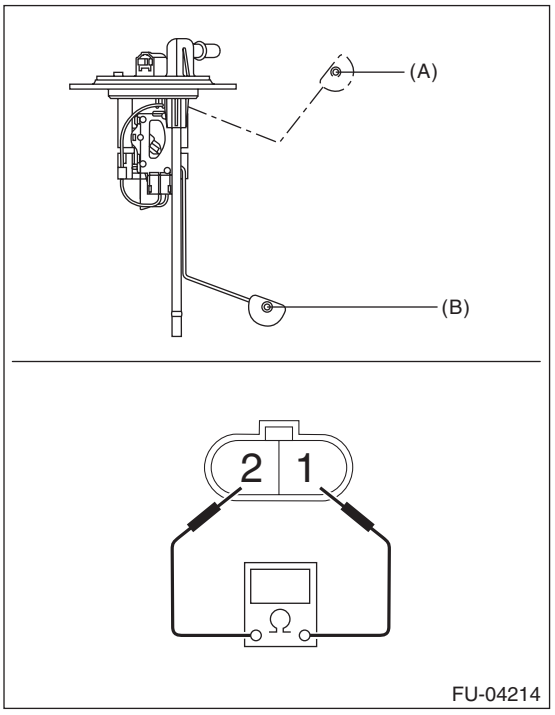

Float position	Terminal No.	Standard
FULL (A)	1 and 2	8.7±1.0 Ω
EMPTY (B)		270.9±4.0 Ω

32.Fuel Filter

A: REMOVAL

WARNING:
Place "NO OPEN FLAMES" signs near the working area.

CAUTION:
- **Be careful not to spill fuel.**
- **If the fuel gauge indicates that two thirds or more of the fuel is remaining, be sure to drain fuel before starting work to avoid the fuel to spill.**
- **Be careful not to drop or apply any impact to the fuel pump during work. This may deteriorate its performance.**

NOTE:
The fuel filter is built in fuel pump assembly.
1) Remove the fuel pump assembly. <Ref. to FU(STI)-83, REMOVAL, Fuel Pump.>
2) Remove the fuel level sensor. <Ref. to FU(STI)-88, REMOVAL, Fuel Level Sensor.>
3) Disconnect the pump assembly connector from sub tank bracket assembly.

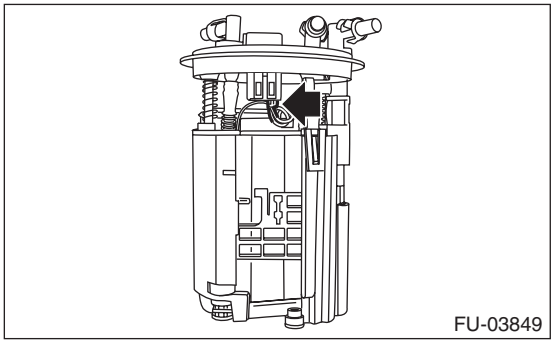
FU-03849

4) Cut off the tab holders connecting the sub tank bracket assembly and the sub tank in four locations, and separate the sub tank bracket assembly and the sub tank.

CAUTION:
Be careful not to damage the sub tank.

NOTE:
If the O-ring is remaining on the sub tank, remove.

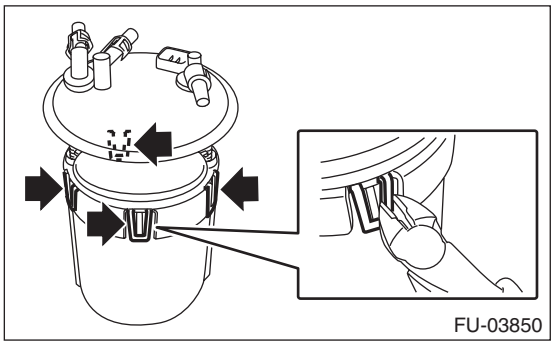
FU-03850

5) Disconnect two connectors of fuel delivery pipe from fuel filter assembly.

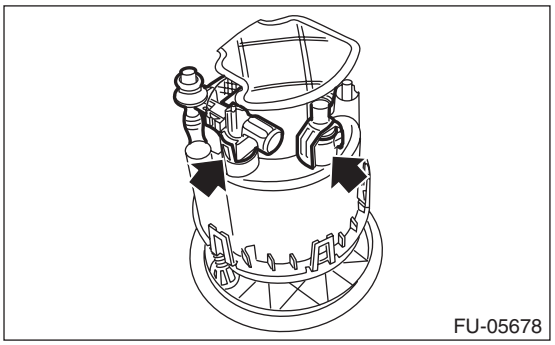
FU-05678

6) Push to compress the fuel filter assembly in the direction of the arrow, remove clip (A), and separate the sub tank bracket assembly and the fuel filter assembly.

CAUTION:
When separating the sub tank bracket assembly and the fuel filter assembly, be careful not to damage the ground wire.

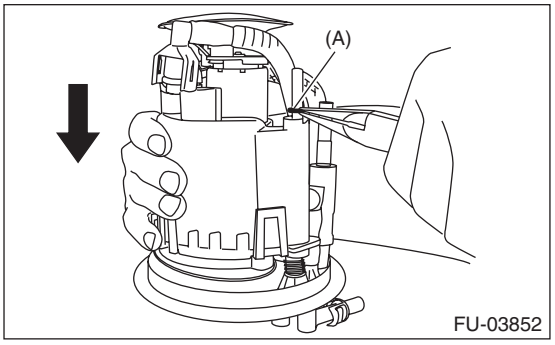

FU-03852

7) Disconnect the connector from the pump assembly.

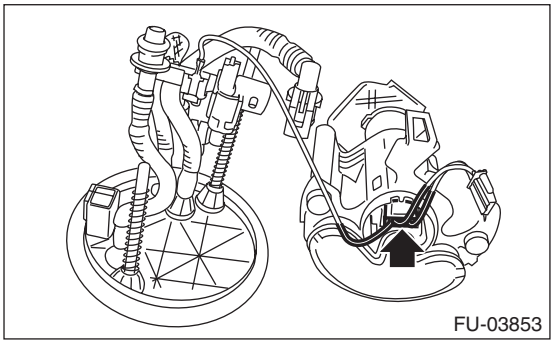
FU-03853

8) Lift the two tab holders connecting the pump assembly to the fuel filter using a flat tip screwdriver (with a shaft diameter of approx. 3 mm (0.12 in)), etc., and separate the fuel filter and pump assembly.

CAUTION:
• To prevent damaging the tabs of the pump assembly, wrap the tip of flat tip screwdriver (A), etc. with tape (B).

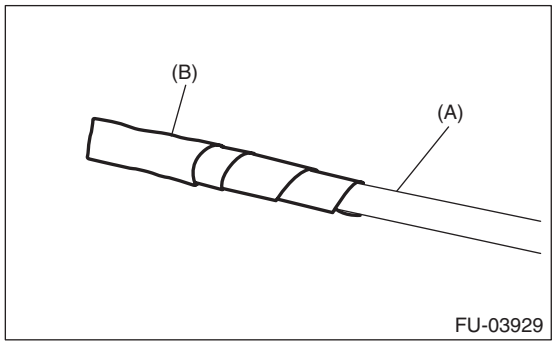

• Be careful not to drop or apply any impact to the pump assembly.

NOTE:
If the spacer and O-ring are remaining on the pump assembly, remove them.

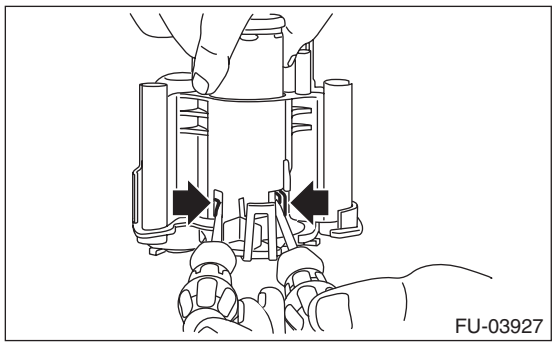

B: INSTALLATION

1) Assemble O-ring (A) and spacer (B) to the pump assembly and attach the pump assembly to the fuel filter.

NOTE:
- Use new O-rings (8 mm (0.31 in) inner diameter).
- Use a new spacer.
- Apply gasoline to the O-ring.
- Insert the pump assembly until a click is heard.

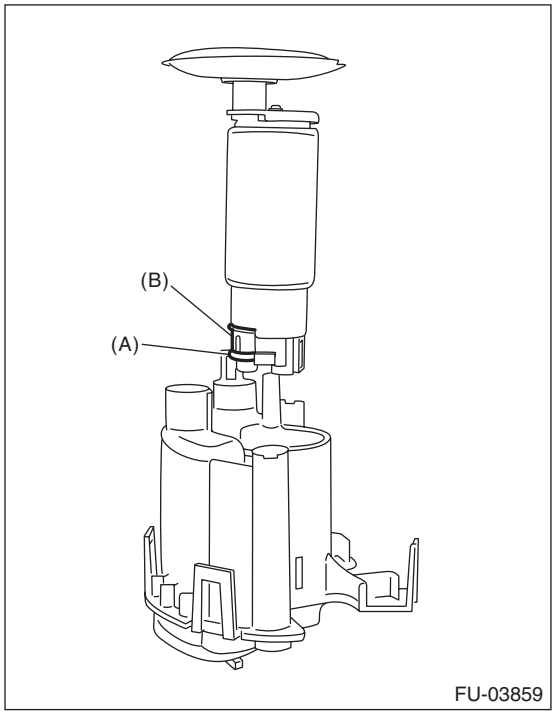

2) Connect the connector to the pump assembly.

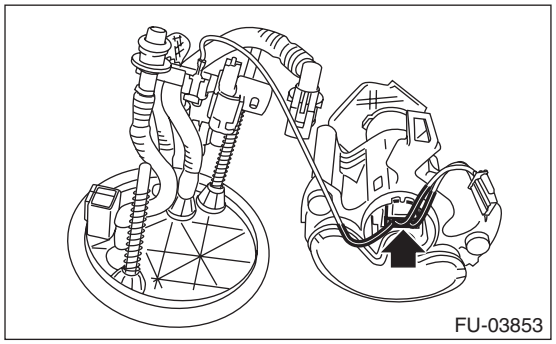

3) Attach spring (A) to the metal rod of the sub tank bracket assembly, and assemble the fuel filter assembly.

NOTE:
Use a new spring.

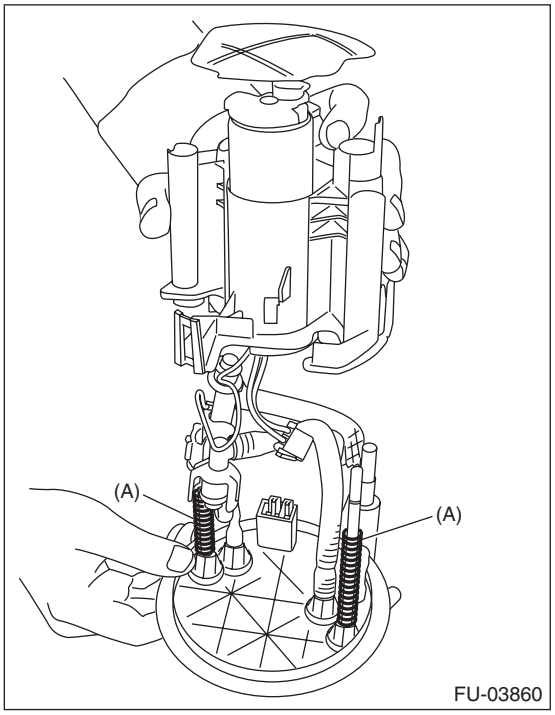

4) Push the fuel filter assembly in the direction of the arrow to compress, and attach clip (A).

NOTE:
Use a new clip.

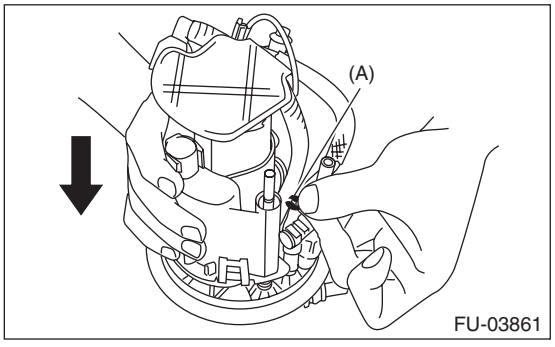

5) Connect the fuel piping connector to the fuel filter assembly.

NOTE:
- Use new O-rings.
- Apply gasoline to the O-ring.
- The O-rings of the black and white connectors are identified by a difference in diameter. Be careful not to confuse the two during assembly.

O-ring inner diameter:
Black connector O-ring [Approx. 7 mm (0.28 in)]
White connector O-ring [Approx. 8 mm (0.31 in)]

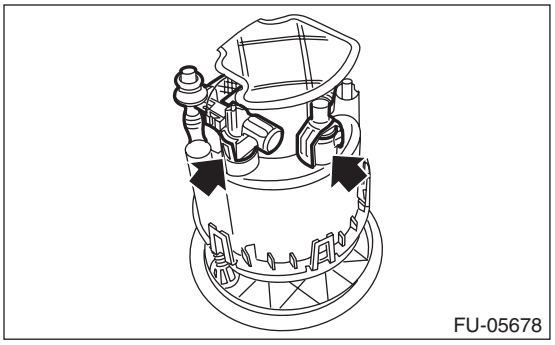

6) Attach the O-ring (A) to the fuel filter assembly, and attach the sub tank to the sub tank bracket assembly.

NOTE:
- Use new O-rings (8 mm (0.31 in) inner diameter).
- Apply gasoline to the O-ring.
- Insert the pump assembly until a “pop” is heard.

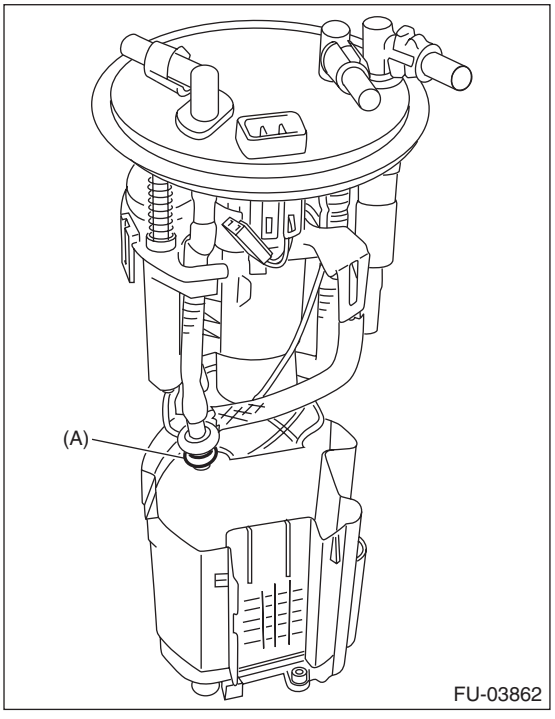

7) When removing the cushion from the sub tank, replace it with a new part.

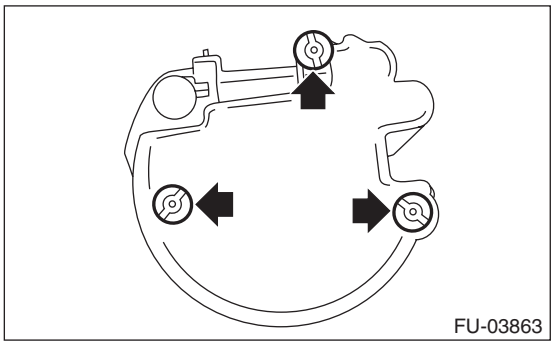

8) Connect the pump assembly connector to the sub tank bracket assembly.

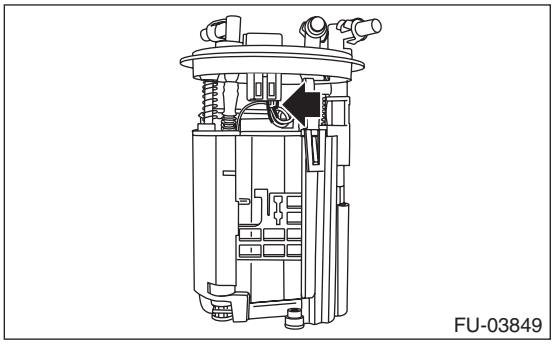

9) Install the fuel level sensor. <Ref. to FU(STI)-88, INSTALLATION, Fuel Level Sensor.>
10) Inspect the fuel level sensor. <Ref. to FU(STI)-88, INSPECTION, Fuel Level Sensor.>
11) Install the fuel pump assembly. <Ref. to FU(STI)-84, INSTALLATION, Fuel Pump.>

33.Pulsation Damper Assembly

A: REMOVAL

WARNING:
Place "NO OPEN FLAMES" signs near the working area.

CAUTION:
- **Be careful not to spill fuel.**
- **Catch the fuel from hoses using a container or cloth.**

1) Release the fuel pressure. <Ref. to FU(STI)-64, RELEASING OF FUEL PRESSURE, PROCEDURE, Fuel.>
2) Disconnect the fuel delivery hose (A) and fuel hose (B) from the pulsation damper assembly, and remove the pulsation damper assembly.

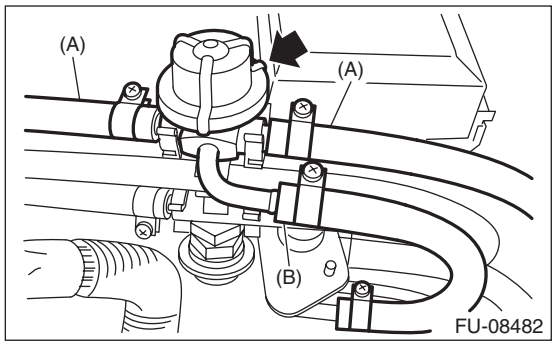

B: INSTALLATION

Install in the reverse order of removal.

NOTE:
- Use new fuel delivery hose and fuel hose.
- For the information about connecting the fuel delivery hose and fuel hose, refer to "Fuel Delivery, Return and Evaporation Lines". <Ref. to FU(STI)-104, CONNECTING FUEL DELIVERY HOSE, FUEL RETURN HOSE AND FUEL HOSE, INSTALLATION, Fuel Delivery, Return and Evaporation Lines.>

C: DISASSEMBLY

Remove the pulsation damper and fuel pipe gasket from the fuel by-pass pipe.

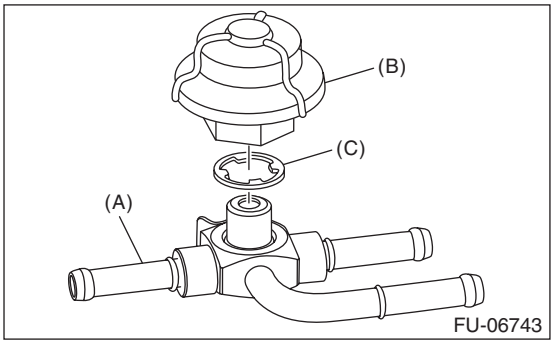

(A) Fuel by-pass pipe
(B) Pulsation damper
(C) Fuel pipe gasket

D: ASSEMBLY

Install the fuel pipe gasket and pulsation damper to the fuel by-pass pipe.

NOTE:
Use a new fuel pipe gasket.

Tightening torque:
21.6 N·m (2.2 kgf-m, 15.9 ft-lb)

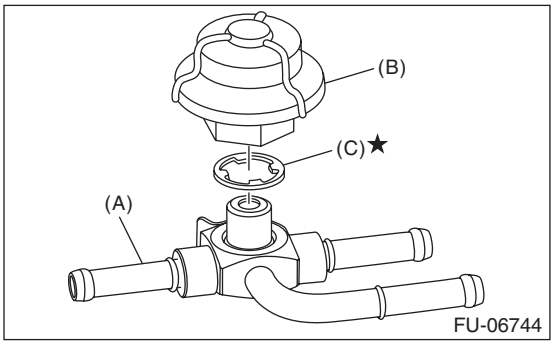

(A) Fuel by-pass pipe
(B) Pulsation damper
(C) Fuel pipe gasket

E: INSPECTION

1) Check that the pulsation damper assembly has no deformation, cracks or other damages.
2) Check that the fuel delivery hose and fuel hose have no cracks, damage or loose part.

34.Pressure Regulator & Damper Assembly

A: REMOVAL

WARNING:
Place "NO OPEN FLAMES" signs near the working area.

CAUTION:
- **Be careful not to spill fuel.**
- **Catch the fuel from hoses using a container or cloth.**

1) Release the fuel pressure. <Ref. to FU(STI)-64, RELEASING OF FUEL PRESSURE, PROCEDURE, Fuel.>
2) Disconnect the vacuum hose (A) from the pressure regulator and damper assembly.
3) Disconnect the fuel return hose (B) and fuel hose (C) from the pressure regulator & damper assembly, and remove the fuel regulator & damper assembly.

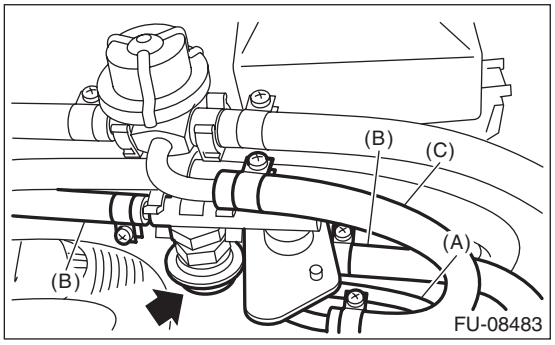

B: INSTALLATION

Install in the reverse order of removal.

NOTE:
- Use new fuel return hose and fuel hose.
- For the information about connecting the fuel return hose and fuel hose, refer to "Fuel Delivery, Return and Evaporation Lines". <Ref. to FU(STI)-104, CONNECTING FUEL DELIVERY HOSE, FUEL RETURN HOSE AND FUEL HOSE, INSTALLATION, Fuel Delivery, Return and Evaporation Lines.>

C: DISASSEMBLY

1) Remove the fuel pipe protector from the pressure regulator and damper assembly.

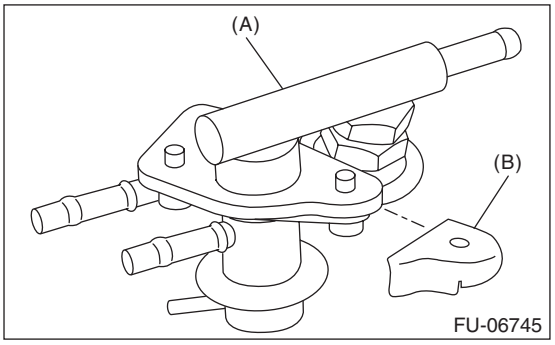

(A) Pressure regulator & damper ASSY
(B) Fuel pipe protector

2) Remove the pulsation damper and fuel pipe gasket from the fuel holder assembly, and remove the pressure regulator from the fuel holder assembly.

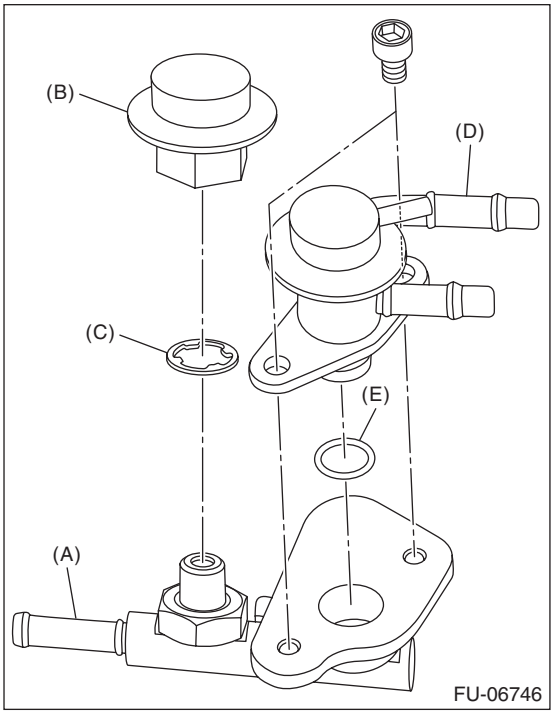

(A) Fuel holder ASSY
(B) Pulsation damper
(C) Fuel pipe gasket
(D) Pressure regulator
(E) O-ring

D: ASSEMBLY

1) Install the pressure regulator to the fuel holder assembly, and install the fuel pipe gasket and pulsation damper to the fuel holder assembly.

NOTE:
- Use new O-rings and fuel pipe gaskets.
- Apply a thin coat of engine oil to the pressure regulator installation hole of fuel holder assembly.

Tightening torque:
T1: 6.4 N·m (0.7 kgf-m, 4.7 ft-lb)
T2: 21.6 N·m (2.2 kgf-m, 15.9 ft-lb)

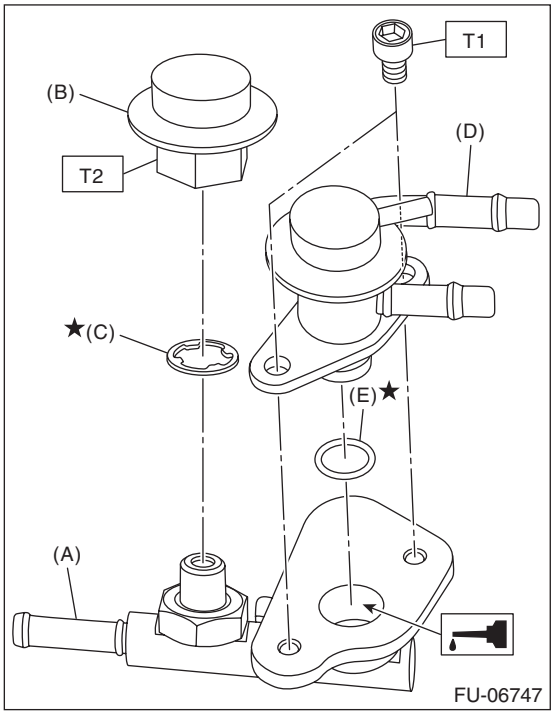

(A) Fuel holder ASSY
(B) Pulsation damper
(C) Fuel pipe gasket
(D) Pressure regulator
(E) O-ring

2) Install the fuel pipe protector to the pressure regulator and damper assembly.

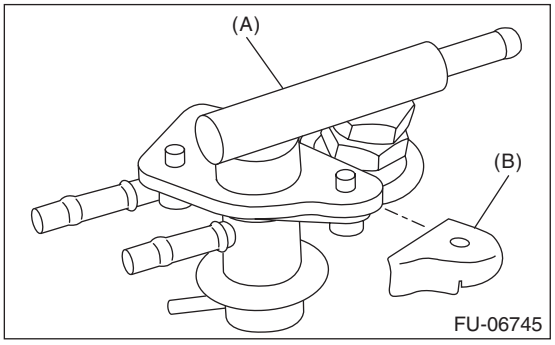

(A) Pressure regulator & damper ASSY
(B) Fuel pipe protector

E: INSPECTION

1) Check that the pressure regulator and damper assembly has no deformation, cracks or other damages.
2) Check that the vacuum hose, fuel return hose and fuel hose have no cracks, damage or loose part.

35.Fuel Delivery, Return and Evaporation Lines

A: REMOVAL

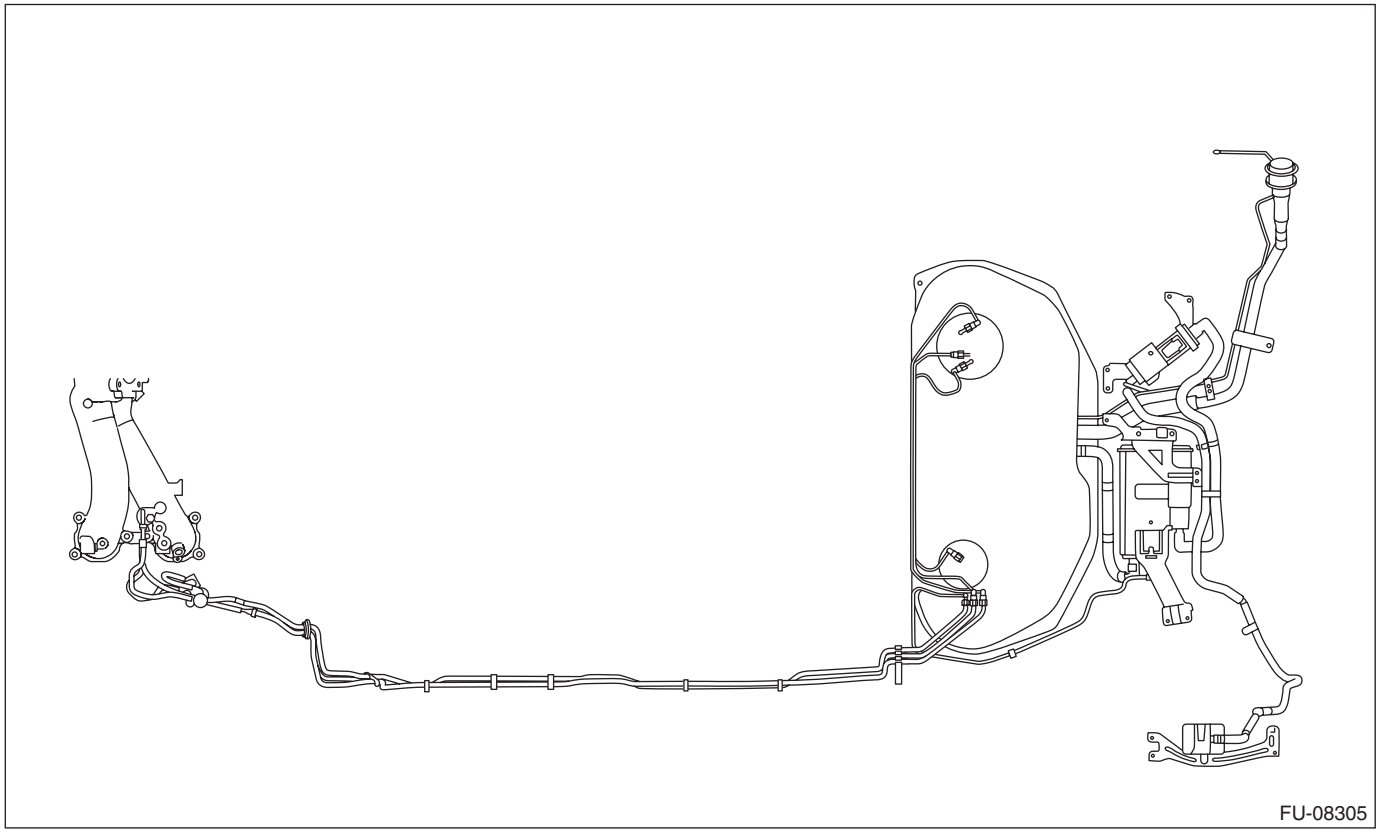

WARNING:
Place "NO OPEN FLAMES" signs near the working area.

CAUTION:
Be careful not to spill fuel.

1) Release the fuel pressure. <Ref. to FU(STI)-64, RELEASING OF FUEL PRESSURE, PROCEDURE, Fuel.>
2) Open the fuel filler lid and remove the fuel filler cap.

NOTE:
This operation is required to release the inner pressure of the fuel tank.

3) Remove the floor mat. <Ref. to EI-107, REMOVAL, Floor Mat.>
4) In the engine compartment, disconnect the fuel delivery hoses, fuel return hoses and evaporation hoses.

CAUTION:
- **Be careful not to spill fuel.**
- **Catch the fuel from hoses using a container or cloth.**

(1) Set the ST to the fuel pipe.

ST 42099AE000 QUICK CONNECTOR RELEASE

(2) Disconnect the quick connector of the fuel delivery hose and fuel return hose by pushing the ST in the direction of the arrow.
(3) Remove the clip and disconnect the evaporation hose from the fuel pipe.

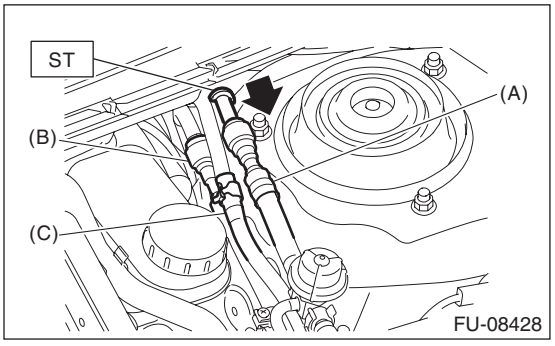

(A) Fuel delivery hose
(B) Fuel return hose
(C) Evaporation hose

5) Remove the fuel tank. <Ref. to FU(STI)-67, REMOVAL, Fuel Tank.>
6) Disconnect the quick connector, and remove the fuel delivery tube, fuel return tube, and jet pump tube from the fuel tank.
• When using ST
1. Attach ST to the pipe and push ST in the direction of arrow mark to disconnect the quick connector.
ST 42099AE000 QUICK CONNECTOR RELEASE

CAUTION:
• Be careful not to spill fuel.
• Catch the fuel from the tubes using a container or cloth.
• To disconnect the connector, hold (C) shown in the figure and pull in axial direction.
• If the connector and pipe are sticking to each other, push and pull the connector with ST pushed, and then pull the connector after it starts moving freely.
• When disconnecting the connector, do not bend or twist the tube forcibly. If the tube is bent, replace with a new part.

NOTE:
Clean the pipe and quick connector, if they are covered with dust.

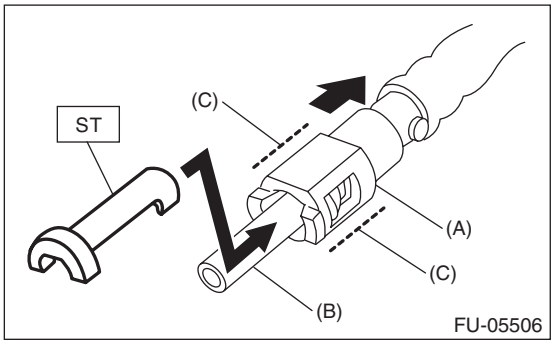

(A) Quick connector
(B) Pipe
(C) Connector holding position

2. To prevent from damaging or entering foreign matter, wrap the pipes and quick connectors with plastic bag etc.

CAUTION:
When reusing the retainer, do not disconnect the retainer from the connector.

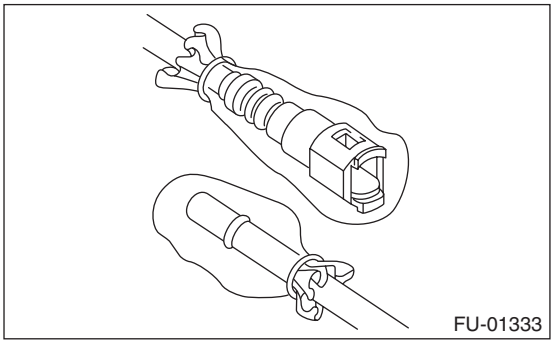

• When not using ST
1. Push the retainer in the direction of the arrow, disconnect the quick connector from pipe.

CAUTION:
• Be careful not to spill fuel.
• Catch the fuel from the tubes using a container or cloth.
• To disconnect the connector, hold (D) shown in the figure and pull in axial direction.
• If the connector and pipe are sticking to each other, push and pull the connector with the retainer pushed in the direction of the arrow, and then pull the connector after it starts moving freely.
• When disconnecting the connector, do not bend or twist the tube forcibly. If the tube is bent, replace with a new part.

NOTE:
Clean the pipe and quick connector, if they are covered with dust.

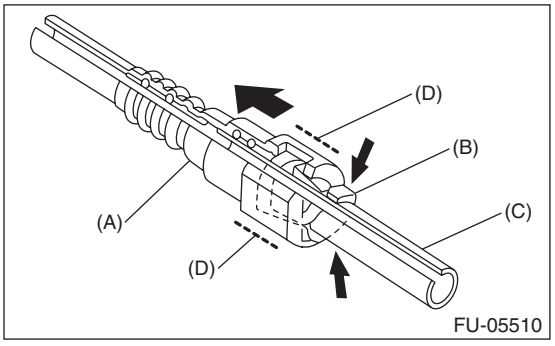

(A) Quick connector
(B) Retainer
(C) Pipe
(D) Connector holding position

2. To prevent from damaging or entering foreign matter, wrap the pipes and quick connectors with plastic bag etc.

CAUTION:
When reusing the retainer, do not disconnect the retainer from the pipe.

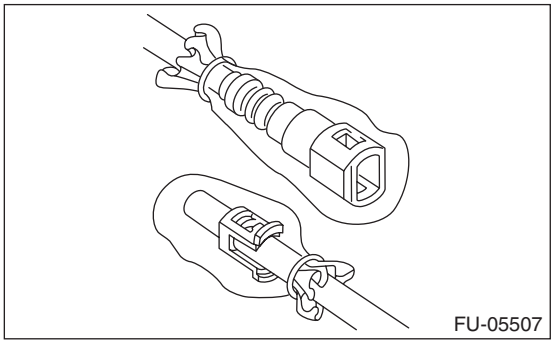

7) Disconnect the quick connector and remove the purge pipe.

NOTE:
Disconnect the quick connector as shown in the figure.

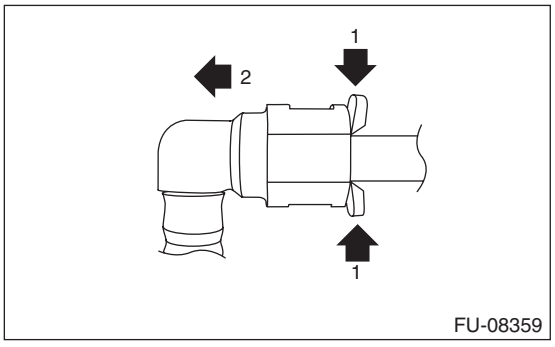

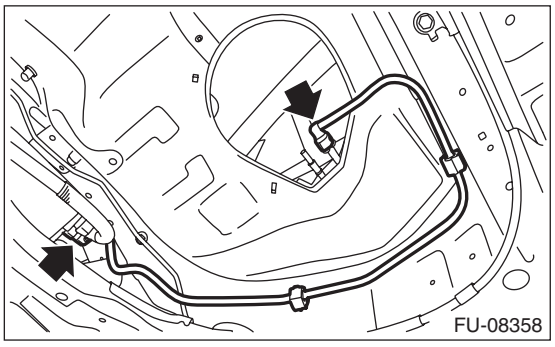

8) Remove the body integrated unit. <Ref. to SL-81, REMOVAL, Body Integrated Unit.>
9) Remove the fuel pipe assembly from vehicle.

B: INSTALLATION

Install in the reverse order of removal while being careful of the following.

1. CONNECTING THE EVAPORATION LINE QUICK CONNECTOR

NOTE:
Connect the quick connector as shown in the figure.

CAUTION:
- **Check that there is no damage or dust on the quick connector. If necessary, clean the seal surface of the pipe.**
- **Make sure that the quick connector is securely connected.**

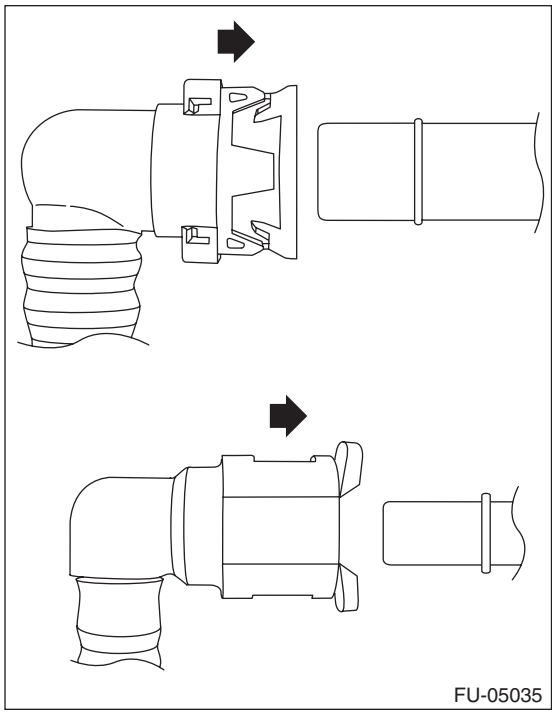

2. CONNECTING THE FUEL LINE QUICK CONNECTOR

CAUTION:
• Make sure there are no damage or dust on connections. If necessary, clean seal surface of pipe.

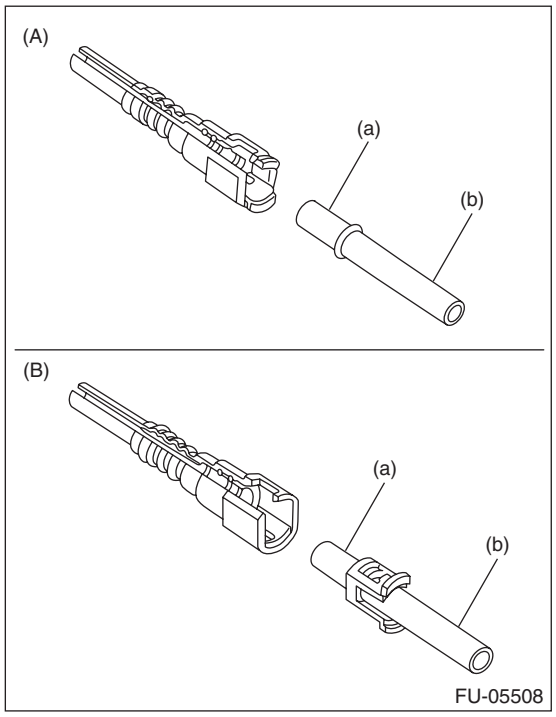

(A) When removed using the ST
(B) When removed without using the ST
(a) Seal surface
(b) Pipe

• When reusing the retainer, make sure that neither scratches nor deformation exist on the retainer. If it is faulty, use a new part.
1) Connect the quick connector to pipe.

CAUTION:
• Make sure that the quick connector is securely connected.

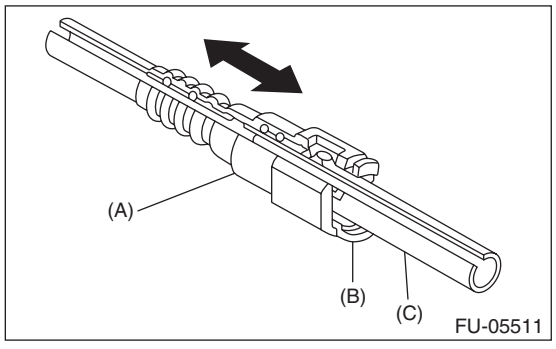

(A) Quick connector
(B) Retainer
(C) Pipe

• Make sure the two retainer pawls are engaged in their mating positions in the quick connector.
• Be sure to inspect tubes and their connections for any leakage of fuel.
• To connect the connector, hold (d) shown in the figure and push in axial direction.
• When connecting the connector, do not bend or twist the tube forcibly. If the tube is bent, replace with a new part.

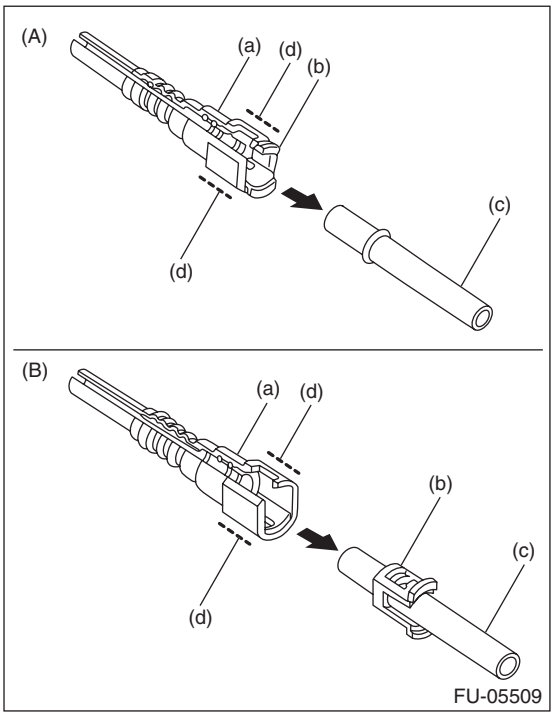

(A) When removed using the ST
(B) When removed without using the ST
(a) Quick connector
(b) Retainer
(c) Pipe
(d) Connector holding position

3. CONNECTING FUEL DELIVERY HOSE, FUEL RETURN HOSE AND FUEL HOSE

Connect the fuel delivery hose, fuel return hose, and fuel hose as shown in the figure.

CAUTION:
• If the connection portion has a spool or stopper, do not allow the end of the hose to bend or ride over by inserting the hose too deep.
• Be sure to inspect hoses and their connections for any leakage of fuel.

NOTE:
Use new fuel delivery hose, fuel return hose, and fuel hose.

Tightening torque:
1.25 N·m (0.1 kgf-m, 0.9 ft-lb)

L1: 2.5±1.5 mm (0.098±0.059 in)

L2: 22.5±2.5 mm (0.886±0.098 in)

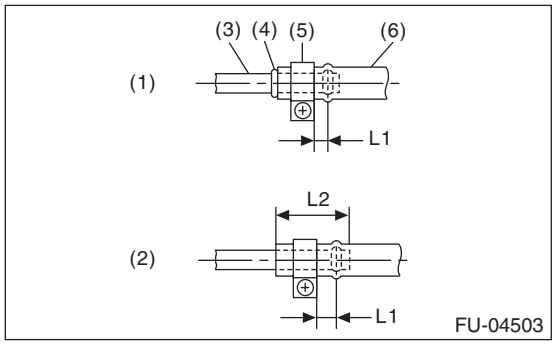

(1) When there is a spool or bump
(2) When there is no spool or bump
(3) Pipe
(4) Spool or bump
(5) Clamp
(6) Hose

4. EVAPORATION HOSE CONNECTION

Connect the evaporation hose to the pipe with an overlap of 15 to 20 mm (0.59 to 0.79 in).

L = 17.5±2.5 mm (0.689±0.098 in)

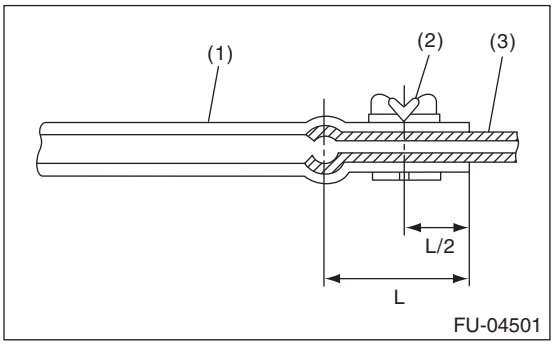

(1) Hose
(2) Clip
(3) Pipe

C: INSPECTION

1) Check that the fuel pipe has no deformation, cracks or other damages.
2) Check that the hose and tube have no cracks, damage or loose part.

36.Fuel System Trouble in General

A: INSPECTION

Trouble	Possible cause	Corrective action
Insufficient fuel supply to fuel injector	a. Fuel pump does not operate.	
	❍ Defective terminal contact	Inspect contact, especially ground, and tighten it securely.
	❍ Trouble in electromagnetic or electronic circuit parts	Replace the faulty parts.
	b. Decline of fuel pump function	Replace the fuel pump.
	c. Clogged fuel filter	Replace the fuel filter. Clean or replace the fuel tank if necessary.
	d. Clogged or bent fuel line pipe, hose or tube	Clean, correct or replace the fuel line pipe, hose or tube.
	e. Air is mixed in fuel system.	Check the fuel line connections, correct or replace the defective part.
	f. Damaged diaphragm of pressure regulator	Replace the pressure regulator.
Leakage or blow out of fuel	a. Loose connections of fuel line pipe, hose or tube	Check the fuel line connections, correct or replace the defective part.
	b. Cracked fuel line pipe, hose or tube	Replace the fuel line pipe, hose or tube.
	c. Cracked fuel tank or defective welding part	Replace the fuel tank.
	d. Clogged or bent fuel line pipe, hose or tube	Clean, correct or replace the fuel line pipe, hose or tube.
Gasoline smell inside of compartment	a. Loose connections of fuel line pipe, hose or tube	Check the fuel line connections, correct or replace the defective part.
	b. Defective canister	Replace the canister.
Defective fuel gauge	a. Defective operation of fuel level sensor	Replace the fuel level sensor.
	b. Defective operation of combination meter	Replace the combination meter.
Noise	a. Large operation noise or vibration of fuel pump	Replace the fuel pump.

NOTE:
• When the vehicle is left unattended for an extended period of time, water may accumulate in the fuel tank. Fill fuel fully to prevent the problem.
• In snow-covered areas, mountainous areas, skiing areas, etc. where ambient temperatures drop to 0°C (32°F) or less throughout the winter season, use a water removing agent in the fuel system to prevent freezing fuel system and accumulating water.
• When water is accumulated in fuel filter, fill the water removing agent in the fuel tank.
• Before using water removing agent, follow the cautions noted on the bottle.

EMISSION CONTROL (AUX. EMISSION CONTROL DEVICES)

EC(STI)

		Page
1.	General Description	2
2.	Front Catalytic Converter	5
3.	Rear Catalytic Converter	6
4.	Canister	7
5.	Purge Control Solenoid Valve	24
6.	Fuel Level Sensor	26
7.	Fuel Sub Level Sensor	27
8.	Drain Filter	28
9.	Leak Check Valve Assembly	32
10.	PCV Hose Assembly	52
11.	PCV Valve	54
12.	Secondary Air Pump	55
13.	Secondary Air Combination Valve	56

1. General Description

A: COMPONENT

1. CANISTER, PURGE CONTROL SOLENOID VALVE, DRAIN FILTER AND LEAK CHECK VALVE ASSEMBLY

For components of canister, purge control solenoid valve, drain filter and leak check valve assembly, refer to FU (STI). <Ref. to FU(STI)-3, COMPONENT, General Description.>

2. SECONDARY AIR PUMP

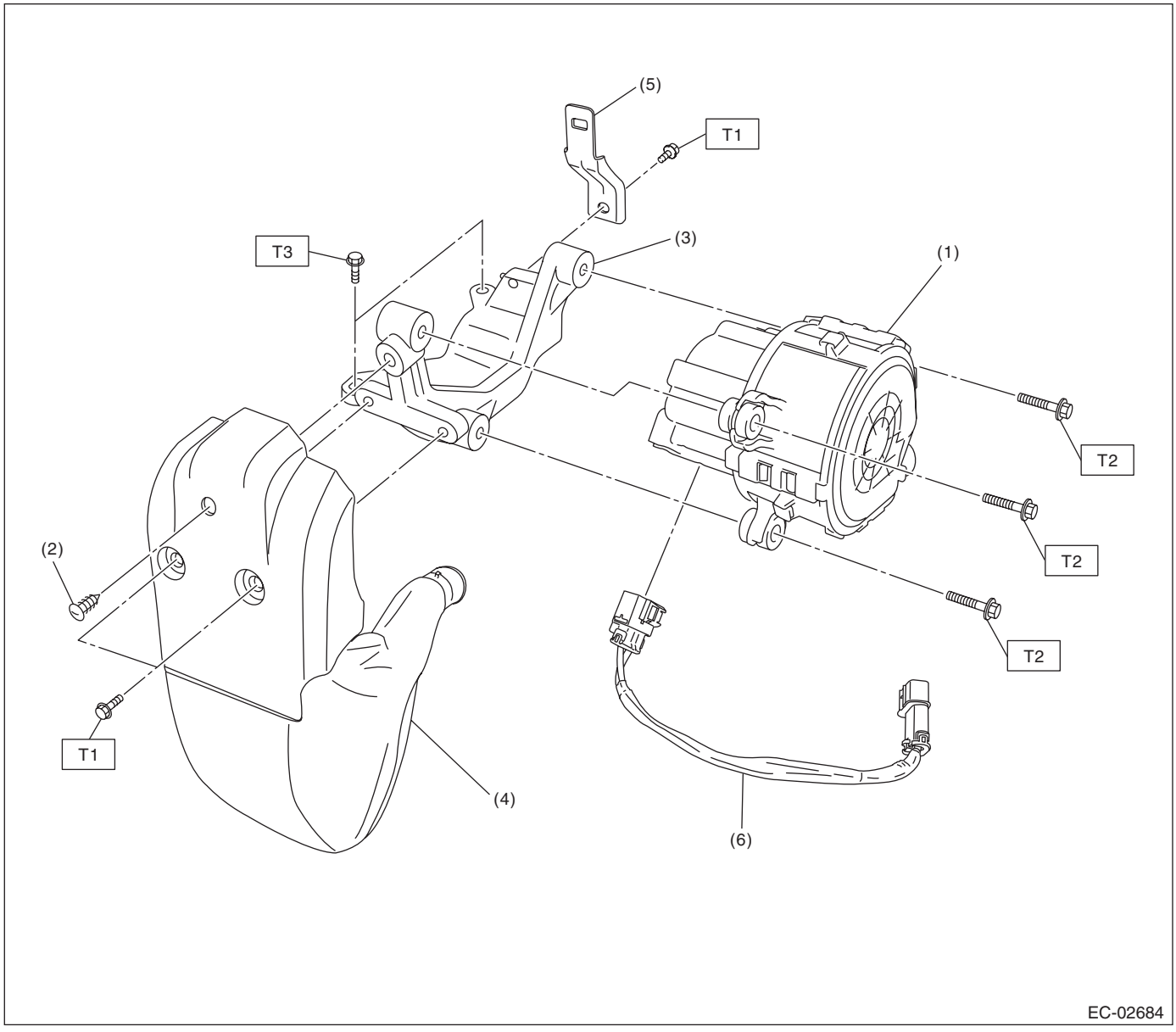

(1)	Secondary air pump	(4)	Resonator	
(2)	Clip	(5)	Harness stay	
(3)	Secondary air pump bracket	(6)	Secondary air pump harness	

Tightening torque: N·m (kgf-m, ft-lb)
T1: 6.4 (0.7, 4.7)
T2: 9 (0.9, 6.6)
T3: 19 (1.9, 14.0)

3. SECONDARY AIR COMBINATION VALVE

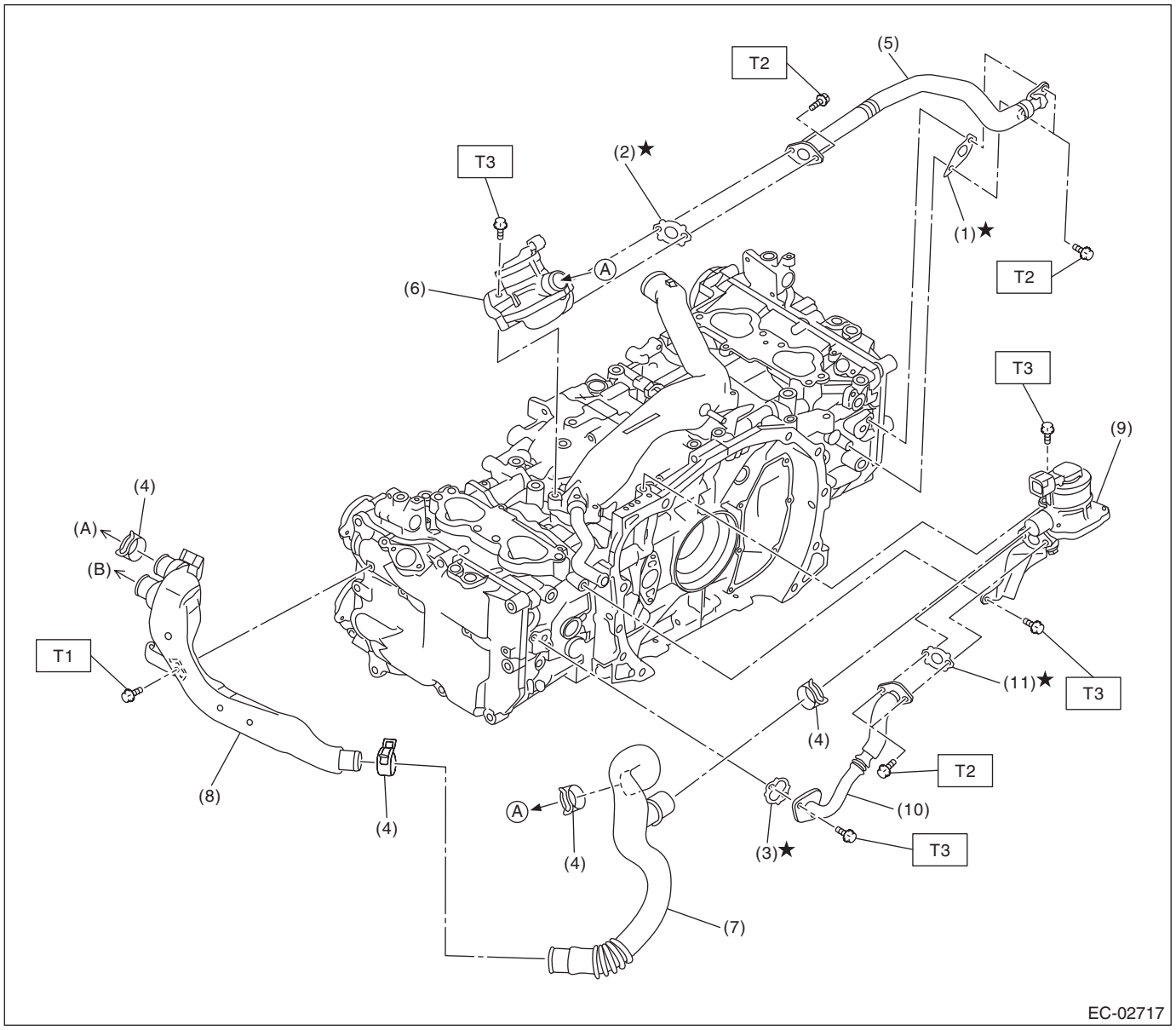

(A) To secondary air pump
(B) To resonator

(1) Gasket
(2) Gasket
(3) Gasket
(4) Clip
(5) Secondary air pipe RH
(6) Secondary air combination valve RH
(7) Air duct A
(8) Air duct B
(9) Secondary air combination valve LH
(10) Secondary air pipe LH
(11) Gasket

Tightening torque: N·m (kgf-m, ft-lb)
T1: 6.4 (0.7, 4.7)
T2: 9 (0.9, 6.6)
T3: 19 (1.9, 14.0)

B: CAUTION

- Prior to starting work, pay special attention to the following:
  1. Always wear work clothes, a work cap, and protective shoes. Additionally, wear a helmet, protective goggles, etc. if necessary.
  2. Protect the vehicle using a seat cover, fender cover, etc.
  3. Prepare the service tools, clean cloth, containers to catch grease and oil, etc.
- Vehicle components are extremely hot immediately after driving. Be wary of receiving burns from heated parts.
- When performing a repair, identify the cause of trouble and avoid unnecessary removal, disassembly and replacement.
- Before disconnecting connectors of sensors or units, be sure to disconnect the ground cable from battery.
- Always use the jack-up point when the shop jacks or rigid racks are used to support the vehicle.
- Remove contamination including dirt and corrosion before removal, installation, disassembly or assembly.
- Keep the removed parts in order and protect them from dust and dirt.
- All removed parts, if to be reused, should be reinstalled in the original positions with attention to the correct directions, etc.
- Bolts, nuts and washers should be replaced with new parts as required.
- Be sure to tighten the fasteners including bolts and nuts to the specified torque.

C: PREPARATION TOOL

1. GENERAL TOOL

TOOL NAME	REMARKS
Circuit tester	Used for measuring resistance, voltage and current.
Clamp pincer	• Used for installing the PCV hose assembly. • This tool is made by OETIKER. Product No. 14100134

2. Front Catalytic Converter

A: REMOVAL

The front catalytic converter is integrated into the center exhaust pipe (front). Refer to “Center Exhaust Pipe” for removal procedures. <Ref. to EX(STI)-7, REMOVAL, Center Exhaust Pipe.>

B: INSTALLATION

The front catalytic converter is integrated into the center exhaust pipe (front). Refer to “Center Exhaust Pipe” for installation procedures. <Ref. to EX(STI)-8, INSTALLATION, Center Exhaust Pipe.>

C: INSPECTION

1) Check the connections and welds for exhaust leaks.
2) Make sure there are no holes or rusting.

3. Rear Catalytic Converter

A: REMOVAL

The rear catalytic converter is integrated into the center exhaust pipe (rear). Refer to “Center Exhaust Pipe” for removal procedures. <Ref. to EX(STI)-7, REMOVAL, Center Exhaust Pipe.>

B: INSTALLATION

The rear catalytic converter is integrated into the center exhaust pipe (rear). Refer to “Center Exhaust Pipe” for installation procedures. <Ref. to EX(STI)-8, INSTALLATION, Center Exhaust Pipe.>

C: INSPECTION

1) Check the connections and welds for exhaust leaks.
2) Make sure there are no holes or rusting.

4. Canister

A: REMOVAL

WARNING:
Place “NO OPEN FLAMES” signs near the working area.

CAUTION:
Be careful not to spill fuel.

1) Release the fuel pressure. <Ref. to FU(STI)-64, RELEASING OF FUEL PRESSURE, PROCEDURE, Fuel.>
2) Drain fuel. <Ref. to FU(STI)-64, DRAINING FUEL (WITH SUBARU SELECT MONITOR), PROCEDURE, Fuel.>
3) Disconnect the ground cable from battery.
4) Lift up the vehicle.
5) Remove the rear exhaust pipe. <Ref. to EX(STI)-12, REMOVAL, Rear Exhaust Pipe.>
6) Remove the propeller shaft. <Ref. to DS-12, REMOVAL, Propeller Shaft.>
7) Support the rear differential with the transmission jack.
8) Disconnect the connector from oil temperature sensor.

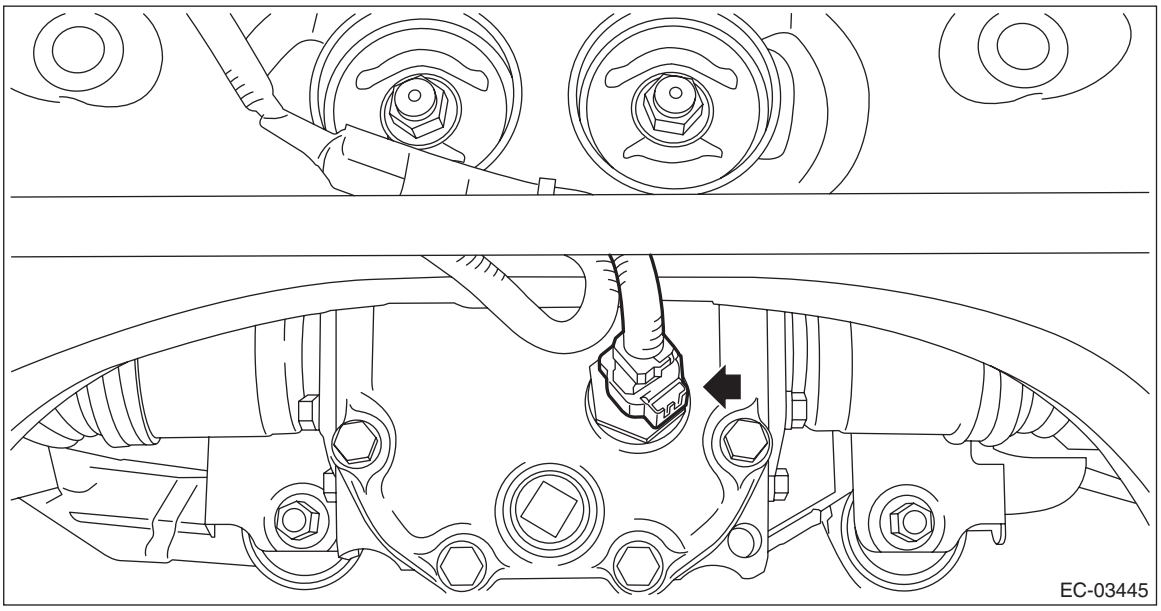

9) Remove the self-locking nuts which hold the rear differential to the rear sub frame assembly.

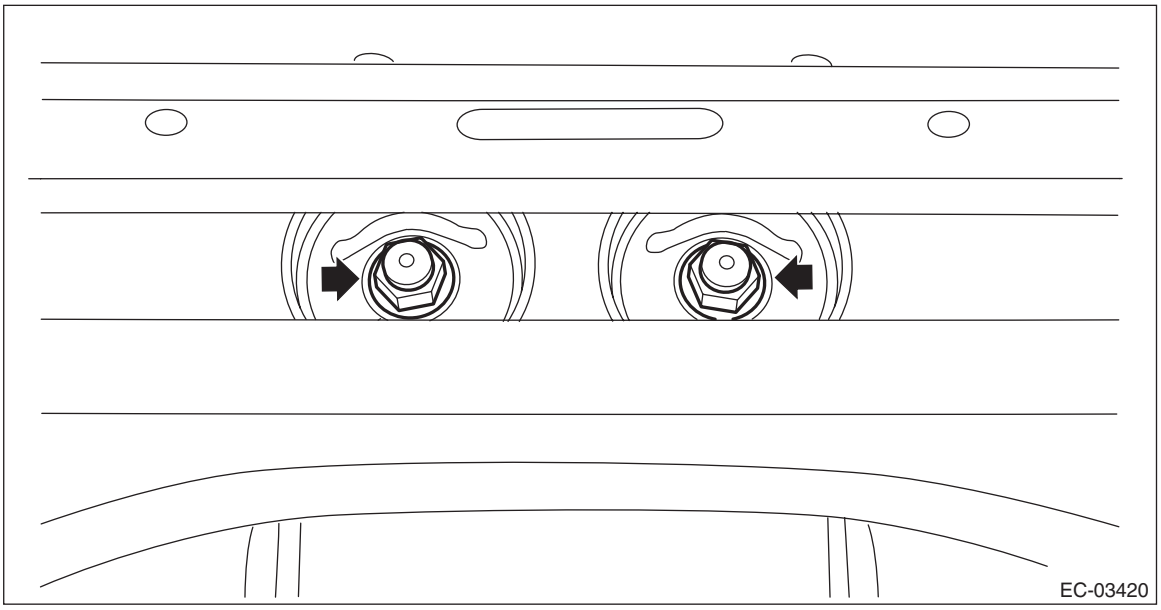

10) Remove the rear differential member from the rear sub frame assembly and the rear differential.

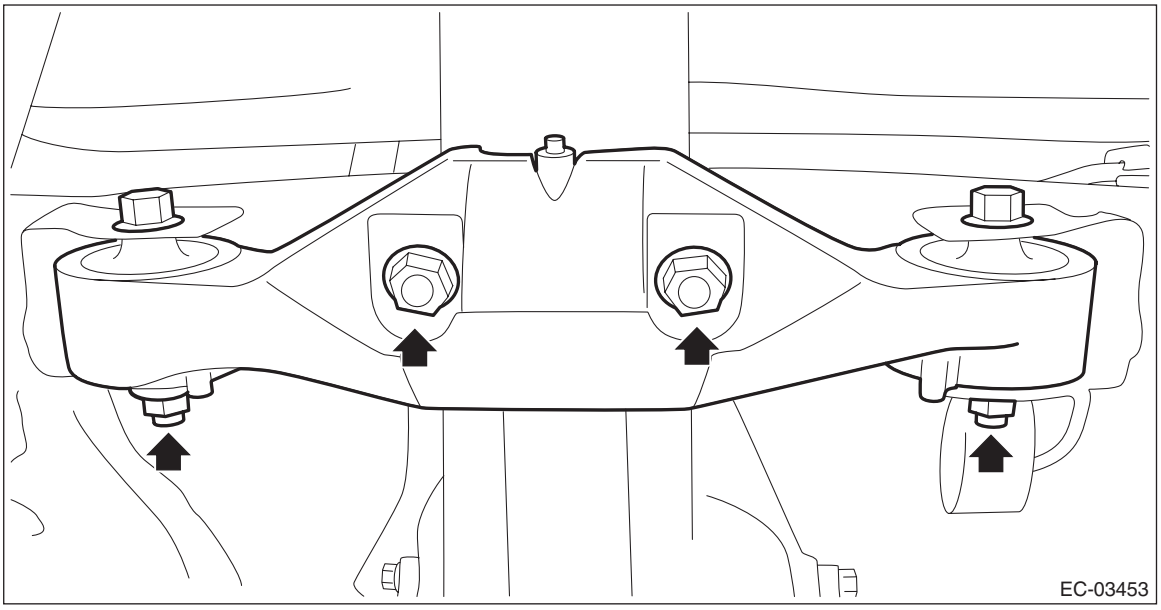

11) Lower the transmission jack gradually until the rear differential is at the position shown in the figure.

NOTE:

• When pulling out the stud bolt from the bushing portion of the rear sub frame assembly, adjust the angle and location of transmission jack and jack stand.

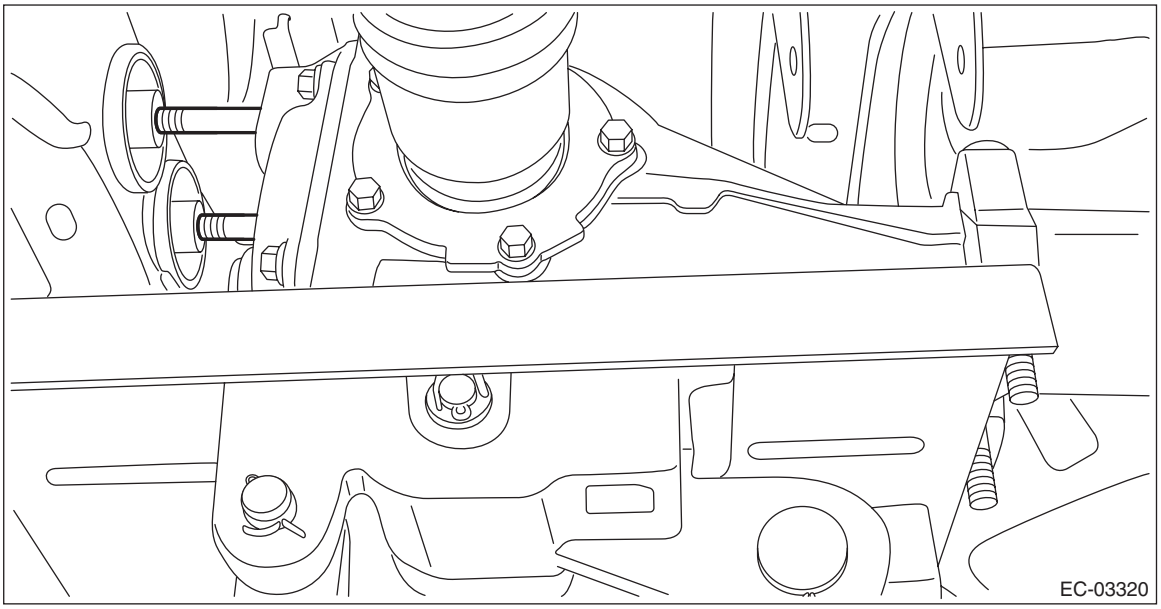

• Do not lower the rear differential excessively. Doing so may add extra load to the drive shaft or cause the falling-off of the drive shaft.

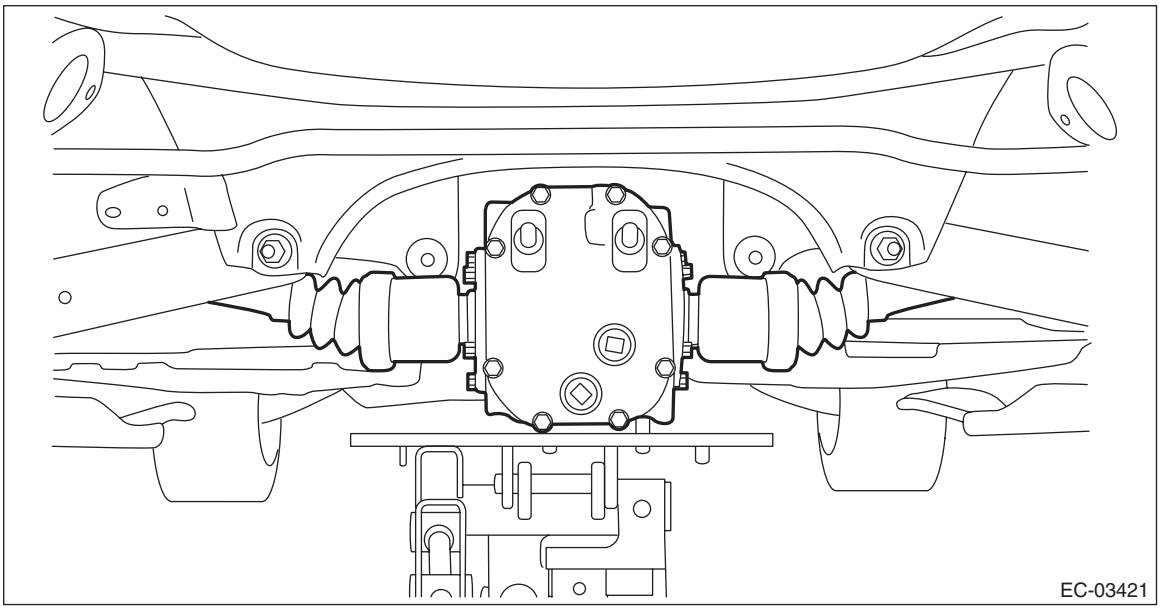

12) Disconnect the vent tube from vent hose.

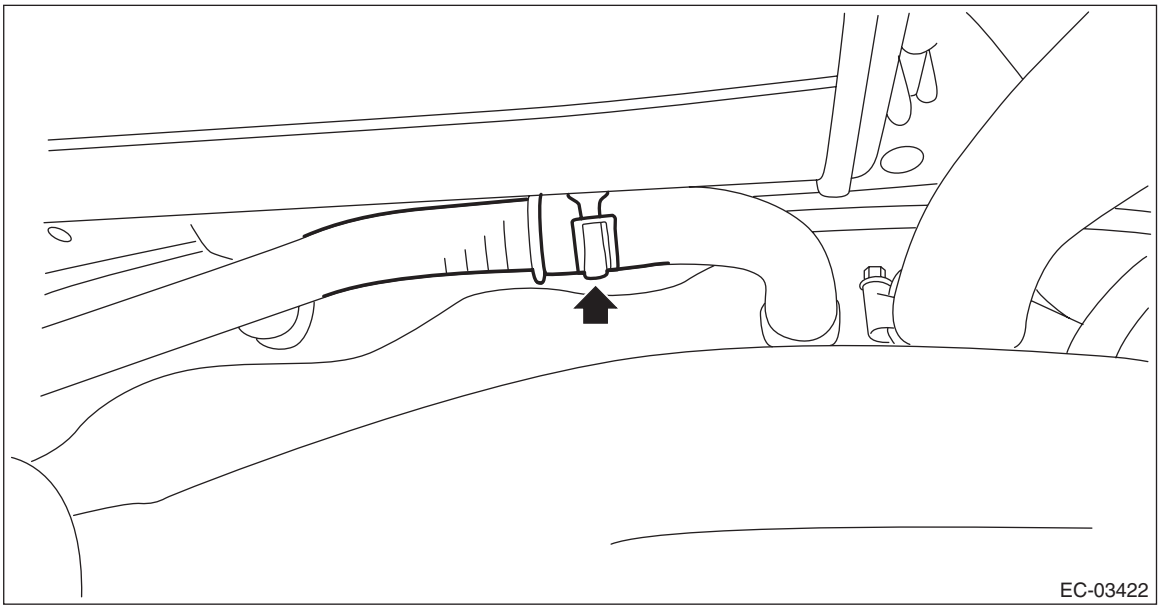

13) Disconnect the drain tube (A) and purge tube (B) from the canister.

NOTE:
Disconnect the quick connector as shown in the figure.

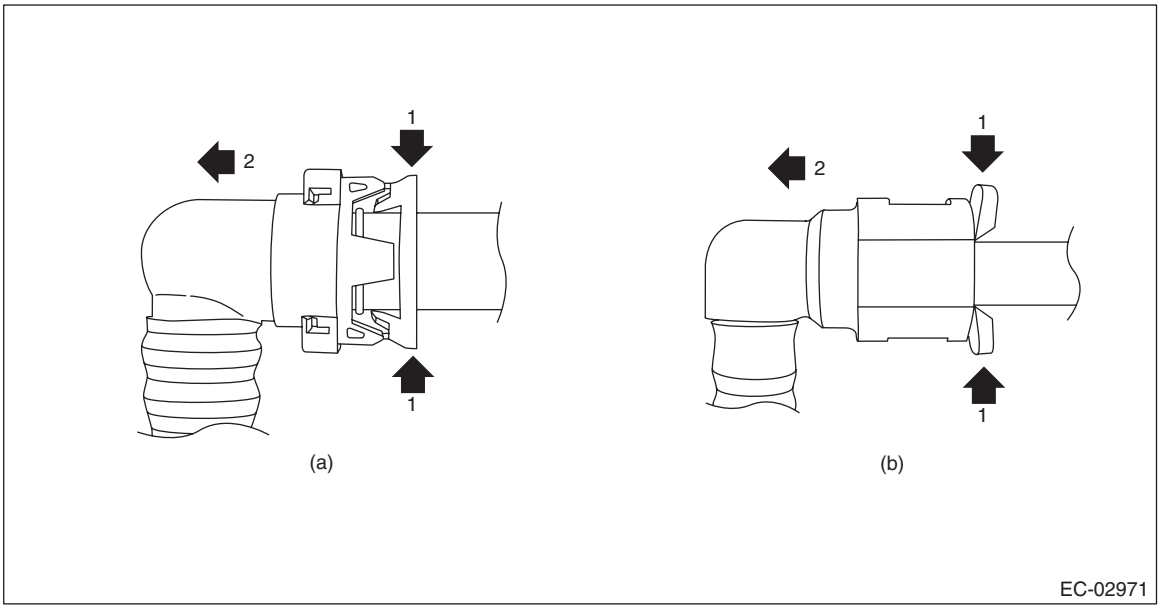

(a) Drain tube (b) Purge tube

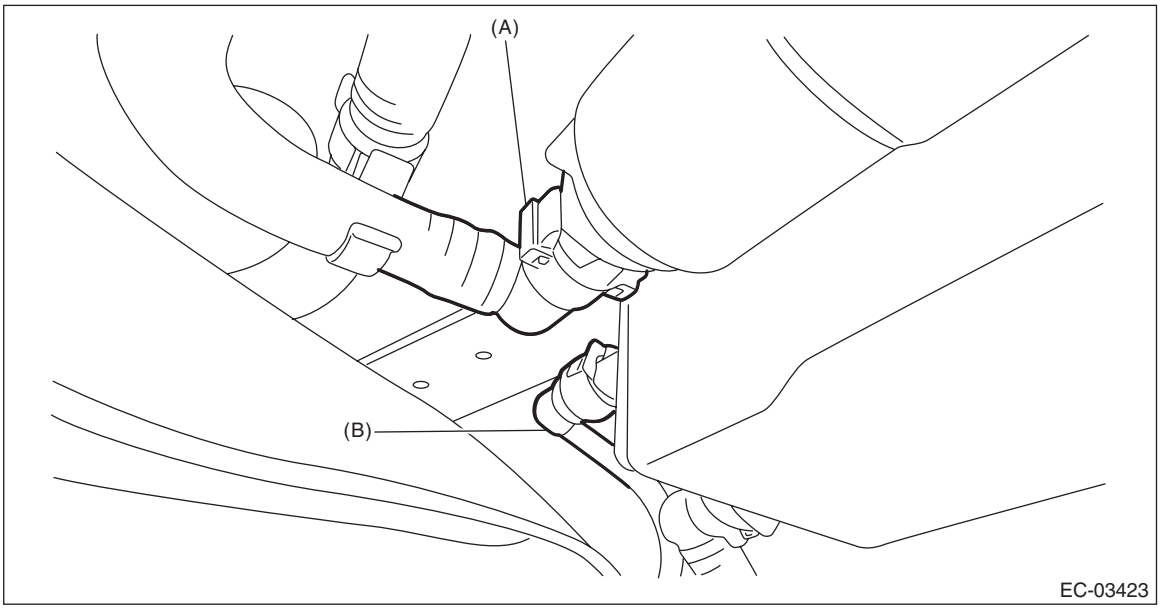

14) Disconnect the fuel filler hose from the fuel filler pipe assembly.

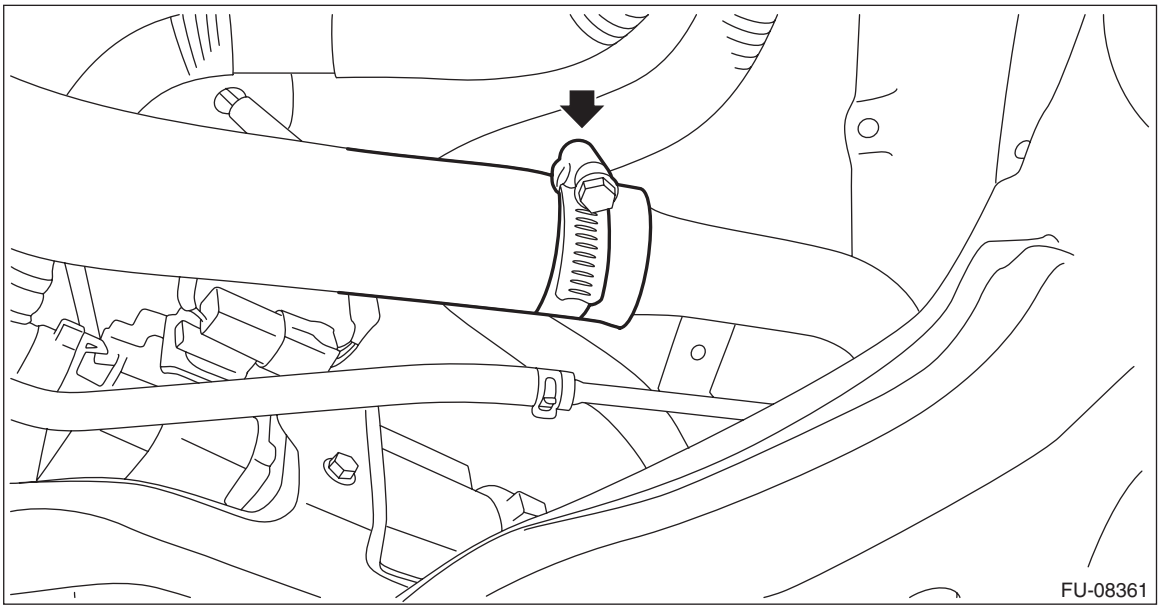

15) Remove the tube clamp from the canister bracket A, and remove the drain tube from the tube clamp.

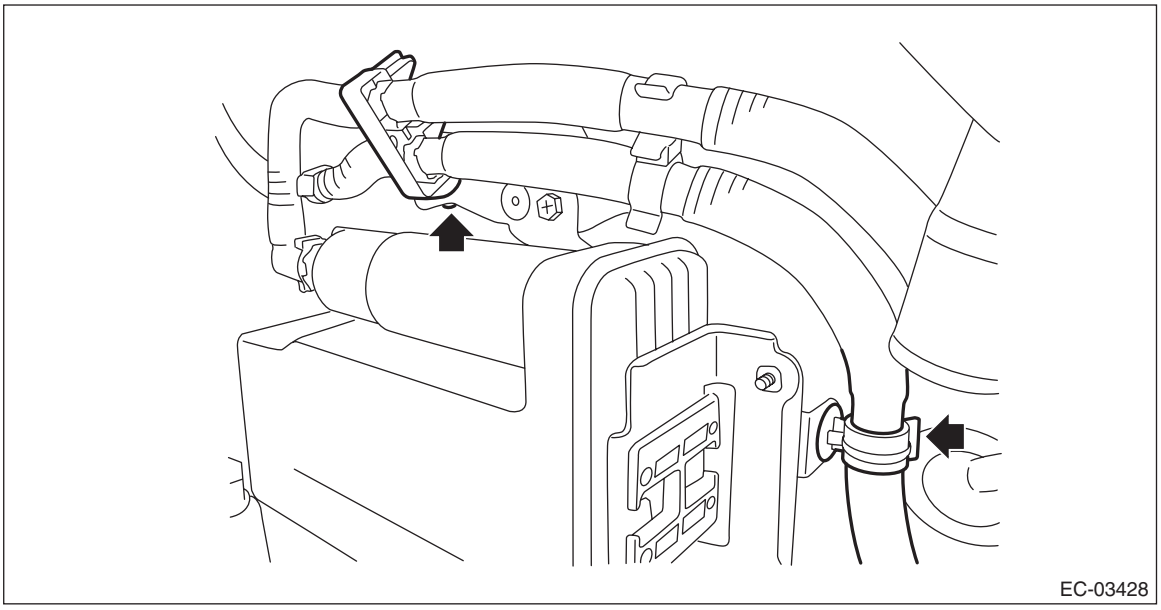

16) Remove the bolts and clip (A) securing the canister to the vehicle, and remove the canister.

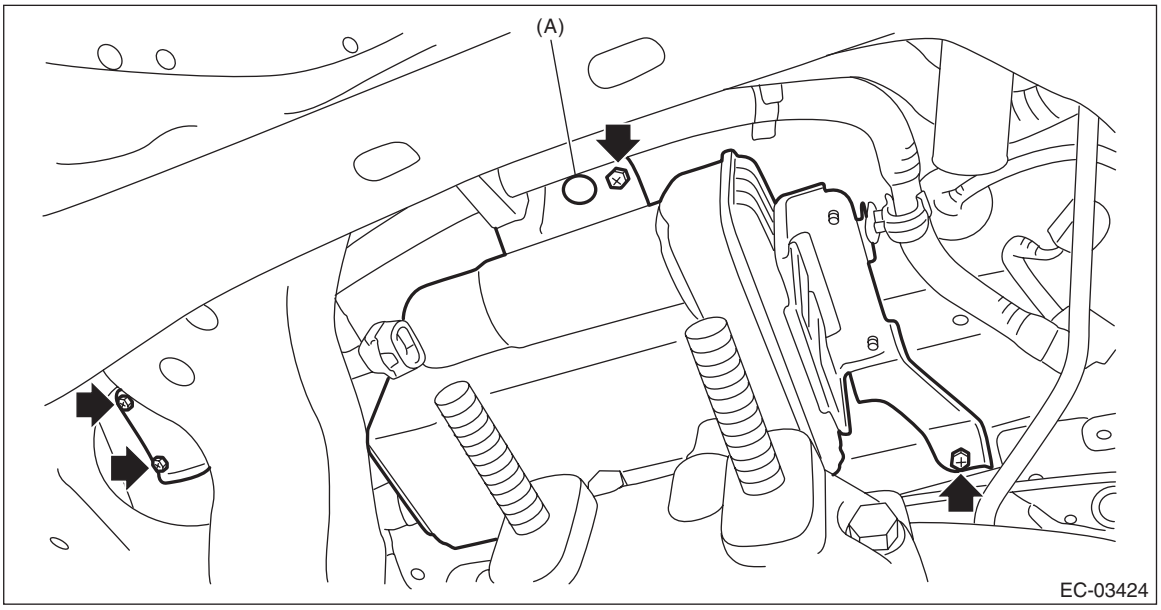

17) Disconnect the vent tube (B) from the canister and remove the canister bracket A (A).

NOTE:

- Disconnect the quick connector as shown in the figure.

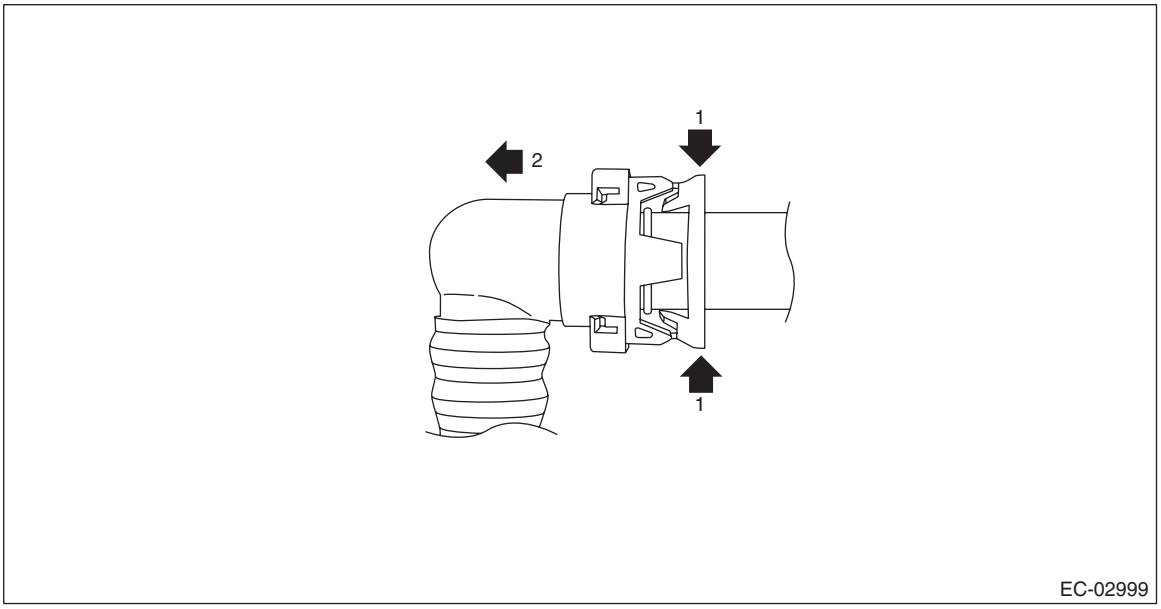

• The canister bracket cannot be separated from the canister. Therefore, be sure to replace both of them with new ones when replacing the canister or canister bracket.

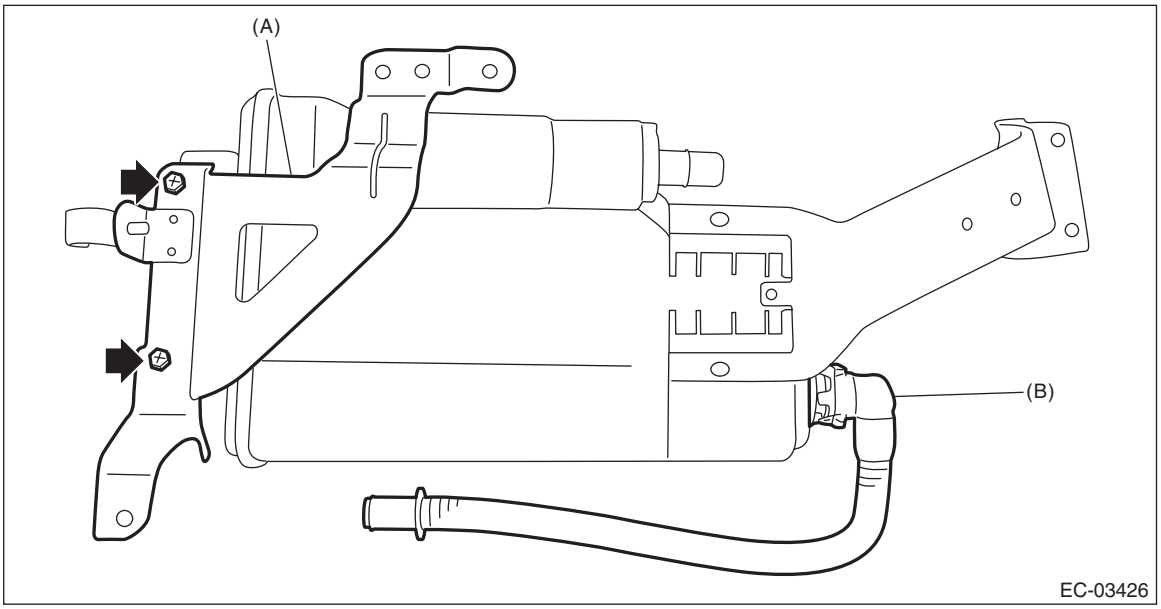

B: INSTALLATION

1) Move it in the direction of the arrow and install the canister bracket B (A) and canister bracket C (B) to the canister.

NOTE:
• Use a new canister and a canister bracket.
• Check that the claw (a) is securely tightened.

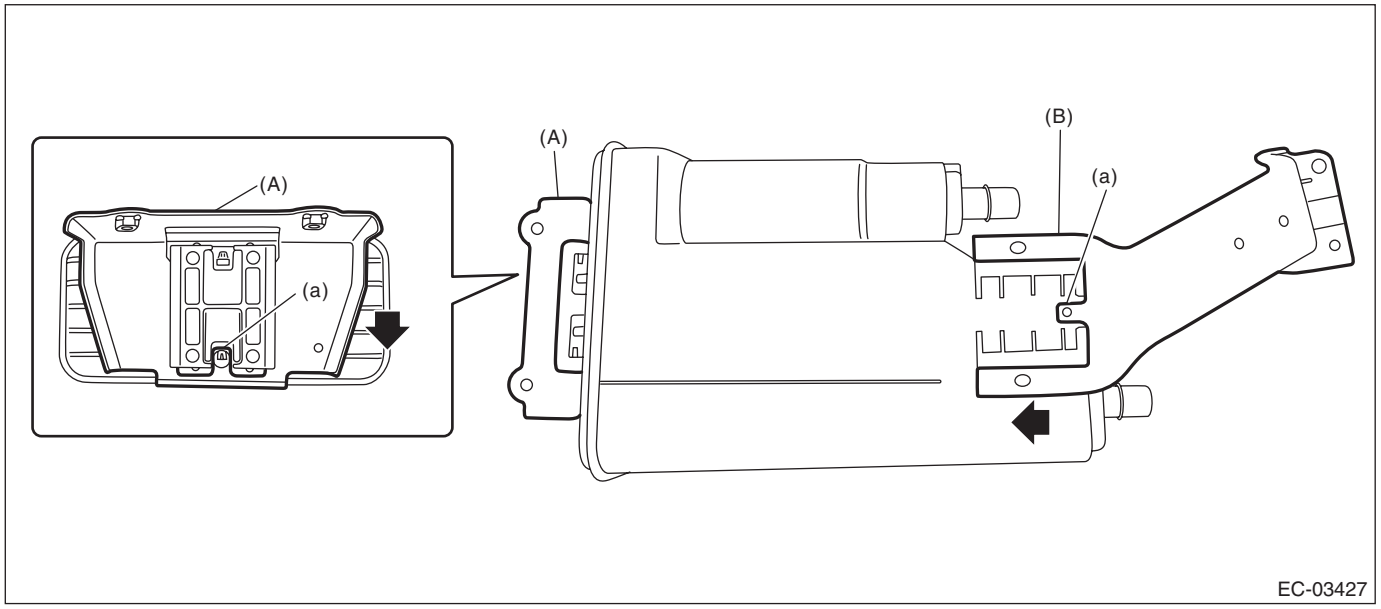

2) Connect the vent tube (B) to the canister and remove the canister bracket A (A).

CAUTION:
- **Check that there is no damage or dust on the quick connector. If necessary, clean the seal surface of the pipe.**
- **Make sure that the quick connector is securely connected.**

NOTE:
Install the quick connector as shown in the figure.

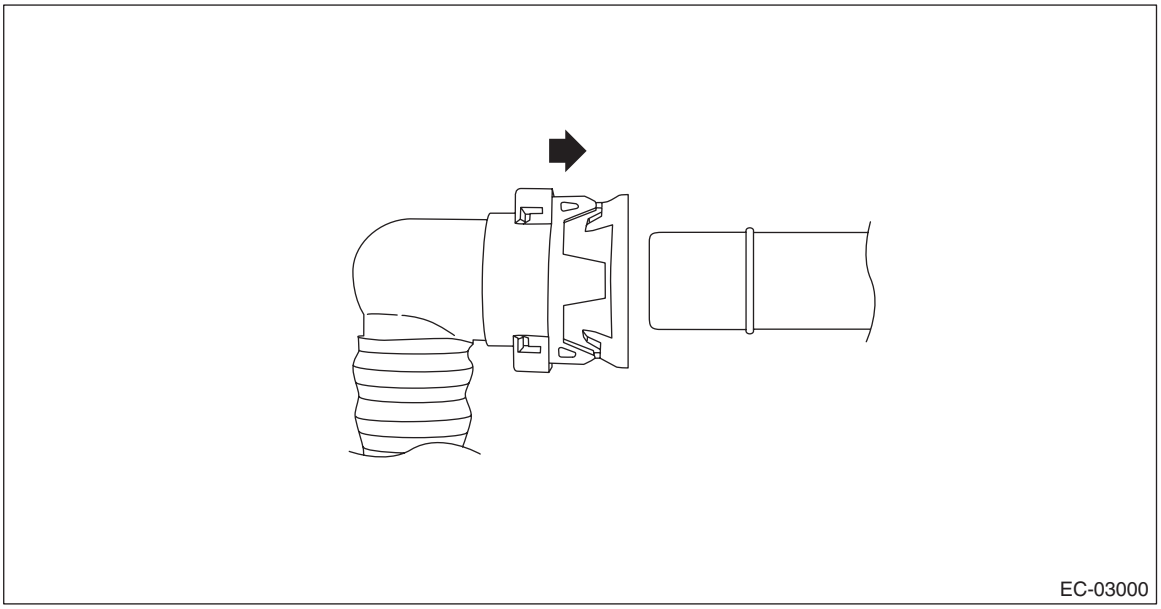

Tightening torque:
7.5 N·m (0.8 kgf-m, 5.5 ft-lb)

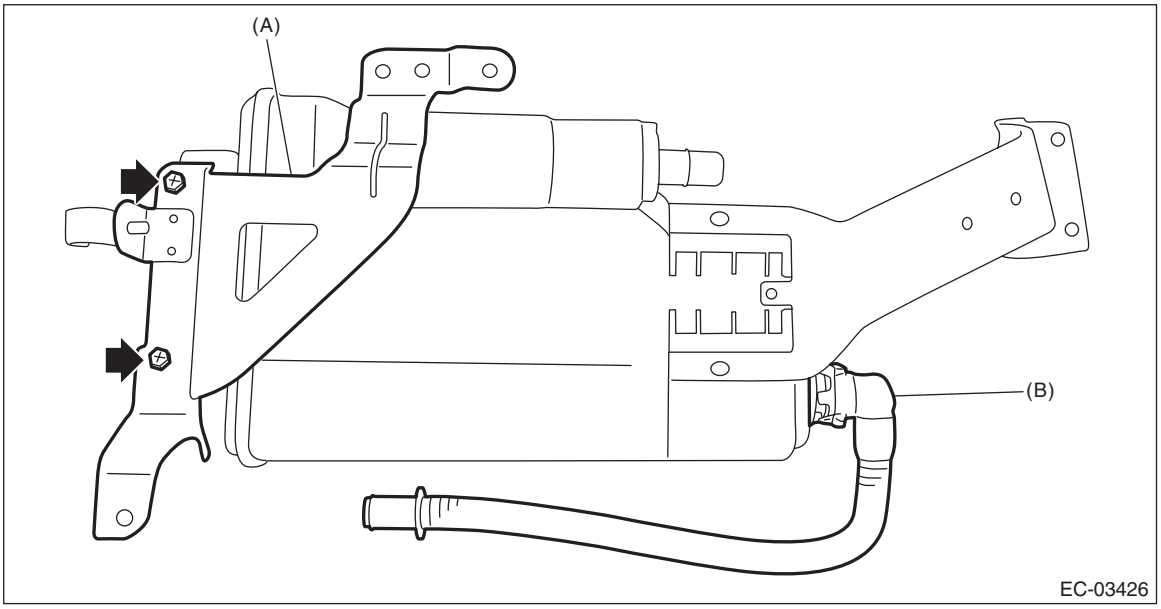

3) Set the canister to the vehicle, and attach the bolts and clip (A) which secure the canister.

Tightening torque:
7.5 N·m (0.8 kgf-m, 5.5 ft-lb)

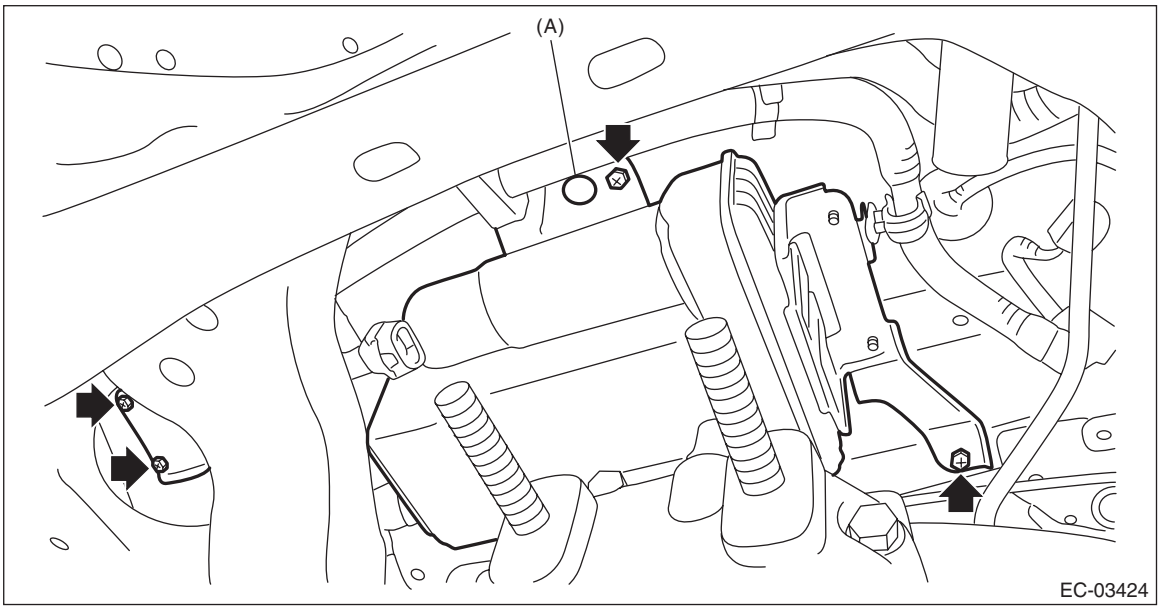

4) Correctly insert the fuel filler hose to the spool, and then install the clamp as shown.

Tightening torque:
2.5 N·m (0.3 kgf-m, 1.8 ft-lb)

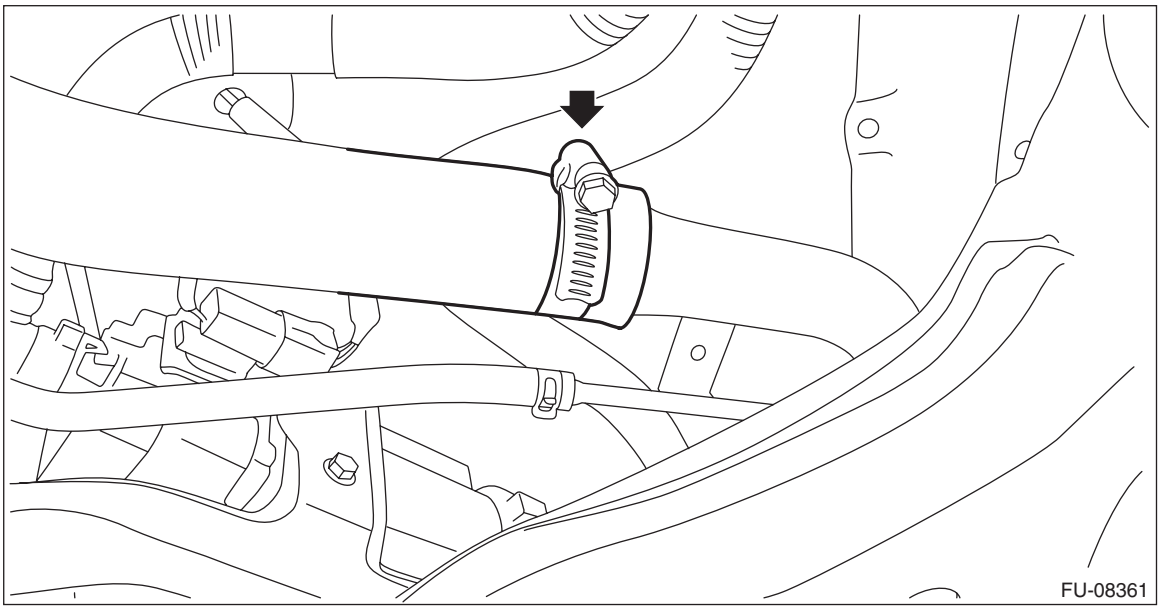

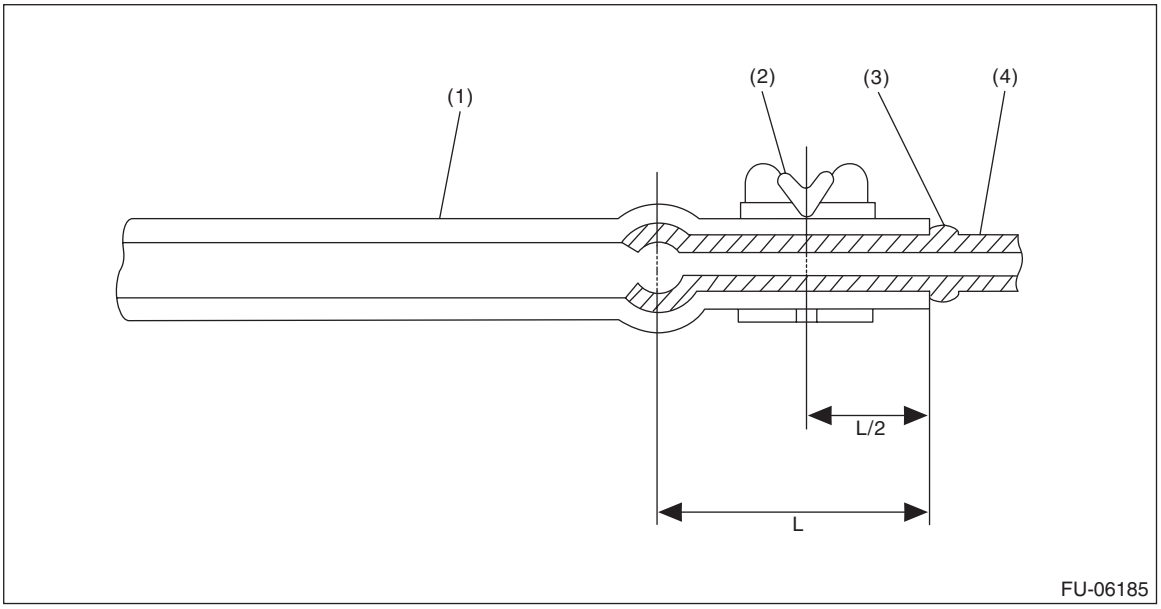

(1) Hose
(2) Clamp
(3) Spool
(4) Pipe

5) Install the tube clamp to the canister bracket A, and install the drain tube to the tube clamp.

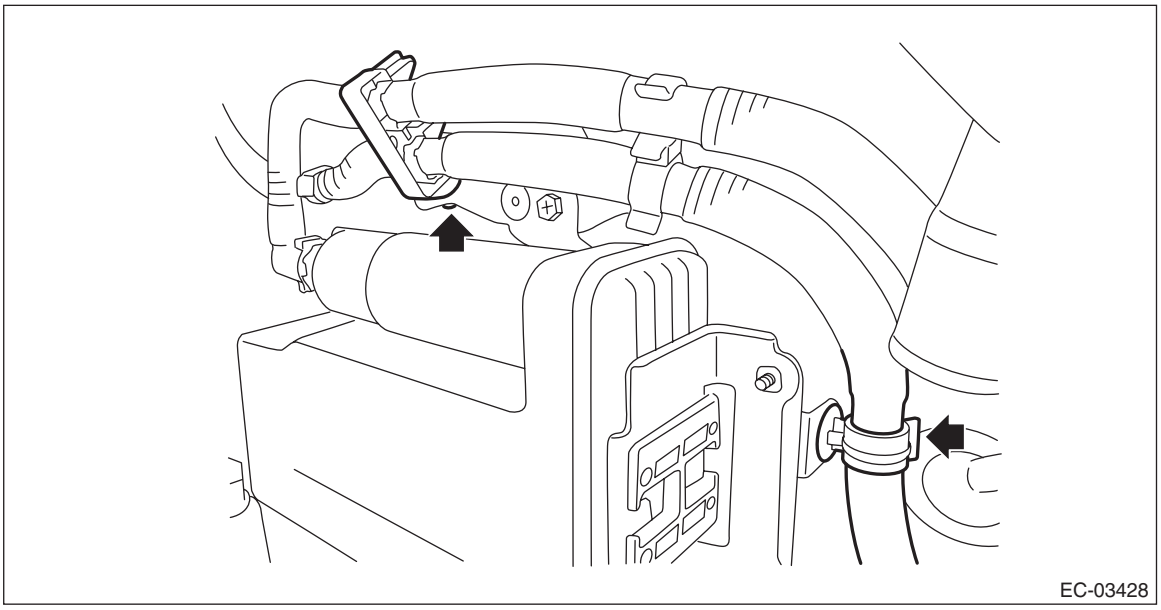

6) Connect the drain tube (A) and purge tube (B) to the canister.

CAUTION:
- **Check that there is no damage or dust on the quick connector. If necessary, clean the seal surface of the pipe.**
- **Make sure that the quick connector is securely connected.**

NOTE:
Install the quick connector as shown in the figure.

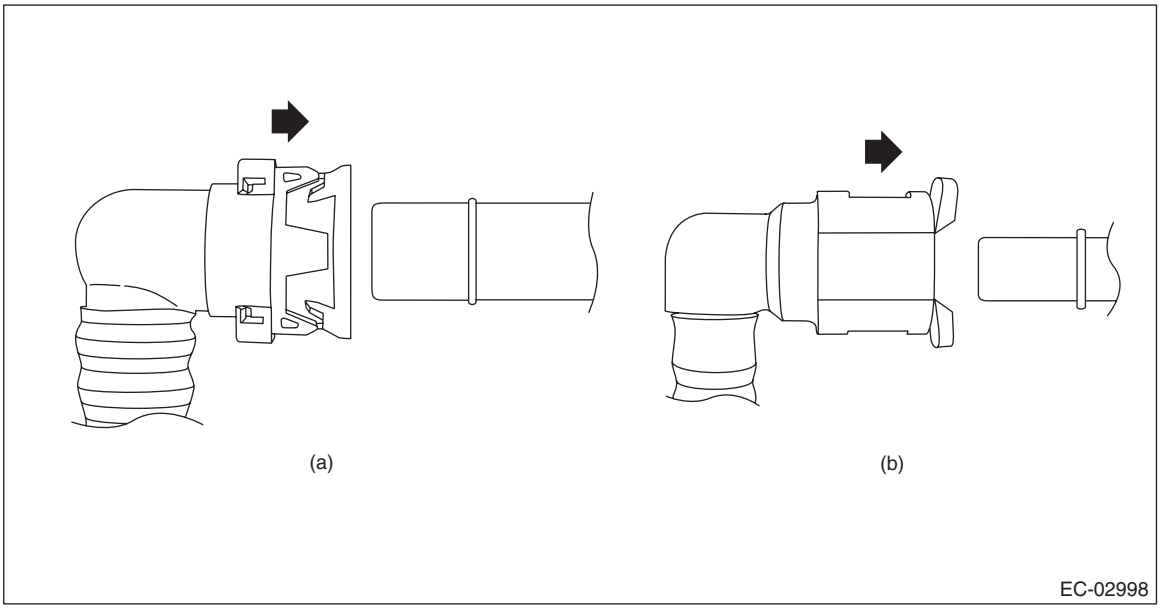

(a) Drain tube (b) Purge tube

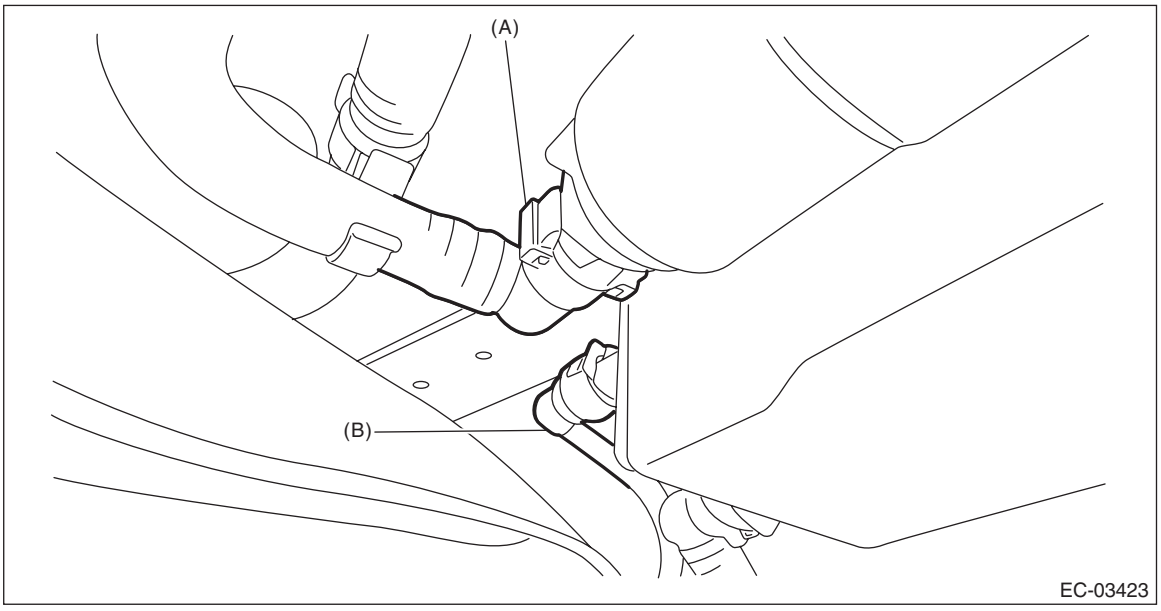

7) Connect the vent tube to the vent hose.

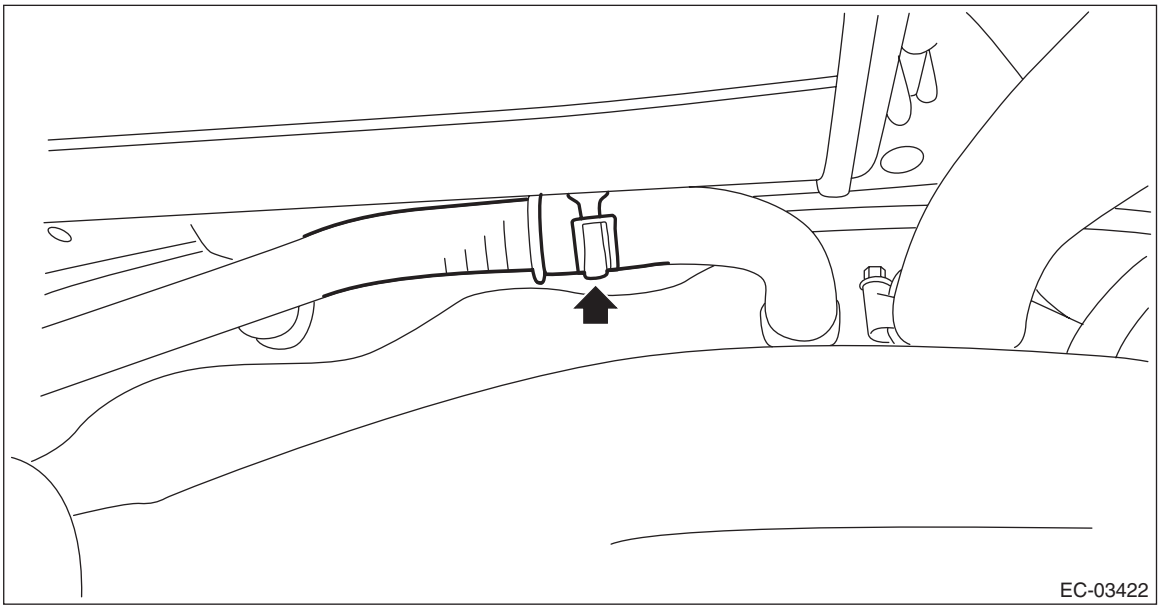

8) Lift up the transmission jack gradually, and set the rear differential to the rear sub frame assembly.

NOTE:
When inserting the stud bolt into the bushing portion of the rear sub frame assembly, adjust the angle and location of transmission jack and jack stand.

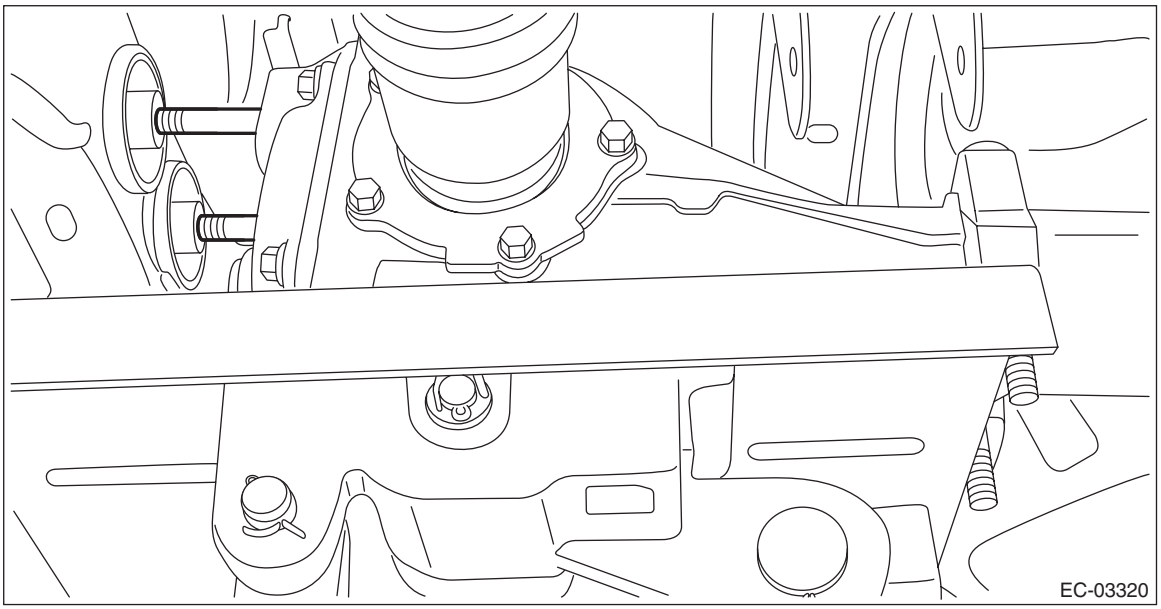

9) Temporarily tighten the self-locking nuts which hold the rear differential to the rear sub frame assembly.

NOTE:
Use a new self-locking nut.

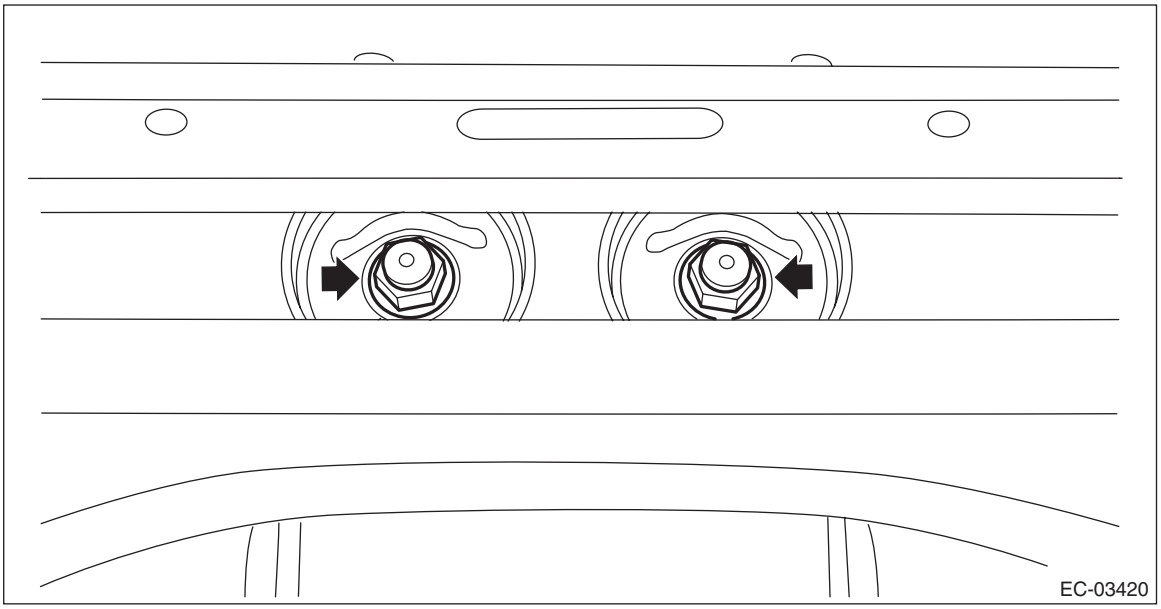

10) Set the rear differential member to the rear sub frame assembly and rear differential, and temporarily tighten the self-lock nuts which secure the rear differential member to the rear sub frame assembly and rear differential.

NOTE:
Use a new self-locking nut.

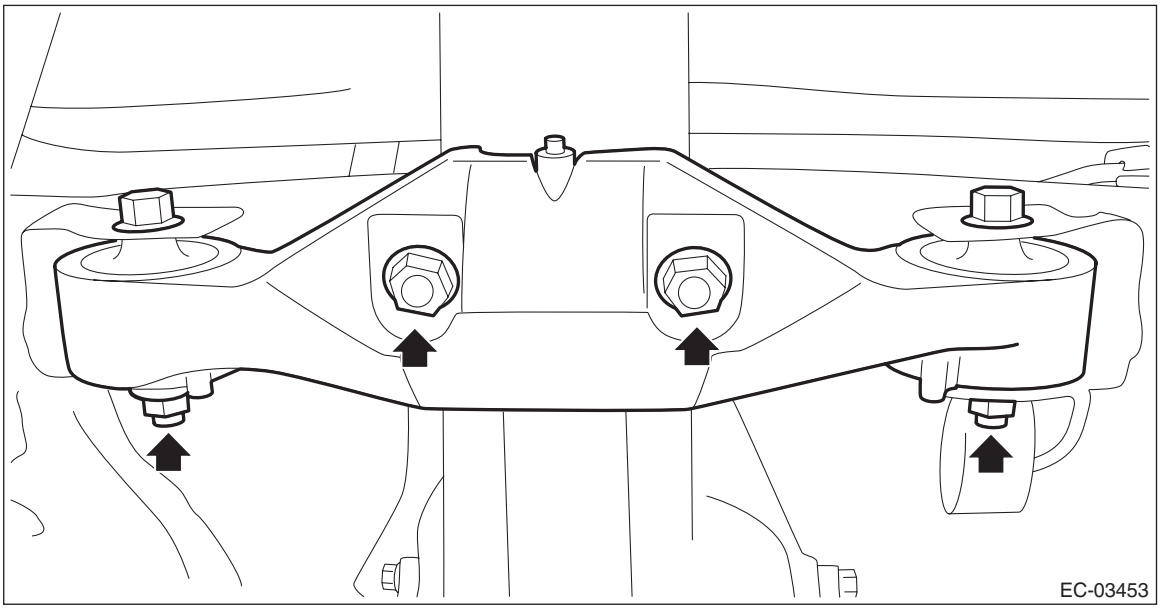

11) Remove the transmission jack from the rear differential.
12) Tighten the self-locking nuts which secure the rear differential member to the rear sub frame assembly and rear differential.

Tightening torque:
T1: 50 N·m (5.1 kgf-m, 36.9 ft-lb)
T2: 110 N·m (11.2 kgf-m, 81.1 ft-lb)

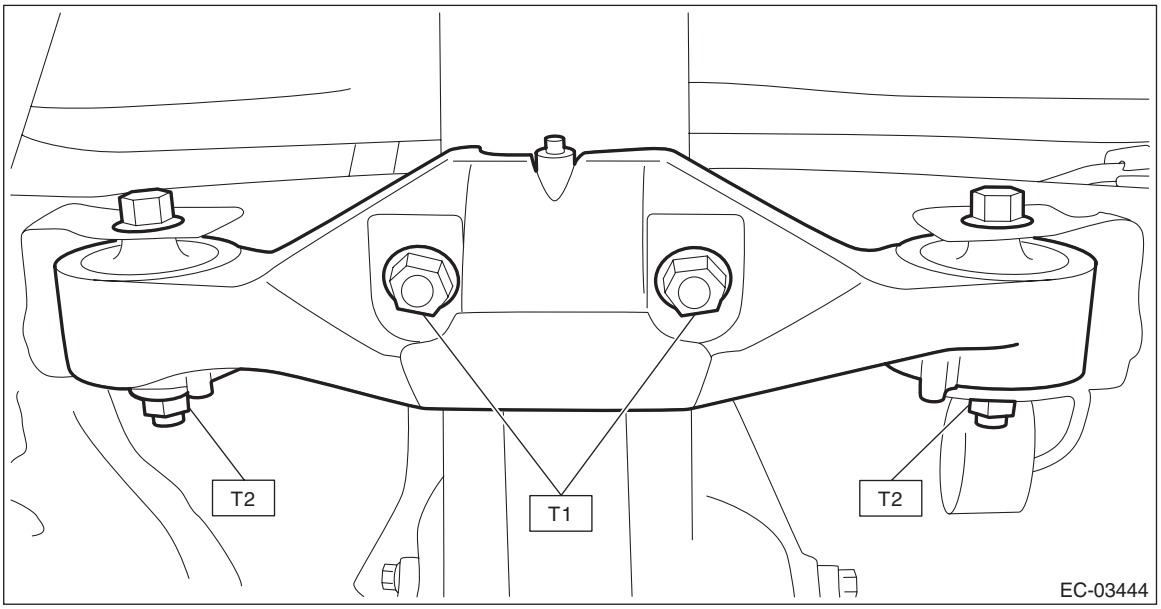

13) Tighten the self-locking nuts which secure the rear differential to the rear sub frame assembly.

Tightening torque:
70 N·m (7.1 kgf-m, 51.6 ft-lb)

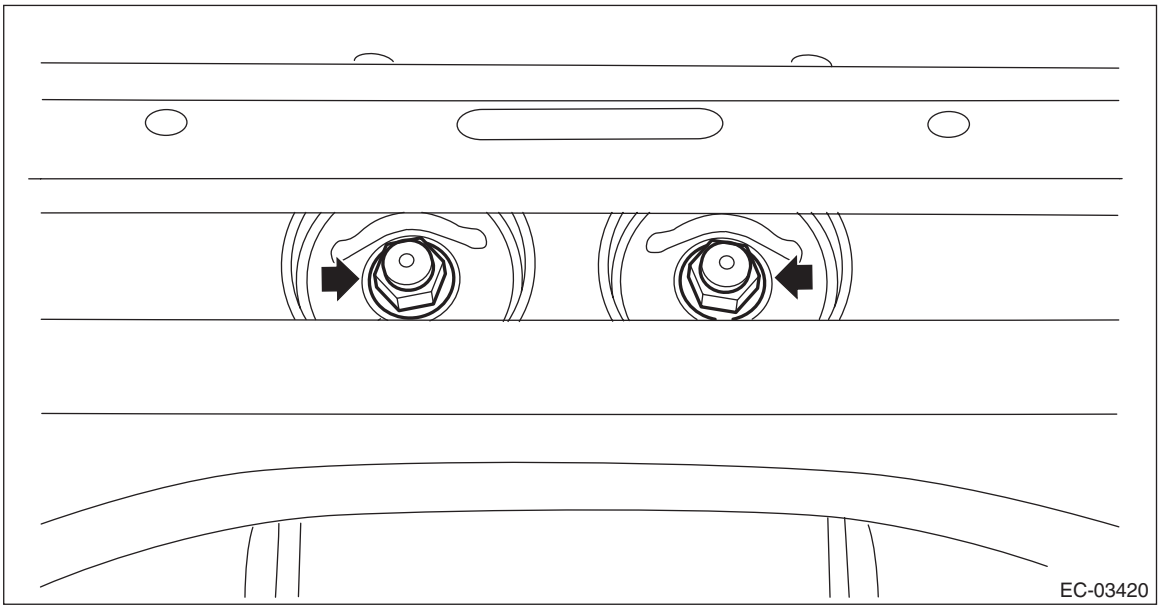

14) Connect the connector to the oil temperature sensor.

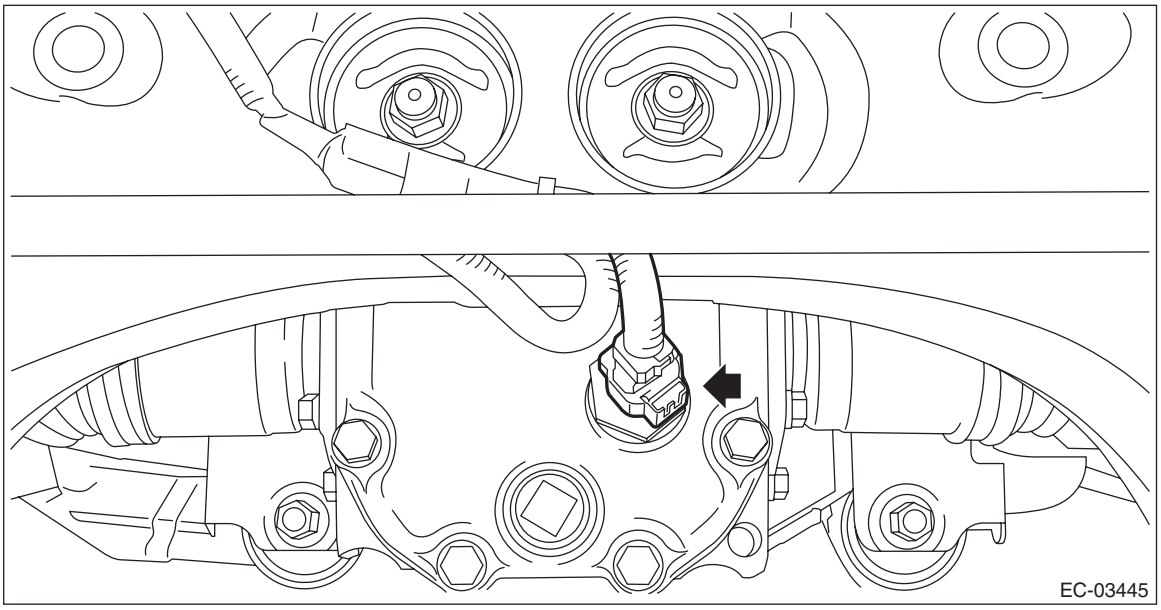

15) Install the propeller shaft. <Ref. to DS-14, INSTALLATION, Propeller Shaft.>
16) Install the rear exhaust pipe. <Ref. to EX(STI)-12, INSTALLATION, Rear Exhaust Pipe.>
17) Lower the vehicle.
18) Connect the ground terminal to the battery.

C: INSPECTION

1) Check that the canister has no deformation, cracks or other damages.
2) Check that the tube has no cracks, damage or loose part.

5. Purge Control Solenoid Valve

A: REMOVAL

1. PURGE CONTROL SOLENOID VALVE 1

1) Disconnect the ground cable from battery.
2) Remove the bolts which secure purge control solenoid valve 1 to the intake manifold, and disconnect the connector from the purge control solenoid valve 1.

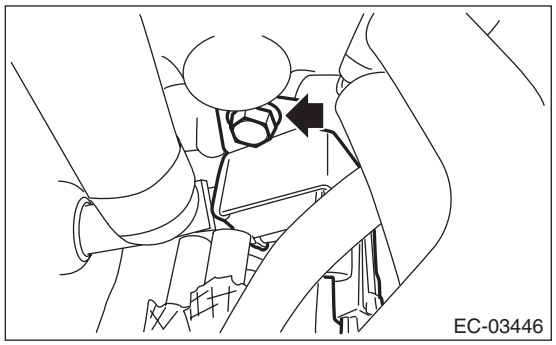

3) Disconnect the vacuum hose and the vacuum control hose from purge control solenoid valve 1.

2. PURGE CONTROL SOLENOID VALVE 2

1) Disconnect the ground cable from battery.
2) Disconnect connector (A), vacuum hose (B), and vacuum control hose (C) from purge control solenoid valve 2.
3) Remove purge control solenoid valve 2 from the solenoid valve bracket.

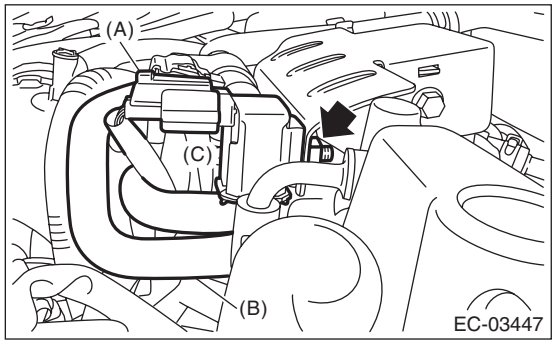

B: INSTALLATION

1. PURGE CONTROL SOLENOID VALVE 1

Install in the reverse order of removal.

NOTE:
Connect the vacuum hose and vacuum control hose as shown in the figure.

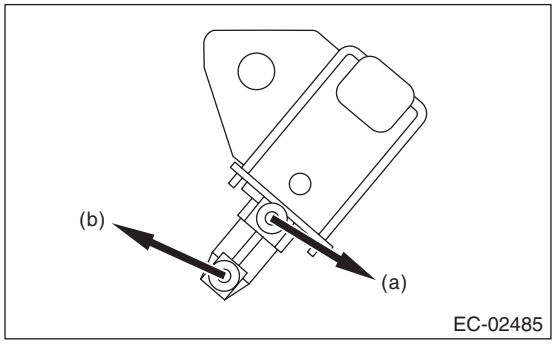

(a) To intake manifold
(b) To branching pipe → fuel pipe

Tightening torque:
19 N·m (1.9 kgf-m, 14.0 ft-lb)

2. PURGE CONTROL SOLENOID VALVE 2

Install in the reverse order of removal.

NOTE:
Connect the vacuum hose and vacuum control hose as shown in the figure.

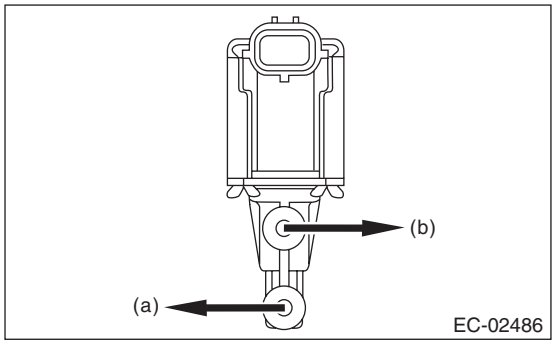

(a) To intake duct
(b) To branching pipe → fuel pipe

Tightening torque:
6.4 N·m (0.7 kgf-m, 4.7 ft-lb)

C: INSPECTION

1. PURGE CONTROL SOLENOID VALVE

1) Check that the purge control solenoid valve has no deformation, cracks or other damages.
2) Measure the resistance between the purge control solenoid valve terminals.

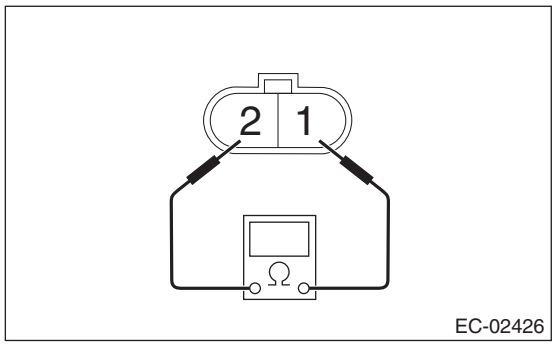

	Terminal No.	Standard
Purge control solenoid valve 1	1 and 2	32±2 Ω (when 20°C (68°F))
Purge control solenoid valve 2		24±3 Ω (when 20°C (68°F))

3) Check that air does not come out from (B) when air is blown into (A).

- Purge control solenoid valve 1

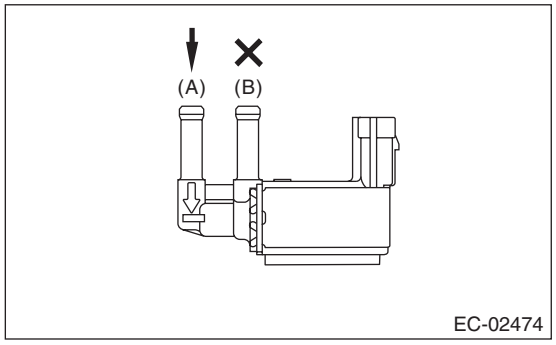

- Purge control solenoid valve 2

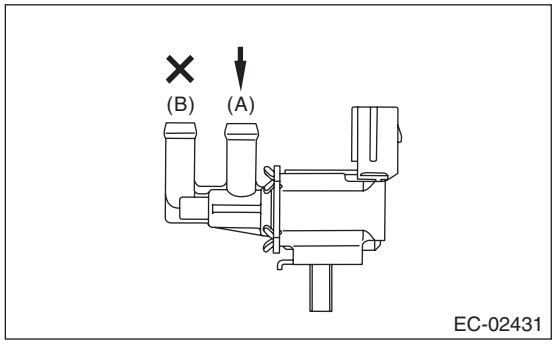

4) Connect the battery positive terminal to the terminal No. 1 and the battery negative terminal to the terminal No. 2. Check that air is discharged from (B), when supplying air to (A).

- Purge control solenoid valve 1

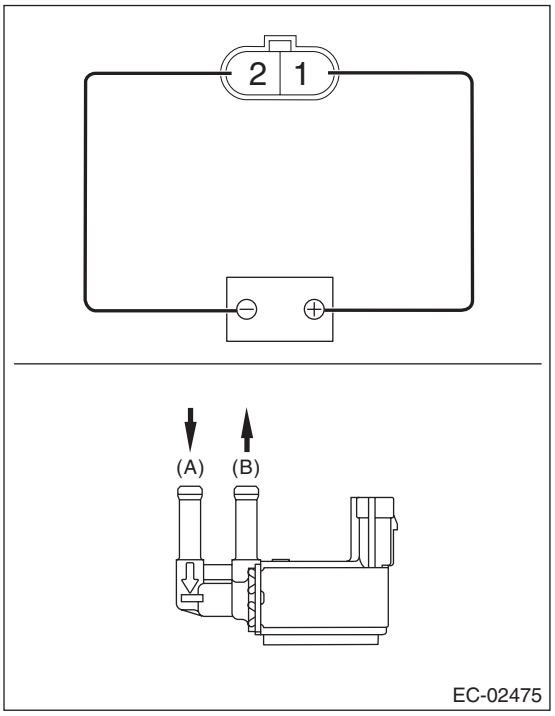

- Purge control solenoid valve 2

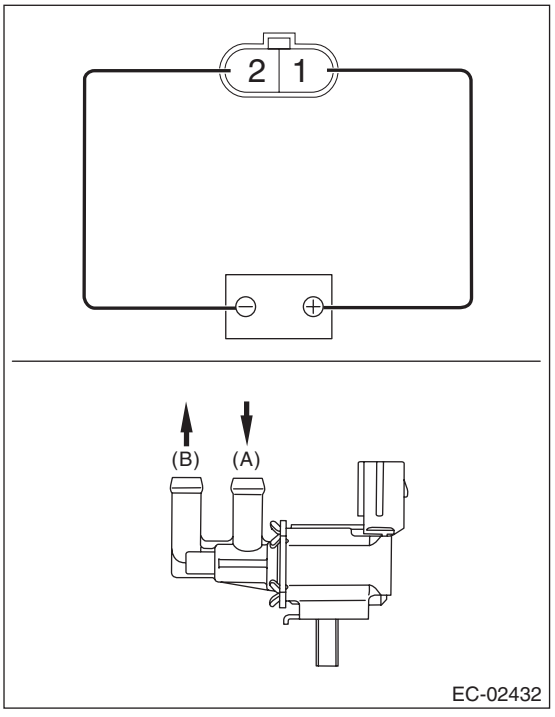

2. OTHER INSPECTIONS

Make sure the vacuum hoses and vacuum control hoses are not cracked or loose.

6. Fuel Level Sensor

A: REMOVAL

For removal procedures, refer to the “FU(STI)” section. <Ref. to FU(STI)-88, REMOVAL, Fuel Level Sensor.>

B: INSTALLATION

For installation procedures, refer to the “FU(STI)” section. <Ref. to FU(STI)-88, INSTALLATION, Fuel Level Sensor.>

C: INSPECTION

For inspection procedures, refer to the “FU(STI)” section. <Ref. to FU(STI)-88, INSPECTION, Fuel Level Sensor.>

7. Fuel Sub Level Sensor

A: REMOVAL

For removal procedures, refer to the “FU(STI)” section. <Ref. to FU(STI)-89, REMOVAL, Fuel Sub Level Sensor.>

B: INSTALLATION

For installation procedures, refer to the “FU(STI)” section. <Ref. to FU(STI)-90, INSTALLATION, Fuel Sub Level Sensor.>

C: INSPECTION

For inspection procedures, refer to the “FU(STI)” section. <Ref. to FU(STI)-92, INSPECTION, Fuel Sub Level Sensor.>

8. Drain Filter

A: REMOVAL

1) Remove the rear wheel LH. <Ref. to WT-5, REMOVAL, Tire and Wheel.>
2) Lift up the vehicle.
3) Remove the rear mud guard LH. <Ref. to EI-24, REMOVAL, Mud Guard.>
4) Disconnect the drain tube from the drain pipe.

NOTE:
Disconnect the quick connector as shown in the figure.

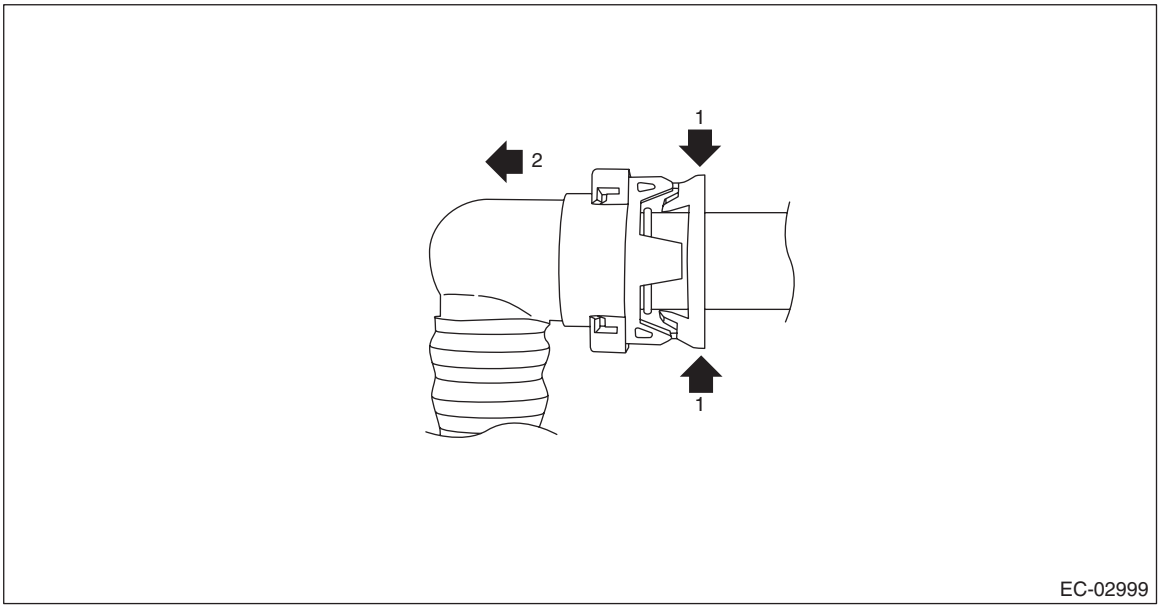

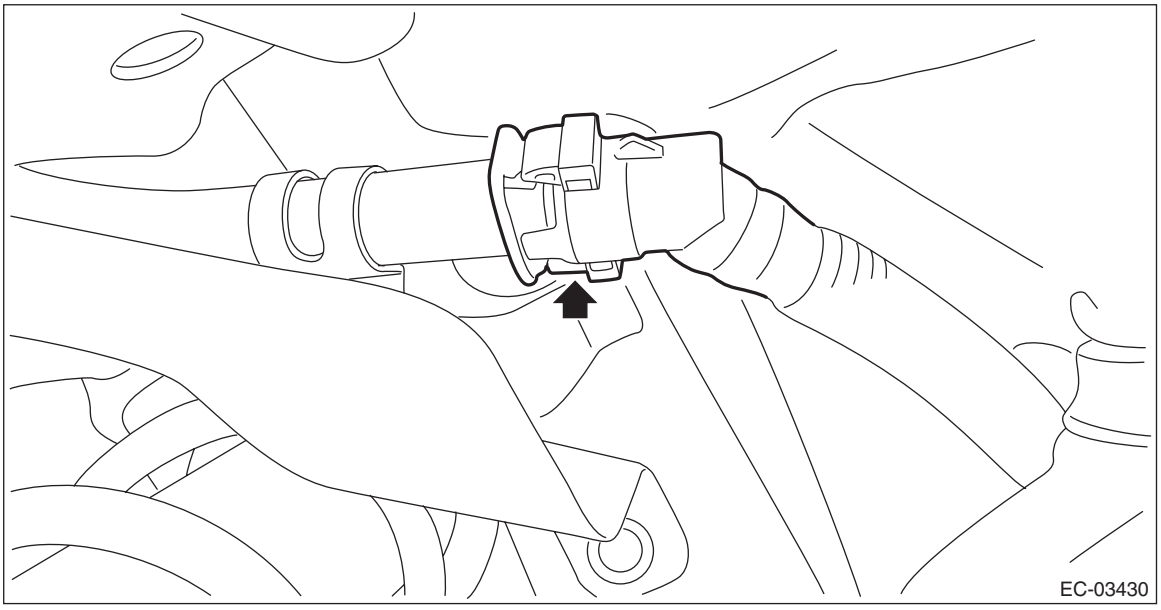

5) Remove the drain bracket and drain pipe from vehicle as a unit.

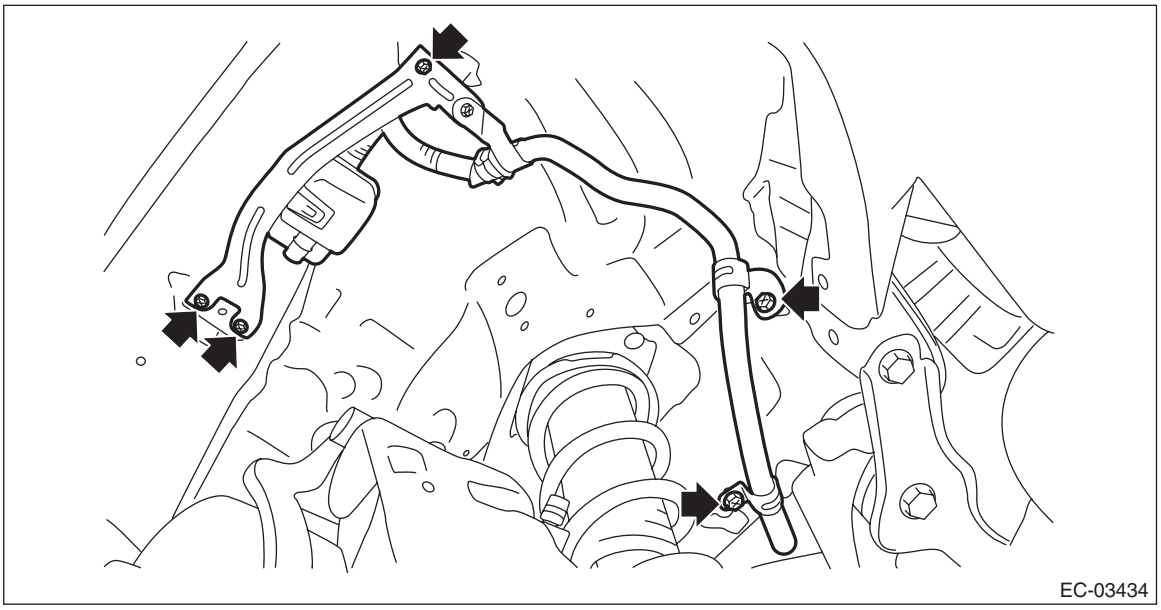

6) Remove the bolt (A) which holds drain pipe from the drain bracket.
7) Disconnect the drain tube (B) from the drain pipe.

NOTE:
- Disconnect the quick connector as shown in the figure.

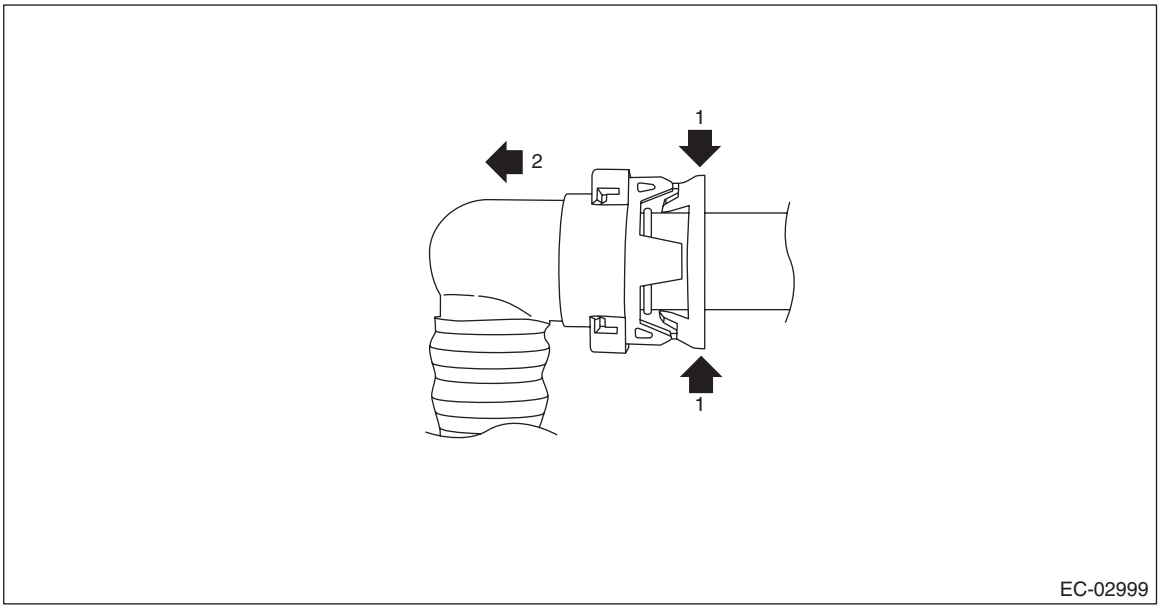

• The drain filter cannot be separated from the drain bracket. Therefore, be sure to replace both of them with new ones when replacing the drain bracket or drain filter.

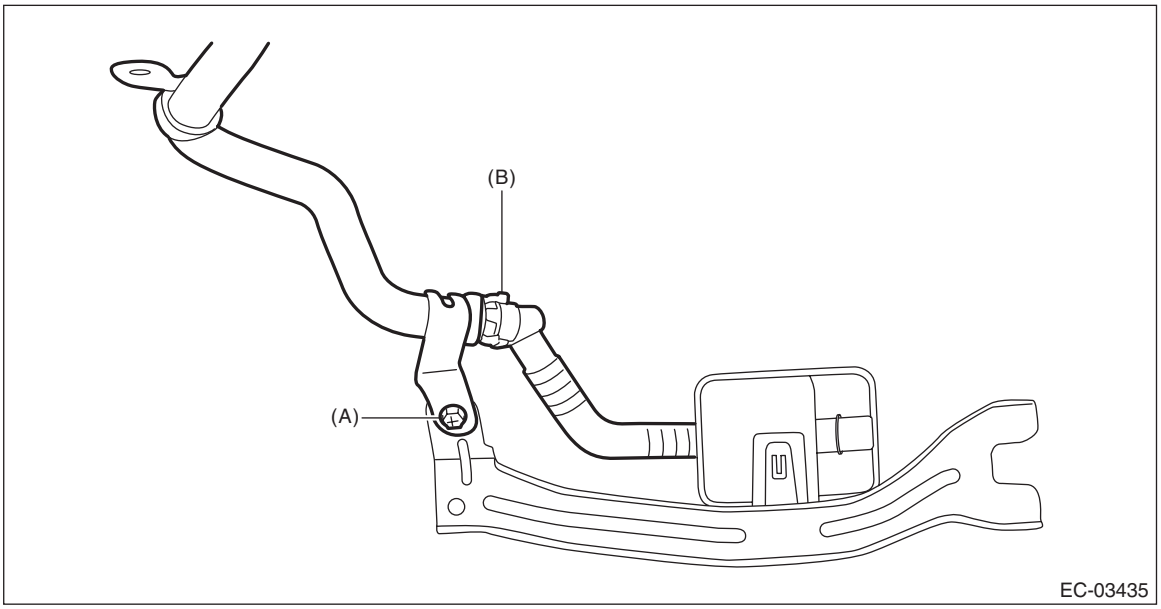

B: INSTALLATION

Install in the reverse order of removal.

CAUTION:
• Check that there is no damage or dust on the quick connector. If necessary, clean the seal surface of the pipe.
• Make sure that the quick connector is securely connected.

NOTE:
• Use a new drain bracket and a drain filter.
• Before installing the drain filter to the drain bracket, check that the claw (a) is securely tightened.

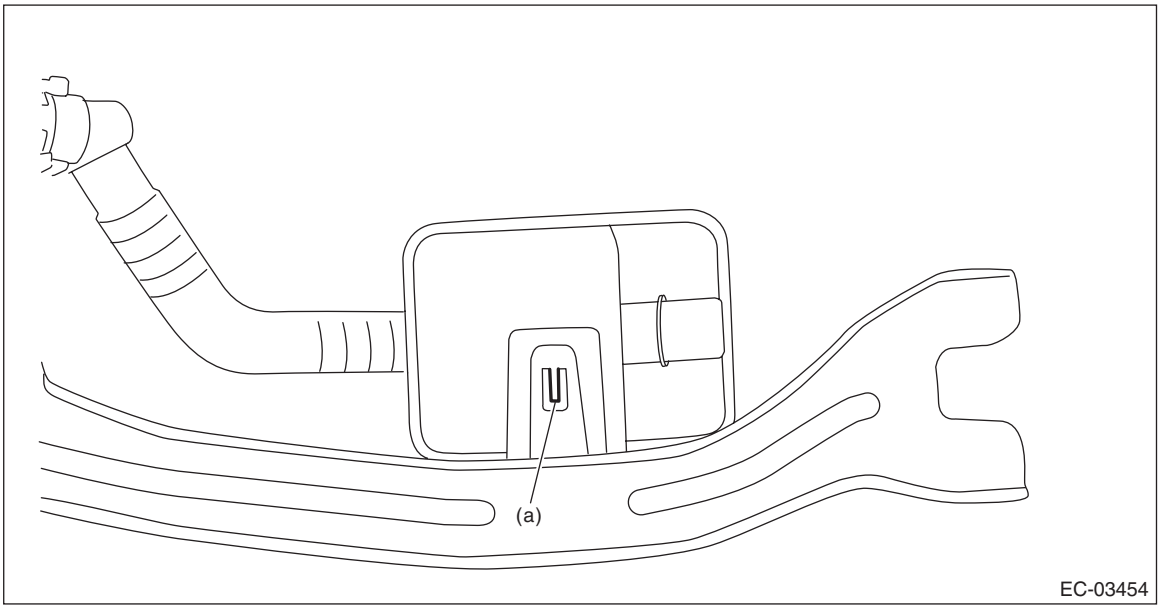

- Install the quick connector as shown in the figure.

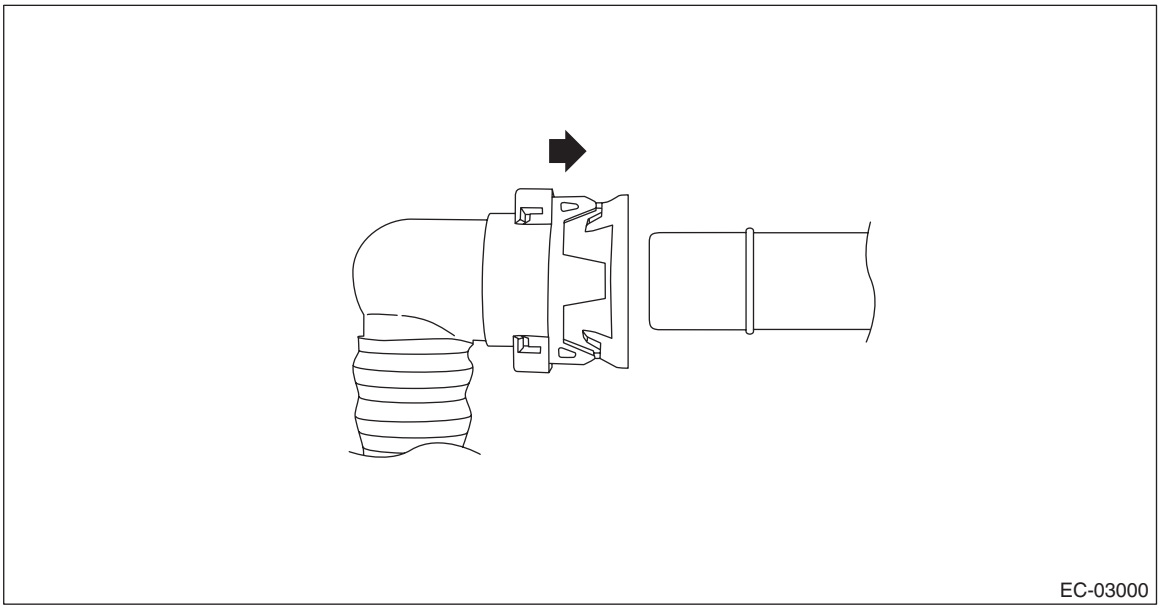

Tightening torque:
7.5 N·m (0.8 kgf-m, 5.5 ft-lb)

C: INSPECTION

1) Check that the drain filter has no deformation, cracks or other damages.
2) Check that the tube has no cracks, damage or loose part.

9. Leak Check Valve Assembly

A: REMOVAL

WARNING:
Place “NO OPEN FLAMES” signs near the working area.

CAUTION:
Be careful not to spill fuel.
1) Release the fuel pressure. <Ref. to FU(STI)-64, RELEASING OF FUEL PRESSURE, PROCEDURE, Fuel.>
2) Drain fuel. <Ref. to FU(STI)-64, DRAINING FUEL (WITH SUBARU SELECT MONITOR), PROCEDURE, Fuel.>
3) Disconnect the ground cable from battery.
4) Lift up the vehicle.
5) Remove the rear exhaust pipe. <Ref. to EX(STI)-12, REMOVAL, Rear Exhaust Pipe.>
6) Remove the propeller shaft. <Ref. to DS-12, REMOVAL, Propeller Shaft.>
7) Support the rear differential with the transmission jack.
8) Disconnect the connector from oil temperature sensor.

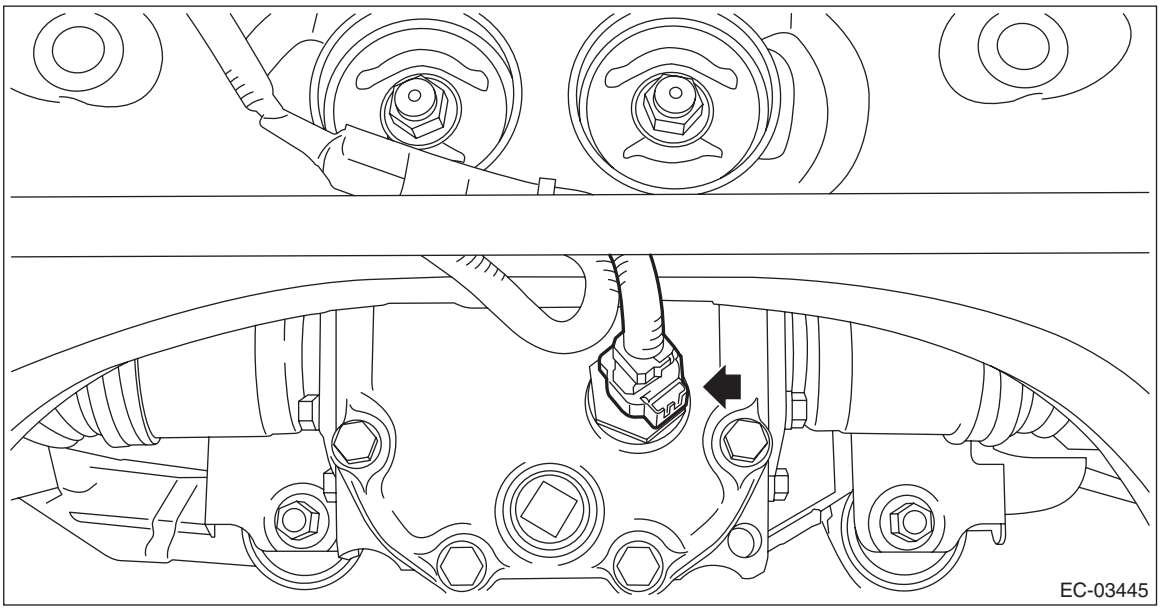

9) Remove the self-locking nuts which hold the rear differential to the rear sub frame assembly.

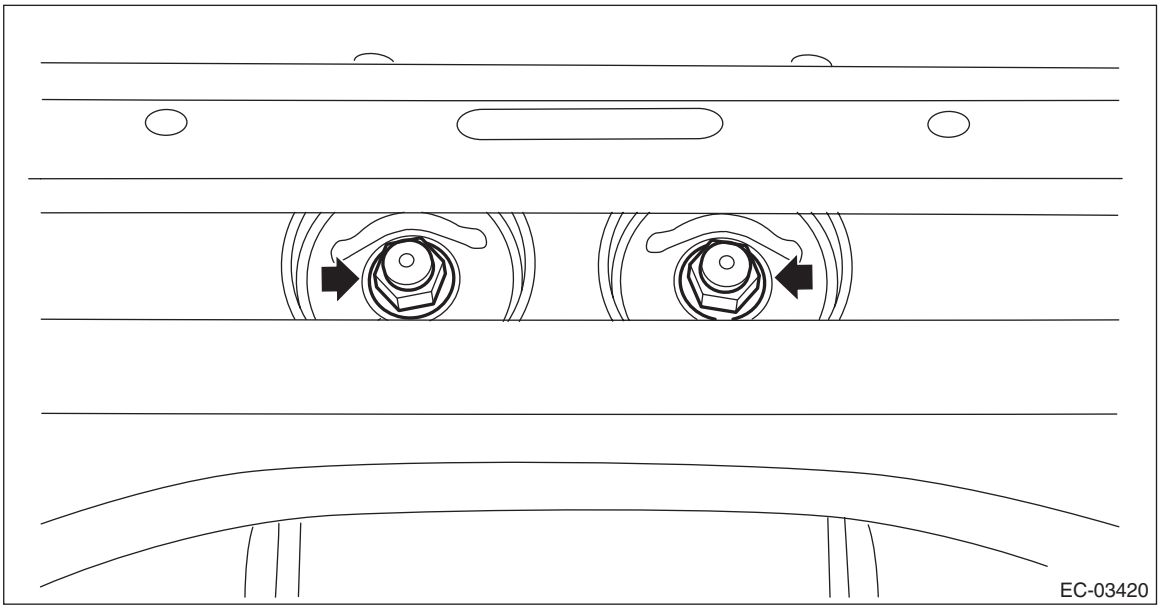

10) Remove the rear differential member from the rear sub frame assembly and the rear differential.

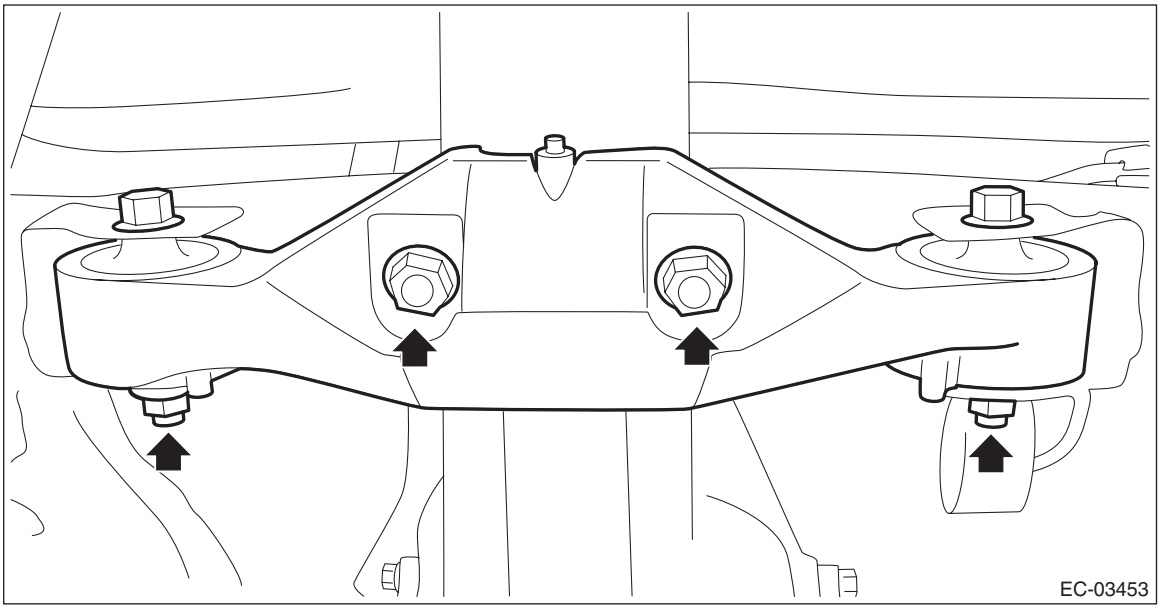

11) Lower the transmission jack gradually until the rear differential is at the position shown in the figure.

NOTE:

• When pulling out the stud bolt from the bushing portion of the rear sub frame assembly, adjust the angle and location of transmission jack and jack stand.

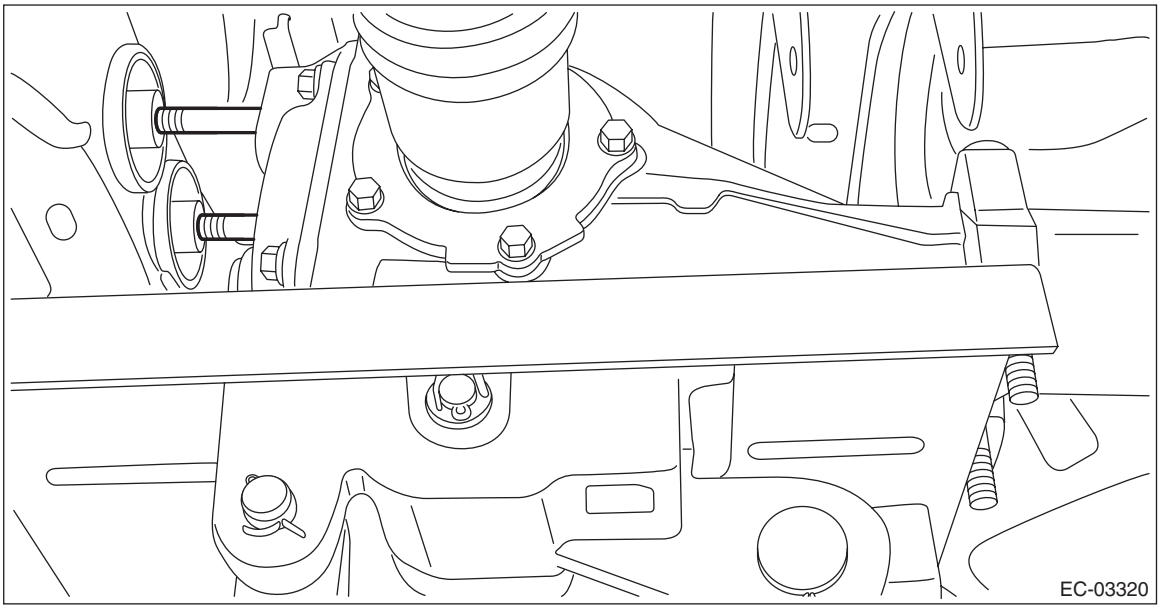

• Do not lower the rear differential excessively. Doing so may add extra load to the drive shaft or cause the falling-off of the drive shaft.

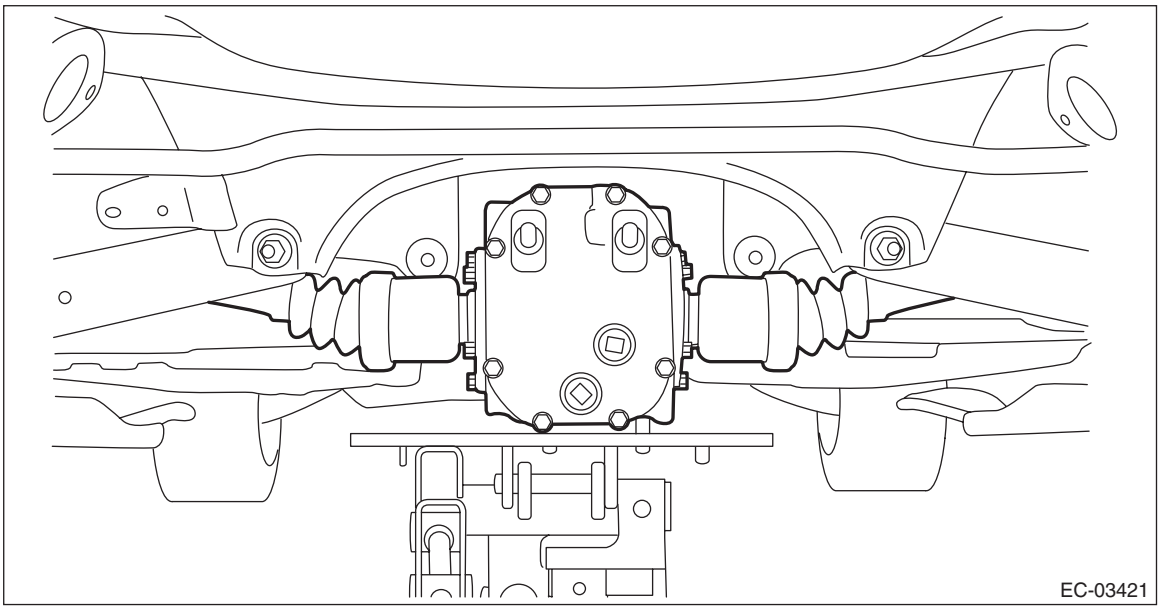

12) Disconnect the fuel filler hose (A) and evaporation hose (B) from the fuel filler pipe assembly.

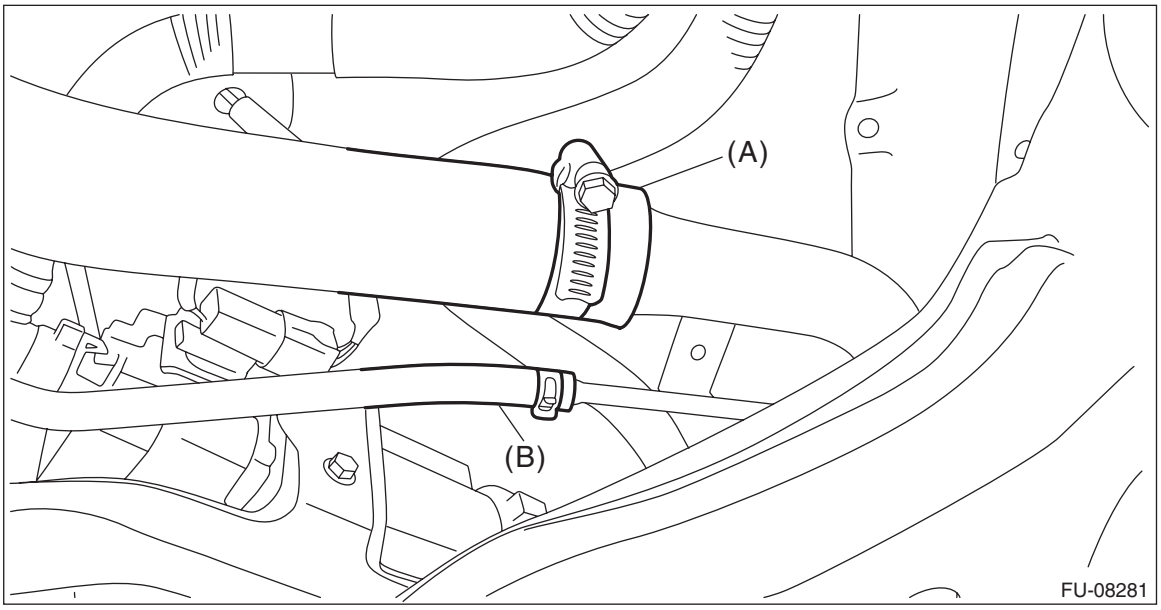

13) Disconnect the drain tube from the drain pipe.

NOTE:
Disconnect the quick connector as shown in the figure.

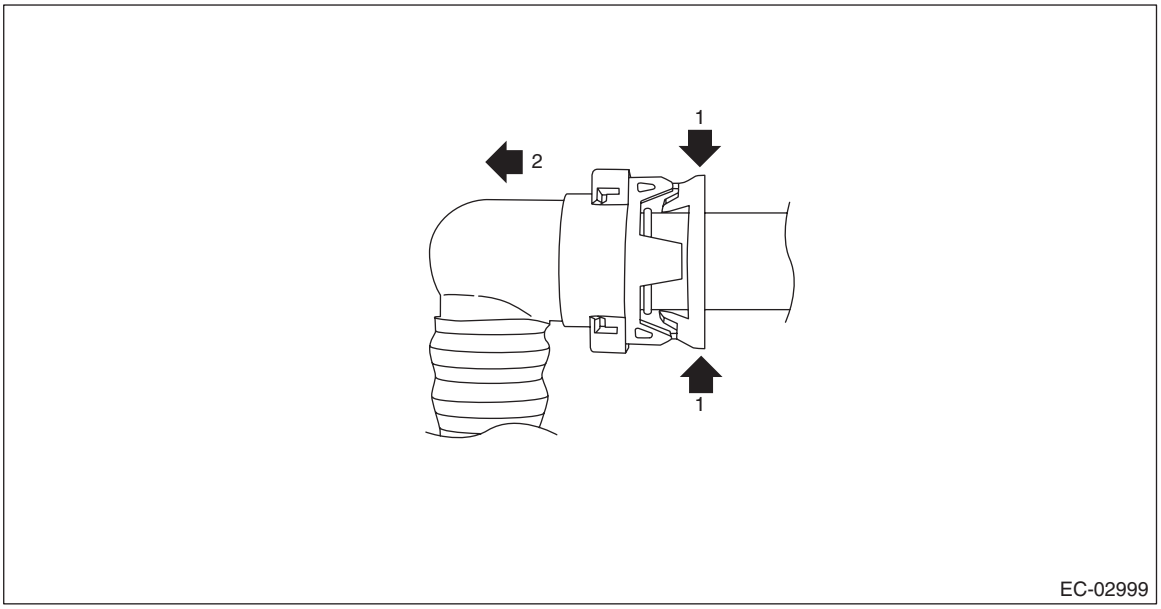

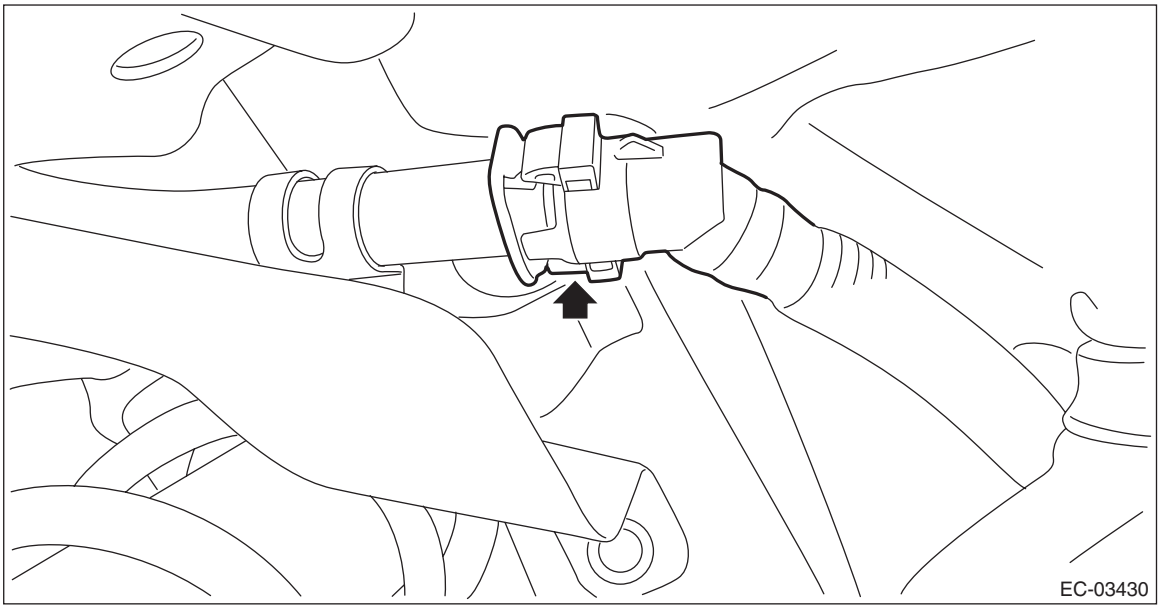

14) Disconnect the drain tube (A) from the canister.

NOTE:
Disconnect the quick connector as shown in the figure.

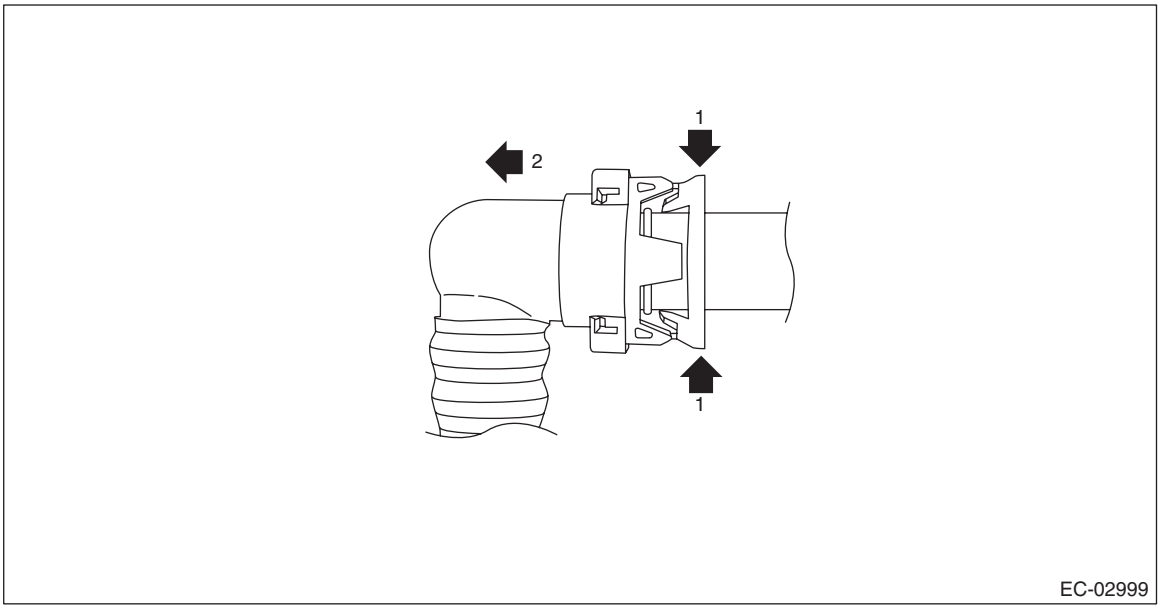

15) Remove the tube clamp (B) from the canister bracket A, and remove the drain tube from the tube clamp.

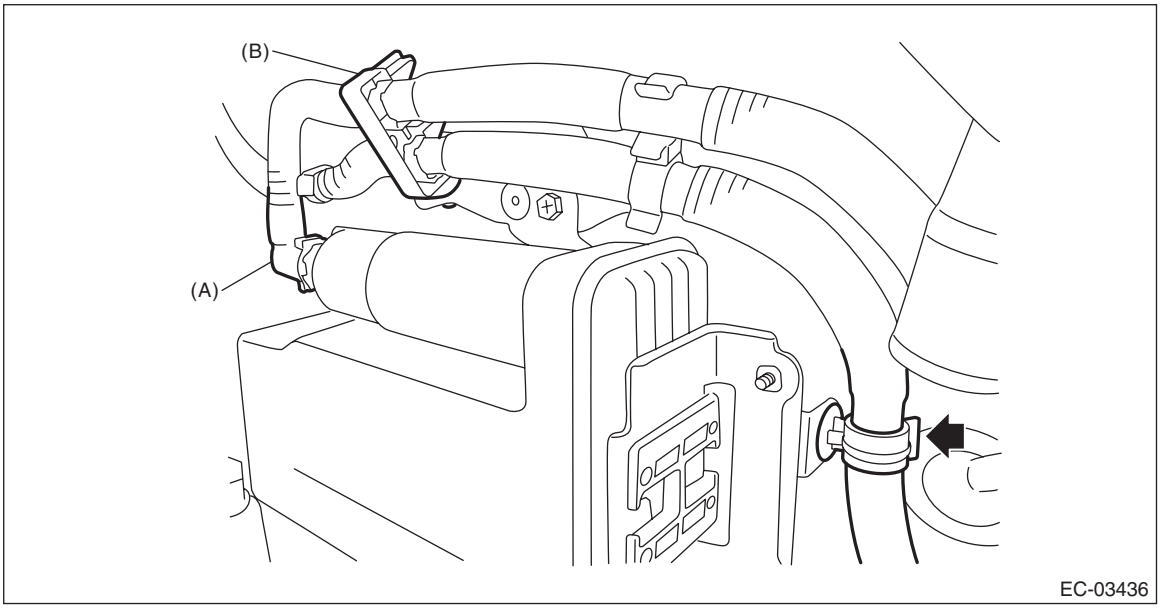

16) Disconnect the connector (A) from the leak check valve assembly.

17) Remove the bolts which hold the leak check valve assembly and remove the leak check valve assembly together with drain tube from vehicle.

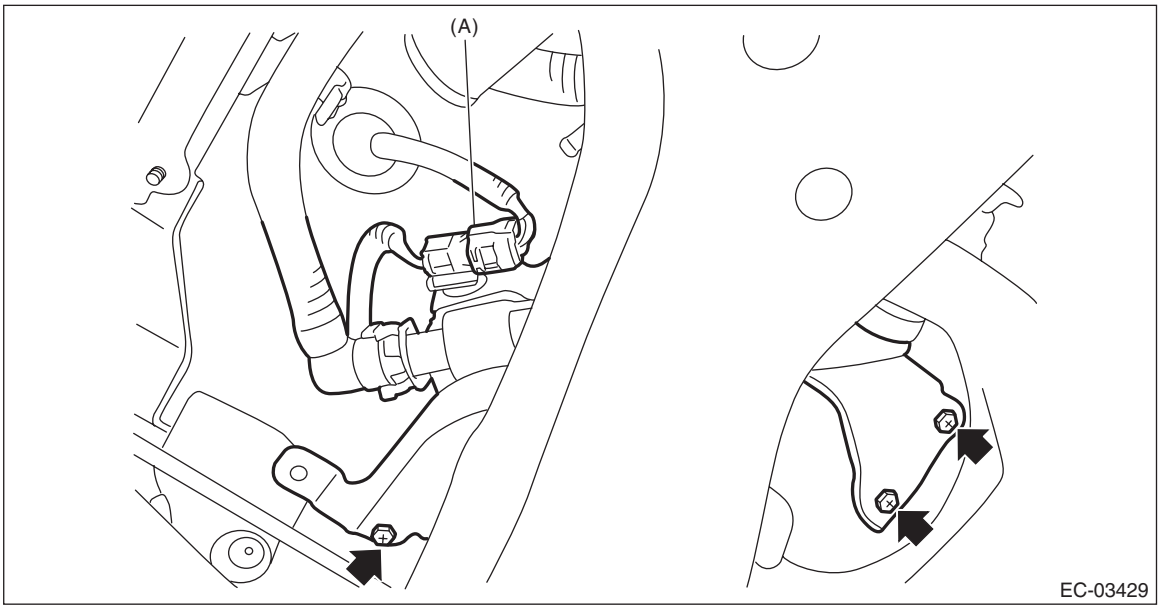

18) Disconnect the drain tube A (A) and drain tube B (B) from the leak check valve assembly.

NOTE:
Disconnect the quick connector as shown in the figure.

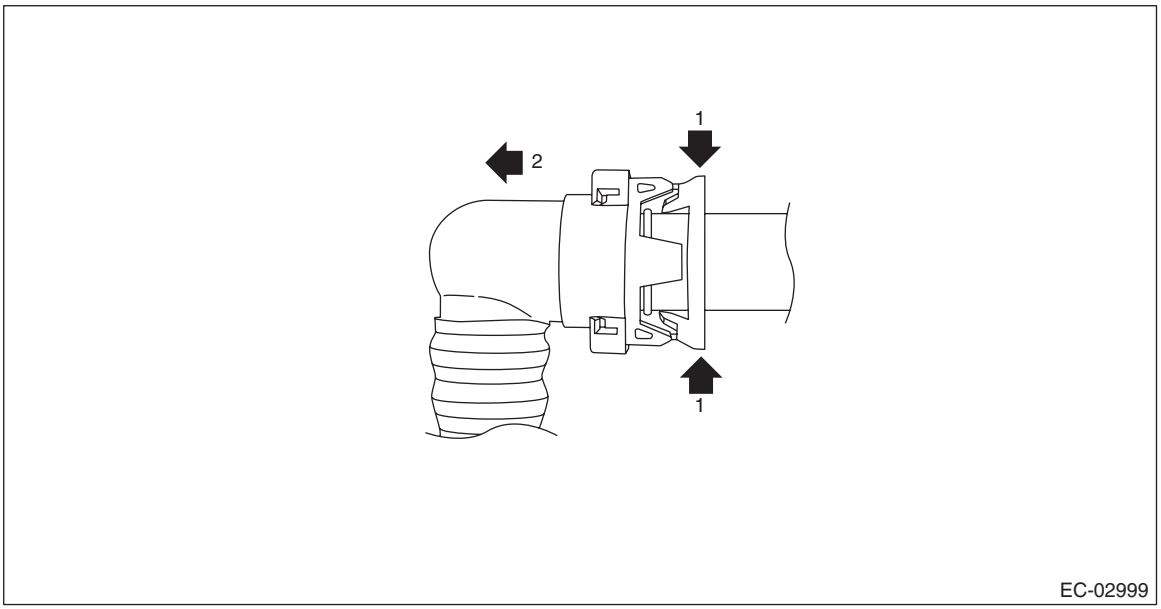

19) Remove the tube clamp from the drain tube A (A) and drain tube B (B).

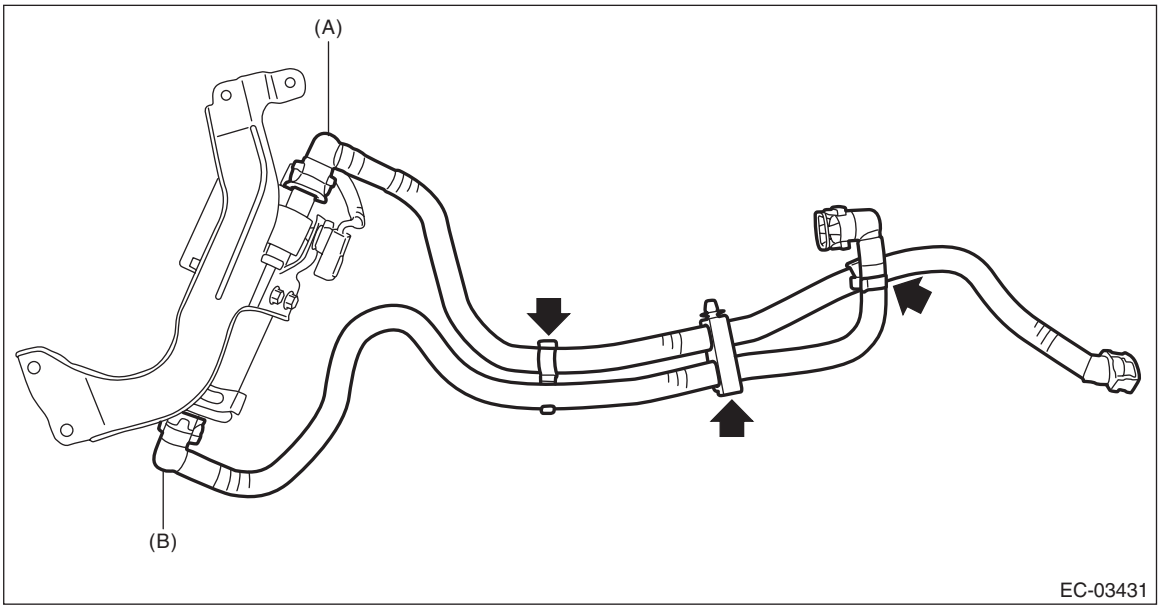

B: INSTALLATION

1) Connect the drain tube A (A) and drain tube B (B) to the leak check valve assembly.

CAUTION:
- **Check that there is no damage or dust on the quick connector. If necessary, clean the seal surface of the pipe.**
- **Make sure that the quick connector is securely connected.**

NOTE:
Connect the quick connector as shown in the figure.

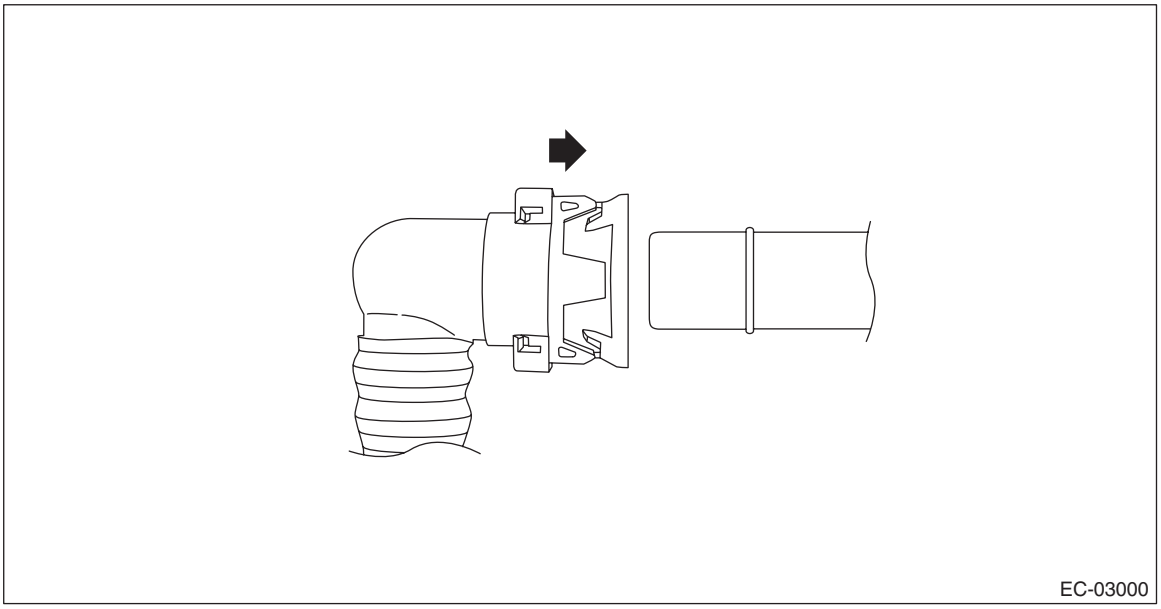

2) Install the tube clamp to the drain tube A (A) and drain tube B (B).

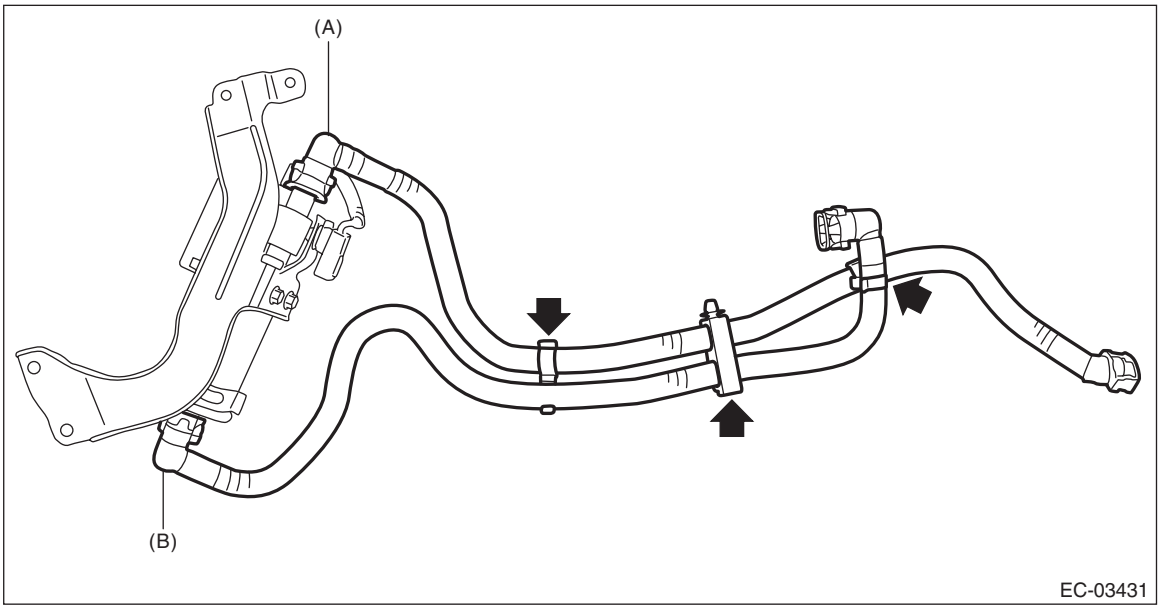

3) Set the leak check valve assembly together with drain tube to the vehicle and install the bolt which holds the leak check valve assembly.

Tightening torque:
7.5 N·m (0.8 kgf-m, 5.5 ft-lb)

4) Connect the connector (A) to the leak check valve assembly.

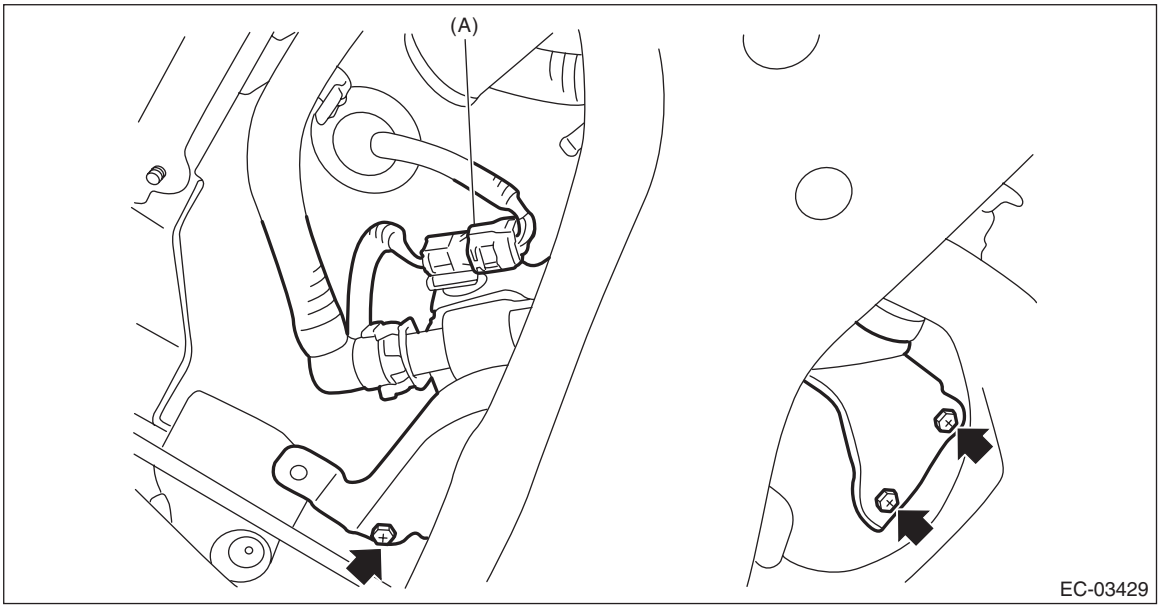

5) Connect the drain tube (A) to the canister.

CAUTION:
• Check that there is no damage or dust on the quick connector. If necessary, clean the seal surface of the pipe.
• Make sure that the quick connector is securely connected.

NOTE:
Connect the quick connector as shown in the figure.

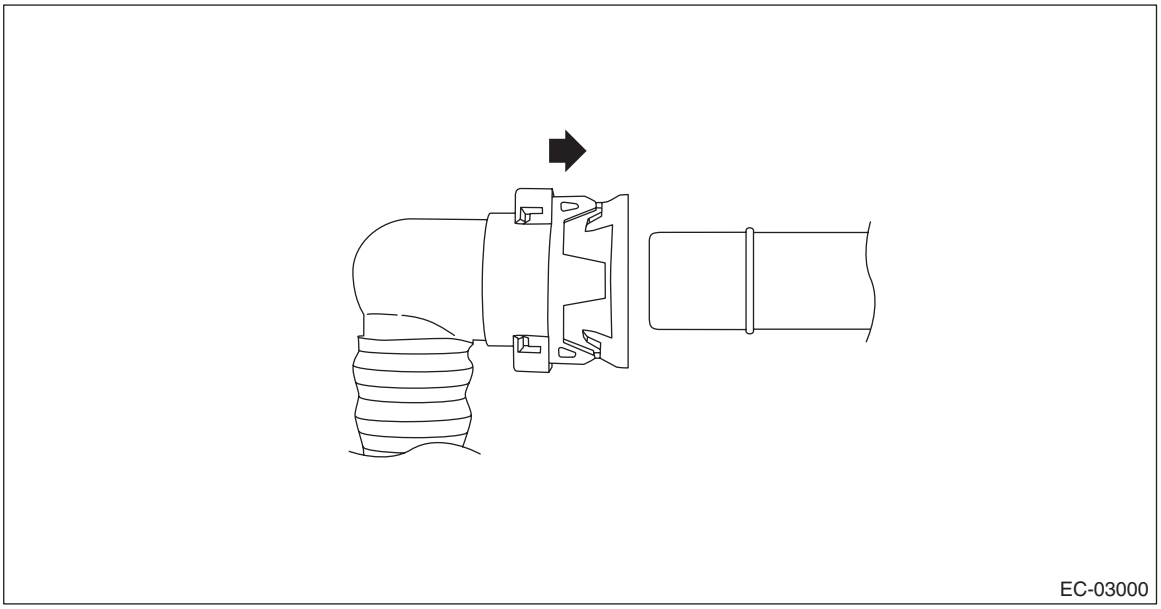

6) Install the tube clamp (B) to the canister bracket A, and install the drain tube to the tube clamp.

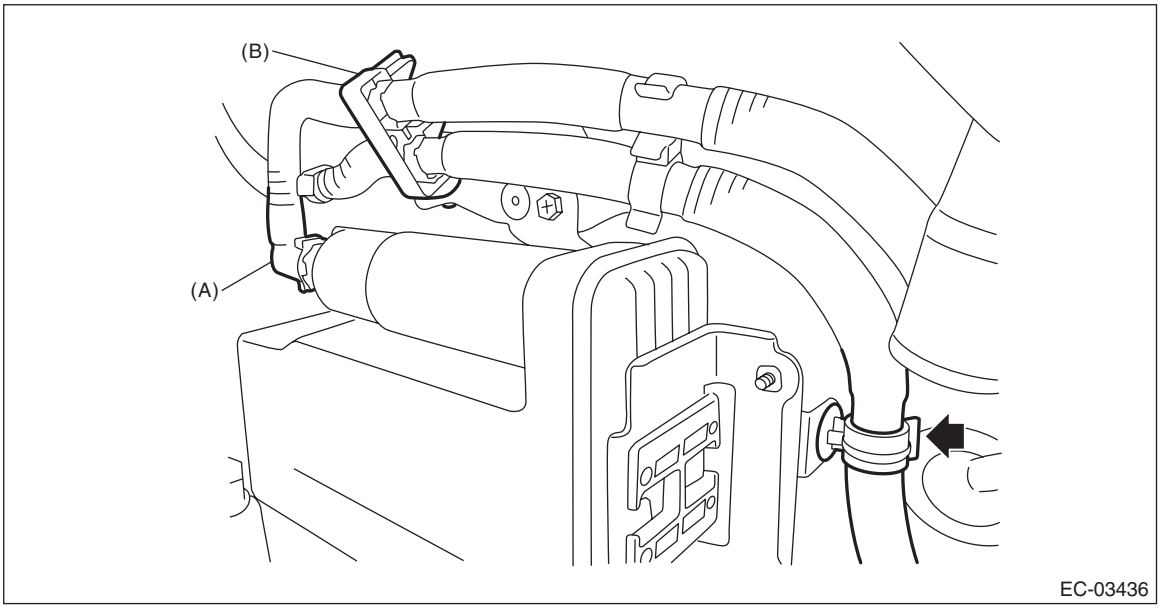

7) Connect the drain tube to the drain pipe.

CAUTION:
- **Check that there is no damage or dust on the quick connector. If necessary, clean the seal surface of the pipe.**
- **Make sure that the quick connector is securely connected.**

NOTE:
Connect the quick connector as shown in the figure.

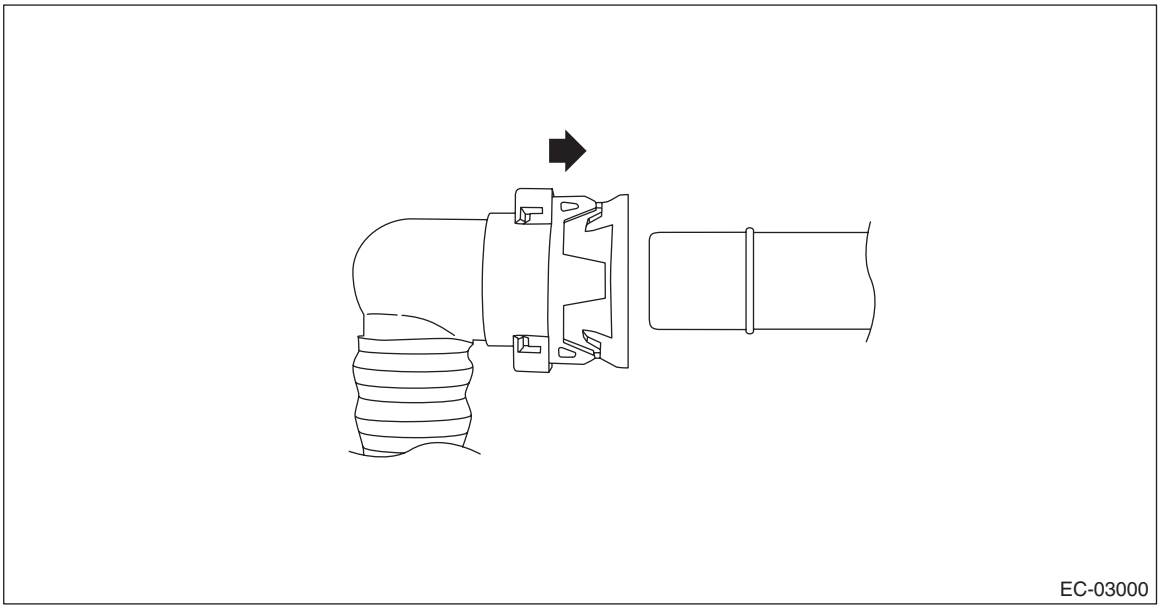

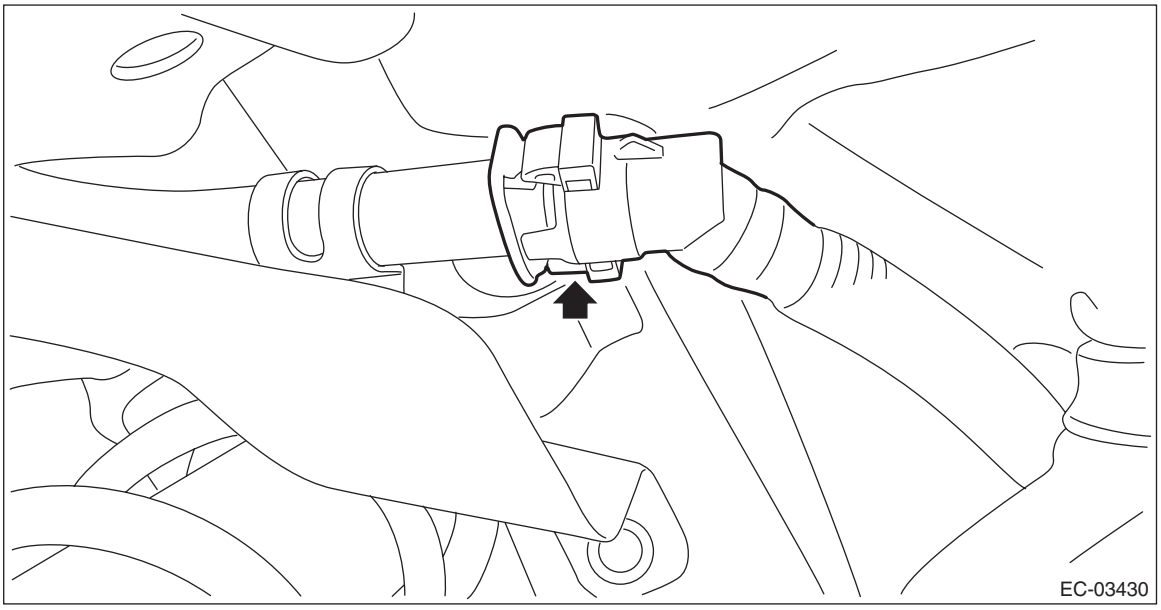

8) Securely insert the fuel filler hose (A) and evaporation hose (B) until the hose end contacts the spool, then attach the clamp and clip as shown in the figure.

Tightening torque:
2.5 N·m (0.3 kgf-m, 1.8 ft-lb)

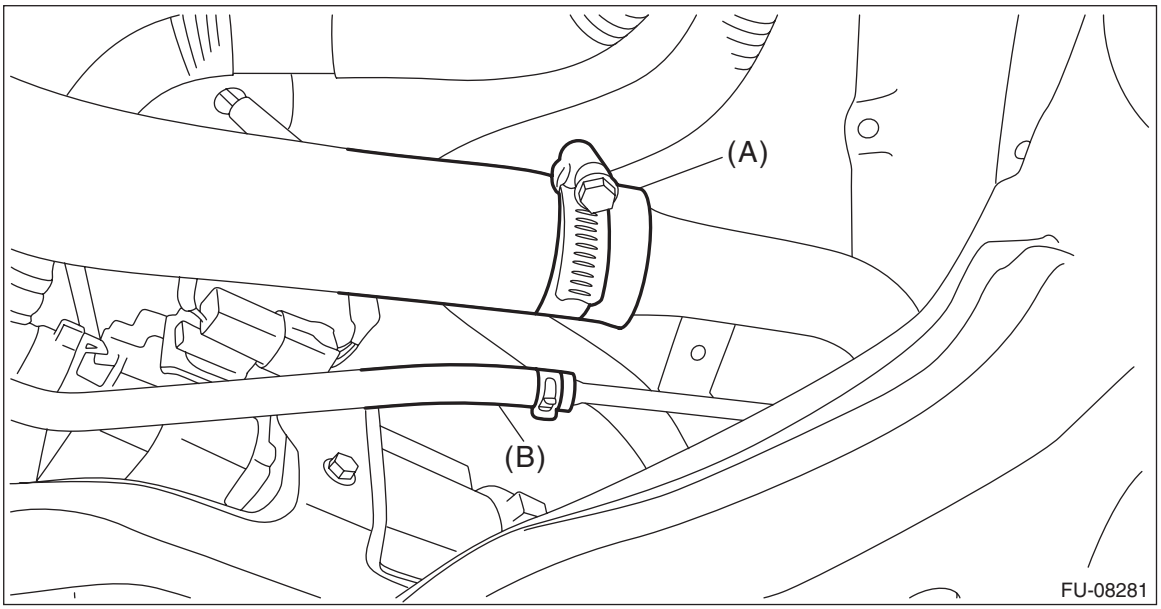

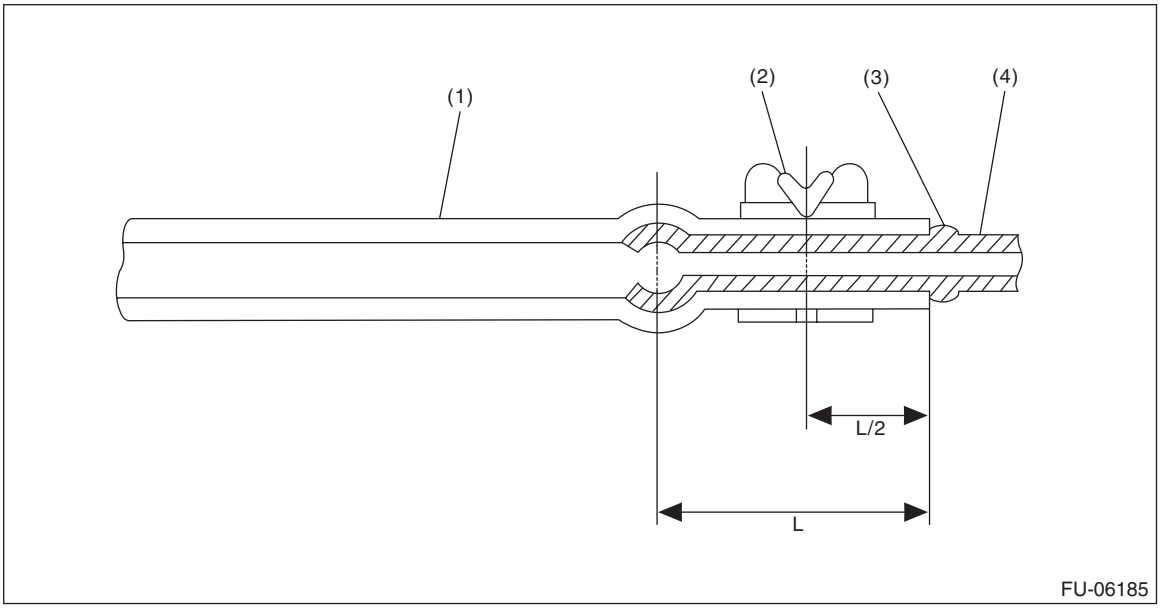

(1) Hose
(2) Clamp and clip
(3) Spool
(4) Pipe

9) Lift up the transmission jack gradually, and set the rear differential to the rear sub frame assembly.

NOTE:
When inserting the stud bolt into the bushing portion of the rear sub frame assembly, adjust the angle and location of transmission jack and jack stand.

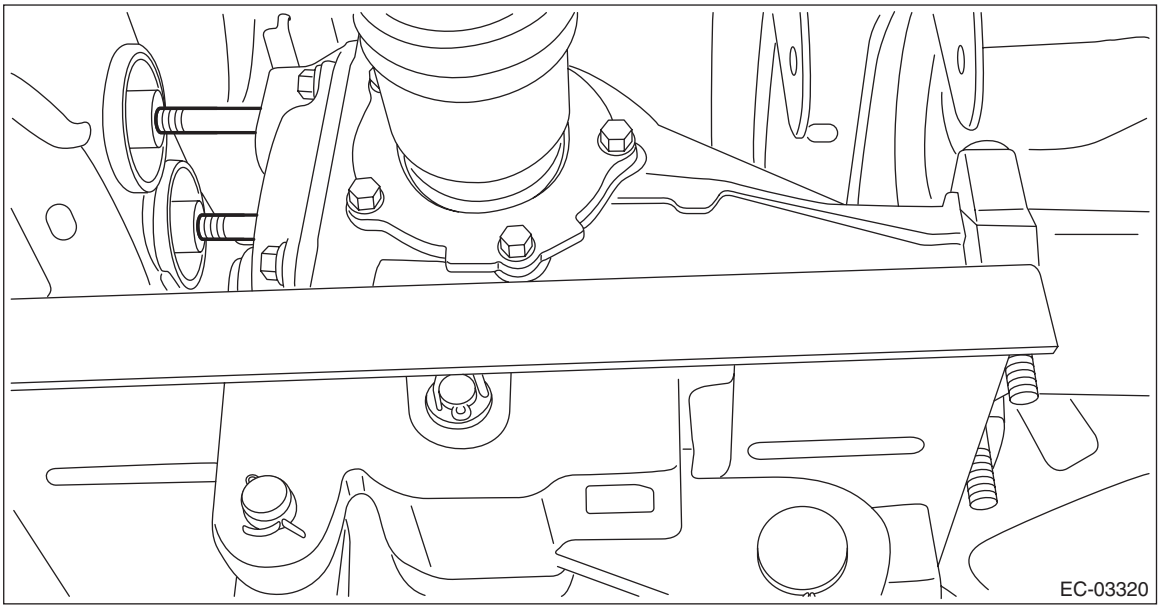

10) Temporarily tighten the self-locking nuts which hold the rear differential to the rear sub frame assembly.

NOTE:
Use a new self-locking nut.

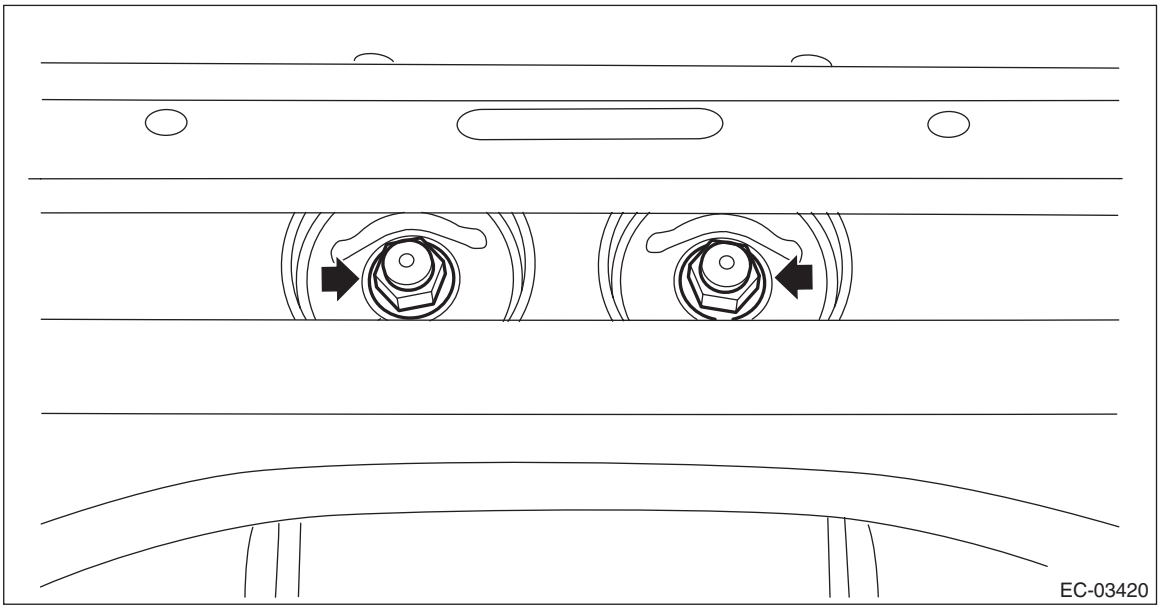

11) Set the rear differential member to the rear sub frame assembly and rear differential, and temporarily tighten the self-lock nuts which secure the rear differential member to the rear sub frame assembly and rear differential.

NOTE:
Use a new self-locking nut.

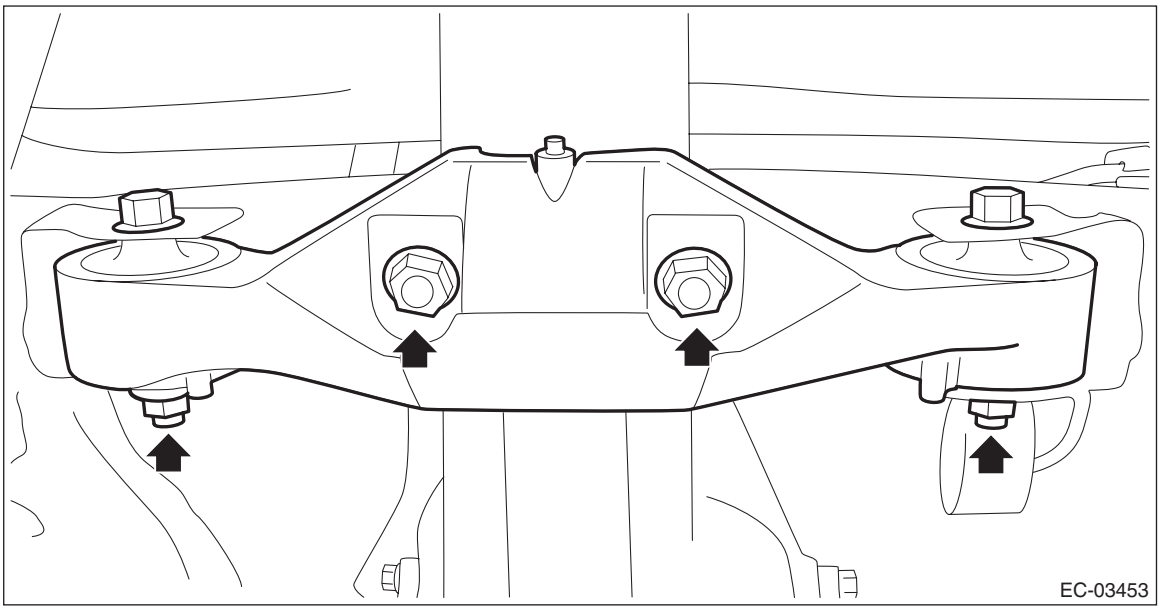

12) Remove the transmission jack from the rear differential.
13) Tighten the self-locking nuts which secure the rear differential member to the rear sub frame assembly and rear differential.

Tightening torque:
T1: 50 N·m (5.1 kgf-m, 36.9 ft-lb)
T2: 110 N·m (11.2 kgf-m, 81.1 ft-lb)

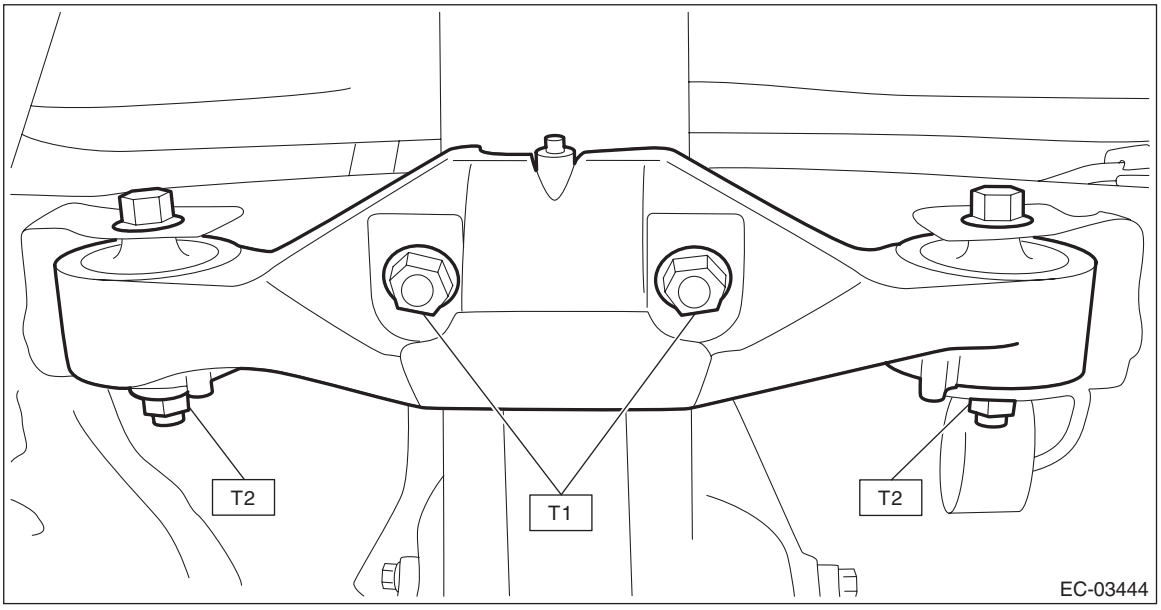

14) Tighten the self-locking nuts which secure the rear differential to the rear sub frame assembly.

Tightening torque:
70 N·m (7.1 kgf-m, 51.6 ft-lb)

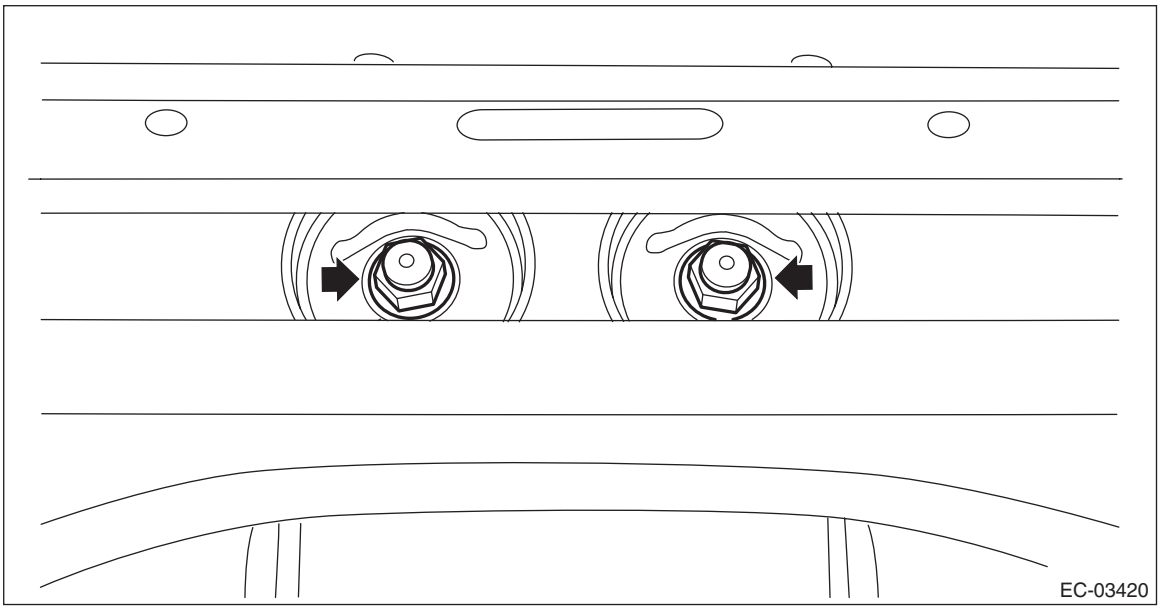

15) Connect the connector to the oil temperature sensor.

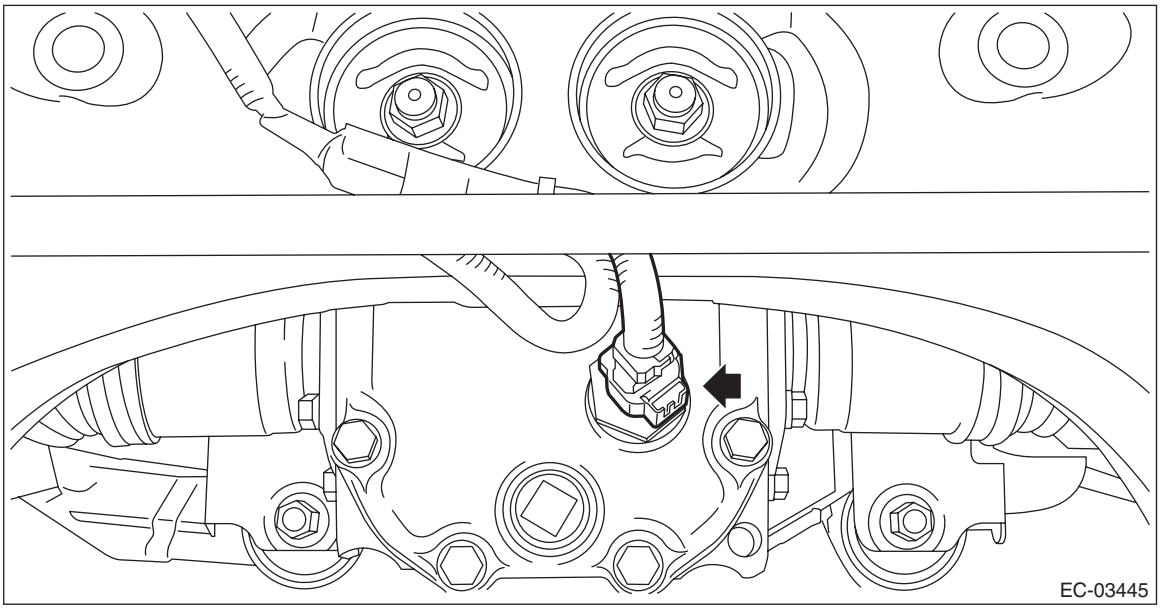

16) Install the propeller shaft. <Ref. to DS-14, INSTALLATION, Propeller Shaft.>
17) Install the rear exhaust pipe. <Ref. to EX(STI)-12, INSTALLATION, Rear Exhaust Pipe.>
18) Lower the vehicle.
19) Connect the ground terminal to the battery.

C: DISASSEMBLY

1) Disconnect the connector (A) from the leak check valve assembly.
2) Remove the bolt (B) securing the leak check valve assembly to the leak check valve bracket.
3) Remove the clamp B (C) which secures the leak check valve assembly, and remove the leak check valve assembly.

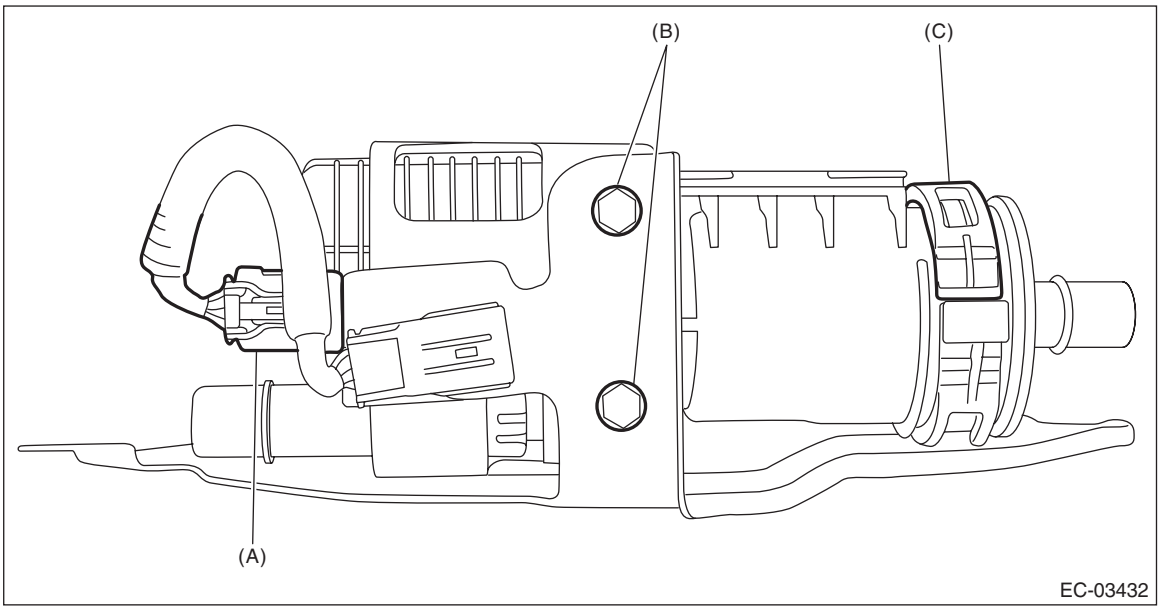

4) Remove the harness (A) from the leak check valve bracket.
5) Rotate the clamp A (B) in the direction of the arrow and remove it from the leak check valve bracket.

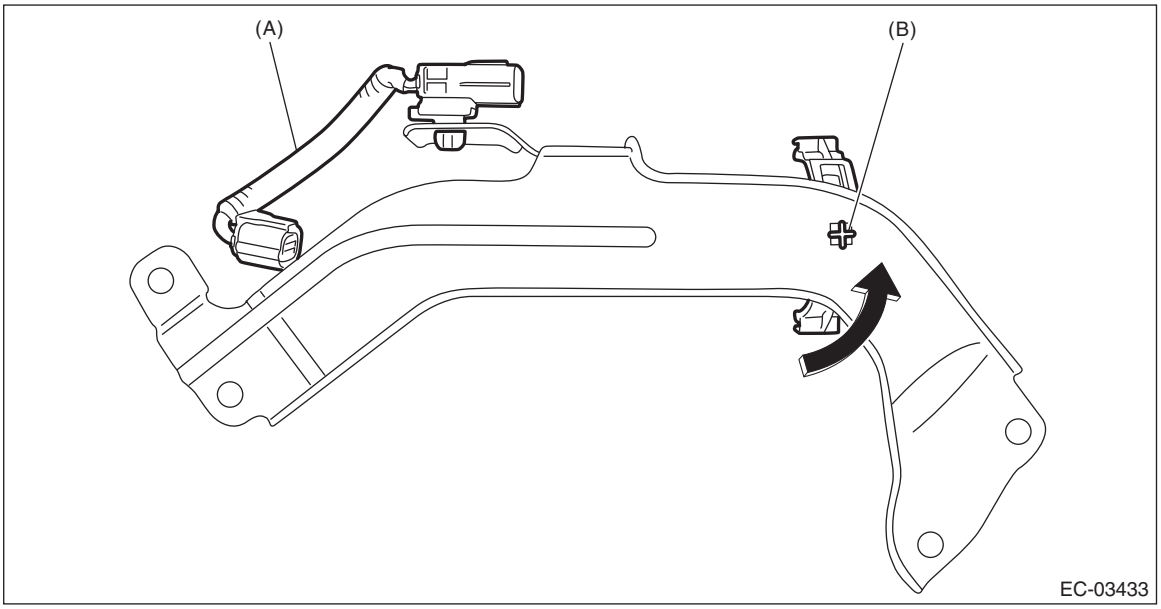

D: ASSEMBLY

Assemble in the reverse order of disassembly.

Tightening torque:
5.4 N·m (0.6 kgf-m, 4.0 ft-lb)

E: INSPECTION

1. CHECK SWITCHING VALVE

1) Check the resistance between switching valve terminals.

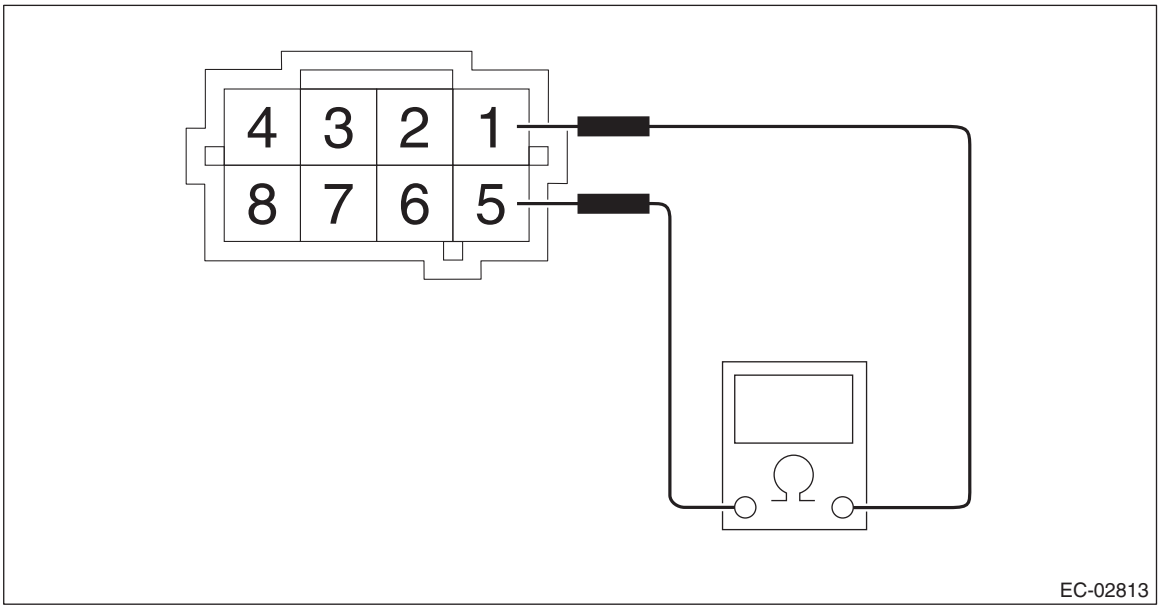

Terminal No.	Standard
1 and 5	27^{+3}_{-2} Ω (when 20°C (68°F))
	31±4 Ω (60°C (140°F))

2) Check that air is discharged from (B) when air is blown into (A).

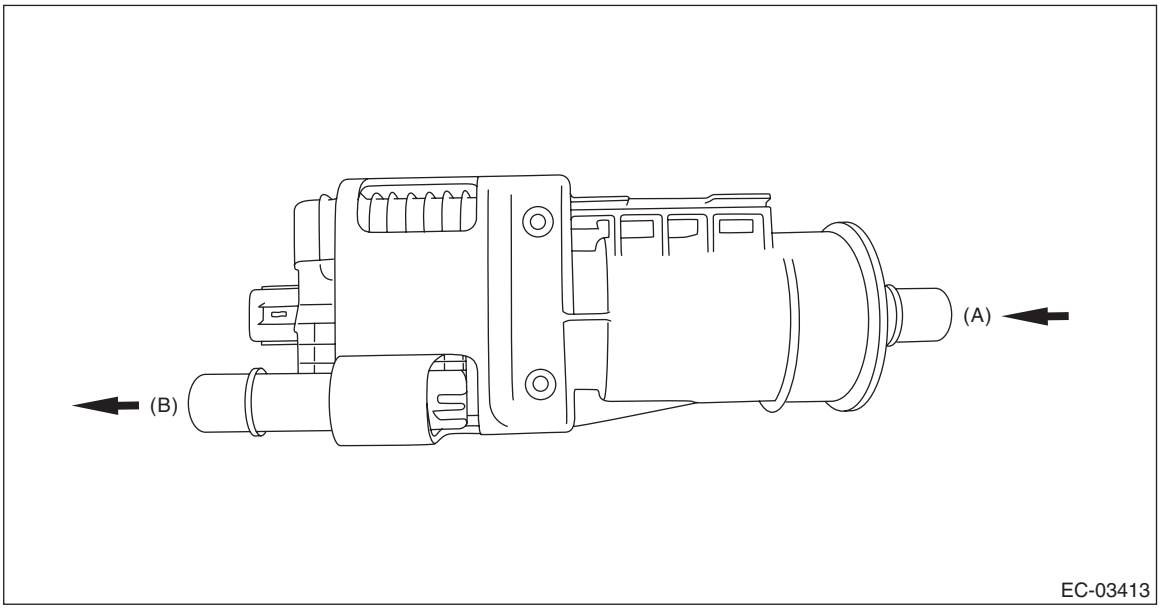

3) Connect the battery positive terminal to the terminal No. 5 and the battery negative terminal to the terminal No. 1. Check that air does not come out from (B) when air is blown into (A).

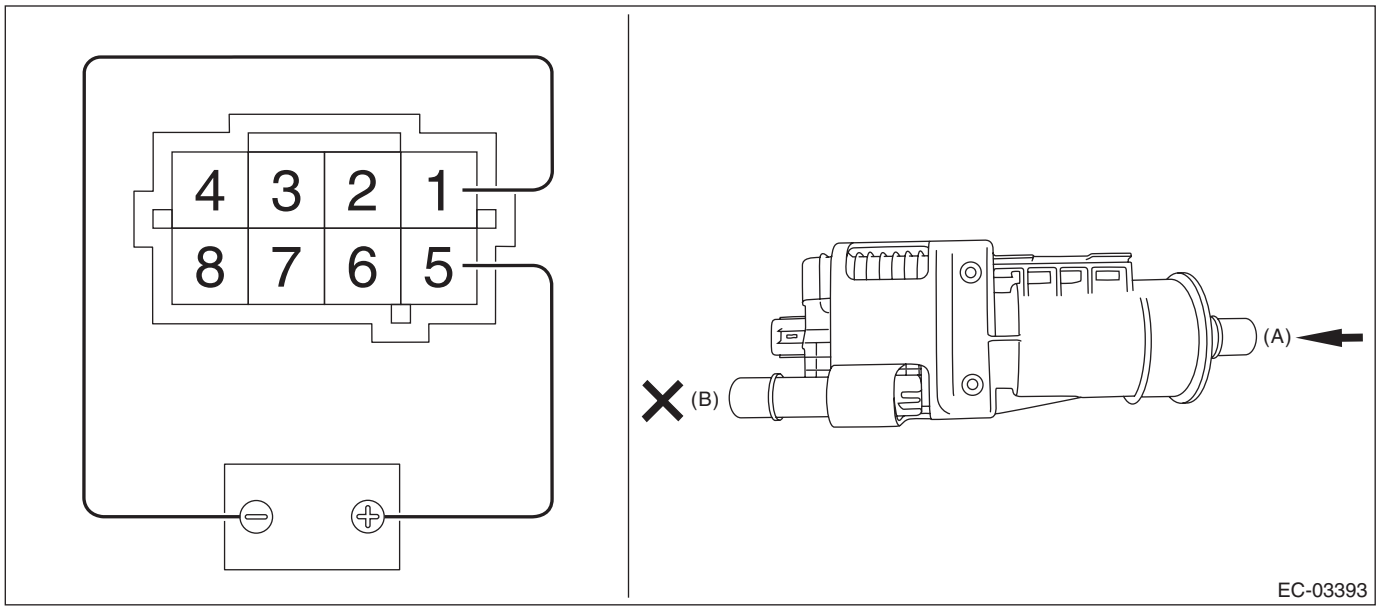

2. CHECK VACUUM PUMP

1) Connect the battery positive terminal to terminal No. 3 and the battery ground terminal to terminal No. 4, and inspect the vacuum pump operation.

CAUTION:
Do not operate the vacuum pump for 5 minutes or more.

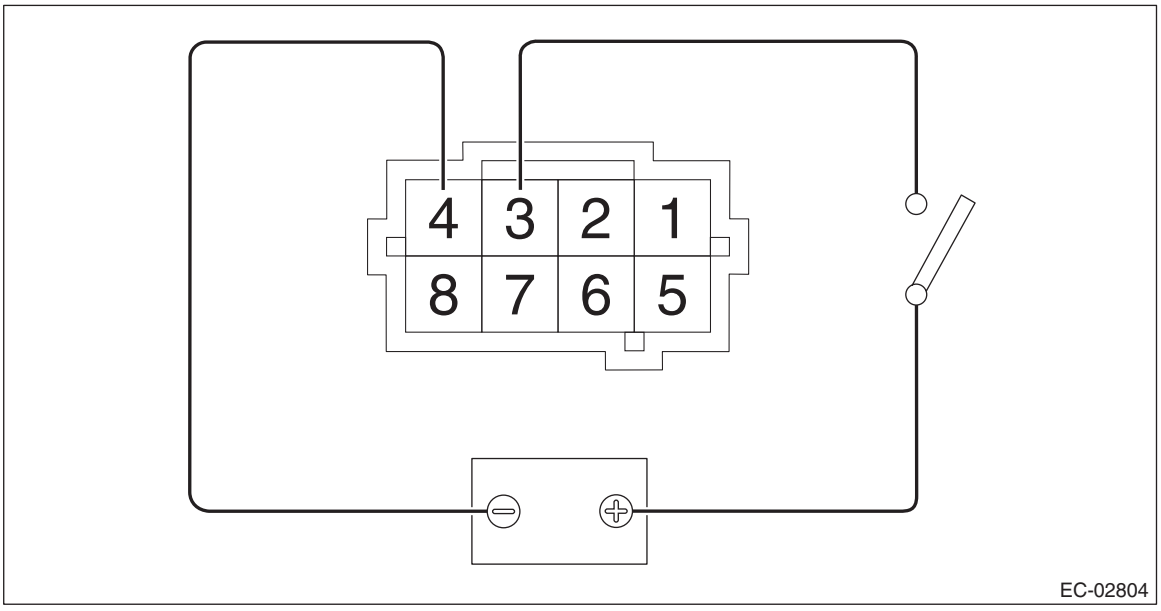

3. CHECK PRESSURE SENSOR

1) Connect dry-cell battery positive terminal to terminal No. 6 and dry-cell battery ground terminal to terminal No. 8, circuit tester positive terminal to terminal No. 7 and the circuit tester ground terminal to terminal No. 8.

NOTE:
- Use new dry-cell batteries.
- Using a circuit tester, check that the initial voltage of each dry-cell battery is 1.6 V or more. And also check that the voltage of three batteries in series is between 4.8 V and 5.2 V.
- For power supply, 5 V DC constant voltage power source can also be used.

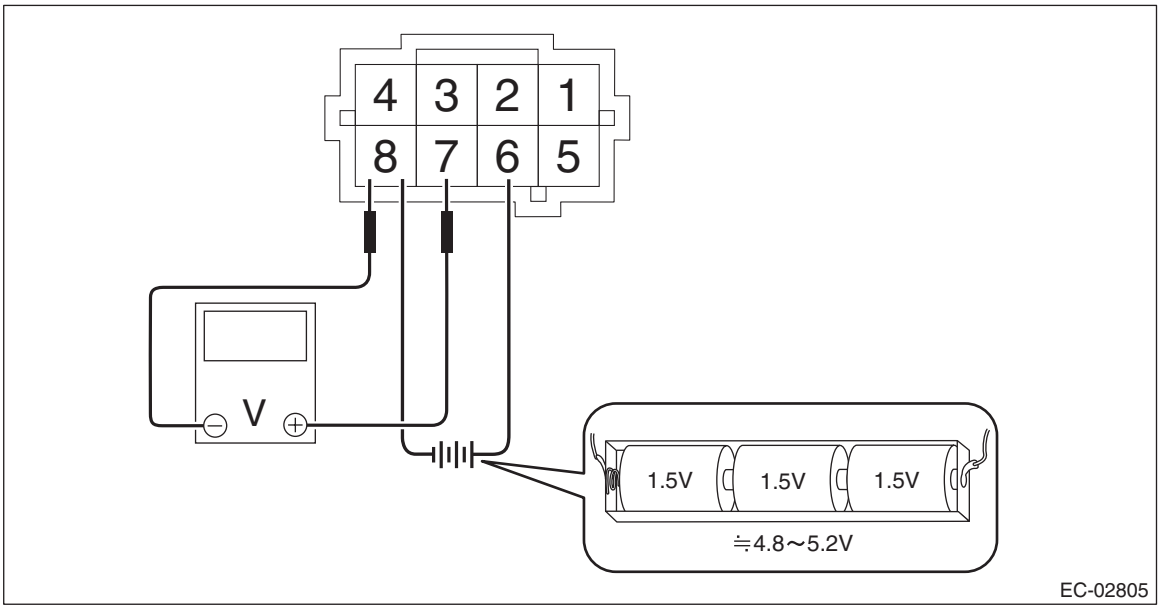

2) Check the voltage at a normal atmospheric pressure.

NOTE:
The atmospheric pressure at higher altitude is lower than normal. Therefore, the voltage is lower than the standard value.

Terminal No.	Standard
7 (+) and 8 (–)	Approx. 3.5 V (when 25°C (77°F))

3) Connect the battery positive terminal to terminal No. 3 and the battery ground terminal to terminal No. 4, and check that there is a voltage drop from the voltage measured in step 2) when the vacuum pump is operated.

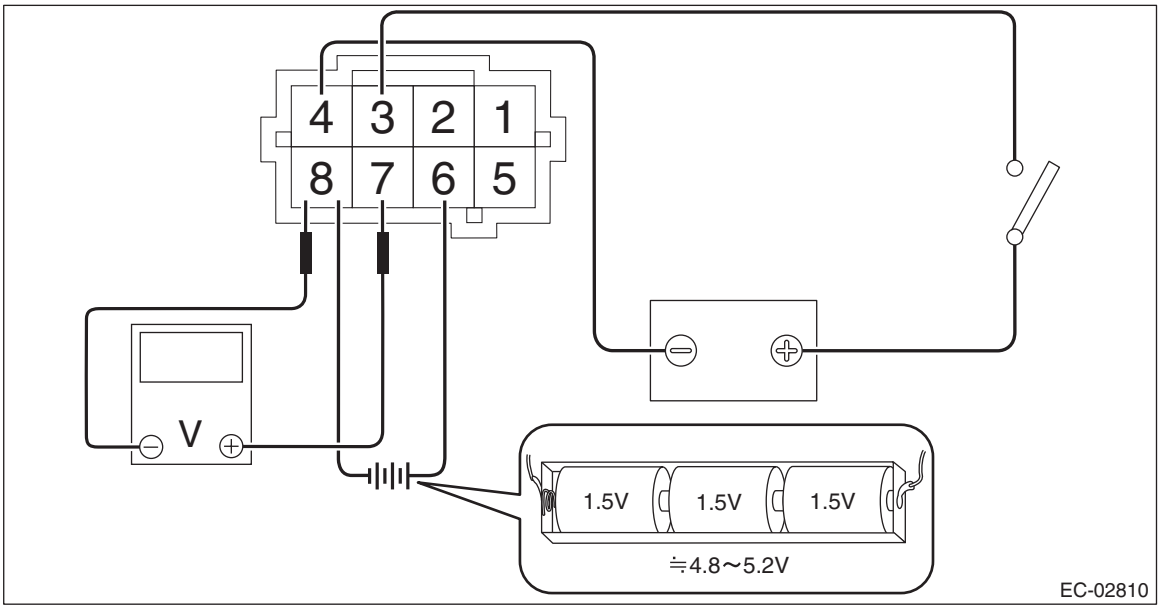

4. OTHER INSPECTIONS

1) Check that the leak check valve assembly and leak check valve bracket have no deformation, cracks or other damages.
2) Check that the tube has no cracks, damage or loose part.

10.PCV Hose Assembly

A: REMOVAL

CAUTION:
Do not remove unless the hose and the leak diagnosis connector are broken.

1) Remove the engine from the vehicle. <Ref. to ME(STI)-30, REMOVAL, Engine Assembly.>
2) Remove the intake manifold. <Ref. to FU(STI)-17, REMOVAL, Intake Manifold.>
3) Remove the bolt securing the water tank pipe assembly, and place the water tank pipe assembly aside so that it does not interfere with the work.
4) Remove the water pipe assembly.

NOTE:
Do not remove the radiator inlet hose and heater outlet hose.

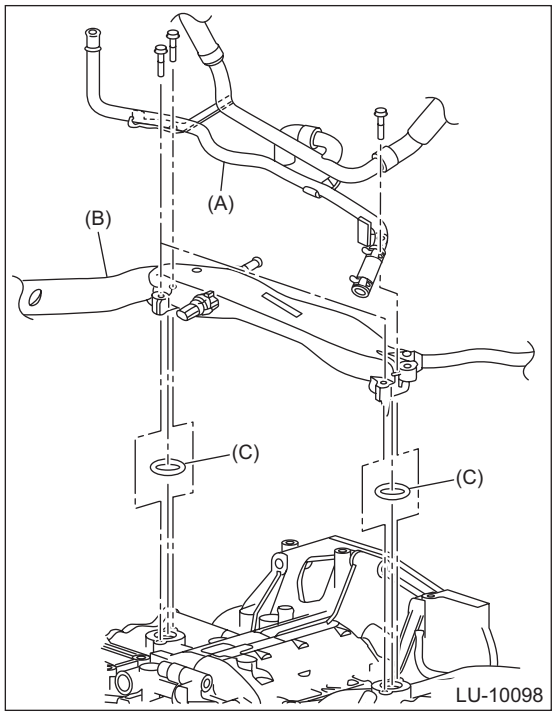

(A) Water tank pipe ASSY
(B) Water pipe ASSY
(C) O-ring

5) Remove the secondary air pipe RH. <Ref. to EC(STI)-56, SECONDARY AIR COMBINATION VALVE RH, REMOVAL, Secondary Air Combination Valve.>

6) Break the clamp, and remove the PCV hose assembly from the cylinder block RH.

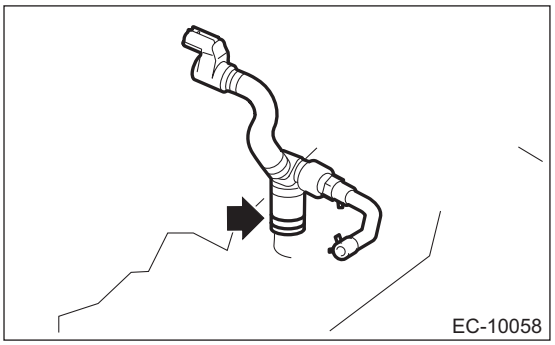

B: INSTALLATION

1) Install the PCV hose assembly to the cylinder block RH, and install the clamp using the Clamp pincer (14100134).

NOTE:
Use a new clamp.

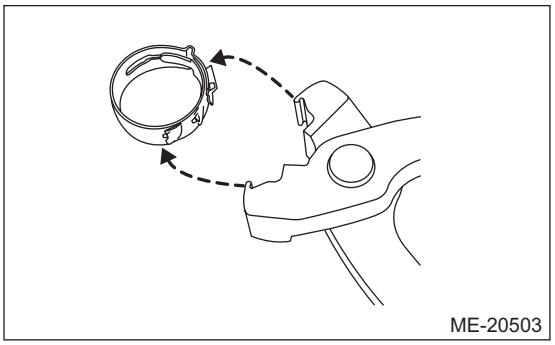

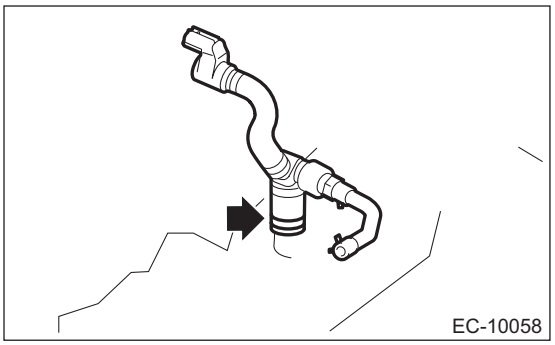

2) Install the secondary air pipe RH. <Ref. to EC(STI)-57, SECONDARY AIR COMBINATION VALVE RH, INSTALLATION, Secondary Air Combination Valve.>
3) Install the water tank pipe assembly and water pipe assembly.

Tightening torque:
6.4 N·m (0.7 kgf-m, 4.7 ft-lb)

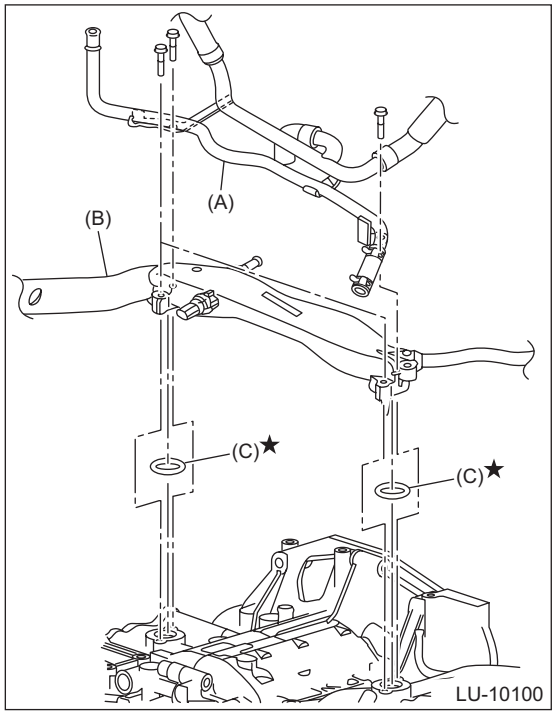

(A) Water tank pipe ASSY
(B) Water pipe ASSY
(C) O-ring

4) Install the intake manifold. <Ref. to FU(STI)-21, INSTALLATION, Intake Manifold.>
5) Install the engine to the vehicle. <Ref. to ME(STI)-34, INSTALLATION, Engine Assembly.>

C: INSPECTION

1. LEAK DIAGNOSIS CONNECTOR

1) Check that the leak diagnosis connector has no deformation, cracks or other damages.
2) Check the resistance between leak diagnosis connector terminals.

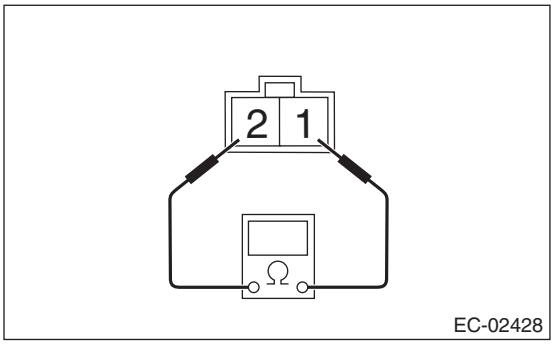

Terminal No.	Standard
1 and 2	Less than 1 Ω

2. OTHER INSPECTIONS

Check that the hose has no cracks, damage or loose part.

11.PCV Valve

A: REMOVAL

CAUTION:
Do not remove unless the PCV valve is broken.
1) Remove the intercooler. <Ref. to IN(STI)-13, REMOVAL, Intercooler.>
2) Disconnect the vacuum hose (A) from the PCV valve and remove the PCV valve from the PCV connector.

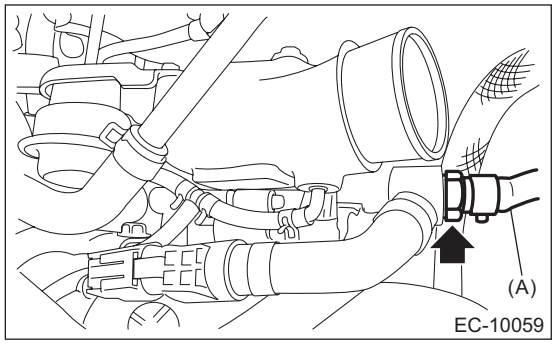

B: INSTALLATION

1) Install the PCV valve to the PCV connector and connect the vacuum hose (A) to the PCV valve.

NOTE:
Apply liquid gasket to the bolt threads of PCV valve.

Liquid gasket:
THREE BOND 1324 (Part No. 004403042) or equivalent

Tightening torque:
22.5 N·m (2.3 kgf-m, 16.6 ft-lb)

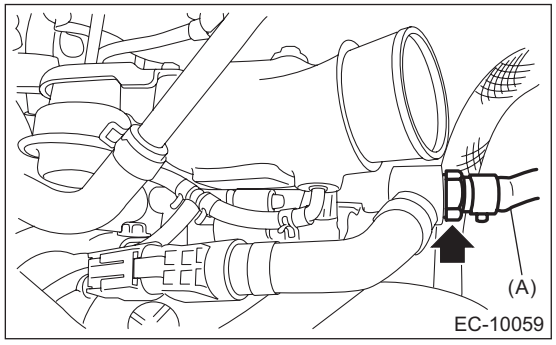

2) Install the intercooler. <Ref. to IN(STI)-14, INSTALLATION, Intercooler.>

C: INSPECTION

1. PCV VALVE

1) Check that the PCV valve has no deformation, cracks or other damages.
2) Check that air is discharged from (B) when air is blown into (A).

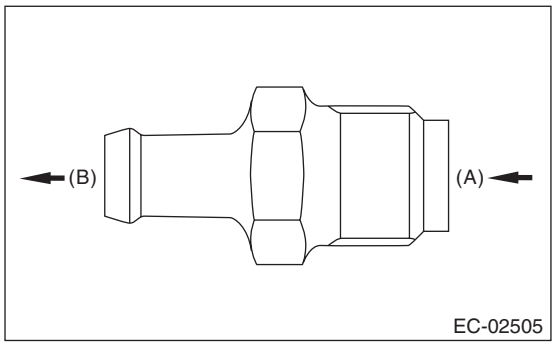

3) Check that air does not come out from (B) when air is blown into (A).

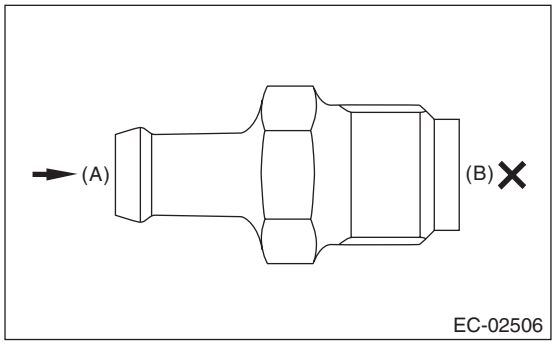

2. OTHER INSPECTIONS

Check the vacuum hose for cracks, damage or looseness.

12.Secondary Air Pump

A: REMOVAL

1) Disconnect the ground cable from battery.
2) Remove the clip (A) which holds the harness on the harness stay and remove the bolt (B) which holds the secondary air pump on the vehicle.

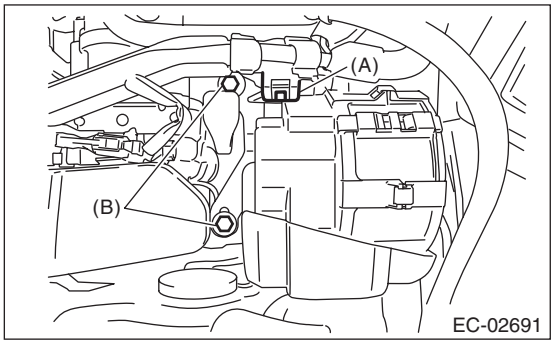

3) Disconnect the connector (A) and air duct (B) from secondary air pump.

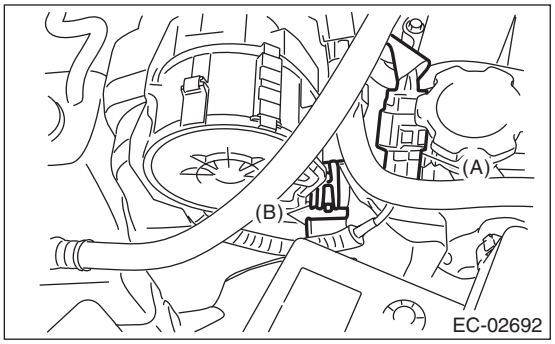

4) Remove the secondary air pump from the vehicle and the resonator from the secondary air pump.

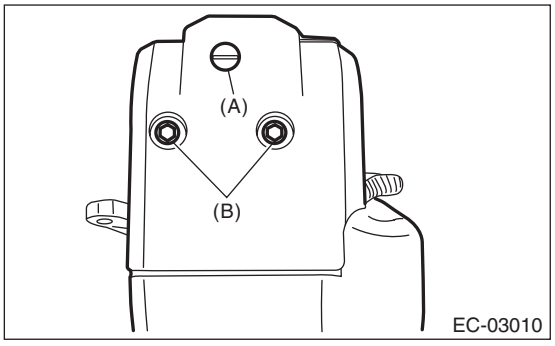

(A) Clip
(B) Bolt

B: INSTALLATION

Install in the reverse order of removal.

Tightening torque:
6.4 N·m (0.7 kgf-m, 4.7 ft-lb)

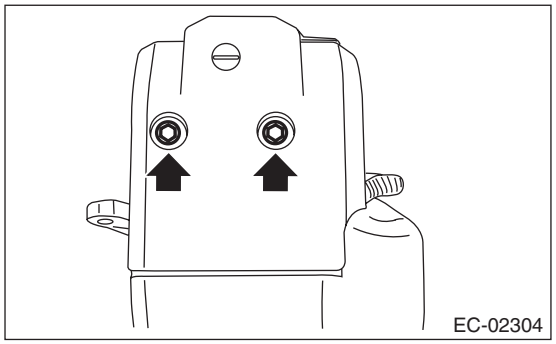

Tightening torque:
19 N·m (1.9 kgf-m, 14.0 ft-lb)

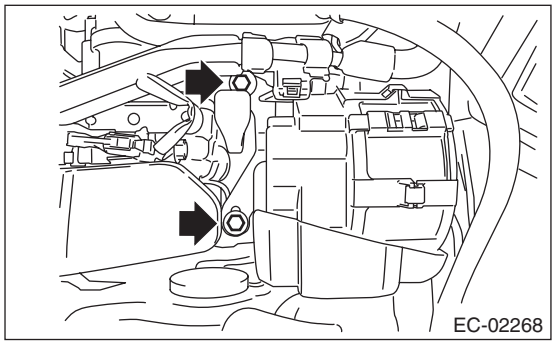

C: INSPECTION

1. SECONDARY AIR PUMP

1) Check that the secondary air pump has no deformation, cracks or other damages.
2) Connect battery positive terminal to the terminal No. 2 and battery negative terminal to the terminal No. 1, and inspect the secondary air pump operation.

CAUTION:
Do not operate the secondary air pump continuously for 80 seconds or more.

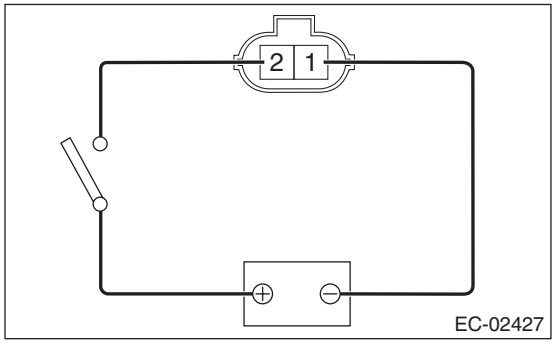

2. OTHER INSPECTIONS

Check that the air duct or resonator has no cracks, damage or loose part.

13.Secondary Air Combination Valve

A: REMOVAL

1. SECONDARY AIR COMBINATION VALVE LH

1) Disconnect the ground cable from battery.
2) Remove the intercooler. <Ref. to IN(STI)-13, REMOVAL, Intercooler.>
3) Disconnect the connector from the secondary air combination valve LH.
4) Disconnect the air duct A.
5) Remove the secondary air pipe LH.
6) Remove the secondary air combination valve LH.

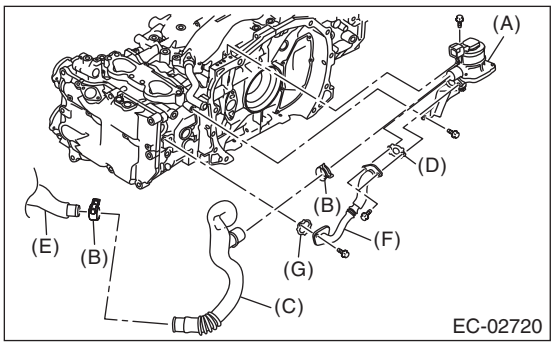

(A) Secondary air combination valve LH
(B) Clip
(C) Air duct A
(D) Gasket
(E) Air duct B
(F) Secondary air pipe LH
(G) Gasket

2. SECONDARY AIR COMBINATION VALVE RH

1) Disconnect the ground cable from battery.

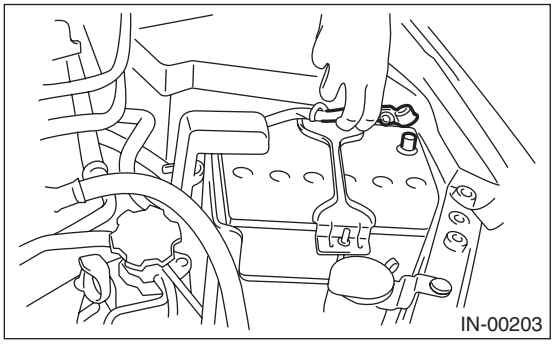

2) Remove the intercooler. <Ref. to IN(STI)-13, REMOVAL, Intercooler.>
3) Remove the intake manifold. <Ref. to FU(STI)-17, REMOVAL, Intake Manifold.>
4) Disconnect the air duct A.
5) Disconnect the secondary air pipe RH.
6) Remove the secondary air combination valve RH.

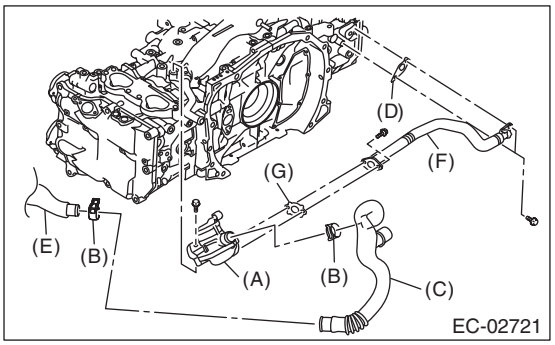

(A) Secondary air combination valve RH
(B) Clip
(C) Air duct A
(D) Gasket
(E) Air duct B
(F) Secondary air pipe RH
(G) Gasket

7) Remove the turbocharger. <Ref. to IN(STI)-17, REMOVAL, Turbocharger.>
8) Remove the secondary air pipe RH.

B: INSTALLATION

1. SECONDARY AIR COMBINATION VALVE LH

Install in the reverse order of removal.

NOTE:
Use a new gasket.

Tightening torque:
T1: 9 N·m (0.9 kgf-m, 6.6 ft-lb)
T2: 19 N·m (1.9 kgf-m, 14.0 ft-lb)

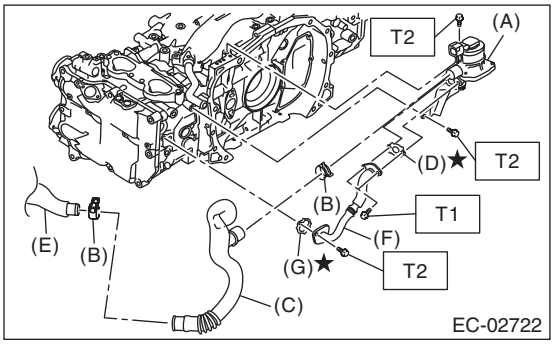

(A) Secondary air combination valve LH
(B) Clip
(C) Air duct A
(D) Gasket
(E) Air duct B
(F) Secondary air pipe LH
(G) Gasket

2. SECONDARY AIR COMBINATION VALVE RH

Install in the reverse order of removal.

NOTE:
Use a new gasket.

Tightening torque:
T1: 9 N·m (0.9 kgf-m, 6.6 ft-lb)
T2: 19 N·m (1.9 kgf-m, 14.0 ft-lb)

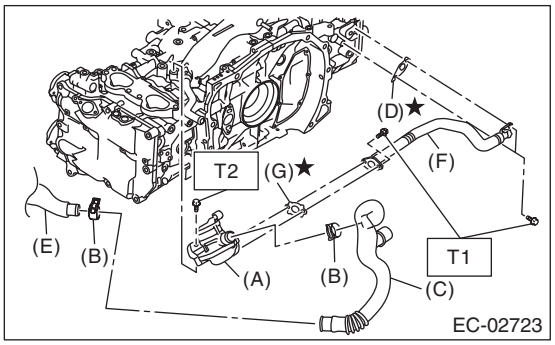

(A) Secondary air combination valve RH
(B) Clip
(C) Air duct A
(D) Gasket
(E) Air duct B
(F) Secondary air pipe RH
(G) Gasket

C: INSPECTION

1. SECONDARY AIR COMBINATION VALVE LH

1) Check that the secondary air combination valve LH has no deformation, cracks or other damages.
2) Check the resistance between the terminals of secondary air combination valve LH.

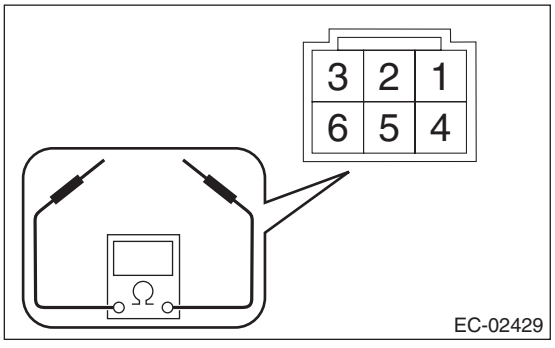

Terminal No.	Standard
4 and 6	5.0±0.5 Ω (when 20°C (68°F))
2 and 3	15 kΩ or less
1 and 2	4.5 kΩ or less

3) Check that air does not come out from (B) when air is blown into (A).

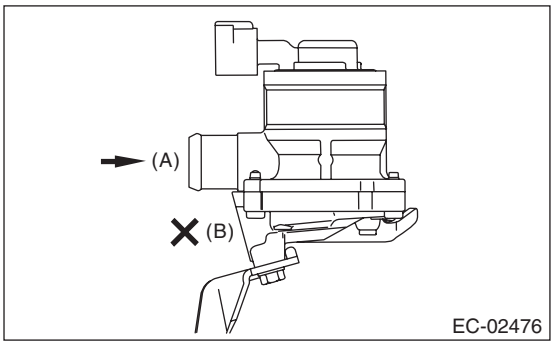

4) Connect the battery positive terminal to the terminal No. 6 and the battery negative terminal to the terminal No. 4. Check that air is discharged from (B), when supplying air to (A).

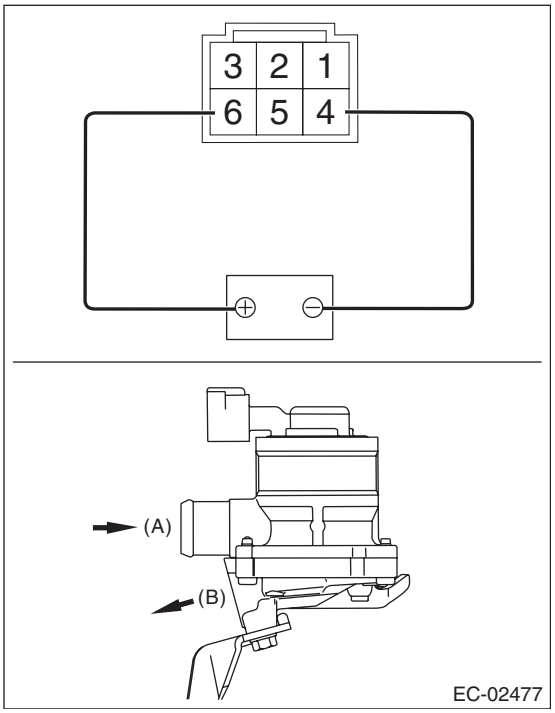

2. SECONDARY AIR COMBINATION VALVE RH

1) Check that the secondary air combination valve RH has no deformation, cracks or other damages.
2) Check the resistance between the terminals of secondary air combination valve RH.

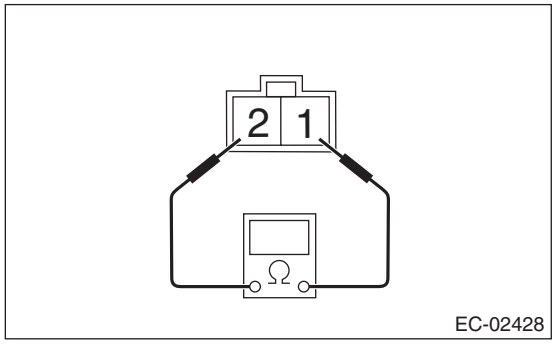

Terminal No.	Standard
1 and 2	5.0±0.5 Ω (when 20°C (68°F))

3) Check that air does not come out from (B) when air is blown into (A).

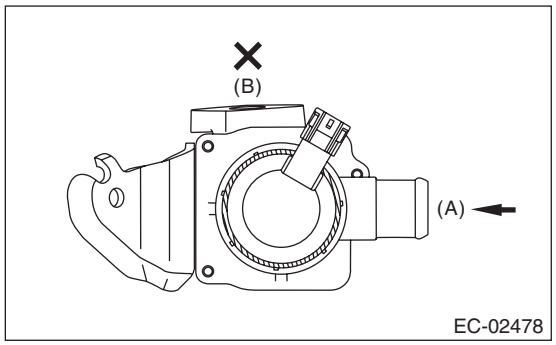

4) Connect the battery positive terminal to the terminal No. 2 and the battery negative terminal to the terminal No. 1. Check that air is discharged from (B), when supplying air to (A).

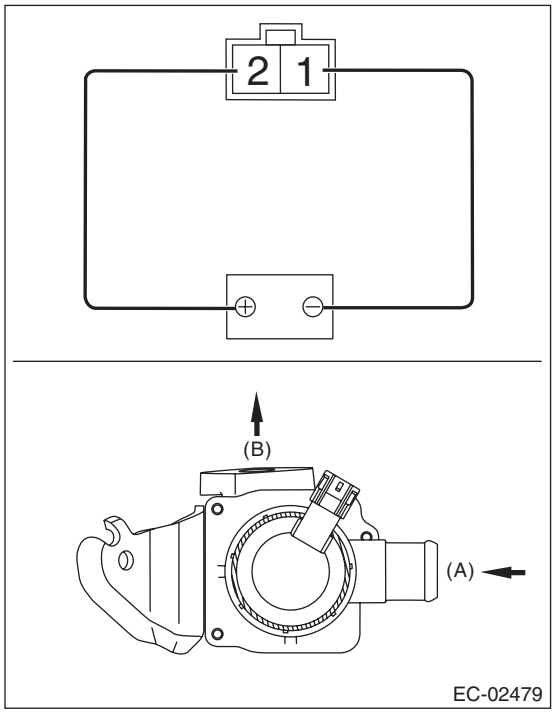

3. OTHER INSPECTIONS

1) Check that the secondary air pipe has no deformation, cracks or other damages.
2) Check that the air duct has no cracks, damage or loose part.

INTAKE (INDUCTION)

IN(STI)

		Page
1.	General Description	2
2.	Air Cleaner Element	7
3.	Air Cleaner Case	8
4.	Air Intake Duct	11
5.	Intake Duct	12
6.	Intercooler	13
7.	Turbocharger	17
8.	Air By-pass Valve	21
9.	Resonator Chamber	22
10.	Chamber Assembly	23

1. General Description

A: COMPONENT

1. AIR CLEANER

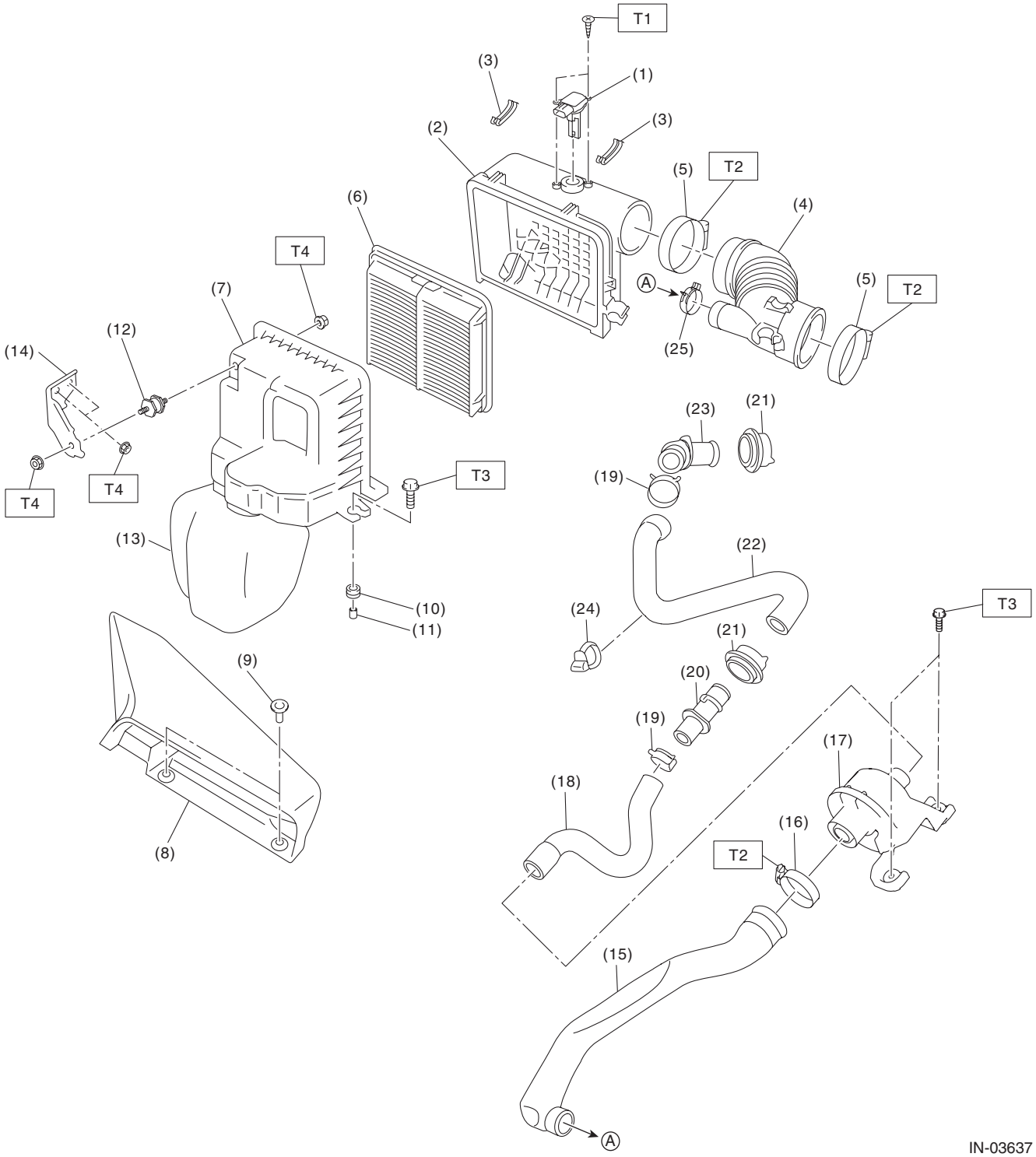

(1) Mass air flow and intake air temperature sensor
(2) Air cleaner case (rear)
(3) Clip
(4) Air intake boot
(5) Clamp
(6) Air cleaner element
(7) Air cleaner case (front)
(8) Air intake duct
(9) Clip
(10) Cushion
(11) Spacer
(12) Cushion
(13) Resonator chamber
(14) Air cleaner case bracket
(15) Chamber duct
(16) Clamp
(17) Chamber ASSY
(18) Hose (front)
(19) Clip
(20) Connector
(21) Grommet
(22) Hose (rear)
(23) Connector
(24) Hose clip
(25) Clip

Tightening torque: N·m (kgf-m, ft-lb)
T1: 1 (0.1, 0.7)
T2: 2.5 (0.3, 1.8)
T3: 6 (0.6, 4.4)
T4: 7.5 (0.8, 5.5)

2. INTAKE DUCT

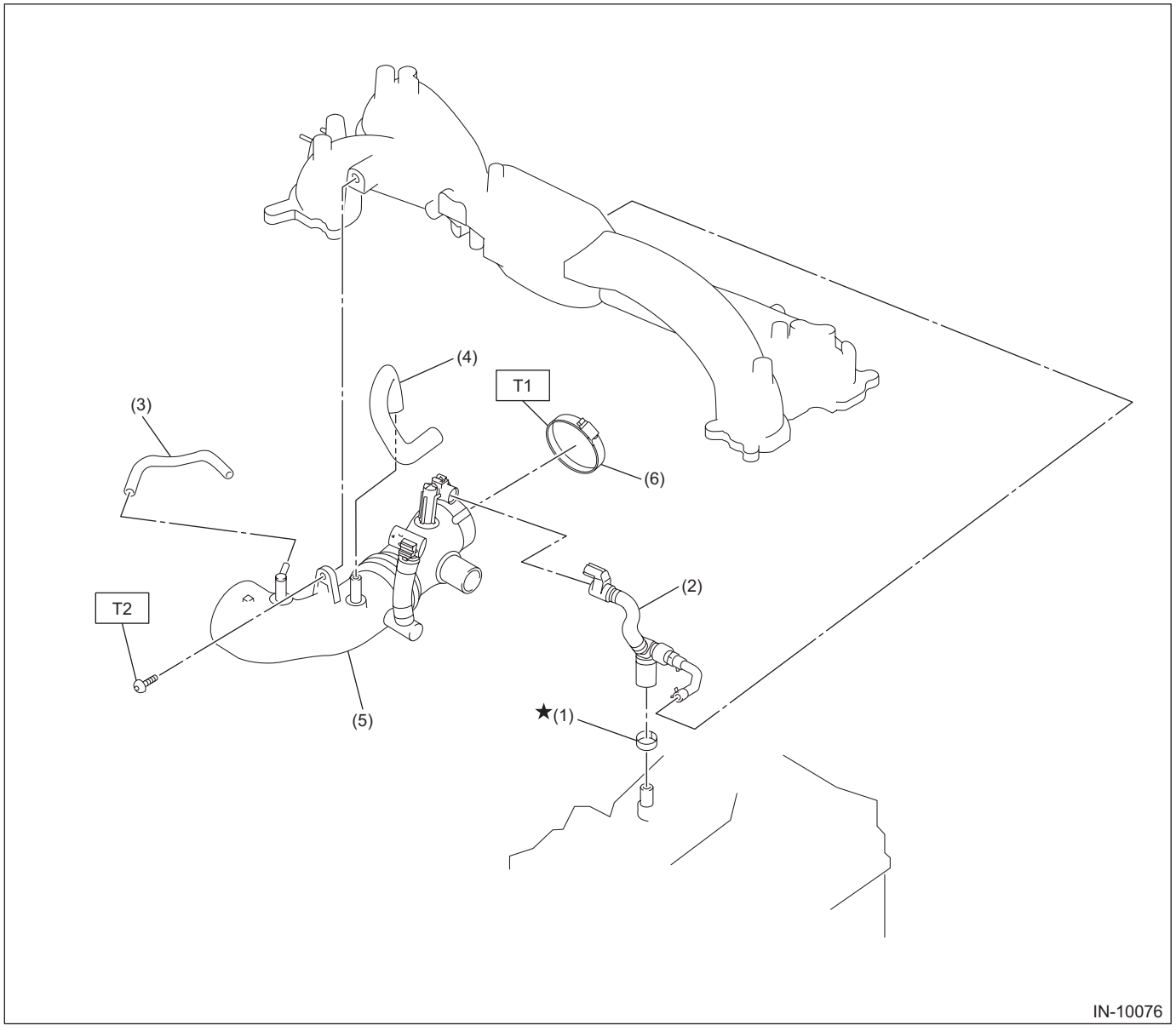

(1) Clamp
(2) PCV hose ASSY
(3) Vacuum hose A
(4) Vacuum hose B
(5) Intake duct
(6) Clamp

Tightening torque: N·m (kgf-m, ft-lb)
T1: 3 (0.3, 2.2)
T2: 17 (1.7, 12.5)

3. INTERCOOLER

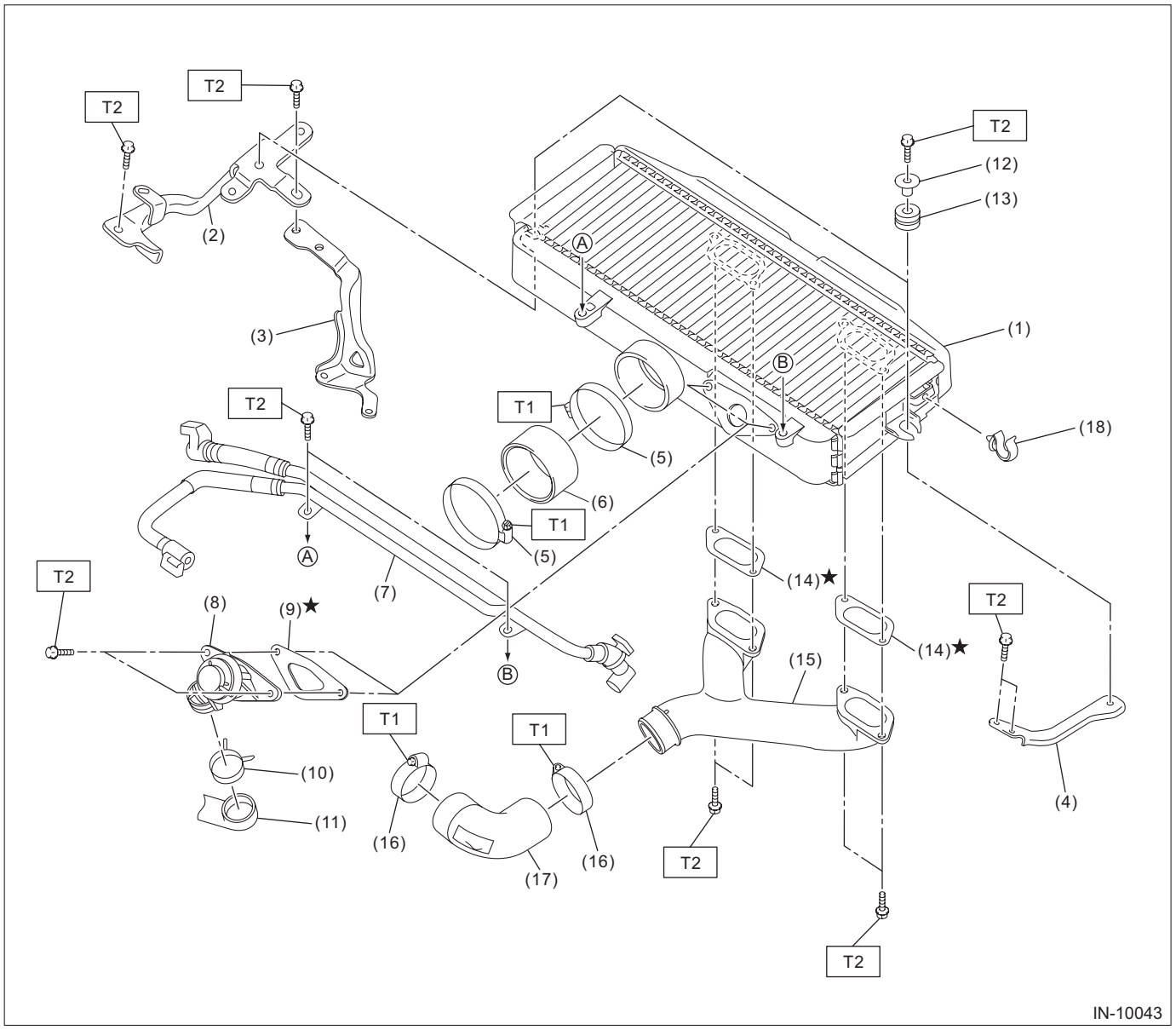

IN-10043

(1) Intercooler
(2) Intercooler stay RH No. 1
(3) Intercooler stay RH No. 2
(4) Intercooler stay LH
(5) Clamp
(6) Air duct hose
(7) PCV pipe ASSY
(8) Air by-pass valve
(9) Gasket
(10) Clip
(11) Air by-pass hose
(12) Spacer
(13) Cushion
(14) Gasket
(15) Intercooler duct
(16) Clamp
(17) Intake duct
(18) Clip

Tightening torque: N·m (kgf-m, ft-lb)
T1: 3 (0.3, 2.2)
T2: 16 (1.6, 11.8)

4. TURBOCHARGER

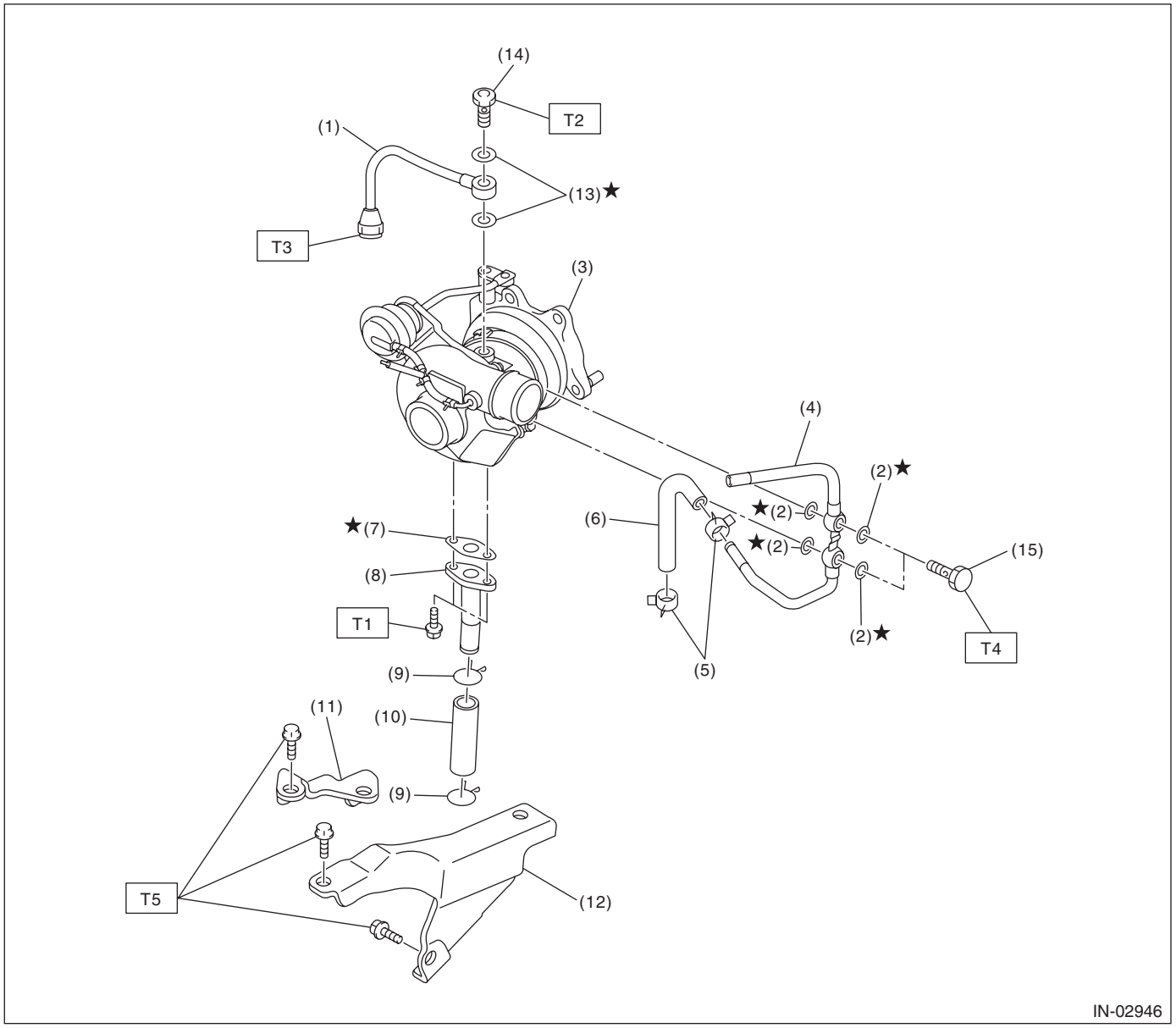

(1) Oil inlet pipe
(2) Gasket
(3) Turbocharger
(4) Water pipe
(5) Clip
(6) Engine coolant hose
(7) Gasket
(8) Oil outlet pipe
(9) Clip
(10) Oil outlet hose
(11) Turbocharger stay RH
(12) Turbocharger stay LH
(13) Gasket
(14) Union bolt A
(15) Union bolt B

Tightening torque: N·m (kgf-m, ft-lb)
T1: 4.9 (0.5, 3.6)
T2: 16 (1.6, 11.8)
T3: 20 (2.0, 14.8)
T4: 23 (2.3, 17.0)
T5: 33 (3.4, 24.3)

B: CAUTION

- Prior to starting work, pay special attention to the following:
  1. Always wear work clothes, a work cap, and protective shoes. Additionally, wear a helmet, protective goggles, etc. if necessary.
  2. Protect the vehicle using a seat cover, fender cover, etc.
  3. Prepare the service tools, clean cloth, containers to catch grease and oil, etc.
- Vehicle components are extremely hot immediately after driving. Be wary of receiving burns from heated parts.
- When performing a repair, identify the cause of trouble and avoid unnecessary removal, disassembly and replacement.
- Before disconnecting connectors of sensors or units, be sure to disconnect the ground cable from battery.
- Always use the jack-up point when the shop jacks or rigid racks are used to support the vehicle.
- Remove contamination including dirt and corrosion before removal, installation, disassembly or assembly.
- Keep the removed parts in order and protect them from dust and dirt.
- All removed parts, if to be reused, should be reinstalled in the original positions with attention to the correct directions, etc.
- Bolts, nuts and washers should be replaced with new parts as required.
- Be sure to tighten the fasteners including bolts and nuts to the specified torque.

C: PREPARATION TOOL

1. GENERAL TOOL

TOOL NAME	REMARKS
Mighty Vac	Used for checking waste gate actuator and air by-pass valve.

2. Air Cleaner Element

A: REMOVAL

1) Disconnect the ground cable from battery.
2) Remove the air intake duct. <Ref. to IN(STI)-11, REMOVAL, Air Intake Duct.>
3) Remove the air flow and intake air temperature sensor harness (A) from the air cleaner case (front).
4) Remove the clips (B) from the air cleaner case (front).
5) Remove the power steering oil pressure hose (suction hose) (C) and harness (D) from the air cleaner case (rear).

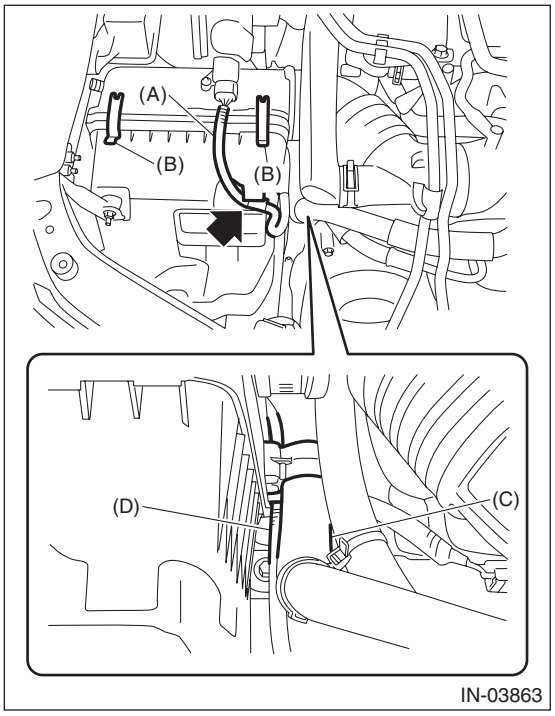

6) Open the air cleaner case, and remove the air cleaner element.

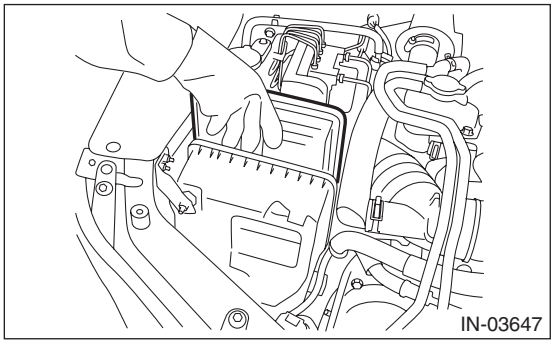

B: INSTALLATION

Install in the reverse order of removal.

CAUTION:
Be sure to use SUBARU genuine air cleaner element depending on the engine type when replacing the air cleaner elements. Using other air cleaner element may affect the engine performance.

NOTE:
• Check that there is no dirt or dust within the air cleaner case. If any dirt or dust is found, clean it.
• Install the air cleaner element as shown in the figure.

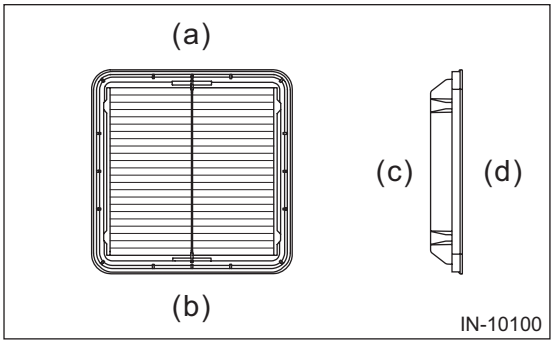

(a) Upside
(b) Downside
(c) Air cleaner case (front) side
(d) Air cleaner case (rear) side

• When setting the air cleaner case (rear), align the protrusion of the air cleaner case (rear) to the air cleaner case (front) to insert.

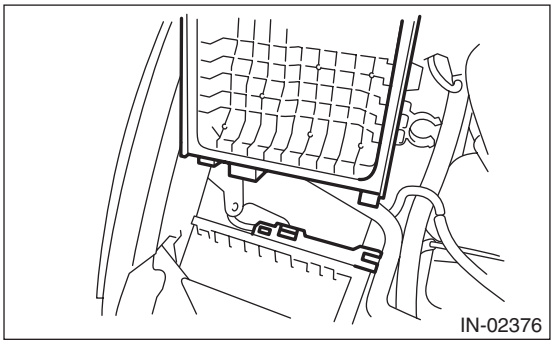

C: INSPECTION

1) Check that the air cleaner element has no deformation, cracks or other damages.
2) Check the air cleaner element for excessive dirt.

3. Air Cleaner Case

A: REMOVAL

1) Disconnect the ground cable from battery.
2) Remove the air intake duct. <Ref. to IN(STI)-11, REMOVAL, Air Intake Duct.>
3) Remove the chamber assembly. <Ref. to IN(STI)-23, REMOVAL, Chamber Assembly.>
4) Disconnect the connector (A) from air flow and intake air temperature sensor.
5) Loosen the clamp (B) which holds the air intake boot.
6) Remove the clip (C) from the air cleaner case (front).
7) Remove the power steering oil pressure hose (suction hose) (D) and harness (E) from the air cleaner case (rear).

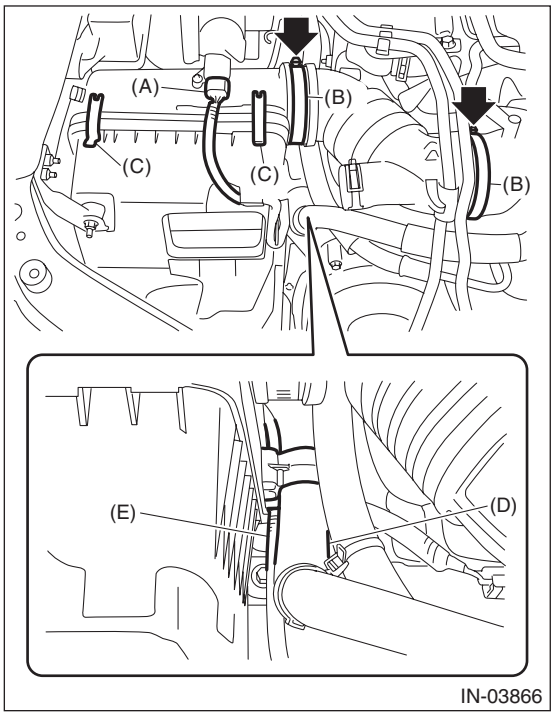

8) Remove the air cleaner case (rear) and air intake boot.
9) Remove the air cleaner element.
10) Remove bolts (A) and nuts (B) which secure the air cleaner case (front) to the body and air cleaner case bracket, and remove the air cleaner case (front).

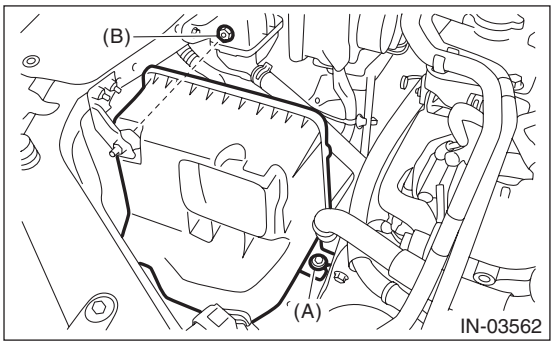

11) Remove the air cleaner case bracket from the vehicle.

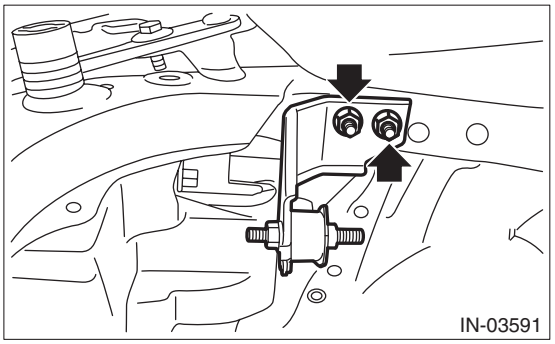

B: INSTALLATION

1) Install the air cleaner case bracket to the vehicle.

Tightening torque:
7.5 N·m (0.8 kgf-m, 5.5 ft-lb)

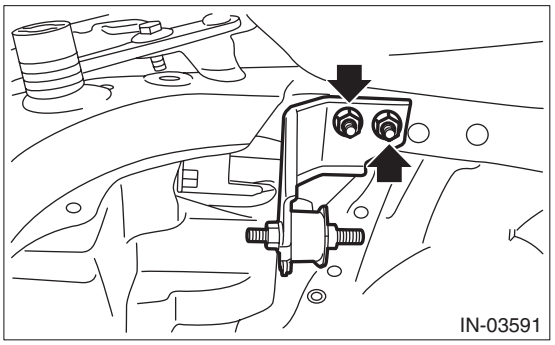

2) Install the bolt (A) and nut (B) which secure the air cleaner case (front) to the vehicle and to the air cleaner case bracket.

Tightening torque:
Bolt (A)
6 N·m (0.6 kgf-m, 4.4 ft-lb)
Nut (B)
7.5 N·m (0.8 kgf-m, 5.5 ft-lb)

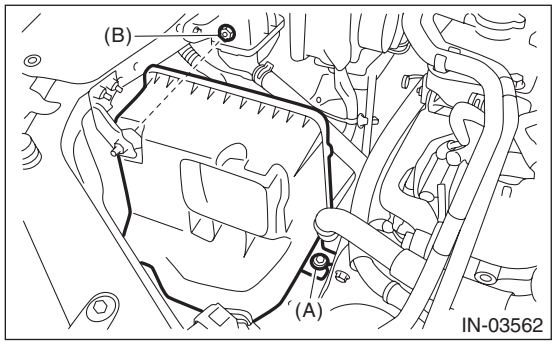

3) Set the air cleaner element and air cleaner case (rear) to the air cleaner case (front).

NOTE:
• Check that there is no dirt or dust within the air cleaner case. If any dirt or dust is found, clean it.
• Install the air cleaner element as shown in the figure.

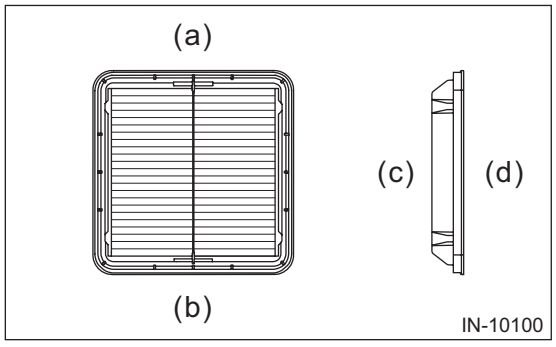

(a) Upside
(b) Downside
(c) Air cleaner case (front) side
(d) Air cleaner case (rear) side

• When setting the air cleaner case (rear), align the protrusion of the air cleaner case (rear) to the air cleaner case (front) to insert.

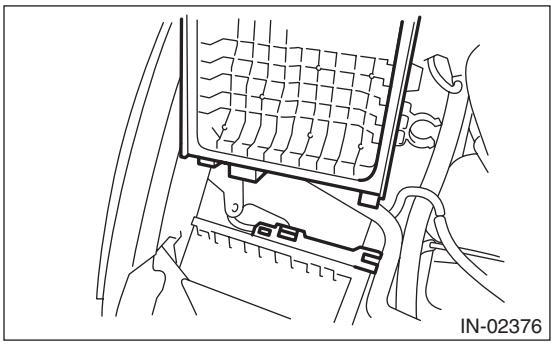

4) Install the air intake boot.

Tightening torque:
2.5 N·m (0.3 kgf-m, 1.8 ft-lb)

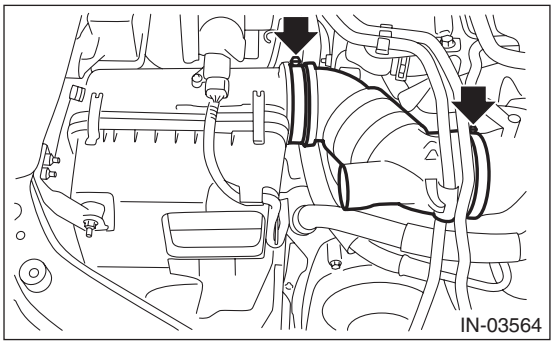

5) Install the harness (D) and power steering oil pressure hose (suction hose) (C) to the air cleaner case (rear).
6) Install the clip (B) to the air cleaner case (front).
7) Connect the connector (A) to the mass air flow and intake air temperature sensor.

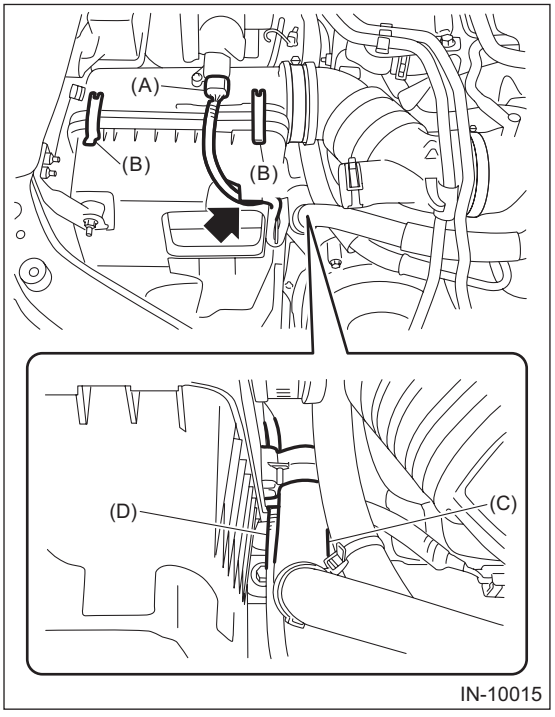

8) Install the chamber assembly. <Ref. to IN(STI)-23, INSTALLATION, Chamber Assembly.>
9) Install the air intake duct. <Ref. to IN(STI)-11, INSTALLATION, Air Intake Duct.>
10) Connect the battery ground terminal.

C: INSPECTION

1) Check that the air cleaner case has no deformation, cracks or other damages.
2) Check that the air intake boot has no cracks, damage or loose part.

4. Air Intake Duct

A: REMOVAL

Remove the clip which secures the air intake duct, and remove the air intake duct.

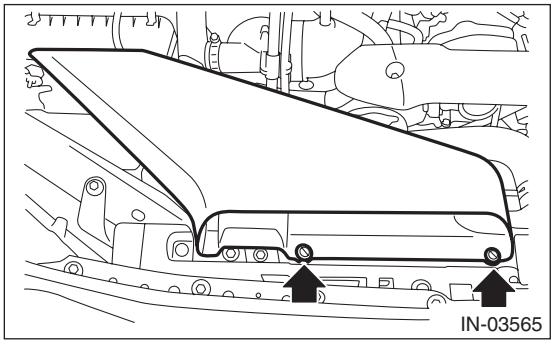

B: INSTALLATION

Install in the reverse order of removal.

C: INSPECTION

1) Check that the air intake duct has no deformation, cracks or other damages.
2) Inspect that no foreign objects are mixed in the air intake duct.

5. Intake Duct

A: REMOVAL

1) Disconnect the ground cable from battery.
2) Remove the intake manifold. <Ref. to FU(STI)-17, REMOVAL, Intake Manifold.>
3) Remove the sensor, engine wiring harness and fuel pipe from the intake manifold. <Ref. to FU(STI)-25, DISASSEMBLY, Intake Manifold.>
4) Remove the intake duct from intake manifold.

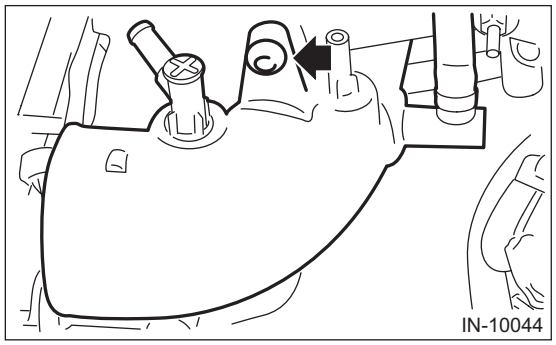

B: INSTALLATION

Install in the reverse order of removal.

Tightening torque:
17 N·m (1.7 kgf-m, 12.5 ft-lb)

C: INSPECTION

1. LEAK DIAGNOSIS CONNECTOR

Refer to “PCV Pipe Assembly” for inspection of leak diagnosis connector. <Ref. to EC(STI)-53, LEAK DIAGNOSIS CONNECTOR, INSPECTION, PCV Hose Assembly.>

2. OTHER INSPECTIONS

Check that the intake duct has no deformation, cracks or other damages.

6. Intercooler

A: REMOVAL

1) Remove the chamber assembly. <Ref. to IN(STI)-23, REMOVAL, Chamber Assembly.>
2) Unlock the leak diagnosis connector, and disconnect the PCV hoses (A) and (B) from the PCV pipe assembly.

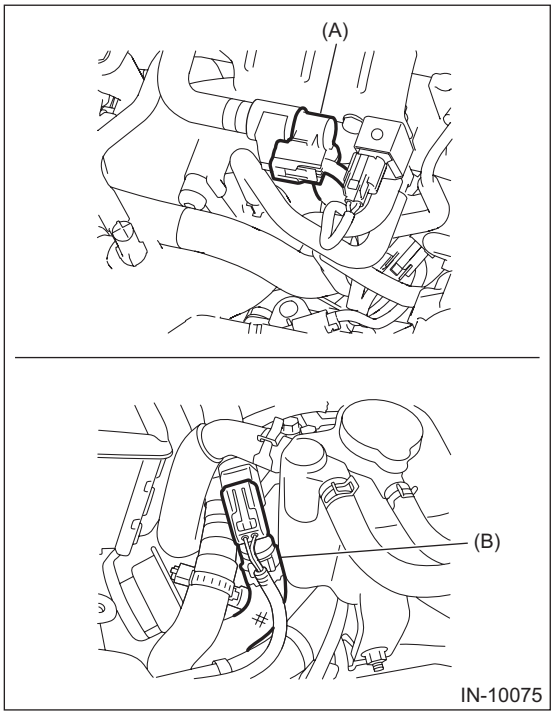

3) Disconnect the connector (A) from the PCV pipe assembly.
4) Unlock the leak diagnosis connector, and disconnect the PCV hose (B) from the PCV pipe assembly.

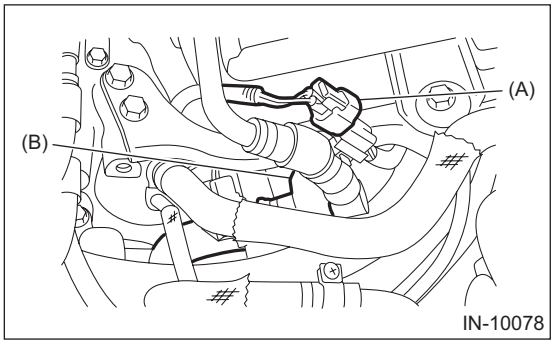

5) Loosen the clamp (A) holding the intake duct to the turbocharger.
6) Loosen the clamp (B) holding the air duct hose to the intercooler.
7) Remove the bolts (C) securing the air by-pass valve to the intercooler, and disconnect the air by-pass valve.

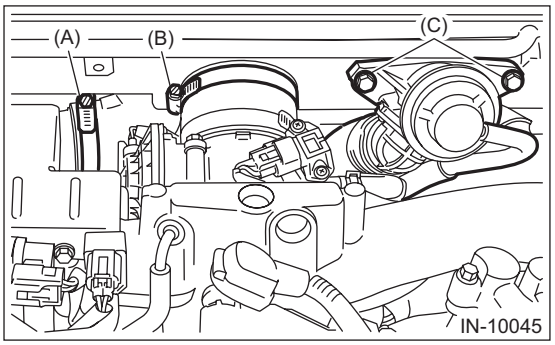

8) Remove the bolts which secure the intercooler to the intercooler stay RH No. 1.

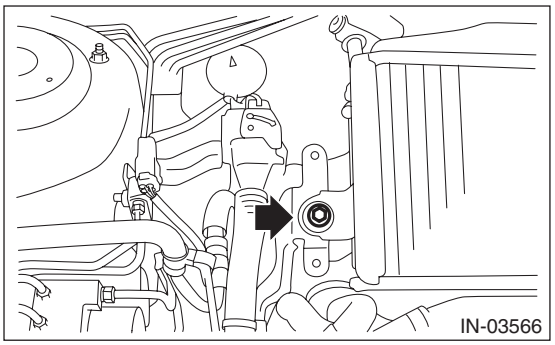

9) Remove the brake booster vacuum hose from the intercooler clip (A), and remove the bolts which secure the intercooler to the intercooler stay LH.

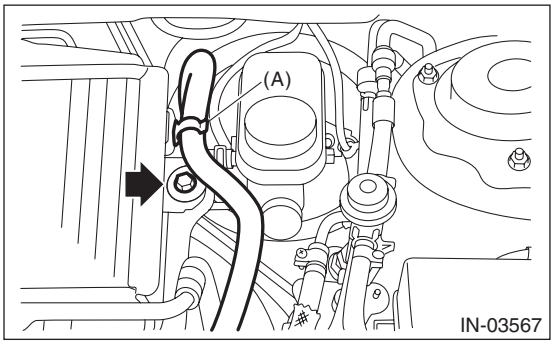

10) Remove the intercooler stay LH.



11) Remove the intercooler.

12) Remove the air duct hose from the throttle body.

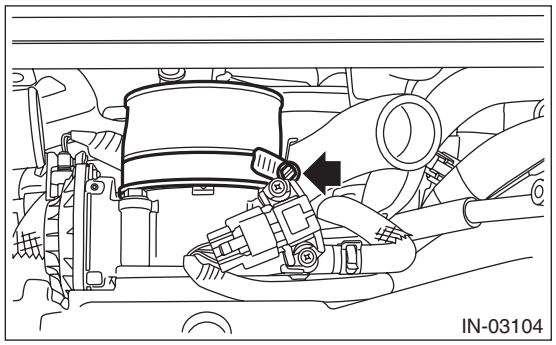

13) Remove clip (A) holding the engine wiring harness to the intercooler stay RH No. 1, and remove the intercooler stay RH No. 1.

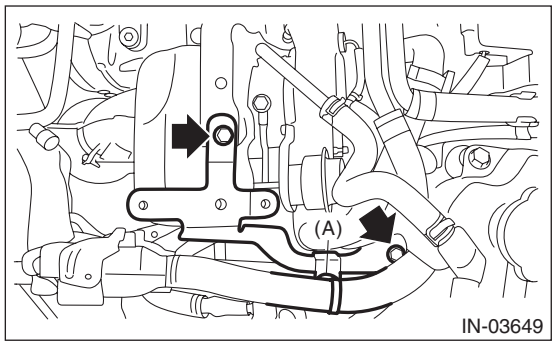

B: INSTALLATION

1) Install the intercooler stay RH No. 1, and install the clip (A) which secures the engine wiring harness to the intercooler stay RH No. 1.

Tightening torque:
16 N·m (1.6 kgf-m, 11.8 ft-lb)

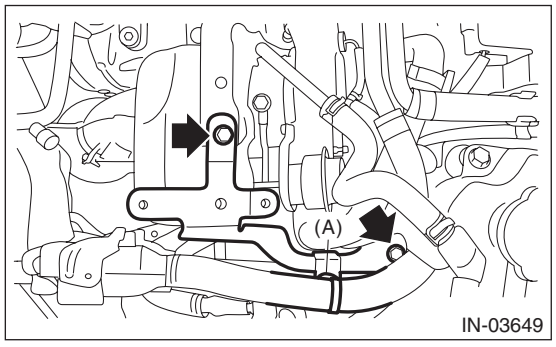

2) Attach the air duct hose to the throttle body.

Tightening torque:
3 N·m (0.3 kgf-m, 2.2 ft-lb)

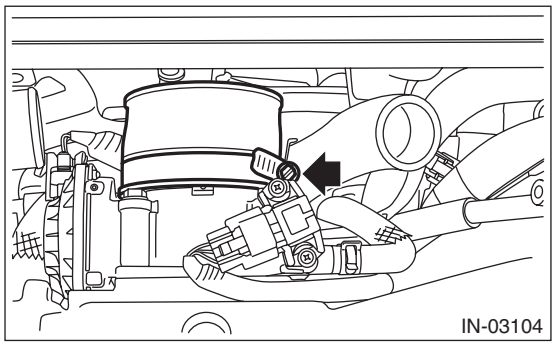

3) Set the intercooler to the vehicle, and install the bolts securing the intercooler to the intercooler stay RH No. 1.

Tightening torque:
16 N·m (1.6 kgf-m, 11.8 ft-lb)

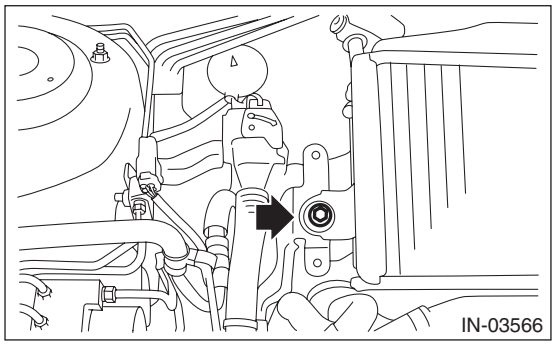

4) Temporarily tighten the bolt securing the intercooler stay LH to the intake manifold.

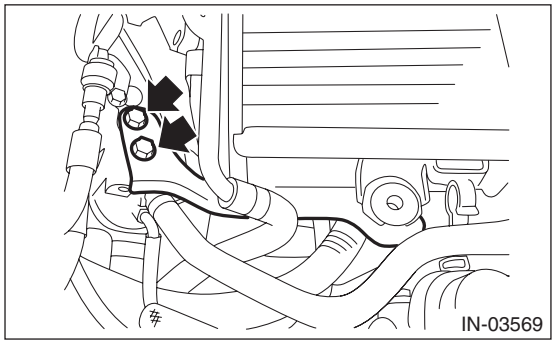

5) Install the bolts which secure the intercooler to the intercooler stay LH, and install the brake booster vacuum hose to the clip (A).

Tightening torque:
16 N·m (1.6 kgf-m, 11.8 ft-lb)

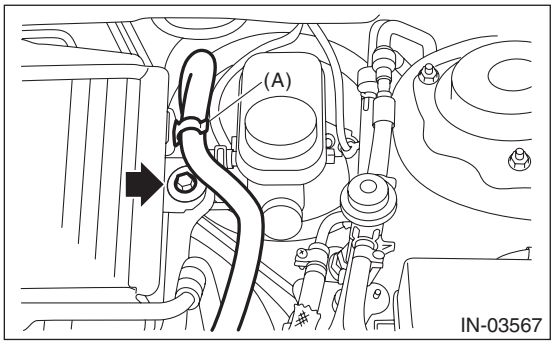

6) Tighten the bolt securing the intercooler stay LH to the intake manifold.

Tightening torque:
16 N·m (1.6 kgf-m, 11.8 ft-lb)

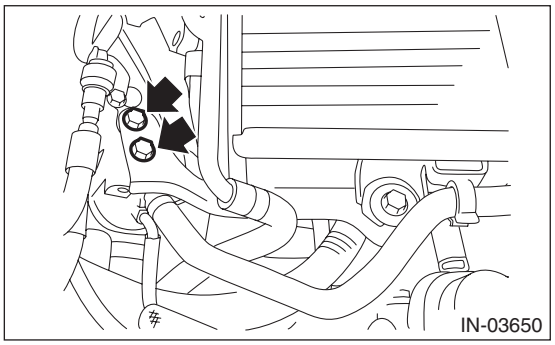

7) Tighten the clamp (A) which secures the intake duct to the turbocharger.
8) Tighten the clamp (B) which secures the air duct hose to the intercooler.
9) Install the bolts (C) which secures the air bypass valve to the intercooler, and install the air bypass valve.

NOTE:
Use a new gasket.

Tightening torque:
T1: 3 N·m (0.3 kgf-m, 2.2 ft-lb)
T2: 16 N·m (1.6 kgf-m, 11.8 ft-lb)

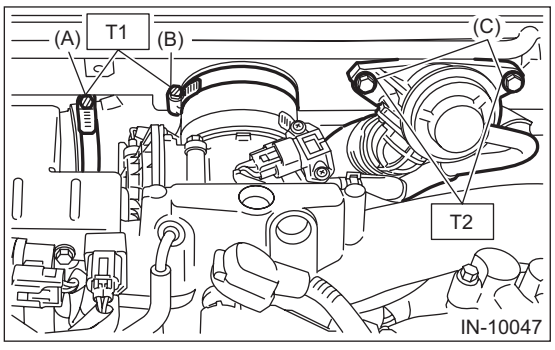

10) Connect the PCV hose (B) to PCV pipe assembly.

NOTE:
Make sure that the leak diagnosis connector is connected securely.
11) Connect the connector (A) to the PCV pipe assembly.

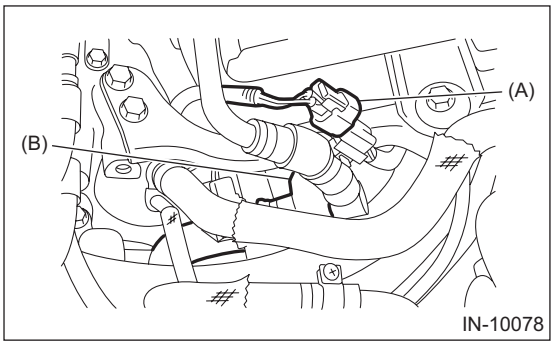

12) Connect the PCV hoses (A) and (B) to the PCV pipe assembly.

NOTE:
Make sure that the leak diagnosis connector is connected securely.

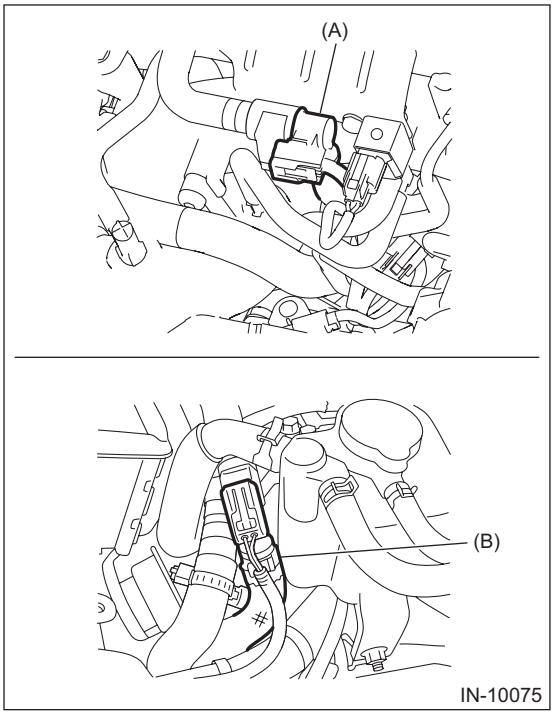

13) Install the chamber assembly. <Ref. to IN(STI)-23, INSTALLATION, Chamber Assembly.>

C: DISASSEMBLY

1) Remove the clip (A) and intercooler duct from the intercooler.

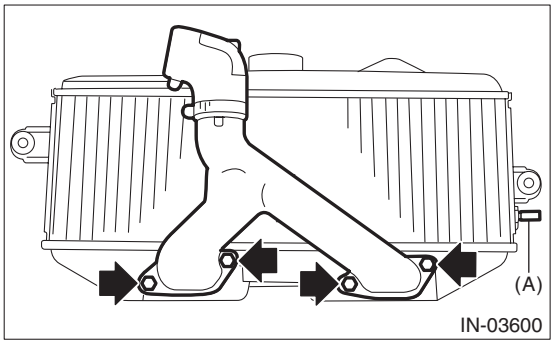

2) Remove the PCV pipe assembly from the intercooler.

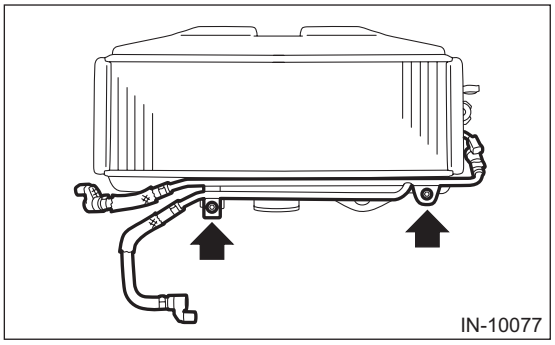

3) Remove the intake duct from intercooler duct.

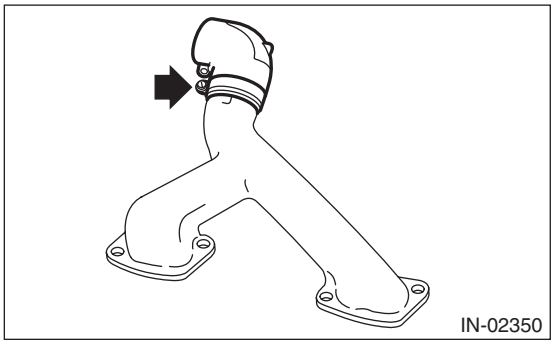

D: ASSEMBLY

1) Install the intake duct to the intercooler duct.

Tightening torque:
3 N·m (0.3 kgf-m, 2.2 ft-lb)

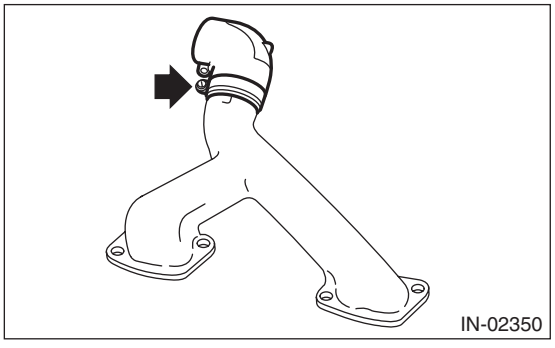

2) Install the PCV pipe assembly to the intercooler.

Tightening torque:
16 N·m (1.6 kgf-m, 11.8 ft-lb)

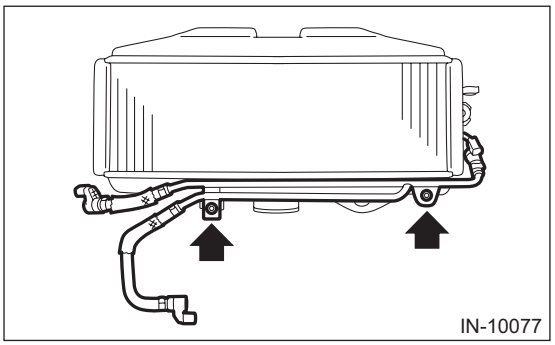

3) Install the clip (A) and intercooler duct to the intercooler.

NOTE:
Use a new gasket.

Tightening torque:
16 N·m (1.6 kgf-m, 11.8 ft-lb)

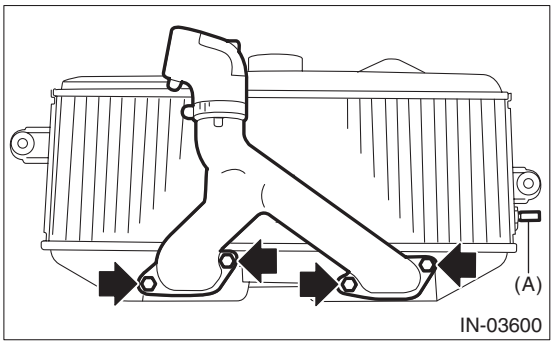

E: INSPECTION

1. LEAK DIAGNOSIS CONNECTOR

Refer to “PCV Pipe Assembly” for inspection of leak diagnosis connector. <Ref. to EC(STI)-53, LEAK DIAGNOSIS CONNECTOR, INSPECTION, PCV Hose Assembly.>

2. OTHER INSPECTIONS

1) Check that the intercooler, intercooler ducts and PCV pipe assembly have no deformation, cracks or other damages.
2) Check that the hose and intake duct have no cracks, damage or loose part.

7. Turbocharger

A: REMOVAL

1) Disconnect the ground cable from battery.
2) Drain approximately 3.0 L (3.2 US qt, 2.6 Imp qt) of coolant. <Ref. to CO(STI)-12, DRAINING OF ENGINE COOLANT, REPLACEMENT, Engine Coolant.>
3) Lower the vehicle.
4) Remove the intercooler. <Ref. to IN(STI)-13, REMOVAL, Intercooler.>
5) Remove the intercooler stay RH No. 2.

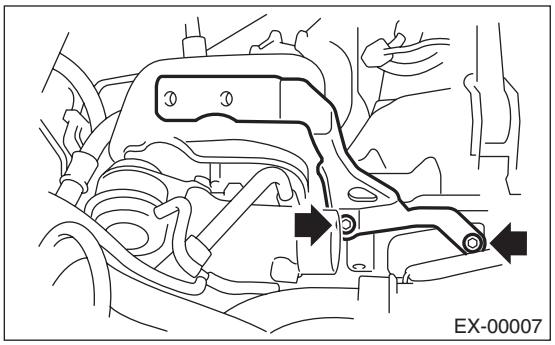

6) Remove the center exhaust pipe. <Ref. to EX(STI)-7, REMOVAL, Center Exhaust Pipe.>
7) Lower the vehicle.
8) Remove the joint pipe from the turbocharger.

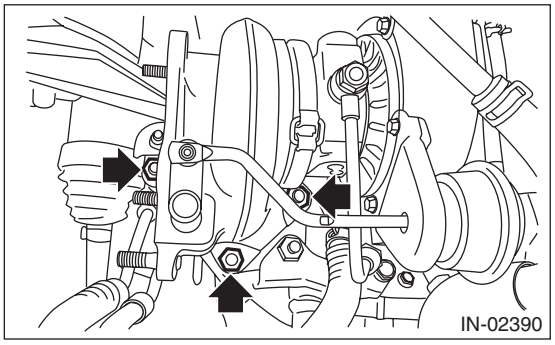

9) Disconnect the engine coolant hose from the upper side of the water pipe.

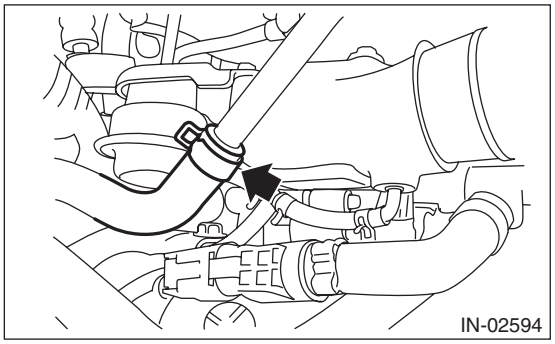

10) Disconnect the air control hose (A), and loosen the clamp holding the intake duct to the turbocharger.

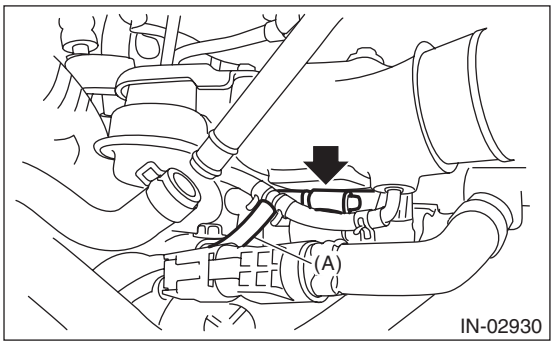

11) Remove the oil inlet pipe from the turbocharger.

CAUTION:
In order to prevent damaging the oil pipe on the cylinder head side, fix the section (a) shown in the figure when loosing the oil inlet pipe flare nut, and avoid the part from rotating together while loosening the nut.

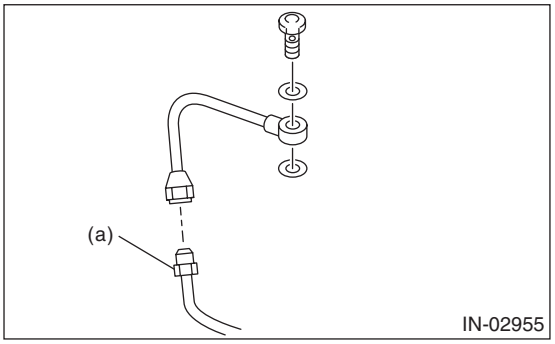

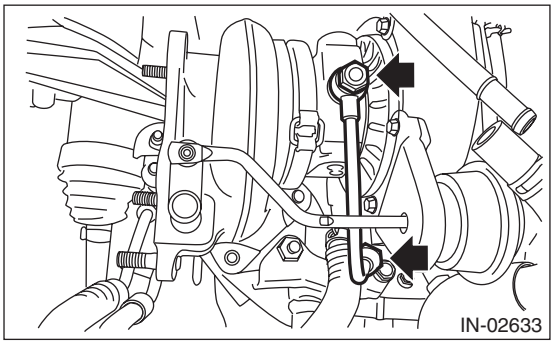

12) Disconnect the engine coolant hose from the lower side of the water pipe.

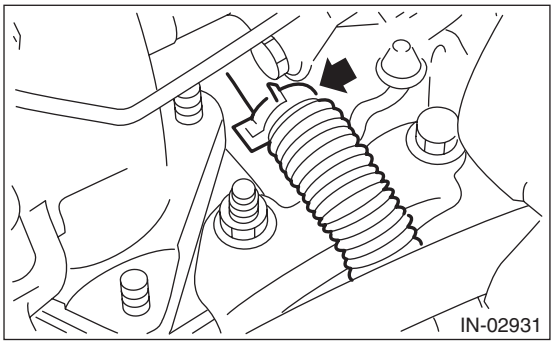

13) Disconnect the oil outlet hose from the oil outlet pipe, and remove the turbocharger.

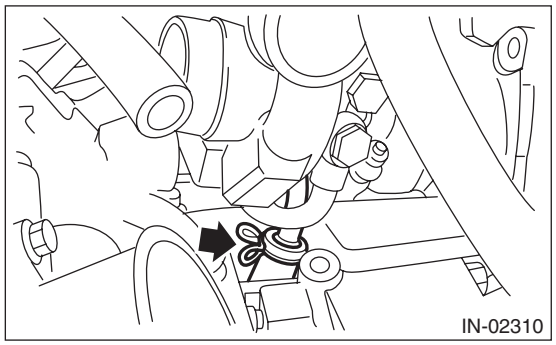

14) Remove the turbocharger stay.

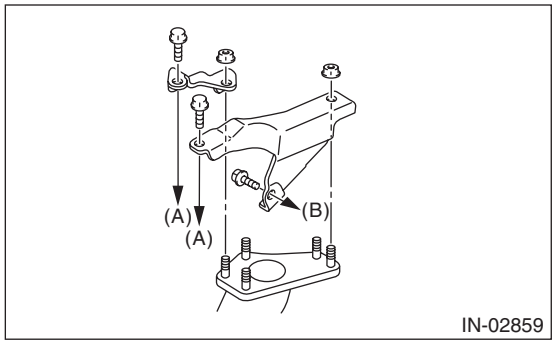

(A) To cylinder head RH
(B) To cylinder block RH

B: INSTALLATION

1) Install the turbocharger stay.

Tightening torque:
T1: 33 N·m (3.4 kgf-m, 24.3 ft-lb)
T2: 42.5 N·m (4.3 kgf-m, 31.3 ft-lb)

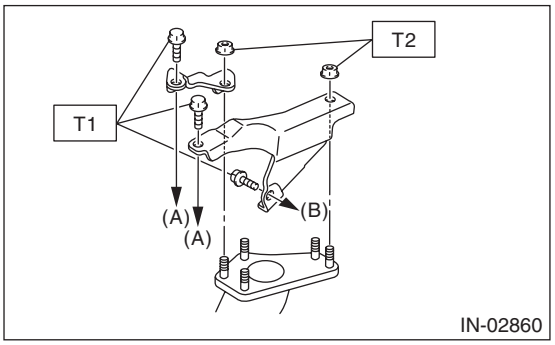

(A) To cylinder head RH
(B) To cylinder block RH

2) Connect the oil outlet hose to the oil outlet pipe.

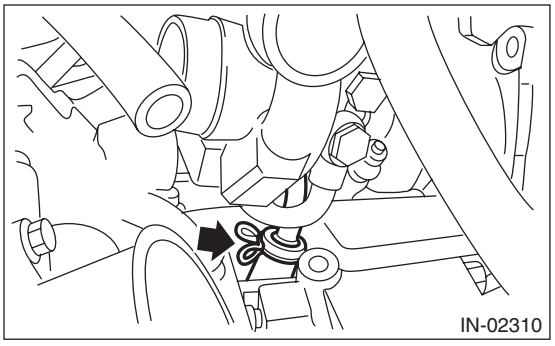

3) Connect the engine coolant hose to the lower side of the water pipe.

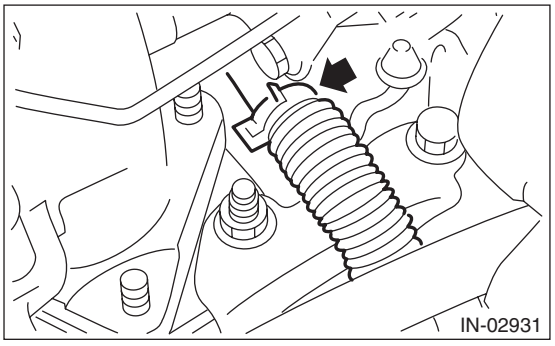

4) Temporarily tighten the union bolts and flare nuts which secure the oil inlet pipe to the turbocharger.

NOTE:
Use a new gasket.

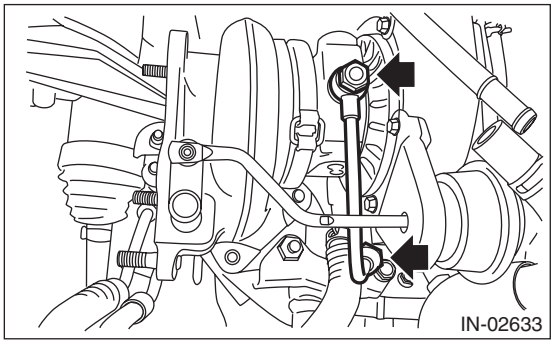

5) Tighten the union bolts and flare nuts which secure the oil inlet pipe to the turbocharger.

CAUTION:
In order to prevent damaging the oil pipe on the cylinder head side, fix the section (a) shown in the figure when tightening the oil inlet pipe flare nut, and avoid the part from rotating together while tightening the nut.

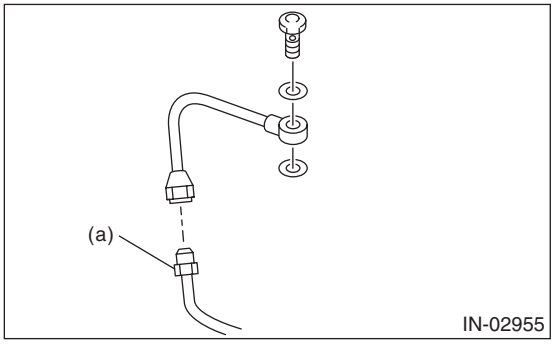

Tightening torque:
T1: 16 N·m (1.6 kgf-m, 11.8 ft-lb)
T2: 20 N·m (2.0 kgf-m, 14.8 ft-lb)

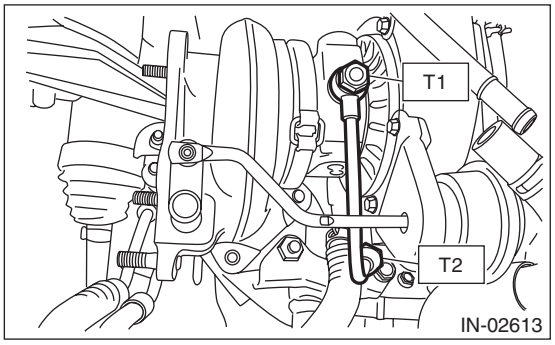

6) Connect the air control hose (A), and install the intake duct to the turbocharger.

Tightening torque:
3 N·m (0.3 kgf-m, 2.2 ft-lb)

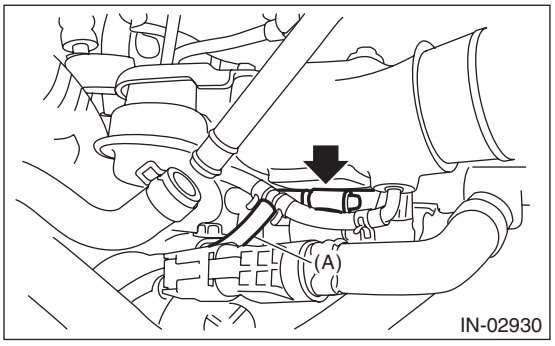

7) Connect the engine coolant hoses to the upper side of the water pipe.

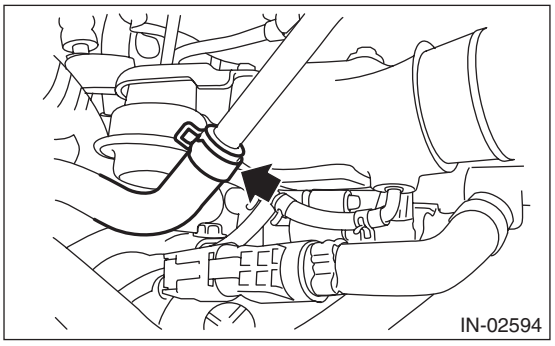

8) Install the joint pipe to turbocharger.

NOTE:
Use a new gasket.

Tightening torque:
42.5 N·m (4.3 kgf-m, 31.3 ft-lb)

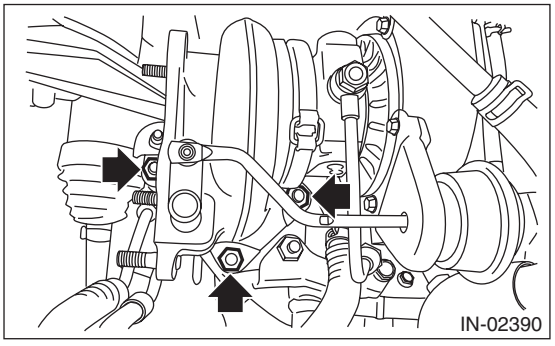

9) Lift up the vehicle.
10) Install the center exhaust pipe. <Ref. to EX(STI)-8, INSTALLATION, Center Exhaust Pipe.>
11) Lower the vehicle.

12) Install the intercooler stay RH No. 2.

Tightening torque:
16 N·m (1.6 kgf-m, 11.8 ft-lb)

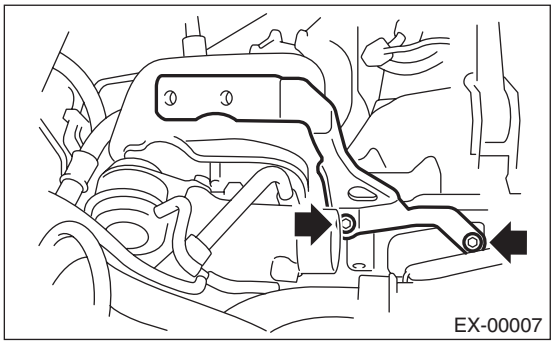

13) Install the intercooler. <Ref. to IN(STI)-14, INSTALLATION, Intercooler.>
14) Connect the battery ground terminal.
15) Fill engine coolant. <Ref. to CO(STI)-12, FILLING OF ENGINE COOLANT, REPLACEMENT, Engine Coolant.>

C: INSPECTION

1. WASTE GATE ACTUATOR

1) Remove the intercooler. <Ref. to IN(STI)-13, REMOVAL, Intercooler.>
2) Remove the turbocharger upper cover.

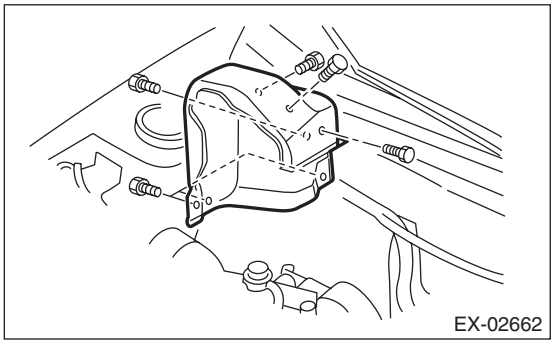

3) Remove the boost hose (B) from the waste gate actuator (A) of the turbocharger, and connect the Mighty Vac to the waste gate actuator (A).

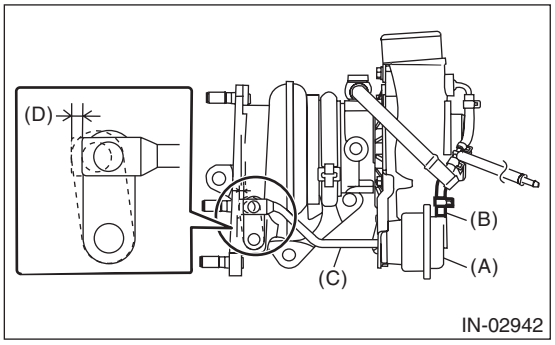

(A) Waste gate actuator
(B) Boost hose
(C) Control rod
(D) Control rod stroke

4) Pressurize slowly with the Mighty Vac, and measure the pressure when the control rod stroke (D) becomes 2 mm (0.08 in). If it is not within the standard, replace the turbocharger assembly.

CAUTION:
Do not pressurize over 89.9 kPa (0.92 kg/cm^2, 13.0 psi) to prevent damaging the waste gate actuator.

Operating pressure (control rod stroke 2 mm (0.08 in)):
Standard
74.7 — 80.8 kPa (0.76 — 0.82 kg/cm^2, 10.8 — 11.7 psi)
5) After inspection, install the related parts in the reverse order of removal.

Tightening torque:
7.5 N·m (0.8 kgf-m, 5.5 ft-lb)

2. OTHER INSPECTIONS

1) Check that the turbocharger, turbocharger stay and pipe have no deformation, cracks or other damages.
2) Check that the hose and intake duct have no cracks, damage or loose part.
3) Check that there are no oil leakage or water leakage from the pipe attachment section.

8. Air By-pass Valve

A: REMOVAL

Remove the air by-pass valve from the intercooler, and then disconnect air by-pass hose (A) and vacuum hose (B) from the air by-pass valve.

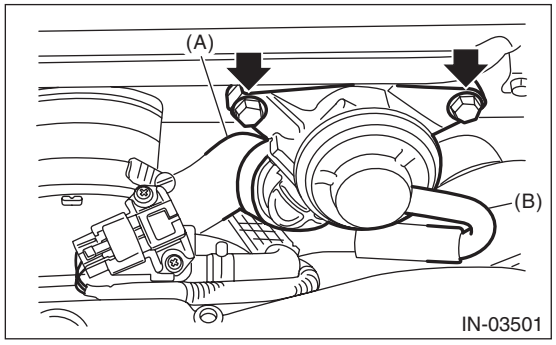

B: INSTALLATION

Install in the reverse order of removal.

NOTE:
Use a new gasket.

Tightening torque:
16 N·m (1.6 kgf-m, 11.8 ft-lb)

C: INSPECTION

1. AIR BY-PASS VALVE

1) Check that the air by-pass valve has no deformation, cracks or other damages.
2) Connect the Mighty Vac to the nipple (A) of the air by-pass valve.

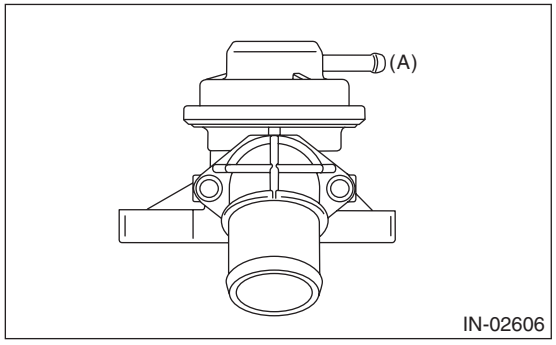

3) Using the Mighty Vac, generate the vacuum pressure to –93.3 kPa (–0.95 kg/cm^2, –13.5 psi). Check that the Mighty Vac gauge needle indication holds 10 seconds without dropping down to lower than –92.6 kPa (–0.94 kg/cm^2, –13.4 psi).
4) Set a dial gauge to the end of valve rod of the air by-pass valve.

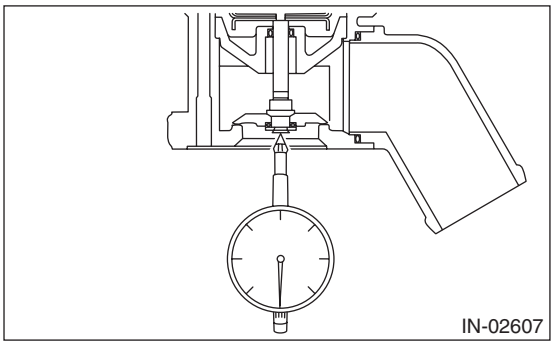

5) Slowly generate vacuum pressure with the Mighty Vac and check the pressure when the needle of the dial gauge (valve stroke) becomes 0.5 mm (0.02 in). If it is not within the standard, replace the air by-pass valve.

Opening pressure (valve stroke 0.5 mm (0.02 in)):
Standard
–62.7 — –70.7 kPa (–0.64 — –0.72 kg/cm^2, –9.09 — –10.3 psi)

6) Increase vacuum pressure more than 5) and check the pressure when the needle of the dial gauge (valve stroke) becomes 7.5 mm (0.3 in). If it is not within the standard, replace the air by-pass valve.

Full open pressure (valve stroke 7.5 mm (0.3 in)):
Standard
–102.7 — –117.3 kPa (–1.05 — –1.20 kg/cm^2, –14.9 — –17.0 psi)

2. OTHER INSPECTIONS

Check that the vacuum hose and air by-pass pipe have no cracks, damage or loose part.

9. Resonator Chamber

A: REMOVAL

The resonator chamber and air cleaner case are integrated into one unit; therefore, refer to “Air Cleaner Case” for removal procedure. <Ref. to IN(STI)-8, REMOVAL, Air Cleaner Case.>

B: INSTALLATION

The resonator chamber and air cleaner case are integrated into one unit; therefore, refer to “Air Cleaner Case” for installation procedure. <Ref. to IN(STI)-8, INSTALLATION, Air Cleaner Case.>

C: INSPECTION

Check that the resonator chamber has no deformation, cracks or other damages.

10.Chamber Assembly

A: REMOVAL

1. CHAMBER ASSEMBLY

1) Loosen the clip that secures the chamber assembly.

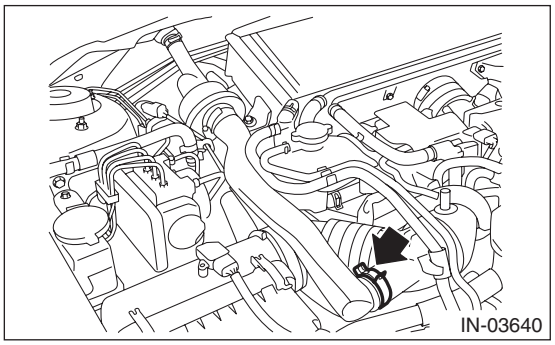

2) Disconnect the hose (front) (A) from the chamber assembly.
3) Remove the bolts which secure the chamber assembly to the intercooler stay RH No. 1, and remove the chamber assembly.

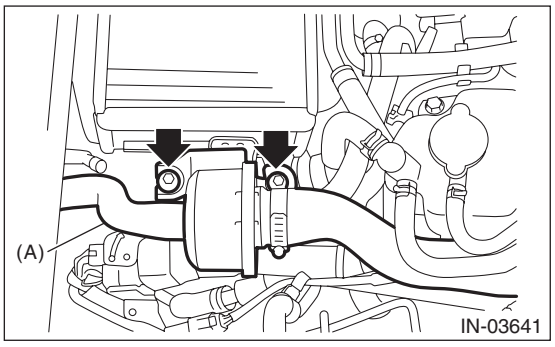

2. HOSE

1) Disconnect the hose (front).

NOTE:
Be careful not to damage the grommet.

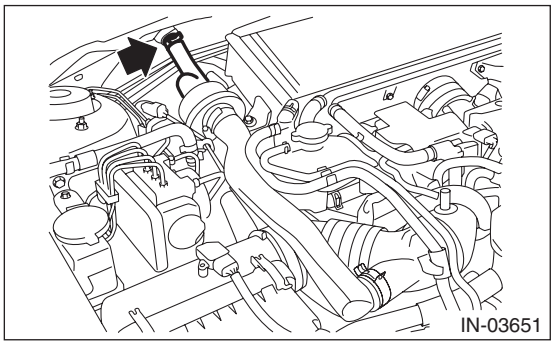

2) Remove the cowl panel. <Ref. to EI-45, REMOVAL, Cowl Panel.>
3) Remove clip (A), and remove the hose (rear).

NOTE:
Be careful not to damage the grommet.

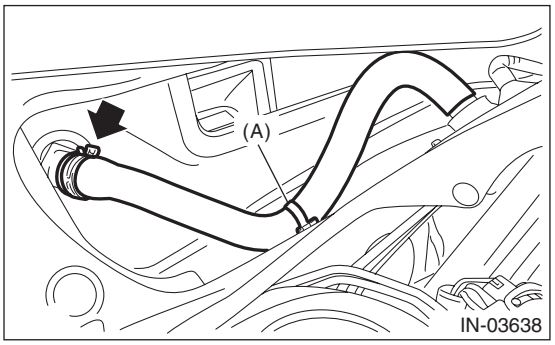

B: INSTALLATION

1. CHAMBER ASSEMBLY

1) Set the chamber assembly to the vehicle, and install the bolts securing the chamber assembly to the intercooler stay RH No. 1.

Tightening torque:
6 N·m (0.6 kgf-m, 4.4 ft-lb)

2) Connect the hose (front) (A) to the chamber assembly.

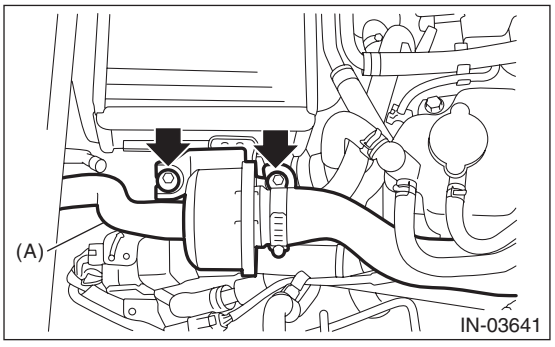

3) Install the clip that secures the chamber assembly.

NOTE:
• Align the concave section (a) of the air intake boot side to the positioning protrusion section (b) of the chamber duct side, and insert until the end face of chamber duct contacts the air intake boot.

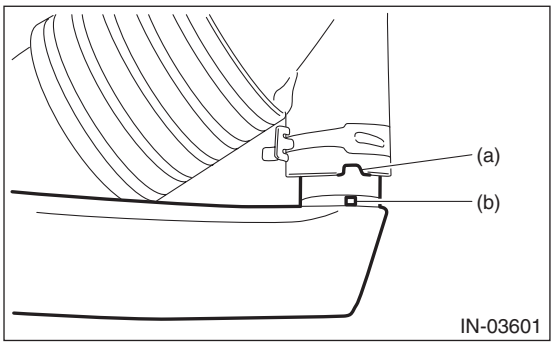

• Align the center of the clip tab to the center of the T-shaped protrusion of the chamber duct.
• Be careful so that the clip does not ride on the protrusion at the bottom of the chamber duct.

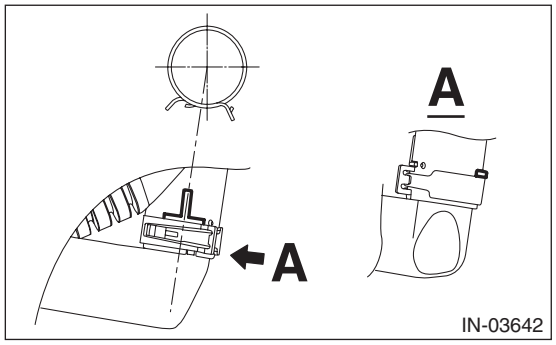

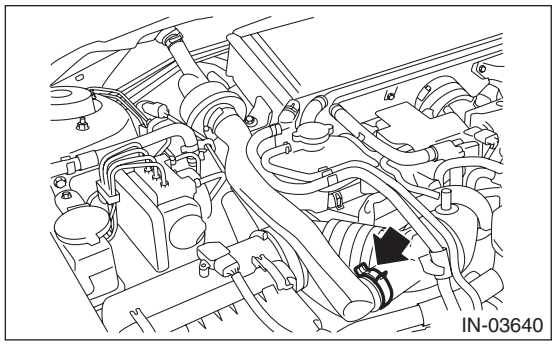

2. HOSE

1) Connect the hose (rear) and install clip (A).

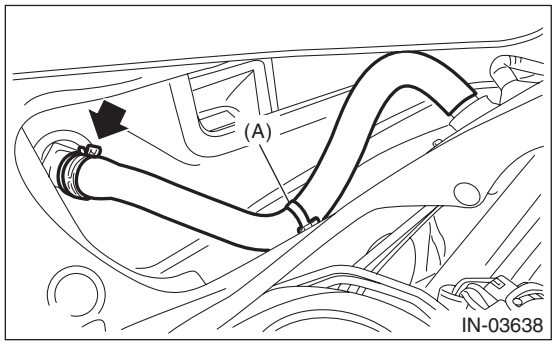

2) Install the cowl panel. <Ref. to EI-47, INSTALLATION, Cowl Panel.>

3) Connect the hose (front).

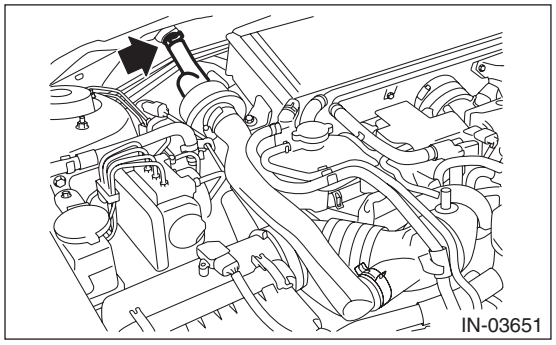

NOTE:
Align the alignment mark (a) on the chamber assembly to the alignment mark (b) on the hose (front) to connect.

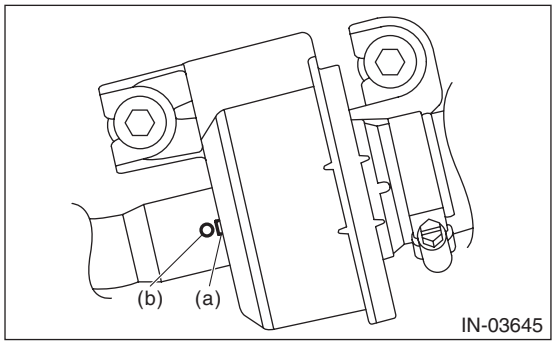

C: DISASSEMBLY

1) Loosen the clamp securing the chamber duct, and remove the chamber duct from chamber assembly.

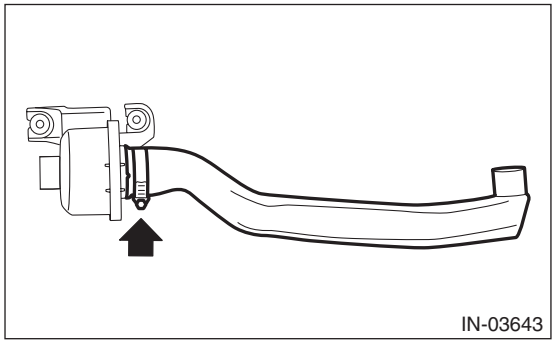

D: ASSEMBLY

1) Install the chamber duct to the chamber assembly, and tighten the clamp which holds the chamber assembly and chamber duct.

NOTE:
Align the positioning protrusion section (a) of the chamber assembly to the concave section (b) of the chamber duct side, and securely insert until the end face of chamber duct contacts the chamber assembly.

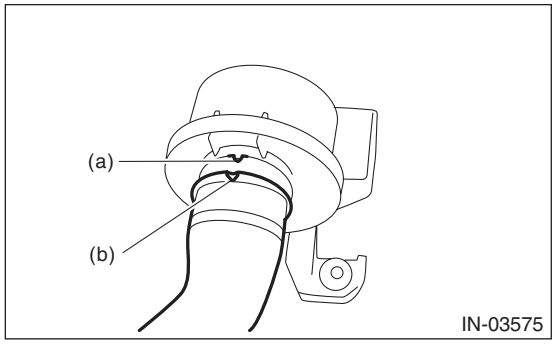

Tightening torque:
2.5 N·m (0.3 kgf-m, 1.8 ft-lb)

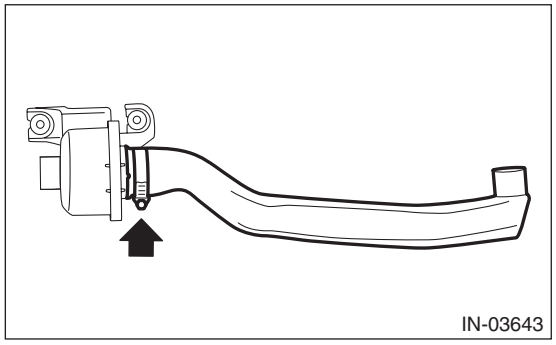

MECHANICAL

ME(STI)

		Page
1.	General Description	2
2.	Compression	20
3.	Idle Speed	21
4.	Ignition Timing	22
5.	Intake Manifold Vacuum	23
6.	Engine Oil Pressure	24
7.	Fuel Pressure	25
8.	Valve Clearance	26
9.	Engine Assembly	30
10.	Engine Mounting	39
11.	Preparation for Overhaul	40
12.	V-belt	41
13.	Crank Pulley	49
14.	Timing Belt Cover	51
15.	Timing Belt	52
16.	Cam Sprocket	61
17.	Crank Sprocket	62
18.	Camshaft	63
19.	Cylinder Head	72
20.	Cylinder Block	82
21.	Intake and Exhaust Valve	103
22.	Piston	104
23.	Connecting Rod	105
24.	Crankshaft	106
25.	Engine Trouble in General	107
26.	Engine Noise	113

1. General Description

A: SPECIFICATION

Engine	Model				2.5 L
	Cylinder arrangement				Horizontally opposed, liquid cooled, 4-cylinder, 4-stroke gasoline engine
	Valve system mechanism				Belt driven, double overhead camshaft, 4-valve/cylinder
	Bore × Stroke		mm (in)		99.5 × 79.0 (3.92 × 3.11)
	Displacement		cm^3 (cu in)		2,457 (150)
	Compression ratio				8.2
	Compression pressure (at 200 — 300 r/min)		kPa (kg/cm^2, psi)	Standard	981 — 1,177 (10 — 12, 142 — 171)
	Number of piston rings				Pressure ring: 2, Oil ring: 1
	Intake valve timing		Open	Max. retard	ATDC 5°
				Min. advance	BTDC 47°
			Close	Max. retard	ABDC 65°
				Min. advance	ABDC 13°
	Exhaust valve timing		Open	Max. retard	BBDC 28°
				Min. advance	BBDC 72°
			Close	Max. retard	ATDC 32°
				Min. advance	BTDC 12°
	Valve clearance mm (in)	Inspection value	Intake		$0.20^{+0.04}_{-0.06}$ ($0.0079^{+0.0016}_{-0.0024}$)
			Exhaust		0.35±0.05 (0.0138±0.0020)
		Adjustment value	Intake		$0.20^{+0.01}_{-0.03}$ ($0.0079^{+0.0004}_{-0.0012}$)
			Exhaust		0.35±0.02 (0.0138±0.0008)
	Idle speed (Gear shift lever is in neutral)		r/min	No load	Standard	700±100
				A/C ON	Standard	750±100
	Ignition order				$1 \rightarrow 3 \rightarrow 2 \rightarrow 4$
	Ignition timing		BTDC/{r/min}	Standard	15°±10°/700

NOTE:
OS: Oversize US: Undersize

Belt tension adjuster	Adjuster rod protrusion amount			mm (in)	5.2 — 6.2 (0.205 — 0.244)
Camshaft	Bending limit			mm (in)	0.020 (0.00079)
	Cam lobe height mm (in)	Intake		Standard	46.55 — 46.65 (1.833 — 1.837)
		Exhaust		Standard	46.75 — 46.85 (1.841 — 1.844)
	Cam base circle diameter mm (in)			Standard	37.0 (1.457)
	Journal O.D. mm (in)	Front		Standard	37.946 — 37.963 (1.4939 — 1.4946)
		Center, rear		Standard	29.946 — 29.963 (1.1790 — 1.1796)
	Oil clearance mm (in)			Standard	0.037 — 0.072 (0.0015 — 0.0028)
	Thrust clearance mm (in)			Standard	0.068 — 0.116 (0.0027 — 0.0047)
Cylinder head	Warping limit (Mating surface with cylinder block)			mm (in)	0.035 (0.0014)
	Grinding limit			mm (in)	0.3 (0.012)
	Standard height			mm (in)	127.5 (5.02)
Valve seat	Seating angle between valve and valve seat				90°
	Contacting width between valve and valve seat mm (in)	Intake		Standard	0.6 — 1.4 (0.024 — 0.055)
		Exhaust		Standard	1.2 — 1.8 (0.047 — 0.071)
Valve guide	Clearance between the valve guide and valve stem mm (in)	Intake		Standard	0.030 — 0.057 (0.0012 — 0.0022)
		Exhaust		Standard	0.040 — 0.067 (0.0016 — 0.0026)
	Inside diameter			mm (in)	6.000 — 6.012 (0.2362 — 0.2367)
	Valve stem outer diameters mm (in)		Intake		5.955 — 5.970 (0.2344 — 0.2350)
			Exhaust		5.945 — 5.960 (0.2341 — 0.2346)
	Valve guide protrusion amount			mm (in)	15.8 — 16.2 (0.622 — 0.638)
Valve	Head edge thickness mm (in)	Intake		Standard	1.0 — 1.4 (0.039 — 0.055)
		Exhaust		Standard	1.3 — 1.7 (0.051 — 0.067)
	Overall length mm (in)	Intake			104.4 (4.110)
		Exhaust			104.65 (4.1201)
Valve spring	Free length			mm (in)	53.48 (2.106)
	Tension/spring height N (kgf, lb)/mm (in)			Set	204.6 — 235.4 (20.86 — 24.00, 46.00 — 52.93)/36.0 (1.417)
				Lift	363.5 — 401.7 (37.07 — 40.96, 81.73 — 90.32)/26.7 (1.051)
	Squareness				2.5°, 2.3 mm (0.091 in) or less
Valve lifter	Outer diameter			mm (in)	Standard 34.959 — 34.975 (1.3763 — 1.3770)
	Valve lifter mating surface inner diameter			mm (in)	Standard 34.994 — 35.016 (1.3777 — 1.3786)
	Valve lifter and valve lifter mating surface clearance			mm (in)	Standard 0.019 — 0.057 (0.0007 — 0.0022)
Cylinder block	Warping limit (Mating surface with cylinder head)			mm (in)	0.025 (0.00098)
	Grinding limit			mm (in)	0.1 (0.004)
	Standard height			mm (in)	201.0 (7.91)
	Cylindricality			mm (in)	Limit 0.015 (0.0006)
	Out-of-roundness			mm (in)	Limit 0.010 (0.0004)
	Clearance between cylinder and piston at 20°C (68°F)			mm (in)	Standard –0.010 — 0.010 (–0.00039 — 0.00039)
	Cylinder inner diameter boring limit (diameter)			mm (in)	To 100.005 (3.9372)
Piston	Piston grade point			mm (in)	38.2 (1.50)
	Outer diameter mm (in)		Standard	A	99.505 — 99.515 (3.9175 — 3.9179)
				B	99.495 — 99.505 (3.9171 — 3.9175)
			0.25 (0.0098) OS		99.745 — 99.765 (3.9270 — 3.9278)
			0.50 (0.0197) OS		99.995 — 100.015 (3.9368 — 3.9376)

Piston pin	Degree of fit				Piston pin must be fitted into position with thumb at 20°C (68°F).
	Clearance between piston pin hole and piston pin		mm (in)	Standard	0.004 — 0.008 (0.0002 — 0.0003)
Piston ring	Piston ring gap	mm (in)	Top ring	Standard	0.23 — 0.28 (0.0091 — 0.0110)
			Second ring	Standard	0.37 — 0.52 (0.015 — 0.0205)
			Oil ring	Standard	0.20 — 0.50 (0.0079 — 0.0197)
	Clearance between piston ring and piston ring groove	mm (in)	Top ring	Standard	0.040 — 0.080 (0.0016 — 0.0031)
			Second ring	Standard	0.030 — 0.070 (0.0012 — 0.0028)
Connecting rod and connecting rod bearing	Bend or twist per 100 mm (3.94 in) in length		mm (in)	Limit	0.10 (0.0039)
	Thrust clearance		mm (in)	Standard	0.070 — 0.330 (0.0028 — 0.0130)
	Oil clearance		mm (in)	Standard	0.017 — 0.045 (0.0007 — 0.0018)
	Bearing size (Thickness at center)		mm (in)	Standard	1.490 — 1.506 (0.0587 — 0.0593)
				0.03 (0.0012) US	1.504 — 1.512 (0.0592 — 0.0595)
				0.05 (0.0020) US	1.514 — 1.522 (0.0596 — 0.0599)
				0.25 (0.0098) US	1.614 — 1.622 (0.0635 — 0.0639)
Bushing of small end	Clearance between piston pin and bushing		mm (in)	Standard	0 — 0.022 (0 — 0.0009)
Crankshaft and crankshaft bearing	Bending limit			mm (in)	0.035 (0.0014)
	Crank pin	Cylindricality	mm (in)	Limit	0.006 (0.0002)
		Out-of-roundness	mm (in)	Limit	0.005 (0.0002)
		Grinding limit (dia.)		mm (in)	To 51.734 (2.0368)
	Crank journal	Cylindricality	mm (in)	Limit	0.006 (0.0002)
		Out-of-roundness	mm (in)	Limit	0.005 (0.0002)
		Grinding limit (dia.)		mm (in)	To 59.742 (2.3520)
	Crank pin outer diameter		mm (in)	Standard	51.976 — 52.000 (2.0463 — 2.0472)
				0.03 (0.0012) US	51.954 — 51.970 (2.0454 — 2.0461)
				0.05 (0.0020) US	51.934 — 51.950 (2.0447 — 2.0453)
				0.25 (0.0098) US	51.734 — 51.750 (2.0368 — 2.0374)
	Crank journal outer diameter		mm (in)	Standard	59.984 — 60.008 (2.3616 — 2.3625)
				0.03 (0.0012) US	59.962 — 59.978 (2.3607 — 2.3613)
				0.05 (0.0020) US	59.942 — 59.958 (2.3599 — 2.3605)
				0.25 (0.0098) US	59.742 — 59.758 (2.3520 — 2.3527)
	Bearing size (Thickness at center)	mm (in)	#1, #3	Standard	1.998 — 2.015 (0.0787 — 0.0793)
				0.03 (0.0012) US	2.017 — 2.020 (0.0794 — 0.0795)
				0.05 (0.0020) US	2.027 — 2.030 (0.0798 — 0.0799)
				0.25 (0.0098) US	2.127 — 2.130 (0.0837 — 0.0839)
			#2, #4, #5	Standard	2.000 — 2.017 (0.0787 — 0.0794)
				0.03 (0.0012) US	2.019 — 2.022 (0.0795 — 0.0796)
				0.05 (0.0020) US	2.029 — 2.032 (0.0799 — 0.0800)
				0.25 (0.0098) US	2.129 — 2.132 (0.0838 — 0.0839)
	Thrust clearance		mm (in)	Standard	0.030 — 0.115 (0.0012 — 0.0045)
	Oil clearance		mm (in)	Standard	0.010 — 0.030 (0.00039 — 0.0012)

B: COMPONENT

1. TIMING BELT

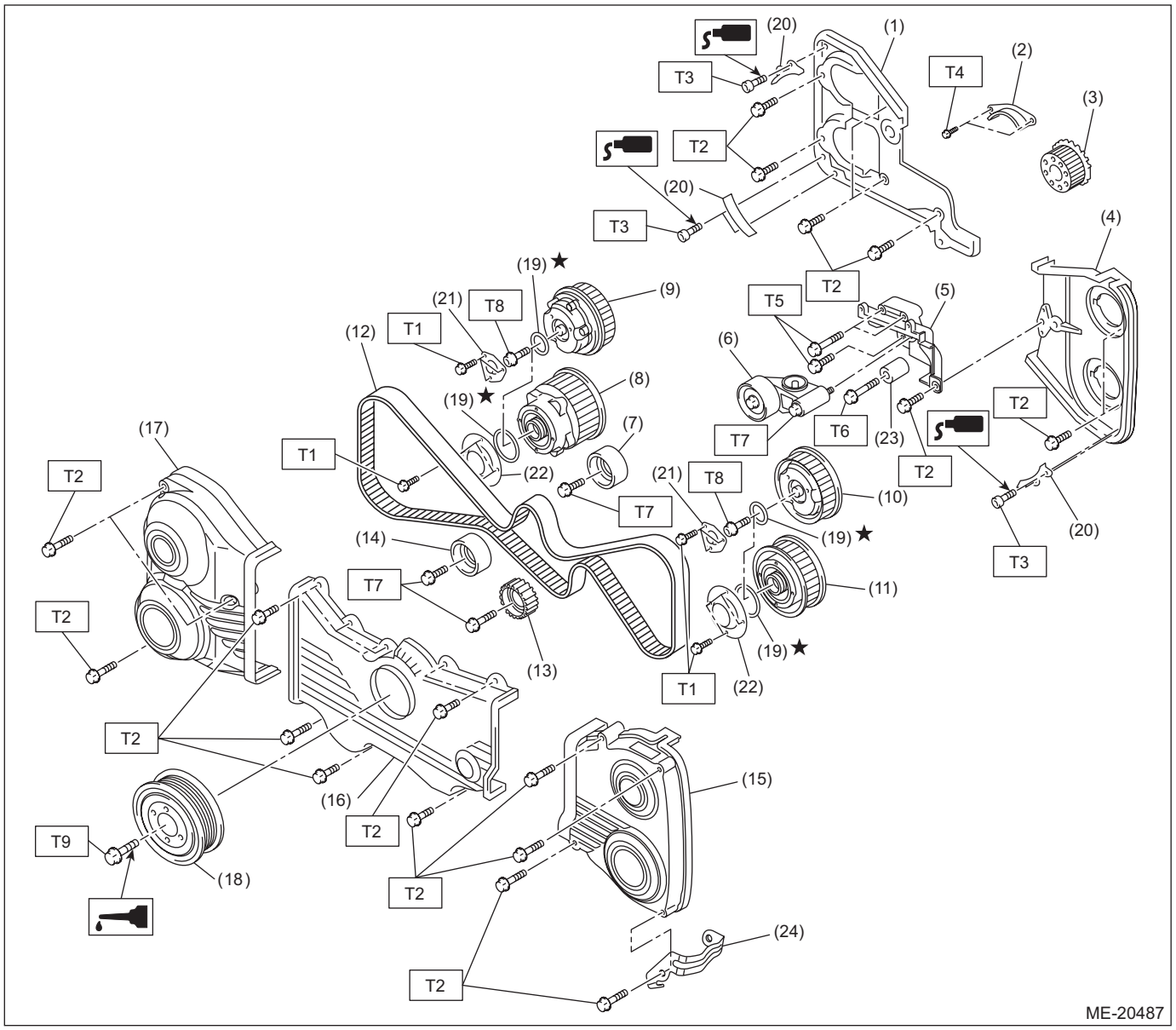

(1)	Timing belt cover No. 2 RH	(13)	Belt idler No. 2	
(2)	Timing belt guide	(14)	Belt idler	
(3)	Crank sprocket	(15)	Timing belt cover LH	
(4)	Timing belt cover No. 2 LH	(16)	Front belt cover	
(5)	Tensioner bracket	(17)	Timing belt cover RH	
(6)	Automatic belt tension adjuster ASSY	(18)	Crank pulley	
(7)	Belt idler	(19)	O-ring	
(8)	Exhaust cam sprocket RH	(20)	Timing belt guide	
(9)	Intake cam sprocket RH	(21)	Intake actuator cover	
(10)	Intake cam sprocket LH	(22)	Exhaust actuator cover	
(11)	Exhaust cam sprocket LH	(23)	Belt idler	
(12)	Timing belt	(24)	Engine harness stay	

Tightening torque: N·m (kgf-m, ft-lb)

T1: 3.4 (0.3, 2.5)

T2: 5 (0.5, 3.7)

T3: 6.4 (0.7, 4.7)

T4: 9.75 (1.0, 7.2)

T5: 24.5 (2.5, 18.1)

T6: 25 (2.5, 18.4)

T7: 39 (4.0, 28.8)

T8: <Ref. to ME(STI)-61, INSTALLATION, Cam Sprocket.>

T9: <Ref. to ME(STI)-49, INSTALLATION, Crank Pulley.>

2. CYLINDER HEAD AND CAMSHAFT

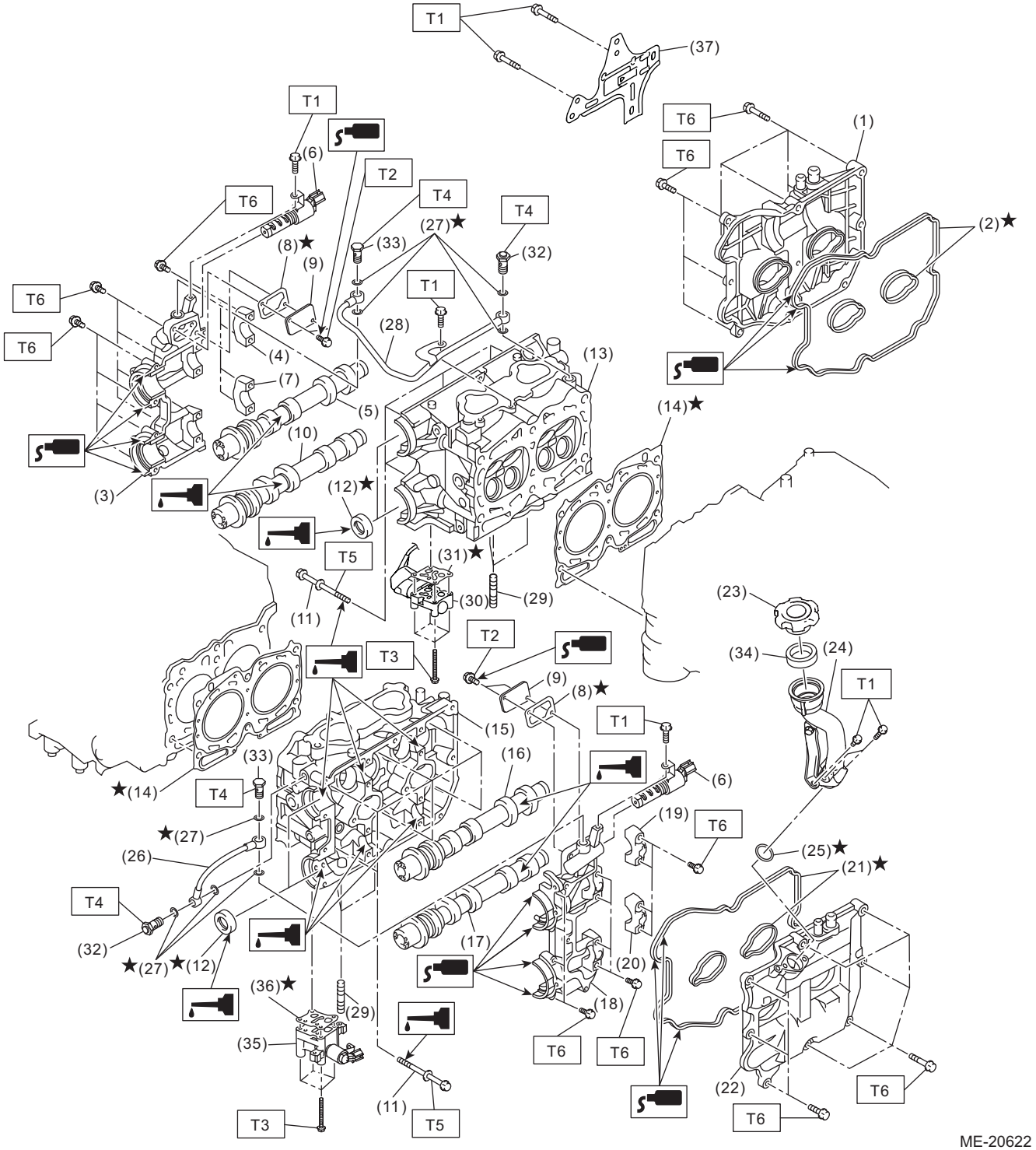

(1) Rocker cover RH
(2) Rocker cover gasket RH
(3) Front camshaft cap RH
(4) Intake camshaft cap RH
(5) Intake camshaft RH
(6) Intake oil flow control solenoid valve
(7) Exhaust camshaft cap RH
(8) Gasket
(9) Oil return cover
(10) Exhaust camshaft RH
(11) Cylinder head bolt
(12) Oil seal
(13) Cylinder head RH
(14) Cylinder head gasket
(15) Cylinder head LH
(16) Intake camshaft LH
(17) Exhaust camshaft LH
(18) Front camshaft cap LH
(19) Intake camshaft cap LH
(20) Exhaust camshaft cap LH
(21) Rocker cover gasket LH
(22) Rocker cover LH
(23) Oil filler cap
(24) Oil filler duct
(25) O-ring
(26) Oil pipe LH
(27) Gasket
(28) Oil pipe RH
(29) Stud bolt
(30) Exhaust oil flow control solenoid valve RH
(31) Gasket RH
(32) Union bolt with filter (with protrusion)
(33) Union bolt without filter (without protrusion)
(34) Gasket
(35) Exhaust oil flow control solenoid valve LH
(36) Gasket LH
(37) Engine harness stay

Tightening torque: N·m (kgf-m, ft-lb)

T1: 6.4 (0.7, 4.7)
T2: 9 (0.9, 6.6)
T3: 10 (1.0, 7.4)
T4: 29 (3.0, 21.4)
T5: <Ref. to ME(STI)-72, INSTALLATION, Cylinder Head.>
T6: <Ref. to ME(STI)-66, INSTALLATION, Camshaft.>

3. CYLINDER HEAD AND VALVE ASSEMBLY

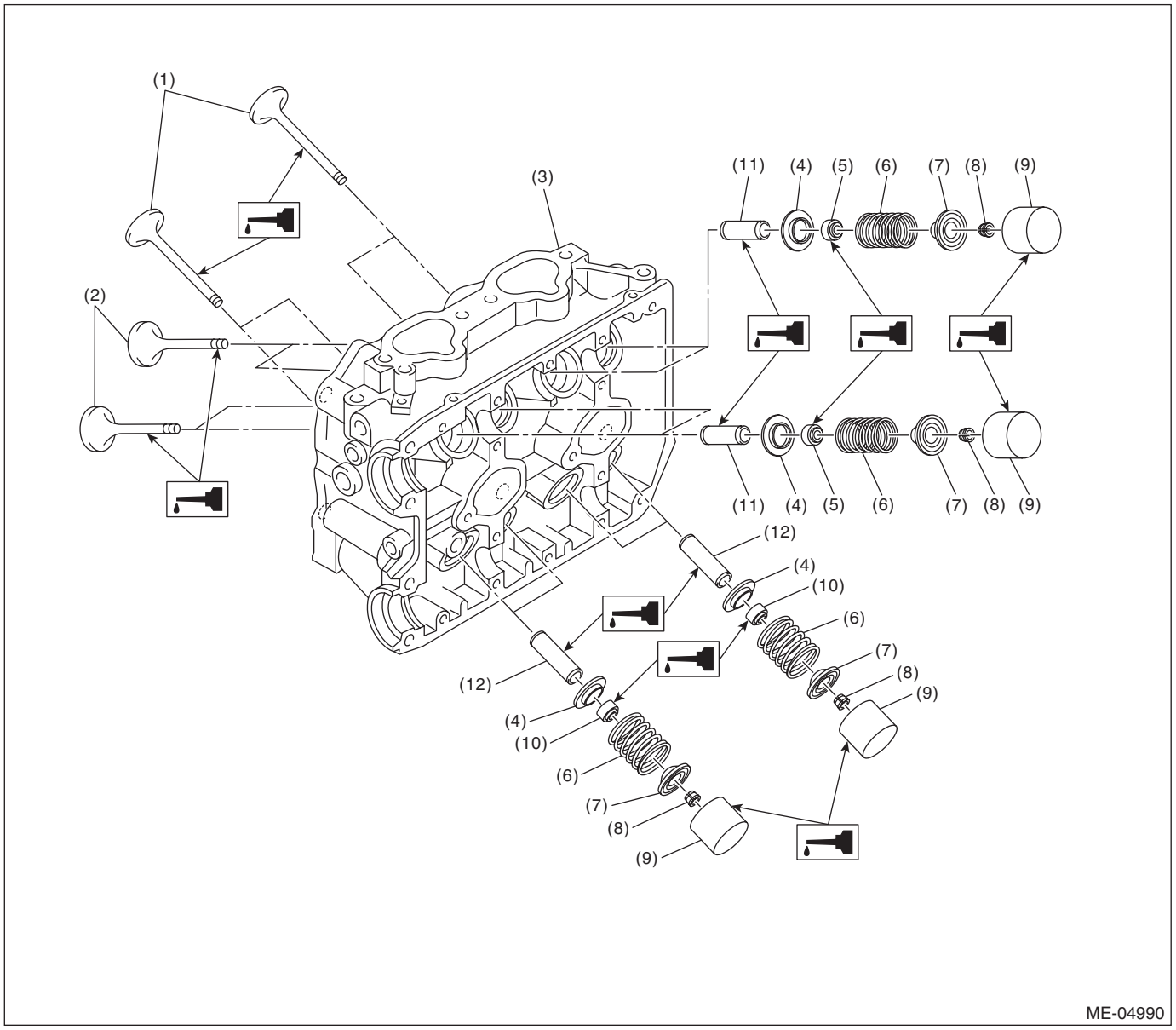

(1) Exhaust valve
(2) Intake valve
(3) Cylinder head
(4) Valve spring seat
(5) Intake valve oil seal
(6) Valve spring
(7) Valve spring retainer
(8) Valve spring retainer key
(9) Valve lifter
(10) Exhaust valve oil seal
(11) Intake valve guide
(12) Exhaust valve guide

4. CYLINDER BLOCK

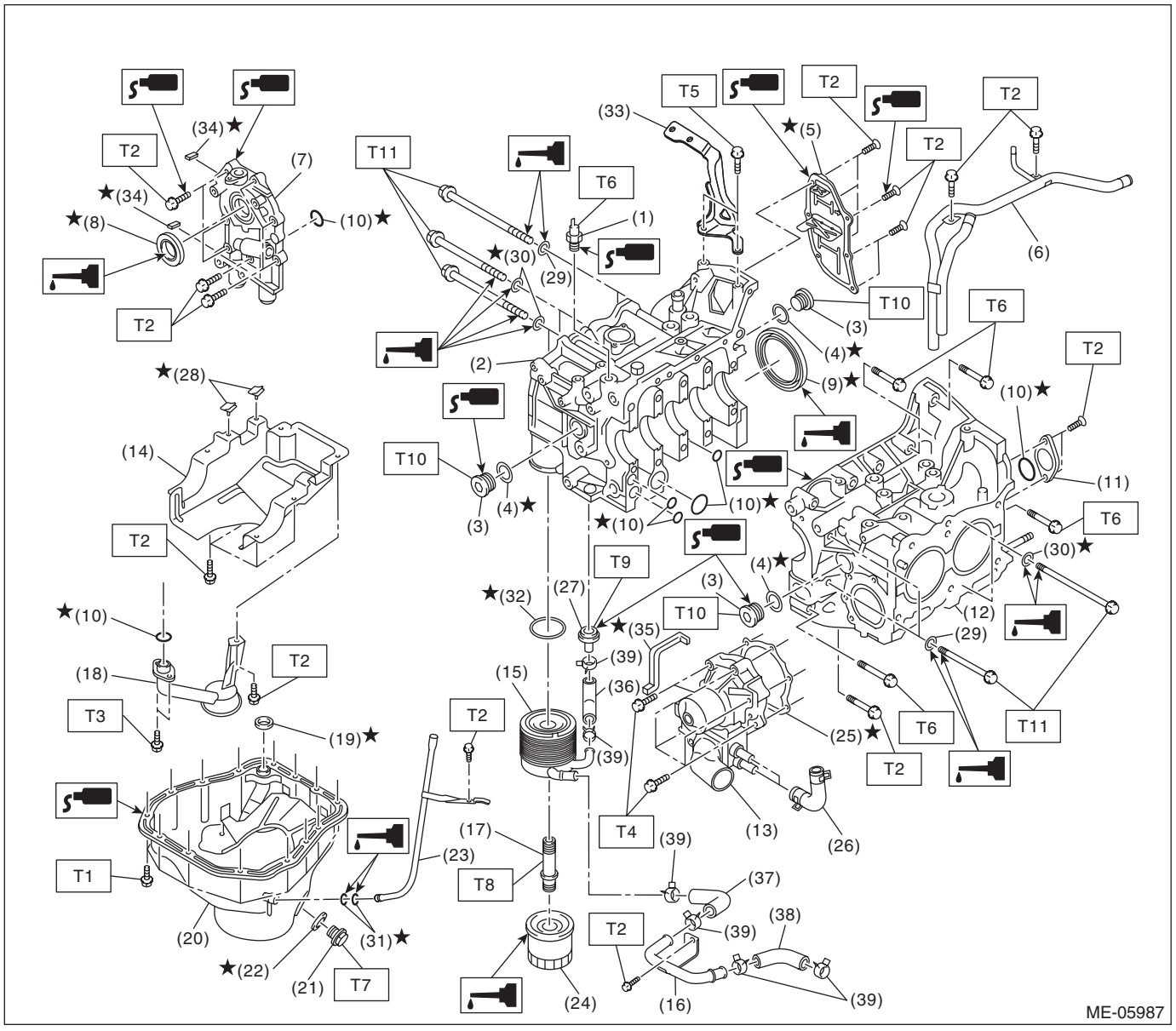

(1) Oil pressure switch
(2) Cylinder block RH
(3) Service hole plug
(4) Gasket
(5) Oil separator cover
(6) Water by-pass pipe
(7) Oil pump
(8) Front oil seal
(9) Rear oil seal
(10) O-ring
(11) Service hole cover
(12) Cylinder block LH
(13) Water pump
(14) Baffle plate
(15) Oil cooler
(16) Oil cooler pipe
(17) Connector
(18) Oil strainer
(19) Gasket
(20) Oil pan
(21) Drain plug
(22) Drain plug gasket
(23) Oil level gauge guide
(24) Oil filter
(25) Gasket
(26) Water pump hose
(27) Nipple
(28) Seal
(29) Washer
(30) Seal washer
(31) O-ring
(32) Gasket
(33) Intercooler stay RH No. 2 (engine rear hanger)
(34) Oil pump seal
(35) Water pump sealing
(36) Oil cooler hose A
(37) Oil cooler hose B
(38) Oil cooler hose C
(39) Clip

Tightening torque: N·m (kgf-m, ft-lb)

T1:	***5 (0.5, 3.7)***
T2:	***6.4 (0.7, 4.7)***
T3:	***10 (1.0, 7.4)***
T4:	***First 12 (1.2, 8.9)***
	Second 12 (1.2, 8.9)
T5:	***16 (1.6, 11.8)***
T6:	***25 (2.5, 18.4)***
T7:	***46.5 (4.7, 34.3)***
T8:	***54 (5.5, 39.8)***
T9:	***69 (7.0, 50.9)***
T10:	***70 (7.1, 51.6)***
T11:	***<Ref. to ME(STI)-86, INSTALLATION, Cylinder Block.>***

5. CRANKSHAFT AND PISTON

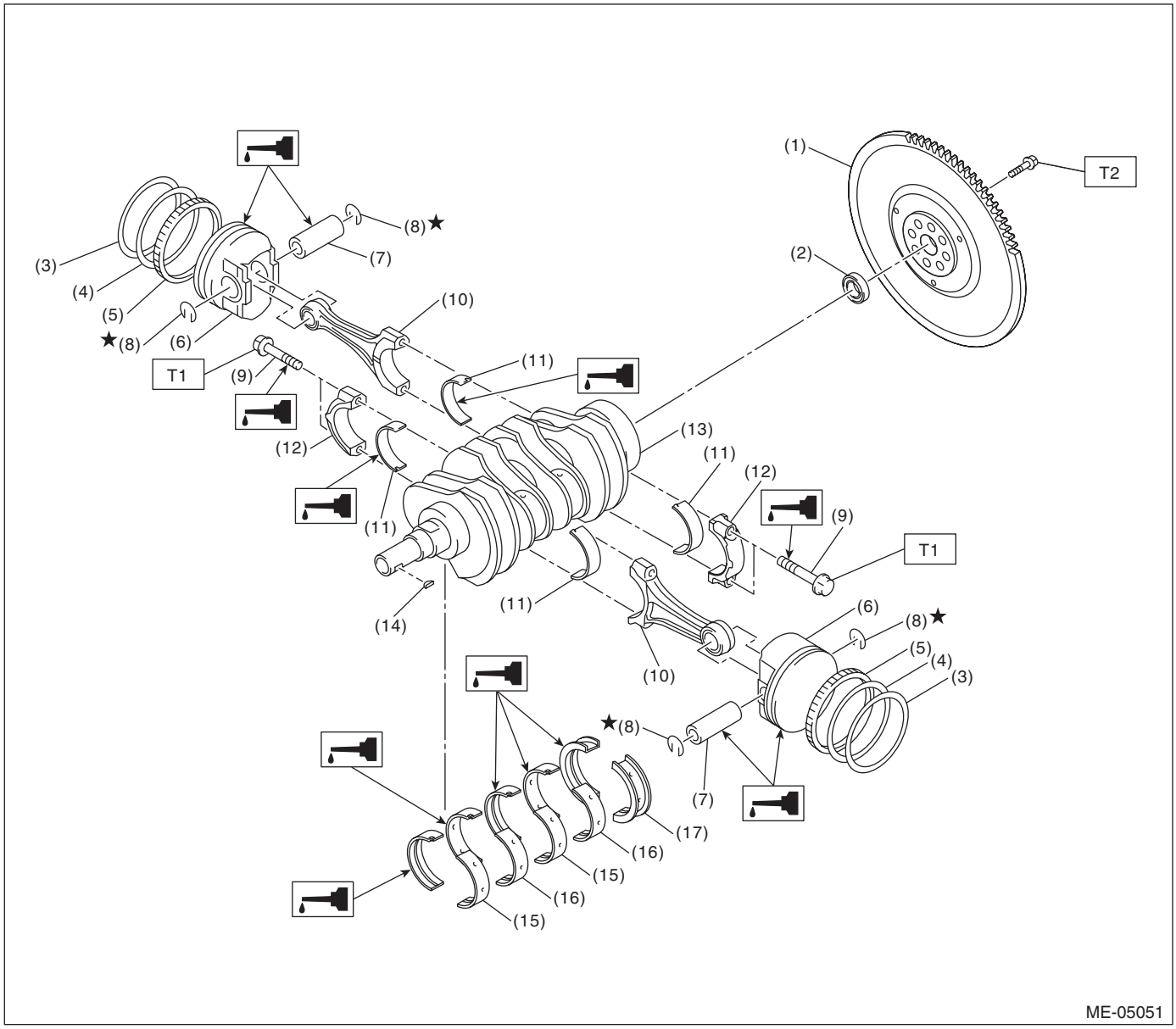

(1) Flywheel
(2) Ball bearing
(3) Top ring
(4) Second ring
(5) Oil ring
(6) Piston
(7) Piston pin
(8) Snap ring
(9) Connecting rod bolt
(10) Connecting rod
(11) Connecting rod bearing
(12) Connecting rod cap
(13) Crankshaft
(14) Woodruff key
(15) Crankshaft bearing #1, #3
(16) Crankshaft bearing #2, #4
(17) Crankshaft bearing #5

Tightening torque: N·m (kgf-m, ft-lb)
T1: 52 (5.3, 38.4)
T2: <Ref. to CL-15, INSTALLATION, Flywheel.>

6. ENGINE MOUNTING

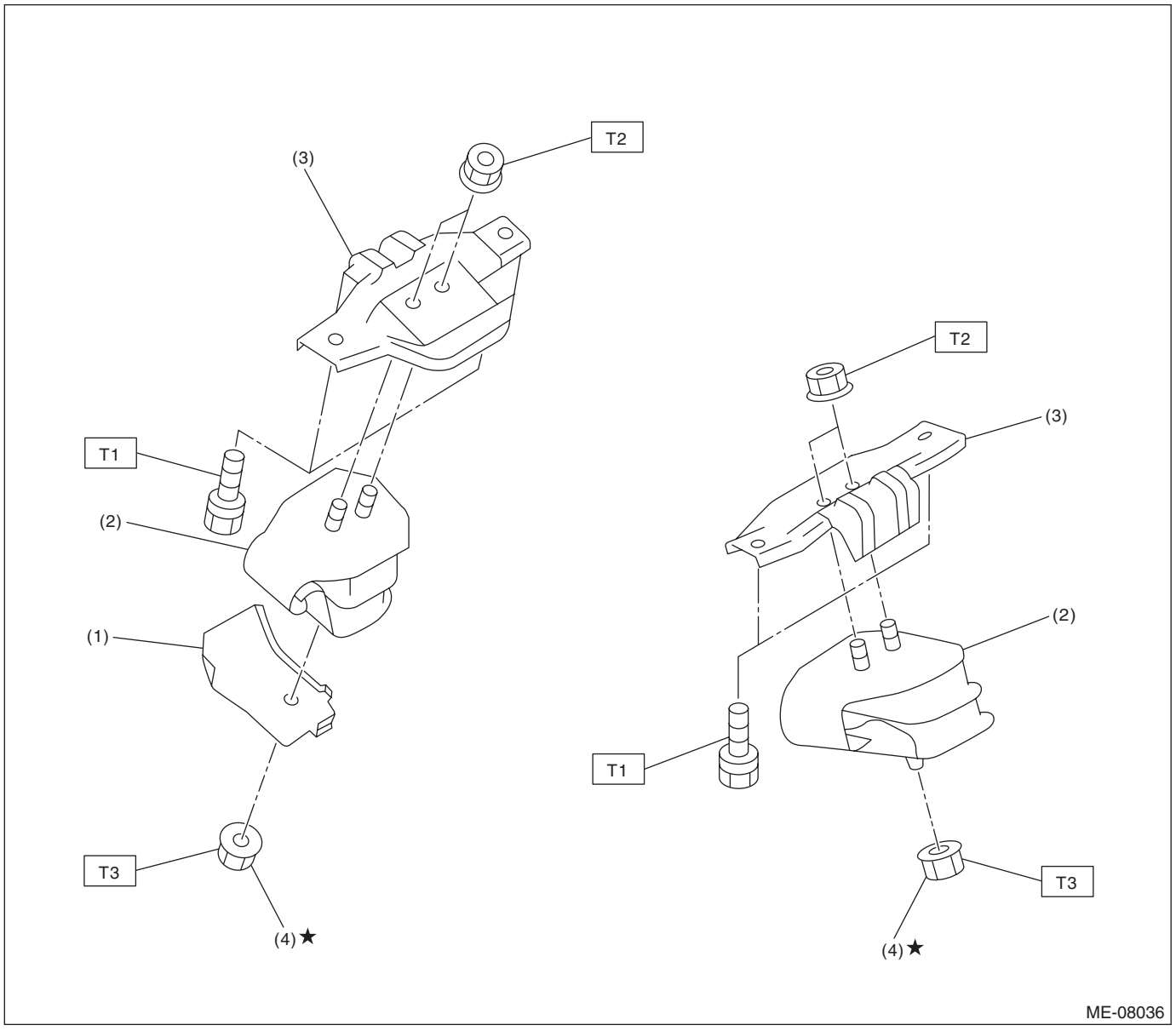

(1) Heat shield cover
(2) Front cushion rubber
(3) Front engine mounting bracket
(4) Nut

Tightening torque: N·m (kgf-m, ft-lb)
T1: 35 (3.6, 25.8)
T2: 42 (4.3, 31.0)
T3: 60 (6.1, 44.3)

C: CAUTION

- Prior to starting work, pay special attention to the following:
  1. Always wear work clothes, a work cap, and protective shoes. Additionally, wear a helmet, protective goggles, etc. if necessary.
  2. Protect the vehicle using a seat cover, fender cover, etc.
  3. Prepare the service tools, clean cloth, containers to catch grease and oil, etc.
- Vehicle components are extremely hot immediately after driving. Be wary of receiving burns from heated parts.
- When performing a repair, identify the cause of trouble and avoid unnecessary removal, disassembly and replacement.
- Before disconnecting connectors of sensors or units, be sure to disconnect the ground cable from battery.
- Always use the jack-up point when the shop jacks or rigid racks are used to support the vehicle.
- Remove or install the engine in an area where chain hoists, lifting devices, etc. are available for ready use. When lifting up the vehicle, make sure to support the vehicle at the jack-up points.
- Be careful not to let any oil or grease contact the clutch disc, flywheel or timing belt.
- Remove contamination including dirt and corrosion before removal, installation, disassembly or assembly.
- Keep the removed parts in order and protect them from dust and dirt.
- All removed parts, if to be reused, should be reinstalled in the original positions with attention to the correct directions, etc.
- Rotating parts and sliding parts such as piston, bearing and gear should be coated with oil when being assembled.
- Bolts, nuts and washers should be replaced with new parts as required.
- Be sure to tighten the fasteners including bolts and nuts to the specified torque.

D: PREPARATION TOOL

1. SPECIAL TOOL

ILLUSTRATION	TOOL NUMBER	DESCRIPTION	REMARKS
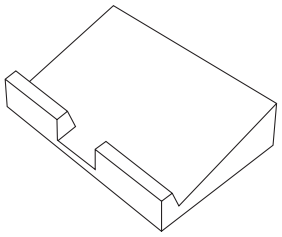 ST-498267600	498267600	CYLINDER HEAD TABLE	• Used for replacing valve guides. • Used for removing and installing valve spring.
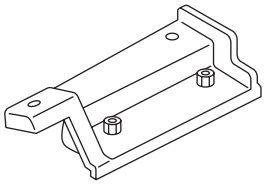 ST-498457000	498457000	ENGINE STAND ADAPTER RH	Used together with ENGINE STAND (499817100).

ILLUSTRATION	TOOL NUMBER	DESCRIPTION	REMARKS
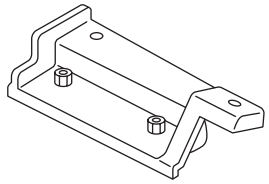 ST-498457100	498457100	ENGINE STAND ADAPTER LH	Used together with ENGINE STAND (499817100).
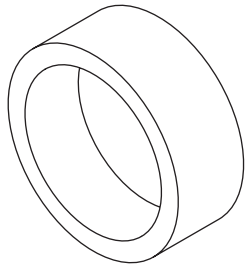 ST-498747300	498747300	PISTON GUIDE	Used for installing the piston into the cylinder.
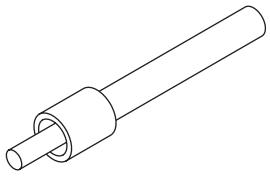 ST-498857100	498857100	VALVE OIL SEAL GUIDE	Used for press-fitting of intake valve guide oil seals and exhaust valve guide oil seals.
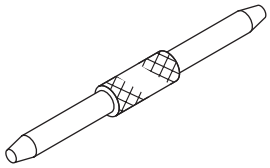 ST-499017100	499017100	PISTON PIN GUIDE	Used for installing piston pin, piston and connecting rod.
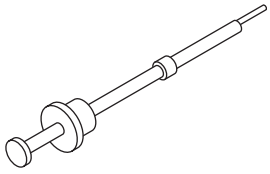 ST-499097700	499097700	PISTON PIN REMOVER ASSY	Used for removing piston pin.

ILLUSTRATION	TOOL NUMBER	DESCRIPTION	REMARKS
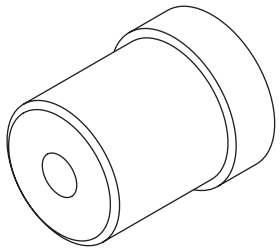 ST-499587100	499587100	OIL SEAL INSTALLER	Used for installing oil pump oil seal.
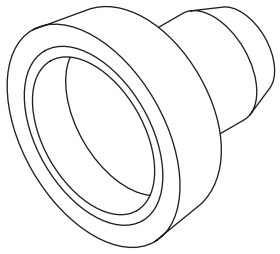 ST-499587200	499587200	CRANKSHAFT OIL SEAL INSTALLER	• Used for installing crankshaft oil seal. • Used together with CRANKSHAFT OIL SEAL GUIDE (499597100).
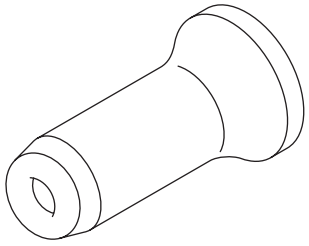 ST-499587600	499587600	OIL SEAL INSTALLER	Used for installing the camshaft oil seal.
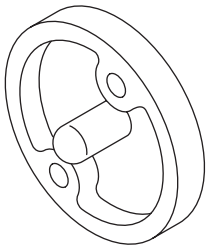 ST-499597100	499597100	CRANKSHAFT OIL SEAL GUIDE	• Used for installing crankshaft oil seal. • Used together with CRANKSHAFT OIL SEAL INSTALLER (499587200).
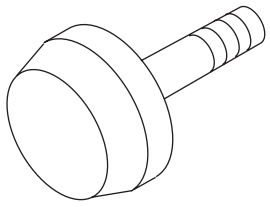 ST-499597200	499597200	OIL SEAL GUIDE	• Used for installing the camshaft oil seal. • Used together with OIL SEAL INSTALLER (499587600).

ILLUSTRATION	TOOL NUMBER	DESCRIPTION	REMARKS
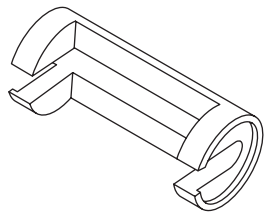 ST-499718000	499718000	VALVE SPRING REMOVER	Used for removing and installing valve spring.
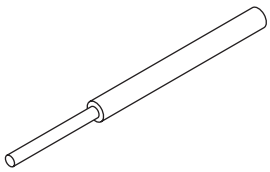 ST-499767200	499767200	VALVE GUIDE REMOVER	Used for removing valve guides.
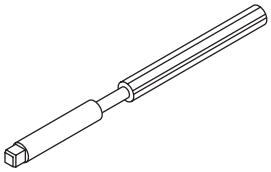 ST-499767400	499767400	VALVE GUIDE REAMER	Used for reaming valve guides.
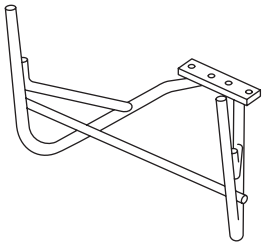 ST-499817100	499817100	ENGINE STAND	• Used for disassembling and assembling engine. • Used together with ENGINE STAND ADAPTER RH (498457000) & LH (498457100).
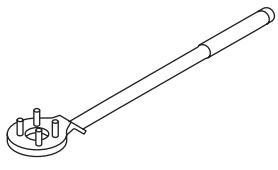 ST-499977100	499977100	CRANK PULLEY WRENCH	Used for removing and installing the crank pulley.

ILLUSTRATION	TOOL NUMBER	DESCRIPTION	REMARKS
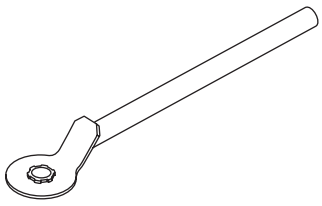 ST-499977500	499977500	CAM SPROCKET WRENCH	Used for removing and installing intake cam sprocket and exhaust cam sprocket.
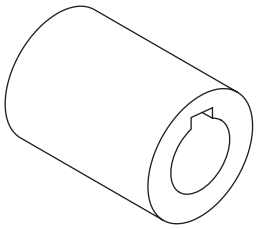 ST-499987500	499987500	CRANKSHAFT SOCKET	Used for rotating crankshaft.
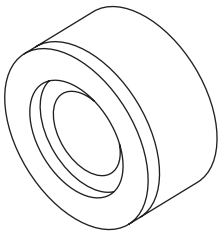 ST18251AA020	18251AA020	VALVE GUIDE ADJUSTER	Used for installing intake valve guides and exhaust valve guides.
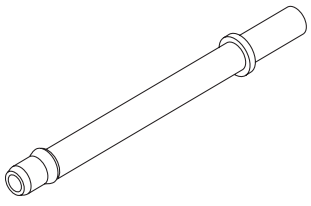 ST18471AA000	18471AA000	FUEL PIPE ADAPTER	Used for inspecting the fuel pressure.
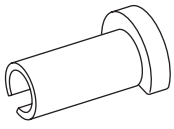 ST42099AE000	42099AE000	QUICK CONNEC-TOR RELEASE	Used for removing the quick connector.

ILLUSTRATION	TOOL NUMBER	DESCRIPTION	REMARKS
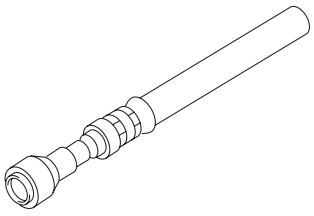 ST42075AG690	42075AG690	FUEL HOSE	Used for inspecting the fuel pressure. NOTE: This is the SUBARU genuine part.
 STSSM4	—	SUBARU SELECT MONITOR 4	Used for setting of each function and trouble-shooting for electrical system. NOTE: For detailed operation procedures of Subaru Select Monitor 4, refer to “Application help”.

2. GENERAL TOOL

TOOL NAME	REMARKS
Compression gauge	Used for measuring compression.
Timing light	Used for measuring ignition timing.
Vacuum gauge	Used for measuring intake manifold vacuum.
Oil pressure gauge	Used for measuring engine oil pressure.
Fuel pressure gauge	Used for measuring fuel pressure.
Thickness gauge	Used for various inspections.
DST-i	Used together with Subaru Select Monitor 4.
Clamp pincer	• Used for installing the PCV hose, vacuum hose and water tank pipe assembly. • This tool is made by OETIKER. Product No. 14100134

2. Compression

A: INSPECTION

CAUTION:
After warming-up, engine becomes very hot. Be careful not to burn yourself during measurement.

NOTE:
• Before checking the compression pressure, the compression condition of each cylinder can be confirmed as a guide by using the compression measurement mode in Subaru Select Monitor. <Ref. to EN(STI)(diag)-69, OPERATION, Active Test.>
• In the compression measurement mode, the compression condition is judged by each cylinder speed. The high speed cylinder has low compression pressure and low speed cylinder has high compression pressure.
1) After warming-up the engine, turn the ignition switch to OFF.
2) Make sure that the battery is fully charged.
3) Remove the fuse of fuel pump from main fuse box.

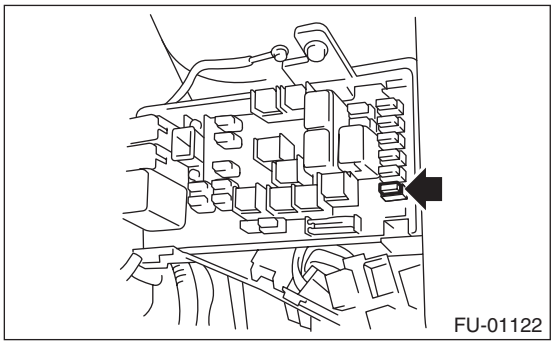

4) Start the engine and run it until it stalls.
5) After the engine stalls, crank it for five more seconds.
6) Turn the ignition switch to OFF.
7) Remove all spark plugs. <Ref. to IG(STI)-4, REMOVAL, Spark Plug.>
8) Depress the accelerator pedal to full throttle.
9) Check the starter motor for satisfactory performance and operation.
10) Install the compression gauge to the spark plug hole.

NOTE:
When using a screw-in type compression gauge, the screw should be less than 18 mm (0.71 in) long.

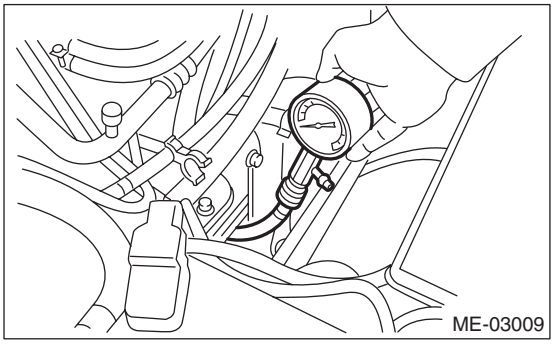

11) Crank the engine by starter motor and read the value when the needle of the compression gauge becomes stable.

NOTE:
• Perform at least two measurements per cylinder, and make sure that the values are correct.
• If the compression pressure is out of standard, check or adjust the pistons, valves and cylinders.

Compression (fully open throttle):
Standard
981 — 1,177 kPa (10 — 12 kg/cm^2, 142 — 171 psi)
Difference between cylinders
49 kPa (0.5 kg/cm^2, 7 psi) or less

12) After inspection, install the related parts in the reverse order of removal.

3. Idle Speed

A: INSPECTION

1) Before checking the idle speed, check the following item:
   (1) Check the air cleaner element is free from clogging, ignition timing is correct, spark plugs are in good condition, and hoses are connected properly.
   (2) Check the malfunction indicator light does not illuminate.
2) Warm up the engine.
3) Read the engine idle speed using Subaru Select Monitor. <Ref. to EN(STI)(diag)-36, DISPLAY CURRENT ENGINE DATA (NORMAL MODE), OPERATION, Subaru Select Monitor.>

NOTE:
• Idle speed cannot be adjusted manually, because the idle speed is automatically adjusted.
• If idle speed is out of standard, refer to the General Diagnosis Table under “Engine Control System”. <Ref. to EN(STI)(diag)-2, Basic Diagnostic Procedure.>
   (1) Check the idle speed when no-loaded. (Headlight, heater fan, rear defroster, radiator fan, A/C and etc. are OFF)

Idle speed (no load and gear shift lever in neutral position):
Standard
700±100 r/min
   (2) Check the idle speed when loaded. (Turn the A/C switch to “ON” and operate the compressor for at least one minute before measurement.)

Idle speed (A/C ON and gear shift lever in neutral position):
Standard
750±100 r/min

4. Ignition Timing

A: INSPECTION

CAUTION:
After warming-up, engine becomes very hot. Be careful not to burn yourself at measurement.

1. METHOD WITH SUBARU SELECT MONITOR

1) Before checking the ignition timing, check the following item:
   (1) Check the air cleaner element is free from clogging, spark plugs are in good condition, and hoses are connected properly.
   (2) Check the malfunction indicator light does not illuminate.
2) Warm up the engine.
3) Read the ignition timing using Subaru Select Monitor. <Ref. to EN(STI)(diag)-36, DISPLAY CURRENT ENGINE DATA (NORMAL MODE), OPERATION, Subaru Select Monitor.>

NOTE:
If ignition timing is out of standard, check the ignition control system. Refer to “Engine Control System”. <Ref. to EN(STI)(diag)-2, Basic Diagnostic Procedure.>

Ignition timing [BTDC/{r/min}]:
Standard
15°±10°/700

2. METHOD WITH TIMING LIGHT

1) Before checking the ignition timing, check the following item:
   (1) Check the air cleaner element is free from clogging, spark plugs are in good condition, and hoses are connected properly.
   (2) Check the malfunction indicator light does not illuminate.
2) Warm up the engine.
3) Stop the engine, and turn the ignition switch to OFF.
4) Disconnect the ground cable from battery.
5) Remove the air intake duct. <Ref. to IN(STI)-11, REMOVAL, Air Intake Duct.>
6) Remove the air cleaner case. <Ref. to IN(STI)-8, REMOVAL, Air Cleaner Case.>
7) Connect the timing light to the power wire of #1 ignition coil.
8) Install the air cleaner case. <Ref. to IN(STI)-8, INSTALLATION, Air Cleaner Case.>
9) Connect the battery ground terminal.
10) Start the engine, turn the timing light to the crank pulley, and check the ignition timing through the timing belt cover gauge.

NOTE:
If ignition timing is out of standard, check the ignition control system. Refer to “Engine Control System”. <Ref. to EN(STI)(diag)-2, Basic Diagnostic Procedure.>

Ignition timing [BTDC/{r/min}]:
Standard
15°±10°/700
11) After inspection, install the related parts in the reverse order of removal.

5. Intake Manifold Vacuum

A: INSPECTION

1) Warm up the engine.
2) Disconnect the brake booster vacuum hose from the intake manifold, and attach the vacuum gauge.

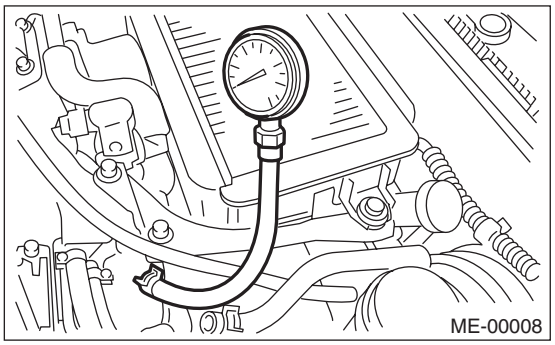

3) Keep the engine at idle speed and read the vacuum gauge indication.

NOTE:
Condition of engine inside can be diagnosed by observing the behavior of the vacuum gauge needle as described in table below.

Intake manifold vacuum (at idling, A/C OFF):
Standard
–65.3 kPa (–490 mmHg, –19.29 inHg) or more

4) After inspection, install the related parts in the reverse order of removal.

Diagnosis of engine condition by inspection of intake manifold vacuum	
Vacuum gauge needle behavior	Possible engine condition
1. Needle is steady but lower than standard value. This tendency becomes more evident as engine temperature rises.	Leakage around intake manifold gasket, disconnection or damage of vacuum hose
2. Needle intermittently drops to position lower than standard value.	Leakage around cylinder
3. Needle drops suddenly and intermittently from standard value.	Sticky valve
4. When engine speed is gradually increased, needle begins to vibrate rapidly at certain speed, and then vibration increases as engine speed increases.	Weak or broken valve springs
5. Needle vibrates above and below standard value in narrow range.	Defective ignition system

6. Engine Oil Pressure

A: INSPECTION

1) Disconnect the ground cable from battery.
2) Remove the oil pressure switch. <Ref. to LU(STI)-20, REMOVAL, Oil Pressure Switch.>
3) Install the oil pressure gauge to cylinder block.

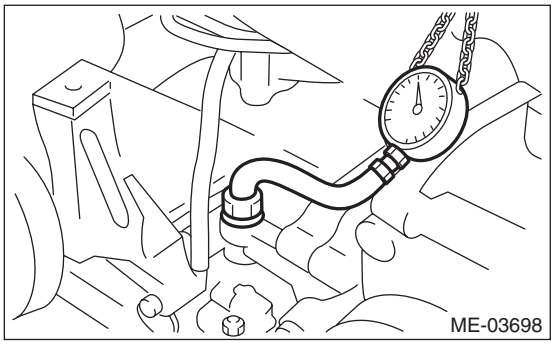

4) Install the generator. <Ref. to SC(STI)-18, INSTALLATION, Generator.>
5) Connect the battery ground terminal.
6) Start the engine, and check the oil pressure.

NOTE:
• Standard value is based on an engine oil temperature of 80°C (176°F).
• If the oil pressure is out of specification, check oil pump, oil filter and lubrication line. <Ref. to LU(STI)-28, INSPECTION, Engine Lubrication System Trouble in General.>
• If the oil pressure warning light is ON and oil pressure is within specification, check the oil pressure switch. <Ref. to LU(STI)-28, INSPECTION, Engine Lubrication System Trouble in General.>

Engine oil pressure:
Standard
98 kPa (1.0 kg/cm^2, 14 psi) or more (at 600 r/min)
392 kPa (4.0 kg/cm^2, 57 psi) or more (at 6,000 r/min)

7) After inspection, install the related parts in the reverse order of removal.

7. Fuel Pressure

A: INSPECTION

CAUTION:
• Before removing the fuel pressure gauge, release the fuel pressure.
• Be careful not to spill fuel.
• Catch the fuel from hoses using a container or cloth.

1) Release the fuel pressure. <Ref. to FU(STI)-64, RELEASING OF FUEL PRESSURE, PROCEDURE, Fuel.>
2) Open the fuel filler lid and remove the fuel filler cap.

NOTE:
This operation is required to release the inner pressure of the fuel tank.

3) Disconnect the fuel delivery hose from the fuel delivery pipe, and connect the fuel pressure gauge.

CAUTION:
• Be careful not to spill fuel.
• Catch the fuel from hoses using a container or cloth.

(1) Attach ST to the fuel delivery pipe and push ST in the direction of arrow mark to disconnect the quick connector of the fuel delivery hose.

ST 42099AE000 QUICK CONNECTOR RELEASE

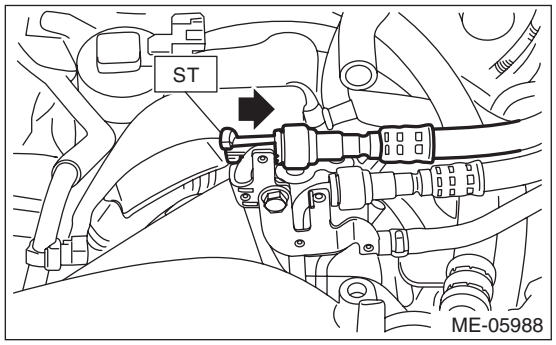

(2) Connect the fuel pressure gauge with ST1 and ST2.

NOTE:
ST1 is a SUBARU genuine part.
ST1 42075AG690 FUEL HOSE
ST2 18471AA000 FUEL PIPE ADAPTER

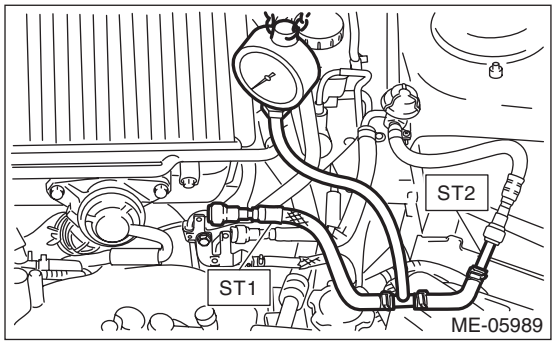

4) Start the engine.
5) Check the fuel pressure while disconnecting pressure regulator vacuum hose from intake manifold.

NOTE:
• The fuel pressure gauge registers 10 to 20 kPa (0.1 to 0.2 kg/cm^2, 1 to 3 psi) higher than standard values during high-altitude operations.
• If the fuel pressure is out of specification, check or replace the fuel pump, fuel line, pressure regulator & damper assembly, and pressure regulator vacuum hose.

Fuel pressure:
Standard
284 — 314 kPa (2.9 — 3.2 kg/cm^2, 41 — 46 psi)

6) After connecting the vacuum hose to the pressure regulator, check the fuel pressure again.

NOTE:
• The fuel pressure gauge registers 10 to 20 kPa (0.1 to 0.2 kg/cm^2, 1 to 3 psi) higher than standard values during high-altitude operations.
• If the fuel pressure is out of specification, check or replace the fuel pump, fuel line, pressure regulator & damper assembly, and pressure regulator vacuum hose.

Fuel pressure:
Standard
230 — 260 kPa (2.4 — 2.7 kg/cm^2, 33 — 38 psi)

7) After inspection, install the related parts in the reverse order of removal.

8. Valve Clearance

A: INSPECTION

CAUTION:
If engine oil is spilt onto the exhaust pipe, wipe it off with cloth to avoid emission of smoke or causing a fire.

NOTE:
Inspection and adjustment of valve clearance should be performed while engine is cold.

1) Disconnect the ground cable from battery.
2) Remove the air intake duct. <Ref. to IN(STI)-11, REMOVAL, Air Intake Duct.>
3) Remove the bolt which secures timing belt cover RH.
4) Lift up the vehicle.
5) Remove the under cover. <Ref. to EI-22, REMOVAL, Front Under Cover.>
6) Remove the remaining bolts which secure timing belt cover RH, then remove the timing belt cover RH.
7) Lower the vehicle.
8) When inspecting #1 and #3 cylinders
   (1) Remove the chamber assembly. <Ref. to IN(STI)-23, REMOVAL, Chamber Assembly.>
   (2) Remove the air cleaner case. <Ref. to IN(STI)-8, REMOVAL, Air Cleaner Case.>
   (3) Disconnect the connector (A) from the exhaust oil flow control solenoid valve.
   (4) Remove the engine harness fixing clip (B) and clip (C) from the engine harness stay.
   (5) Remove the engine harness stay fixing bolt, and remove the engine harness stay fixing clip (D) and the exhaust oil flow control solenoid valve harness fixing clip (E).
   (6) Remove the exhaust oil flow control solenoid valve connector (F) from the engine harness stay.

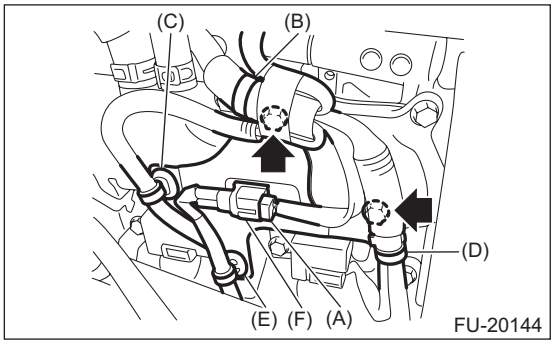

   (7) Disconnect the connector from the exhaust camshaft position sensor RH.

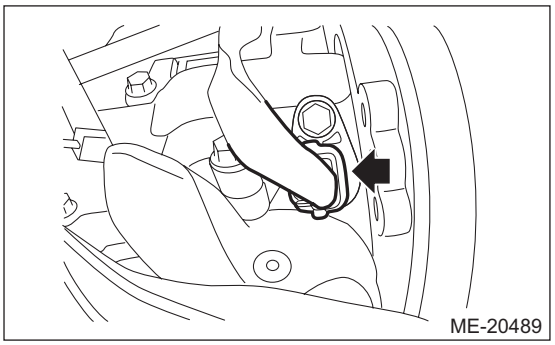

   (8) Remove the ignition coil. <Ref. to IG(STI)-7, REMOVAL, Ignition Coil.>
   (9) Unlock the leak diagnosis connector, and disconnect the PCV hose (A) and vacuum hose (B).

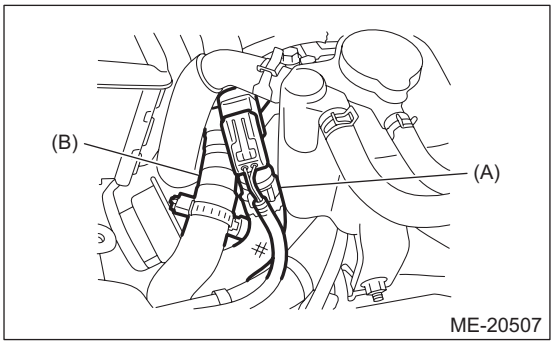

   (10) Remove the rocker cover RH.
9) When inspecting #2 and #4 cylinders
   (1) Remove the battery. <Ref. to SC(STI)-24, REMOVAL, Battery.>
   (2) Remove the secondary air pump. <Ref. to EC(STI)-55, REMOVAL, Secondary Air Pump.>
   (3) Disconnect the connector (A) from the exhaust camshaft position sensor LH and the connector (B) form the exhaust oil flow control solenoid valve LH.

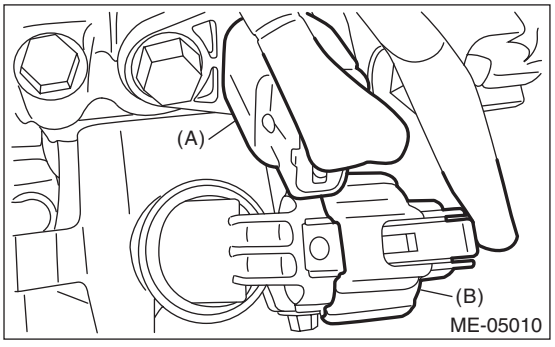

(4) Remove the engine harness stay from the timing belt cover LH.

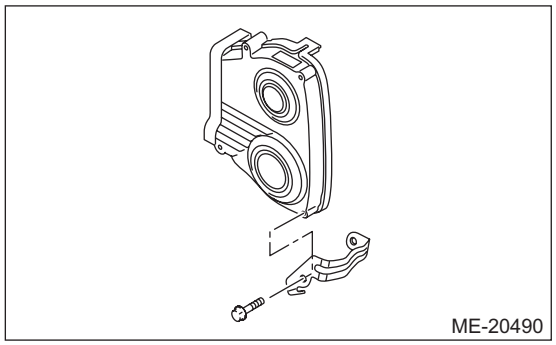

(5) Remove the air duct B (B) from the rocker cover LH and the air duct A (A).

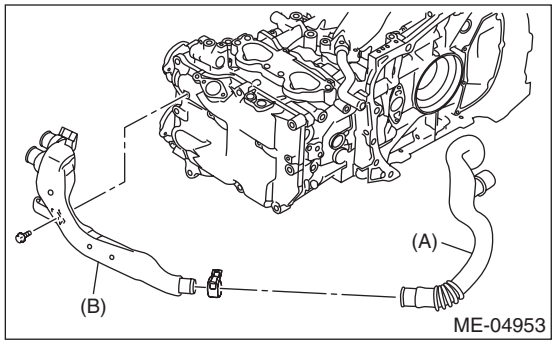

(6) Remove the ignition coil. <Ref. to IG(STI)-7, REMOVAL, Ignition Coil.>

(7) Unlock the leak diagnosis connector, and disconnect the PCV hose (A) and vacuum hose (B).

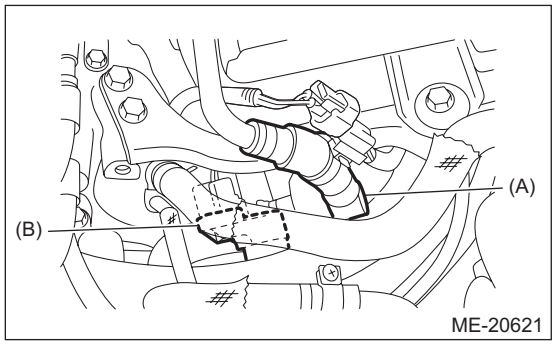

(8) Remove the rocker cover LH.

10) Turn the crank pulley clockwise until the round mark on the camshaft sprocket is set to position shown in the figure.

NOTE:
Turn the crank pulley using a socket wrench.

• Measurement of clearance of #1 cylinder intake valve and #3 cylinder exhaust valve

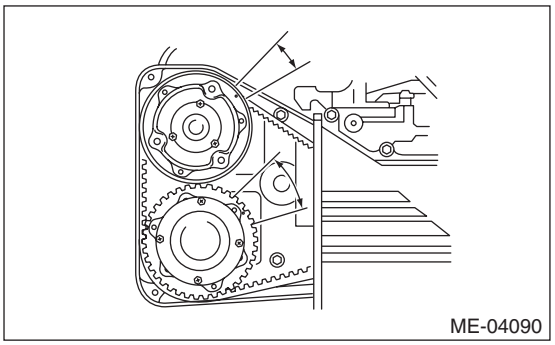

• Measurement of clearance of #2 cylinder exhaust valve and #3 cylinder intake valve

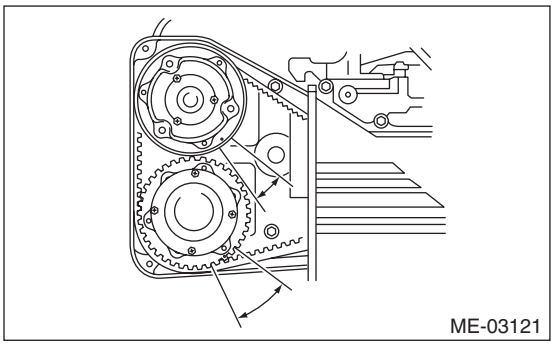

• Measurement of clearance of #2 cylinder intake valve and #4 cylinder exhaust valve

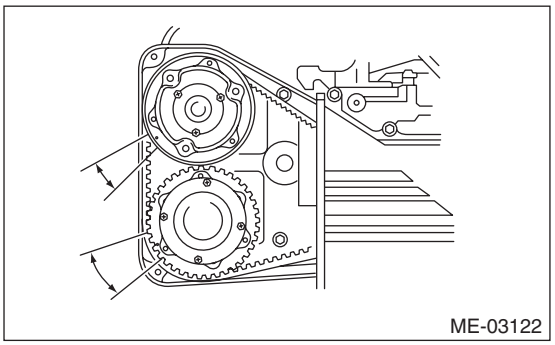

• Measurement of clearance of #1 cylinder exhaust valve and #4 cylinder intake valve

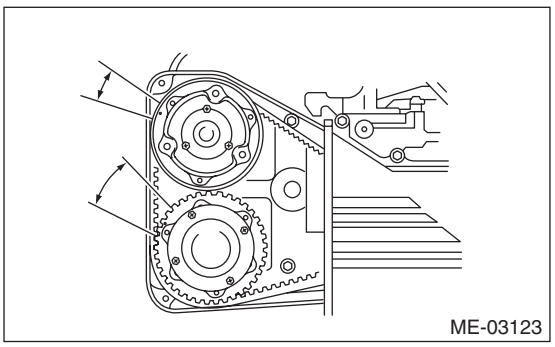

11) Measure the clearance of intake valve and exhaust valve using thickness gauge (A).

NOTE:
• Insert a thickness gauge in a direction as horizontal as possible with respect to the valve lifter.
• Lift up the vehicle, and then measure the exhaust valve clearances.
• If the measured value is not within the inspection value, take notes of the value in order to adjust the valve clearance later on.

Valve clearance (inspection value):
Intake
$0.20^{+0.04}_{-0.06}$ mm ($0.0079^{+0.0016}_{-0.0024}$ in)
Exhaust
0.35±0.05 mm (0.0138±0.0020 in)

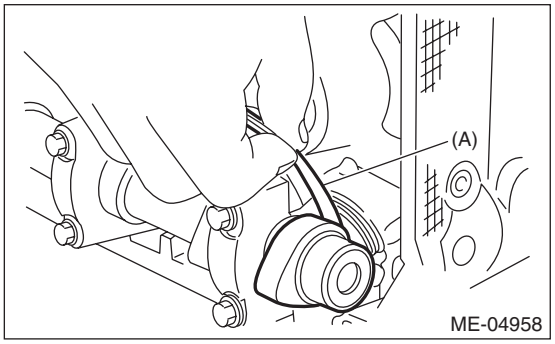

12) If necessary, adjust the valve clearance. <Ref. to ME(STI)-29, ADJUSTMENT, Valve Clearance.>

13) After inspection, install the related parts in the reverse order of removal.

NOTE:
Refer to “Camshaft” when installing the rocker cover. <Ref. to ME(STI)-66, INSTALLATION, Camshaft.>

Tightening torque:
6.4 N·m (0.7 kgf-m, 4.7 ft-lb)

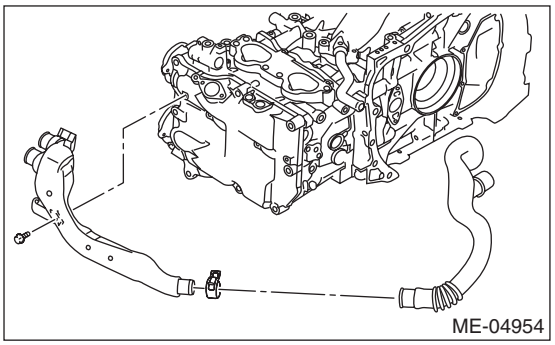

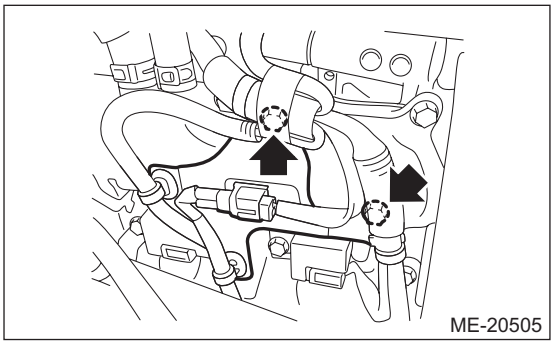

Tightening torque:
5 N·m (0.5 kgf-m, 3.7 ft-lb)

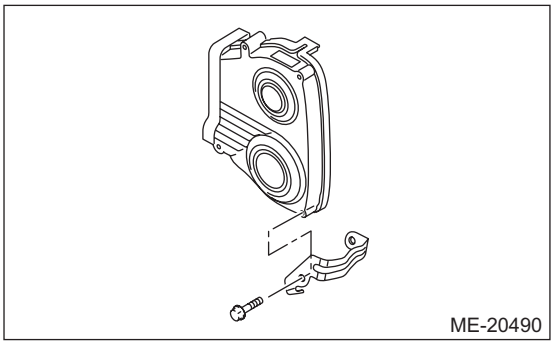

B: ADJUSTMENT

1) Measure all the valve clearances. <Ref. to ME(STI)-26, INSPECTION, Valve Clearance.>

NOTE:
Record the measured value of each valve clearance.

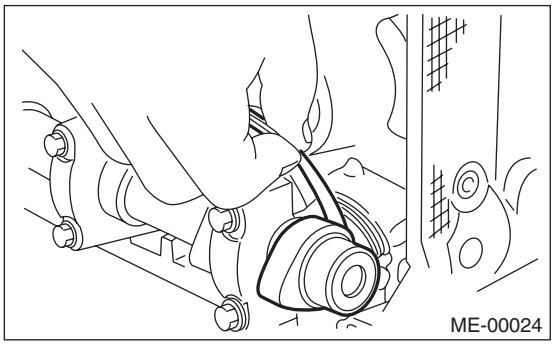
ME-00024

2) Remove the camshaft. <Ref. to ME(STI)-63, REMOVAL, Camshaft.>
3) Remove the valve lifter.
4) Measure the thickness of valve lifter using micrometer.

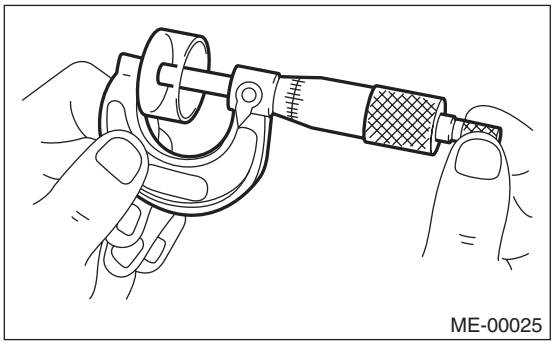
ME-00025

5) Select a valve lifter of suitable thickness using the measured valve clearance and valve lifter thickness, and install it.

NOTE:
Use a new valve lifter.

Unit: mm (in)
Intake valve: S = (V + T) – 0.19 (0.0075) Exhaust valve: S = (V + T) – 0.35 (0.0138)
S: Valve lifter thickness required V: Measured valve clearance T: Valve lifter thickness to be used

6) Install the camshaft. <Ref. to ME(STI)-66, INSTALLATION, Camshaft.>
7) Install the cam sprocket. <Ref. to ME(STI)-61, INSTALLATION, Cam Sprocket.>
8) Install the timing belt. <Ref. to ME(STI)-55, TIMING BELT, INSTALLATION, Timing Belt.>
9) Measure all valves for valve clearance again at this time. If the valve clearance is not within the adjustment value, repeat the procedure over again from step 2).

Valve clearance (adjustment value):
Intake
$0.20^{+0.01}_{-0.03}$ mm ($0.0079^{+0.0004}_{-0.0012}$ in)
Exhaust
0.35 ± 0.02 mm (0.0138 ± 0.0008 in)

10) After adjustment, install the related parts in the reverse order of removal.

9. Engine Assembly

A: REMOVAL

1) Remove the striker - front hood. <Ref. to EB-11, DISASSEMBLY, Front Hood.>
2) Fully open the front hood. <Ref. to NT-23, FRONT HOOD DAMPER STAY, NOTE, Note.>
3) Remove the V-belt covers.

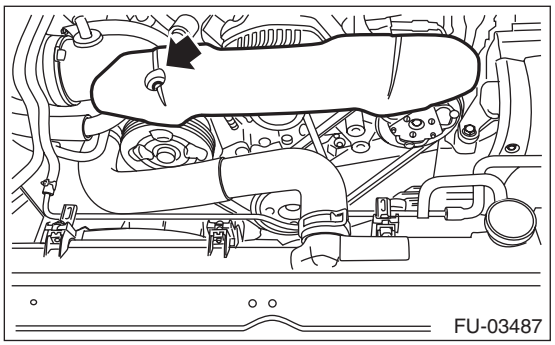

4) Collect the refrigerant from A/C system. <Ref. to AC-26, Refrigerant Recovery Procedure.>
5) Release the fuel pressure. <Ref. to FU(STI)-64, RELEASING OF FUEL PRESSURE, PROCEDURE, Fuel.>
6) Remove the battery. <Ref. to SC(STI)-24, REMOVAL, Battery.>
7) Open the fuel filler lid and remove the fuel filler cap.

NOTE:
This operation is required to release the inner pressure of the fuel tank.
8) Remove the air intake duct and air cleaner case (rear). <Ref. to IN(STI)-11, REMOVAL, Air Intake Duct.> <Ref. to IN(STI)-8, REMOVAL, Air Cleaner Case.>
9) Remove the intercooler. <Ref. to IN(STI)-13, REMOVAL, Intercooler.>
10) Remove the radiator. <Ref. to CO(STI)-18, REMOVAL, Radiator.>
11) Remove the coolant filler tank. <Ref. to CO(STI)-27, REMOVAL, Coolant Filler Tank.>
12) Disconnect the bulkhead harness connectors from the engine harness connectors.
13) Lift the claw (A) and remove the engine harness connector from the engine harness bracket.

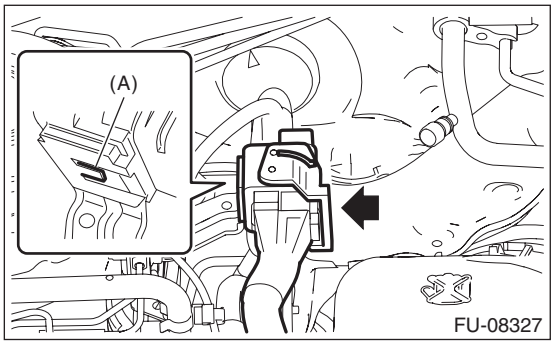

14) Disconnect the following connectors and terminals.
(1) Generator connector and terminal

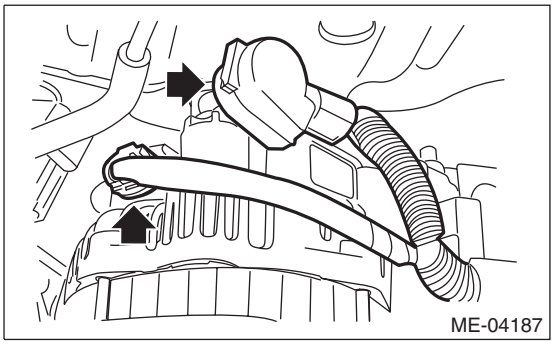

(2) Secondary air pump connector

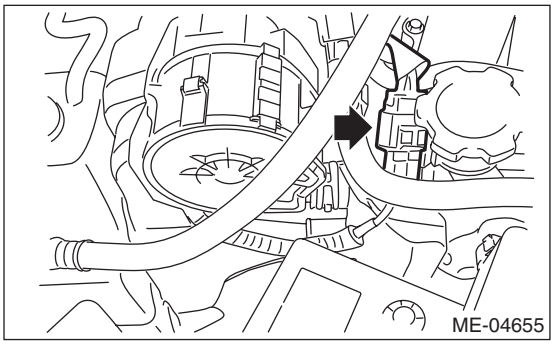

15) Disconnect connector (A) from the A/C compressor.
16) Remove the clip (B) securing the generator cord, and move the generator cord to the left side wheel apron.

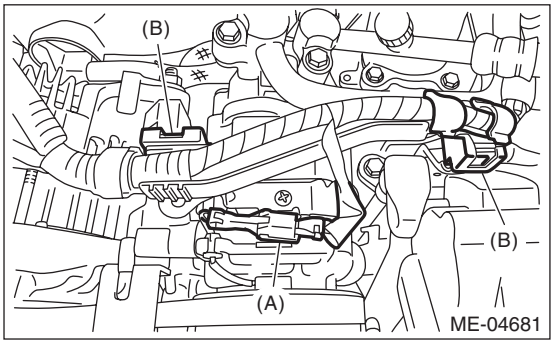

17) Disconnect the following hoses.
(1) A/C pressure hose <Ref. to AC-63, REMOVAL, Hose and Pipe.>

(2) Brake booster vacuum hose (A) and pressure regulator vacuum hose (B)

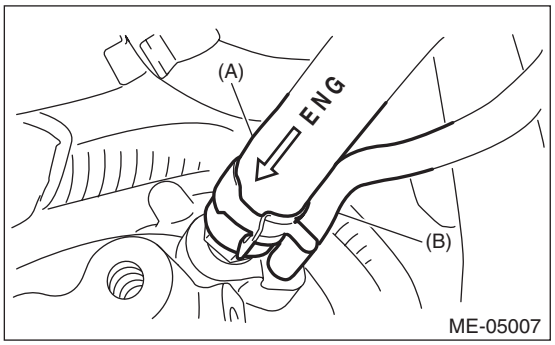

(3) Heater inlet hose and heater outlet hose

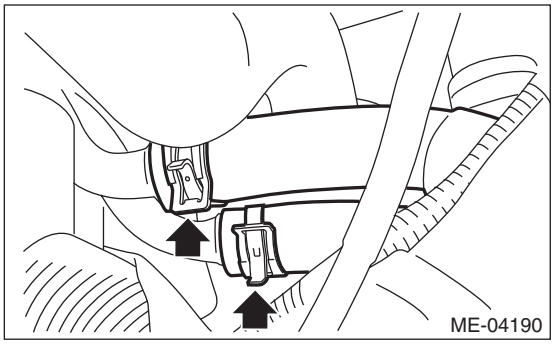

18) Remove the power steering pump.
(1) Remove the front side belt. <Ref. to ME(STI)-41, FRONT SIDE BELT, REMOVAL, V-belt.>
(2) Disconnect the connector from power steering pump switch.

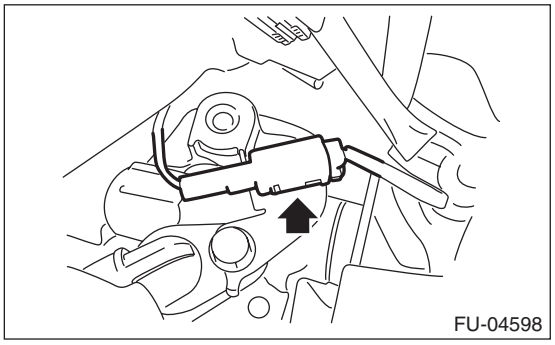

(3) Remove the bolt which holds purge control solenoid valve 1 onto intake manifold.

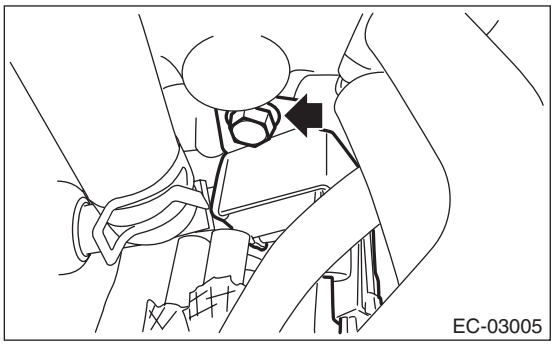

(4) Remove the power steering pump from the engine.

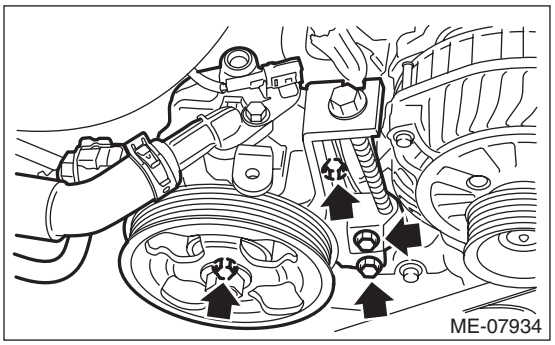

(5) Place the power steering pump on the right side wheel apron.
19) Remove the center exhaust pipe. <Ref. to EX(STI)-7, REMOVAL, Center Exhaust Pipe.>
20) Remove the turbocharger. <Ref. to IN(STI)-17, REMOVAL, Turbocharger.>
21) Remove the joint pipe and front exhaust pipe. <Ref. to EX(STI)-11, REMOVAL, Joint Pipe.> <Ref. to EX(STI)-5, REMOVAL, Front Exhaust Pipe.>
22) Disconnect the ground cable on the engine side.

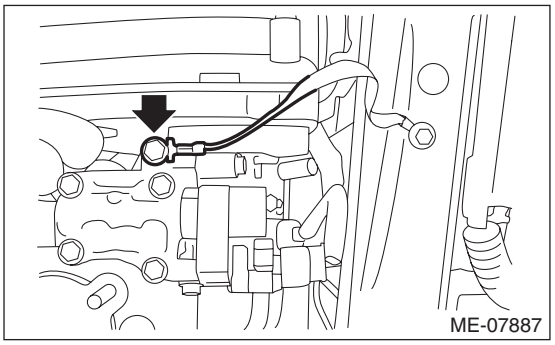

23) Remove the bolts and nuts which hold the lower side of transmission to the engine.

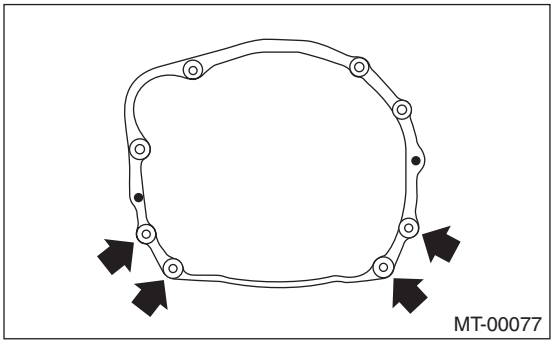

24) Remove the nuts which secure the engine mounting to the front crossmember.

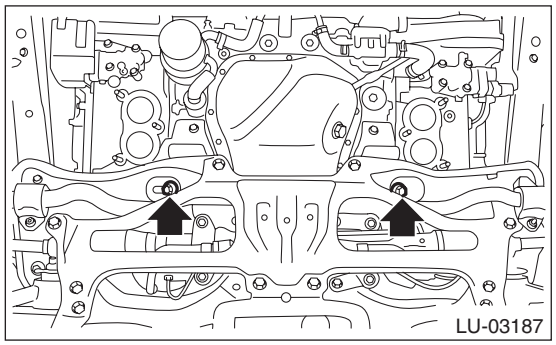

25) Lower the vehicle.
26) Remove the starter. <Ref. to SC(STI)-7, REMOVAL, Starter.>
27) Separate the clutch release fork from the release bearing.

NOTE:
This procedure is required to remove engine with the release bearing assembled to the clutch cover.

(1) Remove the operating cylinder from the transmission.

NOTE:
Move the removed operating cylinders to a location that does not interfere operation.

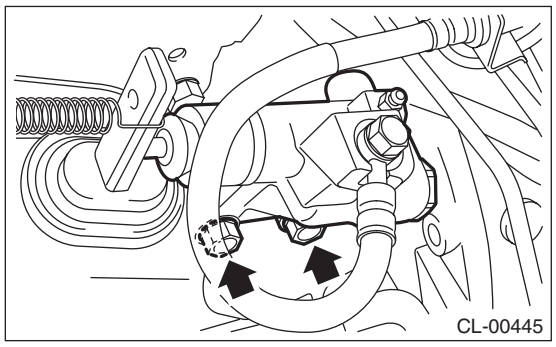

(2) Remove the return spring from the release fork.

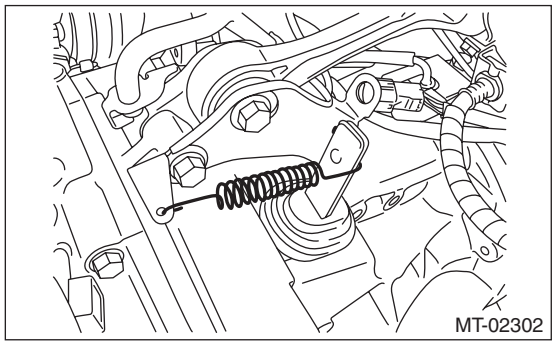

(3) Remove the service hole plug using a hexagon wrench.

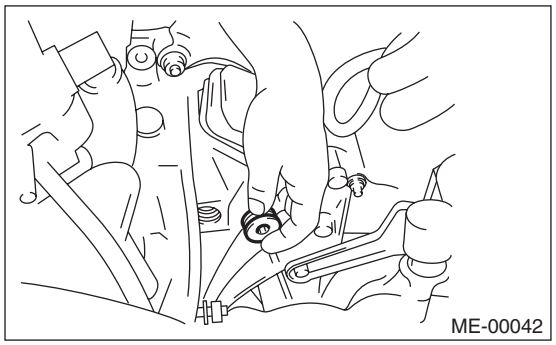

(4) Attach a 6-mm bolt to the release shaft, and pull out the release shaft.

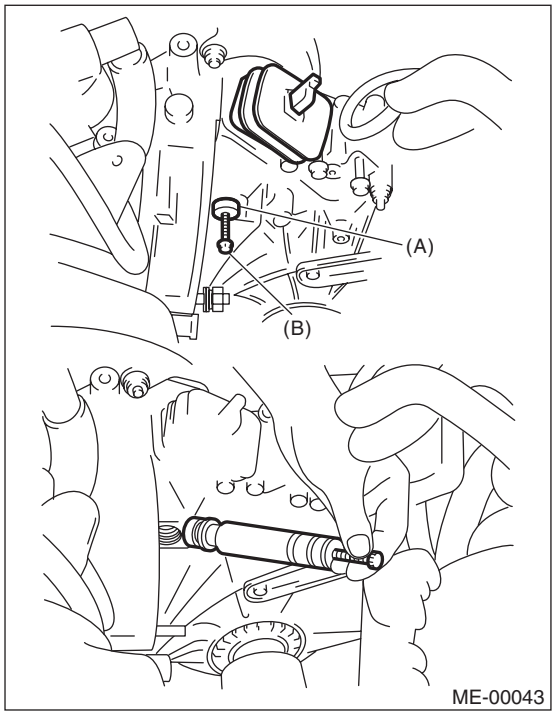

(A) Release fork shaft
(B) Bolt

(5) Lift the release fork, and remove from the tab of the release bearing. Pull the release fork to the engine side, and make it so that it moves freely.

28) Remove the pitching stopper.

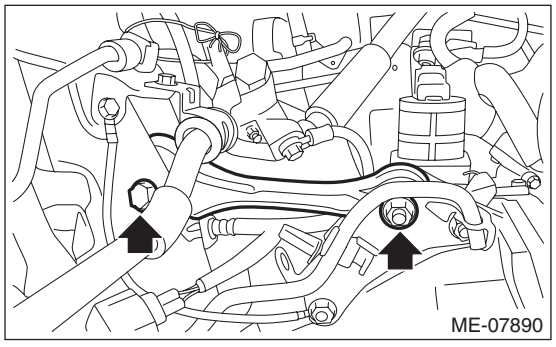

29) Disconnect the fuel delivery hose, fuel return hose and evaporation hose.

CAUTION:
- **Be careful not to spill fuel.**
- **Catch the fuel from hoses using a container or cloth.**

(1) Set the ST to the fuel pipe.

ST 42099AE000 QUICK CONNECTOR RELEASE

(2) Disconnect the quick connector of the fuel delivery hose and fuel return hose by pushing the ST in the direction of the arrow.

(3) Remove the clip and disconnect the evaporation hose from the fuel pipe.

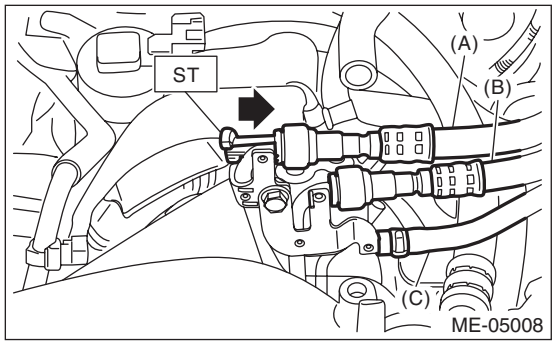

(A) Fuel delivery hose
(B) Fuel return hose
(C) Evaporation hose

30) Install the intercooler stay RH No. 2.

Tightening torque:
16 N·m (1.6 kgf-m, 11.8 ft-lb)

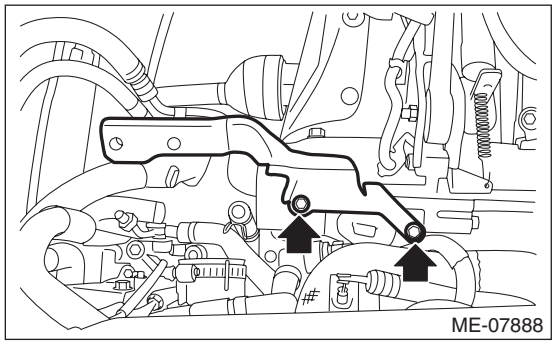

31) Support the engine with a lifting device and wire ropes.

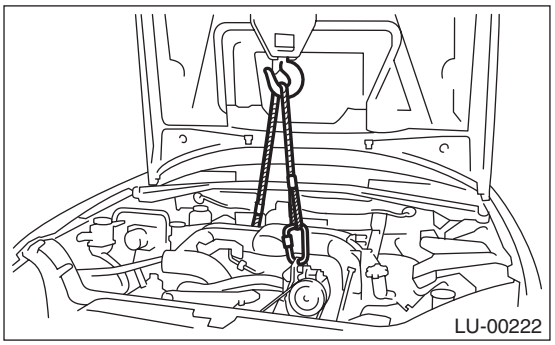

32) Support the transmission with a garage jack.

CAUTION:
Be sure to perform this procedure to prevent the transmission from lowering by its own weight.

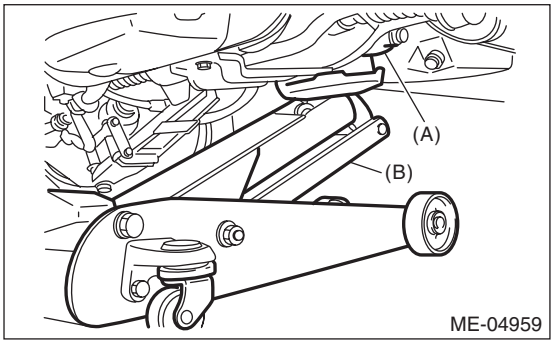

(A) Transmission
(B) Garage jack

33) Remove the bolts which hold the upper side of the transmission to the engine.

CAUTION:
Before removing the engine away from transmission, check to be sure no work has been overlooked.

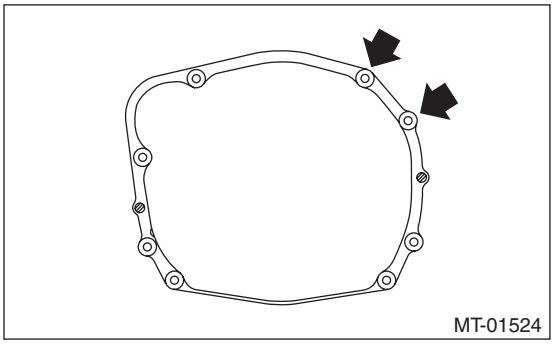

34) Remove the engine from the vehicle.

NOTE:
Be careful not to damage adjacent parts or body panels with crank pulley, oil level gauge, etc.

(1) Slightly raise the engine.
(2) Raise the transmission with garage jack.
(3) Move the engine horizontally until main shaft is withdrawn from clutch cover.
(4) Slowly move the engine away from engine compartment.

35) Remove the engine mounting from the engine.

B: INSTALLATION

1) Install the clutch release fork and bearing to the transmission.

(1) Using a flat tip screwdriver, remove the release bearing from the clutch cover.

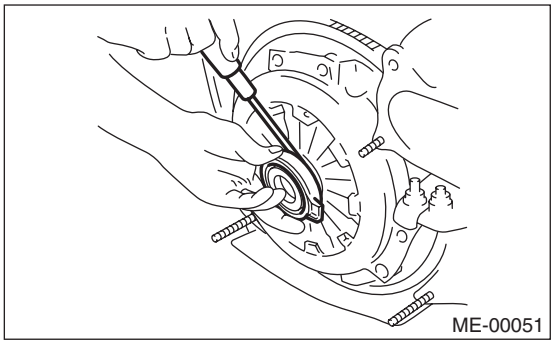

(2) Attach the release bearing to the transmission.
(3) Install the release fork into the release bearing tab.

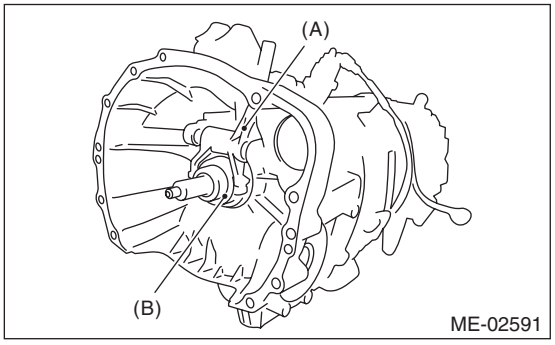

(A) Release fork
(B) Release bearing

(4) Apply grease to the specified areas.

Grease:
Spline part
NICHIMOLY N-130 or equivalent
Shaft part
KOPR-KOTE or equivalent

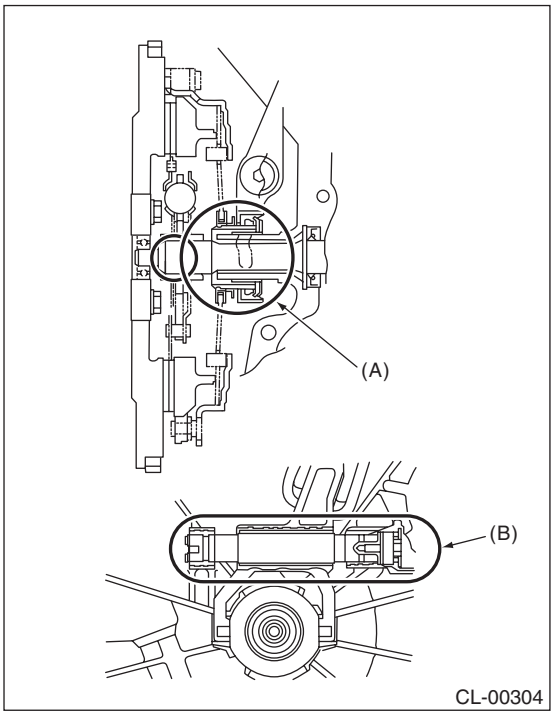

(A) Spline
(B) Shaft

(5) Insert the release shaft to release fork.

NOTE:
Allow the cutout portion of release shaft to come into contact with the spring pin.

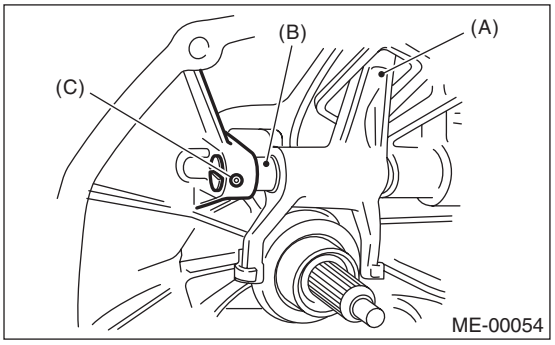

(A) Release fork
(B) Release shaft
(C) Spring pin

(6) Install the service hole plug.

Tightening torque:
44 N·m (4.5 kgf-m, 32.5 ft-lb)

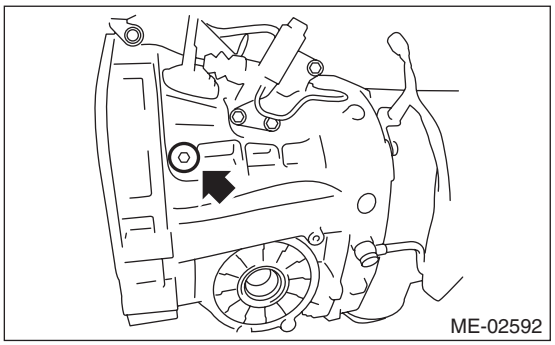

2) Install the engine mounting onto the engine.

Tightening torque:
35 N·m (3.6 kgf-m, 25.8 ft-lb)

3) Apply a small amount of grease to splines of main shaft.

Grease:
NICHIMOLY N-130 or equivalent

4) Position the engine in engine compartment and align it with transmission.

NOTE:
Be careful not to damage adjacent parts or body panels with crank pulley, oil level gauge, etc.

5) Install the bolts which hold upper side of transmission to engine.

Tightening torque:
50 N·m (5.1 kgf-m, 36.9 ft-lb)

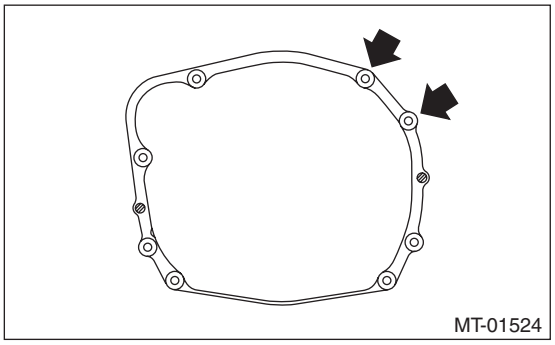

6) Remove the lifting device and wire ropes.

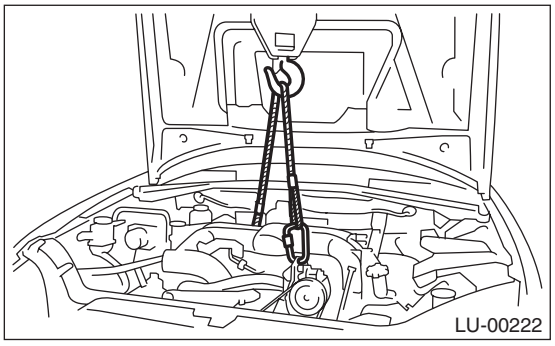

7) Remove the garage jack.
8) Install the pitching stopper.

Tightening torque:
T1: 50 N·m (5.1 kgf-m, 36.9 ft-lb)
T2: 58 N·m (5.9 kgf-m, 42.8 ft-lb)

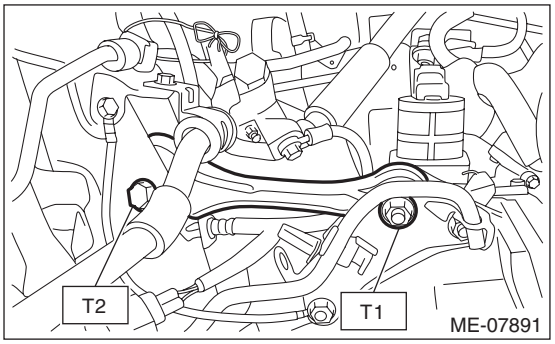

9) Install the return spring.

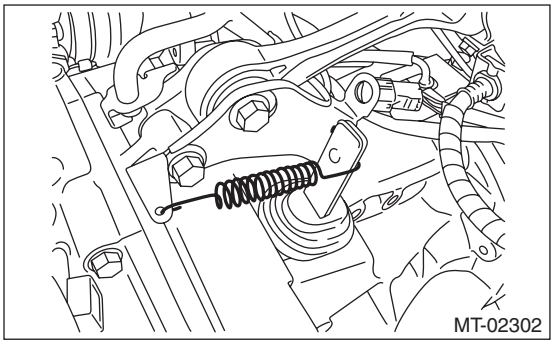

10) Install the operating cylinder.

NOTE:
Check that the clutch hose is routed properly.

Tightening torque:
41 N·m (4.2 kgf-m, 30.2 ft-lb)

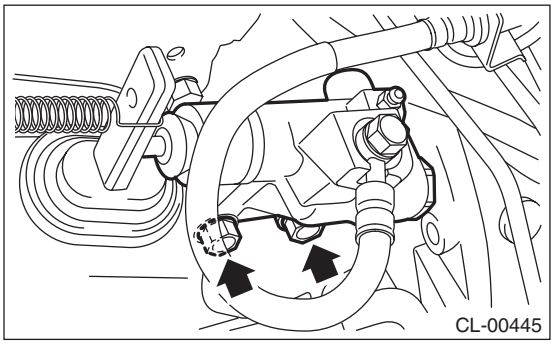

11) Install the starter. <Ref. to SC(STI)-7, INSTALLATION, Starter.>
12) Install the power steering pump.
(1) Install the power steering pump onto the engine.

Tightening torque:
Refer to "COMPONENT" of "Power Steering" for the tightening torque. <Ref. to PS-4, COMPONENT, General Description.>

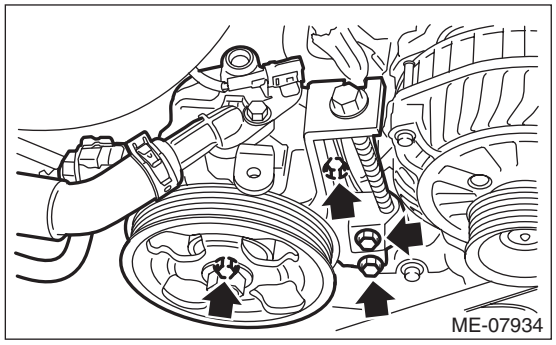
ME-07934

(2) Install the purge control solenoid valve 1 to the intake manifold.

Tightening torque:
19 N·m (1.9 kgf-m, 14.0 ft-lb)

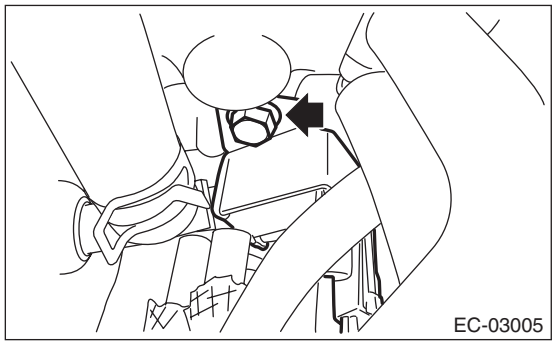
EC-03005

(3) Connect the connector to the power steering pump switch.

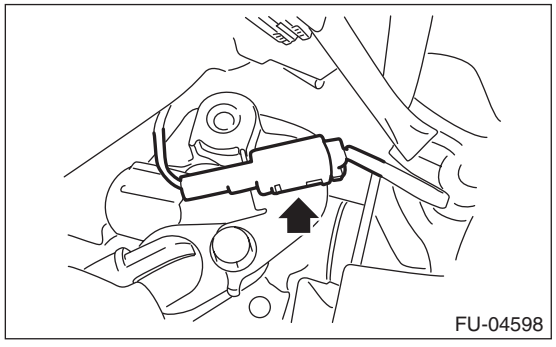
FU-04598

(4) Install the front side belt. <Ref. to ME(STI)-41, FRONT SIDE BELT, INSTALLATION, V-belt.>

13) Remove the intercooler stay RH No. 2.

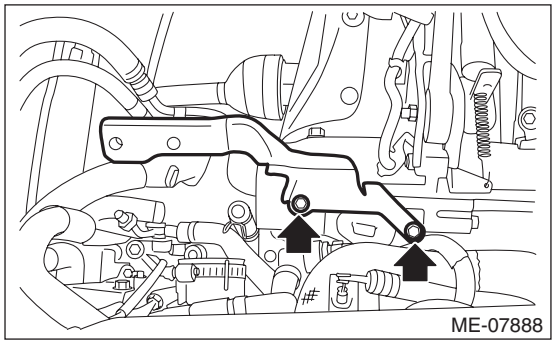
ME-07888

14) Lift up the vehicle.
15) Install the bolts and nuts which hold lower side of the transmission to engine.

Tightening torque:
50 N·m (5.1 kgf-m, 36.9 ft-lb)

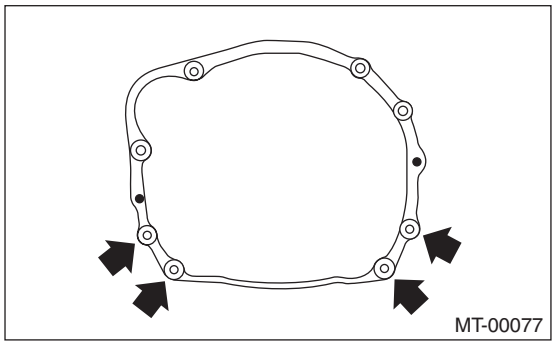
MT-00077

16) Install the nuts which hold the engine mounting to the crossmember.

NOTE:
Use a new nut.

Tightening torque:
60 N·m (6.1 kgf-m, 44.3 ft-lb)

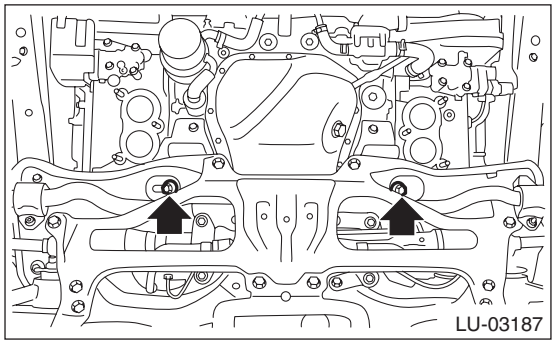
LU-03187

17) Connect the ground cable.

Tightening torque:
7.5 N·m (0.8 kgf-m, 5.5 ft-lb)

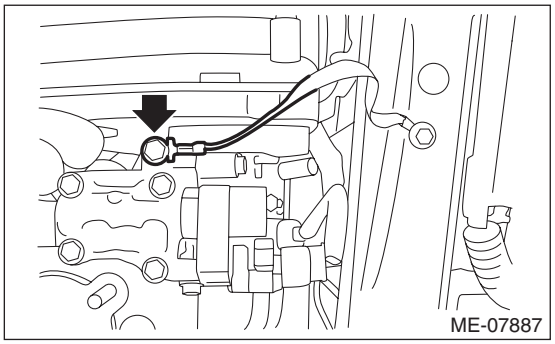

18) Install the joint pipe and front exhaust pipe. <Ref. to EX(STI)-5, INSTALLATION, Front Exhaust Pipe.> <Ref. to EX(STI)-11, INSTALLATION, Joint Pipe.>
19) Install the turbocharger. <Ref. to IN(STI)-18, INSTALLATION, Turbocharger.>
20) Install the center exhaust pipe. <Ref. to EX(STI)-8, INSTALLATION, Center Exhaust Pipe.>
21) Connect the following hoses.
(1) Fuel delivery hose, fuel return hose and evaporation hose
(2) Heater inlet hose and heater outlet hose
(3) Brake booster vacuum hose and pressure regulator vacuum hose
(4) A/C pressure hose <Ref. to AC-67, INSTALLATION, Hose and Pipe.>
22) Secure the generator cord using the clip (B) and connect the connector (A) to A/C compressor.

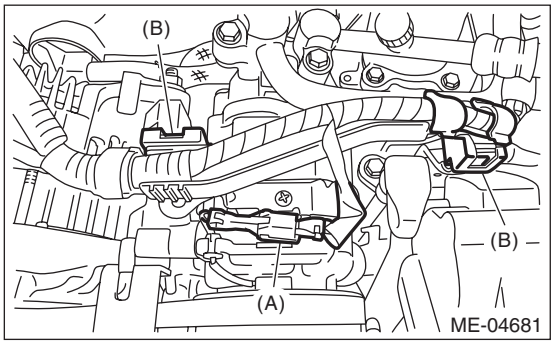

23) Connect the following connectors and terminals.
(1) Generator connector and terminal

Tightening torque:
15 N·m (1.5 kgf-m, 11.1 ft-lb)
(2) Secondary air pump connector

24) Install the engine harness connector to engine harness bracket, then connect the bulkhead harness connector to the engine harness connector.

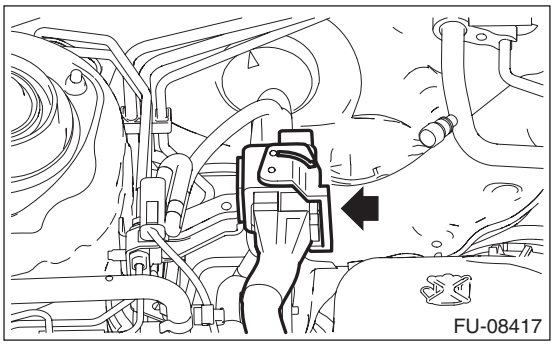

25) Install the intercooler. <Ref. to IN(STI)-14, INSTALLATION, Intercooler.>
26) Install the radiator. <Ref. to CO(STI)-19, INSTALLATION, Radiator.>
27) Install the coolant filler tank. <Ref. to CO(STI)-27, INSTALLATION, Coolant Filler Tank.>
28) Install the air cleaner case and air intake duct. <Ref. to IN(STI)-8, INSTALLATION, Air Cleaner Case.> <Ref. to IN(STI)-11, INSTALLATION, Air Intake Duct.>
29) Install the battery. <Ref. to SC(STI)-24, INSTALLATION, Battery.>
30) Fill engine coolant. <Ref. to CO(STI)-12, FILLING OF ENGINE COOLANT, REPLACEMENT, Engine Coolant.>
31) Charge the A/C system with refrigerant. <Ref. to AC-27, PROCEDURE, Refrigerant Charging Procedure.>
32) Install the V-belt cover.

Tightening torque:
13 N·m (1.3 kgf-m, 9.6 ft-lb)

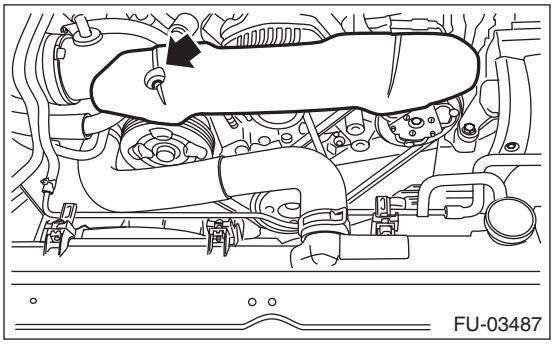

33) Set the front hood to the normal position. <Ref. to NT-23, FRONT HOOD DAMPER STAY, NOTE, Note.>
34) Install the striker - front hood. <Ref. to EB-15, ASSEMBLY, Front Hood.>
35) Close the front hood.

C: INSPECTION

1) Check that pipes, hoses, connectors and clamps are installed firmly.
2) Check the engine coolant is at specified level.
3) Start the engine and check for exhaust gas, engine coolant, leaks of fuel, etc. Also check for noise and vibrations.

10.Engine Mounting

A: REMOVAL

1) Remove the front crossmember. <Ref. to FS-20, REMOVAL, Front Crossmember.>
2) Remove the engine mounting from the engine.

B: INSTALLATION

Install in the reverse order of removal.

Tightening torque:
35 N·m (3.6 kgf-m, 25.8 ft-lb)

C: INSPECTION

Make sure that no crack or other damages do not exist.

11.Preparation for Overhaul

A: PROCEDURE

1) After removing the engine from vehicle body, attach the ST to the engine as shown in the figure.

ST1	498457000	ENGINE STAND ADAPTER RH
ST2	498457100	ENGINE STAND ADAPTER LH
ST3	499817100	ENGINE STAND

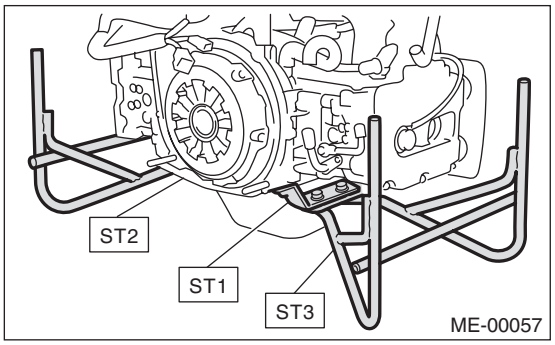

2) In this section the procedures described under each index are all connected and stated in order. The procedure for overhauling of the engine will be completed when you go through all steps in the process.
Therefore, in this section, to conduct the particular procedure within the flow of a section, you need to go back and conduct the procedure described previously in order to do that particular procedure.

12.V-belt

A: REMOVAL

NOTE:
When replacing a single part, perform the work with the engine assembly installed to body.

1. FRONT SIDE BELT

1) Remove the V-belt covers.

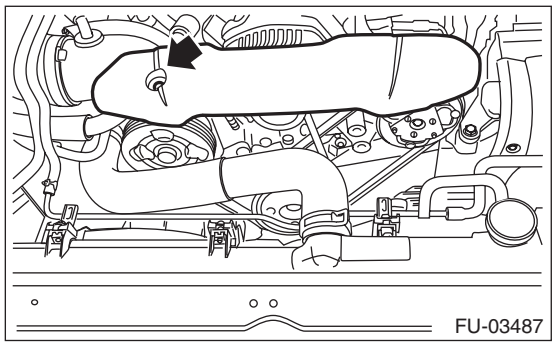

2) Remove the air intake duct. <Ref. to IN(STI)-11, REMOVAL, Air Intake Duct.>
3) Loosen the bolt (A).
4) Loosen the slider bolt (B).
5) Remove the front side belt (C).

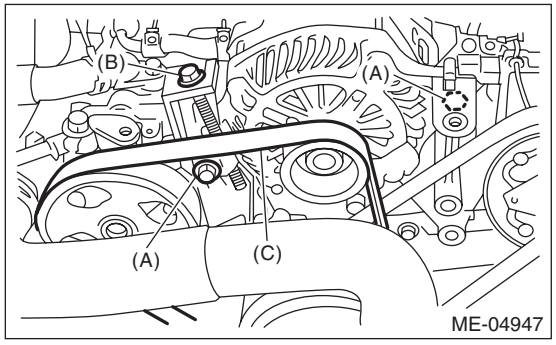

2. REAR SIDE BELT

1) Remove the front side belts. <Ref. to ME(STI)-41, FRONT SIDE BELT, REMOVAL, V-belt.>
2) Cut the rear side belt with a wire cutter, etc., and discard.

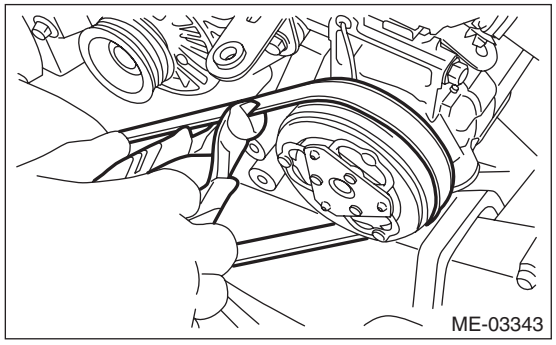

B: INSTALLATION

1. FRONT SIDE BELT

CAUTION:
• When reusing the front side belt, wipe off dust and water with cloth.
• Do not use the front side belt if there is any oil, grease or coolant on the belt.
• Be careful not to rub the belt end surface with bare hands; exposed core may cause injury.
1) Wipe off any dust, oil and water on the groove of each pulley with cloth.
2) Install the front side belt (C), and adjust the slider bolt (B) so as to obtain the specified belt tension. <Ref. to ME(STI)-47, INSPECTION, V-belt.>
3) Tighten the bolt (A).
4) Tighten the slider bolt (B).

Tightening torque:
Bolt (A)
25 N·m (2.5 kgf-m, 18.4 ft-lb)
Slider bolt (B)
8 N·m (0.8 kgf-m, 5.9 ft-lb)

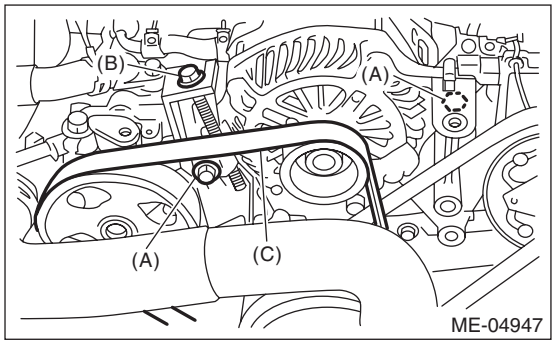

5) Install the air intake duct. <Ref. to IN(STI)-11, INSTALLATION, Air Intake Duct.>
6) Install the V-belt cover.

Tightening torque:
13 N·m (1.3 kgf-m, 9.6 ft-lb)

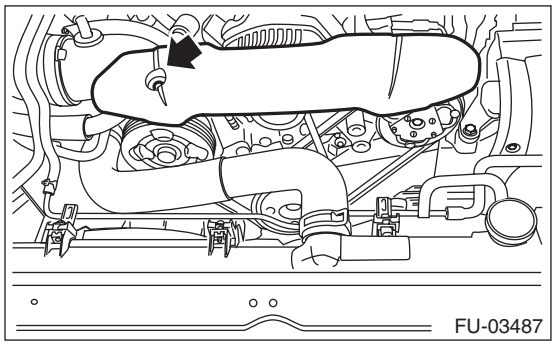

2. REAR SIDE BELT

CAUTION:
- **Do not re-use the rear side belt.**
- **Be careful not to let oil, grease or coolant contact a new rear side belt.**
- **Be careful not to rub the belt end surface with bare hands; exposed core may cause injury.**
- **To install the rear side belt, always use the provided tools (belt stopper, belt guide, belt guide holder, and bolt).**

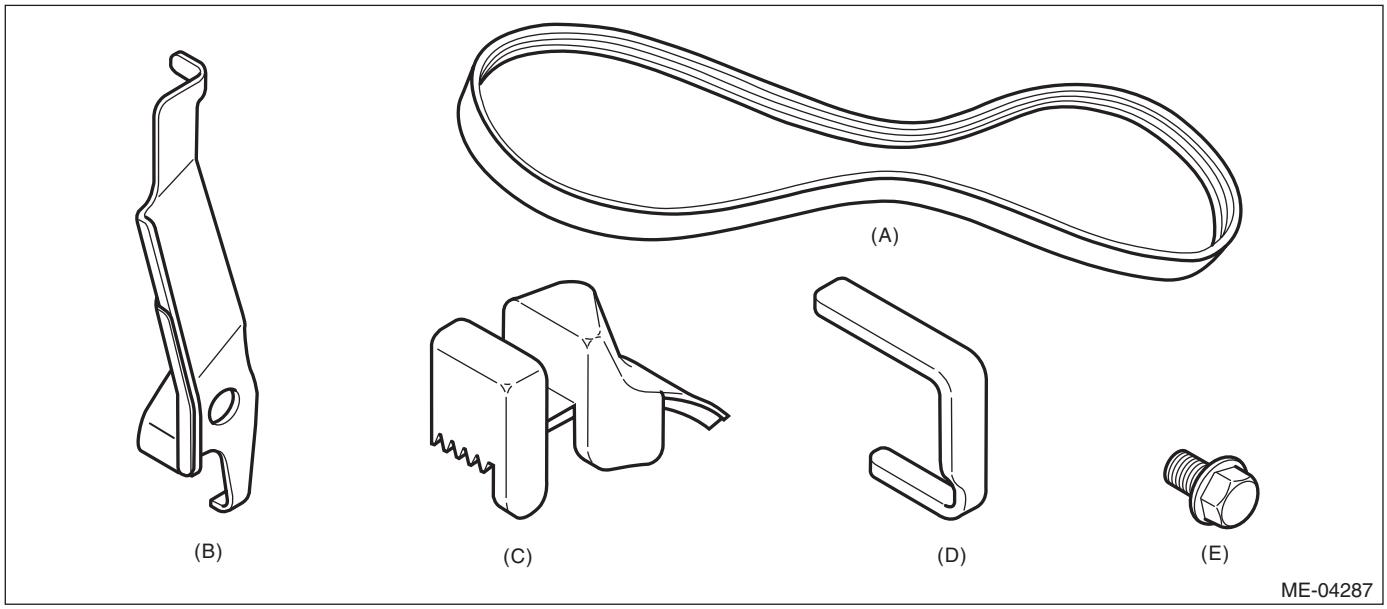

(A) Rear side belt
(B) Belt stopper
(C) Belt guide
(D) Belt guide holder
(E) Bolt

1) Wipe off any dust, oil and water on the groove of each pulley with cloth.
2) Wipe off any oil, water, dirt, and rust on the front of the crank pulley with cloth.
3) Slowly turn the crank pulley clockwise so that the service hole of the crank pulley comes around the top.

CAUTION:
Do not turn the crank pulley counterclockwise.

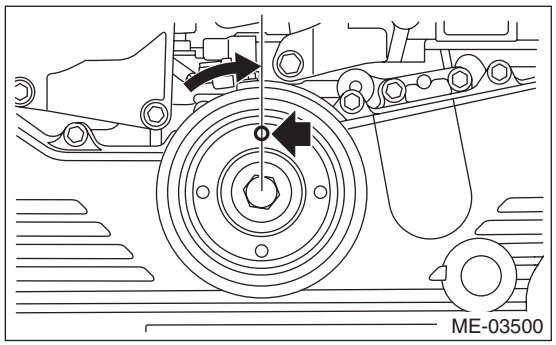

4) Hook a new rear side belt on the A/C compressor pulley.

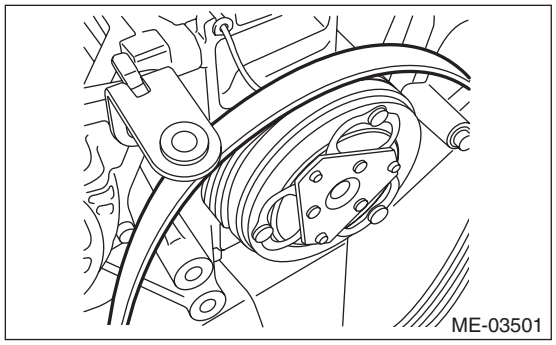

5) As shown in the figure, insert the claw of the belt stopper (A) to the lower hole (B) of the compressor bracket, then attach with bolt (C).

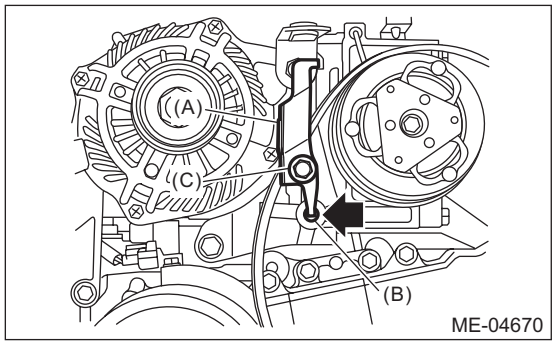

6) Place the belt guide while aligning it with the belt line of the crank pulley on the front side belt side.

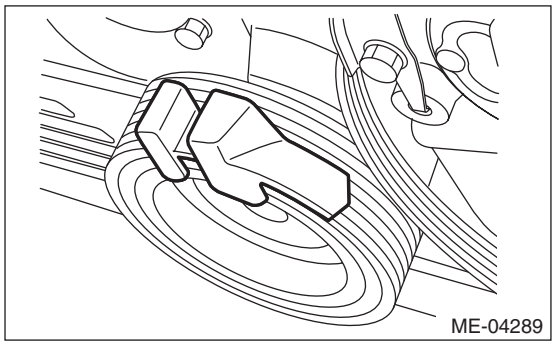

7) Insert the belt guide holder into the service hole of the crank pulley so that the belt guide comes in between.

NOTE:
Place the belt guide holder with the longer side up.

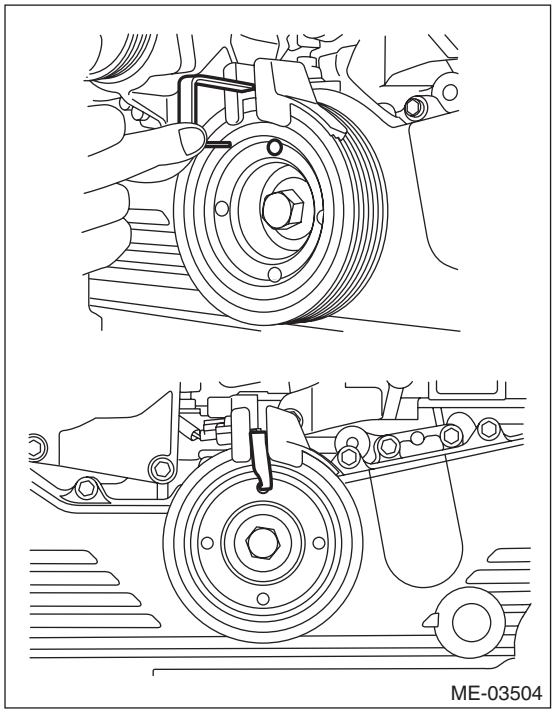

8) Slowly turn the crank pulley clockwise until the belt guide comes to approximately 45°.

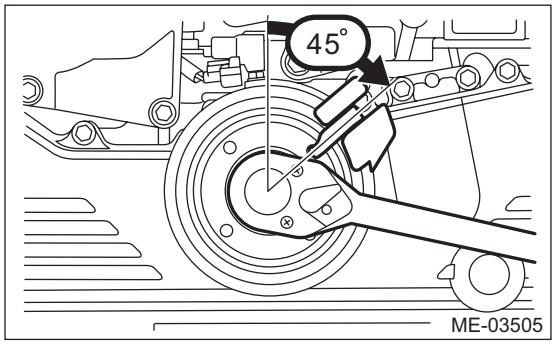

9) Place the rib surface of the rear side belt into the crank pulley groove, so that the rear side belt comes in between the belt guide holder.

CAUTION:
When it is difficult to place the rear side belt to the crank pulley groove, pull out the belt guide holder half way, then place the rear side belt into the groove so that it comes in between the belt guide holder.

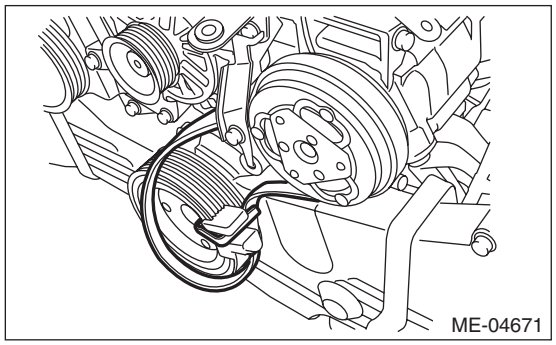
ME-04671

10) Place the tool through the loop of the rear side belt, and set on the crank pulley bolt.

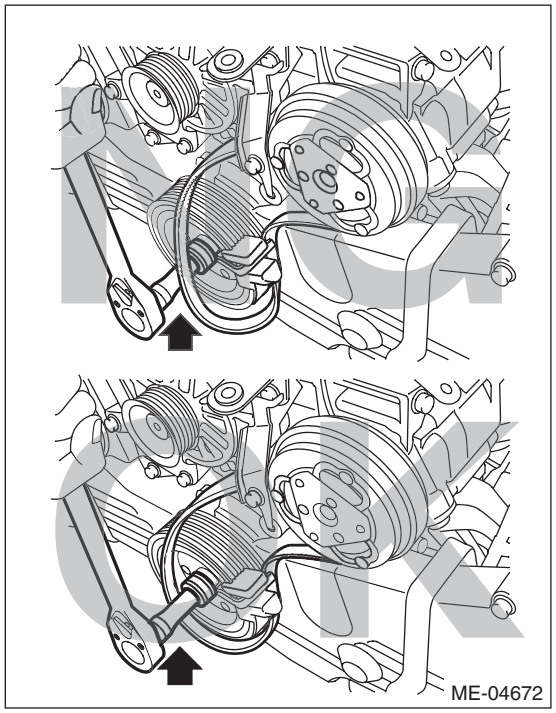

ME-04672

11) While checking the following, slowly turn the crank pulley approximately 90° clockwise so that the belt guide comes to the position shown in the figure.

CAUTION:
When turning the crank pulley, always make sure that the belt guide is not off from the crank pulley groove.

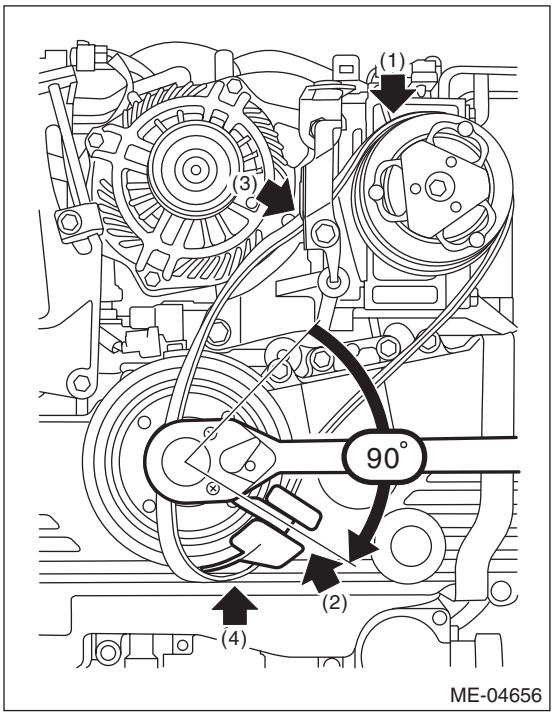

ME-04656

(1) The rib of the rear side belt is securely placed on the groove of the A/C compressor pulley.

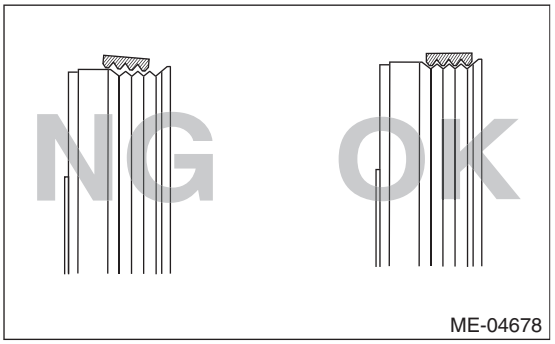

ME-04678

(2) The rib of the rear side belt is securely placed on the groove of the crank pulley.

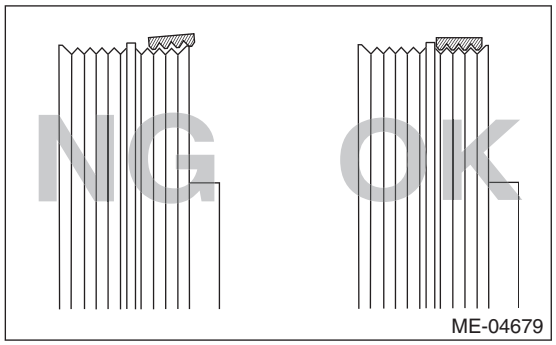

(3) The surface of the rear side belt is held by the belt stopper.

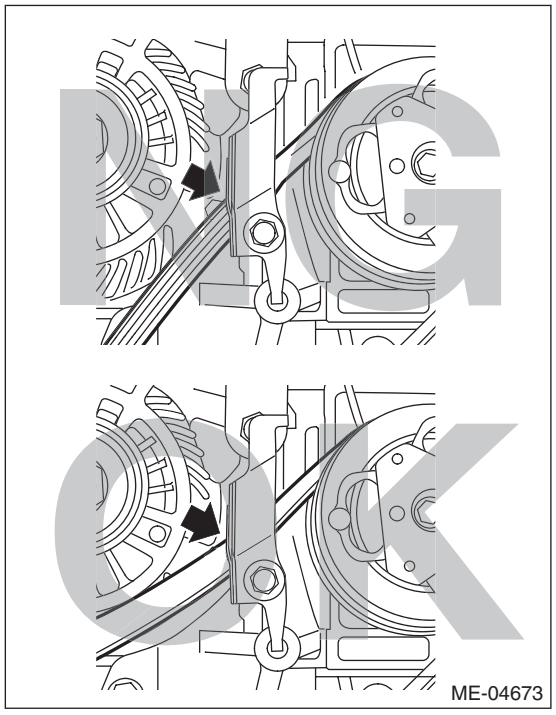

(4) The rear side belt is securely placed on the belt guide.

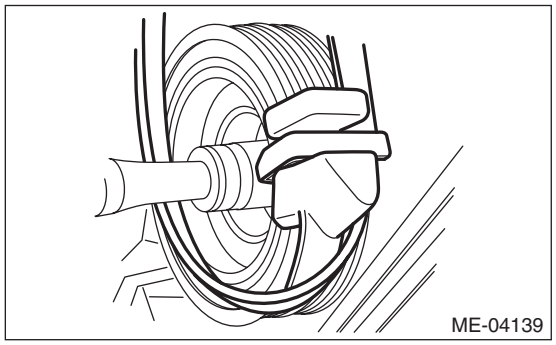

12) While checking the following, slowly turn the crank pulley approximately 90° clockwise so that the belt guide comes to the position shown in the figure.

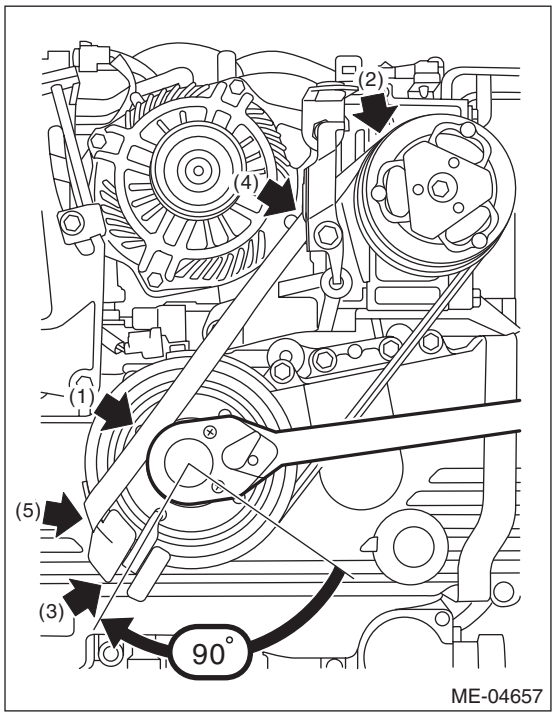

(1) The rear side belt is not twisted.

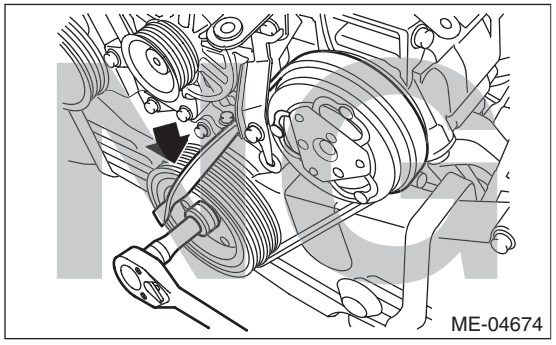

(2) The rib of the rear side belt is securely placed on the groove of the A/C compressor pulley.

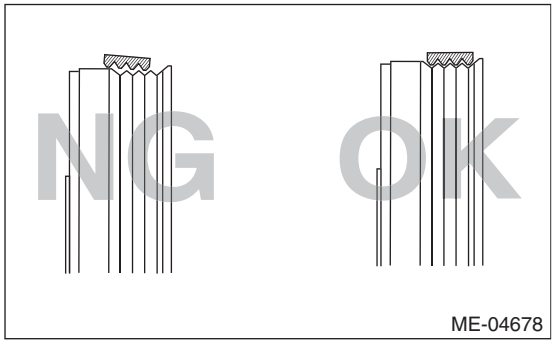

(3) The rib of the rear side belt is securely placed on the groove of the crank pulley.

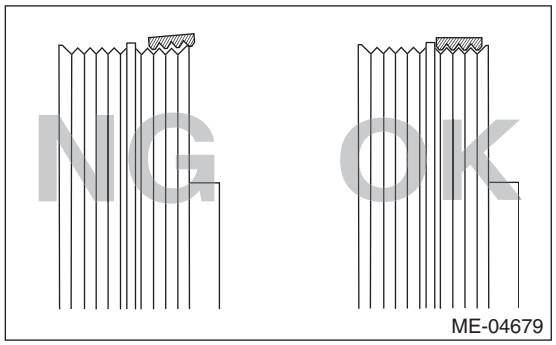

(4) The surface of the rear side belt is held by the belt stopper.

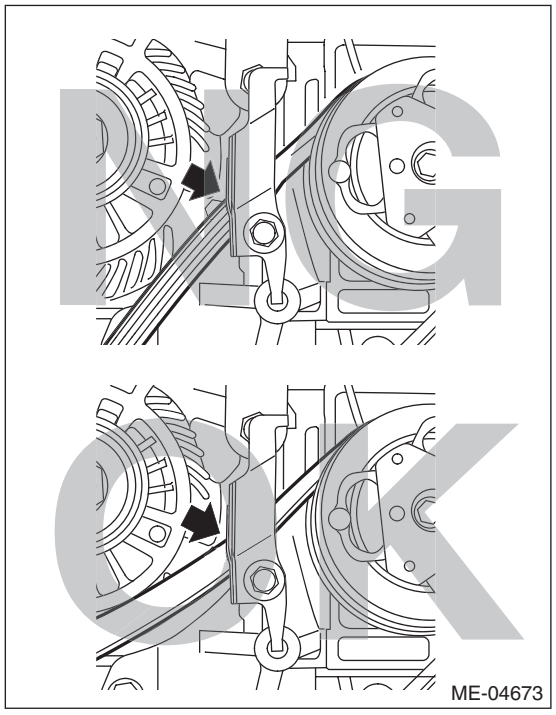

(5) The rear side belt is securely placed on the belt guide.

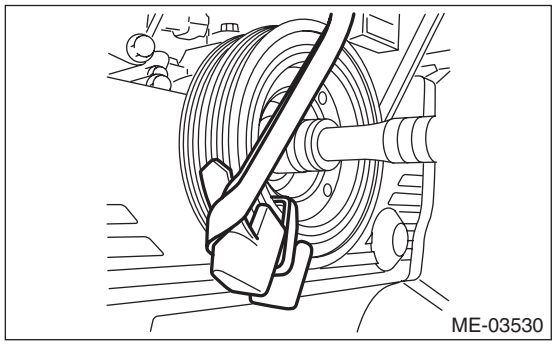

13) Slowly turn the crank pulley clockwise, and install the rear side belt.

CAUTION:
Be careful that the total of procedures 8), 11), 12) and 13) does not exceed 330°; failure to do so may cause damage to the rear side belt and fall of the belt guide holder.

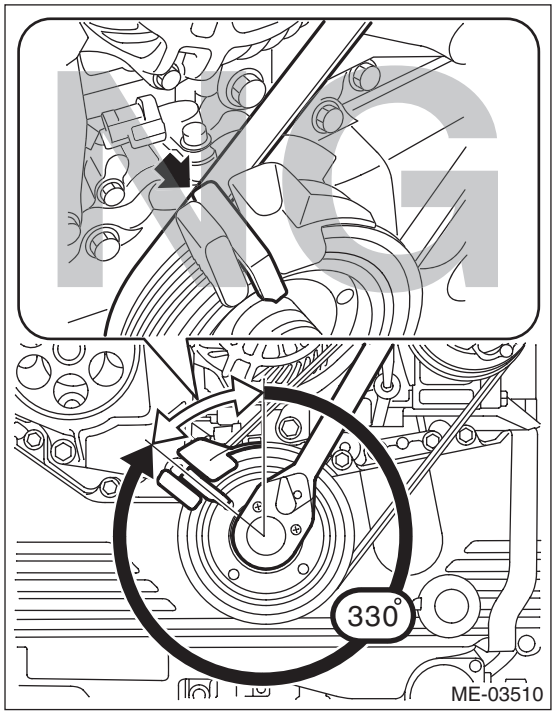

14) Remove the belt guide and belt guide holder from the crank pulley.

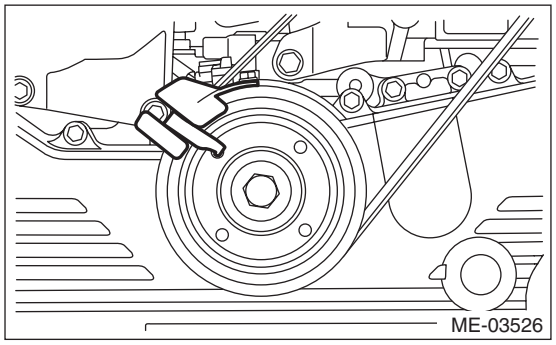

15) Remove the belt stopper from the compressor bracket.

CAUTION:
Always remove the belt stopper; failure to do so may cause smoke, fire, or belt cutting.

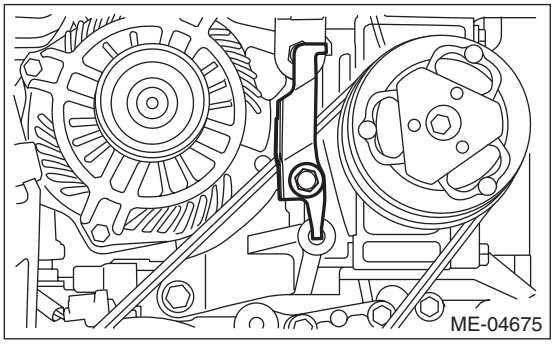

16) Make sure that the belt rib is securely installed on the groove of each pulley, then turn the crank pulley slowly, twice in the clockwise direction, to seat the rear side belt properly.

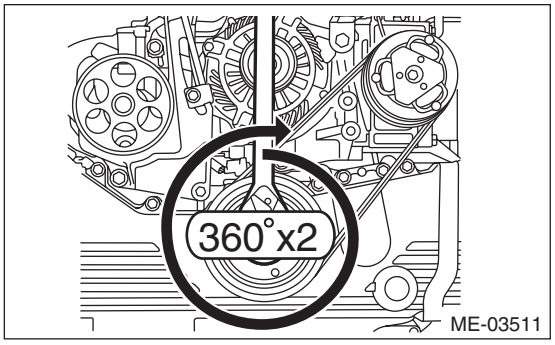

17) Discard the provided tools (belt stopper, belt guide, belt guide holder, and bolt) that are used.
18) Install the front side belt. <Ref. to ME(STI)-41, FRONT SIDE BELT, INSTALLATION, V-belt.>

C: INSPECTION

1. FRONT SIDE BELT

CAUTION:
Check and adjust the front side belt tension so that it is within the specified range. Using the belt with a tension out of the specified range may result in a fault such as the following:
• If the front side belt tension is higher, unexpected force is generated at the power steering oil pump, generator and crankshaft bearing, causing abnormal noise due to abnormal wear of the bearing.
• If the front side belt tension is lower, the front side belt and crank pulley slip, causing abnormally high temperature on the crank pulley due to frictional heat. If this condition repeatedly occurs, the front side belt may abnormally wear, causing abnormal noise, front side belt damage or crank pulley damage.

1) Replace the front side belt, if crack, fraying or wear is found.
2) Check the front side belt tension and adjust it if necessary by changing the generator installing position.

Front side belt tension (with belt tension gauge):
When installing new parts
640 — 780 N (65 — 80 kgf, 144 — 175 lbf)
At inspection
490 — 640 N (50 — 65 kgf, 110 — 144 lbf)

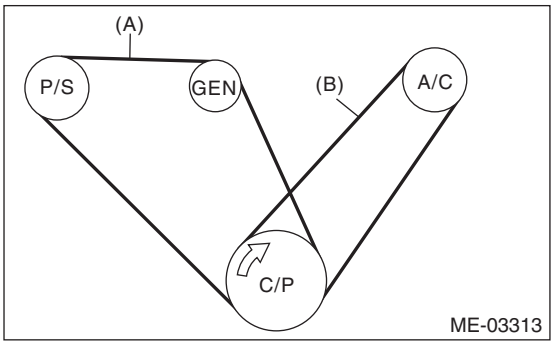

(A) Front side belt
(B) Rear side belt
C/P Crank pulley
GEN Generator pulley
P/S Power steering oil pump pulley
A/C A/C compressor pulley

Front side belt tension (without belt tension gauge):
When installing new parts
7 — 9 mm (0.276 — 0.354 in)
At inspection
9 — 11 mm (0.354 — 0.433 in)

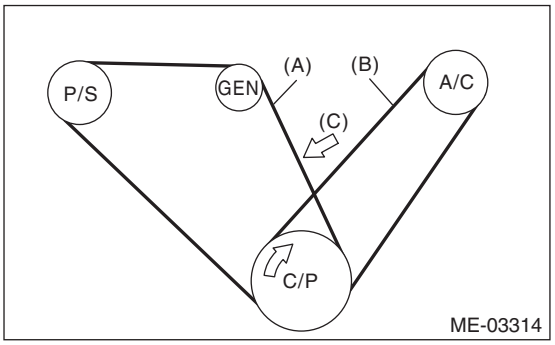

(A) Front side belt
(B) Rear side belt
(C) 98 N (10 kgf, 22 lbf)
C/P Crank pulley
GEN Generator pulley
P/S Power steering oil pump pulley
A/C A/C compressor pulley

3) Start the engine and confirm that the V-belt rotates smoothly and no abnormal noise is emitted.

2. REAR SIDE BELT

Replace the rear side belt, if crack, fraying or wear is found, or noise is emitted.

NOTE:
For the rear side belt, a stretch type belt is used, and therefore, it is not necessary to check deflection nor tension.

13.Crank Pulley

A: REMOVAL

NOTE:
When replacing a single part, perform the work with the engine assembly installed to body.
1) Remove the V-belts. <Ref. to ME(STI)-41, REMOVAL, V-belt.>
2) Use the ST to lock the crank pulley, and remove the crank pulley bolt.
ST 499977100 CRANK PULLEY WRENCH

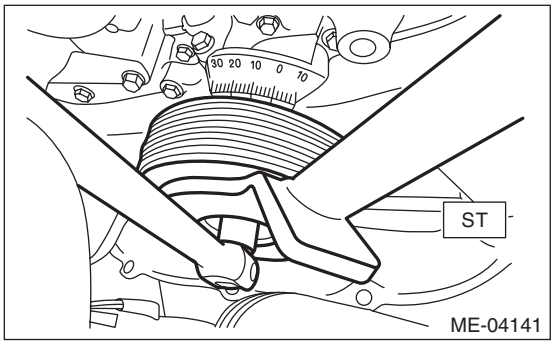

3) Remove the crank pulley.

B: INSTALLATION

1) Clean the crankshaft thread using compressed air.
2) Install the crank pulley.
3) Apply engine oil to the crank pulley bolt seat and thread.
4) Tighten the crank pulley bolts.
(1) Use the ST to lock the crank pulley, and temporarily tighten the crank pulley bolt.
ST 499977100 CRANK PULLEY WRENCH

Tightening torque:
47 N·m (4.8 kgf-m, 34.7 ft-lb)

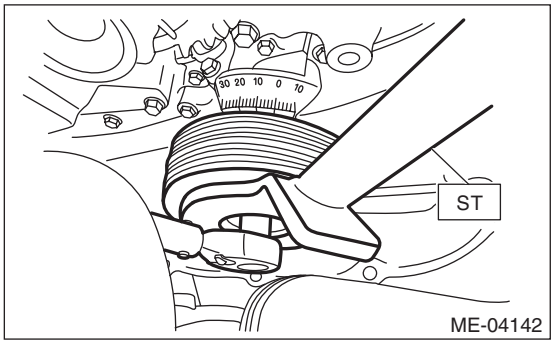

(2) Draw reference lines (A) and (B) using a marker to set the socket to the crank pulley bolt as shown in the figure.

NOTE:
Set the socket onto the crank pulley bolt so that reference lines (A) and (B) is visible.
ST 499977100 CRANK PULLEY WRENCH

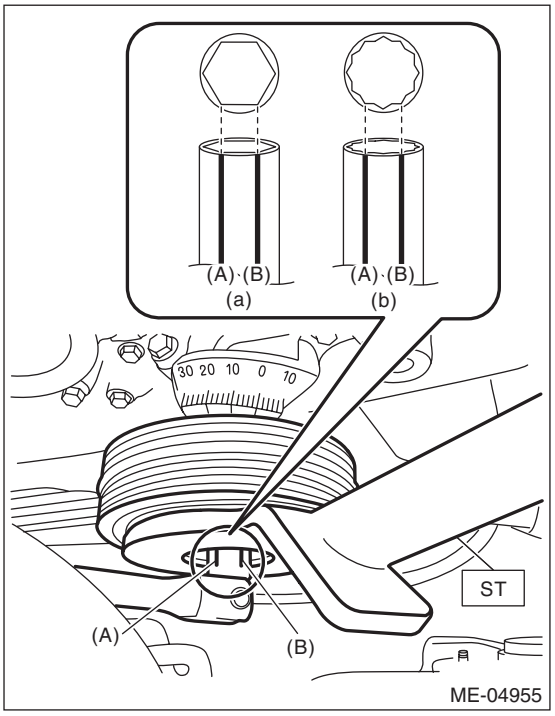

(a) When using 6-point socket
(b) When using 12-point socket

(3) Draw end line (C) on ST using a marker at the same position as reference line (B) drawn on the socket in step (2).
ST 499977100 CRANK PULLEY WRENCH

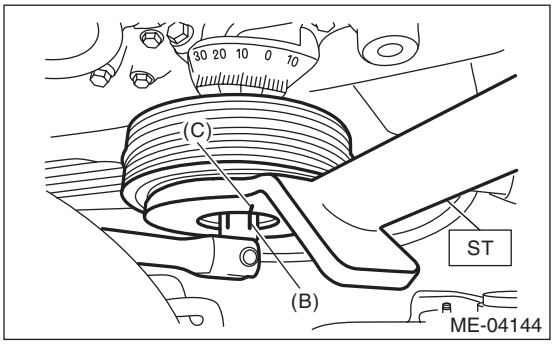

(4) Use the ST to lock the crank pulley, and tighten the crank pulley bolt to the angle where reference line (A) and end line (C) are aligned.

NOTE:
It should be approx. 60° when reference line (A) and end line (C) are aligned.
ST 499977100 CRANK PULLEY WRENCH

Tightening angle:
60°±5°

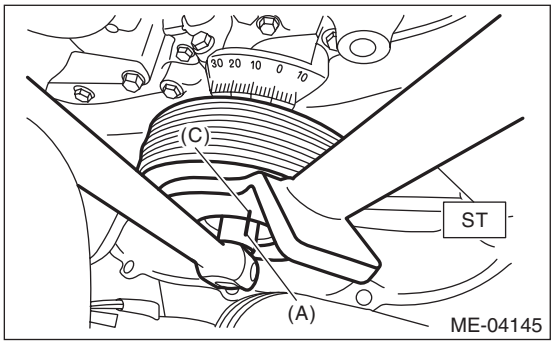

5) Install the V-belts. <Ref. to ME(STI)-41, INSTALLATION, V-belt.>

C: INSPECTION

1) Check that the crank pulley has no deformation, cracks or other damages.

14.Timing Belt Cover

A: REMOVAL

NOTE:
When replacing a single part, perform the work with the engine assembly installed to body.
1) Remove the secondary air pump. <Ref. to EC(STI)-55, REMOVAL, Secondary Air Pump.>
2) Remove the crank pulley. <Ref. to ME(STI)-49, REMOVAL, Crank Pulley.>
3) Remove the timing belt cover RH (A).
4) Remove the timing belt cover LH (C) together with the engine harness stay (B).
5) Remove the front timing belt cover (D).

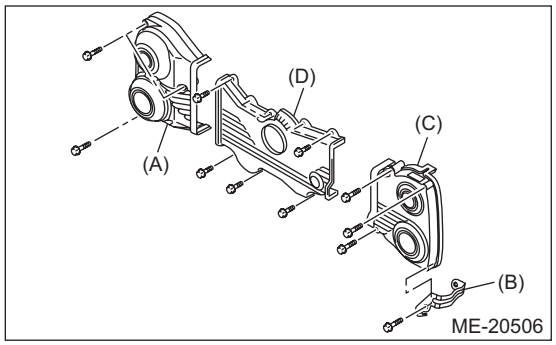

B: INSTALLATION

1) Install the front timing belt cover (D).

Tightening torque:
5 N·m (0.5 kgf-m, 3.7 ft-lb)
2) Install the timing belt cover LH (C) together with the engine harness stay (B).

Tightening torque:
5 N·m (0.5 kgf-m, 3.7 ft-lb)
3) Install the timing belt cover RH (A).

Tightening torque:
5 N·m (0.5 kgf-m, 3.7 ft-lb)

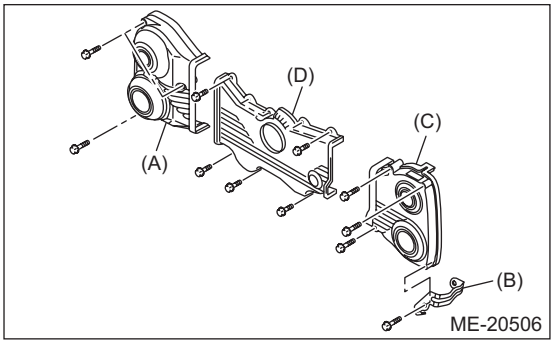

4) Install the crank pulley. <Ref. to ME(STI)-49, INSTALLATION, Crank Pulley.>
5) Install the secondary air pump. <Ref. to EC(STI)-55, INSTALLATION, Secondary Air Pump.>

C: INSPECTION

Check the timing belt cover for damage.

15.Timing Belt

A: REMOVAL

NOTE:
• When replacing a single part, perform the work with the engine assembly installed to body.
• When performing the work with the engine installed to body, the following parts must also be removed/installed.
  • Radiator main fan motor assembly <Ref. to CO(STI)-22, REMOVAL, Radiator Main Fan and Fan Motor.> <Ref. to CO(STI)-22, INSTALLATION, Radiator Main Fan and Fan Motor.>
  • Radiator sub fan motor assembly <Ref. to CO(STI)-24, REMOVAL, Radiator Sub Fan and Fan Motor.> <Ref. to CO(STI)-24, INSTALLATION, Radiator Sub Fan and Fan Motor.>
• When performing the work with the engine installed to body, protect the radiator with cardboards or blankets.

1. TIMING BELT

1) Remove the crank pulley. <Ref. to ME(STI)-49, REMOVAL, Crank Pulley.>
2) Remove the timing belt cover. <Ref. to ME(STI)-51, REMOVAL, Timing Belt Cover.>
3) Remove the timing belt guide.

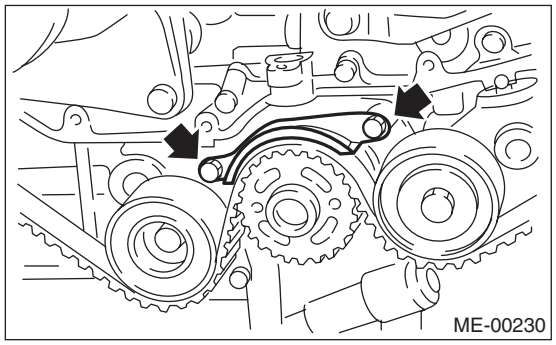
ME-00230

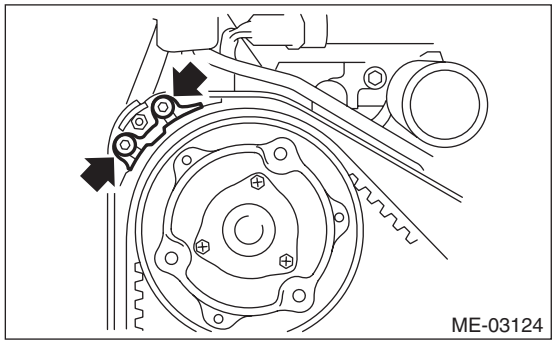
ME-03124

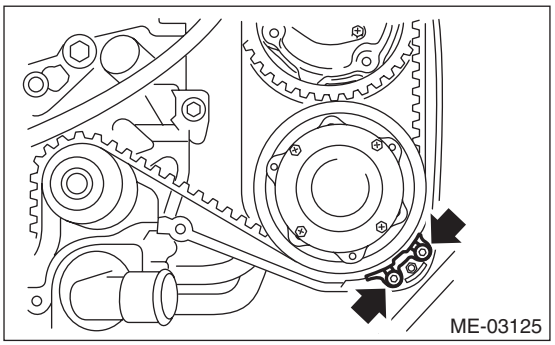
ME-03125

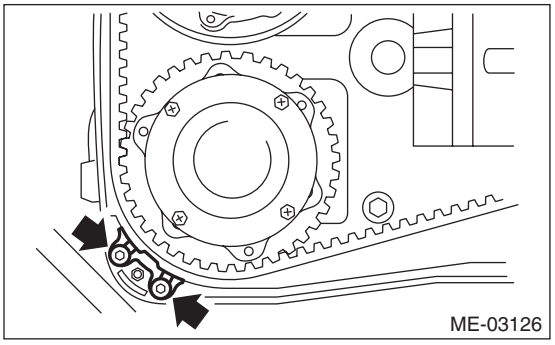
ME-03126

4) If the alignment mark or arrow mark (which indicates the direction of rotation) on timing belt fade away, put new marks before removing the timing belt as shown in procedures below.
  (1) Turn the crankshaft using ST, and align the alignment marks on crank sprocket, intake cam sprocket LH, exhaust cam sprocket LH, intake cam sprocket RH and exhaust cam sprocket RH with marks on oil pump and notches of timing belt cover.

ST 499987500 CRANKSHAFT SOCKET

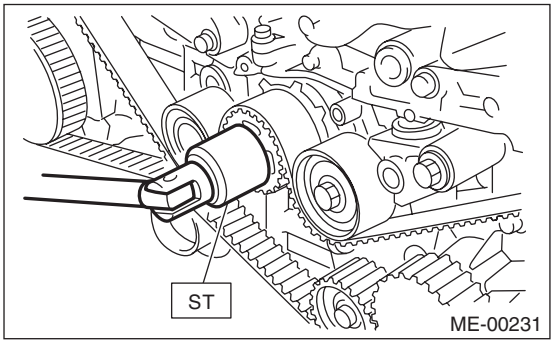

ME-00231

(2) Using white paint, put an alignment mark or an arrow mark on timing belts in relation to the crank sprocket and cam sprockets.

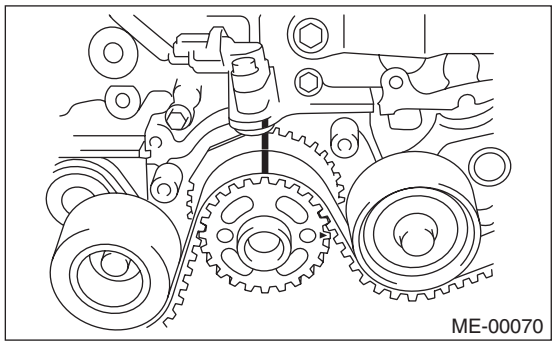
ME-00070

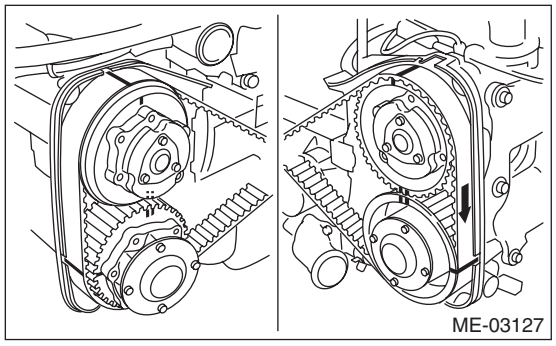
ME-03127

Z_1: 54.5 teeth
Z_2: 51 teeth
Z_3: 28 teeth

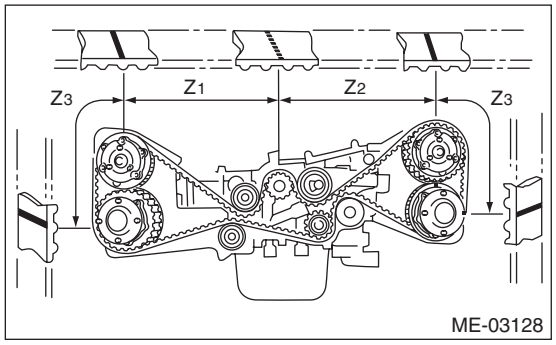

ME-03128

5) Remove the belt idler (A).

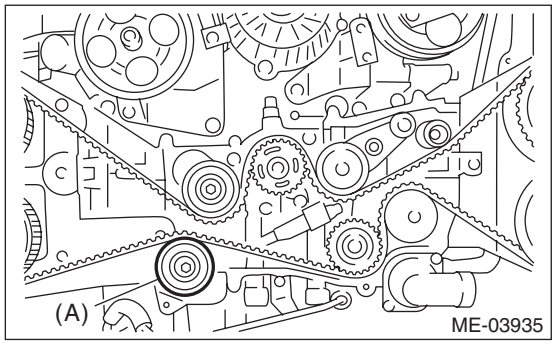

ME-03935

6) Remove the timing belt.

CAUTION:
After the timing belt has been removed, never rotate the intake and exhaust sprocket. If the cam sprocket is rotated, the intake and exhaust valve heads strike together and valve stems are bent.

2. AUTOMATIC BELT TENSION ADJUSTER ASSEMBLY AND BELT IDLER

1) Remove the belt idler (A) and (B).

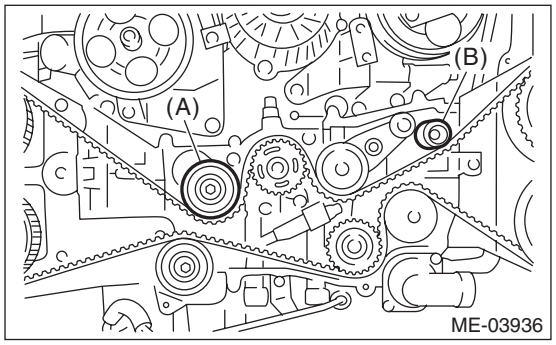

ME-03936

2) Remove the belt idler No. 2.

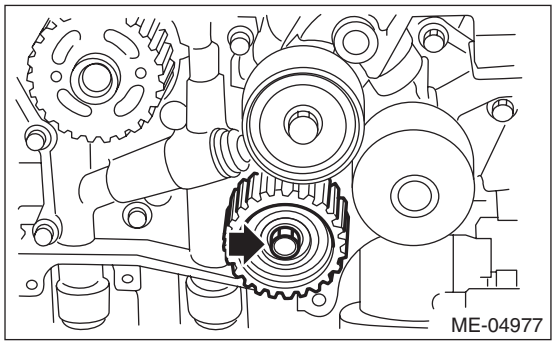
ME-04977

3) Remove the automatic belt tension adjuster assembly.

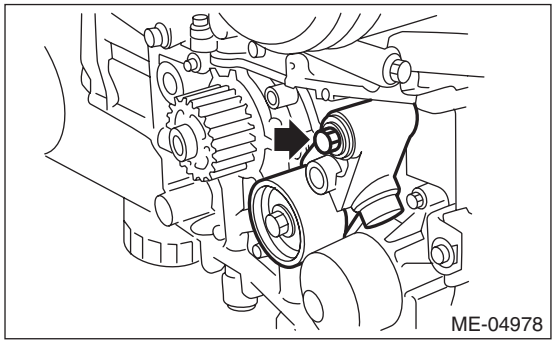
ME-04978

B: INSTALLATION

1. AUTOMATIC BELT TENSION ADJUSTER ASSEMBLY AND BELT IDLER

1) Prepare for installation of the automatic belt tension adjuster assembly.

CAUTION:
• Always use a vertical type pressing tool to move the adjuster rod down.
• Do not use a lateral type vise.
• Push the adjuster rod vertically.
• Press-in the push adjuster rod gradually taking three minutes or more.
• Do not allow press pressure to exceed 9,807 N (1,000 kgf, 2,205 lbf).
• Push in the adjuster rod to the end face of the cylinder. However, do not press the adjuster rod below the end face of the cylinder. Doing so may damage the cylinder.
• Do not release the press pressure until stopper pin is completely inserted.

(1) Attach the automatic belt tension adjuster assembly to vertical pressing tool.

(2) Slowly push in the adjuster rod with a pressure of 165 N (16.8 kgf, 37.1 lbf) or more until the adjuster rod is aligned with the stopper pin hole in the cylinder.

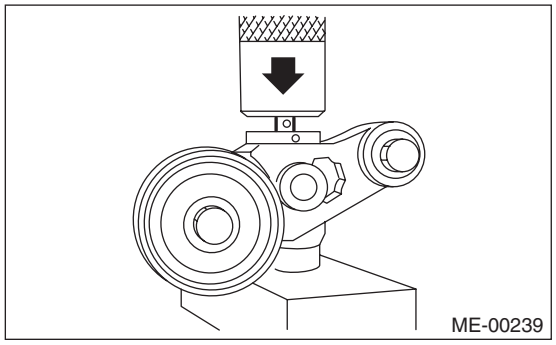
ME-00239

(3) With a 2 mm (0.08 in) dia. stopper pin or a 2 mm (nominal) dia. hex wrench inserted into the stopper pin hole in cylinder, secure the adjuster rod.

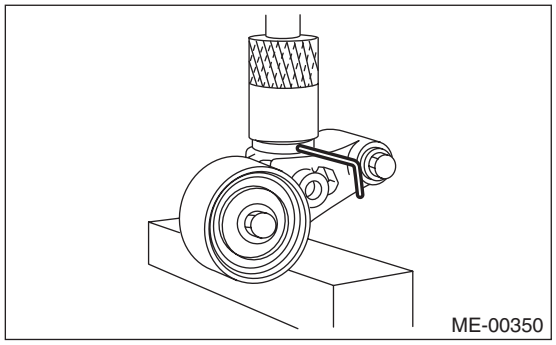
ME-00350

2) Install the automatic belt tension adjuster assembly.

Tightening torque:
39 N·m (4.0 kgf-m, 28.8 ft-lb)

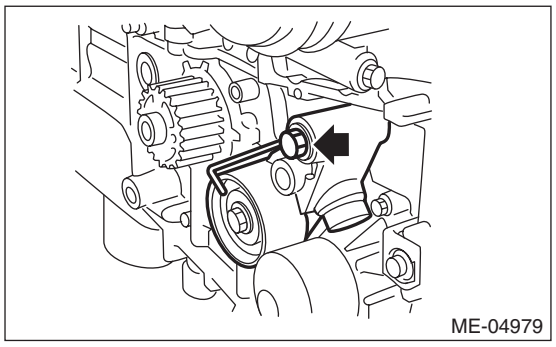
ME-04979

3) Install the belt idler No. 2.

Tightening torque:
39 N·m (4.0 kgf-m, 28.8 ft-lb)

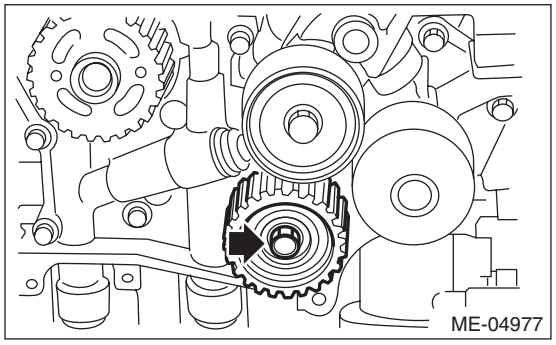
ME-04977

4) Install the belt idlers.

Tightening torque:
39 N·m (4.0 kgf-m, 28.8 ft-lb)

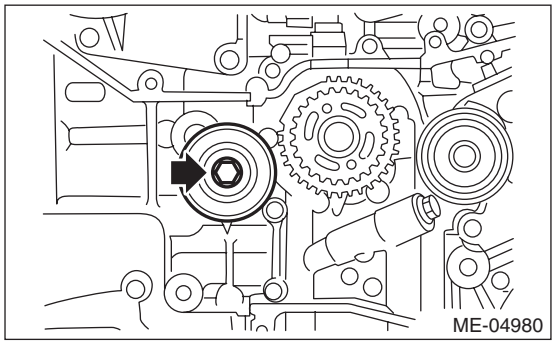
ME-04980

Tightening torque:
25 N·m (2.5 kgf-m, 18.4 ft-lb)

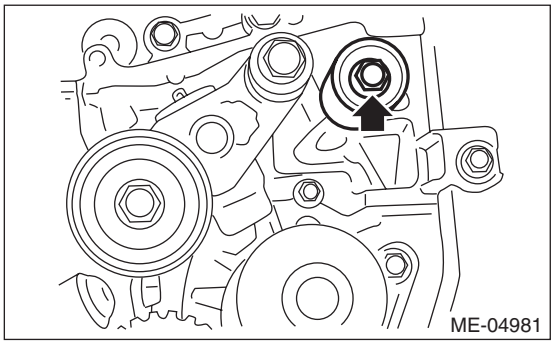

2. TIMING BELT

1) Prepare for installation of the automatic belt tension adjuster assembly. <Ref. to ME(STI)-54, AUTOMATIC BELT TENSION ADJUSTER ASSEMBLY AND BELT IDLER, INSTALLATION, Timing Belt.>
2) Align the mark (B) on crank sprocket with the mark (A) on oil pump.

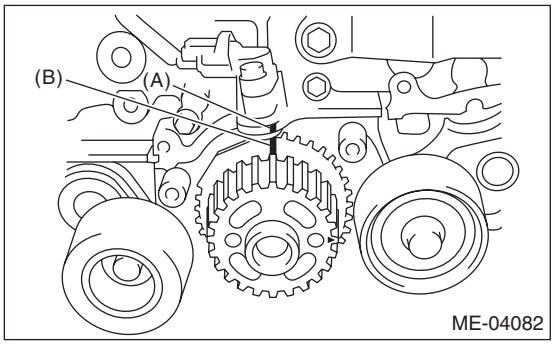

3) Align the single line mark (B) on the exhaust cam sprocket RH with notch (A) on the timing belt cover.

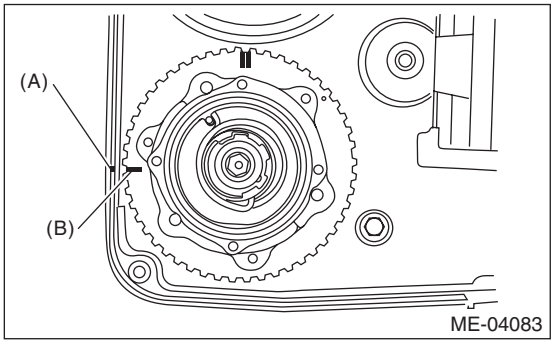

4) Align the single line mark (B) on the intake cam sprocket RH with notch (A) on the timing belt cover. Make sure that the double line marks (C) on intake cam sprocket and exhaust cam sprocket are aligned.

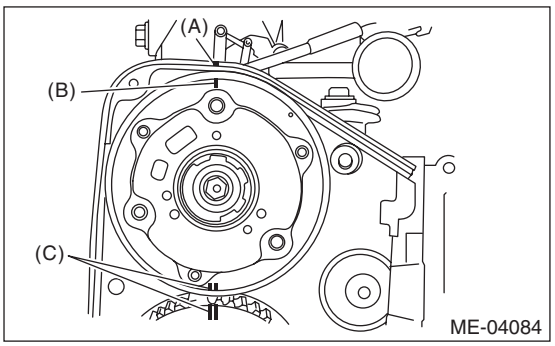

5) Align the single line mark (B) on exhaust cam sprocket LH with notch (A) on the timing belt cover by turning the sprocket counterclockwise (as viewed from front of engine).

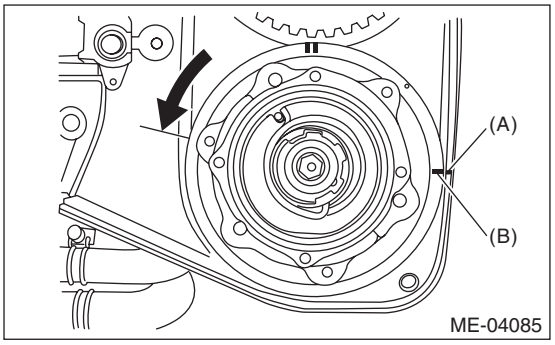

6) Align the single line mark (B) on intake cam sprocket LH with notch (A) on the timing belt cover by turning the sprocket clockwise (as viewed from front of engine). Make sure that the double line marks (C) on intake cam sprocket and exhaust cam sprocket are aligned.

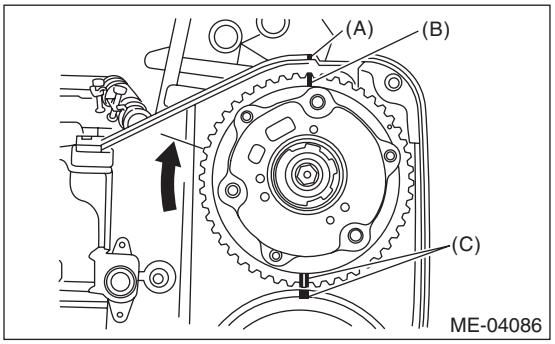

7) Make sure that the cam and crank sprockets are positioned properly.

CAUTION:

• Intake and exhaust camshafts for this DOHC engine can be independently rotated with the timing belts removed. As can be seen from the figure, if the intake and exhaust valves are lifted simultaneously, heads will interfere with each other, resulting in bent valves.

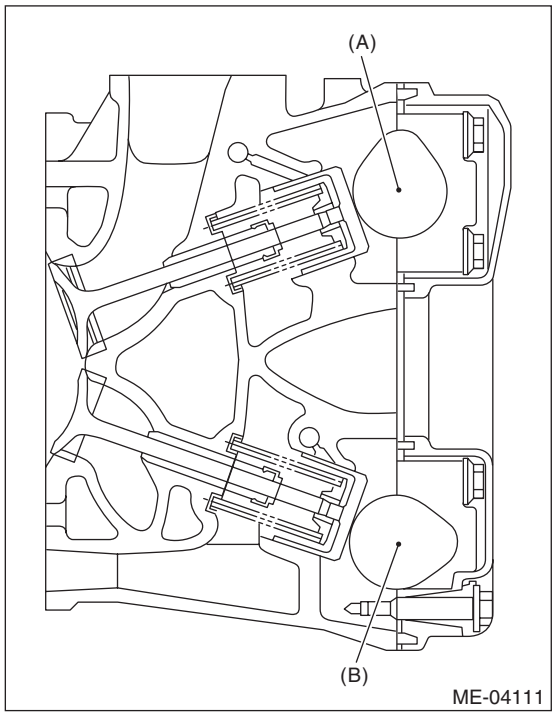

(A) Intake camshaft
(B) Exhaust camshaft

• When the timing belts are not installed, four camshafts are held at the "zero-lift" position, where all cams on camshafts are not pushing down on the intake and exhaust valves. (Under this condition, all valves remain unlifted.)

• When the camshafts are rotated to install the timing belts, #2 intake and #4 exhaust cam of camshaft LH are held, pushing their corresponding valves down. (Under this condition, these valves are held lifted.) Camshaft RH are held so that their cams do not push the valves down.

• Camshafts LH must be rotated from the zero-lift position to the position where the timing belt is to be installed with the smallest possible angle, in order to prevent mutual interference of intake and exhaust valve heads.

• Do not allow the camshafts to rotate in the direction shown in the upper figure. Doing this may cause both the intake and exhaust valves to lift simultaneously, resulting in mutual interference of valve heads.

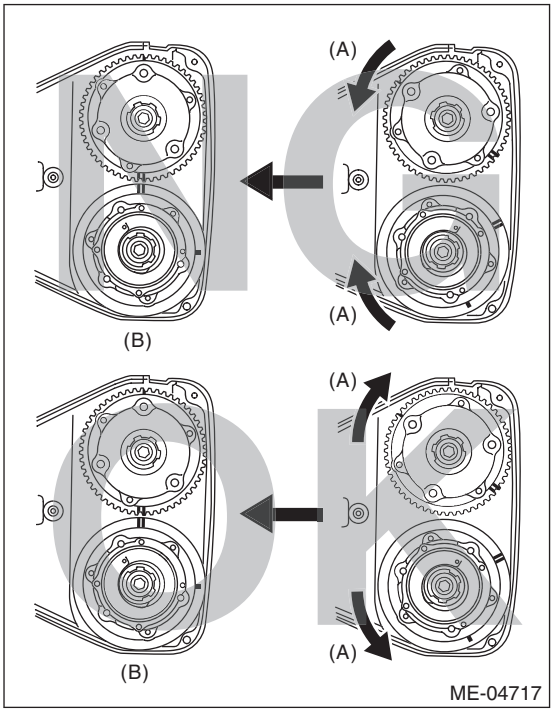

(A) Direction of rotation
(B) Timing belt installation position

8) Align the alignment mark on the timing belt with marks on the sprockets in the alphabetical order shown in the figure. While aligning marks, position the timing belt properly, and install the timing belt.

CAUTION:
- **If the timing belt slips by 1 or more teeth, the valve and piston may hit each other.**
- **Make sure that the direction of belt rotation is correct.**

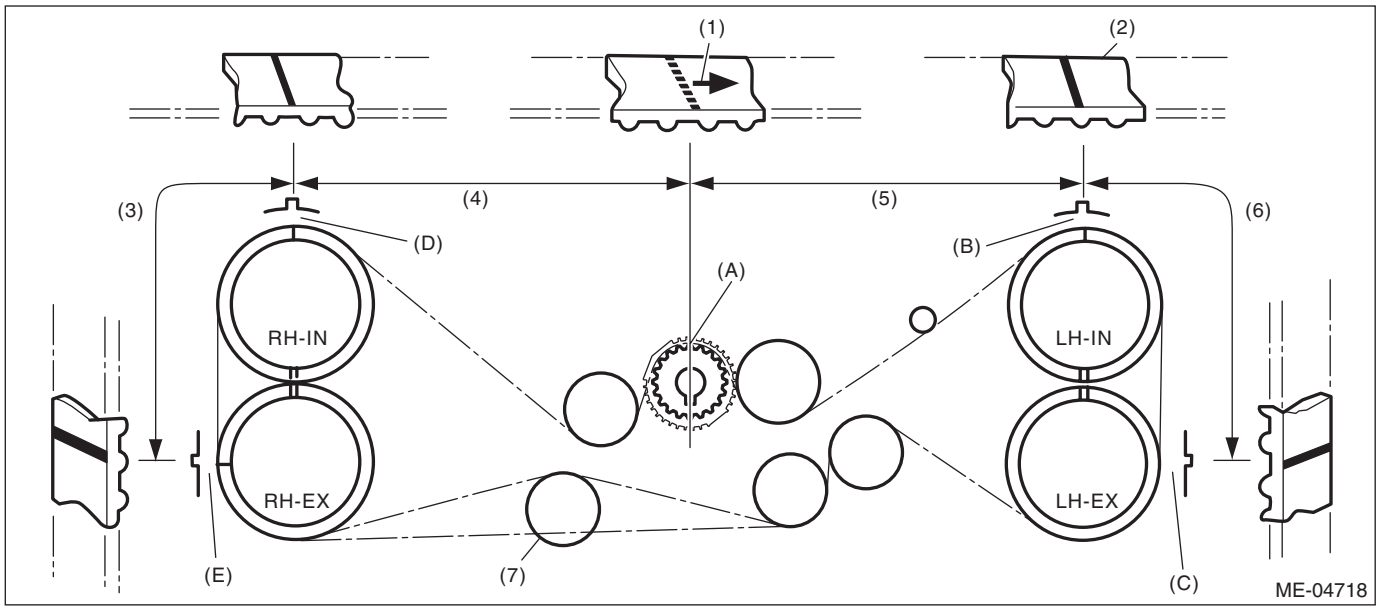

(1) Arrow mark
(2) Timing belt
(3) 28 teeth
(4) 54.5 teeth
(5) 51 teeth
(6) 28 teeth
(7) Install it in the end

9) Install the belt idlers.

Tightening torque:
39 N·m (4.0 kgf-m, 28.8 ft-lb)

NOTE:
Make sure that the marks on the timing belt and sprockets are aligned.

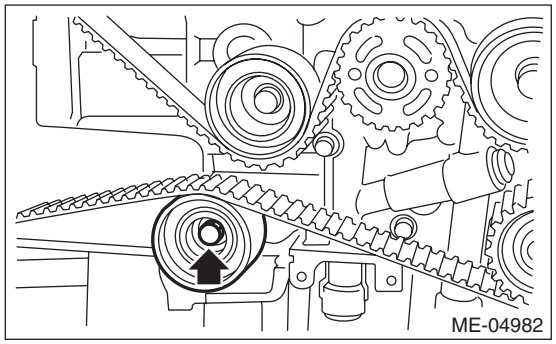

10) After ensuring that the marks on the timing belt and sprockets are aligned, remove the stopper pin from tensioner adjuster.

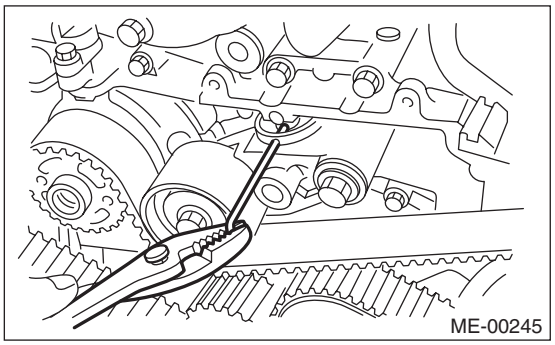
ME-00245

11) Install the timing belt guide.
(1) Temporarily tighten the bolts mounting the timing belt guide.

NOTE:
• Before installing the timing belt guide, clean the timing belt guide mounting bolt holes of the timing belt cover No. 2.
• Apply liquid gasket to the thread of the timing belt guide mounting bolt on the cam sprocket section. (When reusing bolts)

Liquid gasket:
THREE BOND 1324 (Part No. 004403042) or equivalent

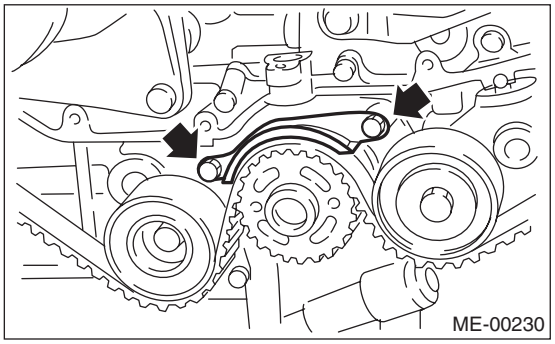
ME-00230

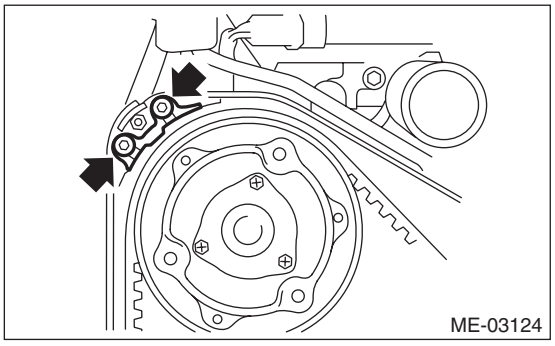
ME-03124

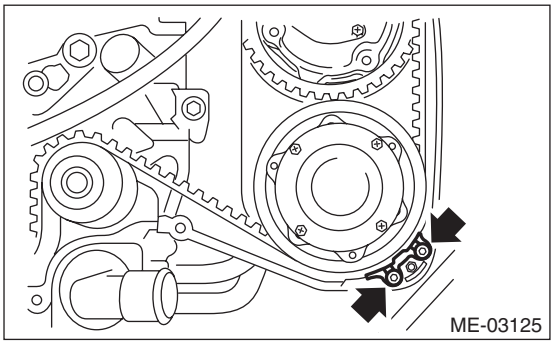
ME-03125

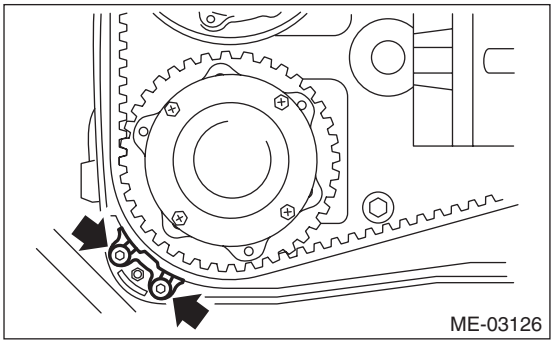
ME-03126

(2) Adjust the clearance between timing belt and timing belt guide using a thickness gauge and tighten.

Clearance:
1.0±0.5 mm (0.039±0.020 in)

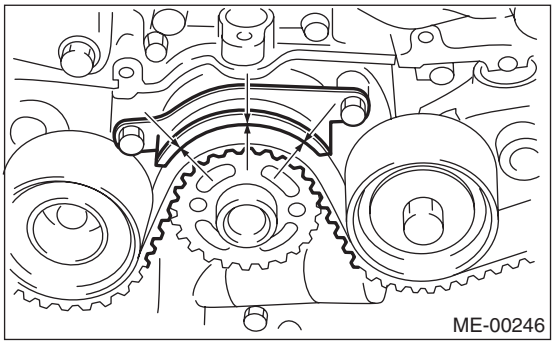
ME-00246

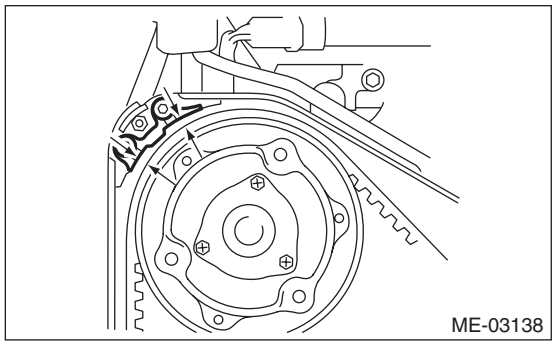
ME-03138

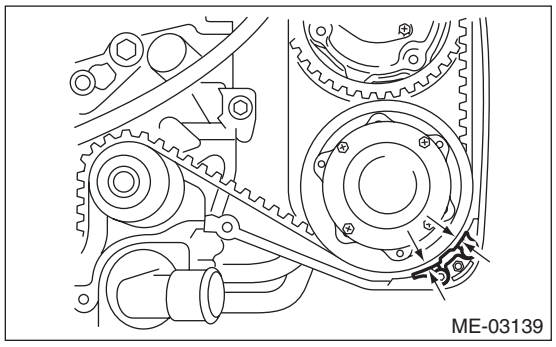
ME-03139

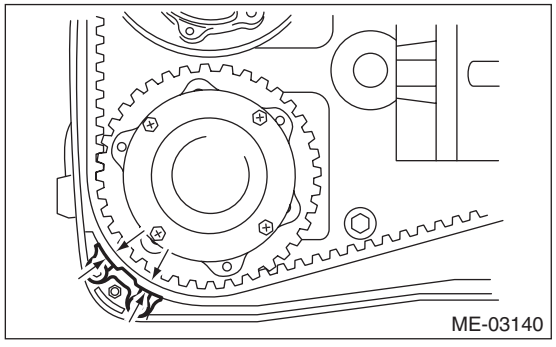
ME-03140

Tightening torque:
9.75 N·m (1.0 kgf-m, 7.2 ft-lb)

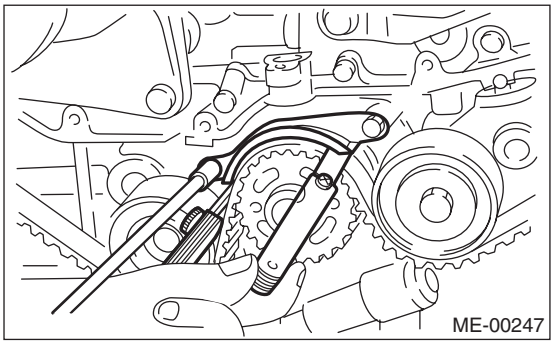
ME-00247

Tightening torque:
6.4 N·m (0.7 kgf-m, 4.7 ft-lb)

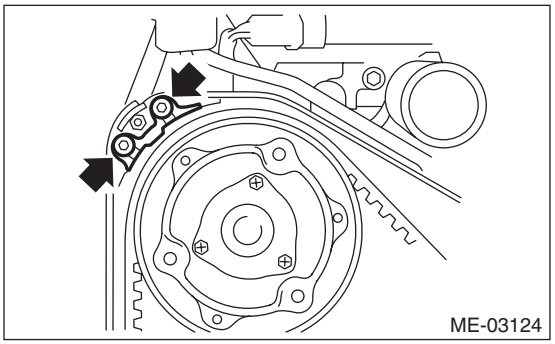
ME-03124

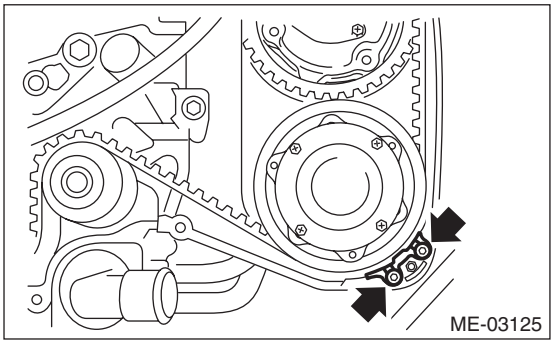
ME-03125

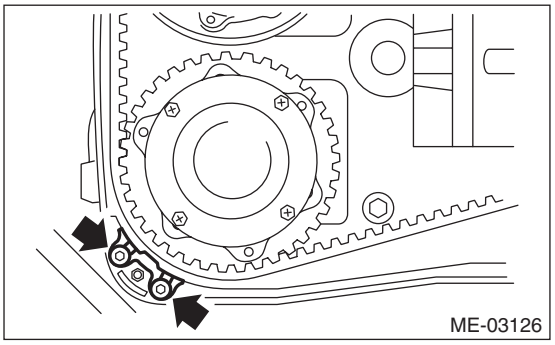
ME-03126

12) Install the timing belt cover. <Ref. to ME(STI)-51, INSTALLATION, Timing Belt Cover.>
13) Install the crank pulley. <Ref. to ME(STI)-49, INSTALLATION, Crank Pulley.>

C: INSPECTION

1. TIMING BELT

1) Check the timing belt teeth for breaks, cracks or wear. If any fault is found, replace the timing belt.
2) Check the condition on the back surface of the timing belt. If cracks are found, replace the timing belt.

CAUTION:
• Be careful not to let oil, grease or coolant contact the timing belt. Remove quickly and thoroughly if this happens.
• Do not bend the timing belt sharply.

In radial diameter h:
60 mm (2.36 in) or more

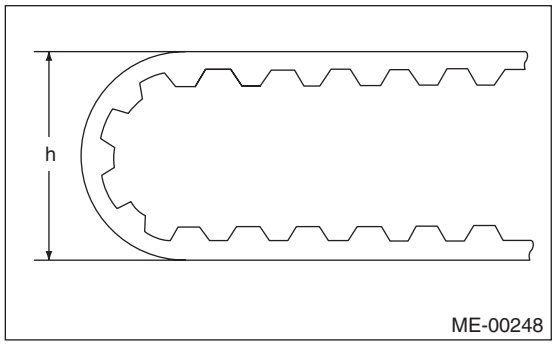

2. AUTOMATIC BELT TENSION ADJUSTER

1) Visually check the oil seals for leaks, and rod ends for abnormal wear and scratches. If necessary, replace the automatic belt tension adjuster assembly.

NOTE:
Slight traces of oil at the rod oil seal does not indicate a problem.
2) Check that the adjuster rod does not move when a pressure of 165 N (16.8 kgf, 37.1 lbf) is applied to it. This is to check adjuster rod stiffness.
3) If the adjuster rod is not stiff enough and moves freely when applying 165 N (16.8 kgf, 37.1 lbf), check it using the following procedures:
(1) Slowly press the adjuster rod down to the end surface of cylinder. Repeat this operation two to three times.
(2) With the adjuster rod moved all the way up, apply a pressure of 165 N (16.8 kgf, 37.1 lbf) to it, and check the adjuster rod stiffness.
(3) If the adjuster rod is not stiff and moves down, replace the automatic belt tension adjuster assembly with a new part.

CAUTION:
• Always use a vertical type pressing tool to move the adjuster rod down.
• Do not use a lateral type vise.
• Push the adjuster rod vertically.
• Press-in the push adjuster rod gradually taking three minutes or more.
• Do not allow press pressure to exceed 9,807 N (1,000 kgf, 2,205 lbf).
• Push in the adjuster rod to the end face of the cylinder. However, do not press the adjuster rod below the end face of the cylinder. Doing so may damage the cylinder.
4) Measure the amount of adjuster rod protrusion "L" from the end surface of the cylinder. If it is not within specifications, replace the automatic belt tension adjuster assembly with a new part.

Protrusion amount of adjuster rod L:
5.2 — 6.2 mm (0.205 — 0.244 in)

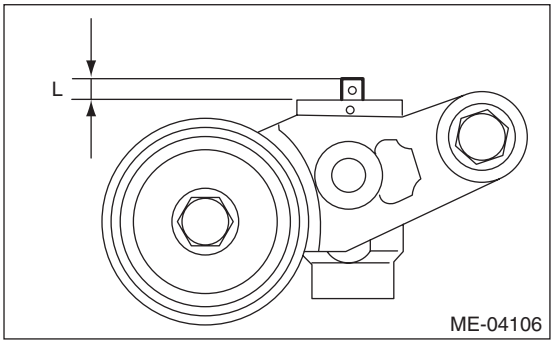

3. BELT TENSION PULLEY

1) Check the mating surfaces of timing belt and contact point of adjuster rod for abnormal wear or scratches. Replace the automatic belt tension adjuster assembly with a new part if faulty.
2) Check the belt tension pulley for smooth rotation. Replace the automatic belt tension adjuster assembly with a new part if abnormal noise or excessive play occurs.
3) Check the belt tension pulley for grease leakage.

4. BELT IDLER

1) Check the belt idler for smooth rotation. Replace if noise or excessive play occurs.
2) Check the outer contacting surfaces of idler pulley for abnormal wear and scratches.
3) Check the belt idler for grease leakage.

16.Cam Sprocket

A: REMOVAL

NOTE:
When replacing a single part, perform the work with the engine assembly installed to body.
1) Remove the crank pulley. <Ref. to ME(STI)-49, REMOVAL, Crank Pulley.>
2) Remove the timing belt cover. <Ref. to ME(STI)-51, REMOVAL, Timing Belt Cover.>
3) Remove the timing belt. <Ref. to ME(STI)-52, REMOVAL, Timing Belt.>
4) Remove the actuator covers of the intake and exhaust cam sprockets.
5) Use the ST to lock the cam sprocket, and remove the cam sprocket bolt.
ST 499977500 CAM SPROCKET WRENCH

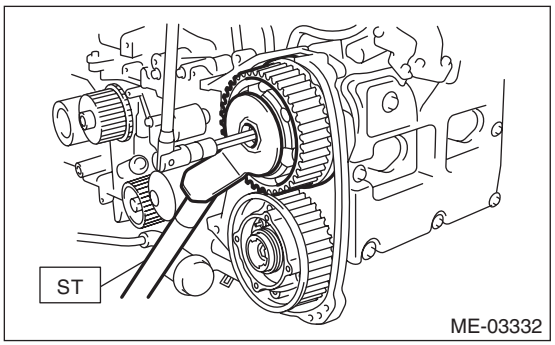

6) Remove the cam sprocket.

B: INSTALLATION

1) Install the cam sprocket.
2) Use the ST to lock the cam sprocket, and install the cam sprocket bolt.

NOTE:
Do not confuse cam sprockets (LH) and (RH), and (INT) and (EXH) during installation.
ST 499977500 CAM SPROCKET WRENCH

Tightening torque:
Tighten to 30 N·m (3.1 kgf-m, 22.1 ft-lb) of torque, and then tighten further by 45°.

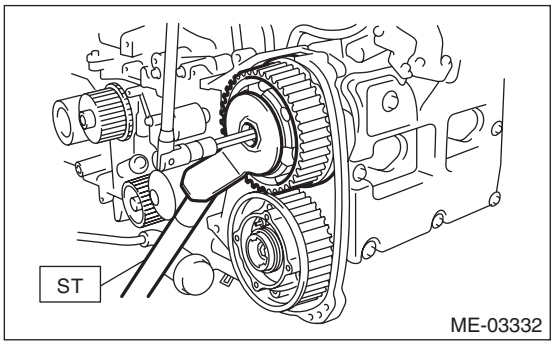

3) Attach the actuator covers of the intake and exhaust cam sprockets.

NOTE:
Use new O-rings.

Tightening torque:
3.4 N·m (0.3 kgf-m, 2.5 ft-lb)
4) Install the timing belt. <Ref. to ME(STI)-54, INSTALLATION, Timing Belt.>
5) Install the timing belt cover. <Ref. to ME(STI)-51, INSTALLATION, Timing Belt Cover.>
6) Install the crank pulley. <Ref. to ME(STI)-49, INSTALLATION, Crank Pulley.>

C: INSPECTION

1) Check the cam sprocket teeth for abnormal wear and scratches.
2) Make sure there is no free play between cam sprocket and key.

17.Crank Sprocket

A: REMOVAL

NOTE:
When replacing a single part, perform the work with the engine assembly installed to body.
1) Remove the crank pulley. <Ref. to ME(STI)-49, REMOVAL, Crank Pulley.>
2) Remove the timing belt cover. <Ref. to ME(STI)-51, REMOVAL, Timing Belt Cover.>
3) Remove the timing belt. <Ref. to ME(STI)-52, REMOVAL, Timing Belt.>
4) Remove the crank sprocket.

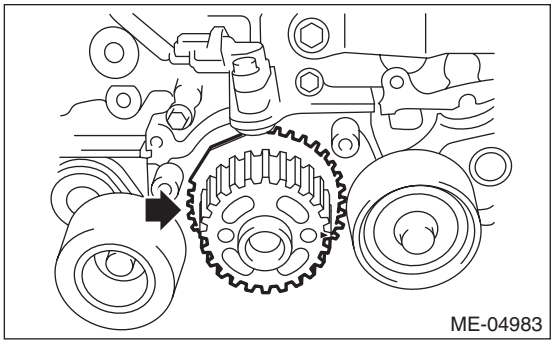

B: INSTALLATION

1) Install the crank sprocket.

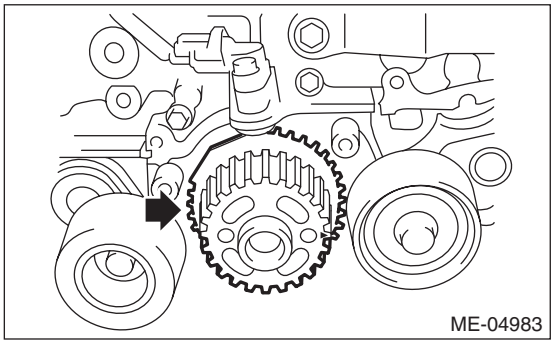

2) Install the timing belt. <Ref. to ME(STI)-54, INSTALLATION, Timing Belt.>
3) Install the timing belt cover. <Ref. to ME(STI)-51, INSTALLATION, Timing Belt Cover.>
4) Install the crank pulley. <Ref. to ME(STI)-49, INSTALLATION, Crank Pulley.>

C: INSPECTION

1) Check the crank sprocket teeth for abnormal wear and scratches.
2) Make sure there is no free play between crank sprocket and key.
3) Check the crank sprocket protrusion used for sensor for damage and contamination of foreign matter.

18.Camshaft

A: REMOVAL

1) Remove the engine from the vehicle. <Ref. to ME(STI)-30, REMOVAL, Engine Assembly.>
2) Remove the rear side belt. <Ref. to ME(STI)-41, REAR SIDE BELT, REMOVAL, V-belt.>
3) Remove the crank pulley. <Ref. to ME(STI)-49, REMOVAL, Crank Pulley.>
4) Remove the timing belt cover. <Ref. to ME(STI)-51, REMOVAL, Timing Belt Cover.>
5) Remove the timing belt. <Ref. to ME(STI)-52, REMOVAL, Timing Belt.>
6) Remove the cam sprocket. <Ref. to ME(STI)-61, REMOVAL, Cam Sprocket.>
7) Disconnect the connector from the intake oil flow control solenoid valve.

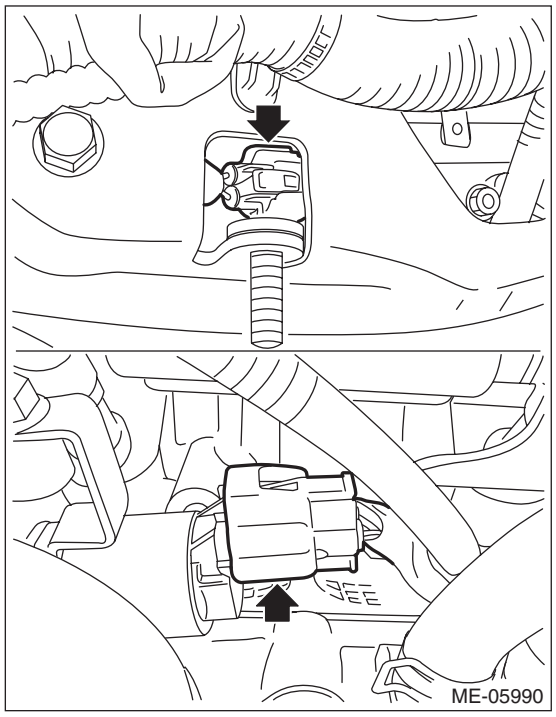

8) Disconnect the connector (A) from the exhaust camshaft position sensor and the connector (B) from the exhaust oil flow control solenoid valve LH.

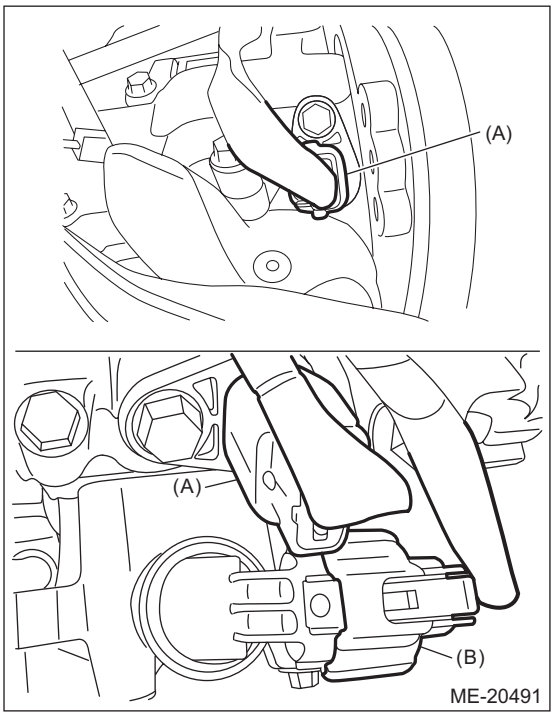

9) Remove the timing belt cover No. 2 RH (A) and timing belt cover No. 2 LH (B).

NOTE:
When removing the timing belt cover, be careful not to damage the seal rubber.

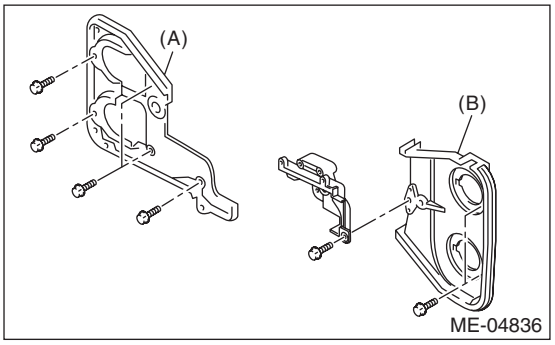

10) Remove the tensioner bracket.

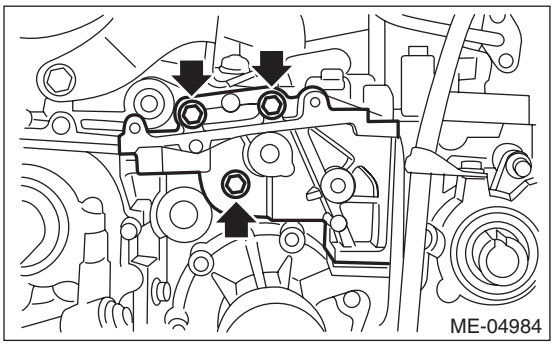

11) Disconnect the connector (A) from the exhaust oil flow control solenoid valve.

12) Remove the engine harness fixing clip (B) and clip (C) from the engine harness stay.
13) Remove the engine harness stay fixing bolt, and remove the engine harness stay fixing clip (D) and the exhaust oil flow control solenoid valve harness fixing clip (E).
14) Remove the exhaust oil flow control solenoid valve connector (F) from the engine harness stay.

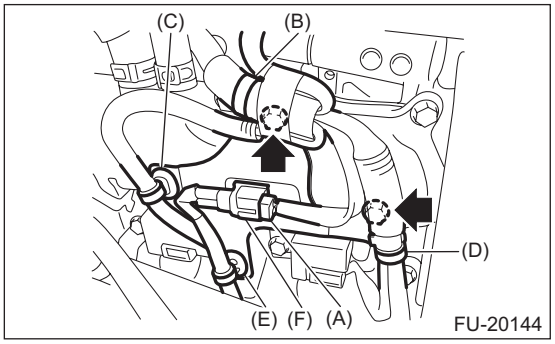

15) Remove the air duct B (B) from the rocker cover LH and the air duct A (A).

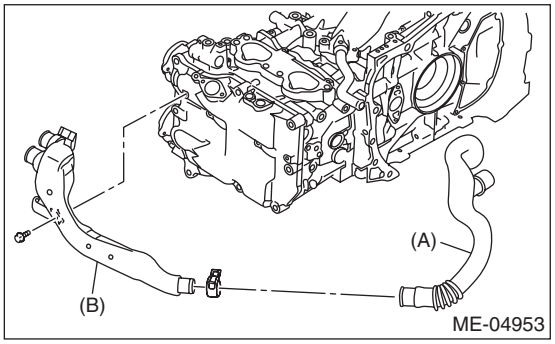

16) Remove the ignition coil. <Ref. to IG(STI)-7, REMOVAL, Ignition Coil.>
17) Remove the rocker cover.
18) Remove the union bolt without filter (without protrusion) which secures the oil pipe to the front camshaft cap.

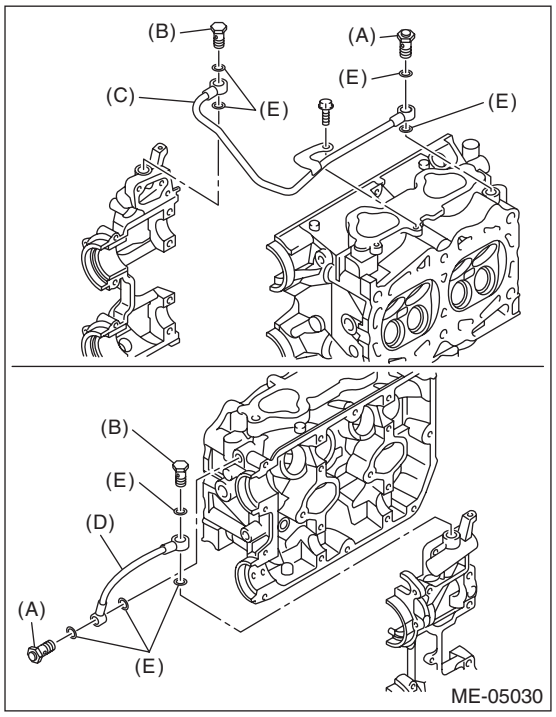

(A) Union bolt with filter (with protrusion)
(B) Union bolt without filter (without protrusion)
(C) Oil pipe RH
(D) Oil pipe LH
(E) Gasket

19) Loosen the upper side of the front camshaft cap and the intake camshaft cap bolts equally, a little at a time in alphabetical sequence shown in the figure.

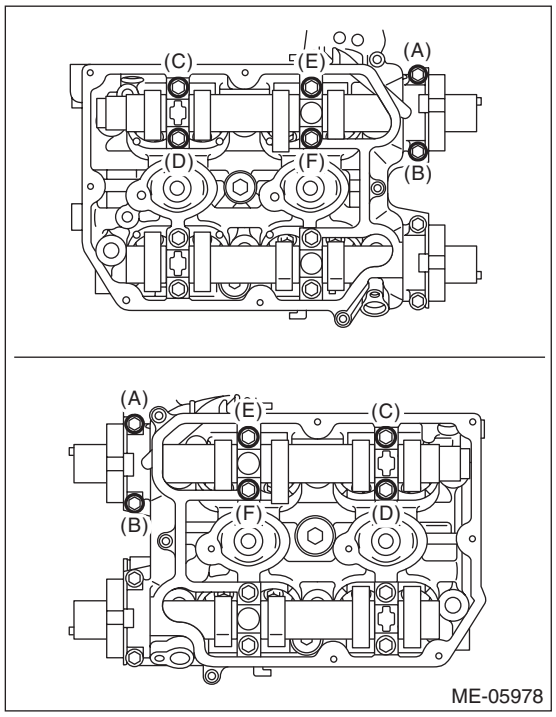

20) Loosen the lower side of the front camshaft cap and the exhaust camshaft cap bolts equally, a little at a time in alphabetical sequence shown in the figure.

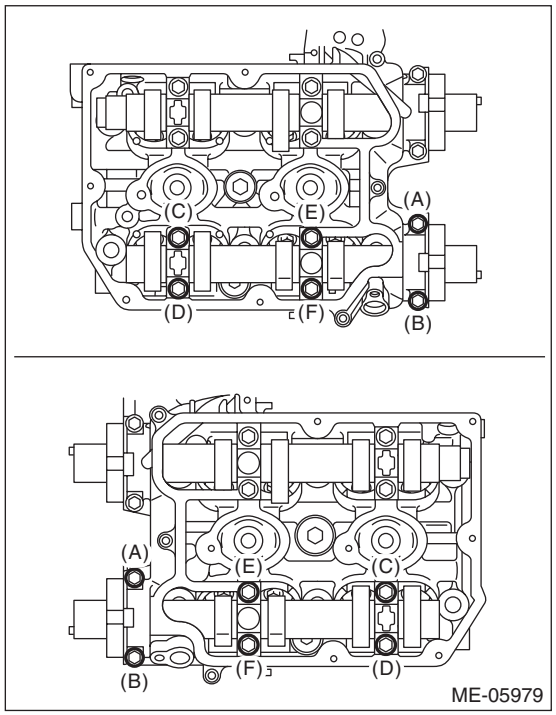

21) Remove the front camshaft cap.
22) Remove the intake camshaft caps and intake camshaft.
23) Remove the exhaust camshaft caps and exhaust camshaft.

NOTE:
Arrange camshaft caps in order so that they can be installed in their original positions.
24) Remove the oil seal.

CAUTION:
Do not scratch the journal surface when removing the oil seal.

B: INSTALLATION

1) Install the camshaft.
Apply engine oil to the cylinder head at camshaft journal installation location before installing the camshaft. Install the camshaft so that each valve is close to or in contact with base circle of the cam lobe.

NOTE:
• Set the camshaft to the position shown in the figure.
• When set at the position shown in the figure, it is not necessary to rotate the camshaft RH when installing the timing belt, but it is necessary to rotate the camshaft LH slightly.

Intake camshaft LH:
Rotate 80° clockwise.

Exhaust camshaft LH:
Rotate 45° counterclockwise.

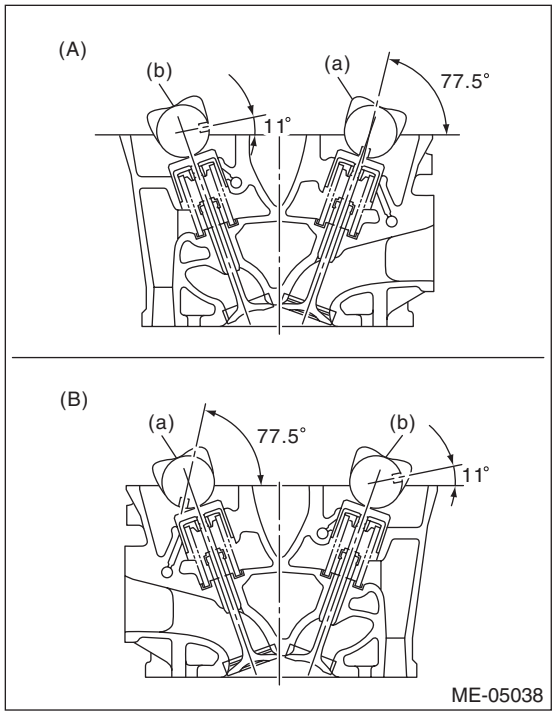

(A) Cylinder head RH
(B) Cylinder head LH
(a) Intake camshaft
(b) Exhaust camshaft

2) Install the camshaft cap.
(1) Apply small amount of liquid gasket to the mating surface of cap.

NOTE:
• Install within 5 min. after applying liquid gasket.
• Do not apply liquid gasket excessively. Applying excessively may cause excess gasket to come out and flow toward oil seal, resulting in oil leak.

Liquid gasket:
THREE BOND 1217G (Part No. K0877Y0100), THREE BOND 1217H or equivalent

Liquid gasket applying diameter:
Mating surfaces other than ranges A and B
2±0.5 mm (0.0787±0.0197 in)
Mating surfaces of ranges A and B
3±1 mm (0.1181±0.0394 in)

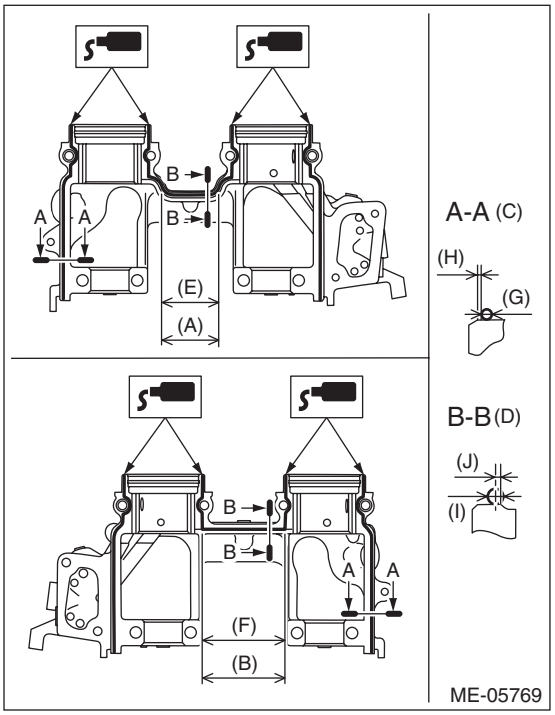

(A) Range A
(B) Range B
(C) Liquid gasket applying position of mating surfaces of ranges other than A and B
(D) Liquid gasket applying position of mating surfaces of ranges A and B
(E) 44.8 mm (1.7638 in)
(F) 65 mm (2.5591 in)
(G) ϕ2±0.5 mm (0.0787±0.0197 in)
(H) 0.5±0.5 mm (0.0197±0.0197 in)
(I) ϕ3±1 mm (0.1181±0.0394 in)
(J) 1 mm (0.0394 in) or less

(2) Apply a thin coat of engine oil to the cap journal surface, and install the camshaft cap to the camshaft.
(3) Gradually tighten the camshaft cap in at least two steps, in alphabetical order shown in the figure, and then tighten to the specified torque.

Tightening torque:
T1: 9.75 N·m (1.0 kgf-m, 7.2 ft-lb)
T2: 20 N·m (2.0 kgf-m, 14.8 ft-lb)

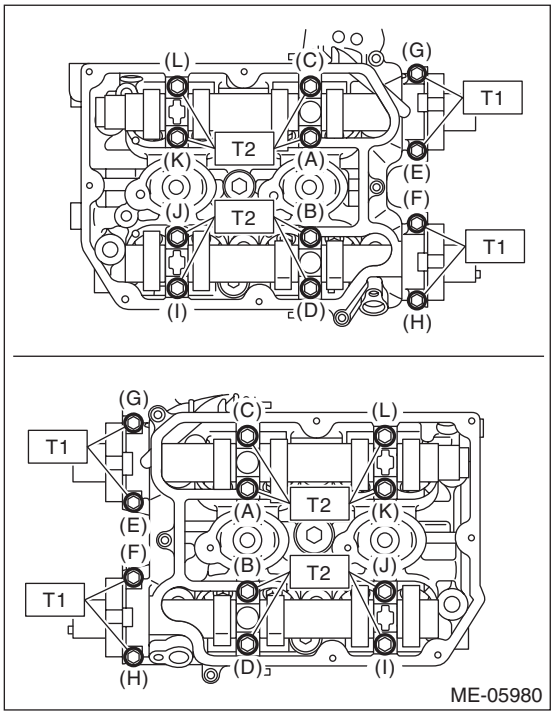

(4) After tightening the camshaft cap, ensure the camshaft rotates only slightly while holding it at base circle.

3) Apply a thin coat of engine oil to the periphery of the camshaft oil seal and oil seal lip, and install the oil seal on the camshaft using ST1 and ST2.

NOTE:
Use a new oil seal.

ST1	499587600	OIL SEAL INSTALLER
ST2	499597200	OIL SEAL GUIDE

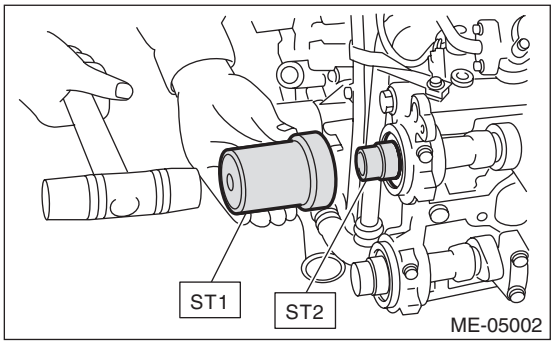

4) Install the oil pipe to the front camshaft cap using the union bolt without filter (without protrusion).

NOTE:
Use a new gasket.

Tightening torque:
29 N·m (3.0 kgf-m, 21.4 ft-lb)

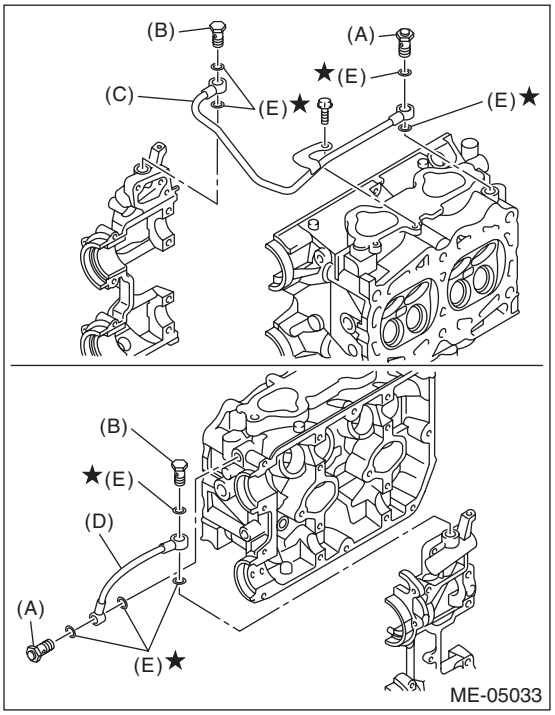

(A) Union bolt with filter (with protrusion)
(B) Union bolt without filter (without protrusion)
(C) Oil pipe RH
(D) Oil pipe LH
(E) Gasket

5) Install the tensioner bracket.

Tightening torque:
24.5 N·m (2.5 kgf-m, 18.1 ft-lb)

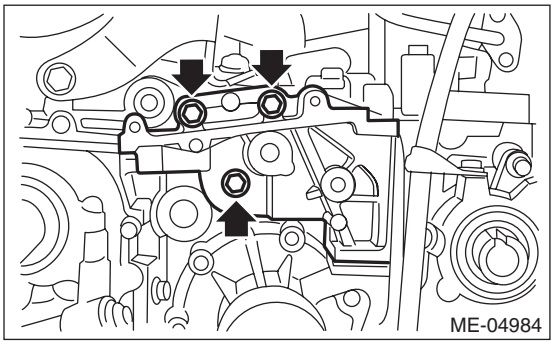

6) Install the timing belt cover No. 2 RH (A) and timing belt cover No. 2 LH (B).

Tightening torque:
5 N·m (0.5 kgf-m, 3.7 ft-lb)

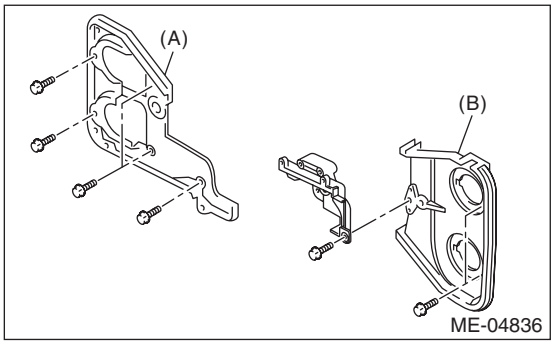

7) Install the cam sprocket. <Ref. to ME(STI)-61, INSTALLATION, Cam Sprocket.>
8) Install the timing belt. <Ref. to ME(STI)-54, INSTALLATION, Timing Belt.>
9) Adjust the valve clearance. <Ref. to ME(STI)-29, ADJUSTMENT, Valve Clearance.>
10) Install the rocker cover.
(1) Install the rocker cover gasket to the rocker cover. (Outer section and ignition coil section)

NOTE:
Use a new rocker cover gasket.

(2) Apply liquid gasket to the specified point of the cylinder head.

NOTE:
Install within 5 min. after applying liquid gasket.

Liquid gasket:
THREE BOND 1217G (Part No. K0877Y0100), THREE BOND 1217H or equivalent

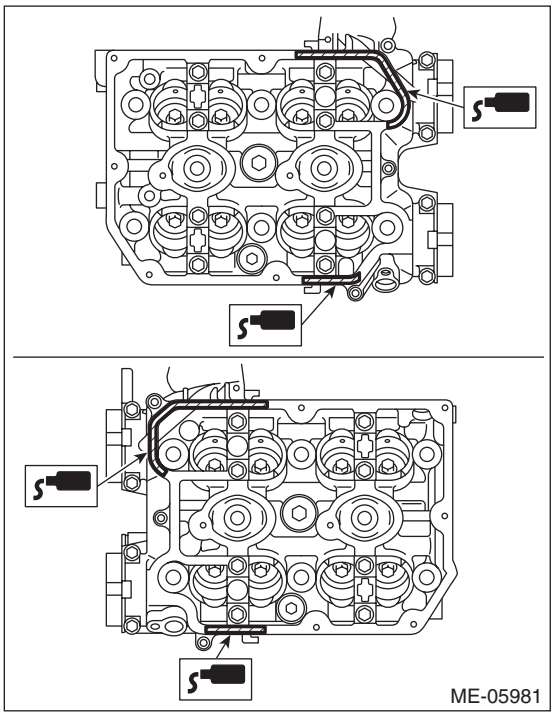

(3) Install the rocker cover onto cylinder heads. Ensure the gasket is properly positioned during installation.
(4) Temporarily tighten the rocker cover bolts in alphabetical order shown in the figure, and then tighten to specified torque in alphabetical order.

Tightening torque:
6.4 N·m (0.7 kgf-m, 4.7 ft-lb)

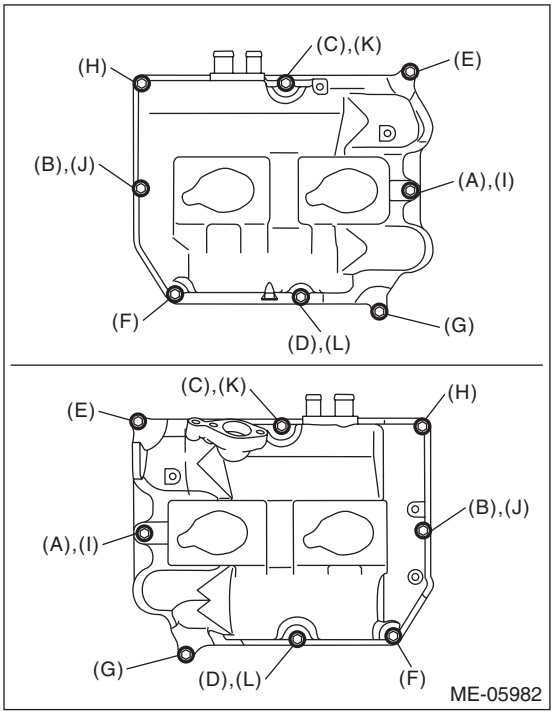

11) Connect the connector to the intake oil flow control solenoid valve.

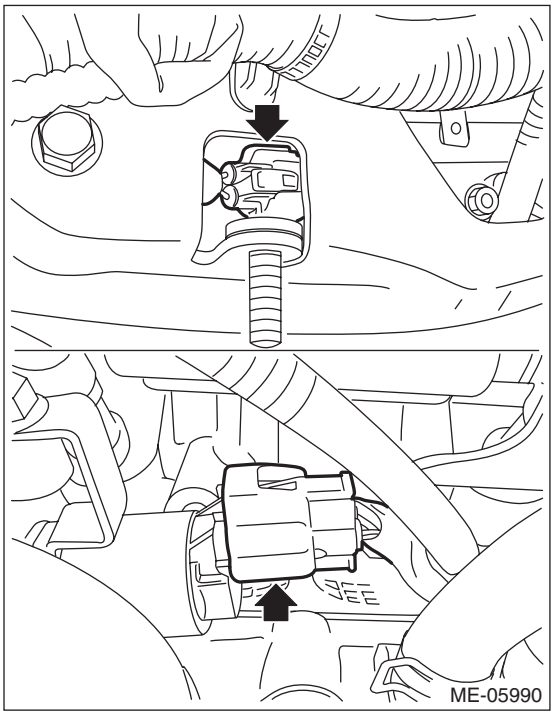

12) Connect the connector (A) to the exhaust camshaft position sensor and the connector (B) to the exhaust oil flow control solenoid valve LH.

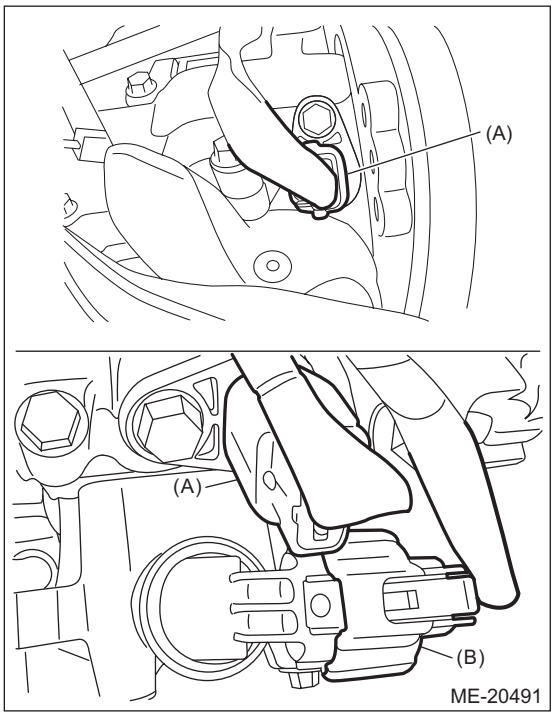

13) Install the ignition coil. <Ref. to IG(STI)-7, INSTALLATION, Ignition Coil.>
14) Install the air duct B (B) to the rocker cover LH and the air duct A (A).

Tightening torque:
6.4 N·m (0.7 kgf-m, 4.7 ft-lb)

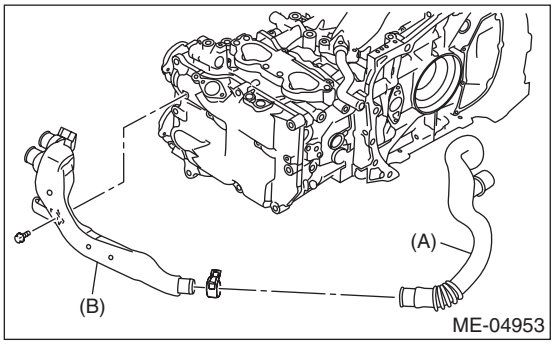

15) Install the engine harness stay and install the exhaust oil flow control solenoid valve connector (F).

Tightening torque:
6.4 N·m (0.7 kgf-m, 4.7 ft-lb)
16) Install the engine harness fixing clip (D) and the exhaust oil flow control solenoid valve fixing clip (E) to the engine harness stay.
17) Install the engine harness fixing clip (B) and clip (C) to the engine harness stay.
18) Connect the connector (A) to the exhaust oil flow control solenoid valve.

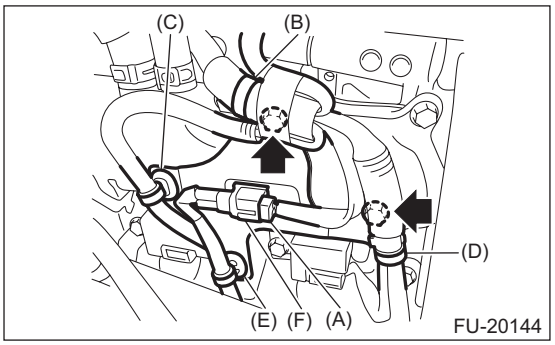

19) Install the timing belt cover. <Ref. to ME(STI)-51, INSTALLATION, Timing Belt Cover.>
20) Install the crank pulley. <Ref. to ME(STI)-49, INSTALLATION, Crank Pulley.>
21) Install the rear side belt. <Ref. to ME(STI)-42, REAR SIDE BELT, INSTALLATION, V-belt.>
22) Install the engine to the vehicle. <Ref. to ME(STI)-34, INSTALLATION, Engine Assembly.>

C: INSPECTION

1) Measure the bend, and repair or replace if necessary.

Camshaft bend limit:
0.020 mm (0.00079 in)

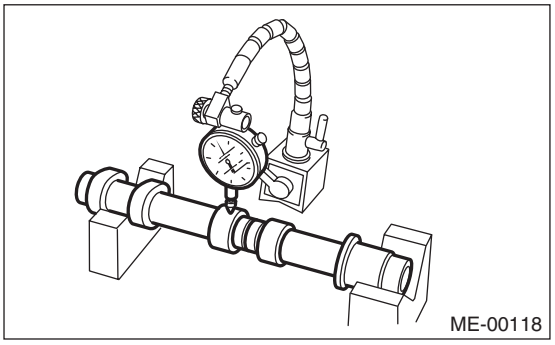

2) Check the journal for damage and wear. Replace if faulty.
3) Check the cutout portion used for camshaft sensor for damage. Replace if faulty.
4) Check the cam face condition, and remove the minor faults by grinding with oil stone. If offset wear occurs, replace it.

5) Measure the cam lobe height “H” and cam base circle diameter “A”. If it exceeds the standard or offset wear occurs, replace it.

Cam lobe height H:

Standard
Intake
46.55 — 46.65 mm (1.833 — 1.837 in)
Exhaust
46.75 — 46.85 mm (1.841 — 1.844 in)

Cam base circle diameter A:
Standard
37.0 mm (1.457 in)

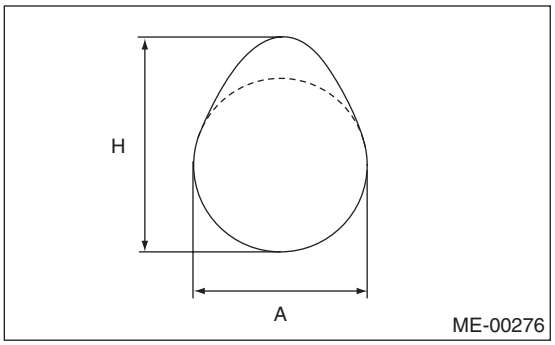

6) Measure the outside diameter of camshaft journal. If the journal diameter is not within specification, check the oil clearance.

	Camshaft journal	
	Front	Center, rear
Standard mm (in)	37.946 — 37.963 (1.4939 — 1.4946)	29.946 — 29.963 (1.1790 — 1.1796)

7) Measure the oil clearance of camshaft journal.
(1) Clean the camshaft cap and cylinder head camshaft journal.
(2) Place the camshaft on cylinder head. (Without installing the valve lifter)
(3) Place a plastigauge across each camshaft journals.
(4) Gradually tighten the camshaft cap in at least two steps, in alphabetical order shown in the figure, and then tighten to the specified torque. Do not turn the camshaft.

Tightening torque:
T1: 9.75 N·m (1.0 kgf-m, 7.2 ft-lb)
T2: 20 N·m (2.0 kgf-m, 14.8 ft-lb)

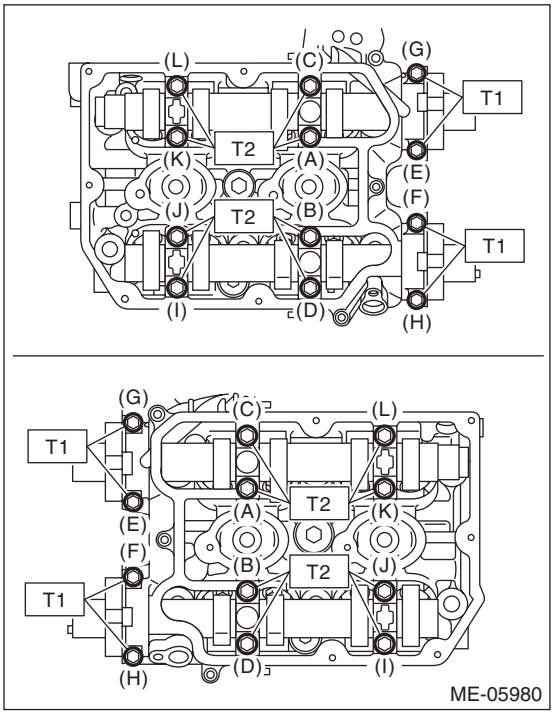

(5) Remove the camshaft cap.
(6) Measure the widest point of the plastigauge on each journal. If oil clearance exceeds the standard, replace the camshaft. If necessary, replace the camshaft caps and cylinder head as a set.

Camshaft oil clearance:
Standard
0.037 — 0.072 mm (0.0015 — 0.0028 in)

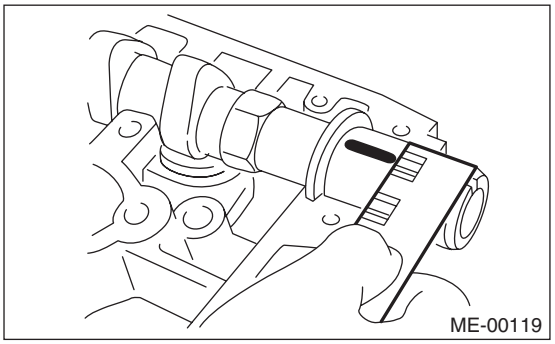

(7) Completely remove the plastigauge.

8) Measure the thrust clearance with setting the dial gauge at end surface of camshaft. If the thrust clearance is not within the standard or there is offset wear, replace the camshaft caps and cylinder head as a set. If necessary replace the camshaft.

Camshaft thrust clearance:
Standard
0.068 — 0.116 mm (0.0027 — 0.0047 in)

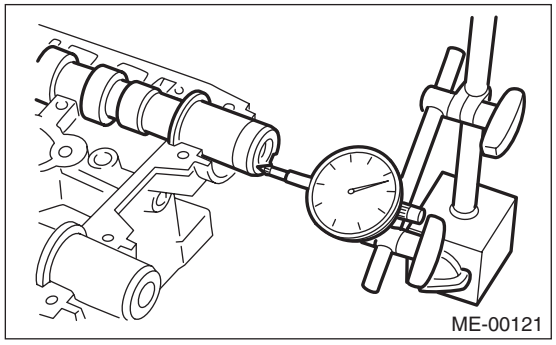

19.Cylinder Head

A: REMOVAL

1) Remove the engine from the vehicle. <Ref. to ME(STI)-30, REMOVAL, Engine Assembly.>
2) Remove the rear side belt. <Ref. to ME(STI)-41, REAR SIDE BELT, REMOVAL, V-belt.>
3) Remove the intake manifold. <Ref. to FU(STI)-17, REMOVAL, Intake Manifold.>
4) Remove the crank pulley. <Ref. to ME(STI)-49, REMOVAL, Crank Pulley.>
5) Remove the timing belt cover. <Ref. to ME(STI)-51, REMOVAL, Timing Belt Cover.>
6) Remove the timing belt. <Ref. to ME(STI)-52, REMOVAL, Timing Belt.>
7) Remove the cam sprocket. <Ref. to ME(STI)-61, REMOVAL, Cam Sprocket.>
8) Remove the secondary air combination valve. <Ref. to EC(STI)-56, REMOVAL, Secondary Air Combination Valve.>
9) Remove the bolts which secure A/C compressor bracket to cylinder head.
10) Remove the oil pipe. <Ref. to LU(STI)-22, REMOVAL, Oil Pipe.>
11) Remove the camshaft. <Ref. to ME(STI)-63, REMOVAL, Camshaft.>
12) Remove the oil level gauge guide. (LH side only)
13) Remove the cylinder head bolts in alphabetical order shown in the figure.

NOTE:
Leave the bolts (A) and (D) engaged by three or four threads to prevent the cylinder head from falling.

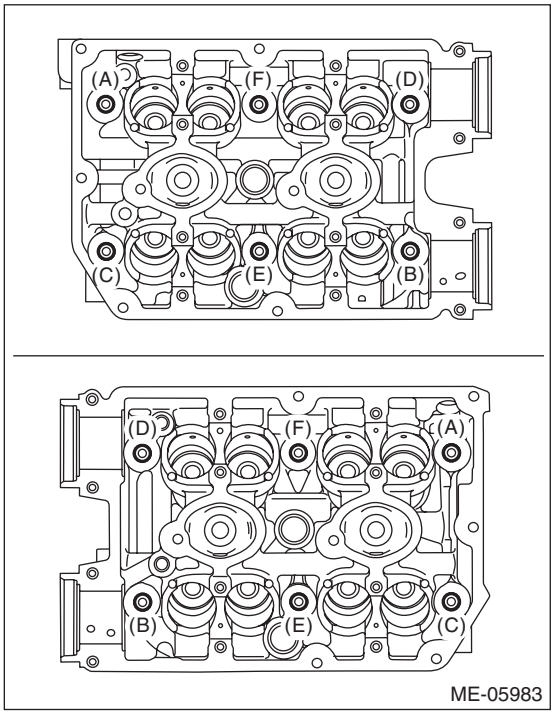

14) While tapping the cylinder head with a plastic hammer, separate it from cylinder block. Remove the bolts (A) and (D) to remove cylinder head.

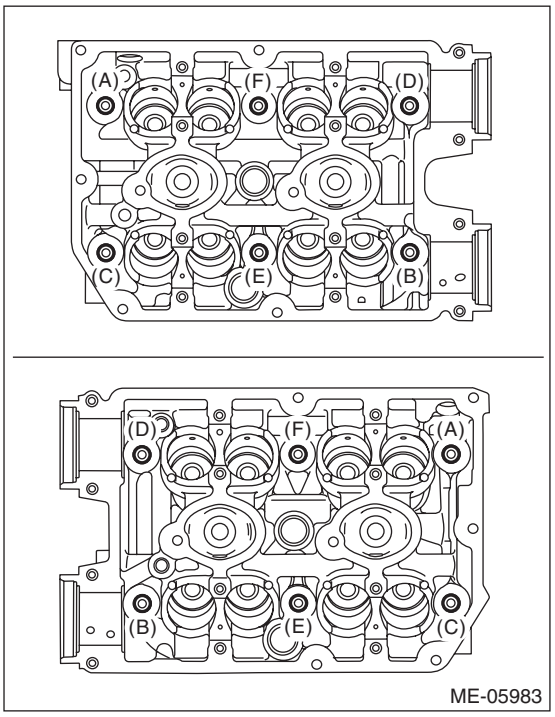

15) Remove the cylinder head gasket.

CAUTION:
Be careful not to scratch the mating surface of cylinder head and cylinder block.

B: INSTALLATION

1) Install the cylinder head to the cylinder block.

CAUTION:
Be careful not to scratch the mating surface of cylinder head and cylinder block.

NOTE:
Use a new cylinder head gasket.

(1) Clean the bolt threads and the bolt holes in the cylinder block.

CAUTION:
To avoid erroneous tightening of the bolts, clean out the bolt holes sufficiently by blowing with compressed air to eliminate engine coolant etc.

(2) Apply a sufficient coat of engine oil to the washer and bolt thread.
(3) Tighten all bolts to 40 N·m (4.1 kgf-m, 29.5 ft-lb) in alphabetical order.
(4) Retighten all bolts to 95 N·m (9.7 kgf-m, 70.1 ft-lb) in alphabetical order.

CAUTION:
If the bolt makes stick-slip sound during tightening, repeat the procedure from step (1). In this case, the cylinder head gasket can be reused.

(5) Loosen all the bolts by 180° in the reverse order of installing, and loosen them further by 180°.
(6) Tighten all bolts to 10 N·m (1.0 kgf-m, 7.4 ft-lb) in alphabetical order.
(7) Retighten all bolts to 30 N·m (3.1 kgf-m, 22.1 ft-lb) in alphabetical order.
(8) Retighten all bolts to 70 N·m (7.1 kgf-m, 51.6 ft-lb) in alphabetical order.
(9) Retighten all bolts by 80 — 90° in alphabetical order.
(10) Retighten all bolts by 40 — 45° in alphabetical order.

CAUTION:
The tightening angle of the bolt should not exceed 45°.

(11) Retighten bolts (A) and (B) by 40 — 45°.

CAUTION:
Make sure the total "tightening angle" of steps (10) and (11) does not exceed 90°.

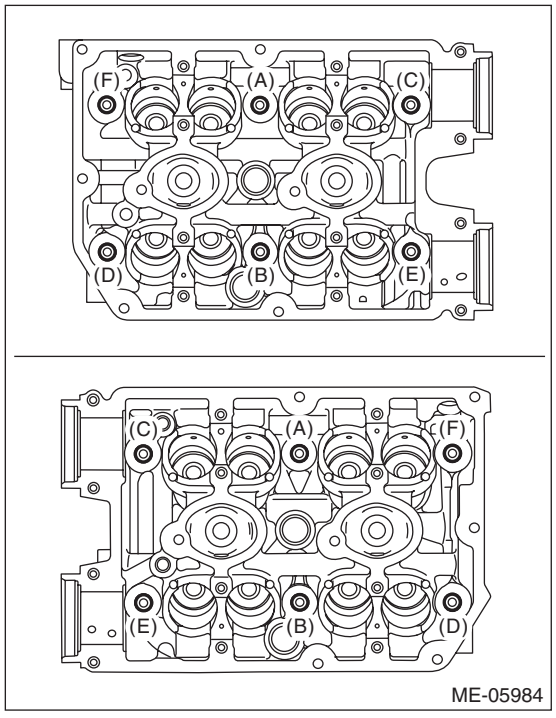

2) Install the oil level gauge guide. (LH side only)

Tightening torque:
6.4 N·m (0.7 kgf-m, 4.7 ft-lb)

3) Install the camshaft. <Ref. to ME(STI)-66, INSTALLATION, Camshaft.>
4) Install the oil pipe. <Ref. to LU(STI)-24, INSTALLATION, Oil Pipe.>
5) Install the A/C compressor bracket on cylinder head.

Tightening torque:
36 N·m (3.7 kgf-m, 26.6 ft-lb)

6) Install the secondary air combination valve. <Ref. to EC(STI)-56, INSTALLATION, Secondary Air Combination Valve.>
7) Install the cam sprocket. <Ref. to ME(STI)-61, INSTALLATION, Cam Sprocket.>
8) Install the timing belt. <Ref. to ME(STI)-54, INSTALLATION, Timing Belt.>
9) Adjust the valve clearance. <Ref. to ME(STI)-29, ADJUSTMENT, Valve Clearance.>
10) Install the rocker cover.

(1) Install the rocker cover gasket to the rocker cover. (Outer section and ignition coil section)

NOTE:
Use a new rocker cover gasket.

(2) Apply liquid gasket to the specified point of the cylinder head.

NOTE:
Install within 5 min. after applying liquid gasket.

Liquid gasket:
THREE BOND 1217G (Part No. K0877Y0100), THREE BOND 1217H or equivalent

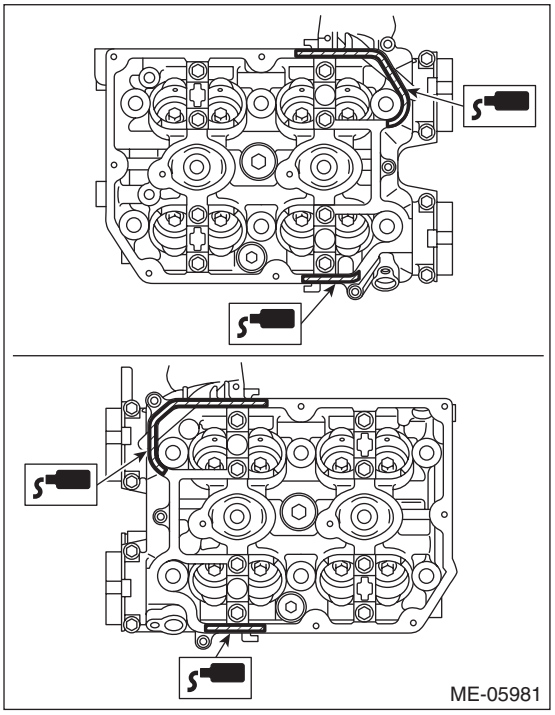

(3) Install the rocker cover onto cylinder heads. Ensure the gasket is properly positioned during installation.
(4) Temporarily tighten the rocker cover bolts in alphabetical order shown in the figure, and then tighten to specified torque in alphabetical order.

Tightening torque:
6.4 N·m (0.7 kgf-m, 4.7 ft-lb)

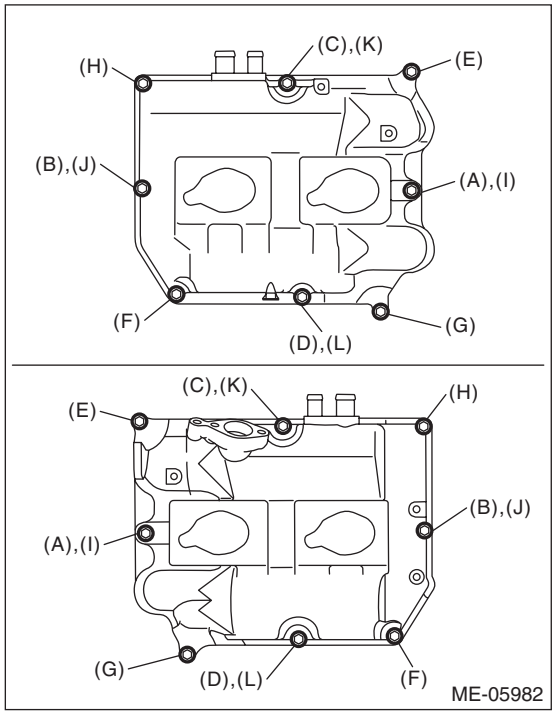

11) Connect the PCV hose (A) and vacuum hose (B).

NOTE:
Make sure that the leak diagnosis connector is connected securely.

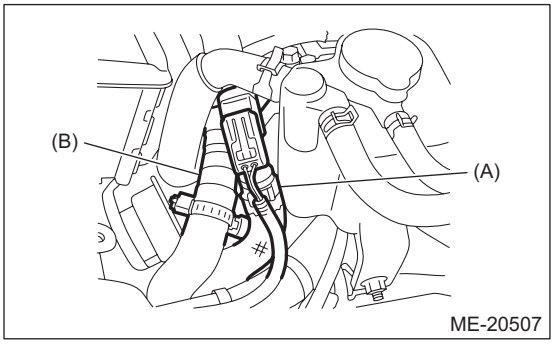

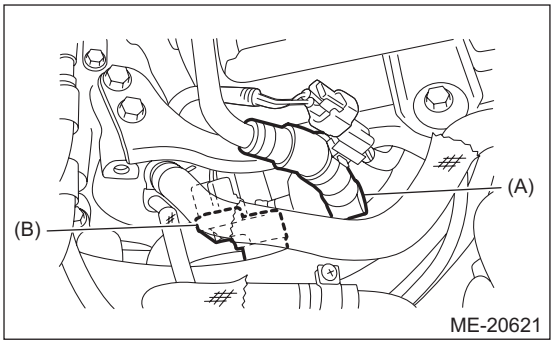

12) Install the timing belt cover. <Ref. to ME(STI)-51, INSTALLATION, Timing Belt Cover.>
13) Install the crank pulley. <Ref. to ME(STI)-49, INSTALLATION, Crank Pulley.>
14) Install the intake manifold. <Ref. to FU(STI)-21, INSTALLATION, Intake Manifold.>
15) Install the rear side belt. <Ref. to ME(STI)-42, REAR SIDE BELT, INSTALLATION, V-belt.>
16) Install the engine to the vehicle. <Ref. to ME(STI)-34, INSTALLATION, Engine Assembly.>

C: DISASSEMBLY

1) Remove the valve lifter.
2) Place the cylinder head on ST1.
ST1 498267600 CYLINDER HEAD TABLE
3) Using ST2, compress the valve spring and remove the valve spring retainer key. Remove each valve and valve spring.
ST2 499718000 VALVE SPRING REMOVER

NOTE:
- Mark each valve to prevent confusion.
- Pay careful attention not to damage the lips of intake valve oil seals and exhaust valve oil seals.
- Keep all the removed parts in order for re-installing in their original positions.
- For removal and installation procedures of the valve guide, intake valve oil seal and exhaust valve oil seal, refer to “INSPECTION”. <Ref. to ME(STI)-78, VALVE GUIDE, INSPECTION, Cylinder Head.> <Ref. to ME(STI)-80, INTAKE AND EXHAUST VALVE OIL SEAL, INSPECTION, Cylinder Head.>

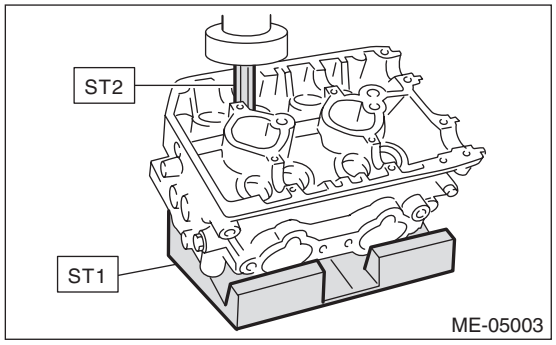

D: ASSEMBLY

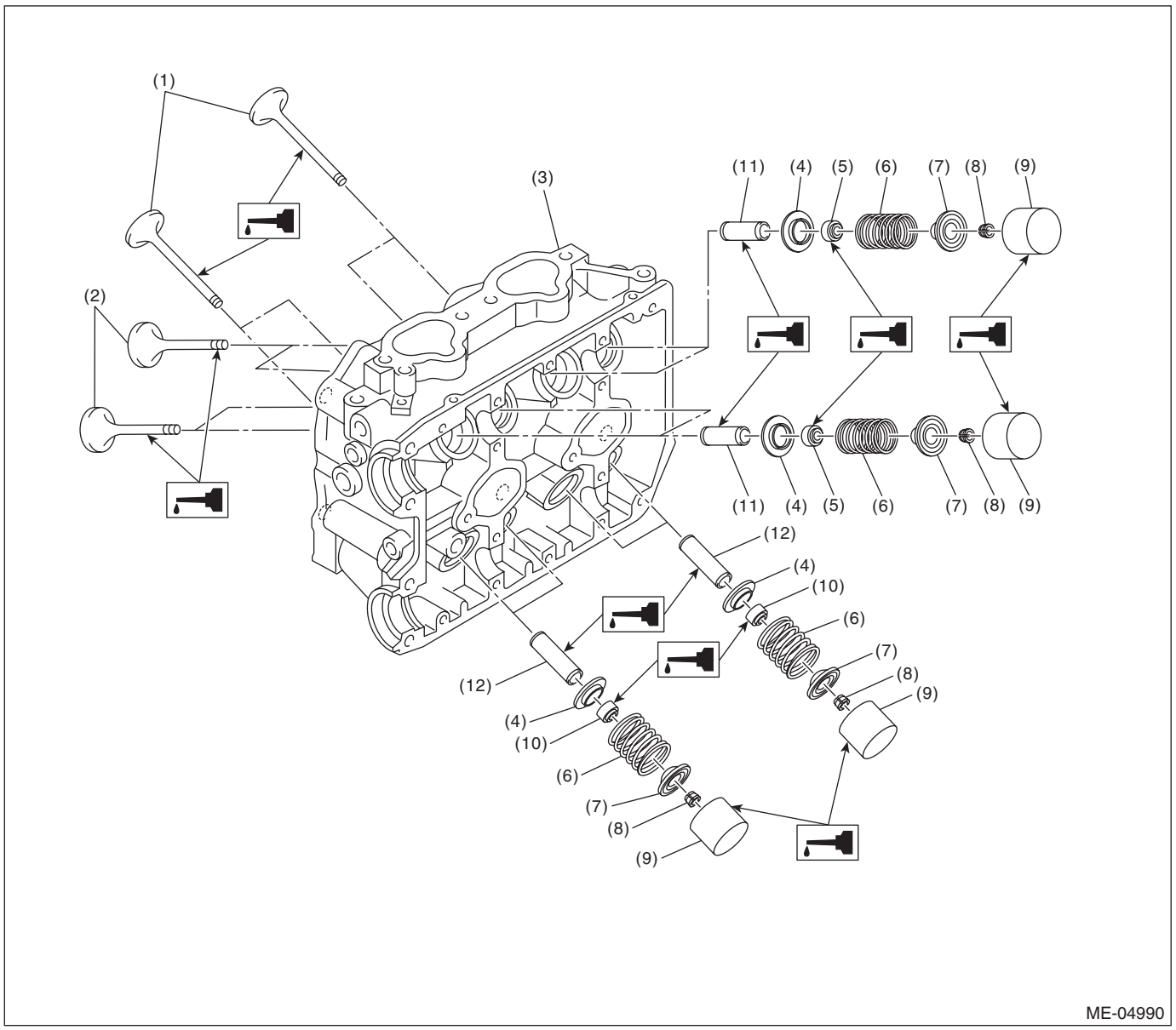

(1) Exhaust valve
(2) Intake valve
(3) Cylinder head
(4) Valve spring seat
(5) Intake valve oil seal
(6) Valve spring
(7) Valve spring retainer
(8) Valve spring retainer key
(9) Valve lifter
(10) Exhaust valve oil seal
(11) Intake valve guide
(12) Exhaust valve guide

1) Install the valve spring and valve.
(1) Coat the valve stem of each valve with engine oil and insert the valve into valve guide.

NOTE:
When inserting the valve into valve guide, use special care not to damage the oil seal lip.

(2) Set the cylinder head on ST1.

ST1 498267600 CYLINDER HEAD TABLE

(3) Install the valve spring and valve spring retainer.

NOTE:
Be sure to install the valve spring with its close-coiled end facing the cylinder head side.

(4) Set the ST2 on valve spring.

ST2 499718000 VALVE SPRING REMOVER

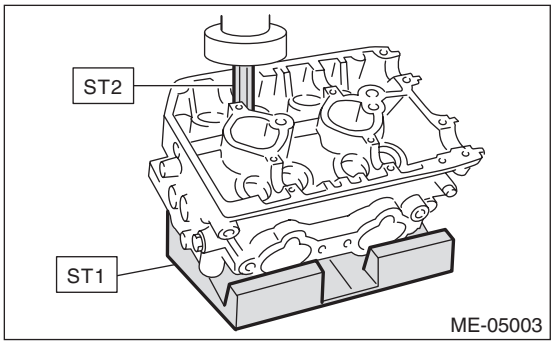

(5) Compress the valve spring and fit the valve spring retainer key.
(6) After installing, tap the valve spring retainers lightly with a plastic hammer for better seating.

2) Apply oil to the surface of valve lifter.
3) Install the valve lifter.

E: INSPECTION

1. CYLINDER HEAD

1) Check for cracks or damage. Use liquid penetrant tester on the important sections to check for fissures. Check that there are no marks of gas leaking or water leaking on gasket installing surface.
2) Measure the warping of the cylinder head surface that mates with cylinder block using a straight edge (A) and thickness gauge (B).
If the warping exceeds the limit, correct the surface by grinding it with a surface grinder.

Warping limit:
0.035 mm (0.0014 in)

Grinding limit:
0.3 mm (0.012 in)

Standard height of cylinder head:
127.5 mm (5.02 in)

NOTE:
Uneven torque for the cylinder head bolts can cause warping. When reinstalling, pay special attention to the torque so as to tighten evenly.

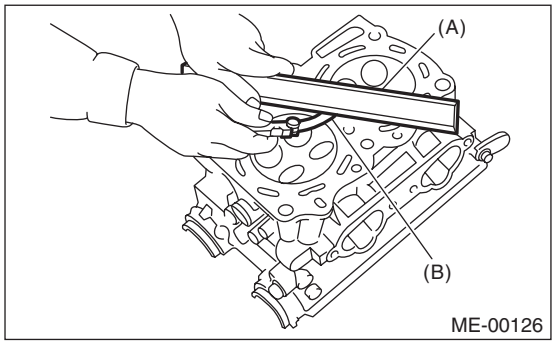

2. VALVE SEAT

Inspect the intake and exhaust valve seats, and correct the contact surfaces with a valve seat cutter if they are defective or when valve guides are replaced.

Contacting width W between valve and valve seat:

Standard
Intake
0.6 — 1.4 mm (0.024 — 0.055 in)
Exhaust
1.2 — 1.8 mm (0.047 — 0.071 in)

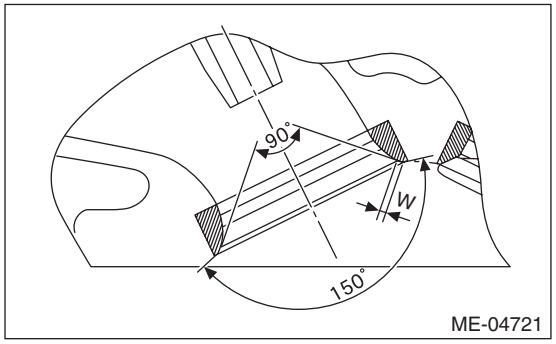

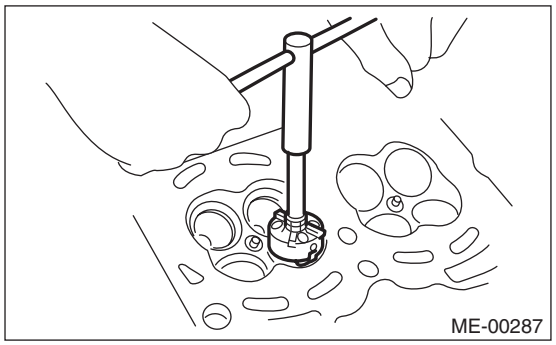

3. VALVE GUIDE

1) Check the clearance between valve guide and valve stem. The clearance can be checked by measuring respectively the outer diameter of valve stem with a micrometer and the inner diameter of valve guide with a caliper gauge.

Clearance between the valve guide and valve stem:

Standard
Intake
0.030 — 0.057 mm (0.0012 — 0.0022 in)
Exhaust
0.040 — 0.067 mm (0.0016 — 0.0026 in)

2) If the clearance between valve guide and valve stem exceeds the standard, replace the valve guide or valve itself, whichever shows the greater amount of wear or damage. See the following procedure for valve guide replacement.

Valve guide inner diameter:
6.000 — 6.012 mm (0.2362 — 0.2367 in)

Valve stem outer diameters:
Intake
5.955 — 5.970 mm (0.2344 — 0.2350 in)
Exhaust
5.945 — 5.960 mm (0.2341 — 0.2346 in)

(1) Place the cylinder head on ST1 with the combustion chamber upward so that valve guides fit the holes in ST1.
(2) Insert the ST2 into valve guide and press it down to remove the valve guide.

ST1 498267600 CYLINDER HEAD TABLE
ST2 499767200 VALVE GUIDE REMOVER

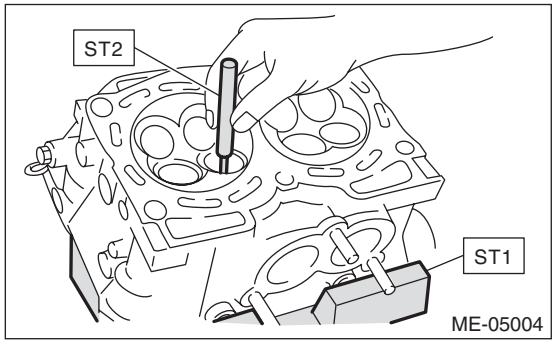

(3) Turn the cylinder head upside down and place the ST as shown in the figure.

ST 18251AA020 VALVE GUIDE ADJUSTER

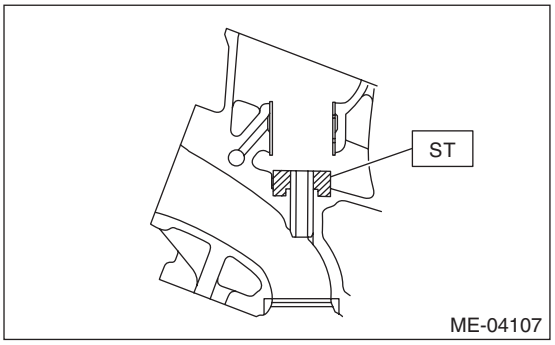

(4) Before installing a new valve guide, make sure that neither scratches nor damages exist on the inner surface of valve guide holes in cylinder head.
(5) Put a new valve guide, coated with sufficient oil, in the cylinder head, and insert the ST1 into valve guide. Press in until the valve guide upper end is flush with the upper surface of ST2.

ST1 499767200 VALVE GUIDE REMOVER
ST2 18251AA020 VALVE GUIDE ADJUSTER

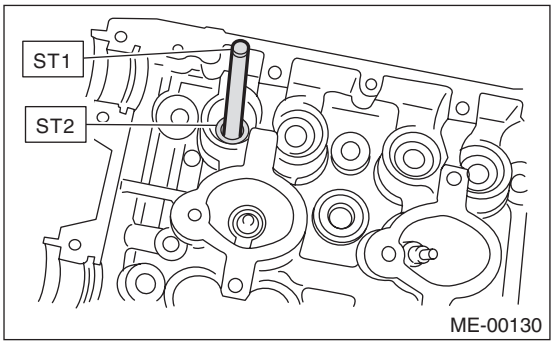

(6) Check the valve guide protrusion amount "L".

Valve guide protrusion amount L:
15.8 — 16.2 mm (0.622 — 0.638 in)

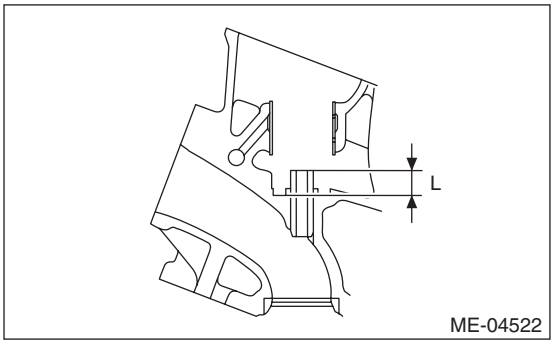

(7) Ream the inside of valve guide using ST. Put the ST in valve guide, and rotate the ST slowly clockwise while pushing it lightly. Bring the ST back while rotating it clockwise.

NOTE:
• Apply engine oil to the ST when reaming.
• If the inner surface of valve guide is damaged, the edge of ST should be slightly ground with oil stone.
• If the inner surface of valve guide becomes lustrous and the ST does not chip, use a new ST or remedy the ST.

ST 499767400 VALVE GUIDE REAMER

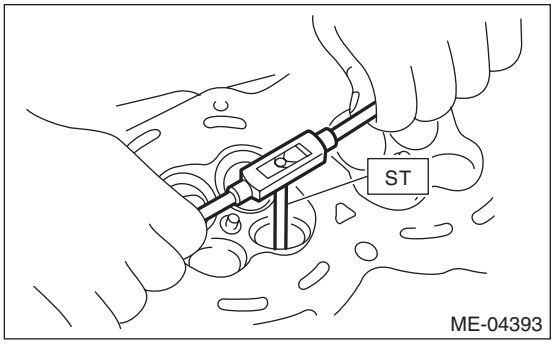

(8) After reaming, clean the valve guide to remove chips.
(9) Recheck the contact condition between valve and valve seat after replacing the valve guide.

4. INTAKE AND EXHAUST VALVE

1) Inspect the flange of valve and valve stem, and replace the valve with a new part if damaged, worn, deformed, or if dimension "H" in the figure is outside of the specified limit.

Head edge thickness H:

Standard
Intake (A)
1.0 — 1.4 mm (0.039 — 0.055 in)
Exhaust (B)
1.3 — 1.7 mm (0.051 — 0.067 in)

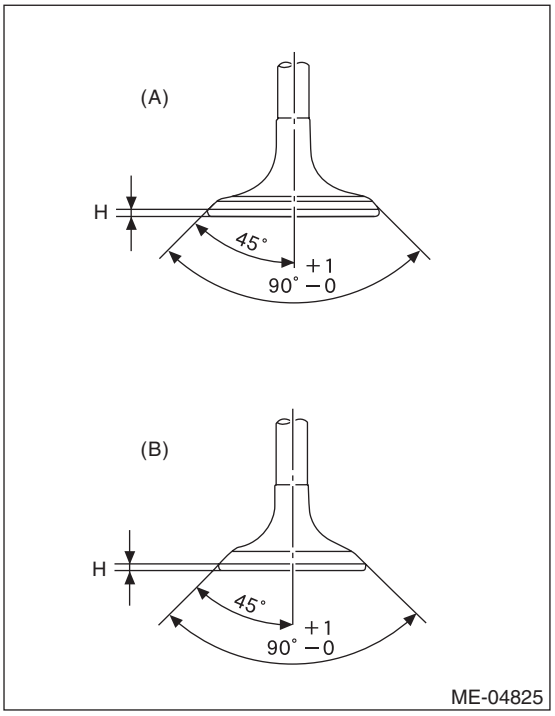

2) Put a small amount of grinding compound on the valve seat surface, and lap the valve and valve seat surface. Replace with a new valve oil seal after lapping.

NOTE:
It is possible to differentiate between the intake valve and the exhaust valve by their overall length.

Valve overall length:
Intake
104.4 mm (4.110 in)
Exhaust
104.65 mm (4.1201 in)

5. VALVE SPRING

1) Check the valve springs for damage, free length, and tension. Replace the valve spring if it is not within the standard value presented in the table.
2) To measure the squareness of the valve spring, stand the valve spring on a surface plate and measure its deflection at the top of the valve spring using a try square.

Free length	mm (in)	53.48 (2.106)
Tension/spring height N (kgf, lbf)/mm (in)	Set	204.6 — 235.4 (20.86 — 24.00, 46.00 — 52.93)/36.0 (1.417)
	Lift	363.5 — 401.7 (37.07 — 40.96, 81.73 — 90.32)/26.7 (1.051)
Squareness		2.5°, 2.3 mm (0.091 in) or less

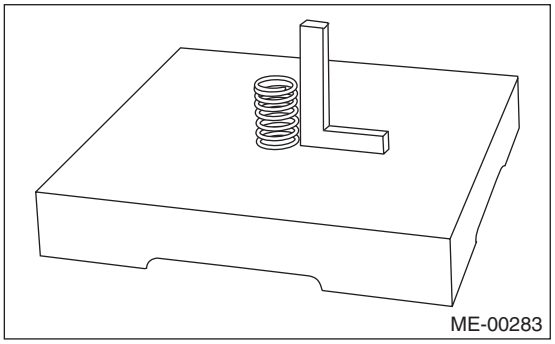
ME-00283

6. INTAKE AND EXHAUST VALVE OIL SEAL

1) For the following, replace the oil seal with a new part. See the procedure 2) and subsequent for replacement procedures.
- When the lip is damaged.
- When the spring is out of the specified position.
- When readjusting the surfaces of valve and valve seat.
- When replacing the valve guide.

2) Place the cylinder head on ST1, and use ST2 to press-fit the oil seal.
ST1 498267600 CYLINDER HEAD TABLE
ST2 498857100 VALVE OIL SEAL GUIDE

NOTE:
- Apply engine oil to oil seal before press-fitting.
- When press-fitting the oil seal, do not use a hammer to strike in.
- The intake valve oil seals and exhaust valve oil seals are distinguished by their colors.

Color of rubber part:
Intake [Gray]
Exhaust [Green]

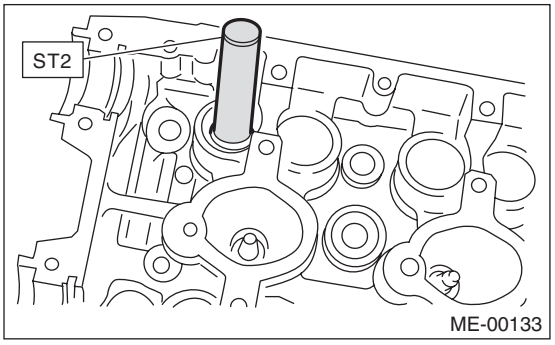

ME-00133

7. VALVE LIFTER

1) Check the valve lifter visually.
2) Measure the outer diameter of valve lifter.

Outer diameter of valve lifter:
Standard
34.959 — 34.975 mm (1.3763 — 1.3770 in)

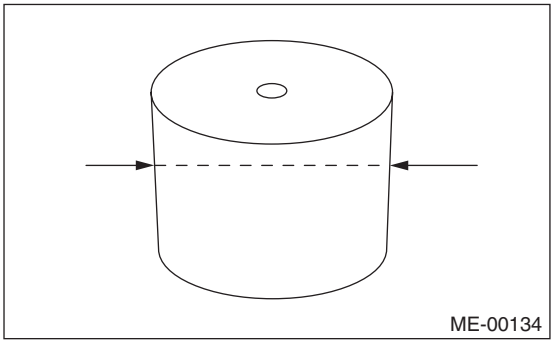
ME-00134

3) Measure the inner diameter of valve lifter mating surface on cylinder head.

Valve lifter mating surface inner diameter:
Standard
34.994 — 35.016 mm (1.3777 — 1.3786 in)

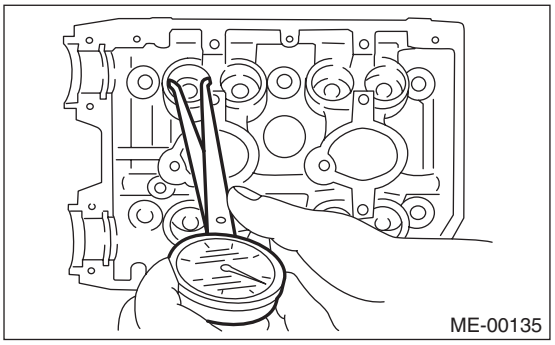
ME-00135

4) Check the clearance between valve lifter and valve lifter mating surface. The clearance can be checked by measuring the outer diameter of valve lifter and the inner diameter of valve lifter. If it exceeds the standard or offset wear occurs, replace the cylinder head.

Valve lifter and valve lifter mating surface clearance:

Standard

0.019 — 0.057 mm (0.0007 — 0.0022 in)

20.Cylinder Block

A: REMOVAL

NOTE:
Before conducting this procedure, drain the engine oil completely.
1) Remove the engine from the vehicle. <Ref. to ME(STI)-30, REMOVAL, Engine Assembly.>
2) Remove the rear side belt. <Ref. to ME(STI)-41, REAR SIDE BELT, REMOVAL, V-belt.>
3) Remove the intake manifold. <Ref. to FU(STI)-17, REMOVAL, Intake Manifold.>
4) Remove the crank pulley. <Ref. to ME(STI)-49, REMOVAL, Crank Pulley.>
5) Remove the timing belt cover. <Ref. to ME(STI)-51, REMOVAL, Timing Belt Cover.>
6) Remove the timing belt. <Ref. to ME(STI)-52, REMOVAL, Timing Belt.>
7) Remove the cam sprocket. <Ref. to ME(STI)-61, REMOVAL, Cam Sprocket.>
8) Remove the crank sprocket. <Ref. to ME(STI)-62, REMOVAL, Crank Sprocket.>
9) Remove the generator and A/C compressor with their brackets.
10) Remove the camshaft. <Ref. to ME(STI)-63, REMOVAL, Camshaft.>
11) Remove the cylinder head. <Ref. to ME(STI)-72, REMOVAL, Cylinder Head.>
12) Remove the clutch disc and cover. <Ref. to CL-12, REMOVAL, Clutch Disc and Cover.>
13) Remove the flywheel. <Ref. to CL-15, REMOVAL, Flywheel.>
14) Remove the oil separator cover.
15) Remove the water by-pass pipe for heater.
16) Remove the oil filter. <Ref. to LU(STI)-27, REMOVAL, Engine Oil Filter.>
17) Remove the oil cooler. <Ref. to LU(STI)-21, REMOVAL, Engine Oil Cooler.>
18) Remove the water pump. <Ref. to CO(STI)-14, REMOVAL, Water Pump.>
19) Remove the bolts which secure oil pump to cylinder block.

NOTE:
When disassembling and checking the oil pump, loosen the relief valve plug before removing the oil pump.

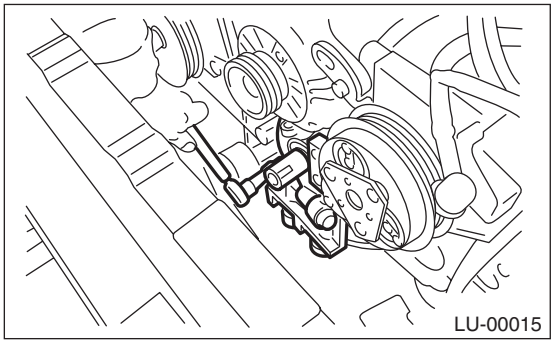

20) Remove the oil pump from cylinder block using a crowbar.

CAUTION:
Be careful not to scratch the mating surface of the cylinder block and oil pump.

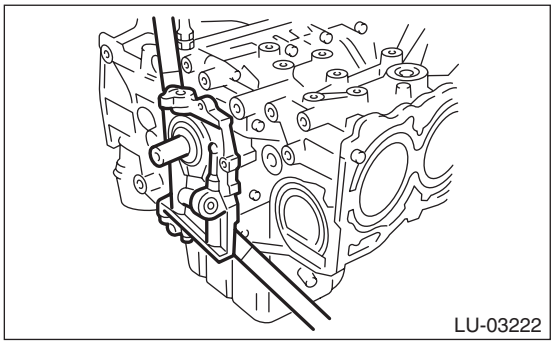

21) Remove the front oil seal from the oil pump.
22) Remove the oil pan.
(1) Set the part so that the cylinder block LH is on the upper side.
(2) Remove the bolts which secure oil pan to cylinder block.
(3) Insert an oil pan cutter blade between cylinder block-to-oil pan clearance and remove the oil pan.

CAUTION:
Do not use a screwdriver or similar tools in place of oil pan cutter.
23) Remove the oil strainer.
24) Remove the baffle plate.
25) Break the clamp which secures the water tank pipe assembly to the cylinder block RH, and remove the water tank pipe assembly from the cylinder block RH.

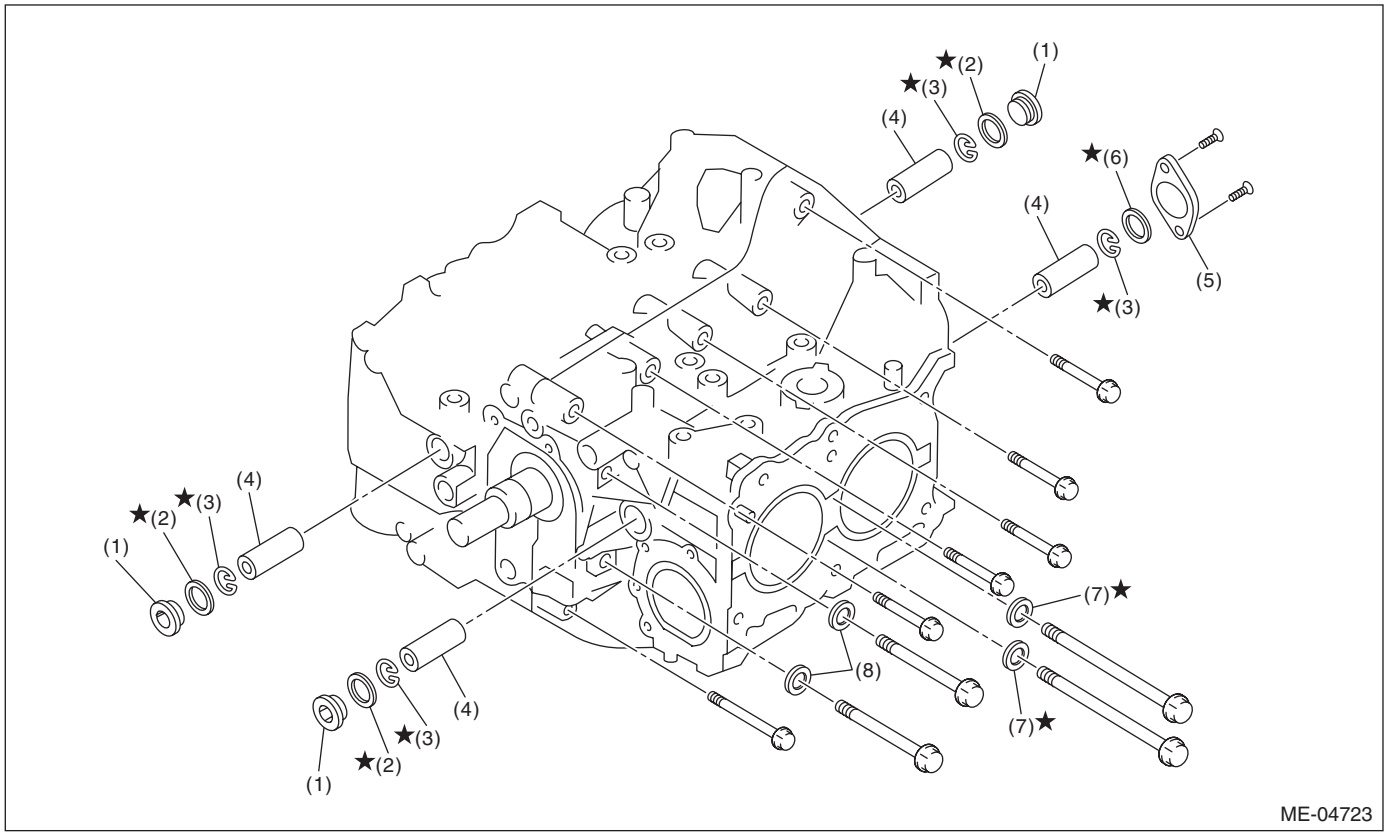

(1) Service hole plug
(2) Gasket
(3) Snap ring
(4) Piston pin
(5) Service hole cover
(6) O-ring
(7) Seal washer
(8) Washer

26) Remove the service hole plugs using a hexagon wrench [14 mm].

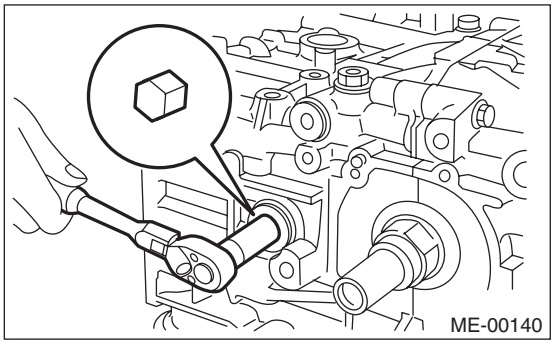

27) Remove the service hole cover.
28) Rotate the crankshaft to bring #1 and #2 pistons to bottom dead center position, then remove the piston snap ring through service hole of #1 and #2 cylinders.

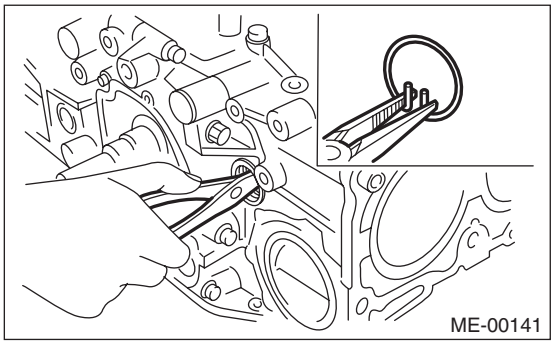

29) Draw out the piston pin from #1 and #2 pistons using ST.
ST 499097700 PISTON PIN REMOVER ASSY

NOTE:
Be careful not to confuse the original combination of piston, piston pin and cylinder.

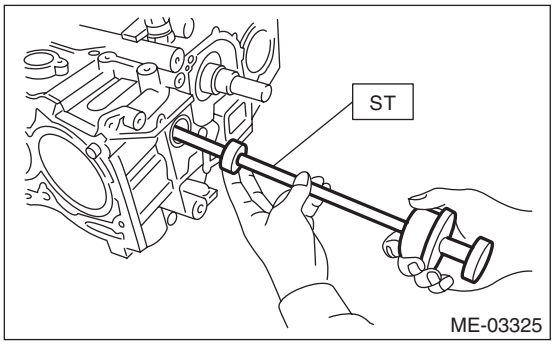

30) Similarly draw out the piston pins from #3 and #4 pistons.
31) Remove the cylinder block connecting bolt on the RH side.
32) Loosen the cylinder block connecting bolt on the LH side by 2 to 3 turns.
33) Set the part so that the cylinder block LH is on the upper side, and remove the cylinder block connecting bolt.

34) Separate the cylinder block LH and RH.

NOTE:
When separating the cylinder block, do not allow the connecting rod to fall or damage the cylinder block.

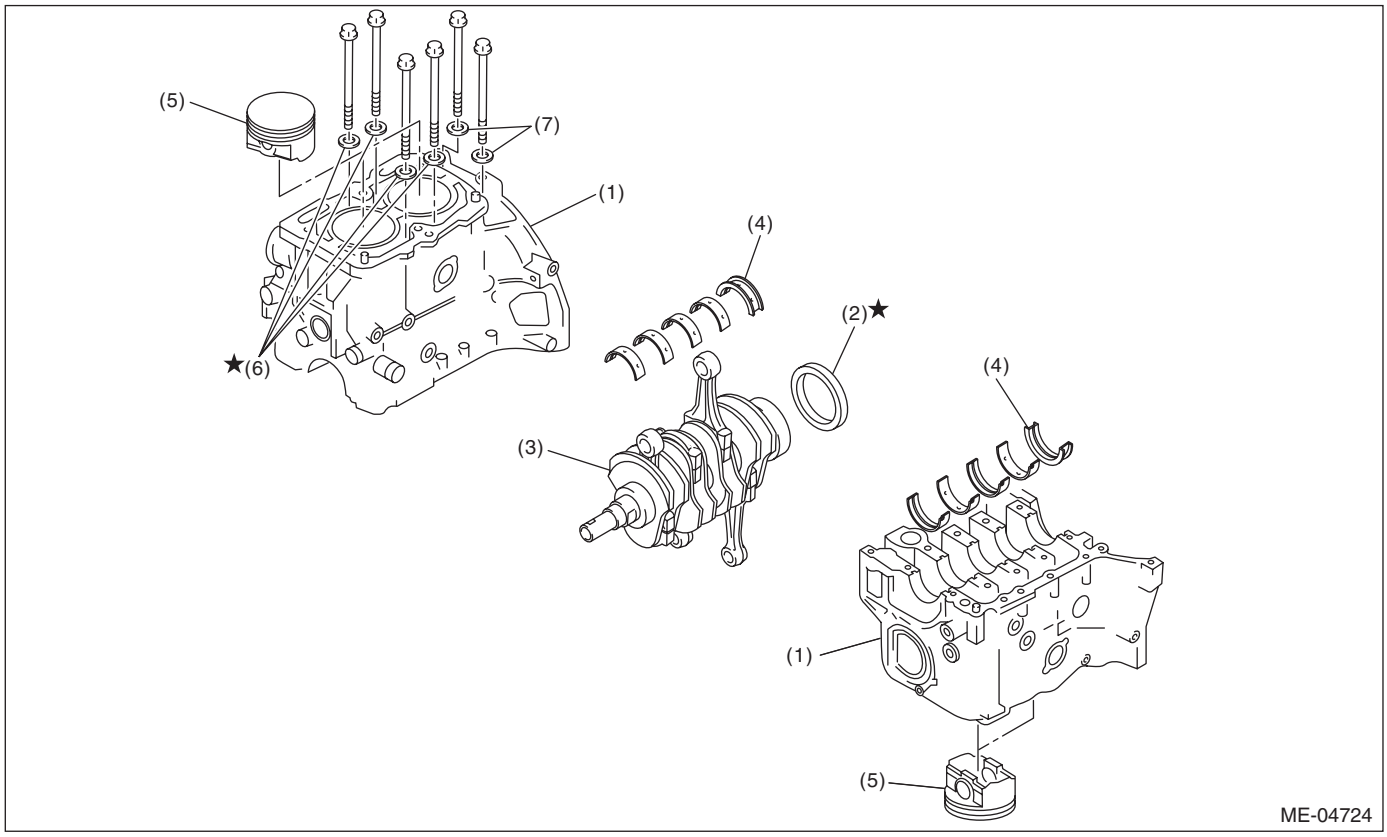

(1) Cylinder block
(2) Rear oil seal
(3) Crankshaft
(4) Crankshaft bearing
(5) Piston
(6) Seal washer
(7) Washer

35) Remove the rear oil seal.
36) Remove the crankshaft together with connecting rod.
37) Remove the crankshaft bearings from cylinder block using a hammer handle.

NOTE:
- Press the crankshaft bearing at the end opposite to locking lip to remove.
- Be careful not to confuse the crankshaft bearing combination.

38) Remove each piston from the cylinder block using a wooden bar or hammer handle.

NOTE:
Be careful not to confuse the original combination of piston and cylinder.

B: INSTALLATION

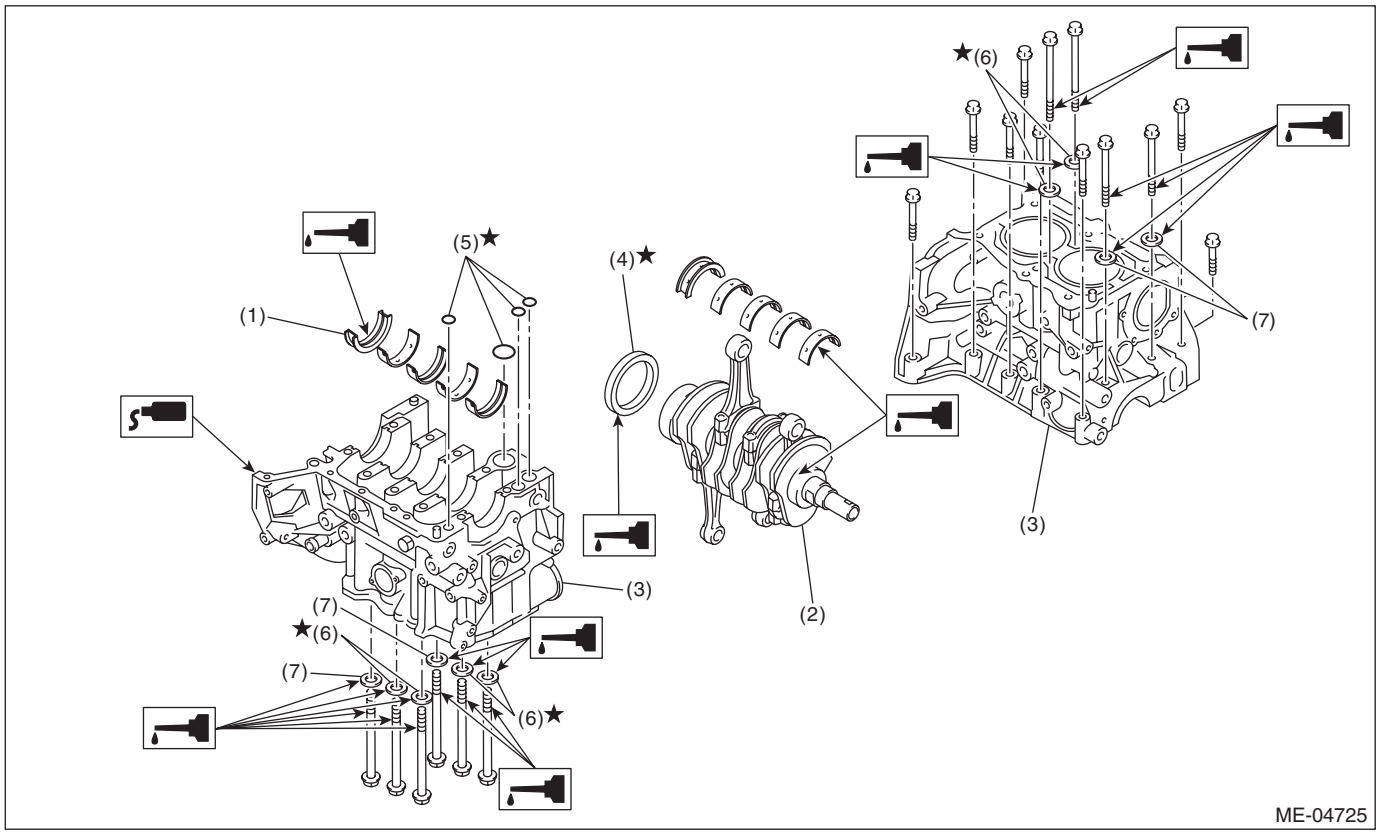

(1) Crankshaft bearing
(2) Crankshaft
(3) Cylinder block
(4) Rear oil seal
(5) O-ring
(6) Seal washer
(7) Washer

1) Remove oil on the mating surface of cylinder block before installation. Apply a coat of engine oil to the bearing and crankshaft journal.
2) Position the crankshaft and O-ring on cylinder block RH.

NOTE:
Use new O-rings.
3) Apply liquid gasket to the mating surfaces of cylinder block RH, and position cylinder block LH.

NOTE:
- Install within 5 min. after applying liquid gasket.
- Do not allow liquid gasket to jut into O-ring grooves, oil passages, bearing grooves, etc.

Liquid gasket:
THREE BOND 1217G (Part No. K0877Y0100), THREE BOND 1217H or equivalent

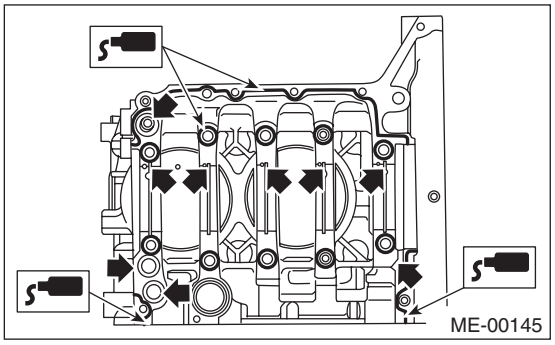

4) Apply a coat of engine oil to the washer and bolt thread.

NOTE:
Use a new seal washer.

5) Tighten the 10 mm cylinder block connecting bolts on the LH side (A — D) in alphabetical order.

Tightening torque:
10 N·m (1.0 kgf-m, 7.4 ft-lb)

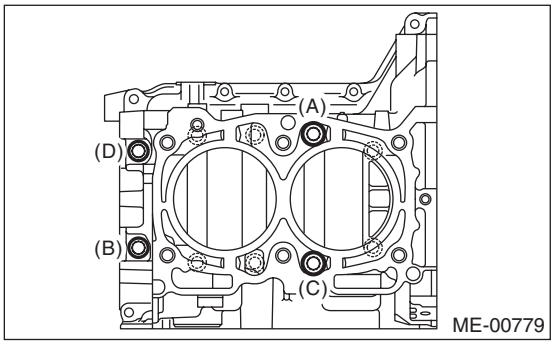

6) Tighten the 10 mm cylinder block connecting bolts on the RH side (E — J) in alphabetical order.

Tightening torque:
10 N·m (1.0 kgf-m, 7.4 ft-lb)

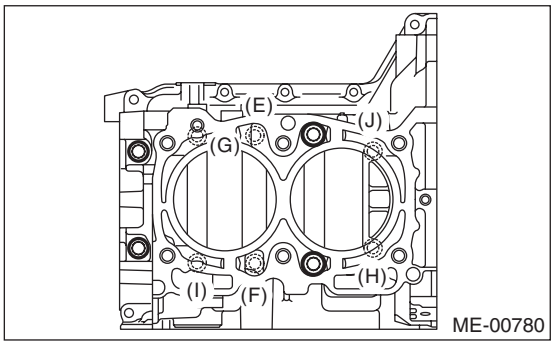

7) Tighten the LH side cylinder block connecting bolts (A — D) further in alphabetical order.

Tightening torque:
18 N·m (1.8 kgf-m, 13.3 ft-lb)

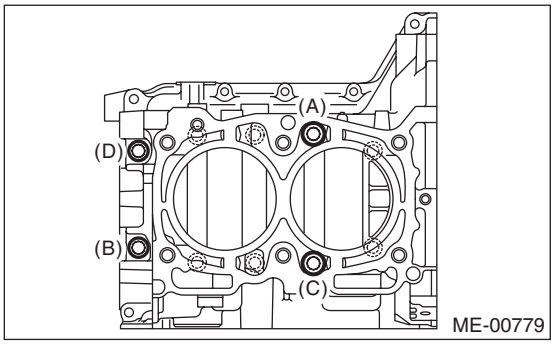

8) Tighten the RH side cylinder block connecting bolts (E — J) further in alphabetical order.

Tightening torque:
18 N·m (1.8 kgf-m, 13.3 ft-lb)

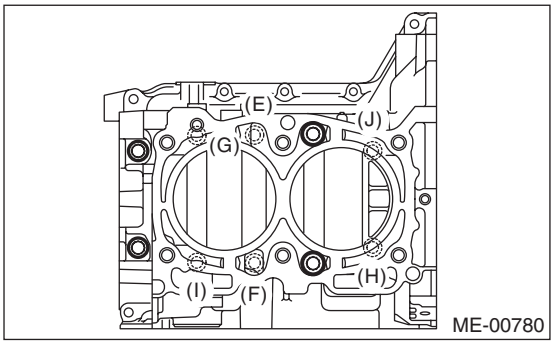

9) Tighten the LH side cylinder block connecting bolts (A — D) further in alphabetical order.

- (A), (C): Angle tightening

Tightening angle:
90°

- (B), (D): Torque tightening

Tightening torque:
40 N·m (4.1 kgf-m, 29.5 ft-lb)

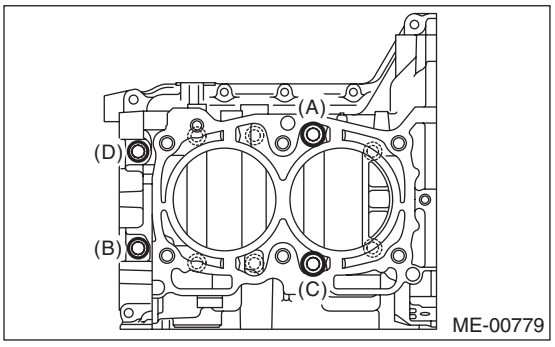

10) Tighten the RH side cylinder block connecting bolts (E — J) further in alphabetical order.

Tightening angle:
90°

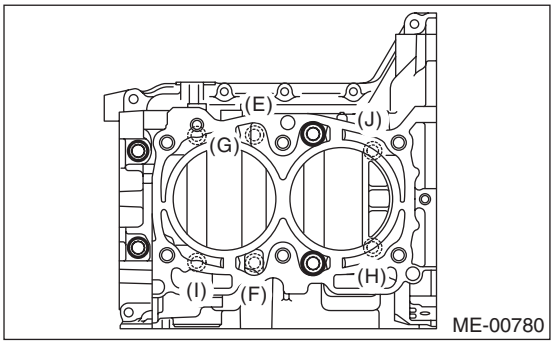

11) Tighten the 8 mm and 6 mm cylinder block connecting bolts on the LH side (A — H) in alphabetical order.

Tightening torque:
(A) — (G): 25 N·m (2.5 kgf-m, 18.4 ft-lb)
(H): 6.4 N·m (0.7 kgf-m, 4.7 ft-lb)

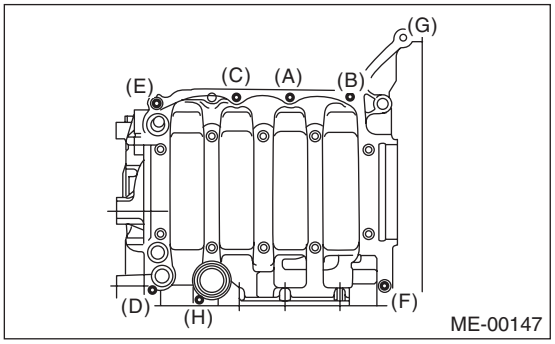

12) Apply a coat of engine oil to the oil seal inner periphery and outer periphery, and install the rear oil seal using ST1 and ST2.

NOTE:
Use a new rear oil seal.

ST1	499597100	CRANKSHAFT OIL SEAL GUIDE
ST2	499587200	CRANKSHAFT OIL SEAL INSTALLER

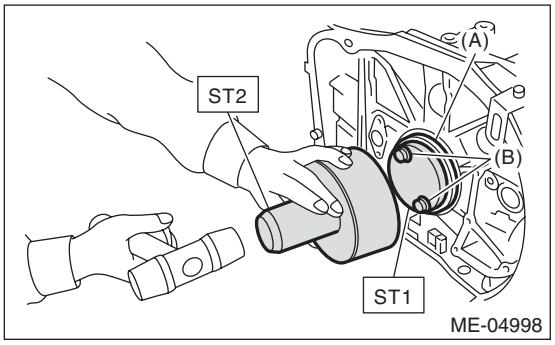

(A) Rear oil seal
(B) Flywheel attachment bolt

13) Position the top ring gap at (A) or (B) in the figure.
14) Position the second ring gap at 180° on the reverse side the top ring gap.

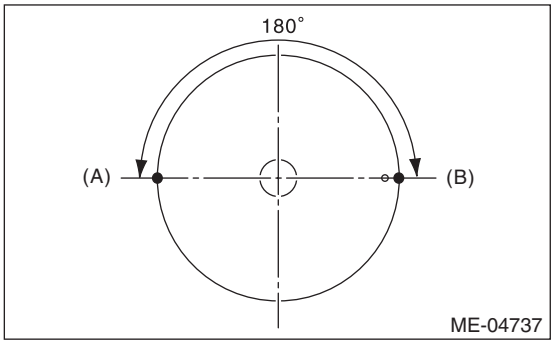

15) Position the upper rail gap at (C) in the figure.

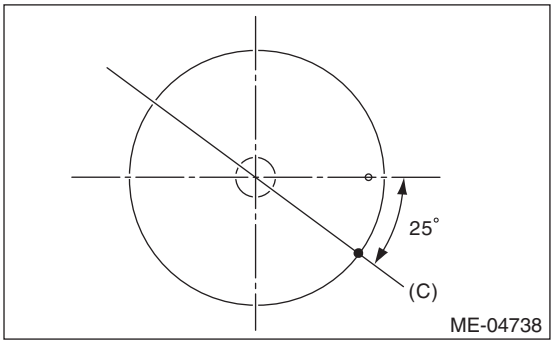

16) Align the upper rail spin stopper (E) to the side hole (D) on the piston.

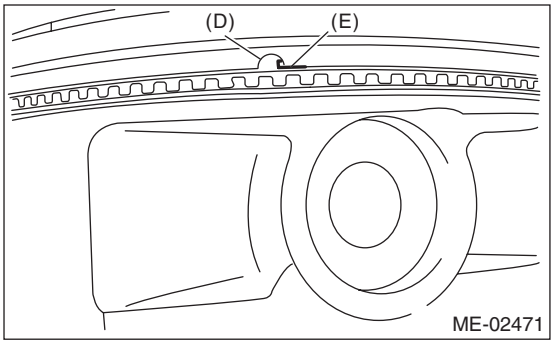

17) Position the expander gap at (F) in the figure on the 180° opposite direction of (C).

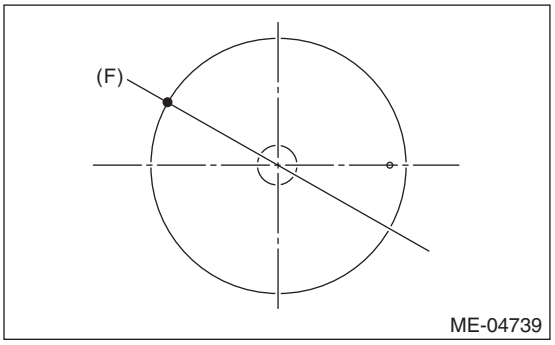

18) Set the lower rail gap at position (G), located 120° clockwise from (C) in the figure.

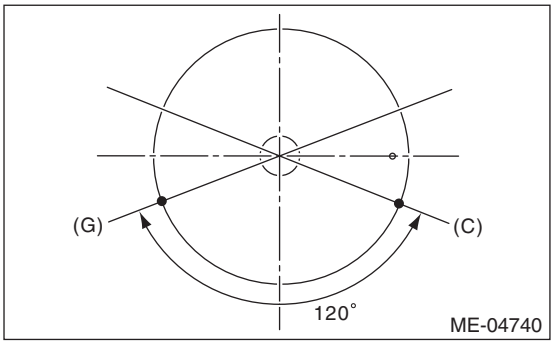

NOTE:
• Make sure ring gaps do not face the same direction.
• Make sure ring gaps are not within the piston skirt area.

19) Install the snap ring.
Before positioning the piston on the cylinder block, attach the snap ring in the service hole of the cylinder block, and the piston hole on the opposite side.

NOTE:
Use new snap rings.

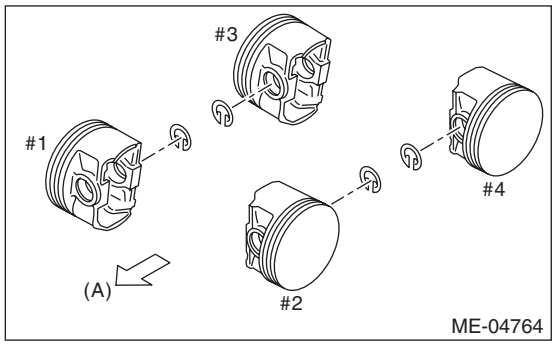

(A) Front side

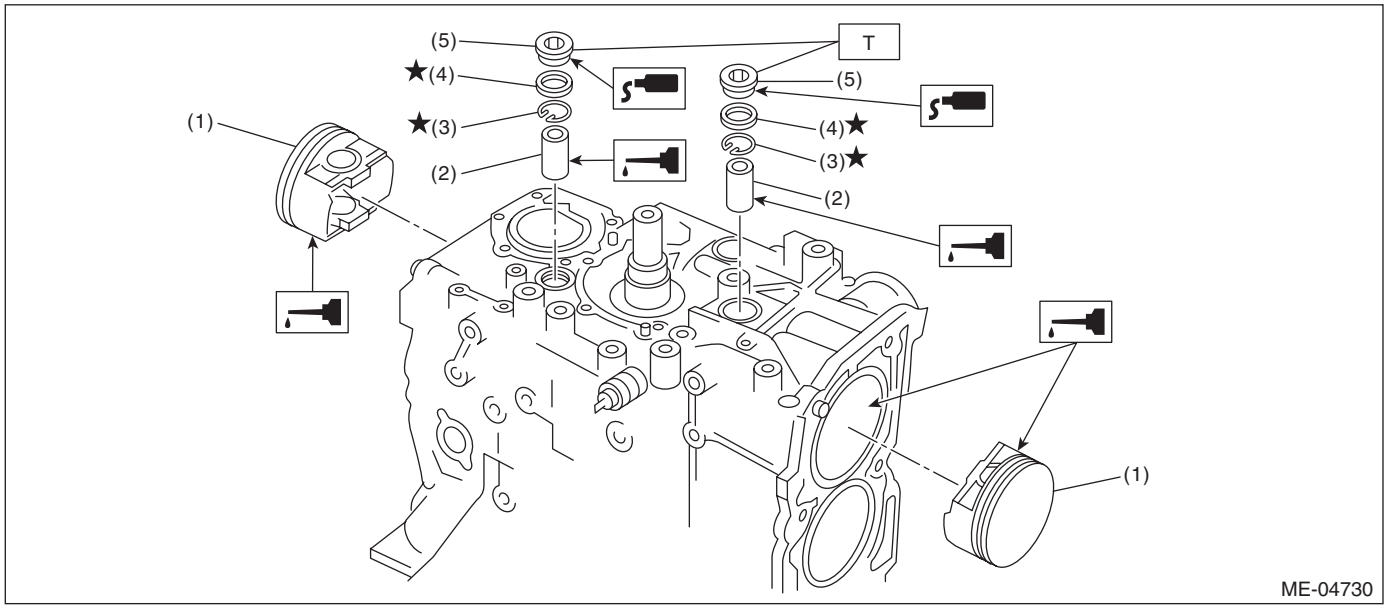

(1) Piston
(2) Piston pin
(3) Snap ring
(4) Gasket
(5) Service hole plug

Tightening torque: N·m (kgf-m, ft-lb)
T: 70 (7.1, 51.6)

20) Install the piston.
(1) Set the parts so that the #1 and #2 cylinders are on the upper side.
(2) Using the ST1, turn the crankshaft so that #1 and #2 connecting rods are set at bottom dead center.

ST1 499987500 CRANKSHAFT SOCKET

(3) Apply a coat of engine oil to the pistons and cylinders and insert pistons in their cylinders using ST2.

ST2 498747300 PISTON GUIDE

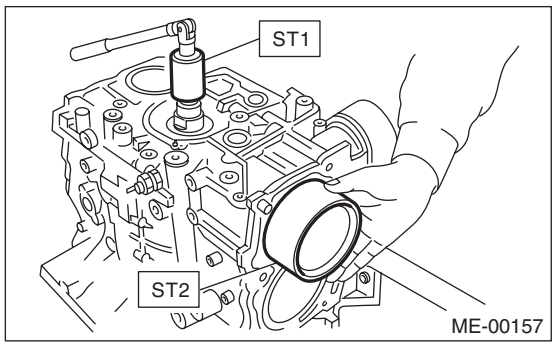

NOTE:
Face the piston front mark towards the front of the engine.

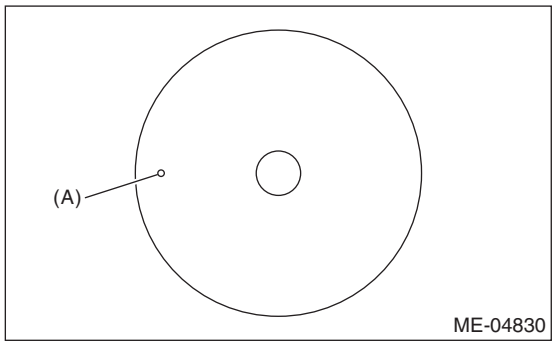

(A) Front mark

21) Install the piston pin.
(1) Apply a coat of engine oil to ST3.
(2) Insert ST3 into the service hole to align the piston pin hole and the connecting rod small end.

ST3 499017100 PISTON PIN GUIDE

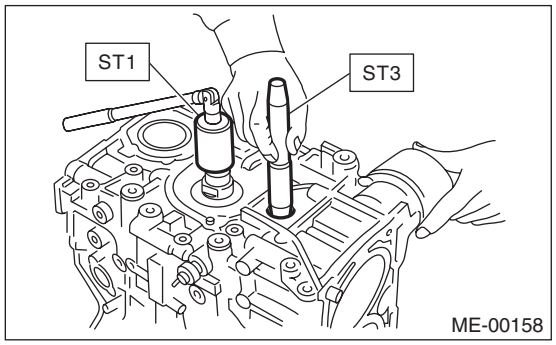

(3) Apply a thin coat of engine oil to piston pin, and insert the piston pin into piston and connecting rod through service hole.
(4) Install the snap ring.

NOTE:
Use new snap rings.

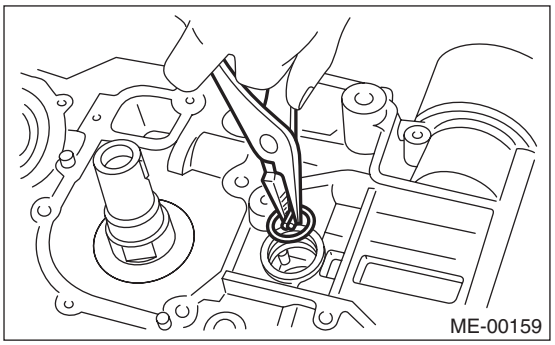

(5) Apply liquid gasket to the threaded portion of the service hole plug.

Liquid gasket:
THREE BOND 1105 (Part No. 004403010) or equivalent

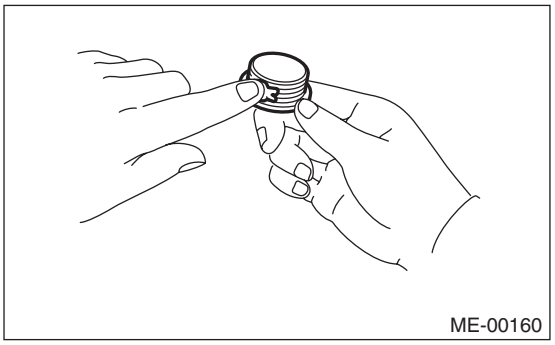

(6) Install the service hole plug and gasket.

NOTE:
Use a new gasket.

Tightening torque:
70 N·m (7.1 kgf-m, 51.6 ft-lb)

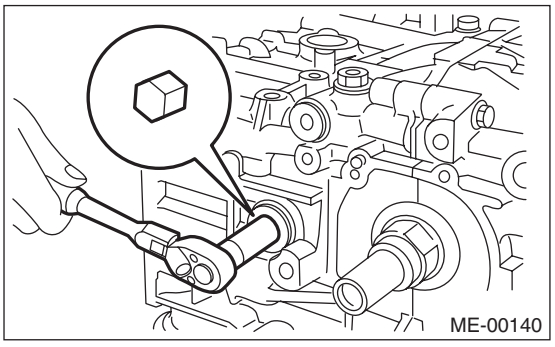

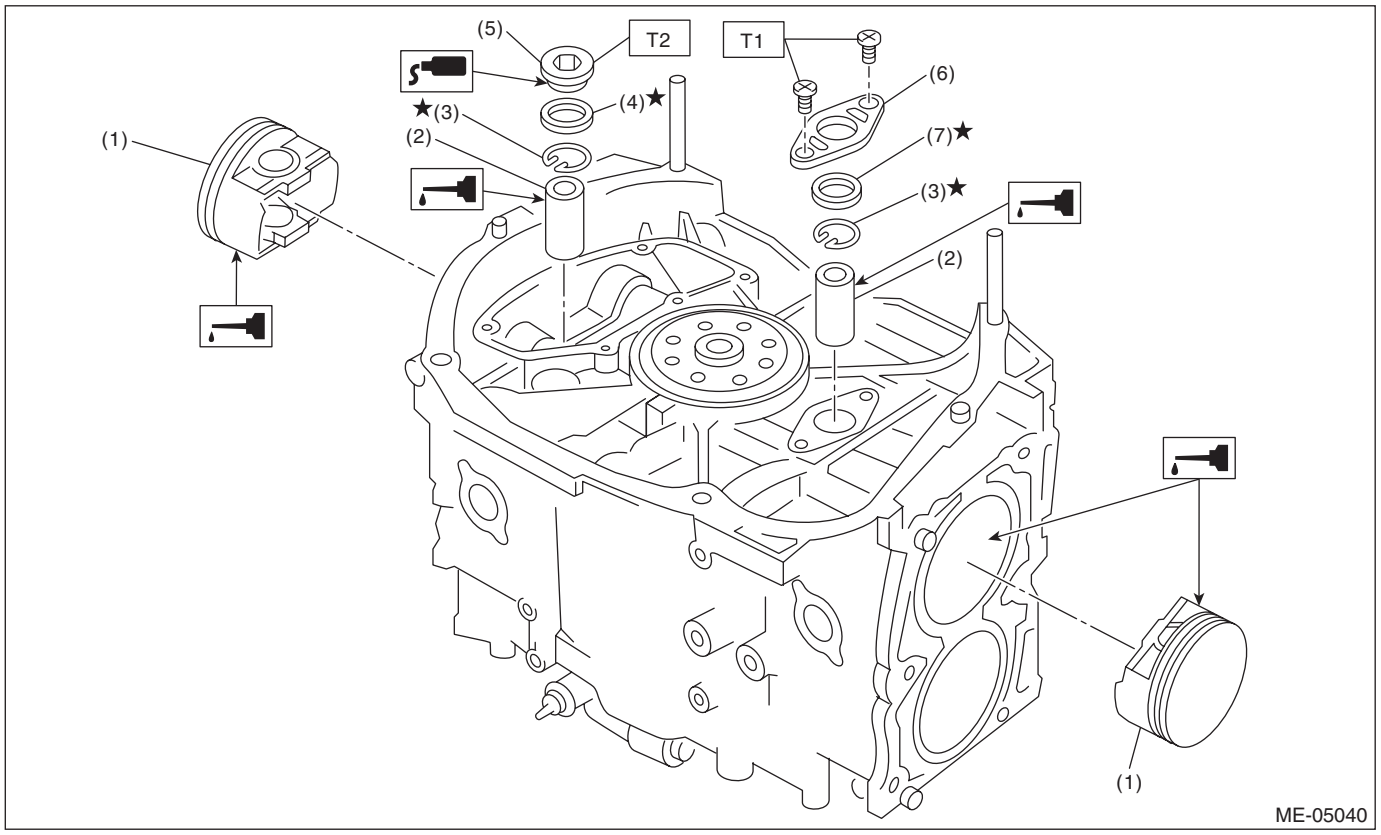

(1) Piston
(2) Piston pin
(3) Snap ring
(4) Gasket
(5) Service hole plug
(6) Service hole cover
(7) O-ring

Tightening torque: N·m (kgf-m, ft-lb)
T1: 6.4 (0.7, 4.7)
T2: 70 (7.1, 51.6)

(7) Set the parts so that the #3 and #4 cylinders are on the upper side. Following the same procedures as used for #1 and #2 cylinders, install the pistons and piston pins.
(8) Install the service hole cover.

NOTE:
Use new O-rings.

Tightening torque:
6.4 N·m (0.7 kgf-m, 4.7 ft-lb)

22) Install the water tank pipe assembly to the cylinder block RH, and install the clamp using the Clamp pincer (14100134).

NOTE:
Use a new clamp.

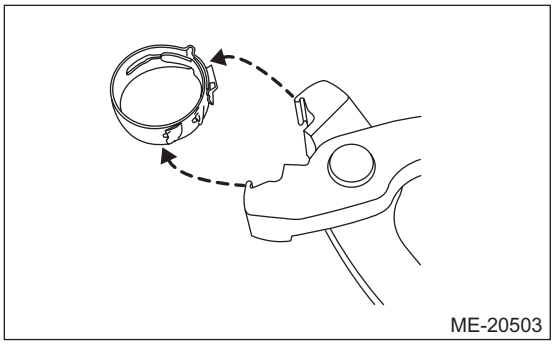

23) Install the baffle plate.

Tightening torque:
6.4 N·m (0.7 kgf-m, 4.7 ft-lb)

24) Install the oil strainer.

NOTE:
Use new O-rings.

Tightening torque:
10 N·m (1.0 kgf-m, 7.4 ft-lb)

25) Tighten the oil strainer stay together with the baffle plate.

Tightening torque:
6.4 N·m (0.7 kgf-m, 4.7 ft-lb)

26) Apply liquid gasket to the mating surfaces of oil pan, and install the oil pan.

NOTE:
Install within 5 min. after applying liquid gasket.

Liquid gasket:
THREE BOND 1217G (Part No. K0877Y0100), THREE BOND 1217H or equivalent

Tightening torque:
5 N·m (0.5 kgf-m, 3.7 ft-lb)

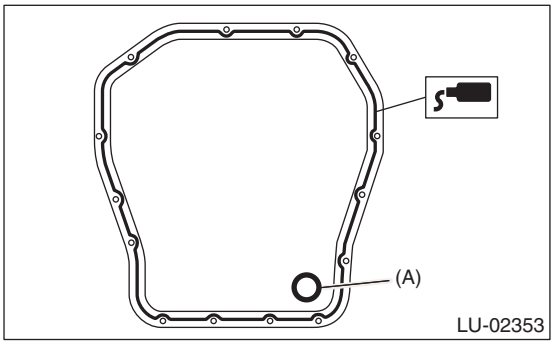

(A) Gasket

27) Apply liquid gasket to the mating surface of oil separator cover and the threaded portion of bolt (A) shown in the figure (when reusing the bolt), and then install the oil separator cover.

NOTE:
- Install within 5 min. after applying liquid gasket.
- Use new oil separator cover.

Liquid gasket:
Mating surface
THREE BOND 1217G (Part No. K0877Y0100), THREE BOND 1217H or equivalent
Bolt thread (A) (when reusing the bolt)
THREE BOND 1324 (Part No. 004403042) or equivalent

Tightening torque:
6.4 N·m (0.65 kgf-m, 4.7 ft-lb)

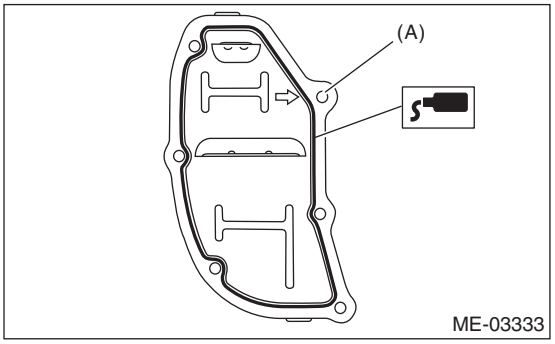

28) Install the flywheel. <Ref. to CL-15, INSTALLATION, Flywheel.>
29) Install the clutch disc and cover. <Ref. to CL-12, INSTALLATION, Clutch Disc and Cover.>

30) Install the oil pump.
(1) Using the ST, install the front oil seal.
ST 499587100 OIL SEAL INSTALLER

NOTE:
Use a new front oil seal.

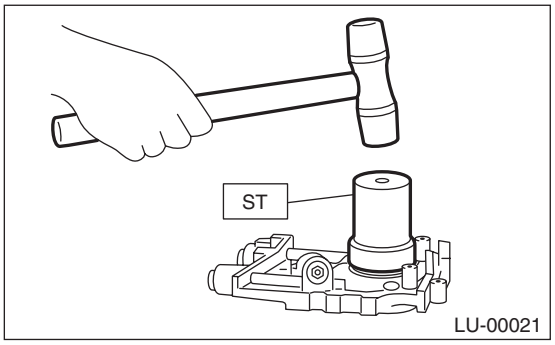

(2) Apply liquid gasket to the mating surfaces of oil pump.

NOTE:
Install within 5 min. after applying liquid gasket.

Liquid gasket:
THREE BOND 1217G (Part No. K0877Y0100), THREE BOND 1217H or equivalent

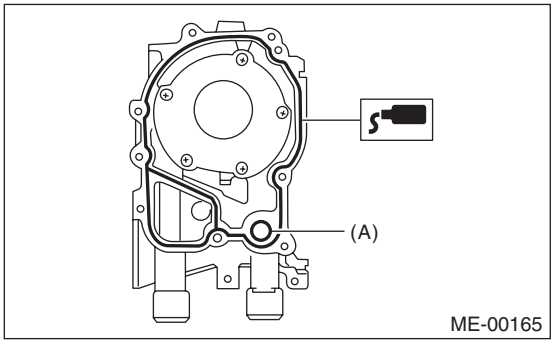

(A) O-ring

(3) Apply a thin coat of engine oil to the inside of front oil seal.

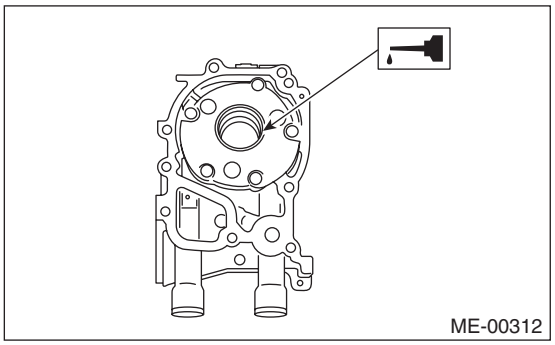

(4) Install the oil pump to cylinder block.

CAUTION:
• Be careful not to damage the front oil seal during installation.
• Make sure the front oil seal lip is not folded.

NOTE:
• Align the flat surface of oil pump's inner rotor with that of crankshaft before installation.
• Use new O-rings.
• Do not forget to assemble O-rings.
(5) Apply liquid gasket to the three bolts thread shown in figure. (When reusing bolts)

Liquid gasket:
THREE BOND 1324 (Part No. 004403042) or equivalent

Tightening torque:
6.4 N·m (0.7 kgf-m, 4.7 ft-lb)

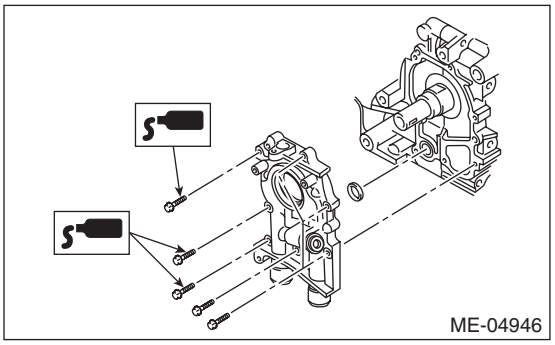

31) Install the water pump and gasket.

NOTE:
• When installing the water pump, tighten bolts in two stages in alphabetical order as shown in the figure.
• Use a new gasket.

Tightening torque:
First: 12 N·m (1.2 kgf-m, 8.9 ft-lb)
Second: 12 N·m (1.2 kgf-m, 8.9 ft-lb)

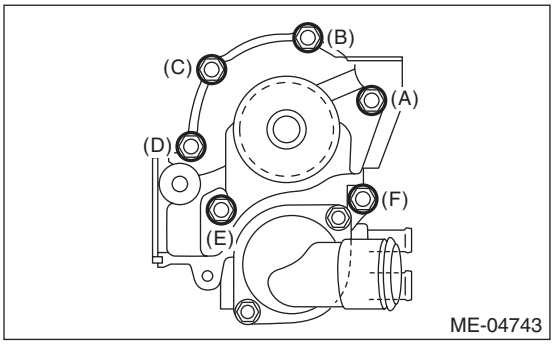

32) Install the water by-pass pipe for heater.

Tightening torque:
6.4 N·m (0.7 kgf-m, 4.7 ft-lb)

33) Install the oil cooler. <Ref. to LU(STI)-21, INSTALLATION, Engine Oil Cooler.>

34) Install the oil filter. <Ref. to LU(STI)-27, INSTALLATION, Engine Oil Filter.>
35) Install the cylinder head. <Ref. to ME(STI)-72, INSTALLATION, Cylinder Head.>
36) Install the camshaft. <Ref. to ME(STI)-66, INSTALLATION, Camshaft.>
37) Install the generator and A/C compressor with their brackets.

Tightening torque:
36 N·m (3.7 kgf-m, 26.6 ft-lb)

38) Install the crank sprocket. <Ref. to ME(STI)-62, INSTALLATION, Crank Sprocket.>
39) Install the cam sprocket. <Ref. to ME(STI)-61, INSTALLATION, Cam Sprocket.>
40) Install the timing belt. <Ref. to ME(STI)-54, INSTALLATION, Timing Belt.>
41) Adjust the valve clearance. <Ref. to ME(STI)-29, ADJUSTMENT, Valve Clearance.>
42) Install the rocker cover.
(1) Install the rocker cover gasket to the rocker cover. (Outer section and ignition coil section)

NOTE:
Use a new rocker cover gasket.

(2) Apply liquid gasket to the specified point of the cylinder head.

NOTE:
Install within 5 min. after applying liquid gasket.

Liquid gasket:
THREE BOND 1217G (Part No. K0877Y0100), THREE BOND 1217H or equivalent

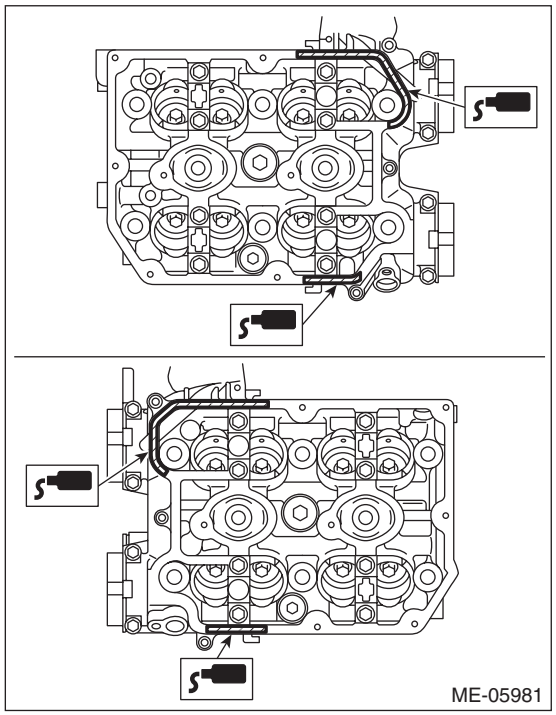

(3) Install the rocker cover onto cylinder heads. Ensure the gasket is properly positioned during installation.
(4) Temporarily tighten the rocker cover bolts in alphabetical order shown in the figure, and then tighten to specified torque in alphabetical order.

Tightening torque:
6.4 N·m (0.7 kgf-m, 4.7 ft-lb)

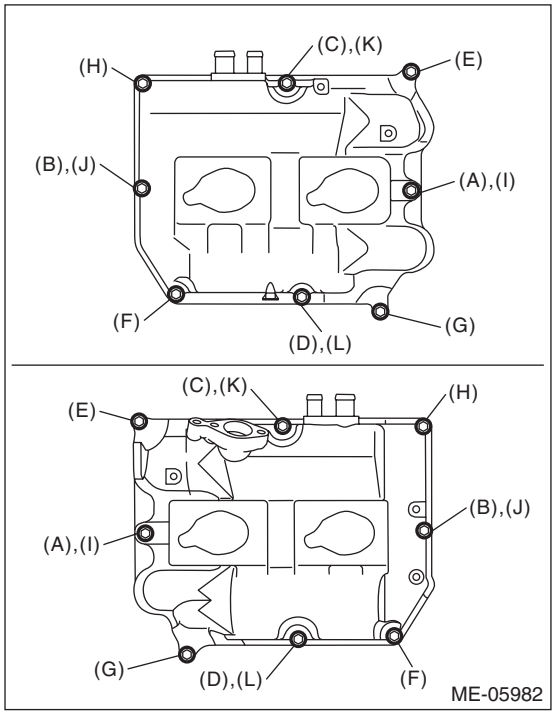

43) Install the timing belt cover. <Ref. to ME(STI)-51, INSTALLATION, Timing Belt Cover.>
44) Install the crank pulley. <Ref. to ME(STI)-49, INSTALLATION, Crank Pulley.>
45) Install the intake manifold. <Ref. to FU(STI)-21, INSTALLATION, Intake Manifold.>
46) Install the rear side belt. <Ref. to ME(STI)-42, REAR SIDE BELT, INSTALLATION, V-belt.>
47) Install the engine to the vehicle. <Ref. to ME(STI)-34, INSTALLATION, Engine Assembly.>

C: DISASSEMBLY

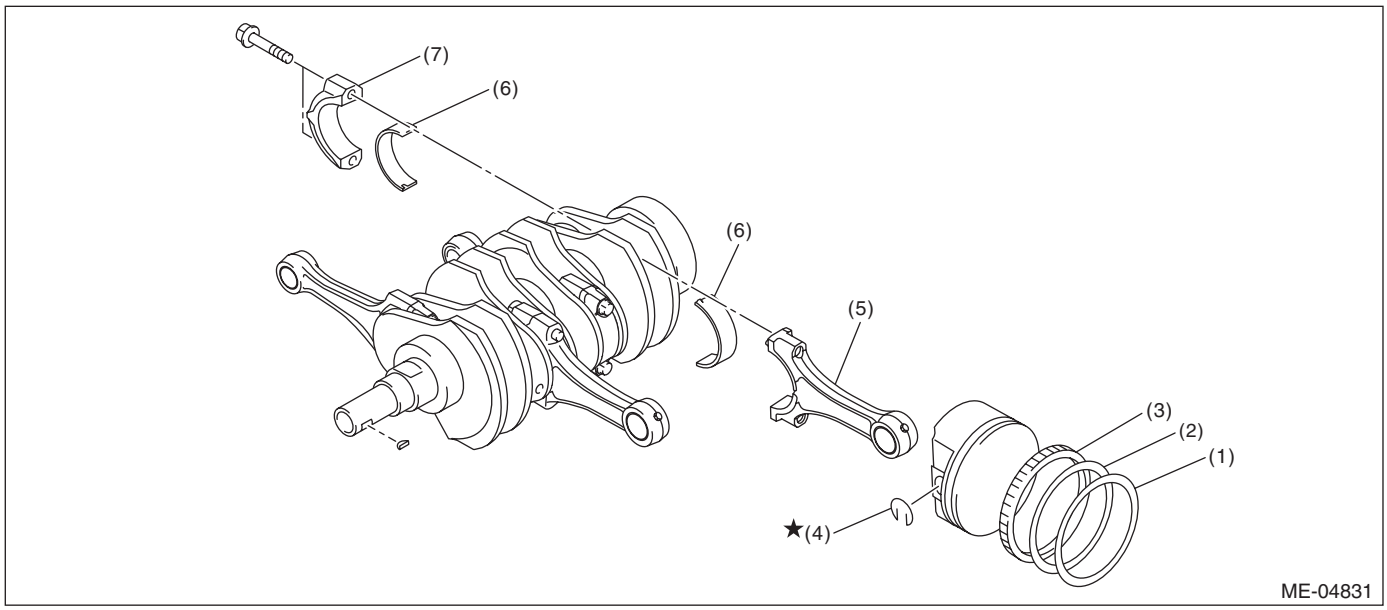

(1) Top ring
(2) Second ring
(3) Oil ring
(4) Snap ring
(5) Connecting rod
(6) Connecting rod bearing
(7) Connecting rod cap

1) Remove the connecting rod cap.
2) Remove the connecting rod bearing.

NOTE:
Keep the removed connecting rods, connecting rod caps and bearings in order so that they are kept in their original combinations/groups, and not mixed together.
3) Remove the piston rings using piston ring expander.
4) Remove the oil ring by hand.

NOTE:
Arrange the removed piston rings in proper order, to prevent confusion.
5) Remove the snap ring.

D: ASSEMBLY

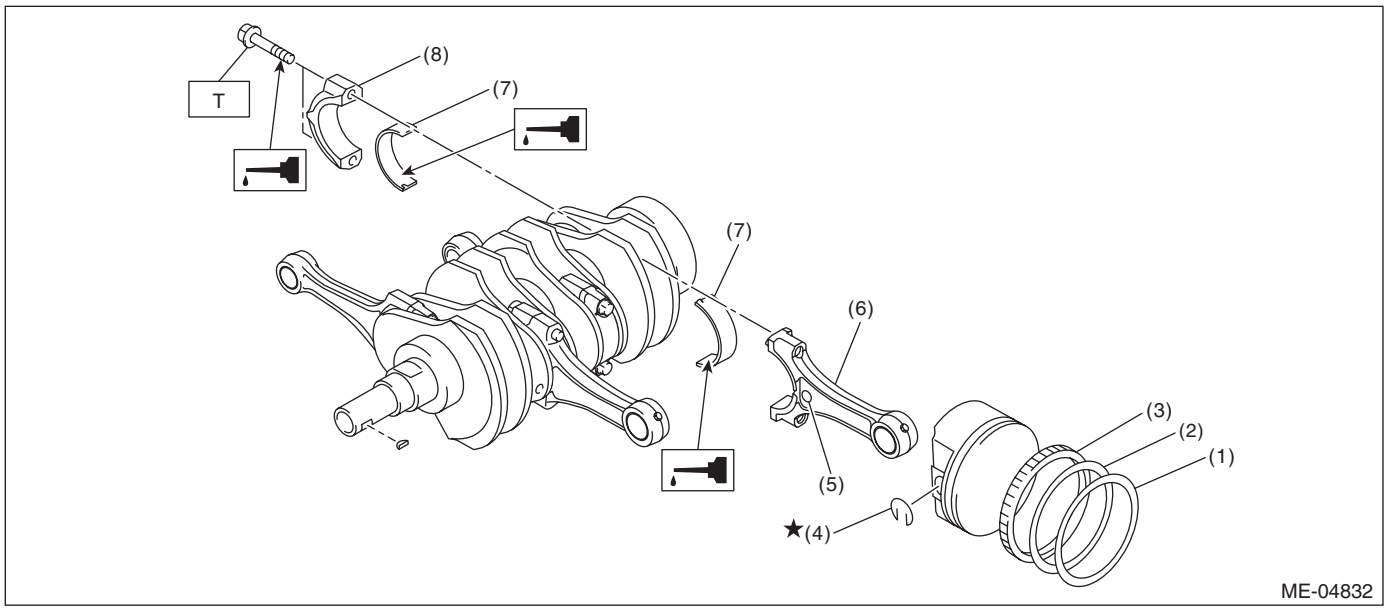

(1) Top ring
(2) Second ring
(3) Oil ring
(4) Snap ring
(5) Side mark
(6) Connecting rod
(7) Connecting rod bearing
(8) Connecting rod cap

Tightening torque: N·m (kgf-m, ft-lb)
T: 52 (5.3, 38.4)

1) Apply engine oil to the surface of the connecting rod bearings, and install the connecting rod bearings on connecting rods and connecting rod caps.
2) Position each connecting rod with the side with a side mark facing forward, and install it.
3) Attach the connecting rod cap and tighten it with connecting rod bolt. Make sure the arrow on connecting rod cap faces the front during installation.

NOTE:
• Each connecting rod has its own mating cap. Make sure that they are assembled correctly by checking their matching number.
• When tightening the connecting rod bolts, apply oil on the threads.

Tightening torque:
52 N·m (5.3 kgf-m, 38.4 ft-lb)
4) Install the oil ring upper rail, expander and lower rail by hand.
5) Install the second ring and top ring using piston ring expander.

NOTE:
Assemble so that the piston ring mark “R” faces the top side of the piston.

E: INSPECTION

1. CYLINDER BLOCK

1) Check for cracks or damage. Use liquid penetrant tester on the important sections to check for fissures. Check that there are no marks of gas leaking or water leaking on gasket installing surface.
2) Check the oil passages for clogging.

3) Inspect the cylinder block surface that mates with cylinder head for warping by using a straight edge, and correct by grinding if necessary.

Warping limit:
0.025 mm (0.00098 in)

Grinding limit:
0.1 mm (0.004 in)

Standard height of cylinder block:
201.0 mm (7.91 in)

2. CYLINDER AND PISTON

1) The cylinder bore size is stamped on the front upper face of the cylinder block.

NOTE:
• Measurement should be performed at a temperature of 20°C (68°F).
• Standard sized pistons are classified into two grades, “A” and “B”. These grades should be used as guide lines in selecting a standard piston.

Standard diameter:
A: 99.505 — 99.515 mm (3.9175 — 3.9179 in)
B: 99.495 — 99.505 mm (3.9171 — 3.9175 in)

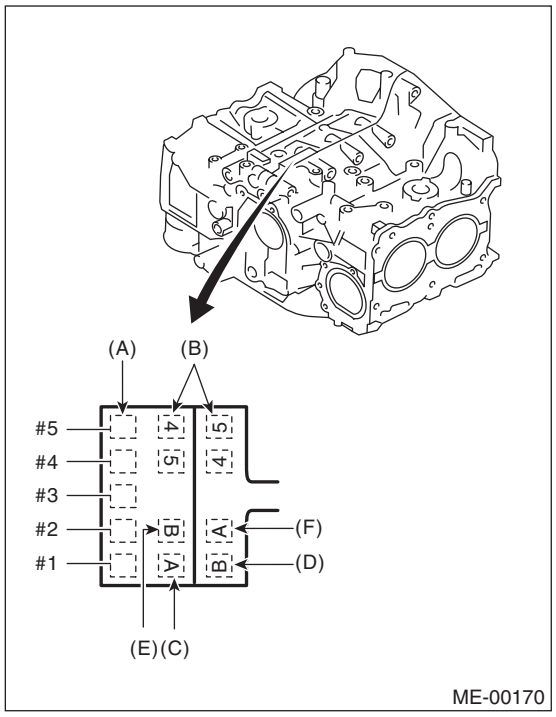

(A) Main journal size mark
(B) Cylinder block (RH) – (LH) combination mark
(C) #1 cylinder bore size mark
(D) #2 cylinder bore size mark
(E) #3 cylinder bore size mark
(F) #4 cylinder bore size mark

2) Measure inner diameter of each cylinder.
Measure the inner diameter of each cylinder in both the thrust and piston pin directions at the heights as shown in the figure, using a cylinder bore gauge.

NOTE:
Measurement should be performed at a temperature of 20°C (68°F).

Cylindricality:
Limit
0.015 mm (0.0006 in)

Out-of-roundness:
Limit
0.010 mm (0.0004 in)

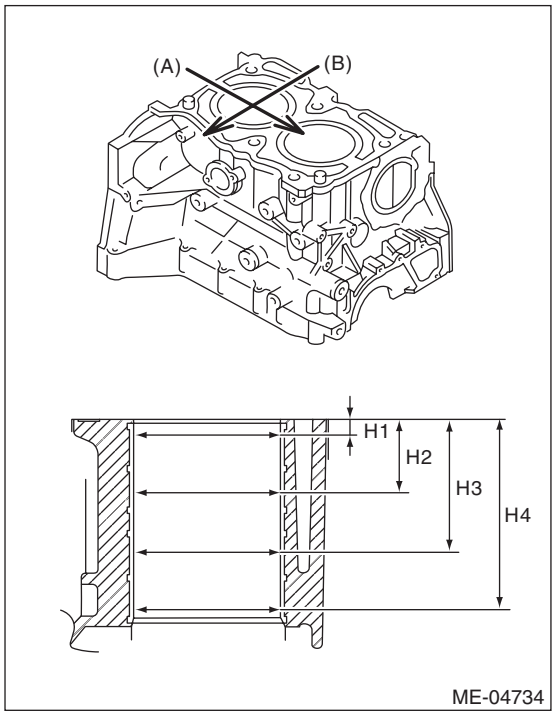

(A) Piston pin direction
(B) Thrust direction
H1: 10 mm (0.39 in)
H2: 45 mm (1.77 in)
H3: 80 mm (3.15 in)
H4: 115 mm (4.53 in)

3) When the piston is to be replaced due to general or cylinder wear, select a suitable sized piston by measuring the piston clearance.
4) Measure outer diameter of each piston.
Measure the outer diameter of each piston at the height as shown in the figure. (Thrust direction)

NOTE:
Measurement should be performed at a temperature of 20°C (68°F).

Piston grade point H:
38.2 mm (1.50 in)

Piston outer diameter:

Standard
A: 99.505 — 99.515 mm (3.9175 — 3.9179 in)
B: 99.495 — 99.505 mm (3.9171 — 3.9175 in)
0.25 mm (0.0098 in) oversize
99.745 — 99.765 mm (3.9270 — 3.9278 in)
0.50 mm (0.0197 in) oversize
99.995 — 100.015 mm (3.9368 — 3.9376 in)

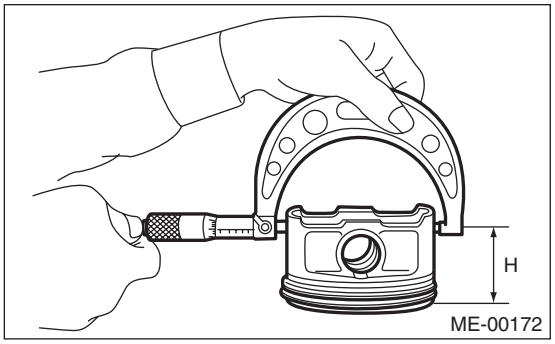

5) Calculate the clearance between cylinder and piston.

NOTE:
Measurement should be performed at a temperature of 20°C (68°F).

Clearance between cylinder and piston at 20°C (68°F):
Standard
–0.010 — 0.010 mm (–0.00039 — 0.00039 in)

6) Boring and honing
(1) If any of the measured value of cylindricality, out-of-roundness or cylinder-to-piston clearance is out of standard or if there is any damage on the cylinder wall, rebore it to replace with an oversize piston.

CAUTION:
When any of the cylinders needs reboring, all other cylinders must be bored at the same time, and replaced with oversize pistons.

(2) If the cylinder inner diameter exceeds the limit after boring and honing, replace the cylinder block.

NOTE:
Immediately after reboring, the cylinder diameter may differ from its real diameter due to temperature rise. Thus, when measuring the cylinder diameter, wait until it has cooled to room temperature.

Cylinder inner diameter boring limit (diameter):
To 100.005 mm (3.9372 in)

3. PISTON AND PISTON PIN

1) Check the piston and piston pin for damage, cracks or wear. Replace if faulty.
2) Check the piston ring groove for wear or damage. Replace if faulty.
3) Make sure that the piston pin can be inserted into the piston pin hole with a thumb at 20°C (68°F). Replace if faulty.

Clearance between piston pin hole and piston pin:
Standard
0.004 — 0.008 mm (0.0002 — 0.0003 in)

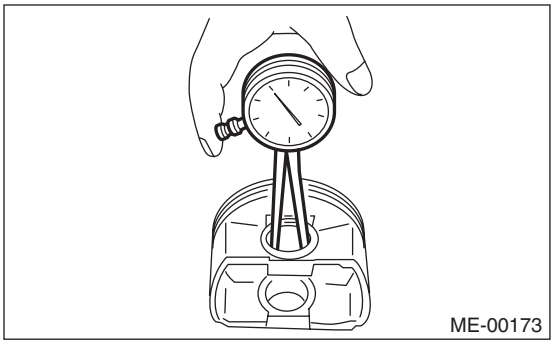

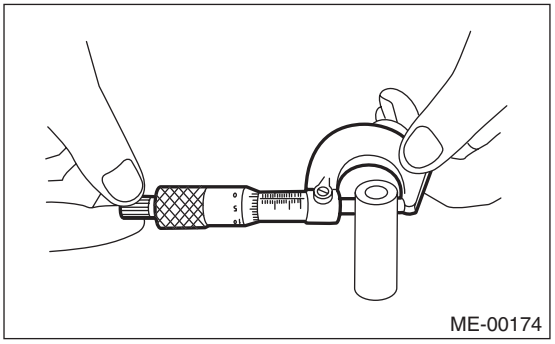

4) Check the snap ring installation groove (A) on the piston for burr. If necessary, remove burr from the groove so that the piston pin can lightly move.

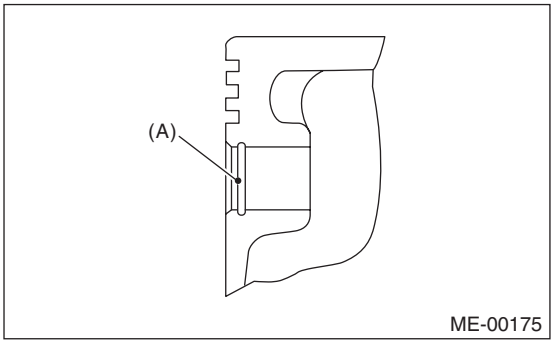

5) Check the snap ring for distortion, cracks and wear.

4. PISTON RING

1) If the piston ring is broken, damaged or worn, or if its tension is insufficient, or when the piston is replaced, replace the piston ring with a new part of the same size as piston.

NOTE:
• The top ring and second ring have the mark to determine the direction for installing. When installing the ring to piston, face marks to the top side.
• Oil ring consists of the upper rail, expander and lower rail. When installing oil ring on piston, be careful of the direction of each rail.

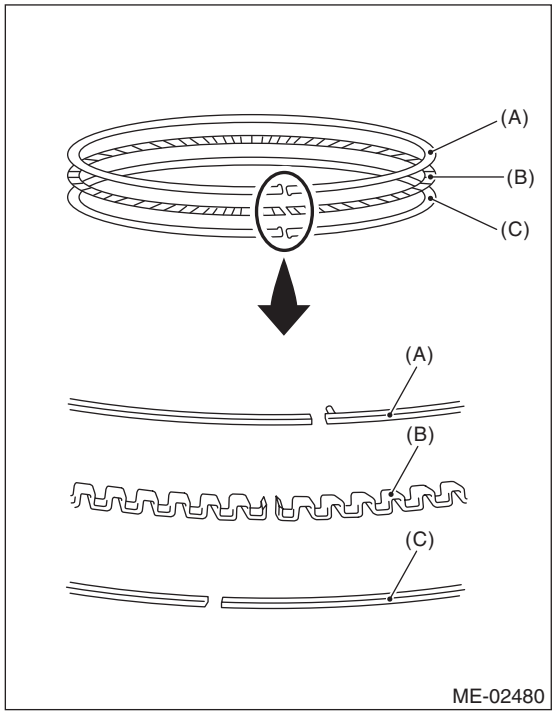

(A) Upper rail
(B) Expander
(C) Lower rail

2) Using the piston, insert the piston ring and oil ring into the cylinder block so that they are perpendicular to the cylinder wall, and measure the piston ring gap using a thickness gauge.

		Standard mm (in)
Piston ring gap	Top ring	0.23 — 0.28 (0.0091 — 0.0110)
	Second ring	0.37 — 0.52 (0.015 — 0.0205)
	Oil ring rail	0.20 — 0.50 (0.0079 — 0.0197)

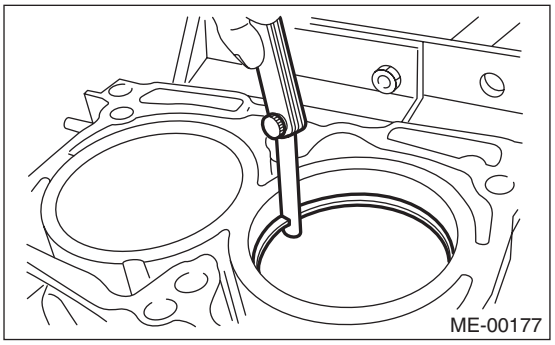

3) Fit the piston ring straight into the piston ring groove, then measure the clearance between piston ring and piston ring groove with a thickness gauge.

NOTE:
Before measuring the clearance, clean the piston ring groove and piston ring.

		Standard mm (in)
Clearance between piston ring and piston ring groove	Top ring	0.040 — 0.080 (0.0016 — 0.0031)
	Second ring	0.030 — 0.070 (0.0012 — 0.0028)

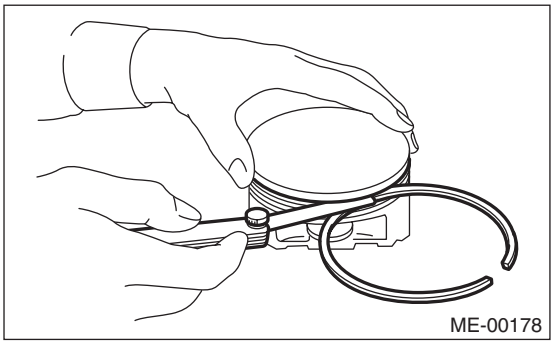

5. CONNECTING ROD

1) Replace the connecting rod, if the large or small end thrust surface is damaged.
2) Check for bend or twist using a connecting rod aligner. Replace the connecting rod if the bend or twist exceeds the limit.

Limit of bend or twist per 100 mm (3.94 in) in length:
0.10 mm (0.0039 in)

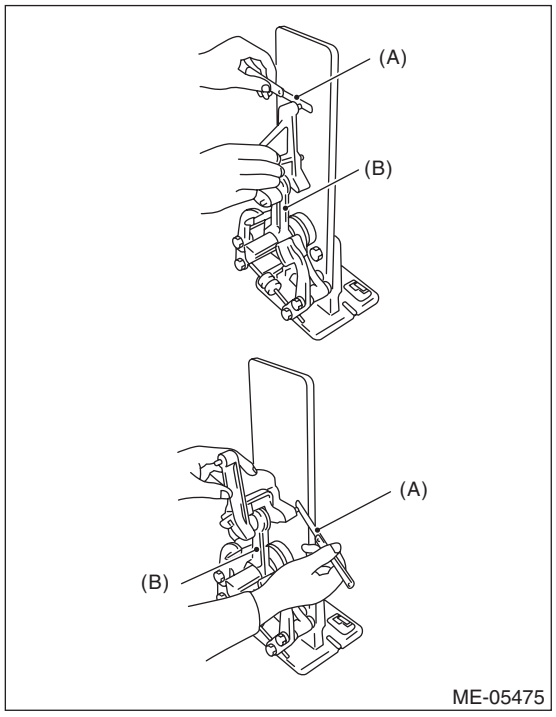

(A) Thickness gauge
(B) Connecting rod

3) Install the connecting rod with bearings attached to the crankshaft, and using a thickness gauge, measure the thrust clearance. If the thrust clearance exceeds the standard or uneven wear is found, replace the connecting rod.

Connecting rod thrust clearance:
Standard
0.070 — 0.330 mm (0.0028 — 0.0130 in)

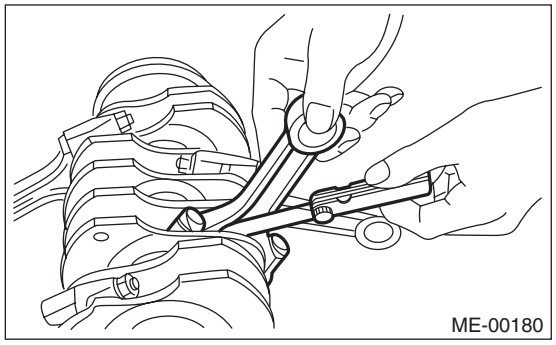

4) Inspect the connecting rod bearing for scar, peeling, seizure, melting, wear, etc.
5) Measure the oil clearance on each connecting rod bearing using plastigauge. If any oil clearance is not within the standard, replace the defective bearing with a new part of standard size or undersize as necessary.

Connecting rod oil clearance:
Standard
0.017 — 0.045 mm (0.0007 — 0.0018 in)

Unit: mm (in)

Bearing	Bearing size (Thickness at center)	Outer diameter of crank pin
Standard	1.490 — 1.506 (0.0587 — 0.0593)	51.976 — 52.000 (2.0463 — 2.0472)
0.03 (0.0012) Undersize	1.504 — 1.512 (0.0592 — 0.0595)	51.954 — 51.970 (2.0454 — 2.0461)
0.05 (0.0020) Undersize	1.514 — 1.522 (0.0596 — 0.0599)	51.934 — 51.950 (2.0447 — 2.0453)
0.25 (0.0098) Undersize	1.614 — 1.622 (0.0635 — 0.0639)	51.734 — 51.750 (2.0368 — 2.0374)

6) Inspect the bushing at connecting rod small end, and replace the connecting rod if it is worn or damaged.
7) Measure the piston pin clearance at connecting rod small end. If the measured value is not within the standard, replace the connecting rod and piston pin as a set.

Clearance between piston pin and bushing:
Standard
0 — 0.022 mm (0 — 0.0009 in)

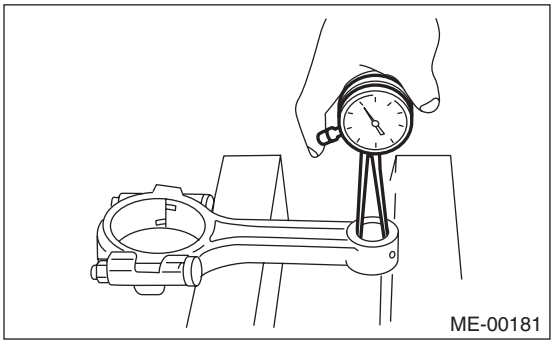

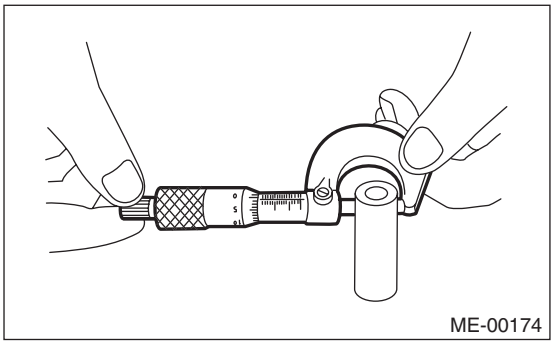

6. CRANKSHAFT AND CRANKSHAFT BEARING

1) Clean the crankshaft completely, and check it for cracks using liquid penetrant tester. If defective, replace the crankshaft.
2) Measure warping of the crankshaft. If it exceeds the limit, correct or replace it.

NOTE:
If a suitable V-block is not available, using just the #1 and #5 crankshaft bearings on cylinder block, position the crankshaft on cylinder block. Then, measure the crankshaft bend using a dial gauge.

Crankshaft bend limit:
0.035 mm (0.0014 in)

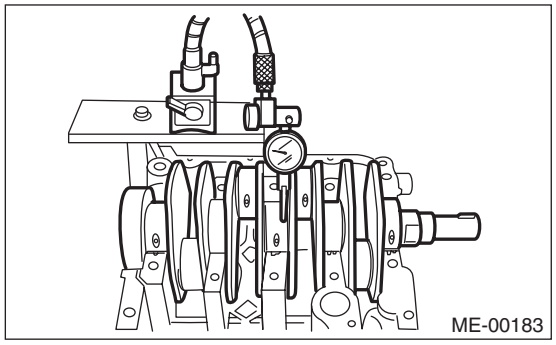

3) Inspect the crank journal and crank pin for wear. If they are not within the standard, replace the bearing with a suitable (undersize) one, and replace or grind to correct the crankshaft as necessary. When grinding the crank journal or crank pin, finish them to the specified dimensions according to the undersize bearing to be used.

Crank pin:
Cylindricality
Limit
0.006 mm (0.0002 in)
Out-of-roundness
Limit
0.005 mm (0.0002 in)
Grinding limit (dia.)
To 51.734 mm (2.0368 in)

Crank journal:
Cylindricality
Limit
0.006 mm (0.0002 in)
Out-of-roundness
Limit
0.005 mm (0.0002 in)
Grinding limit (dia.)
To 59.742 mm (2.3520 in)

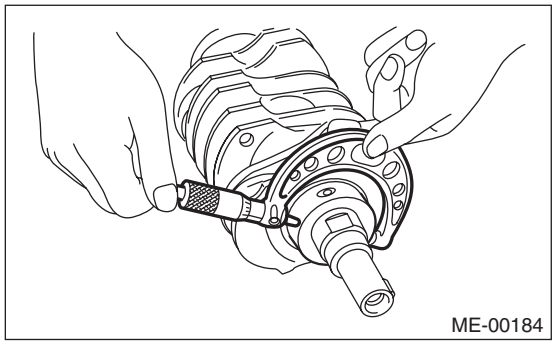

Unit: mm (in)

		Crank journal diameter		Crank pin outer diameter
		#1, #3	#2, #4, #5	
Standard	Journal O.D.	59.984 — 60.008 (2.3616 — 2.3625)	59.984 — 60.008 (2.3616 — 2.3625)	51.976 — 52.000 (2.0463 — 2.0472)
	Bearing size (Thickness at center)	1.998 — 2.015 (0.0787 — 0.0793)	2.000 — 2.017 (0.0787 — 0.0794)	1.490 — 1.506 (0.0587 — 0.0593)
0.03 (0.0012) Undersize	Journal O.D.	59.962 — 59.978 (2.3607 — 2.3613)	59.962 — 59.978 (2.3607 — 2.3613)	51.954 — 51.970 (2.0454 — 2.0461)
	Bearing size (Thickness at center)	2.017 — 2.020 (0.0794 — 0.0795)	2.019 — 2.022 (0.0795 — 0.0796)	1.504 — 1.512 (0.0592 — 0.0595)
0.05 (0.0020) Undersize	Journal O.D.	59.942 — 59.958 (2.3599 — 2.3605)	59.942 — 59.958 (2.3599 — 2.3605)	51.934 — 51.950 (2.0447 — 2.0453)
	Bearing size (Thickness at center)	2.027 — 2.030 (0.0798 — 0.0799)	2.029 — 2.032 (0.0799 — 0.0800)	1.514 — 1.522 (0.0596 — 0.0599)
0.25 (0.0098) Undersize	Journal O.D.	59.742 — 59.758 (2.3520 — 2.3527)	59.742 — 59.758 (2.3520 — 2.3527)	51.734 — 51.750 (2.0368 — 2.0374)
	Bearing size (Thickness at center)	2.127 — 2.130 (0.0837 — 0.0839)	2.129 — 2.132 (0.0838 — 0.0839)	1.614 — 1.622 (0.0635 — 0.0639)

4) Use a thickness gauge to measure the thrust clearance of crankshaft at #5 crank journal bearing. If clearance exceeds the standard, replace the bearing.

Crankshaft thrust clearance:
Standard
0.030 — 0.115 mm (0.0012 — 0.0045 in)

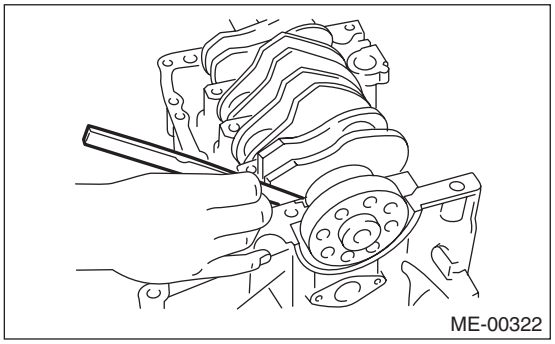
ME-00322

5) Inspect individual crankshaft bearings for signs of flaking, seizure, melting and wear.
6) Measure the oil clearance on each crankshaft bearing using plastigauge. If the measured value is out of standard, replace the defective bearing with an undersize one, and replace or grind to correct the crankshaft as necessary.

Crankshaft oil clearance:
Standard
0.010 — 0.030 mm (0.00039 — 0.0012 in)

21.Intake and Exhaust Valve

A: SPECIFICATION

Refer to “Cylinder Head” for removal and installation procedures of the intake and exhaust valves. <Ref. to ME(STI)-72, REMOVAL, Cylinder Head.> <Ref. to ME(STI)-72, INSTALLATION, Cylinder Head.>

22.Piston

A: SPECIFICATION

Refer to “Cylinder Block” for removal and installation procedures of pistons. <Ref. to ME(STI)-82, REMOVAL, Cylinder Block.> <Ref. to ME(STI)-86, INSTALLATION, Cylinder Block.>

23.Connecting Rod

A: SPECIFICATION

Refer to “Cylinder Block” for removal and installation procedures of connecting rod. <Ref. to ME(STI)-82, REMOVAL, Cylinder Block.> <Ref. to ME(STI)-86, INSTALLATION, Cylinder Block.>

24.Crankshaft

A: SPECIFICATION

Refer to “Cylinder Block” for removal and installation procedures of the crankshaft. <Ref. to ME(STI)-82, REMOVAL, Cylinder Block.> <Ref. to ME(STI)-86, INSTALLATION, Cylinder Block.>

25.Engine Trouble in General

A: INSPECTION

NOTE:
The “RANK” shown in the chart shows the possibilities of the cause of trouble in order from “Very often” to “Rarely”.
A — Very often
B — Sometimes
C — Rarely

Symptoms	Problem parts etc.	Possible cause	RANK
1. Engine does not start.			
1) Starter does not turn.	Starter	Defective battery-to-starter harness	B
		Defective starter switch	C
		Defective clutch start switch	C
		Defective starter	B
	Battery	Improper connection of terminal	A
		Run-down battery	A
		Defective charging system	B
	Friction	Seizure of crankshaft and connecting rod bearing	C
		Seized camshaft	C
		Seized or stuck piston and cylinder	C
	Immobilizer system <Ref. to IM(diag)-2, Basic Diagnostic Procedure.>		A
2) Initial combustion does not occur.	Starter	Defective starter	C
	Engine control system <Ref. to EN(STI)(diag)-2, Basic Diagnostic Procedure.>		A
	Fuel line	Defective fuel pump and relay	A
		Clogged fuel line	C
		Lack of fuel or insufficient fuel	B
	Timing belt	Degradation, etc.	B
		Defective timing	B
	Compression	Incorrect valve clearance	C
		Loosened spark plug or defective gasket	C
		Loosened cylinder head bolt or defective cylinder head gasket	C
		Improper valve sealing	C
		Defective valve stem	C
		Worn or broken valve spring	B
		Worn or stuck piston rings, cylinder and piston	C
		Incorrect valve timing	B
		Improper engine oil (low viscosity)	B

Symptoms	Problem parts etc.	Possible cause	RANK
3) Initial combustion occurs.	Engine control system <Ref. to EN(STI)(diag)-2, Basic Diagnostic Procedure.>		A
	Intake system	Defective intake manifold gasket	B
		Defective throttle body gasket	B
	Fuel line	Defective fuel pump and relay	C
		Clogged fuel line	C
		Lack of fuel or insufficient fuel	B
	Timing belt	Degradation, etc.	B
		Defective timing	B
	Compression	Incorrect valve clearance	C
		Loosened spark plug or defective gasket	C
		Loosened cylinder head bolt or defective cylinder head gasket	C
		Improper valve sealing	C
		Defective valve stem	C
		Worn or broken valve spring	B
		Worn or stuck piston rings, cylinder and piston	C
		Incorrect valve timing	B
		Improper engine oil (low viscosity)	B
4) Engine stalls after initial combustion.	Engine control system <Ref. to EN(STI)(diag)-2, Basic Diagnostic Procedure.>		A
	Intake system	Loosened or cracked intake duct	B
		Loosened or cracked PCV hose	C
		Loosened or cracked vacuum hose	C
		Defective intake manifold gasket	B
		Defective throttle body gasket	B
		Dirty air cleaner element	C
	Fuel line	Clogged fuel line	C
		Lack of fuel or insufficient fuel	B
	Timing belt	Degradation, etc.	B
		Defective timing	B
	Compression	Incorrect valve clearance	C
		Loosened spark plug or defective gasket	C
		Loosened cylinder head bolt or defective cylinder head gasket	C
		Improper valve sealing	C
		Defective valve stem	C
		Worn or broken valve spring	B
		Worn or stuck piston rings, cylinder and piston	C
		Incorrect valve timing	B
		Improper engine oil (low viscosity)	B

Symptoms	Problem parts etc.	Possible cause	RANK
2. Rough idle and engine stall	Engine control system <Ref. to EN(STI)(diag)-2, Basic Diagnostic Procedure.>		A
	Intake system	Loosened or cracked intake duct	A
		Loosened or cracked PCV hose	A
		Loosened or cracked vacuum hose	A
		Defective intake manifold gasket	B
		Defective throttle body gasket	B
		Defective PCV valve	C
		Loosened oil filler cap	B
		Dirty air cleaner element	C
	Fuel line	Defective fuel pump and relay	C
		Clogged fuel line	C
		Lack of fuel or insufficient fuel	B
	Timing belt	Defective timing	C
	Compression	Incorrect valve clearance	B
		Loosened spark plug or defective gasket	B
		Loosened cylinder head bolt or defective cylinder head gasket	B
		Improper valve sealing	B
		Defective valve stem	C
		Worn or broken valve spring	B
		Worn or stuck piston rings, cylinder and piston	B
		Incorrect valve timing	A
		Improper engine oil (low viscosity)	B
	Lubrication system	Incorrect oil pressure	B
		Defective rocker cover gasket	C
	Cooling system	Over-heating	C
	Other	Evaporative emission control system malfunction	A
		Stuck or damaged throttle valve	B

Symptoms	Problem parts etc.	Possible cause	RANK
3. Low output, hesitation and poor acceleration	Engine control system <Ref. to EN(STI)(diag)-2, Basic Diagnostic Procedure.>		A
	Intake system	Loosened or cracked intake duct	A
		Loosened or cracked PCV hose	A
		Loosened or cracked vacuum hose	B
		Defective intake manifold gasket	B
		Defective throttle body gasket	B
		Defective PCV valve	B
		Loosened oil filler cap	B
		Dirty air cleaner element	A
	Fuel line	Defective fuel pump and relay	B
		Clogged fuel line	B
		Lack of fuel or insufficient fuel	C
	Timing belt	Defective timing	B
	Compression	Incorrect valve clearance	B
		Loosened spark plug or defective gasket	B
		Loosened cylinder head bolt or defective cylinder head gasket	B
		Improper valve sealing	B
		Defective valve stem	C
		Worn or broken valve spring	B
		Worn or stuck piston rings, cylinder and piston	C
		Incorrect valve timing	A
		Improper engine oil (low viscosity)	B
	Lubrication system	Incorrect oil pressure	B
	Cooling system	Over-heating	C
		Over-cooling	C
	Other	Evaporative emission control system malfunction	A

Symptoms	Problem parts etc.	Possible cause	RANK
4. Surging	Engine control system <Ref. to EN(STI)(diag)-2, Basic Diagnostic Procedure.>		A
	Intake system	Loosened or cracked intake duct	A
		Loosened or cracked PCV hose	A
		Loosened or cracked vacuum hose	A
		Defective intake manifold gasket	B
		Defective throttle body gasket	B
		Defective PCV valve	B
		Loosened oil filler cap	B
		Dirty air cleaner element	B
	Fuel line	Defective fuel pump and relay	B
		Clogged fuel line	B
		Lack of fuel or insufficient fuel	C
	Timing belt	Defective timing	B
	Compression	Incorrect valve clearance	B
		Loosened spark plug or defective gasket	C
		Loosened cylinder head bolt or defective cylinder head gasket	C
		Improper valve sealing	C
		Defective valve stem	C
		Worn or broken valve spring	C
		Worn or stuck piston rings, cylinder and piston	C
		Incorrect valve timing	A
		Improper engine oil (low viscosity)	B
	Cooling system	Over-heating	B
	Other	Evaporative emission control system malfunction	C
5. Engine does not return to idle.	Engine control system <Ref. to EN(STI)(diag)-2, Basic Diagnostic Procedure.>		A
	Intake system	Loosened or cracked vacuum hose	A
	Other	Stuck or damaged throttle valve	A
6. Dieseling (run-on)	Engine control system <Ref. to EN(STI)(diag)-2, Basic Diagnostic Procedure.>		A
	Cooling system	Over-heating	B
	Other	Evaporative emission control system malfunction	B
7. After burning in exhaust system	Engine control system <Ref. to EN(STI)(diag)-2, Basic Diagnostic Procedure.>		A
	Intake system	Loosened or cracked intake duct	C
		Loosened or cracked PCV hose	C
		Loosened or cracked vacuum hose	B
		Defective PCV valve	B
		Loosened oil filler cap	C
	Timing belt	Defective timing	B
	Compression	Incorrect valve clearance	B
		Loosened spark plug or defective gasket	C
		Loosened cylinder head bolt or defective cylinder head gasket	C
		Improper valve sealing	B
		Defective valve stem	C
		Worn or broken valve spring	C
		Worn or stuck piston rings, cylinder and piston	C
		Incorrect valve timing	A
	Lubrication system	Incorrect oil pressure	C
	Cooling system	Over-cooling	C
	Other	Evaporative emission control system malfunction	C

Symptoms	Problem parts etc.	Possible cause	RANK
8. Knocking	Engine control system <Ref. to EN(STI)(diag)-2, Basic Diagnostic Procedure.>		A
	Intake system	Loosened oil filler cap	B
	Timing belt	Defective timing	B
	Compression	Incorrect valve clearance	C
		Incorrect valve timing	B
	Cooling system	Over-heating	A
9. Excessive engine oil consumption	Intake system	Loosened or cracked PCV hose	A
		Defective PCV valve	B
		Loosened oil filler cap	C
	Compression	Defective valve stem	A
		Worn or stuck piston rings, cylinder and piston	A
	Lubrication system	Loosened oil pump attaching bolts and defective gasket	B
		Defective oil filter gasket	B
		Defective crankshaft oil seal	B
		Defective rocker cover gasket	B
		Loosened oil drain plug or defective gasket	B
		Loosened oil pan fitting bolts or defective oil pan	B
10. Excessive fuel consumption	Engine control system <Ref. to EN(STI)(diag)-2, Basic Diagnostic Procedure.>		A
	Intake system	Dirty air cleaner element	A
	Timing belt	Defective timing	B
	Compression	Incorrect valve clearance	B
		Loosened spark plug or defective gasket	C
		Loosened cylinder head bolt or defective cylinder head gasket	C
		Improper valve sealing	B
		Defective valve stem	C
		Worn or broken valve spring	C
		Worn or stuck piston rings, cylinder and piston	B
		Incorrect valve timing	B
	Lubrication system	Incorrect oil pressure	C
	Cooling system	Over-cooling	C

26.Engine Noise

A: INSPECTION

Type of sound	Condition	Possible cause
Regular clicking sound	Sound increases as engine speed increases.	• Valve mechanism is defective • Incorrect valve clearance • Worn camshaft • Broken valve spring
Heavy and dull clank	Oil pressure is low.	• Worn crankshaft main bearing • Worn connecting rod bearing (large end)
	Oil pressure is normal.	• Loosened flywheel mounting bolt • Damaged engine mounting
High-pitched clank	Sound is noticeable when accelerating with an overload condition.	• Ignition timing advanced • Accumulation of carbon inside combustion chamber • Wrong heat range of spark plug • Improper octane value gasoline
Clank noise when engine speed is between 1,000 and 2,000 r/min	Sound is reduced when the fuel injector connector of the noisy cylinder is disconnected.*	• Worn crankshaft main bearing • Worn connecting rod bearing (large end)
Knocking sound when engine is operating under idling speed and engine is warm	Sound is reduced when the fuel injector connector of the noisy cylinder is disconnected.*	• Worn cylinder liner and piston ring • Broken or stuck piston ring • Worn piston pin and hole at piston end of connecting rod
	Sound is not reduced if each fuel injector connector is disconnected in turn.*	• Unusually worn valve lifter • Worn cam sprocket • Worn camshaft journal bore in cylinder head
Squeaky sound	—	• Insufficient generator lubrication
Rubbing sound	—	• Poor contact of generator brush and rotor
Gear scream when starting engine	—	• Defective ignition starter switch • Worn gear and starter pinion
Sound like polishing glass with a dry cloth	—	• Loose V-belt • Defective water pump shaft
Hissing sound	—	• Insufficient compression • Air leakage in air intake system, hose, connection or manifold
Timing belt noise	—	• Loose timing belt • Timing belt contacting with adjacent part
Valve noise	—	• Incorrect valve clearance

* When disconnecting the fuel injector connector, the malfunction indicator light illuminates and DTC is stored in ECM memory. Therefore, perform the Clear Memory Mode <Ref. to EN(STI)(diag)-68, OPERATION, Clear Memory Mode.> and Inspection Mode <Ref. to EN(STI)(diag)-48, PROCEDURE, Inspection Mode.> after connecting the fuel injector connector.

EXHAUST

EX(STI)

Page

1. General Description 2
2. Front Exhaust Pipe 5
3. Center Exhaust Pipe 7
4. Joint Pipe 11
5. Rear Exhaust Pipe 12
6. Muffler 14

1. General Description

A: COMPONENT

1. FRONT EXHAUST PIPE

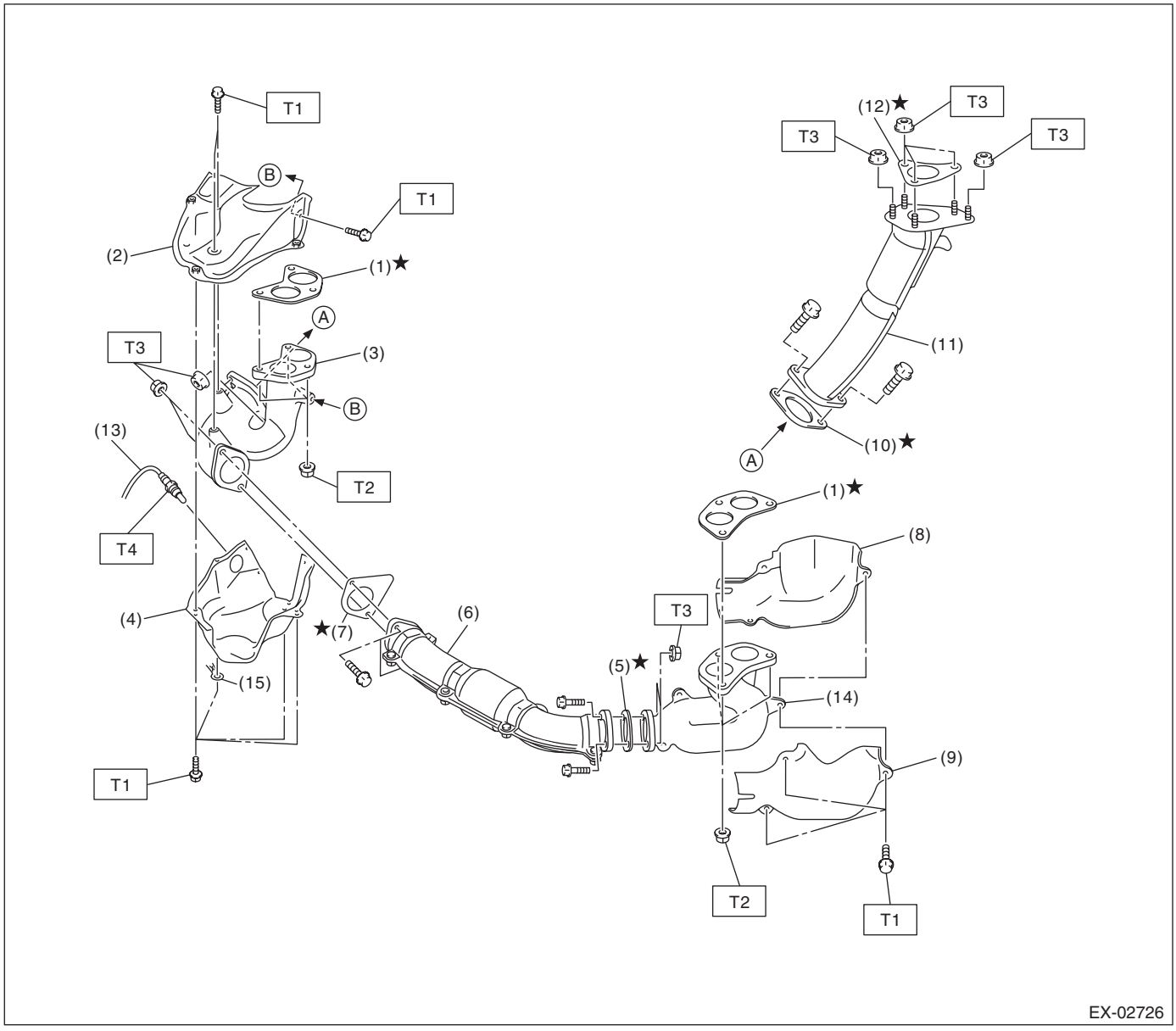

(1) Gasket
(2) Exhaust manifold RH upper cover
(3) Exhaust manifold RH
(4) Exhaust manifold RH lower cover
(5) Gasket
(6) Front exhaust pipe
(7) Gasket
(8) Exhaust manifold LH inner cover
(9) Exhaust manifold LH outer cover
(10) Gasket
(11) Joint pipe
(12) Gasket
(13) Front oxygen (A/F) sensor
(14) Exhaust manifold LH
(15) Ground cable

Tightening torque: N·m (kgf-m, ft-lb)

T1: 19 (1.9, 14.0)
T2: 40 (4.1, 29.5)
T3: 42.5 (4.3, 31.3)
T4: <Ref. to FU(STI)-52, INSTALLATION, Front Oxygen (A/F) Sensor.>

2. CENTER AND REAR EXHAUST PIPE, AND MUFFLER

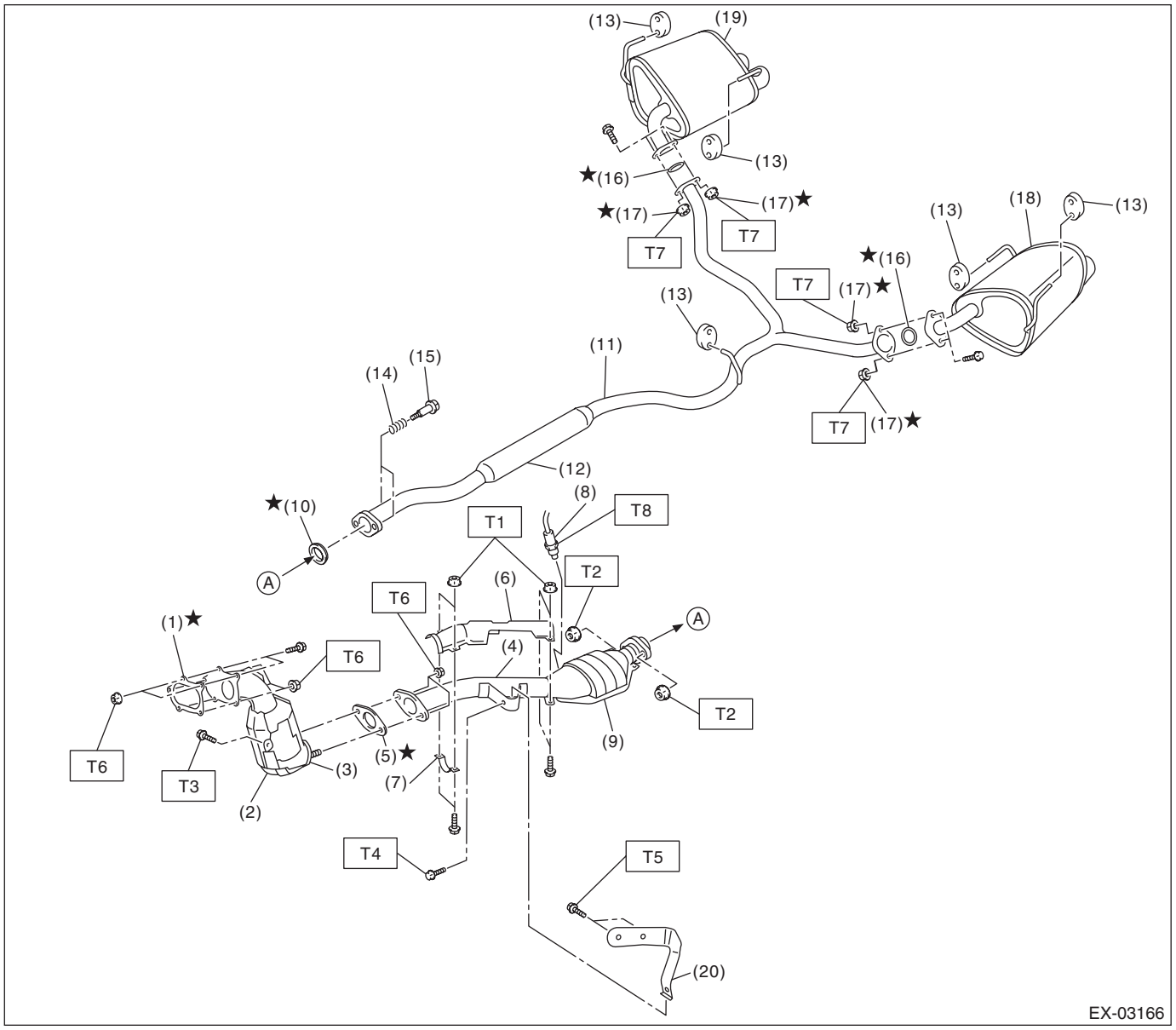

(1) Gasket
(2) Front catalytic converter
(3) Center exhaust pipe (front)
(4) Center exhaust pipe (rear)
(5) Gasket
(6) Center exhaust pipe upper cover
(7) Clamp
(8) Rear oxygen sensor
(9) Rear catalytic converter
(10) Gasket
(11) Rear exhaust pipe
(12) Chamber
(13) Cushion rubber
(14) Spring
(15) Bolt
(16) Gasket
(17) Self-locking nut
(18) Muffler LH
(19) Muffler RH
(20) Hanger bracket

Tightening torque: N·m (kgf-m, ft-lb)

T1: 13 (1.3, 9.6)
T2: 18 (1.8, 13.3)
T3: 30 (3.1, 22.1)
T4: 35 (3.6, 25.8)
T5: 40 (4.1, 29.5)
T6: 42.5 (4.3, 31.3)
T7: 48 (4.9, 35.4)
T8: <Ref. to FU(STI)-54, INSTALLATION, Rear Oxygen Sensor.>

B: CAUTION

- Prior to starting work, pay special attention to the following:
  1. Always wear work clothes, a work cap, and protective shoes. Additionally, wear a helmet, protective goggles, etc. if necessary.
  2. Protect the vehicle using a seat cover, fender cover, etc.
  3. Prepare the service tools, clean cloth, containers to catch grease and oil, etc.
- Vehicle components are extremely hot immediately after driving. Be wary of receiving burns from heated parts.
- When performing a repair, identify the cause of trouble and avoid unnecessary removal, disassembly and replacement.
- Before disconnecting connectors of sensors or units, be sure to disconnect the ground cable from battery.
- Always use the jack-up point when the shop jacks or rigid racks are used to support the vehicle.
- Remove contamination including dirt and corrosion before removal, installation, disassembly or assembly.
- Keep the removed parts in order and protect them from dust and dirt.
- All removed parts, if to be reused, should be reinstalled in the original positions with attention to the correct directions, etc.
- Bolts, nuts and washers should be replaced with new parts as required.
- Be sure to tighten the fasteners including bolts and nuts to the specified torque.
- If any grease adheres to the exhaust pipe, wipe it off. Otherwise a fire may happen.

2. Front Exhaust Pipe

A: REMOVAL

CAUTION:
Vehicle components are extremely hot after driving. Be wary of receiving burns from heated parts.

1) Disconnect the ground cable from battery.
2) Lift up the vehicle.
3) Remove the under cover. <Ref. to EI-22, REMOVAL, Front Under Cover.>
4) Remove the front oxygen (A/F) sensor. <Ref. to FU(STI)-52, REMOVAL, Front Oxygen (A/F) Sensor.>
5) Remove the exhaust manifold RH lower cover and exhaust manifold LH cover.

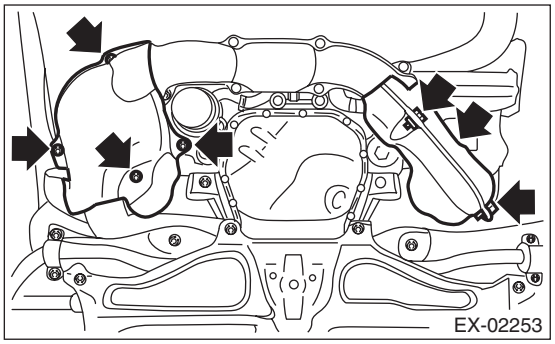
EX-02253

6) Remove the bolts and nuts which hold joint pipe onto exhaust manifold RH.

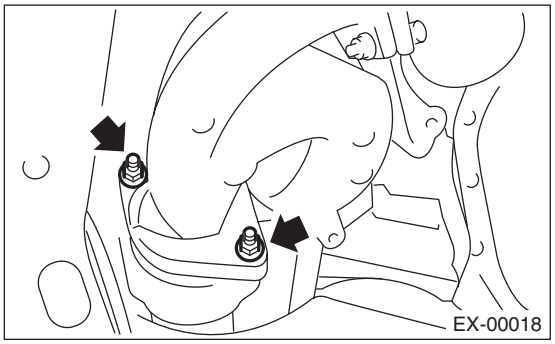
EX-00018

7) While holding the front exhaust pipe with one hand, remove the nuts which hold the exhaust manifold to the cylinder head exhaust port and remove the front exhaust pipe.

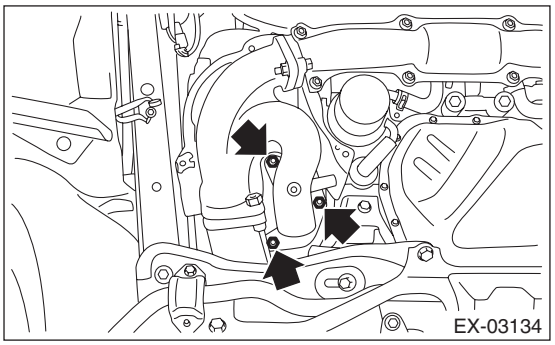
EX-03134

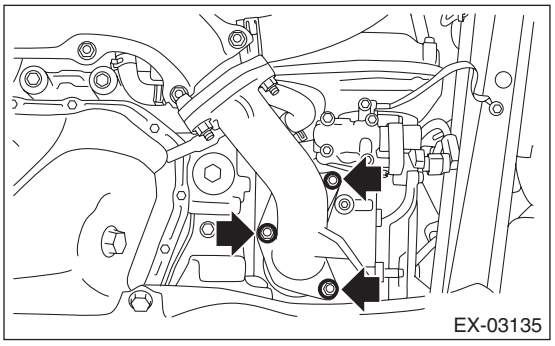
EX-03135

B: INSTALLATION

1) Install the front exhaust pipe.

NOTE:
Use a new gasket.

Tightening torque:
40 N·m (4.1 kgf-m, 29.5 ft-lb)

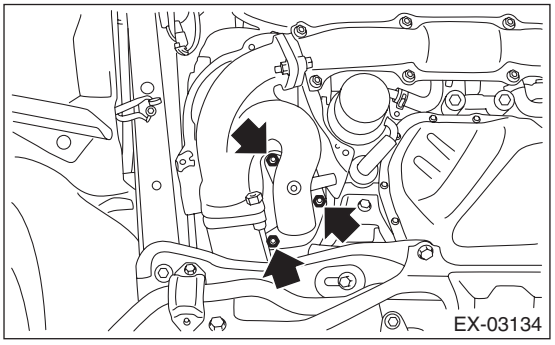
EX-03134

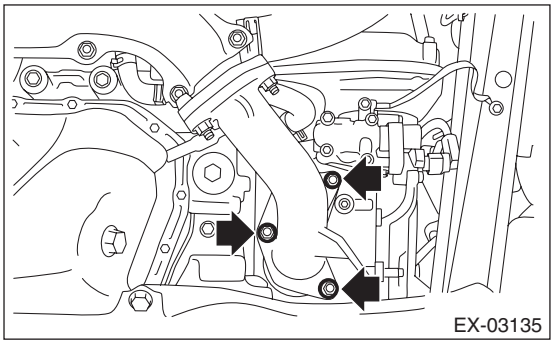
EX-03135

2) Install the joint pipe to the exhaust manifold RH.

NOTE:
Use a new gasket.

Tightening torque:
42.5 N·m (4.3 kgf-m, 31.3 ft-lb)

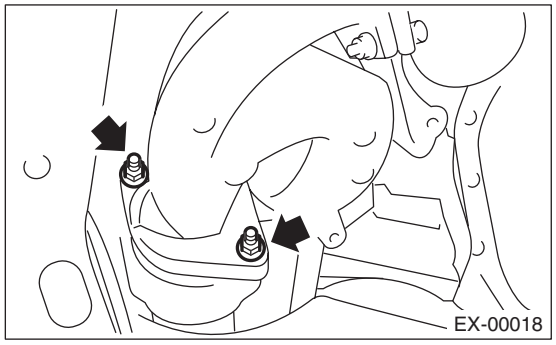

3) Install the exhaust manifold RH lower cover and exhaust manifold LH cover.

Tightening torque:
19 N·m (1.9 kgf-m, 14.0 ft-lb)

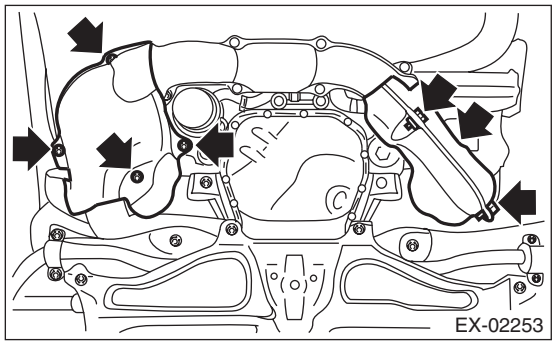

4) Install the front oxygen (A/F) sensor. <Ref. to FU(STI)-52, INSTALLATION, Front Oxygen (A/F) Sensor.>
5) Install the under cover. <Ref. to EI-23, INSTALLATION, Front Under Cover.>
6) Lower the vehicle.
7) Connect the battery ground terminal.

C: DISASSEMBLY

1) Remove the exhaust manifold RH upper cover.
2) Remove the exhaust manifold RH and the exhaust manifold LH from the front exhaust pipe.

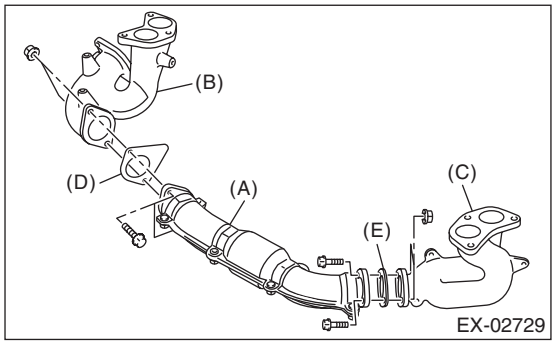

(A) Front exhaust pipe
(B) Exhaust manifold RH
(C) Exhaust manifold LH
(D) Gasket
(E) Gasket

D: ASSEMBLY

1) Install the exhaust manifold RH and the exhaust manifold LH to the front exhaust pipe.

NOTE:
Use a new gasket.

Tightening torque:
42.5 N·m (4.3 kgf-m, 31.3 ft-lb)

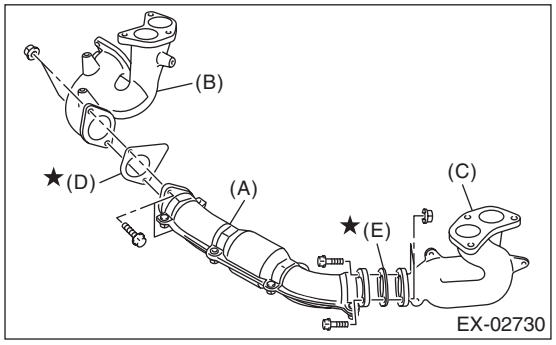

(A) Front exhaust pipe
(B) Exhaust manifold RH
(C) Exhaust manifold LH
(D) Gasket
(E) Gasket

2) Install the exhaust manifold RH upper cover.

Tightening torque:
19 N·m (1.9 kgf-m, 14.0 ft-lb)

E: INSPECTION

1) Check the connections and welds for exhaust leaks.
2) Make sure there are no holes or rusting.

3. Center Exhaust Pipe

A: REMOVAL

CAUTION:
Vehicle components are extremely hot after driving. Be wary of receiving burns from heated parts.

1) Disconnect the ground cable from battery.
2) Remove the intercooler. <Ref. to IN(STI)-13, REMOVAL, Intercooler.>
3) Lift up the vehicle.
4) Remove the transmission under cover.
5) Remove the bolts which secure the lower side of the turbocharger lower cover.

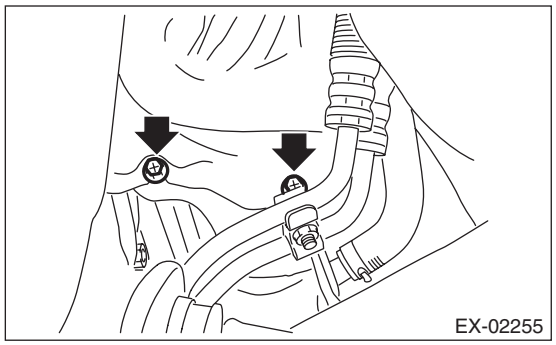
EX-02255

6) Lower the vehicle.
7) Remove the intercooler stay RH No. 2.

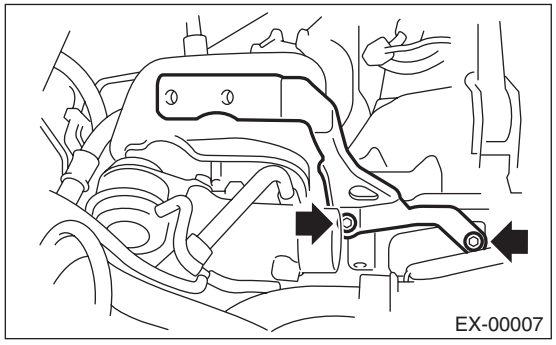
EX-00007

8) Remove the turbocharger upper cover.

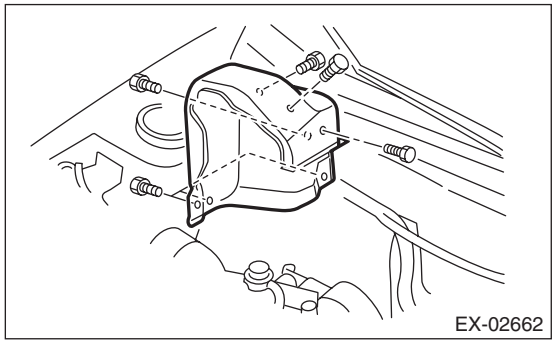
EX-02662

9) Remove the bolts which hold the upper side of the turbocharger lower cover.

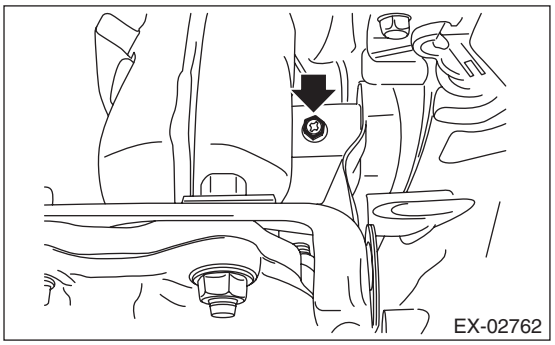
EX-02762

10) Remove the upper side bolts and nuts that hold the center exhaust pipe on the turbocharger, and remove the turbocharger cover stay (A).

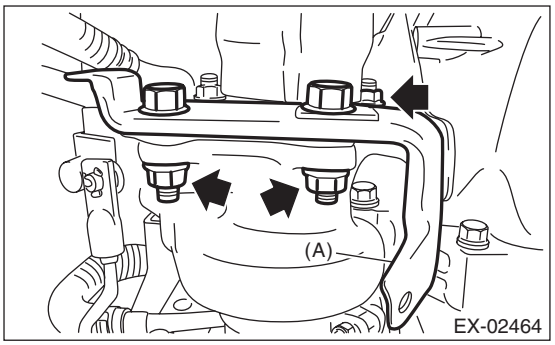

EX-02464

11) Lift up the vehicle.
12) Remove the lower side nuts (two places) that hold the center exhaust pipe on the turbocharger.

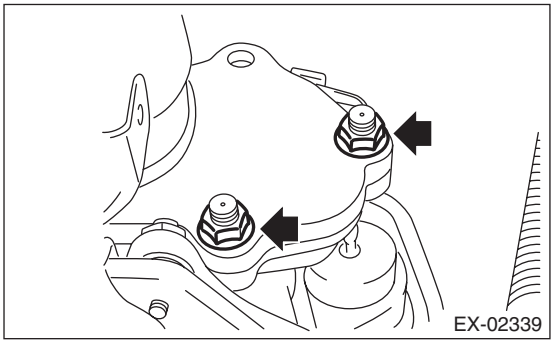
EX-02339

13) Disconnect the connector from the rear oxygen sensor, and remove the clip (A) holding the rear oxygen sensor harness.

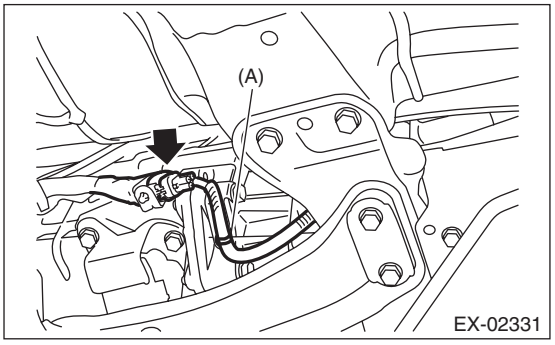

EX-02331

14) Remove the rear exhaust pipe from center exhaust pipe.

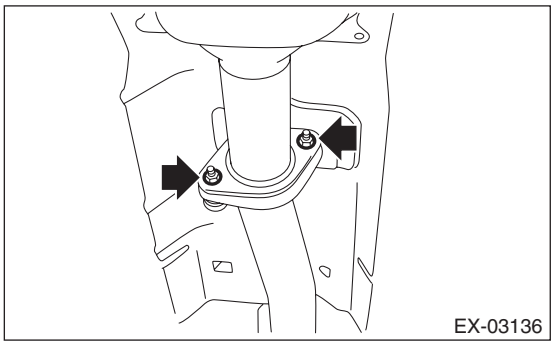

15) Remove the bolt which holds center exhaust pipe to transmission.

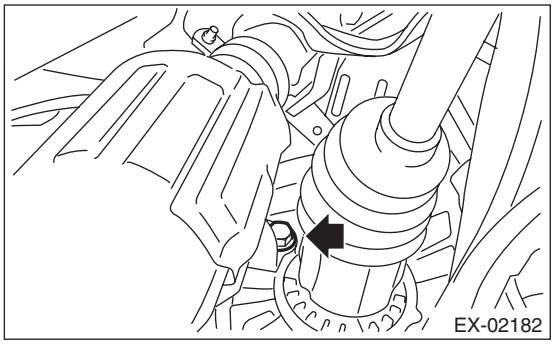

16) Remove the bolt which holds center exhaust pipe to hanger bracket, and remove the center exhaust pipe.

CAUTION:
Be careful not to drop the center exhaust pipe.

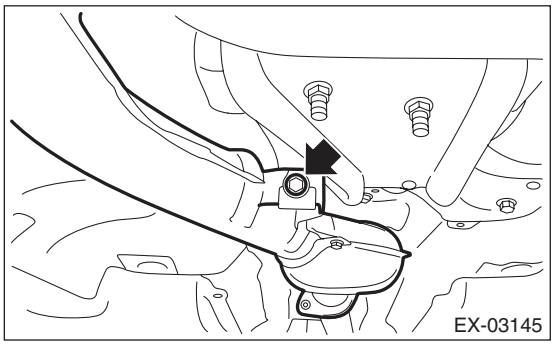

17) Remove the turbocharger lower cover.

B: INSTALLATION

1) Set the turbocharger lower cover, and temporarily tighten the bolts that hold the lower side of the turbocharger lower cover.
2) Install the center exhaust pipe and temporarily tighten the bolt which holds center exhaust pipe to hanger bracket.
3) Temporarily tighten the bolt which holds the center exhaust pipe to the transmission.
4) Install the center exhaust pipe along with the turbocharger cover stay (A) to the turbocharger.

NOTE:
Use a new gasket.

Tightening torque:
42.5 N·m (4.3 kgf-m, 31.3 ft-lb)

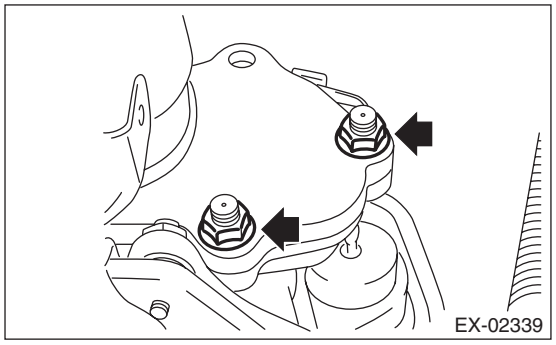

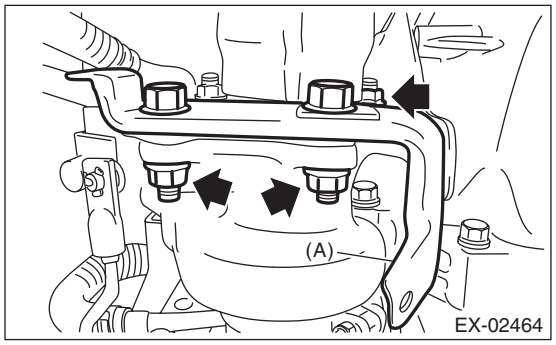

5) Install the rear exhaust pipe to center exhaust pipe.

NOTE:
Use a new gasket.

Tightening torque:
18 N·m (1.8 kgf-m, 13.3 ft-lb)

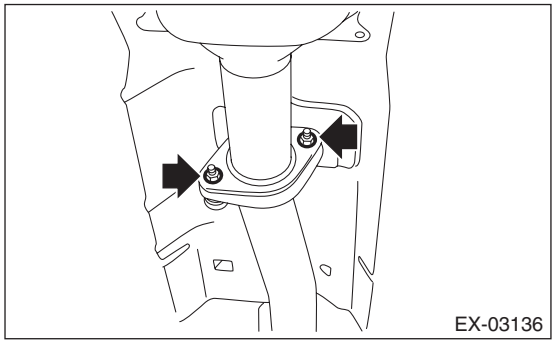

6) Connect the connector to the rear oxygen sensor, and hold the rear oxygen sensor harness with the clip (A).

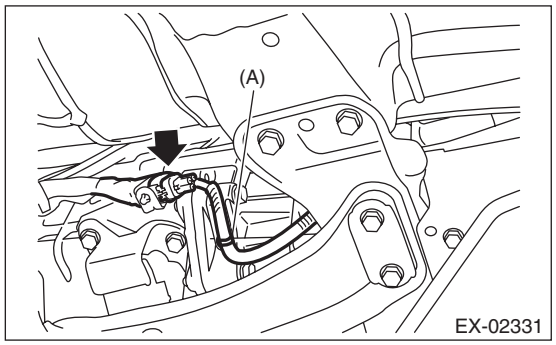

7) Tighten the bolt which holds center exhaust pipe to transmission.

Tightening torque:
30 N·m (3.1 kgf-m, 22.1 ft-lb)

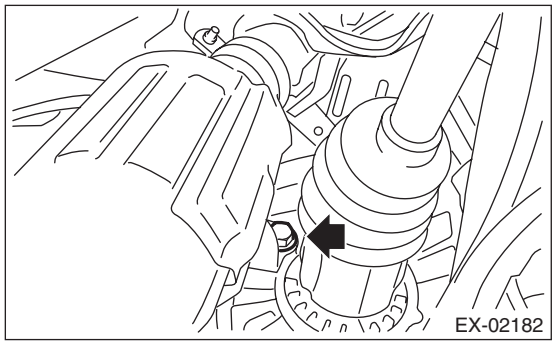

8) Tighten the bolts which secure the center exhaust pipe to the hanger bracket.

Tightening torque:
35 N·m (3.6 kgf-m, 25.8 ft-lb)

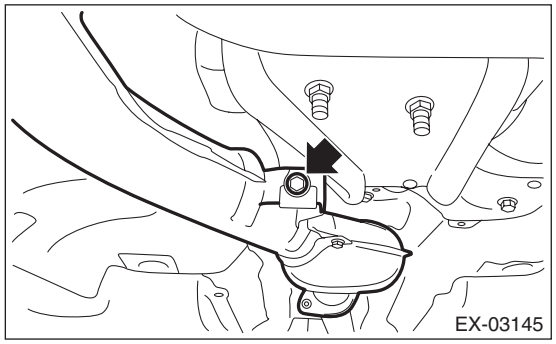

9) Lower the vehicle.
10) Attach the bolt which holds the upper side of the turbocharger lower cover.

Tightening torque:
7.5 N·m (0.8 kgf-m, 5.5 ft-lb)

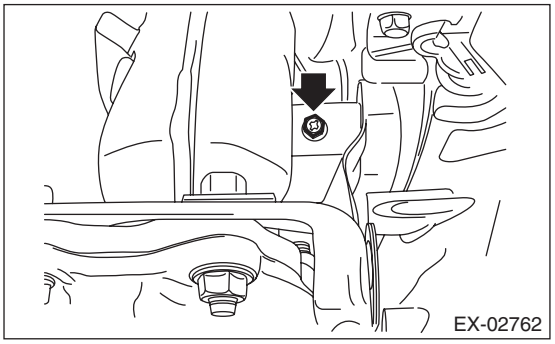

11) Attach the turbocharger upper cover.

Tightening torque:
7.5 N·m (0.8 kgf-m, 5.5 ft-lb)

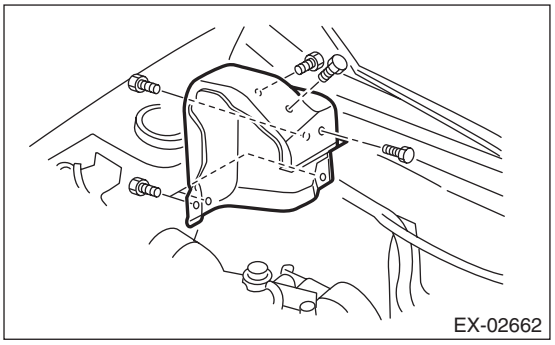

12) Install the intercooler stay RH No. 2.

Tightening torque:
16 N·m (1.6 kgf-m, 11.8 ft-lb)

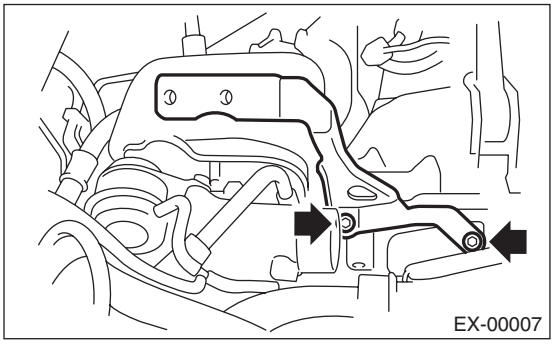

13) Lift up the vehicle.
14) Tighten the bolts that secure the lower side of the turbocharger lower cover.

Tightening torque:
7.5 N·m (0.8 kgf-m, 5.5 ft-lb)

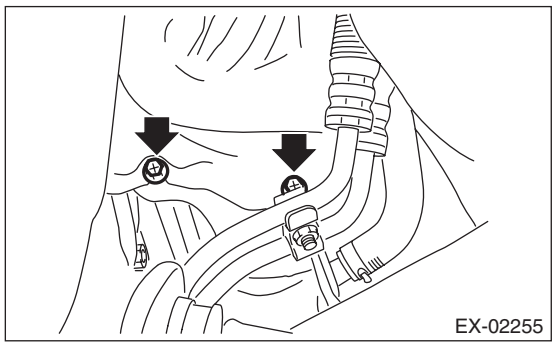

15) Install the transmission under cover.

Tightening torque:
18 N·m (1.8 kgf-m, 13.3 ft-lb)
16) Lower the vehicle.
17) Install the intercooler. <Ref. to IN(STI)-14, INSTALLATION, Intercooler.>
18) Connect the battery ground terminal.

C: DISASSEMBLY

1) Remove the rear oxygen sensor from the center exhaust pipe (rear). <Ref. to FU(STI)-54, REMOVAL, Rear Oxygen Sensor.>
2) Remove the center exhaust pipe upper cover.
3) Remove the center exhaust pipe (rear) from the center exhaust pipe (front).

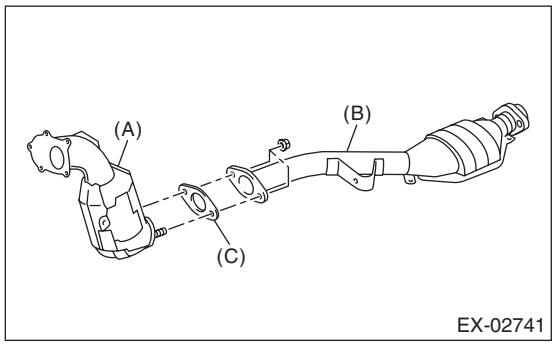

(A) Center exhaust pipe (front)
(B) Center exhaust pipe (rear)
(C) Gasket

D: ASSEMBLY

1) Assemble the center exhaust pipe (rear) to the center exhaust pipe (front).

NOTE:
Use a new gasket.

Tightening torque:
42.5 N·m (4.3 kgf-m, 31.3 ft-lb)

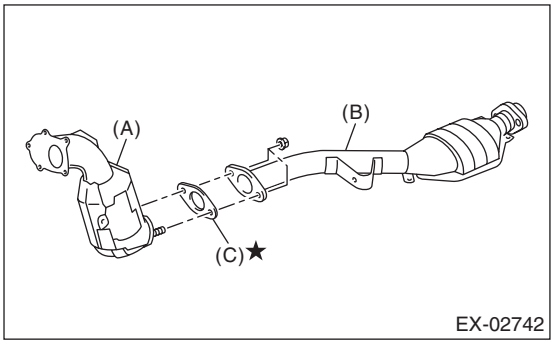

(A) Center exhaust pipe (front)
(B) Center exhaust pipe (rear)
(C) Gasket

2) Install the center exhaust pipe upper cover.

Tightening torque:
13 N·m (1.3 kgf-m, 9.6 ft-lb)
3) Install the rear oxygen sensor to the center exhaust pipe (rear). <Ref. to FU(STI)-54, INSTALLATION, Rear Oxygen Sensor.>

E: INSPECTION

1) Check the connections and welds for exhaust leaks.
2) Make sure there are no holes or rusting.

4. Joint Pipe

A: REMOVAL

CAUTION:
Vehicle components are extremely hot after driving. Be wary of receiving burns from heated parts.

1) Disconnect the ground cable from battery.
2) Lift up the vehicle.
3) Remove the under cover. <Ref. to EI-22, REMOVAL, Front Under Cover.>
4) Remove the front oxygen (A/F) sensor. <Ref. to FU(STI)-52, REMOVAL, Front Oxygen (A/F) Sensor.>
5) Remove the exhaust manifold RH lower cover.

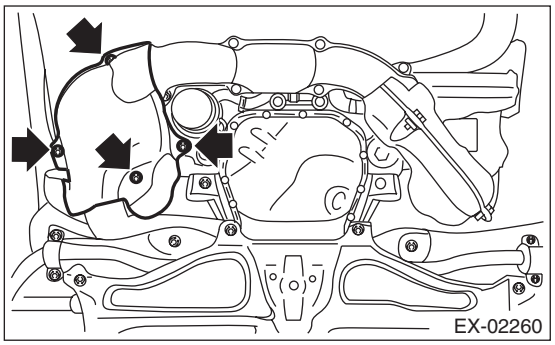

6) Remove the bolts and nuts which hold exhaust manifold RH onto joint pipe.

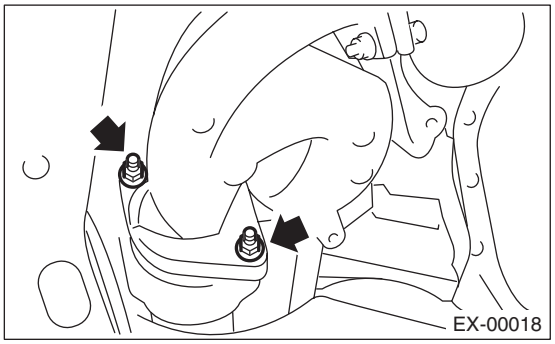

7) Remove the center exhaust pipe. <Ref. to EX(STI)-7, REMOVAL, Center Exhaust Pipe.>
8) Remove the turbocharger. <Ref. to IN(STI)-17, REMOVAL, Turbocharger.>
9) Take off the joint pipe in the upward direction.

B: INSTALLATION

Install in the reverse order of removal.

NOTE:
Use a new gasket.

Tightening torque:
42.5 N·m (4.3 kgf-m, 31.3 ft-lb)

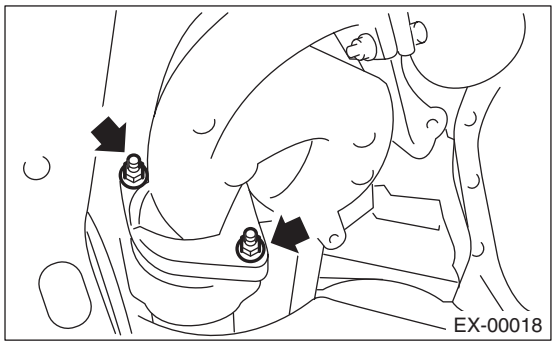

Tightening torque:
19 N·m (1.9 kgf-m, 14.0 ft-lb)

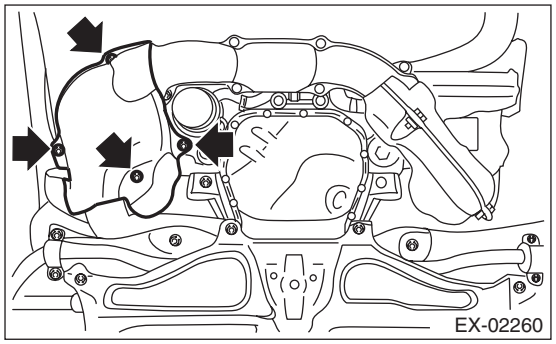

C: INSPECTION

1) Check the connections and welds for exhaust leaks.
2) Make sure there are no holes or rusting.

5. Rear Exhaust Pipe

A: REMOVAL

CAUTION:
Vehicle components are extremely hot after driving. Be wary of receiving burns from heated parts.

1) Lift up the vehicle.
2) Remove the center exhaust pipe from rear exhaust pipe.

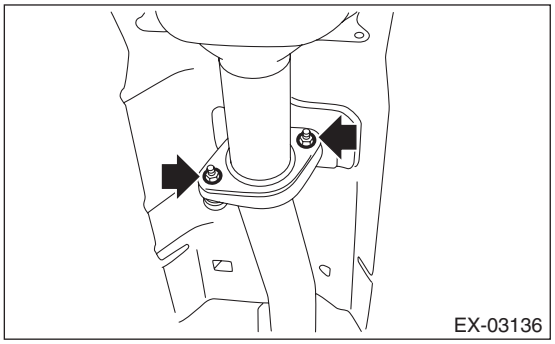

3) Remove the muffler from rear exhaust pipe.

CAUTION:
Be careful not to drop the rear exhaust pipe.

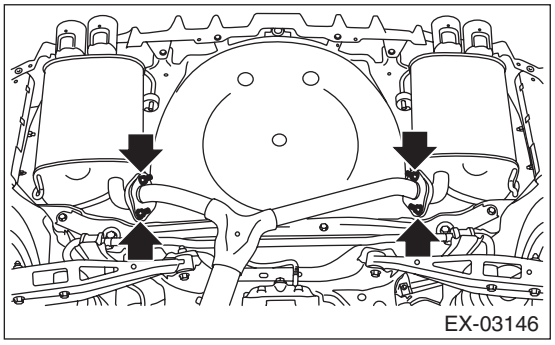

4) Apply a coat of spray type lubricant to the mating area of cushion rubber.
5) Remove the rear exhaust pipe from the cushion rubber.

CAUTION:
Be careful not to let the muffler contact the rear bumper.

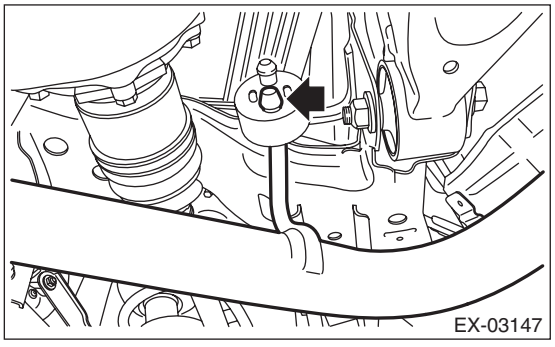

B: INSTALLATION

1) Apply a coat of spray type lubricant to the mating area of cushion rubber.
2) Install the rear exhaust pipe to cushion rubber.

NOTE:
After assembling, degrease the lubricant which was applied to the cushion rubber while removing/installing.

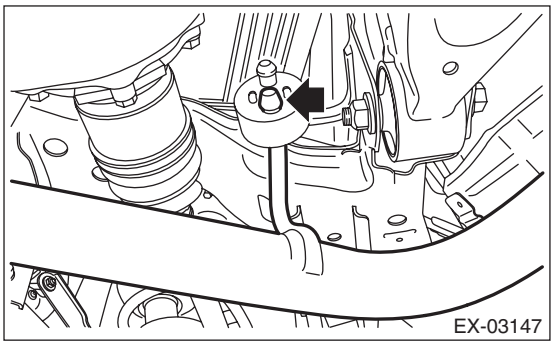

3) Install the rear exhaust pipe to the muffler.

NOTE:
Use a new gasket and self-locking nut.

Tightening torque:
48 N·m (4.9 kgf-m, 35.4 ft-lb)

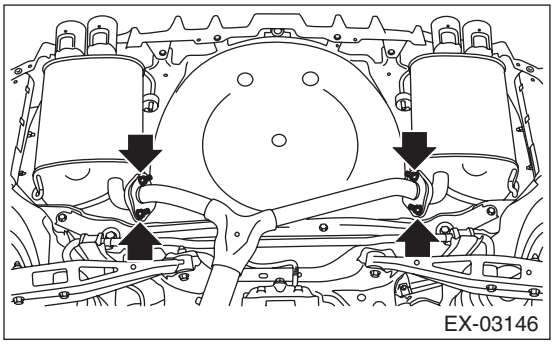

4) Install the center exhaust pipe to rear exhaust pipe.

NOTE:
Use a new gasket.

Tightening torque:
18 N·m (1.8 kgf-m, 13.3 ft-lb)

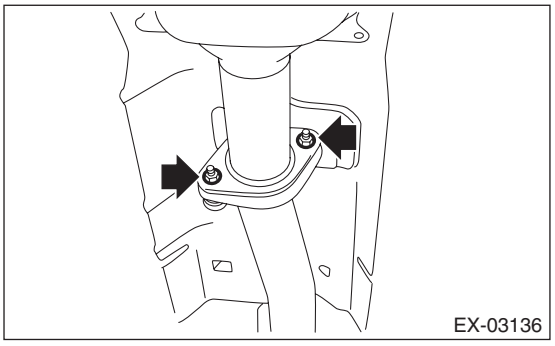

5) Lower the vehicle.

C: INSPECTION

1) Check the connections and welds for exhaust leaks.
2) Make sure there are no holes or rusting.
3) Check the cushion rubber for wear or crack.

6. Muffler

A: REMOVAL

CAUTION:
Vehicle components are extremely hot after driving. Be wary of receiving burns from heated parts.
1) Lift up the vehicle.
2) Remove the clip (A) which holds the cover - rear bumper side to the vehicle and rear bumper.

NOTE:
This procedure is required to facilitate the removal/installation of the muffler.
3) Remove the bolts and self-locking nuts which secure the rear exhaust pipe to the muffler.

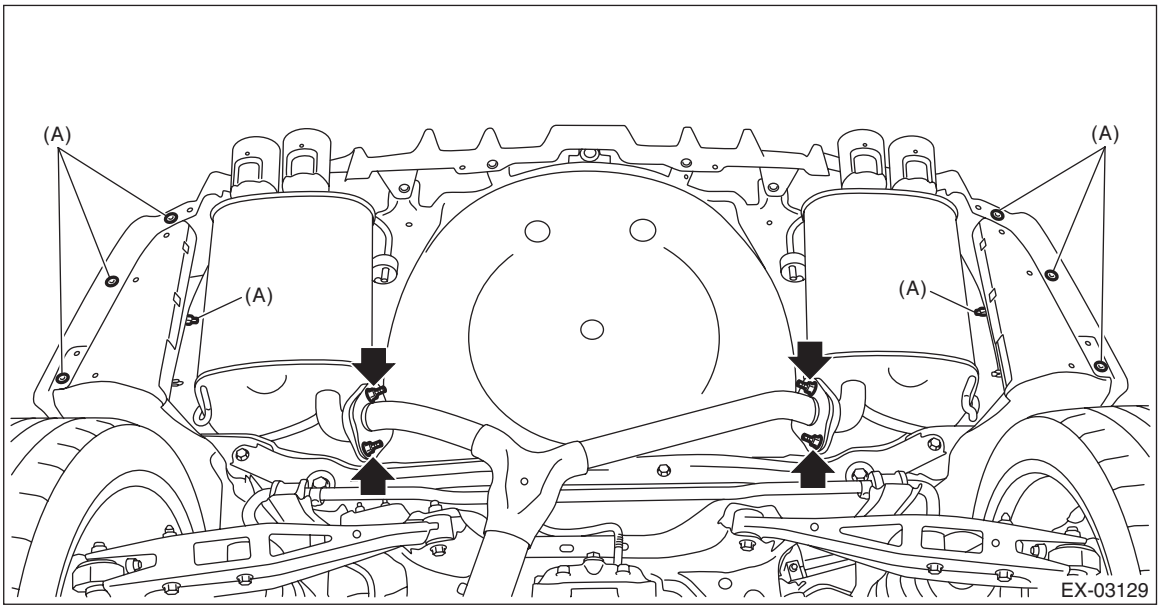

4) Apply a coat of spray type lubricant to the mating area of cushion rubber.
5) Remove the muffler from the cushion rubber.

CAUTION:
Be careful not to drop the muffler during removal.

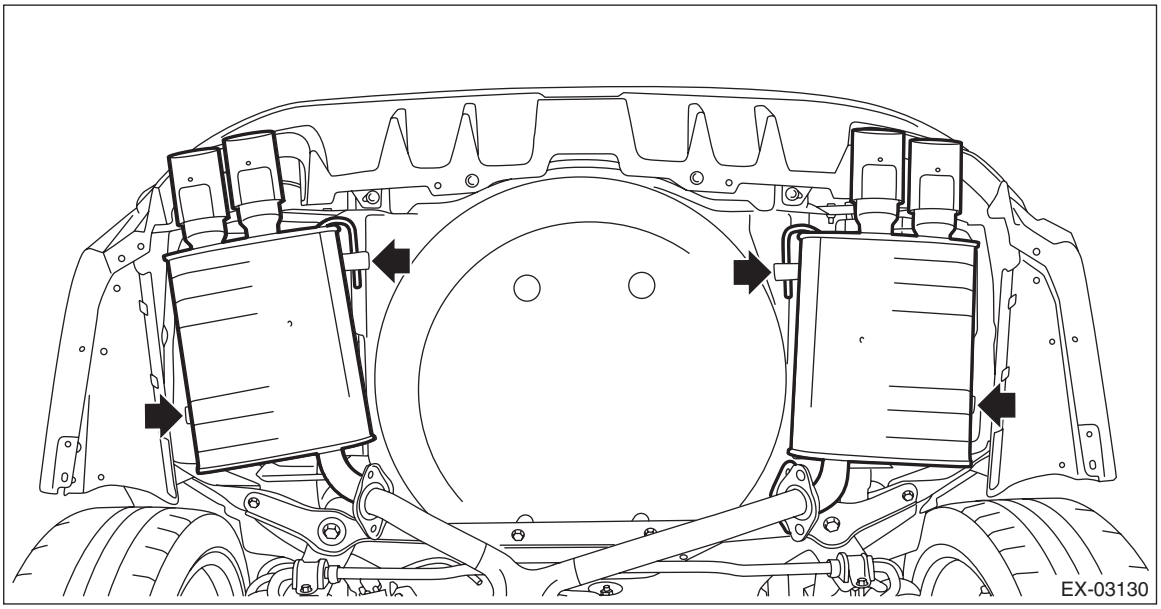

6) Remove the cushion rubber and rear exhaust cover from the vehicle.

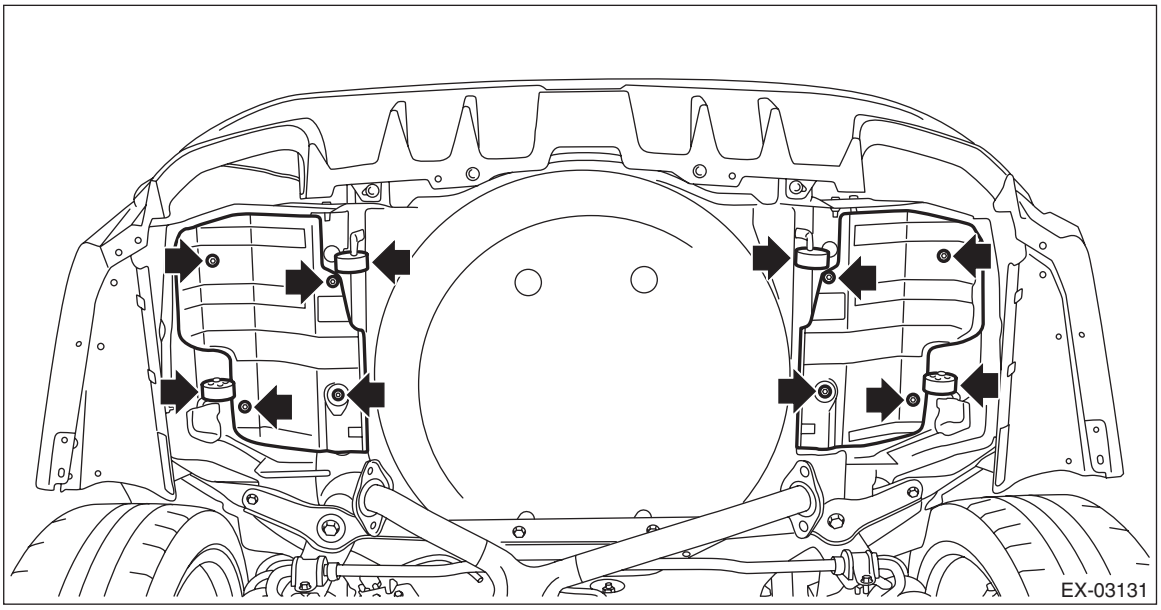

B: INSTALLATION

Install in the reverse order of removal.

NOTE:
- Use a new gasket and self-locking nut.
- After assembling, degrease the lubricant which was applied to the cushion rubber while removing/installing.

Tightening torque:
10 N·m (1.0 kgf-m, 7.4 ft-lb)

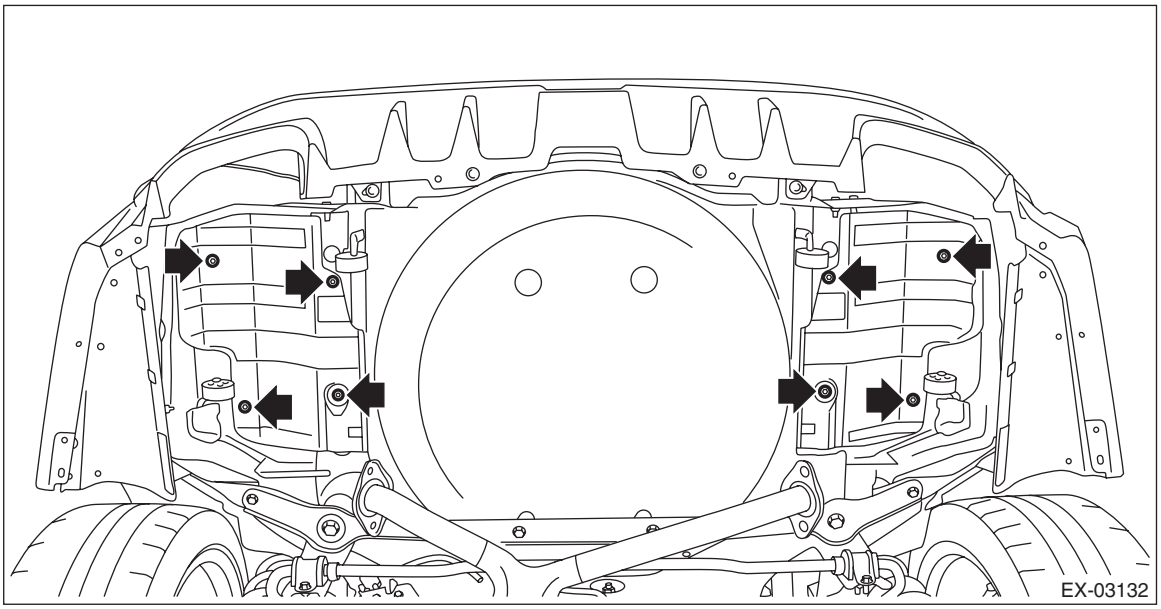

Tightening torque:
48 N·m (4.9 kgf-m, 35.4 ft-lb)

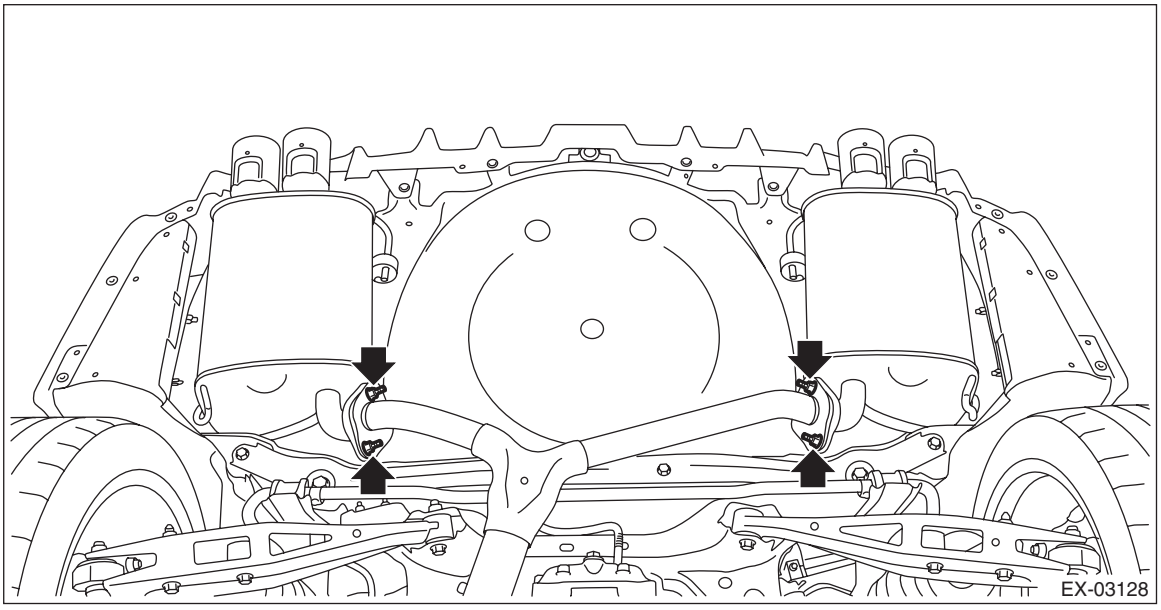

C: INSPECTION

1) Check the connections and welded parts for exhaust leaks.
2) Make sure there are no holes or rusting.
3) Check the cushion rubber for wear or crack.

COOLING

CO(STI)

Page

1. General Description 2
2. Radiator Fan System 7
3. Engine Coolant 12
4. Water Pump 14
5. Thermostat 16
6. Radiator 18
7. Radiator Cap 21
8. Radiator Main Fan and Fan Motor 22
9. Radiator Sub Fan and Fan Motor 24
10. Reservoir Tank 26
11. Coolant Filler Tank 27
12. Engine Cooling System Trouble in General 28

1. General Description

A: SPECIFICATION

Cooling system					Electric fan + Forced engine coolant circulation system
Total engine coolant capacity				L (US qt, Imp qt)	Approx. 7.7 (8.2, 6.8)
Water pump	Type				Centrifugal impeller type
	Discharge performance	Discharge rate		L (US gal, Imp gal)/min	200 (52.8, 44.0)
		Pump speed — Discharge pressure			6,000 r/min — 225.4 kPa (23.0 mAq)
		Engine coolant temperature			80°C (176°F)
	Impeller diameter			mm (in)	76 (2.99)
	Number of impeller vanes				8
	Pump pulley diameter			mm (in)	60 (2.36)
	Clearance between impeller and pump case			mm (in) Standard	0.5 — 1.5 (0.020 — 0.059)
Thermostat	Type				Wax pellet type
	Starting temperature to open				76 — 80°C (169 — 176°F)
	Fully opens				91°C (196°F)
	Valve lift			mm (in)	9.0 (0.354) or more
	Valve opening size			mm (in)	35 (1.38)
Radiator fan	Motor input	Main fan		W	160
		Sub fan		W	160
	Fan diameter / Blade	Main fan			320 mm (12.6 in)/9
		Sub fan			320 mm (12.6 in)/11
Radiator	Type				Down flow
	Core dimensions	Width × Height × Thickness		mm (in)	687.4 × 340 × 16 (27.06 × 13.39 × 0.63)
	Pressure range in which cap valve is open	Coolant filler tank side	kPa (kg/cm^2, psi)	Positive pressure side Standard	93 — 123 (0.95 — 1.25, 14 — 18)
				Limit	83 (0.85, 12)
				Negative pressure side Standard	–1.0 — –4.9 (–0.01 — –0.05, –0.1 — –0.7)
		Radiator side	kPa (kg/cm^2, psi)	Positive pressure side only Standard	122 — 152 (1.24 — 1.55, 18 — 22)
				Limit	112 (1.14, 16)
	Fins				Corrugated fin type
Reservoir tank	Capacity			L (US qt, Imp qt)	0.45 (0.48, 0.40)

	Recommended materials	Item number	Alternative
Coolant	SUBARU SUPER COOLANT (concentrated type)	—	—
	SUBARU SUPER COOLANT (diluted type)	K0670Y0001	
Water for dilution	Distilled water	—	Soft water or tap water
Cooling system protective agent	Cooling system conditioner	SOA345001	—

B: COMPONENT

1. WATER PUMP

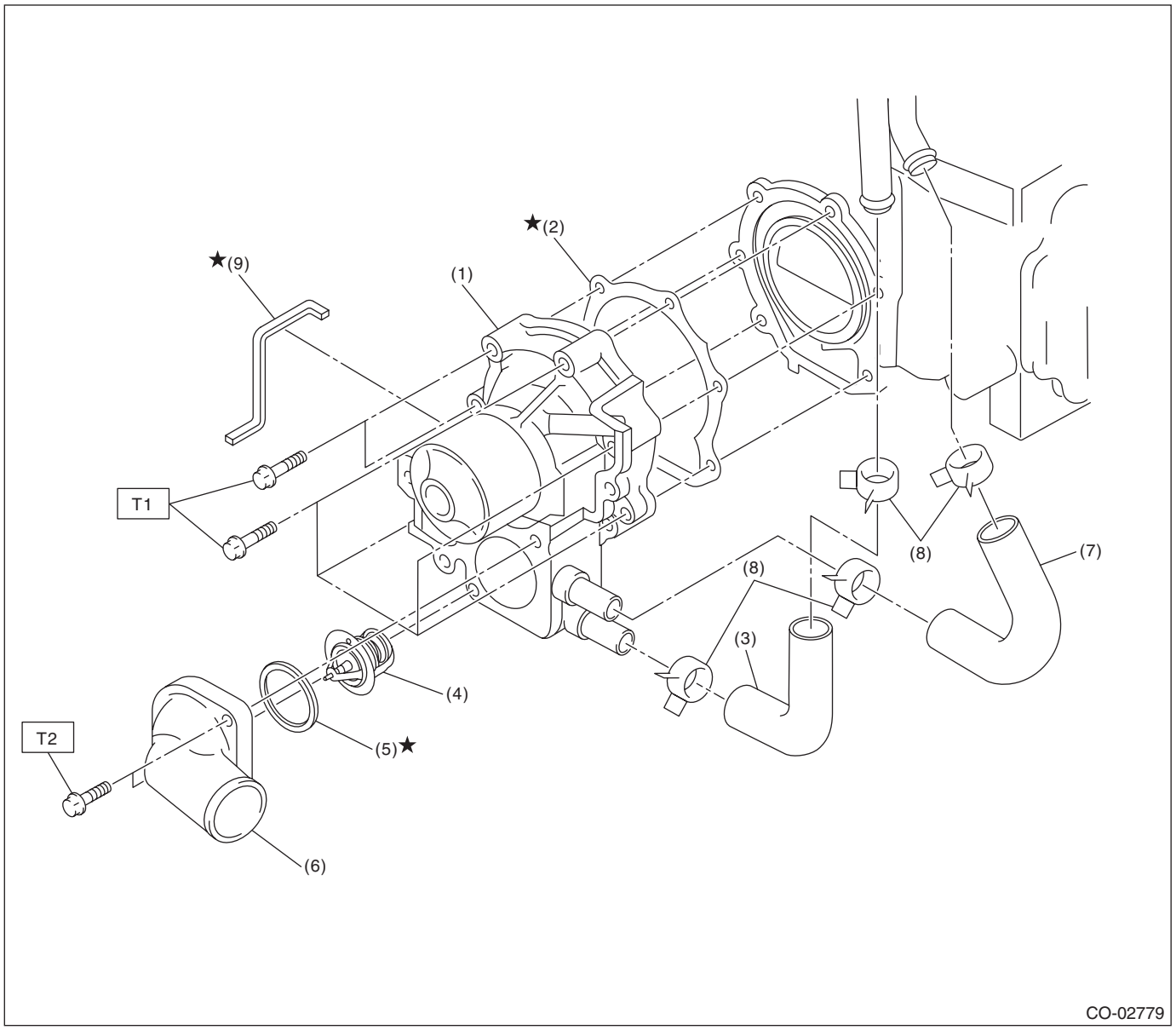

(1) Water pump ASSY
(2) Gasket
(3) Heater by-pass hose
(4) Thermostat
(5) Gasket
(6) Thermostat cover
(7) Coolant filler by-pass hose
(8) Clip
(9) Water pump sealing

Tightening torque: N·m (kgf-m, ft-lb)
T1: First 12 (1.2, 8.9)
Second 12 (1.2, 8.9)
T2: 12 (1.2, 8.9)

2. RADIATOR AND RADIATOR FAN

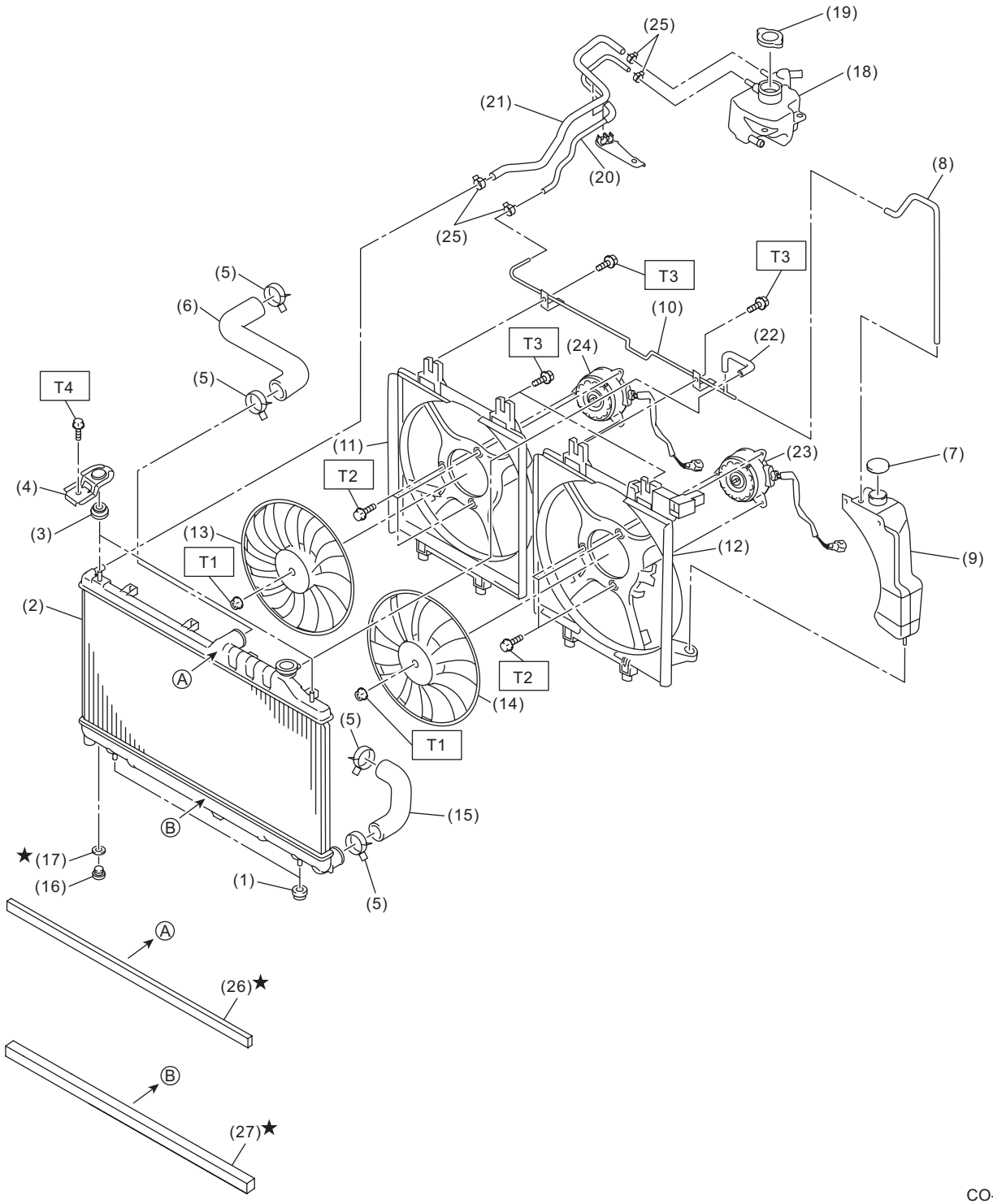

CO-10076

(1) Radiator lower cushion
(2) Radiator
(3) Radiator upper cushion
(4) Radiator upper bracket
(5) Clip
(6) Radiator inlet hose
(7) Engine coolant reservoir tank cap
(8) Over flow hose A
(9) Engine coolant reservoir tank
(10) Over flow pipe
(11) Radiator sub fan shroud
(12) Radiator main fan shroud
(13) Radiator sub fan
(14) Radiator main fan
(15) Radiator outlet hose
(16) Radiator drain plug
(17) O-ring
(18) Engine coolant filler tank
(19) Radiator cap (coolant filler tank cap)
(20) Engine coolant hose A
(21) Engine coolant hose B
(22) Over flow hose B
(23) Main fan motor
(24) Sub fan motor
(25) Clip
(26) Radiator upper gasket
(27) Radiator lower gasket

Tightening torque: N·m (kgf-m, ft-lb)
T1: 3.4 (0.3, 2.5)
T2: 4.41 (0.45, 3.25)
T3: 7.5 (0.8, 5.5)
T4: 12 (1.2, 8.9)

C: CAUTION

- Prior to starting work, pay special attention to the following:
  1. Always wear work clothes, a work cap, and protective shoes. Additionally, wear a helmet, protective goggles, etc. if necessary.
  2. Protect the vehicle using a seat cover, fender cover, etc.
  3. Prepare the service tools, clean cloth, containers to catch grease and oil, etc.
- Prepare a container and cloth to prevent scattering of engine coolant when performing work where engine coolant can be spilled. If the oil spills, wipe it off immediately to prevent from penetrating into floor or flowing out for environmental protection.
- Vehicle components are extremely hot immediately after driving. Be wary of receiving burns from heated parts.
- When performing a repair, identify the cause of trouble and avoid unnecessary removal, disassembly and replacement.
- Before disconnecting connectors of sensors or units, be sure to disconnect the ground cable from battery.
- Always use the jack-up point when the shop jacks or rigid racks are used to support the vehicle.
- Remove contamination including dirt and corrosion before removal, installation, disassembly or assembly.
- Keep the removed parts in order and protect them from dust and dirt.
- All removed parts, if to be reused, should be reinstalled in the original positions with attention to the correct directions, etc.
- Bolts, nuts and washers should be replaced with new parts as required.
- Be sure to tighten the fasteners including bolts and nuts to the specified torque.
- Follow all government and local regulations concerning disposal of refuse when disposing engine coolant.

D: PREPARATION TOOL

1. SPECIAL TOOL

ILLUSTRATION	TOOL NUMBER	DESCRIPTION	REMARKS
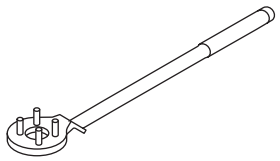 ST-499977100	499977100	CRANK PULLEY WRENCH	Used for removing and installing the crank pulley.
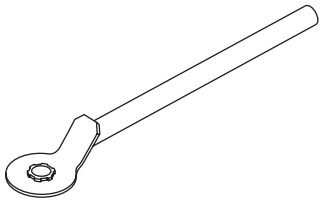 ST-499977500	499977500	CAM SPROCKET WRENCH	Used for removing and installing intake cam sprocket and exhaust cam sprocket.
 STSSM4	—	SUBARU SELECT MONITOR 4	Used for setting of each function and troubleshooting for electrical system. NOTE: For detailed operation procedures of Subaru Select Monitor 4, refer to “Application help”.

2. GENERAL TOOL

TOOL NAME	REMARKS
Circuit tester	Used for measuring resistance, voltage and current.
Radiator cap tester	Used for checking radiator and radiator cap.
DST-i	Used together with Subaru Select Monitor 4.

2. Radiator Fan System

A: WIRING DIAGRAM

Radiator fan system <Ref. to WI-312, WIRING DIAGRAM, Radiator Fan System.>

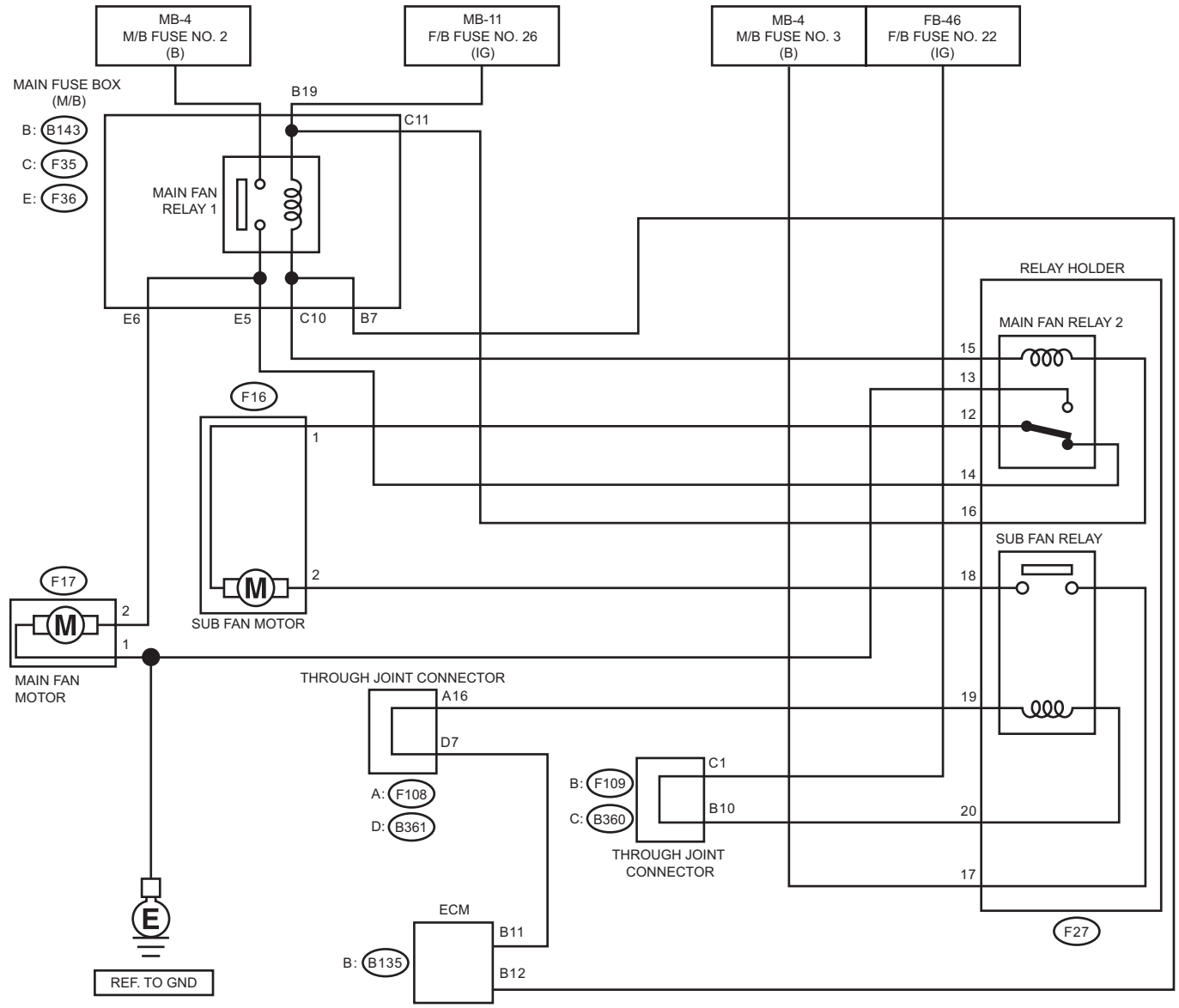

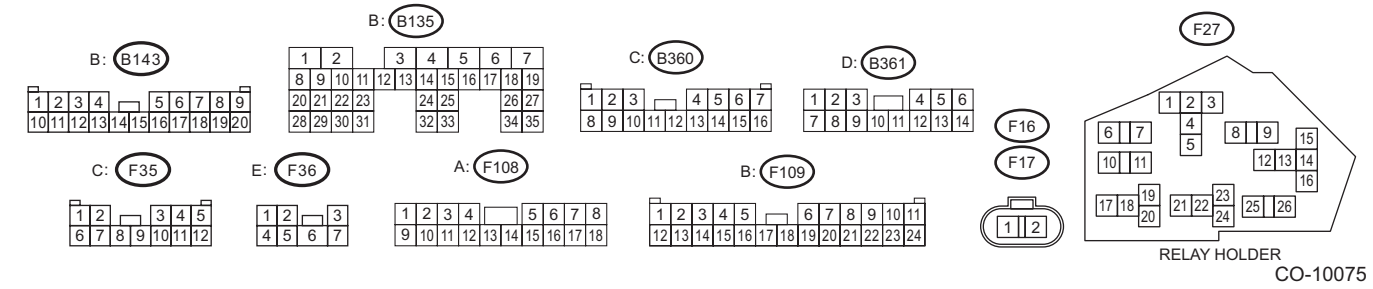

B: INSPECTION

Operating condition:

Vehicle speed	A/C compressor load	Engine coolant temperature		
		Increase: 89°C (192°F) or less Decrease: 87°C (189°F) or less	Increase: 90 — 95°C (194 — 203°F) Decrease: 88 — 90°C (190 — 194°F)	Increase: 96°C (205°F) or more Decrease: 91°C (196°F) or more
		Radiator fan operation	Radiator fan operation	Radiator fan operation
During acceleration: 19 km/h (12 MPH) or less* During deceleration: 10 km/h (6 MPH) or less*	OFF	OFF	Low-Speed	High-Speed
	Low	Low-Speed	Low-Speed	High-Speed
	High	High-Speed	High-Speed	High-Speed
During acceleration: 20 — 69 km/h (12 — 43 MPH) During deceleration: 11 — 64 km/h (7 — 40 MPH)	OFF	OFF	Low-Speed	High-Speed
	Low	High-Speed	High-Speed	High-Speed
	High	High-Speed	High-Speed	High-Speed
During acceleration: 70 — 105 km/h (43 — 65 MPH) During deceleration: 65 — 100 km/h (40 — 62 MPH)	OFF	OFF	Low-Speed	High-Speed
	Low	High-Speed	High-Speed	High-Speed
	High	High-Speed	High-Speed	High-Speed
During acceleration: 106 km/h (66 MPH) or more During deceleration: 101 km/h (63 MPH) or more	OFF	OFF	High-Speed	High-Speed
	Low	High-Speed	High-Speed	High-Speed
	High	High-Speed	High-Speed	High-Speed

* Including the condition under which vehicle is stopped (0 km/h (0 MPH)).

DIAGNOSIS:

Radiator main fan and radiator sub fan do not rotate under the above operating conditions.

	Step	Check	Yes	No
1	**CHECK OPERATION OF RADIATOR FAN.** 1) Install the delivery mode fuse. 2) Turn the ignition switch to ON. 3) Using the Subaru Select Monitor, perform the active test for the radiator fan relay. NOTE: • When performing the active test for the radiator fan relay using the Subaru Select Monitor, the radiator main fan and radiator sub fan will repeat low speed revolution → high speed revolution → OFF in this order. • For detailed operation procedures of Subaru Select Monitor 4, refer to “Application help”.	Do the radiator main fans and radiator sub fans rotate at low speed?	Go to step **2**.	Go to step **3**.
2	**CHECK OPERATION OF RADIATOR FAN.** Using the Subaru Select Monitor, perform the active test for the radiator fan relay. NOTE: • When performing the active test for the radiator fan relay using the Subaru Select Monitor, the radiator main fan and radiator sub fan will repeat low speed revolution → high speed revolution → OFF in this order. • For detailed operation procedures of Subaru Select Monitor 4, refer to “Application help”.	Do the radiator main fans and radiator sub fans rotate at high speed?	Radiator main fan system is normal.	Go to step **27**.

	Step	Check	Yes	No
3	**CHECK POWER SUPPLY TO SUB FAN RELAY.** 1) Turn the ignition switch to OFF. 2) Remove the sub fan relay. 3) Measure the voltage between the sub fan relay terminal and chassis ground. ***Connector & terminal*** ***(F27) No. 17 (+) — Chassis ground (–):***	Is the voltage 10 V or more?	Go to step **4**.	Go to step **5**.
4	**CHECK POWER SUPPLY TO SUB FAN RELAY.** 1) Turn the ignition switch to ON. 2) Measure the voltage between the sub fan relay terminal and chassis ground. ***Connector & terminal*** ***(F27) No. 20 (+) — Chassis ground (–):***	Is the voltage 10 V or more?	Go to step **7**.	Go to step **6**.
5	**CHECK FUSE.** 1) Remove the fuse No. 3. 2) Check the condition of fuse.	Is the fuse blown out?	Replace the fuse.	Repair the power supply line.
6	**CHECK FUSE.** 1) Turn the ignition switch to OFF. 2) Remove the fuse No. 22. 3) Check the condition of fuse.	Is the fuse blown out?	Replace the fuse.	Repair the power supply line.
7	**CHECK SUB FAN RELAY.** Measure the resistance between sub fan relay switch terminals.	Is the resistance 1 MΩ or more?	Go to step **8**.	Replace the sub fan relay. <Ref. to AC-32, Relay and Fuse.>
8	**CHECK SUB FAN RELAY.** 1) Connect the battery to the terminal on the sub fan relay coil side. 2) Measure the resistance between sub fan relay switch terminals.	Is the resistance less than 1 Ω?	Go to step **9**.	Replace the sub fan relay. <Ref. to AC-32, Relay and Fuse.>
9	**CHECK HARNESS BETWEEN SUB FAN RELAY TERMINAL AND SUB FAN MOTOR CONNECTOR.** 1) Turn the ignition switch to OFF. 2) Disconnect the connector from the sub fan motor. 3) Measure the resistance of harness between the sub fan relay terminal and sub fan motor connector. ***Connector & terminal*** ***(F16) No. 2 — (F27) No. 18:***	Is the resistance less than 1 Ω?	Go to step **10**.	Repair the open circuit of harness between sub fan relay terminal and sub fan motor connector.
10	**CHECK HARNESS BETWEEN SUB FAN MOTOR CONNECTOR AND MAIN FAN RELAY 2 CONNECTOR.** 1) Remove the main fan relay 2. 2) Measure the resistance of harness between sub fan motor connector and main fan relay 2 connector. ***Connector & terminal*** ***(F16) No. 1 — (F27) No. 12:***	Is the resistance less than 1 Ω?	Go to step **11**.	Repair the open circuit of the harness between sub fan motor connector and main fan relay 2 connector.
11	**CHECK FOR POOR CONTACT.** Check poor contact of sub fan motor connector.	Is there poor contact of the sub fan motor connector?	Repair the poor contact of sub fan motor connector.	Go to step **12**.
12	**CHECK SUB FAN MOTOR.** Connect the battery positive (+) terminal to terminal No. 2 of the sub fan motor, and the ground (–) terminal to terminal No. 1.	Does the radiator sub fan rotate?	Go to step **13**.	Replace the sub fan motor. <Ref. to CO(STI)-24, Radiator Sub Fan and Fan Motor.>

	Step	Check	Yes	No
13	**CHECK MAIN FAN RELAY 2.** Measure the resistance between terminals of main fan relay 2 switch (always ON side).	Is the resistance less than 1 Ω?	Go to step **14**.	Replace the main fan relay 2. <Ref. to AC-32, Relay and Fuse.>
14	**CHECK HARNESS BETWEEN MAIN FAN RELAY 2 AND MAIN FAN MOTOR CONNECTOR.** 1) Disconnect the connector from the main fan motor. 2) Measure the resistance of the harness between main fan relay 2 terminal and main fan motor connector. ***Connector & terminal*** ***(F17) No. 2 — (F27) No. 14:***	Is the resistance less than 1 Ω?	Go to step **15**.	Repair the open circuit of the harness between main fan relay 2 terminal and main fan motor connector.
15	**CHECK GROUND CIRCUIT OF MAIN FAN MOTOR.** Measure the resistance between main fan motor connector and chassis ground. ***Connector & terminal*** ***(F17) No. 1 — Chassis ground:***	Is the resistance less than 5 Ω?	Go to step **16**.	Repair the open circuit of the harness between main fan motor connector and chassis ground.
16	**CHECK FOR POOR CONTACT.** Check poor contact of main fan motor connector.	Is there poor contact of the main fan motor connector?	Repair the poor contact of main fan motor connector.	Go to step **17**.
17	**CHECK MAIN FAN MOTOR.** Connect the battery positive (+) terminal to terminal No. 2 of the main fan motor, and the ground (–) terminal to terminal No. 1.	Does the radiator main fan rotate?	Go to step **18**.	Replace the main fan motor. <Ref. to CO(STI)-22, Radiator Main Fan and Fan Motor.>
18	**CHECK HARNESS BETWEEN SUB FAN RELAY AND ECM.** 1) Disconnect the connector from ECM. 2) Measure the resistance between the sub fan relay terminal and ECM connector. ***Connector & terminal*** ***(B135) No. 11 — (F27) No. 19:***	Is the resistance less than 1 Ω?	Go to step **19**.	Repair the open circuit of harness between sub fan relay terminal and ECM.
19	**CHECK FOR POOR CONTACT.** Check for poor contact of ECM connector.	Is there poor contact of ECM connector?	Repair the poor contact of ECM connector.	Check the DTC. Repair the trouble cause. <Ref. to EN(w/o STI)(diag)-63, Read Diagnostic Trouble Code (DTC).>
20	**CHECK MAIN FAN RELAY 1.** 1) Turn the ignition switch to OFF. 2) Remove the main fan relay 1. 3) Measure the resistance between terminals of main fan relay 1 switch.	Is the resistance 1 MΩ or more?	Go to step **21**.	Replace the main fan relay 1. <Ref. to AC-32, Relay and Fuse.>
21	**CHECK MAIN FAN RELAY 1.** 1) Connect the main fan relay 1 coil side terminal to the battery. 2) Measure the resistance between terminals of main fan relay 1 switch.	Is the resistance less than 1 Ω?	Go to step **22**.	Replace the main fan relay 1. <Ref. to AC-32, Relay and Fuse.>

	Step	Check	Yes	No
22	**CHECK HARNESS BETWEEN MAIN FAN RELAY 1 AND MAIN FAN MOTOR CONNECTOR.** 1) Disconnect the connector from the main fan motor. 2) Measure the resistance of the harness between main fan relay 1 terminal and main fan motor connector. ***Connector & terminal*** ***(F17) No. 2 — (F36) No. 6:***	Is the resistance less than 1 Ω?	Go to step **23**.	Repair the open circuit of the harness between main fan relay 1 terminal and main fan motor connector.
23	**CHECK HARNESS BETWEEN MAIN FAN RELAY 1 AND ECM.** 1) Disconnect the connector from ECM. 2) Measure the resistance between main fan relay 1 terminal and ECM connector. ***Connector & terminal*** ***(B135) No. 12 — (B143) No. 7:***	Is the resistance less than 1 Ω?	Go to step **24**.	Repair the open circuit of the harness between main fan relay 1 terminal and ECM.
24	**CHECK HARNESS BETWEEN MAIN FAN RELAY 2 AND ECM.** Measure the resistance between main fan relay 2 terminal and ECM connector. ***Connector & terminal*** ***(B135) No. 12 — (F27) No. 15:***	Is the resistance less than 1 Ω?	Go to step **25**.	Repair the open circuit of the harness between main fan relay 2 terminal and ECM.
25	**CHECK FUSE.** 1) Remove the fuse No. 2 and No. 26. 2) Check the condition of fuse.	Is the fuse blown out?	Replace the fuse.	Go to step **26**.
26	**CHECK FOR POOR CONTACT.** Check for poor contact of ECM connector.	Is there poor contact of ECM connector?	Repair the poor contact of ECM connector.	Repair the power supply circuit to the main fuse box.
27	**CHECK OPERATION OF RADIATOR FAN.** If the both fans do not rotate at high speed in the condition of step 2, check whether the radiator sub fan is rotating.	Does the radiator sub fan rotate?	Go to step **20**.	Go to step **28**.
28	**CHECK GROUND CIRCUIT OF MAIN FAN RELAY 2.** 1) Turn the ignition switch to OFF. 2) Remove the main fan relay 2. 3) Measure the resistance between main fan relay 2 terminal and chassis ground. ***Connector & terminal*** ***(F27) No. 13 — Chassis ground:***	Is the resistance less than 1 Ω?	Go to step **29**.	Repair the open circuit of harness between main fan relay 2 and chassis ground.
29	**CHECK POWER SUPPLY TO MAIN FAN RELAY 2.** 1) Turn the ignition switch to ON. 2) Measure the voltage between main fan relay 2 terminal and chassis ground. ***Connector & terminal*** ***(F27) No. 16 (+) — Chassis ground (–):***	Is the voltage 10 V or more?	Go to step **30**.	Repair the power supply line.
30	**CHECK MAIN FAN RELAY 2.** Measure the resistance between terminals of main fan relay 2 switch.	Is the resistance 1 MΩ or more?	Go to step **31**.	Replace the main fan relay 2. <Ref. to AC-32, Relay and Fuse.>
31	**CHECK MAIN FAN RELAY 2.** 1) Connect the main fan relay 2 coil side terminal to the battery. 2) Measure the resistance between terminals of main fan relay 2 switch (always OFF side).	Is the resistance less than 1 Ω?	Go to step **23**.	Replace the main fan relay 2. <Ref. to AC-32, Relay and Fuse.>

3. Engine Coolant

A: INSPECTION

NOTE:
When adding the engine coolant, always use SUBARU Super Coolant.
1) Park the vehicle on a level surface.
2) Check the engine coolant amount, and if the coolant level is low, check for the coolant leakage, and then add the engine coolant.
(1) Make sure the engine coolant level in the reservoir tank is between "FULL" and "LOW" with the engine in a cold condition.
(2) Open the cap of coolant filler tank, and check that the engine coolant is filled up to the filler neck position.

B: REPLACEMENT

1. DRAINING OF ENGINE COOLANT

1) Lift up the vehicle.
2) Remove the under cover. <Ref. to EI-22, REMOVAL, Front Under Cover.>
3) Remove the drain plug to drain engine coolant into container.

NOTE:
Remove the coolant filler tank cap so that engine coolant will drain faster.

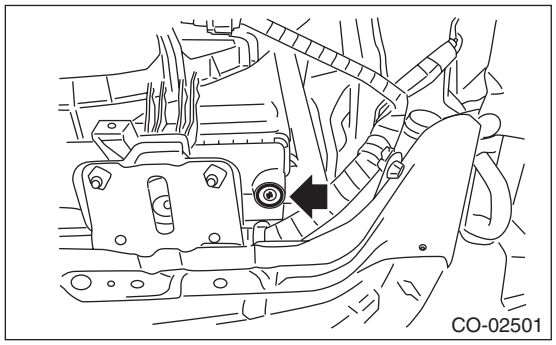

4) Install the drain plug.

NOTE:
Use new O-rings.
5) Install the under cover. <Ref. to EI-23, INSTALLATION, Front Under Cover.>

2. FILLING OF ENGINE COOLANT

CAUTION:
During work, set the gear shift lever to the neutral position and do not shift the lever.
1) Pour cooling system conditioner through the filler neck of coolant filler tank.

Cooling system protective agent:
Refer to "SPECIFICATION" for cooling system protective agent. <Ref. to CO(STI)-2, SPECIFICATION, General Description.>

2) Fill the engine coolant into coolant filler tank up to the filler neck position.

Recommended engine coolant:
Refer to "SPECIFICATION" for recommended engine coolant. <Ref. to CO(STI)-2, SPECIFICATION, General Description.>

Engine coolant level:
Refer to "SPECIFICATION" for engine coolant level. <Ref. to CO(STI)-2, SPECIFICATION, General Description.>

Engine coolant concentration:
Refer to "ADJUSTMENT" for the recommended engine coolant concentration. <Ref. to CO(STI)-13, ADJUSTMENT, Engine Coolant.>

CAUTION:
Do not confuse the cap of coolant filler tank and cap of radiator.

NOTE:
• When pouring the engine coolant, the radiator side cap must not be removed.
• The SUBARU Super Coolant contains anti-freeze and anti-rust agents, and is especially made for Subaru engines with an aluminum cylinder block. Be sure to use SUBARU Super Coolant, since other coolant may cause corrosion.
3) Fill engine coolant into the reservoir tank up to "FULL" level.

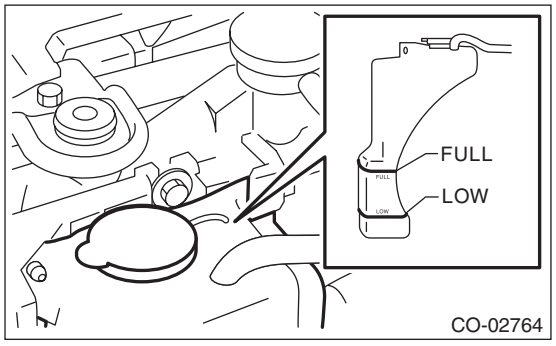

4) Close the coolant filler tank cap, and start the engine. Race 5 to 6 times at 3,000 r/min or less, then stop the engine. (Complete this operation within 40 seconds.)
5) Wait for one minute after the engine stops, then open the coolant filler tank cap. If the engine coolant level drops, add engine coolant into coolant filler tank up to the filler neck position.
6) Perform the procedures 4) and 5) again.
7) Attach the coolant filler tank and reservoir tank cap properly.
8) Start the engine and operate the heater at maximum hot position and the blower speed setting to "LO". (A/C OFF)

9) Run the engine at 3,000 r/min or less until radiator fan starts and stops.

NOTE:
Be careful with the engine coolant temperature to prevent overheating.
10) Stop the engine and wait until the engine coolant temperature lowers to 30°C (86°F) or less.
11) Open the coolant filler tank cap. If the engine coolant level drops, add engine coolant into the coolant filler tank up to the filler neck position and the reservoir tank to “FULL” level.
12) Attach the coolant filler tank and reservoir tank cap properly.
13) Set the heater setting to maximum hot position and the blower speed setting to “LO” and start the engine. Perform racing at 3,000 r/min or less. If the flowing sound is heard from the heater core, repeat the procedures from step 9).

C: ADJUSTMENT

1. PROCEDURE TO ADJUST THE CONCENTRATION OF THE SUBARU SUPER COOLANT

CAUTION:
Use the Subaru Super Coolant with a 50 — 60% concentration in order to obtain maximum anti-freeze and anti-rust performance.
To adjust the concentration of Subaru Super Coolant according to temperature, select the proper Subaru Super Coolant concentration from the table, and add the amount of diluting water corresponding to the required concentration to the Subaru Super Coolant (concentrated type).

Relationship of Subaru Super Coolant concentration and freezing temperature			
Subaru Super Coolant concentration	50%	55%	60%
Freezing temp.	–36°C (–33°F)	–41°C (–42°F)	–50°C (–58°F)

Engine coolant and diluting water:
Refer to “SPECIFICATION” for the recommended engine coolant and diluting water. <Ref. to CO(STI)-2, SPECIFICATION, General Description.>

4. Water Pump

A: REMOVAL

1) Remove the radiator. <Ref. to CO(STI)-18, REMOVAL, Radiator.>
2) Remove the V-belts. <Ref. to ME(STI)-41, REMOVAL, V-belt.>
3) Remove the crank pulley. <Ref. to ME(STI)-49, REMOVAL, Crank Pulley.>
4) Remove the timing belt cover. <Ref. to ME(STI)-51, REMOVAL, Timing Belt Cover.>
5) Remove the timing belt. <Ref. to ME(STI)-52, REMOVAL, Timing Belt.>
6) Remove the automatic belt tension adjuster (A).
7) Remove the belt idler (B).
8) Remove the belt idler No. 2 (C).

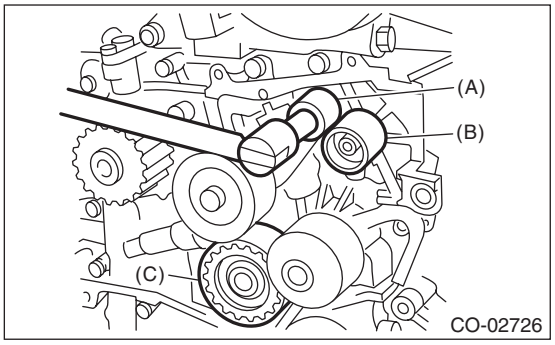

9) Remove the cam sprocket LH. <Ref. to ME(STI)-61, REMOVAL, Cam Sprocket.>
10) Remove the belt cover No. 2 LH.

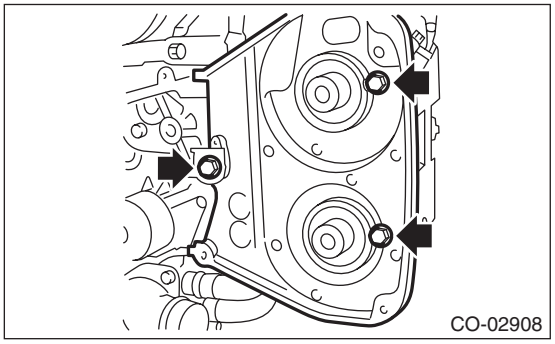

11) Remove the tensioner bracket.

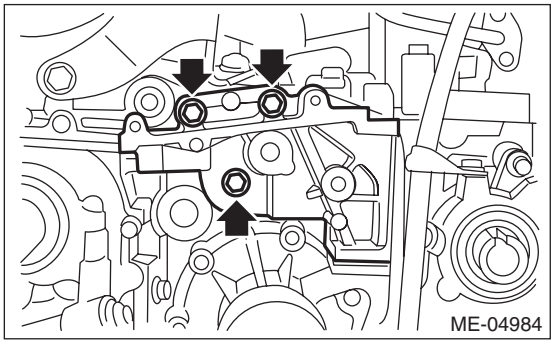

12) Disconnect the hose from water pump.
13) Remove the water pump.

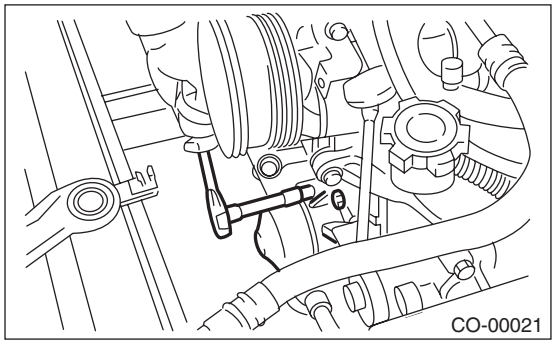

B: INSTALLATION

1) Install the water pump onto cylinder block LH.

NOTE:
- Use a new gasket.
- When installing the water pump, tighten the bolts in two stages in alphabetical sequence as shown in figure.

Tightening torque:
First:
12 N·m (1.2 kgf-m, 8.9 ft-lb)
Second:
12 N·m (1.2 kgf-m, 8.9 ft-lb)

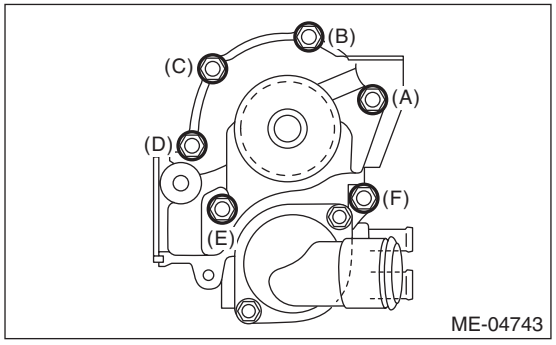

2) Install the hose to water pump.
3) Install the tensioner bracket.

Tightening torque:
24.5 N·m (2.5 kgf-m, 18.1 ft-lb)

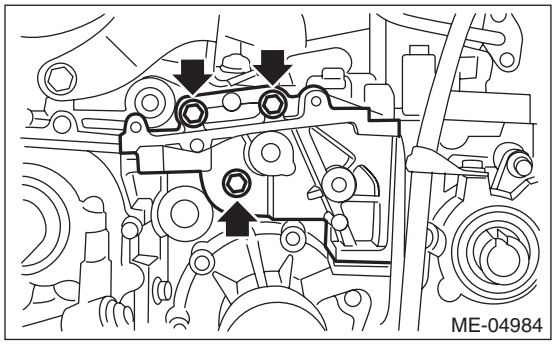

4) Install the belt cover No. 2 LH.

Tightening torque:
5 N·m (0.5 kgf-m, 3.7 ft-lb)

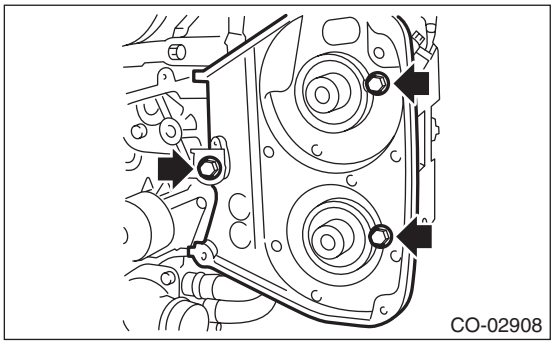

5) Install the cam sprocket LH. <Ref. to ME(STI)-61, INSTALLATION, Cam Sprocket.>
6) Install the belt idler No. 2 (C).

Tightening torque:
39 N·m (4.0 kgf-m, 28.8 ft-lb)
7) Install the belt idler (B).

Tightening torque:
25 N·m (2.5 kgf-m, 18.4 ft-lb)
8) Install the automatic belt tension adjuster (A) with the tension rod held by a pin. <Ref. to ME(STI)-54, AUTOMATIC BELT TENSION ADJUSTER ASSEMBLY AND BELT IDLER, INSTALLATION, Timing Belt.>

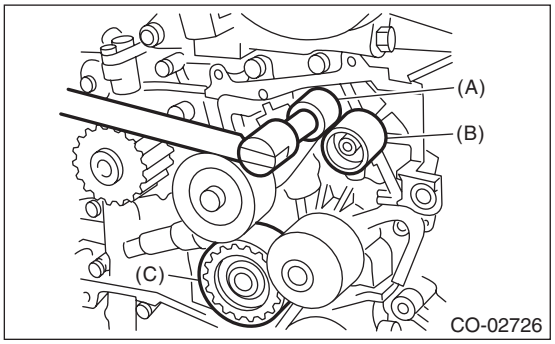

9) Install the timing belt. <Ref. to ME(STI)-55, TIMING BELT, INSTALLATION, Timing Belt.>
10) Install the timing belt cover. <Ref. to ME(STI)-51, INSTALLATION, Timing Belt Cover.>
11) Install the crank pulley. <Ref. to ME(STI)-49, INSTALLATION, Crank Pulley.>
12) Install the V-belts. <Ref. to ME(STI)-41, INSTALLATION, V-belt.>
13) Install the radiator. <Ref. to CO(STI)-19, INSTALLATION, Radiator.>

C: INSPECTION

1) Check the water pump bearing for smooth rotation.
2) Check the water pump pulley for abnormalities.
3) Make sure the impeller is not abnormally deformed or damaged.
4) Inspect the clearance between impeller and pump case.

Clearance between impeller and pump case:
Standard
0.5 — 1.5 mm (0.020 — 0.059 in)

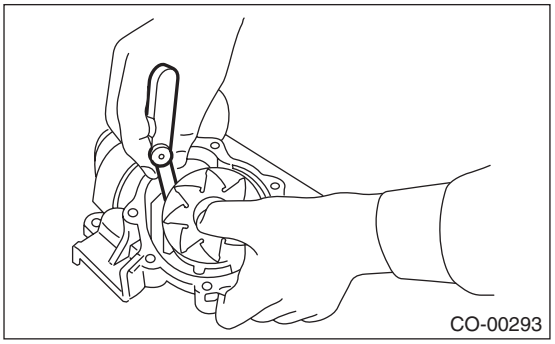

5) After water pump installation, check pulley shaft for engine coolant leaks or noise. If leaks or noise are noted, replace the water pump assembly.

5. Thermostat

A: REMOVAL

1) Drain engine coolant. <Ref. to CO(STI)-12, DRAINING OF ENGINE COOLANT, REPLACEMENT, Engine Coolant.>
2) Disconnect the radiator outlet hose from thermostat cover.

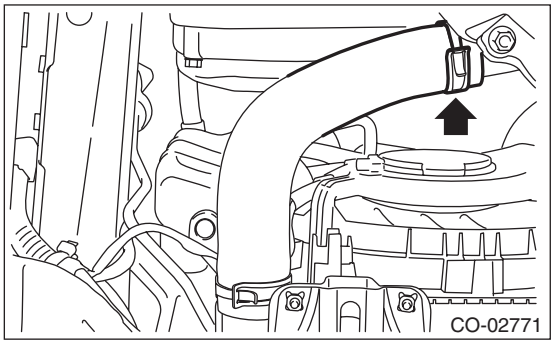

3) Remove the thermostat cover, and then remove the gasket and thermostat.

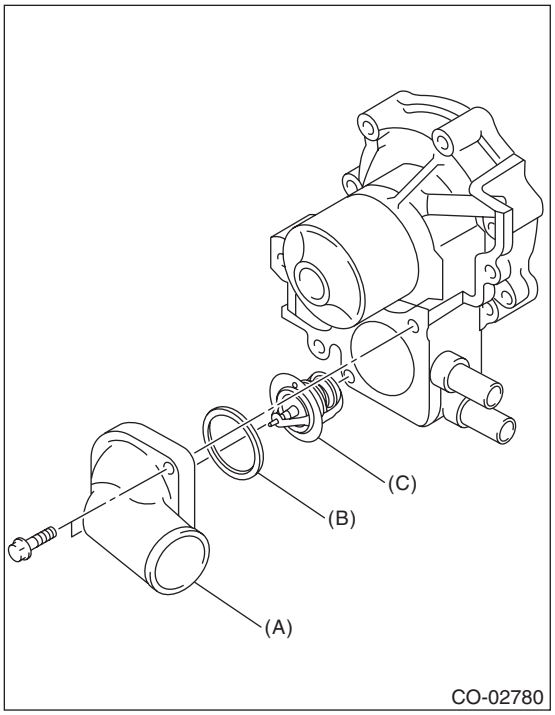

(A) Thermostat cover
(B) Gasket
(C) Thermostat

B: INSTALLATION

1) Install a gasket to thermostat.

NOTE:
Use a new gasket.
2) Install the thermostat and thermostat cover.

NOTE:
Install the parts with the jiggle pin facing upward.

Tightening torque:
12 N·m (1.2 kgf-m, 8.9 ft-lb)

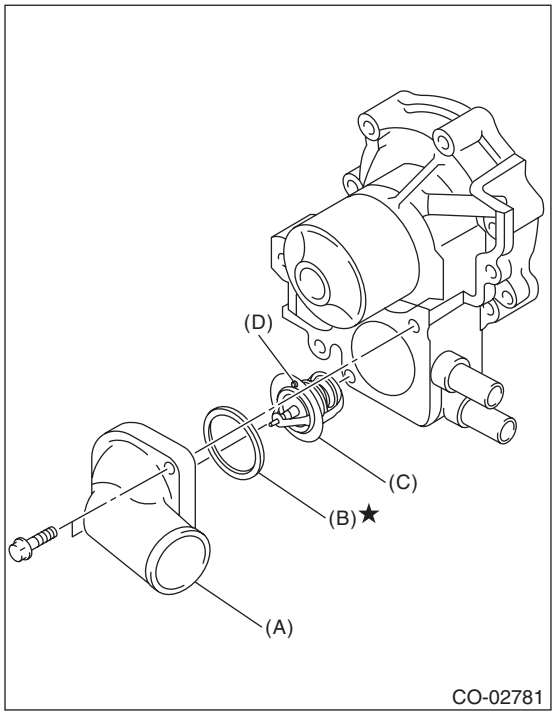

(A) Thermostat cover
(B) Gasket
(C) Thermostat
(D) Jiggle pin

3) Connect the radiator outlet hose to thermostat cover.
4) Install the under cover. <Ref. to EI-23, INSTALLATION, Front Under Cover.>
5) Lower the vehicle.
6) Fill engine coolant. <Ref. to CO(STI)-12, FILLING OF ENGINE COOLANT, REPLACEMENT, Engine Coolant.>

C: INSPECTION

1) Check that the thermostat does not have deformation, cracks or damage.
2) Check that the thermostat valve closes completely at an ambient temperature.
3) Immerse the thermostat and a thermometer in water. Raise water temperature gradually, and check the temperature and valve lift when the valve begins to open and when the valve is fully opened. Replace the thermostat if faulty.

NOTE:
• During the test, agitate the water for even temperature distribution.
• Leave the thermostat in the boiling water for five minutes or more before measuring the valve lift.
• Hold the thermostat with a wire or the like to avoid contacting the container.

Starting temperature to open:
76 — 80°C (169 — 176°F)

Full open temperature:
91°C (196°F)

Total valve lift:
9.0 mm (0.354 in) or more

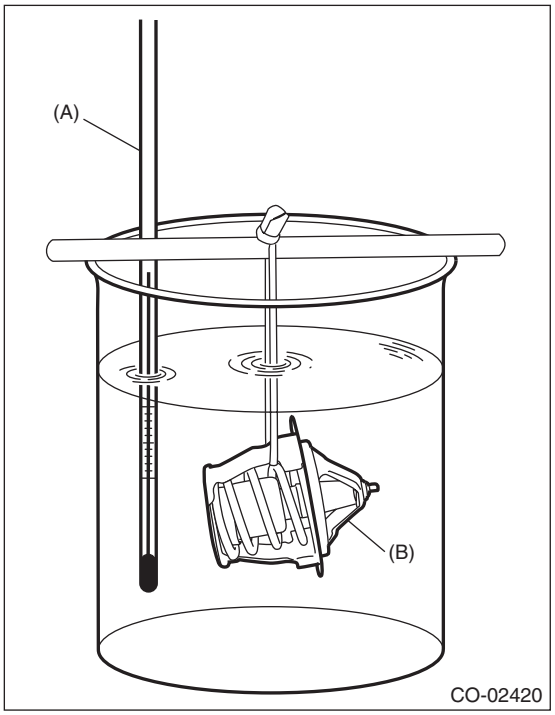

(A) Thermometer
(B) Thermostat

6. Radiator

A: REMOVAL

CAUTION:
The radiator is pressurized when the engine and radiator are hot. Wait until engine and radiator cool down before working on the radiator.

1) Disconnect the ground cable from battery.
2) Remove the air intake duct. <Ref. to IN(STI)-11, REMOVAL, Air Intake Duct.>
3) Remove the reservoir tank. <Ref. to CO(STI)-26, REMOVAL, Reservoir Tank.>
4) Drain engine coolant. <Ref. to CO(STI)-12, DRAINING OF ENGINE COOLANT, REPLACEMENT, Engine Coolant.>
5) Disconnect the connector (A) from the main fan motor and the connector (B) from the sub fan motor.

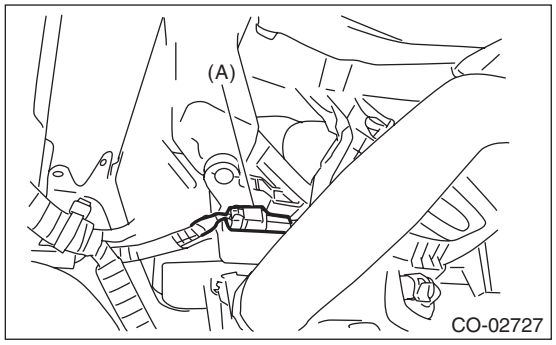

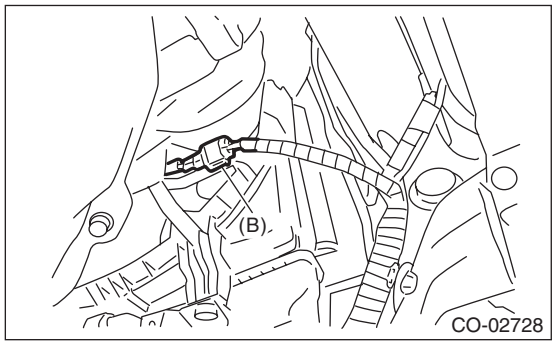

6) Disconnect the radiator outlet hose from thermostat cover.

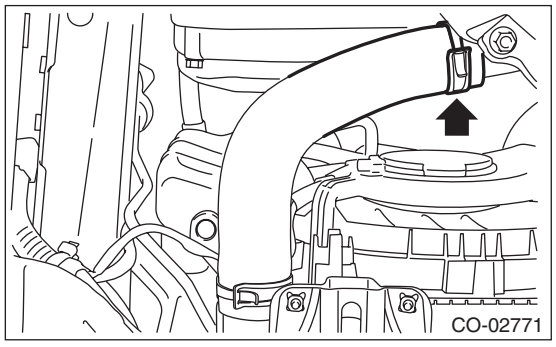

7) Lower the vehicle.
8) Disconnect the radiator inlet hose from the radiator.

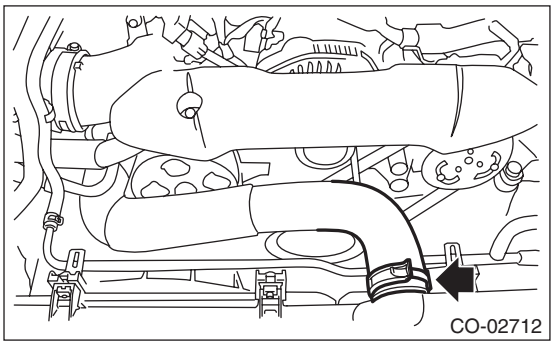

9) Disconnect the two engine coolant hoses from the radiator and over flow pipe.

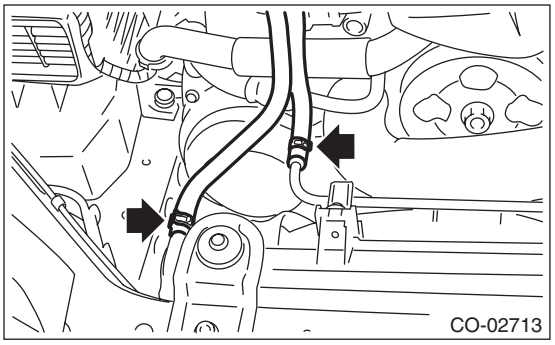

10) Remove the radiator upper brackets.

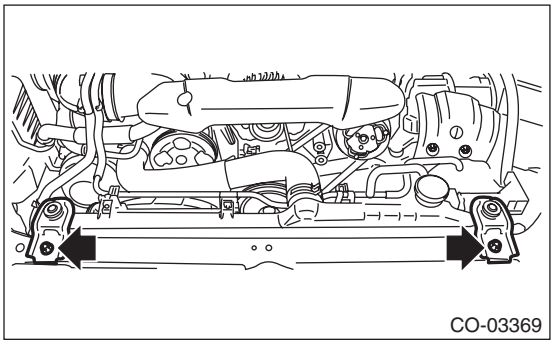

11) Move the radiator to the left while lifting it upward.
12) Lift the radiator up and remove the radiator from vehicle.
13) Remove the radiator lower cushion from the radiator lower bracket.

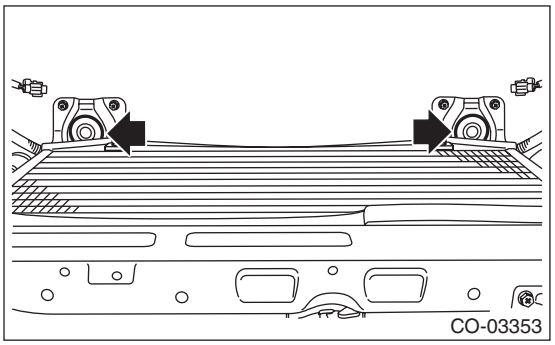

B: INSTALLATION

1) Attach the radiator lower cushion to the radiator lower bracket.

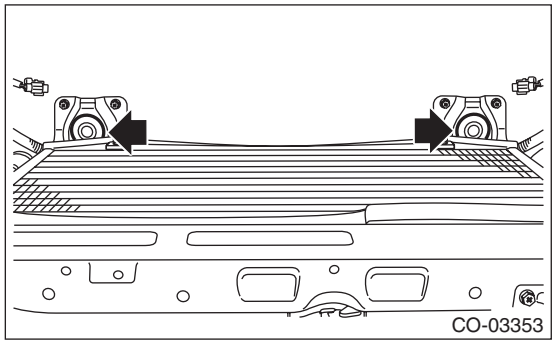

2) Install the radiator to vehicle.

NOTE:
Make pins on the lower side of radiator be fitted into the radiator lower cushions.

3) Install the radiator upper brackets.

Tightening torque:
12 N·m (1.2 kgf-m, 8.9 ft-lb)

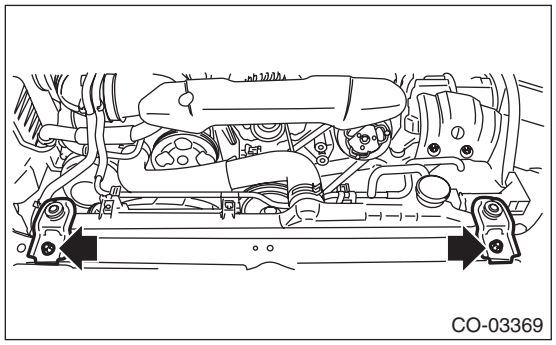

4) Connect the two engine coolant hoses to the radiator and over flow pipe.

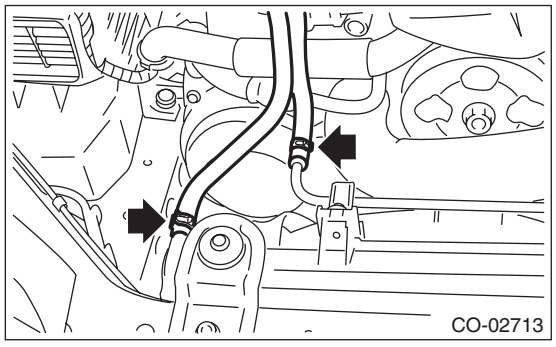

5) Connect the radiator inlet hose.

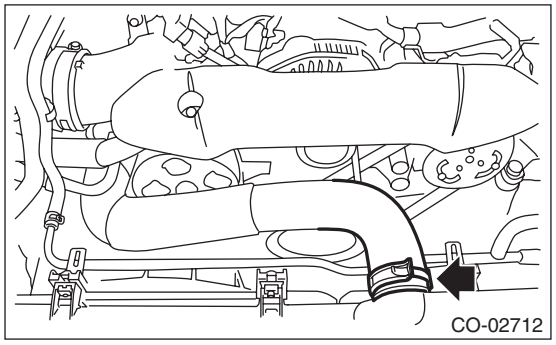

6) Lift up the vehicle.

7) Connect the radiator outlet hose.

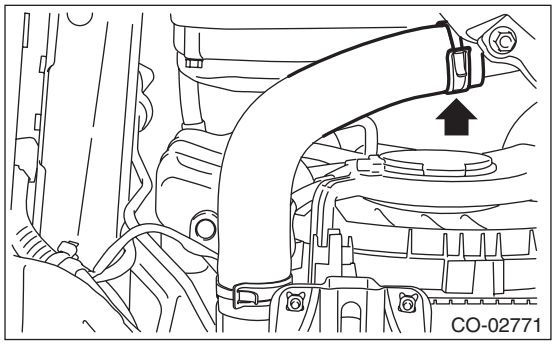

8) Connect the connector (A) to the main fan motor and the connector (B) to the sub fan motor.

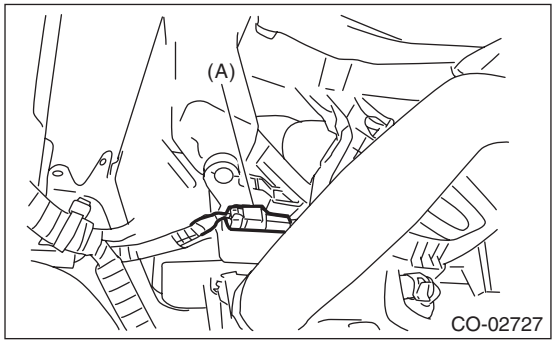

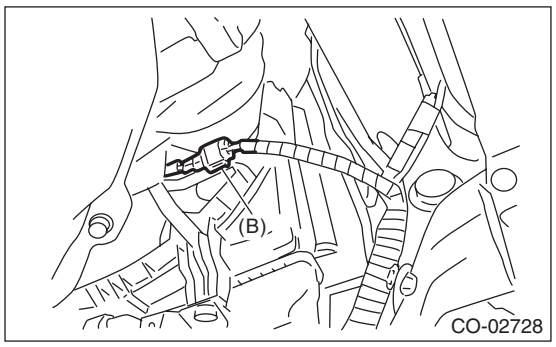

9) Install the under cover. <Ref. to EI-23, INSTALLATION, Front Under Cover.>

10) Lower the vehicle.

11) Install the reservoir tank. <Ref. to CO(STI)-26, INSTALLATION, Reservoir Tank.>

12) Install the air intake duct. <Ref. to IN(STI)-11, INSTALLATION, Air Intake Duct.>
13) Connect the battery ground terminal.
14) Fill engine coolant. <Ref. to CO(STI)-12, FILLING OF ENGINE COOLANT, REPLACEMENT, Engine Coolant.>

C: INSPECTION

1) Check that the radiator does not have deformation, cracks or damage.
2) Check that the hose has no cracks, damage or loose part.
3) Remove the coolant filler tank cap, fill the coolant filler tank with engine coolant, then install the radiator cap tester to the filler neck of coolant filler tank.

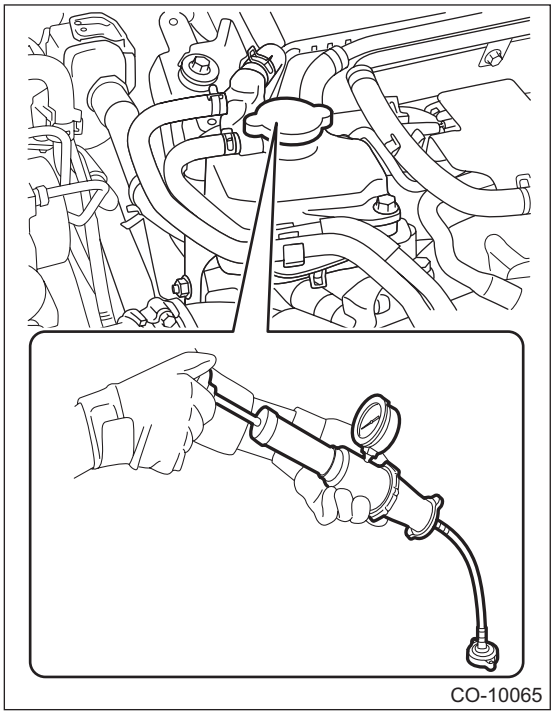
CO-10065

4) Apply a pressure of 122 kPa (1.2 kg/cm^2, 18 psi) to the radiator and check the following points:
- Leakage from the radiator or its vicinity
- Leakage from the hose or its connections

CAUTION:
• Inspection must be carried out at the side of coolant filler tank, not at the side of radiator.
• Engine should be turned off.
• Wipe engine coolant from check points in advance.
• Be careful not to deform the filler neck of the coolant filler tank when installing and removing the radiator cap tester.
• Be careful of engine coolant from spurting out when removing the radiator cap tester.

7. Radiator Cap

A: INSPECTION

1) Check that the radiator cap does not have deformation, cracks or damage.
2) Attach the radiator cap tester to radiator cap.

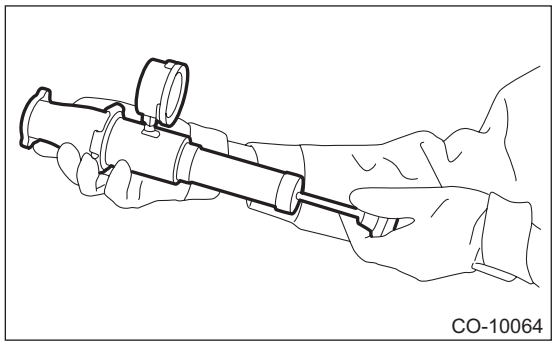

3) Increase pressure until the radiator cap tester gauge needle stops. Radiator cap is functioning properly if it holds the service limit pressure for 5 — 6 seconds. Replace the radiator cap if its valve opens at less than the service limit.

Coolant filler tank side:
Standard
93 — 123 kPa (0.95 — 1.25 kg/cm^2, 14 — 18 psi)
Limit
83 kPa (0.85 kg/cm^2, 12 psi)

Radiator side:
Standard
122 — 152 kPa (1.24 — 1.55 kg/cm^2, 18 — 22 psi)
Limit
112 kPa (1.14 kg/cm^2, 16 psi)

CAUTION:
• Be sure to remove foreign matter and rust from the cap in advance. Otherwise, results of pressure test will be incorrect.
• Do not confuse the cap of coolant filler tank and cap of radiator.

8. Radiator Main Fan and Fan Motor

A: REMOVAL

1) Disconnect the ground cable from battery.
2) Lift up the vehicle.
3) Remove the under cover. <Ref. to EI-22, REMOVAL, Front Under Cover.>
4) Disconnect the connector from the main fan motor.

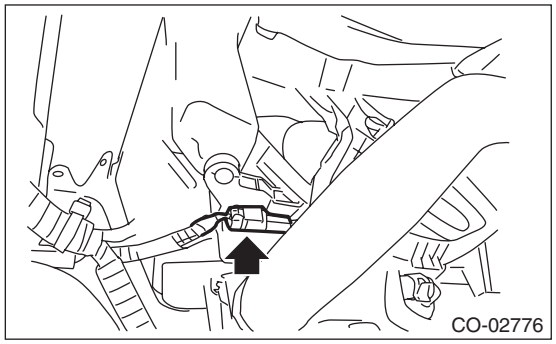
CO-02776

5) Lower the vehicle.
6) Remove the air intake duct. <Ref. to IN(STI)-11, REMOVAL, Air Intake Duct.>
7) Remove the reservoir tank. <Ref. to CO(STI)-26, REMOVAL, Reservoir Tank.>
8) Remove the bolts which secure the radiator main fan motor assembly and the over flow pipe.

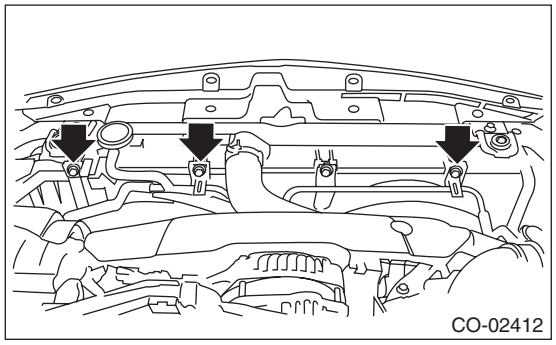
CO-02412

9) Remove the radiator main fan motor assembly from the upper side of the vehicle.

B: INSTALLATION

Install in the reverse order of removal.

CAUTION:
Check if the radiator hose and the over flow hose are properly connected.

Tightening torque:
7.5 N·m (0.8 kgf-m, 5.5 ft-lb)

C: DISASSEMBLY

1) Remove the clip which holds the main fan motor connector onto the radiator main fan shroud.
2) Disconnect the radiator main fan from the main fan motor.

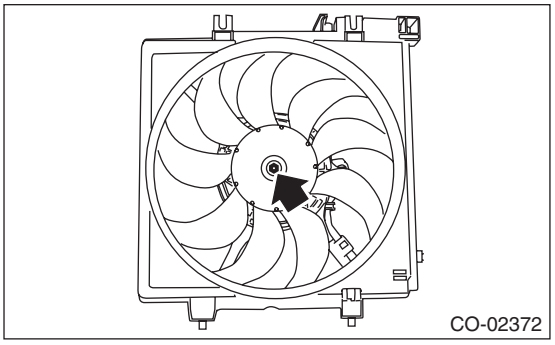
CO-02372

3) Disconnect the main fan motor from the radiator main fan shroud.

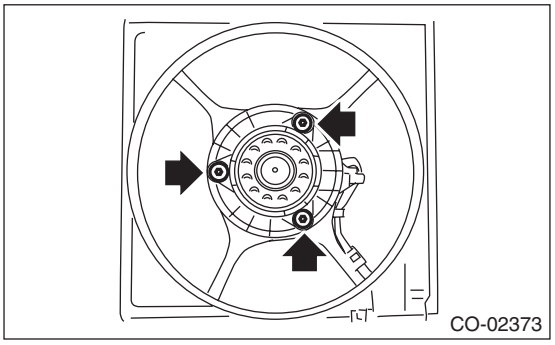
CO-02373

D: ASSEMBLY

Assemble in the reverse order of disassembly.

Tightening torque:
4.41 N·m (0.45 kgf-m, 3.25 ft-lb)

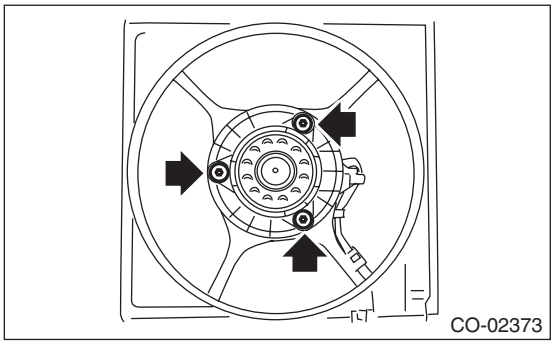

Tightening torque:
3.4 N·m (0.3 kgf-m, 2.5 ft-lb)

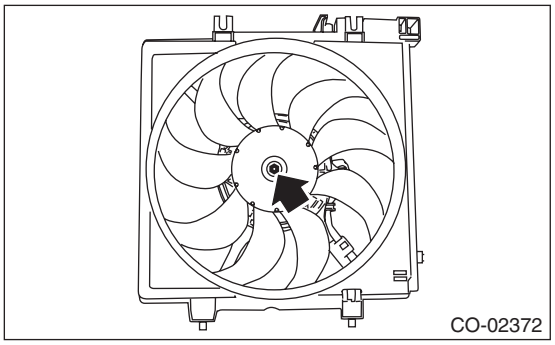

E: INSPECTION

Check that the radiator main fan, radiator main fan shroud and main fan motor do not have deformation, cracks or damage.

9. Radiator Sub Fan and Fan Motor

A: REMOVAL

1) Disconnect the ground cable from battery.
2) Lift up the vehicle.
3) Remove the under cover. <Ref. to EI-22, REMOVAL, Front Under Cover.>
4) Disconnect the connector from the sub fan motor.

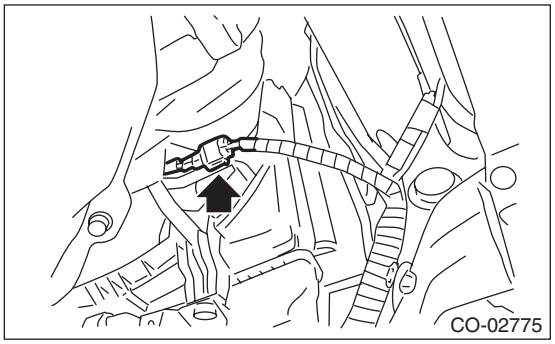

5) Lower the vehicle.
6) Remove the air intake duct. <Ref. to IN(STI)-11, REMOVAL, Air Intake Duct.>
7) Remove the bolts which secure the radiator sub fan motor assembly and the over flow pipe.

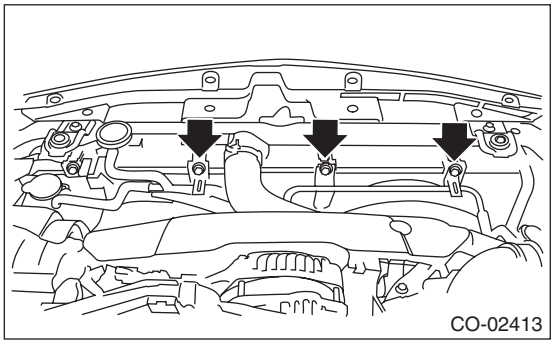

8) Raise the radiator sub fan motor assembly slightly, remove the pin at the lower part of the radiator sub fan motor assembly from the radiator hole, and remove the radiator sub fan motor assembly from the lower side of the vehicle.

B: INSTALLATION

Install in the reverse order of removal.

CAUTION:
Check if the radiator hose and the over flow hose are properly connected.

Tightening torque:
7.5 N·m (0.8 kgf-m, 5.5 ft-lb)

C: DISASSEMBLY

1) Remove the clip which holds the sub fan motor connector onto the radiator sub fan shroud.
2) Disconnect the radiator sub fan from the sub fan motor.

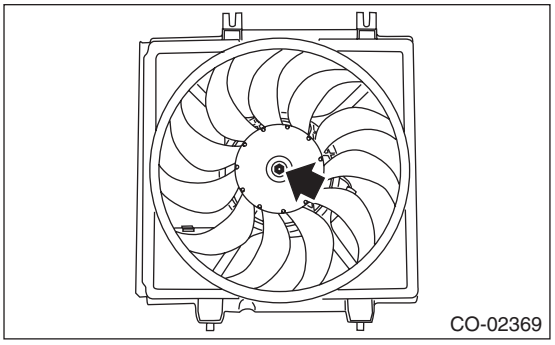

3) Disconnect the sub fan motor from the radiator sub fan shroud.

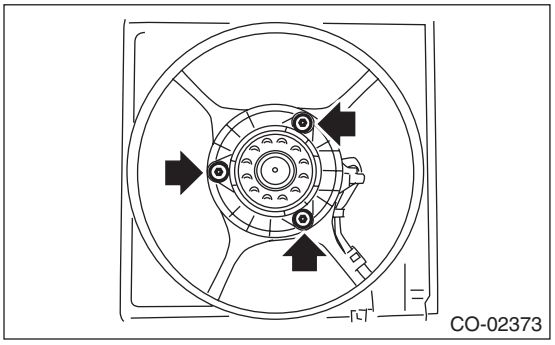

D: ASSEMBLY

Assemble in the reverse order of disassembly.

Tightening torque:
4.41 N·m (0.45 kgf-m, 3.25 ft-lb)

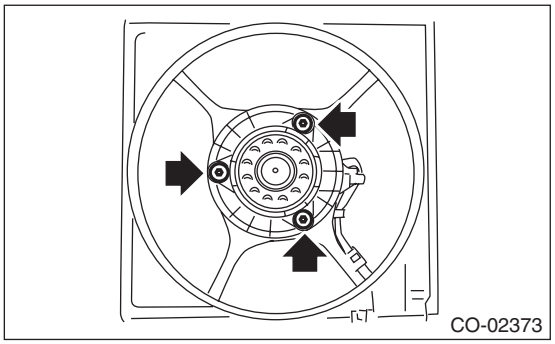

Tightening torque:
3.4 N·m (0.3 kgf-m, 2.5 ft-lb)

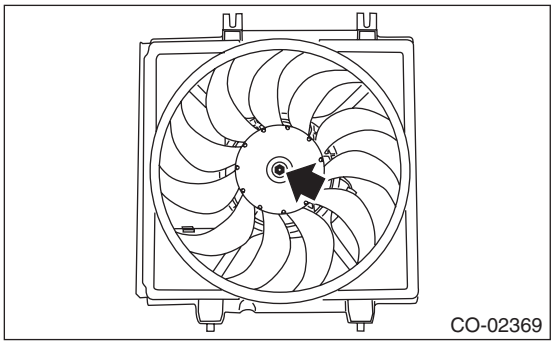

E: INSPECTION

Check that the radiator sub fan, radiator sub fan shroud and sub fan motor do not have deformation, cracks or damage.

10.Reservoir Tank

A: REMOVAL

1) Pull out the over flow hose (A).
2) Pull out the reservoir tank to the arrow direction while pushing the claw (B).

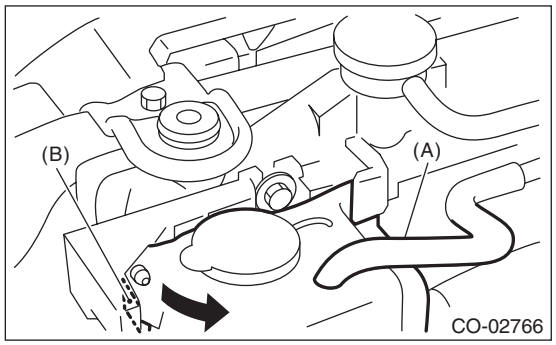

B: INSTALLATION

Install in the reverse order of removal.

C: INSPECTION

1) Check that the reservoir tank does not have deformation, cracks or damage.
2) Make sure the over flow hoses are not cracked, damaged or loose.
3) Make sure the engine coolant level is between “FULL” and “LOW”.

11.Coolant Filler Tank

A: REMOVAL

CAUTION:
The coolant filler tank is pressurized when the engine and radiator are hot. Wait until engine and radiator cool down before working on the coolant filler tank.

1) Drain approximately 3.0 L (3.2 US qt, 2.6 Imp qt) of coolant. <Ref. to CO(STI)-12, DRAINING OF ENGINE COOLANT, REPLACEMENT, Engine Coolant.>
2) Disconnect the engine coolant hoses from coolant filler tank.
3) Remove the bolt and nut which secure the coolant filler tank.
4) Remove the coolant filler tank.

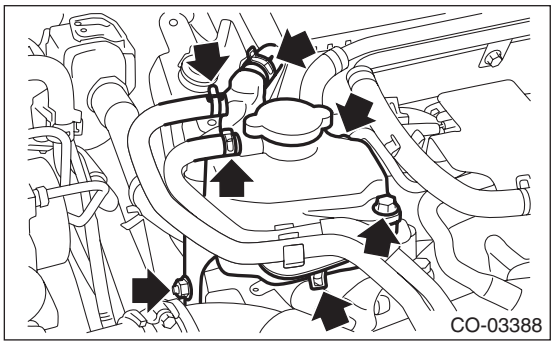

B: INSTALLATION

1) Install in the reverse order of removal.

Tightening torque:
T1: 13 N·m (1.3 kgf-m, 9.6 ft-lb)
T2: 16 N·m (1.6 kgf-m, 11.8 ft-lb)

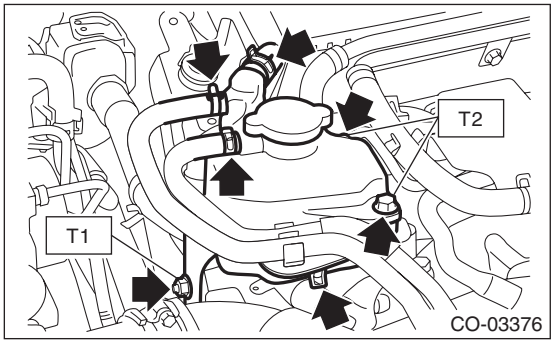

C: INSPECTION

1) Check that the coolant filler tank does not have deformation, cracks or damage.
2) Check that the engine coolant hose has no cracks, damage or loose part.

12.Engine Cooling System Trouble in General

A: INSPECTION

Trouble	Possible cause	Corrective action
Over-heating	a. Insufficient engine coolant	Replenish engine coolant, inspect for leakage, and repair it if necessary.
	b. Loose timing belt	Repair or replace timing belt tensioner.
	c. Oil on timing belt	Replace.
	d. Malfunction of thermostat	Replace.
	e. Malfunction of water pump	Replace.
	f. Clogged engine coolant passage	Clean.
	g. Improper ignition timing	Inspect and repair ignition control system. <Ref. to EN(STI)(diag)-2, PROCEDURE, Basic Diagnostic Procedure.>
	h. Clogged or leaking radiator	Clean, repair or replace.
	i. Defective radiator fan	Replace.
	j. Improper engine oil in engine coolant	Replace the engine coolant. If ineffective, check, repair or replace engine components.
	k. Air/fuel mixture ratio too lean	Inspect and repair the fuel injection system. <Ref. to EN(STI)(diag)-2, PROCEDURE, Basic Diagnostic Procedure.>
	l. Excessive back pressure in exhaust system	Clean or replace.
	m. Insufficient clearance between piston and cylinder	Adjust or replace.
	n. Slipping clutch	Repair or replace.
	o. Dragging brake	Adjust.
	p. Defective radiator fan	Inspect the radiator fan relay, engine coolant temperature sensor or fan motor and replace them.
Over-cooling	a. Ambient temperature extremely low	Partly cover radiator front area.
	b. Defective thermostat	Replace.
Engine coolant leaks	a. Loosened or damaged connecting units on hoses	Repair or replace.
	b. Leakage from water pump	Replace.
	c. Leakage from water pipe	Repair or replace.
	d. Leakage around cylinder head gasket	Retighten cylinder head bolts or replace cylinder head gasket.
	e. Damaged or cracked cylinder head and cylinder block	Repair or replace.
	f. Damaged or cracked thermostat cover	Repair or replace.
	g. Leakage from radiator	Repair or replace.
Noise	a. Timing belt problem	Replace.
	b. Defective radiator fan	Replace.
	c. Defective water pump bearing	Replace water pump.
	d. Defective water pump mechanical seal	Replace water pump.

LUBRICATION

LU(STI)

		Page
1.	General Description	2
2.	Oil Pressure System	8
3.	Engine Oil	10
4.	Oil Pump	12
5.	Oil Pan and Strainer	16
6.	Oil Pressure Switch	20
7.	Engine Oil Cooler	21
8.	Oil Pipe	22
9.	Engine Oil Filter	27
10.	Engine Lubrication System Trouble in General	28

1. General Description

A: SPECIFICATION

Lubrication method					Forced lubrication
Oil pump	Pump type				Trochoid type
	Number of teeth	Inner rotor			9
		Outer rotor			10
	Outer rotor diameter × Thickness			mm (in)	78 × 11 (3.07 × 0.43)
	Tip clearance between inner and outer rotors			mm (in) Standard	0.04 — 0.14 (0.0016 — 0.0055)
	Case clearance between outer rotor and pump case			mm (in) Standard	0.10 — 0.175 (0.0039 — 0.0069)
	Side clearance between inner rotor and pump case			mm (in) Standard	0.02 — 0.07 (0.0008 — 0.0028)
	Relief valve spring	Free length		mm (in)	73.7 (2.902)
		Installed length		mm (in)	54.7 (2.154)
		Load when installed		N (kgf, lbf)	93.1 (9.49, 20.93)
	Performance (Oil temperature 80°C (176°F))	600 r/min	Discharge pressure	kPa (kg/cm^2, psi)	98 (1.0, 14)
			Discharge rate	L (US qt, Imp qt)/min	6.4 (6.8, 5.6) or more
		6,000 r/min	Discharge pressure	kPa (kg/cm^2, psi)	392 (4.0, 56.8)
			Discharge rate	L (US qt, Imp qt)/min	63.0 (66.6, 55.4) or more
	Relief valve working pressure			kPa (kg/cm^2, psi)	538 (5.5, 78)
Oil filter	Filter type				Full-flow filter type
	Filtration area cm^2 (sq in)	Outer diameter: 68 mm (2.68 in) (black)			800 (124)
		Outer diameter: 67.4 mm (2.65 in) (blue)			555 (86)
	By-pass valve opening pressure			kPa (kg/cm^2, psi)	160 (1.63, 23.2)
	Outer diameter × Width mm (in)	Outer diameter: 68 mm (2.68 in) (black)			68 × 65 (2.68 × 2.56)
		Outer diameter: 67.4 mm (2.65 in) (blue)			67.4 × 65.3 (2.65 × 2.57)
	Installation screw specifications				M 20 × 1.5
Oil pressure switch	Type				Immersed contact point type
	Operating voltage — power consumption				12 V — 3.4 W or less
	Warning light operating pressure			kPa (kg/cm^2, psi)	14.7 (0.15, 2.1)
	Proof pressure			kPa (kg/cm^2, psi)	981 (10, 142) or more
Engine oil	Total capacity (at overhaul)			L (US qt, Imp qt)	5.0 (5.3, 4.4)
	When replacing engine oil and oil filter			L (US qt, Imp qt)	4.3 (4.5, 3.8)
	When replacing engine oil only			L (US qt, Imp qt)	4.0 (4.2, 3.5)

Specified oil:

CAUTION:
- **Use 5W-30 (synthetic oil).**
- **It is acceptable to fill an engine with oil of another brand when replacing the oil, but make sure to use the following engine oil specified by Subaru.**

Engine oil standard	SAE viscosity No.
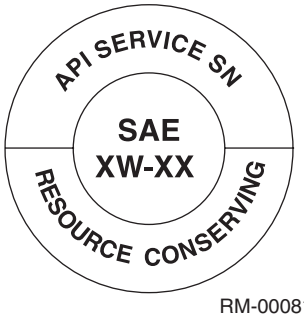 RM-00081 Those with SN "Resource Conserving" logo in case of API standard. or  RM-00002 Those with GF-5 "starburst mark" displayed on top of the container in case of ILSAC standard.	5W-30 (synthetic oil)

NOTE:
The proper viscosity oil helps the engine maintain its ideal temperature, and cranking speed increased by reducing viscosity friction in hot condition.

B: COMPONENT

1. OIL PUMP AND OIL PAN

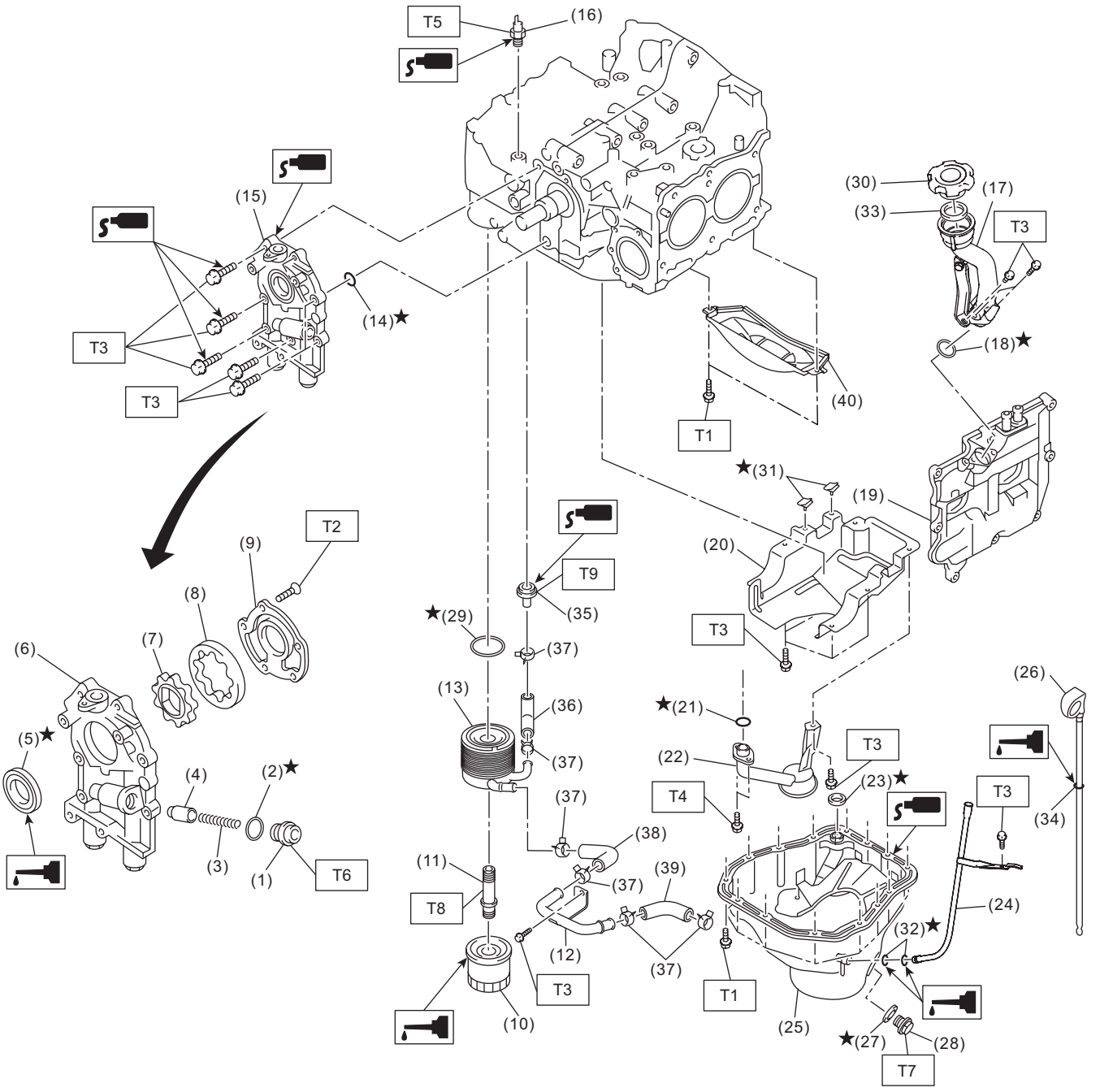

LU-10099

(1) Plug
(2) Gasket
(3) Relief valve spring
(4) Relief valve
(5) Front oil seal
(6) Oil pump case
(7) Inner rotor
(8) Outer rotor
(9) Oil pump cover
(10) Oil filter
(11) Oil cooler connector
(12) Oil cooler pipe
(13) Oil cooler
(14) O-ring
(15) Oil pump ASSY
(16) Oil pressure switch
(17) Oil filler duct
(18) O-ring
(19) Rocker cover
(20) Baffle plate
(21) O-ring
(22) Oil strainer
(23) Gasket
(24) Oil level gauge guide
(25) Oil pan
(26) Oil level gauge
(27) Drain plug gasket
(28) Drain plug
(29) Gasket
(30) Oil filler cap
(31) Seal
(32) O-ring
(33) Gasket
(34) O-ring
(35) Nipple
(36) Oil cooler hose A
(37) Clip
(38) Oil cooler hose B
(39) Oil cooler hose C
(40) Clutch housing cover

Tightening torque: N·m (kgf-m, ft-lb)
T1: 5 (0.5, 3.7)
T2: 5.4 (0.6, 4.0)
T3: 6.4 (0.7, 4.7)
T4: 10 (1.0, 7.0)
T5: 25 (2.5, 18.4)
T6: 44 (4.5, 32.5)
T7: 46.5 (4.7, 34.3)
T8: 54 (5.5, 39.8)
T9: 69 (7.0, 50.9)

2. OIL PIPE

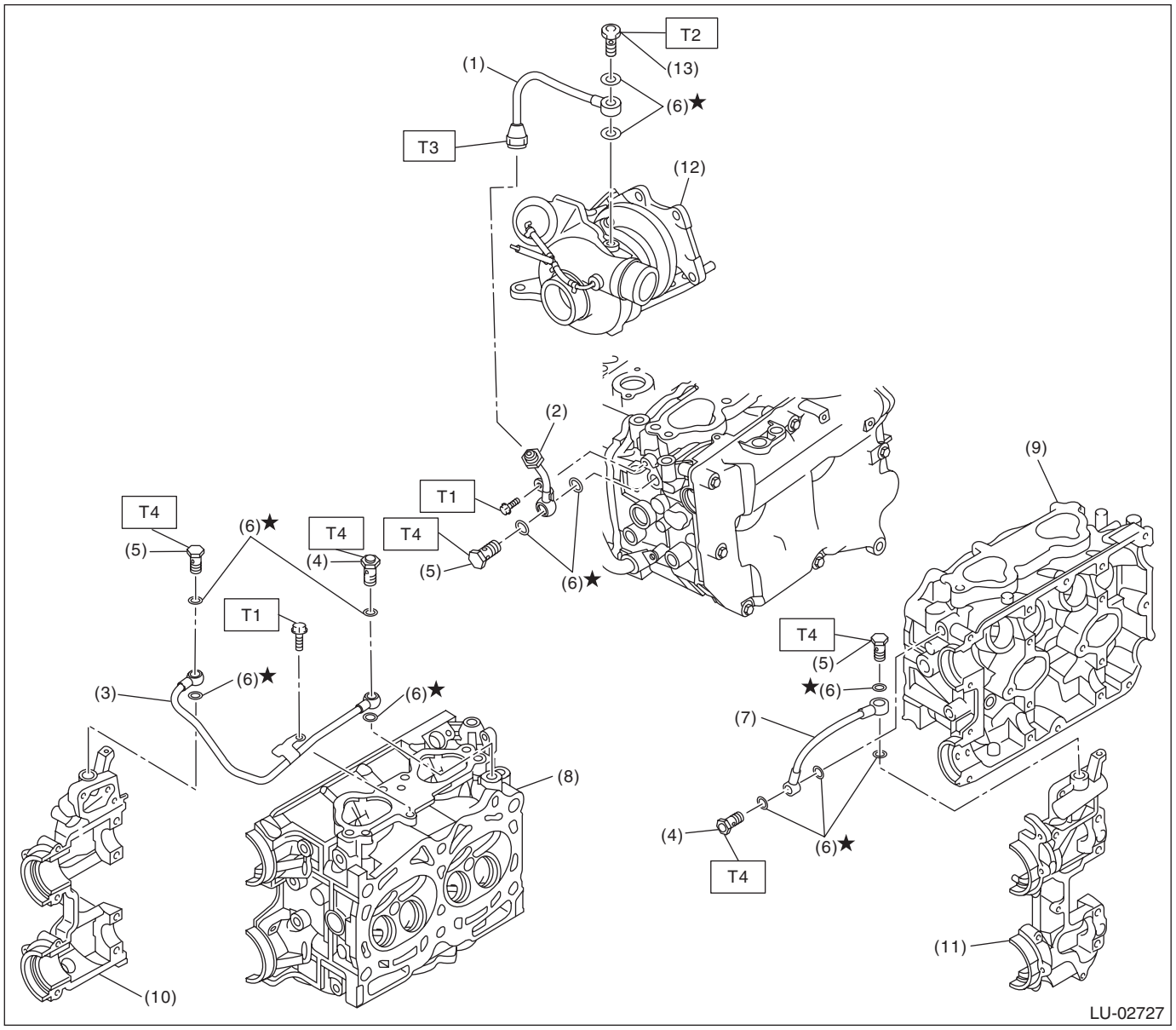

(1)	Oil inlet pipe	(8)	Cylinder head RH
(2)	Turbocharger oil pipe	(9)	Cylinder head LH
(3)	Oil pipe RH	(10)	Front camshaft cap RH
(4)	Union bolt with filter (with protrusion)	(11)	Front camshaft cap LH
(5)	Union bolt without filter (without protrusion)	(12)	Turbocharger
(6)	Gasket	(13)	Union bolt without filter (with protrusion)
(7)	Oil pipe LH		

Tightening torque: N·m (kgf-m, ft-lb)

T1: 6.4 (0.7, 4.7)

T2: 16 (1.6, 11.8)

T3: 20 (2.0, 14.8)

T4: 29 (3.0, 21.4)

C: CAUTION

- Prior to starting work, pay special attention to the following:
  1. Always wear work clothes, a work cap, and protective shoes. Additionally, wear a helmet, protective goggles, etc. if necessary.
  2. Protect the vehicle using a seat cover, fender cover, etc.
  3. Prepare the service tools, clean cloth, containers to catch grease and oil, etc.
- Prepare a container and cloth when performing work which oil possibly spills. If oil spills, wipe it off immediately to prevent from penetrating into floor or flowing out for environmental protection.
- Vehicle components are extremely hot immediately after driving. Be wary of receiving burns from heated parts.
- When performing a repair, identify the cause of trouble and avoid unnecessary removal, disassembly and replacement.
- Before disconnecting connectors of sensors or units, be sure to disconnect the ground cable from battery.
- Always use the jack-up point when the shop jacks or rigid racks are used to support the vehicle.
- Remove contamination including dirt and corrosion before removal, installation, disassembly or assembly.
- Keep the removed parts in order and protect them from dust and dirt.
- All removed parts, if to be reused, should be reinstalled in the original positions with attention to the correct directions, etc.
- Bolts, nuts and washers should be replaced with new parts as required.
- Be sure to tighten the fasteners including bolts and nuts to the specified torque.
- If the engine oil is spilt over exhaust pipe or the under cover, wipe it off with cloth to avoid emitting smoke or causing a fire.
- Follow all government and local regulations concerning disposal of refuse when disposing of oil.

D: PREPARATION TOOL

1. SPECIAL TOOL

ILLUSTRATION	TOOL NUMBER	DESCRIPTION	REMARKS
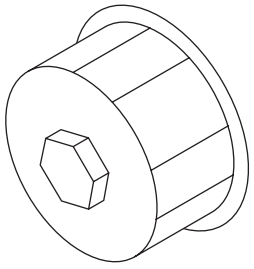 ST18332AA000	18332AA000	OIL FILTER WRENCH	Used for removing and installing oil filter (black). (Outer diameter: 68 mm (2.68 in))
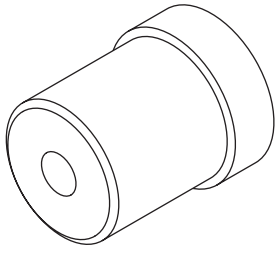 ST-499587100	499587100	OIL SEAL INSTALLER	Used for installing oil seal into oil pump.

2. GENERAL TOOL

TOOL NAME	REMARKS
Oil filter wrench (65/67 mm 14 Flutes)	Used for removing and installing oil filter (blue). (Outer diameter: 67.4 mm (2.65 in))
Circuit tester	Used for measuring resistance, voltage and current.

2. Oil Pressure System

A: WIRING DIAGRAM

Oil pressure warning system <Ref. to WI-294, WIRING DIAGRAM, Oil Pressure Warning Light System.>

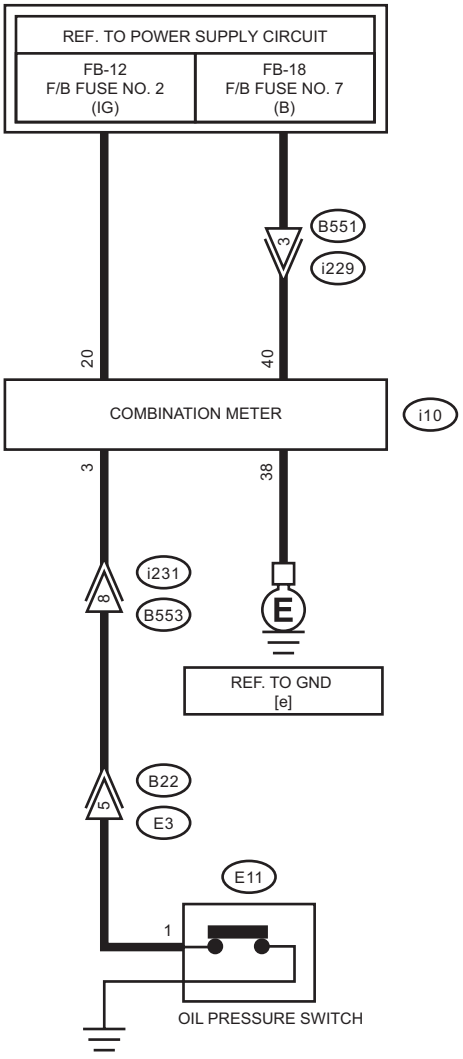

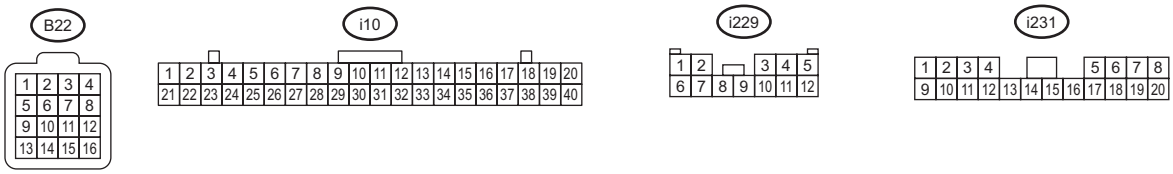

LU-10085

B: INSPECTION

	Step	Check	Yes	No
1	**CHECK ENGINE OIL AMOUNT.**	Is the engine oil amount normal? <Ref. to LU(STI)-10, INSPECTION, Engine Oil.>	Go to step **2**.	Adjust the engine oil amount. <Ref. to LU(STI)-10, INSPECTION, Engine Oil.> After the operation is complete, go to the next step. Go to step **2**.
2	**CHECK DTC.**	Is DTC for engine displayed? <Ref. to EN(STI)(diag)-47, Read Diagnostic Trouble Code (DTC).>	Check the appropriate DTC using the "List of Diagnostic Trouble Code (DTC)". <Ref. to EN(STI)(diag)-96, List of Diagnostic Trouble Code (DTC).>	Go to step **3**.
3	**CHECK POWER SUPPLY TO OIL PRESSURE SWITCH.** 1) Turn the ignition switch to OFF. 2) Disconnect the terminal from oil pressure switch. 3) Turn the ignition switch to ON (engine OFF). 4) Measure the voltage of harness between oil pressure switch harness terminal and chassis ground. ***Terminals*** ***(E11) No. 1 (+) — Chassis ground (–):***	Is the voltage 10 V or more?	Replace the oil pressure switch. <Ref. to LU(STI)-20, Oil Pressure Switch.>	Go to step **4**.
4	**CHECK COMBINATION METER.** Perform the self-diagnosis of combination meter to check if there are any faults in the combination meter. <Ref. to IDI-6, OPERATION, Combination Meter System.>	Is combination meter OK?	Repair the harness and connector. NOTE: In this case, repair the following item: • Open circuit or short circuit of harness between combination meter and oil pressure switch • Poor contact of combination meter connector • Poor contact of oil pressure switch terminal • Poor contact of coupling connector	Repair or replace the combination meter. <Ref. to IDI-9, INSPECTION, Combination Meter System.>

3. Engine Oil

A: INSPECTION

CAUTION:
If the engine oil is spilt over exhaust pipe or the under cover, wipe it off with cloth to avoid emission of smoke or causing a fire.

1) Park the vehicle on a level surface.
2) Remove the oil level gauge and wipe away the oil.
3) Reinsert the oil level gauge all the way. Be sure that the oil level gauge is correctly inserted and properly orientated.
4) Pull out the oil level gauge again, and check the oil level. If the engine oil level is below "L" line, make sure that there is no oil leakage from the engine, then add oil to raise the level up to the "F" line.
5) Start the engine, and spread the oil in engine room.
6) After turning off the engine, wait a few minutes for the oil to return to the oil pan before checking the level.

NOTE:
• Just after driving or while the engine is warm, engine oil level shows in the range between the "F" line and the notch mark. This is caused by thermal expansion of engine oil.
• To prevent overfilling of engine oil, do not add oil above "F" line when the engine is cold.
• As the oil level gauge is used for daily maintenance, "F" line and "L" line is set assuming that the engine is cold.

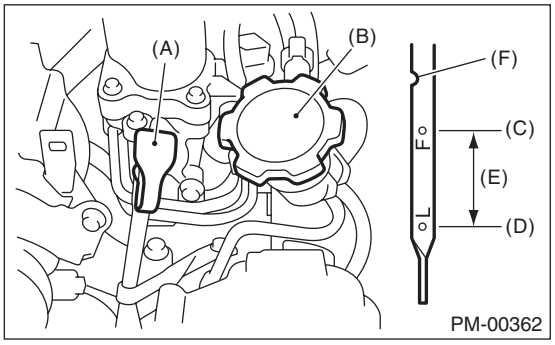

(A) Oil level gauge
(B) Engine oil filler cap
(C) "F" line
(D) "L" line
(E) Approx. 1.0 L (1.1 US qt, 0.9 Imp qt)
(F) Notch mark

B: REPLACEMENT

CAUTION:
If the engine oil is spilt over exhaust pipe or the under cover, wipe it off with cloth to avoid emission of smoke or causing a fire.

1) Open the engine oil filler cap for quick draining of engine oil.
2) Lift up the vehicle.
3) Drain engine oil by loosening the engine oil drain plug.

NOTE:
Prepare the container for draining of engine oil.

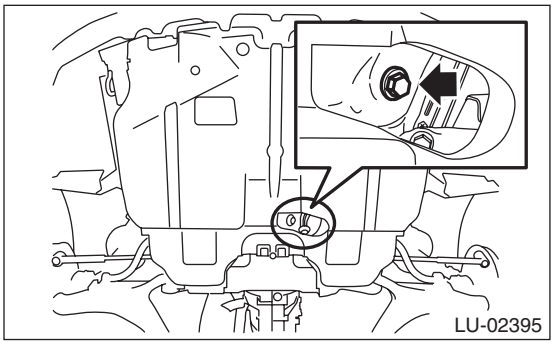

4) Tighten the engine oil drain plug after draining engine oil.

NOTE:
Use a new drain plug gasket.

Tightening torque:
46.5 N·m (4.7 kgf-m, 34.3 ft-lb)

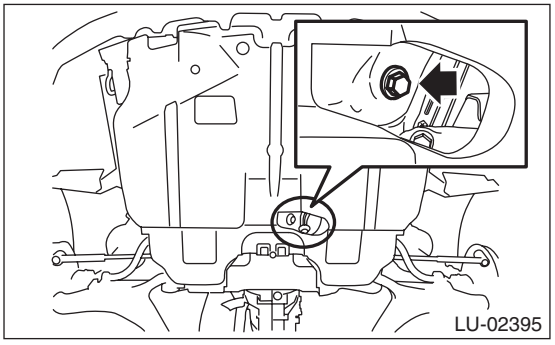

5) Lower the vehicle.
6) Using engine oil of proper quality and viscosity, fill engine oil through the filler duct to the "F" line on the oil level gauge. Make sure that the vehicle is parked on a level surface when checking oil level.

Recommended oil:
Refer to "SPECIFICATION" for recommended oil. <Ref. to LU(STI)-2, SPECIFICATION, General Description.>

Engine oil capacity:
Refer to "SPECIFICATION" for engine oil capacity. <Ref. to LU(STI)-2, SPECIFICATION, General Description.>

7) Close the engine oil filler cap.
8) Start the engine to circulate the oil in engine.
9) After stopping the engine, recheck the oil level. If necessary, add engine oil up to the “F” line on oil level gauge.

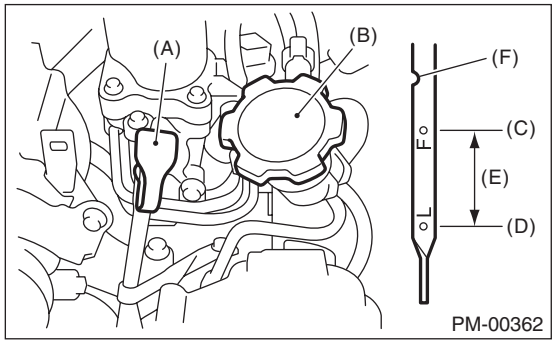

(A) Oil level gauge
(B) Engine oil filler cap
(C) “F” line
(D) “L” line
(E) Approx. 1.0 L (1.1 US qt, 0.9 Imp qt)
(F) Notch mark

4. Oil Pump

A: REMOVAL

1) Disconnect the ground cable from battery.
2) Remove the radiator. <Ref. to CO(STI)-18, REMOVAL, Radiator.>
3) Lift up the vehicle.
4) Remove the bolt (B) which secures oil cooler pipe (A) to oil pump.
5) Remove the oil cooler pipe (A) and hose (C).

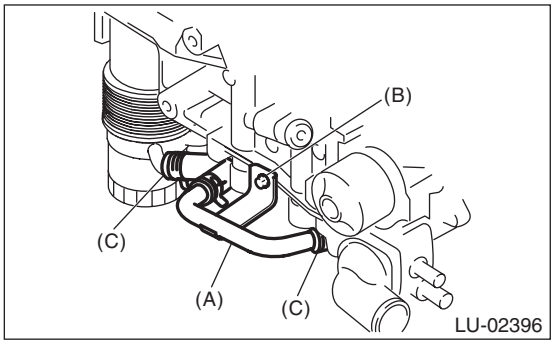

6) Lower the vehicle.
7) Remove the crankshaft position sensor.
<Ref. to FU(STI)-35, REMOVAL, Crankshaft Position Sensor.>
8) Remove the water pump. <Ref. to CO(STI)-14, REMOVAL, Water Pump.>
9) Remove the crank sprocket. <Ref. to ME(STI)-62, REMOVAL, Crank Sprocket.>
10) Remove the bolts which install oil pump onto cylinder block.

NOTE:
When disassembling and checking the oil pump, loosen the relief valve plug before removing the oil pump.

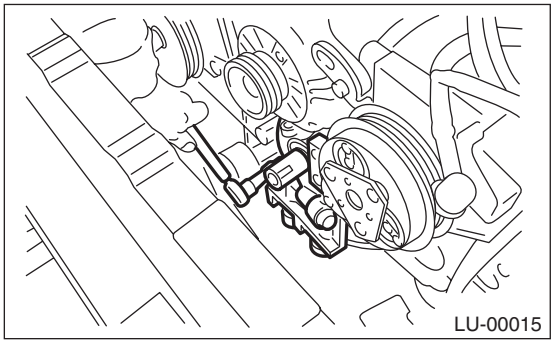

11) Remove the oil pump from cylinder block using a crowbar.

CAUTION:
Be careful not to scratch mating surfaces of cylinder block and oil pump.

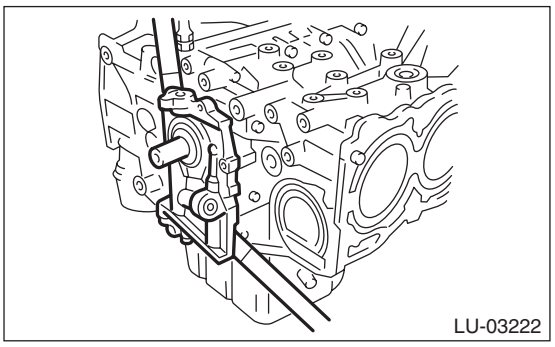

12) Remove the front oil seal from the oil pump.

B: INSTALLATION

1) Using the ST, install the front oil seal.
ST 499587100 OIL SEAL INSTALLER

NOTE:
Use a new front oil seal.

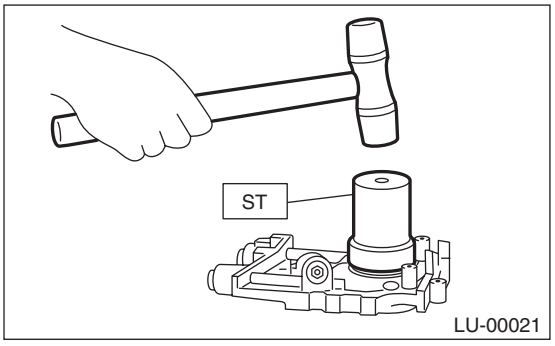

2) Apply liquid gasket to the mating surfaces of oil pump.

NOTE:
Install within 5 min. after applying liquid gasket.

Liquid gasket:
THREE BOND 1217G (Part No. K0877Y0100), THREE BOND 1217H or equivalent

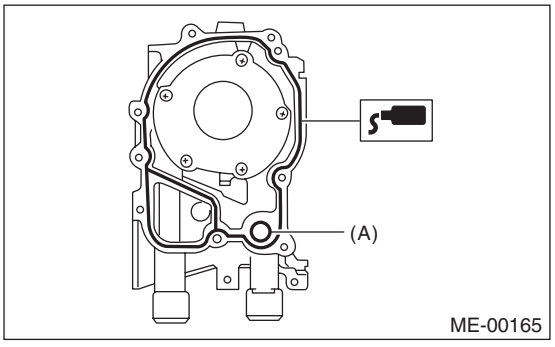

(A) O-ring

3) Apply a coat of engine oil to the inside of front oil seal.

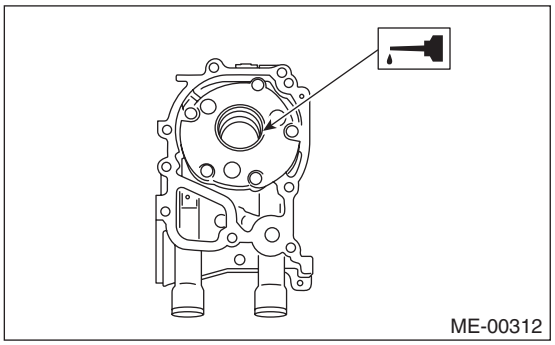

4) Install the oil pump to cylinder block.

CAUTION:
• Be careful not to damage the front oil seal during installation.
• Make sure the front oil seal lip is not folded.

NOTE:
• Align the flat surface of oil pump's inner rotor with that of crankshaft before installation.
• Use new O-rings.
• Do not forget to install O-rings.

5) Apply liquid gasket to the three bolts thread shown in figure. (when reusing bolts)

Liquid gasket:
THREE BOND 1324 (Part No. 004403042) or equivalent

Tightening torque:
6.4 N·m (0.7 kgf-m, 4.7 ft-lb)

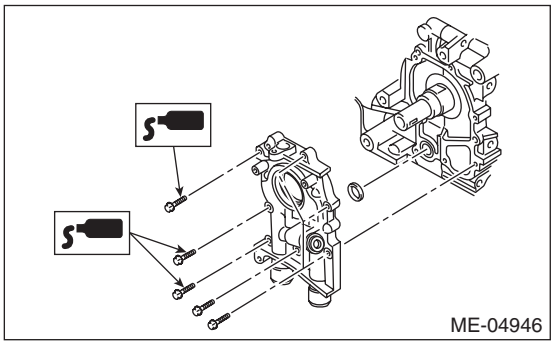

6) Install the crank sprocket. <Ref. to ME(STI)-62, INSTALLATION, Crank Sprocket.>
7) Install the water pump. <Ref. to CO(STI)-14, INSTALLATION, Water Pump.>
8) Install the crankshaft position sensor. <Ref. to FU(STI)-35, INSTALLATION, Crankshaft Position Sensor.>
9) Lift up the vehicle.
10) Install oil cooler pipe (A) and hose (C).
11) Install the oil cooler pipe (A) to oil pump using the bolts (B).

Tightening torque:
6.4 N·m (0.7 kgf-m, 4.7 ft-lb)

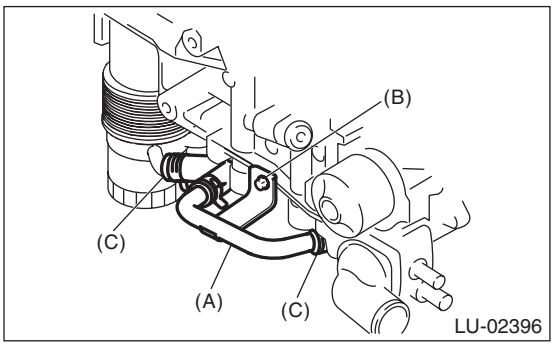

12) Lower the vehicle.
13) Install the radiator. <Ref. to CO(STI)-19, INSTALLATION, Radiator.>
14) Connect the battery ground terminal.

C: DISASSEMBLY

Remove the screw which secures oil pump cover and then disassemble oil pump. Inscribe alignment marks on the inner rotor and outer rotor so that they can be replaced in their original positions during re-assembly.

NOTE:
Before disassembling the oil pump, remove the relief valve.

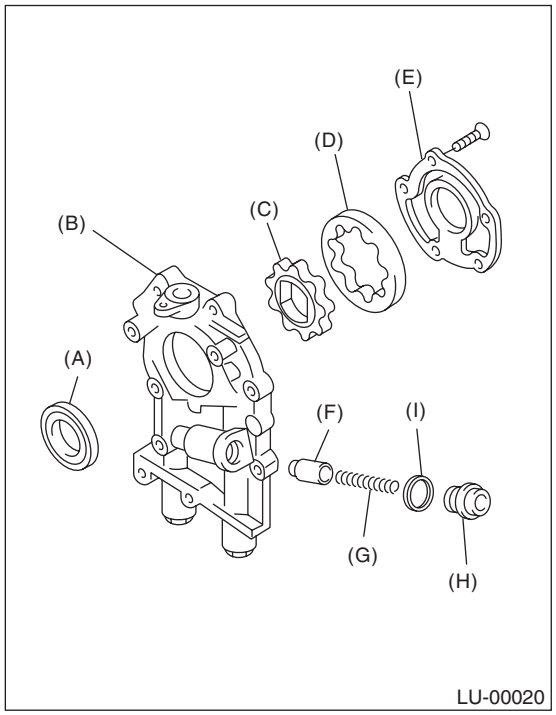

(A) Front oil seal
(B) Oil pump case
(C) Inner rotor
(D) Outer rotor
(E) Oil pump cover
(F) Relief valve
(G) Relief valve spring
(H) Plug
(I) Gasket

D: ASSEMBLY

1) Using the ST, install the front oil seal.
ST 499587100 OIL SEAL INSTALLER

NOTE:
Use a new front oil seal.

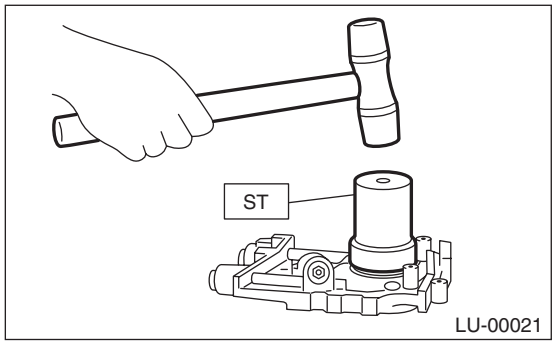

2) Apply a coat of engine oil to the inner rotor and outer rotor.
3) Install the inner rotor and outer rotor.
4) Assemble the oil relief valve and install relief valve spring and plug.

NOTE:
Use a new gasket.
5) Install the oil pump cover.

Tightening torque:
T1: 5.4 N·m (0.6 kgf-m, 4.0 ft-lb)
T2: 44 N·m (4.5 kgf-m, 32.5 ft-lb)

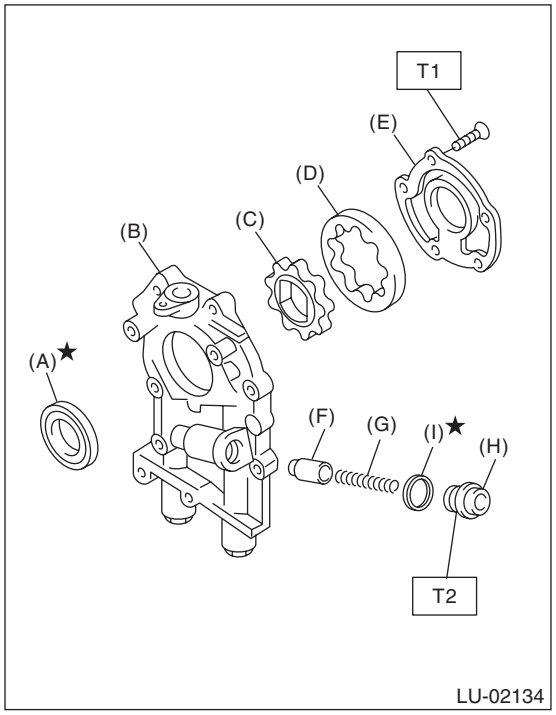

(A) Front oil seal
(B) Oil pump case
(C) Inner rotor
(D) Outer rotor
(E) Oil pump cover
(F) Relief valve
(G) Relief valve spring
(H) Plug
(I) Gasket

E: INSPECTION

1. TIP CLEARANCE

Measure the tip clearance of rotors. If the clearance is out of standard, replace the rotors as a set.

Tip clearance between inner and outer rotors:
Standard
0.04 — 0.14 mm (0.0016 — 0.0055 in)

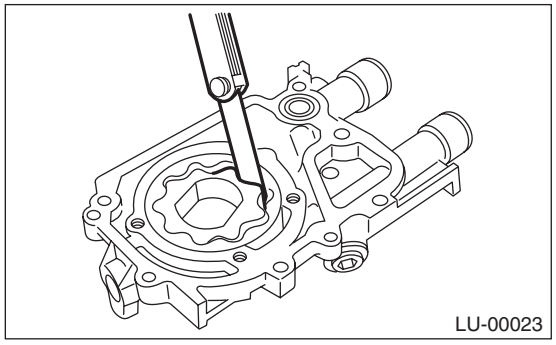

2. CASE CLEARANCE

Measure the clearance between outer rotor and oil pump case. If clearance exceeds the standard, replace the oil pump case.

Case clearance between outer rotor and pump case:
Standard
0.10 — 0.175 mm (0.0039 — 0.0069 in)

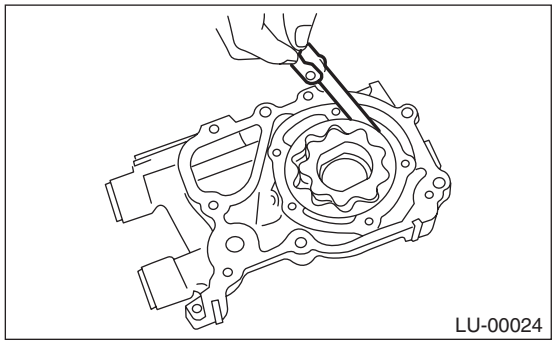

3. SIDE CLEARANCE

Measure the gap between the inner rotor and the oil pump case to measure the clearance between the inner rotor and the oil pump cover as shown in the figure. If clearance is out of standard, replace the rotor or the oil pump case.

Side clearance between inner rotor and pump case:
Standard
0.02 — 0.07 mm (0.0008 — 0.0028 in)

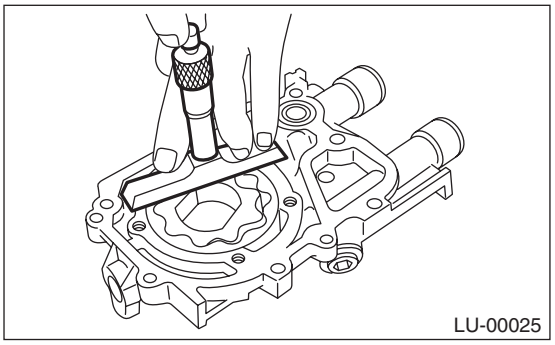

4. OIL RELIEF VALVE

Check the valve for assembly condition and damage, and the relief valve spring for damage and deterioration.
Replace the parts if defective.

Relief valve spring:
Free length
73.7 mm (2.902 in)
Installed length
54.7 mm (2.154 in)
Load when installed
93.1 N (9.49 kgf, 20.93 lbf)

5. OIL PUMP CASE

Check for worn shaft hole, clogged oil passage, worn rotor chamber, cracks and other faults.

6. FRONT OIL SEAL

Check the front oil seal lips for deformation, hardening, wear, etc. and replace if defective.

5. Oil Pan and Strainer

A: REMOVAL

1) Disconnect the ground cable from battery.
2) Remove the air intake duct. <Ref. to IN(STI)-11, REMOVAL, Air Intake Duct.>
3) Remove the intercooler. <Ref. to IN(STI)-13, REMOVAL, Intercooler.>
4) Remove the air intake boot.

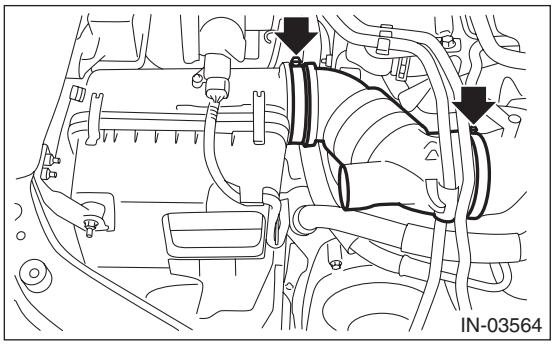

5) Remove the pitching stopper.

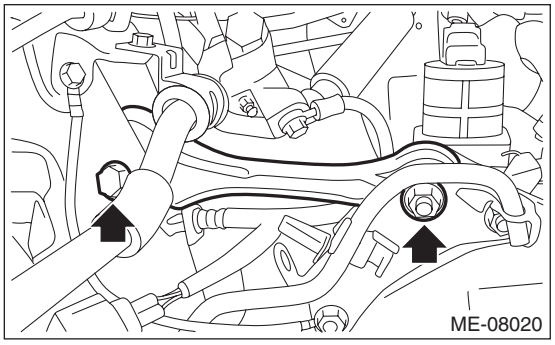

6) Remove the radiator upper brackets.

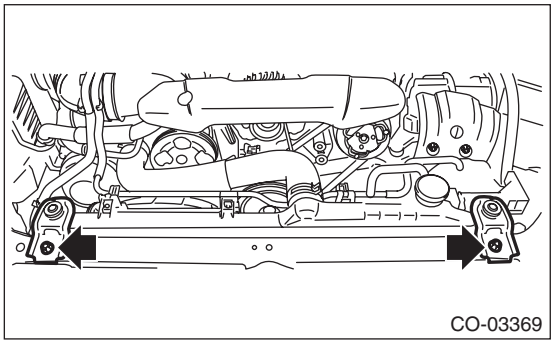

7) Support the engine with a lifting device and wire ropes.

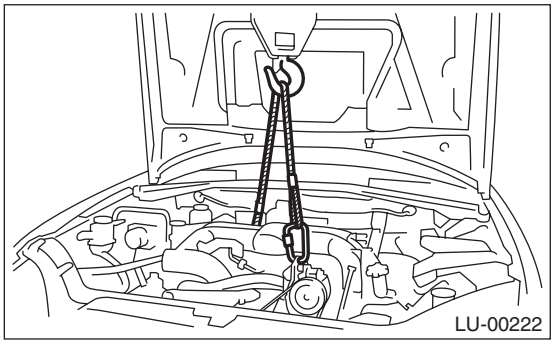

8) Lift up the vehicle.

CAUTION:
When lifting up the vehicle, raise up wire ropes at the same time.

9) Remove the under cover. <Ref. to EI-22, REMOVAL, Front Under Cover.>
10) Drain the engine oil. <Ref. to LU(STI)-10, REPLACEMENT, Engine Oil.>
11) Remove the front exhaust pipe. <Ref. to EX(STI)-5, REMOVAL, Front Exhaust Pipe.>
12) Remove the nuts which secure the engine mounting to the front crossmember.

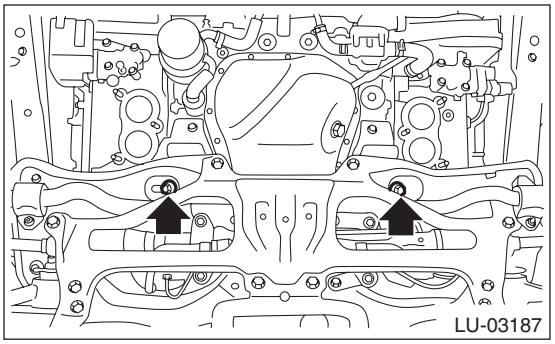

13) Remove the bolts which secure oil pan on cylinder block with the engine raised up.
14) Insert an oil pan cutter blade between cylinder block-to-oil pan clearance and remove the oil pan.

CAUTION:
Do not use a screwdriver or similar tool in place of oil pan cutter.

15) Remove the oil strainer.
16) Remove the baffle plate.

17) Remove the clutch housing cover.

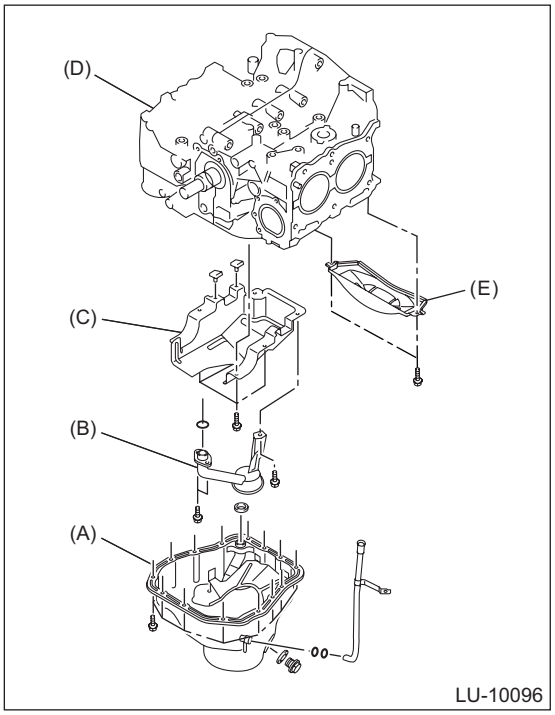

(A) Oil pan
(B) Oil strainer
(C) Baffle plate
(D) Cylinder block
(E) Clutch housing cover

B: INSTALLATION

NOTE:
Before installing the oil pan, clean the mating surface of oil pan and engine block.
1) Install the clutch housing cover.

Tightening torque:
5 N·m (0.5 kgf-m, 3.7 ft-lb)
2) Make sure that the seals (A) are installed securely on the baffle plate in a direction as shown in the figure below.

NOTE:
Use a new seal.

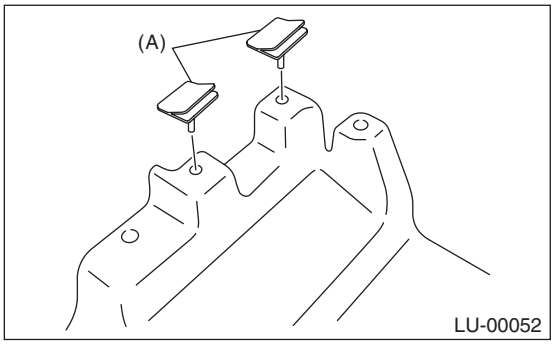

3) Install the baffle plate.

Tightening torque:
6.4 N·m (0.7 kgf-m, 4.7 ft-lb)
4) Install the oil strainer to cylinder block.

NOTE:
Use new O-rings.

Tightening torque:
10 N·m (1.0 kgf-m, 7.4 ft-lb)
5) Tighten the oil strainer stay together with the baffle plate.

Tightening torque:
6.4 N·m (0.7 kgf-m, 4.7 ft-lb)
6) Apply liquid gasket to the mating surfaces of oil pan, and install the oil pan.

NOTE:
- Use a new gasket.
- Install within 5 min. after applying liquid gasket.

Liquid gasket:
THREE BOND 1217G (Part No. K0877Y0100), THREE BOND 1217H or equivalent

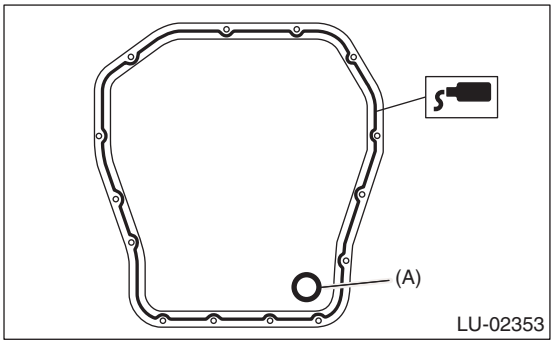

(A) Gasket

7) Tighten the bolts which install oil pan to cylinder block.

Tightening torque:
T1: 5 N·m (0.5 kgf-m, 3.7 ft-lb)
T2: 6.4 N·m (0.7 kgf-m, 4.7 ft-lb)
T3: 10 N·m (1.0 kgf-m, 7.4 ft-lb)

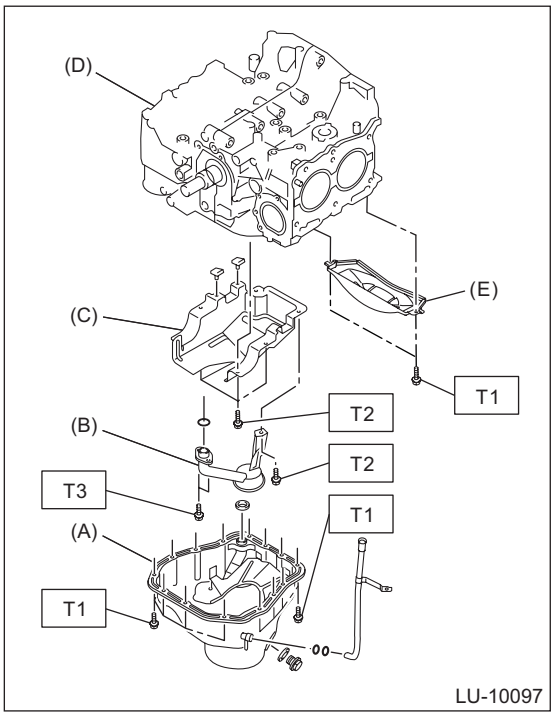

(A) Oil pan
(B) Oil strainer
(C) Baffle plate
(D) Cylinder block
(E) Clutch housing cover

8) Lower the engine onto front crossmember.
9) Install the nuts which hold the engine mounting to the front crossmember.

NOTE:
Use a new nut.

Tightening torque:
60 N·m (6.1 kgf-m, 44.3 ft-lb)

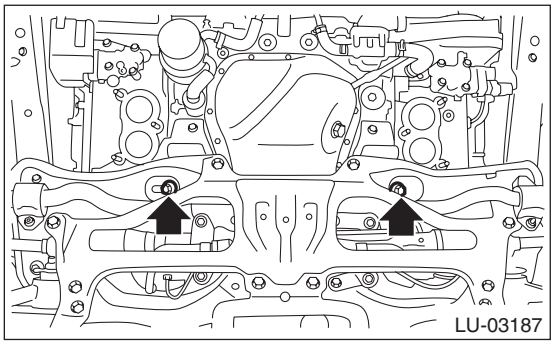

10) Install the front exhaust pipe. <Ref. to EX(STI)-5, INSTALLATION, Front Exhaust Pipe.>

11) Install the under cover. <Ref. to EI-23, INSTALLATION, Front Under Cover.>
12) Lower the vehicle.

CAUTION:
When lowering the vehicle, lower the lift up device and wire ropes at the same time.
13) Remove the lifting device and wire ropes.

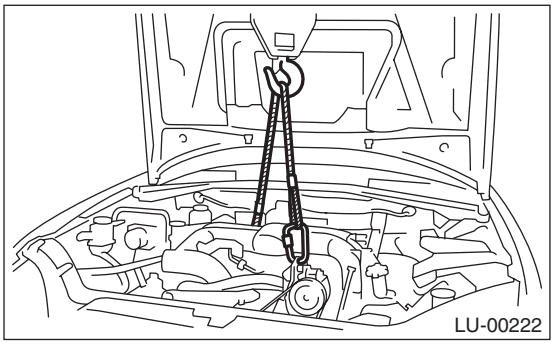

14) Install the pitching stopper.

Tightening torque:
T1: 50 N·m (5.1 kgf-m, 36.9 ft-lb)
T2: 58 N·m (5.9 kgf-m, 42.8 ft-lb)

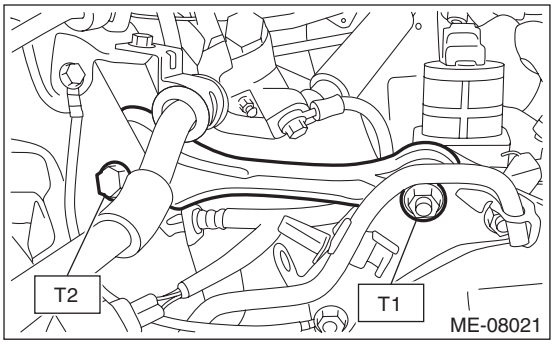

15) Install the radiator upper brackets.

Tightening torque:
12 N·m (1.2 kgf-m, 8.9 ft-lb)

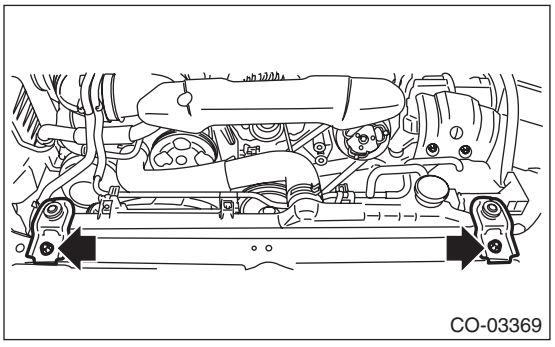

16) Install the air intake boot.

Tightening torque:
2.5 N·m (0.3 kgf-m, 1.8 ft-lb)

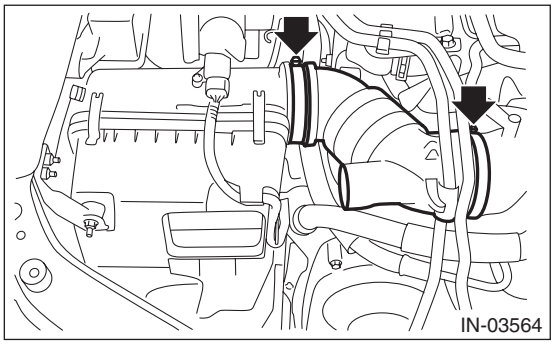

17) Install the intercooler. <Ref. to IN(STI)-14, INSTALLATION, Intercooler.>
18) Install the air intake duct. <Ref. to IN(STI)-11, INSTALLATION, Air Intake Duct.>
19) Connect the battery ground terminal.
20) Refill the engine oil. <Ref. to LU(STI)-10, REPLACEMENT, Engine Oil.>

C: INSPECTION

Check that the oil pan, oil strainer and baffle plate do not have deformation, cracks or damage.

6. Oil Pressure Switch

A: REMOVAL

1) Disconnect the ground cable from battery.
2) Remove the generator from the bracket. <Ref. to SC(STI)-18, REMOVAL, Generator.>
3) Disconnect the terminal from oil pressure switch.

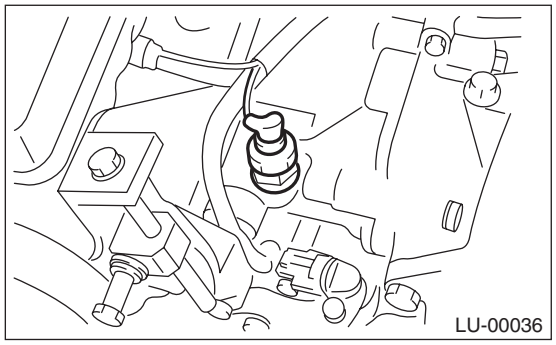

4) Remove the oil pressure switch.

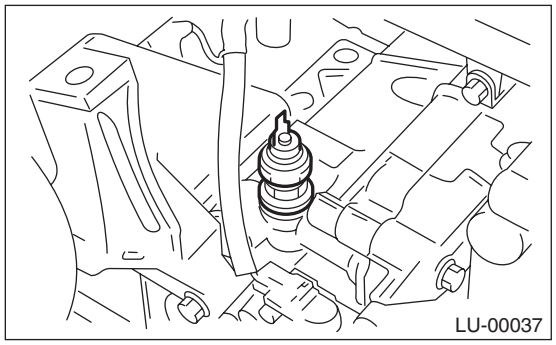

B: INSTALLATION

1) Apply liquid gasket to the oil pressure switch threads.

Liquid gasket:
THREE BOND 1324 (Part No. 004403042) or equivalent

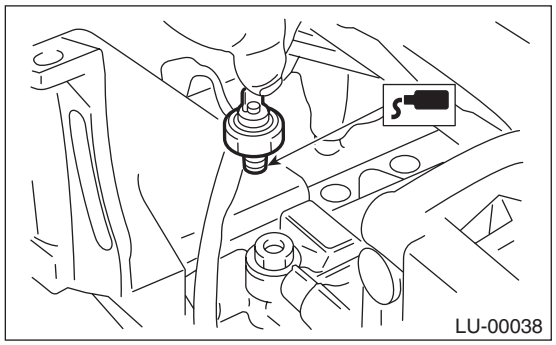

2) Install the oil pressure switch to cylinder block.

Tightening torque:
25 N·m (2.5 kgf-m, 18.4 ft-lb)

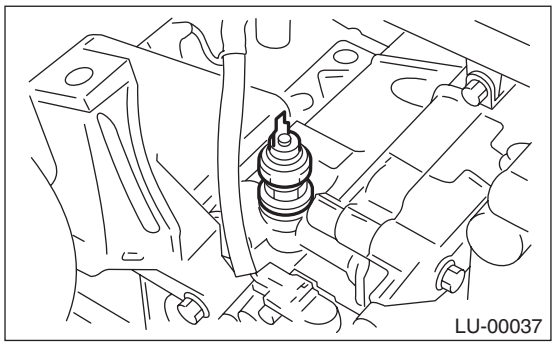

3) Connect the terminal to the oil pressure switch.

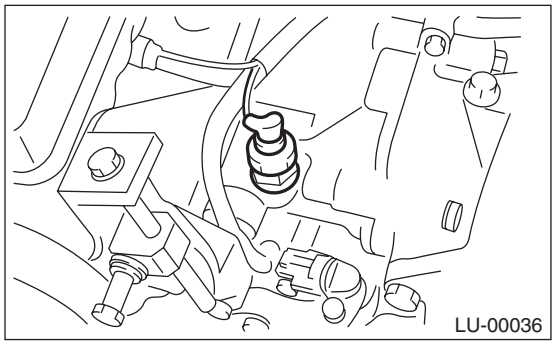

4) Install the generator to the bracket. <Ref. to SC(STI)-18, INSTALLATION, Generator.>
5) Connect the battery ground terminal.

C: INSPECTION

1) Check that the oil pressure switch does not have deformation, cracks or damage.
2) Check that there are no oil leaks or oil oozing from the oil pressure switch installation portion.

7. Engine Oil Cooler

A: REMOVAL

CAUTION:
If engine oil is spilt onto the exhaust pipe, wipe it off with cloth to avoid emission of smoke or causing a fire.

1) Drain engine coolant. <Ref. to CO(STI)-12, DRAINING OF ENGINE COOLANT, REPLACEMENT, Engine Coolant.>
2) Remove the engine oil filter. <Ref. to LU(STI)-27, REMOVAL, Engine Oil Filter.>
3) Remove the bolt (B) holding the oil cooler pipe (A) to the oil pump.
4) Remove the oil cooler pipe (A), oil cooler hose A (C), oil cooler hose B (H), and oil cooler hose C (I).
5) Remove the oil cooler connector (D) and oil cooler (E).

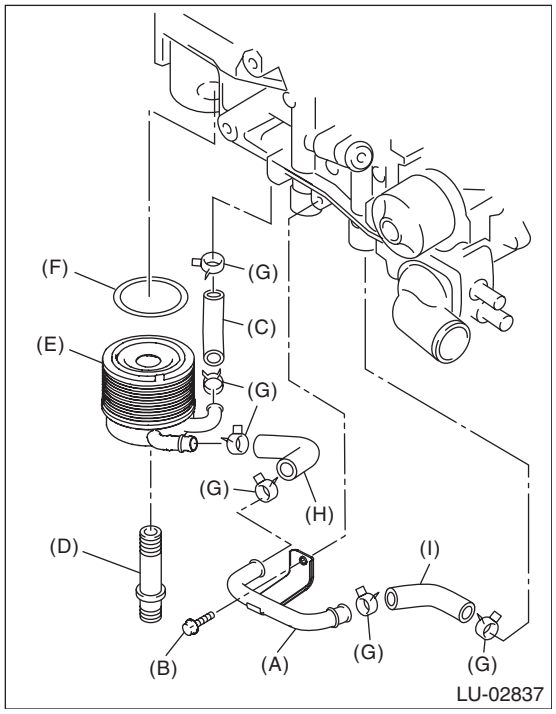

(A) Oil cooler pipe
(B) Bolt
(C) Oil cooler hose A
(D) Oil cooler connector
(E) Oil cooler
(F) Gasket
(G) Clip
(H) Oil cooler hose B
(I) Oil cooler hose C

B: INSTALLATION

Install in the reverse order of removal.

NOTE:
- Use a new gasket.
- After installing, check the engine oil level and replenish it if necessary. <Ref. to LU(STI)-10, INSPECTION, Engine Oil.>

Tightening torque:
T1: 6.4 N·m (0.7 kgf-m, 4.7 ft-lb)
T2: 54 N·m (5.5 kgf-m, 39.8 ft-lb)

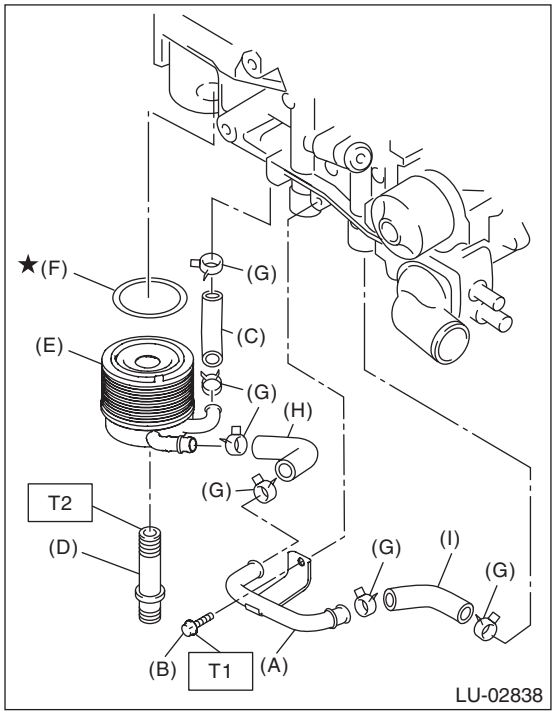

(A) Oil cooler pipe
(B) Bolt
(C) Oil cooler hose A
(D) Oil cooler connector
(E) Oil cooler
(F) Gasket
(G) Clip
(H) Oil cooler hose B
(I) Oil cooler hose C

C: INSPECTION

1) Check that the engine oil cooler, oil cooler pipe and oil cooler connector do not have deformation, cracks or damage.
2) Make sure the oil cooler hoses are not cracked, damaged or loose.
3) Blow with compressed air to make sure the coolant passages are not clogged.
4) Make sure the mating surfaces of the cylinder block do not have damage.

8. Oil Pipe

A: REMOVAL

1) Disconnect the ground cable from battery.
2) Remove the intercooler. <Ref. to IN(STI)-13, REMOVAL, Intercooler.>
3) Remove the turbocharger upper cover.

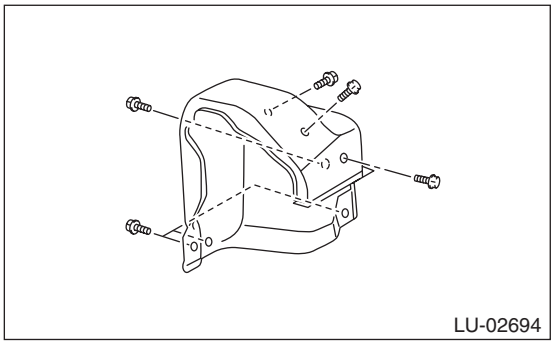
LU-02694

4) Remove the oil inlet pipe from the turbocharger.

CAUTION:
In order to prevent damaging the oil pipe on the cylinder head side, fix the section (a) shown in the figure when loosing the oil inlet pipe flare nut, and avoid the part from rotating together while loosening the nut.

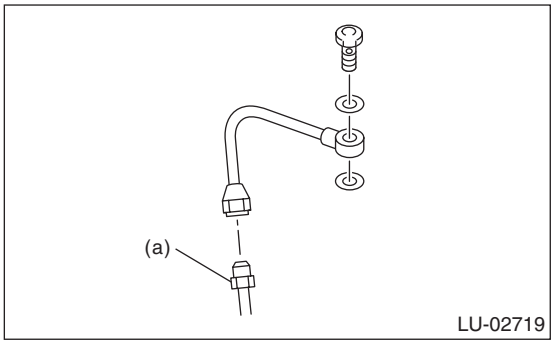

LU-02719

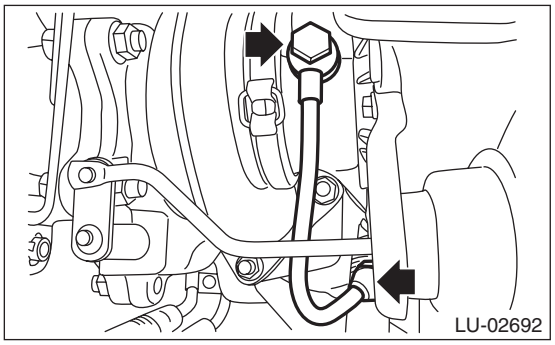
LU-02692

5) Remove the turbocharger stay.

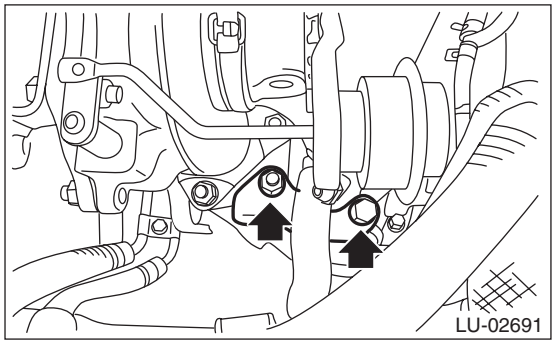
LU-02691

6) Remove the turbocharger oil pipe.

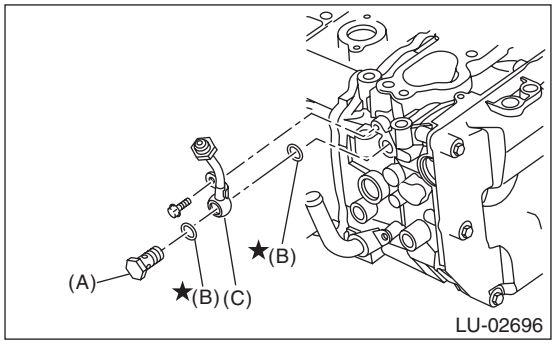

LU-02696

(A) Union bolt without filter (without protrusion)
(B) Gasket
(C) Turbocharger oil pipe

7) Drain engine coolant. <Ref. to CO(STI)-12, DRAINING OF ENGINE COOLANT, REPLACEMENT, Engine Coolant.>
8) Remove the intake manifold. <Ref. to FU(STI)-17, REMOVAL, Intake Manifold.>
9) Remove the secondary air pump. (Oil pipe LH only) <Ref. to EC(STI)-55, REMOVAL, Secondary Air Pump.>
10) Remove the bolt securing the water tank pipe assembly, and place the water tank pipe assembly aside so that it does not interfere with the work. (Oil pipe RH only)

11) Remove the water pipe assembly. (Oil pipe RH only)

NOTE:
Do not remove the radiator inlet hose and heater outlet hose.

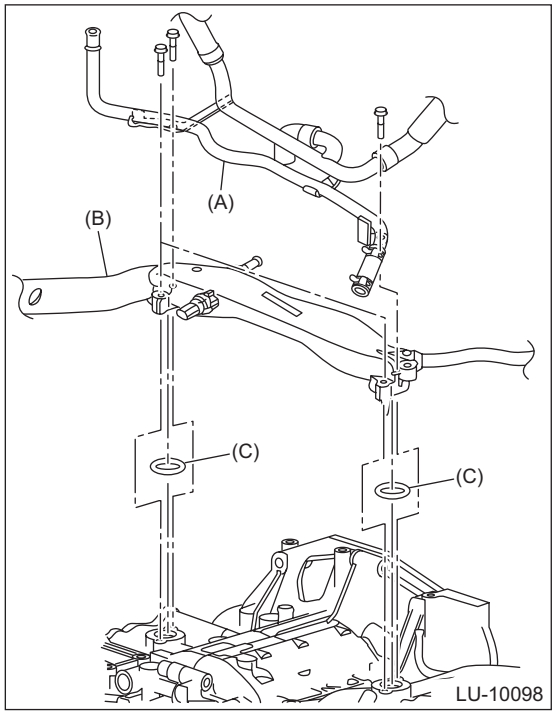

(A) Water tank pipe ASSY
(B) Water pipe ASSY
(C) O-ring

12) Remove the radiator main fan and radiator sub fan. <Ref. to CO(STI)-22, REMOVAL, Radiator Main Fan and Fan Motor.> <Ref. to CO(STI)-24, REMOVAL, Radiator Sub Fan and Fan Motor.>
13) Remove the V-belts. <Ref. to ME(STI)-41, REMOVAL, V-belt.>
14) Remove the crank pulley. <Ref. to ME(STI)-49, REMOVAL, Crank Pulley.>
15) Remove the timing belt cover. <Ref. to ME(STI)-51, REMOVAL, Timing Belt Cover.>
16) Remove the timing belt. <Ref. to ME(STI)-52, REMOVAL, Timing Belt.>
17) Remove the cam sprocket LH. <Ref. to ME(STI)-61, REMOVAL, Cam Sprocket.>

18) Remove the timing belt cover No. 2 LH.

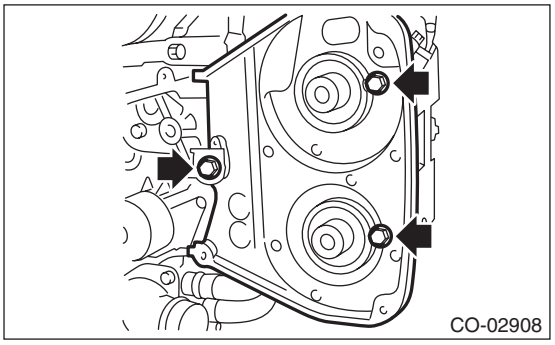

19) Remove the oil pipe.

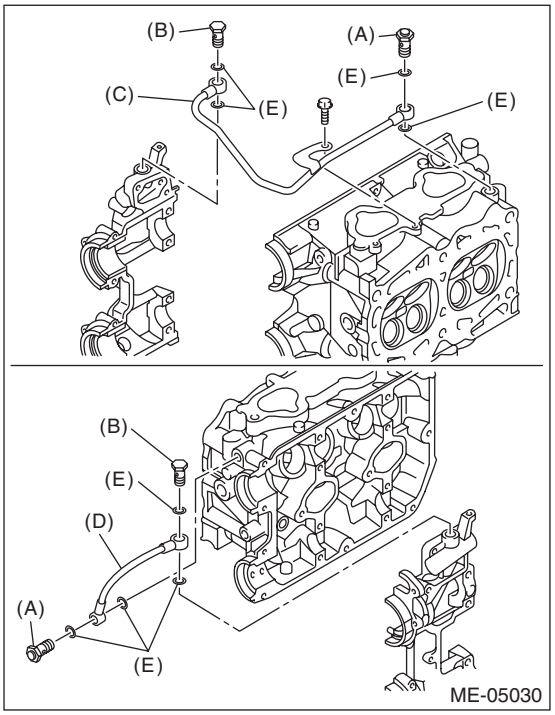

(A) Union bolt with filter (with protrusion)
(B) Union bolt without filter (without protrusion)
(C) Oil pipe RH
(D) Oil pipe LH
(E) Gasket

B: INSTALLATION

1) Inspect the union bolt with filter. <Ref. to LU(STI)-26, INSPECTING UNION BOLT WITH FILTER, INSPECTION, Oil Pipe.>
2) Install the oil pipe.

NOTE:
• Be careful of the install location of the union bolt; the location will differ depending on the presence of filter.
• Use a new gasket.

Tightening torque:
T1: 6.4 N·m (0.7 kgf-m, 4.7 ft-lb)
T2: 29 N·m (3.0 kgf-m, 21.4 ft-lb)

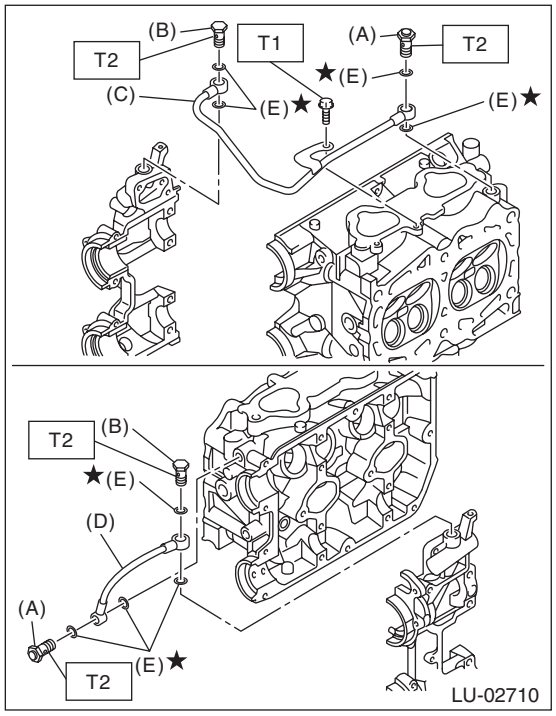

(A) Union bolt with filter (with protrusion)
(B) Union bolt without filter (without protrusion)
(C) Oil pipe RH
(D) Oil pipe LH
(E) Gasket

3) Install the timing belt cover No. 2 LH.

Tightening torque:
5 N·m (0.5 kgf-m, 3.7 ft-lb)

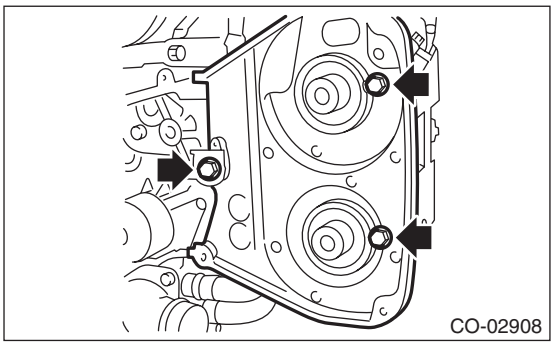

4) Install the cam sprocket LH. <Ref. to ME(STI)-61, INSTALLATION, Cam Sprocket.>
5) Install the timing belt. <Ref. to ME(STI)-55, TIMING BELT, INSTALLATION, Timing Belt.>
6) Install the timing belt cover. <Ref. to ME(STI)-51, INSTALLATION, Timing Belt Cover.>
7) Install the crank pulley. <Ref. to ME(STI)-49, INSTALLATION, Crank Pulley.>
8) Install the V-belts. <Ref. to ME(STI)-41, INSTALLATION, V-belt.>
9) Install the radiator main fan and the radiator sub fan. <Ref. to CO(STI)-22, INSTALLATION, Radiator Main Fan and Fan Motor.> <Ref. to CO(STI)-24, INSTALLATION, Radiator Sub Fan and Fan Motor.>

10) Install the water tank pipe assembly and water pipe assembly. (Oil pipe RH only)

Tightening torque:
6.4 N·m (0.7 kgf-m, 4.7 ft-lb)

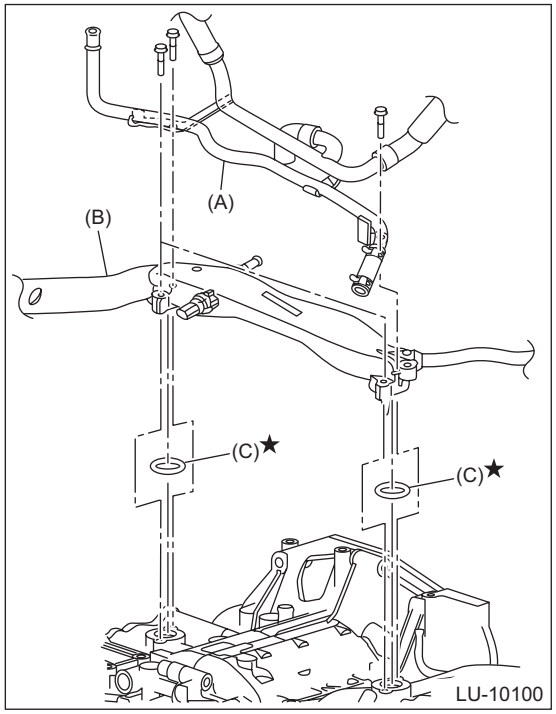

(A) Water tank pipe ASSY
(B) Water pipe ASSY
(C) O-ring

11) Install the secondary air pump. (Oil pipe LH only) <Ref. to EC(STI)-55, INSTALLATION, Secondary Air Pump.>
12) Install the intake manifold. <Ref. to FU(STI)-21, INSTALLATION, Intake Manifold.>
13) Install the turbocharger oil pipe.

Tightening torque:
T1: 6.4 N·m (0.7 kgf-m, 4.7 ft-lb)
T2: 29 N·m (3.0 kgf-m, 21.4 ft-lb)

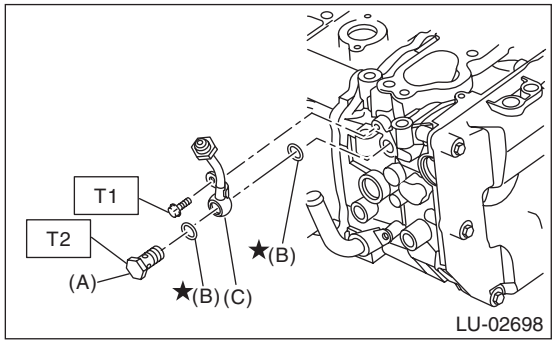

(A) Union bolt without filter (without protrusion)
(B) Gasket
(C) Turbocharger oil pipe

14) Install the turbocharger stay.

Tightening torque:
T1: 33 N·m (3.4 kgf-m, 24.3 ft-lb)
T2: 42.5 N·m (4.3 kgf-m, 31.3 ft-lb)

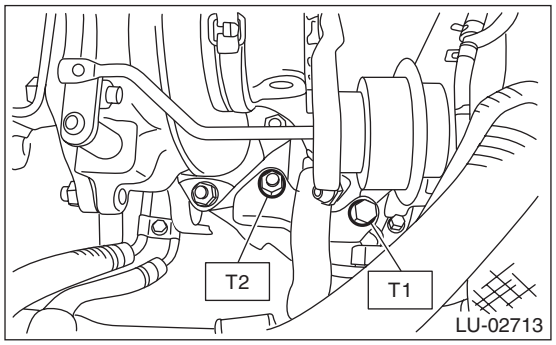

15) Temporarily tighten the bolts and flare nuts which secure the oil inlet pipe to the turbocharger.

NOTE:
Use a new gasket.

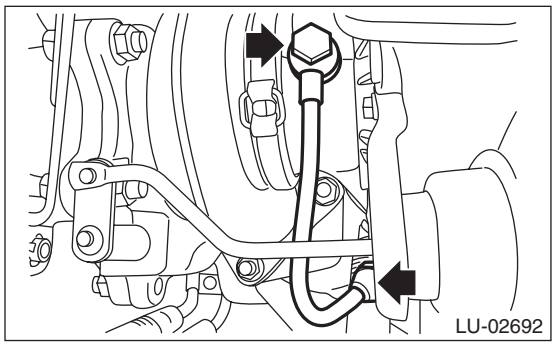

16) Tighten the union bolts and flare nuts which secure the oil inlet pipe to the turbocharger.

CAUTION:
In order to prevent damaging the oil pipe on the cylinder head side, fix the section (a) shown in the figure when tightening the oil inlet pipe flare nut, and avoid the part from rotating together while tightening the nut.

Tightening torque:
T1: 16 N·m (1.6 kgf-m, 11.8 ft-lb)
T2: 20 N·m (2.0 kgf-m, 14.8 ft-lb)

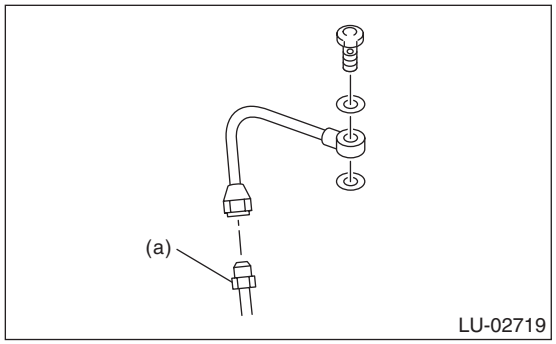

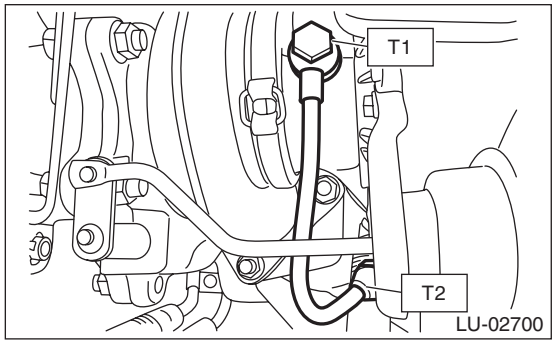

17) Attach the turbocharger upper cover.

Tightening torque:
7.5 N·m (0.8 kgf-m, 5.5 ft-lb)

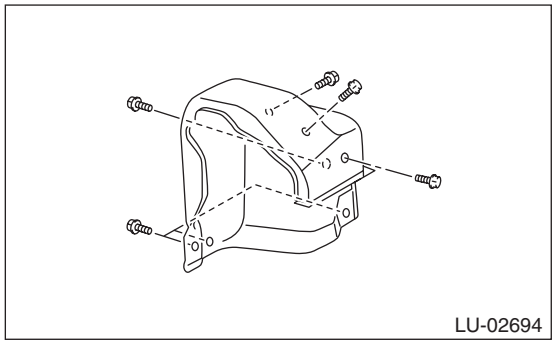

18) Install the intercooler. <Ref. to IN(STI)-14, INSTALLATION, Intercooler.>
19) Connect the battery ground terminal.
20) Fill engine coolant. <Ref. to CO(STI)-12, FILLING OF ENGINE COOLANT, REPLACEMENT, Engine Coolant.>

C: INSPECTION

1. INSPECTING UNION BOLT WITH FILTER

Check the filter part of union bolt for clogging or damage, and if defective, replace the union bolt with filter with the new part.

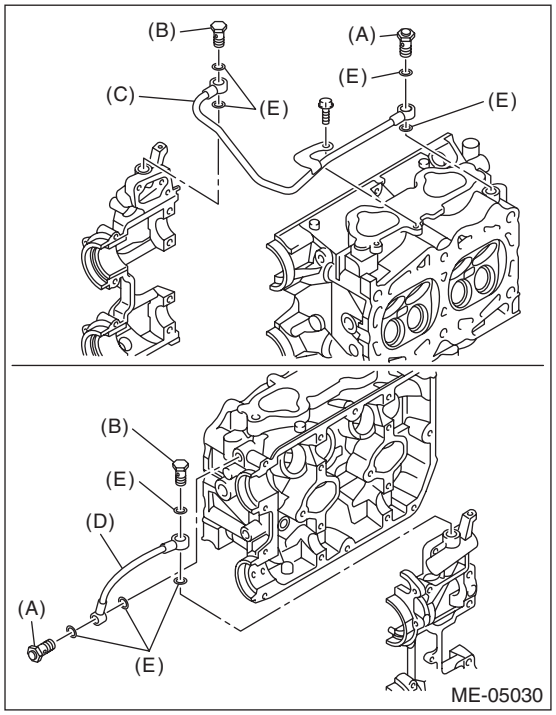

(A) Union bolt with filter (with protrusion)
(B) Union bolt without filter (without protrusion)
(C) Oil pipe RH
(D) Oil pipe LH
(E) Gasket

2. OTHER INSPECTIONS

1) Check that the oil pipe and union bolt have no deformation, cracks and other damages.
2) Check that there are no oil leaks or oil oozing from the oil pipe attachment section.

9. Engine Oil Filter

A: REMOVAL

CAUTION:
If the engine oil is spilt over exhaust pipe or the under cover, wipe it off with cloth to avoid emitting smoke or causing a fire.

1) Lift up the vehicle.
2) Remove the under cover. <Ref. to EI-22, REMOVAL, Front Under Cover.>
3) Remove the oil filter.
• Oil filter (Black)

Remove using the ST.

ST 18332AA000 OIL FILTER WRENCH (OUTER DIAMETER: 68 MM (2.68 IN) FOR OIL FILTER)

• Oil filter (Blue)

Remove using a general tool (65/67 mm 14 Flutes).

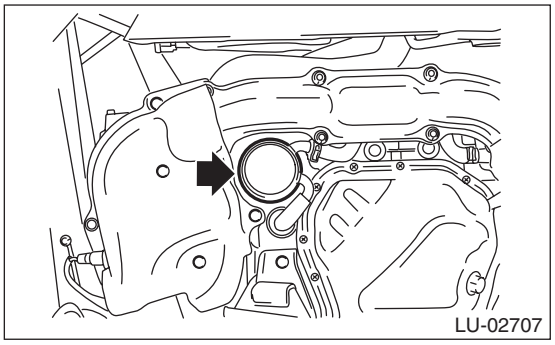
LU-02707

B: INSTALLATION

CAUTION:
Do not tighten excessively, or oil may leak.

1) Clean the oil filter installation surface of the oil cooler.
2) Obtain a new oil filter and apply a thin coat of engine oil to the seal rubber.
3) Install the oil filter by turning it by hand, being careful not to damage the seal rubber of the oil filter.
• Tighten the oil filter (black) with an outer diameter of 68 mm (2.68 in) (approx. 1 rotation) after the seal rubber of the oil filter comes in contact with oil cooler. When using a torque wrench, tighten to 14 N·m (1.4 kgf-m, 10.3 ft-lb).
• Tighten the oil filter (blue) with an outer diameter of 67.4 mm (2.65 in) (approx. 7/8 rotation) after the seal rubber of the oil filter comes in contact with cylinder block. When using a torque wrench, tighten to 12 N·m (1.2 kgf-m, 8.9 ft-lb).
4) Install the under cover. <Ref. to EI-23, INSTALLATION, Front Under Cover.>
5) Lower the vehicle.
6) After installing, check the engine oil level and replenish it if necessary. <Ref. to LU(STI)-10, INSPECTION, Engine Oil.>

C: INSPECTION

1) After installing the oil filter, run the engine and check for oil leakage around seal rubber.

NOTE:
The filter element and filter case are permanently jointed; therefore, interior cleaning is not necessary.

2) Check the engine oil level. <Ref. to LU(STI)-10, INSPECTION, Engine Oil.>

10.Engine Lubrication System Trouble in General

A: INSPECTION

Before performing diagnostics, make sure that the engine oil level is correct and no oil leakage exists.

Trouble	Possible cause	Corrective action
Warning light remains ON.	a. Oil pressure switch failure	
	❍ Cracked diaphragm or oil leakage within switch	Replace.
	❍ Broken spring or seized contacts	Replace.
	b. Low oil pressure	
	❍ Clogging of oil filter	Replace.
	❍ Malfunction of oil by-pass valve in oil filter	Replace.
	❍ Malfunction of oil relief valve in oil pump	Clean or replace.
	❍ Clogged oil passage	Clean.
	❍ Excessive tip clearance and side clearance of oil pump rotor	Replace.
	❍ Clogged oil strainer or broken pipe	Clean or replace.
	c. No oil pressure	
	❍ Insufficient engine oil (degradation, etc.)	Replace.
	❍ Broken pipe of oil strainer	Replace.
	❍ Stuck oil pump rotor	Replace.
Warning light does not illuminate.	a. Malfunction of combination meter	Replace.
	b. Poor contact of switch contact points	Replace.
	c. Disconnection of wiring	Repair.
Warning light flickers momentarily.	a. Defective terminal contact	Repair.
	b. Defective wiring harness	Repair.
	c. Oil pressure switch failure	
	❍ Cracked diaphragm or oil leakage within switch	Replace.
	❍ Broken spring or seized contacts	Replace.
	d. Low oil pressure	
	❍ Clogging of oil filter	Replace.
	❍ Malfunction of oil by-pass valve in oil filter	Replace.
	❍ Malfunction of oil relief valve in oil pump	Clean or replace.
	❍ Clogged oil passage	Clean.
	❍ Excessive tip clearance and side clearance of oil pump rotor	Replace.
	❍ Clogged oil strainer or broken pipe	Clean or replace.

SPEED CONTROL SYSTEMS

SP(STI)

Page

1. General Description 2
2. Accelerator Pedal 4

1. General Description

A: SPECIFICATION

Accelerator pedal	Stroke	At pedal pad	50 — 59 mm (1.97 — 2.32 in)

B: COMPONENT

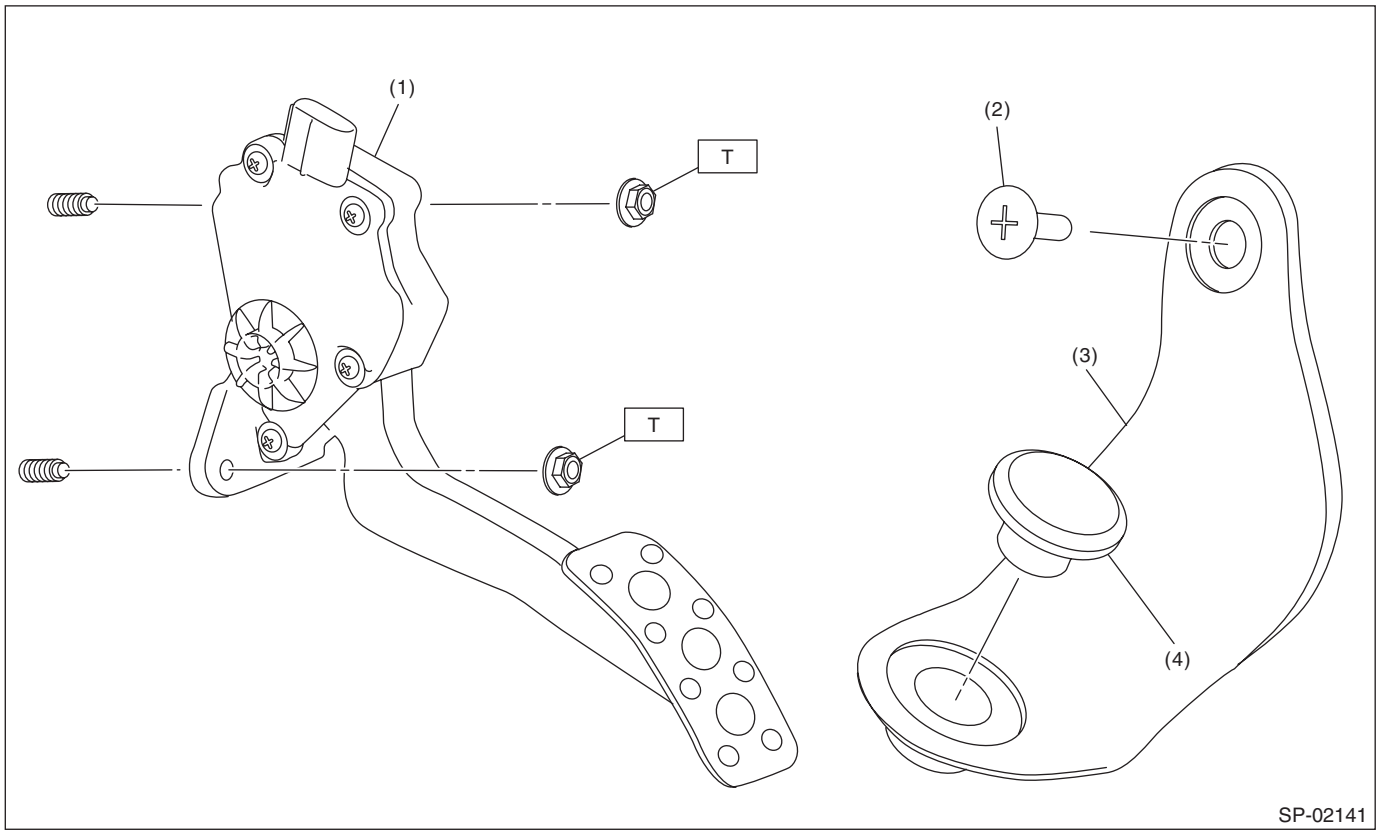

(1) Accelerator pedal ASSY
(2) Clip
(3) Accelerator plate
(4) Accelerator stopper

Tightening torque: N·m (kgf-m, ft-lb)
T: 7.5 (0.8, 5.5)

C: CAUTION

- Prior to starting work, pay special attention to the following:
  1. Always wear work clothes, a work cap, and protective shoes. Additionally, wear a helmet, protective goggles, etc. if necessary.
  2. Protect the vehicle using a seat cover, fender cover, etc.
  3. Prepare the service tools, clean cloth, containers to catch grease and oil, etc.
- Vehicle components are extremely hot immediately after driving. Be wary of receiving burns from heated parts.
- When performing a repair, identify the cause of trouble and avoid unnecessary removal, disassembly and replacement.
- Before disconnecting connectors of sensors or units, be sure to disconnect the ground cable from battery.
- Always use the jack-up point when the shop jacks or rigid racks are used to support the vehicle.
- Remove contamination including dirt and corrosion before removal, installation, disassembly or assembly.
- Keep the removed parts in order and protect them from dust and dirt.
- All removed parts, if to be reused, should be reinstalled in the original positions with attention to the correct directions, etc.
- Bolts, nuts and washers should be replaced with new parts as required.
- Be sure to tighten the fasteners including bolts and nuts to the specified torque.

D: PREPARATION TOOL

1. SPECIAL TOOL

ILLUSTRATION	TOOL NUMBER	DESCRIPTION	REMARKS
 STSSM4	—	SUBARU SELECT MONITOR 4	Used for setting of each function and trouble-shooting for electrical system. NOTE: For detailed operation procedures of Subaru Select Monitor 4, refer to “Application help”.

2. GENERAL TOOL

TOOL NAME	REMARKS
Circuit tester	Used for measuring resistance, voltage and current.
DST-i	Used together with Subaru Select Monitor 4.

2. Accelerator Pedal

A: REMOVAL

1) Disconnect the ground cable from battery.
2) Disconnect the connector (A).
3) Remove the nut (B) securing accelerator pedal assembly, and remove the accelerator pedal assembly.

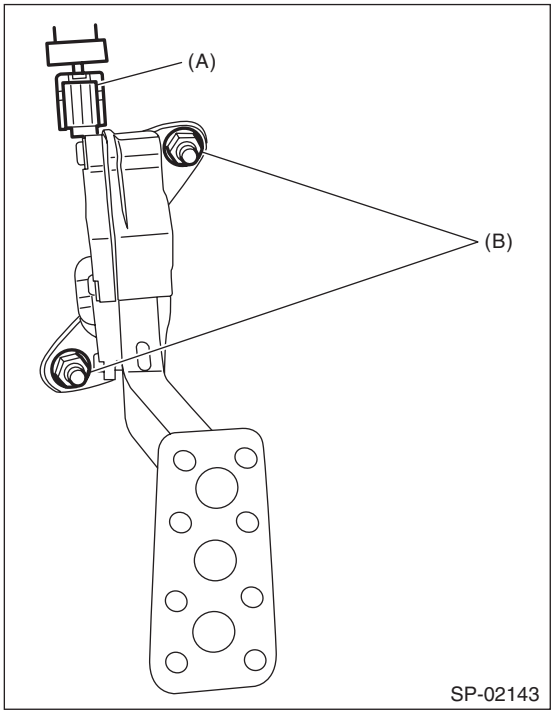

B: INSTALLATION

Install in the reverse order of removal.

Tightening torque:
7.5 N·m (0.8 kgf-m, 5.5 ft-lb)

C: DISASSEMBLY

NOTE:
The accelerator pedal cannot be disassembled.

D: INSPECTION

1. CHECK ACCELERATOR PEDAL SENSOR AREA (METHOD WITH CIRCUIT TESTER)

1) Remove the glove box. <Ref. to EI-64, REMOVAL, Glove Box.>
2) Turn the ignition switch to ON. (engine OFF)
3) Measure the voltage between ECM connector terminals.

- Main sensor side

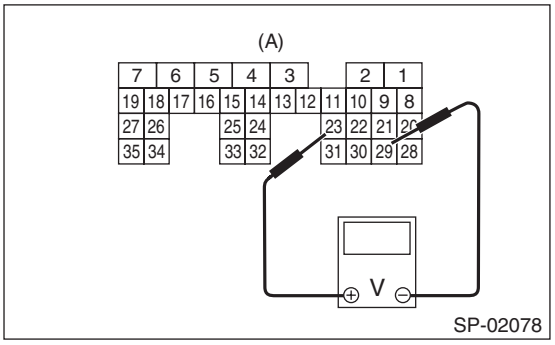

(A) To ECM connector

- Sub sensor side

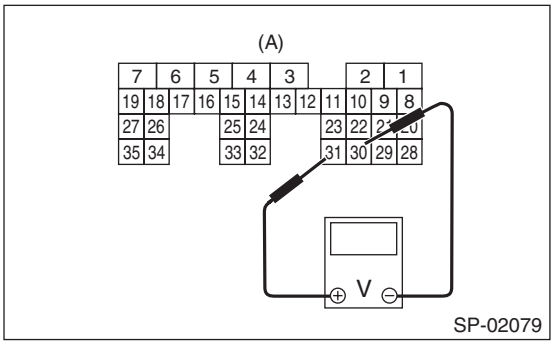

(A) To ECM connector

Accelerator pedal sensor	Accelerator pedal	Terminal No.	Standard
Main	Not depressed (full closed)	23 (+) and 29 (–)	0.4 — 1.0 V
	Depressed (full opened)		2.4 — 3.7 V
Sub	Not depressed (full closed)	31 (+) and 30 (–)	0.3 — 1.1 V
	Depressed (full opened)		2.3 — 3.8 V

4) After inspection, install the related parts in the reverse order of removal.

2. CHECK ACCELERATOR PEDAL SENSOR AREA (METHOD WITH SUBARU SELECT MONITOR)

1) Turn the ignition switch to ON. (engine OFF)
2) Read the accelerator pedal opening angle signal and voltage of accelerator pedal sensor using Subaru Select Monitor. <Ref. to EN(STI)(diag)-36, DISPLAY CURRENT ENGINE DATA (NORMAL MODE), OPERATION, Subaru Select Monitor.>

Accelerator pedal sensor	Accelerator pedal opening angle signal	Standard
Main	0.0%	0.4 — 1.0 V
	100.0%	2.4 — 3.7 V
Sub	0.0%	0.3 — 1.1 V
	100.0%	2.3 — 3.8 V

3. OTHER INSPECTIONS

1) Check that the accelerator pedal does not have deformation, cracks or damage.
2) Check for smooth operation when the accelerator pedal is depressed.
3) Check if the accelerator pedal returns to its original position smoothly when the pedal is released.

IGNITION

IG(STI)

Page

1. General Description 2
2. Spark Plug 4
3. Ignition Coil 7

1. General Description

A: SPECIFICATION

Item			Specifications
Ignition coil	Type		FK0368
	Ignition system		Independent ignition coil
	Manufacturer		Diamond Electric
Spark plug	Manufacturer and type		NGK: SILFR6A
	Thread size (diameter, pitch, length) mm		14, 1.25, 26.5
	Spark plug gap mm (in)	Standard	0.7 — 0.8 (0.028 — 0.031)
	Electrode		Iridium

B: COMPONENT

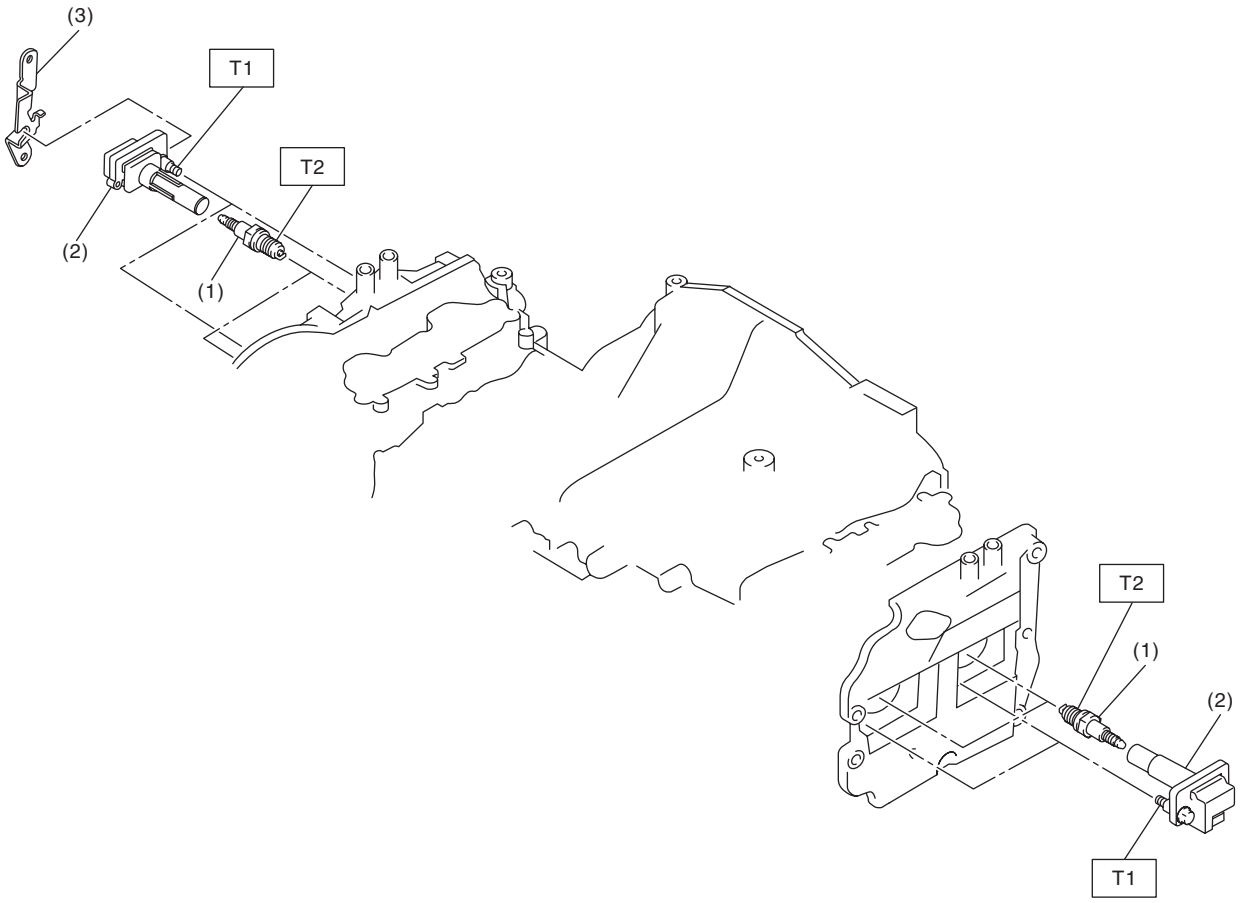

IG-02126

(1) Spark plug
(2) Ignition coil
(3) Engine harness stay (#3 ignition coil side only)

Tightening torque: N·m (kgf-m, ft-lb)

T1: 16 (1.6, 11.8)
T2: 21 (2.1, 15.5)

C: CAUTION

- Prior to starting work, pay special attention to the following:
  1. Always wear work clothes, a work cap, and protective shoes. Additionally, wear a helmet, protective goggles, etc. if necessary.
  2. Protect the vehicle using a seat cover, fender cover, etc.
  3. Prepare the service tools, clean cloth, containers to catch grease and oil, etc.
- Vehicle components are extremely hot immediately after driving. Be wary of receiving burns from heated parts.
- When performing a repair, identify the cause of trouble and avoid unnecessary removal, disassembly and replacement.
- Before disconnecting connectors of sensors or units, be sure to disconnect the ground cable from battery.
- Always use the jack-up point when the shop jacks or rigid racks are used to support the vehicle.
- Remove contamination including dirt and corrosion before removal, installation, disassembly or assembly.
- Keep the removed parts in order and protect them from dust and dirt.
- All removed parts, if to be reused, should be reinstalled in the original positions with attention to the correct directions, etc.
- Bolts, nuts and washers should be replaced with new parts as required.
- Be sure to tighten the fasteners including bolts and nuts to the specified torque.

2. Spark Plug

A: REMOVAL

Spark plug:
Refer to "SPECIFICATION" for the spark plug. <Ref. to IG(STI)-2, SPECIFICATION, General Description.>

1. RH SIDE

1) Disconnect the ground cable from battery.
2) Remove the air cleaner case. <Ref. to IN(STI)-8, REMOVAL, Air Cleaner Case.>
3) Disconnect the connector from ignition coil.

CAUTION:
Be careful not to damage the claw (a) of the connector.

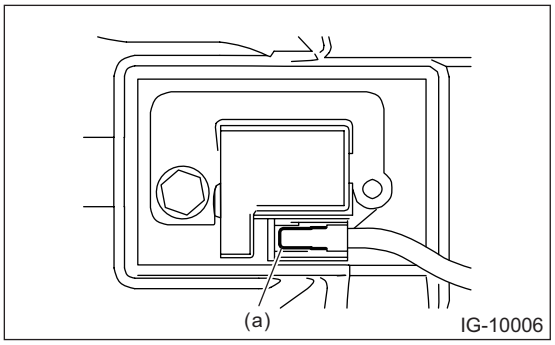

4) Remove the ignition coil.

NOTE:
• When removing the ignition coil #3, remove the clip (A) from the engine harness stay.
• Turn the ignition coil by 180° to remove it.

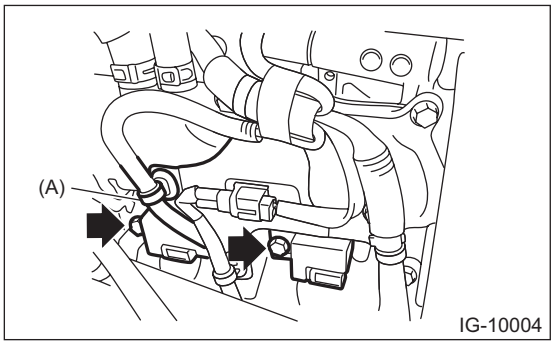

5) Remove the spark plug with a spark plug socket.

2. LH SIDE

1) Remove the battery. <Ref. to SC(STI)-24, REMOVAL, Battery.>
2) Remove the secondary air pump. <Ref. to EC(STI)-55, REMOVAL, Secondary Air Pump.>
3) Remove the bolts that secure the air duct to the rocker cover LH, and lift the air duct.

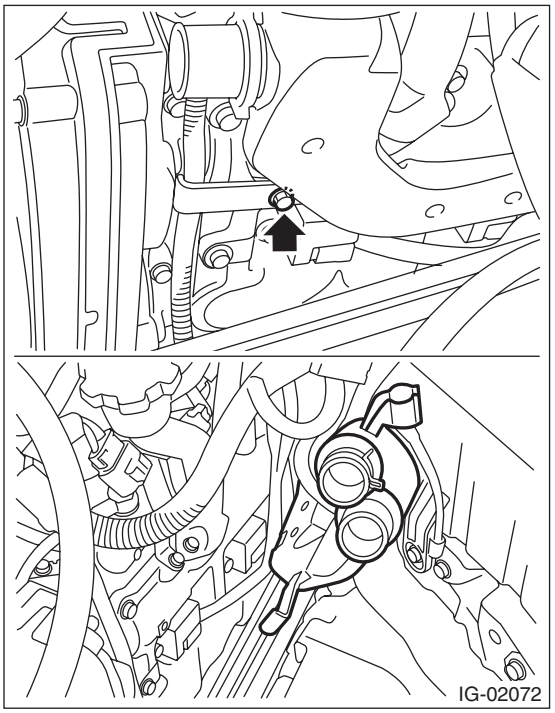

4) Disconnect the connector from ignition coil.

CAUTION:
Be careful not to damage the claw (a) of the connector.

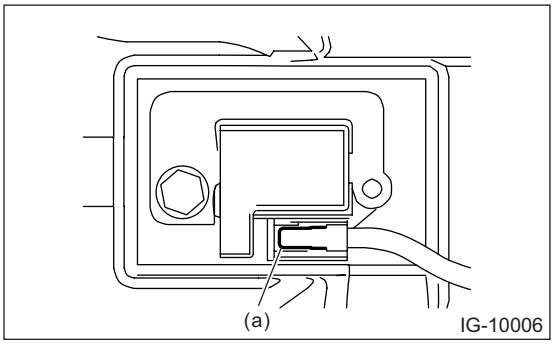

5) Remove the ignition coil.

NOTE:
Turn #4 ignition coil by 180° to remove it.

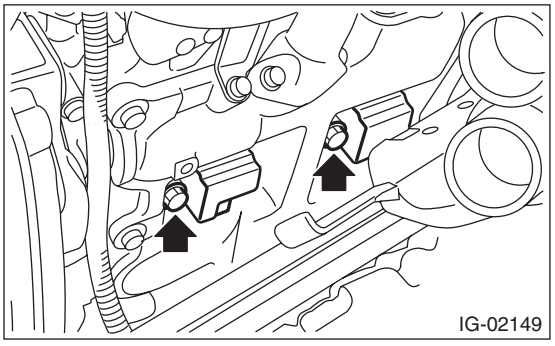

6) Remove the spark plug with a spark plug socket.

B: INSTALLATION

1. RH SIDE

Install in the reverse order of removal.

Tightening torque (Spark plug):
21 N·m (2.1 kgf-m, 15.5 ft-lb)

Tightening torque (Ignition coil):
16 N·m (1.6 kgf-m, 11.8 ft-lb)

2. LH SIDE

Install in the reverse order of removal.

Tightening torque (Spark plug):
21 N·m (2.1 kgf-m, 15.5 ft-lb)

Tightening torque (Ignition coil):
16 N·m (1.6 kgf-m, 11.8 ft-lb)

Tightening torque (Air duct):
6.4 N·m (0.7 kgf-m, 4.7 ft-lb)

C: INSPECTION

1) Check the spark plug for abnormalities. If defective, replace the spark plug.

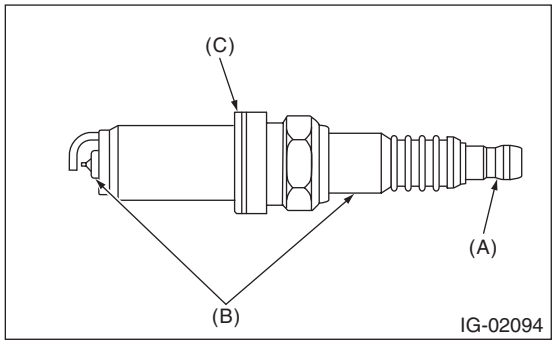

(A) Terminal damage
(B) Crack or damage in insulator
(C) Damaged gasket

2) Check the spark plug electrode and condition of the insulator. If abnormal, check and repair the cause and replace the spark plug.

(1) Normal:
Brown to grayish-tan deposits and slight electrode wear indicate correct spark plug heat range.

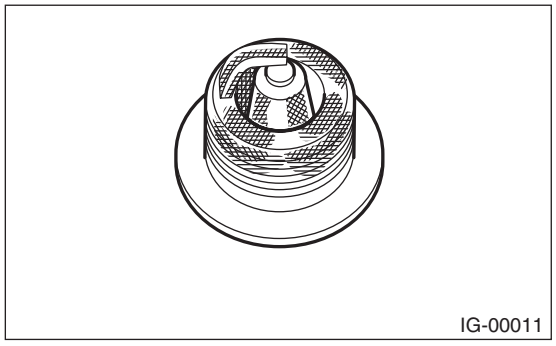

(2) Carbon fouled:
Dry fluffy carbon deposits on insulator and electrode are mostly caused by slow speed driving in the city, weak ignition, too rich fuel mixture, etc.

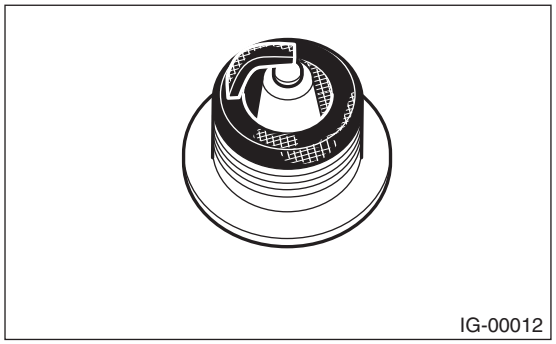

(3) Oil fouled:
Wet black deposits show oil entrance into combustion chamber through worn piston rings or increased clearance between valve guides and valve stems.

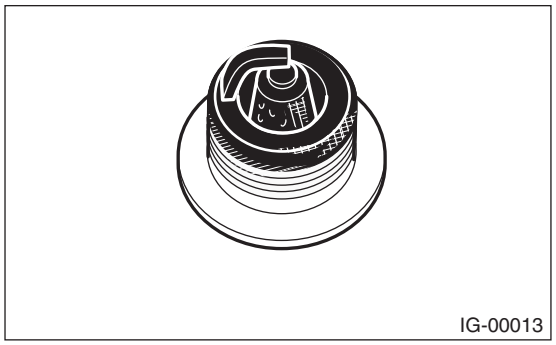

(4) Overheating:
A white or light gray insulator with black or brown spots and bluish burnt electrodes indicate engine overheating, wrong selection of fuel, or loose spark plugs.

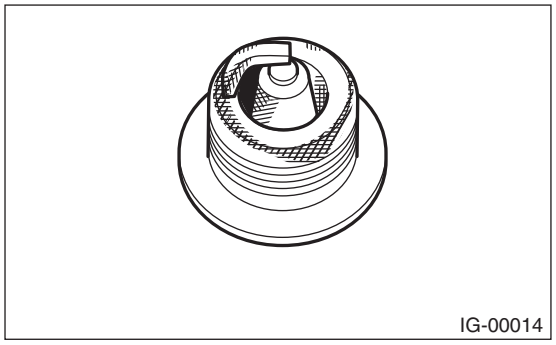

3) Using a nylon brush, etc., clean and remove the carbon or oxide deposits from the spark plug. If deposits are too stubborn, replace the spark plugs. After cleaning the spark plugs, check the spark plug gap “L” using a gap gauge. If it is not within the standard, replace the spark plug.

NOTE:
- Never use a plug cleaner.
- Do not use a metal brush as it may damage the electrode area.

Spark plug gap L:
Standard
0.7 — 0.8 mm (0.028 — 0.031 in)

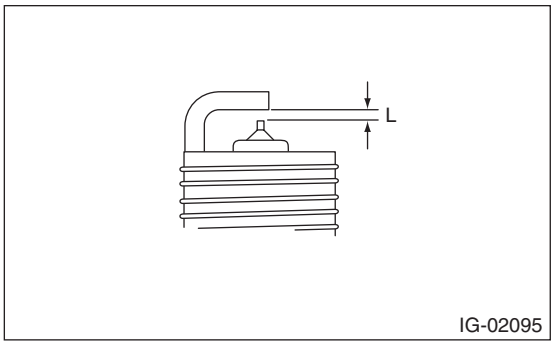

3. Ignition Coil

A: REMOVAL

Direct ignition type is adopted. Refer to “Spark Plug” for removal procedure. <Ref. to IG(STI)-4, REMOVAL, Spark Plug.>

B: INSTALLATION

Install in the reverse order of removal.

Tightening torque:
16 N·m (1.6 kgf-m, 11.8 ft-lb)

C: INSPECTION

For inspection procedure, refer to “Diagnostics for Engine Starting Failure”. <Ref. to EN(STI)(diag)-89, IGNITION CONTROL SYSTEM, Diagnostics for Engine Starting Failure.>

STARTING/CHARGING SYSTEMS

SC(STI)

Page

1. General Description 2
2. Starter 7
3. Generator 18
4. Battery 24

1. General Description

A: SPECIFICATION

Item			Specifications
Starter	Type		Reduction type
	Model		428000-5760
	Manufacturer		DENSO
	Voltage and output		12 V — 1.0 kW
	Direction of rotation		Counterclockwise (when observed from pinion)
	Number of pinion teeth		9
	Armature commutator runout	Standard	0.05 mm (0.0020 in)
		Limit	0.10 mm (0.0039 in)
	Armature depth of segment mold	Standard	0.5 mm (0.020 in)
	Brush length	Standard	12.3 mm (0.484 in)
		Limit	7.0 mm (0.276 in)
	Brush spring force	Standard	15.9 — 19.5 N (1.62 — 1.99 kgf, 3.57 — 4.38 lbf)
		Limit	2.5 N (0.25 kgf, 0.56 lbf)
	No-load characteristics	Voltage	11 V
		Current	90 A or less
Generator	Type		Rotating-field three-phase type, voltage regulator built-in type, with load response control system
	Model		A3TG6591
	Manufacturer		Mitsubishi Electric
	Voltage and output		12 V — 110 A
	Polarity on ground side		Negative
	Direction of rotation		Clockwise (when observed from pulley side)
	Stator connection		3-phase Y-type
	Output current		1,500 r/min — 50 A or more 2,500 r/min — 91 A or more 5,000 r/min — 105 A or more
	Regulated voltage		14.1 — 14.8 V [20°C (68°F)]
	Rotor slip ring outer diameter	Standard	22.7 mm (0.894 in)
		Limit	22.1 mm (0.870 in)
	Brush length	Standard	18.5 mm (0.728 in)
		Limit	5.0 mm (0.197 in)
Battery	Type		55D23L
	Nominal capacity		5 HR: 40 Ah [25°C (77°F)]
	Nominal voltage		12 V
	CCA		390 A

B: COMPONENT

1. STARTER

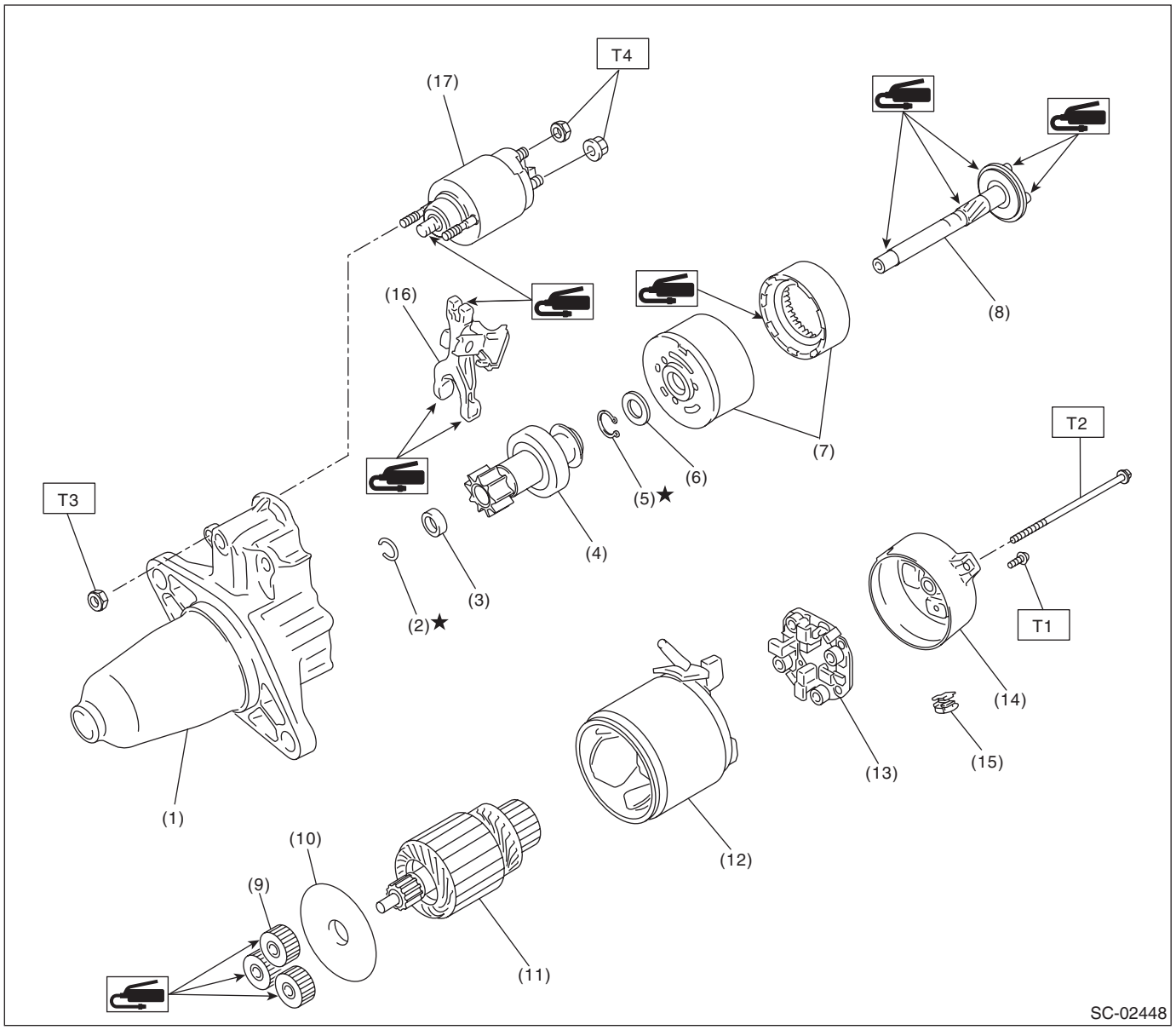

(1) Starter housing ASSY
(2) Snap ring
(3) Stopper
(4) Overrunning clutch
(5) Snap ring
(6) Washer
(7) Internal gear ASSY
(8) Shaft
(9) Pinion gear
(10) Starter plate
(11) Armature
(12) Yoke ASSY
(13) Brush holder ASSY
(14) Starter cover ASSY
(15) Drain duct
(16) Shift lever
(17) Magnet switch ASSY

Tightening torque: N·m (kgf-m, ft-lb)
T1: 1.4 (0.1, 1.0)
T2: 6 (0.6, 4.4)
T3: 7.5 (0.8, 5.5)
T4: 10 (1.0, 7.4)

2. GENERATOR

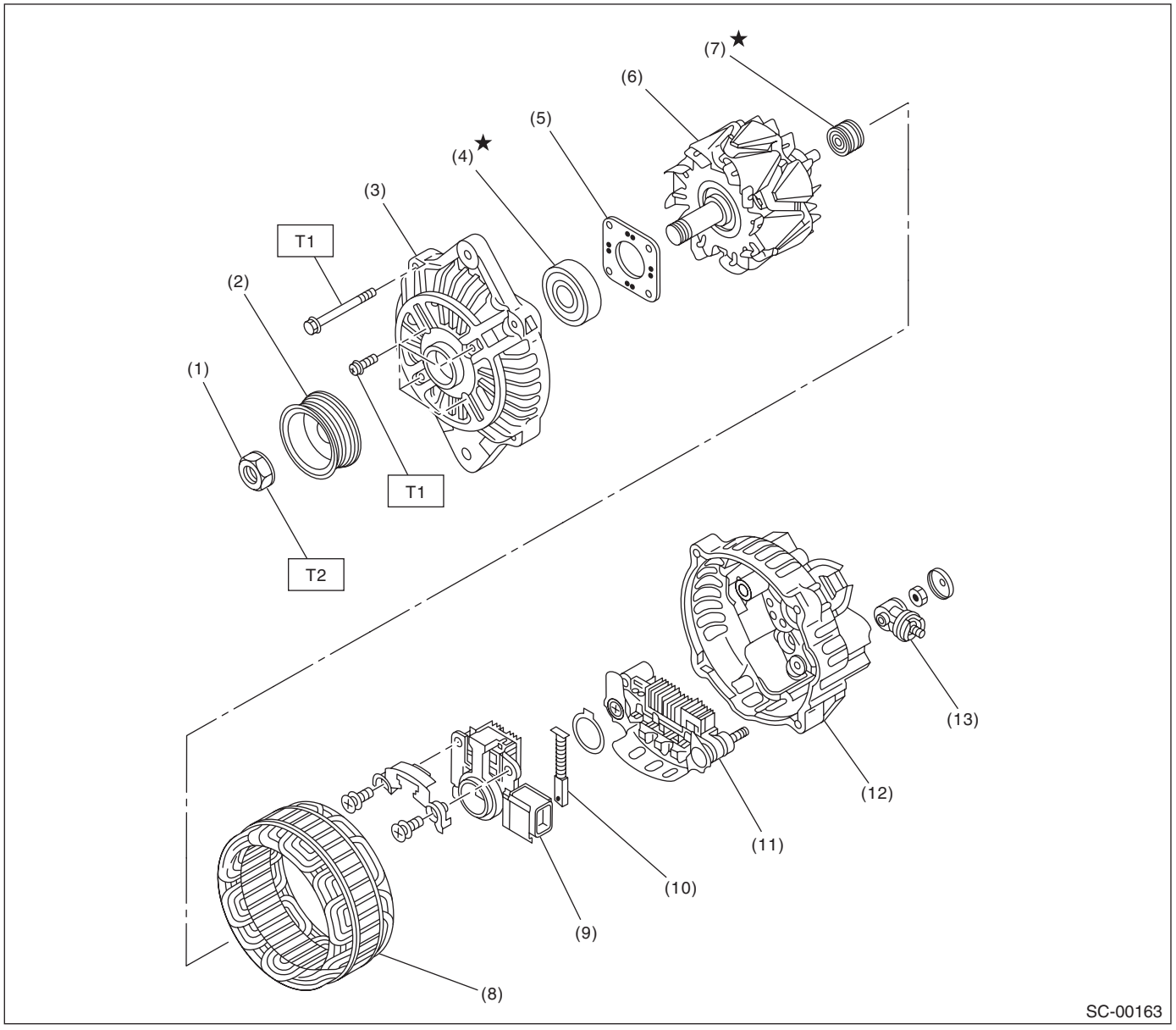

(1) Pulley nut
(2) Pulley
(3) Front cover
(4) Ball bearing
(5) Bearing retainer
(6) Rotor
(7) Bearing
(8) Stator coil
(9) IC regulator
(10) Brush
(11) Rectifier
(12) Rear cover
(13) Terminal B

Tightening torque: N·m (kgf-m, ft-lb)
T1: 4.7 (0.5, 3.5)
T2: 108 (11.0, 79.8)

3. GENERATOR BRACKET

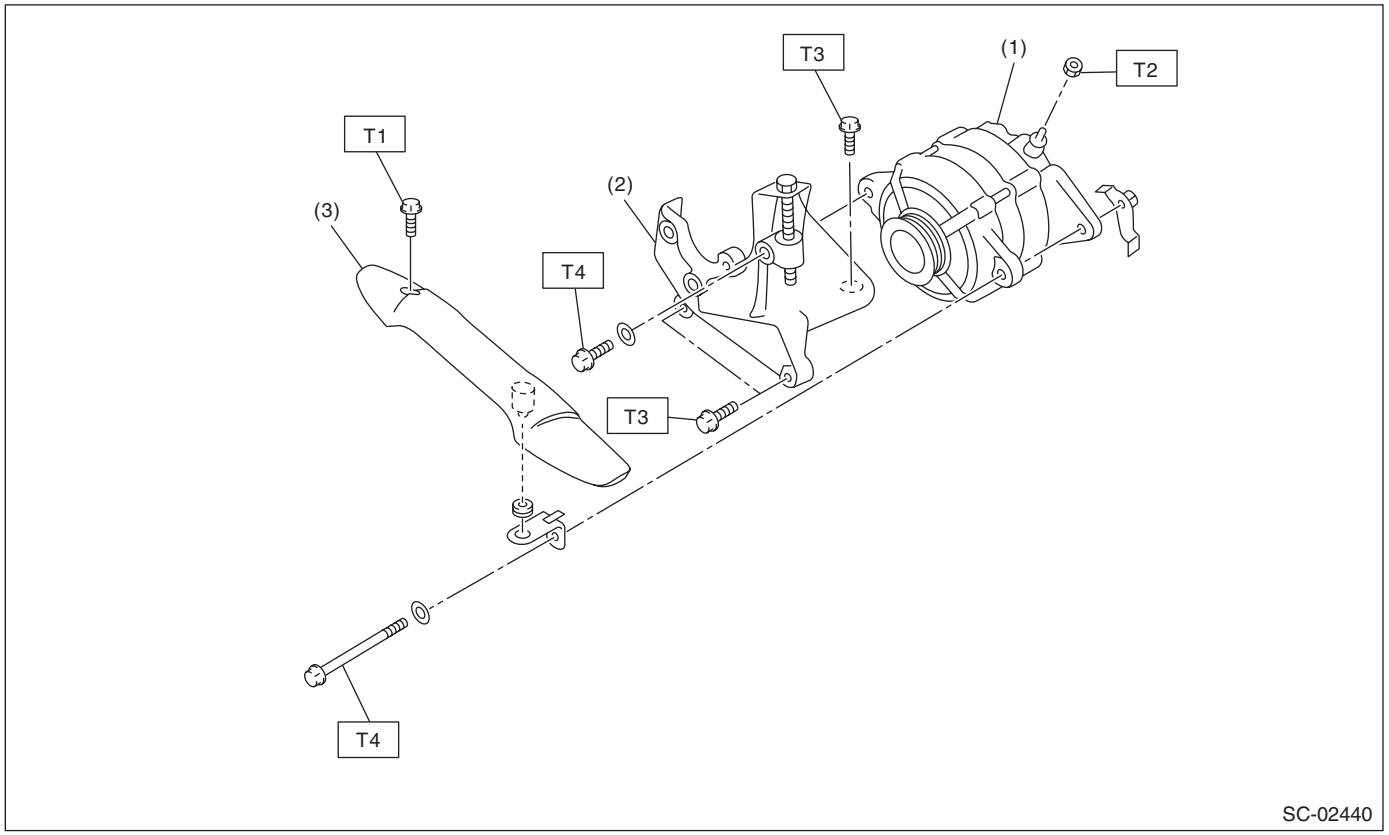

(1) Generator
(2) Power steering pump bracket
(3) V-belt cover

Tightening torque: N·m (kgf-m, ft-lb)
T1: 13 (1.3, 9.6)
T2: 15 (1.5, 11.1)
T3: 22 (2.2, 16.2)
T4: 25 (2.5, 18.4)

C: CAUTION

- Prior to starting work, pay special attention to the following:
  1. Always wear work clothes, a work cap, and protective shoes. Additionally, wear a helmet, protective goggles, etc. if necessary.
  2. Protect the vehicle using a seat cover, fender cover, etc.
  3. Prepare the service tools, clean cloth, containers to catch grease and oil, etc.
- Vehicle components are extremely hot immediately after driving. Be wary of receiving burns from heated parts.
- When performing a repair, identify the cause of trouble and avoid unnecessary removal, disassembly and replacement.
- Before disconnecting connectors of sensors or units, be sure to disconnect the ground cable from battery.
- Always use the jack-up point when the shop jacks or rigid racks are used to support the vehicle.
- Remove contamination including dirt and corrosion before removal, installation, disassembly or assembly.
- Keep the removed parts in order and protect them from dust and dirt.
- All removed parts, if to be reused, should be reinstalled in the original positions with attention to the correct directions, etc.
- Bolts, nuts and washers should be replaced with new parts as required.
- Be sure to tighten the fasteners including bolts and nuts to the specified torque.

D: PREPARATION TOOL

1. GENERAL TOOL

TOOL NAME	REMARKS
Circuit tester	Used for measuring resistance, voltage and current. NOTE: • When measuring the standby current, prepare a circuit tester which can measure down to 1 mA. • When measuring the standby current for models with keyless access function, prepare an analog type.

2. Starter

A: REMOVAL

1) Disconnect the ground cable from battery.
2) Remove the intercooler. <Ref. to IN(STI)-13, REMOVAL, Intercooler.>
3) Disconnect the connector (B) and terminal (A) from starter.

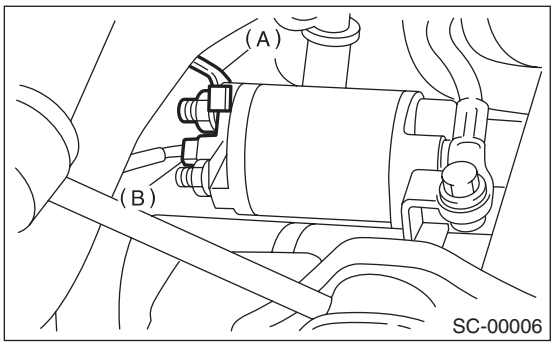

4) Disconnect the terminal (A) from the cable stay and remove the cable stay and starter from the transmission.

CAUTION:
In order to prevent damaging the terminal (A), fix the terminal (A) when loosing the bolt, and avoid the part from rotating together while loosening the bolt.

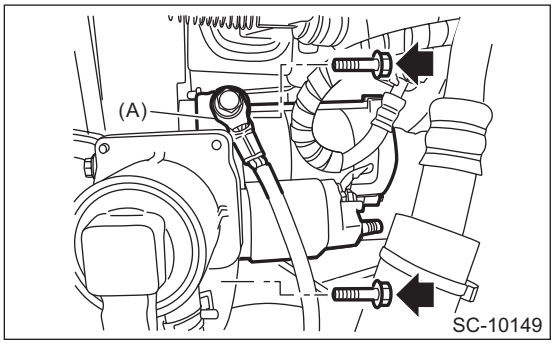

B: INSTALLATION

Install in the reverse order of removal.

NOTE:
Tighten the starter and cable stay (a) together using the upper bolt securing the starter.

Tightening torque:
T1: 14 N·m (1.4 kgf-m, 10.3 ft-lb)
T2: 50 N·m (5.1 kgf-m, 36.9 ft-lb)

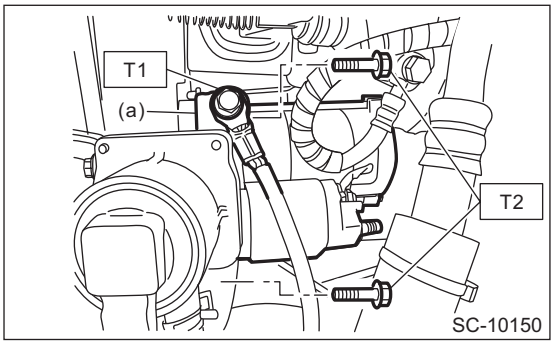

Tightening torque:
10 N·m (1.0 kgf-m, 7.4 ft-lb)

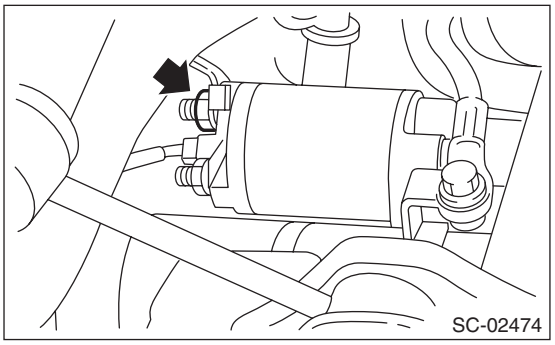

C: DISASSEMBLY

CAUTION:
The starter should be placed through a no-load test whenever it has been overhauled.

1) Disconnect cable from terminal M (A) of the magnet switch assembly.

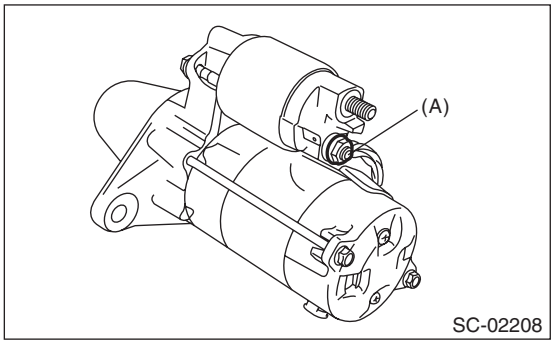

2) Remove the magnet switch assembly from the starter housing assembly.

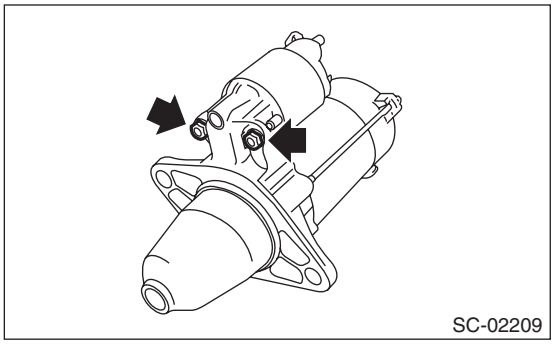

3) Remove through bolts (A) and screws (B) on both sides, and remove the starter cover assembly.

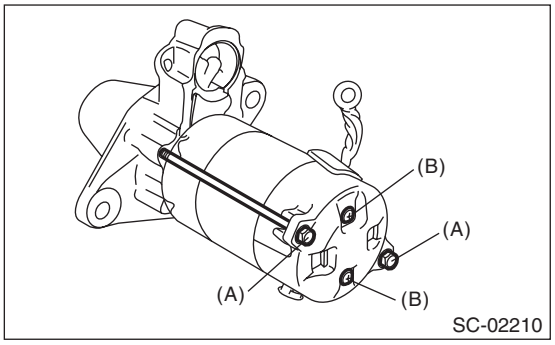

4) Remove the yoke assembly and brush holder assembly as a unit.

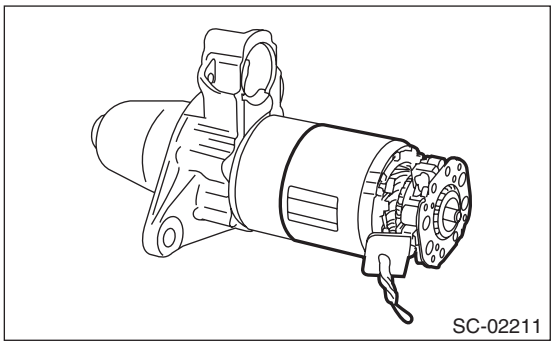

5) Remove the two brushes wired to the yoke assembly, and separate the yoke assembly and the brush holder assembly.

NOTE:
As shown in the figure, use a flat tip screwdriver, etc. to hold the brush spring and remove the brush.

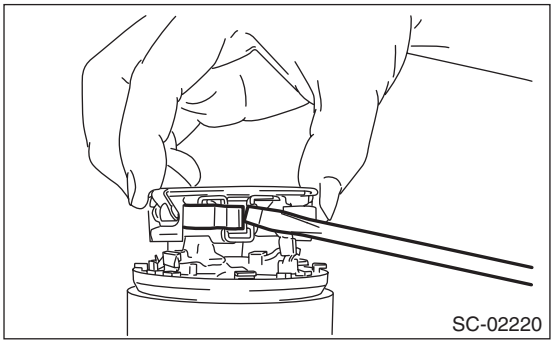

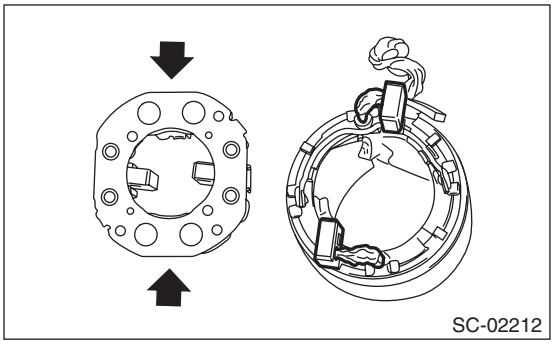

6) Remove the armature from the internal gear assembly.

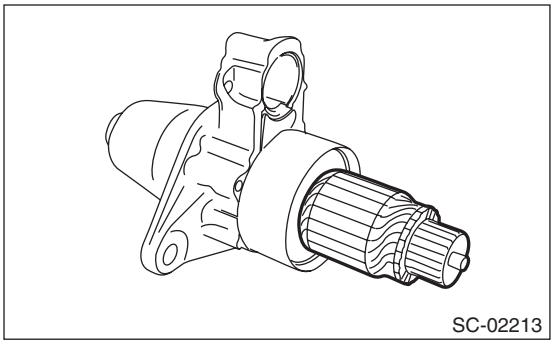

7) Remove the starter housing assembly (A) then remove the shift lever (B).

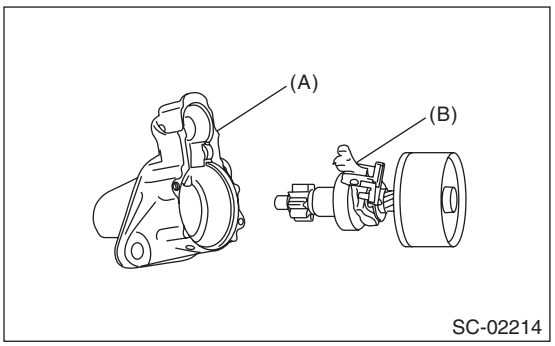

8) Use the following procedures to remove the overrunning clutch from the shaft.

(1) Use an appropriate tool (such as a fit socket wrench), and remove the stopper from snap ring by lightly tapping the stopper with a plastic hammer.

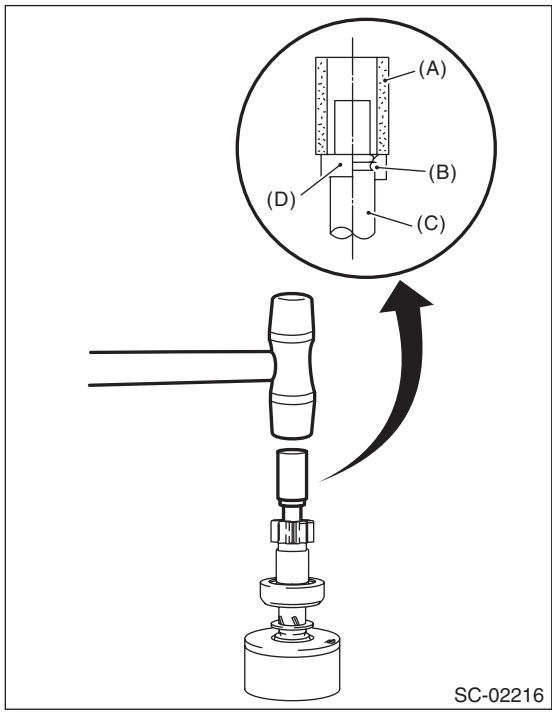

(A) Appropriate tool
(B) Snap ring
(C) Shaft
(D) Stopper

(2) Remove snap ring (A) from the shaft, and remove stopper (B).

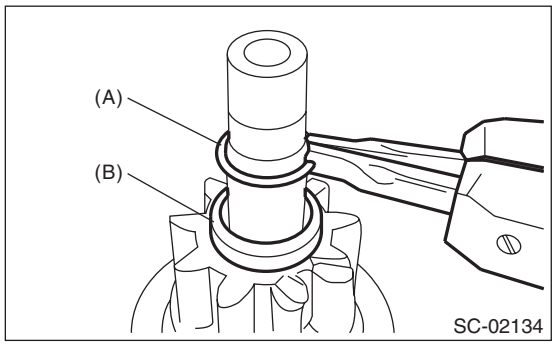

(3) Remove the overrunning clutch from the shaft.

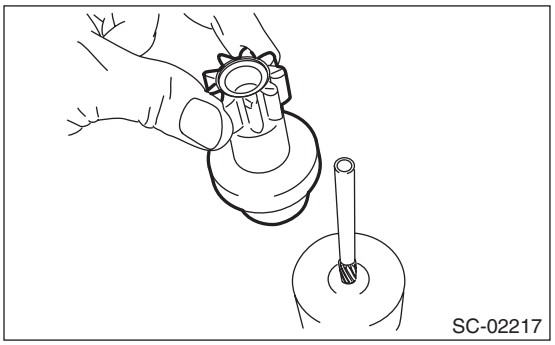

9) Use the following procedures to remove the shaft.

(1) Remove the starter plate, and remove the pinion gear.

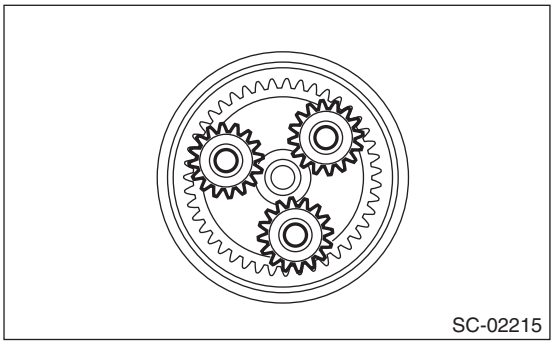

(2) Remove the snap ring from the shaft.

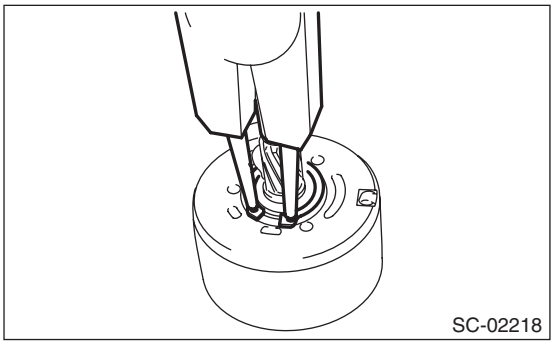

(3) Remove the shaft from the internal gear assembly.

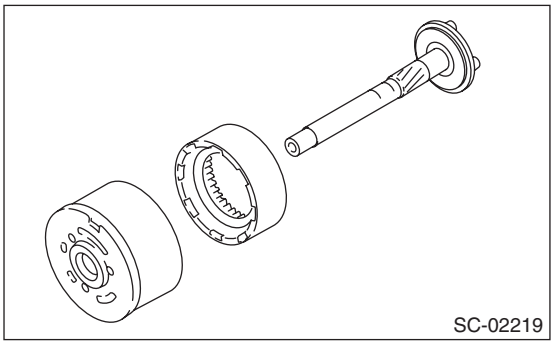

D: ASSEMBLY

1) Use the following procedures to install the shaft.
(1) Apply grease to the shaft sliding surfaces of the internal gear assembly.

Grease:
DENSO HL50

(2) Assemble the shaft to the internal gear assembly.

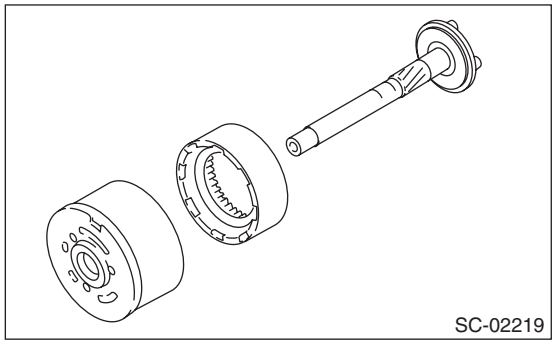
SC-02219

(3) Install the snap ring to shaft.

NOTE:
Use new snap rings.

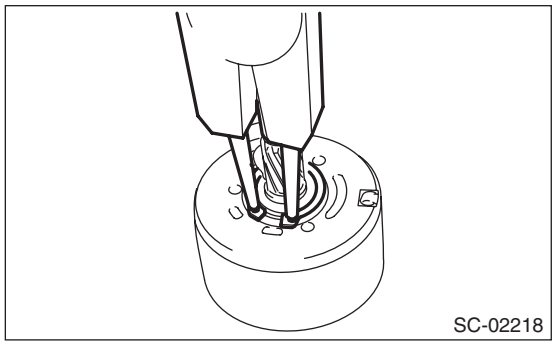
SC-02218

(4) Apply grease to the pinion gear attachment area.

Grease:
DENSO HL50

(5) Attach the pinion gear to the pin.

(6) Apply grease to the pinion gear, internal gear assembly, and on top of the shaft pin.

NOTE:
- Apply grease so that it contacts each gear.
- Be careful not to allow dirt to get in.

Grease:
DENSO HL50

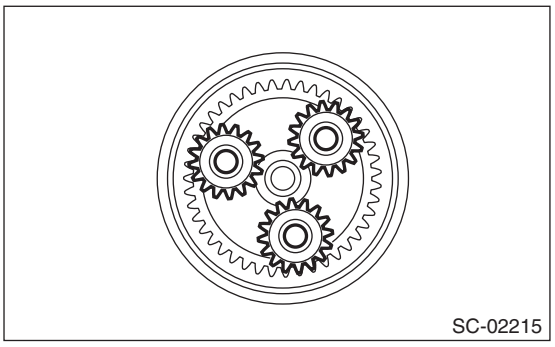
SC-02215

(7) Install the starter plate.

2) Assemble the overrunning clutch and shift lever (B) to the starter housing (A) as a unit.

NOTE:
Apply grease to the contact portion of the shift lever.

Grease:
DENSO HL50

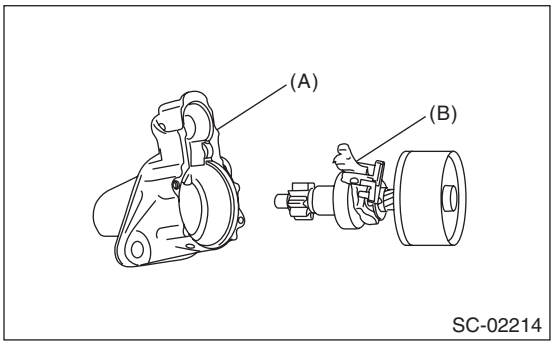

SC-02214

3) Assemble the overrunning clutch as follows:
(1) Apply grease to the spline portion of the shaft.

Grease:
DENSO HL50

(2) Install the overrunning clutch to shaft.

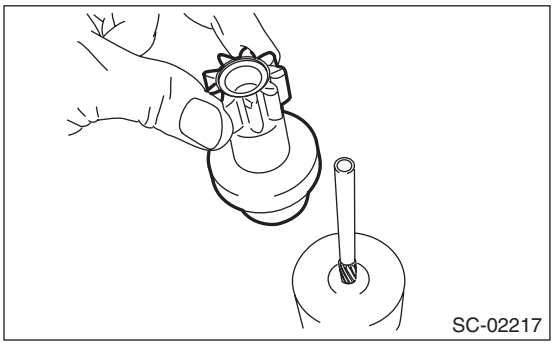
SC-02217

(3) Pass stopper (B) through the shaft, and attach snap ring (A).

NOTE:
Use new snap rings.

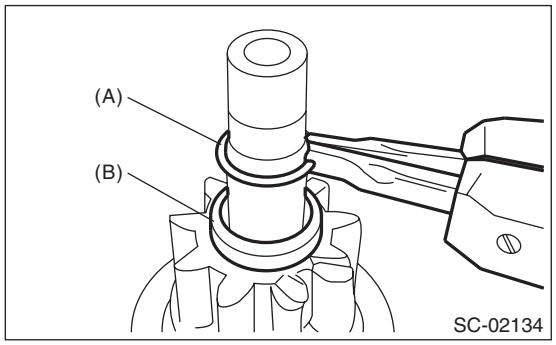

(4) Using a press, pressure fit stopper (B) into snap ring (A).

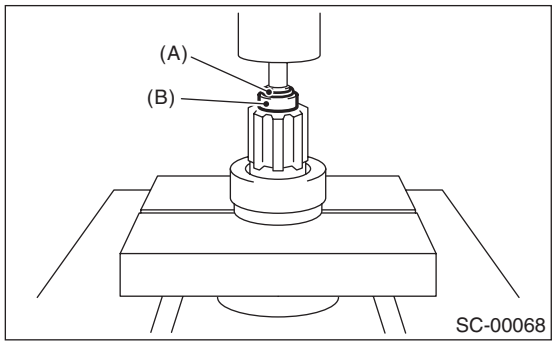

4) Install the armature to the internal gear assembly.

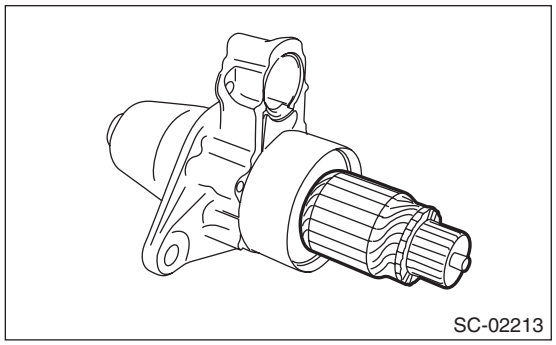

5) Attach the two brushes wired to the yoke assembly to the brush holder assembly.

NOTE:
As shown in the figure, use a flat tip screwdriver, etc. to hold the brush spring and insert the brush while being careful not to damage the brush.

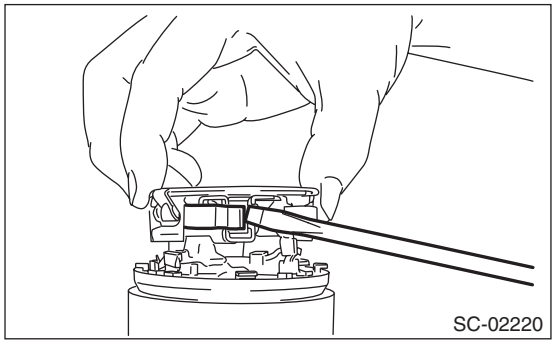

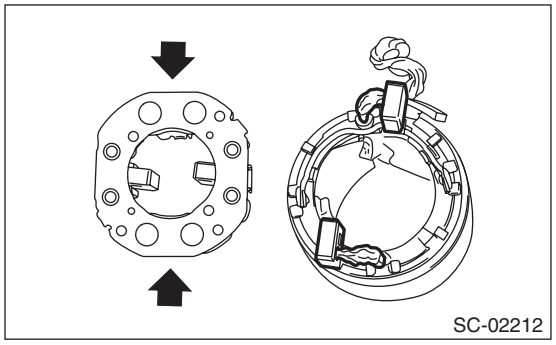

6) Install the yoke assembly and brush holder assembly as a single unit to the armature.

NOTE:
Spread the brush with your fingers, being careful not to damage the brush.

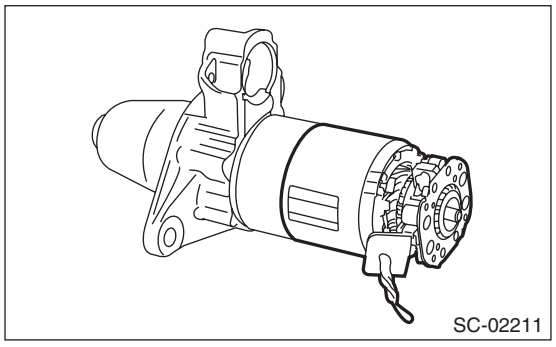

7) Install starter cover assembly to the brush holder assembly with screws (B).

Tightening torque:
1.4 N·m (0.1 kgf-m, 1.0 ft-lb)

8) Tighten the through bolts (A) on both sides.

Tightening torque:
6 N·m (0.6 kgf-m, 4.4 ft-lb)

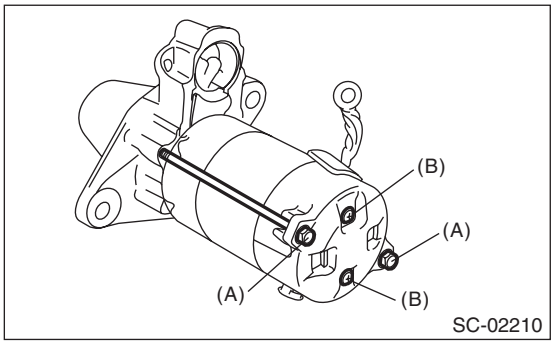

9) Attach the magnet switch assembly to the starter housing assembly.

Tightening torque:
7.5 N·m (0.8 kgf-m, 5.5 ft-lb)

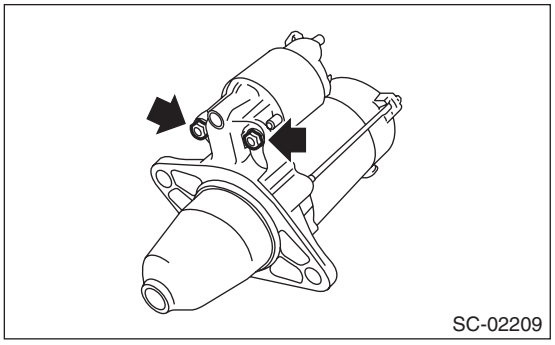

10) Connect terminal M (A) to magnet switch assembly.

Tightening torque:
10 N·m (1.0 kgf-m, 7.4 ft-lb)

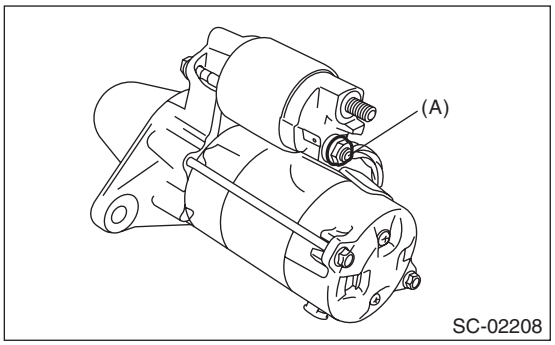

E: INSPECTION

NOTE:
• After the inspection, reinstall the disassembled or removed parts during the inspection in the reverse order of disassembly/removal procedure.
• Refer to component for tightening torque of each part. <Ref. to SC(STI)-3, STARTER, COMPONENT, General Description.>

1. ARMATURE

1) Check the commutator for signs of seizure or stepped wear caused by roughness of the surface. If there is light wear, use sandpaper to repair.
2) Check for runout on the commutator. If excessive, replace the armature.

Commutator runout:
Standard
0.05 mm (0.0020 in)
Limit
0.10 mm (0.0039 in)

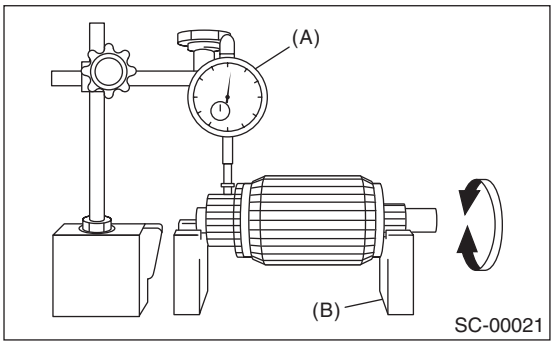

(A) Dial gauge
(B) V-block

3) Check the depth of the segment mold. If it is not within the standard, replace the armature.

Depth of segment mold:
Standard
0.5 mm (0.020 in)

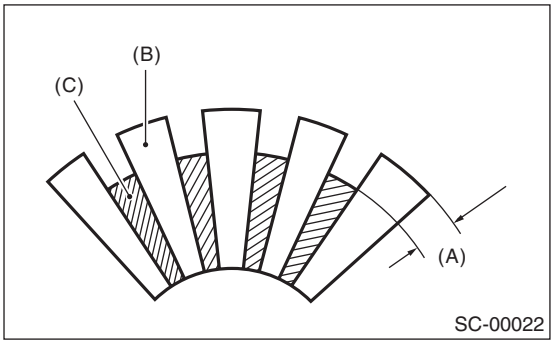

(A) Depth of mold
(B) Segment
(C) Mold

4) Place the armature on the growler tester to check for short circuits. While slowly turning the armature, support the steel sheet for the armature core. If the circuit of the armature is shorted, the steel sheet will vibrate, causing it to move towards the core. When the steel sheet has moved or vibrated, replace the armature.

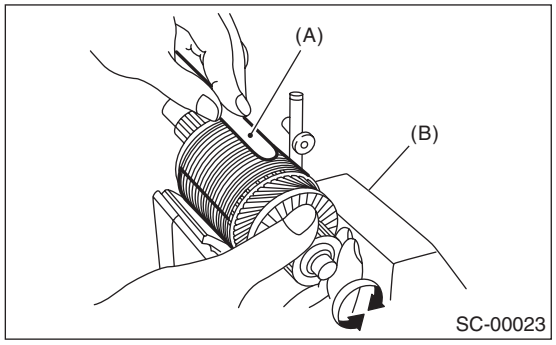

(A) Steel sheet
(B) Growler tester

5) Use a circuit tester to touch the probe of one side to the commutator segment, and the other probe to the shaft. If there is continuity, replace the armature.

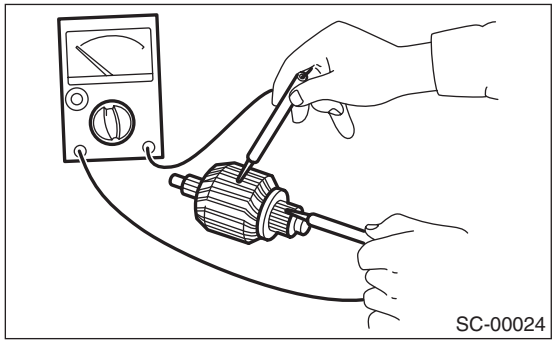

2. YOKE

Make sure that the pole is set at the predetermined position.

3. OVERRUNNING CLUTCH

Check that there is no wear or damage to the piston teeth. Replace the overrunning clutch if it is damaged.
Check that it rotates smoothly when rotated in the correct direction (counterclockwise) and does not return to the other direction. Replace the overrunning clutch if any fault is found.

CAUTION:
To prevent spilling of grease, do not clean the overrunning clutch with oil.

4. BRUSH AND BRUSH HOLDER

1) Measure the length of the brush. Replace if it exceeds service limits or there is abnormal wear or cracks.

Brush length:
Standard
12.3 mm (0.484 in)
Limit
7.0 mm (0.276 in)

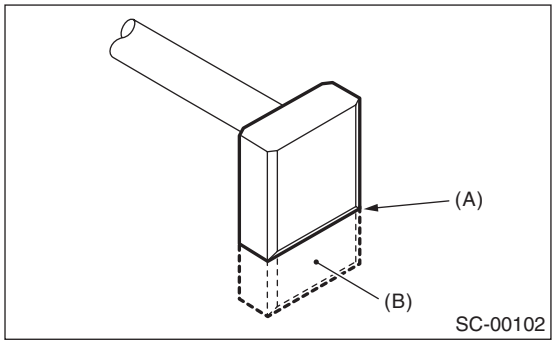

(A) Service limit line
(B) Brush

2) Check that the brush moves smoothly in the brush holder.
3) Measure the brush spring force with a spring scale. Replace the brush holder if below the service limit.

Brush spring force:
Standard
15.9 — 19.5 N (1.62 — 1.99 kgf, 3.57 — 4.38 lbf) (When new)
Limit
2.5 N (0.25 kgf, 0.56 lbf)

5. SWITCH ASSEMBLY

Using a circuit tester, check there is continuity between S terminal and M terminal, and between S terminal and ground. Also, check that there is no continuity between M terminal and B terminal.

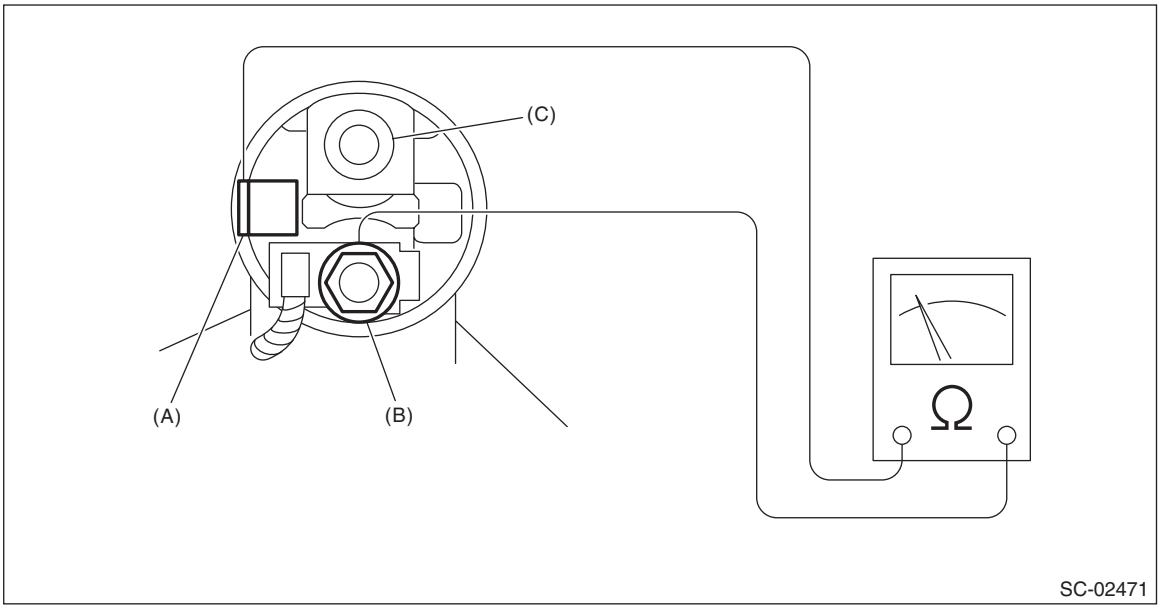

(A) Terminal S (B) Terminal M (C) Terminal B

Terminals	Standard
Terminal S — terminal M	1 Ω or less
Terminal S — Ground	1 Ω or less
Terminal M — terminal B	1 MΩ or more

6. SWITCH ASSEMBLY OPERATION

CAUTION:
Perform the inspection in a short period of time. (Within 3 to 5 seconds)

1) Loosen the nut which holds the M terminal to the starter body.

NOTE:
This procedure is required to facilitate the harness removal from the M terminal.

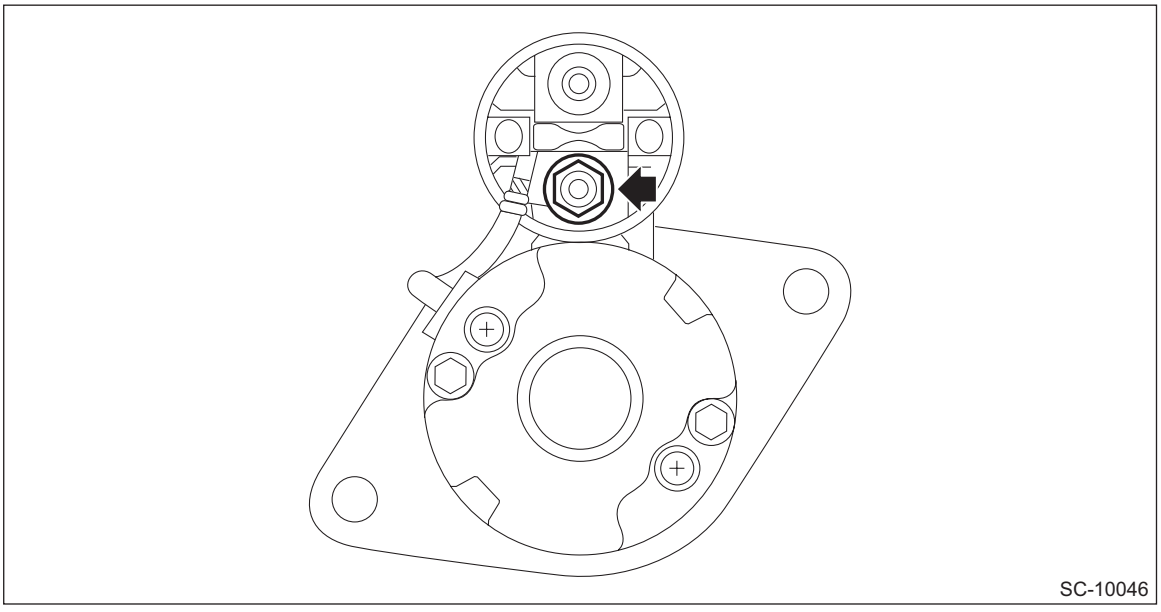

2) Connect the battery positive terminal to the switch assembly S terminal, and connect the battery negative terminal to the starter body. Then, if the pinion protrudes, it is normal.

NOTE:
The starter motor may rotate while the pinion protrudes. This occurs due to current that flows to the motor via pull-in coil. This is not a problem.

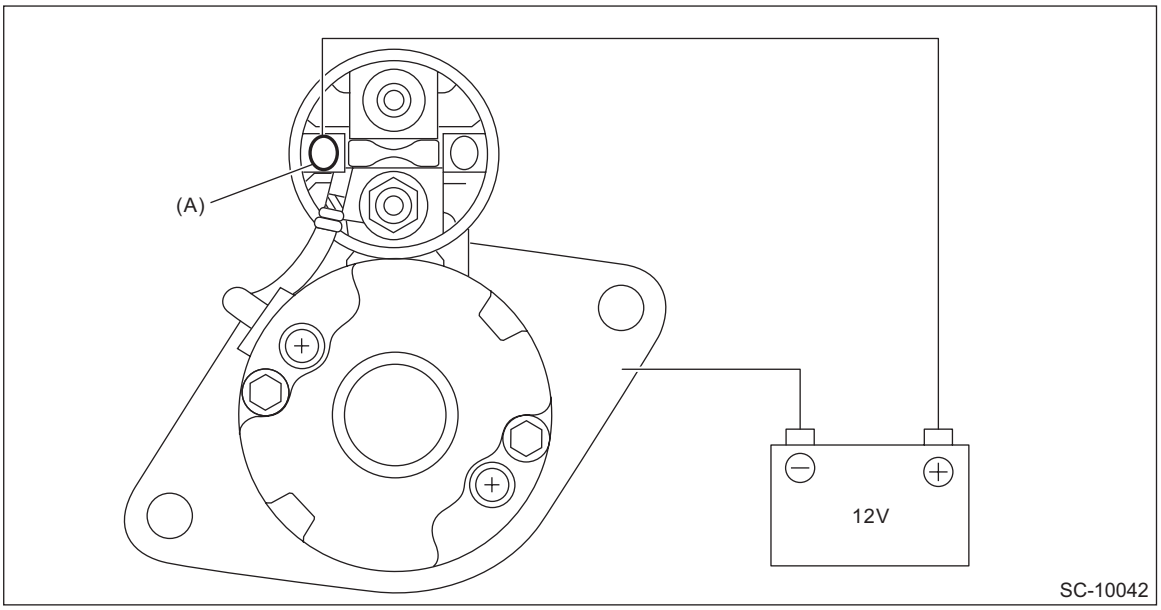

(A) Terminal S

3) Disconnect the harness from the M terminal. Check that the pinion is being protruded at this time.

CAUTION:
Hold the disconnected harness so that it does not contact the terminal or wiring.
4) Disconnect the battery negative terminal from the starter body. Then, if the pinion returns to its original position, it is normal.

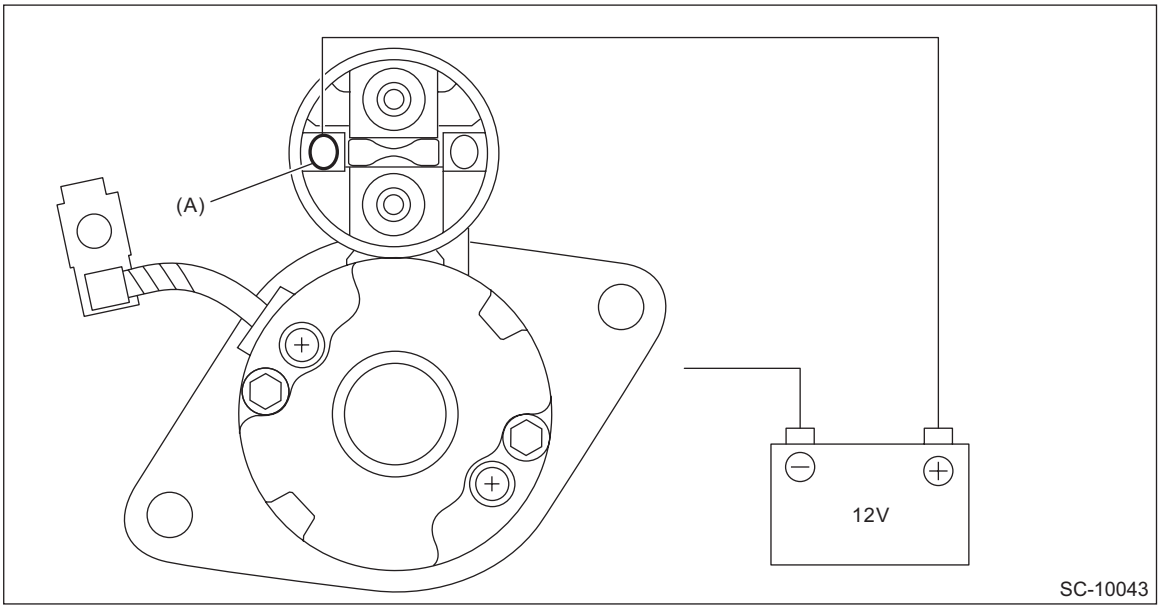

(A) Terminal S

7. NO-LOAD TEST

CAUTION:

- **Use a thick cable due to large current flowing through the cable.**
  - **For B terminal and ground, it is recommended that the cross-section area of continuity part (shaded part) should be 20 mm^2 (0.00310 sq in) or more. For S terminal, 1.25 mm^2 (0.00194 sq in) or more.**

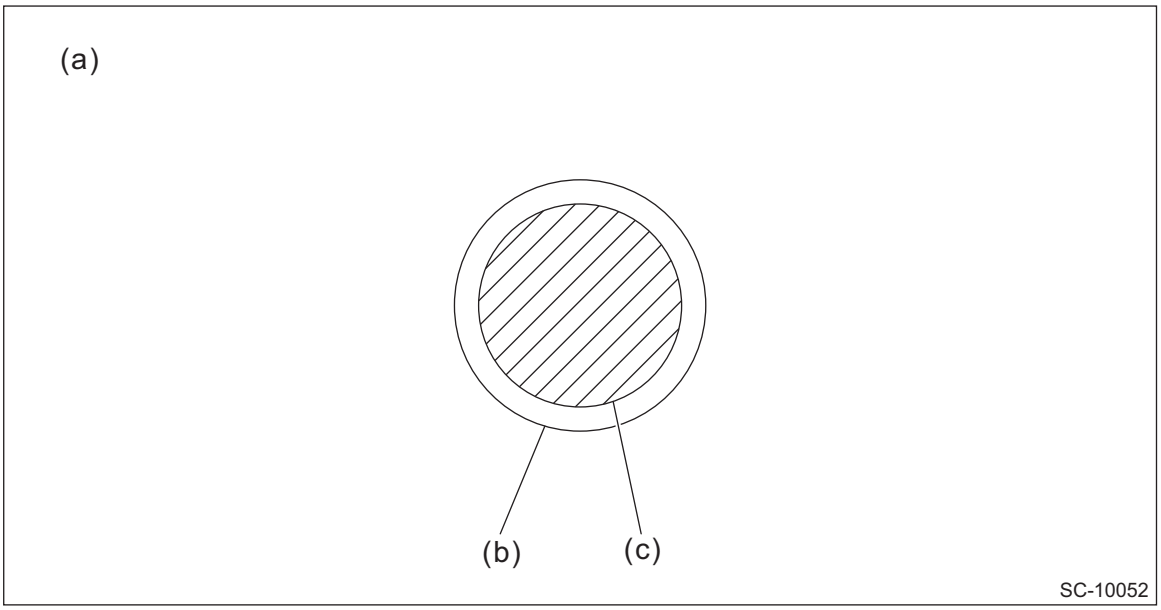

(a) Cable cross-section (b) Cable shield part (c) Cable continuity part

  - **It is possible to use a booster cable instead of wiring.**
- **Be careful not to burn yourself and cause a fire due to heat.**
- **Perform the no-load test in a short period of time. (Within 3 to 5 seconds)**

NOTE:
For no-load test, use the circuit shown in figure.

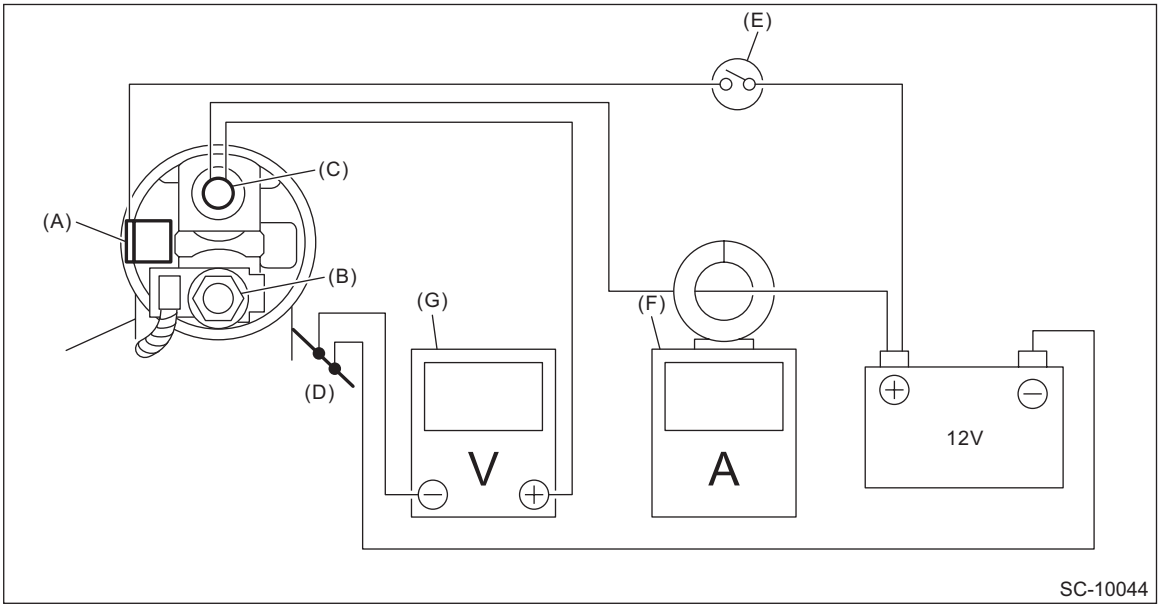

(A) Terminal S (B) Terminal M (C) Terminal B
(D) Magnet switch (E) Switch (F) Circuit tester with clamp-type ammeter
(G) Circuit tester

1) Using a vise, secure the starter.

CAUTION:
Be careful not to deform or damage the starter.
2) Turn the switch ON, and check that the pinion protrudes rapidly into the specified position and rotates powerfully without noise.
3) Check the current and voltage after its rotation speed stabilizes.

Current/Voltage
90 A or less (approx. 11 V)

8. OTHER INSPECTIONS

Check that the starter does not have deformation, cracks and any other damage.

3. Generator

A: REMOVAL

1) Disconnect the ground cable from battery.
2) Remove the V-belt covers.

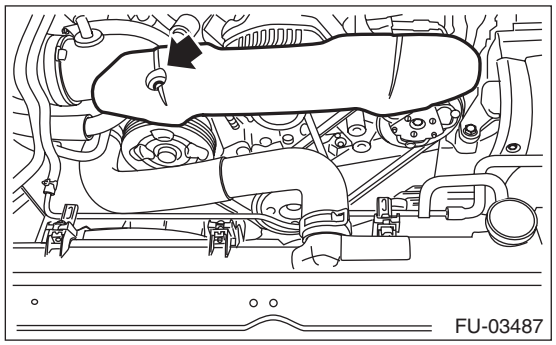

3) Disconnect the connector and terminal from generator.

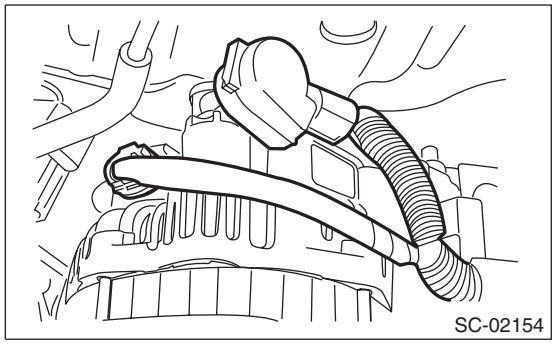

4) Remove the front side belt. <Ref. to ME(STI)-41, FRONT SIDE BELT, REMOVAL, V-belt.>
5) Remove the bolts which install the generator onto bracket.

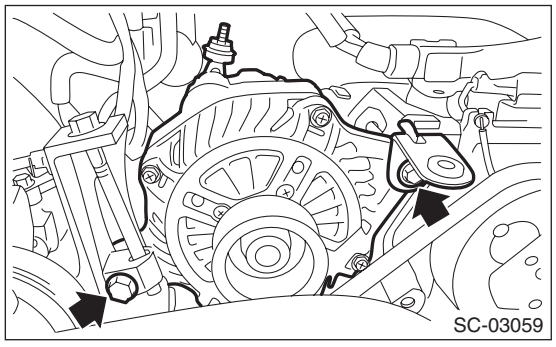

B: INSTALLATION

Install in the reverse order of removal.

CAUTION:
Check and adjust the front side belt tension. <Ref. to ME(STI)-47, FRONT SIDE BELT, INSPECTION, V-belt.>

Tightening torque:
25 N·m (2.5 kgf-m, 18.4 ft-lb)

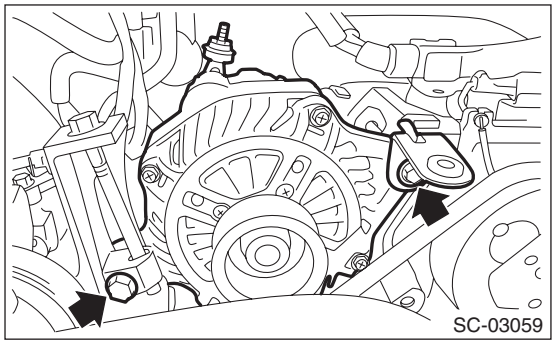

Tightening torque:
15 N·m (1.5 kgf-m, 11.1 ft-lb)

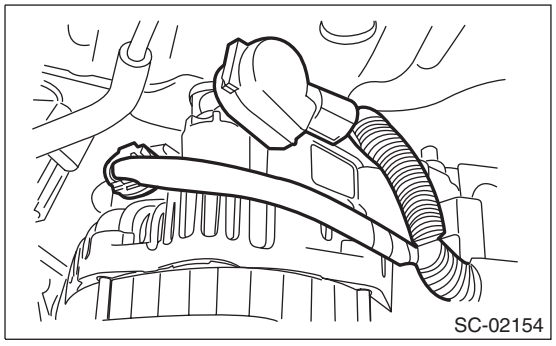

Tightening torque:
13 N·m (1.3 kgf-m, 9.6 ft-lb)

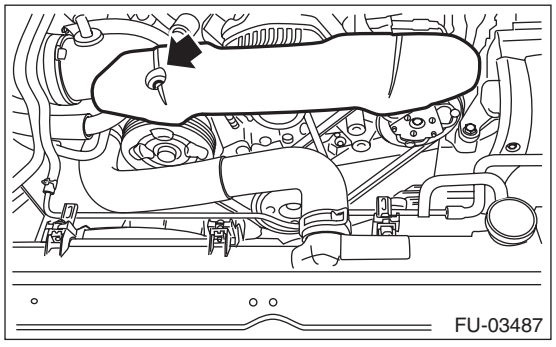

C: DISASSEMBLY

1) Remove the four through-bolts.

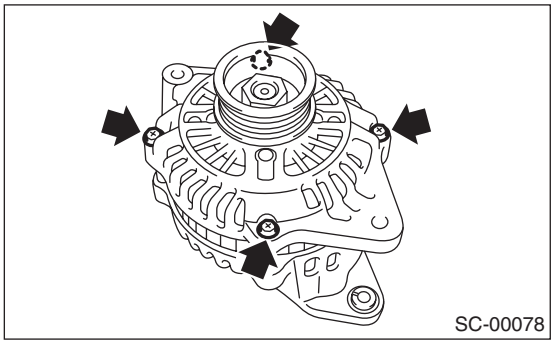

2) Use a drier to heat the rear cover (A) portion to 50°C (122°F).

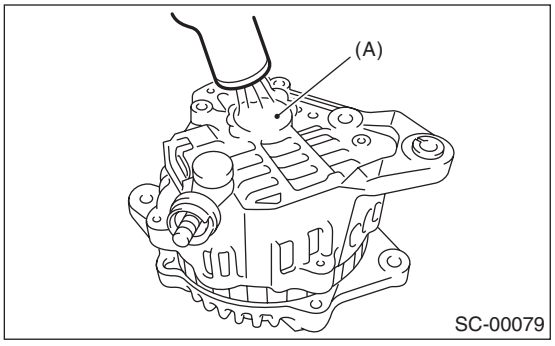

3) Insert the end of a flat tip screwdriver into the gap between stator core and front cover. Pry them apart to disassemble.

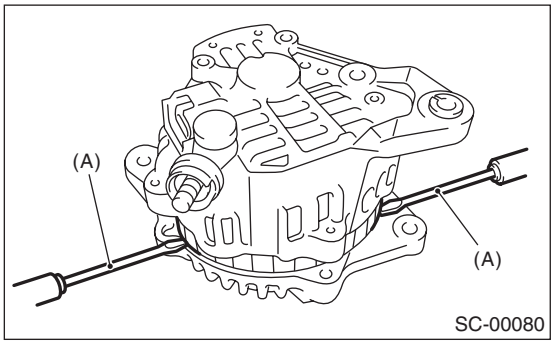

(A) Screwdriver

4) Using a vise, support the rotor and remove the pulley nut, and remove the rotor from the front cover.

CAUTION:
When holding the rotor with a vise, place aluminum plates or wooden pieces on the vise jaws to prevent rotor from damage.

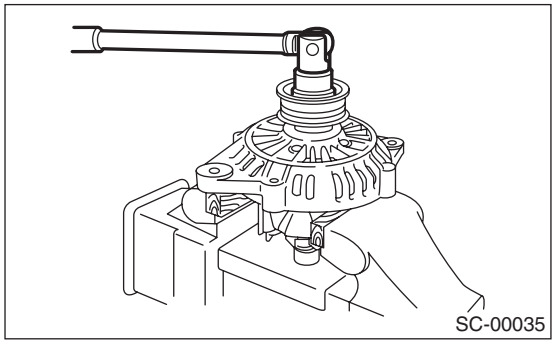

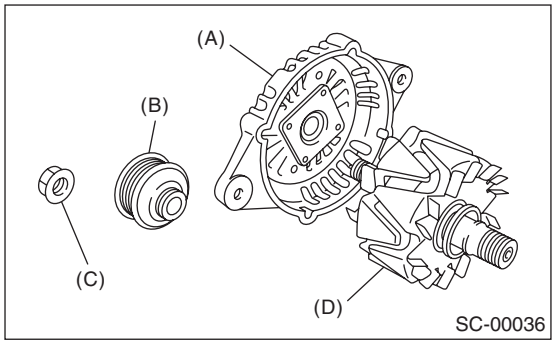

(A) Front cover
(B) Pulley
(C) Pulley nut
(D) Rotor

5) Use the following procedures to remove the ball bearings.

(1) Remove the bolt, and then detach the bearing retainer.

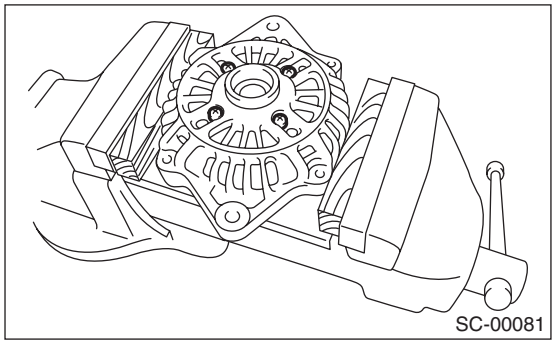

(2) Firmly attach an appropriate tool (such as a correct size socket wrench) to the bearing inner race.

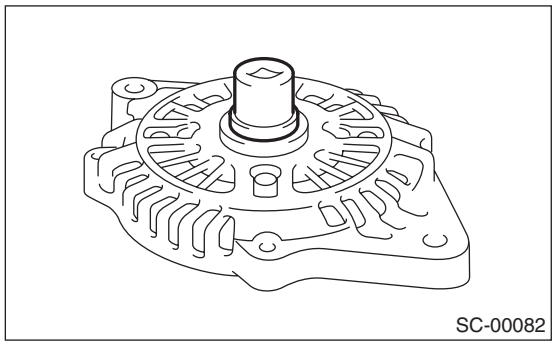
SC-00082

(3) Use the press to push the ball bearings out from the front cover.

6) Using the bearing puller, remove the bearings from the rotor.

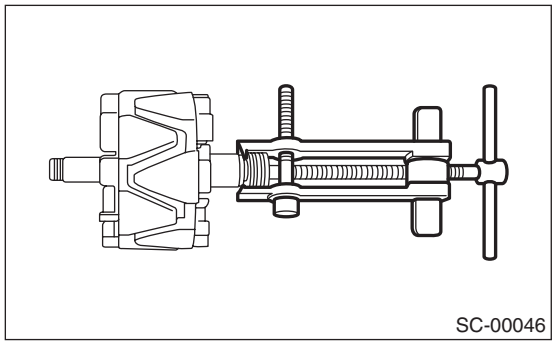
SC-00046

7) Disconnect the connection between the rectifier and stator coil, then remove the stator coil.

CAUTION:
The rectifier is easily damaged by heat. Do not allow a 180 — 270 W soldering iron to contact the terminals for 5 seconds or more at a time.

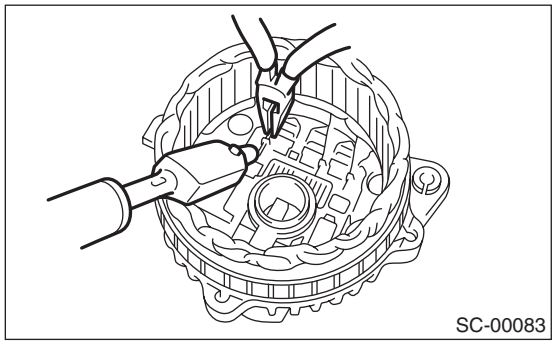
SC-00083

8) Use the following procedures to remove the IC regulator.

(1) Remove the screws which secure the IC regulator to the rear cover.

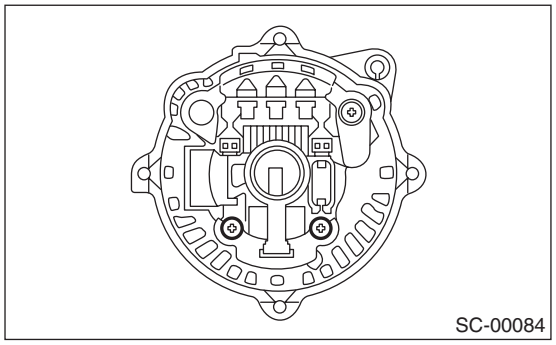
SC-00084

(2) Disconnect the connection between the IC regulator and rectifier, then remove the IC regulator.

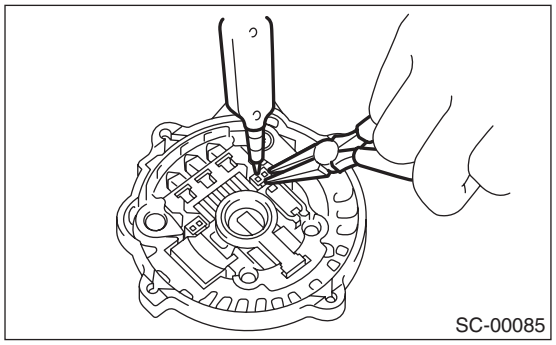
SC-00085

9) Use the following procedures to remove the brush.

(1) Remove the cover A.

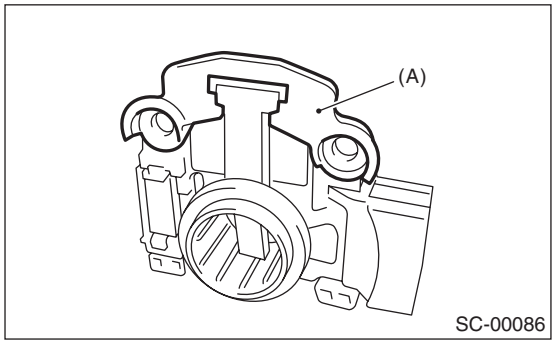

SC-00086

(A) Cover A

(2) Remove the cover B.

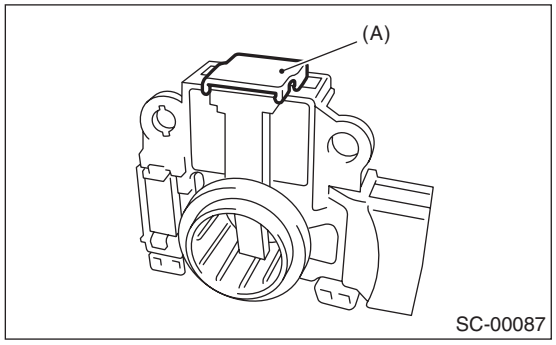

(A) Cover B

(3) Disconnect the connection and remove the brush.

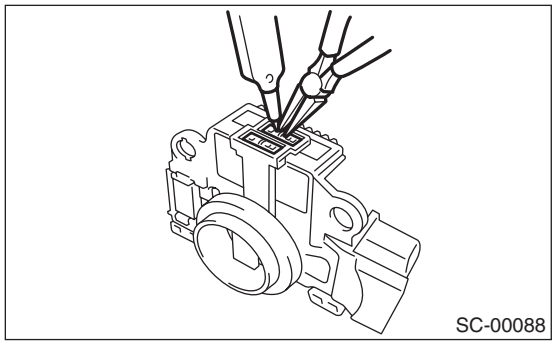

10) Remove the rectifier as follows.
(1) Remove the bolts which secure the rectifier.

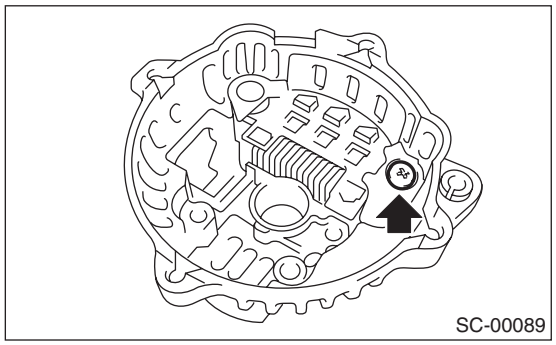

(2) Remove the cover on terminal B.

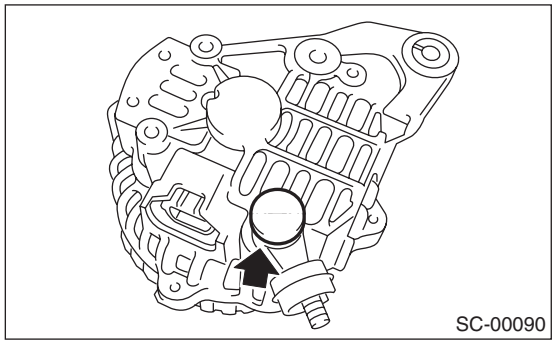

(3) Remove the nuts of terminal B, then remove the rectifier.

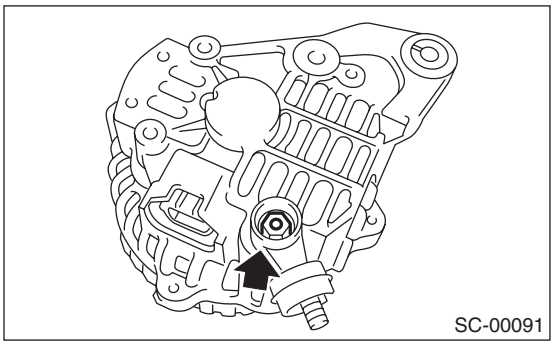

D: ASSEMBLY

Assemble in the reverse order of disassembly.

NOTE:
• Refer to component for tightening torque of each part. <Ref. to SC(STI)-4, GENERATOR, COMPONENT, General Description.>
• After assembling, manually turn the pulley to check that the rotor rotates smoothly.

1) Push of the brush
Before assembling the front and rear parts, press the brush down into the brush holder, then fix the brush in that position by inserting a [1 mm (0.08 in) dia., 40 — 50 mm (1.6 — 2.0 in) long] wire through the hole as shown in the figure.

CAUTION:
After assembling, remove the wire.

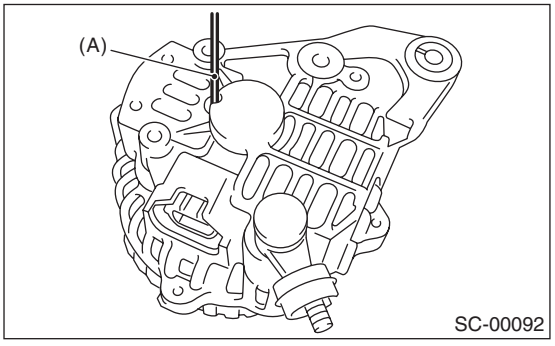

(A) Wire

2) Install the ball bearings.
(1) Set the ball bearings in the front cover, then securely install an appropriate tool (such as a socket wrench of proper size) to the bearing outer race.
(2) Using a press to press the ball bearings into the specified location.
(3) Install the bearing retainer.

3) Install the bearings.

CAUTION:
Do not apply grease to the bearings. If there is any oil on the bearing box, remove it completely.

(1) Use a press to install the bearings to the rotor shaft.
(2) Heat the bearing box in rear cover at 50 to 60°C (122 to 140°F), and then press the bearing into rear cover.

E: INSPECTION

1. DIODE

CAUTION:
There is the possibility of damaging the diodes if a mega-tester (used to measure high voltages) or a similar measuring instrument is used. Never use a mega tester or equivalent for this test.

1) Check for continuity between the diode lead and positive side heat sink. If resistance is 1 Ω or more only in the direction from the diode lead to the heat sink, replace the rectifier.

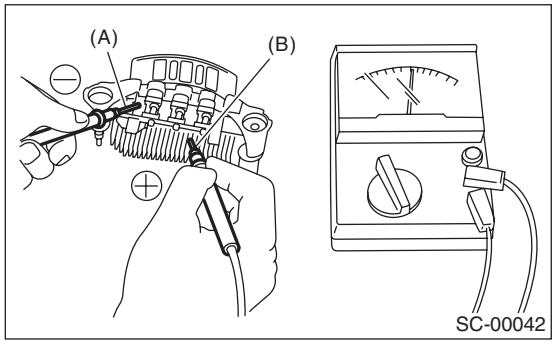

(A) Diode lead
(B) Heat sink (positive side)

2) Check for continuity between the negative side heat sink and diode lead. If resistance is 1 Ω or more only in the direction from the heat sink to the diode lead, replace the rectifier.

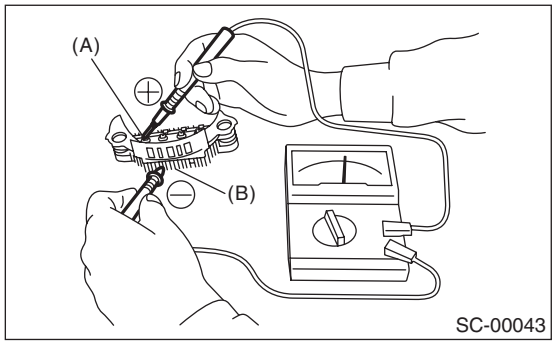

(A) Diode lead
(B) Heat sink (negative side)

2. ROTOR

1) Inspect the slip rings for contamination or any roughness on the sliding surface. Repair the slip ring surface using a lathe or sand paper.
2) Measure the slip ring outer diameter. Replace the rotor if the slip ring is worn.

Slip ring outer diameter:
Standard
22.7 mm (0.894 in)
Limit
22.1 mm (0.870 in)

3) Using a circuit tester, check the resistance between slip rings. If resistance exceeds the standard, replace the rotor.

Standard:
Approx. 1.8 — 2.2 Ω

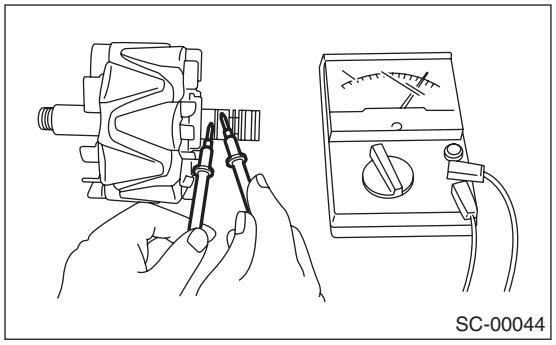

4) Check the continuity between slip ring and rotor core or shaft. If there is continuity, replace the rotor because the rotor coil is grounded.

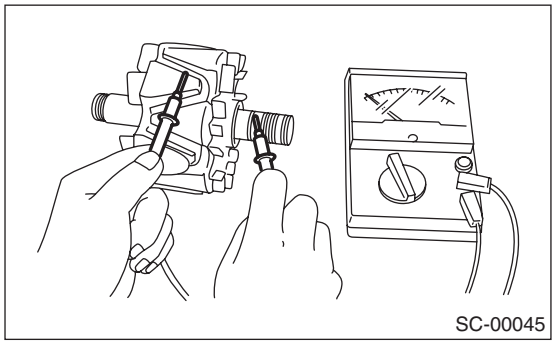

5) Check the bearings. If there is any noise, or the rotor does not rotate smoothly, replace the bearings.

3. STATOR COIL

1) Inspect continuity between the stator coil lead wire terminals. If the resistance is 1 MΩ or more, replace the stator coil.

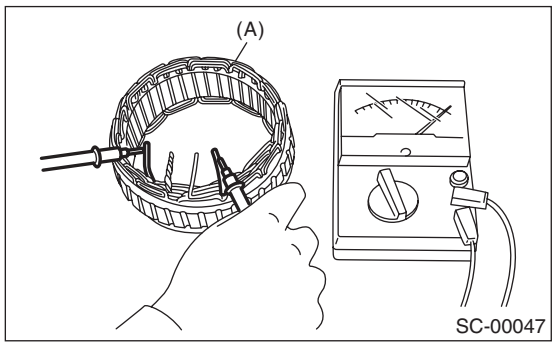

(A) Stator coil

2) Inspect the continuity between the stator coil stator core and lead wire terminals. If the resistance is 1 Ω or less, replace the stator coil.

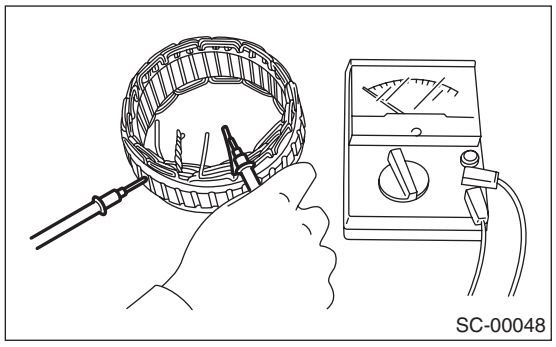

4. BRUSH

1) Measure the length of each brush. Replace the brush if wear exceeds service limits. There is a service limit mark (A) on each brush.

Brush length:
Standard (1)
18.5 mm (0.728 in)
Limit (2)
5.0 mm (0.197 in)

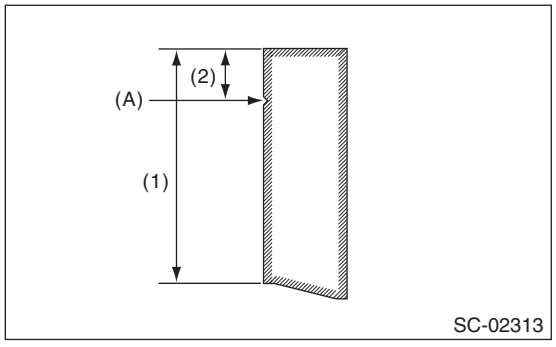

2) Using a spring pressure indicator, push the brush into the brush holder until its tip protrudes 2 mm (0.08 in). Then measure the pressure of brush spring. If the pressure is 2.648 N (270 g, 9.52 oz) or less, replace the brush spring with a new part. 4.609 — 5.786 N (470 — 590 g, 16.58 — 20.810 oz) pressure is required on the new spring.

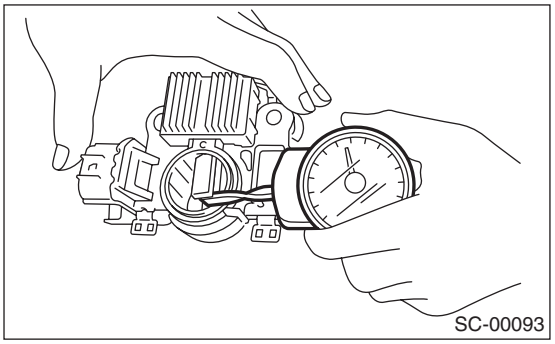

5. BALL BEARING

Check the ball bearings. Replace the ball bearings if there is resistance in the rotation, or if there is any abnormal noise.

6. OTHER INSPECTIONS

Check that the generator does not have deformation, cracks and any other damage.

4. Battery

A: REMOVAL

1) Disconnect the positive (+) terminal after disconnecting the negative (–) terminal of battery.
2) Remove the harness clip of the negative terminal from the battery rod.
3) Remove the flange nut from battery rod and remove battery holder.

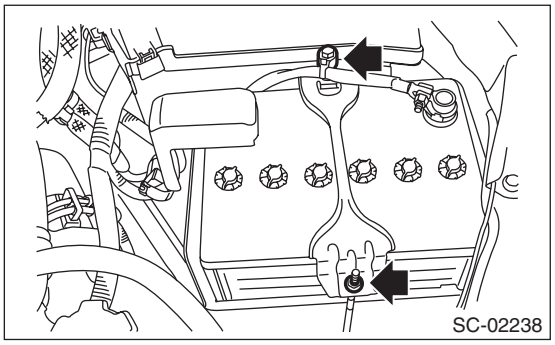

4) Remove the battery.

B: INSTALLATION

Install in the reverse order of removal.

Tightening torque:
3.5 N·m (0.4 kgf-m, 2.6 ft-lb)

NOTE:
- Clean the battery cable terminals and apply grease to retard the formation of corrosion.
- Connect the positive (+) terminal, and then connect the negative (–) terminal of the battery.
- After the battery is installed, initial diagnosis of the electronic throttle control is performed. Wait for 10 seconds or more after turning the ignition switch to ON, and then start the engine.

C: INSPECTION

WARNING:
- **As batteries produce flammable gases, be careful not to bring an open flame close to the batteries.**
- **Ventilate sufficiently when using or charging battery in enclosed space.**
- **Electrolyte is corrosive acid, and has toxicity; be careful of handling the fluid.**
- **For safety, in case an explosion does occur, wear eye protection or shield your eyes when working near any battery. In addition, never lean over the battery.**
- **Be careful that the electrode does not come into contact with skin, eyes or clothing. Especially at contact with eyes, flush with water for 15 minutes and get prompt medical attention.**
- **Be careful not to let the electrode contact with the coated parts.**
- **Before starting work, remove rings, metal watch-bands, and other metal jewelry.**
- **Be careful not to let the metal tools contact the positive battery terminal and anything connected to it. When the operation using a metal tool to the positive terminal or anything connected to it is required, disconnect the battery ground terminal before starting the operation.**

1. APPEARANCE

Check the battery case, top cover and terminal posts for dirt or cracks, and perform the following work as necessary.
- Clean the battery with water and wipe with a dry cloth.
- Apply a thin coat of grease on the terminal posts to prevent corrosion.

Check

- ***Normal → Go to the check item 2.***
- ***Abnormal → Replace the battery.***

2. ELECTROLYTE LEVEL

Check the electrolyte level in each cell.

CAUTION:
Do not fill beyond MAX level.

NOTE:
If the level is below the middle point between MIN level and MAX level, pour distilled water into the battery cell to bring the level to MAX.

Check

- ***MAX level → Go to the check item 3.***
- ***Below the middle point between MIN level and MAX level → Fill → Go to the check item 3.***

3. SPECIFIC GRAVITY OF ELECTROLYTE

Check the specific gravity of the electrolyte using a hydrometer and a thermometer.

NOTE:
- Specific gravity varies with temperature of electrolyte so that it must be corrected at 20°C (68°F) using the following calculation:

S_{20} = St + 0.0007 × (t – 20)
S_{20}: Specific gravity corrected at electrolyte temperature of 20°C
St: Measured specific gravity
t: Measured temperature (°C)

- When measuring in a simplified manner using the battery terminal voltage, calculate the specific gravity by the following formula.

Specific gravity = [0.187 × battery terminal voltage (V)] – 1.1

Perform the steps 1) and 2) before measuring the voltage in order to stabilize the voltage.
1) Turn the ignition switch to OFF and illuminate the headlight for 30 seconds.
2) After turning off the headlight, leave the vehicle for one minute.

• Measuring the specific gravity of the electrolyte in the battery will disclose the state of charge of the battery. The relation between specific gravity and state of charge is as shown in the figure.

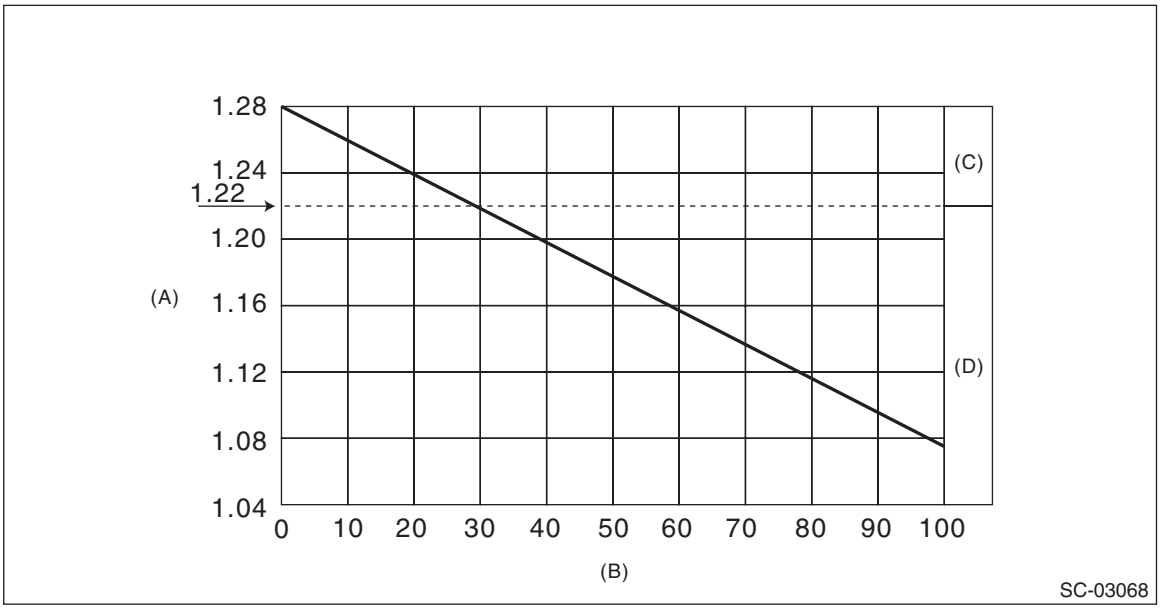

(A) Specific gravity [20°C (68°F)] (B) Amount of discharge (%) (C) Good
(D) Need to charge or replace

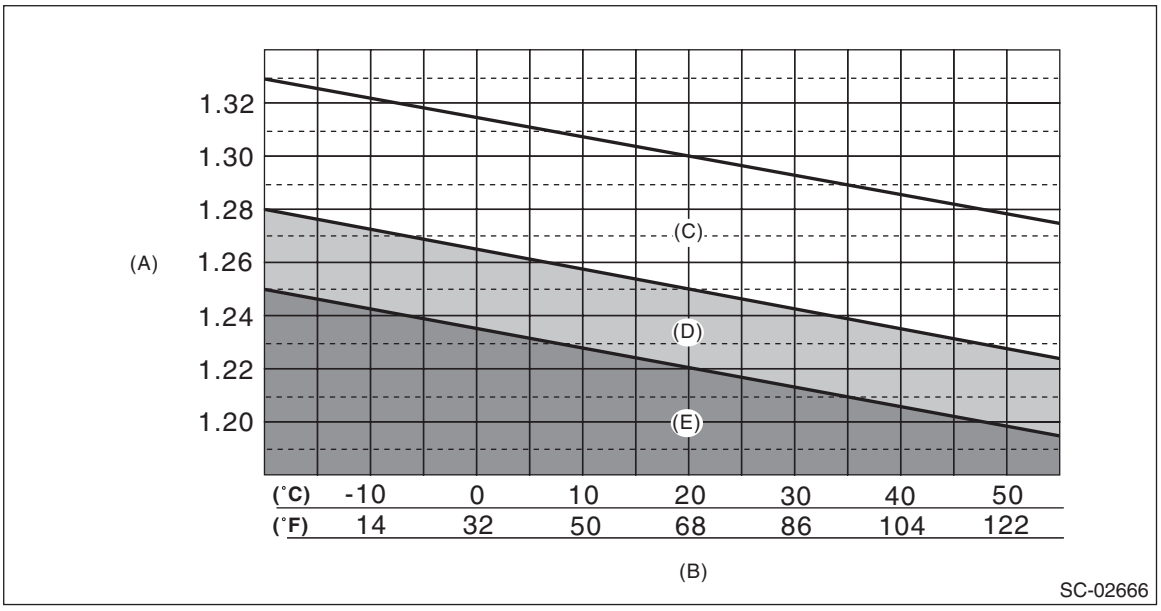

(A) Specific gravity [20°C (68°F)] (B) Electrolyte temperature (C) Good
(D) Caution (E) Need charging

Check

- ***Specific gravity: 1.250 — 1.290, and difference between cells is 0.04 or less → Battery is normal***
- ***Specific gravity: Less than 1.250, or difference between cells is 0.04 or more → Battery needs to be charged or replaced***

4. STANDBY CURRENT

1) Prepare the circuit tester which can measure down to 1 mA.

NOTE:
For model with keyless access function, the standby current changes regularly. Therefore, prepare the analog type circuit tester.

2) Using the circuit tester, check the standby current.

(1) Check the battery. <Ref. to SC(STI)-24, APPEARANCE, INSPECTION, Battery.> <Ref. to SC(STI)-25, ELECTROLYTE LEVEL, INSPECTION, Battery.> <Ref. to SC(STI)-25, SPECIFIC GRAVITY OF ELECTROLYTE, INSPECTION, Battery.>

NOTE:
The standby current may be displayed lower than the actual value if the battery is weak, so be sure to check the battery. Charge or replace if necessary.

(2) Check that the fuse is not blown out and is properly inserted.

(3) When non-genuine electrical parts (including parts sold in authorized workshops) are installed, remove all parts except for genuine electrical parts.

(4) Check that back-up fuse is inserted. <Ref. to PI-5, FUSE, PRE-DELIVERY INSPECTION (PDI) PROCEDURE, Pre-delivery Inspection.>

(5) Start the engine, and set the switch positions for each system as shown in the following table.

NOTE:
Some of the listed systems are not equipped depending on the vehicle. Set only the systems equipped on the vehicle to the positions as shown.

System	Position
Headlight	ON or Auto
Fog light	ON
Wiper (front and rear)	ON or Low speed
Audio and navigation system	ON
Rear defogger	ON
Room light	DOOR
Luggage light	DOOR
Map light	OFF
Auto A/C	ON (AUTO)
Manual A/C	ON (Speed 1)
Electronic parking brake	ON
Electrical parts other than listed above (electrical parts that users can confirm the operation with the key removed)	OFF

(6) Turn the ignition switch to OFF.

(7) Operate the front hood lock release lever to unlock the front hood.

(8) Close all the doors (including rear gate and trunk lid) and then lock the doors. (Security alarm is in set condition)

NOTE:
For model with keyless access function, take the access key 1.5 m or more away from the vehicle after the door lock. And do not put the access key close to the vehicle while measuring the standby current.

(9) Wait for 5 minutes after door lock until the standby current stabilizes.
(10) Loosen the nut which holds the ground terminal to the battery.

NOTE:
Do not remove the ground terminal.

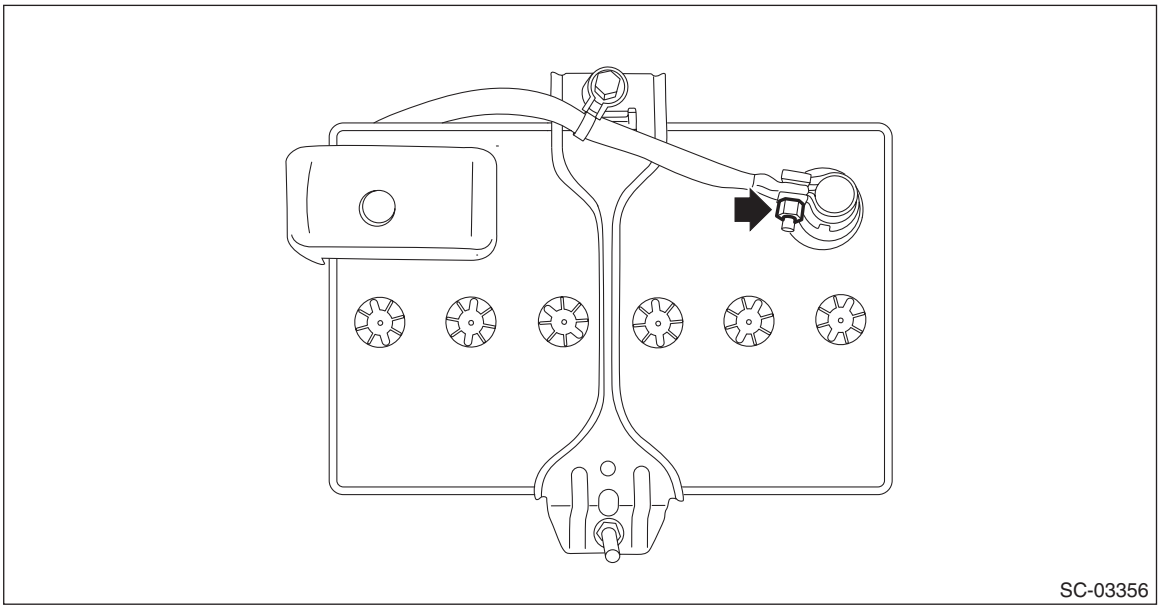
SC-03356

(11) Connect the circuit tester positive terminal to the ground terminal.

NOTE:
To prevent the damage to the circuit tester, set the circuit tester range to a large value first, then gradually change it to smaller values.

(12) Connect the circuit tester negative terminal to the ground terminal installation part of the battery.
(13) While connecting the circuit tester positive terminal with the ground terminal as shown in the figure below, remove the ground terminal from the battery.

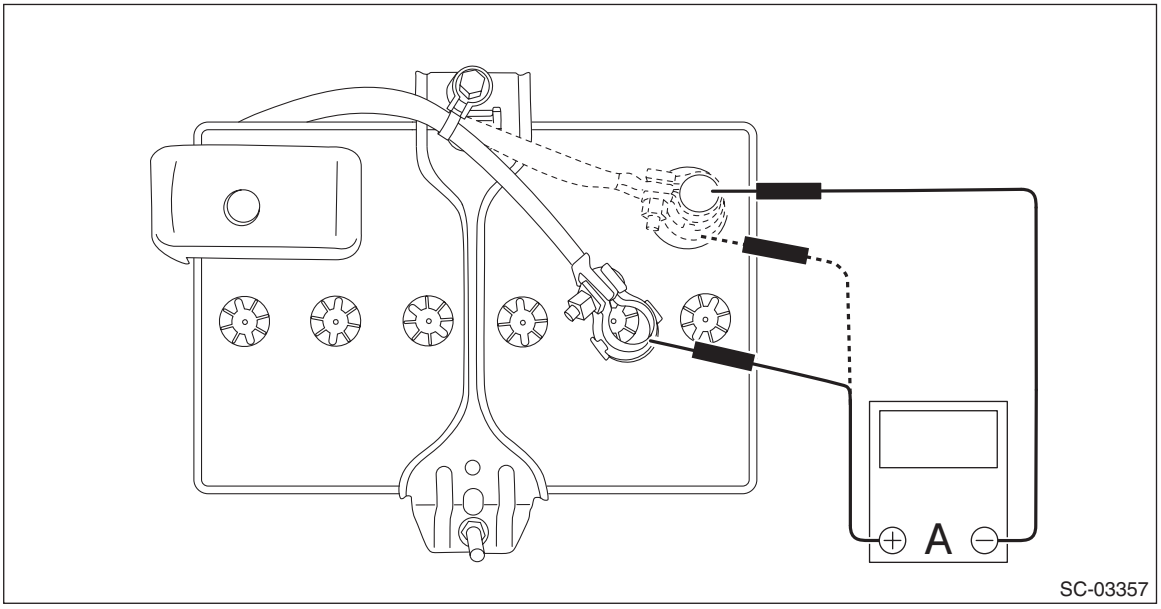

SC-03357

(14) Check the standby current.

NOTE:
• For model with keyless access function, the standby current changes periodically because the keyless access system continuously searches the access key (polling).
• When measuring the standby current, the reading of the circuit tester oscillates. Therefore, read the average value (median value).
• The standby current may become large when the vehicle system is activated 5 times at 30-minute intervals or 5 hours after turning the ignition switch to OFF. Therefore, the measurement should be completed in 20 minutes. If it takes more than 20 minutes, start the engine once, stop the engine, then perform the inspection.

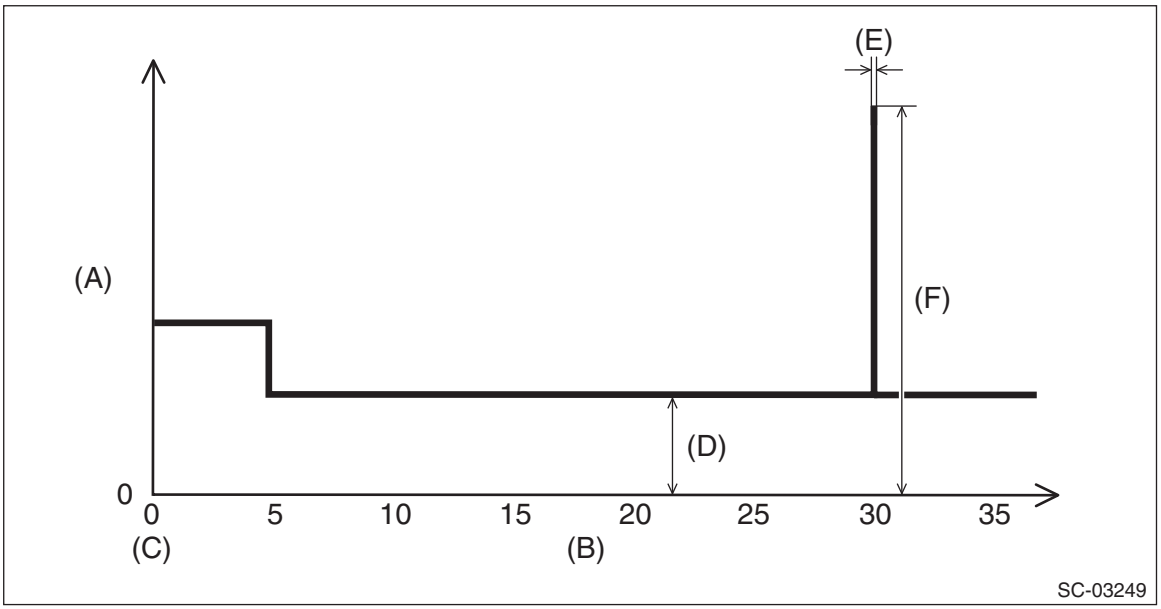

(A)	Current/mA	(B)	Time/min	(C)	Ignition OFF
(D)	Less than 70 mA	(E)	5 seconds (system operation)	(F)	300 mA or more

Check

- ***When the maximum measurement value is less than 70 mA → Standby current is normal.***
- ***When the maximum measurement value is 70 mA or more → Go to step (15).***

(15) Remove all fuses one by one to identify which system changes the standby current value significantly. <Ref. to WI-19, Fuse And Relay.>
(16) Check the harness and connector of the system whose standby current has changed significantly.

D: CHARGE

WARNING:
• Do not bring an open flame close to the battery when working.

CAUTION:
• Prior to charging, corroded terminals should be cleaned with a brush and common caustic soda solution.
• Be careful while charging the battery because it produces flammable gasses.
• Observe instructions when handling the battery charger.
• Before charging the battery on the vehicle, disconnect the battery ground terminal to prevent damage of generator diodes or other electrical units.

1. NORMAL CHARGE (CONSTANT CURRENT CHARGE)

Charge the battery with the current value specified by manufacturer or with approximately 1/10 of battery's rating capacity. (See the table below.)

Type	Charging current (A)	CCA (A)
55D23L	4.0 — 5.0	390

CAUTION:
• The charge control feature and specifications for judgment of charge completion depend on the device. Follow the instruction manual of the charger used.
• Keep the electrolyte temperature at 45°C (113°F) or less while charging. Stop charging when the temperature exceeds this value.

NOTE:
The characteristics of typical charging methods are as follows.
• Constant current charging
This method makes it easy to charge to 100%, since the electrolyte is agitated by the gassing occurred at the end of charging. However, the time for charging is comparatively long because the current value is kept constant.
• Constant voltage charging
This method completes charging in a short period of time due to the large current. However, it is difficult to charge to 100% because no gassing occurred at the end of charging and the electrolyte is not agitated. Therefore, the combined use with the constant current charging is preferable.
• Quasi-constant voltage charging
This method is widely used for commercially available chargers.
Compared to the constant voltage charging whose charging current at the beginning of charging becomes large, it reduces the charging current by lowering the voltage at the initial stage, resulting in battery load reduction. The time for charging is comparatively long. However, this type of chargers can be manufactured comparatively inexpensive due to the simple control circuit (or manual settings). After the initial stage of charging is completed, it gradually raises the charging voltage so that the charging current is within the specification, until the battery is fully charged.
• Constant voltage/current charging
In addition to the constant voltage charging, this method controls the upper limit of the current.
The constant current charging is applied at the beginning of charging, and the constant voltage charging is applied at the end. This makes battery charge comparatively efficient in a short period of time. Charging by generators is similar to this method.
Judgment of charge completion
1) Specific gravity of electrolyte should be held within the specific range of 1.250 — 1.290 for one hour or more.
2) Voltage while charging should be held within the specified range of 15.0 — 16.8 V for one hour or more.
3) Gas is actively generated in all cells.

4) The amount of charge reaches 1.2 — 1.5 times of the amount of discharge.

NOTE:
The amount of discharge/charge can be calculated by the following formula.
Amount of discharge (Ah) = Remaining capacity (%) calculated by specific gravity × 5 hour rate capacity (Ah)
Amount of charge (Ah) = Charging current value (A) × Time for charging

2. QUICK CHARGING

Charge the battery in a short period of time with a relatively large current by using a quick charger.
Charge the battery with the current value at approximately 1/2 of battery's rating capacity. (See the table below.)

CAUTION:
• Quick charging is accompanied by a large amount of heat generation. Charging should be completed in up to 30 minutes regardless of battery size.
• Quick charging is used to recover the battery until it can start the vehicle. For full charging, use the normal charging method.
• Keep the electrolyte temperature at 55°C (131°F) or less while quick charging. Stop charging when the temperature exceeds this value.

Type	Charging current (A)	CCA (A)
55D23L	20.0 — 25.0	390

ENGINE (DIAGNOSTICS)

EN(STI)(diag)

		Page
1.	Basic Diagnostic Procedure	2
2.	Check List for Interview	3
3.	General Description	5
4.	Electrical Component Location	9
5.	Engine Control Module (ECM) I/O Signal	20
6.	Data Link Connector	30
7.	General Scan Tool	31
8.	Subaru Select Monitor	36
9.	Read Diagnostic Trouble Code (DTC)	47
10.	Inspection Mode	48
11.	Drive Cycle	54
12.	Clear Memory Mode	68
13.	Active Test	69
14.	Malfunction Indicator Light	70
15.	Diagnostics for Engine Starting Failure	77
16.	Diagnostic Procedure for Subaru Select Monitor Communication	94
17.	List of Diagnostic Trouble Code (DTC)	96
18.	Diagnostic Procedure with Diagnostic Trouble Code (DTC)	106
19.	Diagnostic Procedure without Diagnostic Trouble Code (DTC)	641
20.	General Diagnostic Table	644

1. Basic Diagnostic Procedure

A: PROCEDURE

1. ENGINE

	Step	Check	Yes	No
1	**CHECK ENGINE START FAILURE.** 1) Ask the customer when and how the trouble occurred using the interview check list. <Ref. to EN(STI)(diag)-3, CHECK, Check List for Interview.> 2) Start the engine.	Does the engine start?	Go to step **2**.	Inspection using "Diagnostics for Engine Starting Failure" <Ref. to EN(STI)(diag)-77, Diagnostics for Engine Starting Failure.>
2	**CHECK ILLUMINATION OF MALFUNCTION INDICATOR LIGHT.**	Does the malfunction indicator light illuminate?	Go to step **3**.	Inspection using "General Diagnostic Table". <Ref. to EN(STI)(diag)-644, General Diagnostic Table.>
3	**CHECK COMMUNICATION STATUS.** 1) Turn the ignition switch to OFF. 2) Connect the Subaru Select Monitor or general scan tool to the data link connector. 3) Turn the ignition switch to ON, and run the Subaru Select Monitor or general scan tool. NOTE: • Subaru Select Monitor For detailed operation procedures, refer to the "Subaru Select Monitor". <Ref. to EN(STI)(diag)-36, Subaru Select Monitor.> • General scan tool For detailed operation procedures, refer to the general scan tool operation manual.	Does Subaru Select Monitor or general scan tool communicate with vehicle normally?	Go to step **4**.	Inspection using "Diagnostic Procedure for Subaru Select Monitor Communication". <Ref. to EN(STI)(diag)-94, Diagnostic Procedure for Subaru Select Monitor Communication.>
4	**CHECK DTC.** Read DTC using Subaru Select Monitor or general scan tool. NOTE: • Subaru Select Monitor For detailed operation procedures, refer to "Read Diagnostic Trouble Code (DTC)". <Ref. to EN(STI)(diag)-47, Read Diagnostic Trouble Code (DTC).> • General scan tool For detailed operation procedures, refer to the general scan tool operation manual.	Is DTC displayed on Subaru Select Monitor or general scan tool?	Record DTC and freeze frame data, then repair the trouble cause. <Ref. to EN(STI)(diag)-96, List of Diagnostic Trouble Code (DTC).> After repair, go to the next step. Go to step **5**.	Repair the related parts. NOTE: If DTC is not shown on display although the malfunction indicator light illuminates, perform the diagnosis of malfunction indicator light circuit or combination meter. <Ref. to EN(STI)(diag)-70, Malfunction Indicator Light.>
5	**PERFORM DIAGNOSIS.** 1) Perform the Clear Memory Mode. <Ref. to EN(STI)(diag)-68, Clear Memory Mode.> 2) Perform the Inspection Mode or Drive Cycle. <Ref. to EN(STI)(diag)-48, Inspection Mode.> <Ref. to EN(STI)(diag)-54, Drive Cycle.>	Is DTC displayed on Subaru Select Monitor or general scan tool?	Inspect using "Diagnostic Procedure with Diagnostic Trouble Code (DTC)". <Ref. to EN(STI)(diag)-106, Diagnostic Procedure with Diagnostic Trouble Code (DTC).>	Finish the diagnosis.

2. Check List for Interview

A: CHECK

1. CHECK LIST NO. 1

Check the following item when problem has occurred.

NOTE:
Use copies of this page for interviewing customers.

Customer's name		Engine No.	
Date of purchase		Fuel type	
Date of repair		Odometer reading	km
V.I.N.			miles
Weather	❑ Fine ❑ Cloudy ❑ Rainy ❑ Snowy ❑ Various/Others:		
Ambient air temperature	°C (°F)		
	❑ Hot ❑ Warm ❑ Cool ❑ Cold		
Place	❑ Highway ❑ Suburbs ❑ Inner city ❑ Uphill ❑ Downhill ❑ Rough road ❑ Others:		
Engine temperature	❑ Cold ❑ Warming-up ❑ After warming-up ❑ Any temperature ❑ Others:		
Engine speed	rpm		
Vehicle speed	km/h (MPH)		
Driving conditions	❑ Not affected ❑ At starting ❑ While idling ❑ At racing ❑ While accelerating ❑ While cruising ❑ While decelerating ❑ While turning (RH/LH)		
Headlight	❑ ON/❑ OFF	Rear defogger	❑ ON/❑ OFF
Blower	❑ ON/❑ OFF	Audio	❑ ON/❑ OFF
A/C compressor	❑ ON/❑ OFF	Rear entertainment system	❑ ON/❑ OFF
Radiator fan	❑ ON/❑ OFF	Car phone	❑ ON/❑ OFF
Front wiper	❑ ON/❑ OFF	Wireless device	❑ ON/❑ OFF
Rear wiper	❑ ON/❑ OFF		

2. CHECK LIST NO. 2

Check the following item about the vehicle's state when the malfunction indicator light turns on.

NOTE:
Use copies of this page for interviewing customers.

a) Other warning lights or indicators illuminate: ❑ Yes / ❑ No
❑ Fuel level warning light ❑ Charge warning light ❑ Engine coolant temperature warning light ❑ Oil pressure warning light ❑ ATF temperature warning light or Sport indicator light ❑ Driver's control center differential indicator light ❑ ABS warning light ❑ VDC warning light ❑ Cruise indicator light ❑ SI-CRUISE warning light ❑ Immobilizer indicator light ❑ STEERING warning light ❑ Electronic parking brake warning light ❑ Glow indicator light ❑ Sedimenter warning light ❑ Others:
b) Fuel level
• Lack of fuel: ❑ Yes / ❑ No • Indicator position of fuel gauge: • Experienced running out of fuel: ❑ Yes / ❑ No
c) Intentional connecting or disconnecting of connectors or spark plug cords: ❑ Yes / ❑ No
• What:
d) Intentional connecting or disconnecting of hoses: ❑ Yes / ❑ No
• What:
e) Installing of other parts except genuine parts: ❑ Yes / ❑ No
• What: • Where:
f) Occurrence of noise: ❑ Yes / ❑ No
• From where: • What kind:
g) Occurrence of smell: ❑ Yes / ❑ No
• From where: • What kind:
h) Intrusion of water into engine compartment or passenger compartment: ❑ Yes / ❑ No
i) Troubles occurred
❑ Engine does not start. ❑ Engine stalls during idling. ❑ Engine stalls while driving. ❑ Engine speed decreases. ❑ Engine speed does not decrease. ❑ Rough idling ❑ Poor acceleration ❑ Back fire ❑ After fire ❑ Does not shift. ❑ Excessive shift shock

3. General Description

A: CAUTION

1) Airbag system wiring harness is routed near the ECM, main relay and fuel pump relay.

CAUTION:
- **Do not use electrical test equipment on the airbag system circuits.**
- **Be careful not to damage the airbag system wiring harness when servicing the ECM, TCM, main relay and fuel pump relay.**

2) Never connect the battery in reverse polarity. Doing so will damage the ECM instantly, and other parts will also be damaged.
3) Do not disconnect the battery terminals while the engine is running. A large counter electromotive force will be generated in the generator, and this voltage may damage electronic parts such as ECM etc.
4) When disconnecting the connectors of the electrical components, always be sure to turn the ignition switch to OFF. Perform the Clear Memory Mode after connecting the connectors. <Ref. to EN(STI)(diag)-68, Clear Memory Mode.>
5) When measuring the voltage or resistance of individual sensor or all electrical control modules, use a tapered pin with a diameter of 0.6 mm (0.024 in) or less and touch it to the tip of terminal.

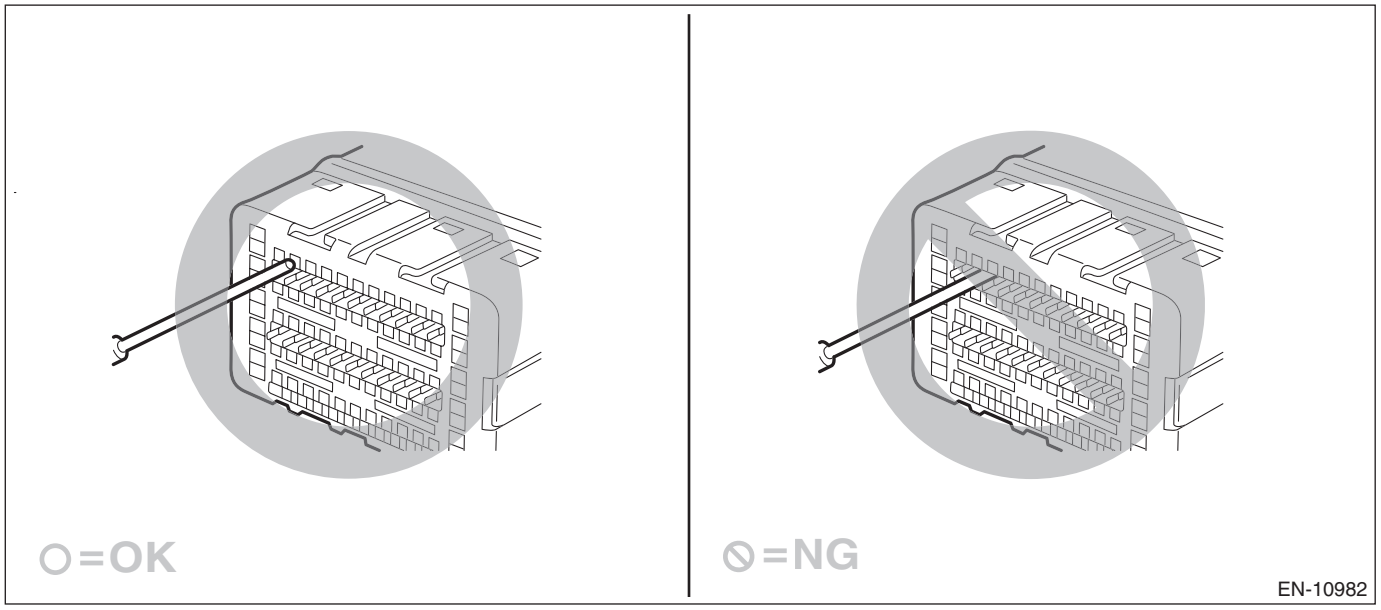

Never insert the tapered pin into the terminal because it deforms inside which may lead to a malfunction.

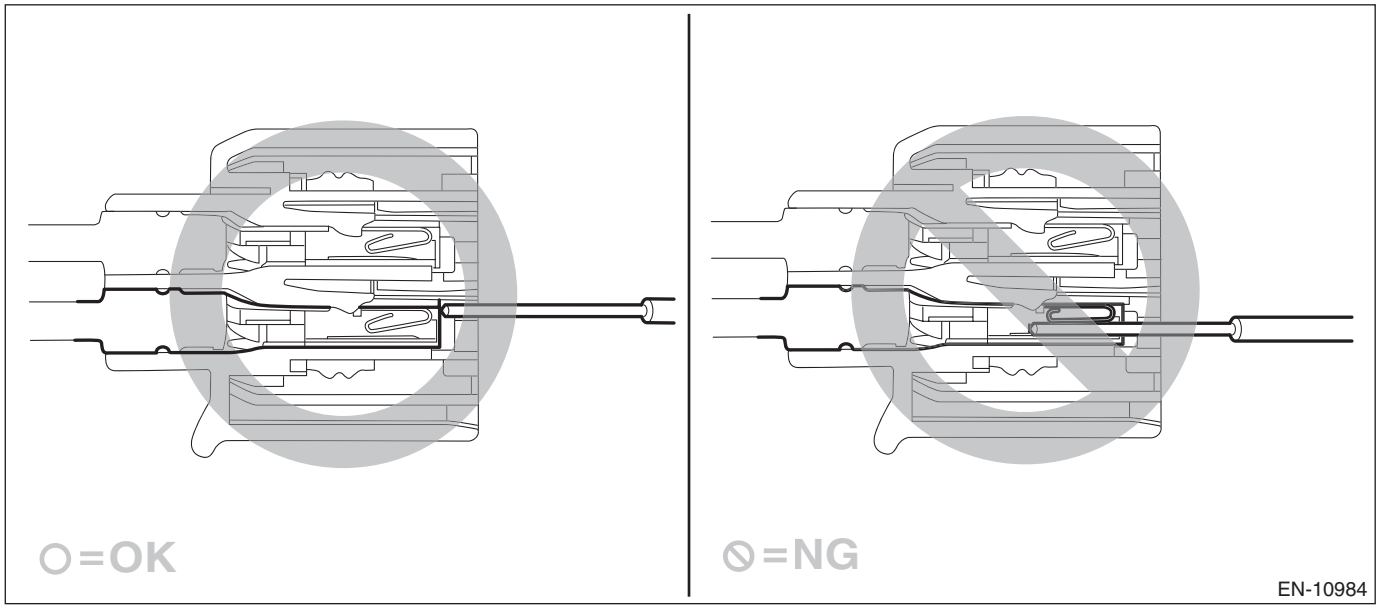

CAUTION:
When replacing the ECM, be careful not to use the ECM of wrong specification to avoid any damage on the fuel injection system.

NOTE:
When replacing the ECM of the models with immobilizer, immobilizer system must be registered. For detailed operation procedure, refer to the “REGISTRATION MANUAL FOR IMMOBILIZER”.
6) Take care not to allow water to get into the connectors when servicing or washing the vehicle in rainy weather. Avoid exposure to water even if the connectors are waterproof.
7) Use the ground terminal of the bulkhead harness for the grounding point when measuring voltage and resistance inside the passenger compartment.

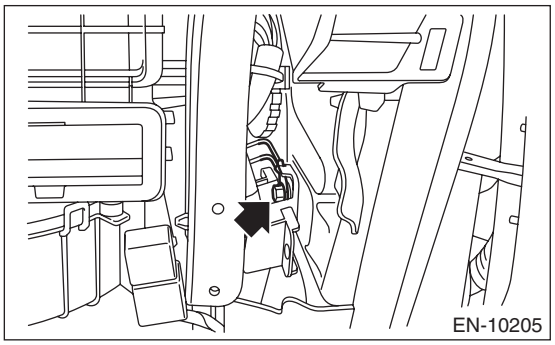
EN-10205

8) Use the engine ground terminal or engine assembly for the grounding point when measuring the voltage and resistance in engine compartment.

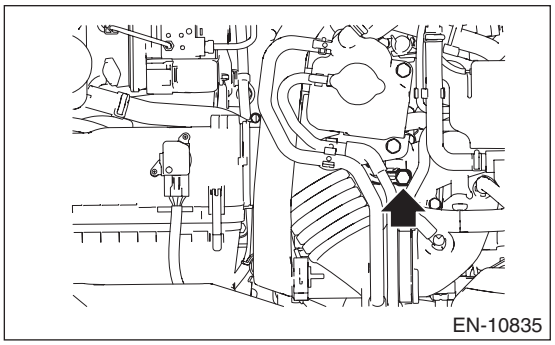
EN-10835

9) All parts related to the engine control system are precision parts. Do not drop or otherwise apply impact. Do not reuse the parts that are dropped accidentally.
10) Observe the following cautions when installing a radio in vehicle.

CAUTION:
• The antenna must be kept as far apart as possible from the ECM. <Ref. to EN(STI)(diag)-9, CONTROL MODULE, LOCATION, Electrical Component Location.>
• The antenna feeder must be placed as far apart as possible from the ECM and engine control system harness.
• Carefully adjust the antenna for correct matching.
• When mounting a large power type radio, pay special attention to the three items mentioned above.
• Incorrect installation of the radio may affect the operation of ECM.
11) When disconnecting the fuel hose, be sure to release the fuel pressure beforehand. <Ref. to FU(STI)-64, RELEASING OF FUEL PRESSURE, PROCEDURE, Fuel.>
12) Warning lights may illuminate when performing driving test with jacked-up or lifted-up condition, but this is not a system malfunction. The reason for this is the rotating speed difference between the front and rear wheels. After diagnosis of engine control system, perform the VDC memory clear procedure of self-diagnosis function. <Ref. to VDC(diag)-30, Clear Memory Mode.>

B: INSPECTION

Before performing diagnostics, check the following item which might affect engine problems.

1. BATTERY

1) Check the battery voltage. <Ref. to SC(STI)-24, INSPECTION, Battery.>
2) Check the condition of the main and other fuses, and harnesses and connectors. Also check for proper grounding.

2. ENGINE GROUND

Make sure that the engine ground terminal is properly connected to the engine.

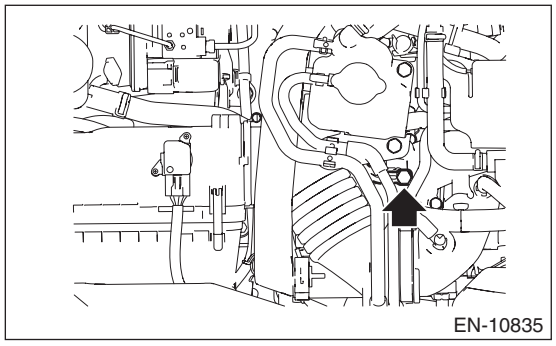

C: NOTE

• The on-board diagnostic (OBD) system detects and indicates a fault in various inputs and outputs of the complex electronic control. Malfunction indicator light in the combination meter indicates occurrence of a fault or trouble.
• Further, against any failure of sensors that would cause the vehicle to stop running, the fail-safe function is provided to ensure the minimal drivability.
• The OBD system incorporated with the vehicles within this type of engine complies with OBD-II regulations. The OBD system monitors the components and the system malfunction listed in “Engine Section” which affects on emissions.
• When the system decides that a malfunction occurs, malfunction indicator light illuminates. At the same time of the malfunction indicator light illumination or blinking, a DTC and a freeze frame engine conditions are stored into on-board computer.
• The OBD system stores freeze frame engine condition data (engine load, engine coolant temperature, fuel trim, engine speed and vehicle speed, etc.) into on-board computer when it detects a malfunction.
• Freeze frame engine condition data are stored until the DTCs are cleared. However when such malfunctions as fuel trim fault and misfire are detected with the freeze frame engine condition data stored, they are rewritten into those related to the fuel trim fault and misfire.
• When the malfunction does not occur again for three consecutive driving cycles*, malfunction indicator light is turned off, but DTC remains at on-board computer.
*: One driving cycle means the period between the ignition switch ON and the ignition switch OFF after driving.
• When performing diagnosis, connect the Subaru Select Monitor or general scan tool to the vehicle.

D: PREPARATION TOOL

1. SPECIAL TOOL

ILLUSTRATION	TOOL NUMBER	DESCRIPTION	REMARKS
 STSSM4	—	SUBARU SELECT MONITOR 4	Used for setting of each function and trouble-shooting for electrical system. NOTE: For detailed operation procedures of Subaru Select Monitor 4, refer to “Application help”.
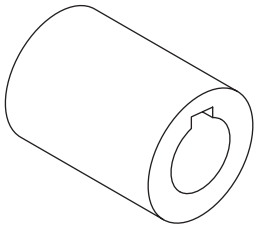 ST-499987500	499987500	CRANKSHAFT SOCKET	Used for rotating crankshaft.

2. GENERAL TOOL

TOOL NAME	REMARKS
Circuit tester	Used for measuring resistance, voltage and current.
Oscilloscope	Used for measuring the sensor.
DST-i	Used together with Subaru Select Monitor 4.

4. Electrical Component Location

A: LOCATION

1. CONTROL MODULE

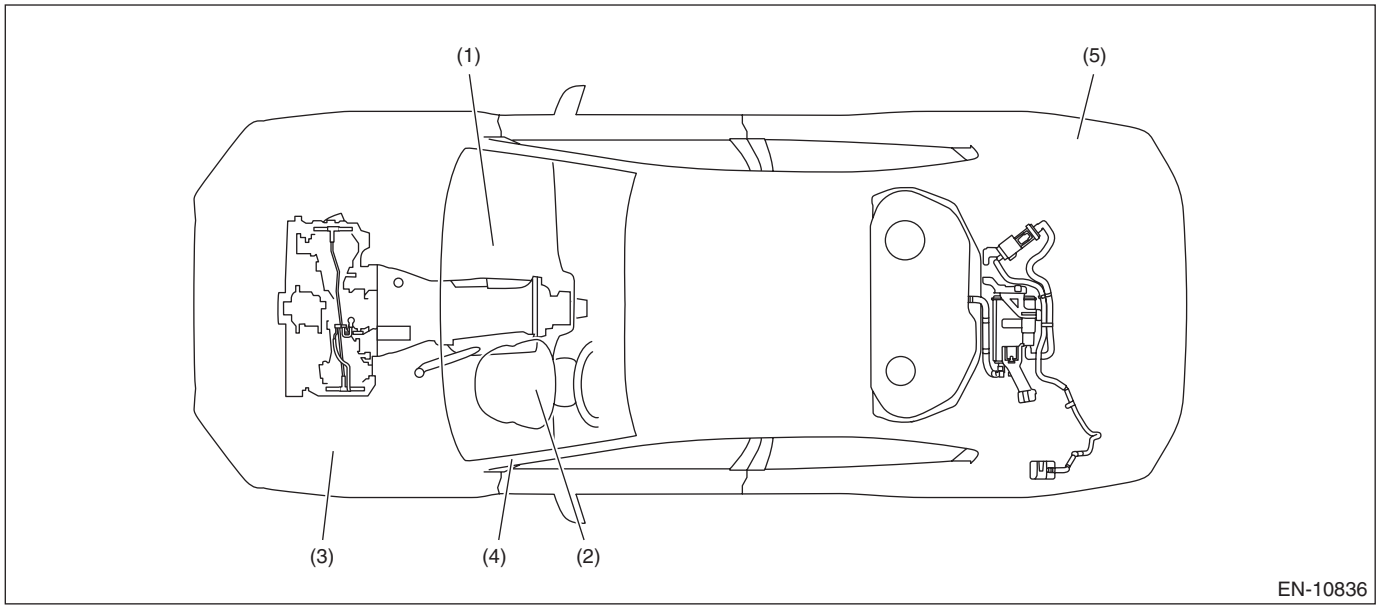

(1) Engine control module (ECM)
(2) Malfunction indicator light
(3) Delivery mode fuse
(4) Data link connector
(5) Fuel pump control unit

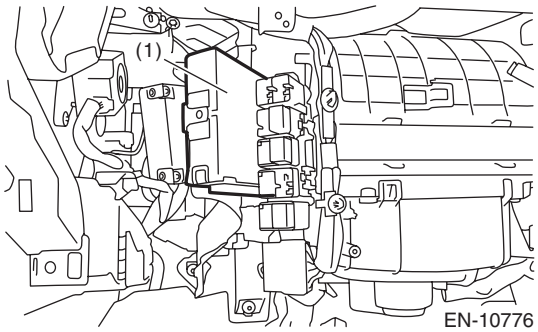

EN-10776

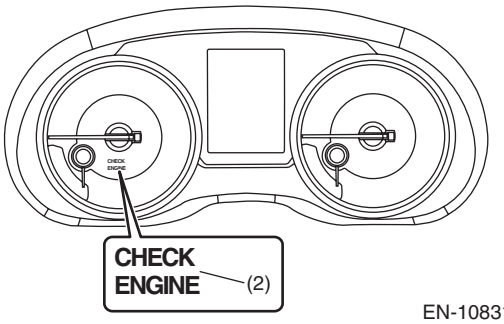

EN-10831

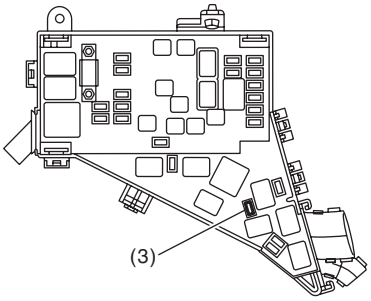

EN-10837

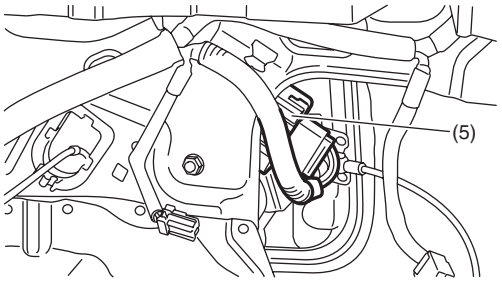

EN-10212

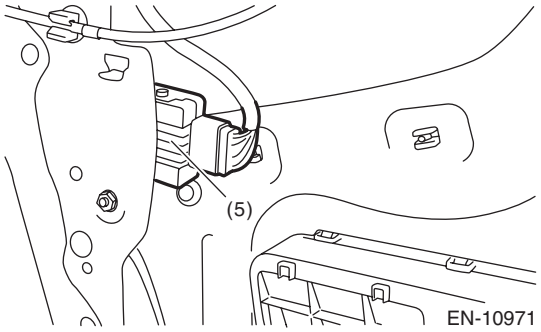

EN-10971

2. SENSOR

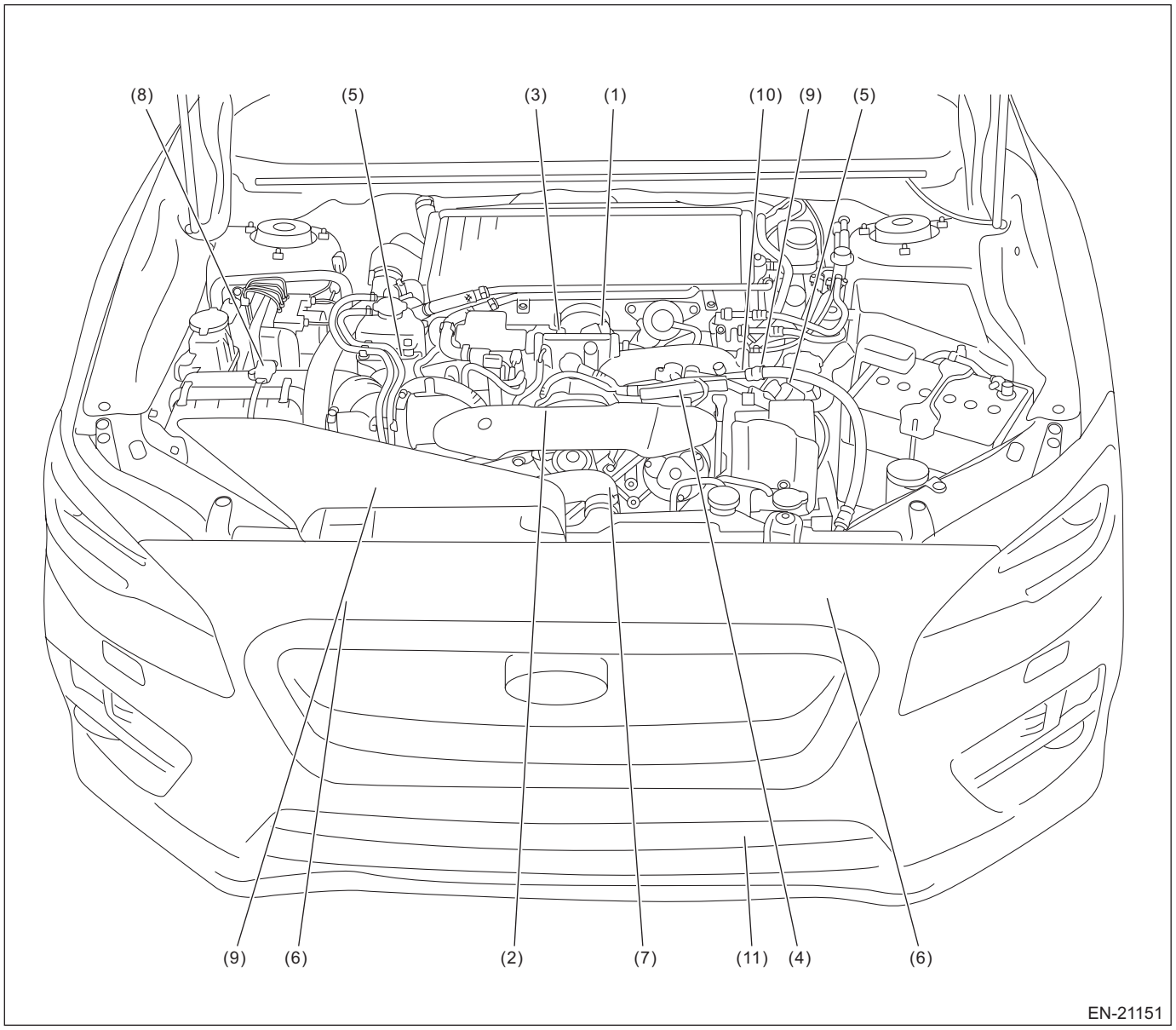

(1) Manifold absolute pressure sensor
(2) Engine coolant temperature sensor
(3) Electronic throttle control
(4) Knock sensor
(5) Intake camshaft position sensor
(6) Exhaust camshaft position sensor
(7) Crankshaft position sensor
(8) Mass air flow and intake air temperature sensor
(9) Tumble generator valve ASSY (with built-in sensor)
(10) Secondary air combination valve LH (with built-in sensor)
(11) Ambient sensor

Electrical Component Location

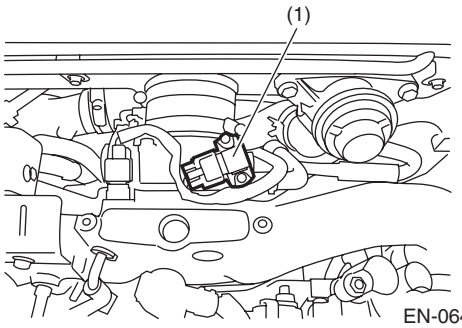

EN-06418

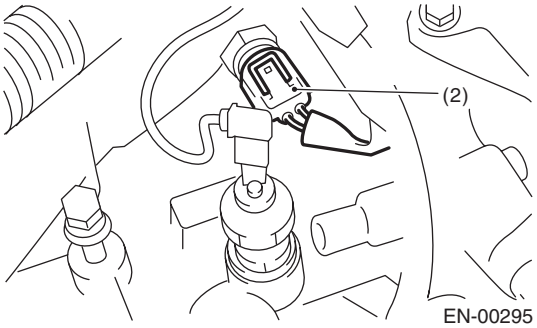

EN-00295

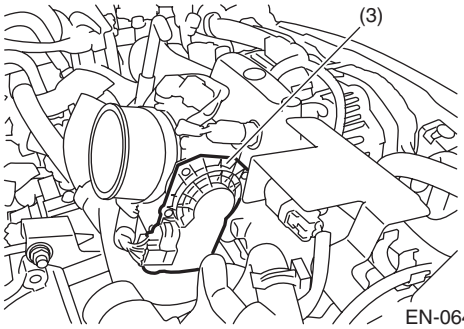

EN-06419

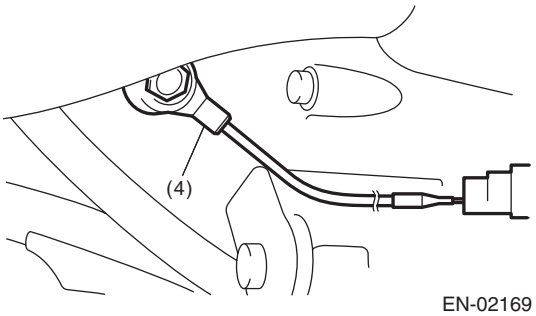

EN-02169

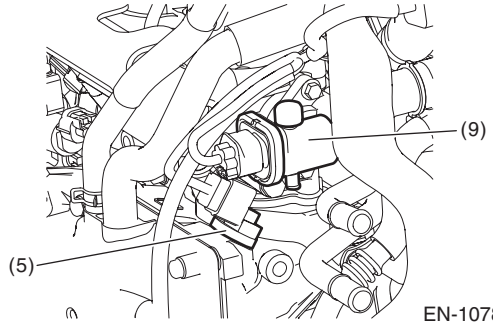

EN-10785

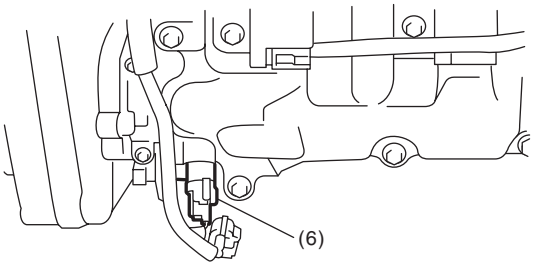

EN-01929

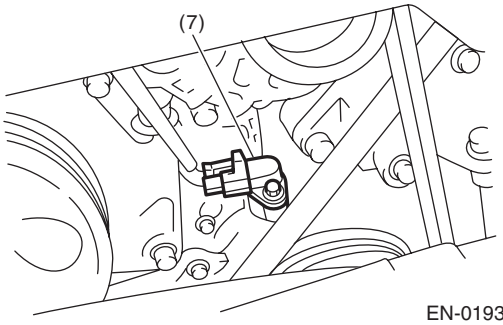

EN-01930

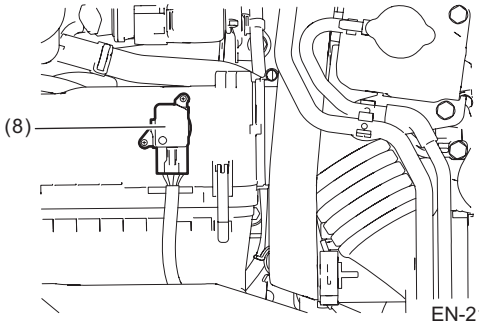

EN-21147

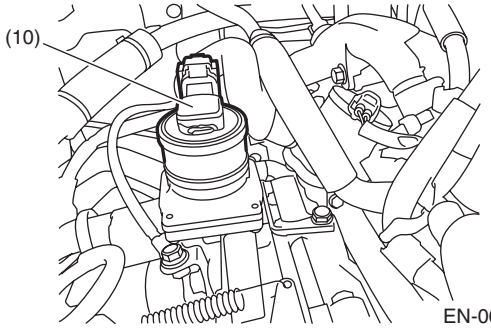

EN-06421

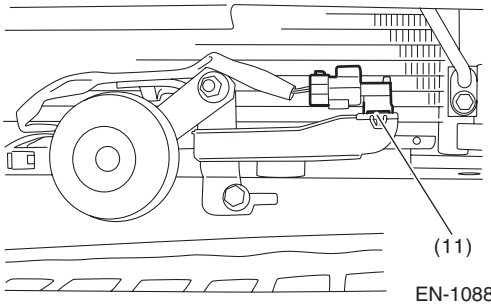

EN-10887

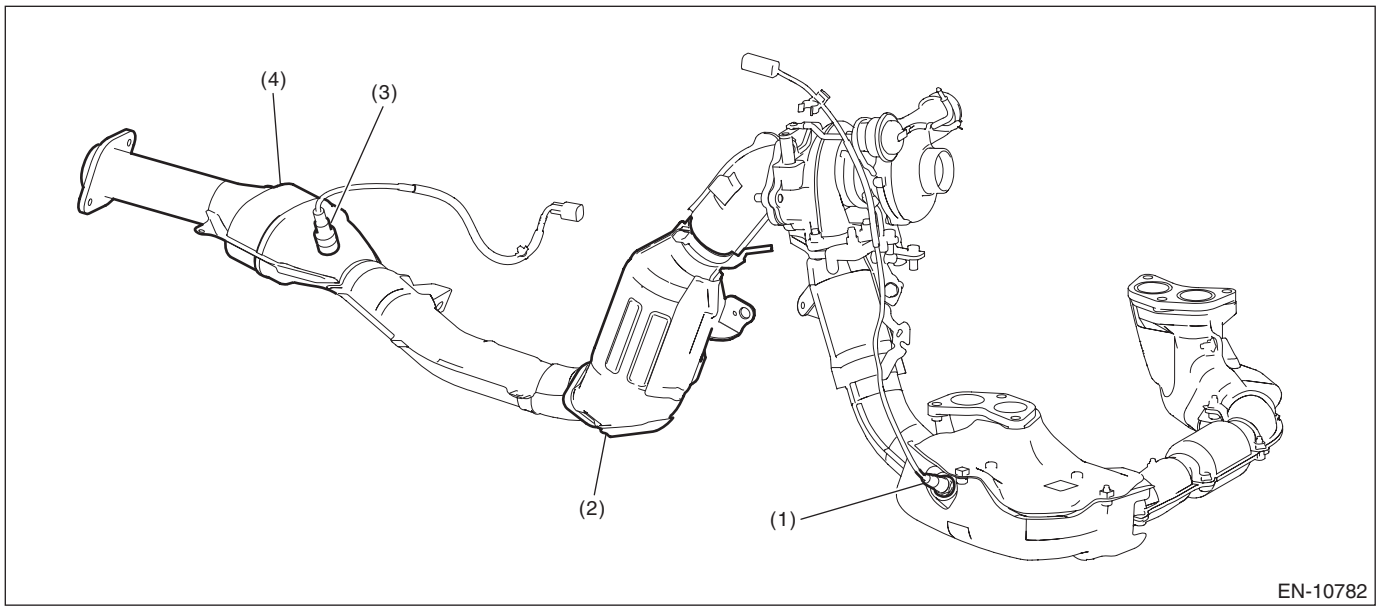

(1) Front oxygen (A/F) sensor
(2) Front catalytic converter
(3) Rear oxygen sensor
(4) Rear catalytic converter

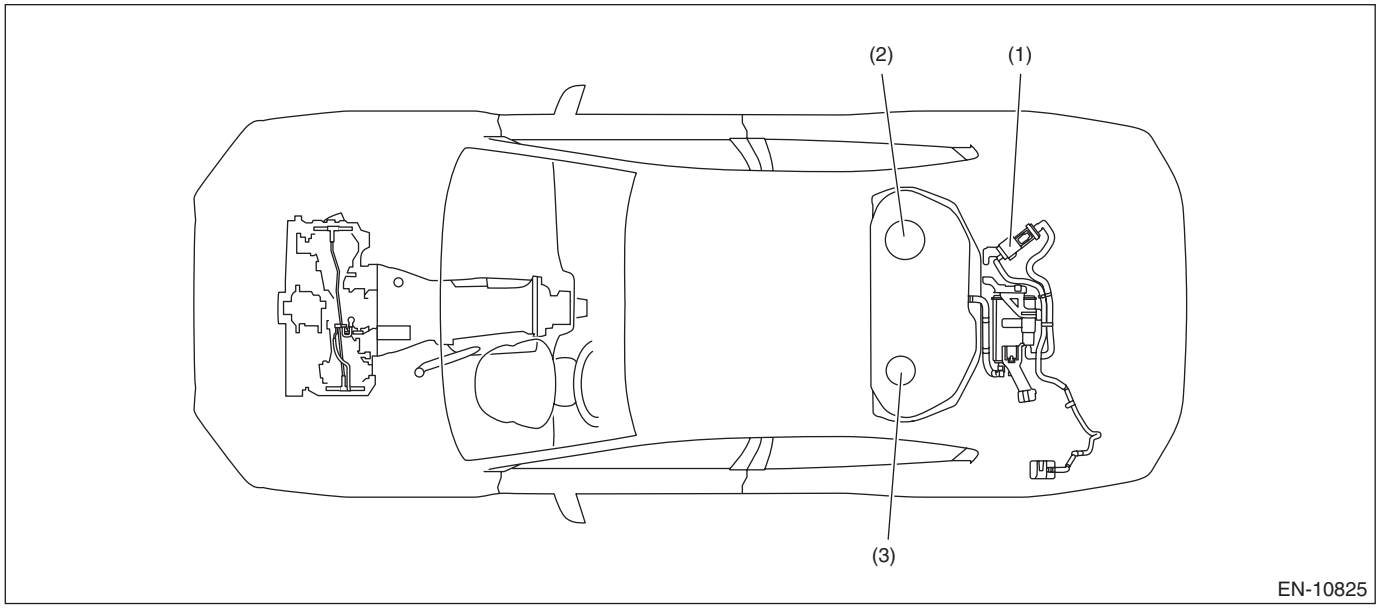

(1) Leak check valve ASSY (with built-in pressure sensor)
(2) Fuel level sensor
(3) Fuel sub level sensor

Electrical Component Location

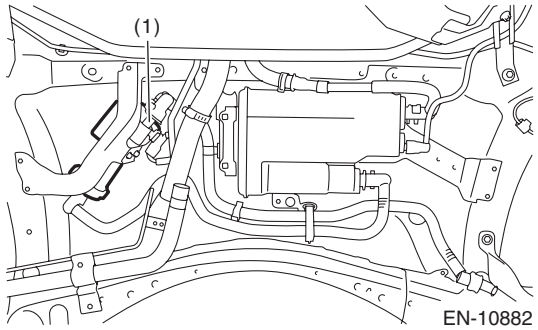

EN-10882

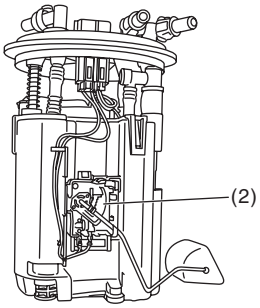

EN-09239

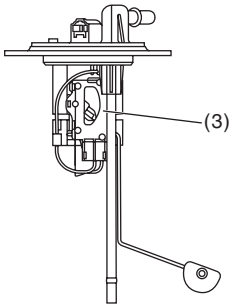

EN-09240

3. SOLENOID VALVE, ACTUATOR, EMISSION CONTROL SYSTEM PARTS AND IGNITION SYSTEM PARTS

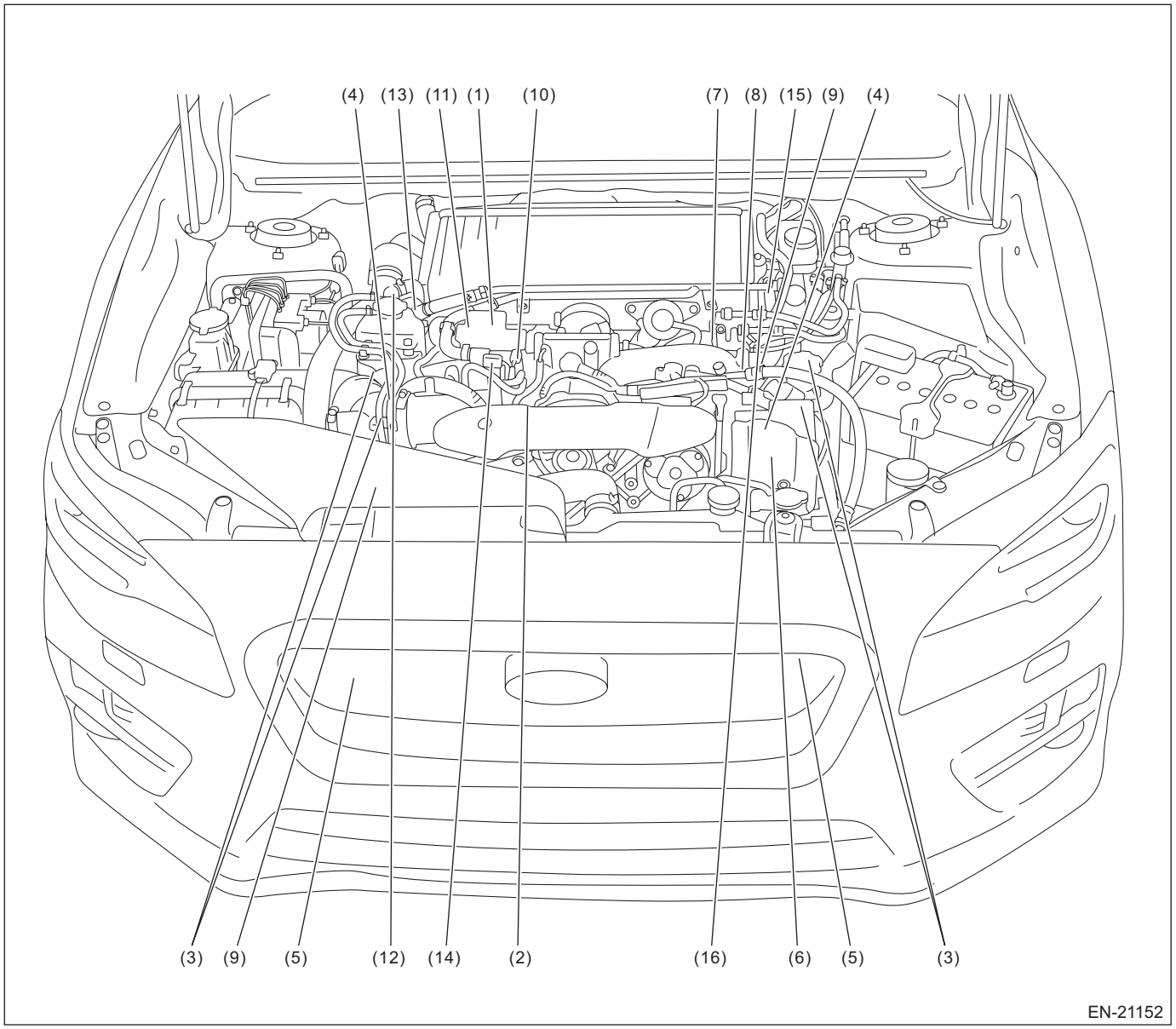

(1)	Wastegate control solenoid valve	(7)	Secondary air combination valve RH	(13)	Leak diagnosis connector 3
(2)	Purge control solenoid valve 1	(8)	Secondary air combination valve LH	(14)	Leak diagnosis connector 4
(3)	Ignition coil	(9)	Tumble generator valve ASSY	(15)	Leak diagnosis connector 5
(4)	Intake oil flow control solenoid valve	(10)	Purge control solenoid valve 2	(16)	Leak diagnosis connector 6
(5)	Exhaust oil flow control solenoid valve	(11)	Leak diagnosis connector 1		
(6)	Secondary air pump	(12)	Leak diagnosis connector 2		

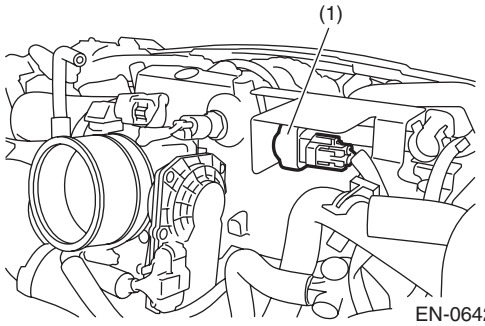

EN-06426

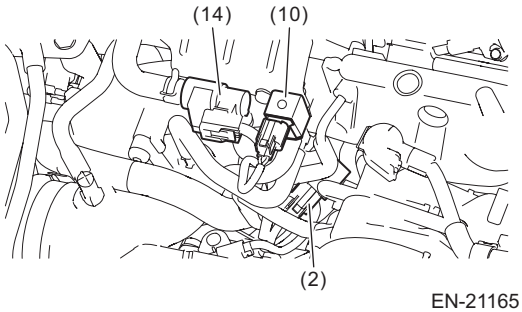

EN-21165

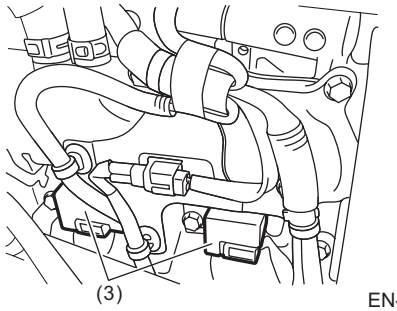

EN-21149

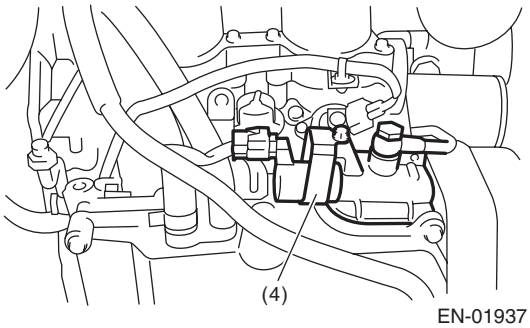

EN-01937

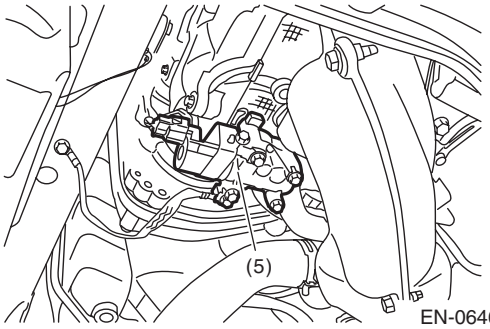

EN-06460

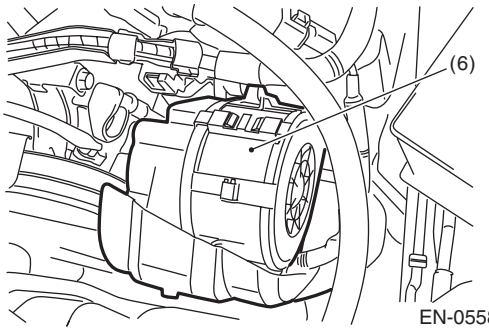

EN-05586

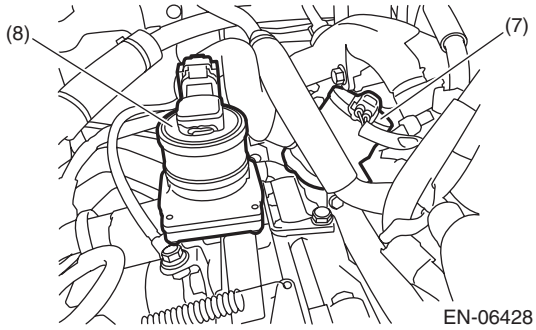

EN-06428

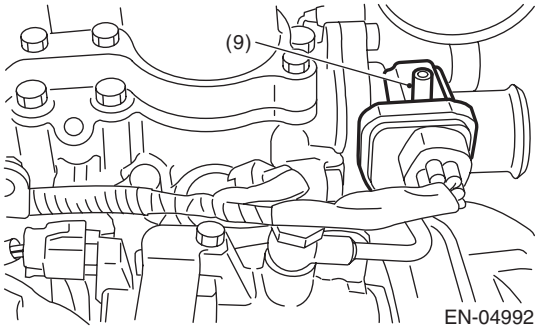

EN-04992

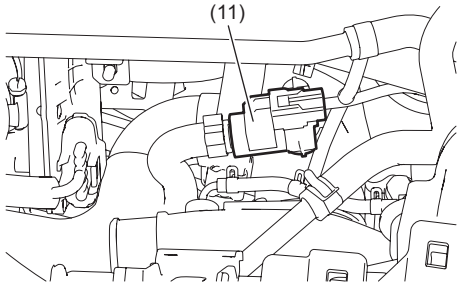

EN-21163

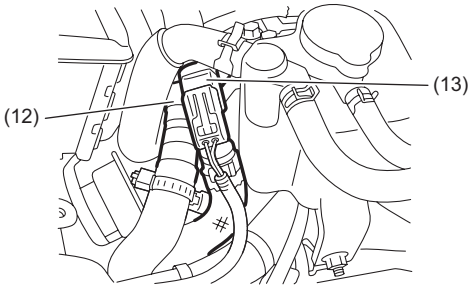

EN-21164

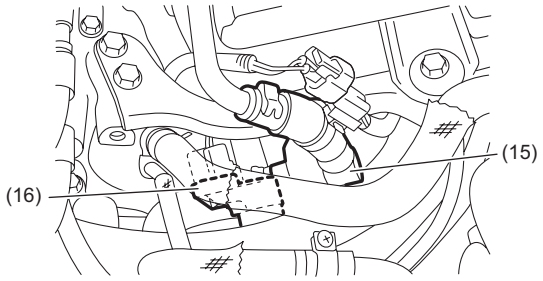

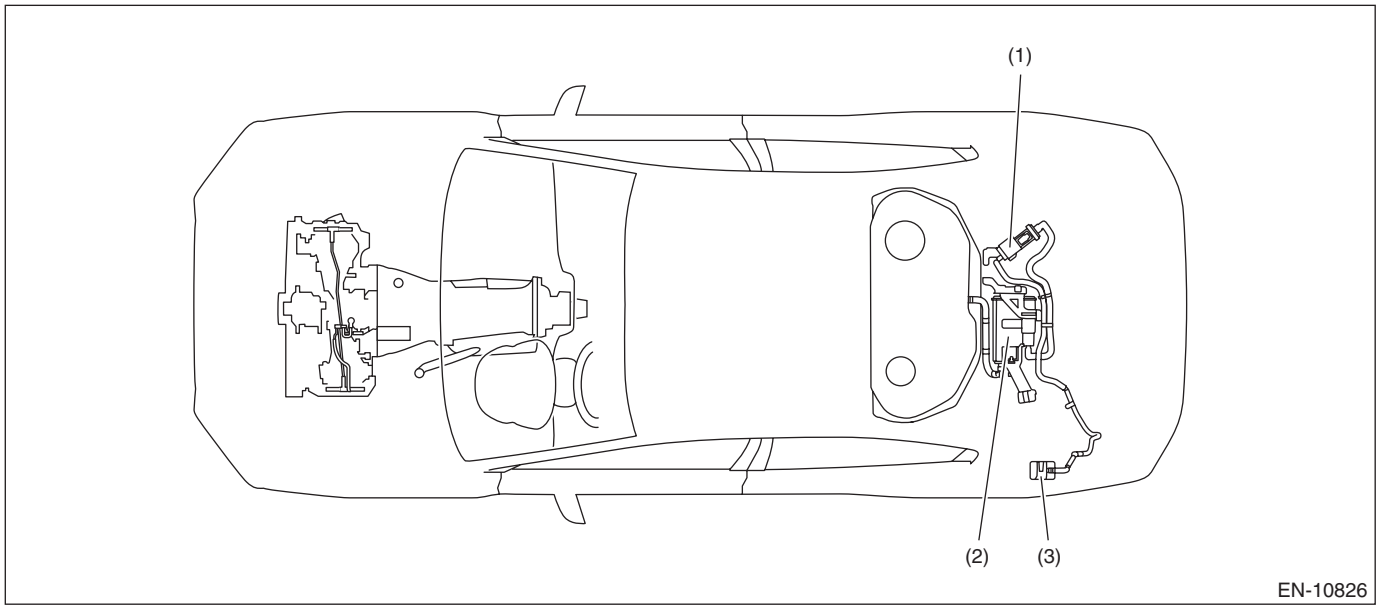

(1) Leak check valve ASSY (2) Canister (3) Drain filter

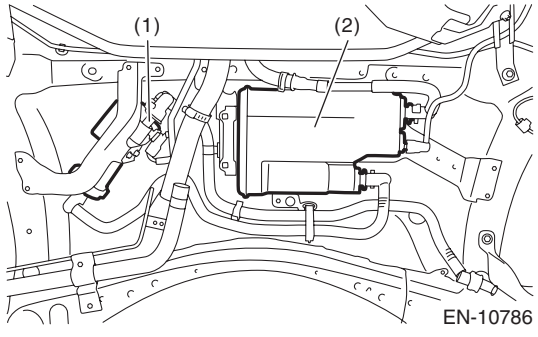

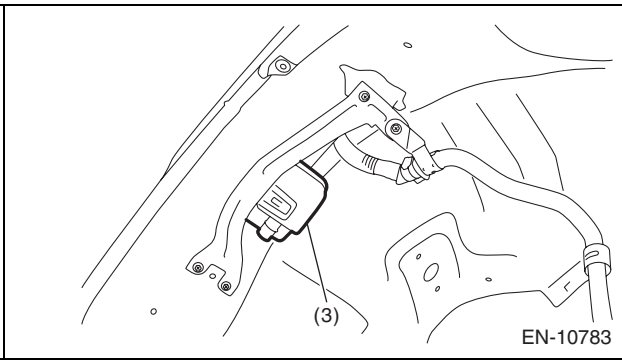

Electrical Component Location

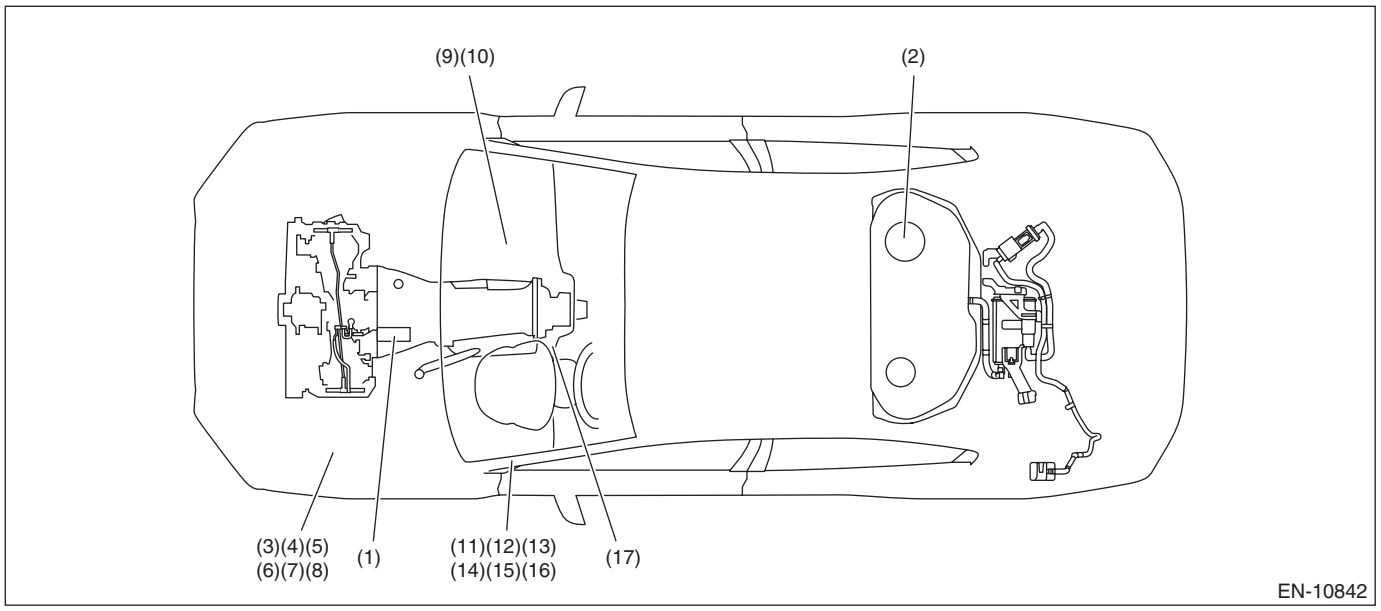

(1)	Starter	(7)	Secondary air combination valve relay 2	(13)	Starter relay 1
(2)	Fuel pump	(8)	Secondary air pump relay	(14)	Starter cut relay (model with push button start)
(3)	Radiator main fan relay 1	(9)	Main relay	(15)	IG relay 1 (push button start) (model with push button start)
(4)	Radiator main fan relay 2	(10)	Fuel pump relay	(16)	Starter relay (push button start) (model with push button start)
(5)	Radiator sub fan relay	(11)	A/F, oxygen sensor relay	(17)	Push button ignition switch (model with push button start)
(6)	Secondary air combination valve relay 1	(12)	Electronic throttle control relay		

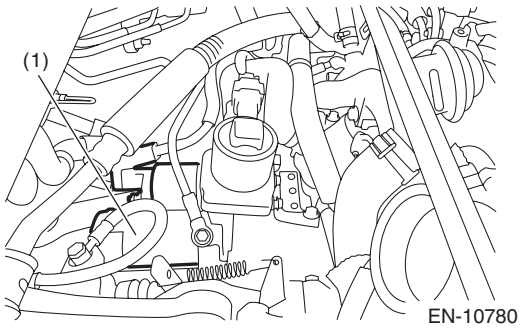

EN-10780

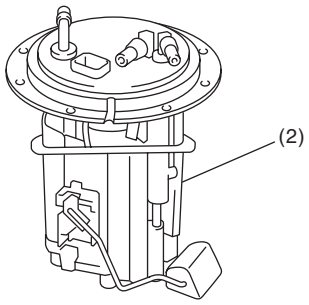

EN-02093

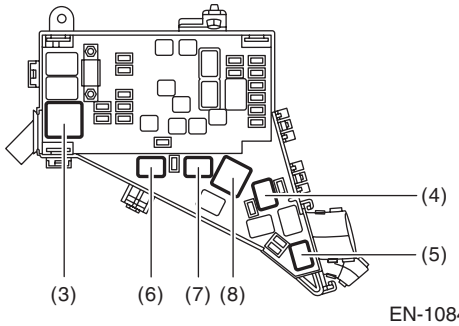

EN-10843

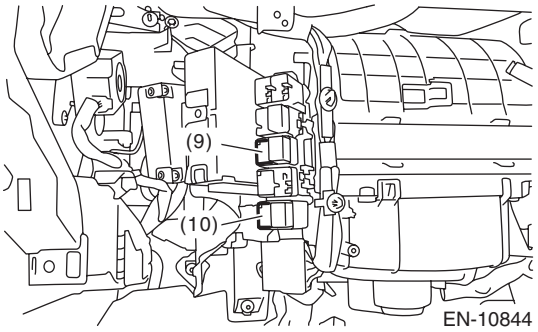

EN-10844

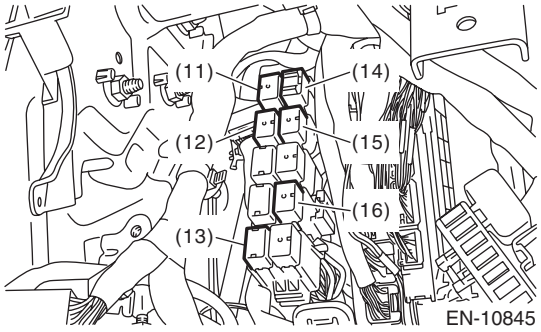

EN-10845

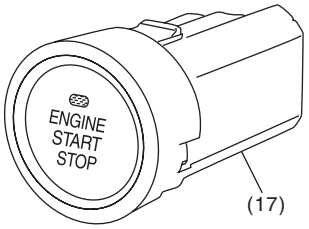

EN-10839

4. TRANSMISSION

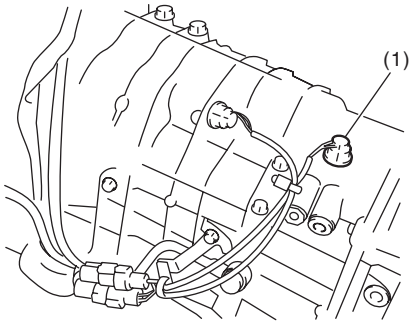

EN-10885

(1) Neutral position switch

5. Engine Control Module (ECM) I/O Signal

A: ELECTRICAL SPECIFICATION

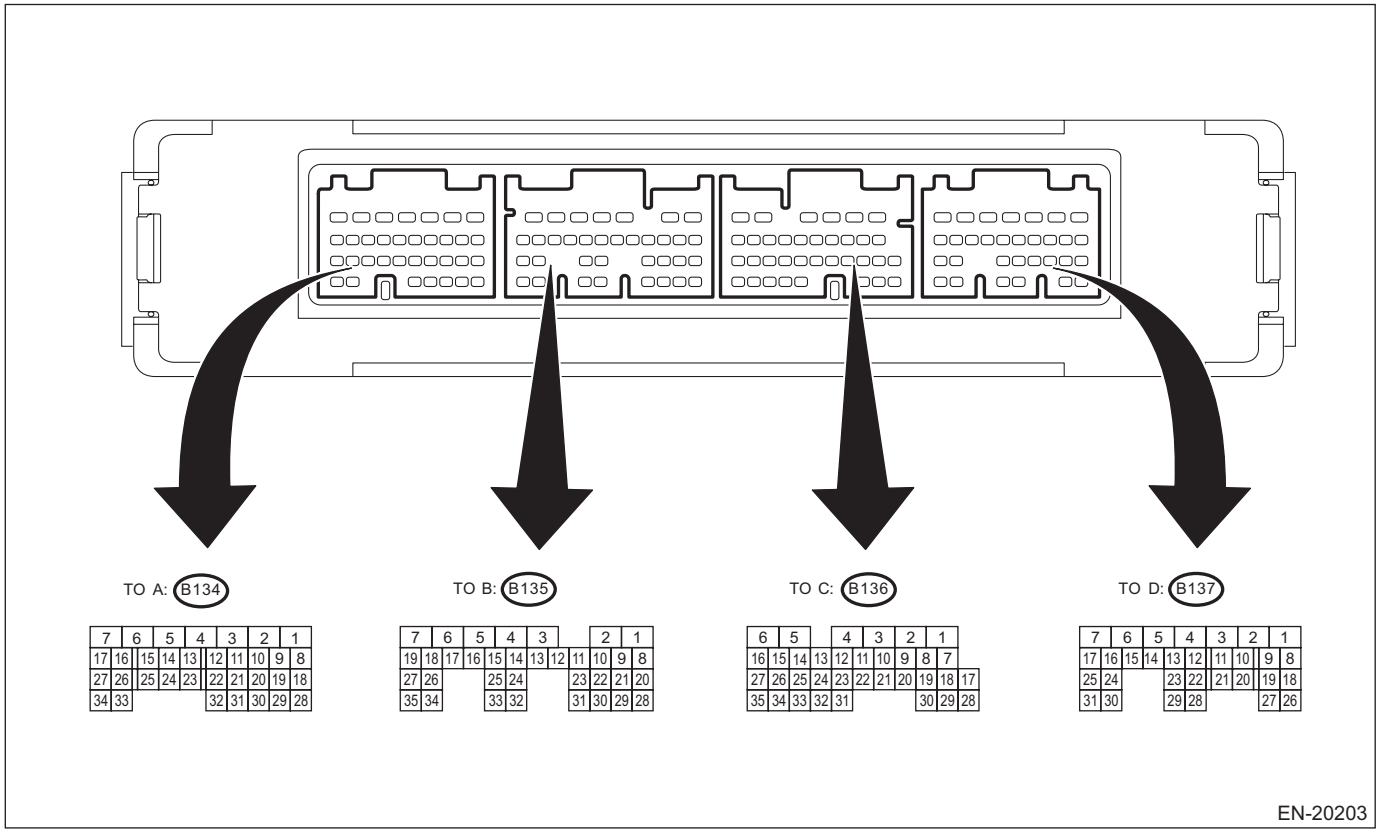

Description		Connector No.	Terminal No.	Signal (V)		Note
				Ignition SW ON (Engine OFF)	Engine ON (Idling)	
Crankshaft position sensor	(+) signal	B137	17	0	–7 — +7	*1: Waveform
	(–) signal	B137	25	0	0	—
	Shield	B137	31	0	0	—
Front oxygen (A/F) sensor	(+) signal	B136	19	2.8 — 3.2	2.8 — 3.2	—
	(–) signal	B136	18	2.4 — 2.7	2.4 — 2.7	—
Rear oxygen sensor	Signal	B136	20	0	0 — 0.9	—
Oxygen sensor	Shield	B136	9	0	0	—
Front oxygen (A/F) sensor heater	Signal 1	B136	6	—	—	Waveform
	Signal 2	B136	5	—	—	Waveform
Rear oxygen sensor heater signal		B135	6	Battery voltage	Battery voltage	Waveform
Engine coolant temperature sensor	Signal	B137	22	1 — 1.4	1 — 1.4	—
Air flow sensor	(+) signal	B136	22	—	0.3 — 4.5	—
	Shield	B136	10	0	0	—
	Ground	B136	11	0	0	—
Intake air temperature sensor signal		B136	31	0.3 — 4.6	0.3 — 4.6	—
Wastegate control solenoid valve		B134	33	0 or battery voltage	0 or battery voltage	Waveform

Description		Connector No.	Terminal No.	Signal (V)		Note
				Ignition SW ON (Engine OFF)	Engine ON (Idling)	
Starter switch		B136	16	0	0	Model without push button start Cranking: Battery voltage Model with push button start Cranking: Waveform
Accessory cut request		B135	32	Battery voltage	Battery voltage	Model with push button start Cranking: 0
Starter switch 2		B136	27	0	0	Model with push button start Cranking: Battery voltage
Starter cut relay		B135	34	0	0	Model with push button start Cranking: Battery voltage
Ignition switch		B136	30	Battery voltage	Battery voltage	—
Neutral position switch		B136	35	ON: 0 OFF: Battery voltage	ON: 0 OFF: Battery voltage	—
Delivery mode switch		B136	34	Battery voltage	Battery voltage	When connected: 0
Knock sensor	Signal	B137	2	2.45 — 2.55	2.45 — 2.55	—
	Shield	B137	8	0	0	—
Back-up power supply		B136	2	Battery voltage	Battery voltage	Ignition switch “OFF”: Battery voltage
Control module power supply		B136	1	Battery voltage	Battery voltage	—
		B137	7	Battery voltage	Battery voltage	—
Sensor power supply		B134	19	5	5	—
		B135	22	5	5	—
Ignition control	#1	B134	21	0	0 or 5	Waveform
	#2	B134	22	0	0 or 5	Waveform
	#3	B134	31	0	0 or 5	Waveform
	#4	B134	32	0	0 or 5	Waveform
Fuel injector	#1	B134	10	Battery voltage	0 or battery voltage	Waveform
	#2	B134	11	Battery voltage	0 or battery voltage	Waveform
	#3	B134	12	Battery voltage	0 or battery voltage	Waveform
	#4	B134	13	Battery voltage	0 or battery voltage	Waveform
Fuel pump control unit	Control	B136	33	0 or 5	0 or 5	Waveform
	Diagnostic signal	B135	10	Battery voltage	Battery voltage	—
A/C relay control		B135	35	ON: 0.5 or less OFF: Battery voltage	ON: 0.5 or less OFF: Battery voltage	—
A/C switch		B136	29	ON: Battery voltage OFF: 0	ON: Battery voltage OFF: 0	Manual A/C model
Blower fan switch		B135	19	ON: 0 OFF: Battery voltage	ON: 0 OFF: Battery voltage	Manual A/C model
Main fan relay control		B135	12	ON: 0.5 or less OFF: Battery voltage	ON: 0.5 or less OFF: Battery voltage	—
Sub fan relay control		B135	11	ON: 0.5 or less OFF: Battery voltage	ON: 0.5 or less OFF: Battery voltage	—

Engine Control Module (ECM) I/O Signal

Description		Connector No.	Terminal No.	Signal (V)		Note
				Ignition SW ON (Engine OFF)	Engine ON (Idling)	
Engine speed output		B135	15	—	0 or battery voltage	Model with push button start Waveform
Purge control solenoid valve 1		B137	6	ON: 1 or less OFF: Battery voltage	ON: 1 or less OFF: Battery voltage	Waveform
Purge control solenoid valve 2		B137	15	ON: 1 or less OFF: Battery voltage	ON: 1 or less OFF: Battery voltage	Waveform
Manifold absolute pressure sensor	Signal	B137	20	1.7 — 2.4	1.1 — 1.6	—
Power steering oil pressure switch		B137	28	Battery voltage	ON: 0 OFF: Battery voltage	—
SSM/GST communication line		B135	14	—	—	—
Intake camshaft position sensor RH		B137	24	0 or 5	0 or 5	*1: Waveform
Intake camshaft position sensor LH		B137	16	0 or 5	0 or 5	*1: Waveform
Exhaust camshaft position sensor RH		B137	23	0 or 5	0 or 5	*1: Waveform
Exhaust camshaft position sensor LH		B137	29	0 or 5	0 or 5	*1: Waveform
Camshaft position sensor ground		B137	30	0	0	—
Electronic Throttle	Main	B134	18	Approx. 0.9	Approx. 0.6 — 0.7	Fully closed: Approx. 0.6 Fully open: Approx. 4.0
	Sub	B134	28	Approx. 1.7	Approx. 1.5 — 1.6	Fully closed: Approx. 1.5 Fully open: Approx. 4.2
(+) Electronic throttle control motor		B134	2	Duty waveform	Duty waveform	Drive frequency: 500 Hz
(–) Electronic throttle control motor		B134	1	Duty waveform	Duty waveform	Drive frequency: 500 Hz
Electronic throttle control motor power supply		B135	7	Battery voltage	Battery voltage	—
Electronic throttle control motor relay		B135	17	0	0	—
Intake oil flow control solenoid valve RH	(+) signal	B134	34	0	0 or battery voltage	—
	(–) signal	B134	27	0	0	—
Intake oil flow control solenoid valve LH	(+) signal	B134	17	0	0 or battery voltage	—
	(–) signal	B134	16	0	0	—
Exhaust oil flow control solenoid valve RH	(+) signal	B134	7	0	0 or battery voltage	—
	(–) signal	B134	15	0	0	—
Exhaust oil flow control solenoid valve LH	(+) signal	B134	5	0	0 or battery voltage	—
	(–) signal	B134	14	0	0	—

Description		Connector No.	Terminal No.	Signal (V)		Note
				Ignition SW ON (Engine OFF)	Engine ON (Idling)	
Accelerator pedal position sensor	Main sensor signal	B135	23	Fully closed: 0.4 — 1 Fully opened: 2.4 — 3.7	Fully closed: 0.4 — 1 Fully opened: 2.4 — 3.7	—
	Main power supply	B135	21	5	5	—
	Ground (main sensor)	B135	29	0	0	—
	Sub sensor signal	B135	31	Fully closed: 0.3 — 1.1 Fully opened: 2.3 — 3.8	Fully closed: 0.3 — 1.1 Fully opened: 2.3 — 3.8	—
Starter relay		B135	26	ON: 0 OFF: Battery voltage	ON: 0 OFF: Battery voltage	ON: Cranking
A/C middle pressure switch		B136	7	ON: 0 OFF: Battery voltage	ON: 0 OFF: Battery voltage	—
Clutch switch		B135	9	When clutch pedal is depressed: 0 When clutch pedal is released: Battery voltage	When clutch pedal is depressed: 0 When clutch pedal is released: Battery voltage	—
Brake switch 1 (Brake switch)		B136	15	When brake pedal is depressed: 0 When brake pedal is released: Battery voltage	When brake pedal is depressed: 0 When brake pedal is released: Battery voltage	—
Brake switch 2 (Stop light switch)		B136	3	When brake pedal is depressed: Battery voltage When brake pedal is released: 0	When brake pedal is depressed: Battery voltage When brake pedal is released: 0	—
Cruise control command switch		B136	12	When operating nothing: 3.5 — 4.5 When operating RES/ACC: 2.5 — 3.5 When operating SET/COAST: 0.5 — 1.5 When operating CANCEL: 0 — 0.5	When operating nothing: 3.5 — 4.5 When operating RES/ACC: 2.5 — 3.5 When operating SET/COAST: 0.5 — 1.5 When operating CANCEL: 0 — 0.5	—
Cruise control main switch		B136	13	ON: 0 OFF: 5	ON: 0 OFF: 5	—
Immobilizer signal		B135	25	—	—	—
CAN communication (Hi)		B136	17	—	—	—
CAN communication (Lo)		B136	28	—	—	—
Blow-by leak diagnosis		B137	12	0	0	At the time of open circuit (fault): 5
Tumble generator valve position sensor signal RH		B137	11	Fully closed: 0.4 — 1.2 Fully opened: 2.8 — 4.6	Fully closed: 0.4 — 1.2 Fully opened: 2.8 — 4.6	—
Tumble generator valve position sensor signal LH		B137	10	Fully closed: 0.4 — 1.2 Fully opened: 2.8 — 4.6	Fully closed: 0.4 — 1.2 Fully opened: 2.8 — 4.6	—

Engine Control Module (ECM) I/O Signal

Description		Connector No.	Terminal No.	Signal (V)		Note
				Ignition SW ON (Engine OFF)	Engine ON (Idling)	
Tumble generator valve RH closed		B134	26	Waveform	Waveform	—
Tumble generator valve LH closed		B134	24	Waveform	Waveform	—
Tumble generator valve RH open		B134	25	Waveform	Waveform	—
Tumble generator valve LH open		B134	23	Waveform	Waveform	—
Secondary air pipe pressure sensor	Signal	B137	9	2.2 — 2.8	2.2 — 2.8	When secondary air is inducted: 3.2 — 4.9
Secondary air combination valve relay 1		B135	8	ON: 0 OFF: Battery voltage	ON: 0 OFF: Battery voltage	—
Secondary air combination valve relay 2		B135	20	ON: 0 OFF: Battery voltage	ON: 0 OFF: Battery voltage	—
Secondary air pump relay		B135	27	ON: 0 OFF: Battery voltage	ON: 0 OFF: Battery voltage	—
Self-shutoff control		B135	13	Battery voltage	Battery voltage	—
Leak check valve assembly	Switching valve	B135	4	Battery voltage	Battery voltage	Operating: 0
	Pressure sensor	B136	21	1 — 4	1 — 4	When ignition switch is turned to ON: atmospheric pressure
	Vacuum pump	B137	27	Battery voltage	Battery voltage	Operating: 0
Ground	Sensor	B134	29	0	0	—
		B135	30	0	0	—
	Engine 1	B134	6	0	0	—
	Engine 2	B134	4	0	0	—
	Engine 3	B134	3	0	0	—
	Engine 4	B137	1	0	0	—
	Engine 5	B137	3	0	0	—
	Body	B136	4	0	0	—

Measuring condition:

NOTE:
- Perform measurement after warming up the engine.
- For measurement of the waveform of the crankshaft position sensor, we recommend using the DST-i oscilloscope function or a general oscilloscope.
- Place the shift lever in neutral position.
- Turn the A/C to OFF.
- Turn all the accessory switches to OFF.
- Waveforms vary depending on a measurement environment and vehicle condition.

*1: Waveform

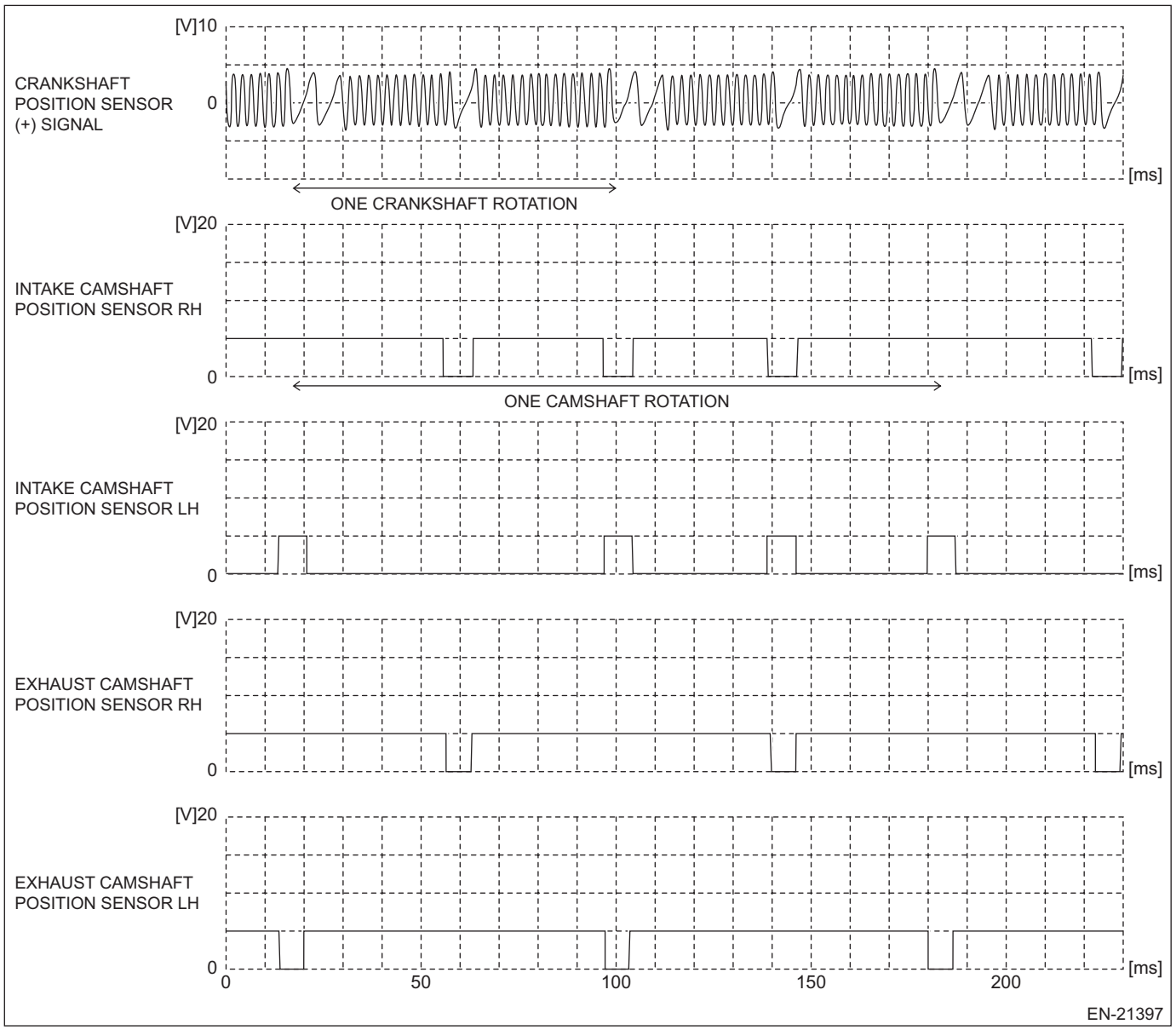

Measured terminal	Crankshaft position sensor (+) signal (B137) No. 17 (+) — Engine ground 3 (B134) No. 3 (–):
	Intake camshaft position sensor RH (B137) No. 24 (+) — Engine ground 3 (B134) No. 3 (–):
	Intake camshaft position sensor LH (B137) No. 16 (+) — Engine ground 3 (B134) No. 3 (–):
	Exhaust camshaft position sensor RH (B137) No. 23 (+) — Engine ground 3 (B134) No. 3 (–):
	Exhaust camshaft position sensor LH (B137) No. 29 (+) — Engine ground 3 (B134) No. 3 (–):
Measuring condition	While engine idling

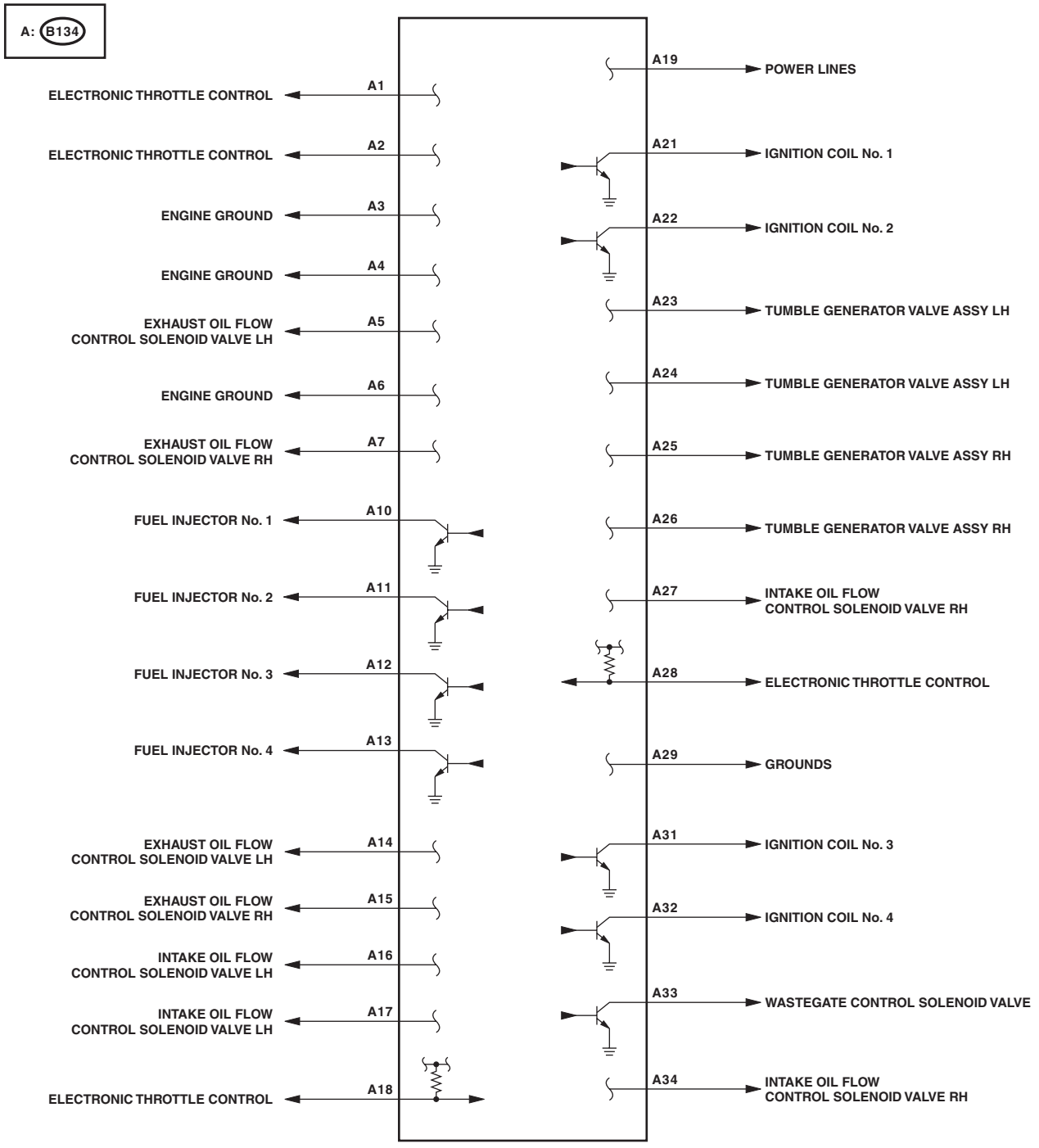
A: B134
ELECTRONIC THROTTLE CONTROL
A1
ELECTRONIC THROTTLE CONTROL
A2
ENGINE GROUND
A3
ENGINE GROUND
A4
EXHAUST OIL FLOW CONTROL SOLENOID VALVE LH
A5
ENGINE GROUND
A6
EXHAUST OIL FLOW CONTROL SOLENOID VALVE RH
A7
FUEL INJECTOR No. 1
A10
FUEL INJECTOR No. 2
A11
FUEL INJECTOR No. 3
A12
FUEL INJECTOR No. 4
A13
EXHAUST OIL FLOW CONTROL SOLENOID VALVE LH
A14
EXHAUST OIL FLOW CONTROL SOLENOID VALVE RH
A15
INTAKE OIL FLOW CONTROL SOLENOID VALVE LH
A16
INTAKE OIL FLOW CONTROL SOLENOID VALVE LH
A17
ELECTRONIC THROTTLE CONTROL
A18
A19
POWER LINES
A21
IGNITION COIL No. 1
A22
IGNITION COIL No. 2
A23
TUMBLE GENERATOR VALVE ASSY LH
A24
TUMBLE GENERATOR VALVE ASSY LH
A25
TUMBLE GENERATOR VALVE ASSY RH
A26
TUMBLE GENERATOR VALVE ASSY RH
A27
INTAKE OIL FLOW CONTROL SOLENOID VALVE RH
A28
ELECTRONIC THROTTLE CONTROL
A29
GROUNDS
A31
IGNITION COIL No. 3
A32
IGNITION COIL No. 4
A33
WASTEGATE CONTROL SOLENOID VALVE
A34
INTAKE OIL FLOW CONTROL SOLENOID VALVE RH

EN-10846

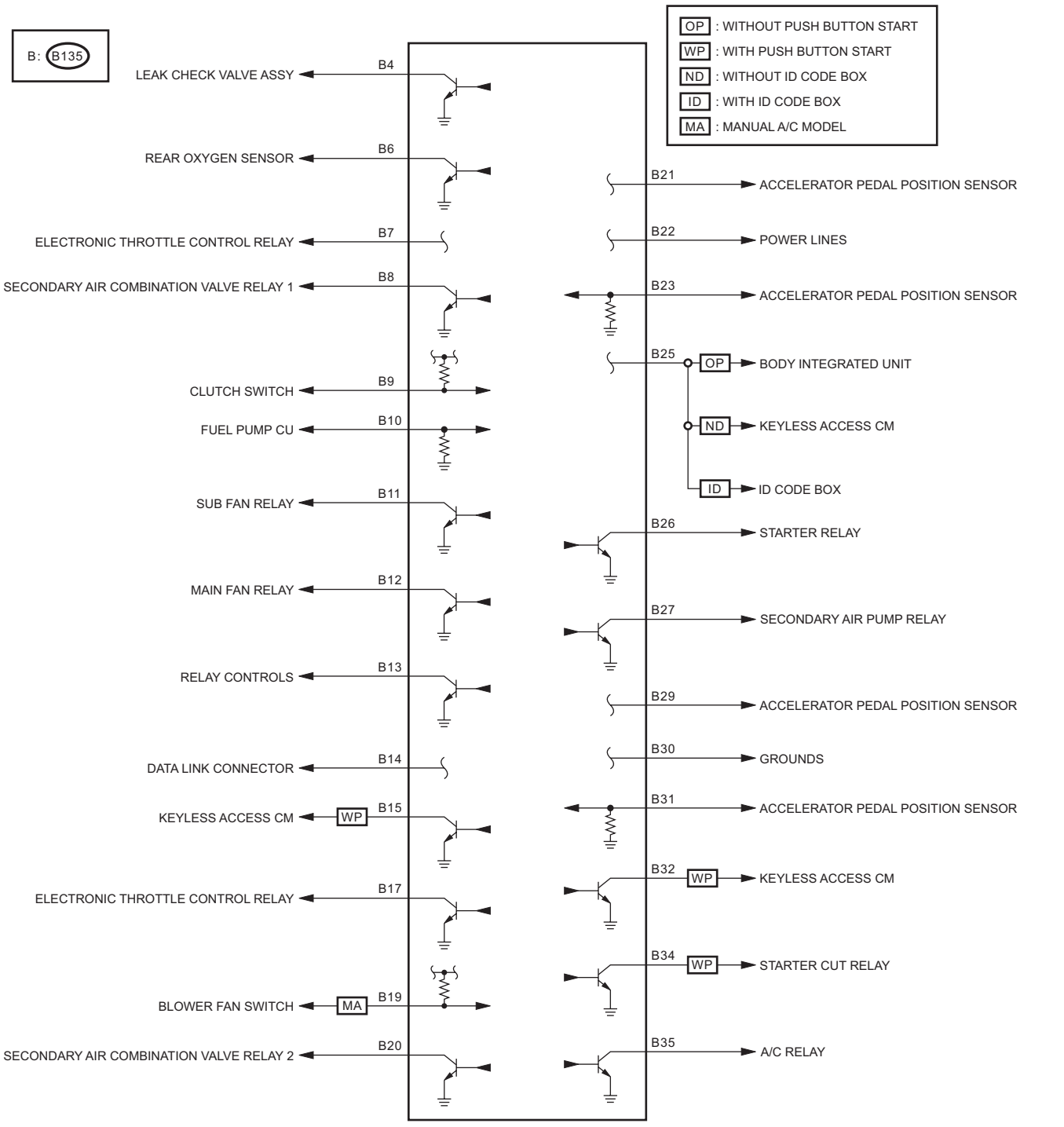
B: B135
OP : WITHOUT PUSH BUTTON START
WP : WITH PUSH BUTTON START
ND : WITHOUT ID CODE BOX
ID : WITH ID CODE BOX
MA : MANUAL A/C MODEL
B4
LEAK CHECK VALVE ASSY
B6
REAR OXYGEN SENSOR
B7
ELECTRONIC THROTTLE CONTROL RELAY
B8
SECONDARY AIR COMBINATION VALVE RELAY 1
B9
CLUTCH SWITCH
B10
FUEL PUMP CU
B11
SUB FAN RELAY
B12
MAIN FAN RELAY
B13
RELAY CONTROLS
B14
DATA LINK CONNECTOR
B15
WP
KEYLESS ACCESS CM
B17
ELECTRONIC THROTTLE CONTROL RELAY
B19
MA
BLOWER FAN SWITCH
B20
SECONDARY AIR COMBINATION VALVE RELAY 2
B21
ACCELERATOR PEDAL POSITION SENSOR
B22
POWER LINES
B23
ACCELERATOR PEDAL POSITION SENSOR
B25
OP
BODY INTEGRATED UNIT
ND
KEYLESS ACCESS CM
ID
ID CODE BOX
B26
STARTER RELAY
B27
SECONDARY AIR PUMP RELAY
B29
ACCELERATOR PEDAL POSITION SENSOR
B30
GROUNDS
B31
ACCELERATOR PEDAL POSITION SENSOR
B32
WP
KEYLESS ACCESS CM
B34
WP
STARTER CUT RELAY
B35
A/C RELAY

EN-21395

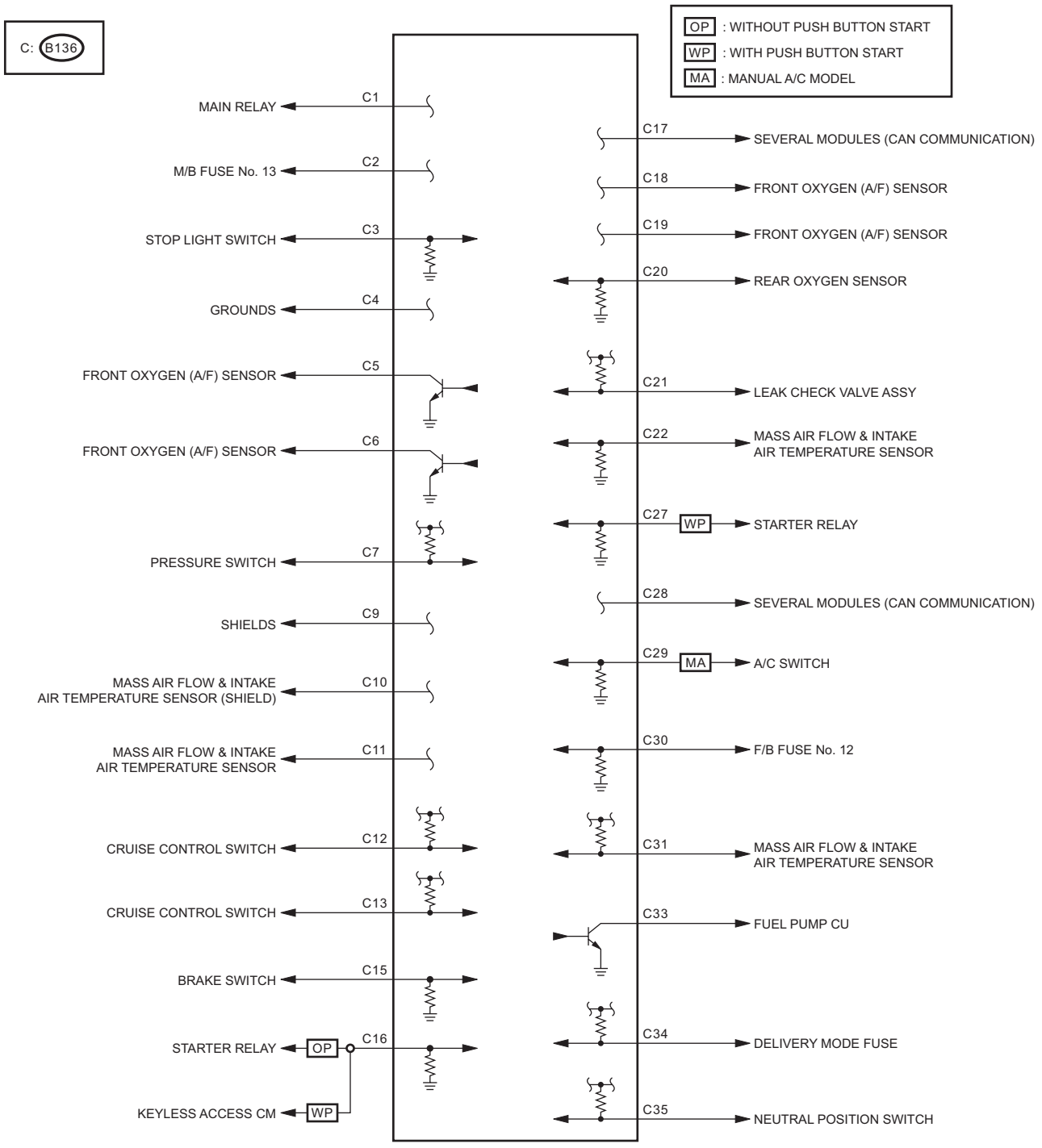
C: B136
OP : WITHOUT PUSH BUTTON START
WP : WITH PUSH BUTTON START
MA : MANUAL A/C MODEL
C1
MAIN RELAY
C2
M/B FUSE No. 13
C3
STOP LIGHT SWITCH
C4
GROUNDS
C5
FRONT OXYGEN (A/F) SENSOR
C6
FRONT OXYGEN (A/F) SENSOR
C7
PRESSURE SWITCH
C9
SHIELDS
C10
MASS AIR FLOW & INTAKE AIR TEMPERATURE SENSOR (SHIELD)
C11
MASS AIR FLOW & INTAKE AIR TEMPERATURE SENSOR
C12
CRUISE CONTROL SWITCH
C13
CRUISE CONTROL SWITCH
C15
BRAKE SWITCH
C16
STARTER RELAY
OP
KEYLESS ACCESS CM
WP
C17
SEVERAL MODULES (CAN COMMUNICATION)
C18
FRONT OXYGEN (A/F) SENSOR
C19
FRONT OXYGEN (A/F) SENSOR
C20
REAR OXYGEN SENSOR
C21
LEAK CHECK VALVE ASSY
C22
MASS AIR FLOW & INTAKE AIR TEMPERATURE SENSOR
C27
WP
STARTER RELAY
C28
SEVERAL MODULES (CAN COMMUNICATION)
C29
MA
A/C SWITCH
C30
F/B FUSE No. 12
C31
MASS AIR FLOW & INTAKE AIR TEMPERATURE SENSOR
C33
FUEL PUMP CU
C34
DELIVERY MODE FUSE
C35
NEUTRAL POSITION SWITCH

EN-21396

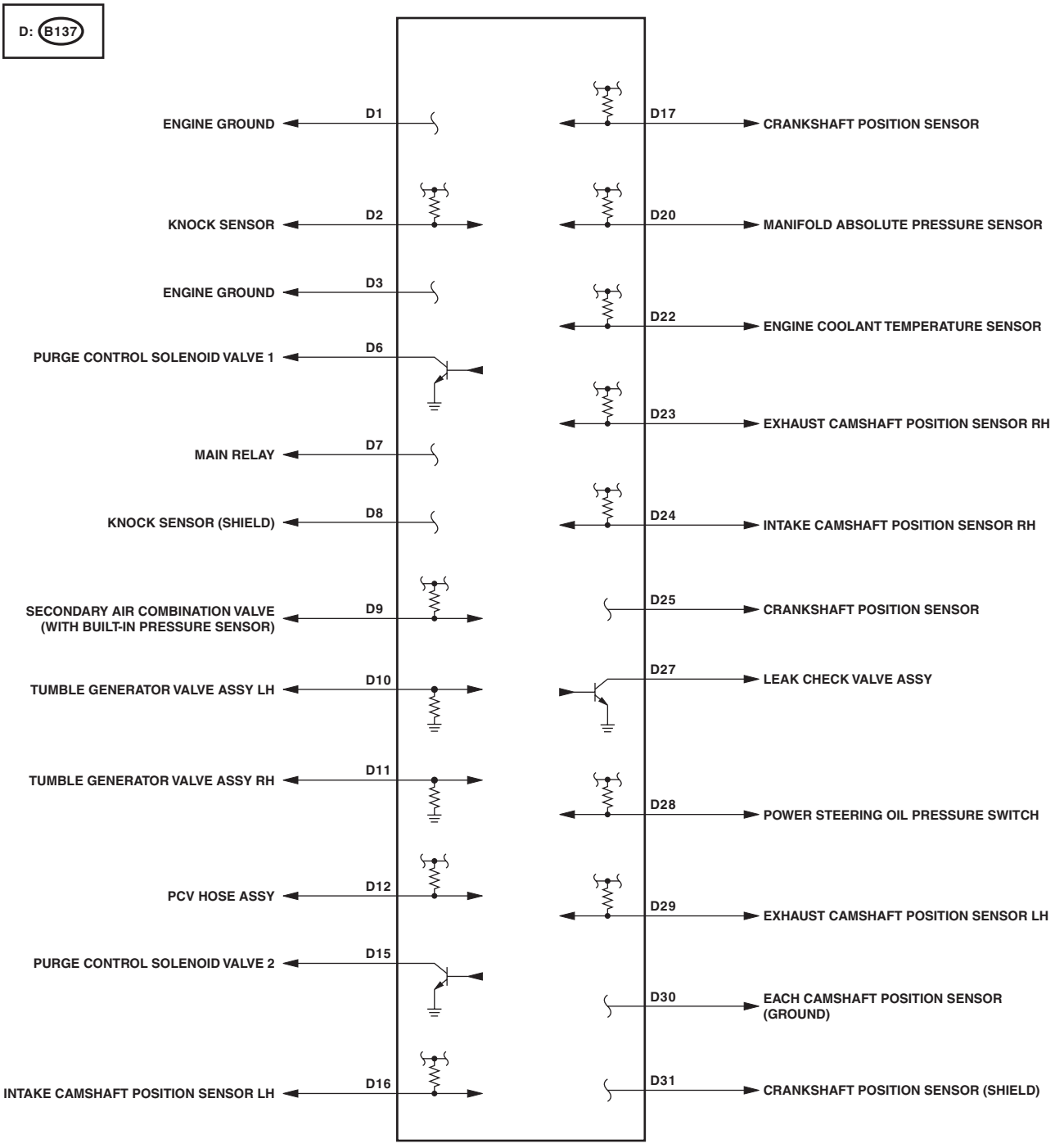
D: B137
ENGINE GROUND
D1
KNOCK SENSOR
D2
ENGINE GROUND
D3
PURGE CONTROL SOLENOID VALVE 1
D6
MAIN RELAY
D7
KNOCK SENSOR (SHIELD)
D8
SECONDARY AIR COMBINATION VALVE (WITH BUILT-IN PRESSURE SENSOR)
D9
TUMBLE GENERATOR VALVE ASSY LH
D10
TUMBLE GENERATOR VALVE ASSY RH
D11
PCV HOSE ASSY
D12
PURGE CONTROL SOLENOID VALVE 2
D15
INTAKE CAMSHAFT POSITION SENSOR LH
D16
D17
CRANKSHAFT POSITION SENSOR
D20
MANIFOLD ABSOLUTE PRESSURE SENSOR
D22
ENGINE COOLANT TEMPERATURE SENSOR
D23
EXHAUST CAMSHAFT POSITION SENSOR RH
D24
INTAKE CAMSHAFT POSITION SENSOR RH
D25
CRANKSHAFT POSITION SENSOR
D27
LEAK CHECK VALVE ASSY
D28
POWER STEERING OIL PRESSURE SWITCH
D29
EXHAUST CAMSHAFT POSITION SENSOR LH
D30
EACH CAMSHAFT POSITION SENSOR (GROUND)
D31
CRANKSHAFT POSITION SENSOR (SHIELD)

EN-10849

6. Data Link Connector

A: NOTE

This connector is used for Subaru Select Monitor.

CAUTION:
Do not connect any scan tools other than Subaru Select Monitor or general scan tool because the circuit for Subaru Select Monitor may be damaged.

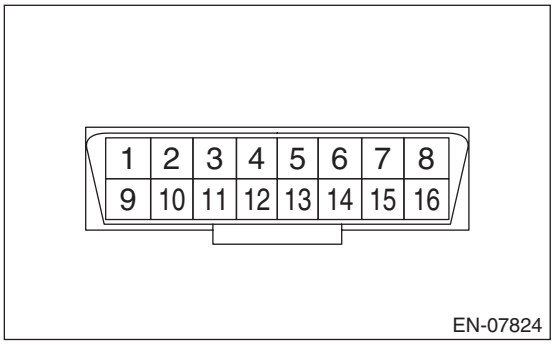

Terminal No.	Contents	Terminal No.	Contents
1	Blank	9	Blank
2	Blank	10	Blank
3	Blank	11	Blank
4	Ground	12	Blank
5	Ground	13	Blank
6	CAN communication (Hi)	14	CAN communication (Lo)
7	Subaru Select Monitor signal	15	Blank
8	Blank	16	Power supply

7. General Scan Tool

A: OPERATION

1. HOW TO USE GENERAL SCAN TOOL

1) Prepare a scan tool (general scan tool) required by SAE J1978.
2) Connect the general scan tool to data link connector located in the lower portion of the instrument panel (on the driver's side).

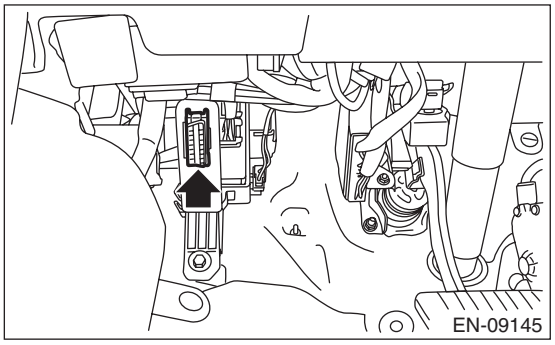

3) Using the general scan tool, call up each data. General scan tool functions consist of:
   (1) MODE $01: Current powertrain diagnostic data
   (2) MODE $02: Powertrain freeze frame data
   (3) MODE $03: Emission-related powertrain DTC
   (4) MODE $04: Clear/Reset emission-related diagnostic information
   (5) MODE $06: Request on-board monitoring test results for intermittently monitored systems
   (6) MODE $07: Initial emission-related powertrain DTC
   (7) MODE $08: Request control for on-board system, test, and component
   (8) MODE $09: Request vehicle information
4) Read out the data according to repair procedures. (For detailed operation procedures, refer to the general scan tool operation manual.)

NOTE:
For details concerning DTC, refer to "List of Diagnostic Trouble Code (DTC)". <Ref. to EN(STI)(diag)-96, List of Diagnostic Trouble Code (DTC).>

2. MODE $01 (CURRENT POWERTRAIN DIAGNOSTIC DATA)

Refer to data denoting the current operating condition of analog input/output, digital input/output or the powertrain system.
A list of the support data and PID (Parameter Identification) codes are shown in the following table.

PID	Data	Unit of measure
$01	Number of emission-related powertrain DTC, and malfunction indicator light status and diagnosis support information	—
$03	Fuel system control status	—
$04	Calculated engine load value	%
$05	Engine coolant temperature	°C
$06	Short term fuel trim	%
$07	Long term fuel trim	%
$0B	Intake manifold absolute pressure	kPa
$0C	Engine speed	rpm
$0D	Vehicle speed	MPH
$0E	Ignition timing advance	°
$0F	Intake air temperature	°C
$10	Intake air amount	g/s
$11	Throttle valve absolute opening angle	%
$12	Secondary air control status	—
$13	Check whether oxygen sensor is installed.	—
$15	Oxygen sensor output voltage and short term fuel trim associated with oxygen sensor	V and %
$1C	Supporting OBD system	—
$1F	Elapsed time after starting the engine	sec
$21	Running distance after MIL turns on	miles
$24	A/F value and A/F sensor output voltage	— and V
$2E	Evaporative purge	%
$2F	Fuel level	%
$31	Travel distance after DTC clear	miles
$33	Barometric pressure	kPa
$34	A/F sensor λ value, current	— and mA
$3C	Catalyst temperature	°C
$41	Diagnostic monitor of each drive cycle	—
$42	ECM power voltage	V
$43	Absolute load	%
$44	A/F target lambda	—
$45	Relative throttle opening angle	%
$46	Ambient temperature	°C
$47	Absolute throttle opening angle 2	%
$49	Absolute accelerator opening angle 1	%
$4A	Absolute accelerator opening angle 2	%
$4C	Target throttle opening angle	%
$4D	Engine operation time during MIL on	min
$4E	Elapsed time after DTC clear	min
$51	Fuel used	—
$53	ELCM pressure	kPa
$5A	Relative accelerator opening angle	%
$65	Neutral status	—

NOTE:
Refer to general scan tool manufacturer's operation manual to access current powertrain diagnostic data (MODE $01).

3. MODE $02 (POWERTRAIN FREEZE FRAME DATA)

Refer to data denoting the operating condition when trouble is detected by on-board diagnosis system. A list of the support data and PID (Parameter Identification) codes are shown in the following table.

PID	Data	Unit of measure
$02	DTC that caused freeze frame data to be stored	—
$03	Fuel system control status	—
$04	Calculated engine load value	%
$05	Engine coolant temperature	°C
$06	Short term fuel trim	%
$07	Long term fuel trim	%
$0B	Intake manifold absolute pressure	kPa
$0C	Engine speed	rpm
$0D	Vehicle speed	MPH
$0E	Ignition timing advance	°
$0F	Intake air temperature	°C
$10	Intake air amount	g/s
$11	Throttle valve absolute opening angle	%
$12	Secondary air control status	—
$13	Air fuel ratio sensor	—
$15	Rear oxygen sensor voltage, compensation value	V and %
$1C	Supporting OBD system	—
$1F	Elapsed time after starting the engine	sec
$2E	Evaporative purge	%
$2F	Fuel level	%
$33	Barometric pressure	kPa
$42	ECM power voltage	V
$43	Absolute load	%
$44	A/F target lambda	—
$45	Relative throttle opening angle	%
$46	Ambient temperature	°C
$47	Absolute throttle opening angle 2	%
$49	Absolute accelerator opening angle 1	%
$4A	Absolute accelerator opening angle 2	%
$4C	Target throttle opening angle	%
$65	Neutral status	—

NOTE:
Refer to general scan tool manufacturer's operation manual to access freeze frame data (MODE $02).

4. MODE $03 (EMISSION-RELATED POWERTRAIN DTC)

Refer to "List of Diagnostic Trouble Code (DTC)" for information about data denoting emission-related powertrain DTC. <Ref. to EN(STI)(diag)-96, List of Diagnostic Trouble Code (DTC).>

5. MODE $04 (CLEAR/RESET EMISSION-RELATED DIAGNOSTIC INFORMATION)

Refer to the mode used to clear or reset emission-related diagnostic information.

NOTE:
Refer to the manufacturer's operation manual for the general scan tool to clear the emission-related diagnostic information (MODE $04).

6. MODE $06 (REQUEST ON-BOARD MONITORING TEST RESULTS FOR CONTINUOUSLY MONITORED SYSTEMS)

Refer to diagnostic value of troubleshooting and data of test limit indicated on the support data bit sequence table. A list of the support data is shown in the following table.

NOTE:
Some items are not displayed according to the specifications.

OBDMID	TID	SID	Diagnostic item
$01	$84	$1E	A/F sensor range failure (Bank 1 Sensor 1)
	$85	$1E	
	$86	$20	A/F sensor response failure (Bank 1 Sensor 1)
	$91	$20	
	$92	$10	
	$A3	$20	
	$A4	$10	
	$AC	$10	
	$AD	$10	
	$AE	$10	
	$AF	$10	
	$CD	$20	
	$CF	$20	
	$DF	$10	
$02	$07	$0B	Oxygen sensor drop failure (Bank 1 Sensor 2)
	$08	$0B	
	$05	$10	Oxygen sensor response failure (Bank 1 Sensor 2)
	$06	$10	
	$BD	$10	
	$A5	$0B	Oxygen sensor characteristic malfunction (drop) diagnosis (P — P voltage)
	$D1	$10	Oxygen sensor delay failure (Bank 1 Sensor 2)
	$D2	$01	
$21	$89	$20	Catalyst deterioration diagnosis (Bank 1)
$35	$8B	$9D	VVT monitor (Bank 1)
	$8C	$9D	
	$8D	$9D	
	$8E	$9D	
	$D3	$9D	
	$D4	$9D	
	$D5	$9D	
	$D6	$9D	
$36	$8B	$9D	VVT monitor (Bank 2)
	$8C	$9D	
	$8D	$9D	
	$8E	$9D	
	$D3	$9D	
	$D4	$9D	
	$D5	$9D	
	$D6	$9D	

OBDMID	TID	SID	Diagnostic item
$3C	$96	$FE	Evaporative emission control system (0.02 inch leak)
	$C1	$FE	
	$C2	$FE	
	$C3	$FE	
	$C4	$FE	
	$C5	$FE	
	$C6	$35	
	$C7	$FE	
	$C8	$FE	
	$C9	$FE	
	$CA	$FE	
	$E4	$FE	
$3D	$E2	$FE	Purge flow
	$E3	$FE	
$41	$9B	$14	A/F sensor heater characteristics failure (Bank 1 Sensor 1)
$42	$A2	$24	Oxygen sensor heater characteristics failure (Bank 1 Sensor 2)
$71	$9E	$17	Secondary air system (all systems)
	$9F	$0B	
	$A1	$0B	
	$B0	$17	Secondary air system (relay 2 — combination valve 2)
	$B3	$0B	
	$B5	$0B	
	$B4	$0B	
	$B6	$0B	
	$B8	$0B	
	$B9	$31	
	$BA	$31	
$A1	$0B	$24	Misfire monitoring (all cylinders)
	$0C	$24	
$A2	$0B	$24	Misfire monitoring (#1 cylinder)
	$0C	$24	
$A3	$0B	$24	Misfire monitoring (#2 cylinder)
	$0C	$24	
$A4	$0B	$24	Misfire monitoring (#3 cylinder)
	$0C	$24	
$A5	$0B	$24	Misfire monitoring (#4 cylinder)
	$0C	$24	

7. MODE $07 (INITIAL EMISSION-RELATED POWERTRAIN DTC)

Refer to the data of DTC (pending code) for troubleshooting result about emission in the first time.

8. MODE $08 (REQUEST CONTROL FOR ON-BOARD SYSTEM, TEST, AND COMPONENT)

Perform “Active Test” of the on-board system.

9. MODE $09 (REQUEST VEHICLE INFORMATION)

Refer to the data of the vehicle specification.

8. Subaru Select Monitor

A: OPERATION

1. HOW TO USE SUBARU SELECT MONITOR

NOTE:
For detailed operation procedures, refer to “Application help”.

2. DISPLAY CURRENT ENGINE DATA (NORMAL MODE)

NOTE:
- For detailed operation procedures, refer to “Application help”.
- A list of the support data is shown in the following table.
- *: For models without cruise control, the brake switch signal does not change.

1) On «Start» display, select «Diagnosis».
2) On «Vehicle selection» display, input the vehicle information and select «Confirmed».
3) On «Main Menu» display, select «Each System».
4) On «Select System» display, select «Engine Control System» and then select «Enter».
5) On «Select Function» display, select «Data Monitor».

Display	Contents	Unit of measure	Note (at idling)
Load Value	Current rate of air amount. Value assuming that the air amount at the current engine speed with the throttle fully open is 100%.	%	21.0%
Engine Coolant Temperature	Value calculated from engine coolant temperature sensor output value.	°C or °F	80 — 100°C or 176 — 212°F
A/F Correction #1	Air fuel ratio correction control value for the front oxygen (A/F) sensor.	%	–10 — +10%
A/F Learning #1	Air fuel ratio learning control value for the front oxygen (A/F) sensor.	%	–15 — +15%
Intake Manifold Absolute Pressure	Value calculated from the manifold pressure sensor.	mmHg, kPa, inHg or psig	220 — 275 mmHg, 29.5 — 37 kPa, 8.7 — 10 inHg or 4.2 — 5.3 psig
Engine Speed	Value calculated from crankshaft position sensor output value.	rpm	630 — 770 rpm (agree with the tachometer indication)
Vehicle Speed	Value calculated from vehicle speed sensor output value.	km/h or MPH	0 km/h or 0 MPH (at parking)
Ignition Timing Advance for #1 Cylinder	Ignition timing control value for No. 1 cylinder. Calculated from rotation speed, manifold pressure, intake air temperature, water temperature, and data from knock sensor etc.	deg	10 — 15 deg
Intake Air Temp.	Value calculated from the intake air temperature sensor output value.	°C or °F	20 — 50°C or 68 — 122°F
Mass Air Flow	Value calculated from air flow sensor output value.	g/s or lb/m	2.1 — 3.1 g/s or 0.35 — 0.40 lb/m
Throttle Opening Angle	Throttle valve opening angle (in percentage) calculated from throttle position sensor output value.	%	2.0 — 2.4%
Rear O2 Sensor Voltage	Rear oxygen sensor output value. Input value to ECM.	V	0 — 1.0 V
Battery Voltage	Battery voltage value. Input value to ECM.	V	12 — 15 V
Air Flow Sensor Voltage	Air flow sensor output value. Input value to ECM.	V	1.0 — 1.7 V
Fuel Injection #1 Pulse	Control value of fuel injection time for the RH bank by ECM.	ms	1.2 — 2.2 ms

Display	Contents	Unit of measure	Note (at idling)
Knocking Correction	Retard angle amount when knocking occurs. Partially learning value of ignition timing learning value.	0.0 deg	deg
Atmospheric Pressure	Value calculated from atmospheric pressure sensor output value.	mmHg, kPa, inHg or psig	—
Mani. Relative Pressure	Value calculated from manifold pressure sensor output value. (Absolute value) (Air intake absolute pressure – Atmospheric pressure)	mmHg, kPa, inHg or psig	Intake Manifold Absolute Pressure – Atmospheric Pressure
Learned Ignition Timing	Ignition timing learning value. Advance angle amount or retard angle amount when knocking occurs.	deg	0 deg
Accel opening angle	Accelerator pedal opening angle (in percentage) calculated from accelerator pedal position sensor output value.	%	0.0%
Primary Control	Boost pressure control value. Control duty ratio of the boost pressure control solenoid valve. ECM output value.	%	0.0%
CPC Valve Duty Ratio	Control duty ratio of the purge control solenoid valve. ECM output value.	%	0 — 25%
TGV Position Sensor R	Tumble generator valve position sensor RH output value. Input value to ECM.	V	0.81 V
TGV Position Sensor L	Tumble generator valve position sensor LH output value. Input value to ECM.	V	0.81 V
Fuel Pump Duty	Fuel pump duty ratio. Supply voltage to the fuel pump is under a duty control by the ECM. This value shows the duty ratio. While the amount of fuel supply is small, such as during idling, the duty value is lowered to decrease the supply voltage.	%	30 — 40%
VVT Adv. Ang. Amount R	AVCS advance angle amount for the RH bank on the intake side.	deg	±5 deg
VVT Adv. Ang. Amount L	AVCS advance angle amount for the LH bank on the intake side.	deg	±5 deg
OCV Duty R	Control duty ratio of the intake side oil control solenoid on the RH bank. ECM output value.	%	0 — 20%
OCV Duty L	Control duty ratio of the intake side oil control solenoid on the LH bank. ECM output value.	%	0 — 20%
OCV Current R	Actual current value of the intake side oil control solenoid on the RH bank. Input value to ECM.	mA	40 — 100 mA
OCV Current L	Actual current value of the intake side oil control solenoid on the LH bank. Input value to ECM.	mA	40 — 100 mA
A/F Sensor #1 Current	Front oxygen (A/F) sensor output current value. Input value to ECM.	mA	–20 — 20 mA
A/F Sensor #1 Resistance	Value calculated from the front oxygen (A/F) sensor output value.	Ω	27 — 35 Ω
A/F Sensor #1	Actual lambda value calculated from the front oxygen (A/F) sensor output value.	—	1.0
A/F Correction #3	Sub correction value of A/F feedback control.	%	0.00%
A/F Learning #3	Sub learning value of A/F feedback control.	%	0.00%
SI Drive mode(Display)	SI-DRIVE mode status. ECM output value. Displayed only on models with SI-DRIVE.	—	I, S or S#
Throttle Motor Duty	Throttle motor control duty ratio. ECM output value.	%	–5%

Display	Contents	Unit of measure	Note (at idling)
Throttle Motor Voltage	Power supply voltage of the throttle motor. Input value to ECM.	V	12 — 15 V
Sub-Throttle Sensor	Voltage value of the sub throttle position sensor. Input value to ECM.	V	1.5 V
Main-Throttle Sensor	Voltage value of the main throttle position sensor. Input value to ECM.	V	0.6 V
Sub-Accelerator Sensor	Voltage value of the sub accelerator pedal position sensor. Input value to ECM.	V	1.1 V
Main-Accelerator Sensor	Voltage value of the main accelerator pedal position sensor. Input value to ECM.	V	1.0 V
Sec. Air Piping Pressure	Secondary air supply piping pressure value.	mmHg, kPa, inHg or psig	765 mmHg, 102 kPa, 30.1 inHg or 14.8 psig
Sec. Air Flow	Secondary airflow volume.	g/s or lb/m	0.00 g/s or 0.00 lb/m
Memorized Cruise Speed	Cruise control system target vehicle speed. (Set speed)	km/h or MPH	—
Fuel level resistance	Fuel level sensor resistance value. Input value to ECM.	Ω	20 — 400 Ω
Odometer	Value of the total cumulative travel distance that ECM calculates from the vehicle speed separately from the odometer in the combination meter. Small difference from the odometer will be possible, but if there is a big difference, ECM or the combination meter may need to be replaced.	km	—
Exh. VVT Retard Ang. R	AVCS actual retard angle amount for the RH bank on the exhaust side.	deg	±5 deg
Exh. VVT Retard Ang. L	AVCS actual retard angle amount for the LH bank on the exhaust side.	deg	±5 deg
Exh. OCV Duty R	Control duty ratio of the exhaust side oil control solenoid on the RH bank. ECM output value.	%	0 — 20%
Exh. OCV Duty L	Control duty ratio of the exhaust side oil control solenoid on the LH bank. ECM output value.	%	0 — 20%
Exh. OCV Current R	Actual current value of the exhaust side oil control solenoid on the RH bank. Input value to ECM.	mA	40 — 100 mA
Exh. OCV Current L	Actual current value of the exhaust side oil control solenoid on the LH bank. Input value to ECM.	mA	40 — 100 mA
Roughness Monitor #1	#1 cylinder roughness monitor count value.	—	0
Roughness Monitor #2	#2 cylinder roughness monitor count value.	—	0
Roughness Monitor #3	#3 cylinder roughness monitor count value.	—	0
Roughness Monitor #4	#4 cylinder roughness monitor count value.	—	0
VVT Initial Position Learning Value #1	AVCS initial position learning value for the RH bank on the intake side. Controls the angle against a standard angle. Deviation learning is performed based on this standard value.	°CA	10 — 50°CA
VVT Initial Position Learning Value #2	AVCS initial position learning value for the LH bank on the intake side. Controls the angle against a standard angle. Deviation learning is performed based on this standard value.	°CA	10 — 50°CA

Display	Contents	Unit of measure	Note (at idling)
VVT Ex Initial Position Learning Value #1	AVCS initial position learning value for the RH bank on the exhaust side. Controls the angle against a standard angle. Deviation learning is performed based on this standard value.	°CA	70 — 90°CA
VVT Ex Initial Position Learning Value #2	AVCS initial position learning value for the LH bank on the exhaust side. Controls the angle against a standard angle. Deviation learning is performed based on this standard value.	°CA	70 — 90°CA
D-check Require Flag	Forced operation of solenoid. Set to “ON” when an activation of compulsory adjusting function for engine speed or for A/F is requested.	—	OFF
Delivery Mode Connector	Delivery mode terminal fuse installation status. Shows the status of delivery mode.	—	OFF
Neutral switch	Neutral switch signal. Signal when in neutral (MT) or in P or N range (AT). Input value to ECM.	—	Neutral
Idle Switch Signal	Idle signal. Set to “Idle” while idling.	—	Idle
Ignition switch	Ignition switch signal. Set to “ON” when the ignition switch is ON.	—	ON
P/S Switch	Power steering switch signal. Set to “ON” when the steering is operated. (Model without electric power steering)	—	OFF (when OFF)
A/C Switch	Air conditioner switch signal. Set to “ON” when the air conditioner switch of the heater control is ON. Input value to ECM.	—	OFF (when OFF)
Starter Switch	Starter switch signal. Set to “ON” when the starter is ON. Input value to ECM.	—	OFF
Rear O2 Rich Signal	Rear oxygen sensor output value. Displays “Rich” when the air fuel ratio of rear oxygen sensor is rich. Displays “Lean” when the air fuel ratio of rear oxygen sensor is lean.	—	Rich/Lean
Knocking Signal	Knock sensor output signal. Judges if a knocking occurs or not. Input value to ECM.	—	OFF
Crankshaft Position Sig.	Crankshaft position sensor output signal. Set to “ON” when the engine is running. Input value to ECM.	—	ON
Camshaft Position Sig.	Camshaft position sensor output signal. Set to “ON” when the engine is running. Input value to ECM.	—	ON
Rear Defogger SW	Rear defogger switch input signal. Set to “ON” when the switch is ON. Input value to ECM.	—	OFF (when OFF)
Blower Fan SW	Blower fan switch input signal. Set to “ON” when the switch is ON. Input value to ECM.	—	OFF (when OFF)
Light Switch	Light switch input signal. Set to “ON” when the switch is ON. Input value to ECM.	—	OFF (when OFF)
Wiper Switch	Wiper switch input signal. Set to “ON” when the switch is ON. Input value to ECM.	—	OFF (when OFF)

Display	Contents	Unit of measure	Note (at idling)
A/C Mid Pressure Switch	Air conditioner middle pressure switch signal. Set to “ON” when the switch is ON. Input value to ECM.	—	OFF (when OFF)
A/C Compressor Signal	A/C compressor drive signal. Set to “ON” when the drive signal is output. ECM output value.	—	OFF (when OFF)
Radiator Fan Relay #1	Radiator fan relay drive signal. Set to “ON” when the drive signal is output. ECM output value.	—	OFF (when OFF)
Radiator Fan Relay #2	Radiator fan relay drive signal. Set to “ON” when the drive signal is output. ECM output value.	—	OFF (when OFF)
Blow-by leak Connector	PCV hose assembly diagnosis signal.	—	Connect
TGV Output	Drive signal to tumble generator valve motor. Set to “ON” when the tumble generator valve is activated (when the duty output is other than 0%). ECM output value.	—	OFF
TGV Drive	Tumble generator valve drive status. Set to “Open” when the tumble generator valve is open. ECM control status.	—	Close
CPC Solenoid 2	Drive status of the evaporative purge solenoid located upstream of the throttle, equipped with turbo models. ECM output value.	—	OFF (when OFF)
Ban of Torque Down VDC	Torque down prohibition notification signal to the vehicle dynamics control (VDC) module. Set to “OFF” when the prohibition signal is output. ECM output value.	—	ON
Request Torque Down VDC	Torque down request signal transmitted from the vehicle dynamics control (VDC) module. Set to “ON” when the request signal is sent. Vehicle dynamics control (VDC) module input value.	—	OFF
ETC Motor Relay	Drive signal to the electronic throttle motor relay. Set to “ON” when the drive signal is output. ECM output value.	—	ON
Clutch switch	Clutch switch signal. Set to “ON” when the clutch switch is ON. (MT model)	—	OFF (when OFF)
Stop Light Switch	Stop light switch signal. Set to “ON” when the stop light illuminates. Input value to ECM.	—	OFF (when OFF)
SET/COAST Switch	Cruise control system SET/COAST SW signal. Set to “ON” when the switch is operated. Input value to ECM.	—	OFF (when OFF)
RESUME/ACCEL Switch	Cruise control system RESUME/ACCEL SW signal. Set to “ON” when the switch is operated. Input value to ECM.	—	OFF (when OFF)
Brake Switch	Brake switch signal. Set to “ON” when the brake pedal is depressed. Input value to ECM.	—	OFF (when OFF)
Main switch	Cruise control system main switch signal. Set to “ON” when the switch is operated. Input value to ECM.	—	OFF (when OFF)
Sec. Air Combi V Relay 2	Secondary air combination valve relay 2 drive signal. Set to “ON” when the drive signal is output. ECM output value.	—	OFF (when OFF)

Display	Contents	Unit of measure	Note (at idling)
Secondary Air Pump Relay	Secondary air pump drive signal. Set to “ON” when the drive signal is output. ECM output value.	—	OFF (when OFF)
Sec. Air Combi V Relay 1	Secondary air combination valve relay 1 drive signal. Set to “ON” when the drive signal is output. ECM output value.	—	OFF (when OFF)
Cruise Control Cancel Switch Signal	Cruise control cancel switch signal of the cruise control system. Set to “ON” when the switch is operated. Input value to ECM.	—	OFF (when OFF)
MIL On Flag	Malfunction indicator light illumination status.	—	OFF (when light OFF)
ELCM switching valve	Leak check valve assembly switching valve drive signal. Set to “Close” when closing the switching valve. ECM output value.	—	Open
ELCM pump	Leak check valve assembly pump drive signal. Set to “ON” when the leak check valve assembly decompression pump is activated. ECM output value.	—	OFF

3. DISPLAY CURRENT ENGINE DATA (OBD MODE)

NOTE:
- For detailed operation procedures, refer to “Application help”.
- A list of the support data is shown in the following table.

Display	Contents	Note (at idling)	Unit of measure
Number of Diagnostic Code(s):	The number of trouble codes recorded in the ECM.	0	—
MIL On Flag	Malfunction indicator light illumination status.	OFF	—
Misfire monitoring(Supp)	Support status of the misfire diagnosis.	YES	—
Misfire monitoring(Rdy)	Status of the misfire diagnosis. YES or N/A: Diagnosis is completed or not supported. NO: Diagnosis is not completed.	YES	—
Fuel system monitoring(Supp)	Support status of the fuel system diagnosis.	YES	—
Fuel system monitoring(Rdy)	Status of the fuel system diagnosis. YES or N/A: Diagnosis is completed or not supported. NO: Diagnosis is not completed.	YES	—
Component monitoring(Supp)	Support status of the component diagnosis.	YES	—
Component monitoring(Rdy)	Status of the component diagnosis. YES or N/A: Diagnosis is completed or not supported. NO: Diagnosis is not completed.	YES	—
Catalyst Diagnosis(Supp)	Support status of the catalyst diagnosis.	YES	—
Catalyst Diagnosis(Rdy)	Status of the catalyst diagnosis. YES or N/A: Diagnosis is completed or not supported. NO: Diagnosis is not completed.	NO	—
Heated catalyst(Supp)	Support status of the heated catalyst diagnosis.	NO	—
Heated catalyst(Rdy)	Status of the heated catalyst diagnosis. YES or N/A: Diagnosis is completed or not supported. NO: Diagnosis is not completed.	N/A	—
Evaporative purge system(Supp)	Support status of the evaporative purge system diagnosis.	YES	—
Evaporative purge system(Rdy)	Status of the evaporative purge system diagnosis. YES or N/A: Diagnosis is completed or not supported. NO: Diagnosis is not completed.	NO	—

Display	Contents	Note (at idling)	Unit of measure
Secondary air system(Supp)	Support status of the secondary air system diagnosis.	YES	—
Secondary air system(Rdy)	Status of the secondary air system diagnosis. YES or N/A: Diagnosis is completed or not supported. NO: Diagnosis is not completed.	NO	—
A/C system refrigerant(Supp)	Support status of the A/C system refrigerant diagnosis.	NO	—
A/C system refrigerant(Rdy)	Status of the A/C system refrigerant diagnosis. YES or N/A: Diagnosis is completed or not supported. NO: Diagnosis is not completed.	N/A	—
Oxygen sensor(Supp)	Support status of the oxygen sensor diagnosis.	YES	—
Oxygen sensor(Rdy)	Status of the oxygen sensor diagnosis. YES or N/A: Diagnosis is completed or not supported. NO: Diagnosis is not completed.	NO	—
O2 Heater Diagnosis(Supp)	Support status of the oxygen sensor heater diagnosis.	YES	—
O2 Heater Diagnosis(Rdy)	Status of the oxygen sensor heater diagnosis. YES or N/A: Diagnosis is completed or not supported. NO: Diagnosis is not completed.	YES	—
EGR system(Supp)	Support status of the EGR diagnosis.	NO	—
EGR system(Rdy)	Status of the EGR diagnosis. YES or N/A: Diagnosis is completed or not supported. NO: Diagnosis is not completed.	N/A	—
Fuel system for Bank 1	Feedback status of air fuel ratio. Open: Feedback is stopped Closed: Feedback control is being performed	Cl_normal	—
Load Value	Current rate of air amount. Value assuming that the air amount at the current engine speed with the throttle fully open is 100%.	15.3%	%
Engine Coolant Temperature	Value calculated from engine coolant temperature sensor output value.	96°C	°C or °F
A/F Correction #1	Air fuel ratio correction control value for the front oxygen (A/F) sensor.	0.8%	%
A/F Learning #1	Air fuel ratio learning control value for the front oxygen (A/F) sensor.	1.6%	%
Intake Manifold Absolute Pressure	Value calculated from the manifold pressure sensor.	32 kPa	kPa, mmHg, inHg or psig
Engine Speed	Value calculated from crankshaft position sensor output value.	675 rpm	rpm
Vehicle Speed	Value calculated from vehicle speed sensor output value.	0 km/h	km/h or MPH
Ignition Timing Advance for #1 Cylinder	Ignition timing control value for No. 1 cylinder. Calculated from rotation speed, manifold pressure, intake air temperature, water temperature, and data from knock sensor etc.	5.5°	°
Intake Air Temperature	Value calculated from the intake air temperature sensor output value.	50°C	°C
Mass Air Flow	Value calculated from air flow sensor output value.	2.5 g/s	g/s or lb/m
Throttle Opening Angle	Throttle valve opening angle (in percentage) calculated from throttle position sensor output value.	13%	%
Secondary air system	Secondary air control status.	Stop	—
Oxygen sensor #12	Rear oxygen sensor output voltage value.	0.7 V	V
O2 Sensor #11	Installation status of the front oxygen (A/F) sensor.	Support	—
O2 Sensor #12	Installation status of the rear oxygen sensor.	Support	—
Short term fuel trim #12	Air fuel ratio correction control value of the rear oxygen sensor.	0.0%	%

Display	Contents	Note (at idling)	Unit of measure
OBD System	Shows the OBD regulation to be followed. This is the information recorded in the ECM, and it does not mean that the unit automatically judges the compliance to the OBD regulations.	OBD/OBD2	—
Time Since Engine Start	Elapsed time after starting the engine.	—	sec
Lighted MI lamp history	Travel distance after the warning light illuminated.	—	km or mile
A/F Sensor #11	Air fuel ratio calculated from the front oxygen (A/F) sensor output value. (Lambda)	0.951	—
A/F Sensor #11	Front oxygen (A/F) sensor output voltage.	2.468 V	V
Commanded Evap Purge	Evaporative purge rate displayed by the OBD.	0%	%
Fuel Level	Fuel level sensor output value. Input value to ECM. Total value of main and sub.	—	%
Number of Warm-ups since DTC cleared	Number of warm ups after DTC clear. 1 cycle is the time from the cold start till warmed up and stop. (Engine start after a warm-up is not counted.)	—	times
Meter since DTC cleared	Travel distance after DTC clear.	—	km or mile
Atmospheric Pressure	Value calculated from atmospheric pressure sensor output value.	101 kPa	kPa, mmHg, inHg or psig
A/F Sensor #11	Air fuel ratio calculated from the front oxygen (A/F) sensor output value. (Lambda)	1.001	—
A/F Sensor #11	Front oxygen (A/F) sensor current value.	2.193 V	V
Catalyst Temperature #11	Estimated temperature of the front catalytic converter.	305.1	°C or °F
Misfire monitoring(Enable)	Shows whether or not the execution condition of misfire diagnosis is met. YES: Diagnosis can be executed. NO or N/A: Diagnosis cannot be executed or is not supported.	YES	—
Misfire monitoring(Comp)	Shows whether or not the continuous misfire diagnosis is completed. YES or N/A: Diagnosis is completed or not supported. NO: Diagnosis is not completed.	YES	—
Fuel system monitoring(Enable)	Shows whether or not the execution condition of fuel system diagnosis is met. YES: Diagnosis can be executed. NO or N/A: Diagnosis cannot be executed or is not supported.	YES	—
Fuel system monitoring(Comp)	Shows whether or not the fuel system diagnosis is completed. YES or N/A: Diagnosis is completed or not supported. NO: Diagnosis is not completed.	NO	—
Component monitoring(Enable)	Shows whether or not the execution condition of component diagnosis is met. YES: Diagnosis can be executed. NO or N/A: Diagnosis cannot be executed or is not supported.	NO	—
Component monitoring(Comp)	Shows whether or not the component diagnosis is completed. YES or N/A: Diagnosis is completed or not supported. NO: Diagnosis is not completed.	NO	—
Catalyst Diagnosis(Enable)	Shows whether or not the execution condition of catalyst diagnosis is met. YES: Diagnosis can be executed. NO or N/A: Diagnosis cannot be executed or is not supported.	YES	—
Catalyst Diagnosis(Comp)	Shows whether or not the catalyst diagnosis is completed. YES or N/A: Diagnosis is completed or not supported. NO: Diagnosis is not completed.	NO	—

Display	Contents	Note (at idling)	Unit of measure
Heated catalyst(Enable)	Shows whether or not the execution condition of heated catalyst diagnosis is met. YES: Diagnosis can be executed. NO or N/A: Diagnosis cannot be executed or is not supported.	N/A	—
Heated catalyst(Comp)	Shows whether or not the heated catalyst diagnosis is completed. YES or N/A: Diagnosis is completed or not supported. NO: Diagnosis is not completed.	N/A	—
Evaporative purge system(Enable)	Shows whether or not the execution condition of evaporative purge system diagnosis is met. YES: Diagnosis can be executed. NO or N/A: Diagnosis cannot be executed or is not supported.	YES	—
Evaporative purge system(Comp)	Shows whether or not the evaporative purge system diagnosis is completed. YES or N/A: Diagnosis is completed or not supported. NO: Diagnosis is not completed.	NO	—
Secondary air system(Enable)	Shows whether or not the execution condition of the secondary air system diagnosis is met. YES: Diagnosis can be executed. NO or N/A: Diagnosis cannot be executed or is not supported.	YES	—
Secondary air system(Comp)	Shows whether or not the secondary air system diagnosis is completed. YES or N/A: Diagnosis is completed or not supported. NO: Diagnosis is not completed.	NO	—
A/C system refrigerant(Enable)	Shows whether or not the execution condition of A/C system refrigerant diagnosis is met. YES: Diagnosis can be executed. NO or N/A: Diagnosis cannot be executed or is not supported.	N/A	—
A/C system refrigerant(Comp)	Shows whether or not the A/C system refrigerant diagnosis is completed. YES or N/A: Diagnosis is completed or not supported. NO: Diagnosis is not completed.	N/A	—
Oxygen sensor(Enable)	Shows whether or not the execution condition of oxygen sensor diagnosis is met. YES: Diagnosis can be executed. NO or N/A: Diagnosis cannot be executed or is not supported.	YES	—
Oxygen sensor(Comp)	Shows whether or not the oxygen sensor diagnosis is completed. YES or N/A: Diagnosis is completed or not supported. NO: Diagnosis is not completed.	NO	—
O2 Heater Diagnosis(Enable)	Shows whether or not the execution condition of oxygen heater diagnosis is met. YES: Diagnosis can be executed. NO or N/A: Diagnosis cannot be executed or is not supported.	YES	—
O2 Heater Diagnosis(Comp)	Shows whether or not the oxygen heater diagnosis is completed. YES or N/A: Diagnosis is completed or not supported. NO: Diagnosis is not completed.	YES	—
EGR system(Enable)	Shows whether or not the execution condition of EGR diagnosis is met. YES: Diagnosis can be executed. NO or N/A: Diagnosis cannot be executed or is not supported.	N/A	—
EGR system(Comp)	Shows whether or not the EGR diagnosis is completed. YES or N/A: Diagnosis is completed or not supported. NO: Diagnosis is not completed.	N/A	—
ECU ACC	ECM input power supply voltage.	14.176 V	V

Display	Contents	Note (at idling)	Unit of measure
Absolute Load Value	Percentage of current intake air amount against the maximum air intake amount of the engine. For non-turbo engine, the value can be close to 95%, but will never be 100%. For turbo engine, this value may exceed 100% due to a boost pressure.	21	%
Target Equivalence Ratio	Target air fuel ratio. (Lambda) It usually becomes 1.0 aiming at a theoretical air fuel ratio.	0.996	—
Relative Throttle Position	Current throttle opening angle in percentage against the throttle voltage (full range) that has reflected the full close point learning value. The value will be approx. 70% at full open.	1.6%	%
Ambient Temperature	Value that ECM estimates by using input values from the engine coolant temperature sensor or the intake air temperature sensor etc.	Ambient Air Temperature	°C or °F
Absolute Throttle Pos.#2	Shows the sub throttle sensor voltage value in % against the full-range 5 V throttle sensor output voltage.	31	%
Accelerator Pedal Pos.#1	Shows the main accelerator sensor voltage value in % against the full-range 5 V throttle sensor output voltage.	13	%
Accelerator Pedal Pos.#2	Shows the sub accelerator sensor voltage value in % against the full-range 5 V throttle sensor output voltage.	13	%
Target Throttle Opening Angle	Control value of the target throttle opening angle calculated by ECM. Target value of opening angle in percentage when 0% means fully closed and 100% means fully open.	0.0%	%
Time while MIL lighted	Engine operating time from when the malfunction indicator light illuminated till when it went off.	—	min
Time since DTC cleared	Elapsed time after DTC clear.	—	min
Type of fuel	Fuel information recorded in the ECM. Not the fuel information currently used.	GAS	—
Relative Accelerator Pos.	Accelerator opening angle with a full close point learning value taken into consideration.	0	%
MT gear status	Neutral condition. Information input from the neutral switch. (MT model)	NEUT	—

4. DISPLAY OF FREEZE FRAME DATA (OBD MODE)

NOTE:
- For detailed operation procedures, refer to “Application help”.
- A list of the support data is shown in the following table.

Display	Contents	Unit of measure
DTC that caused required Freeze Frame data storage	Trouble code when memorizing freeze frame data.	—
Fuel system for Bank 1	Feedback status of air fuel ratio. Open: Feedback is stopped Closed: Feedback control is being performed	—
Load Value	Current rate of air amount. Value assuming that the air amount at the current engine speed with the throttle fully open is 100%.	%
Engine Coolant Temperature	Value calculated from engine coolant temperature sensor output value.	°C or °F
A/F Correction #1	Air fuel ratio correction control value for the front oxygen (A/F) sensor.	%
A/F Learning #1	Air fuel ratio learning control value for the front oxygen (A/F) sensor.	%
Intake Manifold Absolute Pressure	Value calculated from the manifold pressure sensor.	mmHg, kPa, inHg or psi
Engine Speed	Value calculated from crankshaft position sensor output value.	rpm
Vehicle Speed	Value calculated from vehicle speed sensor output value.	km/h or MPH

Display	Contents	Unit of measure
Ignition Timing Advance for #1 Cylinder	Ignition timing control value for No. 1 cylinder. Calculated from rotation speed, manifold pressure, intake air temperature, water temperature, and data from knock sensor etc.	°
Intake Air Temperature	Value calculated from the intake air temperature sensor output value.	°C
Mass Air Flow	Value calculated from air flow sensor output value.	g/s
Throttle Opening Angle	Throttle valve opening angle (in percentage) calculated from throttle position sensor output value.	%
Secondary air system	Secondary air control status.	—
Oxygen sensor #12	Rear oxygen sensor output voltage value.	V
Short term fuel trim #12	Air fuel ratio correction control value of the rear oxygen sensor.	%
OBD System	Shows the OBD regulation to be followed. This is the information recorded in the ECM, and it does not mean that the unit automatically judges the compliance to the OBD regulations.	—
O2 Sensor #11	Installation status of the front oxygen (A/F) sensor.	—
O2 Sensor #12	Installation status of the rear oxygen sensor.	—
Time Since Engine Start	Elapsed time after starting the engine.	sec
Commanded Evap Purge	Evaporative purge rate displayed by the OBD.	%
Fuel Level	Fuel level sensor output value. Input value to ECM. Total value of main and sub.	%
Atmospheric Pressure	Value calculated from atmospheric pressure sensor output value.	mmHg, kPa, inHg or psig
ECU ACC	ECM input power supply voltage.	V
Absolute Load Value	Percentage of current intake air amount against the maximum air intake amount of the engine. For non-turbo engine, the value can be close to 95%, but will never be 100%. For turbo engine, this value may exceed 100% due to a boost pressure.	%
Target Equivalence Ratio	Target air fuel ratio. (Lambda) It usually becomes 1.0 aiming at a theoretical air fuel ratio.	—
Relative Throttle Position	Current throttle opening angle in percentage against the throttle voltage (full range) that has reflected the full close point learning value. The value will be approx. 70% at full open.	%
Ambient Temperature	Value that ECM estimates by using input values from the engine coolant temperature sensor or the intake air temperature sensor etc.	°C or °F
Absolute Throttle Pos.#2	Shows the sub throttle sensor voltage value in % against the full-range 5 V throttle sensor output voltage.	%
Accelerator Pedal Pos.#1	Shows the main accelerator sensor voltage value in % against the full-range 5 V throttle sensor output voltage.	%
Accelerator Pedal Pos.#2	Shows the sub accelerator sensor voltage value in % against the full-range 5 V throttle sensor output voltage.	%
Target Throttle Opening Angle	Control value of the target throttle opening angle calculated by ECM. Target value of opening angle in percentage when 0% means fully closed and 100% means fully open.	%
MT gear status	Neutral condition. Information input from the neutral switch. (MT model)	—

5. V.I.N REGISTRATION

1) On «Start» display, select «Diagnosis».
2) On «Vehicle selection» display, input the target vehicle information and select «Confirmed».
3) On «Main Menu» display, select «Each System».
4) On «Select System» display, select «Engine Control System» and then «Enter».
5) On «Select Function» display, select «Work Support».
6) On «Work Support» display, select «Entry VIN».
7) Perform the procedures shown on the display screen.

9. Read Diagnostic Trouble Code (DTC)

A: OPERATION

1. SUBARU SELECT MONITOR

1) On «Start» display, select «Diagnosis».
2) On «Vehicle selection» display, input the target vehicle information and select «Confirmed».
3) On «Main Menu» display, select «Each System».
4) On «Select System» display, select «Engine Control System» and then «Enter».
5) On «Select Function» display, select «DTC».

NOTE:
- For detailed operation procedures, refer to “Application help”.
- For details concerning DTC, refer to “List of Diagnostic Trouble Code (DTC)”. <Ref. to EN(STI)(diag)-96, List of Diagnostic Trouble Code (DTC).>

2. GENERAL SCAN TOOL

NOTE:
- Refer to general scan tool manufacturer’s instruction manual to access powertrain DTC (MODE $03).
- Refer to data denoting emission-related powertrain DTC.
- For details concerning DTC, refer to “List of Diagnostic Trouble Code (DTC)”. <Ref. to EN(STI)(diag)-96, List of Diagnostic Trouble Code (DTC).>

10.Inspection Mode

A: PROCEDURE

Perform the diagnosis shown in the following DTC table.
When performing the diagnosis not listed in “List of Diagnostic Trouble Code (DTC)”, refer to the item on the drive cycle. <Ref. to EN(STI)(diag)-54, Drive Cycle.>

DTC	Item	Condition
B1570	ANTENNA	—
B1571	REFERENCE CODE INCOMPATIBILITY	—
B1572	IMM CIRCUIT EXCEPT ANTENNA CIRCUIT	—
B1574	KEY COMMUNICATION	—
B1575	INCORRECT IMMOBILIZER KEY	—
B1576	EGI CONTROL MODULE EEPROM	—
B1577	IMM CONTROL MODULE EEPROM	—
B1578	METER	—
P0031	A/F / O2 HEATER CONTROL CIRCUIT LOW BANK 1 SENSOR 1	—
P0032	A/F / O2 HEATER CONTROL CIRCUIT HIGH BANK 1 SENSOR 1	—
P0037	A/F / O2 HEATER CONTROL CIRCUIT LOW BANK 1 SENSOR 2	—
P0038	A/F / O2 HEATER CONTROL CIRCUIT HIGH BANK 1 SENSOR 2	—
P0072	AMBIENT AIR TEMPERATURE SENSOR CIRCUIT "A" LOW	—
P0073	AMBIENT AIR TEMPERATURE SENSOR CIRCUIT "A" HIGH	—
P0102	MASS OR VOLUME AIR FLOW SENSOR "A" CIRCUIT LOW	—
P0103	MASS OR VOLUME AIR FLOW SENSOR "A" CIRCUIT HIGH	—
P0107	MANIFOLD ABSOLUTE PRESSURE/BAROMETRIC PRESSURE SENSOR CIRCUIT LOW	—
P0108	MANIFOLD ABSOLUTE PRESSURE/BAROMETRIC PRESSURE SENSOR CIRCUIT HIGH	—
P0112	INTAKE AIR TEMPERATURE SENSOR 1 CIRCUIT LOW BANK 1	—
P0113	INTAKE AIR TEMPERATURE SENSOR 1 CIRCUIT HIGH BANK 1	—
P0117	ENGINE COOLANT TEMPERATURE SENSOR 1 CIRCUIT LOW	—
P0118	ENGINE COOLANT TEMPERATURE SENSOR 1 CIRCUIT HIGH	—
P0122	THROTTLE/PEDAL POSITION SENSOR/SWITCH "A" CIRCUIT LOW	—
P0123	THROTTLE/PEDAL POSITION SENSOR/SWITCH "A" CIRCUIT HIGH	—
P0131	A/F / O2 SENSOR CIRCUIT LOW VOLTAGE BANK 1 SENSOR 1	—
P0132	A/F / O2 SENSOR CIRCUIT HIGH VOLTAGE BANK 1 SENSOR 1	—
P0201	CYLINDER 1 INJECTOR "A" CIRCUIT	—
P0202	CYLINDER 2 INJECTOR "A" CIRCUIT	—
P0203	CYLINDER 3 INJECTOR "A" CIRCUIT	—
P0204	CYLINDER 4 INJECTOR "A" CIRCUIT	—
P0222	THROTTLE/PEDAL POSITION SENSOR/SWITCH "B" CIRCUIT LOW	—
P0223	THROTTLE/PEDAL POSITION SENSOR/SWITCH "B" CIRCUIT HIGH	—
P0230	FUEL PUMP PRIMARY CIRCUIT	—
P0245	TURBOCHARGER/SUPERCHARGER WASTEGATE SOLENOID "A" LOW	—
P0327	KNOCK/COMBUSTION VIBRATION SENSOR 1 CIRCUIT LOW BANK 1 OR SINGLE SENSOR	—
P0328	KNOCK/COMBUSTION VIBRATION SENSOR 1 CIRCUIT HIGH BANK 1 OR SINGLE SENSOR	—
P0335	CRANKSHAFT POSITION SENSOR "A" CIRCUIT	—
P0336	CRANKSHAFT POSITION SENSOR "A" CIRCUIT RANGE/PERFORMANCE	—
P0340	CAMSHAFT POSITION SENSOR "A" CIRCUIT BANK 1 OR SINGLE SENSOR	—
P0341	CAMSHAFT POSITION SENSOR "A" CIRCUIT RANGE/PERFORMANCE BANK 1 OR SINGLE SENSOR	—
P0345	CAMSHAFT POSITION SENSOR "A" CIRCUIT BANK 2	—
P0346	CAMSHAFT POSITION SENSOR "A" CIRCUIT RANGE/PERFORMANCE BANK 2	—
P0351	IGNITION COIL "A" PRIMARY CONTROL CIRCUIT/OPEN	—

DTC	Item	Condition
P0352	IGNITION COIL "B" PRIMARY CONTROL CIRCUIT/OPEN	—
P0353	IGNITION COIL "C" PRIMARY CONTROL CIRCUIT/OPEN	—
P0354	IGNITION COIL "D" PRIMARY CONTROL CIRCUIT/OPEN	—
P0365	CAMSHAFT POSITION SENSOR "B" CIRCUIT BANK 1	—
P0366	CAMSHAFT POSITION SENSOR "B" CIRCUIT RANGE/PERFORMANCE BANK 1	—
P0390	CAMSHAFT POSITION SENSOR "B" CIRCUIT BANK 2	—
P0391	CAMSHAFT POSITION SENSOR "B" CIRCUIT RANGE/PERFORMANCE BANK 2	—
P0413	SECONDARY AIR SYSTEM SWITCHING VALVE "A" CIRCUIT OPEN	—
P0416	SECONDARY AIR SYSTEM SWITCHING VALVE "B" CIRCUIT OPEN	—
P0452	EVAP SYSTEM (CPC) PRESSURE SENSOR/SWITCH CIRCUIT LOW	—
P0453	EVAP SYSTEM (CPC) PRESSURE SENSOR/SWITCH CIRCUIT HIGH	—
P0458	EVAP SYSTEM (CPC) PURGE CONTROL VALVE "A" CIRCUIT LOW	—
P0462	FUEL LEVEL SENSOR "A" CIRCUIT LOW	—
P0463	FUEL LEVEL SENSOR "A" CIRCUIT HIGH	—
P04AC	EVAP SYSTEM (CPC) PURGE CONTROL VALVE "B" CIRCUIT LOW	—
P04DB	CRANKCASE VENTILATION SYSTEM (PCV) DISCONNECTED	—
P0512	STARTER (SWITCH) REQUEST CIRCUIT	—
P0560	SYSTEM VOLTAGE	—
P0604	INTERNAL CONTROL MODULE RANDOM ACCESS MEMORY (RAM) ERROR	—
P0605	INTERNAL CONTROL MODULE READ ONLY MEMORY (ROM) ERROR	—
P0606	CONTROL MODULE PROCESSOR	—
P060A	INTERNAL CONTROL MODULE MONITORING PROCESSOR PERFORMANCE	—
P060B	INTERNAL CONTROL MODULE A/D PROCESSING PERFORMANCE	—
P0616	STARTER RELAY "A" CIRCUIT LOW	—
P0617	STARTER RELAY "A" CIRCUIT HIGH	—
P062F	INTERNAL CONTROL MODULE EEPROM ERROR	—
P0685	ECM/PCM POWER RELAY CONTROL CIRCUIT/OPEN	—
P081A	STARTER DISABLE CIRCUIT LOW	—
P1160	THROTTLE RETURN SPRING	—
P2008	TGV CONTROL CIRCUIT/OPEN BANK 1	—
P2009	TGV CONTROL CIRCUIT LOW BANK 1	—
P2011	TGV CONTROL CIRCUIT/OPEN BANK 2	—
P2012	TGV CONTROL CIRCUIT LOW BANK 2	—
P2016	TGV POSITION SENSOR/SWITCH CIRCUIT LOW BANK 1	—
P2017	TGV POSITION SENSOR/SWITCH CIRCUIT HIGH BANK 1	—
P2021	TGV POSITION SENSOR/SWITCH CIRCUIT LOW BANK 2	—
P2022	TGV POSITION SENSOR/SWITCH CIRCUIT HIGH BANK 2	—
P2088	"A" CAMSHAFT POSITION ACTUATOR CONTROL CIRCUIT LOW BANK 1	—
P2089	"A" CAMSHAFT POSITION ACTUATOR CONTROL CIRCUIT HIGH BANK 1	—
P2090	"B" CAMSHAFT POSITION ACTUATOR CONTROL CIRCUIT LOW BANK 1	—
P2091	"B" CAMSHAFT POSITION ACTUATOR CONTROL CIRCUIT HIGH BANK 1	—
P2092	"A" CAMSHAFT POSITION ACTUATOR CONTROL CIRCUIT LOW BANK 2	—
P2093	"A" CAMSHAFT POSITION ACTUATOR CONTROL CIRCUIT HIGH BANK 2	—
P2094	"B" CAMSHAFT POSITION ACTUATOR CONTROL CIRCUIT LOW BANK 2	—
P2095	"B" CAMSHAFT POSITION ACTUATOR CONTROL CIRCUIT HIGH BANK 2	—
P2101	THROTTLE ACTUATOR "A" CONTROL MOTOR CIRCUIT RANGE/PERFORMANCE	—
P2102	THROTTLE ACTUATOR "A" CONTROL MOTOR CIRCUIT LOW	—
P2103	THROTTLE ACTUATOR "A" CONTROL MOTOR CIRCUIT HIGH	—
P2109	THROTTLE/PEDAL POSITION SENSOR "A" MINIMUM STOP PERFORMANCE	—
P2119	THROTTLE ACTUATOR "A" CONTROL THROTTLE BODY RANGE/PERFORMANCE	—

DTC	Item	Condition
P2122	THROTTLE/PEDAL POSITION SENSOR/SWITCH "D" CIRCUIT LOW	—
P2123	THROTTLE/PEDAL POSITION SENSOR/SWITCH "D" CIRCUIT HIGH	—
P2127	THROTTLE/PEDAL POSITION SENSOR/SWITCH "E" CIRCUIT LOW	—
P2128	THROTTLE/PEDAL POSITION SENSOR/SWITCH "E" CIRCUIT HIGH	—
P2135	THROTTLE/PEDAL POSITION SENSOR/SWITCH "A"/"B" VOLTAGE CORRELATION	—
P2138	THROTTLE/PEDAL POSITION SENSOR/SWITCH "D"/"E" VOLTAGE CORRELATION	—
P2257	SECONDARY AIR SYSTEM CONTROL "A" CIRCUIT LOW	—
P2401	EVAP SYSTEM LEAK DETECTION PUMP CONTROL CIRCUIT LOW	—
P2419	EVAP SYSTEM SWITCHING VALVE CONTROL CIRCUIT LOW	—
P2432	SECONDARY AIR SYSTEM AIR FLOW/PRESSURE SENSOR CIRCUIT LOW BANK 1	—
P2433	SECONDARY AIR SYSTEM AIR FLOW/PRESSURE SENSOR CIRCUIT HIGH BANK 1	—
P2444	SECONDARY AIR SYSTEM PUMP STUCK ON BANK 1	—
P2530	IGNITION SWITCH RUN POSITION CIRCUIT	—
U0073	CONTROL MODULE COMMUNICATION BUS OFF	—
U0101	LOST COMMUNICATION WITH TCM	—
U0122	LOST COMMUNICATION WITH VEHICLE DYNAMICS CONTROL MODULE	—
U0155	LOST COMMUNICATION WITH INSTRUMENT PANEL CLUSTER (IPC) CONTROL MODULE	—
U0402	INVALID DATA RECEIVED FROM TCM	—
U0416	INVALID DATA RECEIVED FROM VEHICLE DYNAMICS CONTROL MODULE	—
U0423	INVALID DATA RECEIVED FROM INSTRUMENT PANEL CLUSTER CONTROL MODULE	—

1. PREPARATION FOR THE INSPECTION MODE

1) Check that the battery voltage is 12 V or more and fuel remains approx. half [20 — 40 L (5.3 — 10.6 US gal, 4.4 — 8.8 Imp gal)].
2) Lift up the vehicle using a garage jack and place it on rigid racks, or drive the vehicle onto free rollers.

WARNING:
- **Before lifting up the vehicle, ensure parking brake is applied.**
- **Do not use a pantograph jack in place of a rigid rack.**
- **Secure a rope or wire to the front or rear towing hooks to prevent the lateral runout of front wheels.**
- **Before rotating the wheels, make sure that there is no one in front of the vehicle. Besides while the wheels are rotating, make sure that no one approaches the vehicle front side.**
- **Make sure that there is nothing around the wheels. For AWD model, pay attention to all four wheels.**
- **While servicing, do not depress or release the clutch pedal or accelerator pedal quickly regardless of the engine speed. Quick operation may cause the vehicle to drop off the free roller.**

• To prevent the vehicle from slipping due to vibration, do not place anything between rigid rack and the vehicle.

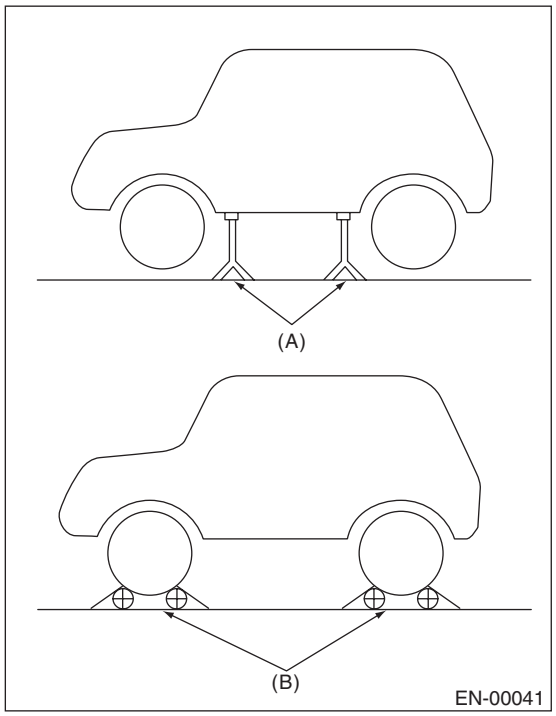

(A) Rigid rack
(B) Free roller

2. SUBARU SELECT MONITOR

1) Check that no DTC remains after clearing memory. <Ref. to EN(STI)(diag)-68, Clear Memory Mode.>
2) Warm up the engine.
3) Prepare the Subaru Select Monitor 4. <Ref. to EN(STI)(diag)-8, PREPARATION TOOL, General Description.>
4) Prepare PC with Subaru Select Monitor installed.
5) Connect the USB cable to the DST-i and the USB port on the personal computer (dedicated port for the Subaru Select Monitor).

NOTE:
The dedicated port for the Subaru Select Monitor means the USB port which was used to install the Subaru Select Monitor.
6) Connect the diagnosis cable to DST-i.
7) Install the delivery mode fuse (A).

CAUTION:
Do not use any fuses that are installed on the vehicle.

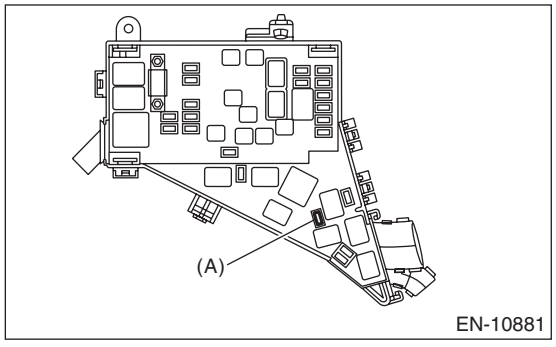

8) Connect the DST-i to the data link connector located in the lower portion of the instrument panel (on the driver's side).

CAUTION:
Do not connect the scan tools except for Subaru Select Monitor and general scan tool.

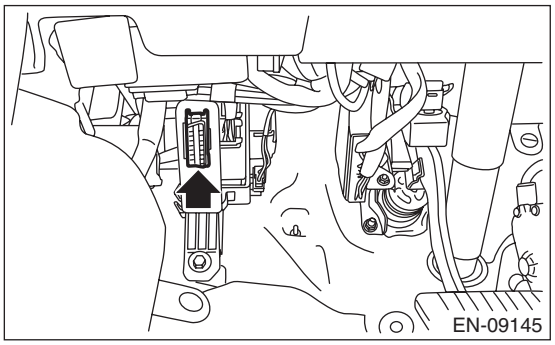

9) Start the PC.
10) Turn the ignition switch to ON (engine OFF) and run the "PC application for Subaru Select Monitor".
11) On «Start» display, select «Diagnosis».
12) On «Vehicle selection» display, input the vehicle information and select «Confirmed».
13) On «Main Menu» display, select «Each System».
14) On «Select System» display, select «Engine Control System» and then select «Enter».
15) On «Select Function» display, select «Work Support».
16) On the «Work Support» display, select «Dealer Check Mode Procedure».
17) When the "Perform Inspection (Dealer Check) Mode ?" is shown on the screen, click the [Next] button.
18) Perform subsequent procedures as instructed on the display screen.
- If trouble still remains in the memory, the corresponding DTC appears on the display screen.

NOTE:
- For detailed operation procedures, refer to "Application help".
- For details concerning DTC, refer to "List of Diagnostic Trouble Code (DTC)".
<Ref. to EN(STI)(diag)-96, List of Diagnostic Trouble Code (DTC).>
- Release the parking brake.
- The rotating speed difference between front and rear wheels may illuminate the ABS warning light, but this does not indicate a malfunction. When engine control system diagnosis is finished, perform the VDC memory clearance procedure of self-diagnosis function. <Ref. to VDC(diag)-30, Clear Memory Mode.>

3. GENERAL SCAN TOOL

1) Check that no DTC remains after clearing memory. <Ref. to EN(STI)(diag)-68, Clear Memory Mode.>
2) Warm up the engine.
3) Install the delivery mode fuse (A).

CAUTION:
Do not use any fuses that are installed on the vehicle.

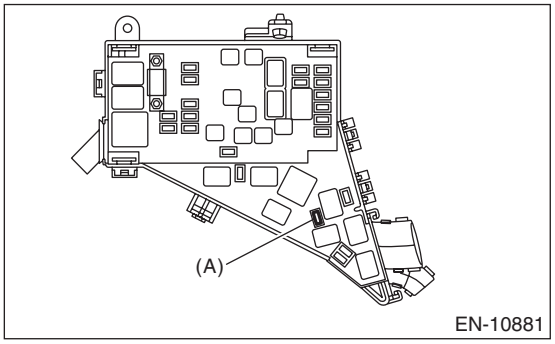

4) Connect the general scan tool to data link connector located in the lower portion of the instrument panel (on the driver's side).

CAUTION:
Do not connect the scan tools except for Subaru Select Monitor and general scan tool.

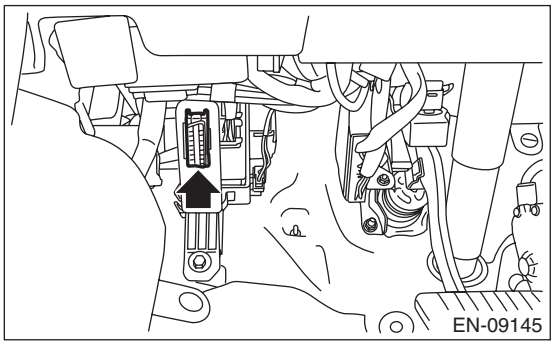

5) Start the engine.

NOTE:
Depress the clutch pedal when starting engine.
6) Turn the neutral position switch to ON by operating shift lever.
7) Keep the engine speed in 2,500 — 3,000 rpm range for 40 seconds.
8) Place the shift lever in 1st gear and drive the vehicle at 5 to 10 km/h (3 to 6 MPH).

NOTE:
- For AWD model, release the parking brake.
- The rotating speed difference between front and rear wheels may illuminate the ABS warning light, but this does not indicate a malfunction. When engine control system diagnosis is finished, perform the VDC memory clearance procedure of self-diagnosis function. <Ref. to VDC(diag)-30, Clear Memory Mode.>

9) Using the general scan tool, check for DTC and record the result(s).

NOTE:
- For detailed operation procedures, refer to the general scan tool operation manual.
- For details concerning DTC, refer to "List of Diagnostic Trouble Code (DTC)".

<Ref. to EN(STI)(diag)-96, List of Diagnostic Trouble Code (DTC).>

11.Drive Cycle

A: PROCEDURE

It is necessary to perform the drive cycle listed below if DTC is not found in the Inspection Mode. It is possible to complete diagnosis of the DTC by performing the indicated drive cycle. After the repair for the DTC, perform a necessary drive cycle and make sure the function recovers and the DTC is recorded.

1. PREPARATION FOR DRIVE CYCLE

1) Check that the battery voltage is 12 V or more and fuel remains approx. half [20 — 40 L (5.3 — 10.6 US gal, 4.4 — 8.8 Imp gal)].
2) After performing the diagnostics and Clear Memory Mode, check that no DTC remains. <Ref. to EN(STI)(diag)-68, Clear Memory Mode.>
3) Make sure that the delivery mode fuse is removed.

NOTE:
Perform the drive cycle after warming up the engine except when the engine coolant temperature at engine start is specified.

2. DRIVE CYCLE A

DTC	Item	Condition
P0128	Coolant Thermostat (Engine Coolant Temperature Below Thermostat Regulating Temperature)	—
P0141	O2 Sensor Heater Circuit Bank 1 Sensor 2	—
P014C	A/F / O2 Sensor Slow Response - Rich to Lean Bank 1 Sensor 1	—
P014D	A/F / O2 Sensor Slow Response - Lean to Rich Bank 1 Sensor 1	—
P015A	A/F / O2 Sensor Delayed Response - Rich to Lean Bank 1 Sensor 1	—
P015B	A/F / O2 Sensor Delayed Response - Lean to Rich Bank 1 Sensor 1	—
P0171	System Too Lean Bank 1	Complete diagnosis with drive cycle B or C as well.
P0172	System Too Rich Bank 1	Complete diagnosis with drive cycle B or C as well.
P0300	Random/Multiple Cylinder Misfire Detected	Complete diagnosis with drive cycle B or C as well.
P0301	Cylinder 1 Misfire Detected	Complete diagnosis with drive cycle B or C as well.
P0302	Cylinder 2 Misfire Detected	Complete diagnosis with drive cycle B or C as well.
P0303	Cylinder 3 Misfire Detected	Complete diagnosis with drive cycle B or C as well.
P0304	Cylinder 4 Misfire Detected	Complete diagnosis with drive cycle B or C as well.
P0420	Catalyst System Efficiency Below Threshold Bank 1	—
P0459	Evap System (CPC) Purge Control Valve "A" Circuit High	—
P2096	Post Catalyst Fuel Trim System Too Lean Bank 1	Complete diagnosis with drive cycle B or C as well.
P2097	Post Catalyst Fuel Trim System Too Rich Bank 1	Complete diagnosis with drive cycle B or C as well.
P2195	A/F /O2 Sensor Signal Biased/Stuck Lean Bank 1 Sensor 1	—
P2196	A/F /O2 Sensor Signal Biased/Stuck Rich Bank 1 Sensor 1	—

Diagnostic procedure:
1) Drive for 20 minutes or more at a constant speed of 80 km/h (50 MPH) or more.
2) Stop the vehicle and idle for one minute.
3) Read the temporary code using the Subaru Select Monitor or general scan tool. <Ref. to EN(STI)(diag)-47, OPERATION, Read Diagnostic Trouble Code (DTC).>

3. DRIVE CYCLE B

DTC	Item	Condition
P0125	Insufficient Coolant Temperature for Closed Loop Fuel Control	«Coolant Temp.» at engine start: Less than –15°C (5°F)
P0137	O2 Sensor Circuit Low Voltage Bank 1 Sensor 2	—
P0138	O2 Sensor Circuit High Voltage Bank 1 Sensor 2	—
P0171	System Too Lean Bank 1	Complete diagnosis with drive cycle A or C as well.
P0172	System Too Rich Bank 1	Complete diagnosis with drive cycle A or C as well.
P0300	Random/Multiple Cylinder Misfire Detected	Complete diagnosis with drive cycle A or C as well.
P0301	Cylinder 1 Misfire Detected	Complete diagnosis with drive cycle A or C as well.
P0302	Cylinder 2 Misfire Detected	Complete diagnosis with drive cycle A or C as well.
P0303	Cylinder 3 Misfire Detected	Complete diagnosis with drive cycle A or C as well.
P0304	Cylinder 4 Misfire Detected	Complete diagnosis with drive cycle A or C as well.
P0500	Vehicle Speed Sensor "A" Circuit	—
P0506	Idle Control System RPM - Lower Than Expected	—
P0507	Idle Control System RPM - Higher Than Expected	—
P2006	TGV Control Stuck Closed Bank 1	—
P2007	TGV Control Stuck Closed Bank 2	—
P2096	Post Catalyst Fuel Trim System Too Lean Bank 1	Complete diagnosis with drive cycle A or C as well.
P2097	Post Catalyst Fuel Trim System Too Rich Bank 1	Complete diagnosis with drive cycle A or C as well.

Diagnostic procedure:
1) Drive at 10 km/h (6 MPH) or more.
2) Stop the vehicle and idle for ten minutes.
3) Read the temporary code using the Subaru Select Monitor or general scan tool. <Ref. to EN(STI)(diag)-47, OPERATION, Read Diagnostic Trouble Code (DTC).>

4. DRIVE CYCLE C

DTC	Item	Condition
P000A	"A" CAMSHAFT POSITION SLOW RESPONSE BANK 1	—
P000B	"B" CAMSHAFT POSITION SLOW RESPONSE BANK 1	—
P000C	"A" CAMSHAFT POSITION SLOW RESPONSE BANK 2	—
P000D	"B" CAMSHAFT POSITION SLOW RESPONSE BANK 2	—
P0011	"A" CAMSHAFT POSITION - TIMING OVER-ADVANCED OR SYSTEM PERFORMANCE BANK 1	—
P0014	"B" CAMSHAFT POSITION - TIMING OVER-ADVANCED OR SYSTEM PERFORMANCE BANK 1	—
P0021	"A" CAMSHAFT POSITION - TIMING OVER-ADVANCED OR SYSTEM PERFORMANCE BANK 2	—
P0024	"B" CAMSHAFT POSITION - TIMING OVER-ADVANCED OR SYSTEM PERFORMANCE BANK 2	—
P0030	A/F / O2 HEATER CONTROL CIRCUIT BANK 1 SENSOR 1	—
P0068	MAP/MAF - THROTTLE POSITION CORRELATION	—
P0101	MASS OR VOLUME AIR FLOW SENSOR "A" CIRCUIT RANGE/PERFORMANCE	—
P0134	A/F / O2 SENSOR CIRCUIT NO ACTIVITY DETECTED BANK 1 SENSOR 1	—
P013A	O2 SENSOR SLOW RESPONSE - RICH TO LEAN BANK 1 SENSOR 2	—
P013B	O2 SENSOR SLOW RESPONSE - LEAN TO RICH BANK 1 SENSOR 2	—
P013E	O2 SENSOR DELAYED RESPONSE - RICH TO LEAN BANK 1 SENSOR 2	—
P013F	O2 SENSOR DELAYED RESPONSE - LEAN TO RICH BANK 1 SENSOR 2	—
P0171	SYSTEM TOO LEAN BANK 1	Complete diagnosis with drive cycle A or B as well.
P0172	SYSTEM TOO RICH BANK 1	Complete diagnosis with drive cycle A or B as well.
P0244	TURBOCHARGER/SUPERCHARGER WASTEGATE SOLENOID "A" RANGE/PERFORMANCE	—
P0246	TURBOCHARGER/SUPERCHARGER WASTEGATE SOLENOID "A" HIGH	—
P0300	RANDOM/MULTIPLE CYLINDER MISFIRE DETECTED	Complete diagnosis with drive cycle A or B as well.
P0301	CYLINDER 1 MISFIRE DETECTED	Complete diagnosis with drive cycle A or B as well.
P0302	CYLINDER 2 MISFIRE DETECTED	Complete diagnosis with drive cycle A or B as well.
P0303	CYLINDER 3 MISFIRE DETECTED	Complete diagnosis with drive cycle A or B as well.
P0304	CYLINDER 4 MISFIRE DETECTED	Complete diagnosis with drive cycle A or B as well.
P04AD	EVAP SYSTEM (CPC) PURGE CONTROL VALVE "B" CIRCUIT HIGH	—
P0851	PARK/NEUTRAL SWITCH INPUT CIRCUIT LOW	—
P0852	PARK/NEUTRAL SWITCH INPUT CIRCUIT HIGH	—
P1449	EVAP SYSTEM CLOG DETECTED (AIR FILTER)	—
P2004	TGV CONTROL STUCK OPEN BANK 1	—
P2005	TGV CONTROL STUCK OPEN BANK 2	—
P2096	POST CATALYST FUEL TRIM SYSTEM TOO LEAN BANK 1	Complete diagnosis with drive cycle A or B as well.
P2097	POST CATALYST FUEL TRIM SYSTEM TOO RICH BANK 1	Complete diagnosis with drive cycle A or B as well.
P2270	O2 SENSOR SIGNAL BIASED/STUCK LEAN BANK 1 SENSOR 2	—
P2271	O2 SENSOR SIGNAL BIASED/STUCK RICH BANK 1 SENSOR 2	—

Diagnostic procedure:
1) Drive according to the drive pattern described below.

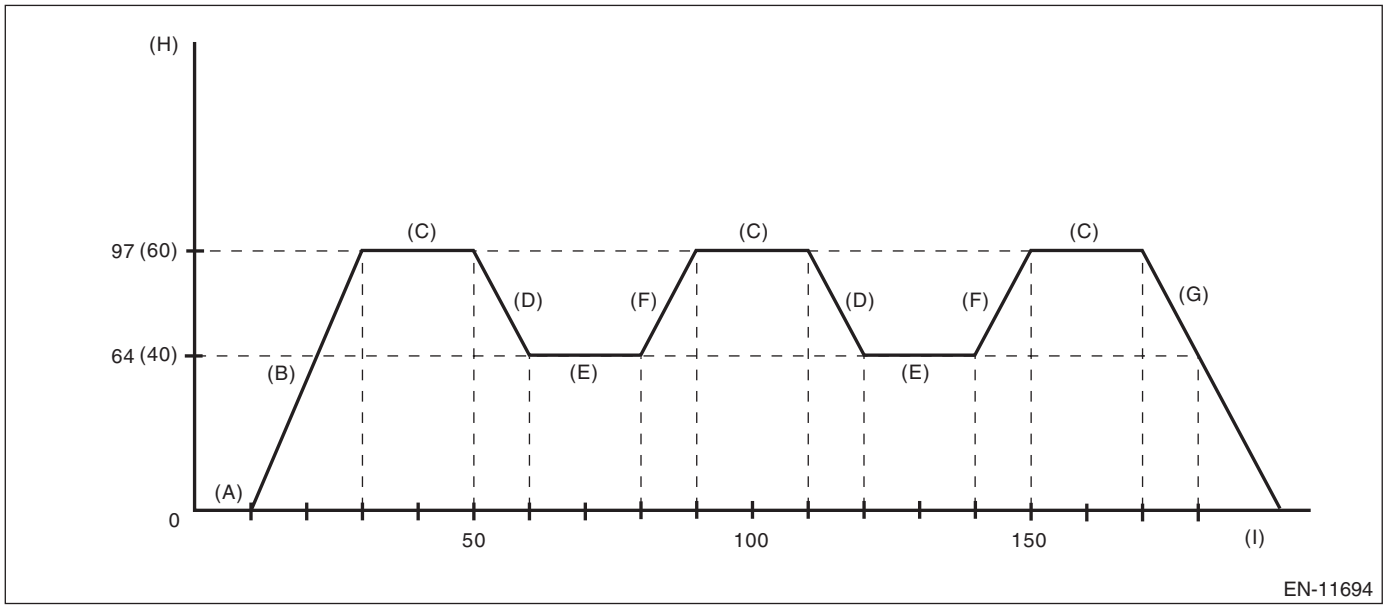

(A)	Place the shift lever in neutral position, and let the engine idle for 10 seconds or more.	(D)	Decelerate with fully closed throttle to 64 km/h (40 MPH) or less.	(G)	Stop the vehicle with throttle fully closed.
(B)	Accelerate to 97 km/h (60 MPH) or more within 20 seconds.	(E)	Drive for 20 seconds or more at 64 km/h (40 MPH) or less.	(H)	Vehicle speed km/h (MPH)
(C)	Drive for 20 seconds or more at 97 km/h (60 MPH) or more.	(F)	Accelerate to 97 km/h (60 MPH) or more within 10 seconds.	(I)	Sec.

2) Read the temporary code using the Subaru Select Monitor or general scan tool. <Ref. to EN(STI)(diag)-47, OPERATION, Read Diagnostic Trouble Code (DTC).>

5. DRIVE CYCLE E

DTC	Item	Condition
P0461	Fuel Level Sensor "A" Circuit Range/Performance	—

Diagnostic procedure:
1) Make sure that the battery voltage is 10.9 V or more.
2) Perform the Clear Memory Mode. <Ref. to EN(STI)(diag)-68, Clear Memory Mode.>
3) Drive for approximately 30 L (7.9 US gal, 6.6 Imp gal) of fuel.

NOTE:
- It is acceptable to drive the vehicle intermittently.
- Do not disconnect the battery terminals while diagnosing. (Data will be cleared by disconnecting the battery terminals.)

4) Read the temporary code using the Subaru Select Monitor or general scan tool. <Ref. to EN(STI)(diag)-47, OPERATION, Read Diagnostic Trouble Code (DTC).>

6. DRIVE CYCLE F

DTC	Item	Condition
P0111	Intake Air Temperature Sensor 1 Circuit Range/Performance Bank 1	• 6 hours have elapsed since ignition switch is OFF under a completely warmed up condition. • For models with block heater, at least 6 hours must have elapsed without operating the block heater.

Diagnostic procedure:
1) With the ignition switch ON (engine stopped), read the value in «Coolant Temp.» and «Intake Air Temp.». <Ref. to EN(STI)(diag)-36, DISPLAY CURRENT ENGINE DATA (NORMAL MODE), OPERATION, Subaru Select Monitor.>
2) If the values from step 1) satisfy the following conditions, idle the engine for two minutes or more.

Condition:
|Engine coolant temperature — Intake air temperature| ≤ 5°C (9°F)

NOTE:
- If the conditions are not satisfied, turn the ignition switch to OFF and wait until the parameters are satisfied.
- Do not move the shift lever from neutral position during idling.

3) Drive according to the drive pattern described below.

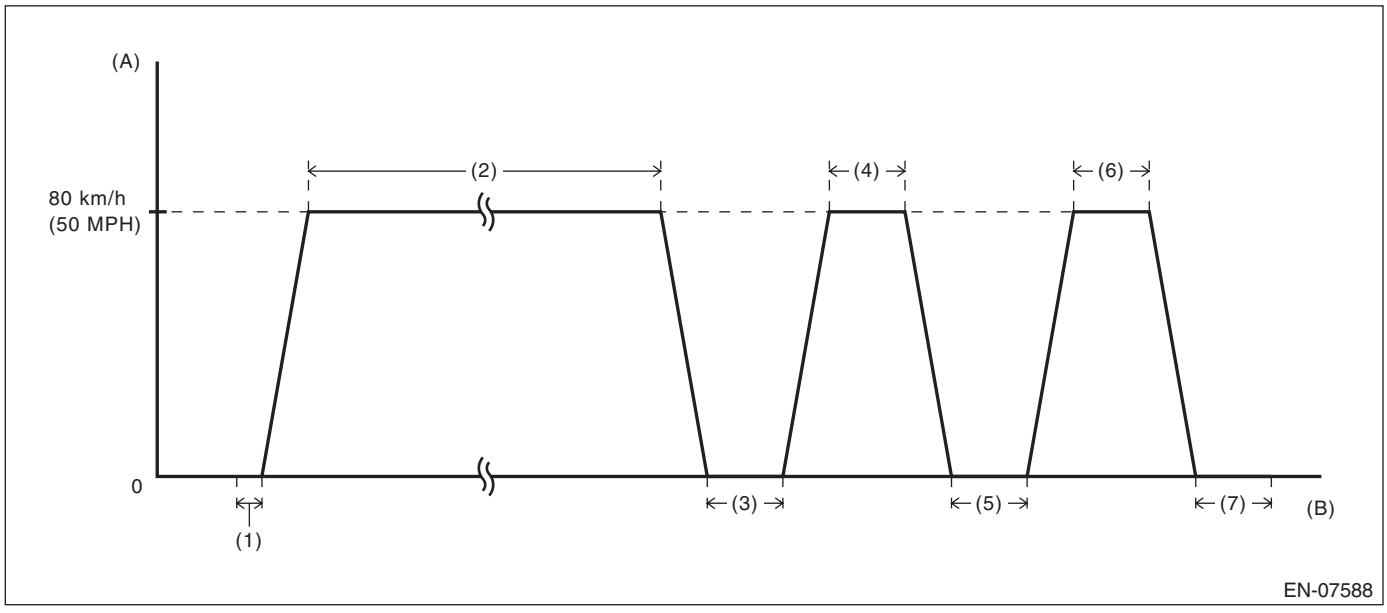

(A) Vehicle speed
(B) Elapsed time
(1) Idle the engine for 2 minutes or more.
(2) Drive for a total period of 15 minutes or more at a speed of 80 km/h (50 MPH) or more.
(3) Stop the vehicle and idle for 30 seconds or more.
(4) Drive for 30 seconds or more at a constant speed of 80 km/h (50 MPH) or more.
(5) Stop the vehicle and idle for 30 seconds or more.
(6) Drive for 30 seconds or more at a constant speed of 80 km/h (50 MPH) or more.
(7) Stop the vehicle and idle for 30 seconds.

NOTE:
• In pattern (2), it is acceptable to decelerate to less than 80 km/h (50 MPH) or to stop the vehicle depending on the traffic conditions. Drive the vehicle at 80 km/h (50 MPH) or more until the total driving time reaches or exceeds 15 minutes.
• There is no given transition time between idling and cruising.
• Driving at constant speed only on a downhill causes smaller engine load and may result in failure to obtain a right diagnostic result.
• If the ignition switch is turned to OFF during driving cycle F, perform this driving cycle again after satisfying the conditions listed in the table.
4) Read the temporary code using the Subaru Select Monitor or general scan tool. <Ref. to EN(STI)(diag)-47, OPERATION, Read Diagnostic Trouble Code (DTC).>

7. DRIVE CYCLE G

DTC	Item	Condition
P0410	Air System	—
P0411	Secondary Air System Incorrect Flow Detected	—
P0414	Secondary Air System Switching Valve "A" Circuit Shorted	—
P0417	Secondary Air System Switching Valve "B" Circuit Shorted	—
P1410	Secondary Air Injection System Combination Valve Stuck Open	—
P2258	Secondary Air System Control "A" Circuit High	—
P2440	Secondary Air System Switching Valve Stuck Open Bank 1	—
P2441	Secondary Air System Switching Valve Stuck Closed Bank 1	—
P2442	Secondary Air System Switching Valve Stuck Open Bank 2	—
P2443	Secondary Air System Switching Valve Stuck Closed Bank 2	—

Diagnostic procedure:
1) Disconnect the battery negative terminal, and reconnect after at least 10 seconds have passed.
2) Idle the engine until engine coolant temperature is 80°C (176°F) more.
3) Stop the engine to decrease the engine coolant temperature down to 40°C (104°F) or less.

NOTE:
Do not let engine coolant temperature drop to 5°C (41°F) or less.
4) Idle the engine until engine coolant temperature is 80°C (176°F) more.
5) Stop the engine to decrease the engine coolant temperature down to 40°C (104°F) or less.

NOTE:
Do not let engine coolant temperature drop to 5°C (41°F) or less.
6) Idle the engine.
7) Read the temporary code using the Subaru Select Monitor or general scan tool. <Ref. to EN(STI)(diag)-47, OPERATION, Read Diagnostic Trouble Code (DTC).>

8. DRIVE CYCLE H

DTC	Item	Condition
P0071	Ambient Air Temperature Sensor Circuit "A" Range/Performance	• 6 hours have elapsed since ignition switch is OFF under a completely warmed up condition. • For models with block heater, at least 6 hours must have elapsed without operating the block heater.
P0116	Engine Coolant Temperature Sensor 1 Circuit Range/Performance	• 6 hours have elapsed since ignition switch is OFF under a completely warmed up condition. • For models with block heater, at least 6 hours must have elapsed without operating the block heater.
P0451	Evap System (CPC) Pressure Sensor/Switch Circuit Range/Performance	60 seconds have elapsed since ignition switch is OFF.
P050A	Cold Start Idle Control System Performance	—
P050B	Cold Start Ignition Timing Performance	—
P2431	Secondary Air System Air Flow/Pressure Sensor Circuit Range/Performance Bank 1	—

Diagnostic procedure:
1) With the ignition switch ON (engine stopped), read the value in «Coolant Temp.» and «Intake Air Temp.». <Ref. to EN(STI)(diag)-36, DISPLAY CURRENT ENGINE DATA (NORMAL MODE), OPERATION, Subaru Select Monitor.>
2) If the values from step 1) satisfy the following conditions, idle the engine for two minutes or more.

Condition:
|Engine coolant temperature — Intake air temperature| ≤ 5°C (9°F)

NOTE:
- If the conditions are not satisfied, turn the ignition switch to OFF and wait until the parameters are satisfied.
- Do not move the shift lever from neutral position during idling.

3) Read the temporary code using the Subaru Select Monitor or general scan tool. <Ref. to EN(STI)(diag)-47, OPERATION, Read Diagnostic Trouble Code (DTC).>

9. DRIVE CYCLE I

DTC	Item	Condition
P0455	EVAP SYSTEM (CPC) LEAK DETECTED (LARGE LEAK)	«Coolant Temp.»: 5 — 45°C (41 — 113°F) «Intake Air Temp.»: 5 — 50°C (41 — 122°F)
P0456	EVAP SYSTEM (CPC) LEAK DETECTED (VERY SMALL LEAK)	
P04AF	EVAP SYSTEM PURGE CONTROL VALVE (CPC) "B" STUCK CLOSED	
P1451	EVAP SYSTEM CLOG DETECTED (PIPE)	
P2402	EVAP SYSTEM LEAK DETECTION PUMP CONTROL CIRCUIT HIGH	
P2404	EVAP SYSTEM LEAK DETECTION PUMP SENSE CIRCUIT RANGE/ PERFORMANCE	
P2420	EVAP SYSTEM SWITCHING VALVE CONTROL CIRCUIT HIGH	

CAUTION:
Be careful of the state of the battery when performing the drive cycle I consecutively. Performing the drive cycle I consecutively without the engine running may cause a low battery voltage and battery discharge.

NOTE:
- If it is necessary to perform drive cycle I consecutively, drive the vehicle under the following conditions to release accumulated evaporating gas. Performing the drive cycle I consecutively without starting the engine causes a large amount of evaporating gas to accumulate in the canister, which hinders an accurate diagnosis.
  - After engine is warmed up
  - Drive for 10 minutes or more at a speed of 48 km/h (30 MPH) or more (duration of drive can be an accumulation)
- To obtain an accurate diagnostic result, perform the procedures according to the following points.
  - Do not refuel gas immediately before performing drive cycle I. There will be a large amount of evaporating gas immediately after refuel, which may cause a less accurate diagnostic performance.
  - Do not shake the vehicle while performing drive cycle I. Shaking the vehicle causes evaporating gas to increase inside the fuel tank, which may cause a less accurate diagnostic performance.
  - Do not perform any service operation including installation or removal of parts or connectors while performing drive cycle I. Performing service operation could affect on the functions of related parts, which may cause a less accurate diagnostic performance.

1) Prepare the Subaru Select Monitor 4. <Ref. to EN(STI)(diag)-8, PREPARATION TOOL, General Description.>
2) Prepare PC with Subaru Select Monitor installed.
3) Connect the USB cable to the DST-i and the USB port on the personal computer (dedicated port for the Subaru Select Monitor).

NOTE:
The dedicated port for the Subaru Select Monitor means the USB port which was used to install the Subaru Select Monitor.
4) Connect the diagnosis cable to DST-i.

5) Connect the DST-i to the data link connector located in the lower portion of the instrument panel (on the driver's side).

CAUTION:
Do not connect the scan tools except for Subaru Select Monitor and general scan tool.

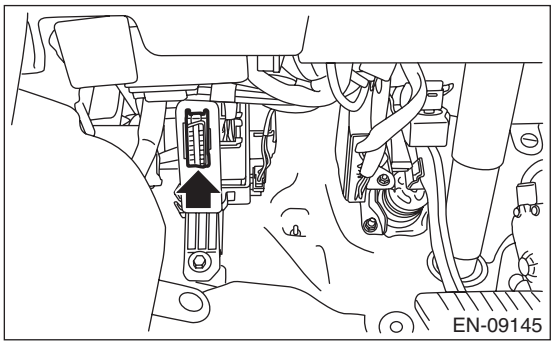

6) Start the PC.
7) Turn the ignition switch to ON (engine OFF) and run the "PC application for Subaru Select Monitor".
8) On «Start» display, select «OBD System» and then «Enter».
9) On «Select System» display, select «Engine Control System» and then select «Enter».
10) On «Select Function» display, select «Active Test».
11) On «Active Test» display, select «Evaporative System Leak Test».
12) On «Evaporative System Leak Test is running. Press Cancel to exit this function.» display, click the [OK] button to perform evaporative system leak test.
13) When «Conditions have been enabled to control this function. Turn the ignition switch off to terminate the test.» display appears, wait for 30 minutes without clicking the [OK] button.

CAUTION:
Do not leave the vehicle for an extended period of time after the test is complete. This may cause early deterioration of the battery or discharged battery.

NOTE:
• Clicking the [OK] button bring the «Evaporative System Leak Test» display back, although the test is continuing.
• The Subaru Select Monitor screen does not change after the evaporative system leak test is complete or when the test is aborted by turning off the ignition switch.
• If «Test conditions are not correct» display appears, check that the values in «Coolant Temp.» and «Intake Air Temp.» are within the specified range using Subaru Select Monitor. If the conditions are satisfied, make the necessary preparation for the drive cycle again. <Ref. to EN(STI)(diag)-54, PREPARATION FOR DRIVE CYCLE, PROCEDURE, Drive Cycle.>
14) After 30 minutes passed from the start of step 14), click the [OK] button to return to the «Evaporative System Leak Test» display.
15) Click buttons until the «OBD System» display appears, then select {On-board monitor test result}.
16) In the {On-board monitor test result}, check TID $C1 — $CA of MID $3C.

Result of on-board monitor test

Display	Details	Remarks
$0000 is stored in all Val.	During the evaporative system leak test, the test conditions were not met and the test was canceled.	Once the test conditions are met, perform the test again.
All Val. are stored with values and OK is set to all the results.	Evaporative system leak test is completed correctly.	While the ignition switch is ON, read temporary codes using the Subaru Select Monitor.
Some results were no good.	The evaporative system leak test completed successfully but the results were faulty.	While the ignition switch is ON, read temporary codes using the Subaru Select Monitor.

17) When the evaporative system leak test is completed correctly, read the temporary codes with the ignition switch turned to ON position. If the DTC is recorded, check the appropriate DTC. <Ref. to EN(STI)(diag)-47, OPERATION, Read Diagnostic Trouble Code (DTC).>

NOTE:
The temporary code will be cleared by turning ignition switch to OFF.

10.DRIVE CYCLE J

DTC	Item	Condition
P2610	ECM/PCM Engine Off Timer Performance	—

1) Idle the engine for 15 minutes or more.
2) Turn the ignition switch to OFF.
3) After 10 hours passed from the start of step 2), read the temporary code using the Subaru Select Monitor. <Ref. to EN(STI)(diag)-47, OPERATION, Read Diagnostic Trouble Code (DTC).>

11.DRIVE CYCLE N

DTC	Item	Condition
P0016	CRANKSHAFT POSITION - CAMSHAFT POSITION CORRELATION BANK 1 SENSOR A	«Coolant Temp.»: 80°C (176°F) or more
P0017	CRANKSHAFT POSITION - CAMSHAFT POSITION CORRELATION BANK 1 SENSOR B	
P0018	CRANKSHAFT POSITION - CAMSHAFT POSITION CORRELATION BANK 2 SENSOR A	
P0019	CRANKSHAFT POSITION - CAMSHAFT POSITION CORRELATION BANK 2 SENSOR B	

WARNING:
When performing drive cycle N on a public road, pay sufficient attention to the traffic condition and give the highest priority to safe driving.
1) Check the data in condition column of table by using the Subaru Select Monitor or general scan tool.

NOTE:
• Subaru Select Monitor
For detailed operation procedures, refer to “Current Data Display For Engine”. <Ref. to EN(STI)(diag)-36, DISPLAY CURRENT ENGINE DATA (NORMAL MODE), OPERATION, Subaru Select Monitor.>
• General scan tool
For detailed operation procedures, refer to the general scan tool operation manual.
2) While the conditions in the list are satisfied, race the engine at the speed of approx. 2,500 rpm for 40 seconds or more.
3) Start the vehicle, then accelerate the vehicle to 50 km/h (31.1 MPH) or more.
4) When the speed reaches 50 km/h (31.1 MPH) or more, release the accelerator pedal, the brake pedal and the clutch pedal (MT model) to decelerate the vehicle without shifting the gear. At this time, select an appropriate gear beforehand so that the engine speed can decrease from 2,500 rpm to 1,900 rpm for 5 seconds or more.

NOTE:
• The vehicle speed does not matter so long as the engine speed can maintain from 2,500 rpm to 1,900 rpm for 5 seconds or more.
Example: On a downhill grade, it can be performed with a low speed gear and at a low vehicle speed.
• When it is performed with the electrical load such as the air conditioner, etc. turned OFF or the vehicle driven on a downhill grade, the engine speed decreases slowly. Therefore, the continuous time can be maintained easily.
5) Bring the vehicle to a stop in a safe place, and idle it for 5 minutes or more.

NOTE:
Driving method while vehicle is driven to a stop at safe place is not restricted.

6) With the vehicle idling, read the temporary diagnostic code of DTC using Subaru Select Monitor or general scan tool.

NOTE:
• For detailed operation procedures, refer to “Read Diagnostic Trouble Code (DTC)”. <Ref. to EN(STI)(diag)-47, Read Diagnostic Trouble Code (DTC).>
• In the step 6), if the DTC is not displayed on the Subaru Select Monitor or general scan tool display screen, the trouble is resolved.

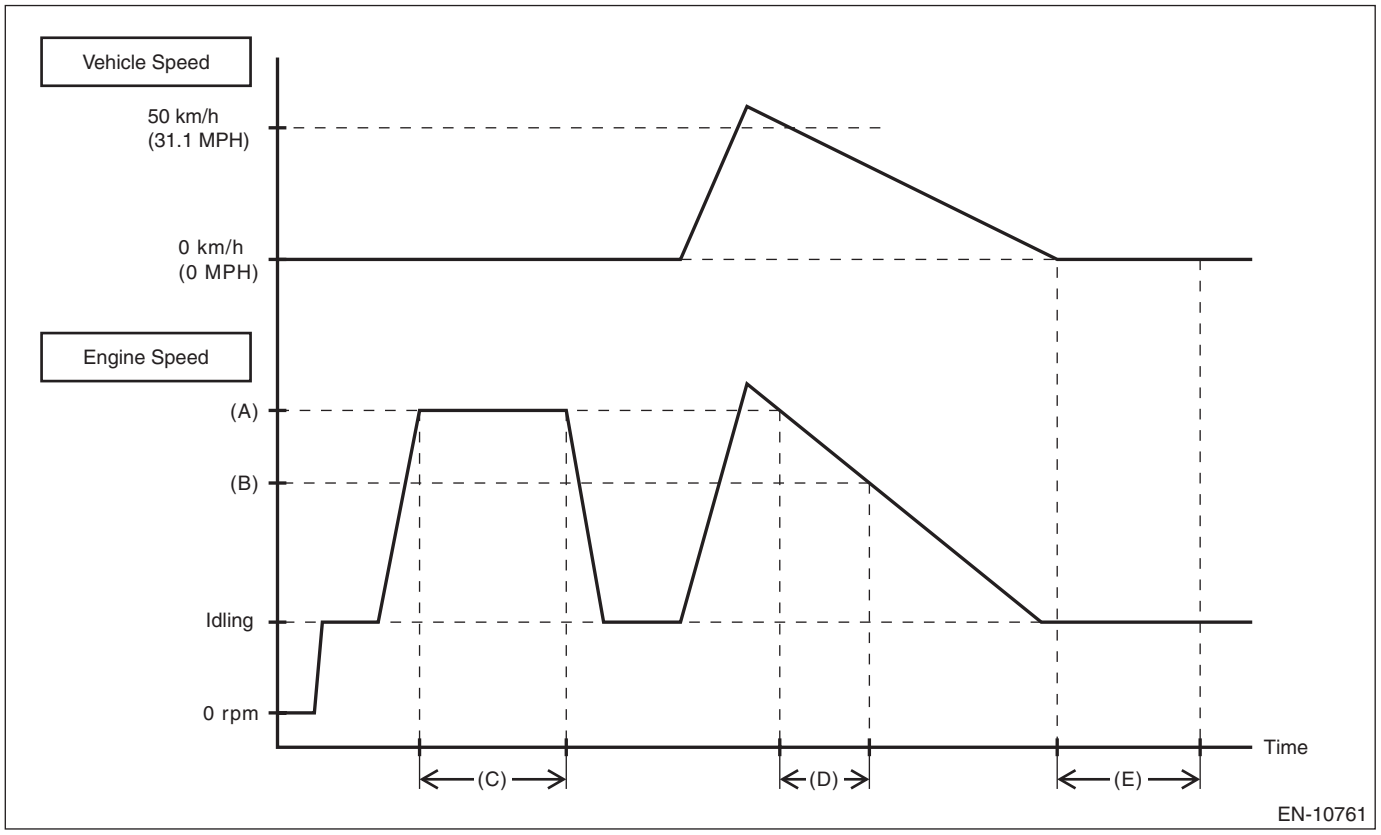

(A) 2500 rpm
(B) 1900 rpm
(C) 40 seconds or more
(D) 5 seconds or more
(E) 5 minutes or more

12.DRIVE CYCLE O

DTC	Item	Condition
P0441	EVAP SYSTEM (CPC) INCORRECT PURGE FLOW	—

Diagnostic procedure:

WARNING:
When performing drive cycle O on a public road, pay sufficient attention to the traffic condition and give the highest priority to safe driving.

1) Drive according to the drive pattern described below.

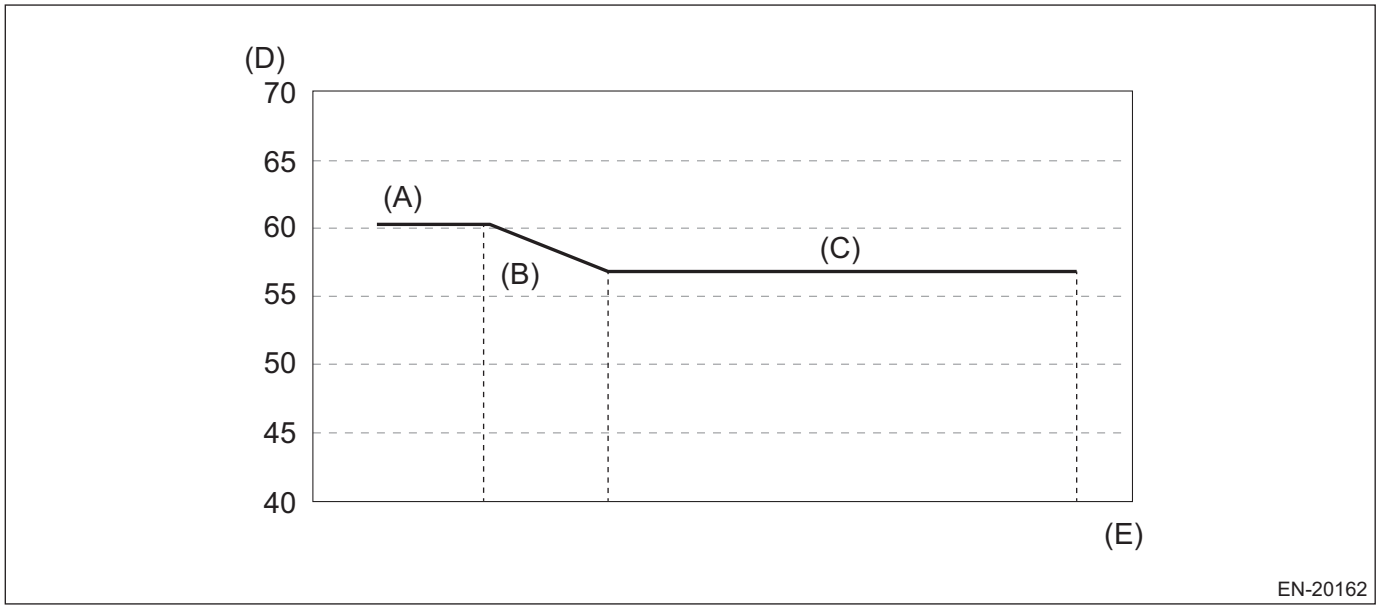

(A) Drive the vehicle at 60 km/h (37 MPH) or faster for at least 5 minutes in fully warm-up condition.
(B) Decelerate with the throttle fully closed for at least 3 seconds.
(C) Drive the vehicle at a constant vehicle speed by depressing the accelerator pedal for at least 30 seconds.
(D) Vehicle speed km/h (MPH)
(E) Sec.

2) Park the vehicle on a safe place.

NOTE:
Driving method while vehicle is driven to a stop at safe place is not restricted.

3) With the vehicle idling, read the temporary diagnostic code of DTC using Subaru Select Monitor or general scan tool.

NOTE:
• For detailed operation procedures, refer to “Read Diagnostic Trouble Code (DTC)”. <Ref. to EN(STI)(diag)-47, Read Diagnostic Trouble Code (DTC).>
• In the step 3), if the DTC is not displayed on the Subaru Select Monitor or general scan tool display screen, the trouble is resolved.

13.DRIVE CYCLE P

DTC	Item	Condition
P04F0	EVAP SYSTEM HIGH PRESSURE PURGE LINE (CPC2) PERFORMANCE	Remaining fuel level 20 L or more

Diagnostic procedure:

WARNING:
When performing drive cycle P on a public road, pay sufficient attention to the traffic condition and give the highest priority to safe driving.
1) Drive according to the drive pattern described below.

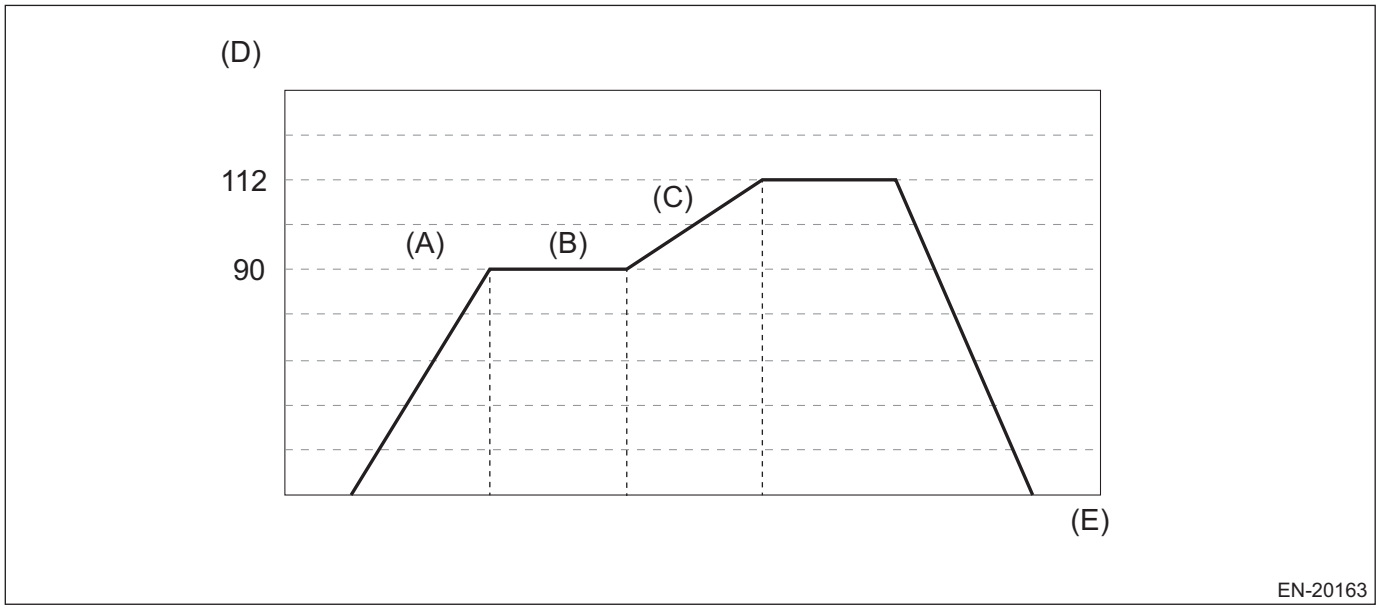

(A) Accelerate the vehicle to 80 km/h (50 MPH) or more in a fully warm-up condition.
(B) Keep a constant vehicle speed of 50 km/h (31.1 MPH) or more for at least five minutes.
(C) While depressing the accelerator pedal without gear shifting, take at least 10 seconds to accelerate to 112 km/h (70 MPH) or more.
(D) Vehicle speed km/h (MPH)
(E) Sec.

2) Park the vehicle on a safe place.

NOTE:
Driving method while vehicle is driven to a stop at safe place is not restricted.
3) With the vehicle idling, read the temporary diagnostic code of DTC using Subaru Select Monitor or general scan tool.

NOTE:
• For detailed operation procedures, refer to “Read Diagnostic Trouble Code (DTC)”. <Ref. to EN(STI)(diag)-47, Read Diagnostic Trouble Code (DTC).>
• In the step 3), if the DTC is not displayed on the Subaru Select Monitor or general scan tool display screen, the trouble is resolved.

14.DRIVE CYCLE R

DTC	Item	Condition
P219A	BANK 1 AIR-FUEL RATIO IMBALANCE	—

WARNING:
When performing the drive cycle R on the public road, be very careful of the traffic condition and the safe driving must be the high priority.
1) Check the data in condition column of table by using the Subaru Select Monitor or general scan tool.

NOTE:
• Subaru Select Monitor
For detailed operation procedures, refer to “Current Data Display For Engine”. <Ref. to EN(STI)(diag)-36, DISPLAY CURRENT ENGINE DATA (NORMAL MODE), OPERATION, Subaru Select Monitor.>
• General scan tool
For detailed operation procedures, refer to the general scan tool operation manual.
2) Keep the engine at idle for at least 30 seconds in a fully warm-up condition.
3) Start the driving.
4) With the gear position in the 4th, take 10 seconds to accelerate from 1600 rpm to 3200 rpm.
5) Decelerate to 1600 rpm in the 4th gear position. (There is no restrictions to the deceleration duration and how to use the brake.)
6) Repeat steps 4) and 5) 10 times (end when the temporary code is acquired).

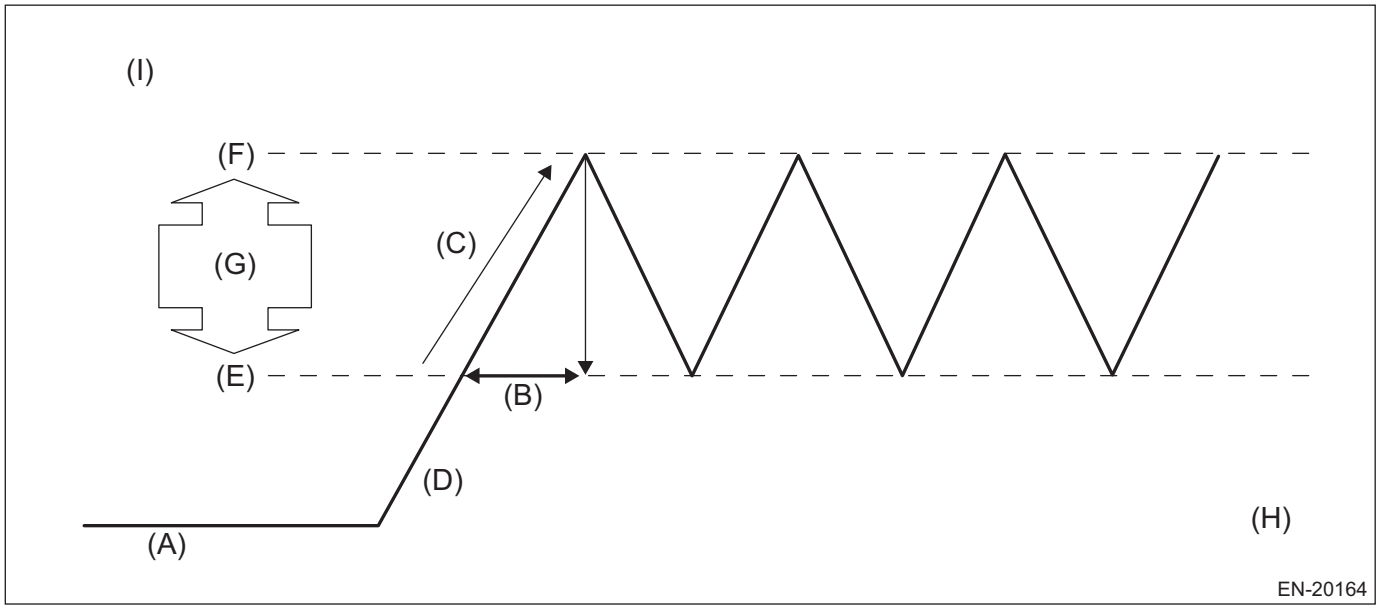

(A)	Idle the engine for at least 30 seconds in a fully warm-up condition.	(D)	Engine speed	(G)	Accelerate and decelerate in the 4th gear position.
(B)	10 seconds	(E)	1600 rpm	(H)	Time
(C)	Accelerating	(F)	3200 rpm	(I)	Accelerating and decelerating

12.Clear Memory Mode

A: OPERATION

1. SUBARU SELECT MONITOR

1) On «Start» display, select «Diagnosis».
2) On «Vehicle selection» display, input the target vehicle information and select «Confirmed».
3) On «Main Menu» display, select «Each System».
4) On «Select System» display, select «Engine Control System» and then «Enter».
5) On «Select Function» display, select «Work Support».
6) On «DTC» display, select «Clear Memory».

NOTE:
- Initial diagnosis of electronic throttle control is performed after memory clearance. Wait for 10 seconds or more after turning the ignition switch to ON, and then start the engine.
- For detailed operation procedures, refer to “Application help”.

2. GENERAL SCAN TOOL

For procedures clearing memory using the general scan tool, refer to the general scan tool operation manual.

NOTE:
Initial diagnosis of electronic throttle control is performed after memory clearance. Wait for 10 seconds or more after turning the ignition switch to ON, and then start the engine.

13.Active Test

A: OPERATION

CAUTION:
After the active test is completed, perform Clear Memory Mode <Ref. to EN(STI)(diag)-68, OPERATION, Clear Memory Mode.>.

1. ENGINE

NOTE:
For detailed operation procedures, refer to “Application help”.

Active test items	Contents	Execution condition
Fuel Pump Control (ON/OFF Dr.)	ON/OFF of the fuel pump can be set.	Ignition switch is ON (engine OFF)
CPC Solenoid Valve	ON/OFF of the purge control solenoid valve can be set.	
Radiator Fan Relay	ON/OFF of the radiator fan relay can be set.	
A/C Compressor Relay	ON/OFF of the A/C relay can be set.	
Turbocharger Wastegate Solenoid	Wastegate control solenoid valve can be set between 0.0% ←→ 99.6%.	
CPC Solenoid 2	ON/OFF of the purge control solenoid valve 2 can be set.	
ELCM switching valve	ON/OFF of the leak check valve assembly switching valve can be set.	
ELCM pump	ON/OFF of the leak check valve assembly vacuum pump can be set.	
Fuel Pump Control (OFF Drive)	Fuel pump can be set to OFF.	At idling
Fixed Idle Ignition Timing	Idle ignition timing can be set and fixed to 10.0°.	
Idle Speed Control	Idle speed can be set to 500 — 2000 rpm.	
Injection Stop Mode (Injector 1) Injection Stop Mode (Injector 2) Injection Stop Mode (Injector 3) Injection Stop Mode (Injector 4)	Injector of each cylinder can be set to stop the fuel injection.	
Injection Quantity Control	The amount of fuel injection can be set to 0 — 20%.	
EGR Valve Control	EGR control valve can be set to 0 — 255 STEP.	
High Pressure Fuel Inspection	High pressure fuel pipe inspection can be executed.	
Alternator control	Alternator control mode can be set to one of the followings: Low mode Middle mode High mode ExHigh mode	
Compression monitor	Compression can be measured.	• Ignition switch is ON (engine OFF) • Accelerator pedal is fully depressed

14.Malfunction Indicator Light

A: PROCEDURE

1. Activation of malfunction indicator light <Ref. to EN(STI)(diag)-70, ACTIVATION OF MALFUNCTION INDICATOR LIGHT, Malfunction Indicator Light.>
↓
2. Malfunction indicator light does not come on <Ref. to EN(STI)(diag)-73, MALFUNCTION INDICATOR LIGHT DOES NOT COME ON, Malfunction Indicator Light.>
↓
3. Malfunction indicator light does not go off <Ref. to EN(STI)(diag)-73, MALFUNCTION INDICATOR LIGHT DOES NOT GO OFF, Malfunction Indicator Light.>
↓
4. Malfunction indicator light does not blink <Ref. to EN(STI)(diag)-74, MALFUNCTION INDICATOR LIGHT DOES NOT BLINK, Malfunction Indicator Light.>
↓
5. Malfunction indicator light remains blinking <Ref. to EN(STI)(diag)-76, MALFUNCTION INDICATOR LIGHT REMAINS BLINKING, Malfunction Indicator Light.>

B: ACTIVATION OF MALFUNCTION INDICATOR LIGHT

1) When the ignition switch is turned to ON (engine OFF), the malfunction indicator light (A) in the combination meter illuminates.

NOTE:
If the malfunction indicator light does not illuminate, perform diagnostics of the malfunction indicator light circuit or the combination meter circuit. <Ref. to EN(STI)(diag)-73, MALFUNCTION INDICATOR LIGHT DOES NOT COME ON, Malfunction Indicator Light.>

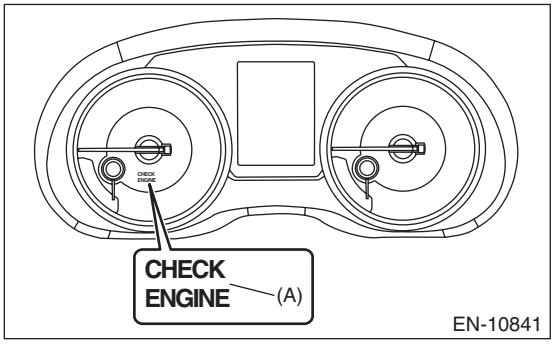

2) After starting the engine, the malfunction indicator light goes out. If it does not go off, any of the engine and emission control system has malfunction.

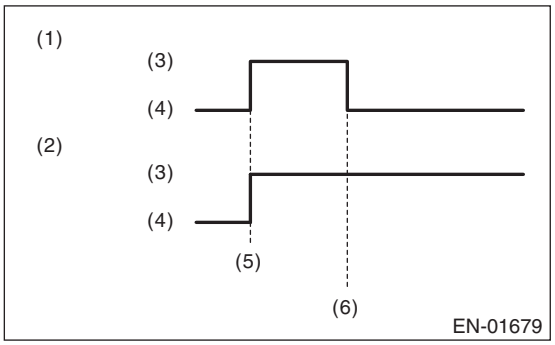

(1) No DTC
(2) Trouble occurs
(3) ON
(4) OFF
(5) Ignition switch ON
(6) Engine start

3) If the diagnostic system detects a misfire which could damage the catalyst, the malfunction indicator light will blink at a cycle of 1 Hz.

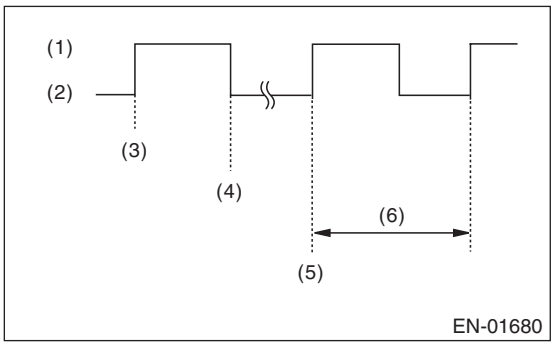

(1) ON
(2) OFF
(3) Ignition switch ON
(4) Engine start
(5) Misfire start
(6) 1 second

4) Turn the ignition switch to OFF and install the delivery mode fuse (A).

CAUTION:
Do not use any fuses that are installed on the vehicle.

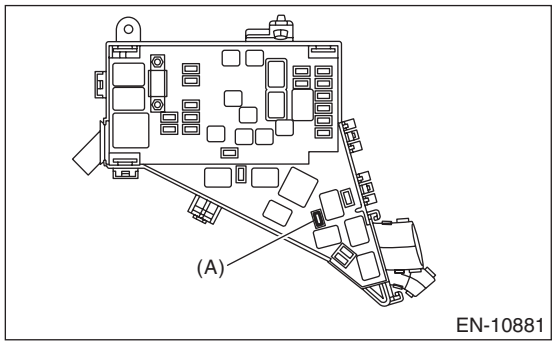

(1) When the ignition switch is turned to ON (engine OFF), the malfunction indicator light illuminates.
(2) After the engine starts, malfunction indicator light blinks in a cycle of 0.5 Hz. (During diagnosis)
(3) Malfunction indicator light blinks at a cycle of 3 Hz after diagnosis if there is no trouble. Malfunction indicator light illuminates if faulty.

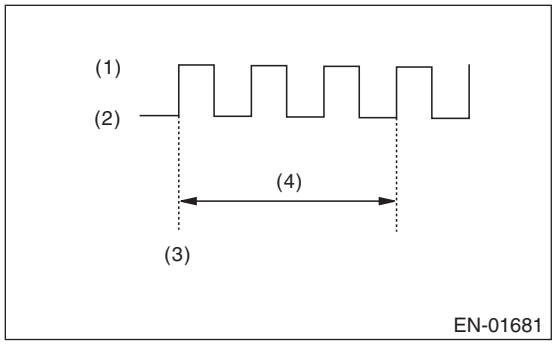

(1) ON
(2) OFF
(3) Ignition switch ON
(4) 1 second

C: MALFUNCTION INDICATOR LIGHT DOES NOT COME ON

TROUBLE SYMPTOM:
When the ignition switch is turned to ON (engine OFF), malfunction indicator light does not illuminate.

NOTE:
Refer to IDI section for diagnostic procedure. <Ref. to IDI(diag)-2, Basic Diagnostic Procedure.>

D: MALFUNCTION INDICATOR LIGHT DOES NOT GO OFF

TROUBLE SYMPTOM:
Although malfunction indicator light comes on when the engine runs, DTC is not shown on the Subaru Select Monitor or general scan tool display.

Step	Check	Yes	No
1 **CHECK DTC.**	Is DTC of engine or LAN system displayed? <Ref. to EN(STI)(diag)-47, OPERATION, Read Diagnostic Trouble Code (DTC).>	Check the appropriate DTC using the “List of Diagnostic Trouble Code (DTC)”. <Ref. to EN(STI)(diag)-96, List of Diagnostic Trouble Code (DTC).> <Ref. to LAN(diag)-109, List of Diagnostic Trouble Code (DTC).>	Check the combination meter system. <Ref. to IDI(diag)-2, Basic Diagnostic Procedure.>

E: MALFUNCTION INDICATOR LIGHT DOES NOT BLINK

DIAGNOSIS:
- The malfunction indicator light circuit is open or shorted.
- Delivery mode fuse circuit is open.

TROUBLE SYMPTOM:
Malfunction indicator light does not blink during Inspection Mode.

WIRING DIAGRAM:
Engine Electrical System <Ref. to WI-154, WIRING DIAGRAM, Engine Electrical System.>

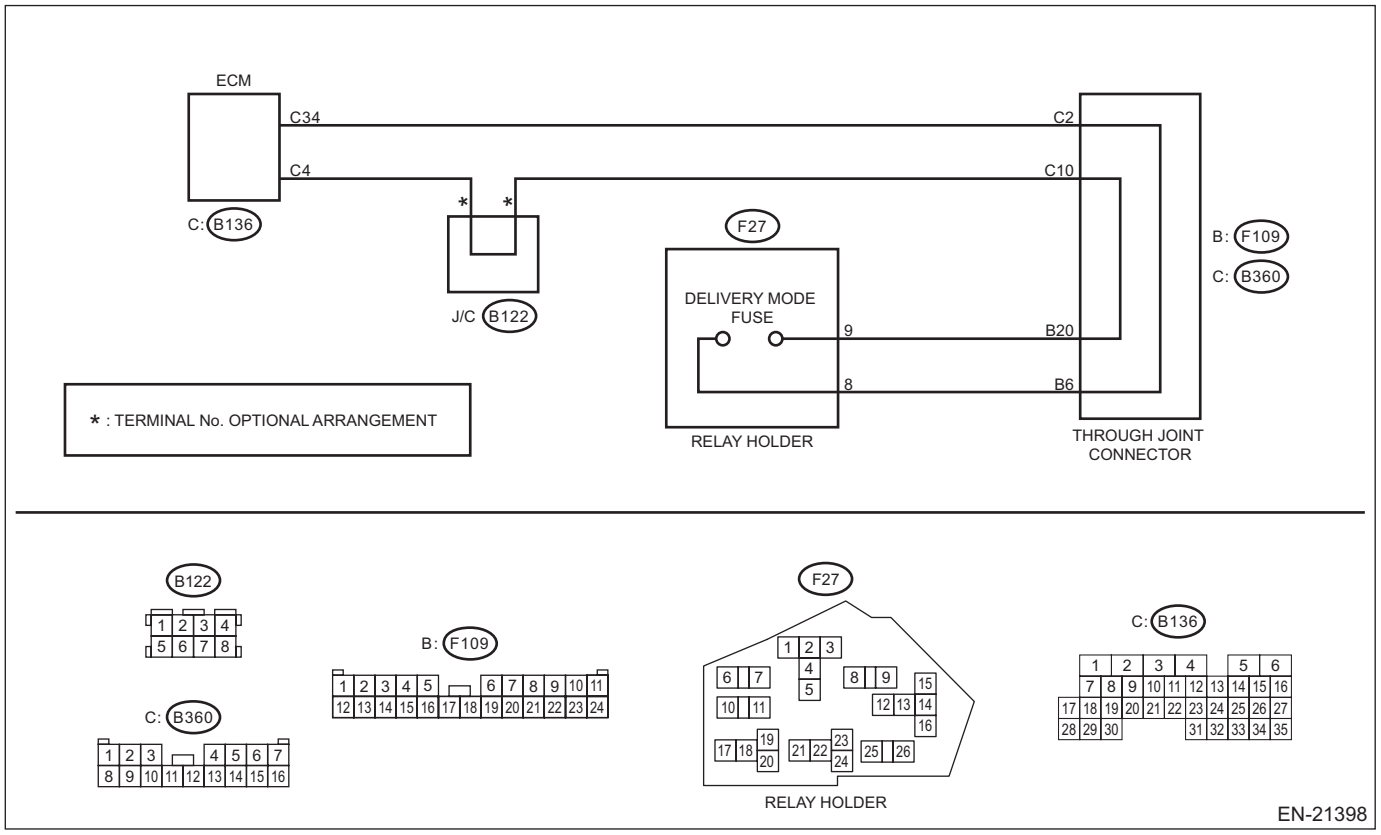

Step		Check	Yes	No
1	**CHECK STATUS OF MALFUNCTION INDICATOR LIGHT.** 1) Turn the ignition switch to OFF. 2) Make sure that the delivery mode fuse is removed. 3) Turn the ignition switch to ON. (Engine OFF)	Does the malfunction indicator light illuminate?	Go to step **2**.	Repair the malfunction indicator light circuit. <Ref. to EN(STI)(diag)-73, MALFUNCTION INDICATOR LIGHT DOES NOT COME ON, Malfunction Indicator Light.>
2	**CHECK HARNESS BETWEEN ECM AND DELIVERY MODE FUSE.** 1) Turn the ignition switch to OFF. 2) Disconnect the connector from ECM. 3) Install the delivery mode fuse. 4) Measure the resistance of harness between ECM connectors. ***Connector & terminal*** ***(B136) No. 34 — (B136) No. 4:***	Is the resistance less than 1 Ω?	Go to step **3**.	Repair the harness and connector. NOTE: In this case, repair the following item: • Open circuit in harness between ECM connector • Poor contact of each connector between ECM connector

Step		Check	Yes	No
3	**CHECK FOR POOR CONTACT.** Check for poor contact of ECM connector.	Is there poor contact of ECM connector?	Repair the poor contact of ECM connector.	Replace the ECM. <Ref. to FU(STI)-56, Engine Control Module (ECM).>

F: MALFUNCTION INDICATOR LIGHT REMAINS BLINKING

DIAGNOSIS:
Delivery mode fuse circuit is shorted to ground.
TROUBLE SYMPTOM:
Malfunction indicator light blinks when delivery mode fuse is not installed.
WIRING DIAGRAM:
Engine Electrical System <Ref. to WI-154, WIRING DIAGRAM, Engine Electrical System.>

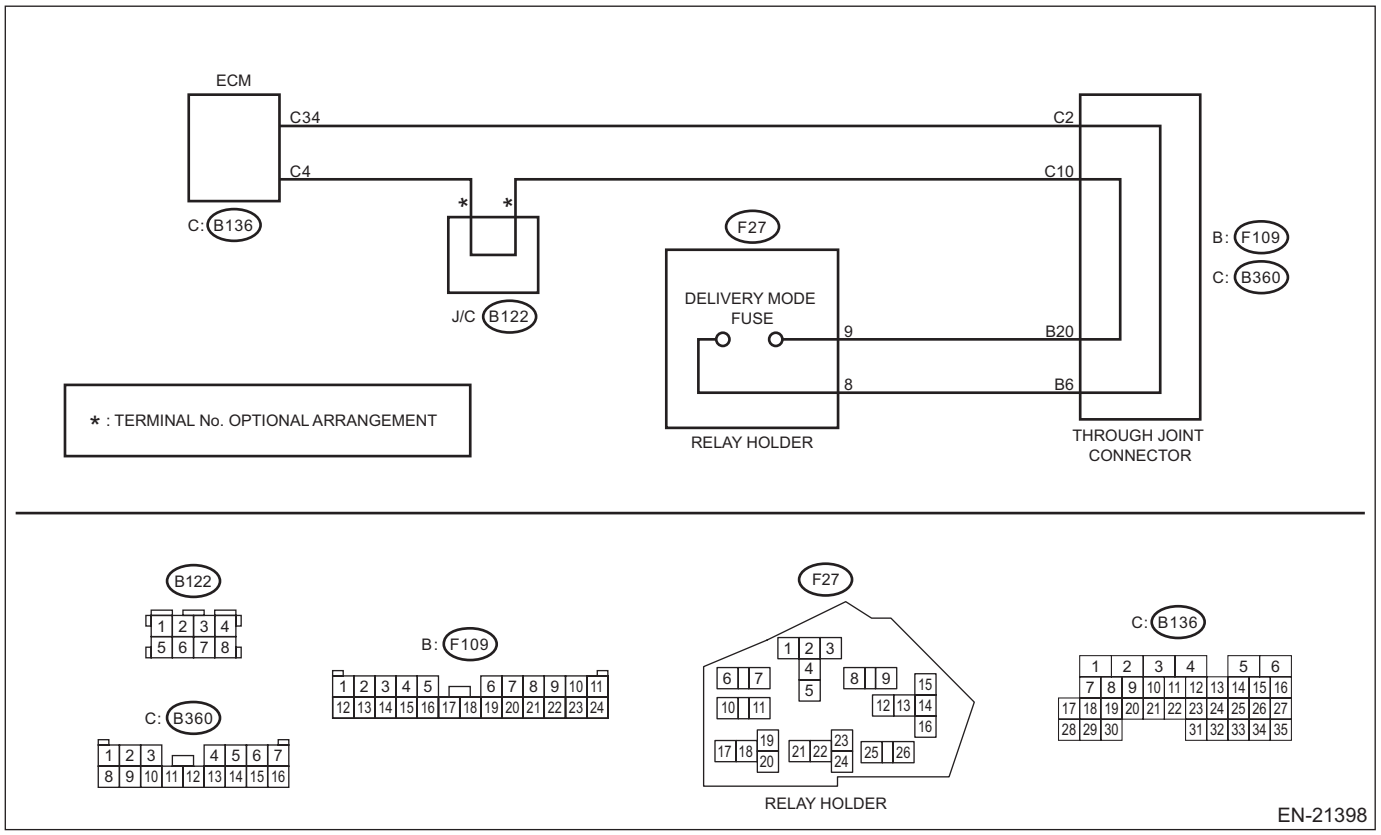

Step		Check	Yes	No
1	**CHECK DELIVERY MODE FUSE.** 1) Make sure that the delivery mode fuse is removed. 2) Turn the ignition switch to ON.	Does the malfunction indicator light blink?	Go to step **2**.	System is normal. NOTE: Malfunction indicator light blinks at a cycle of 3 Hz when delivery mode fuse is installed.
2	**CHECK HARNESS BETWEEN ECM AND DELIVERY MODE FUSE.** 1) Turn the ignition switch to OFF. 2) Disconnect the connector from ECM. 3) Measure the resistance between ECM connector and chassis ground. ***Connector & terminal*** ***(B136) No. 34 — Chassis ground:***	Is the resistance 1 MΩ or more?	Replace the ECM. <Ref. to FU(STI)-56, Engine Control Module (ECM).>	Repair the short circuit to ground in harness between ECM connector and delivery mode fuse.

15.Diagnostics for Engine Starting Failure

A: PROCEDURE

1. Check of the fuel amount
↓
2. Inspection of starter motor circuit <Ref. to EN(STI)(diag)-78, STARTER MOTOR CIRCUIT, Diagnostics for Engine Starting Failure.>
↓
3. Inspection of ECM power supply and ground line <Ref. to EN(STI)(diag)-87, CHECK POWER SUPPLY AND GROUND LINE OF ENGINE CONTROL MODULE (ECM), Diagnostics for Engine Starting Failure.>
↓
4. Inspection of ignition control system <Ref. to EN(STI)(diag)-89, IGNITION CONTROL SYSTEM, Diagnostics for Engine Starting Failure.>
↓
5. Inspection of fuel pump circuit <Ref. to EN(STI)(diag)-91, FUEL PUMP CIRCUIT, Diagnostics for Engine Starting Failure.>
↓
6. Inspection of fuel injector circuit <Ref. to EN(STI)(diag)-92, FUEL INJECTOR CIRCUIT, Diagnostics for Engine Starting Failure.>

B: STARTER MOTOR CIRCUIT

1. MODEL WITHOUT PUSH BUTTON START

CAUTION:
After servicing or replacing faulty parts, perform Clear Memory Mode <Ref. to EN(STI)(diag)-68, OPERATION, Clear Memory Mode.>, and Inspection Mode <Ref. to EN(STI)(diag)-48, PROCEDURE, Inspection Mode.>.
WIRING DIAGRAM:
Engine Electrical System <Ref. to WI-154, WIRING DIAGRAM, Engine Electrical System.>

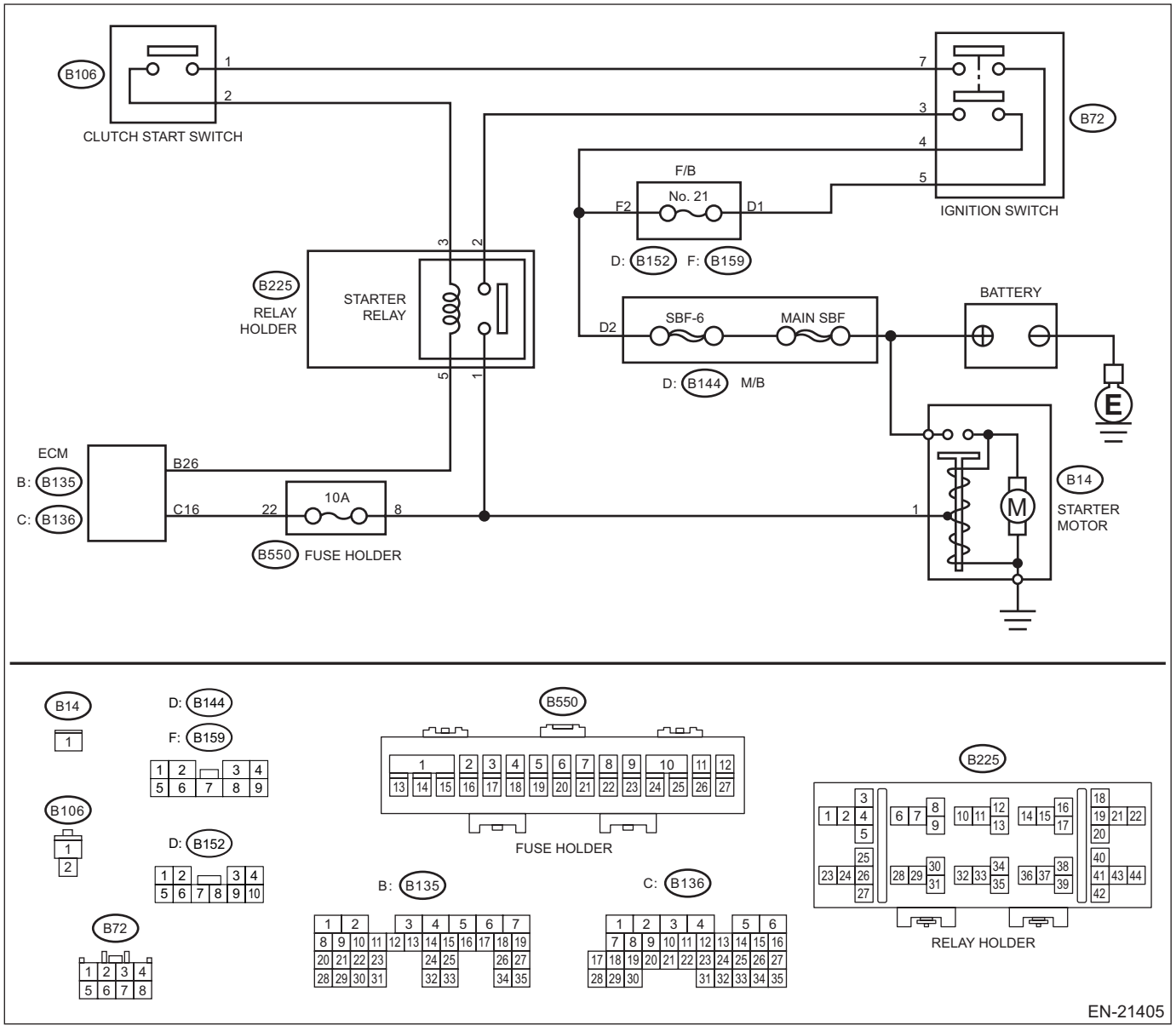

Step		Check	Yes	No
1	**CHECK BATTERY.** Check the battery. <Ref. to SC(STI)-24, INSPECTION, Battery.>	Is the check result OK?	Go to step **2**.	Charge or replace the battery. <Ref. to SC(STI)-24, Battery.>
2	**CHECK OPERATION OF STARTER MOTOR.**	Does the starter motor operate?	Go to step **3**.	Go to step **4**.

	Step	Check	Yes	No
3	**CHECK DTC.**	Is DTC displayed? <Ref. to EN(STI)(diag)-47, OPERATION, Read Diagnostic Trouble Code (DTC).>	Check the appropriate DTC using the "List of Diagnostic Trouble Code (DTC)". <Ref. to EN(STI)(diag)-96, List of Diagnostic Trouble Code (DTC).>	Check ignition control system. <Ref. to EN(STI)(diag)-89, IGNITION CONTROL SYSTEM, Diagnostics for Engine Starting Failure.>
4	**CHECK INPUT SIGNAL FOR STARTER MOTOR.** 1) Turn the ignition switch to OFF. 2) Disconnect the connector from starter motor. 3) Depress the clutch pedal. 4) Turn the ignition switch to START. 5) Measure the voltage between the starter motor connector and the engine ground. ***Connector & terminal*** ***(B14) No. 1 (+) — Engine ground (–):***	Is the voltage 10 V or more?	Check the starter motor. <Ref. to SC(STI)-7, Starter.>	Go to step **5**.
5	**CHECK INPUT SIGNAL FOR STARTER MOTOR.** 1) Depress the clutch pedal. 2) Turn the ignition switch to START. 3) Measure the voltage between starter relay connector and chassis ground. ***Connector & terminal*** ***(B225) No. 1 (+) — Chassis ground (–):***	Is the voltage 10 V or more?	Repair the open circuit of the harness between starter relay connector and starter motor.	Go to step **6**.
6	**CHECK HARNESS BETWEEN BATTERY AND IGNITION SWITCH CONNECTOR.** 1) Turn the ignition switch to OFF. 2) Disconnect the connector from ignition switch. 3) Measure the voltage between ignition switch connector and chassis ground. ***Connector & terminal*** ***(B72) No. 4 (+) — Chassis ground (–):*** ***(B72) No. 5 (+) — Chassis ground (–):***	Is the voltage 10 V or more?	Go to step **7**.	Repair the power supply circuit.
7	**CHECK IGNITION SWITCH.** Measure the resistance between ignition switch terminals after turning the ignition switch to START position. ***Terminals*** ***No. 3 — No. 4:*** ***No. 5 — No. 7:***	Is the resistance less than 1 Ω?	Go to step **8**.	Replace the ignition switch. <Ref. to SL-64, REPLACEMENT, Ignition Key Lock.>
8	**CHECK INPUT VOLTAGE OF CLUTCH START SWITCH.** 1) Turn the ignition switch to OFF. 2) Disconnect the connector from clutch start switch. 3) Connect the connector to ignition switch. 4) Turn the ignition switch to START. 5) Measure the voltage between the clutch start switch connector and chassis ground. ***Connector & terminal*** ***(B106) No. 1 (+) — Chassis ground (–):***	Is the voltage 10 V or more?	Go to step **9**.	Check the following item and repair if necessary. • Blown out of fuse (F/B No. 21) • Open or short circuit to ground in harness between ignition switch connector and clutch start switch connector

	Step	Check	Yes	No
9	**CHECK HARNESS BETWEEN STARTER RELAY CONNECTOR AND CLUTCH START SWITCH CONNECTOR.** 1) Turn the ignition switch to OFF. 2) Remove the starter relay. 3) Measure the resistance of harness between starter relay connector and clutch start switch connector. ***Connector & terminal*** ***(B225) No. 3 — (B106) No. 2:***	Is the resistance less than 1 Ω?	Go to step **10**.	Repair the open circuit in harness between starter relay connector and clutch start switch connector.
10	**CHECK INPUT VOLTAGE OF STARTER RELAY.** 1) Connect the connector to the clutch start switch. 2) Depress the clutch pedal. 3) Turn the ignition switch to START. 4) Measure the voltage between starter relay connector and chassis ground. ***Connector & terminal*** ***(B225) No. 3 (+) — Chassis ground (–):***	Is the voltage 10 V or more?	Go to step **11**.	Replace the clutch start switch. <Ref. to CL-35, Clutch Switch.>
11	**CHECK INPUT VOLTAGE OF STARTER RELAY.** 1) Turn the ignition switch to START. 2) Measure the voltage between starter relay connector and chassis ground. ***Connector & terminal*** ***(B225) No. 2 (+) — Chassis ground (–):***	Is the voltage 10 V or more?	Go to step **12**.	Repair the open circuit of harness between starter relay connector and ignition switch connector.
12	**CHECK STARTER RELAY.** 1) Connect the battery to starter relay terminals No. 3 and No. 5. 2) Measure the resistance between starter relay terminals. ***Terminals*** ***No. 1 — No. 2:***	Is the resistance less than 1 Ω?	Go to step **13**.	Replace the starter relay.
13	**CHECK HARNESS BETWEEN ECM AND STARTER RELAY CONNECTOR.** 1) Turn the ignition switch to OFF. 2) Disconnect the connector from ECM. 3) Measure the resistance of harness between ECM connector and starter relay connector. ***Connector & terminal*** ***(B136) No. 16 — (B225) No. 1:***	Is the resistance less than 1 Ω?	Go to step **14**.	Repair the harness and connector. NOTE: In this case, repair the following item: • Open circuit of harness between ECM connector and starter relay connector • Blown out of fuse
14	**CHECK ECM INPUT VOLTAGE.** 1) Install the starter relay. 2) Depress the clutch pedal. 3) Turn the ignition switch to START. 4) Measure the voltage between ECM connector and chassis ground. ***Connector & terminal*** ***(B135) No. 26 (+) — Chassis ground (–):***	Is the voltage 10 V or more?	Check the ECM power supply and ground line. <Ref. to EN(STI)(diag)-87, CHECK POWER SUPPLY AND GROUND LINE OF ENGINE CONTROL MODULE (ECM), Diagnostics for Engine Starting Failure.>	Repair the open circuit of harness between ECM connector and starter relay connector.

2. MODEL WITH PUSH BUTTON START

CAUTION:
After servicing or replacing faulty parts, perform Clear Memory Mode <Ref. to EN(STI)(diag)-68, OPERATION, Clear Memory Mode.>, and Inspection Mode <Ref. to EN(STI)(diag)-48, PROCEDURE, Inspection Mode.>.
WIRING DIAGRAM:
Engine Electrical System <Ref. to WI-154, WIRING DIAGRAM, Engine Electrical System.>

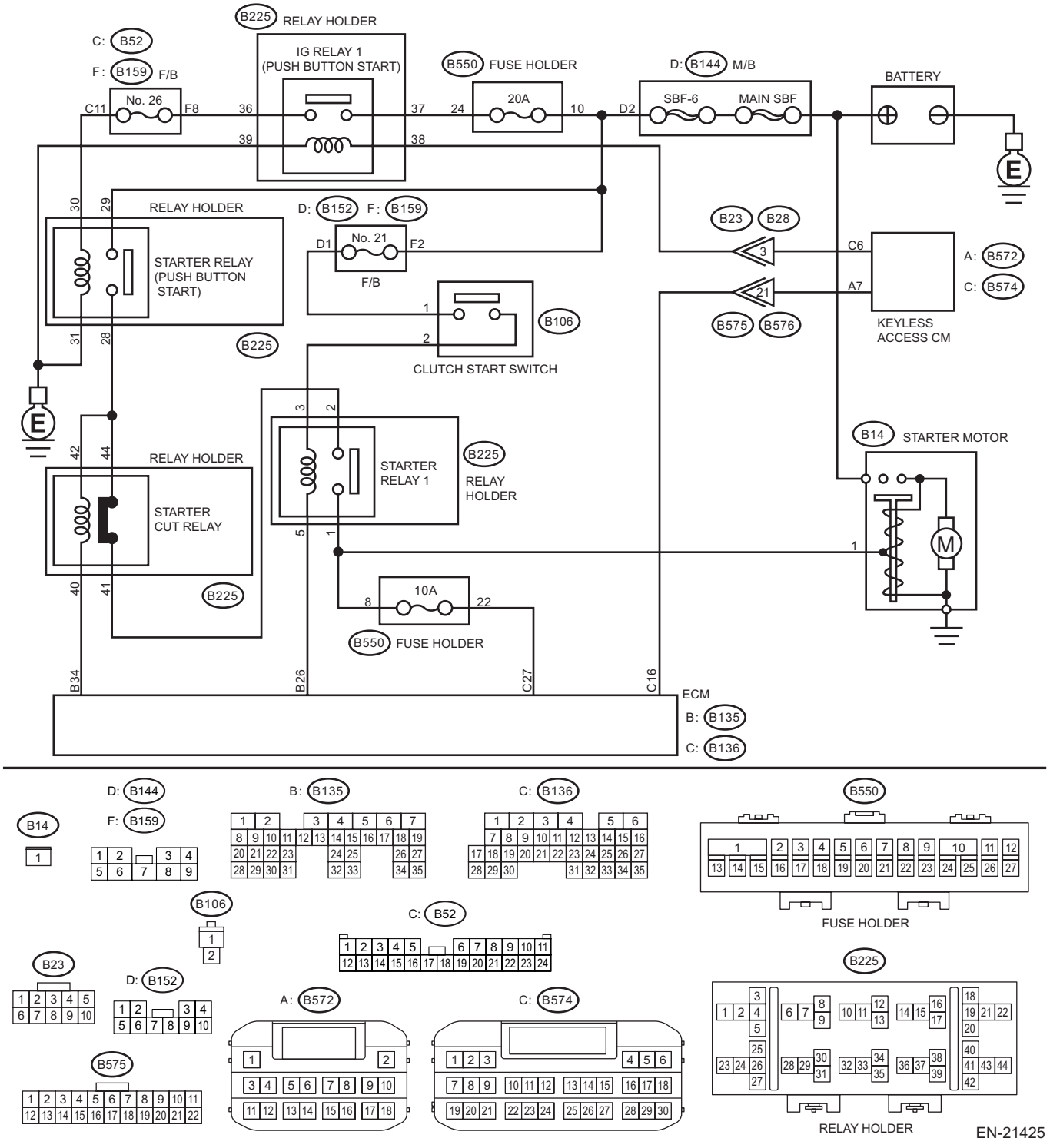

	Step	Check	Yes	No
1	**CHECK BATTERY.** Check the battery. <Ref. to SC(STI)-24, INSPECTION, Battery.>	Is the check result OK?	Go to step **2**.	Charge or replace the battery. <Ref. to SC(STI)-24, Battery.>
2	**CHECK OPERATION OF STARTER MOTOR.**	Does the starter motor operate?	Go to step **3**.	Go to step **4**.
3	**CHECK DTC.**	Is DTC displayed? <Ref. to EN(STI)(diag)-47, OPERATION, Read Diagnostic Trouble Code (DTC).>	Check the appropriate DTC using the "List of Diagnostic Trouble Code (DTC)". <Ref. to EN(STI)(diag)-96, List of Diagnostic Trouble Code (DTC).>	Check ignition control system. <Ref. to EN(STI)(diag)-89, IGNITION CONTROL SYSTEM, Diagnostics for Engine Starting Failure.>
4	**CHECK PUSH BUTTON IGNITION SWITCH.** Press the push button ignition switch twice with the ignition OFF (ACC OFF). NOTE: Release the clutch pedal.	Does the ignition turn to ON?	Go to step **5**.	Check the push button start system. <Ref. to KPS(diag)-113, POWER SUPPLY SWITCHING SYSTEM, INSPECTION, General Diagnostic Table.>
5	**CHECK PUSH BUTTON IGNITION SWITCH.** 1) Depress the clutch pedal. 2) Check the push button ignition switch indicator.	Does the indicator turn to green?	Go to step **6**.	Check the push button start system. <Ref. to KPS(diag)-141, ENGINE DOES NOT START, INSPECTION, Diagnostics with Phenomenon.>
6	**CHECK START SWITCH SIGNAL.** 1) Read the waveform of start switch signal using Subaru Select Monitor. NOTE: For detailed operation procedures, refer to "Current Data Display For Engine". <Ref. to EN(STI)(diag)-36, Subaru Select Monitor.> 2) While depressing the clutch pedal, press the push button ignition switch once.	Does waveform of the start switch signal occur?	Go to step **10**.	Go to step **7**.
7	**CHECK HARNESS BETWEEN ECM AND KEYLESS ACCESS CM.** 1) Turn the ignition to OFF. 2) Disconnect the connector from ECM. 3) Disconnect the connector from the keyless access CM. 4) Measure the resistance of harness between ECM connector and keyless access CM. ***Connector & terminal*** ***(B136) No. 16 — (B572) No. 7:***	Is the resistance less than 1 Ω?	Go to step **8**.	Repair the harness and connector. NOTE: In this case, repair the following item: • Open circuit of harness between ECM connector and keyless access CM connector • Poor contact of coupling connector

	Step	Check	Yes	No
8	**CHECK HARNESS BETWEEN ECM AND KEYLESS ACCESS CM.** Measure the resistance between ECM connector and chassis ground. ***Connector & terminal*** ***(B136) No. 16 — Chassis ground:***	Is the resistance 1 MΩ or more?	Go to step **9**.	Repair the short circuit to ground in harness between ECM connector and keyless access CM connector.
9	**CHECK START SWITCH SIGNAL.** 1) Connect the connector to ECM. 2) Connect the connector to the keyless access CM. 3) Read the waveform of start switch signal using an oscilloscope. 4) While depressing the clutch pedal, press the push button ignition switch once. ***Connector & terminal*** ***(B136) No. 16 (+) — Chassis ground (–):***	Does waveform of the start switch signal occur?	Repair the poor contact of ECM connector.	Repair the poor contact of keyless access CM connector.
10	**CHECK INPUT SIGNAL FOR STARTER MOTOR 1.** 1) Turn the ignition to OFF. 2) Disconnect the connector from starter motor. 3) Place the shift lever in neutral. 4) While depressing the clutch pedal, press the push button ignition switch once. 5) Measure the voltage between the starter motor connector and the engine ground. ***Connector & terminal*** ***(B14) No. 1 (+) — Engine ground (–):***	Is the voltage 10 V or more?	Check the starter motor. <Ref. to SC(STI)-7, Starter.>	Go to step **11**.
11	**CHECK HARNESS BETWEEN STARTER RELAY 1 CONNECTOR AND STARTER MOTOR CONNECTOR.** 1) Remove the starter relay 1. 2) Measure the resistance of harness between starter relay 1 connector and starter motor connector. ***Connector & terminal*** ***(B225) No. 1 — (B14) No. 1:***	Is the resistance less than 1 Ω?	Go to step **12**.	Repair the open circuit of the harness between starter relay 1 connector and starter motor connector.
12	**CHECK IG RELAY 1 (PUSH BUTTON START) POWER SUPPLY.** 1) Remove the IG relay 1 (push button start). 2) Turn the ignition to ON. 3) Measure the voltage between the IG relay 1 (push button start) connector and chassis ground. ***Connector & terminal*** ***(B225) No. 37 (+) — Chassis ground (–):*** ***(B225) No. 38 (+) — Chassis ground (–):***	Is the voltage 10 V or more?	Go to step **13**.	Check the following item and repair or replace if necessary. • Blown out of fuse • Open circuit or short circuit to ground in harness between IG relay 1 (push button start) connector and keyless access CM connector • Open circuit or short circuit to ground in harness between IG relay 1 (push button start) connector and battery

	Step	Check	Yes	No
13	**CHECK HARNESS BETWEEN IG RELAY 1 (PUSH BUTTON START) CONNECTOR AND CHASSIS GROUND.** 1) Turn the ignition to OFF. 2) Measure the resistance of harness between the IG relay 1 (push button start) connector and chassis ground. ***Connector & terminal*** ***(B225) No. 39 — Chassis ground:***	Is the resistance less than 5 Ω?	Go to step **14**.	Repair the open circuit in harness between the IG relay 1 (push button start) connector and chassis ground.
14	**CHECK IG RELAY 1 (PUSH BUTTON START).** 1) Connect the battery to IG relay 1 (push button start) terminals No. 38 and No. 39. 2) Measure the resistance between IG relay 1 (push button start) terminals. ***Terminals*** ***No. 36 — No. 37:***	Is the resistance less than 1 Ω?	Go to step **15**.	Replace the IG relay 1 (push button start). <Ref. to SL-110, IG Relay1 (Push Button Start).>
15	**CHECK STARTER RELAY (PUSH BUTTON START) POWER SUPPLY.** 1) Install the IG relay 1 (push button start). 2) Remove the starter relay (push button start). 3) Turn the ignition to ON. 4) Measure the voltage between starter relay (push button start) connector and chassis ground. ***Connector & terminal*** ***(B225) No. 29 (+) — Chassis ground (–):*** ***(B225) No. 30 (+) — Chassis ground (–):***	Is the voltage 10 V or more?	Go to step **16**.	Check the following item and repair or replace if necessary. • Blown out of fuse (F/B No. 26) • Open circuit or short circuit to ground in harness between starter relay (push button start) connector and IG relay 1 (push button start) connector • Open circuit or short circuit to ground in harness between starter relay (push button start) connector and battery
16	**CHECK HARNESS BETWEEN STARTER RELAY (PUSH BUTTON START) CONNECTOR AND CHASSIS GROUND.** 1) Turn the ignition to OFF. 2) Measure the resistance of harness between starter relay (push button start) connector and chassis ground. ***Connector & terminal*** ***(B225) No. 31 — Chassis ground:***	Is the resistance less than 5 Ω?	Go to step **17**.	Repair the open circuit in harness between starter relay (push button start) connector and chassis ground.
17	**CHECK STARTER RELAY (PUSH BUTTON START).** 1) Connect the battery to starter relay (push button start) terminals No. 30 and No. 31. 2) Measure the resistance between starter relay (push button start) terminals. ***Terminals*** ***No. 28 — No. 29:***	Is the resistance less than 1 Ω?	Go to step **18**.	Replace the starter relay (push button start). <Ref. to SL-108, Starter Relay (Push Button Start).>

	Step	Check	Yes	No
18	**CHECK HARNESS BETWEEN STARTER RELAY (PUSH BUTTON START) CONNECTOR AND STARTER CUT RELAY CONNECTOR.** 1) Remove the starter cut relay. 2) Measure the resistance of harness between starter relay (push button start) connector and starter cut relay connector. ***Connector & terminal*** ***(B225) No. 28 — (B225) No. 42:*** ***(B225) No. 28 — (B225) No. 44:***	Is the resistance less than 1 Ω?	Go to step **19**.	Repair the open circuit in harness between starter relay (push button start) connector and starter cut relay connector.
19	**CHECK HARNESS BETWEEN ECM AND STARTER CUT RELAY CONNECTOR.** 1) Disconnect the connector from ECM. 2) Measure the resistance between starter cut relay connector and chassis ground. ***Connector & terminal*** ***(B225) No. 40 — Chassis ground:***	Is the resistance 1 MΩ or more?	Go to step **20**.	Repair the short circuit to ground in harness between ECM connector and starter cut relay connector.
20	**CHECK STARTER CUT RELAY.** Measure the resistance between starter cut relay terminals. ***Terminals*** ***No. 41 — No. 44:***	Is the resistance less than 1 Ω?	Go to step **21**.	Replace the starter cut relay. <Ref. to SL-116, Starter Cut Relay.>
21	**CHECK HARNESS BETWEEN STARTER CUT RELAY CONNECTOR AND STARTER RELAY 1 CONNECTOR.** 1) Remove the starter relay 1. 2) Measure the resistance of harness between starter cut relay connector and starter relay 1 connector. ***Connector & terminal*** ***(B225) No. 41 — (B225) No. 2:***	Is the resistance less than 1 Ω?	Go to step **22**.	Repair the open circuit of harness between starter cut relay connector and starter relay 1 connector.
22	**CHECK HARNESS BETWEEN STARTER RELAY 1 CONNECTOR AND CLUTCH START SWITCH CONNECTOR.** Measure the resistance of harness between starter relay 1 connector and clutch start switch connector. ***Connector & terminal*** ***(B225) No. 3 — (B106) No. 2:***	Is the resistance less than 1 Ω?	Go to step **23**.	Repair the open circuit in harness between starter relay 1 connector and clutch start switch connector.
23	**CHECK HARNESS BETWEEN ECM AND STARTER RELAY 1 CONNECTOR.** Measure the resistance of harness between ECM connector and starter relay 1 connector. ***Connector & terminal*** ***(B135) No. 26 — (B225) No. 5:*** ***(B136) No. 27 — (B225) No. 1:***	Is the resistance less than 1 Ω?	Go to step **24**.	Repair the harness and connector. NOTE: In this case, repair the following item: • Open circuit of harness between ECM connector and starter relay 1 connector • Blown out of fuse

	Step	Check	Yes	No
24	**CHECK STARTER RELAY 1.** 1) Connect the battery to starter relay 1 terminals No. 3 and No. 5. 2) Measure the resistance between starter relay 1 terminals. ***Terminals*** ***No. 1 — No. 2:***	Is the resistance less than 1 Ω?	Check the ECM power supply and ground line. <Ref. to EN(STI)(diag)-87, CHECK POWER SUPPLY AND GROUND LINE OF ENGINE CONTROL MODULE (ECM), Diagnostics for Engine Starting Failure.>	Replace the starter relay 1. <Ref. to EN(STI)(diag)-9, LOCATION, Electrical Component Location.>

C: CHECK POWER SUPPLY AND GROUND LINE OF ENGINE CONTROL MODULE (ECM)

CAUTION:
After servicing or replacing faulty parts, perform Clear Memory Mode <Ref. to EN(STI)(diag)-68, OPERATION, Clear Memory Mode.>, and Inspection Mode <Ref. to EN(STI)(diag)-48, PROCEDURE, Inspection Mode.>.

WIRING DIAGRAM:
Engine Electrical System <Ref. to WI-154, WIRING DIAGRAM, Engine Electrical System.>

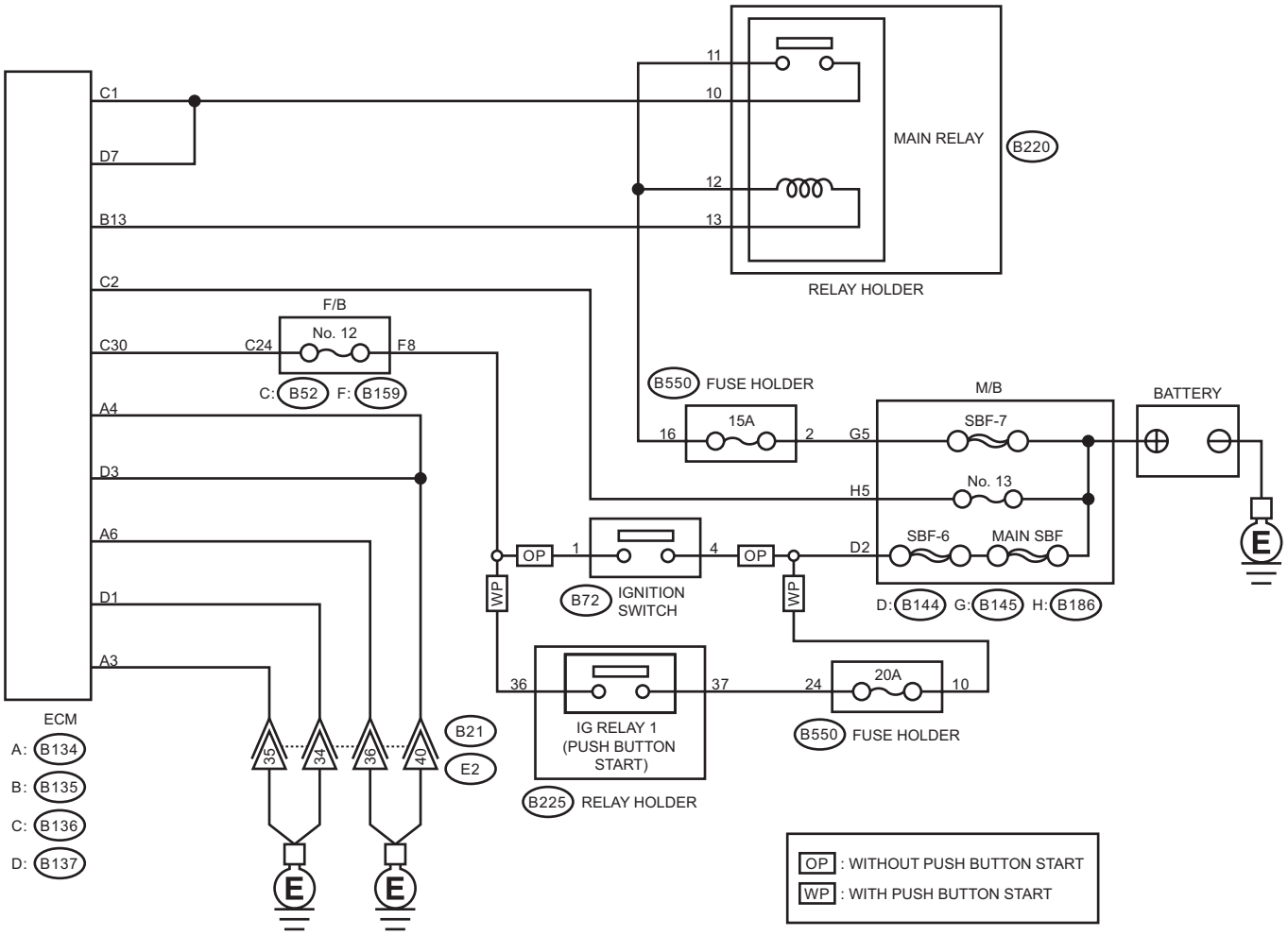

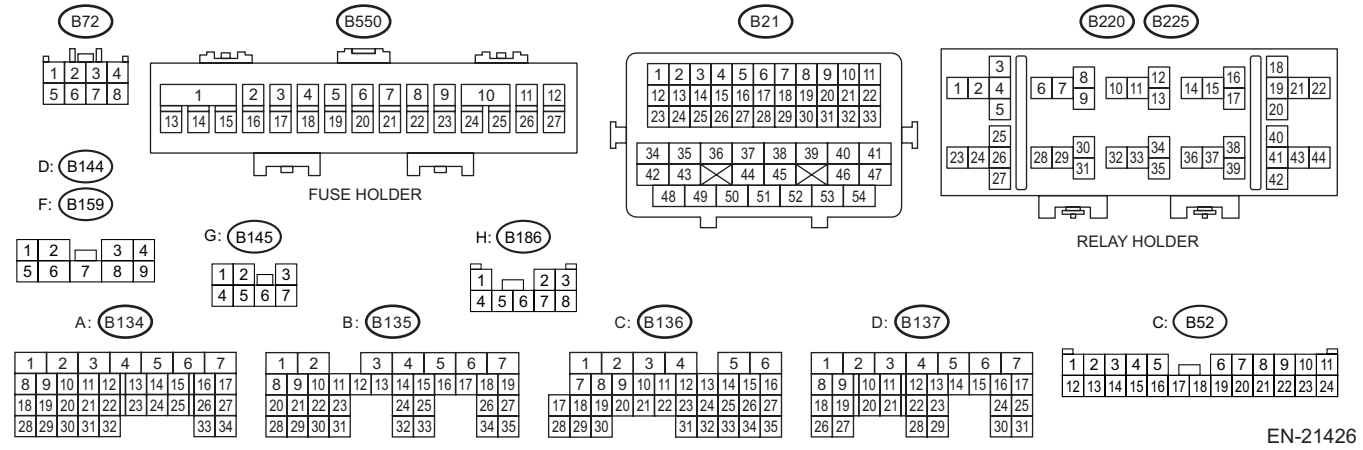

Diagnostics for Engine Starting Failure

	Step	Check	Yes	No
1	**CHECK MAIN RELAY.** 1) Turn the ignition switch to OFF. 2) Remove the main relay. 3) Connect the battery to main relay terminals No. 12 and No. 13. 4) Measure the resistance between main relay terminals. ***Terminals*** ***No. 10 — No. 11:***	Is the resistance less than 1 Ω?	Go to step **2**.	Replace the main relay. <Ref. to FU(STI)-57, Main Relay.>
2	**CHECK GROUND CIRCUIT FOR ECM.** 1) Disconnect the connector from ECM. 2) Measure the resistance of harness between ECM connector and chassis ground. ***Connector & terminal*** ***(B134) No. 3 — Chassis ground:*** ***(B134) No. 4 — Chassis ground:*** ***(B134) No. 6 — Chassis ground:*** ***(B137) No. 1 — Chassis ground:*** ***(B137) No. 3 — Chassis ground:***	Is the resistance less than 5 Ω?	Go to step **3**.	Repair the harness and connector. NOTE: In this case, repair the following item: • Open circuit of harness between ECM connector and engine ground • Poor contact of coupling connector
3	**CHECK INPUT VOLTAGE OF ECM.** 1) Turn the ignition switch to ON. 2) Measure the voltage between ECM connector and chassis ground. ***Connector & terminal*** ***(B136) No. 2 (+) — Chassis ground (–):*** ***(B136) No. 30 (+) — Chassis ground (–):***	Is the voltage 10 V or more?	Go to step **4**.	Repair the open or ground short in the harness of power supply circuit.
4	**CHECK INPUT VOLTAGE OF MAIN RELAY.** Measure the voltage between main relay connector and chassis ground. ***Connector & terminal*** ***(B220) No. 11 (+) — Chassis ground (–):*** ***(B220) No. 12 (+) — Chassis ground (–):***	Is the voltage 10 V or more?	Go to step **5**.	Repair the open or ground short in the harness of power supply circuit.
5	**CHECK INPUT VOLTAGE OF ECM.** 1) Turn the ignition switch to OFF. 2) Install the main relay. 3) Turn the ignition switch to ON. 4) Measure the voltage between ECM connector and chassis ground. ***Connector & terminal*** ***(B135) No. 13 (+) — Chassis ground (–):***	Is the voltage 10 V or more?	Go to step **6**.	Repair the open or ground short circuit of harness between ECM connector and main relay connector.
6	**CHECK INPUT VOLTAGE OF ECM.** 1) Turn the ignition switch to OFF. 2) Connect the connector to ECM. 3) Turn the ignition switch to ON. 4) Measure the voltage between ECM connector and chassis ground. ***Connector & terminal*** ***(B136) No. 1 (+) — Chassis ground (–):*** ***(B137) No. 7 (+) — Chassis ground (–):***	Is the voltage 10 V or more?	Check ignition control system. <Ref. to EN(STI)(diag)-89, IGNITION CONTROL SYSTEM, Diagnostics for Engine Starting Failure.>	Repair the harness and connector. NOTE: In this case, repair the following item: • Open circuit in harness between ECM connector and main relay connector • Poor contact of main relay connector • Poor contact of ECM connector

D: IGNITION CONTROL SYSTEM

CAUTION:
After servicing or replacing faulty parts, perform Clear Memory Mode <Ref. to EN(STI)(diag)-68, OPERATION, Clear Memory Mode.>, and Inspection Mode <Ref. to EN(STI)(diag)-48, PROCEDURE, Inspection Mode.>.

WIRING DIAGRAM:
Engine Electrical System <Ref. to WI-154, WIRING DIAGRAM, Engine Electrical System.>

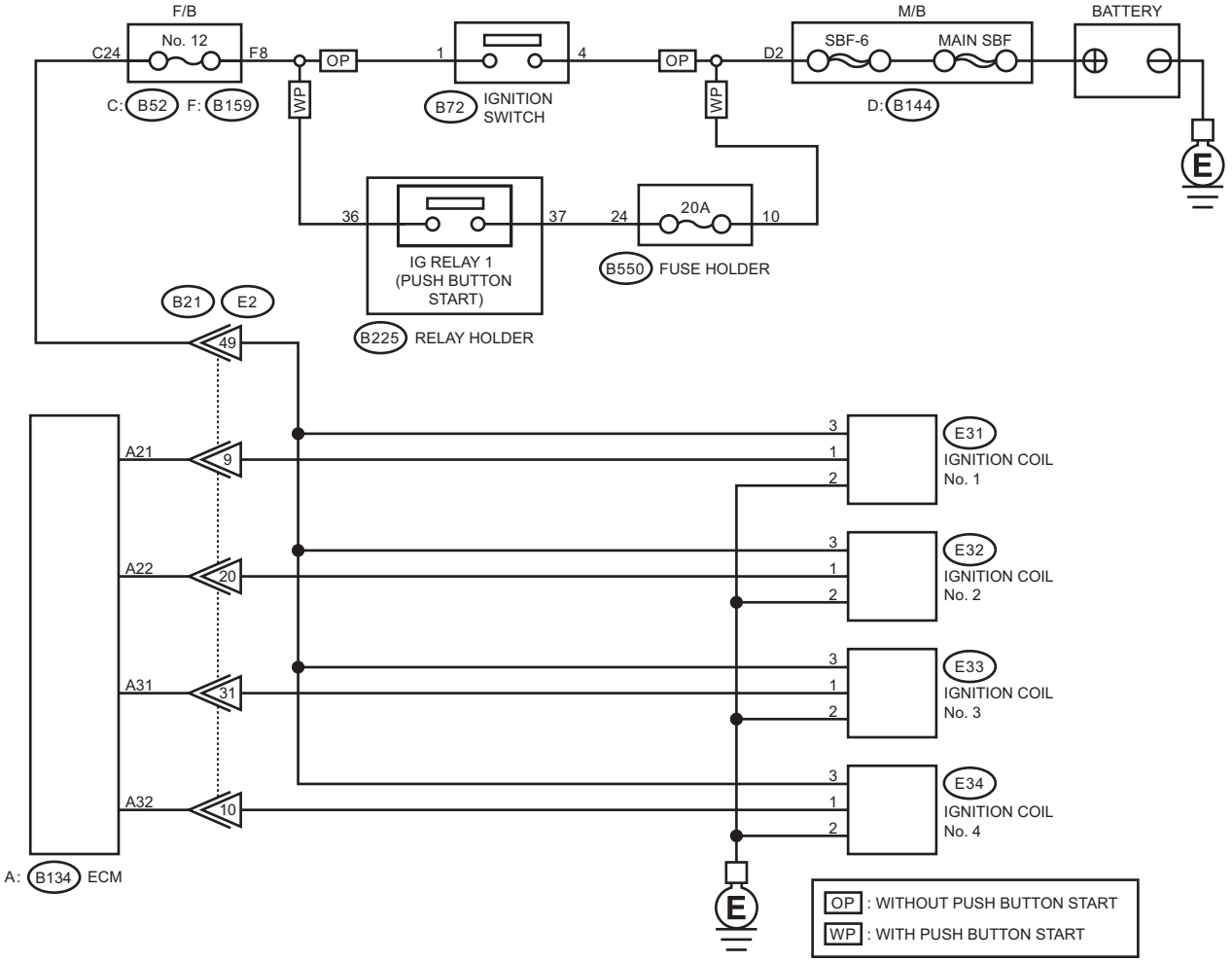

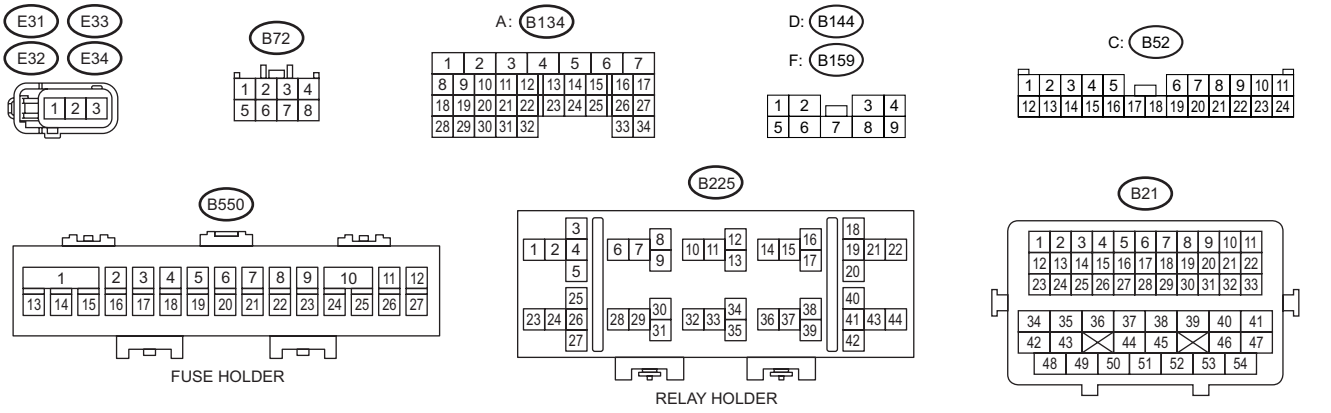

EN-21427

Diagnostics for Engine Starting Failure

	Step	Check	Yes	No
1	**CHECK SPARK PLUG CONDITION.** 1) Remove the spark plug. <Ref. to IG(STI)-4, REMOVAL, Spark Plug.> 2) Check the spark plug condition. <Ref. to IG(STI)-5, INSPECTION, Spark Plug.>	Is the check result OK?	Go to step **2**.	Replace the spark plug. <Ref. to IG(STI)-4, Spark Plug.>
2	**CHECK IGNITION SYSTEM FOR SPARKS.** 1) Connect the spark plug to ignition coil. 2) Release the fuel pressure. <Ref. to FU(STI)-64, RELEASING OF FUEL PRESSURE, PROCEDURE, Fuel.> 3) Contact the spark plug thread portion to engine. 4) While opening the throttle valve fully, crank the engine to check that spark occurs at each cylinder.	Does spark occur at each cylinder?	Check fuel pump system. <Ref. to EN(STI)(diag)-91, FUEL PUMP CIRCUIT, Diagnostics for Engine Starting Failure.>	Go to step **3**.
3	**CHECK IGNITION COIL POWER SUPPLY CIRCUIT.** 1) Turn the ignition switch to OFF. 2) Disconnect the connector from ignition coil. 3) Turn the ignition switch to ON. 4) Measure the power supply voltage between ignition coil connector and engine ground. ***Connector & terminal*** ***(E31) No. 3 (+) — Engine ground (–):*** ***(E32) No. 3 (+) — Engine ground (–):*** ***(E33) No. 3 (+) — Engine ground (–):*** ***(E34) No. 3 (+) — Engine ground (–):***	Is the voltage 10 V or more?	Go to step **4**.	Repair the harness and connector. NOTE: In this case, repair the following item: • Open or short to ground in power supply circuit • Poor contact of coupling connector • Blown out of fuse
4	**CHECK HARNESS OF IGNITION COIL GROUND CIRCUIT.** 1) Turn the ignition switch to OFF. 2) Measure the resistance between ignition coil connector and engine ground. ***Connector & terminal*** ***(E31) No. 2 — Engine ground:*** ***(E32) No. 2 — Engine ground:*** ***(E33) No. 2 — Engine ground:*** ***(E34) No. 2 — Engine ground:***	Is the resistance less than 1 Ω?	Go to step **5**.	Repair the open circuit in harness between ignition coil connector and engine ground.
5	**CHECK HARNESS BETWEEN ECM AND IGNITION COIL CONNECTOR.** 1) Turn the ignition switch to OFF. 2) Disconnect the connector from ECM. 3) Disconnect the connector from ignition coil. 4) Measure the resistance of harness between ECM connector and ignition coil connector. ***Connector & terminal*** ***(B134) No. 21 — (E31) No. 1:*** ***(B134) No. 22 — (E32) No. 1:*** ***(B134) No. 31 — (E33) No. 1:*** ***(B134) No. 32 — (E34) No. 1:***	Is the resistance less than 1 Ω?	Go to step **6**.	Repair the harness and connector. NOTE: In this case, repair the following item: • Open circuit of harness between ECM connector and the ignition coil connector • Poor contact of coupling connector
6	**CHECK HARNESS BETWEEN ECM AND IGNITION COIL CONNECTOR.** Measure the resistance of harness between ECM connector and engine ground. ***Connector & terminal*** ***(B134) No. 21 — Engine ground:*** ***(B134) No. 22 — Engine ground:*** ***(B134) No. 31 — Engine ground:*** ***(B134) No. 32 — Engine ground:***	Is the resistance 1 MΩ or more?	Go to step **7**.	Repair the ground short circuit of harness between ECM connector and ignition coil connector.

	Step	Check	Yes	No
7	**CHECK FOR POOR CONTACT.** Check for poor contact of ECM connector.	Is there poor contact of ECM connector?	Repair the poor contact of ECM connector.	Replace the ignition coil. <Ref. to IG(STI)-7, Ignition Coil.>

E: FUEL PUMP CIRCUIT

CAUTION:
After servicing or replacing faulty parts, perform Clear Memory Mode <Ref. to EN(STI)(diag)-68, OPERATION, Clear Memory Mode.>, and Inspection Mode <Ref. to EN(STI)(diag)-48, PROCEDURE, Inspection Mode.>.

	Step	Check	Yes	No
1	**CHECK OPERATING SOUND OF FUEL PUMP.** Make sure that the fuel pump operates for two seconds when turning the ignition switch to ON. NOTE: Fuel pump operation can be executed using the Subaru Select Monitor. Refer to “Active Test” for the procedures. <Ref. to EN(STI)(diag)-69, Active Test.>	Does the fuel pump emit operating sound?	Check the fuel injector circuit. <Ref. to EN(STI)(diag)-92, FUEL INJECTOR CIRCUIT, Diagnostics for Engine Starting Failure.>	Display the DTC. <Ref. to EN(STI)(diag)-47, OPERATION, Read Diagnostic Trouble Code (DTC).>

F: FUEL INJECTOR CIRCUIT

CAUTION:
- **Check or repair only faulty parts.**
- **After servicing or replacing faulty parts, perform Clear Memory Mode <Ref. to EN(STI)(diag)-68, OPERATION, Clear Memory Mode.>, and Inspection Mode <Ref. to EN(STI)(diag)-48, PROCEDURE, Inspection Mode.>.**

WIRING DIAGRAM:
Engine Electrical System <Ref. to WI-154, WIRING DIAGRAM, Engine Electrical System.>

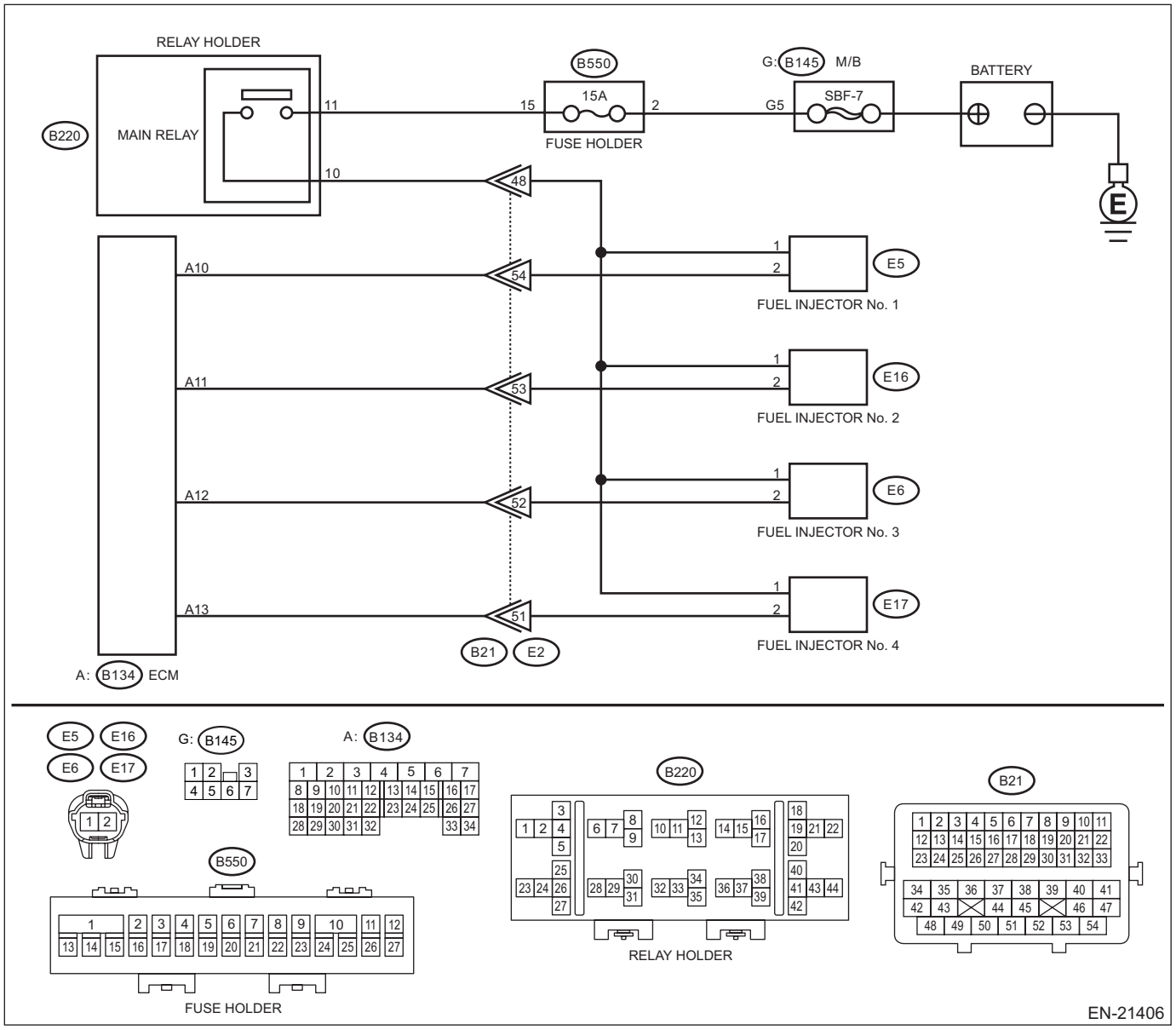

Step		Check	Yes	No
1	**CHECK OPERATION OF EACH FUEL INJECTOR.** While cranking the engine, check each fuel injector emits operating sound. Use a sound scope or attach a screwdriver to the injector for this check.	Does the fuel injector emit operating sound?	Check the fuel pressure. <Ref. to ME(STI)-25, INSPECTION, Fuel Pressure.>	Go to step **2**.

	Step	Check	Yes	No
2	**CHECK POWER SUPPLY TO EACH FUEL INJECTOR.** 1) Turn the ignition switch to OFF. 2) Disconnect the connector from fuel injector. 3) Turn the ignition switch to ON. 4) Measure the power supply voltage between fuel injector connector and the engine ground. ***Connector & terminal*** ***#1 (E5) No. 1 (+) — Engine ground (–):*** ***#2 (E16) No. 1 (+) — Engine ground (–):*** ***#3 (E6) No. 1 (+) — Engine ground (–):*** ***#4 (E17) No. 1 (+) — Engine ground (–):***	Is the voltage 10 V or more?	Go to step **3**.	Repair the harness and connector. NOTE: In this case, repair the following item: • Open circuit in harness between main relay connector and fuel injector connector • Poor contact of main relay connector • Poor contact of coupling connector
3	**CHECK HARNESS BETWEEN ECM AND FUEL INJECTOR CONNECTOR.** 1) Turn the ignition switch to OFF. 2) Disconnect the connector from ECM. 3) Measure the resistance of harness between ECM connector and fuel injector connector. ***Connector & terminal*** ***#1 (B134) No. 10 — (E5) No. 2:*** ***#2 (B134) No. 11 — (E16) No. 2:*** ***#3 (B134) No. 12 — (E6) No. 2:*** ***#4 (B134) No. 13 — (E17) No. 2:***	Is the resistance less than 1 Ω?	Go to step **4**.	Repair the harness and connector. NOTE: In this case, repair the following item: • Open circuit in harness between ECM connector and fuel injector connector • Poor contact of coupling connector
4	**CHECK HARNESS BETWEEN ECM AND FUEL INJECTOR CONNECTOR.** Measure the resistance of harness between ECM connector and chassis ground. ***Connector & terminal*** ***#1 (B134) No. 10 — Chassis ground:*** ***#2 (B134) No. 11 — Chassis ground:*** ***#3 (B134) No. 12 — Chassis ground:*** ***#4 (B134) No. 13 — Chassis ground:***	Is the resistance 1 MΩ or more?	Go to step **5**.	Repair the short circuit to ground in harness between ECM connector and fuel injector connector.
5	**CHECK EACH FUEL INJECTOR.** Measure the resistance between each fuel injector terminals. ***Terminals*** ***No. 1 — No. 2:***	Is the resistance 5 — 20 Ω?	Go to step **6**.	Replace the faulty fuel injector. <Ref. to FU(STI)-43, Fuel Injector.>
6	**CHECK FOR POOR CONTACT.** Check for poor contact of ECM connector.	Is there poor contact of ECM connector?	Repair the poor contact of ECM connector.	Inspection using “General Diagnostic Table”. <Ref. to EN(STI)(diag)-644, INSPECTION, General Diagnostic Table.>

16.Diagnostic Procedure for Subaru Select Monitor Communication

A: COMMUNICATION FOR INITIALIZING IMPOSSIBLE

DIAGNOSIS:
Open or short circuit in data link connector
TROUBLE SYMPTOM:
Subaru Select Monitor communication failure
WIRING DIAGRAM:
Engine Electrical System <Ref. to WI-154, WIRING DIAGRAM, Engine Electrical System.>

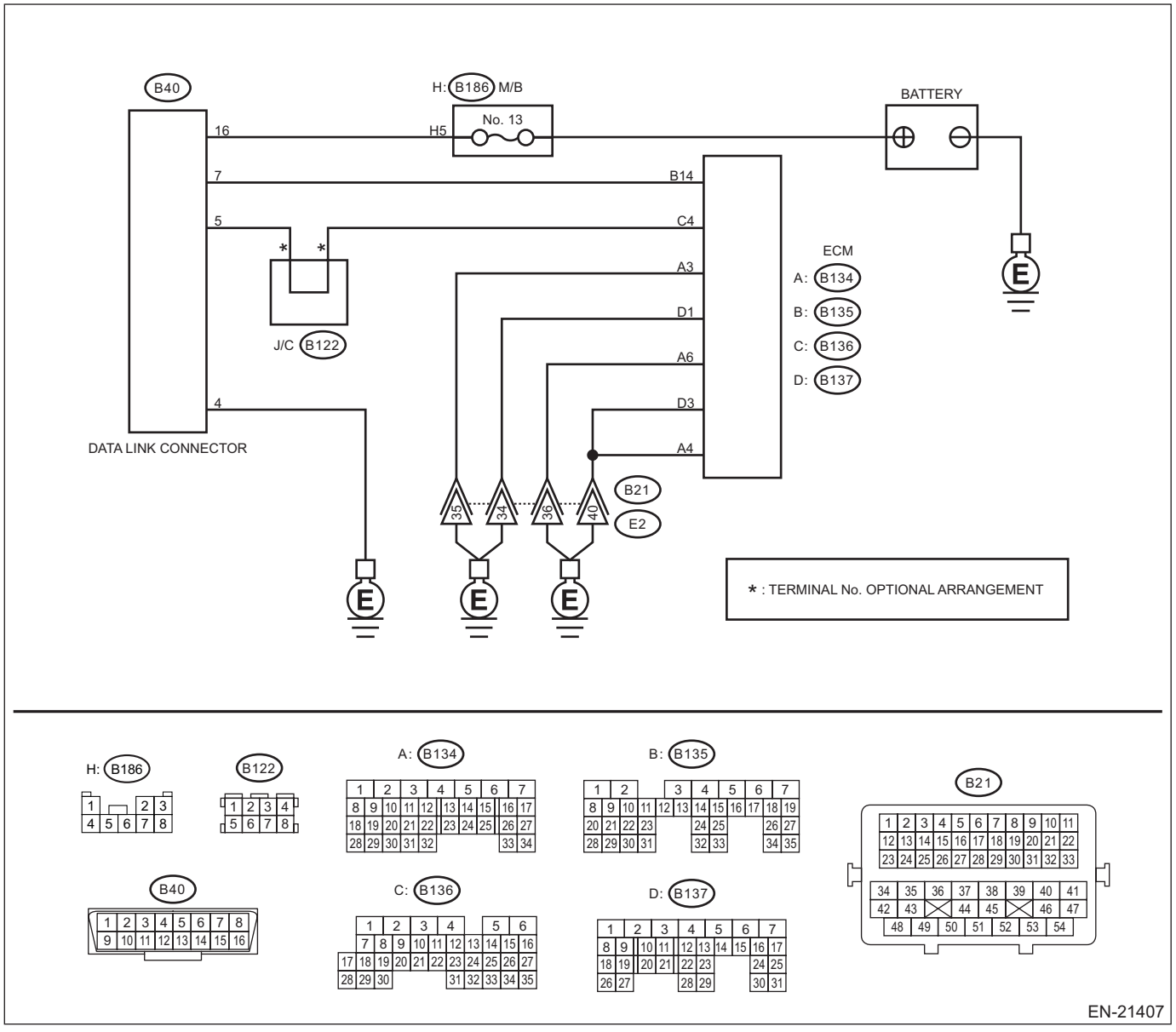

Step		Check	Yes	No
1	**CHECK POWER SUPPLY CIRCUIT.** Connect DST-i or a general scan tool to the data link connector.	Is the DST-i or the general scan tool turned to ON?	Go to step **4**.	Go to step **2**.

	Step	Check	Yes	No
2	**CHECK POWER SUPPLY CIRCUIT.** Measure the voltage between data link connector and chassis ground. ***Connector & terminal*** ***(B40) No. 16 (+) — Chassis ground (–):***	Is the voltage 10 V or more?	Go to step **3**.	Repair the power supply circuit. NOTE: In this case, repair the following item: • Open or ground short circuit of harness between battery and data link connector • Blown out of fuse (M/B No. 13)
3	**CHECK HARNESS BETWEEN DATA LINK CONNECTOR AND CHASSIS GROUND.** 1) Turn the ignition switch to OFF. 2) Measure the resistance of harness between data link connector and chassis ground. ***Connector & terminal*** ***(B40) No. 4 — Chassis ground:*** ***(B40) No. 5 — Chassis ground:***	Is the resistance less than 5 Ω?	Repair the poor contact of data link connector.	Repair the harness and connector. NOTE: In this case, repair the following item: • Open circuit in harness between ECM connector and data link connector • Open circuit of harness between ECM connector and engine ground • Poor contact of ECM connector • Poor contact of joint connector
4	**CHECK HARNESS BETWEEN ECM AND DATA LINK CONNECTOR.** 1) Disconnect the connectors from ECM, DCCD CM, VDC CM, airbag CM, impact sensor, TPMS & keyless entry CM, and body integrated unit. **CAUTION:** **When disconnecting the connector from airbag CM, always follow the precautions on AB section. <Ref. to AB-9, CAUTION, General Description.>** 2) Measure the resistance of harness between ECM connector and data link connector. ***Connector & terminal*** ***(B135) No. 14 — (B40) No. 7:***	Is the resistance less than 1 Ω?	Go to step **5**.	Repair the open circuit of harness between ECM connector and data link connector.
5	**CHECK HARNESS BETWEEN ECM AND DATA LINK CONNECTOR.** Measure the resistance between data link connector and chassis ground. ***Connector & terminal*** ***(B40) No. 7 — Chassis ground:***	Is the resistance 1 MΩ or more?	Repair the poor contact of ECM connector or data link connector.	Repair the short circuit to ground in harness between ECM connector and data link connector.

17.List of Diagnostic Trouble Code (DTC)

A: LIST

DTC	Item	Note
B1570	ANTENNA	<Ref. to IM(diag)-16, DTC B1570 ANTENNA, Diagnostic Procedure with Diagnostic Trouble Code (DTC).>
B1571	REFERENCE CODE INCOMPATIBILITY	<Ref. to IM(diag)-18, DTC B1571 REFERENCE CODE INCOMPATIBILITY, Diagnostic Procedure with Diagnostic Trouble Code (DTC).> <Ref. to KPS(diag)-104, DTC B1571 REFERENCE CODE INCOMPATIBILITY, Diagnostic Procedure with Diagnostic Trouble Code (DTC).>
B1572	IMM CIRCUIT EXCEPT ANTENNA CIRCUIT	<Ref. to IM(diag)-19, DTC B1572 IMM CIRCUIT EXCEPT ANTENNA CIRCUIT, Diagnostic Procedure with Diagnostic Trouble Code (DTC).> <Ref. to KPS(diag)-105, DTC B1572 IMM CIRCUIT EXCEPT ANTENNA CIRCUIT, Diagnostic Procedure with Diagnostic Trouble Code (DTC).>
B1574	KEY COMMUNICATION	<Ref. to IM(diag)-23, DTC B1574 KEY COMMUNICATION, Diagnostic Procedure with Diagnostic Trouble Code (DTC).>
B1575	INCORRECT IMMOBILIZER KEY	<Ref. to IM(diag)-24, DTC B1575 INCORRECT IMMOBILIZER KEY, Diagnostic Procedure with Diagnostic Trouble Code (DTC).>
B1576	EGI CONTROL MODULE EEPROM	<Ref. to IM(diag)-25, DTC B1576 EGI CONTROL MODULE EEPROM, Diagnostic Procedure with Diagnostic Trouble Code (DTC).> <Ref. to KPS(diag)-110, DTC B1576 EGI CONTROL MODULE EEPROM, Diagnostic Procedure with Diagnostic Trouble Code (DTC).>
B1577	IMM CONTROL MODULE EEPROM	<Ref. to IM(diag)-26, DTC B1577 IMM CONTROL MODULE EEPROM, Diagnostic Procedure with Diagnostic Trouble Code (DTC).> <Ref. to KPS(diag)-111, DTC B1577 IMM CONTROL MODULE EEPROM, Diagnostic Procedure with Diagnostic Trouble Code (DTC).>
B1578	METER	<Ref. to IM(diag)-26, DTC B1578 METER, Diagnostic Procedure with Diagnostic Trouble Code (DTC).>
P000A	"A" CAMSHAFT POSITION SLOW RESPONSE BANK 1	<Ref. to EN(STI)(diag)-106, DTC P000A "A" CAMSHAFT POSITION SLOW RESPONSE BANK 1, Diagnostic Procedure with Diagnostic Trouble Code (DTC).>
P000B	"B" CAMSHAFT POSITION SLOW RESPONSE BANK 1	<Ref. to EN(STI)(diag)-108, DTC P000B "B" CAMSHAFT POSITION SLOW RESPONSE BANK 1, Diagnostic Procedure with Diagnostic Trouble Code (DTC).>
P000C	"A" CAMSHAFT POSITION SLOW RESPONSE BANK 2	<Ref. to EN(STI)(diag)-108, DTC P000C "A" CAMSHAFT POSITION SLOW RESPONSE BANK 2, Diagnostic Procedure with Diagnostic Trouble Code (DTC).>
P000D	"B" CAMSHAFT POSITION SLOW RESPONSE BANK 2	<Ref. to EN(STI)(diag)-108, DTC P000D "B" CAMSHAFT POSITION SLOW RESPONSE BANK 2, Diagnostic Procedure with Diagnostic Trouble Code (DTC).>
P0011	"A" CAMSHAFT POSITION - TIMING OVER-ADVANCED OR SYSTEM PERFORMANCE BANK 1	<Ref. to EN(STI)(diag)-109, DTC P0011 "A" CAMSHAFT POSITION - TIMING OVER-ADVANCED OR SYSTEM PERFORMANCE BANK 1, Diagnostic Procedure with Diagnostic Trouble Code (DTC).>
P0014	"B" CAMSHAFT POSITION - TIMING OVER-ADVANCED OR SYSTEM PERFORMANCE BANK 1	<Ref. to EN(STI)(diag)-111, DTC P0014 "B" CAMSHAFT POSITION - TIMING OVER-ADVANCED OR SYSTEM PERFORMANCE BANK 1, Diagnostic Procedure with Diagnostic Trouble Code (DTC).>
P0016	CRANKSHAFT POSITION - CAMSHAFT POSITION CORRELATION BANK 1 SENSOR A	<Ref. to EN(STI)(diag)-113, DTC P0016 CRANKSHAFT POSITION - CAMSHAFT POSITION CORRELATION BANK 1 SENSOR A, Diagnostic Procedure with Diagnostic Trouble Code (DTC).>
P0017	CRANKSHAFT POSITION - CAMSHAFT POSITION CORRELATION BANK 1 SENSOR B	<Ref. to EN(STI)(diag)-115, DTC P0017 CRANKSHAFT POSITION - CAMSHAFT POSITION CORRELATION BANK 1 SENSOR B, Diagnostic Procedure with Diagnostic Trouble Code (DTC).>
P0018	CRANKSHAFT POSITION - CAMSHAFT POSITION CORRELATION BANK 2 SENSOR A	<Ref. to EN(STI)(diag)-117, DTC P0018 CRANKSHAFT POSITION - CAMSHAFT POSITION CORRELATION BANK 2 SENSOR A, Diagnostic Procedure with Diagnostic Trouble Code (DTC).>

DTC	Item	Note
P0019	CRANKSHAFT POSITION - CAMSHAFT POSITION CORRELATION BANK 2 SENSOR B	<Ref. to EN(STI)(diag)-118, DTC P0019 CRANKSHAFT POSITION - CAMSHAFT POSITION CORRELATION BANK 2 SENSOR B, Diagnostic Procedure with Diagnostic Trouble Code (DTC).>
P0021	"A" CAMSHAFT POSITION - TIMING OVER-ADVANCED OR SYSTEM PERFORMANCE BANK 2	<Ref. to EN(STI)(diag)-119, DTC P0021 "A" CAMSHAFT POSITION - TIMING OVER-ADVANCED OR SYSTEM PERFORMANCE BANK 2, Diagnostic Procedure with Diagnostic Trouble Code (DTC).>
P0024	"B" CAMSHAFT POSITION - TIMING OVER-ADVANCED OR SYSTEM PERFORMANCE BANK 2	<Ref. to EN(STI)(diag)-120, DTC P0024 "B" CAMSHAFT POSITION - TIMING OVER-ADVANCED OR SYSTEM PERFORMANCE BANK 2, Diagnostic Procedure with Diagnostic Trouble Code (DTC).>
P0030	A/F / O2 HEATER CONTROL CIRCUIT BANK 1 SENSOR 1	<Ref. to EN(STI)(diag)-121, DTC P0030 A/F / O2 HEATER CONTROL CIRCUIT BANK 1 SENSOR 1, Diagnostic Procedure with Diagnostic Trouble Code (DTC).>
P0031	A/F / O2 HEATER CONTROL CIRCUIT LOW BANK 1 SENSOR 1	<Ref. to EN(STI)(diag)-124, DTC P0031 A/F / O2 HEATER CONTROL CIRCUIT LOW BANK 1 SENSOR 1, Diagnostic Procedure with Diagnostic Trouble Code (DTC).>
P0032	A/F / O2 HEATER CONTROL CIRCUIT HIGH BANK 1 SENSOR 1	<Ref. to EN(STI)(diag)-127, DTC P0032 A/F / O2 HEATER CONTROL CIRCUIT HIGH BANK 1 SENSOR 1, Diagnostic Procedure with Diagnostic Trouble Code (DTC).>
P0037	A/F / O2 HEATER CONTROL CIRCUIT LOW BANK 1 SENSOR 2	<Ref. to EN(STI)(diag)-130, DTC P0037 A/F / O2 HEATER CONTROL CIRCUIT LOW BANK 1 SENSOR 2, Diagnostic Procedure with Diagnostic Trouble Code (DTC).>
P0038	A/F / O2 HEATER CONTROL CIRCUIT HIGH BANK 1 SENSOR 2	<Ref. to EN(STI)(diag)-133, DTC P0038 A/F / O2 HEATER CONTROL CIRCUIT HIGH BANK 1 SENSOR 2, Diagnostic Procedure with Diagnostic Trouble Code (DTC).>
P0068	MAP/MAF - THROTTLE POSITION CORRELATION	<Ref. to EN(STI)(diag)-136, DTC P0068 MAP/MAF - THROTTLE POSITION CORRELATION, Diagnostic Procedure with Diagnostic Trouble Code (DTC).>
P0071	AMBIENT AIR TEMPERATURE SENSOR CIRCUIT "A" RANGE/PERFORMANCE	<Ref. to EN(STI)(diag)-139, DTC P0071 AMBIENT AIR TEMPERATURE SENSOR CIRCUIT "A" RANGE/PERFORMANCE, Diagnostic Procedure with Diagnostic Trouble Code (DTC).>
P0072	AMBIENT AIR TEMPERATURE SENSOR CIRCUIT "A" LOW	<Ref. to EN(STI)(diag)-141, DTC P0072 AMBIENT AIR TEMPERATURE SENSOR CIRCUIT "A" LOW, Diagnostic Procedure with Diagnostic Trouble Code (DTC).>
P0073	AMBIENT AIR TEMPERATURE SENSOR CIRCUIT "A" HIGH	<Ref. to EN(STI)(diag)-143, DTC P0073 AMBIENT AIR TEMPERATURE SENSOR CIRCUIT "A" HIGH, Diagnostic Procedure with Diagnostic Trouble Code (DTC).>
P0101	MASS OR VOLUME AIR FLOW SENSOR "A" CIRCUIT RANGE/PERFORMANCE	<Ref. to EN(STI)(diag)-144, DTC P0101 MASS OR VOLUME AIR FLOW SENSOR "A" CIRCUIT RANGE/PERFORMANCE, Diagnostic Procedure with Diagnostic Trouble Code (DTC).>
P0102	MASS OR VOLUME AIR FLOW SENSOR "A" CIRCUIT LOW	<Ref. to EN(STI)(diag)-147, DTC P0102 MASS OR VOLUME AIR FLOW SENSOR "A" CIRCUIT LOW, Diagnostic Procedure with Diagnostic Trouble Code (DTC).>
P0103	MASS OR VOLUME AIR FLOW SENSOR "A" CIRCUIT HIGH	<Ref. to EN(STI)(diag)-150, DTC P0103 MASS OR VOLUME AIR FLOW SENSOR "A" CIRCUIT HIGH, Diagnostic Procedure with Diagnostic Trouble Code (DTC).>
P0107	MANIFOLD ABSOLUTE PRESSURE/BAROMETRIC PRESSURE SENSOR CIRCUIT LOW	<Ref. to EN(STI)(diag)-153, DTC P0107 MANIFOLD ABSOLUTE PRESSURE/BAROMETRIC PRESSURE SENSOR CIRCUIT LOW, Diagnostic Procedure with Diagnostic Trouble Code (DTC).>
P0108	MANIFOLD ABSOLUTE PRESSURE/BAROMETRIC PRESSURE SENSOR CIRCUIT HIGH	<Ref. to EN(STI)(diag)-156, DTC P0108 MANIFOLD ABSOLUTE PRESSURE/BAROMETRIC PRESSURE SENSOR CIRCUIT HIGH, Diagnostic Procedure with Diagnostic Trouble Code (DTC).>
P0111	INTAKE AIR TEMPERATURE SENSOR 1 CIRCUIT RANGE/PERFORMANCE BANK 1	<Ref. to EN(STI)(diag)-159, DTC P0111 INTAKE AIR TEMPERATURE SENSOR 1 CIRCUIT RANGE/PERFORMANCE BANK 1, Diagnostic Procedure with Diagnostic Trouble Code (DTC).>
P0112	INTAKE AIR TEMPERATURE SENSOR 1 CIRCUIT LOW BANK 1	<Ref. to EN(STI)(diag)-162, DTC P0112 INTAKE AIR TEMPERATURE SENSOR 1 CIRCUIT LOW BANK 1, Diagnostic Procedure with Diagnostic Trouble Code (DTC).>

DTC	Item	Note
P0113	INTAKE AIR TEMPERATURE SENSOR 1 CIRCUIT HIGH BANK 1	<Ref. to EN(STI)(diag)-165, DTC P0113 INTAKE AIR TEMPERATURE SENSOR 1 CIRCUIT HIGH BANK 1, Diagnostic Procedure with Diagnostic Trouble Code (DTC).>
P0116	ENGINE COOLANT TEMPERATURE SENSOR 1 CIRCUIT RANGE/PERFORMANCE	<Ref. to EN(STI)(diag)-168, DTC P0116 ENGINE COOLANT TEMPERATURE SENSOR 1 CIRCUIT RANGE/PERFORMANCE, Diagnostic Procedure with Diagnostic Trouble Code (DTC).>
P0117	ENGINE COOLANT TEMPERATURE SENSOR 1 CIRCUIT LOW	<Ref. to EN(STI)(diag)-170, DTC P0117 ENGINE COOLANT TEMPERATURE SENSOR 1 CIRCUIT LOW, Diagnostic Procedure with Diagnostic Trouble Code (DTC).>
P0118	ENGINE COOLANT TEMPERATURE SENSOR 1 CIRCUIT HIGH	<Ref. to EN(STI)(diag)-173, DTC P0118 ENGINE COOLANT TEMPERATURE SENSOR 1 CIRCUIT HIGH, Diagnostic Procedure with Diagnostic Trouble Code (DTC).>
P0122	THROTTLE/PEDAL POSITION SENSOR/SWITCH "A" CIRCUIT LOW	<Ref. to EN(STI)(diag)-176, DTC P0122 THROTTLE/PEDAL POSITION SENSOR/SWITCH "A" CIRCUIT LOW, Diagnostic Procedure with Diagnostic Trouble Code (DTC).>
P0123	THROTTLE/PEDAL POSITION SENSOR/SWITCH "A" CIRCUIT HIGH	<Ref. to EN(STI)(diag)-180, DTC P0123 THROTTLE/PEDAL POSITION SENSOR/SWITCH "A" CIRCUIT HIGH, Diagnostic Procedure with Diagnostic Trouble Code (DTC).>
P0125	INSUFFICIENT COOLANT TEMPERATURE FOR CLOSED LOOP FUEL CONTROL	<Ref. to EN(STI)(diag)-184, DTC P0125 INSUFFICIENT COOLANT TEMPERATURE FOR CLOSED LOOP FUEL CONTROL, Diagnostic Procedure with Diagnostic Trouble Code (DTC).>
P0128	COOLANT THERMOSTAT (ENGINE COOLANT TEMPERATURE BELOW THERMOSTAT REGULATING TEMPERATURE)	<Ref. to EN(STI)(diag)-186, DTC P0128 COOLANT THERMOSTAT (ENGINE COOLANT TEMPERATURE BELOW THERMOSTAT REGULATING TEMPERATURE), Diagnostic Procedure with Diagnostic Trouble Code (DTC).>
P0131	A/F / O2 SENSOR CIRCUIT LOW VOLTAGE BANK 1 SENSOR 1	<Ref. to EN(STI)(diag)-191, DTC P0131 A/F / O2 SENSOR CIRCUIT LOW VOLTAGE BANK 1 SENSOR 1, Diagnostic Procedure with Diagnostic Trouble Code (DTC).>
P0132	A/F / O2 SENSOR CIRCUIT HIGH VOLTAGE BANK 1 SENSOR 1	<Ref. to EN(STI)(diag)-194, DTC P0132 A/F / O2 SENSOR CIRCUIT HIGH VOLTAGE BANK 1 SENSOR 1, Diagnostic Procedure with Diagnostic Trouble Code (DTC).>
P0134	A/F / O2 SENSOR CIRCUIT NO ACTIVITY DETECTED BANK 1 SENSOR 1	<Ref. to EN(STI)(diag)-197, DTC P0134 A/F / O2 SENSOR CIRCUIT NO ACTIVITY DETECTED BANK 1 SENSOR 1, Diagnostic Procedure with Diagnostic Trouble Code (DTC).>
P0137	O2 SENSOR CIRCUIT LOW VOLTAGE BANK 1 SENSOR 2	<Ref. to EN(STI)(diag)-201, DTC P0137 O2 SENSOR CIRCUIT LOW VOLTAGE BANK 1 SENSOR 2, Diagnostic Procedure with Diagnostic Trouble Code (DTC).>
P0138	O2 SENSOR CIRCUIT HIGH VOLTAGE BANK 1 SENSOR 2	<Ref. to EN(STI)(diag)-205, DTC P0138 O2 SENSOR CIRCUIT HIGH VOLTAGE BANK 1 SENSOR 2, Diagnostic Procedure with Diagnostic Trouble Code (DTC).>
P013A	O2 SENSOR SLOW RESPONSE - RICH TO LEAN BANK 1 SENSOR 2	<Ref. to EN(STI)(diag)-208, DTC P013A O2 SENSOR SLOW RESPONSE - RICH TO LEAN BANK 1 SENSOR 2, Diagnostic Procedure with Diagnostic Trouble Code (DTC).>
P013B	O2 SENSOR SLOW RESPONSE - LEAN TO RICH BANK 1 SENSOR 2	<Ref. to EN(STI)(diag)-213, DTC P013B O2 SENSOR SLOW RESPONSE - LEAN TO RICH BANK 1 SENSOR 2, Diagnostic Procedure with Diagnostic Trouble Code (DTC).>
P013E	O2 SENSOR DELAYED RESPONSE - RICH TO LEAN BANK 1 SENSOR 2	<Ref. to EN(STI)(diag)-215, DTC P013E O2 SENSOR DELAYED RESPONSE - RICH TO LEAN BANK 1 SENSOR 2, Diagnostic Procedure with Diagnostic Trouble Code (DTC).>
P013F	O2 SENSOR DELAYED RESPONSE - LEAN TO RICH BANK 1 SENSOR 2	<Ref. to EN(STI)(diag)-217, DTC P013F O2 SENSOR DELAYED RESPONSE - LEAN TO RICH BANK 1 SENSOR 2, Diagnostic Procedure with Diagnostic Trouble Code (DTC).>
P0141	O2 SENSOR HEATER CIRCUIT BANK 1 SENSOR 2	<Ref. to EN(STI)(diag)-219, DTC P0141 O2 SENSOR HEATER CIRCUIT BANK 1 SENSOR 2, Diagnostic Procedure with Diagnostic Trouble Code (DTC).>
P014C	A/F / O2 SENSOR SLOW RESPONSE - RICH TO LEAN BANK 1 SENSOR 1	<Ref. to EN(STI)(diag)-220, DTC P014C A/F / O2 SENSOR SLOW RESPONSE - RICH TO LEAN BANK 1 SENSOR 1, Diagnostic Procedure with Diagnostic Trouble Code (DTC).>

DTC	Item	Note
P014D	A/F / O2 SENSOR SLOW RESPONSE - LEAN TO RICH BANK 1 SENSOR 1	<Ref. to EN(STI)(diag)-222, DTC P014D A/F / O2 SENSOR SLOW RESPONSE - LEAN TO RICH BANK 1 SENSOR 1, Diagnostic Procedure with Diagnostic Trouble Code (DTC).>
P015A	A/F / O2 SENSOR DELAYED RESPONSE - RICH TO LEAN BANK 1 SENSOR 1	<Ref. to EN(STI)(diag)-223, DTC P015A A/F / O2 SENSOR DELAYED RESPONSE - RICH TO LEAN BANK 1 SENSOR 1, Diagnostic Procedure with Diagnostic Trouble Code (DTC).>
P015B	A/F / O2 SENSOR DELAYED RESPONSE - LEAN TO RICH BANK 1 SENSOR 1	<Ref. to EN(STI)(diag)-228, DTC P015B A/F / O2 SENSOR DELAYED RESPONSE - LEAN TO RICH BANK 1 SENSOR 1, Diagnostic Procedure with Diagnostic Trouble Code (DTC).>
P0171	SYSTEM TOO LEAN BANK 1	<Ref. to EN(STI)(diag)-229, DTC P0171 SYSTEM TOO LEAN BANK 1, Diagnostic Procedure with Diagnostic Trouble Code (DTC).>
P0172	SYSTEM TOO RICH BANK 1	<Ref. to EN(STI)(diag)-230, DTC P0172 SYSTEM TOO RICH BANK 1, Diagnostic Procedure with Diagnostic Trouble Code (DTC).>
P0201	CYLINDER 1 INJECTOR "A" CIRCUIT	<Ref. to EN(STI)(diag)-233, DTC P0201 CYLINDER 1 INJECTOR "A" CIRCUIT, Diagnostic Procedure with Diagnostic Trouble Code (DTC).>
P0202	CYLINDER 2 INJECTOR "A" CIRCUIT	<Ref. to EN(STI)(diag)-236, DTC P0202 CYLINDER 2 INJECTOR "A" CIRCUIT, Diagnostic Procedure with Diagnostic Trouble Code (DTC).>
P0203	CYLINDER 3 INJECTOR "A" CIRCUIT	<Ref. to EN(STI)(diag)-236, DTC P0203 CYLINDER 3 INJECTOR "A" CIRCUIT, Diagnostic Procedure with Diagnostic Trouble Code (DTC).>
P0204	CYLINDER 4 INJECTOR "A" CIRCUIT	<Ref. to EN(STI)(diag)-236, DTC P0204 CYLINDER 4 INJECTOR "A" CIRCUIT, Diagnostic Procedure with Diagnostic Trouble Code (DTC).>
P0222	THROTTLE/PEDAL POSITION SENSOR/SWITCH "B" CIRCUIT LOW	<Ref. to EN(STI)(diag)-237, DTC P0222 THROTTLE/PEDAL POSITION SENSOR/SWITCH "B" CIRCUIT LOW, Diagnostic Procedure with Diagnostic Trouble Code (DTC).>
P0223	THROTTLE/PEDAL POSITION SENSOR/SWITCH "B" CIRCUIT HIGH	<Ref. to EN(STI)(diag)-241, DTC P0223 THROTTLE/PEDAL POSITION SENSOR/SWITCH "B" CIRCUIT HIGH, Diagnostic Procedure with Diagnostic Trouble Code (DTC).>
P0230	FUEL PUMP PRIMARY CIRCUIT	<Ref. to EN(STI)(diag)-245, DTC P0230 FUEL PUMP PRIMARY CIRCUIT, Diagnostic Procedure with Diagnostic Trouble Code (DTC).>
P0244	TURBOCHARGER/SUPERCHARGER WASTEGATE SOLENOID "A" RANGE/PERFORMANCE	<Ref. to EN(STI)(diag)-249, DTC P0244 TURBOCHARGER/SUPERCHARGER WASTEGATE SOLENOID "A" RANGE/PERFORMANCE, Diagnostic Procedure with Diagnostic Trouble Code (DTC).>
P0245	TURBOCHARGER/SUPERCHARGER WASTEGATE SOLENOID "A" LOW	<Ref. to EN(STI)(diag)-251, DTC P0245 TURBOCHARGER/SUPERCHARGER WASTEGATE SOLENOID "A" LOW, Diagnostic Procedure with Diagnostic Trouble Code (DTC).>
P0246	TURBOCHARGER/SUPERCHARGER WASTEGATE SOLENOID "A" HIGH	<Ref. to EN(STI)(diag)-254, DTC P0246 TURBOCHARGER/SUPERCHARGER WASTEGATE SOLENOID "A" HIGH, Diagnostic Procedure with Diagnostic Trouble Code (DTC).>
P0300	RANDOM/MULTIPLE CYLINDER MISFIRE DETECTED	<Ref. to EN(STI)(diag)-257, DTC P0300 RANDOM/MULTIPLE CYLINDER MISFIRE DETECTED, Diagnostic Procedure with Diagnostic Trouble Code (DTC).>
P0301	CYLINDER 1 MISFIRE DETECTED	<Ref. to EN(STI)(diag)-262, DTC P0301 CYLINDER 1 MISFIRE DETECTED, Diagnostic Procedure with Diagnostic Trouble Code (DTC).>
P0302	CYLINDER 2 MISFIRE DETECTED	<Ref. to EN(STI)(diag)-268, DTC P0302 CYLINDER 2 MISFIRE DETECTED, Diagnostic Procedure with Diagnostic Trouble Code (DTC).>
P0303	CYLINDER 3 MISFIRE DETECTED	<Ref. to EN(STI)(diag)-268, DTC P0303 CYLINDER 3 MISFIRE DETECTED, Diagnostic Procedure with Diagnostic Trouble Code (DTC).>
P0304	CYLINDER 4 MISFIRE DETECTED	<Ref. to EN(STI)(diag)-269, DTC P0304 CYLINDER 4 MISFIRE DETECTED, Diagnostic Procedure with Diagnostic Trouble Code (DTC).>
P0327	KNOCK/COMBUSTION VIBRATION SENSOR 1 CIRCUIT LOW BANK 1 OR SINGLE SENSOR	<Ref. to EN(STI)(diag)-274, DTC P0327 KNOCK/COMBUSTION VIBRATION SENSOR 1 CIRCUIT LOW BANK 1 OR SINGLE SENSOR, Diagnostic Procedure with Diagnostic Trouble Code (DTC).>
P0328	KNOCK/COMBUSTION VIBRATION SENSOR 1 CIRCUIT HIGH BANK 1 OR SINGLE SENSOR	<Ref. to EN(STI)(diag)-277, DTC P0328 KNOCK/COMBUSTION VIBRATION SENSOR 1 CIRCUIT HIGH BANK 1 OR SINGLE SENSOR, Diagnostic Procedure with Diagnostic Trouble Code (DTC).>
P0335	CRANKSHAFT POSITION SENSOR "A" CIRCUIT	<Ref. to EN(STI)(diag)-280, DTC P0335 CRANKSHAFT POSITION SENSOR "A" CIRCUIT, Diagnostic Procedure with Diagnostic Trouble Code (DTC).>

DTC	Item	Note
P0336	CRANKSHAFT POSITION SENSOR "A" CIRCUIT RANGE/PERFORMANCE	<Ref. to EN(STI)(diag)-284, DTC P0336 CRANKSHAFT POSITION SENSOR "A" CIRCUIT RANGE/PERFORMANCE, Diagnostic Procedure with Diagnostic Trouble Code (DTC).>
P0340	CAMSHAFT POSITION SENSOR "A" CIRCUIT BANK 1 OR SINGLE SENSOR	<Ref. to EN(STI)(diag)-287, DTC P0340 CAMSHAFT POSITION SENSOR "A" CIRCUIT BANK 1 OR SINGLE SENSOR, Diagnostic Procedure with Diagnostic Trouble Code (DTC).>
P0341	CAMSHAFT POSITION SENSOR "A" CIRCUIT RANGE/PERFORMANCE BANK 1 OR SINGLE SENSOR	<Ref. to EN(STI)(diag)-291, DTC P0341 CAMSHAFT POSITION SENSOR "A" CIRCUIT RANGE/PERFORMANCE BANK 1 OR SINGLE SENSOR, Diagnostic Procedure with Diagnostic Trouble Code (DTC).>
P0345	CAMSHAFT POSITION SENSOR "A" CIRCUIT BANK 2	<Ref. to EN(STI)(diag)-293, DTC P0345 CAMSHAFT POSITION SENSOR "A" CIRCUIT BANK 2, Diagnostic Procedure with Diagnostic Trouble Code (DTC).>
P0346	CAMSHAFT POSITION SENSOR "A" CIRCUIT RANGE/PERFORMANCE BANK 2	<Ref. to EN(STI)(diag)-295, DTC P0346 CAMSHAFT POSITION SENSOR "A" CIRCUIT RANGE/PERFORMANCE BANK 2, Diagnostic Procedure with Diagnostic Trouble Code (DTC).>
P0351	IGNITION COIL "A" PRIMARY CONTROL CIRCUIT/OPEN	<Ref. to EN(STI)(diag)-296, DTC P0351 IGNITION COIL "A" PRIMARY CONTROL CIRCUIT/OPEN, Diagnostic Procedure with Diagnostic Trouble Code (DTC).>
P0352	IGNITION COIL "B" PRIMARY CONTROL CIRCUIT/OPEN	<Ref. to EN(STI)(diag)-299, DTC P0352 IGNITION COIL "B" PRIMARY CONTROL CIRCUIT/OPEN, Diagnostic Procedure with Diagnostic Trouble Code (DTC).>
P0353	IGNITION COIL "C" PRIMARY CONTROL CIRCUIT/OPEN	<Ref. to EN(STI)(diag)-299, DTC P0353 IGNITION COIL "C" PRIMARY CONTROL CIRCUIT/OPEN, Diagnostic Procedure with Diagnostic Trouble Code (DTC).>
P0354	IGNITION COIL "D" PRIMARY CONTROL CIRCUIT/OPEN	<Ref. to EN(STI)(diag)-299, DTC P0354 IGNITION COIL "D" PRIMARY CONTROL CIRCUIT/OPEN, Diagnostic Procedure with Diagnostic Trouble Code (DTC).>
P0365	CAMSHAFT POSITION SENSOR "B" CIRCUIT BANK 1	<Ref. to EN(STI)(diag)-300, DTC P0365 CAMSHAFT POSITION SENSOR "B" CIRCUIT BANK 1, Diagnostic Procedure with Diagnostic Trouble Code (DTC).>
P0366	CAMSHAFT POSITION SENSOR "B" CIRCUIT RANGE/PERFORMANCE BANK 1	<Ref. to EN(STI)(diag)-303, DTC P0366 CAMSHAFT POSITION SENSOR "B" CIRCUIT RANGE/PERFORMANCE BANK 1, Diagnostic Procedure with Diagnostic Trouble Code (DTC).>
P0390	CAMSHAFT POSITION SENSOR "B" CIRCUIT BANK 2	<Ref. to EN(STI)(diag)-304, DTC P0390 CAMSHAFT POSITION SENSOR "B" CIRCUIT BANK 2, Diagnostic Procedure with Diagnostic Trouble Code (DTC).>
P0391	CAMSHAFT POSITION SENSOR "B" CIRCUIT RANGE/PERFORMANCE BANK 2	<Ref. to EN(STI)(diag)-306, DTC P0391 CAMSHAFT POSITION SENSOR "B" CIRCUIT RANGE/PERFORMANCE BANK 2, Diagnostic Procedure with Diagnostic Trouble Code (DTC).>
P0410	SECONDARY AIR SYSTEM	<Ref. to EN(STI)(diag)-307, DTC P0410 SECONDARY AIR SYSTEM, Diagnostic Procedure with Diagnostic Trouble Code (DTC).>
P0411	SECONDARY AIR SYSTEM INCORRECT FLOW DETECTED	<Ref. to EN(STI)(diag)-318, DTC P0411 SECONDARY AIR SYSTEM INCORRECT FLOW DETECTED, Diagnostic Procedure with Diagnostic Trouble Code (DTC).>
P0413	SECONDARY AIR SYSTEM SWITCHING VALVE "A" CIRCUIT OPEN	<Ref. to EN(STI)(diag)-319, DTC P0413 SECONDARY AIR SYSTEM SWITCHING VALVE "A" CIRCUIT OPEN, Diagnostic Procedure with Diagnostic Trouble Code (DTC).>
P0414	SECONDARY AIR SYSTEM SWITCHING VALVE "A" CIRCUIT SHORTED	<Ref. to EN(STI)(diag)-322, DTC P0414 SECONDARY AIR SYSTEM SWITCHING VALVE "A" CIRCUIT SHORTED, Diagnostic Procedure with Diagnostic Trouble Code (DTC).>
P0416	SECONDARY AIR SYSTEM SWITCHING VALVE "B" CIRCUIT OPEN	<Ref. to EN(STI)(diag)-325, DTC P0416 SECONDARY AIR SYSTEM SWITCHING VALVE "B" CIRCUIT OPEN, Diagnostic Procedure with Diagnostic Trouble Code (DTC).>
P0417	SECONDARY AIR SYSTEM SWITCHING VALVE "B" CIRCUIT SHORTED	<Ref. to EN(STI)(diag)-328, DTC P0417 SECONDARY AIR SYSTEM SWITCHING VALVE "B" CIRCUIT SHORTED, Diagnostic Procedure with Diagnostic Trouble Code (DTC).>
P0420	CATALYST SYSTEM EFFICIENCY BELOW THRESHOLD BANK 1	<Ref. to EN(STI)(diag)-331, DTC P0420 CATALYST SYSTEM EFFICIENCY BELOW THRESHOLD BANK 1, Diagnostic Procedure with Diagnostic Trouble Code (DTC).>

DTC	Item	Note
P0441	EVAP SYSTEM (CPC) INCORRECT PURGE FLOW	<Ref. to EN(STI)(diag)-340, DTC P0441 EVAP SYSTEM (CPC) INCORRECT PURGE FLOW, Diagnostic Procedure with Diagnostic Trouble Code (DTC).>
P0451	EVAP SYSTEM (CPC) PRESSURE SENSOR/SWITCH CIRCUIT RANGE/PERFORMANCE	<Ref. to EN(STI)(diag)-342, DTC P0451 EVAP SYSTEM (CPC) PRESSURE SENSOR/SWITCH CIRCUIT RANGE/PERFORMANCE, Diagnostic Procedure with Diagnostic Trouble Code (DTC).>
P0452	EVAP SYSTEM (CPC) PRESSURE SENSOR/SWITCH CIRCUIT LOW	<Ref. to EN(STI)(diag)-344, DTC P0452 EVAP SYSTEM (CPC) PRESSURE SENSOR/SWITCH CIRCUIT LOW, Diagnostic Procedure with Diagnostic Trouble Code (DTC).>
P0453	EVAP SYSTEM (CPC) PRESSURE SENSOR/SWITCH CIRCUIT HIGH	<Ref. to EN(STI)(diag)-348, DTC P0453 EVAP SYSTEM (CPC) PRESSURE SENSOR/SWITCH CIRCUIT HIGH, Diagnostic Procedure with Diagnostic Trouble Code (DTC).>
P0455	EVAP SYSTEM (CPC) LEAK DETECTED (LARGE LEAK)	<Ref. to EN(STI)(diag)-352, DTC P0455 EVAP SYSTEM (CPC) LEAK DETECTED (LARGE LEAK), Diagnostic Procedure with Diagnostic Trouble Code (DTC).>
P0456	EVAP SYSTEM (CPC) LEAK DETECTED (VERY SMALL LEAK)	<Ref. to EN(STI)(diag)-359, DTC P0456 EVAP SYSTEM (CPC) LEAK DETECTED (VERY SMALL LEAK), Diagnostic Procedure with Diagnostic Trouble Code (DTC).>
P0458	EVAP SYSTEM (CPC) PURGE CONTROL VALVE "A" CIRCUIT LOW	<Ref. to EN(STI)(diag)-360, DTC P0458 EVAP SYSTEM (CPC) PURGE CONTROL VALVE "A" CIRCUIT LOW, Diagnostic Procedure with Diagnostic Trouble Code (DTC).>
P0459	EVAP SYSTEM (CPC) PURGE CONTROL VALVE "A" CIRCUIT HIGH	<Ref. to EN(STI)(diag)-363, DTC P0459 EVAP SYSTEM (CPC) PURGE CONTROL VALVE "A" CIRCUIT HIGH, Diagnostic Procedure with Diagnostic Trouble Code (DTC).>
P0461	FUEL LEVEL SENSOR "A" CIRCUIT RANGE/PERFORMANCE	<Ref. to EN(STI)(diag)-366, DTC P0461 FUEL LEVEL SENSOR "A" CIRCUIT RANGE/PERFORMANCE, Diagnostic Procedure with Diagnostic Trouble Code (DTC).>
P0462	FUEL LEVEL SENSOR "A" CIRCUIT LOW	<Ref. to EN(STI)(diag)-368, DTC P0462 FUEL LEVEL SENSOR "A" CIRCUIT LOW, Diagnostic Procedure with Diagnostic Trouble Code (DTC).>
P0463	FUEL LEVEL SENSOR "A" CIRCUIT HIGH	<Ref. to EN(STI)(diag)-369, DTC P0463 FUEL LEVEL SENSOR "A" CIRCUIT HIGH, Diagnostic Procedure with Diagnostic Trouble Code (DTC).>
P04AC	EVAP SYSTEM (CPC) PURGE CONTROL VALVE "B" CIRCUIT LOW	<Ref. to EN(STI)(diag)-371, DTC P04AC EVAP SYSTEM (CPC) PURGE CONTROL VALVE "B" CIRCUIT LOW, Diagnostic Procedure with Diagnostic Trouble Code (DTC).>
P04AD	EVAP SYSTEM (CPC) PURGE CONTROL VALVE "B" CIRCUIT HIGH	<Ref. to EN(STI)(diag)-374, DTC P04AD EVAP SYSTEM (CPC) PURGE CONTROL VALVE "B" CIRCUIT HIGH, Diagnostic Procedure with Diagnostic Trouble Code (DTC).>
P04AF	EVAP SYSTEM PURGE CONTROL VALVE (CPC) "B" STUCK CLOSED	<Ref. to EN(STI)(diag)-376, DTC P04AF EVAP SYSTEM PURGE CONTROL VALVE (CPC) "B" STUCK CLOSED, Diagnostic Procedure with Diagnostic Trouble Code (DTC).>
P04DB	CRANKCASE VENTILATION SYSTEM (PCV) DISCONNECTED	<Ref. to EN(STI)(diag)-377, DTC P04DB CRANKCASE VENTILATION SYSTEM (PCV) DISCONNECTED, Diagnostic Procedure with Diagnostic Trouble Code (DTC).>
P04F0	EVAP SYSTEM HIGH PRESSURE PURGE LINE (CPC2) PERFORMANCE	<Ref. to EN(STI)(diag)-380, DTC P04F0 EVAP SYSTEM HIGH PRESSURE PURGE LINE (CPC2) PERFORMANCE, Diagnostic Procedure with Diagnostic Trouble Code (DTC).>
P0500	VEHICLE SPEED SENSOR "A" CIRCUIT	<Ref. to EN(STI)(diag)-384, DTC P0500 VEHICLE SPEED SENSOR "A" CIRCUIT, Diagnostic Procedure with Diagnostic Trouble Code (DTC).>
P0506	IDLE CONTROL SYSTEM RPM - LOWER THAN EXPECTED	<Ref. to EN(STI)(diag)-385, DTC P0506 IDLE CONTROL SYSTEM RPM - LOWER THAN EXPECTED, Diagnostic Procedure with Diagnostic Trouble Code (DTC).>
P0507	IDLE CONTROL SYSTEM RPM - HIGHER THAN EXPECTED	<Ref. to EN(STI)(diag)-387, DTC P0507 IDLE CONTROL SYSTEM RPM - HIGHER THAN EXPECTED, Diagnostic Procedure with Diagnostic Trouble Code (DTC).>
P050A	COLD START IDLE CONTROL SYSTEM PERFORMANCE	<Ref. to EN(STI)(diag)-389, DTC P050A COLD START IDLE CONTROL SYSTEM PERFORMANCE, Diagnostic Procedure with Diagnostic Trouble Code (DTC).>

DTC	Item	Note
P050B	COLD START IGNITION TIMING PERFORMANCE	<Ref. to EN(STI)(diag)-401, DTC P050B COLD START IGNITION TIMING PERFORMANCE, Diagnostic Procedure with Diagnostic Trouble Code (DTC).>
P0512	STARTER (SWITCH) REQUEST CIRCUIT	<Ref. to EN(STI)(diag)-402, DTC P0512 STARTER (SWITCH) REQUEST CIRCUIT, Diagnostic Procedure with Diagnostic Trouble Code (DTC).>
P0560	SYSTEM VOLTAGE	<Ref. to EN(STI)(diag)-405, DTC P0560 SYSTEM VOLTAGE, Diagnostic Procedure with Diagnostic Trouble Code (DTC).>
P0604	INTERNAL CONTROL MODULE RANDOM ACCESS MEMORY (RAM) ERROR	<Ref. to EN(STI)(diag)-407, DTC P0604 INTERNAL CONTROL MODULE RANDOM ACCESS MEMORY (RAM) ERROR, Diagnostic Procedure with Diagnostic Trouble Code (DTC).>
P0605	INTERNAL CONTROL MODULE READ ONLY MEMORY (ROM) ERROR	<Ref. to EN(STI)(diag)-408, DTC P0605 INTERNAL CONTROL MODULE READ ONLY MEMORY (ROM) ERROR, Diagnostic Procedure with Diagnostic Trouble Code (DTC).>
P0606	CONTROL MODULE PROCESSOR	<Ref. to EN(STI)(diag)-409, DTC P0606 CONTROL MODULE PROCESSOR, Diagnostic Procedure with Diagnostic Trouble Code (DTC).>
P060A	INTERNAL CONTROL MODULE MONITORING PROCESSOR PERFORMANCE	<Ref. to EN(STI)(diag)-414, DTC P060A INTERNAL CONTROL MODULE MONITORING PROCESSOR PERFORMANCE, Diagnostic Procedure with Diagnostic Trouble Code (DTC).>
P060B	INTERNAL CONTROL MODULE A/D PROCESSING PERFORMANCE	<Ref. to EN(STI)(diag)-416, DTC P060B INTERNAL CONTROL MODULE A/D PROCESSING PERFORMANCE, Diagnostic Procedure with Diagnostic Trouble Code (DTC).>
P0616	STARTER RELAY "A" CIRCUIT LOW	<Ref. to EN(STI)(diag)-418, DTC P0616 STARTER RELAY "A" CIRCUIT LOW, Diagnostic Procedure with Diagnostic Trouble Code (DTC).>
P0617	STARTER RELAY "A" CIRCUIT HIGH	<Ref. to EN(STI)(diag)-423, DTC P0617 STARTER RELAY "A" CIRCUIT HIGH, Diagnostic Procedure with Diagnostic Trouble Code (DTC).>
P062F	INTERNAL CONTROL MODULE EEPROM ERROR	<Ref. to EN(STI)(diag)-428, DTC P062F INTERNAL CONTROL MODULE EEPROM ERROR, Diagnostic Procedure with Diagnostic Trouble Code (DTC).>
P0685	ECM/PCM POWER RELAY CONTROL CIRCUIT/OPEN	<Ref. to EN(STI)(diag)-430, DTC P0685 ECM/PCM POWER RELAY CONTROL CIRCUIT/OPEN, Diagnostic Procedure with Diagnostic Trouble Code (DTC).>
P081A	STARTER DISABLE CIRCUIT LOW	<Ref. to EN(STI)(diag)-432, DTC P081A STARTER DISABLE CIRCUIT LOW, Diagnostic Procedure with Diagnostic Trouble Code (DTC).>
P0851	PARK/NEUTRAL SWITCH INPUT CIRCUIT LOW	<Ref. to EN(STI)(diag)-435, DTC P0851 PARK/NEUTRAL SWITCH INPUT CIRCUIT LOW, Diagnostic Procedure with Diagnostic Trouble Code (DTC).>
P0852	PARK/NEUTRAL SWITCH INPUT CIRCUIT HIGH	<Ref. to EN(STI)(diag)-437, DTC P0852 PARK/NEUTRAL SWITCH INPUT CIRCUIT HIGH, Diagnostic Procedure with Diagnostic Trouble Code (DTC).>
P1160	THROTTLE RETURN SPRING	<Ref. to EN(STI)(diag)-439, DTC P1160 THROTTLE RETURN SPRING, Diagnostic Procedure with Diagnostic Trouble Code (DTC).>
P1410	SECONDARY AIR INJECTION SYSTEM COMBINATION VALVE STUCK OPEN	<Ref. to EN(STI)(diag)-440, DTC P1410 SECONDARY AIR INJECTION SYSTEM COMBINATION VALVE STUCK OPEN, Diagnostic Procedure with Diagnostic Trouble Code (DTC).>
P1449	EVAP SYSTEM CLOG DETECTED (AIR FILTER)	<Ref. to EN(STI)(diag)-442, DTC P1449 EVAP SYSTEM CLOG DETECTED (AIR FILTER), Diagnostic Procedure with Diagnostic Trouble Code (DTC).>
P1451	EVAP SYSTEM CLOG DETECTED (PIPE)	<Ref. to EN(STI)(diag)-445, DTC P1451 EVAP SYSTEM CLOG DETECTED (PIPE), Diagnostic Procedure with Diagnostic Trouble Code (DTC).>
P2004	TGV CONTROL STUCK OPEN BANK 1	<Ref. to EN(STI)(diag)-446, DTC P2004 TGV CONTROL STUCK OPEN BANK 1, Diagnostic Procedure with Diagnostic Trouble Code (DTC).>
P2005	TGV CONTROL STUCK OPEN BANK 2	<Ref. to EN(STI)(diag)-447, DTC P2005 TGV CONTROL STUCK OPEN BANK 2, Diagnostic Procedure with Diagnostic Trouble Code (DTC).>
P2006	TGV CONTROL STUCK CLOSED BANK 1	<Ref. to EN(STI)(diag)-448, DTC P2006 TGV CONTROL STUCK CLOSED BANK 1, Diagnostic Procedure with Diagnostic Trouble Code (DTC).>
P2007	TGV CONTROL STUCK CLOSED BANK 2	<Ref. to EN(STI)(diag)-449, DTC P2007 TGV CONTROL STUCK CLOSED BANK 2, Diagnostic Procedure with Diagnostic Trouble Code (DTC).>
P2008	TGV CONTROL CIRCUIT/OPEN BANK 1	<Ref. to EN(STI)(diag)-450, DTC P2008 TGV CONTROL CIRCUIT/OPEN BANK 1, Diagnostic Procedure with Diagnostic Trouble Code (DTC).>
P2009	TGV CONTROL CIRCUIT LOW BANK 1	<Ref. to EN(STI)(diag)-453, DTC P2009 TGV CONTROL CIRCUIT LOW BANK 1, Diagnostic Procedure with Diagnostic Trouble Code (DTC).>

DTC	Item	Note
P2011	TGV CONTROL CIRCUIT/OPEN BANK 2	<Ref. to EN(STI)(diag)-455, DTC P2011 TGV CONTROL CIRCUIT/OPEN BANK 2, Diagnostic Procedure with Diagnostic Trouble Code (DTC).>
P2012	TGV CONTROL CIRCUIT LOW BANK 2	<Ref. to EN(STI)(diag)-458, DTC P2012 TGV CONTROL CIRCUIT LOW BANK 2, Diagnostic Procedure with Diagnostic Trouble Code (DTC).>
P2016	TGV POSITION SENSOR/SWITCH CIRCUIT LOW BANK 1	<Ref. to EN(STI)(diag)-460, DTC P2016 TGV POSITION SENSOR/SWITCH CIRCUIT LOW BANK 1, Diagnostic Procedure with Diagnostic Trouble Code (DTC).>
P2017	TGV POSITION SENSOR/SWITCH CIRCUIT HIGH BANK 1	<Ref. to EN(STI)(diag)-463, DTC P2017 TGV POSITION SENSOR/SWITCH CIRCUIT HIGH BANK 1, Diagnostic Procedure with Diagnostic Trouble Code (DTC).>
P2021	TGV POSITION SENSOR/SWITCH CIRCUIT LOW BANK 2	<Ref. to EN(STI)(diag)-466, DTC P2021 TGV POSITION SENSOR/SWITCH CIRCUIT LOW BANK 2, Diagnostic Procedure with Diagnostic Trouble Code (DTC).>
P2022	TGV POSITION SENSOR/SWITCH CIRCUIT HIGH BANK 2	<Ref. to EN(STI)(diag)-469, DTC P2022 TGV POSITION SENSOR/SWITCH CIRCUIT HIGH BANK 2, Diagnostic Procedure with Diagnostic Trouble Code (DTC).>
P2088	"A" CAMSHAFT POSITION ACTUATOR CONTROL CIRCUIT LOW BANK 1	<Ref. to EN(STI)(diag)-472, DTC P2088 "A" CAMSHAFT POSITION ACTUATOR CONTROL CIRCUIT LOW BANK 1, Diagnostic Procedure with Diagnostic Trouble Code (DTC).>
P2089	"A" CAMSHAFT POSITION ACTUATOR CONTROL CIRCUIT HIGH BANK 1	<Ref. to EN(STI)(diag)-474, DTC P2089 "A" CAMSHAFT POSITION ACTUATOR CONTROL CIRCUIT HIGH BANK 1, Diagnostic Procedure with Diagnostic Trouble Code (DTC).>
P2090	"B" CAMSHAFT POSITION ACTUATOR CONTROL CIRCUIT LOW BANK 1	<Ref. to EN(STI)(diag)-476, DTC P2090 "B" CAMSHAFT POSITION ACTUATOR CONTROL CIRCUIT LOW BANK 1, Diagnostic Procedure with Diagnostic Trouble Code (DTC).>
P2091	"B" CAMSHAFT POSITION ACTUATOR CONTROL CIRCUIT HIGH BANK 1	<Ref. to EN(STI)(diag)-478, DTC P2091 "B" CAMSHAFT POSITION ACTUATOR CONTROL CIRCUIT HIGH BANK 1, Diagnostic Procedure with Diagnostic Trouble Code (DTC).>
P2092	"A" CAMSHAFT POSITION ACTUATOR CONTROL CIRCUIT LOW BANK 2	<Ref. to EN(STI)(diag)-480, DTC P2092 "A" CAMSHAFT POSITION ACTUATOR CONTROL CIRCUIT LOW BANK 2, Diagnostic Procedure with Diagnostic Trouble Code (DTC).>
P2093	"A" CAMSHAFT POSITION ACTUATOR CONTROL CIRCUIT HIGH BANK 2	<Ref. to EN(STI)(diag)-482, DTC P2093 "A" CAMSHAFT POSITION ACTUATOR CONTROL CIRCUIT HIGH BANK 2, Diagnostic Procedure with Diagnostic Trouble Code (DTC).>
P2094	"B" CAMSHAFT POSITION ACTUATOR CONTROL CIRCUIT LOW BANK 2	<Ref. to EN(STI)(diag)-484, DTC P2094 "B" CAMSHAFT POSITION ACTUATOR CONTROL CIRCUIT LOW BANK 2, Diagnostic Procedure with Diagnostic Trouble Code (DTC).>
P2095	"B" CAMSHAFT POSITION ACTUATOR CONTROL CIRCUIT HIGH BANK 2	<Ref. to EN(STI)(diag)-486, DTC P2095 "B" CAMSHAFT POSITION ACTUATOR CONTROL CIRCUIT HIGH BANK 2, Diagnostic Procedure with Diagnostic Trouble Code (DTC).>
P2096	POST CATALYST FUEL TRIM SYSTEM TOO LEAN BANK 1	<Ref. to EN(STI)(diag)-488, DTC P2096 POST CATALYST FUEL TRIM SYSTEM TOO LEAN BANK 1, Diagnostic Procedure with Diagnostic Trouble Code (DTC).>
P2097	POST CATALYST FUEL TRIM SYSTEM TOO RICH BANK 1	<Ref. to EN(STI)(diag)-497, DTC P2097 POST CATALYST FUEL TRIM SYSTEM TOO RICH BANK 1, Diagnostic Procedure with Diagnostic Trouble Code (DTC).>
P2101	THROTTLE ACTUATOR "A" CONTROL MOTOR CIRCUIT RANGE/PERFORMANCE	<Ref. to EN(STI)(diag)-506, DTC P2101 THROTTLE ACTUATOR "A" CONTROL MOTOR CIRCUIT RANGE/PERFORMANCE, Diagnostic Procedure with Diagnostic Trouble Code (DTC).>
P2102	THROTTLE ACTUATOR "A" CONTROL MOTOR CIRCUIT LOW	<Ref. to EN(STI)(diag)-513, DTC P2102 THROTTLE ACTUATOR "A" CONTROL MOTOR CIRCUIT LOW, Diagnostic Procedure with Diagnostic Trouble Code (DTC).>
P2103	THROTTLE ACTUATOR "A" CONTROL MOTOR CIRCUIT HIGH	<Ref. to EN(STI)(diag)-517, DTC P2103 THROTTLE ACTUATOR "A" CONTROL MOTOR CIRCUIT HIGH, Diagnostic Procedure with Diagnostic Trouble Code (DTC).>

DTC	Item	Note
P2109	THROTTLE/PEDAL POSITION SENSOR "A" MINIMUM STOP PERFORMANCE	<Ref. to EN(STI)(diag)-520, DTC P2109 THROTTLE/PEDAL POSITION SENSOR "A" MINIMUM STOP PERFORMANCE, Diagnostic Procedure with Diagnostic Trouble Code (DTC).>
P2119	THROTTLE ACTUATOR "A" CONTROL THROTTLE BODY RANGE/PERFORMANCE	<Ref. to EN(STI)(diag)-521, DTC P2119 THROTTLE ACTUATOR "A" CONTROL THROTTLE BODY RANGE/PERFORMANCE, Diagnostic Procedure with Diagnostic Trouble Code (DTC).>
P2122	THROTTLE/PEDAL POSITION SENSOR/SWITCH "D" CIRCUIT LOW	<Ref. to EN(STI)(diag)-524, DTC P2122 THROTTLE/PEDAL POSITION SENSOR/SWITCH "D" CIRCUIT LOW, Diagnostic Procedure with Diagnostic Trouble Code (DTC).>
P2123	THROTTLE/PEDAL POSITION SENSOR/SWITCH "D" CIRCUIT HIGH	<Ref. to EN(STI)(diag)-527, DTC P2123 THROTTLE/PEDAL POSITION SENSOR/SWITCH "D" CIRCUIT HIGH, Diagnostic Procedure with Diagnostic Trouble Code (DTC).>
P2127	THROTTLE/PEDAL POSITION SENSOR/SWITCH "E" CIRCUIT LOW	<Ref. to EN(STI)(diag)-530, DTC P2127 THROTTLE/PEDAL POSITION SENSOR/SWITCH "E" CIRCUIT LOW, Diagnostic Procedure with Diagnostic Trouble Code (DTC).>
P2128	THROTTLE/PEDAL POSITION SENSOR/SWITCH "E" CIRCUIT HIGH	<Ref. to EN(STI)(diag)-533, DTC P2128 THROTTLE/PEDAL POSITION SENSOR/SWITCH "E" CIRCUIT HIGH, Diagnostic Procedure with Diagnostic Trouble Code (DTC).>
P2135	THROTTLE/PEDAL POSITION SENSOR/SWITCH "A"/"B" VOLTAGE CORRELATION	<Ref. to EN(STI)(diag)-536, DTC P2135 THROTTLE/PEDAL POSITION SENSOR/SWITCH "A"/"B" VOLTAGE CORRELATION, Diagnostic Procedure with Diagnostic Trouble Code (DTC).>
P2138	THROTTLE/PEDAL POSITION SENSOR/SWITCH "D"/"E" VOLTAGE CORRELATION	<Ref. to EN(STI)(diag)-541, DTC P2138 THROTTLE/PEDAL POSITION SENSOR/SWITCH "D"/"E" VOLTAGE CORRELATION, Diagnostic Procedure with Diagnostic Trouble Code (DTC).>
P2195	A/F /O2 SENSOR SIGNAL BIASED/STUCK LEAN BANK 1 SENSOR 1	<Ref. to EN(STI)(diag)-545, DTC P2195 A/F /O2 SENSOR SIGNAL BIASED/STUCK LEAN BANK 1 SENSOR 1, Diagnostic Procedure with Diagnostic Trouble Code (DTC).>
P2196	A/F /O2 SENSOR SIGNAL BIASED/STUCK RICH BANK 1 SENSOR 1	<Ref. to EN(STI)(diag)-549, DTC P2196 A/F /O2 SENSOR SIGNAL BIASED/STUCK RICH BANK 1 SENSOR 1, Diagnostic Procedure with Diagnostic Trouble Code (DTC).>
P219A	BANK 1 AIR-FUEL RATIO IMBALANCE	<Ref. to EN(STI)(diag)-553, DTC P219A BANK 1 AIR-FUEL RATIO IMBALANCE, Diagnostic Procedure with Diagnostic Trouble Code (DTC).>
P2257	SECONDARY AIR SYSTEM CONTROL "A" CIRCUIT LOW	<Ref. to EN(STI)(diag)-569, DTC P2257 SECONDARY AIR SYSTEM CONTROL "A" CIRCUIT LOW, Diagnostic Procedure with Diagnostic Trouble Code (DTC).>
P2258	SECONDARY AIR SYSTEM CONTROL "A" CIRCUIT HIGH	<Ref. to EN(STI)(diag)-571, DTC P2258 SECONDARY AIR SYSTEM CONTROL "A" CIRCUIT HIGH, Diagnostic Procedure with Diagnostic Trouble Code (DTC).>
P2270	O2 SENSOR SIGNAL BIASED/STUCK LEAN BANK 1 SENSOR 2	<Ref. to EN(STI)(diag)-573, DTC P2270 O2 SENSOR SIGNAL BIASED/STUCK LEAN BANK 1 SENSOR 2, Diagnostic Procedure with Diagnostic Trouble Code (DTC).>
P2271	O2 SENSOR SIGNAL BIASED/STUCK RICH BANK 1 SENSOR 2	<Ref. to EN(STI)(diag)-577, DTC P2271 O2 SENSOR SIGNAL BIASED/STUCK RICH BANK 1 SENSOR 2, Diagnostic Procedure with Diagnostic Trouble Code (DTC).>
P2401	EVAP SYSTEM LEAK DETECTION PUMP CONTROL CIRCUIT LOW	<Ref. to EN(STI)(diag)-580, DTC P2401 EVAP SYSTEM LEAK DETECTION PUMP CONTROL CIRCUIT LOW, Diagnostic Procedure with Diagnostic Trouble Code (DTC).>
P2402	EVAP SYSTEM LEAK DETECTION PUMP CONTROL CIRCUIT HIGH	<Ref. to EN(STI)(diag)-584, DTC P2402 EVAP SYSTEM LEAK DETECTION PUMP CONTROL CIRCUIT HIGH, Diagnostic Procedure with Diagnostic Trouble Code (DTC).>
P2404	EVAP SYSTEM LEAK DETECTION PUMP SENSE CIRCUIT RANGE/PERFORMANCE	<Ref. to EN(STI)(diag)-588, DTC P2404 EVAP SYSTEM LEAK DETECTION PUMP SENSE CIRCUIT RANGE/PERFORMANCE, Diagnostic Procedure with Diagnostic Trouble Code (DTC).>
P2419	EVAP SYSTEM SWITCHING VALVE CONTROL CIRCUIT LOW	<Ref. to EN(STI)(diag)-593, DTC P2419 EVAP SYSTEM SWITCHING VALVE CONTROL CIRCUIT LOW, Diagnostic Procedure with Diagnostic Trouble Code (DTC).>

DTC	Item	Note
P2420	EVAP SYSTEM SWITCHING VALVE CONTROL CIRCUIT HIGH	<Ref. to EN(STI)(diag)-596, DTC P2420 EVAP SYSTEM SWITCHING VALVE CONTROL CIRCUIT HIGH, Diagnostic Procedure with Diagnostic Trouble Code (DTC).>
P2431	SECONDARY AIR SYSTEM AIR FLOW/PRESSURE SENSOR CIRCUIT RANGE/PERFORMANCE BANK 1	<Ref. to EN(STI)(diag)-599, DTC P2431 SECONDARY AIR SYSTEM AIR FLOW/PRESSURE SENSOR CIRCUIT RANGE/PERFORMANCE BANK 1, Diagnostic Procedure with Diagnostic Trouble Code (DTC).>
P2432	SECONDARY AIR SYSTEM AIR FLOW/PRESSURE SENSOR CIRCUIT LOW BANK 1	<Ref. to EN(STI)(diag)-601, DTC P2432 SECONDARY AIR SYSTEM AIR FLOW/PRESSURE SENSOR CIRCUIT LOW BANK 1, Diagnostic Procedure with Diagnostic Trouble Code (DTC).>
P2433	SECONDARY AIR SYSTEM AIR FLOW/PRESSURE SENSOR CIRCUIT HIGH BANK 1	<Ref. to EN(STI)(diag)-605, DTC P2433 SECONDARY AIR SYSTEM AIR FLOW/PRESSURE SENSOR CIRCUIT HIGH BANK 1, Diagnostic Procedure with Diagnostic Trouble Code (DTC).>
P2440	SECONDARY AIR SYSTEM SWITCHING VALVE STUCK OPEN BANK 1	<Ref. to EN(STI)(diag)-609, DTC P2440 SECONDARY AIR SYSTEM SWITCHING VALVE STUCK OPEN BANK 1, Diagnostic Procedure with Diagnostic Trouble Code (DTC).>
P2441	SECONDARY AIR SYSTEM SWITCHING VALVE STUCK CLOSED BANK 1	<Ref. to EN(STI)(diag)-613, DTC P2441 SECONDARY AIR SYSTEM SWITCHING VALVE STUCK CLOSED BANK 1, Diagnostic Procedure with Diagnostic Trouble Code (DTC).>
P2442	SECONDARY AIR SYSTEM SWITCHING VALVE STUCK OPEN BANK 2	<Ref. to EN(STI)(diag)-614, DTC P2442 SECONDARY AIR SYSTEM SWITCHING VALVE STUCK OPEN BANK 2, Diagnostic Procedure with Diagnostic Trouble Code (DTC).>
P2443	SECONDARY AIR SYSTEM SWITCHING VALVE STUCK CLOSED BANK 2	<Ref. to EN(STI)(diag)-618, DTC P2443 SECONDARY AIR SYSTEM SWITCHING VALVE STUCK CLOSED BANK 2, Diagnostic Procedure with Diagnostic Trouble Code (DTC).>
P2444	SECONDARY AIR SYSTEM PUMP STUCK ON BANK 1	<Ref. to EN(STI)(diag)-619, DTC P2444 SECONDARY AIR SYSTEM PUMP STUCK ON BANK 1, Diagnostic Procedure with Diagnostic Trouble Code (DTC).>
P2530	IGNITION SWITCH RUN POSITION CIRCUIT	<Ref. to EN(STI)(diag)-623, DTC P2530 IGNITION SWITCH RUN POSITION CIRCUIT, Diagnostic Procedure with Diagnostic Trouble Code (DTC).>
P2610	ECM/PCM ENGINE OFF TIMER PERFORMANCE	<Ref. to EN(STI)(diag)-627, DTC P2610 ECM/PCM ENGINE OFF TIMER PERFORMANCE, Diagnostic Procedure with Diagnostic Trouble Code (DTC).>
U0073	CONTROL MODULE COMMUNICATION BUS OFF	<Ref. to EN(STI)(diag)-636, DTC U0073 CONTROL MODULE COMMUNICATION BUS OFF, Diagnostic Procedure with Diagnostic Trouble Code (DTC).>
U0101	LOST COMMUNICATION WITH TCM	<Ref. to EN(STI)(diag)-637, DTC U0101 LOST COMMUNICATION WITH TCM, Diagnostic Procedure with Diagnostic Trouble Code (DTC).>
U0122	LOST COMMUNICATION WITH VEHICLE DYNAMICS CONTROL MODULE	<Ref. to EN(STI)(diag)-638, DTC U0122 LOST COMMUNICATION WITH VEHICLE DYNAMICS CONTROL MODULE, Diagnostic Procedure with Diagnostic Trouble Code (DTC).>
U0155	LOST COMMUNICATION WITH INSTRUMENT PANEL CLUSTER (IPC) CONTROL MODULE	<Ref. to EN(STI)(diag)-638, DTC U0155 LOST COMMUNICATION WITH INSTRUMENT PANEL CLUSTER (IPC) CONTROL MODULE, Diagnostic Procedure with Diagnostic Trouble Code (DTC).>
U0402	INVALID DATA RECEIVED FROM TCM	<Ref. to EN(STI)(diag)-639, DTC U0402 INVALID DATA RECEIVED FROM TCM, Diagnostic Procedure with Diagnostic Trouble Code (DTC).>
U0416	INVALID DATA RECEIVED FROM VEHICLE DYNAMICS CONTROL MODULE	<Ref. to EN(STI)(diag)-640, DTC U0416 INVALID DATA RECEIVED FROM VEHICLE DYNAMICS CONTROL MODULE, Diagnostic Procedure with Diagnostic Trouble Code (DTC).>
U0423	INVALID DATA RECEIVED FROM INSTRUMENT PANEL CLUSTER CONTROL MODULE	<Ref. to EN(STI)(diag)-640, DTC U0423 INVALID DATA RECEIVED FROM INSTRUMENT PANEL CLUSTER CONTROL MODULE, Diagnostic Procedure with Diagnostic Trouble Code (DTC).>

18.Diagnostic Procedure with Diagnostic Trouble Code (DTC)

A: DTC P000A "A" CAMSHAFT POSITION SLOW RESPONSE BANK 1

NOTE:
For the diagnostic procedure, refer to DTC P0011. <Ref. to EN(STI)(diag)-109, DTC P0011 "A" CAMSHAFT POSITION - TIMING OVER-ADVANCED OR SYSTEM PERFORMANCE BANK 1, Diagnostic Procedure with Diagnostic Trouble Code (DTC).>

1. OUTLINE OF DIAGNOSIS

- Intake side

Detect the AVCS system malfunction.
Judge NG when the amount of AVCS actual timing advance does not approach to the amount of AVCS target timing advance.

- Exhaust side

Detect the exhaust AVCS system malfunction.
Judge NG when the amount of exhaust AVCS actual timing advance does not approach the amount of exhaust AVCS target timing advance.

2. COMPONENT DESCRIPTION

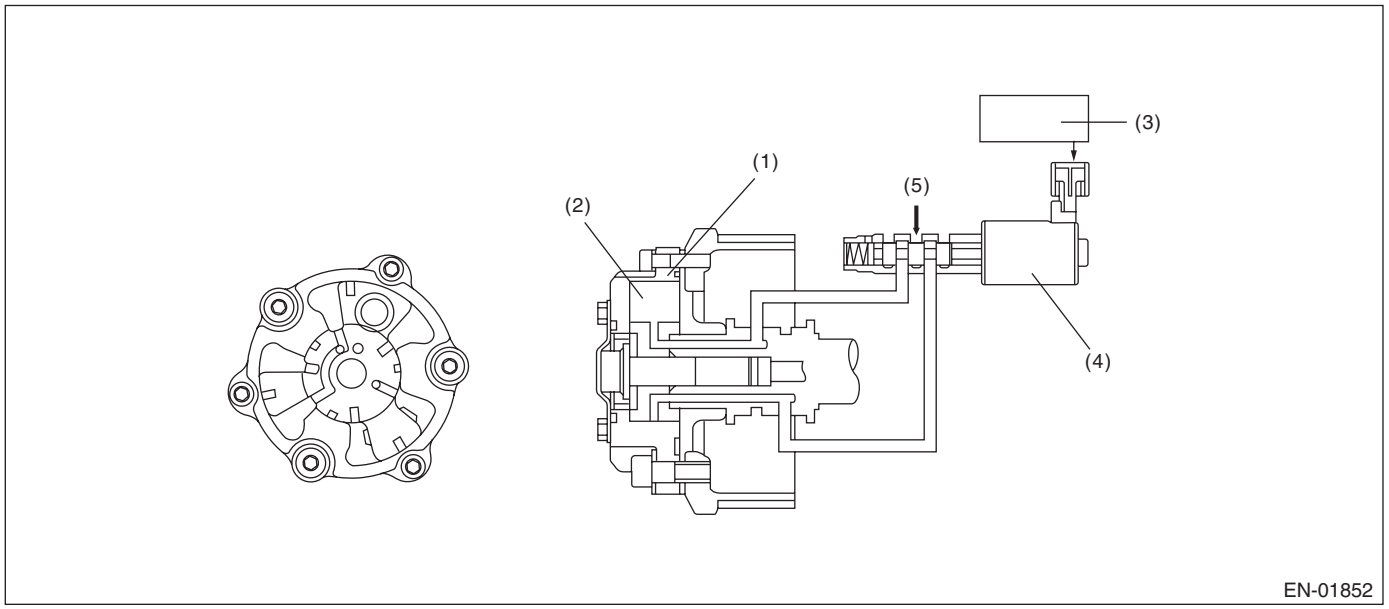

(1) AVCS timing controller
(2) Vane
(3) Engine control module (ECM)
(4) Oil flow control solenoid valve
(5) Hydraulic

3. EXECUTION CONDITION

Secondary parameters	Execution condition	DTC
Intake side Battery voltage AVCS control |Target timing advance change amount (per 64 ms)|	 ≥ 10.9 V In operation < 10 °CA	 P000A P000C
Exhaust side Battery voltage Exhaust AVCS control |Target timing advance change amount (per 64 ms)|	 ≥ 10.9 V In operation < 10 °CA	 P000B P000D

4. GENERAL DRIVING CYCLE

- Intake side

Perform the diagnosis continuously while AVCS is operating.

- Exhaust side

Perform the diagnosis continuously while exhaust AVCS is operating.

5. DIAGNOSTIC METHOD

- Intake side

When the differences of target timing advance amount and actual timing advance amount is calculated during AVCS control, and the difference per predetermined time is the specified value or larger.
Judge as NG when the following conditions are established within the predetermined time.

- Exhaust side

When the differences of target timing advance amount and actual timing advance amount is calculated during exhaust AVCS control, and the difference per predetermined time is the specified value or larger.
Judge as NG when the following conditions are established within the predetermined time.

Judgment Value

Malfunction Criteria	Threshold Value	DTC
Intake side Σ(Target position – Actual position)	> 4000 °CA (Bank 1) or < –4000 °CA (Bank 2)	P000A P000C
Exhaust side Σ(Target position – Actual position)	> 4000 °CA (Bank 1) or < –4000 °CA (Bank 2)	P000B P000D

Time Needed for Diagnosis: 25000 ms
Malfunction Indicator Light Illumination: Illuminates when malfunction occurs in 2 continuous driving cycles.

B: DTC P000B "B" CAMSHAFT POSITION SLOW RESPONSE BANK 1

NOTE:
For the diagnostic procedure, refer to DTC P0014. <Ref. to EN(STI)(diag)-111, DTC P0014 "B" CAMSHAFT POSITION - TIMING OVER-ADVANCED OR SYSTEM PERFORMANCE BANK 1, Diagnostic Procedure with Diagnostic Trouble Code (DTC).>

1. OUTLINE OF DIAGNOSIS

NOTE:
For the detection standard, refer to the exhaust side of P000A. <Ref. to EN(STI)(diag)-106, DTC P000A "A" CAMSHAFT POSITION SLOW RESPONSE BANK 1, Diagnostic Procedure with Diagnostic Trouble Code (DTC).>

C: DTC P000C "A" CAMSHAFT POSITION SLOW RESPONSE BANK 2

NOTE:
For the diagnostic procedure, refer to DTC P0021. <Ref. to EN(STI)(diag)-119, DTC P0021 "A" CAMSHAFT POSITION - TIMING OVER-ADVANCED OR SYSTEM PERFORMANCE BANK 2, Diagnostic Procedure with Diagnostic Trouble Code (DTC).>

1. OUTLINE OF DIAGNOSIS

NOTE:
For the detection standard, refer to the intake side of P000A. <Ref. to EN(STI)(diag)-106, DTC P000A "A" CAMSHAFT POSITION SLOW RESPONSE BANK 1, Diagnostic Procedure with Diagnostic Trouble Code (DTC).>

D: DTC P000D "B" CAMSHAFT POSITION SLOW RESPONSE BANK 2

NOTE:
For the diagnostic procedure, refer to DTC P0024. <Ref. to EN(STI)(diag)-120, DTC P0024 "B" CAMSHAFT POSITION - TIMING OVER-ADVANCED OR SYSTEM PERFORMANCE BANK 2, Diagnostic Procedure with Diagnostic Trouble Code (DTC).>

1. OUTLINE OF DIAGNOSIS

NOTE:
For the detection standard, refer to the exhaust side of P000B. <Ref. to EN(STI)(diag)-108, DTC P000B "B" CAMSHAFT POSITION SLOW RESPONSE BANK 1, Diagnostic Procedure with Diagnostic Trouble Code (DTC).>

E: DTC P0011 "A" CAMSHAFT POSITION - TIMING OVER-ADVANCED OR SYSTEM PERFORMANCE BANK 1

DTC DETECTING CONDITION:
Detected when two consecutive driving cycles with fault occur.
TROUBLE SYMPTOM:
- Engine stalls.
- Improper idling

CAUTION:
After servicing or replacing faulty parts, perform Clear Memory Mode <Ref. to EN(STI)(diag)-68, OPERATION, Clear Memory Mode.>, and Inspection Mode <Ref. to EN(STI)(diag)-48, PROCEDURE, Inspection Mode.>.

	Step	Check	Yes	No
1	**CHECK CURRENT DATA.** 1) Start the engine and let it idle. 2) Read the value of «VVT Adv. Ang. Amount R» using the Subaru Select Monitor. NOTE: For detailed operation procedures, refer to “Current Data Display For Engine”. <Ref. to EN(STI)(diag)-36, Subaru Select Monitor.>	Is the value of «VVT Adv. Ang. Amount R» approx. 0 deg?	Go to step **2**.	Check the following item and repair or replace if necessary. • Oil pipe (clog) • Oil flow control solenoid valve (clog or dirt of oil routing, setting of spring) • Intake camshaft (dirt, damage of camshaft)
2	**CHECK CURRENT DATA.** 1) Drive with acceleration and deceleration at 80 km/h (50 MPH) or less. NOTE: Drive to an extent that the duty output of oil flow control solenoid valve increases. 2) Read the values of «OCV Duty R» and «VVT Adv. Ang. Amount R» using the Subaru Select Monitor. NOTE: For detailed operation procedures, refer to “Current Data Display For Engine”. <Ref. to EN(STI)(diag)-36, Subaru Select Monitor.>	When the value of «OCV Duty R» increases more than 10%, is the value of «VVT Adv. Ang. Amount R» approx. 0 deg?	Check the following item and repair or replace if necessary. • Oil pipe (clog) • Oil flow control solenoid valve (clog or dirt of oil routing, setting of spring) • Intake camshaft (dirt, damage of camshaft)	Perform the following procedures, and clean the oil routing. Replace the engine oil and idle the engine for 5 minutes, and then replace the oil filter and engine oil. <Ref. to LU(STI)-10, REPLACEMENT, Engine Oil.> <Ref. to LU(STI)-27, Engine Oil Filter.>

1. OUTLINE OF DIAGNOSIS

Detect the AVCS system malfunction.
Judge NG when the amount of AVCS actual timing advance does not approach to the amount of AVCS target timing advance.

2. COMPONENT DESCRIPTION

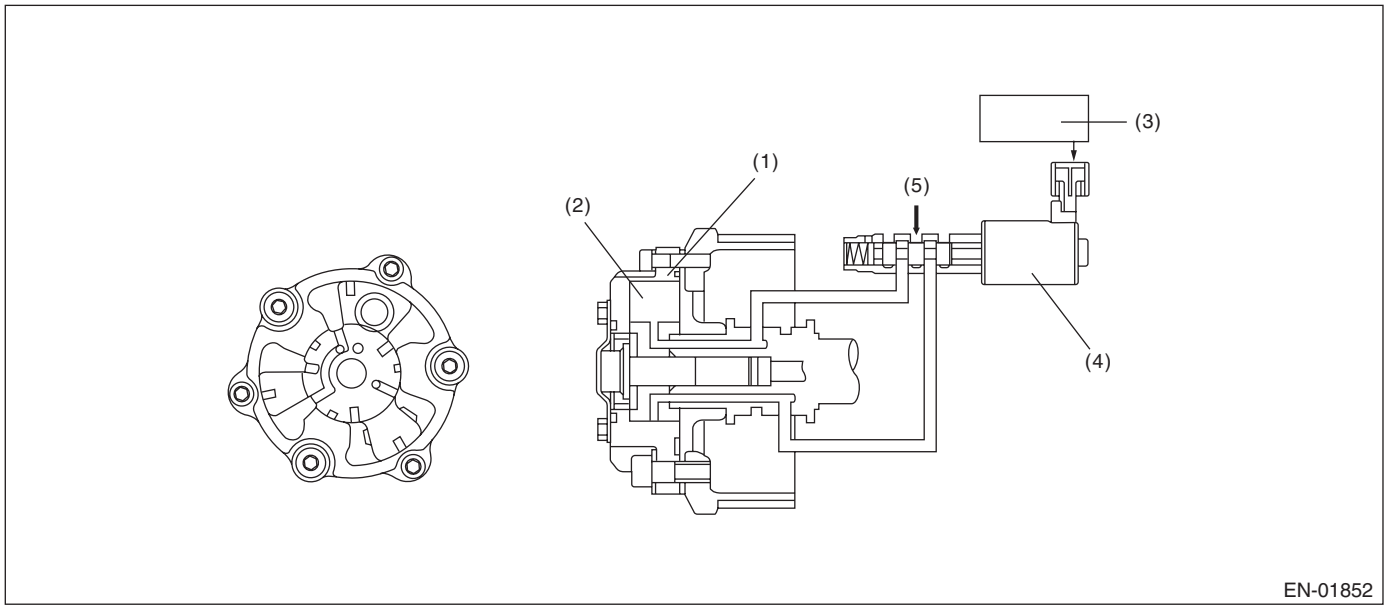

(1) AVCS timing controller
(2) Vane
(3) Engine control module (ECM)
(4) Oil flow control solenoid valve
(5) Hydraulic

3. EXECUTION CONDITION

Secondary parameters	Execution condition
Battery voltage	≥ 10.9 V
AVCS control	In operation

4. GENERAL DRIVING CYCLE

Perform the diagnosis continuously while AVCS is operating.

5. DIAGNOSTIC METHOD

When the conditions during which the differences of AVCS target timing advance amount and AVCS actual timing advance amount is large continues for certain amount of time.
Judge as NG when the following conditions are established within the predetermined time.

Judgment Value

Malfunction Criteria	Threshold Value
|(Target position – Actual position)|	> 20 °CA

Time Needed for Diagnosis: 5000 ms
Malfunction Indicator Light Illumination: Illuminates when malfunction occurs in 2 continuous driving cycles.

F: DTC P0014 "B" CAMSHAFT POSITION - TIMING OVER-ADVANCED OR SYSTEM PERFORMANCE BANK 1

DTC DETECTING CONDITION:
Detected when two consecutive driving cycles with fault occur.
TROUBLE SYMPTOM:
- Engine stalls.
- Improper idling

CAUTION:
After servicing or replacing faulty parts, perform Clear Memory Mode <Ref. to EN(STI)(diag)-68, OPERATION, Clear Memory Mode.>, and Inspection Mode <Ref. to EN(STI)(diag)-48, PROCEDURE, Inspection Mode.>.

	Step	Check	Yes	No
1	**CHECK CURRENT DATA.** 1) Start the engine and let it idle. 2) Read the value of «Exh. VVT Retard Ang. R» using the Subaru Select Monitor. NOTE: For detailed operation procedures, refer to “Current Data Display For Engine”. <Ref. to EN(STI)(diag)-36, Subaru Select Monitor.>	Is the value of «Exh. VVT Retard Ang. R» approx. 0 deg?	Go to step **2**.	Check the following item and repair or replace if necessary. • Oil pipe (clog) • Oil flow control solenoid valve (clog or dirt of oil routing, setting of spring) • Exhaust camshaft (dirt, damage of camshaft)
2	**CHECK CURRENT DATA.** 1) Drive with acceleration and deceleration at 80 km/h (50 MPH) or less. NOTE: Drive to an extent that the duty output of oil flow control solenoid valve increases. 2) Read the values of «Exh. OCV Duty R» and «Exh. VVT Retard Ang. R» using the Subaru Select Monitor. NOTE: For detailed operation procedures, refer to “Current Data Display For Engine”. <Ref. to EN(STI)(diag)-36, Subaru Select Monitor.>	When the value of «Exh. OCV Duty R» increases more than 10%, is the value of «Exh. VVT Retard Ang. R» approx. 0 deg?	Check the following item and repair or replace if necessary. • Oil pipe (clog) • Oil flow control solenoid valve (clog or dirt of oil routing, setting of spring) • Exhaust camshaft (dirt, damage of camshaft)	Perform the following procedures, and clean the oil routing. Replace the engine oil and idle the engine for 5 minutes, and then replace the oil filter and engine oil. <Ref. to LU(STI)-10, REPLACEMENT, Engine Oil.> <Ref. to LU(STI)-27, Engine Oil Filter.>

1. OUTLINE OF DIAGNOSIS

Detect the exhaust AVCS system malfunction.
Judge NG when the amount of exhaust AVCS actual timing advance does not approach the amount of exhaust AVCS target timing advance.

2. COMPONENT DESCRIPTION

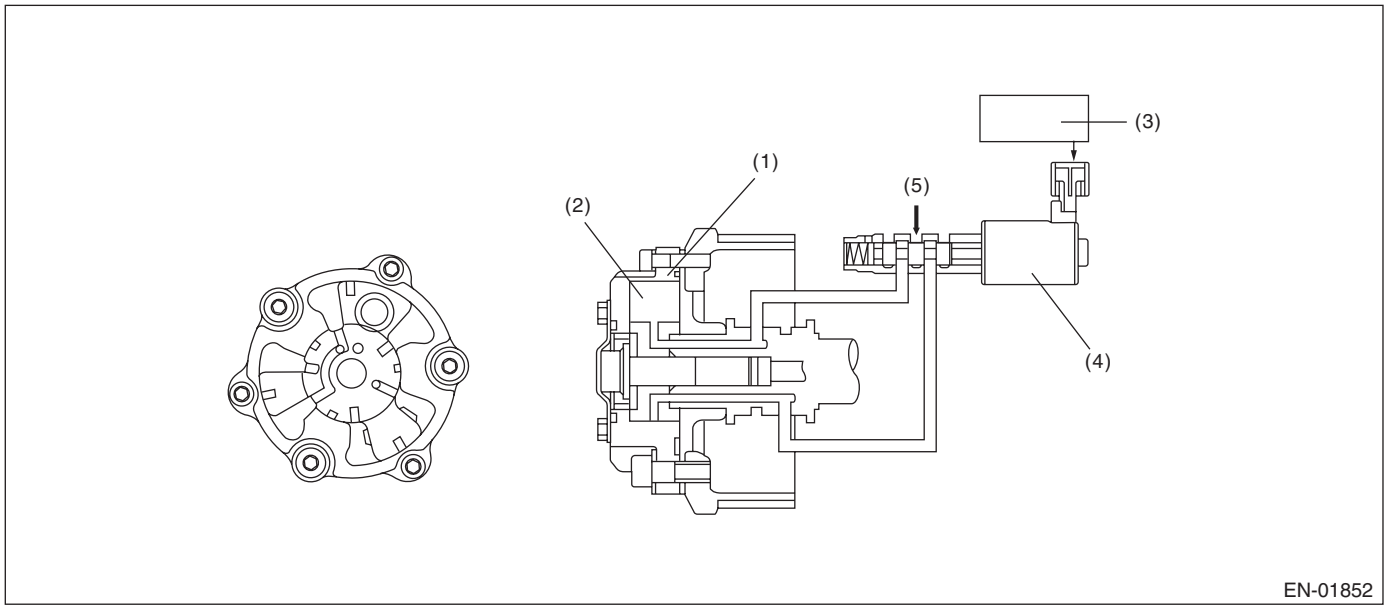

(1) Exhaust AVCS timing controller
(2) Vane
(3) Engine control module (ECM)
(4) Oil flow control solenoid valve
(5) Hydraulic

3. EXECUTION CONDITION

Secondary parameters	Execution condition
Battery voltage	≥ 10.9 V
Exhaust AVCS control	In operation

4. GENERAL DRIVING CYCLE

Perform the diagnosis continuously while exhaust AVCS is operating.

5. DIAGNOSTIC METHOD

When the conditions during which the differences of exhaust AVCS target timing advance amount and exhaust AVCS actual timing advance amount is large continues for certain amount of time.
Judge as NG when the following conditions are established within the predetermined time.

Judgment Value

Malfunction Criteria	Threshold Value
|(Target position – Actual position)|	> 20 °CA

Time Needed for Diagnosis:
5000 ms
Malfunction Indicator Light Illumination: Illuminates when malfunction occurs in 2 continuous driving cycles.

G: DTC P0016 CRANKSHAFT POSITION - CAMSHAFT POSITION CORRELATION BANK 1 SENSOR A

DTC DETECTING CONDITION:
Detected when two consecutive driving cycles with fault occur.
TROUBLE SYMPTOM:
- Engine stalls.
- Improper idling

CAUTION:
After servicing or replacing faulty parts, perform Clear Memory Mode <Ref. to EN(STI)(diag)-68, OPERATION, Clear Memory Mode.>, and Inspection Mode <Ref. to EN(STI)(diag)-48, PROCEDURE, Inspection Mode.>.

Step		Check	Yes	No
1	**CHECK CURRENT DATA.** 1) Start the engine and let it idle. 2) Read the values of «VVT Adv. Ang. Amount R» and «OCV Duty R» using the Subaru Select Monitor. NOTE: For detailed operation procedures, refer to “Current Data Display For Engine”. <Ref. to EN(STI)(diag)-36, Subaru Select Monitor.>	Is the value of «VVT Adv. Ang. Amount R» approx. 0 deg, and the value of «OCV Duty R» approx. 10%?	Perform the following procedures, and clean the oil routing. Replace the engine oil and idle the engine for 5 minutes, and then replace the oil filter and engine oil. <Ref. to LU(STI)-10, REPLACEMENT, Engine Oil.> <Ref. to LU(STI)-27, Engine Oil Filter.>	Check the following item and repair or replace if necessary. • Oil pipe (clog) • Oil flow control solenoid valve (clog or dirt of oil routing, setting of spring) • Intake camshaft (dirt, damage of camshaft) • Timing belt (matching of timing mark)

1. OUTLINE OF DIAGNOSIS

Detect the AVCS system malfunction.
Judge as NG when standard timing advance amount is far from learning angle.

2. COMPONENT DESCRIPTION

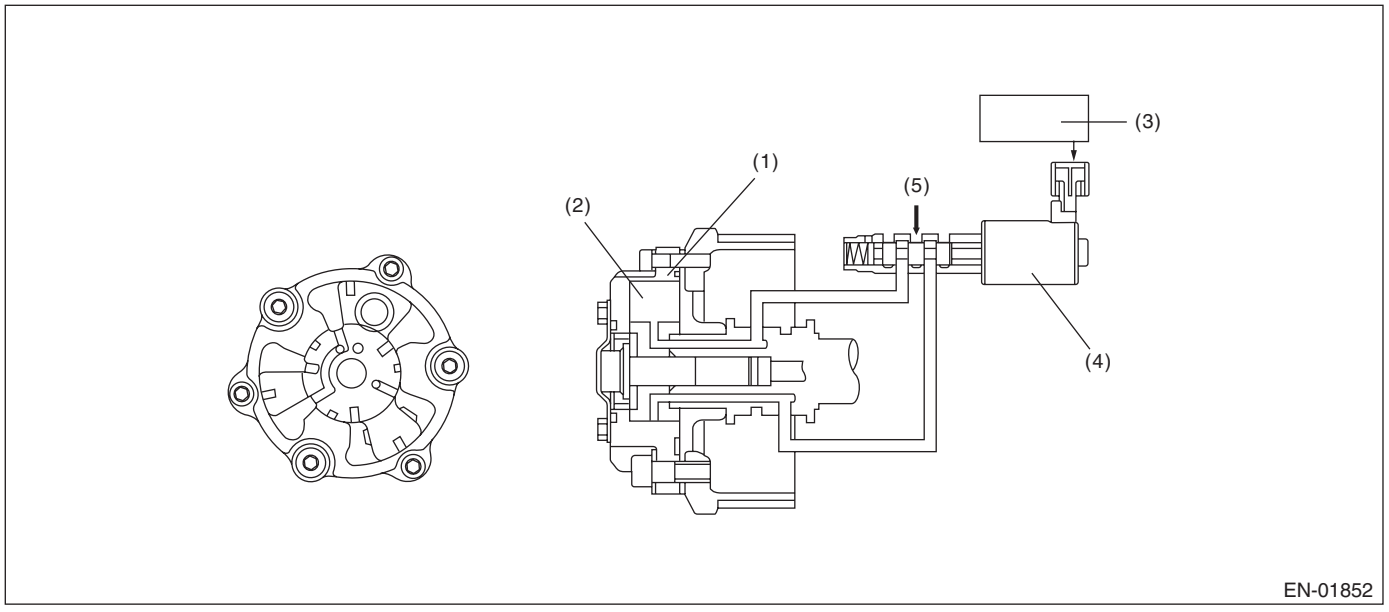

(1) AVCS timing controller
(2) Vane
(3) Engine control module (ECM)
(4) Oil flow control solenoid valve
(5) Hydraulic

3. EXECUTION CONDITION

Secondary parameters	Execution condition
Battery voltage	≥ 10.9 V
Elapsed time after external load (power steering, neutral position switch) change	≥ 3000 ms
AVCS position learning	In operation
|Actual timing advance change amount (for 8 ms)|	< 1 °CA

4. GENERAL DRIVING CYCLE

Perform the diagnosis continuously after starting engine and while AVCS is not operating.

5. DIAGNOSTIC METHOD

Judge as NG when the absolute value of the difference between cam signal input position and learning value is out of specification.

Diagnosis 1

If the duration of time while the following conditions are met is longer than the time indicated, judge as NG.

Judgment Value

Malfunction Criteria	Threshold Value
|Crankshaft position when camshaft position sensor signal is input – Learning value|	> 8.5 °CA

Time Needed for Diagnosis: 5000 ms

Diagnosis 2

Judgment Value

Malfunction Criteria	Threshold Value
Camshaft position sensor signal input position	< 13 °CA or > 55 °CA

Time Needed for Diagnosis: 5000 ms

Malfunction Indicator Light Illumination: Illuminates when malfunction occurs in 2 continuous driving cycles.

NOTE:

Initial standard learning value is the value of crank angle initially input at the production plant. And then it will be updated every time normal judgment has been completed. Learning value will not be updated if NG judgment occurs because timing belt or chain derails suddenly in process or because wrong assembly occurs during servicing.

H: DTC P0017 CRANKSHAFT POSITION - CAMSHAFT POSITION CORRELATION BANK 1 SENSOR B

DTC DETECTING CONDITION:
Detected when two consecutive driving cycles with fault occur.
TROUBLE SYMPTOM:
- Engine stalls.
- Improper idling

CAUTION:
After servicing or replacing faulty parts, perform Clear Memory Mode <Ref. to EN(STI)(diag)-68, OPERATION, Clear Memory Mode.>, and Inspection Mode <Ref. to EN(STI)(diag)-48, PROCEDURE, Inspection Mode.>.

Step		Check	Yes	No
1	**CHECK CURRENT DATA.** 1) Start the engine and let it idle. 2) Read the values of «Exh. VVT Retard Ang. R» and «Exh. OCV Duty R» using the Subaru Select Monitor. NOTE: For detailed operation procedures, refer to "Current Data Display For Engine". <Ref. to EN(STI)(diag)-36, Subaru Select Monitor.>	Is the value of «Exh. VVT Retard Ang. R» approx. 0 deg, and the value of «Exh. OCV Duty R» approx. 10%?	Perform the following procedures, and clean the oil routing. Replace the engine oil and idle the engine for 5 minutes, and then replace the oil filter and engine oil. <Ref. to LU(STI)-10, REPLACEMENT, Engine Oil.> <Ref. to LU(STI)-27, Engine Oil Filter.>	Check the following item and repair or replace if necessary. • Oil pipe (clog) • Oil flow control solenoid valve (clog or dirt of oil routing, setting of spring) • Exhaust camshaft (dirt, damage of camshaft) • Timing belt (matching of timing mark)

1. OUTLINE OF DIAGNOSIS

Detect the exhaust AVCS system malfunction.
Judge as NG when standard timing advance amount is far from learning angle.

2. COMPONENT DESCRIPTION

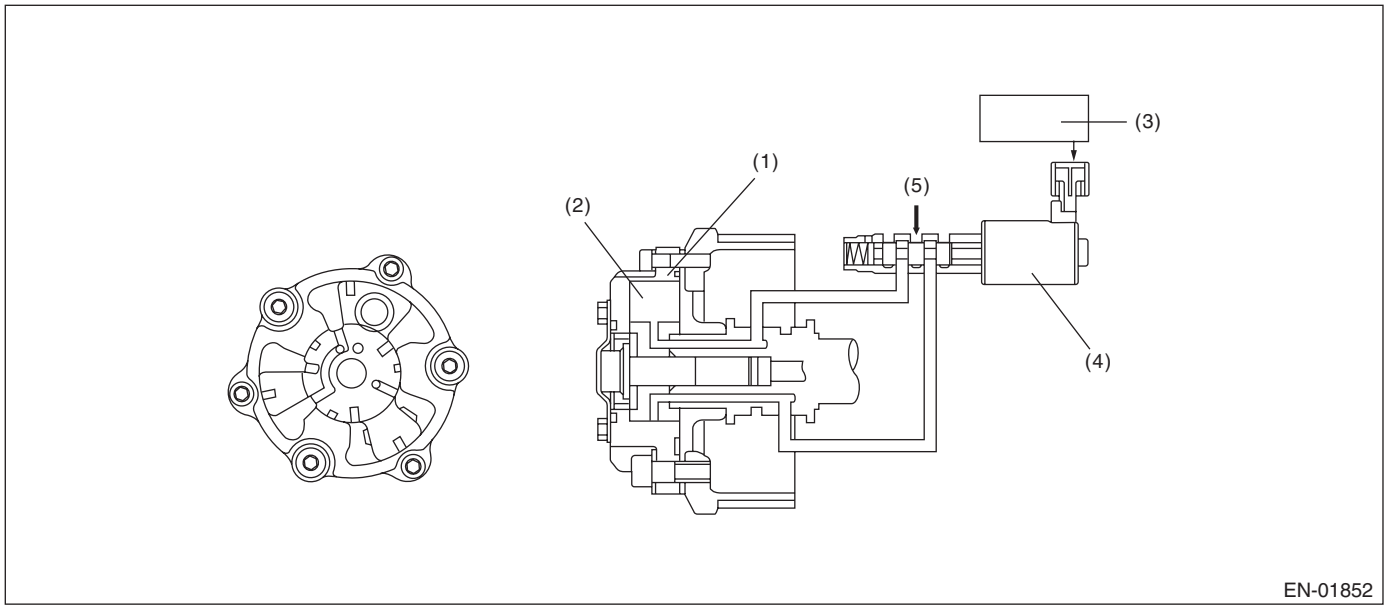

(1) Exhaust AVCS timing controller
(2) Vane
(3) Engine control module (ECM)
(4) Oil flow control solenoid valve
(5) Hydraulic

3. EXECUTION CONDITION

Secondary parameters	Execution condition
Battery voltage	≥ 10.9 V
Elapsed time after external load (power steering, neutral position switch) change	≥ 3000 ms
Exhaust AVCS position learning	In operation
|Actual timing advance change amount (for 8 ms)|	< 1 °CA

4. GENERAL DRIVING CYCLE

Perform the diagnosis continuously while the exhaust AVCS is not operating after warming up.

5. DIAGNOSTIC METHOD

Judge as NG when the absolute value of the difference between cam signal input position and learning value is out of specification.

Diagnosis 1

If the duration of time while the following conditions are met is longer than the time indicated, judge as NG.

Judgment Value

Malfunction Criteria	Threshold Value
|Crankshaft position when camshaft position sensor signal is input – Learning value|	> 8.5 °CA

Time Needed for Diagnosis: 5000 ms

Diagnosis 2

Judgment Value

Malfunction Criteria	Threshold Value
Camshaft position sensor signal input position	< 55 °CA or > 105 °CA

Time Needed for Diagnosis: 5000 ms

Malfunction Indicator Light Illumination: Illuminates when malfunction occurs in 2 continuous driving cycles.

NOTE:

Initial standard learning value is the value of crank angle initially input at the production plant. And then it will be updated every time normal judgment has been completed. Learning value will not be updated if NG judgment occurs because timing belt or chain derails suddenly in process or because wrong assembly occurs during servicing.

I: DTC P0018 CRANKSHAFT POSITION - CAMSHAFT POSITION CORRELATION BANK 2 SENSOR A

DTC DETECTING CONDITION:
Detected when two consecutive driving cycles with fault occur.
TROUBLE SYMPTOM:
- Engine stalls.
- Improper idling

CAUTION:
After servicing or replacing faulty parts, perform Clear Memory Mode <Ref. to EN(STI)(diag)-68, OPERATION, Clear Memory Mode.>, and Inspection Mode <Ref. to EN(STI)(diag)-48, PROCEDURE, Inspection Mode.>.

Step		Check	Yes	No
1	**CHECK CURRENT DATA.** 1) Start the engine and let it idle. 2) Read the values of «VVT Adv. Ang. Amount L» and «OCV Duty L» using the Subaru Select Monitor. NOTE: For detailed operation procedures, refer to “Current Data Display For Engine”. <Ref. to EN(STI)(diag)-36, Subaru Select Monitor.>	Is the value of «VVT Adv. Ang. Amount L» approx. 0 deg, and the value of «OCV Duty L» approx. 10%?	Perform the following procedures, and clean the oil routing. Replace the engine oil and idle the engine for 5 minutes, and then replace the oil filter and engine oil. <Ref. to LU(STI)-10, REPLACEMENT, Engine Oil.> <Ref. to LU(STI)-27, Engine Oil Filter.>	Check the following item and repair or replace if necessary. • Oil pipe (clog) • Oil flow control solenoid valve (clog or dirt of oil routing, setting of spring) • Intake camshaft (dirt, damage of camshaft) • Timing belt (matching of timing mark)

1. OUTLINE OF DIAGNOSIS

NOTE:
For the detection standard, refer to DTC P0016. <Ref. to EN(STI)(diag)-113, DTC P0016 CRANKSHAFT POSITION - CAMSHAFT POSITION CORRELATION BANK 1 SENSOR A, Diagnostic Procedure with Diagnostic Trouble Code (DTC).>

J: DTC P0019 CRANKSHAFT POSITION - CAMSHAFT POSITION CORRELATION BANK 2 SENSOR B

DTC DETECTING CONDITION:
Detected when two consecutive driving cycles with fault occur.
TROUBLE SYMPTOM:
- Engine stalls.
- Improper idling

CAUTION:
After servicing or replacing faulty parts, perform Clear Memory Mode <Ref. to EN(STI)(diag)-68, OPERATION, Clear Memory Mode.>, and Inspection Mode <Ref. to EN(STI)(diag)-48, PROCEDURE, Inspection Mode.>.

	Step	Check	Yes	No
1	**CHECK CURRENT DATA.** 1) Start the engine and let it idle. 2) Read the values of «Exh. VVT Retard Ang. L» and «Exh. OCV Duty L» using the Subaru Select Monitor. NOTE: For detailed operation procedures, refer to “Current Data Display For Engine”. <Ref. to EN(STI)(diag)-36, Subaru Select Monitor.>	Is the value of «Exh. VVT Retard Ang. L» approx. 0 deg, and the value of «Exh. OCV Duty L» approx. 10%?	Perform the following procedures, and clean the oil routing. Replace the engine oil and idle the engine for 5 minutes, and then replace the oil filter and engine oil. <Ref. to LU(STI)-10, REPLACEMENT, Engine Oil.> <Ref. to LU(STI)-27, Engine Oil Filter.>	Check the following item and repair or replace if necessary. • Oil pipe (clog) • Oil flow control solenoid valve (clog or dirt of oil routing, setting of spring) • Exhaust camshaft (dirt, damage of camshaft) • Timing belt (matching of timing mark)

1. OUTLINE OF DIAGNOSIS

NOTE:
For the detection standard, refer to DTC P0017. <Ref. to EN(STI)(diag)-115, DTC P0017 CRANKSHAFT POSITION - CAMSHAFT POSITION CORRELATION BANK 1 SENSOR B, Diagnostic Procedure with Diagnostic Trouble Code (DTC).>

K: DTC P0021 "A" CAMSHAFT POSITION - TIMING OVER-ADVANCED OR SYSTEM PERFORMANCE BANK 2

DTC DETECTING CONDITION:
Detected when two consecutive driving cycles with fault occur.
TROUBLE SYMPTOM:
- Engine stalls.
- Improper idling

CAUTION:
After servicing or replacing faulty parts, perform Clear Memory Mode <Ref. to EN(STI)(diag)-68, OPERATION, Clear Memory Mode.>, and Inspection Mode <Ref. to EN(STI)(diag)-48, PROCEDURE, Inspection Mode.>.

	Step	Check	Yes	No
1	**CHECK CURRENT DATA.** 1) Start the engine and let it idle. 2) Read the value of «VVT Adv. Ang. Amount L» using the Subaru Select Monitor. NOTE: For detailed operation procedures, refer to “Current Data Display For Engine”. <Ref. to EN(STI)(diag)-36, Subaru Select Monitor.>	Is the value of «VVT Adv. Ang. Amount L» approx. 0 deg?	Go to step **2**.	Check the following item and repair or replace if necessary. • Oil pipe (clog) • Oil flow control solenoid valve (clog or dirt of oil routing, setting of spring) • Intake camshaft (dirt, damage of camshaft)
2	**CHECK CURRENT DATA.** 1) Drive with acceleration and deceleration at 80 km/h (50 MPH) or less. NOTE: Drive to an extent that the duty output of oil flow control solenoid valve increases. 2) Read the values of «OCV Duty L» and «VVT Adv. Ang. Amount L» using the Subaru Select Monitor. NOTE: For detailed operation procedures, refer to “Current Data Display For Engine”. <Ref. to EN(STI)(diag)-36, Subaru Select Monitor.>	When the value of «OCV Duty L» increases more than 10%, is the value of «VVT Adv. Ang. Amount L» approx. 0 deg?	Check the following item and repair or replace if necessary. • Oil pipe (clog) • Oil flow control solenoid valve (clog or dirt of oil routing, setting of spring) • Intake camshaft (dirt, damage of camshaft)	Perform the following procedures, and clean the oil routing. Replace the engine oil and idle the engine for 5 minutes, and then replace the oil filter and engine oil. <Ref. to LU(STI)-10, REPLACEMENT, Engine Oil.> <Ref. to LU(STI)-27, Engine Oil Filter.>

1. OUTLINE OF DIAGNOSIS

NOTE:
For the detection standard, refer to DTC P0011. <Ref. to EN(STI)(diag)-109, DTC P0011 "A" CAMSHAFT POSITION - TIMING OVER-ADVANCED OR SYSTEM PERFORMANCE BANK 1, Diagnostic Procedure with Diagnostic Trouble Code (DTC).>

L: DTC P0024 "B" CAMSHAFT POSITION - TIMING OVER-ADVANCED OR SYSTEM PERFORMANCE BANK 2

DTC DETECTING CONDITION:
Detected when two consecutive driving cycles with fault occur.
TROUBLE SYMPTOM:
- Engine stalls.
- Improper idling

CAUTION:
After servicing or replacing faulty parts, perform Clear Memory Mode <Ref. to EN(STI)(diag)-68, OPERATION, Clear Memory Mode.>, and Inspection Mode <Ref. to EN(STI)(diag)-48, PROCEDURE, Inspection Mode.>.

	Step	Check	Yes	No
1	**CHECK CURRENT DATA.** 1) Start the engine and let it idle. 2) Read the value of «Exh. VVT Retard Ang. L» using the Subaru Select Monitor. NOTE: For detailed operation procedures, refer to “Current Data Display For Engine”. <Ref. to EN(STI)(diag)-36, Subaru Select Monitor.>	Is the value of «Exh. VVT Retard Ang. L» approx. 0 deg?	Go to step **2**.	Check the following item and repair or replace if necessary. • Oil pipe (clog) • Oil flow control solenoid valve (clog or dirt of oil routing, setting of spring) • Exhaust camshaft (dirt, damage of camshaft)
2	**CHECK CURRENT DATA.** 1) Drive with acceleration and deceleration at 80 km/h (50 MPH) or less. NOTE: Drive to an extent that the duty output of oil flow control solenoid valve increases. 2) Read the values of «Exh. OCV Duty L» and «Exh. VVT Retard Ang. L» using the Subaru Select Monitor. NOTE: For detailed operation procedures, refer to “Current Data Display For Engine”. <Ref. to EN(STI)(diag)-36, Subaru Select Monitor.>	When the value of «Exh. OCV Duty L» increases more than 10%, is the value of «Exh. VVT Retard Ang. L» approx. 0 deg?	Check the following item and repair or replace if necessary. • Oil pipe (clog) • Oil flow control solenoid valve (clog or dirt of oil routing, setting of spring) • Exhaust camshaft (dirt, damage of camshaft)	Perform the following procedures, and clean the oil routing. Replace the engine oil and idle the engine for 5 minutes, and then replace the oil filter and engine oil. <Ref. to LU(STI)-10, REPLACEMENT, Engine Oil.> <Ref. to LU(STI)-27, Engine Oil Filter.>

1. OUTLINE OF DIAGNOSIS

NOTE:
For the detection standard, refer to DTC P0014. <Ref. to EN(STI)(diag)-111, DTC P0014 "B" CAMSHAFT POSITION - TIMING OVER-ADVANCED OR SYSTEM PERFORMANCE BANK 1, Diagnostic Procedure with Diagnostic Trouble Code (DTC).>

M: DTC P0030 A/F / O2 HEATER CONTROL CIRCUIT BANK 1 SENSOR 1

DTC DETECTING CONDITION:

Detected when two consecutive driving cycles with fault occur.

CAUTION:

After servicing or replacing faulty parts, perform Clear Memory Mode <Ref. to EN(STI)(diag)-68, OPERATION, Clear Memory Mode.>, and Inspection Mode <Ref. to EN(STI)(diag)-48, PROCEDURE, Inspection Mode.>.

WIRING DIAGRAM:

Engine Electrical System <Ref. to WI-154, WIRING DIAGRAM, Engine Electrical System.>

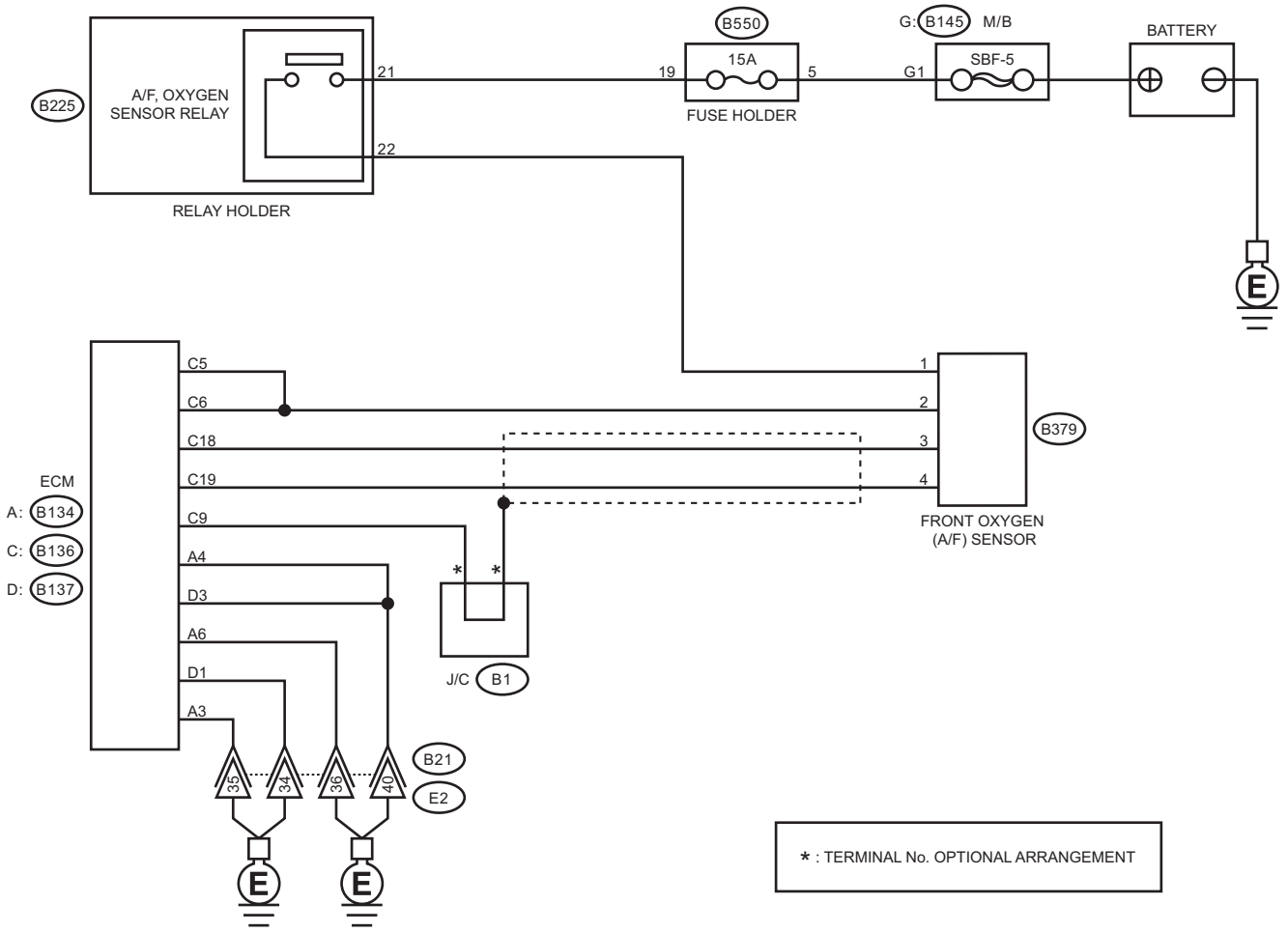

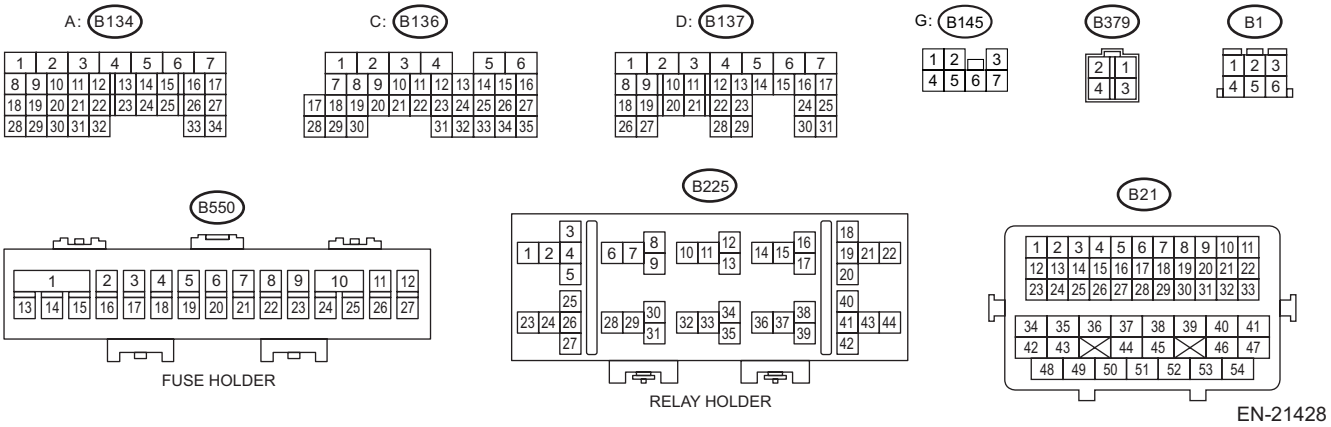

EN-21428

	Step	Check	Yes	No
1	**CHECK HARNESS BETWEEN ECM AND FRONT OXYGEN (A/F) SENSOR CONNECTOR.** 1) Start and warm up the engine. 2) Turn the ignition switch to OFF. 3) Disconnect the connector from ECM. 4) Disconnect the connectors from front oxygen (A/F) sensor. 5) Measure the resistance of harness between ECM connector and front oxygen (A/F) sensor connector. ***Connector & terminal*** ***(B136) No. 5 — (B379) No. 2:*** ***(B136) No. 6 — (B379) No. 2:*** ***(B136) No. 18 — (B379) No. 3:*** ***(B136) No. 19 — (B379) No. 4:***	Is the resistance less than 1 Ω?	Go to step **2**.	Repair the open circuit of harness between ECM connector and front oxygen (A/F) sensor connector.
2	**CHECK FRONT OXYGEN (A/F) SENSOR.** Measure the resistance between front oxygen (A/F) sensor terminals. ***Terminals*** ***No. 1 — No. 2:***	Is the resistance less than 2 — 3 Ω?	Go to step **3**.	Replace the front oxygen (A/F) sensor. <Ref. to FU(STI)-52, Front Oxygen (A/F) Sensor.>
3	**CHECK FOR POOR CONTACT.** Check for poor contact of ECM and front oxygen (A/F) sensor connector.	Is there poor contact of ECM or front oxygen (A/F) sensor connector?	Repair the poor contact of ECM or front oxygen (A/F) sensor connector.	Replace the front oxygen (A/F) sensor. <Ref. to FU(STI)-52, Front Oxygen (A/F) Sensor.>

1. OUTLINE OF DIAGNOSIS

Detect functional errors of the front oxygen (A/F) sensor heater.
Judge as NG when it is determined that the front oxygen (A/F) sensor impedance is large when looking at engine status such as deceleration fuel cut.

2. COMPONENT DESCRIPTION

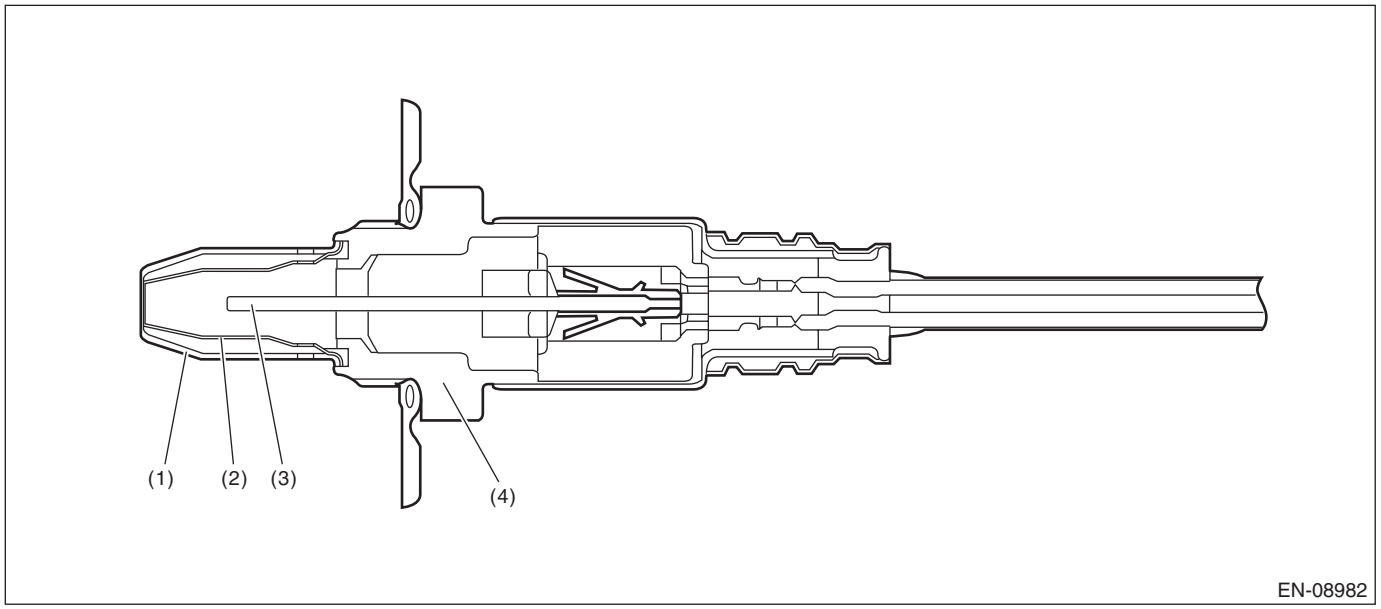

(1) Element cover (outer)
(2) Element cover (inner)
(3) Sensor element
(4) Sensor housing

3. EXECUTION CONDITION

Secondary parameters	Execution condition
Battery voltage	≥ 10.9 V
A/F sensor heater control duty	> 30 %
Elapsed time after returning from the fuel cut	≥ 20000 ms

4. GENERAL DRIVING CYCLE

Perform the diagnosis continuously when 20000 ms have elapsed since the fuel cut was initiated after starting the heater control.

5. DIAGNOSTIC METHOD

If the duration of time while the following conditions are met is longer than the time indicated, judge as NG.

Judgment Value

Malfunction Criteria	Threshold Value
Front oxygen (A/F) sensor impedance	> 35 Ω

Time Needed for Diagnosis: 10000 ms
Malfunction Indicator Light Illumination: Illuminates when malfunction occurs in 2 continuous driving cycles.

N: DTC P0031 A/F / O2 HEATER CONTROL CIRCUIT LOW BANK 1 SENSOR 1

DTC DETECTING CONDITION:
Immediately at fault recognition

CAUTION:
After servicing or replacing faulty parts, perform Clear Memory Mode <Ref. to EN(STI)(diag)-68, OPERATION, Clear Memory Mode.>, and Inspection Mode <Ref. to EN(STI)(diag)-48, PROCEDURE, Inspection Mode.>.

WIRING DIAGRAM:
Engine Electrical System <Ref. to WI-154, WIRING DIAGRAM, Engine Electrical System.>

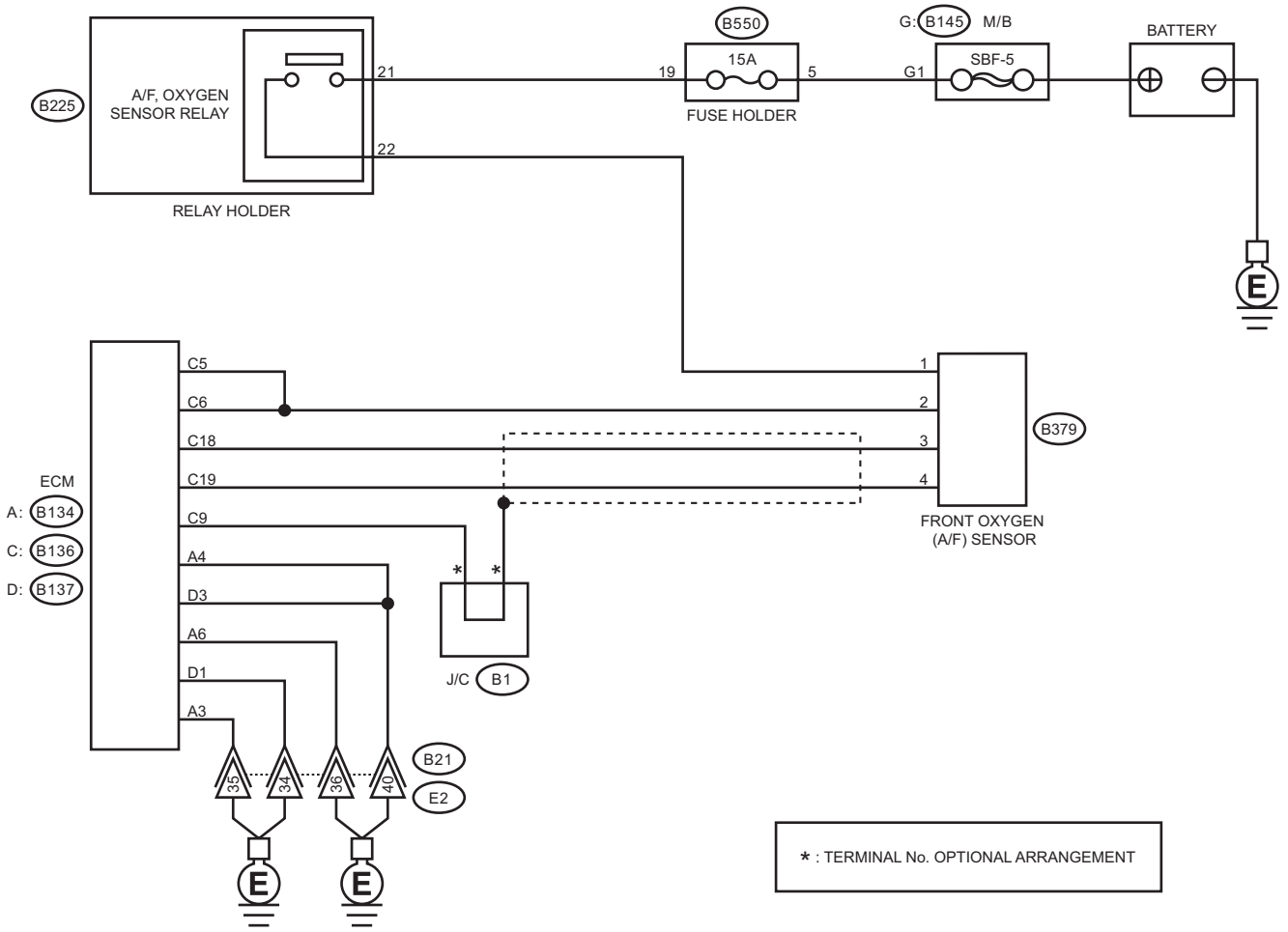

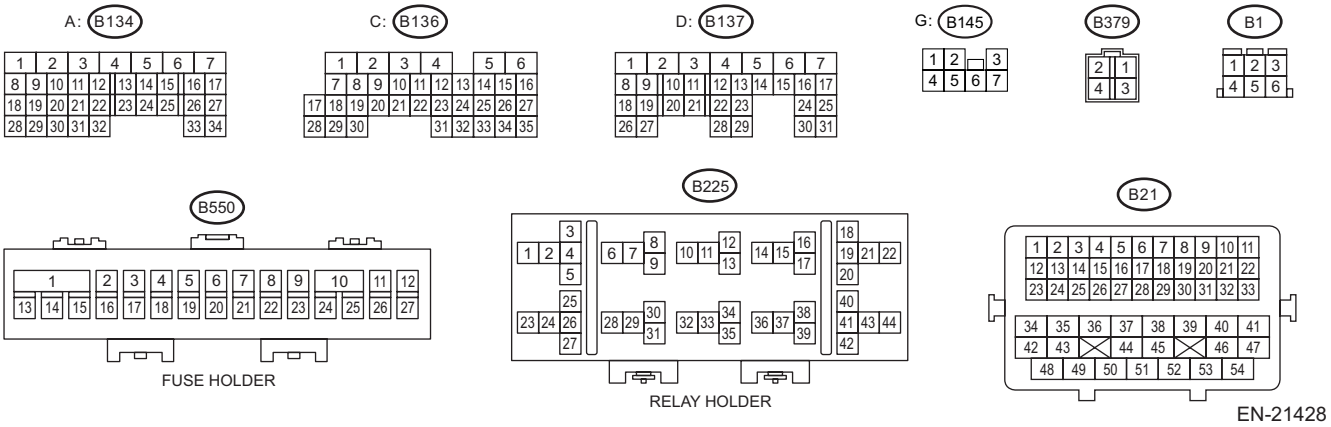

EN-21428

	Step	Check	Yes	No
1	**CHECK POWER SUPPLY TO FRONT OXYGEN (A/F) SENSOR.** 1) Turn the ignition switch to OFF. 2) Disconnect the connectors from front oxygen (A/F) sensor. 3) Turn the ignition switch to ON. 4) Measure the voltage between front oxygen (A/F) sensor connector and engine ground. ***Connector & terminal*** ***(B379) No. 1 (+) — Engine ground (–):***	Is the voltage 10 V or more?	Go to step **2**.	Repair the power supply line. NOTE: In this case, repair the following item: • Open circuit in harness between A/F, oxygen sensor relay and front oxygen (A/F) sensor connector • Poor contact of A/F, oxygen sensor relay connector • Malfunction of A/F, oxygen sensor relay
2	**CHECK HARNESS BETWEEN ECM AND FRONT OXYGEN (A/F) SENSOR CONNECTOR.** 1) Turn the ignition switch to OFF. 2) Disconnect the connector from ECM. 3) Measure the resistance between ECM connector and front oxygen (A/F) sensor connector. ***Connector & terminal*** ***(B136) No. 5 — (B379) No. 2:*** ***(B136) No. 6 — (B379) No. 2:***	Is the resistance less than 1 Ω?	Go to step **3**.	Repair the open circuit of harness between ECM connector and front oxygen (A/F) sensor connector.
3	**CHECK GROUND CIRCUIT FOR ECM.** Measure the resistance of harness between ECM connector and chassis ground. ***Connector & terminal*** ***(B134) No. 3 — Chassis ground:*** ***(B134) No. 4 — Chassis ground:*** ***(B134) No. 6 — Chassis ground:*** ***(B137) No. 1 — Chassis ground:*** ***(B137) No. 3 — Chassis ground:***	Is the resistance less than 5 Ω?	Go to step **4**.	Repair the harness and connector. NOTE: In this case, repair the following item: • Open circuit of harness between ECM connector and engine ground • Poor contact of coupling connector
4	**CHECK FRONT OXYGEN (A/F) SENSOR.** Measure the resistance between front oxygen (A/F) sensor terminals. ***Terminals*** ***No. 1 — No. 2:***	Is the resistance 2 — 3 Ω?	Repair the poor contact of ECM connector.	Replace the front oxygen (A/F) sensor. <Ref. to FU(STI)-52, Front Oxygen (A/F) Sensor.>

1. OUTLINE OF DIAGNOSIS

Detect front oxygen (A/F) sensor heater open or short circuit.
The front oxygen (A/F) sensor heater performs duty control, and the output terminal voltage at ON is 0 V, and the output terminal voltage at OFF is the battery voltage.
Judge as NG when the terminal voltage remains Low.

2. COMPONENT DESCRIPTION

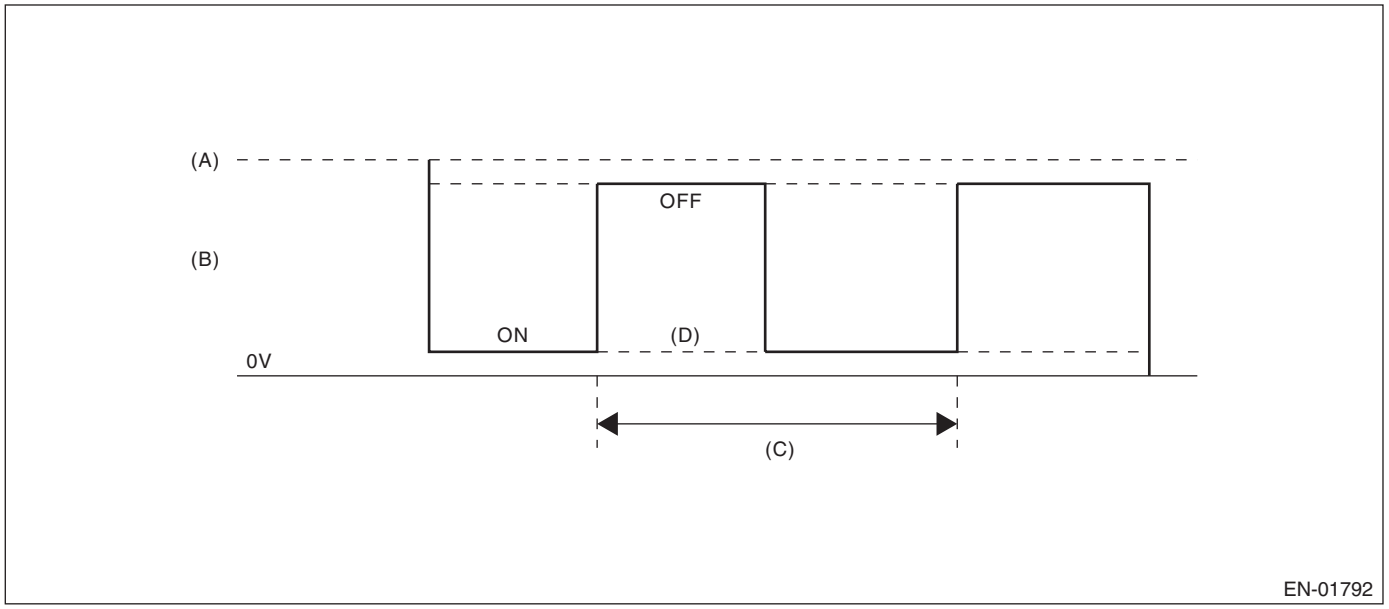

(A) Battery voltage
(B) Front oxygen (A/F) sensor heater output voltage
(C) 128 ms
(D) Low error

3. EXECUTION CONDITION

Secondary parameters	Execution condition
Battery voltage	≥ 10.9 V
Front oxygen (A/F) sensor heater control duty	< 87.5 %

4. GENERAL DRIVING CYCLE

Always perform the diagnosis continuously.

5. DIAGNOSTIC METHOD

If the duration of time while the following conditions are met is longer than the time indicated, judge as NG.

Judgment Value

Malfunction Criteria	Threshold Value
Output voltage	< 1.9 V

Time Needed for Diagnosis: 4 ms × 250 time(s)
Malfunction Indicator Light Illumination: Illuminates as soon as a malfunction occurs.

O: DTC P0032 A/F / O2 HEATER CONTROL CIRCUIT HIGH BANK 1 SENSOR 1

DTC DETECTING CONDITION:
Immediately at fault recognition

CAUTION:
After servicing or replacing faulty parts, perform Clear Memory Mode <Ref. to EN(STI)(diag)-68, OPERATION, Clear Memory Mode.>, and Inspection Mode <Ref. to EN(STI)(diag)-48, PROCEDURE, Inspection Mode.>.

WIRING DIAGRAM:
Engine Electrical System <Ref. to WI-154, WIRING DIAGRAM, Engine Electrical System.>

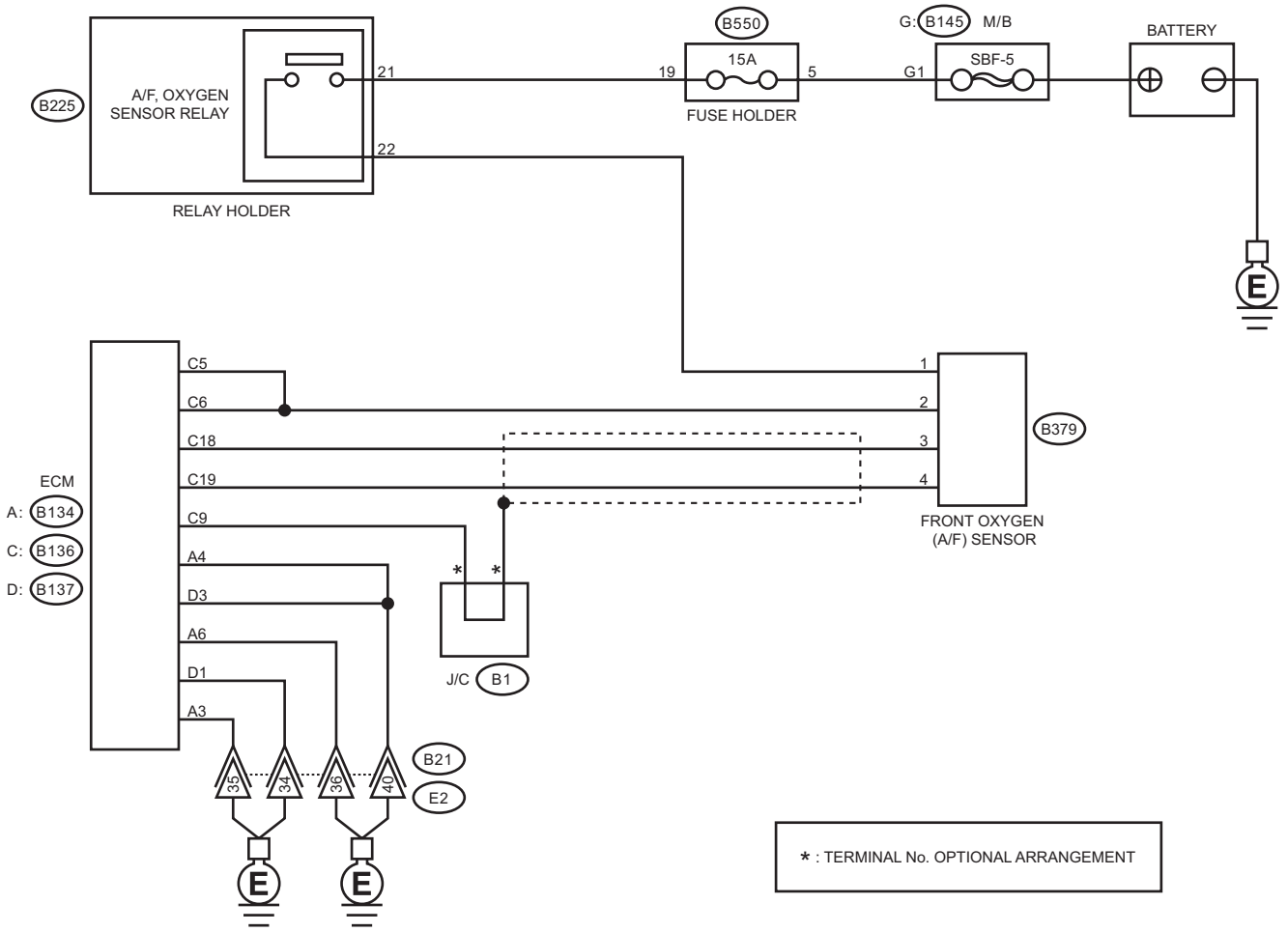

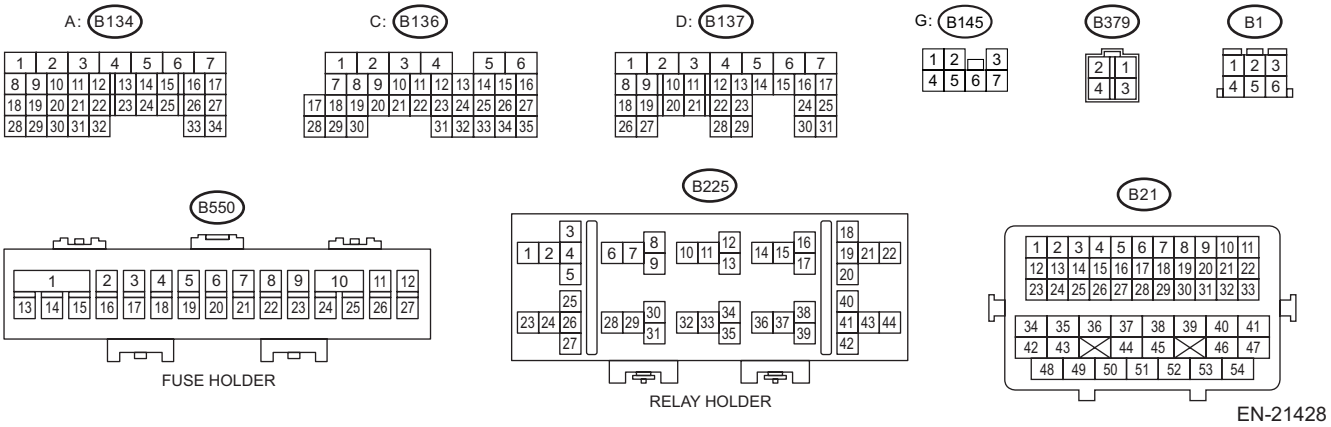

EN-21428

	Step	Check	Yes	No
1	**CHECK HARNESS BETWEEN ECM AND FRONT OXYGEN (A/F) SENSOR CONNECTOR.** 1) Turn the ignition switch to OFF. 2) Measure the voltage between ECM connector and chassis ground. ***Connector & terminal*** ***(B136) No. 5 (+) — Chassis ground (–):*** ***(B136) No. 6 (+) — Chassis ground (–):***	Is the voltage 10 V or more?	Repair the short circuit to power in the harness between ECM connector and front oxygen (A/F) sensor connector.	Go to step **2**.
2	**CHECK GROUND CIRCUIT FOR ECM.** 1) Disconnect the connector from ECM. 2) Measure the resistance between ECM connector and chassis ground. ***Connector & terminal*** ***(B134) No. 3 — Chassis ground:*** ***(B134) No. 4 — Chassis ground:*** ***(B134) No. 6 — Chassis ground:*** ***(B137) No. 1 — Chassis ground:*** ***(B137) No. 3 — Chassis ground:***	Is the resistance less than 5 Ω?	Repair the poor contact of ECM connector.	Repair the harness and connector. NOTE: In this case, repair the following item: • Open circuit of harness between ECM connector and engine ground • Poor contact of coupling connector

1. OUTLINE OF DIAGNOSIS

Detect front oxygen (A/F) sensor heater open or short circuit.
The front oxygen (A/F) sensor heater performs duty control, and the output terminal voltage at ON is 0 V, and the output terminal voltage at OFF is the battery voltage.
Judge as NG when the terminal voltage remains High.

2. COMPONENT DESCRIPTION

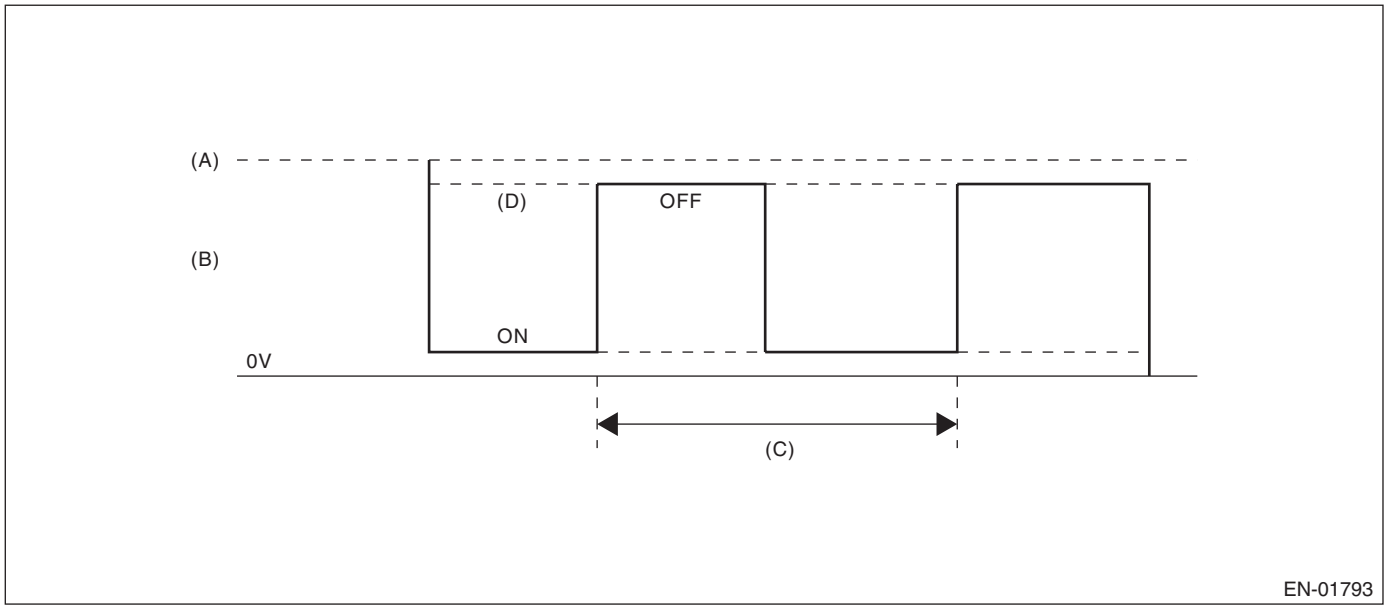

(A) Battery voltage
(B) Front oxygen (A/F) sensor heater output voltage
(C) 128 ms
(D) High error

3. EXECUTION CONDITION

Secondary parameters	Execution condition
Battery voltage	≥ 10.9 V
Front oxygen (A/F) sensor heater control duty	≥ 12.5 %

4. GENERAL DRIVING CYCLE

Always perform the diagnosis continuously.

5. DIAGNOSTIC METHOD

If the duration of time while the following conditions are met is longer than the time indicated, judge as NG.

Judgment Value

Malfunction Criteria	Threshold Value
Output voltage	≥ 1.9 V

Time Needed for Diagnosis: 4 ms × 500 time(s)
Malfunction Indicator Light Illumination: Illuminates as soon as a malfunction occurs.

P: DTC P0037 A/F / O2 HEATER CONTROL CIRCUIT LOW BANK 1 SENSOR 2

DTC DETECTING CONDITION:

Detected when two consecutive driving cycles with fault occur.

CAUTION:

After servicing or replacing faulty parts, perform Clear Memory Mode <Ref. to EN(STI)(diag)-68, OPERATION, Clear Memory Mode.>, and Inspection Mode <Ref. to EN(STI)(diag)-48, PROCEDURE, Inspection Mode.>.

WIRING DIAGRAM:

Engine Electrical System <Ref. to WI-154, WIRING DIAGRAM, Engine Electrical System.>

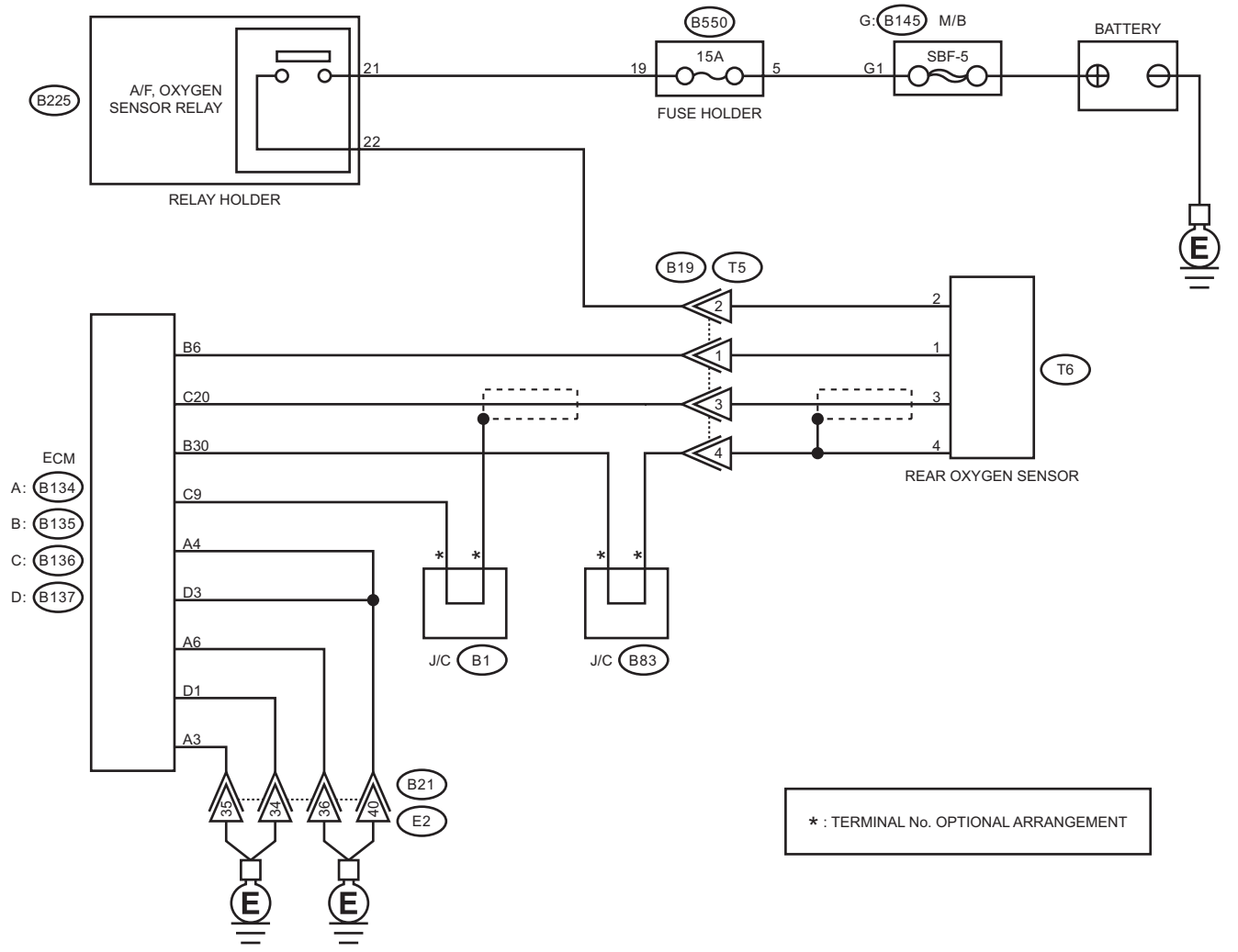

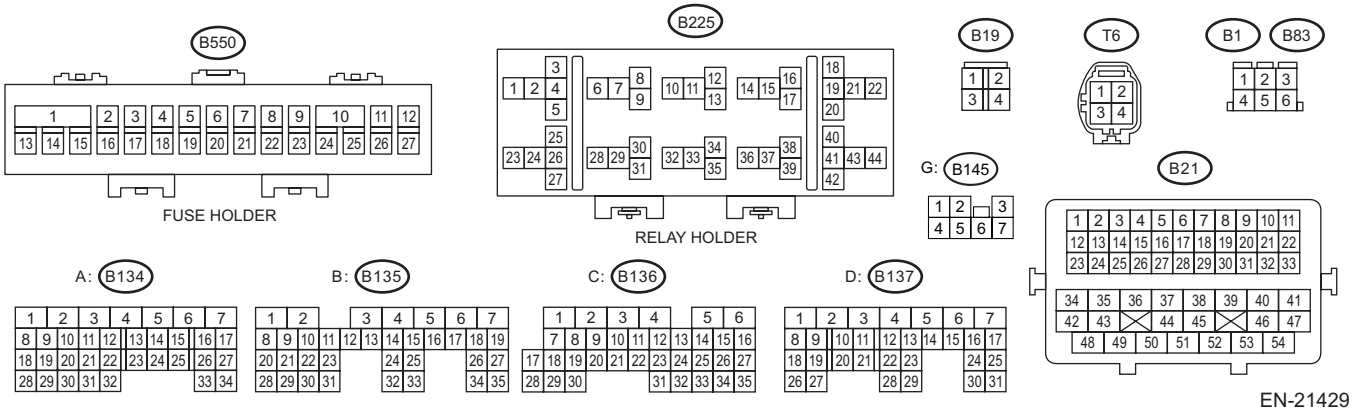

EN-21429

	Step	Check	Yes	No
1	**CHECK POWER SUPPLY TO REAR OXYGEN SENSOR.** 1) Turn the ignition switch to OFF. 2) Disconnect the connector from rear oxygen sensor. 3) Turn the ignition switch to ON. 4) Measure the voltage between rear oxygen sensor connector and engine ground. ***Connector & terminal*** ***(T6) No. 2 (+) — Engine ground (–):***	Is the voltage 10 V or more?	Go to step **2**.	Repair the power supply line. NOTE: In this case, repair the following item: • Open circuit in harness between A/F, oxygen sensor relay and rear oxygen sensor connector • Poor contact of A/F, oxygen sensor relay connector • Poor contact of coupling connector • Malfunction of A/F, oxygen sensor relay
2	**CHECK HARNESS BETWEEN ECM AND REAR OXYGEN SENSOR CONNECTOR.** 1) Turn the ignition switch to OFF. 2) Disconnect the connector from ECM. 3) Measure the resistance between ECM connector and rear oxygen sensor connector. ***Connector & terminal*** ***(B135) No. 6 — (T6) No. 1:***	Is the resistance less than 1 Ω?	Go to step **3**.	Repair the harness and connector. NOTE: In this case, repair the following item: • Open circuit in harness between ECM connector and rear oxygen sensor connector • Poor contact of coupling connector
3	**CHECK GROUND CIRCUIT FOR ECM.** Measure the resistance of harness between ECM connector and chassis ground. ***Connector & terminal*** ***(B134) No. 3 — Chassis ground:*** ***(B134) No. 4 — Chassis ground:*** ***(B134) No. 6 — Chassis ground:*** ***(B137) No. 1 — Chassis ground:*** ***(B137) No. 3 — Chassis ground:***	Is the resistance less than 5 Ω?	Go to step **4**.	Repair the harness and connector. NOTE: In this case, repair the following item: • Open circuit of harness between ECM connector and engine ground • Poor contact of ECM connector • Poor contact of coupling connector
4	**CHECK REAR OXYGEN SENSOR.** Measure the resistance between rear oxygen sensor terminals. ***Terminals*** ***No. 1 — No. 2:***	Is the resistance 5 — 6.4 Ω?	Repair the poor contact of ECM connector.	Replace the rear oxygen sensor. <Ref. to FU(STI)-54, Rear Oxygen Sensor.>

1. OUTLINE OF DIAGNOSIS

Detect the rear oxygen sensor heater open or short circuit.
The rear oxygen sensor heater performs duty control, and the output terminal voltage at ON is 0 V, and the output terminal voltage at OFF is the battery voltage.
Judge as NG when the terminal voltage remains Low.

2. COMPONENT DESCRIPTION

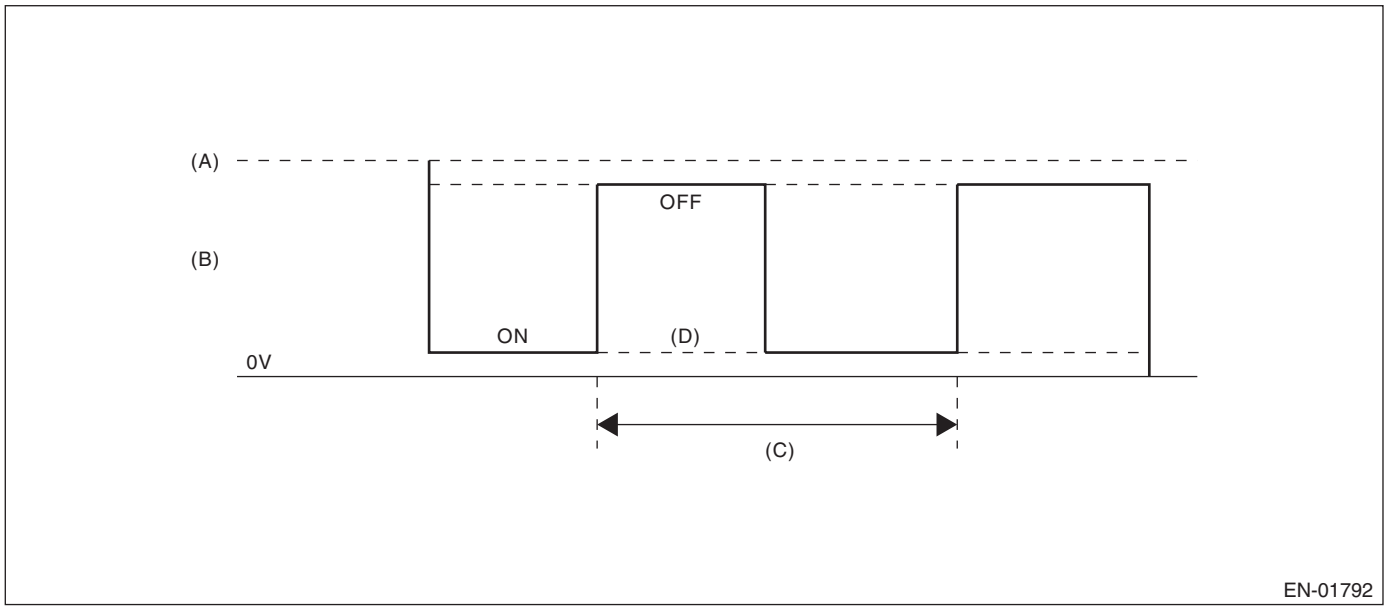

(A) Battery voltage
(B) Output voltage of the rear oxygen sensor heater
(C) 256 ms (cycles)
(D) Low error

3. EXECUTION CONDITION

Secondary parameters	Execution condition
Battery voltage	≥ 10.9 V
Rear oxygen sensor heater control duty	< 75 %

4. GENERAL DRIVING CYCLE

After starting the engine, perform the diagnosis continuously when engine is low speed.

5. DIAGNOSTIC METHOD

If the duration of time while the following conditions are met is longer than the time indicated, judge as NG.

Judgment Value

Malfunction Criteria	Threshold Value
Output voltage	< Battery voltage × 0.2 V

Time Needed for Diagnosis: 8 ms × 1250 time(s)
Malfunction Indicator Light Illumination: Illuminates when malfunction occurs in 2 continuous driving cycles.

Q: DTC P0038 A/F / O2 HEATER CONTROL CIRCUIT HIGH BANK 1 SENSOR 2

DTC DETECTING CONDITION:

Detected when two consecutive driving cycles with fault occur.

CAUTION:

After servicing or replacing faulty parts, perform Clear Memory Mode <Ref. to EN(STI)(diag)-68, OPERATION, Clear Memory Mode.>, and Inspection Mode <Ref. to EN(STI)(diag)-48, PROCEDURE, Inspection Mode.>.

WIRING DIAGRAM:

Engine Electrical System <Ref. to WI-154, WIRING DIAGRAM, Engine Electrical System.>

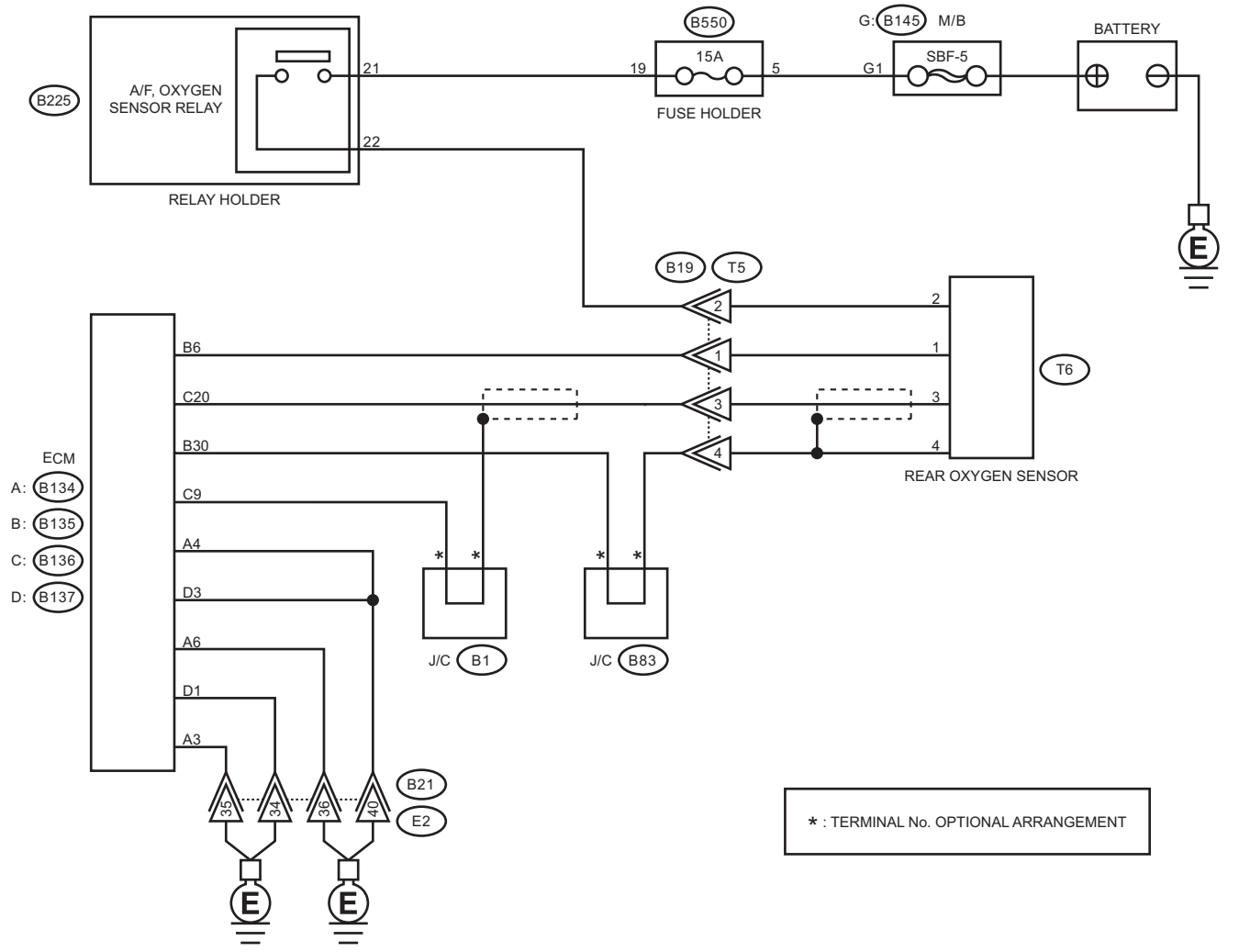

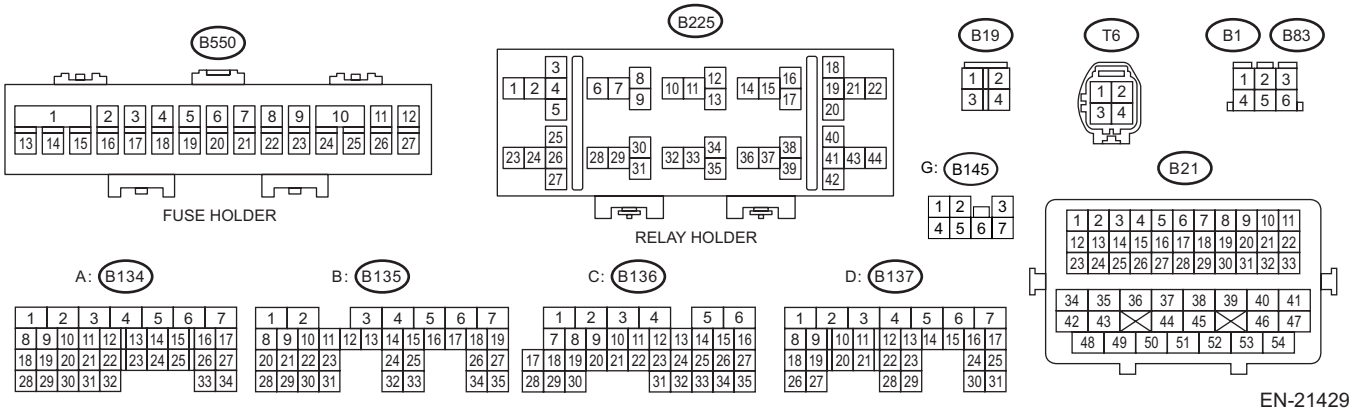

EN-21429

	Step	Check	Yes	No
1	**CHECK HARNESS BETWEEN ECM AND REAR OXYGEN SENSOR CONNECTOR.** 1) Turn the ignition switch to OFF. 2) Measure the voltage between ECM connector and chassis ground. ***Connector & terminal*** ***(B135) No. 6 (+) — Chassis ground (–):***	Is the voltage 10 V or more?	Repair the short circuit to power in the harness between ECM connector and rear oxygen sensor connector.	Go to step **2**.
2	**CHECK GROUND CIRCUIT FOR ECM.** 1) Disconnect the connector from ECM. 2) Measure the resistance between ECM connector and chassis ground. ***Connector & terminal*** ***(B134) No. 3 — Chassis ground:*** ***(B134) No. 4 — Chassis ground:*** ***(B134) No. 6 — Chassis ground:*** ***(B137) No. 1 — Chassis ground:*** ***(B137) No. 3 — Chassis ground:***	Is the resistance less than 5 Ω?	Repair the poor contact of ECM connector.	Repair the harness and connector. NOTE: In this case, repair the following item: • Open circuit of harness between ECM connector and engine ground • Poor contact of coupling connector

1. OUTLINE OF DIAGNOSIS

Detect the rear oxygen sensor heater open or short circuit.
The rear oxygen sensor heater performs duty control, and the output terminal voltage at ON is 0 V, and the output terminal voltage at OFF is the battery voltage.
Judge as NG when the terminal voltage remains High.

2. COMPONENT DESCRIPTION

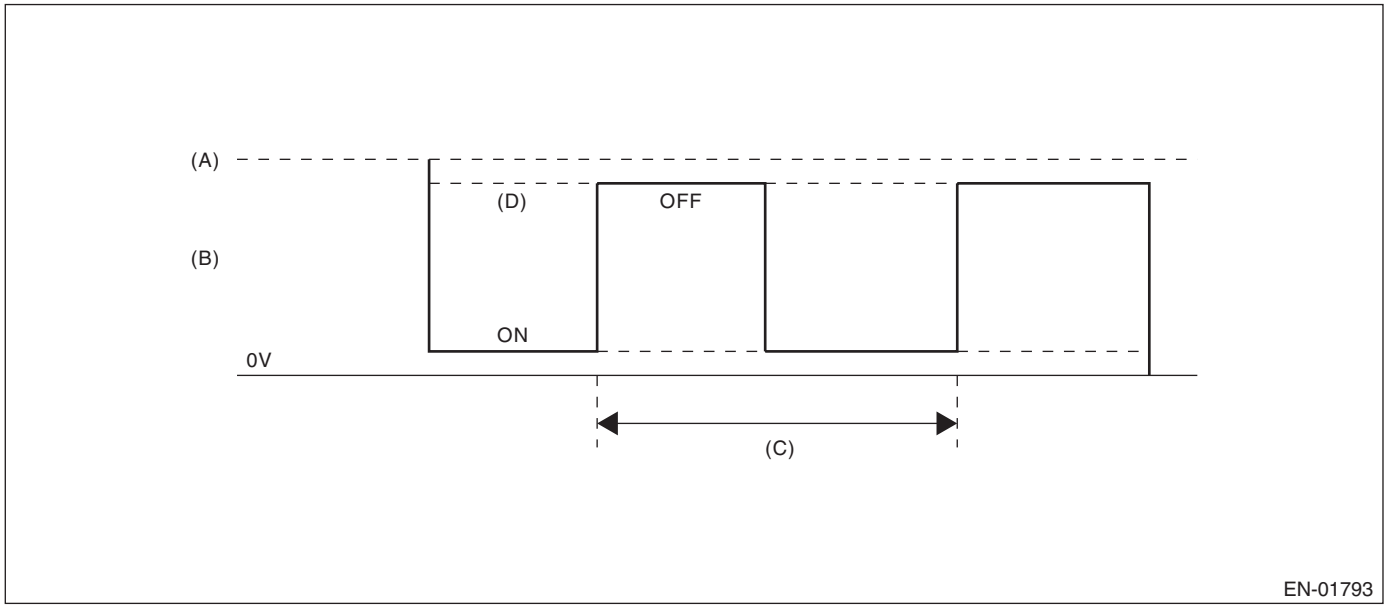

(A) Battery voltage
(B) Output voltage of the rear oxygen sensor heater
(C) 256 ms (cycles)
(D) High error

3. EXECUTION CONDITION

Secondary parameters	Execution condition
Battery voltage	≥ 10.9 V
Rear oxygen sensor heater control duty	≥ 25 %

4. GENERAL DRIVING CYCLE

After starting the engine, perform the diagnosis continuously when engine is low speed.

5. DIAGNOSTIC METHOD

If the duration of time while the following conditions are met is longer than the time indicated, judge as NG.

Judgment Value

Malfunction Criteria	Threshold Value
Output voltage	> Battery voltage × 0.3 V

Time Needed for Diagnosis: 8 ms × 320 time(s)
Malfunction Indicator Light Illumination: Illuminates when malfunction occurs in 2 continuous driving cycles.

R: DTC P0068 MAP/MAF - THROTTLE POSITION CORRELATION

DTC DETECTING CONDITION:
Detected when two consecutive driving cycles with fault occur.

CAUTION:
After servicing or replacing faulty parts, perform Clear Memory Mode <Ref. to EN(STI)(diag)-68, OPERATION, Clear Memory Mode.>, and Inspection Mode <Ref. to EN(STI)(diag)-48, PROCEDURE, Inspection Mode.>.

	Step	Check	Yes	No
1	**CHECK AIR INTAKE SYSTEM.**	Are there holes, loose bolts or disconnection of hose on air intake system?	Repair the air intake system.	Go to step **2**.
2	**CHECK MANIFOLD ABSOLUTE PRESSURE SENSOR.** 1) Start the engine and warm up engine until coolant temperature is higher than 75°C (167°F). 2) Place the shift lever in neutral position. 3) Turn the A/C switch to OFF. 4) Turn all the accessory switches to OFF. 5) Read the value of «Mani. Absolute Pressure» using the Subaru Select Monitor or a general scan tool. NOTE: • Subaru Select Monitor For detailed operation procedures, refer to “Current Data Display For Engine”. <Ref. to EN(STI)(diag)-36, Subaru Select Monitor.> • General scan tool For detailed operation procedures, refer to the general scan tool operation manual.	Is the value in «Mani. Absolute Pressure» 73.3 — 106.6 kPa (550 — 800 mmHg, 21.65 — 31.50 inHg) when the ignition is turned ON, and 20.0 — 46.7 kPa (150 — 350 mmHg, 5.91 — 13.78 inHg) during idling?	Go to step **3**.	Replace the manifold absolute pressure sensor. <Ref. to FU(STI)-41, Manifold Absolute Pressure Sensor.>
3	**CHECK THROTTLE OPENING ANGLE.** Using the Subaru Select Monitor or a general scan tool, read the value in «Throttle Opening Angle». NOTE: • Subaru Select Monitor For detailed operation procedures, refer to “Current Data Display For Engine”. <Ref. to EN(STI)(diag)-36, Subaru Select Monitor.> • General scan tool For detailed operation procedures, refer to the general scan tool operation manual.	Is the value in «Throttle Opening Angle» with the throttle fully closed less than 5%?	Go to step **4**.	Replace the electronic throttle control. <Ref. to FU(STI)-15, Throttle Body.>
4	**CHECK THROTTLE OPENING ANGLE.**	Is the value in «Throttle Opening Angle» with the throttle fully open 85% or more?	Replace the manifold absolute pressure sensor. <Ref. to FU(STI)-41, Manifold Absolute Pressure Sensor.>	Replace the electronic throttle control. <Ref. to FU(STI)-15, Throttle Body.>

1. OUTLINE OF DIAGNOSIS

Detect problems in the intake manifold pressure sensor output properties.
Judge as NG when the intake air pressure AD value is Low whereas it seemed to be High from the viewpoint of engine condition, or when it is High whereas it seemed to be Low from the engine condition.

2. COMPONENT DESCRIPTION

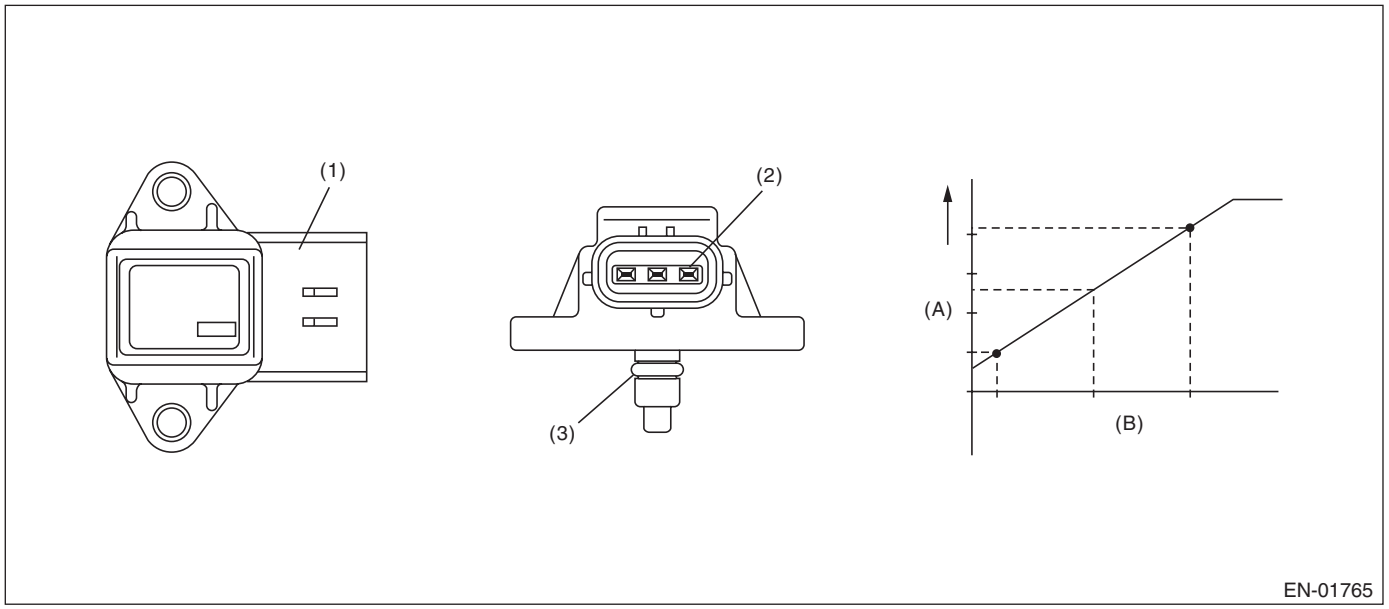

(A) Output voltage
(B) Absolute pressure
(1) Connector
(2) Terminals
(3) O-ring

3. EXECUTION CONDITION

Low

Secondary parameters	Execution condition
Engine speed	< 3000 rpm
Charging efficiency (with atmospheric pressure compensation)	> 1.2 g/rev (0.04 oz/rev)
Throttle position	≥ 16 °

High

Secondary parameters	Execution condition
Engine speed	≥ 600 rpm and < 900 rpm
Charging efficiency (with atmospheric pressure compensation)	≤ 0.46 g/rev (0.02 oz/rev)
Throttle position	≤ 5 °

4. GENERAL DRIVING CYCLE

Perform the diagnosis continuously after idling.

5. DIAGNOSTIC METHOD

Judge as NG when Low side or High side becomes NG.
If the duration of time while the following conditions are met is longer than the time indicated, judge as NG.

Judgment Value

Malfunction Criteria	Threshold Value
Low	
Output voltage	< 1.435 V
High	
Output voltage	≥ 1.435 V

Time Needed for Diagnosis:
Low side: 5000 ms
High side: 5000 ms
Malfunction Indicator Light Illumination: Illuminates when malfunction occurs in 2 continuous driving cycles.

S: DTC P0071 AMBIENT AIR TEMPERATURE SENSOR CIRCUIT "A" RANGE/ PERFORMANCE

DTC DETECTING CONDITION:
Detected when two consecutive driving cycles with fault occur.

CAUTION:
After servicing or replacing faulty parts, perform Clear Memory Mode <Ref. to EN(STI)(diag)-68, OPERATION, Clear Memory Mode.>, and Inspection Mode <Ref. to EN(STI)(diag)-48, PROCEDURE, Inspection Mode.>.

	Step	Check	Yes	No
1	**CHECK FOR ANY OTHER DTC ON DISPLAY.**	Is any other DTC displayed?	Check the appropriate DTC using the “List of Diagnostic Trouble Code (DTC)”. <Ref. to EN(STI)(diag)-96, List of Diagnostic Trouble Code (DTC).>	Go to step **2**.
2	**CHECK CURRENT DATA.** 1) Turn the ignition switch to ON. 2) Read the value of «Ambient Air Temperature» using the Subaru Select Monitor or a general scan tool. NOTE: • Subaru Select Monitor For detailed operation procedures, refer to “Current Data Display For HVAC System”. <Ref. to AC(diag)-47, Read Current Data.> • General scan tool For detailed operation procedures, refer to the general scan tool operation manual. 3) Read the change of the value in «Ambient Air Temperature» while heating and cooling the ambient sensor using a hair dryer. **CAUTION:** **Do not heat the part to the temperature where you cannot touch it with your bare hand in order to prevent burning yourself and protect the part.**	Does the value of «Ambient Air Temperature» change between heating and cooling?	Repair the poor contact of ECM connector.	Replace the ambient sensor. <Ref. to AC-71, Ambient Sensor.>

1. OUTLINE OF DIAGNOSIS

Detect the malfunction of ambient temperature sensor characteristics.
After the engine starts after the specified period of soaking time has elapsed, judge by correlation between ambient temperature sensor value, intake air temperature sensor value and engine coolant temperature sensor value. Judge as NG when the differences are both above the specified value by comparing between ambient air temperature and intake air temperature, ambient air temperature and engine coolant temperature.

2. COMPONENT DESCRIPTION

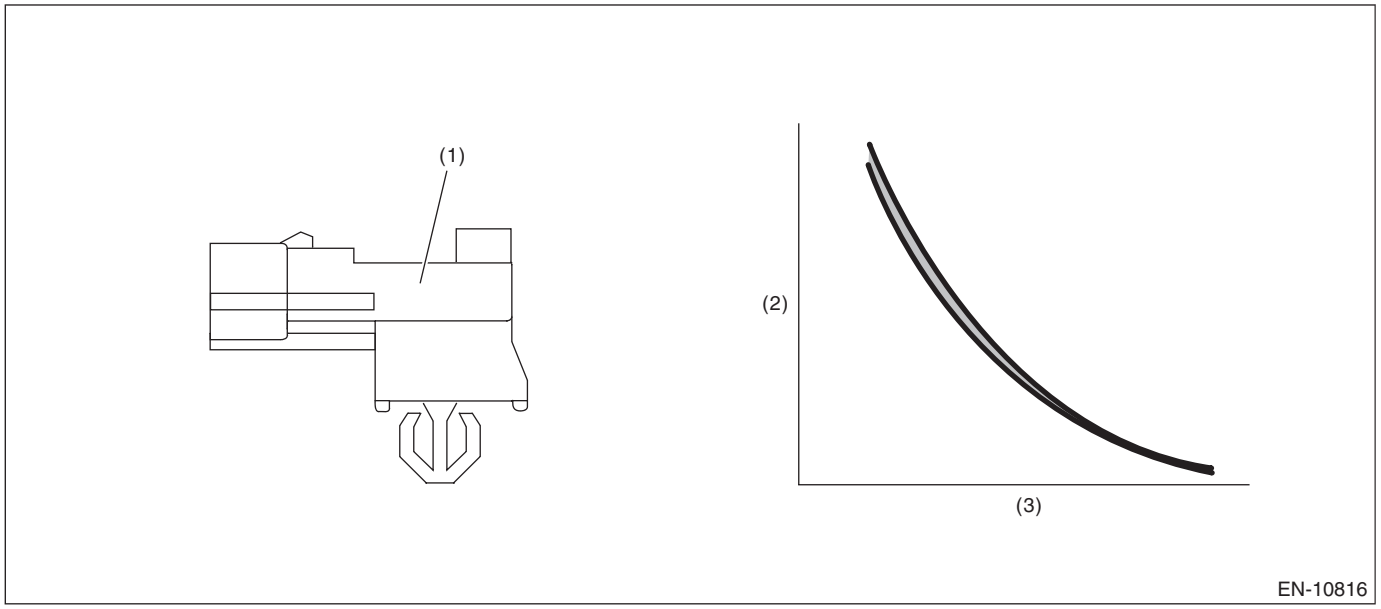

(1) Ambient sensor (2) Resistance value (kΩ) (3) Ambient air temperature (°C (°F))

3. EXECUTION CONDITION

Secondary parameters	Execution condition
Battery voltage	≥ 10.9 V
Soaking time	≥ 21600 s
Block heater judgment	Completed
Block heater operation	Not in operation

4. GENERAL DRIVING CYCLE

Perform the diagnosis only once after the engine starts after a certain period of soaking time.

5. DIAGNOSTIC METHOD

If the duration of time while the following conditions are met is longer than the time indicated, judge as NG.

Judgment Value

Malfunction Criteria	Threshold Value
|Ambient air temperature 30 sec. after engine start – Intake air temperature 30 sec. after engine start|	> Value from Map
|Ambient air temperature at engine start – Engine coolant temperature at engine start|	> 25 °C (77 °F)

Map

Intake air temperature °C (°F)	–30 (–22)	45 (113)	60 (140)	80 (176)
|Ambient air temperature 30 sec. after engine start – Intake air temperature 30 sec. after engine start| °C (°F)	20 (68)	20 (68)	32 (89.6)	32 (89.6)

Time Needed for Diagnosis: 64 ms
Malfunction Indicator Light Illumination: Illuminates as soon as a malfunction occurs.

T: DTC P0072 AMBIENT AIR TEMPERATURE SENSOR CIRCUIT "A" LOW

DTC DETECTING CONDITION:
Immediately at fault recognition

	Step	Check	Yes	No
1	**CHECK DTC.** Check for DTC. <Ref. to EN(STI)(diag)-47, Read Diagnostic Trouble Code (DTC).>	Is DTC P0072 or P0073 displayed?	Go to step **2**.	Even if DTC is detected, the circuit has returned to a normal condition at this time. Reproduce the failure, and then perform the diagnosis again. NOTE: In this case, temporary poor contact of connector, temporary open or short circuit of harness may be the cause.
2	**CHECK COMBINATION METER.** Check the combination meter system. <Ref. to IDI(diag)-2, Basic Diagnostic Procedure.>	Is the check result OK?	Repair the poor contact of ECM connector.	Repair the combination meter system. <Ref. to IDI(diag)-2, Basic Diagnostic Procedure.>

1. OUTLINE OF DIAGNOSIS

Detect the open or short circuit of ambient temperature sensor.
Judge as NG if out of specification.

2. COMPONENT DESCRIPTION

Ambient temperature signals are taken into the instrument/driver information control module, and the data of ambient temperature sensor is received from the instrument/driver information control module via CAN communication.

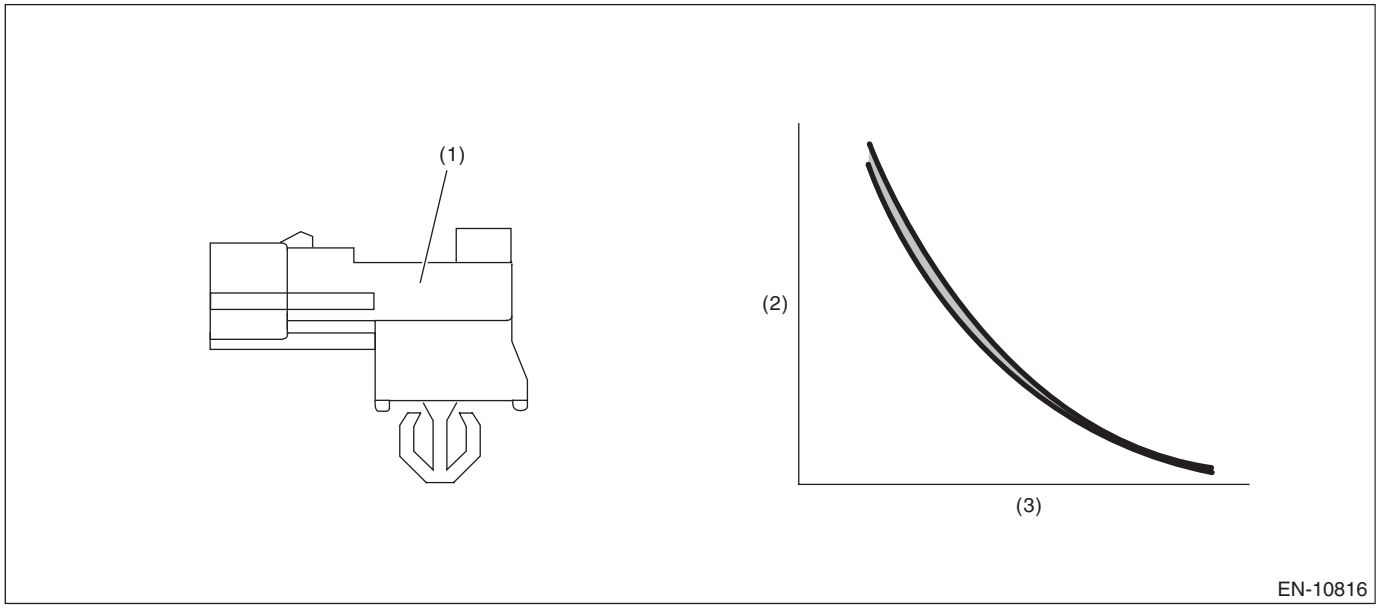

(1) Ambient sensor (2) Resistance value (kΩ) (3) Ambient air temperature (°C (°F))

3. EXECUTION CONDITION

Secondary parameters	Execution condition
Battery voltage	≥ 10.9 V

4. GENERAL DRIVING CYCLE

Always perform the diagnosis continuously after the enable conditions have been established.

5. DIAGNOSTIC METHOD

If the duration of time while the following conditions are met is longer than the time indicated, judge as NG.

Judgment Value

Malfunction Criteria	Threshold Value
Output voltage	< 0.42 V

Time Needed for Diagnosis: 2500 ms
Malfunction Indicator Light Illumination: Illuminates as soon as a malfunction occurs.

U: DTC P0073 AMBIENT AIR TEMPERATURE SENSOR CIRCUIT "A" HIGH

NOTE:
For the diagnostic procedure, refer to DTC P0072. <Ref. to EN(STI)(diag)-141, DTC P0072 AMBIENT AIR TEMPERATURE SENSOR CIRCUIT "A" LOW, Diagnostic Procedure with Diagnostic Trouble Code (DTC).>

1. OUTLINE OF DIAGNOSIS

Detect the open or short circuit of ambient temperature sensor.
Judge as NG if out of specification.

2. COMPONENT DESCRIPTION

Ambient temperature signals are taken into the instrument/driver information control module, and the data of ambient temperature sensor is received from the instrument/driver information control module via CAN communication.

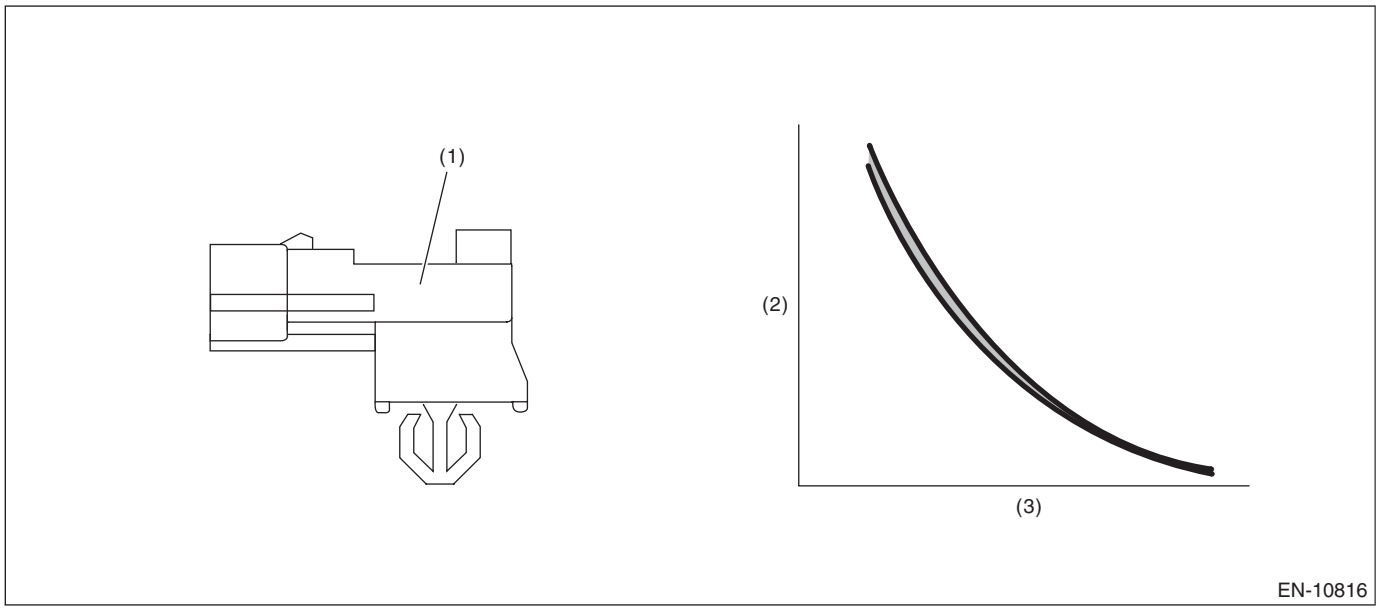

(1) Ambient sensor (2) Resistance value (kΩ) (3) Ambient air temperature (°C (°F))

3. EXECUTION CONDITION

Secondary parameters	Execution condition
Battery voltage	≥ 10.9 V

4. GENERAL DRIVING CYCLE

Always perform the diagnosis continuously after the enable conditions have been established.

5. DIAGNOSTIC METHOD

If the duration of time while the following conditions are met is longer than the time indicated, judge as NG.

Judgment Value

Malfunction Criteria	Threshold Value
Output voltage	> 4.88 V

Time Needed for Diagnosis: 2500 ms
Malfunction Indicator Light Illumination: Illuminates as soon as a malfunction occurs.

V: DTC P0101 MASS OR VOLUME AIR FLOW SENSOR "A" CIRCUIT RANGE/ PERFORMANCE

DTC DETECTING CONDITION:
Detected when two consecutive driving cycles with fault occur.
TROUBLE SYMPTOM:
- Improper idling
- Engine stalls.
- Poor driving performance

CAUTION:
After servicing or replacing faulty parts, perform Clear Memory Mode <Ref. to EN(STI)(diag)-68, OPERATION, Clear Memory Mode.>, and Inspection Mode <Ref. to EN(STI)(diag)-48, PROCEDURE, Inspection Mode.>.

Step		Check	Yes	No
1	**CHECK FOR ANY OTHER DTC ON DISPLAY.**	Is any other DTC displayed?	Check the appropriate DTC using the “List of Diagnostic Trouble Code (DTC)”. <Ref. to EN(STI)(diag)-96, List of Diagnostic Trouble Code (DTC).>	Replace the mass air flow and intake air temperature sensor. <Ref. to FU(STI)-40, Mass Air Flow and Intake Air Temperature Sensor.>

1. OUTLINE OF DIAGNOSIS

Detect the malfunction of air flow sensor output properties.
Judge as NG on the Low side when the displayed value of air flow voltage is small even in a driving condition where it should be large. Judge as NG on the High side when the displayed value of air flow voltage is large even in a driving condition where it should be small. Judge as NG in the air flow sensor property when either the Low side or High side becomes NG.

2. COMPONENT DESCRIPTION

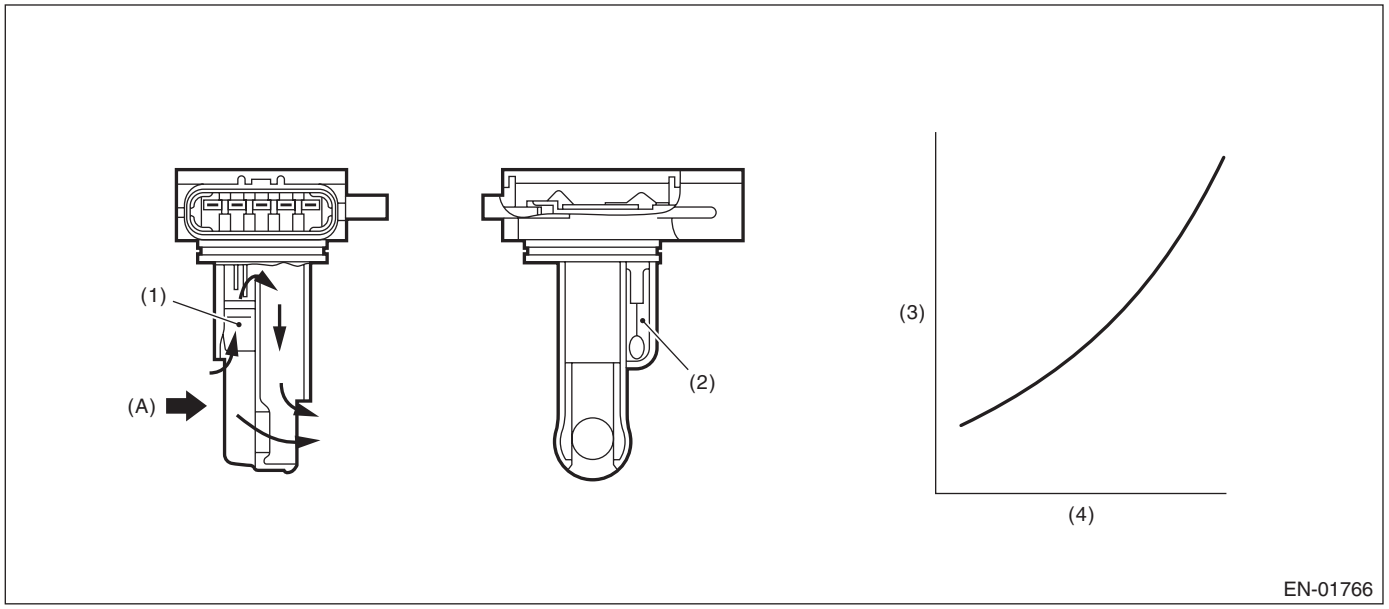

(A) Air

(1) Air flow sensor
(2) Intake air temperature sensor
(3) Voltage (V)
(4) Intake air amount (kg (lb)/s)

3. EXECUTION CONDITION

Low

Secondary parameters	Execution condition
Engine speed	≥ 1600 rpm
Throttle position	≥ 12 °
Intake manifold pressure (with atmospheric pressure compensation)	≥ 73.3 kPa (550 mmHg, 21.7 inHg)

High

Secondary parameters	Execution condition
Engine speed	≥ 600 rpm and < 900 rpm
Throttle position	< 5 °
Intake manifold pressure (with atmospheric pressure compensation)	< 49.3 kPa (370 mmHg, 14.6 inHg)

4. GENERAL DRIVING CYCLE

Perform the diagnosis continuously after idling.

5. DIAGNOSTIC METHOD

Judge as NG when Low side or High side becomes NG.
If the duration of time while the following conditions are met is longer than the time indicated, judge as NG.

Judgment Value

Malfunction Criteria	Threshold Value
Low	
Output voltage	< MAP1
High	
Output voltage	≥ MAP2

Map 1

Engine speed (rpm)	1600	2000	3000	4000	5000	6000	7000
Output voltage (V)	1.848	1.970	2.220	2.420	2.580	2.730	2.850

Map 2

Engine speed (rpm)	600	700	800	900
Output voltage (V)	1.640	1.720	1.790	1.845

Time Needed for Diagnosis:
Low: 5000 ms
High: 5000 ms
Malfunction Indicator Light Illumination: Illuminates when malfunction occurs in 2 continuous driving cycles.

W: DTC P0102 MASS OR VOLUME AIR FLOW SENSOR "A" CIRCUIT LOW

DTC DETECTING CONDITION:
Immediately at fault recognition
TROUBLE SYMPTOM:

- Improper idling
- Engine stalls.
- Poor driving performance

CAUTION:
After servicing or replacing faulty parts, perform Clear Memory Mode <Ref. to EN(STI)(diag)-68, OPERATION, Clear Memory Mode.>, and Inspection Mode <Ref. to EN(STI)(diag)-48, PROCEDURE, Inspection Mode.>.
WIRING DIAGRAM:
Engine Electrical System <Ref. to WI-154, WIRING DIAGRAM, Engine Electrical System.>

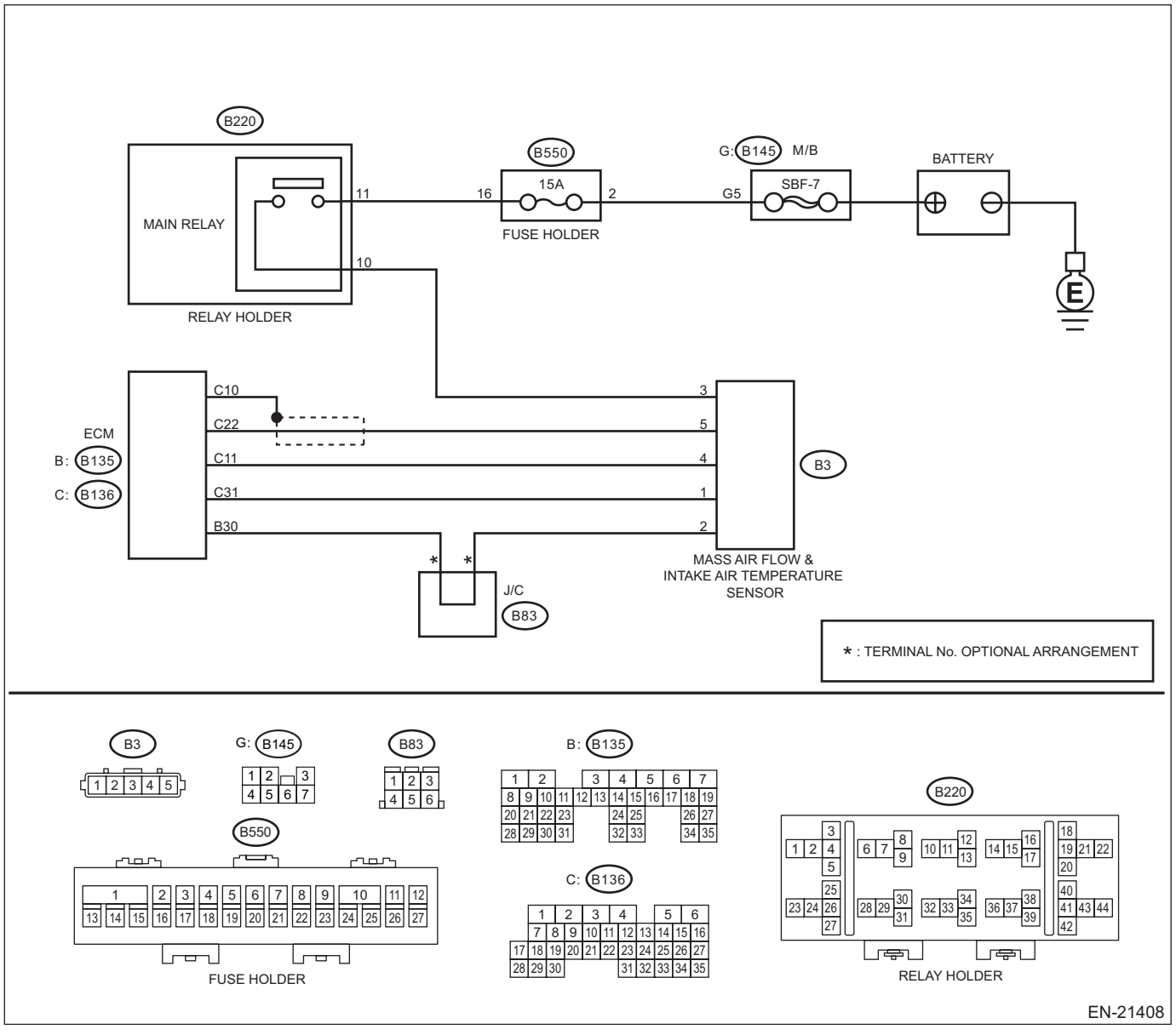

	Step	Check	Yes	No
1	**CHECK CURRENT DATA.** 1) Start the engine. 2) Read the value of «Air Flow Sensor Voltage» using Subaru Select Monitor. NOTE: For detailed operation procedures, refer to "Current Data Display For Engine". <Ref. to EN(STI)(diag)-36, Subaru Select Monitor.>	Is the value of «Air Flow Sensor Voltage» less than 0.2 V?	Go to step **2**.	Even if DTC is detected, the circuit has returned to a normal condition at this time. Reproduce the failure, and then perform the diagnosis again. NOTE: In this case, temporary poor contact of connector, temporary open or short circuit of harness may be the cause.
2	**CHECK POWER SUPPLY OF MASS AIR FLOW AND INTAKE AIR TEMPERATURE SENSOR.** 1) Turn the ignition switch to OFF. 2) Disconnect the connectors from the mass air flow and intake air temperature sensor. 3) Turn the ignition switch to ON. 4) Measure the voltage between mass air flow and intake air temperature sensor connector and engine ground. ***Connector & terminal*** ***(B3) No. 3 (+) — Engine ground (–):***	Is the voltage 10 V or more?	Go to step **3**.	Repair the harness and connector. NOTE: In this case, repair the following item: • Open circuit in harness between main relay connector and mass air flow and intake air temperature sensor connector • Poor contact of main relay connector
3	**CHECK HARNESS BETWEEN ECM AND MASS AIR FLOW AND INTAKE AIR TEMPERATURE SENSOR CONNECTOR.** 1) Turn the ignition switch to OFF. 2) Disconnect the connector from ECM. 3) Measure the resistance of harness between ECM connector and the mass air flow and intake air temperature sensor connector. ***Connector & terminal*** ***(B136) No. 22 — (B3) No. 5:***	Is the resistance less than 1 Ω?	Go to step **4**.	Repair the open circuit of harness between ECM connector and the mass air flow and intake air temperature sensor connector.
4	**CHECK HARNESS BETWEEN ECM AND MASS AIR FLOW AND INTAKE AIR TEMPERATURE SENSOR CONNECTOR.** Measure the resistance between ECM connector and chassis ground. ***Connector & terminal*** ***(B136) No. 22 — Chassis ground:***	Is the resistance 1 MΩ or more?	Go to step **5**.	Repair the ground short circuit of harness between ECM connector and the mass air flow and intake air temperature sensor connector.
5	**CHECK FOR POOR CONTACT.** Check for poor contact of ECM and mass air flow and intake air temperature sensor connector.	Is there poor contact of ECM or mass air flow and intake air temperature sensor connector?	Repair the poor contact of ECM or mass air flow and intake air temperature sensor connector.	Replace the mass air flow and intake air temperature sensor. <Ref. to FU(STI)-40, Mass Air Flow and Intake Air Temperature Sensor.>

1. OUTLINE OF DIAGNOSIS

Detect open or short circuits of the air flow sensor.
Judge as NG if out of specification.

2. COMPONENT DESCRIPTION

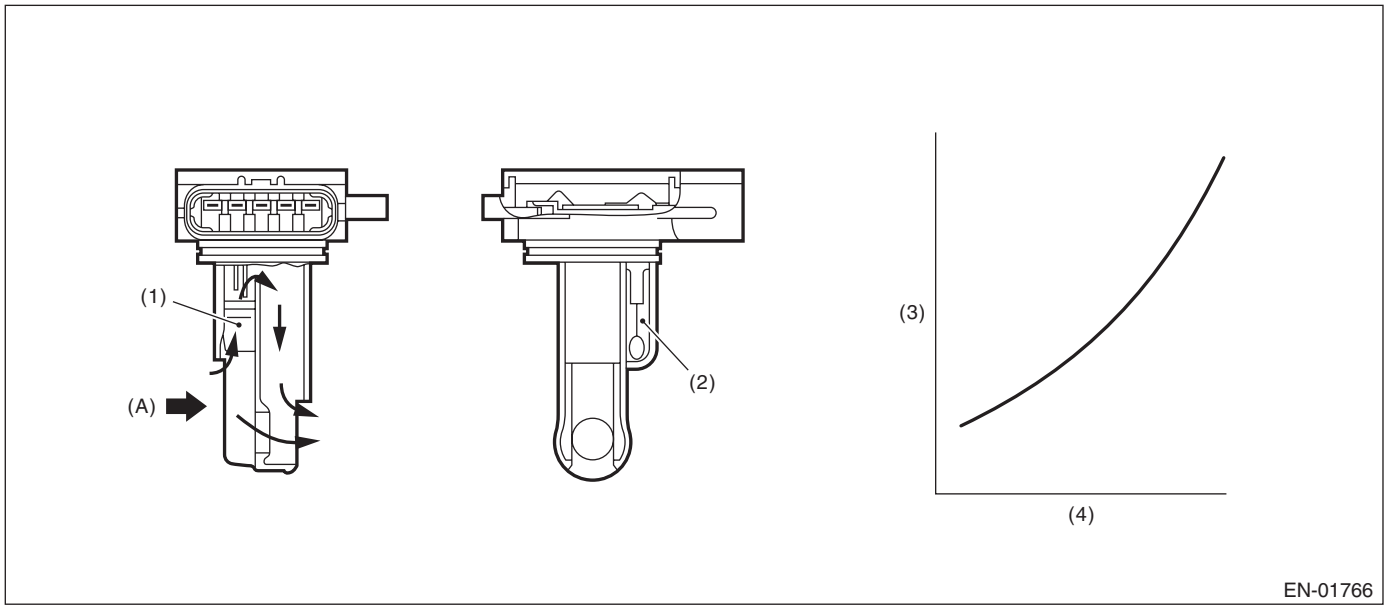

(A) Air

(1) Air flow sensor
(2) Intake air temperature sensor
(3) Voltage (V)
(4) Intake air amount (kg (lb)/s)

3. EXECUTION CONDITION

Secondary parameters	Execution condition
None	

4. GENERAL DRIVING CYCLE

Always perform the diagnosis continuously.

5. DIAGNOSTIC METHOD

If the duration of time while the following conditions are met is longer than the time indicated, judge as NG.

Judgment Value

Malfunction Criteria	Threshold Value
Output voltage	< 0.22 V

Time Needed for Diagnosis: 500 ms
Malfunction Indicator Light Illumination: Illuminates as soon as a malfunction occurs.

X: DTC P0103 MASS OR VOLUME AIR FLOW SENSOR "A" CIRCUIT HIGH

DTC DETECTING CONDITION:
Immediately at fault recognition
TROUBLE SYMPTOM:

- Improper idling
- Engine stalls.
- Poor driving performance

CAUTION:
After servicing or replacing faulty parts, perform Clear Memory Mode <Ref. to EN(STI)(diag)-68, OPERATION, Clear Memory Mode.>, and Inspection Mode <Ref. to EN(STI)(diag)-48, PROCEDURE, Inspection Mode.>.
WIRING DIAGRAM:
Engine Electrical System <Ref. to WI-154, WIRING DIAGRAM, Engine Electrical System.>

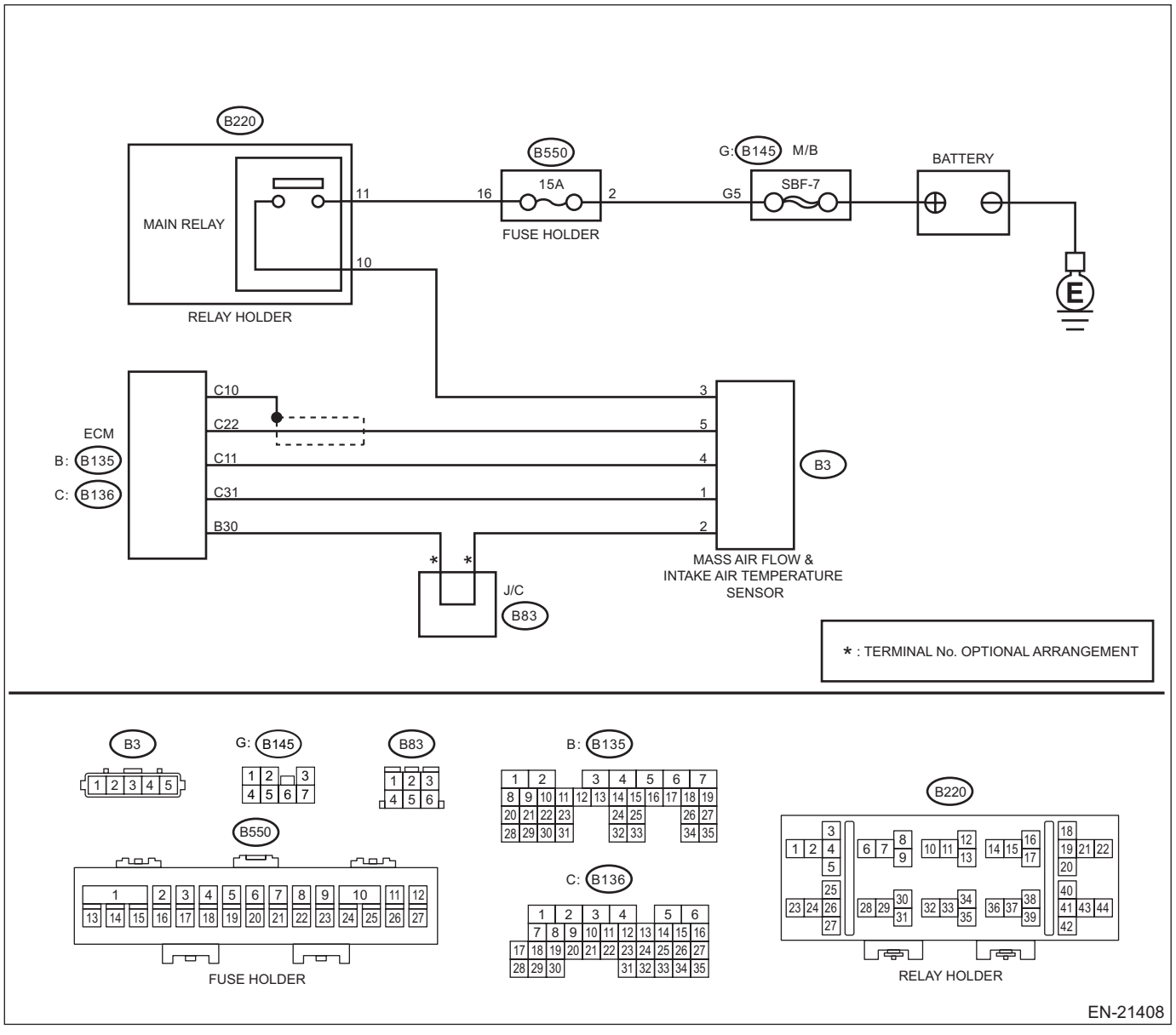

	Step	Check	Yes	No
1	**CHECK CURRENT DATA.** 1) Start the engine. 2) Read the value of «Air Flow Sensor Voltage» using Subaru Select Monitor. NOTE: For detailed operation procedures, refer to "Current Data Display For Engine". <Ref. to EN(STI)(diag)-36, Subaru Select Monitor.>	Is the value of «Air Flow Sensor Voltage» 5 V or more?	Go to step **2**.	Even if DTC is detected, the circuit has returned to a normal condition at this time. Reproduce the failure, and then perform the diagnosis again. NOTE: In this case, temporary poor contact of connector, temporary open or short circuit of harness may be the cause.
2	**CHECK HARNESS BETWEEN ECM AND MASS AIR FLOW AND INTAKE AIR TEMPERATURE SENSOR CONNECTOR.** 1) Turn the ignition switch to OFF. 2) Disconnect the connectors from the mass air flow and intake air temperature sensor. 3) Start the engine. 4) Read the value of «Air Flow Sensor Voltage» using Subaru Select Monitor. NOTE: For detailed operation procedures, refer to "Current Data Display For Engine". <Ref. to EN(STI)(diag)-36, Subaru Select Monitor.>	Is the value of «Air Flow Sensor Voltage» 5 V or more?	Repair the short circuit of harness to power supply between ECM connector and the mass air flow and intake air temperature sensor connector.	Go to step **3**.
3	**CHECK HARNESS BETWEEN ECM AND MASS AIR FLOW AND INTAKE AIR TEMPERATURE SENSOR CONNECTOR.** 1) Turn the ignition switch to OFF. 2) Measure the resistance of harness between mass air flow and intake air temperature sensor connector and engine ground. ***Connector & terminal*** ***(B3) No. 4 — Engine ground:***	Is the resistance less than 5 Ω?	Go to step **4**.	Repair the harness and connector. NOTE: In this case, repair the following item: • Open circuit in harness between ECM connector and the mass air flow and intake air temperature sensor connector • Poor contact of ECM connector
4	**CHECK FOR POOR CONTACT.** Check for poor contact of mass air flow and intake air temperature sensor connector.	Is there poor contact of mass air flow and intake air temperature sensor connector?	Repair the poor contact of mass air flow and intake air temperature sensor connector.	Replace the mass air flow and intake air temperature sensor. <Ref. to FU(STI)-40, Mass Air Flow and Intake Air Temperature Sensor.>

1. OUTLINE OF DIAGNOSIS

Detect open or short circuits of the air flow sensor.
Judge as NG if out of specification.

2. COMPONENT DESCRIPTION

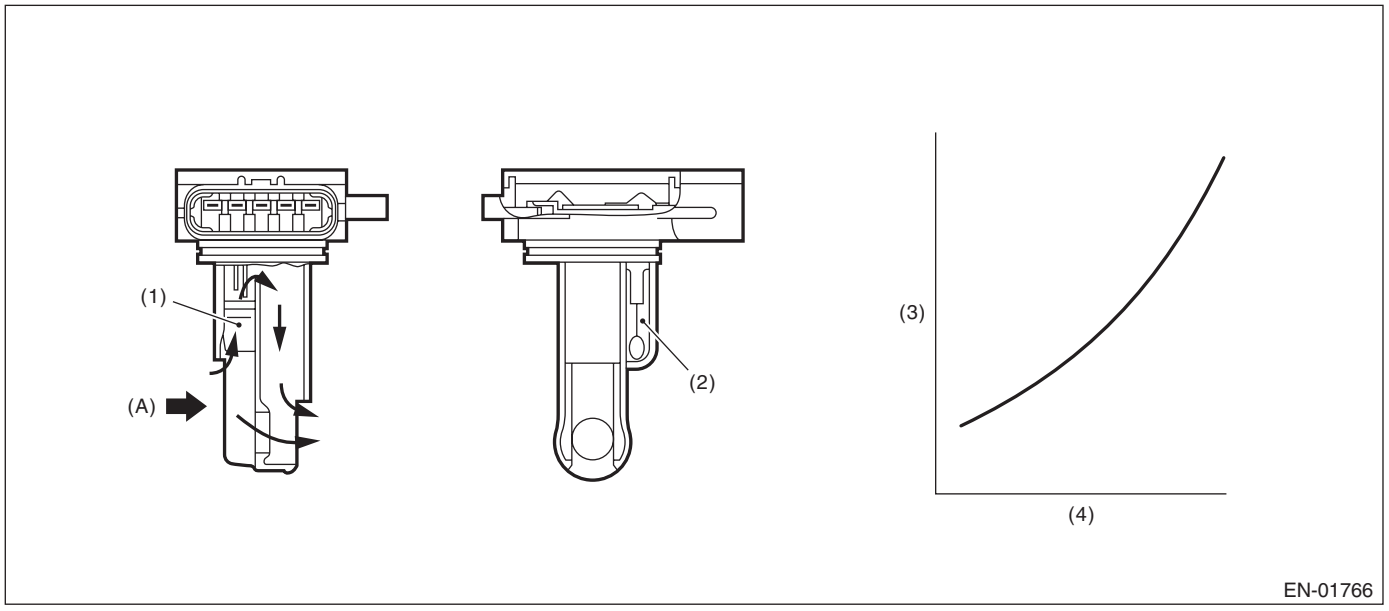

(A) Air

(1) Air flow sensor
(2) Intake air temperature sensor
(3) Voltage (V)
(4) Intake air amount (kg (lb)/s)

3. EXECUTION CONDITION

Secondary parameters	Execution condition
None	

4. GENERAL DRIVING CYCLE

Always perform the diagnosis continuously.

5. DIAGNOSTIC METHOD

If the duration of time while the following conditions are met is longer than the time indicated, judge as NG.

Judgment Value

Malfunction Criteria	Threshold Value
Output voltage	≥ 4.952 V

Time Needed for Diagnosis: 500 ms
Malfunction Indicator Light Illumination: Illuminates as soon as a malfunction occurs.

Y: DTC P0107 MANIFOLD ABSOLUTE PRESSURE/BAROMETRIC PRESSURE SENSOR CIRCUIT LOW

DTC DETECTING CONDITION:
Immediately at fault recognition

CAUTION:
After servicing or replacing faulty parts, perform Clear Memory Mode <Ref. to EN(STI)(diag)-68, OPERATION, Clear Memory Mode.>, and Inspection Mode <Ref. to EN(STI)(diag)-48, PROCEDURE, Inspection Mode.>.

WIRING DIAGRAM:
Engine Electrical System <Ref. to WI-154, WIRING DIAGRAM, Engine Electrical System.>

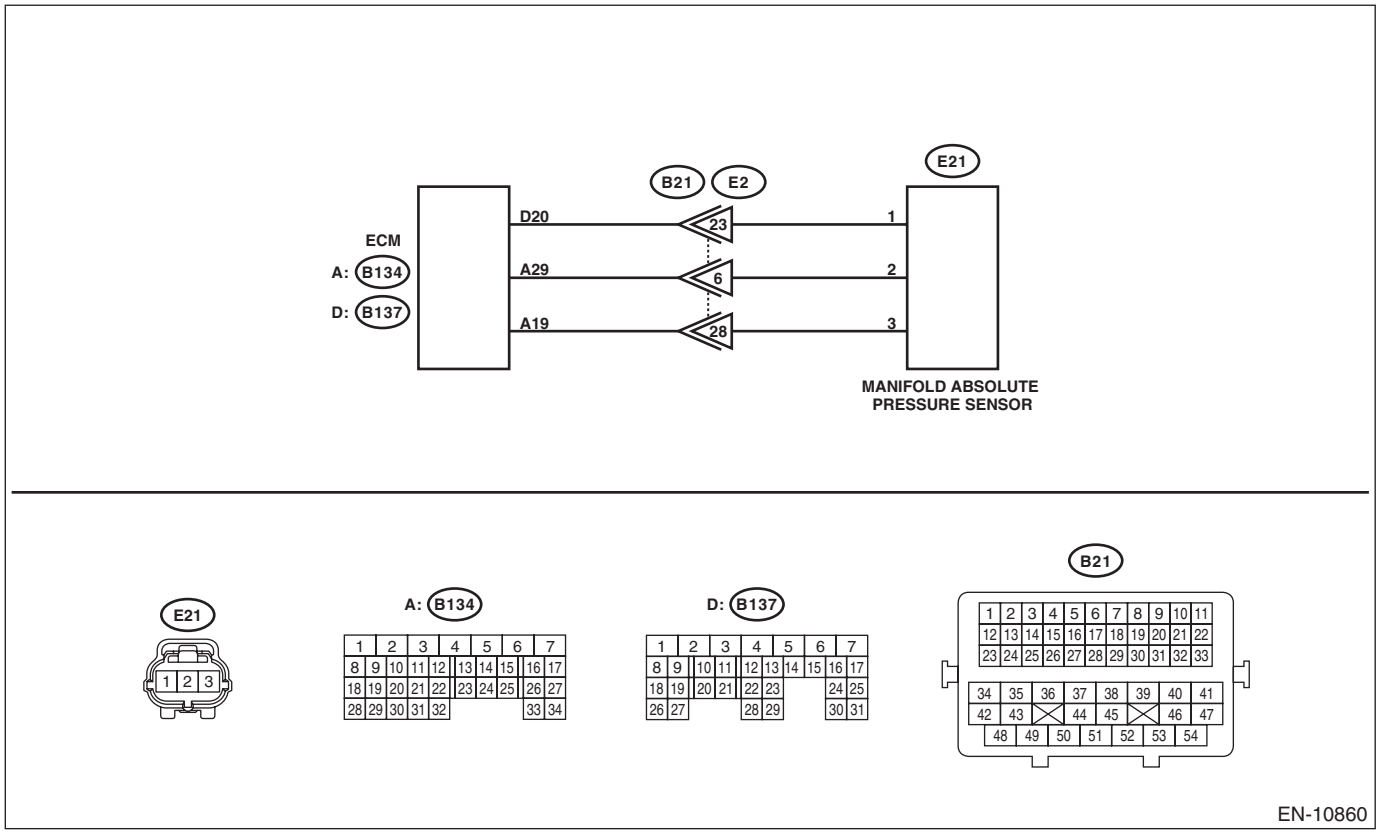

Step		Check	Yes	No
1	**CHECK CURRENT DATA.** 1) Start the engine. 2) Read the value of «Mani. Absolute Pressure» using the Subaru Select Monitor or a general scan tool. NOTE: • Subaru Select Monitor For detailed operation procedures, refer to “Current Data Display For Engine”. <Ref. to EN(STI)(diag)-36, Subaru Select Monitor.> • General scan tool For detailed operation procedures, refer to the general scan tool operation manual.	Is the value of «Mani. Absolute Pressure» less than 13.3 kPa (100 mmHg, 3.94 inHg)?	Go to step **2**.	Even if DTC is detected, the circuit has returned to a normal condition at this time. Reproduce the failure, and then perform the diagnosis again. NOTE: In this case, temporary poor contact of connector, temporary open or short circuit of harness may be the cause.

	Step	Check	Yes	No
2	**CHECK POWER SUPPLY OF MANIFOLD ABSOLUTE PRESSURE SENSOR.** 1) Turn the ignition switch to OFF. 2) Disconnect the connector from manifold absolute pressure sensor. 3) Turn the ignition switch to ON. 4) Measure the voltage between manifold absolute pressure sensor connector and engine ground. ***Connector & terminal*** ***(E21) No. 3 (+) — Engine ground (–):***	Is the voltage 4.5 V or more?	Go to step **3**.	Repair the harness and connector. NOTE: In this case, repair the following item: • Open circuit of harness between ECM connector and manifold absolute pressure sensor connector • Poor contact of ECM connector • Poor contact of coupling connector
3	**CHECK HARNESS BETWEEN ECM AND MANIFOLD ABSOLUTE PRESSURE SENSOR CONNECTOR.** 1) Turn the ignition switch to OFF. 2) Disconnect the connector from ECM. 3) Measure the resistance of harness between ECM connector and manifold absolute pressure sensor connector. ***Connector & terminal*** ***(B137) No. 20 — (E21) No. 1:***	Is the resistance less than 1 Ω?	Go to step **4**.	Repair the harness and connector. NOTE: In this case, repair the following item: • Open circuit of harness between ECM connector and manifold absolute pressure sensor connector • Poor contact of coupling connector
4	**CHECK HARNESS BETWEEN ECM AND MANIFOLD ABSOLUTE PRESSURE SENSOR CONNECTOR.** Measure the resistance between ECM connector and chassis ground. ***Connector & terminal*** ***(B137) No. 20 — Chassis ground:***	Is the resistance 1 MΩ or more?	Go to step **5**.	Repair short circuit to ground in harness between ECM connector and manifold absolute pressure sensor connector.
5	**CHECK FOR POOR CONTACT.** Check for poor contact of ECM and manifold absolute pressure sensor connector.	Is there poor contact of ECM or manifold absolute pressure sensor connector?	Repair the poor contact of ECM or manifold absolute pressure sensor connector.	Replace the manifold absolute pressure sensor. <Ref. to FU(STI)-41, Manifold Absolute Pressure Sensor.>

1. OUTLINE OF DIAGNOSIS

Detect the open or short circuit of intake manifold pressure sensor.
Judge as NG if out of specification.

2. COMPONENT DESCRIPTION

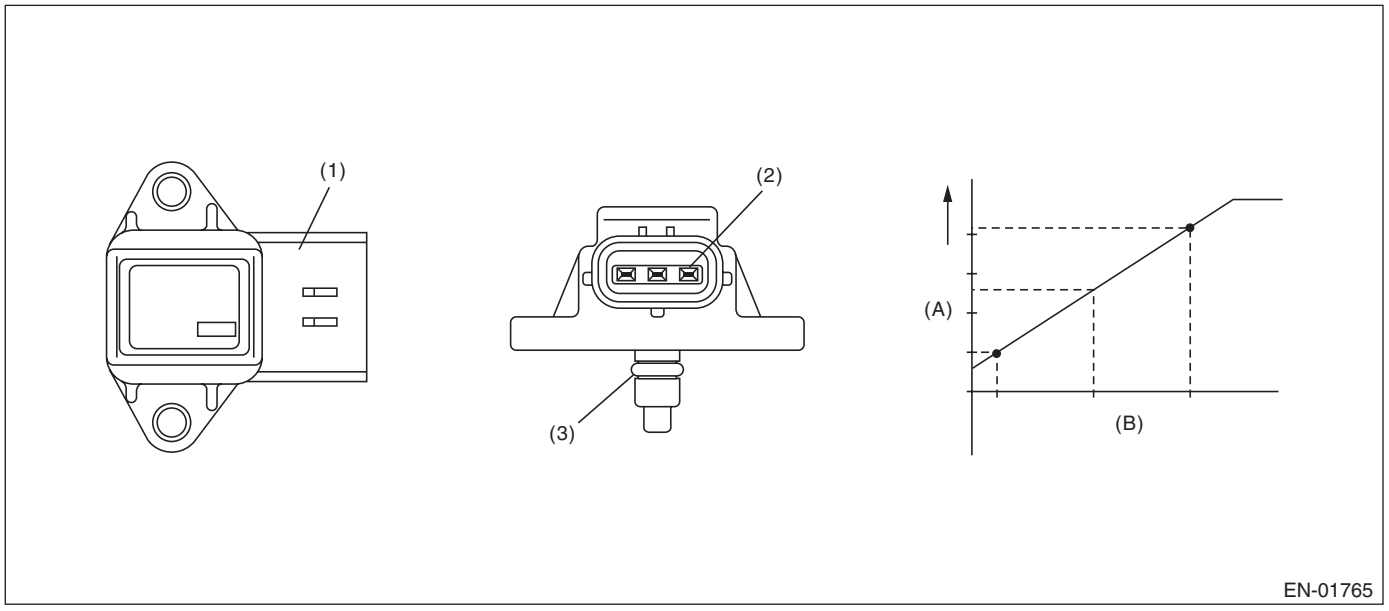

(A) Output voltage
(B) Absolute pressure
(1) Connector
(2) Terminals
(3) O-ring

3. EXECUTION CONDITION

Secondary parameters	Execution condition
None	

4. GENERAL DRIVING CYCLE

Always perform the diagnosis continuously.

5. DIAGNOSTIC METHOD

If the duration of time while the following conditions are met is longer than the time indicated, judge as NG.

Judgment Value

Malfunction Criteria	Threshold Value
Output voltage	< 0.581 V

Time Needed for Diagnosis: 2000 ms
Malfunction Indicator Light Illumination: Illuminates as soon as a malfunction occurs.

Z: DTC P0108 MANIFOLD ABSOLUTE PRESSURE/BAROMETRIC PRESSURE SENSOR CIRCUIT HIGH

DTC DETECTING CONDITION:
Immediately at fault recognition

CAUTION:
After servicing or replacing faulty parts, perform Clear Memory Mode <Ref. to EN(STI)(diag)-68, OPERATION, Clear Memory Mode.>, and Inspection Mode <Ref. to EN(STI)(diag)-48, PROCEDURE, Inspection Mode.>.

WIRING DIAGRAM:
Engine Electrical System <Ref. to WI-154, WIRING DIAGRAM, Engine Electrical System.>

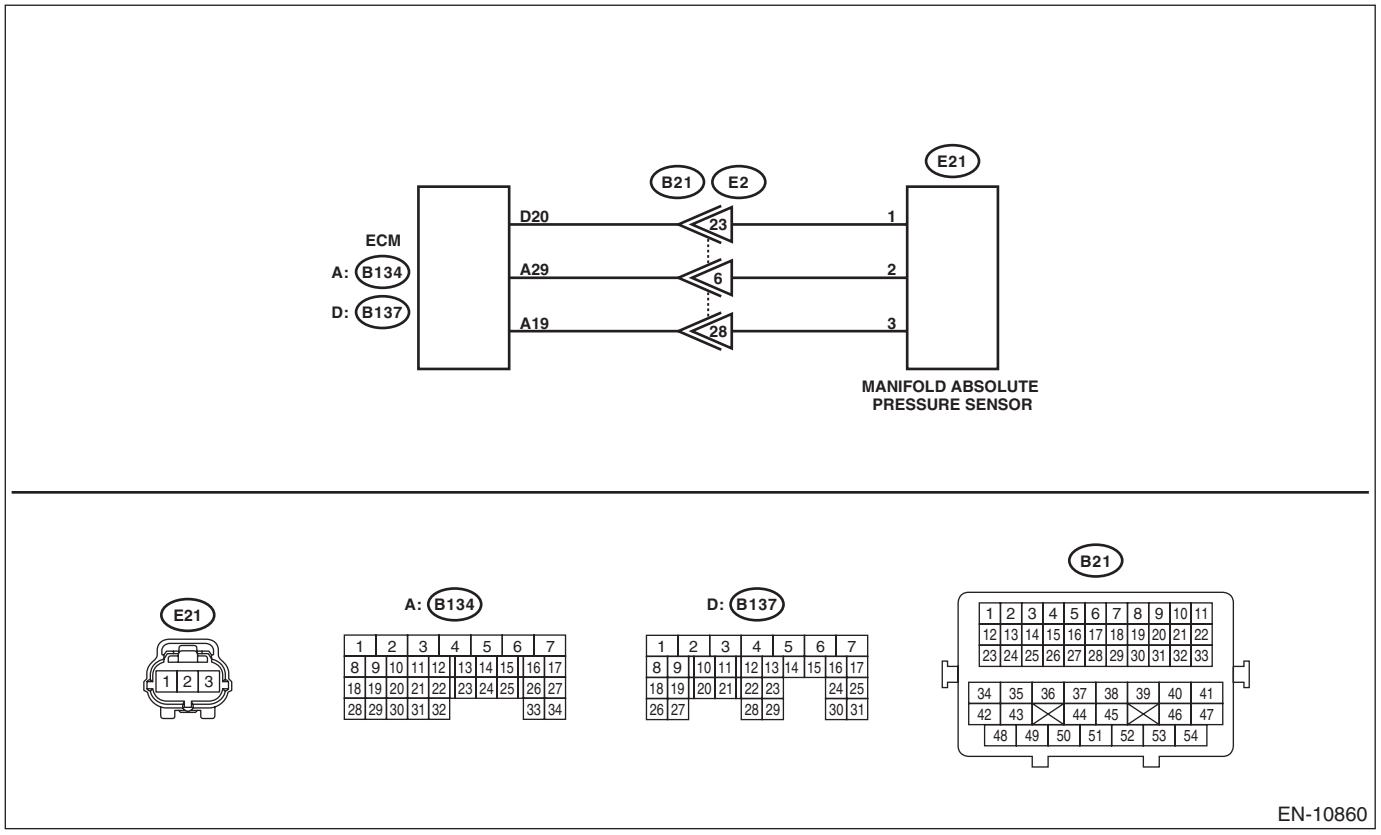

Step		Check	Yes	No
1	**CHECK CURRENT DATA.** 1) Start the engine. 2) Read the value of «Mani. Absolute Pressure» using the Subaru Select Monitor or a general scan tool. NOTE: • Subaru Select Monitor For detailed operation procedures, refer to “Current Data Display For Engine”. <Ref. to EN(STI)(diag)-36, Subaru Select Monitor.> • General scan tool For detailed operation procedures, refer to the general scan tool operation manual.	Is the value of «Mani. Absolute Pressure» 119.5 kPa (896.5 mmHg, 35.29 inHg) or more?	Go to step **2**.	Even if DTC is detected, the circuit has returned to a normal condition at this time. Reproduce the failure, and then perform the diagnosis again. NOTE: In this case, temporary poor contact of connector, temporary open or short circuit of harness may be the cause.

	Step	Check	Yes	No
2	**CHECK HARNESS BETWEEN ECM AND MANIFOLD ABSOLUTE PRESSURE SENSOR CONNECTOR.** 1) Turn the ignition switch to OFF. 2) Disconnect the connector from manifold absolute pressure sensor. 3) Start the engine. 4) Read the value of «Mani. Absolute Pressure» using the Subaru Select Monitor or a general scan tool. NOTE: • Subaru Select Monitor For detailed operation procedures, refer to "Current Data Display For Engine". <Ref. to EN(STI)(diag)-36, Subaru Select Monitor.> • General scan tool For detailed operation procedures, refer to the general scan tool operation manual.	Is the value of «Mani. Absolute Pressure» 119.5 kPa (896.5 mmHg, 35.29 inHg) or more?	Repair the short circuit to power in harness between ECM connector and manifold absolute pressure sensor connector.	Go to step **3**.
3	**CHECK HARNESS BETWEEN ECM AND MANIFOLD ABSOLUTE PRESSURE SENSOR CONNECTOR.** 1) Turn the ignition switch to OFF. 2) Measure the resistance of harness between manifold absolute pressure sensor connector and engine ground. ***Connector & terminal*** ***(E21) No. 2 — Engine ground:***	Is the resistance less than 5 Ω?	Go to step **4**.	Repair the harness and connector. NOTE: In this case, repair the following item: • Open circuit of harness between ECM connector and manifold absolute pressure sensor connector • Poor contact of ECM connector • Poor contact of coupling connector
4	**CHECK FOR POOR CONTACT.** Check for poor contact of manifold absolute pressure sensor connector.	Is there poor contact of manifold absolute pressure sensor connector?	Repair the poor contact of manifold absolute pressure sensor connector.	Replace the manifold absolute pressure sensor. <Ref. to FU(STI)-41, Manifold Absolute Pressure Sensor.>

1. OUTLINE OF DIAGNOSIS

Detect the open or short circuit of intake manifold pressure sensor.
Judge as NG if out of specification.

2. COMPONENT DESCRIPTION

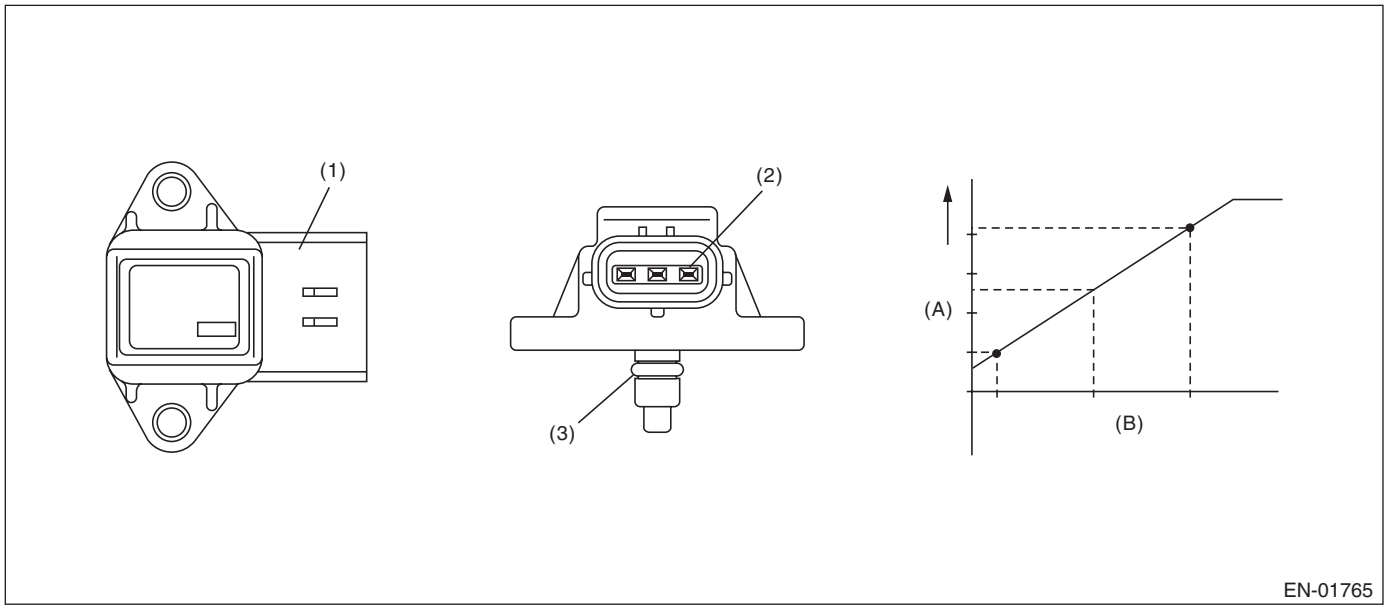

(A) Output voltage
(B) Absolute pressure
(1) Connector
(2) Terminals
(3) O-ring

3. EXECUTION CONDITION

Secondary parameters	Execution condition
None	

4. GENERAL DRIVING CYCLE

Always perform the diagnosis continuously.

5. DIAGNOSTIC METHOD

If the duration of time while the following conditions are met is longer than the time indicated, judge as NG.

Judgment Value

Malfunction Criteria	Threshold Value
Output voltage	≥ 4.681 V

Time Needed for Diagnosis: 2000 ms
Malfunction Indicator Light Illumination: Illuminates as soon as a malfunction occurs.

AA:DTC P0111 INTAKE AIR TEMPERATURE SENSOR 1 CIRCUIT RANGE/PERFORMANCE BANK 1

DTC DETECTING CONDITION:
Detected when two consecutive driving cycles with fault occur.
TROUBLE SYMPTOM:
- Improper idling
- Poor driving performance

CAUTION:
After servicing or replacing faulty parts, perform Clear Memory Mode <Ref. to EN(STI)(diag)-68, OPERATION, Clear Memory Mode.>, and Inspection Mode <Ref. to EN(STI)(diag)-48, PROCEDURE, Inspection Mode.>.

	Step	Check	Yes	No
1	**CHECK FOR ANY OTHER DTC ON DISPLAY.**	Is any other DTC displayed?	Check the appropriate DTC using the "List of Diagnostic Trouble Code (DTC)". <Ref. to EN(STI)(diag)-96, List of Diagnostic Trouble Code (DTC).>	Go to step **2**.
2	**CHECK CURRENT DATA.** 1) Turn the ignition switch to ON. 2) Read the value of «Intake Air Temp.» using the Subaru Select Monitor or a general scan tool. NOTE: • Subaru Select Monitor For detailed operation procedures, refer to "Current Data Display For Engine". <Ref. to EN(STI)(diag)-36, Subaru Select Monitor.> • General scan tool For detailed operation procedures, refer to the general scan tool operation manual. 3) Read the change of the value in «Intake Air Temp.» while heating and cooling the mass air flow and intake air temperature sensor using a hair dryer. **CAUTION:** **Do not heat the part to the temperature where you cannot touch it with your bare hand in order to prevent burning yourself and protect the part.**	Does the value of «Intake Air Temp.» change between heating and cooling?	Repair the poor contact of ECM connector.	Replace the mass air flow and intake air temperature sensor. <Ref. to FU(STI)-40, Mass Air Flow and Intake Air Temperature Sensor.>

1. OUTLINE OF DIAGNOSIS

Detect the malfunction of the intake air temperature sensor output properties. Using the following two diagnoses, judge as NG when either is NG.
• **Diagnosis 1 (correlation diagnosis):** After the engine starts after the specified period of soaking time has elapsed, diagnose by correlation between intake air temperature sensor value, engine coolant temperature sensor value and ambient temperature sensor value. Judge as NG when the differences are both above the specified value by comparing between intake air temperature and engine coolant temperature, intake air temperature and ambient air temperature.
• **Diagnosis 2 (stuck diagnosis):** Judge as NG when intake air temperature does not change under the driving condition where it should change, considering engine condition.

2. COMPONENT DESCRIPTION

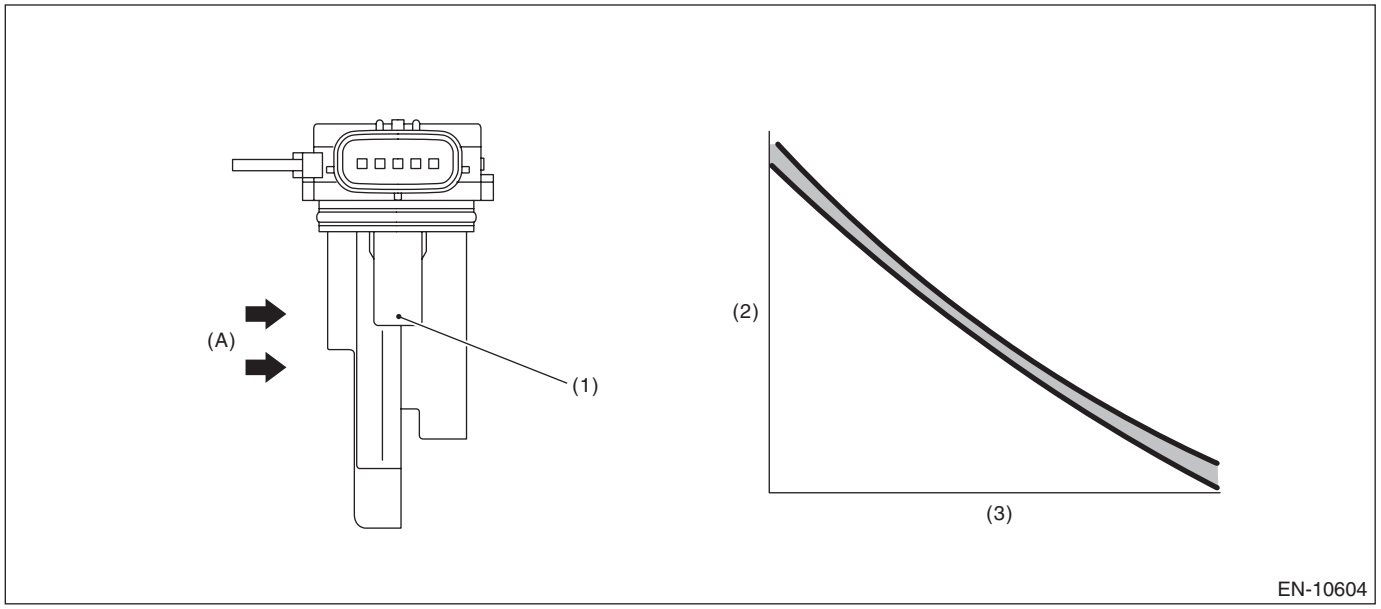

(A) Air

(1) Intake air temperature sensor (2) Resistance value (Ω) (3) Intake air temperature °C (°F)

3. EXECUTION CONDITION

• Diagnosis 1

Secondary parameters	Execution condition
Battery voltage	≥ 10.9 V
Soaking time	≥ 21600 s
Block heater judgment	Completed
Block heater operation	Not in operation

• Diagnosis 2

Secondary parameters	Execution condition
Battery voltage	≥ 10.9 V
Engine coolant temperature	≥ 70 °C (158 °F)
Integrated value of intake air amount	≥ Value of Map 1
Number of experiences under following driving conditions	≥ 3 time(s)
• Duration of driving condition 1	≥ 15 s
Vehicle speed	≥ 40 km/h (24.9 MPH)
and	
Amount of intake air	≥ 15 g/s (0.53 oz/s)
• Duration of driving condition 2	≥ Value from Map 2
Vehicle speed	≥ Value at 4 km/h (2.5 MPH)

Map 1

Engine coolant temperature °C (°F)	–20 (–4)	–10 (14)	0 (32)	10 (50)	20 (68)
Integrated value of intake air amount (g (oz))	76000 (2680.52)	10192 (359.47)	9028 (318.42)	7864 (277.36)	5500 (193.99)

Map 2

Engine coolant temperature °C (°F)	–20 (–4)	–10 (14)	5 (41)	20 (68)
Duration of driving condition 2 (s)	250	40	32	15

4. GENERAL DRIVING CYCLE

- **Diagnosis 1:** Perform the diagnosis only once after the engine starts after a certain period of soaking time.
- **Diagnosis 2:** Perform the diagnosis when the vehicle speed condition is met after warming up from a cold condition.

5. DIAGNOSTIC METHOD

Judge as NG when Diagnosis 1 or Diagnosis 2 becomes NG.

Diagnosis 1

If the duration of time while the following conditions are met is longer than the time indicated, judge as NG.

Judgment Value

Malfunction Criteria	Threshold Value
|Intake air temperature 30 sec. after engine start – Engine coolant temperature at engine start|	> Value of Map 3
|Intake air temperature 30 sec. after engine start – Ambient air temperature 30 sec. after engine start|	> Value of Map 4

Map 3

Ambient temperature °C (°F)	–30 (–22)	30 (86)	45 (113)	60 (140)
|Intake air temperature 30 sec. after engine start – Engine coolant temperature at engine start| °C (°F)	12 (53.6)	12 (53.6)	22 (71.6)	22 (71.6)

Map 4

Ambient temperature °C (°F)	–30 (–22)	30 (86)	45 (113)	60 (140)
|Intake air temperature 30 sec. after engine start – Ambient air temperature 30 sec. after engine start| °C (°F)	20 (68)	20 (68)	32 (89.6)	32 (89.6)

Time Needed for Diagnosis: Less than 1 second

Diagnosis 2

Judge as NG when the following conditions are established.

Judgment Value

Malfunction Criteria	Threshold Value
Output voltage difference between Max. and Min.	< 0.02 V (Equivalent to approximately 0.5°C (0.9°F) near 25°C (77°F))

Time Needed for Diagnosis: Less than 1 second

Malfunction Indicator Light Illumination: Illuminates when malfunction occurs in 2 continuous driving cycles.

AB:DTC P0112 INTAKE AIR TEMPERATURE SENSOR 1 CIRCUIT LOW BANK 1

DTC DETECTING CONDITION:
Immediately at fault recognition
TROUBLE SYMPTOM:
- Improper idling
- Poor driving performance

CAUTION:
After servicing or replacing faulty parts, perform Clear Memory Mode <Ref. to EN(STI)(diag)-68, OPERATION, Clear Memory Mode.>, and Inspection Mode <Ref. to EN(STI)(diag)-48, PROCEDURE, Inspection Mode.>.
WIRING DIAGRAM:
Engine Electrical System <Ref. to WI-154, WIRING DIAGRAM, Engine Electrical System.>

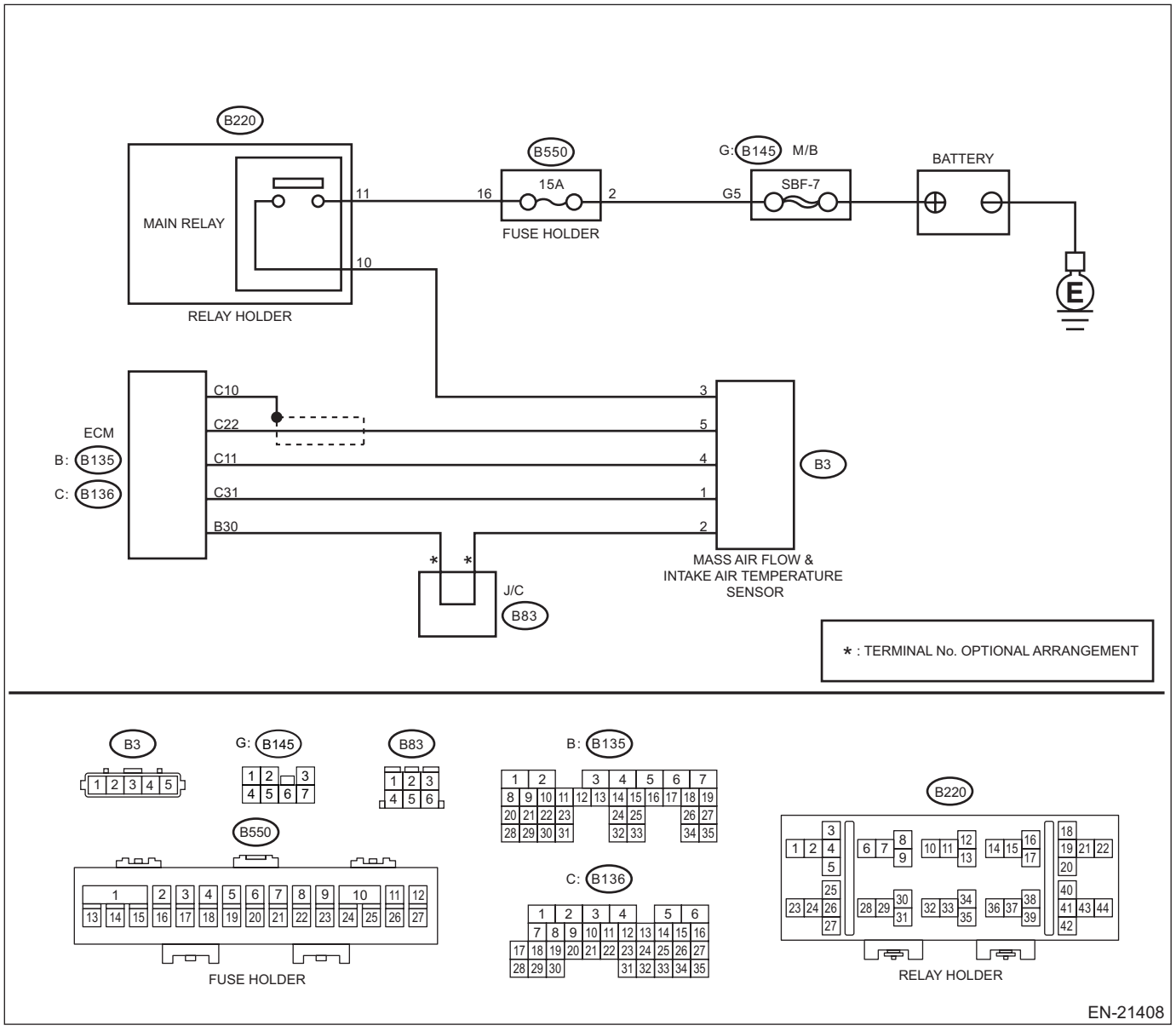

	Step	Check	Yes	No
1	**CHECK CURRENT DATA.** 1) Start the engine. 2) Read the value of «Intake Air Temp.» using the Subaru Select Monitor or a general scan tool. NOTE: • Subaru Select Monitor For detailed operation procedures, refer to “Current Data Display For Engine”. <Ref. to EN(STI)(diag)-36, Subaru Select Monitor.> • General scan tool For detailed operation procedures, refer to the general scan tool operation manual.	Is the value of «Intake Air Temp.» 120°C (248°F) or more?	Go to step **2**.	Even if DTC is detected, the circuit has returned to a normal condition at this time. Reproduce the failure, and then perform the diagnosis again. NOTE: In this case, temporary poor contact of connector, temporary open or short circuit of harness may be the cause.
2	**CHECK HARNESS BETWEEN ECM AND MASS AIR FLOW AND INTAKE AIR TEMPERATURE SENSOR CONNECTOR.** 1) Turn the ignition switch to OFF. 2) Disconnect the connector from ECM. 3) Disconnect the connectors from the mass air flow and intake air temperature sensor. 4) Measure the resistance between ECM connector and chassis ground. ***Connector & terminal*** ***(B136) No. 31 — Chassis ground:***	Is the resistance 1 MΩ or more?	Replace the mass air flow and intake air temperature sensor. <Ref. to FU(STI)-40, Mass Air Flow and Intake Air Temperature Sensor.>	Repair the ground short circuit of harness between ECM connector and the mass air flow and intake air temperature sensor connector.

1. OUTLINE OF DIAGNOSIS

Detect open or short circuit of the intake air temperature sensor.
Judge as NG if out of specification.

2. COMPONENT DESCRIPTION

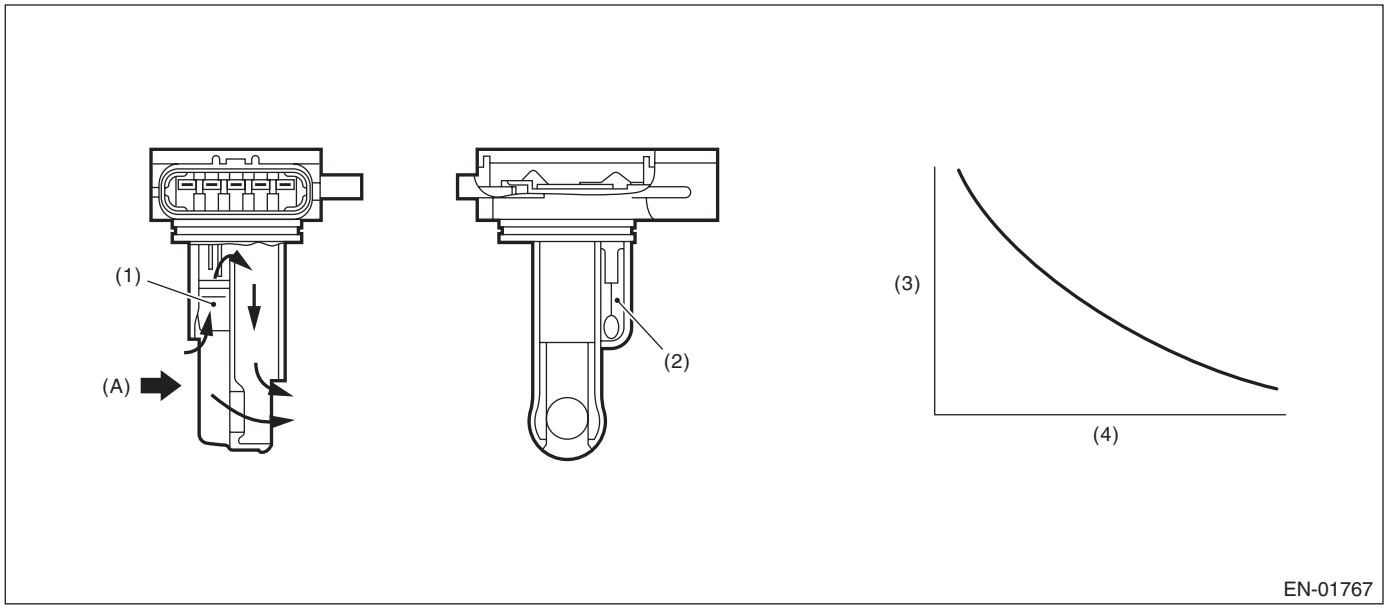

(A) Air

(1) Air flow sensor
(2) Intake air temperature sensor
(3) Resistance value (Ω)
(4) Intake air temperature °C (°F)

3. EXECUTION CONDITION

Secondary parameters	Execution condition
None	

4. GENERAL DRIVING CYCLE

Always perform the diagnosis continuously.

5. DIAGNOSTIC METHOD

If the duration of time while the following conditions are met is longer than the time indicated, judge as NG.

Judgment Value

Malfunction Criteria	Threshold Value
Output voltage	< 0.395 V

Time Needed for Diagnosis: 500 ms
Malfunction Indicator Light Illumination: Illuminates as soon as a malfunction occurs.

AC:DTC P0113 INTAKE AIR TEMPERATURE SENSOR 1 CIRCUIT HIGH BANK 1

DTC DETECTING CONDITION:
Immediately at fault recognition
TROUBLE SYMPTOM:
- Improper idling
- Poor driving performance

CAUTION:
After servicing or replacing faulty parts, perform Clear Memory Mode <Ref. to EN(STI)(diag)-68, OPERATION, Clear Memory Mode.>, and Inspection Mode <Ref. to EN(STI)(diag)-48, PROCEDURE, Inspection Mode.>.
WIRING DIAGRAM:
Engine Electrical System <Ref. to WI-154, WIRING DIAGRAM, Engine Electrical System.>

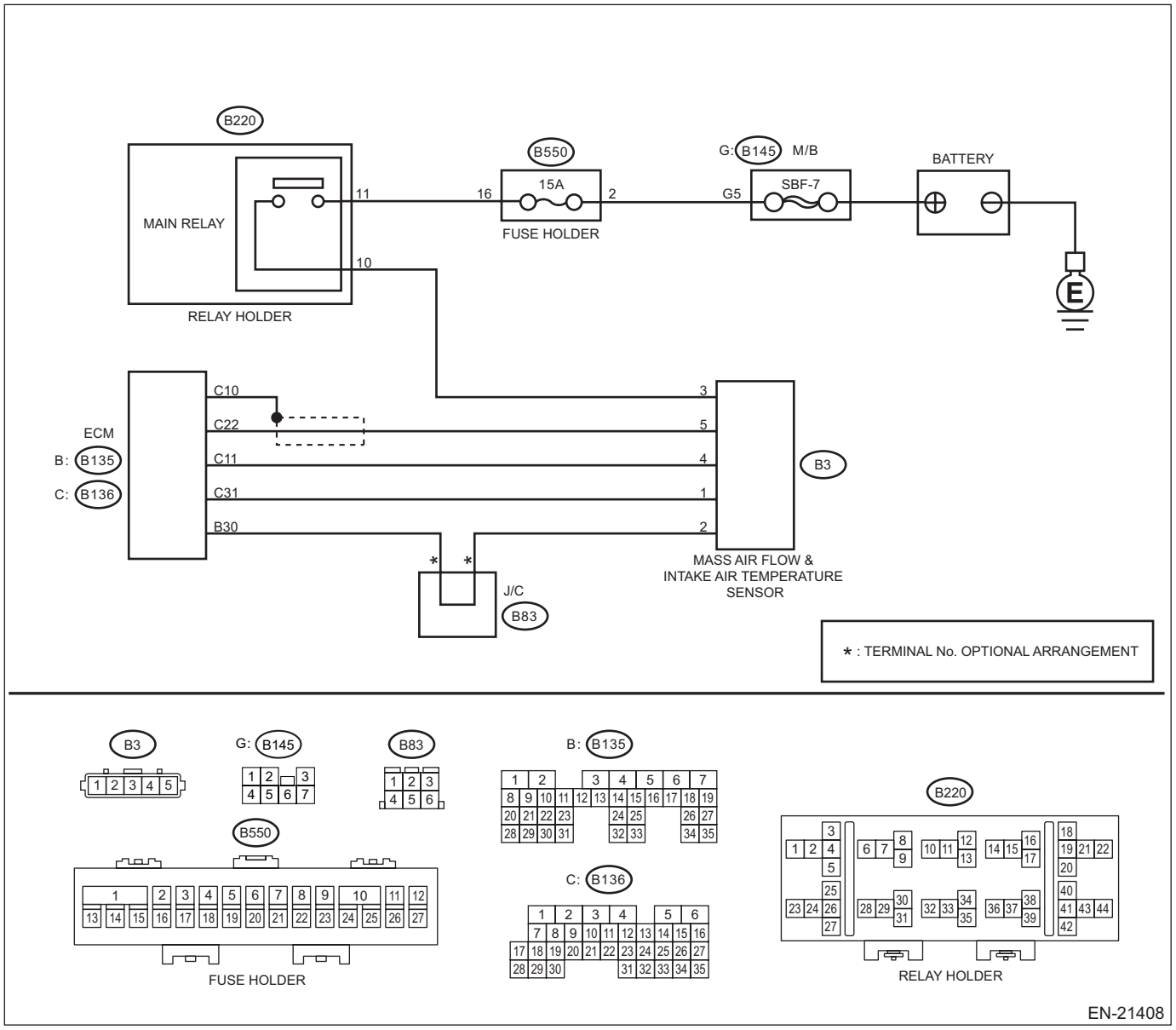

	Step	Check	Yes	No
1	**CHECK CURRENT DATA.** 1) Start the engine. 2) Read the value of «Intake Air Temp.» using the Subaru Select Monitor or a general scan tool. NOTE: • Subaru Select Monitor For detailed operation procedures, refer to "Current Data Display For Engine". <Ref. to EN(STI)(diag)-36, Subaru Select Monitor.> • General scan tool For detailed operation procedures, refer to the general scan tool operation manual.	Is the value of «Intake Air Temp.» less than –40°C (–40°F)?	Go to step **2**.	Even if DTC is detected, the circuit has returned to a normal condition at this time. Reproduce the failure, and then perform the diagnosis again. NOTE: In this case, temporary poor contact of connector, temporary open or short circuit of harness may be the cause.
2	**CHECK FOR POOR CONTACT.** Check for poor contact of ECM and mass air flow and intake air temperature sensor connector.	Is there poor contact of ECM or mass air flow and intake air temperature sensor connector?	Repair the poor contact of ECM or mass air flow and intake air temperature sensor connector.	Go to step **3**.
3	**CHECK HARNESS BETWEEN ECM AND MASS AIR FLOW AND INTAKE AIR TEMPERATURE SENSOR CONNECTOR.** 1) Turn the ignition switch to OFF. 2) Disconnect the connector from ECM. 3) Disconnect the connectors from the mass air flow and intake air temperature sensor. 4) Measure the resistance of harness between ECM connector and the mass air flow and intake air temperature sensor connector. ***Connector & terminal*** ***(B136) No. 31 — (B3) No. 1:*** ***(B135) No. 30 — (B3) No. 2:***	Is the resistance less than 1 Ω?	Go to step **4**.	Repair the harness and connector. NOTE: In this case, repair the following item: • Open circuit in harness between ECM connector and the mass air flow and intake air temperature sensor connector • Poor contact of joint connector
4	**CHECK HARNESS BETWEEN ECM AND MASS AIR FLOW AND INTAKE AIR TEMPERATURE SENSOR CONNECTOR.** 1) Connect all connectors. 2) Turn the ignition switch to ON. 3) Measure the voltage between ECM connector and chassis ground. ***Connector & terminal*** ***(B136) No. 31 (+) — Chassis ground (–):***	Is the voltage 5 V or more?	Repair the short circuit of harness to power supply between ECM connector and the mass air flow and intake air temperature sensor connector.	Replace the mass air flow and intake air temperature sensor. <Ref. to FU(STI)-40, Mass Air Flow and Intake Air Temperature Sensor.>

1. OUTLINE OF DIAGNOSIS

Detect open or short circuit of the intake air temperature sensor.
Judge as NG if out of specification.

2. COMPONENT DESCRIPTION

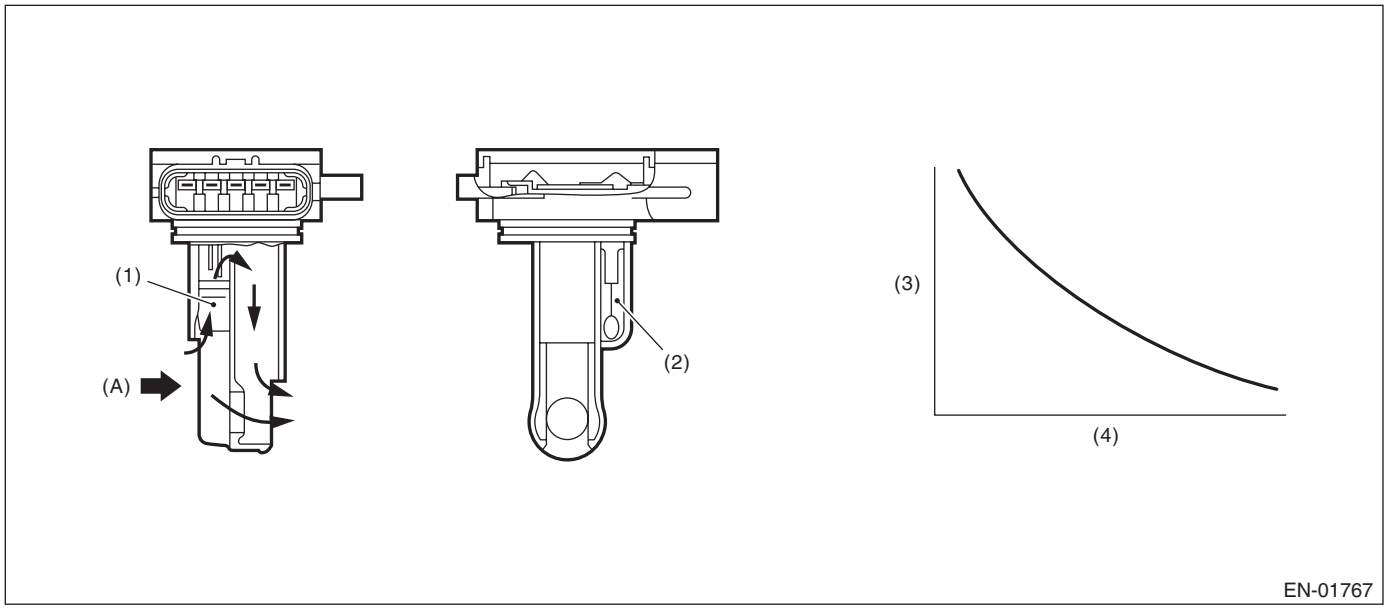

(A) Air

(1) Air flow sensor
(2) Intake air temperature sensor
(3) Resistance value (Ω)
(4) Intake air temperature °C (°F)

3. EXECUTION CONDITION

Secondary parameters	Execution condition
None	

4. GENERAL DRIVING CYCLE

Always perform the diagnosis continuously.

5. DIAGNOSTIC METHOD

If the duration of time while the following conditions are met is longer than the time indicated, judge as NG.

Judgment Value

Malfunction Criteria	Threshold Value
Output voltage	≥ 4.712 V

Time Needed for Diagnosis: 500 ms
Malfunction Indicator Light Illumination: Illuminates as soon as a malfunction occurs.

AD:DTC P0116 ENGINE COOLANT TEMPERATURE SENSOR 1 CIRCUIT RANGE/PERFORMANCE

DTC DETECTING CONDITION:
Detected when two consecutive driving cycles with fault occur.
TROUBLE SYMPTOM:
- Hard to start
- Improper idling
- Poor driving performance

CAUTION:
After servicing or replacing faulty parts, perform Clear Memory Mode <Ref. to EN(STI)(diag)-68, OPERATION, Clear Memory Mode.>, and Inspection Mode <Ref. to EN(STI)(diag)-48, PROCEDURE, Inspection Mode.>.

	Step	Check	Yes	No
1	**CHECK FOR ANY OTHER DTC ON DISPLAY.**	Is any other DTC displayed?	Check the appropriate DTC using the "List of Diagnostic Trouble Code (DTC)". <Ref. to EN(STI)(diag)-96, List of Diagnostic Trouble Code (DTC).>	Go to step **2**.
2	**CHECK ENGINE COOLANT TEMPERATURE SENSOR.** 1) Disconnect the connectors from the engine coolant temperature sensor. 2) Measure the resistance between engine coolant temperature sensor terminals when the engine coolant is cold and after warmed up. ***Terminals*** ***No. 1 — No. 2:***	Is the resistance of engine coolant temperature sensor different between when engine coolant is cold and after warmed up?	Repair the poor contact of ECM connector.	Replace the engine coolant temperature sensor. <Ref. to FU(STI)-33, Engine Coolant Temperature Sensor.>

1. OUTLINE OF DIAGNOSIS

Detect the malfunction of the engine coolant temperature sensor characteristics.
After the engine starts after the specified period of soaking time has elapsed, diagnose by correlation between engine coolant temperature sensor value, intake air temperature sensor value and ambient temperature sensor value. Judge as NG when the differences are both above the specified value by comparing between engine coolant temperature and ambient air temperature, engine coolant temperature and intake air temperature.

2. COMPONENT DESCRIPTION

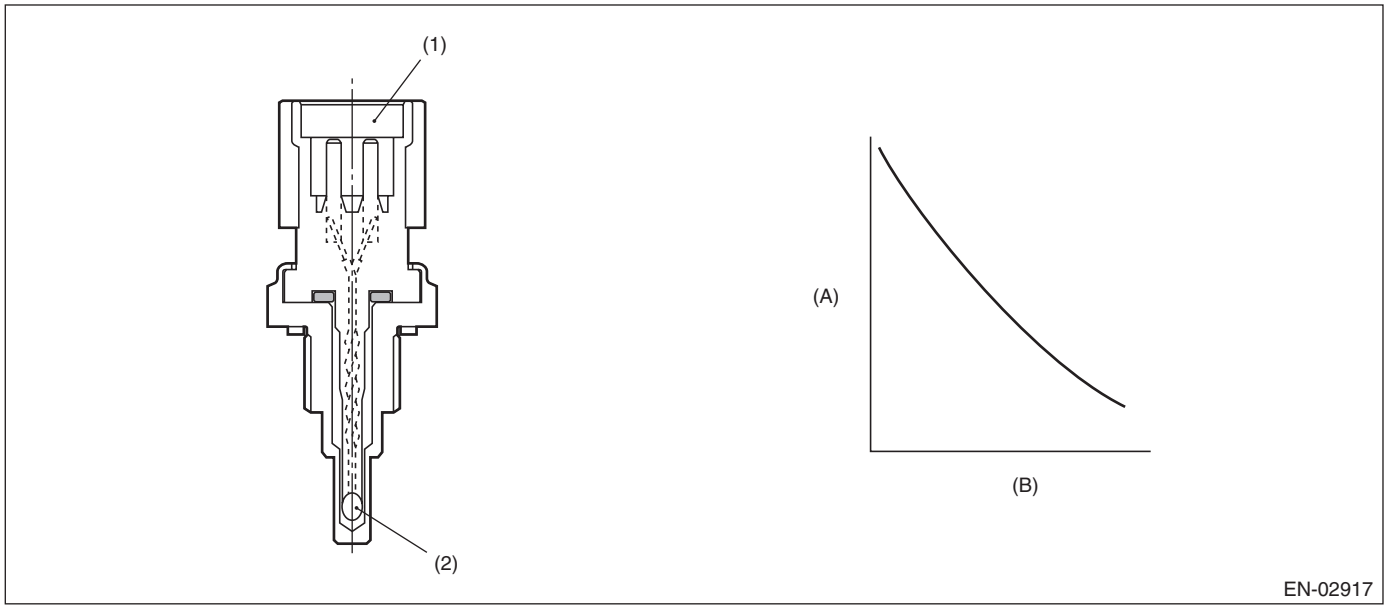

(A) Resistance value (kΩ)
(B) Temperature °C (°F)
(1) Connector
(2) Thermistor element

3. EXECUTION CONDITION

Secondary parameters	Execution condition
Battery voltage	≥ 10.9 V
Soaking time	≥ 21600 s
Block heater judgment	Completed
Block heater operation	Not in operation

4. GENERAL DRIVING CYCLE

Perform the diagnosis only once after the engine starts after a certain period of soaking time.

5. DIAGNOSTIC METHOD

If the duration of time while the following conditions are met is longer than the time indicated, judge as NG.

Judgment Value

Malfunction Criteria	Threshold Value
|Engine coolant temperature at engine start – Intake air temperature 30 sec. after engine start|	> Value from Map
|Engine coolant temperature at engine start – Ambient air temperature at engine start|	> 25 °C (77 °F)

Map

Ambient temperature °C (°F)	–30 (–22)	30 (86)	45 (113)	60 (140)
|Engine coolant temperature at engine start – Intake air temperature 30 sec. after engine start| °C (°F)	12 (53.6)	12 (53.6)	22 (71.6)	22 (71.6)

Time Needed for Diagnosis: Less than 1 second
Malfunction Indicator Light Illumination: Illuminates as soon as a malfunction occurs.

AE:DTC P0117 ENGINE COOLANT TEMPERATURE SENSOR 1 CIRCUIT LOW

DTC DETECTING CONDITION:
Immediately at fault recognition
TROUBLE SYMPTOM:

- Hard to start
- Improper idling
- Poor driving performance

CAUTION:
After servicing or replacing faulty parts, perform Clear Memory Mode <Ref. to EN(STI)(diag)-68, OPERATION, Clear Memory Mode.>, and Inspection Mode <Ref. to EN(STI)(diag)-48, PROCEDURE, Inspection Mode.>.
WIRING DIAGRAM:
Engine Electrical System <Ref. to WI-154, WIRING DIAGRAM, Engine Electrical System.>

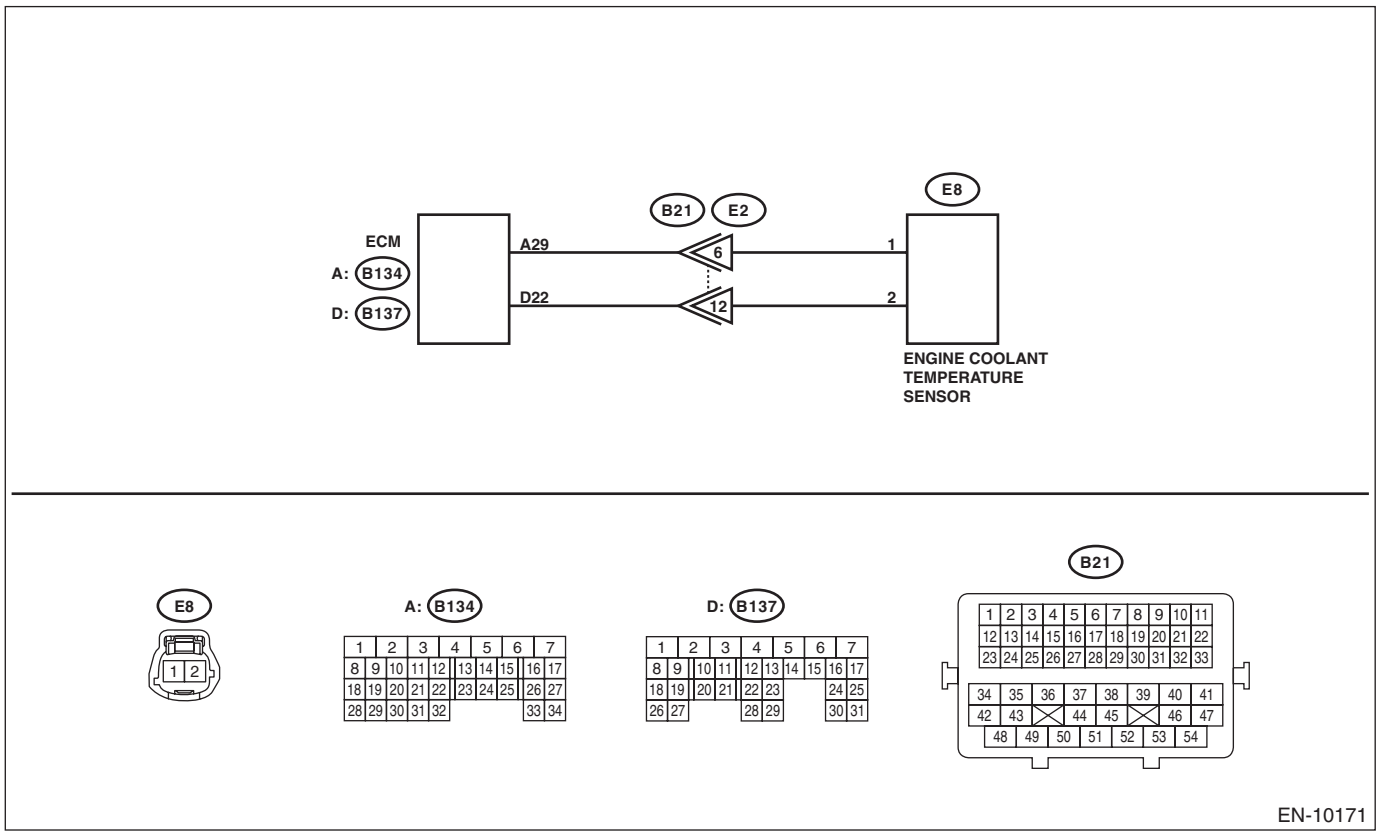

	Step	Check	Yes	No
1	**CHECK CURRENT DATA.** 1) Start the engine. 2) Read the value of «Coolant Temp.» using the Subaru Select Monitor or a general scan tool. NOTE: • Subaru Select Monitor For detailed operation procedures, refer to "Current Data Display For Engine". <Ref. to EN(STI)(diag)-36, Subaru Select Monitor.> • General scan tool For detailed operation procedures, refer to the general scan tool operation manual.	Is the value of «Coolant Temp.» 150°C (302°F) or more?	Go to step **2**.	Even if DTC is detected, the circuit has returned to a normal condition at this time. Reproduce the failure, and then perform the diagnosis again. NOTE: In this case, temporary poor contact of connector, temporary open or short circuit of harness may be the cause.
2	**CHECK HARNESS BETWEEN ECM AND ENGINE COOLANT TEMPERATURE SENSOR CONNECTOR.** 1) Turn the ignition switch to OFF. 2) Disconnect the connector from ECM. 3) Disconnect the connectors from the engine coolant temperature sensor. 4) Measure the resistance between ECM connector and chassis ground. ***Connector & terminal*** ***(B137) No. 22 — Chassis ground:***	Is the resistance 1 MΩ or more?	Replace the engine coolant temperature sensor. <Ref. to FU(STI)-33, Engine Coolant Temperature Sensor.>	Repair the short circuit to ground in harness between ECM connector and engine coolant temperature sensor connector.

1. OUTLINE OF DIAGNOSIS

Detect the open or short circuit of the engine coolant temperature sensor.
Judge as NG if out of specification.

2. COMPONENT DESCRIPTION

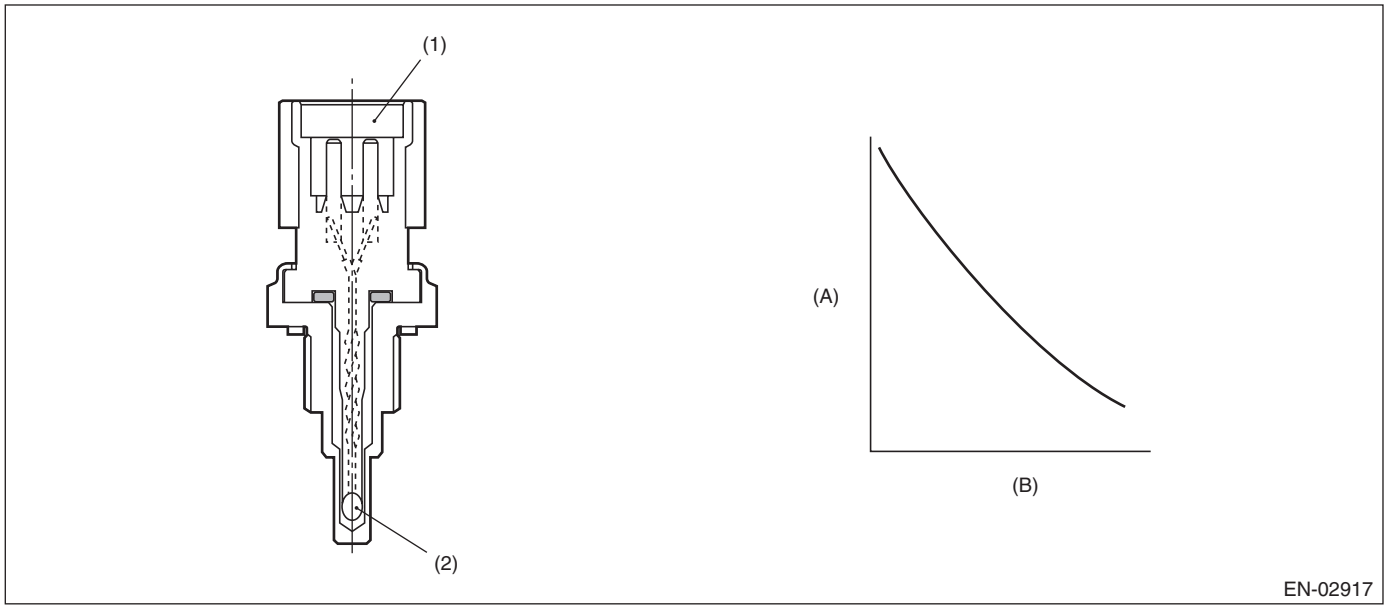

(A) Resistance value (kΩ)
(B) Temperature °C (°F)
(1) Connector
(2) Thermistor element

3. EXECUTION CONDITION

Secondary parameters	Execution condition
None	

4. GENERAL DRIVING CYCLE

Always perform the diagnosis continuously.

5. DIAGNOSTIC METHOD

If the duration of time while the following conditions are met is longer than the time indicated, judge as NG.

Judgment Value

Malfunction Criteria	Threshold Value
Output voltage	< 0.343 V

Time Needed for Diagnosis: 500 ms
Malfunction Indicator Light Illumination: Illuminates as soon as a malfunction occurs.

AF:DTC P0118 ENGINE COOLANT TEMPERATURE SENSOR 1 CIRCUIT HIGH

DTC DETECTING CONDITION:
Immediately at fault recognition
TROUBLE SYMPTOM:
- Hard to start
- Improper idling
- Poor driving performance

CAUTION:
After servicing or replacing faulty parts, perform Clear Memory Mode <Ref. to EN(STI)(diag)-68, OPERATION, Clear Memory Mode.>, and Inspection Mode <Ref. to EN(STI)(diag)-48, PROCEDURE, Inspection Mode.>.
WIRING DIAGRAM:
Engine Electrical System <Ref. to WI-154, WIRING DIAGRAM, Engine Electrical System.>

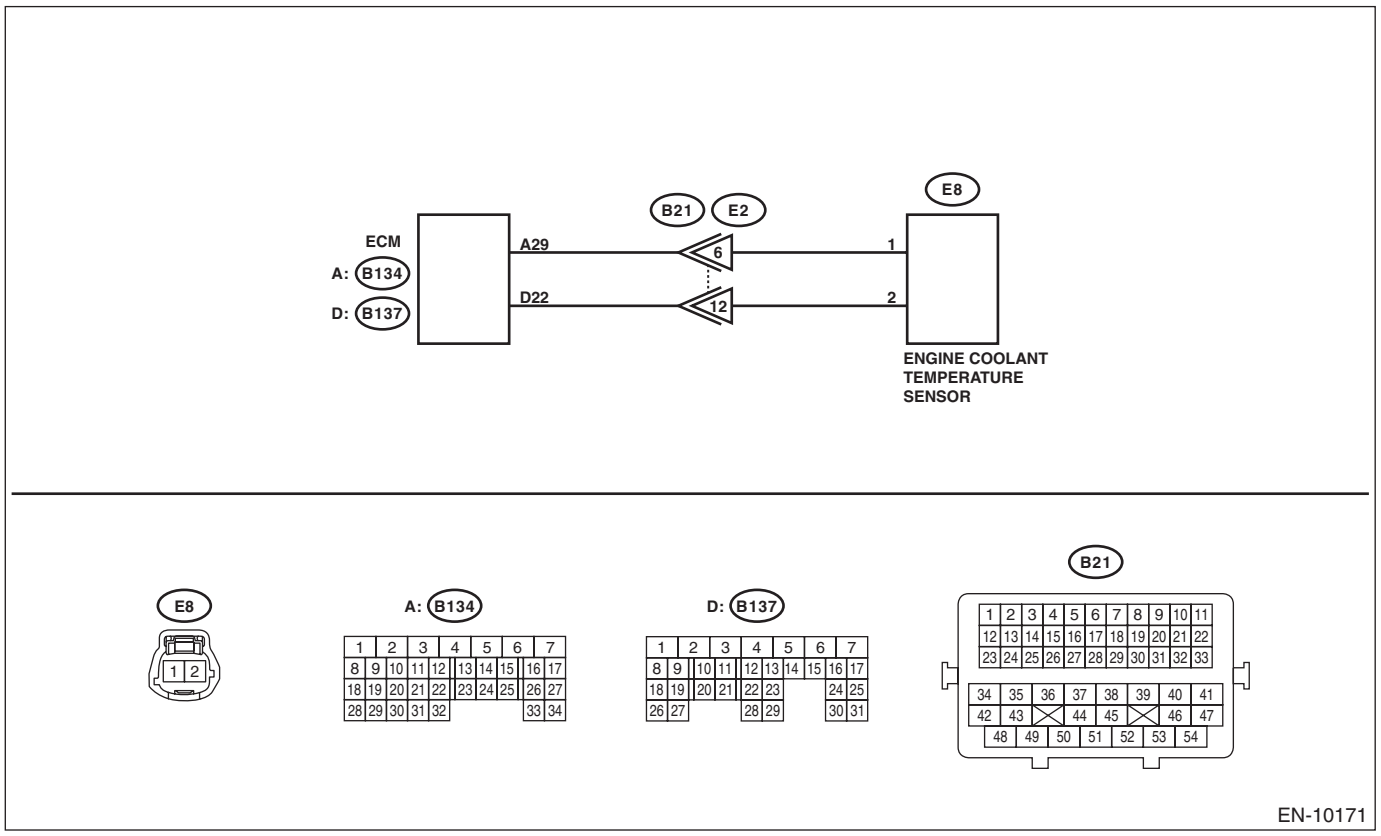

	Step	Check	Yes	No
1	**CHECK CURRENT DATA.** 1) Start the engine. 2) Read the value of «Coolant Temp.» using the Subaru Select Monitor or a general scan tool. NOTE: • Subaru Select Monitor For detailed operation procedures, refer to "Current Data Display For Engine". <Ref. to EN(STI)(diag)-36, Subaru Select Monitor.> • General scan tool For detailed operation procedures, refer to the general scan tool operation manual.	Is the value of «Coolant Temp.» less than –40°C (–40°F)?	Go to step **2**.	Even if DTC is detected, the circuit has returned to a normal condition at this time. Reproduce the failure, and then perform the diagnosis again. NOTE: In this case, temporary poor contact of connector, temporary open or short circuit of harness may be the cause.
2	**CHECK FOR POOR CONTACT.** Check for poor contact of ECM and engine coolant temperature sensor connector.	Is there poor contact of ECM or engine coolant temperature sensor connector?	Repair the poor contact of ECM or engine coolant temperature sensor connector.	Go to step **3**.
3	**CHECK HARNESS BETWEEN ECM AND ENGINE COOLANT TEMPERATURE SENSOR CONNECTOR.** 1) Turn the ignition switch to OFF. 2) Disconnect the connector from ECM. 3) Disconnect the connectors from the engine coolant temperature sensor. 4) Measure the resistance of harness between ECM connector and engine coolant temperature sensor connector. ***Connector & terminal*** ***(B134) No. 29 — (E8) No. 1:*** ***(B137) No. 22 — (E8) No. 2:***	Is the resistance less than 1 Ω?	Go to step **4**.	Repair the harness and connector. NOTE: In this case, repair the following item: • Open circuit in harness between ECM connector and engine coolant temperature sensor connector • Poor contact of coupling connector
4	**CHECK HARNESS BETWEEN ECM AND ENGINE COOLANT TEMPERATURE SENSOR CONNECTOR.** 1) Connect all connectors. 2) Turn the ignition switch to ON. 3) Measure the voltage between ECM connector and chassis ground. ***Connector & terminal*** ***(B137) No. 22 (+) — Chassis ground (–):***	Is the voltage 5 V or more?	Repair the short circuit of harness to power supply between ECM connector and engine coolant temperature sensor connector.	Replace the engine coolant temperature sensor. <Ref. to FU(STI)-33, Engine Coolant Temperature Sensor.>

1. OUTLINE OF DIAGNOSIS

Detect the open or short circuit of the engine coolant temperature sensor.
Judge as NG if out of specification.

2. COMPONENT DESCRIPTION

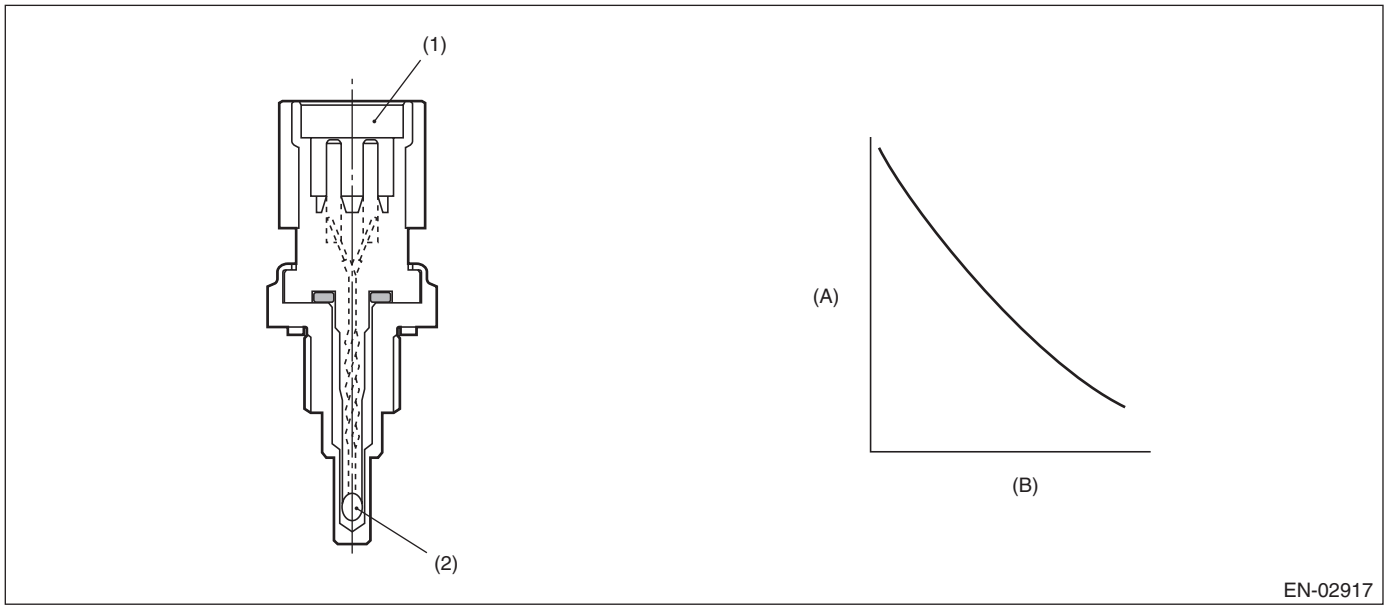

(A) Resistance value (kΩ)
(B) Temperature °C (°F)
(1) Connector
(2) Thermistor element

3. EXECUTION CONDITION

Secondary parameters	Execution condition
None	

4. GENERAL DRIVING CYCLE

Always perform the diagnosis continuously.

5. DIAGNOSTIC METHOD

If the duration of time while the following conditions are met is longer than the time indicated, judge as NG.

Judgment Value

Malfunction Criteria	Threshold Value
Output voltage	≥ 4.702 V

Time Needed for Diagnosis: 500 ms
Malfunction Indicator Light Illumination: Illuminates as soon as a malfunction occurs.

AG:DTC P0122 THROTTLE/PEDAL POSITION SENSOR/SWITCH "A" CIRCUIT LOW

DTC DETECTING CONDITION:
Immediately at fault recognition
TROUBLE SYMPTOM:
- Improper idling
- Engine stalls.
- Poor driving performance

CAUTION:
After servicing or replacing faulty parts, perform Clear Memory Mode <Ref. to EN(STI)(diag)-68, OPERATION, Clear Memory Mode.>, and Inspection Mode <Ref. to EN(STI)(diag)-48, PROCEDURE, Inspection Mode.>.

WIRING DIAGRAM:

Engine Electrical System <Ref. to WI-154, WIRING DIAGRAM, Engine Electrical System.>

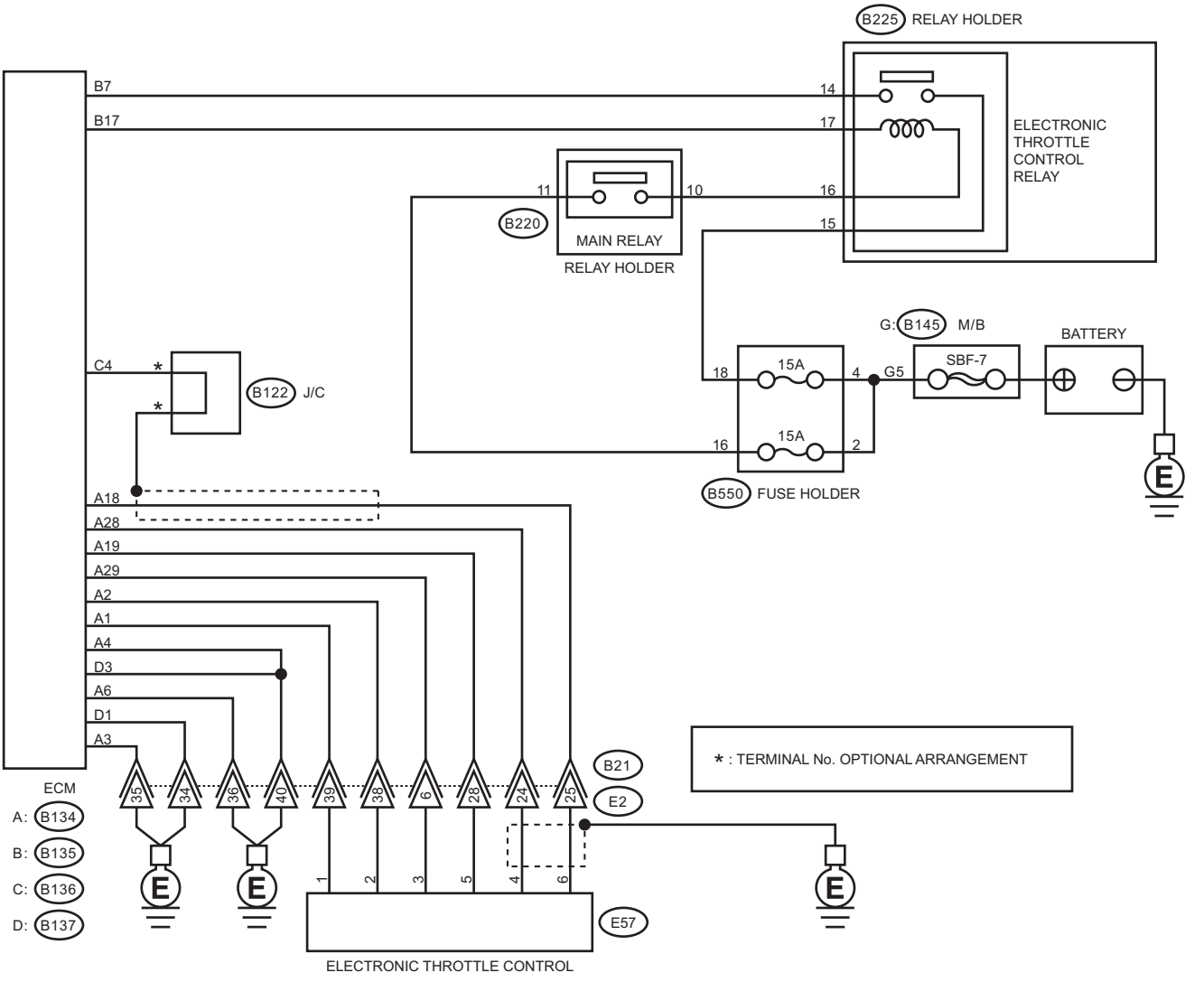

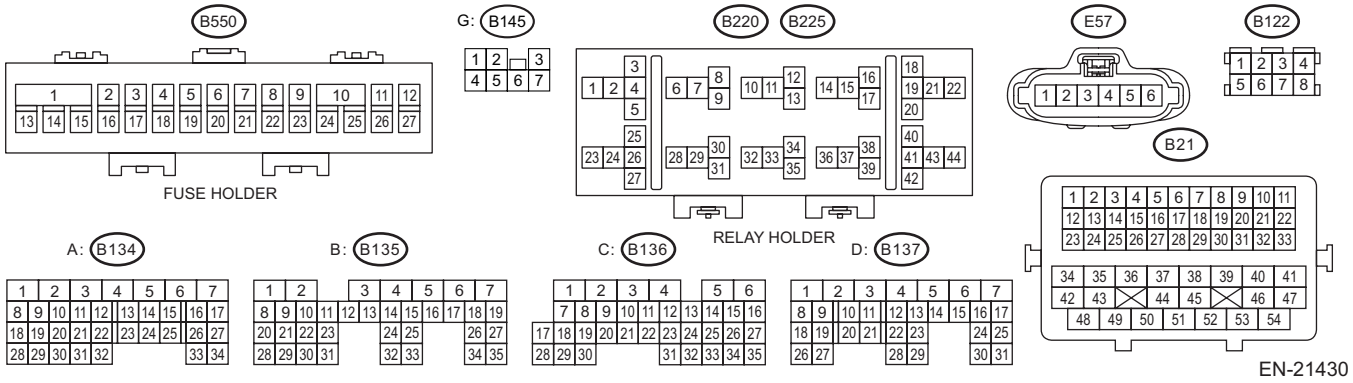

EN-21430

	Step	Check	Yes	No
1	**CHECK HARNESS BETWEEN ECM AND ELECTRONIC THROTTLE CONTROL CONNECTOR.** 1) Turn the ignition switch to OFF. 2) Disconnect the connector from ECM. 3) Disconnect the connectors from electronic throttle control. 4) Measure the resistance between ECM connector and chassis ground. ***Connector & terminal*** ***(B134) No. 19 — Chassis ground:*** ***(B134) No. 18 — Chassis ground:*** ***(B134) No. 18 — (B136) No. 4:***	Is the resistance 1 MΩ or more?	Go to step **2**.	Repair the ground short circuit of harness between ECM connector and electronic throttle control connector.
2	**CHECK SHORT CIRCUIT INSIDE THE ECM.** 1) Connect the connector to ECM. 2) Measure the resistance between electronic throttle control connector and engine ground. ***Connector & terminal*** ***(E57) No. 6 — Engine ground:***	Is the resistance 1 MΩ or more?	Replace the electronic throttle control. <Ref. to FU(STI)-15, Throttle Body.>	Repair the ground short circuit of harness between ECM connector and electronic throttle control connector. Replace the ECM if defective. <Ref. to FU(STI)-56, Engine Control Module (ECM).>

2. OUTLINE OF DIAGNOSIS

Detect the open or short circuit of throttle position sensor 1.
Judge as NG if out of specification.

3. COMPONENT DESCRIPTION

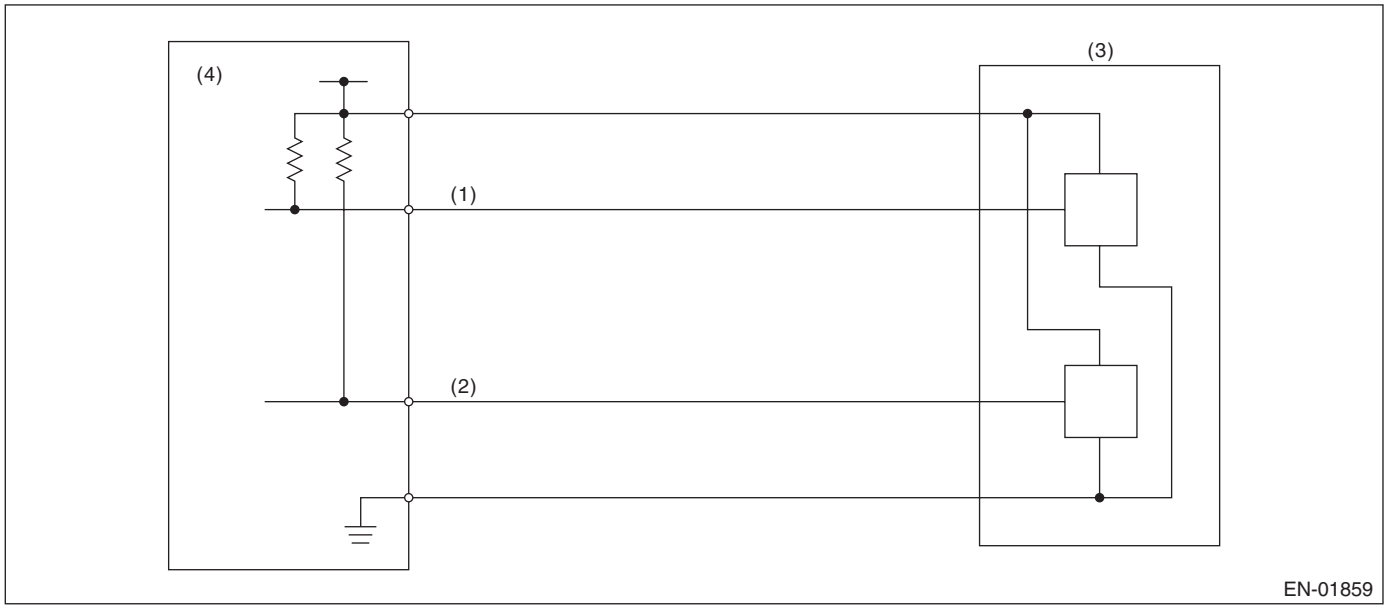

(1) Throttle position sensor 1 signal
(2) Throttle position sensor 2 signal
(3) Throttle position sensor
(4) Engine control module (ECM)

4. EXECUTION CONDITION

Secondary parameters	Execution condition
Battery voltage	≥ 6 V

5. GENERAL DRIVING CYCLE

Always perform the diagnosis continuously.

6. DIAGNOSTIC METHOD

If the duration of time while the following conditions are met is longer than the time indicated, judge as NG.

Judgment Value

Malfunction Criteria	Threshold Value
Sensor 1 input voltage	≤ 0.27 V

Time Needed for Diagnosis: 24 ms
Malfunction Indicator Light Illumination: Illuminates as soon as a malfunction occurs.

AH:DTC P0123 THROTTLE/PEDAL POSITION SENSOR/SWITCH "A" CIRCUIT HIGH

DTC DETECTING CONDITION:
Immediately at fault recognition
TROUBLE SYMPTOM:
- Improper idling
- Engine stalls.
- Poor driving performance

CAUTION:
After servicing or replacing faulty parts, perform Clear Memory Mode <Ref. to EN(STI)(diag)-68, OPERATION, Clear Memory Mode.>, and Inspection Mode <Ref. to EN(STI)(diag)-48, PROCEDURE, Inspection Mode.>.

WIRING DIAGRAM:

Engine Electrical System <Ref. to WI-154, WIRING DIAGRAM, Engine Electrical System.>

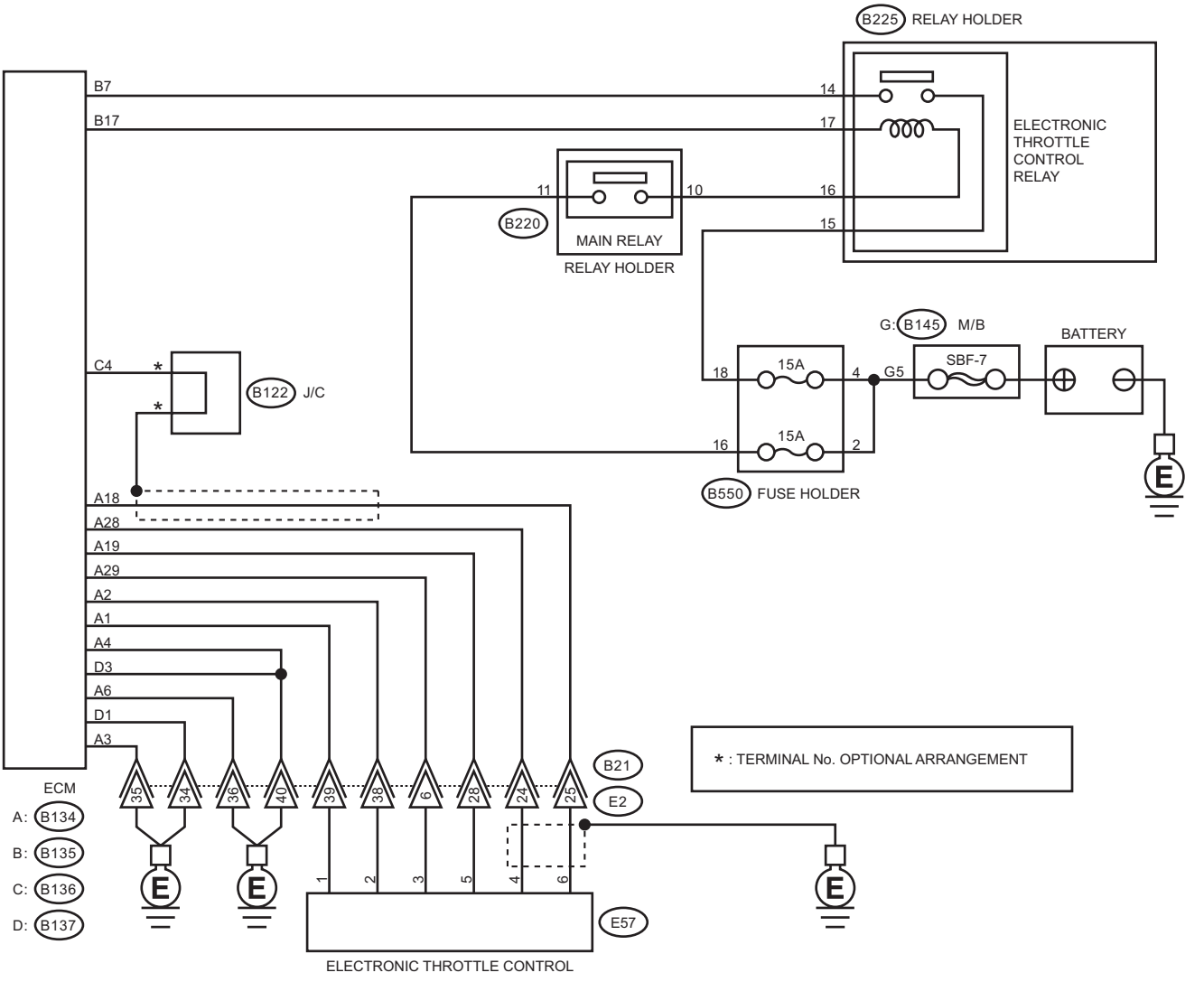

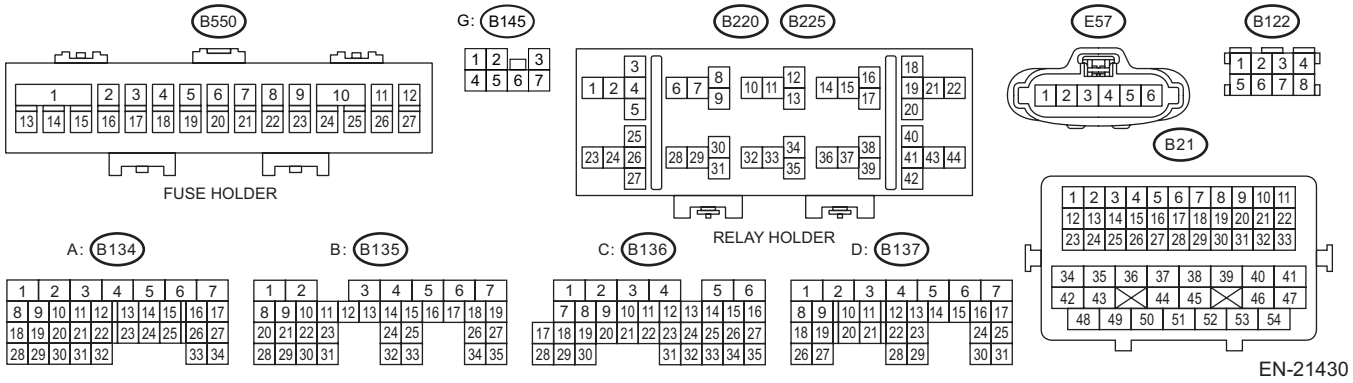

	Step	Check	Yes	No
1	**CHECK HARNESS BETWEEN ECM AND ELECTRONIC THROTTLE CONTROL CONNECTOR.** 1) Turn the ignition switch to OFF. 2) Disconnect the connector from ECM. 3) Disconnect the connectors from electronic throttle control. 4) Measure the resistance of harness between ECM connector and electronic throttle control connector. ***Connector & terminal*** ***(B134) No. 18 — (E57) No. 6:*** ***(B134) No. 29 — (E57) No. 3:***	Is the resistance less than 1 Ω?	Go to step **2**.	Repair the harness and connector. NOTE: In this case, repair the following item: • Open circuit in harness between ECM connector and electronic throttle control connector • Poor contact of coupling connector
2	**CHECK HARNESS BETWEEN ECM AND ELECTRONIC THROTTLE CONTROL CONNECTOR.** 1) Connect the connector to ECM. 2) Measure the resistance between electronic throttle control connector and engine ground. ***Connector & terminal*** ***(E57) No. 3 — Engine ground:***	Is the resistance less than 5 Ω?	Go to step **3**.	Repair the harness and connector. NOTE: In this case, repair the following item: • Open circuit of harness between ECM connector and engine ground • Poor contact of ECM connector • Poor contact of coupling connector
3	**CHECK HARNESS BETWEEN ECM AND ELECTRONIC THROTTLE CONTROL CONNECTOR.** 1) Turn the ignition switch to ON. 2) Measure the voltage between electronic throttle control connector and engine ground. ***Connector & terminal*** ***(E57) No. 6 (+) — Engine ground (–):***	Is the voltage 5 V or more?	Repair the short circuit to power in the harness between ECM connector and electronic throttle control connector.	Go to step **4**.
4	**CHECK HARNESS BETWEEN ECM AND ELECTRONIC THROTTLE CONTROL CONNECTOR.** 1) Turn the ignition switch to OFF. 2) Disconnect the connector from ECM. 3) Measure the resistance between ECM connectors. ***Connector & terminal*** ***(B134) No. 19 — (B134) No. 18:***	Is the resistance 1 MΩ or more?	Repair the poor contact of electronic throttle control connector. Replace the electronic throttle control if defective. <Ref. to FU(STI)-15, Throttle Body.>	Repair the short circuit to power in the harness between ECM connector and electronic throttle control connector.

2. OUTLINE OF DIAGNOSIS

Detect the open or short circuit of throttle position sensor 1.
Judge as NG if out of specification.

3. COMPONENT DESCRIPTION

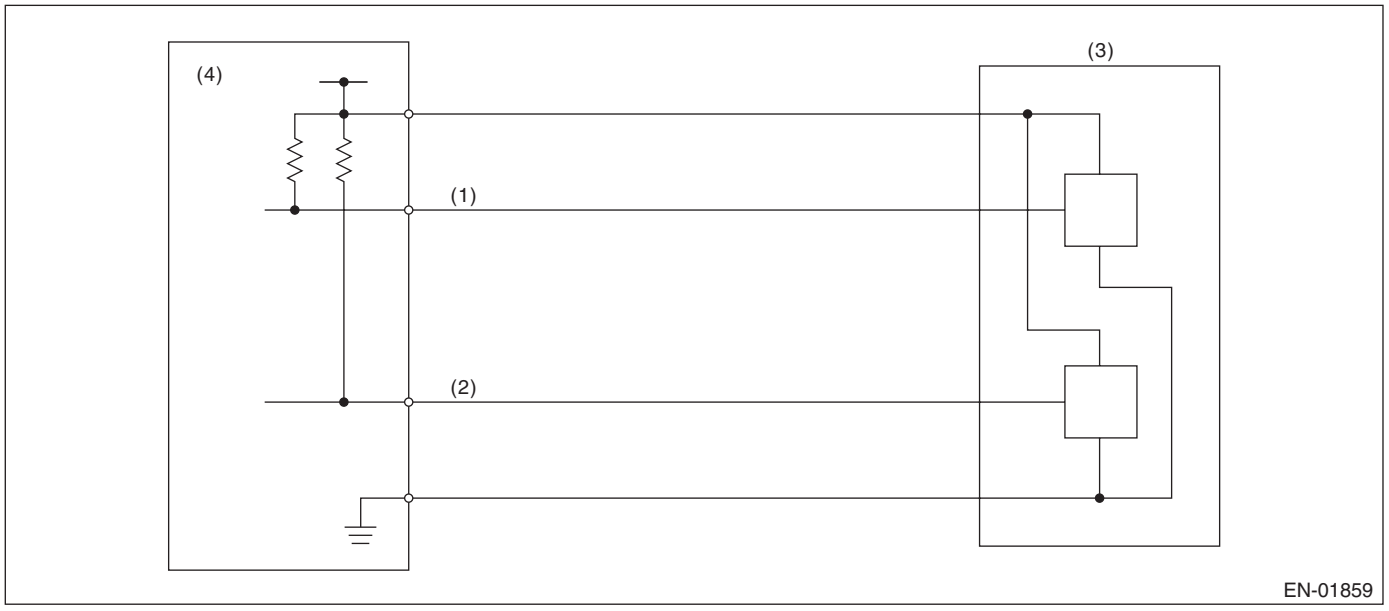

(1) Throttle position sensor 1 signal
(2) Throttle position sensor 2 signal
(3) Throttle position sensor
(4) Engine control module (ECM)

4. EXECUTION CONDITION

Secondary parameters	Execution condition
Battery voltage	≥ 6 V

5. GENERAL DRIVING CYCLE

Always perform the diagnosis continuously.

6. DIAGNOSTIC METHOD

If the duration of time while the following conditions are met is longer than the time indicated, judge as NG.

Judgment Value

Malfunction Criteria	Threshold Value
Sensor 1 input voltage	≥ 4.858 V

Time Needed for Diagnosis: 24 ms
Malfunction Indicator Light Illumination: Illuminates as soon as a malfunction occurs.

AI: DTC P0125 INSUFFICIENT COOLANT TEMPERATURE FOR CLOSED LOOP FUEL CONTROL

DTC DETECTING CONDITION:
Detected when two consecutive driving cycles with fault occur.
TROUBLE SYMPTOM:
Engine does not return to idle.

CAUTION:
After servicing or replacing faulty parts, perform Clear Memory Mode <Ref. to EN(STI)(diag)-68, OPERATION, Clear Memory Mode.>, and Inspection Mode <Ref. to EN(STI)(diag)-48, PROCEDURE, Inspection Mode.>.

	Step	Check	Yes	No
1	**CHECK ENGINE COOLANT.** Check the following items: • Amount of engine coolant • Engine coolant freeze • Contamination of engine coolant	Is the check result OK?	Go to step **2**.	Fill or replace the engine coolant. <Ref. to CO(STI)-12, Engine Coolant.>
2	**CHECK THERMOSTAT.**	Does the thermostat remain opened?	Replace the thermostat. <Ref. to CO(STI)-16, Thermostat.>	Replace the engine coolant temperature sensor. <Ref. to FU(STI)-33, Engine Coolant Temperature Sensor.>

1. OUTLINE OF DIAGNOSIS

Detect the malfunction of engine coolant temperature output property.
Judge as NG when engine coolant temperature does not rise to the specified value after predetermined time has elapsed since engine start.

2. COMPONENT DESCRIPTION

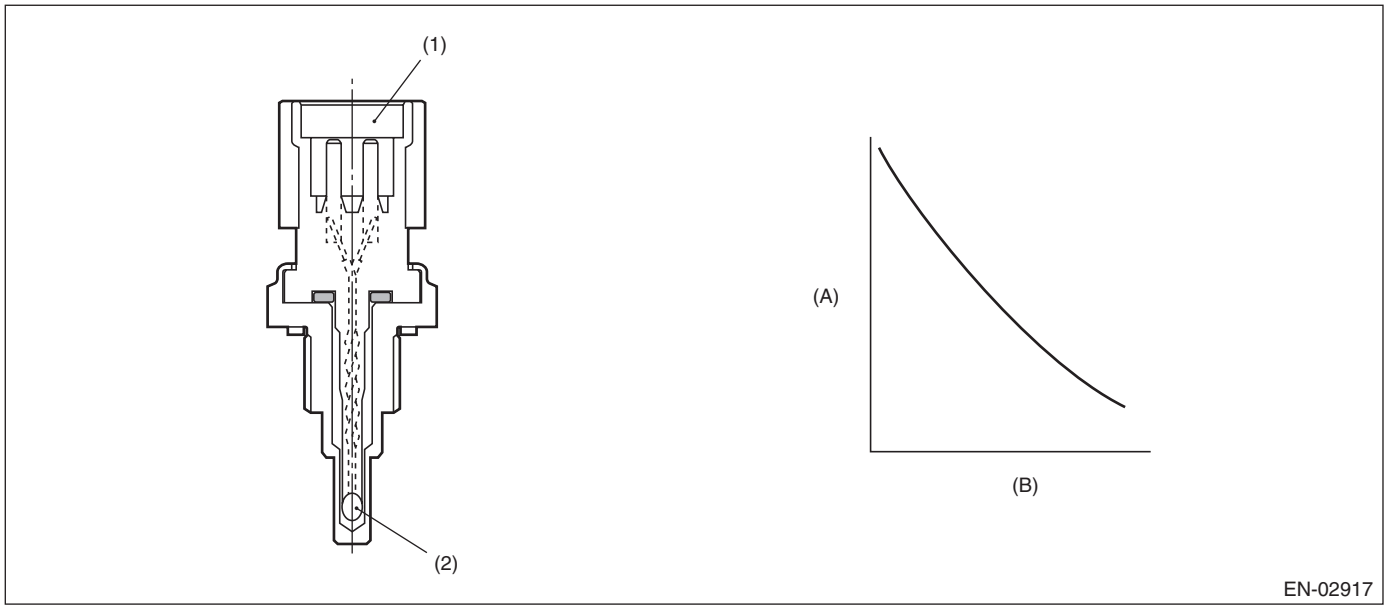

(A) Resistance value (kΩ)
(B) Temperature °C (°F)
(1) Connector
(2) Thermistor element

3. EXECUTION CONDITION

Secondary parameters	Execution condition
Battery voltage	≥ 10.9 V
Engine coolant temperature at engine start	< –15 °C (5 °F)
Engine speed	≥ 500 rpm

4. GENERAL DRIVING CYCLE

Perform the diagnosis only once after starting the engine from cold condition.

5. DIAGNOSTIC METHOD

If the duration of time while the following conditions are met is longer than the time indicated, judge as NG.

Judgment Value

Malfunction Criteria	Threshold Value
Engine coolant temperature	< –15 °C (5 °F)
Elapsed time after starting the engine ((Smaller value either one of engine coolant temperature and intake air temperature at engine start) ≥ –23.3°C (–9.9°F)) or ((Smaller value either one of engine coolant temperature and intake air temperature at engine start) < –23.3°C (–9.9°F))	≥ Value from Map

Map

		Smaller value either one of engine coolant temperature and intake air temperature at engine start °C (°F)							
		–40 (–40)	–23.4 (–10.1)	–23.3 (–9.9)	0 (32)	20 (68)	40 (104)	60 (140)	80 (176)
Percentage of time when engine is at stop against time elapsed since engine start	0.0	300000	300000	120000	120000	120000	120000	120000	120000
	0.3	300000	300000	120000	120000	120000	120000	120000	120000
	0.6	300000	300000	120000	120000	120000	120000	120000	120000
	1.0	300000	300000	120000	120000	120000	120000	120000	120000
ms									

Time Needed for Diagnosis: 120 or 300 seconds
Malfunction Indicator Light Illumination: Illuminates as soon as a malfunction occurs.

AJ:DTC P0128 COOLANT THERMOSTAT (ENGINE COOLANT TEMPERATURE BELOW THERMOSTAT REGULATING TEMPERATURE)

DTC DETECTING CONDITION:
Detected when two consecutive driving cycles with fault occur.
TROUBLE SYMPTOM:
- Thermostat remains open.
- Coolant temperature rises slowly.

CAUTION:
After servicing or replacing faulty parts, perform Clear Memory Mode <Ref. to EN(STI)(diag)-68, OPERATION, Clear Memory Mode.>, and Inspection Mode <Ref. to EN(STI)(diag)-48, PROCEDURE, Inspection Mode.>.

	Step	Check	Yes	No
1	**CHECK FOR ANY OTHER DTC ON DISPLAY.**	Is any other DTC displayed?	Check the appropriate DTC using the "List of Diagnostic Trouble Code (DTC)". <Ref. to EN(STI)(diag)-96, List of Diagnostic Trouble Code (DTC).>	Go to step **2**.
2	**CHECK ENGINE COOLANT.**	Is the check result OK?	Go to step **3**.	Refill the engine coolant. <Ref. to CO(STI)-12, Engine Coolant.>
3	**CHECK RADIATOR FAN.** 1) Start the engine. 2) Keep idling for approx. 3 minutes (with acceleration OFF) 3) Check the radiator fan operation.	Does the radiator fan continuously rotate for 3 minutes or more during idling?	Repair radiator fan circuit. <Ref. to CO(STI)-22, Radiator Main Fan and Fan Motor.> <Ref. to CO(STI)-24, Radiator Sub Fan and Fan Motor.>	Go to step **4**.
4	**CHECK ENGINE COOLANT TEMPERATURE SENSOR.** Check the engine coolant temperature sensor. <Ref. to FU(STI)-33, INSPECTION, Engine Coolant Temperature Sensor.>	Is the check result OK?	Replace the thermostat. <Ref. to CO(STI)-16, Thermostat.>	Replace the engine coolant temperature sensor. <Ref. to FU(STI)-33, Engine Coolant Temperature Sensor.>

1. OUTLINE OF DIAGNOSIS

Detect malfunctions of the thermostat function.
Judge as NG when any one of the following conditions is established.
- When the actual engine coolant temperature does not reach the maximum temperature necessary to perform other OBDII diagnosis and Σ (Estimated engine coolant temperature – actual engine coolant temperature) exceeded the predetermined value. (Judgment 1)
- When the actual engine coolant temperature does not reach the range within –11°C (–19.8°F) from the regulated temperature and Σ (Estimated engine coolant temperature – actual engine coolant temperature) exceeded the predetermined value. (Judgment 2)
- When the difference between the estimated coolant temperature and the actual engine coolant temperature exceeds the predetermined value, and Σ (Estimated engine coolant temperature – actual engine coolant temperature) exceeded the predetermined value. (Judgment 3)

2. COMPONENT DESCRIPTION

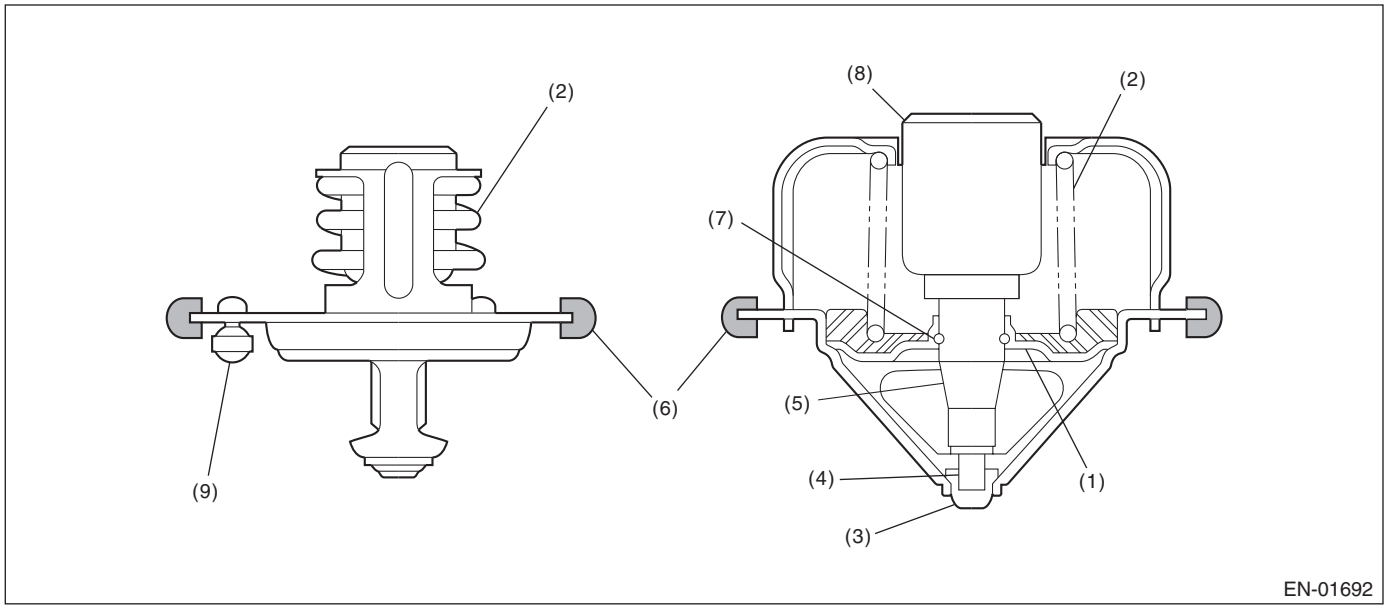

(1) Valve
(2) Spring
(3) Stopper
(4) Piston
(5) Guide
(6) Rubber seal
(7) Stop ring
(8) Wax element
(9) Jiggle valve

3. EXECUTION CONDITION

Secondary parameters	Execution condition
<Judgment 1>	
Battery voltage	≥ 10.9 V
Ambient air temperature	≥ –7 °C (19.4 °F)
Vehicle speed	≥ 30 km/h (18.6 MPH)
Estimated coolant temperature	> Value of Map 1
Engine coolant temperature at engine start	< 60 °C (140 °F)
<Judgment 2>	
Battery voltage	≥ 10.9 V
Ambient air temperature	≥ –7 °C (19.4 °F)
Vehicle speed	≥ 30 km/h (18.6 MPH)
Estimated coolant temperature	> Value of Map 2
Engine coolant temperature at engine start	< 60 °C (140 °F)
<Judgment 3>	
Battery voltage	≥ 10.9 V
Ambient air temperature	≥ –7 °C (19.4 °F)
Vehicle speed	≥ 30 km/h (18.6 MPH)
Estimated coolant temperature	≥ Value from Map 3
Engine coolant temperature at engine start	< 60 °C (140 °F)

Map 1

Engine coolant temperature at engine starting °C (°F)	–7 (19.4)	8 (46.4)	10 (50)	25 (77)
Estimated coolant temperature °C (°F)	70 (158)	70 (158)	70 (158)	70 (158)

Map 2

Engine coolant temperature at engine starting °C (°F)	–7 (19.4)	8 (46.4)	10 (50)	25 (77)
Estimated coolant temperature °C (°F)	77.5 (171.5)	77.5 (171.5)	77.5 (171.5)	77.5 (171.5)

Map 3

Engine coolant temperature at engine starting °C (°F)	–7 (19.4)	10 (50)	26 (78.8)	60 (140)
Estimated coolant temperature °C (°F)	60 (140)	69 (156.2)	77.5 (171.5)	77.5 (171.5)

4. GENERAL DRIVING CYCLE

Perform the diagnosis only once after starting the engine.

5. DIAGNOSTIC METHOD

If the duration of time while the following conditions are met is longer than the time indicated, judge as NG.

Judgment Value

Malfunction Criteria	Threshold Value
When any one of the followings is established:	
<Judgment 1>	
Actual engine coolant temperature and Σ (Estimated engine coolant temperature – actual engine coolant temperature)	< Value of Map 4 > Value of Map 5
<Judgment 2>	
Actual engine coolant temperature and Σ (Estimated engine coolant temperature – actual engine coolant temperature) *Regulated temperature = 88.6	< Regulated temperature* – Value of Map 6 > Value of Map 7
<Judgment 3>	
Estimated engine coolant temperature – actual engine coolant temperature and Σ (Estimated engine coolant temperature – actual engine coolant temperature)	> Value of Map 8 > Value of Map 9

Map 4

Estimate ambient temperature °C (°F)	–7 (19.4)	8 (46.4)	10 (50)	25 (77)
Threshold Value °C (°F)	70 (158)	70 (158)	70 (158)	70 (158)

Map 5

Engine coolant temperature at engine starting °C (°F)	–7 (19.4)	0 (32)	8 (46.4)	10 (50)	25 (77)	35 (95)
Threshold Value °C (°F)	1731.6 (3116.9)	1731.6 (3116.9)	1731.6 (3116.9)	1731.6 (3116.9)	1731.6 (3116.9)	1200 (1800)

Map 6

Estimate ambient temperature °C (°F)	–7 (19.4)	8 (46.4)	10 (50)	25 (77)
Threshold Value °C (°F)	11.1 (20)	11.1 (20)	11.1 (20)	11.1 (20)

Map 7

Engine coolant temperature at engine starting °C (°F)	–7 (19.4)	0 (32)	8 (46.4)	10 (50)	25 (77)	30 (86)	35 (95)
Threshold Value °C (°F)	1731.6 (3116.9)	1731.6 (3116.9)	1731.6 (3116.9)	1731.6 (3116.9)	1731.6 (3116.9)	1731.6 (3116.9)	1200 (2160)

Map 8

Estimate ambient temperature °C (°F)	–7 (19.4)	8 (46.4)	10 (50)	25 (77)
Threshold Value °C (°F)	11.1 (20)	11.1 (20)	11.1 (20)	11.1 (20)

Map 9

Engine coolant temperature at engine starting °C (°F)	–7 (19.4)	8 (46.4)	10 (50)	25 (77)
Threshold Value °C (°F)	1731.6 (3116.9)	1731.6 (3116.9)	1731.6 (3116.9)	1731.6 (3116.9)

Time Needed for Diagnosis: Less than 1 second
Malfunction Indicator Light Illumination: Illuminates when malfunction occurs in 2 continuous driving cycles.

AK:DTC P0131 A/F / O2 SENSOR CIRCUIT LOW VOLTAGE BANK 1 SENSOR 1

DTC DETECTING CONDITION:
Immediately at fault recognition

CAUTION:
After servicing or replacing faulty parts, perform Clear Memory Mode <Ref. to EN(STI)(diag)-68, OPERATION, Clear Memory Mode.>, and Inspection Mode <Ref. to EN(STI)(diag)-48, PROCEDURE, Inspection Mode.>.

WIRING DIAGRAM:
Engine Electrical System <Ref. to WI-154, WIRING DIAGRAM, Engine Electrical System.>

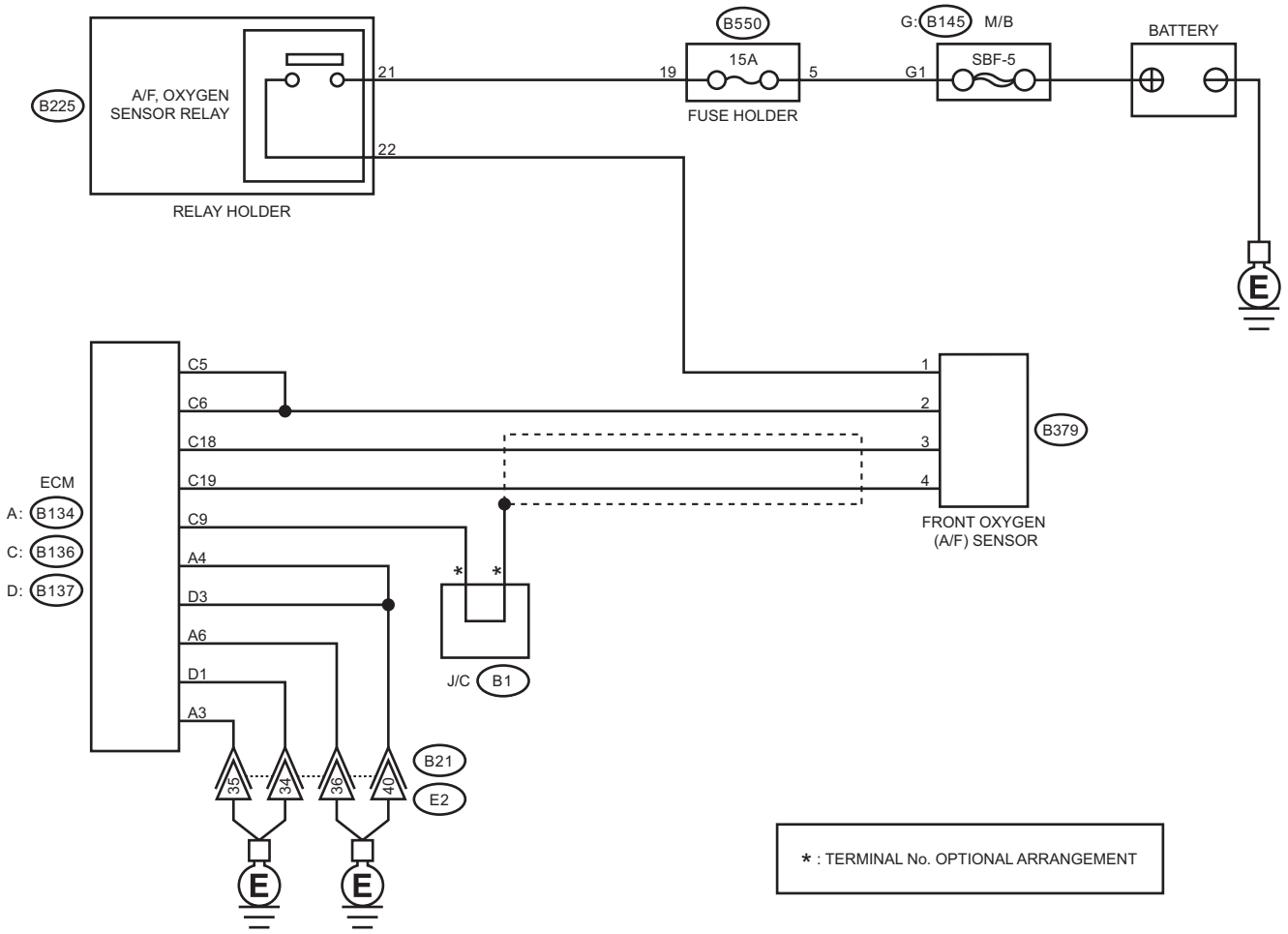

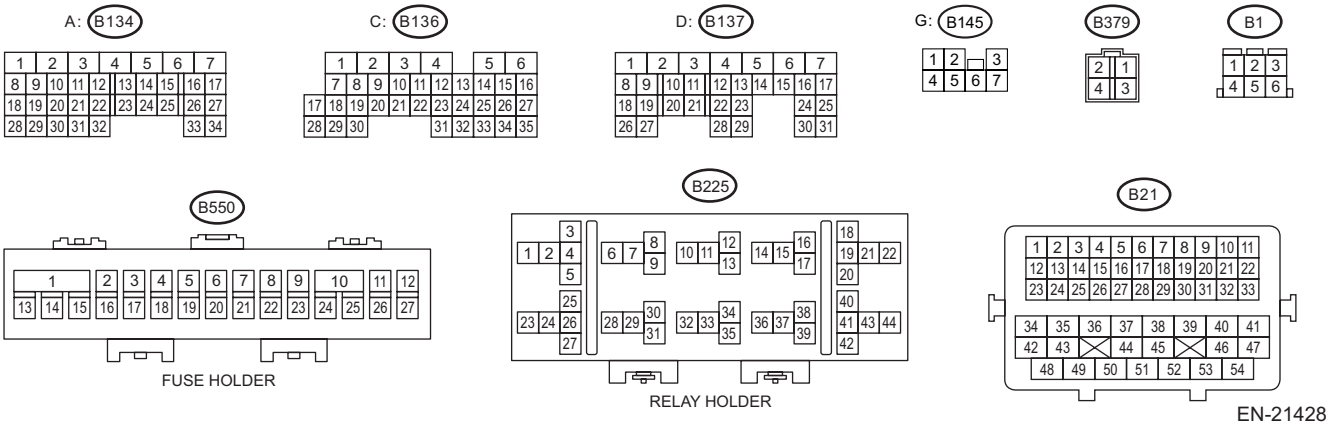

EN-21428

	Step	Check	Yes	No
1	**CHECK FRONT OXYGEN (A/F) SENSOR CONNECTOR AND COUPLING CONNECTOR.**	Has water entered the connector?	Completely remove any water inside.	Go to step **2**.
2	**CHECK HARNESS BETWEEN ECM AND FRONT OXYGEN (A/F) SENSOR CONNECTOR.** 1) Turn the ignition switch to OFF. 2) Disconnect the connector from ECM. 3) Disconnect the connectors from front oxygen (A/F) sensor. 4) Measure the resistance between ECM connector and chassis ground. ***Connector & terminal*** ***(B136) No. 18 — Chassis ground:*** ***(B136) No. 19 — Chassis ground:***	Is the resistance 1 MΩ or more?	Go to step **3**.	Repair the short circuit to ground in harness between ECM connector and front oxygen (A/F) sensor connector.
3	**CHECK FOR POOR CONTACT.** Check for poor contact of the front oxygen (A/F) sensor connector.	Is there poor contact of front oxygen (A/F) sensor connector?	Repair the poor contact of front oxygen (A/F) sensor connector.	Replace the front oxygen (A/F) sensor. <Ref. to FU(STI)-52, Front Oxygen (A/F) Sensor.>

1. OUTLINE OF DIAGNOSIS

Detect the open or short circuit of sensor.
Judge as NG, when the element voltage is out of the specified range.

2. COMPONENT DESCRIPTION

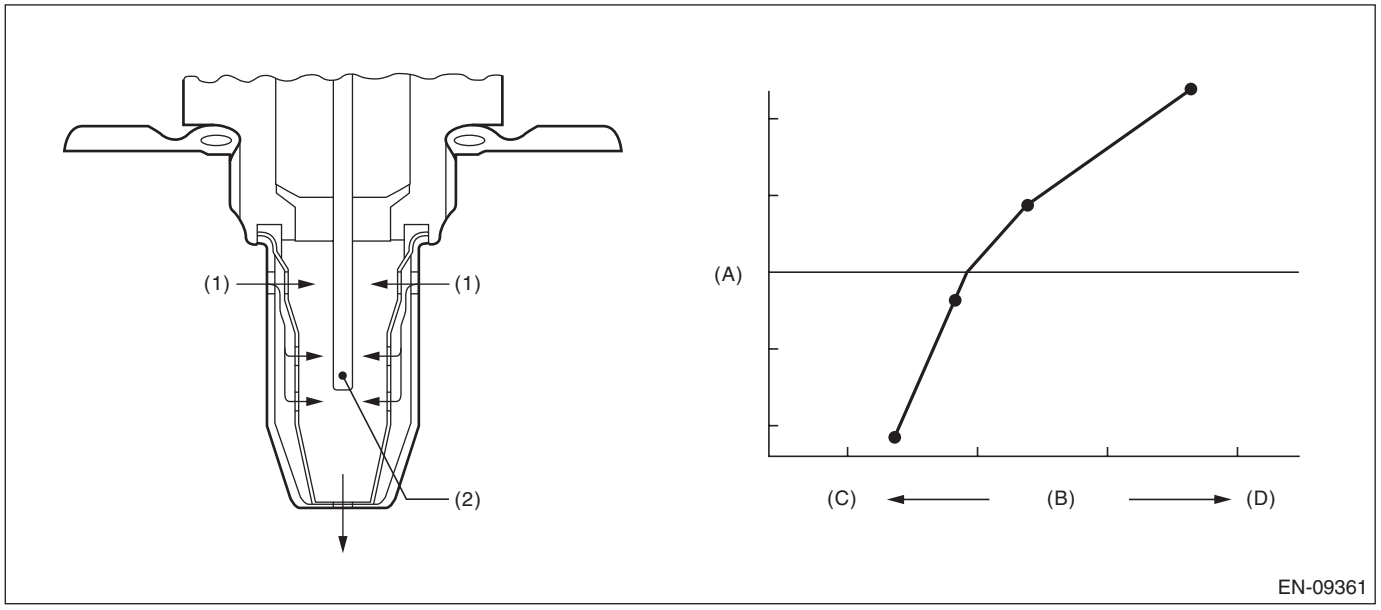

(A) Electromotive force (B) Air fuel ratio (C) Rich
(D) Lean

(1) Exhaust gas (2) ZrO_2

3. EXECUTION CONDITION

Secondary parameters	Execution condition
Battery voltage	≥ 10.9 V

4. GENERAL DRIVING CYCLE

Always perform the diagnosis continuously.

5. DIAGNOSTIC METHOD

If the duration of time while the following conditions are met is longer than the time indicated, judge as NG.

Judgment Value

Malfunction Criteria	Threshold Value
Input voltage (+)	< 1.128 V
or	
Input voltage (–)	< 0.644 V
or	
|Input voltage (+) – Input voltage (–)|	< 0.23 V

Time Needed for Diagnosis: 1000 ms
Malfunction Indicator Light Illumination: Illuminates as soon as a malfunction occurs.

AL:DTC P0132 A/F / O2 SENSOR CIRCUIT HIGH VOLTAGE BANK 1 SENSOR 1

DTC DETECTING CONDITION:
Immediately at fault recognition

CAUTION:
After servicing or replacing faulty parts, perform Clear Memory Mode <Ref. to EN(STI)(diag)-68, OPERATION, Clear Memory Mode.>, and Inspection Mode <Ref. to EN(STI)(diag)-48, PROCEDURE, Inspection Mode.>.

WIRING DIAGRAM:
Engine Electrical System <Ref. to WI-154, WIRING DIAGRAM, Engine Electrical System.>

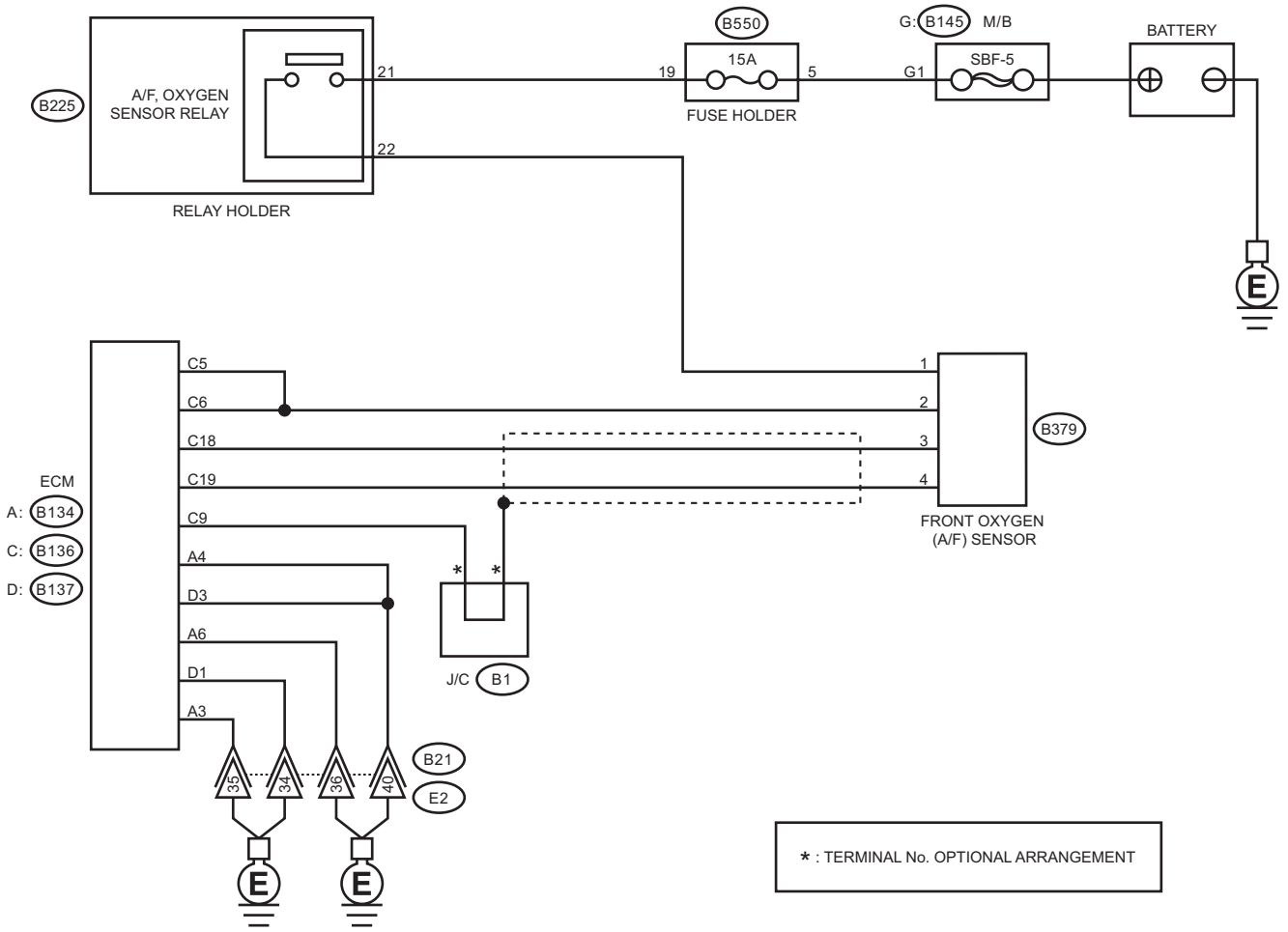

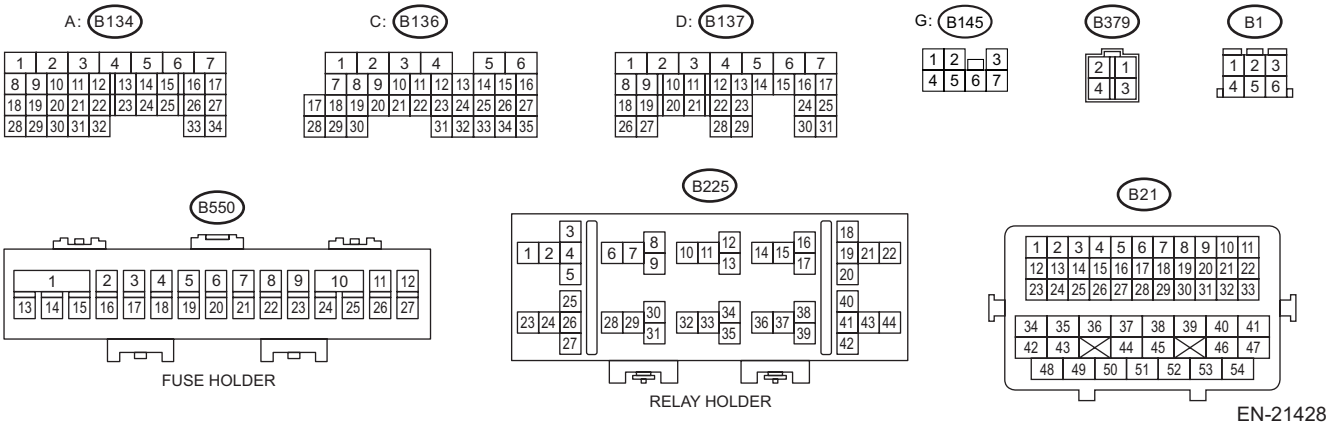

EN-21428

	Step	Check	Yes	No
1	**CHECK FRONT OXYGEN (A/F) SENSOR CONNECTOR AND COUPLING CONNECTOR.**	Has water entered the connector?	Completely remove any water inside.	Go to step **2**.
2	**CHECK HARNESS BETWEEN ECM AND FRONT OXYGEN (A/F) SENSOR CONNECTOR.** 1) Turn the ignition switch to OFF. 2) Disconnect the connectors from front oxygen (A/F) sensor. 3) Turn the ignition switch to ON. 4) Measure the voltage between ECM connector and chassis ground. ***Connector & terminal*** ***(B136) No. 18 (+) — Chassis ground (–):*** ***(B136) No. 19 (+) — Chassis ground (–):***	Is the voltage 8 V or more?	Repair the short circuit to power in the harness between ECM connector and front oxygen (A/F) sensor connector.	Replace the front oxygen (A/F) sensor. <Ref. to FU(STI)-52, Front Oxygen (A/F) Sensor.>

1. OUTLINE OF DIAGNOSIS

Detect the open or short circuit of sensor.
Judge as NG, when the element voltage is out of the specified range.

2. COMPONENT DESCRIPTION

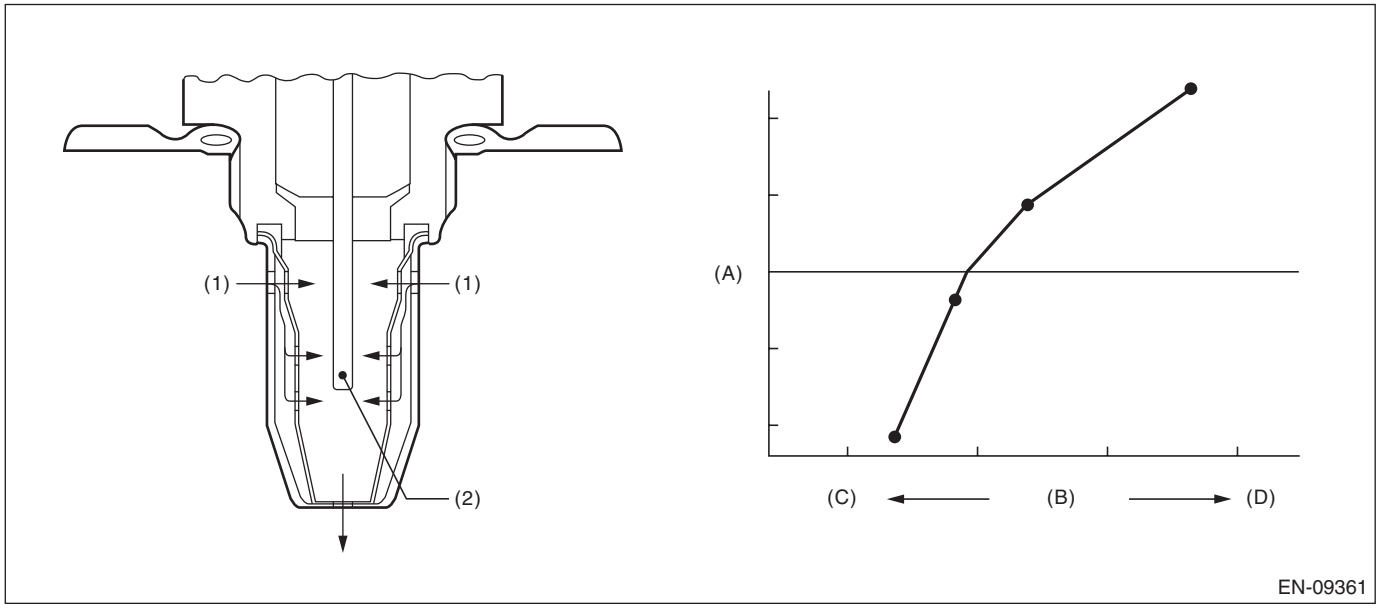

(A) Electromotive force (B) Air fuel ratio (C) Rich
(D) Lean

(1) Exhaust gas (2) ZrO_2

3. EXECUTION CONDITION

Secondary parameters	Execution condition
Battery voltage	≥ 10.9 V

4. GENERAL DRIVING CYCLE

Always perform the diagnosis continuously.

5. DIAGNOSTIC METHOD

If the duration of time while the following conditions are met is longer than the time indicated, judge as NG.

Judgment Value

Malfunction Criteria	Threshold Value
Input voltage (+) or Input voltage (–)	> 3.589 V > 3.541 V

Time Needed for Diagnosis: 1000 ms
Malfunction Indicator Light Illumination: Illuminates as soon as a malfunction occurs.

AM:DTC P0134 A/F / O2 SENSOR CIRCUIT NO ACTIVITY DETECTED BANK 1 SENSOR 1

DTC DETECTING CONDITION:
Immediately at fault recognition

CAUTION:
After servicing or replacing faulty parts, perform Clear Memory Mode <Ref. to EN(STI)(diag)-68, OPERATION, Clear Memory Mode.>, and Inspection Mode <Ref. to EN(STI)(diag)-48, PROCEDURE, Inspection Mode.>.

WIRING DIAGRAM:

Engine Electrical System <Ref. to WI-154, WIRING DIAGRAM, Engine Electrical System.>

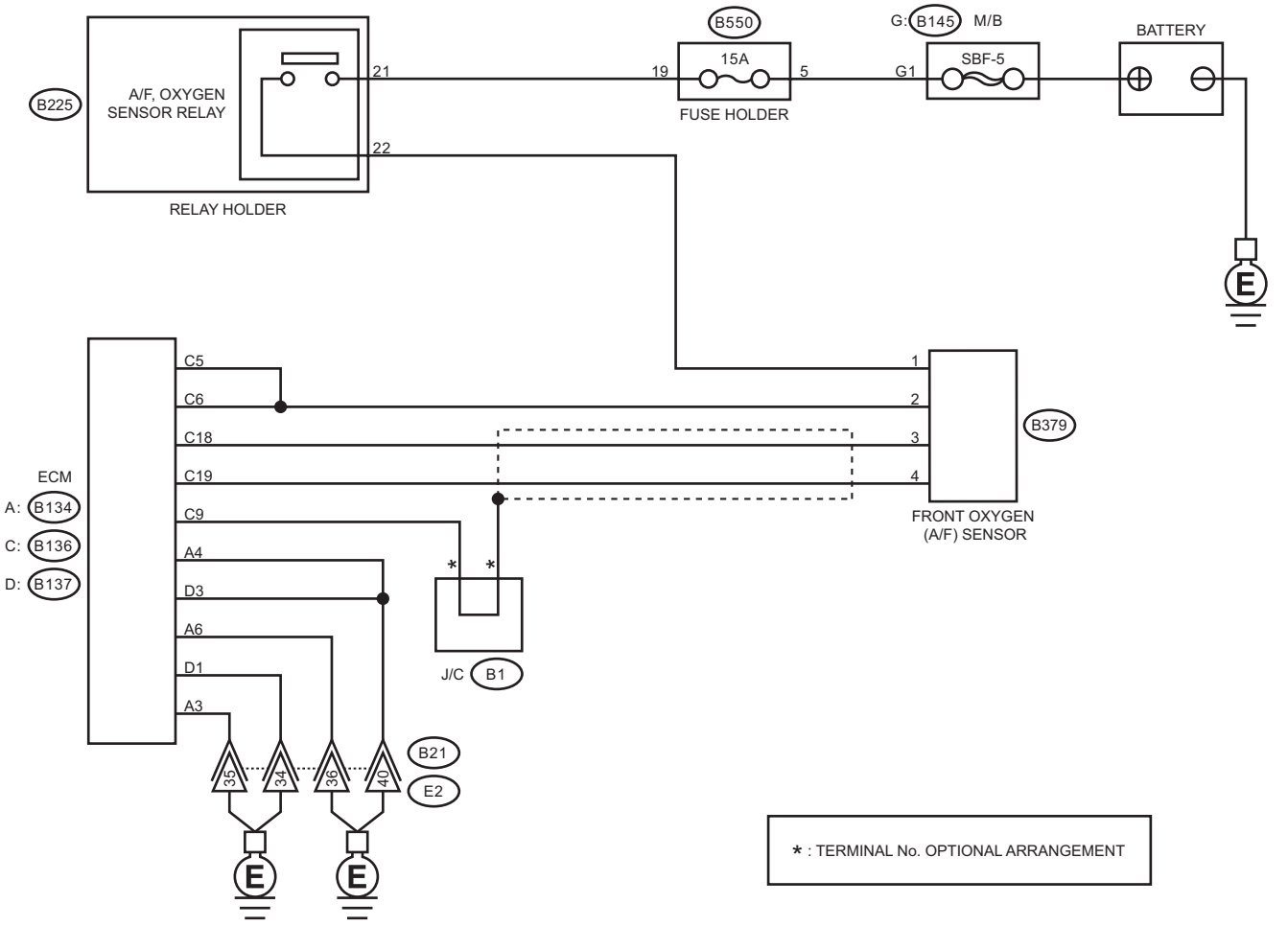

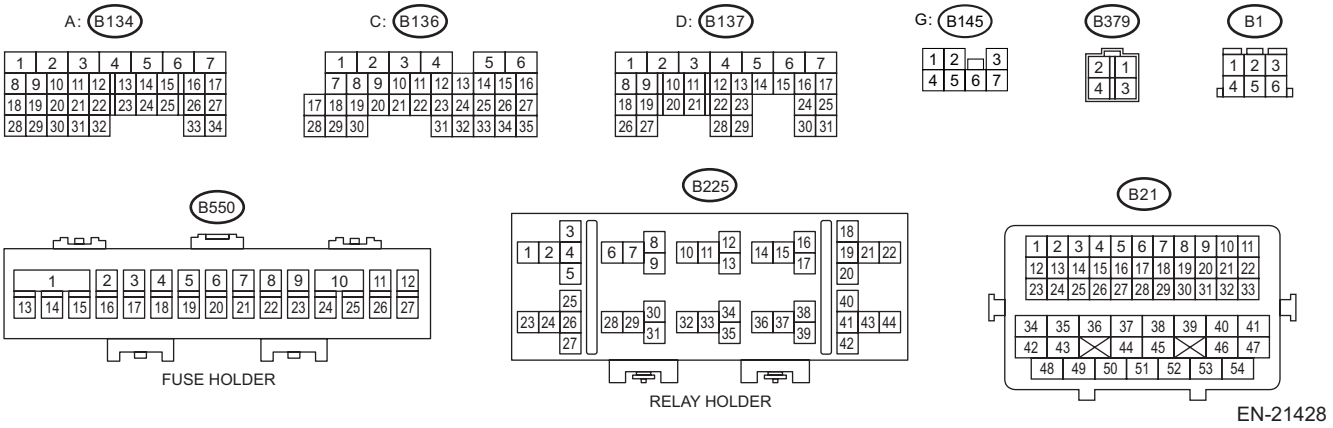

EN-21428

	Step	Check	Yes	No
1	**CHECK HARNESS BETWEEN ECM AND FRONT OXYGEN (A/F) SENSOR CONNECTOR.** 1) Turn the ignition switch to OFF. 2) Disconnect the connector from ECM. 3) Disconnect the connectors from front oxygen (A/F) sensor. 4) Measure the resistance of harness between ECM connector and front oxygen (A/F) sensor connector. ***Connector & terminal*** ***(B136) No. 18 — (B379) No. 3:*** ***(B136) No. 19 — (B379) No. 4:***	Is the resistance less than 1 Ω?	Go to step **2**.	Repair the open circuit of harness between ECM connector and front oxygen (A/F) sensor connector.
2	**CHECK FOR POOR CONTACT.** Check for poor contact of ECM and front oxygen (A/F) sensor connector.	Is there poor contact of ECM or front oxygen (A/F) sensor connector?	Repair the poor contact of ECM or front oxygen (A/F) sensor connector.	Replace the front oxygen (A/F) sensor. <Ref. to FU(STI)-52, Front Oxygen (A/F) Sensor.>

1. OUTLINE OF DIAGNOSIS

Detect open circuits of the sensor.
Judge as NG when the impedance of the element is large.

2. COMPONENT DESCRIPTION

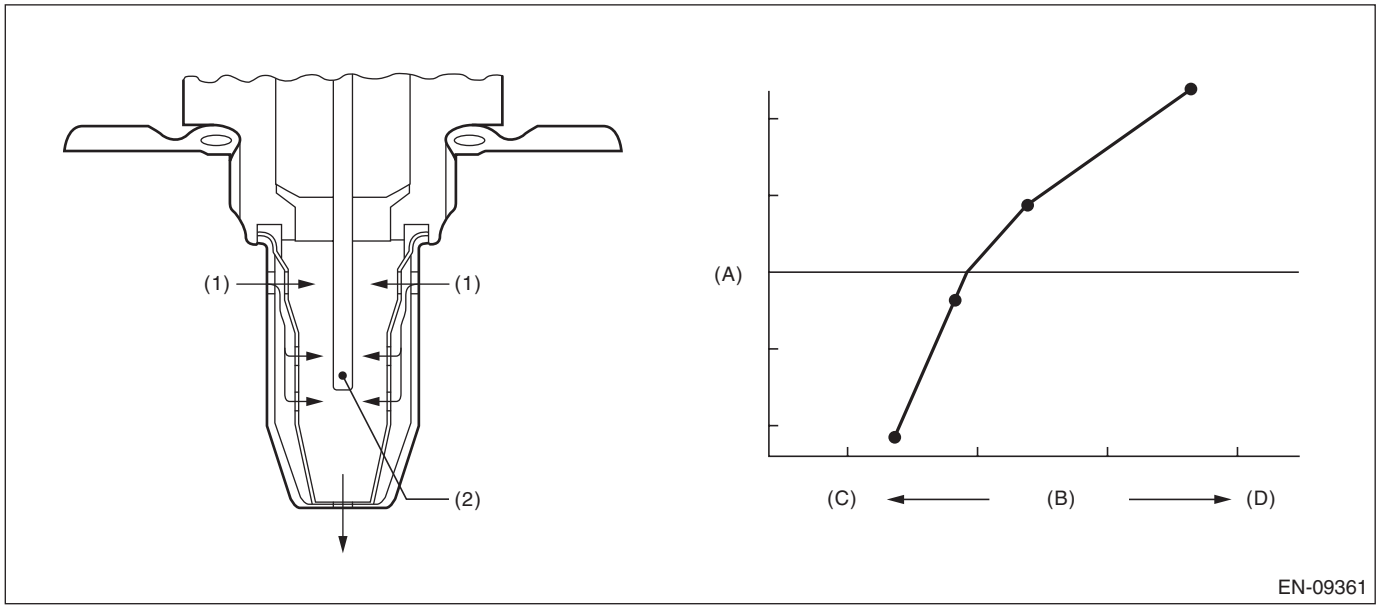

(A) Electromotive force (B) Air fuel ratio (C) Rich
(D) Lean

(1) Exhaust gas (2) ZrO_2

3. EXECUTION CONDITION

Secondary parameters	Execution condition
Battery voltage	≥ 10.9 V
Time of heater control duty at 70 % or more	≥ 36000 ms

4. GENERAL DRIVING CYCLE

Always perform the diagnosis continuously.

5. DIAGNOSTIC METHOD

If the duration of time while the following conditions are met is longer than the time indicated, judge as NG.

Judgment Value

Malfunction Criteria	Threshold Value
Front oxygen (A/F) sensor impedance	> 500 Ω

Time Needed for Diagnosis: 5000 ms
Malfunction Indicator Light Illumination: Illuminates as soon as a malfunction occurs.

AN:DTC P0137 O2 SENSOR CIRCUIT LOW VOLTAGE BANK 1 SENSOR 2

DTC DETECTING CONDITION:

Detected when two consecutive driving cycles with fault occur.

CAUTION:

After servicing or replacing faulty parts, perform Clear Memory Mode <Ref. to EN(STI)(diag)-68, OPERATION, Clear Memory Mode.>, and Inspection Mode <Ref. to EN(STI)(diag)-48, PROCEDURE, Inspection Mode.>.

WIRING DIAGRAM:

Engine Electrical System <Ref. to WI-154, WIRING DIAGRAM, Engine Electrical System.>

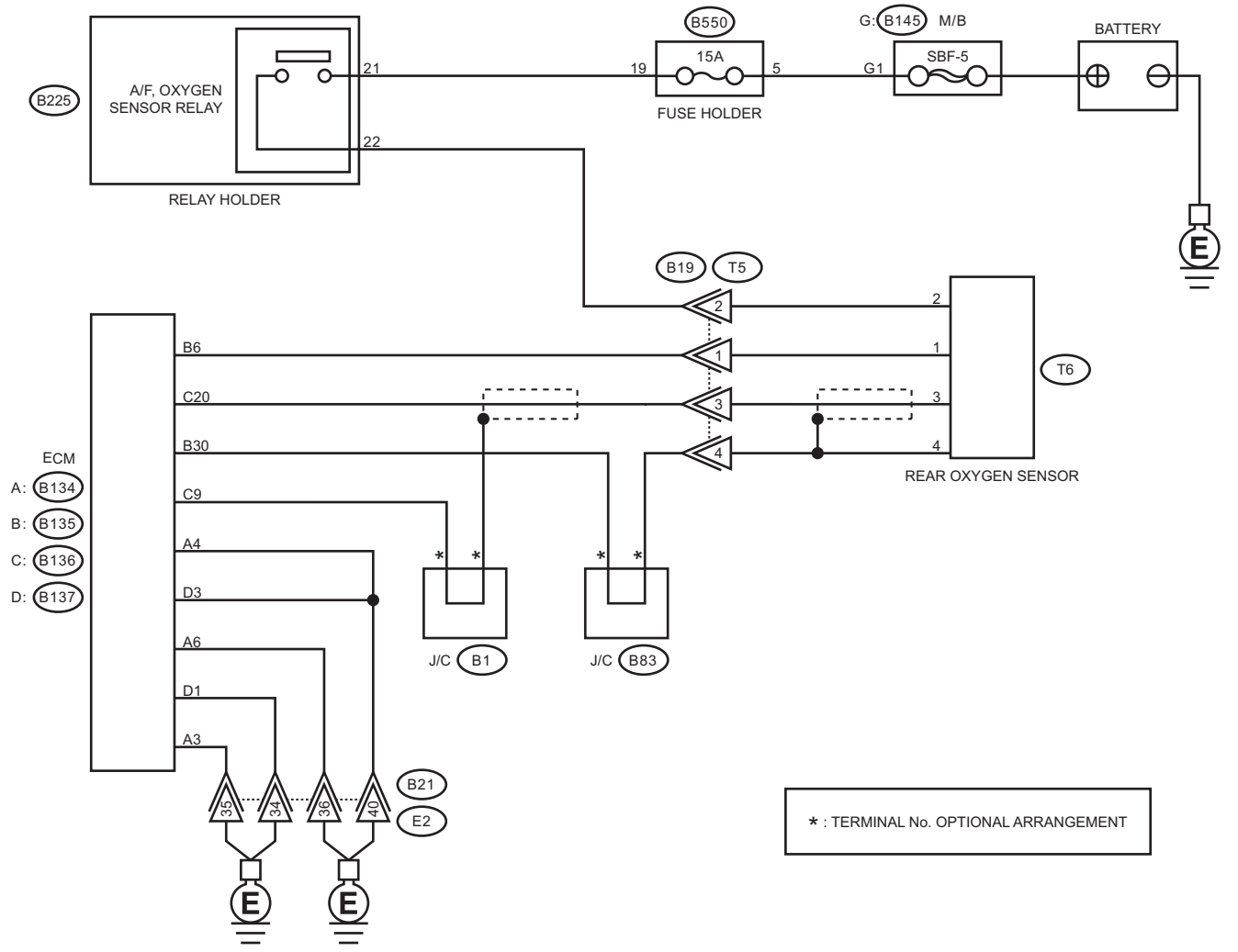

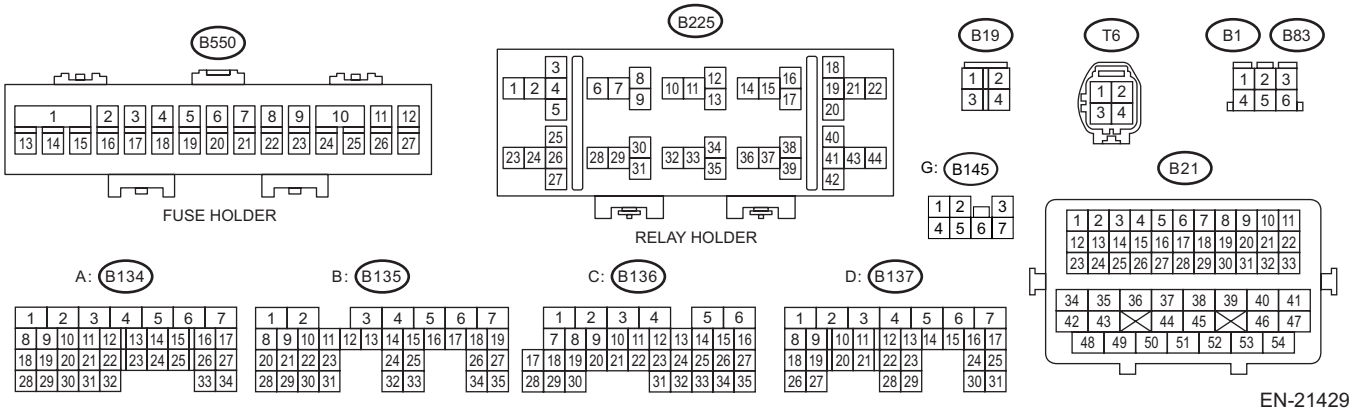

EN-21429

	Step	Check	Yes	No
1	**CHECK REAR OXYGEN SENSOR DATA.** 1) Warm up the engine until engine coolant temperature is higher than 75°C (167°F), and keep the engine speed at 3,000 rpm. (2 minutes maximum) 2) Read the value of «Rear O2 Sensor Voltage» using the Subaru Select Monitor or a general scan tool. NOTE: • Subaru Select Monitor For detailed operation procedures, refer to "Current Data Display For Engine". <Ref. to EN(STI)(diag)-36, Subaru Select Monitor.> • General scan tool For detailed operation procedures, refer to the general scan tool operation manual.	Is the value of «Rear O2 Sensor Voltage» 0.490 V or more?	Go to step **5**.	Go to step **2**.
2	**CHECK REAR OXYGEN SENSOR CONNECTOR AND COUPLING CONNECTOR.**	Has water entered the connector?	Completely remove any water inside.	Go to step **3**.
3	**CHECK HARNESS BETWEEN ECM AND REAR OXYGEN SENSOR CONNECTOR.** 1) Turn the ignition switch to OFF. 2) Disconnect the connector from ECM. 3) Disconnect the connector from rear oxygen sensor. 4) Measure the resistance of harness between ECM connector and rear oxygen sensor connector. ***Connector & terminal*** ***(B136) No. 20 — (T6) No. 3:*** ***(B135) No. 30 — (T6) No. 4:***	Is the resistance less than 1 Ω?	Go to step **4**.	Repair the harness and connector. NOTE: In this case, repair the following item: • Open circuit in harness between ECM connector and rear oxygen sensor connector • Poor contact of coupling connector
4	**CHECK HARNESS BETWEEN ECM AND REAR OXYGEN SENSOR CONNECTOR.** 1) Connect the connector to ECM. 2) Turn the ignition switch to ON. 3) Measure the voltage between rear oxygen sensor connector and chassis ground. ***Connector & terminal*** ***(T6) No. 3 (+) — Chassis ground (–):***	Is the voltage 0.2 — 0.5 V?	Replace the rear oxygen sensor. <Ref. to FU(STI)-54, Rear Oxygen Sensor.>	Repair the harness and connector. NOTE: In this case, repair the following item: • Open circuit in harness between ECM connector and rear oxygen sensor connector • Poor contact of ECM connector • Poor contact of coupling connector
5	**CHECK EXHAUST SYSTEM.** Check exhaust system parts. NOTE: Check the following items. • Looseness and improper fitting of exhaust system parts • Damage (crack, hole etc.) of parts • Loose part and improper installation between front oxygen (A/F) sensor and rear oxygen sensor	Is there any fault in exhaust system?	Repair or replace faulty parts.	Replace the rear oxygen sensor. <Ref. to FU(STI)-54, Rear Oxygen Sensor.>

1. OUTLINE OF DIAGNOSIS

Detect continuity NG of the oxygen sensor. If the oxygen sensor voltage reading is not within the probable range considering the operating conditions, judge as NG.

2. COMPONENT DESCRIPTION

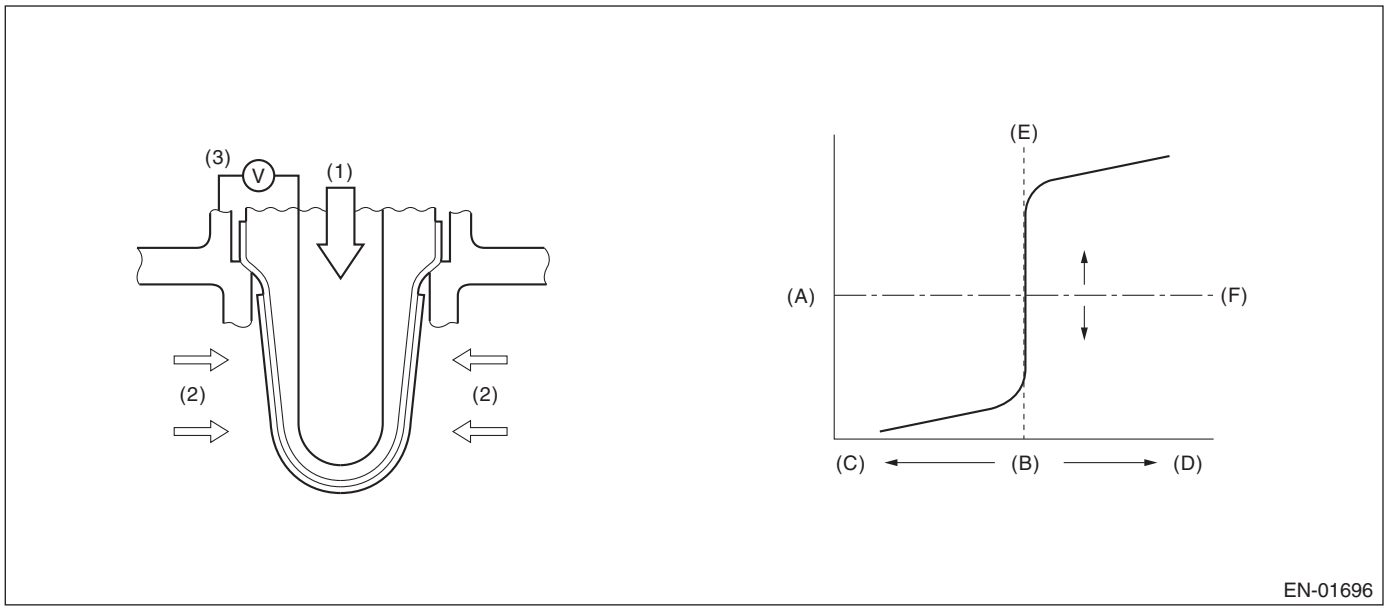

(A) Electromotive force
(B) Air fuel ratio
(C) Lean
(D) Rich
(E) Theoretical air fuel ratio
(F) Comparative voltage

(1) Atmosphere
(2) Exhaust gas
(3) Electromotive force

3. EXECUTION CONDITION

Secondary parameters	Execution condition
High	
Battery voltage	≥ 10.9 V
Low (1)	
Battery voltage	≥ 10.9 V
Closed loop control at the oxygen sensor	In operation
Secondary air system	Not in operation
Amount of intake air	≥ 10 g/s (0.35 oz/s)
Low (2)	
Battery voltage	≥ 10.9 V
Closed loop control at the oxygen sensor	In operation
Secondary air system	Not in operation
Amount of intake air	< 10 g/s (0.35 oz/s)

4. GENERAL DRIVING CYCLE

After starting the engine, continuously perform the diagnosis with the same engine condition.

5. DIAGNOSTIC METHOD

If the duration of time while the following conditions are met is longer than the time indicated, judge as NG.

Judgment Value

Malfunction Criteria	Threshold Value	DTC
High Sensor output voltage	> 1.2 V	P0138
Low Sensor output voltage	< 0.03 V	P0137

Time Needed for Diagnosis:

High: 2500 ms
Low (1): 20000 ms
Low (2): 150000 ms

Malfunction Indicator Light Illumination: Illuminates as soon as a malfunction occurs.

AO:DTC P0138 O2 SENSOR CIRCUIT HIGH VOLTAGE BANK 1 SENSOR 2

DTC DETECTING CONDITION:

Detected when two consecutive driving cycles with fault occur.

CAUTION:

After servicing or replacing faulty parts, perform Clear Memory Mode <Ref. to EN(STI)(diag)-68, OPERATION, Clear Memory Mode.>, and Inspection Mode <Ref. to EN(STI)(diag)-48, PROCEDURE, Inspection Mode.>.

WIRING DIAGRAM:

Engine Electrical System <Ref. to WI-154, WIRING DIAGRAM, Engine Electrical System.>

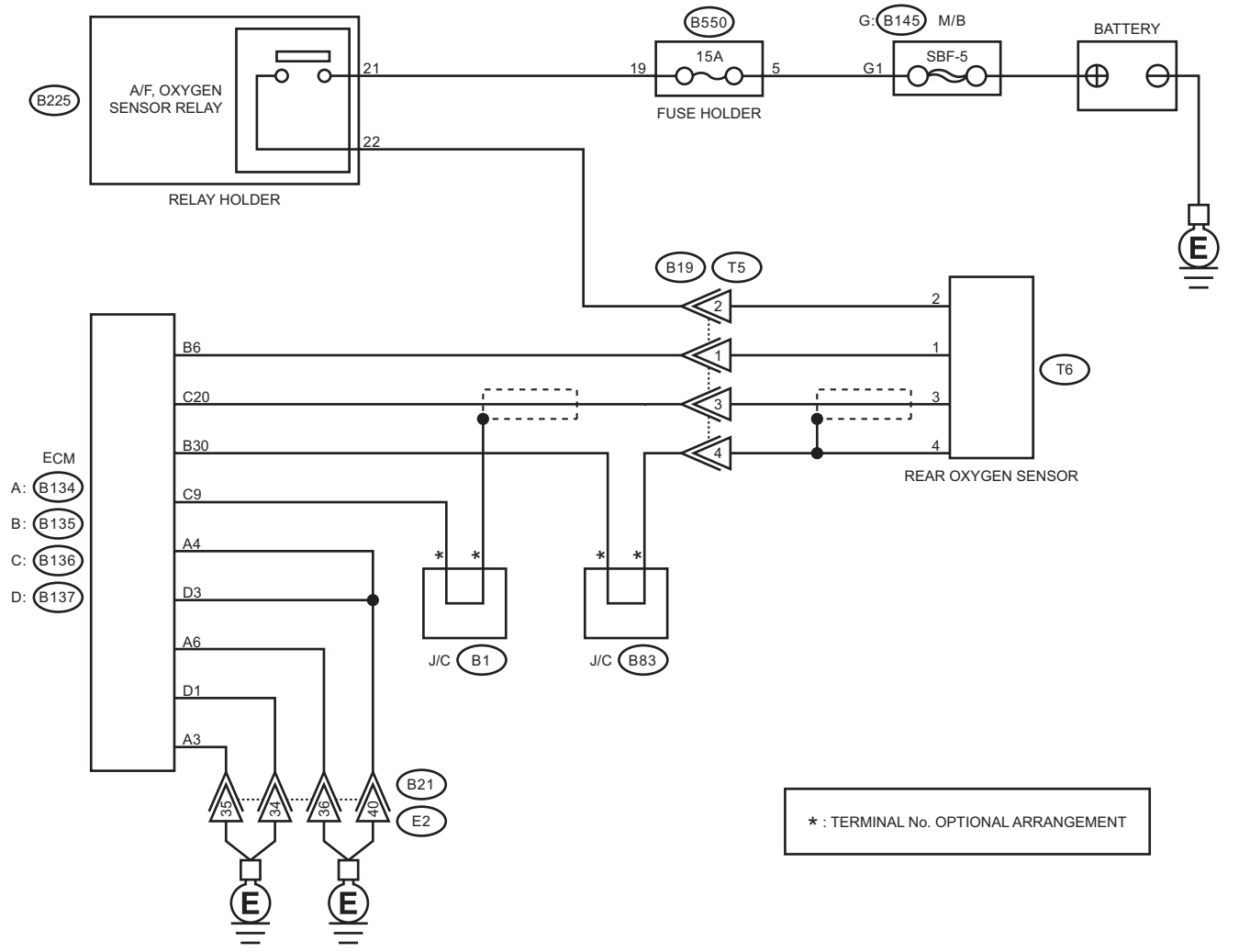

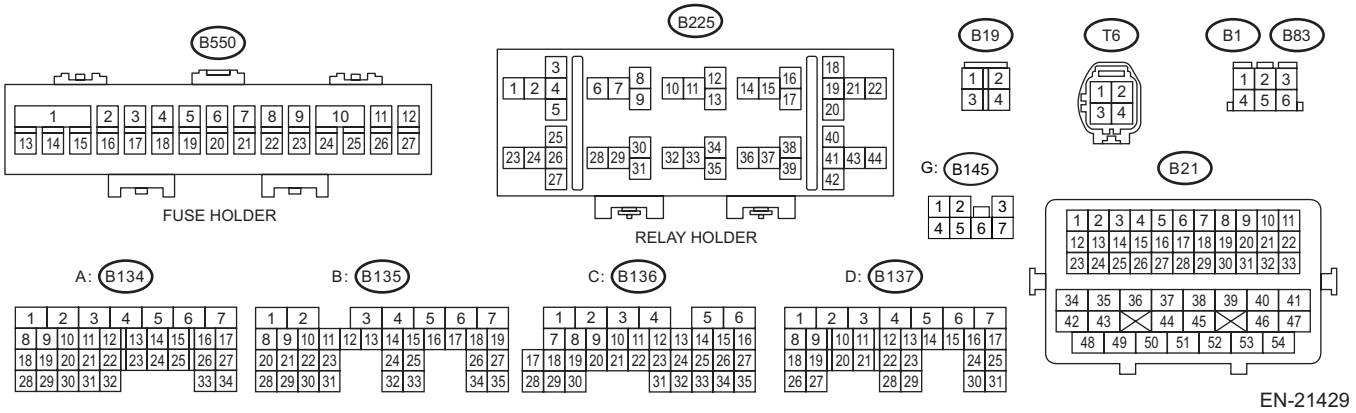

EN-21429

	Step	Check	Yes	No
1	**CHECK REAR OXYGEN SENSOR DATA.** 1) Warm up the engine until engine coolant temperature is higher than 75°C (167°F), and rapidly reduce the engine speed from 3,000 rpm. 2) Read the value of «Rear O2 Sensor Voltage» using the Subaru Select Monitor or a general scan tool. NOTE: • Subaru Select Monitor For detailed operation procedures, refer to "Current Data Display For Engine". <Ref. to EN(STI)(diag)-36, Subaru Select Monitor.> • General scan tool For detailed operation procedures, refer to the general scan tool operation manual.	Is the value of «Rear O2 Sensor Voltage» 0.250 V or less?	Go to step **5**.	Go to step **2**.
2	**CHECK REAR OXYGEN SENSOR CONNECTOR AND COUPLING CONNECTOR.**	Has water entered the connector?	Completely remove any water inside.	Go to step **3**.
3	**CHECK HARNESS BETWEEN ECM AND REAR OXYGEN SENSOR CONNECTOR.** 1) Turn the ignition switch to OFF. 2) Disconnect the connector from ECM. 3) Disconnect the connector from rear oxygen sensor. 4) Measure the resistance of harness between ECM connector and rear oxygen sensor connector. ***Connector & terminal*** ***(B136) No. 20 — (T6) No. 3:*** ***(B135) No. 30 — (T6) No. 4:***	Is the resistance less than 1 Ω?	Go to step **4**.	Repair the harness and connector. NOTE: In this case, repair the following item: • Open circuit in harness between ECM connector and rear oxygen sensor connector • Poor contact of coupling connector
4	**CHECK HARNESS BETWEEN ECM AND REAR OXYGEN SENSOR CONNECTOR.** 1) Connect the connector to ECM. 2) Turn the ignition switch to ON. 3) Measure the voltage between rear oxygen sensor connector and chassis ground. ***Connector & terminal*** ***(T6) No. 3 (+) — Chassis ground (–):***	Is the voltage 0.2 — 0.5 V?	Replace the rear oxygen sensor. <Ref. to FU(STI)-54, Rear Oxygen Sensor.>	Repair the harness and connector. NOTE: In this case, repair the following item: • Open circuit in harness between ECM connector and rear oxygen sensor connector • Poor contact of ECM connector • Poor contact of coupling connector
5	**CHECK EXHAUST SYSTEM.** Check exhaust system parts. NOTE: Check the following items. • Looseness and improper fitting of exhaust system parts • Damage (crack, hole etc.) of parts • Loose part and improper installation between front oxygen (A/F) sensor and rear oxygen sensor	Is there any fault in exhaust system?	Repair or replace faulty parts.	Replace the rear oxygen sensor. <Ref. to FU(STI)-54, Rear Oxygen Sensor.>

1. OUTLINE OF DIAGNOSIS

NOTE:
For the detection standard, refer to DTC P0137. <Ref. to EN(STI)(diag)-201, DTC P0137 O2 SENSOR CIRCUIT LOW VOLTAGE BANK 1 SENSOR 2, Diagnostic Procedure with Diagnostic Trouble Code (DTC).>

AP:DTC P013A O2 SENSOR SLOW RESPONSE - RICH TO LEAN BANK 1 SENSOR 2

DTC DETECTING CONDITION:

Detected when two consecutive driving cycles with fault occur.

CAUTION:

After servicing or replacing faulty parts, perform Clear Memory Mode <Ref. to EN(STI)(diag)-68, OPERATION, Clear Memory Mode.>, and Inspection Mode <Ref. to EN(STI)(diag)-48, PROCEDURE, Inspection Mode.>.

WIRING DIAGRAM:

Engine Electrical System <Ref. to WI-154, WIRING DIAGRAM, Engine Electrical System.>

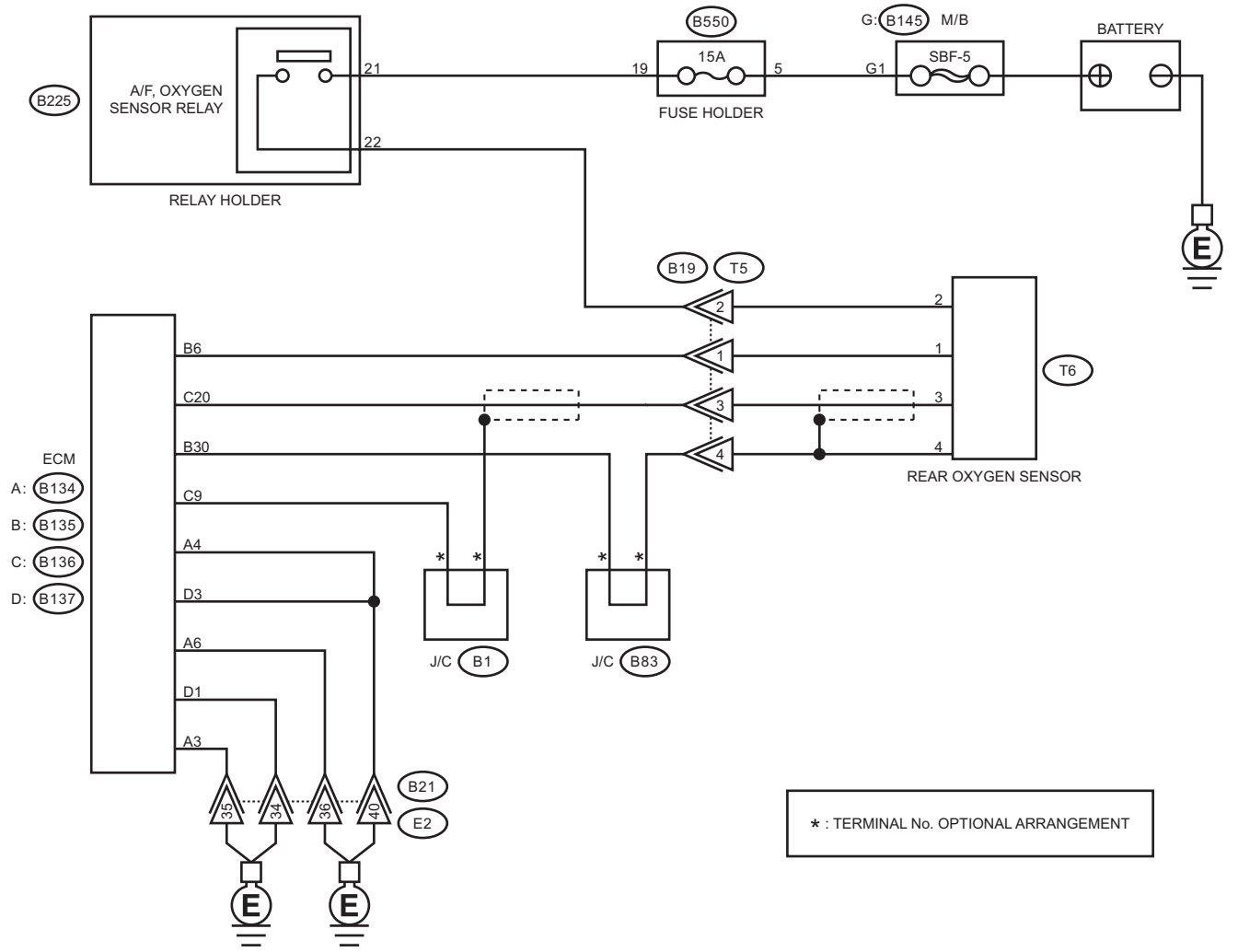

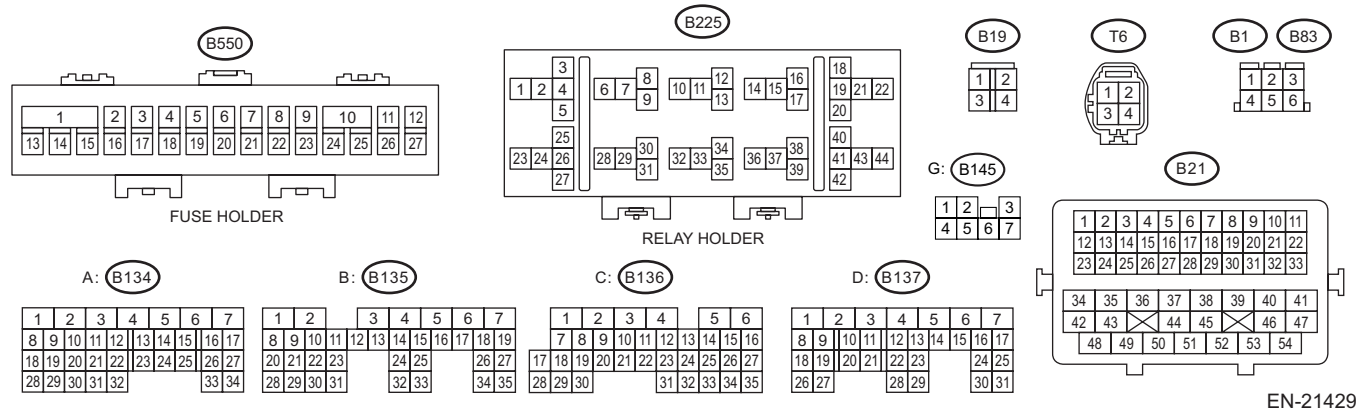

EN-21429

	Step	Check	Yes	No
1	**CHECK HARNESS BETWEEN ECM AND REAR OXYGEN SENSOR CONNECTOR.** 1) Turn the ignition switch to OFF. 2) Disconnect the connector from ECM. 3) Disconnect the connector from rear oxygen sensor. 4) Measure the resistance of harness between ECM connector and rear oxygen sensor connector. ***Connector & terminal*** ***(B136) No. 20 — (T6) No. 3:***	Is the resistance less than 1 Ω?	Go to step **2**.	Repair the harness and connector. NOTE: In this case, repair the following item: • Open circuit in harness between ECM connector and rear oxygen sensor connector • Poor contact of coupling connector
2	**CHECK HARNESS BETWEEN ECM AND REAR OXYGEN SENSOR CONNECTOR.** Measure the resistance between rear oxygen sensor connector and chassis ground. ***Connector & terminal*** ***(T6) No. 3 — Chassis ground:***	Is the resistance 1 MΩ or more?	Go to step **3**.	Repair the short circuit to ground in harness between ECM connector and rear oxygen sensor connector.
3	**CHECK REAR OXYGEN SENSOR.** Measure the resistance between rear oxygen sensor terminals. ***Terminals*** ***No. 3 — No. 4***	Is the resistance less than 1 Ω?	Replace the rear oxygen sensor. <Ref. to FU(STI)-54, Rear Oxygen Sensor.>	Even if DTC is detected, the circuit has returned to a normal condition at this time. Reproduce the failure, and then perform the diagnosis again. NOTE: In this case, temporary poor contact of connector, temporary open or short circuit of harness may be the cause.

1. OUTLINE OF DIAGNOSIS

Detect the slow response of rich → lean for rear oxygen sensor output.
When the deceleration fuel cut has occurred, detect the trouble by calculating the time when the rear oxygen sensor output passes through the predetermined range of voltages.
Judge as NG when the response time is larger than the threshold value.

2. COMPONENT DESCRIPTION

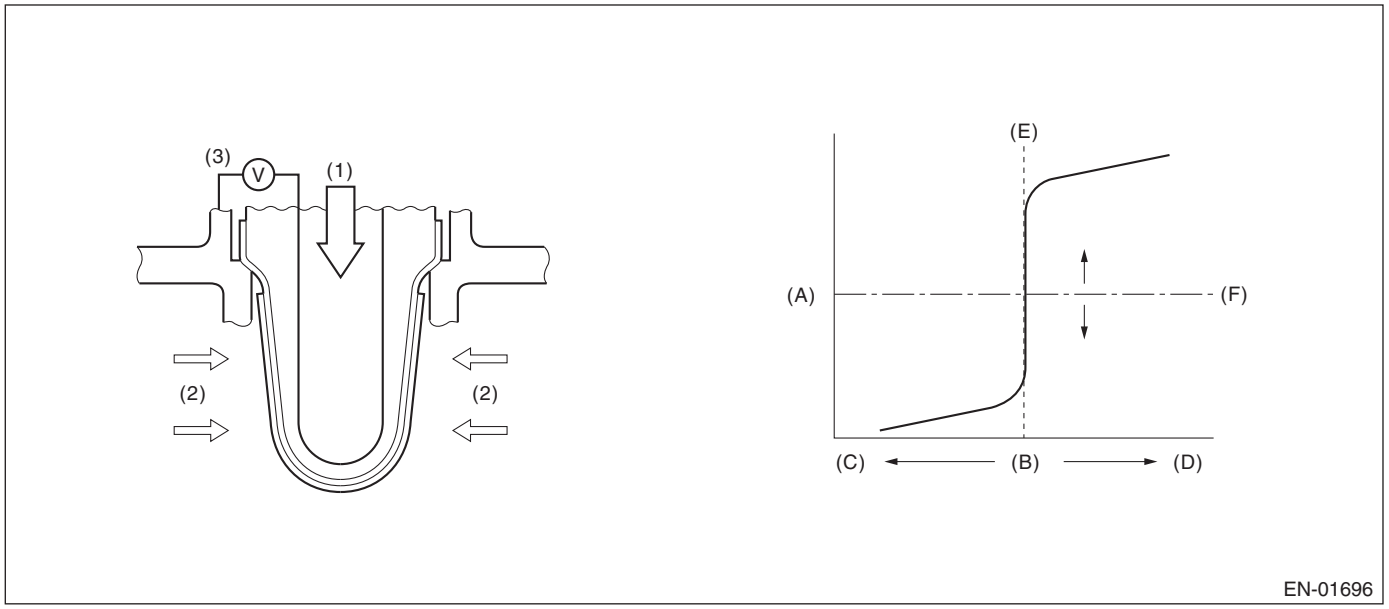

(A)	Electromotive force	(B)	Air fuel ratio	(C)	Lean
(D)	Rich	(E)	Theoretical air fuel ratio	(F)	Comparative voltage
(1)	Atmosphere	(2)	Exhaust gas	(3)	Electromotive force

3. EXECUTION CONDITION

Secondary parameters	Execution condition
Battery voltage	≥ 10.9 V
Current calculation time of the rear oxygen sensor heater after starting	≥ 180000 ms
Rear oxygen sensor voltage when fuel cut starts	≥ 0.55 V
Fuel cut	= In operation
Estimated temperature of rear oxygen sensor element when fuel cut starts	≥ 500 °C (932 °F)

4. GENERAL DRIVING CYCLE

Perform diagnosis once during deceleration fuel cut from a constant and high speed driving, when rear oxygen sensor is warmed up sufficiently.

5. DIAGNOSTIC METHOD

Detect the trouble by calculating the response time of the rear oxygen sensor during fuel cut.

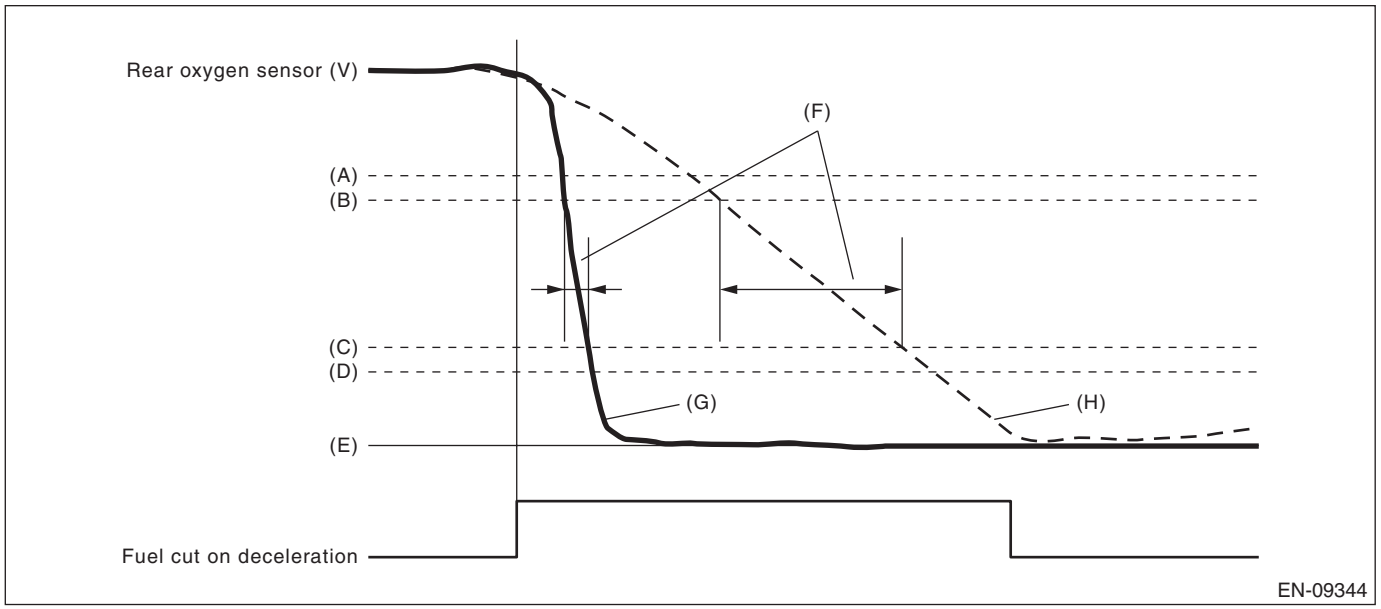

(A) 0.55 V
(B) 0.50 V
(C) 0.20 V
(D) 0.15 V
(E) 0 V
(F) Diagnostic parameter
(G) Normal
(H) Malfunction

Judge as NG when the following conditions are established.

Judgment Value

Malfunction Criteria	Threshold Value
Time needed for rear oxygen sensor voltage to change from 0.5 V to 0.2 V	> 837 ms

Time Needed for Diagnosis: 5000 ms
Malfunction Indicator Light Illumination: Illuminates when malfunction occurs in 2 continuous driving cycles.

AQ:DTC P013B O2 SENSOR SLOW RESPONSE - LEAN TO RICH BANK 1 SENSOR 2

NOTE:
For the diagnostic procedure, refer to DTC P013A. <Ref. to EN(STI)(diag)-208, DTC P013A O2 SENSOR SLOW RESPONSE - RICH TO LEAN BANK 1 SENSOR 2, Diagnostic Procedure with Diagnostic Trouble Code (DTC).>

1. OUTLINE OF DIAGNOSIS

Detect the slow response of lean → rich for rear oxygen sensor output.
After the deceleration fuel cut has occurred, detect the trouble by calculating the time when the rear oxygen sensor output passes through the predetermined range of voltages.
Judge as NG when the response time is larger than the threshold value.

2. COMPONENT DESCRIPTION

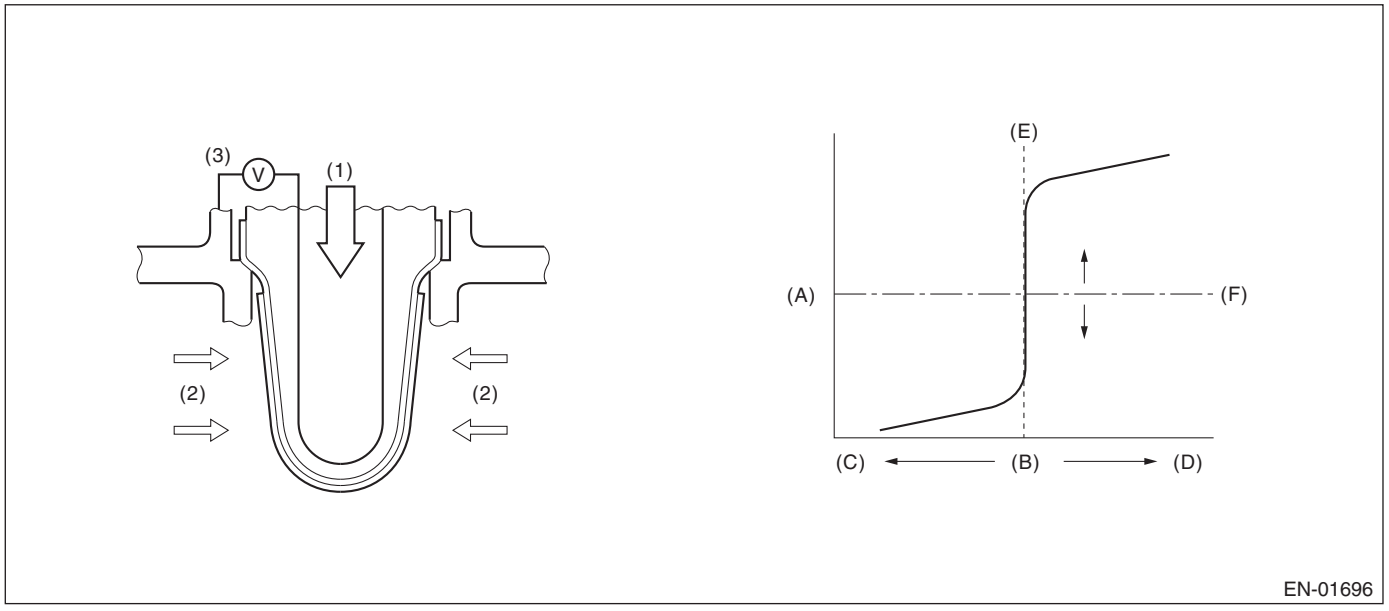

(A)	Electromotive force	(B)	Air fuel ratio	(C)	Lean
(D)	Rich	(E)	Theoretical air fuel ratio	(F)	Comparative voltage
(1)	Atmosphere	(2)	Exhaust gas	(3)	Electromotive force

3. EXECUTION CONDITION

Secondary parameters	Execution condition
Battery voltage	≥ 10.9 V
Main feedback	In operation
Deceleration fuel cut of 5000 ms or more	Experienced

4. GENERAL DRIVING CYCLE

Perform diagnosis only once after recovering from a deceleration fuel cut continued for more than predetermined time.

5. DIAGNOSTIC METHOD

Detect the trouble by calculating the response time of the rear oxygen sensor after fuel cut.

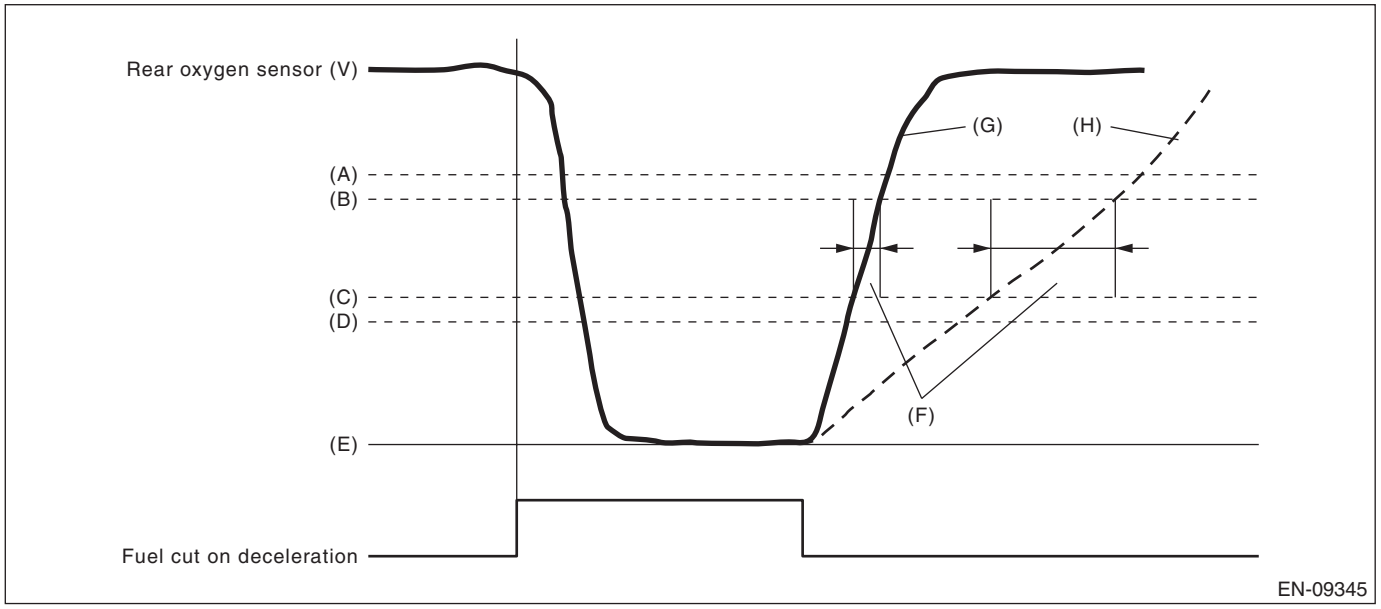

(A) 0.55 V
(B) 0.50 V
(C) 0.30 V
(D) 0.25 V
(E) 0 V
(F) Diagnostic parameter
(G) Normal
(H) Malfunction

Judge as NG when the following conditions are established.

Judgment Value

Malfunction Criteria	Threshold Value
Time needed for rear oxygen sensor voltage to change from 0.3 V to 0.5 V	> 4000 ms

Time Needed for Diagnosis: Less than 1 second
Malfunction Indicator Light Illumination: Illuminates as soon as a malfunction occurs.

AR:DTC P013E O2 SENSOR DELAYED RESPONSE - RICH TO LEAN BANK 1 SENSOR 2

NOTE:
For the diagnostic procedure, refer to DTC P013A. <Ref. to EN(STI)(diag)-208, DTC P013A O2 SENSOR SLOW RESPONSE - RICH TO LEAN BANK 1 SENSOR 2, Diagnostic Procedure with Diagnostic Trouble Code (DTC).>

1. OUTLINE OF DIAGNOSIS

Detect the delayed response of rear oxygen sensor output for rich → lean.
After the deceleration fuel cut has started, detect the trouble by calculating the time when the rear oxygen sensor output decreases to the predetermined voltages.
Judge as NG when the response time is larger than the threshold value.

2. COMPONENT DESCRIPTION

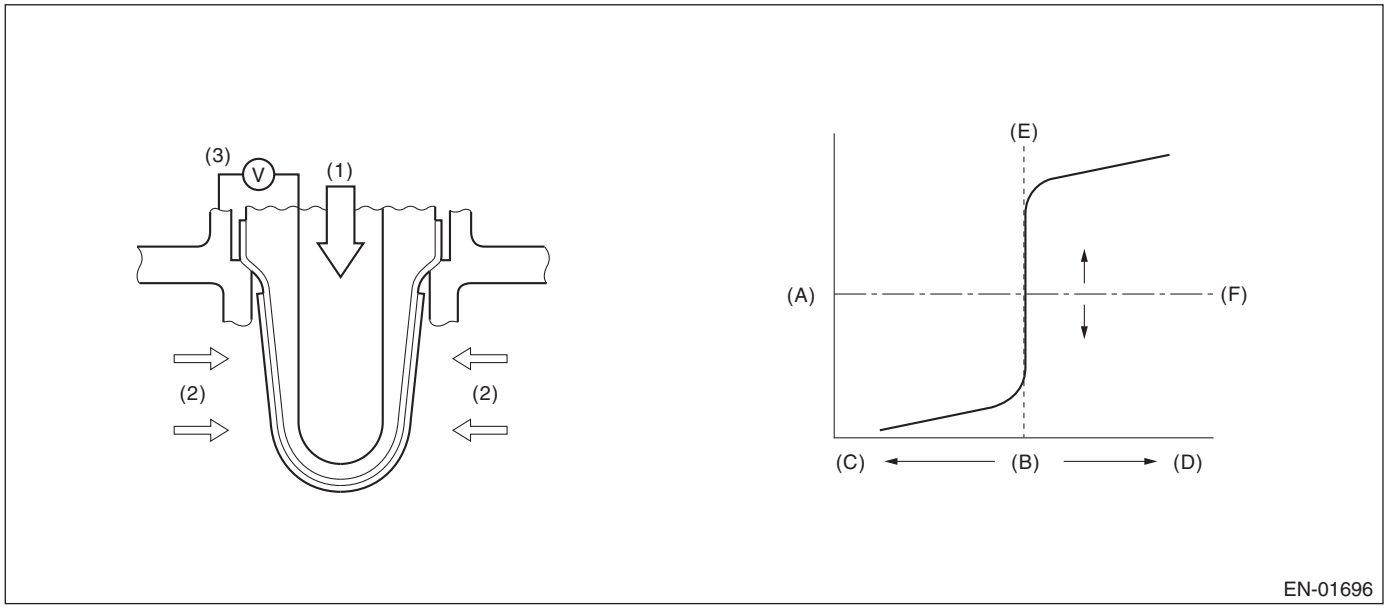

(A)	Electromotive force	(B)	Air fuel ratio	(C)	Lean
(D)	Rich	(E)	Theoretical air fuel ratio	(F)	Comparative voltage
(1)	Atmosphere	(2)	Exhaust gas	(3)	Electromotive force

3. EXECUTION CONDITION

Secondary parameters	Execution condition
Battery voltage	≥ 10.9 V
Rear oxygen sensor voltage when fuel cut starts	≥ 0.55 V
Fuel cut	In operation
Estimated temperature of rear oxygen sensor element when fuel cut starts	≥ 500 °C (932 °F)

4. GENERAL DRIVING CYCLE

Perform diagnosis once during deceleration fuel cut from a constant and high speed driving, when rear oxygen sensor is warmed up sufficiently.

5. DIAGNOSTIC METHOD

Detect the trouble by calculating the time from the beginning of the fuel cut to the beginning of the rear oxygen sensor voltage starting to drop.

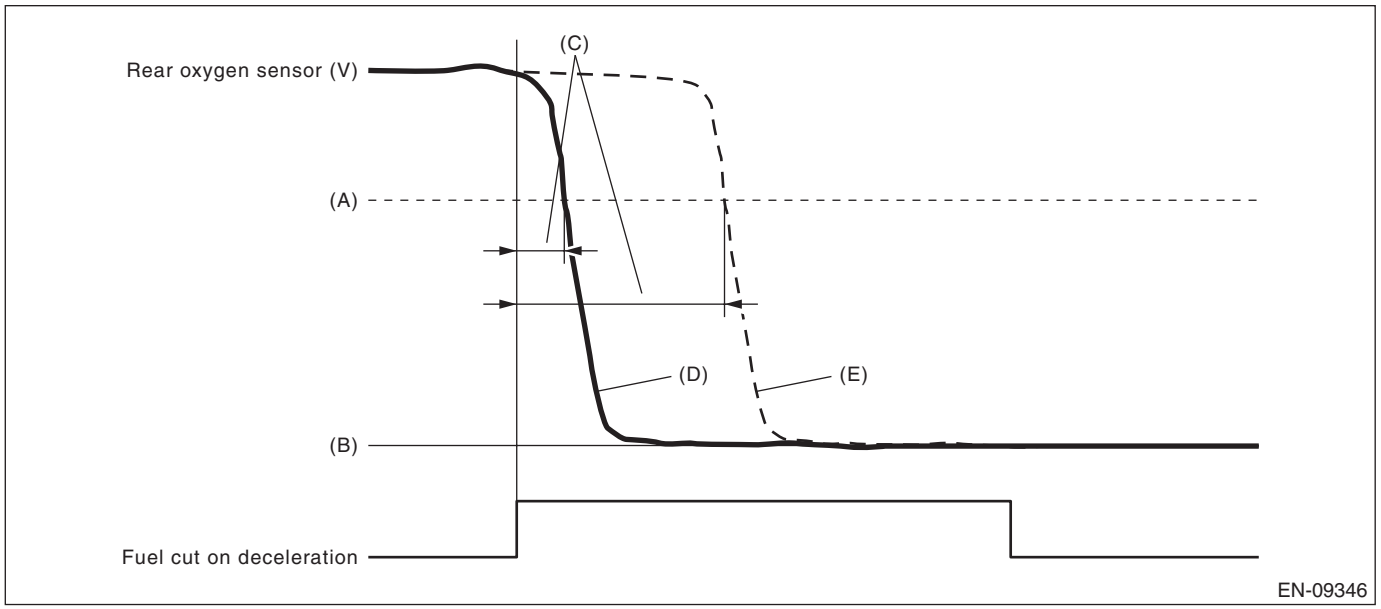

(A) 0.5 V
(B) 0 V
(C) Diagnostic parameter
(D) Normal
(E) Malfunction

Judge as NG when the following conditions are established.

Judgment Value

Malfunction Criteria	Threshold Value
Time when rear oxygen sensor voltage changed to 0.5 V after the fuel cut started	> 4000 ms

Time Needed for Diagnosis: 5000 ms
Malfunction Indicator Light Illumination: Illuminates as soon as a malfunction occurs.

AS:DTC P013F O2 SENSOR DELAYED RESPONSE - LEAN TO RICH BANK 1 SENSOR 2

NOTE:
For the diagnostic procedure, refer to DTC P013A. <Ref. to EN(STI)(diag)-208, DTC P013A O2 SENSOR SLOW RESPONSE - RICH TO LEAN BANK 1 SENSOR 2, Diagnostic Procedure with Diagnostic Trouble Code (DTC).>

1. OUTLINE OF DIAGNOSIS

Detect the delayed response of rear oxygen sensor output for lean → rich.
After the deceleration fuel cut has completed, detect the trouble by calculating the time when the rear oxygen sensor output increases to the predetermined voltages.
Judge as NG when the response time is larger than the threshold value.

2. COMPONENT DESCRIPTION

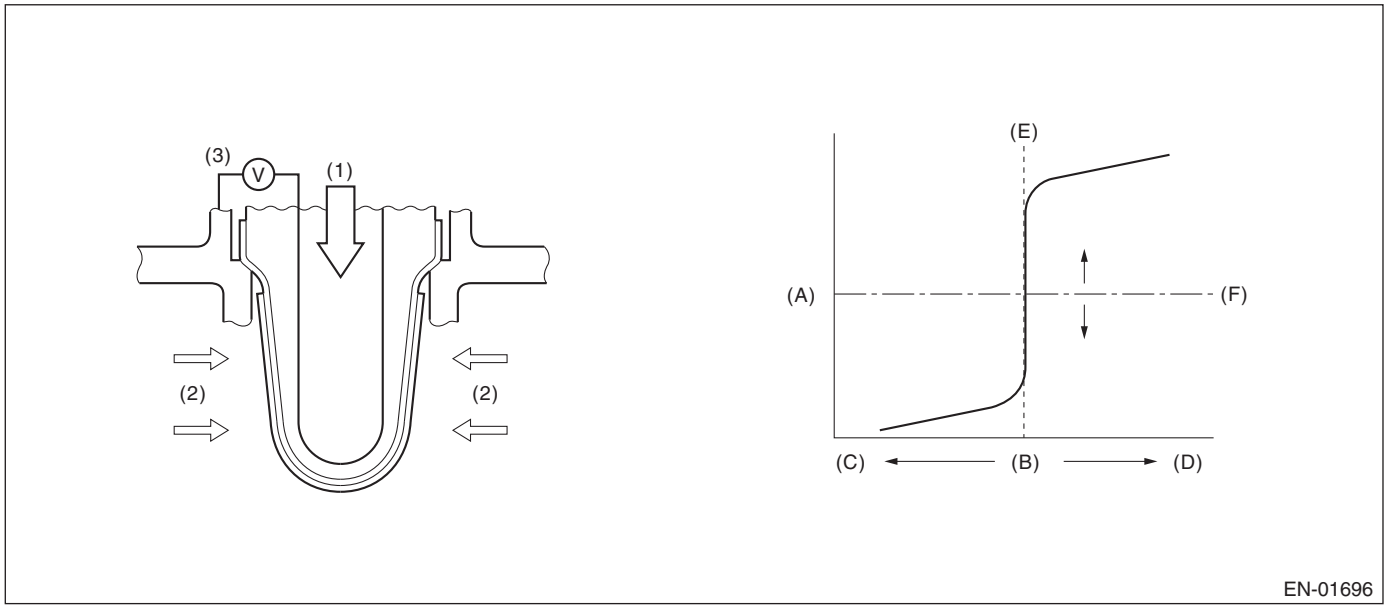

(A)	Electromotive force	(B)	Air fuel ratio	(C)	Lean
(D)	Rich	(E)	Theoretical air fuel ratio	(F)	Comparative voltage
(1)	Atmosphere	(2)	Exhaust gas	(3)	Electromotive force

3. EXECUTION CONDITION

Secondary parameters	Execution condition
Battery voltage	≥ 10.9 V
Main feedback	In operation
Rear oxygen sensor voltage when fuel cut has completed	≤ 0.15 V
Deceleration fuel cut of 5000 ms or more	Experienced
Estimated element temperature of rear oxygen sensor when fuel cut has completed	≥ 500 °C (932 °F)
Amount of intake air	≥ 15 g/s (0.53 oz/s)

4. GENERAL DRIVING CYCLE

Perform diagnosis only once when recovering from the deceleration fuel cut continued for more than predetermined time with the rear oxygen sensor warmed up sufficiently.

5. DIAGNOSTIC METHOD

Detect the trouble by calculating the time from the completion of the fuel cut to the beginning of the rear oxygen sensor voltage starting to rise.

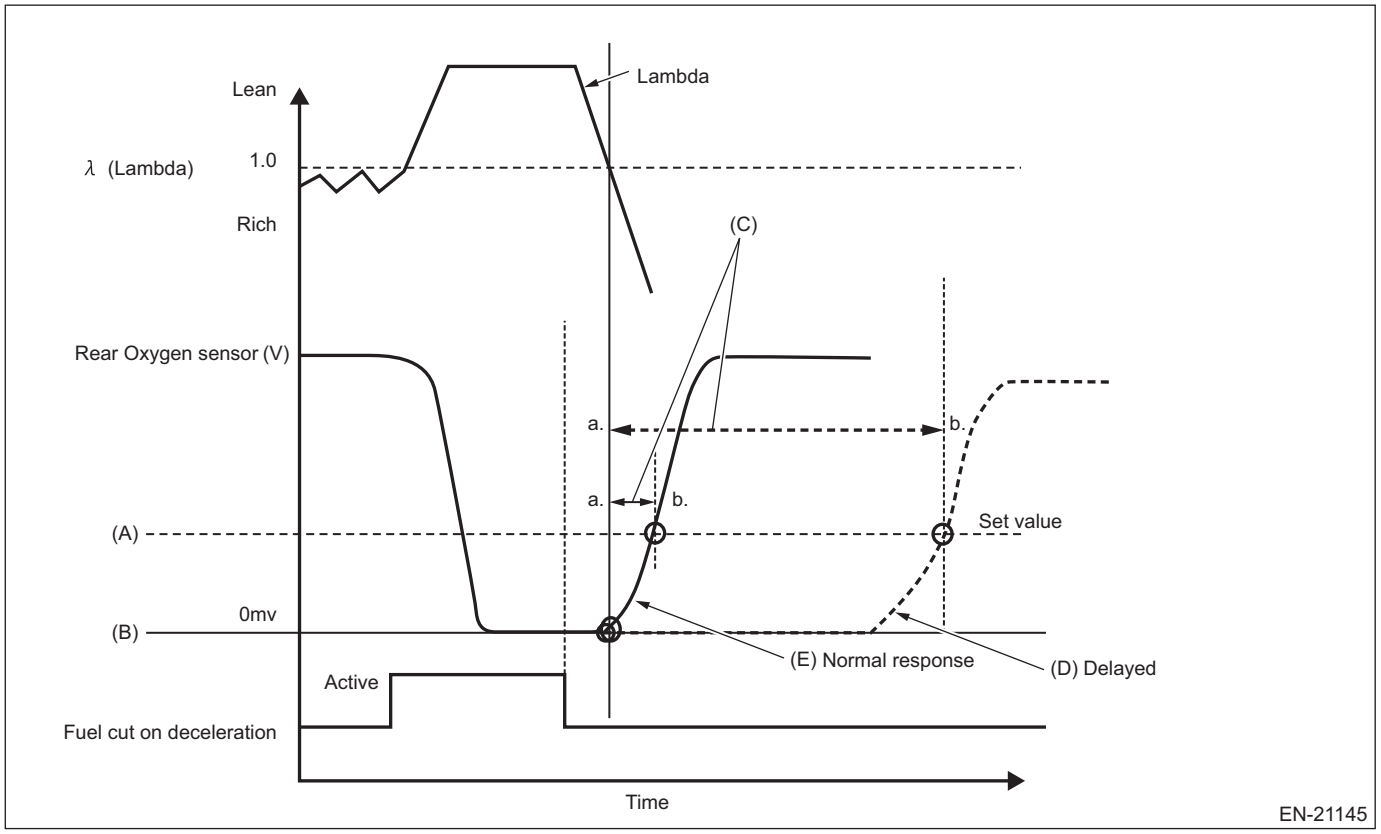

(A) 0.3 V (B) 0 V (C) Diagnostic parameter
(D) Normal (E) Malfunction

Judge as NG when the following conditions are established.

Judgment Value

Malfunction Criteria	Threshold Value
Output voltage value of rear oxygen sensor	< 0.2 V
Elapsed time*	> MAP

*Elapsed time: The time since the λ became less than 1 after the end of fuel cut

Map

Intake air amount (g/s)	15	17	18	20
Elapsed time (s)	7.0	5.5	5.0	5.0

Time Needed for Diagnosis: Less than 1 s
Malfunction Indicator Light Illumination: Illuminates as soon as a malfunction occurs.

AT:DTC P0141 O2 SENSOR HEATER CIRCUIT BANK 1 SENSOR 2

NOTE:
For the diagnostic procedure, refer to DTC P0037. <Ref. to EN(STI)(diag)-130, DTC P0037 A/F / O2 HEATER CONTROL CIRCUIT LOW BANK 1 SENSOR 2, Diagnostic Procedure with Diagnostic Trouble Code (DTC).>

1. OUTLINE OF DIAGNOSIS

Detect malfunction of the rear oxygen sensor heater.
Judge as NG if it is determined that the rear oxygen sensor impedance is large by observing the engine conditions.

2. COMPONENT DESCRIPTION

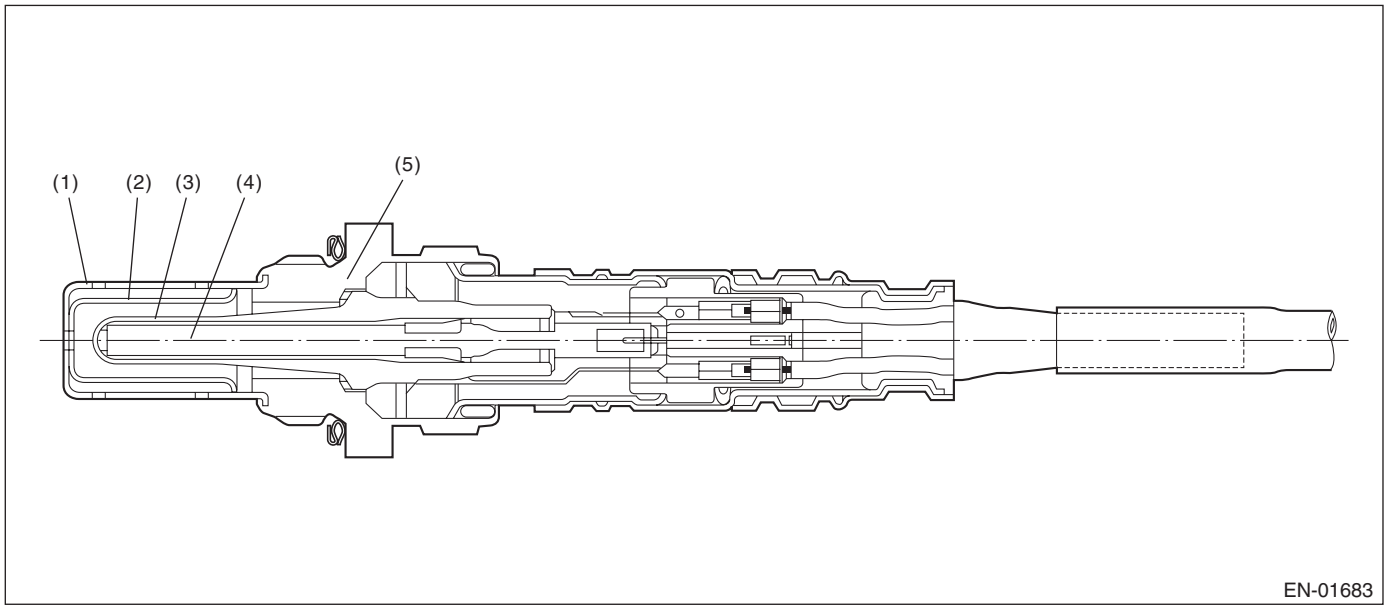

(1) Element cover (outer)
(2) Element cover (inner)
(3) Sensor element
(4) Ceramic heater
(5) Sensor housing

3. EXECUTION CONDITION

Secondary parameters	Execution condition
Battery voltage	≥ 10.9 V
Elapsed time after starting the engine	≥ 1000 ms
A/F sensor element impedance	≤ 35 Ω
A/F sensor heater control duty	≤ 75 %
Rear oxygen sensor heater control duty	< 75 %

4. GENERAL DRIVING CYCLE

Perform the diagnosis continuously after 1000 ms seconds or more have passed since the engine started.

5. DIAGNOSTIC METHOD

If the duration of time while the following conditions are met is longer than the time indicated, judge as NG.

Judgment Value

Malfunction Criteria	Threshold Value
Output voltage	< Battery voltage × 0.88

Time Needed for Diagnosis: 4 ms × 2500 time(s)

AU:DTC P014C A/F / O2 SENSOR SLOW RESPONSE - RICH TO LEAN BANK 1 SENSOR 1

DTC DETECTING CONDITION:
Detected when two consecutive driving cycles with fault occur.

CAUTION:
After servicing or replacing faulty parts, perform Clear Memory Mode <Ref. to EN(STI)(diag)-68, OPERATION, Clear Memory Mode.>, and Inspection Mode <Ref. to EN(STI)(diag)-48, PROCEDURE, Inspection Mode.>.

	Step	Check	Yes	No
1	**CHECK EXHAUST SYSTEM.** NOTE: Check the following items. • Loose installation of front portion of exhaust pipe onto cylinder heads • Loose connection between front exhaust pipe and front catalytic converter • Damage of exhaust pipe resulting in a hole	Is there any fault in exhaust system?	Repair the exhaust system.	Replace the front oxygen (A/F) sensor. <Ref. to FU(STI)-52, Front Oxygen (A/F) Sensor.>

1. OUTLINE OF DIAGNOSIS

Detect the slow response of front oxygen (A/F) sensor.
For diagnosis, detect the trouble by processing the λ waveform in normal driving without forcibly changing the target air fuel ratio.

2. COMPONENT DESCRIPTION

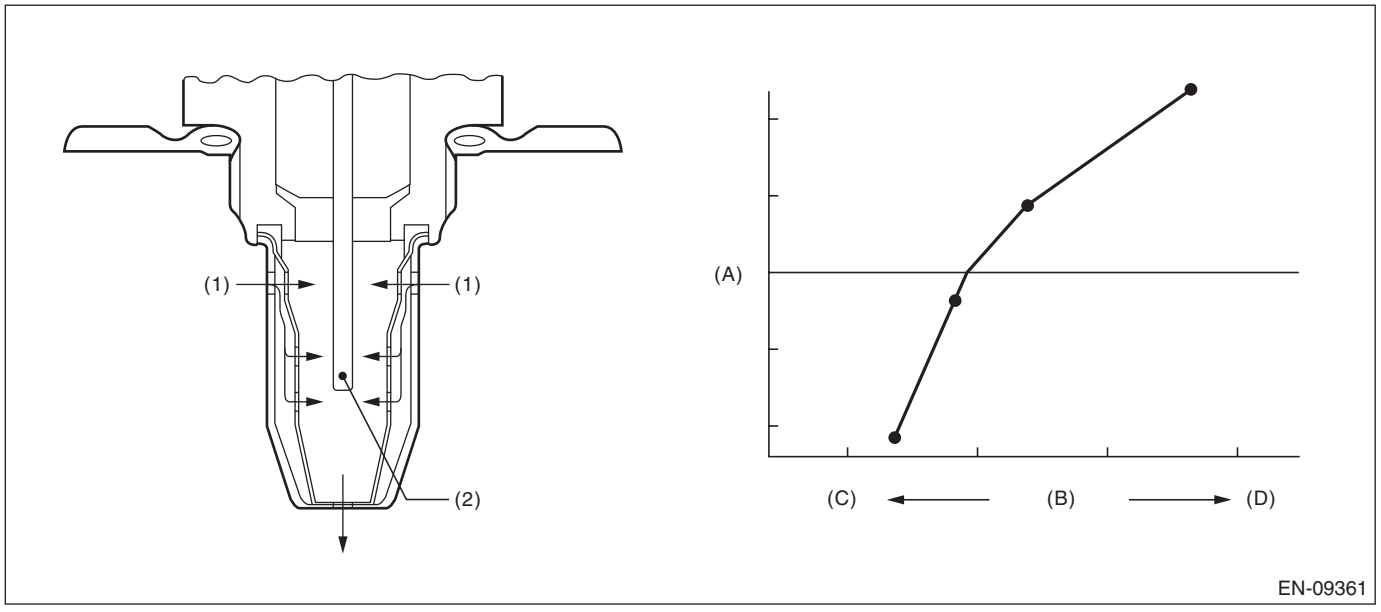

(A) Electromotive force
(B) Air fuel ratio
(C) Rich
(D) Lean

(1) Exhaust gas
(2) ZrO_2

3. EXECUTION CONDITION

Secondary parameters	Execution condition
Battery voltage	≥ 10.9 V
Barometric pressure	> 75.1 kPa (563 mmHg, 22.2 inHg)
Closed loop control with main feedback (3000 ms or more)	In operation
Engine speed	≥ 1000 rpm
Amount of intake air	≥ 10 g/s (0.35 oz/s)
Accelerator pedal position	> 0%

4. GENERAL DRIVING CYCLE

Perform diagnosis only once in a city driving including normal acceleration and deceleration.

5. DIAGNOSTIC METHOD 1

Detect the malfunction by checking “Cumulative value of time when λ changes from lean → rich” in comparison to “Time during which diagnosis is in progress”.

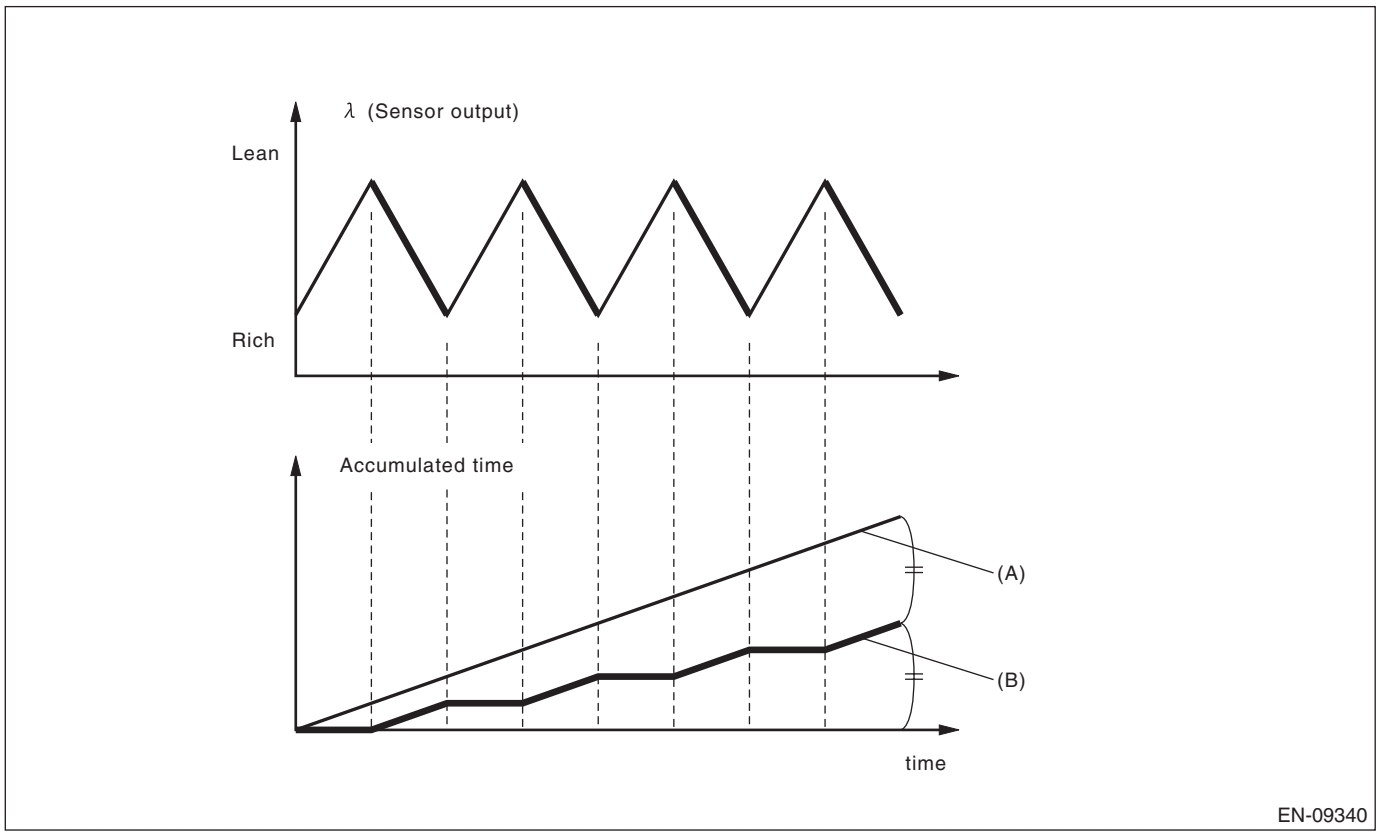

(A) Time during which diagnosis is in progress

(B) Cumulative value of time when λ changes from lean → rich

Judge as NG when the following conditions are established.

Judgment Value

Malfunction Criteria	Threshold Value	DTC
(Cumulative value of time when λ changes from lean → rich) / (Time during which diagnosis is in progress)	< 0.45	P014C
	> 0.56	P014D

Time Needed for Diagnosis: 90000 ms

Malfunction Indicator Light Illumination: Illuminates when malfunction occurs in 2 continuous driving cycles.

6. DIAGNOSTIC METHOD 2

Detect the malfunction by the cumulative value obtained from the amount of variation in λ change.

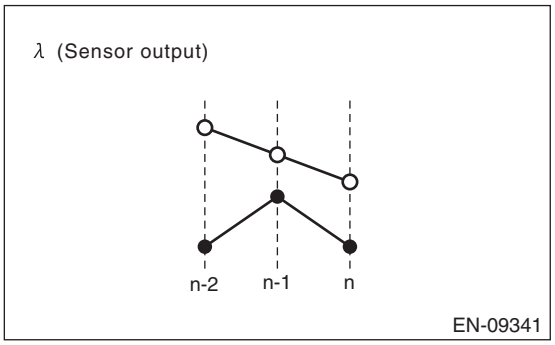

Judge as NG when the following conditions are established.

Judgment Value

Malfunction Criteria	Threshold Value	DTC
Cumulative value obtained from the amount of variation in λ change	< Value from Map	P014C and P014D

Map

Cumulative value obtained from the amount of variation in λ	0.00	6.00
Cumulative value obtained from the amount of variation in λ change	0.00	6.50

Time Needed for Diagnosis: 90000 ms
Malfunction Indicator Light Illumination: Illuminates when malfunction occurs in 2 continuous driving cycles.

AV:DTC P014D A/F / O2 SENSOR SLOW RESPONSE - LEAN TO RICH BANK 1 SENSOR 1

NOTE:
For the diagnostic procedure, refer to DTC P014C. <Ref. to EN(STI)(diag)-220, DTC P014C A/F / O2 SENSOR SLOW RESPONSE - RICH TO LEAN BANK 1 SENSOR 1, Diagnostic Procedure with Diagnostic Trouble Code (DTC).>

1. OUTLINE OF DIAGNOSIS

NOTE:
For the detection standard, refer to DTC P014C. <Ref. to EN(STI)(diag)-220, DTC P014C A/F / O2 SENSOR SLOW RESPONSE - RICH TO LEAN BANK 1 SENSOR 1, Diagnostic Procedure with Diagnostic Trouble Code (DTC).>

AW:DTC P015A A/F / O2 SENSOR DELAYED RESPONSE - RICH TO LEAN BANK 1 SENSOR 1

NOTE:
For the diagnostic procedure, refer to DTC P014C. <Ref. to EN(STI)(diag)-220, DTC P014C A/F / O2 SENSOR SLOW RESPONSE - RICH TO LEAN BANK 1 SENSOR 1, Diagnostic Procedure with Diagnostic Trouble Code (DTC).>

1. OUTLINE OF DIAGNOSIS

Detect the slow response of front oxygen (A/F) sensor.
For diagnosis, detect the trouble by processing the λ waveform in normal driving without forcibly changing the target air fuel ratio.

2. COMPONENT DESCRIPTION

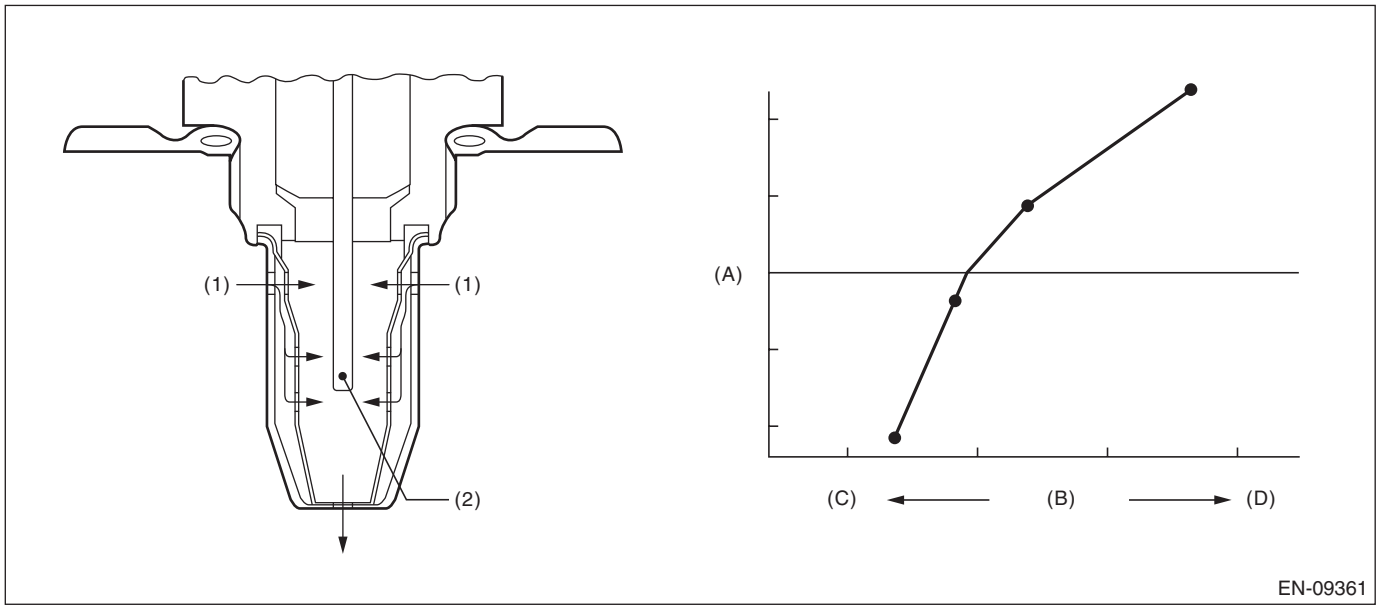

(A) Electromotive force (B) Air fuel ratio (C) Rich
(D) Lean

(1) Exhaust gas (2) ZrO_2

3. EXECUTION CONDITION

Diagnostic method 1 and 2

Secondary parameters	Execution condition
Battery voltage	≥ 10.9 V
Barometric pressure	> 75.1 kPa (563 mmHg, 22.2 inHg)
Closed loop control with main feedback (3000 ms or more)	In operation
Engine speed	≥ 1000 rpm
Amount of intake air	≥ 10 g/s (0.35 oz/s)
Accelerator pedal position	> 0%

Diagnostic method 3

Secondary parameters	Execution condition
Battery voltage	≥ 10.9 V
Barometric pressure	> 75.1 kPa (563 mmHg, 22.2 inHg)
Main feedback	In operation
Vehicle speed	> 40 km/h (24.9 MPH)
Engine speed	≥ 1000 rpm and < 4000 rpm
Amount of intake air	≥ 10 g/s (0.35 oz/s) and < 40 g/s (1.41 oz/s)
Status of catalytic converter monitor	Not under diagnosis

4. GENERAL DRIVING CYCLE

Perform diagnosis only once in a city driving including normal acceleration and deceleration.

5. DIAGNOSTIC METHOD 1

Detect the malfunction depending on the average value of time necessary for λ to inverse the air fuel ratio from “Lean → Rich → Lean” to “Rich → Lean → Rich”.

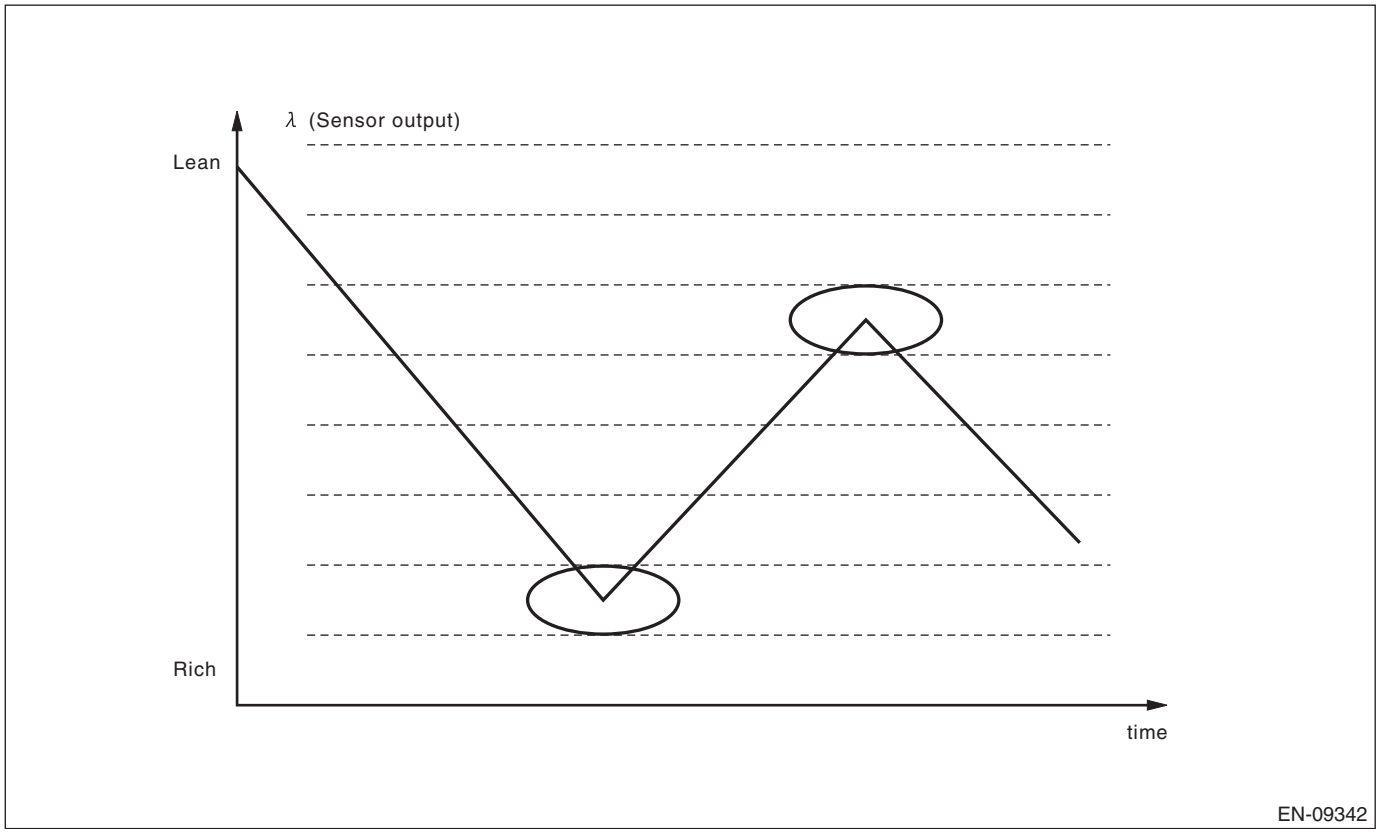

Judge as NG when the following conditions are established.

Judgment Value

Malfunction Criteria	Threshold Value	DTC
Average value of time necessary for λ to inverse the air fuel ratio to Lean → Rich → Lean	> 100 ms	P015A
Average value of time necessary for λ to inverse the air fuel ratio to Rich → Lean → Rich	> 100 ms	P015B

Time Needed for Diagnosis: 90 seconds
Malfunction Indicator Light Illumination: Illuminates when malfunction occurs in 2 continuous driving cycles.

6. DIAGNOSTIC METHOD 2

Detect the malfunction by calculating the average amplitude of λ.

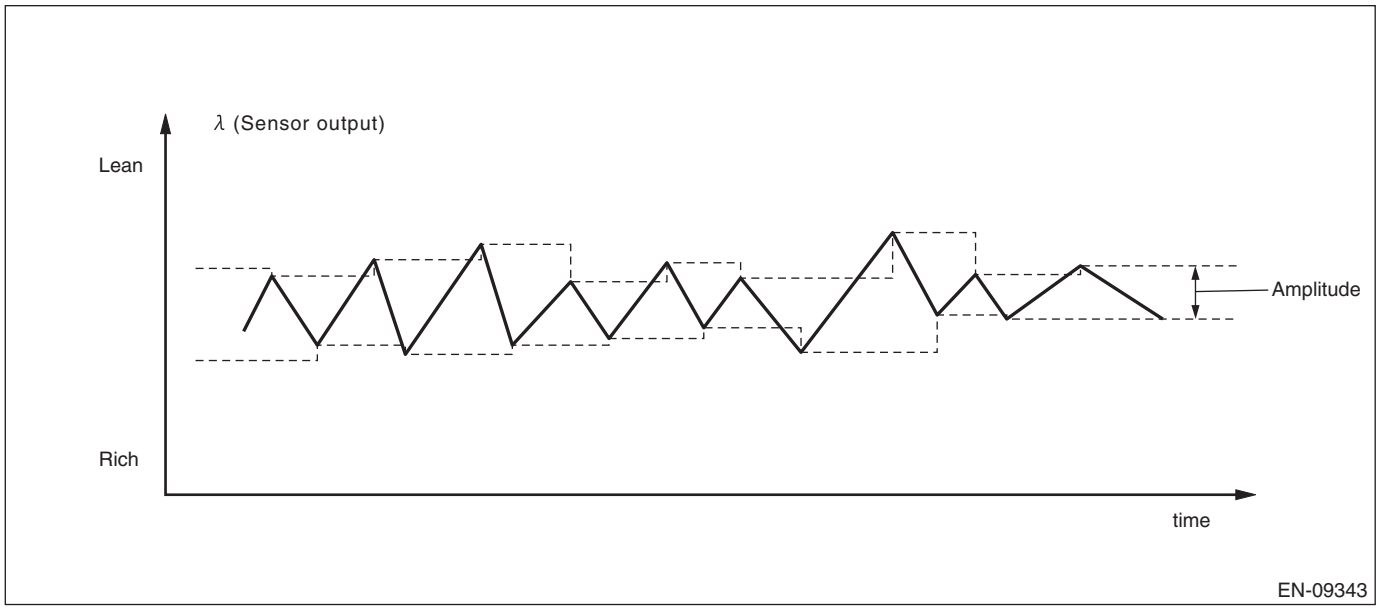

Judge as NG when the following conditions are established.

Judgment Value

Malfunction Criteria	Threshold Value	DTC
Average value for λ amplitude	> 0.1	P015A and P015B

Time Needed for Diagnosis: 90 seconds
Malfunction Indicator Light Illumination: Illuminates when malfunction occurs in 2 continuous driving cycles.

7. DIAGNOSTIC METHOD 3

Change STFT (A/F compensation value) by interruption, and measure the reaction time of λ value. When A/F sensor malfunctions, the reaction time takes longer than at normal condition. In this case, judge as abnormal.

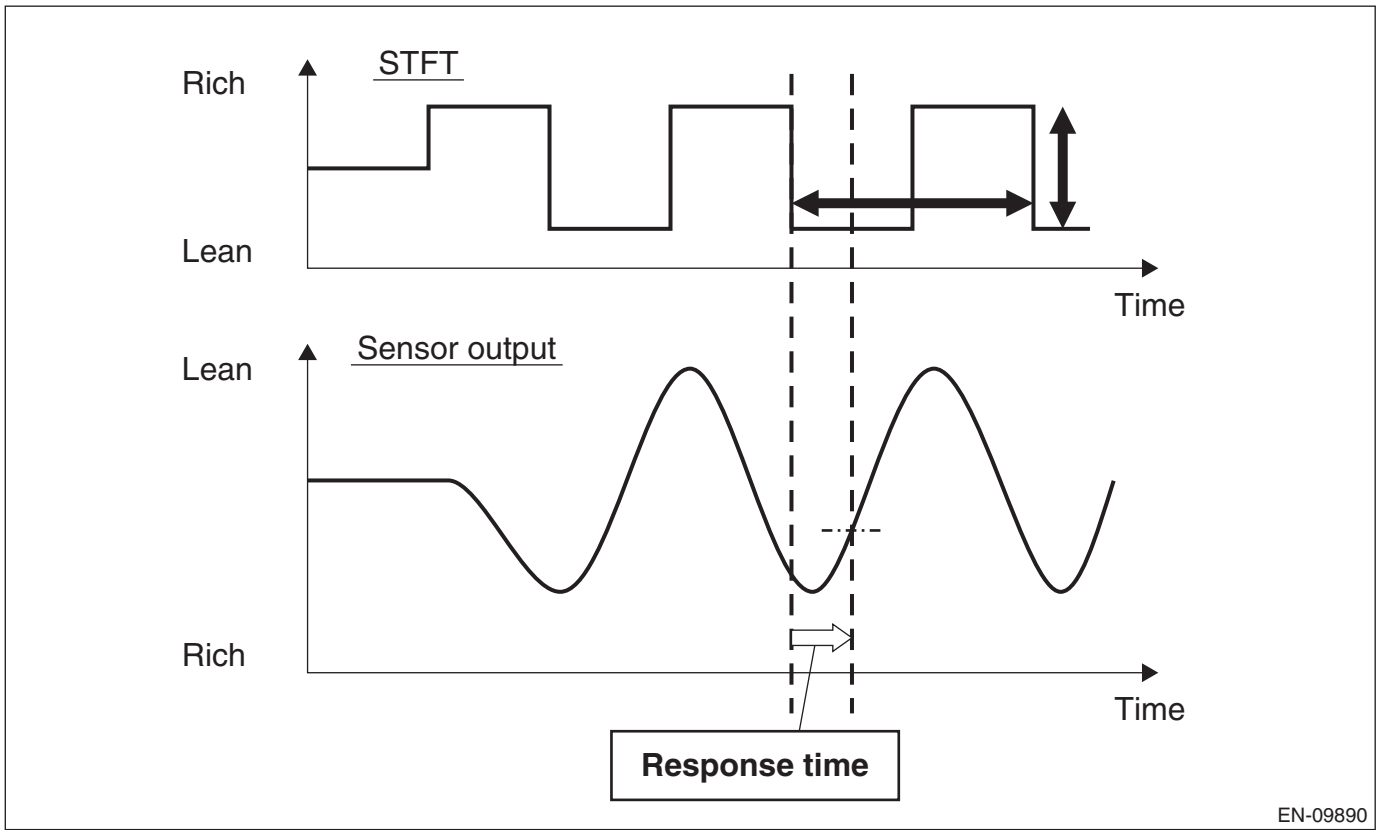

Measure reaction time (t1, t2, t3) and reaction time (t4, t5, t6). Use the average value of the reaction time to obtain the diagnostic value.

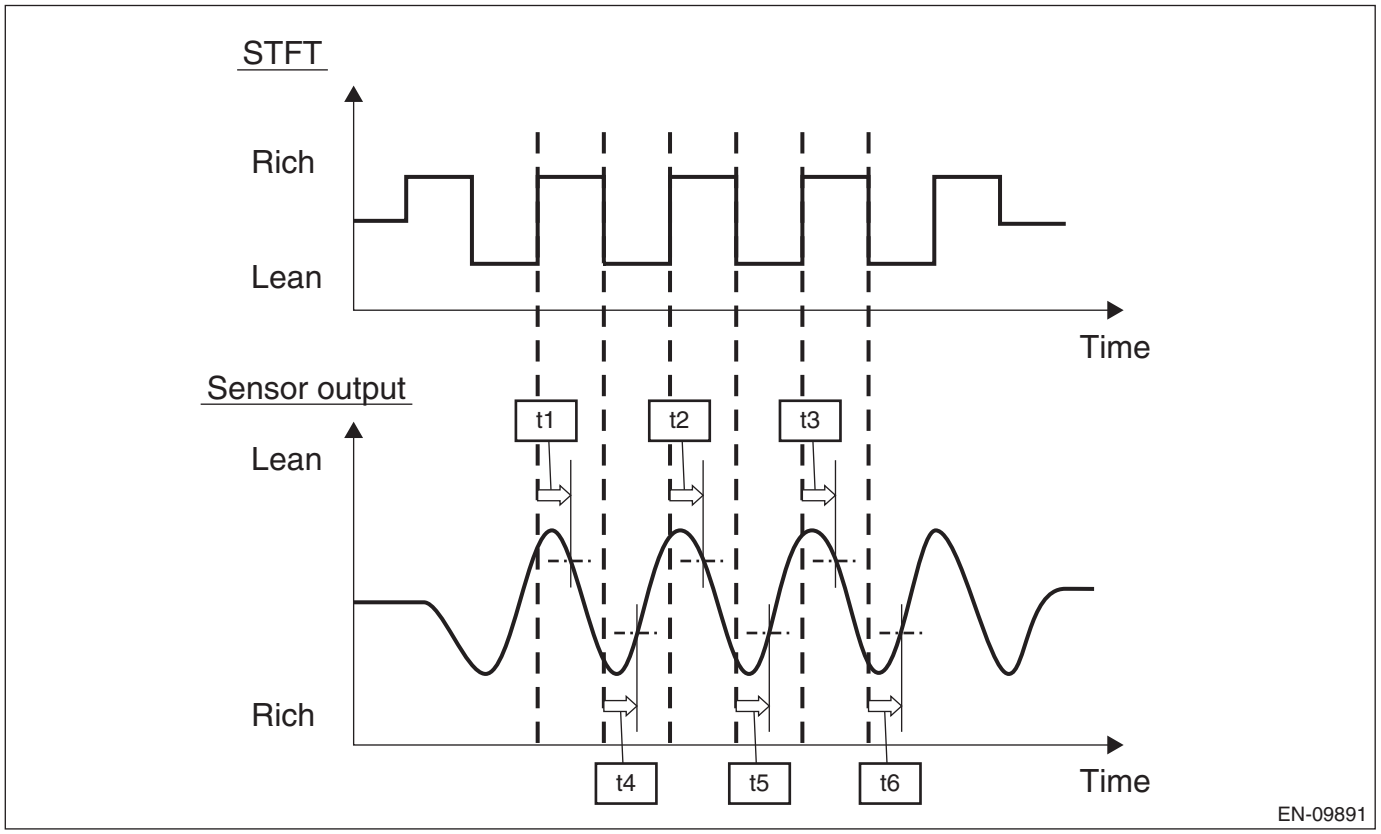

Judge as NG when the following conditions are established.

Judgment Value

Malfunction Criteria	Threshold Value	DTC
(t1 + t2 + t3)/3 and (t4 + t5 + t6)/3	> 380 ms > 380 ms	P015A and P015B

Time Needed for Diagnosis: 4500 ms
Malfunction Indicator Light Illumination: Illuminates when malfunction occurs in 2 continuous driving cycles.

AX:DTC P015B A/F / O2 SENSOR DELAYED RESPONSE - LEAN TO RICH BANK 1 SENSOR 1

NOTE:
For the diagnostic procedure, refer to DTC P014C. <Ref. to EN(STI)(diag)-220, DTC P014C A/F / O2 SENSOR SLOW RESPONSE - RICH TO LEAN BANK 1 SENSOR 1, Diagnostic Procedure with Diagnostic Trouble Code (DTC).>

1. OUTLINE OF DIAGNOSIS

NOTE:
For the detection standard, refer to DTC P015A. <Ref. to EN(STI)(diag)-223, DTC P015A A/F / O2 SENSOR DELAYED RESPONSE - RICH TO LEAN BANK 1 SENSOR 1, Diagnostic Procedure with Diagnostic Trouble Code (DTC).>

AY:DTC P0171 SYSTEM TOO LEAN BANK 1

NOTE:
For the diagnostic procedure, refer to DTC P0172. <Ref. to EN(STI)(diag)-230, DTC P0172 SYSTEM TOO RICH BANK 1, Diagnostic Procedure with Diagnostic Trouble Code (DTC).>

1. OUTLINE OF DIAGNOSIS

Detect fuel system malfunction by the amount of main feedback control.
Fuel system is diagnosed by comparing the target air fuel ratio calculated by ECM with the actual air fuel ratio measured by sensor.

2. EXECUTION CONDITION

Secondary parameters	Execution condition
Main feedback	In operation

3. GENERAL DRIVING CYCLE

Perform the diagnosis continuously at idling or at a constant speed after warming up the engine.

4. DIAGNOSTIC METHOD

Compare the diagnostic value with the threshold value, and if a condition meeting the malfunction criteria listed below continues for 10 s × 3 time(s) or more, judge that there is a fault in the fuel system.

Judgment Value

Malfunction Criteria	Threshold Value
Offset amount of main feedback compensation	≥ Value from Map

Map

Amount of air (g/s (oz/s))	0 (0)	2.34375 (0.08)	4.6875 (0.17)	7.03125 (0.25)	9.375 (0.33)	11.71875 (0.41)	14.0625 (0.5)
Threshold Value	1.35	1.35	1.35	1.35	1.35	1.35	1.35

Time Needed for Diagnosis: 10 s × 3 time(s)
Malfunction Indicator Light Illumination: Illuminates when malfunction occurs in 2 continuous driving cycles.

AZ:DTC P0172 SYSTEM TOO RICH BANK 1

DTC DETECTING CONDITION:
Detected when two consecutive driving cycles with fault occur.
TROUBLE SYMPTOM:
- Improper idling
- Engine stalls.
- Poor driving performance

CAUTION:
After servicing or replacing faulty parts, perform Clear Memory Mode <Ref. to EN(STI)(diag)-68, OPERATION, Clear Memory Mode.>, and Inspection Mode <Ref. to EN(STI)(diag)-48, PROCEDURE, Inspection Mode.>.

	Step	Check	Yes	No
1	**CHECK EXHAUST SYSTEM.**	Are there holes or loose bolts on exhaust system?	Repair the exhaust system.	Go to step **2**.
2	**CHECK AIR INTAKE SYSTEM.**	Are there holes, loose bolts or disconnection of hose on air intake system?	Repair the air intake system.	Go to step **3**.
3	**CHECK FUEL PRESSURE.** **WARNING:** **Place "NO OPEN FLAMES" signs near the working area.** **CAUTION:** **Be careful not to spill fuel.** Measure the fuel pressure while disconnecting pressure regulator vacuum hose from intake manifold. <Ref. to ME(STI)-25, INSPECTION, Fuel Pressure.> **CAUTION:** **Release fuel pressure before removing the fuel pressure gauge.** NOTE: If fuel pressure does not increase, squeeze the fuel return hose 2 to 3 times, then measure fuel pressure again.	Is the measured value 284 — 314 kPa (2.9 — 3.2 kg/cm^2, 41 — 46 psi)?	Go to step **4**.	Check the fuel pump and fuel delivery line. <Ref. to FU(STI)-87, INSPECTION, Fuel Pump.> <Ref. to FU(STI)-104, INSPECTION, Fuel Delivery, Return and Evaporation Lines.>
4	**CHECK FUEL PRESSURE.** After connecting the pressure regulator vacuum hose, measure fuel pressure. <Ref. to ME(STI)-25, INSPECTION, Fuel Pressure.> **CAUTION:** **Release fuel pressure before removing the fuel pressure gauge.** NOTE: • If fuel pressure does not increase, squeeze fuel return hose 2 to 3 times, then measure fuel pressure again. • If the measured value at this step is out of specification, check or replace pressure regulator and pressure regulator vacuum hose.	Is the measured value 230 — 260 kPa (2.4 — 2.7 kg/cm^2, 33 — 38 psi)?	Go to step **5**.	Check the fuel pump and fuel delivery line. <Ref. to FU(STI)-87, INSPECTION, Fuel Pump.> <Ref. to FU(STI)-104, INSPECTION, Fuel Delivery, Return and Evaporation Lines.>

	Step	Check	Yes	No
5	**CHECK ENGINE COOLANT TEMPERATURE SENSOR.** 1) Start the engine and warm up completely. 2) Read the value of «Coolant Temp.» using the Subaru Select Monitor or a general scan tool. NOTE: • Subaru Select Monitor For detailed operation procedures, refer to "Read Current Data For Engine". <Ref. to EN(STI)(diag)-36, Subaru Select Monitor.> • General scan tool For detailed operation procedures, refer to the general scan tool operation manual.	Is the value of «Coolant Temp.» 75°C (167°F) or more?	Go to step **6**.	Replace the engine coolant temperature sensor. <Ref. to FU(STI)-33, Engine Coolant Temperature Sensor.>
6	**CHECK MASS AIR FLOW AND INTAKE AIR TEMPERATURE SENSOR.** 1) Start the engine and warm up engine until coolant temperature is higher than 75°C (167°F). 2) Place the shift lever in neutral position. 3) Turn the A/C switch to OFF. 4) Turn all the accessory switches to OFF. 5) Read the value of «Mass Air Flow» using the Subaru Select Monitor or a general scan tool. NOTE: • Subaru Select Monitor For detailed operation procedures, refer to "Read Current Data For Engine". <Ref. to EN(STI)(diag)-36, Subaru Select Monitor.> • General scan tool For detailed operation procedures, refer to the general scan tool operation manual.	Is the value of «Mass Air Flow» 2.0 — 5.0 g/s (0.26 — 0.66 lb/m)?	Go to step **7**.	Replace the mass air flow and intake air temperature sensor. <Ref. to FU(STI)-40, Mass Air Flow and Intake Air Temperature Sensor.>
7	**CHECK MASS AIR FLOW AND INTAKE AIR TEMPERATURE SENSOR.** 1) Start the engine and warm up engine until coolant temperature is higher than 75°C (167°F). 2) Place the shift lever in neutral position. 3) Turn the A/C switch to OFF. 4) Turn all the accessory switches to OFF. 5) Open the front hood. 6) Measure the ambient temperature. 7) Read the value of «Intake Air Temp.» using the Subaru Select Monitor or a general scan tool. NOTE: • Subaru Select Monitor For detailed operation procedures, refer to "Read Current Data For Engine". <Ref. to EN(STI)(diag)-36, Subaru Select Monitor.> • General scan tool For detailed operation procedures, refer to the general scan tool operation manual.	Subtract ambient temperature from «Intake Air Temp.». Is the obtained value –10 — 50°C (–18 — 90°F)?	Go to step **8**.	Replace the mass air flow and intake air temperature sensor. <Ref. to FU(STI)-40, Mass Air Flow and Intake Air Temperature Sensor.>
8	**CHECK PCV VALVE.** Check the PCV valve.	Is the PCV valve free from deformation, crack or other damage?	Repair or replace the PCV valve. <Ref. to EC(STI)-54, PCV Valve.>	Go to step **9**.

Step		Check	Yes	No
9	**CHECK PCV HOSE.** Check the PCV hose.	Is the PCV hose free from deformation, crack or other damage?	Check the PCV hose assembly for cracks, damage or looseness. <Ref. to EC(STI)-52, PCV Hose Assembly.>	Go to step **10**.
10	**CHECK PCV HOSE.** Check the PCV hose.	Check the clamp of PCV hose assembly for damage or looseness.	Repair or replace the PCV valve. <Ref. to EC(STI)-52, PCV Hose Assembly.>	Repair the poor contact of ECM connector.

1. OUTLINE OF DIAGNOSIS

Detect fuel system malfunction by the amount of main feedback control.
Fuel system is diagnosed by comparing the target air fuel ratio calculated by ECM with the actual air fuel ratio measured by sensor.

2. EXECUTION CONDITION

Secondary parameters	Execution condition
Main feedback	In operation

3. GENERAL DRIVING CYCLE

Perform the diagnosis continuously at idling or at a constant speed after warming up the engine.

4. DIAGNOSTIC METHOD

Compare the diagnostic value with the threshold value, and if a condition meeting the malfunction criteria listed below continues for 10 s × 3 time(s) or more, judge that there is a fault in the fuel system.

Judgment Value

Malfunction Criteria	Threshold Value
Offset amount of main feedback compensation	< Value from Map

Map

Warm-up increase compensation coefficient	0.00	0.10	0.20	0.30
Threshold Value	0.650	0.547	0.476	0.414

Warm-up increase compensation coefficient	0.39	0.50	0.60
Threshold Value	0.360	0.312	0.301

Perform the diagnosis using the threshold value produced by subtraction.
Time Needed for Diagnosis: 10 s × 3 time(s)
Malfunction Indicator Light Illumination: Illuminates when malfunction occurs in 2 continuous driving cycles.

BA:DTC P0201 CYLINDER 1 INJECTOR "A" CIRCUIT

DTC DETECTING CONDITION:
Immediately at fault recognition
TROUBLE SYMPTOM:
- Improper idling
- Poor driving performance

CAUTION:
After servicing or replacing faulty parts, perform Clear Memory Mode <Ref. to EN(STI)(diag)-68, OPERATION, Clear Memory Mode.>, and Inspection Mode <Ref. to EN(STI)(diag)-48, PROCEDURE, Inspection Mode.>.
WIRING DIAGRAM:
Engine Electrical System <Ref. to WI-154, WIRING DIAGRAM, Engine Electrical System.>

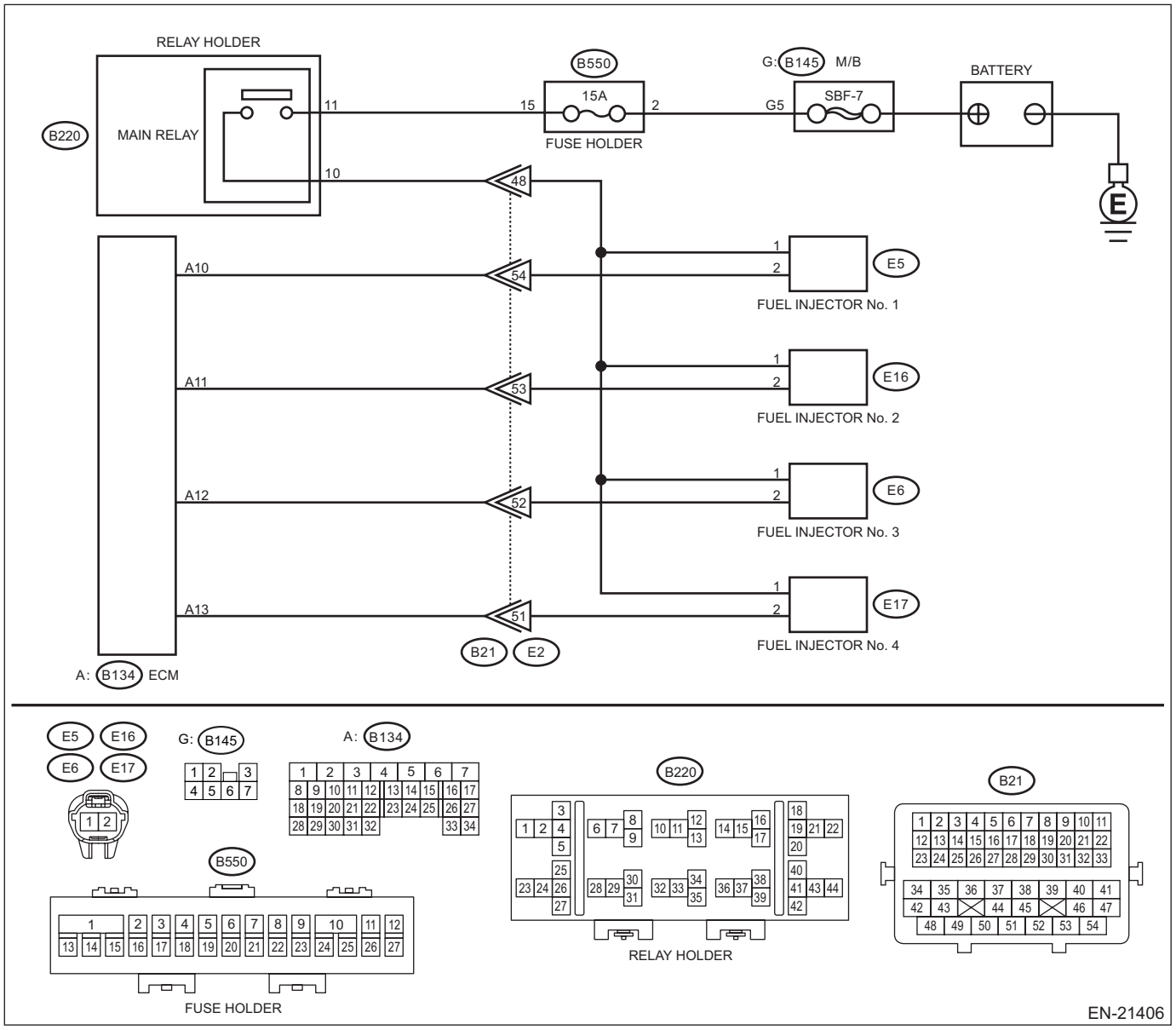

	Step	Check	Yes	No
1	**CHECK POWER SUPPLY TO FUEL INJECTOR.** 1) Turn the ignition switch to OFF. 2) Disconnect the connector from fuel injector. 3) Turn the ignition switch to ON. 4) Measure the voltage between fuel injector connector and the engine ground. ***Connector & terminal*** ***DTC P0201; (E5) No. 1 (+) — Engine ground (–):*** ***DTC P0202; (E16) No. 1 (+) — Engine ground (–):*** ***DTC P0203; (E6) No. 1 (+) — Engine ground (–):*** ***DTC P0204; (E17) No. 1 (+) — Engine ground (–):***	Is the voltage 10 V or more?	Go to step **2**.	Repair the harness and connector. NOTE: In this case, repair the following item: • Open circuit in harness between main relay and fuel injector connector • Poor contact of main relay connector • Poor contact of coupling connector
2	**CHECK HARNESS BETWEEN ECM AND FUEL INJECTOR CONNECTOR.** 1) Turn the ignition switch to OFF. 2) Disconnect the connector from ECM. 3) Measure the resistance between fuel injector connector and engine ground. ***Connector & terminal*** ***DTC P0201; (E5) No. 2 — Engine ground:*** ***DTC P0202; (E16) No. 2 — Engine ground:*** ***DTC P0203; (E6) No. 2 — Engine ground:*** ***DTC P0204; (E17) No. 2 — Engine ground:***	Is the resistance 1 MΩ or more?	Go to step **3**.	Repair the short circuit to ground in harness between ECM connector and fuel injector connector.
3	**CHECK HARNESS BETWEEN ECM AND FUEL INJECTOR CONNECTOR.** Measure the resistance of harness between ECM connector and fuel injector connector. ***Connector & terminal*** ***DTC P0201; (B134) No. 10 — (E5) No. 2:*** ***DTC P0202; (B134) No. 11 — (E16) No. 2:*** ***DTC P0203; (B134) No. 12 — (E6) No. 2:*** ***DTC P0204; (B134) No. 13 — (E17) No. 2:***	Is the resistance less than 1 Ω?	Go to step **4**.	Repair the harness and connector. NOTE: In this case, repair the following item: • Open circuit in harness between ECM connector and fuel injector connector • Poor contact of coupling connector
4	**CHECK FUEL INJECTOR.** Measure the resistance between fuel injector terminals on the corresponding cylinder. ***Terminals*** ***No. 1 — No. 2:***	Is the resistance 5 — 20 Ω?	Go to step **5**.	Replace the fuel injector. <Ref. to FU(STI)-43, Fuel Injector.>
5	**CHECK FOR POOR CONTACT.** Check for poor contact of ECM connector.	Is there poor contact of ECM connector?	Repair the poor contact of ECM connector.	Go to step **6**.

Step		Check	Yes	No
6	**CHECK FUEL INJECTOR OPERATION.** 1) Connect all connectors. 2) Start the engine. 3) Check if the corresponding fuel injector emits operating sound. NOTE: Use a sound scope to check the operating sound.	Does the fuel injector emit operating sound?	Even if DTC is detected, the circuit has returned to a normal condition at this time. Reproduce the failure, and then perform the diagnosis again. NOTE: In this case, temporary poor contact of connector, temporary open or short circuit of harness may be the cause.	Repair the poor contact of fuel injector connector.

1. OUTLINE OF DIAGNOSIS

Based on the self-diagnostic result of the injector driving IC, judge the injector driving circuit as normal or abnormal.
Injector driving IC detects the status of “fuel remains injected” or “fuel is not injected” as a malfunction.

2. EXECUTION CONDITION

Secondary parameters	Execution condition
Battery voltage	≥ 10.9 V
Elapsed time after starting the engine	> 1 s
Engine speed	≥ 500 rpm
Injection status	Not during fuel cut

3. GENERAL DRIVING CYCLE

Always perform the diagnosis continuously.

4. DIAGNOSTIC METHOD

Judge as NG when the following conditions are established.

Judgment Value

Malfunction Criteria	Threshold Value
Injector driving IC information	Trouble

Time Needed for Diagnosis: 10 time(s) × 256/1000 s
Malfunction Indicator Light Illumination: Illuminates as soon as a malfunction occurs.

BB:DTC P0202 CYLINDER 2 INJECTOR "A" CIRCUIT

NOTE:
For the diagnostic procedure, refer to DTC P0201. <Ref. to EN(STI)(diag)-233, DTC P0201 CYLINDER 1 INJECTOR "A" CIRCUIT, Diagnostic Procedure with Diagnostic Trouble Code (DTC).>

1. OUTLINE OF DIAGNOSIS

NOTE:
For the detection standard, refer to DTC P0201. <Ref. to EN(STI)(diag)-233, DTC P0201 CYLINDER 1 INJECTOR "A" CIRCUIT, Diagnostic Procedure with Diagnostic Trouble Code (DTC).>

BC:DTC P0203 CYLINDER 3 INJECTOR "A" CIRCUIT

NOTE:
For the diagnostic procedure, refer to DTC P0201. <Ref. to EN(STI)(diag)-233, DTC P0201 CYLINDER 1 INJECTOR "A" CIRCUIT, Diagnostic Procedure with Diagnostic Trouble Code (DTC).>

1. OUTLINE OF DIAGNOSIS

NOTE:
For the detection standard, refer to DTC P0201. <Ref. to EN(STI)(diag)-233, DTC P0201 CYLINDER 1 INJECTOR "A" CIRCUIT, Diagnostic Procedure with Diagnostic Trouble Code (DTC).>

BD:DTC P0204 CYLINDER 4 INJECTOR "A" CIRCUIT

NOTE:
For the diagnostic procedure, refer to DTC P0201. <Ref. to EN(STI)(diag)-233, DTC P0201 CYLINDER 1 INJECTOR "A" CIRCUIT, Diagnostic Procedure with Diagnostic Trouble Code (DTC).>

1. OUTLINE OF DIAGNOSIS

NOTE:
For the detection standard, refer to DTC P0201. <Ref. to EN(STI)(diag)-233, DTC P0201 CYLINDER 1 INJECTOR "A" CIRCUIT, Diagnostic Procedure with Diagnostic Trouble Code (DTC).>

BE:DTC P0222 THROTTLE/PEDAL POSITION SENSOR/SWITCH "B" CIRCUIT LOW

DTC DETECTING CONDITION:
Immediately at fault recognition
TROUBLE SYMPTOM:
- Improper idling
- Poor driving performance
- Engine stalls.

CAUTION:
After servicing or replacing faulty parts, perform Clear Memory Mode <Ref. to EN(STI)(diag)-68, OPERATION, Clear Memory Mode.>, and Inspection Mode <Ref. to EN(STI)(diag)-48, PROCEDURE, Inspection Mode.>.

WIRING DIAGRAM:

Engine Electrical System <Ref. to WI-154, WIRING DIAGRAM, Engine Electrical System.>

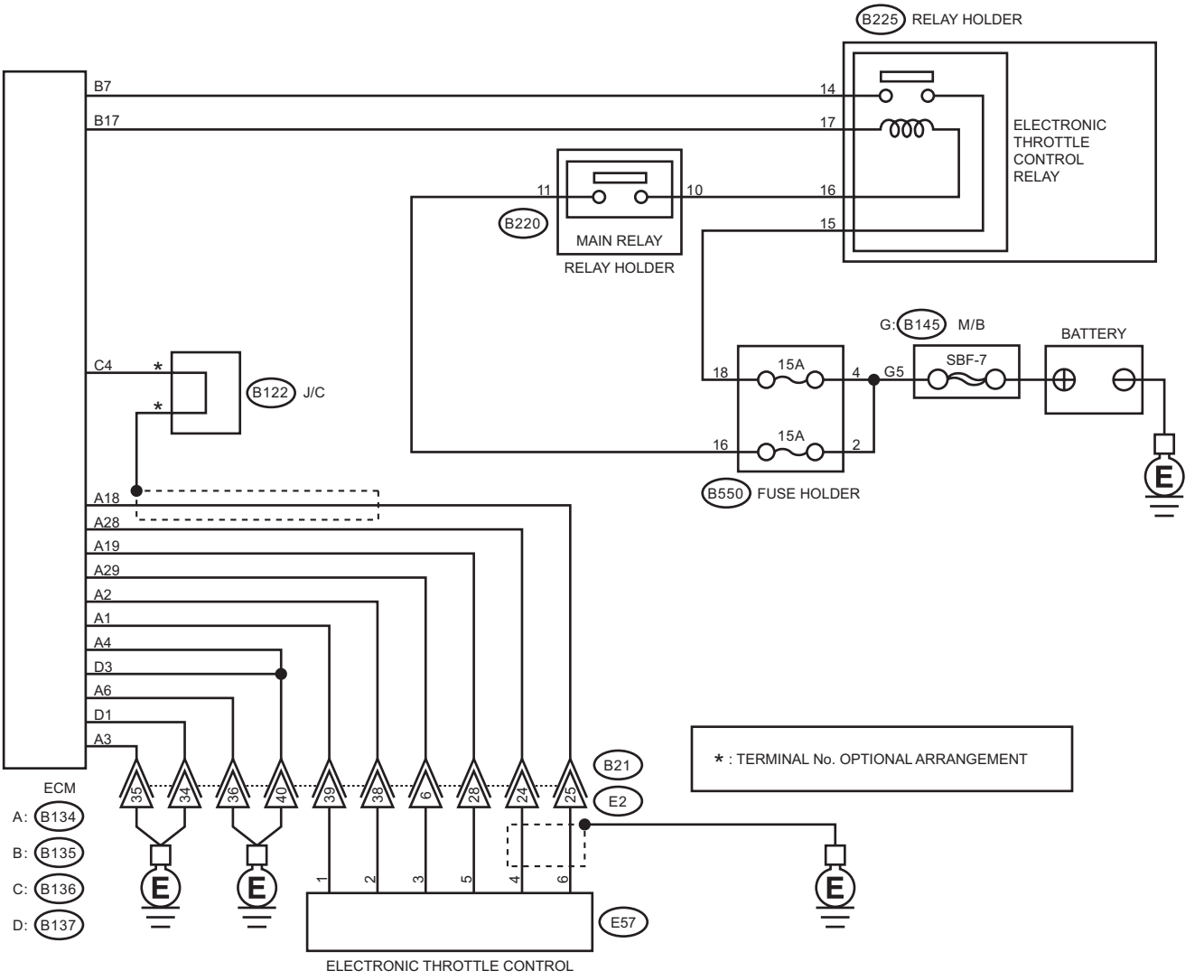

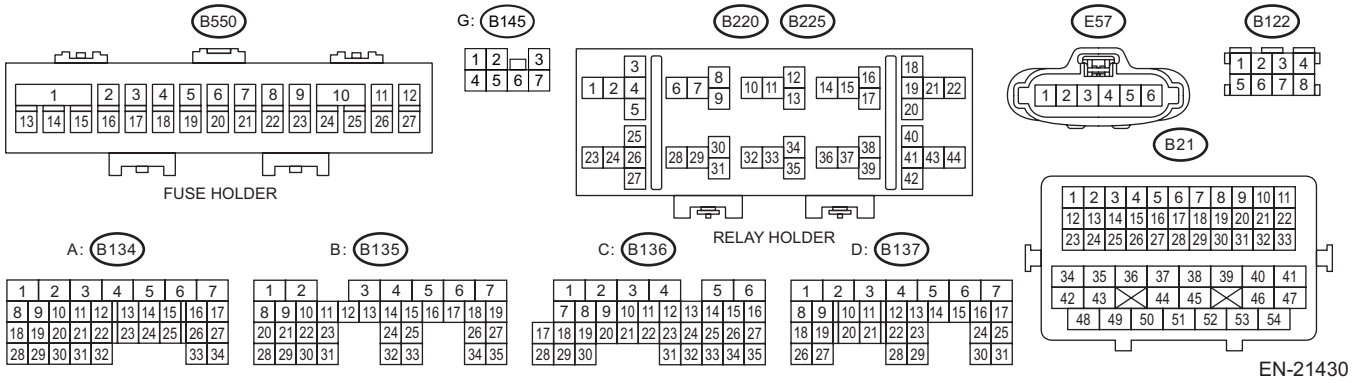

EN-21430

	Step	Check	Yes	No
1	**CHECK HARNESS BETWEEN ECM AND ELECTRONIC THROTTLE CONTROL CONNECTOR.** 1) Turn the ignition switch to OFF. 2) Disconnect the connector from ECM. 3) Disconnect the connectors from electronic throttle control. 4) Measure the resistance between ECM connector and chassis ground. ***Connector & terminal*** ***(B134) No. 19 — Chassis ground:*** ***(B134) No. 28 — Chassis ground:***	Is the resistance 1 MΩ or more?	Go to step **2**.	Repair the ground short circuit of harness between ECM connector and electronic throttle control connector.
2	**CHECK SHORT CIRCUIT INSIDE THE ECM.** 1) Connect the connector to ECM. 2) Measure the resistance between electronic throttle control connector and engine ground. ***Connector & terminal*** ***(E57) No. 4 — Engine ground:***	Is the resistance 1 MΩ or more?	Replace the electronic throttle control. <Ref. to FU(STI)-15, Throttle Body.>	Repair the ground short circuit of harness between ECM connector and electronic throttle control connector. Replace the ECM if defective. <Ref. to FU(STI)-56, Engine Control Module (ECM).>

1. OUTLINE OF DIAGNOSIS

Detect the open or short circuit of throttle position sensor 2.
Judge as NG if out of specification.

2. COMPONENT DESCRIPTION

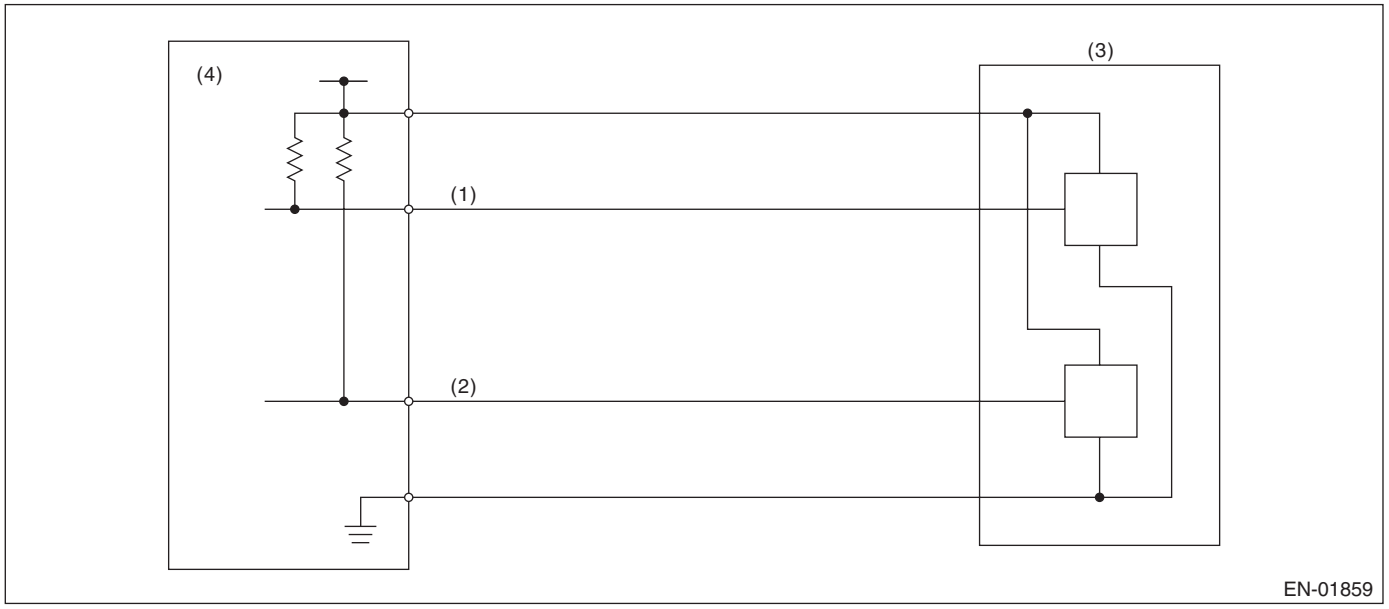

(1) Throttle position sensor 1 signal
(2) Throttle position sensor 2 signal
(3) Throttle position sensor
(4) Engine control module (ECM)

3. EXECUTION CONDITION

Secondary parameters	Execution condition
Battery voltage	≥ 6 V

4. GENERAL DRIVING CYCLE

Always perform the diagnosis continuously.

5. DIAGNOSTIC METHOD

If the duration of time while the following conditions are met is longer than the time indicated, judge as NG.

Judgment Value

Malfunction Criteria	Threshold Value
Sensor 2 input voltage	≤ 1.15 V

Time Needed for Diagnosis: 24 ms
Malfunction Indicator Light Illumination: Illuminates as soon as a malfunction occurs.

BF:DTC P0223 THROTTLE/PEDAL POSITION SENSOR/SWITCH "B" CIRCUIT HIGH

DTC DETECTING CONDITION:
Immediately at fault recognition
TROUBLE SYMPTOM:
- Improper idling
- Poor driving performance
- Engine stalls.

CAUTION:
After servicing or replacing faulty parts, perform Clear Memory Mode <Ref. to EN(STI)(diag)-68, OPERATION, Clear Memory Mode.>, and Inspection Mode <Ref. to EN(STI)(diag)-48, PROCEDURE, Inspection Mode.>.

WIRING DIAGRAM:

Engine Electrical System <Ref. to WI-154, WIRING DIAGRAM, Engine Electrical System.>

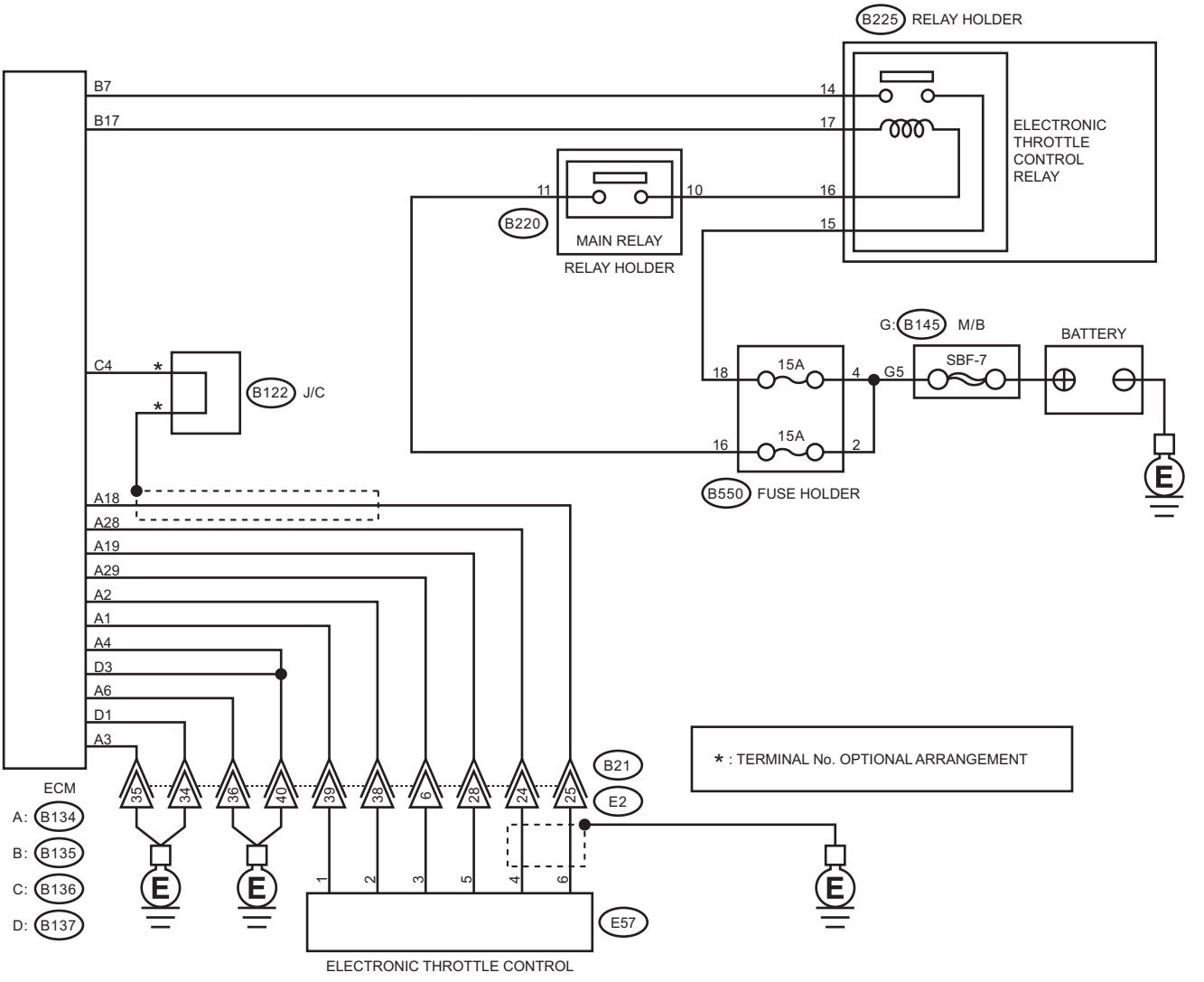

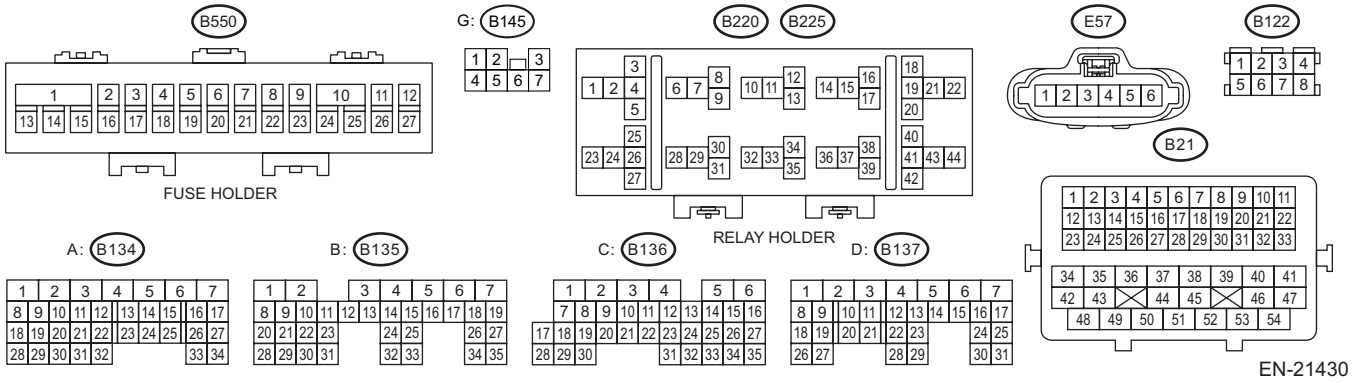

EN-21430

	Step	Check	Yes	No
1	**CHECK HARNESS BETWEEN ECM AND ELECTRONIC THROTTLE CONTROL CONNECTOR.** 1) Turn the ignition switch to OFF. 2) Disconnect the connector from ECM. 3) Disconnect the connectors from electronic throttle control. 4) Measure the resistance of harness between ECM connector and electronic throttle control connector. ***Connector & terminal*** ***(B134) No. 28 — (E57) No. 4:*** ***(B134) No. 29 — (E57) No. 3:***	Is the resistance less than 1 Ω?	Go to step **2**.	Repair the harness and connector. NOTE: In this case, repair the following item: • Open circuit in harness between ECM connector and electronic throttle control connector • Poor contact of coupling connector
2	**CHECK HARNESS BETWEEN ECM AND ELECTRONIC THROTTLE CONTROL CONNECTOR.** 1) Connect the connector to ECM. 2) Measure the resistance between electronic throttle control connector and engine ground. ***Connector & terminal*** ***(E57) No. 3 — Engine ground:***	Is the resistance less than 5 Ω?	Go to step **3**.	Repair the harness and connector. NOTE: In this case, repair the following item: • Open circuit of harness between ECM connector and engine ground • Poor contact of ECM connector • Poor contact of coupling connector
3	**CHECK HARNESS BETWEEN ECM AND ELECTRONIC THROTTLE CONTROL CONNECTOR.** 1) Turn the ignition switch to ON. 2) Measure the voltage between electronic throttle control connector and engine ground. ***Connector & terminal*** ***(E57) No. 4 (+) — Engine ground (–):***	Is the voltage 5 V or more?	Repair the short circuit to power in the harness between ECM connector and electronic throttle control connector.	Go to step **4**.
4	**CHECK HARNESS BETWEEN ECM AND ELECTRONIC THROTTLE CONTROL CONNECTOR.** 1) Turn the ignition switch to OFF. 2) Disconnect the connector from ECM. 3) Measure the resistance between ECM connectors. ***Connector & terminal*** ***(B134) No. 19 — (B134) No. 28:***	Is the resistance 1 MΩ or more?	Repair the poor contact of electronic throttle control connector. Replace the electronic throttle control if defective. <Ref. to FU(STI)-15, Throttle Body.>	Repair the short circuit to power in the harness between ECM connector and electronic throttle control connector.

1. OUTLINE OF DIAGNOSIS

Detect the open or short circuit of throttle position sensor 2.
Judge as NG if out of specification.

2. COMPONENT DESCRIPTION

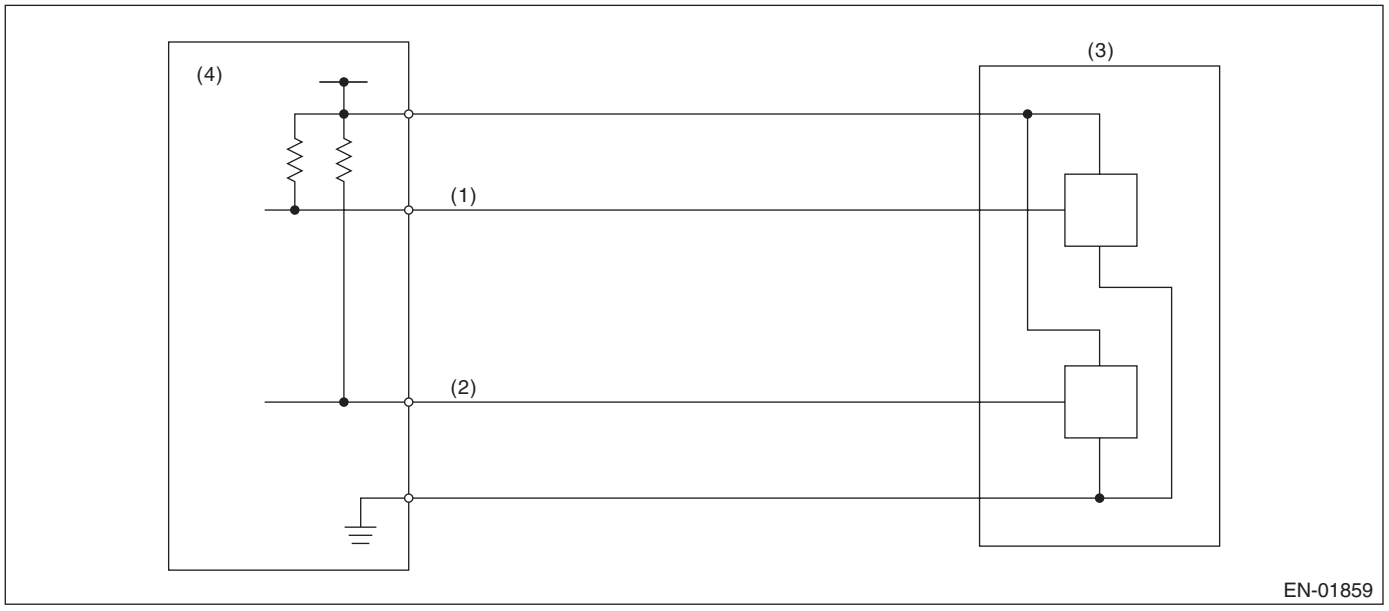

(1) Throttle position sensor 1 signal
(2) Throttle position sensor 2 signal
(3) Throttle position sensor
(4) Engine control module (ECM)

3. EXECUTION CONDITION

Secondary parameters	Execution condition
Battery voltage	≥ 6 V

4. GENERAL DRIVING CYCLE

Always perform the diagnosis continuously.

5. DIAGNOSTIC METHOD

If the duration of time while the following conditions are met is longer than the time indicated, judge as NG.

Judgment Value

Malfunction Criteria	Threshold Value
Sensor 2 input voltage	≥ 4.858 V

Time Needed for Diagnosis: 24 ms
Malfunction Indicator Light Illumination: Illuminates as soon as a malfunction occurs.

BG:DTC P0230 FUEL PUMP PRIMARY CIRCUIT

DTC DETECTING CONDITION:

Detected when two consecutive driving cycles with fault occur.

CAUTION:

After servicing or replacing faulty parts, perform Clear Memory Mode <Ref. to EN(STI)(diag)-68, OPERATION, Clear Memory Mode.>, and Inspection Mode <Ref. to EN(STI)(diag)-48, PROCEDURE, Inspection Mode.>.

WIRING DIAGRAM:

Engine Electrical System <Ref. to WI-154, WIRING DIAGRAM, Engine Electrical System.>

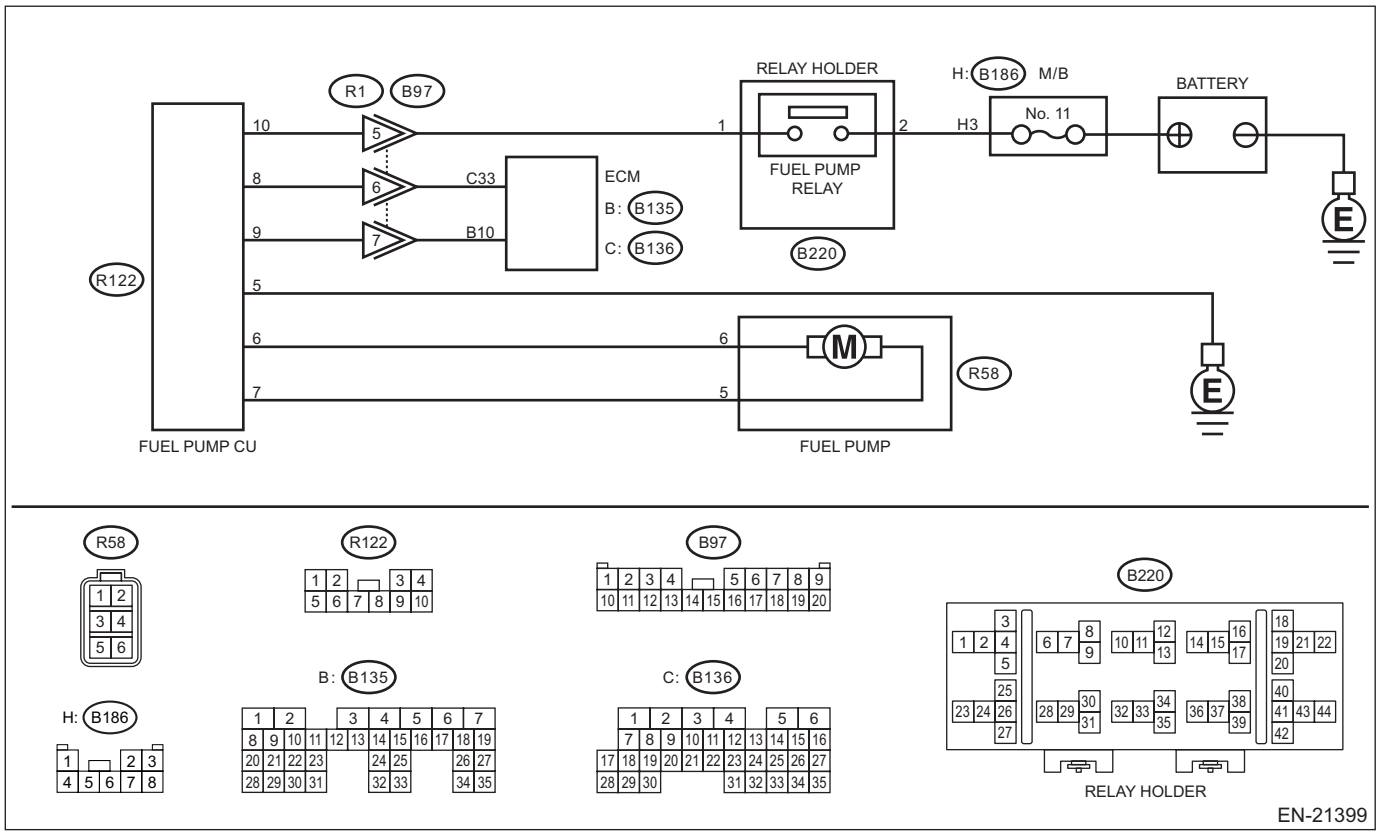

Step		Check	Yes	No
1	**CHECK POWER SUPPLY CIRCUIT TO FUEL PUMP CONTROL UNIT.** 1) Turn the ignition switch to OFF. 2) Disconnect the connector from fuel pump control unit. 3) Turn the ignition switch to ON. 4) Measure the voltage between fuel pump control unit connector and chassis ground. ***Connector & terminal*** ***(R122) No. 10 (+) — Chassis ground (–):***	Is the voltage 10 V or more?	Go to step **2**.	Repair the power supply circuit. NOTE: In this case, repair the following item: • Open circuit or short circuit to ground in harness between fuel pump relay connector and fuel pump control unit connector • Poor contact of fuel pump relay connector • Poor contact of coupling connector

	Step	Check	Yes	No
2	**CHECK GROUND CIRCUIT OF FUEL PUMP CONTROL UNIT.** 1) Turn the ignition switch to OFF. 2) Measure the resistance of harness between fuel pump control unit connector and chassis ground. ***Connector & terminal*** ***(R122) No. 5 — Chassis ground:***	Is the resistance less than 5 Ω?	Go to step **3**.	Repair the open circuit in harness between fuel pump control unit connector and chassis ground.
3	**CHECK HARNESS BETWEEN FUEL PUMP CONTROL UNIT AND FUEL PUMP CONNECTOR.** 1) Disconnect the connector from fuel pump. 2) Measure the resistance of harness between fuel pump control unit and fuel pump connector. ***Connector & terminal*** ***(R122) No. 7 — (R58) No. 5:*** ***(R122) No. 6 — (R58) No. 6:***	Is the resistance less than 1 Ω?	Go to step **4**.	Repair the harness and connector. NOTE: In this case, repair the following item: • Open circuit in harness between fuel pump control unit connector and fuel pump connector • Poor contact of coupling connector
4	**CHECK HARNESS BETWEEN FUEL PUMP CONTROL UNIT AND FUEL PUMP CONNECTOR.** Measure the resistance between fuel pump control unit connector and chassis ground. ***Connector & terminal*** ***(R122) No. 7 — Chassis ground:*** ***(R122) No. 6 — Chassis ground:***	Is the resistance 1 MΩ or more?	Go to step **5**.	Repair the short circuit to ground in harness between fuel pump control unit connector and fuel pump connector.
5	**CHECK HARNESS BETWEEN ECM AND FUEL PUMP CONTROL UNIT CONNECTOR.** 1) Disconnect the connector from ECM. 2) Measure the resistance of harness between ECM connector and fuel pump control unit connector. ***Connector & terminal*** ***(B135) No. 10 — (R122) No. 9:*** ***(B136) No. 33 — (R122) No. 8:***	Is the resistance less than 1 Ω?	Go to step **6**.	Repair the harness and connector. NOTE: In this case, repair the following item: • Open circuit in harness between ECM connector and fuel pump control unit connector • Poor contact of coupling connector
6	**CHECK HARNESS BETWEEN ECM AND FUEL PUMP CONTROL UNIT CONNECTOR.** Measure the resistance between fuel pump control unit connector and chassis ground. ***Connector & terminal*** ***(R122) No. 9 — Chassis ground:*** ***(R122) No. 8 — Chassis ground:***	Is the resistance 1 MΩ or more?	Go to step **7**.	Repair the short circuit to ground in harness between ECM connector and fuel pump control unit connector.
7	**CHECK FOR POOR CONTACT.** Check for poor contact of ECM and fuel pump control unit connector.	Is there poor contact of ECM or fuel pump control unit connector?	Repair the poor contact of ECM or fuel pump control unit connector.	Go to step **8**.

Step		Check	Yes	No
8	**CHECK EXPERIENCE OF RUNNING OUT OF FUEL.**	Has the vehicle experienced running out of fuel?	Finish the diagnosis. NOTE: DTC may be recorded as a result of fuel pump idling while running out of fuel.	Replace the fuel pump control unit. <Ref. to FU(STI)-63, Fuel Pump Control Unit.>

1. OUTLINE OF DIAGNOSIS

Detect the malfunction of fuel pump control unit.
Judge as NG when the NG signal is sent through a diagnostic line coming from the fuel pump control unit.
Fuel pump control unit detects the open or short circuit malfunction for each line, and then sends NG signals if one of them is found NG.

2. COMPONENT DESCRIPTION

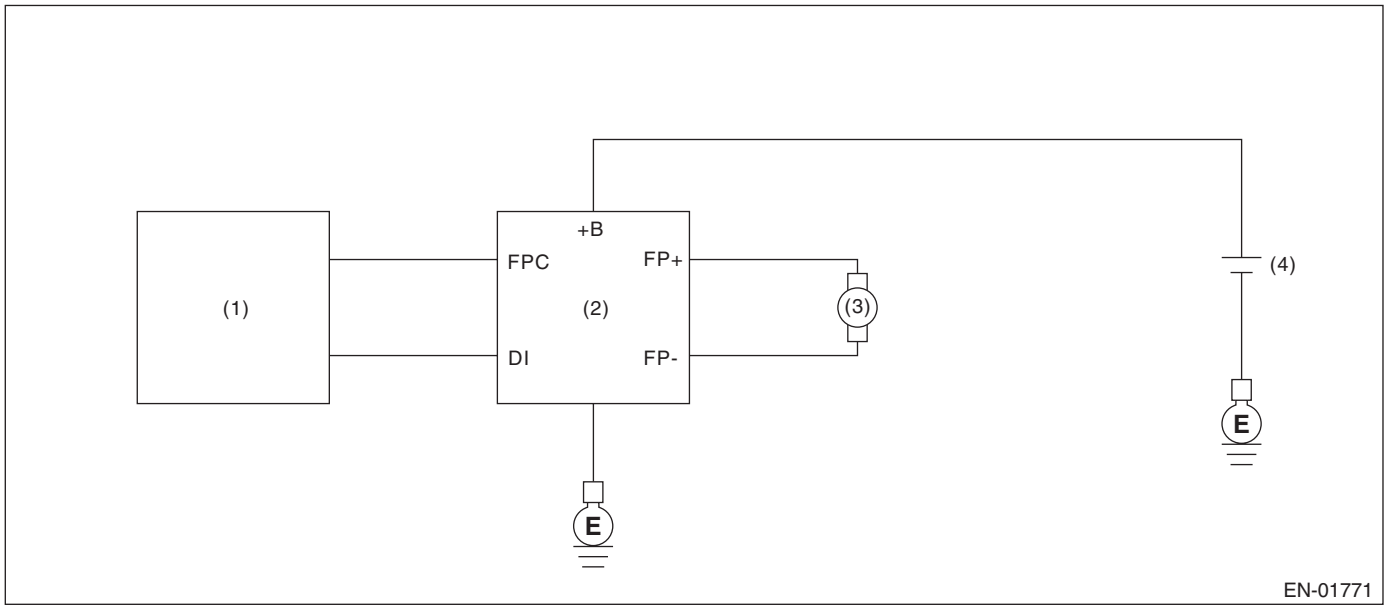

(1) Engine control module (ECM)
(2) Fuel pump control unit
(3) Fuel pump
(4) Battery

3. EXECUTION CONDITION

Secondary parameters	Execution condition
Battery voltage	≥ 8 V
Remaining fuel level	≥ 9 L (2.38 US gal, 1.98 Imp gal)
Elapsed time after starting the engine	≥ 180000 ms

4. GENERAL DRIVING CYCLE

Always perform the diagnosis continuously.

5. DIAGNOSTIC METHOD

If the duration of time while the following conditions are met is longer than the time indicated, judge as NG.

Judgment Value

Malfunction Criteria	Threshold Value
Output voltage	≤ Battery voltage × 0.35 V

Time Needed for Diagnosis: 2500 ms
Malfunction Indicator Light Illumination: Illuminates when malfunction occurs in 2 continuous driving cycles.

BH:DTC P0244 TURBOCHARGER/SUPERCHARGER WASTEGATE SOLENOID "A" RANGE/PERFORMANCE

DTC DETECTING CONDITION:
Immediately at fault recognition
TROUBLE SYMPTOM:
Poor driving performance

CAUTION:
After servicing or replacing faulty parts, perform Clear Memory Mode <Ref. to EN(STI)(diag)-68, OPERATION, Clear Memory Mode.>, and Inspection Mode <Ref. to EN(STI)(diag)-48, PROCEDURE, Inspection Mode.>.

	Step	Check	Yes	No
1	**CHECK FOR ANY OTHER DTC ON DISPLAY.**	Is any other DTC displayed?	Check the appropriate DTC using the “List of Diagnostic Trouble Code (DTC)”. <Ref. to EN(STI)(diag)-96, List of Diagnostic Trouble Code (DTC).>	Go to step **2**.
2	**CHECK WASTEGATE ACTUATOR PIPING AND WASTEGATE CONTROL SOLENOID VALVE PIPING.**	Are there any damage or disconnection of hose in wastegate actuator piping or wastegate control solenoid valve piping?	Connect the wastegate actuator pipe or wastegate control solenoid valve pipe properly. If defective, replace the hose.	Replace the wastegate control solenoid valve. <Ref. to FU(STI)-50, Wastegate Control Solenoid Valve.>

1. OUTLINE OF DIAGNOSIS

Detect the malfunction of wastegate control solenoid valve function.
Judge as NG when becoming high wastegate pressure.

2. COMPONENT DESCRIPTION

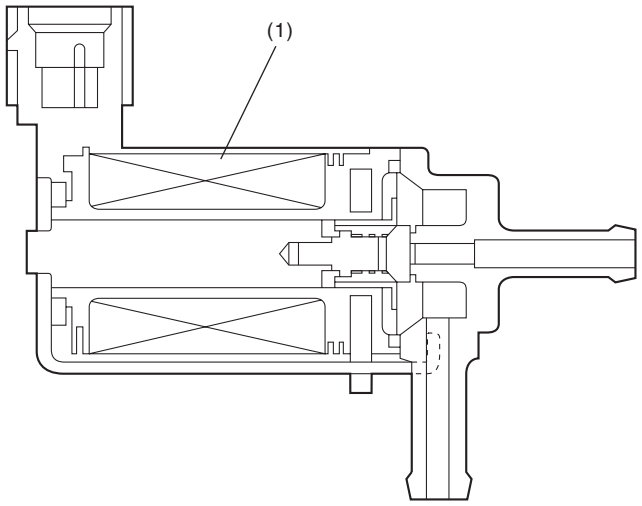

EN-01772

(1) Coil

3. EXECUTION CONDITION

Secondary parameters	Execution condition
None	

4. GENERAL DRIVING CYCLE

Always perform the diagnosis continuously.

5. DIAGNOSTIC METHOD

If the duration of time while the following conditions are met is longer than the time indicated, judge as NG.

Judgment Value

Malfunction Criteria	Threshold Value
Intake manifold pressure	> Value from Map

Map

		Barometric pressure (kPa (mmHg, inHg))					
		59.3 (445, 17.5)	68.7 (515, 20.3)	78 (585, 23)	92 (690, 27.2)	96 (720, 28.3)	98.7 (740, 29.1)
Engine speed (rpm)	1000	124.5 (934, 36.8)	135.3 (1015, 40)	135.3 (1015, 40)	135.3 (1015, 40)	135.3 (1015, 40)	135.3 (1015 , 40)
	2000	169.5 (1271, 50)	185.3 (1390, 54.7)	185.3 (1390, 54.7)	185.3 (1390, 54.7)	185.3 (1390, 54.7)	185.3 (1390 , 54.7)
	3000	158.3 (1187, 46.7)	214.6 (1610, 63.4)	214.6 (1610, 63.4)	214.6 (1610, 63.4)	214.6 (1610, 63.4)	214.6 (1610 , 63.4)
	4000	155.8 (1169, 46)	195.5 (1467, 57.7)	205.4 (1541, 60.7)	225.3 (1690, 66.5)	225.3 (1690, 66.5)	225.3 (1690 , 66.5)
	5000	145.9 (1094, 43.1)	169.7 (1273, 50.1)	185.6 (1392, 54.8)	215.4 (1616, 63.6)	225.3 (1690, 66.5)	225.3 (1690 , 66.5)
	6000	117.9 (884, 34.8)	156.4 (1173, 46.2)	168.5 (1264, 49.8)	205 (1538, 60.5)	215.1 (1614, 63.5)	229.3 (1720 , 67.7)
kPa (mmHg, inHg)							

Time Needed for Diagnosis: 2000 ms
Malfunction Indicator Light Illumination: Illuminates as soon as a malfunction occurs.

BI: DTC P0245 TURBOCHARGER/SUPERCHARGER WASTEGATE SOLENOID "A" LOW

DTC DETECTING CONDITION:
Immediately at fault recognition
TROUBLE SYMPTOM:
Poor driving performance

CAUTION:
After servicing or replacing faulty parts, perform Clear Memory Mode <Ref. to EN(STI)(diag)-68, OPERATION, Clear Memory Mode.>, and Inspection Mode <Ref. to EN(STI)(diag)-48, PROCEDURE, Inspection Mode.>.
WIRING DIAGRAM:
Engine Electrical System <Ref. to WI-154, WIRING DIAGRAM, Engine Electrical System.>

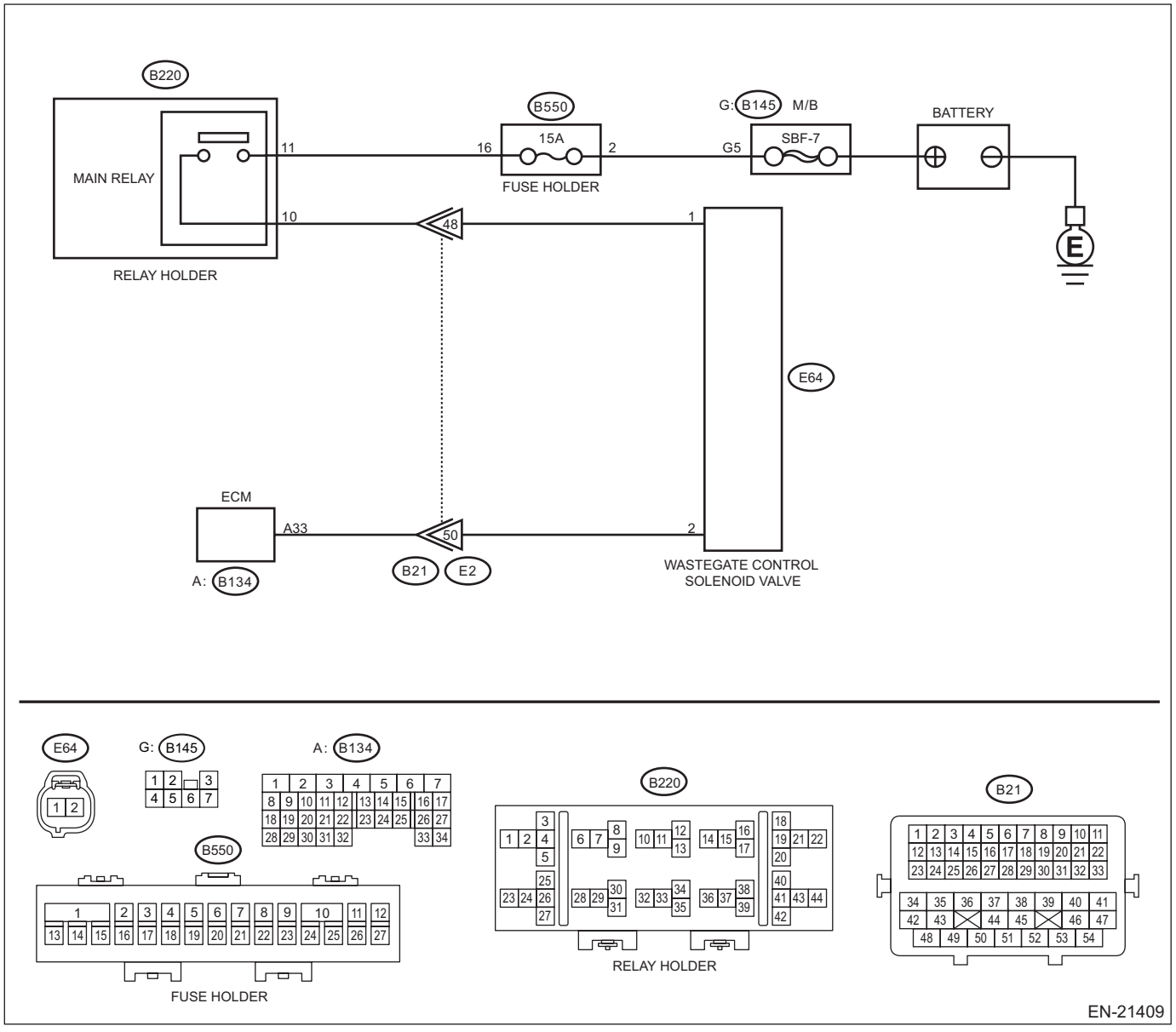

	Step	Check	Yes	No
1	**CHECK OUTPUT SIGNAL OF ECM.** 1) Turn the ignition switch to ON. 2) Measure the voltage between ECM connector and chassis ground. ***Connector & terminal*** ***(B134) No. 33 (+) — Chassis ground (–):***	Is the voltage 10 V or more?	Go to step **2**.	Go to step **3**.
2	**CHECK FOR POOR CONTACT.** Check for poor contact of ECM connector.	Is there poor contact of ECM connector?	Repair the poor contact of ECM connector.	Even if DTC is detected, the circuit has returned to a normal condition at this time. Reproduce the failure, and then perform the diagnosis again. NOTE: In this case, temporary open or short circuit of harness or temporary poor contact of connector may be the cause.
3	**CHECK POWER SUPPLY TO WASTEGATE CONTROL SOLENOID VALVE.** Measure the voltage between wastegate control solenoid valve connector and engine ground. ***Connector & terminal*** ***(E64) No. 1 (+) — Engine ground (–):***	Is the voltage 10 V or more?	Go to step **4**.	Repair the power supply circuit.
4	**CHECK HARNESS BETWEEN ECM AND WASTEGATE CONTROL SOLENOID VALVE CONNECTOR.** 1) Turn the ignition switch to OFF. 2) Disconnect the connector from ECM. 3) Disconnect the connector from the wastegate control solenoid valve. 4) Measure the resistance between wastegate control solenoid valve connector and engine ground. ***Connector & terminal*** ***(E64) No. 2 — Engine ground:***	Is the resistance 1 MΩ or more?	Go to step **5**.	Repair ground short circuit of harness between ECM connector and wastegate control solenoid valve connector.
5	**CHECK HARNESS BETWEEN ECM AND WASTEGATE CONTROL SOLENOID VALVE CONNECTOR.** Measure the resistance of harness between ECM connector and wastegate control solenoid valve connector. ***Connector & terminal*** ***(B134) No. 33 — (E64) No. 2:***	Is the resistance less than 1 Ω?	Go to step **6**.	Repair the harness and connector. NOTE: In this case, repair the following item: • Open circuit of harness between ECM connector and wastegate control solenoid valve connector • Poor contact of coupling connector

Step		Check	Yes	No
6	**CHECK WASTEGATE CONTROL SOLENOID VALVE.** 1) Remove the wastegate control solenoid valve. 2) Measure the resistance between wastegate control solenoid valve terminals. ***Terminals*** ***No. 1 — No. 2:***	Is the resistance 10 — 100 Ω?	Repair poor contact of wastegate control solenoid valve connector.	Replace the wastegate control solenoid valve. <Ref. to FU(STI)-50, Wastegate Control Solenoid Valve.>

1. OUTLINE OF DIAGNOSIS

Detect open or short circuit of the wastegate control solenoid valve.
Judge as NG when the terminal output voltage remains Low during outputting the duty signal.

2. COMPONENT DESCRIPTION

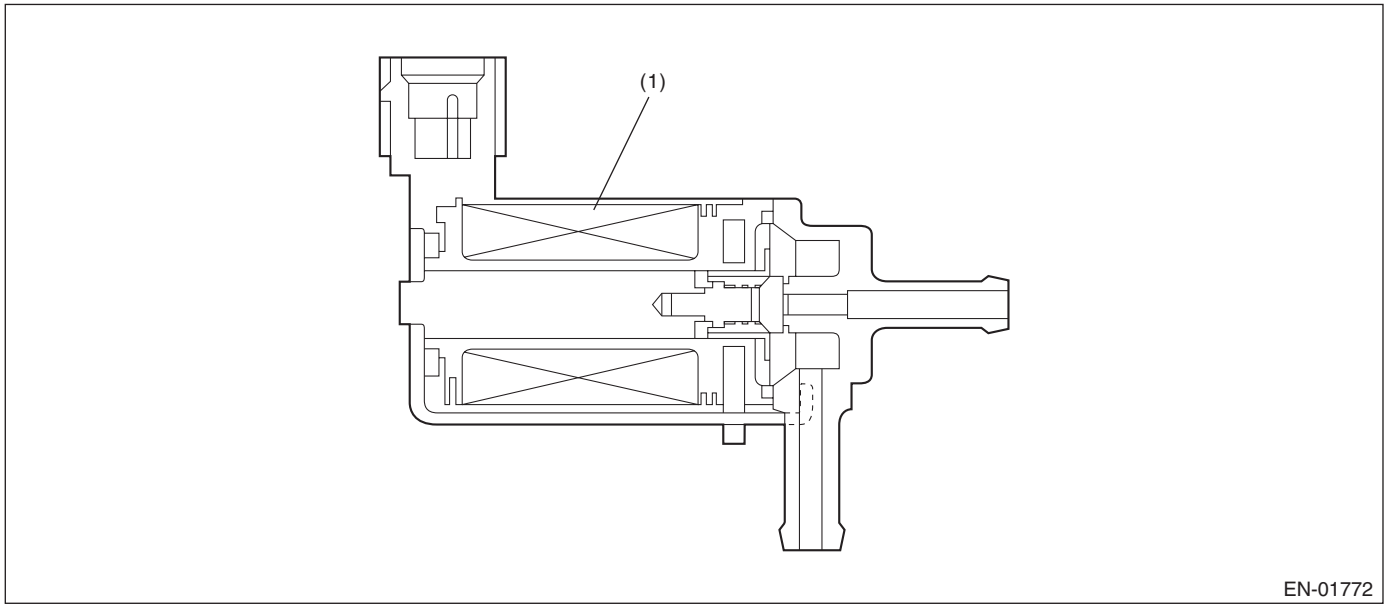

(1) Coil

3. EXECUTION CONDITION

Secondary parameters	Execution condition
Battery voltage	≥ 10.9 V
Duty ratio of wastegate control	< 75%

4. GENERAL DRIVING CYCLE

Perform the diagnosis continuously after starting the engine.

5. DIAGNOSTIC METHOD

If the duration of time while the following conditions are met is longer than the time indicated, judge as NG.

Judgment Value

Malfunction Criteria	Threshold Value
Output voltage	≤ Battery voltage × 0.34 V

Time Needed for Diagnosis: 640 ms
Malfunction Indicator Light Illumination: Illuminates as soon as a malfunction occurs.

BJ:DTC P0246 TURBOCHARGER/SUPERCHARGER WASTEGATE SOLENOID "A" HIGH

DTC DETECTING CONDITION:
Immediately at fault recognition
TROUBLE SYMPTOM:
Poor driving performance

CAUTION:
After servicing or replacing faulty parts, perform Clear Memory Mode <Ref. to EN(STI)(diag)-68, OPERATION, Clear Memory Mode.>, and Inspection Mode <Ref. to EN(STI)(diag)-48, PROCEDURE, Inspection Mode.>.
WIRING DIAGRAM:
Engine Electrical System <Ref. to WI-154, WIRING DIAGRAM, Engine Electrical System.>

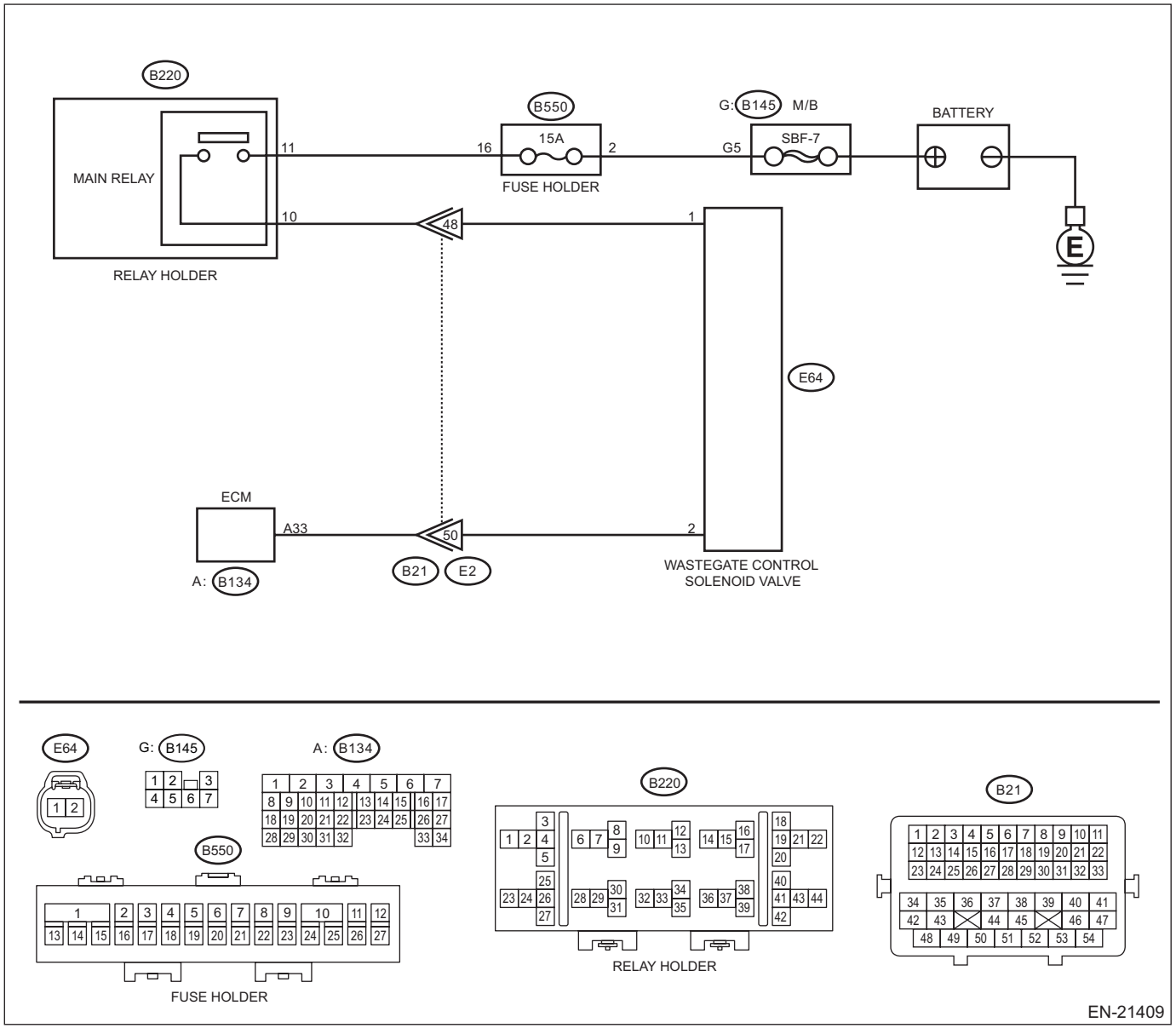

	Step	Check	Yes	No
1	**CHECK HARNESS BETWEEN ECM AND WASTEGATE CONTROL SOLENOID VALVE CONNECTOR.** 1) Turn the ignition switch to OFF. 2) Disconnect the connector from ECM. 3) Disconnect the connector from the wastegate control solenoid valve. 4) Turn the ignition switch to ON. 5) Measure the voltage between ECM connector and chassis ground. ***Connector & terminal*** ***(B134) No. 33 (+) — Chassis ground (–):***	Is the voltage 10 V or more?	Repair short circuit to power in harness between ECM connector and wastegate control solenoid valve connector.	Go to step **2**.
2	**CHECK WASTEGATE CONTROL SOLENOID VALVE.** 1) Turn the ignition switch to OFF. 2) Measure the resistance between wastegate control solenoid valve terminals. ***Terminals*** ***No. 1 — No. 2:***	Is the resistance less than 1 Ω?	Replace the wastegate control solenoid valve. <Ref. to FU(STI)-50, Wastegate Control Solenoid Valve.>	Repair the poor contact of ECM connector.

1. OUTLINE OF DIAGNOSIS

Detect open or short circuit of the wastegate control solenoid valve.
Judge as NG when the terminal output voltage remains Low or High during outputting the duty signal.

2. COMPONENT DESCRIPTION

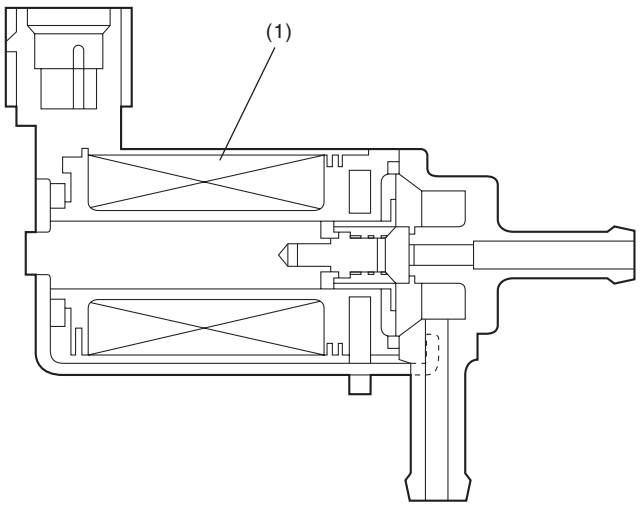

EN-01772

(1) Coil

3. EXECUTION CONDITION

Secondary parameters	Execution condition
Battery voltage	≥ 10.9 V
Duty ratio of wastegate control	≥ 25%

4. GENERAL DRIVING CYCLE

Perform the diagnosis continuously after starting the engine.

5. DIAGNOSTIC METHOD

If the duration of time while the following conditions are met is longer than the time indicated, judge as NG.

Judgment Value

Malfunction Criteria	Threshold Value
Output current	≥ 12 A

Time Needed for Diagnosis: 640 ms
Malfunction Indicator Light Illumination: Illuminates as soon as a malfunction occurs.

BK:DTC P0300 RANDOM/MULTIPLE CYLINDER MISFIRE DETECTED

DTC DETECTING CONDITION:

- Detected when two consecutive driving cycles with fault occur.
- Immediately at fault recognition (A misfire which could damage catalyst occurs.)

TROUBLE SYMPTOM:

- Engine stalls.
- Improper idling
- Rough driving

CAUTION:

After servicing or replacing faulty parts, perform Clear Memory Mode <Ref. to EN(STI)(diag)-68, OPERATION, Clear Memory Mode.>, and Inspection Mode <Ref. to EN(STI)(diag)-48, PROCEDURE, Inspection Mode.>.

WIRING DIAGRAM:

Engine Electrical System <Ref. to WI-154, WIRING DIAGRAM, Engine Electrical System.>

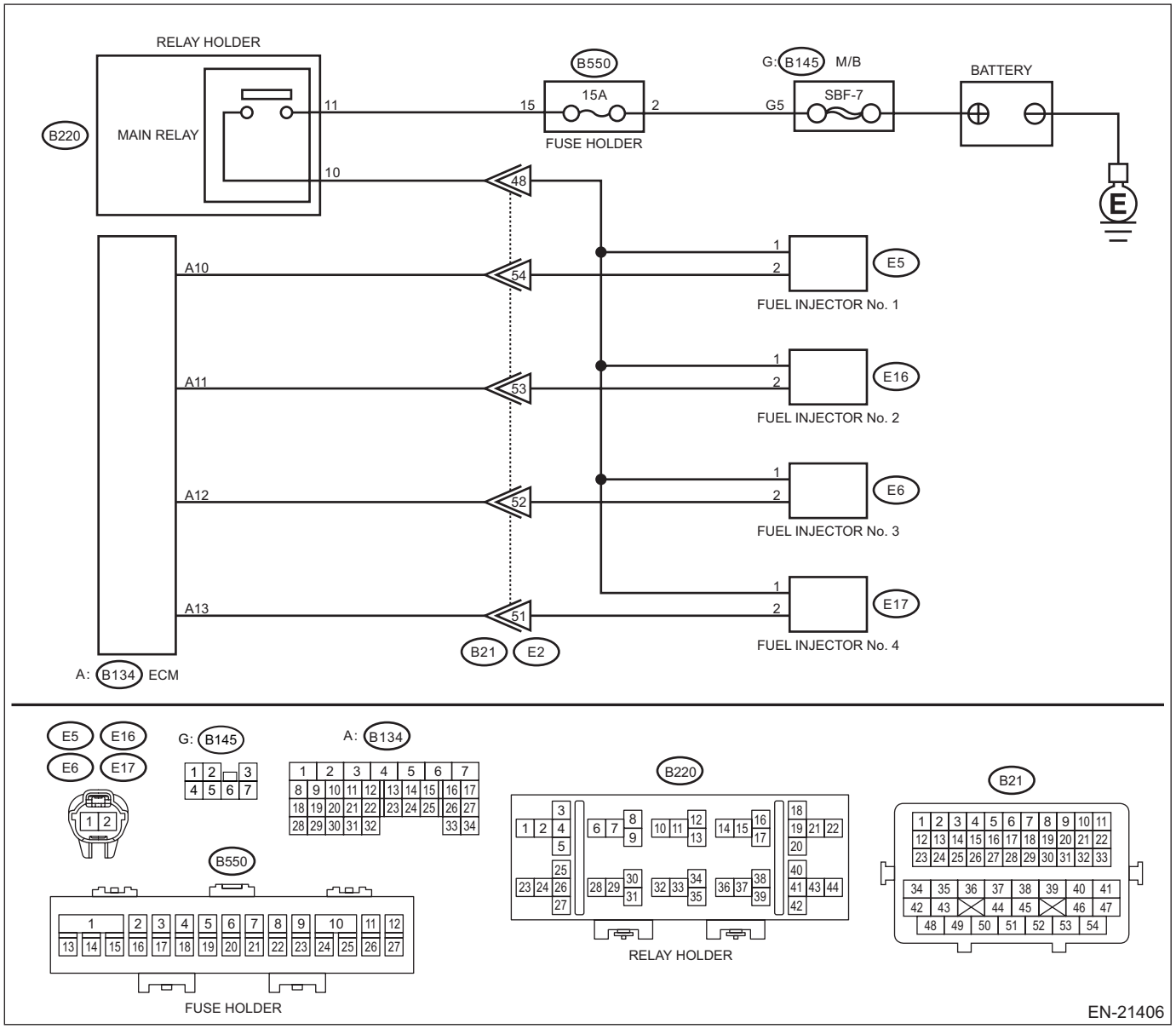

	Step	Check	Yes	No
1	**CHECK OUTPUT SIGNAL OF ECM.** 1) Turn the ignition switch to ON. 2) Measure the voltage between ECM connector and chassis ground on all cylinders. ***Connector & terminal*** ***#1 (B134) No. 10 (+) — Chassis ground (–):*** ***#2 (B134) No. 11 (+) — Chassis ground (–):*** ***#3 (B134) No. 12 (+) — Chassis ground (–):*** ***#4 (B134) No. 13 (+) — Chassis ground (–):***	Is the voltage 10 V or more?	Go to step **6**.	Go to step **2**.
2	**CHECK HARNESS BETWEEN ECM AND FUEL INJECTOR CONNECTOR.** 1) Turn the ignition switch to OFF. 2) Disconnect the connector from all fuel injectors. 3) Measure the resistance between all fuel injector connectors and engine ground. ***Connector & terminal*** ***#1 (E5) No. 2 — Engine ground:*** ***#2 (E16) No. 2 — Engine ground:*** ***#3 (E6) No. 2 — Engine ground:*** ***#4 (E17) No. 2 — Engine ground:***	Is the resistance 1 MΩ or more?	Go to step **3**.	Repair the short circuit to ground in harness between ECM connector and fuel injector connector.
3	**CHECK HARNESS BETWEEN ECM AND FUEL INJECTOR CONNECTOR.** Measure the resistance of harness between ECM connector and fuel injector connector on all cylinders. ***Connector & terminal*** ***#1 (B134) No. 10 — (E5) No. 2:*** ***#2 (B134) No. 11 — (E16) No. 2:*** ***#3 (B134) No. 12 — (E6) No. 2:*** ***#4 (B134) No. 13 — (E17) No. 2:***	Is the resistance less than 1 Ω?	Go to step **4**.	Repair the harness and connector. NOTE: In this case, repair the following item: • Open circuit in harness between ECM connector and fuel injector connector • Poor contact of coupling connector
4	**CHECK FUEL INJECTOR.** Measure the resistance between all fuel injector terminals. ***Terminals*** ***No. 1 — No. 2:***	Is the resistance 5 — 20 Ω?	Go to step **5**.	Replace the faulty fuel injector. <Ref. to FU(STI)-43, Fuel Injector.>
5	**CHECK POWER SUPPLY LINE.** 1) Turn the ignition switch to ON. 2) Measure the voltage between all fuel injector connectors and the engine ground. ***Connector & terminal*** ***#1 (E5) No. 1 (+) — Engine ground (–):*** ***#2 (E16) No. 1 (+) — Engine ground (–):*** ***#3 (E6) No. 1 (+) — Engine ground (–):*** ***#4 (E17) No. 1 (+) — Engine ground (–):***	Is the voltage 10 V or more?	Repair the poor contact of all connectors in fuel injector circuit.	Repair the harness and connector. NOTE: In this case, repair the following item: • Open circuit in harness between the main relay connector and fuel injector connector on faulty cylinders • Poor contact of coupling connector • Poor contact of main relay connector

	Step	Check	Yes	No
6	**CHECK HARNESS BETWEEN ECM AND FUEL INJECTOR CONNECTOR.** 1) Turn the ignition switch to OFF. 2) Disconnect the connector from all fuel injectors. 3) Turn the ignition switch to ON. 4) Measure the voltage between ECM connector and chassis ground on all cylinders. ***Connector & terminal*** ***#1 (B134) No. 10 (+) — Chassis ground (–):*** ***#2 (B134) No. 11 (+) — Chassis ground (–):*** ***#3 (B134) No. 12 (+) — Chassis ground (–):*** ***#4 (B134) No. 13 (+) — Chassis ground (–):***	Is the voltage 10 V or more?	Repair the short circuit to power in harness between ECM connector and fuel injector connectors.	Go to step **7**.
7	**CHECK FUEL INJECTOR.** 1) Turn the ignition switch to OFF. 2) Measure the resistance between all fuel injector terminals. ***Terminals*** ***No. 1 — No. 2:***	Is the resistance 5 — 20 Ω?	Go to step **8**.	Replace the faulty fuel injector. <Ref. to FU(STI)-43, Fuel Injector.>
8	**CHECK INSTALLATION OF CAMSHAFT POSITION SENSOR/CRANKSHAFT POSITION SENSOR.**	Is the camshaft position sensor or crankshaft position sensor loosely installed?	Tighten the camshaft position sensor or crankshaft position sensor. <Ref. to FU(STI)-36, Camshaft Position Sensor.> <Ref. to FU(STI)-35, Crankshaft Position Sensor.>	Go to step **9**.
9	**CHECK CRANK SPROCKET.** Remove the timing belt cover.	Is the crank sprocket rusted or does it have broken teeth?	Replace the crank sprocket. <Ref. to ME(STI)-62, Crank Sprocket.>	Go to step **10**.
10	**CHECK INSTALLATION CONDITION OF TIMING BELT.** Turn the crankshaft, and align alignment mark on crank sprocket with alignment mark on cylinder block. ST 499987500 CRANKSHAFT SOCKET	Is the timing belt dislocated from its proper position?	Repair the installation condition of timing belt. <Ref. to ME(STI)-52, Timing Belt.>	Go to step **11**.
11	**CHECK FUEL LEVEL.**	Is the fuel meter indication higher than the “Lower” level?	Go to step **12**.	Refill the fuel so that the fuel meter indication is higher than the “Lower” level, and proceed to the next step. Go to step **12**.
12	**CHECK STATUS OF MALFUNCTION INDICATOR LIGHT.** 1) Clear the memory using the Subaru Select Monitor or general scan tool. <Ref. to EN(STI)(diag)-68, Clear Memory Mode.> 2) Start the engine, and drive the vehicle 10 minutes or more.	Does the malfunction indicator light illuminate or blink?	Go to step **14**.	Go to step **13**.

	Step	Check	Yes	No
13	**CHECK CAUSE OF MISFIRE.**	Was the cause of misfire identified when the engine is running?	Finish diagnostics operation, if the engine has no abnormality.	Repair the poor contact of connector. NOTE: In this case, repair the following item: • Poor contact of ignition coil connector • Poor contact of fuel injector connector on faulty cylinders • Poor contact of ECM connector • Poor contact of coupling connector
14	**CHECK AIR INTAKE SYSTEM.**	Is there any fault in air intake system?	Repair the air intake system. NOTE: Check the following items. • Are there air leaks or air suction caused by loose or dislocated nuts and bolts? • Are there cracks or any disconnection of hoses?	Go to step **15**.
15	**CHECK PCV VALVE.** Check the PCV valve.	Is the PCV valve free from deformation, crack or other damage?	Repair or replace the PCV valve. <Ref. to EC(STI)-54, PCV Valve.>	Go to step **16**.
16	**CHECK PCV HOSE.** Check the PCV hose.	Is the PCV hose free from deformation, crack or other damage?	Check the PCV hose assembly for cracks, damage or looseness. <Ref. to EC(STI)-52, PCV Hose Assembly.>	Go to step **17**.
17	**CHECK PCV HOSE.** Check the PCV hose.	Check the clamp of PCV hose assembly for damage or looseness.	Repair or replace the PCV valve. <Ref. to EC(STI)-52, PCV Hose Assembly.>	Go to step **18**.
18	**CHECK ALL CYLINDERS.**	Is there a fault in any cylinder?	Repair or replace the faulty part of the faulty cylinder. NOTE: Check the following items. • Spark plug • Fuel injector • Ignition coil • Compression • Skipping timing belt teeth	Go to DTC P0171. <Ref. to EN(STI)(diag)-229, DTC P0171 SYSTEM TOO LEAN BANK 1, Diagnostic Procedure with Diagnostic Trouble Code (DTC).>

1. OUTLINE OF DIAGNOSIS

NOTE:
For the detection standard, refer to DTC P0301. <Ref. to EN(STI)(diag)-262, DTC P0301 CYLINDER 1 MISFIRE DETECTED, Diagnostic Procedure with Diagnostic Trouble Code (DTC).>

BL:DTC P0301 CYLINDER 1 MISFIRE DETECTED

NOTE:
For the diagnostic procedure, refer to DTC P0304. <Ref. to EN(STI)(diag)-269, DTC P0304 CYLINDER 4 MISFIRE DETECTED, Diagnostic Procedure with Diagnostic Trouble Code (DTC).>

1. OUTLINE OF DIAGNOSIS

Detect the presence of misfire occurrence. (Revolution fluctuation method)
Monitoring Misfire which influences exhaust deterioration (1.5 times of FTP) and catalyst damage is made obligatory by the law. Misfire affecting these two has two patterns below:
- Intermittent misfire (The same cylinder misfires in random, or different cylinders misfire in random.): FTP 1.5 times misfire
- Every time misfire (The same cylinder misfires every time.): FTP 1.5 times misfire, Catalyst damage misfire

The following detecting methods are adopted for these detection.
1) Intermittent misfire: FTP 1.5 times misfire
- 180° Interval Difference Method
- 360° Interval Difference Method (whole range)
- 720° Interval Difference Method (3,000 rpm or more)

2) Misfire every time: FTP 1.5 times misfire, Catalyst damage misfire
- 360° Interval Difference Method

2. EXECUTION CONDITION

Secondary parameters	Execution condition
Battery voltage	≥ 8 V
Fuel shut-off function	≠ Fuel cut
Throttle position change during 16 milliseconds	< 14 °
Engine speed	≥ 550 rpm to < 6800 rpm
Intake manifold pressure	≥ Value of Map 1
Elapsed time after starting the engine	≥ 2 crankshaft revolutions
Following condition A or B is met	
A: Engine coolant temperature at engine starting	> –6.7°C (19.4°F)
B: Following conditions (b1) and (b2) are met	
(b1) Engine coolant temperature at engine starting	≤ –6.7°C (19.4°F)
(b2) Engine coolant temperature	≥ 21.1°C (69.8°F)

Map 1

- Normal ignition

		Barometric pressure (kPa (mmHg, inHg))						
		66.7 (500, 19.7)	76.7 (575, 22.6)	80 (600, 23.6)	84 (630, 24.8)	86.7 (650, 25.6)	92 (690, 27.2)	100.3 (752, 29.6)
Engine speed (rpm)	700	26.7 (200.0 , 7.9)	26.7 (200.0 , 7.9)	27.3 (205.0 , 8.1)	28.4 (213.0 , 8.4)	29.3 (220.0 , 8.7)	29.9 (224.0 , 8.8)	28.8 (216.0 , 8.5)
	1000	23.9 (179.0 , 7)	23.9 (179.0 , 7)	24.9 (187.0 , 7.4)	25.5 (191.0 , 7.5)	25.9 (194.0 , 7.6)	27.5 (206.0 , 8.1)	28.6 (214.7 , 8.5)
	1500	22.4 (168.0 , 6.6)	22.4 (168.0 , 6.6)	23.3 (175.0 , 6.9)	24.1 (181.0 , 7.1)	24.7 (185.0 , 7.3)	24.8 (186.0 , 7.3)	24.9 (186.9 , 7.4)
	2000	23.2 (174.0 , 6.9)	23.2 (174.0 , 6.9)	24 (180.0 , 7.1)	25.5 (191.0 , 7.5)	26.1 (196.0 , 7.7)	25.6 (192.0 , 7.6)	25.3 (189.5 , 7.5)
	2500	23.9 (179.0 , 7)	23.9 (179.0 , 7)	24.5 (184.0 , 7.2)	25.5 (191.0 , 7.5)	26 (195.0 , 7.7)	25.5 (191.0 , 7.5)	25.1 (188.6 , 7.4)
	3000	24.7 (185.0 , 7.3)	24.7 (185.0 , 7.3)	25.3 (190.0 , 7.5)	25.6 (192.0 , 7.6)	26.1 (196.0 , 7.7)	25.9 (194.0 , 7.6)	25.8 (193.3 , 7.6)
	3500	29.1 (218.5 , 8.6)	29.1 (218.5 , 8.6)	29.8 (223.5 , 8.8)	29.9 (224.5 , 8.8)	31.3 (234.5 , 9.2)	31.5 (236.0 , 9.3)	29.5 (221.5 , 8.7)
	4000	29.2 (219.0 , 8.6)	29.2 (219.0 , 8.6)	29.9 (224.0 , 8.8)	30.5 (229.0 , 9)	30.8 (231.0 , 9.1)	31.7 (238.0 , 9.4)	32.3 (242.2 , 9.5)
	4500	29.3 (219.5 , 8.6)	29.3 (219.5 , 8.6)	30.3 (227.5 , 9)	30.9 (231.5 , 9.1)	31.4 (235.5 , 9.3)	32.1 (241.0 , 9.5)	32.6 (244.2 , 9.6)
	5000	30.4 (228.1 , 9)	30.4 (228.1 , 9)	30.7 (230.1 , 9.1)	31.7 (238.1 , 9.4)	32.1 (241.1 , 9.5)	32.7 (245.0 , 9.6)	33.1 (248.0 , 9.8)
	5500	33.4 (250.6 , 9.9)	33.4 (250.6 , 9.9)	34.2 (256.6 , 10.1)	34.9 (261.6 , 10.3)	35.1 (263.6 , 10.4)	35.7 (268.0 , 10.6)	36.1 (271.0 , 10.7)
	6000	37.5 (281.1 , 11.1)	37.5 (281.1 , 11.1)	38 (285.1 , 11.2)	38.8 (291.1 , 11.5)	39.1 (293.1 , 11.5)	40.3 (302.0 , 11.9)	40.9 (306.9 , 12.1)
	6500	42.6 (319.6 , 12.6)	42.6 (319.6 , 12.6)	43.3 (324.6 , 12.8)	43.9 (329.6 , 13)	43.8 (328.6 , 12.9)	44.9 (337.0 , 13.3)	45.6 (341.7 , 13.5)
	6700	43.3 (325, 12.8)	43.3 (325, 12.8)	44 (330, 13)	44.7 (335, 13.2)	44.5 (334, 13.1)	45.6 (342, 13.5)	46.3 (347.1442749, 13.7)
kPa (mmHg, inHg)								

- Idling ignition

		Barometric pressure (kPa (mmHg, inHg))						
		66.7 (500, 19.7)	76.7 (575 , 22.6)	80 (600 , 23.6)	84 (630 , 24.8)	86.7 (650 , 25.6)	92 (690 , 27.2)	100.3 (752 , 29.6)
Engine speed (rpm)	700	26.7 (200.0 , 7.9)	26.7 (200.0 , 7.9)	27.3 (205.0 , 8.1)	28.4 (213.0 , 8.4)	29.3 (220.0 , 8.7)	29.9 (224.0 , 8.8)	28.8 (216.0 , 8.5)
	1000	25.1 (188.0 , 7.4)	25.1 (188.0 , 7.4)	26 (195.0 , 7.7)	26.9 (202.0 , 8)	28 (210.0 , 8.3)	28.7 (215.0 , 8.5)	30.4 (228.1 , 9)
	1500	22.9 (172.0 , 6.8)	22.9 (172.0 , 6.8)	23.3 (175.0 , 6.9)	23.9 (179.0 , 7)	24.7 (185.0 , 7.3)	24.9 (187.0 , 7.4)	26.7 (200.6 , 7.9)
	2000	23.2 (174.0 , 6.9)	23.2 (174.0 , 6.9)	23.7 (178.0 , 7)	24.4 (183.0 , 7.2)	25.1 (188.0 , 7.4)	25.3 (190.0 , 7.5)	27.8 (208.5 , 8.2)
	2500	23.2 (174.0 , 6.9)	23.2 (174.0 , 6.9)	23.7 (178.0 , 7)	24.5 (184.0 , 7.2)	24.8 (186.0 , 7.3)	25.3 (190.0 , 7.5)	26.6 (199.7 , 7.9)
	3000	24.3 (182.0 , 7.2)	24.3 (182.0 , 7.2)	24.9 (187.0 , 7.4)	25.9 (194.0 , 7.6)	25.9 (194.0 , 7.6)	26.1 (196.0 , 7.7)	26.6 (199.7 , 7.9)
	3500	31.7 (237.5 , 9.4)	31.7 (237.5 , 9.4)	31.4 (235.5 , 9.3)	32.6 (244.5 , 9.6)	33.1 (248.5 , 9.8)	34.6 (259.5 , 10.2)	35.2 (264.0 , 10.4)
	4000	32.1 (241.0 , 9.5)	32.1 (241.0 , 9.5)	32.3 (242.0 , 9.5)	33.2 (249.0 , 9.8)	33.7 (253.0 , 10)	34.9 (262.0 , 10.3)	36 (270.0 , 10.6)
	4500	32.1 (240.5 , 9.5)	32.1 (240.5 , 9.5)	32.1 (240.5 , 9.5)	33 (247.5 , 9.7)	33.9 (254.5 , 10)	35.5 (266.5 , 10.5)	35.3 (265.1 , 10.4)
	5000	35.5 (266.1 , 10.5)	35.5 (266.1 , 10.5)	34.4 (258.1 , 10.2)	35.3 (265.1 , 10.4)	35.7 (268.1 , 10.6)	37.3 (280.1 , 11)	37.2 (279.2 , 11)
	5500	38.1 (285.6 , 11.2)	38.1 (285.6 , 11.2)	37.5 (281.6 , 11.1)	38.5 (288.6 , 11.4)	39.5 (296.6 , 11.7)	40.3 (302.6 , 11.9)	40.7 (305.2 , 12)
	6000	41.6 (312.1 , 12.3)	41.6 (312.1 , 12.3)	41.5 (311.1 , 12.2)	42.8 (321.1 , 12.6)	43.5 (326.1 , 12.8)	45.6 (342.1 , 13.5)	45.4 (340.3 , 13.4)
	6500	48.6 (364.6 , 14.4)	48.6 (364.6 , 14.4)	49.3 (369.6 , 14.6)	48.6 (364.6 , 14.4)	49.4 (370.6 , 14.6)	49.4 (370.6 , 14.6)	53.4 (400.7 , 15.8)
	6700	49.3 (370, 14.6)	49.3 (370, 14.6)	50 (375, 14.8)	49.3 (370, 14.6)	50.1 (376, 14.8)	50.1 (376, 14.8)	54.1 (406.1514536, 16)
kPa (mmHg, inHg)								

3. GENERAL DRIVING CYCLE

- If conditions are met, it is possible to detect the misfires from idling to high engine speed. However, in case any engine load or breakage occurs, perform with the engine at idle.
- Perform the diagnosis continuously.

4. DIAGNOSTIC METHOD

When a misfire occurs, the engine speed will decrease and the crankshaft position speed will change. Calculate the interval difference value (diagnostic value) from crankshaft position speed by the following formula, and judge whether a misfire is occurring or not comparing the calculated result with judgment value. Count the number of misfires, if the misfire ratio is higher during 1000 revs. or 200 revs., judge corresponding cylinders as NG.

Diagnostic value calculation (Calculate from angle speed) →	Misfire detection in every single ignition (Compare diagnostic value with judgment value) →	NG judgment (Misfire occurrence judgment required by the law) (Compare number of misfire with judgment value)
	• 180 Degree Interval Difference Method • 360 Degree Interval Difference Method • 720 Degree Interval Difference Method	• FTP 1.5 times misfire NG judgment • NG judgment for catalyst-damaging misfire

As shown in the following figure, pick a cylinder as the standard and name it A. And the former crankshaft position speed is named B, the second former crankshaft position speed is named C, the third is named D, etc.

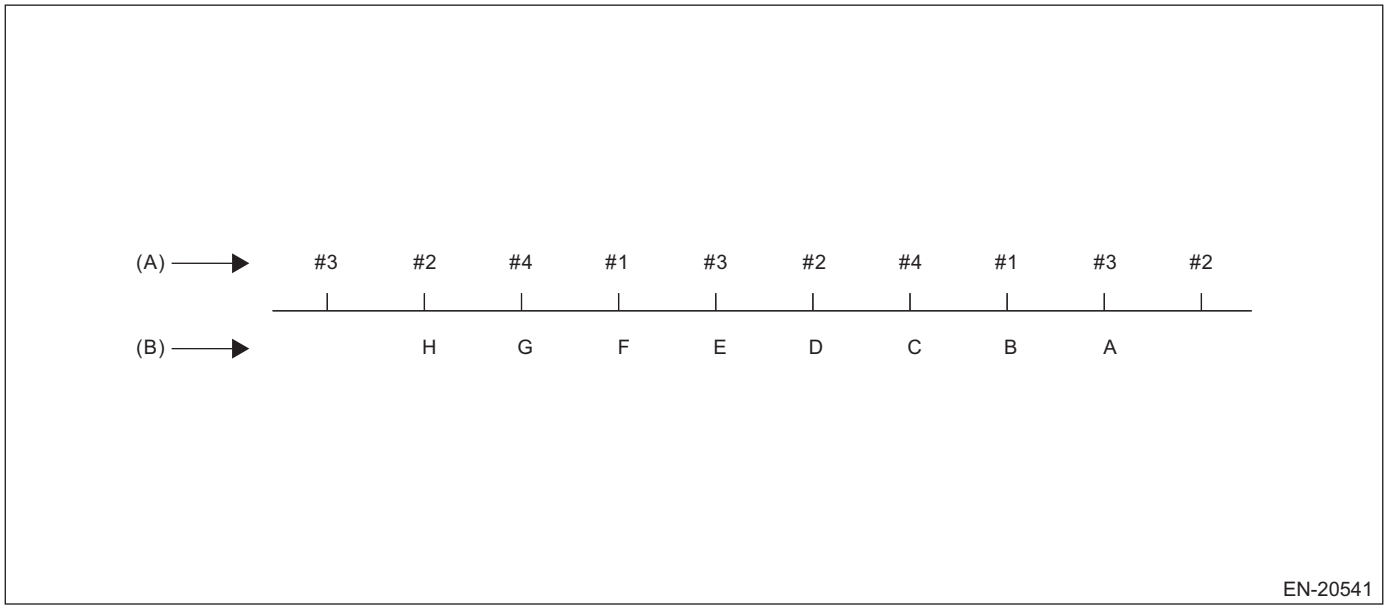

(A) Ignition order (B) Crankshaft position speed

180° Interval Difference Method

Diagnostic value	180 degree interval difference = (B – A) – (F – B)/4
Judge as a misfire in the following cases. • 180 degree interval difference > Judgment value of positive side • 180 degree interval difference ≤ Judgment value of negative side (Diagnostic value before 180° CA)	

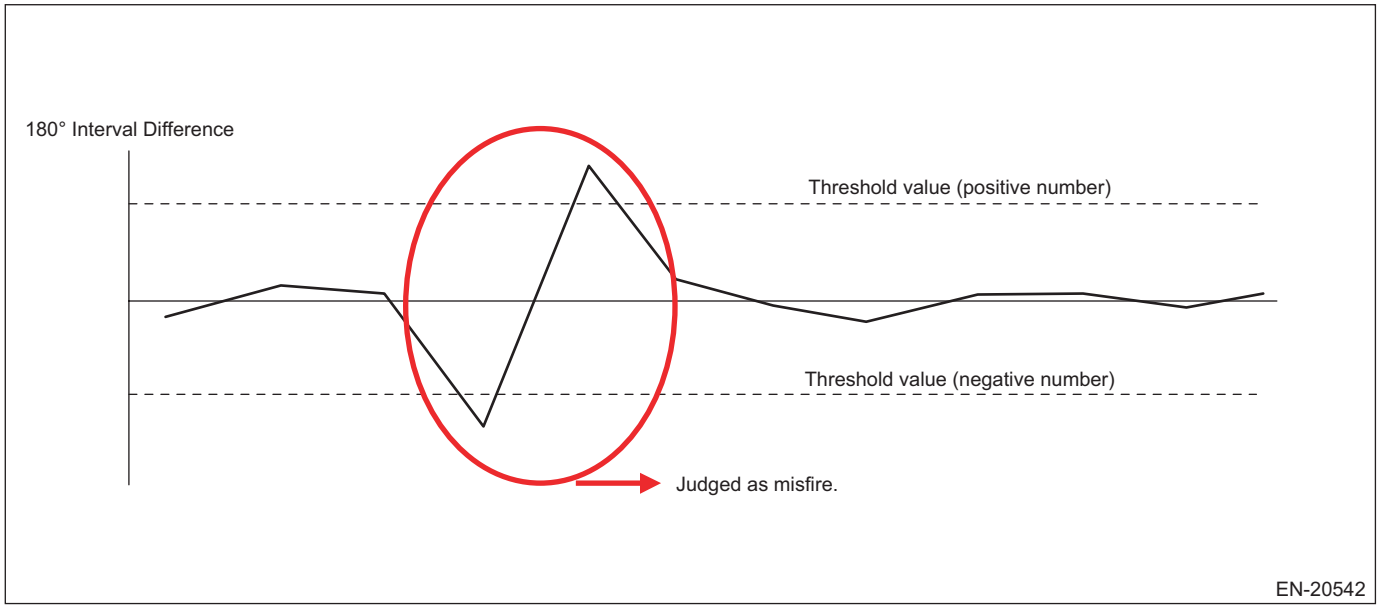

360° Interval Difference Method

Diagnostic value	360 degree interval difference = (B – A) – (D – C)
Misfire judgment	360 degree interval difference > Judgment value: → Judged as misfire

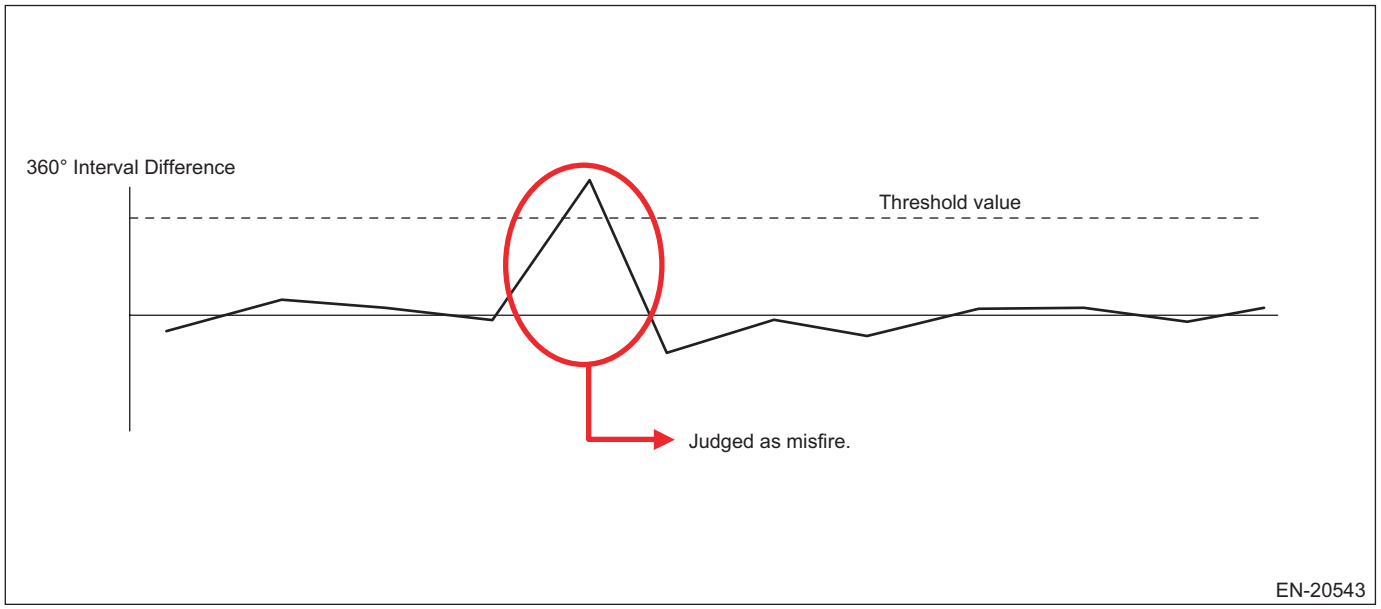

720° Interval Difference Method

Diagnostic value	720 degree interval difference = (B – A) – (F – E)
Misfire judgment	720 degree interval difference > Judgment value: → Judged as misfire

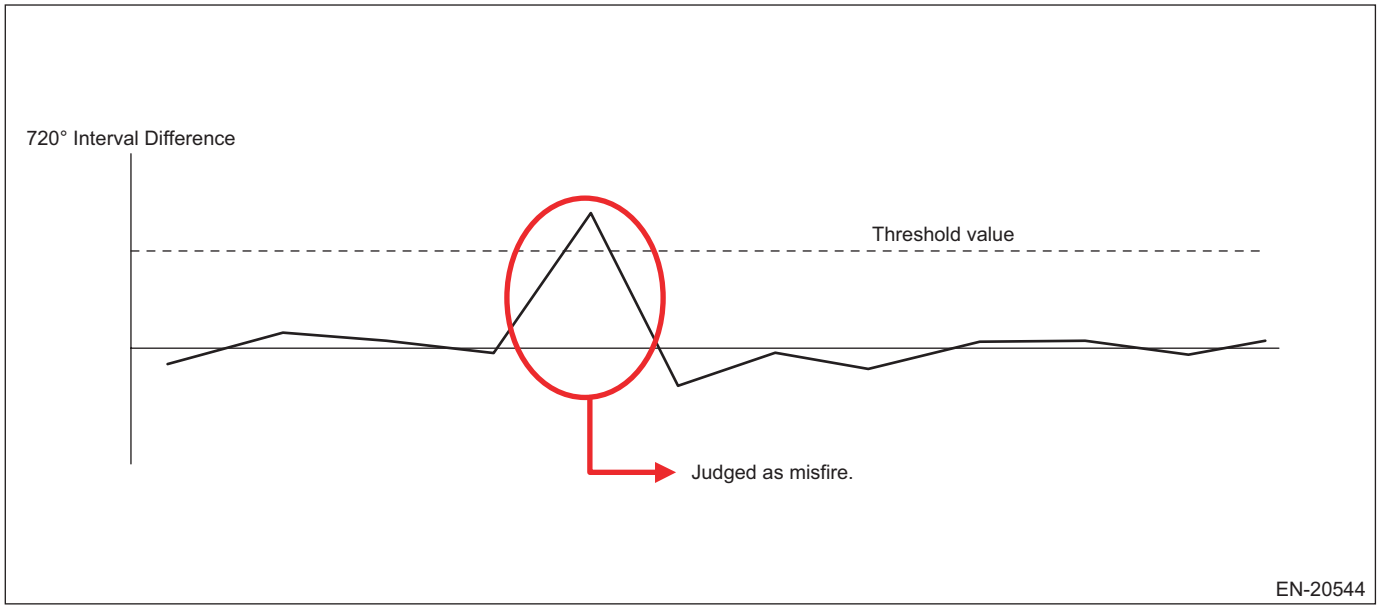

- **FTP 1.5 times misfire (misfire occurrence level which influences exhaust gas)**

Judgment Value (Judge that malfunction occurs when the misfire ratio is high in 1000 engine revs.)

Malfunction Criteria	Threshold Value
FTP emission diagnostic value	≥ 16 × 100/2000% in 1000 revs.

Time Needed for Diagnosis: 1000 engine revs.
Malfunction Indicator Light Illumination: Illuminates when malfunction occurs in 2 continuous driving cycles.

- **Catalyst-damaging misfire (misfire occurrence level that will damage catalyst)**

Judgment Value

Malfunction Criteria	Threshold Value
Catalyst-damaging misfire diagnostic value	≥ Value from Map 2

Map 2

		Intake air (g(oz)/rev)									
		0.2 (0.01)	0.4 (0.01)	0.6 (0.02)	0.8 (0.03)	1 (0.04)	1.2 (0.04)	1.4 (0.05)	1.6 (0.06)	1.8 (0.06)	2 (0.07)
Engine speed (rpm)	700	148	128	116	106	100	90	90	90	90	90
	1000	148	128	114	104	92	85	85	85	85	85
	1500	140	118	102	90	85	85	85	72	72	72
	2000	128	90	90	73	58	43	40	36	32	20
	2500	116	87	57	45	39	36	34	32	30	20
	3000	108	87	58	39	36	36	32	30	28	20
	3500	74	74	43	27	23	22	20	20	20	20
	4000	61	61	40	27	22	20	20	20	20	20
	4500	55	55	34	25	20	20	20	20	20	20
	5000	55	55	34	23	20	20	20	20	20	20
	5500	54	54	33	22	20	20	20	20	20	20
	6000	52	52	32	21	20	20	20	20	20	20
	6500	50	50	30	20	20	20	20	20	20	20
	6700	50	50	30	20	20	20	20	20	20	20

Time Needed for Diagnosis: 200 engine revs.
Malfunction Indicator Light Illumination: Illuminates as soon as a malfunction occurs.

BM:DTC P0302 CYLINDER 2 MISFIRE DETECTED

NOTE:
For the diagnostic procedure, refer to DTC P0304. <Ref. to EN(STI)(diag)-269, DTC P0304 CYLINDER 4 MISFIRE DETECTED, Diagnostic Procedure with Diagnostic Trouble Code (DTC).>

1. OUTLINE OF DIAGNOSIS

NOTE:
For the detection standard, refer to DTC P0301. <Ref. to EN(STI)(diag)-262, DTC P0301 CYLINDER 1 MISFIRE DETECTED, Diagnostic Procedure with Diagnostic Trouble Code (DTC).>

BN:DTC P0303 CYLINDER 3 MISFIRE DETECTED

NOTE:
For the diagnostic procedure, refer to DTC P0304. <Ref. to EN(STI)(diag)-269, DTC P0304 CYLINDER 4 MISFIRE DETECTED, Diagnostic Procedure with Diagnostic Trouble Code (DTC).>

1. OUTLINE OF DIAGNOSIS

NOTE:
For the detection standard, refer to DTC P0301. <Ref. to EN(STI)(diag)-262, DTC P0301 CYLINDER 1 MISFIRE DETECTED, Diagnostic Procedure with Diagnostic Trouble Code (DTC).>

BO:DTC P0304 CYLINDER 4 MISFIRE DETECTED

DTC DETECTING CONDITION:

- Detected when two consecutive driving cycles with fault occur.
- Immediately at fault recognition (A misfire which could damage catalyst occurs.)

TROUBLE SYMPTOM:

- Engine stalls.
- Improper idling
- Rough driving

CAUTION:

After servicing or replacing faulty parts, perform Clear Memory Mode <Ref. to EN(STI)(diag)-68, OPERATION, Clear Memory Mode.>, and Inspection Mode <Ref. to EN(STI)(diag)-48, PROCEDURE, Inspection Mode.>.

WIRING DIAGRAM:

Engine Electrical System <Ref. to WI-154, WIRING DIAGRAM, Engine Electrical System.>

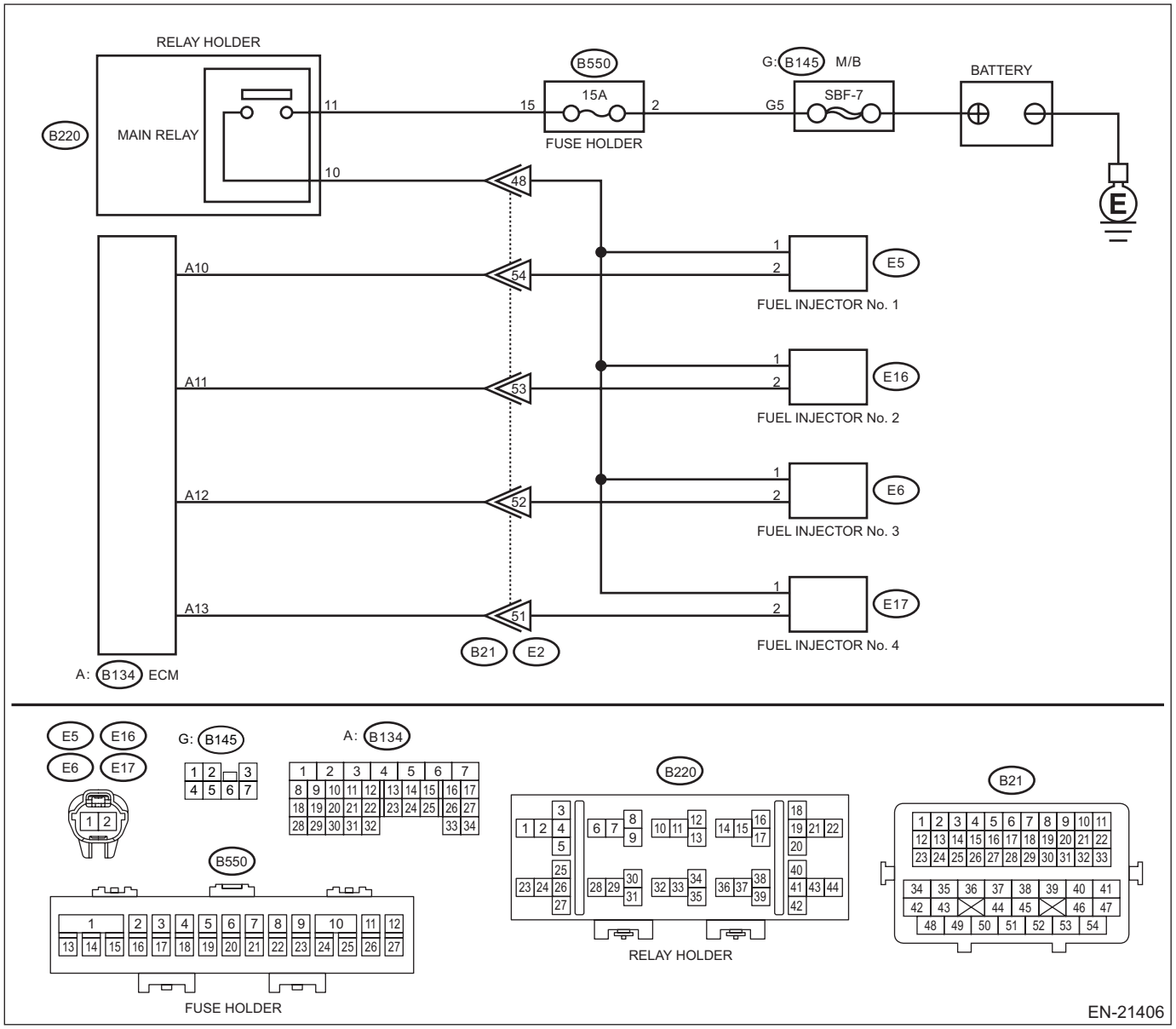

	Step	Check	Yes	No
1	**CHECK OUTPUT SIGNAL OF ECM.** 1) Turn the ignition switch to ON. 2) Measure the voltage between ECM connector and chassis ground on faulty cylinders. ***Connector & terminal*** ***#1 (B134) No. 10 (+) — Chassis ground (–):*** ***#2 (B134) No. 11 (+) — Chassis ground (–):*** ***#3 (B134) No. 12 (+) — Chassis ground (–):*** ***#4 (B134) No. 13 (+) — Chassis ground (–):***	Is the voltage 10 V or more?	Go to step **6**.	Go to step **2**.
2	**CHECK HARNESS BETWEEN ECM AND FUEL INJECTOR CONNECTOR.** 1) Turn the ignition switch to OFF. 2) Disconnect the connector from fuel injector on faulty cylinders. 3) Measure the resistance between fuel injector connector and engine ground on faulty cylinders. ***Connector & terminal*** ***#1 (E5) No. 2 — Engine ground:*** ***#2 (E16) No. 2 — Engine ground:*** ***#3 (E6) No. 2 — Engine ground:*** ***#4 (E17) No. 2 — Engine ground:***	Is the resistance 1 MΩ or more?	Go to step **3**.	Repair the short circuit to ground in harness between ECM connector and fuel injector connector.
3	**CHECK HARNESS BETWEEN ECM AND FUEL INJECTOR CONNECTOR.** Measure the resistance of harness between ECM connector and fuel injector connector on faulty cylinders. ***Connector & terminal*** ***#1 (B134) No. 10 — (E5) No. 2:*** ***#2 (B134) No. 11 — (E16) No. 2:*** ***#3 (B134) No. 12 — (E6) No. 2:*** ***#4 (B134) No. 13 — (E17) No. 2:***	Is the resistance less than 1 Ω?	Go to step **4**.	Repair the harness and connector. NOTE: In this case, repair the following item: • Open circuit in harness between ECM connector and fuel injector connector • Poor contact of coupling connector
4	**CHECK FUEL INJECTOR.** Measure the resistance between fuel injector terminals on faulty cylinder. ***Terminals*** ***No. 1 — No. 2:***	Is the resistance 5 — 20 Ω?	Go to step **5**.	Replace the faulty fuel injector. <Ref. to FU(STI)-43, Fuel Injector.>
5	**CHECK POWER SUPPLY LINE.** 1) Turn the ignition switch to ON. 2) Measure the voltage between fuel injector connector of faulty cylinders and engine ground. ***Connector & terminal*** ***#1 (E5) No. 1 (+) — Engine ground (–):*** ***#2 (E16) No. 1 (+) — Engine ground (–):*** ***#3 (E6) No. 1 (+) — Engine ground (–):*** ***#4 (E17) No. 1 (+) — Engine ground (–):***	Is the voltage 10 V or more?	Repair the poor contact of all connectors in fuel injector circuit.	Repair the harness and connector. NOTE: In this case, repair the following item: • Open circuit in harness between the main relay connector and fuel injector connector on faulty cylinders • Poor contact of coupling connector • Poor contact of main relay connector

	Step	Check	Yes	No
6	**CHECK HARNESS BETWEEN ECM AND FUEL INJECTOR CONNECTOR.** 1) Turn the ignition switch to OFF. 2) Disconnect the connector from fuel injector on faulty cylinders. 3) Turn the ignition switch to ON. 4) Measure the voltage between ECM connector and chassis ground on faulty cylinders. ***Connector & terminal*** ***#1 (B134) No. 10 (+) — Chassis ground (–):*** ***#2 (B134) No. 11 (+) — Chassis ground (–):*** ***#3 (B134) No. 12 (+) — Chassis ground (–):*** ***#4 (B134) No. 13 (+) — Chassis ground (–):***	Is the voltage 10 V or more?	Repair the short circuit to power in harness between ECM connector and fuel injector connectors.	Go to step **7**.
7	**CHECK FUEL INJECTOR.** 1) Turn the ignition switch to OFF. 2) Measure the resistance between fuel injector terminals on faulty cylinder. ***Terminals*** ***No. 1 — No. 2:***	Is the resistance 5 — 20 Ω?	Go to step **8**.	Replace the faulty fuel injector. <Ref. to FU(STI)-43, Fuel Injector.>
8	**CHECK INSTALLATION OF CAMSHAFT POSITION SENSOR/CRANKSHAFT POSITION SENSOR.**	Is the camshaft position sensor or crankshaft position sensor loosely installed?	Tighten the camshaft position sensor or crankshaft position sensor. <Ref. to FU(STI)-36, Camshaft Position Sensor.> <Ref. to FU(STI)-35, Crankshaft Position Sensor.>	Go to step **9**.
9	**CHECK CRANK SPROCKET.** Remove the timing belt cover.	Is the crank sprocket rusted or does it have broken teeth?	Replace the crank sprocket. <Ref. to ME(STI)-62, Crank Sprocket.>	Go to step **10**.
10	**CHECK INSTALLATION CONDITION OF TIMING BELT.** Turn the crankshaft, and align alignment mark on crank sprocket with alignment mark on cylinder block. ST 499987500 CRANKSHAFT SOCKET	Is the timing belt dislocated from its proper position?	Repair the installation condition of timing belt. <Ref. to ME(STI)-52, Timing Belt.>	Go to step **11**.
11	**CHECK FUEL LEVEL.**	Is the fuel meter indication higher than the “Lower” level?	Go to step **12**.	Refill the fuel so that the fuel meter indication is higher than the “Lower” level, and proceed to the next step. Go to step **12**.
12	**CHECK STATUS OF MALFUNCTION INDICATOR LIGHT.** 1) Clear the memory using the Subaru Select Monitor or general scan tool. <Ref. to EN(STI)(diag)-68, Clear Memory Mode.> 2) Start the engine, and drive the vehicle 10 minutes or more.	Does the malfunction indicator light illuminate or blink?	Go to step **14**.	Go to step **13**.

	Step	Check	Yes	No
13	**CHECK CAUSE OF MISFIRE.**	Was the cause of misfire identified when the engine is running?	Finish diagnostics operation, if the engine has no abnormality.	Repair the poor contact of connector. NOTE: In this case, repair the following item: • Poor contact of ignition coil connector • Poor contact of fuel injector connector on faulty cylinders • Poor contact of ECM connector • Poor contact of coupling connector
14	**CHECK AIR INTAKE SYSTEM.**	Is there any fault in air intake system?	Repair the air intake system. NOTE: Check the following items. • Are there air leaks or air suction caused by loose or dislocated nuts and bolts? • Are there cracks or any disconnection of hoses?	Go to step **15**.
15	**CHECK PCV VALVE.** Check the PCV valve.	Is the PCV valve free from deformation, crack or other damage?	Repair or replace the PCV valve. <Ref. to EC(STI)-54, PCV Valve.>	Go to step **16**.
16	**CHECK PCV HOSE.** Check the PCV hose.	Is the PCV hose free from deformation, crack or other damage?	Check the PCV hose assembly for cracks, damage or looseness. <Ref. to EC(STI)-52, PCV Hose Assembly.>	Go to step **17**.
17	**CHECK PCV HOSE.** Check the PCV hose.	Check the clamp of PCV hose assembly for damage or looseness.	Repair or replace the PCV valve. <Ref. to EC(STI)-52, PCV Hose Assembly.>	Go to step **18**.
18	**CHECK MISFIRE SYMPTOM.** 1) Turn the ignition switch to ON. 2) Check for DTC. <Ref. to EN(STI)(diag)-47, Read Diagnostic Trouble Code (DTC).>	Does the Subaru Select Monitor or general scan tool indicate only one DTC?	Go to step **21**.	Go to step **19**.
19	**CHECK DTC.**	Is DTC P0301 and P0303 displayed on the Subaru Select Monitor or general scan tool?	Go to step **22**.	Go to step **20**.
20	**CHECK DTC.**	Is DTC P0302 and P0304 displayed on the Subaru Select Monitor or general scan tool?	Go to step **23**.	Go to step **24**.

	Step	Check	Yes	No
21	**ONLY ONE CYLINDER.**	Is there any fault in the cylinder?	Repair or replace faulty parts. NOTE: Check the following items. • Spark plug • Ignition coil • Fuel injector • Compression	Go to DTC P0171. <Ref. to EN(STI)(diag)-229, DTC P0171 SYSTEM TOO LEAN BANK 1, Diagnostic Procedure with Diagnostic Trouble Code (DTC).>
22	**GROUP OF #1 AND #3 CYLINDERS.**	Are there any faults in #1 and #3 cylinders?	Repair or replace faulty parts. NOTE: Check the following items. • Spark plug • Ignition coil • Fuel injector • Compression • Skipping timing belt teeth	Go to DTC P0171. <Ref. to EN(STI)(diag)-229, DTC P0171 SYSTEM TOO LEAN BANK 1, Diagnostic Procedure with Diagnostic Trouble Code (DTC).>
23	**GROUP OF #2 AND #4 CYLINDERS.**	Are there any faults in #2 and #4 cylinders?	Repair or replace faulty parts. NOTE: Check the following items. • Spark plug • Ignition coil • Fuel injector • Compression • Skipping timing belt teeth	Go to DTC P0171. <Ref. to EN(STI)(diag)-229, DTC P0171 SYSTEM TOO LEAN BANK 1, Diagnostic Procedure with Diagnostic Trouble Code (DTC).>
24	**CYLINDER AT RANDOM.**	Is the engine idle rough?	Go to DTC P0171. <Ref. to EN(STI)(diag)-229, DTC P0171 SYSTEM TOO LEAN BANK 1, Diagnostic Procedure with Diagnostic Trouble Code (DTC).>	Repair or replace faulty parts. NOTE: Check the following items. • Spark plug • Ignition coil • Fuel injector • Compression

1. OUTLINE OF DIAGNOSIS

NOTE:
For the detection standard, refer to DTC P0301. <Ref. to EN(STI)(diag)-262, DTC P0301 CYLINDER 1 MISFIRE DETECTED, Diagnostic Procedure with Diagnostic Trouble Code (DTC).>

BP:DTC P0327 KNOCK/COMBUSTION VIBRATION SENSOR 1 CIRCUIT LOW BANK 1 OR SINGLE SENSOR

DTC DETECTING CONDITION:
Immediately at fault recognition
TROUBLE SYMPTOM:
- Poor driving performance
- Knocking occurs

CAUTION:
After servicing or replacing faulty parts, perform Clear Memory Mode <Ref. to EN(STI)(diag)-68, OPERATION, Clear Memory Mode.>, and Inspection Mode <Ref. to EN(STI)(diag)-48, PROCEDURE, Inspection Mode.>.
WIRING DIAGRAM:
Engine Electrical System <Ref. to WI-154, WIRING DIAGRAM, Engine Electrical System.>

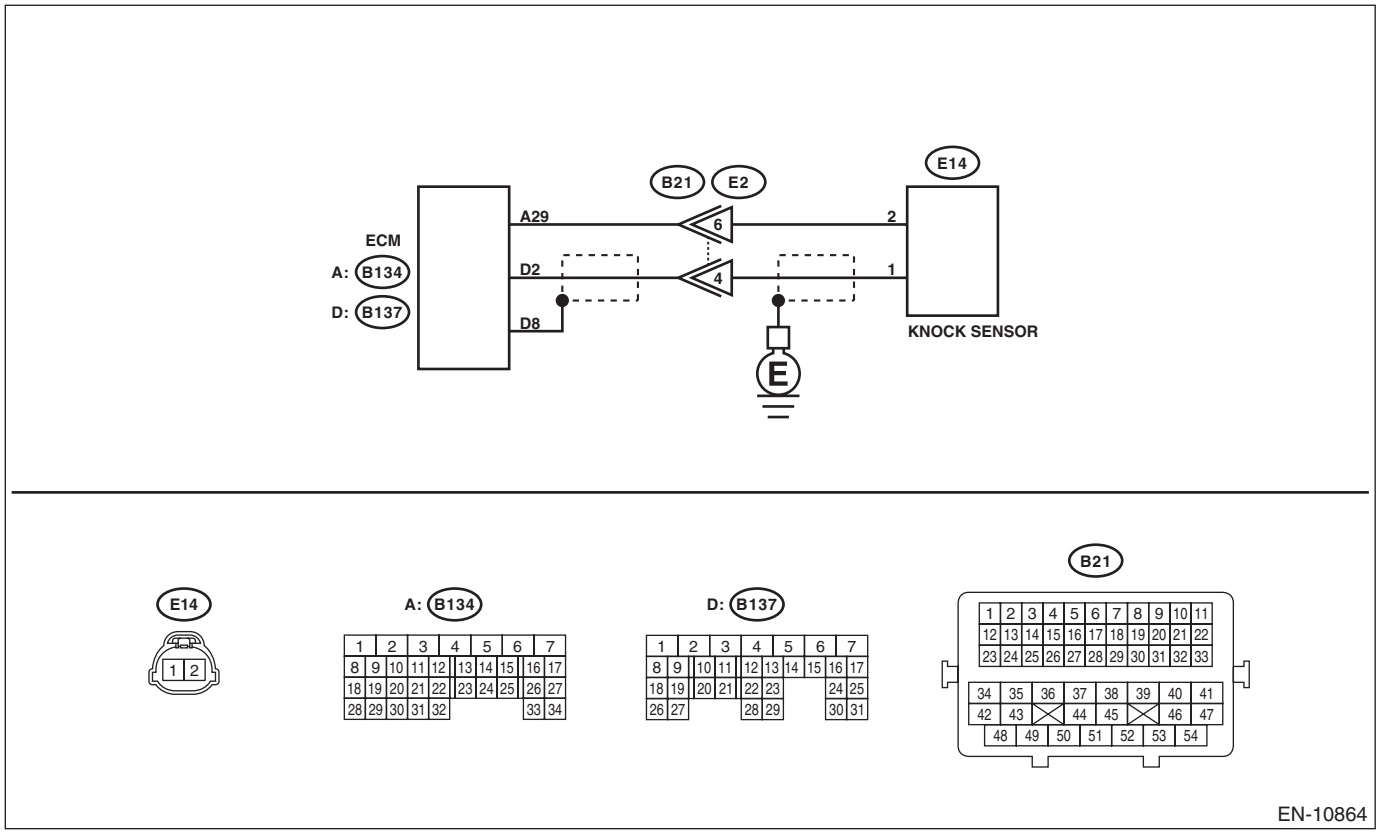

Step		Check	Yes	No
1	**CHECK HARNESS BETWEEN ECM AND KNOCK SENSOR CONNECTOR.** 1) Turn the ignition switch to OFF. 2) Disconnect the connector from ECM. 3) Measure the resistance between ECM connectors. ***Connector & terminal*** ***(B137) No. 2 — (B134) No. 29:***	Is the resistance less than 500 kΩ?	Go to step **2**.	Go to step **3**.

	Step	Check	Yes	No
2	**CHECK KNOCK SENSOR.** 1) Disconnect the connector from the knock sensor. 2) Measure the resistance between knock sensor connectors. ***Terminals*** ***No. 1 — No. 2:***	Is the resistance less than 500 kΩ?	Replace the knock sensor. <Ref. to FU(STI)-38, Knock Sensor.>	Repair the short circuit to ground in harness between ECM connector and knock sensor connector. NOTE: The harness between both connectors are shielded. Remove the shield and repair the short circuit of harness.
3	**CHECK INPUT SIGNAL OF ECM.** 1) Connect the connector to ECM. 2) Turn the ignition switch to ON. 3) Measure the voltage between ECM connector and chassis ground. ***Connector & terminal*** ***(B137) No. 2 (+) — Chassis ground (–):***	Is the voltage 2 V or more?	Even if DTC is detected, the circuit has returned to a normal condition at this time. Reproduce the failure, and then perform the diagnosis again. NOTE: In this case, temporary poor contact of connector, temporary open or short circuit of harness may be the cause.	Repair the short circuit to ground in harness between ECM connector and knock sensor connector. NOTE: The harness between both connectors are shielded. Remove the shield and repair the short circuit of harness.

1. OUTLINE OF DIAGNOSIS

Detect the open or short circuit of knock sensor.
Judge as NG if out of specification.

2. COMPONENT DESCRIPTION

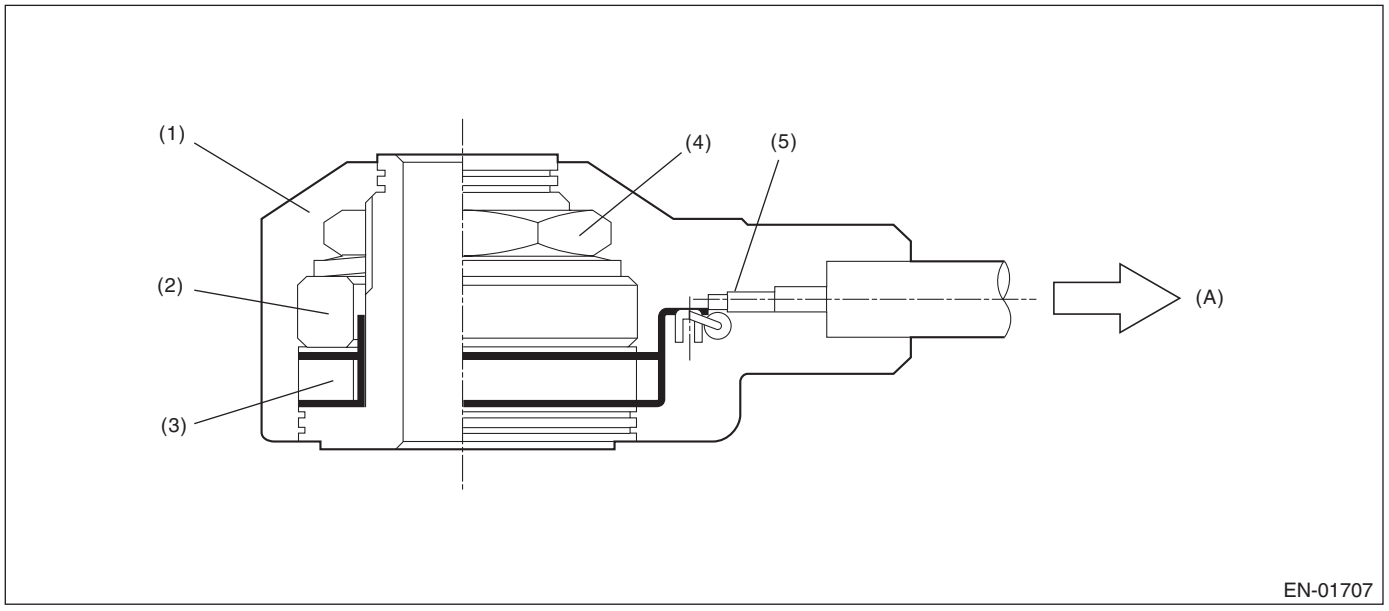

(A) To knock sensor harness

(1) Case
(2) Weight
(3) Piezoelectric element
(4) Nut
(5) Resistance

3. EXECUTION CONDITION

Secondary parameters	Execution condition
None	

4. GENERAL DRIVING CYCLE

Always perform the diagnosis continuously.

5. DIAGNOSTIC METHOD

If the duration of time while the following conditions are met is longer than the time indicated, judge as NG.

Judgment Value

Malfunction Criteria	Threshold Value
Output voltage	< 0.243 V

Time Needed for Diagnosis: 1000 ms
Malfunction Indicator Light Illumination: Illuminates as soon as a malfunction occurs.

BQ:DTC P0328 KNOCK/COMBUSTION VIBRATION SENSOR 1 CIRCUIT HIGH BANK 1 OR SINGLE SENSOR

DTC DETECTING CONDITION:
Immediately at fault recognition
TROUBLE SYMPTOM:
- Poor driving performance
- Knocking occurs

CAUTION:
After servicing or replacing faulty parts, perform Clear Memory Mode <Ref. to EN(STI)(diag)-68, OPERATION, Clear Memory Mode.>, and Inspection Mode <Ref. to EN(STI)(diag)-48, PROCEDURE, Inspection Mode.>.
WIRING DIAGRAM:
Engine Electrical System <Ref. to WI-154, WIRING DIAGRAM, Engine Electrical System.>

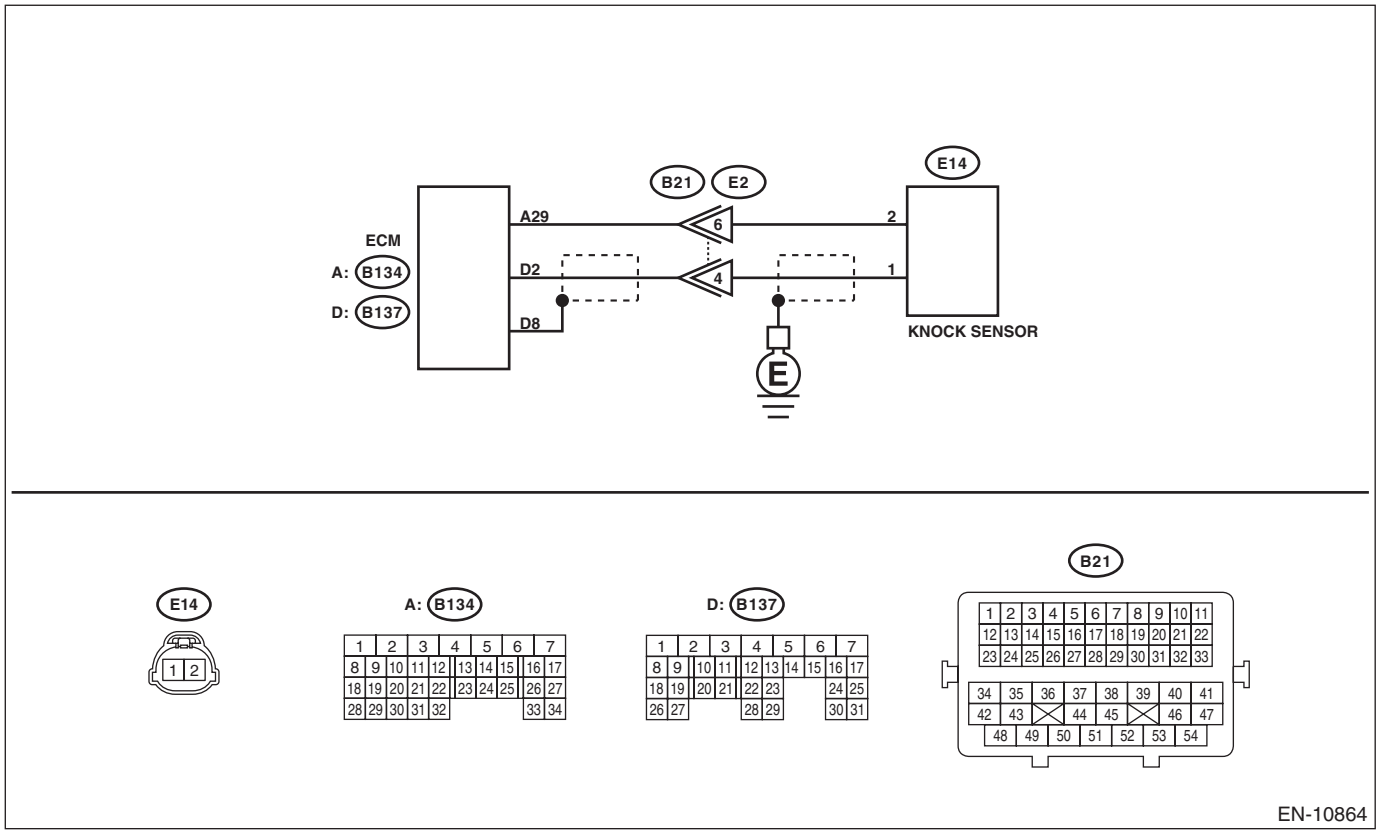

Step		Check	Yes	No
1	**CHECK HARNESS BETWEEN ECM AND KNOCK SENSOR CONNECTOR.** 1) Turn the ignition switch to OFF. 2) Disconnect the connector from ECM. 3) Measure the resistance between ECM connectors. ***Connector & terminal*** ***(B137) No. 2 — (B134) No. 29:***	Is the resistance 600 kΩ or more?	Go to step **2**.	Repair the poor contact of ECM connector.

Step		Check	Yes	No
2	**CHECK KNOCK SENSOR.** 1) Disconnect the connector from the knock sensor. 2) Measure the resistance between knock sensor terminals. ***Terminals*** ***No. 1 — No. 2:***	Is the resistance 600 kΩ or more?	Replace the knock sensor. <Ref. to FU(STI)-38, Knock Sensor.>	Repair the harness and connector. NOTE: In this case, repair the following item: • Open circuit in harness between ECM connector and knock sensor connector • Poor contact of knock sensor connector • Poor contact of coupling connector

1. OUTLINE OF DIAGNOSIS

Detect the open or short circuit of knock sensor.
Judge as NG if out of specification.

2. COMPONENT DESCRIPTION

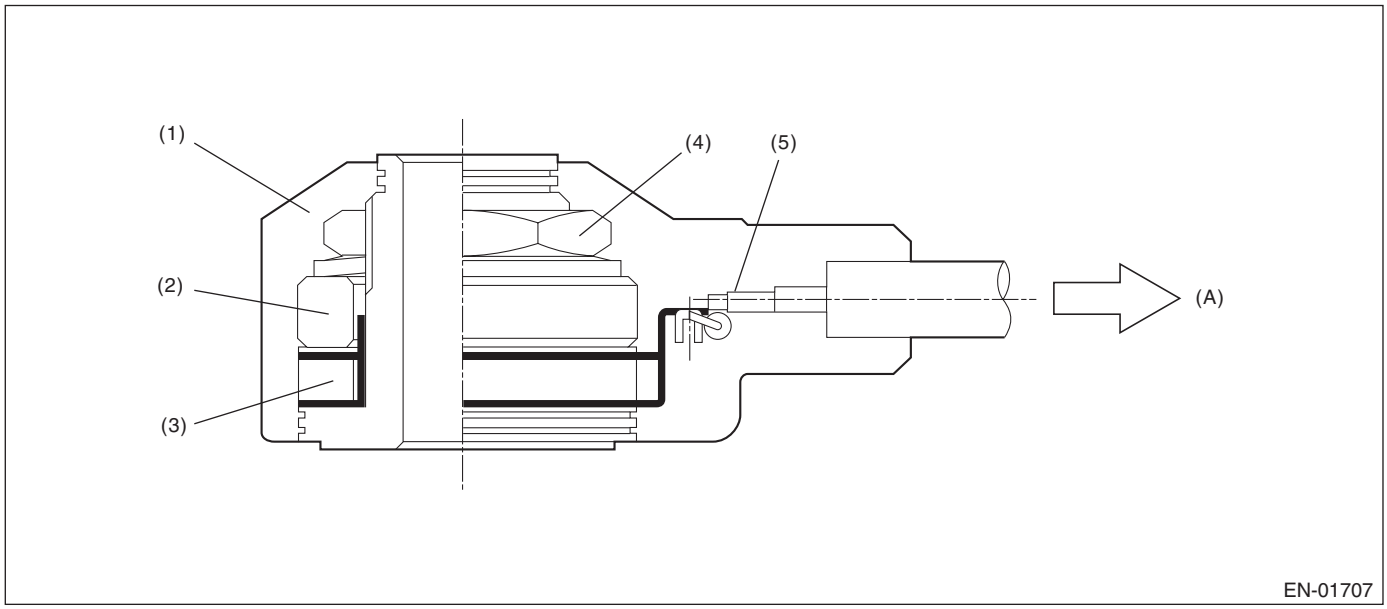

(A) To knock sensor harness

(1) Case
(2) Weight
(3) Piezoelectric element
(4) Nut
(5) Resistance

3. EXECUTION CONDITION

Secondary parameters	Execution condition
None	

4. GENERAL DRIVING CYCLE

Always perform the diagnosis continuously.

5. DIAGNOSTIC METHOD

If the duration of time while the following conditions are met is longer than the time indicated, judge as NG.

Judgment Value

Malfunction Criteria	Threshold Value
Output voltage	≥ 4.709 V

Time Needed for Diagnosis: 1000 ms
Malfunction Indicator Light Illumination: Illuminates as soon as a malfunction occurs.

BR:DTC P0335 CRANKSHAFT POSITION SENSOR "A" CIRCUIT

DTC DETECTING CONDITION:
Immediately at fault recognition
TROUBLE SYMPTOM:
- Engine stalls.
- Failure of engine to start

CAUTION:
After servicing or replacing faulty parts, perform Clear Memory Mode <Ref. to EN(STI)(diag)-68, OPERATION, Clear Memory Mode.>, and Inspection Mode <Ref. to EN(STI)(diag)-48, PROCEDURE, Inspection Mode.>.
WIRING DIAGRAM:
Engine Electrical System <Ref. to WI-154, WIRING DIAGRAM, Engine Electrical System.>

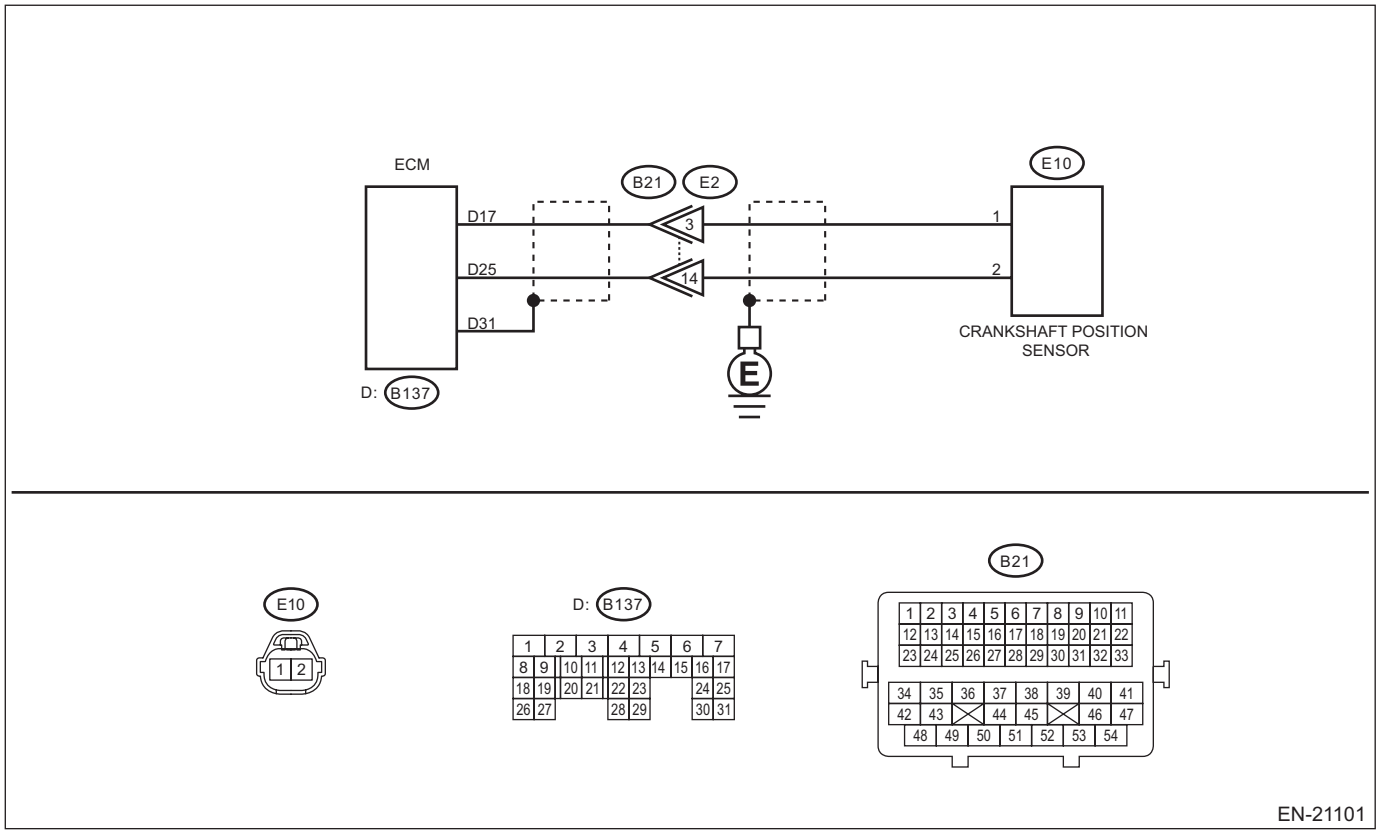

	Step	Check	Yes	No
1	**CHECK CONDITION OF CRANKSHAFT POSITION SENSOR.**	Is the crankshaft position sensor installation bolt tightened securely?	Go to step **2**.	Tighten the crankshaft position sensor installation bolt securely. <Ref. to FU(STI)-35, Crankshaft Position Sensor.>
2	**CHECK CRANKSHAFT POSITION SENSOR.** 1) Turn the ignition switch to OFF. 2) Remove the crankshaft position sensor. 3) Measure the resistance between terminals of crankshaft position sensor. ***Terminals*** ***No. 1 — No. 2:***	Is the resistance between 1 and 4 kΩ?	Go to step **3**.	Replace the crankshaft position sensor. <Ref. to FU(STI)-35, Crankshaft Position Sensor.>

Step		Check	Yes	No
3	**CHECK HARNESS BETWEEN ECM AND CRANKSHAFT POSITION SENSOR CONNECTOR.** 1) Disconnect the connector from ECM. 2) Measure the resistance of harness between ECM connector and crankshaft position sensor connector. ***Connector & terminal*** ***(B137) No. 17 — (E10) No. 1:*** ***(B137) No. 25 — (E10) No. 2:***	Is the resistance less than 1 Ω?	Repair the poor contact of ECM and crankshaft position sensor connector.	Repair the harness and connector. NOTE: In this case, repair the following item: • Open circuit in harness between ECM connector and crankshaft position sensor connector • Poor contact of coupling connector

1. OUTLINE OF DIAGNOSIS

Detect the open or short circuit of the crankshaft position sensor.
Judge as NG when the crank signal is not input even though the starter was rotated.

2. COMPONENT DESCRIPTION

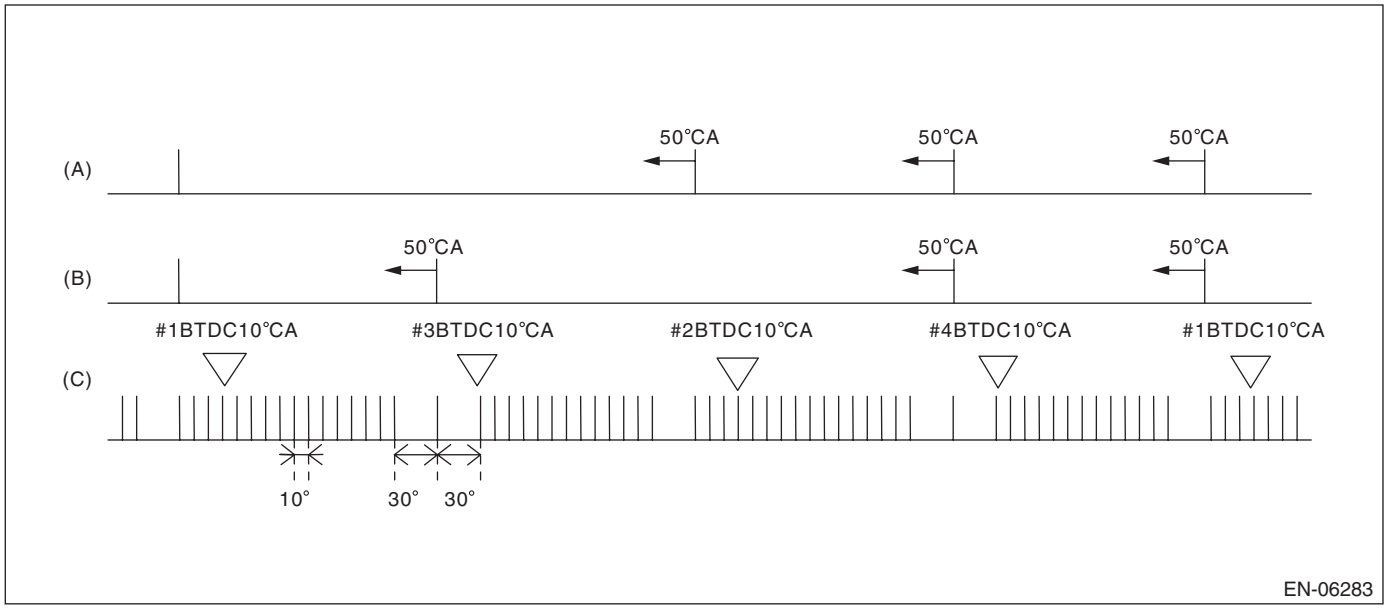

(A) Camshaft signal (RH) (B) Camshaft signal (LH) (C) Crankshaft signal

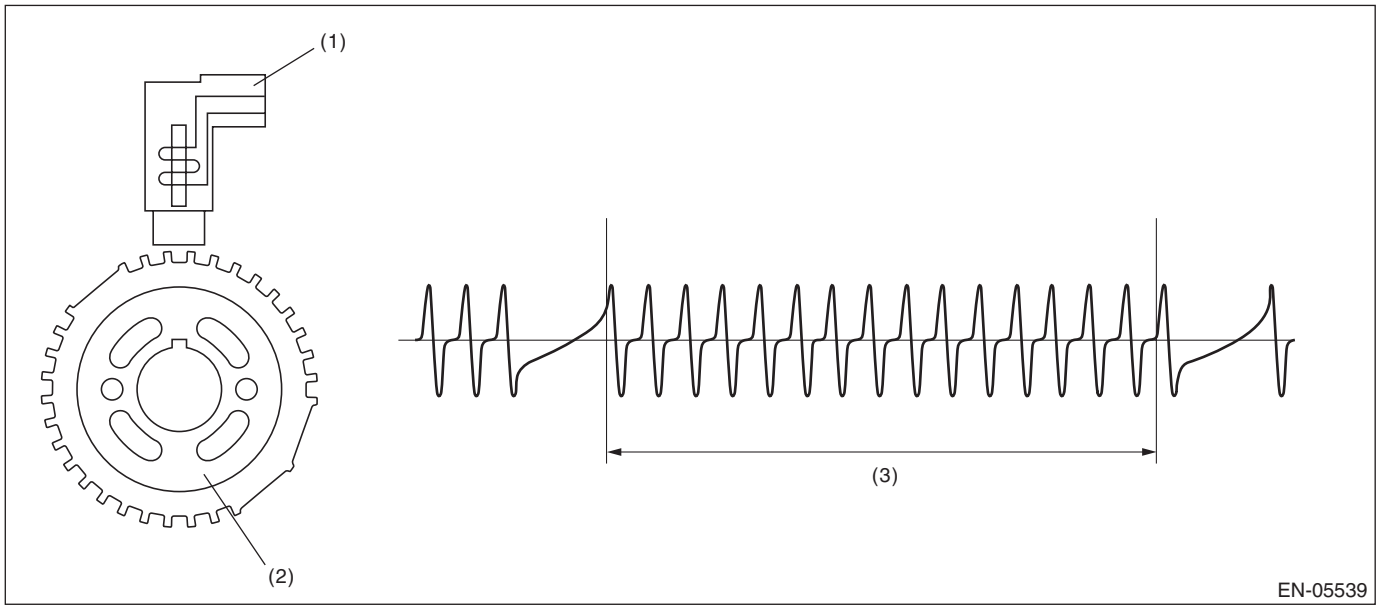

(1) Crankshaft position sensor (2) Crank sprocket (3) Crankshaft half-turn

3. EXECUTION CONDITION

Secondary parameters	Execution condition
Battery voltage	≥ 8 V

4. GENERAL DRIVING CYCLE

Always perform the diagnosis continuously.

5. DIAGNOSTIC METHOD

If the duration of time while the following conditions are met is longer than the time indicated, judge as NG.

Judgment Value

Malfunction Criteria	Threshold Value
Number of crankshaft position sensor signals during cranking	= 0

Time Needed for Diagnosis: 3000 ms
Malfunction Indicator Light Illumination: Illuminates as soon as a malfunction occurs.

BS:DTC P0336 CRANKSHAFT POSITION SENSOR "A" CIRCUIT RANGE/PERFORMANCE

DTC DETECTING CONDITION:
Detected when two consecutive driving cycles with fault occur.
TROUBLE SYMPTOM:
- Engine stalls.
- Failure of engine to start

CAUTION:
After servicing or replacing faulty parts, perform Clear Memory Mode <Ref. to EN(STI)(diag)-68, OPERATION, Clear Memory Mode.>, and Inspection Mode <Ref. to EN(STI)(diag)-48, PROCEDURE, Inspection Mode.>.

	Step	Check	Yes	No
1	**CHECK CONDITION OF CRANKSHAFT POSITION SENSOR.** Turn the ignition switch to OFF.	Is the crankshaft position sensor installation bolt tightened securely?	Go to step **2**.	Tighten the crankshaft position sensor installation bolt securely. <Ref. to FU(STI)-35, Crankshaft Position Sensor.>
2	**CHECK CRANK SPROCKET.** Remove the timing belt cover.	Are crank sprocket teeth cracked or damaged?	Replace the crank sprocket. <Ref. to ME(STI)-62, Crank Sprocket.>	Go to step **3**.
3	**CHECK INSTALLATION CONDITION OF TIMING BELT.** Turn the crankshaft, and align alignment mark on crank sprocket with alignment mark on cylinder block. ST 499987500 CRANKSHAFT SOCKET	Is the timing belt dislocated from its proper position?	Repair the installation condition of timing belt. <Ref. to ME(STI)-52, Timing Belt.>	Replace the crankshaft position sensor. <Ref. to FU(STI)-35, Crankshaft Position Sensor.>

1. OUTLINE OF DIAGNOSIS

Detect for faults in crankshaft position sensor output properties.
Judge as NG when there is a problem in the number of crankshaft signals for every revolution.

2. COMPONENT DESCRIPTION

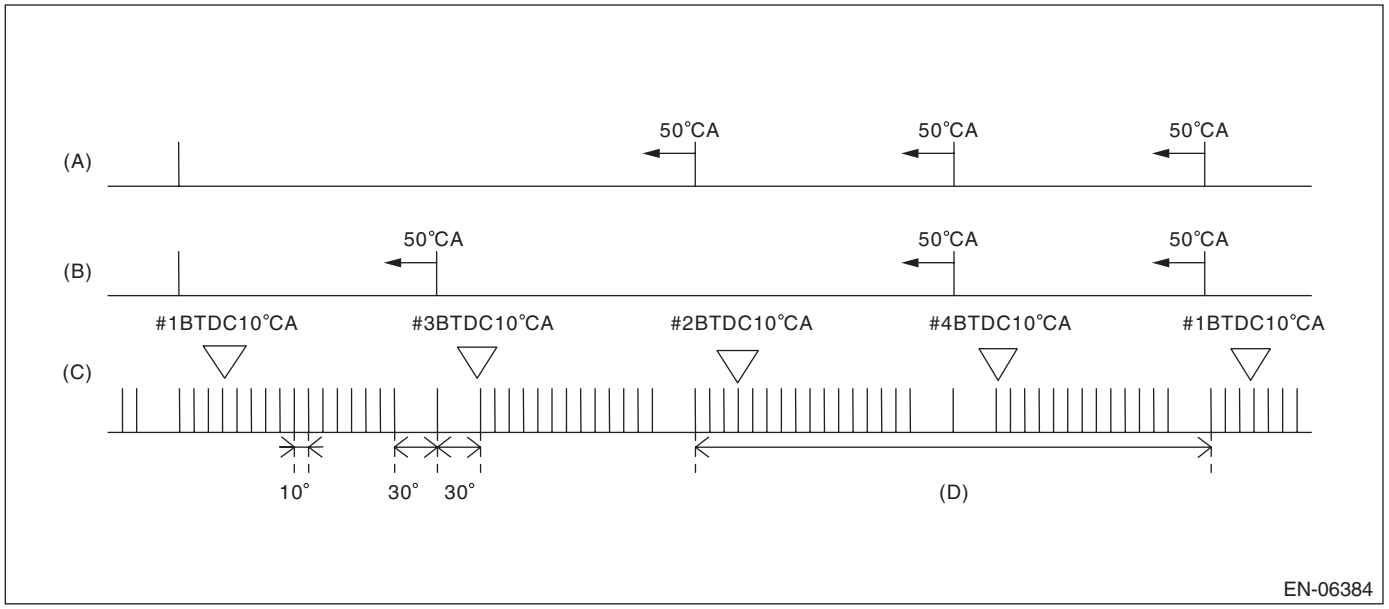

(A) Camshaft signal (RH)
(B) Camshaft signal (LH)
(C) Crankshaft signal
(D) Normal: Number of crankshaft signals = 30

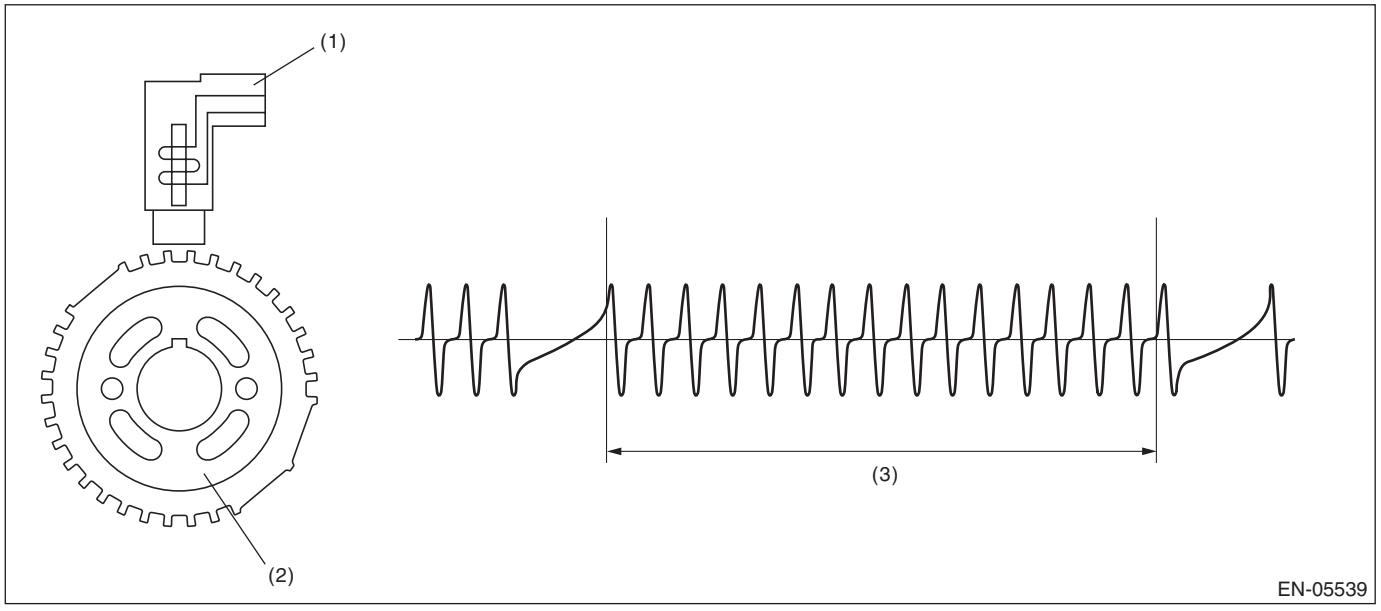

(1) Crankshaft position sensor
(2) Crank sprocket
(3) Crankshaft half-turn

3. EXECUTION CONDITION

Secondary parameters	Execution condition
Battery voltage	≥ 8 V

4. GENERAL DRIVING CYCLE

Always perform the diagnosis continuously.

5. DIAGNOSTIC METHOD

Judge as NG when the following conditions are established.

Judgment Value

Malfunction Criteria	Threshold Value
Amount of crank sensor signal during 1 rev.	≠ 30

Time Needed for Diagnosis: 10 engine revs.
Malfunction Indicator Light Illumination: Illuminates when malfunction occurs in 2 continuous driving cycles.

BT:DTC P0340 CAMSHAFT POSITION SENSOR "A" CIRCUIT BANK 1 OR SINGLE SENSOR

DTC DETECTING CONDITION:
Immediately at fault recognition
TROUBLE SYMPTOM:
- Engine stalls.
- Failure of engine to start

CAUTION:
After servicing or replacing faulty parts, perform Clear Memory Mode <Ref. to EN(STI)(diag)-68, OPERATION, Clear Memory Mode.>, and Inspection Mode <Ref. to EN(STI)(diag)-48, PROCEDURE, Inspection Mode.>.
WIRING DIAGRAM:
Engine Electrical System <Ref. to WI-154, WIRING DIAGRAM, Engine Electrical System.>

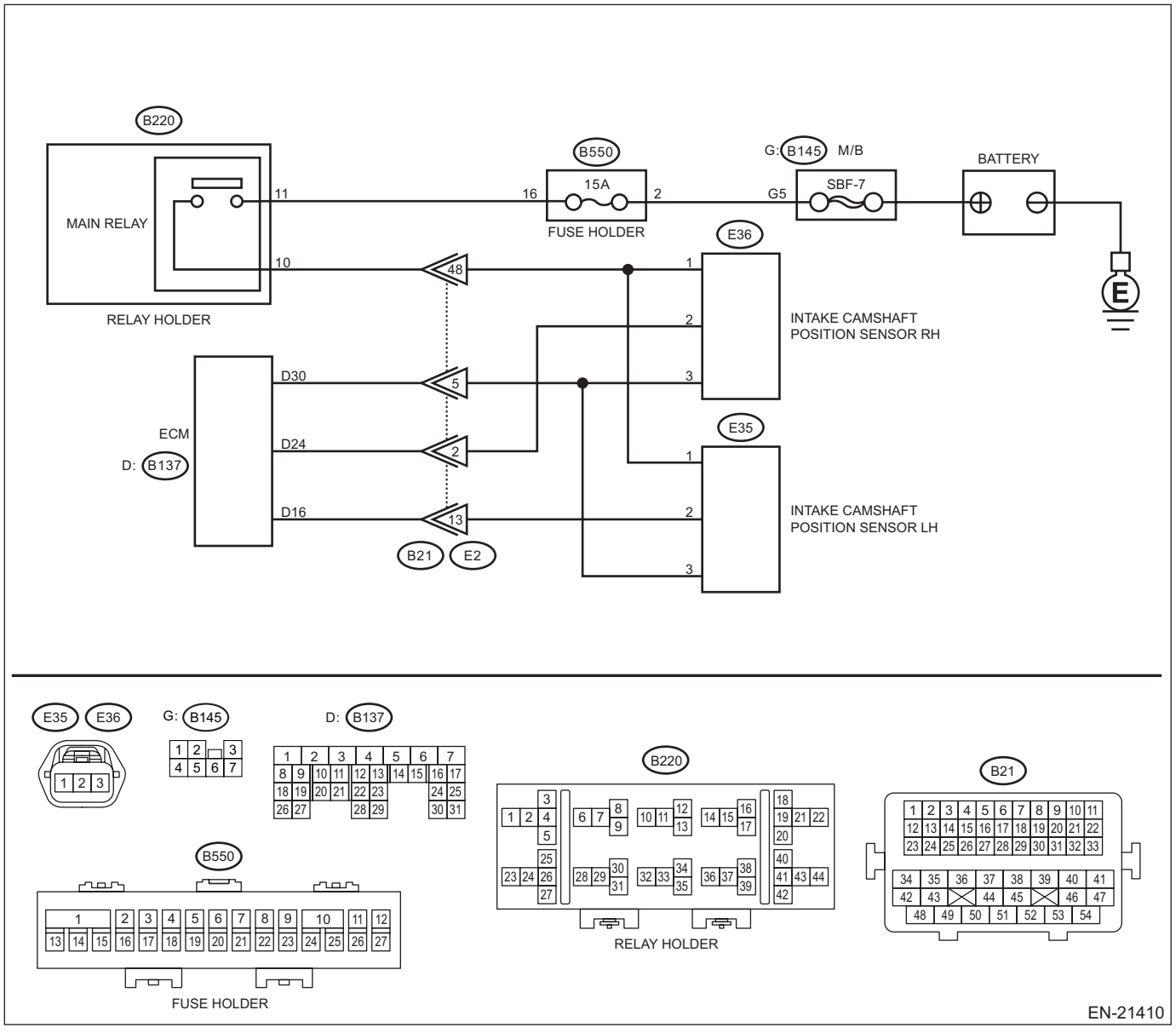

	Step	Check	Yes	No
1	**CHECK POWER SUPPLY OF CAMSHAFT POSITION SENSOR.** 1) Turn the ignition switch to OFF. 2) Disconnect the connector from camshaft position sensor. 3) Turn the ignition switch to ON. 4) Measure the voltage between camshaft position sensor connector and engine ground. ***Connector & terminal*** ***(E36) No. 1 (+) — Engine ground (–):***	Is the voltage 10 V or more?	Go to step **2**.	Repair the harness and connector. NOTE: In this case, repair the following item: • Open circuit or short circuit to ground in harness between main relay connector and camshaft position sensor connector • Poor contact of coupling connector
2	**CHECK HARNESS BETWEEN ECM AND CAMSHAFT POSITION SENSOR CONNECTOR.** 1) Turn the ignition switch to OFF. 2) Disconnect the connector from ECM. 3) Measure the resistance between ECM connector and camshaft position sensor connector. ***Connector & terminal*** ***(B137) No. 24 — (E36) No. 2:*** ***(B137) No. 30 — (E36) No. 3:***	Is the resistance less than 1 Ω?	Go to step **3**.	Repair the harness and connector. NOTE: In this case, repair the following item: • Open circuit in harness between ECM connector and camshaft position sensor connector • Poor contact of coupling connector
3	**CHECK HARNESS BETWEEN ECM AND CAMSHAFT POSITION SENSOR CONNECTOR.** Measure the resistance between camshaft position sensor connector and engine ground. ***Connector & terminal*** ***(E36) No. 2 — Engine ground:***	Is the resistance 1 MΩ or more?	Go to step **4**.	Repair short circuit to ground in harness between ECM connector and camshaft position sensor connector.
4	**CHECK HARNESS BETWEEN ECM AND CAMSHAFT POSITION SENSOR CONNECTOR.** Measure the voltage between camshaft position sensor connector and engine ground. ***Connector & terminal*** ***(E36) No. 2 (+) — Engine ground (–):***	Is the voltage 5 V or more?	Repair the short circuit to power in the harness between ECM connector and camshaft position sensor connector.	Go to step **5**.
5	**CHECK CONDITION OF CAMSHAFT POSITION SENSOR.**	Is the camshaft position sensor installation bolt tightened securely?	Go to step **6**.	Tighten the camshaft position sensor installation bolt securely. <Ref. to FU(STI)-36, Camshaft Position Sensor.>
6	**CHECK CAMSHAFT POSITION SENSOR.** Check the waveform of the camshaft position sensor. <Ref. to EN(STI)(diag)-20, Engine Control Module (ECM) I/O Signal.>	Is there any abnormality in waveform?	Replace the camshaft position sensor. <Ref. to FU(STI)-36, Camshaft Position Sensor.>	Repair the following item. • Poor contact of ECM connector • Poor contact of camshaft position sensor connector • Poor contact of coupling connector

1. OUTLINE OF DIAGNOSIS

Detect the open or short circuit of the camshaft position sensor.
When there is no camshaft position signal input continuously, judge as NG.

2. COMPONENT DESCRIPTION

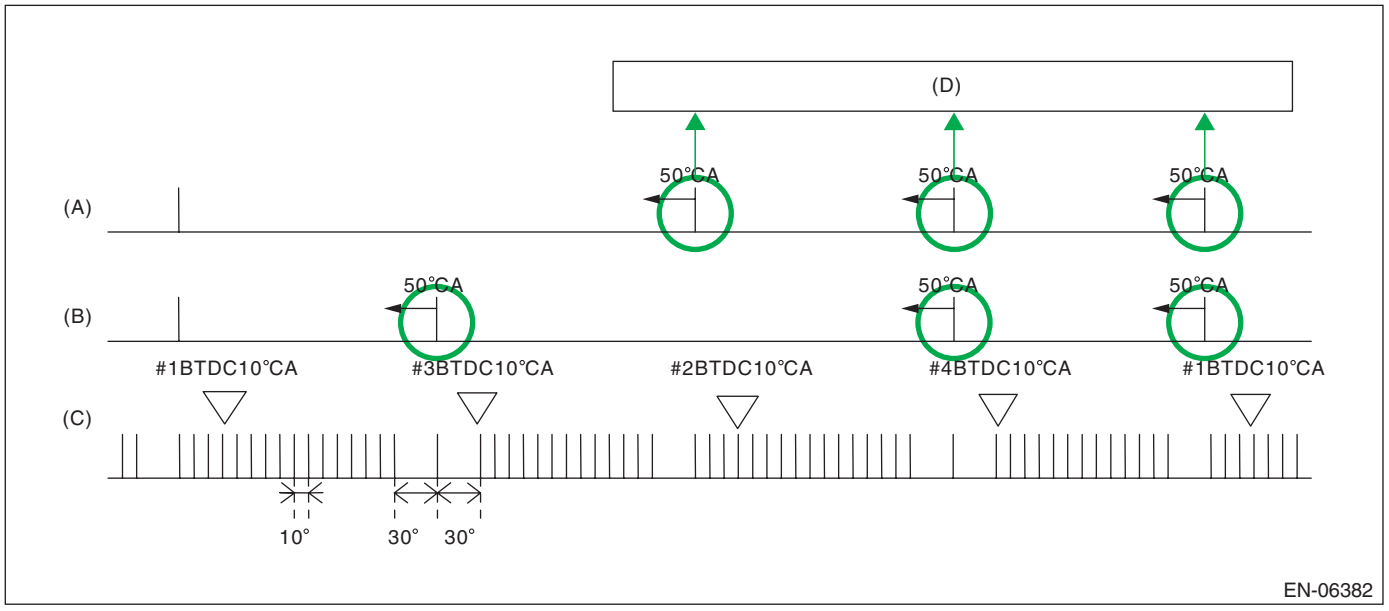

(A) Camshaft signal (RH)
(B) Camshaft signal (LH)
(C) Crankshaft signal
(D) Camshaft position signal: When normal, there will be 3 camshaft position signals for every 2 crankshaft revolutions.

3. EXECUTION CONDITION

Diagnosis 1

Secondary parameters	Execution condition
Battery voltage	≥ 8 V

Diagnosis 2

Secondary parameters	Execution condition
Battery voltage	≥ 8 V
Elapsed time after starting the engine	≥ 200 ms

4. GENERAL DRIVING CYCLE

Diagnosis 1: Perform the diagnosis only once.
Diagnosis 2: Always perform the diagnosis continuously.

5. DIAGNOSTIC METHOD

Diagnosis 1

If the duration of time while the following conditions are met is longer than the time indicated, judge as NG.

Judgment Value

Malfunction Criteria	Threshold Value
Number of camshaft position sensor signals during cranking	= 0

Time Needed for Diagnosis: 3000 ms

Diagnosis 2

Judge as NG when no input status of camshaft position sensor signal continues for (10 time(s) +2)/2 revs.

Judgment Value

Malfunction Criteria	Threshold Value
Amount of camshaft sensor signal during 0.5 revs of crankshaft	= 0

Time Needed for Diagnosis: (10 time(s) +2)/2 engine revs.

Malfunction Indicator Light Illumination: Illuminates as soon as a malfunction occurs.

BU:DTC P0341 CAMSHAFT POSITION SENSOR "A" CIRCUIT RANGE/PERFORMANCE BANK 1 OR SINGLE SENSOR

NOTE:
For the diagnostic procedure, refer to DTC P0340. <Ref. to EN(STI)(diag)-287, DTC P0340 CAMSHAFT POSITION SENSOR "A" CIRCUIT BANK 1 OR SINGLE SENSOR, Diagnostic Procedure with Diagnostic Trouble Code (DTC).>

1. OUTLINE OF DIAGNOSIS

Detect the malfunction of camshaft position sensor property.
Judge as NG when the number of camshaft signals remains abnormal.

2. COMPONENT DESCRIPTION

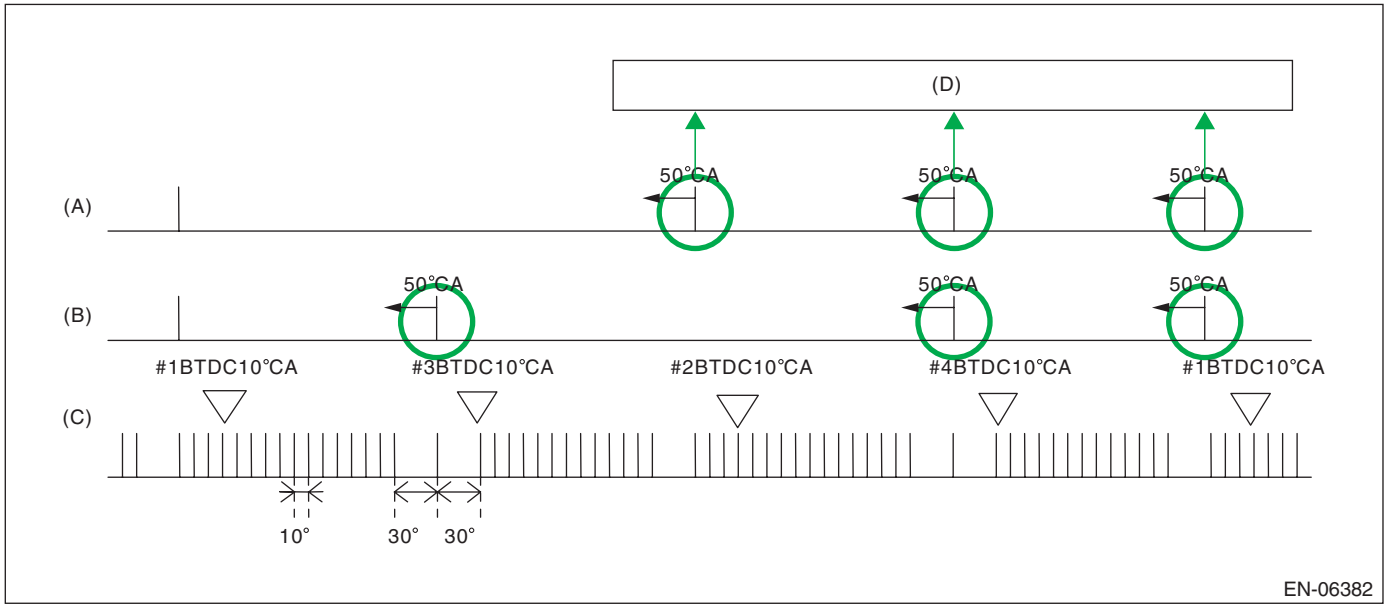

(A) Camshaft signal (RH)
(B) Camshaft signal (LH)
(C) Crankshaft signal
(D) Camshaft position signal: When normal, there will be 3 camshaft position signals for every 2 crankshaft revolutions.

3. EXECUTION CONDITION

Diagnosis 1

Secondary parameters	Execution condition
Battery voltage	≥ 8 V
Elapsed time after starting the engine	≥ 200 ms

Diagnosis 2

Secondary parameters	Execution condition
Battery voltage	≥ 8 V
Elapsed time after starting the engine	≥ 200 ms
Engine speed	< 5000 rpm

Diagnosis 3

Secondary parameters	Execution condition
Battery voltage	≥ 8 V
Elapsed time after starting the engine	≥ 200 ms
Engine speed	≥ 5000 rpm

4. GENERAL DRIVING CYCLE

Always perform the diagnosis continuously.

5. DIAGNOSTIC METHOD

Diagnosis 1: Judge as NG when the number of camshaft position sensor signals in two crankshaft revolutions is less than 3 time(s).

Judgment Value

Malfunction Criteria	Threshold Value
Amount of camshaft sensor signal during 2 revs of crankshaft	< 3 time(s)

Diagnosis 2: Judge as NG when the number of camshaft position sensor signals in two crankshaft revolutions is more than 3 time(s).

Judgment Value

Malfunction Criteria	Threshold Value
Amount of camshaft sensor signal during 2 revs of crankshaft	> 3 time(s)

Diagnosis 3: Judge as NG when the number of camshaft position sensor signals in two crankshaft revolutions is more than 12 time(s).

Judgment Value

Malfunction Criteria	Threshold Value
Amount of camshaft sensor signal during 2 revs of crankshaft	> 12 time(s)

Time Needed for Diagnosis: Two engine revs. × 4 time(s)
Malfunction Indicator Light Illumination: Illuminates as soon as a malfunction occurs.

BV:DTC P0345 CAMSHAFT POSITION SENSOR "A" CIRCUIT BANK 2

DTC DETECTING CONDITION:
Immediately at fault recognition
TROUBLE SYMPTOM:

- Engine stalls.
- Failure of engine to start

CAUTION:
After servicing or replacing faulty parts, perform Clear Memory Mode <Ref. to EN(STI)(diag)-68, OPERATION, Clear Memory Mode.>, and Inspection Mode <Ref. to EN(STI)(diag)-48, PROCEDURE, Inspection Mode.>.
WIRING DIAGRAM:
Engine Electrical System <Ref. to WI-154, WIRING DIAGRAM, Engine Electrical System.>

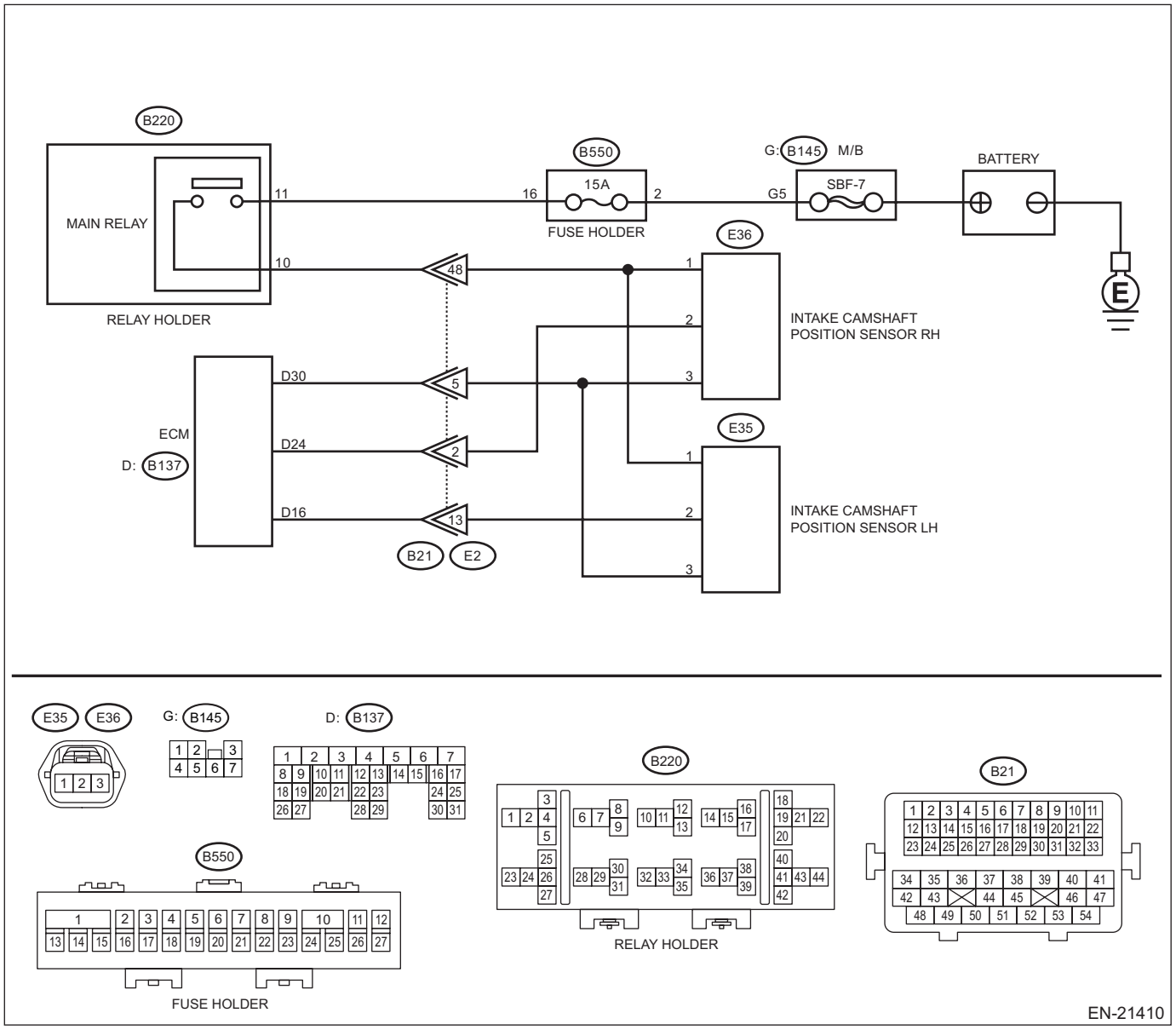

	Step	Check	Yes	No
1	**CHECK POWER SUPPLY OF CAMSHAFT POSITION SENSOR.** 1) Turn the ignition switch to OFF. 2) Disconnect the connector from camshaft position sensor. 3) Turn the ignition switch to ON. 4) Measure the voltage between camshaft position sensor connector and engine ground. ***Connector & terminal*** ***(E35) No. 1 (+) — Engine ground (–):***	Is the voltage 10 V or more?	Go to step **2**.	Repair the harness and connector. NOTE: In this case, repair the following item: • Open circuit or short circuit to ground in harness between main relay connector and camshaft position sensor connector • Poor contact of coupling connector
2	**CHECK HARNESS BETWEEN ECM AND CAMSHAFT POSITION SENSOR CONNECTOR.** 1) Turn the ignition switch to OFF. 2) Disconnect the connector from ECM. 3) Measure the resistance between ECM connector and camshaft position sensor connector. ***Connector & terminal*** ***(B137) No. 16 — (E35) No. 2:*** ***(B137) No. 30 — (E35) No. 3:***	Is the resistance less than 1 Ω?	Go to step **3**.	Repair the harness and connector. NOTE: In this case, repair the following item: • Open circuit in harness between ECM connector and camshaft position sensor connector • Poor contact of coupling connector
3	**CHECK HARNESS BETWEEN ECM AND CAMSHAFT POSITION SENSOR CONNECTOR.** Measure the resistance between camshaft position sensor connector and engine ground. ***Connector & terminal*** ***(E35) No. 2 — Engine ground:***	Is the resistance 1 MΩ or more?	Go to step **4**.	Repair short circuit to ground in harness between ECM connector and camshaft position sensor connector.
4	**CHECK HARNESS BETWEEN ECM AND CAMSHAFT POSITION SENSOR CONNECTOR.** Measure the voltage between camshaft position sensor connector and engine ground. ***Connector & terminal*** ***(E35) No. 2 (+) — Engine ground (–):***	Is the voltage 5 V or more?	Repair the short circuit to power in the harness between ECM connector and camshaft position sensor connector.	Go to step **5**.
5	**CHECK CONDITION OF CAMSHAFT POSITION SENSOR.**	Is the camshaft position sensor installation bolt tightened securely?	Go to step **6**.	Tighten the camshaft position sensor installation bolt securely. <Ref. to FU(STI)-36, Camshaft Position Sensor.>
6	**CHECK CAMSHAFT POSITION SENSOR.** Check the waveform of the camshaft position sensor. <Ref. to EN(STI)(diag)-20, Engine Control Module (ECM) I/O Signal.>	Is there any abnormality in waveform?	Replace the camshaft position sensor. <Ref. to FU(STI)-36, Camshaft Position Sensor.>	Repair the following item. • Poor contact of ECM connector • Poor contact of camshaft position sensor connector • Poor contact of coupling connector

1. OUTLINE OF DIAGNOSIS

NOTE:
For the detection standard, refer to DTC P0340. <Ref. to EN(STI)(diag)-287, DTC P0340 CAMSHAFT POSITION SENSOR "A" CIRCUIT BANK 1 OR SINGLE SENSOR, Diagnostic Procedure with Diagnostic Trouble Code (DTC).>

BW:DTC P0346 CAMSHAFT POSITION SENSOR "A" CIRCUIT RANGE/PERFORMANCE BANK 2

NOTE:
For the diagnostic procedure, refer to DTC P0345. <Ref. to EN(STI)(diag)-293, DTC P0345 CAMSHAFT POSITION SENSOR "A" CIRCUIT BANK 2, Diagnostic Procedure with Diagnostic Trouble Code (DTC).>

1. OUTLINE OF DIAGNOSIS

NOTE:
For the detection standard, refer to DTC P0341. <Ref. to EN(STI)(diag)-291, DTC P0341 CAMSHAFT POSITION SENSOR "A" CIRCUIT RANGE/PERFORMANCE BANK 1 OR SINGLE SENSOR, Diagnostic Procedure with Diagnostic Trouble Code (DTC).>

BX:DTC P0351 IGNITION COIL "A" PRIMARY CONTROL CIRCUIT/OPEN

DTC DETECTING CONDITION:
Immediately at fault recognition
TROUBLE SYMPTOM:
- Improper idling
- Poor driving performance

CAUTION:
After servicing or replacing faulty parts, perform Clear Memory Mode <Ref. to EN(STI)(diag)-68, OPERATION, Clear Memory Mode.>, and Inspection Mode <Ref. to EN(STI)(diag)-48, PROCEDURE, Inspection Mode.>.

WIRING DIAGRAM:

Engine Electrical System <Ref. to WI-154, WIRING DIAGRAM, Engine Electrical System.>

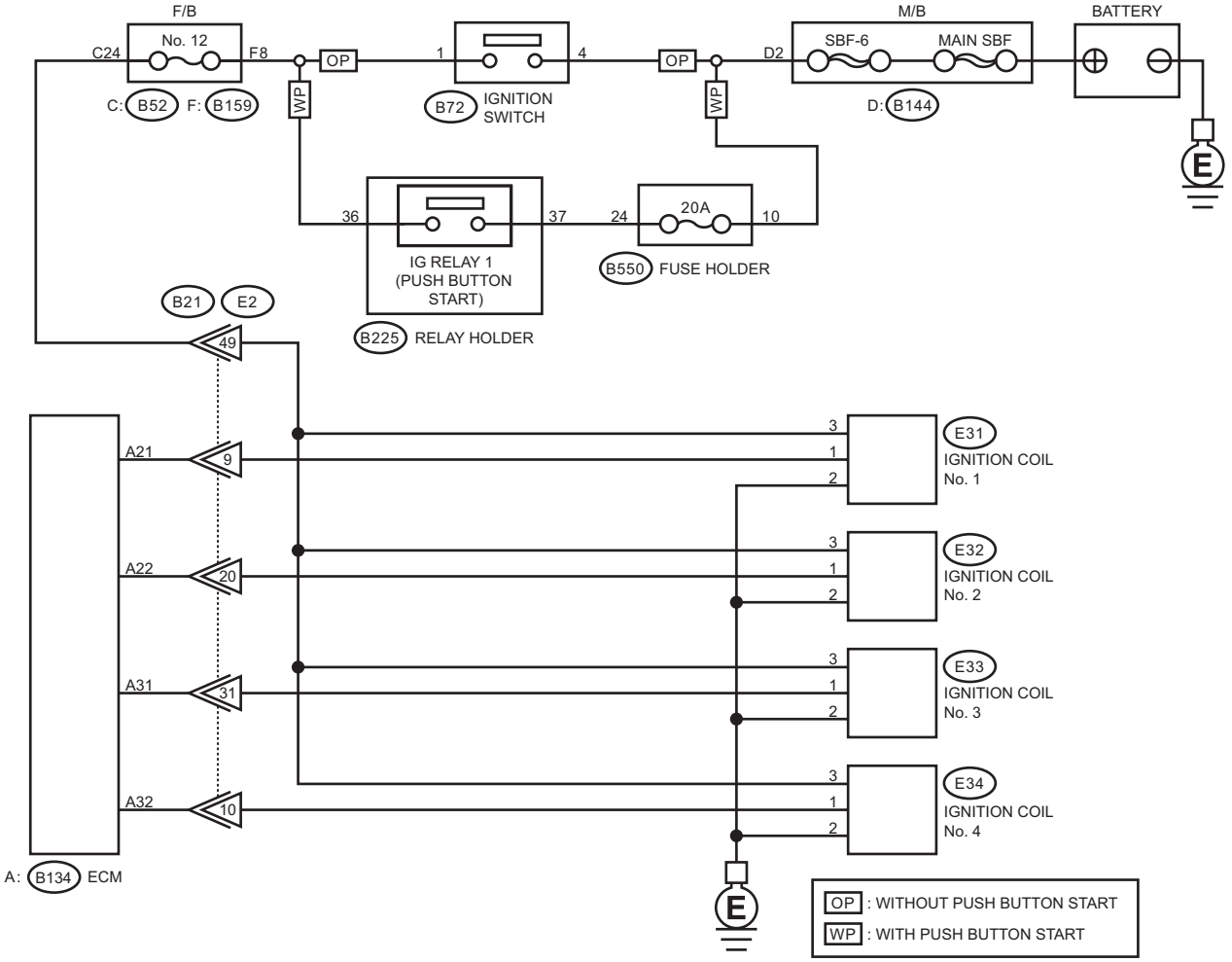

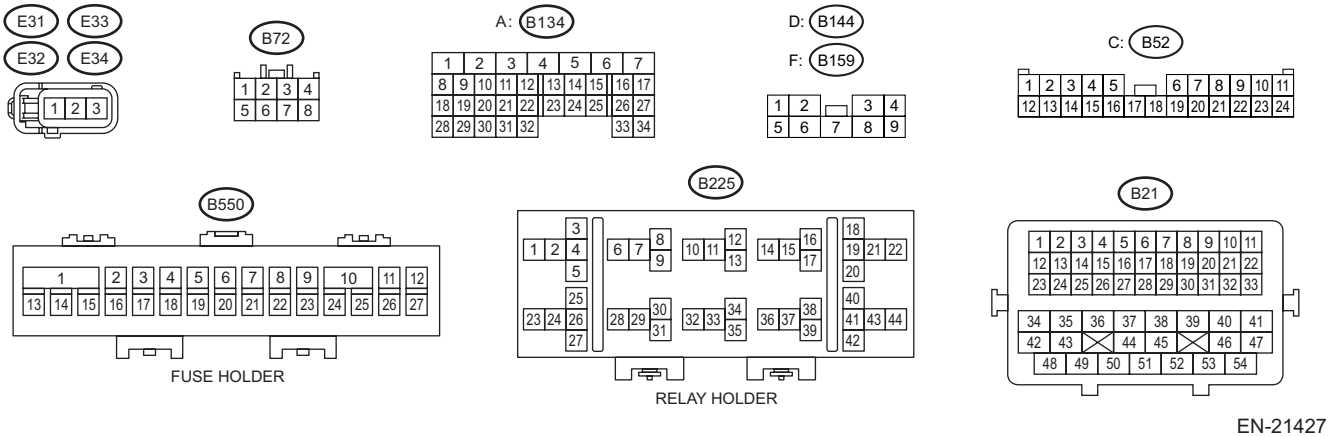

EN-21427

	Step	Check	Yes	No
1	**CHECK IGNITION COIL POWER SUPPLY CIRCUIT.** 1) Turn the ignition switch to OFF. 2) Disconnect the connector from ignition coil. 3) Turn the ignition switch to ON. 4) Measure the voltage between ignition coil connector and engine ground. ***Connector & terminal*** ***DTC P0351; (E31) No. 3 (+) — Engine ground (–):*** ***DTC P0352; (E32) No. 3 (+) — Engine ground (–):*** ***DTC P0353; (E33) No. 3 (+) — Engine ground (–):*** ***DTC P0354; (E34) No. 3 (+) — Engine ground (–):***	Is the voltage 10 V or more?	Go to step **2**.	Repair the harness and connector. NOTE: In this case, repair the following item: • Open or short to ground in harness of power supply circuit • Blown out of fuse • Poor contact of coupling connector
2	**CHECK HARNESS OF IGNITION COIL GROUND CIRCUIT.** 1) Turn the ignition switch to OFF. 2) Measure the resistance of harness between ignition coil connector and engine ground. ***Connector & terminal*** ***DTC P0351; (E31) No. 2 — Engine ground:*** ***DTC P0352; (E32) No. 2 — Engine ground:*** ***DTC P0353; (E33) No. 2 — Engine ground:*** ***DTC P0354; (E34) No. 2 — Engine ground:***	Is the resistance less than 5 Ω?	Go to step **3**.	Repair the open circuit in harness between ignition coil connector and engine grounding terminal.
3	**CHECK HARNESS BETWEEN ECM AND IGNITION COIL CONNECTOR.** 1) Disconnect the connector from ECM. 2) Measure the resistance between ignition coil connector and engine ground. ***Connector & terminal*** ***DTC P0351; (E31) No. 1 — Engine ground:*** ***DTC P0352; (E32) No. 1 — Engine ground:*** ***DTC P0353; (E33) No. 1 — Engine ground:*** ***DTC P0354; (E34) No. 1 — Engine ground:***	Is the resistance 1 MΩ or more?	Go to step **4**.	Repair the ground short circuit of harness between ECM connector and ignition coil connector.
4	**CHECK HARNESS BETWEEN ECM AND IGNITION COIL CONNECTOR.** Measure the resistance of harness between ECM connector and ignition coil connector. ***Connector & terminal*** ***DTC P0351; (B134) No. 21 — (E31) No. 1:*** ***DTC P0352; (B134) No. 22 — (E32) No. 1:*** ***DTC P0353; (B134) No. 31 — (E33) No. 1:*** ***DTC P0354; (B134) No. 32 — (E34) No. 1:***	Is the resistance less than 1 Ω?	Go to step **5**.	Repair the harness and connector. NOTE: In this case, repair the following item: • Open circuit of harness between ECM connector and the ignition coil connector • Poor contact of coupling connector
5	**CHECK FOR POOR CONTACT.** Check for poor contact of ECM connector.	Is there poor contact of ECM connector?	Repair the poor contact of ECM connector.	Go to step **6**.
6	**CHECK SPARK PLUG CONDITION.** 1) Remove the spark plug of the corresponding cylinder. <Ref. to IG(STI)-4, REMOVAL, Spark Plug.> 2) Check the spark plug condition. <Ref. to IG(STI)-5, INSPECTION, Spark Plug.>	Is the check result OK?	Replace the ignition coil. <Ref. to IG(STI)-7, Ignition Coil.>	Replace the spark plug. <Ref. to IG(STI)-4, Spark Plug.>

1. OUTLINE OF DIAGNOSIS

Based on the self-diagnostic result of the ignition coil driving IC, judge the ignition coil driving circuit as normal or abnormal.
The ignition coil driving IC detects “no ignition” status as a malfunction.

2. EXECUTION CONDITION

Secondary parameters	Execution condition
Battery voltage	≥ 10.9 V
Elapsed time after starting the engine	> 1 s
Engine speed	≥ 500 rpm

3. GENERAL DRIVING CYCLE

Always perform the diagnosis continuously.

4. DIAGNOSTIC METHOD

Judge as NG when the following conditions are established.

Judgment Value

Malfunction Criteria	Threshold Value
Ignition driving IC information	Trouble

Time Needed for Diagnosis: 10 time(s) × 256/1000 s
Malfunction Indicator Light Illumination: Illuminates as soon as a malfunction occurs.

BY:DTC P0352 IGNITION COIL "B" PRIMARY CONTROL CIRCUIT/OPEN

NOTE:
For the diagnostic procedure, refer to DTC P0351. <Ref. to EN(STI)(diag)-296, DTC P0351 IGNITION COIL "A" PRIMARY CONTROL CIRCUIT/OPEN, Diagnostic Procedure with Diagnostic Trouble Code (DTC).>

1. OUTLINE OF DIAGNOSIS

NOTE:
For the detection standard, refer to DTC P0351. <Ref. to EN(STI)(diag)-296, DTC P0351 IGNITION COIL "A" PRIMARY CONTROL CIRCUIT/OPEN, Diagnostic Procedure with Diagnostic Trouble Code (DTC).>

BZ:DTC P0353 IGNITION COIL "C" PRIMARY CONTROL CIRCUIT/OPEN

NOTE:
For the diagnostic procedure, refer to DTC P0351. <Ref. to EN(STI)(diag)-296, DTC P0351 IGNITION COIL "A" PRIMARY CONTROL CIRCUIT/OPEN, Diagnostic Procedure with Diagnostic Trouble Code (DTC).>

1. OUTLINE OF DIAGNOSIS

NOTE:
For the detection standard, refer to DTC P0351. <Ref. to EN(STI)(diag)-296, DTC P0351 IGNITION COIL "A" PRIMARY CONTROL CIRCUIT/OPEN, Diagnostic Procedure with Diagnostic Trouble Code (DTC).>

CA:DTC P0354 IGNITION COIL "D" PRIMARY CONTROL CIRCUIT/OPEN

NOTE:
For the diagnostic procedure, refer to DTC P0351. <Ref. to EN(STI)(diag)-296, DTC P0351 IGNITION COIL "A" PRIMARY CONTROL CIRCUIT/OPEN, Diagnostic Procedure with Diagnostic Trouble Code (DTC).>

1. OUTLINE OF DIAGNOSIS

NOTE:
For the detection standard, refer to DTC P0351. <Ref. to EN(STI)(diag)-296, DTC P0351 IGNITION COIL "A" PRIMARY CONTROL CIRCUIT/OPEN, Diagnostic Procedure with Diagnostic Trouble Code (DTC).>

CB:DTC P0365 CAMSHAFT POSITION SENSOR "B" CIRCUIT BANK 1

DTC DETECTING CONDITION:
Immediately at fault recognition
TROUBLE SYMPTOM:

- Engine stalls.
- Failure of engine to start

CAUTION:
After servicing or replacing faulty parts, perform Clear Memory Mode <Ref. to EN(STI)(diag)-68, OPERATION, Clear Memory Mode.>, and Inspection Mode <Ref. to EN(STI)(diag)-48, PROCEDURE, Inspection Mode.>.
WIRING DIAGRAM:
Engine Electrical System <Ref. to WI-154, WIRING DIAGRAM, Engine Electrical System.>

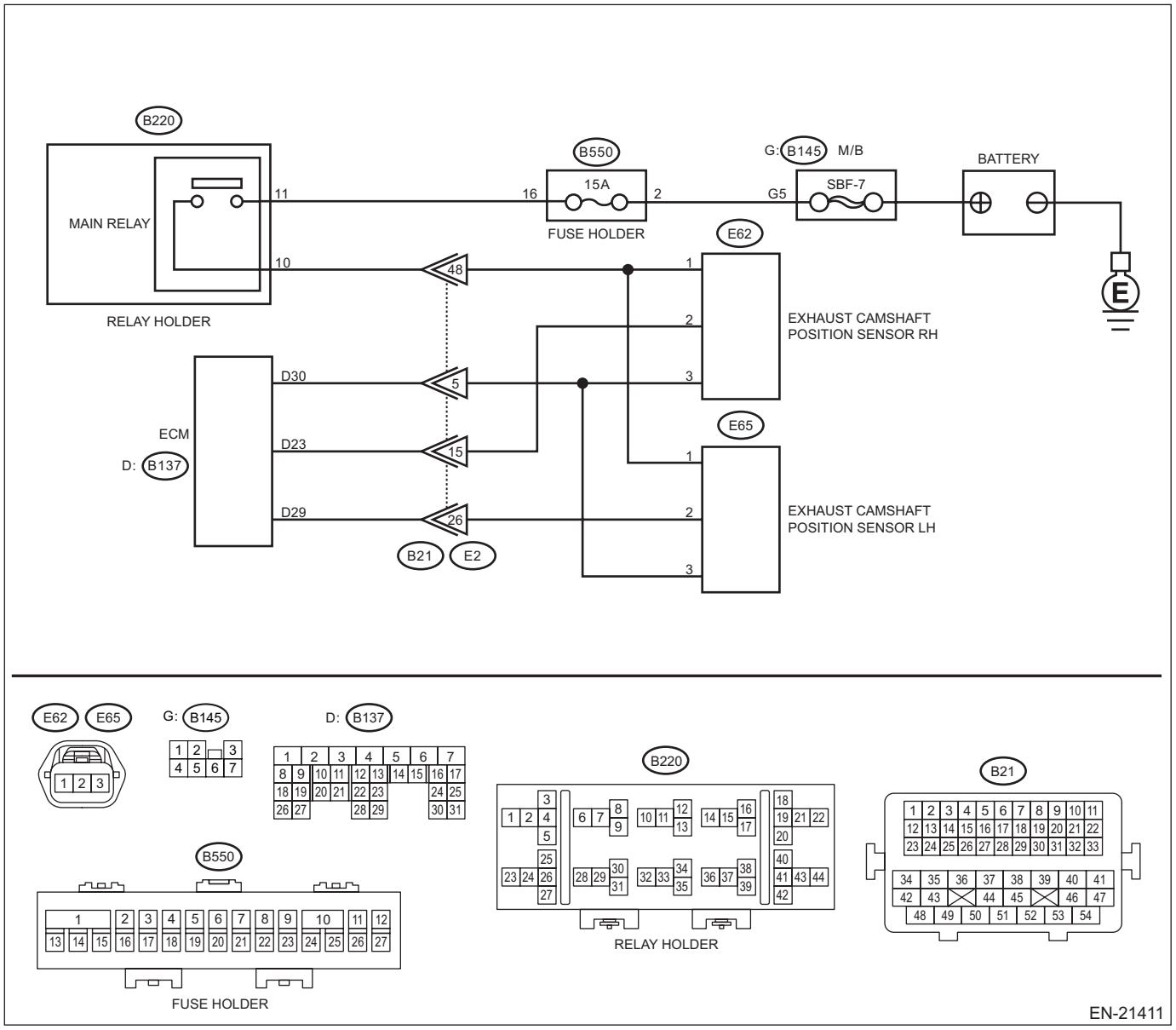

	Step	Check	Yes	No
1	**CHECK POWER SUPPLY OF CAMSHAFT POSITION SENSOR.** 1) Turn the ignition switch to OFF. 2) Disconnect the connector from camshaft position sensor. 3) Turn the ignition switch to ON. 4) Measure the voltage between camshaft position sensor connector and engine ground. ***Connector & terminal*** ***(E62) No. 1 (+) — Engine ground (–):***	Is the voltage 10 V or more?	Go to step **2**.	Repair the harness and connector. NOTE: In this case, repair the following item: • Open circuit or short circuit to ground in harness between main relay connector and camshaft position sensor connector • Poor contact of coupling connector
2	**CHECK HARNESS BETWEEN ECM AND CAMSHAFT POSITION SENSOR CONNECTOR.** 1) Turn the ignition switch to OFF. 2) Disconnect the connector from ECM. 3) Measure the resistance between ECM connector and camshaft position sensor connector. ***Connector & terminal*** ***(B137) No. 23 — (E62) No. 2:*** ***(B137) No. 30 — (E62) No. 3:***	Is the resistance less than 1 Ω?	Go to step **3**.	Repair the harness and connector. NOTE: In this case, repair the following item: • Open circuit in harness between ECM connector and camshaft position sensor connector • Poor contact of coupling connector
3	**CHECK HARNESS BETWEEN ECM AND CAMSHAFT POSITION SENSOR CONNECTOR.** Measure the resistance between camshaft position sensor connector and engine ground. ***Connector & terminal*** ***(E62) No. 2 — Engine ground:***	Is the resistance 1 MΩ or more?	Go to step **4**.	Repair short circuit to ground in harness between ECM connector and camshaft position sensor connector.
4	**CHECK HARNESS BETWEEN ECM AND CAMSHAFT POSITION SENSOR CONNECTOR.** Measure the voltage between camshaft position sensor connector and engine ground. ***Connector & terminal*** ***(E62) No. 2 (+) — Engine ground (–):***	Is the voltage 5 V or more?	Repair the short circuit to power in the harness between ECM connector and camshaft position sensor connector.	Go to step **5**.
5	**CHECK CONDITION OF CAMSHAFT POSITION SENSOR.**	Is the camshaft position sensor installation bolt tightened securely?	Go to step **6**.	Tighten the camshaft position sensor installation bolt securely. <Ref. to FU(STI)-36, Camshaft Position Sensor.>
6	**CHECK CAMSHAFT POSITION SENSOR.** Check the waveform of the camshaft position sensor. <Ref. to EN(STI)(diag)-20, Engine Control Module (ECM) I/O Signal.>	Is there any abnormality in waveform?	Replace the camshaft position sensor. <Ref. to FU(STI)-36, Camshaft Position Sensor.>	Repair the following item. • Poor contact of ECM connector • Poor contact of camshaft position sensor connector • Poor contact of coupling connector

1. OUTLINE OF DIAGNOSIS

Detect the open or short circuit of the camshaft position sensor.
When there is no camshaft position signal input continuously, judge as NG.

2. EXECUTION CONDITION

Secondary parameters	Execution condition
Battery voltage	≥ 10.9 V
Elapsed time after starting the engine	≥ 200 ms

3. GENERAL DRIVING CYCLE

Always perform the diagnosis continuously.

4. DIAGNOSTIC METHOD

Judge as NG when no input status of camshaft position sensor signal continues for (10 time(s) +2)/2 revs.

Judgment Value

Malfunction Criteria	Threshold Value
Amount of camshaft sensor signal during 0.5 revs of crankshaft	= 0

Time Needed for Diagnosis: (10 time(s) +2)/2 engine revs.
Malfunction Indicator Light Illumination: Illuminates as soon as a malfunction occurs.

CC:DTC P0366 CAMSHAFT POSITION SENSOR "B" CIRCUIT RANGE/PERFORMANCE BANK 1

NOTE:
For the diagnostic procedure, refer to DTC P0365. <Ref. to EN(STI)(diag)-300, DTC P0365 CAMSHAFT POSITION SENSOR "B" CIRCUIT BANK 1, Diagnostic Procedure with Diagnostic Trouble Code (DTC).>

1. OUTLINE OF DIAGNOSIS

Detect the malfunction of camshaft position sensor property.
Judge as NG when the number of camshaft signals remains abnormal.

2. EXECUTION CONDITION

Secondary parameters	Execution condition
Battery voltage	≥ 10.9 V
Elapsed time after starting the engine	≥ 200 ms

3. GENERAL DRIVING CYCLE

Always perform the diagnosis continuously.

4. DIAGNOSTIC METHOD

Judge as NG when the status continues where the number of camshaft position sensor signals in two crankshaft revolutions is other than 2 time(s).

Judgment Value

Malfunction Criteria	Threshold Value
Amount of camshaft sensor signal during 2 revs of crankshaft	≠ 2 time(s)

Time Needed for Diagnosis: Two engine revs. × 4 time(s)
Malfunction Indicator Light Illumination: Illuminates as soon as a malfunction occurs.

CD:DTC P0390 CAMSHAFT POSITION SENSOR "B" CIRCUIT BANK 2

DTC DETECTING CONDITION:
Immediately at fault recognition
TROUBLE SYMPTOM:

- Engine stalls.
- Failure of engine to start

CAUTION:
After servicing or replacing faulty parts, perform Clear Memory Mode <Ref. to EN(STI)(diag)-68, OPERATION, Clear Memory Mode.>, and Inspection Mode <Ref. to EN(STI)(diag)-48, PROCEDURE, Inspection Mode.>.
WIRING DIAGRAM:
Engine Electrical System <Ref. to WI-154, WIRING DIAGRAM, Engine Electrical System.>

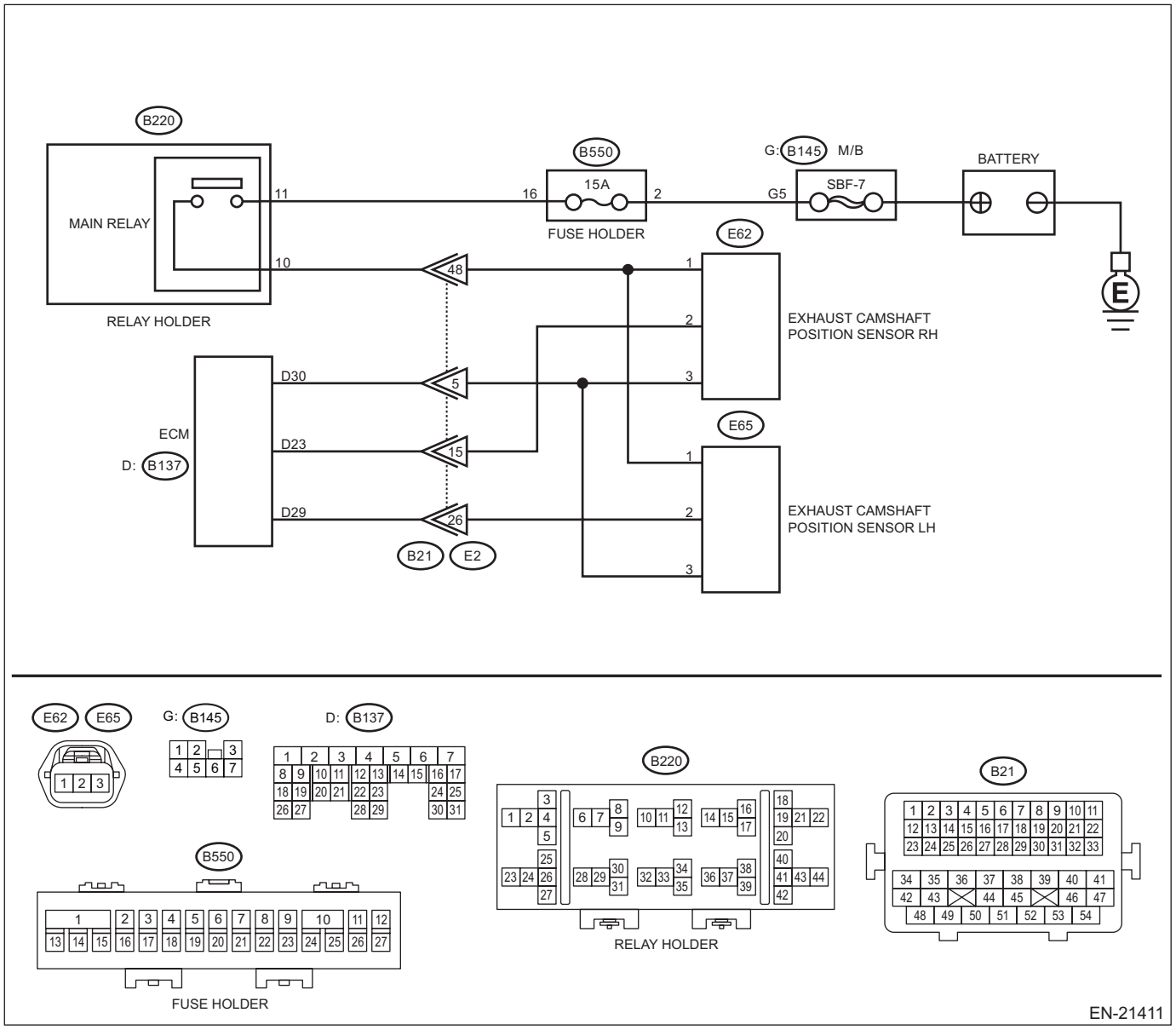

	Step	Check	Yes	No
1	**CHECK POWER SUPPLY OF CAMSHAFT POSITION SENSOR.** 1) Turn the ignition switch to OFF. 2) Disconnect the connector from camshaft position sensor. 3) Turn the ignition switch to ON. 4) Measure the voltage between camshaft position sensor connector and engine ground. ***Connector & terminal*** ***(E65) No. 1 (+) — Engine ground (–):***	Is the voltage 10 V or more?	Go to step **2**.	Repair the harness and connector. NOTE: In this case, repair the following item: • Open circuit or short circuit to ground in harness between main relay connector and camshaft position sensor connector • Poor contact of coupling connector
2	**CHECK HARNESS BETWEEN ECM AND CAMSHAFT POSITION SENSOR CONNECTOR.** 1) Turn the ignition switch to OFF. 2) Disconnect the connector from ECM. 3) Measure the resistance between ECM connector and camshaft position sensor connector. ***Connector & terminal*** ***(B137) No. 29 — (E65) No. 2:*** ***(B137) No. 30 — (E65) No. 3:***	Is the resistance less than 1 Ω?	Go to step **3**.	Repair the harness and connector. NOTE: In this case, repair the following item: • Open circuit in harness between ECM connector and camshaft position sensor connector • Poor contact of coupling connector
3	**CHECK HARNESS BETWEEN ECM AND CAMSHAFT POSITION SENSOR CONNECTOR.** Measure the resistance between camshaft position sensor connector and engine ground. ***Connector & terminal*** ***(E65) No. 2 — Engine ground:***	Is the resistance 1 MΩ or more?	Go to step **4**.	Repair short circuit to ground in harness between ECM connector and camshaft position sensor connector.
4	**CHECK HARNESS BETWEEN ECM AND CAMSHAFT POSITION SENSOR CONNECTOR.** Measure the voltage between camshaft position sensor connector and engine ground. ***Connector & terminal*** ***(E65) No. 2 (+) — Engine ground (–):***	Is the voltage 5 V or more?	Repair the short circuit to power in the harness between ECM connector and camshaft position sensor connector.	Go to step **5**.
5	**CHECK CONDITION OF CAMSHAFT POSITION SENSOR.**	Is the camshaft position sensor installation bolt tightened securely?	Go to step **6**.	Tighten the camshaft position sensor installation bolt securely. <Ref. to FU(STI)-36, Camshaft Position Sensor.>
6	**CHECK CAMSHAFT POSITION SENSOR.** Check the waveform of the camshaft position sensor. <Ref. to EN(STI)(diag)-20, Engine Control Module (ECM) I/O Signal.>	Is there any abnormality in waveform?	Replace the camshaft position sensor. <Ref. to FU(STI)-36, Camshaft Position Sensor.>	Repair the following item. • Poor contact of ECM connector • Poor contact of camshaft position sensor connector • Poor contact of coupling connector

1. OUTLINE OF DIAGNOSIS

NOTE:
For the detection standard, refer to DTC P0365. <Ref. to EN(STI)(diag)-300, DTC P0365 CAMSHAFT POSITION SENSOR "B" CIRCUIT BANK 1, Diagnostic Procedure with Diagnostic Trouble Code (DTC).>

CE:DTC P0391 CAMSHAFT POSITION SENSOR "B" CIRCUIT RANGE/PERFORMANCE BANK 2

NOTE:
For the diagnostic procedure, refer to DTC P0390. <Ref. to EN(STI)(diag)-304, DTC P0390 CAMSHAFT POSITION SENSOR "B" CIRCUIT BANK 2, Diagnostic Procedure with Diagnostic Trouble Code (DTC).>

1. OUTLINE OF DIAGNOSIS

NOTE:
For the detection standard, refer to DTC P0366. <Ref. to EN(STI)(diag)-303, DTC P0366 CAMSHAFT POSITION SENSOR "B" CIRCUIT RANGE/PERFORMANCE BANK 1, Diagnostic Procedure with Diagnostic Trouble Code (DTC).>

CF:DTC P0410 SECONDARY AIR SYSTEM

DTC DETECTING CONDITION:

Detected when two consecutive driving cycles with fault occur.

CAUTION:

After servicing or replacing faulty parts, perform Clear Memory Mode <Ref. to EN(STI)(diag)-68, OPERATION, Clear Memory Mode.>, and Inspection Mode <Ref. to EN(STI)(diag)-48, PROCEDURE, Inspection Mode.>.

WIRING DIAGRAM:

Engine Electrical System <Ref. to WI-154, WIRING DIAGRAM, Engine Electrical System.>

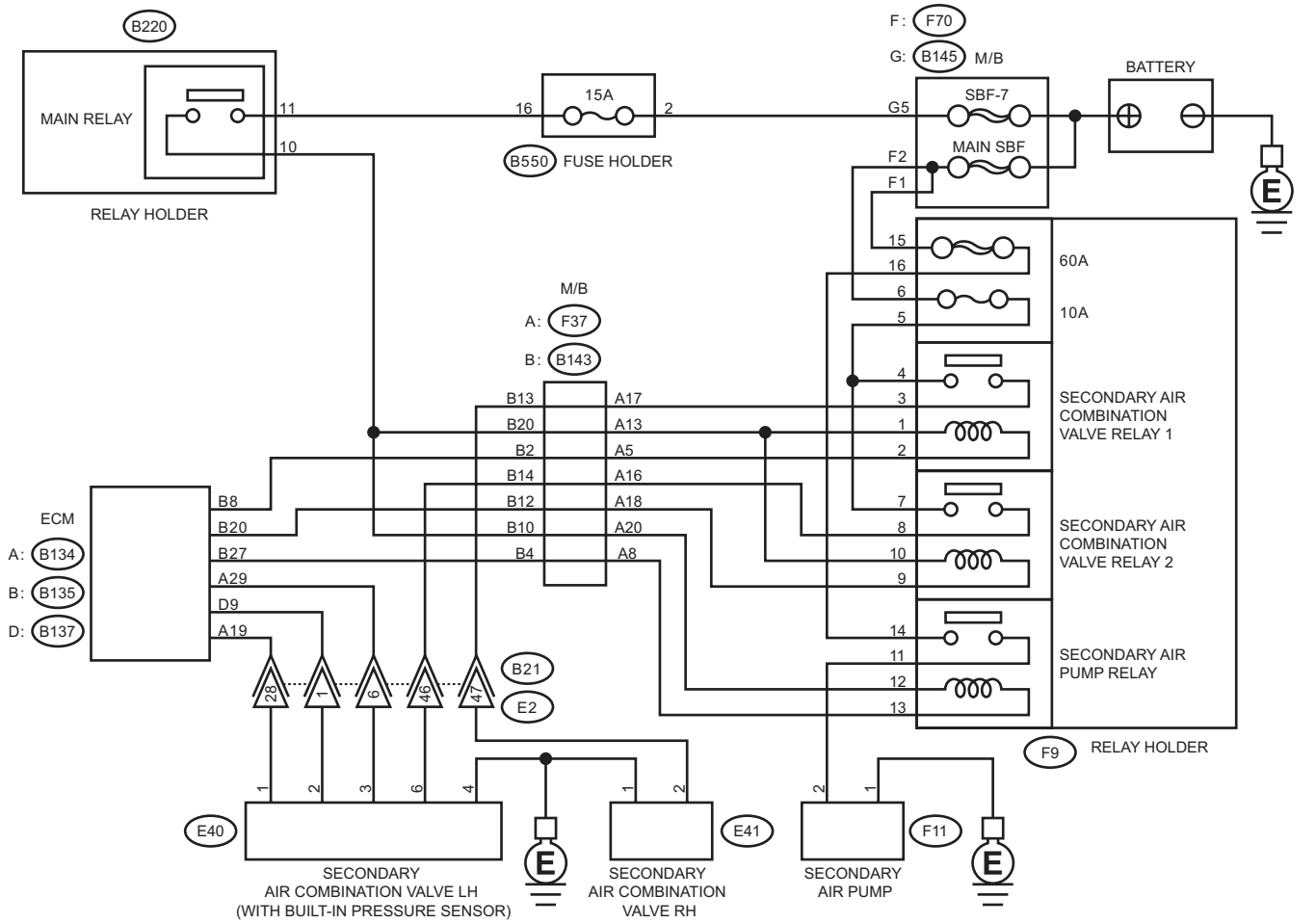

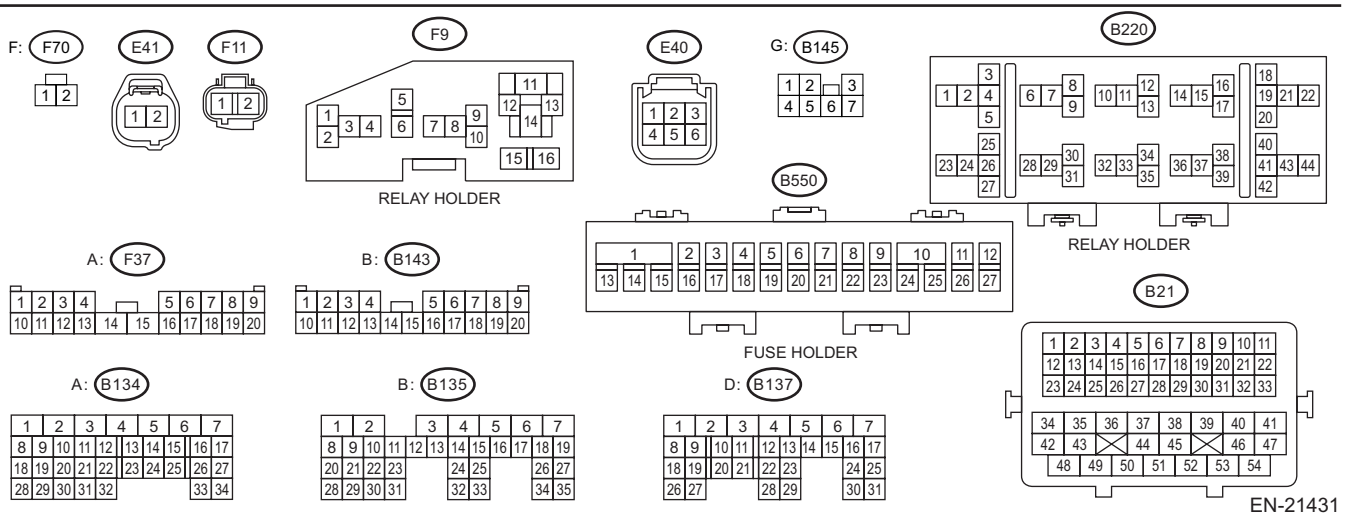

	Step	Check	Yes	No
1	**CHECK SECONDARY AIR PUMP FUSE.** Check if the secondary air pump fuse (60 A) is blown out.	Is the fuse blown out?	Go to step **2**.	Go to step **3**.
2	**CHECK HARNESS BETWEEN FUSE BOX AND SECONDARY AIR PUMP CONNECTOR.** 1) Remove the secondary air pump fuse from the fuse box. 2) Disconnect the secondary air pump connector. 3) Measure the resistance between the secondary air pump fuse and secondary air pump connector, and chassis ground. ***Connector & terminal*** ***(F9) No. 16 — Chassis ground:*** ***(F11) No. 2 — Chassis ground:***	Is the resistance 1 MΩ or more?	Replace the fuse with a new part, and connect the secondary air pump connector. Go to step **3**.	Repair ground short of the harness between the fuse box and the secondary air pump connector.
3	**CHECK SECONDARY AIR PUMP OPERATION.** **CAUTION:** **Try your best to complete the confirmation process of this inspection in one try. This inspection will put a heavy workload on the secondary air pump, so the continuous operation may cause damage to the pump. Do not operate the pump continuously for more than three times. If you need to operate the pump further, turn the ignition switch to OFF and wait for at least two hours.** 1) Install the delivery mode fuse. 2) Turn the ignition switch to ON. 3) Perform operation check for the secondary air pump using the Subaru Select Monitor. NOTE: • The compulsory operation using the Subaru Select Monitor is performed only for 10 seconds in order to protect the secondary air pump. When you want to operate the pump again, disconnect the ground cable from battery, wait at least one minute, and perform the clear memory operation of ECM. Then, perform the forced operation using the Subaru Select Monitor. • For detailed operation procedures, refer to the “Active Test”. <Ref. to EN(STI)(diag)-69, Active Test.>	Does the secondary air pump operate?	Go to step **4**.	Go to step **5**.
4	**CHECK DUCT BETWEEN SECONDARY AIR PUMP AND COMBINATION VALVE.** Check the duct between secondary air pump and combination valve.	Is there damage, clog or disconnection of the duct?	Replace, clean or connect the duct.	Replace the secondary air combination valve LH. <Ref. to EC(STI)-56, Secondary Air Combination Valve.>

	Step	Check	Yes	No
5	**CHECK POWER SUPPLY TO SECONDARY AIR PUMP.** 1) Turn the ignition switch to OFF. 2) Disconnect the battery negative terminal, wait for 1 minute, and connect it again. 3) Disconnect the secondary air pump connector. 4) Install the delivery mode fuse. 5) Turn the ignition switch to ON. 6) Using the Subaru Select Monitor, measure the voltage between the secondary air pump connector and chassis ground while the secondary air pump is operating. NOTE: • The compulsory operation using the Subaru Select Monitor is performed only for 10 seconds in order to protect the secondary air pump. When you want to operate the pump again, disconnect the ground cable from battery, wait at least one minute, and perform the clear memory operation of ECM. Then, perform the forced operation using the Subaru Select Monitor. • For detailed operation procedures, refer to the "Active Test". <Ref. to EN(STI)(diag)-69, Active Test.> ***Connector & terminal*** ***(F11) No. 2 (+) — Chassis ground (–):***	Is the voltage 10 V or more?	Replace the secondary air pump. <Ref. to EC(STI)-55, Secondary Air Pump.>	Go to step **6**.
6	**CHECK HARNESS BETWEEN SECONDARY AIR PUMP RELAY AND SECONDARY AIR PUMP CONNECTOR.** 1) Turn the ignition switch to OFF. 2) Remove the secondary air pump relay. 3) Measure the resistance of harness between secondary air pump relay connector and secondary air pump connector. ***Connector & terminal*** ***(F9) No. 11 — (F11) No. 2:***	Is the resistance less than 1 Ω?	Go to step **7**.	Repair the open circuit in harness between secondary air pump relay connector and secondary air pump connector.
7	**CHECK HARNESS BETWEEN SECONDARY AIR PUMP CONNECTOR AND CHASSIS GROUND.** Measure the resistance of the harness between secondary air pump connector and chassis ground. ***Connector & terminal*** ***(F11) No. 1 — Chassis ground:***	Is the resistance less than 5 Ω?	Go to step **8**.	Repair the open circuit of the harness between secondary air pump connector and chassis ground.
8	**CHECK SECONDARY AIR PUMP RELAY.** 1) Connect the battery to terminals No. 12 and No. 13 of the secondary air pump relay. 2) Measure the resistance between secondary air pump relay terminals. ***Terminals*** ***No. 14 — No. 11:***	Is the resistance less than 1 Ω?	Go to step **9**.	Replace the secondary air pump relay. <Ref. to EN(STI)(diag)-9, Electrical Component Location.>

	Step	Check	Yes	No
9	**CHECK SECONDARY AIR PUMP RELAY POWER SUPPLY.** 1) Turn the ignition switch to ON. 2) Measure the voltage between the secondary air pump relay connector and chassis ground. ***Connector & terminal*** ***(F9) No. 14 (+) — Chassis ground (–):*** ***(F9) No. 12 (+) — Chassis ground (–):***	Is the voltage 10 V or more?	Go to step **10**.	Repair the open or short to ground in the power supply circuit.
10	**CHECK HARNESS BETWEEN ECM AND SECONDARY AIR PUMP RELAY CONNECTOR.** 1) Turn the ignition switch to OFF. 2) Disconnect the ECM connector. 3) Measure the resistance of harness between ECM connector and secondary air pump relay connector. ***Connector & terminal*** ***(B135) No. 27 — (F9) No. 13:***	Is the resistance less than 1 Ω?	Repair the poor contact of ECM connector.	Repair the harness and connector. NOTE: In this case, repair the following item: • Open circuit in harness between ECM connector and secondary air pump relay connector • Poor contact of coupling connector

1. OUTLINE OF DIAGNOSIS

Detect NG judging from secondary air delivery pipe pressure, pulse of secondary air delivery pipe pressure and secondary air pipe airflow amount.

2. EXECUTION CONDITION

Secondary parameters	Execution condition
Pump supply pressure check	
Battery voltage	≥ 10.9 V
Barometric pressure	≥ 75.1 kPa (563 mmHg, 22.2 inHg)
Ambient air temperature	≥ 4.4 °C (39.9 °F)
Secondary air pump	Operating
Combination valve both closed pulse diagnosis	
Battery voltage	≥ 10.9 V
Barometric pressure	≥ 75.1 kPa (563 mmHg, 22.2 inHg)/1000
Ambient air temperature	≥ 4.4 °C (39.9 °F)
Secondary air pump	Operating
Engine load	≥ 0.2 g/rev (0.01 oz/rev)
Elapsed time after fuel cut	≥ 1000 ms
Combination valve changeover pressure diagnosis	
Battery voltage	≥ 10.9 V
Barometric pressure	≥ 75.1 kPa (563 mmHg, 22.2 inHg)/1000
Ambient air temperature	≥ 4.4 °C (39.9 °F)
Secondary air pump	= ON
Amount of intake air	< 25 g/s (0.88 oz/s)
Elapsed time after fuel cut	≥ 1000 ms
Overflow diagnosis	
Battery voltage	≥ 10.9 V
Barometric pressure	≥ 75.1 kPa (563 mmHg, 22.2 inHg)/1000
Estimate ambient temperature	≥ 4.4 °C (39.9 °F)
Secondary air pump	= ON
Amount of intake air	< 25 g/s (0.88 oz/s)
Elapsed time after fuel cut	≥ 1000 ms

3. GENERAL DRIVING CYCLE

Perform diagnosis during secondary air pump operation.

4. DIAGNOSTIC METHOD

Measure secondary air delivery pipe pressure, pulse of secondary air delivery pipe pressure and secondary air pipe airflow amount.

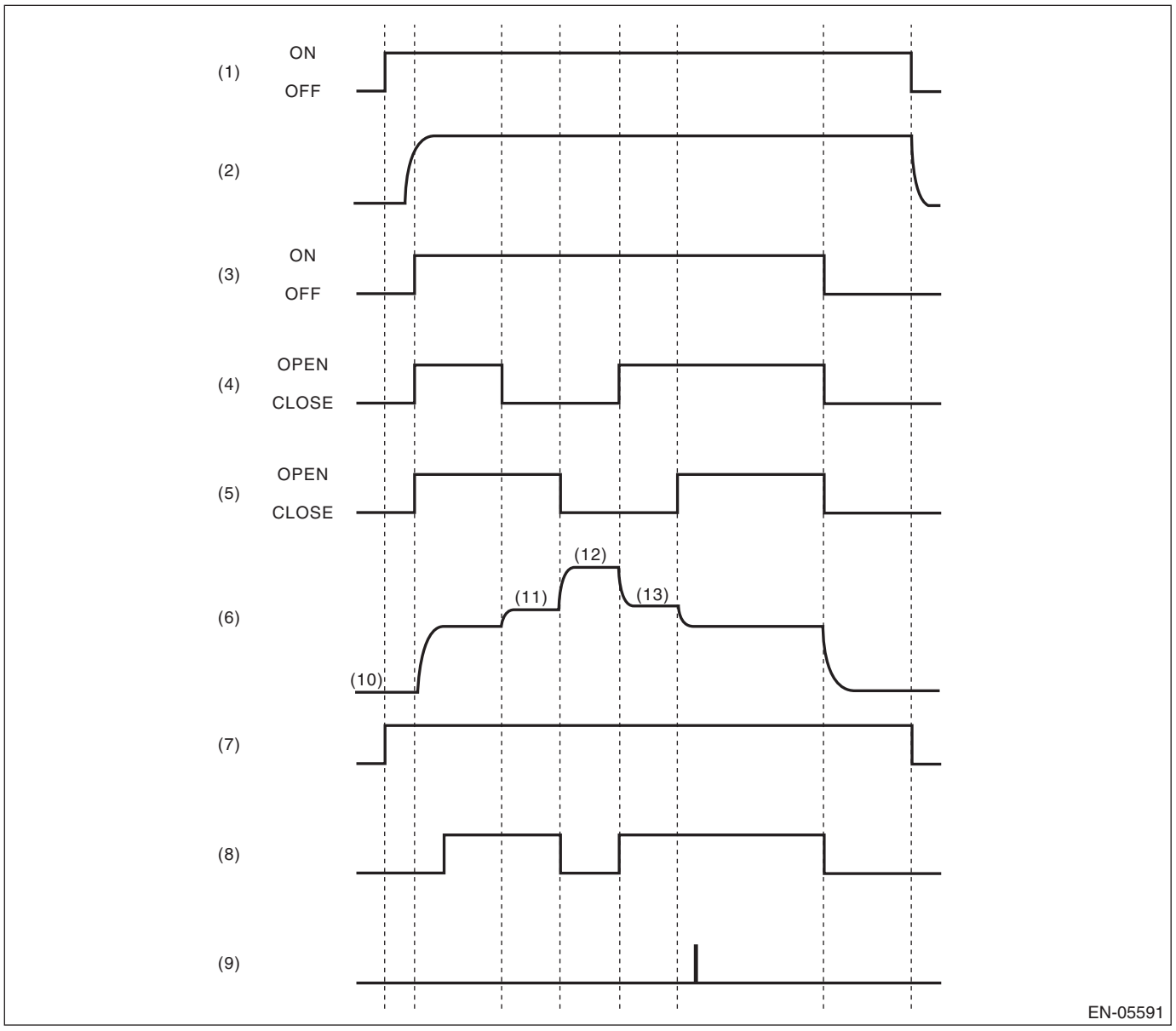

(1) Ignition switch
(2) Engine speed
(3) Secondary air pump operating status
(4) E-COMB valve (right hand) status
(5) E-COMB valve (left hand) status
(6) Secondary air delivery pipe pressure (psi)
(7) Diagnosis enable condition
(8) Pump supply pressure check (judgment)
(9) Flow amount check (judgment)
(10) Barometric pressure (Pas) measurement before secondary air control
(11) Right bank all closed pressure (P0R) measurement
(12) Both banks all closed pressure (P0RL) measurement
(13) Left bank all closed pressure (P0L) measurement

Pump supply pressure check

Perform the system function diagnosis with how much the pressure rises when the secondary air pump is turned from OFF to ON.
Judge as NG if delivery pipe pressure does not rise though it should when the secondary air pump turns OFF → ON.
If the duration of time while the following conditions are met is longer than the time indicated, judge as NG.

Judgment Value

Malfunction Criteria	Threshold Value	DTC
Secondary air supply pipe pressure (after barometric pressure compensation)	< 0.9 kPa (7 mmHg, 0.3 inHg)	P0410

Time Needed for Diagnosis: 4000 ms
Malfunction Indicator Light Illumination: Illuminates when malfunction occurs in 2 continuous driving cycles.

Combination valve both closed pulse diagnosis

Perform open stuck diagnosis of both combination valves using delivery pipe pressure pulse when both combination valves are closed. Determine which side of valves is stuck open by comparing the secondary air flow amount when RH combination valve is closed with that when LH combination valve is closed.
Calculate voltage pulse of the pump delivery pipe pressure when both combination valves are closed. The calculation should be small because there is no pulse from supply pipe pressure with both combination valves closed. When the calculation is large, determine that either of the combination valves is stuck open. Determine which side of valves is stuck open by comparing the secondary air flow amount when RH combination valve is closed with that when LH combination valve is closed. Air flow amount is larger on the open stuck valve.
If the duration of time while the following conditions are met is longer than the time indicated, judge as NG.

Judgment Value

Malfunction Criteria	Threshold Value	DTC
Pulse calculation value when both combination valves are closed Air flow amount when the right bank is closed (value from Map 4)	> Value of Map 3 ≥ Air flow amount when the left bank is closed (value from Map 5)	P2440
Pulse calculation value when both combination valves are closed Air flow amount when the left bank is closed (value from Map 5)	> Value of Map 3 > Air flow amount when the right bank is closed (value from Map 4)	P2442

Time Needed for Diagnosis: 992 ms + 992 ms + 992 ms + 4000 ms
Malfunction Indicator Light Illumination: Illuminates when malfunction occurs in 2 continuous driving cycles.

Combination valve changeover pressure diagnosis

Perform the RH combination valve stuck closed diagnosis with the variation of delivery pipe pressure when the RH combination valve turns closed → open.
Delivery pipe pressure should vary when the RH combination valve turns closed → open. When the variation is small, determine that the RH combination valve is stuck closed.
If the duration of time while the following conditions are met is longer than the time indicated, judge as NG.

Judgment Value

Malfunction Criteria	Threshold Value	DTC
Pressure variation value when the RH combination valve is switched	< Value of Map 6	P2441

Time Needed for Diagnosis: 992 ms + 992 ms + 992 ms + 4000 ms
Malfunction Indicator Light Illumination: Illuminates when malfunction occurs in 2 continuous driving cycles.
Perform the LH combination valve stuck closed diagnosis with the variation of delivery pipe pressure when the LH combination valve turns open → closed.
Delivery pipe pressure should vary when the LH combination valve turns open → closed. When the variation is small, determine that the LH combination valve is stuck closed.
If the duration of time while the following conditions are met is longer than the time indicated, judge as NG.

Judgment Value

Malfunction Criteria	Threshold Value	DTC
Pressure variation value when the LH combination valve is switched	< Value of Map 7	P2443

Time Needed for Diagnosis: 992 ms + 992 ms + 992 ms + 4000 ms
Malfunction Indicator Light Illumination: Illuminates when malfunction occurs in 2 continuous driving cycles.

Overflow diagnosis

Perform secondary air system flow abnormality diagnosis using both sides of combination valves secondary air amount when both are closed.
Judge as secondary air system flow abnormality either if there is excessive secondary air flow amount with the RH combination valve closed, or if there is excessive secondary air flow amount with the LH combination valve closed.
If the duration of time while the following conditions are met is longer than the time indicated, judge as NG.

Judgment Value

Malfunction Criteria	Threshold Value	DTC
Air flow amount when the right bank is closed (value from Map 4) or Air flow amount when the left bank is closed (value from Map 5)	> Value of Map 8 > Value of Map 9	P0411

Time Needed for Diagnosis: 992 ms + 992 ms + 992 ms + 4000 ms
Malfunction Indicator Light Illumination: Illuminates when malfunction occurs in 2 continuous driving cycles.

Map 3

Intake air (g (oz)/rev)	0.1 (0)	0.25 (0.01)	0.3 (0.01)	1 (0.04)
Threshold value (V)	100	100	4.5	4.5

Map 4

Secondary air pressure in the pipe when both comb. valve is closing kPa (mmHg, inHg) Secondary air pressure in the pipe when LH comb. valve is closing kPa (mmHg, inHg)	69.3 (520, 20.5)	74.7 (560, 22)	80 (600, 23.6)	85.3 (640, 25.2)	90.7 (680, 26.8)	96 (720, 28.3)	101.3 (760, 29.9)	106.7 (800, 31.5)	112 (840, 33.1)	117.3 (880, 34.6)	122.7 (920, 36.2)	128 (960, 37.8)	133.3 (1000, 39.4)	138.7 (1040, 40.9)	144 (1080, 42.5)	149.3 (1120, 44.1)
69.3 (520, 20.5)	0	200	400	600	800	1000	1200	1400	1600	1800	2000	2200	2400	2400	2400	2400
74.7 (560, 22)	–200	0	200	400	600	800	1000	1200	1400	1600	1800	2000	2200	2400	2400	2400
80 (600, 23.6)	–400	–200	0	200	400	600	800	1000	1200	1400	1600	1800	2000	2200	2400	2400
85.3 (640, 25.2)	–600	–400	–200	0	200	400	600	800	1000	1200	1400	1600	1800	2000	2200	2400
90.7 (680, 26.8)	–800	–600	–400	–200	0	200	400	600	800	1000	1200	1400	1600	1800	2000	2200
96 (720, 28.3)	–1000	–800	–600	–400	–200	0	200	400	600	800	1000	1200	1400	1600	1800	2000
101.3 (760, 29.9)	–1200	–1000	–800	–600	–400	–200	0	200	400	600	800	1000	1200	1400	1600	1800
106.7 (800, 31.5)	–1400	–1200	–1000	–800	–600	–400	–200	0	200	400	600	800	1000	1200	1400	1600
112 (840, 33.1)	–1600	–1400	–1200	–1000	–800	–600	–400	–200	0	200	400	600	800	1000	1200	1400
117.3 (880, 34.6)	–1800	–1600	–1400	–1200	–1000	–800	–600	–400	–200	0	200	400	600	800	1000	1200
122.7 (920, 36.2)	–2000	–1800	–1600	–1400	–1200	–1000	–800	–600	–400	–200	0	200	400	600	800	1000
128 (960, 37.8)	–2200	–2000	–1800	–1600	–1400	–1200	–1000	–800	–600	–400	–200	0	200	400	600	800
133.3 (1000, 39.4)	–2400	–2200	–2000	–1800	–1600	–1400	–1200	–1000	–800	–600	–400	–200	0	200	400	600
138.7 (1040, 40.9)	–2400	–2400	–2200	–2000	–1800	–1600	–1400	–1200	–1000	–800	–600	–400	–200	0	200	400
144 (1080, 42.5)	–2400	–2400	–2400	–2200	–2000	–1800	–1600	–1400	–1200	–1000	–800	–600	–400	–200	0	200
149.3 (1120, 44.1)	–2400	–2400	–2400	–2400	–2200	–2000	–1800	–1600	–1400	–1200	–1000	–800	–600	–400	–200	0
																(L/min)

Map 5

Secondary air pressure in the pipe when both comb. valve is closing kPa (mmHg, inHg) Secondary air pressure in the pipe when RH comb. valve is closing kPa (mmHg, inHg)	69.3 (520, 20.5)	74.7 (560, 22)	80 (600, 23.6)	85.3 (640, 25.2)	90.7 (680, 26.8)	96 (720, 28.3)	101.3 (760, 29.9)	106.7 (800, 31.5)	112 (840, 33.1)	117.3 (880, 34.6)	122.7 (920, 36.2)	128 (960, 37.8)	133.3 (1000, 39.4)	138.7 (1040, 40.9)	144 (1080, 42.5)	149.3 (1120, 44.1)
69.3 (520, 20.5)	0	200	400	600	800	1000	1200	1400	1600	1800	2000	2200	2400	2400	2400	2400
74.7 (560, 22)	–200	0	200	400	600	800	1000	1200	1400	1600	1800	2000	2200	2400	2400	2400
80 (600, 23.6)	–400	–200	0	200	400	600	800	1000	1200	1400	1600	1800	2000	2200	2400	2400
85.3 (640, 25.2)	–600	–400	–200	0	200	400	600	800	1000	1200	1400	1600	1800	2000	2200	2400
90.7 (680, 26.8)	–800	–600	–400	–200	0	200	400	600	800	1000	1200	1400	1600	1800	2000	2200
96 (720, 28.3)	–1000	–800	–600	–400	–200	0	200	400	600	800	1000	1200	1400	1600	1800	2000
101.3 (760, 29.9)	–1200	–1000	–800	–600	–400	–200	0	200	400	600	800	1000	1200	1400	1600	1800
106.7 (800, 31.5)	–1400	–1200	–1000	–800	–600	–400	–200	0	200	400	600	800	1000	1200	1400	1600
112 (840, 33.1)	–1600	–1400	–1200	–1000	–800	–600	–400	–200	0	200	400	600	800	1000	1200	1400
117.3 (880, 34.6)	–1800	–1600	–1400	–1200	–1000	–800	–600	–400	–200	0	200	400	600	800	1000	1200
122.7 (920, 36.2)	–2000	–1800	–1600	–1400	–1200	–1000	–800	–600	–400	–200	0	200	400	600	800	1000
128 (960, 37.8)	–2200	–2000	–1800	–1600	–1400	–1200	–1000	–800	–600	–400	–200	0	200	400	600	800
133.3 (1000, 39.4)	–2400	–2200	–2000	–1800	–1600	–1400	–1200	–1000	–800	–600	–400	–200	0	200	400	600
138.7 (1040, 40.9)	–2400	–2400	–2200	–2000	–1800	–1600	–1400	–1200	–1000	–800	–600	–400	–200	0	200	400
144 (1080, 42.5)	–2400	–2400	–2400	–2200	–2000	–1800	–1600	–1400	–1200	–1000	–800	–600	–400	–200	0	200
149.3 (1120, 44.1)	–2400	–2400	–2400	–2400	–2200	–2000	–1800	–1600	–1400	–1200	–1000	–800	–600	–400	–200	0
																(L/min)

Map 6

Amount of intake air when RH comb. valve switches (g (oz)/s) Battery voltage when RH comb. valve switches (V)	10 (0.35)	15 (0.53)	20 (0.71)	25 (0.88)	26 (0.92)
11	0.025	0.025	0.025	0.005	0
12	0.035	0.035	0.035	0.015	0
13	0.05	0.05	0.05	0.025	0
14	0.05	0.05	0.05	0.025	0
					(V)

Map 7

Amount of intake air when LH comb. valve switches (g (oz)/s) Battery voltage when LH comb. valve switches (V)	10 (0.35)	15 (0.53)	20 (0.71)	25 (0.88)	26 (0.92)
11	0.025	0.025	0.025	0.005	0
12	0.035	0.035	0.035	0.015	0
13	0.05	0.05	0.05	0.025	0
14	0.05	0.05	0.05	0.025	0
					(V)

Map 8

Amount of intake air when P0R is measuring (g (oz)/s) Battery voltage when P0R measuring (V)	2 (0.07)	25 (0.88)
11.5	345	345
12.5	345	345
13.5	345	345
14.5	390	390
15.5	420	420
		(L/min)

Map 9

Amount of intake air when P0L is measuring (g (oz)/s) Battery voltage when P0L measuring (V)	2 (0.07)	25 (0.88)
11.5	345	345
12.5	345	345
13.5	345	345
14.5	390	390
15.5	420	420
		(L/min)

CG:DTC P0411 SECONDARY AIR SYSTEM INCORRECT FLOW DETECTED

DTC DETECTING CONDITION:
Detected when two consecutive driving cycles with fault occur.

CAUTION:
After servicing or replacing faulty parts, perform Clear Memory Mode <Ref. to EN(STI)(diag)-68, OPERATION, Clear Memory Mode.>, and Inspection Mode <Ref. to EN(STI)(diag)-48, PROCEDURE, Inspection Mode.>.

	Step	Check	Yes	No
1	**CHECK SECONDARY AIR COMBINATION VALVE.** Check the pipe between the secondary air combination valve and cylinder head.	Is there damage or disconnection of the pipe?	Replace the pipe between secondary air combination valve and cylinder head. <Ref. to EC(STI)-56, Secondary Air Combination Valve.>	Go to step **2**.
2	**CHECK SECONDARY AIR COMBINATION VALVE.** Race the engine at 2,000 rpm to check whether or not the exhaust leak is heard.	Is there any exhaust leak?	Replace the pipe between secondary air combination valve and cylinder head. <Ref. to EC(STI)-56, Secondary Air Combination Valve.>	Repair the poor contact of ECM connector.

1. OUTLINE OF DIAGNOSIS

NOTE:
For the detection standard, refer to DTC P0410. <Ref. to EN(STI)(diag)-307, DTC P0410 SECONDARY AIR SYSTEM, Diagnostic Procedure with Diagnostic Trouble Code (DTC).>

CH:DTC P0413 SECONDARY AIR SYSTEM SWITCHING VALVE "A" CIRCUIT OPEN

DTC DETECTING CONDITION:
Immediately at fault recognition

CAUTION:
After servicing or replacing faulty parts, perform Clear Memory Mode <Ref. to EN(STI)(diag)-68, OPERATION, Clear Memory Mode.>, and Inspection Mode <Ref. to EN(STI)(diag)-48, PROCEDURE, Inspection Mode.>.

WIRING DIAGRAM:

Engine Electrical System <Ref. to WI-154, WIRING DIAGRAM, Engine Electrical System.>

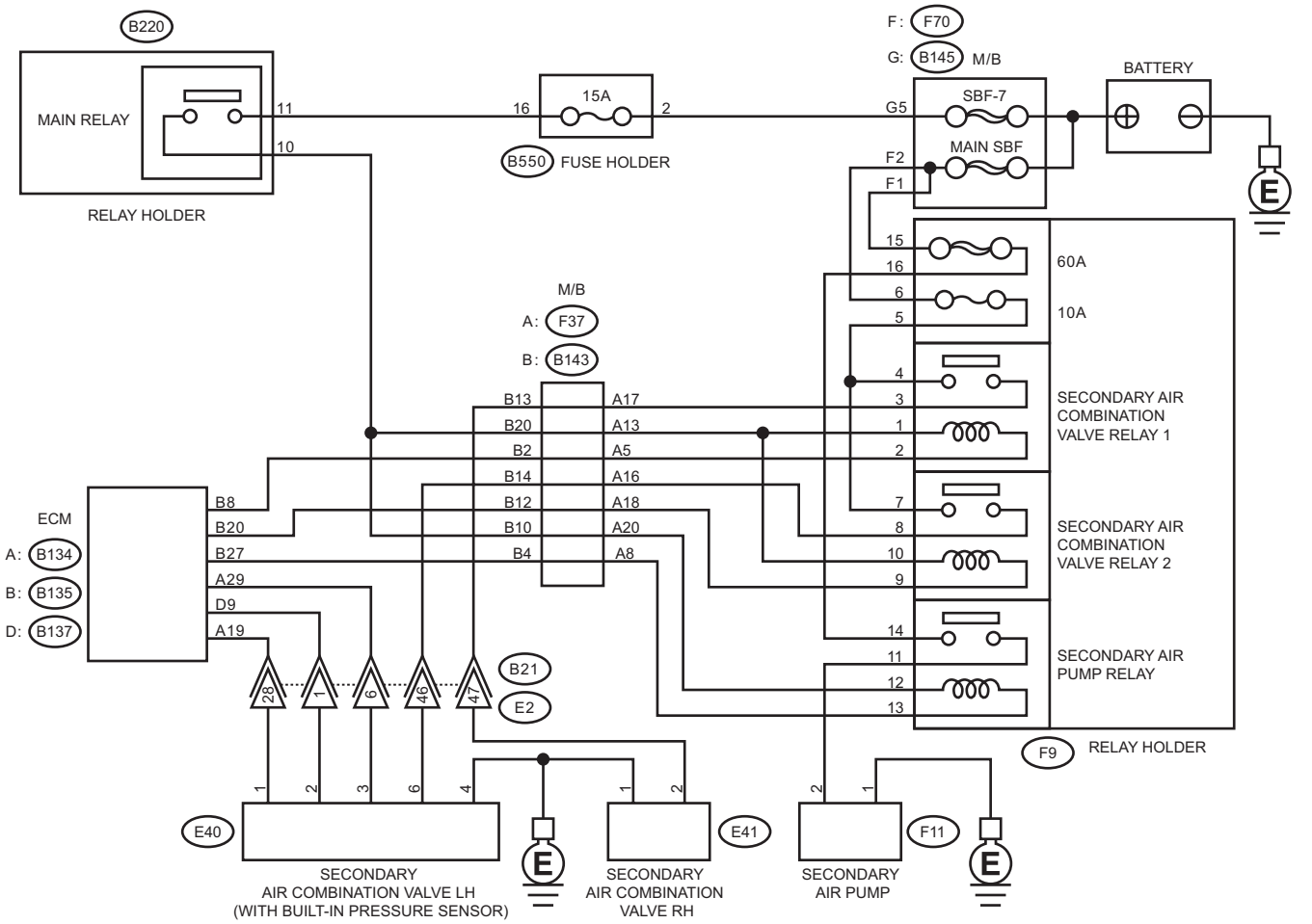

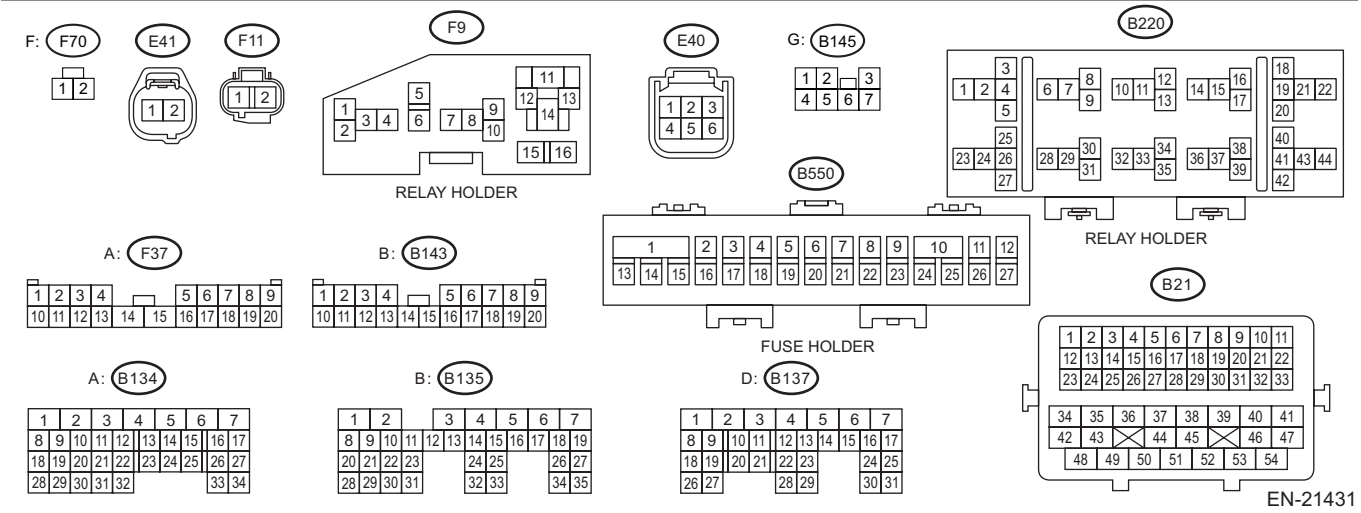

	Step	Check	Yes	No
1	**CHECK HARNESS BETWEEN ECM AND SECONDARY AIR COMBINATION VALVE RELAY 1 CONNECTOR.** 1) Turn the ignition switch to OFF. 2) Disconnect the connector from ECM. 3) Remove the secondary air combination valve relay 1. 4) Measure the resistance of harness between ECM connector and secondary air combination valve relay 1 connector. ***Connector & terminal*** ***(B135) No. 8 — (F9) No. 2:***	Is the resistance less than 1 Ω?	Go to step **2**.	Repair the harness and connector. NOTE: In this case, repair the following item: • Open circuit in harness between ECM connector and secondary air combination valve relay 1 connector • Poor contact of coupling connector
2	**CHECK HARNESS BETWEEN ECM AND SECONDARY AIR COMBINATION VALVE RELAY 1 CONNECTOR.** Measure the resistance between ECM connector and chassis ground. ***Connector & terminal*** ***(B135) No. 8 — Chassis ground:***	Is the resistance 1 MΩ or more?	Even if DTC is detected, the circuit has returned to a normal condition at this time. Reproduce the failure, and then perform the diagnosis again. NOTE: In this case, temporary poor contact of connector, temporary open or short circuit of harness may be the cause.	Repair the short circuit to ground in harness between ECM connector and secondary air combination valve relay 1 connector.

1. OUTLINE OF DIAGNOSIS

Judge as NG when the ECM output level differs from the actual terminal level.

2. EXECUTION CONDITION

Secondary parameters	Execution condition
Battery voltage	≥ 10.9 V
Secondary air combination valve relay output	OFF

3. GENERAL DRIVING CYCLE

Always perform the diagnosis continuously.

4. DIAGNOSTIC METHOD

If the duration of time while the following conditions are met is longer than the time indicated, judge as NG.

Judgment Value

Malfunction Criteria	Threshold Value
Output voltage	≤ Battery voltage × 0.34 V

Time Needed for Diagnosis: 2500 ms
Malfunction Indicator Light Illumination: Illuminates as soon as a malfunction occurs.

CI: DTC P0414 SECONDARY AIR SYSTEM SWITCHING VALVE "A" CIRCUIT SHORTED

DTC DETECTING CONDITION:
Immediately at fault recognition

CAUTION:
After servicing or replacing faulty parts, perform Clear Memory Mode <Ref. to EN(STI)(diag)-68, OPERATION, Clear Memory Mode.>, and Inspection Mode <Ref. to EN(STI)(diag)-48, PROCEDURE, Inspection Mode.>.

WIRING DIAGRAM:

Engine Electrical System <Ref. to WI-154, WIRING DIAGRAM, Engine Electrical System.>

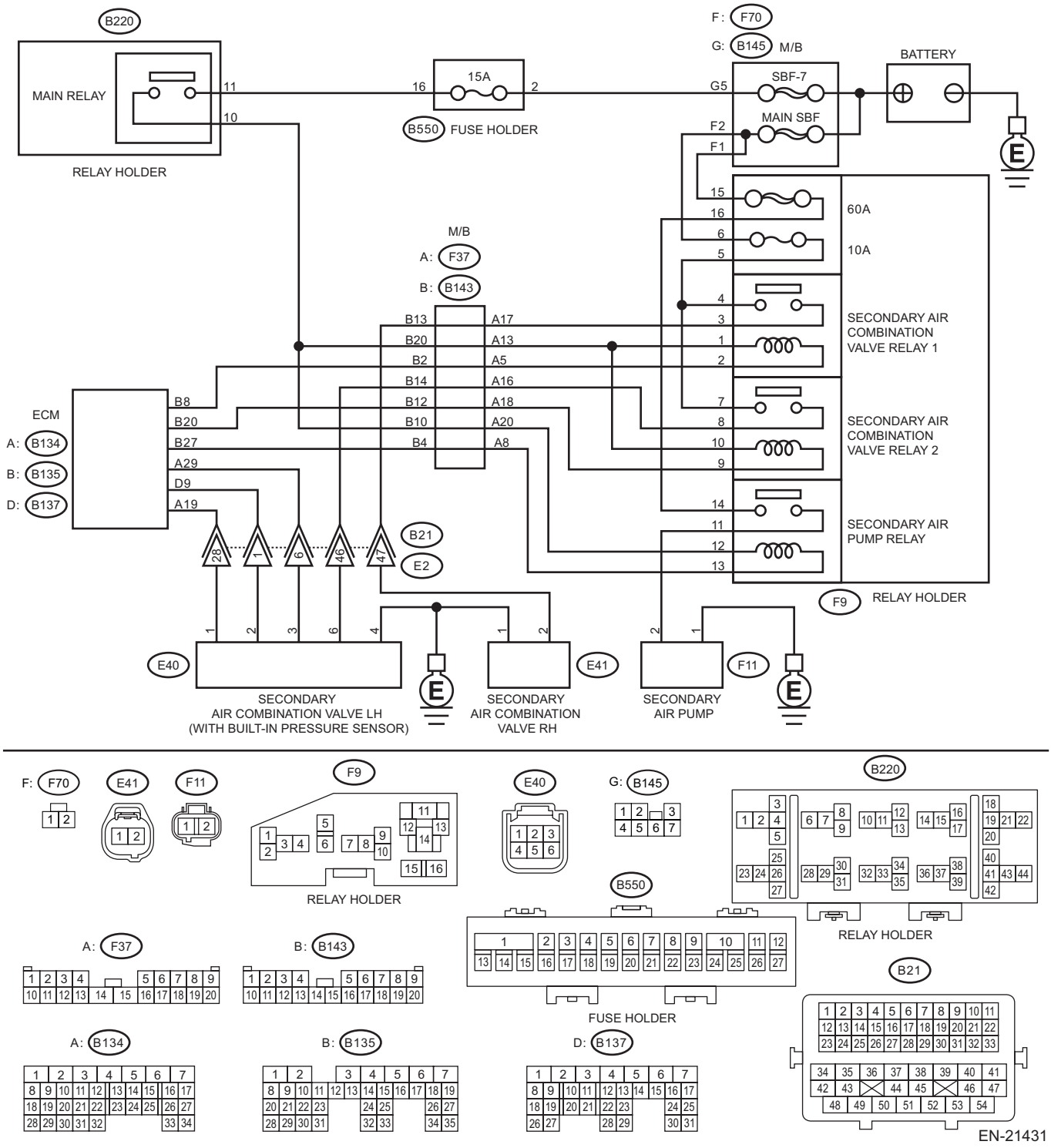

Step		Check	Yes	No
1	**CHECK HARNESS BETWEEN ECM AND SECONDARY AIR COMBINATION VALVE RELAY 1 CONNECTOR.** 1) Turn the ignition switch to OFF. 2) Disconnect the connector from ECM. 3) Remove the secondary air combination valve relay 1. 4) Measure the voltage between ECM connector and chassis ground. ***Connector & terminal*** ***(B135) No. 8 (+) — Chassis ground (–):***	Is the voltage 10 V or more?	Repair the short circuit to power in harness between ECM connector and secondary air combination valve relay 1 connector.	Repair the poor contact of ECM connector.

1. OUTLINE OF DIAGNOSIS

Judge as NG when the ECM output level differs from the actual terminal level.

2. EXECUTION CONDITION

Secondary parameters	Execution condition
Battery voltage	≥ 10.9 V
Secondary air combination valve relay output	ON

3. GENERAL DRIVING CYCLE

Always perform the diagnosis continuously.

4. DIAGNOSTIC METHOD

If the duration of time while the following conditions are met is longer than the time indicated, judge as NG.

Judgment Value

Malfunction Criteria	Threshold Value
Output current	≥ 6 A

Time Needed for Diagnosis: 2500 ms
Malfunction Indicator Light Illumination: Illuminates as soon as a malfunction occurs.

CJ:DTC P0416 SECONDARY AIR SYSTEM SWITCHING VALVE "B" CIRCUIT OPEN

DTC DETECTING CONDITION:
Immediately at fault recognition

CAUTION:
After servicing or replacing faulty parts, perform Clear Memory Mode <Ref. to EN(STI)(diag)-68, OPERATION, Clear Memory Mode.>, and Inspection Mode <Ref. to EN(STI)(diag)-48, PROCEDURE, Inspection Mode.>.

WIRING DIAGRAM:

Engine Electrical System <Ref. to WI-154, WIRING DIAGRAM, Engine Electrical System.>

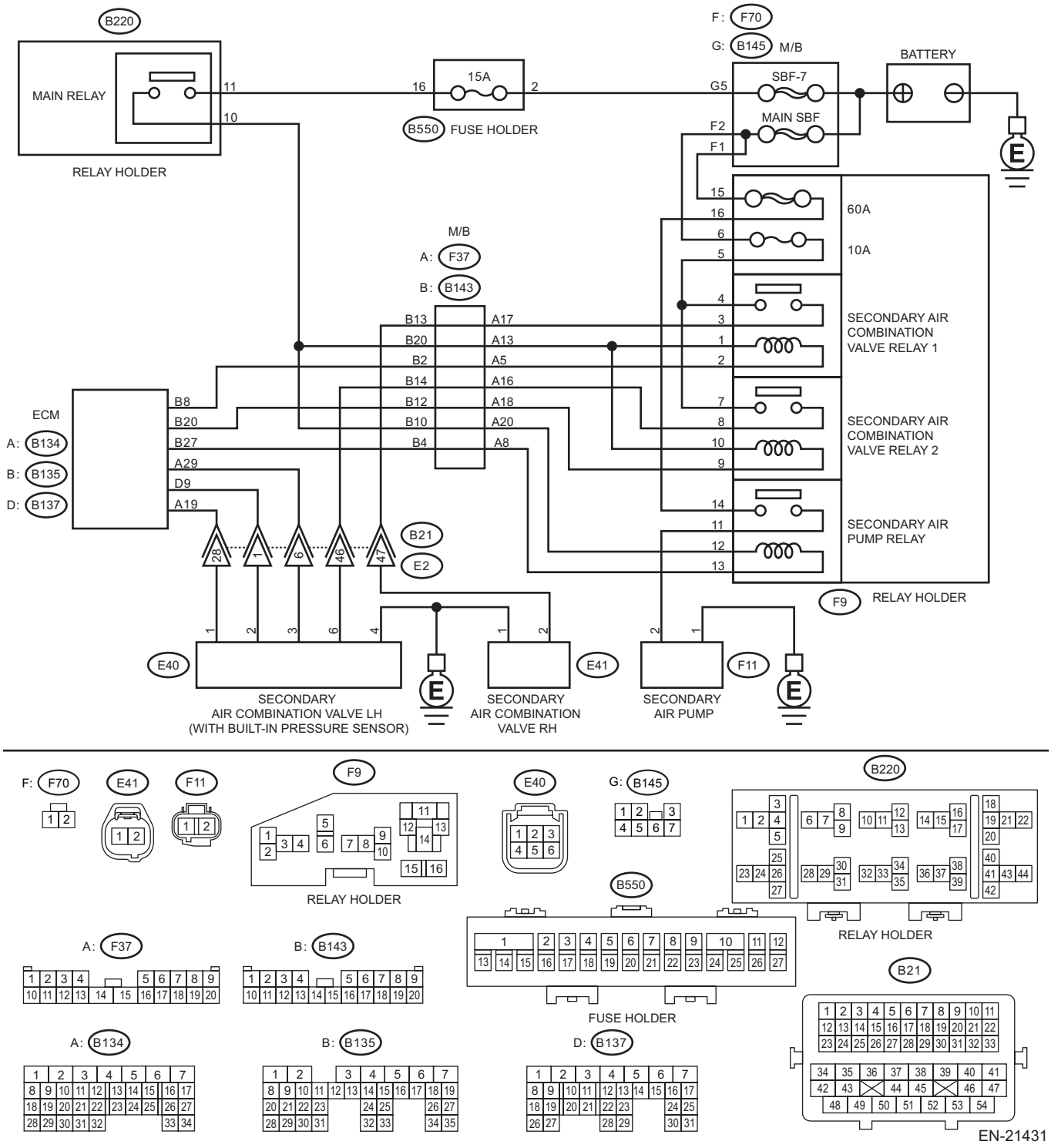

	Step	Check	Yes	No
1	**CHECK HARNESS BETWEEN ECM AND SECONDARY AIR COMBINATION VALVE RELAY 2 CONNECTOR.** 1) Turn the ignition switch to OFF. 2) Disconnect the connector from ECM. 3) Remove the secondary air combination valve relay 2. 4) Measure the resistance of harness between ECM connector and secondary air combination valve relay 2 connector. ***Connector & terminal*** ***(B135) No. 20 — (F9) No. 9:***	Is the resistance less than 1 Ω?	Go to step **2**.	Repair the harness and connector. NOTE: In this case, repair the following item: • Open circuit in harness between ECM connector and secondary air combination valve relay 2 connector • Poor contact of coupling connector
2	**CHECK HARNESS BETWEEN ECM AND SECONDARY AIR COMBINATION VALVE RELAY 2 CONNECTOR.** Measure the resistance between ECM connector and chassis ground. ***Connector & terminal*** ***(B135) No. 20 — Chassis ground:***	Is the resistance 1 MΩ or more?	Even if DTC is detected, the circuit has returned to a normal condition at this time. Reproduce the failure, and then perform the diagnosis again. NOTE: In this case, temporary poor contact of connector, temporary open or short circuit of harness may be the cause.	Repair the short circuit to ground in harness between ECM connector and secondary air combination valve relay 2 connector.

1. OUTLINE OF DIAGNOSIS

NOTE:
For the detection standard, refer to DTC P0413. <Ref. to EN(STI)(diag)-319, DTC P0413 SECONDARY AIR SYSTEM SWITCHING VALVE "A" CIRCUIT OPEN, Diagnostic Procedure with Diagnostic Trouble Code (DTC).>

CK:DTC P0417 SECONDARY AIR SYSTEM SWITCHING VALVE "B" CIRCUIT SHORTED

DTC DETECTING CONDITION:
Immediately at fault recognition

CAUTION:
After servicing or replacing faulty parts, perform Clear Memory Mode <Ref. to EN(STI)(diag)-68, OPERATION, Clear Memory Mode.>, and Inspection Mode <Ref. to EN(STI)(diag)-48, PROCEDURE, Inspection Mode.>.

WIRING DIAGRAM:

Engine Electrical System <Ref. to WI-154, WIRING DIAGRAM, Engine Electrical System.>

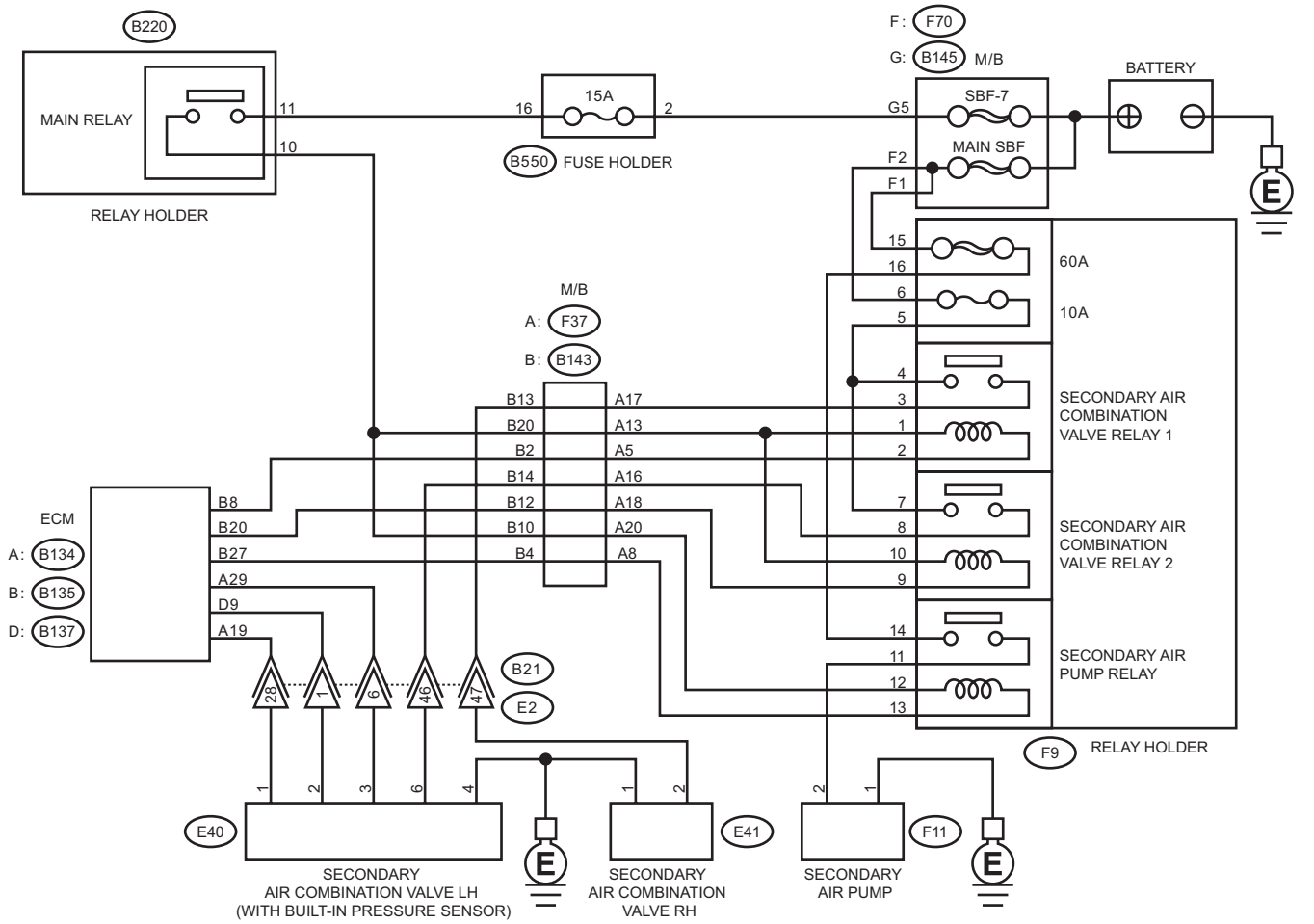

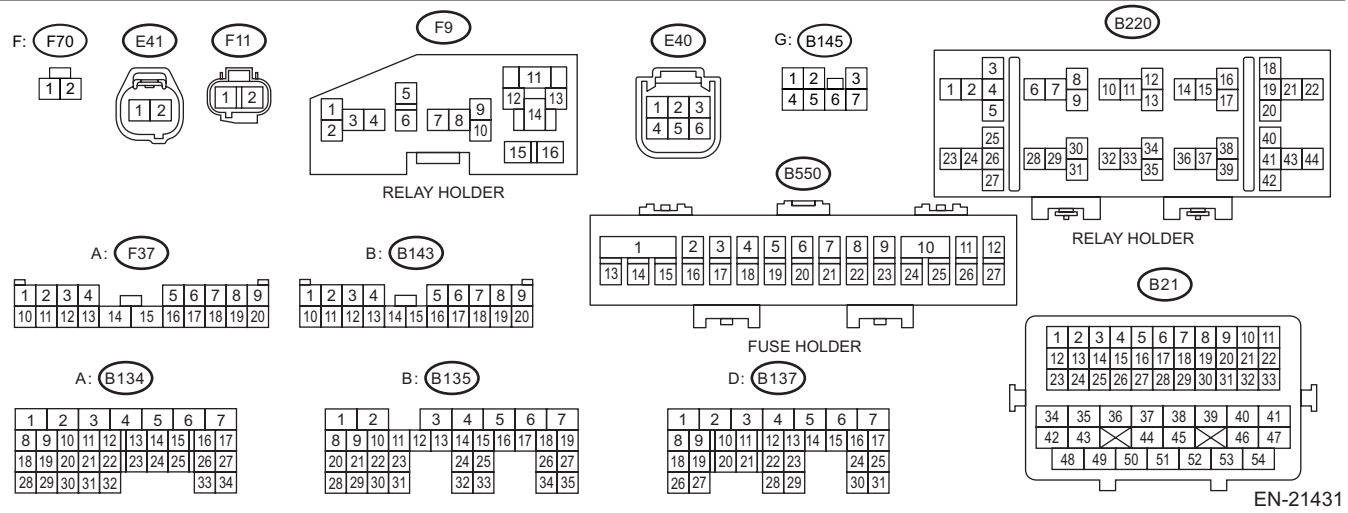

Step		Check	Yes	No
1	**CHECK HARNESS BETWEEN ECM AND SECONDARY AIR COMBINATION VALVE RELAY 2 CONNECTOR.** 1) Turn the ignition switch to OFF. 2) Disconnect the connector from ECM. 3) Remove the secondary air combination valve relay 2. 4) Measure the voltage between ECM connector and chassis ground. ***Connector & terminal*** ***(B135) No. 20 (+) — Chassis ground (–):***	Is the voltage 10 V or more?	Repair the short circuit to power in harness between ECM connector and secondary air combination valve relay 2 connector.	Repair the poor contact of ECM connector.

1. OUTLINE OF DIAGNOSIS

NOTE:
For the detection standard, refer to DTC P0414. <Ref. to EN(STI)(diag)-322, DTC P0414 SECONDARY AIR SYSTEM SWITCHING VALVE "A" CIRCUIT SHORTED, Diagnostic Procedure with Diagnostic Trouble Code (DTC).>

CL:DTC P0420 CATALYST SYSTEM EFFICIENCY BELOW THRESHOLD BANK 1

DTC DETECTING CONDITION:

Detected when two consecutive driving cycles with fault occur.

TROUBLE SYMPTOM:

- Engine stalls.
- Idle mixture is out of specifications.

CAUTION:

After servicing or replacing faulty parts, perform Clear Memory Mode <Ref. to EN(STI)(diag)-68, OPERATION, Clear Memory Mode.>, and Inspection Mode <Ref. to EN(STI)(diag)-48, PROCEDURE, Inspection Mode.>.

WIRING DIAGRAM:

Engine Electrical System <Ref. to WI-154, WIRING DIAGRAM, Engine Electrical System.>

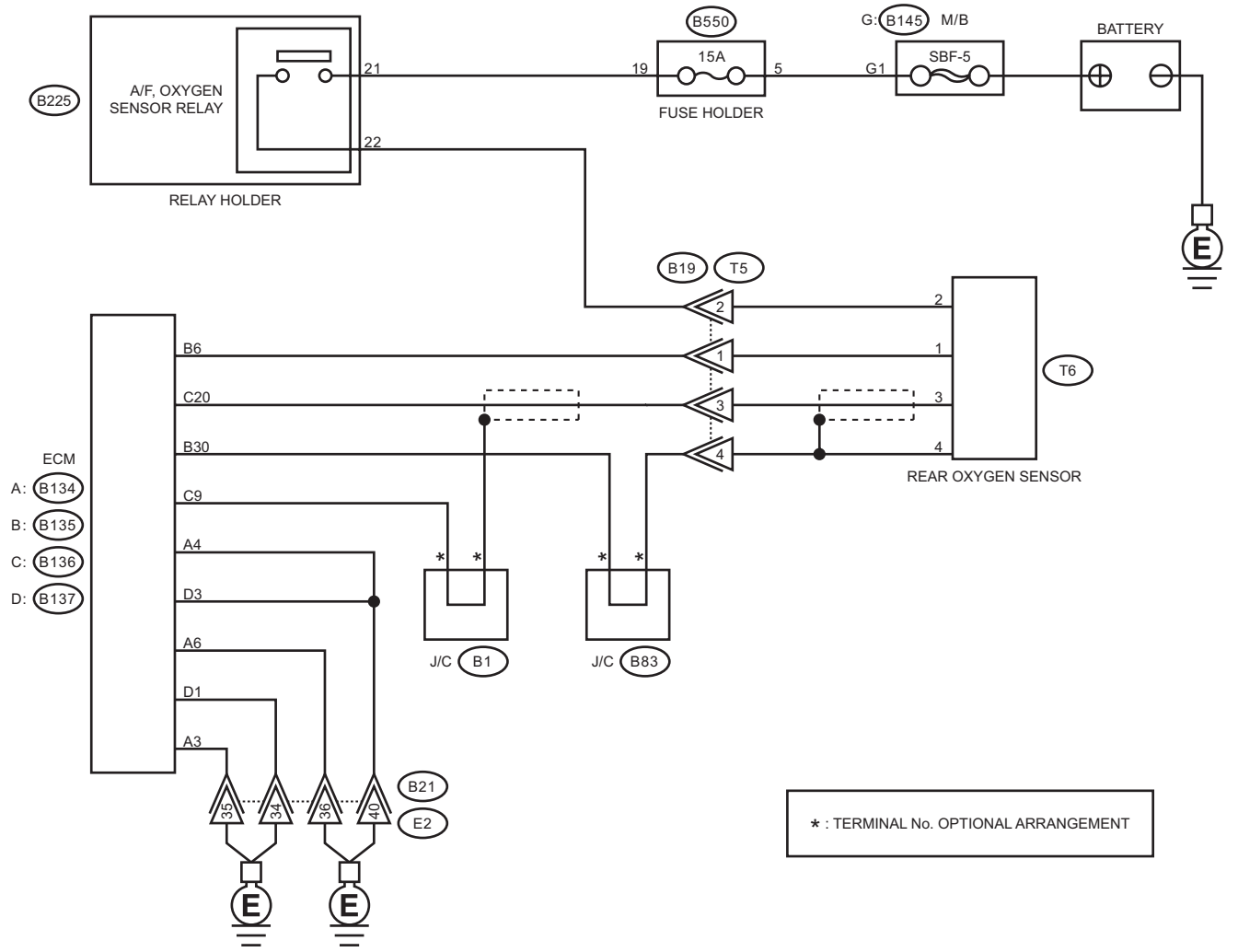

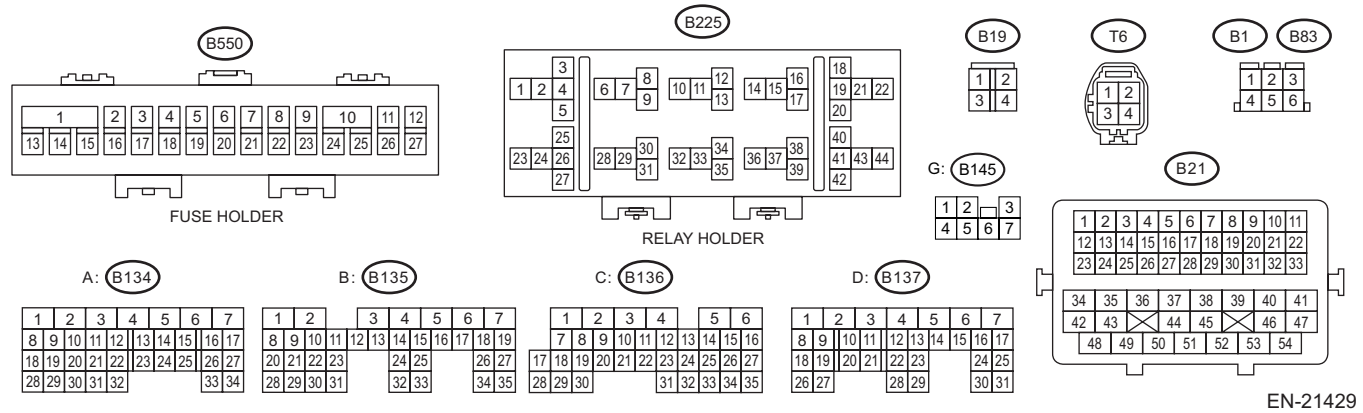

EN-21429

	Step	Check	Yes	No
1	**CHECK EXHAUST SYSTEM.** Check for gas leaks or air suction caused by loose or dislocated nuts and bolts, and open hole at exhaust pipes. NOTE: Check the following positions. • Between cylinder head and front exhaust pipe • Between front exhaust pipe and front catalytic converter • Between front catalytic converter and rear catalytic converter • Loose or improperly attached front oxygen (A/F) sensor or rear oxygen sensor	Is there any fault in exhaust system?	Repair or replace the exhaust system. <Ref. to EX(STI)-2, General Description.>	Go to step **2**.
2	**CHECK WAVEFORM DATA ON THE SUBARU SELECT MONITOR (WHILE DRIVING).** 1) Drive at a constant speed between 80 — 112 km/h (50 — 70 MPH). 2) After 5 minutes have elapsed in the condition of step 1), use the Subaru Select Monitor while still driving to read the waveform data. • At normal condition 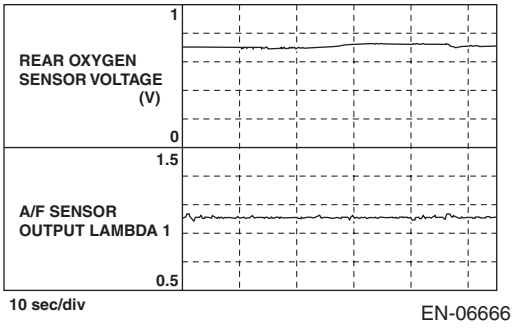 EN-06666 • At abnormal condition (numerous inversion) 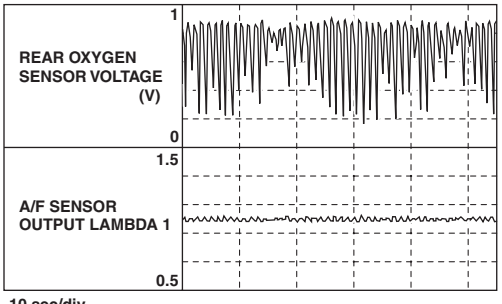 EN-06667	Is a normal waveform displayed?	Even if DTC is detected, the circuit has returned to a normal condition at this time. Reproduce the failure, and then perform the diagnosis again. NOTE: In this case, temporary poor contact of connector, temporary open or short circuit of harness may be the cause.	Go to step **3**.

	Step	Check	Yes	No
3	**CHECK WAVEFORM DATA ON THE SUBARU SELECT MONITOR (WHILE IDLING).** 1) Run the engine at idle. 2) In the condition of step 1), use the Subaru Select Monitor to read the waveform data. • At normal condition 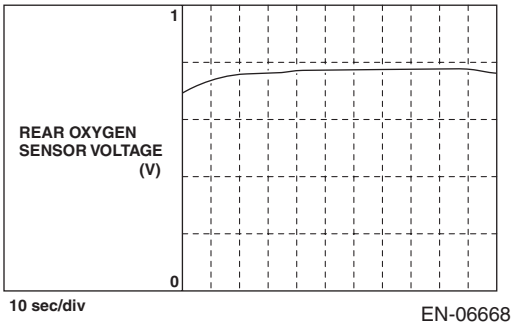 EN-06668 • At abnormal condition 1 (numerous inversion) 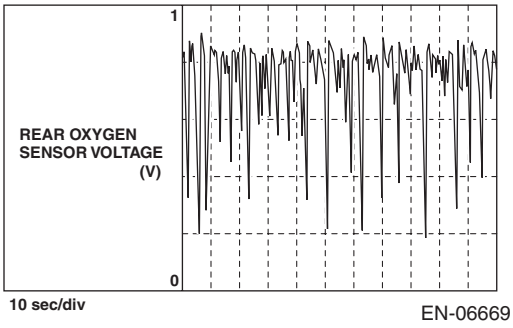 EN-06669 • At abnormal condition 2 (noise input) 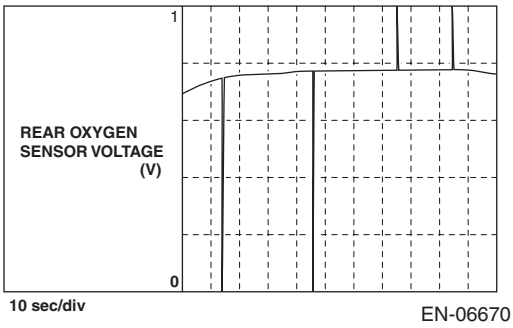 EN-06670	Is a normal waveform displayed?	Go to step **4**.	• The waveform is displayed at abnormal condition 1: Go to step **4**. • The waveform is displayed at abnormal condition 2: Go to step **5**.
4	**CHECK CATALYTIC CONVERTER.**	Is the catalytic converter damaged?	Replace the catalytic converter. <Ref. to EC(STI)-5, Front Catalytic Converter.> <Ref. to EC(STI)-6, Rear Catalytic Converter.>	Go to step **5**.
5	**CHECK REAR OXYGEN SENSOR CONNECTOR AND COUPLING CONNECTOR.**	Has water entered the connector?	Completely remove any water inside.	Go to step **6**.

	Step	Check	Yes	No
6	**CHECK HARNESS BETWEEN ECM AND REAR OXYGEN SENSOR CONNECTOR.** 1) Turn the ignition switch to OFF. 2) Disconnect the connector from ECM. 3) Disconnect the connector from rear oxygen sensor. 4) Measure the resistance of harness between ECM connector and rear oxygen sensor connector. ***Connector & terminal*** ***(B136) No. 20 — (T6) No. 3:*** ***(B135) No. 30 — (T6) No. 4:***	Is the resistance less than 1 Ω?	Go to step **7**.	Repair the harness and connector. NOTE: Repair the following locations. • Open circuit in harness between ECM connector and rear oxygen sensor connector • Poor contact of coupling connector
7	**CHECK REAR OXYGEN SENSOR SHIELD.** 1) Turn the ignition switch to OFF. 2) Expose the rear oxygen sensor connector body side harness sensor shield. 3) Measure the resistance between sensor shield and chassis ground.	Is the resistance less than 1 Ω?	Go to step **8**.	Repair the open circuit of rear oxygen sensor harness.
8	**CHECK ENGINE OIL AMOUNT AND EXHAUST GAS.** 1) Check the engine oil amount. <Ref. to LU(STI)-10, INSPECTION, Engine Oil.> 2) Check exhaust gas during idling.	Does the engine oil amount drop or white smoke emit from the muffler?	Check the engine, and repair the defective part. <Ref. to ME(STI)-107, INSPECTION, Engine Trouble in General.> After repairing the engine, replace the catalytic converter. <Ref. to EC(STI)-5, Front Catalytic Converter.> <Ref. to EC(STI)-6, Rear Catalytic Converter.> After the catalytic converter is replaced, perform step 2 to check the normal waveform is displayed, and then exit the procedure.	Go to step **9**.

	Step	Check	Yes	No
9	**CHECK IGNITION SYSTEM.** 1) Check the spark plug. <Ref. to IG(STI)-5, INSPECTION, Spark Plug.> 2) Check the status of the ignition coil connector and the spark plug terminal.	Is there any fault in the ignition system?	After repairing the ignition system, replace the catalytic converter. <Ref. to EC(STI)-5, Front Catalytic Converter.> <Ref. to EC(STI)-6, Rear Catalytic Converter.> After the catalytic converter is replaced, perform step 2 to check the normal waveform is displayed, and then exit the procedure.	Go to step **10**.
10	**CHECK FUEL SYSTEM.** 1) Refer to and check the items in “Insufficient fuel supply to fuel injector” (except for “a. Fuel pump does not operate.”) and “Leakage or blow out of fuel”. <Ref. to FU(STI)-105, INSPECTION, Fuel System Trouble in General.> 2) Check throttle body. <Ref. to FU(STI)-15, INSPECTION, Throttle Body.> 3) Check intake manifold. <Ref. to FU(STI)-32, INSPECTION, Intake Manifold.>	Is there any fault in the fuel system?	After repairing the fuel system, replace the catalytic converter. <Ref. to EC(STI)-5, Front Catalytic Converter.> <Ref. to EC(STI)-6, Rear Catalytic Converter.> After the catalytic converter is replaced, perform step 2 to check the normal waveform is displayed, and then exit the procedure.	Go to step **11**.

Step	Check	Yes	No
11 CHECK DTC.	Is any other DTC displayed?	Check the appropriate DTC using the “List of Diagnostic Trouble Code (DTC)”. <Ref. to EN(STI)(diag)-96, List of Diagnostic Trouble Code (DTC).> After checking the DTC, replace the catalytic converter. <Ref. to EC(STI)-5, Front Catalytic Converter.> <Ref. to EC(STI)-6, Rear Catalytic Converter.> After the catalytic converter is replaced, perform step 2 to check the normal waveform is displayed, and then exit the procedure.	Replace the rear oxygen sensor. <Ref. to FU(STI)-54, Rear Oxygen Sensor.>

1. OUTLINE OF DIAGNOSIS

Detect the deterioration of the catalyst function.
Though the rear oxygen sensor output changes slowly with a new catalyst, the sensor output with a deteriorated catalyst becomes high and the inversion time is shortened.
For this reason, the catalyst diagnosis is carried out by monitoring the rear oxygen sensor output and comparing it with the front oxygen (A/F) sensor output.

2. COMPONENT DESCRIPTION

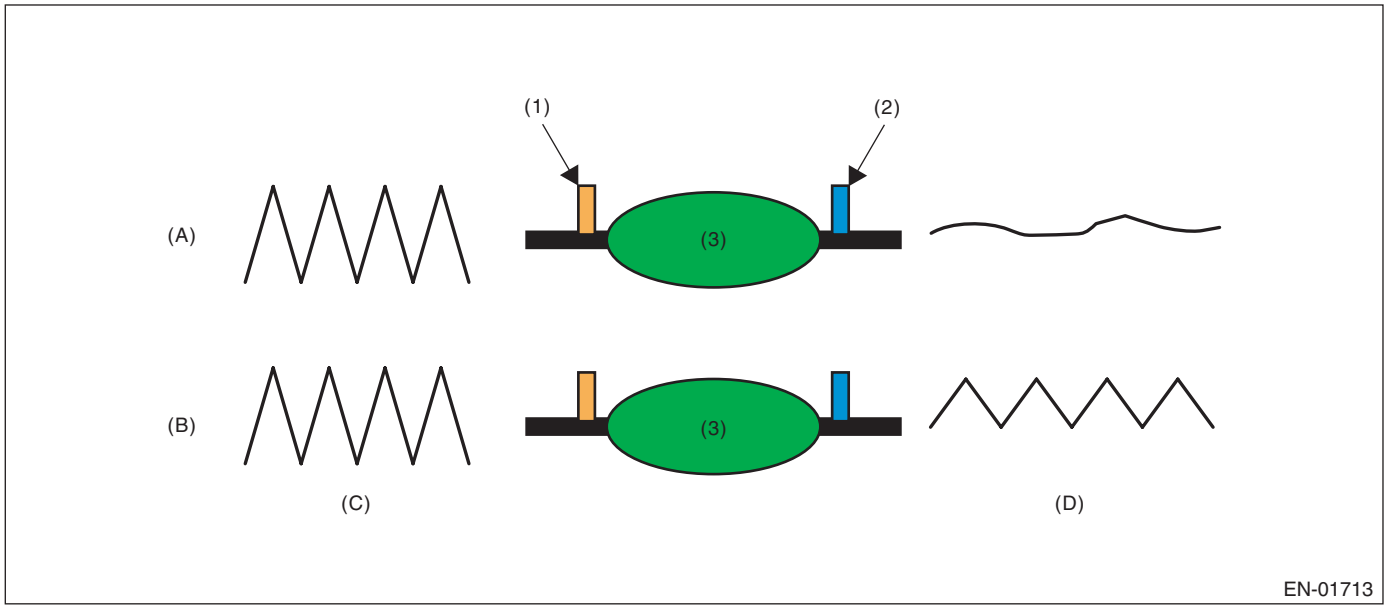

(A) Normal
(B) Deterioration
(C) Output waveform from the front oxygen (A/F) sensor
(D) Output waveform from the rear oxygen sensor
(1) Front oxygen (A/F) sensor
(2) Rear oxygen sensor
(3) Catalytic converter

3. EXECUTION CONDITION

Secondary parameters	Execution condition
Battery voltage	≥ 10.9 V
Barometric pressure	≥ 75.1 kPa (563 mmHg, 22.2 inHg)
Sub feedback	In operation
Amount of intake air	≥ 10 g/s (0.35 oz/s) and < 50 g/s (1.76 oz/s)
Estimated catalyst temperature	≥ 450 °C (842 °F)
Vehicle speed	≥ 40 km/h (24.9 MPH)
Rear oxygen output change from 0.55 V or less to 0.55 V or more	Experienced after fuel cut
Estimated temperature of the rear oxygen sensor element	≥ 500 °C (932 °F)

4. GENERAL DRIVING CYCLE

Perform the diagnosis only once at a constant speed of 40 km/h (24.9 MPH) or higher.

5. DIAGNOSTIC METHOD

After the enable conditions have been established, calculate the front oxygen (A/F) sensor lambda deviation sum value and the rear oxygen sensor output voltage deviation sum value in every 32 ms × 4 times. If the front oxygen (A/F) sensor lambda deviation sum value is the predetermined value or more, calculate the diagnostic value.
If the duration of time while the following conditions are met is within the time indicated, judge as NG.

Judgment Value

Malfunction Criteria	Threshold Value
Rear oxygen sensor output voltage deviation sum value / front oxygen (A/F) sensor lambda deviation sum value	> 8

Time Needed for Diagnosis: 30 — 55 seconds
Malfunction Indicator Light Illumination: Illuminates when malfunction occurs in 2 continuous driving cycles.

CM:DTC P0441 EVAP SYSTEM (CPC) INCORRECT PURGE FLOW

DTC DETECTING CONDITION:
Detected when two consecutive driving cycles with fault occur.
TROUBLE SYMPTOM:
Improper idling

CAUTION:
After servicing or replacing faulty parts, perform Clear Memory Mode <Ref. to EN(STI)(diag)-68, OPERATION, Clear Memory Mode.>, and Inspection Mode <Ref. to EN(STI)(diag)-48, PROCEDURE, Inspection Mode.>.

	Step	Check	Yes	No
1	**CHECK FOR ANY OTHER DTC ON DISPLAY.**	Is any other DTC displayed?	Check the appropriate DTC using the "List of Diagnostic Trouble Code (DTC)". <Ref. to EN(STI)(diag)-96, List of Diagnostic Trouble Code (DTC).>	Go to step **2**.
2	**CHECK PURGE CONTROL SOLENOID VALVE.** Operate the purge control solenoid valve using the Subaru Select Monitor. NOTE: For detailed operation procedures, refer to the "Active Test". <Ref. to EN(STI)(diag)-69, Active Test.>	Does the purge control solenoid valve operate?	Go to step **3**.	Replace the purge control solenoid valve. <Ref. to EC(STI)-24, Purge Control Solenoid Valve.>
3	**CHECK EVAPORATIVE EMISSION CONTROL SYSTEM LINE.** 1) Turn the ignition switch to OFF. 2) Make sure that the delivery mode fuse is removed.	Are there holes, cracks, clogging, or disconnection, misconnection of hoses or pipes in evaporative emission control system?	Repair or replace the hoses or pipes.	Repair the poor contact of ECM connector.

1. OUTLINE OF DIAGNOSIS

Detect the malfunction of purge flow by the change of Evaporative Leak Check Module pressure sensor output value before/after purge introduction.

2. EXECUTION CONDITION

Secondary parameters	Execution condition
(Evaporative Leak Check Module switching valve for time) = Close	< 120000 ms
Purge control duty ratio	> 0%
Precondition (Conditions to close the switching valve of Evaporative Leak Check Module intrusively):	
Battery voltage	≥ 10.9 V
Barometric pressure	≥ 75.1 kPa (563 mmHg, 22.2 inHg)
Integrated value of calculated purge airflow since engine start	≥ 72 g(2.54 oz) *
Barometric pressure — Manifold absolute pressure	≥ 17.3 kPa (130 mmHg, 5.1 inHg)
((Accelerator pedal position	= 0%
for time)	≥ 1000 ms
followed by	
Accelerator pedal position)	≠ 0%
Ambient air temperature	≥ –25 °C (–13 °F)

* It takes approximately 2 min at 40 mph.

3. GENERAL DRIVING CYCLE

Perform the diagnosis only once after engine start.

4. DIAGNOSTIC METHOD

Close the Evaporative Leak Check Module switching valve, and close the fuel tank completely, and perform the forced purging. If pressure change amount is -0.7 kPa (-0.2 inHg, -5 mmHg) or less, judge as malfunction of purge flow.

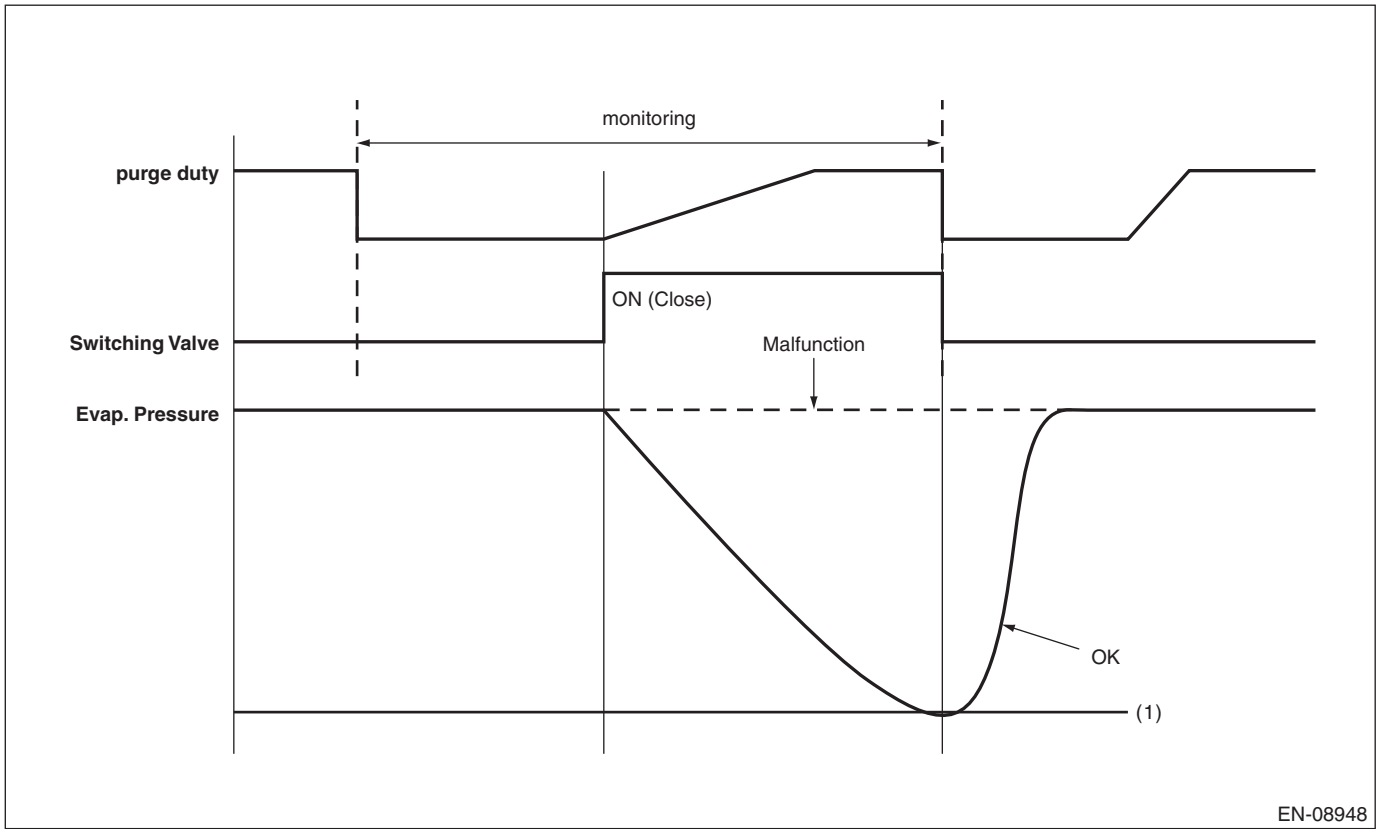

(1) -0.7 kPa (-5 mmHg, -0.2 inHg)

Judge as NG when the following conditions are established.

Judgment Value

Malfunction Criteria	Threshold Value
Evaporative Leak Check Module pressure (gauge)	> –0.7 kPa (–5 mmHg, –0.2 inHg)

Time Needed for Diagnosis: 20 seconds
Malfunction Indicator Light Illumination: Illuminates when malfunction occurs in 2 continuous driving cycles.

CN:DTC P0451 EVAP SYSTEM (CPC) PRESSURE SENSOR/SWITCH CIRCUIT RANGE/PERFORMANCE

DTC DETECTING CONDITION:

Detected when two consecutive driving cycles with fault occur.

CAUTION:

After servicing or replacing faulty parts, perform Clear Memory Mode <Ref. to EN(STI)(diag)-68, OPERATION, Clear Memory Mode.>, and Inspection Mode <Ref. to EN(STI)(diag)-48, PROCEDURE, Inspection Mode.>.

	Step	Check	Yes	No
1	**CHECK FOR ANY OTHER DTC ON DISPLAY.**	Is any other DTC displayed?	Check the appropriate DTC using the “List of Diagnostic Trouble Code (DTC)”. <Ref. to EN(STI)(diag)-96, List of Diagnostic Trouble Code (DTC).>	Go to step **2**.
2	**CHECK CURRENT DATA.** 1) Turn the ignition switch to ON (engine OFF). 2) Using the Subaru Select Monitor or general scan tool, read the value in «Atmosphere Pressure» and «Mani. Absolute Pressure», and compare them with the actual atmospheric pressure. NOTE: • Subaru Select Monitor For detailed operation procedures, refer to “Read Current Data For Engine”. <Ref. to EN(STI)(diag)-36, Subaru Select Monitor.> • General scan tool For detailed operation procedures, refer to the general scan tool operation manual. • To read the actual atmospheric pressure, connect the Subaru Select Monitor or general scan tool to the other known good vehicle.	Is the difference with the actual atmospheric pressure 3.3 kPa (24.8 mmHg, 1 inHg) or more?	Replace the part that showed larger deviation from the actual atmospheric pressure than the other. • If deviations in value for «Atmosphere Pressure» is larger: Replace the leak check valve assembly. <Ref. to EC(STI)-32, Leak Check Valve Assembly.> • If deviations in value for «Mani. Absolute Pressure» is larger: Replace the manifold absolute pressure sensor. <Ref. to FU(STI)-41, Manifold Absolute Pressure Sensor.>	Even if DTC is detected, the circuit has returned to a normal condition at this time. Reproduce the failure, and then perform the diagnosis again. NOTE: In this case, temporary poor contact of connector, temporary open or short circuit of harness may be the cause.

1. OUTLINE OF DIAGNOSIS

Detect the output characteristics malfunction of Evaporative Leak Check Module pressure sensor.
Judge as NG when the Evaporative Leak Check Module pressure sensor output value is largely different from the intake manifold pressure when the ignition switch is ON.

2. COMPONENT DESCRIPTION

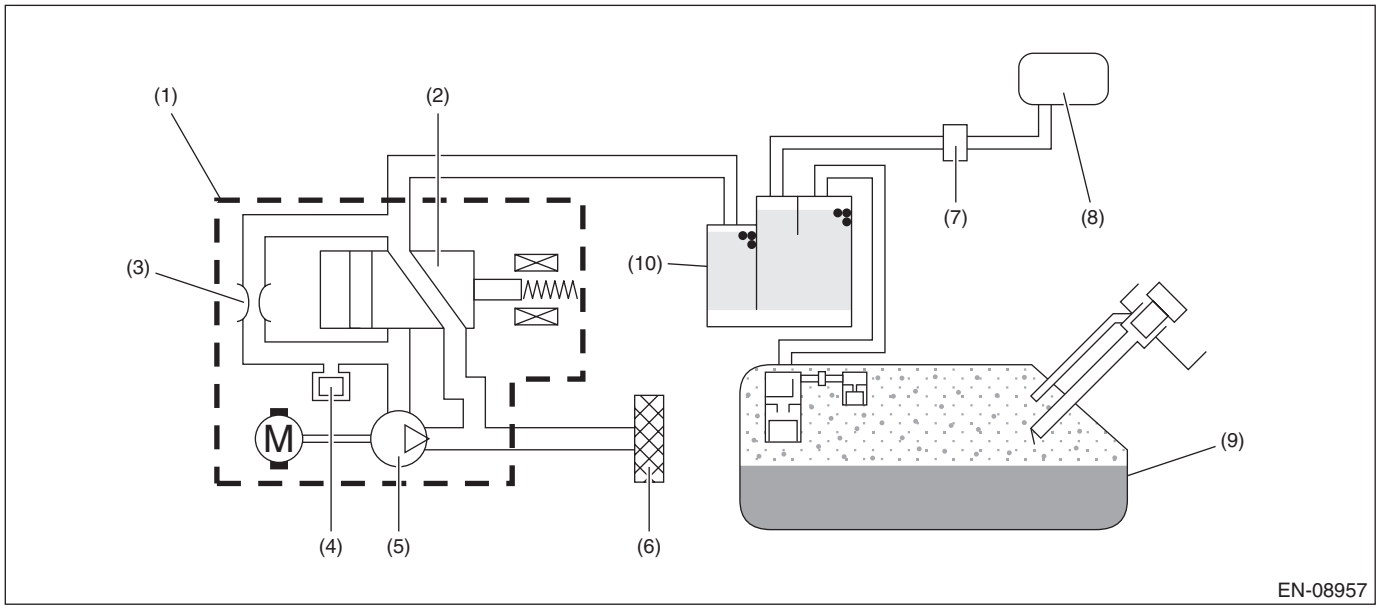

(1) Leak check valve ASSY
(2) Switching valve
(3) Reference orifice (0.02 inch orifice)
(4) Pressure sensor
(5) Vacuum pump
(6) Drain filter
(7) Purge control solenoid valve
(8) Intake manifold
(9) Fuel tank
(10) Canister

3. EXECUTION CONDITION

Secondary parameters	Execution condition
Elapsed time after ignition switch is turned to ON	≥ 500 ms and < 60000 ms
Soaking time	≥ 60 s
Evaporative Leak Check Module vacuum pump	Not in operation
Evaporative Leak Check Module switching valve	Open
Purge control	Not in operation

4. GENERAL DRIVING CYCLE

Perform the diagnosis once at ignition ON.

5. DIAGNOSTIC METHOD

If the duration of time while the following conditions are met is longer than the time indicated, judge as NG.

Judgment Value

Malfunction Criteria	Threshold Value
|Evaporative Leak Check Module pressure sensor output value – intake manifold pressure (absolute pressure) when ignition switch is ON|	> 6532.8 Pa (49 mmHg, 1.9 inHg)

Time Needed for Diagnosis: 320 ms
Malfunction Indicator Light Illumination: Illuminates as soon as a malfunction occurs.

CO:DTC P0452 EVAP SYSTEM (CPC) PRESSURE SENSOR/SWITCH CIRCUIT LOW

DTC DETECTING CONDITION:
Immediately at fault recognition

CAUTION:
After servicing or replacing faulty parts, perform Clear Memory Mode <Ref. to EN(STI)(diag)-68, OPERATION, Clear Memory Mode.>, and Inspection Mode <Ref. to EN(STI)(diag)-48, PROCEDURE, Inspection Mode.>.

WIRING DIAGRAM:
Engine Electrical System <Ref. to WI-154, WIRING DIAGRAM, Engine Electrical System.>

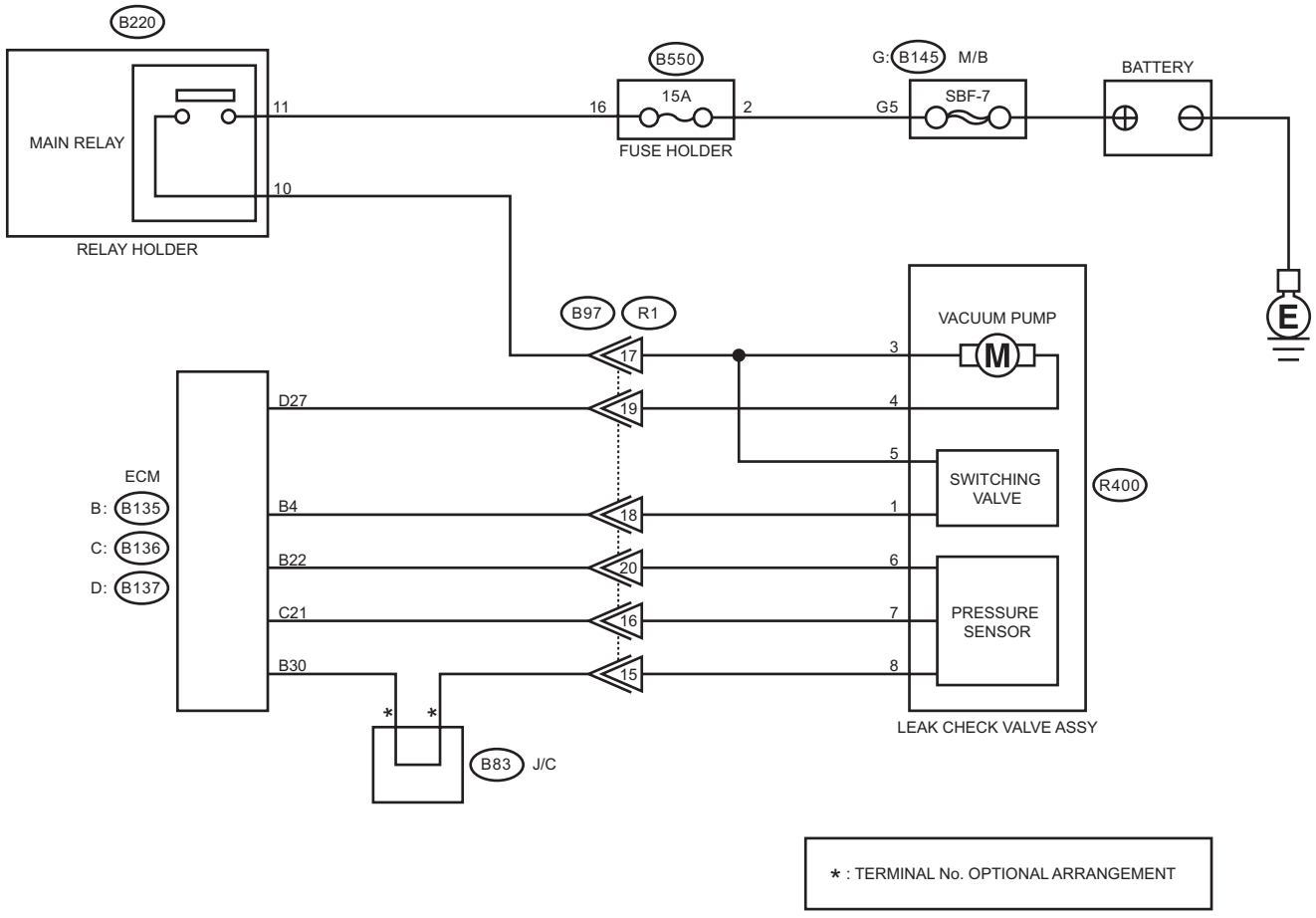

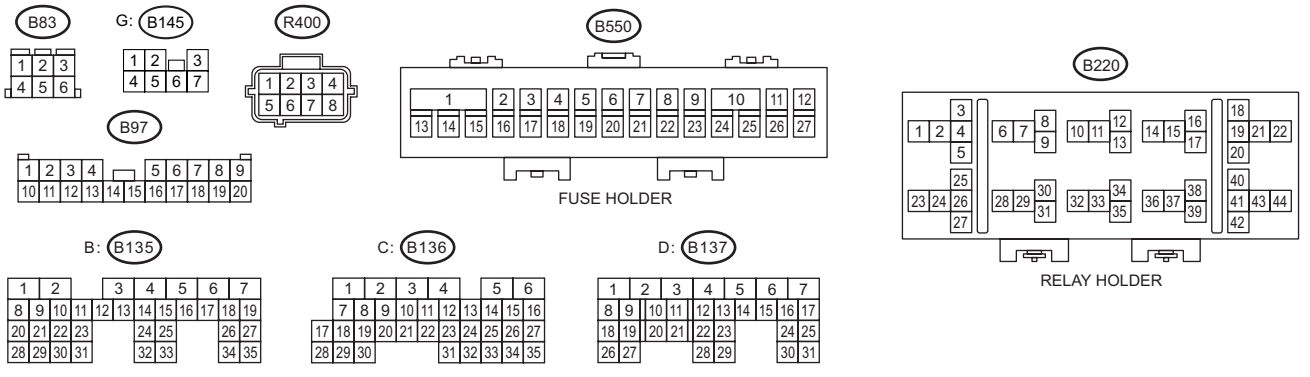

EN-21432

	Step	Check	Yes	No
1	**CHECK CURRENT DATA.** 1) Turn the ignition switch to ON. 2) Read the value of «Atmosphere Pressure» using the Subaru Select Monitor or a general scan tool. NOTE: • Subaru Select Monitor For detailed operation procedures, refer to "Read Current Data For Engine". <Ref. to EN(STI)(diag)-36, Subaru Select Monitor.> • General scan tool For detailed operation procedures, refer to the general scan tool operation manual.	Is the value in «Atmosphere Pressure» 34 kPa (255 mmHg, 10 inHg) or less?	Go to step **2**.	Even if DTC is detected, the circuit has returned to a normal condition at this time. Reproduce the failure, and then perform the diagnosis again. NOTE: In this case, temporary poor contact of connector, temporary open or short circuit of harness may be the cause.
2	**CHECK POWER SUPPLY OF LEAK CHECK VALVE ASSEMBLY.** 1) Turn the ignition switch to OFF. 2) Disconnect the connector from the leak check valve assembly. 3) Turn the ignition switch to ON. 4) Measure the voltage between the leak check valve assembly connector and chassis ground. ***Connector & terminal*** ***(R400) No. 6 (+) — Chassis ground (–):***	Is the voltage 4.5 V or more?	Go to step **3**.	Repair the harness and connector. NOTE: In this case, repair the following item: • Open circuit in harness between ECM connector and the leak check valve assembly connector • Poor contact of ECM connector • Poor contact of coupling connector
3	**CHECK HARNESS BETWEEN ECM AND LEAK CHECK VALVE ASSEMBLY CONNECTOR.** 1) Turn the ignition switch to OFF. 2) Disconnect the connector from ECM. 3) Measure the resistance between ECM connector and chassis ground. ***Connector & terminal*** ***(B136) No. 21 — Chassis ground:***	Is the resistance 1 MΩ or more?	Go to step **4**.	Repair the short circuit to ground in harness between ECM connector and leak check valve assembly connector.
4	**CHECK FOR POOR CONTACT.** Check for poor contact of leak check valve assembly connector.	Is there poor contact in the leak check valve assembly connector?	Repair the poor contact in the leak check valve assembly connector.	Replace the leak check valve assembly. <Ref. to EC(STI)-32, Leak Check Valve Assembly.>

1. OUTLINE OF DIAGNOSIS

Detect the open or short circuit in Evaporative Leak Check Module pressure sensor.
Judge as NG if out of specification.

2. COMPONENT DESCRIPTION

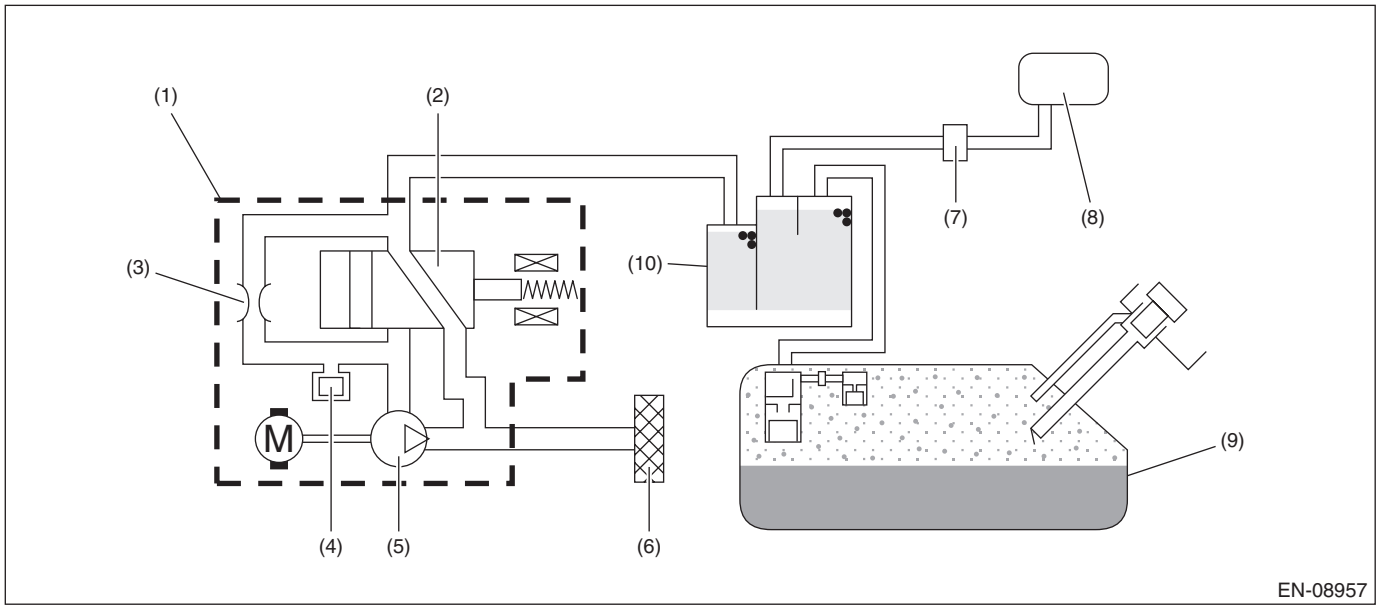

(1) Leak check valve ASSY
(2) Switching valve
(3) Reference orifice (0.02 inch orifice)
(4) Pressure sensor
(5) Vacuum pump
(6) Drain filter
(7) Purge control solenoid valve
(8) Intake manifold
(9) Fuel tank
(10) Canister

3. EXECUTION CONDITION

Secondary parameters	Execution condition
Battery voltage	≥ 10.9 V

4. GENERAL DRIVING CYCLE

Always perform the diagnosis continuously.

5. DIAGNOSTIC METHOD

If the duration of time while the following conditions are met is longer than the time indicated, judge as NG.

Judgment Value

Malfunction Criteria	Threshold Value
Output voltage	< 0.973 V

Time Needed for Diagnosis: 1000 ms
Malfunction Indicator Light Illumination: Illuminates as soon as a malfunction occurs.

CP:DTC P0453 EVAP SYSTEM (CPC) PRESSURE SENSOR/SWITCH CIRCUIT HIGH

DTC DETECTING CONDITION:
Immediately at fault recognition

CAUTION:
After servicing or replacing faulty parts, perform Clear Memory Mode <Ref. to EN(STI)(diag)-68, OPERATION, Clear Memory Mode.>, and Inspection Mode <Ref. to EN(STI)(diag)-48, PROCEDURE, Inspection Mode.>.

WIRING DIAGRAM:
Engine Electrical System <Ref. to WI-154, WIRING DIAGRAM, Engine Electrical System.>

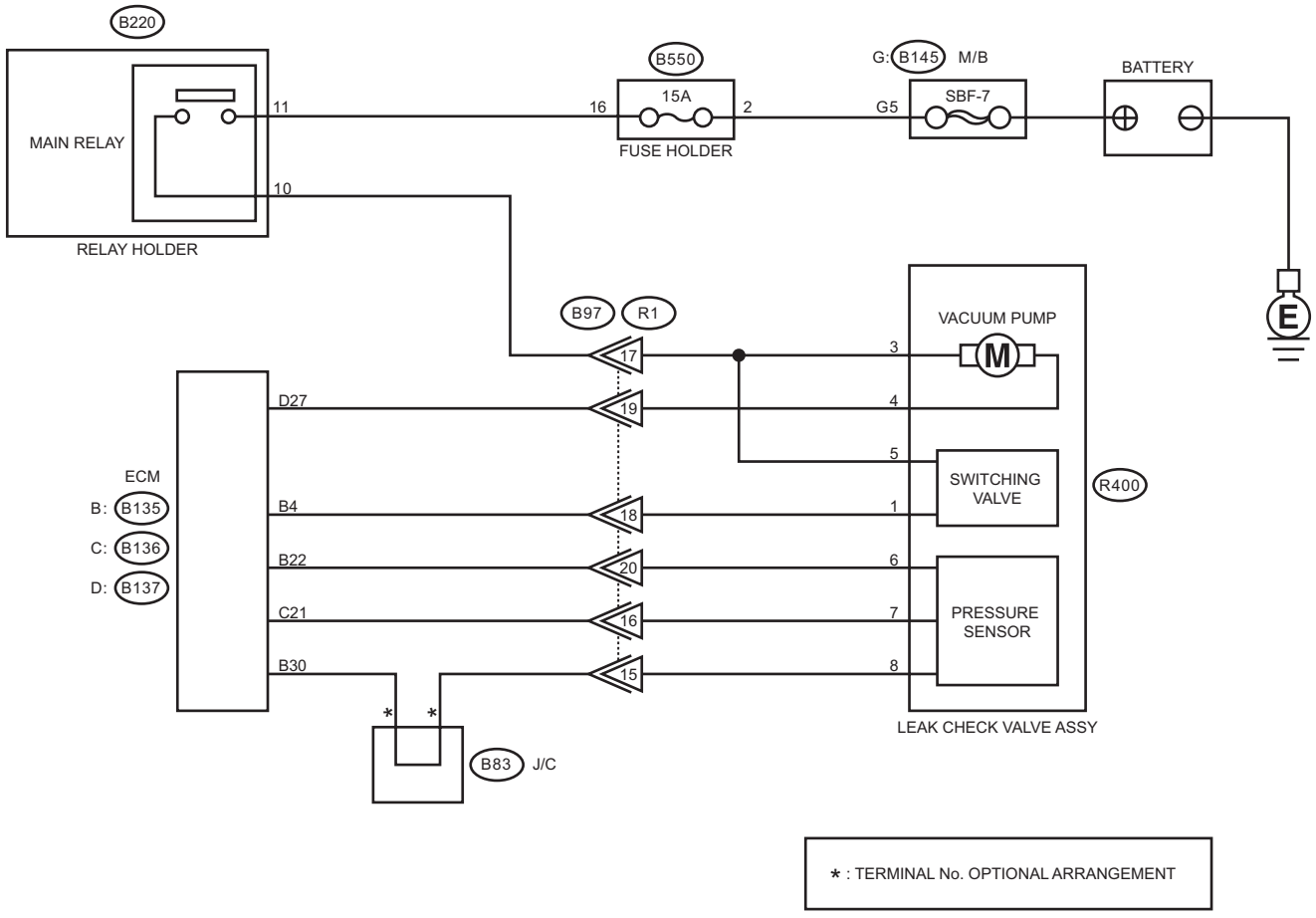

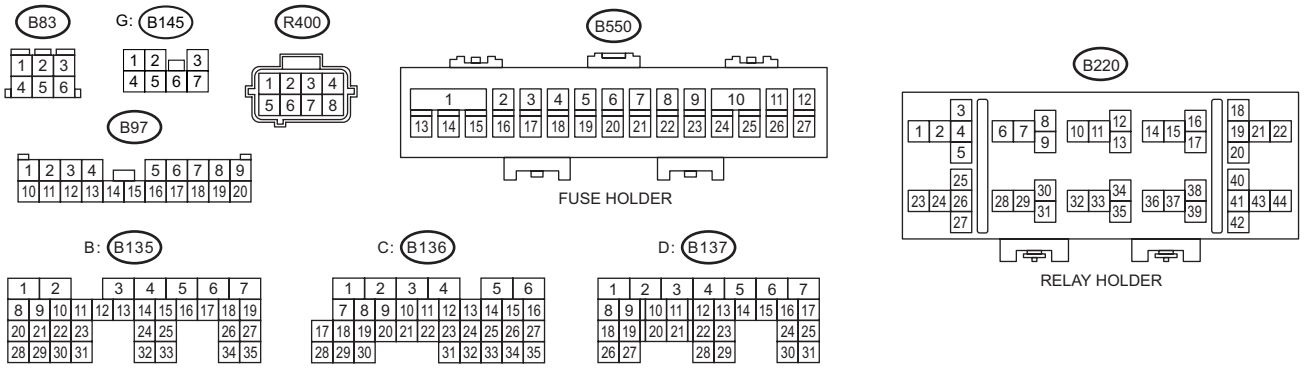

EN-21432

	Step	Check	Yes	No
1	**CHECK CURRENT DATA.** 1) Turn the ignition switch to ON. 2) Read the value of «Atmosphere Pressure» using the Subaru Select Monitor or a general scan tool. NOTE: • Subaru Select Monitor For detailed operation procedures, refer to "Read Current Data For Engine". <Ref. to EN(STI)(diag)-36, Subaru Select Monitor.> • General scan tool For detailed operation procedures, refer to the general scan tool operation manual.	Is the value in «Atmosphere Pressure» 125 kPa (938 mmHg, 36.9 inHg) or more?	Go to step **2**.	Even if DTC is detected, the circuit has returned to a normal condition at this time. Reproduce the failure, and then perform the diagnosis again. NOTE: In this case, temporary poor contact of connector, temporary open or short circuit of harness may be the cause.
2	**CHECK HARNESS BETWEEN ECM AND LEAK CHECK VALVE ASSEMBLY CONNECTOR.** 1) Turn the ignition switch to OFF. 2) Disconnect the connector from ECM. 3) Disconnect the connector from the leak check valve assembly. 4) Measure the resistance of harness between ECM connector and the leak check valve assembly connector. ***Connector & terminal*** ***(B136) No. 21 — (R400) No. 7:*** ***(B135) No. 30 — (R400) No. 8:***	Is the resistance less than 1 Ω?	Go to step **3**.	Repair the harness and connector. NOTE: In this case, repair the following item: • Open circuit in harness between ECM connector and the leak check valve assembly connector • Poor contact of coupling connector • Poor contact of joint connector
3	**CHECK FOR POOR CONTACT.** Check for poor contact of ECM and the leak check valve assembly connector.	Is there poor contact in ECM and the leak check valve assembly connector?	Repair the poor contact of ECM and the leak check valve assembly connector.	Go to step **4**.
4	**CHECK LEAK CHECK VALVE ASSEMBLY.** Check the pressure sensor of the leak check valve assembly. <Ref. to EC(STI)-50, CHECK PRESSURE SENSOR, INSPECTION, Leak Check Valve Assembly.>	Is the check result OK?	Repair the short circuit to power in harness between ECM connector and leak check valve assembly connector.	Replace the leak check valve assembly. <Ref. to EC(STI)-32, Leak Check Valve Assembly.>

1. OUTLINE OF DIAGNOSIS

Detect the open or short circuit in Evaporative Leak Check Module pressure sensor.
Judge as NG if out of specification.

2. COMPONENT DESCRIPTION

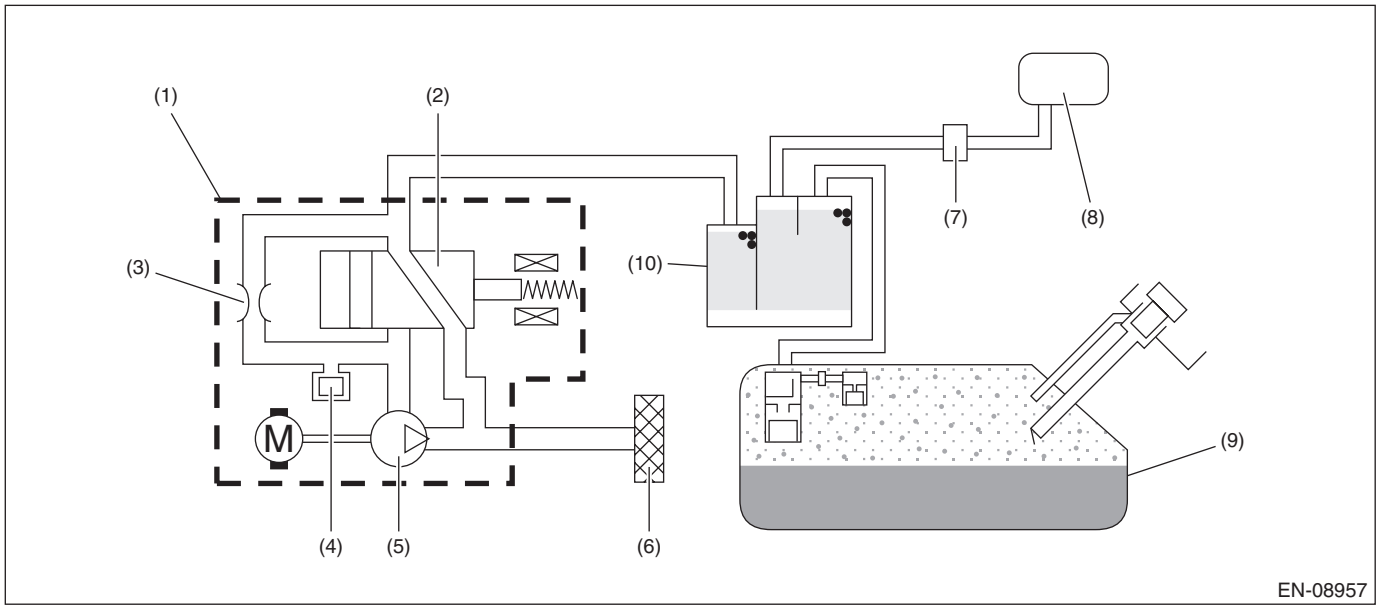

(1) Leak check valve ASSY
(2) Switching valve
(3) Reference orifice (0.02 inch orifice)
(4) Pressure sensor
(5) Vacuum pump
(6) Drain filter
(7) Purge control solenoid valve
(8) Intake manifold
(9) Fuel tank
(10) Canister

3. EXECUTION CONDITION

Secondary parameters	Execution condition
Battery voltage	≥ 10.9 V

4. GENERAL DRIVING CYCLE

Always perform the diagnosis continuously.

5. DIAGNOSTIC METHOD

If the duration of time while the following conditions are met is longer than the time indicated, judge as NG.

Judgment Value

Malfunction Criteria	Threshold Value
Output voltage	≥ 4.095 V

Time Needed for Diagnosis: 1000 ms
Malfunction Indicator Light Illumination: Illuminates as soon as a malfunction occurs.

CQ:DTC P0455 EVAP SYSTEM (CPC) LEAK DETECTED (LARGE LEAK)

DTC DETECTING CONDITION:
Detected when two consecutive driving cycles with fault occur.
TROUBLE SYMPTOM:
- Fuel odor
- There is a hole of more than 1.0 mm (0.04 in) dia. in evaporation system or fuel tank.
- Fuel filler cap loose or lost

CAUTION:
After servicing or replacing faulty parts, perform Clear Memory Mode <Ref. to EN(STI)(diag)-68, OPERATION, Clear Memory Mode.>, and Inspection Mode <Ref. to EN(STI)(diag)-48, PROCEDURE, Inspection Mode.>.

	Step	Check	Yes	No
1	**CHECK FUEL FILLER CAP.** 1) Turn the ignition switch to OFF. 2) Check the fuel filler cap. NOTE: The DTC is stored in memory if fuel filler cap is or was loose or if the cap chain has caught while tightening.	Is the fuel filler cap tightened securely?	Go to step **2**.	Tighten fuel filler cap securely.
2	**CHECK FUEL FILLER CAP.**	Is the fuel filler cap genuine?	Go to step **3**.	Replace with a genuine fuel filler cap.
3	**CHECK FUEL FILLER PIPE GASKET.**	Is there any damage to the seal between fuel filler cap and fuel filler pipe?	Repair or replace the fuel filler cap and fuel filler pipe. <Ref. to FU(STI)-78, Fuel Filler Pipe.>	Go to step **4**.
4	**CHECK PURGE CONTROL SOLENOID VALVE.** Check air-tightness of the purge control solenoid valve. <Ref. to EC(STI)-25, INSPECTION, Purge Control Solenoid Valve.>	Is the check result OK?	Go to step **5**.	Replace the purge control solenoid valve. <Ref. to EC(STI)-24, Purge Control Solenoid Valve.>
5	**CHECK EVAPORATIVE EMISSION CONTROL SYSTEM LINE.**	Are there holes on the evaporation line?	Repair or replace the evaporation line. <Ref. to FU(STI)-100, Fuel Delivery, Return and Evaporation Lines.>	Go to step **6**.
6	**CHECK CANISTER.**	Are there holes on the canister?	Replace the canister. <Ref. to EC(STI)-7, Canister.>	Go to step **7**.
7	**CHECK LEAK CHECK VALVE ASSEMBLY.**	Are there damage or holes on the leak check valve assembly?	Replace the leak check valve assembly. <Ref. to EC(STI)-32, Leak Check Valve Assembly.>	Go to step **8**.
8	**CHECK FUEL TANK.** Remove the fuel tank. <Ref. to FU(STI)-67, Fuel Tank.>	Are there damage or holes on the fuel tank?	Repair or replace the fuel tank. <Ref. to FU(STI)-67, Fuel Tank.>	Go to step **9**.

Step		Check	Yes	No
9	**CHECK ANY OTHER MECHANICAL TROUBLE IN EVAPORATIVE EMISSION CONTROL SYSTEM.**	Are there holes, cracks, clogging, or disconnection, misconnection of hoses or pipes in evaporative emission control system?	Repair or replace the hoses or pipes.	Repair the poor contact of ECM connector.

1. OUTLINE OF DIAGNOSIS

This diagnosis judges whether the Evaporative Leak Check Module operation is normal or not, and whether the evaporative emission system has leak and clogging or not.
To purge the canister, after driving, perform the five hours soaking after ignition switch OFF in order to stabilize the evaporative gas status. * After 5 or 7 or 9.5 hours passed, ECM is activated by soaking timer, and the leak check is started.
Judges whether the Evaporative Leak Check Module operation is normal or not, by measuring the reference pressure status via reference orifice (0.02 inch orifice). Judge as malfunction if the reference pressure is out of specified range. Then, judge whether there is a leak or not, by comparing the pressure (leak pressure) when the reference pressure and the evaporative emission system are in negative pressure condition. Judge as system leak in the evaporative emission system if the leak pressure is higher than reference pressure. Judge as clogging of pipe if the leak pressure becomes lower than the reference pressure within the specified amount of time.
0.02 inch leak and 0.04 inch leak can be distinguished by measuring the leak pressure.
The diagnosis results are stored inside ECM until the engine is started again.
*: When the test conditions are not met in 5 hours, perform diagnosis at elapsed time of 7 hours. When the test conditions are not met in 7 hours, perform diagnosis at elapsed time of 9.5 hours.

Diagnostic item	
Evaporative Leak Check Module system (Evaporative Leak Check Module main body)	Vacuum pump stuck Switching valve stuck to open Switching valve stuck to close Reference orifice flow large Reference orifice flow small
Leak check	Large leak • 0.04 inch leak • Fuel cap loose • Fuel cap off • System malfunction
	Very small leak • 0.02 inch leak
Clogging of pipe	—

OUTLINE OF DIAGNOSIS

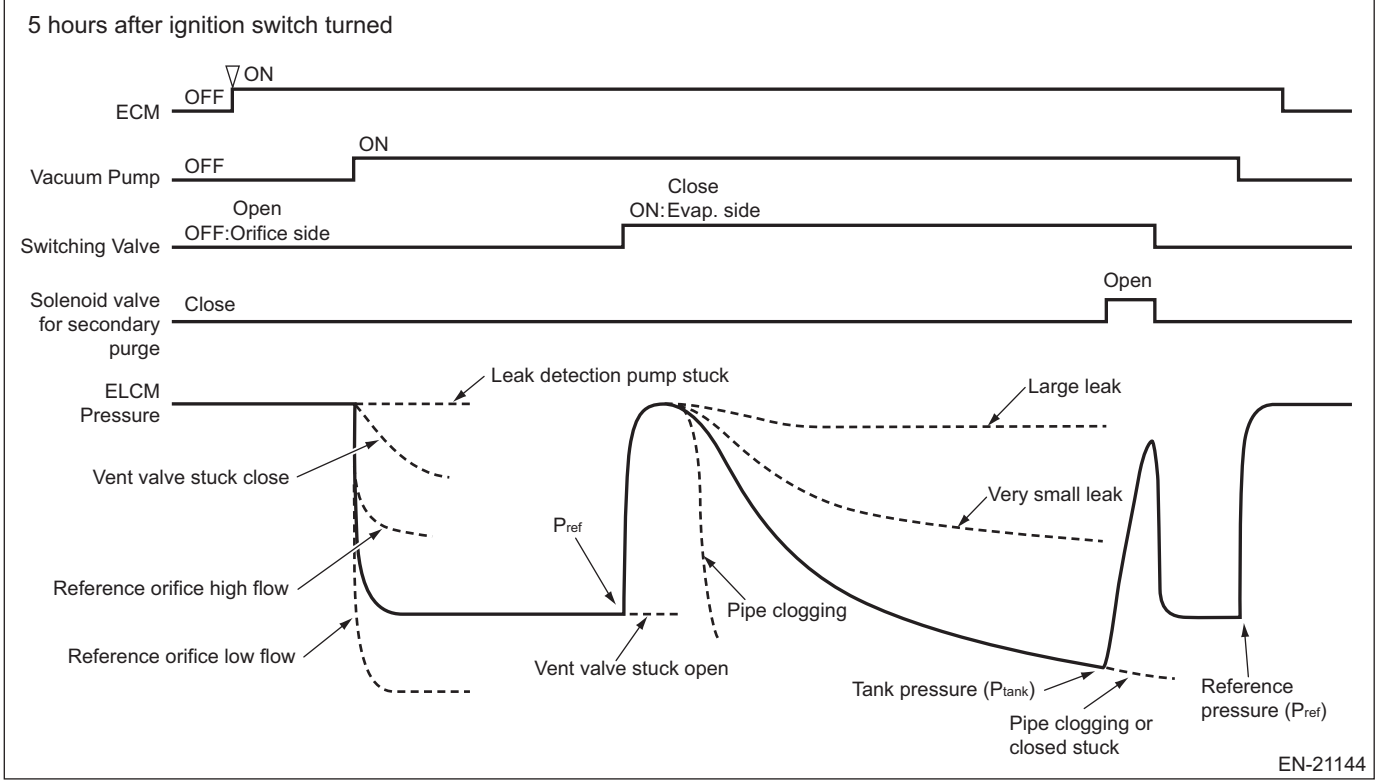

2. COMPONENT DESCRIPTION

Evaporative Leak Check Module consists of the pressure sensor, the reference orifice (diameter of 0.02 inch), the vacuum pump which introduces the negative pressure into evaporative emission system, and the switching valve which switches the passage to introduce the negative pressure.

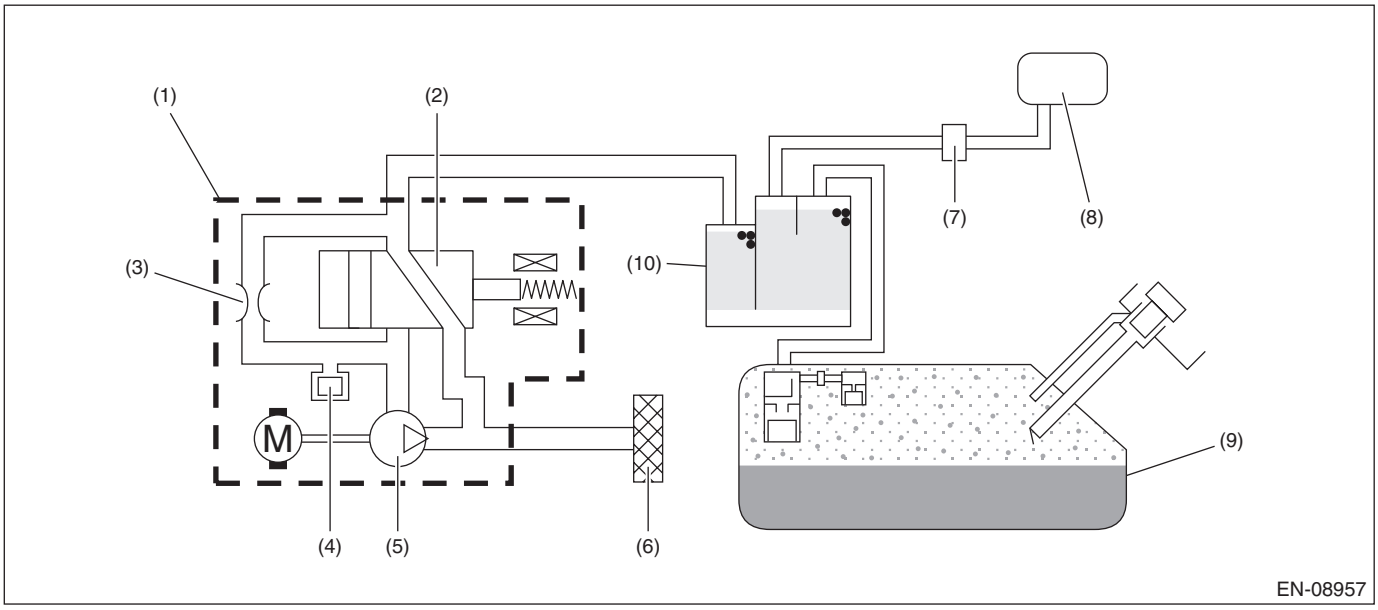

(1) ELCM
(2) Switching valve
(3) Reference orifice (0.02 inch orifice)
(4) Pressure sensor
(5) Vacuum pump
(6) Drain filter
(7) Purge control solenoid valve
(8) Intake manifold
(9) Fuel tank
(10) Canister

3. EXECUTION CONDITION

Secondary parameters	Execution condition
Battery voltage	≥ 10.9 V
Barometric pressure	≥ 75.1 kPa (563 mmHg, 22.2 inHg)
Engine coolant temperature	≥ 4.4 °C (39.9 °F) and < 45 °C (113 °F)
Accumulated purge amount during previous driving cycle	≥ Value of Map 1

Map 1

Engine coolant temperature when ECM is activated after soak time °C (°F)	0 (32)	30 (86)	35 (95)	40 (104)	45 (113)
Accumulated purge amount during previous driving cycle g (oz)	128 (4.51)	128 (4.51)	384 (13.54)	640 (22.57)	896 (31.6)

4. GENERAL DRIVING CYCLE

Perform the diagnosis only once when 5 or 7 or 9.5 hours has passed after ignition switch is OFF. For more detail, refer to “OUTLINE OF DIAGNOSIS”. <Ref. to EN(STI)(diag)-353, OUTLINE OF DIAGNOSIS, DTC P0455 EVAP SYSTEM (CPC) LEAK DETECTED (LARGE LEAK), Diagnostic Procedure with Diagnostic Trouble Code (DTC).>

5. DIAGNOSTIC METHOD

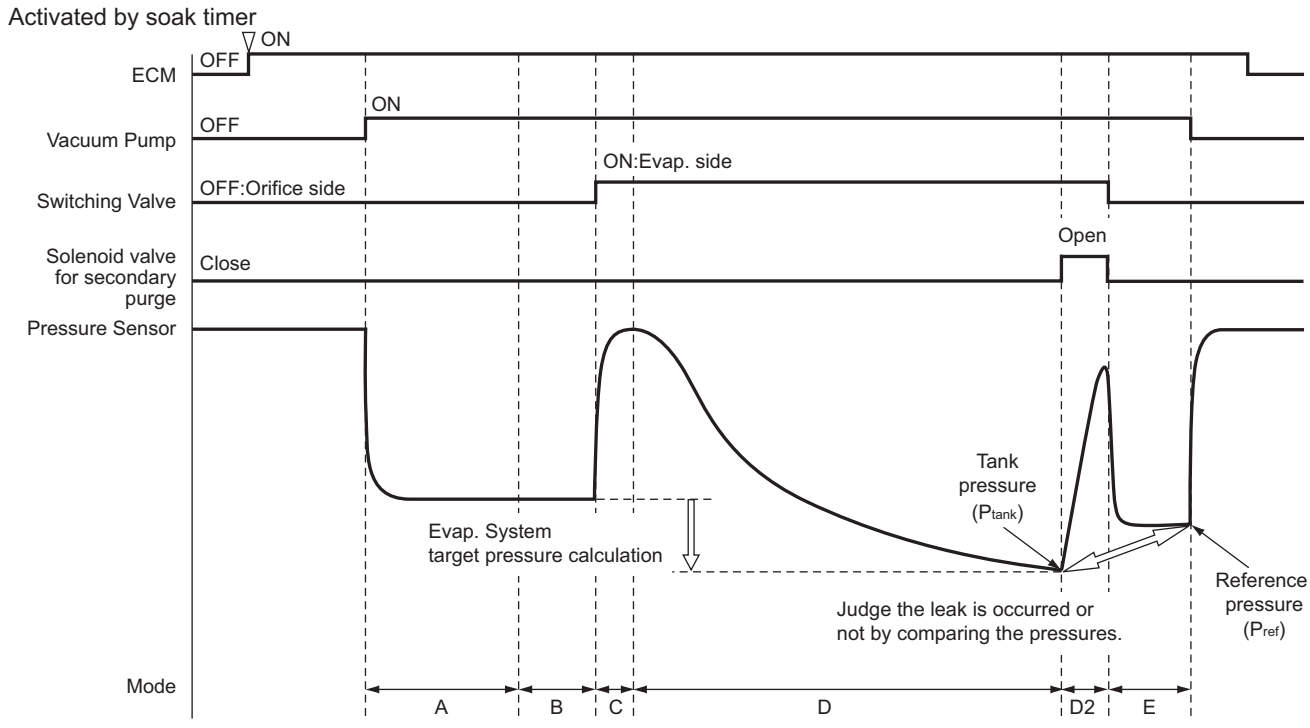

EN-20165

Mode	Explanation of Mode	Diagnosis Period
A	Vacuum pump operation confirmation and characteristics stability	7 s or less & 300 s
B	Measurement of reference pressure for setting the target negative pressure	40 s or less
C	Switching valve operation confirmation	12 s or less
D	Clogging of pipe diagnosis and leak pressure measurement	900 s or less
D2	Pipe clogging of the high pressure line Solenoid valve for secondary purge stuck closed	60 s
E	Reference pressure measurement for judgment	40 s or less

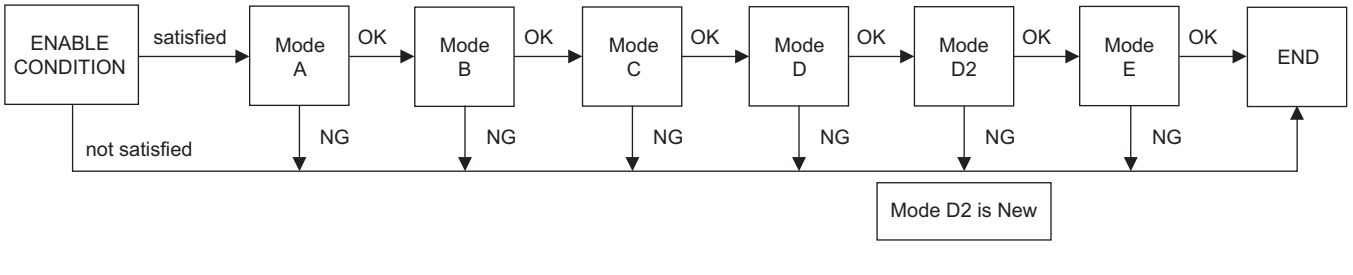

EN-20167

Mode A (Vacuum pump operation confirmation and characteristics stability)

Purpose: Detect the vacuum pump operation trouble.
Judge as NG when the following conditions are established.
Judge as OK if the following conditions are not established, and warm up for five minutes to stabilize the vacuum pump characteristics.

Judgment Value

Malfunction Criteria	Threshold Value	DTC
Pressure sensor output value	> –224 Pa (–1.68 mmHg, –0.1 inHg)	P2404

Mode B (Measurement of reference pressure for setting the target negative pressure)

Judgment 1
Purpose: Judge the reference pressure stability.
Judgment 2
Purpose: Judge whether the reference pressure is within the normal range, and detect the vacuum pump and orifice malfunctions.
Judge as NG when the following conditions are established.

Judgment Value

Malfunction Criteria	Threshold Value	DTC
Judgment 1 |Pressure sensor maximum output value – Pressure sensor minimum output value| or Judgment 2	> 314 Pa (2.355 mmHg, 0.1 inHg)	P2404
Reference pressure for setting the target negative pressure	< Value of Map 2 or > Value of Map 3	P2404

Map 2

Barometric pressure kPa (mmHg, inHg)	70 (525, 20.7)	80 (600, 23.6)	90 (675, 26.6)	100 (750, 29.5)
Reference pressure for setting the target negative pressure kPa (mmHg, inHg)	–4 (–29.79, –1.2)	–4.1 (–30.593, –1.2)	–4.2 (–31.395, –1.2)	–4.3 (–32.19, –1.3)

Map 3

Barometric pressure kPa (mmHg, inHg)	70 (525, 20.7)	80 (600, 23.6)	90 (675, 26.6)	100 (750, 29.5)
Reference pressure for setting the target negative pressure kPa (mmHg, inHg)	–0.9 (–7.065, –0.3)	–1 (–7.86, –0.3)	–1.2 (–8.663, –0.3)	–1.3 (–9.465, –0.4)

Mode C (Switching valve operation confirmation)

Purpose: Measure the pressure increase when switching valve is changed from open to close, and detect the stuck to open/close malfunctions of the switching valve.
Judge as NG when the following conditions are established.

Judgment Value

Malfunction Criteria	Threshold Value	DTC
Pressure sensor output value – Reference pressure for setting the target negative pressure	< 224 Pa (1.68 mmHg, 0.1 inHg)	P2404

Mode D (Clogging of pipe diagnosis and leak pressure measurement)

1. **Clogging of pipe**
   Purpose: Measure the time required for the evaporative emission system to reach the target negative pressure by the vacuum pump, and detect the clogging of pipe trouble.
   Judge as clogging of pipe malfunction if the evaporative emission system reaches to the target negative pressure within the specified time.
2. **Leak pressure measurement**
   Purpose: Measure the pressure (leak pressure) when the evaporative emission system becomes the negative pressure by the vacuum pump.
   Store the pressure as a leak pressure while the following conditions are met.

Phase D

Judgment Value

Malfunction Criteria	Threshold Value	DTC
Phase D Time of Phase D	≤ 27000 ms	P1451
Phase D2 Reference pressure for setting the target negative pressure	< –0.7 kPa (–5 mmHg, –0.2 inHg)	P04AF
<Large leak (0.04 inch)> Leak pressure	≥ Map6 (Pa)	P0455
<Very small leak (0.02 inch)> Leak pressure	> Reference pressure of 0.018 inch (Pa) and < Map6 (Pa)	P0456

Map 6

Reference pressure (Pa)	–4856	–4000	–2750	–1500	–824
Threshold Value (Pa)	–1785	–1463	–991	–520	–265

Formula for threshold value = Reference pressure × 0.377 – –0.341 mmHg
Time Needed for Diagnosis: 24 min

Mode E (Measurement of reference pressure for judgment)

Judgment 1
Purpose: Judge the reference pressure stability.
Judge as NG when the following conditions are established.
Judgment 2
Purpose: Judge whether the reference pressure is within the normal range, and detect the vacuum pump and orifice malfunctions.
Judge the vacuum pump performance stability.
Judge as NG when the following conditions are established.
Judgment 3
Purpose: Judge the presence of evaporative emission system leak.
Judge as NG when the following conditions are established.

Judgment Value

Malfunction Criteria	Threshold Value	DTC
Judgment 1 |Pressure sensor maximum output value – Pressure sensor minimum output value|	> 314 Pa (2.355 mmHg, 0.1 inHg)	P2404
or Judgment 2 Reference pressure for judgment	< Value of Map 4 or > Value of Map 5	P2404
or Judgment 3 |Reference pressure for setting the target negative pressure – Reference pressure for judgment|	> 941 Pa (136.4 mmHg, 277.9 inHg)	

Map 4

Barometric pressure kPa (mmHg, inHg)	70 (525, 20.7)	80 (600, 23.6)	90 (675, 26.6)	100 (750, 29.5)
Reference pressure for judgment kPa (mmHg, inHg)	–4.5 (–34.02, –1.3)	–4.6 (–34.815, –1.4)	–4.7 (–35.618, –1.4)	–4.9 (–36.42, –1.4)

Map 5

Barometric pressure kPa (mmHg, inHg)	70 (525, 20.7)	80 (600, 23.6)	90 (675, 26.6)	100 (750, 29.5)
Reference pressure for judgment kPa (mmHg, inHg)	–0.8 (–6.18, –0.2)	–0.9 (–6.983, –0.3)	–1 (–7.785, –0.3)	–1.1 (–8.58, –0.3)

Time Needed for Diagnosis: Approx. 24 min
At next engine start, confirm whether the enable conditions are satisfied even though refueling has been done during soaking, and determine the malfunction.
Malfunction Indicator Light Illumination: Illuminates when malfunction occurs in 2 continuous driving cycles.

CR:DTC P0456 EVAP SYSTEM (CPC) LEAK DETECTED (VERY SMALL LEAK)

NOTE:
For the diagnostic procedure, refer to DTC P0455. <Ref. to EN(STI)(diag)-352, DTC P0455 EVAP SYSTEM (CPC) LEAK DETECTED (LARGE LEAK), Diagnostic Procedure with Diagnostic Trouble Code (DTC).>

1. OUTLINE OF DIAGNOSIS

NOTE:
For the detection standard, refer to DTC P0455. <Ref. to EN(STI)(diag)-352, DTC P0455 EVAP SYSTEM (CPC) LEAK DETECTED (LARGE LEAK), Diagnostic Procedure with Diagnostic Trouble Code (DTC).>

CS:DTC P0458 EVAP SYSTEM (CPC) PURGE CONTROL VALVE "A" CIRCUIT LOW

DTC DETECTING CONDITION:
Detected when two consecutive driving cycles with fault occur.
TROUBLE SYMPTOM:
Improper idling

CAUTION:
After servicing or replacing faulty parts, perform Clear Memory Mode <Ref. to EN(STI)(diag)-68, OPERATION, Clear Memory Mode.>, and Inspection Mode <Ref. to EN(STI)(diag)-48, PROCEDURE, Inspection Mode.>.
WIRING DIAGRAM:
Engine Electrical System <Ref. to WI-154, WIRING DIAGRAM, Engine Electrical System.>

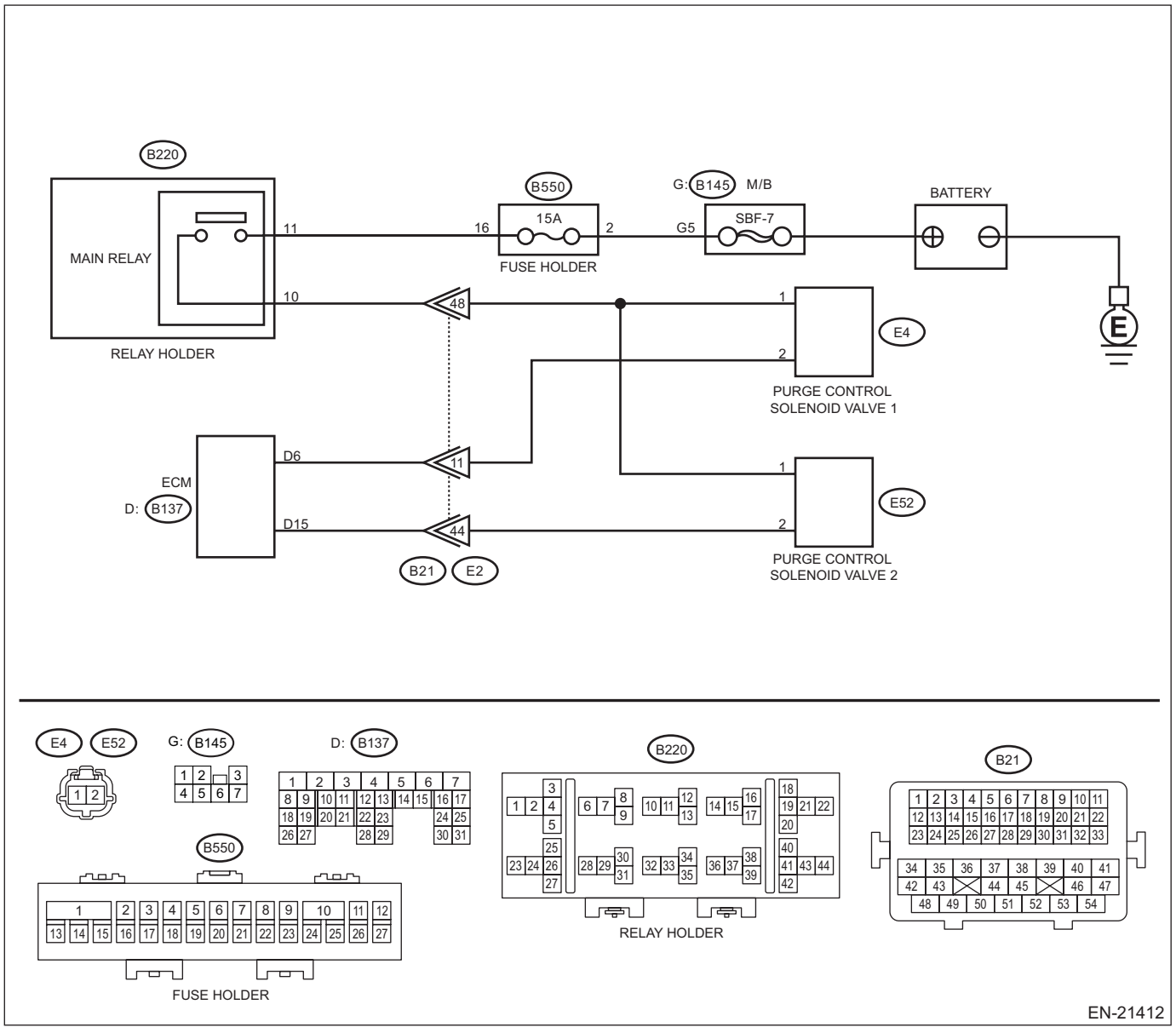

	Step	Check	Yes	No
1	**CHECK OUTPUT SIGNAL OF ECM.** 1) Turn the ignition switch to ON. 2) Measure the voltage between ECM connector and chassis ground. ***Connector & terminal*** ***(B137) No. 6 (+) — Chassis ground (–):***	Is the voltage 10 V or more?	Go to step **2**.	Go to step **3**.
2	**CHECK FOR POOR CONTACT.** Check for poor contact of ECM connector.	Is there poor contact of ECM connector?	Repair the poor contact of ECM connector.	Even if DTC is detected, the circuit has returned to a normal condition at this time. Reproduce the failure, and then perform the diagnosis again. NOTE: In this case, temporary open or short circuit of harness or temporary poor contact of connector may be the cause.
3	**CHECK POWER SUPPLY TO PURGE CONTROL SOLENOID VALVE CONNECTOR.** Measure the voltage between purge control solenoid valve connector and engine ground. ***Connector & terminal*** ***(E4) No. 1 (+) — Engine ground (–):***	Is the voltage 10 V or more?	Go to step **4**.	Repair the power supply circuit.
4	**CHECK HARNESS BETWEEN ECM AND PURGE CONTROL SOLENOID VALVE CONNECTOR.** 1) Turn the ignition switch to OFF. 2) Disconnect the connector from ECM. 3) Disconnect the connector from the purge control solenoid valve. 4) Measure the resistance between the purge control solenoid valve connector and engine ground. ***Connector & terminal*** ***(E4) No. 2 — Engine ground:***	Is the resistance 1 MΩ or more?	Go to step **5**.	Repair the short circuit to ground in harness between ECM connector and purge control solenoid valve connector.
5	**CHECK HARNESS BETWEEN ECM AND PURGE CONTROL SOLENOID VALVE CONNECTOR.** Measure the resistance of harness between ECM connector and purge control solenoid valve connector. ***Connector & terminal*** ***(B137) No. 6 — (E4) No. 2:***	Is the resistance less than 1 Ω?	Go to step **6**.	Repair the harness and connector. NOTE: In this case, repair the following item: • Open circuit in harness between ECM connector and purge control solenoid valve connector • Poor contact of coupling connector

	Step	Check	Yes	No
6	**CHECK PURGE CONTROL SOLENOID VALVE.** 1) Remove the purge control solenoid valve. 2) Measure the resistance between purge control solenoid valve terminals. ***Terminals*** ***No. 1 — No. 2:***	Is the resistance 10 — 100 Ω?	Repair the poor contact of purge control solenoid valve connector.	Replace the purge control solenoid valve. <Ref. to EC(STI)-24, Purge Control Solenoid Valve.>

1. OUTLINE OF DIAGNOSIS

Detect open or short circuit of the purge control solenoid valve.
Judge as NG when the ECM output level differs from the actual terminal level.

2. COMPONENT DESCRIPTION

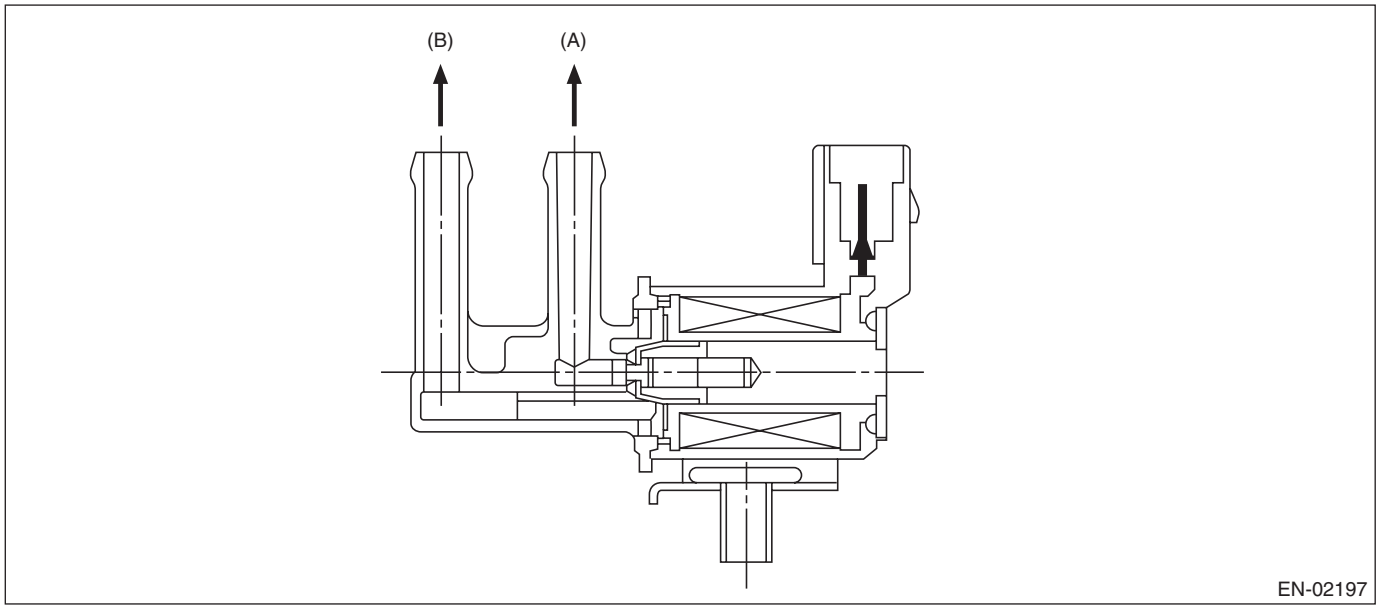

(A) To canister (B) To intake manifold

3. EXECUTION CONDITION

Secondary parameters	Execution condition
Battery voltage	≥ 10.9 V
Duty ratio of “ON”	< 0.75

4. GENERAL DRIVING CYCLE

Perform the diagnosis continuously after the conditions have been established.

5. DIAGNOSTIC METHOD

If the duration of time while the following conditions are met is longer than the time indicated, judge as NG.

Judgment Value

Malfunction Criteria	Threshold Value
Output voltage	≤ Battery voltage × 0.34

Time Needed for Diagnosis: 2500 ms
Malfunction Indicator Light Illumination: Illuminates when malfunction occurs in 2 continuous driving cycles.

CT:DTC P0459 EVAP SYSTEM (CPC) PURGE CONTROL VALVE "A" CIRCUIT HIGH

DTC DETECTING CONDITION:

Detected when two consecutive driving cycles with fault occur.

TROUBLE SYMPTOM:

Improper idling

CAUTION:

After servicing or replacing faulty parts, perform Clear Memory Mode <Ref. to EN(STI)(diag)-68, OPERATION, Clear Memory Mode.>, and Inspection Mode <Ref. to EN(STI)(diag)-48, PROCEDURE, Inspection Mode.>.

WIRING DIAGRAM:

Engine Electrical System <Ref. to WI-154, WIRING DIAGRAM, Engine Electrical System.>

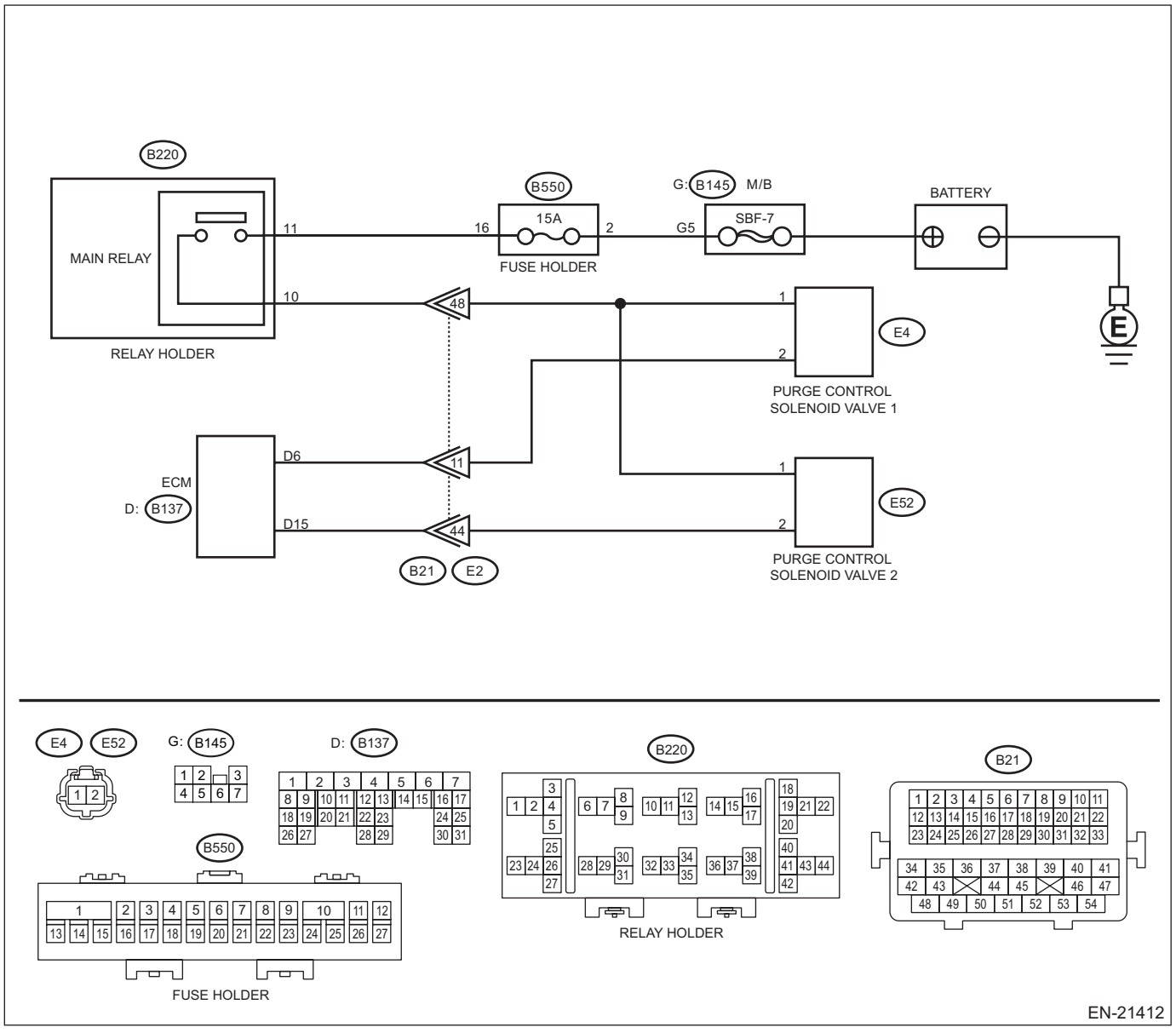

	Step	Check	Yes	No
1	**CHECK HARNESS BETWEEN ECM AND PURGE CONTROL SOLENOID VALVE CONNECTOR.** 1) Turn the ignition switch to OFF. 2) Disconnect the connector from ECM. 3) Disconnect the connector from the purge control solenoid valve. 4) Turn the ignition switch to ON. 5) Measure the voltage between ECM connector and chassis ground. ***Connector & terminal*** ***(B137) No. 6 (+) — Chassis ground (–):***	Is the voltage 10 V or more?	Repair the short circuit to power in the harness between ECM connector and purge control solenoid valve connector.	Go to step **2**.
2	**CHECK PURGE CONTROL SOLENOID VALVE.** 1) Turn the ignition switch to OFF. 2) Measure the resistance between purge control solenoid valve terminals. ***Terminals*** ***No. 1 — No. 2:***	Is the resistance less than 1 Ω?	Replace the purge control solenoid valve. <Ref. to EC(STI)-24, Purge Control Solenoid Valve.>	Repair the poor contact of ECM connector.

1. OUTLINE OF DIAGNOSIS

Detect open or short circuit of the purge control solenoid valve.
Judge as NG when the ECM output level differs from the actual terminal level.

2. COMPONENT DESCRIPTION

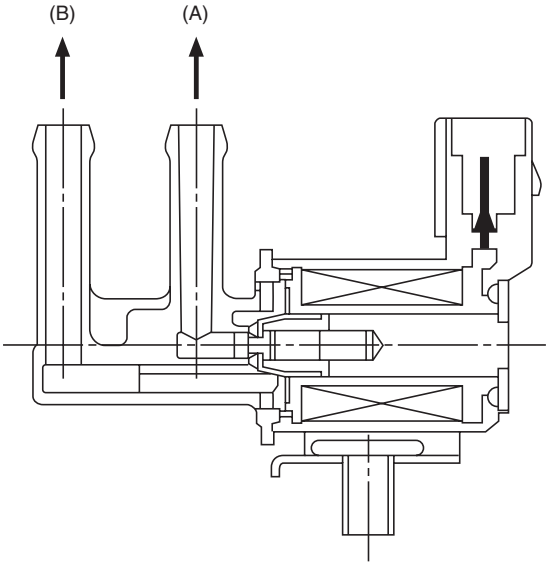

EN-02197

(A) To canister (B) To intake manifold

3. EXECUTION CONDITION

Secondary parameters	Execution condition
Battery voltage	≥ 10.9 V
Duty ratio of “ON”	≥ 0.25

4. GENERAL DRIVING CYCLE

Perform the diagnosis continuously after the conditions have been established.

5. DIAGNOSTIC METHOD

If the duration of time while the following conditions are met is longer than the time indicated, judge as NG.

Judgment Value

Malfunction Criteria	Threshold Value
Output current	≥ 12 A

Time Needed for Diagnosis: 2500 ms
Malfunction Indicator Light Illumination: Illuminates when malfunction occurs in 2 continuous driving cycles.

CU:DTC P0461 FUEL LEVEL SENSOR "A" CIRCUIT RANGE/PERFORMANCE

DTC DETECTING CONDITION:
Detected when two consecutive driving cycles with fault occur.

CAUTION:
After servicing or replacing faulty parts, perform Clear Memory Mode <Ref. to EN(STI)(diag)-68, OPERATION, Clear Memory Mode.>, and Inspection Mode <Ref. to EN(STI)(diag)-48, PROCEDURE, Inspection Mode.>.

Step	Check	Yes	No
1 CHECK FOR ANY OTHER DTC ON DISPLAY.	Is any other DTC displayed?	Check the appropriate DTC using the “List of Diagnostic Trouble Code (DTC)”. <Ref. to EN(STI)(diag)-96, List of Diagnostic Trouble Code (DTC).>	Replace the fuel level sensor and fuel sub level sensor. <Ref. to FU(STI)-88, Fuel Level Sensor.> <Ref. to FU(STI)-89, Fuel Sub Level Sensor.>

1. OUTLINE OF DIAGNOSIS

Detect malfunctions of the fuel level sensor output property.
If the fuel level does not vary in a particular driving condition / engine condition where it should, judge as NG.

2. COMPONENT DESCRIPTION

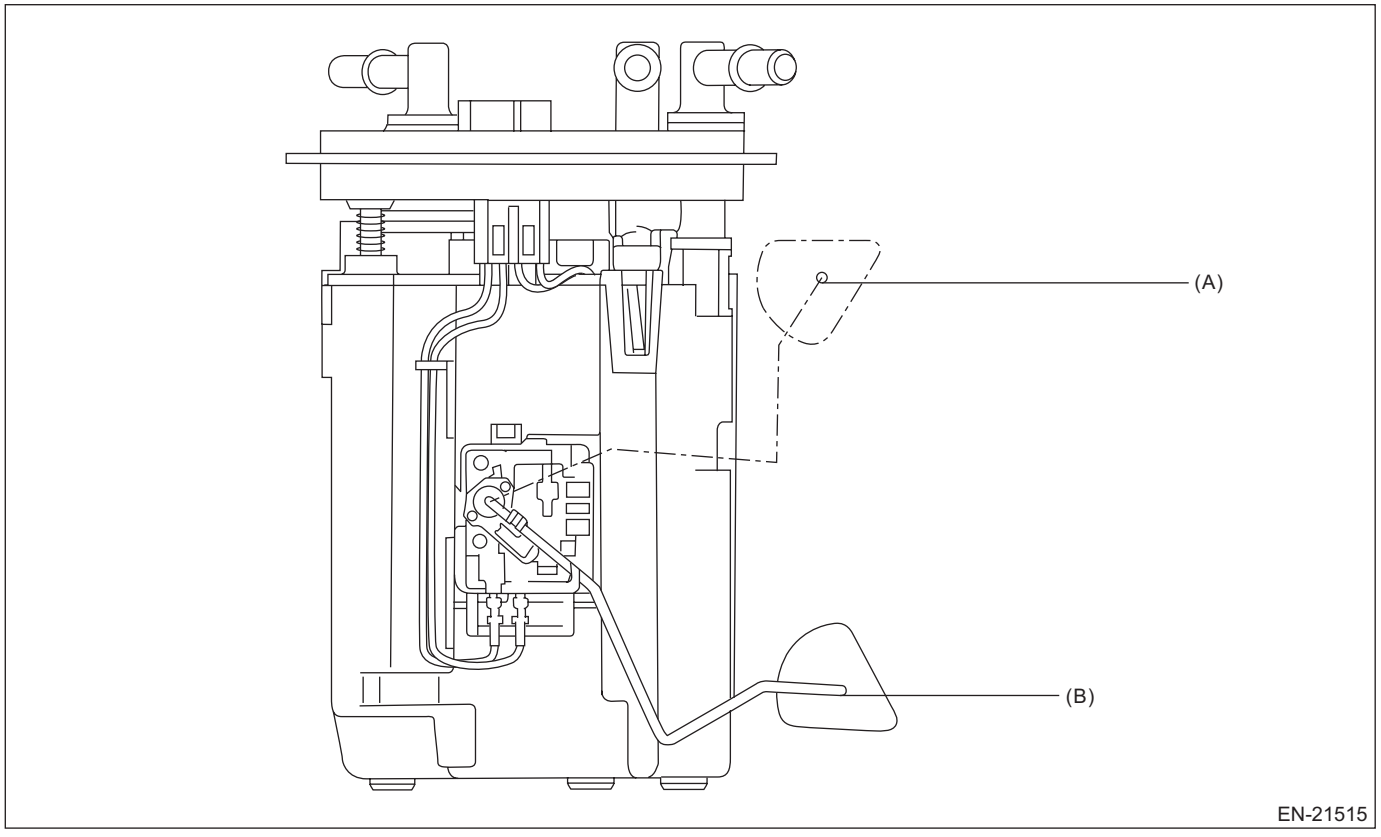

(A) FULL 8.7 Ω (B) EMPTY 139.1 Ω

3. EXECUTION CONDITION

Secondary parameters	Execution condition
Battery voltage	≥ 10.9 V
Elapsed time after starting the engine	≥ 5000 ms
Accumulated amount of intake air	≥ 82687.5 g (2916.39 oz)

4. GENERAL DRIVING CYCLE

Always perform the diagnosis continuously.

5. DIAGNOSTIC METHOD

Judge as NG when the following conditions are established.

Judgment Value

Malfunction Criteria	Threshold Value
Max. – min. values of fuel level output	< 2.6 L (0.69 US gal, 0.57 Imp gal)

Time Needed for Diagnosis: Less than 1 second
Malfunction Indicator Light Illumination: Illuminates as soon as a malfunction occurs.

CV:DTC P0462 FUEL LEVEL SENSOR "A" CIRCUIT LOW

NOTE:
For the diagnostic procedure, refer to DTC P0463. <Ref. to EN(STI)(diag)-369, DTC P0463 FUEL LEVEL SENSOR "A" CIRCUIT HIGH, Diagnostic Procedure with Diagnostic Trouble Code (DTC).>

1. OUTLINE OF DIAGNOSIS

Detect the open or short circuit of fuel level sensor. Judge as NG if out of specification.

2. COMPONENT DESCRIPTION

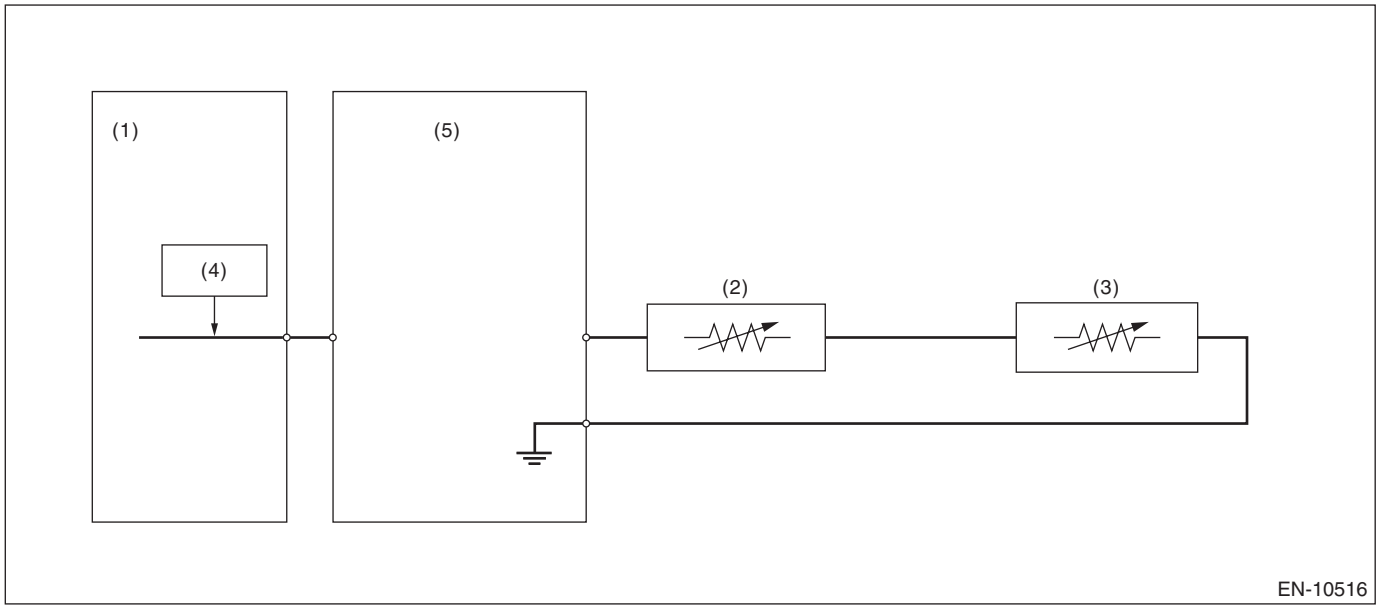

(1) Engine control module (ECM)
(2) Fuel sub level sensor
(3) Fuel level sensor
(4) Detecting circuit
(5) Combination meter

3. EXECUTION CONDITION

Secondary parameters	Execution condition
Battery voltage	≥ 10.9 V
Elapsed time after starting the engine	≥ 3000 ms

4. GENERAL DRIVING CYCLE

Always perform the diagnosis continuously after the enable conditions have been established.

5. DIAGNOSTIC METHOD

If the duration of time while the following conditions are met is longer than the time indicated, judge as NG.

Judgment Value

Malfunction Criteria	Threshold Value
Output voltage	< 2.211 V

Time Needed for Diagnosis: 2500 ms
Malfunction Indicator Light Illumination: Illuminates when malfunction occurs in 2 continuous driving cycles.

CW:DTC P0463 FUEL LEVEL SENSOR "A" CIRCUIT HIGH

DTC DETECTING CONDITION:
Detected when two consecutive driving cycles with fault occur.

CAUTION:
After servicing or replacing faulty parts, perform Clear Memory Mode <Ref. to EN(STI)(diag)-68, OPERATION, Clear Memory Mode.>, and Inspection Mode <Ref. to EN(STI)(diag)-48, PROCEDURE, Inspection Mode.>.

Step	Check	Yes	No
1 CHECK FOR ANY OTHER DTC ON DISPLAY.	Is DTC P0462 or P0463 displayed on the Subaru Select Monitor?	Check the combination meter. <Ref. to IDI(diag)-2, Basic Diagnostic Procedure.>	Even if DTC is detected, the circuit has returned to a normal condition at this time. Reproduce the failure, and then perform the diagnosis again. NOTE: In this case, temporary poor contact of connector, temporary open or short circuit of harness may be the cause.

1. OUTLINE OF DIAGNOSIS

Detect the open or short circuit of fuel level sensor. Judge as NG if out of specification.

2. COMPONENT DESCRIPTION

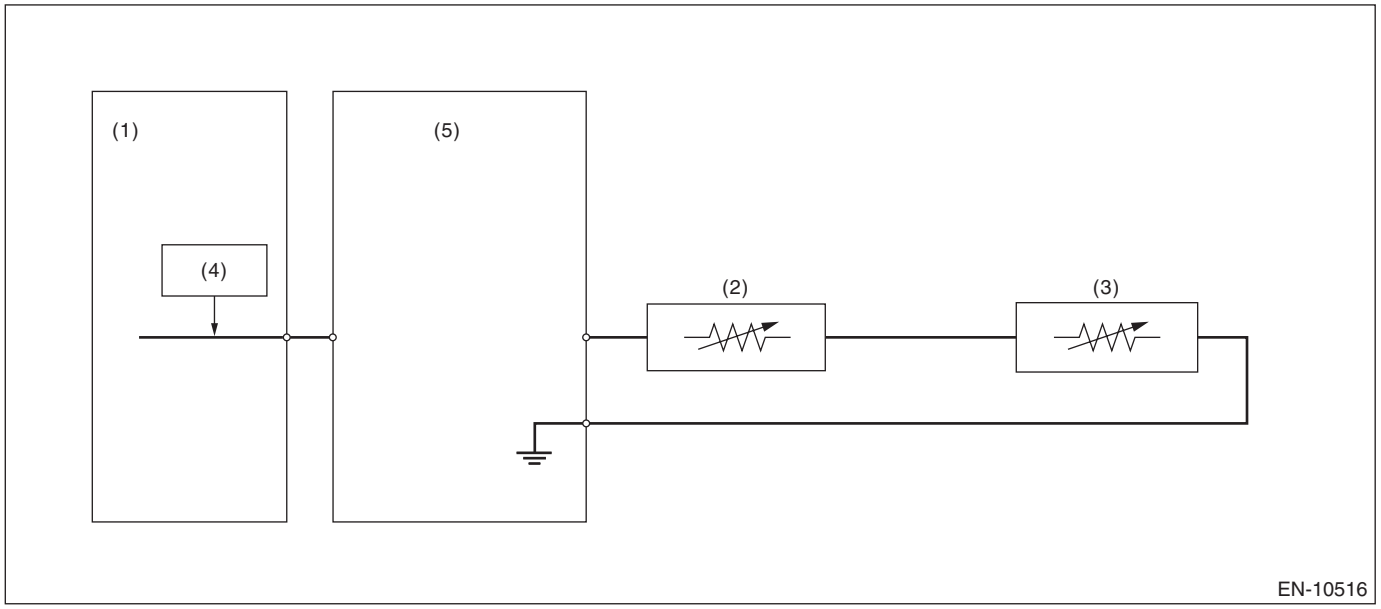

(1) Engine control module (ECM)
(2) Fuel sub level sensor
(3) Fuel level sensor
(4) Detecting circuit
(5) Combination meter

3. EXECUTION CONDITION

Secondary parameters	Execution condition
Battery voltage	≥ 10.9 V

4. GENERAL DRIVING CYCLE

Always perform the diagnosis continuously after the enable conditions have been established.

5. DIAGNOSTIC METHOD

If the duration of time while the following conditions are met is longer than the time indicated, judge as NG.

Judgment Value

Malfunction Criteria	Threshold Value
Output voltage	≥ 12 V

Time Needed for Diagnosis: 1000 ms
Malfunction Indicator Light Illumination: Illuminates when malfunction occurs in 2 continuous driving cycles.

CX:DTC P04AC EVAP SYSTEM (CPC) PURGE CONTROL VALVE "B" CIRCUIT LOW

DTC DETECTING CONDITION:

Detected when two consecutive driving cycles with fault occur.

TROUBLE SYMPTOM:

Improper idling

CAUTION:

After servicing or replacing faulty parts, perform Clear Memory Mode <Ref. to EN(STI)(diag)-68, OPERATION, Clear Memory Mode.>, and Inspection Mode <Ref. to EN(STI)(diag)-48, PROCEDURE, Inspection Mode.>.

WIRING DIAGRAM:

Engine Electrical System <Ref. to WI-154, WIRING DIAGRAM, Engine Electrical System.>

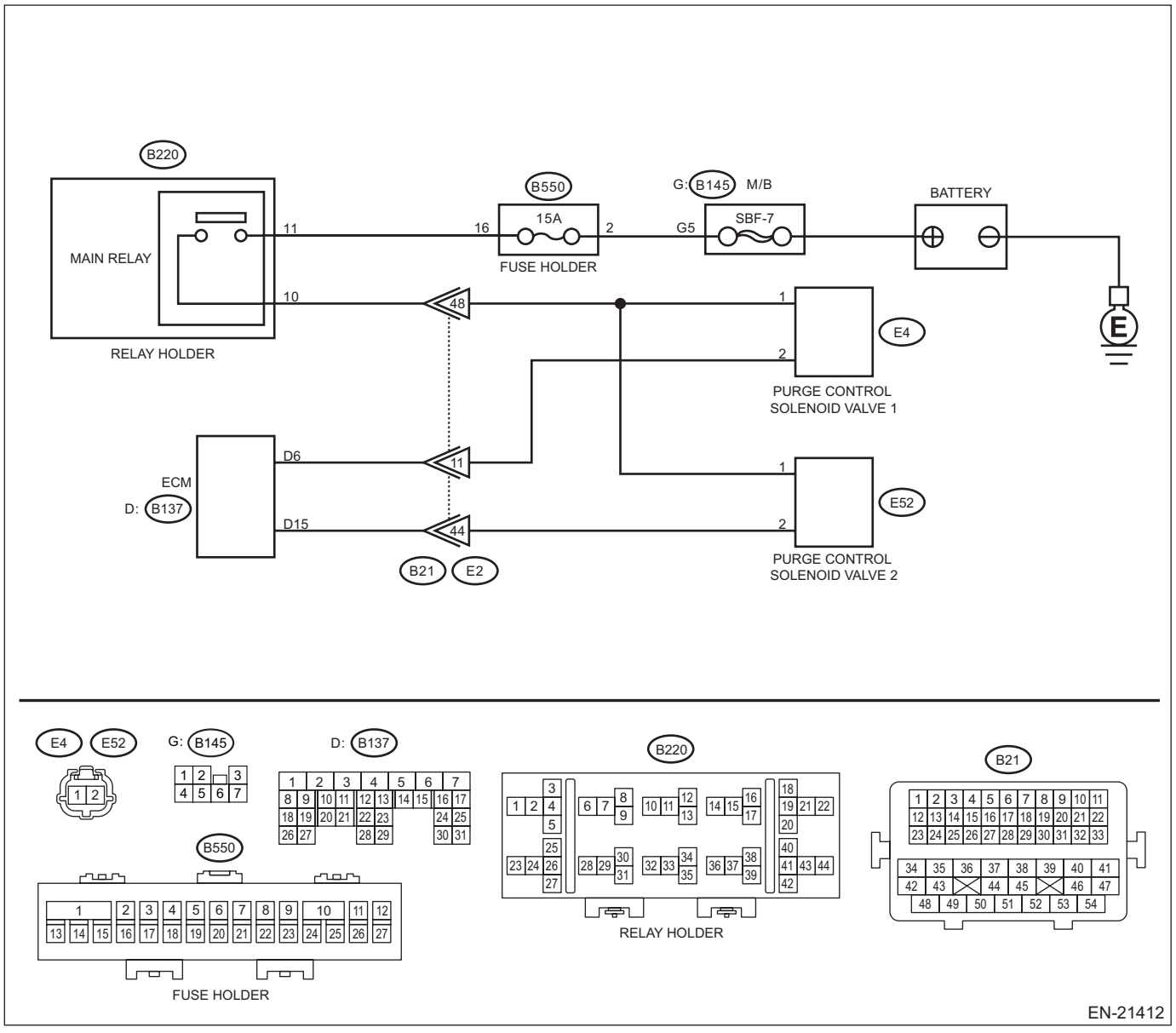

	Step	Check	Yes	No
1	**CHECK OUTPUT SIGNAL OF ECM.** 1) Turn the ignition switch to ON. 2) Measure the voltage between ECM connector and chassis ground. ***Connector & terminal*** ***(B137) No. 15 (+) — Chassis ground (–):***	Is the voltage 10 V or more?	Go to step **2**.	Go to step **3**.
2	**CHECK FOR POOR CONTACT.** Check for poor contact of ECM connector.	Is there poor contact of ECM connector?	Repair the poor contact of ECM connector.	Even if DTC is detected, the circuit has returned to a normal condition at this time. Reproduce the failure, and then perform the diagnosis again. NOTE: In this case, temporary open or short circuit of harness or temporary poor contact of connector may be the cause.
3	**CHECK POWER SUPPLY TO PURGE CONTROL SOLENOID VALVE 2 CONNECTOR.** Measure the voltage between purge control solenoid valve 2 connector and engine ground. ***Connector & terminal*** ***(E52) No. 1 (+) — Engine ground (–):***	Is the voltage 10 V or more?	Go to step **4**.	Repair the power supply circuit.
4	**CHECK HARNESS BETWEEN ECM AND PURGE CONTROL SOLENOID VALVE 2 CONNECTOR.** 1) Turn the ignition switch to OFF. 2) Disconnect the connector from ECM. 3) Disconnect the connector from purge control solenoid valve 2. 4) Measure the resistance between the purge control solenoid valve 2 connector and engine ground. ***Connector & terminal*** ***(E52) No. 2 — Engine ground:***	Is the resistance 1 MΩ or more?	Go to step **5**.	Repair the ground short circuit of harness between ECM connector and purge control solenoid valve 2 connector.
5	**CHECK HARNESS BETWEEN ECM AND PURGE CONTROL SOLENOID VALVE 2 CONNECTOR.** Measure the resistance of harness between ECM connector and purge control solenoid valve 2 connector. ***Connector & terminal*** ***(B137) No. 15 — (E52) No. 2:***	Is the resistance less than 1 Ω?	Go to step **6**.	Repair the harness and connector. NOTE: In this case, repair the following item: • Open circuit of harness between ECM connector and purge control solenoid valve 2 connector • Poor contact of coupling connector

	Step	Check	Yes	No
6	**CHECK PURGE CONTROL SOLENOID VALVE 2.** 1) Remove the purge control solenoid valve 2. 2) Measure the resistance between purge control solenoid valve 2 terminals. ***Terminals*** ***No. 1 — No. 2:***	Is the resistance 10 — 100 Ω?	Repair the poor contact of the purge control solenoid valve 2 connector.	Replace the purge control solenoid valve 2. <Ref. to EC(STI)-24, Purge Control Solenoid Valve.>

1. OUTLINE OF DIAGNOSIS

Detect open or short circuit of the purge control solenoid valve 2.
Judge as NG when the ECM output level differs from the actual terminal level.

2. EXECUTION CONDITION

Secondary parameters	Execution condition
Battery voltage	≥ 10.9 V
Purge control solenoid valve 2 drive signal	OFF

3. GENERAL DRIVING CYCLE

Always perform the diagnosis continuously.

4. DIAGNOSTIC METHOD

If the duration of time while the following conditions are met is longer than the time indicated, judge as NG.

Judgment Value

Malfunction Criteria	Threshold Value
Output voltage	≤ Battery voltage × 0.34 V

Time Needed for Diagnosis: 2500 ms
Malfunction Indicator Light Illumination: Illuminates when malfunction occurs in 2 continuous driving cycles.

CY:DTC P04AD EVAP SYSTEM (CPC) PURGE CONTROL VALVE "B" CIRCUIT HIGH

DTC DETECTING CONDITION:
Detected when two consecutive driving cycles with fault occur.
TROUBLE SYMPTOM:
Improper idling

CAUTION:
After servicing or replacing faulty parts, perform Clear Memory Mode <Ref. to EN(STI)(diag)-68, OPERATION, Clear Memory Mode.>, and Inspection Mode <Ref. to EN(STI)(diag)-48, PROCEDURE, Inspection Mode.>.
WIRING DIAGRAM:
Engine Electrical System <Ref. to WI-154, WIRING DIAGRAM, Engine Electrical System.>

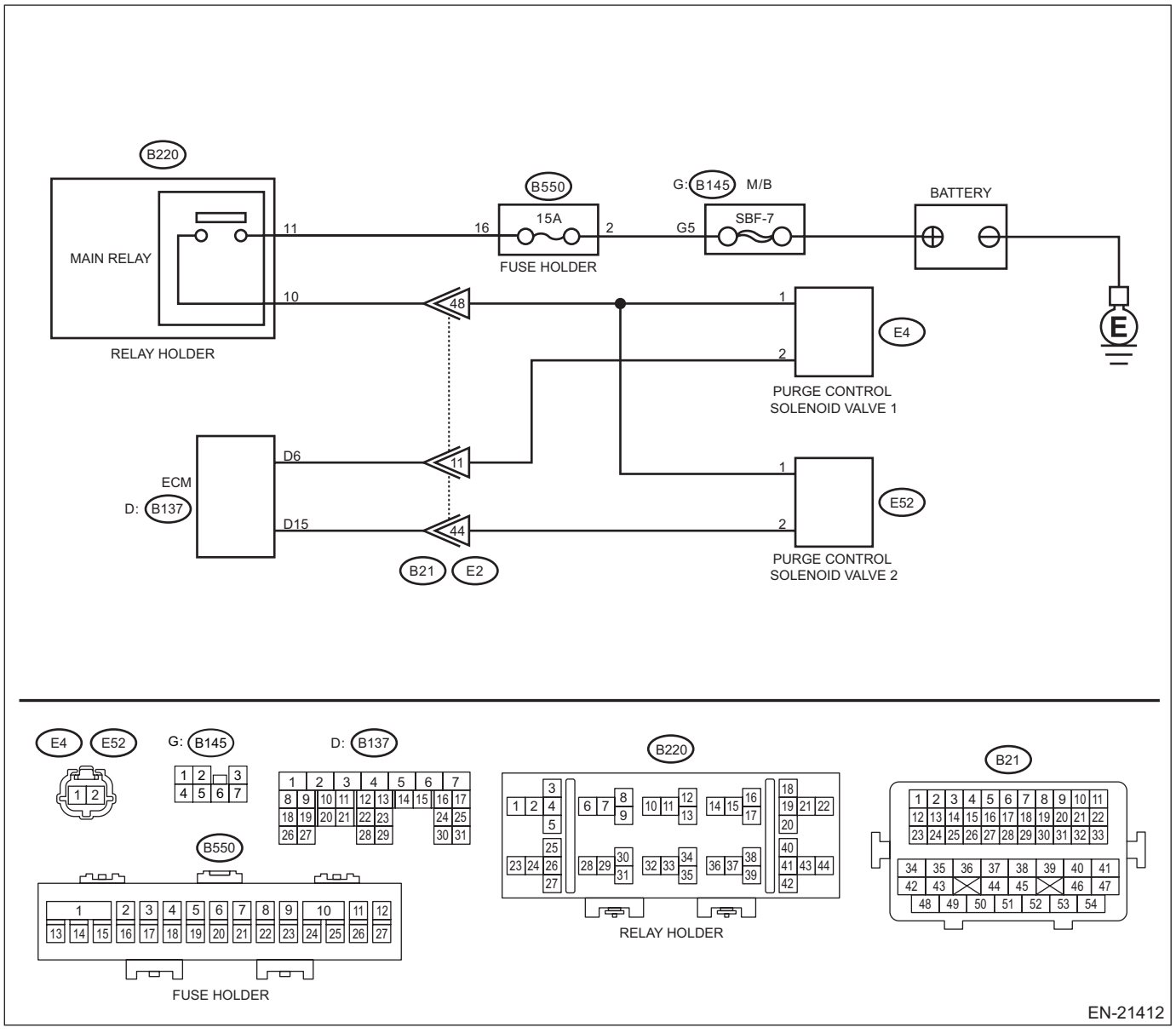

	Step	Check	Yes	No
1	**CHECK HARNESS BETWEEN ECM AND PURGE CONTROL SOLENOID VALVE 2 CONNECTOR.** 1) Turn the ignition switch to OFF. 2) Disconnect the connector from ECM. 3) Disconnect the connector from purge control solenoid valve 2. 4) Turn the ignition switch to ON. 5) Measure the voltage between ECM connector and chassis ground. ***Connector & terminal*** ***(B137) No. 15 (+) — Chassis ground (–):***	Is the voltage 10 V or more?	Repair the short circuit to power in harness between ECM connector and purge control solenoid valve 2 connector.	Go to step **2**.
2	**CHECK PURGE CONTROL SOLENOID VALVE 2.** 1) Turn the ignition switch to OFF. 2) Measure the resistance between purge control solenoid valve 2 terminals. ***Terminals*** ***No. 1 — No. 2:***	Is the resistance less than 1 Ω?	Replace the purge control solenoid valve 2. <Ref. to EC(STI)-24, Purge Control Solenoid Valve.>	Repair the poor contact of ECM connector.

1. OUTLINE OF DIAGNOSIS

Detect open or short circuit of the purge control solenoid valve 2.
Judge as NG when the ECM output level differs from the actual terminal level.

2. EXECUTION CONDITION

Secondary parameters	Execution condition
Battery voltage	≥ 10.9 V
Purge control solenoid valve 2 drive signal	ON

3. GENERAL DRIVING CYCLE

Always perform the diagnosis continuously.

4. DIAGNOSTIC METHOD

If the duration of time while the following conditions are met is longer than the time indicated, judge as NG.

Judgment Value

Malfunction Criteria	Threshold Value
Output current	≥ 12 A

Time Needed for Diagnosis: 2500 ms
Malfunction Indicator Light Illumination: Illuminates when malfunction occurs in 2 continuous driving cycles.

CZ:DTC P04AF EVAP SYSTEM PURGE CONTROL VALVE (CPC) "B" STUCK CLOSED

DTC DETECTING CONDITION:
Detected when two consecutive driving cycles with fault occur.

CAUTION:
After servicing or replacing faulty parts, perform Clear Memory Mode <Ref. to EN(STI)(diag)-68, OPERATION, Clear Memory Mode.>, and Inspection Mode <Ref. to EN(STI)(diag)-48, PROCEDURE, Inspection Mode.>.

	Step	Check	Yes	No
1	**CHECK BETWEEN CANISTER AND PURGE CONTROL VALVE 2.** Check the piping between the canister and the purge control valve 2.	Is there clogging in the piping between the canister and the purge control valve 2?	Repair or replace the piping between the canister and the purge control valve 2. <Ref. to FU(STI)-100, Fuel Delivery, Return and Evaporation Lines.>	Go to step **2**.
2	**CHECK BETWEEN CANISTER AND PURGE CONTROL VALVE 2.** Check the piping between the canister and the purge control valve 2.	Is there closed stuck state in the piping between the canister and the purge control valve 2?	Repair or replace the purge control valve 2. <Ref. to EC(STI)-24, Purge Control Solenoid Valve.>	Go to step **3**.
3	**CHECK PIPING BETWEEN PURGE CONTROL VALVE 2 AND TURBOCHARGER.** Check the piping between the purge control valve 2 and the turbocharger.	Is there clogging in the piping between the purge control valve 2 and the turbocharger?	Repair or replace the piping between the purge control valve 2 and the turbocharger. <Ref. to IN(STI)-17, Turbocharger.>	Go to step **4**.
4	**CHECK EVAPORATIVE EMISSION CONTROL SYSTEM.** Perform drive cycle I. <Ref. to EN(STI)(diag)-61, DRIVE CYCLE I, PROCEDURE, Drive Cycle.>	Is DTC P04AF displayed on the display?	Replace the leak check valve assembly. <Ref. to EC(STI)-32, Leak Check Valve Assembly.>	End.

1. OUTLINE OF DIAGNOSIS

NOTE:
For the detection standard, refer to DTC P0455. <Ref. to EN(STI)(diag)-352, DTC P0455 EVAP SYSTEM (CPC) LEAK DETECTED (LARGE LEAK), Diagnostic Procedure with Diagnostic Trouble Code (DTC).>

DA:DTC P04DB CRANKCASE VENTILATION SYSTEM (PCV) DISCONNECTED

DTC DETECTING CONDITION:
Immediately at fault recognition
TROUBLE SYMPTOM:
Improper idling

CAUTION:
After servicing or replacing faulty parts, perform Clear Memory Mode <Ref. to EN(STI)(diag)-68, OPERATION, Clear Memory Mode.>, and Inspection Mode <Ref. to EN(STI)(diag)-48, PROCEDURE, Inspection Mode.>.
WIRING DIAGRAM:
Engine Electrical System <Ref. to WI-154, WIRING DIAGRAM, Engine Electrical System.>

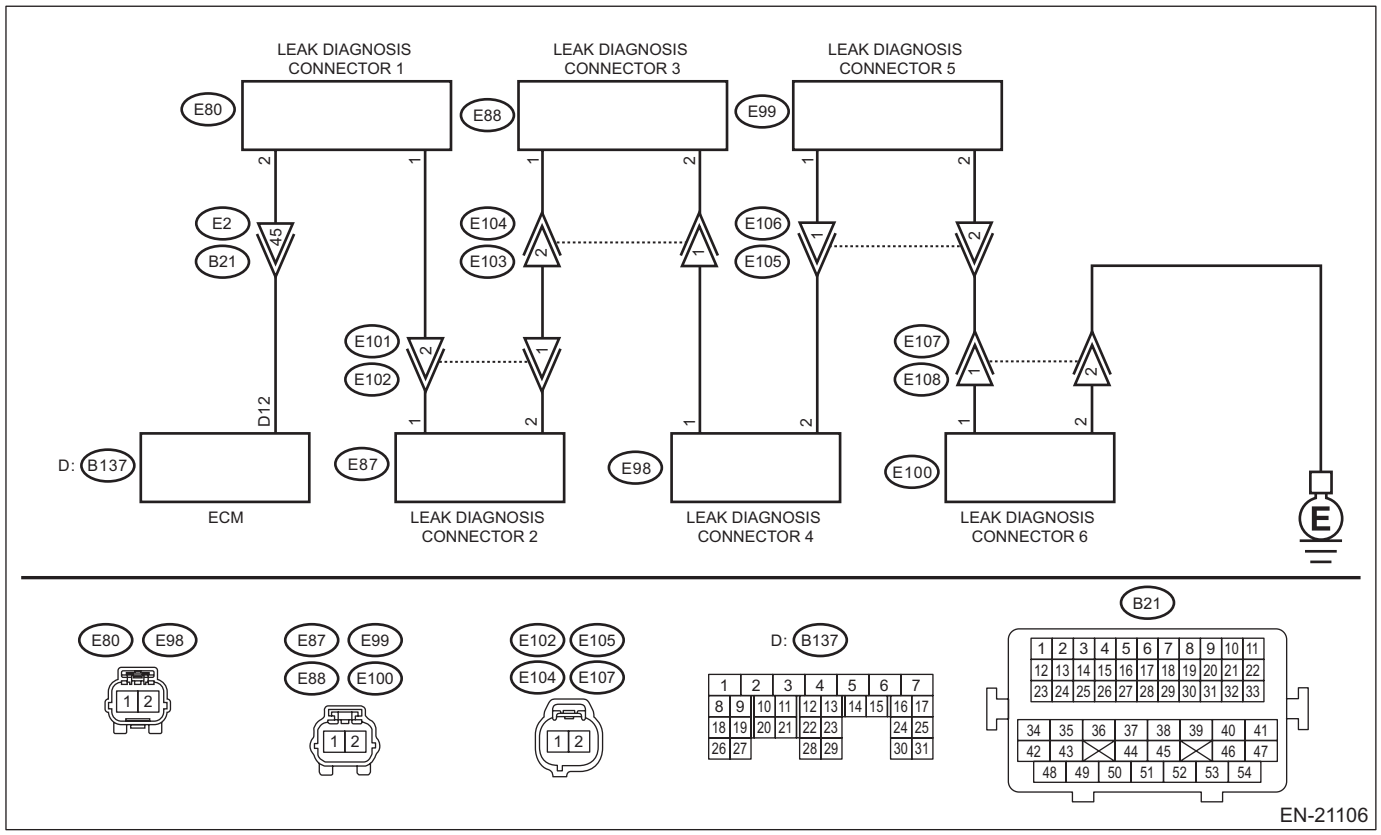

Step		Check	Yes	No
1	**CHECK BLOW-BY HOSE.** Check the blow-by hose condition.	Is there any disconnection or crack in blow-by hose?	Install or replace the blow-by hose.	Go to step **2**.
2	**CHECK HARNESS BETWEEN ECM AND PCV HOSE ASSEMBLY CONNECTOR.** 1) Turn the ignition switch to OFF. 2) Disconnect the connector from ECM. 3) Disconnect the connector from the PCV hose assembly. 4) Measure the resistance of harness between ECM connector and PCV hose assembly connector. ***Connector & terminal*** ***(B137) No. 12 — (E80) No. 2:***	Is the resistance less than 1 Ω?	Go to step **3**.	Repair the harness and connector. NOTE: In this case, repair the following item: • Open circuit in harness between ECM connector and PCV hose assembly connector • Poor contact of coupling connector

	Step	Check	Yes	No
3	**CHECK HARNESS BETWEEN ECM AND PCV HOSE ASSEMBLY CONNECTOR.** Measure the resistance between PCV hose assembly connector and chassis ground. ***Connector & terminal*** ***(B137) No. 12 — Chassis ground:***	Is the resistance 1 MΩ or more?	Go to step **4**.	Repair the short circuit to ground in harness between ECM connector and PCV hose assembly connector.
4	**CHECK HARNESS BETWEEN LEAK DIAGNOSIS CONNECTORS.** Measure the resistance of harness between each of leak diagnosis connector. ***Connector & terminal*** ***(E80) No. 1 — (E87) No. 1:*** ***(E87) No. 2 — (E88) No. 1:*** ***(E88) No. 2 — (E98) No. 1:*** ***(E98) No. 2 — (E99) No. 1:*** ***(E99) No. 2 — (E100) No. 1:***	Is the resistance less than 1 Ω?	Go to step **5**.	Repair the open circuit in the wiring harness between leak diagnosis connectors.
5	**CHECK GROUND CIRCUIT OF PCV HOSE ASSEMBLY.** Measure the resistance of harness between PCV hose assembly connector and engine ground. ***Connector & terminal*** ***(E87) No. 2 — Engine ground:***	Is the resistance less than 5 Ω?	Go to step **6**.	Repair the open circuit in harness between PCV hose assembly connector and engine ground.
6	**CHECK PCV HOSE ASSEMBLY.** Measure the resistance between terminals of each leak diagnosis connector. ***Terminals*** ***No. 1 — No. 2:***	Is the resistance less than 1 Ω at all measurement?	Repair the poor contact of ECM and PCV hose assembly connector.	Replace the PCV hose assembly. <Ref. to EC(STI)-52, PCV Hose Assembly.>

1. OUTLINE OF DIAGNOSIS

Detect the blow-by hose disconnection abnormality.
Judge as NG when the diagnosis terminal voltage is high.

2. COMPONENT DESCRIPTION

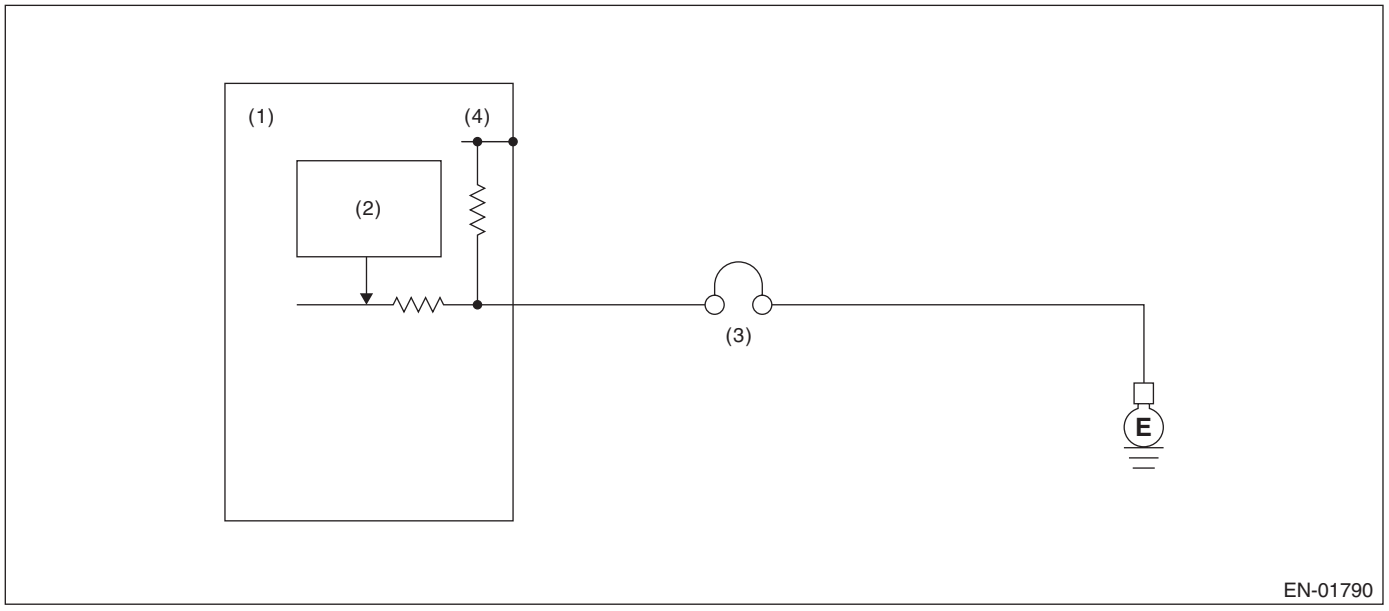

(1) Engine control module (ECM) (3) PCV diagnosis connector (4) 5 V
(2) Detecting circuit

3. EXECUTION CONDITION

Secondary parameters	Execution condition
Battery voltage	≥ 10.9 V

4. GENERAL DRIVING CYCLE

Always perform the diagnosis continuously.

5. DIAGNOSTIC METHOD

If the duration of time while the following conditions are met is longer than the time indicated, judge as NG.

Judgment Value

Malfunction Criteria	Threshold Value
Positive crankcase ventilation diagnosis voltage	≥ 5.9 V

Time Needed for Diagnosis: 2500 ms
Malfunction Indicator Light Illumination: Illuminates as soon as a malfunction occurs.

DB:DTC P04F0 EVAP SYSTEM HIGH PRESSURE PURGE LINE (CPC2) PERFORMANCE

DTC DETECTING CONDITION:
Detected when two consecutive driving cycles with fault occur.
TROUBLE SYMPTOM:
Improper idling

CAUTION:
After servicing or replacing faulty parts, perform Clear Memory Mode <Ref. to EN(STI)(diag)-68, OPERATION, Clear Memory Mode.>, and Inspection Mode <Ref. to EN(STI)(diag)-48, PROCEDURE, Inspection Mode.>.

	Step	Check	Yes	No
1	**CHECK FOR ANY OTHER DTC ON DISPLAY.**	Is any other DTC displayed?	Check the appropriate DTC using the "List of Diagnostic Trouble Code (DTC)". <Ref. to EN(STI)(diag)-96, List of Diagnostic Trouble Code (DTC).>	Go to step **2**.
2	**CHECK PIPING BETWEEN PURGE CONTROL VALVE 2 AND TURBOCHARGER.** Check the piping between the purge control valve 2 and the turbocharger.	Is there dislocation of the piping between the purge control valve 2 and the turbocharger?	Repair or replace the piping between the purge control valve 2 and the turbocharger. <Ref. to IN(STI)-17, Turbocharger.>	Go to step **3**.
3	**CHECK PIPING BETWEEN PURGE CONTROL VALVE 2 AND TURBOCHARGER.** Check the piping between the purge control valve 2 and the turbocharger.	Is there clogging in the piping between the purge control valve 2 and the turbocharger?	Repair or replace the piping between the purge control valve and the turbocharger. <Ref. to IN(STI)-17, Turbocharger.>	Go to step **4**.
4	**CHECK PURGE CONTROL VALVE 2.** Check the purge control valve 2.	Is there closed or open stuck state in the purge control valve 2?	Repair or replace the purge control valve 2 or leak check valve. <Ref. to EC(STI)-54, PCV Valve.> <Ref. to EC(STI)-32, Leak Check Valve Assembly.>	Go to step **5**.
5	**CHECK PURGE CONTROL VALVE 1.** Check the main body of the purge control valve 1.	Is there any leakage in the main body of the purge control valve 1?	Repair or replace the purge control valve 1. <Ref. to EC(STI)-24, Purge Control Solenoid Valve.>	Go to step **6**.
6	**CHECK EVAPORATIVE EMISSION CONTROL SYSTEM LINE.** 1) Turn the ignition switch to OFF. 2) Make sure that the delivery mode fuse is removed.	Are there holes, cracks, clogging, or disconnection, misconnection of hoses or pipes in evaporative emission control system?	Repair or replace the hoses or pipes.	Go to step **7**.

	Step	Check	Yes	No
7	**CHECK VACUUM PUMP OPERATION OF LEAK CHECK VALVE ASSEMBLY.** Check the vacuum pump operation of the leak check valve assembly. <Ref. to EC(STI)-48, INSPECTION, Leak Check Valve Assembly.>	Does the vacuum pump operate?	Go to step **8**.	Replace the leak check valve assembly. <Ref. to EC(STI)-32, Leak Check Valve Assembly.>
8	**CHECK SWITCHING VALVE OPERATION OF LEAK CHECK VALVE ASSEMBLY.** Check the switching valve operation of the leak check valve assembly. <Ref. to EC(STI)-48, INSPECTION, Leak Check Valve Assembly.>	Does the switching valve operate?	End.	Replace the leak check valve assembly. <Ref. to EC(STI)-32, Leak Check Valve Assembly.>

1. OUTLINE OF DIAGNOSIS

Monitor Method

This monitor intrusively performs a functional check to detect incorrect purge flow when the engine is running in very high boost conditions.

Theory of operation: At very high boost conditions, the pressure drop caused by the air filter creates a slight vacuum in the high pressure purge line. Refer to following Figure 1.

Phase 1: The monitor removes the air in EVAP system by closing the Evaporative Leak Check Module switching valve and ELCM pump is intrusively activated when the solenoid valve for high pressure purge is open and all enable conditions are satisfied. In the case of normal condition, Evaporative Leak Check Module pressure (gauge) will decrease to reach the threshold value. However, if the hose is disconnected, the Evaporative Leak Check Module pressure will remain above the threshold value.

Phase 2: Since there is a possibility that a large amount of EVAP vapor is generated during Phase 1, the monitor may determine a false fail. To prevent this condition, the EVAP system is sealed and the pressure is measured again after a predetermined time (following Phase 1). If the measured pressure exceeds a second threshold value, the monitor is cancelled. If the pressure does not reach the second threshold value, the monitor determines a malfunction (disconnection).

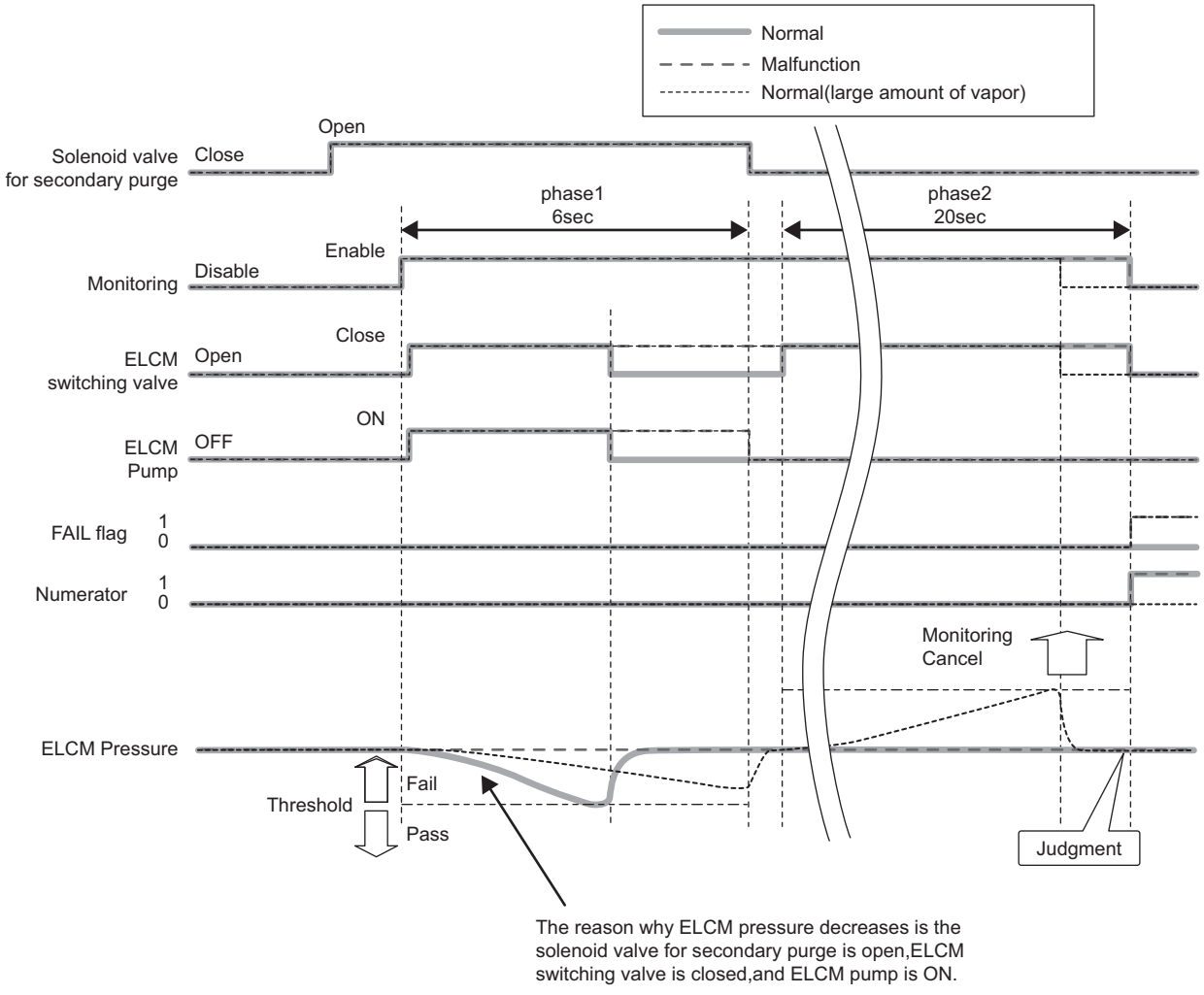

Figure2:Timing Chart

EN-20166

2. EXECUTION CONDITION

Secondary parameters	Execution condition
Common condition (Phase 1, Phase 2)	
Battery voltage	≥ 10.9 V
Barometric pressure	≥ 75.1 kPa (563 mmHg, 22.2 inHg)
Fuel level	≥ 9 L
Phase1	
Integrated purge air amount since engine starting	≥ 72 g
(Purge control duty ratio	= 0%
for time)	≥ 1 s
Ambient air temperature	> 4.4 °C (39.9 °F) and < 35 °C (95 °F)
Intake air amount per 1 second	> Map
Commanded solenoid valve for secondary purge (High Pressure Purge Line)	Open

Map

Fuel level L (US gal)	0 (0)	10 (2.64)	20 (5.28)	30 (7.93)	40 (10.57)	50 (13.21)	60 (15.85)
Intake air amount per 1 second (g/s)	80	80	60	60	60	60	60

3. GENERAL DRIVING CYCLE

Perform the diagnosis only once after starting the engine.

4. DIAGNOSTIC METHOD

Judge as NG when the following conditions are established.

Judgment Value

Malfunction Criteria	Threshold Value
<Phase1>	
Evaporative Leak Check Module pressure (gauge)	> -266.6 Pa(2 mmHg, 0.1 inHg)
<Phase2>	
Evaporative Leak Check Module pressure (gauge)	< 266.6 Pa(2 mmHg, 0.1 inHg)

Phase1
Time Needed for Diagnosis: 6016 ms
Phase2
Time Needed for Diagnosis: 20 seconds
Malfunction Indicator Light Illumination: Illuminates when malfunction occurs in 2 continuous driving cycles.

DC:DTC P0500 VEHICLE SPEED SENSOR "A" CIRCUIT

DTC DETECTING CONDITION:
Immediately at fault recognition

CAUTION:
After servicing or replacing faulty parts, perform Clear Memory Mode <Ref. to EN(STI)(diag)-68, OPERATION, Clear Memory Mode.>, and Inspection Mode <Ref. to EN(STI)(diag)-48, PROCEDURE, Inspection Mode.>.

Step		Check	Yes	No
1	**CHECK DTC OF VDC.** Check DTC of VDC.	Is DTC for VDC displayed?	Perform the diagnosis according to DTC. <Ref. to VDC(diag)-55, List of Diagnostic Trouble Code (DTC).>	Repair the poor contact of ECM connector.

1. OUTLINE OF DIAGNOSIS

Judge as NG when outside of the judgment value.
Judge NG when the received data from VDCCM&H/U is abnormal vehicle speed, and the vehicle speed data is impossible.

2. COMPONENT DESCRIPTION

Vehicle speed signals are taken in to the VDC control module and hydraulic control unit, and normal/erroneous data of the ABS wheel speed sensor is received by CAN communication from the VDC control module and hydraulic control unit.

3. EXECUTION CONDITION

Secondary parameters	Execution condition
Battery voltage	≥ 10.9 V

4. GENERAL DRIVING CYCLE

Always perform the diagnosis continuously after the enable conditions have been established.

5. DIAGNOSTIC METHOD

If the duration of time while the following conditions are met is longer than the time indicated, judge as NG.

Judgment Value

Malfunction Criteria	Threshold Value
Speed of front wheels received from VDC control module & hydraulic control unit	≥ 300 km/h (186.4 MPH)

Time Needed for Diagnosis: 2500 ms
Malfunction Indicator Light Illumination: Illuminates as soon as a malfunction occurs.

DD:DTC P0506 IDLE CONTROL SYSTEM RPM - LOWER THAN EXPECTED

DTC DETECTING CONDITION:

Detected when two consecutive driving cycles with fault occur.

TROUBLE SYMPTOM:

- Hard to start the engine.
- Engine does not start.
- Improper idling
- Engine stalls.

CAUTION:

After servicing or replacing faulty parts, perform Clear Memory Mode <Ref. to EN(STI)(diag)-68, OPERATION, Clear Memory Mode.>, and Inspection Mode <Ref. to EN(STI)(diag)-48, PROCEDURE, Inspection Mode.>.

	Step	Check	Yes	No
1	**CHECK FOR ANY OTHER DTC ON DISPLAY.**	Is any other DTC displayed?	Check the appropriate DTC using the "List of Diagnostic Trouble Code (DTC)". <Ref. to EN(STI)(diag)-96, List of Diagnostic Trouble Code (DTC).>	Go to step **2**.
2	**CHECK AIR CLEANER ELEMENT.** 1) Turn the ignition switch to OFF. 2) Check the air cleaner element.	Is there excessive clogging on air cleaner element?	Replace the air cleaner element. <Ref. to IN(STI)-7, Air Cleaner Element.>	Go to step **3**.
3	**CHECK ELECTRONIC THROTTLE CONTROL.** 1) Remove the electronic throttle control. <Ref. to FU(STI)-15, REMOVAL, Throttle Body.> 2) Check the electronic throttle control.	Are foreign matter found inside electronic throttle control?	Remove foreign matter from electronic throttle control.	Perform the diagnosis of DTC P2101. <Ref. to EN(STI)(diag)-506, DTC P2101 THROTTLE ACTUATOR "A" CONTROL MOTOR CIRCUIT RANGE/PERFORMANCE, Diagnostic Procedure with Diagnostic Trouble Code (DTC).>

1. OUTLINE OF DIAGNOSIS

Detect the malfunction that actual engine speed is not close to target engine speed during idling. Judge as NG when actual engine speed is not close to target engine speed during idling.

2. EXECUTION CONDITION

Secondary parameters	Execution condition
Battery voltage	≥ 10.9 V
Barometric pressure	≥ 75.1 kPa (563 mmHg, 22.2 inHg)
Lambda value (left and right)	≥ 0.85 and < 1.151
Vehicle speed	= 0 km/h (0 MPH)
Engine coolant temperature	≥ 60 °C (140 °F)
Elapsed time after starting the engine	≥ 10 s
Accelerator pedal position	= 0%
Elapsed time after gear position change (P ←→ D or N ←→ D)	> 5 s
Cold start diagnosis	Not in operation
Main feedback	In operation
Idle speed control feedback	In operation

3. GENERAL DRIVING CYCLE

Perform the diagnosis continuously at idling after warming up engine.

4. DIAGNOSTIC METHOD

If the duration of time while the following conditions are met is longer than the time indicated, judge as NG.

Judgment Value

Malfunction Criteria	Threshold Value
Actual engine speed – Targeted engine speed	< –100 rpm

Time Needed for Diagnosis: 15 s × 1 time(s)
Malfunction Indicator Light Illumination: Illuminates when malfunction occurs in 2 continuous driving cycles.

DE:DTC P0507 IDLE CONTROL SYSTEM RPM - HIGHER THAN EXPECTED

DTC DETECTING CONDITION:
Detected when two consecutive driving cycles with fault occur.
TROUBLE SYMPTOM:
Engine keeps running at higher speed than specified idle speed.

CAUTION:
After servicing or replacing faulty parts, perform Clear Memory Mode <Ref. to EN(STI)(diag)-68, OPERATION, Clear Memory Mode.>, and Inspection Mode <Ref. to EN(STI)(diag)-48, PROCEDURE, Inspection Mode.>.

	Step	Check	Yes	No
1	**CHECK FOR ANY OTHER DTC ON DISPLAY.**	Is any other DTC displayed?	Check the appropriate DTC using the “List of Diagnostic Trouble Code (DTC)”. <Ref. to EN(STI)(diag)-96, List of Diagnostic Trouble Code (DTC).>	Go to step **2**.
2	**CHECK AIR INTAKE SYSTEM.** 1) Start and idle the engine. 2) Check the following items. • Loose installation of intake manifold and throttle body • Cracks of intake manifold gasket and throttle body gasket • Disconnection of vacuum hoses	Is there any fault in air intake system?	Repair air suction and leaks.	Go to step **3**.
3	**CHECK ELECTRONIC THROTTLE CONTROL.** 1) Turn the ignition switch to OFF. 2) Remove the electronic throttle control. <Ref. to FU(STI)-15, REMOVAL, Throttle Body.> 3) Check the electronic throttle control.	Are foreign matter found inside electronic throttle control?	Remove foreign matter from electronic throttle control.	Perform the diagnosis of DTC P2101. <Ref. to EN(STI)(diag)-506, DTC P2101 THROTTLE ACTUATOR "A" CONTROL MOTOR CIRCUIT RANGE/PERFORMANCE, Diagnostic Procedure with Diagnostic Trouble Code (DTC).>

1. OUTLINE OF DIAGNOSIS

Detect the malfunction that actual engine speed is not close to target engine speed during idling. Judge as NG when actual engine speed is not close to target engine speed during idling.

2. EXECUTION CONDITION

Secondary parameters	Execution condition
Battery voltage	≥ 10.9 V
Barometric pressure	≥ 75.1 kPa (563 mmHg, 22.2 inHg)
Lambda value (left and right)	≥ 0.85 and < 1.151
Vehicle speed	= 0 km/h (0 MPH)
Engine coolant temperature	≥ 60 °C (140 °F)
Elapsed time after starting the engine	≥ 10 s
Accelerator pedal position	= 0%
Elapsed time after gear position change (P ←→ D or N ←→ D)	> 5 s
Cold start diagnosis	Not in operation
Main feedback	In operation
Idle speed control feedback	In operation

3. GENERAL DRIVING CYCLE

Perform the diagnosis continuously at idling after warming up engine.

4. DIAGNOSTIC METHOD

If the duration of time while the following conditions are met is longer than the time indicated, judge as NG.

Judgment Value

Malfunction Criteria	Threshold Value
Actual engine speed – Targeted engine speed	> 200 rpm

Time Needed for Diagnosis: 15 s × 1 time(s)
Malfunction Indicator Light Illumination: Illuminates when malfunction occurs in 2 continuous driving cycles.

DF:DTC P050A COLD START IDLE CONTROL SYSTEM PERFORMANCE

DTC DETECTING CONDITION:

Detected when two consecutive driving cycles with fault occur.

TROUBLE SYMPTOM:

- Engine keeps running at higher speed than specified idle speed.
- Engine keeps running at a lower speed than the specified idle speed.
- Engine stalls.

CAUTION:

After servicing or replacing faulty parts, perform Clear Memory Mode <Ref. to EN(STI)(diag)-68, OPERATION, Clear Memory Mode.>, and Inspection Mode <Ref. to EN(STI)(diag)-48, PROCEDURE, Inspection Mode.>.

WIRING DIAGRAM:

Engine Electrical System <Ref. to WI-154, WIRING DIAGRAM, Engine Electrical System.>

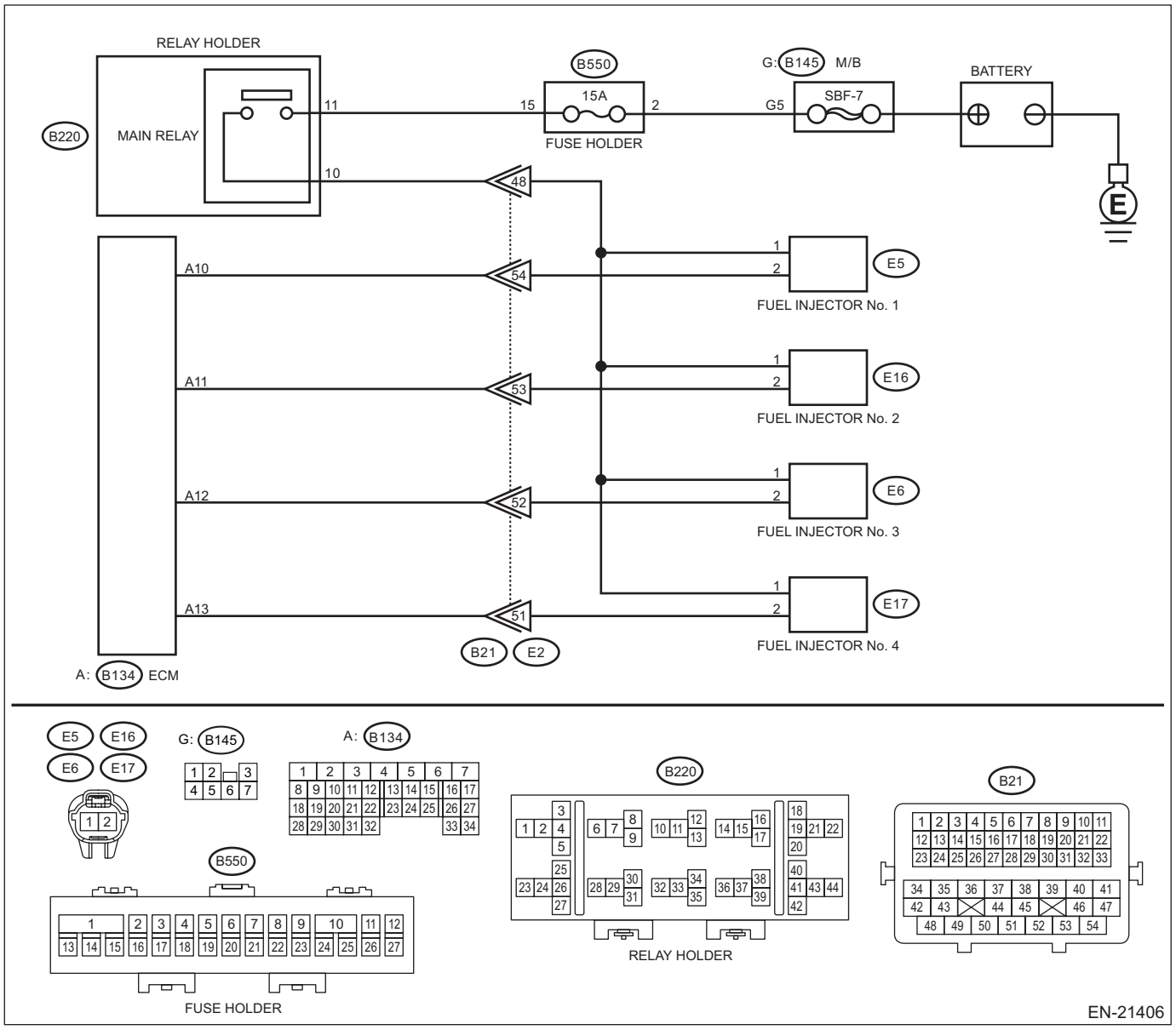

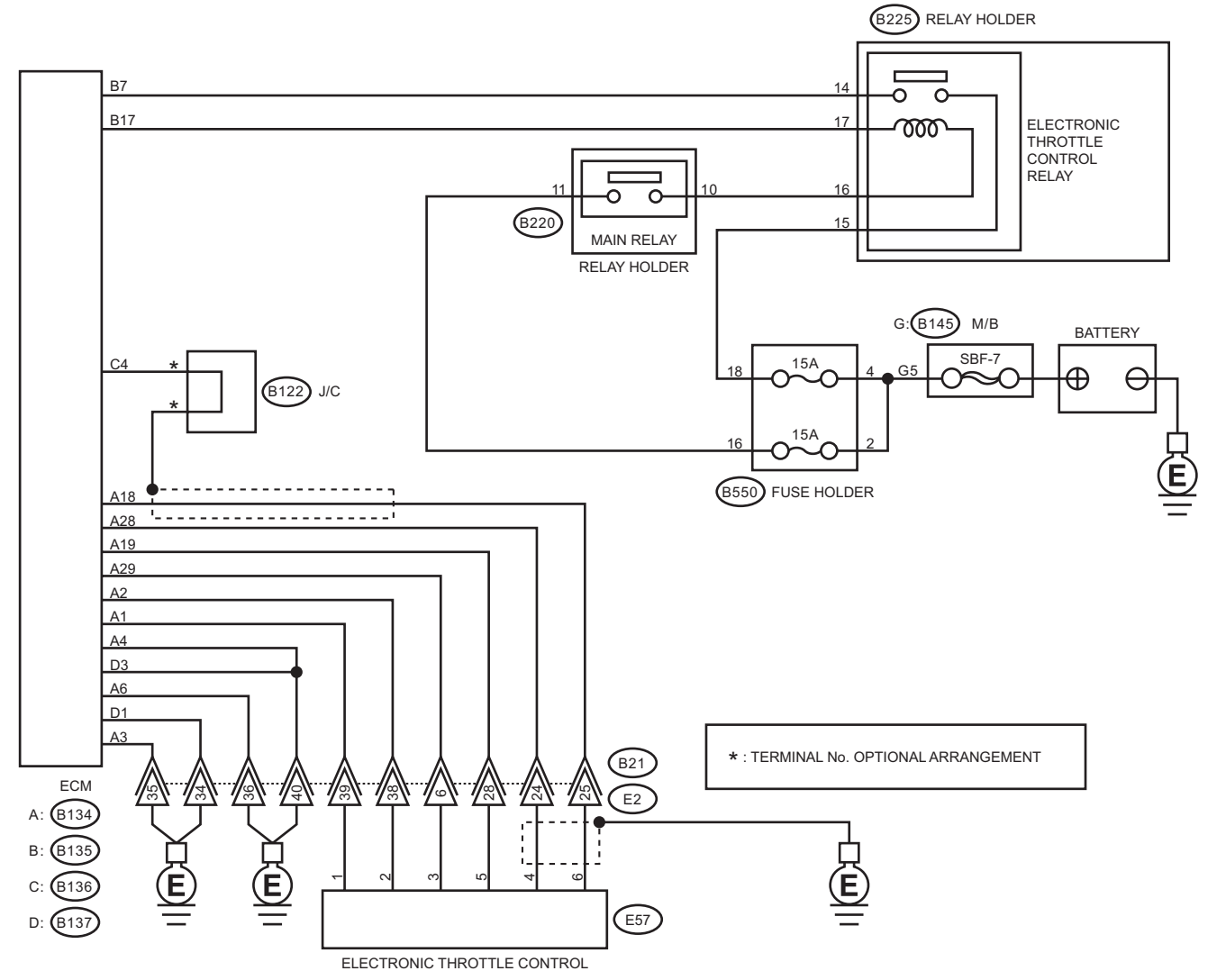
B225 RELAY HOLDER
B7
B17
14
17
ELECTRONIC THROTTLE CONTROL RELAY
11
10
16
15
B220
MAIN RELAY
RELAY HOLDER
G: B145 M/B
BATTERY
C4
B122 J/C
18
15A
4
G5
SBF-7
16
15A
2
B550 FUSE HOLDER
A18
A28
A19
A29
A2
A1
A4
D3
A6
D1
A3
* : TERMINAL No. OPTIONAL ARRANGEMENT
ECM
A: B134
B: B135
C: B136
D: B137
35
34
36
40
39
38
6
28
24
25
B21
E2
1
2
3
5
4
6
E57
ELECTRONIC THROTTLE CONTROL

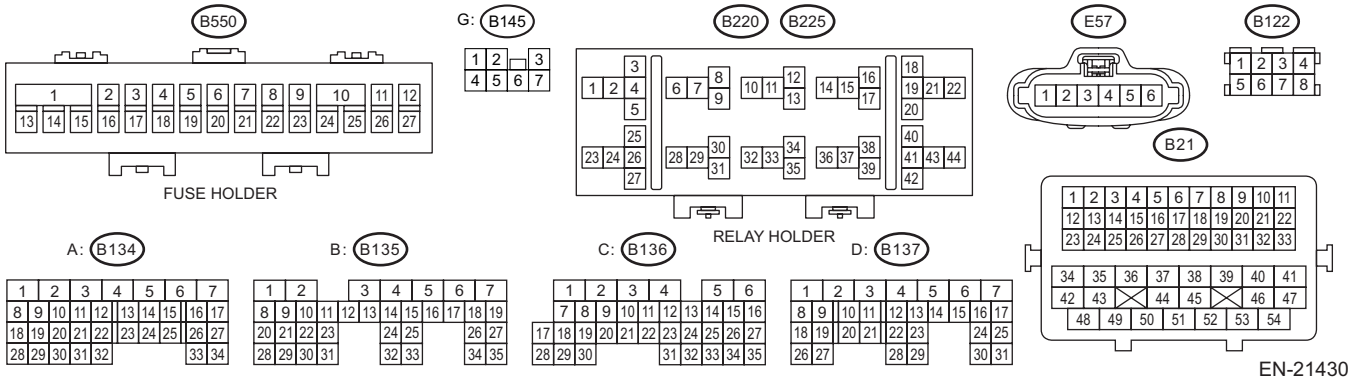
B550
FUSE HOLDER
G: B145
B220
B225
RELAY HOLDER
E57
B122
B21
A: B134
B: B135
C: B136
D: B137

EN-21430

	Step	Check	Yes	No
1	**CHECK FOR ANY OTHER DTC ON DISPLAY.**	Is any other DTC displayed?	Check the appropriate DTC using the "List of Diagnostic Trouble Code (DTC)". <Ref. to EN(STI)(diag)-96, List of Diagnostic Trouble Code (DTC).>	Go to step **2**.
2	**CHECK ENGINE OIL.**	Is there a proper amount of engine oil?	Go to step **3**.	Replace engine oil. <Ref. to LU(STI)-10, REPLACEMENT, Engine Oil.>
3	**CHECK EXHAUST SYSTEM.**	Are there holes or loose bolts on exhaust system?	Repair the exhaust system.	Go to step **4**.
4	**CHECK AIR INTAKE SYSTEM.**	Are there holes, loose bolts or disconnection of hose on air intake system?	Repair the air intake system.	Go to step **5**.
5	**CHECK FUEL PRESSURE.** **WARNING:** **Place "NO OPEN FLAMES" signs near the working area.** **CAUTION:** **Be careful not to spill fuel.** Measure the fuel pressure while disconnecting pressure regulator vacuum hose from intake manifold. <Ref. to ME(STI)-25, INSPECTION, Fuel Pressure.> **CAUTION:** **Release fuel pressure before removing the fuel pressure gauge.** NOTE: If fuel pressure does not increase, squeeze the fuel return hose 2 to 3 times, then measure fuel pressure again.	Is the measured value 284 — 314 kPa (2.9 — 3.2 kg/cm^2, 41 — 46 psi)?	Go to step **6**.	Check the fuel pump and fuel delivery line. <Ref. to FU(STI)-87, INSPECTION, Fuel Pump.> <Ref. to FU(STI)-104, INSPECTION, Fuel Delivery, Return and Evaporation Lines.>
6	**CHECK FUEL PRESSURE.** After connecting the pressure regulator vacuum hose, measure fuel pressure. <Ref. to ME(STI)-25, INSPECTION, Fuel Pressure.> **CAUTION:** **Release fuel pressure before removing the fuel pressure gauge.** NOTE: • If fuel pressure does not increase, squeeze fuel return hose 2 to 3 times, then measure fuel pressure again. • If the measured value at this step is out of specification, check or replace pressure regulator and pressure regulator vacuum hose.	Is the measured value 230 — 260 kPa (2.4 — 2.7 kg/cm^2, 33 — 38 psi)?	Go to step **7**.	Check the fuel pump and fuel delivery line. <Ref. to FU(STI)-87, INSPECTION, Fuel Pump.> <Ref. to FU(STI)-104, INSPECTION, Fuel Delivery, Return and Evaporation Lines.>

	Step	Check	Yes	No
7	**CHECK ENGINE COOLANT TEMPERATURE SENSOR.** 1) Start the engine and warm up completely. 2) Read the value of «Coolant Temp.» using the Subaru Select Monitor or a general scan tool. NOTE: • Subaru Select Monitor For detailed operation procedures, refer to “Read Current Data For Engine”. <Ref. to EN(STI)(diag)-36, Subaru Select Monitor.> • General scan tool For detailed operation procedures, refer to the general scan tool operation manual.	Is the value of «Coolant Temp.» 75°C (167°F) or more?	Go to step **8**.	Replace the engine coolant temperature sensor. <Ref. to FU(STI)-33, Engine Coolant Temperature Sensor.>
8	**CHECK MASS AIR FLOW AND INTAKE AIR TEMPERATURE SENSOR.** 1) Start the engine and warm up engine until coolant temperature is higher than 75°C (167°F). 2) Place the shift lever in neutral position. 3) Turn the A/C switch to OFF. 4) Turn all the accessory switches to OFF. 5) Read the value of «Mass Air Flow» using the Subaru Select Monitor or a general scan tool. NOTE: • Subaru Select Monitor For detailed operation procedures, refer to “Read Current Data For Engine”. <Ref. to EN(STI)(diag)-36, Subaru Select Monitor.> • General scan tool For detailed operation procedures, refer to the general scan tool operation manual.	Is the value of «Mass Air Flow» 2.0 — 5.0 g/s (0.26 — 0.66 lb/m)?	Go to step **9**.	Replace the mass air flow and intake air temperature sensor. <Ref. to FU(STI)-40, Mass Air Flow and Intake Air Temperature Sensor.>
9	**CHECK MASS AIR FLOW AND INTAKE AIR TEMPERATURE SENSOR.** 1) Start the engine and warm up engine until coolant temperature is higher than 75°C (167°F). 2) Place the shift lever in neutral position. 3) Turn the A/C switch to OFF. 4) Turn all the accessory switches to OFF. 5) Open the front hood. 6) Measure the ambient temperature. 7) Read the value of «Intake Air Temp.» using the Subaru Select Monitor or a general scan tool. NOTE: • Subaru Select Monitor For detailed operation procedures, refer to “Read Current Data For Engine”. <Ref. to EN(STI)(diag)-36, Subaru Select Monitor.> • General scan tool For detailed operation procedures, refer to the general scan tool operation manual.	Subtract ambient temperature from «Intake Air Temp.». Is the obtained value –10 — 50°C (–18 — 90°F)?	Go to step **10**.	Check the mass air flow and intake air temperature sensor. <Ref. to FU(STI)-40, Mass Air Flow and Intake Air Temperature Sensor.>

	Step	Check	Yes	No
10	**CHECK OUTPUT SIGNAL OF ECM.** 1) Turn the ignition switch to ON. 2) Measure the voltage between ECM connector and chassis ground on faulty cylinders. ***Connector & terminal*** ***#1 (B134) No. 10 (+) — Chassis ground (–):*** ***#2 (B134) No. 11 (+) — Chassis ground (–):*** ***#3 (B134) No. 12 (+) — Chassis ground (–):*** ***#4 (B134) No. 13 (+) — Chassis ground (–):***	Is the voltage 10 V or more?	Go to step **15**.	Go to step **11**.
11	**CHECK HARNESS BETWEEN ECM AND FUEL INJECTOR CONNECTOR.** 1) Turn the ignition switch to OFF. 2) Disconnect the connector from fuel injector on faulty cylinders. 3) Measure the resistance between fuel injector connector and engine ground on faulty cylinders. ***Connector & terminal*** ***#1 (E5) No. 2 — Engine ground:*** ***#2 (E16) No. 2 — Engine ground:*** ***#3 (E6) No. 2 — Engine ground:*** ***#4 (E17) No. 2 — Engine ground:***	Is the resistance 1 MΩ or more?	Go to step **12**.	Repair the short circuit to ground in harness between ECM connector and fuel injector connector.
12	**CHECK HARNESS BETWEEN ECM AND FUEL INJECTOR CONNECTOR.** Measure the resistance of harness between ECM connector and fuel injector connector on faulty cylinders. ***Connector & terminal*** ***#1 (B134) No. 10 — (E5) No. 2:*** ***#2 (B134) No. 11 — (E16) No. 2:*** ***#3 (B134) No. 12 — (E6) No. 2:*** ***#4 (B134) No. 13 — (E17) No. 2:***	Is the resistance less than 1 Ω?	Go to step **13**.	Repair the harness and connector. NOTE: In this case, repair the following item: • Open circuit in harness between ECM connector and fuel injector connector • Poor contact of coupling connector
13	**CHECK FUEL INJECTOR.** Measure the resistance between fuel injector terminals on faulty cylinder. ***Terminals*** ***No. 1 — No. 2:***	Is the resistance 5 — 20 Ω?	Go to step **14**.	Replace the faulty fuel injector. <Ref. to FU(STI)-43, Fuel Injector.>
14	**CHECK POWER SUPPLY LINE.** 1) Turn the ignition switch to ON. 2) Measure the voltage between fuel injector and engine ground on faulty cylinders. ***Connector & terminal*** ***#1 (E5) No. 1 (+) — Engine ground (–):*** ***#2 (E16) No. 1 (+) — Engine ground (–):*** ***#3 (E6) No. 1 (+) — Engine ground (–):*** ***#4 (E17) No. 1 (+) — Engine ground (–):***	Is the voltage 10 V or more?	Repair the poor contact of all connectors in fuel injector circuit.	Repair the harness and connector. NOTE: In this case, repair the following item: • Open circuit in harness between the main relay connector and fuel injector connector on faulty cylinders • Poor contact of coupling connector • Poor contact of main relay connector

	Step	Check	Yes	No
15	**CHECK HARNESS BETWEEN ECM AND FUEL INJECTOR CONNECTOR.** 1) Turn the ignition switch to OFF. 2) Disconnect the connector from fuel injector on faulty cylinders. 3) Turn the ignition switch to ON. 4) Measure the voltage between ECM connector and chassis ground on faulty cylinders. ***Connector & terminal*** ***#1 (B134) No. 10 (+) — Chassis ground (–):*** ***#2 (B134) No. 11 (+) — Chassis ground (–):*** ***#3 (B134) No. 12 (+) — Chassis ground (–):*** ***#4 (B134) No. 13 (+) — Chassis ground (–):***	Is the voltage 10 V or more?	Repair the short circuit to power in harness between ECM connector and fuel injector connectors.	Go to step **16**.
16	**CHECK FUEL INJECTOR.** 1) Turn the ignition switch to OFF. 2) Measure the resistance between fuel injector terminals on faulty cylinder. ***Terminals*** ***No. 1 — No. 2:***	Is the resistance 5 — 20 Ω?	Go to step **17**.	Replace the faulty fuel injector. <Ref. to FU(STI)-43, Fuel Injector.>
17	**CHECK INSTALLATION OF CAMSHAFT POSITION SENSOR/CRANKSHAFT POSITION SENSOR.**	Is the camshaft position sensor or crankshaft position sensor loosely installed?	Tighten the camshaft position sensor or crankshaft position sensor. <Ref. to FU(STI)-36, Camshaft Position Sensor.> <Ref. to FU(STI)-35, Crankshaft Position Sensor.>	Go to step **18**.
18	**CHECK CRANK SPROCKET.** Remove the timing belt cover. <Ref. to ME(STI)-51, REMOVAL, Timing Belt Cover.>	Is the crank sprocket rusted or does it have broken teeth?	Replace the crank sprocket. <Ref. to ME(STI)-62, Crank Sprocket.>	Go to step **19**.
19	**CHECK INSTALLATION CONDITION OF TIMING BELT.** Turn the crankshaft, and align alignment mark on crank sprocket with alignment mark on cylinder block. ST 499987500 CRANKSHAFT SOCKET	Is the timing belt dislocated from its proper position?	Repair the installation condition of timing belt. <Ref. to ME(STI)-52, Timing Belt.>	Go to step **20**.
20	**CHECK ELECTRONIC THROTTLE CONTROL RELAY.** 1) Turn the ignition switch to OFF. 2) Remove the electronic throttle control relay. 3) Connect the battery to terminals No. 16 and No. 17 of electronic throttle control relay. 4) Measure the resistance between electronic throttle control relay terminals. ***Terminals*** ***No. 14 — No. 15:***	Is the resistance less than 1 Ω?	Go to step **21**.	Replace the electronic throttle control relay. <Ref. to FU(STI)-60, Electronic Throttle Control Relay.>
21	**CHECK POWER SUPPLY OF ELECTRONIC THROTTLE CONTROL RELAY.** Measure the voltage between electronic throttle control relay connector and chassis ground. ***Connector & terminal*** ***(B225) No. 15 (+) — Chassis ground (–):***	Is the voltage 10 V or more?	Go to step **22**.	Repair the open or short to ground in the power supply circuit.

	Step	Check	Yes	No
22	**CHECK HARNESS BETWEEN ECM AND ELECTRONIC THROTTLE CONTROL RELAY CONNECTOR.** 1) Disconnect the connector from ECM. 2) Turn the ignition switch to ON. 3) Measure the voltage between electronic throttle control relay connector and chassis ground. ***Connector & terminal*** ***(B225) No. 17 (+) — Chassis ground (–):***	Is the voltage 10 V or more?	Repair the short circuit to power in the harness between ECM connector and electronic throttle control relay connector.	Go to step **23**.
23	**CHECK HARNESS BETWEEN ECM AND ELECTRONIC THROTTLE CONTROL RELAY CONNECTOR.** 1) Turn the ignition switch to OFF. 2) Measure the resistance between electronic throttle control relay connector and chassis ground. ***Connector & terminal*** ***(B225) No. 14 — Chassis ground:*** ***(B225) No. 17 — Chassis ground:***	Is the resistance 1 MΩ or more?	Go to step **24**.	Repair the short circuit to ground in harness between ECM connector and electronic throttle control relay connector.
24	**CHECK HARNESS BETWEEN ECM AND ELECTRONIC THROTTLE CONTROL RELAY CONNECTOR.** Measure the resistance between ECM connector and electronic throttle control relay connector. ***Connector & terminal*** ***(B135) No. 7 — (B225) No. 14:*** ***(B135) No. 17 — (B225) No. 17:***	Is the resistance less than 1 Ω?	Go to step **25**.	Repair the open circuit in harness between ECM connector and electronic throttle control relay connector.
25	**CHECK HARNESS BETWEEN ECM AND ELECTRONIC THROTTLE CONTROL CONNECTOR.** 1) Turn the ignition switch to OFF. 2) Disconnect the connector from ECM. 3) Disconnect the connectors from electronic throttle control. 4) Measure the resistance between ECM connector and chassis ground. ***Connector & terminal*** ***(B134) No. 19 — Chassis ground:*** ***(B134) No. 18 — Chassis ground:*** ***(B134) No. 18 — (B136) No. 4:*** ***(B134) No. 28 — Chassis ground:***	Is the resistance 1 MΩ or more?	Go to step **26**.	Repair the ground short circuit of harness between ECM connector and electronic throttle control connector.
26	**CHECK SHORT CIRCUIT INSIDE THE ECM.** 1) Connect the connector to ECM. 2) Measure the resistance between electronic throttle control connector and engine ground. ***Connector & terminal*** ***(B57) No. 6 — Engine ground:*** ***(B57) No. 4 — Engine ground:***	Is the resistance 1 MΩ or more?	Go to step **27**.	Repair the ground short circuit of harness between ECM connector and electronic throttle control connector. Replace the ECM if defective. <Ref. to FU(STI)-56, Engine Control Module (ECM).>

	Step	Check	Yes	No
27	**CHECK HARNESS BETWEEN ECM AND ELECTRONIC THROTTLE CONTROL CONNECTOR.** 1) Disconnect the connector from ECM. 2) Measure the resistance of harness between ECM connector and electronic throttle control connector. ***Connector & terminal*** ***(B134) No. 18 — (E57) No. 6:*** ***(B134) No. 28 — (E57) No. 4:*** ***(B134) No. 29 — (E57) No. 3:***	Is the resistance less than 1 Ω?	Go to step **28**.	Repair the harness and connector. NOTE: In this case, repair the following item: • Open circuit in harness between ECM connector and electronic throttle control connector • Poor contact of coupling connector
28	**CHECK HARNESS BETWEEN ECM AND ELECTRONIC THROTTLE CONTROL CONNECTOR.** 1) Connect the connector to ECM. 2) Measure the resistance between electronic throttle control connector and engine ground. ***Connector & terminal*** ***(E57) No. 3 — Engine ground:***	Is the resistance less than 5 Ω?	Go to step **29**.	Repair the harness and connector. NOTE: In this case, repair the following item: • Open circuit of harness between ECM connector and engine ground • Poor contact of ECM connector • Poor contact of coupling connector
29	**CHECK HARNESS BETWEEN ECM AND ELECTRONIC THROTTLE CONTROL CONNECTOR.** 1) Turn the ignition switch to ON. 2) Measure the voltage between electronic throttle control connector and engine ground. ***Connector & terminal*** ***(E57) No. 6 (+) — Engine ground (–):*** ***(E57) No. 4 (+) — Engine ground (–):***	Is the voltage 5 V or more?	Repair the short circuit to power in the harness between ECM connector and electronic throttle control connector.	Go to step **30**.
30	**CHECK HARNESS BETWEEN ECM AND ELECTRONIC THROTTLE CONTROL CONNECTOR.** 1) Turn the ignition switch to OFF. 2) Disconnect the connector from ECM. 3) Measure the resistance between ECM connectors. ***Connector & terminal*** ***(B134) No. 19 — (B134) No. 18:*** ***(B134) No. 19 — (B134) No. 28:***	Is the resistance 1 MΩ or more?	Go to step **31**.	Repair the short circuit to power in the harness between ECM connector and electronic throttle control connector.
31	**CHECK SENSOR OUTPUT.** 1) Connect all connectors. 2) Turn the ignition switch to ON. 3) Read the value of «Main-Throttle Sensor» using Subaru Select Monitor. NOTE: For detailed operation procedures, refer to “Read Current Data For Engine”. <Ref. to EN(STI)(diag)-36, Subaru Select Monitor.>	Is the value of «Main-Throttle Sensor» 0.81 — 0.87 V?	Go to step **32**.	Repair the poor contact of electronic throttle control connector. Replace the electronic throttle control if defective. <Ref. to FU(STI)-15, Throttle Body.>

	Step	Check	Yes	No
32	**CHECK SENSOR OUTPUT.** Read the value of «Sub-Throttle Sensor» using Subaru Select Monitor. NOTE: For detailed operation procedures, refer to "Read Current Data For Engine". <Ref. to EN(STI)(diag)-36, Subaru Select Monitor.>	Is the value of «Sub-Throttle Sensor» 1.64 — 1.70 V?	Go to step **33**.	Repair the poor contact of electronic throttle control connector. Replace the electronic throttle control if defective. <Ref. to FU(STI)-15, Throttle Body.>
33	**CHECK HARNESS BETWEEN ECM AND ELECTRONIC THROTTLE CONTROL MOTOR.** 1) Turn the ignition switch to OFF. 2) Disconnect the connector from ECM. 3) Disconnect the connectors from electronic throttle control. 4) Measure the resistance between ECM connector and electronic throttle control connector. ***Connector & terminal*** ***(B134) No. 1 — (E57) No. 1:*** ***(B134) No. 2 — (E57) No. 2:***	Is the resistance less than 1 Ω?	Go to step **34**.	Repair the harness and connector. NOTE: In this case, repair the following item: • Open circuit in harness between ECM connector and electronic throttle control connector • Poor contact of coupling connector
34	**CHECK HARNESS BETWEEN ECM AND ELECTRONIC THROTTLE CONTROL MOTOR.** 1) Connect the connector to ECM. 2) Turn the ignition switch to ON. 3) Measure the voltage between electronic throttle control connector and engine ground. ***Connector & terminal*** ***(E57) No. 1 (+) — Engine ground (–):*** ***(E57) No. 2 (+) — Engine ground (–):***	Is the voltage 5 V or more?	Repair the short circuit to power in the harness between ECM connector and electronic throttle control connector.	Go to step **35**.
35	**CHECK HARNESS BETWEEN ECM AND ELECTRONIC THROTTLE CONTROL MOTOR.** 1) Turn the ignition switch to OFF. 2) Disconnect the connector from ECM. 3) Measure the resistance between electronic throttle control connector and engine ground. ***Connector & terminal*** ***(E57) No. 1 — Engine ground:*** ***(E57) No. 2 — Engine ground:***	Is the resistance 1 MΩ or more?	Go to step **36**.	Repair the ground short circuit of harness between ECM connector and electronic throttle control connector.
36	**CHECK ELECTRONIC THROTTLE CONTROL MOTOR HARNESS.** Measure the resistance between electronic throttle control connectors. ***Connector & terminal*** ***(E57) No. 1 — (E57) No. 2:***	Is the resistance 1 MΩ or more?	Go to step **37**.	Repair the short circuit in harness between ECM connector and electronic throttle control connector.
37	**CHECK ELECTRONIC THROTTLE CONTROL GROUND CIRCUIT.** Measure the resistance between ECM connector and chassis ground. ***Connector & terminal*** ***(B134) No. 3 — Chassis ground:*** ***(B134) No. 4 — Chassis ground:*** ***(B134) No. 6 — Chassis ground:*** ***(B137) No. 1 — Chassis ground:*** ***(B137) No. 3 — Chassis ground:***	Is the resistance less than 5 Ω?	Go to step **38**.	Repair the harness and connector. NOTE: In this case, repair the following item: • Open circuit of harness between ECM connector and engine ground • Poor contact of coupling connector

	Step	Check	Yes	No
38	**CHECK ELECTRONIC THROTTLE CONTROL.** Measure the resistance between electronic throttle control terminals. ***Terminals*** ***No. 1 — No. 2:***	Is the resistance 50 Ω or less?	Go to step **39**.	Replace the electronic throttle control. <Ref. to FU(STI)-15, Throttle Body.>
39	**CHECK ELECTRONIC THROTTLE CONTROL.** Move the throttle valve to the fully opened and fully closed positions with fingers. Check that the valve returns to the specified position when releasing fingers.	Does the valve return to the specified position? Specified value: 3 mm (0.12 in) from fully closed position	Repair the poor contact of ECM connector.	Replace the electronic throttle control. <Ref. to FU(STI)-15, Throttle Body.>

1. OUTLINE OF DIAGNOSIS

- **When cold, the abnormality in the control of target engine speed increase is detected. (P050A)**
- Idle speed diagnosis

Judge as NG when actual engine speed is not close to target engine speed at cold start.

- **Detect malfunctions of the catalyst advanced idling retard angle control. (P050B)**

Judge as NG when ECM is not controlling the angle properly during catalyst advanced idling retard angle control.

- Final ignition timing diagnosis

Judge as NG when actual retard amount is under the specified value at cold start.

2. EXECUTION CONDITION

Secondary parameters	Execution condition
<Idle speed diagnosis>	
Battery voltage	≥ 10.9 V
Barometric pressure	≥ 75.1 kPa (563 mmHg, 22.2 inHg)
Vehicle speed	≤ 2 km/h (1.2 MPH)
Engine coolant temperature	≤ 60 °C (140 °F)
Throttle position	< 0.37 °
Integrated value of intake air amount	< Value of Map 1
Elapsed time after starting the engine	≥ 2000 ms
<Final ignition timing diagnosis>	
Battery voltage	≥ 10.9 V
Barometric pressure	≥ 75.1 kPa (563 mmHg, 22.2 inHg)
Engine coolant temperature	≤ 60 °C (140 °F)
Throttle position	< 0.37 °
Integrated value of intake air amount	< Value of Map 2
Target retard amount	≥ Value from Map 3

Map 1

Engine coolant temperature at engine starting °C (°F)	–40 (–40)	–30 (–22)	–20 (–4)	–10 (14)	0 (32)	10 (50)	20 (68)	30 (86)
Integrated value of intake air amount g (oz)	950 (33.51)	925 (32.62)	900 (31.74)	870 (30.68)	840 (29.63)	620 (21.87)	420 (14.81)	310 (10.93)

Engine coolant temperature at engine starting °C (°F)	40 (104)	50 (122)	60 (140)	70 (158)	80 (176)	90 (194)	100 (212)	110 (230)
Integrated value of intake air amount g (oz)	260 (9.17)	210 (7.41)	170 (6)	170 (6)	170 (6)	170 (6)	170 (6)	170 (6)

Map 2

Engine coolant temperature at engine starting °C (°F)	–40 (–40)	–30 (–22)	–20 (–4)	–10 (14)	0 (32)	10 (50)	20 (68)	30 (86)
Integrated value of intake air amount g (oz)	950 (33.51)	925 (32.62)	900 (31.74)	870 (30.68)	840 (29.63)	620 (21.87)	420 (14.81)	310 (10.93)

Engine coolant temperature at engine starting °C (°F)	40 (104)	50 (122)	60 (140)	70 (158)	80 (176)	90 (194)	100 (212)	110 (230)
Integrated value of intake air amount g (oz)	260 (9.17)	210 (7.41)	170 (6)	170 (6)	170 (6)	170 (6)	170 (6)	170 (6)

Map 3

Engine coolant temperature	–40 °C (–40 °F)	–30 °C (–22 °F)	–20 °C (–4 °F)	–10 °C (14 °F)	0 °C (32 °F)	10 °C (50 °F)	20 °C (68 °F)	30 °C (86 °F)	40 °C (104 °F)	50 °C (122 °F)	60 °C (140 °F)
Target retard amount	6 °CA	6 °CA	6 °CA	6 °CA	6 °CA	6 °CA	6 °CA	6 °CA	6 °CA	6 °CA	6 °CA

3. GENERAL DRIVING CYCLE

Perform the diagnosis at cold start.

4. DIAGNOSTIC METHOD

• Idle speed diagnosis

Judge as NG when the following conditions are established.

Judgment Value

Malfunction Criteria	Threshold Value
Actual engine speed – Target engine speed	< Value of Map 4

Map 4

Engine coolant temperature	–40 °C (–40 °F)	–30 °C (–22 °F)	–20 °C (–4 °F)	–10 °C (14 °F)	0 °C (32 °F)	10 °C (50 °F)	20 °C (68 °F)	30 °C (86 °F)	40 °C (104 °F)	50 °C (122 °F)	60 °C (140 °F)
Threshold Value	–150 rpm	–150 rpm	–150 rpm	–150 rpm	–150 rpm	–150 rpm	–300 rpm	–300 rpm	–300 rpm	–300 rpm	–300 rpm

Time Needed for Diagnosis: 6000 ms
Malfunction Indicator Light Illumination: Illuminates when malfunction occurs in 2 continuous driving cycles.

• Final ignition timing diagnosis

Judge as NG when the following conditions are established.

Judgment Value

Malfunction Criteria	Threshold Value
Final ignition timing – ignition timing during CSERS* *: Ignition timing during CSERS (Cold Start Emission Reduction Strategy) = Base ignition timing – retard amount	> Value of Map 5

Map 5

Engine coolant temperature	–40 °C (–40 °F)	–30 °C (–22 °F)	–20 °C (–4 °F)	–10 °C (14 °F)	0 °C (32 °F)	10 °C (50 °F)	20 °C (68 °F)	30 °C (86 °F)	40 °C (104 °F)	50 °C (122 °F)	60 °C (140 °F)
Threshold Value	6 °CA	6 °CA	6 °CA	6 °CA	6 °CA	6 °CA	6 °CA	6 °CA	6 °CA	6 °CA	6 °CA

Time Needed for Diagnosis: 6000 ms
Malfunction Indicator Light Illumination: Illuminates as soon as a malfunction occurs.

DG:DTC P050B COLD START IGNITION TIMING PERFORMANCE

NOTE:
For the diagnostic procedure, refer to DTC P050A. <Ref. to EN(STI)(diag)-389, DTC P050A COLD START IDLE CONTROL SYSTEM PERFORMANCE, Diagnostic Procedure with Diagnostic Trouble Code (DTC).>

1. OUTLINE OF DIAGNOSIS

NOTE:
For the detection standard, refer to DTC P050A. <Ref. to EN(STI)(diag)-389, DTC P050A COLD START IDLE CONTROL SYSTEM PERFORMANCE, Diagnostic Procedure with Diagnostic Trouble Code (DTC).>

DH:DTC P0512 STARTER (SWITCH) REQUEST CIRCUIT

DTC DETECTING CONDITION:
Immediately at fault recognition
TROUBLE SYMPTOM:
Failure of engine to start

CAUTION:
After servicing or replacing faulty parts, perform Clear Memory Mode <Ref. to EN(STI)(diag)-68, OPERATION, Clear Memory Mode.>, and Inspection Mode <Ref. to EN(STI)(diag)-48, PROCEDURE, Inspection Mode.>.

WIRING DIAGRAM:
Engine Electrical System <Ref. to WI-154, WIRING DIAGRAM, Engine Electrical System.>

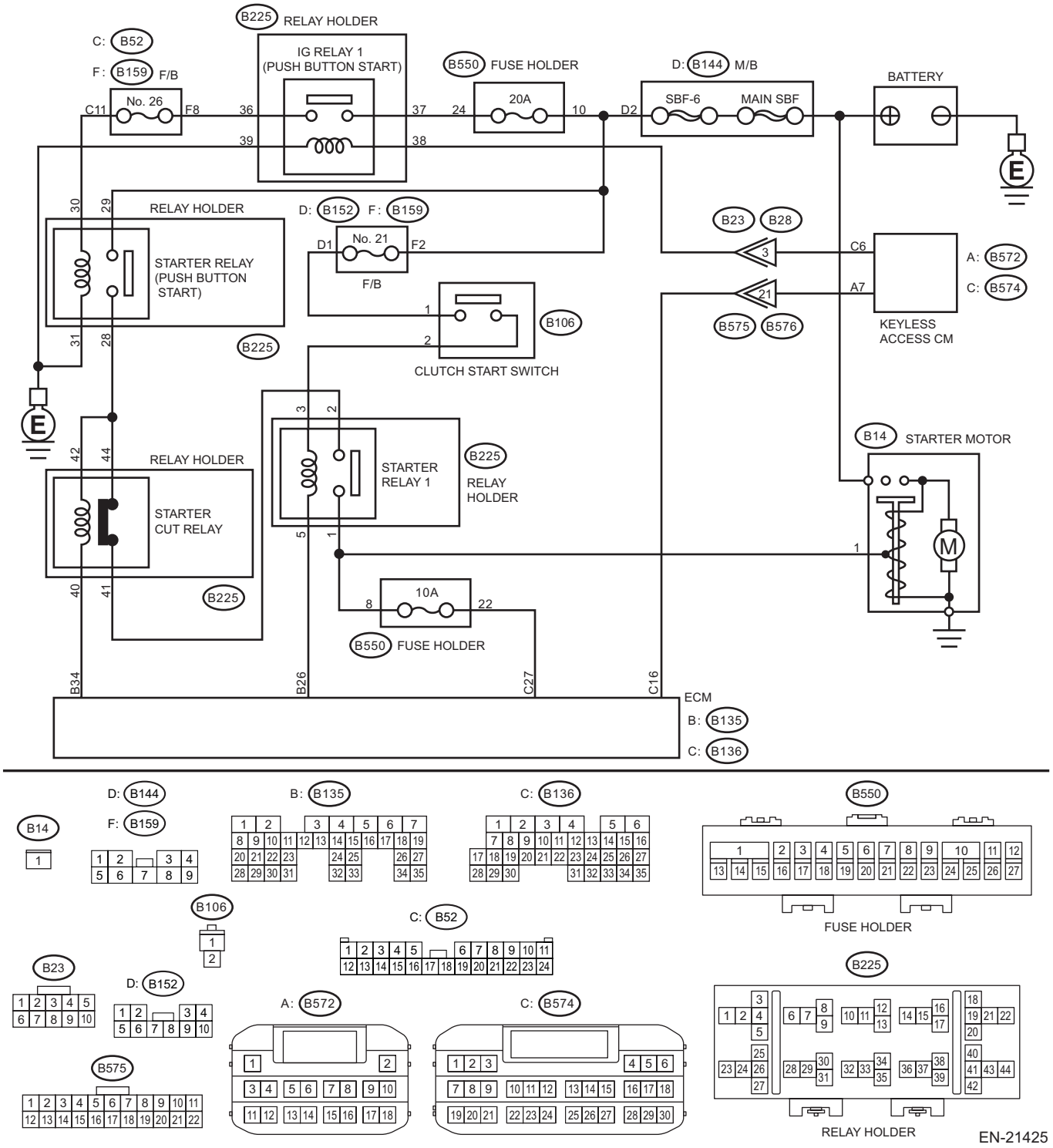

Step		Check	Yes	No
1	**CHECK PUSH BUTTON IGNITION SWITCH.** Operate the push button ignition switch.	Does it operate smoothly without catch?	Go to step **2**.	Replace the push button ignition switch. <Ref. to SL-106, Push Button Ignition Switch.>

Step		Check	Yes	No
2	**CHECK DTC.** 1) Clear the memory using the Subaru Select Monitor. <Ref. to EN(STI)(diag)-68, Clear Memory Mode.> 2) Start and idle the engine for three minutes or more.	Is the same DTC as current diagnosis output?	Go to step **3**.	Even if DTC is detected, the circuit has returned to a normal condition at this time. Reproduce the failure, and then perform the diagnosis again. NOTE: In this case, temporary poor contact of connector, temporary open or short circuit of harness may be the cause.
3	**CHECK HARNESS BETWEEN ECM AND KEYLESS ACCESS CM.** 1) Turn the ignition to OFF. 2) Disconnect the connector from ECM. 3) Turn the ignition to ON. 4) Measure the voltage between ECM connector and chassis ground. ***Connector & terminal*** ***(B136) No. 16 (+) — Chassis ground (–):***	Is the voltage 10 V or more?	Repair the short circuit to power supply in harness between ECM connector and keyless access CM connector.	Repair the poor contact of ECM connector.

1. OUTLINE OF DIAGNOSIS

Detect abnormal continuity in the starter SW1.
Judge as ON NG when the starter SW 1 signal remains ON.

2. EXECUTION CONDITION

Secondary parameters	Execution condition
Battery voltage	≥ 8 V
Engine speed	≥ 500 rpm

3. GENERAL DRIVING CYCLE

Perform the diagnosis continuously after starting the engine.

4. DIAGNOSTIC METHOD

If the duration of time while the following conditions are met is longer than the time indicated, judge as NG.

Judgment Value

Malfunction Criteria	Threshold Value
Starter SW1 voltage	≥ Battery voltage × 0.85 V

Time Needed for Diagnosis: 30000 ms
Malfunction Indicator Light Illumination: Illuminates as soon as a malfunction occurs.

DI: DTC P0560 SYSTEM VOLTAGE

DTC DETECTING CONDITION:
Immediately at fault recognition

CAUTION:
After servicing or replacing faulty parts, perform Clear Memory Mode <Ref. to EN(STI)(diag)-68, OPERATION, Clear Memory Mode.>, and Inspection Mode <Ref. to EN(STI)(diag)-48, PROCEDURE, Inspection Mode.>.

WIRING DIAGRAM:
Engine Electrical System <Ref. to WI-154, WIRING DIAGRAM, Engine Electrical System.>

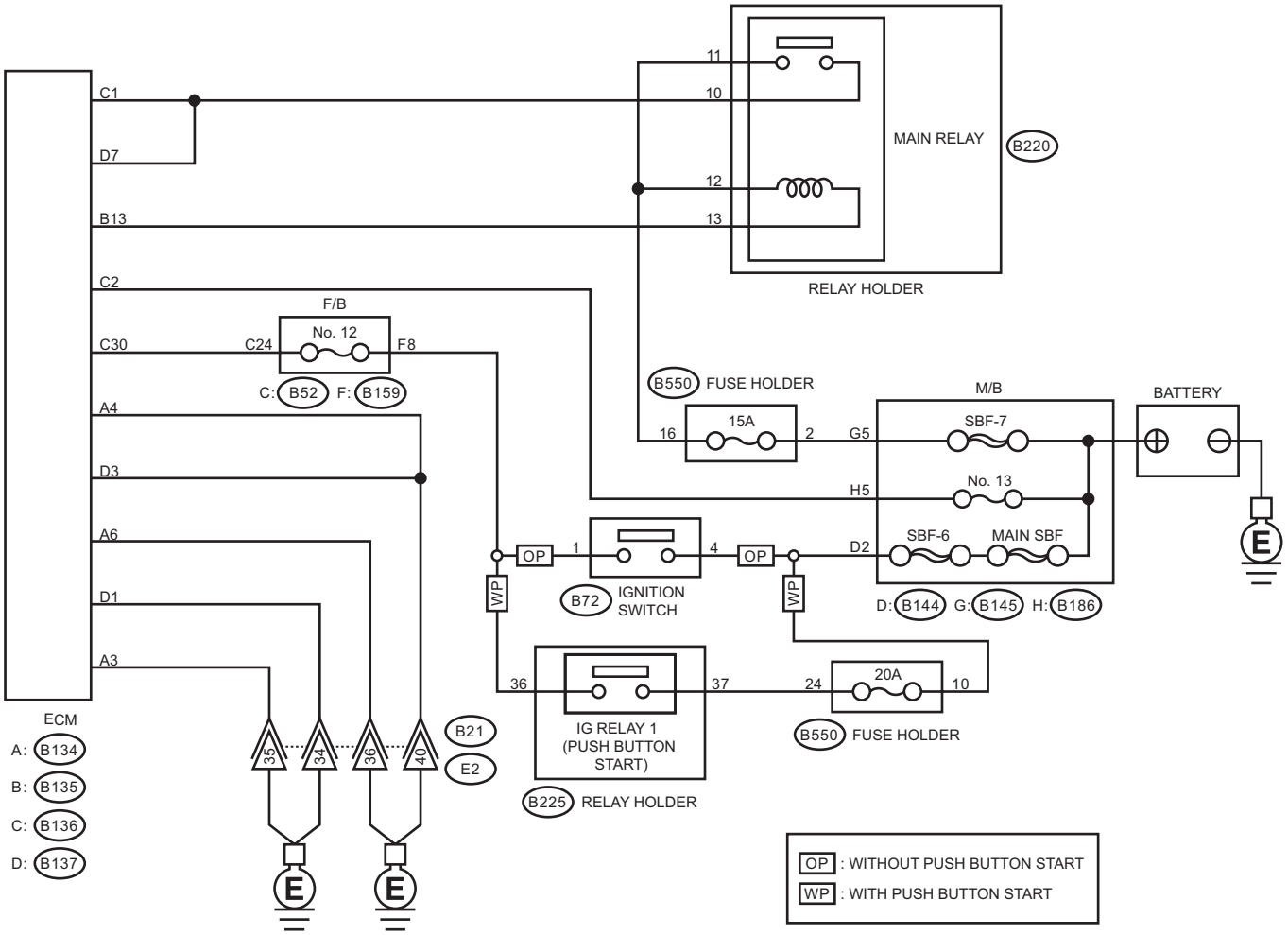

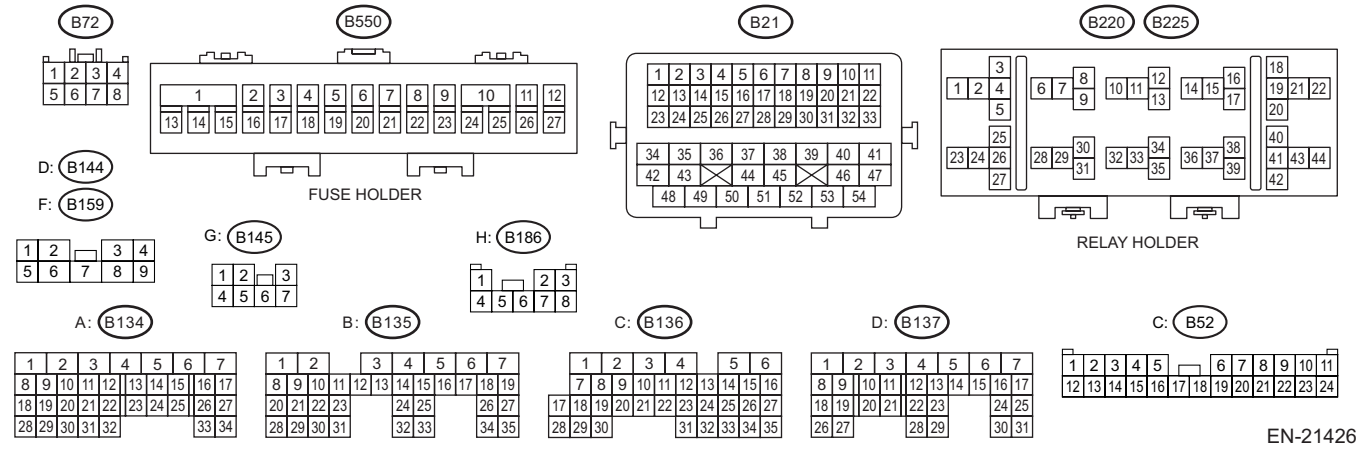

EN-21426

	Step	Check	Yes	No
1	**CHECK INPUT SIGNAL OF ECM.** 1) Turn the ignition switch to OFF. 2) Measure the voltage between ECM connector and chassis ground. ***Connector & terminal*** ***(B136) No. 2 (+) — Chassis ground (–):***	Is the voltage 10 V or more?	Repair the poor contact of ECM connector.	Go to step **2**.
2	**CHECK HARNESS BETWEEN ECM AND MAIN FUSE BOX CONNECTOR.** 1) Disconnect the connector from ECM. 2) Measure the resistance between ECM connector and chassis ground. ***Connector & terminal*** ***(B136) No. 2 — Chassis ground:***	Is the resistance 1 MΩ or more?	Go to step **3**.	Repair the short circuit to ground in harness between ECM connector and battery terminal.
3	**CHECK FUSE NO. 13.**	Is the fuse blown out?	Replace the fuse.	Repair the harness and connector. NOTE: In this case, repair the following item: • Open circuit in harness between ECM connector and battery • Poor contact of ECM connector • Poor contact of battery terminal

1. OUTLINE OF DIAGNOSIS

Detect the open/short circuit of back-up power supply circuit.
Judge as NG when the backup power voltage is low.

2. EXECUTION CONDITION

Secondary parameters	Execution condition
Battery voltage	≥ 10.9 V

3. GENERAL DRIVING CYCLE

Always perform the diagnosis continuously.

4. DIAGNOSTIC METHOD

If the duration of time while the following conditions are met is longer than the time indicated, judge as NG.

Judgment Value

Malfunction Criteria	Threshold Value
Voltage of back-up power supply	≤ 2.5 V

Time Needed for Diagnosis: 2500 ms
Malfunction Indicator Light Illumination: Illuminates as soon as a malfunction occurs.

DJ:DTC P0604 INTERNAL CONTROL MODULE RANDOM ACCESS MEMORY (RAM) ERROR

DTC DETECTING CONDITION:
Immediately at fault recognition
TROUBLE SYMPTOM:
- Engine does not start.
- Engine stalls.

CAUTION:
After servicing or replacing faulty parts, perform Clear Memory Mode <Ref. to EN(STI)(diag)-68, OPERATION, Clear Memory Mode.>, and Inspection Mode <Ref. to EN(STI)(diag)-48, PROCEDURE, Inspection Mode.>.

Step		Check	Yes	No
1	**CHECK FOR ANY OTHER DTC ON DISPLAY.**	Is any other DTC displayed?	Check the appropriate DTC using the "List of Diagnostic Trouble Code (DTC)". <Ref. to EN(STI)(diag)-96, List of Diagnostic Trouble Code (DTC).>	Even if DTC is detected, the circuit has returned to a normal condition at this time. Reproduce the failure, and then perform the diagnosis again. NOTE: In this case, temporary poor contact of connector, temporary open or short circuit of harness may be the cause.

1. OUTLINE OF DIAGNOSIS

Detect the malfunction of microcomputer (RAM).
If it is possible to write data to the whole area of RAM in the initial routine, and is possible to read the same data, it is judged as OK, and if not, NG.

2. EXECUTION CONDITION

Secondary parameters	Execution condition
ECM initialization	Execution

Diagnosis with the initial routine.

3. GENERAL DRIVING CYCLE

Perform the diagnosis immediately after the ignition switch is to ON.

4. DIAGNOSTIC METHOD

Judge as NG when the following conditions are established.

Judgment Value

Malfunction Criteria	Threshold Value
Write the specified value into the RAM.	Different from written value

Time Needed for Diagnosis: 512 ms
Malfunction Indicator Light Illumination: Illuminates as soon as a malfunction occurs.

DK:DTC P0605 INTERNAL CONTROL MODULE READ ONLY MEMORY (ROM) ERROR

NOTE:
For the diagnostic procedure, refer to DTC P0606. <Ref. to EN(STI)(diag)-409, DTC P0606 CONTROL MODULE PROCESSOR, Diagnostic Procedure with Diagnostic Trouble Code (DTC).>

1. OUTLINE OF DIAGNOSIS

Judge as NG when SUM value of ROM is outside the standard value.

2. EXECUTION CONDITION

Secondary parameters	Execution condition
ECM initialization	Execution

3. GENERAL DRIVING CYCLE

Perform the diagnosis immediately after the ignition switch is to ON.

4. DIAGNOSTIC METHOD

Judge as NG if the criteria below are met.

Judgment Value

Malfunction Criteria	Threshold Value
SUM value of ROM	Standard

Time Needed for Diagnosis: 512 ms
Malfunction Indicator Light Illumination: Illuminates as soon as a malfunction occurs.

DL:DTC P0606 CONTROL MODULE PROCESSOR

DTC DETECTING CONDITION:
Immediately at fault recognition
TROUBLE SYMPTOM:
- Improper idling
- Poor driving performance

CAUTION:
After servicing or replacing faulty parts, perform Clear Memory Mode <Ref. to EN(STI)(diag)-68, OPERATION, Clear Memory Mode.>, and Inspection Mode <Ref. to EN(STI)(diag)-48, PROCEDURE, Inspection Mode.>.

WIRING DIAGRAM:
Engine Electrical System <Ref. to WI-154, WIRING DIAGRAM, Engine Electrical System.>

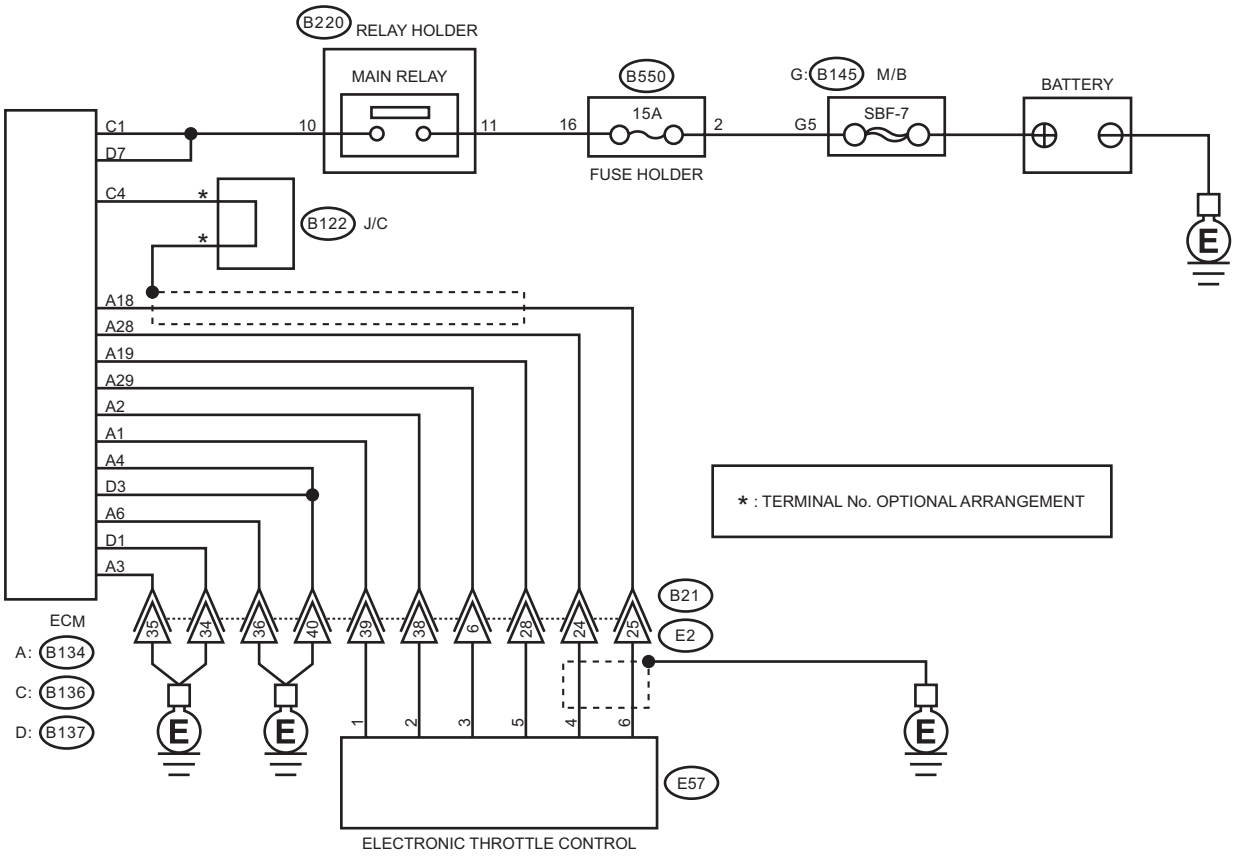

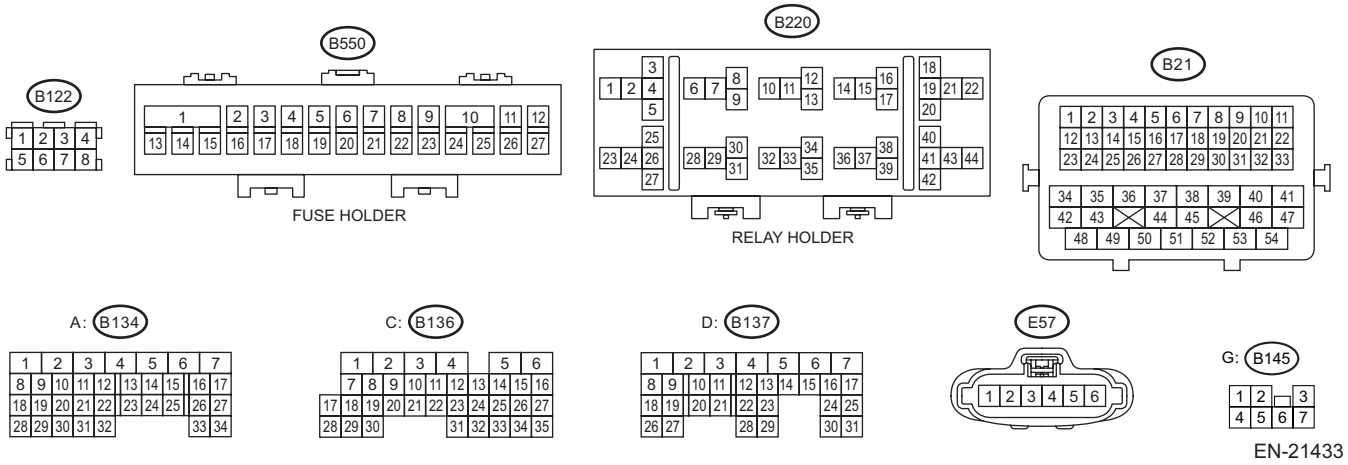

EN-21433

	Step	Check	Yes	No
1	**CHECK INPUT VOLTAGE OF ECM.** 1) Turn the ignition switch to ON. 2) Measure the voltage between ECM connector and chassis ground. ***Connector & terminal*** ***(B136) No. 1 (+) — Chassis ground (–):*** ***(B137) No. 7 (+) — Chassis ground (–):***	Is the voltage 10 — 13 V?	Go to step **2**.	Repair the open or short to ground in the power supply circuit.
2	**CHECK INPUT VOLTAGE OF ECM.** 1) Start the engine. 2) Measure the voltage between ECM connector and chassis ground. ***Connector & terminal*** ***(B136) No. 1 (+) — Chassis ground (–):*** ***(B137) No. 7 (+) — Chassis ground (–):***	Is the voltage 13 — 15 V?	Go to step **3**.	Repair the open or short to ground in the power supply circuit.
3	**CHECK HARNESS BETWEEN ECM AND ELECTRONIC THROTTLE CONTROL CONNECTOR.** 1) Turn the ignition switch to OFF. 2) Disconnect the connector from ECM. 3) Disconnect the connectors from electronic throttle control. 4) Measure the resistance of harness between ECM connector and electronic throttle control connector. ***Connector & terminal*** ***(B134) No. 19 — (E57) No. 5:*** ***(B134) No. 29 — (E57) No. 3:***	Is the resistance less than 1 Ω?	Go to step **4**.	Repair the harness and connector. NOTE: In this case, repair the following item: • Open circuit in harness between ECM connector and electronic throttle control connector • Poor contact of coupling connector
4	**CHECK ECM GROUND HARNESS.** 1) Connect all connectors. 2) Turn the ignition switch to ON. 3) Measure the voltage between ECM connector and chassis ground. ***Connector & terminal*** ***(B134) No. 3 (+) — Chassis ground (–):*** ***(B134) No. 4 (+) — Chassis ground (–):*** ***(B134) No. 6 (+) — Chassis ground (–):*** ***(B137) No. 1 (+) — Chassis ground (–):*** ***(B137) No. 3 (+) — Chassis ground (–):***	Is the voltage less than 1 V?	Check the connector for poor contact and check the harness. Replace the ECM if no fault is found. <Ref. to FU(STI)-56, Engine Control Module (ECM).>	Repair the harness and connector. NOTE: In this case, repair the following item: • Open circuit in ground circuit • Further tightening of the engine ground terminal • Poor contact of ECM connector • Poor contact of coupling connector

1. OUTLINE OF DIAGNOSIS

Judge as NG when the CPU operation is abnormal.
(1) Instruction check
(2) Software flow check
(3) Software monitor check
(4) If the output IC operation is abnormal
(5) CAN register check

2. COMPONENT DESCRIPTION

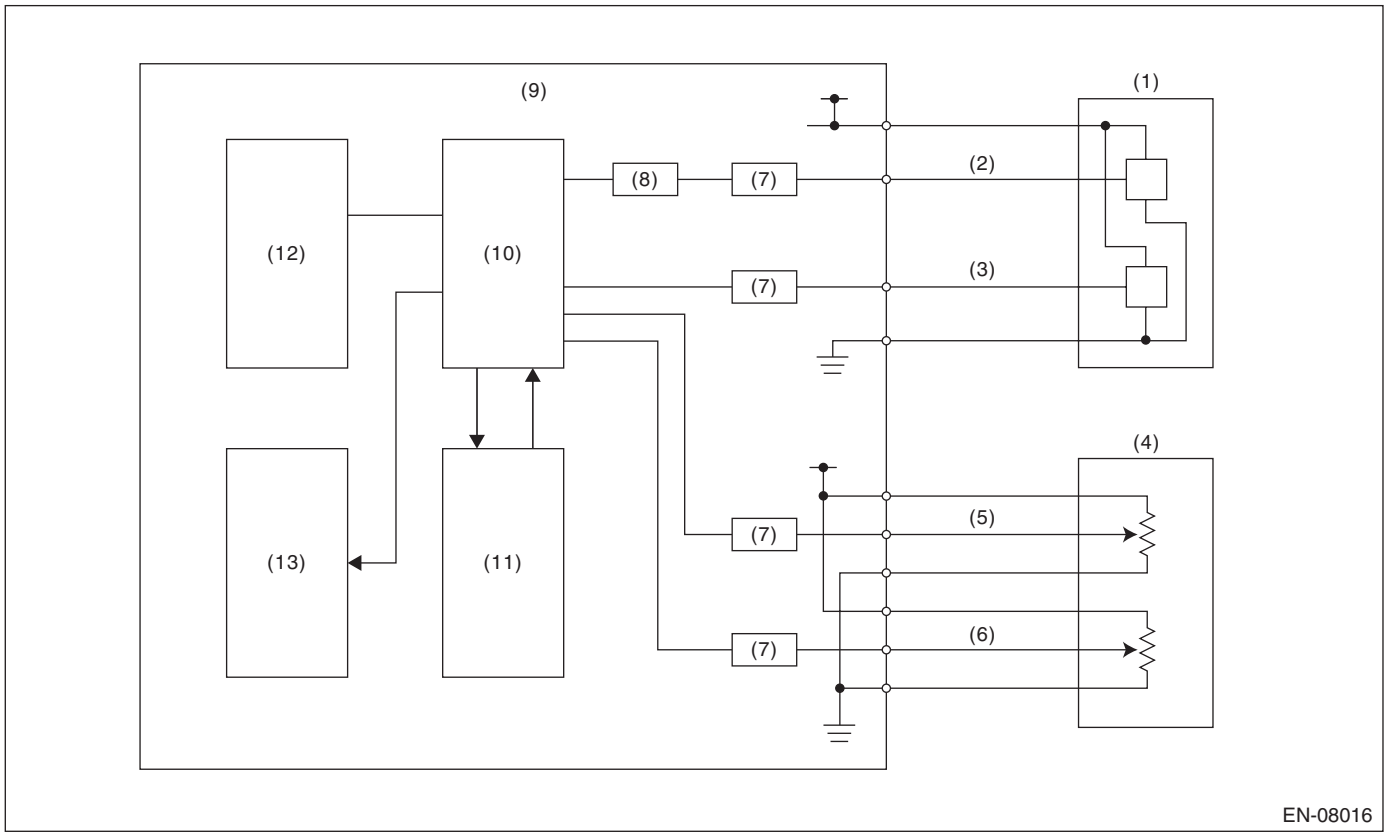

(1)	Throttle position sensor	(6)	Accelerator pedal position sensor 2	(10)	CPU
(2)	Throttle position sensor 1	(7)	I/F circuit	(11)	Monitoring IC
(3)	Throttle position sensor 2	(8)	Amplifier circuit	(12)	EEPROM
(4)	Accelerator pedal position sensor	(9)	Engine control module (ECM)	(13)	Output IC
(5)	Accelerator pedal position sensor 1				

3. EXECUTION CONDITION

Secondary parameters	Execution condition
(1) — 1 Initial routine	
(1) — 2 Ignition switch	ON
(1) — 2 Battery voltage	≥ 6.2 V
(1) — 2 Electronic throttle control relay	ON
(2) Ignition switch	ON
(3) Ignition switch	ON
(3) Battery voltage	≥ 6.2 V
(3) Electronic throttle control relay	ON
(4) Ignition switch	ON
(5) Initial routine	

4. GENERAL DRIVING CYCLE

Always perform the diagnosis continuously.

5. DIAGNOSTIC METHOD

Judge as NG when the following conditions are established.

Judgment Value

Malfunction Criteria	Threshold Value
(1) — 1 Instruction value	Different from expected value
(1) — 2 Calculated result from CPU and FPU	Different from expected value
(2) Process flow result	The result and expected value do not match.
(3) High integrated IC motor continuity cut demand	Exist
(4) Communication between output driver ICs	Communication failure
(5) Writing value to CAN register	≠ Read out value

Time Needed for Diagnosis:

(1) — 1:2 time(s)
(1) — 2:512 ms
(2): 504 ms
(3): 48 ms
(4): 2500 ms
(5): Less than 1 second

Malfunction Indicator Light Illumination: Illuminates as soon as a malfunction occurs.

DM:DTC P060A INTERNAL CONTROL MODULE MONITORING PROCESSOR PERFORMANCE

NOTE:
For the diagnostic procedure, refer to DTC P0606. <Ref. to EN(STI)(diag)-409, DTC P0606 CONTROL MODULE PROCESSOR, Diagnostic Procedure with Diagnostic Trouble Code (DTC).>

1. OUTLINE OF DIAGNOSIS

Judge as NG when the monitoring IC operation is abnormal.
(1) Monitoring IC Disable (motor continuity cut demand) diagnosis
(2) Monitoring IC function diagnosis
(3) Monitoring IC register diagnosis
(4) Count up timer diagnosis

2. COMPONENT DESCRIPTION

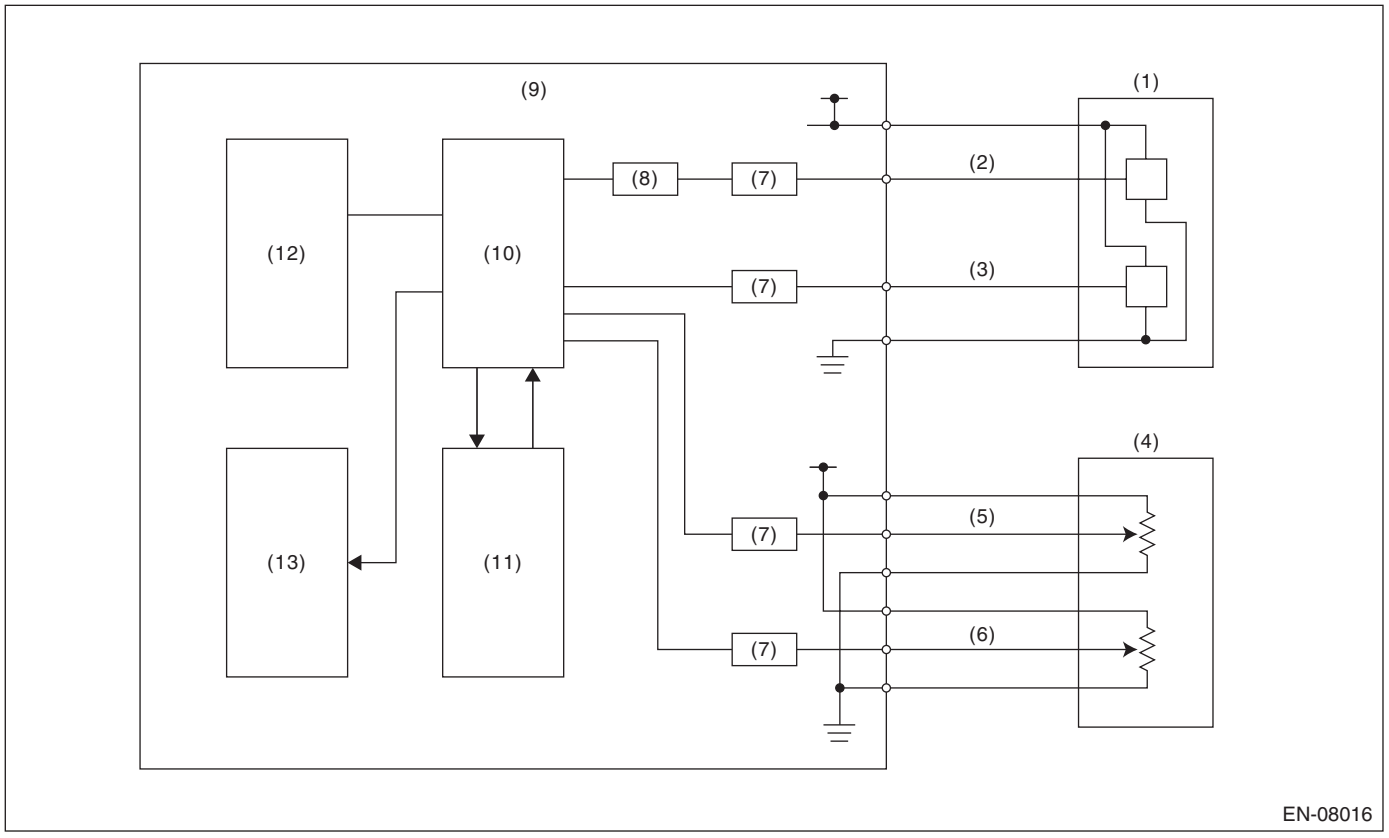

(1)	Throttle position sensor	(6)	Accelerator pedal position sensor 2	(10)	CPU
(2)	Throttle position sensor 1	(7)	I/F circuit	(11)	Monitoring IC
(3)	Throttle position sensor 2	(8)	Amplifier circuit	(12)	EEPROM
(4)	Accelerator pedal position sensor	(9)	Engine control module (ECM)	(13)	Output IC
(5)	Accelerator pedal position sensor 1				

3. EXECUTION CONDITION

Secondary parameters	Execution condition
(1) • Battery voltage • When CPU intentionally sends motor continuity cut demand	≥ 6 V
(2) • Battery voltage • CPU intentionally sends incorrect data	≥ 6 V
(3) and (4) Battery voltage	≥ 6 V

4. GENERAL DRIVING CYCLE

Always perform the diagnosis continuously.

5. DIAGNOSTIC METHOD

Judge as NG when one of the following conditions is established.

Judgment Value

Malfunction Criteria	Threshold Value
(1) Main throttle position – Main throttle position when monitoring starts	≥ 2 °
(2) Monitoring IC motor continuity cut demand	Not detected
(3) Monitoring IC register writing value	≠ Reading value
(4) Monitoring IC count up timer	Does not change

Time Needed for Diagnosis:
(1): 24 ms
(2): (192 ms – 16 ms) × 9 + 304 ms × 2 time(s)
(3): 8 time(s)
(4): 200 ms
Malfunction Indicator Light Illumination: Illuminates as soon as a malfunction occurs.

DN:DTC P060B INTERNAL CONTROL MODULE A/D PROCESSING PERFORMANCE

NOTE:
For the diagnostic procedure, refer to DTC P0606. <Ref. to EN(STI)(diag)-409, DTC P0606 CONTROL MODULE PROCESSOR, Diagnostic Procedure with Diagnostic Trouble Code (DTC).>

1. OUTLINE OF DIAGNOSIS

Judge as NG when the A/D converter operation is abnormal.
- When the A/D converter operation is abnormal (ADC malfunction)
- When the input amplifier circuit of throttle position sensor 1 is abnormal (quadruple amplification problem).

2. COMPONENT DESCRIPTION

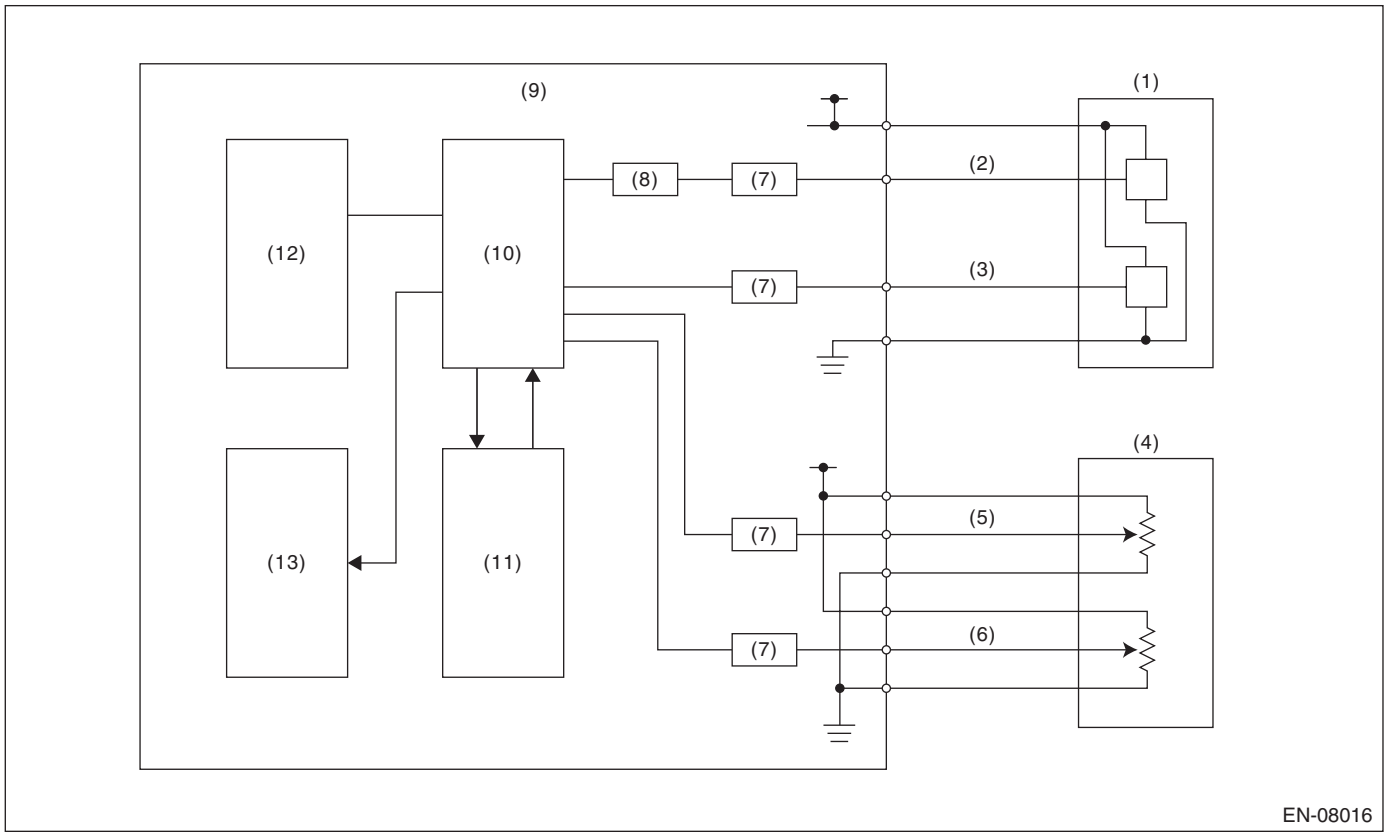

(1)	Throttle position sensor	(6)	Accelerator pedal position sensor 2	(10)	CPU
(2)	Throttle position sensor 1	(7)	I/F circuit	(11)	Monitoring IC
(3)	Throttle position sensor 2	(8)	Amplifier circuit	(12)	EEPROM
(4)	Accelerator pedal position sensor	(9)	Engine control module (ECM)	(13)	Output IC
(5)	Accelerator pedal position sensor 1				

3. EXECUTION CONDITION

Secondary parameters	Execution condition
(1), (2) and (3)	
Battery voltage	≥ 6 V
(4)	
• Battery voltage	≥ 6 V
• Main throttle position	< Value from Map
(5)	
• Battery voltage	≥ 6 V
• Main throttle position	≥ Value from Map

Map

Battery voltage	7.5 V	8 V
Main throttle position	27.5 °	31 °

4. GENERAL DRIVING CYCLE

Always perform the diagnosis continuously.

5. DIAGNOSTIC METHOD

Judge as NG when one of the following conditions is established.

Judgment Value

Malfunction Criteria	Threshold Value
(1) A/D voltages for monitoring	> 2.7 V or < 2.5 V
(2) |Buffer voltage of AD changes – Base voltage of A/D changes|	> 0.029296875 V
(3) A/D voltages for monitoring	Did not change
(4) |Throttle position sensor (Main) – (Amplified throttle position sensor (Main))/4|	≥ 3 °
(5) (Amplified throttle position sensor (Main))/4	≤ 23.8235 °

Time Needed for Diagnosis:
(1): 200 ms
(2): 200 ms
(3): 200 ms
(4): 24 ms
(5): 24 ms
Malfunction Indicator Light Illumination: Illuminates as soon as a malfunction occurs.

DO:DTC P0616 STARTER RELAY "A" CIRCUIT LOW

1. MODEL WITHOUT PUSH BUTTON START

DTC DETECTING CONDITION:
Immediately at fault recognition

CAUTION:
After servicing or replacing faulty parts, perform Clear Memory Mode <Ref. to EN(STI)(diag)-68, OPERATION, Clear Memory Mode.>, and Inspection Mode <Ref. to EN(STI)(diag)-48, PROCEDURE, Inspection Mode.>.

WIRING DIAGRAM:
Engine Electrical System <Ref. to WI-154, WIRING DIAGRAM, Engine Electrical System.>

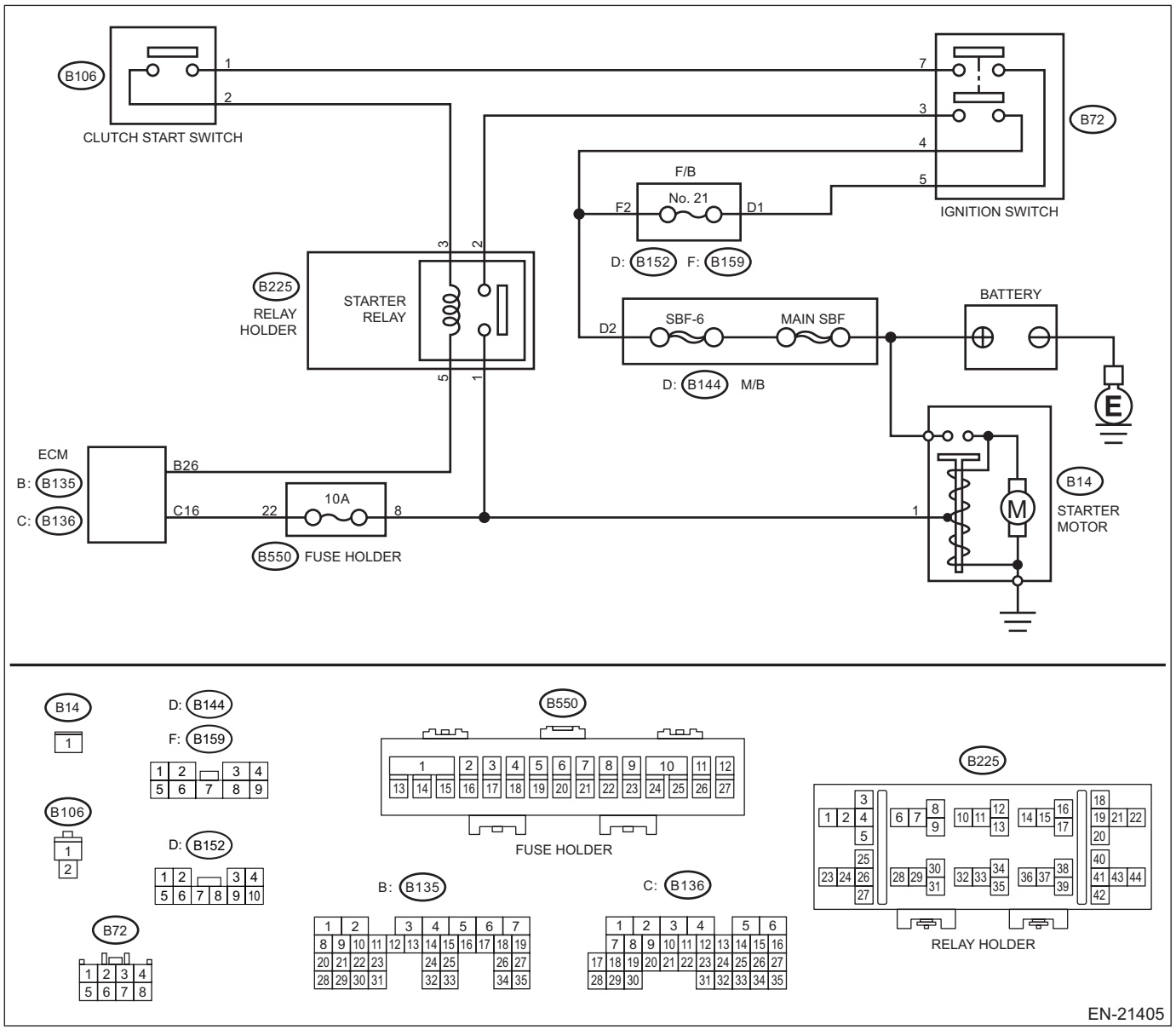

	Step	Check	Yes	No
1	**CHECK FOR ANY OTHER DTC ON DISPLAY.**	Is any other DTC displayed?	Check DTC using "List of Diagnostic Trouble Code (DTC)". <Ref. to EN(STI)(diag)-96, List of Diagnostic Trouble Code (DTC).>	Go to step **2**.
2	**CHECK HARNESS BETWEEN ECM AND STARTER RELAY CONNECTOR.** 1) Turn the ignition switch to OFF. 2) Remove the starter relay. 3) Disconnect the connector from ECM. 4) Disconnect the connector from starter motor. 5) Measure the resistance of harness between ECM connector and starter relay connector. ***Connector & terminal*** ***(B136) No. 16 — (B225) No. 1:***	Is the resistance less than 1 Ω?	Go to step **3**.	NOTE: Check the following item and repair or replace if necessary. • Open circuit of harness between ECM connector and starter relay connector • Blown out of fuse
3	**CHECK HARNESS BETWEEN ECM AND STARTER RELAY CONNECTOR.** Measure the resistance between ECM connector and chassis ground. ***Connector & terminal*** ***(B136) No. 16 — Chassis ground:***	Is the resistance 1 MΩ or more?	Repair the poor contact of ECM connector.	Repair the short circuit to ground in harness between ECM connector and starter relay connector.

2. MODEL WITH PUSH BUTTON START

DTC DETECTING CONDITION:
Immediately at fault recognition
TROUBLE SYMPTOM:
Failure of engine to start

CAUTION:
After servicing or replacing faulty parts, perform Clear Memory Mode <Ref. to EN(STI)(diag)-68, OPERATION, Clear Memory Mode.>, and Inspection Mode <Ref. to EN(STI)(diag)-48, PROCEDURE, Inspection Mode.>.

WIRING DIAGRAM:

Engine Electrical System <Ref. to WI-154, WIRING DIAGRAM, Engine Electrical System.>

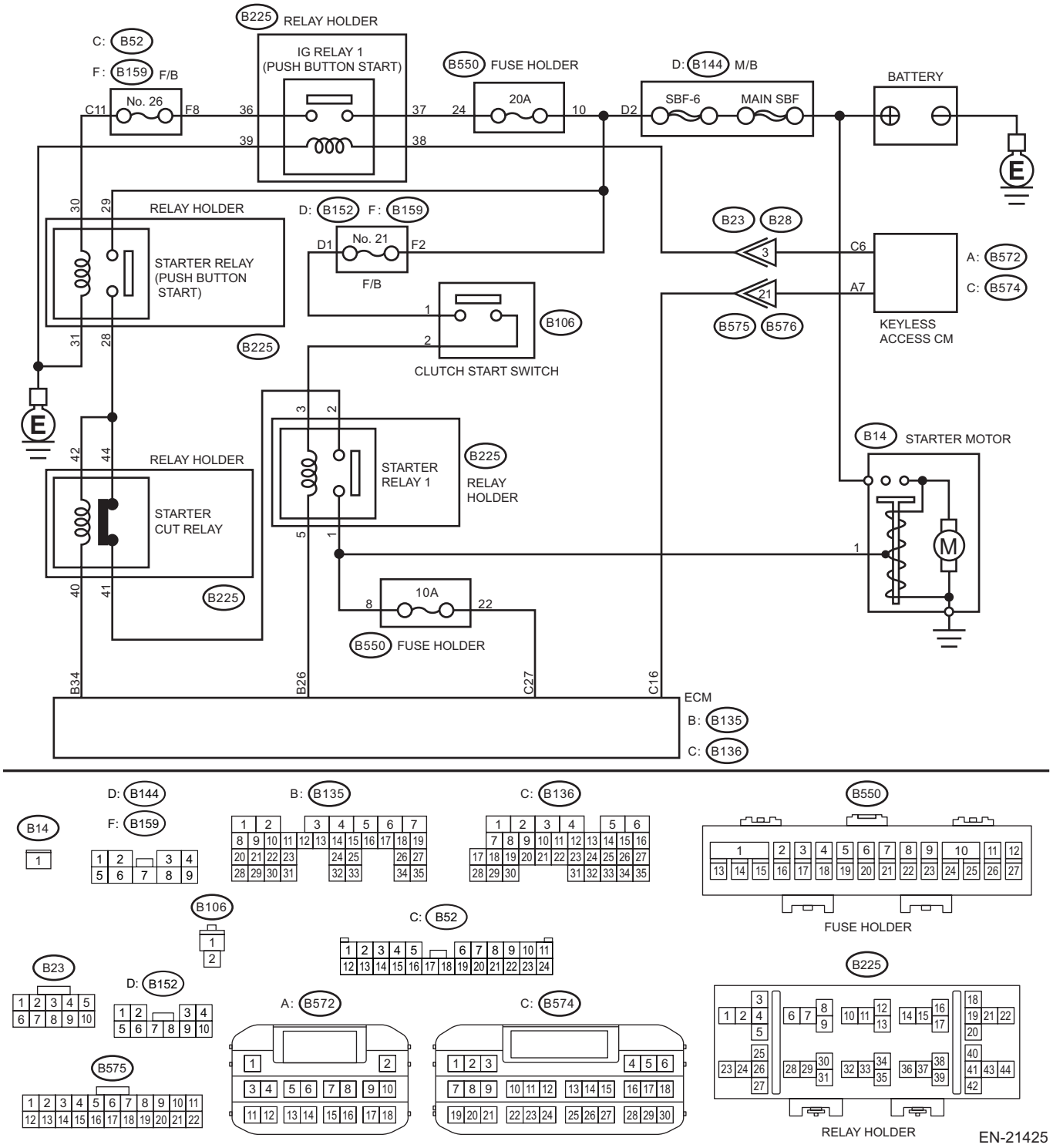

	Step	Check	Yes	No
1	**CHECK HARNESS BETWEEN ECM AND STARTER RELAY 1 CONNECTOR.** 1) Turn the ignition to OFF. 2) Disconnect the connector from ECM. 3) Remove the starter relay 1. 4) Measure the resistance of harness between ECM connector and starter relay 1 connector. ***Connector & terminal*** ***(B136) No. 27 — (B225) No. 1:***	Is the resistance less than 1 Ω?	Go to step **2**.	Repair the harness and connector. NOTE: In this case, repair the following item: • Open circuit of harness between ECM connector and starter relay 1 connector • Blown out of fuse
2	**CHECK HARNESS BETWEEN ECM AND STARTER RELAY 1 CONNECTOR.** 1) Disconnect the connector from starter motor. 2) Measure the resistance between ECM connector and chassis ground. ***Connector & terminal*** ***(B136) No. 27 — Chassis ground:***	Is the resistance 1 MΩ or more?	Repair the poor contact of ECM connector.	Repair the short circuit to ground in harness between ECM connector and starter relay 1 connector.

3. OUTLINE OF DIAGNOSIS

• Model without push button start
Detect abnormal continuity in the starter SW1.
Judge as OFF NG when the starter SW 1 signal remains OFF.
• Model with push button start
Detect abnormal continuity in the starter SW 2.
Judge as OFF NG when the starter SW 2 signal remains OFF.

4. EXECUTION CONDITION

Secondary parameters	Execution condition
Battery voltage	≥ 8 V
Engine speed	Changes from 0 rpm to 500 rpm or more
Vehicle speed	< 1 km/h (0.6 MPH)
Starter relay drive	ON

5. GENERAL DRIVING CYCLE

Perform the diagnosis only once at engine start.

6. DIAGNOSTIC METHOD

Judge as OFF NG when the following conditions are established.

Judgment Value

Malfunction Criteria	Threshold Value
Starter SW1 signal (models without push button start) with battery voltage × 0.85 V or more Starter SW2 signal (models with push button start) with battery voltage × 0.85 V or more	Not detected

Time Needed for Diagnosis: Less than 1 second
Malfunction Indicator Light Illumination: Illuminates as soon as a malfunction occurs.

DP:DTC P0617 STARTER RELAY "A" CIRCUIT HIGH

1. MODEL WITHOUT PUSH BUTTON START

DTC DETECTING CONDITION:
Immediately at fault recognition
TROUBLE SYMPTOM:
Failure of engine to start

CAUTION:
After servicing or replacing faulty parts, perform Clear Memory Mode <Ref. to EN(STI)(diag)-68, OPERATION, Clear Memory Mode.>, and Inspection Mode <Ref. to EN(STI)(diag)-48, PROCEDURE, Inspection Mode.>.
WIRING DIAGRAM:
Engine Electrical System <Ref. to WI-154, WIRING DIAGRAM, Engine Electrical System.>

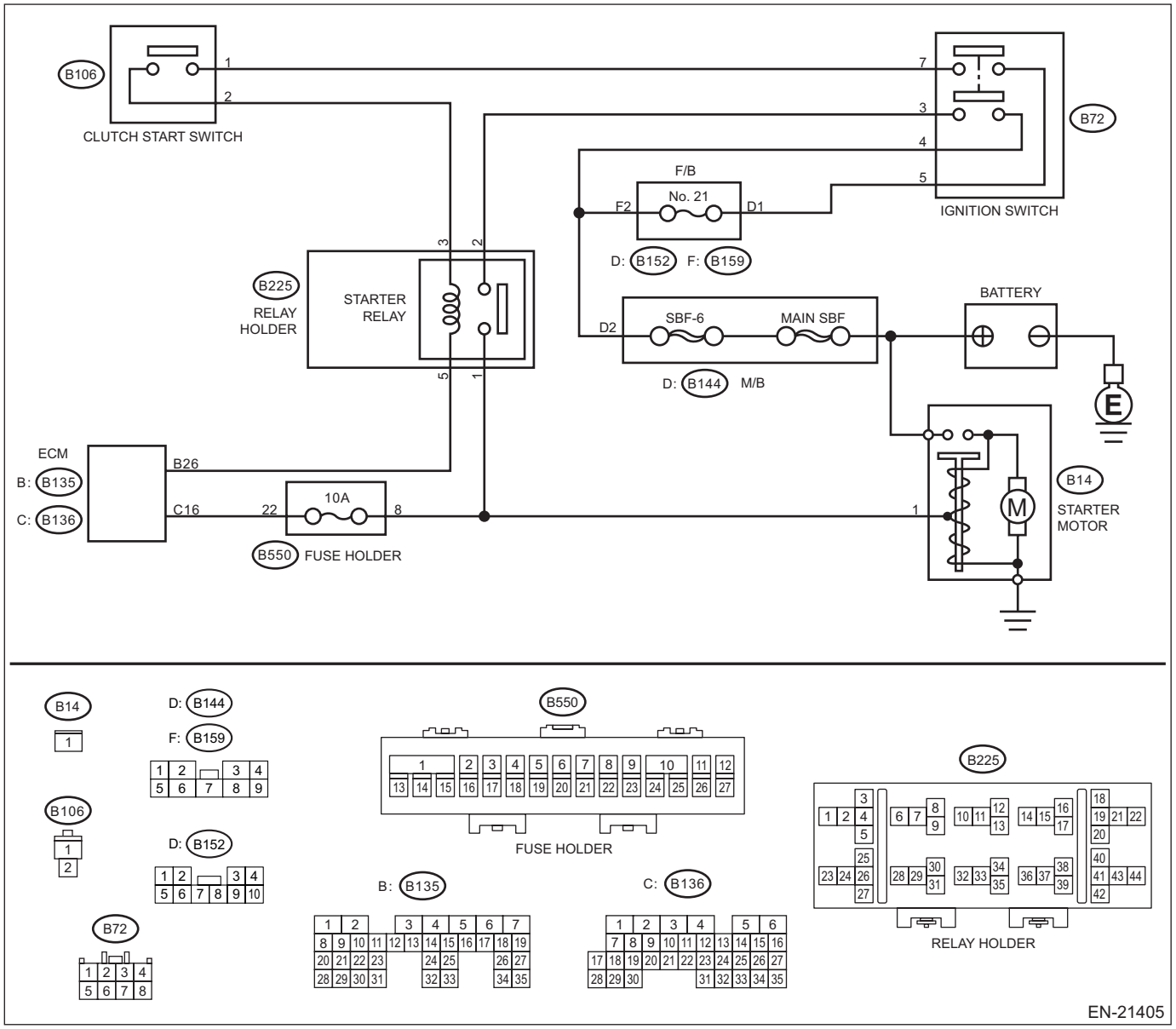

	Step	Check	Yes	No
1	**CHECK FOR ANY OTHER DTC ON DISPLAY.**	Is any other DTC displayed?	Check the appropriate DTC using the "List of Diagnostic Trouble Code (DTC)". <Ref. to EN(STI)(diag)-96, List of Diagnostic Trouble Code (DTC).>	Go to step **2**.
2	**CHECK HARNESS BETWEEN ECM AND STARTER RELAY CONNECTOR.** 1) Turn the ignition switch to OFF. 2) Disconnect the connector from ECM. 3) Turn the ignition switch to ON. 4) Measure the voltage between ECM connector and chassis ground. ***Connector & terminal*** ***(B136) No. 16 (+) — Chassis ground (–):***	Is the voltage 10 V or more?	Repair the short circuit to power in harness between ECM connector and starter relay connector.	Repair the poor contact of ECM connector.

2. MODEL WITH PUSH BUTTON START

DTC DETECTING CONDITION:
Immediately at fault recognition
TROUBLE SYMPTOM:
Failure of engine to start

CAUTION:
After servicing or replacing faulty parts, perform Clear Memory Mode <Ref. to EN(STI)(diag)-68, OPERATION, Clear Memory Mode.>, and Inspection Mode <Ref. to EN(STI)(diag)-48, PROCEDURE, Inspection Mode.>.

WIRING DIAGRAM:

Engine Electrical System <Ref. to WI-154, WIRING DIAGRAM, Engine Electrical System.>

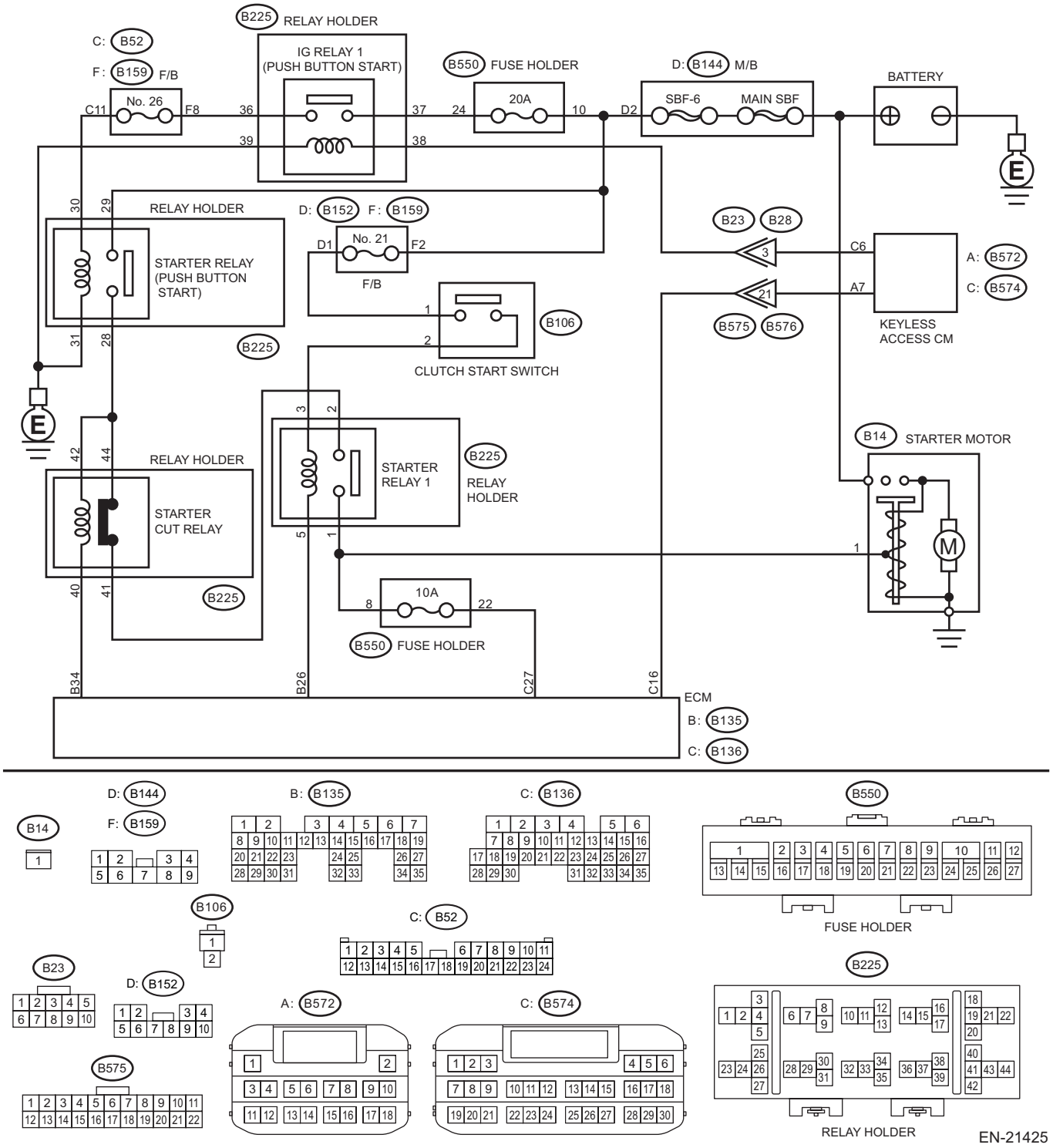

	Step	Check	Yes	No
1	**CHECK STARTER MOTOR.** 1) Turn the ignition to ON. 2) Check the starter motor condition.	Is the starter motor rotating?	Go to step **2**.	Repair the short circuit to power supply. NOTE: In this case, repair the following harnesses: • Short circuit to power supply in harness between ECM connector and starter relay 1 connector • Short circuit to power supply in harness between ECM connector and starter motor • Short circuit to power supply in harness between starter relay 1 connector and starter motor
2	**CHECK HARNESS BETWEEN STARTER CUT RELAY CONNECTOR AND STARTER RELAY 1 CONNECTOR.** 1) Turn the ignition to OFF. 2) Disconnect the connector from starter motor. 3) Remove the starter cut relay. 4) Remove the starter relay 1. 5) Turn the ignition to ON. 6) Measure the voltage between starter relay 1 connector and chassis ground. ***Connector & terminal*** ***(B225) No. 2 (+) — Chassis ground (–):***	Is the voltage 10 V or more?	Repair the short circuit to power in harness between starter cut relay connector and starter relay 1 connector.	Go to step **3**.
3	**CHECK STARTER CUT RELAY.** 1) Connect the battery to starter cut relay terminals No. 40 and No. 42. 2) Measure the resistance between starter cut relay terminals. ***Terminals*** ***No. 41 — No. 44:***	Is the resistance 1 MΩ or more?	Go to step **6**.	Replace the starter cut relay. <Ref. to SL-116, Starter Cut Relay.> Go to step **4**.
4	**CHECK HARNESS BETWEEN ECM AND STARTER RELAY CONNECTOR.** 1) Disconnect the connector from ECM. 2) Measure the resistance between ECM connector and chassis ground. ***Connector & terminal*** ***(B135) No. 26 — Chassis ground:***	Is the resistance 1 MΩ or more?	Go to step **5**.	Repair the short circuit to ground in harness between ECM connector and starter relay 1 connector.
5	**CHECK STARTER RELAY.** Measure the resistance between starter relay terminals. ***Terminals*** ***No. 1 — No. 2:***	Is the resistance 1 MΩ or more?	Go to step **6**.	Replace the starter relay 1. <Ref. to EN(STI)(diag)-9, LOCATION, Electrical Component Location.>

Step		Check	Yes	No
6	**CHECK HARNESS BETWEEN ECM, STARTER RELAY 1 CONNECTOR AND STARTER MOTOR.** 1) Disconnect the connector from ECM. 2) Turn the ignition to ON. 3) Measure the voltage between ECM connector and chassis ground. ***Connector & terminal*** ***(B136) No. 27 (+) — Chassis ground (–):***	Is the voltage 10 V or more?	Repair the short circuit to power supply. NOTE: In this case, repair the following harnesses: • Short circuit to power supply in harness between ECM connector and starter relay 1 connector • Short circuit to power supply in harness between ECM connector and starter motor • Short circuit to power supply in harness between starter relay 1 connector and starter motor	Repair the poor contact of ECM connector.

3. OUTLINE OF DIAGNOSIS

• Model without push button start
Detect abnormal continuity in the starter SW1.
Judge as ON NG when the starter SW 1 signal remains ON.
• Model with push button start
Detect abnormal continuity in the starter SW 2.
Judge as ON NG when the starter SW 2 signal remains ON.

4. EXECUTION CONDITION

Secondary parameters	Execution condition
Battery voltage	≥ 8 V
Engine speed	≥ 500 rpm
Starter relay drive	OFF

5. GENERAL DRIVING CYCLE

Always perform the diagnosis continuously.

6. DIAGNOSTIC METHOD

If the duration of time while the following conditions are met is longer than the time indicated, judge as NG.

Judgment Value

Malfunction Criteria	Threshold Value
Starter SW 1 signal (model without push button start) Starter SW 2 signal (model with push button start)	≥ Battery voltage × 0.85 V

Time Needed for Diagnosis: 30000 ms
Malfunction Indicator Light Illumination: Illuminates as soon as a malfunction occurs.

DQ:DTC P062F INTERNAL CONTROL MODULE EEPROM ERROR

NOTE:
For the diagnostic procedure, refer to DTC P0606. <Ref. to EN(STI)(diag)-409, DTC P0606 CONTROL MODULE PROCESSOR, Diagnostic Procedure with Diagnostic Trouble Code (DTC).>

1. OUTLINE OF DIAGNOSIS

Judge as NG when the EEPROM operation is abnormal. (EEPROM malfunction)

2. COMPONENT DESCRIPTION

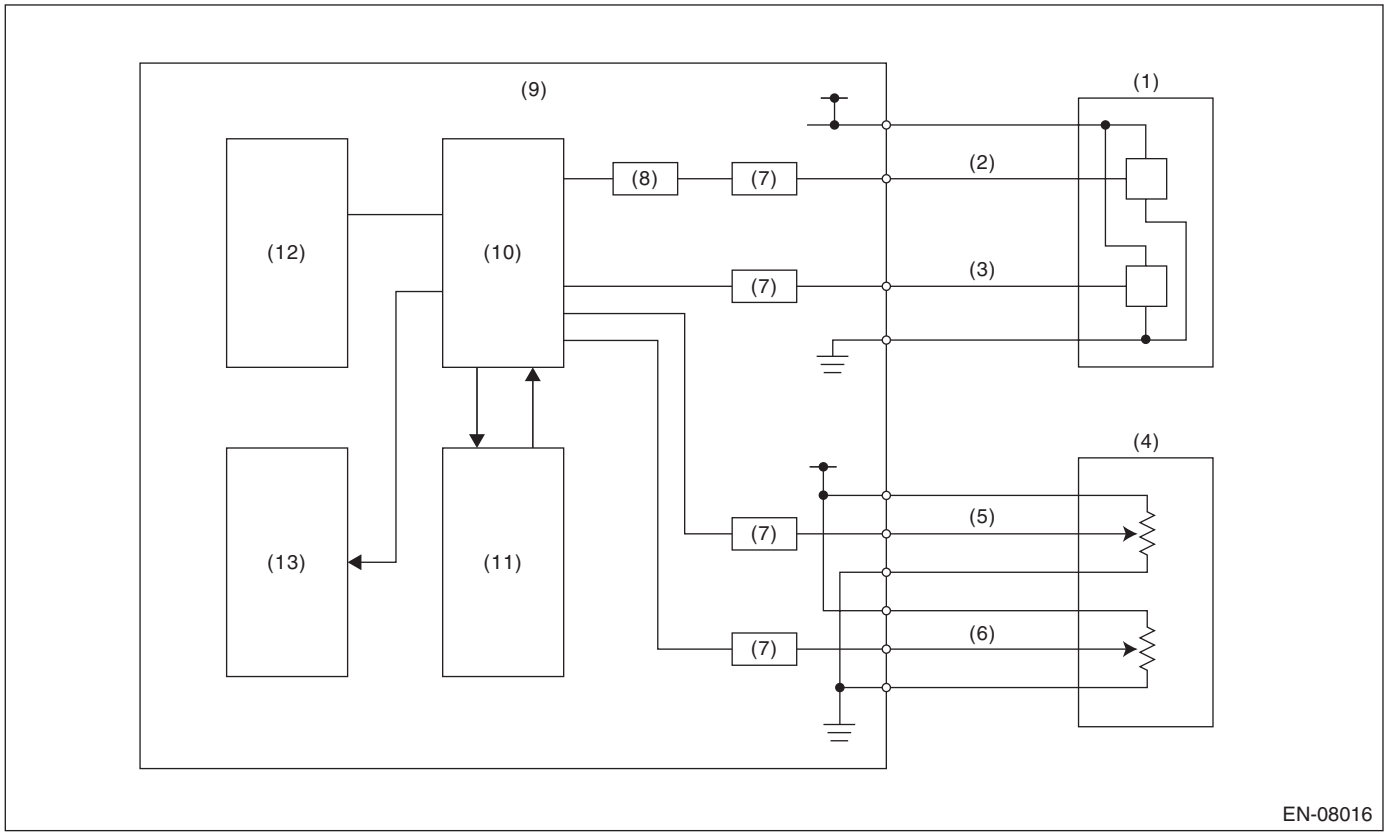

(1)	Throttle position sensor	(6)	Accelerator pedal position sensor 2	(10)	CPU
(2)	Throttle position sensor 1	(7)	I/F circuit	(11)	Monitoring IC
(3)	Throttle position sensor 2	(8)	Amplifier circuit	(12)	EEPROM
(4)	Accelerator pedal position sensor	(9)	Engine control module (ECM)	(13)	Output IC
(5)	Accelerator pedal position sensor 1				

3. EXECUTION CONDITION

Secondary parameters	Execution condition
Ignition switch	ON
Battery voltage	≥ 6 V

4. GENERAL DRIVING CYCLE

Always perform the diagnosis continuously.

5. DIAGNOSTIC METHOD

Judge as NG when the following conditions are established.

Diagnosis 1

Judgment Value

Malfunction Criteria	Threshold Value
Time needed for storing data in EEPROM	≥ 48 ms

Diagnosis 2

Judgment Value

Malfunction Criteria	Threshold Value
EEPROM writing	Error

Time Needed for Diagnosis:

- **Diagnosis 1:** 48 ms
- **Diagnosis 2:** 2 times

Malfunction Indicator Light Illumination: Illuminates as soon as a malfunction occurs.

DR:DTC P0685 ECM/PCM POWER RELAY CONTROL CIRCUIT/OPEN

DTC DETECTING CONDITION:

Detected when two consecutive driving cycles with fault occur.

CAUTION:

After servicing or replacing faulty parts, perform Clear Memory Mode <Ref. to EN(STI)(diag)-68, OPERATION, Clear Memory Mode.>, and Inspection Mode <Ref. to EN(STI)(diag)-48, PROCEDURE, Inspection Mode.>.

WIRING DIAGRAM:

Engine Electrical System <Ref. to WI-154, WIRING DIAGRAM, Engine Electrical System.>

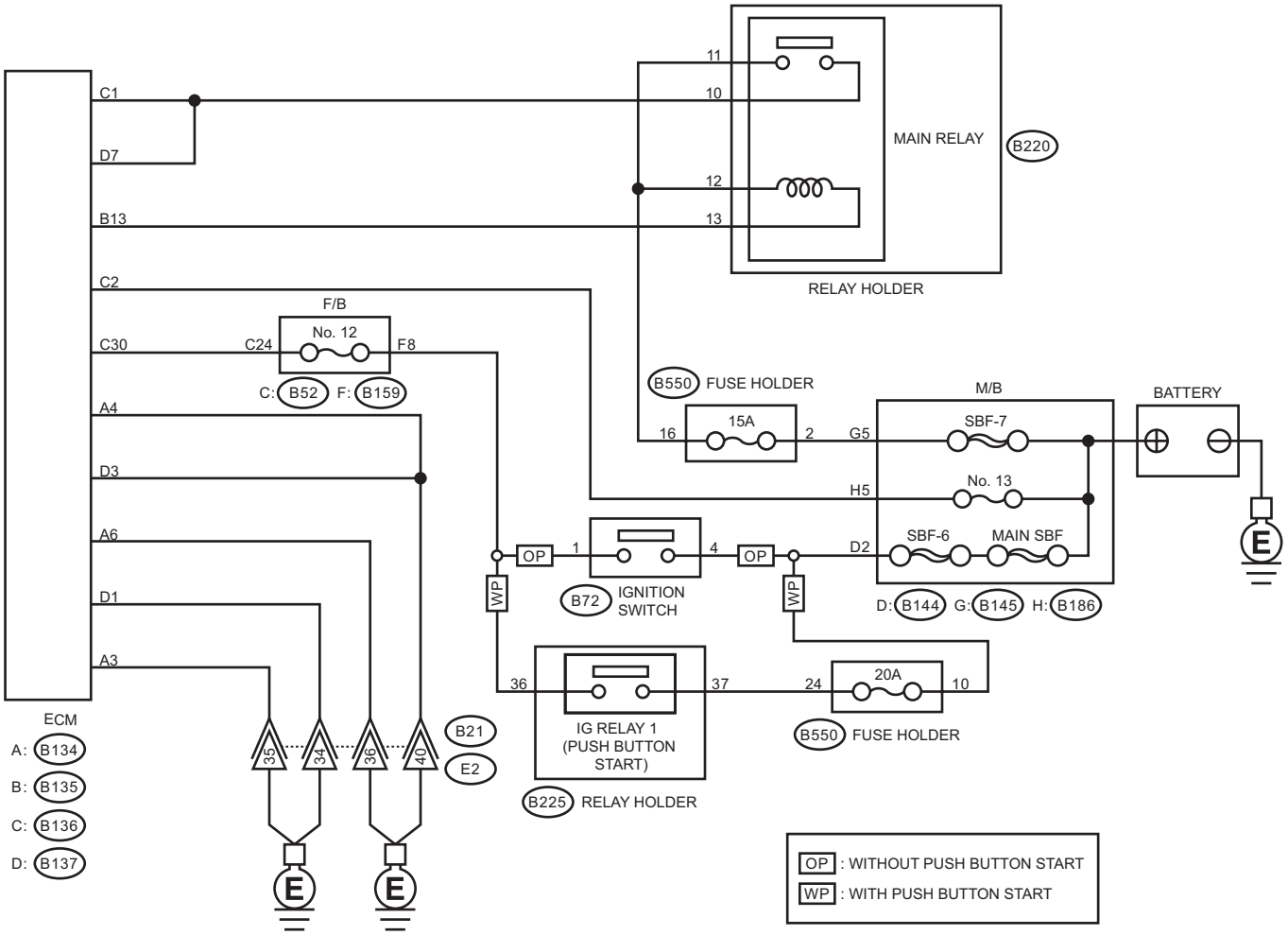

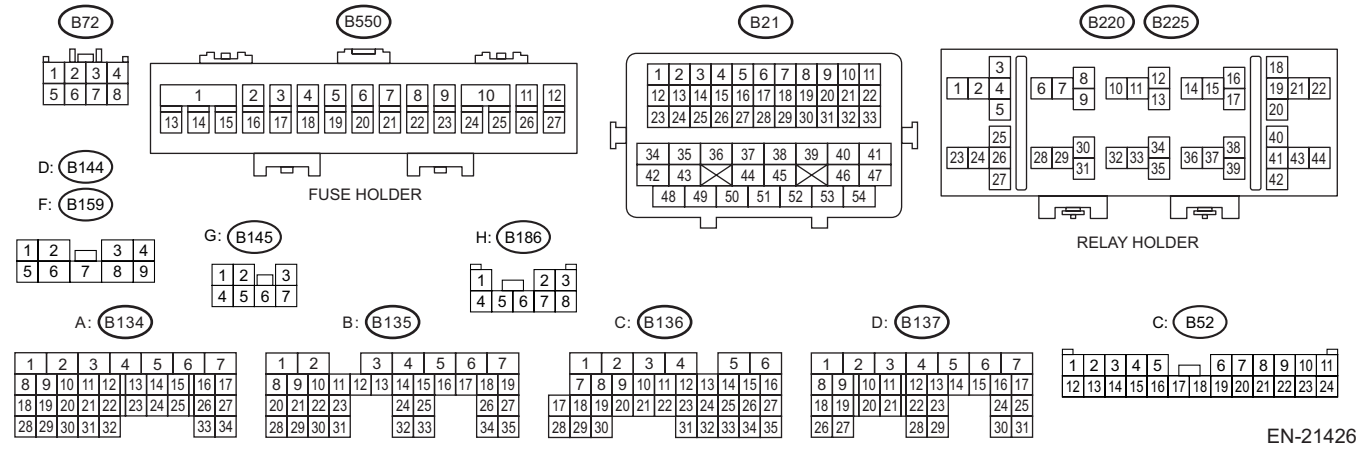

EN-21426

	Step	Check	Yes	No
1	**CHECK ECM CONNECTOR.** Check the connecting condition of ECM connector.	Is the ECM connector correctly connected?	Go to step **2**.	Connect the ECM connector correctly.
2	**CHECK HARNESS BETWEEN ECM AND MAIN RELAY CONNECTOR.** 1) Turn the ignition switch to OFF. 2) Remove the main relay. 3) Disconnect the connector from ECM. 4) Measure the resistance between ECM connector and chassis ground. ***Connector & terminal*** ***(B135) No. 13 — Chassis ground:***	Is the resistance 1 MΩ or more?	Go to step **3**.	Repair the short circuit to ground in harness between ECM connector and main relay connector.
3	**CHECK HARNESS BETWEEN ECM AND MAIN RELAY CONNECTOR.** 1) Install the main relay. 2) Turn the ignition switch to ON. 3) Measure the voltage between ECM connector and chassis ground. ***Connector & terminal*** ***(B136) No. 1 (+) — Chassis ground (–):*** ***(B137) No. 7 (+) — Chassis ground (–):***	Is the voltage 10 V or more?	Repair the harness and connector. NOTE: In this case, repair the following item: • Short circuit to power supply in harness between ECM connector and main relay connector • Defective main relay	Repair the poor contact of ECM connector.

1. OUTLINE OF DIAGNOSIS

Detect the main relay stuck to ON.
Judge as NG when ECM keeps operating for more than predetermined time although the main relay does not turn to OFF after ignition switch is turned to OFF.

2. COMPONENT DESCRIPTION

The main relay controls the current in the coil section to switch ON/OFF the ECM by receiving instructions from the ignition switch and Evaporative Leak Check Module.

3. EXECUTION CONDITION

Secondary parameters	Execution condition
Main relay	OFF instruction

4. GENERAL DRIVING CYCLE

Perform the diagnosis only once when the enable conditions are established with the ignition switch OFF → ON.

5. DIAGNOSTIC METHOD

If the duration of time while the following conditions are met is longer than the time indicated, judge as NG.

Judgment Value

Malfunction Criteria	Threshold Value
ECM status	In operation

Time Needed for Diagnosis: 2500 ms
Malfunction Indicator Light Illumination: Illuminates when malfunction occurs in 2 continuous driving cycles.

DS:DTC P081A STARTER DISABLE CIRCUIT LOW

Immediately at fault recognition
TROUBLE SYMPTOM:
Failure of engine to start

CAUTION:
After servicing or replacing faulty parts, perform Clear Memory Mode <Ref. to EN(STI)(diag)-68, OPERATION, Clear Memory Mode.>, and Inspection Mode <Ref. to EN(STI)(diag)-48, PROCEDURE, Inspection Mode.>.

WIRING DIAGRAM:

Engine Electrical System <Ref. to WI-154, WIRING DIAGRAM, Engine Electrical System.>

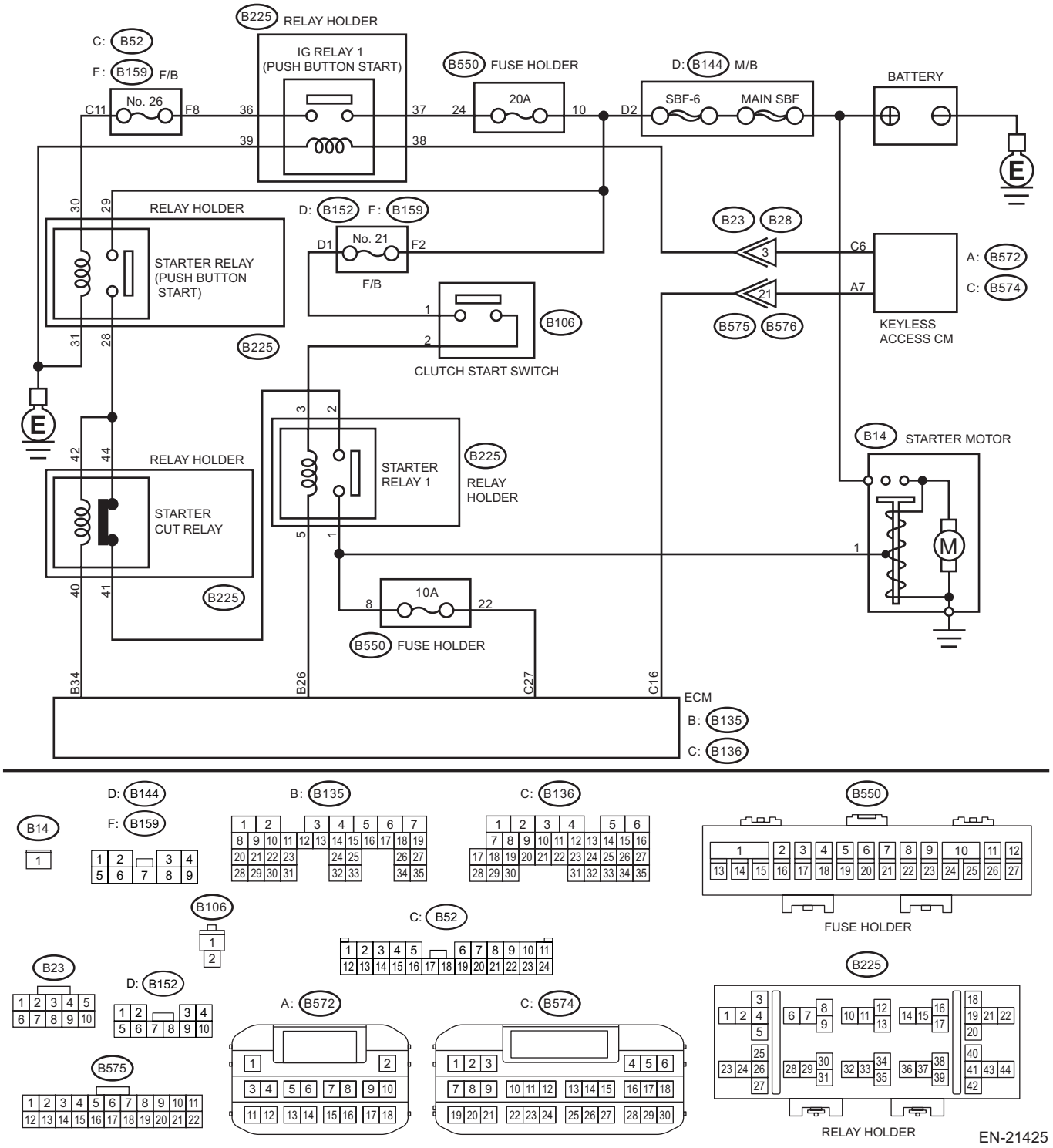

	Step	Check	Yes	No
1	**CHECK HARNESS BETWEEN STARTER RELAY (PUSH BUTTON START) CONNECTOR AND STARTER CUT RELAY CONNECTOR.** 1) Turn the ignition to OFF. 2) Remove the starter relay (push button start). 3) Remove the starter cut relay. 4) Measure the resistance of harness between starter relay (push button start) connector and starter cut relay connector. ***Connector & terminal*** ***(B225) No. 28 — (B225) No. 42:***	Is the resistance less than 1 Ω?	Go to step **2**.	Repair the open circuit in harness between starter relay (push button start) connector and starter cut relay connector.
2	**CHECK HARNESS BETWEEN ECM AND STARTER CUT RELAY CONNECTOR.** 1) Disconnect the connector from ECM. 2) Measure the resistance of harness between ECM connector and starter cut relay connector. ***Connector & terminal*** ***(B135) No. 34 — (B225) No. 40:***	Is the resistance less than 1 Ω?	Go to step **3**.	Repair the open circuit of harness between ECM connector and starter cut relay connector.
3	**CHECK STARTER CUT RELAY.** 1) Connect the battery to starter cut relay terminals No. 40 and No. 42. 2) Measure the resistance between starter cut relay terminals. ***Terminals*** ***No. 41 — No. 44:***	Is the resistance 1 MΩ or more?	Repair the poor contact of ECM connector.	Replace the starter cut relay. <Ref. to SL-116, Starter Cut Relay.>

1. OUTLINE OF DIAGNOSIS

Detect abnormal continuity in the starter cut relay.
Judge as NG when the starter cut relay output line is open.

2. EXECUTION CONDITION

Secondary parameters	Execution condition
Battery voltage	≥ 8 V
Engine speed	Changes from 0 rpm to 500 rpm or more
Vehicle speed	< 1 km/h (0.6 MPH)
Starter cut relay drive	OFF

3. GENERAL DRIVING CYCLE

Perform the diagnosis only once at engine start.

4. DIAGNOSTIC METHOD

Judge as NG when the following conditions are established.

Judgment Value

Malfunction Criteria	Threshold Value
Starter cut relay control signal that exceeds battery voltage × 0.34 V	Not detected

Time Needed for Diagnosis: Less than 1 second
Malfunction Indicator Light Illumination: Illuminates as soon as a malfunction occurs.

DT:DTC P0851 PARK/NEUTRAL SWITCH INPUT CIRCUIT LOW

DTC DETECTING CONDITION:
Detected when two consecutive driving cycles with fault occur.
TROUBLE SYMPTOM:
Improper idling

CAUTION:
After servicing or replacing faulty parts, perform Clear Memory Mode <Ref. to EN(STI)(diag)-68, OPERATION, Clear Memory Mode.>, and Inspection Mode <Ref. to EN(STI)(diag)-48, PROCEDURE, Inspection Mode.>.

Engine Electrical System <Ref. to WI-154, WIRING DIAGRAM, Engine Electrical System.>

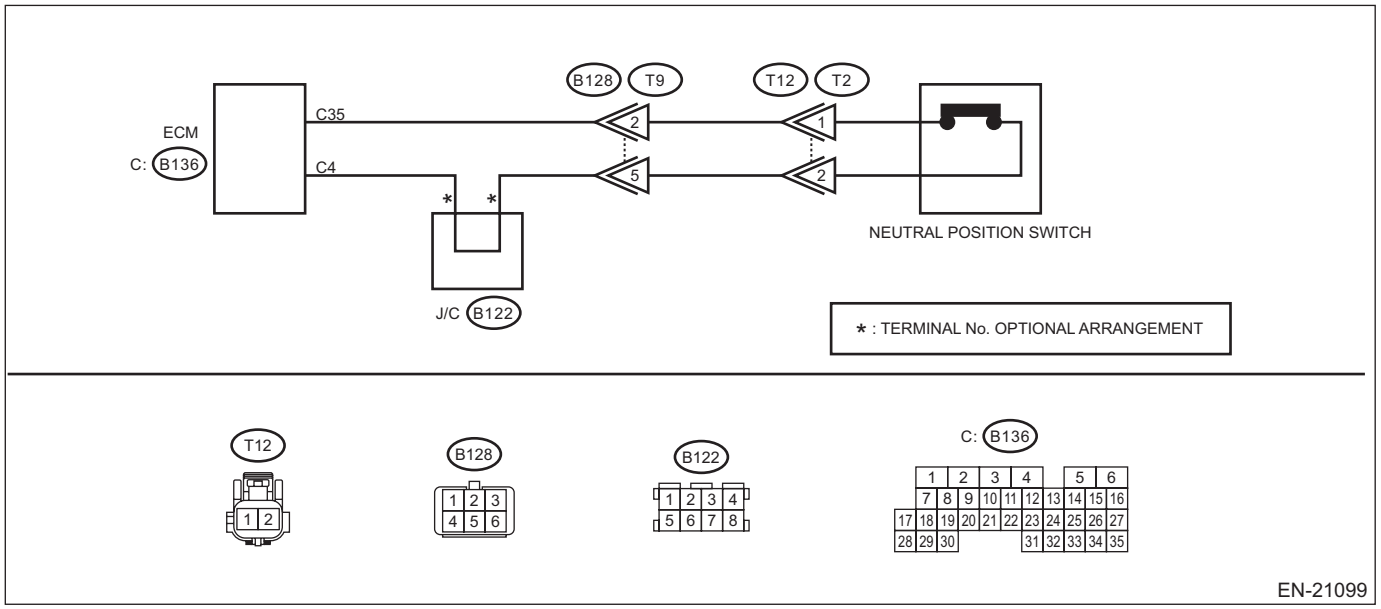

Step		Check	Yes	No
1	**CHECK INPUT SIGNAL OF ECM.** 1) Turn the ignition switch to ON. 2) Place the shift lever in a position other than neutral. 3) Measure the voltage between ECM connector and chassis ground. ***Connector & terminal*** ***(B136) No. 35 (+) — Chassis ground (–):***	Is the voltage 10 V or more?	Repair the poor contact of ECM connector.	Go to step **2**.
2	**CHECK HARNESS BETWEEN ECM AND NEUTRAL POSITION SWITCH CONNECTOR.** 1) Turn the ignition switch to OFF. 2) Disconnect the connector from ECM. 3) Disconnect the connector from the neutral position switch. 4) Measure the resistance between ECM connector and chassis ground. ***Connector & terminal*** ***(B136) No. 35 — Chassis ground:***	Is the resistance 1 MΩ or more?	Replace the neutral position switch. <Ref. to 6MT(TY85)-42, Neutral Position Switch.>	Repair the short circuit to ground harness between ECM connector and neutral position switch connector.

1. OUTLINE OF DIAGNOSIS

Detect the open or short circuit of neutral SW.
Judge as NG when there is no change in the neutral SW regardless of driving condition with shift changes (there should be neutral SW ON/OFF inversion considering the vehicle speed and engine speed).

2. EXECUTION CONDITION

Secondary parameters	Execution condition
Battery voltage	≥ 10.9 V
The number of driving condition change from a) to b)	= 3 time(s)
a)	
Vehicle speed	≤ 0 km/h (0 MPH)
and	
Engine speed	≥ 600 rpm and ≤ 900 rpm
b)	
Vehicle speed	≥ 64 km/h (39.8 MPH)
and	
Engine speed	≥ 1400 rpm and ≤ 2200 rpm

3. GENERAL DRIVING CYCLE

Perform the diagnosis continuously in 2 seconds after starting the engine.

4. DIAGNOSTIC METHOD

Judge NG when the malfunction criteria below are completed determined times or more after the neutral SW change.

Judgment Value

Malfunction Criteria	Threshold Value
Neutral switch output voltage	≤ Battery voltage × 0.19 V

Time Needed for Diagnosis: 3 time(s)
Malfunction Indicator Light Illumination: Illuminates when malfunction occurs in 2 continuous driving cycles.

DU:DTC P0852 PARK/NEUTRAL SWITCH INPUT CIRCUIT HIGH

DTC DETECTING CONDITION:
Detected when two consecutive driving cycles with fault occur.
TROUBLE SYMPTOM:
Improper idling

CAUTION:
After servicing or replacing faulty parts, perform Clear Memory Mode <Ref. to EN(STI)(diag)-68, OPERATION, Clear Memory Mode.>, and Inspection Mode <Ref. to EN(STI)(diag)-48, PROCEDURE, Inspection Mode.>.

Engine Electrical System <Ref. to WI-154, WIRING DIAGRAM, Engine Electrical System.>

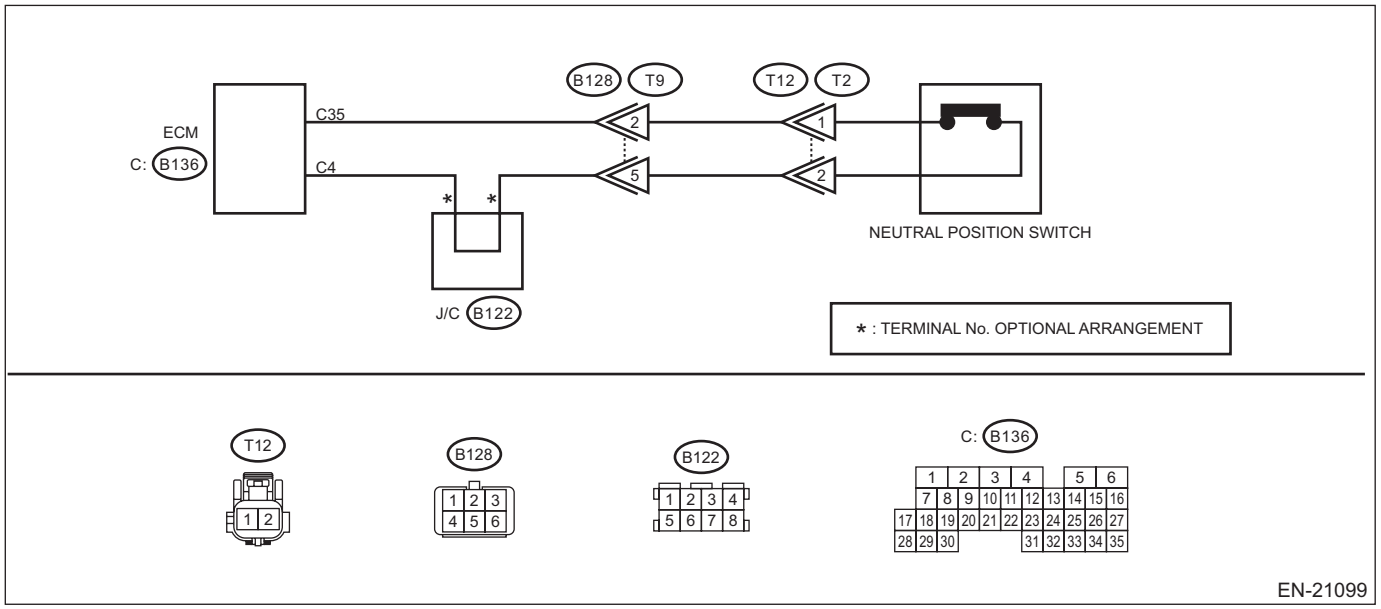

	Step	Check	Yes	No
1	**CHECK INPUT SIGNAL OF ECM.** 1) Turn the ignition switch to ON. 2) Place the shift lever in neutral. 3) Measure the voltage between ECM connector and chassis ground. ***Connector & terminal*** ***(B136) No. 35 (+) — Chassis ground (–):***	Is the voltage less than 1 V?	Repair the poor contact of ECM connector.	Go to step **2**.
2	**CHECK HARNESS BETWEEN ECM AND NEUTRAL POSITION SWITCH CONNECTOR.** 1) Turn the ignition switch to OFF. 2) Disconnect the connector from ECM. 3) Disconnect the connector from the neutral position switch. 4) Measure the resistance of harness between ECM connector and transmission harness connector. ***Connector & terminal*** ***(B136) No. 35 — (T12) No. 1:*** ***(B136) No. 4 — (T12) No. 2:***	Is the resistance less than 1 Ω?	Go to step **3**.	Repair the harness and connector. NOTE: In this case, repair the following item: • Open circuit in harness between ECM connector and transmission harness connector • Poor contact of coupling connector
3	**CHECK NEUTRAL POSITION SWITCH.** 1) Place the shift lever in neutral. 2) Measure the resistance between transmission harness connector terminals. ***Connector & terminal*** ***(T2) No. 1 — (T2) No. 2:***	Is the resistance less than 1 Ω?	Repair the poor contact of transmission harness connector.	Replace the neutral position switch. <Ref. to 6MT(TY85)-42, Neutral Position Switch.>

1. OUTLINE OF DIAGNOSIS

Detect the open or short circuit of neutral SW.
Judge as NG when there is no change in the neutral SW regardless of driving condition with shift changes (there should be neutral SW ON/OFF inversion considering the vehicle speed and engine speed).

2. EXECUTION CONDITION

Secondary parameters	Execution condition
Battery voltage	≥ 10.9 V
The number of driving condition change from a) to b)	= 3 time(s)
a)	
Vehicle speed	≤ 0 km/h (0 MPH)
and	
Engine speed	≥ 600 rpm and ≤ 900 rpm
b)	
Vehicle speed	≥ 64 km/h (39.8 MPH)
and	
Engine speed	≥ 1400 rpm and ≤ 2200 rpm

3. GENERAL DRIVING CYCLE

Perform the diagnosis continuously in 2 seconds after starting the engine.

4. DIAGNOSTIC METHOD

Judge NG when the malfunction criteria below are completed determined times or more after the neutral SW change.

Judgment Value

Malfunction Criteria	Threshold Value
Neutral switch output voltage	≥ Battery voltage × 0.6 V

Time Needed for Diagnosis: 3 time(s)
Malfunction Indicator Light Illumination: Illuminates when malfunction occurs in 2 continuous driving cycles.

DV:DTC P1160 THROTTLE RETURN SPRING

NOTE:
For the diagnostic procedure, refer to DTC P2101. <Ref. to EN(STI)(diag)-506, DTC P2101 THROTTLE ACTUATOR "A" CONTROL MOTOR CIRCUIT RANGE/PERFORMANCE, Diagnostic Procedure with Diagnostic Trouble Code (DTC).>

1. OUTLINE OF DIAGNOSIS

Judge as NG when the valve is opened more than the default opening angle, but does not move to the close direction with the motor power stopped.

2. COMPONENT DESCRIPTION

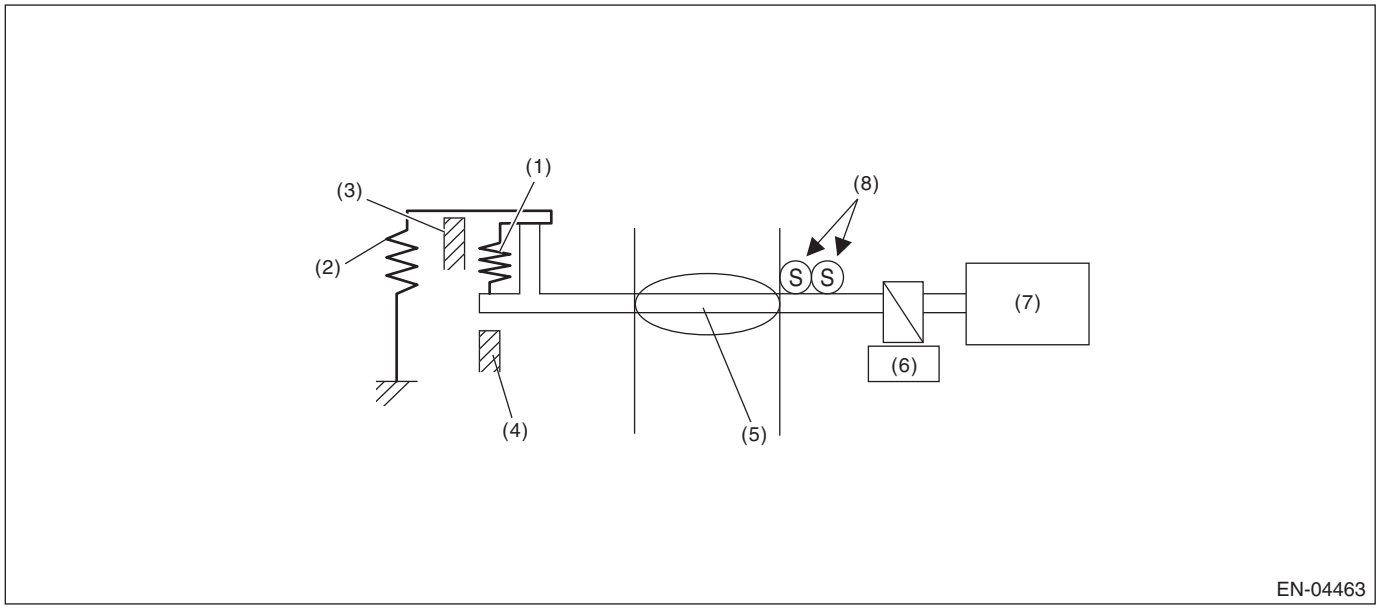

(1) Opener spring
(2) Return spring
(3) Intermediate stopper
(4) Full closed stopper
(5) Throttle valve
(6) Gear
(7) DC motor
(8) Main and sub throttle position sensor

3. EXECUTION CONDITION

Secondary parameters	Execution condition
Battery voltage	≥ 6 V
Ignition switch	OFF
Elapsed time after motor continuity OFF	= 1.6 s

4. GENERAL DRIVING CYCLE

- Ignition switch ON → OFF
- Ignition switch OFF → ON (Only after clearing memory)

5. DIAGNOSTIC METHOD

Judge as NG when the following conditions are established.

Judgment Value

Malfunction Criteria	Threshold Value
Sensor 1 opening angle with power OFF – Sensor 1 opening angle	< 2 °

Time Needed for Diagnosis: Less than 1 second
Malfunction Indicator Light Illumination: Illuminates as soon as a malfunction occurs.

DW:DTC P1410 SECONDARY AIR INJECTION SYSTEM COMBINATION VALVE STUCK OPEN

DTC DETECTING CONDITION:
Immediately at fault recognition

CAUTION:
After servicing or replacing faulty parts, perform Clear Memory Mode <Ref. to EN(STI)(diag)-68, OPERATION, Clear Memory Mode.>, and Inspection Mode <Ref. to EN(STI)(diag)-48, PROCEDURE, Inspection Mode.>.

	Step	Check	Yes	No
1	**CHECK SECONDARY AIR COMBINATION VALVE.** 1) Remove the secondary air combination valve. <Ref. to EC(STI)-56, Secondary Air Combination Valve.> 2) Blow in air from the secondary air combination valve air inlet, and check whether there are leaks at the pipe connections.	Are there air leaks from the pipe connections?	Replace the secondary air combination valve on the side with the air leak. <Ref. to EC(STI)-56, Secondary Air Combination Valve.>	Perform the diagnostic procedure of DTC P2440. <Ref. to EN(STI)(diag)-609, DTC P2440 SECONDARY AIR SYSTEM SWITCHING VALVE STUCK OPEN BANK 1, Diagnostic Procedure with Diagnostic Trouble Code (DTC).>

1. OUTLINE OF DIAGNOSIS

Always detect abnormality that both combination valve electromagnetic valve and the reed valve are open failure.
Calculate the integrated value of Max./Min. value and output voltage deviation of the secondary air delivery pipe pressure sensor output voltage in a given time after engine start. Judge as NG if the integrated value and the difference between Max. and Min. values are large.

2. EXECUTION CONDITION

Secondary parameters	Execution condition
Battery voltage	≥ 10.9 V
Engine speed	≥ 500 rpm
Elapsed time after starting the engine	≥ 9000 ms
After secondary air system stops	≥ 9000 ms
After fuel cut	≥ 1000 ms

3. GENERAL DRIVING CYCLE

Perform continuous diagnosis when air flow amount is large during the secondary air pump stop after engine start.

4. DIAGNOSTIC METHOD

When both combination valve electromagnetic valve and the reed valve are open failure, the failure appears as pulses in the secondary air delivery pipe pressure sensor output. Detect abnormality by capturing these pulses using the following method.
Calculate Max./Min. value of the secondary air delivery pipe pressure sensor output voltage and the sum of the output voltage deviation for the given time. Compare the difference between Max. and Min. values with threshold value and also compare the sum value with the threshold value. If both values exceed the threshold value, count up NG counter and then judge as NG if the counter reaches the given times.

Judgment Value

Malfunction Criteria	Threshold Value
Difference between maximum and minimum values of pipe inner pressure (value at 40 s)	≥ 0.05 V
Sum of the pipe inner pressure variation value every 4 ms	≥ 5 V

Time Needed for Diagnosis: Less than 1 second
Malfunction Indicator Light Illumination: Illuminates when malfunction occurs in 2 continuous driving cycles.

DX:DTC P1449 EVAP SYSTEM CLOG DETECTED (AIR FILTER)

DTC DETECTING CONDITION:
Detected when two consecutive driving cycles with fault occur.

CAUTION:
After servicing or replacing faulty parts, perform Clear Memory Mode <Ref. to EN(STI)(diag)-68, OPERATION, Clear Memory Mode.>, and Inspection Mode <Ref. to EN(STI)(diag)-48, PROCEDURE, Inspection Mode.>.

	Step	Check	Yes	No
1	**CHECK FOR ANY OTHER DTC ON DISPLAY.**	Is any other DTC displayed?	Check the appropriate DTC using the "List of Diagnostic Trouble Code (DTC)". <Ref. to EN(STI)(diag)-96, List of Diagnostic Trouble Code (DTC).>	Go to step **2**.
2	**CHECK DRAIN TUBE A AND DRAIN PIPE BETWEEN LEAK CHECK VALVE ASSEMBLY AND DRAIN FILTER.**	Is the drain tube A or the drain pipe between leak check valve assembly and drain filter clogged?	Replace the drain tube A or the drain pipe between leak check valve assembly and drain filter. <Ref. to EC(STI)-32, Leak Check Valve Assembly.> <Ref. to EC(STI)-28, Drain Filter.>	Go to step **3**.
3	**CHECK DRAIN FILTER.**	Is the drain filter clogged?	Replace the drain filter. <Ref. to EC(STI)-28, Drain Filter.>	Replace the leak check valve assembly. <Ref. to EC(STI)-32, Leak Check Valve Assembly.>

1. OUTLINE OF DIAGNOSIS

Detect the drain filter clogging by the pressure change during purge introduction.
Judge as drain filter clogging malfunction if the pressure in the evaporative emission system piping suddenly decreases by the purging.

2. COMPONENT DESCRIPTION

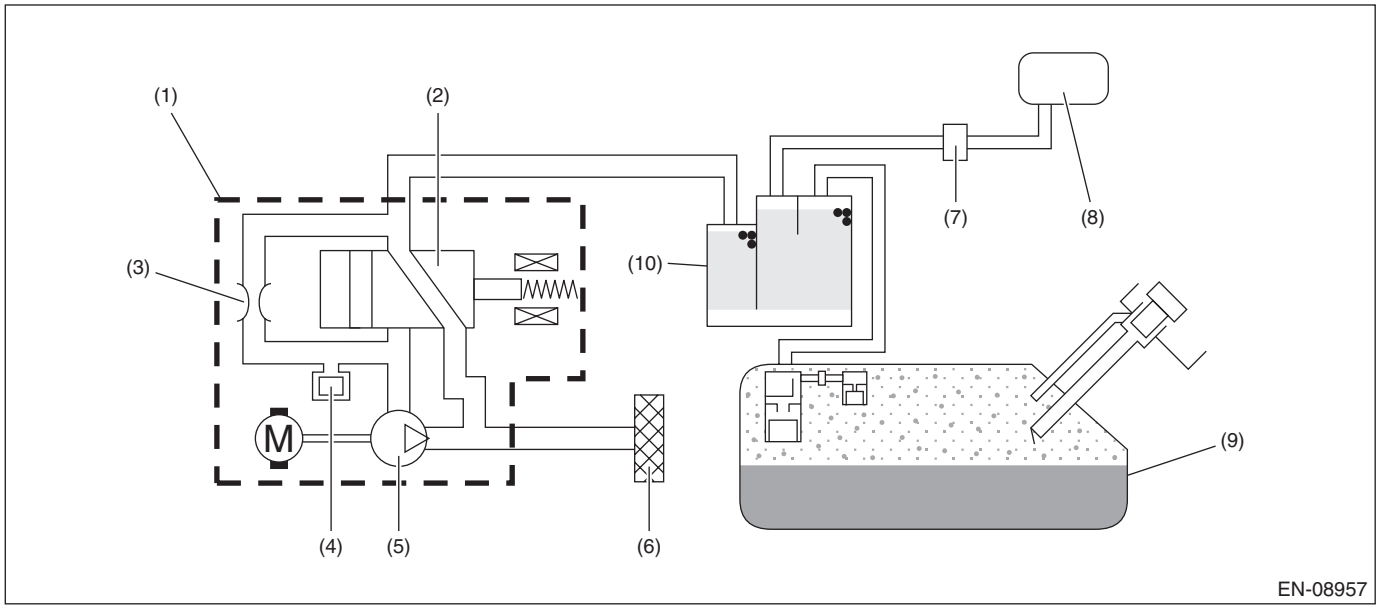

(1) Leak check valve ASSY
(2) Switching valve
(3) Reference orifice (0.02 inch orifice)
(4) Pressure sensor
(5) Vacuum pump
(6) Drain filter
(7) Purge control solenoid valve
(8) Intake manifold
(9) Fuel tank
(10) Canister

3. EXECUTION CONDITION

Secondary parameters	Execution condition
Battery voltage	≥ 10.9 V
Elapsed time after starting the engine	≥ 20000 ms
• Evaporative Leak Check Module vacuum pump	Not in operation
• Evaporative Leak Check Module switching valve	Open

4. GENERAL DRIVING CYCLE

Perform the diagnosis continuously when purging is performed after 20000 ms have passed since the engine started.

5. DIAGNOSTIC METHOD

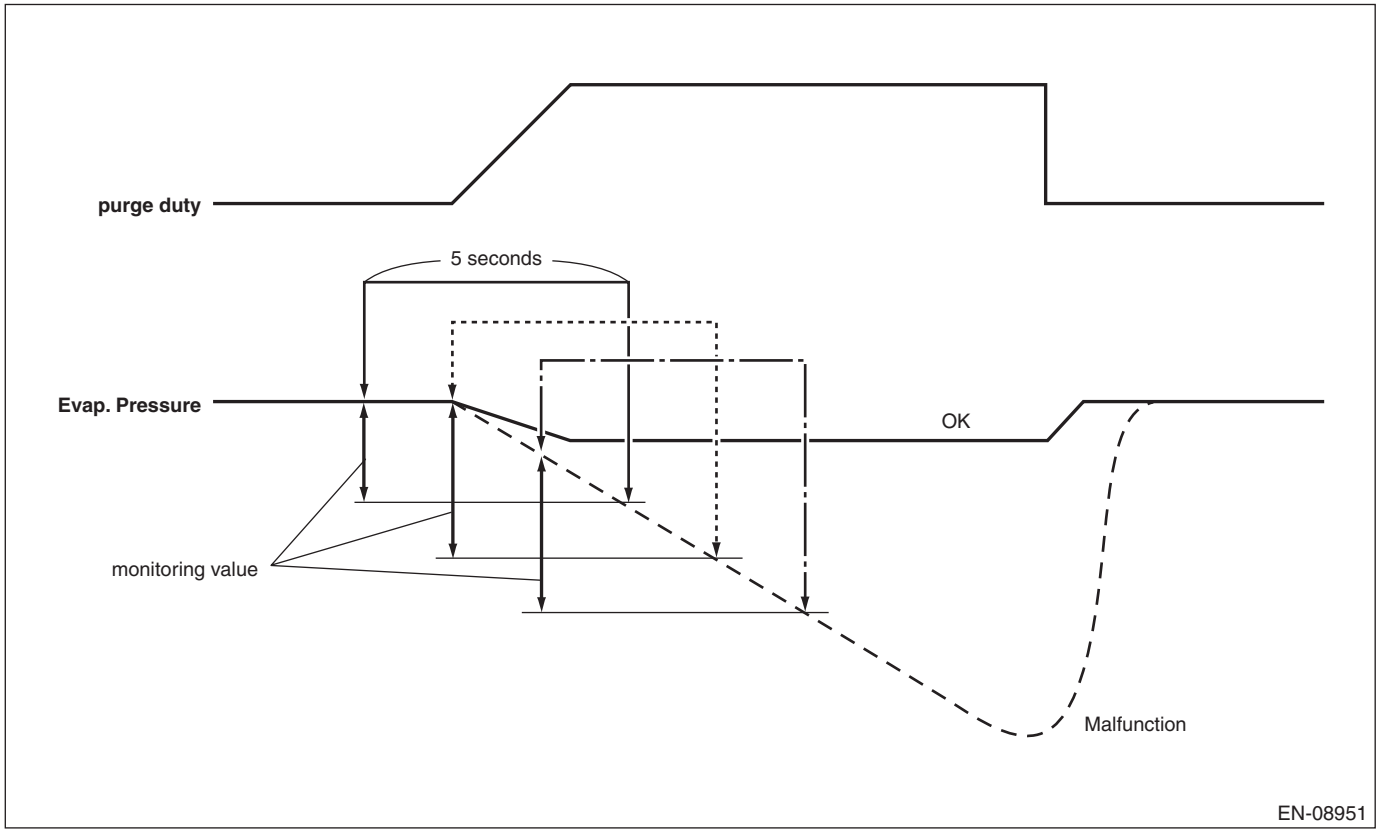

Calculate the difference between the Evaporative Leak Check Module pressure sensor output value of 5 seconds ago and the value at the present moment, and if the value is greater than the judgment value, detect as filter clogging trouble and judge as malfunction.
Judge as NG when the following conditions are established.

Judgment Value

Malfunction Criteria	Threshold Value
|Pressure sensor output value as of 5 seconds ago – Current pressure sensor output value|	> Value from Map

Map

Vehicle speed km/h (MPH)	0 (0)	20 (12.4)	40 (24.9)	60 (37.3)	80 (49.7)	100 (62.1)	120 (74.6)	300 (186.4)
|Pressure sensor output value as of 5 seconds ago – Current pressure sensor output value| kPa (mmHg, inHg)	969.3 (7.27, 0.3)	969.3 (7.27, 0.3)	969.3 (7.27, 0.3)	969.3 (7.27, 0.3)	969.3 (7.27, 0.3)	969.3 (7.27, 0.3)	969.3 (7.27, 0.3)	2027.2 (15.21, 0.6)

Time Needed for Diagnosis: Approx. 5.5 seconds
Malfunction Indicator Light Illumination: Illuminates when malfunction occurs in 2 continuous driving cycles.

DY:DTC P1451 EVAP SYSTEM CLOG DETECTED (PIPE)

DTC DETECTING CONDITION:
Detected when two consecutive driving cycles with fault occur.

CAUTION:
After servicing or replacing faulty parts, perform Clear Memory Mode <Ref. to EN(STI)(diag)-68, OPERATION, Clear Memory Mode.>, and Inspection Mode <Ref. to EN(STI)(diag)-48, PROCEDURE, Inspection Mode.>.

	Step	Check	Yes	No
1	**CHECK DRAIN TUBE BETWEEN CANISTER AND LEAK CHECK VALVE ASSEMBLY.**	Is the drain tube between canister and leak check valve assembly clogged?	Replace the drain tube between the canister and leak check valve assembly. <Ref. to EC(STI)-32, Leak Check Valve Assembly.>	Go to step **2**.
2	**CHECK HOSE AND TUBE BETWEEN CANISTER AND FUEL TANK.**	Are the hose and tube between the canister and fuel tank clogged?	Replace the hose or tube between the canister and fuel tank. <Ref. to EC(STI)-7, Canister.> <Ref. to FU(STI)-67, Fuel Tank.>	Replace the canister. <Ref. to EC(STI)-7, Canister.> After the operation is complete, go to the next step. Go to step **3**.
3	**CHECK EVAPORATIVE EMISSION CONTROL SYSTEM.** Perform drive cycle I. <Ref. to EN(STI)(diag)-61, DRIVE CYCLE I, PROCEDURE, Drive Cycle.>	Is DTC P1451 displayed on the display?	Replace the leak check valve assembly. <Ref. to EC(STI)-32, Leak Check Valve Assembly.>	End.

1. OUTLINE OF DIAGNOSIS

NOTE:
For the detection standard, refer to DTC P0455. <Ref. to EN(STI)(diag)-352, DTC P0455 EVAP SYSTEM (CPC) LEAK DETECTED (LARGE LEAK), Diagnostic Procedure with Diagnostic Trouble Code (DTC).>

DZ:DTC P2004 TGV CONTROL STUCK OPEN BANK 1

DTC DETECTING CONDITION:
Immediately at fault recognition

CAUTION:
After servicing or replacing faulty parts, perform Clear Memory Mode <Ref. to EN(STI)(diag)-68, OPERATION, Clear Memory Mode.>, and Inspection Mode <Ref. to EN(STI)(diag)-48, PROCEDURE, Inspection Mode.>.

	Step	Check	Yes	No
1	**CHECK FOR ANY OTHER DTC ON DISPLAY.**	Is any other DTC displayed?	Check the appropriate DTC using the "List of Diagnostic Trouble Code (DTC)". <Ref. to EN(STI)(diag)-96, List of Diagnostic Trouble Code (DTC).>	Go to step **2**.
2	**CHECK TUMBLE GENERATOR VALVE RH.** 1) Remove the tumble generator valve assembly RH. 2) Check the tumble generator valve body.	Is there any dirt or clogging with foreign objects in the tumble generator valve?	Clean the tumble generator valve.	Replace the tumble generator valve assembly RH. <Ref. to FU(STI)-46, Tumble Generator Valve Assembly.>

1. OUTLINE OF DIAGNOSIS

Detect the malfunction of tumble generator valve motor function.
Judge open fixing malfunction when the opening degree is large even after finishing the tumble generator valve closing driving.

2. EXECUTION CONDITION

Secondary parameters	Execution condition
Battery voltage	≥ 10.9 V
Elapsed time after tumble generator valve "closed" signal output	≥ 3200 ms

3. GENERAL DRIVING CYCLE

Always perform the diagnosis continuously.

4. DIAGNOSTIC METHOD

If the duration of time while the following conditions are met is longer than the time indicated, judge as NG.

Judgment Value

Malfunction Criteria	Threshold Value
Tumble generator valve opening angle	≥ 64.3 °

Time Needed for Diagnosis: 3000 ms
Malfunction Indicator Light Illumination: Illuminates as soon as a malfunction occurs.

EA:DTC P2005 TGV CONTROL STUCK OPEN BANK 2

DTC DETECTING CONDITION:
Immediately at fault recognition

CAUTION:
After servicing or replacing faulty parts, perform Clear Memory Mode <Ref. to EN(STI)(diag)-68, OPERATION, Clear Memory Mode.>, and Inspection Mode <Ref. to EN(STI)(diag)-48, PROCEDURE, Inspection Mode.>.

	Step	Check	Yes	No
1	**CHECK FOR ANY OTHER DTC ON DISPLAY.**	Is any other DTC displayed?	Check the appropriate DTC using the "List of Diagnostic Trouble Code (DTC)". <Ref. to EN(STI)(diag)-96, List of Diagnostic Trouble Code (DTC).>	Go to step **2**.
2	**CHECK TUMBLE GENERATOR VALVE LH.** 1) Remove the tumble generator valve assembly LH. 2) Check the tumble generator valve body.	Is there any dirt or clogging with foreign objects in the tumble generator valve?	Clean the tumble generator valve.	Replace the tumble generator valve assembly LH. <Ref. to FU(STI)-46, Tumble Generator Valve Assembly.>

1. OUTLINE OF DIAGNOSIS

Detect the malfunction of tumble generator valve motor function.
Judge open fixing malfunction when the opening degree is large even after finishing the tumble generator valve closing driving.

2. EXECUTION CONDITION

Secondary parameters	Execution condition
Battery voltage	≥ 10.9 V
Elapsed time after tumble generator valve "closed" signal output	≥ 3200 ms

3. GENERAL DRIVING CYCLE

Always perform the diagnosis continuously.

4. DIAGNOSTIC METHOD

If the duration of time while the following conditions are met is longer than the time indicated, judge as NG.

Judgment Value

Malfunction Criteria	Threshold Value
Tumble generator valve opening angle	≥ 64.3 °

Time Needed for Diagnosis: 3000 ms
Malfunction Indicator Light Illumination: Illuminates as soon as a malfunction occurs.

EB:DTC P2006 TGV CONTROL STUCK CLOSED BANK 1

DTC DETECTING CONDITION:
Immediately at fault recognition

CAUTION:
After servicing or replacing faulty parts, perform Clear Memory Mode <Ref. to EN(STI)(diag)-68, OPERATION, Clear Memory Mode.>, and Inspection Mode <Ref. to EN(STI)(diag)-48, PROCEDURE, Inspection Mode.>.

	Step	Check	Yes	No
1	**CHECK FOR ANY OTHER DTC ON DISPLAY.**	Is any other DTC displayed?	Check the appropriate DTC using the "List of Diagnostic Trouble Code (DTC)". <Ref. to EN(STI)(diag)-96, List of Diagnostic Trouble Code (DTC).>	Go to step **2**.
2	**CHECK TUMBLE GENERATOR VALVE RH.** 1) Remove the tumble generator valve assembly RH. 2) Check the tumble generator valve body.	Is there any dirt or clogging with foreign objects in the tumble generator valve?	Clean the tumble generator valve.	Replace the tumble generator valve assembly RH. <Ref. to FU(STI)-46, Tumble Generator Valve Assembly.>

1. OUTLINE OF DIAGNOSIS

Detect the malfunction of tumble generator valve motor function.
Judge close fixing malfunction when the opening degree is small even after finishing the tumble generator valve open driving.

2. EXECUTION CONDITION

Secondary parameters	Execution condition
Battery voltage	≥ 10.9 V
Elapsed time after tumble generator valve "open" signal output	≥ 4600 ms

3. GENERAL DRIVING CYCLE

Always perform the diagnosis continuously.

4. DIAGNOSTIC METHOD

If the duration of time while the following conditions are met is longer than the time indicated, judge as NG.

Judgment Value

Malfunction Criteria	Threshold Value
Tumble generator valve opening angle	< 64.3 °

Time Needed for Diagnosis: 3000 ms
Malfunction Indicator Light Illumination: Illuminates as soon as a malfunction occurs.

EC:DTC P2007 TGV CONTROL STUCK CLOSED BANK 2

DTC DETECTING CONDITION:
Immediately at fault recognition

CAUTION:
After servicing or replacing faulty parts, perform Clear Memory Mode <Ref. to EN(STI)(diag)-68, OPERATION, Clear Memory Mode.>, and Inspection Mode <Ref. to EN(STI)(diag)-48, PROCEDURE, Inspection Mode.>.

	Step	Check	Yes	No
1	**CHECK FOR ANY OTHER DTC ON DISPLAY.**	Is any other DTC displayed?	Check the appropriate DTC using the "List of Diagnostic Trouble Code (DTC)". <Ref. to EN(STI)(diag)-96, List of Diagnostic Trouble Code (DTC).>	Go to step **2**.
2	**CHECK TUMBLE GENERATOR VALVE LH.** 1) Remove the tumble generator valve assembly LH. 2) Check the tumble generator valve body.	Is there any dirt or clogging with foreign objects in the tumble generator valve?	Clean the tumble generator valve.	Replace the tumble generator valve assembly LH. <Ref. to FU(STI)-46, Tumble Generator Valve Assembly.>

1. OUTLINE OF DIAGNOSIS

Detect the malfunction of tumble generator valve motor function.
Judge close fixing malfunction when the opening degree is small even after finishing the tumble generator valve open driving.

2. EXECUTION CONDITION

Secondary parameters	Execution condition
Battery voltage	≥ 10.9 V
Elapsed time after tumble generator valve "open" signal output	≥ 4600 ms

3. GENERAL DRIVING CYCLE

Always perform the diagnosis continuously.

4. DIAGNOSTIC METHOD

If the duration of time while the following conditions are met is longer than the time indicated, judge as NG.

Judgment Value

Malfunction Criteria	Threshold Value
Tumble generator valve opening angle	< 64.3 °

Time Needed for Diagnosis: 3000 ms
Malfunction Indicator Light Illumination: Illuminates as soon as a malfunction occurs.

ED:DTC P2008 TGV CONTROL CIRCUIT/OPEN BANK 1

DTC DETECTING CONDITION:
Immediately at fault recognition

CAUTION:
After servicing or replacing faulty parts, perform Clear Memory Mode <Ref. to EN(STI)(diag)-68, OPERATION, Clear Memory Mode.>, and Inspection Mode <Ref. to EN(STI)(diag)-48, PROCEDURE, Inspection Mode.>.

WIRING DIAGRAM:
Engine Electrical System <Ref. to WI-154, WIRING DIAGRAM, Engine Electrical System.>

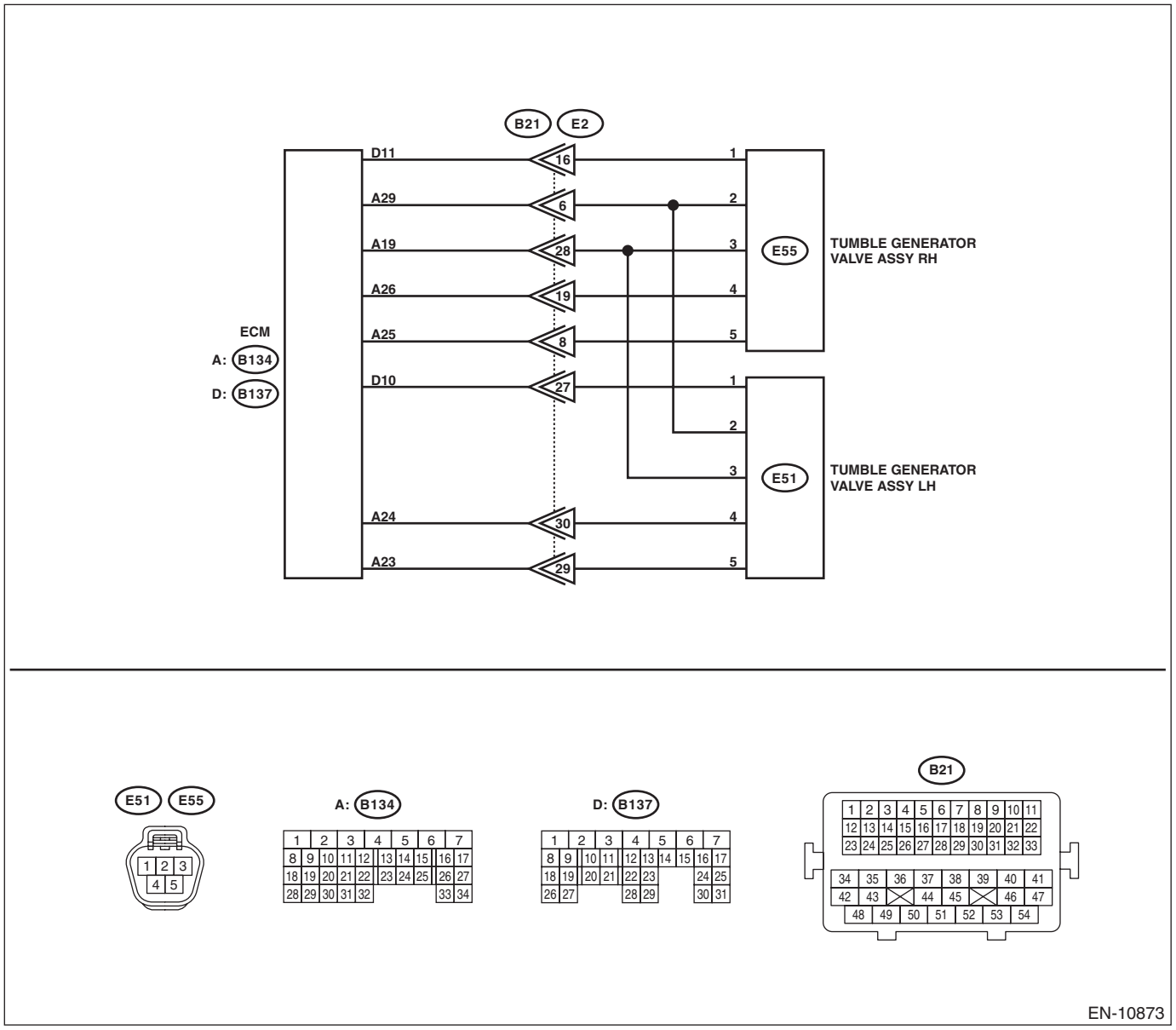

	Step	Check	Yes	No
1	**CHECK HARNESS BETWEEN ECM AND TUMBLE GENERATOR VALVE ASSEMBLY RH CONNECTOR.** 1) Turn the ignition switch to OFF. 2) Disconnect the connector from ECM. 3) Disconnect the connector from tumble generator valve assembly RH. 4) Measure the resistance of harness between ECM connector and tumble generator valve assembly RH connector. ***Connector & terminal*** ***(B134) No. 25 — (E55) No. 5:*** ***(B134) No. 26 — (E55) No. 4:***	Is the resistance less than 1 Ω?	Go to step **2**.	Repair the harness and connector. NOTE: In this case, repair the following item: • Open circuit in harness between ECM connector and tumble generator valve assembly RH connector • Poor contact of coupling connector
2	**CHECK HARNESS BETWEEN ECM AND TUMBLE GENERATOR VALVE ASSEMBLY RH CONNECTOR.** Measure the resistance between ECM connector and chassis ground. ***Connector & terminal*** ***(B134) No. 25 — Chassis ground:*** ***(B134) No. 26 — Chassis ground:***	Is the resistance 1 MΩ or more?	Go to step **3**.	Repair the short circuit to ground in harness between ECM connector and tumble generator valve assembly RH connector.
3	**CHECK FOR POOR CONTACT.** Check for poor contact of tumble generator valve assembly RH connector.	Is there poor contact of the tumble generator valve assembly RH connector?	Repair the poor contact of tumble generator valve assembly RH connector.	Replace the tumble generator valve assembly RH. <Ref. to FU(STI)-46, Tumble Generator Valve Assembly.>

1. OUTLINE OF DIAGNOSIS

Detect the open or short circuit of tumble generator valve motor.
Judge as NG when the open signal is sent from IC after tumble generator valve driving IC diagnosis.

2. COMPONENT DESCRIPTION

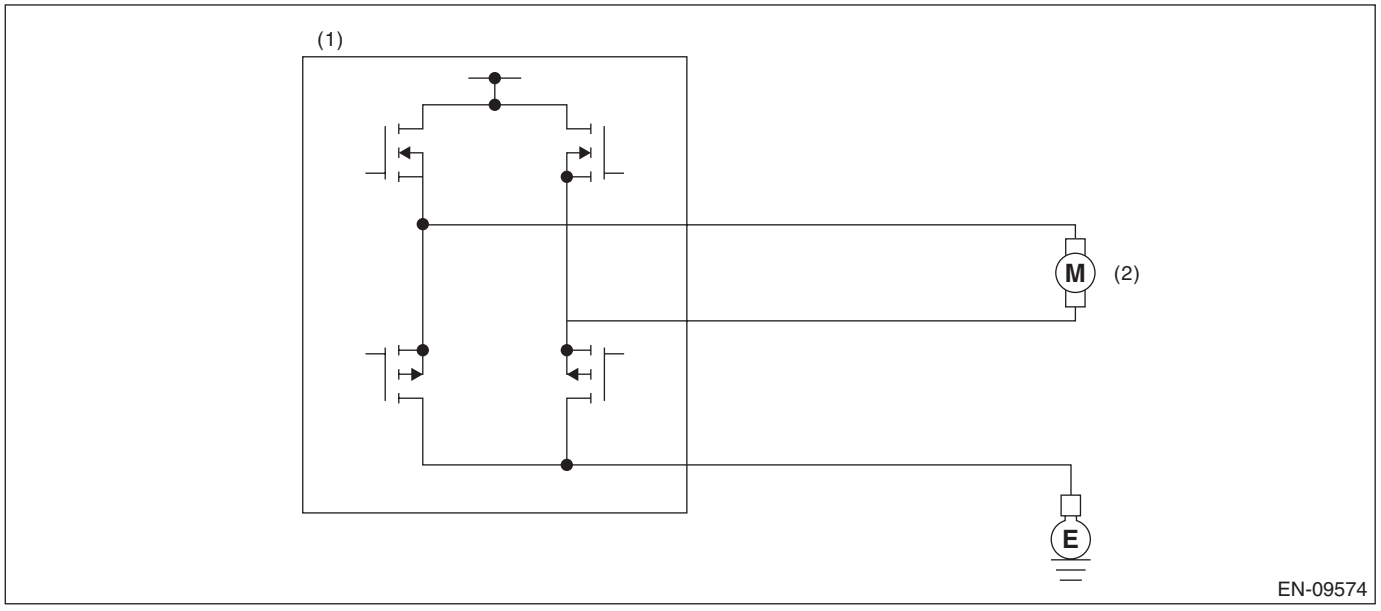

(1) Engine control module (ECM) (2) Tumble generator valve

3. EXECUTION CONDITION

Secondary parameters	Execution condition
Battery voltage	≥ 10.9 V
Tumble generator valve drive duty	≤ 79.17%

4. GENERAL DRIVING CYCLE

Always perform the diagnosis continuously.

5. DIAGNOSTIC METHOD

If the duration of time while the following conditions are met is longer than the time indicated, judge as NG.

Judgment Value

Malfunction Criteria	Threshold Value
Output voltage	≥ Battery voltage × 0.55 V

Time Needed for Diagnosis: 32 ms × 20 time(s)
Malfunction Indicator Light Illumination: Illuminates as soon as a malfunction occurs.

EE:DTC P2009 TGV CONTROL CIRCUIT LOW BANK 1

DTC DETECTING CONDITION:
Immediately at fault recognition

CAUTION:
After servicing or replacing faulty parts, perform Clear Memory Mode <Ref. to EN(STI)(diag)-68, OPERATION, Clear Memory Mode.>, and Inspection Mode <Ref. to EN(STI)(diag)-48, PROCEDURE, Inspection Mode.>.

WIRING DIAGRAM:
Engine Electrical System <Ref. to WI-154, WIRING DIAGRAM, Engine Electrical System.>

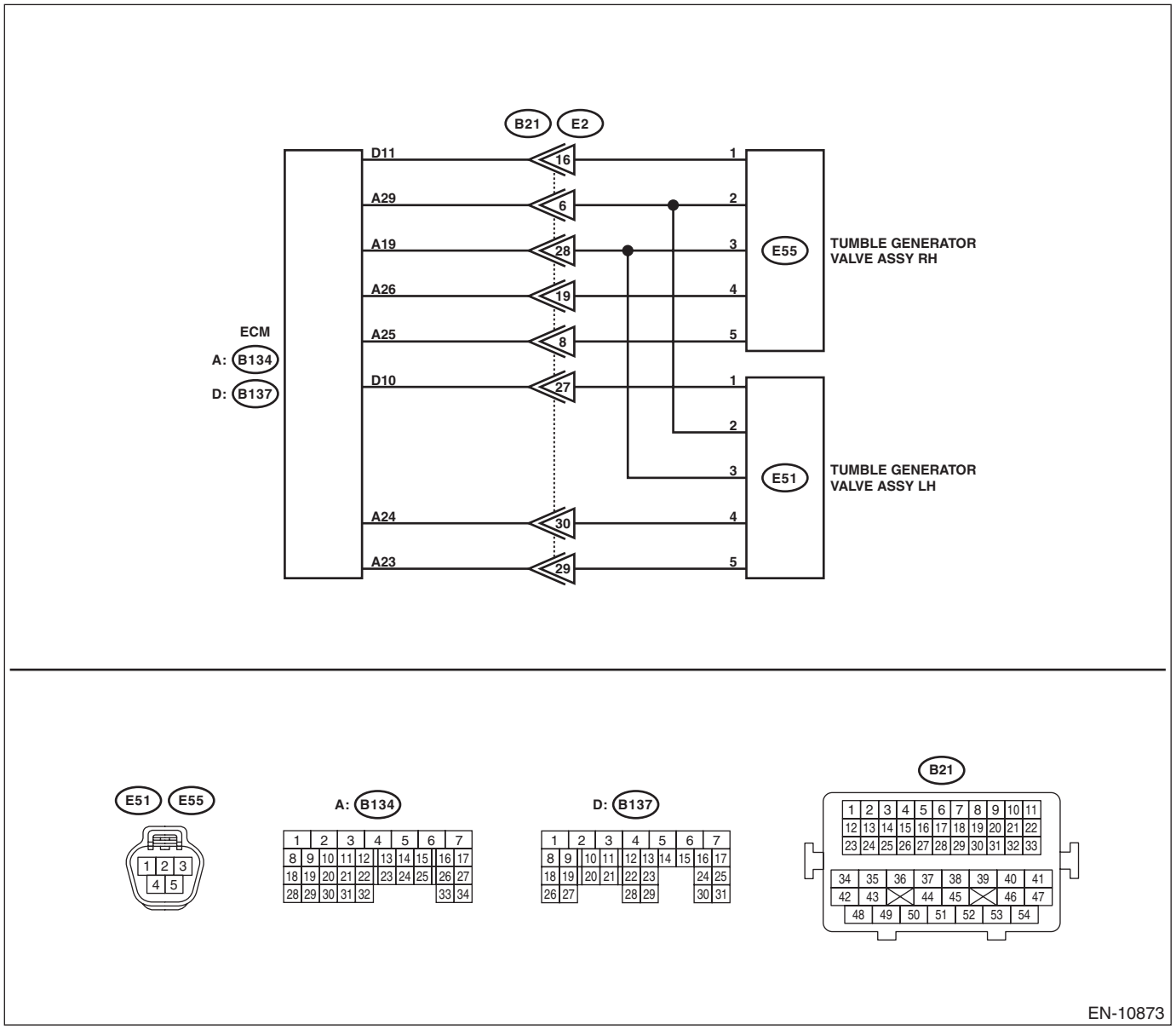

Step		Check	Yes	No
1	**CHECK HARNESS BETWEEN ECM AND TUMBLE GENERATOR VALVE ASSEMBLY RH CONNECTOR.** 1) Turn the ignition switch to OFF. 2) Disconnect the connector from ECM. 3) Measure the voltage between ECM connector and chassis ground. ***Connector & terminal*** ***(B134) No. 25 (+) — Chassis ground (–):*** ***(B134) No. 26 (+) — Chassis ground (–):***	Is the voltage 5 V or more?	Repair the short circuit to power in harness between ECM connector and tumble generator valve assembly RH connector.	Replace the tumble generator valve assembly RH. <Ref. to FU(STI)-46, Tumble Generator Valve Assembly.>

1. OUTLINE OF DIAGNOSIS

Detect the open or short circuit of tumble generator valve motor.
Judge as NG when the overcurrent signal is sent from IC after tumble generator valve driving IC diagnosis.

2. COMPONENT DESCRIPTION

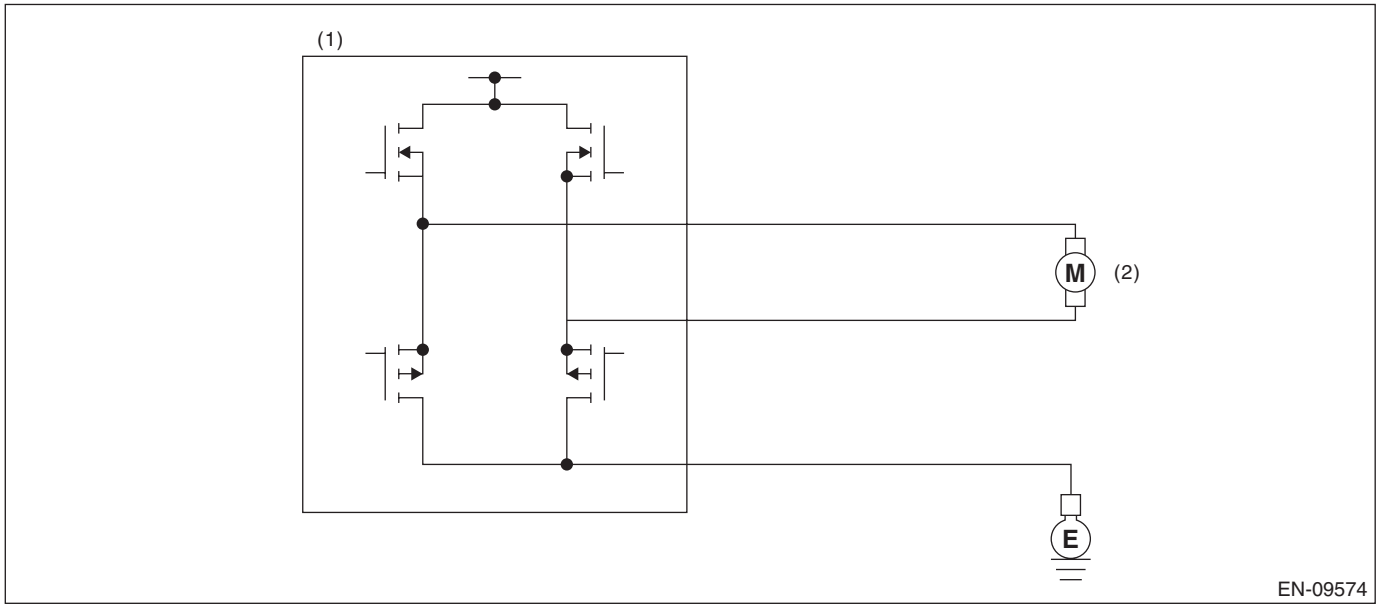

(1) Engine control module (ECM) (2) Tumble generator valve

3. EXECUTION CONDITION

Secondary parameters	Execution condition
Battery voltage	≥ 10.9 V
Tumble generator valve instruction	Open or Closed

4. GENERAL DRIVING CYCLE

Always perform the diagnosis continuously.

5. DIAGNOSTIC METHOD

If the duration of time while the following conditions are met is longer than the time indicated, judge as NG.

Judgment Value

Malfunction Criteria	Threshold Value
Overcurrent signal from driver	ON

Time Needed for Diagnosis: 96 ms × 10 time(s)
Malfunction Indicator Light Illumination: Illuminates as soon as a malfunction occurs.

EF:DTC P2011 TGV CONTROL CIRCUIT/OPEN BANK 2

DTC DETECTING CONDITION:
Immediately at fault recognition

CAUTION:
After servicing or replacing faulty parts, perform Clear Memory Mode <Ref. to EN(STI)(diag)-68, OPERATION, Clear Memory Mode.>, and Inspection Mode <Ref. to EN(STI)(diag)-48, PROCEDURE, Inspection Mode.>.

WIRING DIAGRAM:
Engine Electrical System <Ref. to WI-154, WIRING DIAGRAM, Engine Electrical System.>

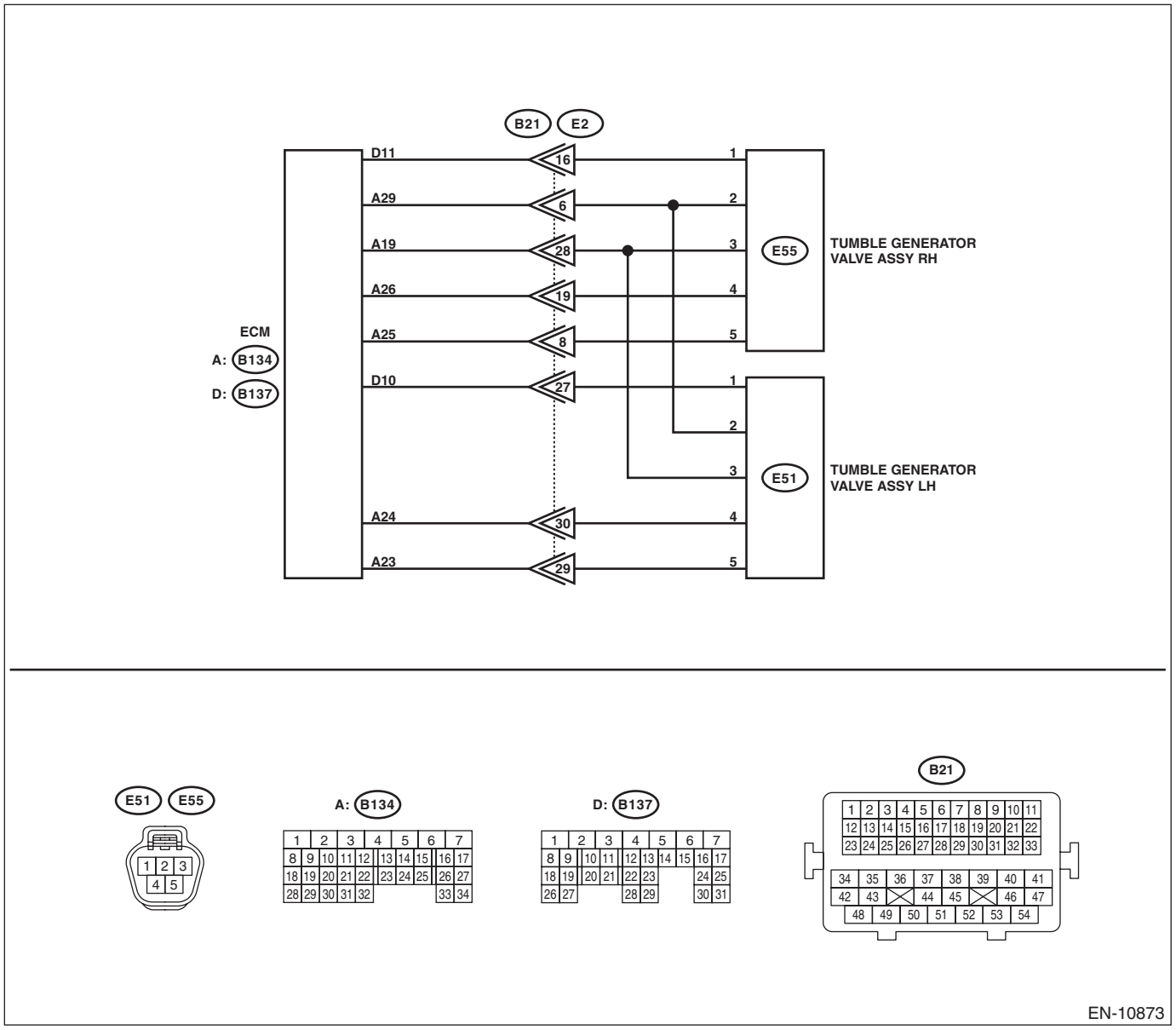

	Step	Check	Yes	No
1	**CHECK HARNESS BETWEEN ECM AND TUMBLE GENERATOR VALVE ASSEMBLY LH CONNECTOR.** 1) Turn the ignition switch to OFF. 2) Disconnect the connector from ECM. 3) Disconnect the connector from tumble generator valve assembly LH. 4) Measure the resistance of harness between ECM connector and tumble generator valve assembly LH connector. ***Connector & terminal*** ***(B134) No. 23 — (E51) No. 5:*** ***(B134) No. 24 — (E51) No. 4:***	Is the resistance less than 1 Ω?	Go to step **2**.	Repair the harness and connector. NOTE: In this case, repair the following item: • Open circuit in harness between ECM connector and tumble generator valve assembly LH connector • Poor contact of coupling connector
2	**CHECK HARNESS BETWEEN ECM AND TUMBLE GENERATOR VALVE ASSEMBLY LH CONNECTOR.** Measure the resistance between ECM connector and chassis ground. ***Connector & terminal*** ***(B134) No. 23 — Chassis ground:*** ***(B134) No. 24 — Chassis ground:***	Is the resistance 1 MΩ or more?	Go to step **3**.	Repair the short circuit to ground in harness between ECM connector and tumble generator valve assembly LH connector.
3	**CHECK FOR POOR CONTACT.** Check for poor contact of tumble generator valve assembly LH connector.	Is there poor contact of the tumble generator valve assembly LH connector?	Repair the poor contact of tumble generator valve assembly LH connector.	Replace the tumble generator valve assembly LH. <Ref. to FU(STI)-46, Tumble Generator Valve Assembly.>

1. OUTLINE OF DIAGNOSIS

Detect the open or short circuit of tumble generator valve motor.
Judge as NG when the open signal is sent from IC after tumble generator valve driving IC diagnosis.

2. COMPONENT DESCRIPTION

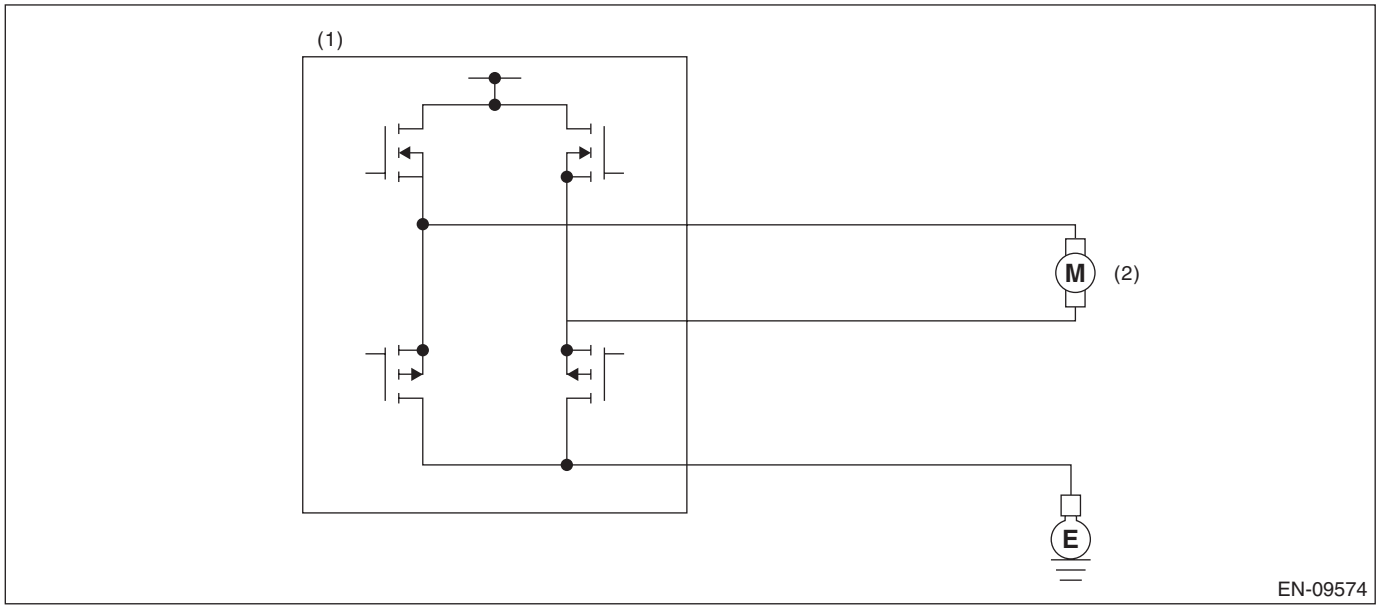

(1) Engine control module (ECM) (2) Tumble generator valve

3. EXECUTION CONDITION

Secondary parameters	Execution condition
Battery voltage	≥ 10.9 V
Tumble generator valve drive duty	≤ 79.17%

4. GENERAL DRIVING CYCLE

Always perform the diagnosis continuously.

5. DIAGNOSTIC METHOD

If the duration of time while the following conditions are met is longer than the time indicated, judge as NG.

Judgment Value

Malfunction Criteria	Threshold Value
Output voltage	≥ Battery voltage × 0.55 V

Time Needed for Diagnosis: 32 ms × 20 time(s)
Malfunction Indicator Light Illumination: Illuminates as soon as a malfunction occurs.

EG:DTC P2012 TGV CONTROL CIRCUIT LOW BANK 2

DTC DETECTING CONDITION:
Immediately at fault recognition

CAUTION:
After servicing or replacing faulty parts, perform Clear Memory Mode <Ref. to EN(STI)(diag)-68, OPERATION, Clear Memory Mode.>, and Inspection Mode <Ref. to EN(STI)(diag)-48, PROCEDURE, Inspection Mode.>.

WIRING DIAGRAM:
Engine Electrical System <Ref. to WI-154, WIRING DIAGRAM, Engine Electrical System.>

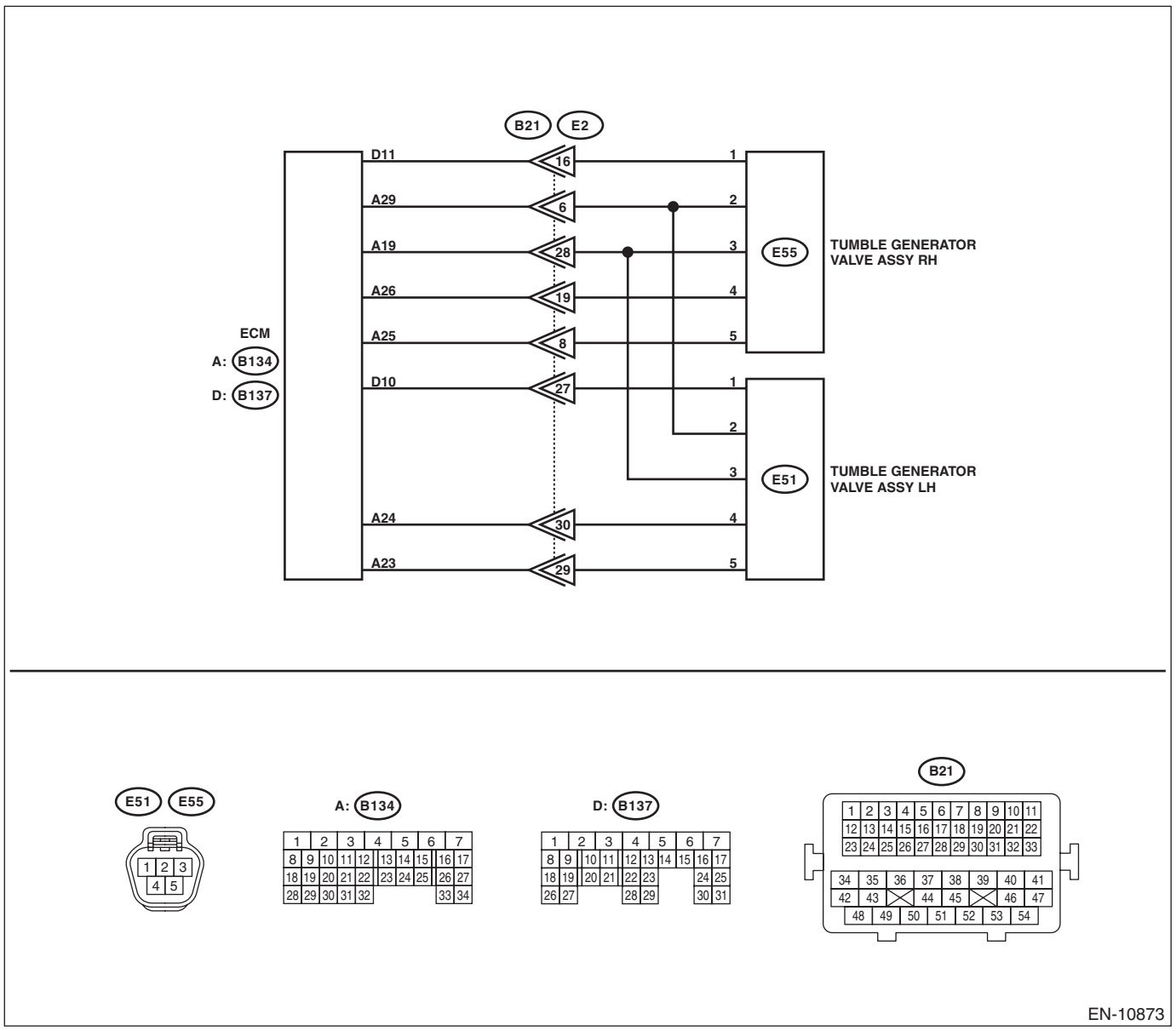

	Step	Check	Yes	No
1	**CHECK HARNESS BETWEEN ECM AND TUMBLE GENERATOR VALVE ASSEMBLY LH CONNECTOR.** 1) Turn the ignition switch to OFF. 2) Disconnect the connector from ECM. 3) Measure the voltage between ECM connector and chassis ground. ***Connector & terminal*** ***(B134) No. 23 (+) — Chassis ground (–):*** ***(B134) No. 24 (+) — Chassis ground (–):***	Is the voltage 5 V or more?	Repair the short circuit to power in harness between ECM connector and tumble generator valve assembly LH connector.	Replace the tumble generator valve assembly LH. <Ref. to FU(STI)-46, Tumble Generator Valve Assembly.>

1. OUTLINE OF DIAGNOSIS

Detect the open or short circuit of tumble generator valve motor.
Judge as NG when the overcurrent signal is sent from IC after tumble generator valve driving IC diagnosis.

2. COMPONENT DESCRIPTION

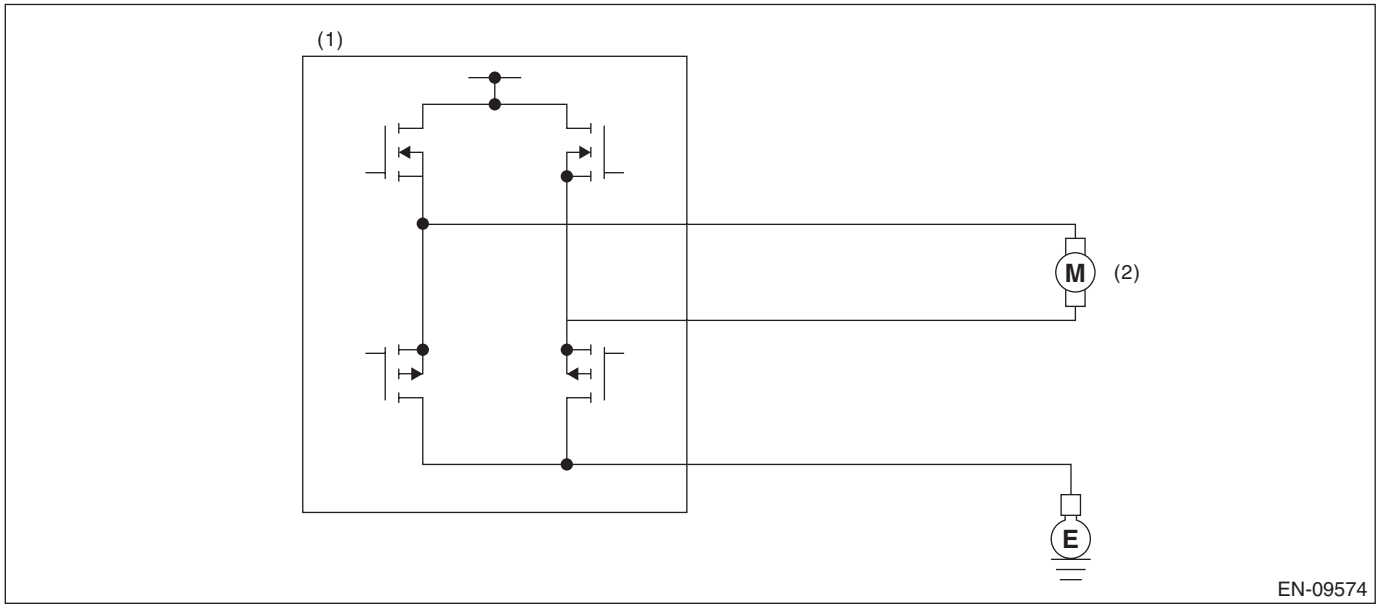

(1) Engine control module (ECM) (2) Tumble generator valve

3. EXECUTION CONDITION

Secondary parameters	Execution condition
Battery voltage	≥ 10.9 V
Tumble generator valve instruction	Open or Closed

4. GENERAL DRIVING CYCLE

Always perform the diagnosis continuously.

5. DIAGNOSTIC METHOD

If the duration of time while the following conditions are met is longer than the time indicated, judge as NG.

Judgment Value

Malfunction Criteria	Threshold Value
Overcurrent signal from driver	ON

Time Needed for Diagnosis: 96 ms × 10 time(s)
Malfunction Indicator Light Illumination: Illuminates as soon as a malfunction occurs.

EH:DTC P2016 TGV POSITION SENSOR/SWITCH CIRCUIT LOW BANK 1

DTC DETECTING CONDITION:
Immediately at fault recognition
TROUBLE SYMPTOM:

- Improper idling
- Engine stalls.
- Poor driving performance

CAUTION:
After servicing or replacing faulty parts, perform Clear Memory Mode <Ref. to EN(STI)(diag)-68, OPERATION, Clear Memory Mode.>, and Inspection Mode <Ref. to EN(STI)(diag)-48, PROCEDURE, Inspection Mode.>.
WIRING DIAGRAM:
Engine Electrical System <Ref. to WI-154, WIRING DIAGRAM, Engine Electrical System.>

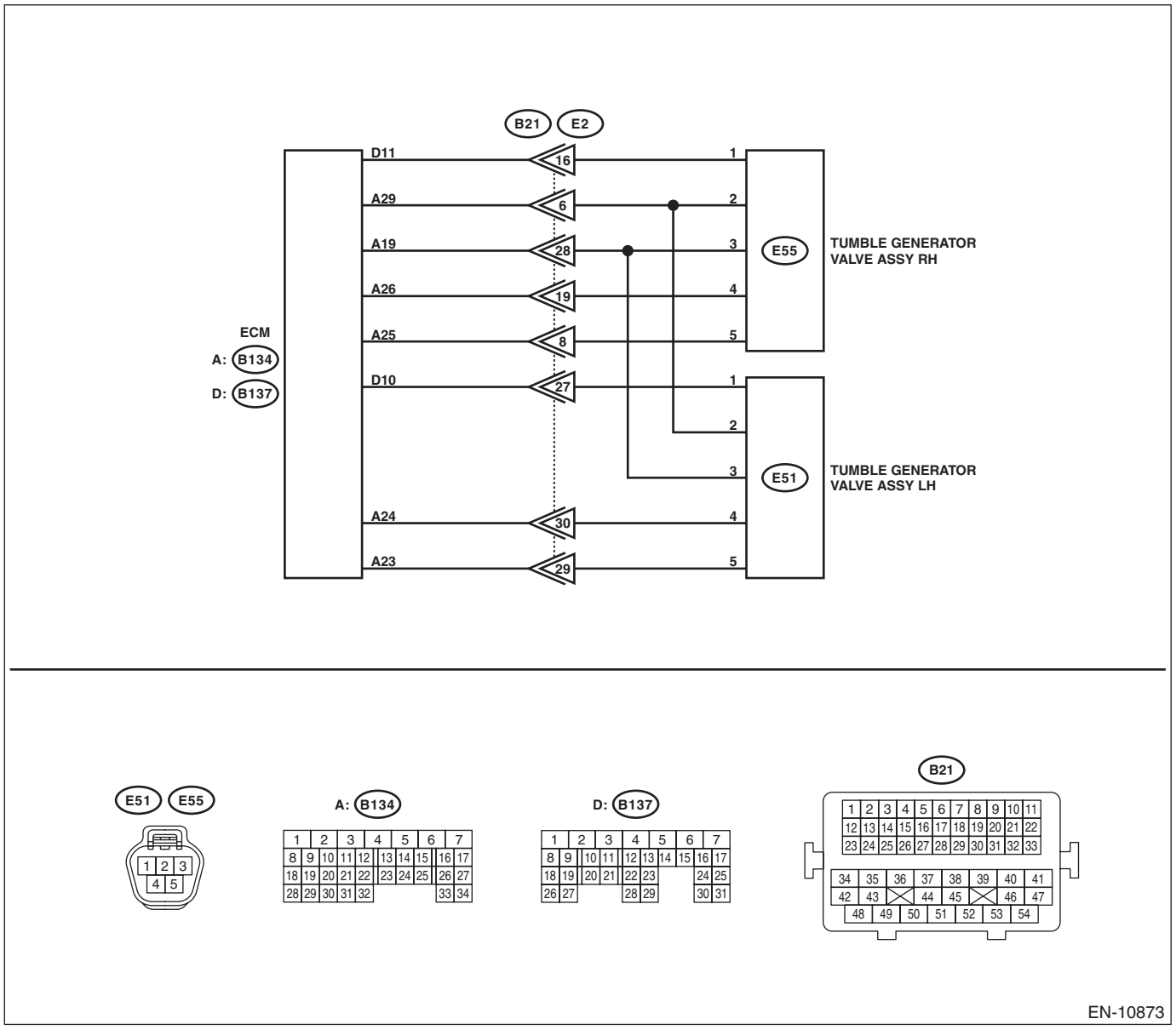

EN-10873

	Step	Check	Yes	No
1	**CHECK CURRENT DATA.** 1) Start the engine. 2) Read the value of «TGV Position Sensor R» using the Subaru Select Monitor. NOTE: For detailed operation procedures, refer to "Read Current Data For Engine". <Ref. to EN(STI)(diag)-36, Subaru Select Monitor.>	Is the value of «TGV Position Sensor R» less than 0.2 V?	Go to step **2**.	Even if DTC is detected, the circuit has returned to a normal condition at this time. Reproduce the failure, and then perform the diagnosis again. NOTE: In this case, temporary poor contact of connector, temporary open or short circuit of harness may be the cause.
2	**CHECK POWER SUPPLY OF TUMBLE GENERATOR VALVE ASSEMBLY RH.** 1) Turn the ignition switch to OFF. 2) Disconnect the connector from tumble generator valve assembly RH. 3) Turn the ignition switch to ON. 4) Measure the voltage between tumble generator valve assembly RH connector and engine ground. ***Connector & terminal*** ***(E55) No. 3 (+) — Engine ground (–):***	Is the voltage 4.5 V or more?	Go to step **3**.	Repair the harness and connector. NOTE: In this case, repair the following item: • Open circuit in harness between ECM connector and tumble generator valve assembly RH connector • Poor contact of ECM connector • Poor contact of coupling connector
3	**CHECK HARNESS BETWEEN ECM AND TUMBLE GENERATOR VALVE ASSEMBLY RH CONNECTOR.** 1) Turn the ignition switch to OFF. 2) Disconnect the connector from ECM. 3) Measure the resistance of harness between ECM connector and tumble generator valve assembly RH connector. ***Connector & terminal*** ***(B137) No. 11 — (E55) No. 1:***	Is the resistance less than 1 Ω?	Go to step **4**.	Repair the harness and connector. NOTE: In this case, repair the following item: • Open circuit in harness between ECM connector and tumble generator valve assembly RH connector • Poor contact of coupling connector
4	**CHECK HARNESS BETWEEN ECM AND TUMBLE GENERATOR VALVE ASSEMBLY RH CONNECTOR.** Measure the resistance between ECM connector and chassis ground. ***Connector & terminal*** ***(B137) No. 11 — Chassis ground:***	Is the resistance 1 MΩ or more?	Go to step **5**.	Repair the short circuit to ground in harness between ECM connector and tumble generator valve assembly RH connector.
5	**CHECK FOR POOR CONTACT.** Check for poor contact of ECM and tumble generator valve assembly RH connector.	Is there poor contact of ECM or the tumble generator valve assembly RH connector?	Repair the poor contact of ECM or tumble generator valve assembly RH connector.	Replace the tumble generator valve assembly RH. <Ref. to FU(STI)-46, Tumble Generator Valve Assembly.>

1. OUTLINE OF DIAGNOSIS

Detect open or short circuit of tumble generator valve position sensor.
Judge as NG if out of specification.

2. COMPONENT DESCRIPTION

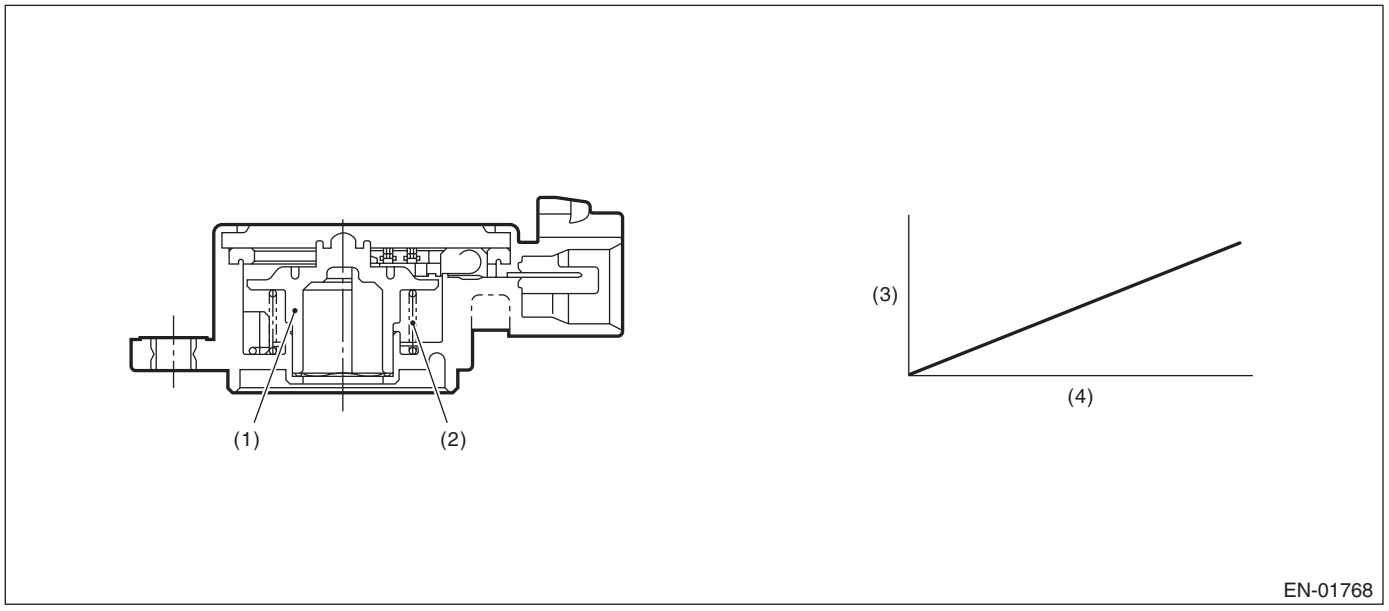

(1) Rotor
(2) Return spring
(3) Voltage (V)
(4) Tumble generator valve opening angle (°)

3. EXECUTION CONDITION

Secondary parameters	Execution condition
None	

4. GENERAL DRIVING CYCLE

Always perform the diagnosis continuously.

5. DIAGNOSTIC METHOD

If the duration of time while the following conditions are met is longer than the time indicated, judge as NG.

Judgment Value

Malfunction Criteria	Threshold Value
Output voltage	< 0.264 V

Time Needed for Diagnosis: 500 ms
Malfunction Indicator Light Illumination: Illuminates as soon as a malfunction occurs.

EI: DTC P2017 TGV POSITION SENSOR/SWITCH CIRCUIT HIGH BANK 1

DTC DETECTING CONDITION:
Immediately at fault recognition
TROUBLE SYMPTOM:

- Improper idling
- Engine stalls.
- Poor driving performance

CAUTION:
After servicing or replacing faulty parts, perform Clear Memory Mode <Ref. to EN(STI)(diag)-68, OPERATION, Clear Memory Mode.>, and Inspection Mode <Ref. to EN(STI)(diag)-48, PROCEDURE, Inspection Mode.>.
WIRING DIAGRAM:
Engine Electrical System <Ref. to WI-154, WIRING DIAGRAM, Engine Electrical System.>

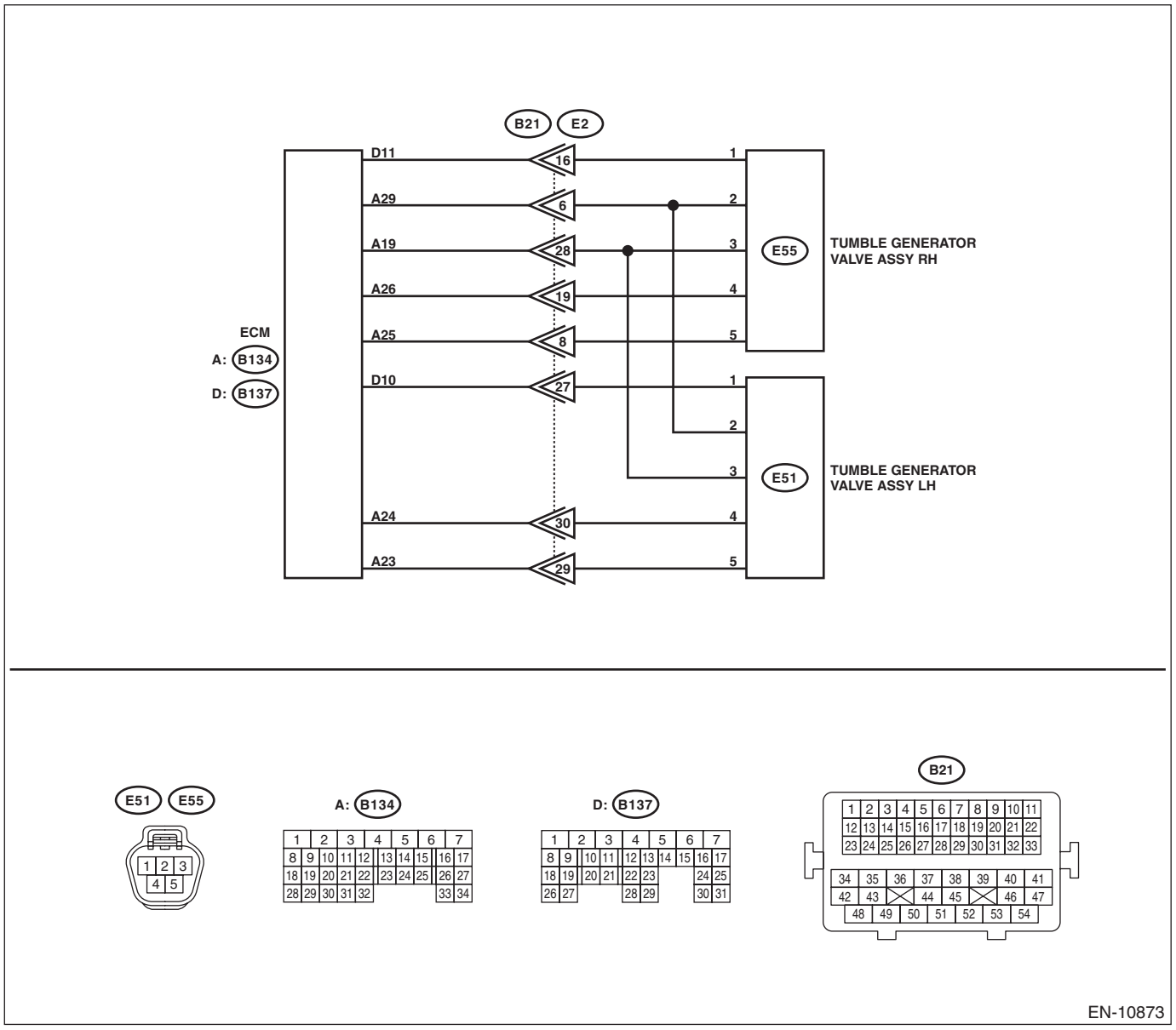

EN-10873

	Step	Check	Yes	No
1	**CHECK CURRENT DATA.** 1) Start the engine. 2) Read the value of «TGV Position Sensor R» using the Subaru Select Monitor. NOTE: For detailed operation procedures, refer to "Read Current Data For Engine". <Ref. to EN(STI)(diag)-36, Subaru Select Monitor.>	Is the value of «TGV Position Sensor R» 5 V or more?	Go to step **2**.	Even if DTC is detected, the circuit has returned to a normal condition at this time. Reproduce the failure, and then perform the diagnosis again. NOTE: In this case, temporary poor contact of connector, temporary open or short circuit of harness may be the cause.
2	**CHECK HARNESS BETWEEN ECM AND TUMBLE GENERATOR VALVE ASSEMBLY RH CONNECTOR.** 1) Turn the ignition switch to OFF. 2) Disconnect the connector from tumble generator valve assembly RH. 3) Start the engine. 4) Read the value of «TGV Position Sensor R» using the Subaru Select Monitor. NOTE: For detailed operation procedures, refer to "Read Current Data For Engine". <Ref. to EN(STI)(diag)-36, Subaru Select Monitor.>	Is the value of «TGV Position Sensor R» 5 V or more?	Repair the short circuit to power in harness between ECM connector and tumble generator valve assembly RH connector.	Go to step **3**.
3	**CHECK HARNESS BETWEEN ECM AND TUMBLE GENERATOR VALVE ASSEMBLY RH CONNECTOR.** 1) Turn the ignition switch to OFF. 2) Measure the resistance of harness between tumble generator valve assembly RH connector and engine ground. ***Connector & terminal*** ***(E55) No. 2 — Engine ground:***	Is the resistance less than 5 Ω?	Go to step **4**.	Repair the harness and connector. NOTE: In this case, repair the following item: • Open circuit in harness between ECM connector and tumble generator valve assembly RH connector • Poor contact of ECM connector • Poor contact of coupling connector
4	**CHECK FOR POOR CONTACT.** Check for poor contact of tumble generator valve assembly RH connector.	Is there poor contact of the tumble generator valve assembly RH connector?	Repair the poor contact of tumble generator valve assembly RH connector.	Replace the tumble generator valve assembly RH. <Ref. to FU(STI)-46, Tumble Generator Valve Assembly.>

1. OUTLINE OF DIAGNOSIS

Detect open or short circuit of tumble generator valve position sensor.
Judge as NG if out of specification.

2. COMPONENT DESCRIPTION

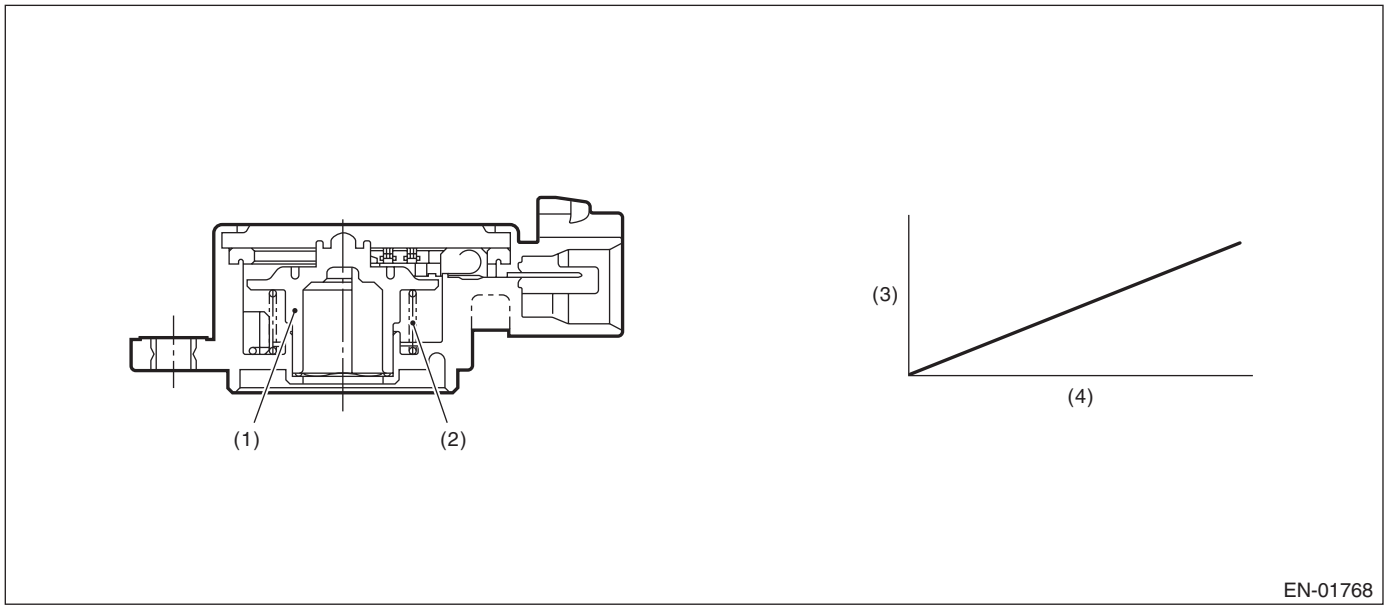

(1) Rotor
(2) Return spring
(3) Voltage (V)
(4) Tumble generator valve opening angle (°)

3. EXECUTION CONDITION

Secondary parameters	Execution condition
None	

4. GENERAL DRIVING CYCLE

Always perform the diagnosis continuously.

5. DIAGNOSTIC METHOD

If the duration of time while the following conditions are met is longer than the time indicated, judge as NG.

Judgment Value

Malfunction Criteria	Threshold Value
Output voltage	≥ 4.783 V

Time Needed for Diagnosis: 500 ms
Malfunction Indicator Light Illumination: Illuminates as soon as a malfunction occurs.

EJ: DTC P2021 TGV POSITION SENSOR/SWITCH CIRCUIT LOW BANK 2

DTC DETECTING CONDITION:
Immediately at fault recognition
TROUBLE SYMPTOM:

- Improper idling
- Engine stalls.
- Poor driving performance

CAUTION:
After servicing or replacing faulty parts, perform Clear Memory Mode <Ref. to EN(STI)(diag)-68, OPERATION, Clear Memory Mode.>, and Inspection Mode <Ref. to EN(STI)(diag)-48, PROCEDURE, Inspection Mode.>.
WIRING DIAGRAM:
Engine Electrical System <Ref. to WI-154, WIRING DIAGRAM, Engine Electrical System.>

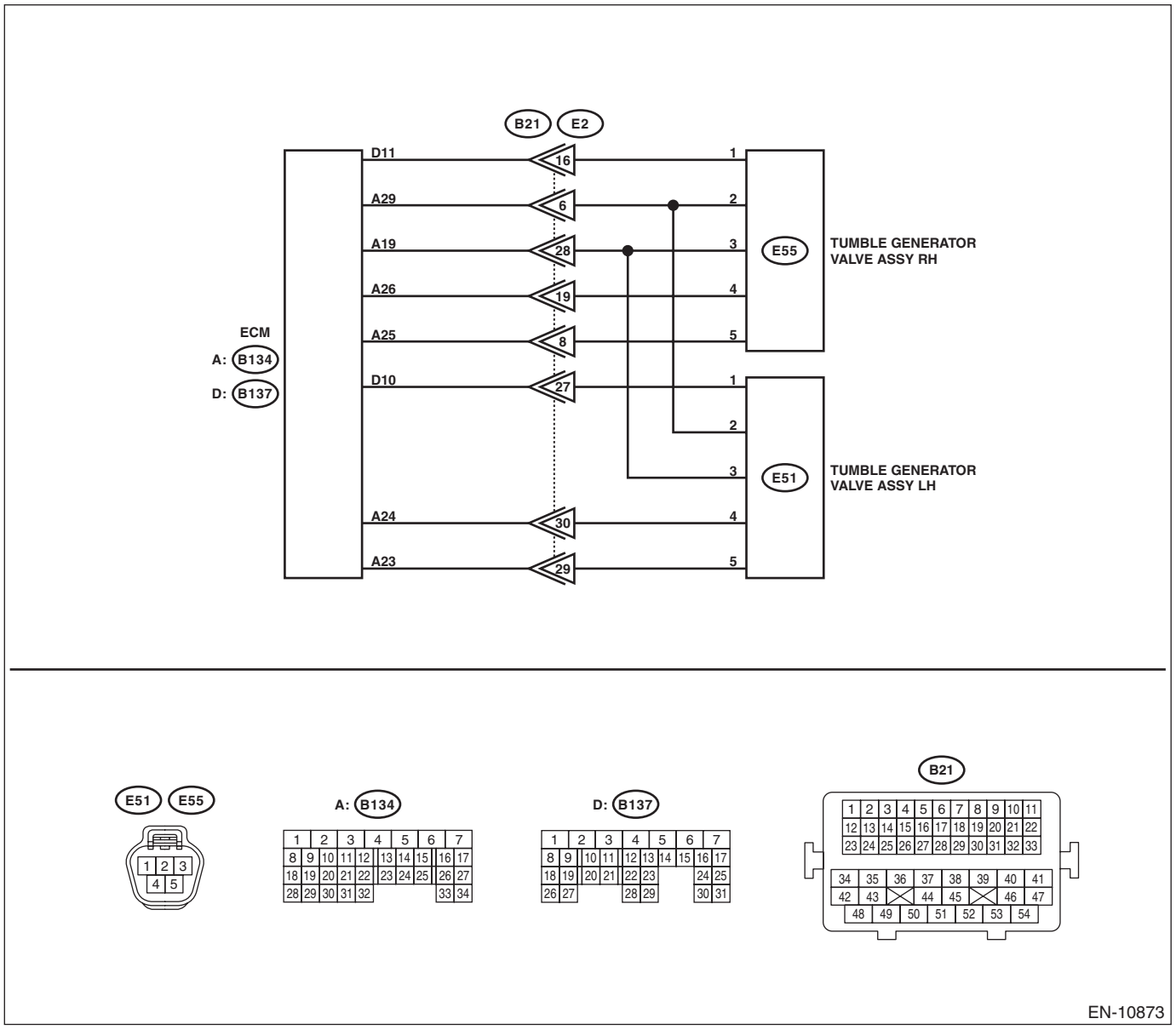

	Step	Check	Yes	No
1	**CHECK CURRENT DATA.** 1) Start the engine. 2) Read the value of «TGV Position Sensor L» using the Subaru Select Monitor. NOTE: For detailed operation procedures, refer to "Read Current Data For Engine". <Ref. to EN(STI)(diag)-36, Subaru Select Monitor.>	Is the value of «TGV Position Sensor L» less than 0.2 V?	Go to step **2**.	Even if DTC is detected, the circuit has returned to a normal condition at this time. Reproduce the failure, and then perform the diagnosis again. NOTE: In this case, temporary poor contact of connector, temporary open or short circuit of harness may be the cause.
2	**CHECK POWER SUPPLY OF TUMBLE GENERATOR VALVE ASSEMBLY LH.** 1) Turn the ignition switch to OFF. 2) Disconnect the connector from tumble generator valve assembly LH. 3) Turn the ignition switch to ON. 4) Measure the voltage between tumble generator valve assembly LH connector and engine ground. ***Connector & terminal*** ***(E51) No. 3 (+) — Engine ground (–):***	Is the voltage 4.5 V or more?	Go to step **3**.	Repair the harness and connector. NOTE: In this case, repair the following item: • Open circuit in harness between ECM connector and tumble generator valve assembly LH connector • Poor contact of ECM connector • Poor contact of coupling connector
3	**CHECK HARNESS BETWEEN ECM AND TUMBLE GENERATOR VALVE ASSEMBLY LH CONNECTOR.** 1) Turn the ignition switch to OFF. 2) Disconnect the connector from ECM. 3) Measure the resistance of harness between ECM connector and tumble generator valve assembly LH connector. ***Connector & terminal*** ***(B137) No. 10 — (E51) No. 1:***	Is the resistance less than 1 Ω?	Go to step **4**.	Repair the harness and connector. NOTE: In this case, repair the following item: • Open circuit in harness between ECM connector and tumble generator valve assembly LH connector • Poor contact of coupling connector
4	**CHECK HARNESS BETWEEN ECM AND TUMBLE GENERATOR VALVE ASSEMBLY LH CONNECTOR.** Measure the resistance between ECM connector and chassis ground. ***Connector & terminal*** ***(B137) No. 10 — Chassis ground:***	Is the resistance 1 MΩ or more?	Go to step **5**.	Repair the short circuit to ground in harness between ECM connector and tumble generator valve assembly LH connector.
5	**CHECK FOR POOR CONTACT.** Check for poor contact of ECM and tumble generator valve assembly LH connector.	Is there poor contact of ECM or the tumble generator valve assembly LH connector?	Repair the poor contact of ECM or tumble generator valve assembly LH connector.	Replace the tumble generator valve assembly LH. <Ref. to FU(STI)-46, Tumble Generator Valve Assembly.>

1. OUTLINE OF DIAGNOSIS

Detect open or short circuit of tumble generator valve position sensor.
Judge as NG if out of specification.

2. COMPONENT DESCRIPTION

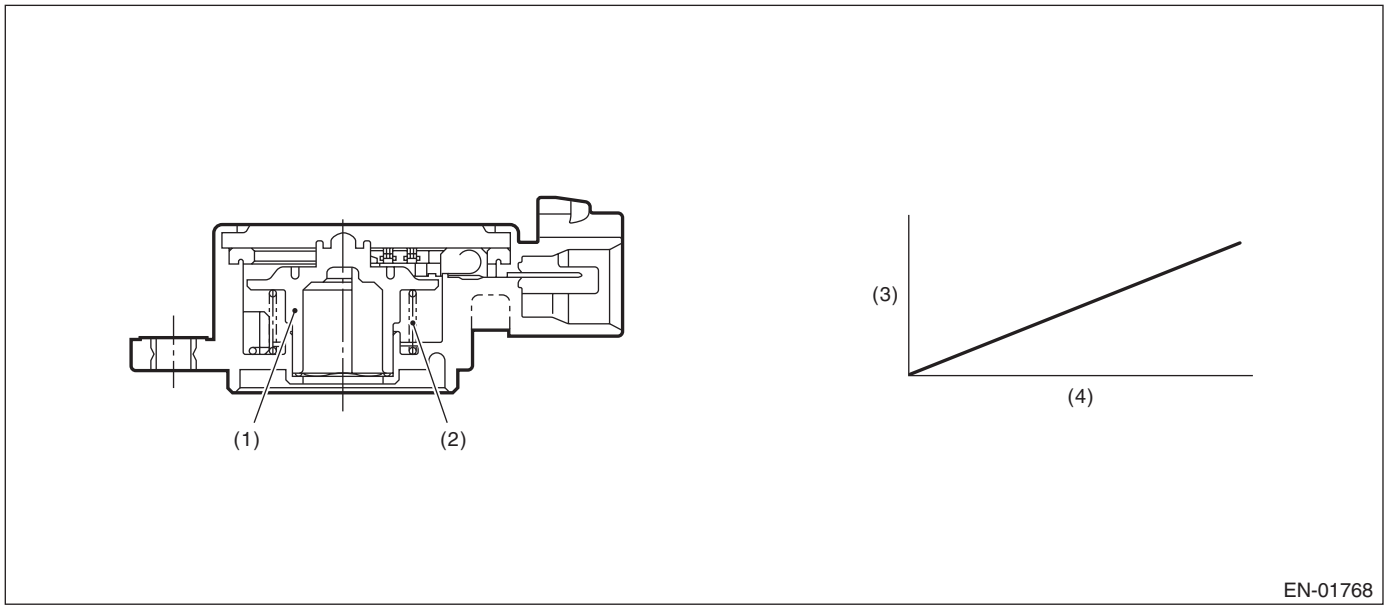

(1) Rotor
(2) Return spring
(3) Voltage (V)
(4) Tumble generator valve opening angle (°)

3. EXECUTION CONDITION

Secondary parameters	Execution condition
None	

4. GENERAL DRIVING CYCLE

Always perform the diagnosis continuously.

5. DIAGNOSTIC METHOD

If the duration of time while the following conditions are met is longer than the time indicated, judge as NG.

Judgment Value

Malfunction Criteria	Threshold Value
Output voltage	< 0.264 V

Time Needed for Diagnosis: 500 ms
Malfunction Indicator Light Illumination: Illuminates as soon as a malfunction occurs.

EK:DTC P2022 TGV POSITION SENSOR/SWITCH CIRCUIT HIGH BANK 2

DTC DETECTING CONDITION:
Immediately at fault recognition
TROUBLE SYMPTOM:

- Improper idling
- Engine stalls.
- Poor driving performance

CAUTION:
After servicing or replacing faulty parts, perform Clear Memory Mode <Ref. to EN(STI)(diag)-68, OPERATION, Clear Memory Mode.>, and Inspection Mode <Ref. to EN(STI)(diag)-48, PROCEDURE, Inspection Mode.>.
WIRING DIAGRAM:
Engine Electrical System <Ref. to WI-154, WIRING DIAGRAM, Engine Electrical System.>

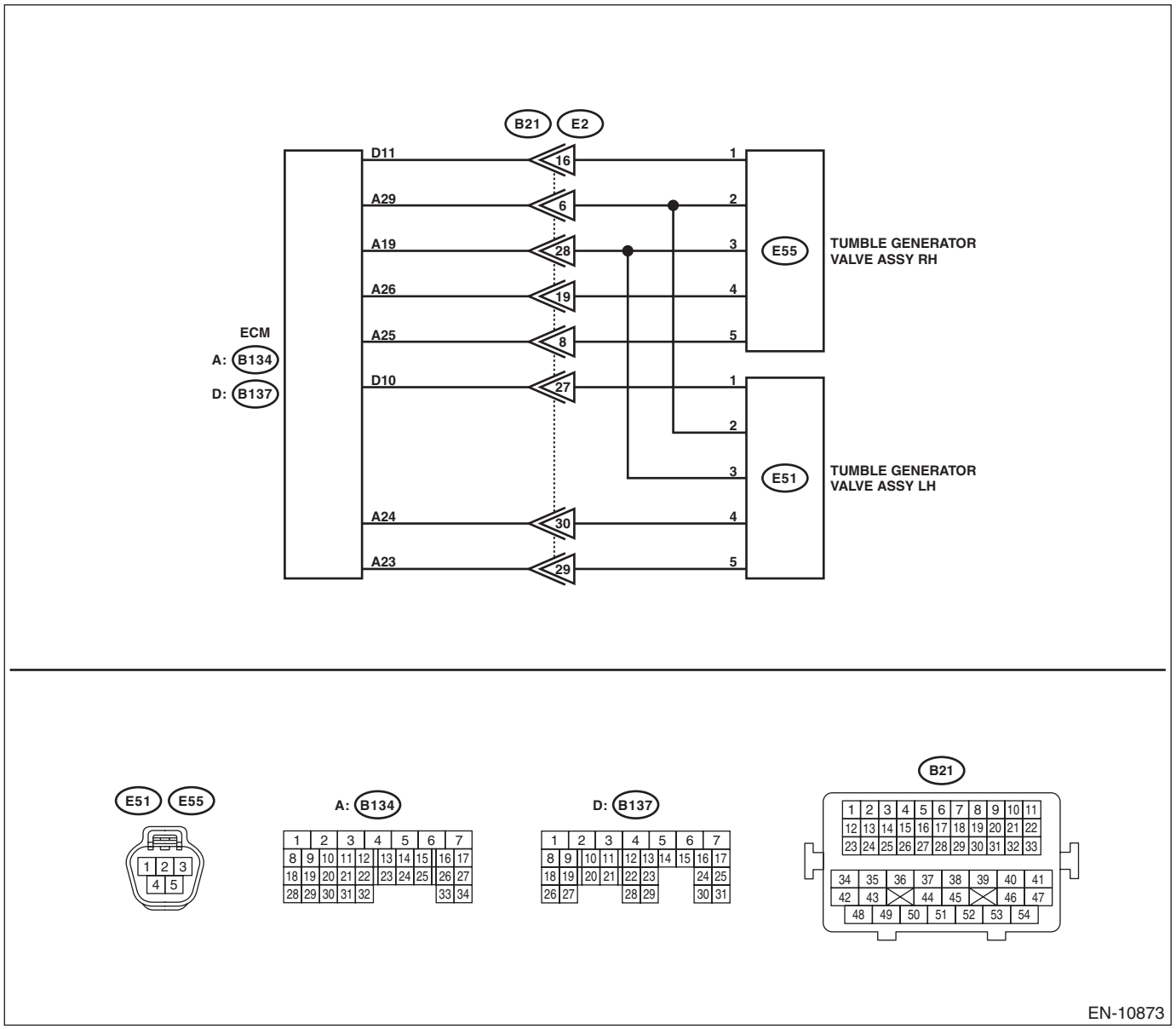

EN-10873

	Step	Check	Yes	No
1	**CHECK CURRENT DATA.** 1) Start the engine. 2) Read the value of «TGV Position Sensor L» using the Subaru Select Monitor. NOTE: For detailed operation procedures, refer to "Read Current Data For Engine". <Ref. to EN(STI)(diag)-36, Subaru Select Monitor.>	Is the value of «TGV Position Sensor L» 5 V or more?	Go to step **2**.	Even if DTC is detected, the circuit has returned to a normal condition at this time. Reproduce the failure, and then perform the diagnosis again. NOTE: In this case, temporary poor contact of connector, temporary open or short circuit of harness may be the cause.
2	**CHECK HARNESS BETWEEN ECM AND TUMBLE GENERATOR VALVE ASSEMBLY LH CONNECTOR.** 1) Turn the ignition switch to OFF. 2) Disconnect the connector from tumble generator valve assembly LH. 3) Start the engine. 4) Read the value of «TGV Position Sensor L» using the Subaru Select Monitor. NOTE: For detailed operation procedures, refer to "Read Current Data For Engine". <Ref. to EN(STI)(diag)-36, Subaru Select Monitor.>	Is the value of «TGV Position Sensor L» 5 V or more?	Repair the short circuit to power in harness between ECM connector and tumble generator valve assembly LH connector.	Go to step **3**.
3	**CHECK HARNESS BETWEEN ECM AND TUMBLE GENERATOR VALVE ASSEMBLY LH CONNECTOR.** 1) Turn the ignition switch to OFF. 2) Measure the resistance of harness between tumble generator valve assembly LH connector and engine ground. ***Connector & terminal*** ***(E51) No. 2 — Engine ground:***	Is the resistance less than 5 Ω?	Go to step **4**.	Repair the harness and connector. NOTE: In this case, repair the following item: • Open circuit in harness between ECM connector and tumble generator valve assembly LH connector • Poor contact of ECM connector • Poor contact of coupling connector
4	**CHECK FOR POOR CONTACT.** Check for poor contact of tumble generator valve assembly LH connector.	Is there poor contact of the tumble generator valve assembly LH connector?	Repair the poor contact of tumble generator valve assembly LH connector.	Replace the tumble generator valve assembly LH. <Ref. to FU(STI)-46, Tumble Generator Valve Assembly.>

1. OUTLINE OF DIAGNOSIS

Detect open or short circuit of tumble generator valve position sensor.
Judge as NG if out of specification.

2. COMPONENT DESCRIPTION

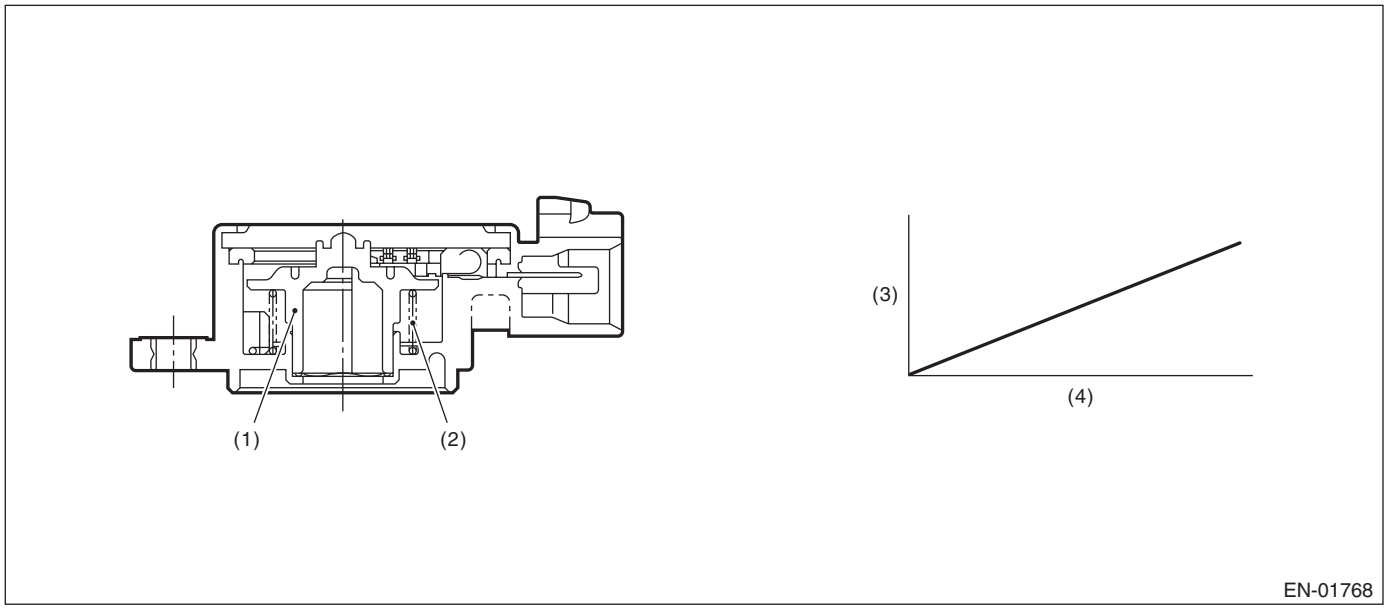

(1) Rotor
(2) Return spring
(3) Voltage (V)
(4) Tumble generator valve opening angle (°)

3. EXECUTION CONDITION

Secondary parameters	Execution condition
None	

4. GENERAL DRIVING CYCLE

Always perform the diagnosis continuously.

5. DIAGNOSTIC METHOD

If the duration of time while the following conditions are met is longer than the time indicated, judge as NG.

Judgment Value

Malfunction Criteria	Threshold Value
Output voltage	≥ 4.783 V

Time Needed for Diagnosis: 500 ms
Malfunction Indicator Light Illumination: Illuminates as soon as a malfunction occurs.

EL:DTC P2088 "A" CAMSHAFT POSITION ACTUATOR CONTROL CIRCUIT LOW BANK 1

DTC DETECTING CONDITION:
Immediately at fault recognition
TROUBLE SYMPTOM:
Improper idling

CAUTION:
After servicing or replacing faulty parts, perform Clear Memory Mode <Ref. to EN(STI)(diag)-68, OPERATION, Clear Memory Mode.>, and Inspection Mode <Ref. to EN(STI)(diag)-48, PROCEDURE, Inspection Mode.>.
WIRING DIAGRAM:
Engine Electrical System <Ref. to WI-154, WIRING DIAGRAM, Engine Electrical System.>

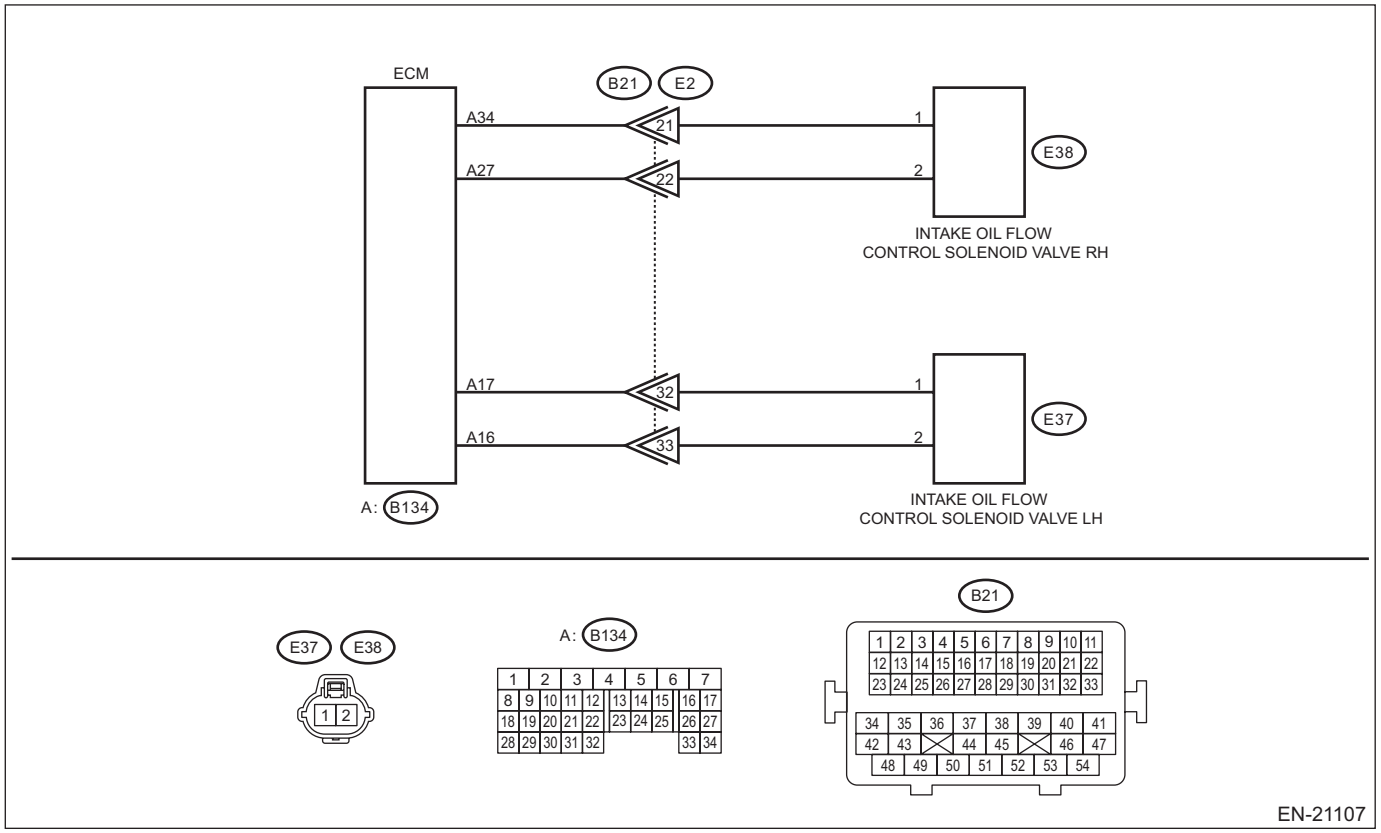

	Step	Check	Yes	No
1	**CHECK HARNESS BETWEEN ECM AND OIL FLOW CONTROL SOLENOID VALVE RH CONNECTOR.** 1) Turn the ignition switch to OFF. 2) Disconnect the connector from ECM. 3) Disconnect the connector from the oil flow control solenoid valve RH. 4) Measure the resistance of harness between ECM connector and oil flow control solenoid valve RH connector. ***Connector & terminal*** ***(B134) No. 34 — (E38) No. 1:*** ***(B134) No. 27 — (E38) No. 2:***	Is the resistance less than 1 Ω?	Go to step **2**.	Repair the harness and connector. NOTE: In this case, repair the following item: • Open circuit in harness between ECM connector and oil flow control solenoid valve RH connector • Poor contact of coupling connector

	Step	Check	Yes	No
2	**CHECK HARNESS BETWEEN ECM AND OIL FLOW CONTROL SOLENOID VALVE RH CONNECTOR.** Measure the resistance between ECM connector and chassis ground. ***Connector & terminal*** ***(B134) No. 34 — Chassis ground:*** ***(B134) No. 27 — Chassis ground:***	Is the resistance 1 MΩ or more?	Go to step **3**.	Repair the short circuit to ground in harness between ECM connector and oil flow control solenoid valve RH connector.
3	**CHECK OIL FLOW CONTROL SOLENOID VALVE.** Measure the resistance between oil flow control solenoid valve terminals. ***Terminals*** ***No. 1 — No. 2:***	Is the resistance 6 — 12 Ω?	Repair the poor contact of ECM and oil flow control solenoid valve RH connector.	Replace the oil flow control solenoid valve RH. <Ref. to ME(STI)-63, Camshaft.>

1. OUTLINE OF DIAGNOSIS

Detect open or short circuit of the oil flow control solenoid valve.
Judge as NG when the current is small even though the duty signal is large.

2. EXECUTION CONDITION

Secondary parameters	Execution condition
Battery voltage	≥ 10.9 V
Oil flow control solenoid valve control duty	≥ 99.61 %

3. GENERAL DRIVING CYCLE

Always perform the diagnosis continuously.

4. DIAGNOSTIC METHOD

If the duration of time while the following conditions are met is longer than the time indicated, judge as NG.

Judgment Value

Malfunction Criteria	Threshold Value
Oil control solenoid valve control present current	< 0.306 A

Time Needed for Diagnosis: 2000 ms
Malfunction Indicator Light Illumination: Illuminates as soon as a malfunction occurs.

EM:DTC P2089 "A" CAMSHAFT POSITION ACTUATOR CONTROL CIRCUIT HIGH BANK 1

DTC DETECTING CONDITION:
Immediately at fault recognition
TROUBLE SYMPTOM:
Improper idling

CAUTION:
After servicing or replacing faulty parts, perform Clear Memory Mode <Ref. to EN(STI)(diag)-68, OPERATION, Clear Memory Mode.>, and Inspection Mode <Ref. to EN(STI)(diag)-48, PROCEDURE, Inspection Mode.>.
WIRING DIAGRAM:
Engine Electrical System <Ref. to WI-154, WIRING DIAGRAM, Engine Electrical System.>

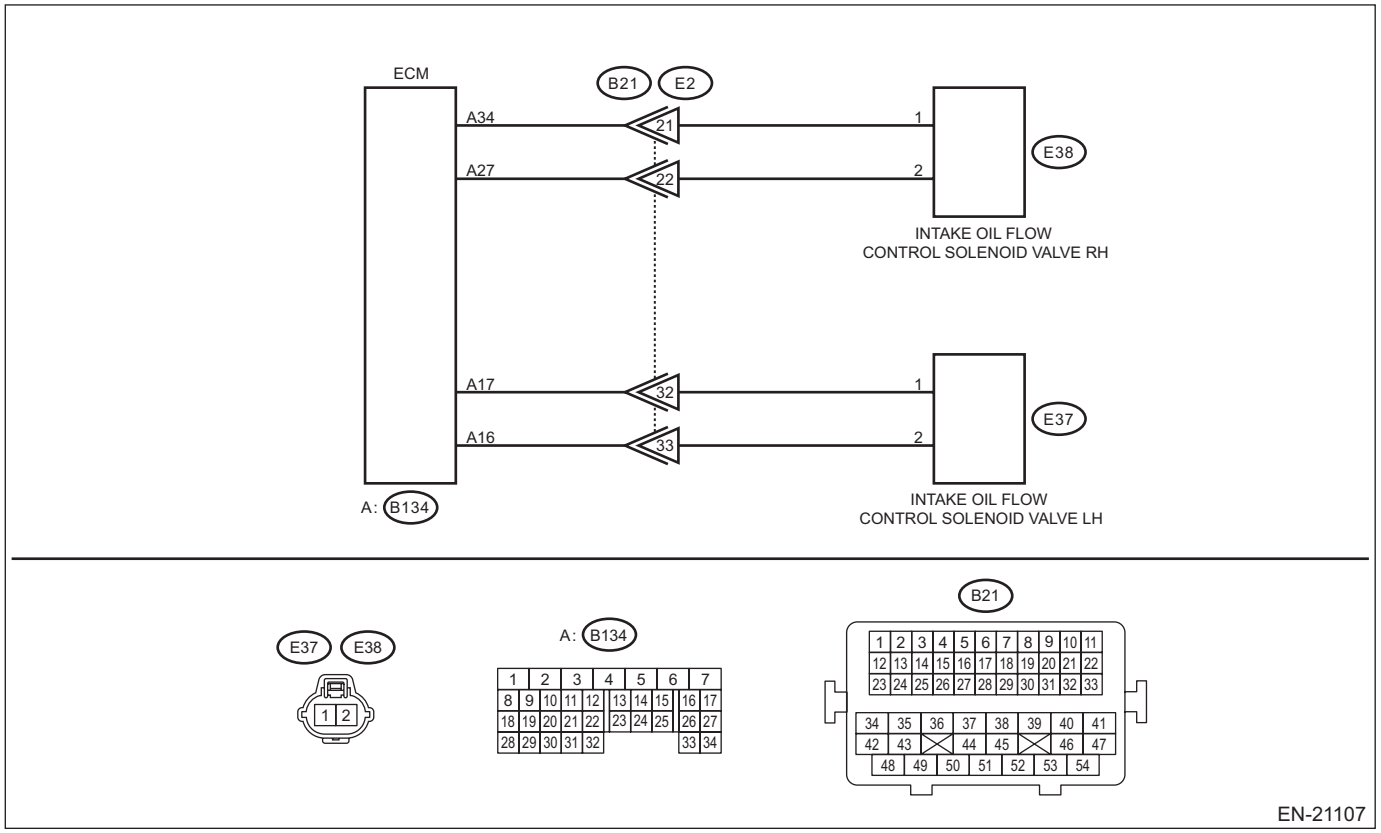

Step		Check	Yes	No
1	**CHECK HARNESS BETWEEN ECM AND OIL FLOW CONTROL SOLENOID VALVE RH CONNECTOR.** 1) Turn the ignition switch to OFF. 2) Disconnect the connector from ECM. 3) Disconnect the connector from the oil flow control solenoid valve RH. 4) Measure the voltage between ECM connector and chassis ground. ***Connector & terminal*** ***(B134) No. 34 (+) — Chassis ground (–):*** ***(B134) No. 27 (+) — Chassis ground (–):***	Is the voltage less than 1 V?	Go to step **2**.	Repair the short circuit to power in harness between ECM connector and oil flow control solenoid valve RH connector.

	Step	Check	Yes	No
2	**CHECK HARNESS BETWEEN ECM AND OIL FLOW CONTROL SOLENOID VALVE RH CONNECTOR.** Measure the resistance of harness between ECM connector and oil flow control solenoid valve RH connector. ***Connector & terminal*** ***(B134) No. 34 — (E38) No. 1:*** ***(B134) No. 27 — (E38) No. 2:***	Is the resistance less than 1 Ω?	Go to step **3**.	Repair the harness and connector. NOTE: In this case, repair the following item: • Open circuit in harness between ECM connector and oil flow control solenoid valve RH connector • Poor contact of coupling connector
3	**CHECK OIL FLOW CONTROL SOLENOID VALVE.** Measure the resistance between oil flow control solenoid valve terminals. ***Terminals*** ***No. 1 — No. 2:***	Is the resistance 6 — 12 Ω?	Repair the poor contact of ECM and oil flow control solenoid valve RH connector.	Replace the oil flow control solenoid valve RH. <Ref. to ME(STI)-63, Camshaft.>

1. OUTLINE OF DIAGNOSIS

Detect open or short circuit of oil flow control solenoid valve.
Judge as NG when the current is large even though the duty signal is small.

2. EXECUTION CONDITION

Secondary parameters	Execution condition
Battery voltage	≥ 10.9 V
Oil flow control solenoid valve control duty	< 0.39 %

3. GENERAL DRIVING CYCLE

Always perform the diagnosis continuously.

4. DIAGNOSTIC METHOD

If the duration of time while the following conditions are met is longer than the time indicated, judge as NG.

Judgment Value

Malfunction Criteria	Threshold Value
Oil control solenoid valve control present current	≥ 0.306 A

Time Needed for Diagnosis: 2000 ms
Malfunction Indicator Light Illumination: Illuminates as soon as a malfunction occurs.

EN:DTC P2090 "B" CAMSHAFT POSITION ACTUATOR CONTROL CIRCUIT LOW BANK 1

DTC DETECTING CONDITION:
Immediately at fault recognition
TROUBLE SYMPTOM:
Improper idling

CAUTION:
After servicing or replacing faulty parts, perform Clear Memory Mode <Ref. to EN(STI)(diag)-68, OPERATION, Clear Memory Mode.>, and Inspection Mode <Ref. to EN(STI)(diag)-48, PROCEDURE, Inspection Mode.>.
WIRING DIAGRAM:
Engine Electrical System <Ref. to WI-154, WIRING DIAGRAM, Engine Electrical System.>

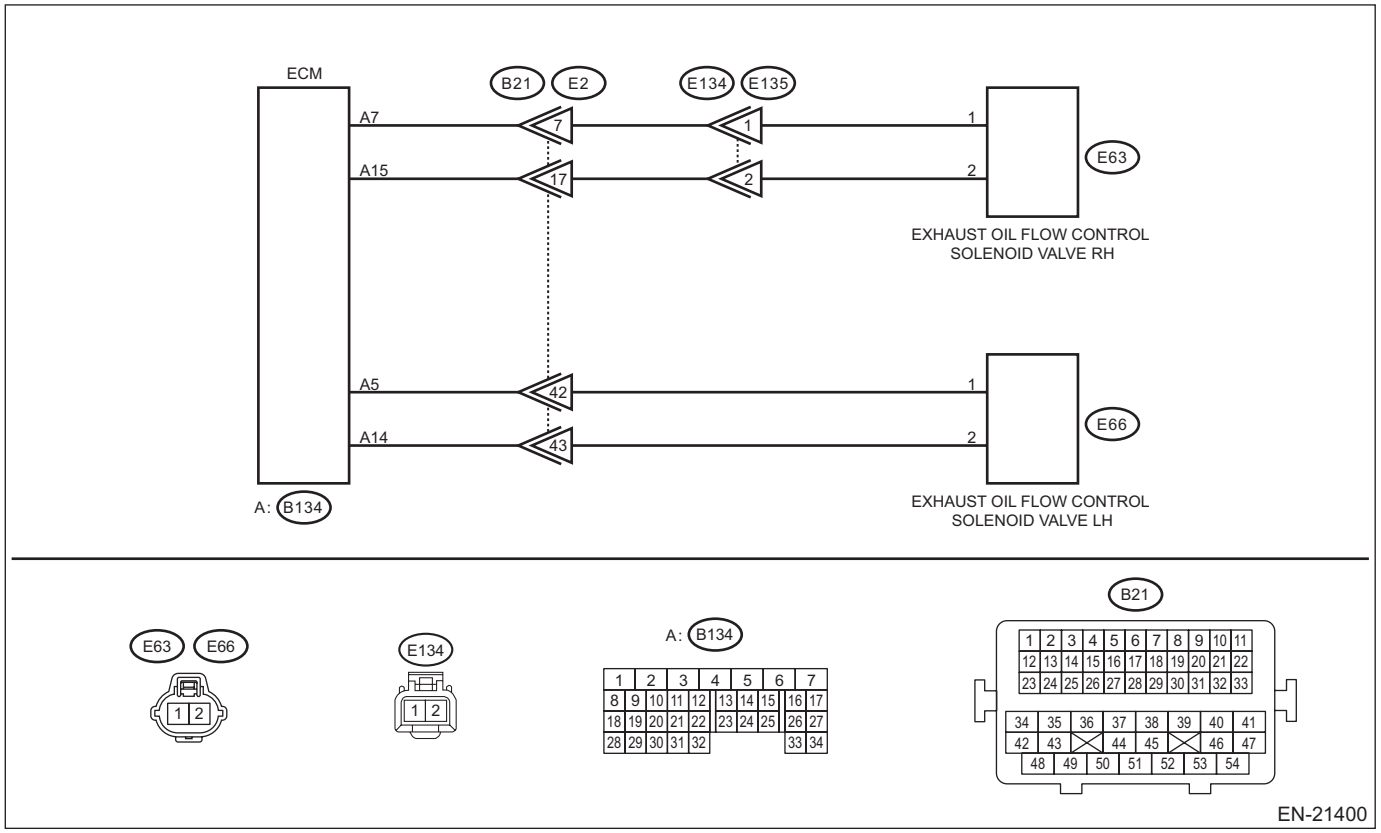

Step		Check	Yes	No
1	**CHECK HARNESS BETWEEN ECM AND OIL FLOW CONTROL SOLENOID VALVE RH CONNECTOR.** 1) Turn the ignition switch to OFF. 2) Disconnect the connector from ECM. 3) Disconnect the connector from the oil flow control solenoid valve RH. 4) Measure the resistance of harness between ECM connector and oil flow control solenoid valve RH connector. ***Connector & terminal*** ***(B134) No. 7 — (E63) No. 1:*** ***(B134) No. 15 — (E63) No. 2:***	Is the resistance less than 1 Ω?	Go to step **2**.	Repair the harness and connector. NOTE: In this case, repair the following item: • Open circuit in harness between ECM connector and oil flow control solenoid valve RH connector • Poor contact of coupling connector

	Step	Check	Yes	No
2	**CHECK HARNESS BETWEEN ECM AND OIL FLOW CONTROL SOLENOID VALVE RH CONNECTOR.** Measure the resistance between ECM connector and chassis ground. ***Connector & terminal*** ***(B134) No. 7 — Chassis ground:*** ***(B134) No. 15 — Chassis ground:***	Is the resistance 1 MΩ or more?	Go to step **3**.	Repair the short circuit to ground in harness between ECM connector and oil flow control solenoid valve RH connector.
3	**CHECK OIL FLOW CONTROL SOLENOID VALVE.** Measure the resistance between oil flow control solenoid valve terminals. ***Terminals*** ***No. 1 — No. 2:***	Is the resistance 6 — 12 Ω?	Repair the poor contact of ECM and oil flow control solenoid valve RH connector.	Replace the oil flow control solenoid valve RH. <Ref. to FU(STI)-48, Oil Flow Control Solenoid Valve.>

1. OUTLINE OF DIAGNOSIS

Detect open or short circuit of the oil flow control solenoid valve.
Judge as NG when the current is small even though the duty signal is large.

2. EXECUTION CONDITION

Secondary parameters	Execution condition
Battery voltage	≥ 10.9 V
Oil flow control solenoid valve control duty	≥ 99.61 %

3. GENERAL DRIVING CYCLE

Always perform the diagnosis continuously.

4. DIAGNOSTIC METHOD

If the duration of time while the following conditions are met is longer than the time indicated, judge as NG.

Judgment Value

Malfunction Criteria	Threshold Value
Oil control solenoid valve control present current	< 0.306 A

Time Needed for Diagnosis: 2000 ms
Malfunction Indicator Light Illumination: Illuminates as soon as a malfunction occurs.

EO:DTC P2091 "B" CAMSHAFT POSITION ACTUATOR CONTROL CIRCUIT HIGH BANK 1

DTC DETECTING CONDITION:
Immediately at fault recognition
TROUBLE SYMPTOM:
Improper idling

CAUTION:
After servicing or replacing faulty parts, perform Clear Memory Mode <Ref. to EN(STI)(diag)-68, OPERATION, Clear Memory Mode.>, and Inspection Mode <Ref. to EN(STI)(diag)-48, PROCEDURE, Inspection Mode.>.
WIRING DIAGRAM:
Engine Electrical System <Ref. to WI-154, WIRING DIAGRAM, Engine Electrical System.>

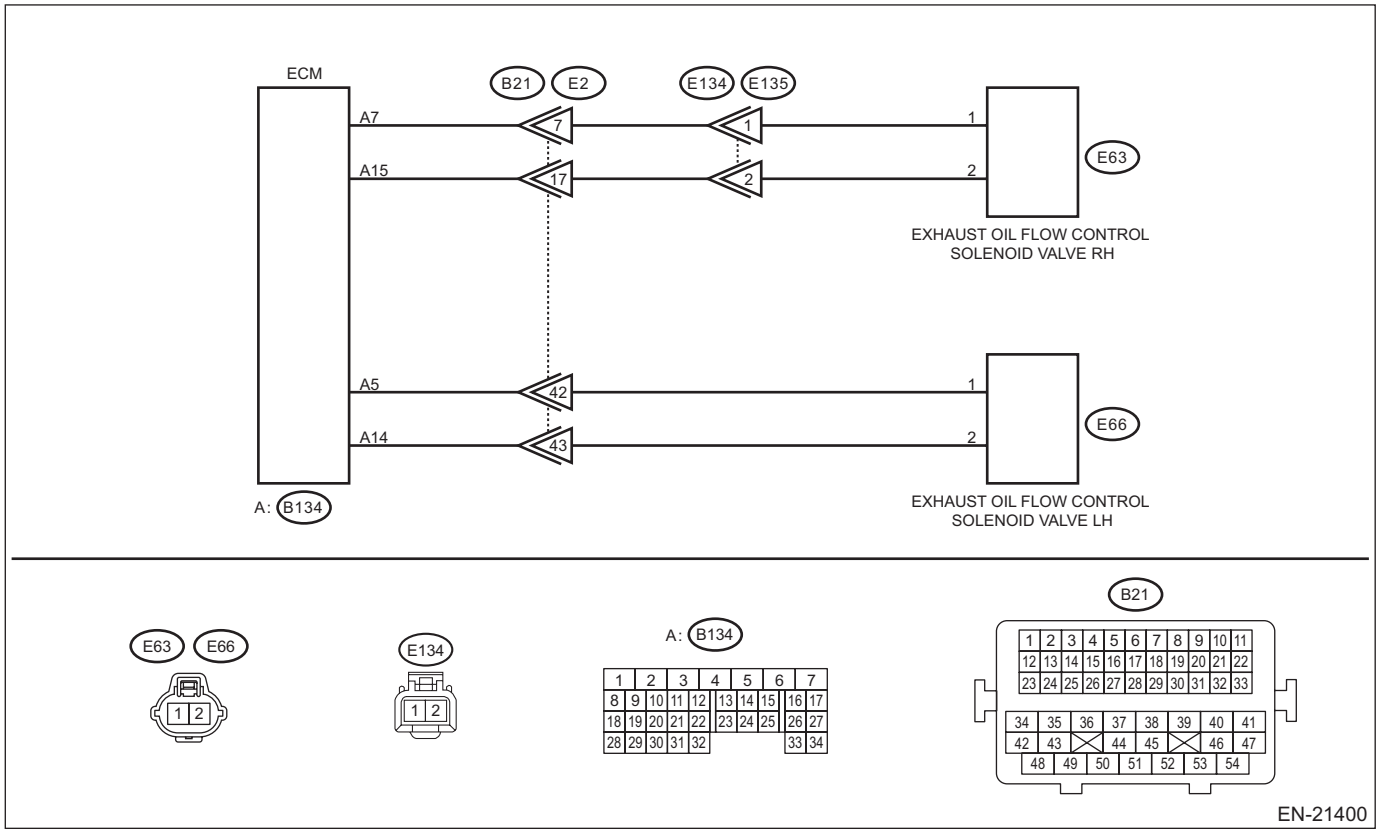

Step		Check	Yes	No
1	**CHECK HARNESS BETWEEN ECM AND OIL FLOW CONTROL SOLENOID VALVE RH CONNECTOR.** 1) Turn the ignition switch to OFF. 2) Disconnect the connector from ECM. 3) Disconnect the connector from the oil flow control solenoid valve RH. 4) Measure the voltage between ECM connector and chassis ground. ***Connector & terminal*** ***(B134) No. 7 (+) — Chassis ground (–):*** ***(B134) No. 15 (+) — Chassis ground (–):***	Is the voltage less than 1 V?	Go to step **2**.	Repair the short circuit to power in harness between ECM connector and oil flow control solenoid valve RH connector.

	Step	Check	Yes	No
2	**CHECK HARNESS BETWEEN ECM AND OIL FLOW CONTROL SOLENOID VALVE RH CONNECTOR.** Measure the resistance of harness between ECM connector and oil flow control solenoid valve RH connector. ***Connector & terminal*** ***(B134) No. 7 — (E63) No. 1:*** ***(B134) No. 15 — (E63) No. 2:***	Is the resistance less than 1 Ω?	Go to step **3**.	Repair the harness and connector. NOTE: In this case, repair the following item: • Open circuit in harness between ECM connector and oil flow control solenoid valve RH connector • Poor contact of coupling connector
3	**CHECK OIL FLOW CONTROL SOLENOID VALVE.** Measure the resistance between oil flow control solenoid valve terminals. ***Terminals*** ***No. 1 — No. 2:***	Is the resistance 6 — 12 Ω?	Repair the poor contact of ECM and oil flow control solenoid valve RH connector.	Replace the oil flow control solenoid valve RH. <Ref. to FU(STI)-48, Oil Flow Control Solenoid Valve.>

1. OUTLINE OF DIAGNOSIS

Detect open or short circuit of oil flow control solenoid valve.
Judge as NG when the current is large even though the duty signal is small.

2. EXECUTION CONDITION

Secondary parameters	Execution condition
Battery voltage	≥ 10.9 V
Oil flow control solenoid valve control duty	< 0.39 %

3. GENERAL DRIVING CYCLE

Always perform the diagnosis continuously.

4. DIAGNOSTIC METHOD

If the duration of time while the following conditions are met is longer than the time indicated, judge as NG.

Judgment Value

Malfunction Criteria	Threshold Value
Oil control solenoid valve control present current	≥ 0.306 A

Time Needed for Diagnosis: 2000 ms
Malfunction Indicator Light Illumination: Illuminates as soon as a malfunction occurs.

EP:DTC P2092 "A" CAMSHAFT POSITION ACTUATOR CONTROL CIRCUIT LOW BANK 2

DTC DETECTING CONDITION:
Immediately at fault recognition
TROUBLE SYMPTOM:
Improper idling

CAUTION:
After servicing or replacing faulty parts, perform Clear Memory Mode <Ref. to EN(STI)(diag)-68, OPERATION, Clear Memory Mode.>, and Inspection Mode <Ref. to EN(STI)(diag)-48, PROCEDURE, Inspection Mode.>.
WIRING DIAGRAM:
Engine Electrical System <Ref. to WI-154, WIRING DIAGRAM, Engine Electrical System.>

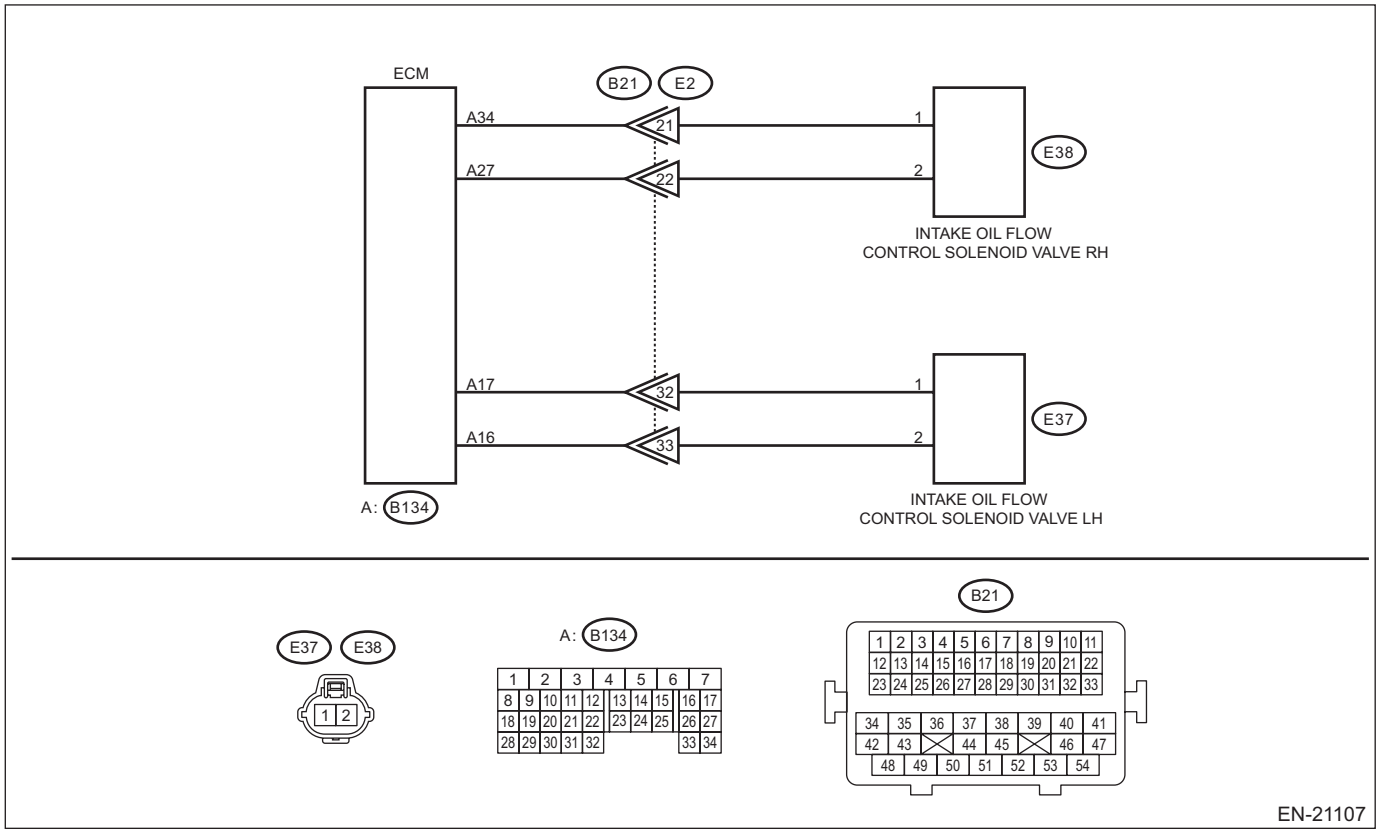

Step		Check	Yes	No
1	**CHECK HARNESS BETWEEN ECM AND OIL FLOW CONTROL SOLENOID VALVE LH CONNECTOR.** 1) Turn the ignition switch to OFF. 2) Disconnect the connector from ECM. 3) Disconnect the connector from the oil flow control solenoid valve LH. 4) Measure the resistance of harness between ECM connector and oil flow control solenoid valve LH connector. ***Connector & terminal*** ***(B134) No. 17 — (E37) No. 1:*** ***(B134) No. 16 — (E37) No. 2:***	Is the resistance less than 1 Ω?	Go to step **2**.	Repair the harness and connector. NOTE: In this case, repair the following item: • Open circuit in harness between ECM connector and oil flow control solenoid valve LH connector • Poor contact of coupling connector

	Step	Check	Yes	No
2	**CHECK HARNESS BETWEEN ECM AND OIL FLOW CONTROL SOLENOID VALVE LH CONNECTOR.** Measure the resistance between ECM connector and chassis ground. ***Connector & terminal*** ***(B134) No. 17 — Chassis ground:*** ***(B134) No. 16 — Chassis ground:***	Is the resistance 1 MΩ or more?	Go to step **3**.	Repair the short circuit to ground in harness between ECM connector and oil flow control solenoid valve LH connector.
3	**CHECK OIL FLOW CONTROL SOLENOID VALVE.** Measure the resistance between oil flow control solenoid valve terminals. ***Terminals*** ***No. 1 — No. 2:***	Is the resistance 6 — 12 Ω?	Repair the poor contact of ECM and oil flow control solenoid valve LH connector.	Replace the oil flow control solenoid valve LH. <Ref. to ME(STI)-63, Camshaft.>

1. OUTLINE OF DIAGNOSIS

NOTE:
For the detection standard, refer to DTC P2088. <Ref. to EN(STI)(diag)-472, DTC P2088 "A" CAMSHAFT POSITION ACTUATOR CONTROL CIRCUIT LOW BANK 1, Diagnostic Procedure with Diagnostic Trouble Code (DTC).>

EQ:DTC P2093 "A" CAMSHAFT POSITION ACTUATOR CONTROL CIRCUIT HIGH BANK 2

DTC DETECTING CONDITION:
Immediately at fault recognition
TROUBLE SYMPTOM:
Improper idling

CAUTION:
After servicing or replacing faulty parts, perform Clear Memory Mode <Ref. to EN(STI)(diag)-68, OPERATION, Clear Memory Mode.>, and Inspection Mode <Ref. to EN(STI)(diag)-48, PROCEDURE, Inspection Mode.>.
WIRING DIAGRAM:
Engine Electrical System <Ref. to WI-154, WIRING DIAGRAM, Engine Electrical System.>

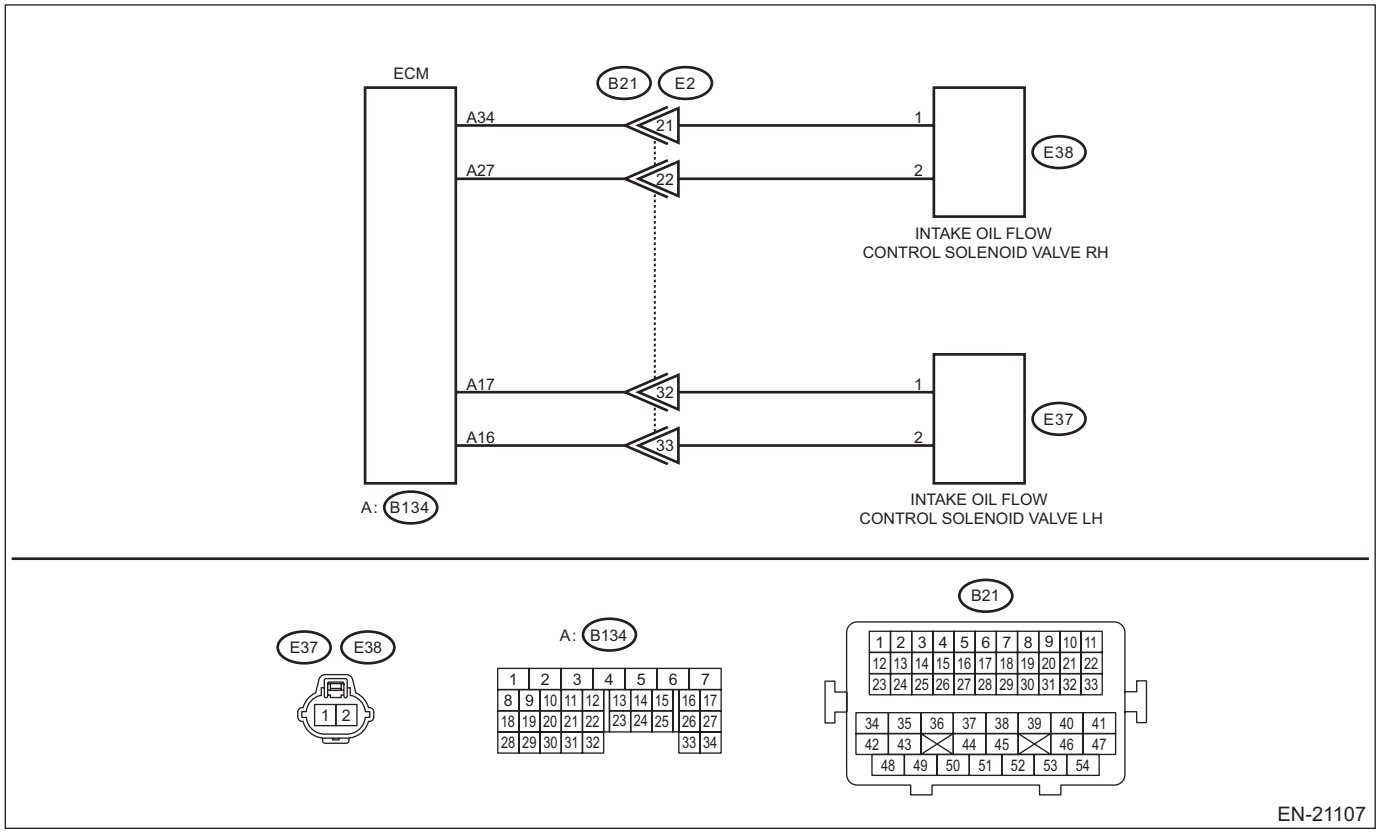

Step		Check	Yes	No
1	**CHECK HARNESS BETWEEN ECM AND OIL FLOW CONTROL SOLENOID VALVE LH CONNECTOR.** 1) Turn the ignition switch to OFF. 2) Disconnect the ECM connector. 3) Disconnect the connector from the oil flow control solenoid valve LH. 4) Measure the voltage between ECM connector and chassis ground. ***Connector & terminal*** ***(B134) No. 17 (+) — Chassis ground (–):*** ***(B134) No. 16 (+) — Chassis ground (–):***	Is the voltage less than 1 V?	Go to step **2**.	Repair the short circuit to power in harness between ECM connector and oil flow control solenoid valve LH connector.

	Step	Check	Yes	No
2	**CHECK HARNESS BETWEEN ECM AND OIL FLOW CONTROL SOLENOID VALVE LH CONNECTOR.** Measure the resistance of harness between ECM connector and oil flow control solenoid valve LH connector. ***Connector & terminal*** ***(B134) No. 17 — (E37) No. 1:*** ***(B134) No. 16 — (E37) No. 2:***	Is the resistance less than 1 Ω?	Go to step **3**.	Repair the harness and connector. NOTE: In this case, repair the following item: • Open circuit in harness between ECM connector and oil flow control solenoid valve LH connector • Poor contact of coupling connector
3	**CHECK OIL FLOW CONTROL SOLENOID VALVE.** Measure the resistance between oil flow control solenoid valve terminals. ***Terminals*** ***No. 1 — No. 2:***	Is the resistance 6 — 12 Ω?	Repair the poor contact of ECM and oil flow control solenoid valve LH connector.	Replace the oil flow control solenoid valve LH. <Ref. to ME(STI)-63, Camshaft.>

1. OUTLINE OF DIAGNOSIS

NOTE:
For the detection standard, refer to DTC P2089. <Ref. to EN(STI)(diag)-474, DTC P2089 "A" CAMSHAFT POSITION ACTUATOR CONTROL CIRCUIT HIGH BANK 1, Diagnostic Procedure with Diagnostic Trouble Code (DTC).>

ER:DTC P2094 "B" CAMSHAFT POSITION ACTUATOR CONTROL CIRCUIT LOW BANK 2

DTC DETECTING CONDITION:
Immediately at fault recognition
TROUBLE SYMPTOM:
Improper idling

CAUTION:
After servicing or replacing faulty parts, perform Clear Memory Mode <Ref. to EN(STI)(diag)-68, OPERATION, Clear Memory Mode.>, and Inspection Mode <Ref. to EN(STI)(diag)-48, PROCEDURE, Inspection Mode.>.
WIRING DIAGRAM:
Engine Electrical System <Ref. to WI-154, WIRING DIAGRAM, Engine Electrical System.>

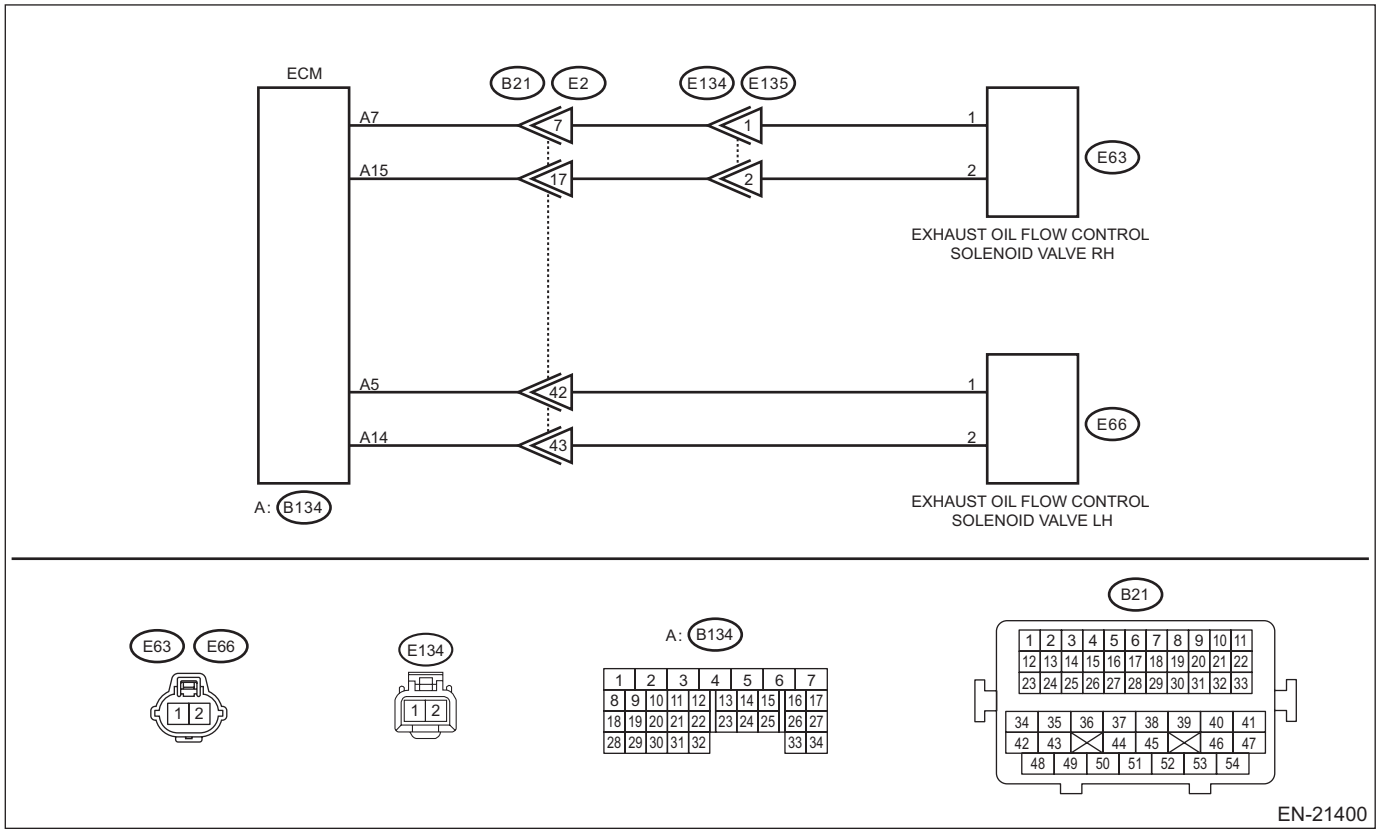

Step		Check	Yes	No
1	**CHECK HARNESS BETWEEN ECM AND OIL FLOW CONTROL SOLENOID VALVE LH CONNECTOR.** 1) Turn the ignition switch to OFF. 2) Disconnect the connector from ECM. 3) Disconnect the connector from the oil flow control solenoid valve LH. 4) Measure the resistance of harness between ECM connector and oil flow control solenoid valve LH connector. ***Connector & terminal*** ***(B134) No. 5 — (E66) No. 1:*** ***(B134) No. 14 — (E66) No. 2:***	Is the resistance less than 1 Ω?	Go to step **2**.	Repair the harness and connector. NOTE: In this case, repair the following item: • Open circuit in harness between ECM connector and oil flow control solenoid valve LH connector • Poor contact of coupling connector

	Step	Check	Yes	No
2	**CHECK HARNESS BETWEEN ECM AND OIL FLOW CONTROL SOLENOID VALVE LH CONNECTOR.** Measure the resistance between ECM connector and chassis ground. ***Connector & terminal*** ***(B134) No. 5 — Chassis ground:*** ***(B134) No. 14 — Chassis ground:***	Is the resistance 1 MΩ or more?	Go to step **3**.	Repair the short circuit to ground in harness between ECM connector and oil flow control solenoid valve LH connector.
3	**CHECK OIL FLOW CONTROL SOLENOID VALVE.** Measure the resistance between oil flow control solenoid valve terminals. ***Terminals*** ***No. 1 — No. 2:***	Is the resistance 6 — 12 Ω?	Repair the poor contact of ECM and oil flow control solenoid valve LH connector.	Replace the oil flow control solenoid valve LH. <Ref. to FU(STI)-48, Oil Flow Control Solenoid Valve.>

1. OUTLINE OF DIAGNOSIS

NOTE:
For the detection standard, refer to DTC P2090. <Ref. to EN(STI)(diag)-476, DTC P2090 "B" CAMSHAFT POSITION ACTUATOR CONTROL CIRCUIT LOW BANK 1, Diagnostic Procedure with Diagnostic Trouble Code (DTC).>

ES:DTC P2095 "B" CAMSHAFT POSITION ACTUATOR CONTROL CIRCUIT HIGH BANK 2

DTC DETECTING CONDITION:
Immediately at fault recognition
TROUBLE SYMPTOM:
Improper idling

CAUTION:
After servicing or replacing faulty parts, perform Clear Memory Mode <Ref. to EN(STI)(diag)-68, OPERATION, Clear Memory Mode.>, and Inspection Mode <Ref. to EN(STI)(diag)-48, PROCEDURE, Inspection Mode.>.
WIRING DIAGRAM:
Engine Electrical System <Ref. to WI-154, WIRING DIAGRAM, Engine Electrical System.>

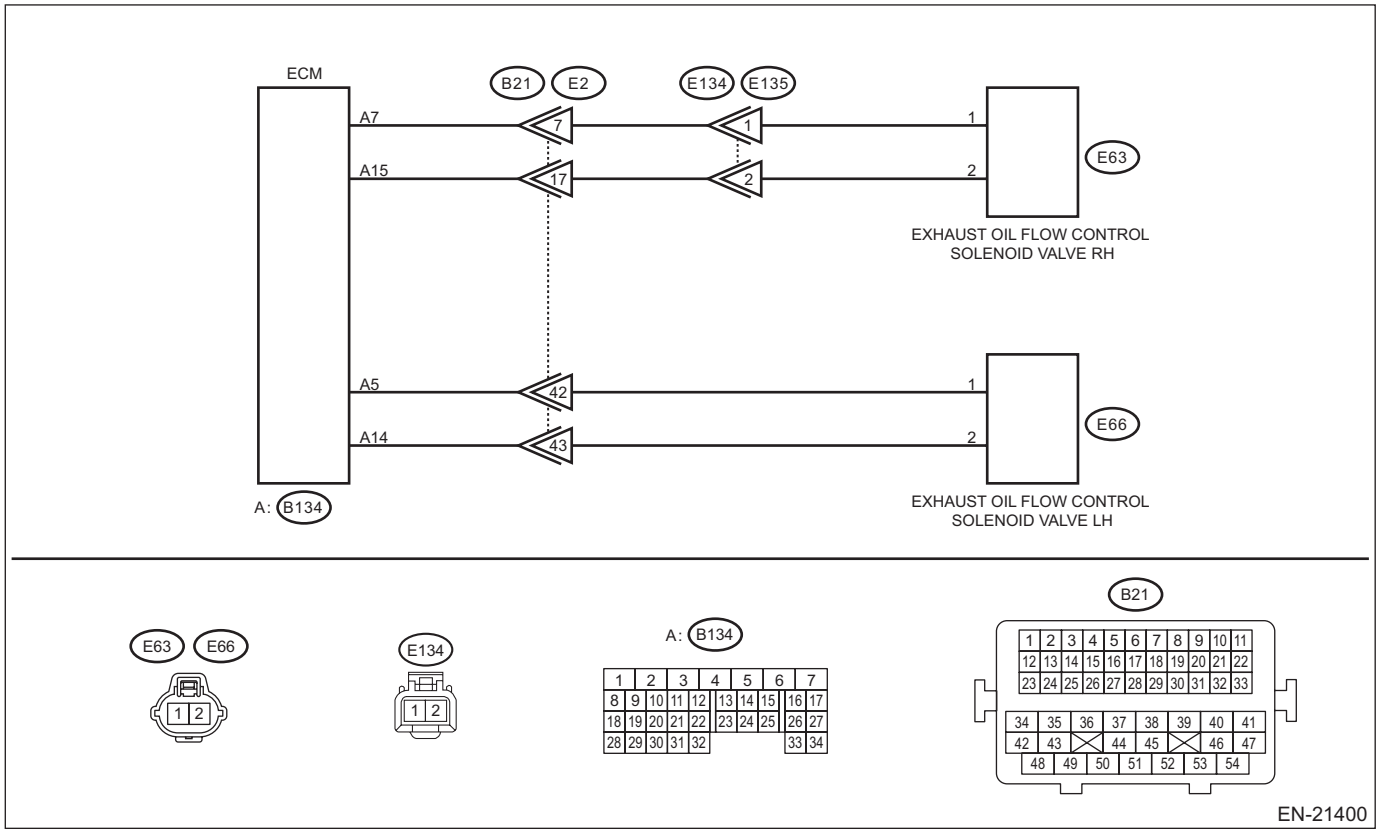

	Step	Check	Yes	No
1	**CHECK HARNESS BETWEEN ECM AND OIL FLOW CONTROL SOLENOID VALVE LH CONNECTOR.** 1) Turn the ignition switch to OFF. 2) Disconnect the connector from ECM. 3) Disconnect the connector from the oil flow control solenoid valve LH. 4) Measure the voltage between ECM connector and chassis ground. ***Connector & terminal*** ***(B134) No. 5 (+) — Chassis ground (–):*** ***(B134) No. 14 (+) — Chassis ground (–):***	Is the voltage less than 1 V?	Go to step **2**.	Repair the short circuit to power in harness between ECM connector and oil flow control solenoid valve LH connector.

	Step	Check	Yes	No
2	**CHECK HARNESS BETWEEN ECM AND OIL FLOW CONTROL SOLENOID VALVE LH CONNECTOR.** Measure the resistance of harness between ECM connector and oil flow control solenoid valve LH connector. ***Connector & terminal*** ***(B134) No. 5 — (E66) No. 1:*** ***(B134) No. 14 — (E66) No. 2:***	Is the resistance less than 1 Ω?	Go to step **3**.	Repair the harness and connector. NOTE: In this case, repair the following item: • Open circuit in harness between ECM connector and oil flow control solenoid valve LH connector • Poor contact of coupling connector
3	**CHECK OIL FLOW CONTROL SOLENOID VALVE.** Measure the resistance between oil flow control solenoid valve terminals. ***Terminals*** ***No. 1 — No. 2:***	Is the resistance 6 — 12 Ω?	Repair the poor contact of ECM and oil flow control solenoid valve LH connector.	Replace the oil flow control solenoid valve LH. <Ref. to FU(STI)-48, Oil Flow Control Solenoid Valve.>

1. OUTLINE OF DIAGNOSIS

NOTE:
For the detection standard, refer to DTC P2091. <Ref. to EN(STI)(diag)-478, DTC P2091 "B" CAMSHAFT POSITION ACTUATOR CONTROL CIRCUIT HIGH BANK 1, Diagnostic Procedure with Diagnostic Trouble Code (DTC).>

ET:DTC P2096 POST CATALYST FUEL TRIM SYSTEM TOO LEAN BANK 1

DTC DETECTING CONDITION:
Detected when two consecutive driving cycles with fault occur.

CAUTION:
After servicing or replacing faulty parts, perform Clear Memory Mode <Ref. to EN(STI)(diag)-68, OPERATION, Clear Memory Mode.>, and Inspection Mode <Ref. to EN(STI)(diag)-48, PROCEDURE, Inspection Mode.>.

WIRING DIAGRAM:

Engine Electrical System <Ref. to WI-154, WIRING DIAGRAM, Engine Electrical System.>

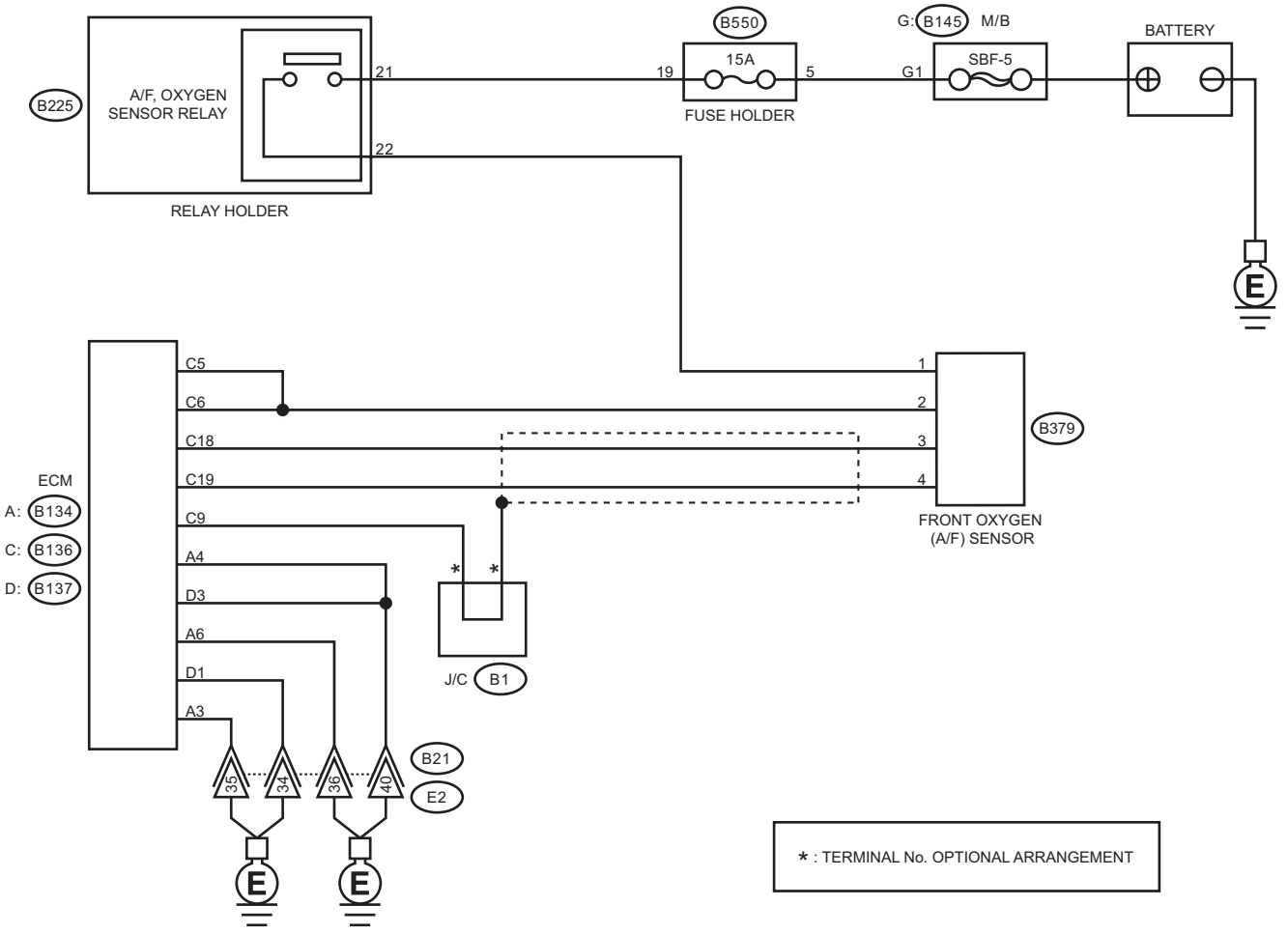

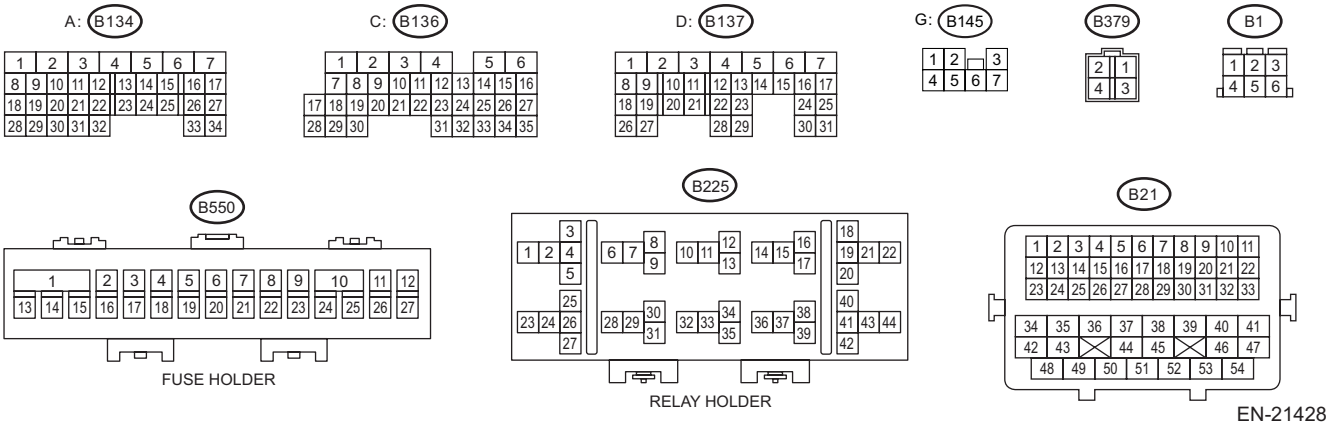

EN-21428

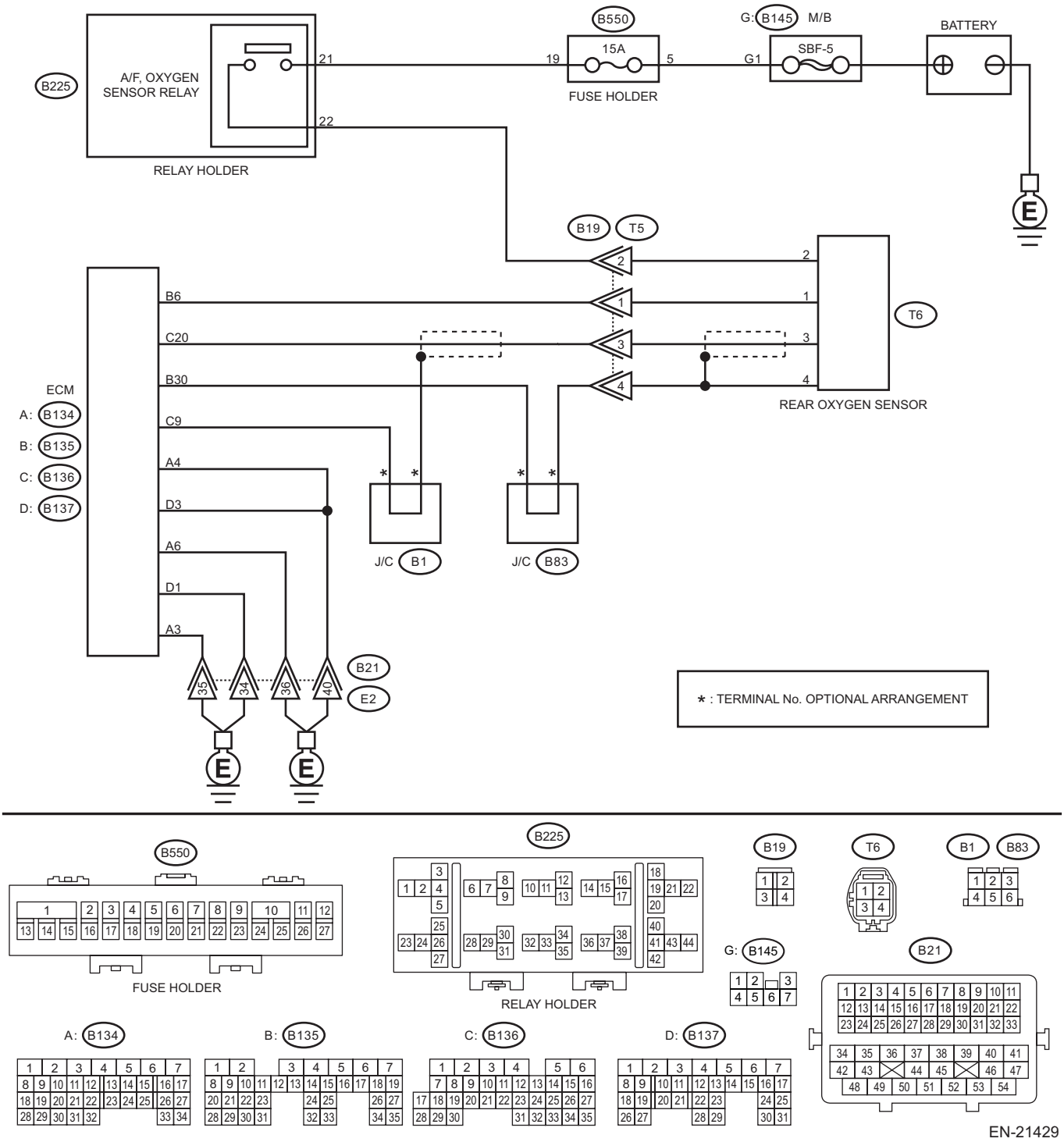

Step	Check	Yes	No
1 CHECK FOR ANY OTHER DTC ON DISPLAY.	Is any other DTC displayed?	Check DTC using “List of Diagnostic Trouble Code (DTC)”. <Ref. to EN(STI)(diag)-96, List of Diagnostic Trouble Code (DTC).>	Go to step **2**.

	Step	Check	Yes	No
2	**CHECK FRONT OXYGEN (A/F) SENSOR CONNECTOR AND COUPLING CONNECTOR.**	Has water entered the connector?	Completely remove any water inside.	Go to step **3**.
3	**CHECK HARNESS BETWEEN ECM AND FRONT OXYGEN (A/F) SENSOR CONNECTOR.** 1) Turn the ignition switch to OFF. 2) Disconnect the connector from ECM. 3) Disconnect the connectors from front oxygen (A/F) sensor. 4) Measure the resistance of harness between ECM connector and front oxygen (A/F) sensor connector. ***Connector & terminal*** ***(B136) No. 18 — (B379) No. 3:*** ***(B136) No. 19 — (B379) No. 4:***	Is the resistance less than 1 Ω?	Go to step **4**.	Repair the harness and connector. NOTE: In this case, repair the following item: • Open circuit in harness between ECM connector and front oxygen (A/F) sensor connector • Poor contact of front oxygen (A/F) sensor connector • Poor contact of ECM connector • Poor contact of coupling connector
4	**CHECK HARNESS BETWEEN ECM AND FRONT OXYGEN (A/F) SENSOR CONNECTOR.** Measure the resistance between ECM connector and chassis ground. ***Connector & terminal*** ***(B136) No. 18 — Chassis ground:*** ***(B136) No. 19 — Chassis ground:***	Is the resistance 1 MΩ or more?	Go to step **5**.	Repair the short circuit to ground in harness between ECM connector and front oxygen (A/F) sensor connector.
5	**CHECK OUTPUT SIGNAL FOR ECM.** 1) Connect the connector to ECM. 2) Turn the ignition switch to ON. 3) Measure the voltage between front oxygen (A/F) sensor connector and chassis ground. ***Connector & terminal*** ***(B379) No. 4 (+) — Chassis ground (–):***	Is the voltage 4.5 V or more?	Go to step **7**.	Go to step **6**.
6	**CHECK OUTPUT SIGNAL FOR ECM.** Measure the voltage between front oxygen (A/F) sensor connector and chassis ground. ***Connector & terminal*** ***(B379) No. 3 (+) — Chassis ground (–):***	Is the voltage 4.95 V or more?	Go to step **7**.	Go to step **8**.
7	**CHECK OUTPUT SIGNAL FOR ECM.** Measure the voltage between front oxygen (A/F) sensor connector and chassis ground. ***Connector & terminal*** ***(B379) No. 3 (+) — Chassis ground (–):*** ***(B379) No. 4 (+) — Chassis ground (–):***	Is the voltage 8 V or more?	Repair the short circuit to power in the harness between ECM connector and front oxygen (A/F) sensor connector. After repair, replace the ECM. <Ref. to FU(STI)-56, Engine Control Module (ECM).>	Repair the poor contact of ECM connector.
8	**CHECK EXHAUST SYSTEM.**	Are there holes or loose bolts on exhaust system?	Repair the exhaust system.	Go to step **9**.
9	**CHECK AIR INTAKE SYSTEM.**	Are there holes, loose bolts or disconnection of hose on air intake system?	Repair the air intake system.	Go to step **10**.

	Step	Check	Yes	No
10	**CHECK FUEL PRESSURE.** **WARNING:** **Place "NO OPEN FLAMES" signs near the working area.** **CAUTION:** **Be careful not to spill fuel.** 1) Connect the front oxygen (A/F) sensor connector. 2) Measure the fuel pressure while disconnecting pressure regulator vacuum hose from intake manifold. <Ref. to ME(STI)-25, INSPECTION, Fuel Pressure.> **CAUTION:** **Release fuel pressure before removing the fuel pressure gauge.** NOTE: If fuel pressure does not increase, squeeze the fuel return hose 2 to 3 times, then measure fuel pressure again.	Is the measured value 284 — 314 kPa (2.9 — 3.2 kgf/cm^2, 41 — 46 psi)?	Go to step **11**.	Check the fuel pump and fuel delivery line. <Ref. to FU(STI)-87, INSPECTION, Fuel Pump.> <Ref. to FU(STI)-104, INSPECTION, Fuel Delivery, Return and Evaporation Lines.>
11	**CHECK FUEL PRESSURE.** After connecting the pressure regulator vacuum hose, measure fuel pressure. <Ref. to ME(STI)-25, INSPECTION, Fuel Pressure.> **CAUTION:** **Release fuel pressure before removing the fuel pressure gauge.** NOTE: • If fuel pressure does not increase, squeeze fuel return hose 2 to 3 times, then measure fuel pressure again. • If the measured value at this step is out of specification, check or replace pressure regulator and pressure regulator vacuum hose.	Is the measured value 230 — 260 kPa (2.4 — 2.7 kgf/cm^2, 33 — 38 psi)?	Go to step **12**.	Check the fuel pump and fuel delivery line. <Ref. to FU(STI)-87, INSPECTION, Fuel Pump.> <Ref. to FU(STI)-104, INSPECTION, Fuel Delivery, Return and Evaporation Lines.>
12	**CHECK ENGINE COOLANT TEMPERATURE SENSOR.** 1) Start the engine and warm up completely. 2) Read the value of «Coolant Temp.» using the Subaru Select Monitor or a general scan tool. NOTE: • Subaru Select Monitor For detailed operation procedures, refer to "Read Current Data For Engine". <Ref. to EN(STI)(diag)-36, Subaru Select Monitor.> • General scan tool For detailed operation procedures, refer to the general scan tool operation manual.	Is the value of «Coolant Temp.» 75°C (167°F) or more?	Go to step **13**.	Replace the engine coolant temperature sensor. <Ref. to FU(STI)-33, Engine Coolant Temperature Sensor.>

	Step	Check	Yes	No
13	**CHECK MASS AIR FLOW AND INTAKE AIR TEMPERATURE SENSOR.** 1) Start the engine and warm up engine until coolant temperature is higher than 75°C (167°F). 2) Place the shift lever in neutral position. 3) Turn the A/C switch to OFF. 4) Turn all the accessory switches to OFF. 5) Read the value of «Mass Air Flow» using the Subaru Select Monitor or a general scan tool. NOTE: • Subaru Select Monitor For detailed operation procedures, refer to "Read Current Data For Engine". <Ref. to EN(STI)(diag)-36, Subaru Select Monitor.> • General scan tool For detailed operation procedures, refer to the general scan tool operation manual.	Is the value of «Mass Air Flow» 2.0 — 5.0 g/s (0.26 — 0.66 lb/m)?	Go to step **14**.	Replace the mass air flow and intake air temperature sensor. <Ref. to FU(STI)-40, Mass Air Flow and Intake Air Temperature Sensor.>
14	**CHECK MASS AIR FLOW AND INTAKE AIR TEMPERATURE SENSOR.** 1) Start the engine and warm up engine until coolant temperature is higher than 75°C (167°F). 2) Place the shift lever in neutral position. 3) Turn the A/C switch to OFF. 4) Turn all the accessory switches to OFF. 5) Open the front hood. 6) Measure the ambient temperature. 7) Read the value of «Intake Air Temp.» using the Subaru Select Monitor or a general scan tool. NOTE: • Subaru Select Monitor For detailed operation procedures, refer to "Read Current Data For Engine". <Ref. to EN(STI)(diag)-36, Subaru Select Monitor.> • General scan tool For detailed operation procedures, refer to the general scan tool operation manual.	Subtract ambient temperature from «Intake Air Temp.». Is the obtained value –10 — 50°C (–18 — 90°F)?	Go to step **15**.	Check the mass air flow and intake air temperature sensor. <Ref. to FU(STI)-40, Mass Air Flow and Intake Air Temperature Sensor.>
15	**CHECK REAR OXYGEN SENSOR DATA.** 1) Warm up the engine until engine coolant temperature is higher than 75°C (167°F), and keep the engine speed at 3,000 rpm. (2 minutes maximum) 2) Read the value of «Rear O2 Sensor Voltage» using the Subaru Select Monitor or a general scan tool. NOTE: • Depress the clutch pedal. • Subaru Select Monitor For detailed operation procedures, refer to "Read Current Data For Engine". <Ref. to EN(STI)(diag)-36, Subaru Select Monitor.> • General scan tool For detailed operation procedures, refer to the general scan tool operation manual.	Is the value of «Rear O2 Sensor Voltage» 0.490 V or more?	Go to step **16**.	Go to step **17**.

	Step	Check	Yes	No
16	**CHECK REAR OXYGEN SENSOR DATA.** 1) Warm up the engine until engine coolant temperature is higher than 75°C (167°F), and rapidly reduce the engine speed from 3,000 rpm. 2) Read the value of «Rear O2 Sensor Voltage» using the Subaru Select Monitor or a general scan tool. NOTE: • Depress the clutch pedal. • Subaru Select Monitor For detailed operation procedures, refer to "Read Current Data For Engine". <Ref. to EN(STI)(diag)-36, Subaru Select Monitor.> • General scan tool For detailed operation procedures, refer to the general scan tool operation manual.	Is the value of «Rear O2 Sensor Voltage» 0.250 V or less?	Go to step **18**.	Go to step **17**.
17	**CHECK REAR OXYGEN SENSOR CONNECTOR AND COUPLING CONNECTOR.**	Has water entered the connector?	Completely remove any water inside.	Go to step **19**.
18	**CHECK FRONT OXYGEN (A/F) SENSOR USING REAR OXYGEN SENSOR SIGNAL.** 1) Warm up the engine until engine coolant temperature is higher than 75°C (167°F), then keep the engine idling for 5 minutes or more. 2) Read the value of «Rear O2 Sensor Voltage» using the Subaru Select Monitor or a general scan tool. NOTE: • Subaru Select Monitor For detailed operation procedures, refer to "Read Current Data For Engine". <Ref. to EN(STI)(diag)-36, Subaru Select Monitor.> • General scan tool For detailed operation procedures, refer to the general scan tool operation manual.	Is the value in «Rear O2 Sensor Voltage» kept at 0.250 V or less for 5 minutes or more?	Replace the front oxygen (A/F) sensor. <Ref. to FU(STI)-52, Front Oxygen (A/F) Sensor.>	Go to step **19**.
19	**CHECK HARNESS BETWEEN ECM AND REAR OXYGEN SENSOR CONNECTOR.** 1) Turn the ignition switch to OFF. 2) Disconnect the connector from ECM. 3) Disconnect the connector from rear oxygen sensor. 4) Measure the resistance of harness between ECM connector and rear oxygen sensor connector. ***Connector & terminal*** ***(B136) No. 20 — (T6) No. 3:*** ***(B135) No. 30 — (T6) No. 4:***	Is the resistance less than 1 Ω?	Go to step **20**.	Repair the harness and connector. NOTE: In this case, repair the following item: • Open circuit in harness between ECM connector and rear oxygen sensor connector • Poor contact of coupling connector

Step		Check	Yes	No
20	**CHECK HARNESS BETWEEN ECM AND REAR OXYGEN SENSOR CONNECTOR.** 1) Connect the connector to ECM. 2) Turn the ignition switch to ON. 3) Measure the voltage between rear oxygen sensor connector and chassis ground. ***Connector & terminal*** ***(T6) No. 3 (+) — Chassis ground (–):***	Is the voltage 0.2 — 0.5 V?	Replace the rear oxygen sensor. <Ref. to FU(STI)-54, Rear Oxygen Sensor.>	Repair the harness and connector. NOTE: In this case, repair the following item: • Open circuit in harness between ECM connector and rear oxygen sensor connector • Poor contact of ECM connector • Poor contact of coupling connector

1. OUTLINE OF DIAGNOSIS

Detect the malfunction of fuel system from the size of the sub feedback learning value.
Control the sub feedback learning and judge as NG when the learning value is in the lean zone.

2. COMPONENT DESCRIPTION

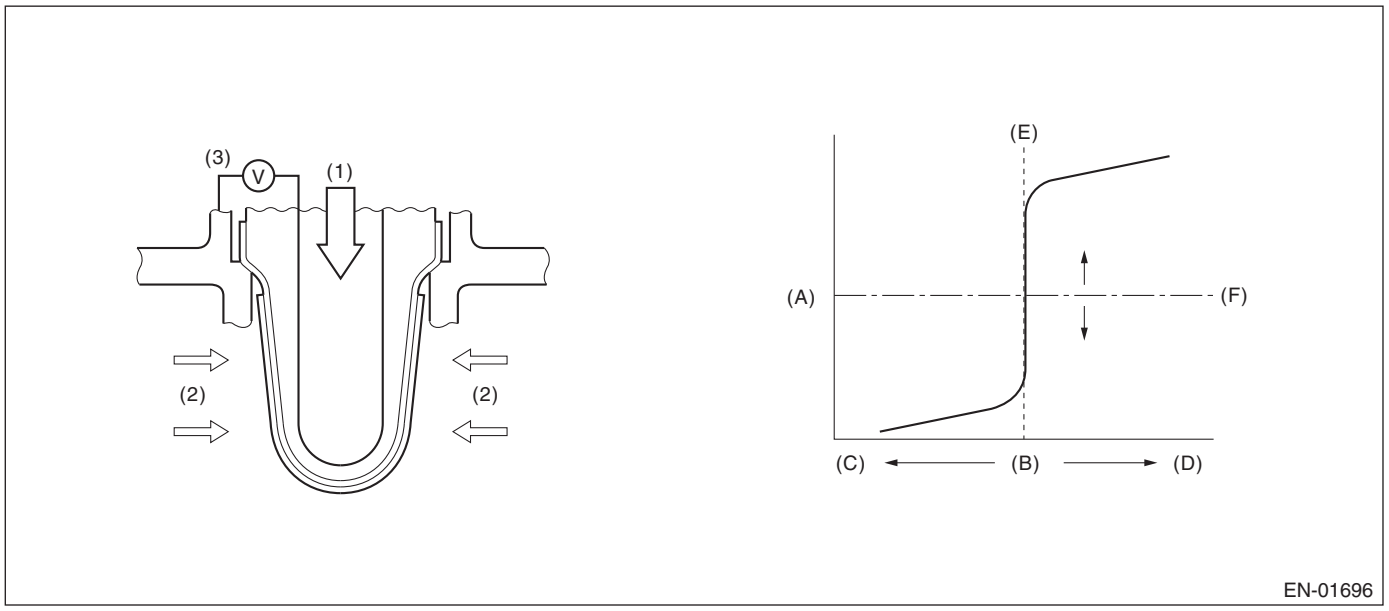

(A) Electromotive force
(B) Air fuel ratio
(C) Lean
(D) Rich
(E) Theoretical air fuel ratio
(F) Comparative voltage

(1) Atmosphere
(2) Exhaust gas
(3) Electromotive force

3. EXECUTION CONDITION

Secondary parameters	Execution condition
Sub feedback	In operation
Amount of intake air	≥ 10 g/s (0.35 oz/s)
Engine load change every 0.5 engine revs.	< 0.02 g/rev (0 oz/rev)
Estimated temperature of the rear oxygen sensor element	≥ 500 °C (932°F)
Stoichiometric integrated intake air amount	≥ 750 g (26.5 oz)

4. GENERAL DRIVING CYCLE

Perform the diagnosis continuously when the vehicle is idling or running at a constant speed of 80 km/h (50 MPH) or more.

5. DIAGNOSTIC METHOD

If the duration of time while the following conditions are met is longer than the time indicated, judge as NG.

Judgment Value

Malfunction Criteria	Threshold Value
Sub feedback learning value	< –0.042

Time Needed for Diagnosis: 1 s
Malfunction Indicator Light Illumination: Illuminates when malfunction occurs in 2 continuous driving cycles.

EU:DTC P2097 POST CATALYST FUEL TRIM SYSTEM TOO RICH BANK 1

DTC DETECTING CONDITION:

Detected when two consecutive driving cycles with fault occur.

CAUTION:

After servicing or replacing faulty parts, perform Clear Memory Mode <Ref. to EN(STI)(diag)-68, OPERATION, Clear Memory Mode.>, and Inspection Mode <Ref. to EN(STI)(diag)-48, PROCEDURE, Inspection Mode.>.

WIRING DIAGRAM:

Engine Electrical System <Ref. to WI-154, WIRING DIAGRAM, Engine Electrical System.>

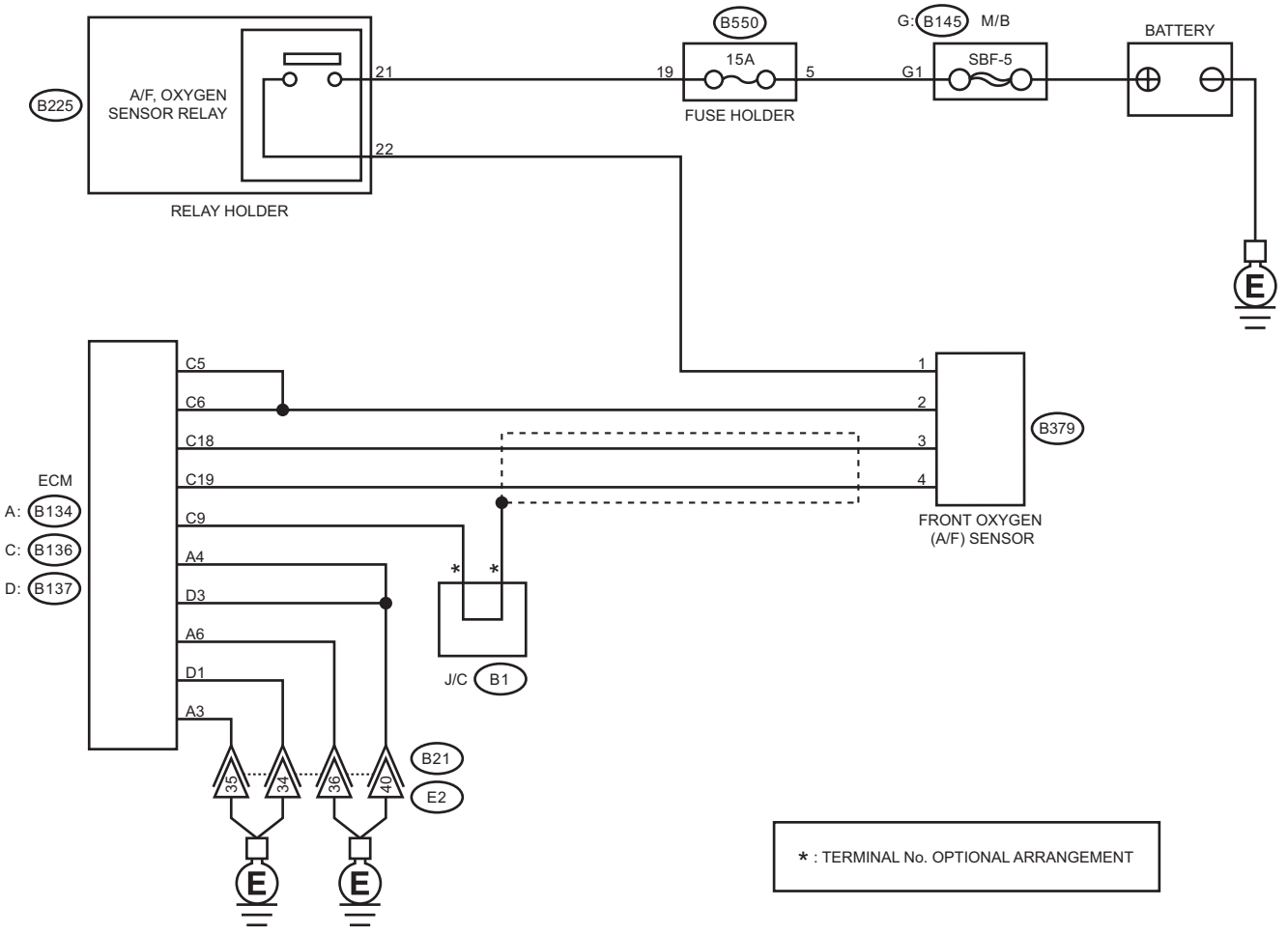

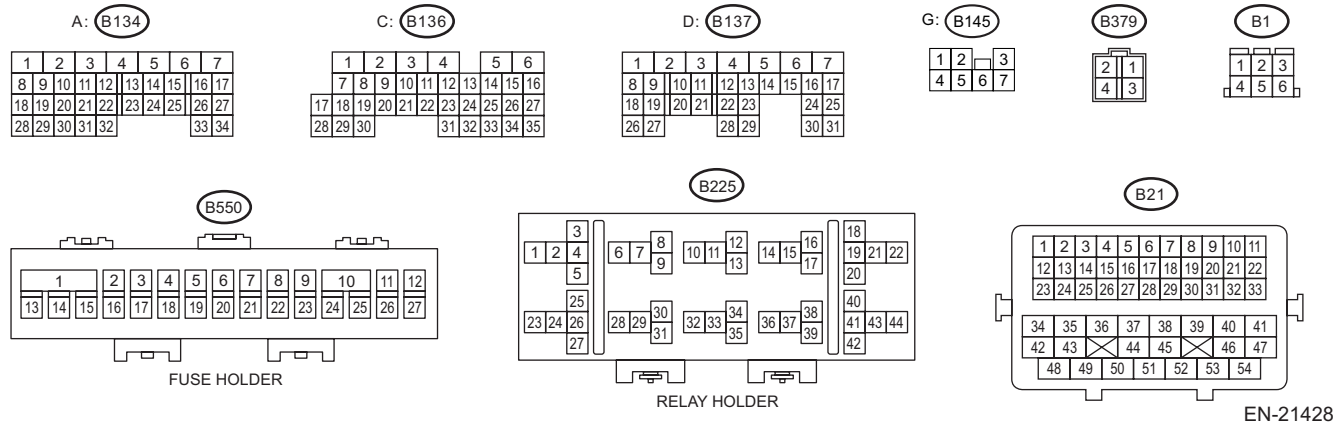

EN-21428

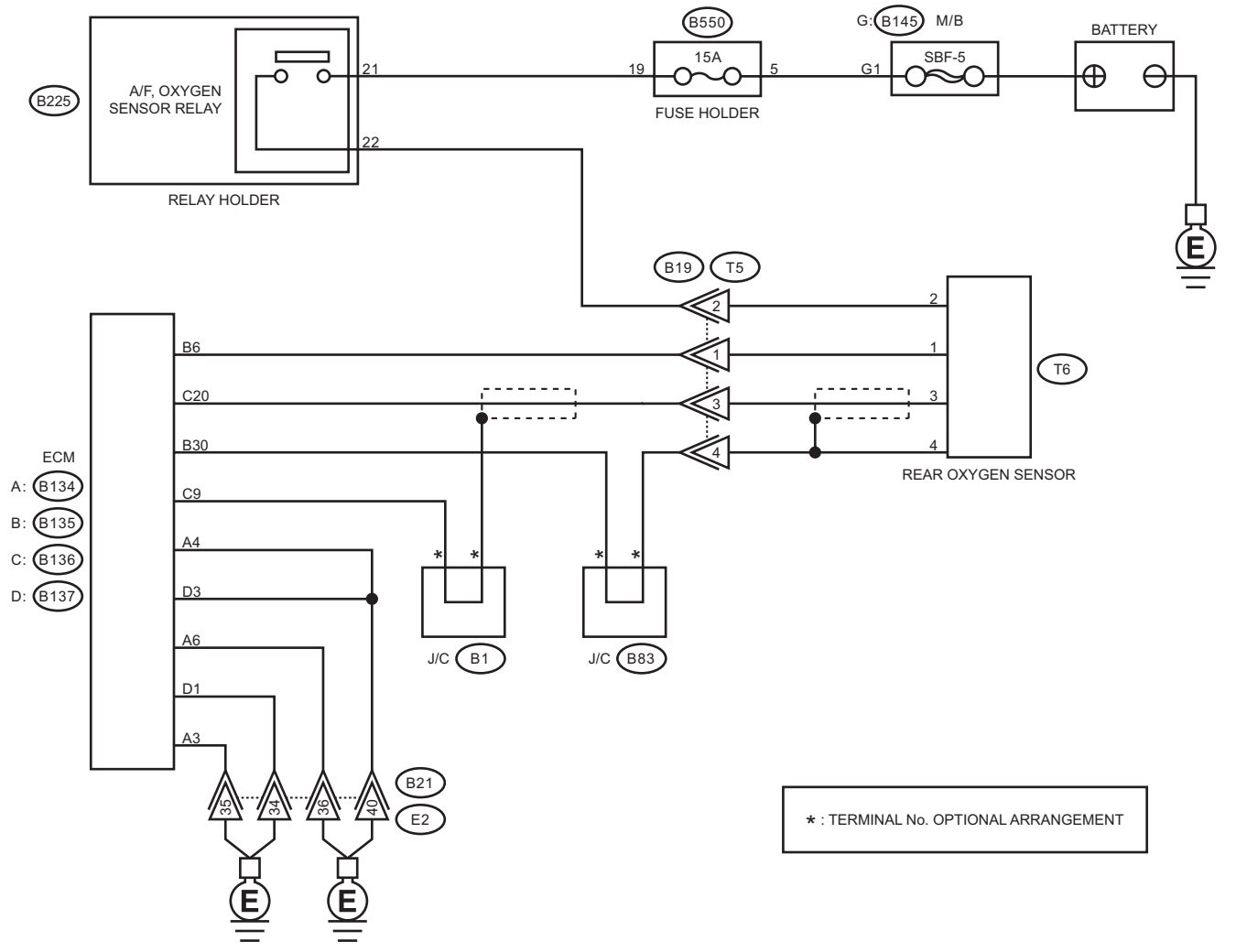

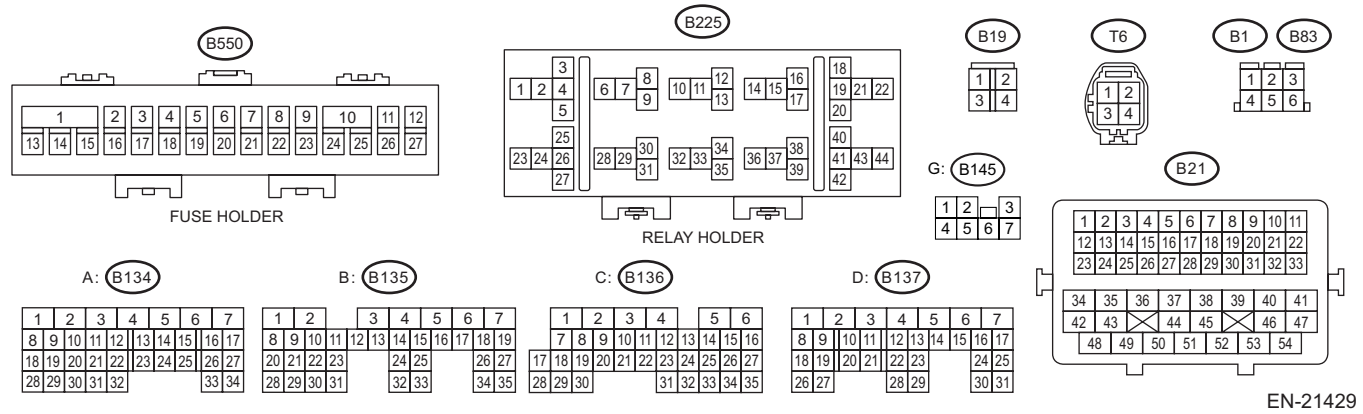

EN-21429

Step	Check	Yes	No
1 **CHECK FOR ANY OTHER DTC ON DISPLAY.**	Is any other DTC displayed?	Check DTC using "List of Diagnostic Trouble Code (DTC)". <Ref. to EN(STI)(diag)-96, List of Diagnostic Trouble Code (DTC).>	Go to step **2**.

	Step	Check	Yes	No
2	**CHECK FRONT OXYGEN (A/F) SENSOR CONNECTOR AND COUPLING CONNECTOR.**	Has water entered the connector?	Completely remove any water inside.	Go to step **3**.
3	**CHECK HARNESS BETWEEN ECM AND FRONT OXYGEN (A/F) SENSOR CONNECTOR.** 1) Turn the ignition switch to OFF. 2) Disconnect the connector from ECM. 3) Disconnect the connectors from front oxygen (A/F) sensor. 4) Measure the resistance of harness between ECM connector and front oxygen (A/F) sensor connector. ***Connector & terminal*** ***(B136) No. 18 — (B379) No. 3:*** ***(B136) No. 19 — (B379) No. 4:***	Is the resistance less than 1 Ω?	Go to step **4**.	Repair the open circuit of harness between ECM connector and front oxygen (A/F) sensor connector.
4	**CHECK HARNESS BETWEEN ECM AND FRONT OXYGEN (A/F) SENSOR CONNECTOR.** Measure the resistance between ECM connector and chassis ground. ***Connector & terminal*** ***(B136) No. 18 — Chassis ground:*** ***(B136) No. 19 — Chassis ground:***	Is the resistance 1 MΩ or more?	Go to step **5**.	Repair the short circuit to ground in harness between ECM connector and front oxygen (A/F) sensor connector.
5	**CHECK OUTPUT SIGNAL FOR ECM.** 1) Connect the connector to ECM. 2) Turn the ignition switch to ON. 3) Measure the voltage between front oxygen (A/F) sensor connector and chassis ground. ***Connector & terminal*** ***(B379) No. 4 (+) — Chassis ground (–):***	Is the voltage 4.5 V or more?	Go to step **7**.	Go to step **6**.
6	**CHECK OUTPUT SIGNAL FOR ECM.** Measure the voltage between front oxygen (A/F) sensor connector and chassis ground. ***Connector & terminal*** ***(B379) No. 3 (+) — Chassis ground (–):***	Is the voltage 4.95 V or more?	Go to step **7**.	Go to step **8**.
7	**CHECK OUTPUT SIGNAL FOR ECM.** Measure the voltage between front oxygen (A/F) sensor connector and chassis ground. ***Connector & terminal*** ***(B379) No. 3 (+) — Chassis ground (–):*** ***(B379) No. 4 (+) — Chassis ground (–):***	Is the voltage 8 V or more?	Repair the short circuit to power in the harness between ECM connector and front oxygen (A/F) sensor connector. After repair, replace the ECM. <Ref. to FU(STI)-56, Engine Control Module (ECM).>	Repair the poor contact of ECM connector.
8	**CHECK EXHAUST SYSTEM.**	Are there holes or loose bolts on exhaust system?	Repair the exhaust system.	Go to step **9**.
9	**CHECK AIR INTAKE SYSTEM.**	Are there holes, loose bolts or disconnection of hose on air intake system?	Repair the air intake system.	Go to step **10**.

	Step	Check	Yes	No
10	**CHECK FUEL PRESSURE.** **WARNING:** **Place "NO OPEN FLAMES" signs near the working area.** **CAUTION:** **Be careful not to spill fuel.** 1) Connect the front oxygen (A/F) sensor connector. 2) Measure the fuel pressure while disconnecting pressure regulator vacuum hose from intake manifold. <Ref. to ME(STI)-25, INSPECTION, Fuel Pressure.> **CAUTION:** **Release fuel pressure before removing the fuel pressure gauge.** NOTE: If fuel pressure does not increase, squeeze the fuel return hose 2 to 3 times, then measure fuel pressure again.	Is the measured value 284 — 314 kPa (2.9 — 3.2 kgf/cm^2, 41 — 46 psi)?	Go to step **11**.	Check the fuel pump and fuel delivery line. <Ref. to FU(STI)-87, INSPECTION, Fuel Pump.> <Ref. to FU(STI)-104, INSPECTION, Fuel Delivery, Return and Evaporation Lines.>
11	**CHECK FUEL PRESSURE.** After connecting the pressure regulator vacuum hose, measure fuel pressure. <Ref. to ME(STI)-25, INSPECTION, Fuel Pressure.> **CAUTION:** **Release fuel pressure before removing the fuel pressure gauge.** NOTE: • If fuel pressure does not increase, squeeze fuel return hose 2 to 3 times, then measure fuel pressure again. • If the measured value at this step is out of specification, check or replace pressure regulator and pressure regulator vacuum hose.	Is the measured value 230 — 260 kPa (2.4 — 2.7 kgf/cm^2, 33 — 38 psi)?	Go to step **12**.	Check the fuel pump and fuel delivery line. <Ref. to FU(STI)-87, INSPECTION, Fuel Pump.> <Ref. to FU(STI)-104, INSPECTION, Fuel Delivery, Return and Evaporation Lines.>
12	**CHECK ENGINE COOLANT TEMPERATURE SENSOR.** 1) Start the engine and warm up completely. 2) Read the value of «Coolant Temp.» using the Subaru Select Monitor or a general scan tool. NOTE: • Subaru Select Monitor For detailed operation procedures, refer to "Read Current Data For Engine". <Ref. to EN(STI)(diag)-36, Subaru Select Monitor.> • General scan tool For detailed operation procedures, refer to the general scan tool operation manual.	Is the value of «Coolant Temp.» 75°C (167°F) or more?	Go to step **13**.	Replace the engine coolant temperature sensor. <Ref. to FU(STI)-33, Engine Coolant Temperature Sensor.>

	Step	Check	Yes	No
13	**CHECK MASS AIR FLOW AND INTAKE AIR TEMPERATURE SENSOR.** 1) Start the engine and warm up engine until coolant temperature is higher than 75°C (167°F). 2) Place the shift lever in neutral position. 3) Turn the A/C switch to OFF. 4) Turn all the accessory switches to OFF. 5) Read the value of «Mass Air Flow» using the Subaru Select Monitor or a general scan tool. NOTE: • Subaru Select Monitor For detailed operation procedures, refer to "Read Current Data For Engine". <Ref. to EN(STI)(diag)-36, Subaru Select Monitor.> • General scan tool For detailed operation procedures, refer to the general scan tool operation manual.	Is the value of «Mass Air Flow» 2.0 — 5.0 g/s (0.26 — 0.66 lb/m)?	Go to step **14**.	Replace the mass air flow and intake air temperature sensor. <Ref. to FU(STI)-40, Mass Air Flow and Intake Air Temperature Sensor.>
14	**CHECK MASS AIR FLOW AND INTAKE AIR TEMPERATURE SENSOR.** 1) Start the engine and warm up engine until coolant temperature is higher than 75°C (167°F). 2) Place the shift lever in neutral position. 3) Turn the A/C switch to OFF. 4) Turn all the accessory switches to OFF. 5) Open the front hood. 6) Measure the ambient temperature. 7) Read the value of «Intake Air Temp.» using the Subaru Select Monitor or a general scan tool. NOTE: • Subaru Select Monitor For detailed operation procedures, refer to "Read Current Data For Engine". <Ref. to EN(STI)(diag)-36, Subaru Select Monitor.> • General scan tool For detailed operation procedures, refer to the general scan tool operation manual.	Subtract ambient temperature from «Intake Air Temp.». Is the obtained value –10 — 50°C (–18 — 90°F)?	Go to step **15**.	Check the mass air flow and intake air temperature sensor. <Ref. to FU(STI)-40, Mass Air Flow and Intake Air Temperature Sensor.>
15	**CHECK REAR OXYGEN SENSOR DATA.** 1) Warm up the engine until engine coolant temperature is higher than 75°C (167°F), and keep the engine speed at 3,000 rpm. (2 minutes maximum) 2) Read the value of «Rear O2 Sensor Voltage» using the Subaru Select Monitor or a general scan tool. NOTE: • Depress the clutch pedal. • Subaru Select Monitor For detailed operation procedures, refer to "Read Current Data For Engine". <Ref. to EN(STI)(diag)-36, Subaru Select Monitor.> • General scan tool For detailed operation procedures, refer to the general scan tool operation manual.	Is the value of «Rear O2 Sensor Voltage» 0.490 V or more?	Go to step **16**.	Go to step **17**.

	Step	Check	Yes	No
16	**CHECK REAR OXYGEN SENSOR DATA.** 1) Warm up the engine until engine coolant temperature is higher than 75°C (167°F), and rapidly reduce the engine speed from 3,000 rpm. 2) Read the value of «Rear O2 Sensor Voltage» using the Subaru Select Monitor or a general scan tool. NOTE: • Depress the clutch pedal. • Subaru Select Monitor For detailed operation procedures, refer to "Read Current Data For Engine". <Ref. to EN(STI)(diag)-36, Subaru Select Monitor.> • General scan tool For detailed operation procedures, refer to the general scan tool operation manual.	Is the value of «Rear O2 Sensor Voltage» 0.250 V or less?	Go to step **18**.	Go to step **17**.
17	**CHECK REAR OXYGEN SENSOR CONNECTOR AND COUPLING CONNECTOR.**	Has water entered the connector?	Completely remove any water inside.	Go to step **19**.
18	**CHECK FRONT OXYGEN (A/F) SENSOR USING REAR OXYGEN SENSOR SIGNAL.** 1) Warm up the engine until engine coolant temperature is higher than 75°C (167°F), then keep the engine idling for 5 minutes or more. 2) Read the value of «Rear O2 Sensor Voltage» using the Subaru Select Monitor or a general scan tool. NOTE: • Subaru Select Monitor For detailed operation procedures, refer to "Read Current Data For Engine". <Ref. to EN(STI)(diag)-36, Subaru Select Monitor.> • General scan tool For detailed operation procedures, refer to the general scan tool operation manual.	Is the value in «Rear O2 Sensor Voltage» kept at 0.8 V or more for 5 minutes or more?	Replace the front oxygen (A/F) sensor. <Ref. to FU(STI)-52, Front Oxygen (A/F) Sensor.>	Go to step **19**.
19	**CHECK HARNESS BETWEEN ECM AND REAR OXYGEN SENSOR CONNECTOR.** 1) Turn the ignition switch to OFF. 2) Disconnect the connector from ECM. 3) Disconnect the connector from rear oxygen sensor. 4) Measure the resistance of harness between ECM connector and rear oxygen sensor connector. ***Connector & terminal*** ***(B136) No. 20 — (T6) No. 3:*** ***(B135) No. 30 — (T6) No. 4:***	Is the resistance less than 1 Ω?	Go to step **20**.	Repair the harness and connector. NOTE: In this case, repair the following item: • Open circuit in harness between ECM connector and rear oxygen sensor connector • Poor contact of coupling connector

	Step	Check	Yes	No
20	**CHECK HARNESS BETWEEN ECM AND REAR OXYGEN SENSOR CONNECTOR.** 1) Connect the connector to ECM. 2) Turn the ignition switch to ON. 3) Measure the voltage between rear oxygen sensor connector and chassis ground. ***Connector & terminal*** ***(T6) No. 3 (+) — Chassis ground (–):***	Is the voltage 0.2 — 0.5 V?	Replace the rear oxygen sensor. <Ref. to FU(STI)-54, Rear Oxygen Sensor.>	Repair the harness and connector. NOTE: In this case, repair the following item: • Open circuit in harness between ECM connector and rear oxygen sensor connector • Poor contact of ECM connector • Poor contact of coupling connector

1. OUTLINE OF DIAGNOSIS

Detect the malfunction of fuel system from the size of the sub feedback learning value.
Sub feedback learning is being performed. When the learning value goes to the rich side, judge as NG.

2. COMPONENT DESCRIPTION

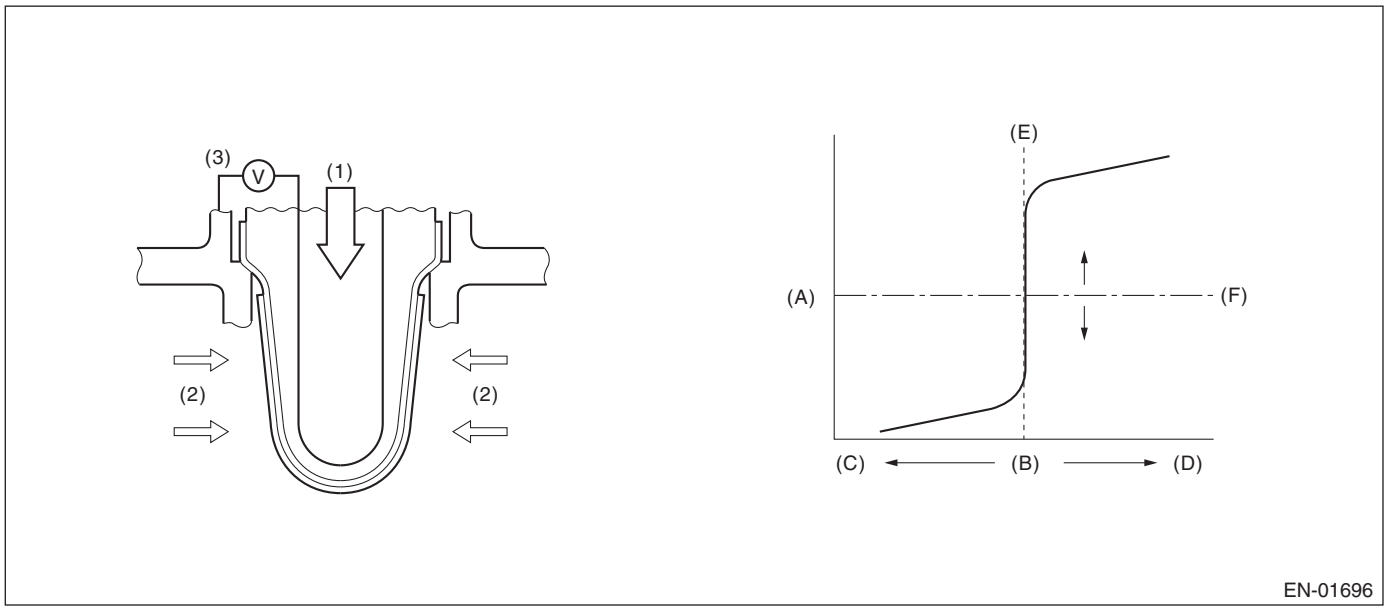

(A) Electromotive force
(B) Air fuel ratio
(C) Lean
(D) Rich
(E) Theoretical air fuel ratio
(F) Comparative voltage

(1) Atmosphere
(2) Exhaust gas
(3) Electromotive force

3. EXECUTION CONDITION

Secondary parameters	Execution condition
Sub feedback	In operation
Amount of intake air	≥ 10 g/s (0.35 oz/s)
Engine load change every 0.5 engine revs.	< 0.02 g/rev (0 oz/rev)
Estimated temperature of the rear oxygen sensor element	≥ 500 °C (932°F)
Stoichiometric integrated intake air amount	≥ 750 g (26.5 oz)

4. GENERAL DRIVING CYCLE

Perform the diagnosis continuously when the vehicle is idling or running at a constant speed of 80 km/h (50 MPH) or more.

5. DIAGNOSTIC METHOD

If the duration of time while the following conditions are met is longer than the time indicated, judge as NG.

Judgment Value

Malfunction Criteria	Threshold Value
Sub feedback learning value	≥ 0.028

Time Needed for Diagnosis: 1 s
Malfunction Indicator Light Illumination: Illuminates when malfunction occurs in 2 continuous driving cycles.

EV:DTC P2101 THROTTLE ACTUATOR "A" CONTROL MOTOR CIRCUIT RANGE/PERFORMANCE

DTC DETECTING CONDITION:
Immediately at fault recognition
TROUBLE SYMPTOM:
- Improper idling
- Poor driving performance
- Engine stalls.

CAUTION:
After servicing or replacing faulty parts, perform Clear Memory Mode <Ref. to EN(STI)(diag)-68, OPERATION, Clear Memory Mode.>, and Inspection Mode <Ref. to EN(STI)(diag)-48, PROCEDURE, Inspection Mode.>.

WIRING DIAGRAM:

Engine Electrical System <Ref. to WI-154, WIRING DIAGRAM, Engine Electrical System.>

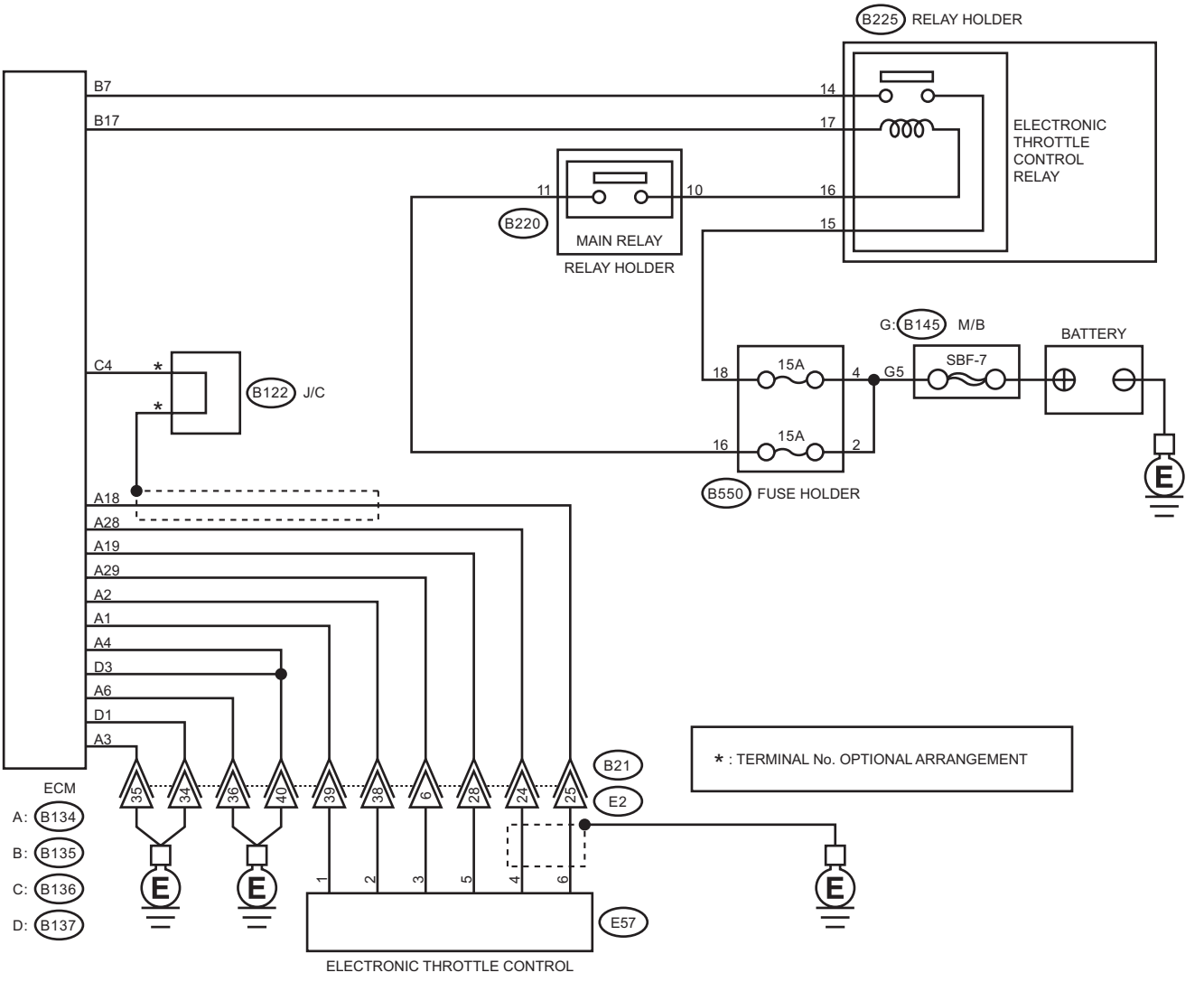

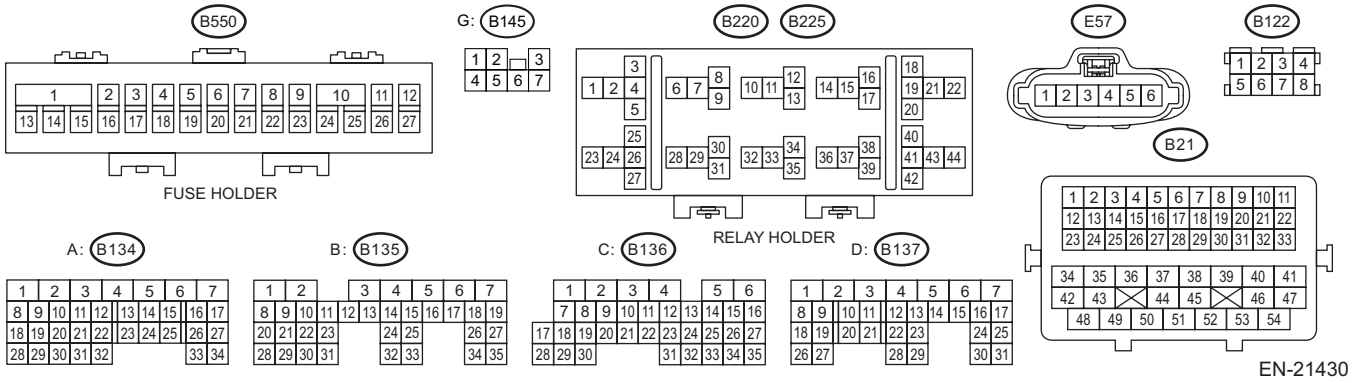

EN-21430

	Step	Check	Yes	No
1	**CHECK ELECTRONIC THROTTLE CONTROL RELAY.** 1) Turn the ignition switch to OFF. 2) Remove the electronic throttle control relay. 3) Connect the battery to terminals No. 16 and No. 17 of electronic throttle control relay. 4) Measure the resistance between electronic throttle control relay terminals. ***Terminals*** ***No. 14 — No. 15:***	Is the resistance less than 1 Ω?	Go to step **2**.	Replace the electronic throttle control relay. <Ref. to FU(STI)-60, Electronic Throttle Control Relay.>
2	**CHECK POWER SUPPLY OF ELECTRONIC THROTTLE CONTROL RELAY.** Measure the voltage between electronic throttle control relay connector and chassis ground. ***Connector & terminal*** ***(B225) No. 15 (+) — Chassis ground (–):***	Is the voltage 10 V or more?	Go to step **3**.	Repair the open or short to ground in the power supply circuit.
3	**CHECK HARNESS BETWEEN ECM AND ELECTRONIC THROTTLE CONTROL RELAY CONNECTOR.** 1) Disconnect the connector from ECM. 2) Turn the ignition switch to ON. 3) Measure the voltage between electronic throttle control relay connector and chassis ground. ***Connector & terminal*** ***(B225) No. 17 (+) — Chassis ground (–):***	Is the voltage 10 V or more?	Repair the short circuit to power in the harness between ECM connector and electronic throttle control relay connector.	Go to step **4**.
4	**CHECK HARNESS BETWEEN ECM AND ELECTRONIC THROTTLE CONTROL RELAY CONNECTOR.** 1) Turn the ignition switch to OFF. 2) Measure the resistance between electronic throttle control relay connector and chassis ground. ***Connector & terminal*** ***(B225) No. 14 — Chassis ground:*** ***(B225) No. 17 — Chassis ground:***	Is the resistance 1 MΩ or more?	Go to step **5**.	Repair the short circuit to ground in harness between ECM connector and electronic throttle control relay connector.
5	**CHECK HARNESS BETWEEN ECM AND ELECTRONIC THROTTLE CONTROL RELAY CONNECTOR.** Measure the resistance between ECM connector and electronic throttle control relay connector. ***Connector & terminal*** ***(B135) No. 7 — (B225) No. 14:*** ***(B135) No. 17 — (B225) No. 17:***	Is the resistance less than 1 Ω?	Go to step **6**.	Repair the open circuit in harness between ECM connector and electronic throttle control relay connector.
6	**CHECK HARNESS BETWEEN ECM AND ELECTRONIC THROTTLE CONTROL CONNECTOR.** 1) Turn the ignition switch to OFF. 2) Disconnect the connectors from electronic throttle control. 3) Measure the resistance between ECM connector and chassis ground. ***Connector & terminal*** ***(B134) No. 19 — Chassis ground:*** ***(B134) No. 18 — Chassis ground:*** ***(B134) No. 18 — (B136) No. 4:*** ***(B134) No. 28 — Chassis ground:***	Is the resistance 1 MΩ or more?	Go to step **7**.	Repair the ground short circuit of harness between ECM connector and electronic throttle control connector.

	Step	Check	Yes	No
7	**CHECK SHORT CIRCUIT INSIDE THE ECM.** 1) Connect the connector to ECM. 2) Measure the resistance between electronic throttle control connector and engine ground. ***Connector & terminal*** ***(E57) No. 6 — Engine ground:*** ***(E57) No. 4 — Engine ground:***	Is the resistance 200 kΩ or more?	Go to step **8**.	Repair the ground short circuit of harness between ECM connector and electronic throttle control connector. Replace the ECM if defective. <Ref. to FU(STI)-56, Engine Control Module (ECM).>
8	**CHECK HARNESS BETWEEN ECM AND ELECTRONIC THROTTLE CONTROL CONNECTOR.** 1) Disconnect the connector from ECM. 2) Measure the resistance of harness between ECM connector and electronic throttle control connector. ***Connector & terminal*** ***(B134) No. 18 — (E57) No. 6:*** ***(B134) No. 28 — (E57) No. 4:*** ***(B134) No. 29 — (E57) No. 3:***	Is the resistance less than 1 Ω?	Go to step **9**.	Repair the harness and connector. NOTE: In this case, repair the following item: • Open circuit in harness between ECM connector and electronic throttle control connector • Poor contact of coupling connector
9	**CHECK HARNESS BETWEEN ECM AND ELECTRONIC THROTTLE CONTROL CONNECTOR.** 1) Connect the connector to ECM. 2) Measure the resistance between electronic throttle control connector and engine ground. ***Connector & terminal*** ***(E57) No. 3 — Engine ground:***	Is the resistance less than 5 Ω?	Go to step **10**.	Repair the harness and connector. NOTE: In this case, repair the following item: • Open circuit of harness between ECM connector and engine ground • Poor contact of ECM connector • Poor contact of coupling connector
10	**CHECK HARNESS BETWEEN ECM AND ELECTRONIC THROTTLE CONTROL CONNECTOR.** 1) Turn the ignition switch to ON. 2) Measure the voltage between electronic throttle control connector and engine ground. ***Connector & terminal*** ***(E57) No. 4 (+) — Engine ground (–):*** ***(E57) No. 6 (+) — Engine ground (–):***	Is the voltage 5 V or more?	Repair the short circuit to power in the harness between ECM connector and electronic throttle control connector.	Go to step **11**.
11	**CHECK HARNESS BETWEEN ECM AND ELECTRONIC THROTTLE CONTROL CONNECTOR.** 1) Turn the ignition switch to OFF. 2) Disconnect the connector from ECM. 3) Measure the resistance between ECM connectors. ***Connector & terminal*** ***(B134) No. 19 — (B134) No. 18:*** ***(B134) No. 19 — (B134) No. 28:***	Is the resistance 1 MΩ or more?	Go to step **12**.	Repair the short circuit to power in the harness between ECM connector and electronic throttle control connector.

	Step	Check	Yes	No
12	**CHECK SENSOR OUTPUT.** 1) Connect all connectors. 2) Start the engine and warm up completely. 3) Stop the engine, and then turn the ignition switch to ON (engine OFF). 4) Read the value of «Main-Throttle Sensor» using Subaru Select Monitor. NOTE: For detailed operation procedures, refer to "Read Current Data For Engine". <Ref. to EN(STI)(diag)-36, Subaru Select Monitor.>	Is the value of «Main-Throttle Sensor» 0.81 — 0.87 V?	Go to step **13**.	Repair the poor contact of electronic throttle control connector. Replace the electronic throttle control if defective. <Ref. to FU(STI)-15, Throttle Body.>
13	**CHECK SENSOR OUTPUT.** Read the value of «Sub-Throttle Sensor» using Subaru Select Monitor. NOTE: For detailed operation procedures, refer to "Read Current Data For Engine". <Ref. to EN(STI)(diag)-36, Subaru Select Monitor.>	Is the value of «Sub-Throttle Sensor» 1.64 — 1.70 V?	Go to step **14**.	Repair the poor contact of electronic throttle control connector. Replace the electronic throttle control if defective. <Ref. to FU(STI)-15, Throttle Body.>
14	**CHECK HARNESS BETWEEN ECM AND ELECTRONIC THROTTLE CONTROL MOTOR.** 1) Turn the ignition switch to OFF. 2) Disconnect the connector from ECM. 3) Disconnect the connectors from electronic throttle control. 4) Measure the resistance between ECM connector and electronic throttle control connector. ***Connector & terminal*** ***(B134) No. 1 — (E57) No. 1:*** ***(B134) No. 2 — (E57) No. 2:***	Is the resistance less than 1 Ω?	Go to step **15**.	Repair the harness and connector. NOTE: In this case, repair the following item: • Open circuit in harness between ECM connector and electronic throttle control connector • Poor contact of coupling connector
15	**CHECK HARNESS BETWEEN ECM AND ELECTRONIC THROTTLE CONTROL MOTOR.** 1) Connect the connector to ECM. 2) Turn the ignition switch to ON. 3) Measure the voltage between electronic throttle control connector and engine ground. ***Connector & terminal*** ***(E57) No. 1 (+) — Engine ground (–):*** ***(E57) No. 2 (+) — Engine ground (–):***	Is the voltage 5 V or more?	Repair the short circuit to power in the harness between ECM connector and electronic throttle control connector.	Go to step **16**.
16	**CHECK HARNESS BETWEEN ECM AND ELECTRONIC THROTTLE CONTROL MOTOR.** 1) Turn the ignition switch to OFF. 2) Disconnect the connector from ECM. 3) Measure the resistance between electronic throttle control connector and engine ground. ***Connector & terminal*** ***(E57) No. 1 — Engine ground:*** ***(E57) No. 2 — Engine ground:***	Is the resistance 1 MΩ or more?	Go to step **17**.	Repair the ground short circuit of harness between ECM connector and electronic throttle control connector.
17	**CHECK ELECTRONIC THROTTLE CONTROL MOTOR HARNESS.** Measure the resistance between electronic throttle control connectors. ***Connector & terminal*** ***(E57) No. 1 — (E57) No. 2:***	Is the resistance 1 MΩ or more?	Go to step **18**.	Repair the short circuit in harness between ECM connector and electronic throttle control connector.

	Step	Check	Yes	No
18	**CHECK ELECTRONIC THROTTLE CONTROL GROUND CIRCUIT.** Measure the resistance between ECM connector and chassis ground. ***Connector & terminal*** ***(B134) No. 3 — Chassis ground:*** ***(B134) No. 4 — Chassis ground:*** ***(B134) No. 6 — Chassis ground:*** ***(B137) No. 1 — Chassis ground:*** ***(B137) No. 3 — Chassis ground:***	Is the resistance less than 5 Ω?	Go to step **19**.	Repair the harness and connector. NOTE: In this case, repair the following item: • Open circuit of harness between ECM connector and engine ground • Poor contact of coupling connector
19	**CHECK ELECTRONIC THROTTLE CONTROL.** Measure the resistance between electronic throttle control terminals. ***Terminals*** ***No. 1 — No. 2:***	Is the resistance 50 Ω or less?	Go to step **20**.	Replace the electronic throttle control. <Ref. to FU(STI)-15, Throttle Body.>
20	**CHECK ELECTRONIC THROTTLE CONTROL.** Move the throttle valve to the fully opened and fully closed positions with fingers. Check that the valve returns to the specified position when releasing fingers.	Does the valve return to the specified position? Standard value: 3 mm (0.12 in) from fully closed position	Repair the poor contact of ECM connector.	Replace the electronic throttle control. <Ref. to FU(STI)-15, Throttle Body.>

1. OUTLINE OF DIAGNOSIS

Judge as NG when the motor current becomes large or drive circuit is heated.

2. COMPONENT DESCRIPTION

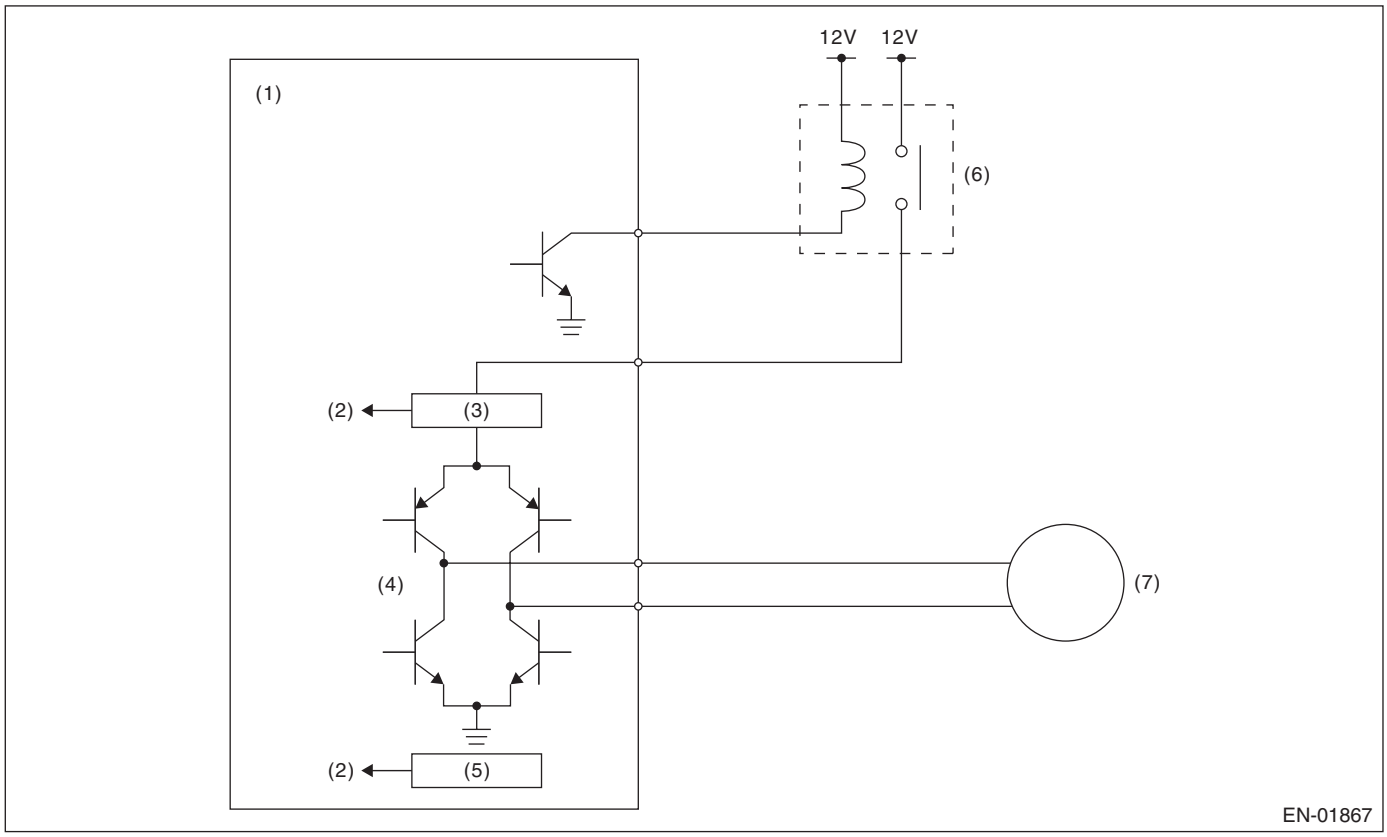

(1) Engine control module (ECM)
(2) Detecting circuit
(3) Overcurrent detection circuit
(4) Drive circuit
(5) Temperature detection circuit
(6) Electronic throttle control relay
(7) Motor

3. EXECUTION CONDITION

Secondary parameters	Execution condition
Battery voltage	≥ 6.2 V
Electronic throttle control relay output	ON

4. GENERAL DRIVING CYCLE

Always perform the diagnosis continuously.

5. DIAGNOSTIC METHOD

If the duration of time while the following conditions are met is longer than the time indicated, judge as NG.

Judgment Value

Malfunction Criteria	Threshold Value
Overcurrent signal from driver	ON

Time Needed for Diagnosis: 512 ms
Malfunction Indicator Light Illumination: Illuminates as soon as a malfunction occurs.

EW:DTC P2102 THROTTLE ACTUATOR "A" CONTROL MOTOR CIRCUIT LOW

DTC DETECTING CONDITION:
Immediately at fault recognition
TROUBLE SYMPTOM:

- Improper idling
- Poor driving performance
- Engine stalls.

CAUTION:
After servicing or replacing faulty parts, perform Clear Memory Mode <Ref. to EN(STI)(diag)-68, OPERATION, Clear Memory Mode.>, and Inspection Mode <Ref. to EN(STI)(diag)-48, PROCEDURE, Inspection Mode.>.

WIRING DIAGRAM:

Engine Electrical System <Ref. to WI-154, WIRING DIAGRAM, Engine Electrical System.>

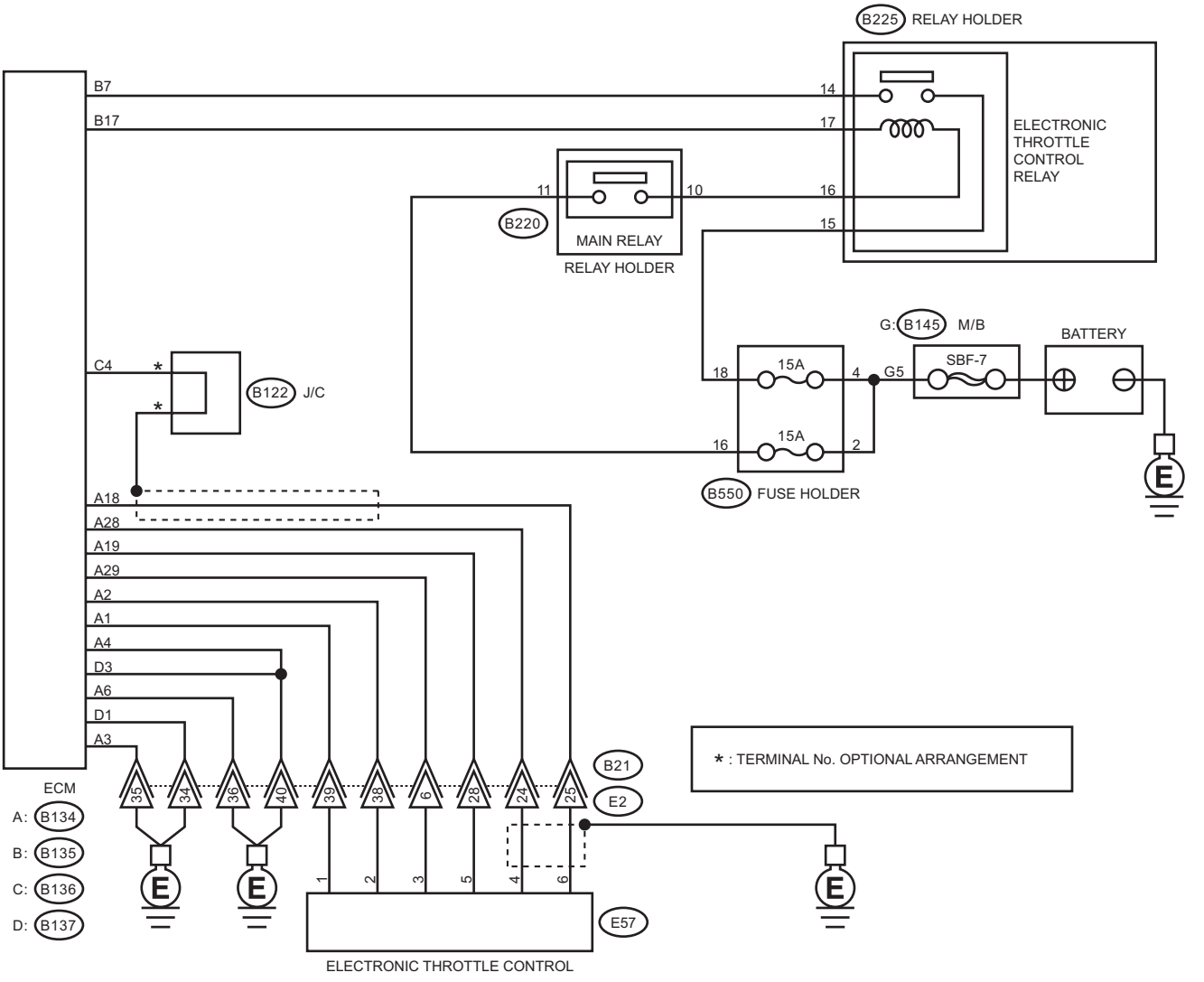

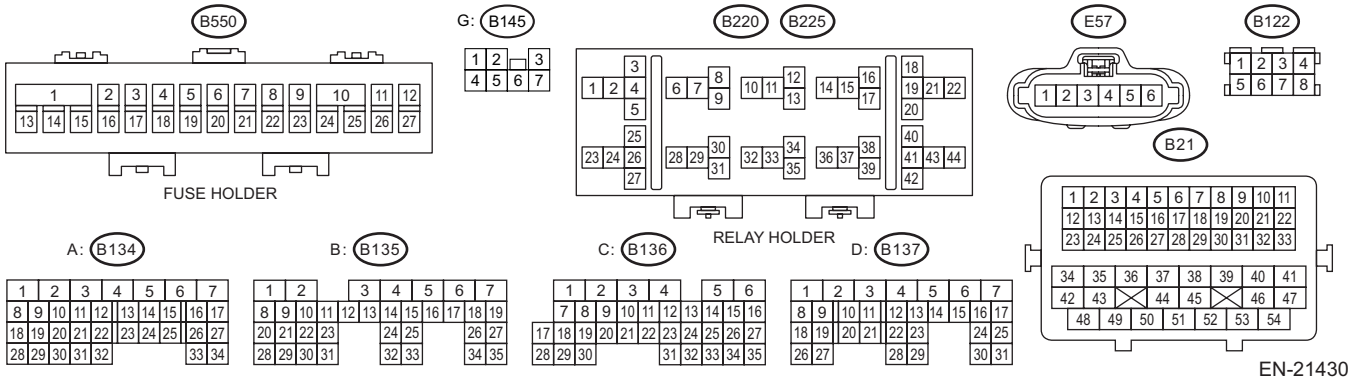

EN-21430

	Step	Check	Yes	No
1	**CHECK ELECTRONIC THROTTLE CONTROL RELAY.** 1) Turn the ignition switch to OFF. 2) Remove the electronic throttle control relay. 3) Connect the battery to terminals No. 16 and No. 17 of electronic throttle control relay. 4) Measure the resistance between electronic throttle control relay terminals. ***Terminals*** ***No. 14 — No. 15:***	Is the resistance less than 1 Ω?	Go to step **2**.	Replace the electronic throttle control relay. <Ref. to FU(STI)-60, Electronic Throttle Control Relay.>
2	**CHECK POWER SUPPLY OF ELECTRONIC THROTTLE CONTROL RELAY.** Measure the voltage between electronic throttle control relay connector and chassis ground. ***Connector & terminal*** ***(B225) No. 15 (+) — Chassis ground (–):***	Is the voltage 10 V or more?	Go to step **3**.	Repair the open or short to ground in the power supply circuit.
3	**CHECK HARNESS BETWEEN ECM AND ELECTRONIC THROTTLE CONTROL RELAY CONNECTOR.** 1) Disconnect the connector from ECM. 2) Turn the ignition switch to ON. 3) Measure the voltage between electronic throttle control relay connector and chassis ground. ***Connector & terminal*** ***(B225) No. 17 (+) — Chassis ground (–):***	Is the voltage 10 V or more?	Repair the short circuit to power in the harness between ECM connector and electronic throttle control relay connector.	Go to step **4**.
4	**CHECK HARNESS BETWEEN ECM AND ELECTRONIC THROTTLE CONTROL RELAY CONNECTOR.** 1) Turn the ignition switch to OFF. 2) Measure the resistance between electronic throttle control relay connector and chassis ground. ***Connector & terminal*** ***(B225) No. 14 — Chassis ground:*** ***(B225) No. 17 — Chassis ground:***	Is the resistance 1 MΩ or more?	Go to step **5**.	Repair the short circuit to ground in harness between ECM connector and electronic throttle control relay connector.
5	**CHECK HARNESS BETWEEN ECM AND ELECTRONIC THROTTLE CONTROL RELAY CONNECTOR.** Measure the resistance between ECM connector and electronic throttle control relay connector. ***Connector & terminal*** ***(B135) No. 7 — (B225) No. 14:*** ***(B135) No. 17 — (B225) No. 17:***	Is the resistance less than 1 Ω?	Repair the poor contact of ECM connector.	Repair the open circuit in harness between ECM connector and electronic throttle control relay connector.

1. OUTLINE OF DIAGNOSIS

Judge as NG when the electronic throttle control power is not supplied even when ECM sets the electric control throttle relay to ON.

2. COMPONENT DESCRIPTION

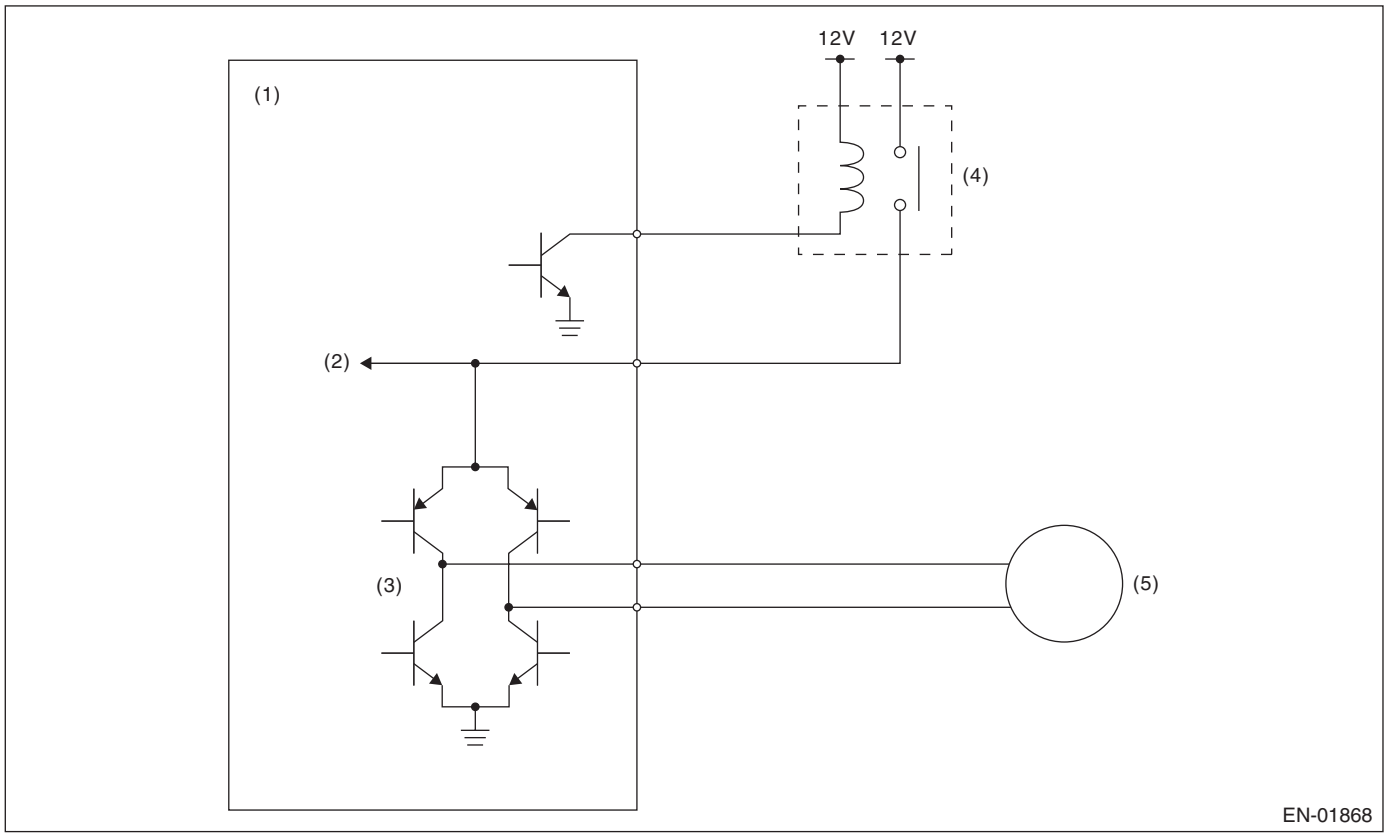

(1) Engine control module (ECM)
(2) Voltage detection circuit
(3) Drive circuit
(4) Electronic throttle control relay
(5) Motor

3. EXECUTION CONDITION

Secondary parameters	Execution condition
Battery voltage	≥ 11 V
Electronic throttle control relay output	ON

4. GENERAL DRIVING CYCLE

Always perform the diagnosis continuously.

5. DIAGNOSTIC METHOD

If the duration of time while the following conditions are met is longer than the time indicated, judge as NG.

Judgment Value

Malfunction Criteria	Threshold Value
Motor power voltage	≤ 5 V

Time Needed for Diagnosis: 352 ms
Malfunction Indicator Light Illumination: Illuminates as soon as a malfunction occurs.

EX:DTC P2103 THROTTLE ACTUATOR "A" CONTROL MOTOR CIRCUIT HIGH

DTC DETECTING CONDITION:
Immediately at fault recognition

CAUTION:
After servicing or replacing faulty parts, perform Clear Memory Mode <Ref. to EN(STI)(diag)-68, OPERATION, Clear Memory Mode.>, and Inspection Mode <Ref. to EN(STI)(diag)-48, PROCEDURE, Inspection Mode.>.

WIRING DIAGRAM:
Engine Electrical System <Ref. to WI-154, WIRING DIAGRAM, Engine Electrical System.>

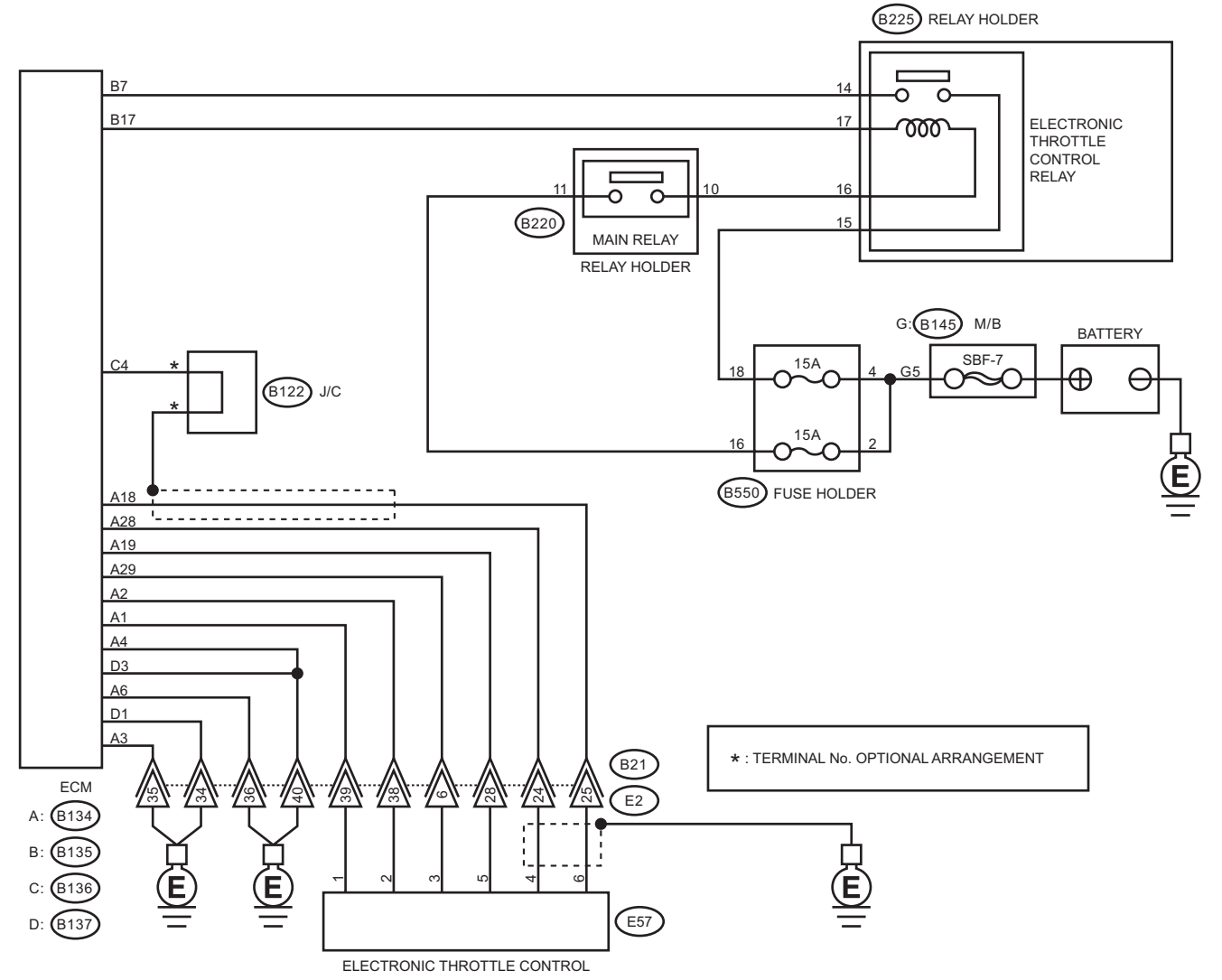

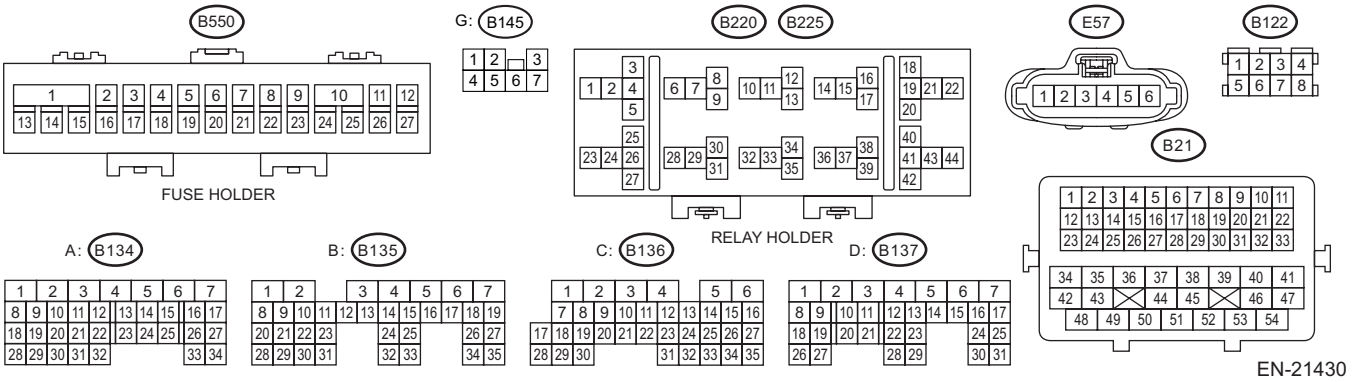

EN-21430

	Step	Check	Yes	No
1	**CHECK ELECTRONIC THROTTLE CONTROL RELAY.** 1) Turn the ignition switch to OFF. 2) Remove the electronic throttle control relay. 3) Measure the resistance between electronic throttle control relay terminals. ***Terminals*** ***No. 14 — No. 15:***	Is the resistance 1 MΩ or more?	Go to step **2**.	Replace the electronic throttle control relay. <Ref. to FU(STI)-60, Electronic Throttle Control Relay.>
2	**CHECK SHORT CIRCUIT OF ELECTRONIC THROTTLE CONTROL RELAY POWER SUPPLY.** 1) Turn the ignition switch to ON. 2) Measure the voltage between electronic throttle control relay connector and chassis ground. ***Connector & terminal*** ***(B225) No. 14 (+) — Chassis ground (–):***	Is the voltage 10 V or more?	Repair the short circuit to power in the harness between ECM connector and electronic throttle control relay connector.	Go to step **3**.
3	**CHECK HARNESS BETWEEN ECM AND ELECTRONIC THROTTLE CONTROL RELAY CONNECTOR.** 1) Turn the ignition switch to OFF. 2) Disconnect the connector from ECM. 3) Measure the resistance between ECM connector and chassis ground. ***Connector & terminal*** ***(B135) No. 17 — Chassis ground:***	Is the resistance 1 MΩ or more?	Repair the poor contact of ECM connector.	Repair the short circuit to ground in harness between ECM connector and electronic throttle control relay connector.

1. OUTLINE OF DIAGNOSIS

Judge as NG when the electronic throttle control power is supplied even when ECM sets the electronic throttle control relay to OFF.

2. COMPONENT DESCRIPTION

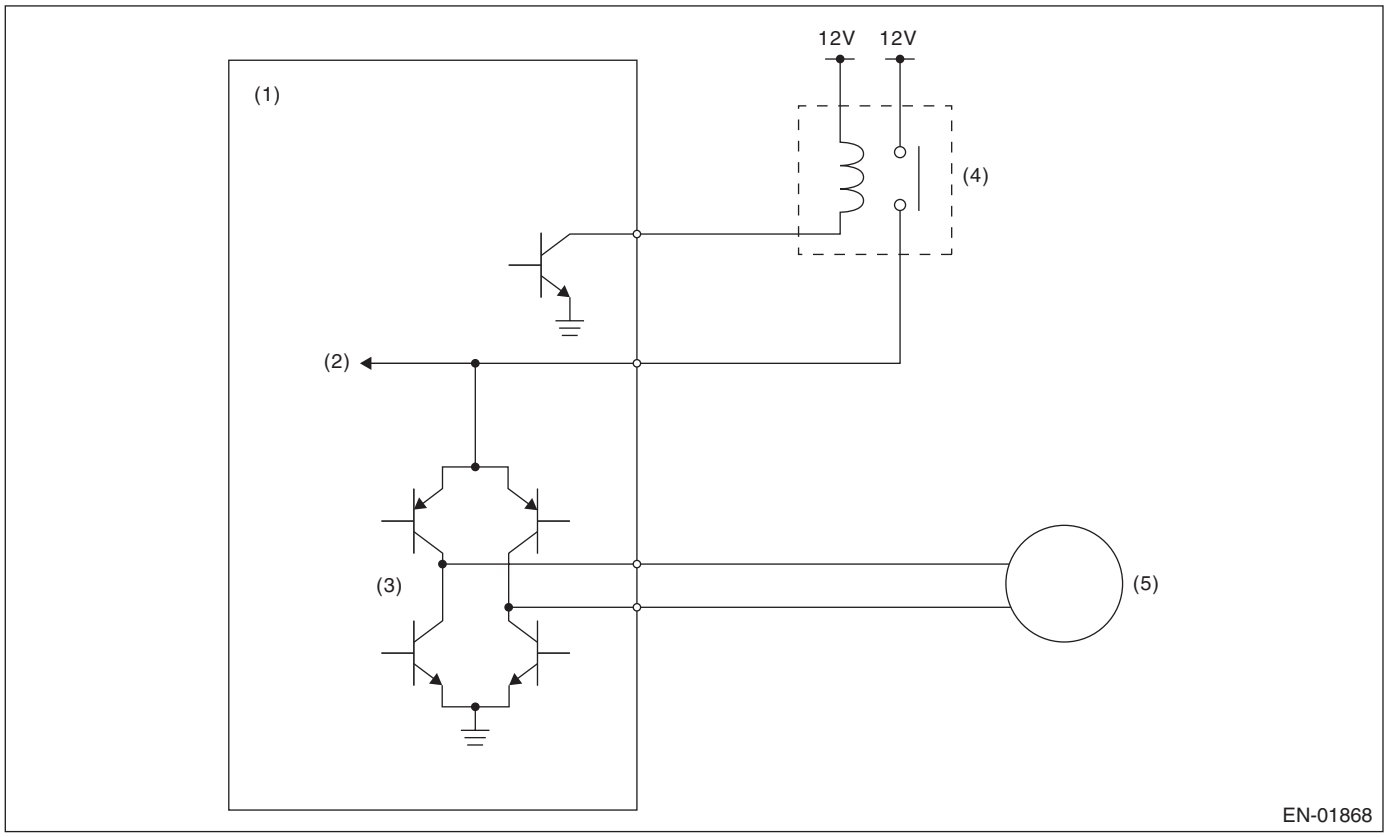

(1) Engine control module (ECM)
(2) Voltage detection circuit
(3) Drive circuit
(4) Electronic throttle control relay
(5) Motor

3. EXECUTION CONDITION

Secondary parameters	Execution condition
Battery voltage	≥ 6 V
Electronic throttle control relay output	OFF

4. GENERAL DRIVING CYCLE

- When ignition switch ON → OFF
- Ignition switch OFF → ON (Only after clearing memory)

5. DIAGNOSTIC METHOD

If the duration of time while the following conditions are met is longer than the time indicated, judge as NG.

Judgment Value

Malfunction Criteria	Threshold Value
Motor power voltage	≥ 5 V

Time Needed for Diagnosis: 600 ms
Malfunction Indicator Light Illumination: Illuminates as soon as a malfunction occurs.

EY:DTC P2109 THROTTLE/PEDAL POSITION SENSOR "A" MINIMUM STOP PERFORMANCE

NOTE:
For the diagnostic procedure, refer to DTC P2101. <Ref. to EN(STI)(diag)-506, DTC P2101 THROTTLE ACTUATOR "A" CONTROL MOTOR CIRCUIT RANGE/PERFORMANCE, Diagnostic Procedure with Diagnostic Trouble Code (DTC).>

1. OUTLINE OF DIAGNOSIS

Judge as NG when full close point learning cannot conducted or abnormal value is detected.

2. COMPONENT DESCRIPTION

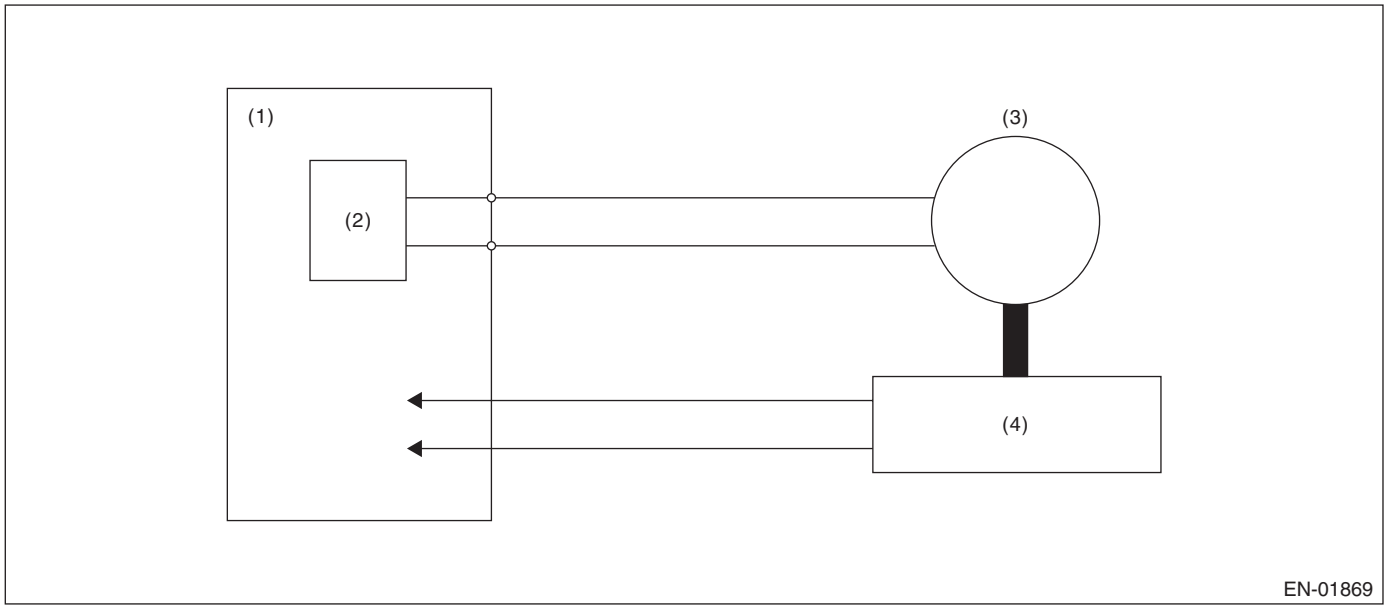

(1) Engine control module (ECM)
(2) Drive circuit
(3) Motor
(4) Throttle position sensor

3. EXECUTION CONDITION

Secondary parameters	Execution condition
Battery voltage	≥ 6 V

4. GENERAL DRIVING CYCLE

Perform the diagnosis at full closed point learning.

5. DIAGNOSTIC METHOD

If the duration of time while the following conditions are met is longer than the time indicated, judge as NG.

Judgment Value

Malfunction Criteria	Threshold Value
Throttle sensor opening angle at full close point learning	< 9.884 ° or > 20.116 °
or	
Throttle position when the ignition switch is ON – Throttle minimum stop position	< 1.637 °

Time Needed for Diagnosis: 8 ms — 80 ms
Malfunction Indicator Light Illumination: Illuminates as soon as a malfunction occurs.

EZ:DTC P2119 THROTTLE ACTUATOR "A" CONTROL THROTTLE BODY RANGE/PERFORMANCE

NOTE:
For the diagnostic procedure, refer to DTC P2101. <Ref. to EN(STI)(diag)-506, DTC P2101 THROTTLE ACTUATOR "A" CONTROL MOTOR CIRCUIT RANGE/PERFORMANCE, Diagnostic Procedure with Diagnostic Trouble Code (DTC).>

1. OUTLINE OF DIAGNOSIS

Judge as NG when the target opening angle and actual opening angle is mismatched or the current to motor is the specified duty or more for specified time continuously.

2. COMPONENT DESCRIPTION

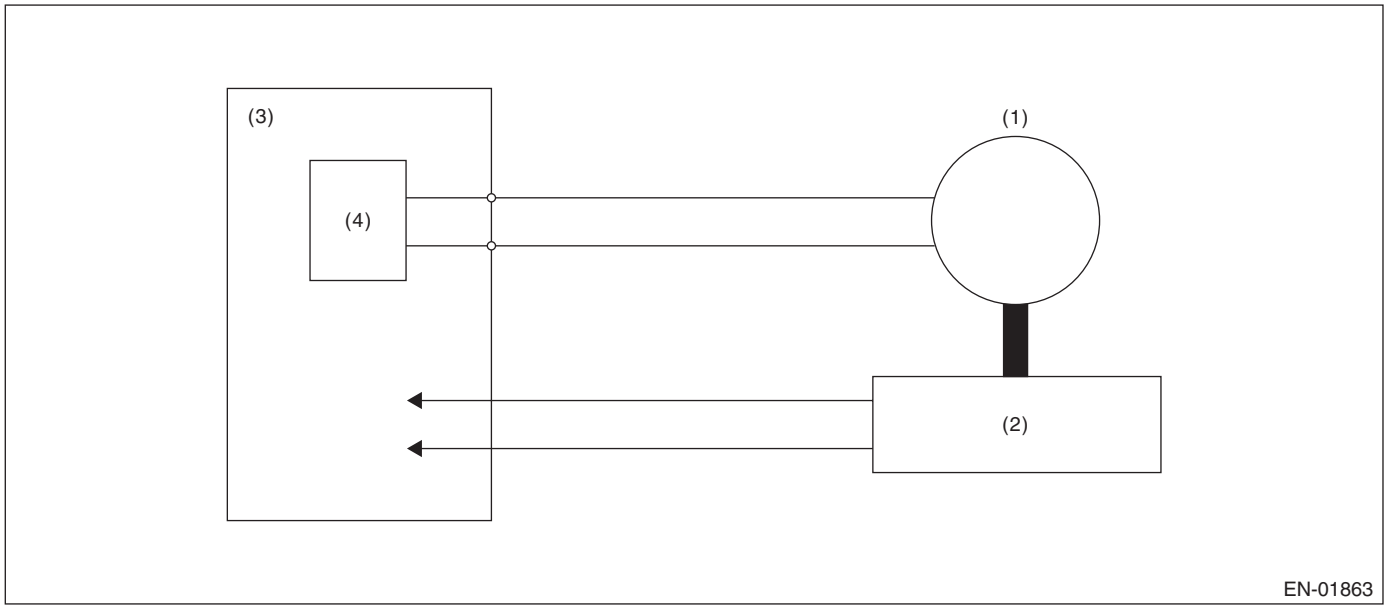

(1) Motor
(2) Throttle position sensor
(3) Engine control module (ECM)
(4) Drive circuit

3. EXECUTION CONDITION

Secondary parameters	Execution condition
Battery voltage	≥ 6.2 V
Electronic throttle control relay	ON

4. GENERAL DRIVING CYCLE

Always perform the diagnosis continuously when the electronic throttle control is operating.

5. DIAGNOSTIC METHOD

Judge as NG if the criteria below are met.

Diagnosis 1

Judgment Value

Malfunction Criteria	Threshold Value
Output duty to drive circuit	≥ 95 %

Time Needed for Diagnosis:

- Engine speed ≥ 500 rpm: 2000 ms
- Engine speed < 500 rpm: 5000 ms

Diagnosis 2

Judgment Value

Malfunction Criteria	Threshold Value
Difference between target opening angle and actual opening angle	Within NG range of **Details of Judgment value**

Time Needed for Diagnosis:

- Engine speed ≥ 500 rpm: Refer to **Details of Judgment time**.
- Engine speed < 500 rpm: 5000 ms

Details of Judgment Value

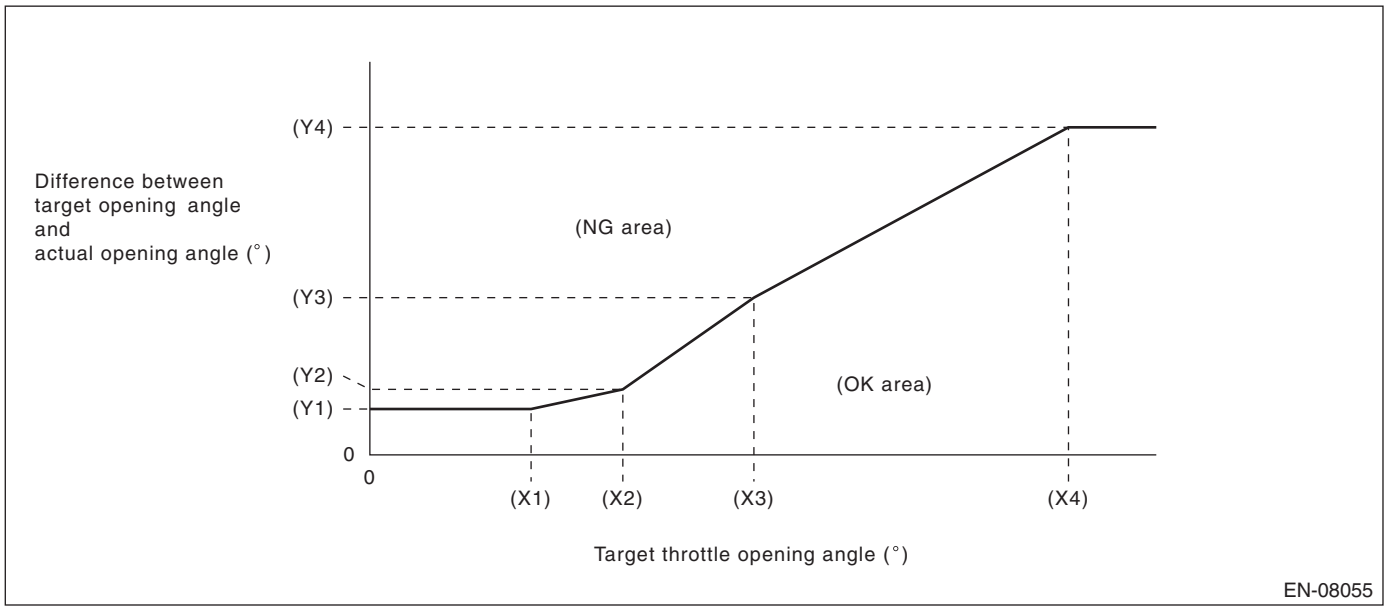

(X1) 6.15 °
(X2) 9.65 °
(X3) 14.65 °
(X4) 26.65 °

(Y1) 3.5 °
(Y2) 5 °
(Y3) 12 °
(Y4) 25 °

Details of Judgment time

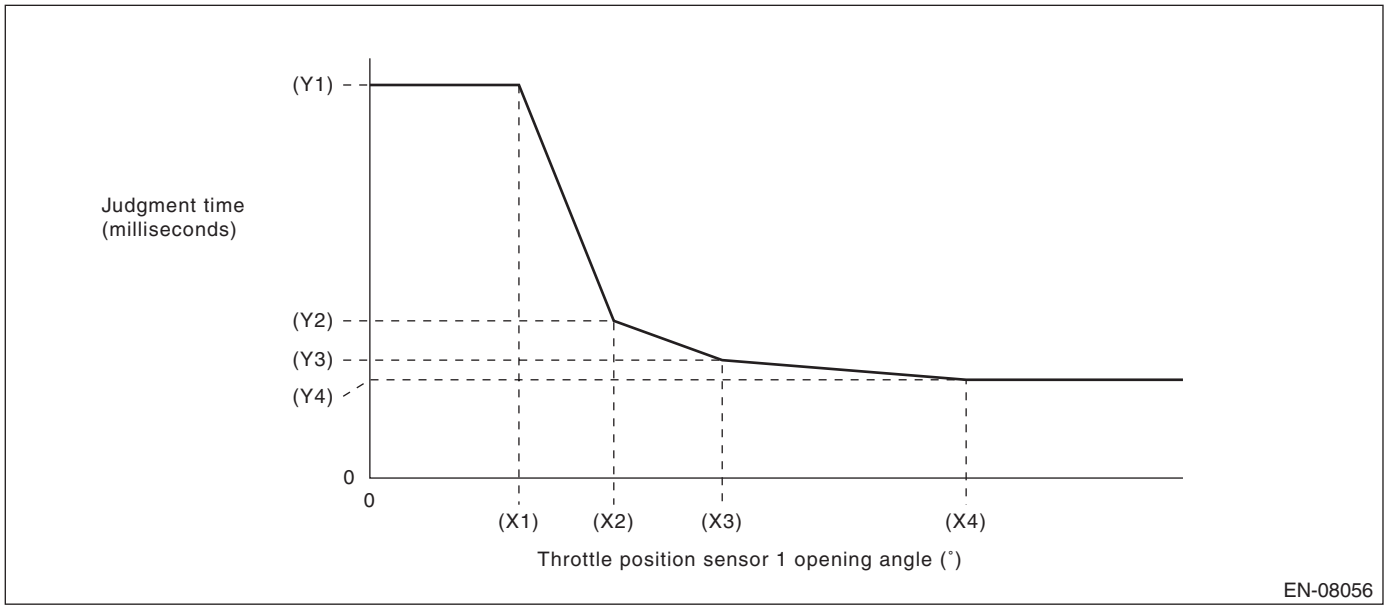

(X1) 5.5 °
(X2) 9 °
(X3) 13 °
(X4) 22 °

(Y1) 1000 ms
(Y2) 400 ms
(Y3) 300 ms
(Y4) 250 ms

NOTE:
Judgment time is always 1000 milliseconds when actual opening angle < target opening angle.
Malfunction Indicator Light Illumination: Illuminates as soon as a malfunction occurs.

FA:DTC P2122 THROTTLE/PEDAL POSITION SENSOR/SWITCH "D" CIRCUIT LOW

DTC DETECTING CONDITION:
Immediately at fault recognition
TROUBLE SYMPTOM:
- Improper idling
- Poor driving performance

CAUTION:
After servicing or replacing faulty parts, perform Clear Memory Mode <Ref. to EN(STI)(diag)-68, OPERATION, Clear Memory Mode.>, and Inspection Mode <Ref. to EN(STI)(diag)-48, PROCEDURE, Inspection Mode.>.
WIRING DIAGRAM:
Engine Electrical System <Ref. to WI-154, WIRING DIAGRAM, Engine Electrical System.>

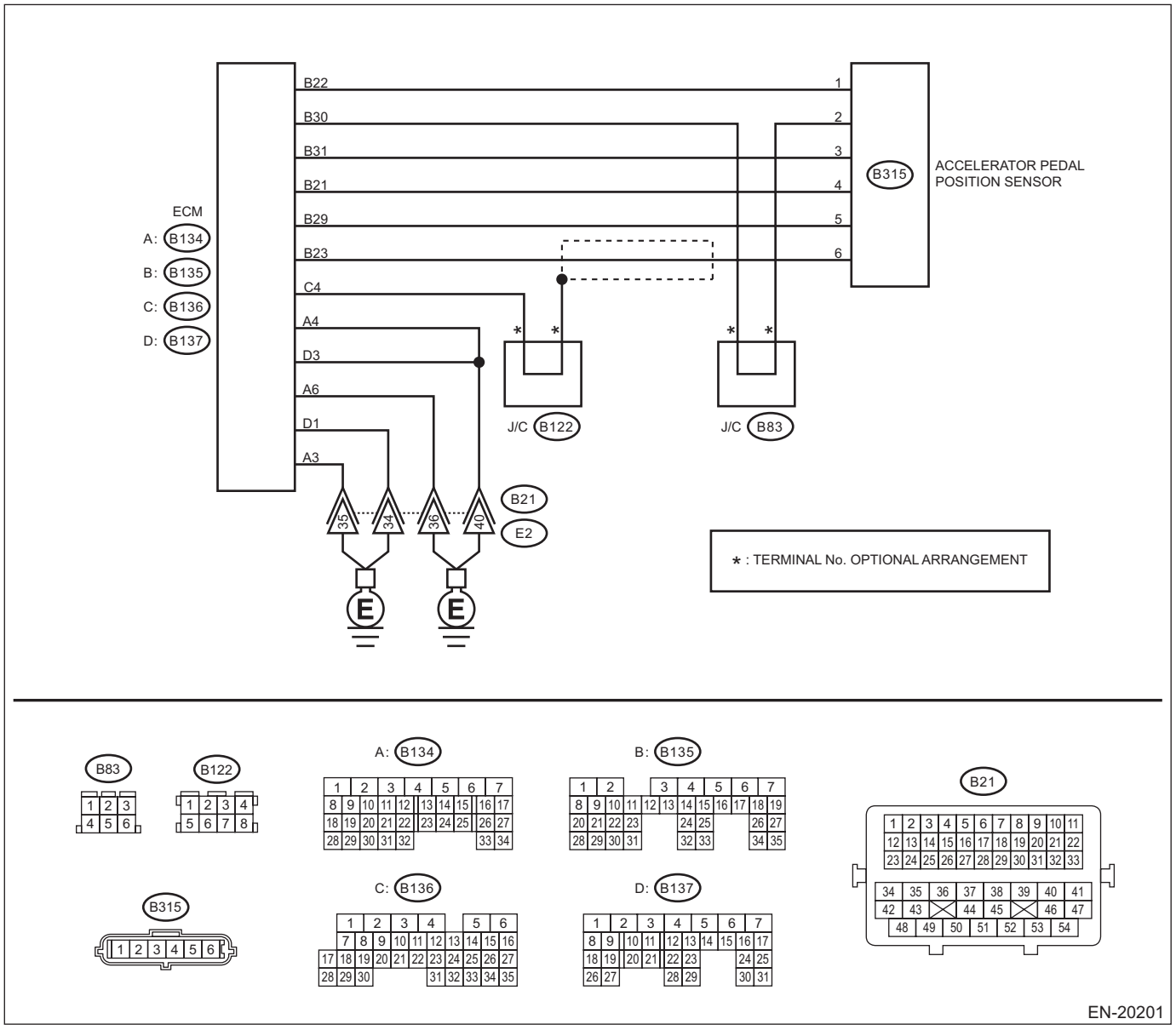

	Step	Check	Yes	No
1	**CHECK HARNESS BETWEEN ECM AND ACCELERATOR PEDAL POSITION SENSOR CONNECTOR.** 1) Turn the ignition switch to OFF. 2) Disconnect the connector from ECM. 3) Disconnect the connector from the accelerator pedal position sensor. 4) Measure the resistance between ECM connector and chassis ground. ***Connector & terminal*** ***(B135) No. 21 — Chassis ground:*** ***(B135) No. 23 — Chassis ground:*** ***(B135) No. 23 — (B136) No. 4:***	Is the resistance 1 MΩ or more?	Go to step **2**.	Repair the short circuit to ground in harness between ECM connector and accelerator pedal position sensor connector.
2	**CHECK SHORT CIRCUIT INSIDE THE ECM.** 1) Connect the connector to ECM. 2) Measure the resistance between accelerator pedal position sensor connector and chassis ground. ***Connector & terminal*** ***(B315) No. 6 — Chassis ground:***	Is the resistance 1 MΩ or more?	Replace the accelerator pedal. <Ref. to SP(STI)-4, Accelerator Pedal.>	Repair the short circuit to ground in harness between ECM connector and accelerator pedal position sensor connector. Replace the ECM if defective. <Ref. to FU(STI)-56, Engine Control Module (ECM).>

1. OUTLINE OF DIAGNOSIS

Detect the open or short circuit of accelerator pedal position sensor 1.
Judge as NG if out of specification.

2. COMPONENT DESCRIPTION

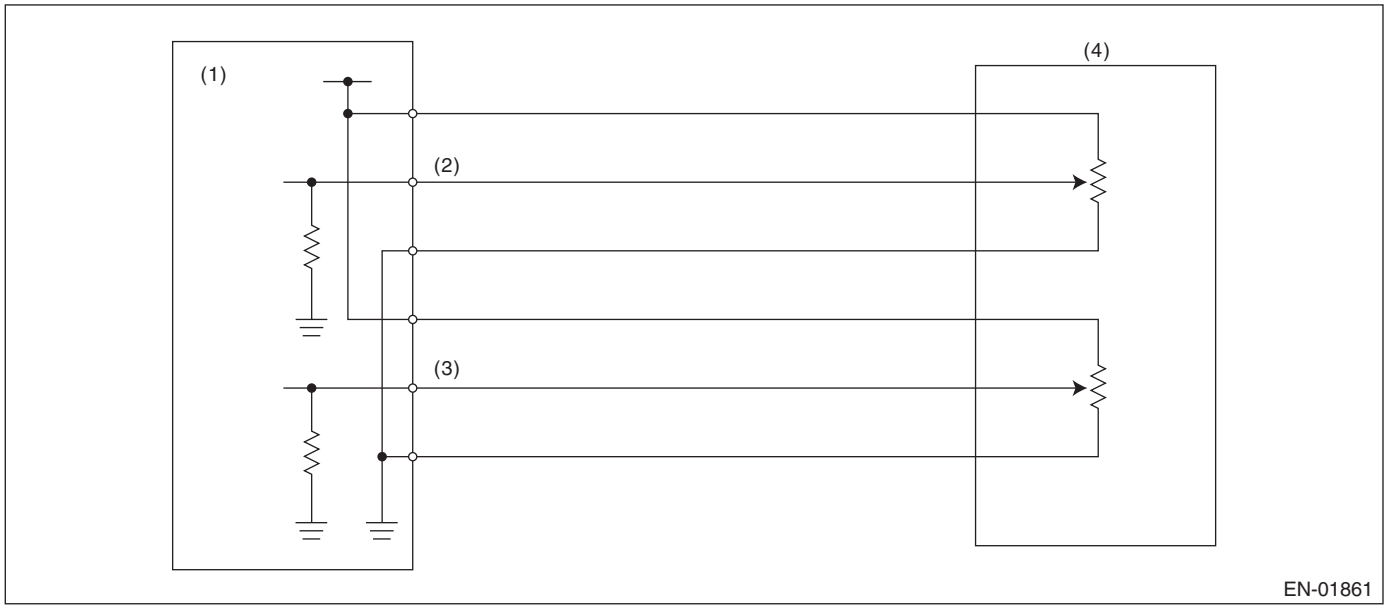

(1) Engine control module (ECM)
(2) Accelerator pedal position sensor 1 signal
(3) Accelerator pedal position sensor 2 signal
(4) Accelerator pedal position sensor

3. EXECUTION CONDITION

Secondary parameters	Execution condition
Battery voltage	≥ 6 V

4. GENERAL DRIVING CYCLE

Always perform the diagnosis continuously.

5. DIAGNOSTIC METHOD

If the duration of time while the following conditions are met is longer than the time indicated, judge as NG.

Judgment Value

Malfunction Criteria	Threshold Value
Sensor 1 input voltage	< 0.301 V

Time Needed for Diagnosis: 100 ms
Malfunction Indicator Light Illumination: Illuminates as soon as a malfunction occurs.

FB:DTC P2123 THROTTLE/PEDAL POSITION SENSOR/SWITCH "D" CIRCUIT HIGH

DTC DETECTING CONDITION:
Immediately at fault recognition
TROUBLE SYMPTOM:
- Improper idling
- Poor driving performance

CAUTION:
After servicing or replacing faulty parts, perform Clear Memory Mode <Ref. to EN(STI)(diag)-68, OPERATION, Clear Memory Mode.>, and Inspection Mode <Ref. to EN(STI)(diag)-48, PROCEDURE, Inspection Mode.>.
WIRING DIAGRAM:
Engine Electrical System <Ref. to WI-154, WIRING DIAGRAM, Engine Electrical System.>

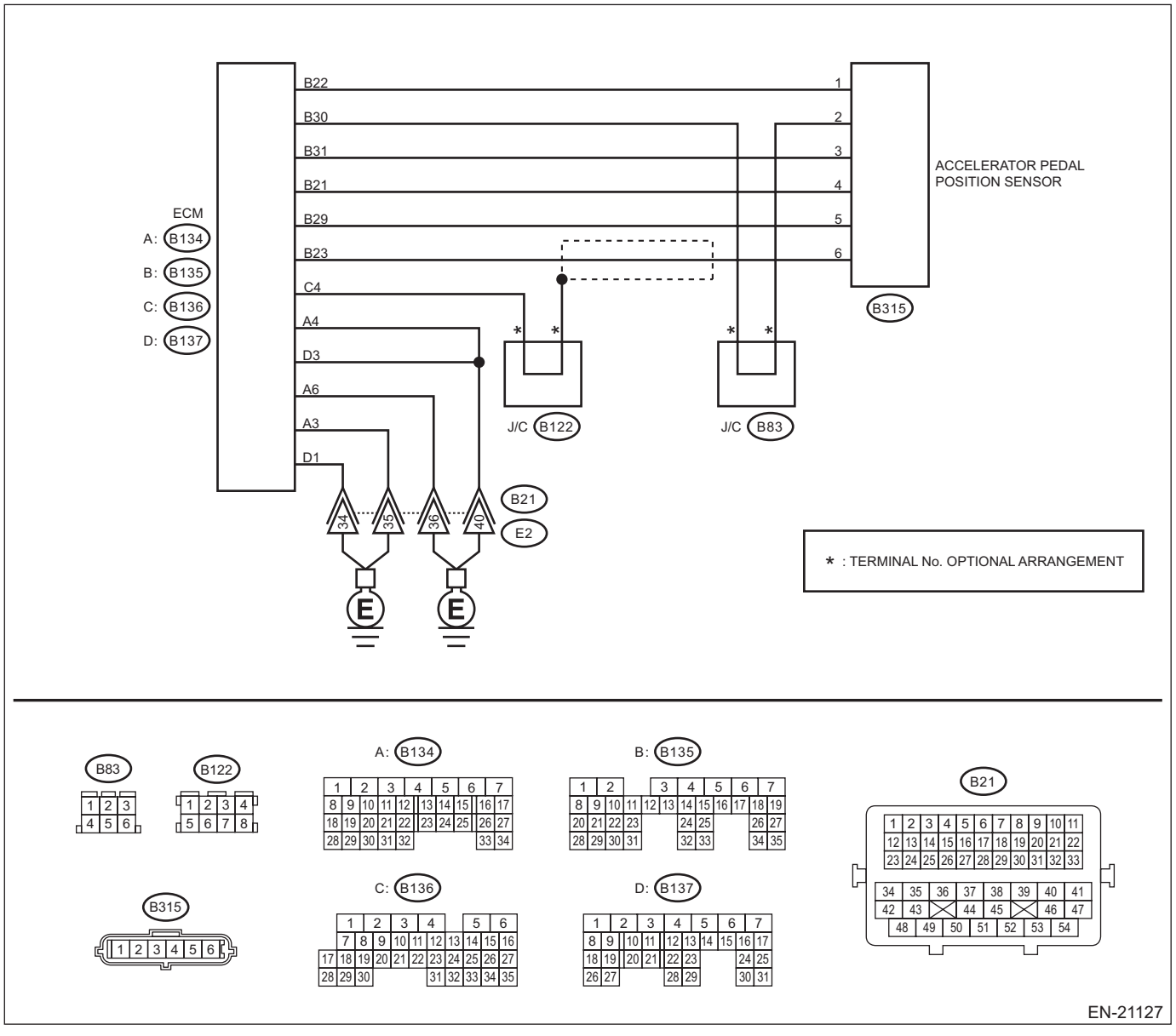

	Step	Check	Yes	No
1	**CHECK HARNESS BETWEEN ECM AND ACCELERATOR PEDAL POSITION SENSOR CONNECTOR.** 1) Turn the ignition switch to OFF. 2) Disconnect the connector from ECM. 3) Disconnect the connector from the accelerator pedal position sensor. 4) Measure the resistance of harness between ECM connector and accelerator pedal position sensor connector. ***Connector & terminal*** ***(B135) No. 23 — (B315) No. 6:*** ***(B135) No. 29 — (B315) No. 5:***	Is the resistance less than 1 Ω?	Go to step **2**.	Repair the open circuit of harness between ECM connector and accelerator pedal position sensor connector.
2	**CHECK HARNESS BETWEEN ECM AND ACCELERATOR PEDAL POSITION SENSOR CONNECTOR.** 1) Connect the connector to ECM. 2) Measure the resistance between accelerator pedal position sensor connector and chassis ground. ***Connector & terminal*** ***(B315) No. 5 — Chassis ground:***	Is the resistance less than 5 Ω?	Go to step **3**.	Repair the harness and connector. NOTE: In this case, repair the following item: • Open circuit of harness between ECM connector and engine ground • Poor contact of ECM connector • Poor contact of coupling connector
3	**CHECK HARNESS BETWEEN ECM AND ACCELERATOR PEDAL POSITION SENSOR CONNECTOR.** 1) Turn the ignition switch to ON. 2) Measure the voltage between accelerator pedal position sensor connector and chassis ground. ***Connector & terminal*** ***(B315) No. 6 (+) — Chassis ground (–):***	Is the voltage 5 V or more?	Repair the short circuit to power supply in harness between ECM connector and accelerator pedal position sensor connector.	Go to step **4**.
4	**CHECK HARNESS BETWEEN ECM AND ACCELERATOR PEDAL POSITION SENSOR CONNECTOR.** 1) Turn the ignition switch to OFF. 2) Disconnect the connector from ECM. 3) Measure the resistance between ECM connectors. ***Connector & terminal*** ***(B135) No. 21 — (B135) No. 23:***	Is the resistance 1 MΩ or more?	Repair the poor contact of accelerator pedal position sensor connector. Replace the accelerator pedal if defective. <Ref. to SP(STI)-4, Accelerator Pedal.>	Repair the short circuit to power supply in harness between ECM connector and accelerator pedal position sensor connector.

1. OUTLINE OF DIAGNOSIS

Detect the open or short circuit of accelerator pedal position sensor 1.
Judge as NG if out of specification.

2. COMPONENT DESCRIPTION

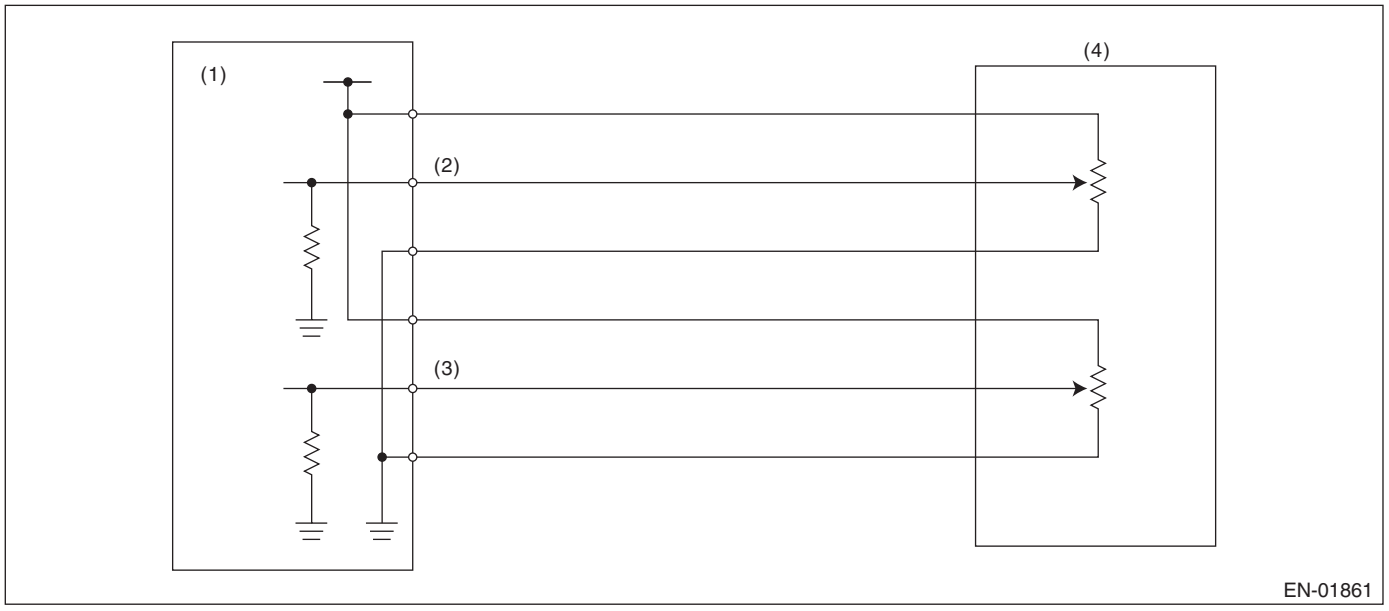

(1) Engine control module (ECM)
(2) Accelerator pedal position sensor 1 signal
(3) Accelerator pedal position sensor 2 signal
(4) Accelerator pedal position sensor

3. EXECUTION CONDITION

Secondary parameters	Execution condition
Battery voltage	≥ 6 V

4. GENERAL DRIVING CYCLE

Always perform the diagnosis continuously.

5. DIAGNOSTIC METHOD

If the duration of time while the following conditions are met is longer than the time indicated, judge as NG.

Judgment Value

Malfunction Criteria	Threshold Value
Sensor 1 input voltage	≥ 4.783 V

Time Needed for Diagnosis: 32 ms
Malfunction Indicator Light Illumination: Illuminates as soon as a malfunction occurs.

FC:DTC P2127 THROTTLE/PEDAL POSITION SENSOR/SWITCH "E" CIRCUIT LOW

DTC DETECTING CONDITION:
Immediately at fault recognition
TROUBLE SYMPTOM:
- Improper idling
- Poor driving performance

CAUTION:
After servicing or replacing faulty parts, perform Clear Memory Mode <Ref. to EN(STI)(diag)-68, OPERATION, Clear Memory Mode.>, and Inspection Mode <Ref. to EN(STI)(diag)-48, PROCEDURE, Inspection Mode.>.
WIRING DIAGRAM:
Engine Electrical System <Ref. to WI-154, WIRING DIAGRAM, Engine Electrical System.>

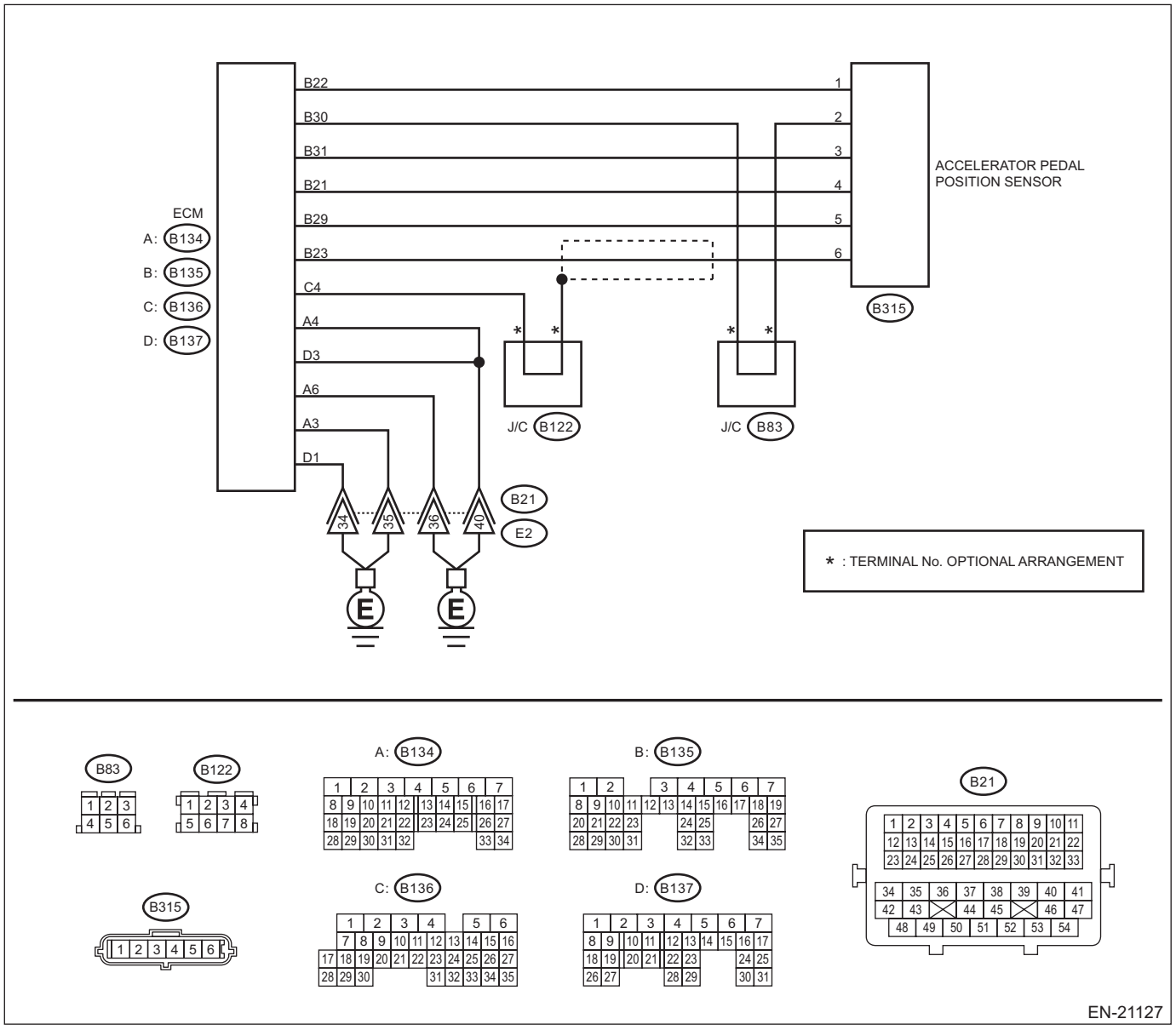

	Step	Check	Yes	No
1	**CHECK HARNESS BETWEEN ECM AND ACCELERATOR PEDAL POSITION SENSOR CONNECTOR.** 1) Turn the ignition switch to OFF. 2) Disconnect the connector from ECM. 3) Disconnect the connector from the accelerator pedal position sensor. 4) Measure the resistance between ECM connector and chassis ground. ***Connector & terminal*** ***(B135) No. 22 — Chassis ground:*** ***(B135) No. 31 — Chassis ground:***	Is the resistance 1 MΩ or more?	Go to step **2**.	Repair the short circuit to ground in harness between ECM connector and accelerator pedal position sensor connector.
2	**CHECK SHORT CIRCUIT INSIDE THE ECM.** 1) Connect the connector to ECM. 2) Measure the resistance between accelerator pedal position sensor connector and chassis ground. ***Connector & terminal*** ***(B315) No. 3 — Chassis ground:***	Is the resistance 1 MΩ or more?	Replace the accelerator pedal. <Ref. to SP(STI)-4, Accelerator Pedal.>	Repair the short circuit to ground in harness between ECM connector and accelerator pedal position sensor connector. Replace the ECM if defective. <Ref. to FU(STI)-56, Engine Control Module (ECM).>

1. OUTLINE OF DIAGNOSIS

Detect the open or short circuit of accelerator pedal position sensor 2.
Judge as NG if out of specification.

2. COMPONENT DESCRIPTION

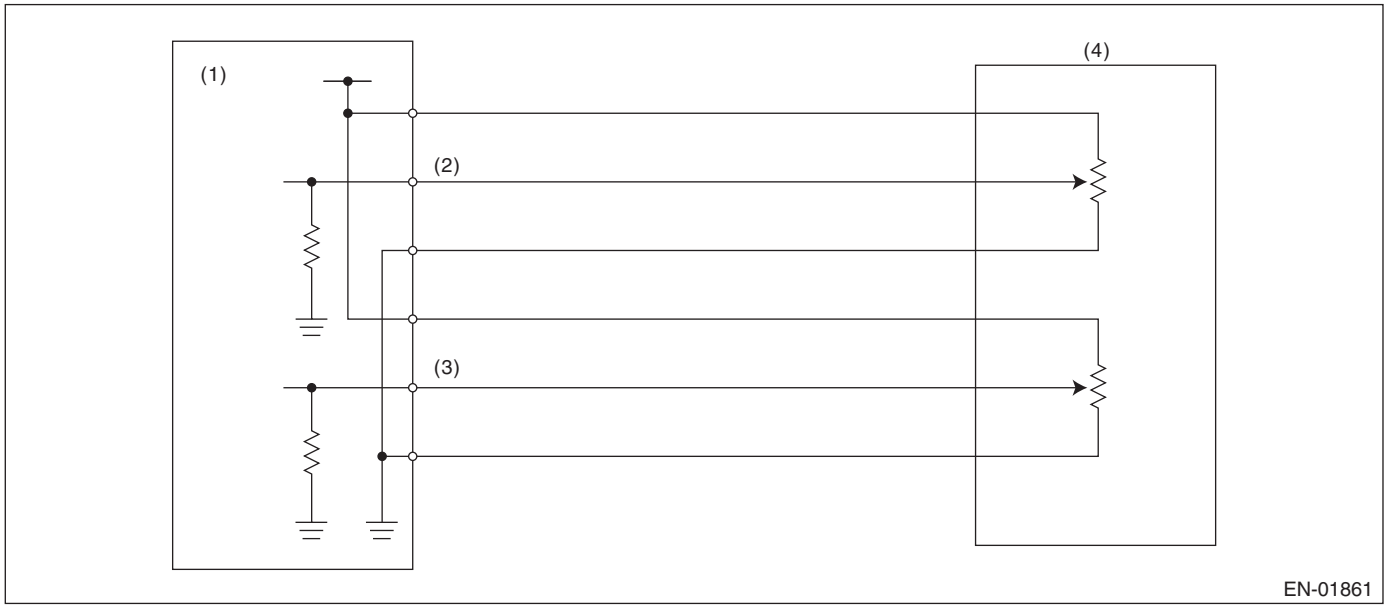

(1) Engine control module (ECM)
(2) Accelerator pedal position sensor 1 signal
(3) Accelerator pedal position sensor 2 signal
(4) Accelerator pedal position sensor

3. EXECUTION CONDITION

Secondary parameters	Execution condition
Battery voltage	≥ 6 V

4. GENERAL DRIVING CYCLE

Always perform the diagnosis continuously.

5. DIAGNOSTIC METHOD

If the duration of time while the following conditions are met is longer than the time indicated, judge as NG.

Judgment Value

Malfunction Criteria	Threshold Value
Sensor 2 input voltage	< 0.301 V

Time Needed for Diagnosis: 100 ms
Malfunction Indicator Light Illumination: Illuminates as soon as a malfunction occurs.

FD:DTC P2128 THROTTLE/PEDAL POSITION SENSOR/SWITCH "E" CIRCUIT HIGH

DTC DETECTING CONDITION:
Immediately at fault recognition
TROUBLE SYMPTOM:
- Improper idling
- Poor driving performance

CAUTION:
After servicing or replacing faulty parts, perform Clear Memory Mode <Ref. to EN(STI)(diag)-68, OPERATION, Clear Memory Mode.>, and Inspection Mode <Ref. to EN(STI)(diag)-48, PROCEDURE, Inspection Mode.>.
WIRING DIAGRAM:
Engine Electrical System <Ref. to WI-154, WIRING DIAGRAM, Engine Electrical System.>

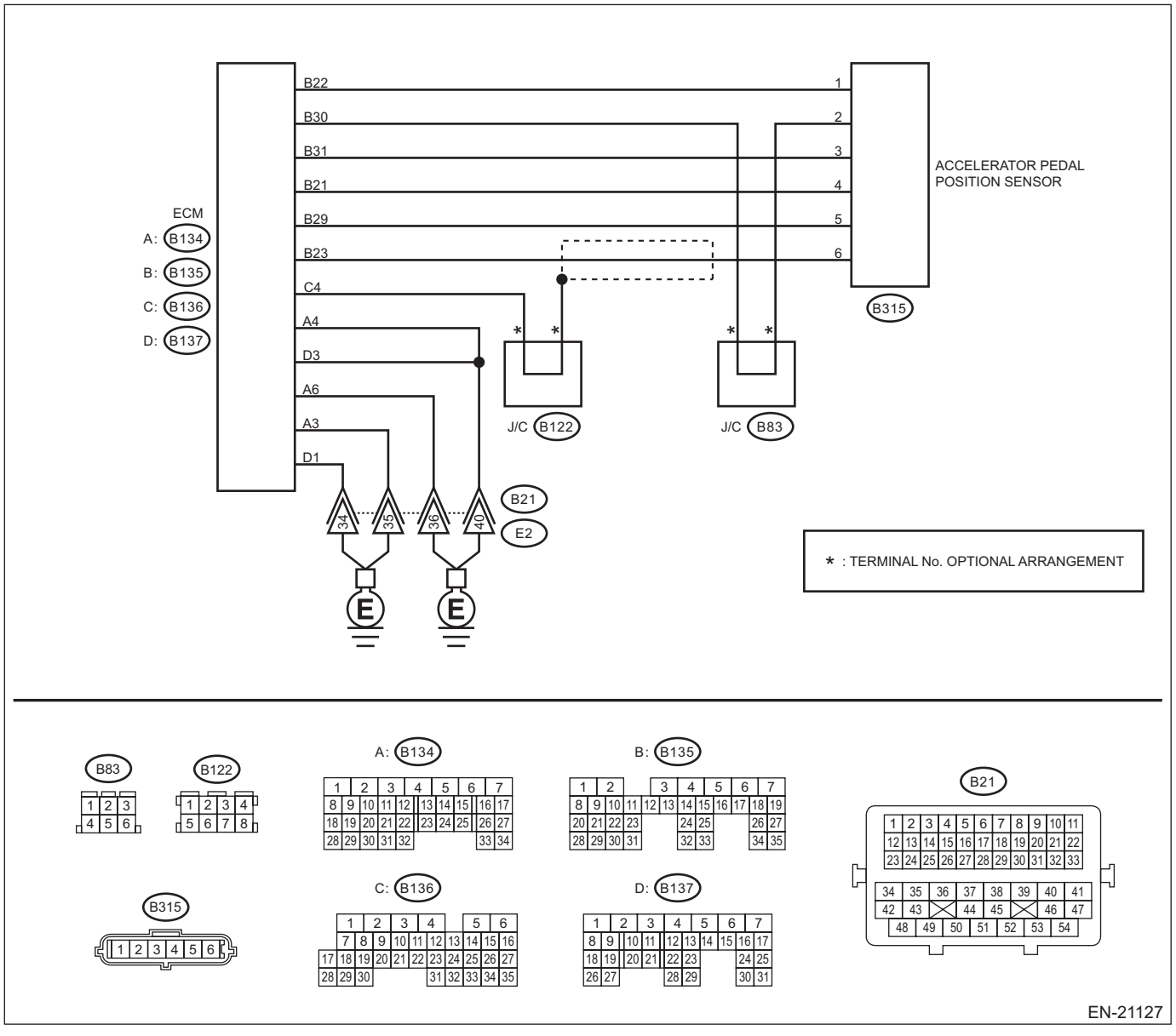

	Step	Check	Yes	No
1	**CHECK HARNESS BETWEEN ECM AND ACCELERATOR PEDAL POSITION SENSOR CONNECTOR.** 1) Turn the ignition switch to OFF. 2) Disconnect the connector from ECM. 3) Disconnect the connector from the accelerator pedal position sensor. 4) Measure the resistance of harness between ECM connector and accelerator pedal position sensor connector. ***Connector & terminal*** ***(B135) No. 31 — (B315) No. 3:*** ***(B135) No. 30 — (B315) No. 2:***	Is the resistance less than 1 Ω?	Go to step **2**.	Repair the harness and connector. NOTE: In this case, repair the following item: • Open circuit of harness between ECM connector and accelerator pedal position sensor connector • Poor contact of joint connector
2	**CHECK HARNESS BETWEEN ECM AND ACCELERATOR PEDAL POSITION SENSOR CONNECTOR.** 1) Connect the connector to ECM. 2) Measure the resistance between accelerator pedal position sensor connector and chassis ground. ***Connector & terminal*** ***(B315) No. 2 — Chassis ground:***	Is the resistance less than 1 Ω?	Go to step **3**.	Repair the harness and connector. NOTE: In this case, repair the following item: • Open circuit of harness between ECM connector and engine ground • Poor contact of ECM connector • Poor contact of coupling connector
3	**CHECK HARNESS BETWEEN ECM AND ACCELERATOR PEDAL POSITION SENSOR CONNECTOR.** 1) Turn the ignition switch to ON. 2) Measure the voltage between accelerator pedal position sensor connector and chassis ground. ***Connector & terminal*** ***(B315) No. 3 (+) — Chassis ground (–):***	Is the voltage 5 V or more?	Repair the short circuit to power supply in harness between ECM connector and accelerator pedal position sensor connector.	Go to step **4**.
4	**CHECK HARNESS BETWEEN ECM AND ACCELERATOR PEDAL POSITION SENSOR CONNECTOR.** 1) Turn the ignition switch to OFF. 2) Disconnect the connector from ECM. 3) Measure the resistance between ECM connectors. ***Connector & terminal*** ***(B135) No. 22 — (B135) No. 31:***	Is the resistance 1 MΩ or more?	Repair the poor contact of accelerator pedal position sensor connector. Replace the accelerator pedal if defective. <Ref. to SP(STI)-4, Accelerator Pedal.>	Repair the short circuit to power supply in harness between ECM connector and accelerator pedal position sensor connector.

1. OUTLINE OF DIAGNOSIS

Detect the open or short circuit of accelerator pedal position sensor 2.
Judge as NG if out of specification.

2. COMPONENT DESCRIPTION

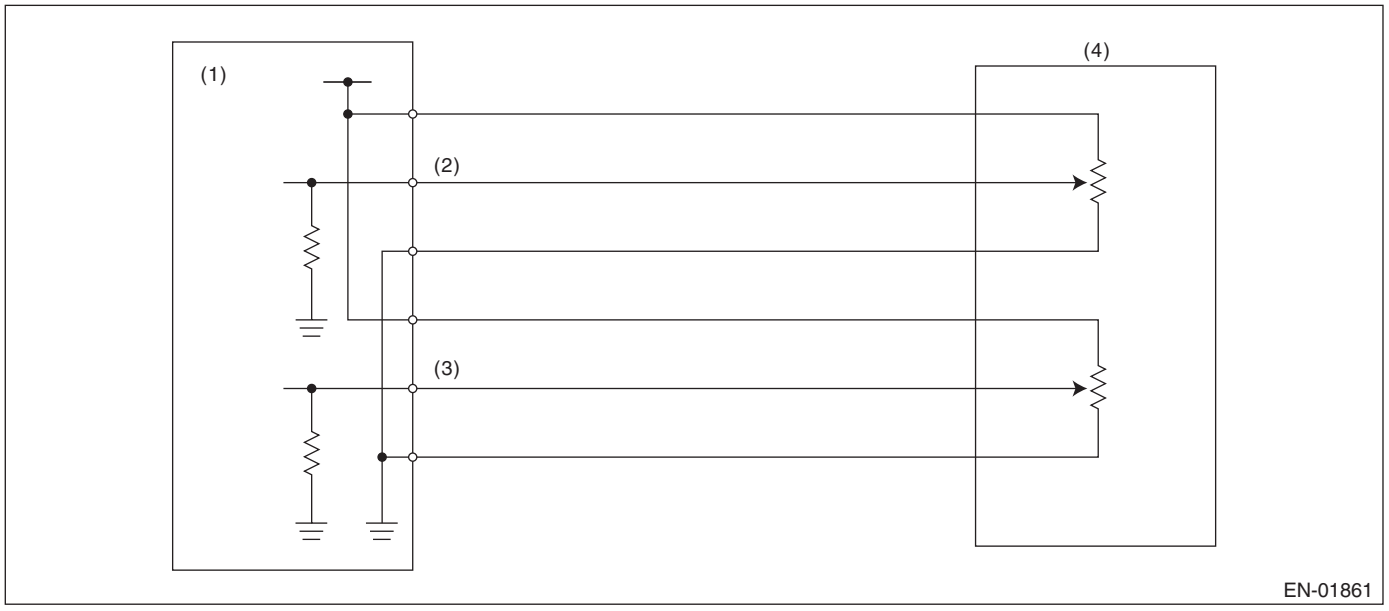

(1) Engine control module (ECM)
(2) Accelerator pedal position sensor 1 signal
(3) Accelerator pedal position sensor 2 signal
(4) Accelerator pedal position sensor

3. EXECUTION CONDITION

Secondary parameters	Execution condition
Battery voltage	≥ 6 V

4. GENERAL DRIVING CYCLE

Always perform the diagnosis continuously.

5. DIAGNOSTIC METHOD

If the duration of time while the following conditions are met is longer than the time indicated, judge as NG.

Judgment Value

Malfunction Criteria	Threshold Value
Sensor 2 input voltage	≥ 4.783 V

Time Needed for Diagnosis: 100 ms
Malfunction Indicator Light Illumination: Illuminates as soon as a malfunction occurs.

FE:DTC P2135 THROTTLE/PEDAL POSITION SENSOR/SWITCH "A"/"B" VOLTAGE CORRELATION

DTC DETECTING CONDITION:
Immediately at fault recognition
TROUBLE SYMPTOM:
- Improper idling
- Poor driving performance

CAUTION:
After servicing or replacing faulty parts, perform Clear Memory Mode <Ref. to EN(STI)(diag)-68, OPERATION, Clear Memory Mode.>, and Inspection Mode <Ref. to EN(STI)(diag)-48, PROCEDURE, Inspection Mode.>.

WIRING DIAGRAM:

Engine Electrical System <Ref. to WI-154, WIRING DIAGRAM, Engine Electrical System.>

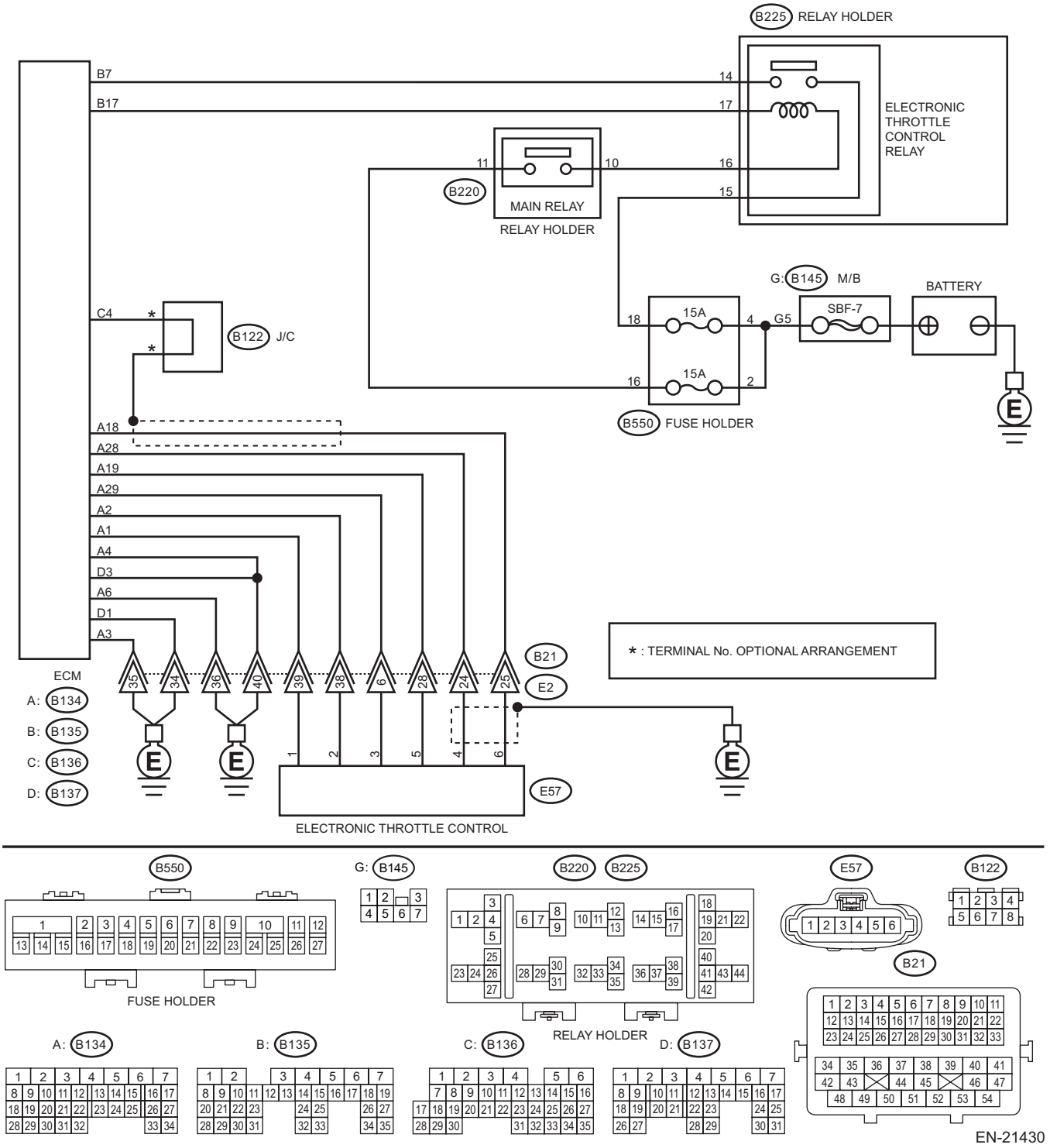

	Step	Check	Yes	No
1	**CHECK HARNESS BETWEEN ECM AND ELECTRONIC THROTTLE CONTROL CONNECTOR.** 1) Turn the ignition switch to OFF. 2) Disconnect the connector from ECM. 3) Disconnect the connectors from electronic throttle control. 4) Measure the resistance between ECM connector and chassis ground. ***Connector & terminal*** ***(B134) No. 19 — Chassis ground:*** ***(B134) No. 18 — Chassis ground:*** ***(B134) No. 18 — (B136) No. 4:*** ***(B134) No. 28 — Chassis ground:***	Is the resistance 1 MΩ or more?	Go to step **2**.	Repair the ground short circuit of harness between ECM connector and electronic throttle control connector.
2	**CHECK SHORT CIRCUIT INSIDE THE ECM.** 1) Connect the connector to ECM. 2) Measure the resistance between electronic throttle control connector and engine ground. ***Connector & terminal*** ***(E57) No. 4 — Engine ground:*** ***(E57) No. 6 — Engine ground:***	Is the resistance 1 MΩ or more?	Go to step **3**.	Repair the ground short circuit of harness between ECM connector and electronic throttle control connector. Replace the ECM if defective. <Ref. to FU(STI)-56, Engine Control Module (ECM).>
3	**CHECK HARNESS BETWEEN ECM AND ELECTRONIC THROTTLE CONTROL CONNECTOR.** 1) Disconnect the connector from ECM. 2) Measure the resistance of harness between ECM connector and electronic throttle control connector. ***Connector & terminal*** ***(B134) No. 18 — (E57) No. 6:*** ***(B134) No. 28 — (E57) No. 4:*** ***(B134) No. 29 — (E57) No. 3:***	Is the resistance less than 1 Ω?	Go to step **4**.	Repair the harness and connector. NOTE: In this case, repair the following item: • Open circuit in harness between ECM connector and electronic throttle control connector • Poor contact of coupling connector
4	**CHECK HARNESS BETWEEN ECM AND ELECTRONIC THROTTLE CONTROL CONNECTOR.** 1) Connect the connector to ECM. 2) Measure the resistance between electronic throttle control connector and engine ground. ***Connector & terminal*** ***(E57) No. 3 — Engine ground:***	Is the resistance less than 5 Ω?	Go to step **5**.	Repair the harness and connector. NOTE: In this case, repair the following item: • Open circuit of harness between ECM connector and engine ground • Poor contact of ECM connector • Poor contact of coupling connector

	Step	Check	Yes	No
5	**CHECK HARNESS BETWEEN ECM AND ELECTRONIC THROTTLE CONTROL CONNECTOR.** 1) Turn the ignition switch to ON. 2) Measure the voltage between electronic throttle control connector and engine ground. ***Connector & terminal*** ***(E57) No. 4 (+) — Engine ground (–):*** ***(E57) No. 6 (+) — Engine ground (–):***	Is the voltage 5 V or more?	Repair the short circuit to power in the harness between ECM connector and electronic throttle control connector.	Go to step **6**.
6	**CHECK HARNESS BETWEEN ECM AND ELECTRONIC THROTTLE CONTROL CONNECTOR.** 1) Turn the ignition switch to OFF. 2) Disconnect the connector from ECM. 3) Measure the resistance between ECM connectors. ***Connector & terminal*** ***(B134) No. 19 — (B134) No. 18:*** ***(B134) No. 19 — (B134) No. 28:***	Is the resistance 1 MΩ or more?	Repair the poor contact of electronic throttle control connector. Replace the electronic throttle control if defective. <Ref. to FU(STI)-15, Throttle Body.>	Repair the short circuit to power in the harness between ECM connector and electronic throttle control connector.

1. OUTLINE OF DIAGNOSIS

Judge as NG when the signal level of throttle position sensor 1 is different from the throttle position sensor 2.

2. COMPONENT DESCRIPTION

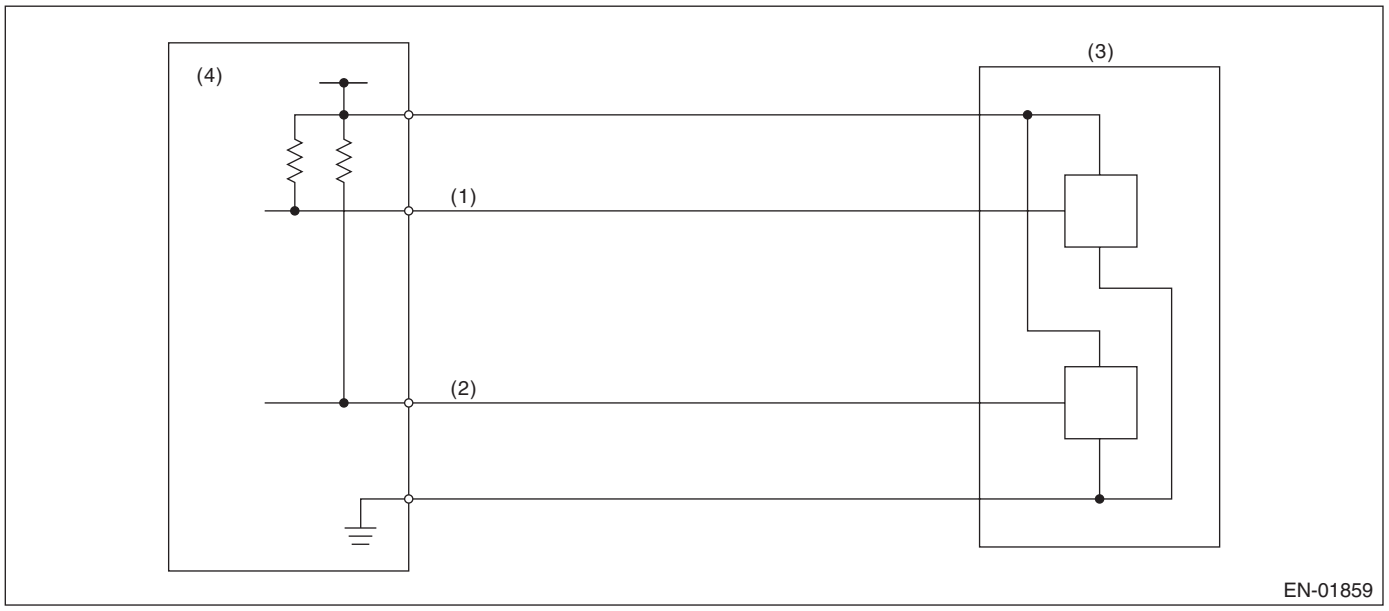

(1) Throttle position sensor 1 signal
(2) Throttle position sensor 2 signal
(3) Throttle position sensor
(4) Engine control module (ECM)

3. EXECUTION CONDITION

Secondary parameters	Execution condition
Battery voltage	≥ 6 V

4. GENERAL DRIVING CYCLE

Always perform the diagnosis continuously.

5. DIAGNOSTIC METHOD

If the duration of time while the following conditions are met is longer than the time indicated, judge as NG.

Judgment Value

Malfunction Criteria	Threshold Value
Signal difference between two sensors	Within NG range of **Details of Judgment value**

Details of Judgment Value

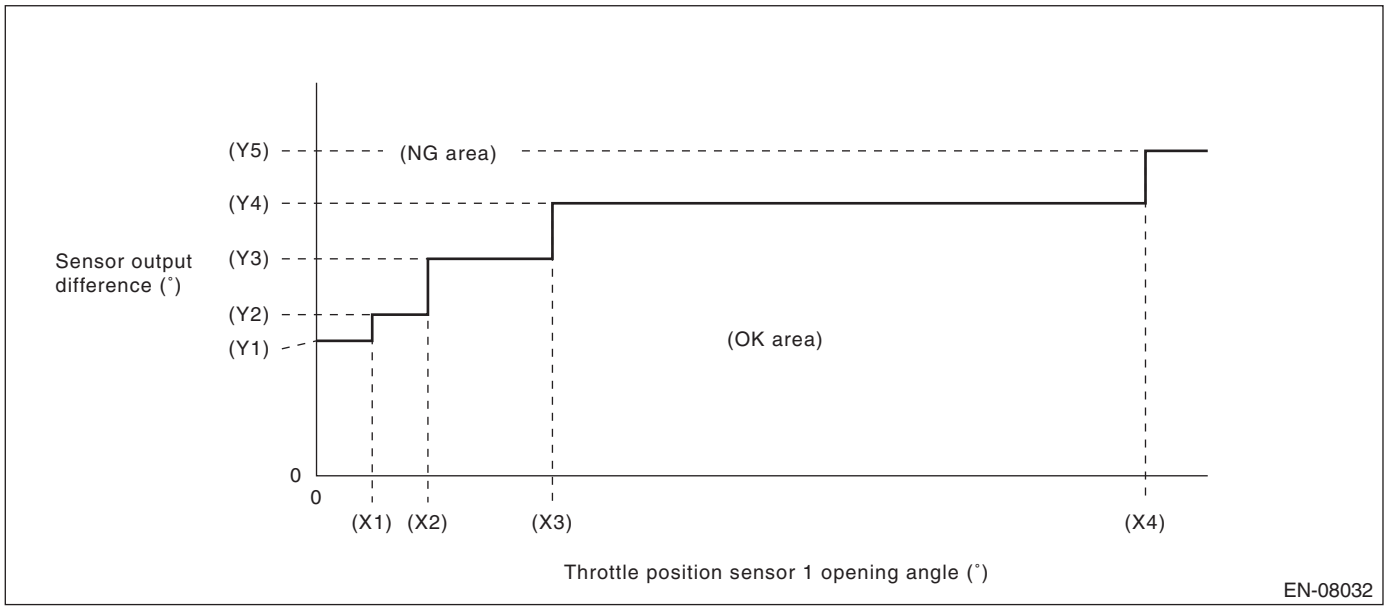

(X1) 2.125 °
(X2) 4.25 °
(X3) 9 °
(X4) 31.625 °

(Y1) 5.15 °
(Y2) 6.15 °
(Y3) 8.28 °
(Y4) 10.4 °
(Y5) 12.4 °

Time Needed for Diagnosis: 212 ms
Malfunction Indicator Light Illumination: Illuminates as soon as a malfunction occurs.

FF: DTC P2138 THROTTLE/PEDAL POSITION SENSOR/SWITCH "D"/"E" VOLTAGE CORRELATION

DTC DETECTING CONDITION:
Immediately at fault recognition
TROUBLE SYMPTOM:
- Improper idling
- Poor driving performance

CAUTION:
After servicing or replacing faulty parts, perform Clear Memory Mode <Ref. to EN(STI)(diag)-68, OPERATION, Clear Memory Mode.>, and Inspection Mode <Ref. to EN(STI)(diag)-48, PROCEDURE, Inspection Mode.>.
WIRING DIAGRAM:
Engine Electrical System <Ref. to WI-154, WIRING DIAGRAM, Engine Electrical System.>

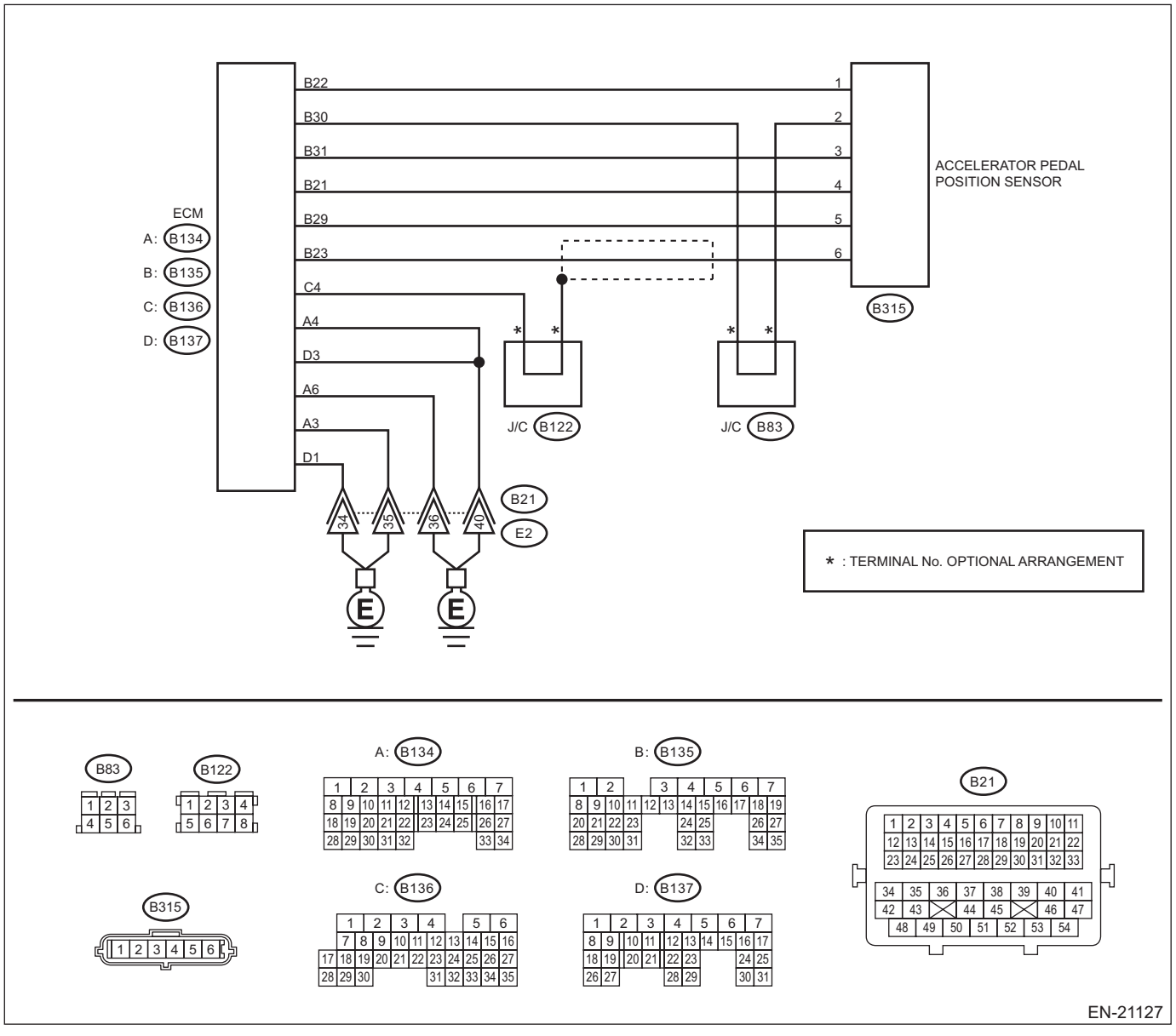

	Step	Check	Yes	No
1	**CHECK ACCELERATOR PEDAL POSITION SENSOR OUTPUT.** 1) Turn the ignition switch to ON. 2) Measure the voltage between ECM connector and chassis ground. ***Connector & terminal*** ***Main accelerator pedal position sensor signal*** ***(B135) No. 23 (+) — Chassis ground (–):*** ***Sub accelerator pedal position sensor signal*** ***(B135) No. 31 (+) — Chassis ground (–):***	Is the difference in measured values for the main accelerator pedal position sensor signal and the sub accelerator pedal position sensor signal 0 V?	Go to step **3**.	Go to step **2**.
2	**CHECK ACCELERATOR PEDAL POSITION SENSOR OUTPUT.** 1) Measure the voltage between accelerator pedal position sensor connector and chassis ground. ***Connector & terminal*** ***(B315) No. 6 (+) — Chassis ground (–):*** ***(B315) No. 3 (+) — Chassis ground (–):***	Is the difference in measured values for the main accelerator pedal position sensor signal and the sub accelerator pedal position sensor signal 0 V?	Replace the accelerator pedal. <Ref. to SP(STI)-4, Accelerator Pedal.>	Repair the harness and connector. NOTE: In this case, repair the following item: • Open circuit of harness between ECM connector and accelerator pedal position sensor connector • Short circuit to ground in harness between ECM connector and accelerator pedal position sensor connector
3	**CHECK HARNESS BETWEEN ECM AND ACCELERATOR PEDAL POSITION SENSOR CONNECTOR.** Measure the resistance of harness between accelerator pedal position sensor connector and chassis ground. ***Connector & terminal*** ***(B315) No. 5 — Chassis ground:*** ***(B315) No. 2 — Chassis ground:***	Is the resistance less than 5 Ω?	Repair the poor contact of ECM connector.	Repair the harness and connector. NOTE: In this case, repair the following item: • Open circuit of harness between ECM connector and accelerator pedal position sensor connector • Open circuit of harness between ECM connector and engine ground • Poor contact of ECM connector • Poor contact of coupling connector

1. OUTLINE OF DIAGNOSIS

Judge as NG when the signal level of accelerator pedal position sensor 1 is different from the accelerator pedal position sensor 2.

2. COMPONENT DESCRIPTION

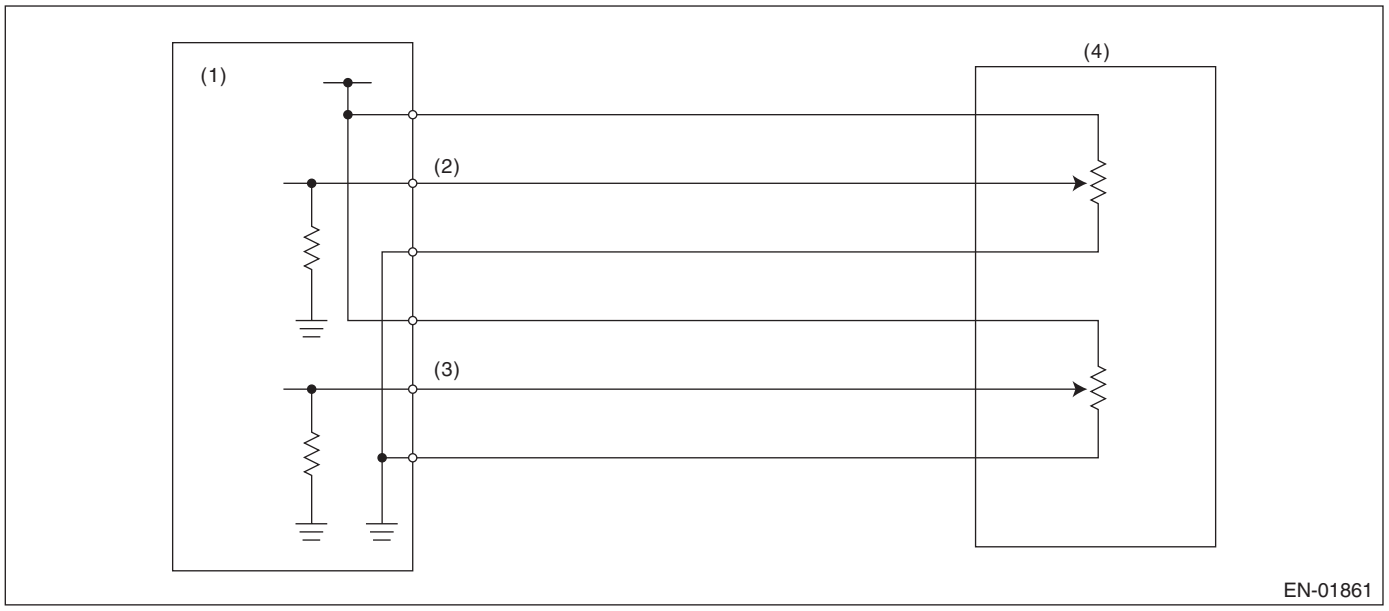

(1) Engine control module (ECM)
(2) Accelerator pedal position sensor 1 signal
(3) Accelerator pedal position sensor 2 signal
(4) Accelerator pedal position sensor

3. EXECUTION CONDITION

Secondary parameters	Execution condition
Battery voltage	≥ 6 V

4. GENERAL DRIVING CYCLE

Always perform the diagnosis continuously.

5. DIAGNOSTIC METHOD

If the duration of time while the following conditions are met is longer than the time indicated, judge as NG.

Judgment Value

Malfunction Criteria	Threshold Value
Signal difference between two sensors	Within NG range of **Details of Judgment value**

Details of Judgment Value

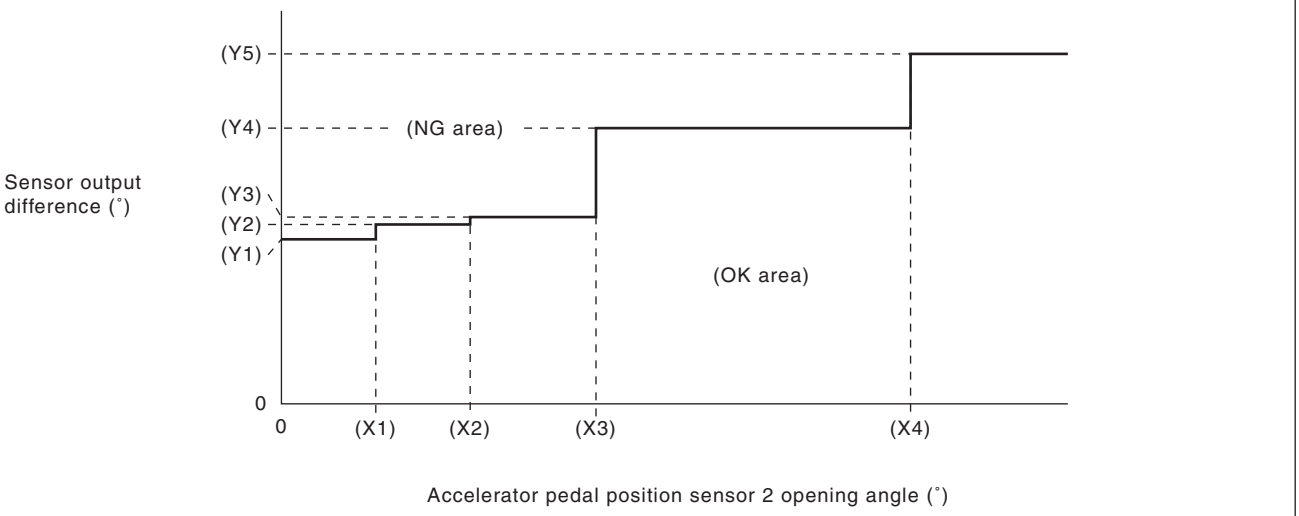

(X1) 0.6 °
(X2) 1.2 °
(X3) 2 °
(X4) 4 °

(Y1) 1.465 °
(Y2) 1.597 °
(Y3) 1.663 °
(Y4) 2.455 °
(Y5) 3.116 °

Time Needed for Diagnosis: 116 ms
Malfunction Indicator Light Illumination: Illuminates as soon as a malfunction occurs.

FG:DTC P2195 A/F /O2 SENSOR SIGNAL BIASED/STUCK LEAN BANK 1 SENSOR 1

DTC DETECTING CONDITION:

Detected when two consecutive driving cycles with fault occur.

CAUTION:

After servicing or replacing faulty parts, perform Clear Memory Mode <Ref. to EN(STI)(diag)-68, OPERATION, Clear Memory Mode.>, and Inspection Mode <Ref. to EN(STI)(diag)-48, PROCEDURE, Inspection Mode.>.

WIRING DIAGRAM:
Engine Electrical System <Ref. to WI-154, WIRING DIAGRAM, Engine Electrical System.>

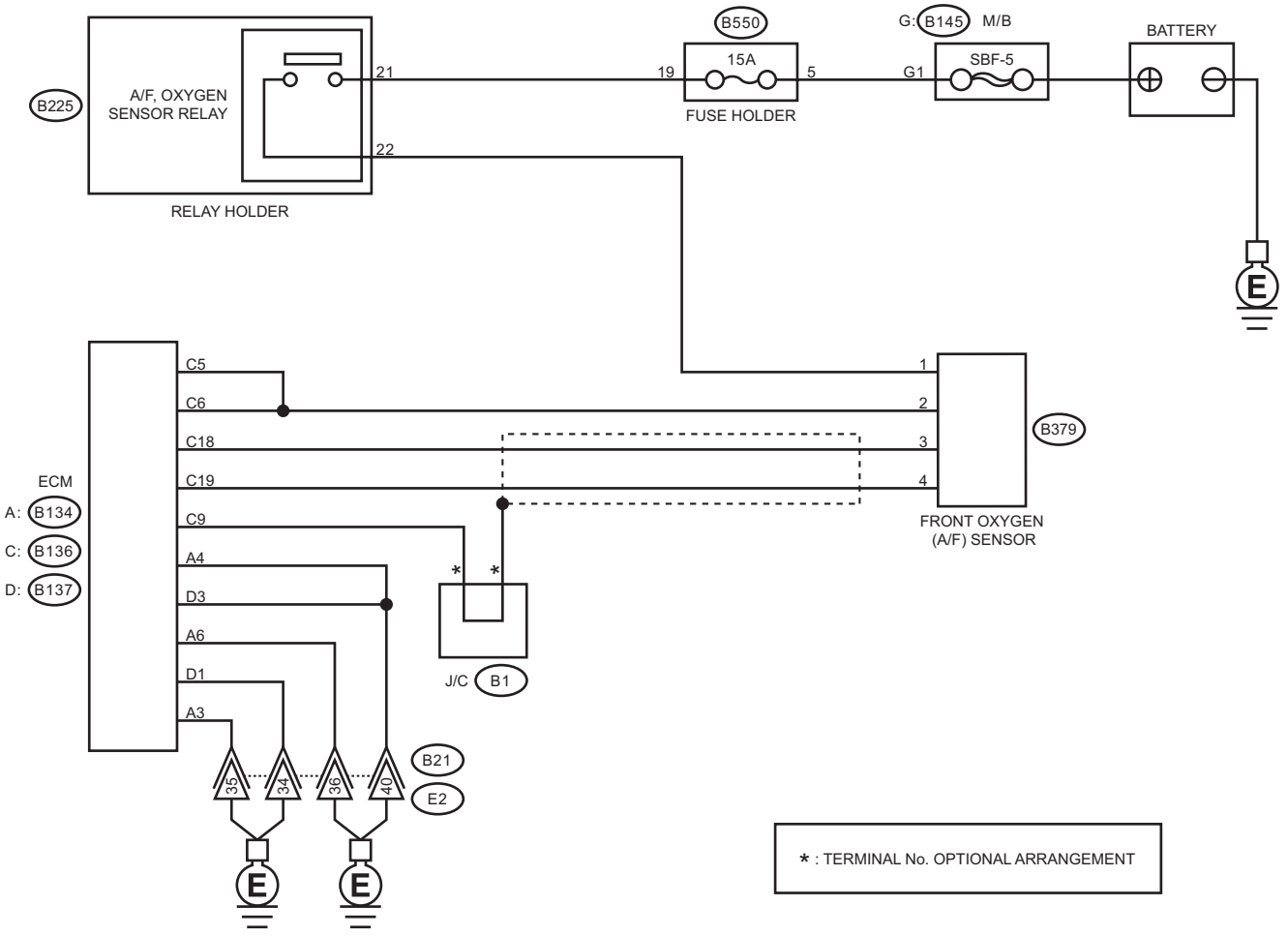

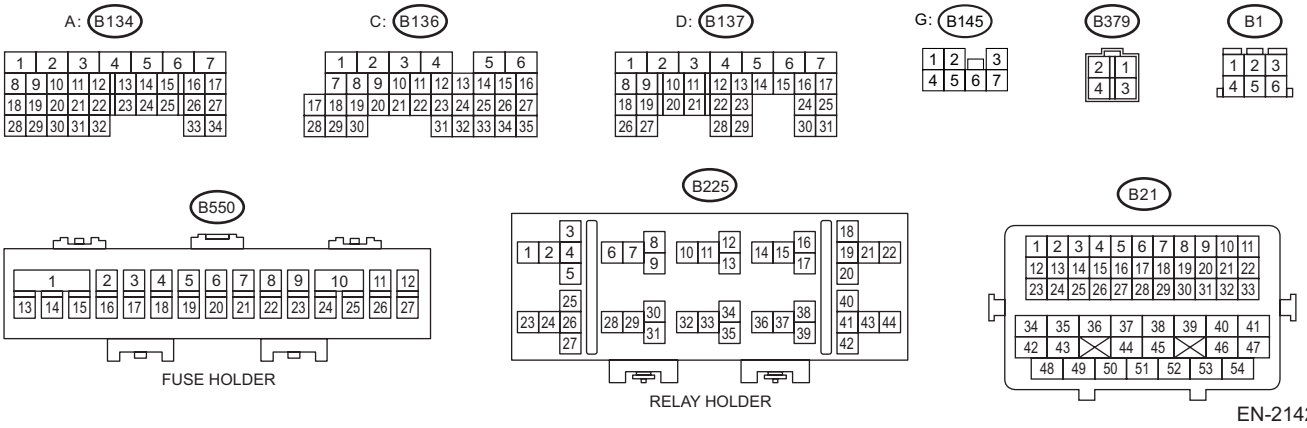

Step		Check	Yes	No
1	**CHECK FRONT OXYGEN (A/F) SENSOR CONNECTOR AND COUPLING CONNECTOR.**	Has water entered the connector?	Completely remove any water inside.	Go to step **2**.

	Step	Check	Yes	No
2	**CHECK HARNESS BETWEEN ECM AND FRONT OXYGEN (A/F) SENSOR CONNECTOR.** 1) Turn the ignition switch to OFF. 2) Disconnect the connector from ECM. 3) Disconnect the connectors from front oxygen (A/F) sensor. 4) Measure the resistance of harness between ECM connector and front oxygen (A/F) sensor connector. ***Connector & terminal*** ***(B136) No. 18 — (B379) No. 3:*** ***(B136) No. 19 — (B379) No. 4:***	Is the resistance less than 1 Ω?	Go to step **3**.	Repair the open circuit of harness between ECM connector and front oxygen (A/F) sensor connector.
3	**CHECK FOR POOR CONTACT.** Check for poor contact of the front oxygen (A/F) sensor connector.	Is there poor contact of front oxygen (A/F) sensor connector?	Repair the poor contact of front oxygen (A/F) sensor connector.	Replace the front oxygen (A/F) sensor. <Ref. to FU(STI)-52, Front Oxygen (A/F) Sensor.>

1. OUTLINE OF DIAGNOSIS

Detect that λ value remains low.
Judge as NG when lambda value is abnormal in accordance with λ value of front oxygen (A/F) sensor and driving conditions such as vehicle speed, amount of intake air, engine coolant temperature, sub feedback control, etc.

λ value = Actual air fuel ratio/Theoretical air fuel ratio
λ > 1: Lean
λ < 1: Rich

2. COMPONENT DESCRIPTION

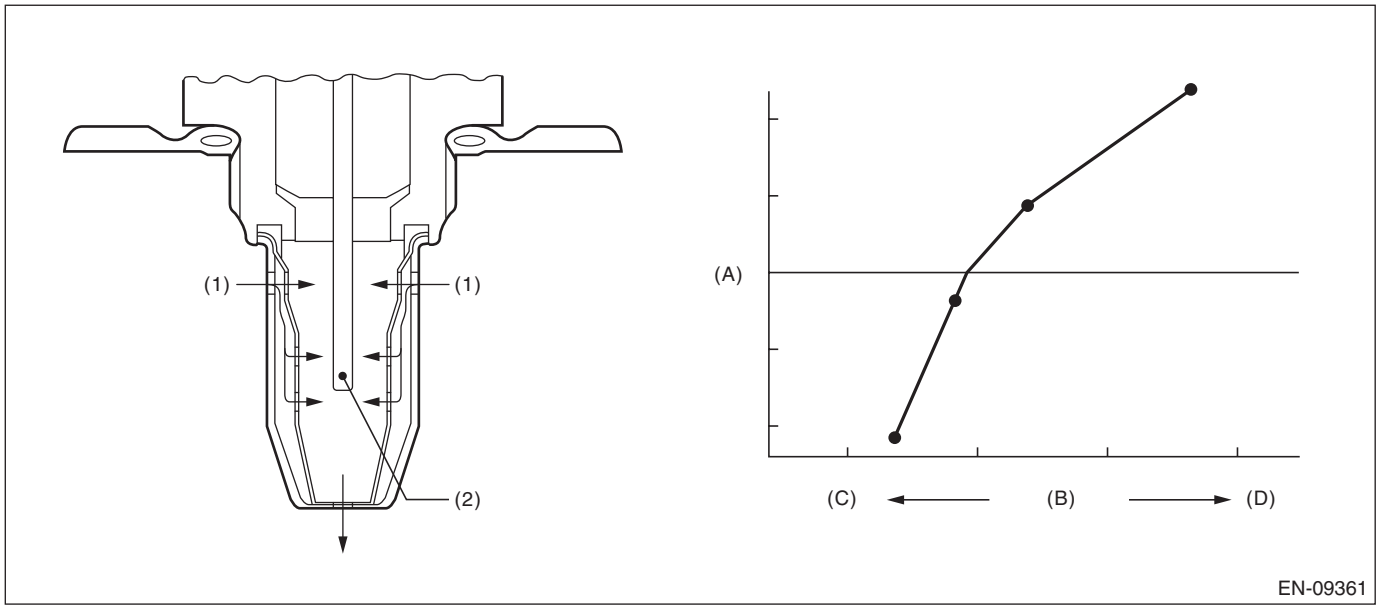

(A) Electromotive force
(B) Air fuel ratio
(C) Rich
(D) Lean

(1) Exhaust gas
(2) ZrO_2

3. EXECUTION CONDITION

Secondary parameters	Execution condition
Battery voltage	≥ 10.9 V
Barometric pressure	> 75.1 kPa (563 mmHg, 22.2 inHg)
Sub feedback	In operation
Amount of intake air	≥ 6 g/s (0.21 oz/s)
Rear oxygen sensor output voltage – Feedback target voltage	– 0.2 V — 0.1 V
or	
Rear oxygen sensor sub feedback compensation coefficient	On Min.
or	
Rear oxygen sensor sub feedback compensation coefficient	On Max.

4. GENERAL DRIVING CYCLE

Always perform the diagnosis continuously.

5. DIAGNOSTIC METHOD

If the duration of time while the following conditions are met is longer than the time indicated, judge as NG.

Judgment Value

Malfunction Criteria	Threshold Value
λ value	≤ 0.85

Time Needed for Diagnosis: 10000 ms
Malfunction Indicator Light Illumination: Illuminates when malfunction occurs in 2 continuous driving cycles.

FH:DTC P2196 A/F /O2 SENSOR SIGNAL BIASED/STUCK RICH BANK 1 SENSOR 1

DTC DETECTING CONDITION:

Detected when two consecutive driving cycles with fault occur.

CAUTION:

After servicing or replacing faulty parts, perform Clear Memory Mode <Ref. to EN(STI)(diag)-68, OPERATION, Clear Memory Mode.>, and Inspection Mode <Ref. to EN(STI)(diag)-48, PROCEDURE, Inspection Mode.>.

WIRING DIAGRAM:

Engine Electrical System <Ref. to WI-154, WIRING DIAGRAM, Engine Electrical System.>

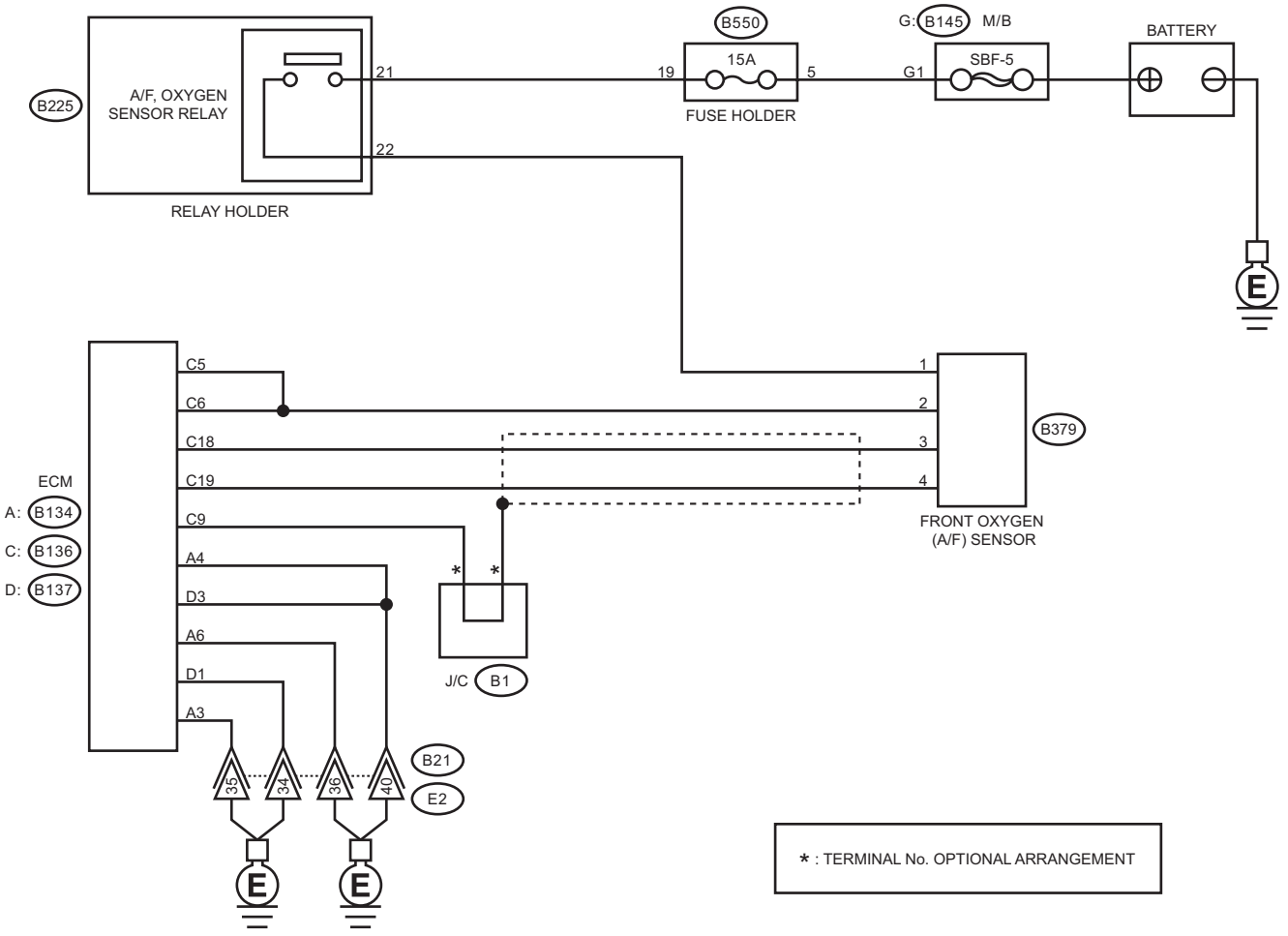

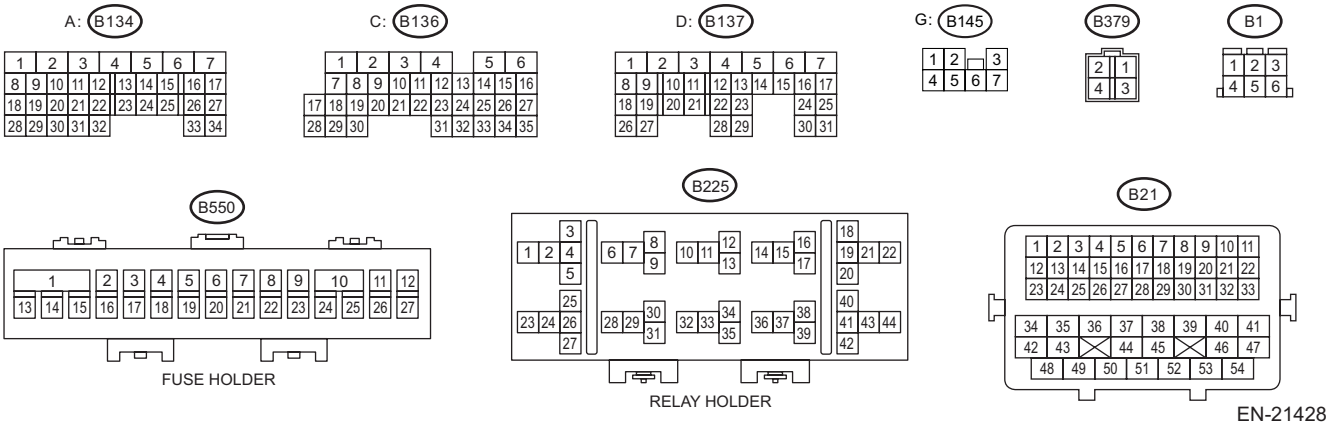

Step		Check	Yes	No
1	**CHECK FRONT OXYGEN (A/F) SENSOR CONNECTOR AND COUPLING CONNECTOR.**	Has water entered the connector?	Completely remove any water inside.	Go to step **2**.

	Step	Check	Yes	No
2	**CHECK HARNESS BETWEEN ECM AND FRONT OXYGEN (A/F) SENSOR CONNECTOR.** 1) Turn the ignition switch to OFF. 2) Disconnect the connector from ECM. 3) Measure the resistance between ECM connector and chassis ground. ***Connector & terminal*** ***(B136) No. 18 — Chassis ground:*** ***(B136) No. 19 — Chassis ground:***	Is the resistance 1 MΩ or more?	Go to step **3**.	Repair the short circuit to ground in harness between ECM connector and front oxygen (A/F) sensor connector.
3	**CHECK OUTPUT SIGNAL FOR ECM.** 1) Connect the connector to ECM. 2) Turn the ignition switch to ON. 3) Measure the voltage between ECM connector and chassis ground. ***Connector & terminal*** ***(B136) No. 19 (+) — Chassis ground (–):***	Is the voltage 4.5 V or more?	Go to step **5**.	Go to step **4**.
4	**CHECK OUTPUT SIGNAL FOR ECM.** Measure the voltage between ECM connector and chassis ground. ***Connector & terminal*** ***(B136) No. 18 (+) — Chassis ground (–):***	Is the voltage 4.95 V or more?	Go to step **5**.	Replace the front oxygen (A/F) sensor. <Ref. to FU(STI)-52, Front Oxygen (A/F) Sensor.>
5	**CHECK OUTPUT SIGNAL FOR ECM.** Measure the voltage between ECM connector and chassis ground. ***Connector & terminal*** ***(B136) No. 18 (+) — Chassis ground (–):*** ***(B136) No. 19 (+) — Chassis ground (–):***	Is the voltage 8 V or more?	Repair the short circuit to power in the harness between ECM connector and front oxygen (A/F) sensor connector. After repair, replace the ECM. <Ref. to FU(STI)-56, Engine Control Module (ECM).>	Repair the poor contact of ECM connector.

1. OUTLINE OF DIAGNOSIS

Detect that λ value remains high.
Judge as NG when lambda value is abnormal in accordance with λ value of front oxygen (A/F) sensor and driving conditions such as vehicle speed, amount of intake air, engine coolant temperature, sub feedback control, etc.

λ value = Actual air fuel ratio/Theoretical air fuel ratio
λ > 1: Lean
λ < 1: Rich

2. COMPONENT DESCRIPTION

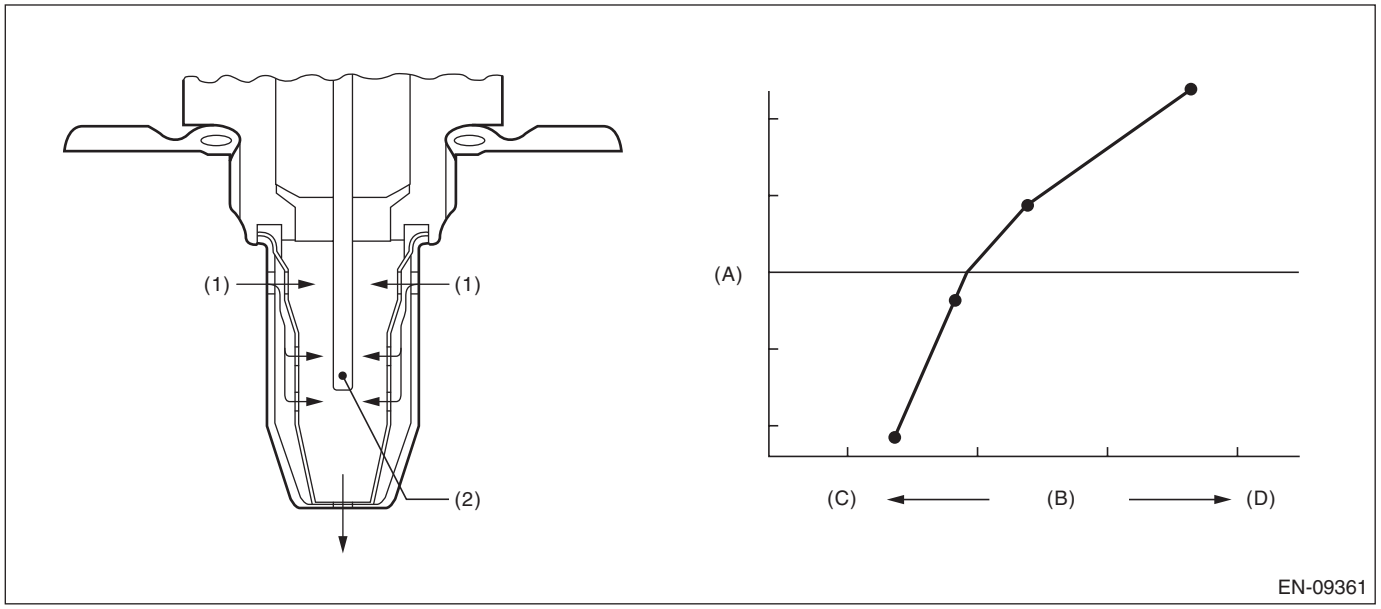

(A) Electromotive force (B) Air fuel ratio (C) Rich
(D) Lean

(1) Exhaust gas (2) ZrO_2

3. EXECUTION CONDITION

Secondary parameters	Execution condition
Battery voltage	≥ 10.9 V
Barometric pressure	> 75.1 kPa (563 mmHg, 22.2 inHg)
Sub feedback	Execution
Amount of intake air	≥ 6 g/s (0.21 oz/s)
Rear oxygen sensor output voltage – Feedback target voltage	– 0.2 V — 0.1 V
or	
Rear oxygen sensor sub feedback compensation coefficient	On Min.
or	
Rear oxygen sensor sub feedback compensation coefficient	On Max.

4. GENERAL DRIVING CYCLE

Always perform the diagnosis continuously.

5. DIAGNOSTIC METHOD

If the duration of time while the following conditions are met is longer than the time indicated, judge as NG.

Judgment Value

Malfunction Criteria	Threshold Value
λ value	≥ 1.15

Time Needed for Diagnosis: 10000 ms
Malfunction Indicator Light Illumination: Illuminates when malfunction occurs in 2 continuous driving cycles.

FI: DTC P219A BANK 1 AIR-FUEL RATIO IMBALANCE

DTC DETECTING CONDITION:

Detected when two consecutive driving cycles with fault occur.

TROUBLE SYMPTOM:

- Engine stalls.
- Improper idling

CAUTION:

After servicing or replacing faulty parts, perform Clear Memory Mode <Ref. to EN(STI)(diag)-68, OPERATION, Clear Memory Mode.>, and Inspection Mode <Ref. to EN(STI)(diag)-48, PROCEDURE, Inspection Mode.>.

WIRING DIAGRAM:

Engine Electrical System <Ref. to WI-154, WIRING DIAGRAM, Engine Electrical System.>

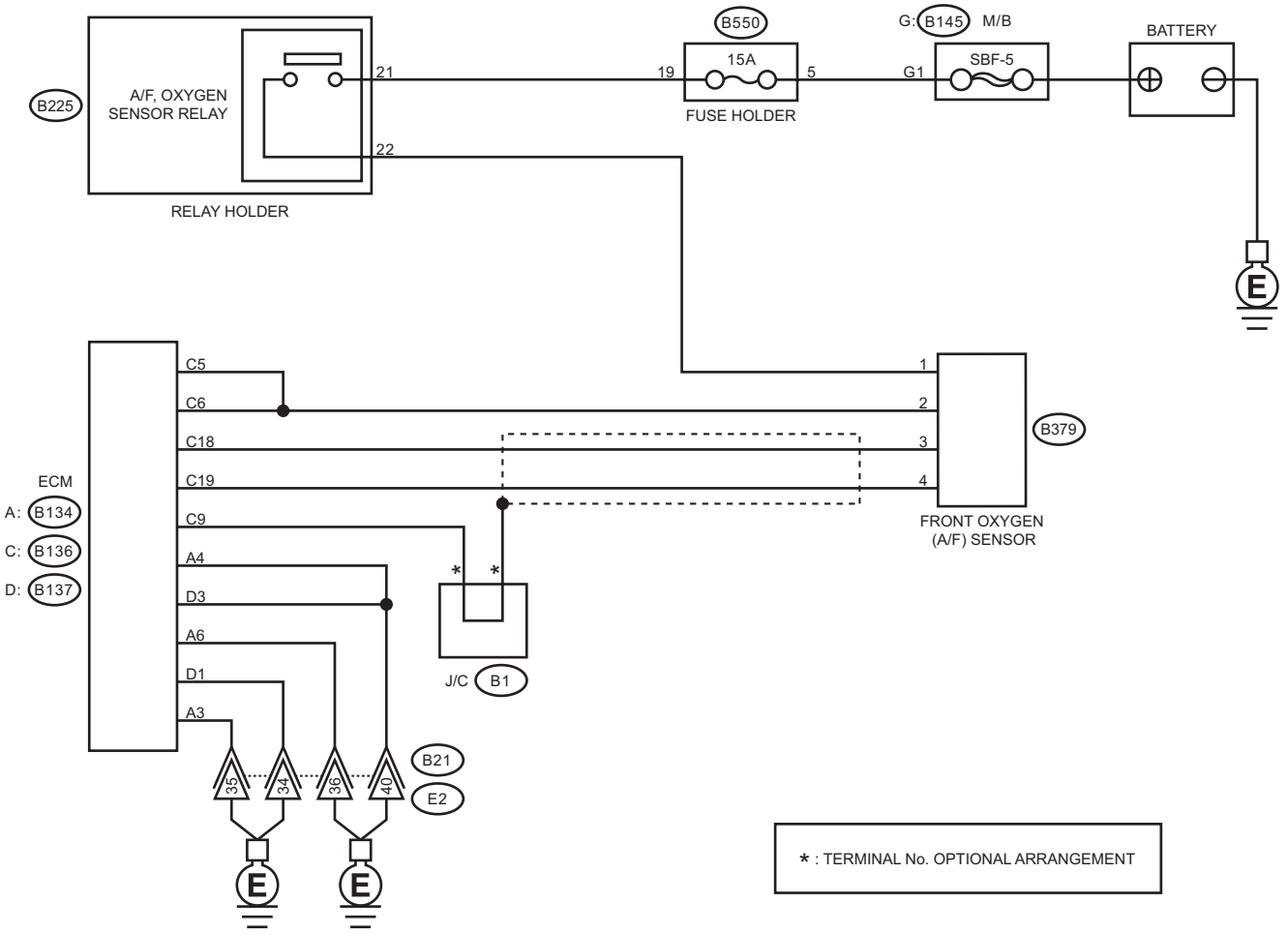

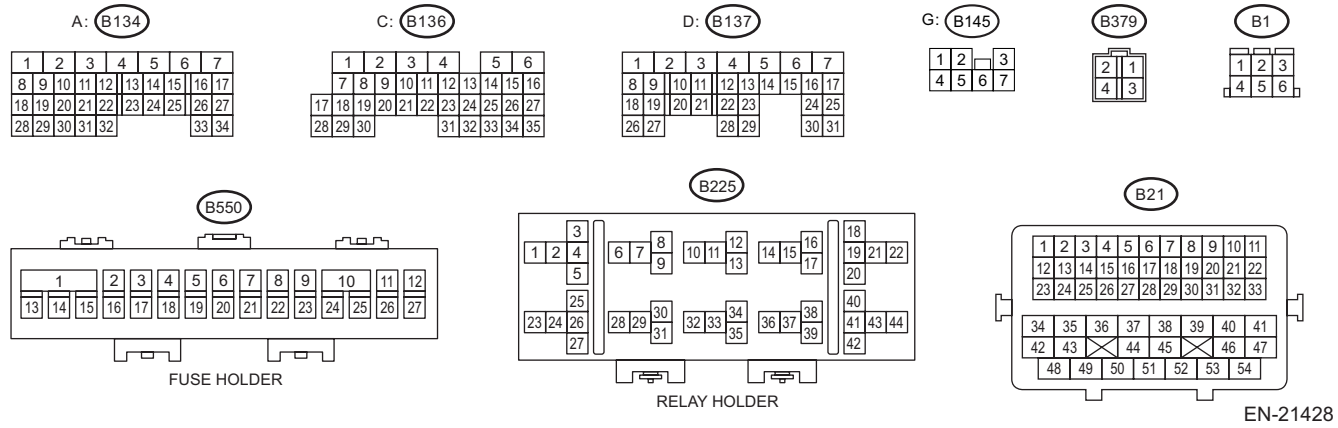

EN-21428

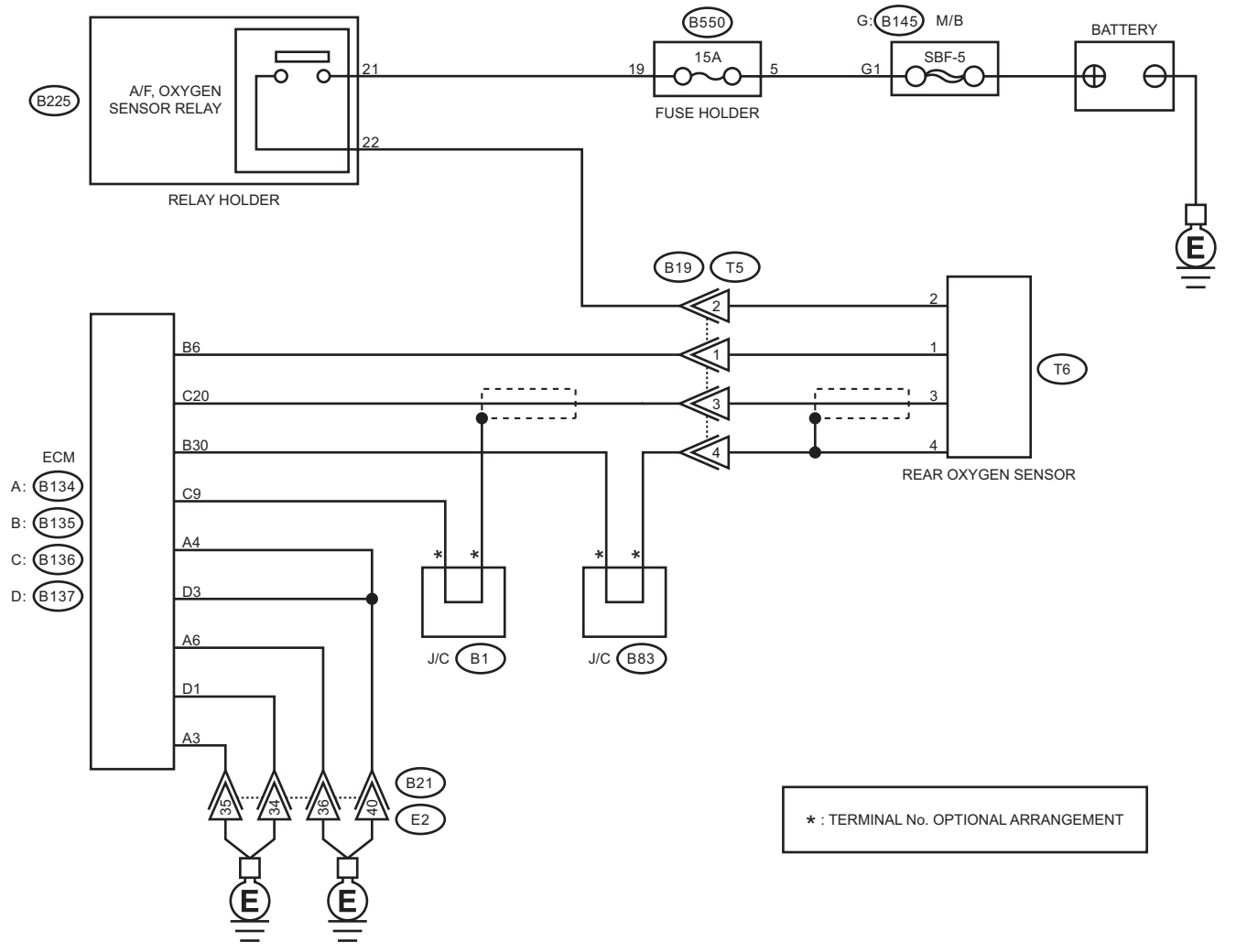
B225
A/F, OXYGEN SENSOR RELAY
RELAY HOLDER
21
22
B550
19
15A
5
FUSE HOLDER
G: B145
M/B
G1
SBF-5
BATTERY
E
B19
T5
2
1
3
4
B6
C20
B30
C9
A4
D3
A6
D1
A3
ECM
A: B134
B: B135
C: B136
D: B137
J/C B1
J/C B83
T6
REAR OXYGEN SENSOR
B21
E2
35
34
36
40
* : TERMINAL No. OPTIONAL ARRANGEMENT

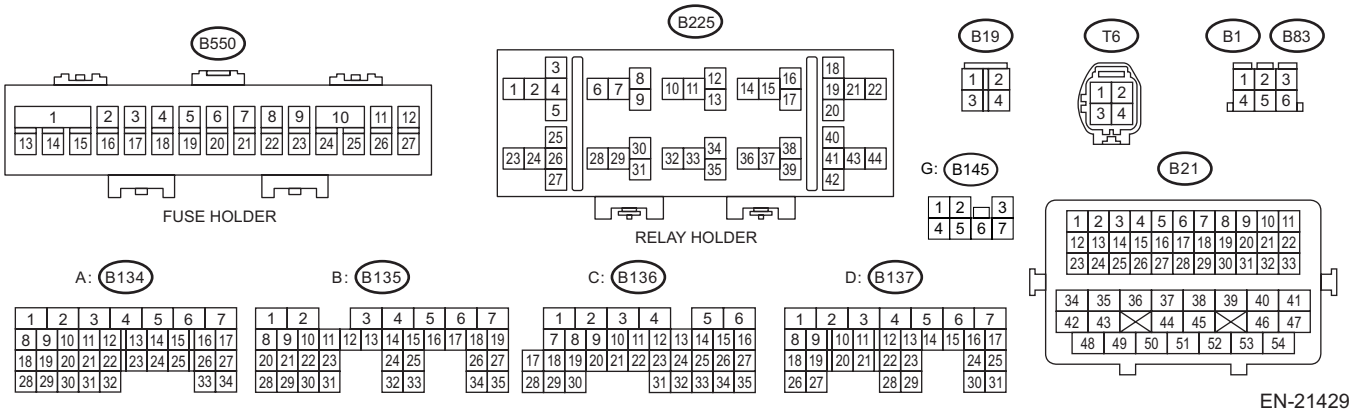
B550
FUSE HOLDER
B225
RELAY HOLDER
B19
T6
B1
B83
G: B145
B21
A: B134
B: B135
C: B136
D: B137
EN-21429

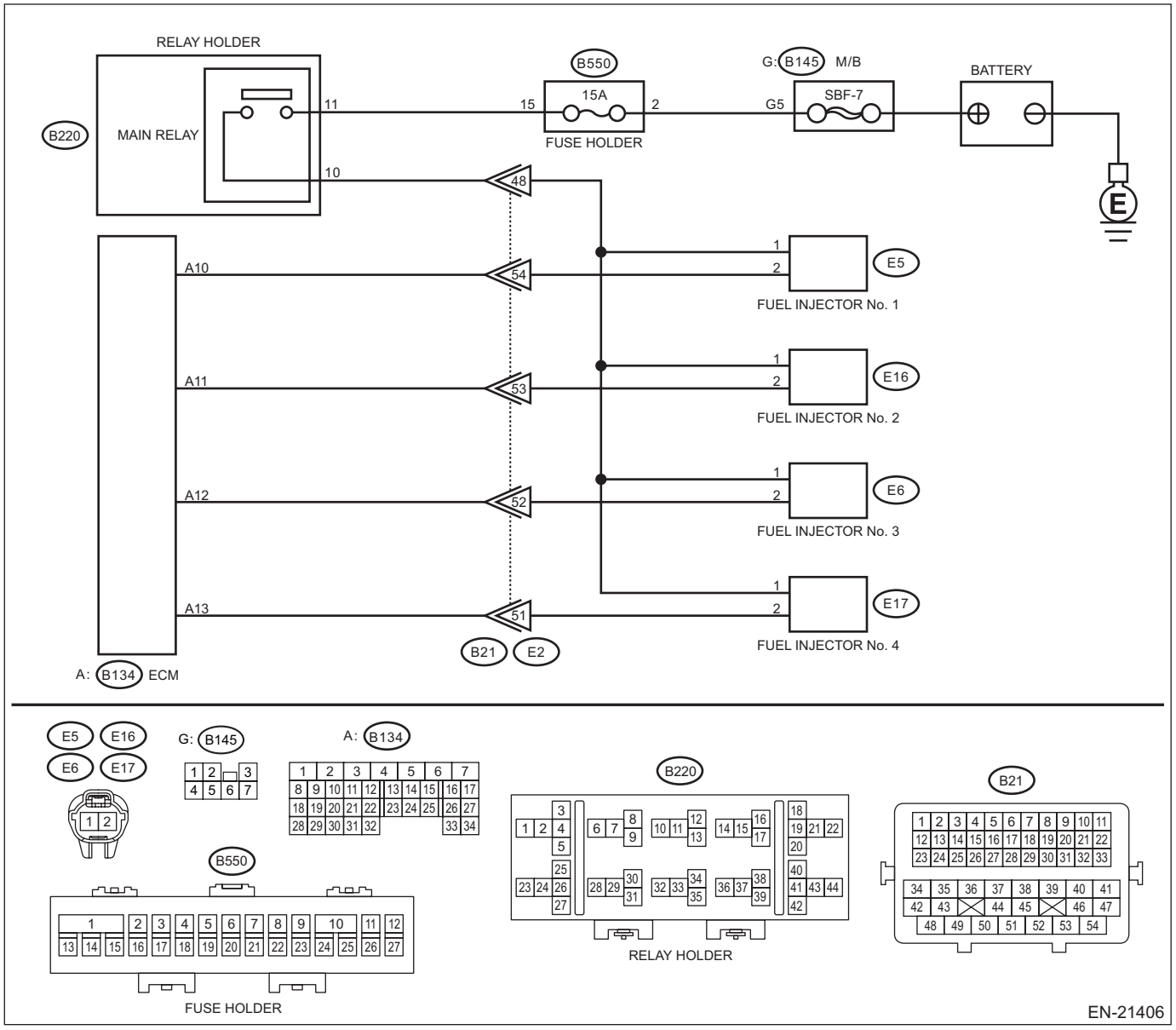

Step		Check	Yes	No
1	**CHECK FRONT OXYGEN (A/F) SENSOR CONNECTOR AND COUPLING CONNECTOR.**	Has water entered the connector?	Completely remove any water inside.	Go to step **2**.
2	**CHECK HARNESS BETWEEN ECM AND FRONT OXYGEN (A/F) SENSOR CONNECTOR.** 1) Turn the ignition switch to OFF. 2) Disconnect the connector from ECM. 3) Disconnect the connectors from front oxygen (A/F) sensor. 4) Measure the resistance of harness between ECM connector and front oxygen (A/F) sensor connector. ***Connector & terminal*** ***(B136) No. 18 — (B379) No. 3:*** ***(B136) No. 19 — (B379) No. 4:***	Is the resistance less than 1 Ω?	Go to step **3**.	Repair the harness and connector. NOTE: In this case, repair the following item: • Open circuit in harness between ECM connector and front oxygen (A/F) sensor connector • Poor contact of coupling connector

	Step	Check	Yes	No
3	**CHECK HARNESS BETWEEN ECM AND FRONT OXYGEN (A/F) SENSOR CONNECTOR.** Measure the resistance between ECM connector and chassis ground. ***Connector & terminal*** ***(B136) No. 18 — Chassis ground:*** ***(B136) No. 19 — Chassis ground:***	Is the resistance 1 MΩ or more?	Go to step **4**.	Repair the short circuit to ground in harness between ECM connector and front oxygen (A/F) sensor connector.
4	**CHECK OUTPUT SIGNAL FOR ECM.** 1) Connect the connector to ECM. 2) Turn the ignition switch to ON. 3) Measure the voltage between front oxygen (A/F) sensor connector and chassis ground. ***Connector & terminal*** ***(B379) No. 4 (+) — Chassis ground (–):***	Is the voltage 4.5 V or more?	Go to step **6**.	Go to step **5**.
5	**CHECK OUTPUT SIGNAL FOR ECM.** Measure the voltage between front oxygen (A/F) sensor connector and chassis ground. ***Connector & terminal*** ***(B379) No. 3 (+) — Chassis ground (–):***	Is the voltage 4.95 V or more?	Go to step **6**.	Go to step **7**.
6	**CHECK OUTPUT SIGNAL FOR ECM.** Measure the voltage between front oxygen (A/F) sensor connector and chassis ground. ***Connector & terminal*** ***(B379) No. 3 (+) — Chassis ground (–):*** ***(B379) No. 4 (+) — Chassis ground (–):***	Is the voltage 8 V or more?	Repair the short circuit to power in the harness between ECM connector and front oxygen (A/F) sensor connector. After repair, replace the ECM. <Ref. to FU(STI)-56, Engine Control Module (ECM).>	Repair the poor contact of ECM connector.
7	**CHECK EXHAUST SYSTEM.**	Are there holes or loose bolts on exhaust system?	Repair the exhaust system.	Go to step **8**.
8	**CHECK AIR INTAKE SYSTEM.**	Are there holes, loose bolts or disconnection of hose on air intake system?	Repair the air intake system.	Go to step **9**.
9	**CHECK FUEL PRESSURE.** **WARNING:** **Place "NO OPEN FLAMES" signs near the working area.** **CAUTION:** **Be careful not to spill fuel.** 1) Connect the front oxygen (A/F) sensor connector. 2) Measure the fuel pressure while disconnecting pressure regulator vacuum hose from intake manifold. <Ref. to ME(STI)-25, INSPECTION, Fuel Pressure.> **CAUTION:** **Release fuel pressure before removing the fuel pressure gauge.** NOTE: If fuel pressure does not increase, squeeze the fuel return hose 2 to 3 times, then measure fuel pressure again.	Is the measured value 284 — 314 kPa (2.9 — 3.2 kg/cm^2, 41 — 46 psi)?	Go to step **10**.	Check the fuel pump and fuel delivery line. <Ref. to FU(STI)-87, INSPECTION, Fuel Pump.> <Ref. to FU(STI)-104, INSPECTION, Fuel Delivery, Return and Evaporation Lines.>

	Step	Check	Yes	No
10	**CHECK FUEL PRESSURE.** After connecting the pressure regulator vacuum hose, measure fuel pressure. <Ref. to ME(STI)-25, INSPECTION, Fuel Pressure.> **CAUTION:** **Release fuel pressure before removing the fuel pressure gauge.** NOTE: • If fuel pressure does not increase, squeeze fuel return hose 2 to 3 times, then measure fuel pressure again. • If the measured value at this step is out of specification, check or replace pressure regulator vacuum hose.	Is the measured value 230 — 260 kPa (2.4 — 2.7 kg/cm^2, 33 — 38 psi)?	Go to step **11**.	Check the fuel pump and fuel delivery line. <Ref. to FU(STI)-87, INSPECTION, Fuel Pump.> <Ref. to FU(STI)-104, INSPECTION, Fuel Delivery, Return and Evaporation Lines.>
11	**CHECK ENGINE COOLANT TEMPERATURE SENSOR.** 1) Start the engine and warm up completely. 2) Read the value of «Coolant Temp.» using the Subaru Select Monitor or a general scan tool. NOTE: • Subaru Select Monitor For detailed operation procedures, refer to “Read Current Data For Engine”. <Ref. to EN(STI)(diag)-36, Subaru Select Monitor.> • General scan tool For detailed operation procedures, refer to the general scan tool operation manual.	Is the value of «Coolant Temp.» 75°C (167°F) or more?	Go to step **12**.	Replace the engine coolant temperature sensor. <Ref. to FU(STI)-33, Engine Coolant Temperature Sensor.>
12	**CHECK MASS AIR FLOW AND INTAKE AIR TEMPERATURE SENSOR.** 1) Start the engine and warm up engine until coolant temperature is higher than 75°C (167°F). 2) Place the shift lever in neutral position. 3) Turn the A/C switch to OFF. 4) Turn all the accessory switches to OFF. 5) Read the value of «Mass Air Flow» using the Subaru Select Monitor or a general scan tool. NOTE: • Subaru Select Monitor For detailed operation procedures, refer to “Read Current Data For Engine”. <Ref. to EN(STI)(diag)-36, Subaru Select Monitor.> • General scan tool For detailed operation procedures, refer to the general scan tool operation manual.	Is the value of «Mass Air Flow» 2.0 — 5.0 g/s (0.26 — 0.66 lb/m)?	Go to step **13**.	Replace the mass air flow and intake air temperature sensor. <Ref. to FU(STI)-40, Mass Air Flow and Intake Air Temperature Sensor.>

	Step	Check	Yes	No
13	**CHECK MASS AIR FLOW AND INTAKE AIR TEMPERATURE SENSOR.** 1) Start the engine and warm up engine until coolant temperature is higher than 75°C (167°F). 2) Place the shift lever in neutral position. 3) Turn the A/C switch to OFF. 4) Turn all the accessory switches to OFF. 5) Open the front hood. 6) Measure the ambient temperature. 7) Read the value of «Intake Air Temp.» using the Subaru Select Monitor or a general scan tool. NOTE: • Subaru Select Monitor For detailed operation procedures, refer to “Read Current Data For Engine”. <Ref. to EN(STI)(diag)-36, Subaru Select Monitor.> • General scan tool For detailed operation procedures, refer to the general scan tool operation manual.	Subtract ambient temperature from «Intake Air Temp.». Is the obtained value –10 — 50°C (–18 — 90°F)?	Go to step **14**.	Check the mass air flow and intake air temperature sensor. <Ref. to FU(STI)-40, Mass Air Flow and Intake Air Temperature Sensor.>
14	**CHECK REAR OXYGEN SENSOR DATA.** 1) Warm up the engine until engine coolant temperature is higher than 75°C (167°F), and keep the engine speed at 3,000 rpm. (2 minutes maximum) 2) Read the value of «Rear O2 Sensor Voltage» using the Subaru Select Monitor or a general scan tool. NOTE: • Depress the clutch pedal. • Subaru Select Monitor For detailed operation procedures, refer to “Read Current Data For Engine”. <Ref. to EN(STI)(diag)-36, Subaru Select Monitor.> • General scan tool For detailed operation procedures, refer to the general scan tool operation manual.	Is the value of «Rear O2 Sensor Voltage» 0.490 V or more?	Go to step **15**.	Go to step **16**.
15	**CHECK REAR OXYGEN SENSOR DATA.** 1) Warm up the engine until engine coolant temperature is higher than 75°C (167°F), and rapidly reduce the engine speed from 3,000 rpm. 2) Read the value of «Rear O2 Sensor Voltage» using the Subaru Select Monitor or a general scan tool. NOTE: • Depress the clutch pedal. • Subaru Select Monitor For detailed operation procedures, refer to “Read Current Data For Engine”. <Ref. to EN(STI)(diag)-36, Subaru Select Monitor.> • General scan tool For detailed operation procedures, refer to the general scan tool operation manual.	Is the value of «Rear O2 Sensor Voltage» 0.250 V or less?	Go to step **17**.	Go to step **16**.
16	**CHECK REAR OXYGEN SENSOR CONNECTOR AND COUPLING CONNECTOR.**	Has water entered the connector?	Completely remove any water inside.	Go to step **18**.

	Step	Check	Yes	No
17	**CHECK FRONT OXYGEN (A/F) SENSOR USING REAR OXYGEN SENSOR SIGNAL.** 1) Warm up the engine until engine coolant temperature is higher than 75°C (167°F), then keep the engine idling for 5 minutes or more. 2) Read the value of «Rear O2 Sensor Voltage» using the Subaru Select Monitor or a general scan tool. NOTE: • Subaru Select Monitor For detailed operation procedures, refer to "Read Current Data For Engine". <Ref. to EN(STI)(diag)-36, Subaru Select Monitor.> • General scan tool For detailed operation procedures, refer to the general scan tool operation manual.	Is the value in «Rear O2 Sensor Voltage» kept at 0.250 V or less for 5 minutes or more?	Replace the front oxygen (A/F) sensor. <Ref. to FU(STI)-52, Front Oxygen (A/F) Sensor.>	Go to step **18**.
18	**CHECK HARNESS BETWEEN ECM AND REAR OXYGEN SENSOR CONNECTOR.** 1) Turn the ignition switch to OFF. 2) Disconnect the ECM connector. 3) Disconnect the connector from rear oxygen sensor. 4) Measure the resistance of harness between ECM connector and rear oxygen sensor connector. ***Connector & terminal*** ***(B136) No. 20 — (T6) No. 3:*** ***(B135) No. 30 — (T6) No. 4:***	Is the resistance less than 1 Ω?	Go to step **19**.	Repair the harness and connector. NOTE: In this case, repair the following item: • Open circuit in harness between ECM connector and rear oxygen sensor connector • Poor contact of coupling connector
19	**CHECK HARNESS BETWEEN ECM AND REAR OXYGEN SENSOR CONNECTOR.** 1) Connect the connector to ECM. 2) Turn the ignition switch to ON. 3) Measure the voltage between rear oxygen sensor connector and chassis ground. ***Connector & terminal*** ***(T6) No. 3 (+) — Chassis ground (–):***	Is the voltage 0.2 — 0.5 V?	Replace the rear oxygen sensor. <Ref. to FU(STI)-54, Rear Oxygen Sensor.>	Go to step **20**.
20	**CHECK OUTPUT SIGNAL OF ECM.** 1) Turn the ignition switch to ON. 2) Measure the voltage between ECM connector and chassis ground on faulty cylinders. ***Connector & terminal*** ***#1 (B134) No. 10 (+) — Chassis ground (–):*** ***#2 (B134) No. 11 (+) — Chassis ground (–):*** ***#3 (B134) No. 12 (+) — Chassis ground (–):*** ***#4 (B134) No. 13 (+) — Chassis ground (–):***	Is the voltage 10 V or more?	Go to step **25**.	Go to step **21**.
21	**CHECK HARNESS BETWEEN ECM AND FUEL INJECTOR CONNECTOR.** 1) Turn the ignition switch to OFF. 2) Disconnect the connector from fuel injector on faulty cylinders. 3) Measure the resistance between fuel injector connector and engine ground on faulty cylinders. ***Connector & terminal*** ***#1 (E5) No. 2 — Engine ground:*** ***#2 (E16) No. 2 — Engine ground:*** ***#3 (E6) No. 2 — Engine ground:*** ***#4 (E17) No. 2 — Engine ground:***	Is the resistance 1 MΩ or more?	Go to step **22**.	Repair the short circuit to ground in harness between ECM connector and fuel injector connector.

	Step	Check	Yes	No
22	**CHECK HARNESS BETWEEN ECM AND FUEL INJECTOR CONNECTOR.** Measure the resistance of harness between ECM connector and fuel injector connector on faulty cylinders. ***Connector & terminal*** ***#1 (B134) No. 10 — (E5) No. 2:*** ***#2 (B134) No. 11 — (E16) No. 2:*** ***#3 (B134) No. 12 — (E6) No. 2:*** ***#4 (B134) No. 13 — (E17) No. 2:***	Is the resistance less than 1 Ω?	Go to step **23**.	Repair the harness and connector. NOTE: In this case, repair the following item: • Open circuit in harness between ECM connector and fuel injector connector • Poor contact of coupling connector
23	**CHECK FUEL INJECTOR.** Measure the resistance between fuel injector terminals on faulty cylinder. ***Terminals*** ***No. 1 — No. 2:***	Is the resistance 5 — 20 Ω?	Go to step **24**.	Replace the faulty fuel injector. <Ref. to FU(STI)-43, Fuel Injector.>
24	**CHECK POWER SUPPLY LINE.** 1) Turn the ignition switch to ON. 2) Measure the voltage between fuel injector connector of faulty cylinders and engine ground. ***Connector & terminal*** ***#1 (E5) No. 1 (+) — Engine ground (–):*** ***#2 (E16) No. 1 (+) — Engine ground (–):*** ***#3 (E6) No. 1 (+) — Engine ground (–):*** ***#4 (E17) No. 1 (+) — Engine ground (–):***	Is the voltage 10 V or more?	Repair the poor contact of all connectors in fuel injector circuit.	Repair the harness and connector. NOTE: In this case, repair the following item: • Open circuit in harness between the main relay and fuel injector connector on faulty cylinders • Poor contact of coupling connector • Poor contact of main relay connector
25	**CHECK HARNESS BETWEEN ECM AND FUEL INJECTOR CONNECTOR.** 1) Turn the ignition switch to OFF. 2) Disconnect the connector from fuel injector on faulty cylinders. 3) Turn the ignition switch to ON. 4) Measure the voltage between ECM connector and chassis ground on faulty cylinders. ***Connector & terminal*** ***#1 (B134) No. 10 (+) — Chassis ground (–):*** ***#2 (B134) No. 11 (+) — Chassis ground (–):*** ***#3 (B134) No. 12 (+) — Chassis ground (–):*** ***#4 (B134) No. 13 (+) — Chassis ground (–):***	Is the voltage 10 V or more?	Repair the short circuit to power in harness between ECM connector and fuel injector connectors.	Go to step **26**.
26	**CHECK FUEL INJECTOR.** 1) Turn the ignition switch to OFF. 2) Measure the resistance between fuel injector terminals on faulty cylinder. ***Terminals*** ***No. 1 — No. 2:***	Is the resistance 5 — 20 Ω?	Go to step **27**.	Replace the faulty fuel injector. <Ref. to FU(STI)-43, Fuel Injector.>

	Step	Check	Yes	No
27	**CHECK INSTALLATION CONDITION OF CAMSHAFT POSITION SENSOR/CRANKSHAFT POSITION SENSOR.**	Is the camshaft position sensor or crankshaft position sensor loosely installed?	Tighten the camshaft position sensor or crankshaft position sensor. <Ref. to FU(STI)-36, Camshaft Position Sensor.> <Ref. to FU(STI)-35, Crankshaft Position Sensor.>	Go to step **28**.
28	**CHECK CRANK SPROCKET.** Remove the timing belt cover. <Ref. to ME(STI)-51, REMOVAL, Timing Belt Cover.>	Is there rust or defective teeth on the crank sprocket?	Replace the crank sprocket. <Ref. to ME(STI)-62, Crank Sprocket.>	Go to step **29**.
29	**CHECK INSTALLATION CONDITION OF TIMING BELT.** Turn the crankshaft using ST, and align the alignment mark on crank sprocket with alignment mark on cylinder block. ST 499987500 CRANKSHAFT SOCKET	Is the timing belt dislocated from its proper position?	Repair the installation condition of timing belt. <Ref. to ME(STI)-52, Timing Belt.>	Go to step **30**.
30	**CHECK FUEL LEVEL.**	Is the fuel meter indication higher than the “Lower” level?	Go to step **31**.	Refill the fuel so that the fuel meter indication is higher than the “Lower” level, and proceed to the next step. Go to step **31**.
31	**CHECK STATUS OF MALFUNCTION INDICATOR LIGHT.** 1) Clear the memory using the Subaru Select Monitor or general scan tool. <Ref. to EN(STI)(diag)-68, Clear Memory Mode.> 2) Start the engine, and drive the vehicle 10 minutes or more.	Does the malfunction indicator light illuminate or blink?	Go to step **33**.	Go to step **32**.
32	**CHECK CAUSE OF MISFIRE.**	Was the cause of misfire identified when the engine is running?	Finish diagnostics operation, if the engine has no abnormality.	Repair the poor contact of connector. NOTE: In this case, repair the following item: • Poor contact of ignition coil connector • Poor contact of fuel injector connector on faulty cylinders • Poor contact of ECM connector • Poor contact of coupling connector

	Step	Check	Yes	No
33	**CHECK AIR INTAKE SYSTEM.**	Is there any fault in air intake system?	Repair the air intake system. NOTE: Check the following items. • Are there air leaks or air suction caused by loose or dislocated nuts and bolts? • Are there cracks or any disconnection of hoses?	Go to step **34**.
34	**CHECK MISFIRE SYMPTOM.** 1) Turn the ignition switch to ON. 2) Check for DTC. <Ref. to EN(STI)(diag)-47, Read Diagnostic Trouble Code (DTC).>	Does the Subaru Select Monitor or general scan tool indicate only one DTC?	Go to step **37**.	Go to step **35**.
35	**CHECK DTC.**	Is DTC P0301 and P0303 displayed on the Subaru Select Monitor or general scan tool?	Go to step **38**.	Go to step **36**.
36	**CHECK DTC.**	Is DTC P0302 and P0304 displayed on the Subaru Select Monitor or general scan tool?	Go to step **39**.	Go to step **40**.
37	**ONLY ONE CYLINDER.**	Is there any fault in the cylinder?	Repair or replace faulty parts. NOTE: Check the following items. • Spark plug • Ignition coil • Fuel injector • Compression	Go to DTC P0171. <Ref. to EN(STI)(diag)-229, DTC P0171 SYSTEM TOO LEAN BANK 1, Diagnostic Procedure with Diagnostic Trouble Code (DTC).>
38	**GROUP OF #1 AND #3 CYLINDERS.**	Are there any faults in #1 and #3 cylinders?	Repair or replace faulty parts. NOTE: Check the following items. • Spark plug • Ignition coil • Fuel injector • Compression • Skipping timing belt teeth	Go to DTC P0171. <Ref. to EN(STI)(diag)-229, DTC P0171 SYSTEM TOO LEAN BANK 1, Diagnostic Procedure with Diagnostic Trouble Code (DTC).>
39	**GROUP OF #2 AND #4 CYLINDERS.**	Are there any faults in #2 and #4 cylinders?	Repair or replace faulty parts. NOTE: Check the following items. • Spark plug • Ignition coil • Fuel injector • Compression • Skipping timing belt teeth	Go to DTC P0171. <Ref. to EN(STI)(diag)-229, DTC P0171 SYSTEM TOO LEAN BANK 1, Diagnostic Procedure with Diagnostic Trouble Code (DTC).>

Step		Check	Yes	No
40	CYLINDER AT RANDOM.	Is the engine idle rough?	Go to DTC P0171. <Ref. to EN(STI)(diag)-229, DTC P0171 SYSTEM TOO LEAN BANK 1, Diagnostic Procedure with Diagnostic Trouble Code (DTC).>	Repair or replace faulty parts. NOTE: Check the following items. • Spark plug • Ignition coil • Fuel injector • Compression

1. OUTLINE OF DIAGNOSIS

This diagnostic monitor performs a functional check of the fuel system to determine an air-fuel ratio cylinder imbalance.
This diagnosis is composed of two monitors.
The outline of “monitor A1” is as follows. When an air-fuel ratio cylinder imbalance occurs, the primary oxygen sensor output signal will oscillate with increased amplitude. This monitor utilizes this behavior to make a diagnosis. The monitor integrates the difference between the amplification value and the mean value of the first oxygen sensor output signal and compares it to a threshold to make a judgment.
The outline of “monitor B1” is as follows. Similarly, when an imbalance occurs, the engine speed also fluctuates with increased amplitude. This monitor utilizes this behavior to make a diagnosis. For reference, it should be noted that this imbalance monitor method is actually similar to the current misfire diagnostic monitor, and the parameter “domg360” (units: degrees CA) is shared between the imbalance and misfire monitors. The imbalance monitor is performed during idle condition when the engine is warm. The monitor integrates the count of “domg360” which exceeds a threshold in 1000 revolution.
When both the “monitor A1” value and the “monitor B1” value exceed a predetermined threshold, this monitor determines a malfunction and stores a fault code.

Monitor A1

When there is an air-fuel ratio cylinder imbalance malfunction, the primary oxygen sensor output fluctuates widely compared with a normal sensor, as shown by the chain line in Figure 1 below. This monitor makes a diagnosis based on this phenomenon. Each primary oxygen sensor signal (PS) and mean value of the primary oxygen sensor signal (MS) is calculated from the primary oxygen sensor signal. The absolute values of (PS – MS) are sampled every 4 ms as shown in the figure. Diagnostic value 1 (DV1) is obtained by integrating the absolute value of (PS – MS) for 2500 times. A malfunction is determined when DV1 exceeds the threshold. The judgment values are determined experimentally.

Figure 1. Compare malfunctioned primary oxygen sensor output with a normal sensor

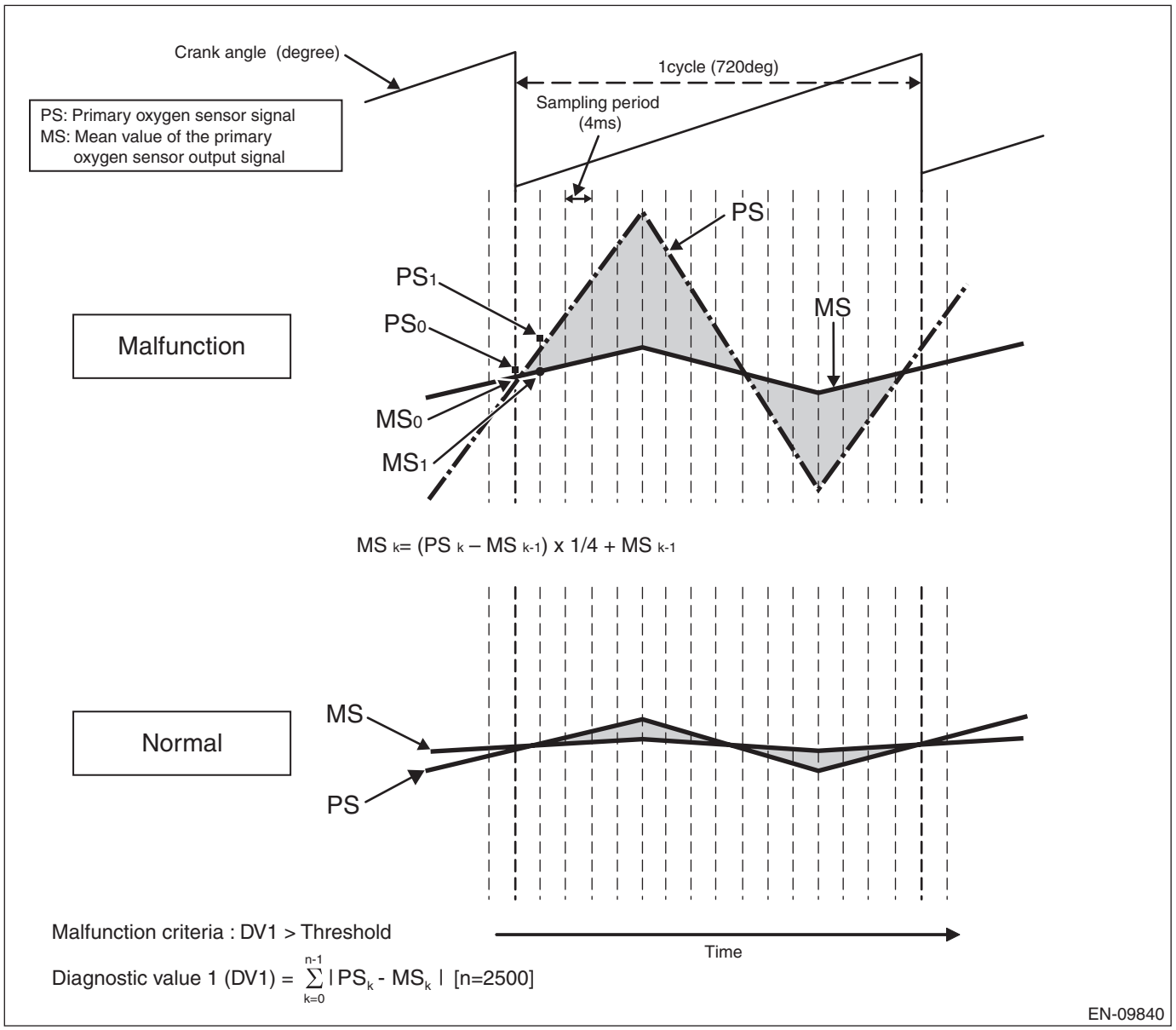

Monitor B1

Method used: Difference method of 360 degrees CA
Monitor value: domg360 = (omg 1 – omg 0) – (omg 3 – omg 2) = angular speed
Each crankshaft angular speed is defined as Figure 2 below.
Figure 2. Description of domg360 output

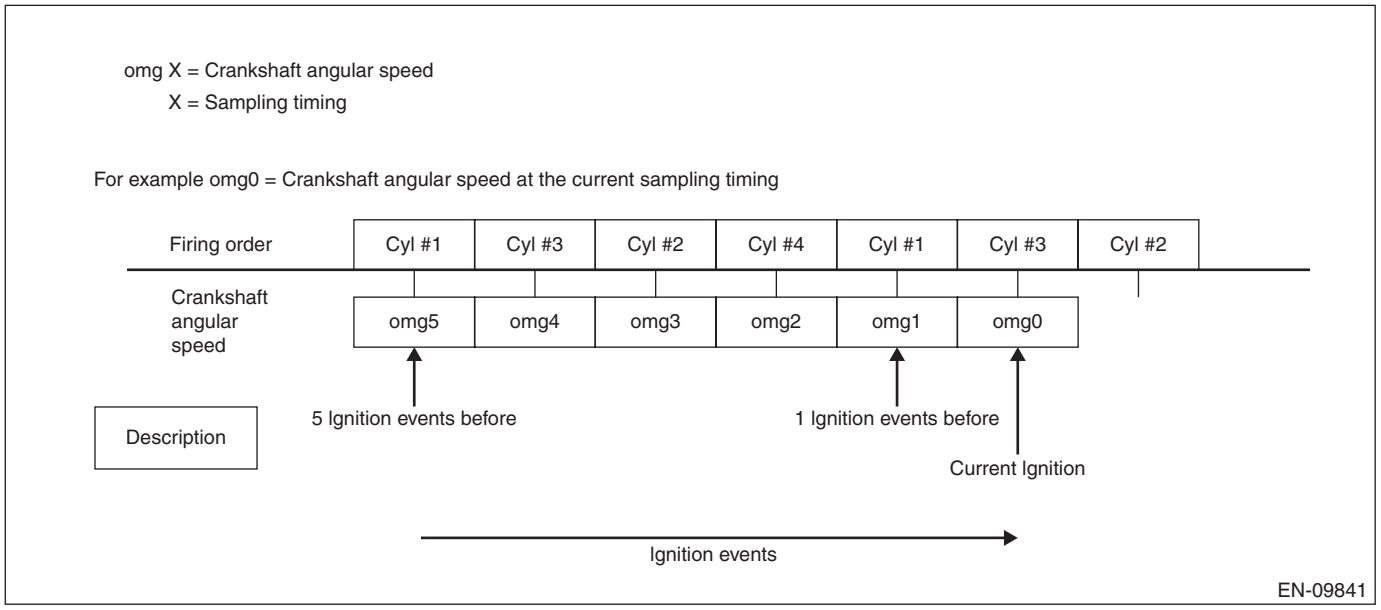

This method uses the fact that the domg360 of lean conditioned cylinder caused by imbalance malfunction indicates big value, as shown by the chain line in Figure 3 below.
The number of times for domg360 to exceed the judgment value in 1000 revolutions (500 cycles) is calculated as diagnostic value 2 (DV2). A malfunction is determined when DV2 exceeds the threshold.
Figure 3. Compare malfunctioned domg360 output with a normal output

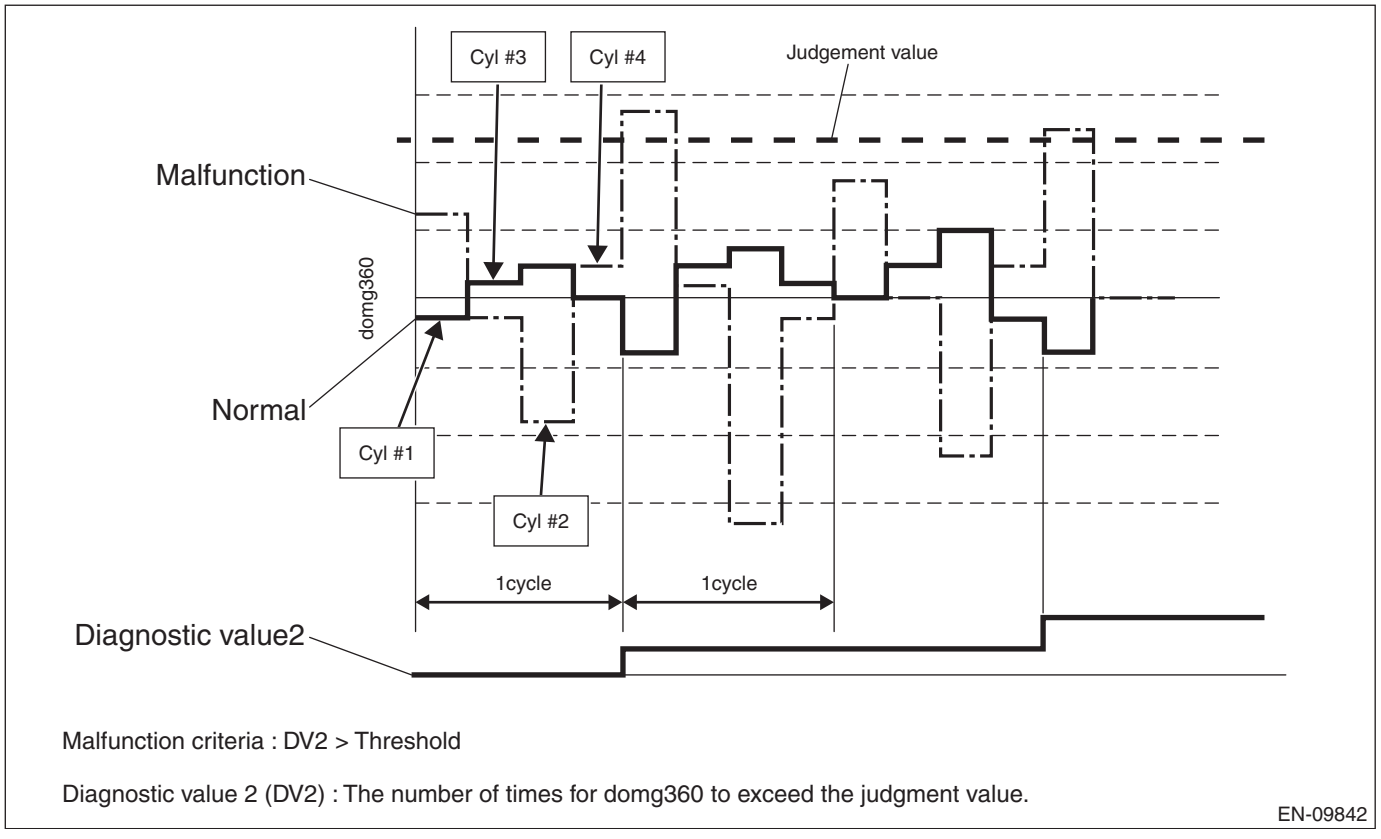

2. EXECUTION CONDITION

Monitor A1: Primary oxygen sensor fluctuation

Secondary parameters	Execution condition
Battery voltage	≥ 10.9 V
Barometric pressure	≥ 75.1 kPa (563 mmHg, 22.2 inHg)
Main feedback	In operation
Engine speed	> 1600 rpm and < 3200 rpm
Amount of intake air	> 0.80 g/rev (0.03 oz/rev)
(Target A/F in order to stabilize the Oxygen Storage Capacity	
in the catalyst after fuel cut recovery	≠ Rich
for time)	≥ 500 ms
Fuel control for short-term fuel trim by A/F sensor response monitoring (only for MT model)	≠ Intrusively changed

Monitor B1: Crankshaft speed fluctuation

Secondary parameters	Execution condition
Misfiring diagnosis monitoring	In operation
Accelerator pedal position	≠ 0%
Vehicle speed	≤ 482.78 km/h (300 MPH)
Main feedback	In operation
Engine speed	> 1800 rpm and < 2800 rpm
Amount of intake air	> 0.8 g/rev (0.03 oz/rev) and < 1.5 g/rev (0.05 oz/rev)

3. GENERAL DRIVING CYCLE

Always perform the diagnosis continuously.

4. DIAGNOSTIC METHOD

Judge as NG when Monitor A1 and Monitor B1 are both NG, and when either is OK, judge as OK.

Monitor A1

Judge as NG when the following conditions are established.

Judgment Value

Malfunction Criteria	Threshold Value
Diagnostic value 1 (DV1)	> Threshold value 1 (TV1)

Threshold value 1 (TV1):

$$\sum_{k=0}^{n-1} Map_k \quad [n=2500]$$

EN-09888

TV1

		Engine load (g/rev (oz/rev))							
		0.8 (0.03)	0.9 (0.03)	1 (0.04)	1.1 (0.04)	1.2 (0.04)	1.3 (0.05)	1.4 (0.05)	1.5 (0.05)
Engine speed (rpm)	1800	0.007	0.009	0.007	0.007	0.008	0.008	0.008	0.008
	2000	0.004	0.005	0.004	0.004	0.004	0.005	0.005	0.005
	2200	0.003	0.003	0.003	0.004	0.004	0.005	0.006	0.006
	2400	0.005	0.005	0.006	0.006	0.007	0.007	0.008	0.009
	2600	0.004	0.004	0.004	0.006	0.008	0.009	0.011	0.011
	2800	0.005	0.006	0.009	0.009	0.009	0.009	0.011	0.011

Time Needed for Diagnosis: 4 ms × 2500 times

Monitor B1

Judge as NG when the following conditions are established.

Judgment Value

Malfunction Criteria	Threshold Value
Diagnostic Value2 (DV2)	> 22 times

Time Needed for Diagnosis: 1000 engine revs.

Malfunction Indicator Light Illumination: Illuminates when malfunction occurs in 2 continuous driving cycles.

FJ: DTC P2257 SECONDARY AIR SYSTEM CONTROL "A" CIRCUIT LOW

DTC DETECTING CONDITION:

Immediately at fault recognition

CAUTION:

After servicing or replacing faulty parts, perform Clear Memory Mode <Ref. to EN(STI)(diag)-68, OPERATION, Clear Memory Mode.>, and Inspection Mode <Ref. to EN(STI)(diag)-48, PROCEDURE, Inspection Mode.>.

WIRING DIAGRAM:

Engine Electrical System <Ref. to WI-154, WIRING DIAGRAM, Engine Electrical System.>

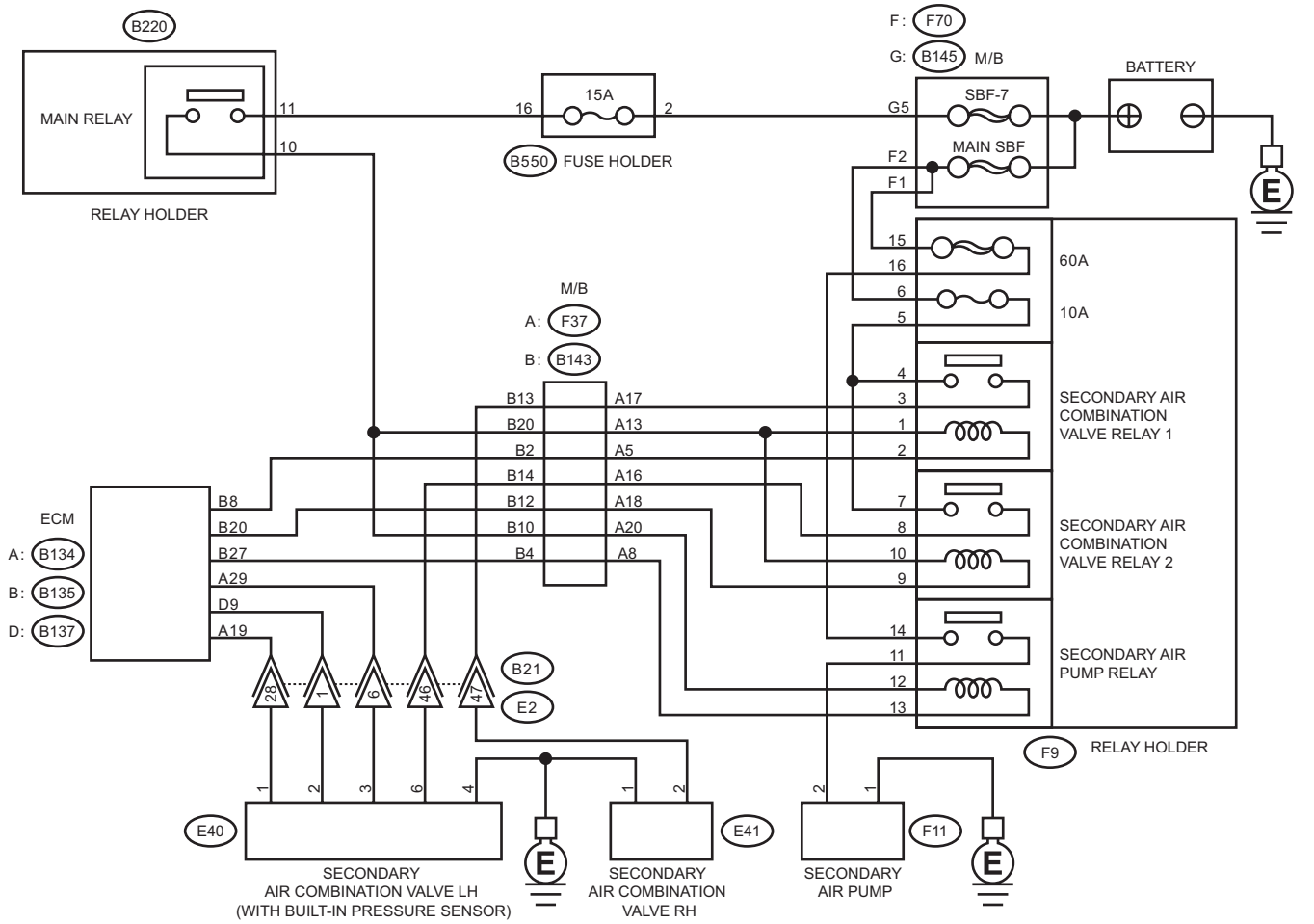

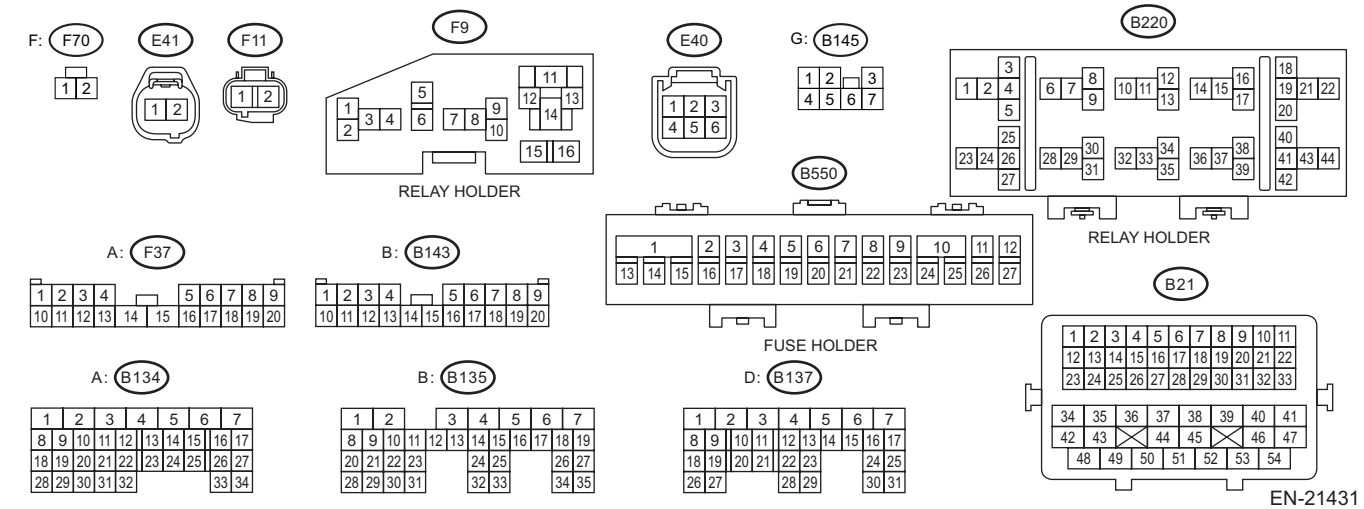

	Step	Check	Yes	No
1	**CHECK HARNESS BETWEEN ECM AND SECONDARY AIR PUMP RELAY CONNECTOR.** 1) Turn the ignition switch to OFF. 2) Disconnect the connector from ECM. 3) Remove the secondary air pump relay. 4) Measure the resistance of harness between ECM connector and secondary air pump relay connector. ***Connector & terminal*** ***(B135) No. 27 — (F9) No. 13:***	Is the resistance less than 1 Ω?	Go to step **2**.	Repair the harness and connector. NOTE: In this case, repair the following item: • Open circuit in harness between ECM connector and secondary air pump relay connector • Poor contact of coupling connector
2	**CHECK HARNESS BETWEEN ECM AND SECONDARY AIR PUMP RELAY CONNECTOR.** Measure the resistance between ECM connector and chassis ground. ***Connector & terminal*** ***(B135) No. 27 — Chassis ground:***	Is the resistance 1 MΩ or more?	Even if DTC is detected, the circuit has returned to a normal condition at this time. Reproduce the failure, and then perform the diagnosis again. NOTE: In this case, temporary poor contact of connector, temporary open or short circuit of harness may be the cause.	Repair the short circuit to ground in harness between ECM connector and secondary air pump relay connector.

1. OUTLINE OF DIAGNOSIS

Judge as NG when the ECM output level differs from the actual terminal level.

2. EXECUTION CONDITION

Secondary parameters	Execution condition
Battery voltage	≥ 10.9 V
Secondary air pump drive signal	OFF

3. GENERAL DRIVING CYCLE

Always perform the diagnosis continuously.

4. DIAGNOSTIC METHOD

If the duration of time while the following conditions are met is longer than the time indicated, judge as NG.

Judgment Value

Malfunction Criteria	Threshold Value
Output voltage	≤ Battery voltage × 0.34 V

Time Needed for Diagnosis: 2500 ms
Malfunction Indicator Light Illumination: Illuminates as soon as a malfunction occurs.

FK:DTC P2258 SECONDARY AIR SYSTEM CONTROL "A" CIRCUIT HIGH

DTC DETECTING CONDITION:
Immediately at fault recognition

CAUTION:
After servicing or replacing faulty parts, perform Clear Memory Mode <Ref. to EN(STI)(diag)-68, OPERATION, Clear Memory Mode.>, and Inspection Mode <Ref. to EN(STI)(diag)-48, PROCEDURE, Inspection Mode.>.

WIRING DIAGRAM:
Engine Electrical System <Ref. to WI-154, WIRING DIAGRAM, Engine Electrical System.>

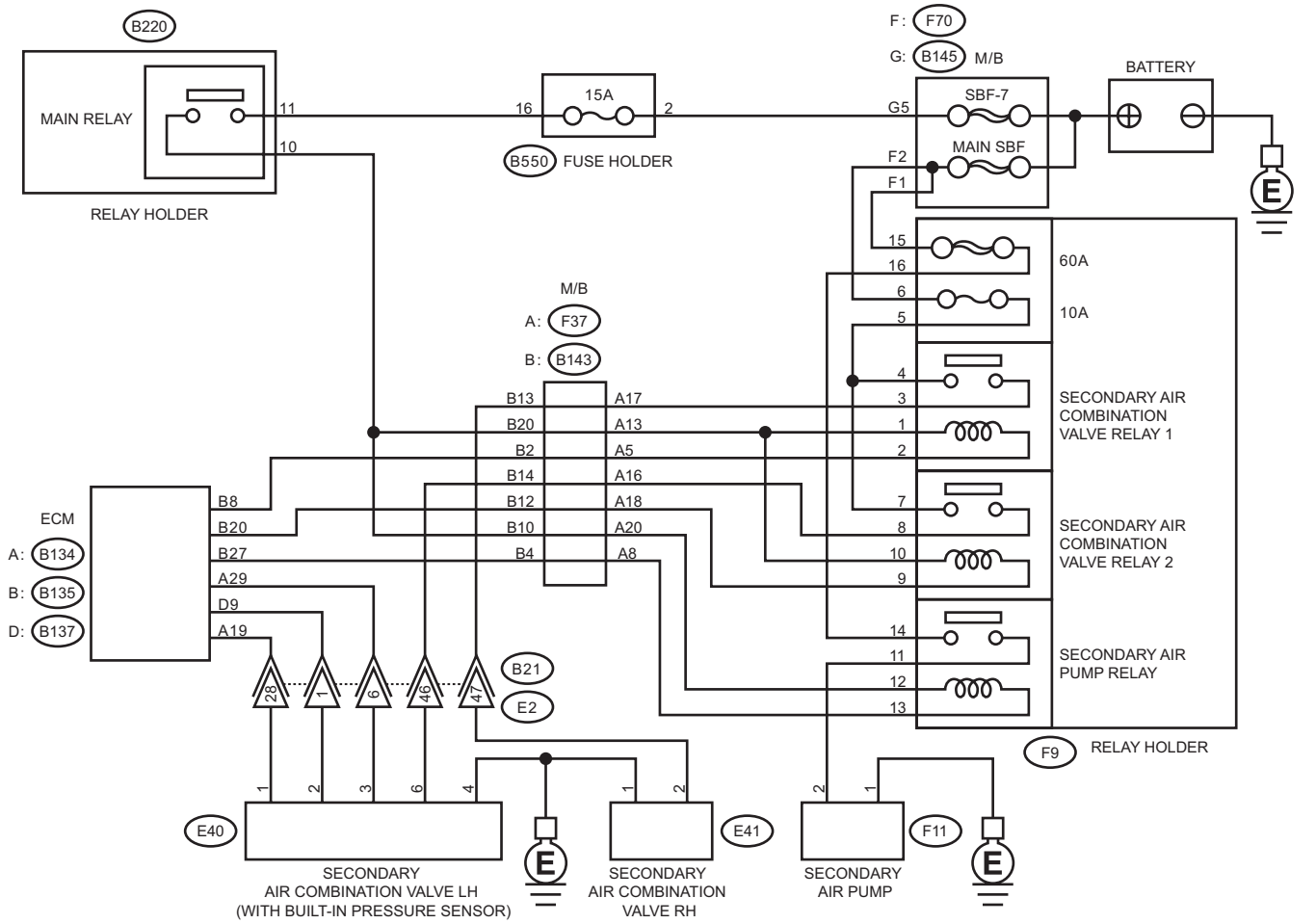

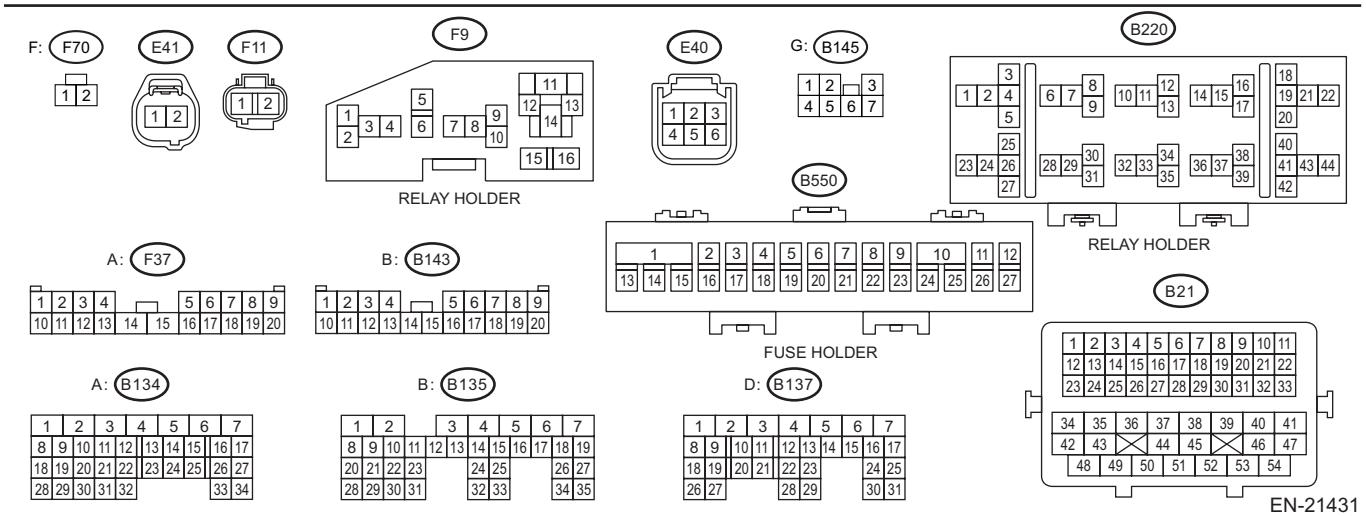

Step		Check	Yes	No
1	**CHECK HARNESS BETWEEN ECM AND SECONDARY AIR PUMP RELAY CONNECTOR.** 1) Turn the ignition switch to OFF. 2) Disconnect the connector from ECM. 3) Remove the secondary air pump relay. 4) Measure the voltage between ECM connector and chassis ground. ***Connector & terminal*** ***(B135) No. 27 (+) — Chassis ground (–):***	Is the voltage 10 V or more?	Repair the short circuit to power in harness between ECM connector and secondary air pump relay connector.	Even if DTC is detected, the circuit has returned to a normal condition at this time. Reproduce the failure, and then perform the diagnosis again. NOTE: In this case, temporary poor contact of connector, temporary open or short circuit of harness may be the cause.

1. OUTLINE OF DIAGNOSIS

Judge as NG when the ECM output level differs from the actual terminal level.

2. EXECUTION CONDITION

Secondary parameters	Execution condition
Battery voltage	≥ 10.9 V
Secondary air pump drive signal	ON

3. GENERAL DRIVING CYCLE

Always perform the diagnosis continuously.

4. DIAGNOSTIC METHOD

If the duration of time while the following conditions are met is longer than the time indicated, judge as NG.

Judgment Value

Malfunction Criteria	Threshold Value
Output current	≥ 12 A

Time Needed for Diagnosis: 2500 ms
Malfunction Indicator Light Illumination: Illuminates as soon as a malfunction occurs.

FL: DTC P2270 O2 SENSOR SIGNAL BIASED/STUCK LEAN BANK 1 SENSOR 2

DTC DETECTING CONDITION:

Detected when two consecutive driving cycles with fault occur.

CAUTION:

After servicing or replacing faulty parts, perform Clear Memory Mode <Ref. to EN(STI)(diag)-68, OPERATION, Clear Memory Mode.>, and Inspection Mode <Ref. to EN(STI)(diag)-48, PROCEDURE, Inspection Mode.>.

WIRING DIAGRAM:

Engine Electrical System <Ref. to WI-154, WIRING DIAGRAM, Engine Electrical System.>

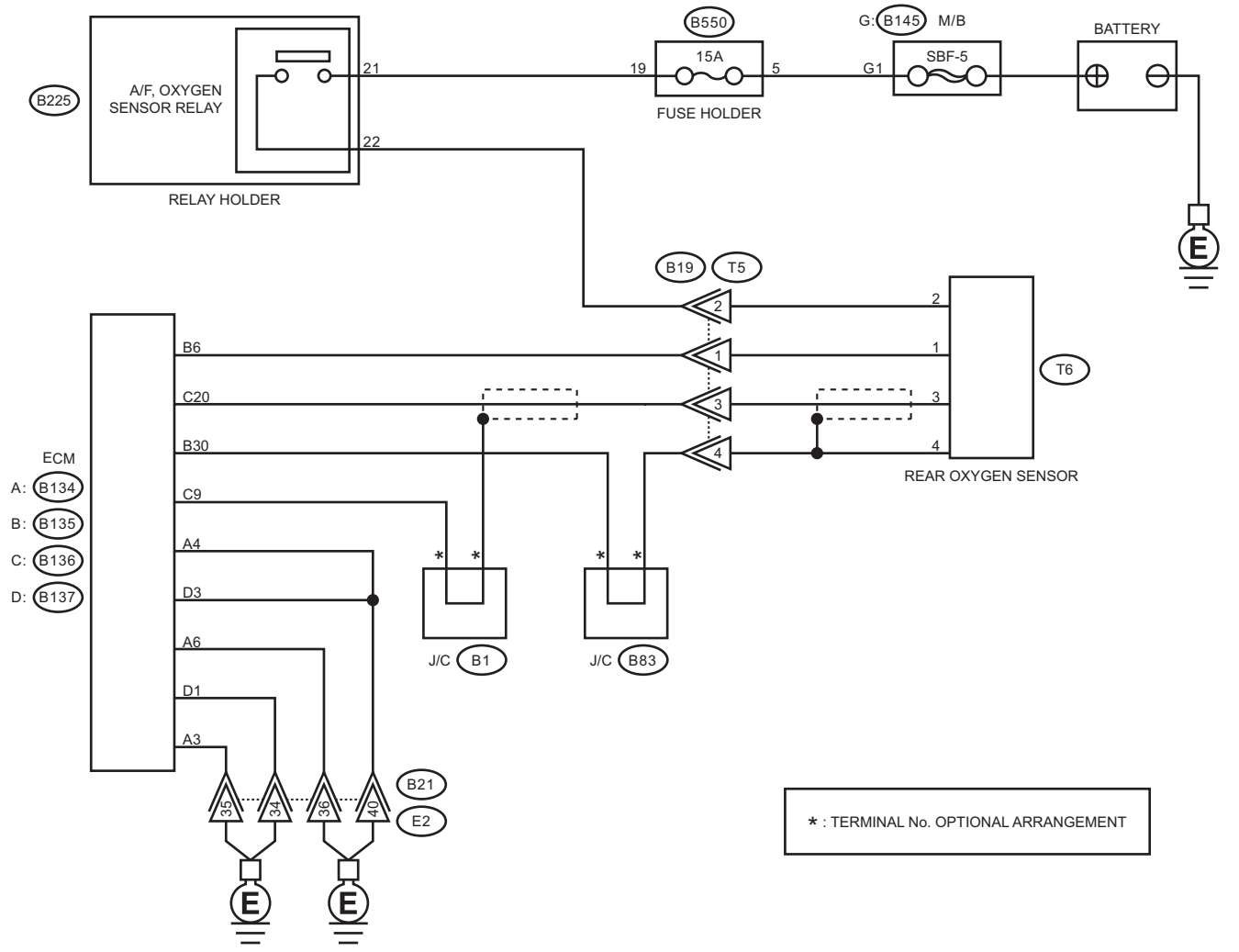

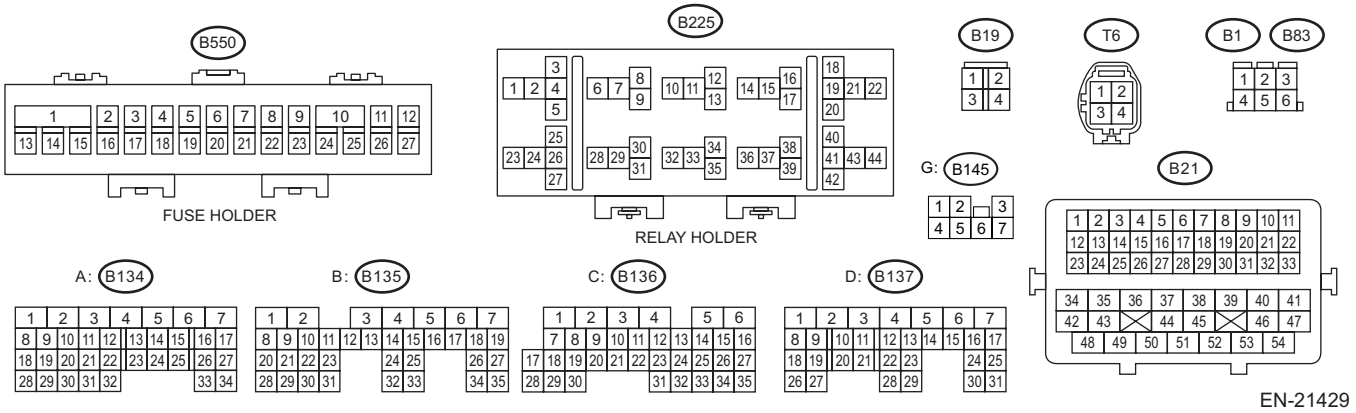

	Step	Check	Yes	No
1	**CHECK REAR OXYGEN SENSOR CONNECTOR.**	Has water entered the connector?	Completely remove any water inside.	Go to step **2**.
2	**CHECK HARNESS BETWEEN ECM AND REAR OXYGEN SENSOR CONNECTOR.** 1) Turn the ignition switch to OFF. 2) Disconnect the connector from ECM. 3) Disconnect the connector from rear oxygen sensor. 4) Measure the resistance of harness between ECM connector and rear oxygen sensor connector. ***Connector & terminal*** ***(B136) No. 20 — (T6) No. 3:*** ***(B135) No. 30 — (T6) No. 4:***	Is the resistance less than 1 Ω?	Go to step **3**.	Repair the harness and connector. NOTE: In this case, repair the following item: • Open circuit in harness between ECM connector and rear oxygen sensor connector • Poor contact of coupling connector
3	**CHECK HARNESS BETWEEN ECM AND REAR OXYGEN SENSOR CONNECTOR.** 1) Connect the connector to ECM. 2) Turn the ignition switch to ON. 3) Measure the voltage between rear oxygen sensor connector and chassis ground. ***Connector & terminal*** ***(T6) No. 3 (+) — Chassis ground (–):***	Is the voltage 0.15 V or more?	Repair the short circuit to power in the harness between ECM connector and rear oxygen sensor connector.	Go to step **4**.
4	**CHECK EXHAUST SYSTEM.** Check exhaust system parts. NOTE: Check the following items. • Looseness and improper fitting of exhaust system parts • Damage (crack, hole etc.) of parts • Damage (crack, hole etc.) between front oxygen (A/F) sensor and rear oxygen sensor	Is there any fault in exhaust system?	Repair or replace faulty parts.	Replace the rear oxygen sensor. <Ref. to FU(STI)-54, Rear Oxygen Sensor.>

1. OUTLINE OF DIAGNOSIS

Detect the stuck of rear oxygen sensor voltage in lean state.
When rear oxygen sensor voltage remains below the threshold value for predetermined time, diagnosis interrupts target air fuel ratio for control and raises output voltage.
Judge as NG detecting the stuck in lean state when rear oxygen sensor voltage remains below the threshold value even after the interrupt control.

2. COMPONENT DESCRIPTION

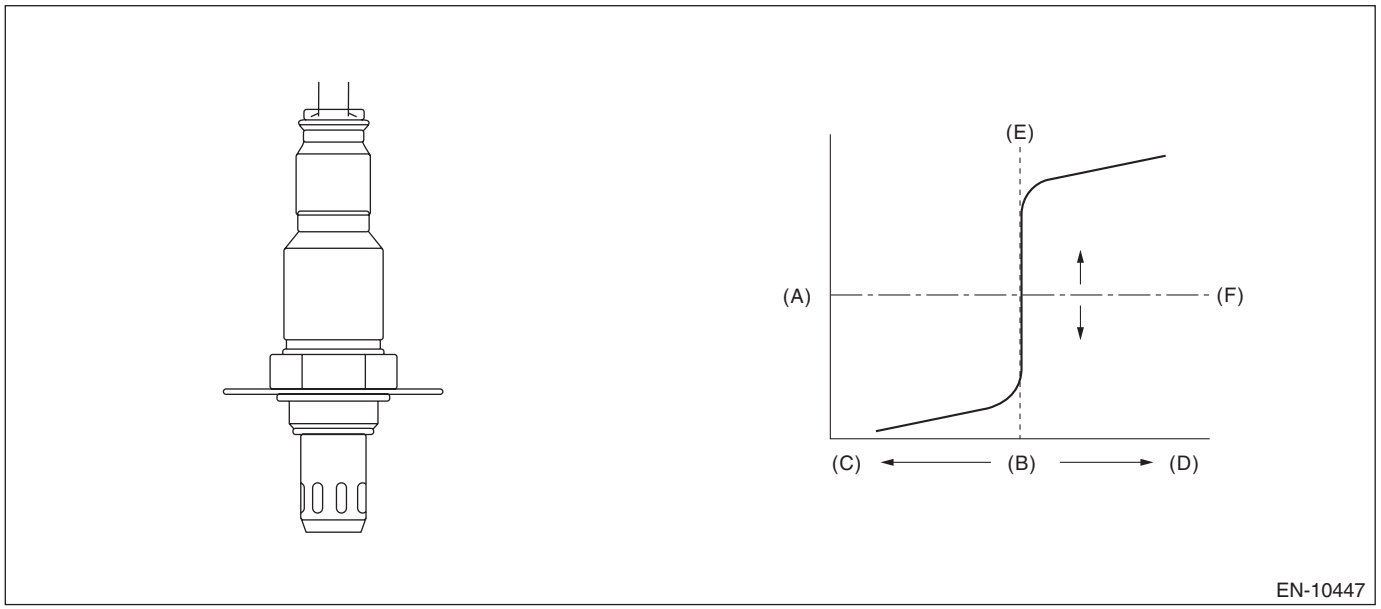

(A) Electromotive force
(B) Air fuel ratio
(C) Lean
(D) Rich
(E) Theoretical air fuel ratio
(F) Comparative voltage

3. EXECUTION CONDITION

Secondary parameters	Execution condition
Battery voltage	≥ 10.9 V
Sub feedback	In operation
Amount of intake air	≥ 10 g/s (0.35 oz/s)
Estimated temperature of the rear oxygen sensor element	≥ 500 °C (932 °F)
Enable conditions at interrupt control are as follows	
Continuous time when rear oxygen sensor output voltage is less than 0.55 V	≥ 15000 ms
Air fuel ratio reduced from target air fuel ratio	= Value of Map

Map

Output voltage of rear oxygen sensor V	0.00	0.15	0.20	0.40	0.60
Air fuel ratio reduced from target air fuel ratio %	15	15	4	4	4

4. GENERAL DRIVING CYCLE

Perform the diagnosis only once after the enable conditions have been established.

5. DIAGNOSTIC METHOD

If the duration of time while the following conditions are met is longer than the time indicated, judge as NG.

Judgment Value

Malfunction Criteria	Threshold Value
Output voltage of rear oxygen sensor	< 0.55 V

Time Needed for Diagnosis: 25000 ms
Malfunction Indicator Light Illumination: Illuminates when malfunction occurs in 2 continuous driving cycles.

FM:DTC P2271 O2 SENSOR SIGNAL BIASED/STUCK RICH BANK 1 SENSOR 2

DTC DETECTING CONDITION:

Detected when two consecutive driving cycles with fault occur.

CAUTION:

After servicing or replacing faulty parts, perform Clear Memory Mode <Ref. to EN(STI)(diag)-68, OPERATION, Clear Memory Mode.>, and Inspection Mode <Ref. to EN(STI)(diag)-48, PROCEDURE, Inspection Mode.>.

WIRING DIAGRAM:

Engine Electrical System <Ref. to WI-154, WIRING DIAGRAM, Engine Electrical System.>

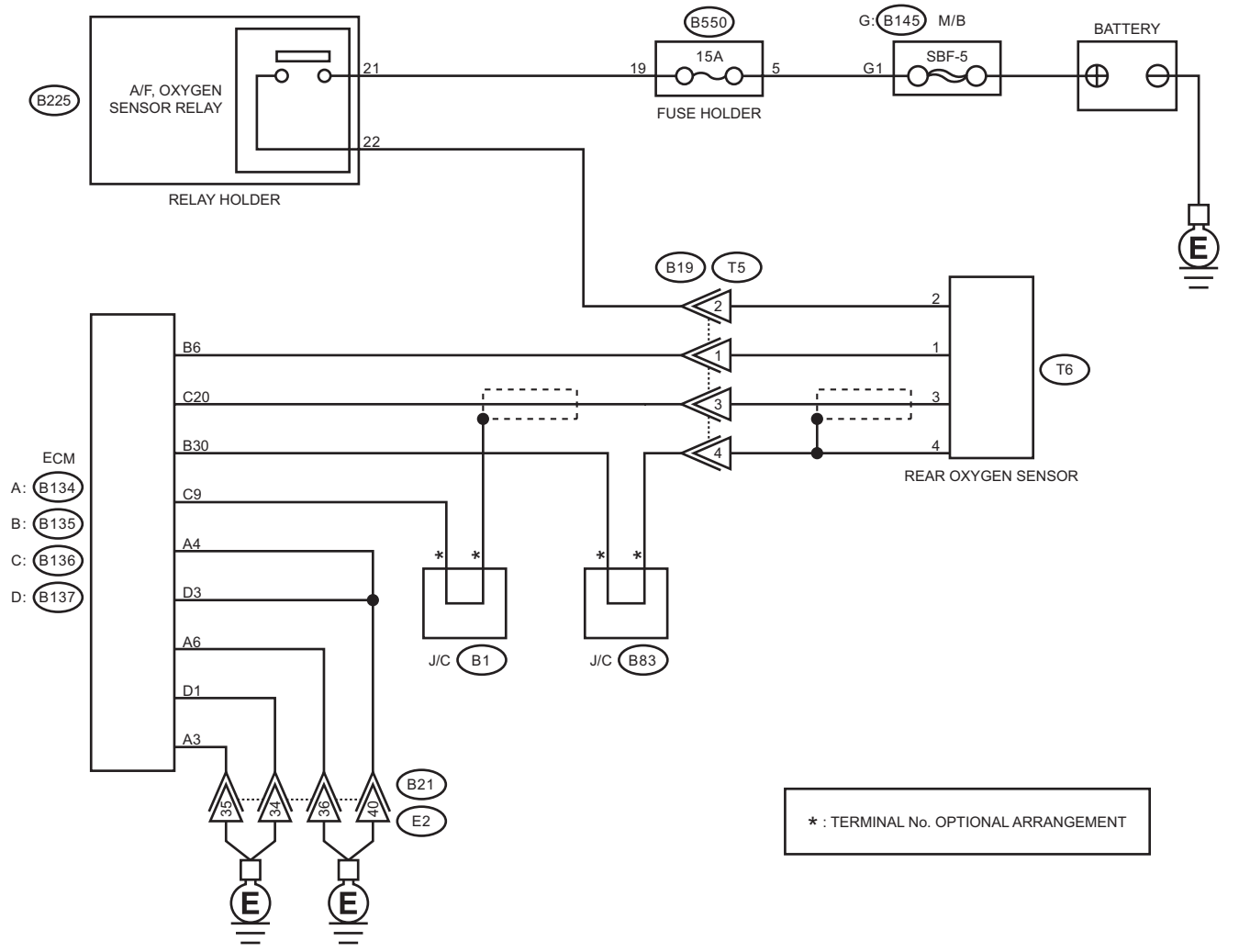

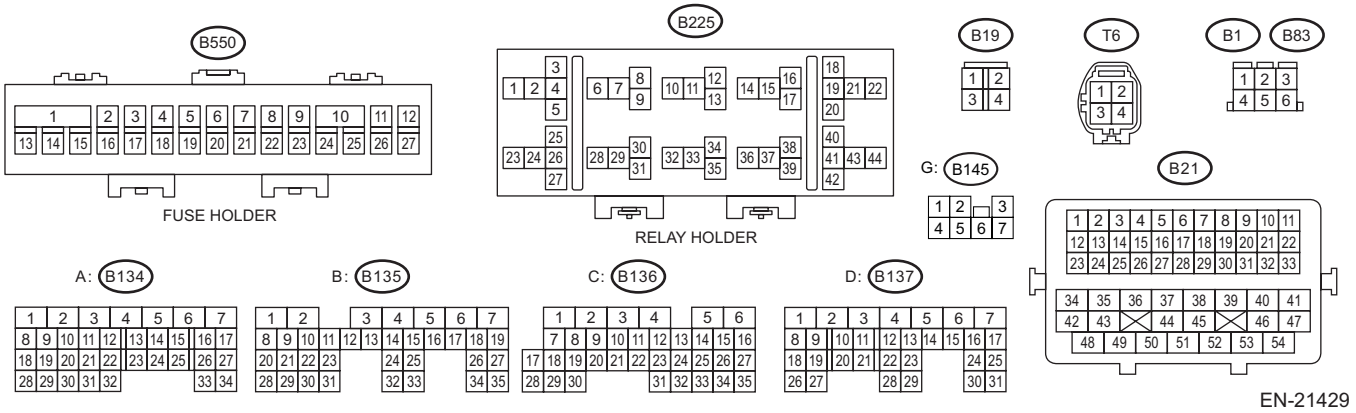

EN-21429

	Step	Check	Yes	No
1	**CHECK REAR OXYGEN SENSOR CONNECTOR.**	Has water entered the connector?	Completely remove any water inside.	Go to step **2**.
2	**CHECK HARNESS BETWEEN ECM AND REAR OXYGEN SENSOR CONNECTOR.** 1) Turn the ignition switch to OFF. 2) Disconnect the connector from ECM. 3) Disconnect the connector from rear oxygen sensor. 4) Measure the resistance of harness between ECM connector and rear oxygen sensor connector. ***Connector & terminal*** ***(B136) No. 20 — (T6) No. 3:*** ***(B135) No. 30 — (T6) No. 4:***	Is the resistance less than 1 Ω?	Go to step **3**.	Repair the harness and connector. NOTE: In this case, repair the following item: • Open circuit in harness between ECM connector and rear oxygen sensor connector • Poor contact of coupling connector
3	**CHECK HARNESS BETWEEN ECM AND REAR OXYGEN SENSOR CONNECTOR.** Measure the resistance between ECM connector and chassis ground. ***Connector & terminal*** ***(B136) No. 20 — Chassis ground:***	Is the resistance 1 MΩ or more?	Go to step **4**.	Repair the short circuit to ground in harness between ECM connector and rear oxygen sensor connector.
4	**CHECK EXHAUST SYSTEM.** Check exhaust system parts. NOTE: Check the following items. • Looseness and improper fitting of exhaust system parts • Damage (crack, hole etc.) of parts • Damage (crack, hole etc.) between front oxygen (A/F) sensor and rear oxygen sensor	Is there any fault in exhaust system?	Repair or replace faulty parts.	Replace the rear oxygen sensor. <Ref. to FU(STI)-54, Rear Oxygen Sensor.>

1. OUTLINE OF DIAGNOSIS

Detect the stuck of rear oxygen sensor voltage in rich state.
Detect the stuck in rich state and judge as NG if rear oxygen sensor voltage remains above the threshold value for predetermined time.

2. COMPONENT DESCRIPTION

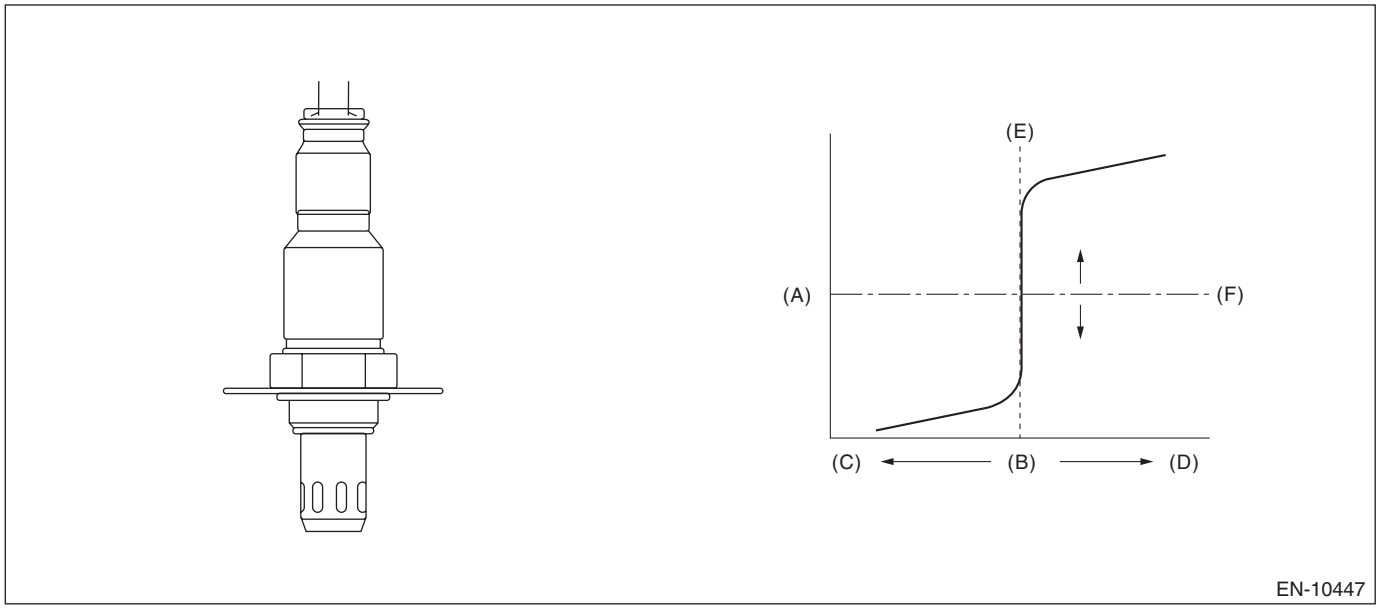

(A) Electromotive force
(B) Air fuel ratio
(C) Lean
(D) Rich
(E) Theoretical air fuel ratio
(F) Comparative voltage

3. EXECUTION CONDITION

Secondary parameters	Execution condition
Battery voltage	≥ 10.9 V
Deceleration fuel cut for 5000 ms or more	Experienced
Estimated temperature of the rear oxygen sensor element	≥ 500 °C (932 °F)

4. GENERAL DRIVING CYCLE

Perform the diagnosis only once after the enable conditions have been established.

5. DIAGNOSTIC METHOD

If the duration of time while the following conditions are met is longer than the time indicated, judge as NG.

Judgment Value

Malfunction Criteria	Threshold Value
Output voltage of rear oxygen sensor	> 0.15 V

Time Needed for Diagnosis: 500 ms
Malfunction Indicator Light Illumination: Illuminates when malfunction occurs in 2 continuous driving cycles.

FN:DTC P2401 EVAP SYSTEM LEAK DETECTION PUMP CONTROL CIRCUIT LOW

DTC DETECTING CONDITION:
Immediately at fault recognition

CAUTION:
After servicing or replacing faulty parts, perform Clear Memory Mode <Ref. to EN(STI)(diag)-68, OPERATION, Clear Memory Mode.>, and Inspection Mode <Ref. to EN(STI)(diag)-48, PROCEDURE, Inspection Mode.>.

WIRING DIAGRAM:
Engine Electrical System <Ref. to WI-154, WIRING DIAGRAM, Engine Electrical System.>

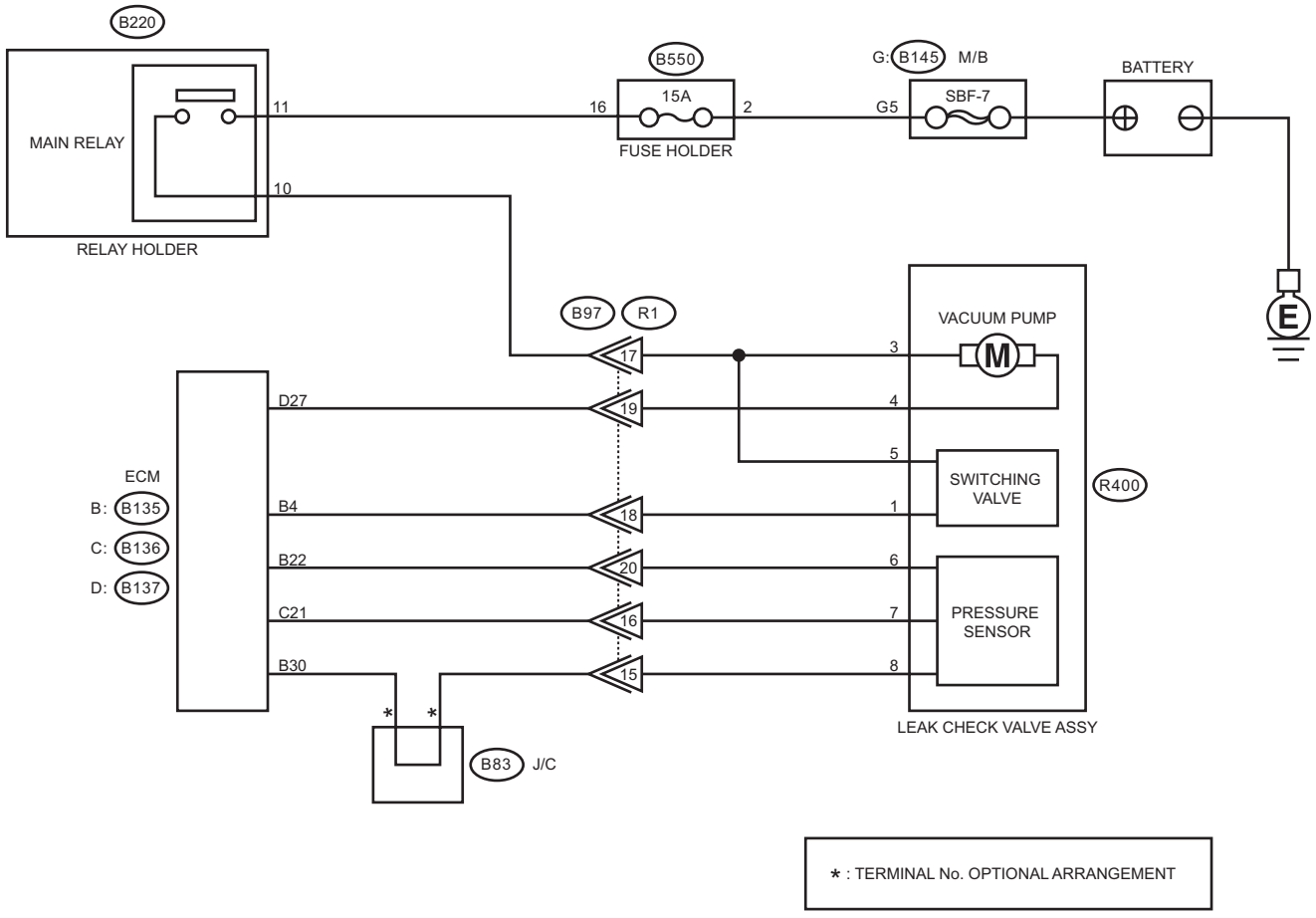

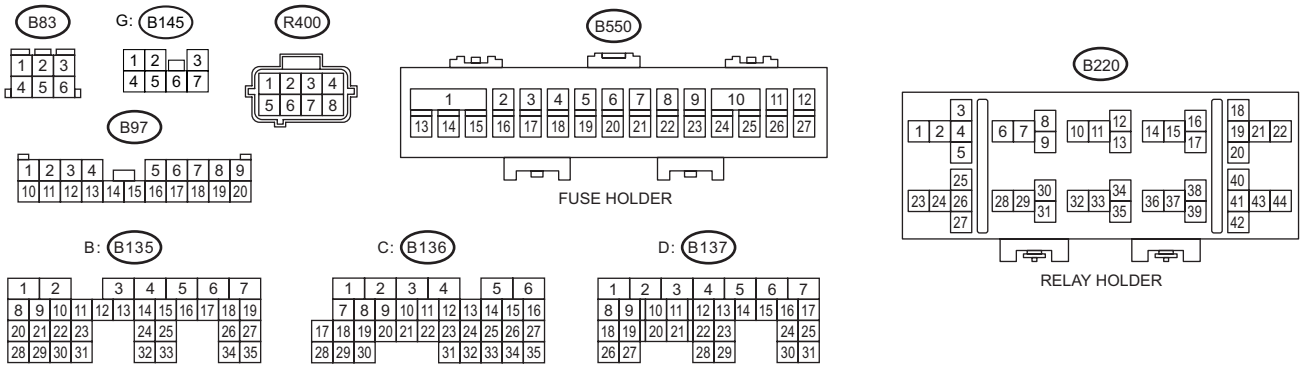

EN-21432

	Step	Check	Yes	No
1	**CHECK HARNESS BETWEEN ECM AND LEAK CHECK VALVE ASSEMBLY CONNECTOR.** 1) Turn the ignition switch to ON. 2) Measure the voltage between ECM connector and chassis ground. ***Connector & terminal*** ***(B137) No. 27 (+) — Chassis ground (–):***	Is the voltage 10 V or more?	Go to step **2**.	Go to step **3**.
2	**CHECK FOR POOR CONTACT.** Check for poor contact of ECM connector.	Is there poor contact of ECM connector?	Repair the poor contact of ECM connector.	Even if DTC is detected, the circuit has returned to a normal condition at this time. Reproduce the failure, and then perform the diagnosis again. NOTE: In this case, temporary open or short circuit of harness or temporary poor contact of connector may be the cause.
3	**CHECK POWER SUPPLY TO LEAK CHECK VALVE ASSEMBLY.** Measure the voltage between the leak check valve assembly connector and engine ground. ***Connector & terminal*** ***(R400) No. 3 (+) — Engine ground (–):***	Is the voltage 10 V or more?	Go to step **4**.	Repair the power supply circuit.
4	**CHECK HARNESS BETWEEN ECM AND LEAK CHECK VALVE ASSEMBLY CONNECTOR.** 1) Turn the ignition switch to OFF. 2) Disconnect the connector from ECM. 3) Disconnect the connector from the leak check valve assembly. 4) Measure the resistance between leak check valve assembly and chassis ground. ***Connector & terminal*** ***(R400) No. 4 — Chassis ground:***	Is the resistance 1 MΩ or more?	Go to step **5**.	Repair the short circuit to ground in harness between ECM connector and leak check valve assembly connector.
5	**CHECK HARNESS BETWEEN ECM AND LEAK CHECK VALVE ASSEMBLY CONNECTOR.** Measure the resistance of harness between ECM connector and the leak check valve assembly connector. ***Connector & terminal*** ***(B137) No. 27 — (R400) No. 4:***	Is the resistance less than 1 Ω?	Go to step **6**.	Repair the harness and connector. NOTE: In this case, repair the following item: • Open circuit in harness between ECM connector and the leak check valve assembly connector • Poor contact of coupling connector

Step		Check	Yes	No
6	**CHECK LEAK CHECK VALVE ASSEMBLY.** Check the vacuum pump of the leak check valve assembly. <Ref. to EC(STI)-49, CHECK VACUUM PUMP, INSPECTION, Leak Check Valve Assembly.>	Is the check result OK?	Repair the poor contact in the leak check valve assembly connector.	Replace the leak check valve assembly. <Ref. to EC(STI)-32, Leak Check Valve Assembly.>

1. OUTLINE OF DIAGNOSIS

Detect the open or short circuit in Evaporative Leak Check Module vacuum pump.
Judge as NG if out of specification.

2. COMPONENT DESCRIPTION

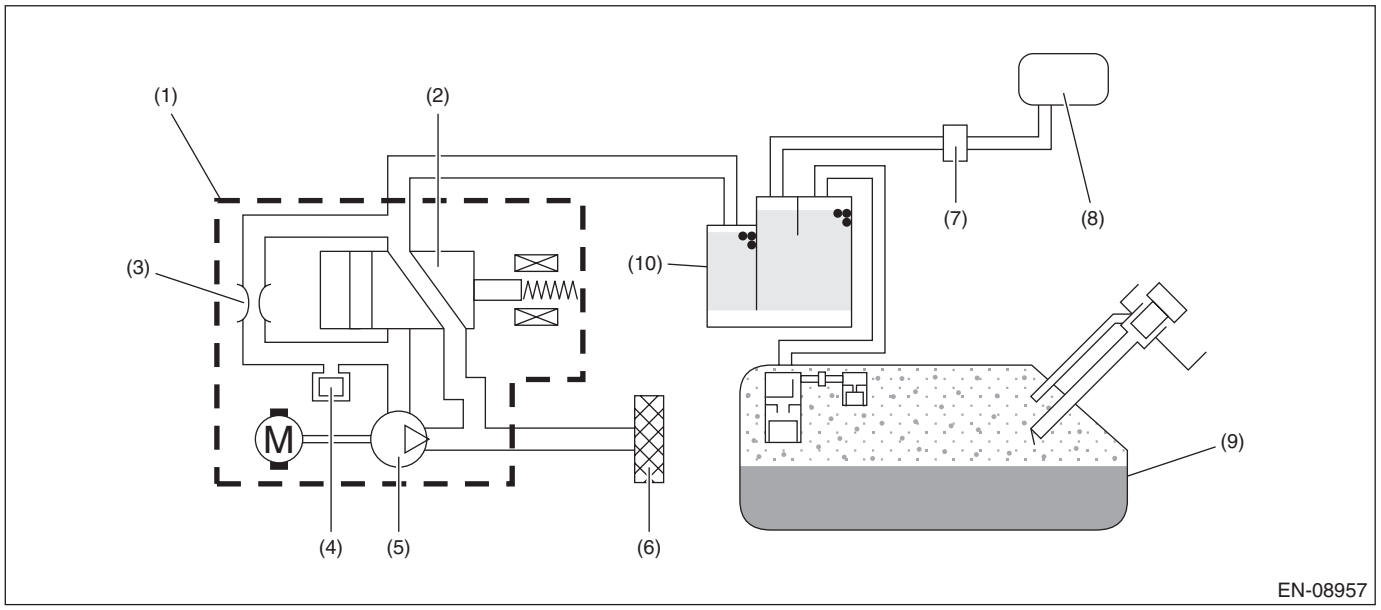

(1) Leak check valve ASSY
(2) Switching valve
(3) Reference orifice (0.02 inch orifice)
(4) Pressure sensor
(5) Vacuum pump
(6) Drain filter
(7) Purge control solenoid valve
(8) Intake manifold
(9) Fuel tank
(10) Canister

3. EXECUTION CONDITION

Secondary parameters	Execution condition
Battery voltage	≥ 10.9 V
Evaporative Leak Check Module vacuum pump drive signal	OFF

4. GENERAL DRIVING CYCLE

Perform the diagnosis continuously after the enable conditions have been established.

5. DIAGNOSTIC METHOD

If the duration of time while the following conditions are met is longer than the time indicated, judge as NG.

Judgment Value

Malfunction Criteria	Threshold Value
Output voltage	≤ Battery voltage × 0.34 V

Time Needed for Diagnosis: 2500 ms
Malfunction Indicator Light Illumination: Illuminates as soon as a malfunction occurs.

FO:DTC P2402 EVAP SYSTEM LEAK DETECTION PUMP CONTROL CIRCUIT HIGH

DTC DETECTING CONDITION:
Immediately at fault recognition

CAUTION:
After servicing or replacing faulty parts, perform Clear Memory Mode <Ref. to EN(STI)(diag)-68, OPERATION, Clear Memory Mode.>, and Inspection Mode <Ref. to EN(STI)(diag)-48, PROCEDURE, Inspection Mode.>.

WIRING DIAGRAM:
Engine Electrical System <Ref. to WI-154, WIRING DIAGRAM, Engine Electrical System.>

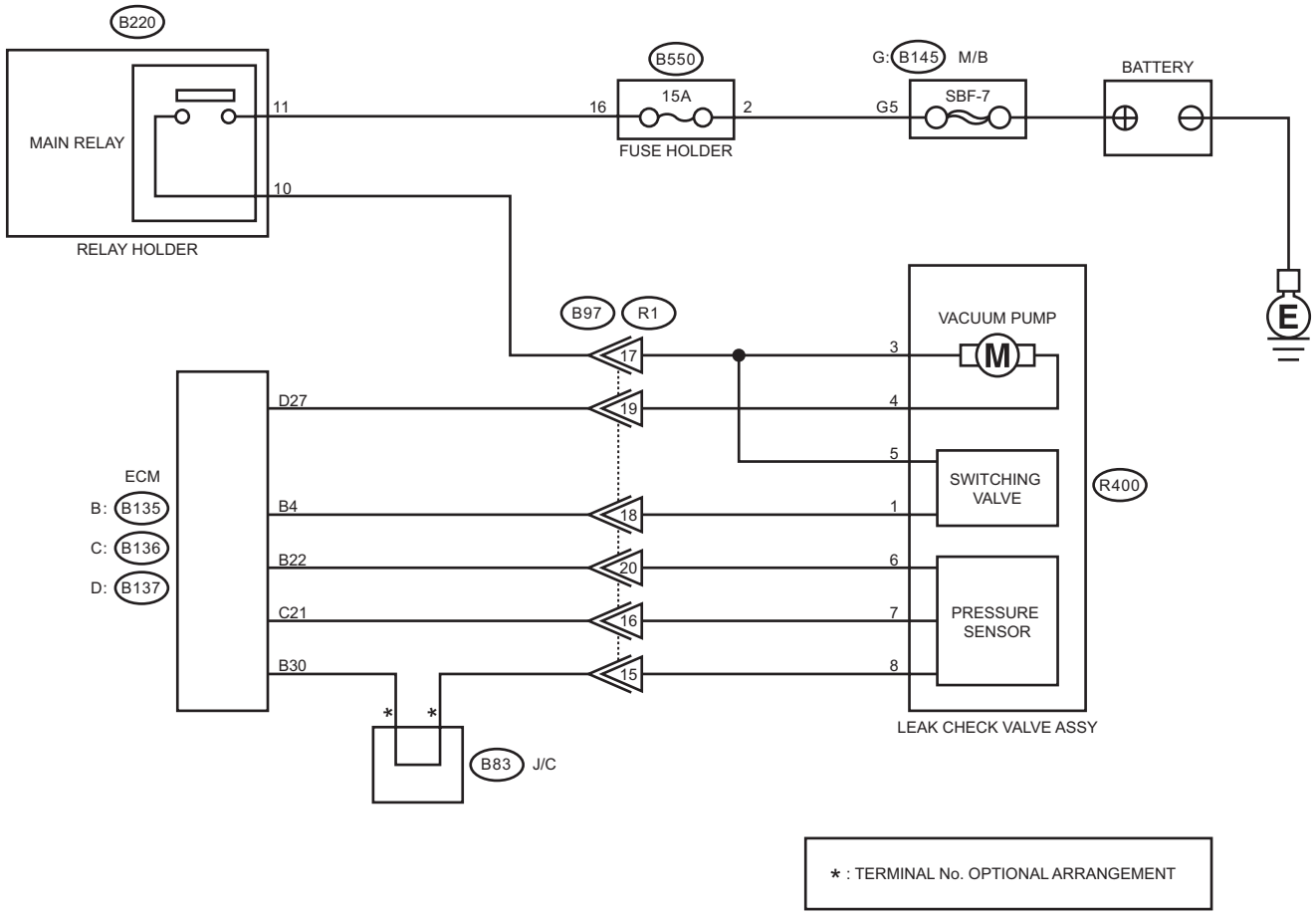

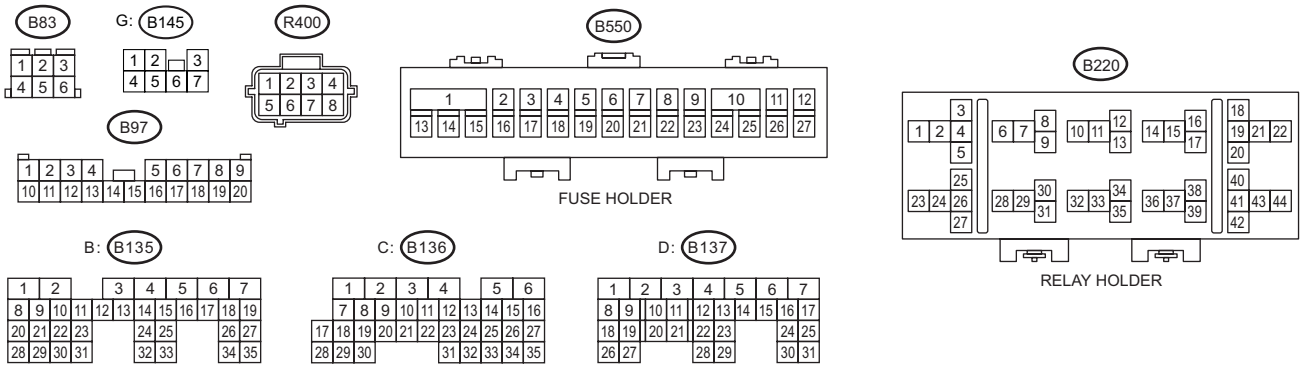

EN-21432

	Step	Check	Yes	No
1	**CHECK HARNESS BETWEEN ECM AND LEAK CHECK VALVE ASSEMBLY CONNECTOR.** 1) Turn the ignition switch to OFF. 2) Disconnect the connector from the leak check valve assembly. 3) Turn the ignition switch to ON. 4) Measure the voltage between leak check valve assembly and chassis ground. ***Connector & terminal*** ***(R400) No. 4 (+) — Chassis ground (–):***	Is the voltage 10 V or more?	Repair the short circuit to power in harness between ECM connector and leak check valve assembly connector.	Go to step **2**.
2	**CHECK LEAK CHECK VALVE ASSEMBLY.** 1) Turn the ignition switch to OFF. 2) Check the vacuum pump of the leak check valve assembly. <Ref. to EC(STI)-49, CHECK VACUUM PUMP, INSPECTION, Leak Check Valve Assembly.>	Is the check result OK?	Repair the poor contact in the leak check valve assembly connector.	Replace the leak check valve assembly. <Ref. to EC(STI)-32, Leak Check Valve Assembly.>

1. OUTLINE OF DIAGNOSIS

Detect the open or short circuit in Evaporative Leak Check Module vacuum pump.
Judge as NG if out of specification.

2. COMPONENT DESCRIPTION

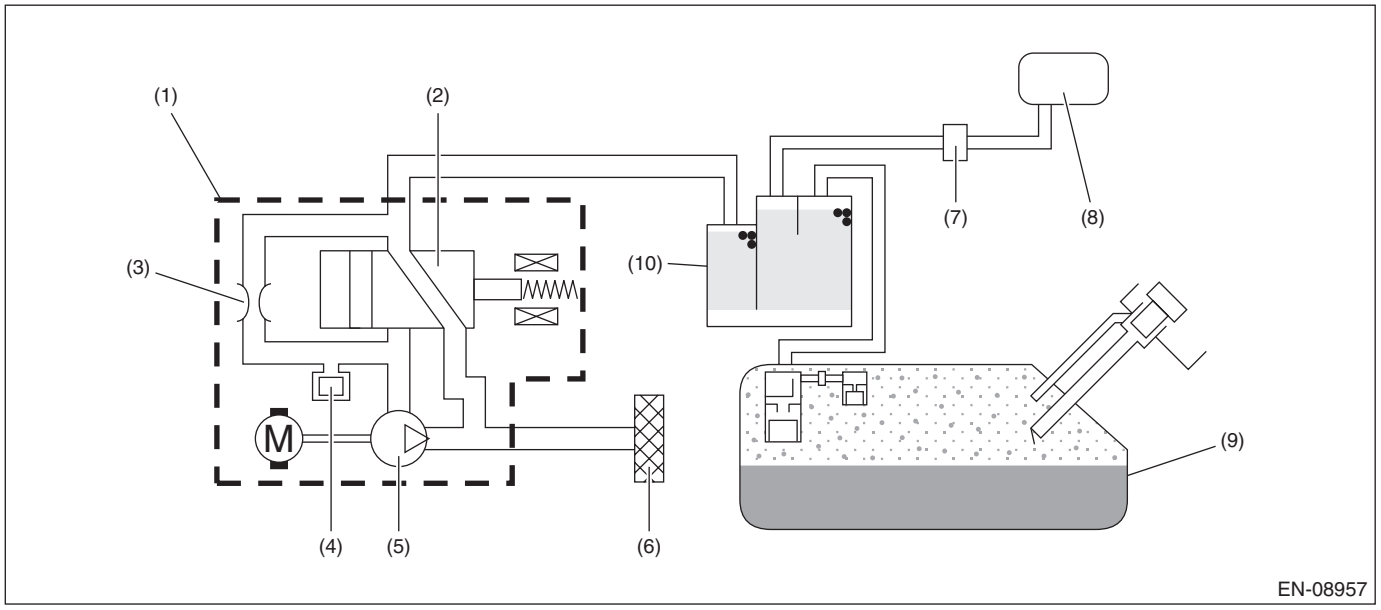

(1) Leak check valve ASSY
(2) Switching valve
(3) Reference orifice (0.02 inch orifice)
(4) Pressure sensor
(5) Vacuum pump
(6) Drain filter
(7) Purge control solenoid valve
(8) Intake manifold
(9) Fuel tank
(10) Canister

3. EXECUTION CONDITION

Secondary parameters	Execution condition
Battery voltage	≥ 10.9 V
Evaporative Leak Check Module vacuum pump drive signal	ON

4. GENERAL DRIVING CYCLE

Perform the diagnosis continuously after the enable conditions have been established.

5. DIAGNOSTIC METHOD

If the duration of time while the following conditions are met is longer than the time indicated, judge as NG.

Judgment Value

Malfunction Criteria	Threshold Value
Output current	≥ 12 A

Time Needed for Diagnosis: 2500 ms
Malfunction Indicator Light Illumination: Illuminates as soon as a malfunction occurs.

FP:DTC P2404 EVAP SYSTEM LEAK DETECTION PUMP SENSE CIRCUIT RANGE/PERFORMANCE

DTC DETECTING CONDITION:
Detected when two consecutive driving cycles with fault occur.

CAUTION:
After servicing or replacing faulty parts, perform Clear Memory Mode <Ref. to EN(STI)(diag)-68, OPERATION, Clear Memory Mode.>, and Inspection Mode <Ref. to EN(STI)(diag)-48, PROCEDURE, Inspection Mode.>.

WIRING DIAGRAM:
Engine Electrical System <Ref. to WI-154, WIRING DIAGRAM, Engine Electrical System.>

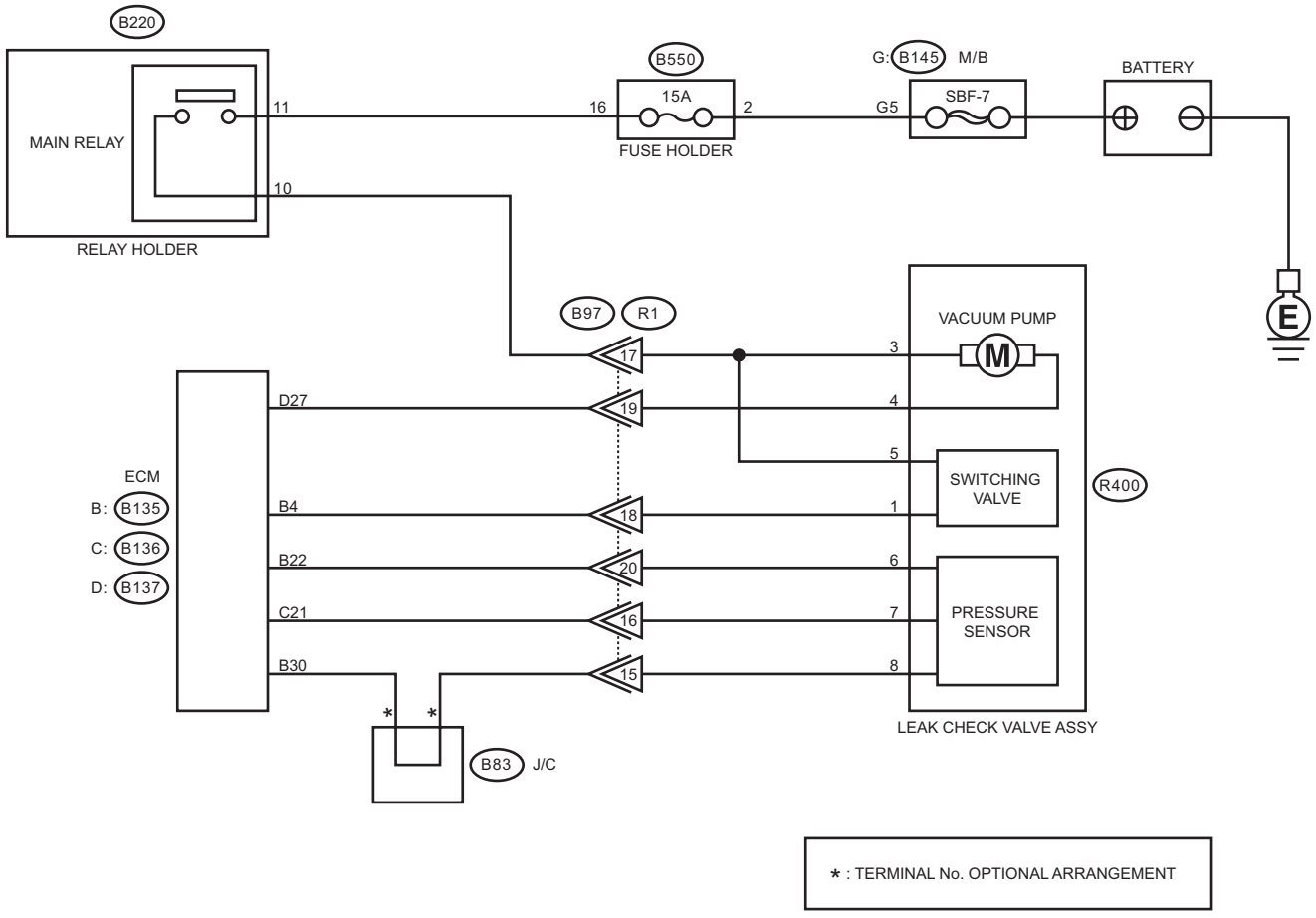

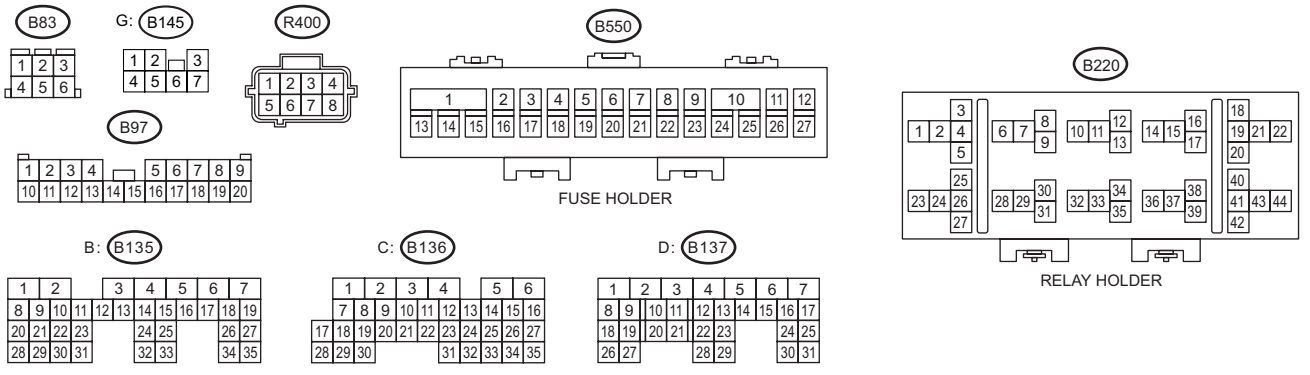

EN-21432

	Step	Check	Yes	No
1	**CHECK FOR ANY OTHER DTC ON DISPLAY.**	Is any other DTC displayed?	Check the appropriate DTC using the "List of Diagnostic Trouble Code (DTC)". <Ref. to EN(STI)(diag)-96, List of Diagnostic Trouble Code (DTC).>	Go to step **2**.
2	**CHECK LEAK CHECK VALVE ASSEMBLY PUMP.** Using the Subaru Select Monitor, operate the leak check valve assembly pump. NOTE: For detailed operation procedures, refer to the "Active Test". <Ref. to EN(STI)(diag)-69, Active Test.>	Does the leak check valve assembly pump operate?	Go to step **6**.	Go to step **3**.
3	**CHECK POWER SUPPLY OF LEAK CHECK VALVE ASSEMBLY.** 1) Turn the ignition switch to OFF. 2) Disconnect the connector from the leak check valve assembly. 3) Turn the ignition switch to ON. 4) Measure the voltage between the leak check valve assembly connector and chassis ground. ***Connector & terminal*** ***(R400) No. 3 (+) — Chassis ground (–):***	Is the voltage 10 V or more?	Go to step **4**.	Repair the harness and connector. NOTE: In this case, repair the following item: • Open circuit in harness between the main relay and the leak check valve assembly connector • Poor contact of main relay connector • Poor contact of coupling connector
4	**CHECK HARNESS BETWEEN ECM AND LEAK CHECK VALVE ASSEMBLY CONNECTOR.** 1) Turn the ignition switch to OFF. 2) Disconnect the connector from ECM. 3) Measure the resistance of harness between ECM connector and the leak check valve assembly connector. ***Connector & terminal*** ***(B137) No. 27 — (R400) No. 4:***	Is the resistance less than 1 Ω?	Go to step **5**.	Repair the harness and connector. NOTE: In this case, repair the following item: • Open circuit in harness between ECM connector and the leak check valve assembly connector • Poor contact of coupling connector
5	**CHECK HARNESS BETWEEN ECM AND LEAK CHECK VALVE ASSEMBLY CONNECTOR.** 1) Measure the resistance of harness between ECM connector and chassis ground. ***Connector & terminal*** ***(B137) No. 27 — Chassis ground:***	Is the resistance 1 MΩ or more?	Replace the leak check valve assembly. <Ref. to EC(STI)-32, Leak Check Valve Assembly.>	Repair the short circuit to ground in harness between ECM connector and leak check valve assembly connector.

	Step	Check	Yes	No
6	**CHECK LEAK CHECK VALVE ASSEMBLY SWITCHING VALVE.** Using the Subaru Select Monitor, operate the leak check valve assembly switching valve. NOTE: For detailed operation procedures, refer to the "Active Test". <Ref. to EN(STI)(diag)-69, Active Test.>	Does the leak check valve assembly switching valve operate?	Go to step **10**.	Go to step **7**.
7	**CHECK POWER SUPPLY OF LEAK CHECK VALVE ASSEMBLY.** 1) Turn the ignition switch to OFF. 2) Disconnect the connector from the leak check valve assembly. 3) Turn the ignition switch to ON. 4) Measure the voltage between the leak check valve assembly connector and chassis ground. ***Connector & terminal*** ***(R400) No. 5 (+) — Chassis ground (–):***	Is the voltage 10 V or more?	Go to step **8**.	Repair the harness and connector. NOTE: In this case, repair the following item: • Open circuit in harness between the main relay and the leak check valve assembly connector • Poor contact of main relay connector • Poor contact of coupling connector
8	**CHECK HARNESS BETWEEN ECM AND LEAK CHECK VALVE ASSEMBLY CONNECTOR.** 1) Turn the ignition switch to OFF. 2) Disconnect the connector from ECM. 3) Measure the resistance of harness between ECM connector and the leak check valve assembly connector. ***Connector & terminal*** ***(B135) No. 4 — (R400) No. 1:***	Is the resistance less than 1 Ω?	Go to step **9**.	Repair the harness and connector. NOTE: In this case, repair the following item: • Open circuit in harness between ECM connector and the leak check valve assembly connector • Poor contact of coupling connector
9	**CHECK HARNESS BETWEEN ECM AND LEAK CHECK VALVE ASSEMBLY CONNECTOR.** 1) Measure the resistance of harness between ECM connector and chassis ground. ***Connector & terminal*** ***(B135) No. 4 — Chassis ground:***	Is the resistance 1 MΩ or more?	Replace the leak check valve assembly. <Ref. to EC(STI)-32, Leak Check Valve Assembly.>	Repair the short circuit to ground in harness between ECM connector and leak check valve assembly connector.

	Step	Check	Yes	No
10	**CHECK EVAPORATIVE EMISSION CONTROL SYSTEM.** Perform drive cycle I. <Ref. to EN(STI)(diag)-61, DRIVE CYCLE I, PROCEDURE, Drive Cycle.>	Is DTC P2404 displayed on the display?	Replace the leak check valve assembly. <Ref. to EC(STI)-32, Leak Check Valve Assembly.>	Even if DTC is detected, the circuit has returned to a normal condition at this time. Reproduce the failure, and then perform the diagnosis again. NOTE: In this case, temporary poor contact of connector, temporary open or short circuit of harness may be the cause.

1. OUTLINE OF DIAGNOSIS

NOTE:
For the detection standard, refer to DTC P0455. <Ref. to EN(STI)(diag)-352, DTC P0455 EVAP SYSTEM (CPC) LEAK DETECTED (LARGE LEAK), Diagnostic Procedure with Diagnostic Trouble Code (DTC).>

FQ:DTC P2419 EVAP SYSTEM SWITCHING VALVE CONTROL CIRCUIT LOW

DTC DETECTING CONDITION:
Immediately at fault recognition

CAUTION:
After servicing or replacing faulty parts, perform Clear Memory Mode <Ref. to EN(STI)(diag)-68, OPERATION, Clear Memory Mode.>, and Inspection Mode <Ref. to EN(STI)(diag)-48, PROCEDURE, Inspection Mode.>.

WIRING DIAGRAM:
Engine Electrical System <Ref. to WI-154, WIRING DIAGRAM, Engine Electrical System.>

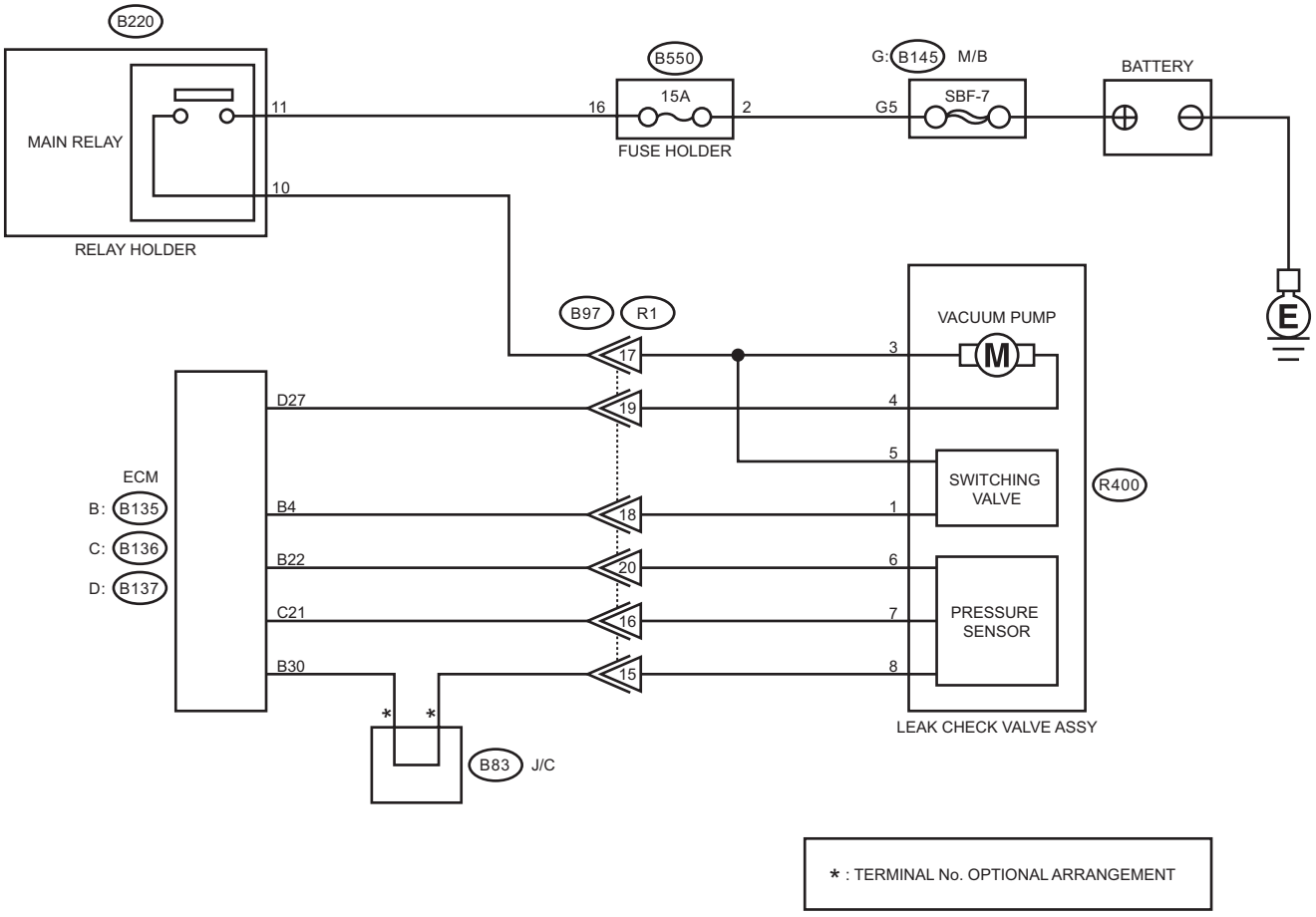

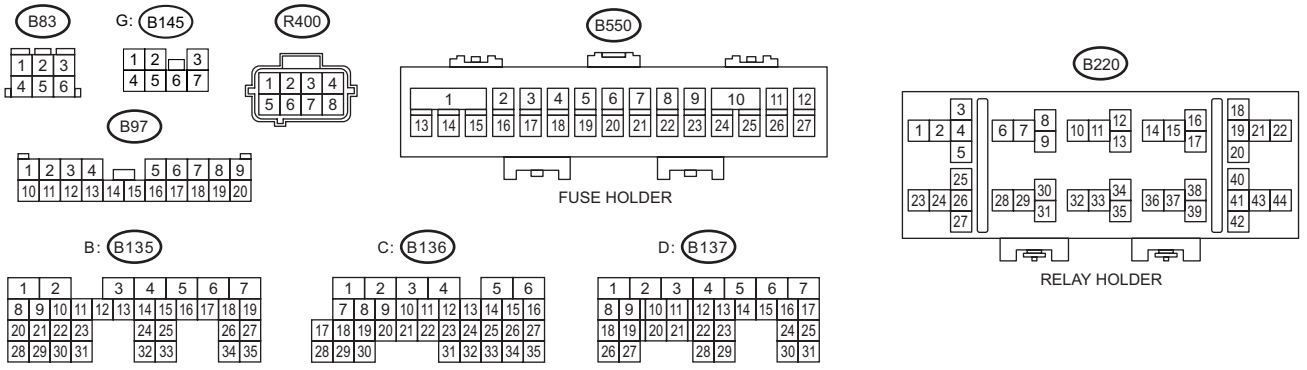

EN-21432

	Step	Check	Yes	No
1	**CHECK HARNESS BETWEEN ECM AND LEAK CHECK VALVE ASSEMBLY CONNECTOR.** 1) Turn the ignition switch to ON. 2) Measure the voltage between ECM connector and chassis ground. ***Connector & terminal*** ***(B135) No. 4 (+) — Chassis ground (–):***	Is the voltage 10 V or more?	Go to step **2**.	Go to step **3**.
2	**CHECK FOR POOR CONTACT.** Check for poor contact of ECM connector.	Is there poor contact of ECM connector?	Repair the poor contact of ECM connector.	Even if DTC is detected, the circuit has returned to a normal condition at this time. Reproduce the failure, and then perform the diagnosis again. NOTE: In this case, temporary open or short circuit of harness or temporary poor contact of connector may be the cause.
3	**CHECK POWER SUPPLY TO LEAK CHECK VALVE ASSEMBLY.** Measure the voltage between the leak check valve assembly connector and engine ground. ***Connector & terminal*** ***(R400) No. 5 (+) — Engine ground (–):***	Is the voltage 10 V or more?	Go to step **4**.	Repair the power supply circuit.
4	**CHECK HARNESS BETWEEN ECM AND LEAK CHECK VALVE ASSEMBLY CONNECTOR.** 1) Turn the ignition switch to OFF. 2) Disconnect the connector from ECM. 3) Disconnect the connector from the leak check valve assembly. 4) Measure the resistance between leak check valve assembly and chassis ground. ***Connector & terminal*** ***(R400) No. 1 — Chassis ground:***	Is the resistance 1 MΩ or more?	Go to step **5**.	Repair the short circuit to ground in harness between ECM connector and leak check valve assembly connector.
5	**CHECK HARNESS BETWEEN ECM AND LEAK CHECK VALVE ASSEMBLY CONNECTOR.** Measure the resistance of harness between ECM connector and the leak check valve assembly connector. ***Connector & terminal*** ***(B135) No. 4 — (R400) No. 1:***	Is the resistance less than 1 Ω?	Go to step **6**.	Repair the harness and connector. NOTE: In this case, repair the following item: • Open circuit in harness between ECM connector and the leak check valve assembly connector • Poor contact of coupling connector

Step		Check	Yes	No
6	**CHECK LEAK CHECK VALVE ASSEMBLY.** Check the switching valve of the leak check valve assembly. <Ref. to EC(STI)-48, CHECK SWITCHING VALVE, INSPECTION, Leak Check Valve Assembly.>	Is the check result OK?	Repair the poor contact in the leak check valve assembly connector.	Replace the leak check valve assembly. <Ref. to EC(STI)-32, Leak Check Valve Assembly.>

1. OUTLINE OF DIAGNOSIS

Detect the open or short circuit in Evaporative Leak Check Module switching valve.
Judge as NG if out of specification.

2. COMPONENT DESCRIPTION

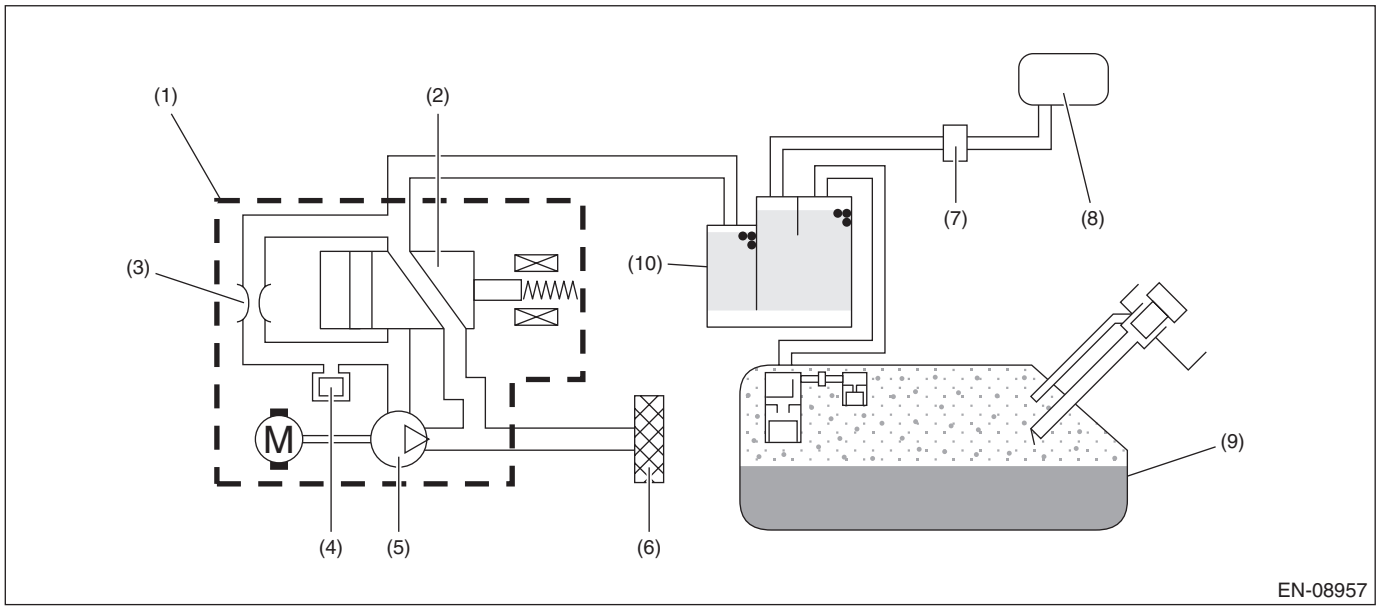

(1) Leak check valve ASSY
(2) Switching valve
(3) Reference orifice (0.02 inch orifice)
(4) Pressure sensor
(5) Vacuum pump
(6) Drain filter
(7) Purge control solenoid valve
(8) Intake manifold
(9) Fuel tank
(10) Canister

3. EXECUTION CONDITION

Secondary parameters	Execution condition
Battery voltage	≥ 10.9 V
Evaporative Leak Check Module switching valve drive signal	OFF

4. GENERAL DRIVING CYCLE

Perform the diagnosis continuously after the enable conditions have been established.

5. DIAGNOSTIC METHOD

If the duration of time while the following conditions are met is longer than the time indicated, judge as NG.

Judgment Value

Malfunction Criteria	Threshold Value
Output voltage	≤ Battery voltage × 0.34 V

Time Needed for Diagnosis: 2500 ms
Malfunction Indicator Light Illumination: Illuminates as soon as a malfunction occurs.

FR:DTC P2420 EVAP SYSTEM SWITCHING VALVE CONTROL CIRCUIT HIGH

DTC DETECTING CONDITION:
Immediately at fault recognition

CAUTION:
After servicing or replacing faulty parts, perform Clear Memory Mode <Ref. to EN(STI)(diag)-68, OPERATION, Clear Memory Mode.>, and Inspection Mode <Ref. to EN(STI)(diag)-48, PROCEDURE, Inspection Mode.>.

WIRING DIAGRAM:
Engine Electrical System <Ref. to WI-154, WIRING DIAGRAM, Engine Electrical System.>

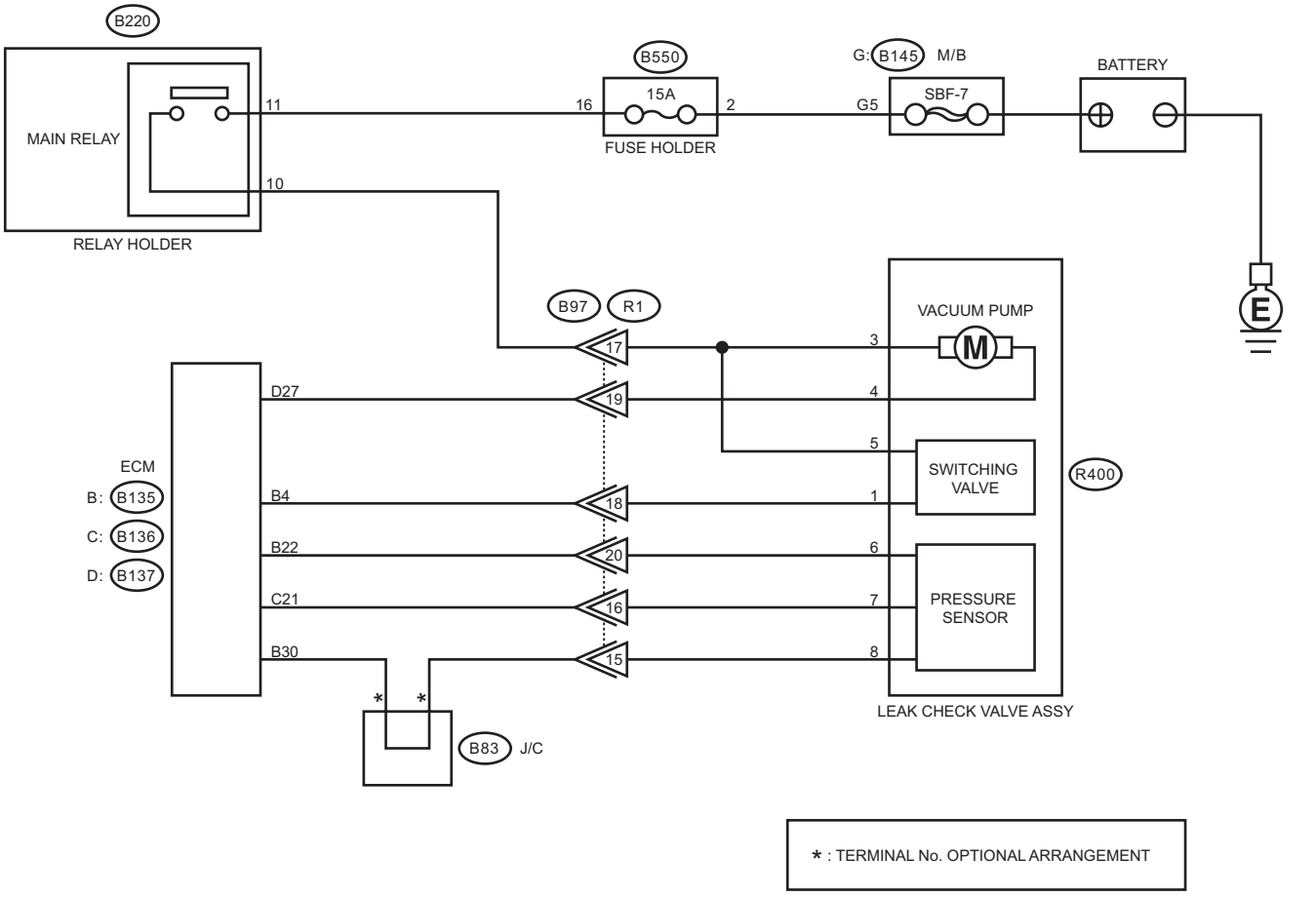

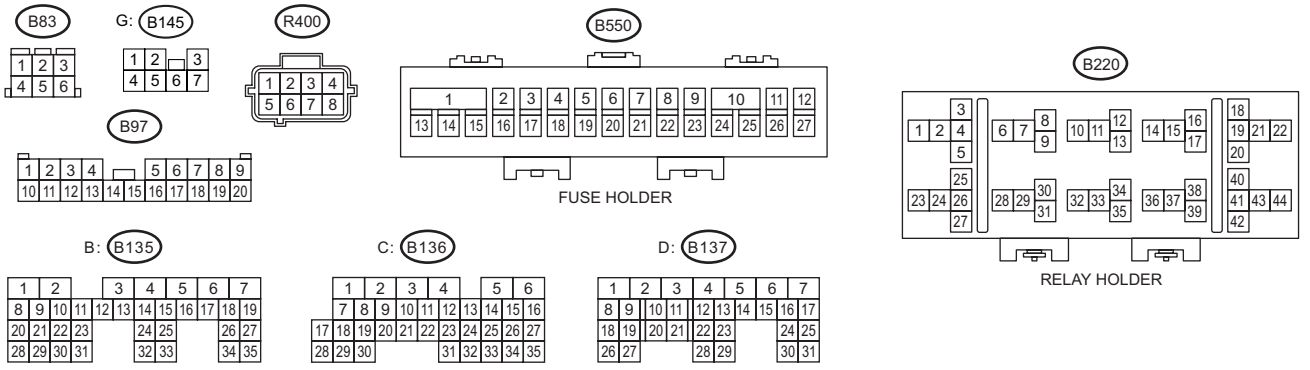

EN-21432

	Step	Check	Yes	No
1	**CHECK HARNESS BETWEEN ECM AND LEAK CHECK VALVE ASSEMBLY CONNECTOR.** 1) Turn the ignition switch to OFF. 2) Disconnect the connector from the leak check valve assembly. 3) Turn the ignition switch to ON. 4) Measure the voltage between leak check valve assembly and chassis ground. ***Connector & terminal*** ***(R400) No. 1 (+) — Chassis ground (–):***	Is the voltage 10 V or more?	Repair the short circuit to power in harness between ECM connector and leak check valve assembly connector.	Go to step **2**.
2	**CHECK LEAK CHECK VALVE ASSEMBLY.** 1) Turn the ignition switch to OFF. 2) Check the switching valve of the leak check valve assembly. <Ref. to EC(STI)-48, CHECK SWITCHING VALVE, INSPECTION, Leak Check Valve Assembly.>	Is the check result OK?	Repair the poor contact in the leak check valve assembly connector.	Replace the leak check valve assembly. <Ref. to EC(STI)-32, Leak Check Valve Assembly.>

1. OUTLINE OF DIAGNOSIS

Detect the open or short circuit in Evaporative Leak Check Module switching valve.
Judge as NG if out of specification.

2. COMPONENT DESCRIPTION

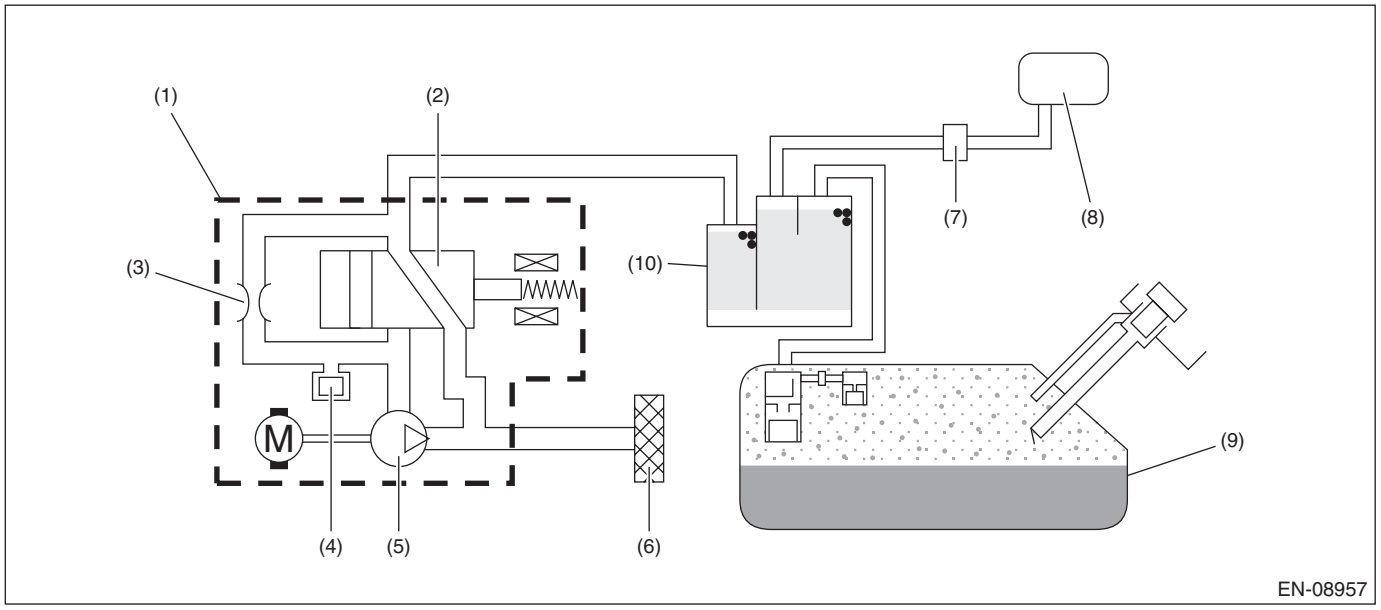

(1) Leak check valve ASSY
(2) Switching valve
(3) Reference orifice (0.02 inch orifice)
(4) Pressure sensor
(5) Vacuum pump
(6) Drain filter
(7) Purge control solenoid valve
(8) Intake manifold
(9) Fuel tank
(10) Canister

3. EXECUTION CONDITION

Secondary parameters	Execution condition
Battery voltage	≥ 10.9 V
Evaporative Leak Check Module switching valve drive signal	ON

4. GENERAL DRIVING CYCLE

Perform the diagnosis continuously after the enable conditions have been established.

5. DIAGNOSTIC METHOD

If the duration of time while the following conditions are met is longer than the time indicated, judge as NG.

Judgment Value

Malfunction Criteria	Threshold Value
Output current	≥ 12 A

Time Needed for Diagnosis: 2500 ms
Malfunction Indicator Light Illumination: Illuminates as soon as a malfunction occurs.

FS:DTC P2431 SECONDARY AIR SYSTEM AIR FLOW/PRESSURE SENSOR CIRCUIT RANGE/PERFORMANCE BANK 1

DTC DETECTING CONDITION:
Detected when two consecutive driving cycles with fault occur.

CAUTION:
After servicing or replacing faulty parts, perform Clear Memory Mode <Ref. to EN(STI)(diag)-68, OPERATION, Clear Memory Mode.>, and Inspection Mode <Ref. to EN(STI)(diag)-48, PROCEDURE, Inspection Mode.>.

	Step	Check	Yes	No
1	**CHECK FOR ANY OTHER DTC ON DISPLAY.**	Is any other DTC displayed?	Check the appropriate DTC using the "List of Diagnostic Trouble Code (DTC)". <Ref. to EN(STI)(diag)-96, List of Diagnostic Trouble Code (DTC).>	Go to step **2**.
2	**CHECK CURRENT DATA.** 1) Turn the ignition switch to ON (engine OFF). 2) Using the Subaru Select Monitor, read the values in «Sec. Air Piping Pressure», «Mani. Absolute Pressure» and «Atmosphere Pressure», and compare them with actual atmospheric pressure. NOTE: For detailed operation procedures, refer to "Read Current Data For Engine". <Ref. to EN(STI)(diag)-36, Subaru Select Monitor.>	Does the displayed value differ from the actual atmospheric pressure by 200 mmHg (27 kPa, 8 inHg, 3.9 psig) or more?	Replace the secondary air combination valve (with built-in pressure sensor). <Ref. to EC(STI)-56, Secondary Air Combination Valve.>	Even if DTC is detected, the circuit has returned to a normal condition at this time. Reproduce the failure, and then perform the diagnosis again. NOTE: In this case, temporary poor contact of connector, temporary open or short circuit of harness may be the cause.

1. OUTLINE OF DIAGNOSIS

Detect the malfunction of secondary air pressure sensor output property.
Judge as NG when the secondary air pressure sensor output is largely different from the intake manifold pressure at engine start.

2. EXECUTION CONDITION

Secondary parameters	Execution condition
Elapsed time after ignition switch to OFF	< 60000 ms
Soaking time	≥ 60 s
After secondary air system stops	≥ 3000 ms

3. GENERAL DRIVING CYCLE

Perform the diagnosis with ignition switch ON.

4. DIAGNOSTIC METHOD

If the duration of time while the following conditions are met is longer than the time indicated, judge as NG.

Judgment Value

Malfunction Criteria	Threshold Value
|Secondary air pipe pressure – Intake manifold pressure|	> 7.9 kPa (59.44 mmHg, 2.3 inHg)

Time Needed for Diagnosis: 320 ms
Malfunction Indicator Light Illumination: Illuminates when malfunction occurs in 2 continuous driving cycles.

FT: DTC P2432 SECONDARY AIR SYSTEM AIR FLOW/PRESSURE SENSOR CIRCUIT LOW BANK 1

DTC DETECTING CONDITION:
Immediately at fault recognition

CAUTION:
After servicing or replacing faulty parts, perform Clear Memory Mode <Ref. to EN(STI)(diag)-68, OPERATION, Clear Memory Mode.>, and Inspection Mode <Ref. to EN(STI)(diag)-48, PROCEDURE, Inspection Mode.>.

WIRING DIAGRAM:

Engine Electrical System <Ref. to WI-154, WIRING DIAGRAM, Engine Electrical System.>

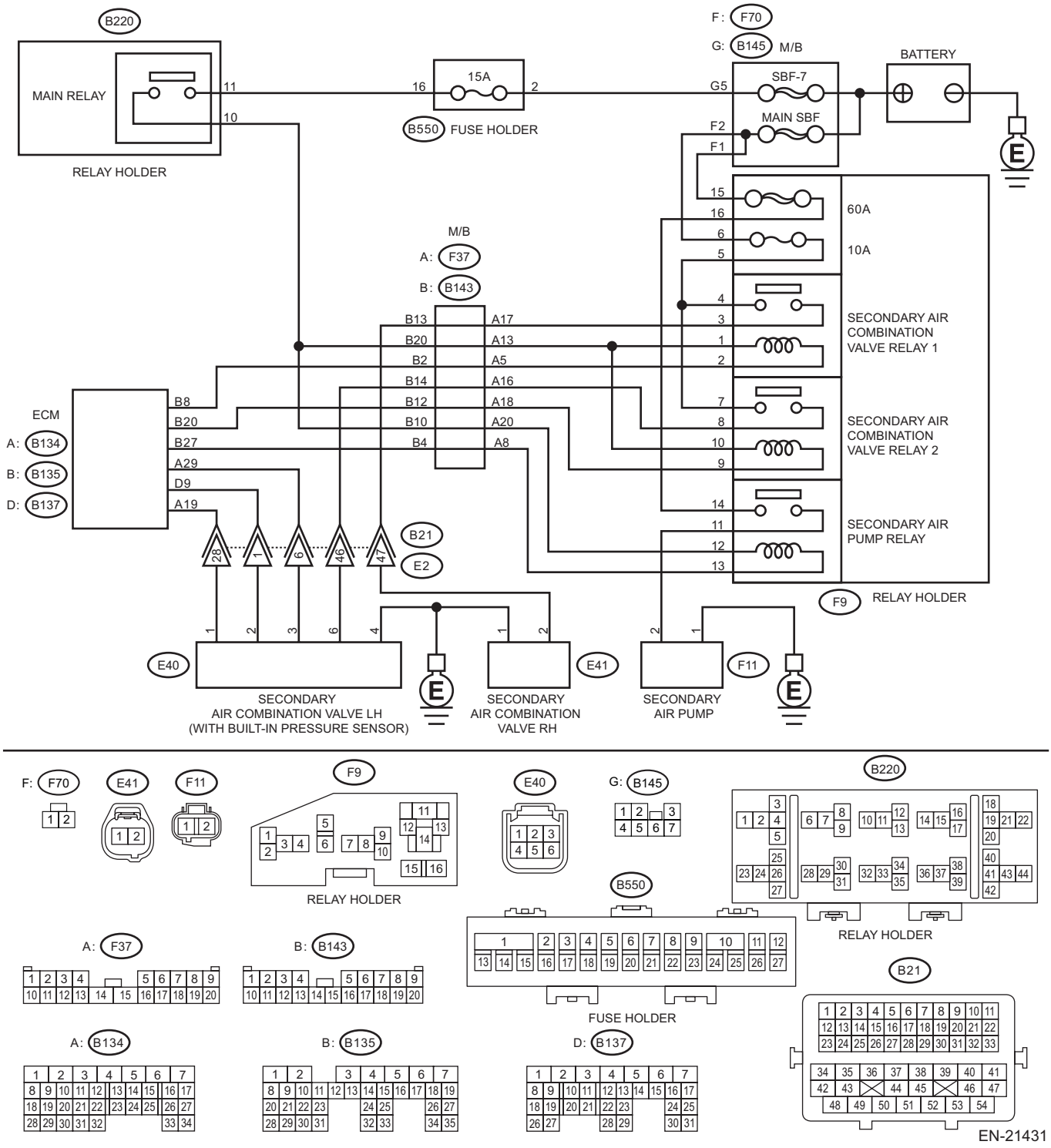

	Step	Check	Yes	No
1	**CHECK CURRENT DATA.** 1) Turn the ignition switch to ON. 2) Read the value of «Sec. Air Piping Pressure» using Subaru Select Monitor. NOTE: For detailed operation procedures, refer to "Read Current Data For Engine". <Ref. to EN(STI)(diag)-36, Subaru Select Monitor.>	Is the value of «Sec. Air Piping Pressure» less than 53.3 kPa (400 mmHg, 15.8 inHg)?	Go to step **2**.	Even if DTC is detected, the circuit has returned to a normal condition at this time. Reproduce the failure, and then perform the diagnosis again. NOTE: In this case, temporary poor contact of connector, temporary open or short circuit of harness may be the cause.
2	**CHECK POWER SUPPLY OF SECONDARY AIR COMBINATION VALVE.** 1) Turn the ignition switch to OFF. 2) Disconnect the connector from the secondary air combination valve LH. 3) Turn the ignition switch to ON. 4) Measure the voltage between the secondary air combination valve LH connector and chassis ground. ***Connector & terminal*** ***(E40) No. 1 (+) — Chassis ground (–):***	Is the voltage 4.5 V or more?	Go to step **3**.	Repair the harness and connector. NOTE: In this case, repair the following item: • Open circuit in harness between ECM connector and secondary air combination valve LH connector • Poor contact of ECM connector • Poor contact of coupling connector
3	**CHECK HARNESS BETWEEN ECM AND SECONDARY AIR COMBINATION VALVE CONNECTOR.** 1) Turn the ignition switch to OFF. 2) Disconnect the connector from ECM. 3) Measure the resistance of harness between ECM connector and secondary air combination valve LH connector. ***Connector & terminal*** ***(B137) No. 9 — (E40) No. 2:***	Is the resistance less than 1 Ω?	Go to step **4**.	Repair the harness and connector. NOTE: In this case, repair the following item: • Open circuit in harness between ECM connector and secondary air combination valve LH connector • Poor contact of coupling connector
4	**CHECK HARNESS BETWEEN ECM AND SECONDARY AIR COMBINATION VALVE CONNECTOR.** Measure the resistance between ECM connector and chassis ground. ***Connector & terminal*** ***(B137) No. 9 — Chassis ground:***	Is the resistance 1 MΩ or more?	Go to step **5**.	Repair the ground short circuit in harness between ECM connector and secondary air combination valve LH connector.
5	**CHECK FOR POOR CONTACT.** Check for poor contact of the ECM and secondary air combination valve LH connector.	Is there poor contact of the ECM or secondary air combination valve LH connector?	Repair the poor contact of the ECM or secondary air combination valve LH connector.	Replace the secondary air combination valve LH. <Ref. to EC(STI)-56, Secondary Air Combination Valve.>

1. OUTLINE OF DIAGNOSIS

Judge as NG if out of specification.

2. EXECUTION CONDITION

Secondary parameters	Execution condition
None	

3. GENERAL DRIVING CYCLE

Always perform the diagnosis continuously.

4. DIAGNOSTIC METHOD

If the duration of time while the following conditions are met is longer than the time indicated, judge as NG.

Judgment Value

Malfunction Criteria	Threshold Value
Output voltage	< 0.573 V

Time Needed for Diagnosis: 500 ms
Malfunction Indicator Light Illumination: Illuminates as soon as a malfunction occurs.

FU:DTC P2433 SECONDARY AIR SYSTEM AIR FLOW/PRESSURE SENSOR CIRCUIT HIGH BANK 1

DTC DETECTING CONDITION:
Immediately at fault recognition

CAUTION:
After servicing or replacing faulty parts, perform Clear Memory Mode <Ref. to EN(STI)(diag)-68, OPERATION, Clear Memory Mode.>, and Inspection Mode <Ref. to EN(STI)(diag)-48, PROCEDURE, Inspection Mode.>.

WIRING DIAGRAM:

Engine Electrical System <Ref. to WI-154, WIRING DIAGRAM, Engine Electrical System.>

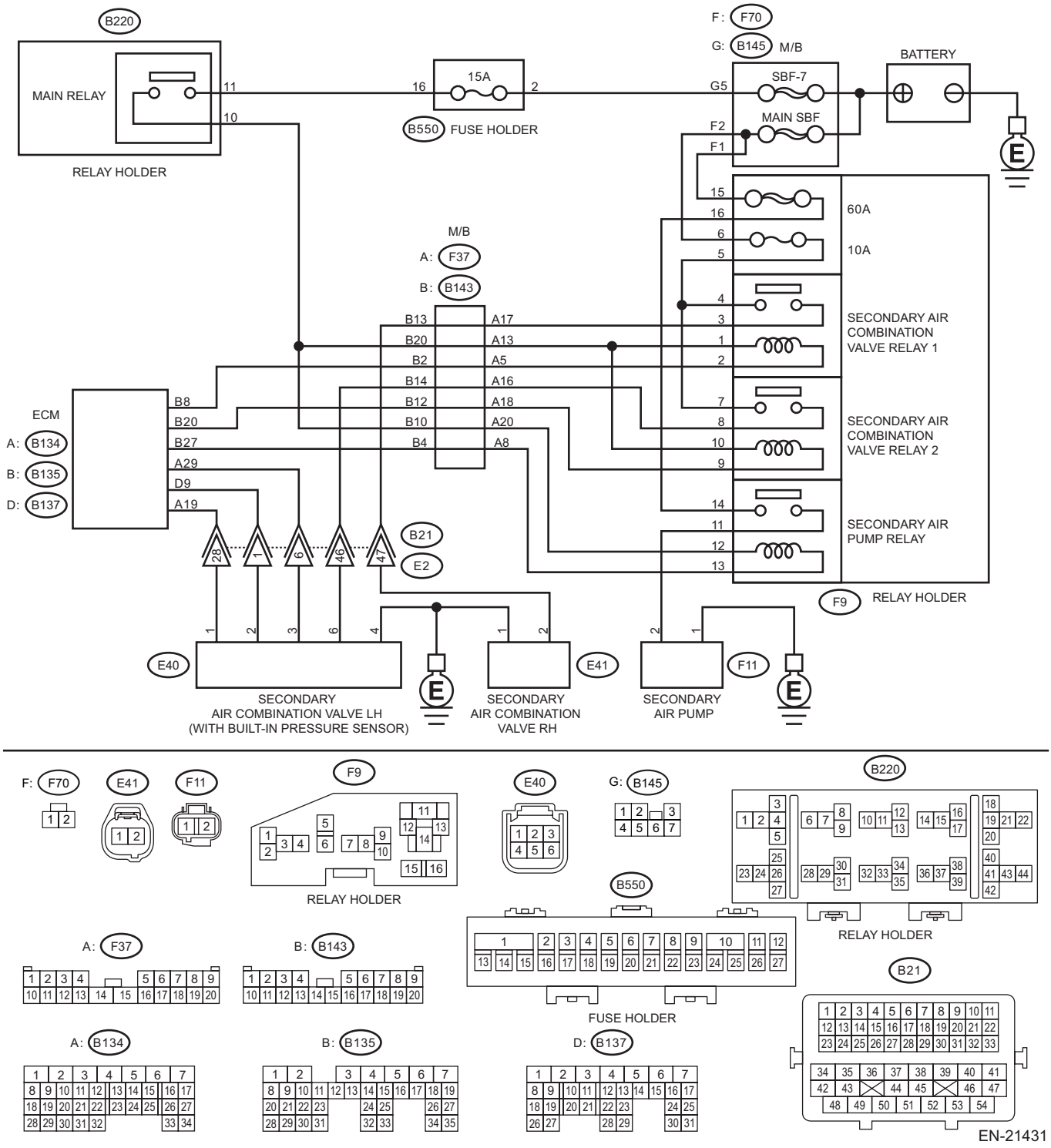

	Step	Check	Yes	No
1	**CHECK CURRENT DATA.** 1) Turn the ignition switch to ON. 2) Read the value of «Sec. Air Piping Pressure» using Subaru Select Monitor. NOTE: For detailed operation procedures, refer to "Read Current Data For Engine". <Ref. to EN(STI)(diag)-36, Subaru Select Monitor.>	Is the value of «Sec. Air Piping Pressure» 133.3 kPa (1,000 mmHg, 39.4 inHg) or more?	Go to step **2**.	Even if DTC is detected, the circuit has returned to a normal condition at this time. Reproduce the failure, and then perform the diagnosis again. NOTE: In this case, temporary poor contact of connector, temporary open or short circuit of harness may be the cause.
2	**CHECK HARNESS BETWEEN ECM AND SECONDARY AIR COMBINATION VALVE CONNECTOR.** 1) Turn the ignition switch to OFF. 2) Disconnect the connector from the secondary air combination valve LH. 3) Turn the ignition switch to ON. 4) Read the value of «Sec. Air Piping Pressure» using Subaru Select Monitor. NOTE: For detailed operation procedures, refer to "Read Current Data For Engine". <Ref. to EN(STI)(diag)-36, Subaru Select Monitor.>	Is the value of «Sec. Air Piping Pressure» 133.3 kPa (1,000 mmHg, 39.4 inHg) or more?	Repair the short circuit to power in harness between ECM connector and secondary air combination valve LH connector.	Go to step **3**.
3	**CHECK HARNESS BETWEEN ECM AND SECONDARY AIR COMBINATION VALVE CONNECTOR.** 1) Turn the ignition switch to OFF. 2) Measure the resistance of the harness between the secondary air combination valve LH connector and engine ground. ***Connector & terminal*** ***(E40) No. 3 — Engine ground:***	Is the resistance less than 5 Ω?	Go to step **4**.	Repair the harness and connector. NOTE: In this case, repair the following item: • Open circuit in harness between ECM connector and secondary air combination valve LH connector • Poor contact of ECM connector • Poor contact of coupling connector
4	**CHECK FOR POOR CONTACT.** Check for poor contact of the secondary air combination valve LH connector.	Is there poor contact of the secondary air combination valve LH connector?	Repair the poor contact of the secondary air combination valve LH connector.	Replace the secondary air combination valve LH. <Ref. to EC(STI)-56, Secondary Air Combination Valve.>

1. OUTLINE OF DIAGNOSIS

Judge as NG if out of specification.

2. EXECUTION CONDITION

Secondary parameters	Execution condition
None	

3. GENERAL DRIVING CYCLE

Always perform the diagnosis continuously.

4. DIAGNOSTIC METHOD

If the duration of time while the following conditions are met is longer than the time indicated, judge as NG.

Judgment Value

Malfunction Criteria	Threshold Value
Output voltage	> 4.916 V

Time Needed for Diagnosis: 500 ms
Malfunction Indicator Light Illumination: Illuminates as soon as a malfunction occurs.

FV:DTC P2440 SECONDARY AIR SYSTEM SWITCHING VALVE STUCK OPEN BANK 1

DTC DETECTING CONDITION:

Detected when two consecutive driving cycles with fault occur.

CAUTION:

After servicing or replacing faulty parts, perform Clear Memory Mode <Ref. to EN(STI)(diag)-68, OPERATION, Clear Memory Mode.>, and Inspection Mode <Ref. to EN(STI)(diag)-48, PROCEDURE, Inspection Mode.>.

WIRING DIAGRAM:

Engine Electrical System <Ref. to WI-154, WIRING DIAGRAM, Engine Electrical System.>

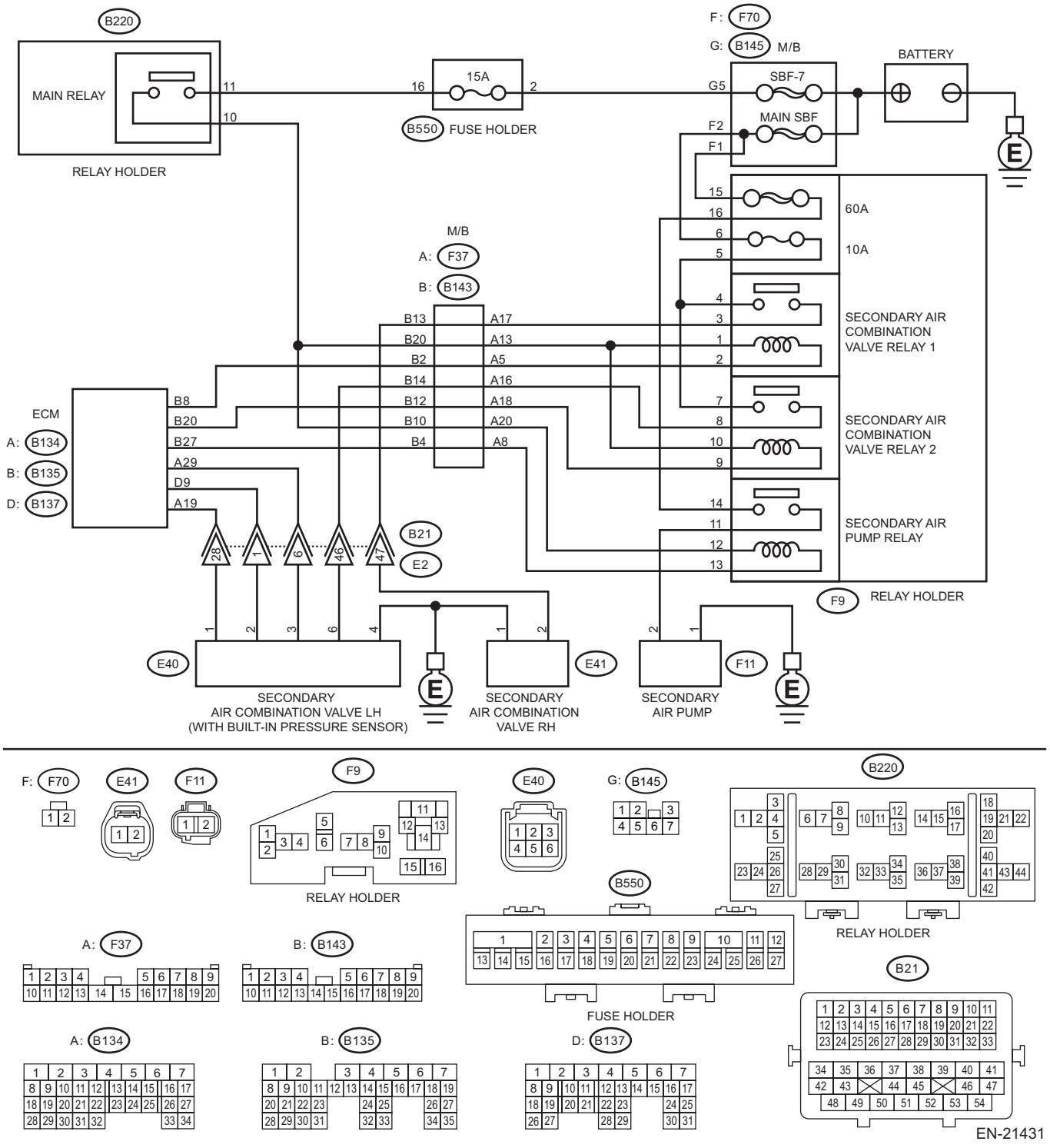

Step		Check	Yes	No
1	**CHECK SECONDARY AIR COMBINATION VALVE FUSE.** Check if the secondary air combination valve fuse (10 A) is blown out.	Is the fuse blown out?	Go to step **2**.	Go to step **3**.

	Step	Check	Yes	No
2	**CHECK HARNESS BETWEEN FUSE BOX AND SECONDARY AIR COMBINATION VALVE RH CONNECTOR.** 1) Remove the secondary air combination valve fuse (10 A) from the fuse box. 2) Disconnect the connector from the secondary air combination valve RH. 3) Measure the resistance between the secondary air combination valve fuse and secondary air combination valve RH connector, and chassis ground. ***Connector & terminal*** ***(F9) No. 5 — Chassis ground:*** ***(E41) No. 2 — Chassis ground:***	Is the resistance 1 MΩ or more?	Replace the fuse with a new part, and connect the secondary air combination valve RH connector. Go to step **3**.	Repair the short circuit to ground in harness between the fuse box and the secondary air combination valve RH connector.
3	**CHECK SECONDARY AIR COMBINATION VALVE RH OPERATION.** 1) Install the delivery mode fuse. 2) Turn the ignition switch to ON. 3) Perform operation check for the secondary air combination valve RH using the Subaru Select Monitor. NOTE: For detailed operation procedures, refer to the "Active Test". <Ref. to EN(STI)(diag)-69, Active Test.>	Does the secondary air combination valve RH repeatedly switch to ON and OFF?	Go to step **4**.	Go to step **6**.
4	**CHECK DUCT BETWEEN SECONDARY AIR PUMP AND SECONDARY AIR COMBINATION VALVE RH.** Check the duct between the secondary air pump and secondary air combination valve RH.	Is there damage, clog or disconnection of the duct?	Replace, clean or connect the duct.	Go to step **5**.
5	**CHECK PIPE BETWEEN SECONDARY AIR COMBINATION VALVE RH AND CYLINDER HEAD.** Check the pipe between the secondary air combination valve RH and cylinder head.	Is there damage, clog or disconnection of the pipe?	Replace, clean or connect the pipe.	Even if DTC is detected, the circuit has returned to a normal condition at this time. Reproduce the failure, and then perform the diagnosis again. NOTE: In this case, temporary poor contact of connector, temporary open or short circuit of harness may be the cause.
6	**CHECK POWER SUPPLY TO SECONDARY AIR COMBINATION VALVE RH.** 1) Disconnect the connector from the secondary air combination valve RH. 2) In the condition of step 3, measure the voltage between secondary air combination valve RH connector and chassis ground. ***Connector & terminal*** ***(E41) No. 2 (+) — Chassis ground (–):***	Does the voltage repeatedly change between 10 V and 0 V?	Replace the secondary air combination valve RH. <Ref. to EC(STI)-56, Secondary Air Combination Valve.>	Go to step **7**.

	Step	Check	Yes	No
7	**CHECK HARNESS BETWEEN SECONDARY AIR COMBINATION VALVE RH AND CHASSIS GROUND.** Measure the resistance between the secondary air combination valve RH connector and chassis ground. ***Connector & terminal*** ***(E41) No. 1 — Chassis ground:***	Is the resistance less than 5 Ω?	Go to step **8**.	Repair the open circuit in harness between secondary air combination valve RH connector and chassis ground.
8	**CHECK HARNESS BETWEEN SECONDARY AIR COMBINATION VALVE RELAY 2 AND SECONDARY AIR COMBINATION VALVE RH CONNECTOR.** 1) Turn the ignition switch to OFF. 2) Remove the secondary air combination valve relay 2 from the relay box. 3) Measure the resistance of the harness between secondary air combination valve relay 2 connector and secondary air combination valve RH connector. ***Connector & terminal*** ***(F9) No. 8 — (E41) No. 2:***	Is the resistance less than 1 Ω?	Go to step **9**.	Repair the harness and connector. NOTE: In this case, repair the following item: • Open circuit in harness between secondary air combination valve relay 2 connector and secondary air combination valve RH connector • Poor contact of coupling connector
9	**CHECK SECONDARY AIR COMBINATION VALVE RELAY 2.** 1) Connect the battery to terminals No. 9 and No. 10 of the secondary air combination valve relay 2. 2) Measure the resistance between the secondary air combination valve relay 2 terminals. ***Terminals*** ***No. 7 — No. 8:***	Is the resistance less than 1 Ω?	Go to step **10**.	Replace the secondary air combination valve relay 2. <Ref. to EN(STI)(diag)-9, Electrical Component Location.>
10	**CHECK SECONDARY AIR COMBINATION VALVE RELAY 2.** Measure the resistance between the secondary air combination valve relay 2 terminals with the battery disconnected. ***Terminals*** ***No. 7 — No. 8:***	Is the resistance 1 MΩ or more?	Go to step **11**.	Replace the secondary air combination valve relay 2. <Ref. to EN(STI)(diag)-9, Electrical Component Location.>
11	**CHECK SECONDARY AIR COMBINATION VALVE RELAY 2 POWER SUPPLY.** 1) Turn the ignition switch to ON. 2) Measure the voltage between the secondary air combination valve relay 2 connector and chassis ground. ***Connector & terminal*** ***(F9) No. 7 (+) — Chassis ground (–):*** ***(F9) No. 10 (+) — Chassis ground (–):***	Is the voltage 10 V or more?	Go to step **12**.	Repair the open or short to ground in the power supply circuit.

	Step	Check	Yes	No
12	**CHECK HARNESS BETWEEN ECM AND SECONDARY AIR COMBINATION VALVE RELAY 2 CONNECTOR.** 1) Turn the ignition switch to OFF. 2) Disconnect the ECM connector. 3) Measure the resistance of harness between ECM connector and secondary air combination valve relay 2 connector. ***Connector & terminal*** ***(B135) No. 20 — (F9) No. 9:***	Is the resistance less than 1 Ω?	Go to step **13**.	Repair the harness and connector. NOTE: In this case, repair the following item: • Open circuit in harness between ECM connector and secondary air combination valve relay 2 connector • Poor contact of coupling connector
13	**CHECK HARNESS BETWEEN ECM AND SECONDARY AIR COMBINATION VALVE RELAY 2 CONNECTOR.** Measure the resistance between the secondary air combination valve relay 2 connector and chassis ground. ***Connector & terminal*** ***(F9) No. 9 — Chassis ground:***	Is the resistance 1 MΩ or more?	Repair the poor contact of ECM connector.	Repair the short circuit to ground in harness between ECM connector and secondary air combination valve relay 2 connector.

1. OUTLINE OF DIAGNOSIS

NOTE:
For the detection standard, refer to DTC P0410. <Ref. to EN(STI)(diag)-307, DTC P0410 SECONDARY AIR SYSTEM, Diagnostic Procedure with Diagnostic Trouble Code (DTC).>

FW:DTC P2441 SECONDARY AIR SYSTEM SWITCHING VALVE STUCK CLOSED BANK 1

NOTE:
For the diagnostic procedure, refer to DTC P2440. <Ref. to EN(STI)(diag)-609, DTC P2440 SECONDARY AIR SYSTEM SWITCHING VALVE STUCK OPEN BANK 1, Diagnostic Procedure with Diagnostic Trouble Code (DTC).>

1. OUTLINE OF DIAGNOSIS

NOTE:
For the detection standard, refer to DTC P0410. <Ref. to EN(STI)(diag)-307, DTC P0410 SECONDARY AIR SYSTEM, Diagnostic Procedure with Diagnostic Trouble Code (DTC).>

FX:DTC P2442 SECONDARY AIR SYSTEM SWITCHING VALVE STUCK OPEN BANK 2

DTC DETECTING CONDITION:

Detected when two consecutive driving cycles with fault occur.

CAUTION:

After servicing or replacing faulty parts, perform Clear Memory Mode <Ref. to EN(STI)(diag)-68, OPERATION, Clear Memory Mode.>, and Inspection Mode <Ref. to EN(STI)(diag)-48, PROCEDURE, Inspection Mode.>.

WIRING DIAGRAM:
Engine Electrical System <Ref. to WI-154, WIRING DIAGRAM, Engine Electrical System.>

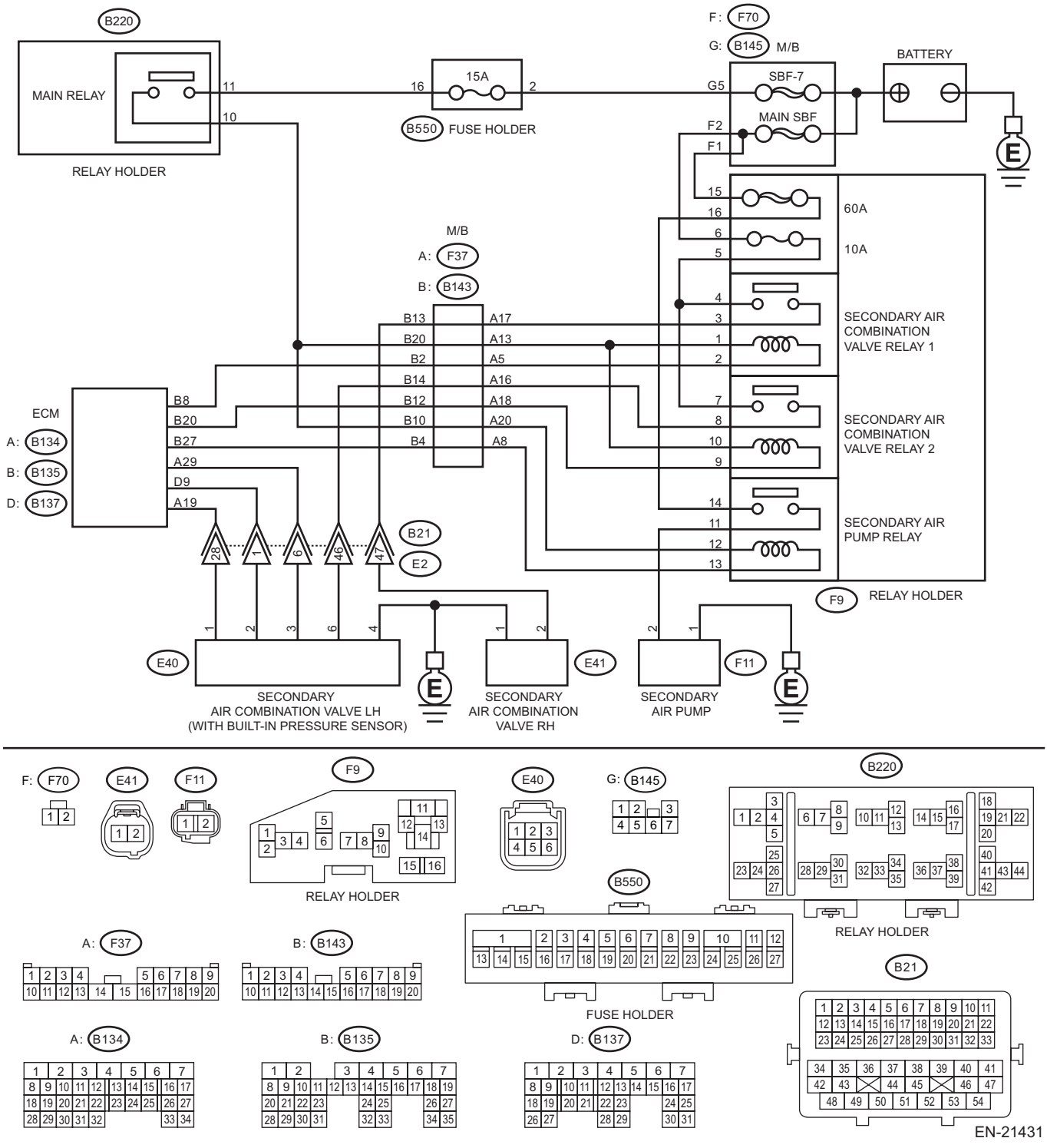

Step		Check	Yes	No
1	**CHECK SECONDARY AIR COMBINATION VALVE FUSE.** Check if the secondary air combination valve fuse (10 A) is blown out.	Is the fuse blown out?	Go to step **2**.	Go to step **3**.

	Step	Check	Yes	No
2	**CHECK HARNESS BETWEEN FUSE BOX AND SECONDARY AIR COMBINATION VALVE LH CONNECTOR.** 1) Remove the secondary air combination valve fuse (10 A) from the fuse box. 2) Disconnect the connector from the secondary air combination valve LH. 3) Measure the resistance between the secondary air combination valve fuse and secondary air combination valve LH connector, and chassis ground. ***Connector & terminal*** ***(F9) No. 5 — Chassis ground:*** ***(E40) No. 6 — Chassis ground:***	Is the resistance 1 MΩ or more?	Replace the fuse with a new part, and connect the secondary air combination valve LH connector. Go to step **3**.	Repair the ground short circuit of harness between the fuse box and the secondary air combination valve LH connector.
3	**CHECK SECONDARY AIR COMBINATION VALVE LH OPERATION.** 1) Install the delivery mode fuse. 2) Turn the ignition switch to ON. 3) Perform operation check for the secondary air combination valve LH using the Subaru Select Monitor. NOTE: For detailed operation procedures, refer to the "Active Test". <Ref. to EN(STI)(diag)-69, Active Test.>	Does the secondary air combination valve LH repeatedly switch to ON and OFF?	Go to step **4**.	Go to step **6**.
4	**CHECK DUCT BETWEEN SECONDARY AIR PUMP AND SECONDARY AIR COMBINATION VALVE LH.** Check the duct between the secondary air pump and secondary air combination valve LH.	Is there damage, clog or disconnection of the duct?	Replace, clean or connect the duct.	Go to step **5**.
5	**CHECK PIPE BETWEEN SECONDARY AIR COMBINATION VALVE LH AND CYLINDER HEAD.** Check the pipe between the secondary air combination valve LH and cylinder head.	Is there damage, clog or disconnection of the pipe?	Replace, clean or connect the pipe.	Even if DTC is detected, the circuit has returned to a normal condition at this time. Reproduce the failure, and then perform the diagnosis again. NOTE: In this case, temporary poor contact of connector, temporary open or short circuit of harness may be the cause.
6	**CHECK POWER SUPPLY TO SECONDARY AIR COMBINATION VALVE LH.** 1) Disconnect the connector from the secondary air combination valve LH. 2) In the condition of step 3, measure the voltage between secondary air combination valve LH connector and chassis ground. ***Connector & terminal*** ***(E40) No. 6 (+) — Chassis ground (–):***	Does the voltage repeatedly change between 10 V and 0 V?	Replace the secondary air combination valve LH. <Ref. to EC(STI)-56, Secondary Air Combination Valve.>	Go to step **7**.

	Step	Check	Yes	No
7	**CHECK HARNESS BETWEEN SECONDARY AIR COMBINATION VALVE LH AND CHASSIS GROUND.** Measure the resistance between the secondary air combination valve LH connector and chassis ground. ***Connector & terminal*** ***(E40) No. 4 — Chassis ground:***	Is the resistance less than 5 Ω?	Go to step **8**.	Repair the open circuit in harness between secondary air combination valve LH connector and chassis ground.
8	**CHECK HARNESS BETWEEN SECONDARY AIR COMBINATION VALVE RELAY 1 AND SECONDARY AIR COMBINATION VALVE LH CONNECTOR.** 1) Turn the ignition switch to OFF. 2) Remove the secondary air combination valve relay 1 from the relay box. 3) Measure the resistance of the harness between the secondary air combination valve relay 1 and secondary air combination valve LH connector. ***Connector & terminal*** ***(F9) No. 3 — (E40) No. 6:***	Is the resistance less than 1 Ω?	Go to step **9**.	Repair the harness and connector. NOTE: In this case, repair the following item: • Open circuit in harness between secondary air combination valve relay 1 connector and secondary air combination valve LH connector • Poor contact of coupling connector
9	**CHECK SECONDARY AIR COMBINATION VALVE RELAY 1.** 1) Connect the battery to terminals No. 1 and No. 2 of the secondary air combination valve relay 1. 2) Measure the resistance between the secondary air combination valve relay 1 terminals. ***Terminals*** ***No. 3 — No. 4:***	Is the resistance less than 1 Ω?	Go to step **10**.	Replace the secondary air combination valve relay 1. <Ref. to EN(STI)(diag)-9, Electrical Component Location.>
10	**CHECK SECONDARY AIR COMBINATION VALVE RELAY 1.** Measure the resistance between the secondary air combination valve relay 1 terminals with the battery disconnected. ***Terminals*** ***No. 3 — No. 4:***	Is the resistance 1 MΩ or more?	Go to step **11**.	Replace the secondary air combination valve relay 1. <Ref. to EN(STI)(diag)-9, Electrical Component Location.>
11	**CHECK SECONDARY AIR COMBINATION VALVE RELAY 1 POWER SUPPLY.** 1) Turn the ignition switch to ON. 2) Measure the voltage between the secondary air combination valve relay 1 connector and chassis ground. ***Connector & terminal*** ***(F9) No. 4 (+) — Chassis ground (–):*** ***(F9) No. 1 (+) — Chassis ground (–):***	Is the voltage 10 V or more?	Go to step **12**.	Repair the open or short to ground in the power supply circuit.

	Step	Check	Yes	No
12	**CHECK HARNESS BETWEEN ECM AND SECONDARY AIR COMBINATION VALVE RELAY 1 CONNECTOR.** 1) Turn the ignition switch to OFF. 2) Disconnect the ECM connector. 3) Measure the resistance of harness between ECM connector and secondary air combination valve relay 1 connector. ***Connector & terminal*** ***(B135) No. 8 — (F9) No. 2:***	Is the resistance less than 1 Ω?	Go to step **13**.	Repair the harness and connector. NOTE: In this case, repair the following item: • Open circuit in harness between ECM connector and secondary air combination valve relay 1 connector • Poor contact of coupling connector
13	**CHECK HARNESS BETWEEN ECM AND SECONDARY AIR COMBINATION VALVE RELAY 1 CONNECTOR.** Measure the resistance between the secondary air combination valve relay 1 connector and chassis ground. ***Connector & terminal*** ***(F9) No. 2 — Chassis ground:***	Is the resistance 1 MΩ or more?	Repair the poor contact of ECM connector.	Repair the short circuit to ground in harness between ECM connector and secondary air combination valve relay 1 connector.

1. OUTLINE OF DIAGNOSIS

NOTE:
For the detection standard, refer to DTC P0410. <Ref. to EN(STI)(diag)-307, DTC P0410 SECONDARY AIR SYSTEM, Diagnostic Procedure with Diagnostic Trouble Code (DTC).>

FY:DTC P2443 SECONDARY AIR SYSTEM SWITCHING VALVE STUCK CLOSED BANK 2

NOTE:
For the diagnostic procedure, refer to DTC P2442. <Ref. to EN(STI)(diag)-614, DTC P2442 SECONDARY AIR SYSTEM SWITCHING VALVE STUCK OPEN BANK 2, Diagnostic Procedure with Diagnostic Trouble Code (DTC).>

1. OUTLINE OF DIAGNOSIS

NOTE:
For the detection standard, refer to DTC P0410. <Ref. to EN(STI)(diag)-307, DTC P0410 SECONDARY AIR SYSTEM, Diagnostic Procedure with Diagnostic Trouble Code (DTC).>

FZ: DTC P2444 SECONDARY AIR SYSTEM PUMP STUCK ON BANK 1

DTC DETECTING CONDITION:
Immediately at fault recognition

CAUTION:
After servicing or replacing faulty parts, perform Clear Memory Mode <Ref. to EN(STI)(diag)-68, OPERATION, Clear Memory Mode.>, and Inspection Mode <Ref. to EN(STI)(diag)-48, PROCEDURE, Inspection Mode.>.

WIRING DIAGRAM:

Engine Electrical System <Ref. to WI-154, WIRING DIAGRAM, Engine Electrical System.>

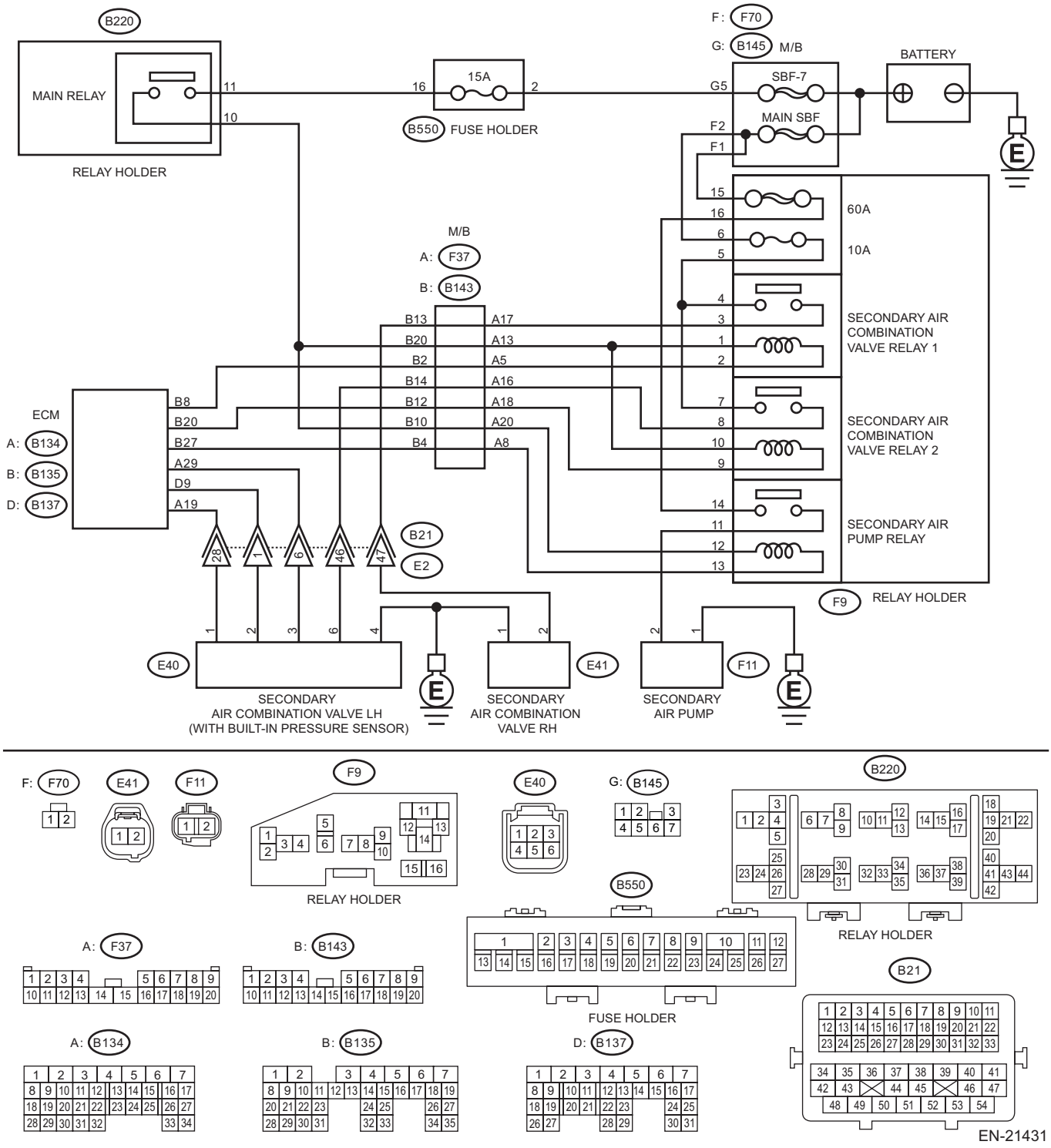

	Step	Check	Yes	No
1	**CHECK SECONDARY AIR PIPING PRESSURE.** 1) Turn the ignition switch to ON. 2) Using the Subaru Select Monitor, read the value of «Sec. Air Piping Pressure», and compare with the actual atmospheric pressure. NOTE: For detailed operation procedures, refer to "Read Current Data For Engine". <Ref. to EN(STI)(diag)-36, Subaru Select Monitor.>	Is the difference between «Sec. Air Piping Pressure» and atmospheric pressure 50 mmHg (6.7 kPa, 2.0 inHg, 0.97 psig) or less?	Go to step **2**.	Replace the secondary air combination valve LH. <Ref. to EC(STI)-56, Secondary Air Combination Valve.>
2	**CHECK HARNESS BETWEEN ECM AND SECONDARY AIR PUMP RELAY CONNECTOR.** 1) Turn the ignition switch to OFF. 2) Remove the secondary air pump relay from the relay holder. 3) Measure the resistance between the secondary air pump relay connector and engine ground terminals. ***Connector & terminal*** ***(F9) No. 13 — Engine ground:***	Is the resistance 1 MΩ or more?	Go to step **3**.	Repair the short circuit to ground in harness between ECM connector and secondary air pump relay connector, and go to the next step. Go to step **3**.
3	**CHECK SECONDARY AIR PUMP FUSE.** 1) Disconnect the secondary air pump connector. 2) Install the secondary air pump relay to the relay holder. 3) Check the MAIN SBF and the secondary air pump fuse (60 A) for blown out.	Is the fuse blown out?	Replace the fuse with a new part, and go to the next step. Go to step **4**.	Go to step **4**.
4	**CHECK SECONDARY AIR PUMP POWER SUPPLY.** 1) Disconnect the positive (+) terminal after disconnecting the negative (-) terminal of battery. 2) Measure the resistance between secondary air pump connector and battery cable positive terminal. ***Connector & terminal*** ***(F11) No. 2 — battery cable positive terminal:***	Is the resistance 1 MΩ or more?	Go to step **6**.	Go to step **5**.
5	**CHECK SECONDARY AIR PUMP RELAY.** 1) Remove the secondary air pump relay from the relay holder. 2) Measure the resistance between the secondary air pump relay terminals. ***Terminals*** ***No. 11 — No. 14:***	Is the resistance 1 MΩ or more?	Repair the short circuit to power of the secondary air pump, and go to the next step. Go to step **6**.	Replace the secondary air pump relay. <Ref. to EN(STI)(diag)-9, LOCATION, Electrical Component Location.> After replacement, go to the next step. Go to step **6**.
6	**CHECK SECONDARY AIR PUMP.** Check the appearance of secondary air pump and the condition of impeller.	Is the secondary air pump free from deformation, cracks and other damages? And does the impeller rotate smoothly?	End.	Replace the secondary air pump. <Ref. to EC(STI)-55, Secondary Air Pump.>

1. OUTLINE OF DIAGNOSIS

Detect the secondary air pump malfunction (always ON).
After the secondary air pump turns to OFF, judge as NG if the secondary air pipe pressure is higher than that before the secondary air pump operation.

2. EXECUTION CONDITION

Secondary parameters	Execution condition
Battery voltage	≥ 7 V
Time since secondary air control completion	≥ 3000 ms and ≤ 8000 ms

3. GENERAL DRIVING CYCLE

Always perform the diagnosis continuously.

4. DIAGNOSTIC METHOD

If the duration of time while the following conditions are met is longer than the time indicated, judge as NG.

Judgment Value

Malfunction Criteria	Threshold Value
Secondary air pipe pressure – Secondary air pipe pressure before operation	> 6.7 kPa (50 mmHg, 2 inHg)

Time Needed for Diagnosis: Less than 1 second
Malfunction Indicator Light Illumination: Illuminates when malfunction occurs in 2 continuous driving cycles.

GA:DTC P2530 IGNITION SWITCH RUN POSITION CIRCUIT

DTC DETECTING CONDITION:
Immediately at fault recognition
TROUBLE SYMPTOM:
Improper idling

CAUTION:
After servicing or replacing faulty parts, perform Clear Memory Mode <Ref. to EN(STI)(diag)-68, OPERATION, Clear Memory Mode.>, and Inspection Mode <Ref. to EN(STI)(diag)-48, PROCEDURE, Inspection Mode.>.

WIRING DIAGRAM:

Engine Electrical System <Ref. to WI-154, WIRING DIAGRAM, Engine Electrical System.>

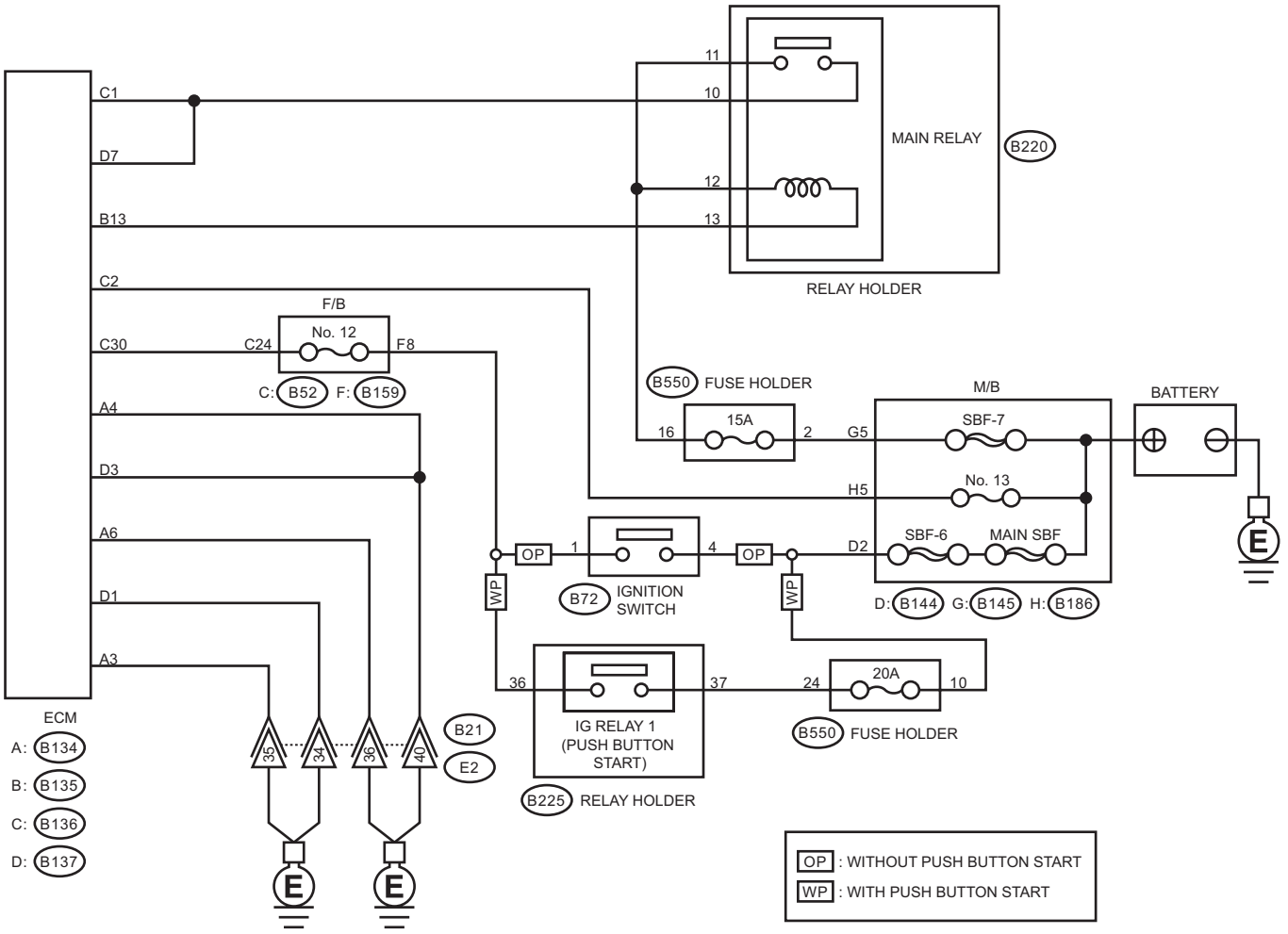

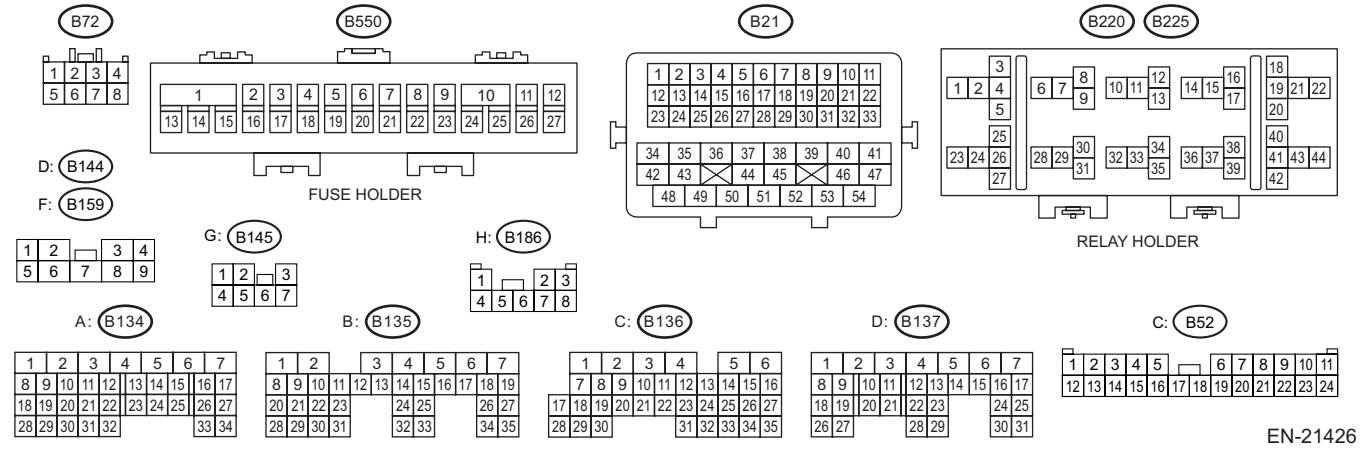

Step		Check	Yes	No
1	**CHECK ECM CONNECTOR.** Check the connecting condition of ECM connector.	Is the ECM connector correctly connected?	Go to step **2**.	Connect the ECM connector correctly.

	Step	Check	Yes	No
2	**CHECK INPUT VOLTAGE OF ECM.** 1) Turn the ignition switch to ON. 2) Measure the voltage between ECM connector and chassis ground while wiggling the harness between ECM connector and ignition switch connector (for models without push button start), or between ECM connector and IG relay 1 (push button start) connector (for models with push button start). ***Connector & terminal*** ***(B136) No. 30 (+) — Chassis ground (–):***	Is the voltage 8 V or more all the time?	Even if DTC is detected, the circuit has returned to a normal condition at this time. Reproduce the failure, and then perform the diagnosis again. NOTE: In this case, the following items may be the cause of fault. Model without push button start • Open circuit or short circuit to ground in harness between ECM connector and ignition switch connector • Poor contact of ignition switch connector • Poor contact of ignition switch Model with push button start • Open circuit or short circuit to ground in harness between ECM connector and IG relay 1 (push button start) connector • Poor contact in IG relay 1 (push button start) connector • Poor contact in IG relay 1 (push button start)	Repair the harness and connector. NOTE: In this case, repair the following item: Model without push button start • Open circuit or short circuit to ground in harness between ECM connector and ignition switch connector • Poor contact of ignition switch connector • Poor contact of ignition switch • Faulty fuse (F/B No. 12) Model with push button start • Open circuit or short circuit to ground in harness between ECM connector and IG relay 1 (push button start) connector • Poor contact in IG relay 1 (push button start) connector • Poor contact in IG relay 1 (push button start) • Faulty fuse (F/B No. 12)

1. OUTLINE OF DIAGNOSIS

Detect instantaneous open in ignition switch input circuit to ECM.
Judge as NG if out of specification.

2. COMPONENT DESCRIPTION

ECM monitors the voltage of the ignition switch input circuit. Judge as ignition switch ON when the voltage is the specified value or more.

3. EXECUTION CONDITION

Secondary parameters	Execution condition
Battery voltage	≥ 10.9 V
Engine speed	≥ 600 rpm

4. GENERAL DRIVING CYCLE

Always perform the diagnosis continuously after the enable conditions have been established.

5. DIAGNOSTIC METHOD

Judge as NG when the following conditions are established within the predetermined time.

Judgment Value

Malfunction Criteria	Threshold Value
Number of instantaneous opens in ignition switch input circuit	≥ 5 time(s)

Time Needed for Diagnosis: 5000 ms
Malfunction Indicator Light Illumination: Illuminates as soon as a malfunction occurs.

GB:DTC P2610 ECM/PCM ENGINE OFF TIMER PERFORMANCE

DTC DETECTING CONDITION:
Detected when two consecutive driving cycles with fault occur.

CAUTION:
After servicing or replacing faulty parts, perform Clear Memory Mode <Ref. to EN(STI)(diag)-68, OPERATION, Clear Memory Mode.>, and Inspection Mode <Ref. to EN(STI)(diag)-48, PROCEDURE, Inspection Mode.>.

	Step	Check	Yes	No
1	**CHECK FOR ANY OTHER DTC ON DISPLAY.**	Is any other DTC displayed?	Check DTC using “List of Diagnostic Trouble Code (DTC)”. <Ref. to EN(STI)(diag)-96, List of Diagnostic Trouble Code (DTC).>	Replace the ECM. <Ref. to FU(STI)-56, Engine Control Module (ECM).> NOTE: The soaking timer IC is built into the ECM.

1. OUTLINE OF DIAGNOSIS

Detect malfunction of soaking timer IC by the five diagnoses below.

Monitor Number	Explanation	Time required for diagnosis
Monitor #1 <Timer diagnosis>	Perform diagnosis of the soaking timer IC accuracy	128 ms
Monitor #2 <Full count diagnosis>	Perform diagnosis of the soaking timer IC counter function	128 ms
Monitor #3 <Soaking timer IC setting diagnosis>	Perform diagnosis of communication between ECM and soaking timer IC	128 ms
Monitor #4 <Timer diagnosis (during soaking)>	Perform diagnosis of the soaking timer IC accuracy during soaking	None
Monitor #5 <Wake-up diagnosis>	Perform diagnosis of wake-up function	None

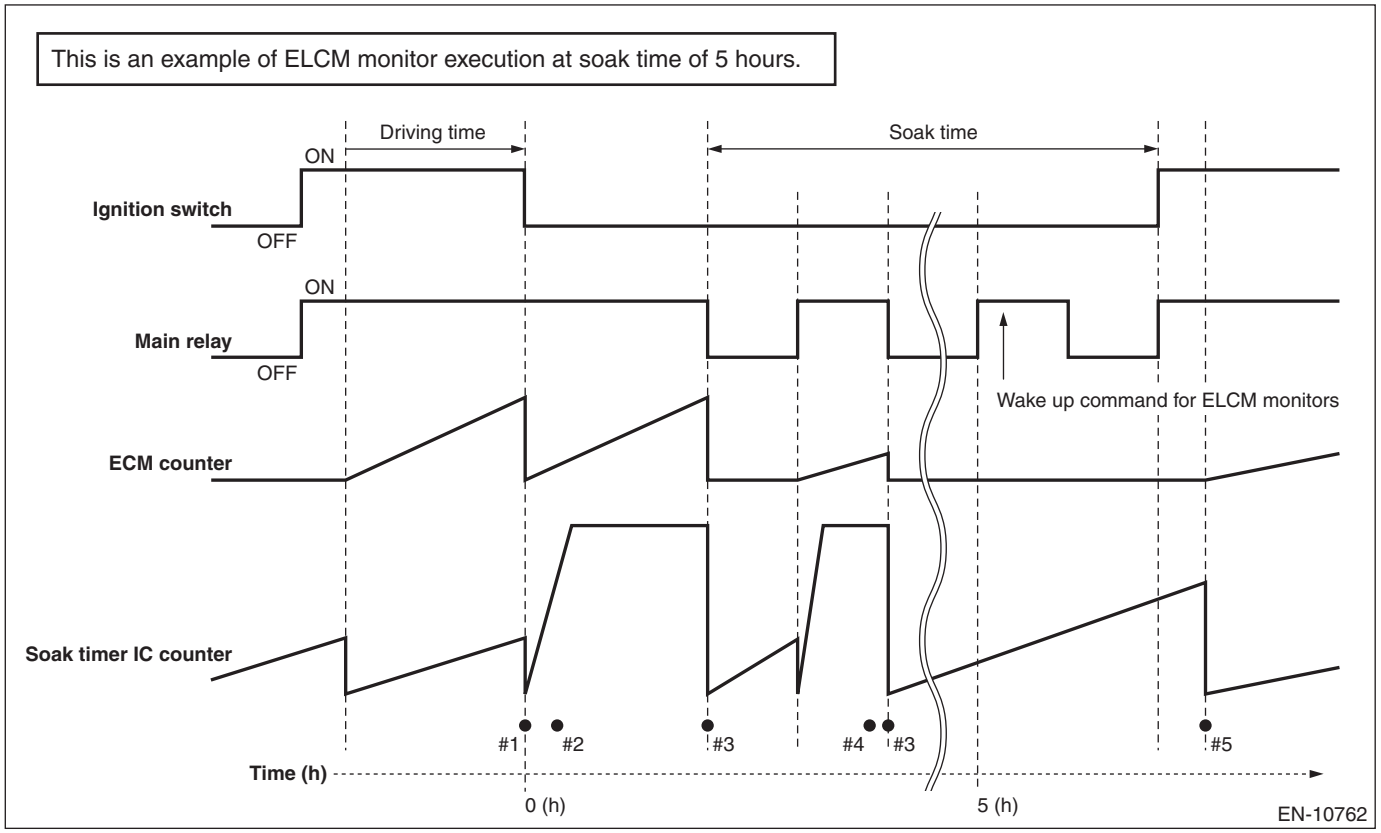

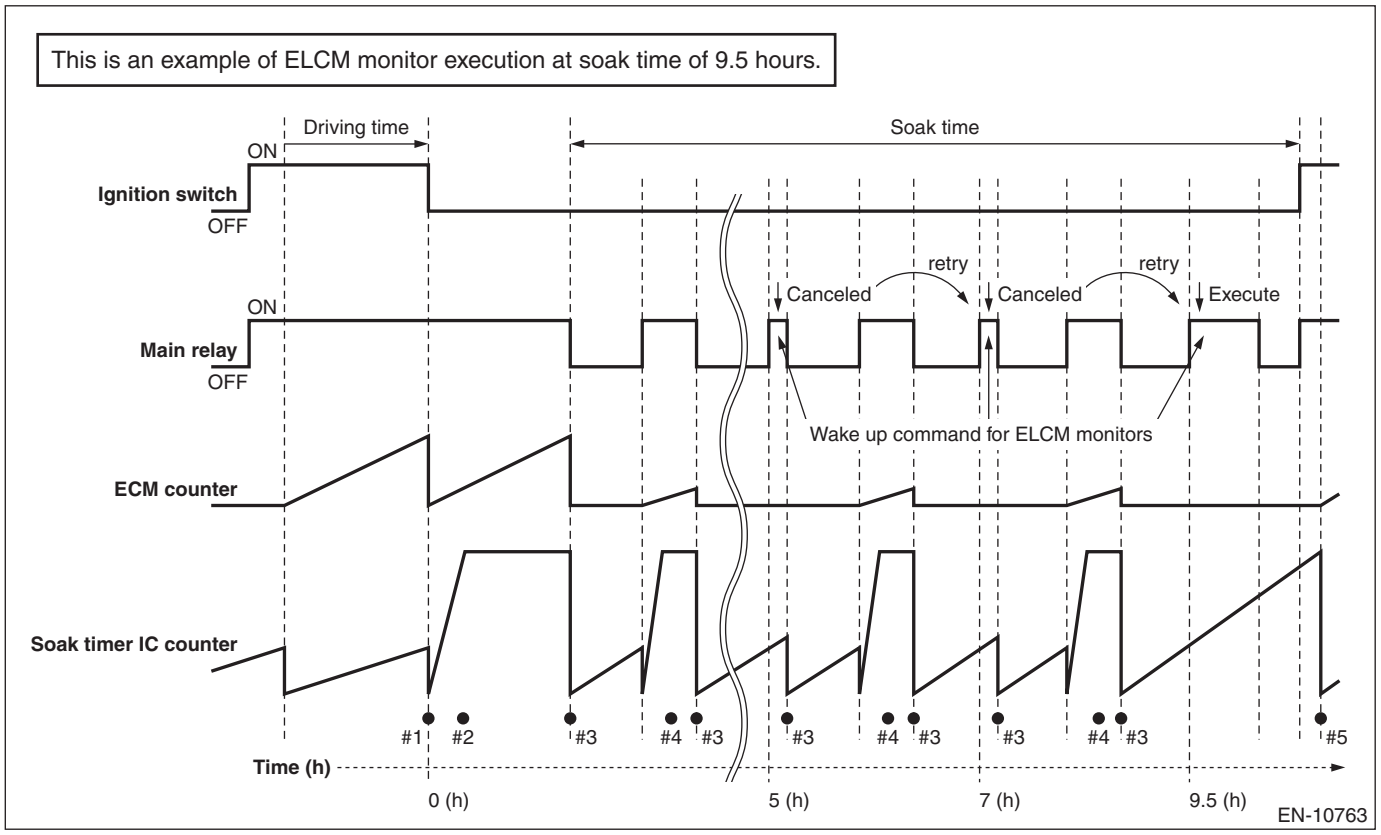

2. COMPONENT DESCRIPTION

The soaking timer IC is built into the ECM.

3. EXECUTION CONDITION

Secondary parameters	Execution condition
<Timer diagnosis>	
Battery voltage	≥ 10.9 V
Ignition switch	OFF
Elapsed time after starting the engine	> 600 s and < 61380 s
<Full count diagnosis>	
Battery voltage	≥ 10.9 V
Ignition switch	OFF
Counter in ECM	≥ 4 s
<Soaking timer IC setting diagnosis>	
Battery voltage	≥ 10.9 V
Ignition switch	OFF
<Timer diagnosis (during soaking)>	
Battery voltage	≥ 10.9 V
Ignition switch	OFF
<Wake-up diagnosis>	
Ignition switch	ON
Time in the soaking timer IC	> 3600 s

4. GENERAL DRIVING CYCLE

Perform the diagnosis only once when the ignition switch is OFF and when the ignition switch is ON after the soaking of one hour or more.

5. DIAGNOSTIC METHOD

<Timer diagnosis>

Start the count up operation of counters in ECM and in soaking timer IC when the engine is started.
Judge as timer malfunction if the difference between the counter in ECM and counter in soaking timer IC exceeds the allowable limit when the ignition switch is OFF.

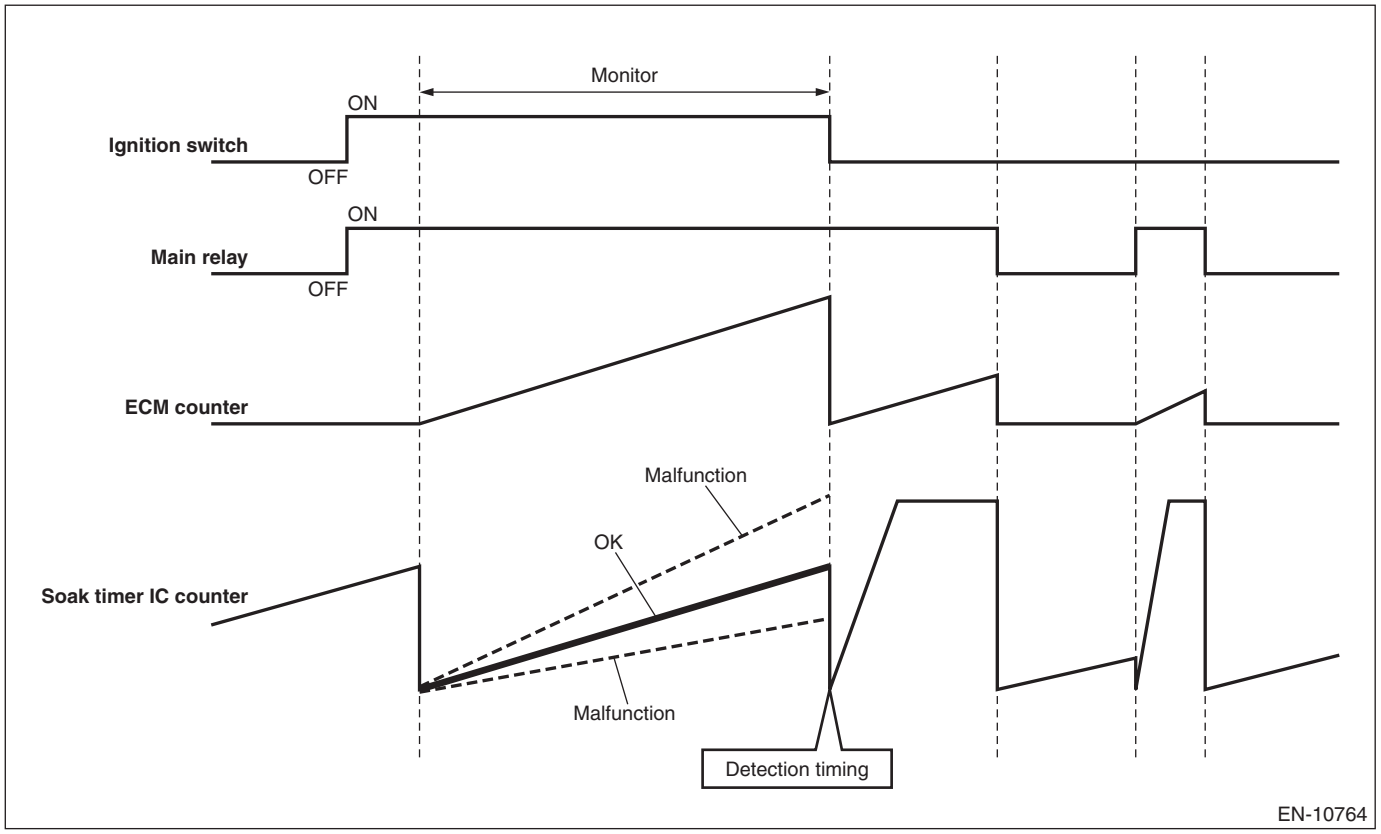

Judge as NG when the following conditions are established.

Judgment Value

Malfunction Criteria	Threshold Value
|osoaktimcpu – osoaktimic| / osoaktimcpu osoaktimcpu = Counter in ECM osoaktimic = Counter in soaking timer IC	> 0.24

<Full count diagnosis>

Reset the counter in soaking timer IC and start the count up operation.
Judge as full count diagnosis malfunction if counter in soaking timer IC is not $3FF (1023 count) after 4 seconds.

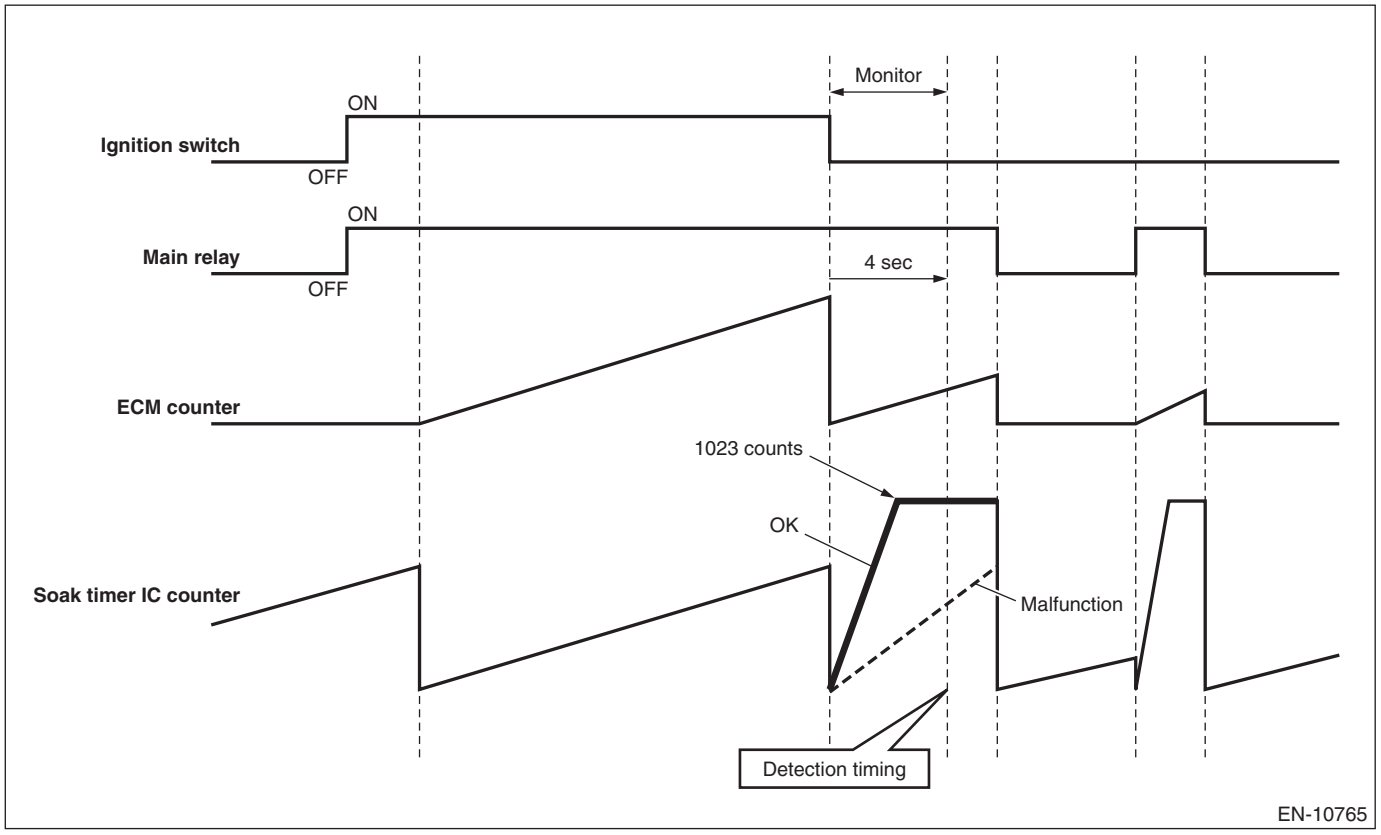

Judge as NG when the following conditions are established.

Judgment Value

Malfunction Criteria	Threshold Value
osoakfcntic osoakfcntic = Counter in soaking timer IC	≠ $3FF (1023 count)

<Soaking timer IC setting diagnosis>

When setting the activation setting time to soaking timer IC, compare the writing value to soaking timer IC with read out value. Judge as malfunction if the values do not match 3 times in a row.

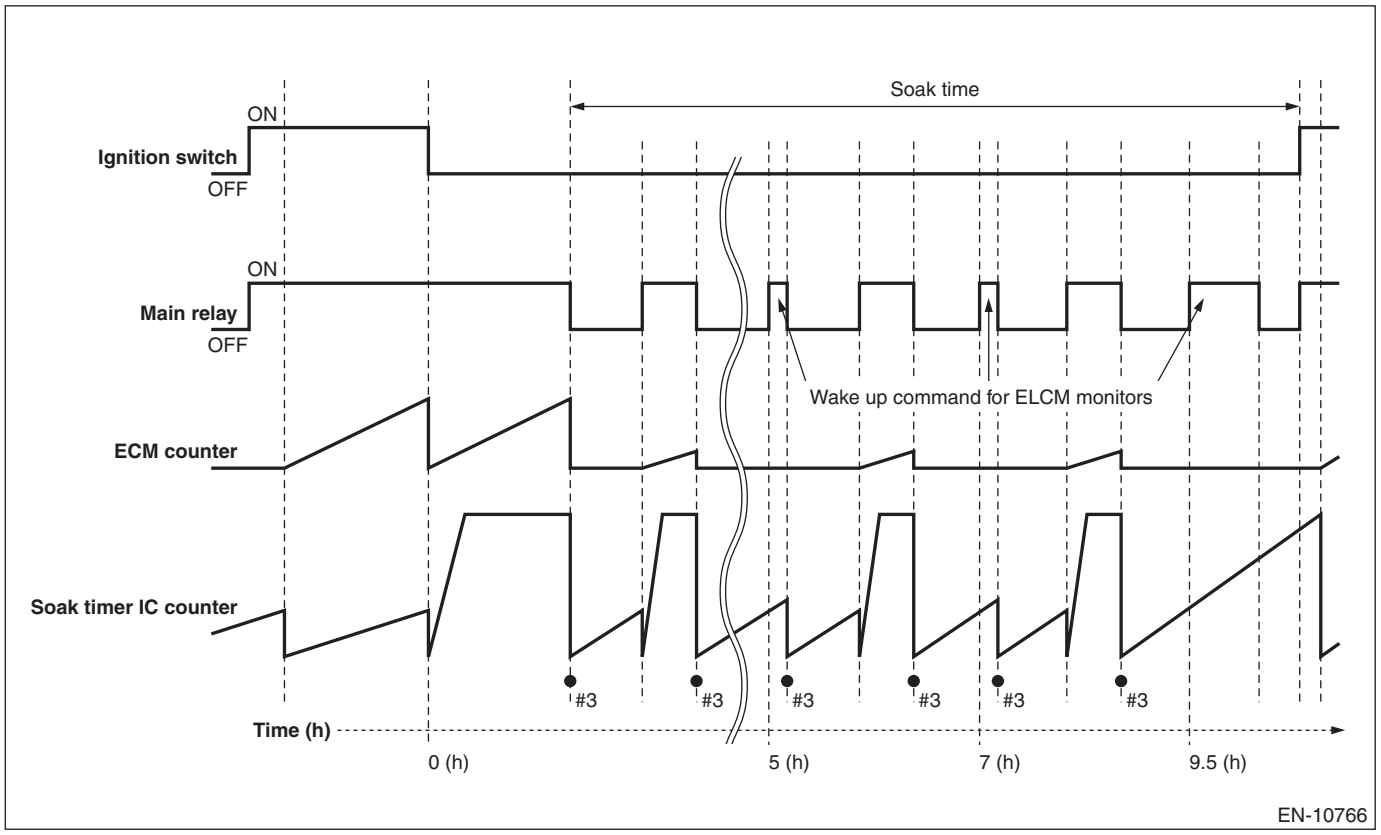

Judge as NG when the following conditions are established.

Judgment Value

Malfunction Criteria	Threshold Value
Writing value and read out value when setting the soaking timer	Unmatch

<Timer diagnosis (during soaking)>

Wake-up at the predetermined interval until 5 or 7 or 9.5 hours have passed after the ignition switch is OFF, and compare the counter in soaking timer IC with the counter in ECM.
Judge as malfunction if the counter in soaking timer IC is counted up to maximum value (1023 count) when the counter in ECM is 1636 ms, or if the counter in soaking timer IC is not counted up to maximum value (1023 count) when the counter in ECM is 2456 ms.

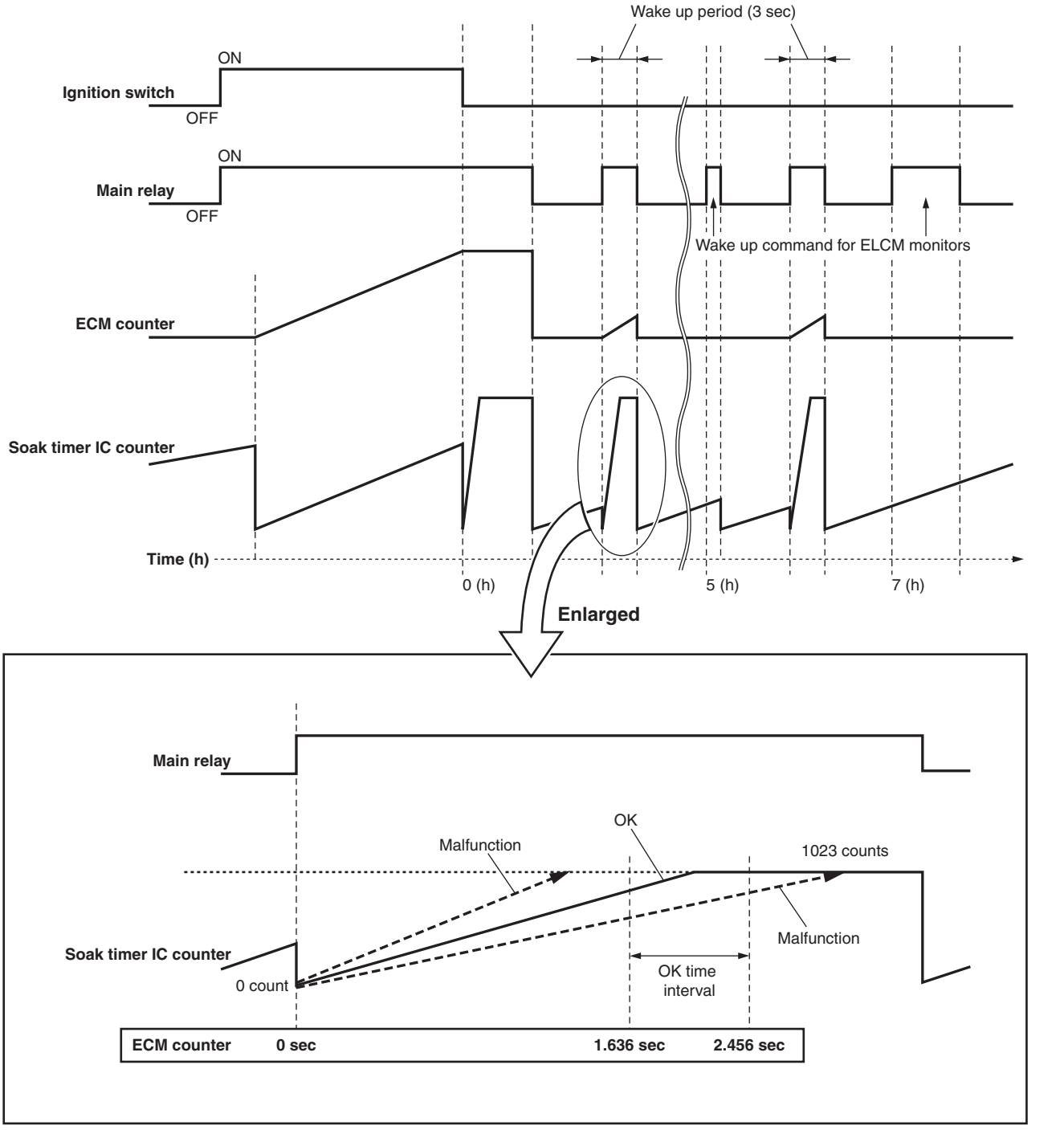

EN-10767

Judge as NG when the following conditions are established.

Judgment Value

Malfunction Criteria	Threshold Value
When any one of the followings is established:	
• All of the following conditions are established. Counter in ECM Counter in soaking timer IC	 ≤ 1636 ms = $3FF (1023 count)
• All of the following conditions are established. Counter in ECM Counter in soaking timer IC	 ≥ 2456 ms ≠ $3FF (1023 count)

<Wake-up diagnosis>

Store the number of wake-up activation when the ECM wakes up by the soaking timer IC.
Next time when the ignition switch is ON, if the number of wake-up activation does not reach the predetermined value even though the counter in soaking timer IC operates 1 hour or more, judge as wake-up malfunction.

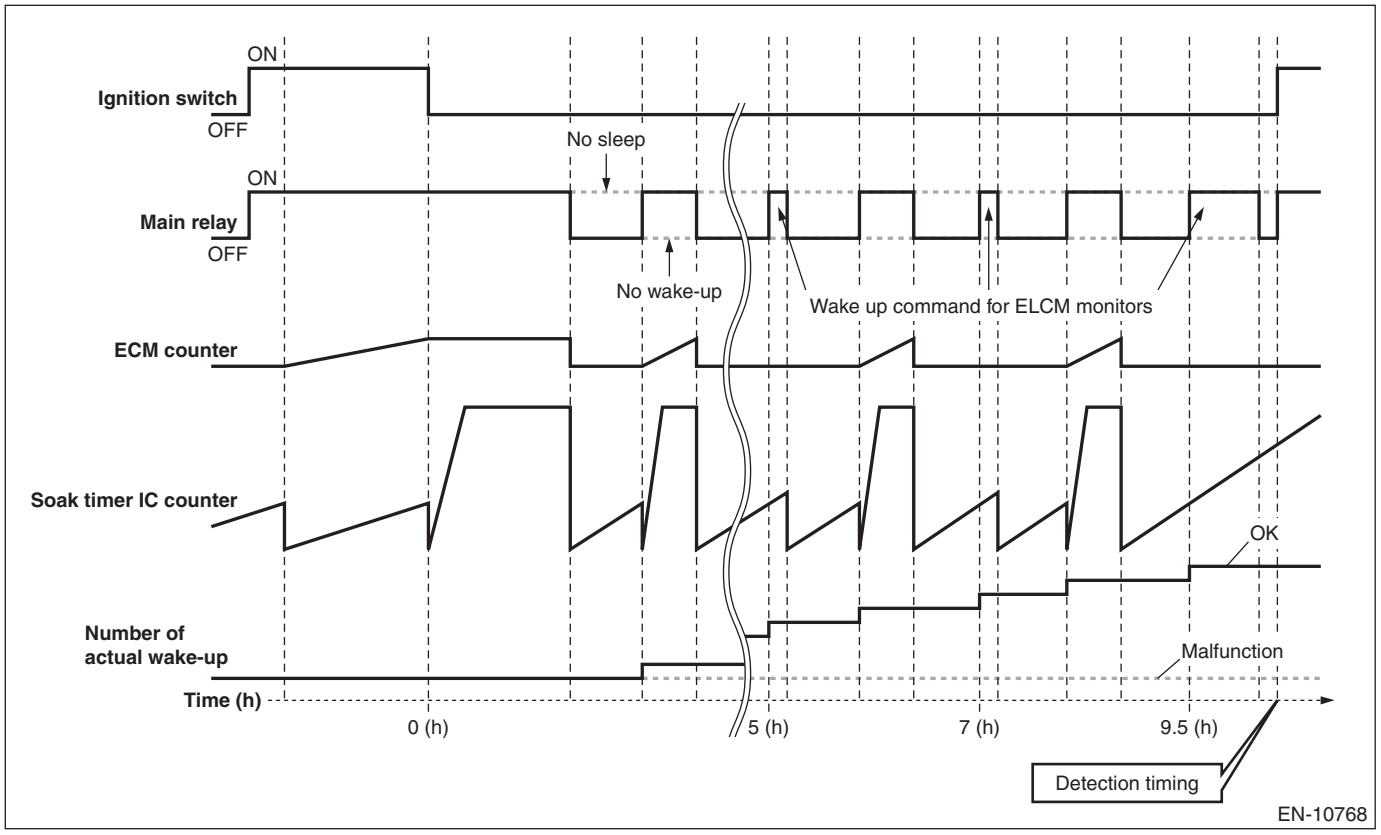

Judge as NG when the following conditions are established.

Judgment Value

Malfunction Criteria	Threshold Value
Number of wake-up	≠ Wake-up indication count

Judge as NG when the following conditions are established.

Judgment Value

Malfunction Criteria	Threshold Value
Ignition switch	ON
Driving cycle	Completed
When any one of the followings is established:	
• Timer diagnosis	NG
• Full count diagnosis	NG
• Soaking timer IC setting diagnosis	NG
• Timer diagnosis (during soaking)	NG
• Wake-up diagnosis	NG

Time Needed for Diagnosis: Approx. 5 — 9.5 hours
Malfunction Indicator Light Illumination: Illuminates when malfunction occurs in 2 continuous driving cycles.

GC:DTC U0073 CONTROL MODULE COMMUNICATION BUS OFF

NOTE:
For the diagnostic procedure, refer to LAN section. <Ref. to LAN(diag)-2, Basic Diagnostic Procedure.>

1. OUTLINE OF DIAGNOSIS

Detect malfunction of CAN communication.
Judge as NG when CAN communication failure has occurred.

2. COMPONENT DESCRIPTION

(Common Specifications)
CAN Protocol 2.0 B (Active)
Frame Format: 11 Bit ID Frame (Standard Frame)
Conforms to ISO11898
Communication Speed: 500 kbps

3. EXECUTION CONDITION

Secondary parameters	Execution condition
Battery voltage	≥ 10.9 V

4. GENERAL DRIVING CYCLE

Perform the diagnosis continuously after starting the engine.

5. DIAGNOSTIC METHOD

Judge as NG when the following conditions are established.

Judgment Value

Malfunction Criteria	Threshold Value
CAN bus condition	= “Bus off”

Time Needed for Diagnosis: 436 ms
Malfunction Indicator Light Illumination: Illuminates as soon as a malfunction occurs.

GD:DTC U0101 LOST COMMUNICATION WITH TCM

NOTE:
For the diagnostic procedure, refer to LAN section. <Ref. to LAN(diag)-2, Basic Diagnostic Procedure.>

1. OUTLINE OF DIAGNOSIS

Detect malfunction of CAN communication.
Judge as NG when CAN communication failure between TCM, VDC CM and combination meter has occurred.

2. COMPONENT DESCRIPTION

(Common Specifications)
CAN Protocol 2.0 B (Active)
Frame Format: 11 Bit ID Frame (Standard Frame)
Conforms to ISO11898
Communication Speed: 500 kbps

3. EXECUTION CONDITION

Secondary parameters	Execution condition
Battery voltage	≥ 10.9 V

4. GENERAL DRIVING CYCLE

Always perform the diagnosis continuously.

5. DIAGNOSTIC METHOD

Judge as NG when the following conditions are established.

Judgment Value

Malfunction Criteria	Threshold Value
ID received from control module connected to CAN	None

Time Needed for Diagnosis: 500 ms
Malfunction Indicator Light Illumination: Illuminates as soon as a malfunction occurs.

GE:DTC U0122 LOST COMMUNICATION WITH VEHICLE DYNAMICS CONTROL MODULE

NOTE:
For the diagnostic procedure, refer to LAN section. <Ref. to LAN(diag)-2, Basic Diagnostic Procedure.>

1. OUTLINE OF DIAGNOSIS

Detect malfunction of CAN communication.
Judge as NG when CAN communication failure between TCM, VDC CM and combination meter has occurred.

2. COMPONENT DESCRIPTION

(Common Specifications)
CAN Protocol 2.0 B (Active)
Frame Format: 11 Bit ID Frame (Standard Frame)
Conforms to ISO11898
Communication Speed: 500 kbps

3. EXECUTION CONDITION

Secondary parameters	Execution condition
Battery voltage	≥ 10.9 V

4. GENERAL DRIVING CYCLE

Perform the diagnosis continuously after starting the engine.

5. DIAGNOSTIC METHOD

Judge as NG when the following conditions are established.

Judgment Value

Malfunction Criteria	Threshold Value
ID received from control module connected to CAN	None

Time Needed for Diagnosis: 500 ms
Malfunction Indicator Light Illumination: Illuminates as soon as a malfunction occurs.

GF:DTC U0155 LOST COMMUNICATION WITH INSTRUMENT PANEL CLUSTER (IPC) CONTROL MODULE

NOTE:
For the diagnostic procedure, refer to LAN section. <Ref. to LAN(diag)-2, Basic Diagnostic Procedure.>

1. OUTLINE OF DIAGNOSIS

NOTE:
For the detection standard, refer to DTC U0122. <Ref. to EN(STI)(diag)-638, DTC U0122 LOST COMMUNICATION WITH VEHICLE DYNAMICS CONTROL MODULE, Diagnostic Procedure with Diagnostic Trouble Code (DTC).>

GG:DTC U0402 INVALID DATA RECEIVED FROM TCM

NOTE:
For the diagnostic procedure, refer to LAN section. <Ref. to LAN(diag)-2, Basic Diagnostic Procedure.>

1. OUTLINE OF DIAGNOSIS

Detect malfunction of CAN communication.
Judge as NG when data received from TCM, VDC CM and combination meter is not normal.

2. COMPONENT DESCRIPTION

(Common Specifications)
CAN Protocol 2.0 B (Active)
Frame Format: 11 Bit ID Frame (Standard Frame)
Conforms to ISO11898
Communication Speed: 500 kbps

3. EXECUTION CONDITION

Secondary parameters	Execution condition
Battery voltage	≥ 10.9 V

4. GENERAL DRIVING CYCLE

Always perform the diagnosis continuously.

5. DIAGNOSTIC METHOD

Judge as NG when the following conditions are established.

Judgment Value

Malfunction Criteria	Threshold Value
Data updated from control module connected to CAN	None

Time Needed for Diagnosis: 2 seconds
Malfunction Indicator Light Illumination: Illuminates as soon as a malfunction occurs.

GH:DTC U0416 INVALID DATA RECEIVED FROM VEHICLE DYNAMICS CONTROL MODULE

NOTE:
For the diagnostic procedure, refer to LAN section. <Ref. to LAN(diag)-2, Basic Diagnostic Procedure.>

1. OUTLINE OF DIAGNOSIS

Detect malfunction of CAN communication.
Judge as NG when data received from TCM, VDC CM and combination meter is not normal.

2. COMPONENT DESCRIPTION

(Common Specifications)
CAN Protocol 2.0 B (Active)
Frame Format: 11 Bit ID Frame (Standard Frame)
Conforms to ISO11898
Communication Speed: 500 kbps

3. EXECUTION CONDITION

Secondary parameters	Execution condition
Battery voltage	≥ 10.9 V

4. GENERAL DRIVING CYCLE

Perform the diagnosis continuously after starting the engine.

5. DIAGNOSTIC METHOD

Judge as NG when the following conditions are established.

Judgment Value

Malfunction Criteria	Threshold Value
Data updated from control module connected to CAN	None

Time Needed for Diagnosis: 2 seconds
Malfunction Indicator Light Illumination: Illuminates as soon as a malfunction occurs.

GI: DTC U0423 INVALID DATA RECEIVED FROM INSTRUMENT PANEL CLUSTER CONTROL MODULE

NOTE:
For the diagnostic procedure, refer to LAN section. <Ref. to LAN(diag)-2, Basic Diagnostic Procedure.>

1. OUTLINE OF DIAGNOSIS

NOTE:
For the detection standard, refer to DTC U0416. <Ref. to EN(STI)(diag)-640, DTC U0416 INVALID DATA RECEIVED FROM VEHICLE DYNAMICS CONTROL MODULE, Diagnostic Procedure with Diagnostic Trouble Code (DTC).>

19.Diagnostic Procedure without Diagnostic Trouble Code (DTC)

A: CHECK SI-DRIVE (SUBARU INTELLIGENT DRIVE) SYSTEM

DIAGNOSIS:
SI-DRIVE mode does not switch.

CAUTION:
Note that SI-DRIVE system operates the following controls when it switches the modes.
1. Switches to S (Sport) mode when turning the engine OFF in S (Sport) or S# (Sport sharp) mode and then turning the engine ON again.
2. Switches to I (intelligent) mode when turning the engine OFF in I (intelligent) mode and then turning the engine ON again.
3. Switches to S (Sport) when the malfunction indicator light illuminates while the engine is running. In this case, Cannot switch to S# (Sport Sharp) or I (Intelligent) mode.
4. Cannot switch to S# (Sport Sharp), when engine coolant temperature tells that overheating may occur. Switches to S (Sport) while driving in S# (Sport sharp) mode.

1. SI-DRIVE MODE INDICATION DOES NOT CHANGE AND MODES DO NOT SWITCH AFTER SWITCHING SI-DRIVE MODES

WIRING DIAGRAM:
Engine Electrical System <Ref. to WI-154, WIRING DIAGRAM, Engine Electrical System.>

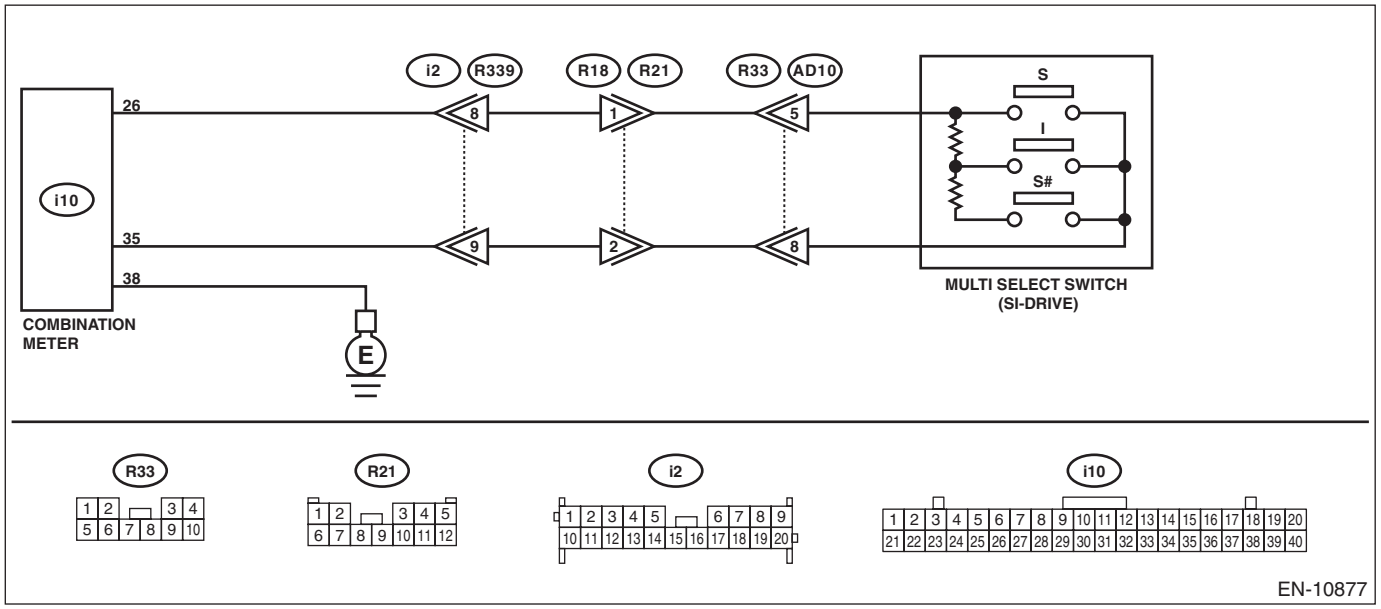

Step		Check	Yes	No
1	**CHECK SI-DRIVE SELECTOR.** 1) Turn the ignition switch to OFF. 2) Disconnect the connector from the combination meter. 3) Measure the resistance between connectors when the SI-DRIVE selector is operated. ***Connector & terminal*** ***(i10) No. 26 — (i10) No. 35:***	Does the resistance change as below? S#: 3.48 — 3.85 kΩ I: 0.95 — 1.05 kΩ S: less than 1 Ω	Go to step **4**.	Go to step **2**.

	Step	Check	Yes	No
2	**CHECK HARNESS BETWEEN COMBINATION METER AND MULTI-SELECT SWITCH CONNECTOR.** 1) Disconnect the connector from multi-select switch. 2) Measure the resistance of harness between combination meter and multi-select switch connector. ***Connector & terminal*** ***(i10) No. 26 — (R33) No. 5:*** ***(i10) No. 35 — (R33) No. 8:***	Is the resistance less than 1 Ω?	Go to step **3**.	Repair the harness and connector. NOTE: In this case, repair the following item: • Open circuit in harness between combination meter and multi-select switch connector • Poor contact of coupling connector
3	**CHECK HARNESS BETWEEN COMBINATION METER AND MULTI-SELECT SWITCH CONNECTOR.** Measure the resistance between multi-select switch connector and chassis ground. ***Connector & terminal*** ***(R33) No. 5 — Chassis ground:*** ***(R33) No. 8 — Chassis ground:***	Is the resistance 1 MΩ or more?	Repair the poor contact of multi-select switch connector. Replace the multi-select switch if defective. <Ref. to FU(STI)-55, SI-DRIVE (SUBARU Intelligent Drive) Selector.>	Repair the ground short circuit in harness between combination meter and multi-select switch connector.
4	**CHECK HARNESS BETWEEN COMBINATION METER AND CHASSIS GROUND.** Measure the resistance of harness between combination meter and chassis ground. ***Connector & terminal*** ***(i10) No. 38 — Chassis ground:***	Is the resistance less than 5 Ω?	Go to step **5**.	Repair the open circuit of harness between combination meter and chassis ground.
5	**RECHECK FAULT.** 1) Connect all connectors. 2) Switch SI-DRIVE modes.	Is there any fault?	Repair the poor contact of combination meter connector. Replace the combination meter if defective. <Ref. to IDI-13, Combination Meter.>	The circuit has returned to a normal condition at this time. Reproduce the failure, and then perform the diagnosis again. NOTE: In this case, temporary poor contact of connector, temporary open or short circuit of harness may be the cause.

2. WHEN THE SI-DRIVE MODE IS CHANGED, “S”, “I” OR “S#” FLASHES IN COMBINATION METER SI-DRIVE MODE DISPLAY IN APPROX. 5 SECONDS

Step		Check	Yes	No
1	**CHECK DTC.**	Is DTC displayed?	Check the appropriate DTC using the “List of Diagnostic Trouble Code (DTC)” concerning the respective units.	Go to step **2**.
2	**CHECK COMBINATION METER AND CLOCK DISPLAY.** Check for abnormal display other than “S”, “I” or “S#” flashing. Examples: Malfunction indicator light illuminates.	Is there an abnormal display other than “S”, “I” or “S#” flashing?	For the diagnostic procedure, refer to LAN section. <Ref. to LAN(diag)-2, Basic Diagnostic Procedure.>	Go to step **3**.
3	**CHECK ECM AND COMBINATION METER.**	Is the part number of ECM and combination meter correct?	Replace the meter case assembly. <Ref. to IDI-13, Combination Meter.>	Replace ECM or meter case assembly with the one with the correct part number. <Ref. to FU(STI)-56, Engine Control Module (ECM).> <Ref. to IDI-13, Combination Meter.>

3. “S#”, “I” OR “S” BLINKS ON SI-DRIVE MODE DISPLAY IN THE COMBINATION METER AFTER SWITCHING SI-DRIVE MODES

NOTE:
In this case, there is a fault other than in SI-DRIVE system.

Step		Check	Yes	No
1	**CHECK MALFUNCTION INDICATOR LIGHT.** 1) Start the engine. 2) Check if malfunction indicator light illuminates.	Does the malfunction indicator light illuminate?	Read the DTC using Subaru Select Monitor and check the indicated DTC. <Ref. to EN(STI)(diag)-96, List of Diagnostic Trouble Code (DTC).>	Go to step **2**.
2	**CHECK ENGINE COOLANT TEMPERATURE GAUGE.** 1) Turn the ignition switch to ON. 2) Check the engine coolant temperature gauge.	Does it indicate overheating?	Inspect for the cause of overheating and repair.	Go to step **3**.
3	**CHECK COMBINATION METER INDICATION.** 1) Turn the ignition switch to ON. 2) Switch SI-DRIVE modes. 3) Check the SI-DRIVE mode display in the combination meter.	Does “S#”, “I” or “S” of the SI-DRIVE mode blink in combination meter?	Replace the combination meter. <Ref. to IDI-13, Combination Meter.>	Perform test driving to check the malfunction indicator light and engine coolant temperature gauge. Complete the diagnosis if they are normal.

20.General Diagnostic Table

A: INSPECTION

1. ENGINE

NOTE:
Malfunction of parts other than those listed is also possible. <Ref. to ME(STI)-107, Engine Trouble in General.>

Symptoms	Faulty parts
1. Engine stalls during idling.	1) Electronic throttle control 2) Manifold absolute pressure sensor 3) Mass air flow and intake air temperature sensor 4) Ignition parts (*1) 5) Engine coolant temperature sensor (*2) 6) Crankshaft position sensor (*3) 7) Camshaft position sensor (*3) 8) Fuel injection parts (*4)
2. Rough idling	1) Electronic throttle control 2) Manifold absolute pressure sensor 3) Mass air flow and intake air temperature sensor 4) Engine coolant temperature sensor (*2) 5) Ignition parts (*1) 6) Air intake system (*5) 7) Fuel injection parts (*4) 8) Crankshaft position sensor (*3) 9) Camshaft position sensor (*3) 10) Oxygen sensor 11) Fuel pump and fuel pump relay
3. Engine does not return to idle.	1) Electronic throttle control 2) Engine coolant temperature sensor 3) Manifold absolute pressure sensor 4) Mass air flow and intake air temperature sensor 5) Accelerator pedal position sensor
4. Poor acceleration	1) Manifold absolute pressure sensor 2) Mass air flow and intake air temperature sensor 3) Electronic throttle control 4) Fuel injection parts (*4) 5) Fuel pump and fuel pump relay 6) Engine coolant temperature sensor (*2) 7) Crankshaft position sensor (*3) 8) Camshaft position sensor (*3) 9) A/C switch and A/C relay 10) Engine torque control signal circuit 11) Ignition parts (*1) 12) Accelerator pedal position sensor
5. Engine stalls, hesitates, or sputters at acceleration.	1) Manifold absolute pressure sensor 2) Mass air flow and intake air temperature sensor 3) Engine coolant temperature sensor (*2) 4) Crankshaft position sensor (*3) 5) Camshaft position sensor (*3) 6) Purge control solenoid valve 7) Fuel injection parts (*4) 8) Fuel pump and fuel pump relay 9) Electronic throttle control

Symptoms	Faulty parts
6. Surging	1) Manifold absolute pressure sensor 2) Mass air flow and intake air temperature sensor 3) Engine coolant temperature sensor (*2) 4) Crankshaft position sensor (*3) 5) Camshaft position sensor (*3) 6) Fuel injection parts (*4) 7) Electronic throttle control 8) Fuel pump and fuel pump relay
7. Spark knock	1) Manifold absolute pressure sensor 2) Mass air flow and intake air temperature sensor 3) Engine coolant temperature sensor 4) Knock sensor 5) Fuel injection parts (*4) 6) Fuel pump and fuel pump relay
8. After burning in exhaust system	1) Manifold absolute pressure sensor 2) Mass air flow and intake air temperature sensor 3) Engine coolant temperature sensor (*2) 4) Fuel injection parts (*4) 5) Fuel pump and fuel pump relay

*1: Check ignition coil and spark plug.
*2: Indicate the symptom occurring only in cold temperatures.
*3: Ensure secure installation.
*4: Check fuel injector, fuel pressure regulator and fuel filter.
*5: Inspect for air leak in air intake system.

ENGINE 2 SECTION

This service manual has been prepared to provide SUBARU service personnel with the necessary information and data for the correct maintenance and repair of SUBARU vehicles.
This manual includes the procedures for maintenance, disassembling, reassembling, inspection and adjustment of components and diagnostics for guidance of experienced mechanics.
Please peruse and utilize this manual fully to ensure complete repair work for satisfying our customers by keeping their vehicle in optimum condition. When replacement of parts during repair work is needed, be sure to use SUBARU genuine parts.

All information, illustration and specifications contained in this manual are based on the latest product information available at the time of publication approval.

FUEL INJECTION (FUEL SYSTEMS)	FU(w/o STI)
EMISSION CONTROL (AUX. EMISSION CONTROL DEVICES)	EC(w/o STI)
INTAKE (INDUCTION)	IN(w/o STI)
MECHANICAL	ME(w/o STI)
EXHAUST	EX(w/o STI)
COOLING	CO(w/o STI)
LUBRICATION	LU(w/o STI)
SPEED CONTROL SYSTEMS	SP(w/o STI)
IGNITION	IG(w/o STI)
STARTING/CHARGING SYSTEMS	SC(w/o STI)
ENGINE (DIAGNOSTICS)	EN(w/o STI) (diag)

FUEL INJECTION (FUEL SYSTEMS)

FU(w/o STI)

		Page
1.	General Description	2
2.	Throttle Body	15
3.	Intake Manifold	18
4.	Tumble Generator Valve Assembly	42
5.	Tumble Generator Valve Actuator	44
6.	Fuel Insulator	45
7.	Fuel Injector	50
8.	Fuel Pressure Sensor	66
9.	High Pressure Fuel Pump	69
10.	High Pressure Fuel Delivery Pipe	78
11.	Engine Wiring Harness	81
12.	Engine Coolant Temperature Sensor	89
13.	Engine Oil Temperature Sensor	91
14.	Crankshaft Position Sensor	93
15.	Crankshaft Position Sensor Plate	96
16.	Camshaft Position Sensor	97
17.	Oil Control Solenoid	101
18.	Knock Sensor	104
19.	Throttle Position Sensor	109
20.	Mass Air Flow and Intake Air Temperature Sensor	110
21.	Manifold Absolute Pressure and Intake Air Temperature Sensor	112
22.	Wastegate Control Solenoid Valve	116
23.	Front Oxygen (A/F) Sensor	118
24.	Rear Oxygen Sensor	120
25.	SI-DRIVE (SUBARU Intelligent Drive) Selector	123
26.	Engine Control Module (ECM)	124
27.	Main Relay	127
28.	Oxygen Sensor Relay	129
29.	Electronic Throttle Control Relay	131
30.	Fuel Pump Relay	133
31.	Fuel Injector Relay	135
32.	Fuel Pump Control Unit	137
33.	Fuel	138
34.	Fuel Tank Protector	144
35.	Fuel Tank	145
36.	Fuel Filler Pipe	156
37.	Fuel Pump	161
38.	Fuel Level Sensor	168
39.	Fuel Sub Level Sensor	171
40.	Fuel Filter	180
41.	Fuel Delivery and Evaporation Lines	191
42.	Fuel System Trouble in General	197

1. General Description

A: SPECIFICATION

Fuel tank	Capacity	60 L (15.9 US gal, 13.2 Imp gal)
	Location	Under rear seat
Fuel pump	Type	Impeller
	Shutoff discharge pressure	940 kPa (9.6 kg/cm^2, 136.3 psi) or less
	Discharge rate	153 L (40.4 US gal, 33.7 Imp gal)/h or more [12.5 V at 343 kPa (3.5 kg/cm^2, 49.7 psi)]
Fuel filter		In-tank type

B: COMPONENT

1. INTAKE MANIFOLD

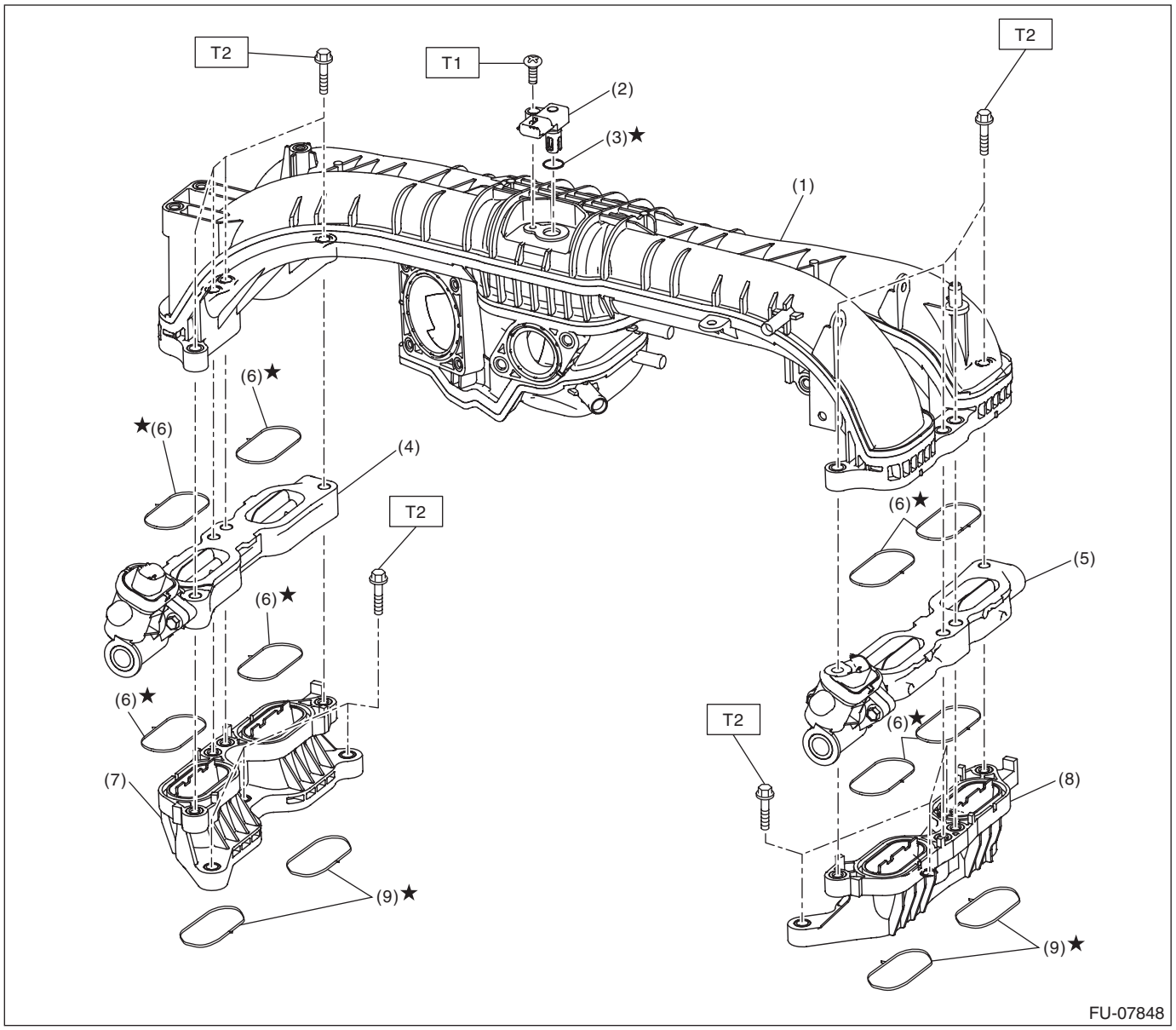

(1)	Intake manifold	(6)	Gasket	***Tightening torque: N·m (kgf-m, ft-lb)***
(2)	Manifold absolute pressure and intake air temperature sensor	(7)	Air intake adapter LH	***T1: 3.5 (0.4, 2.6)***
(3)	O-ring	(8)	Air intake adapter RH	***T2: 25 (2.5, 18.4)***
(4)	Tumble generator valve ASSY LH	(9)	Gasket	
(5)	Tumble generator valve ASSY RH			

2. FUEL INJECTOR 1

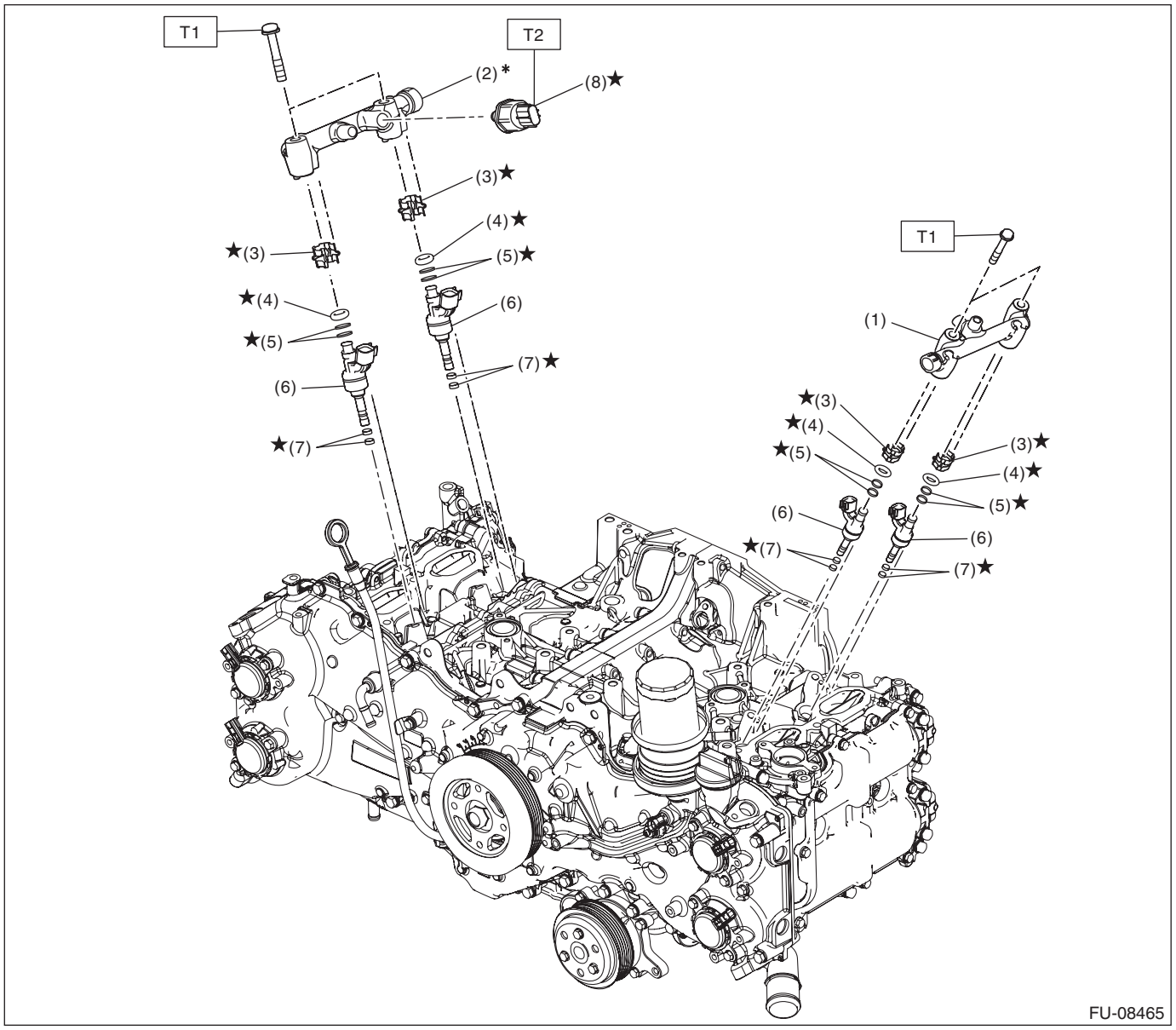

(1)	Fuel injector pipe LH	(5)	Back-up ring
(2)	Fuel injector pipe RH	(6)	Fuel injector
(3)	Holder	(7)	Injector seal
(4)	O-ring	(8)	Fuel pressure sensor

Tightening torque: N·m (kgf-m, ft-lb)
T1: 19 (1.9, 14.0)
T2: 46 (4.7, 33.9)

* When removing the fuel pressure sensor from the fuel injector pipe RH, replace it with a new one.

3. FUEL INJECTOR 2

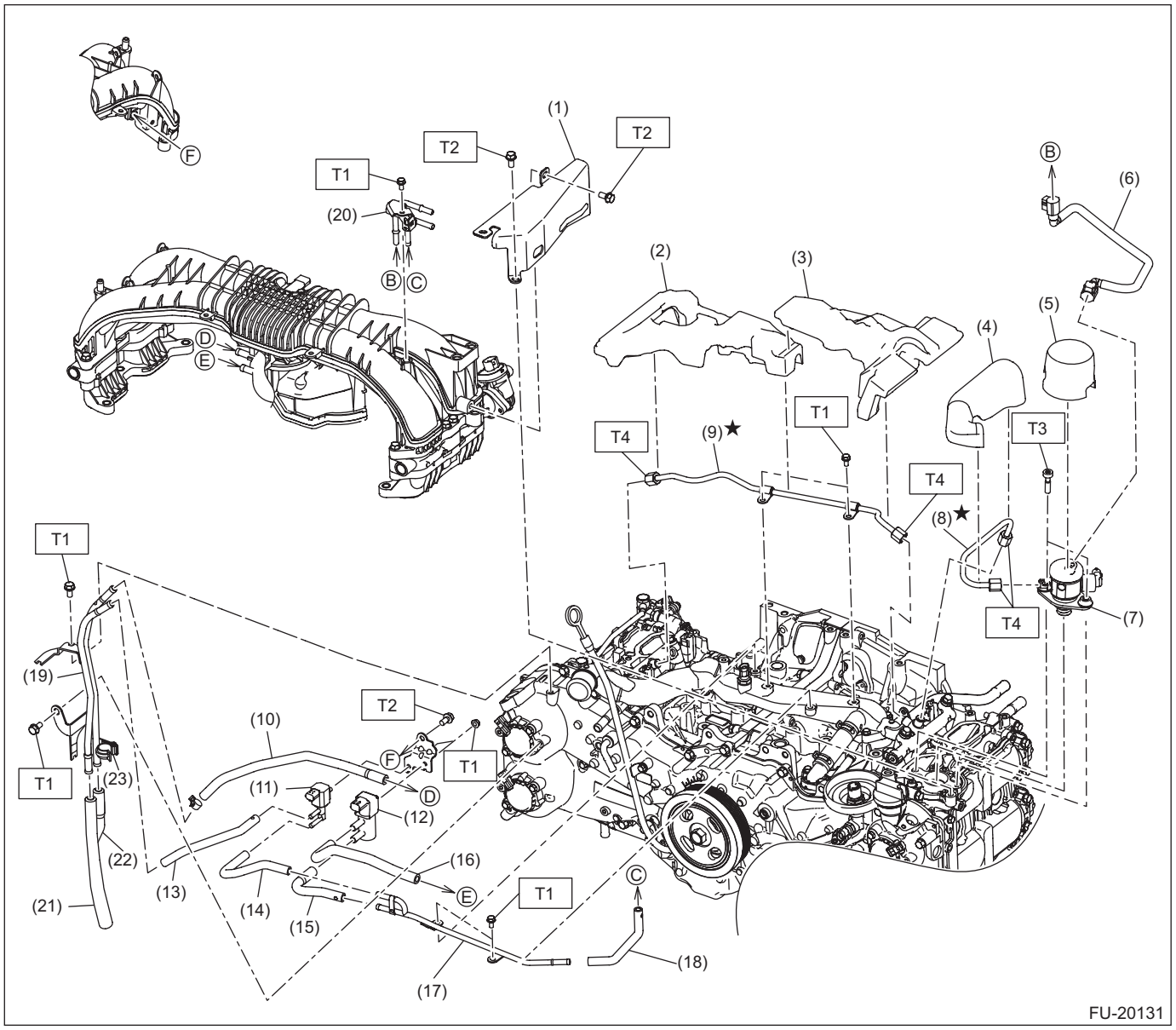

(1) Fuel pipe protector
(2) Fuel pipe insulator No. 3
(3) Fuel pipe insulator No. 2
(4) Fuel pipe insulator No. 1
(5) Fuel pump insulator
(6) Fuel delivery pipe
(7) High-pressure fuel pump
(8) High-pressure fuel delivery pipe
(9) High-pressure fuel delivery pipe ASSY
(10) Vacuum control hose
(11) Purge control solenoid valve A
(12) Purge control solenoid valve B
(13) Vacuum hose A
(14) Vacuum hose B
(15) Vacuum hose C
(16) Vacuum hose D
(17) Canister pipe
(18) Vacuum hose E
(19) Vacuum pipe ASSY
(20) Fuel pipe ASSY
(21) Vacuum hose F
(22) Vacuum hose G
(23) Pipe clamp

Tightening torque: N·m (kgf-m, ft-lb)
T1: 6.4 (0.7, 4.7)
T2: 19 (1.9, 14.0)
T3: 21 (2.1, 15.5)
T4: 25 (2.5, 18.4)

4. THROTTLE BODY

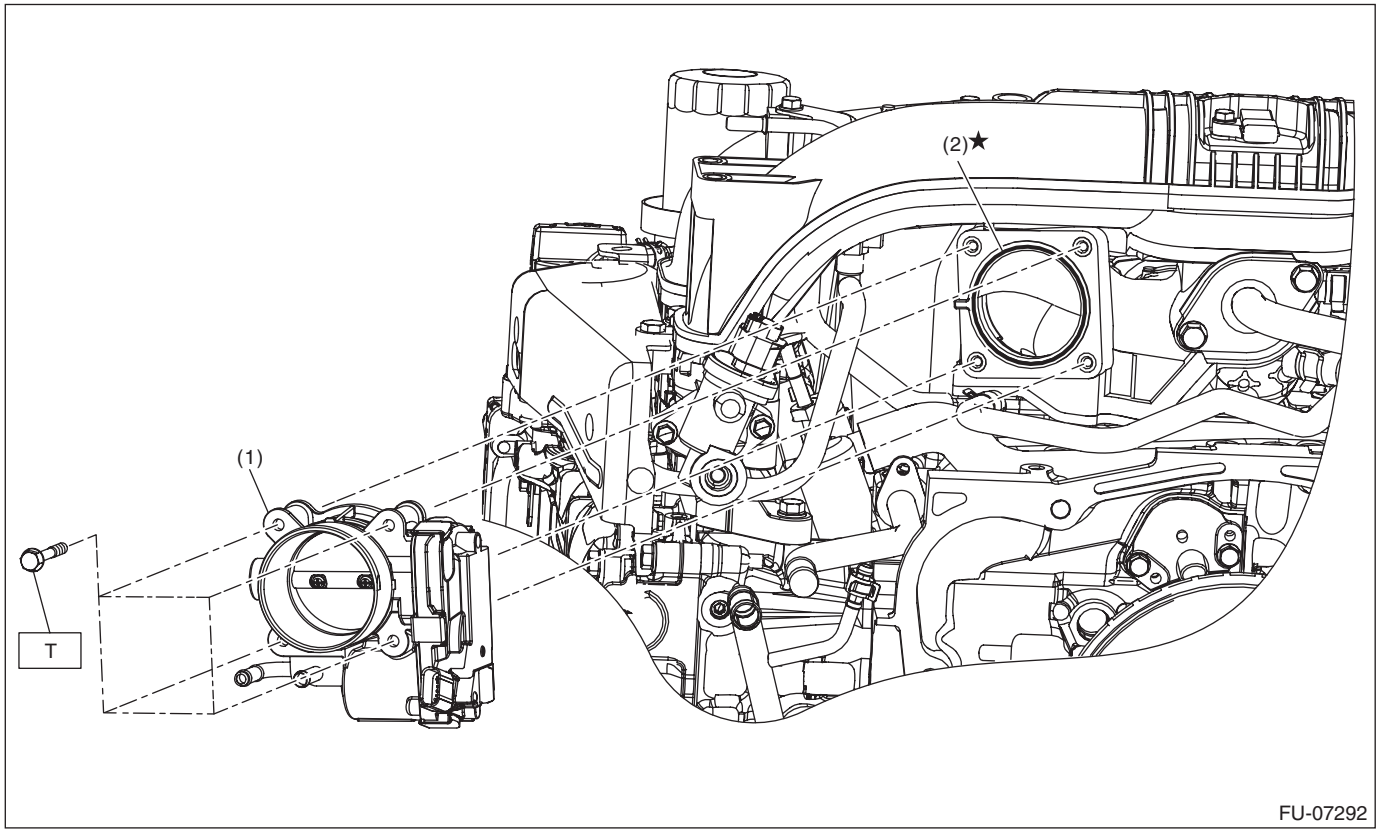

(1) Throttle body
(2) Gasket

Tightening torque: N·m (kgf-m, ft-lb)
T: 8 (0.8, 5.9)

5. CRANKSHAFT POSITION, CAMSHAFT POSITION AND KNOCK SENSORS

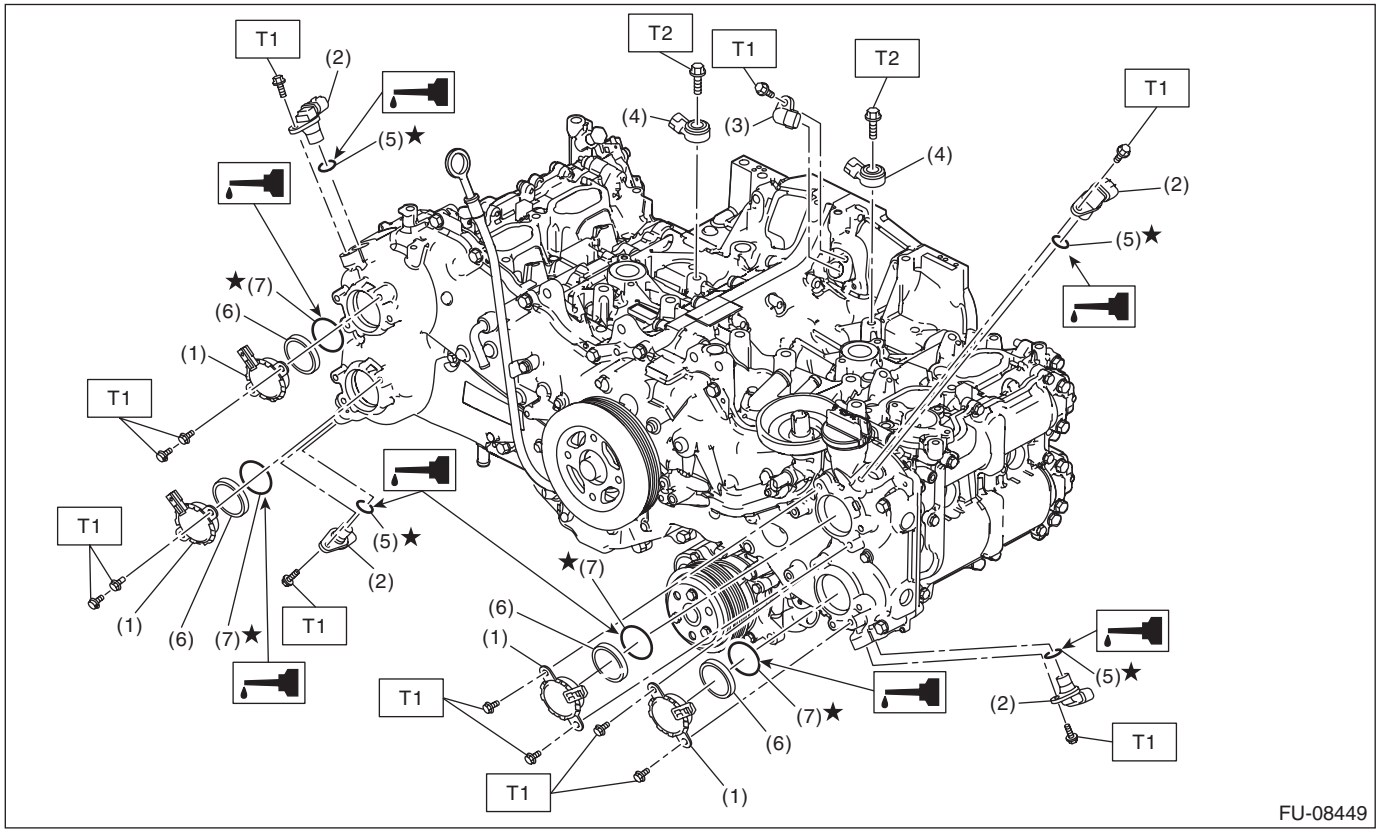

(1) Oil control solenoid
(2) Camshaft position sensor
(3) Crankshaft position sensor
(4) Knock sensor
(5) O-ring
(6) Back-up ring
(7) O-ring

Tightening torque: N·m (kgf-m, ft-lb)
T1: 6.4 (0.7, 4.7)
T2: 24 (2.4, 17.7)

6. FUEL TANK

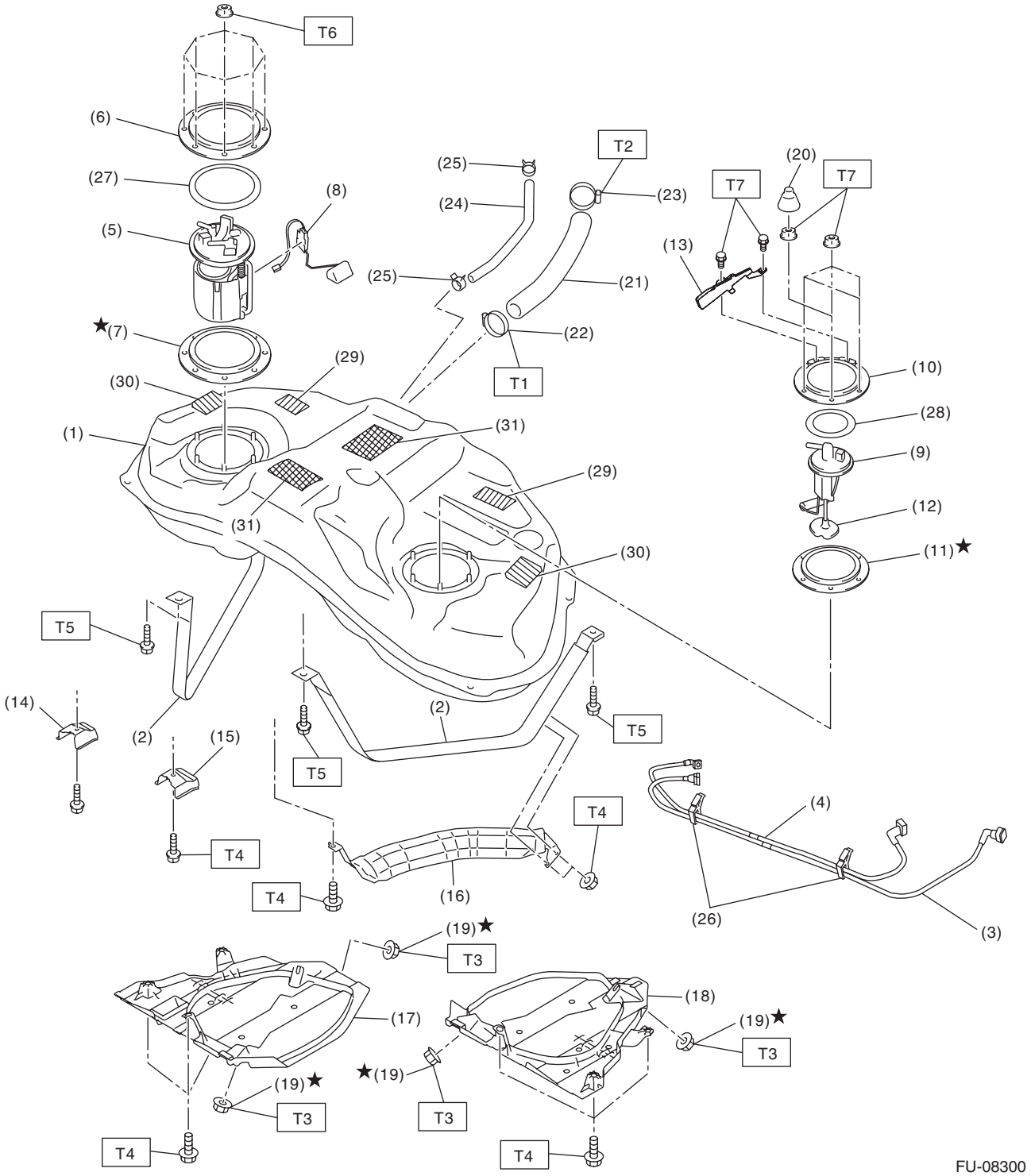
T6
(6)
(27)
(8)
(5)
(25)
(24)
T2
(23)
(20)
T7
T7
(13)
(25)
(21)
★(7)
(22)
T1
(29)
(30)
(10)
(28)
(1)
(31)
(9)
(29)
(12)
(31)
(30)
(11)★
T5
(14)
(2)
(2)
(15)
T5
T5
T4
(4)
T4
T4
(16)
(26)
(3)
(19)★
T3
(18)
(17)
(19)★
T3
★(19)
T3
T4
T4
FU-08300

(1) Fuel tank
(2) Fuel tank band
(3) Fuel delivery tube
(4) Jet pump tube
(5) Fuel pump ASSY
(6) Fuel pump upper plate
(7) Fuel pump gasket
(8) Fuel level sensor
(9) Fuel sub level sensor
(10) Fuel sub level sensor upper plate
(11) Fuel sub level sensor gasket
(12) Fuel sub level sensor filter
(13) Fuel sub level sensor protector
(14) Stopper RH
(15) Stopper LH
(16) Heat shield cover
(17) Fuel tank protector RH
(18) Fuel tank protector LH
(19) Self-locking nut
(20) Rubber cap
(21) Fuel filler hose
(22) Clamp
(23) Clamp
(24) Evaporation hose
(25) Clip
(26) Tube clamp
(27) Fuel pump upper plate cushion
(28) Fuel sub level sensor upper plate cushion
(29) Cushion
(30) Cushion
(31) Cushion

Tightening torque: N·m (kgf-m, ft-lb)
T1: 2 (0.2, 1.5)
T2: 2.5 (0.3, 1.8)
T3: 9 (0.9, 6.6)
T4: 18 (1.8, 13.3)
T5: <Ref. to FU(w/o STI)-150, INSTALLATION, Fuel Tank.>
T6: <Ref. to FU(w/o STI)-163, INSTALLATION, Fuel Pump.>
T7: <Ref. to FU(w/o STI)-174, INSTALLATION, Fuel Sub Level Sensor.>

7. FUEL LINE

- Fuel line 1

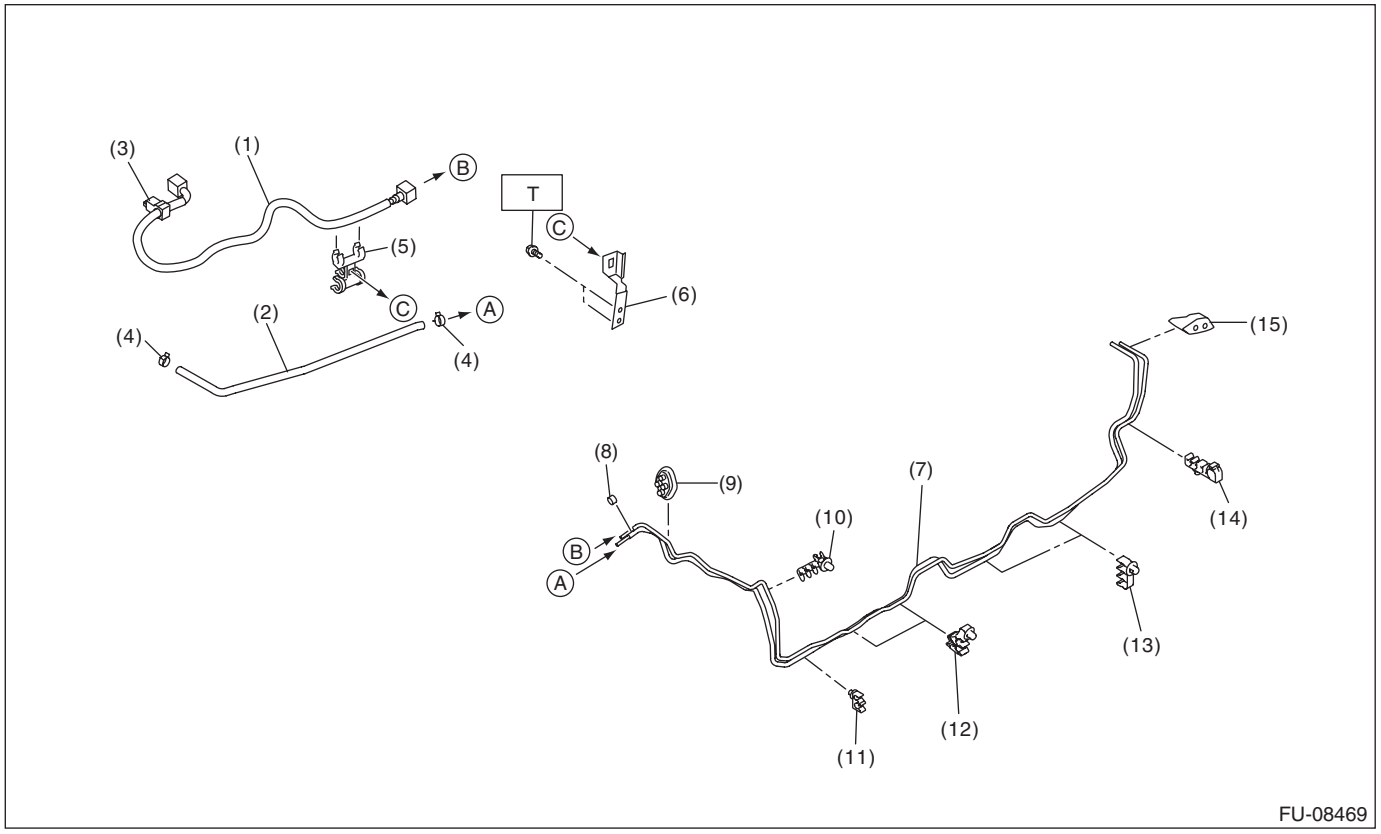

(1) Fuel delivery tube
(2) Evaporation hose
(3) Tube clamp
(4) Clip
(5) Hose clamp
(6) Hose clamp bracket
(7) Fuel pipe ASSY
(8) Bushing
(9) Fuel pipe front grommet
(10) Pipe clamp
(11) Pipe clamp
(12) Pipe clamp
(13) Pipe clamp
(14) Pipe clamp
(15) Fuel pipe rear grommet

Tightening torque: N·m (kgf-m, ft-lb)
T: 7.5 (0.8, 5.5)

- Fuel line 2

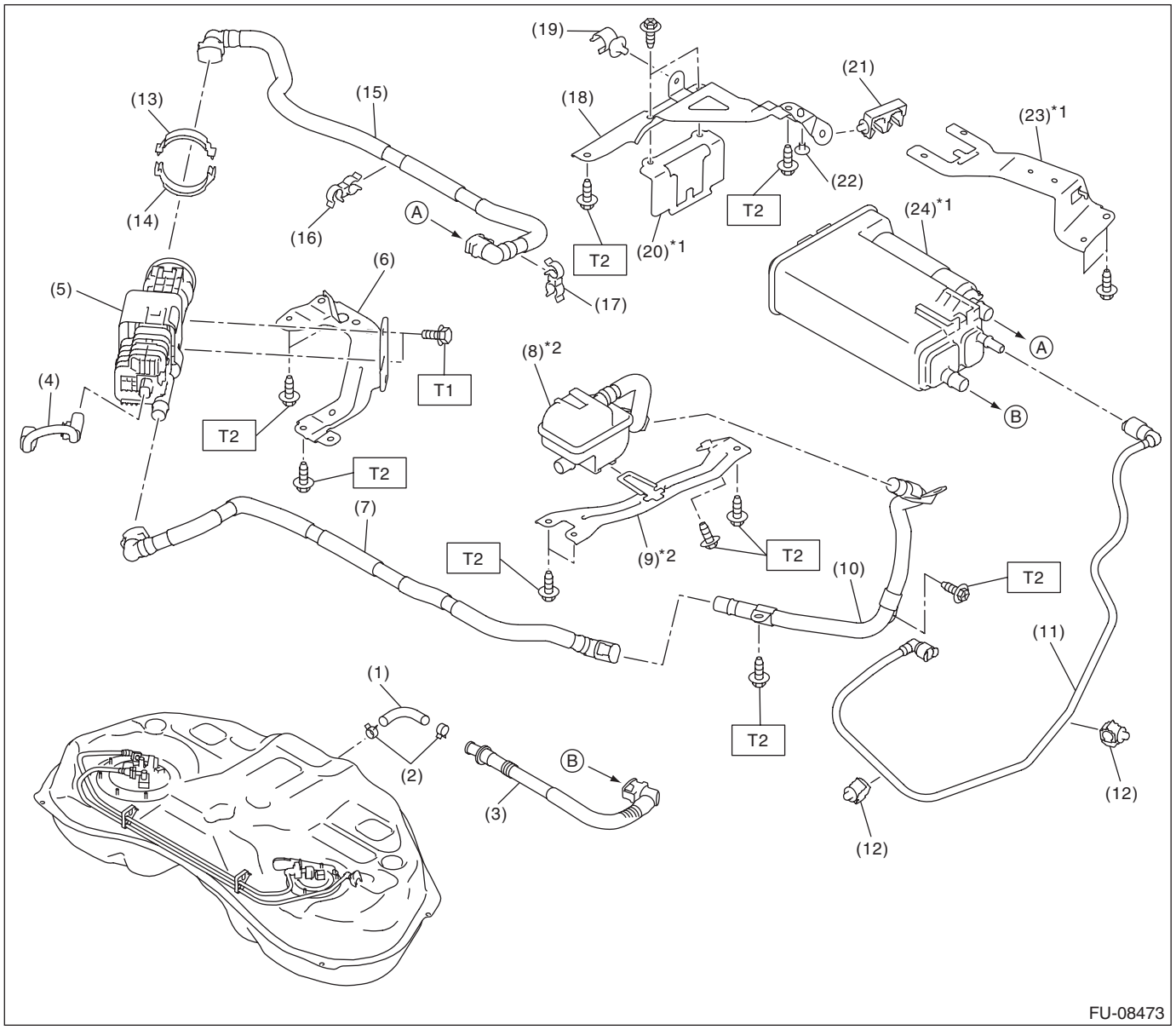

(1) Vent hose
(2) Clip
(3) Vent tube
(4) Harness
(5) Leak check valve ASSY
(6) Leak check valve bracket
(7) Drain tube A
(8) Drain filter
(9) Drain bracket
(10) Drain pipe
(11) Purge tube
(12) Tube clamp
(13) Clamp B
(14) Clamp A
(15) Drain tube B
(16) Tube clamp
(17) Tube clamp
(18) Canister bracket A
(19) Tube clamp
(20) Canister bracket B
(21) Tube clamp
(22) Clip
(23) Canister bracket C
(24) Canister

Tightening torque: N·m (kgf-m, ft-lb)
T1: 5.4 (0.6, 4.0)
T2: 7.5 (0.8, 5.5)

*1 The canister bracket cannot be separated from the canister. Therefore, be sure to replace both of them with new ones when replacing the canister or canister bracket.

*2 The drain filter cannot be separated from the drain bracket. Therefore, be sure to replace both of them with new ones when replacing the drain bracket or drain filter.

8. FUEL FILLER PIPE

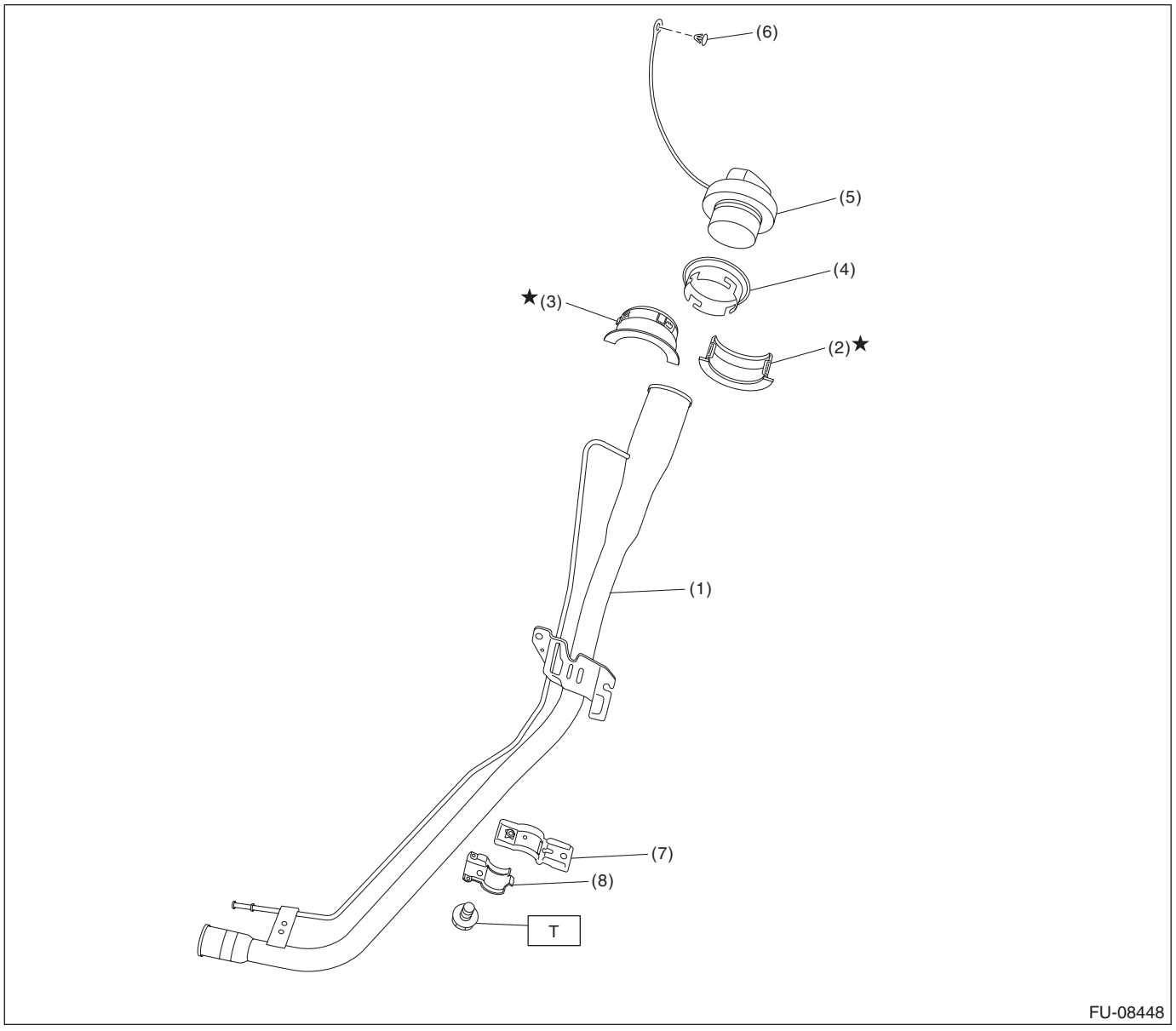

(1) Fuel filler pipe ASSY
(2) Neck holder A
(3) Neck holder B
(4) Fuel filler pipe protector
(5) Fuel filler cap
(6) Clip
(7) Upper bracket
(8) Lower bracket

Tightening torque: N·m (kgf-m, ft-lb)
T: 7.5 (0.8, 5.5)

9. FUEL PUMP

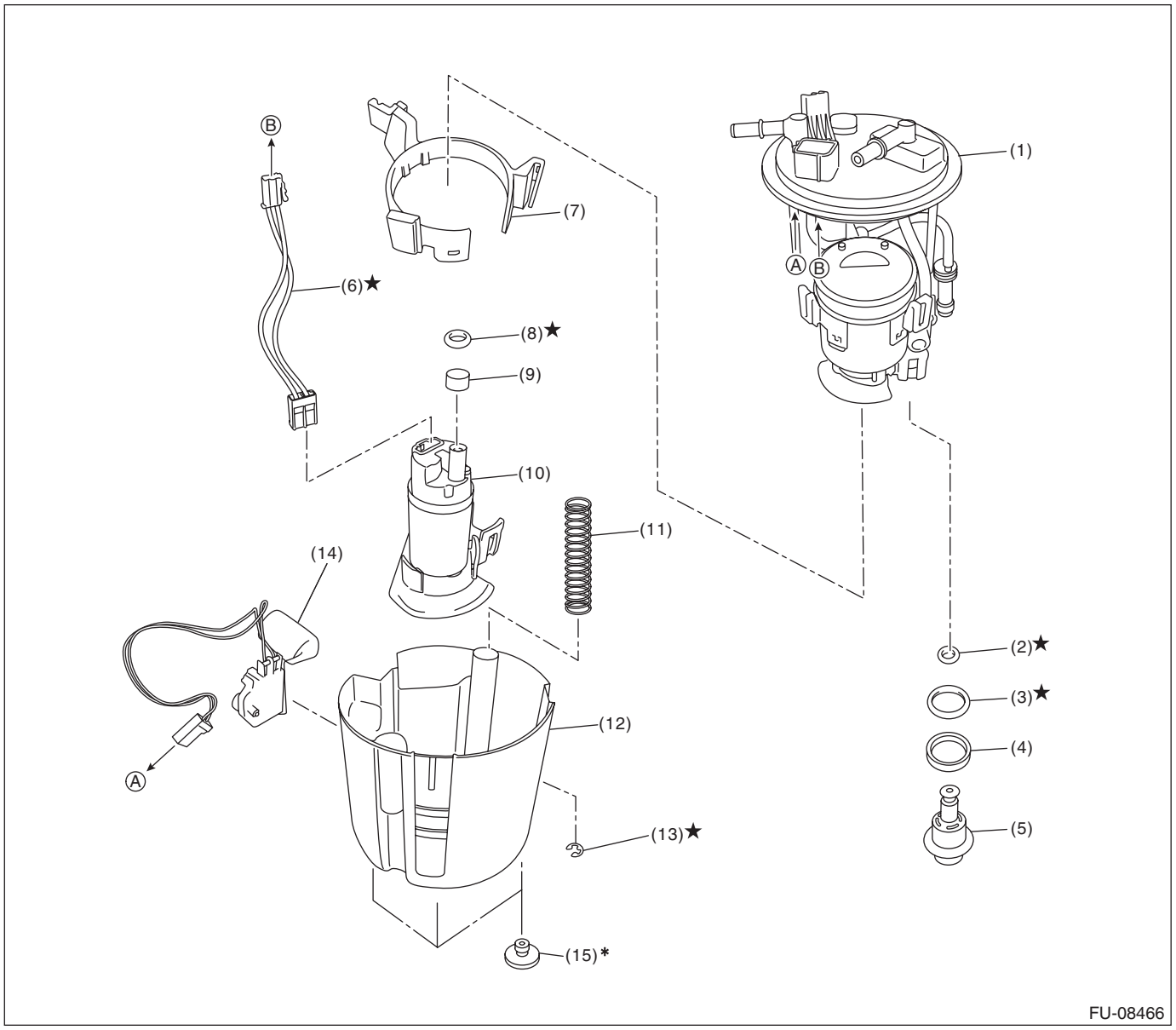

(1)	Fuel filter ASSY	(6)	Connector cable	(11)	Spring
(2)	O-ring	(7)	Fuel pump holder	(12)	Fuel chamber ASSY
(3)	O-ring	(8)	O-ring	(13)	Clip
(4)	Back-up ring	(9)	Spacer	(14)	Fuel level sensor
(5)	Pressure regulator	(10)	Fuel pump	(15)	Cushion

* When removing the cushion from the fuel chamber assembly, replace it with a new part.

C: CAUTION

- Prior to starting work, pay special attention to the following:
  1. Always wear work clothes, a work cap, and protective shoes. Additionally, wear a helmet, protective goggles, etc. if necessary.
  2. Protect the vehicle using a seat cover, fender cover, etc.
  3. Prepare the service tools, clean cloth, containers to catch grease and oil, etc.
- Place “NO OPEN FLAMES” signs near the working area.
- Prepare a container and cloth to prevent scattering of fuels when performing work where fuels can be spilled. If the oil spills, wipe it off immediately to prevent from penetrating into floor or flowing out for environmental protection.
- Vehicle components are extremely hot immediately after driving. Be wary of receiving burns from heated parts.
- When performing a repair, identify the cause of trouble and avoid unnecessary removal, disassembly and replacement.
- Before disconnecting connectors of sensors or units, be sure to disconnect the ground cable from battery.
- Always use the jack-up point when the shop jacks or rigid racks are used to support the vehicle.
- Remove contamination including dirt and corrosion before removal, installation, disassembly or assembly.
- Keep the removed parts in order and protect them from dust and dirt.
- All removed parts, if to be reused, should be reinstalled in the original positions with attention to the correct directions, etc.
- Bolts, nuts and washers should be replaced with new parts as required.
- Always inspect for fuel leaks after removing/installing the fuel system components.
- Follow all government and local regulations concerning disposal of refuse when disposing fuel.

D: PREPARATION TOOL

1. SPECIAL TOOL

ILLUSTRATION	TOOL NUMBER	DESCRIPTION	REMARKS
 STSSM4	—	SUBARU SELECT MONITOR 4	Used for setting of each function and trouble-shooting for electrical system. NOTE: For detailed operation procedures of Subaru Select Monitor 4, refer to “Application help”.
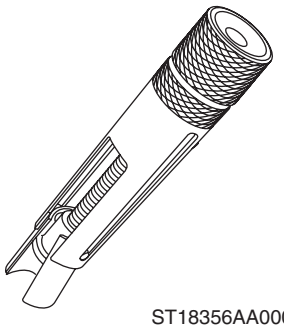 ST18356AA000	18356AA000	INJECTOR REMOVER	Used for removing the injector.

ILLUSTRATION	TOOL NUMBER	DESCRIPTION	REMARKS
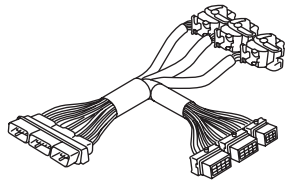 ST18460AA030	18460AA030	CHECK BOARD	Used for measuring voltage and resistance of ECM terminals.
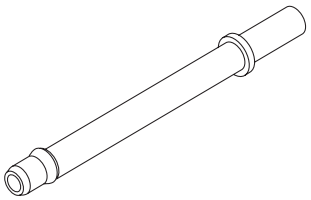 ST18471AA000	18471AA000	FUEL PIPE ADAPTER	Used for draining fuel.
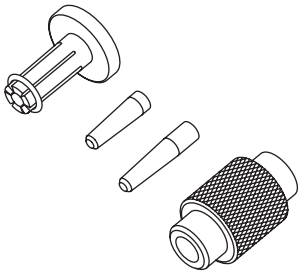 ST18683AA000	18683AA000	INJECTOR SEAL INSTALLER	Used for installing the injector seal.

2. GENERAL TOOL

TOOL NAME	REMARKS
Circuit tester	Used for measuring resistance, voltage and current.
Oscilloscope	Used for inspecting the waveform of each sensor.
TORX PLUS® bit 40IP	Used for removing and installing high-pressure fuel pump.
Mighty Vac	Used for inspecting the manifold absolute pressure and intake air temperature sensor.
DST-i	Used together with Subaru Select Monitor 4.

2. Throttle Body

A: REMOVAL

1) Remove the collector cover. <Ref. to IN(w/o STI)-7, REMOVAL, Collector Cover.>
2) Disconnect the ground terminal from battery sensor. <Ref. to NT-6, BATTERY, NOTE, Note.>
3) Lift up the vehicle.
4) Remove the under cover. <Ref. to EI-22, REMOVAL, Front Under Cover.>
5) Drain approximately 3.0 L (3.2 US qt, 2.6 Imp qt) of coolant. <Ref. to CO(w/o STI)-13, DRAINING OF ENGINE COOLANT, REPLACEMENT, Engine Coolant.>
6) Remove the intercooler. <Ref. to IN(w/o STI)-43, REMOVAL, Intercooler.>
7) Remove the intake duct No. 3. <Ref. to IN(w/o STI)-32, INTAKE DUCT NO. 3, REMOVAL, Intake Duct.>
8) Disconnect the connector (A) from the throttle position sensor, and disconnect the preheater hose (B) from the throttle body.

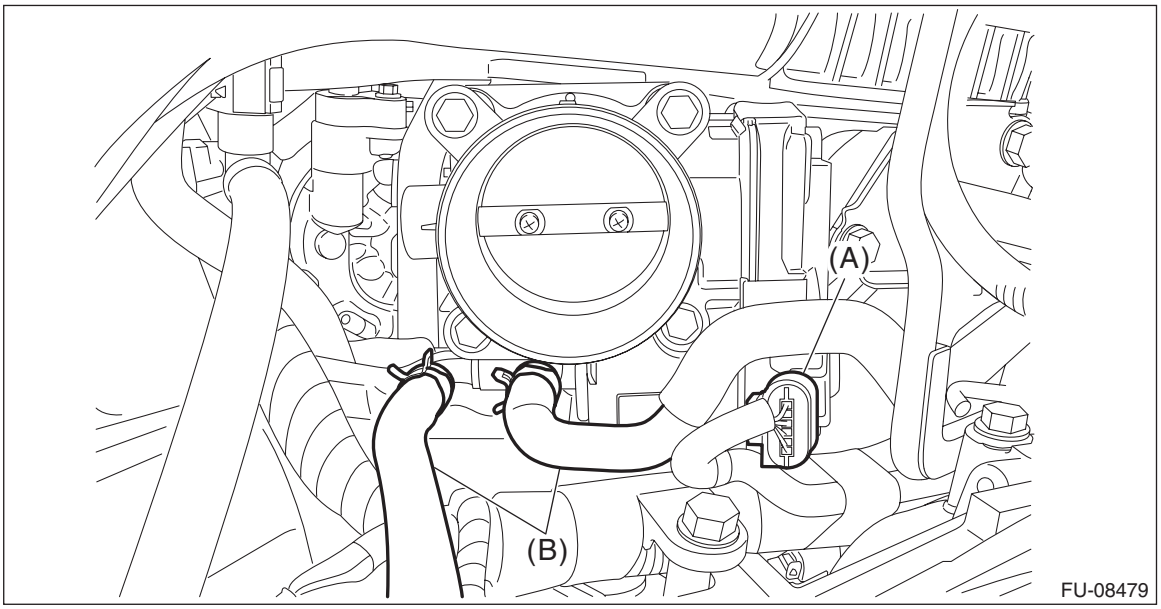

9) Remove the throttle body from the intake manifold.

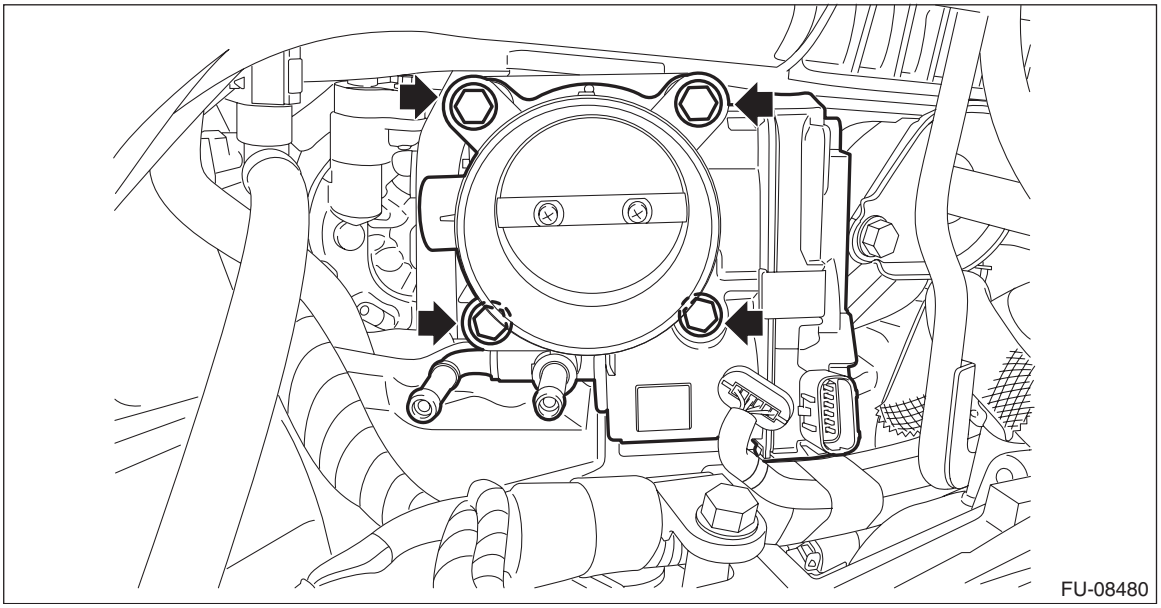

B: INSTALLATION

Install in the reverse order of removal.

NOTE:
Use a new gasket.

Tightening torque:
8 N·m (0.8 kgf-m, 5.9 ft-lb)

C: INSPECTION

1. THROTTLE SENSOR (METHOD WITH CIRCUIT TESTER)

1) Disconnect the ground terminal from battery sensor. <Ref. to NT-6, BATTERY, NOTE, Note.>
2) Remove the engine control module (ECM). <Ref. to FU(w/o STI)-124, REMOVAL, Engine Control Module (ECM).>
3) Install the ST between the ECM and bulkhead harness and the engine harness. <Ref. to EN(w/o STI)(diag)-6, CAUTION, General Description.>
ST 18460AA030 CHECK BOARD
4) Connect the ground terminal to battery sensor. <Ref. to NT-6, BATTERY, NOTE, Note.>
5) After warming-up the engine, turn the ignition switch to OFF.
6) Turn the ignition switch to ON. (engine OFF)
7) Measure the voltage between ECM connector terminals using ST.

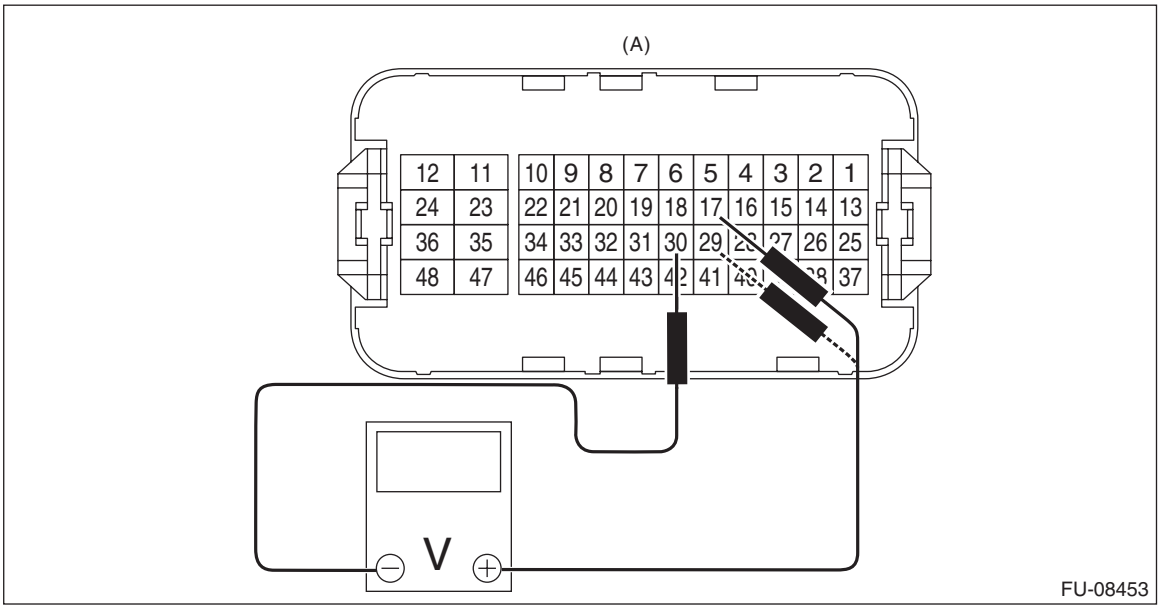

(A) To the check board connector (ECM connector)

Throttle sensor	Accelerator pedal	Terminal No.	Standard
Main	Not depressed (full closed)	17 (+) and 30 (–)	Approx. 0.7 V
	Depressed (full opened)		Approx. 3.9 V
Sub	Not depressed (full closed)	29 (+) and 30 (–)	Approx. 4.4 V
	Depressed (full opened)		Approx. 1.1 V

8) After inspection, install the related parts in the reverse order of removal.

2. THROTTLE SENSOR (METHOD WITH SUBARU SELECT MONITOR)

1) After warming-up the engine, turn the ignition switch to OFF.
2) Turn the ignition switch to ON. (engine OFF)
3) Read the throttle opening angle signal and voltage of throttle sensor using Subaru Select Monitor. <Ref. to EN(w/o STI)(diag)-46, DISPLAY CURRENT ENGINE DATA, OPERATION, Subaru Select Monitor.>

NOTE:
Due to the specification of the Subaru Select Monitor, value read from the throttle opening angle signal is highlighted and displayed as the voltage readings of sub throttle sensor.

Throttle sensor	Throttle opening angle signal	Standard
Main	0.0%	Approx. 0.7 V
	100.0%	Approx. 3.9 V
Sub	0.0%	Approx. 1.1 V
	100.0%	Approx. 4.4 V

3. OTHER INSPECTIONS

1) Check that the throttle body has no deformation, cracks or other damages.
2) Check that the preheater hose has no cracks, damage or loose part.

3. Intake Manifold

A: REMOVAL

1) Remove the collector cover. <Ref. to IN(w/o STI)-7, REMOVAL, Collector Cover.>
2) Release the fuel pressure. <Ref. to FU(w/o STI)-138, RELEASING OF FUEL PRESSURE, PROCEDURE, Fuel.>
3) Disconnect the ground terminal from battery sensor. <Ref. to NT-6, BATTERY, NOTE, Note.>
4) Open the fuel filler lid and remove the fuel filler cap.

NOTE:
This operation is required to release the inner pressure of the fuel tank.
5) Lift up the vehicle.
6) Remove the under cover. <Ref. to EI-22, REMOVAL, Front Under Cover.>
7) Drain approximately 3.0 L (3.2 US qt, 2.6 Imp qt) of coolant. <Ref. to CO(w/o STI)-13, DRAINING OF ENGINE COOLANT, REPLACEMENT, Engine Coolant.>
8) Remove the intercooler. <Ref. to IN(w/o STI)-43, REMOVAL, Intercooler.>
9) Remove the intake duct No. 2. <Ref. to IN(w/o STI)-30, INTAKE DUCT NO. 2, REMOVAL, Intake Duct.>
10) Remove the intake duct No. 3. <Ref. to IN(w/o STI)-32, INTAKE DUCT NO. 3, REMOVAL, Intake Duct.>
11) Disconnect the PCV hose from the PCV valve.

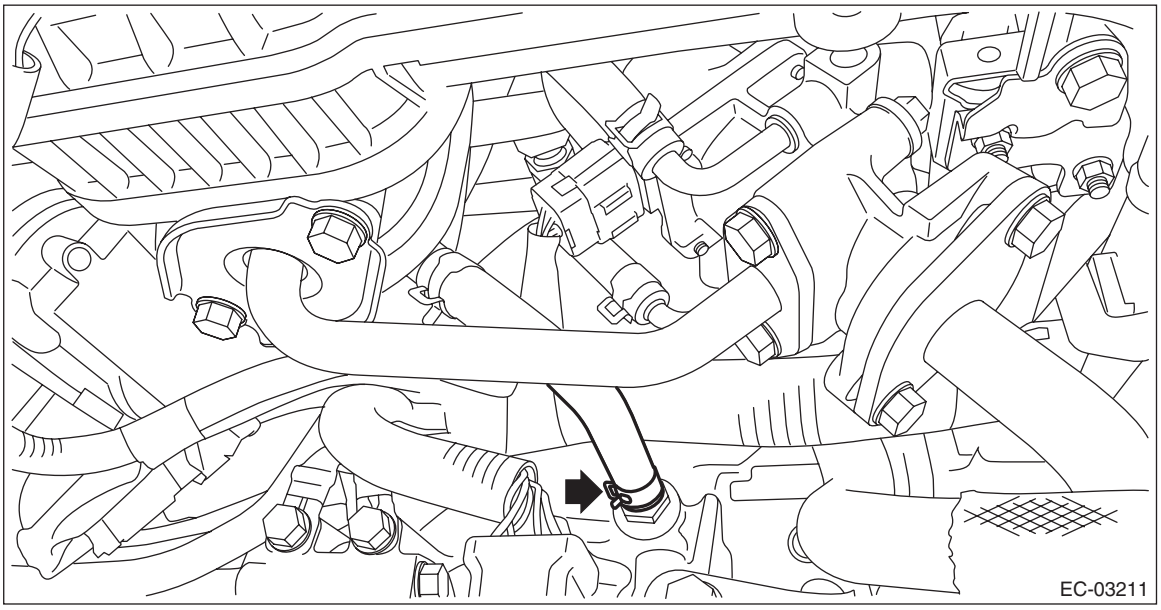

12) Disconnect the connector (A) from the throttle body, and disconnect the preheater hose (B) from the throttle body.

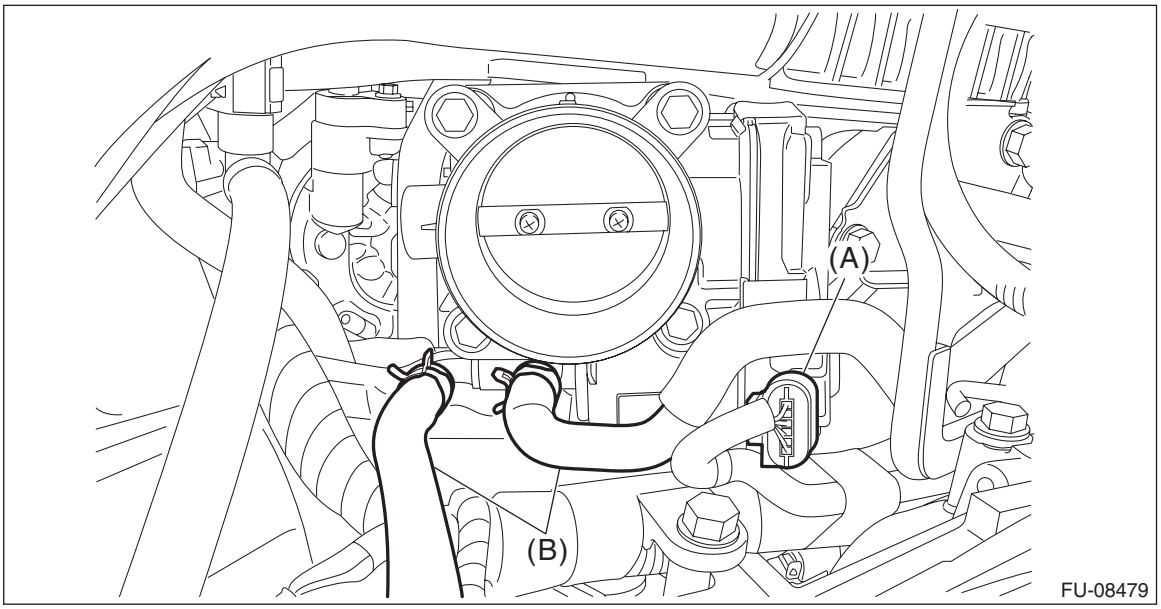

13) Disconnect sections (A) and (B) of the brake booster vacuum hose from the brake vacuum pump and intake manifold, and remove the brake booster vacuum hose from the clip (C).
14) Remove the brake booster vacuum hose from the clip (D), and place the brake booster vacuum hose aside so that it does not interfere with the work.

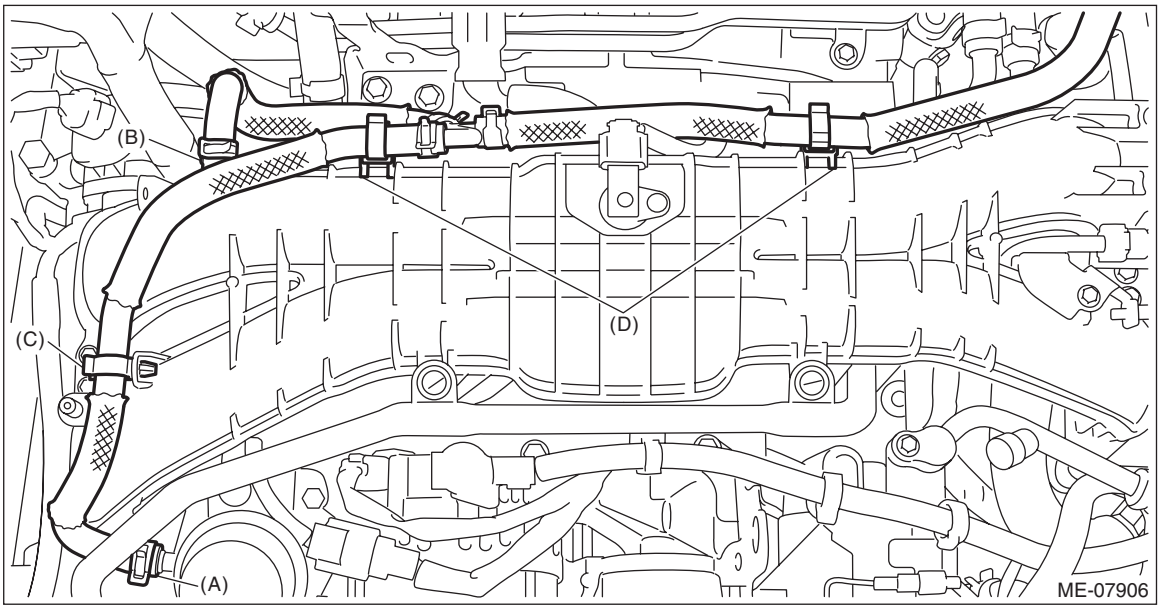

15) Remove the clips securing the PCV pipe and generator cord to the intake manifold.

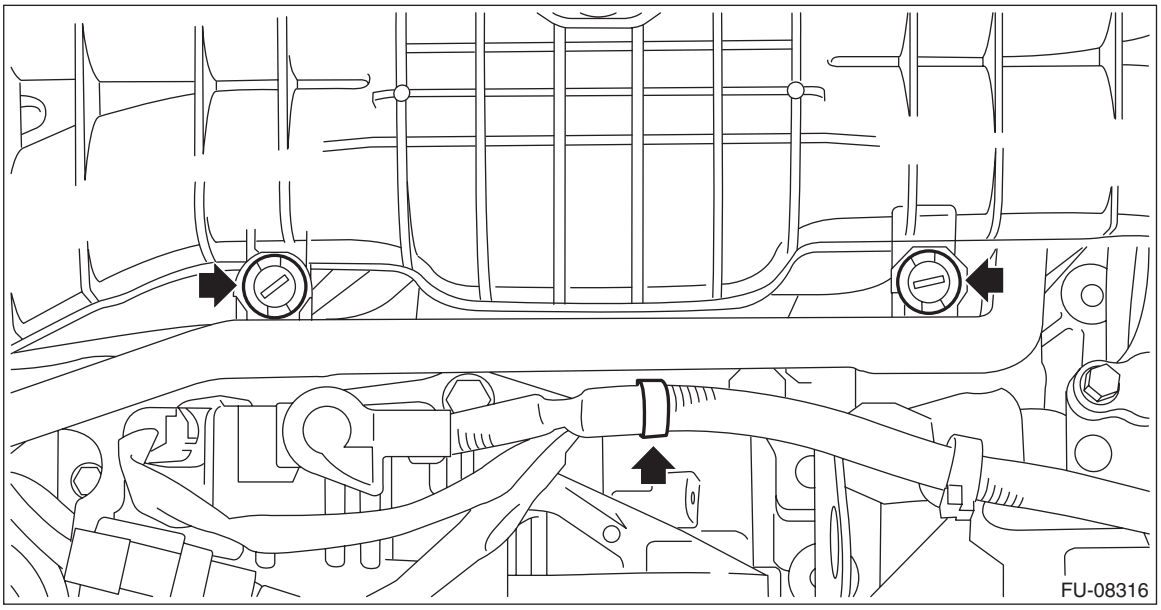

16) Disconnect the vacuum control hose and vacuum hose from the vacuum pipe assembly.

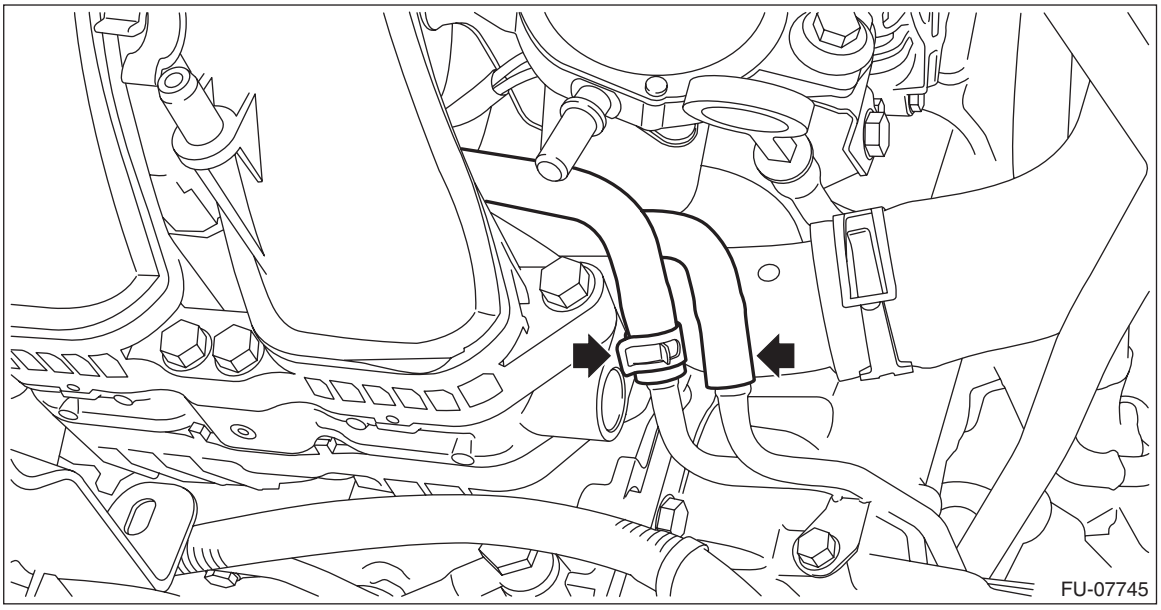

17) Disconnect two vacuum hoses from the canister pipe.

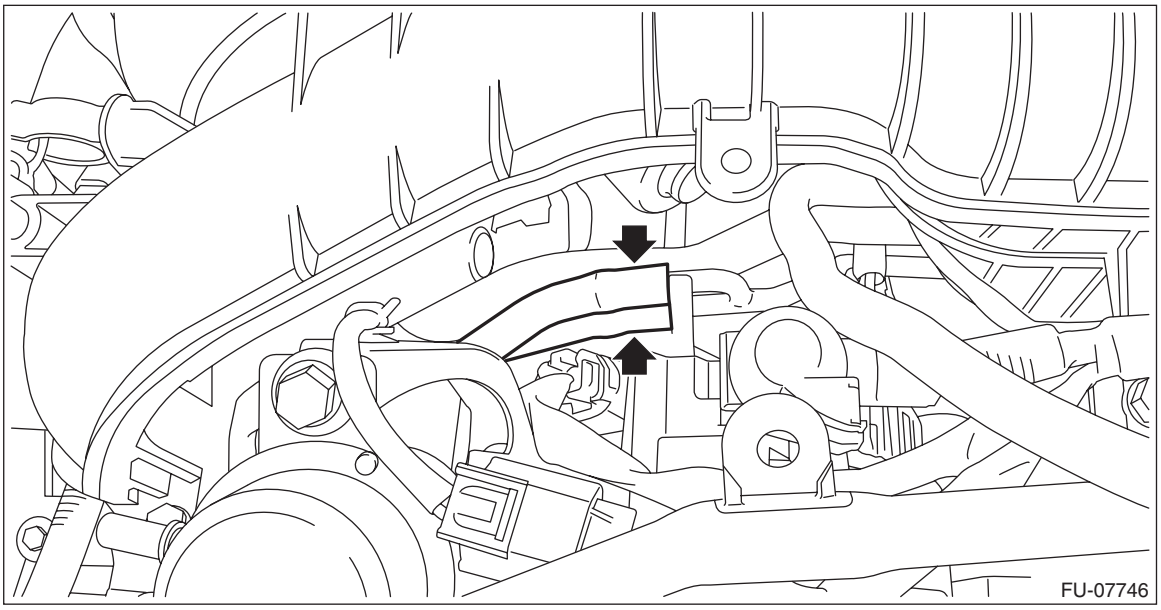

18) Disconnect the connector from the purge control solenoid valve.

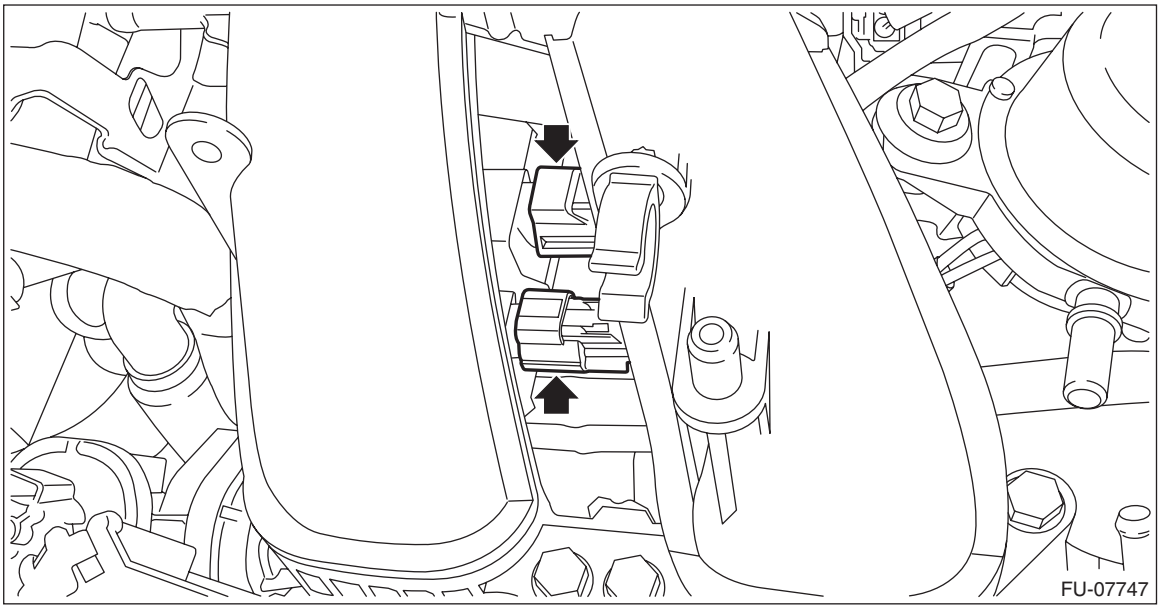

19) Disconnect the connector from the manifold absolute pressure and intake air temperature sensor.

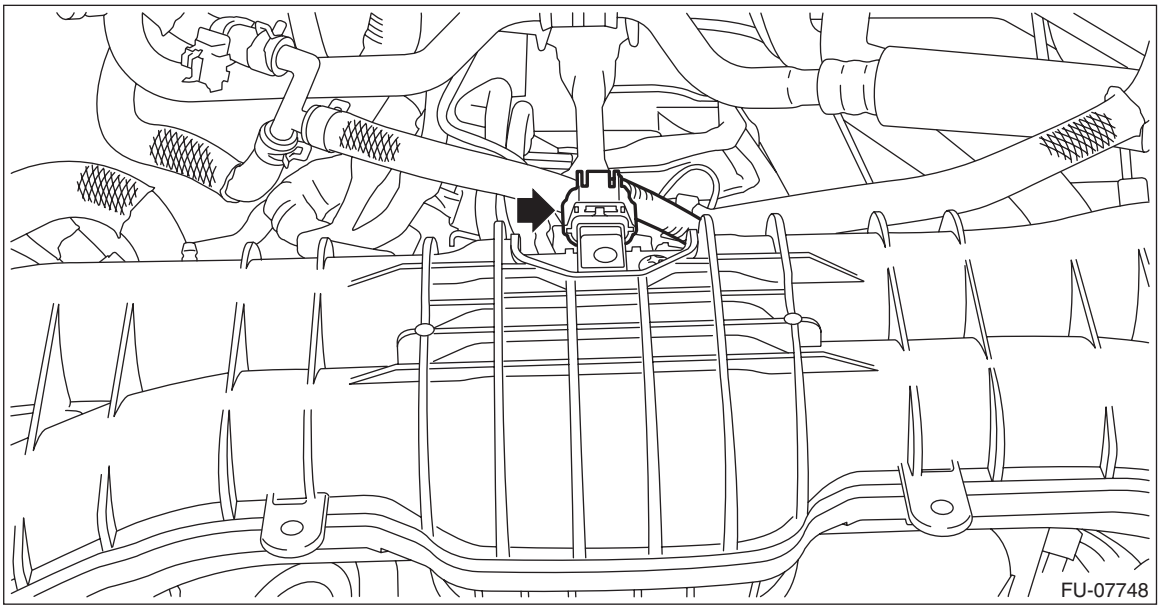

20) Disconnect the connector (A) from the tumble generator valve RH.
21) Disconnect the connector (B) from the tumble generator valve LH, and remove the bolt securing the fuel pipe protector to the intake manifold.

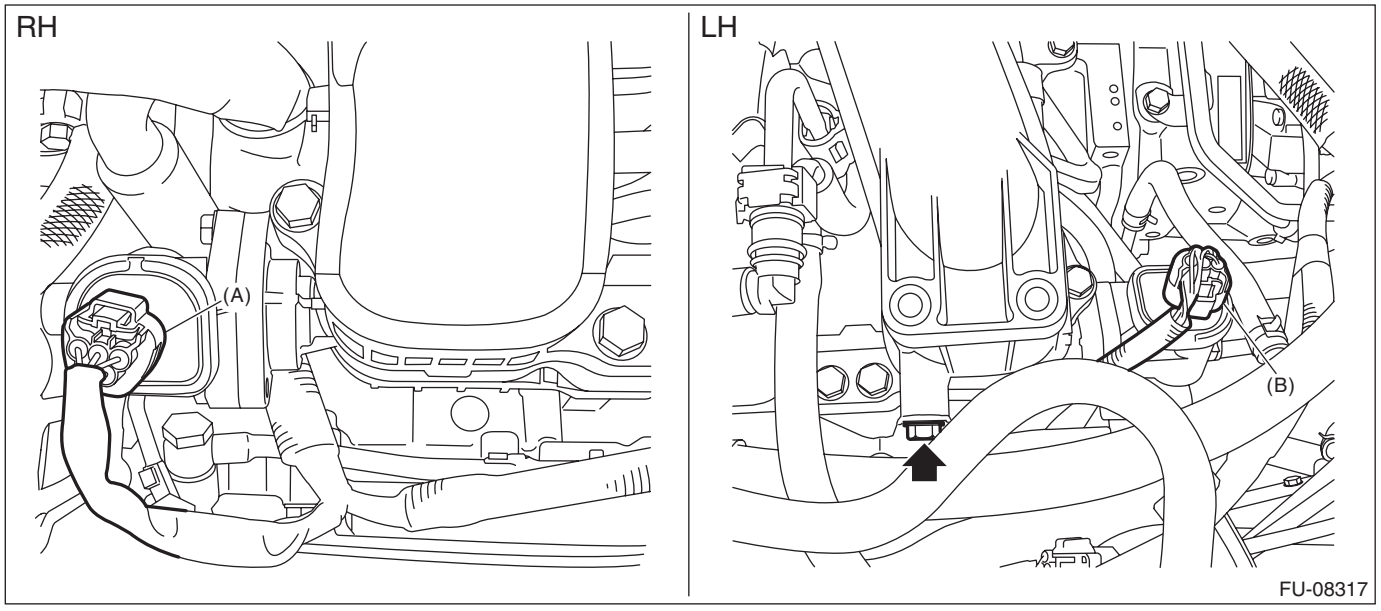

22) Remove the engine harness clip from the intake manifold.

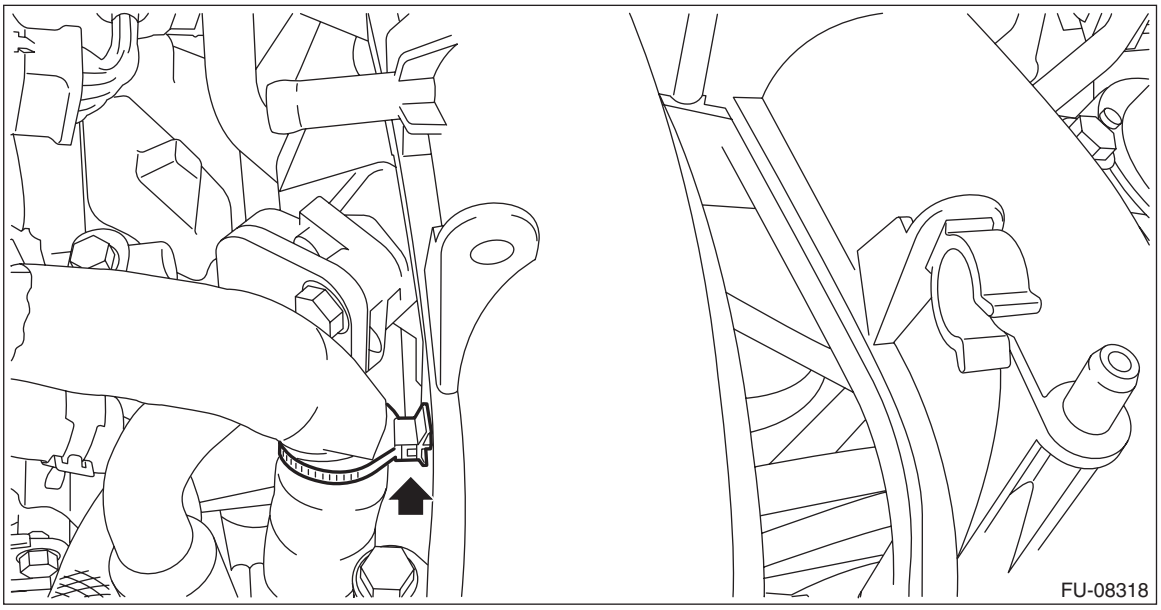

23) Remove the bolt securing the EGR pipe to the EGR valve.

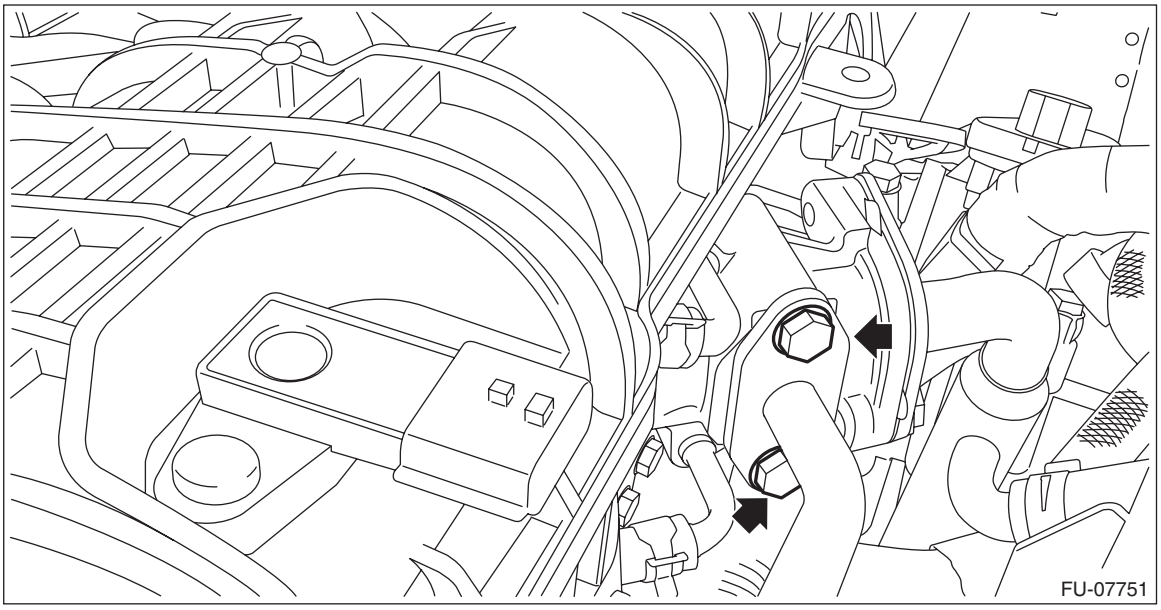

24) Disconnect the fuel delivery tube and evaporation hose.

CAUTION:
- **Be careful not to spill fuel.**
- **Catch the fuel from the tubes using a container or cloth.**

(1) Disconnect the quick connector on the fuel delivery tube from the fuel pipe assembly, and remove the clip (A) securing the fuel delivery tube.

NOTE:
Disconnect the quick connector as shown in the figure.

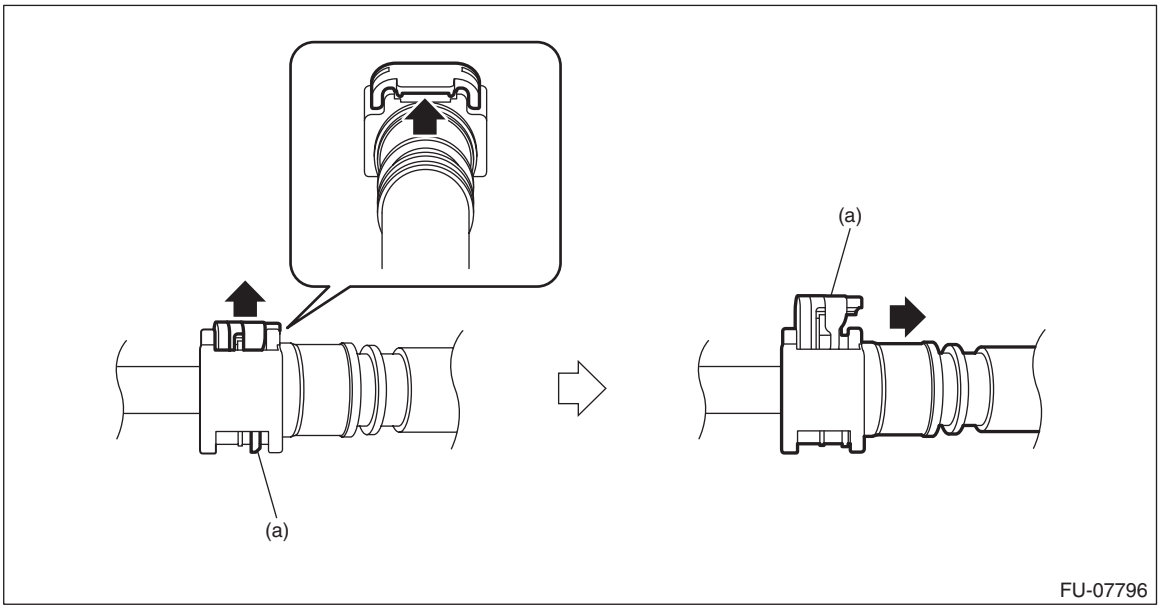

(a) Slider

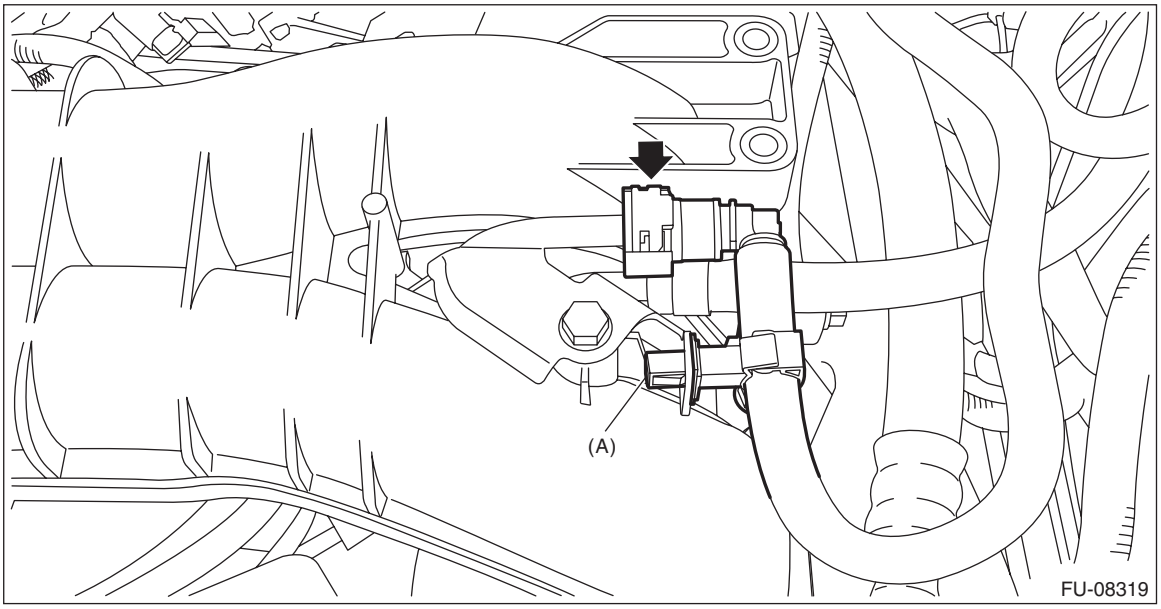

(2) Disconnect the evaporation hose from the fuel pipe assembly.

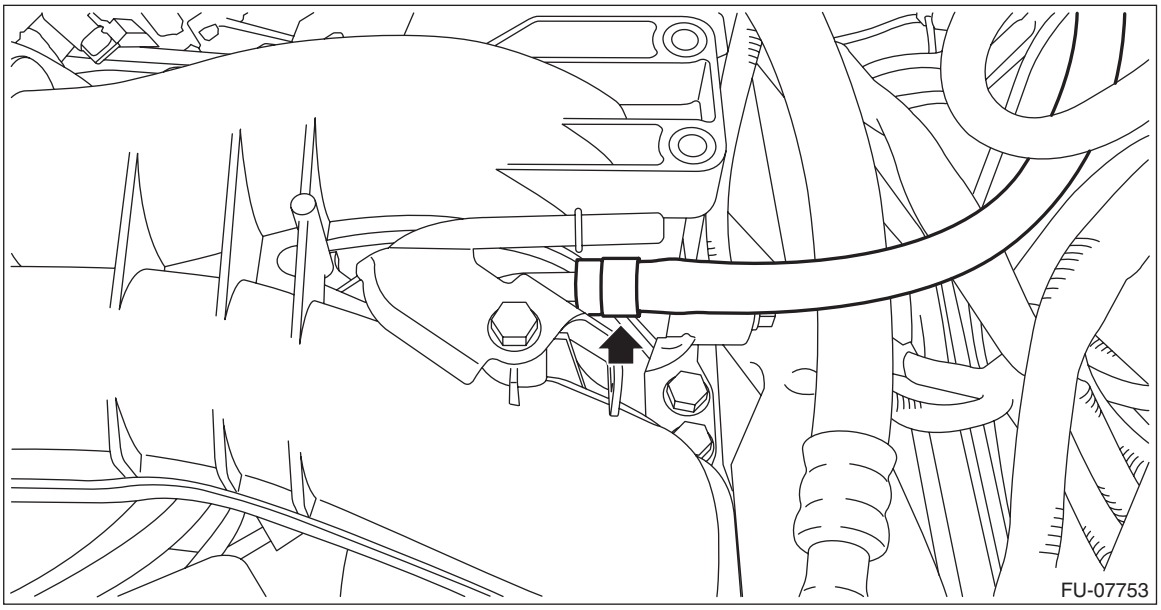

25) Remove the bolts securing the fuel pipe assembly to the intake manifold.

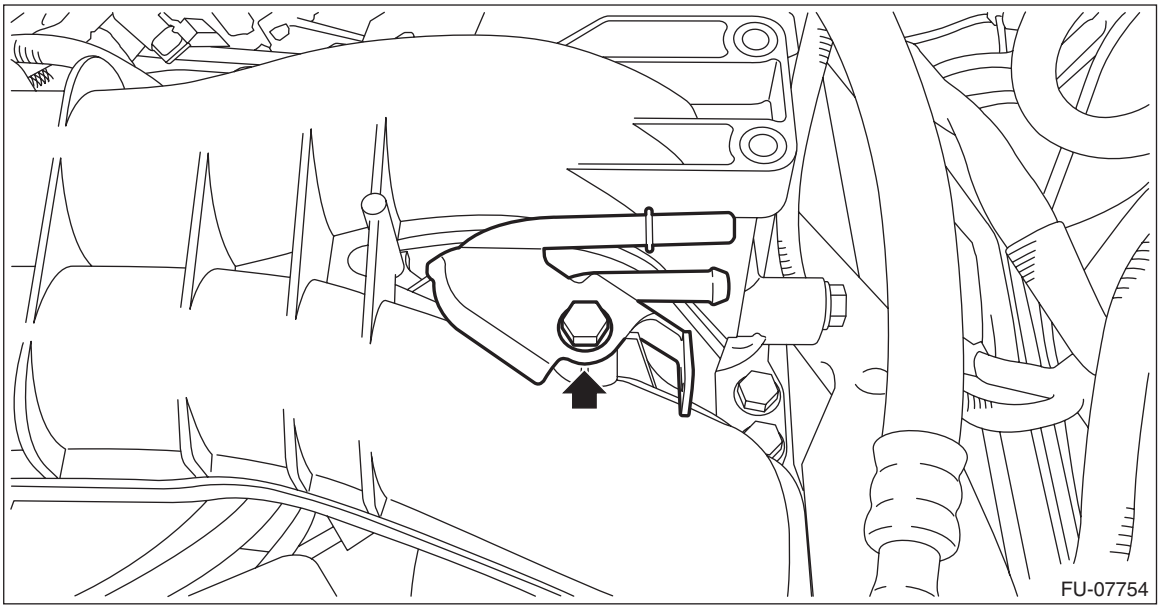

26) Disconnect the fuel delivery pipe (A) and vacuum hose (B), and remove the fuel pipe assembly.

CAUTION:
- **Be careful not to spill fuel.**
- **Catch the fuel from the pipes using a container or cloth.**

NOTE:
Disconnect the quick connector as shown in the figure.

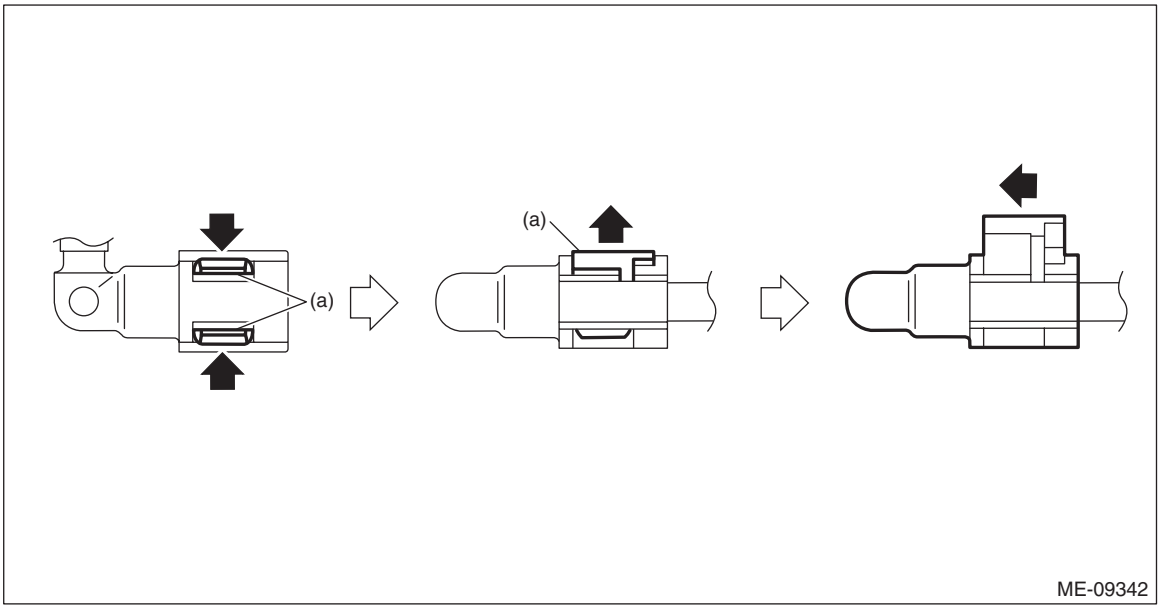

(a) Slider

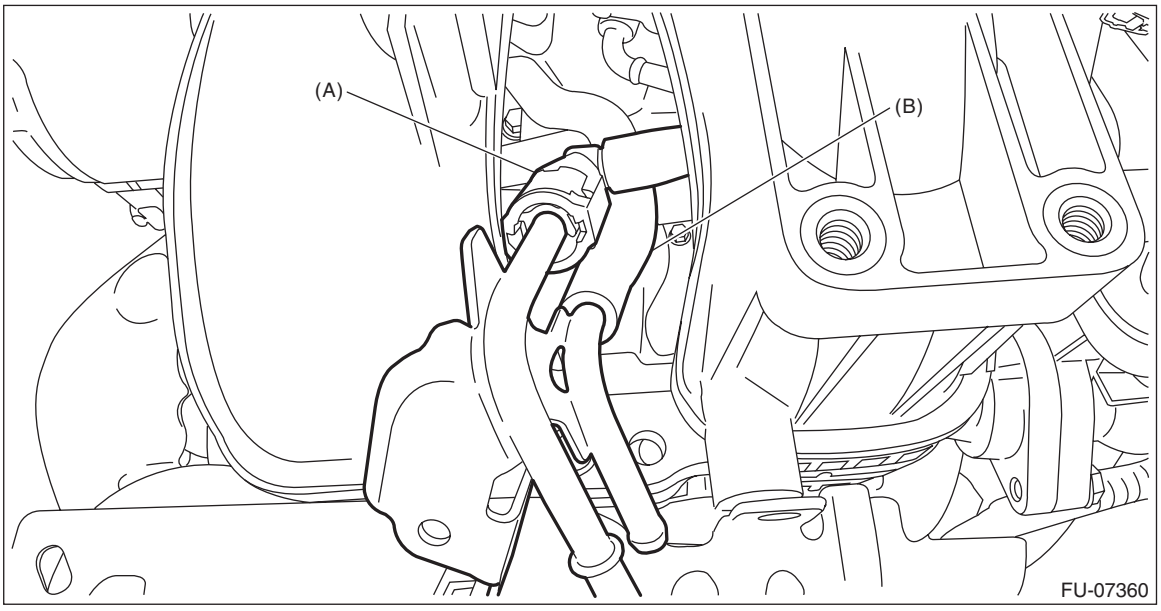

27) Remove the intake manifold from the air intake adapter together with the tumble generator valve assembly.

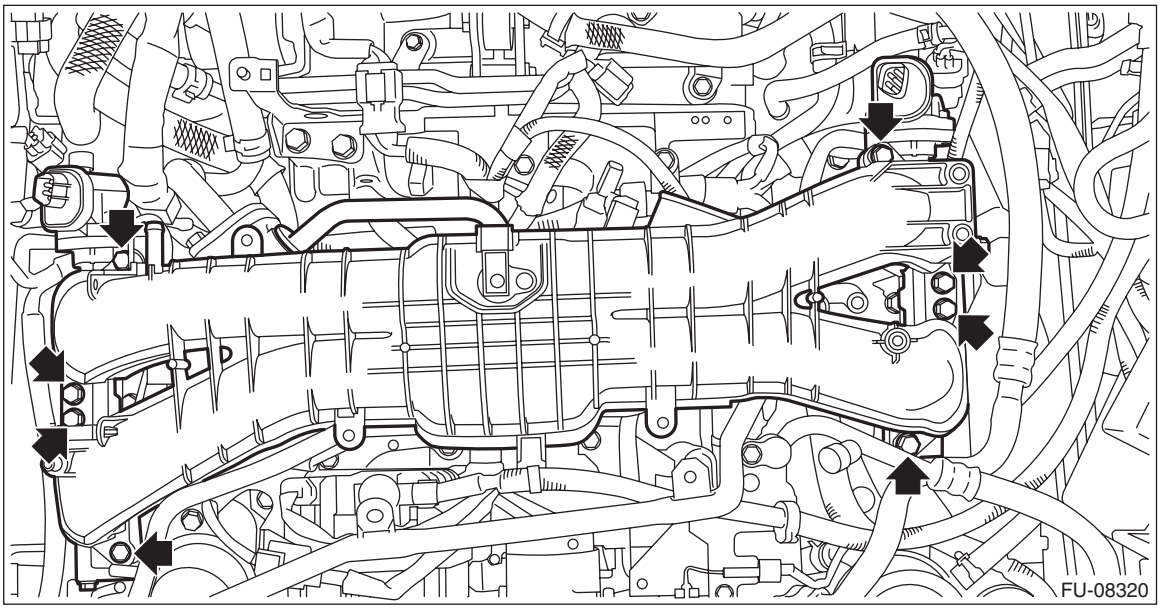

28) Remove the vacuum hose assembly from the water pipe assembly.

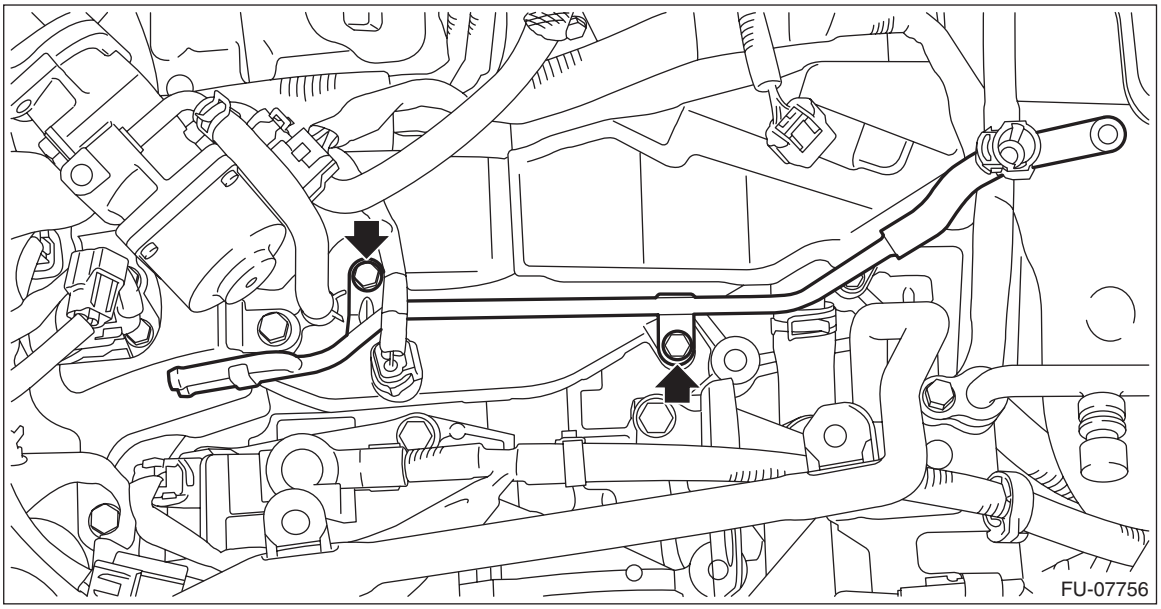

B: INSTALLATION

1) Install the vacuum hose assembly to the water pipe assembly.

Tightening torque:
6.4 N·m (0.7 kgf-m, 4.7 ft-lb)

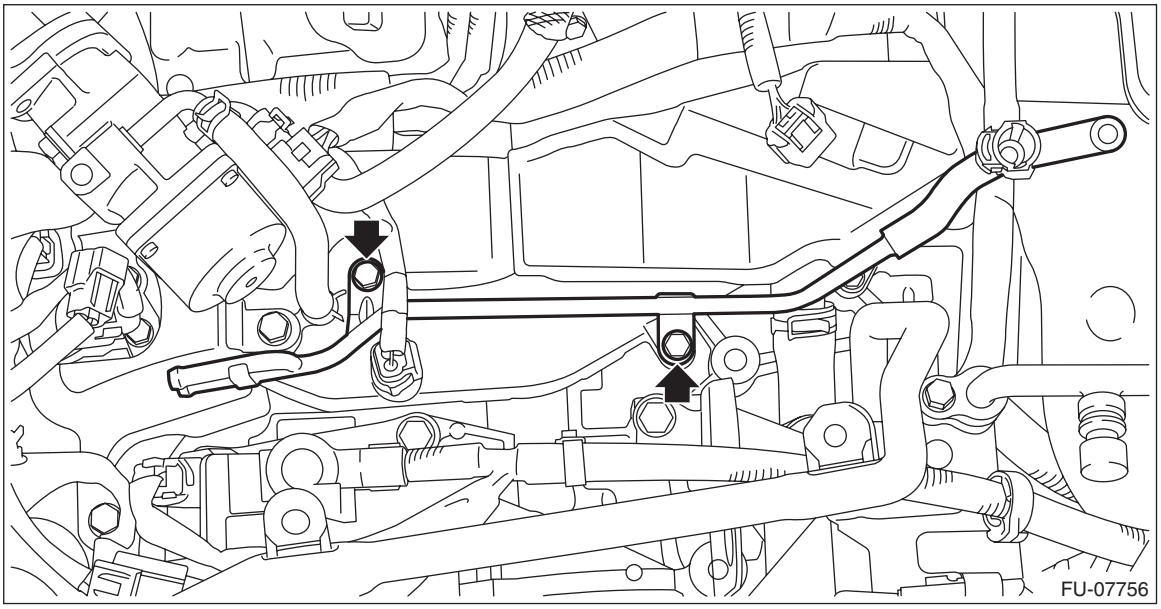

2) Install the intake manifold and tumble generator valve assembly to the air intake adapter.

NOTE:
Use a new gasket.

Tightening torque:
25 N·m (2.5 kgf-m, 18.4 ft-lb)

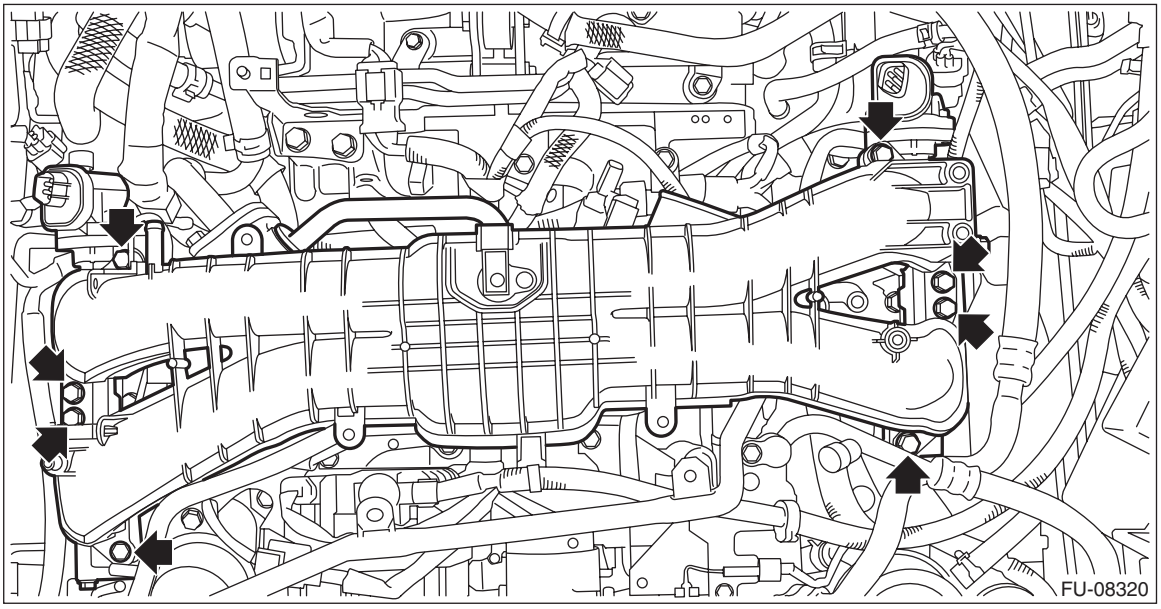

3) Connect the fuel delivery pipe (A) and vacuum hose (B) to the fuel pipe assembly.

CAUTION:
- **Check that there is no damage or dust on the quick connector. If necessary, clean the seal surface of the pipe.**
- **When connecting the quick connector, make sure to insert it all the way in before locking the slider.**
- **When it is difficult to lock the slider, check that the connector is fully inserted.**
- **After locking the slider, check again that the quick connector is securely connected.**

NOTE:
Connect the quick connector as shown in the figure.

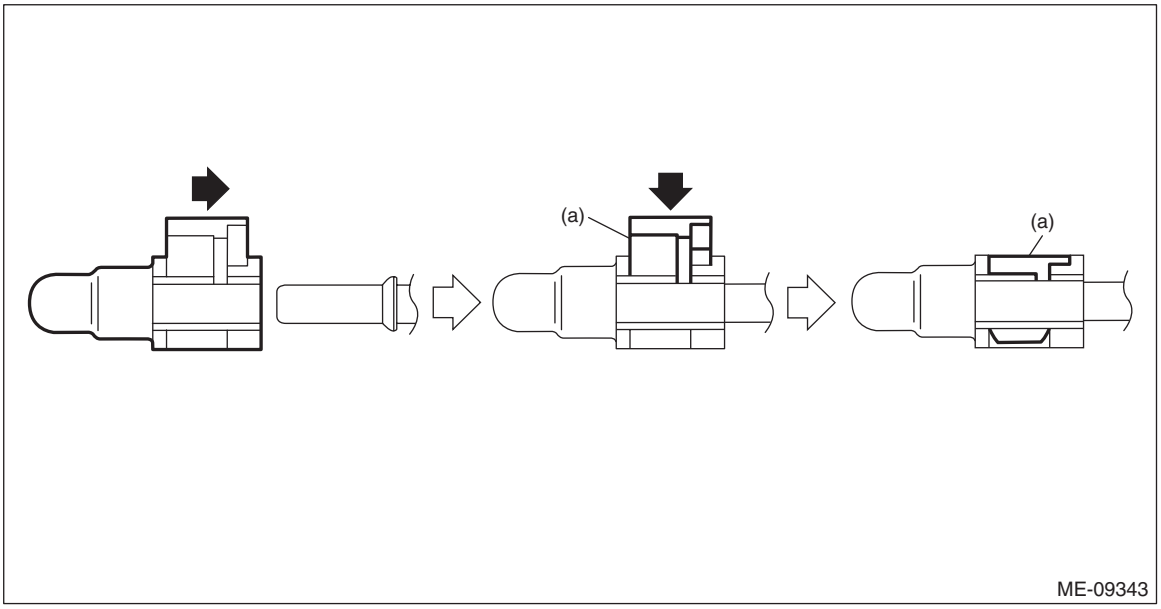

(a) Slider

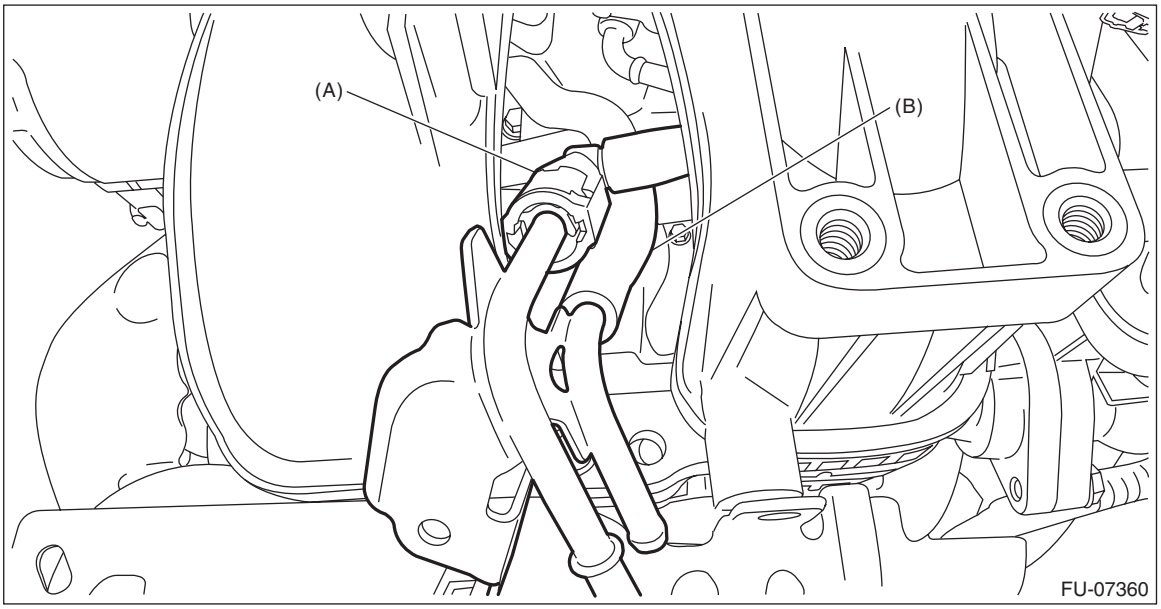

4) Install the fuel pipe assembly to the intake manifold.

Tightening torque:
6.4 N·m (0.7 kgf-m, 4.7 ft-lb)

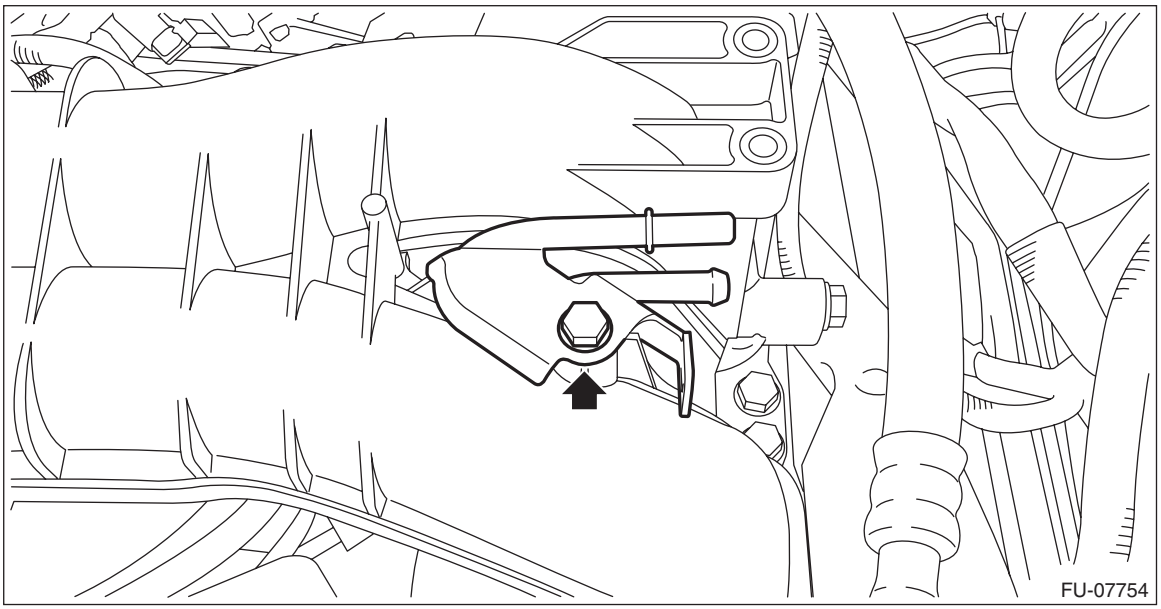

5) Connect the fuel delivery tube and evaporation hose.
(1) Connect the evaporation hose to fuel pipe assembly.

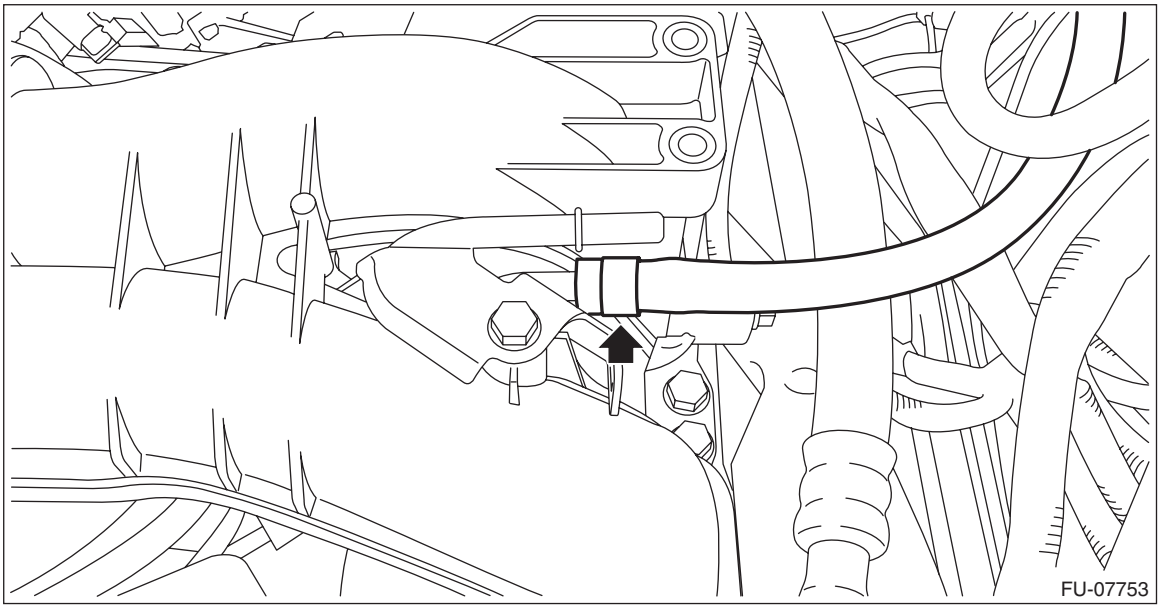

(2) Connect the connector on the fuel delivery tube to the fuel pipe assembly, and secure the fuel delivery tube using clip (A).

CAUTION:
• Check that there is no damage or dust on the quick connector. If necessary, clean the seal surface of the pipe.
• When connecting the quick connector, make sure to insert it all the way in before locking the slider.
• When it is difficult to lock the slider, check that the connector is fully inserted.
• After locking the slider, check again that the quick connector is securely connected.

NOTE:
Connect the quick connector as shown in the figure.

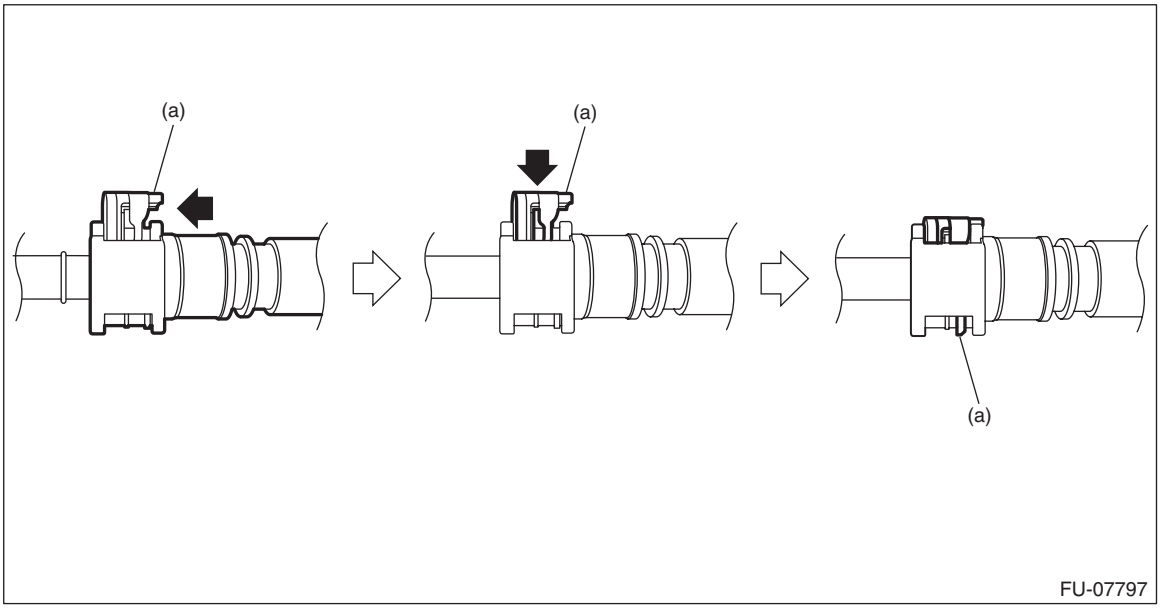

(a) Slider

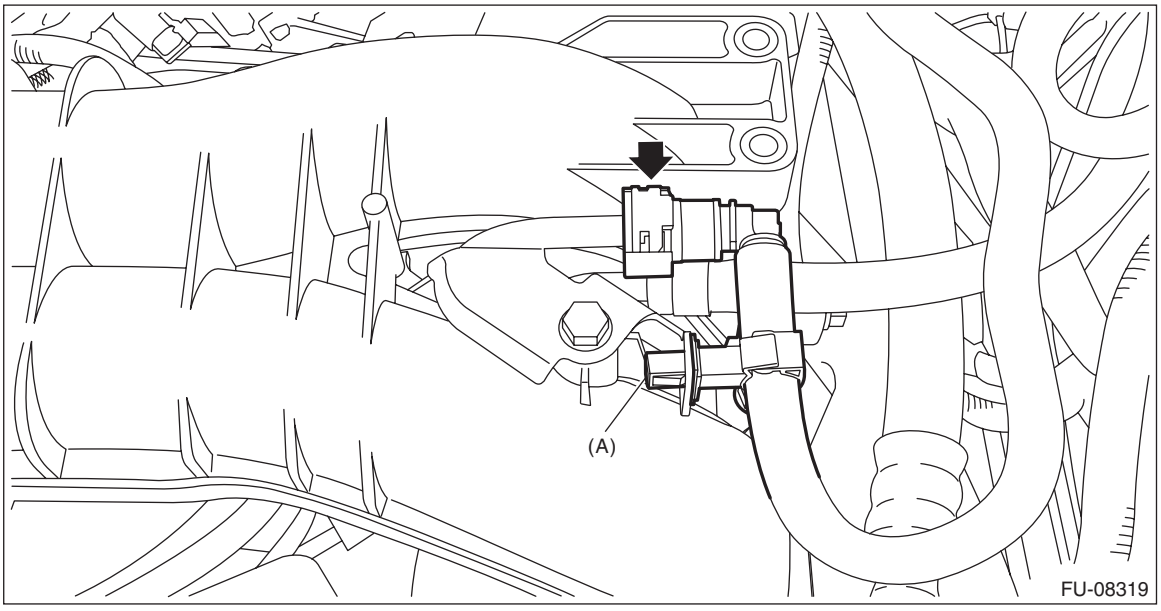

6) Install the EGR pipe. <Ref. to EC(w/o STI)-32, INSTALLATION, EGR Pipe.>

7) Secure the engine harness to the intake manifold using clip.

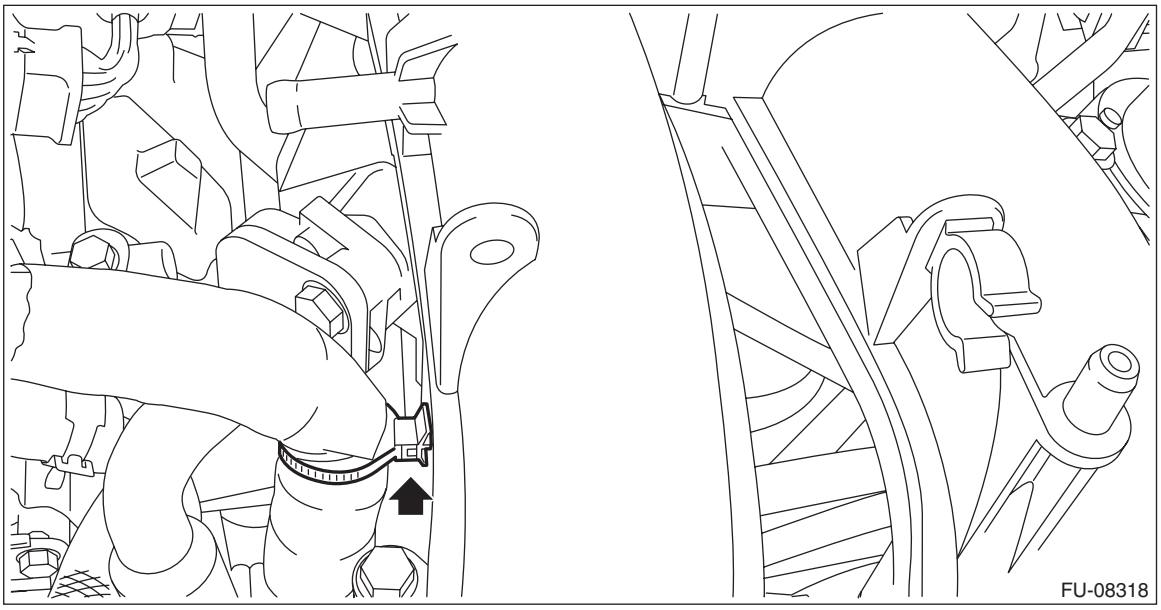

8) Connect the connector (A) to the tumble generator valve RH.
9) Connect the connector (B) to the tumble generator valve LH, and secure the fuel pipe protector to the intake manifold.

Tightening torque:
19 N·m (1.9 kgf-m, 14.0 ft-lb)

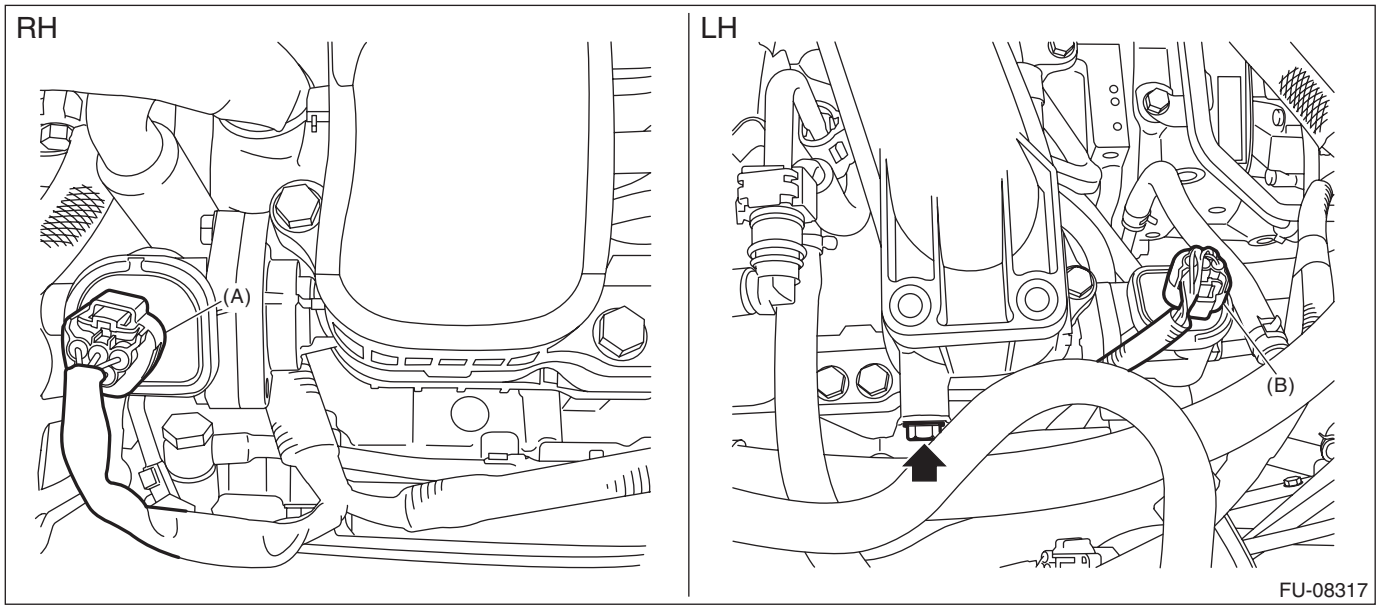

10) Connect connectors to the manifold absolute pressure & intake air temperature sensor.

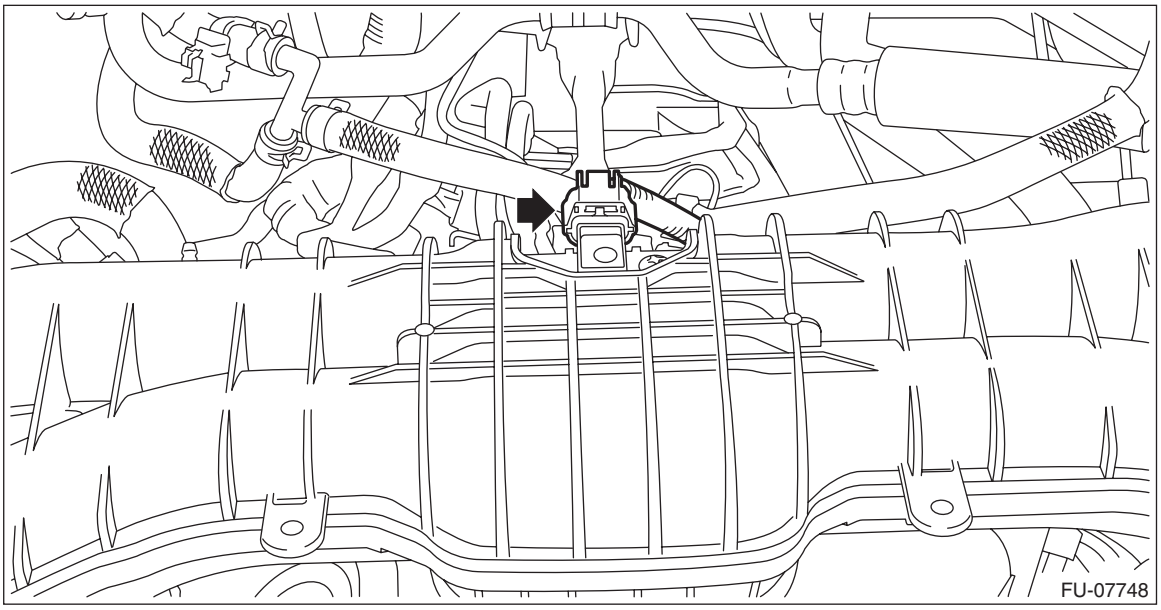

11) Connect the connector to the purge control solenoid valve.

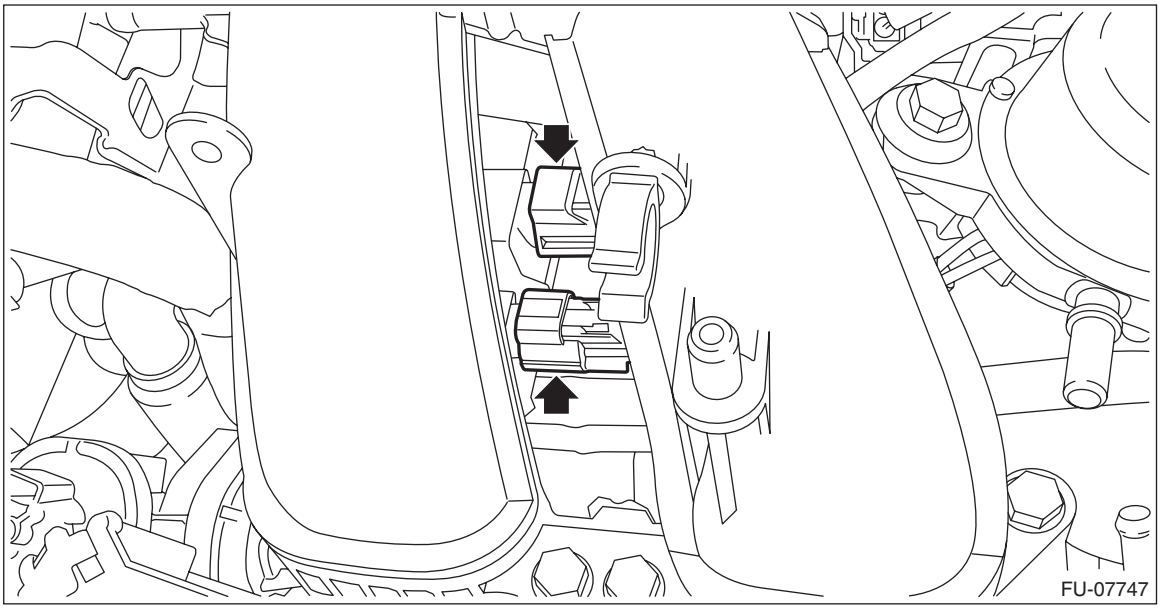

12) Connect the vacuum hose to the canister pipe.

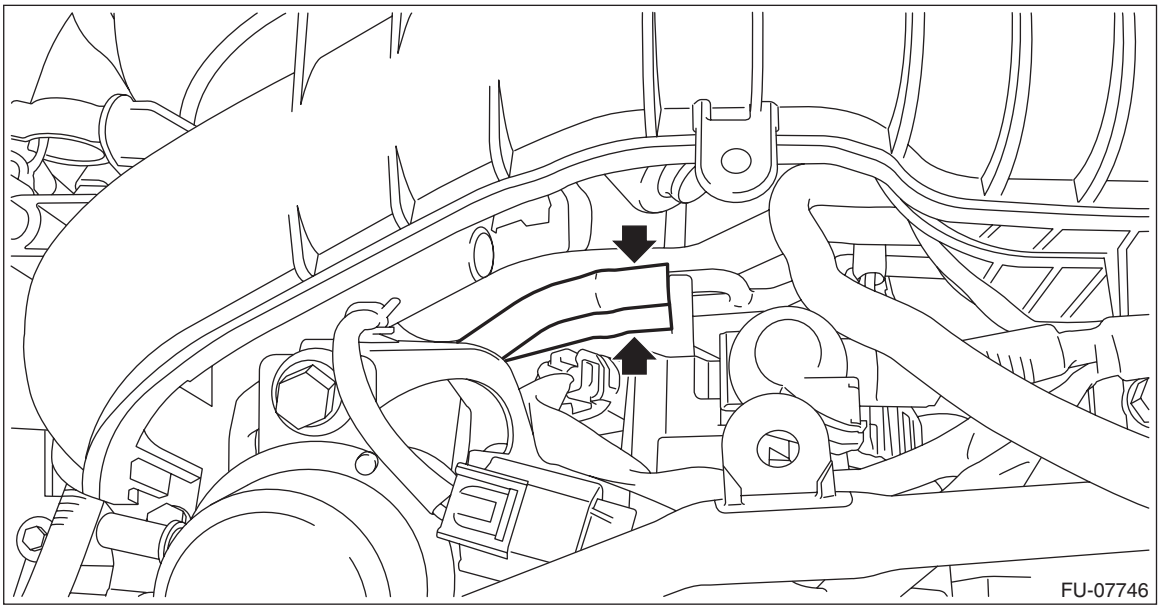

13) Connect the vacuum control hose and vacuum hose to the vacuum pipe assembly.

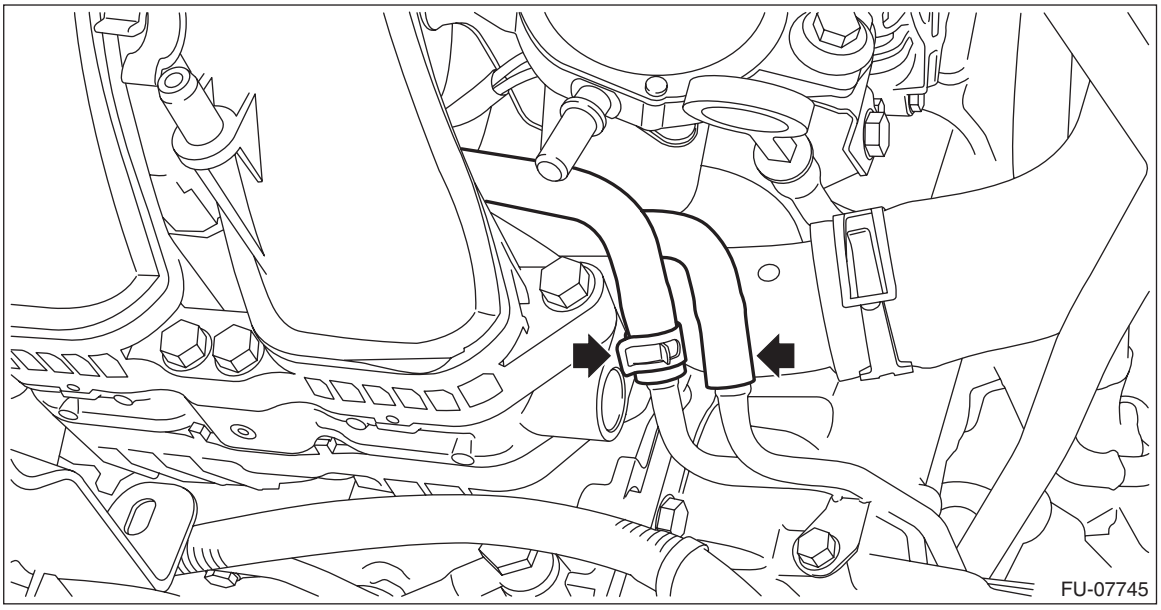

14) Secure the PCV pipe and generator cord to the intake manifold using the clip.

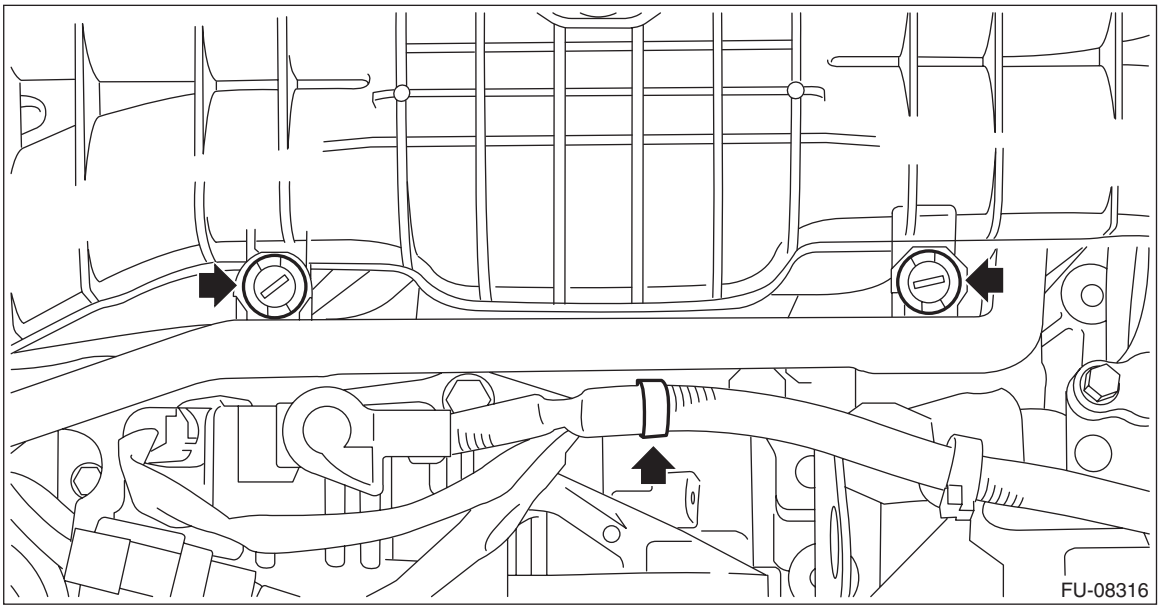

15) Install the brake booster vacuum hose to the clip (D).

NOTE:
If the clip is removed from the intake manifold, install the clip to the position of alignment mark ▼ of intake manifold.

16) Connect sections (A) and (B) of the brake booster vacuum hose to the brake vacuum pump and intake manifold, and install the brake booster vacuum hose to the clip (C).

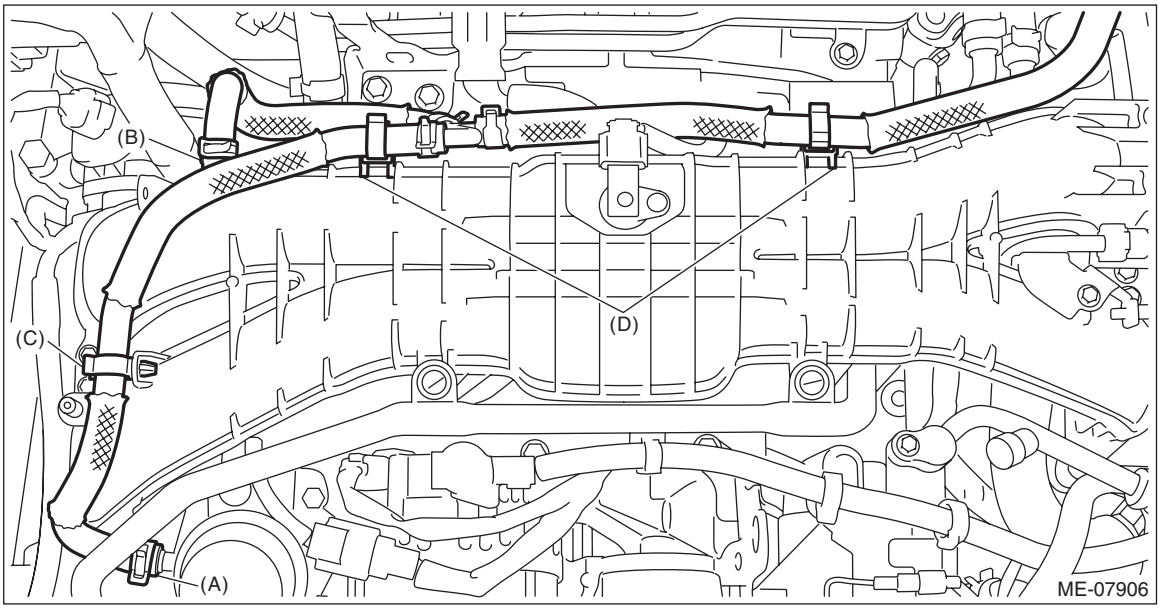

17) Connect the preheater hose (B) to the throttle body, and connect the connector (A) to the throttle body.

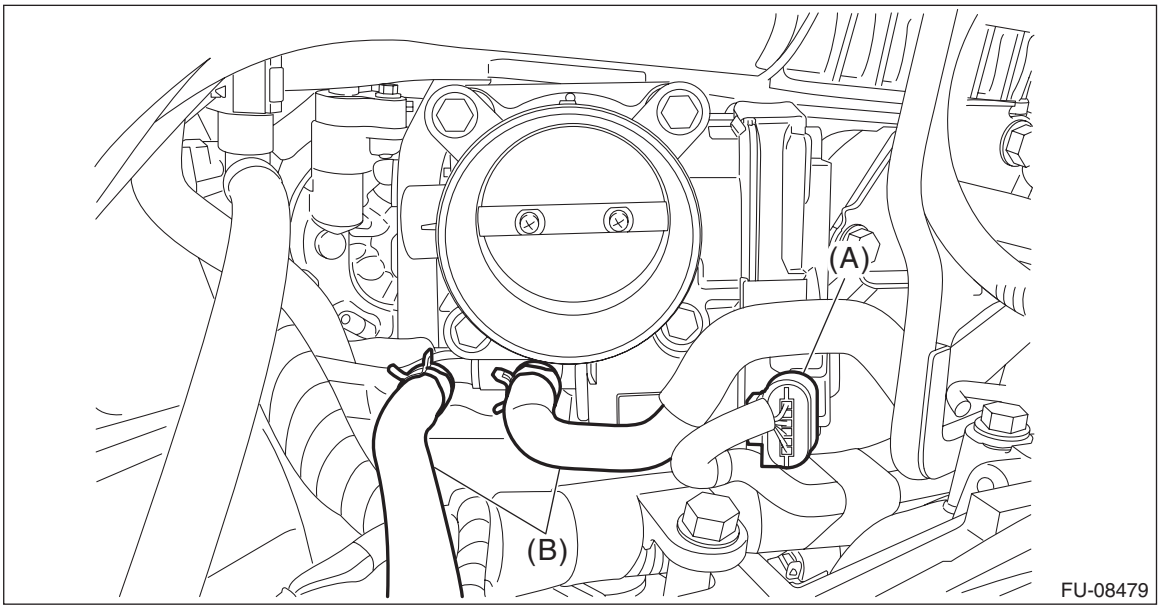

18) Connect the PCV hose to the PCV valve.

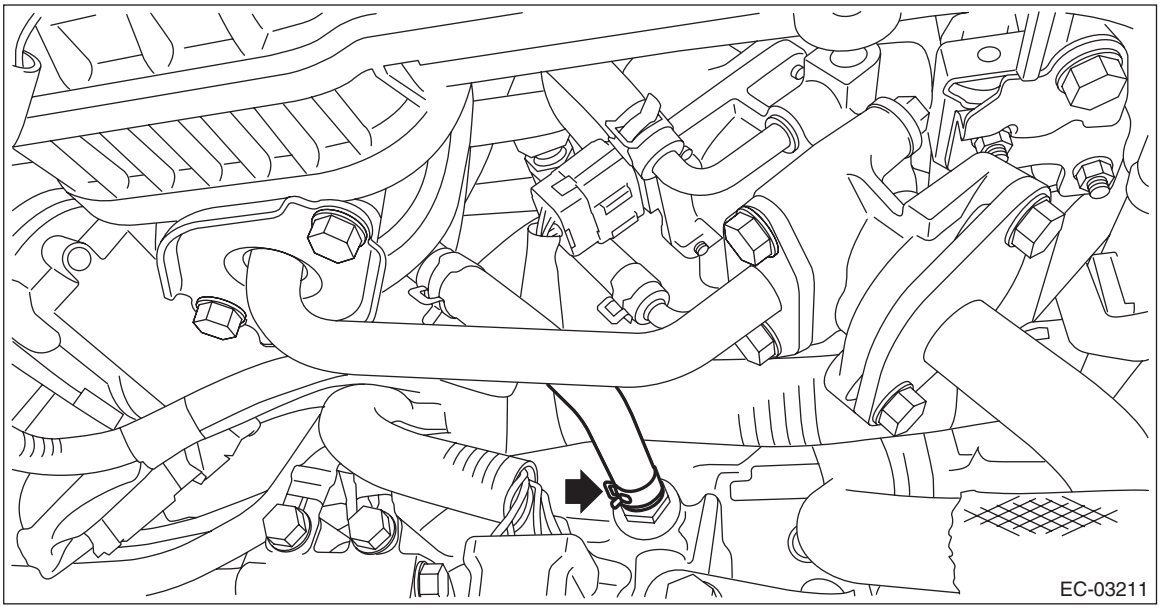

19) Install the intake duct No. 3. <Ref. to IN(w/o STI)-39, INTAKE DUCT NO. 3, INSTALLATION, Intake Duct.>
20) Install the intake duct No. 2. <Ref. to IN(w/o STI)-36, INTAKE DUCT NO. 2, INSTALLATION, Intake Duct.>
21) Install the intercooler. <Ref. to IN(w/o STI)-45, INSTALLATION, Intercooler.>
22) Install the under cover. <Ref. to EI-23, INSTALLATION, Front Under Cover.>
23) Lower the vehicle.
24) Connect the ground terminal to battery sensor. <Ref. to NT-6, BATTERY, NOTE, Note.>
25) Fill engine coolant. <Ref. to CO(w/o STI)-14, FILLING OF ENGINE COOLANT, REPLACEMENT, Engine Coolant.>
26) Install the collector cover. <Ref. to IN(w/o STI)-10, INSTALLATION, Collector Cover.>

C: DISASSEMBLY

1) Remove the manifold absolute pressure & intake air temperature sensor from the intake manifold.

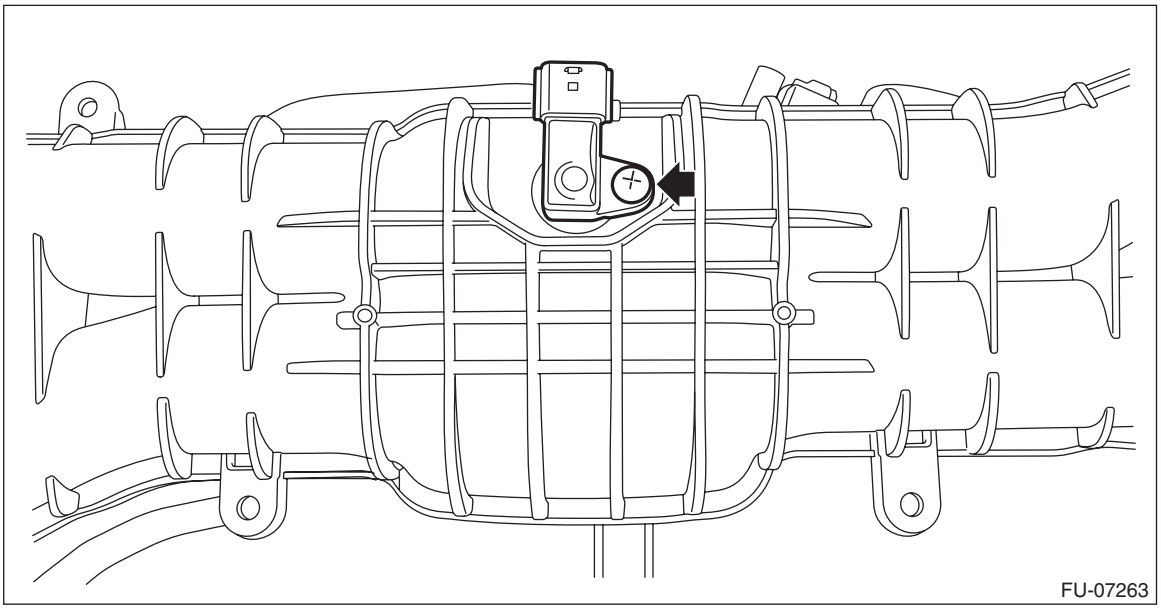

2) Remove the EGR pipe from intake manifold.

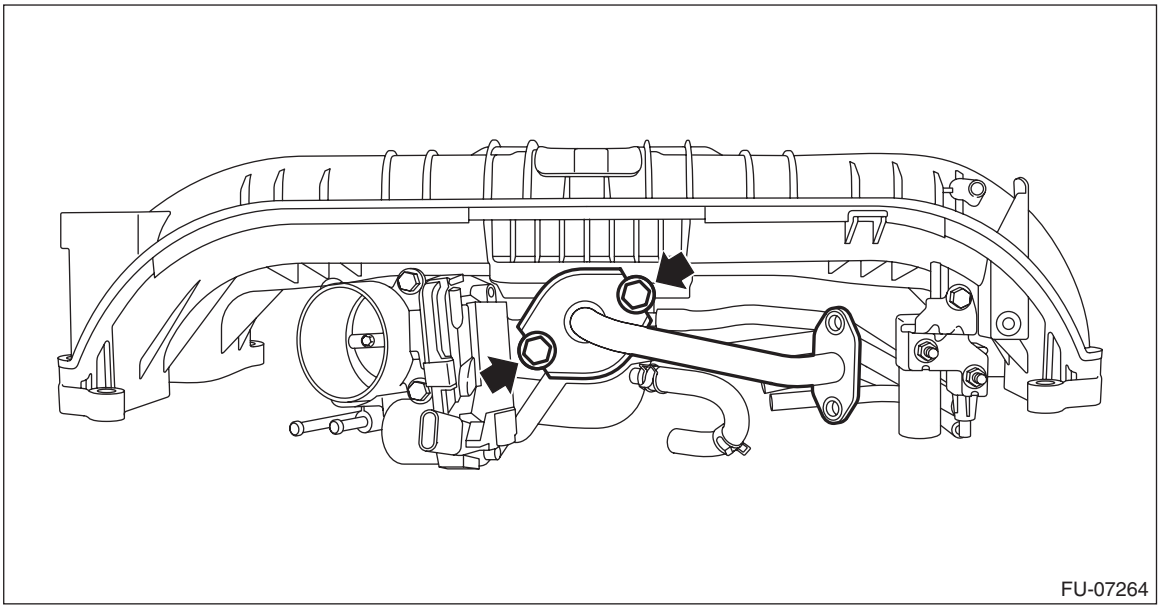

3) Remove the throttle body from the intake manifold.

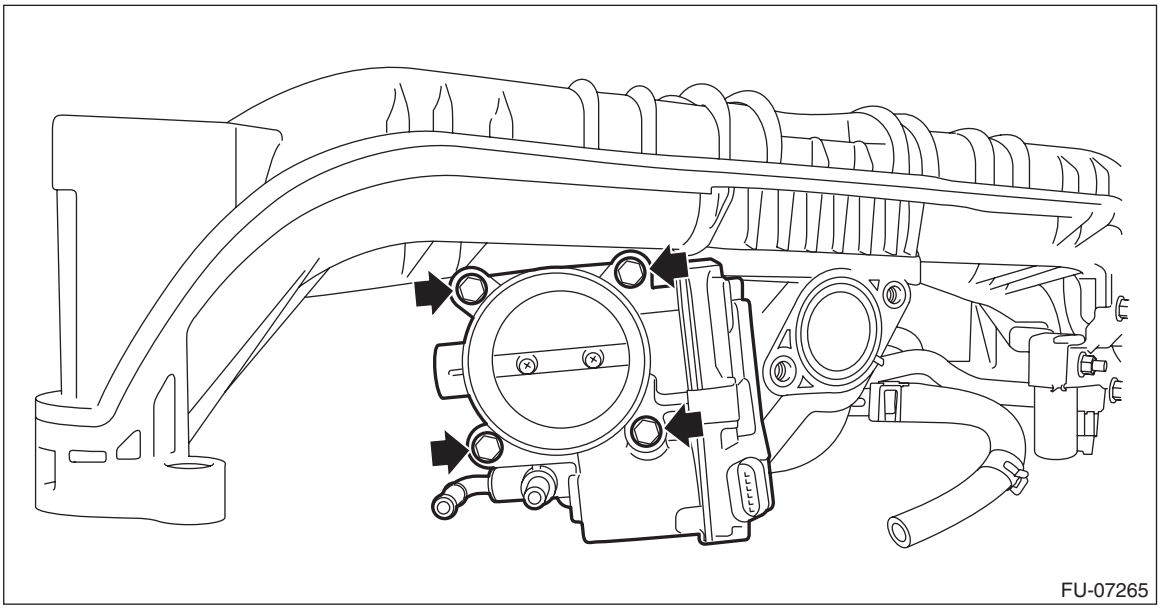

4) Disconnect the vacuum hose from the intake manifold, and remove the purge control solenoid valve.

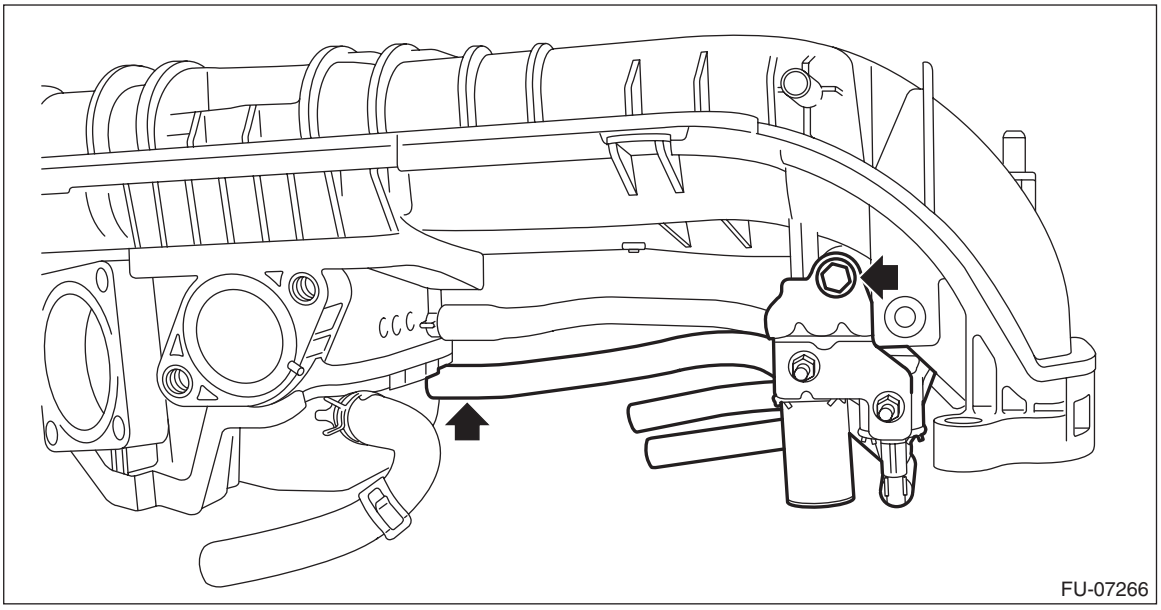

5) Disconnect the PCV hose and vacuum control hose from the intake manifold.

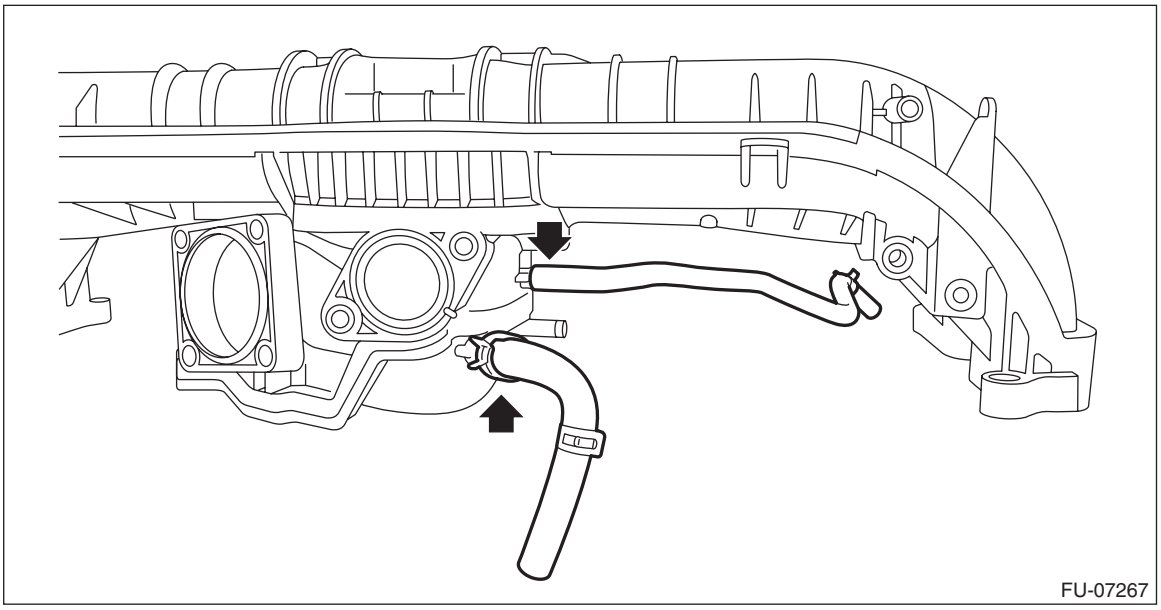

D: ASSEMBLY

1) Connect the PCV hose and vacuum control hose to intake manifold.

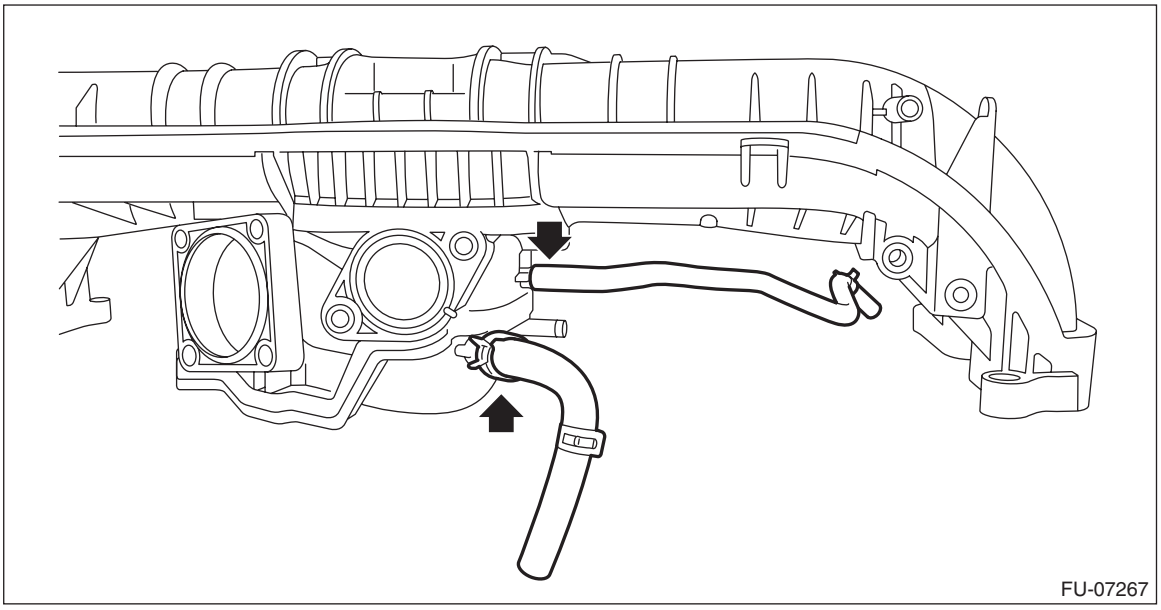

2) Connect the vacuum hose to the intake manifold, and install the purge control solenoid valve.

Tightening torque:
19 N·m (1.9 kgf-m, 14.0 ft-lb)

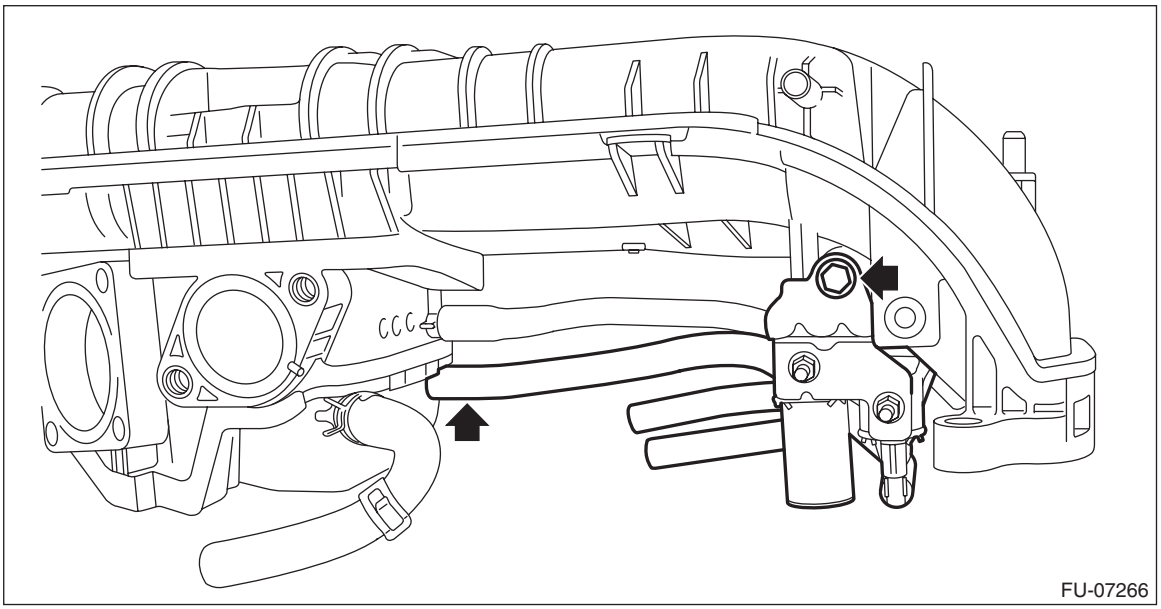

3) Install the throttle body to the intake manifold.

NOTE:
Use a new gasket.

Tightening torque:
8 N·m (0.8 kgf-m, 5.9 ft-lb)

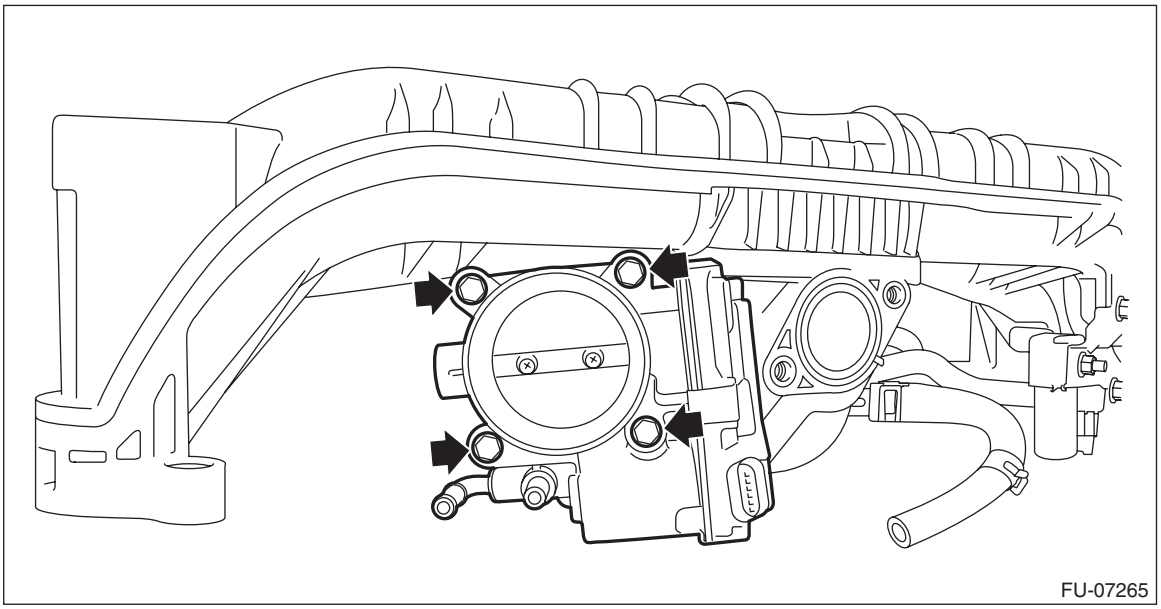

4) Temporarily install the EGR pipe to the intake manifold.

NOTE:
- Use new O-rings.
- Tighten the EGR pipe when installing the intake manifold. <Ref. to EC(w/o STI)-32, INSTALLATION, EGR Pipe.>

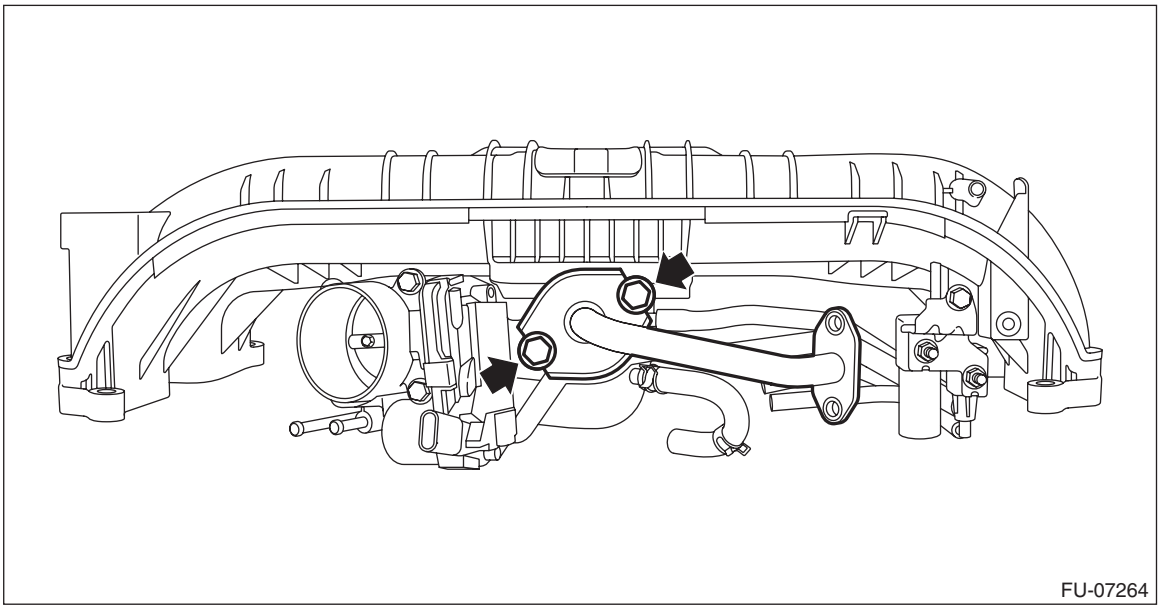
FU-07264

5) Install the manifold absolute pressure & intake air temperature sensor to the intake manifold.

NOTE:
Use new O-rings.

Tightening torque:
3.5 N·m (0.3 kgf-m, 2.5 ft-lb)

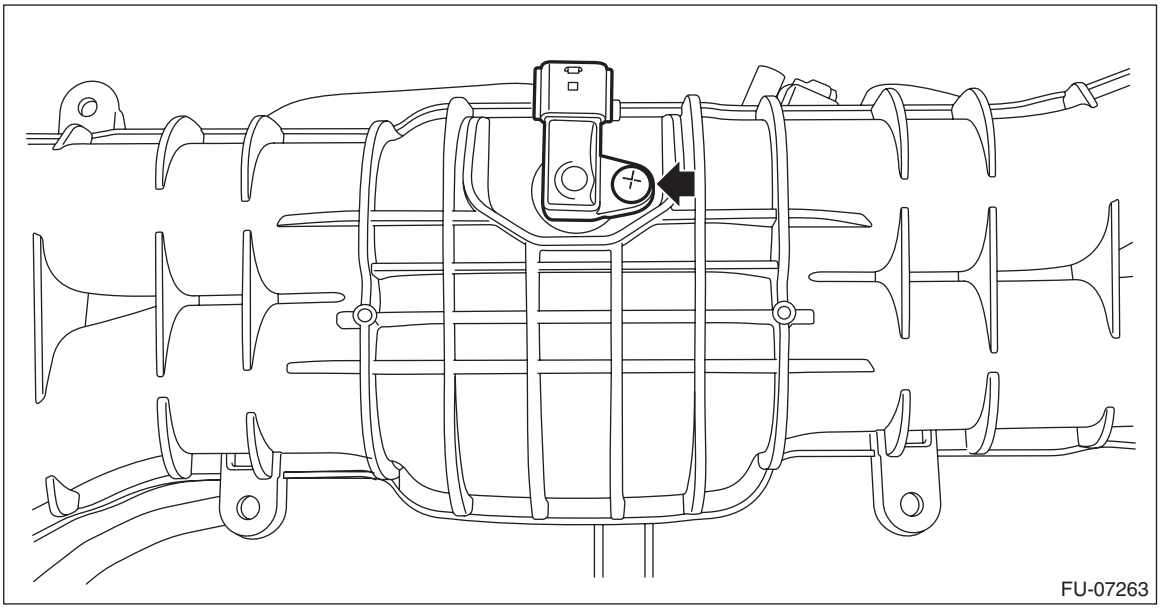
FU-07263

E: INSPECTION

1) Check that the intake manifold and fuel pipe have no deformation, cracks and other damages.
2) Check that the hose has no cracks, damage or loose part.

4. Tumble Generator Valve Assembly

A: REMOVAL

NOTE:
The tumble generator valve assembly is tightened together with the intake manifold.
1) Disconnect the ground terminal from battery sensor. <Ref. to NT-6, BATTERY, NOTE, Note.>
2) Remove the intake manifold. <Ref. to FU(w/o STI)-18, REMOVAL, Intake Manifold.>
3) Remove the air intake adapter from the cylinder head.
- RH side

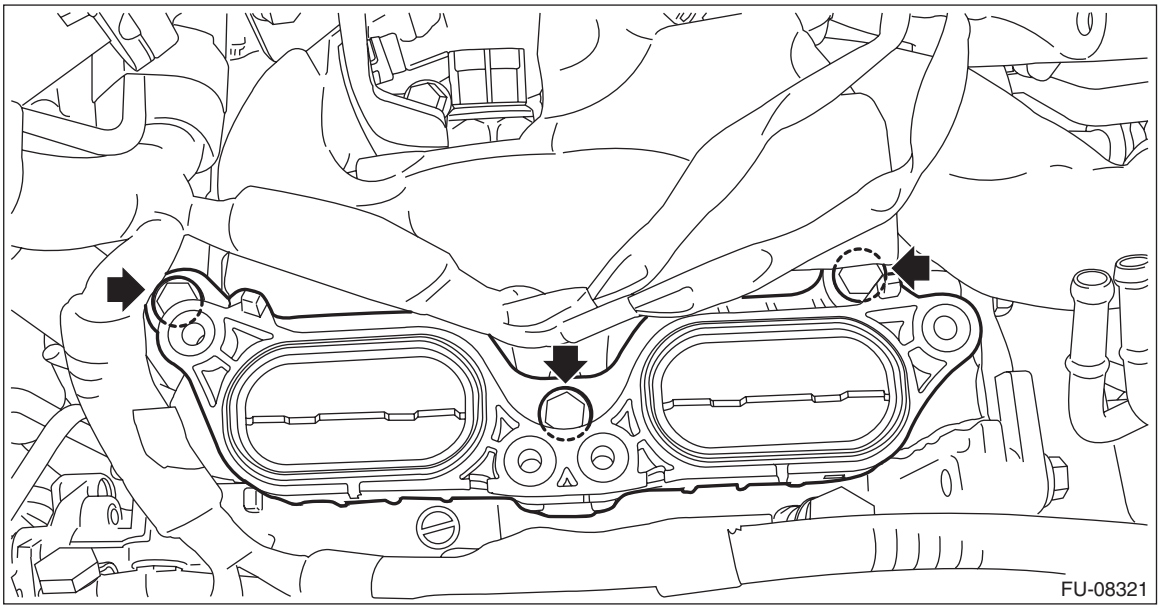

- LH side

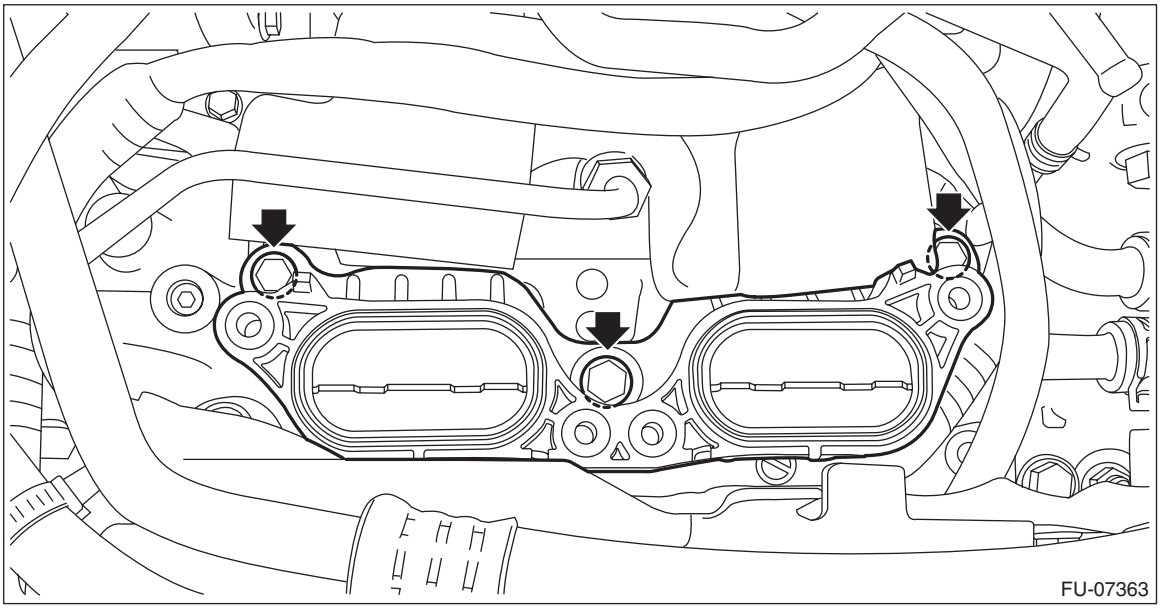

4) Remove the cylinder head plate from cylinder head.

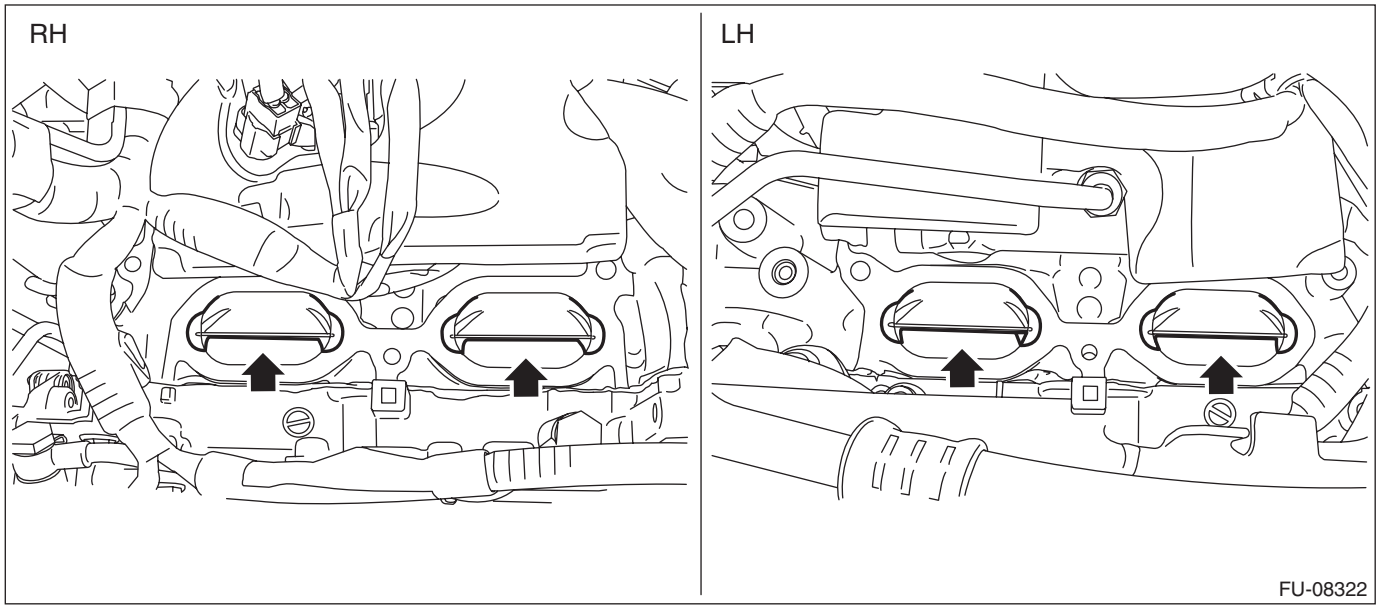

B: INSTALLATION

Install in the reverse order of removal.

NOTE:
Use a new gasket.

Tightening torque:
25 N·m (2.5 kgf-m, 18.4 ft-lb)

C: INSPECTION

1) Check that the tumble generator valve assembly or air intake adapter has no deformation, cracks or other damages.
2) Check tumble generator valve assembly or air intake adapter for contamination or clogging.

5. Tumble Generator Valve Actuator

A: SPECIFICATION

The tumble generator valve assembly cannot be disassembled.
Refer to “Tumble Generator Valve Assembly” for removal and installation procedures. <Ref. to FU(w/o STI)-42, REMOVAL, Tumble Generator Valve Assembly.> <Ref. to FU(w/o STI)-43, INSTALLATION, Tumble Generator Valve Assembly.>

6. Fuel Insulator

A: REMOVAL

1. FUEL PUMP INSULATOR

1) Disconnect the ground terminal from battery sensor. <Ref. to NT-6, BATTERY, NOTE, Note.>
2) Remove the intake manifold. <Ref. to FU(w/o STI)-18, REMOVAL, Intake Manifold.>
3) Remove the clip (A) on the generator cord, and remove the fuel pipe protector.

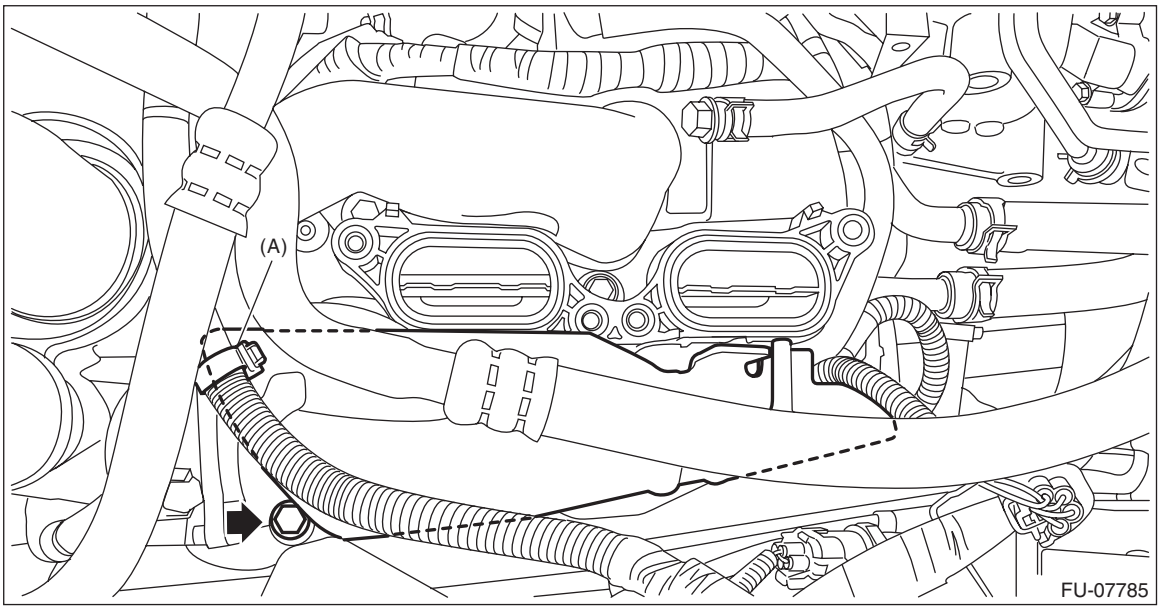

4) Remove the fuel pump insulator.

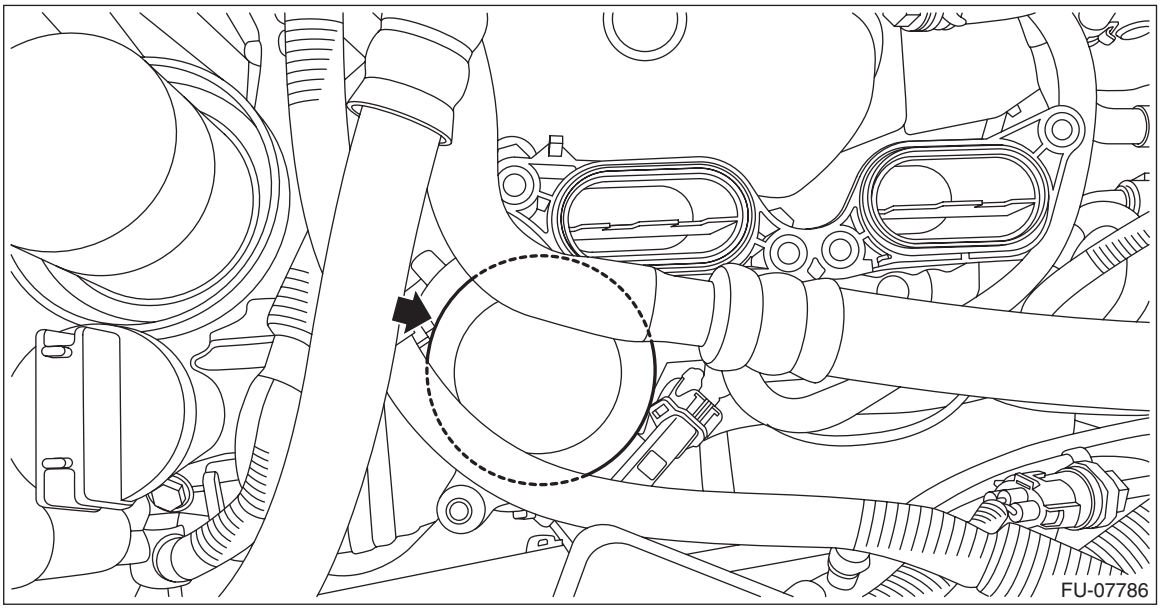

2. FUEL PIPE INSULATOR NO. 1

1) Disconnect the ground terminal from battery sensor. <Ref. to NT-6, BATTERY, NOTE, Note.>
2) Remove the intake manifold. <Ref. to FU(w/o STI)-18, REMOVAL, Intake Manifold.>
3) Remove the fuel pipe insulator No. 1.

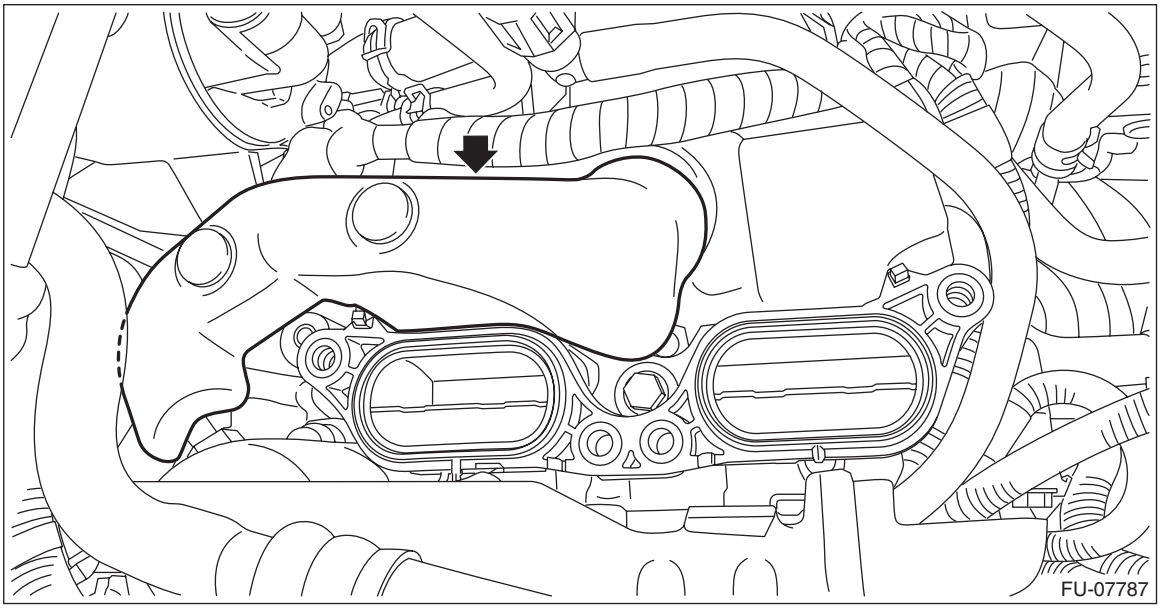

3. FUEL PIPE INSULATOR NO. 2

1) Remove the fuel pipe insulator No. 1. <Ref. to FU(w/o STI)-46, FUEL PIPE INSULATOR NO. 1, REMOVAL, Fuel Insulator.>
2) Remove the fuel pipe insulator No. 2.

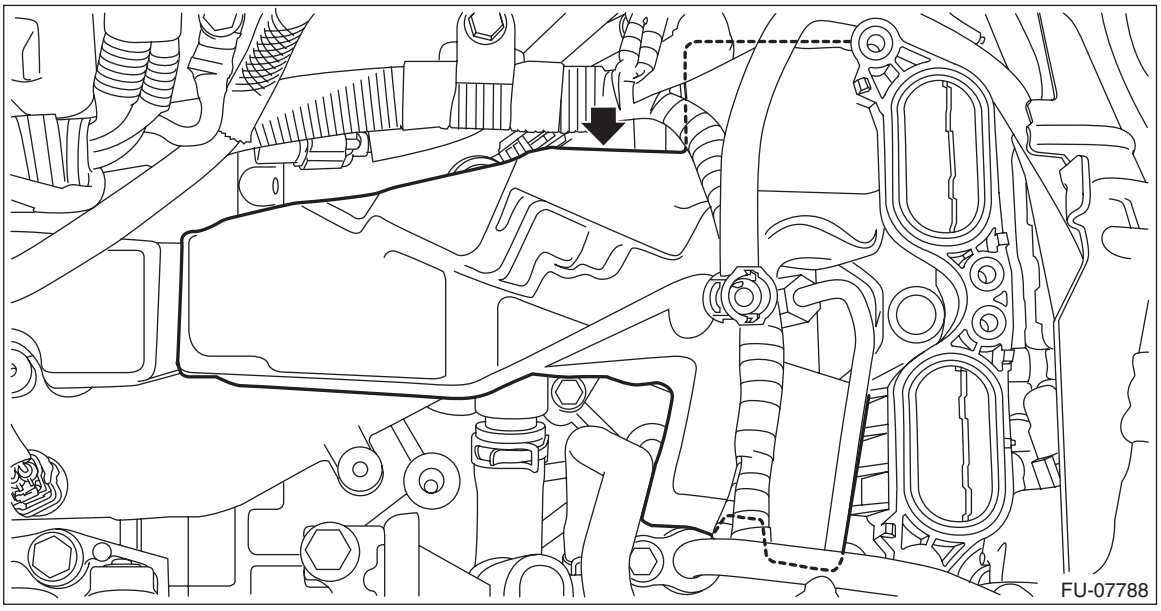

4. FUEL PIPE INSULATOR NO. 3

1) Disconnect the ground terminal from battery sensor. <Ref. to NT-6, BATTERY, NOTE, Note.>
2) Remove the intake manifold. <Ref. to FU(w/o STI)-18, REMOVAL, Intake Manifold.>
3) Disconnect the connector (A) from the EGR control valve.
4) Remove the bolts (B) securing the EGR cooler to the EGR control valve.
5) Remove the preheater hose (C) from the EGR control valve.

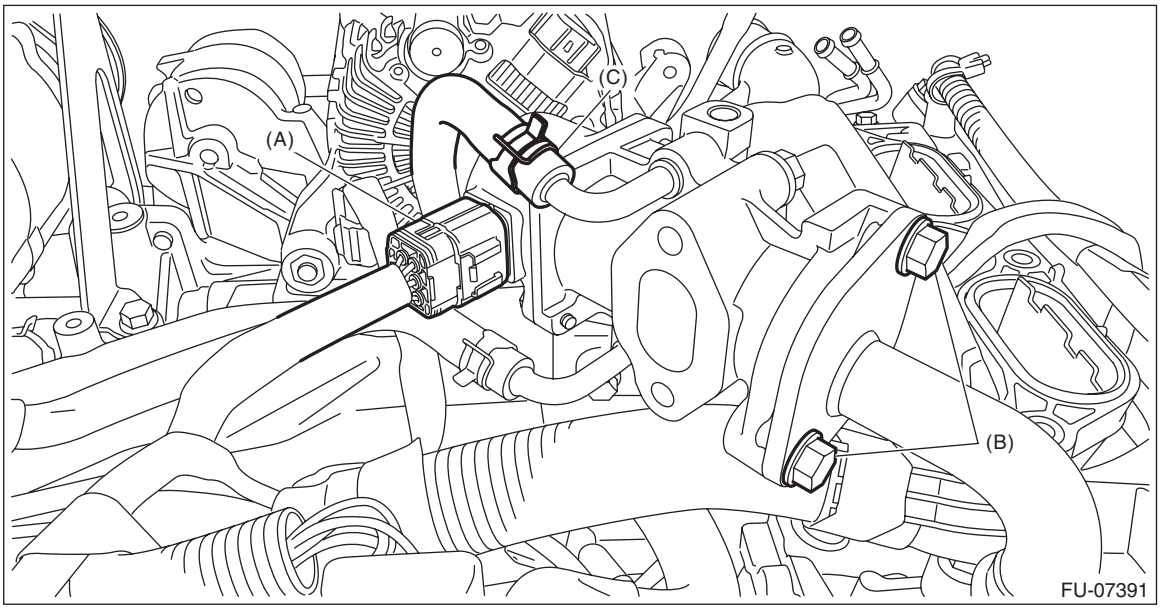

6) Remove the EGR control valve.

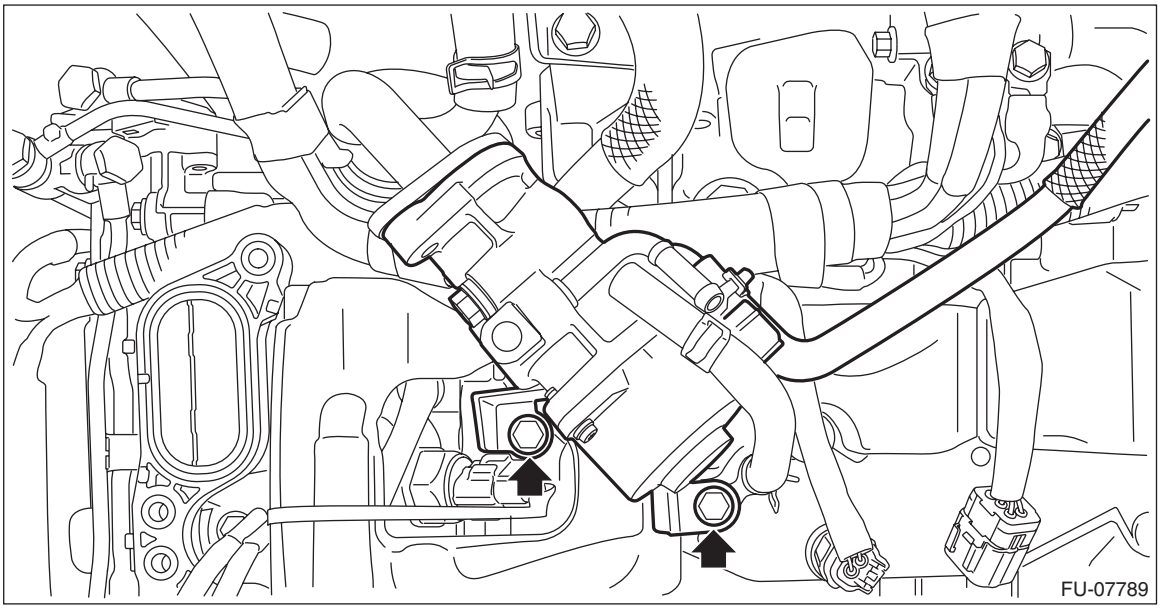

7) Disconnect the connector (A) on the fuel pressure sensor, and remove the fuel pipe insulator No. 3.

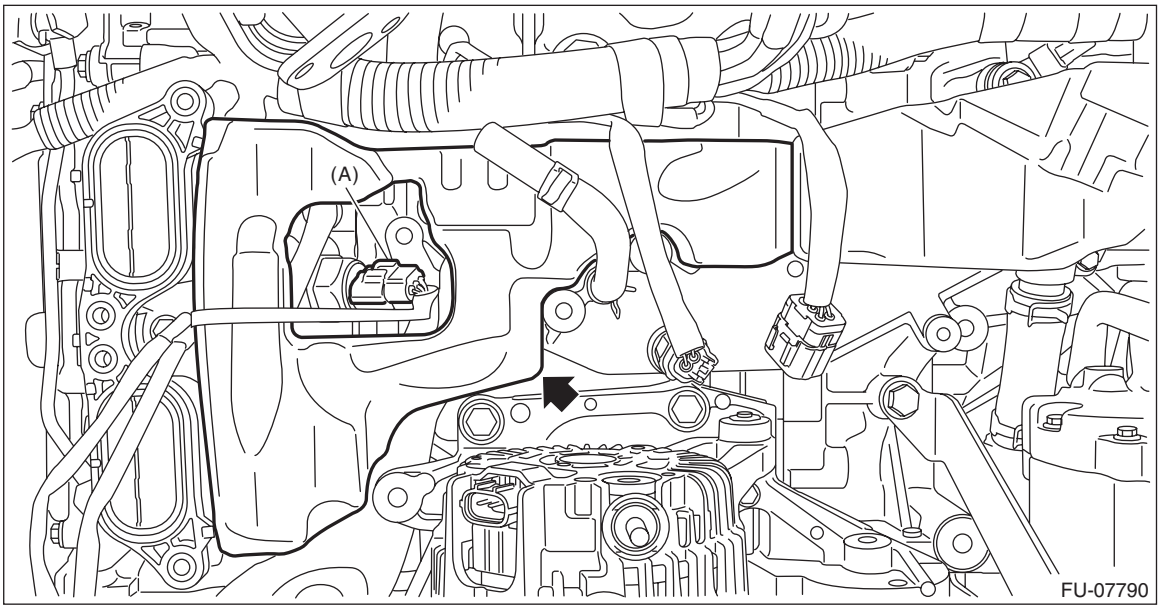

B: INSTALLATION

1. FUEL PUMP INSULATOR

Install in the reverse order of removal.

Tightening torque:
19 N·m (1.9 kgf-m, 14.0 ft-lb)

2. FUEL PIPE INSULATOR NO. 1

Install in the reverse order of removal.

NOTE:
When installing the fuel pipe insulator No. 1, push the sections (a) of fuel pipe insulator No. 1 to fix it to the high-pressure fuel delivery pipe.

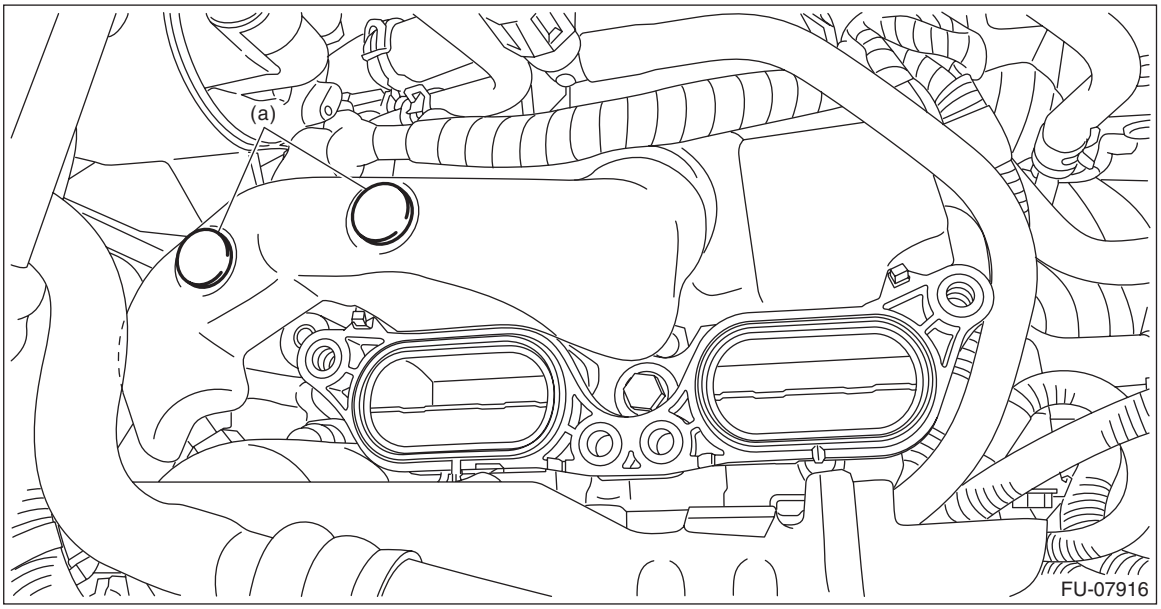

3. FUEL PIPE INSULATOR NO. 2

Install in the reverse order of removal.

4. FUEL PIPE INSULATOR NO. 3

Install in the reverse order of removal.

NOTE:
Use a new gasket.

Tightening torque:
19 N·m (1.9 kgf-m, 14.0 ft-lb)

C: INSPECTION

Check that the fuel insulator has no deformation, cracks or other damages.

7. Fuel Injector

A: REMOVAL

1. FUEL INJECTOR RH

CAUTION:
- **Be careful not to spill fuel.**
- **Catch the fuel from the pipes using a container or cloth.**

1) Disconnect the ground terminal from battery sensor. <Ref. to NT-6, BATTERY, NOTE, Note.>
2) Remove the high-pressure fuel delivery pipe assembly. <Ref. to FU(w/o STI)-78, HIGH-PRESSURE FUEL DELIVERY PIPE ASSEMBLY, REMOVAL, High Pressure Fuel Delivery Pipe.>
3) Disconnect the connector (A) from fuel injector, and remove the fuel injector pipe.

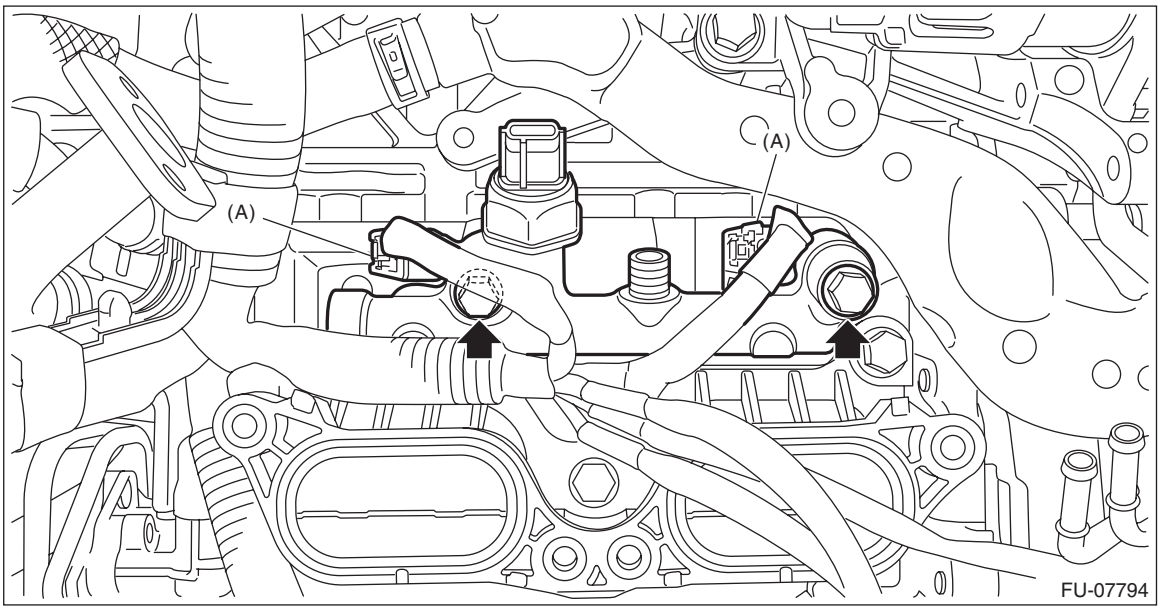

4) Remove the holder from the fuel injector.

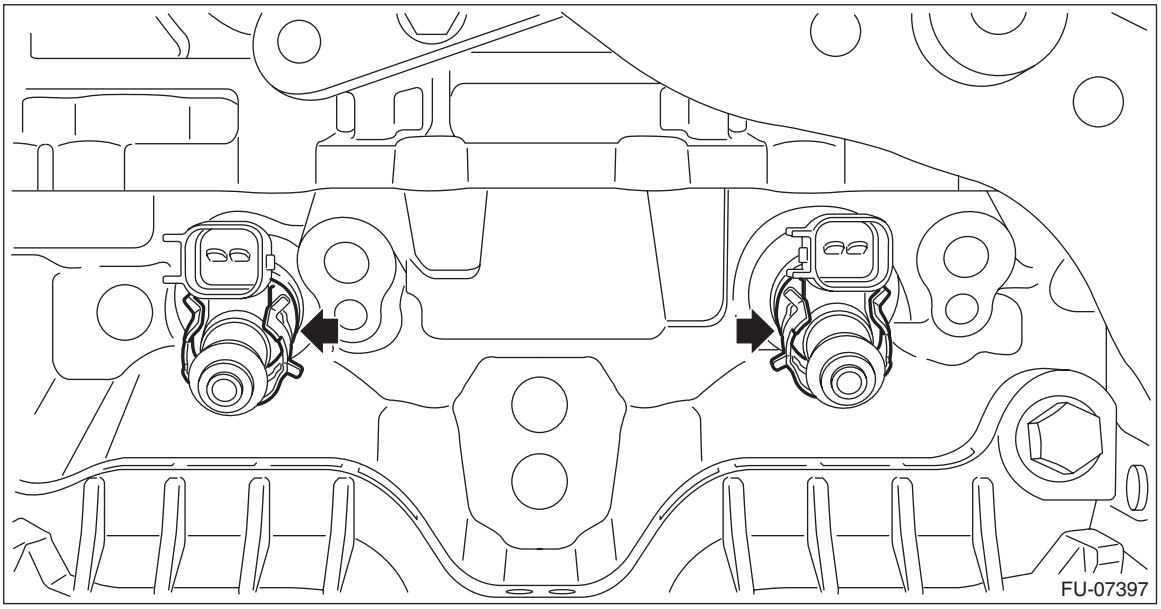

5) Using ST, remove the fuel injector from the cylinder head.
ST 18356AA000 INJECTOR REMOVER
(1) Set the ST so that its mark faces the center of the engine.

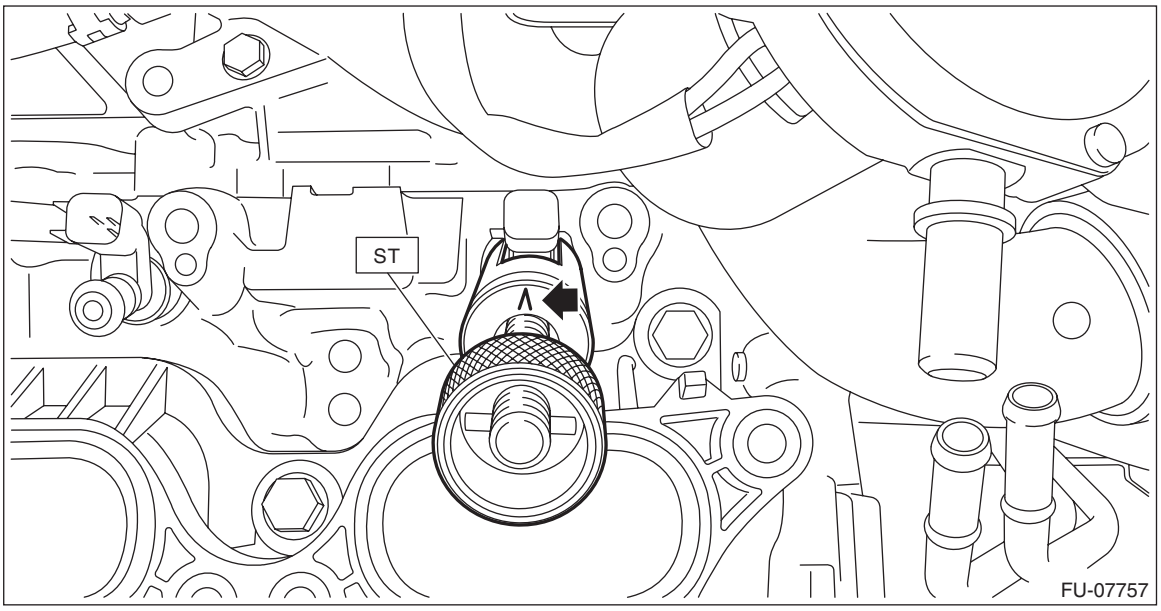

(2) Pinch the fuel injector groove (A) with the claw section (B) of ST.

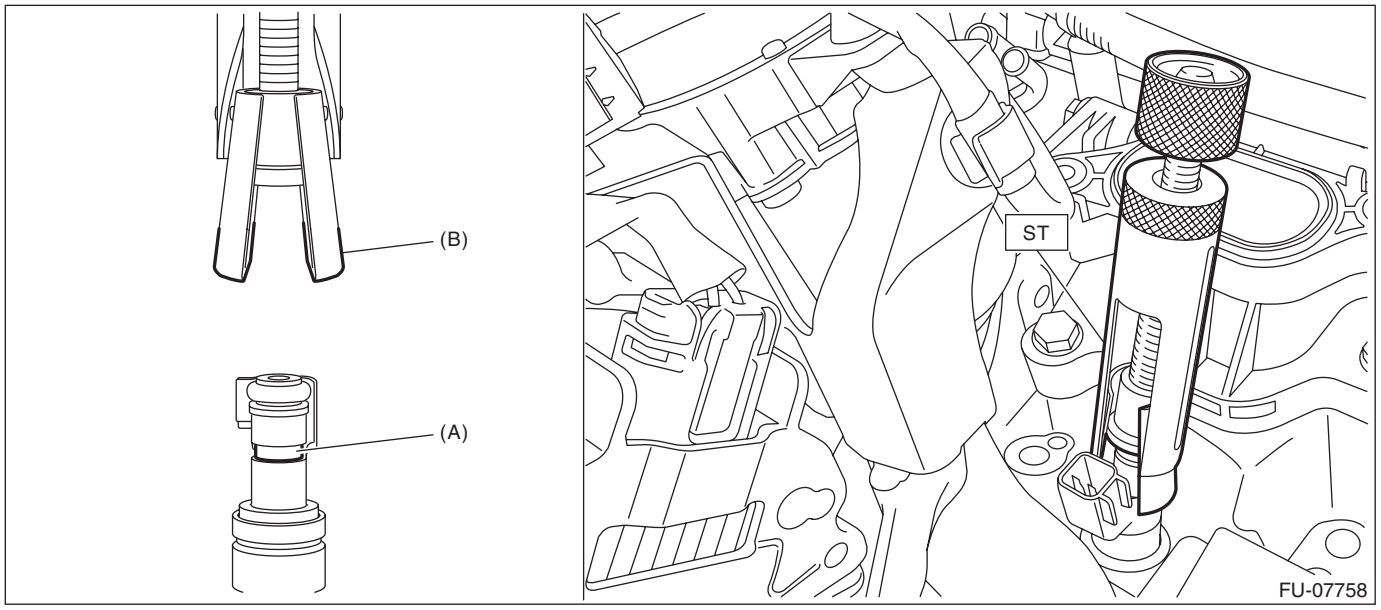

(3) Press the ST to the cylinder head.

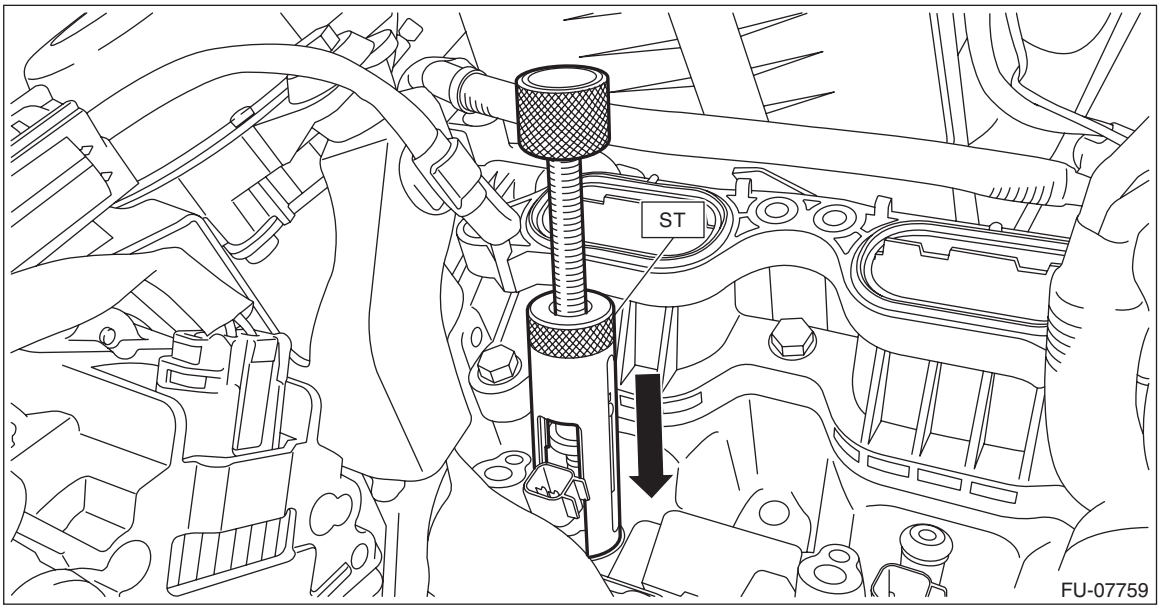

(4) Screw in the threaded section of the ST clockwise, and remove the fuel injector from the cylinder head.

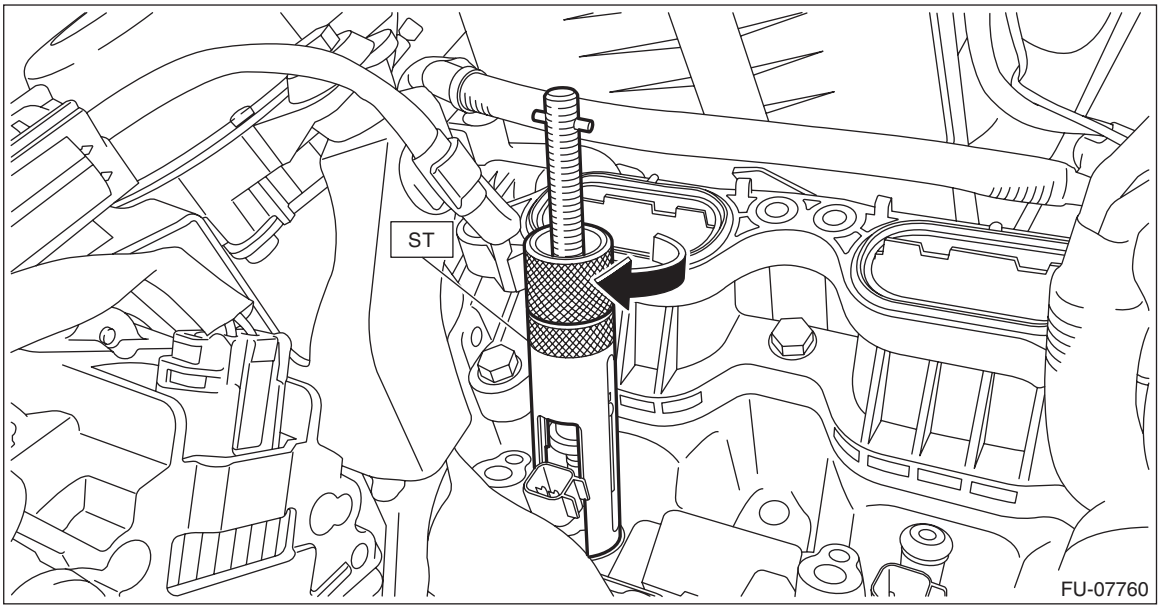

2. FUEL INJECTOR LH

CAUTION:
- **Be careful not to spill fuel.**
- **Catch the fuel from the pipes using a container or cloth.**

1) Disconnect the ground terminal from battery sensor. <Ref. to NT-6, BATTERY, NOTE, Note.>
2) Remove the high-pressure fuel delivery pipe assembly. <Ref. to FU(w/o STI)-78, HIGH-PRESSURE FUEL DELIVERY PIPE ASSEMBLY, REMOVAL, High Pressure Fuel Delivery Pipe.>
3) Remove the high-pressure fuel delivery pipes. <Ref. to FU(w/o STI)-78, HIGH-PRESSURE FUEL DELIVERY PIPE, REMOVAL, High Pressure Fuel Delivery Pipe.>
4) Disconnect the connector (A) from fuel injector, and remove the fuel injector pipe LH.

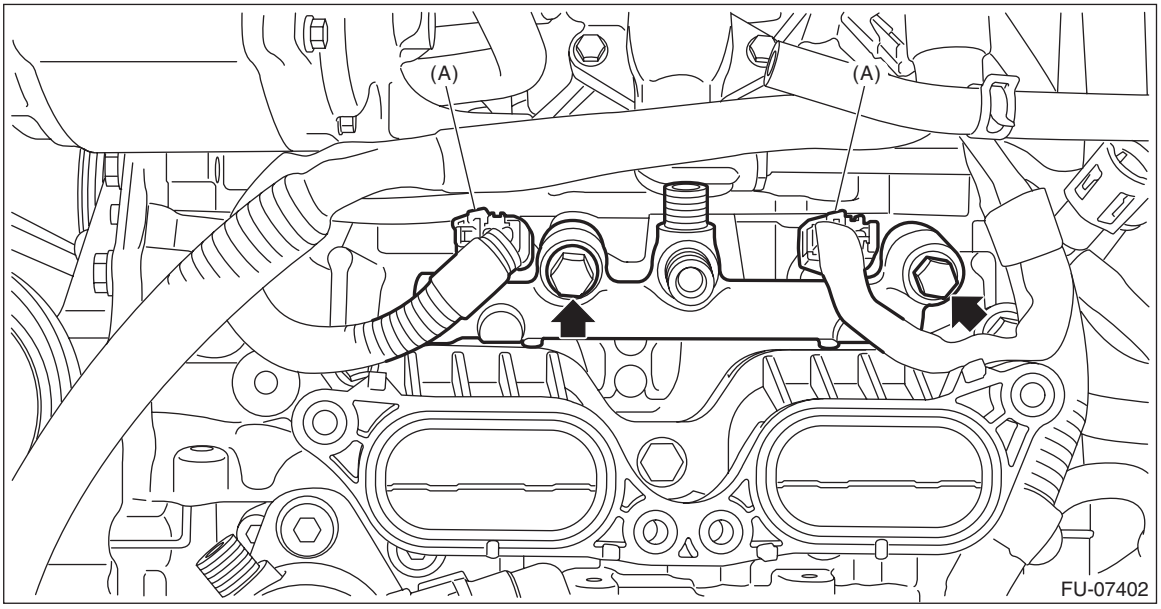

5) Remove the holder from the fuel injector.

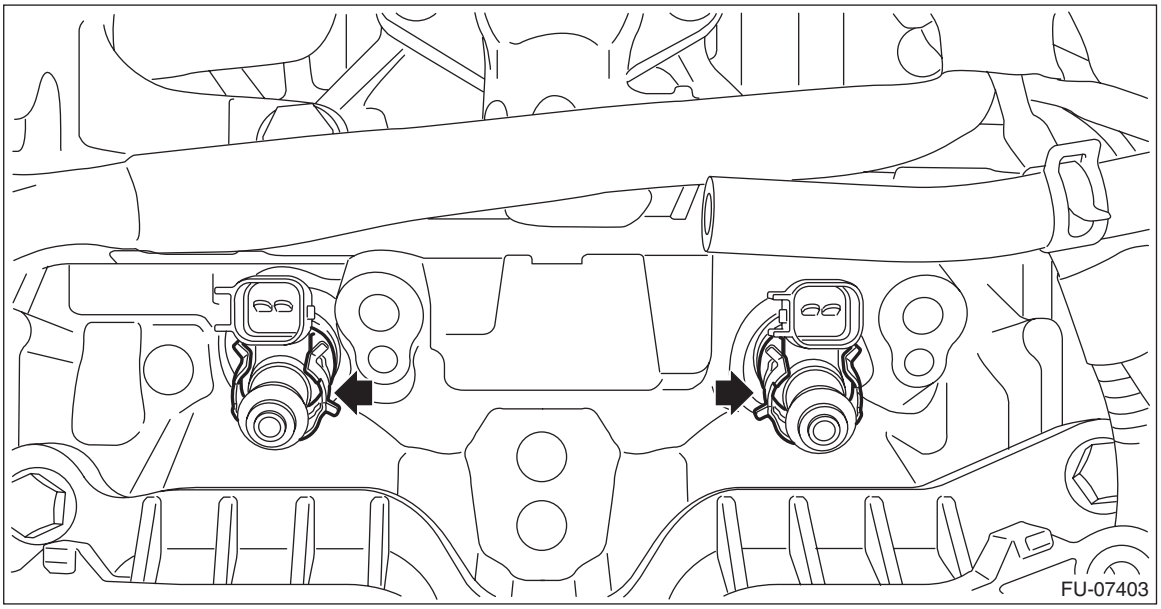

6) Using ST, remove the fuel injector from the cylinder head.
ST 18356AA000 INJECTOR REMOVER
(1) Set the ST so that its mark faces the center of the engine.

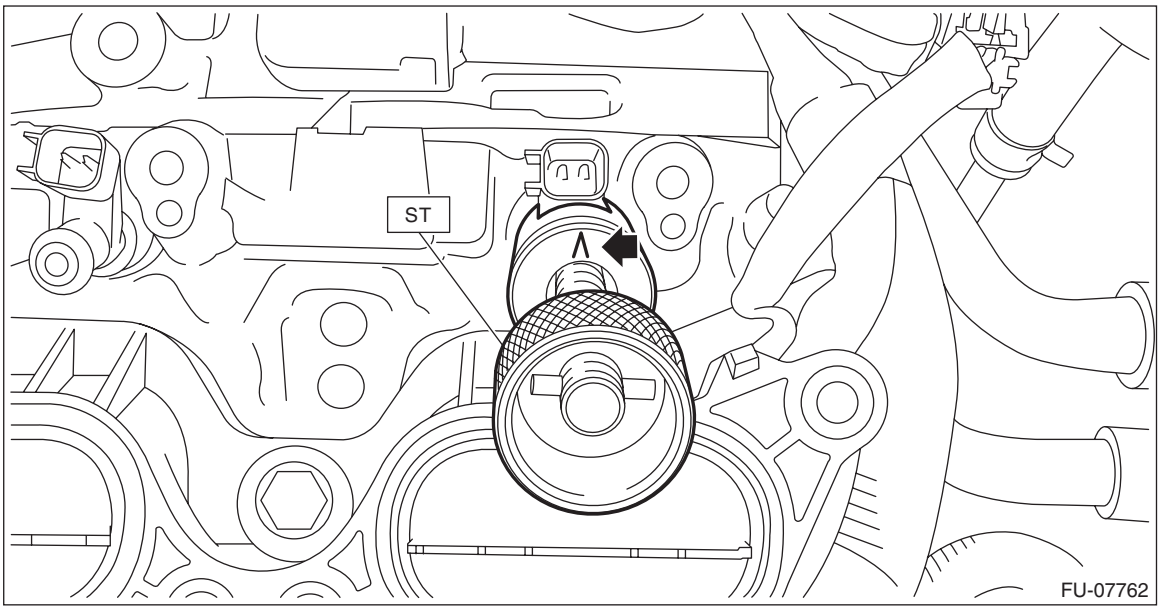

(2) Pinch the fuel injector groove (A) with the claw section (B) of ST.

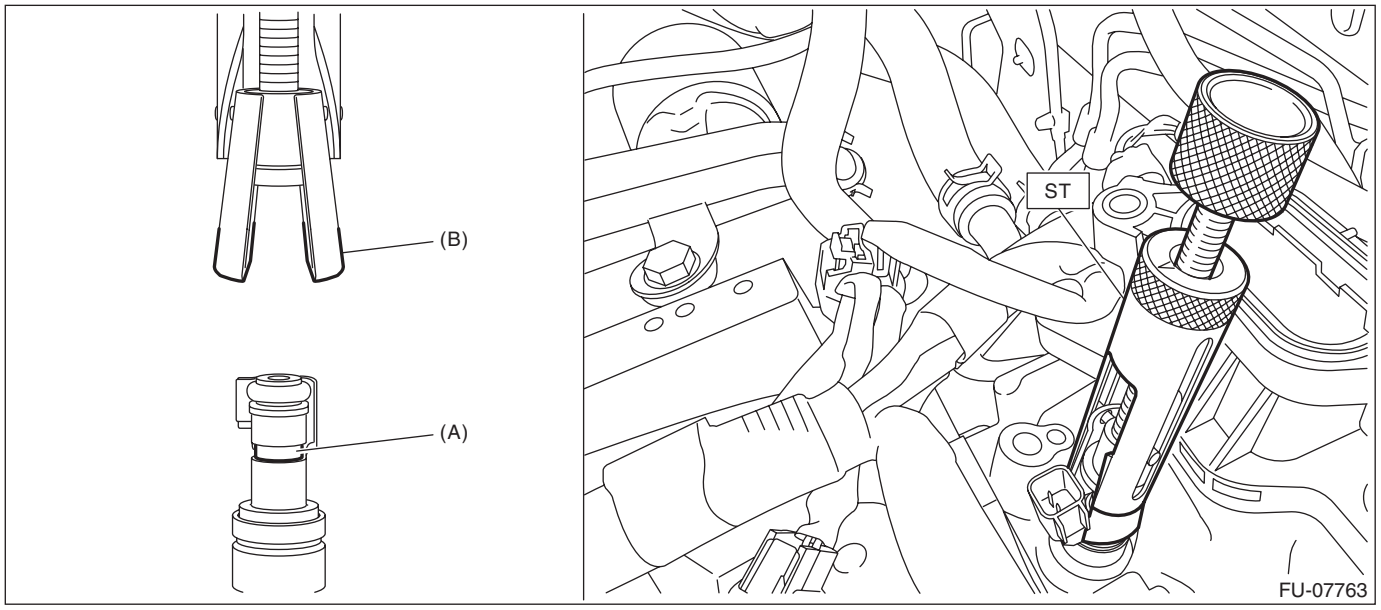

(3) Press the ST to the cylinder head.

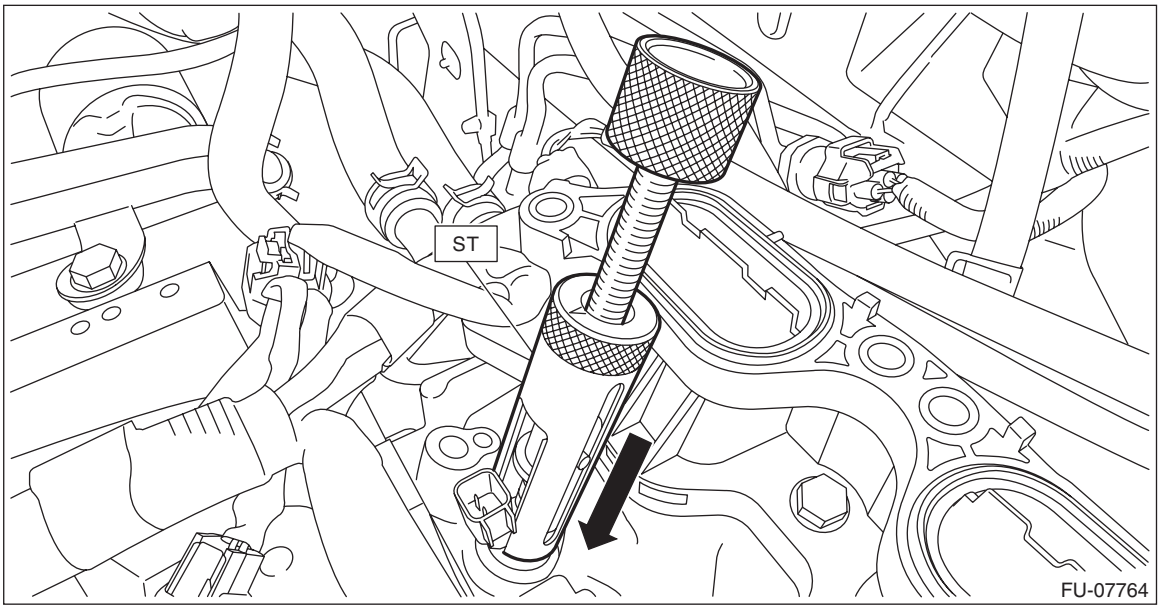

(4) Screw in the threaded section of the ST clockwise, and remove the fuel injector from the cylinder head.

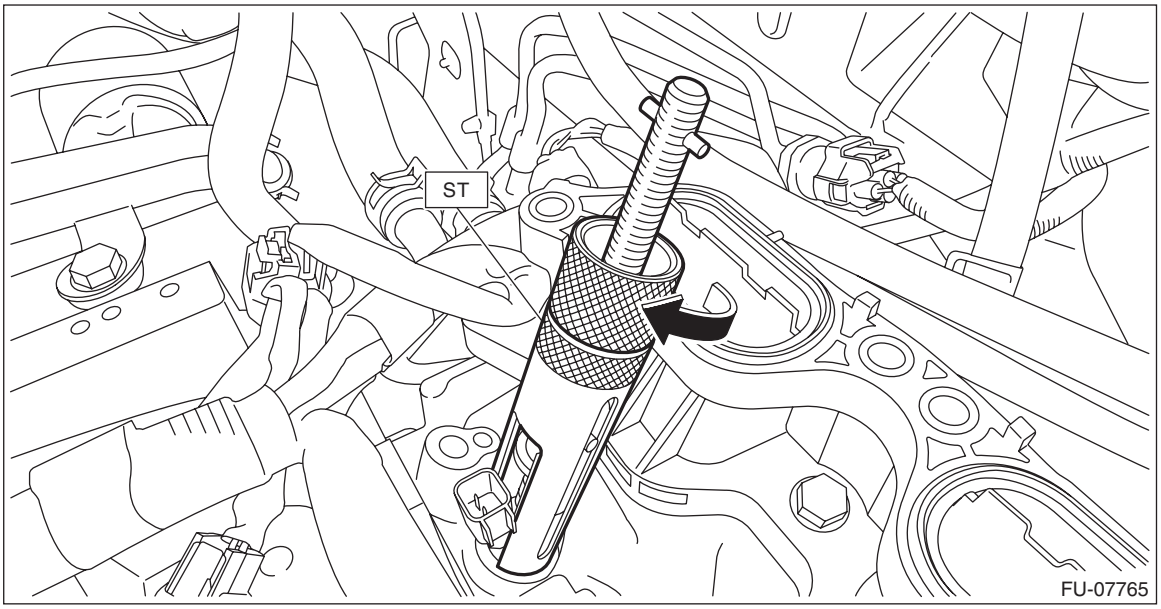

B: INSTALLATION

1. FUEL INJECTOR RH

1) Replace injector seal, retainer, and O-ring with a new part. <Ref. to FU(w/o STI)-59, REPLACEMENT, Fuel Injector.>
2) Set the holder to the fuel injector, and install it to the fuel injector pipe RH.

CAUTION:
Always use a new holder.

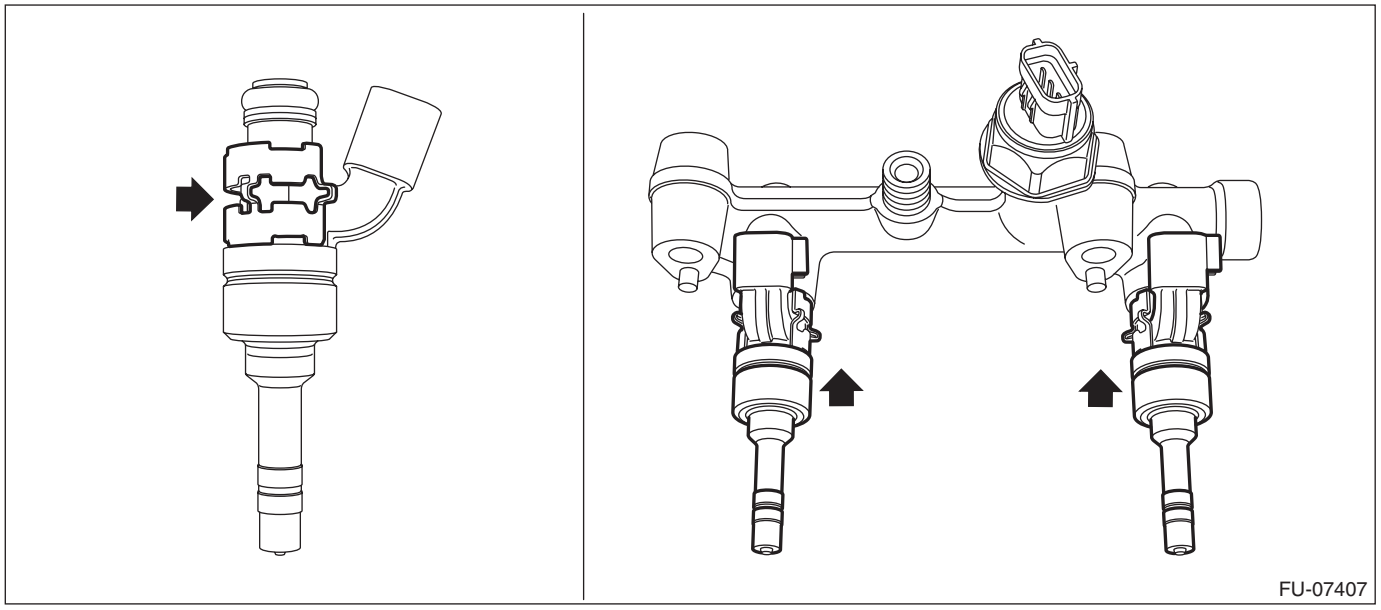

3) Install the fuel injector pipe RH and fuel injector as a single unit to the cylinder head.

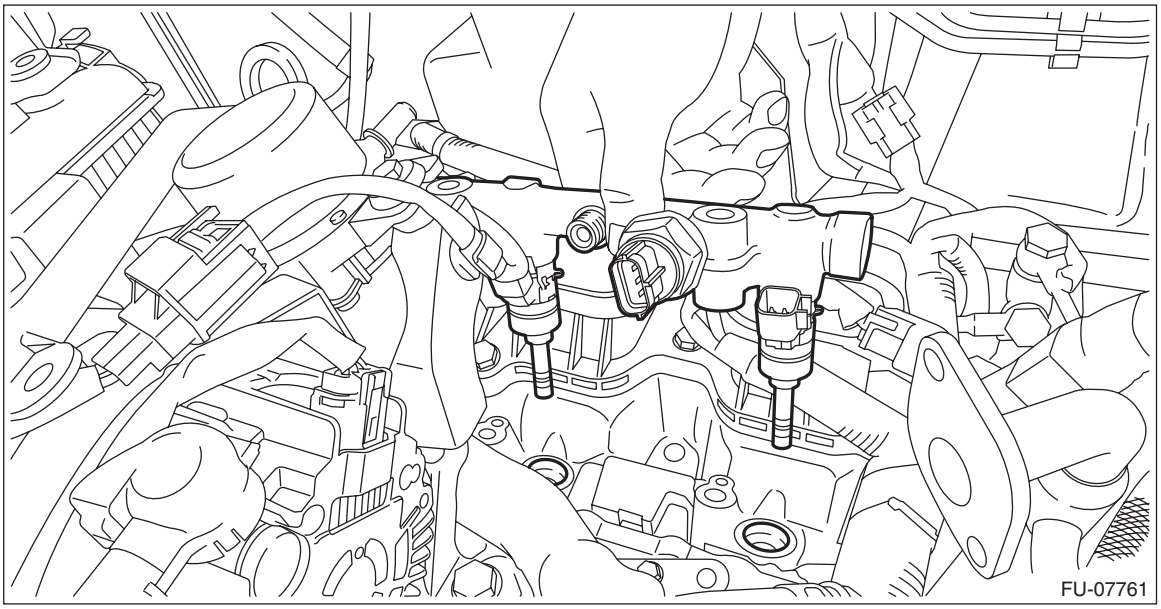

4) Tighten the bolt on fuel pipe RH, and connect the connector (A) to the fuel injector.

Tightening torque:
19 N·m (1.9 kgf-m, 14.0 ft-lb)

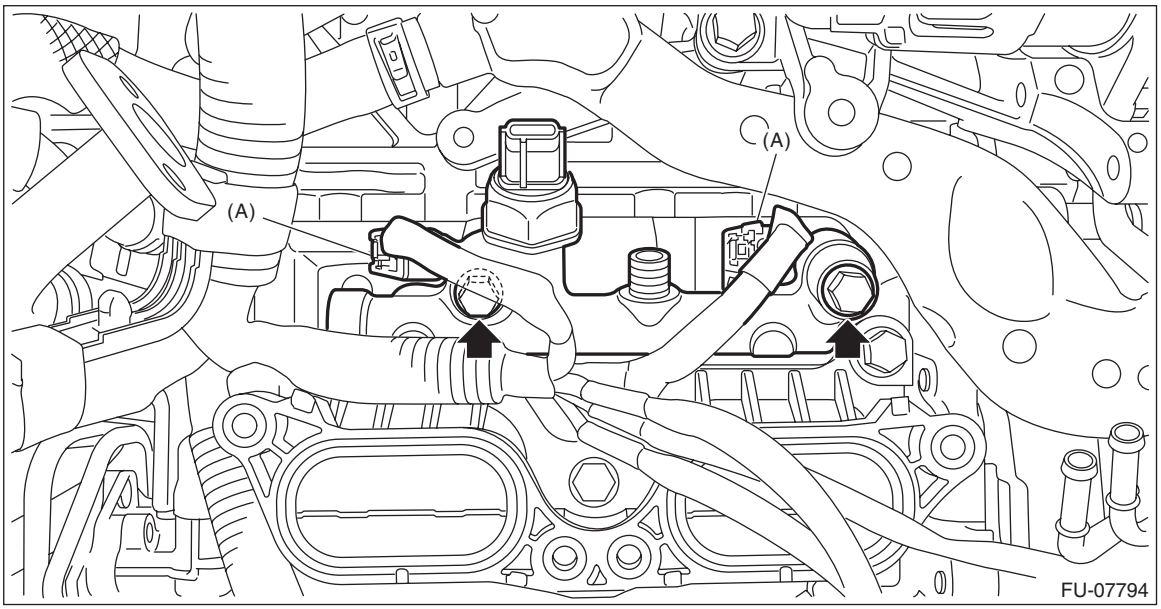

5) Install the high-pressure fuel delivery pipe assembly. <Ref. to FU(w/o STI)-80, HIGH-PRESSURE FUEL DELIVERY PIPE ASSEMBLY, INSTALLATION, High Pressure Fuel Delivery Pipe.>
6) Connect the ground terminal to battery sensor. <Ref. to NT-6, BATTERY, NOTE, Note.>

2. FUEL INJECTOR LH

1) Replace injector seal, retainer, and O-ring with a new part. <Ref. to FU(w/o STI)-59, REPLACEMENT, Fuel Injector.>
2) Set the holder to the fuel injector, and install it to the fuel injector pipe LH.

CAUTION:
Always use a new holder.

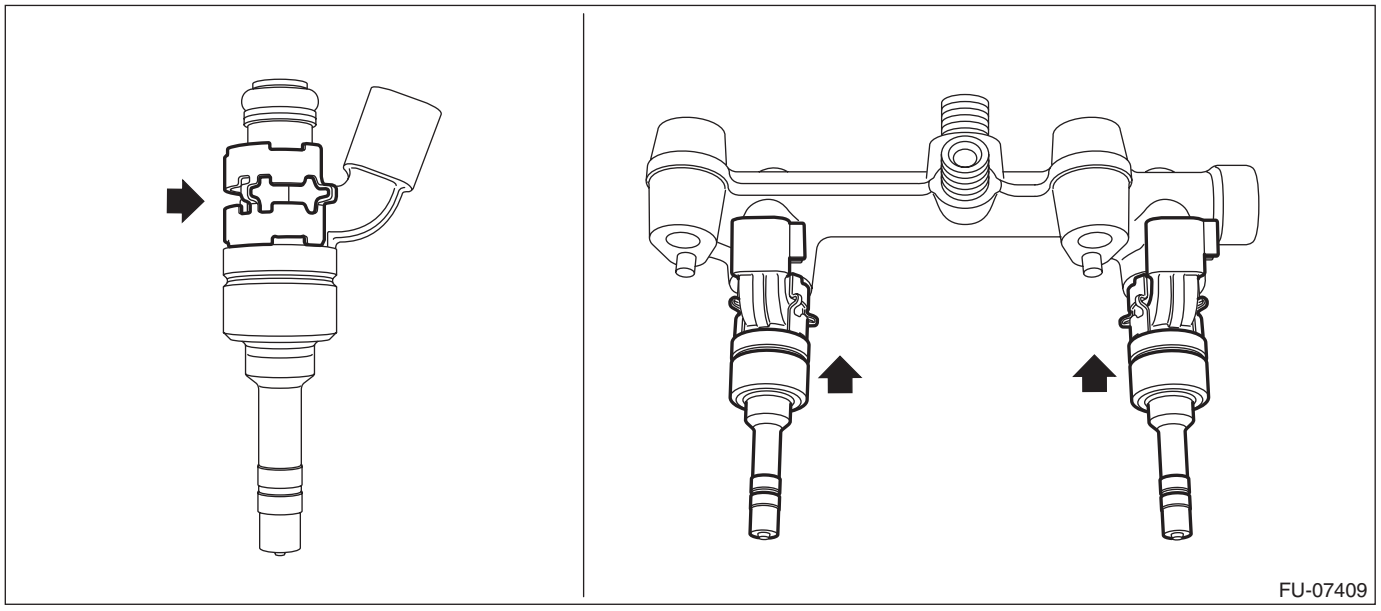

3) Install the fuel injector pipe LH and fuel injector as a single unit to the cylinder head.

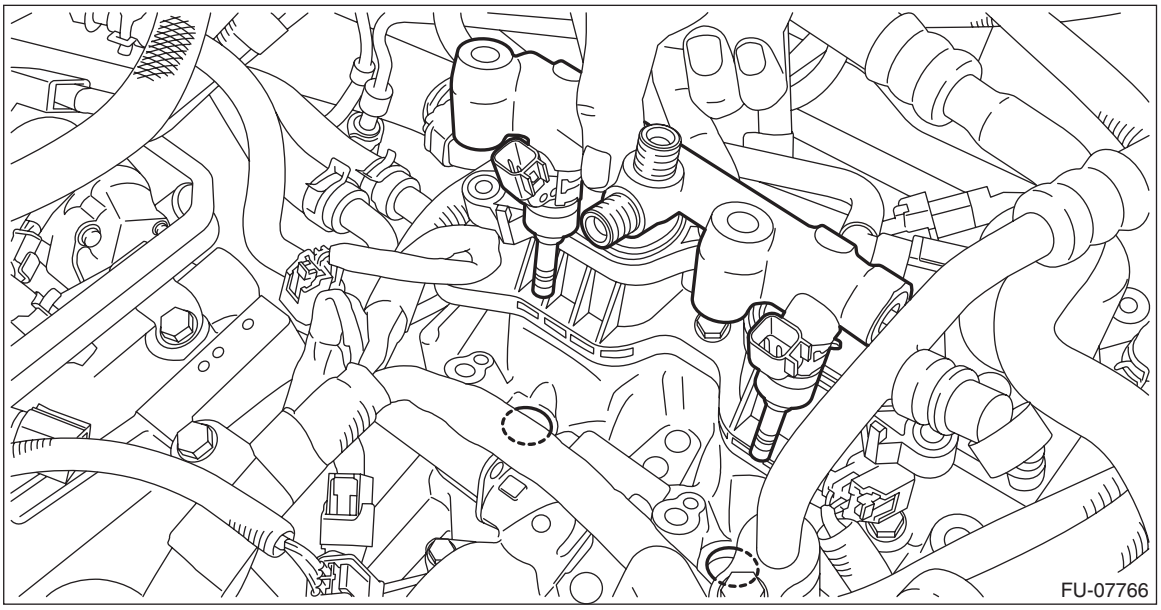

4) Tighten the bolt on fuel injector pipe LH, and connect the connector (A) to the fuel injector.

Tightening torque:
19 N·m (1.9 kgf-m, 14.0 ft-lb)

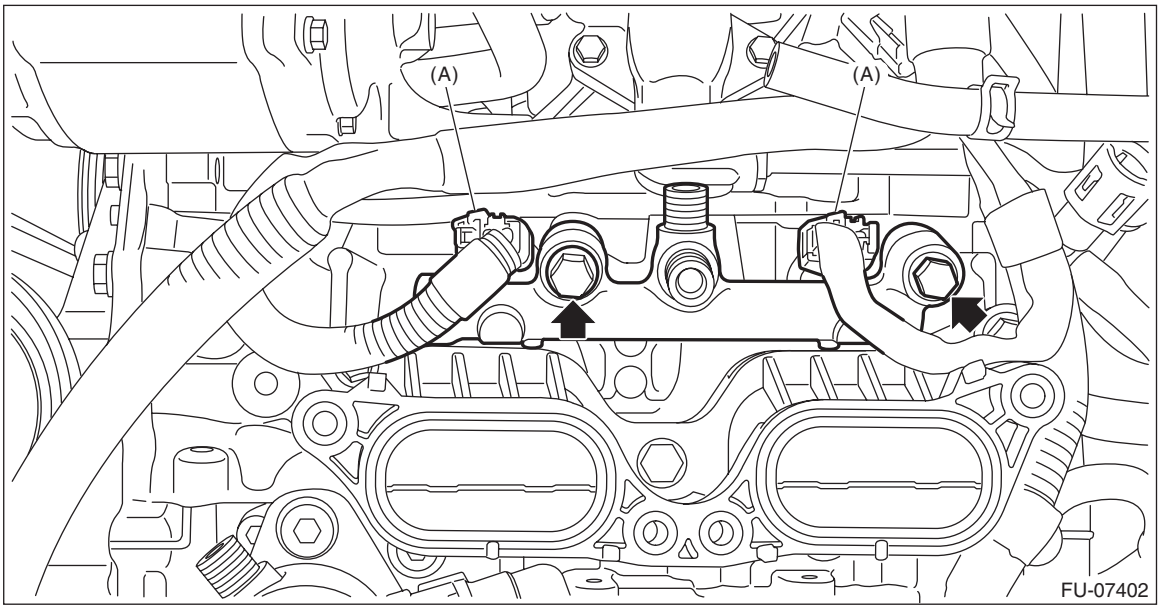

5) Install the high-pressure fuel delivery pipe assembly. <Ref. to FU(w/o STI)-80, HIGH-PRESSURE FUEL DELIVERY PIPE ASSEMBLY, INSTALLATION, High Pressure Fuel Delivery Pipe.>
6) Install the high-pressure fuel delivery pipe. <Ref. to FU(w/o STI)-79, HIGH-PRESSURE FUEL DELIVERY PIPE, INSTALLATION, High Pressure Fuel Delivery Pipe.>
7) Connect the ground terminal to battery sensor. <Ref. to NT-6, BATTERY, NOTE, Note.>

C: REPLACEMENT

CAUTION:
- **Perform work without using gloves.**
- **Always use the ST when installing the injector seal.**

ST 18683AA000 INJECTOR SEAL INSTALLER

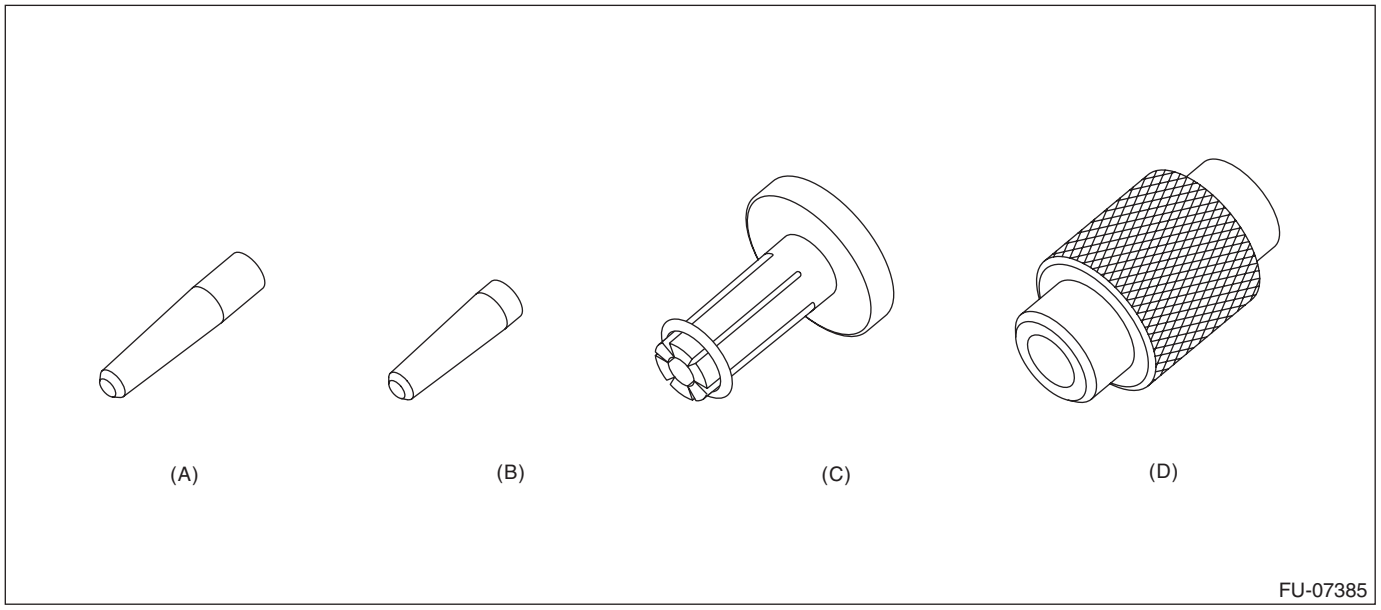

(A) Seal guide A (B) Seal guide B (C) Injector seal installer
(D) Injector seal adjuster

1) Using a pair of nippers, cut off the injector seal by pinching it.

CAUTION:
Be careful not to damage the fuel injector.

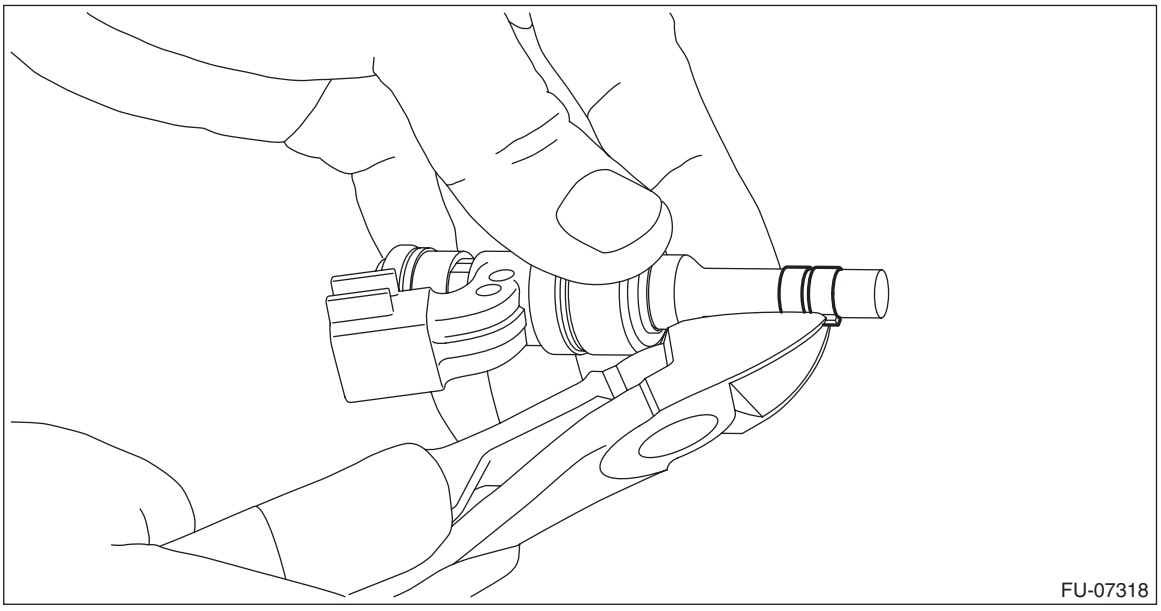

2) Remove the O-ring and backup ring from the fuel injector.

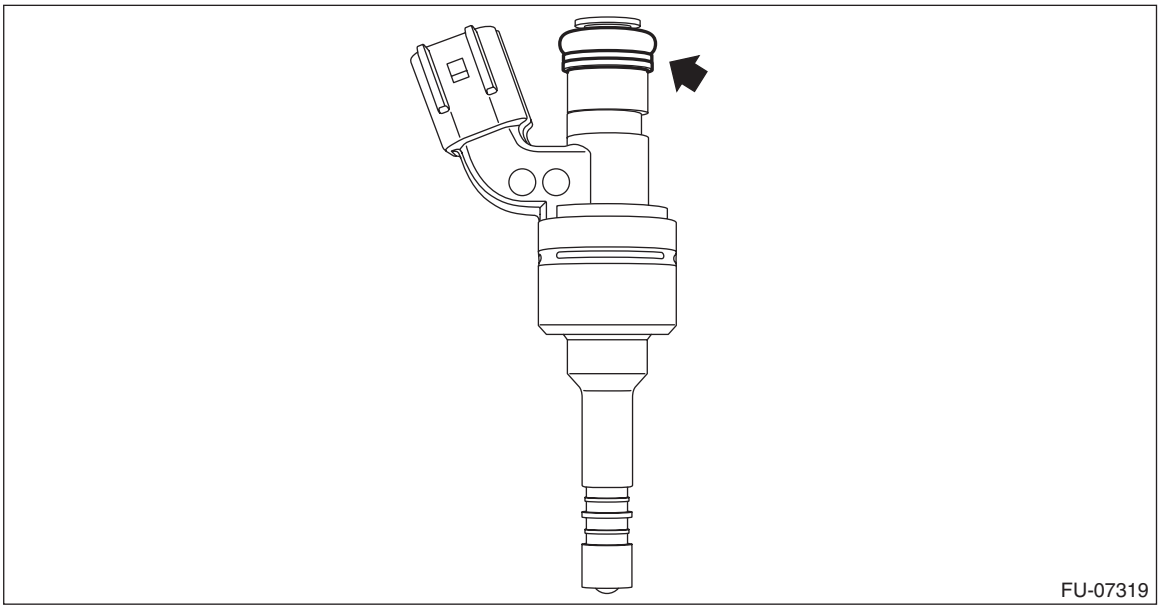

3) Attach the seal guide A to the fuel injector.

NOTE:
Two types of seal guides are provided. So, do not mix up the type to be used.

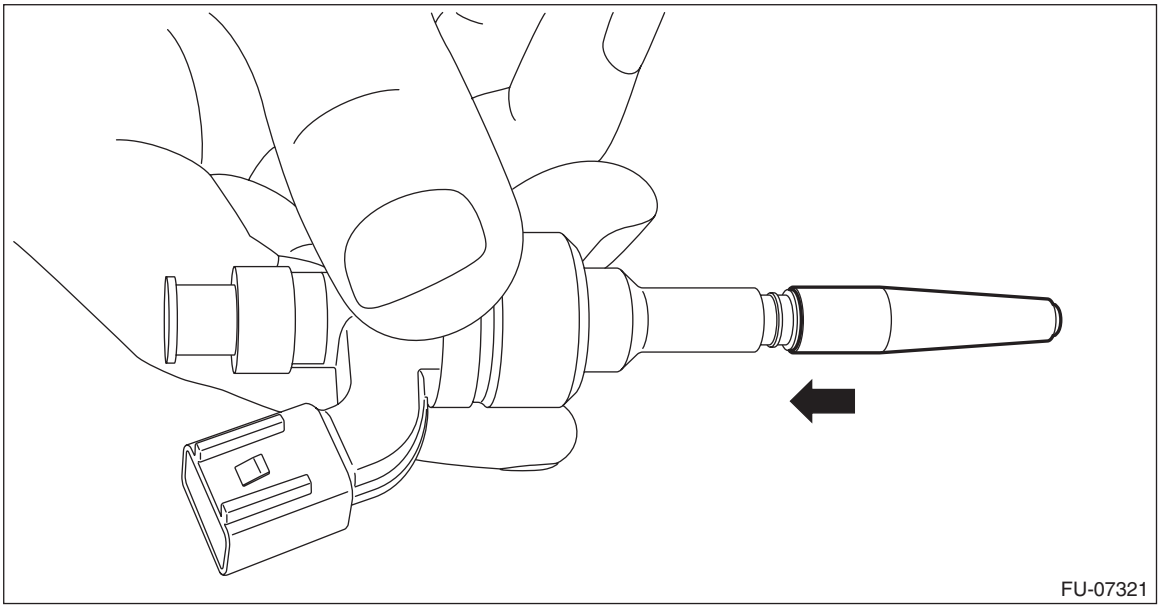

4) Set the injector seal to the injector seal installer.

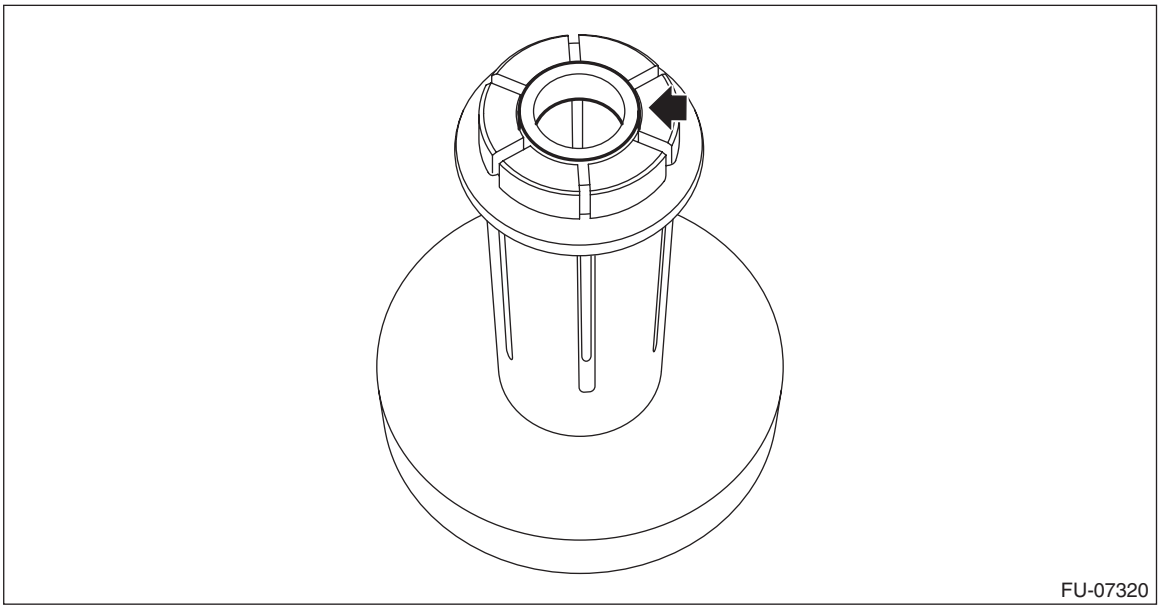

5) Push in the injector seal installer slowly in the direction of the arrow, and attach the injector seal to the fuel injector.

CAUTION:
- **Insert it so that the injector seal is installed straight.**
- **Be careful that the injector seal does not go beyond the fuel injector groove.**

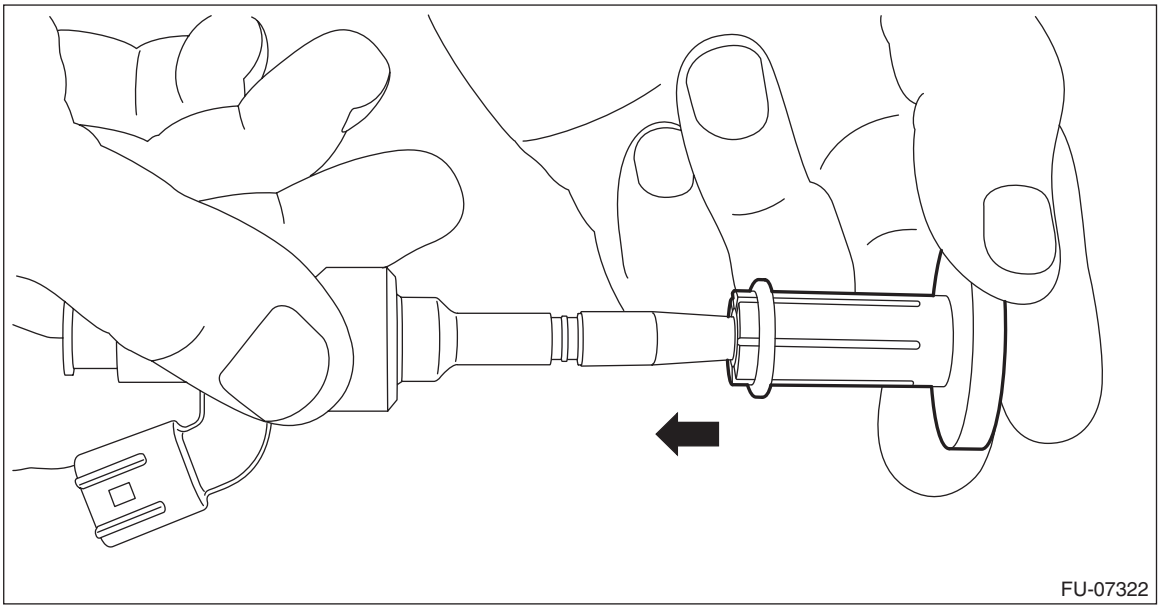

6) While rotating the injector seal adjuster to left and right by 90° for each side, slowly insert it all the way.

NOTE:
- Apply a thin coat of gasoline to the injector seal and injector seal adjuster.
- With the injector seal adjuster fully inserted, rotate it to left and right approx. ten times by 90° for each side to normalize the injector seal.

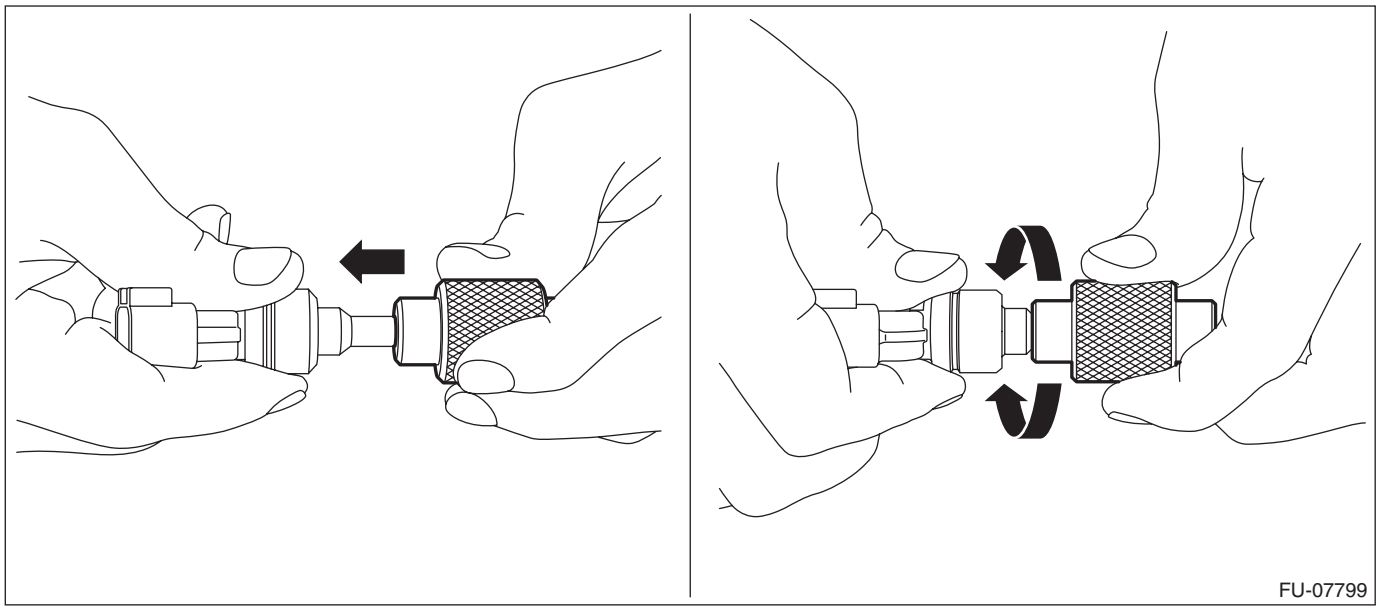

7) Attach the seal guide B to the fuel injector.

NOTE:
Two types of seal guides are provided. So, do not mix up the type to be used.

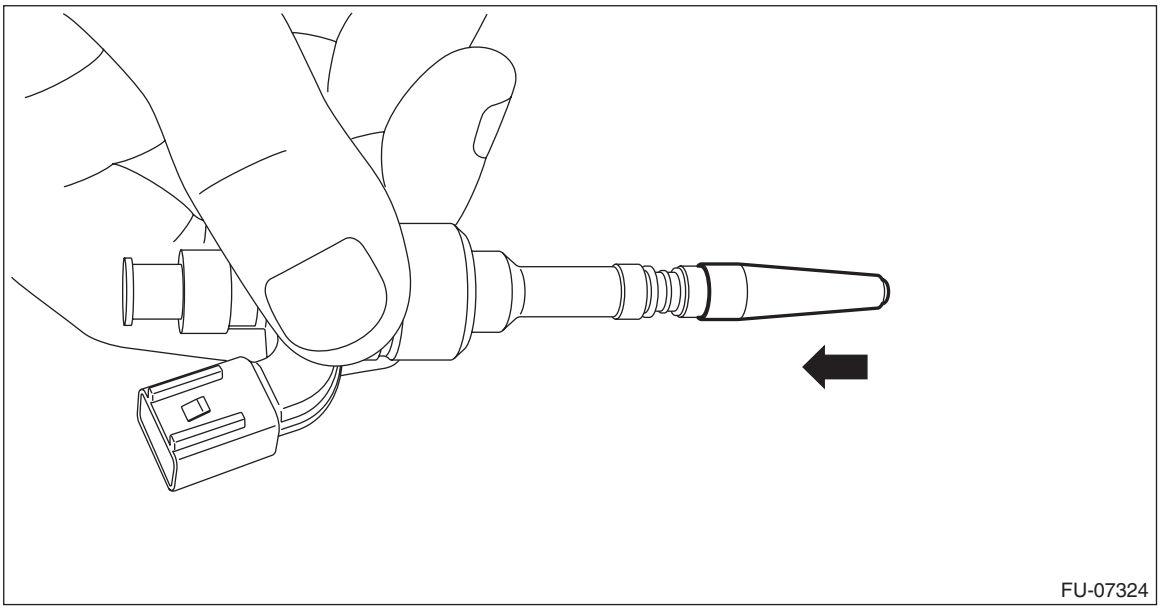

8) Set the injector seal to the injector seal installer.

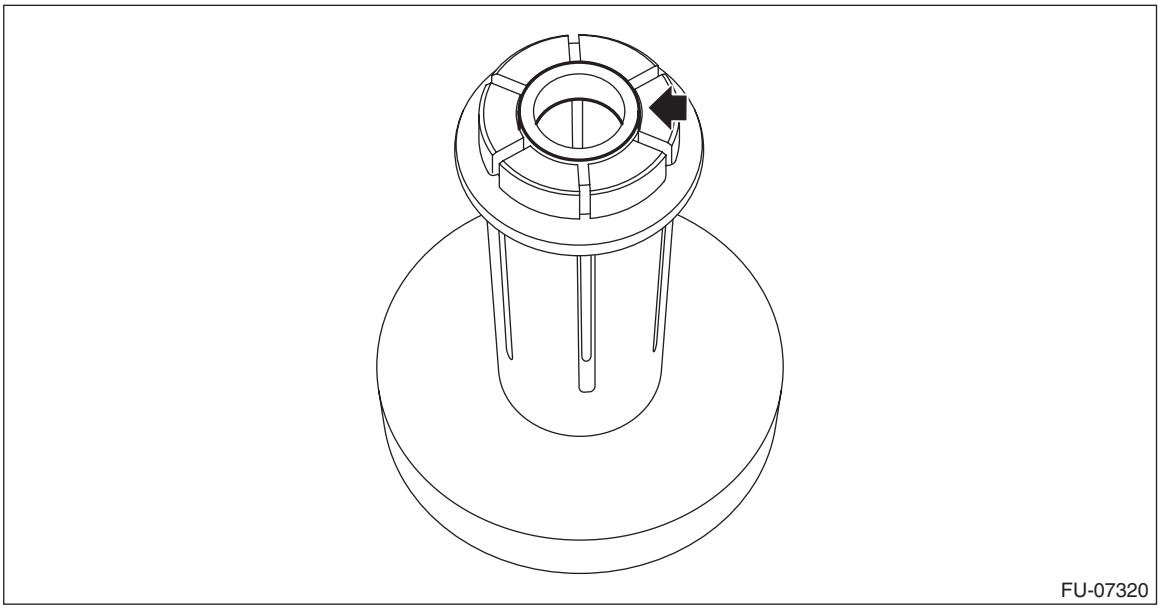

9) Push in the injector seal installer slowly in the direction of the arrow, and attach the injector seal to the fuel injector.

CAUTION:
- **Insert it so that the injector seal is installed straight.**
- **Be careful that the injector seal does not go beyond the fuel injector groove.**

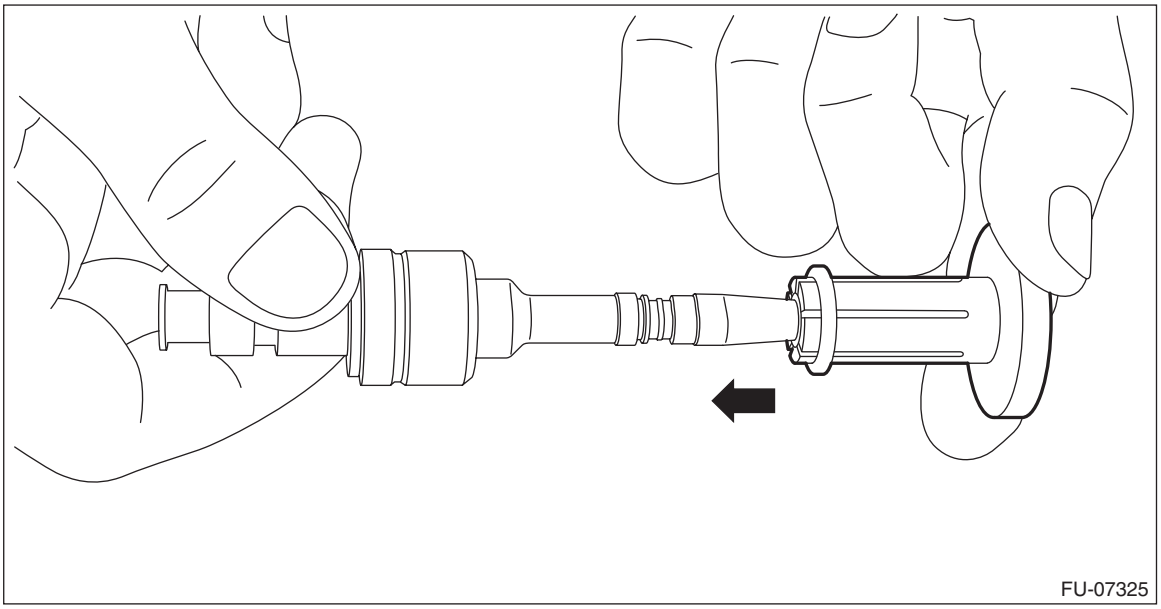

10) While rotating the injector seal adjuster to left and right by 90° for each side, slowly insert it all the way.

NOTE:
- Apply a thin coat of gasoline to the injector seal and injector seal adjuster.
- With the injector seal adjuster fully inserted, rotate it to left and right approx. ten times by 90° for each side to normalize the injector seal.

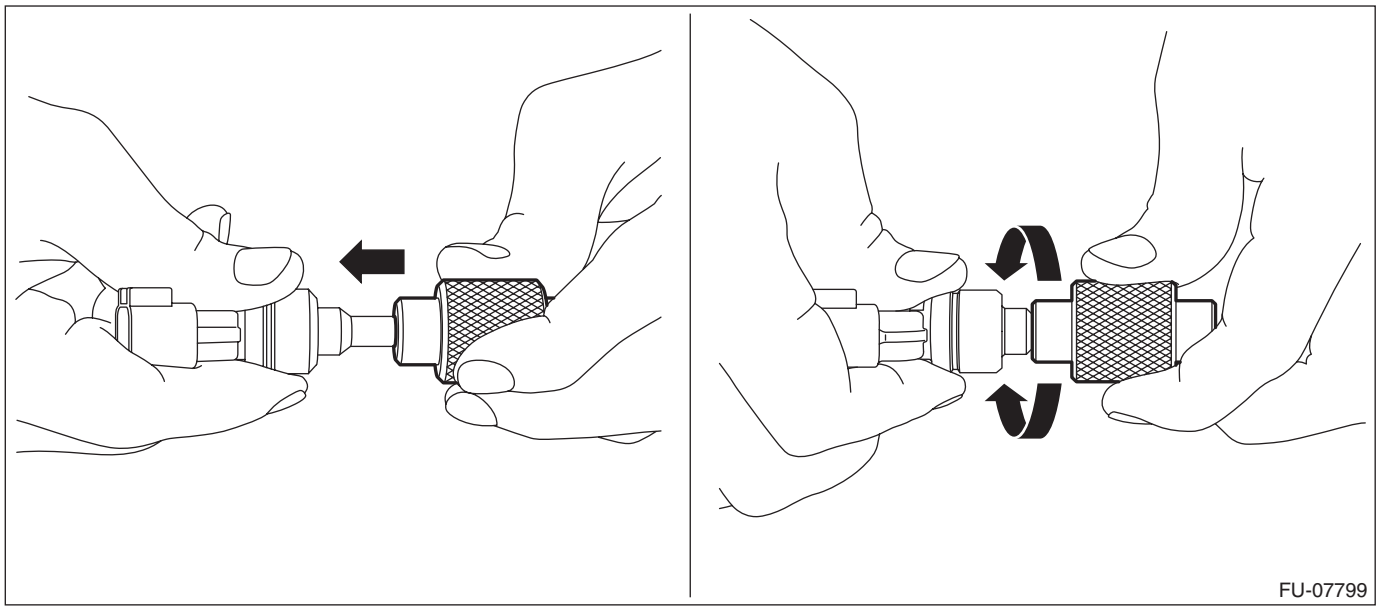

11) Attach two backup rings and O-ring to the fuel injector.

NOTE:
Use new backup rings and O-ring.

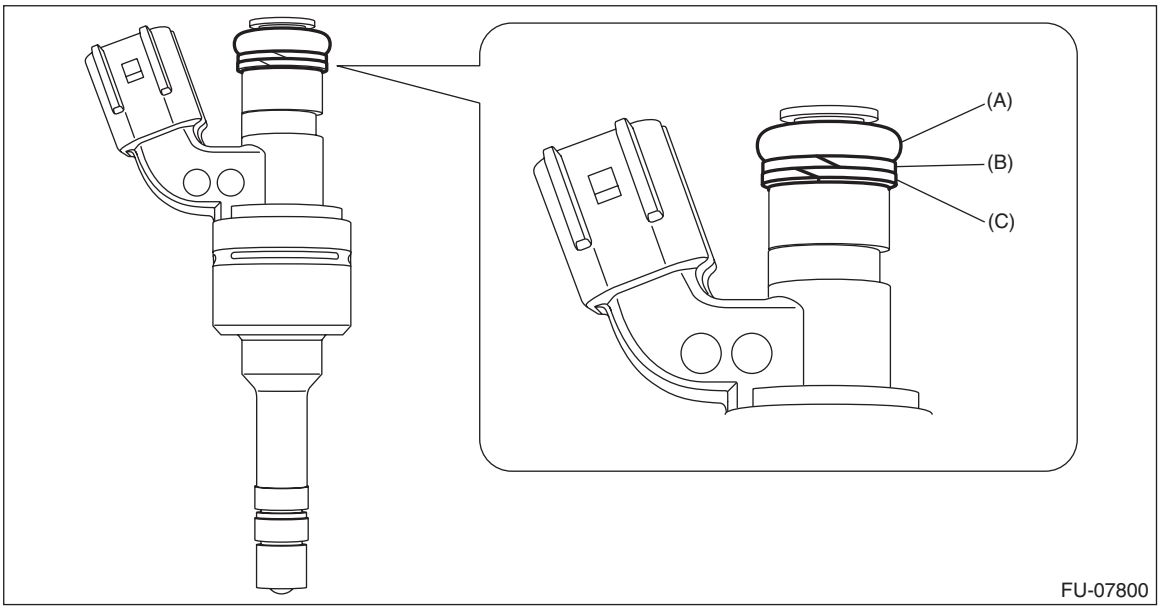

(A) O-ring
(B) Backup ring (brown)
(C) Backup ring (white)

D: INSPECTION

1) Check that the fuel injector has no deformation, cracks or other damages.
2) Measure the resistance between fuel injector terminals.

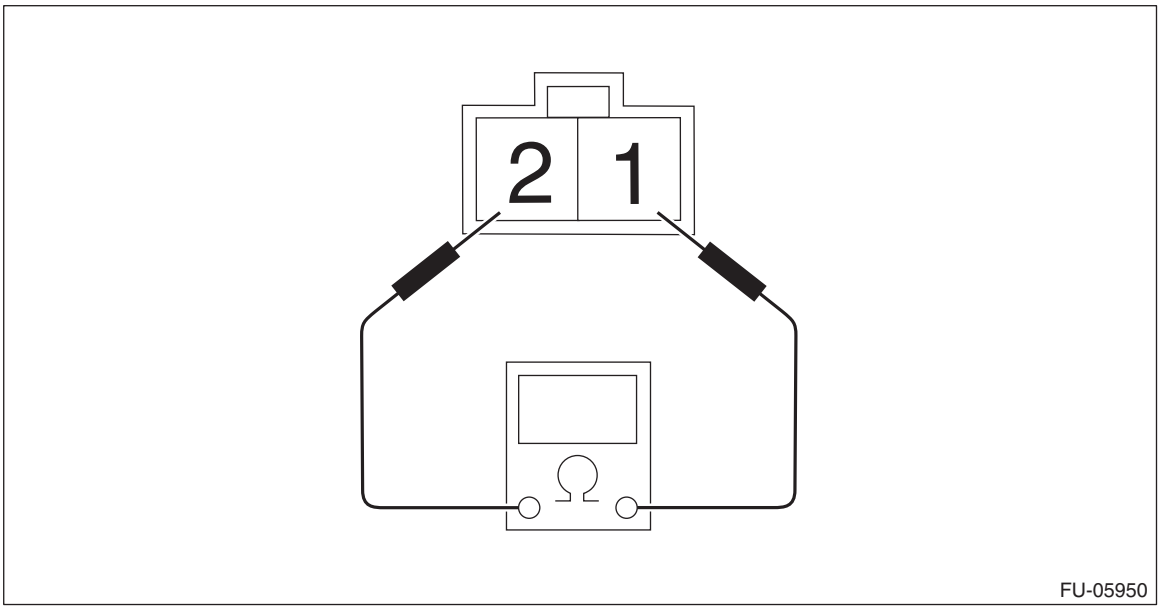

Terminal No.	Standard
1 and 2	Approx. 2.1 Ω (when 20°C (68°F))

8. Fuel Pressure Sensor

A: REMOVAL

CAUTION:
- **Be careful not to spill fuel.**
- **Catch the fuel from the pipes using a container or cloth.**

1) Disconnect the ground terminal from battery sensor. <Ref. to NT-6, BATTERY, NOTE, Note.>
2) Remove the intake manifold. <Ref. to FU(w/o STI)-18, REMOVAL, Intake Manifold.>
3) Remove the fuel injector RH. <Ref. to FU(w/o STI)-50, FUEL INJECTOR RH, REMOVAL, Fuel Injector.>

B: INSTALLATION

1) Replace injector seal, retainer, and O-ring with a new part. <Ref. to FU(w/o STI)-59, REPLACEMENT, Fuel Injector.>
2) Set the holder to the fuel injector, and install it to the fuel injector pipe RH.

CAUTION:
- **Always use a new holder.**
- **Always use a new fuel injector pipe RH.**

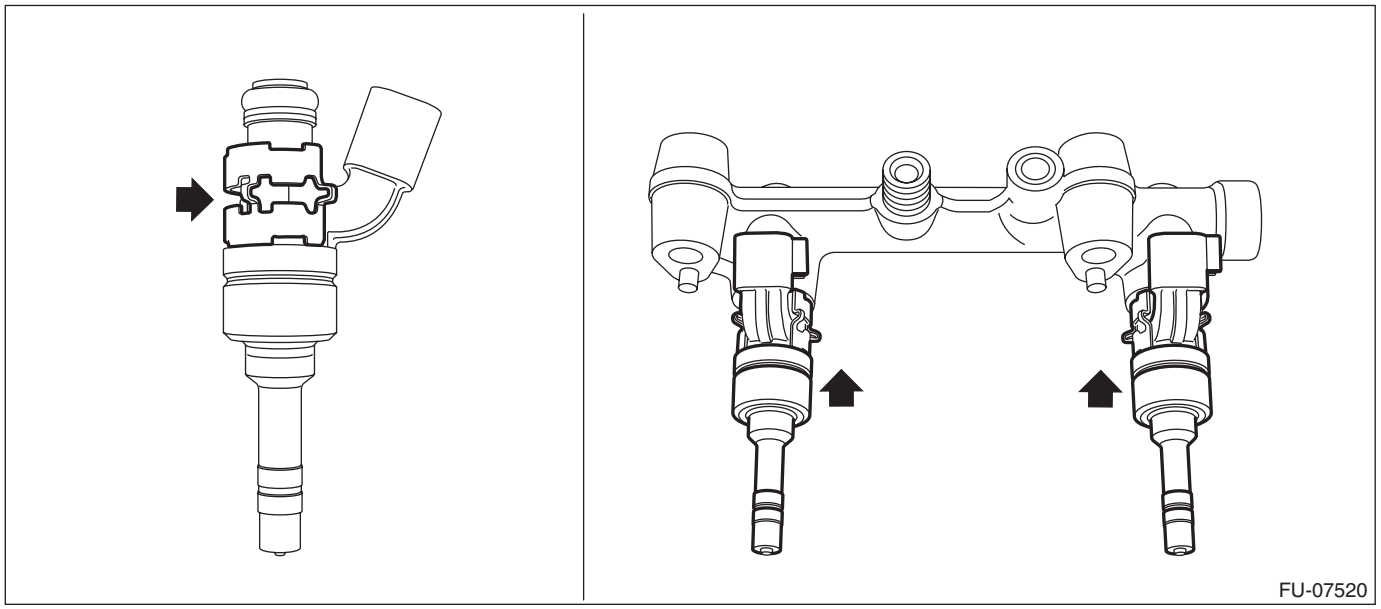

3) Install the fuel injector pipe RH and fuel injector as a single unit to the cylinder head.

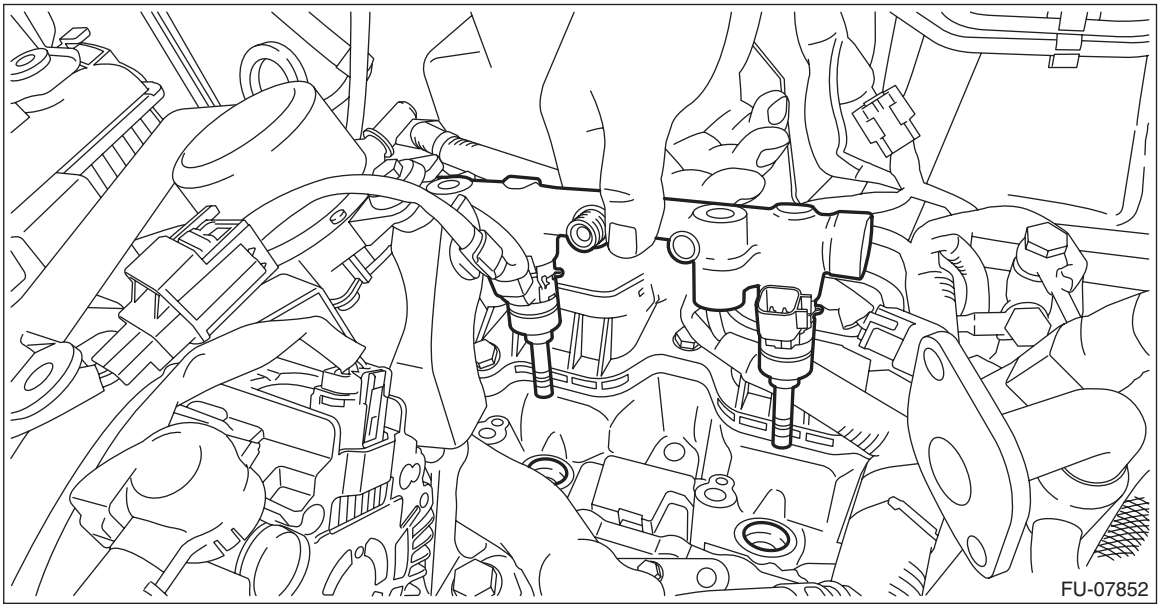

4) Tighten the fuel injector pipe RH.

Tightening torque:
19 N·m (1.9 kgf-m, 14.0 ft-lb)

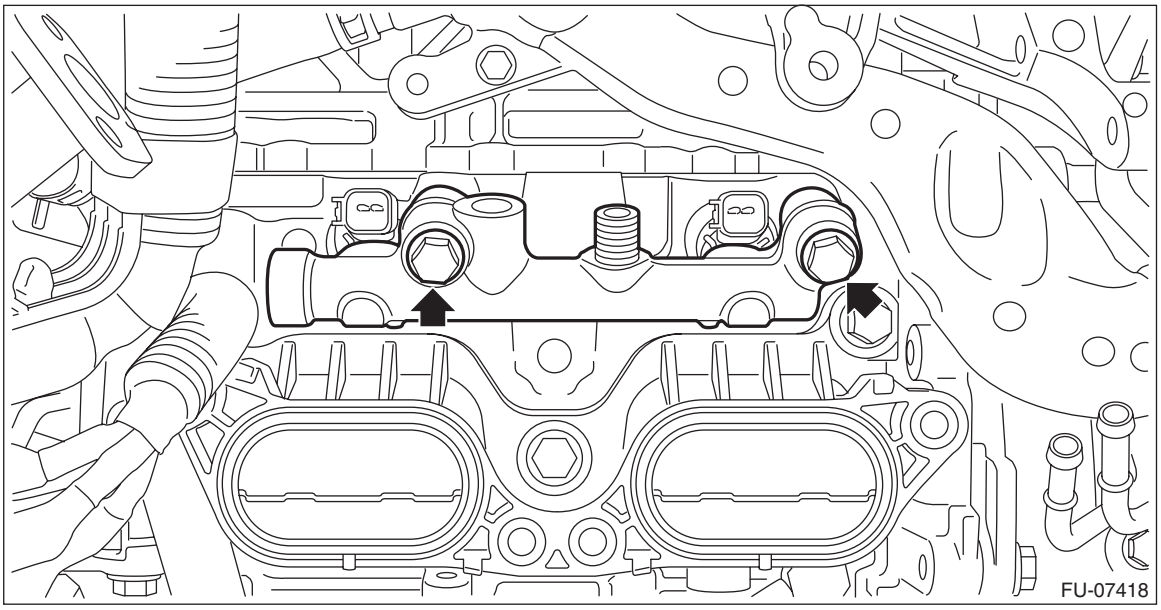

5) Temporarily tighten the fuel pressure sensor to the fuel injector pipe RH until it cannot be turned by hand.

CAUTION:
Always use a new fuel pressure sensor.

6) Tighten the fuel pressure sensor.

CAUTION:
• Be careful not to spill oil on the screw sections of the fuel pressure sensor and the fuel injector pipe RH.
• Be careful not to let foreign matter enter into the fuel pressure sensor during installation.
• Do not recheck the tightening torque after tightening the fuel pressure sensor with specified torque.

Tightening torque:
46 N·m (4.7 kgf-m, 33.9 ft-lb)

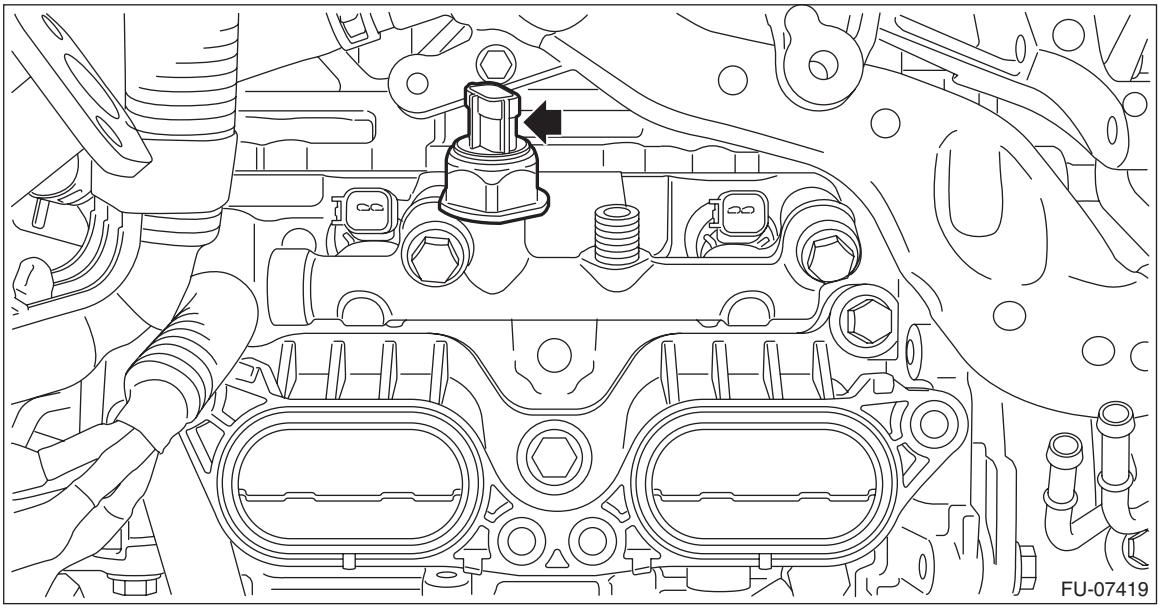

7) Install the high-pressure fuel delivery pipe assembly. <Ref. to FU(w/o STI)-80, HIGH-PRESSURE FUEL DELIVERY PIPE ASSEMBLY, INSTALLATION, High Pressure Fuel Delivery Pipe.>
8) Connect the ground terminal to battery sensor. <Ref. to NT-6, BATTERY, NOTE, Note.>

C: INSPECTION

Check that the fuel pressure sensor has no deformation, cracks or other damages.

9. High Pressure Fuel Pump

A: REMOVAL

1. HIGH-PRESSURE FUEL PUMP

CAUTION:
- **Be careful not to spill fuel.**
- **Catch the fuel from the pipes using a container or cloth.**

1) Disconnect the ground terminal from battery sensor. <Ref. to NT-6, BATTERY, NOTE, Note.>
2) Remove the high-pressure fuel delivery pipes. <Ref. to FU(w/o STI)-78, HIGH-PRESSURE FUEL DELIVERY PIPE, REMOVAL, High Pressure Fuel Delivery Pipe.>
3) Remove the fuel delivery pipe (A) from the high-pressure fuel pump, and disconnect the connector (B) from the high-pressure fuel pump.

NOTE:
Disconnect the quick connector as shown in the figure.

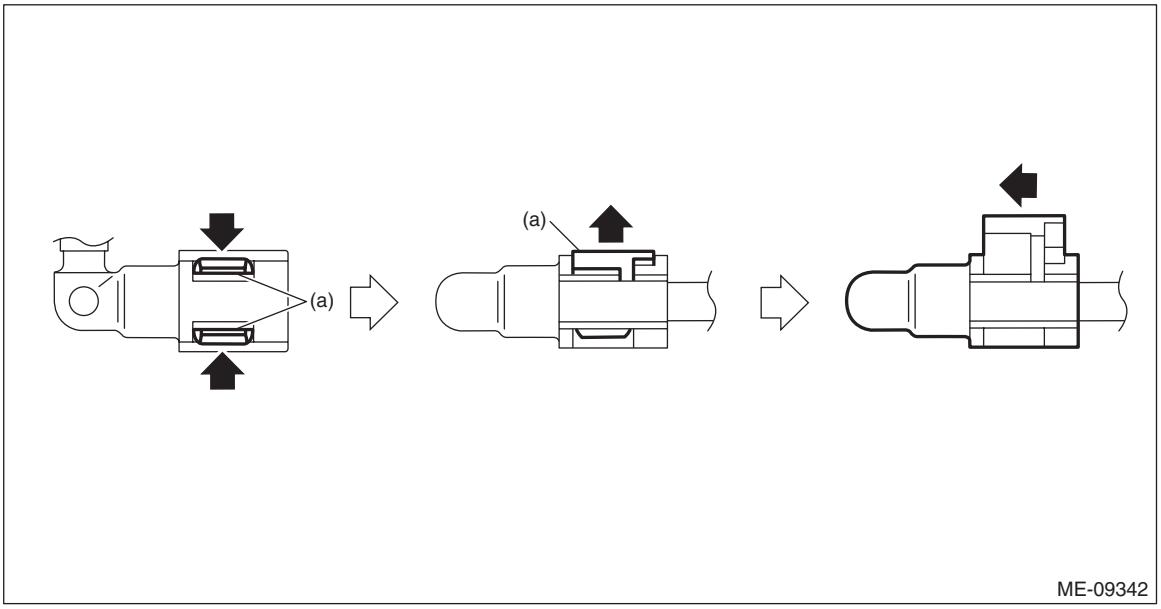

(a) Slider

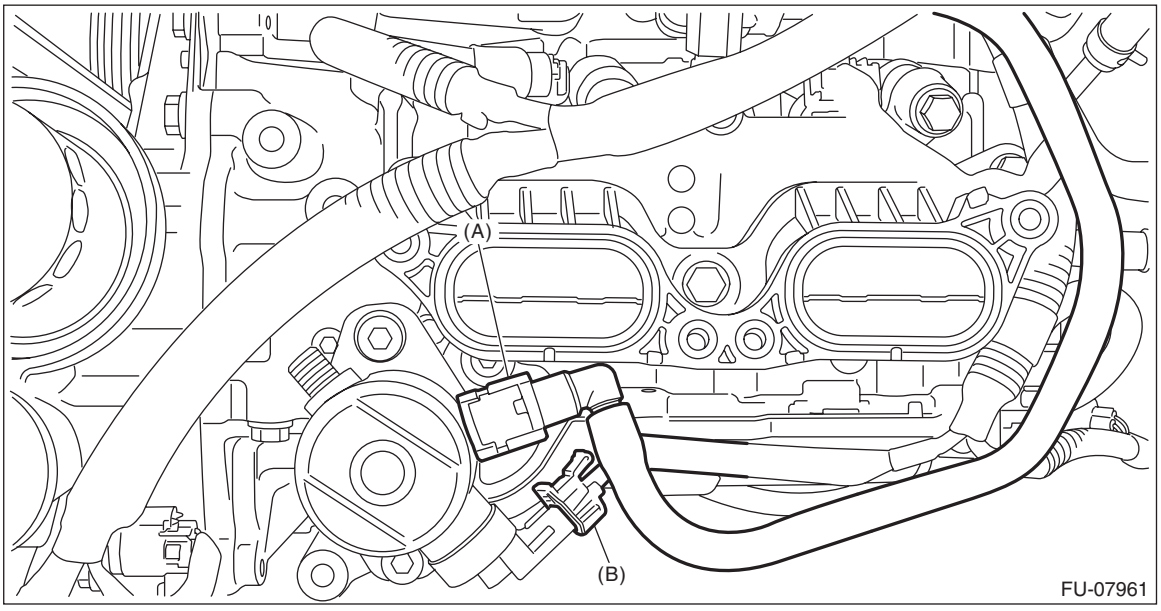

4) Using TORX PLUS® bit 40IP, remove the high-pressure fuel pump.

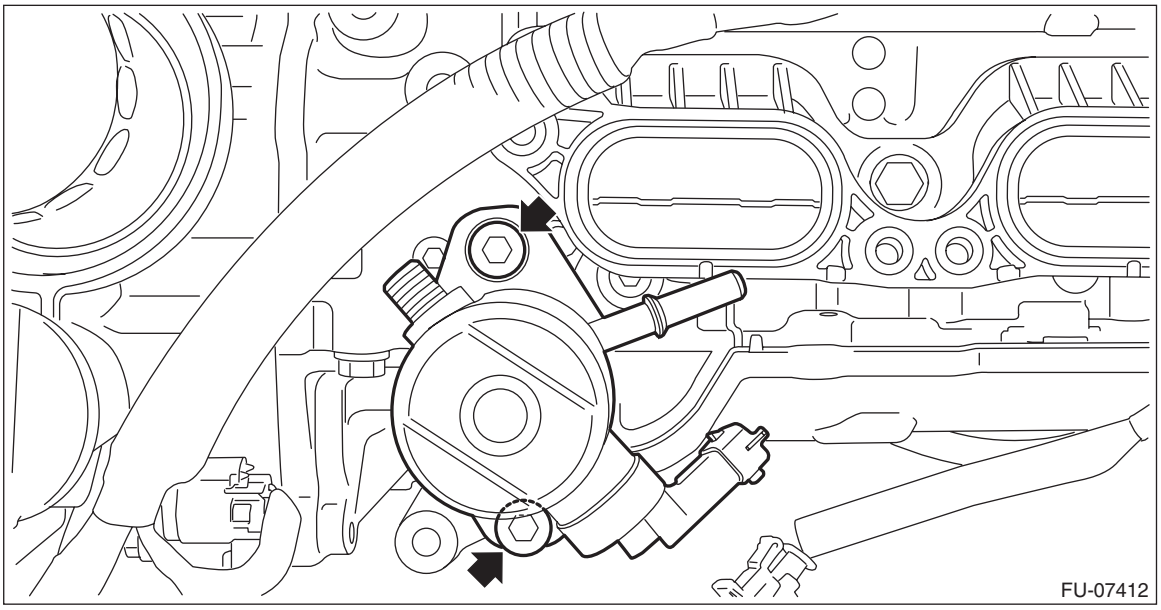

5) Remove the fuel pump lifter from the fuel pump case.

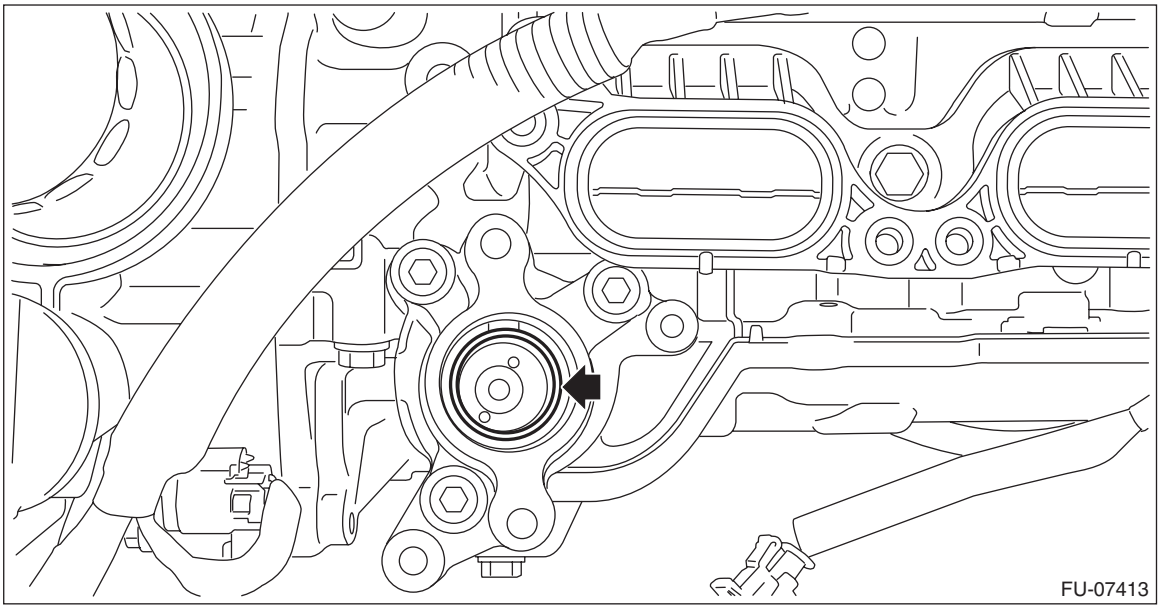

2. HIGH-PRESSURE FUEL PUMP CASE

1) Remove the high-pressure fuel pump. <Ref. to FU(w/o STI)-69, HIGH-PRESSURE FUEL PUMP, REMOVAL, High Pressure Fuel Pump.>
2) Remove the air intake adapter LH from the cylinder head.

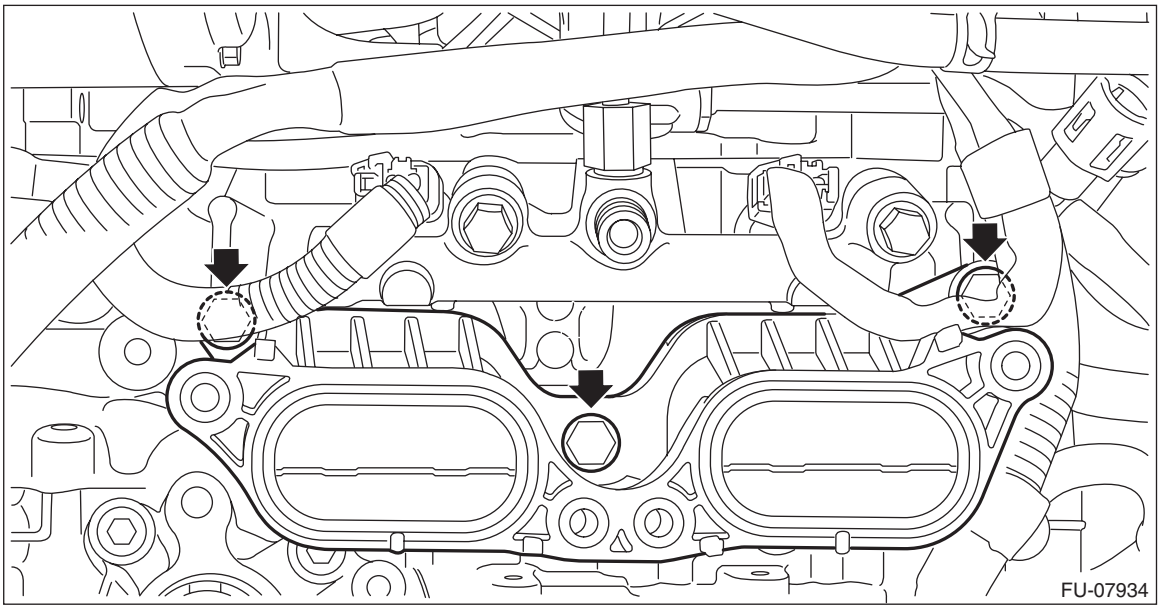

3) Remove the high-pressure fuel pump case from the cam carrier assembly LH.

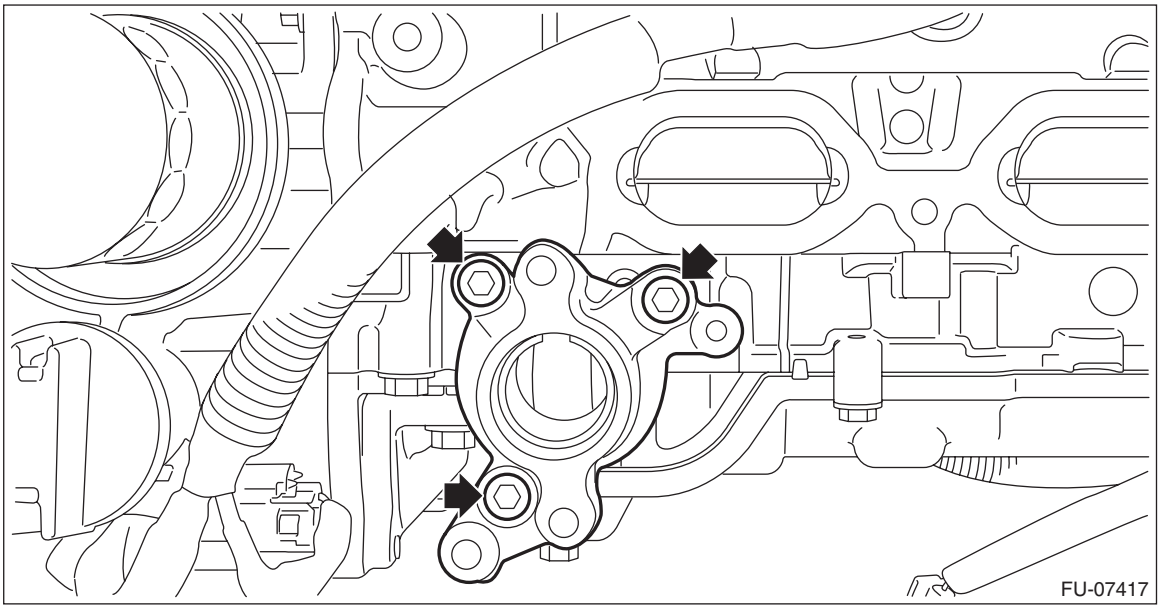

B: INSTALLATION

1. HIGH-PRESSURE FUEL PUMP

1) Install the fuel pump lifter to the high-pressure fuel pump case.

NOTE:
Apply engine oil to the side of the high-pressure fuel pump case and to the bottom surface of the fuel pump lifter.

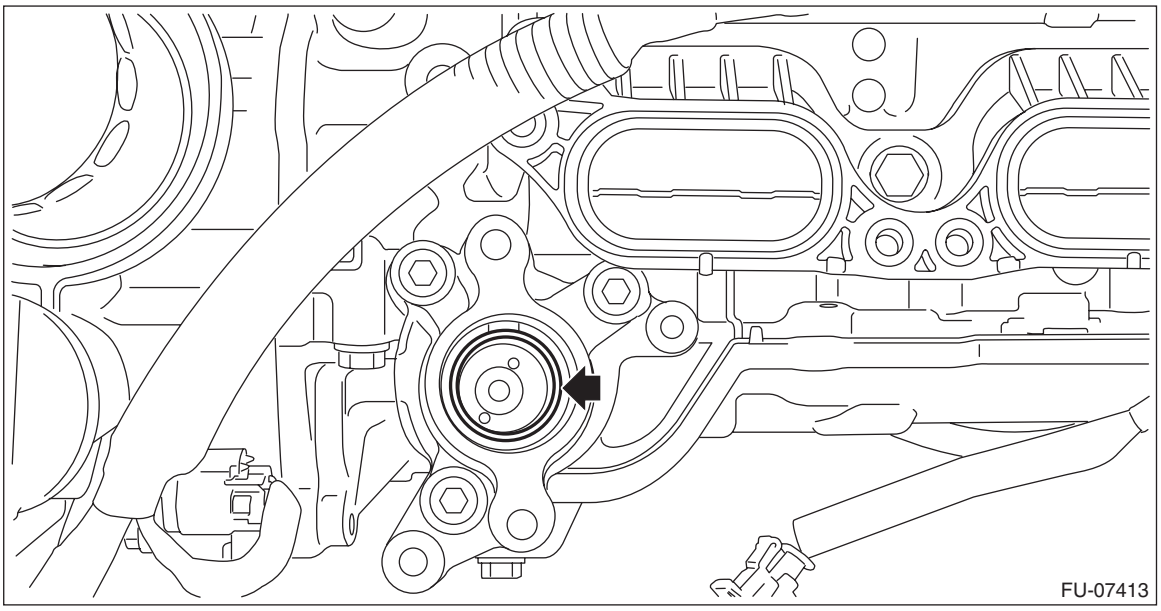

2) Using TORX PLUS® bit 40IP, install the high-pressure fuel pump.

NOTE:
Use new O-rings.

Tightening torque:
21 N·m (2.1 kgf-m, 15.5 ft-lb)

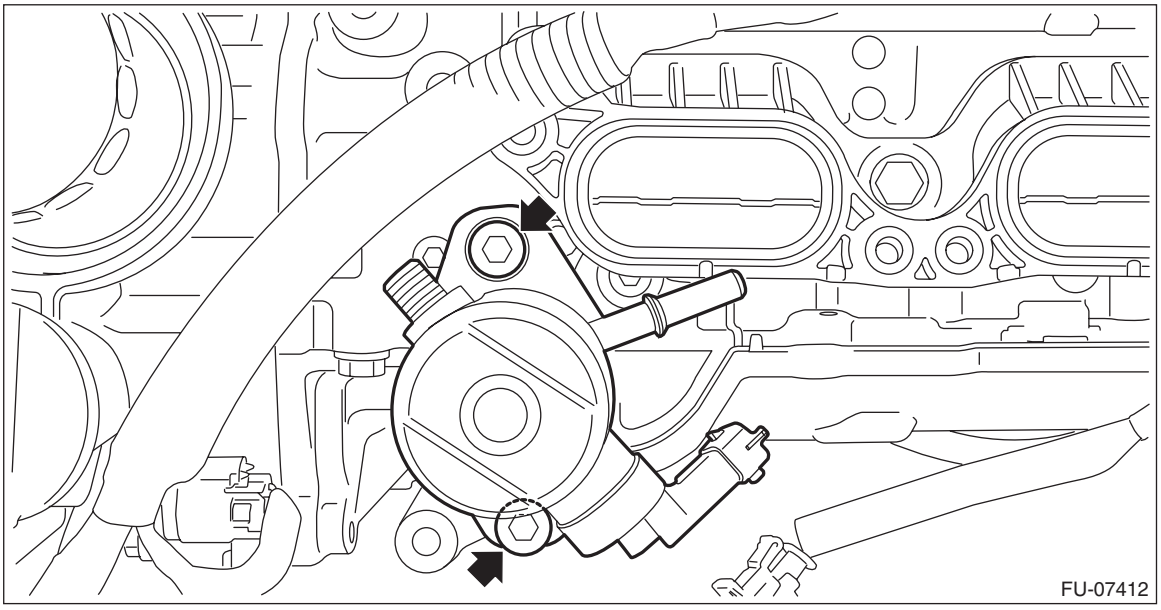

3) Connect the connector (B) to the high-pressure fuel pump, and install the fuel delivery pipe (A) to the high-pressure fuel pump.

CAUTION:
• Check that there is no damage or dust on the quick connector. If necessary, clean the seal surface of the pipe.
• When connecting the quick connector, make sure to insert it all the way in before locking the slider.
• When it is difficult to lock the slider, check that the connector is fully inserted.
• After locking the slider, check again that the quick connector is securely connected.

NOTE:
Connect the quick connector as shown in the figure.

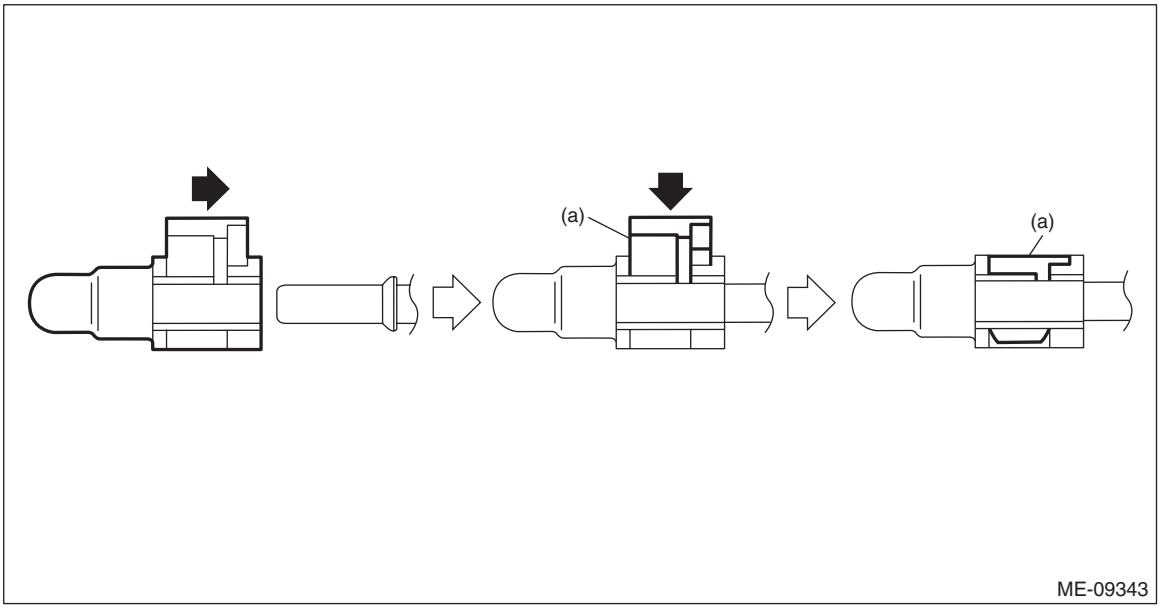

(a) Slider

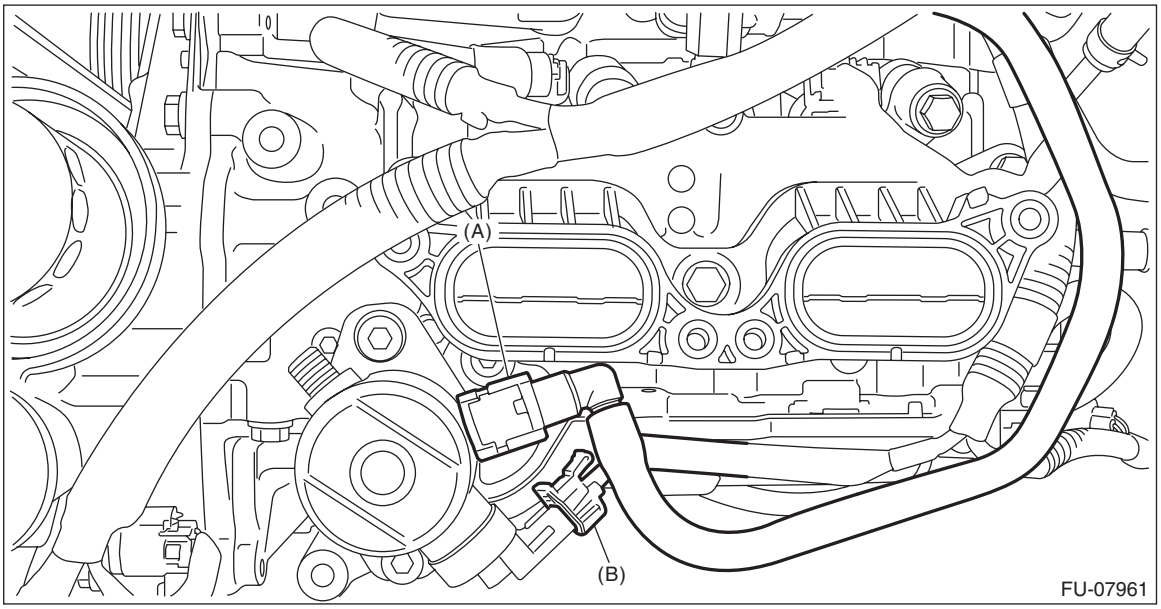

4) Install the high-pressure fuel delivery pipe. <Ref. to FU(w/o STI)-79, HIGH-PRESSURE FUEL DELIVERY PIPE, INSTALLATION, High Pressure Fuel Delivery Pipe.>
5) Connect the ground terminal to battery sensor. <Ref. to NT-6, BATTERY, NOTE, Note.>

2. HIGH-PRESSURE FUEL PUMP CASE

1) Apply liquid gasket to the mating surfaces of fuel pump case, and install the high-pressure fuel pump case.

NOTE:
- Clean the mating surface of the high-pressure fuel pump case and cam carrier assembly LH.
- Install within 5 min. after applying liquid gasket.

Liquid gasket:
THREE BOND 1217G (Part No. K0877Y0100), THREE BOND 1217H or equivalent

Liquid gasket applying diameter:
3±1 mm (0.1181±0.0394 in)

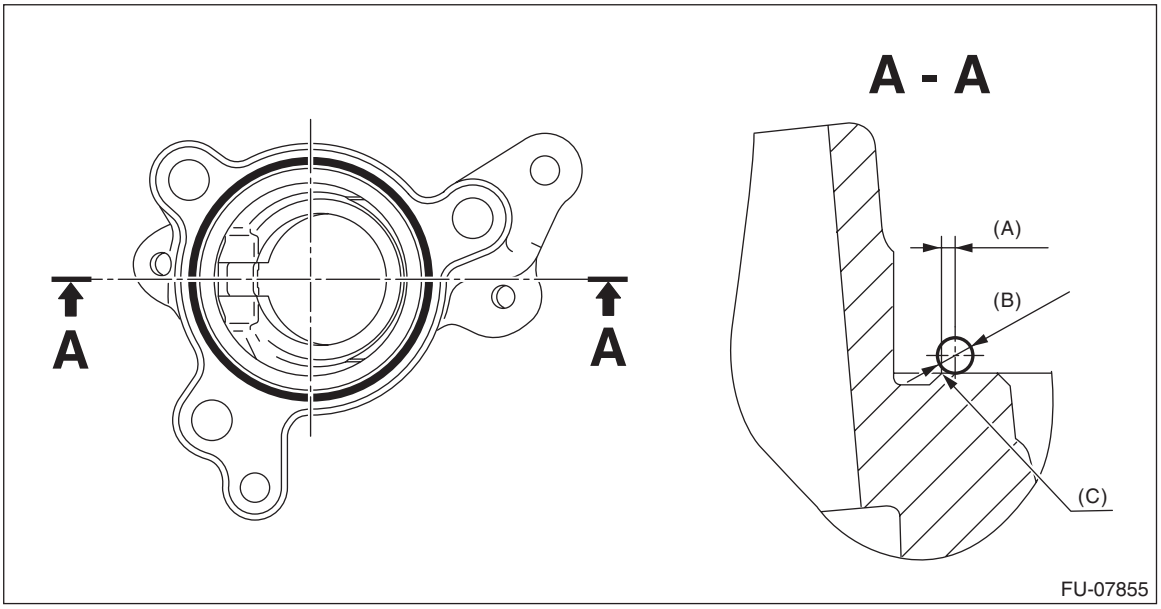

(A) 1 mm or less (0.0394 in or less) (B) 3 mm (0.1181 in) (C) Chamfer edge

2) Install the high-pressure fuel pump case to the cam carrier assembly LH.

Tightening torque:
19 N·m (1.9 kgf-m, 14.0 ft-lb)

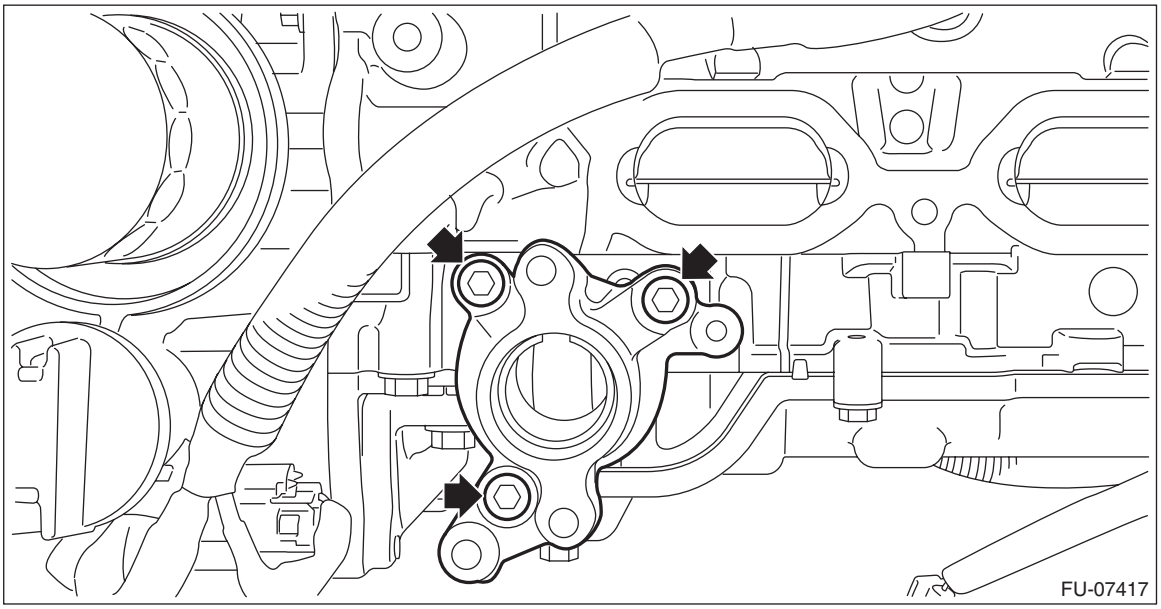

3) Install the air intake adapter LH to cylinder heads.

NOTE:
Use a new gasket.

Tightening torque:
25 N·m (2.5 kgf-m, 18.4 ft-lb)

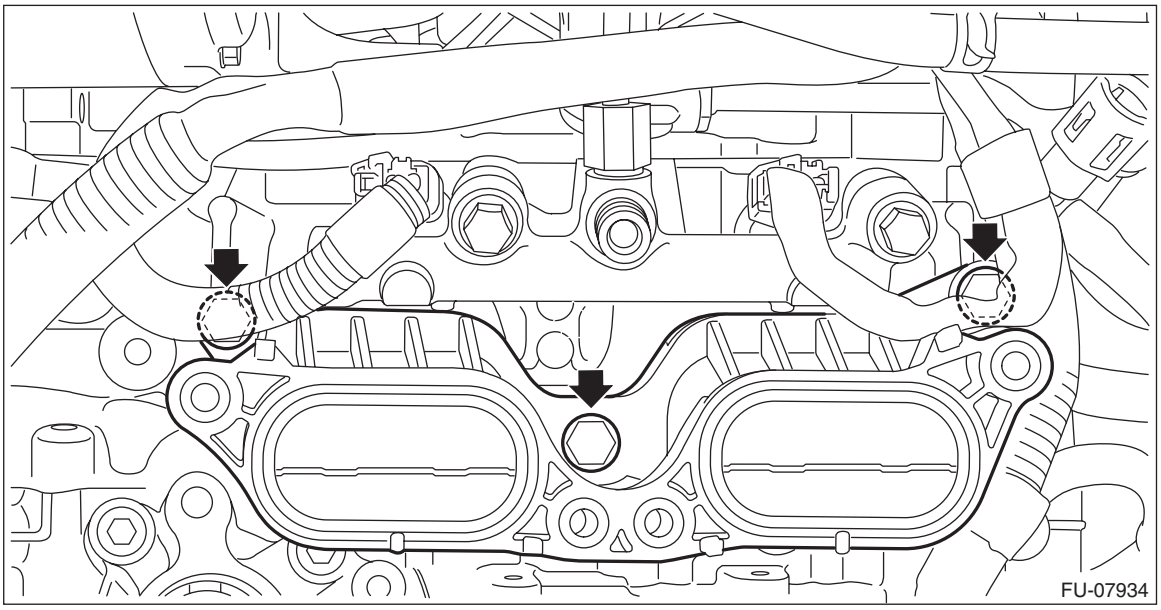

4) Install the high-pressure fuel pump. <Ref. to FU(w/o STI)-72, HIGH-PRESSURE FUEL PUMP, INSTALLATION, High Pressure Fuel Pump.>

C: INSPECTION

1. CHECK HIGH-PRESSURE FUEL PUMP

1) Check that the high-pressure fuel pump has no deformation, cracks or other damages.
2) Measure the resistance between high-pressure fuel pump terminals.

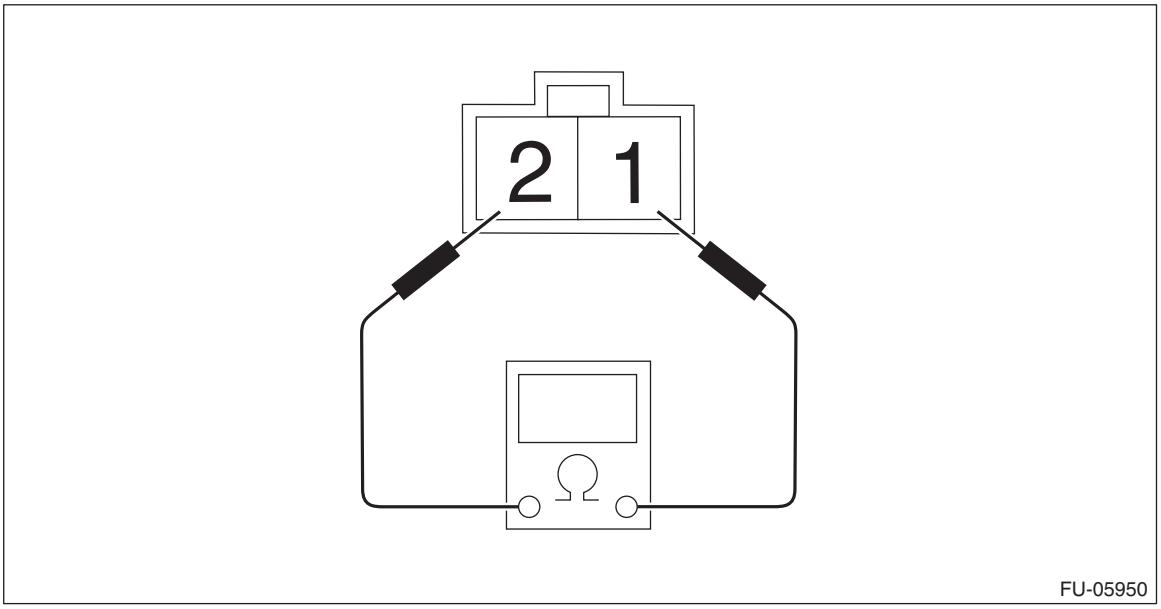

Terminal No.	Standard
1 and 2	10±1 Ω (when 20°C (68°F))

2. CHECK HIGH-PRESSURE FUEL PUMP CASE

1) Check that the high-pressure fuel pump case has no deformation, cracks or other damages.
2) Check the clearance between the fuel pump lifter and high-pressure fuel pump case bore. Check the clearance between fuel pump lifter and high-pressure fuel pump case bore by measuring the outer diameter of fuel pump lifter and the inner diameter of high-pressure fuel pump case bore respectively.
(1) Measure the outer diameter of fuel pump lifter with a micrometer.

NOTE:
- Measurement should be performed at a temperature of 20°C (68°F).
- Record the measured value.

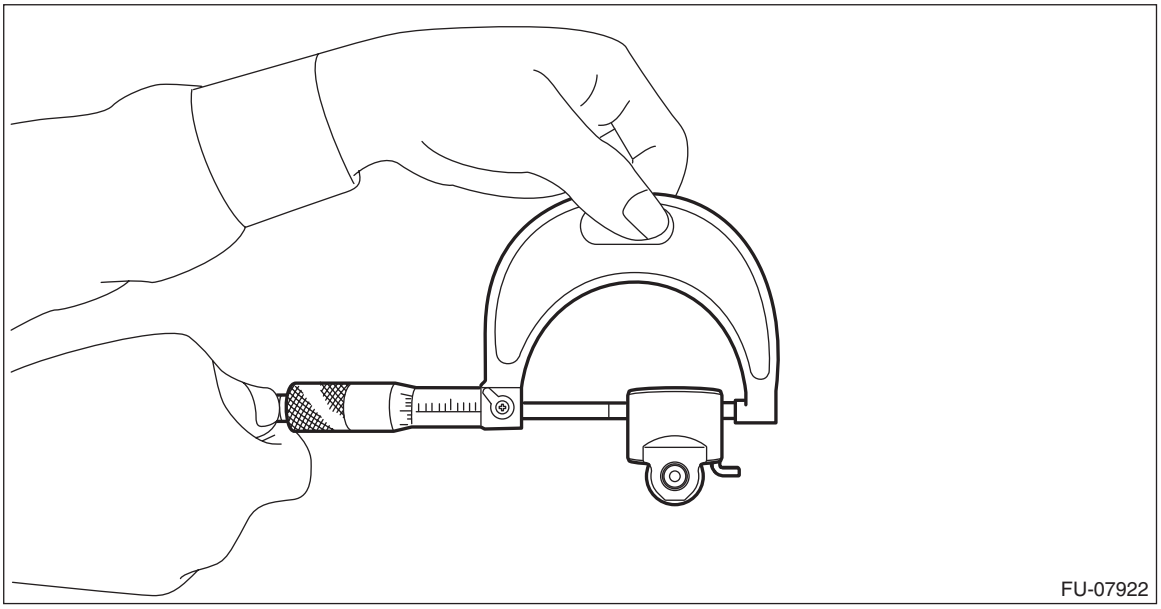

(2) Using a caliper gauge, measure the inner diameter of high-pressure fuel pump case bore.

NOTE:
- Measurement should be performed at a temperature of 20°C (68°F).
- Record the measured value.

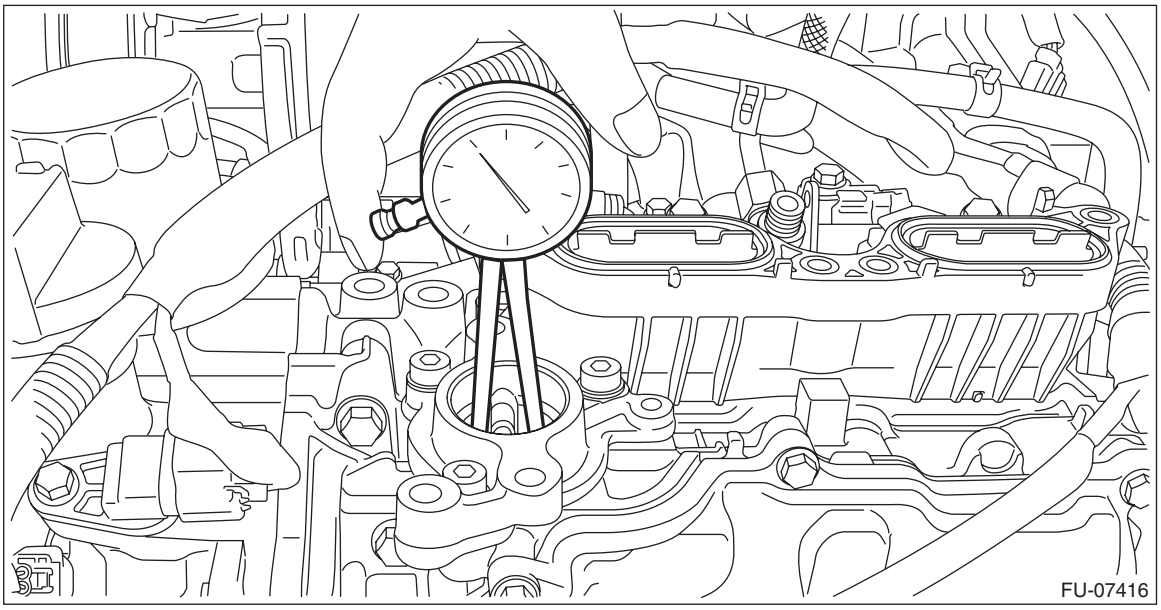

(3) Calculate the clearance between the fuel pump lifter and high-pressure fuel pump case bore. If it is not within the standard, replace the fuel pump lifter and high-pressure fuel pump case as a set.

Clearance between fuel pump lifter and high-pressure fuel pump case bore:
Standard
0.065 — 0.134 mm (0.0026 — 0.0053 in)

10.High Pressure Fuel Delivery Pipe

A: REMOVAL

1. HIGH-PRESSURE FUEL DELIVERY PIPE

CAUTION:
- **Be careful not to spill fuel.**
- **Catch the fuel from the pipes using a container or cloth.**

1) Disconnect the ground terminal from battery sensor. <Ref. to NT-6, BATTERY, NOTE, Note.>
2) Remove the intake manifold. <Ref. to FU(w/o STI)-18, REMOVAL, Intake Manifold.>
3) Remove the fuel pump insulator. <Ref. to FU(w/o STI)-45, FUEL PUMP INSULATOR, REMOVAL, Fuel Insulator.>
4) Remove the fuel pipe insulator No. 1. <Ref. to FU(w/o STI)-46, FUEL PIPE INSULATOR NO. 1, REMOVAL, Fuel Insulator.>
5) Remove the fuel pipe insulator No. 2. <Ref. to FU(w/o STI)-46, FUEL PIPE INSULATOR NO. 2, REMOVAL, Fuel Insulator.>
6) Remove the high-pressure fuel delivery pipes.

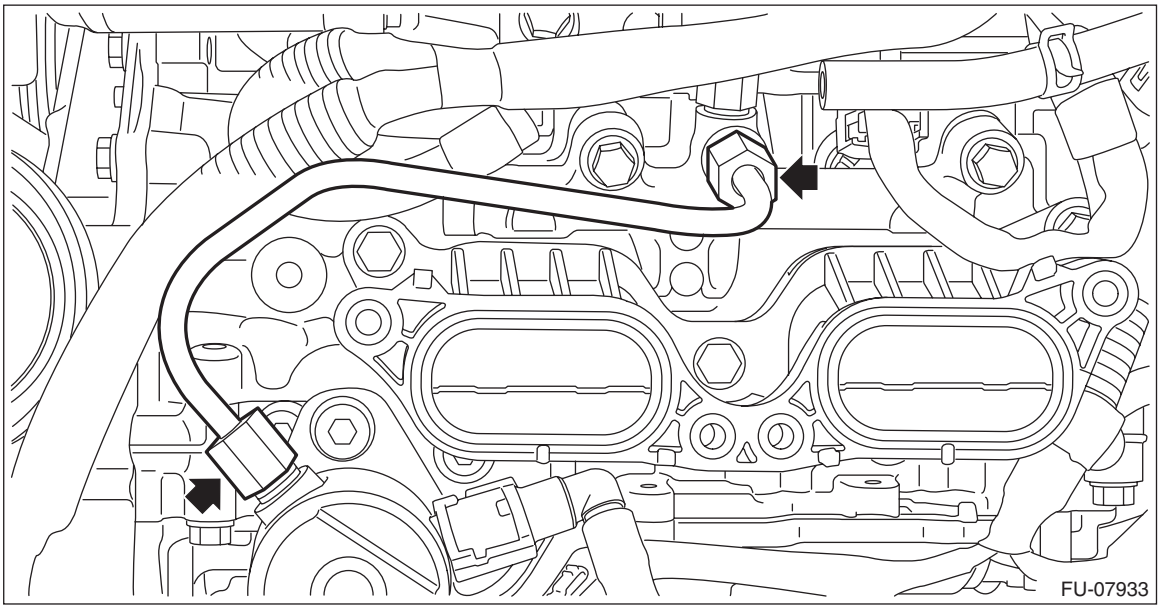

2. HIGH-PRESSURE FUEL DELIVERY PIPE ASSEMBLY

CAUTION:
- **Be careful not to spill fuel.**
- **Catch the fuel from the pipes using a container or cloth.**

1) Disconnect the ground terminal from battery sensor. <Ref. to NT-6, BATTERY, NOTE, Note.>
2) Remove the intake manifold. <Ref. to FU(w/o STI)-18, REMOVAL, Intake Manifold.>
3) Remove the fuel pipe insulator No. 1. <Ref. to FU(w/o STI)-46, FUEL PIPE INSULATOR NO. 1, REMOVAL, Fuel Insulator.>
4) Remove the fuel pipe insulator No. 2. <Ref. to FU(w/o STI)-46, FUEL PIPE INSULATOR NO. 2, REMOVAL, Fuel Insulator.>
5) Remove the fuel pipe insulator No. 3. <Ref. to FU(w/o STI)-47, FUEL PIPE INSULATOR NO. 3, REMOVAL, Fuel Insulator.>

6) Remove the flare nut (A) and bolt (B), and then remove the high-pressure fuel delivery pipe assembly.

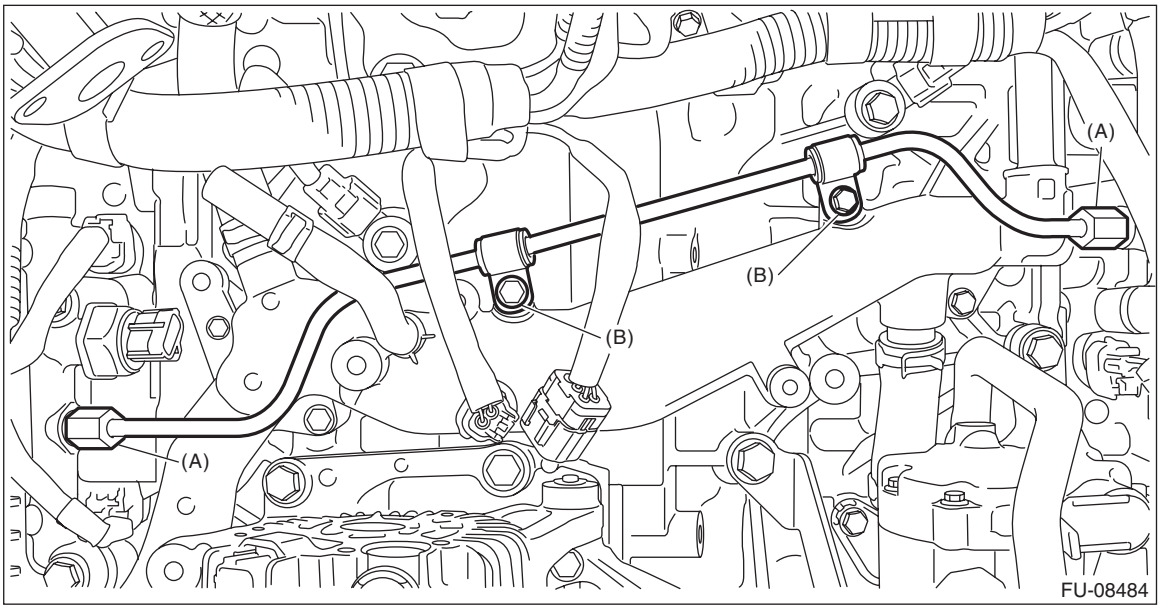

B: INSTALLATION

1. HIGH-PRESSURE FUEL DELIVERY PIPE

1) Temporarily tighten the high-pressure fuel delivery pipe by hand until it is seated, and tighten the flare nuts on both ends.

CAUTION:
Always use a new high-pressure fuel delivery pipe.

Tightening torque:
25 N·m (2.5 kgf-m, 18.4 ft-lb)

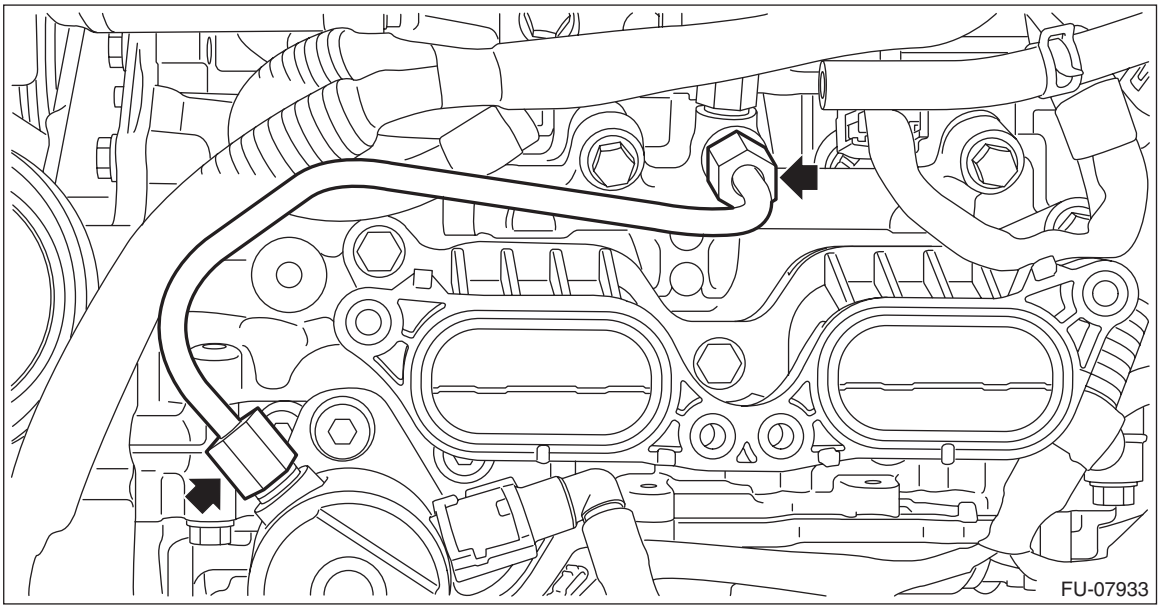

2) Install the fuel pipe insulator No. 2. <Ref. to FU(w/o STI)-48, FUEL PIPE INSULATOR NO. 2, INSTALLATION, Fuel Insulator.>
3) Install the fuel pipe insulator No. 1. <Ref. to FU(w/o STI)-48, FUEL PIPE INSULATOR NO. 1, INSTALLATION, Fuel Insulator.>
4) Install the fuel pump insulator. <Ref. to FU(w/o STI)-48, FUEL PUMP INSULATOR, INSTALLATION, Fuel Insulator.>
5) Install the intake manifold. <Ref. to FU(w/o STI)-28, INSTALLATION, Intake Manifold.>

6) Connect the ground terminal to battery sensor. <Ref. to NT-6, BATTERY, NOTE, Note.>

2. HIGH-PRESSURE FUEL DELIVERY PIPE ASSEMBLY

1) Install the high-pressure fuel delivery pipe assembly.

CAUTION:
Always use a new high-pressure fuel delivery pipe assembly.

(1) Temporarily tighten the flare nut (A) to the fuel injector pipe by hand until it is seated, and secure the high-pressure fuel delivery pipe assembly to the water pipe assembly using bolts (B).

Tightening torque:
T1: 6.4 N·m (0.7 kgf-m, 4.7 ft-lb)

(2) Tighten the flare nuts (A).

Tightening torque:
T2: 25 N·m (2.5 kgf-m, 18.4 ft-lb)

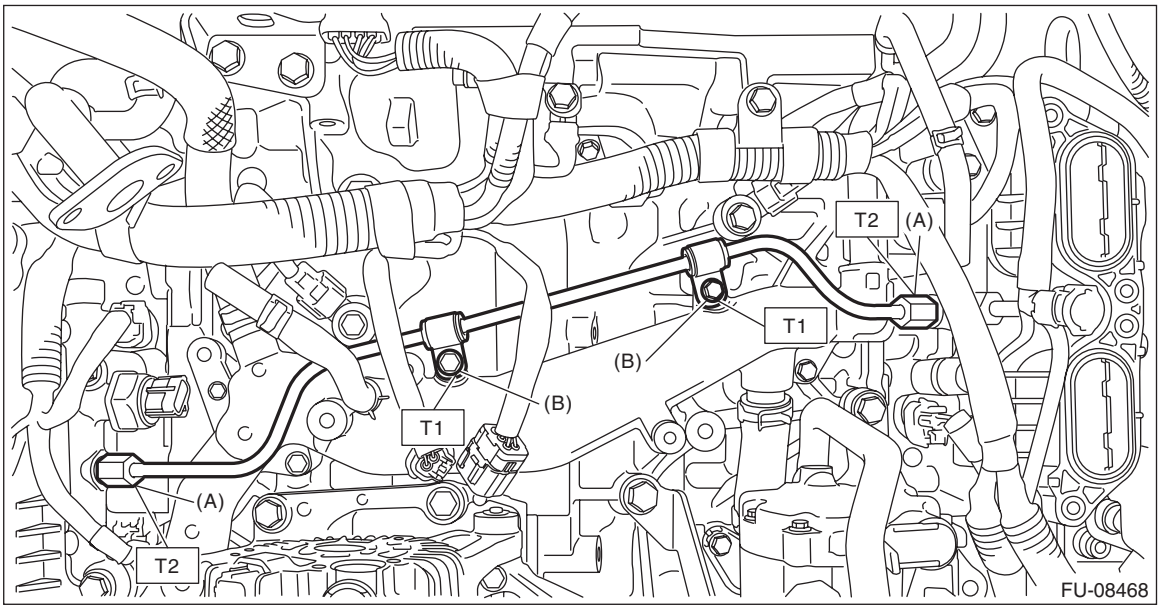

2) Install the fuel pipe insulator No. 3. <Ref. to FU(w/o STI)-49, FUEL PIPE INSULATOR NO. 3, INSTALLATION, Fuel Insulator.>
3) Install the fuel pipe insulator No. 2. <Ref. to FU(w/o STI)-48, FUEL PIPE INSULATOR NO. 2, INSTALLATION, Fuel Insulator.>
4) Install the fuel pipe insulator No. 1. <Ref. to FU(w/o STI)-48, FUEL PIPE INSULATOR NO. 1, INSTALLATION, Fuel Insulator.>
5) Install the intake manifold. <Ref. to FU(w/o STI)-28, INSTALLATION, Intake Manifold.>
6) Connect the ground terminal to battery sensor. <Ref. to NT-6, BATTERY, NOTE, Note.>

C: INSPECTION

Check that the high-pressure fuel delivery pipe and the high-pressure fuel delivery pipe assembly have no deformation, cracks and other damages.

11.Engine Wiring Harness

A: REMOVAL

1) Disconnect the ground terminal from battery sensor. <Ref. to NT-6, BATTERY, NOTE, Note.>
2) Remove the intake manifold. <Ref. to FU(w/o STI)-18, REMOVAL, Intake Manifold.>
3) Remove the fuel insulator. <Ref. to FU(w/o STI)-45, REMOVAL, Fuel Insulator.>
4) Remove the engine control module (ECM). <Ref. to FU(w/o STI)-124, REMOVAL, Engine Control Module (ECM).>
5) Disconnect the connector from the engine.

- Structural diagram 1

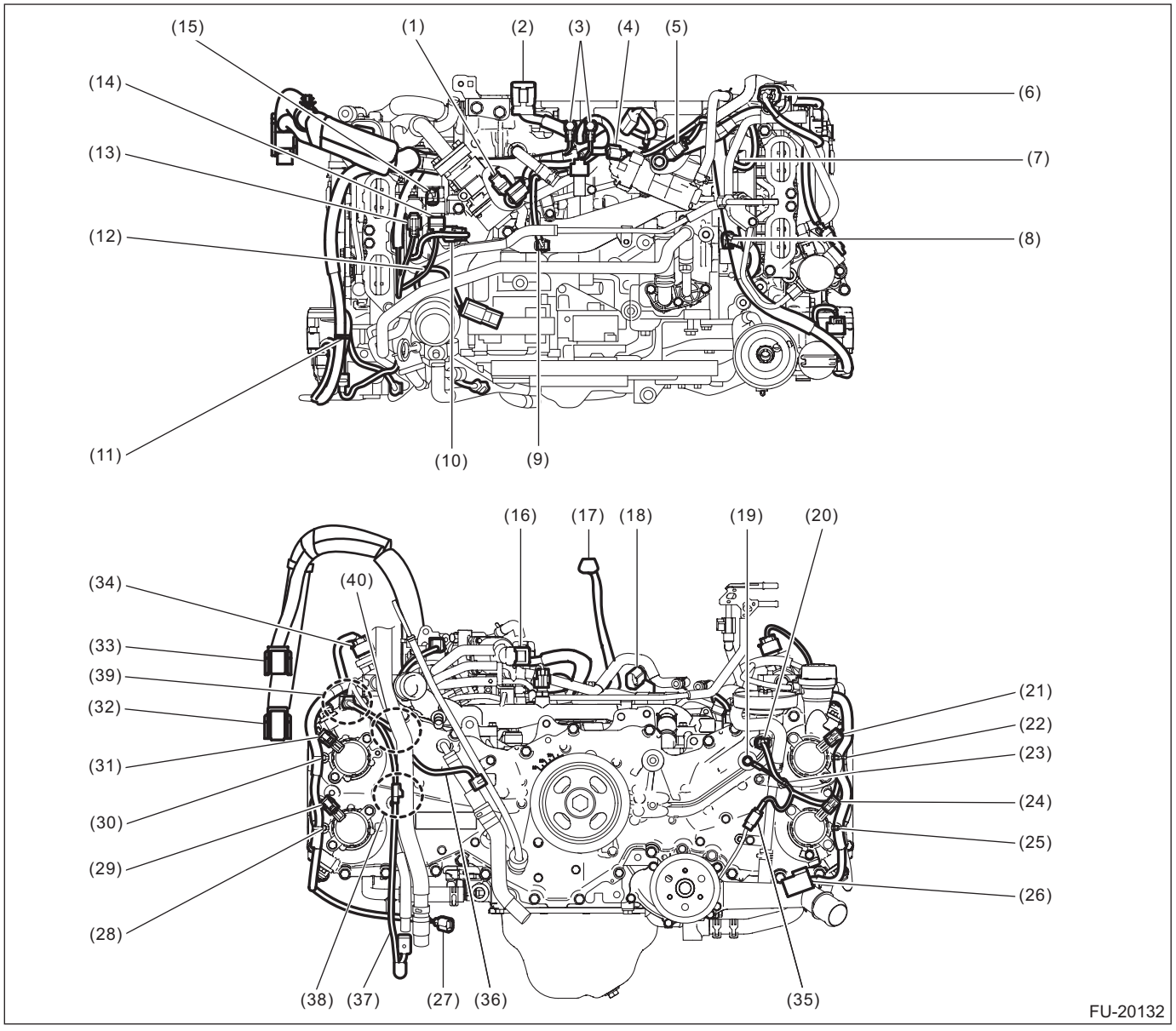

(1) Knock sensor RH
(2) Engine harness connector (16P)
(3) Engine ground (2 locations)
(4) Crankshaft position sensor
(5) Knock sensor LH
(6) Tumble generator valve actuator LH
(7) Fuel injector (#4)
(8) Fuel injector (#2)
(9) Engine coolant temperature sensor
(10) Fuel pressure sensor
(11) Remove clip from screw hole.
(12) Fuel injector (#1)
(13) Purge control solenoid valve (#2) (black connector)
(14) Purge control solenoid valve (#1) (blue connector)
(15) Fuel injector (#3)
(16) EGR valve
(17) Manifold absolute pressure and intake air temperature sensor
(18) Throttle position sensor
(19) Oil pressure switch
(20) Engine oil temperature sensor
(21) Intake oil control solenoid LH
(22) Remove clip from screw hole.
(23) Remove clip from the round hole of stay.
(24) Exhaust oil control solenoid LH
(25) Remove clip from screw hole.
(26) Front oxygen (A/F) sensor (remove from the front oxygen (A/F) sensor bracket)
(27) Wastegate solenoid
(28) Remove clip from screw hole.
(29) Exhaust oil control solenoid RH
(30) Remove clip from screw hole.
(31) Intake oil control solenoid RH
(32) Engine harness connector (48P)
(33) Engine harness connector (32P)
(34) Tumble generator valve actuator RH
(35) Oil level switch
(36) Blow-by diagnosis connector harness 1
(37) Blow-by diagnosis connector harness 2
(38) Remove the harness connector from the stay.
(39) Remove the harness connector from the stay.
(40) Pull out the blow-by diagnosis connector harness 1 from between the PCV pipe assembly and the vacuum hose.

- Structural diagram 2

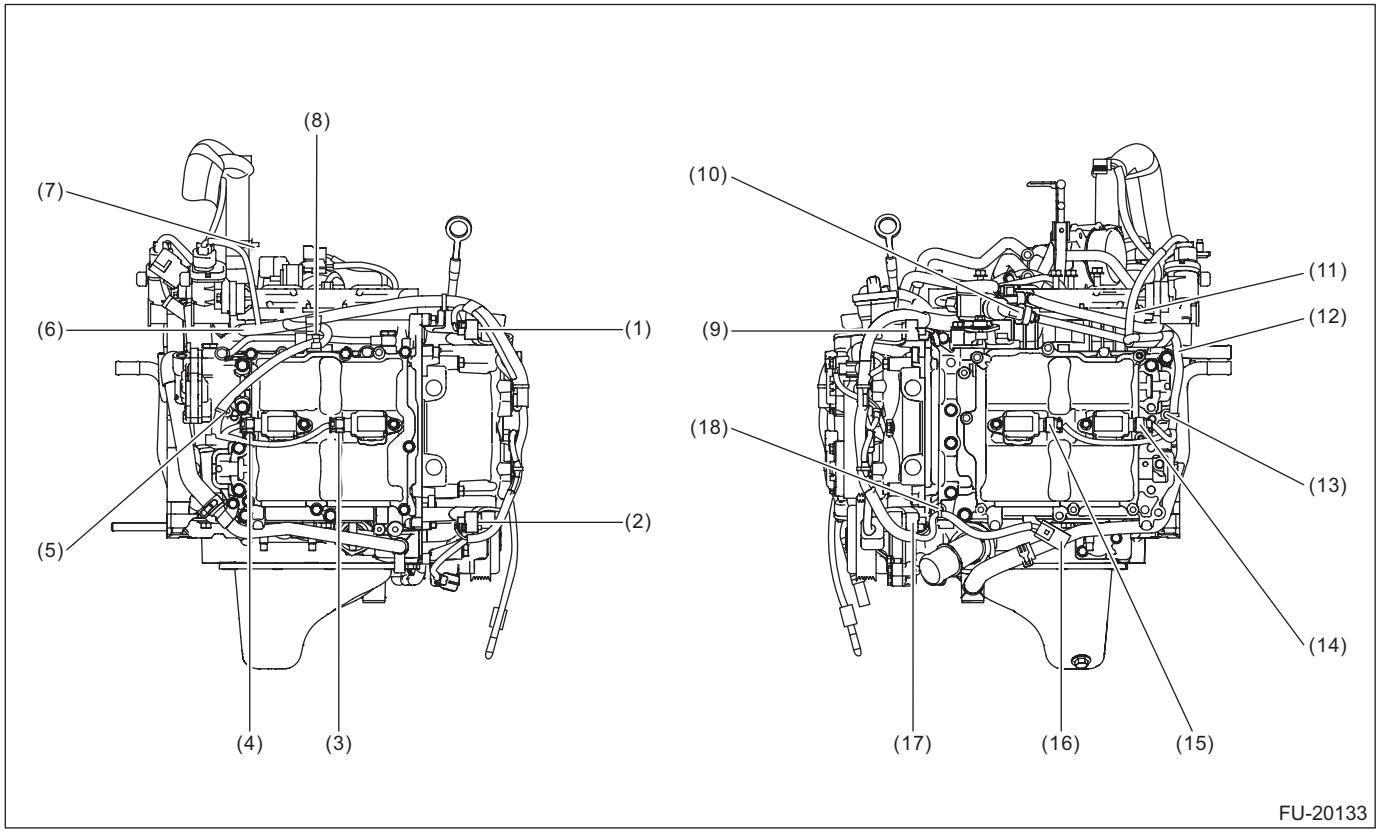

(1) Intake camshaft position sensor RH
(2) Exhaust camshaft position sensor RH
(3) Ignition coil No. 1
(4) Ignition coil No. 3
(5) Remove clip from screw hole.
(6) Pull out from the lower side of the tumble generator valve RH.
(7) Remove clip from the round hole.
(8) Remove clip from the oil pipe.
(9) Intake camshaft position sensor LH
(10) High-pressure fuel pump
(11) Pull out from the outside of the fuel tube.
(12) Pull out from the lower side of the tumble generator valve LH.
(13) Remove clip from screw hole.
(14) Ignition coil No. 4
(15) Ignition coil No. 2
(16) Oxygen sensor
(17) Exhaust camshaft position sensor LH
(18) Remove clip from screw hole.

6) Remove the engine wiring harness.

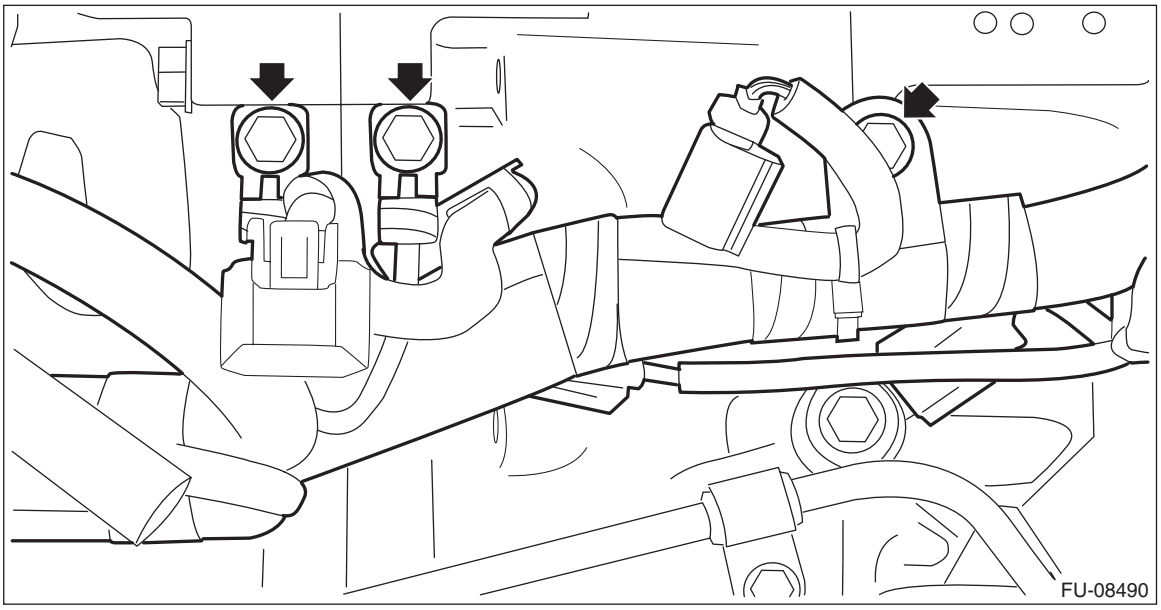

B: INSTALLATION

1) Set the engine wiring harness to the engine, and connect the connector.

NOTE:
- If the clip is damaged, replace it with a new part.
- Before replacing the clip, put an alignment mark (a) on both engine wiring harness and clip to remove the clip, and then align to the alignment mark (a) to attach a new clip to the engine wiring harness.

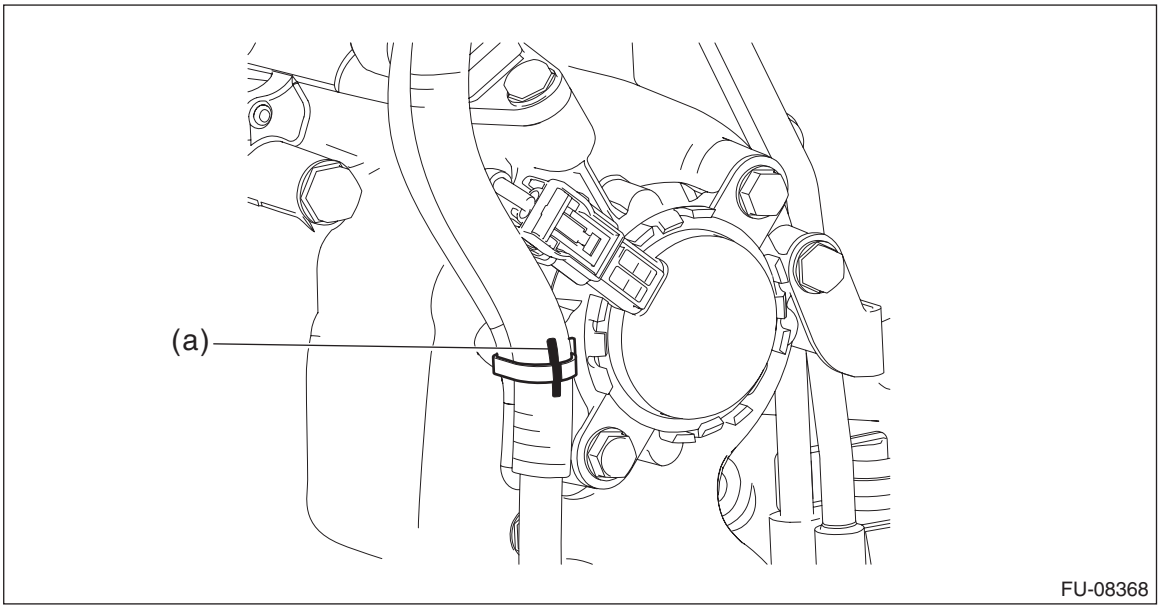

- Structural diagram 1

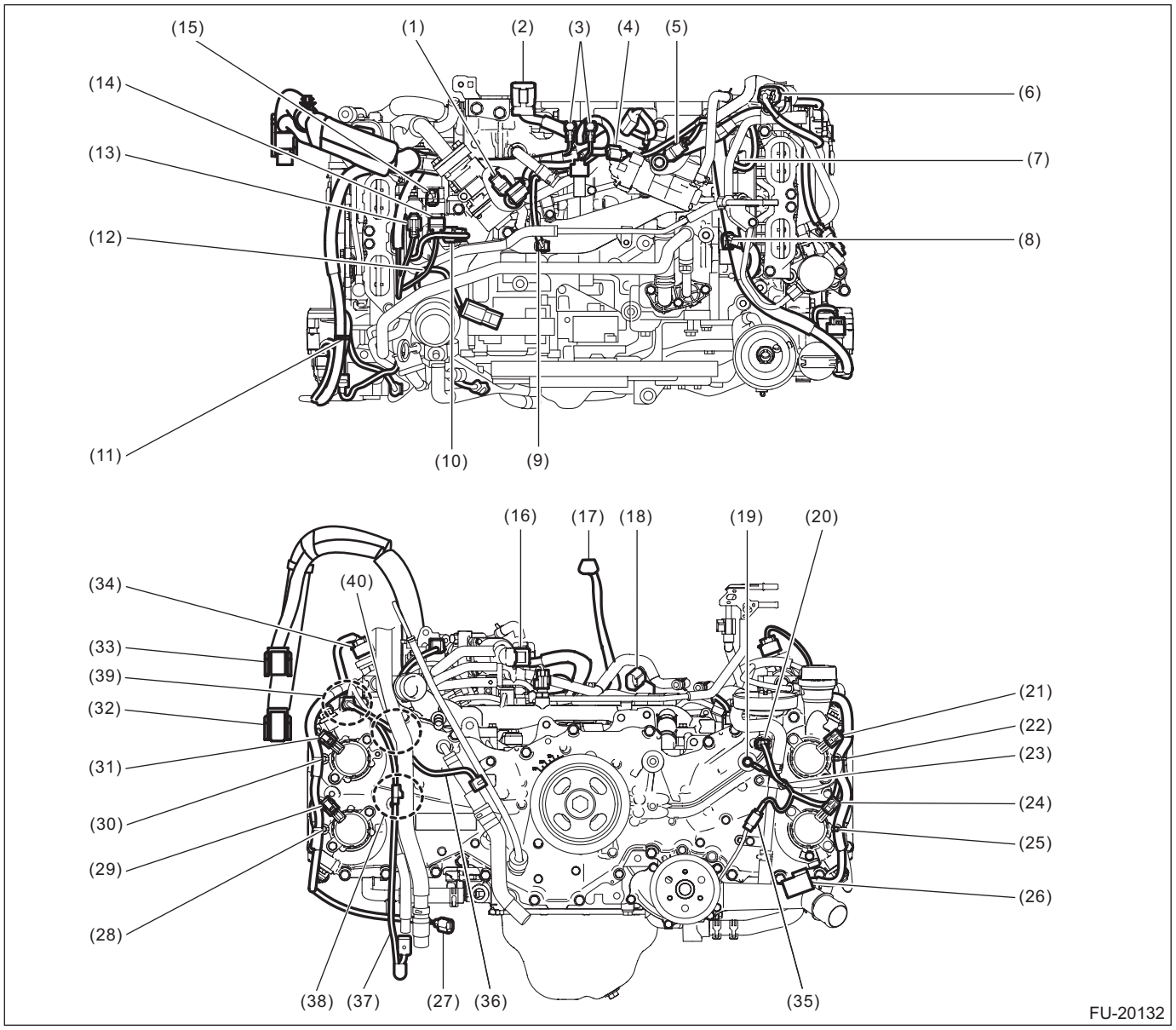

(1) Knock sensor RH (routed under the insulator)
(2) Engine harness connector (16P) (secured to engine hanger)
(3) Engine ground (2 places) (During installation, let the terminal tip come in contact with the block step.)
(4) Crankshaft position sensor
(5) Knock sensor LH (routed under the insulator)
(6) Tumble generator valve actuator LH
(7) Fuel injector (#4) (routed under the insulator)
(8) Fuel injector (#2) (routed under the insulator)
(9) Engine coolant temperature sensor
(10) Fuel pressure sensor
(11) Secure the clip to the screw hole.
(12) Fuel injector (#1) (routed under the insulator)
(13) Purge control solenoid valve (#2) (black connector)
(14) Purge control solenoid valve (#1) (blue connector)
(15) Fuel injector (#3) (routed under the insulator)
(16) EGR valve
(17) Manifold absolute pressure and intake air temperature sensor
(18) Throttle position sensor
(19) Oil pressure switch
(20) Engine oil temperature sensor
(21) Intake oil control solenoid LH
(22) Secure the clip to the screw hole.
(23) Secure the clip to the round hole of stay.
(24) Exhaust oil control solenoid LH
(25) Secure the clip to the screw hole.
(26) Front oxygen (A/F) sensor (secured to the front oxygen (A/F) sensor bracket)
(27) Wastegate solenoid
(28) Secure the clip to the screw hole.
(29) Exhaust oil control solenoid RH
(30) Secure the clip to the screw hole.
(31) Intake oil control solenoid RH
(32) Engine harness connector (48P)
(33) Engine harness connector (32P)
(34) Tumble generator valve actuator RH
(35) Oil level switch
(36) Blow-by diagnosis harness connector 1
(37) Blow-by diagnosis harness connector 2
(38) Install the harness connector to the stay.
(39) Install the harness connector to the stay.
(40) Pass the blow-by diagnosis connector harness 1 through between the PCV pipe assembly and the vacuum hose.

- Structural diagram 2

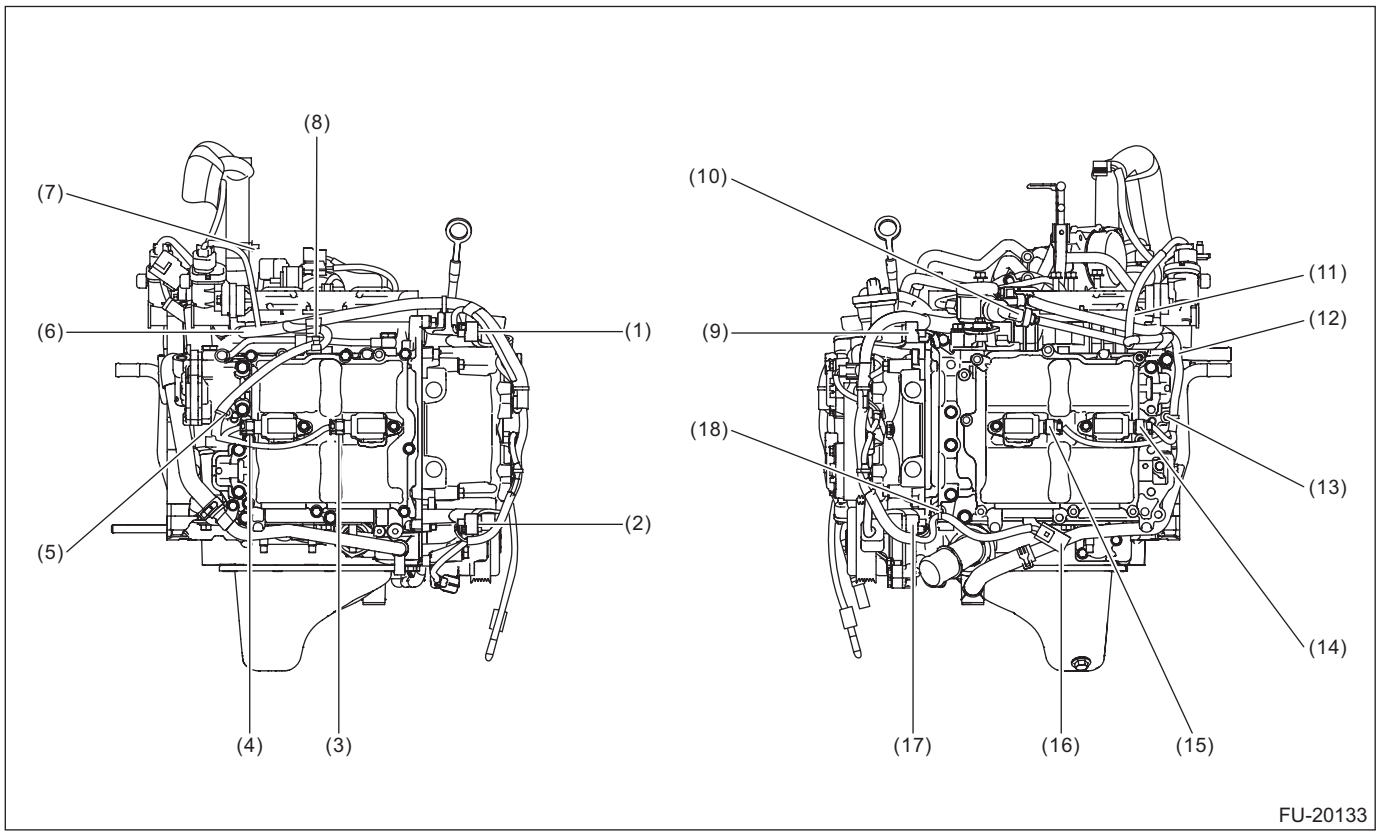

(1) Intake camshaft position sensor RH
(2) Exhaust camshaft position sensor RH
(3) Ignition coil No. 1
(4) Ignition coil No. 3
(5) Secure the clip to the screw hole.
(6) Route under the tumble generator valve.
(7) Secure the clip to the round hole.
(8) Secure the clip to the oil pipe.
(9) Intake camshaft position sensor LH
(10) High-pressure fuel pump
(11) Route outside of the fuel tube.
(12) Route under the tumble generator valve.
(13) Secure the clip to the screw hole.
(14) Ignition coil No. 4
(15) Ignition coil No. 2
(16) Oxygen sensor (secured to the heater pipe)
(17) Exhaust camshaft position sensor LH
(18) Secure the clip to the screw hole.

2) Install the engine wiring harness.

Tightening torque:
19 N·m (1.9 kgf-m, 14.0 ft-lb)

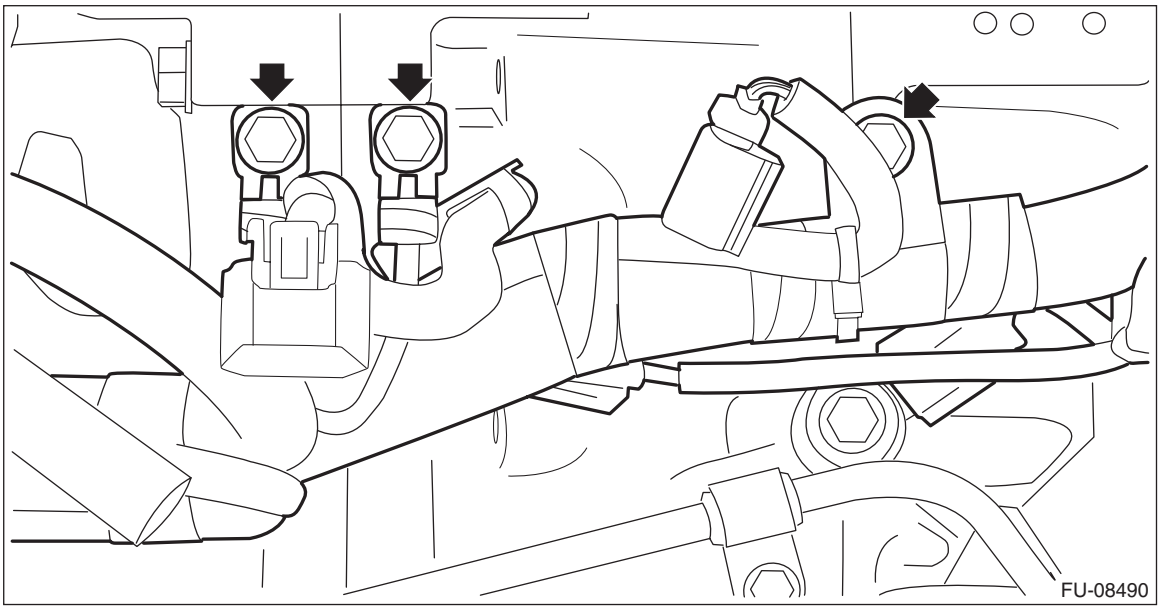

3) Install the engine control module (ECM). <Ref. to FU(w/o STI)-125, INSTALLATION, Engine Control Module (ECM).>
4) Install the fuel insulator. <Ref. to FU(w/o STI)-48, INSTALLATION, Fuel Insulator.>
5) Install the intake manifold. <Ref. to FU(w/o STI)-28, INSTALLATION, Intake Manifold.>
6) Connect the ground terminal to battery sensor. <Ref. to NT-6, BATTERY, NOTE, Note.>

C: INSPECTION

1) Check that the engine wiring harness does not have deformation, cracks and any other damage.
2) Check the engine wiring harness for contamination or clogging.

12.Engine Coolant Temperature Sensor

A: REMOVAL

1) Remove the collector cover. <Ref. to IN(w/o STI)-7, REMOVAL, Collector Cover.>
2) Disconnect the ground terminal from battery sensor. <Ref. to NT-6, BATTERY, NOTE, Note.>
3) Drain engine coolant. <Ref. to CO(w/o STI)-13, DRAINING OF ENGINE COOLANT, REPLACEMENT, Engine Coolant.>
4) Disconnect the connector (A) from the engine coolant temperature sensor, and remove the engine coolant temperature sensor.

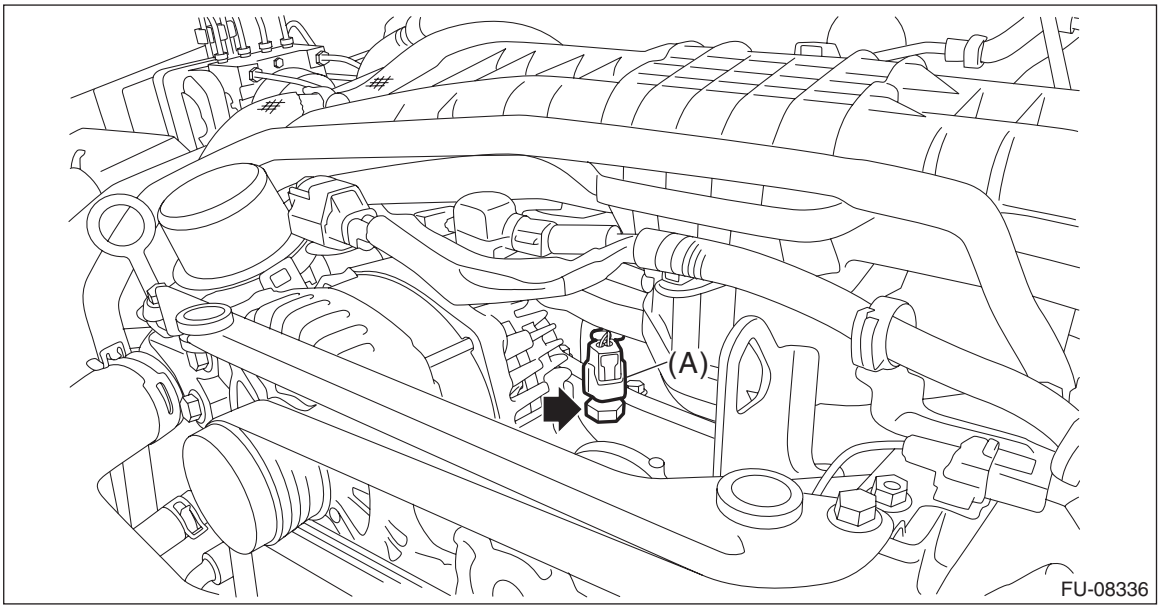

B: INSTALLATION

Install in the reverse order of removal.

NOTE:
Use a new gasket.

Tightening torque:
18 N·m (1.8 kgf-m, 13.3 ft-lb)

C: INSPECTION

1) Check that the engine coolant temperature sensor has no deformation, cracks or other damages.
2) Immerse the engine coolant temperature sensor and a thermometer in water.

CAUTION:
Take care not to allow water to get into the engine coolant temperature sensor connector. Completely remove any water inside.

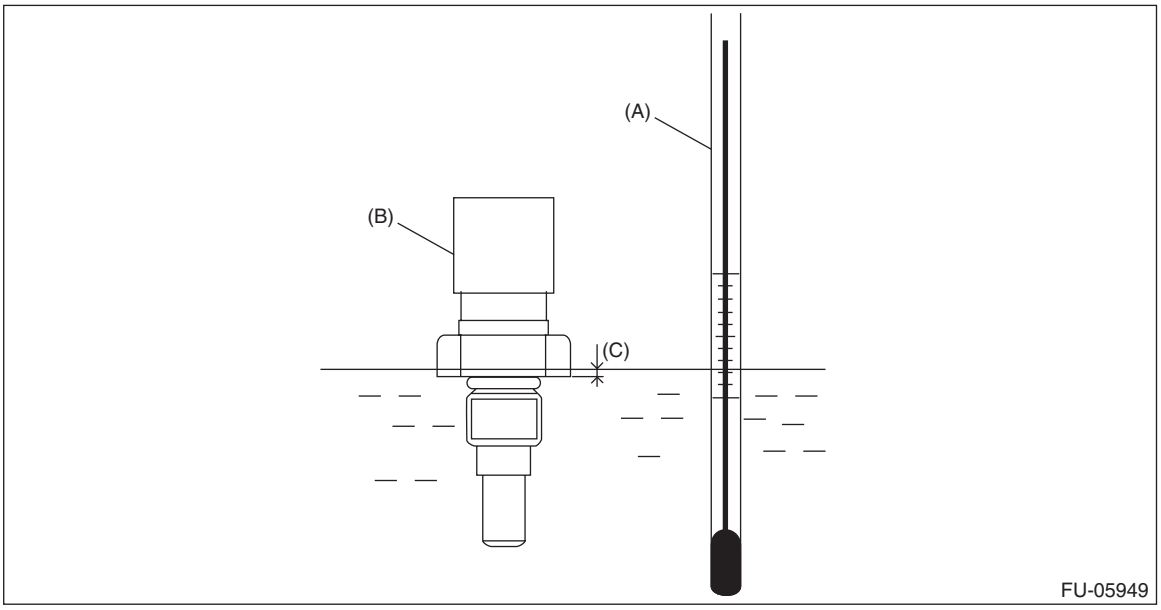

(A) Thermometer
(B) Engine coolant temperature sensor
(C) Hexagonal part height: To approx. $^{1}/_{3}$

3) Raise water temperature gradually, measure the resistance between the engine coolant temperature sensor terminals when the temperature is 20°C (68°F) and 80°C (176°F).

NOTE:
Agitate the water for even temperature distribution.

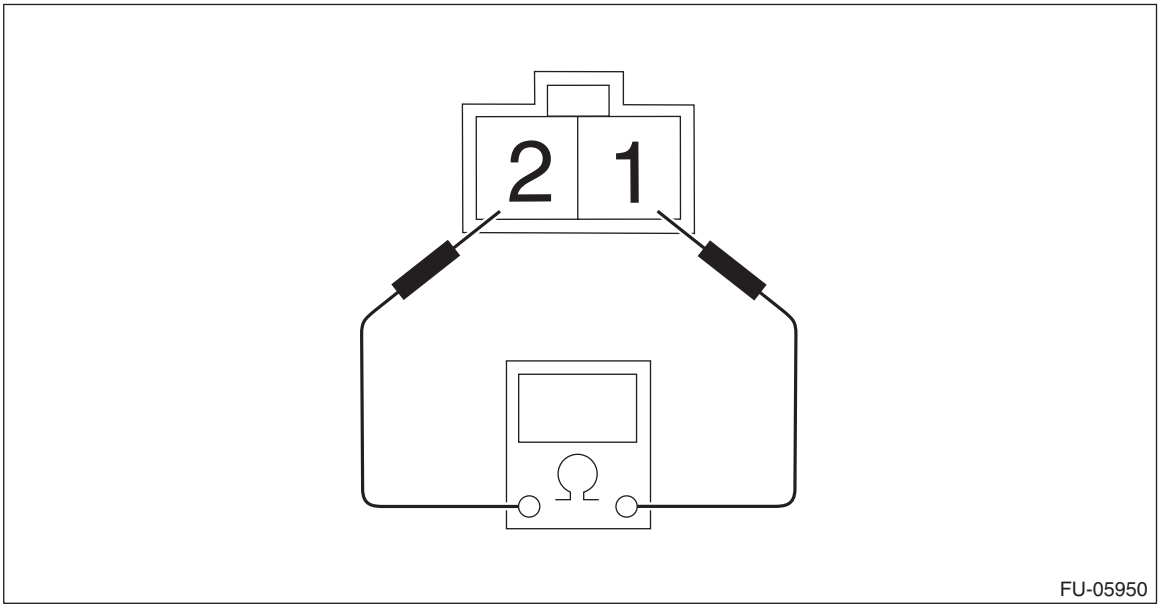

Water temperature	Terminal No.	Standard
20°C (68°F)	1 and 2	Approx. 2.45±0.2 kΩ
80°C (176°F)		Approx. 0.318±0.013 kΩ

13.Engine Oil Temperature Sensor

A: REMOVAL

CAUTION:
If the engine oil is spilt over exhaust pipe or the under cover, wipe it off with cloth to avoid emission of smoke or causing a fire.

1) Disconnect the ground terminal from battery sensor. <Ref. to NT-6, BATTERY, NOTE, Note.>
2) Disconnect the connector (A) from the engine oil temperature sensor, and remove the engine oil temperature sensor from the chain cover.

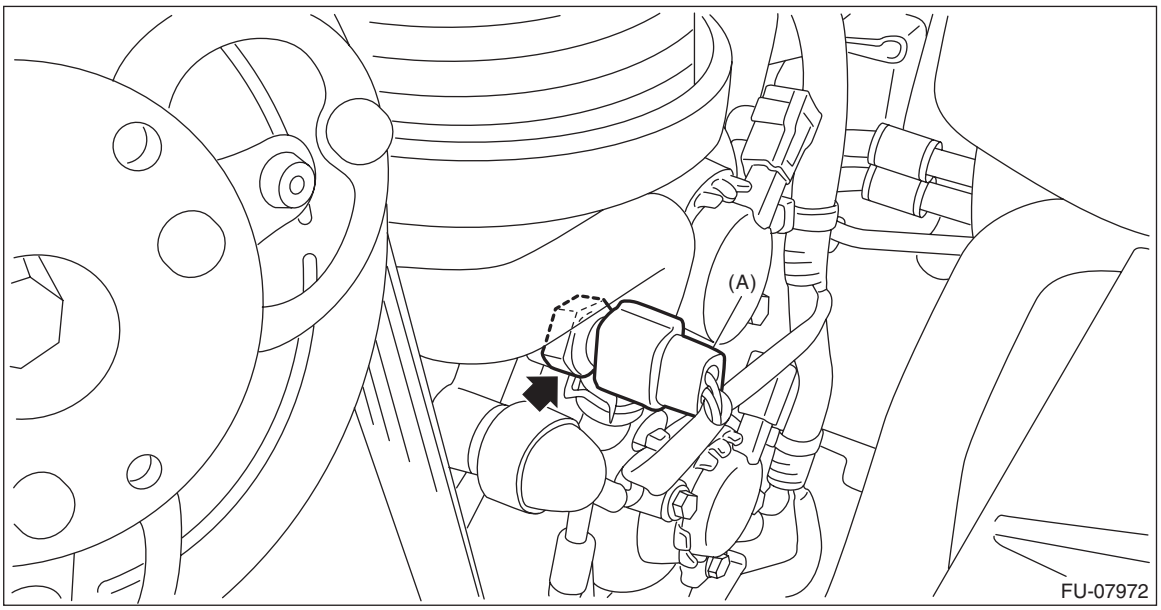

B: INSTALLATION

Install in the reverse order of removal.

NOTE:
Use a new gasket.

Tightening torque:
18 N·m (1.8 kgf-m, 13.3 ft-lb)

C: INSPECTION

1) Check that the engine oil temperature sensor has no deformation, cracks or other damages.
2) Immerse the engine oil temperature sensor and a thermometer in water.

CAUTION:
Take care not to allow water to get into the engine oil temperature sensor connector. Completely remove any water inside.

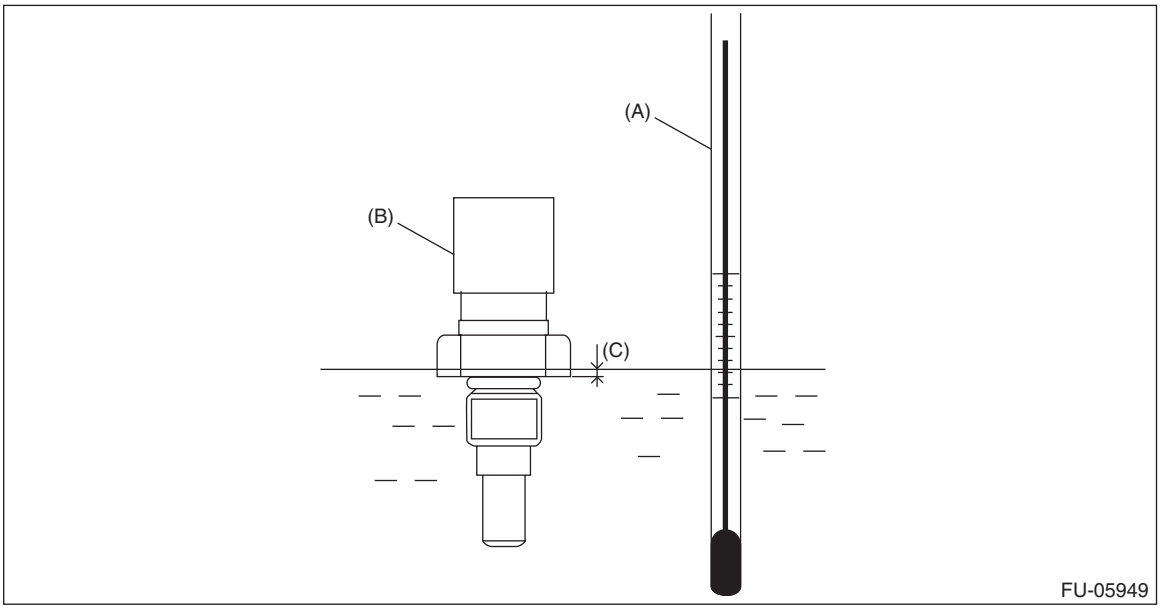

(A) Thermometer
(B) Engine oil temperature sensor
(C) Hexagonal part height: To approx. $^1/_3$

3) Raise water temperature gradually, measure the resistance between the engine oil temperature sensor terminals when the temperature is 20°C (68°F) and 80°C (176°F).

NOTE:
Agitate the water for even temperature distribution.

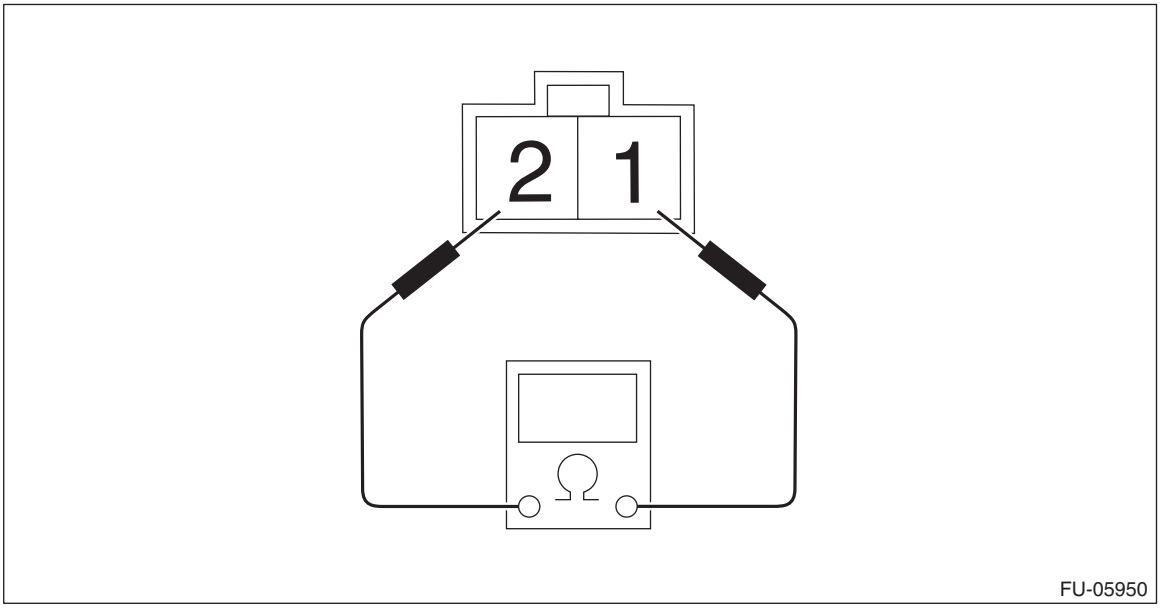

Water temperature	Terminal No.	Standard
20°C (68°F)	1 and 2	Approx. 2.45±0.2 kΩ
80°C (176°F)		Approx. 0.318±0.013 kΩ

14.Crankshaft Position Sensor

A: REMOVAL

1) Remove the collector cover. <Ref. to IN(w/o STI)-7, REMOVAL, Collector Cover.>
2) Disconnect the ground terminal from battery sensor. <Ref. to NT-6, BATTERY, NOTE, Note.>
3) Remove the intercooler. <Ref. to IN(w/o STI)-43, REMOVAL, Intercooler.>
4) Remove the throttle body. <Ref. to FU(w/o STI)-15, REMOVAL, Throttle Body.>
5) Remove the bolts securing the engine harness.

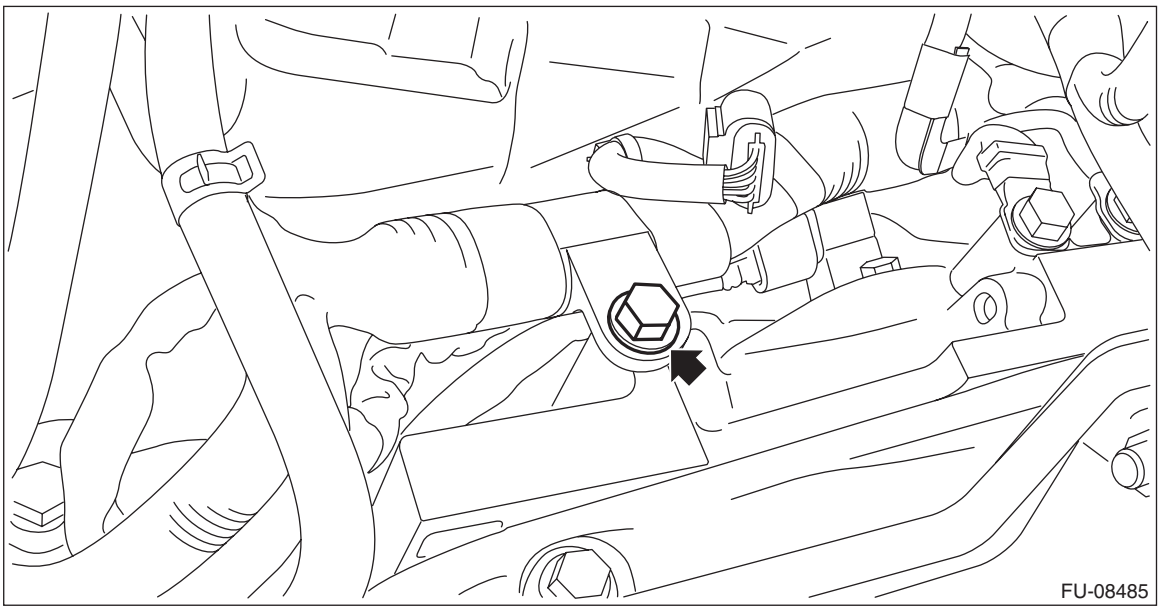

6) Disconnect the connector (A) from the crankshaft position sensor, and remove the crankshaft position sensor from the cylinder block.

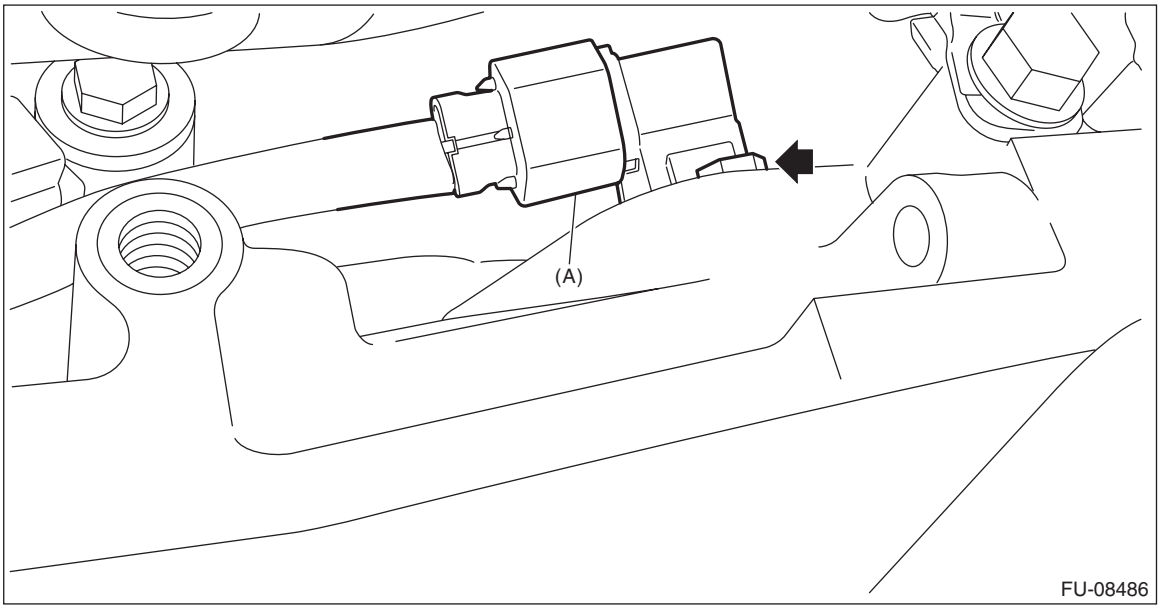

B: INSTALLATION

Install in the reverse order of removal.

Tightening torque:
6.4 N·m (0.7 kgf-m, 4.7 ft-lb)

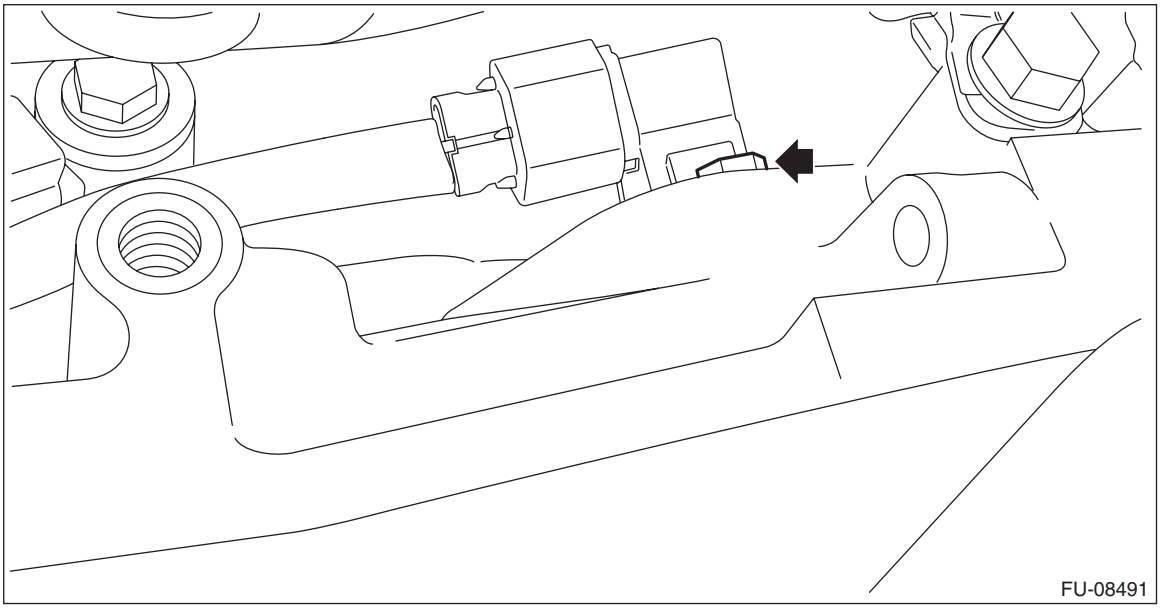

Tightening torque:
19 N·m (1.9 kgf-m, 14.0 ft-lb)

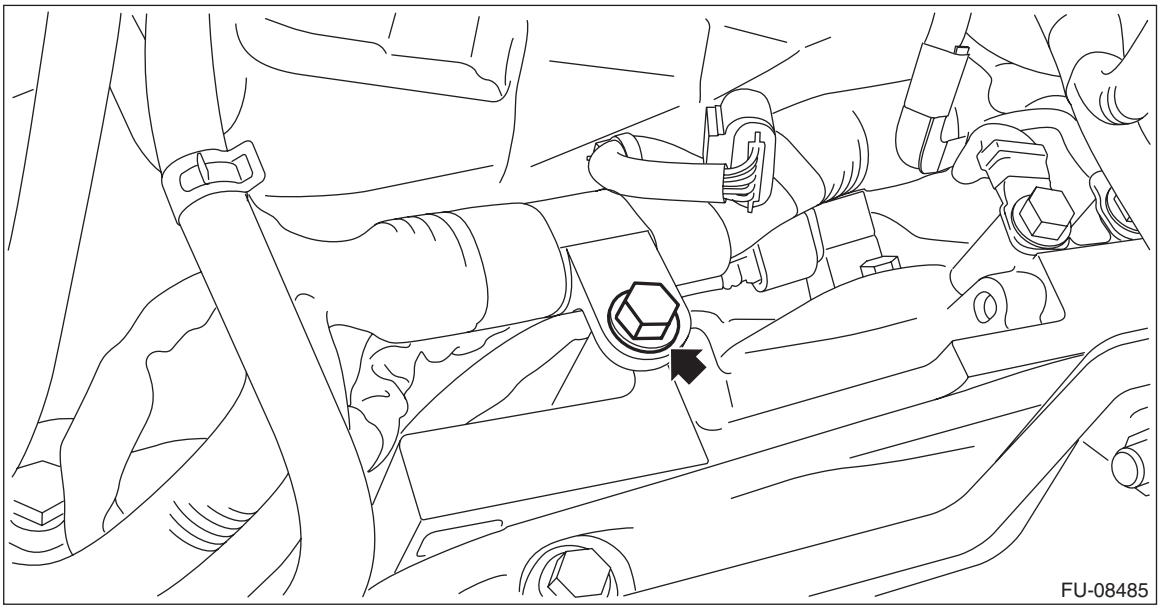

C: INSPECTION

1. CRANKSHAFT POSITION SENSOR (METHOD WITH OSCILLOSCOPE)

1) Disconnect the ground terminal from battery sensor. <Ref. to NT-6, BATTERY, NOTE, Note.>
2) Prepare an oscilloscope.
3) Remove the engine control module (ECM). <Ref. to FU(w/o STI)-124, REMOVAL, Engine Control Module (ECM).>
4) Install the ST between the ECM and bulkhead harness and the engine harness. <Ref. to EN(w/o STI)(diag)-6, CAUTION, General Description.>
ST 18460AA030 CHECK BOARD
5) Connect the ground terminal to battery sensor. <Ref. to NT-6, BATTERY, NOTE, Note.>
6) Connect the probe to ST.

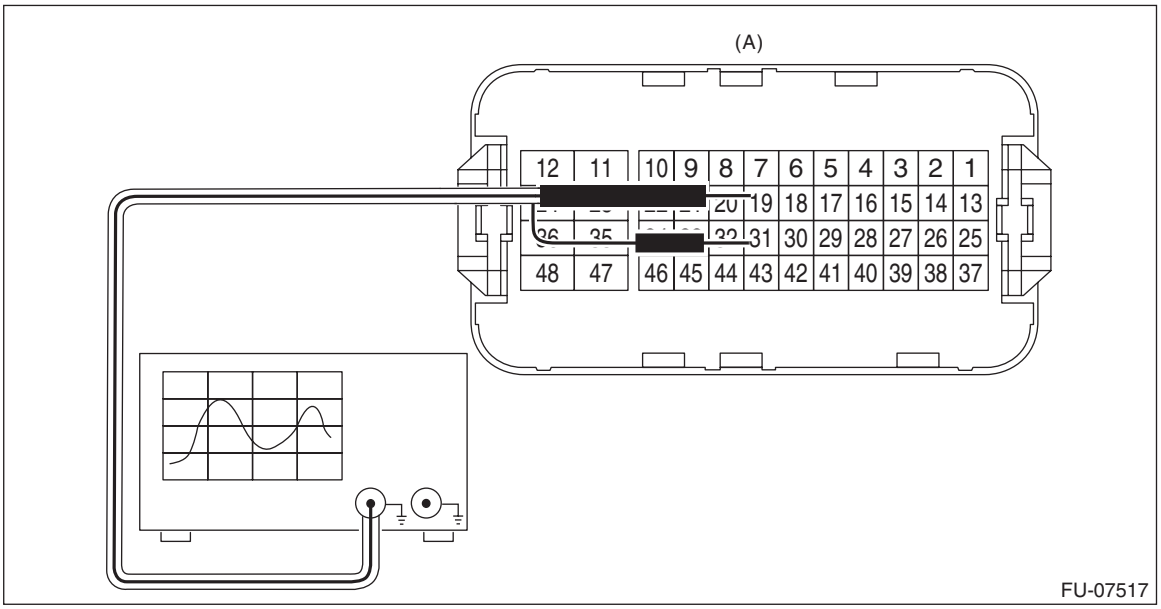

(A) To the check board connector (ECM connector)

Terminal No.	Probe
19	+
31	–

7) Start the engine and let it idle.
8) Check the waveforms and voltage.

NOTE:
For waveform and voltage, refer to “Engine Control Module (ECM) I/O Signal”. <Ref. to EN(w/o STI)(diag)-21, Engine Control Module (ECM) I/O Signal.>
9) After inspection, install the related parts in the reverse order of removal.

2. OTHER INSPECTIONS

Check that the crankshaft position sensor has no deformation, cracks or other damages.

15.Crankshaft Position Sensor Plate

A: REMOVAL

The crankshaft position sensor plate is tightened together with the drive plate (CVT model) or flywheel (MT model); therefore, refer to “Drive Plate” or “Flywheel” for removal procedure. <Ref. to CVT(TR690)-138, REMOVAL, Drive Plate.> <Ref. to CL-15, REMOVAL, Flywheel.>

B: INSTALLATION

The crankshaft position sensor plate is tightened together with the drive plate (CVT model) or flywheel (MT model); therefore, refer to “Drive Plate” or “Flywheel” for installation procedure. <Ref. to CVT(TR690)-138, INSTALLATION, Drive Plate.> <Ref. to CL-15, INSTALLATION, Flywheel.>

C: INSPECTION

Check that the crankshaft position sensor plate has no deformation, cracks or other damages.

16.Camshaft Position Sensor

A: REMOVAL

1. INTAKE SIDE

1) Disconnect the ground terminal from battery sensor. <Ref. to NT-6, BATTERY, NOTE, Note.>
2) Remove the air intake duct. (RH side only) <Ref. to IN(w/o STI)-26, REMOVAL, Air Intake Duct.>
3) Disconnect the connector (A) from the camshaft position sensor, and remove the camshaft position sensor from the chain cover.

- RH side

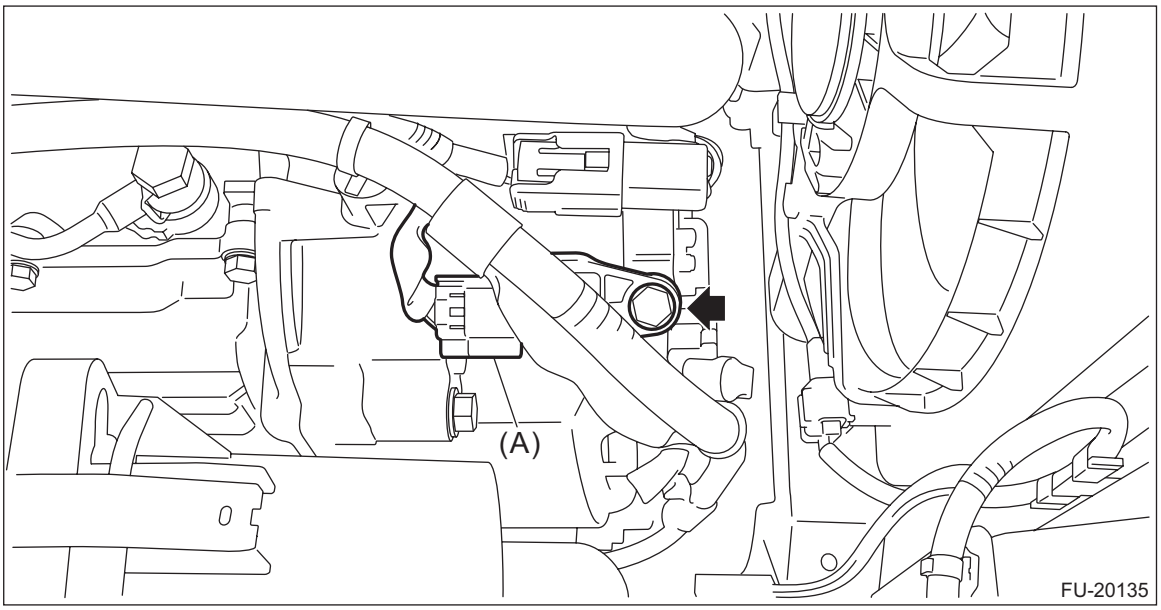

- LH side

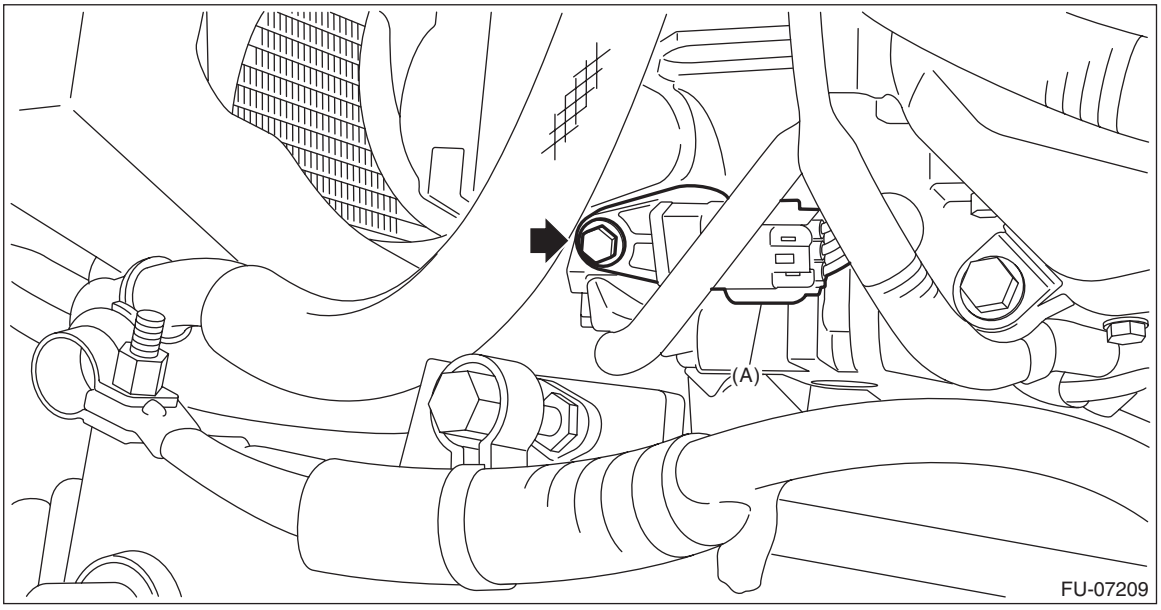

2. EXHAUST SIDE

1) Disconnect the ground terminal from battery sensor. <Ref. to NT-6, BATTERY, NOTE, Note.>
2) Remove the under cover. <Ref. to EI-22, REMOVAL, Front Under Cover.>
3) Disconnect the connector (A) from the camshaft position sensor, and remove the camshaft position sensor from the chain cover.

- RH side

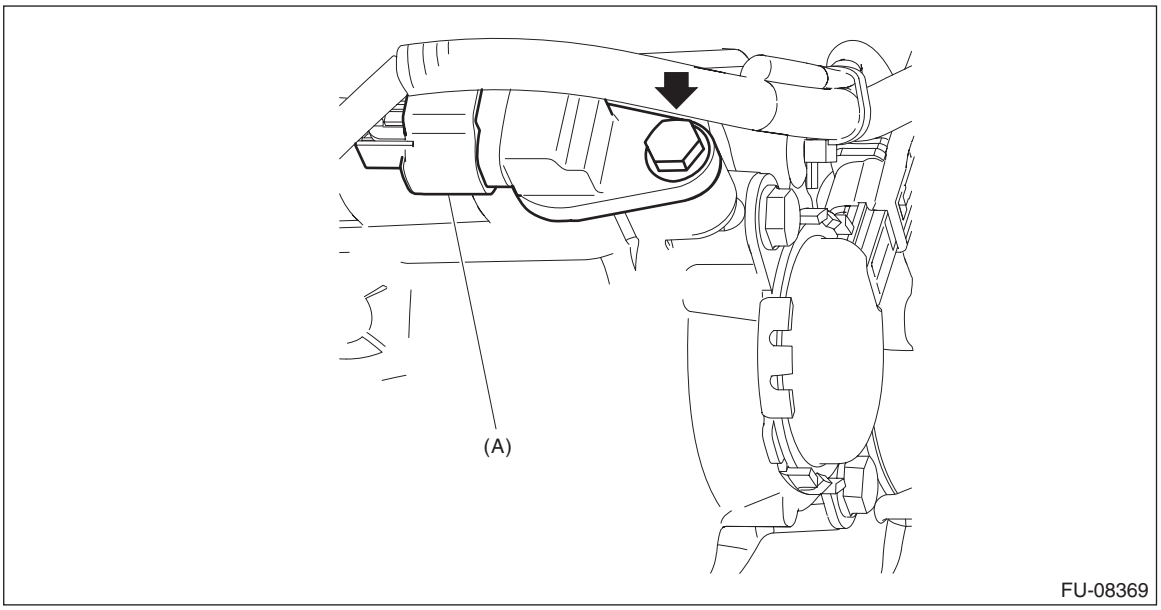

- LH side

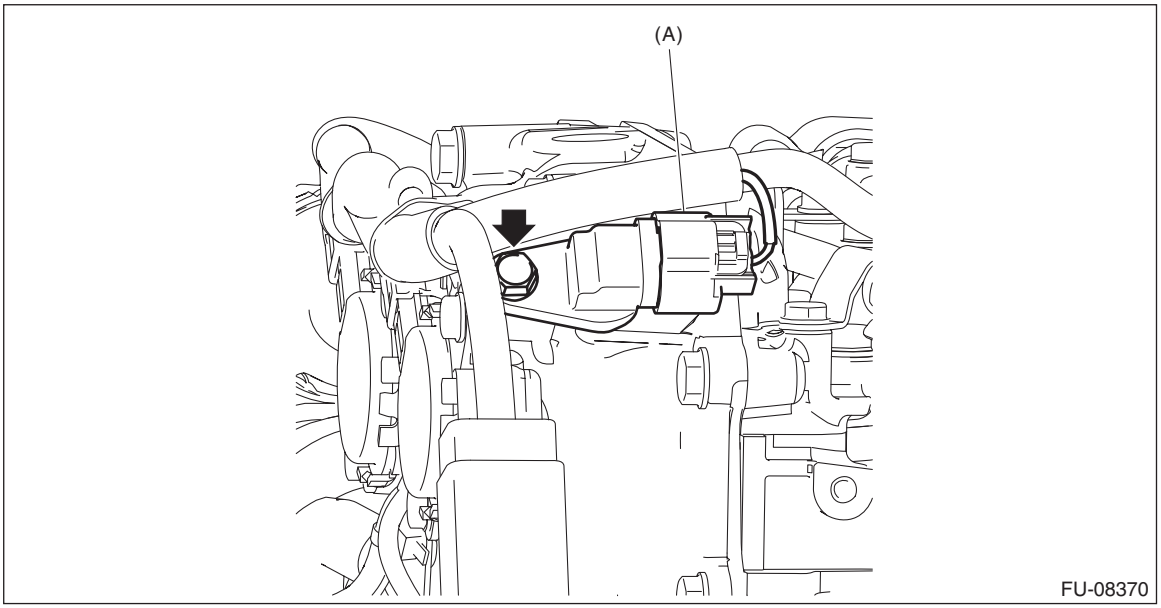

B: INSTALLATION

Install in the reverse order of removal.

NOTE:
- Use new O-rings.
- Apply engine oil to O-ring.

Tightening torque:
6.4 N·m (0.7 kgf-m, 4.7 ft-lb)

C: INSPECTION

1. CAMSHAFT POSITION SENSOR (METHOD WITH OSCILLOSCOPE)

1) Disconnect the ground terminal from battery sensor. <Ref. to NT-6, BATTERY, NOTE, Note.>
2) Prepare an oscilloscope.
3) Remove the engine control module (ECM). <Ref. to FU(w/o STI)-124, REMOVAL, Engine Control Module (ECM).>
4) Install the ST between the ECM and bulkhead harness and the engine harness. <Ref. to EN(w/o STI)(diag)-6, CAUTION, General Description.>
ST 18460AA030 CHECK BOARD
5) Connect the ground terminal to battery sensor. <Ref. to NT-6, BATTERY, NOTE, Note.>
6) Connect the probe to ST.
- Intake camshaft position sensor

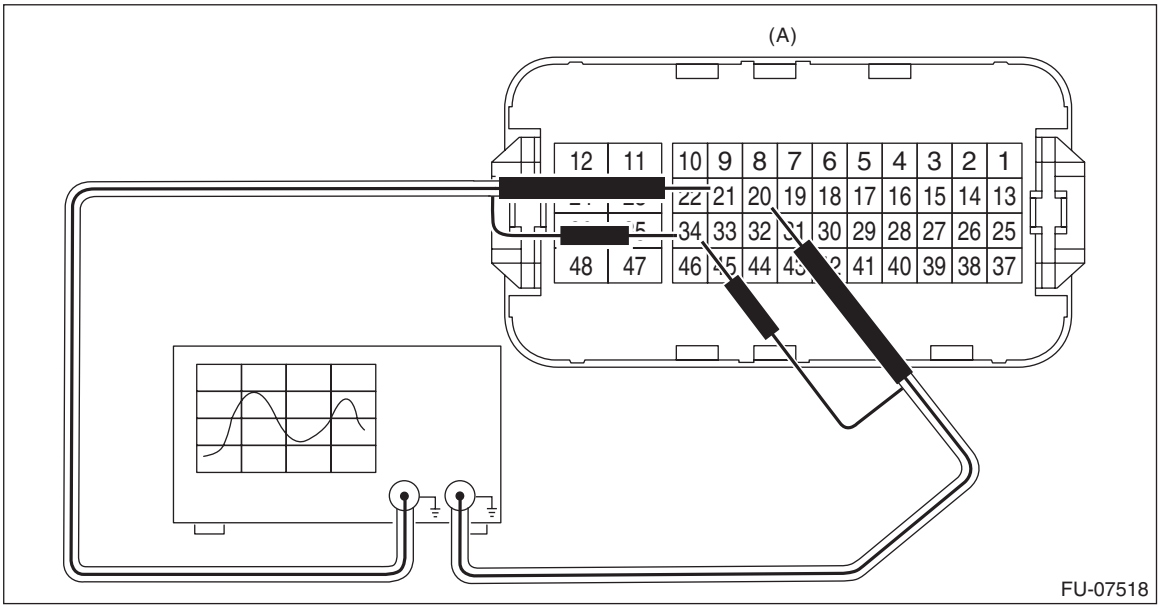

(A) To the check board connector (ECM connector)

- Exhaust camshaft position sensor

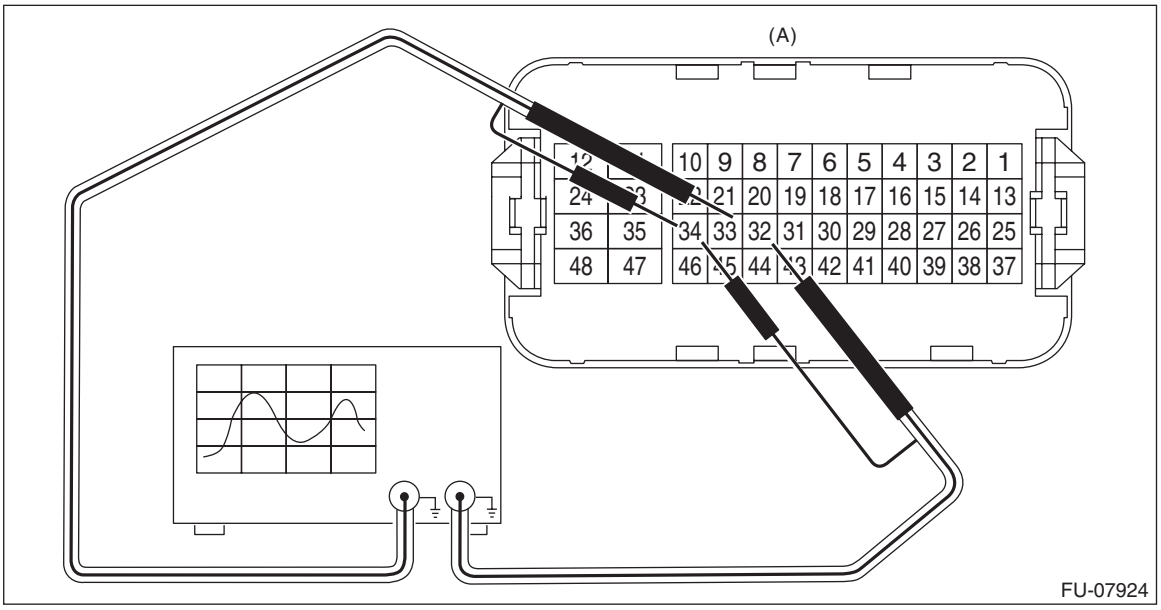

(A) To the check board connector (ECM connector)

Camshaft position sensor		Terminal No.	Probe
Intake	RH	20	+
	LH	21	+
Exhaust	RH	32	+
	LH	33	+
RH and LH		34	–

7) Start the engine and let it idle.
8) Check the waveforms and voltage.

NOTE:
For waveform and voltage, refer to “Engine Control Module (ECM) I/O Signal”. <Ref. to EN(w/o STI)(diag)-21, Engine Control Module (ECM) I/O Signal.>
9) After inspection, install the related parts in the reverse order of removal.

2. OTHER INSPECTIONS

Check that the camshaft position sensor has no deformation, cracks or other damages.

17.Oil Control Solenoid

A: REMOVAL

CAUTION:
If the engine oil is spilt over exhaust pipe or the under cover, wipe it off with cloth to avoid emission of smoke or causing a fire.

1. INTAKE SIDE

1) Disconnect the ground terminal from battery sensor. <Ref. to NT-6, BATTERY, NOTE, Note.>
2) Remove the air intake duct. (RH side only) <Ref. to IN(w/o STI)-26, REMOVAL, Air Intake Duct.>
3) Disconnect the connector (A) from the oil control solenoid, and remove the oil control solenoid from the chain cover.

- RH side

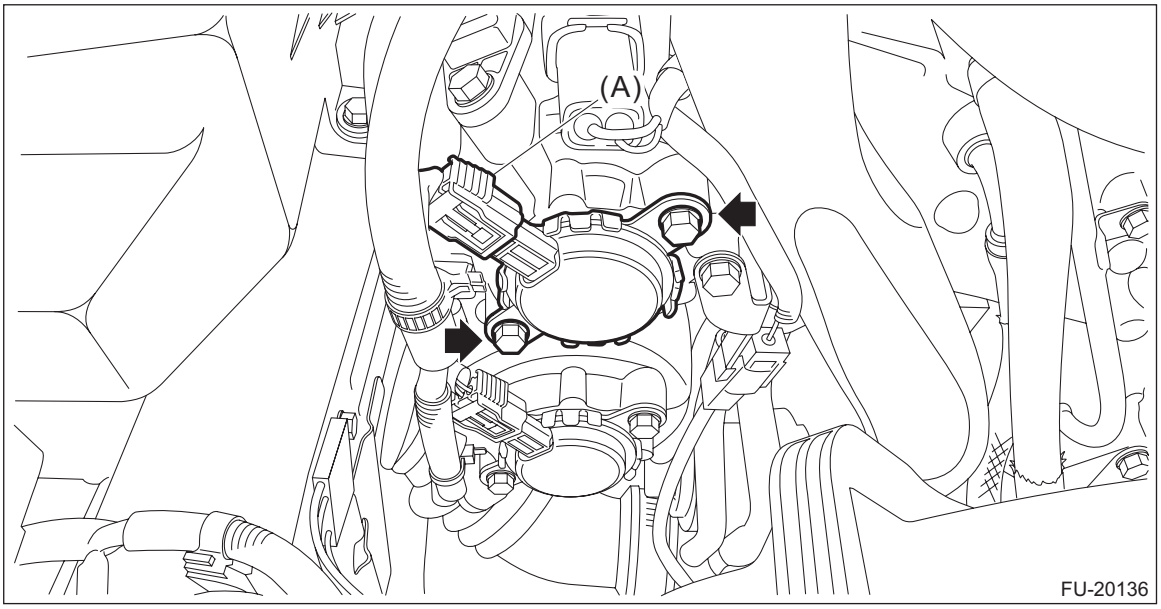

- LH side

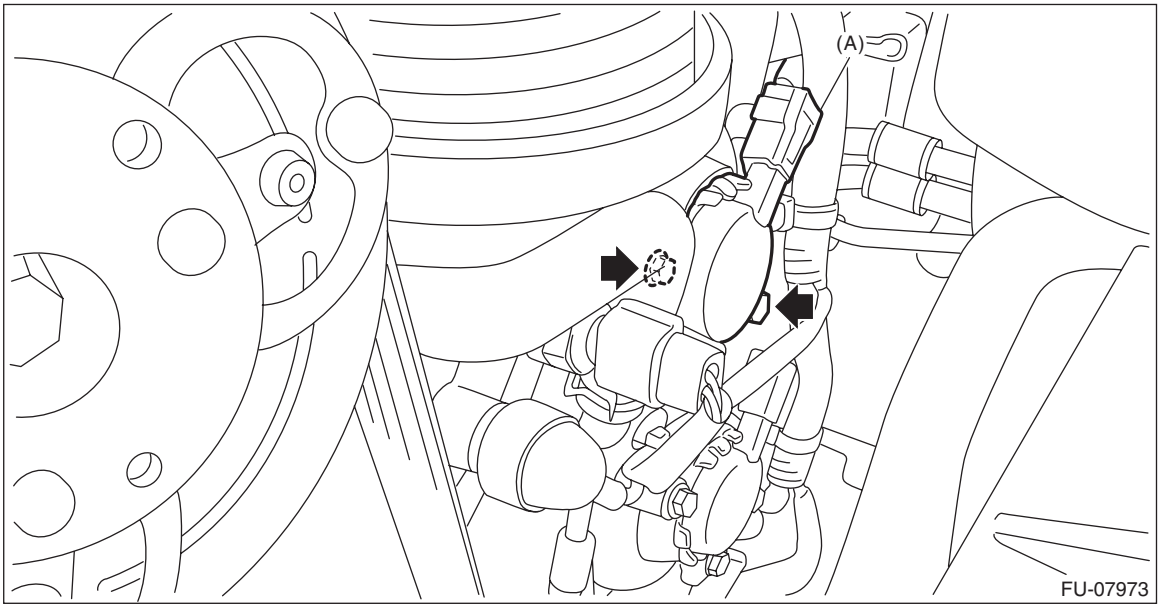

2. EXHAUST SIDE

1) Disconnect the ground terminal from battery sensor. <Ref. to NT-6, BATTERY, NOTE, Note.>
2) Remove the air intake duct. (RH side only) <Ref. to IN(w/o STI)-26, REMOVAL, Air Intake Duct.>
3) Disconnect the connector (A) from the oil control solenoid, and remove the oil control solenoid from the chain cover.

- RH side

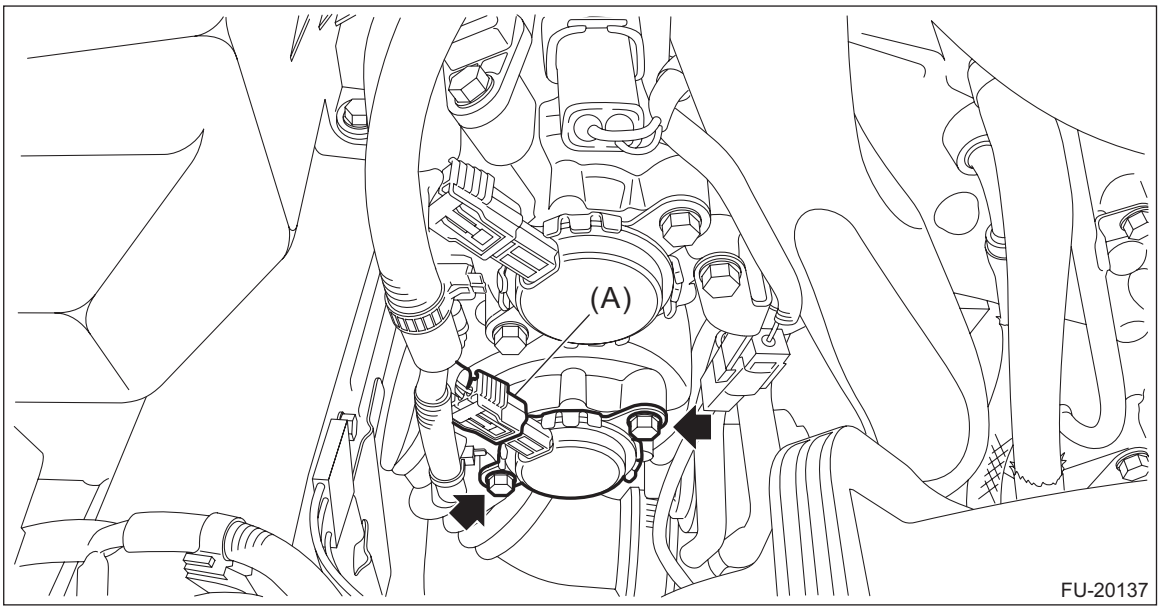

- LH side

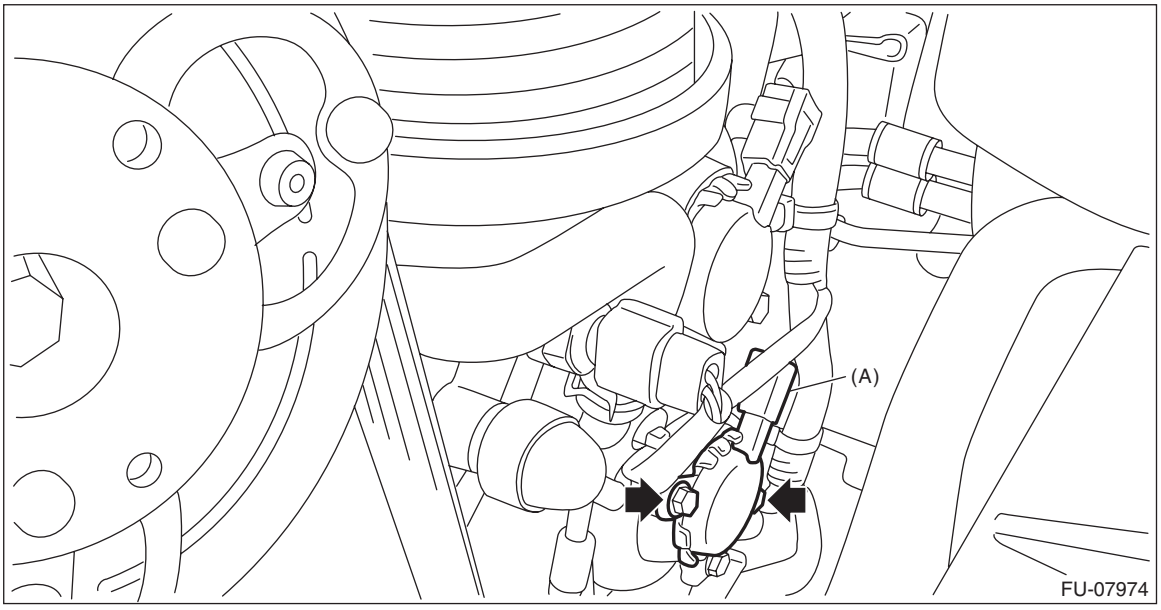

B: INSTALLATION

Install in the reverse order of removal.

NOTE:
- Use new O-rings.
- Apply engine oil to O-ring.

Tightening torque:
6.4 N·m (0.7 kgf-m, 4.7 ft-lb)

C: INSPECTION

1) Check that the oil control solenoid has no deformation, cracks or other damages.
2) Measure the resistance between the oil control solenoid terminals.

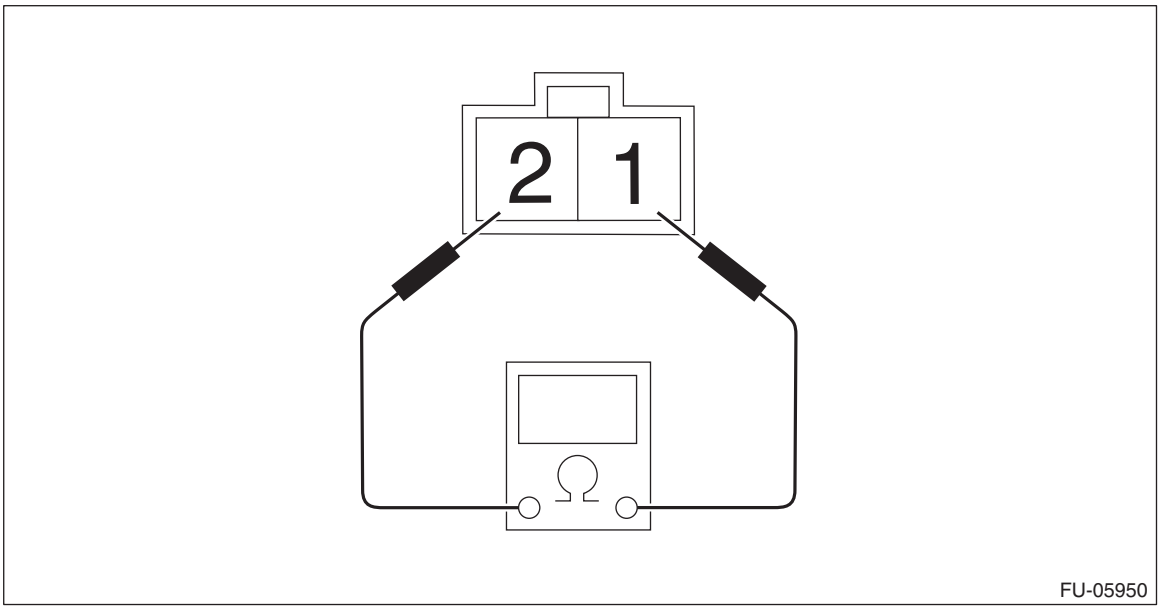

Terminal No.	Standard
1 and 2	7.25±0.4 Ω (when 20°C (68°F))

18.Knock Sensor

A: REMOVAL

1. RH SIDE

1) Remove the collector cover. <Ref. to IN(w/o STI)-7, REMOVAL, Collector Cover.>
2) Disconnect the ground terminal from battery sensor. <Ref. to NT-6, BATTERY, NOTE, Note.>
3) Remove the intake manifold. <Ref. to FU(w/o STI)-18, REMOVAL, Intake Manifold.>
4) Remove the fuel pipe insulator No. 3. <Ref. to FU(w/o STI)-47, FUEL PIPE INSULATOR NO. 3, REMOVAL, Fuel Insulator.>
5) Disconnect the connector (A) from the knock sensor, and remove the knock sensor from the cylinder block.

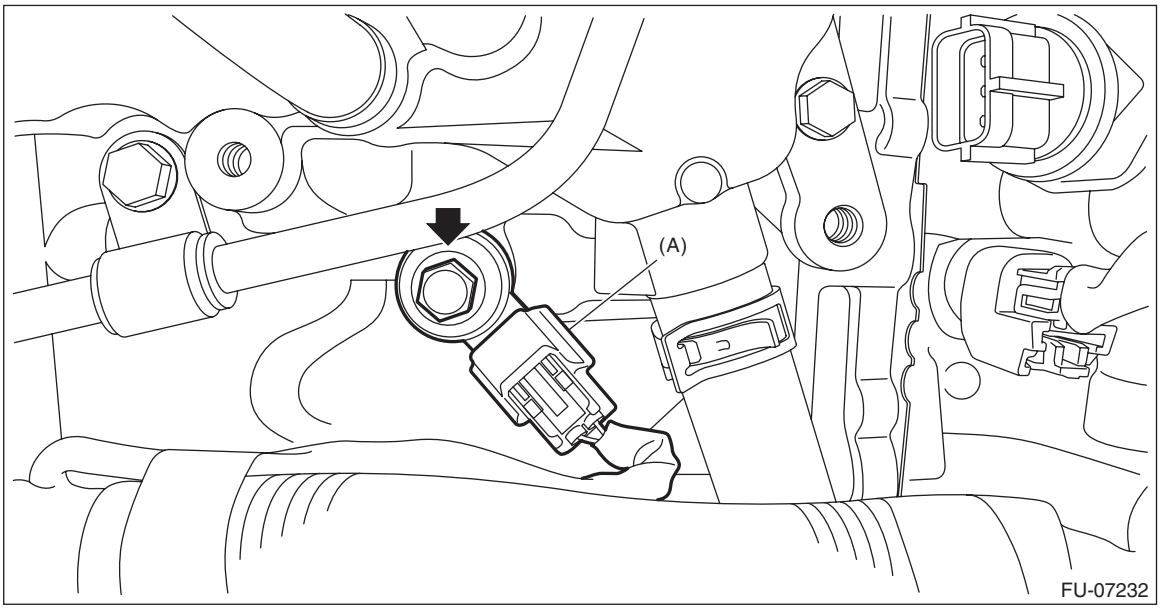

2. LH SIDE

1) Remove the collector cover. <Ref. to IN(w/o STI)-7, REMOVAL, Collector Cover.>
2) Disconnect the ground terminal from battery sensor. <Ref. to NT-6, BATTERY, NOTE, Note.>
3) Remove the intercooler. <Ref. to IN(w/o STI)-43, REMOVAL, Intercooler.>
4) Remove the throttle body. <Ref. to FU(w/o STI)-15, REMOVAL, Throttle Body.>
5) Remove the bolts securing the engine harness.

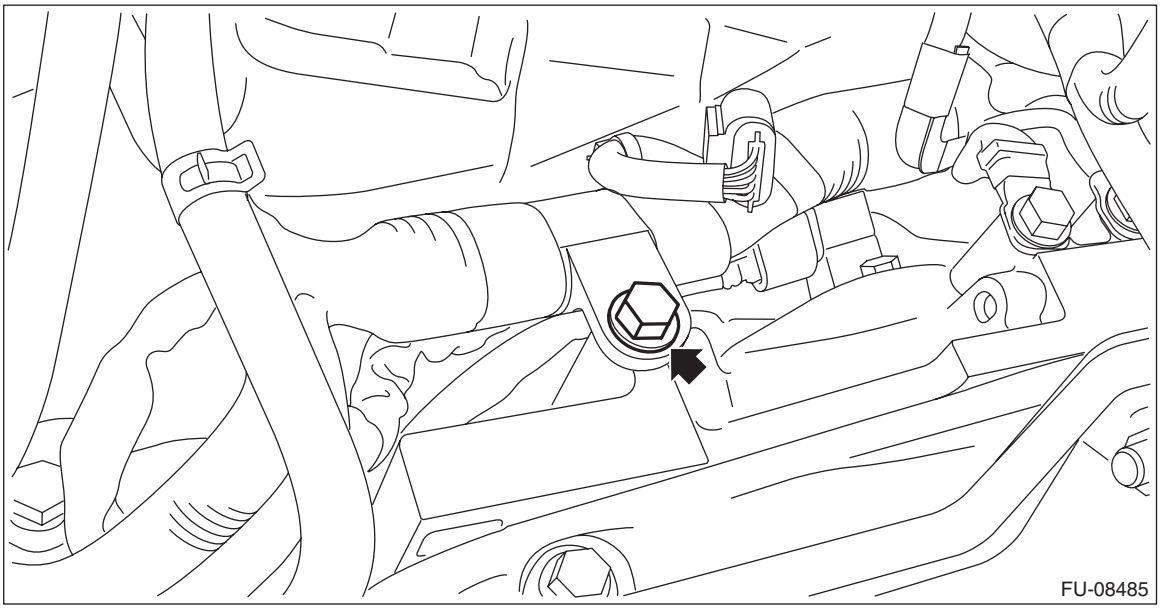

6) Disconnect the connector (A) from the knock sensor, and remove the knock sensor from the cylinder block.

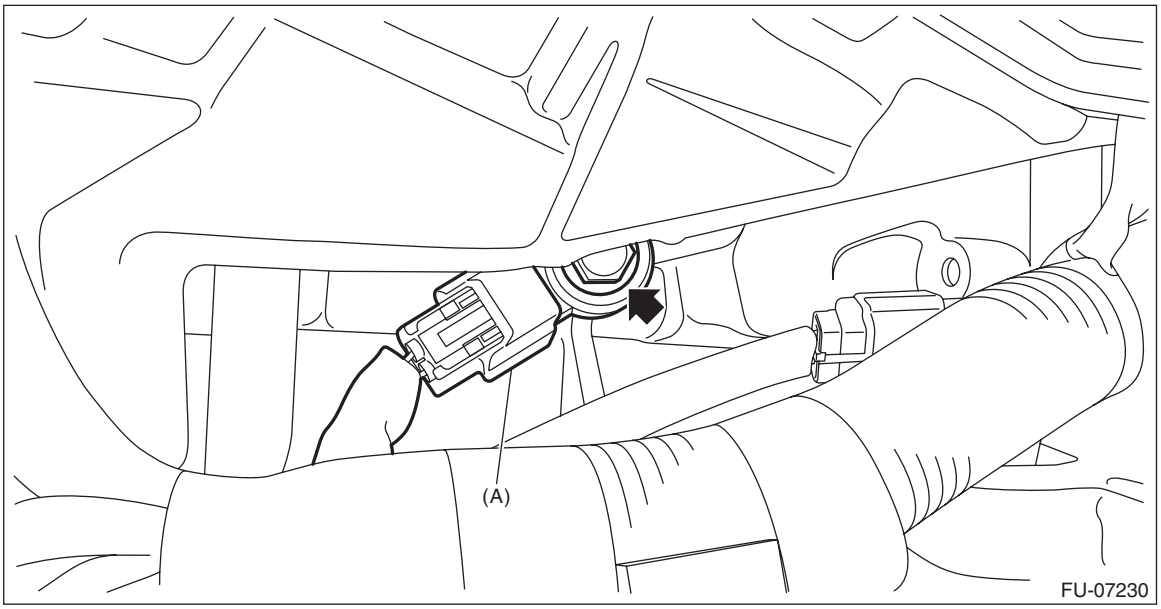

B: INSTALLATION

1. RH SIDE

1) Install the knock sensor to the cylinder block.

NOTE:
The knock sensor should be installed so that the center of the connector is positioned at a 32.5 — 47.5° angle relative to the rear of engine.

Tightening torque:
24 N·m (2.4 kgf-m, 17.7 ft-lb)

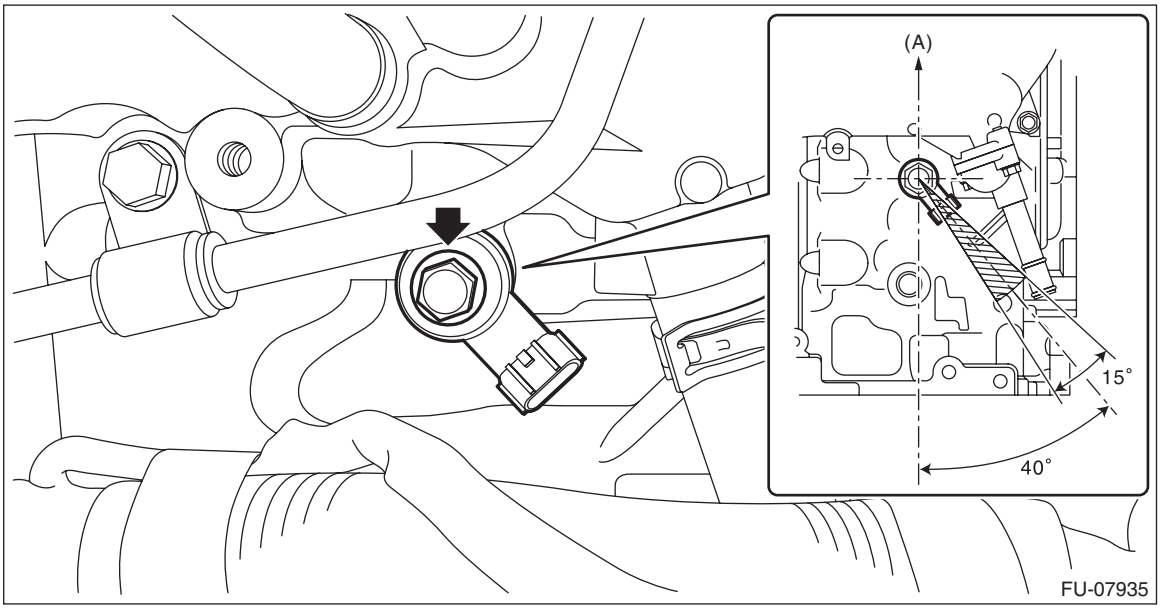

(A) Front of engine

2) Connect the connector to the knock sensor.

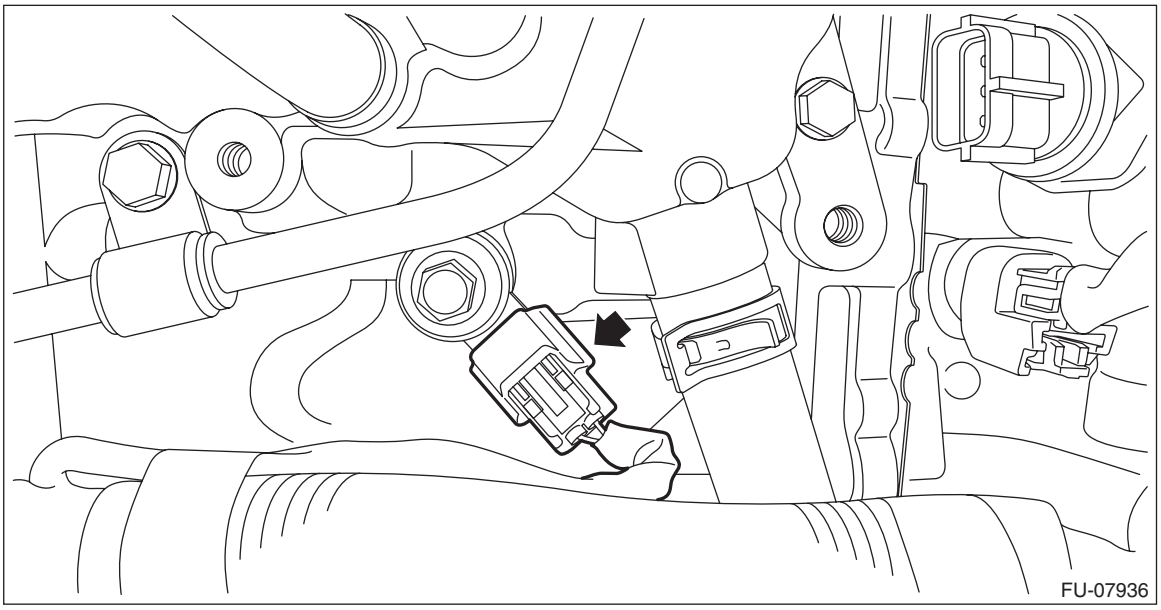

3) Install the fuel pipe insulator No. 3. <Ref. to FU(w/o STI)-49, FUEL PIPE INSULATOR NO. 3, INSTALLATION, Fuel Insulator.>
4) Install the intake manifold. <Ref. to FU(w/o STI)-28, INSTALLATION, Intake Manifold.>
5) Connect the ground terminal to battery sensor. <Ref. to NT-6, BATTERY, NOTE, Note.>
6) Install the collector cover. <Ref. to IN(w/o STI)-10, INSTALLATION, Collector Cover.>

2. LH SIDE

1) Install the knock sensor to the cylinder block.

NOTE:
The knock sensor should be installed so that the center of the connector is positioned at a 47.5 — 62.5° angle relative to the rear of engine.

Tightening torque:
24 N·m (2.4 kgf-m, 17.7 ft-lb)

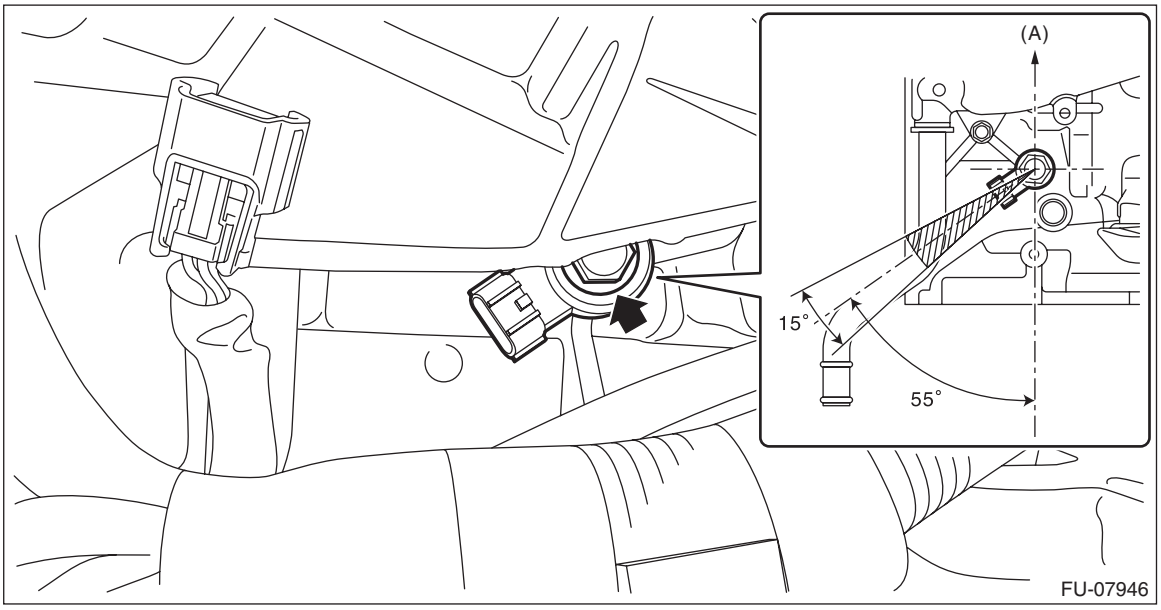

(A) Front of engine

2) Connect the connector to the knock sensor.

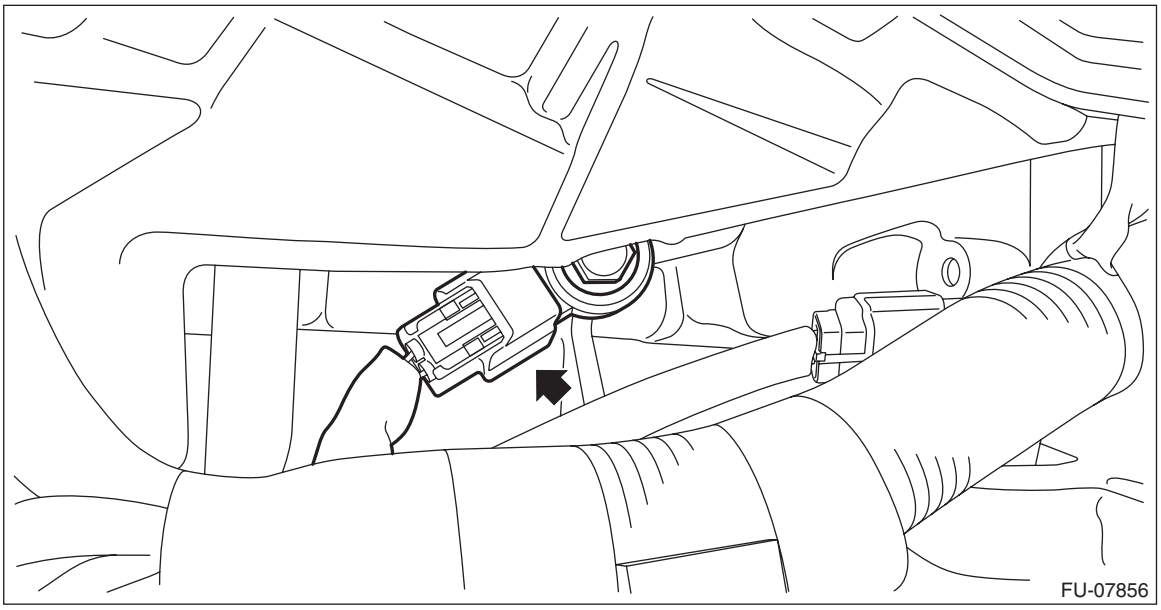

3) Install the bolts securing the engine harness.

Tightening torque:
19 N·m (1.9 kgf-m, 14.0 ft-lb)

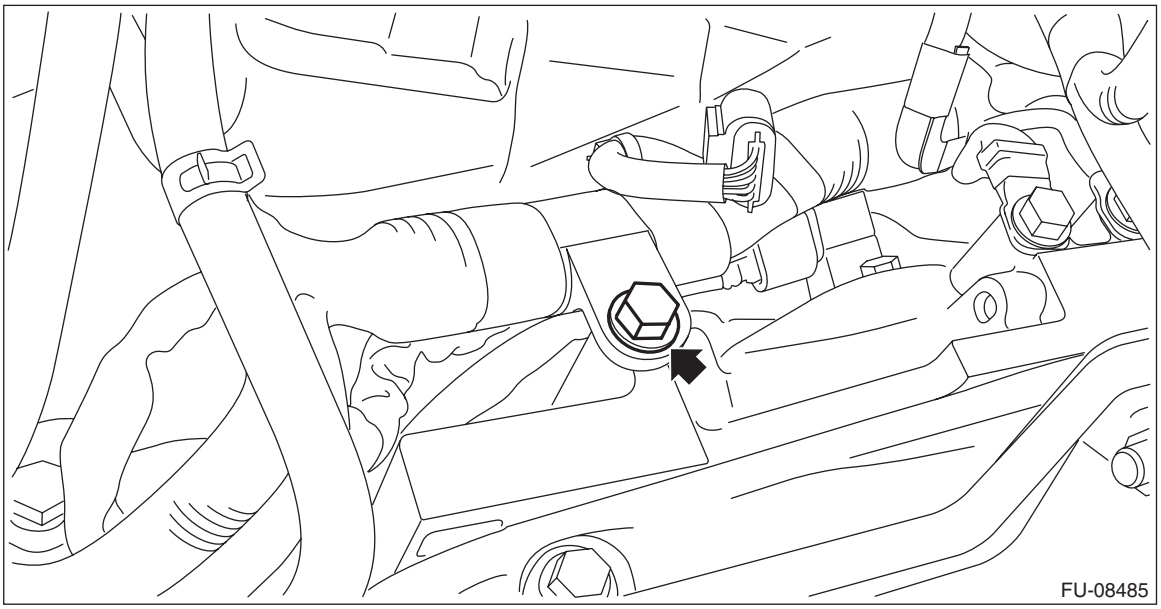

4) Install the throttle body. <Ref. to FU(w/o STI)-16, INSTALLATION, Throttle Body.>
5) Install the intercooler. <Ref. to IN(w/o STI)-45, INSTALLATION, Intercooler.>
6) Connect the ground terminal to battery sensor. <Ref. to NT-6, BATTERY, NOTE, Note.>
7) Install the collector cover. <Ref. to IN(w/o STI)-10, INSTALLATION, Collector Cover.>

C: INSPECTION

1) Check that the knock sensor has no deformation, cracks or other damages.
2) Measure the resistance between knock sensor terminals.

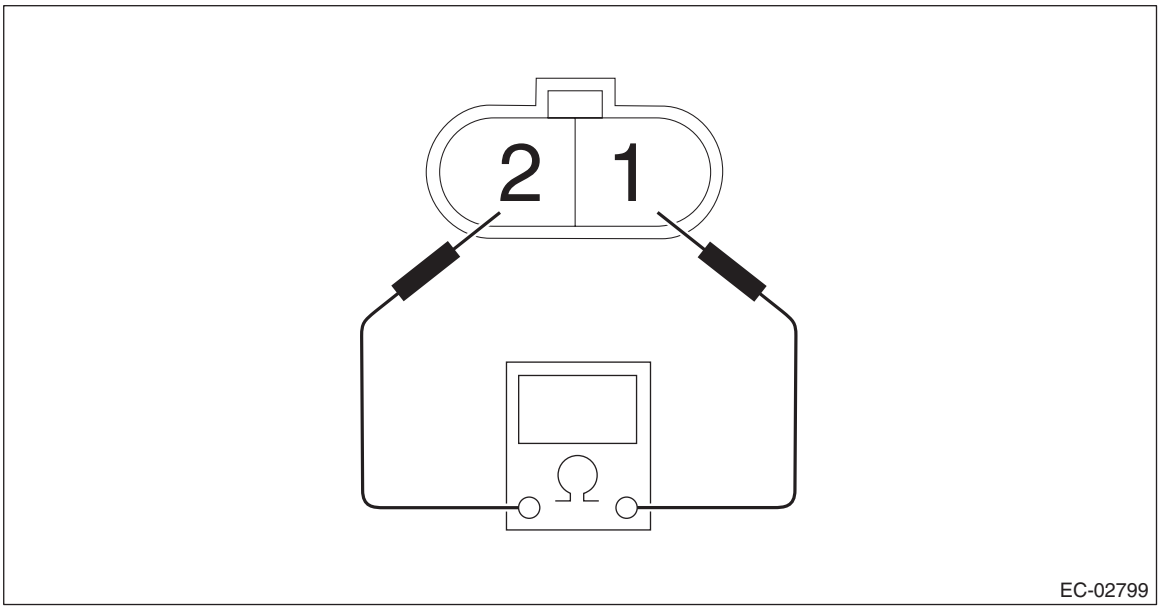

Terminal No.	Standard
1 and 2	560±28 kΩ

19.Throttle Position Sensor

A: SPECIFICATION

Throttle body is a non-disassembled part, so do not remove the throttle position sensor from throttle body. Refer to “Throttle Body” for removal and installation procedure. <Ref. to FU(w/o STI)-15, REMOVAL, Throttle Body.> <Ref. to FU(w/o STI)-16, INSTALLATION, Throttle Body.>

20.Mass Air Flow and Intake Air Temperature Sensor

A: REMOVAL

1) Disconnect the ground terminal from battery sensor. <Ref. to NT-6, BATTERY, NOTE, Note.>
2) Disconnect the connector (A) from the mass air flow and intake air temperature sensor, and remove the mass air flow and intake air temperature sensor.

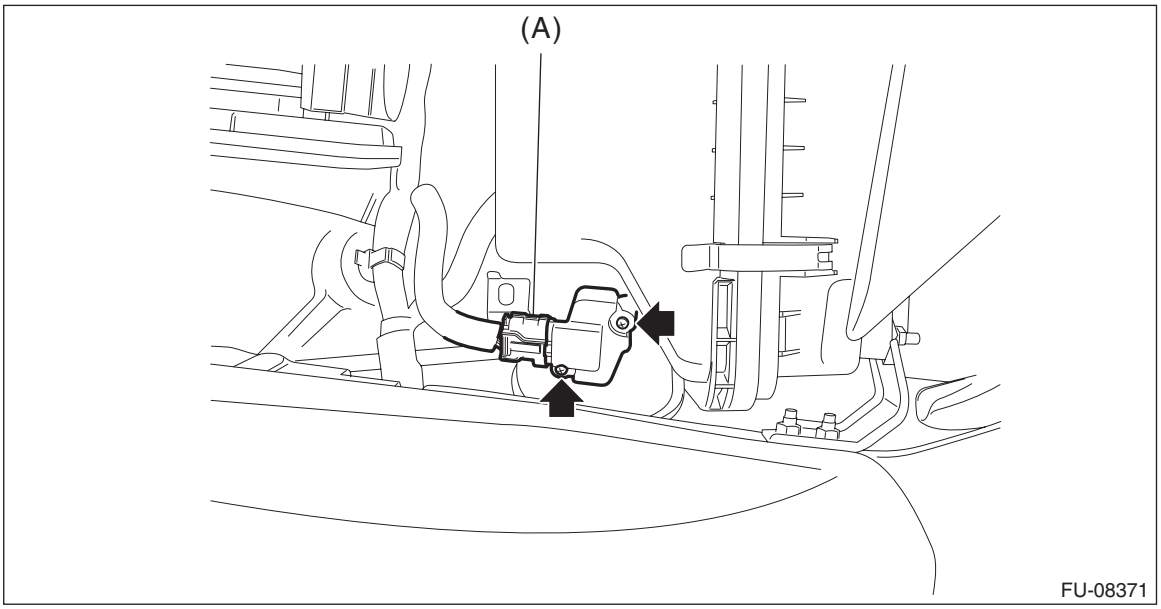

B: INSTALLATION

Install in the reverse order of removal.

Tightening torque:
1 N·m (0.1 kgf-m, 0.7 ft-lb)

C: INSPECTION

1. CHECK THE MASS AIR FLOW SENSOR UNIT

1) Connect the battery positive terminal to terminal No. 1 and the battery ground terminal to terminal No. 2, the circuit tester positive terminal to terminal No. 3 and the circuit tester ground terminal to terminal No. 2.

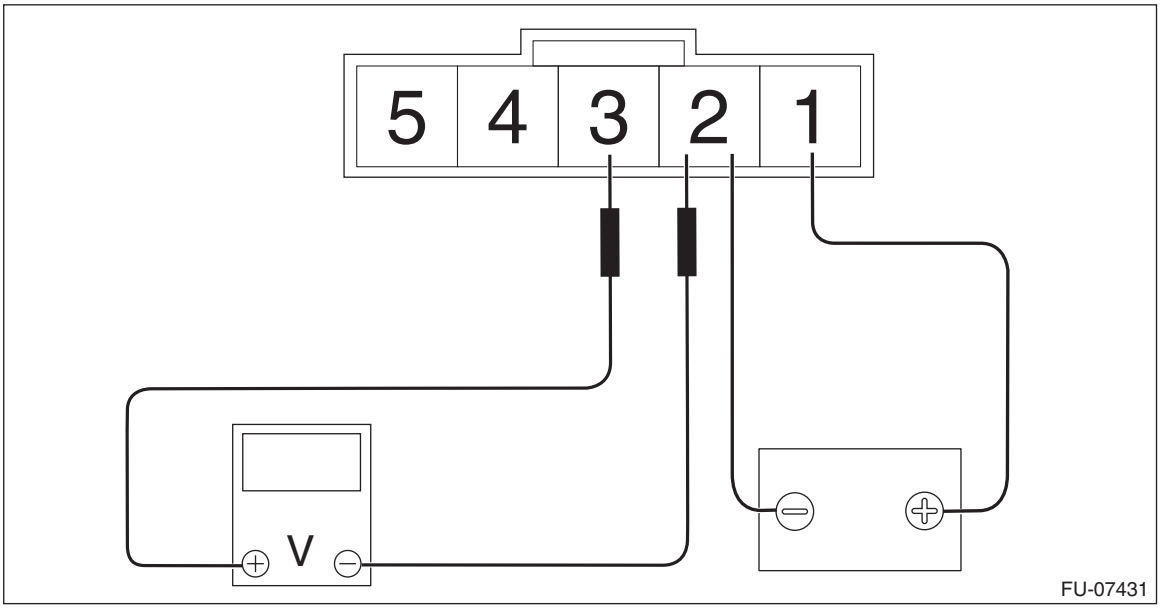

2) Check the voltage changes when air is blown to the mass air flow sensor unit in arrow direction.

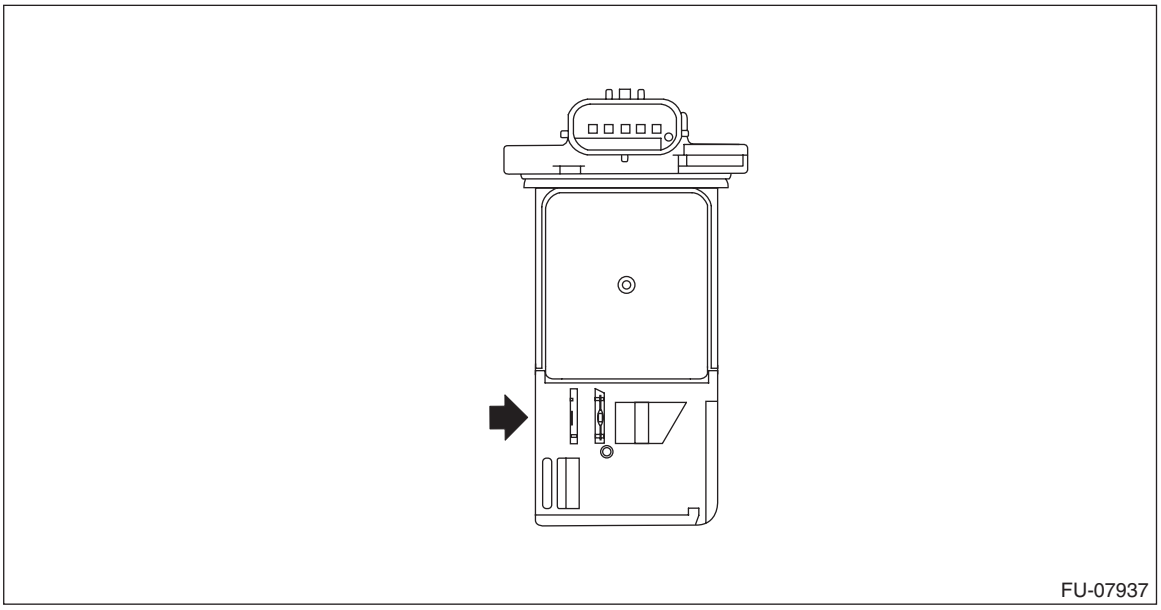

2. CHECK THE INTAKE AIR TEMPERATURE SENSOR UNIT

Measure the resistance between intake air temperature sensor terminals.

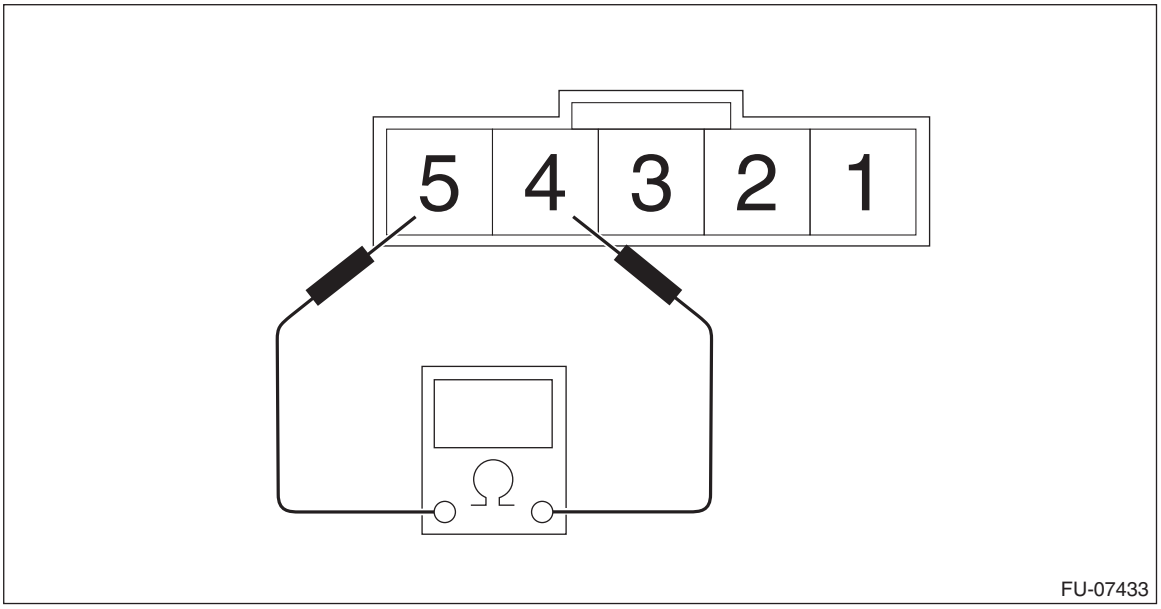

Temperature	Terminal No.	Standard
–20°C (–4°F)	4 and 5	14.7±2.2 kΩ
25°C (77°F)		2.0±0.2 kΩ
60°C (140°F)		0.59±0.09 kΩ

3. OTHER INSPECTIONS

1) Check that the mass air flow and intake air temperature sensor has no deformation, cracks or other damages.
2) Check that the mass air flow and intake air temperature sensor has no dirt.

21.Manifold Absolute Pressure and Intake Air Temperature Sensor

A: REMOVAL

1) Remove the collector cover. <Ref. to IN(w/o STI)-7, REMOVAL, Collector Cover.>
2) Disconnect the ground terminal from battery sensor. <Ref. to NT-6, BATTERY, NOTE, Note.>
3) Disconnect the connector (A) from the manifold absolute pressure & intake air temperature sensor, and remove the manifold absolute pressure & intake air temperature sensor from the intake manifold.

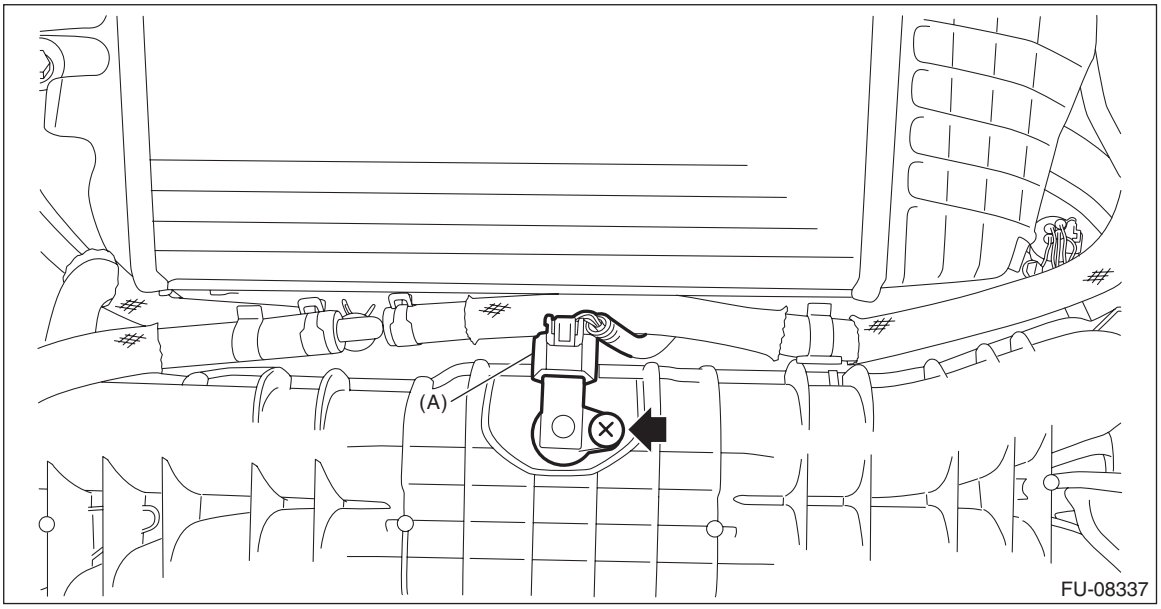

B: INSTALLATION

Install in the reverse order of removal.

NOTE:
Use new O-rings.

Tightening torque:
3.5 N·m (0.4 kgf-m, 2.6 ft-lb)

C: INSPECTION

1. CHECK MANIFOLD ABSOLUTE PRESSURE SENSOR

1) Connect dry-cell battery positive terminal to terminal No. 4 and dry-cell battery ground terminal to terminal No. 2, circuit tester positive terminal to terminal No. 3 and the circuit tester ground terminal to terminal No. 2.

NOTE:
- Use new dry-cell batteries.
- Using a circuit tester, check that the initial voltage of each dry-cell battery is 1.6 V or more. And also check that the voltage of three batteries in series is between 4.8 V and 5.2 V.
- For power supply, 5 V DC constant voltage power source can also be used.

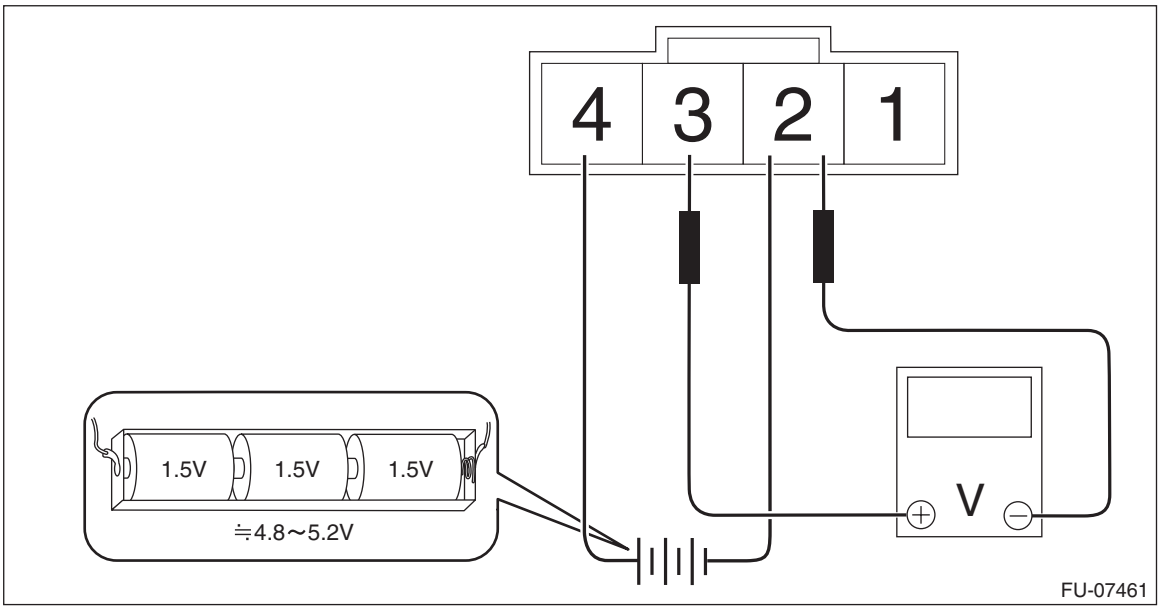

2) Check the voltage at a normal atmospheric pressure.

NOTE:
The atmospheric pressure at higher altitude is lower than normal. Therefore, the voltage is lower than the standard value.

Terminal No.	Standard
3 (+) and 2 (–)	Approx. 2 V (when 25°C (77°F))

3) Connect the Mighty Vac to the pressure port (A).

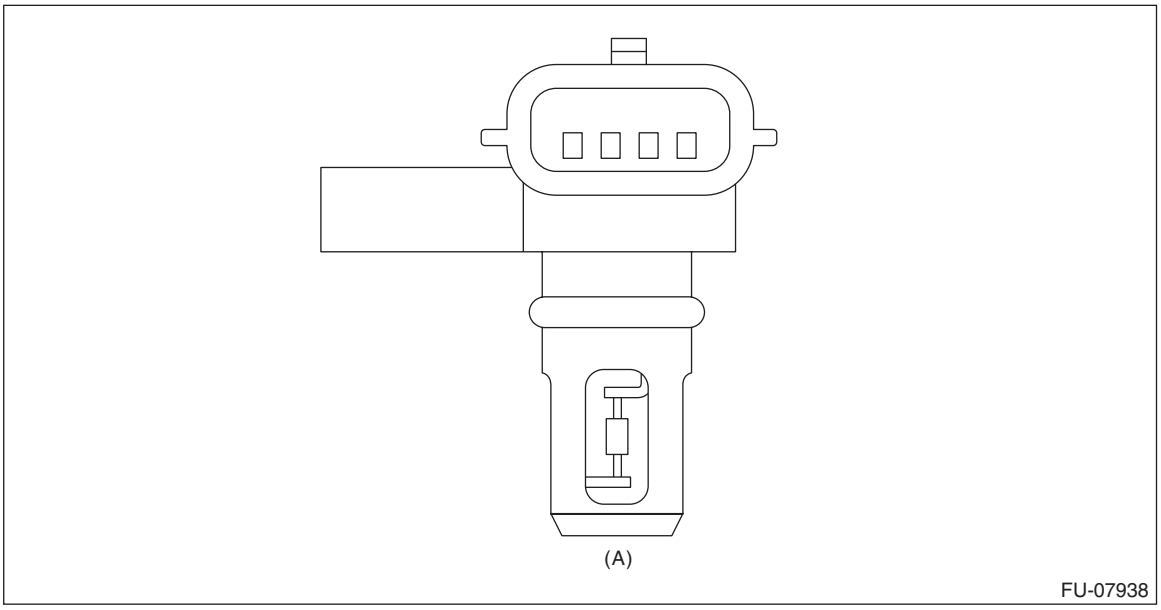

4) Check the voltage when generating vacuum and positive pressure using Mighty Vac.

CAUTION:
Do not apply vacuum of less than –88 kPa (–0.9 kg/cm^2, –12.8 psi). Doing so may damage the manifold absolute pressure sensor.

NOTE:
When vacuum pressure occurs at the pressure port, the voltage will drop from the value as in step 3). When positive pressure occurs, on the other hand, the voltage will rise.

Pressure	Terminal No.	Standard
–88 kPa (–0.9 kg/cm^2, –12.8 psi)	3 (+) and 2 (–)	Approx. 1 V (when 25°C (77°F))

2. CHECK MANIFOLD TEMPERATURE SENSOR UNIT

1) Measure the resistance between engine coolant temperature sensor terminals.

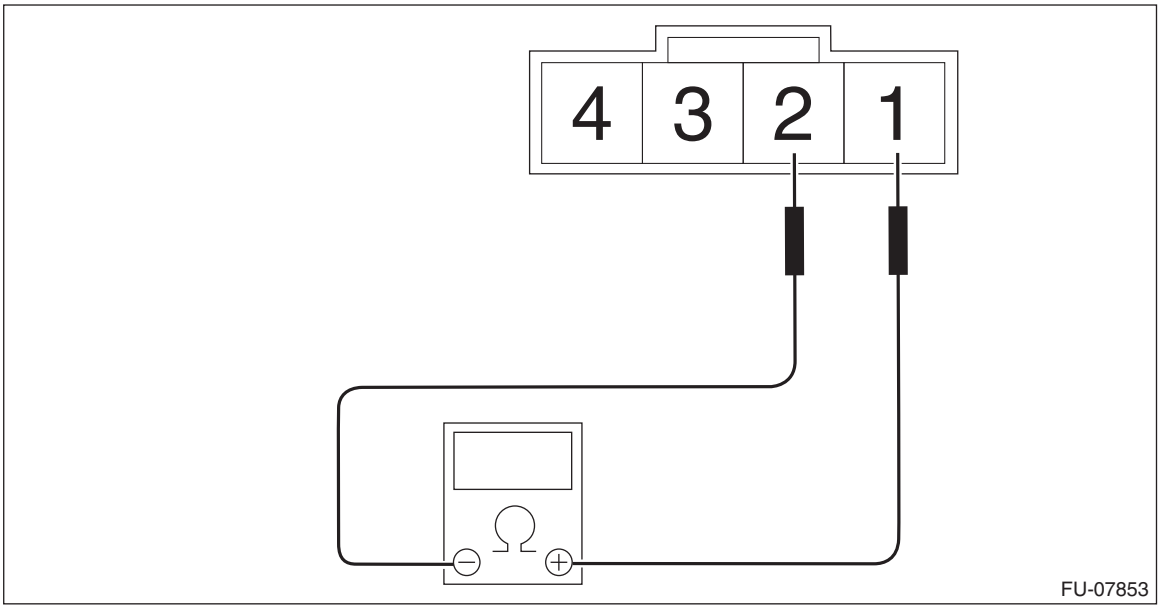

Temperature	Terminal No.	Standard
–20°C (–4°F)	1 and 2	Approx. 14.7±2.2 kΩ
25°C (77°F)		Approx. 2.0±0.2 kΩ
60°C (140°F)		Approx. 0.59±0.09 kΩ

3. OTHER INSPECTIONS

Check that the manifold pressure & intake air temperature sensor has no deformation, cracks or other damages.

22.Wastegate Control Solenoid Valve

A: REMOVAL

For removal procedures of wastegate control solenoid valve, refer to “Intake Duct No. 1”. <Ref. to IN(w/o STI)-27, INTAKE DUCT NO. 1, REMOVAL, Intake Duct.> <Ref. to IN(w/o STI)-40, INTAKE DUCT NO. 1, DISASSEMBLY, Intake Duct.>

B: INSTALLATION

For installation procedures of wastegate control solenoid valve, refer to “Intake Duct No. 1”. <Ref. to IN(w/o STI)-33, INTAKE DUCT NO. 1, INSTALLATION, Intake Duct.> <Ref. to IN(w/o STI)-41, INTAKE DUCT NO. 1, ASSEMBLY, Intake Duct.>

C: INSPECTION

1. WASTEGATE CONTROL SOLENOID VALVE

1) Check that the wastegate control solenoid valve has no deformation, cracks or other damages.
2) Check the resistance between the wastegate control solenoid valve terminals.

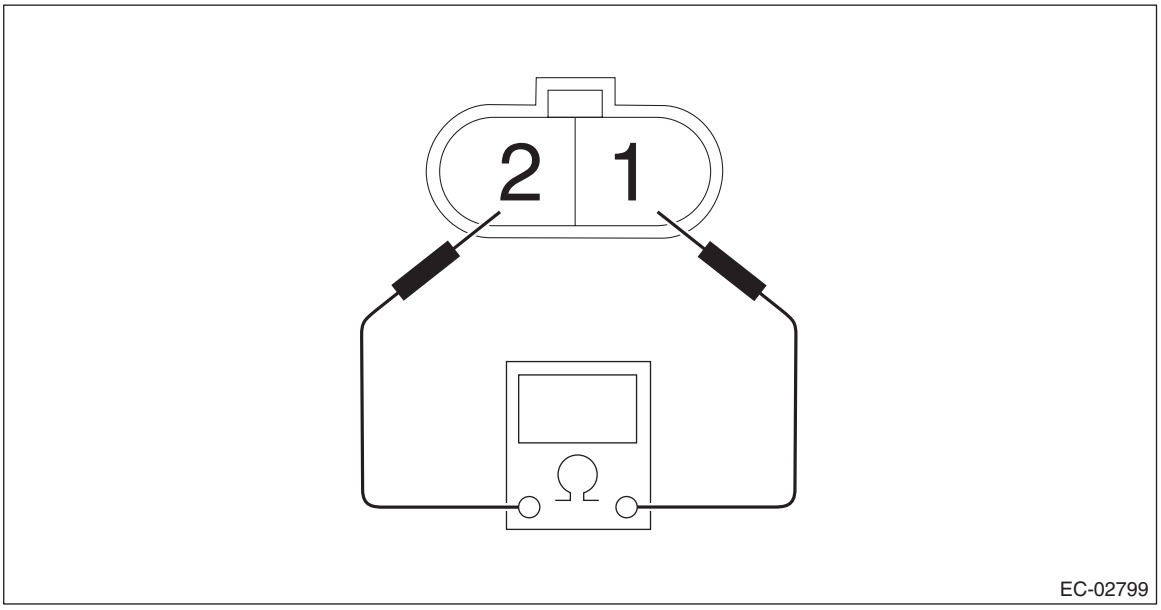

Terminal No.	Standard
1 and 2	24±3 Ω (when 20°C (68°F))

3) Check that air does not come out from (B) when air is blown into (A).

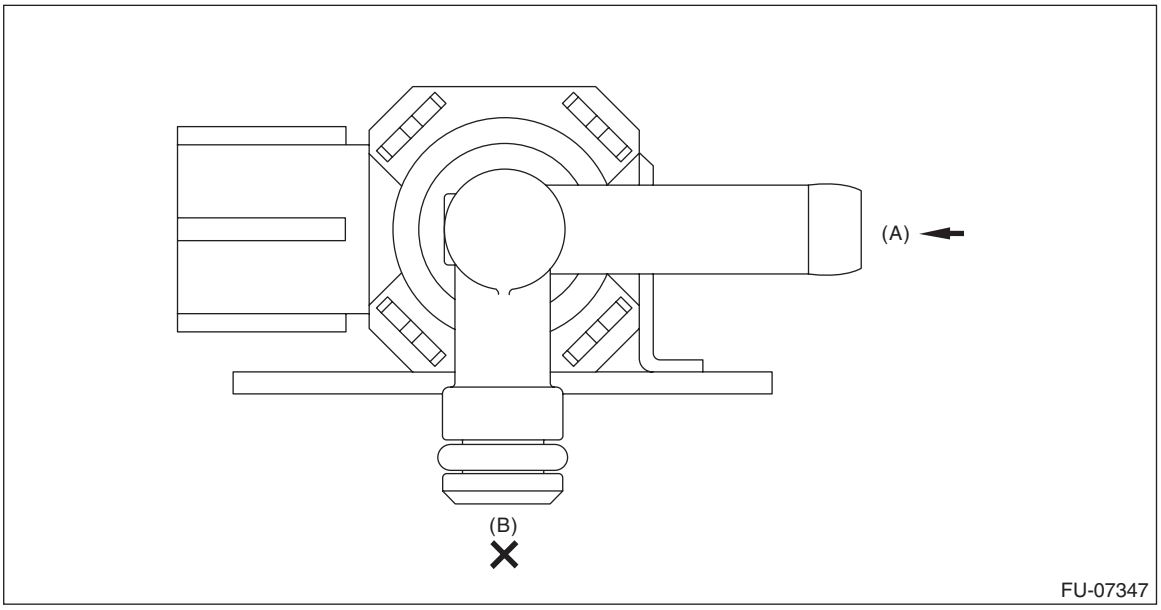

4) Connect the battery positive terminal to the terminal No. 1 and the battery negative terminal to the terminal No. 2. Check that air is discharged from (B), when supplying air to (A).

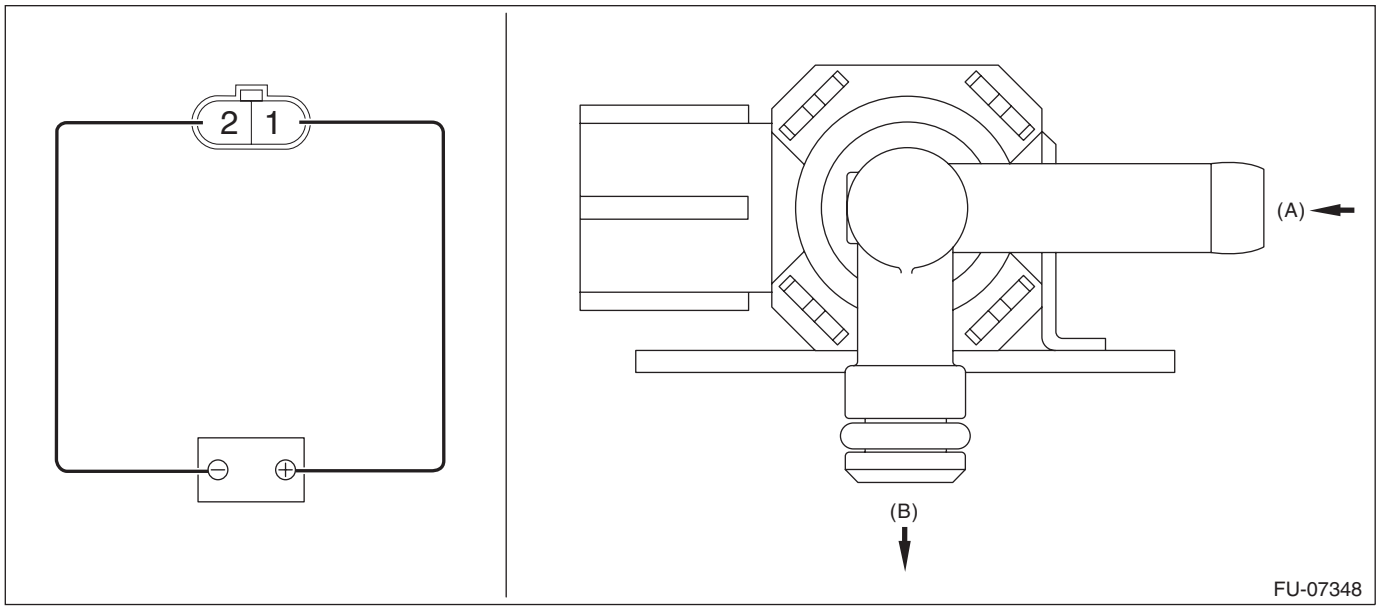

2. OTHER INSPECTIONS

Check that the air control hose has no cracks, damage or loose part.

23.Front Oxygen (A/F) Sensor

A: REMOVAL

1) Disconnect the ground terminal from battery sensor. <Ref. to NT-6, BATTERY, NOTE, Note.>
2) Remove the radiator main fan & fan motor assembly. <Ref. to CO(w/o STI)-44, REMOVAL, Radiator Main Fan and Fan Motor.>
3) Lift up the vehicle.
4) Remove the under cover. <Ref. to EI-22, REMOVAL, Front Under Cover.>
5) Disconnect the connector (A) on the front oxygen (A/F) sensor from the engine harness, and remove the clip (B) which secures the front oxygen (A/F) sensor harness to the water pump cover.
6) Apply spray-type lubricant (004301003) to the threaded portion of front oxygen (A/F) sensor, and leave it for one minute or more.
7) Remove the front oxygen (A/F) sensor.

CAUTION:
When removing the front oxygen (A/F) sensor, wait until exhaust pipe cools, otherwise it will damage the exhaust pipe.

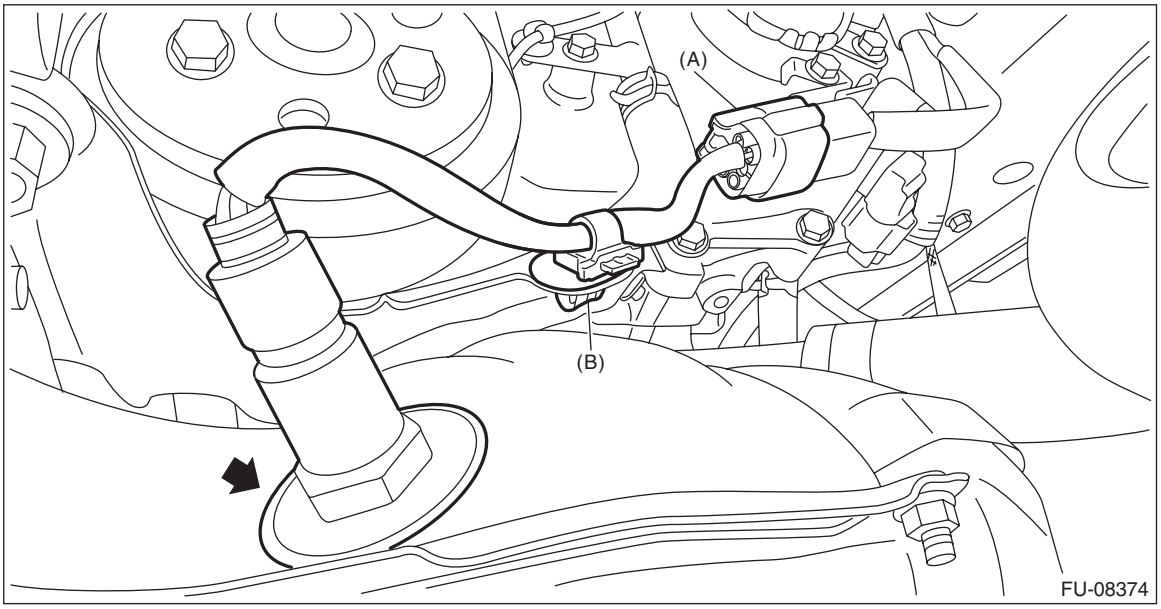

B: INSTALLATION

CAUTION:
If lubricant is spilt over the exhaust pipe, wipe it off with cloth to avoid emission of smoke or causing a fire.
1) Before installing front oxygen (A/F) sensor, apply anti-seize compound only to the threaded portion of front oxygen (A/F) sensor to make the next removal easier.

CAUTION:
Never apply anti-seize compound to the protector of front oxygen (A/F) sensor.

Anti-seize compound:
NEVER-SEEZ NSN, JET LUBE SS-30 or equivalent
2) Install the front oxygen (A/F) sensor.

Tightening torque:
30 N·m (3.1 kgf-m, 22.1 ft-lb)

3) Secure the front oxygen (A/F) sensor harness to the water pump cover using clip (B), and connect the front oxygen (A/F) sensor connector (A) to the engine harness.

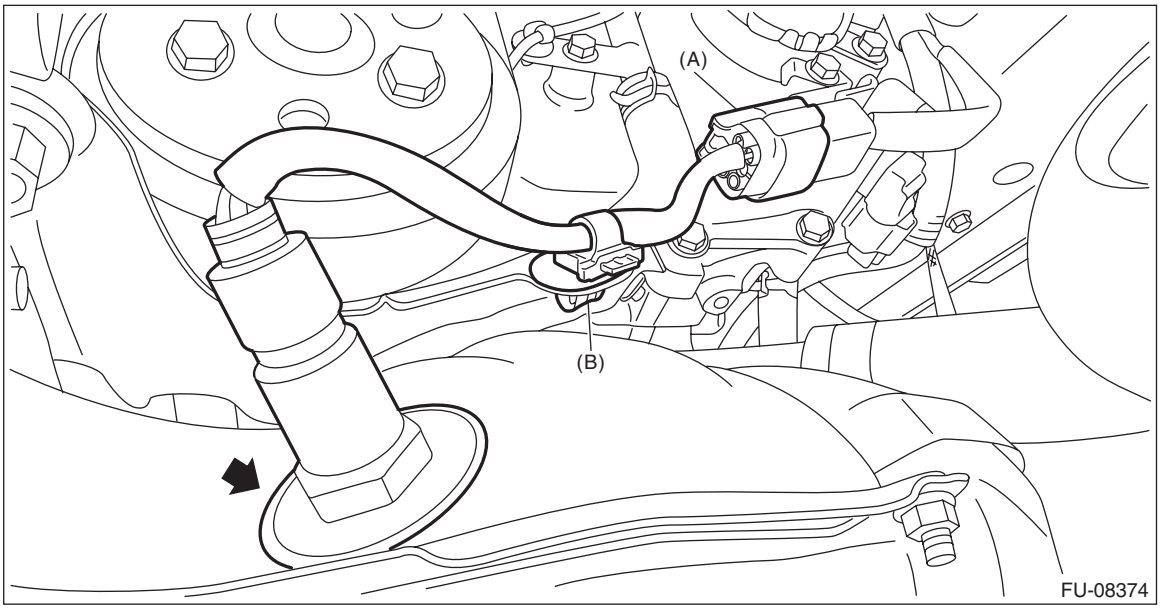

4) Install the under cover. <Ref. to EI-23, INSTALLATION, Front Under Cover.>
5) Lower the vehicle.
6) Install the radiator main fan & fan motor assembly. <Ref. to CO(w/o STI)-44, INSTALLATION, Radiator Main Fan and Fan Motor.>
7) Connect the ground terminal to battery sensor. <Ref. to NT-6, BATTERY, NOTE, Note.>

C: INSPECTION

1) Check that the front oxygen (A/F) sensor has no deformation, cracks or other damages.
2) Measure the resistance between front oxygen (A/F) sensor terminals.

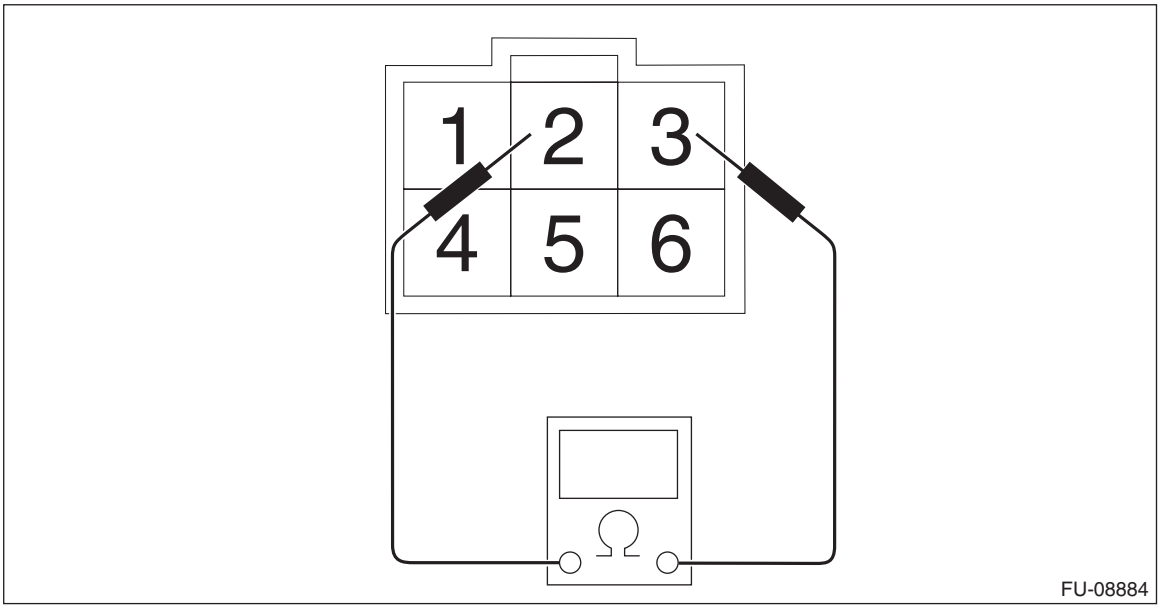

Terminal No.	Standard
2 and 3	2.5 — 4.0 Ω (when 20°C (68°F))

24.Rear Oxygen Sensor

A: REMOVAL

1) Disconnect the ground terminal from battery sensor. <Ref. to NT-6, BATTERY, NOTE, Note.>
2) Lift up the vehicle.
3) Remove the under cover. <Ref. to EI-22, REMOVAL, Front Under Cover.>
4) Disconnect the connector on the rear oxygen sensor from the engine harness.

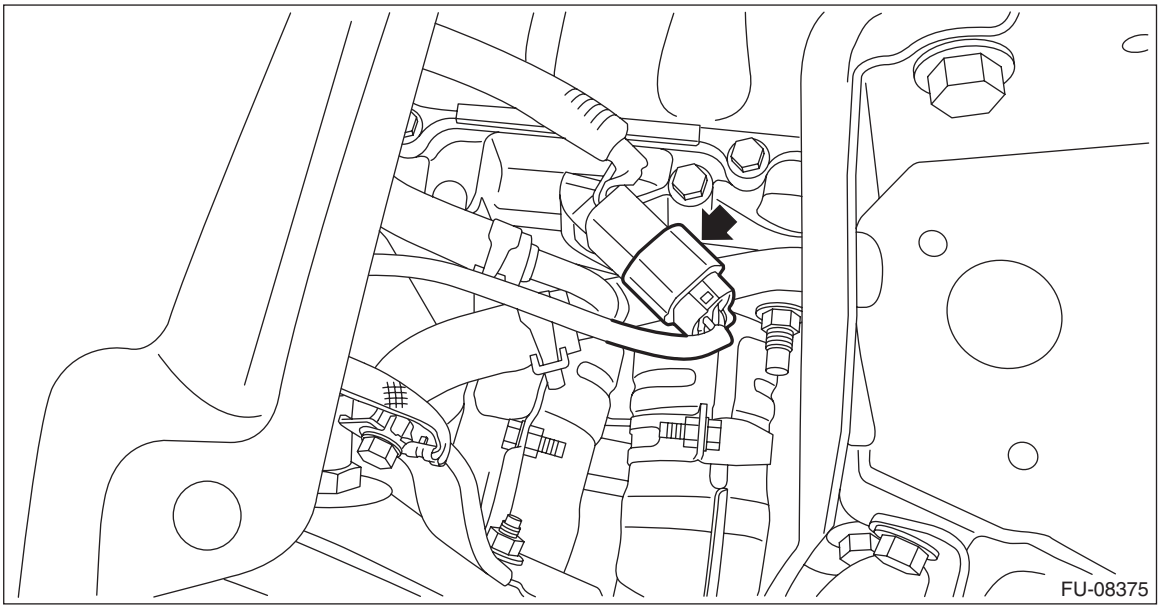

5) Apply spray-type lubricant (004301003) to the threaded portion of rear oxygen sensor, and leave it for one minute or more.
6) Remove the rear oxygen sensor.

CAUTION:
When removing the rear oxygen sensor, wait until exhaust pipe cools, otherwise it will damage the exhaust pipe.

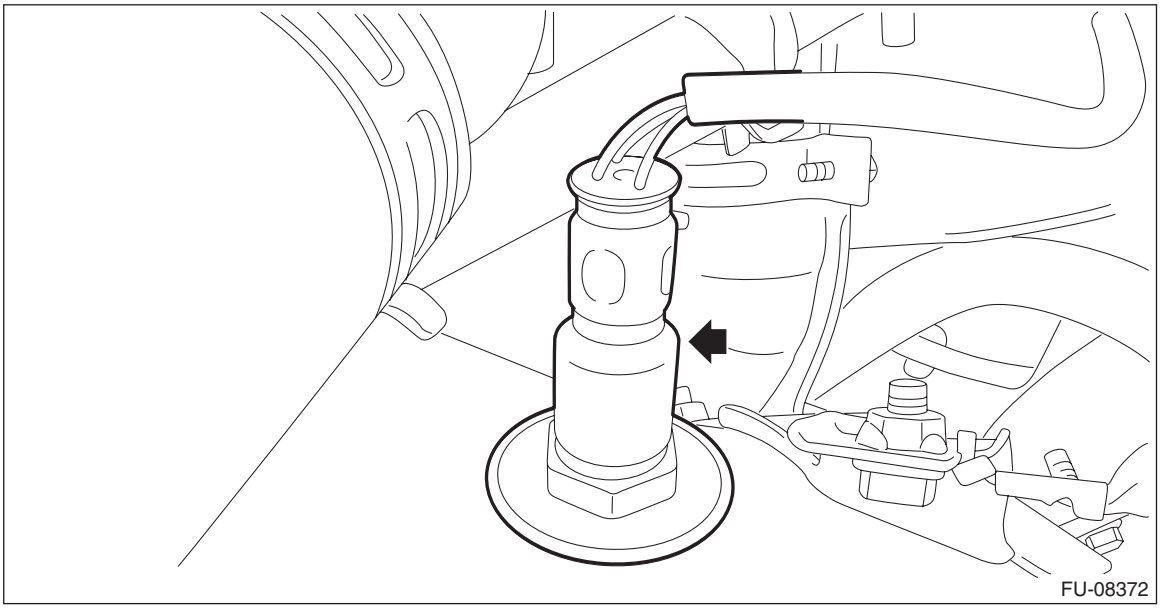

B: INSTALLATION

CAUTION:
If lubricant is spilt over the exhaust pipe, wipe it off with cloth to avoid emission of smoke or causing a fire.

1) Before installing rear oxygen sensor, apply the anti-seize compound only to the threaded portion of rear oxygen sensor to make the next removal easier.

CAUTION:
Never apply anti-seize compound to the protector of rear oxygen sensor.

Anti-seize compound:
NEVER-SEEZ NSN, JET LUBE SS-30 or equivalent

2) Install the rear oxygen sensor.

Tightening torque:
30 N·m (3.1 kgf-m, 22.1 ft-lb)

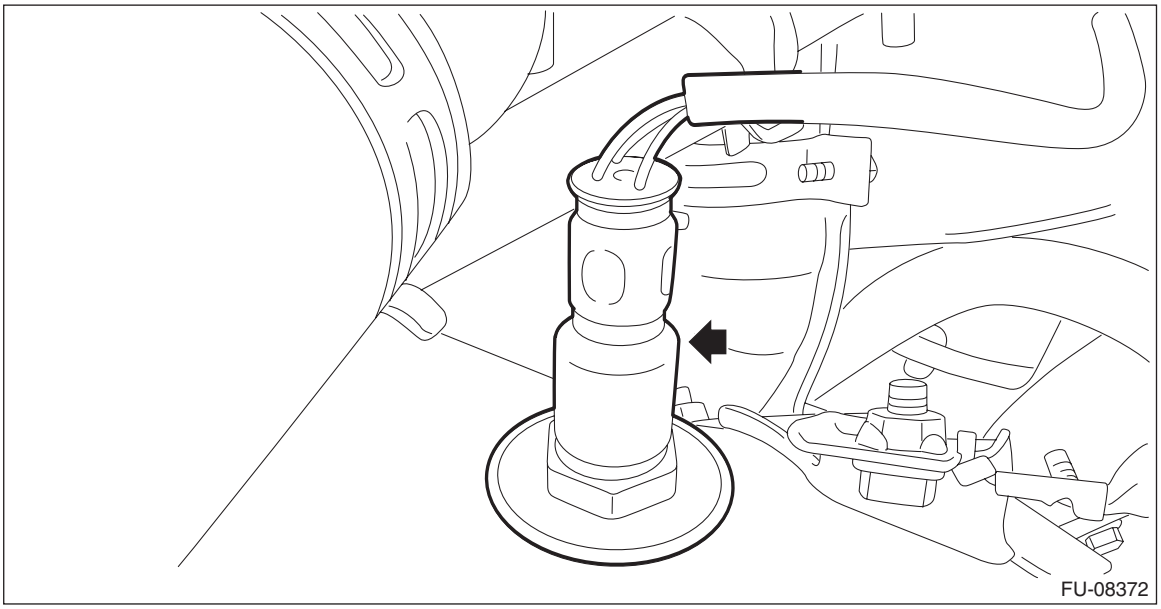

3) Connect the rear oxygen sensor connector to the engine harness.

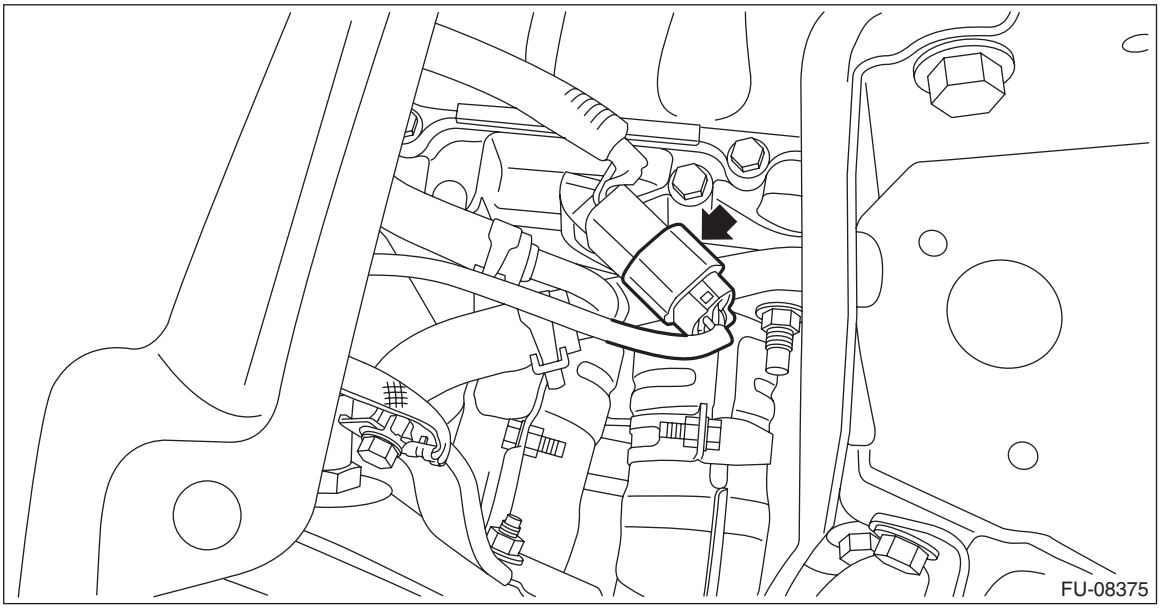

4) Install the under cover. <Ref. to EI-23, INSTALLATION, Front Under Cover.>
5) Lower the vehicle.
6) Connect the ground terminal to battery sensor. <Ref. to NT-6, BATTERY, NOTE, Note.>

C: INSPECTION

1) Check that the rear oxygen sensor has no deformation, cracks or other damages.
2) Measure the resistance between rear oxygen sensor terminals.

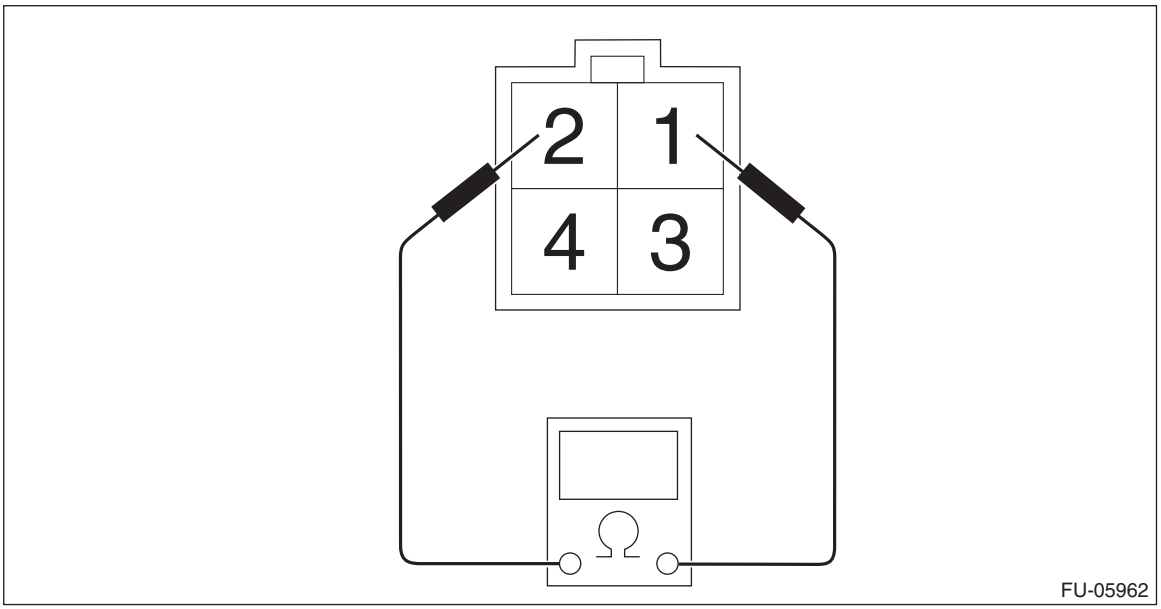

Terminal No.	Standard
1 and 2	$13.0^{+1.5}_{-1.3}$ Ω (when 20°C (68°F))

25.SI-DRIVE (SUBARU Intelligent Drive) Selector

A: SPECIFICATION

SI-DRIVE (SUBARU Intelligent Drive) selector is integrated as a unit with the cruise control command switch. For removal, installation and inspection, refer to “Cruise Control Command Switch”. <Ref. to CC-6, REMOVAL, Cruise Control Command Switch.> <Ref. to CC-6, INSTALLATION, Cruise Control Command Switch.> <Ref. to CC-7, INSPECTION, Cruise Control Command Switch.>

26.Engine Control Module (ECM)

A: REMOVAL

1) Disconnect the ground terminal from battery sensor. <Ref. to NT-6, BATTERY, NOTE, Note.>
2) Remove the clip (A) and clip (B) which secure the engine harness and bulkhead harness from the bracket, and remove the bolt which secures the ECM to the bracket.

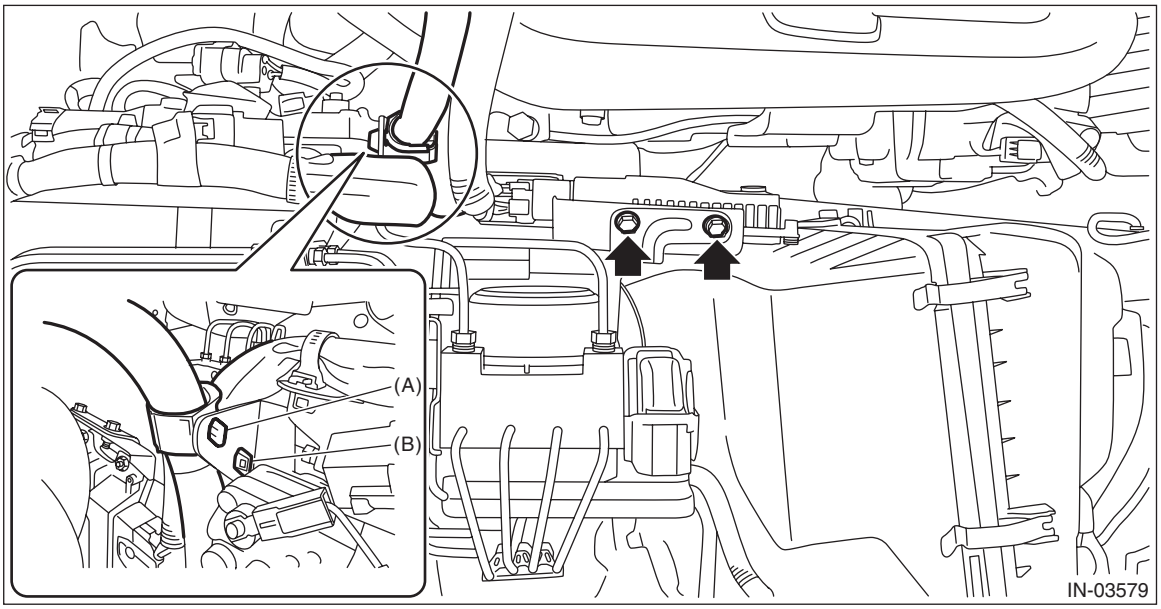

3) Pull out the ECM from the bracket.

NOTE:
When performing the pulling out operation, pay attention not to apply excessive load to the breather filter portion (a) in order to avoid the damage.

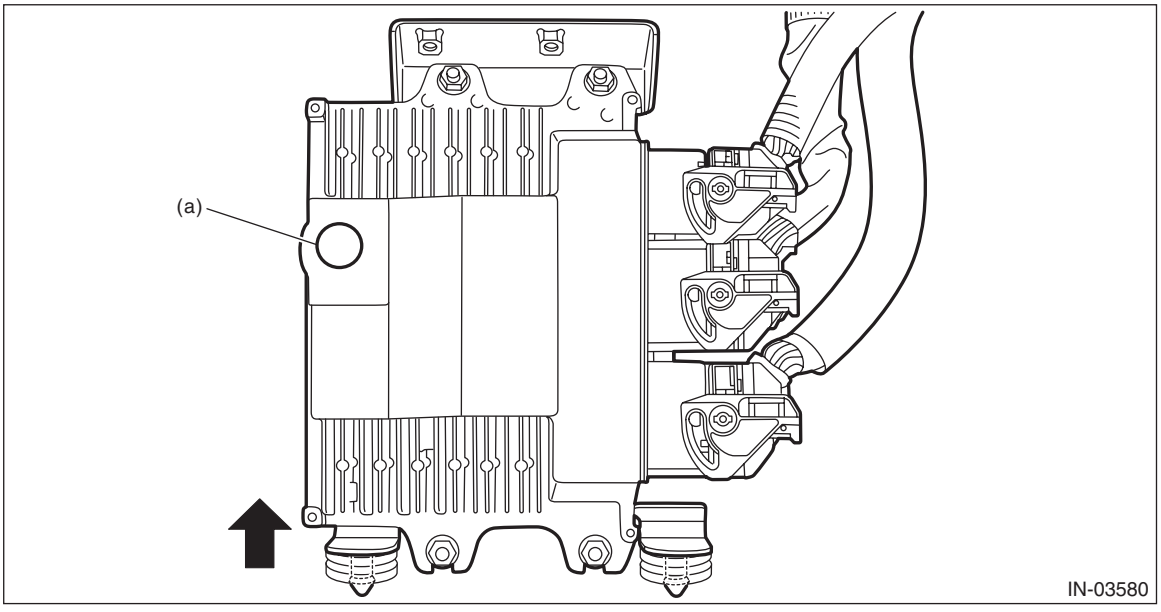

4) While pressing the section (A) shown in the figure, move the lock lever (B) in the direction of the arrow to disconnect the connectors from the ECM in numerical order as shown in the figure.

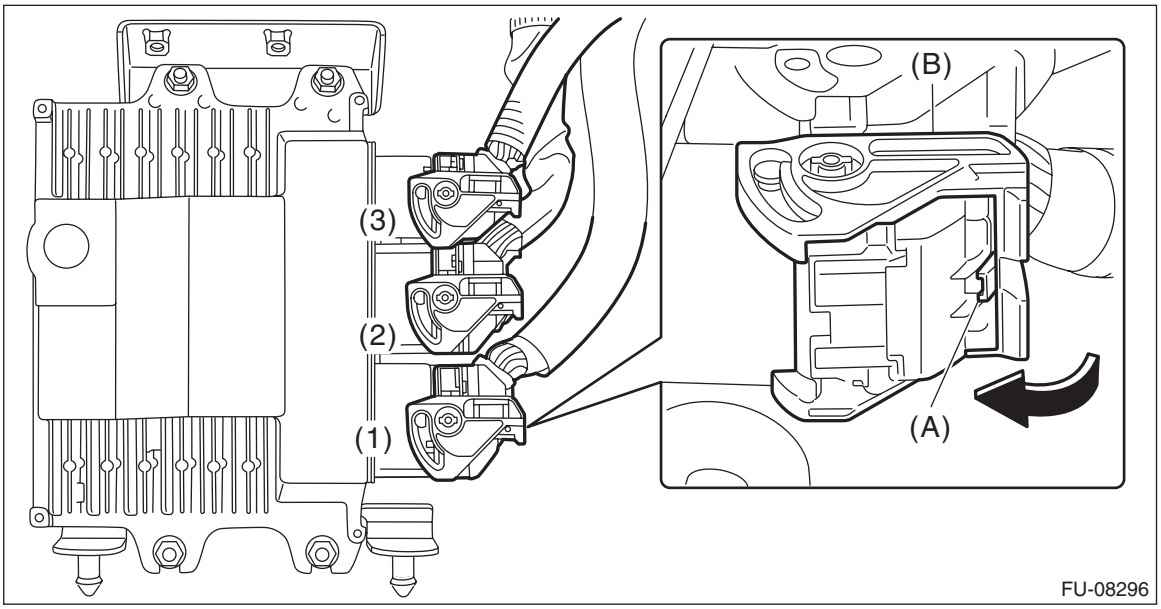

5) Remove the bracket from ECM.

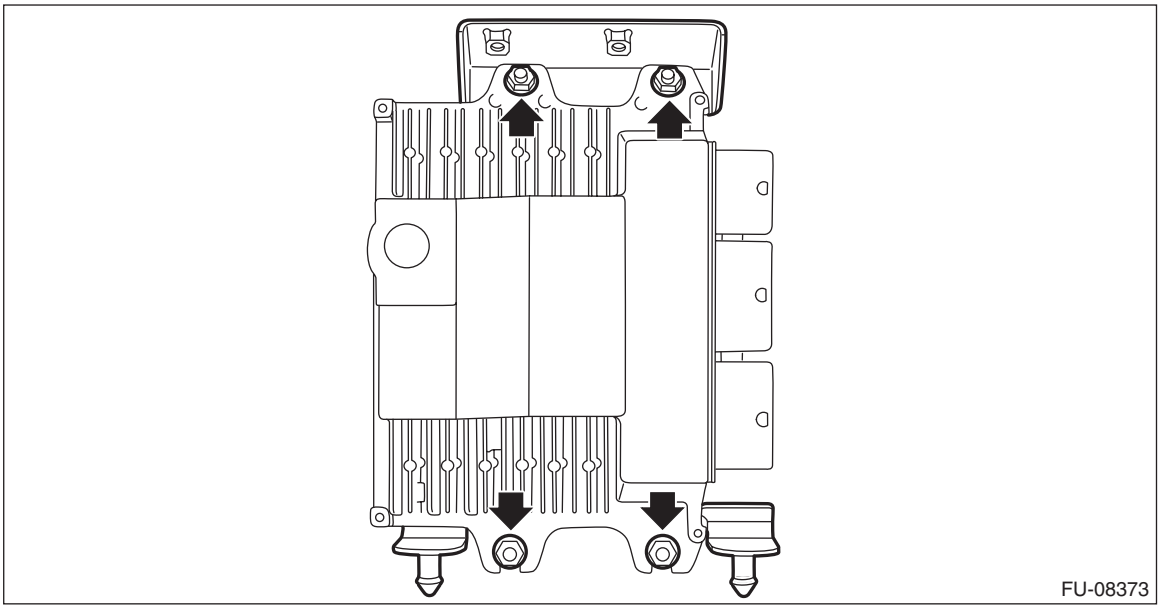

B: INSTALLATION

Install in the reverse order of removal.

CAUTION:
When the ECM of model with immobilizer has been replaced, be sure to perform the registration of immobilizer system.

- **For model without keyless access with push button start, refer to the Type B in "REGISTRATION MANUAL FOR IMMOBILIZER".**
- **For model with keyless access with push button start, refer to the Type D in "REGISTRATION MANUAL FOR IMMOBILIZER".**

NOTE:
• When replacing the ECM, be careful not to use the ECM of wrong specification to avoid any damage on the fuel injection system.
• When installing the bracket (A) to the ECM, press to install it in the direction of the arrow.

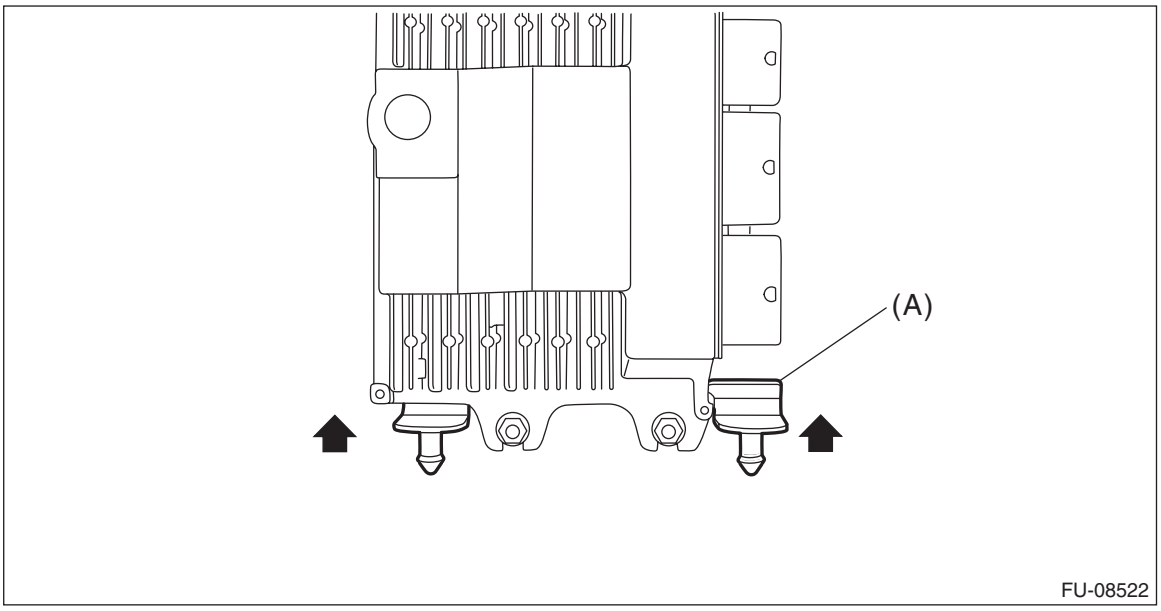

• Insert the ECM into the bracket cushion.

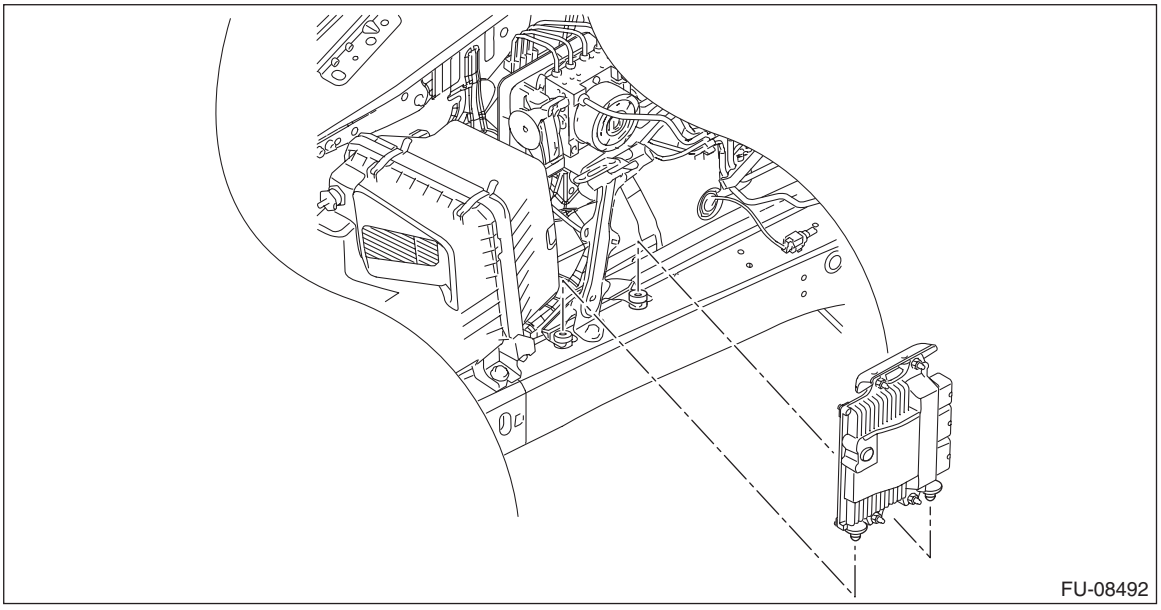

Tightening torque:
7.5 N·m (0.8 kgf-m, 5.5 ft-lb)

C: INSPECTION

Check that the ECM has no deformation, cracks or other damages.

27.Main Relay

A: REMOVAL

1) Disconnect the ground terminal from battery sensor. <Ref. to NT-6, BATTERY, NOTE, Note.>
2) Remove the glove box. <Ref. to EI-64, REMOVAL, Glove Box.>
3) Remove the main relay.

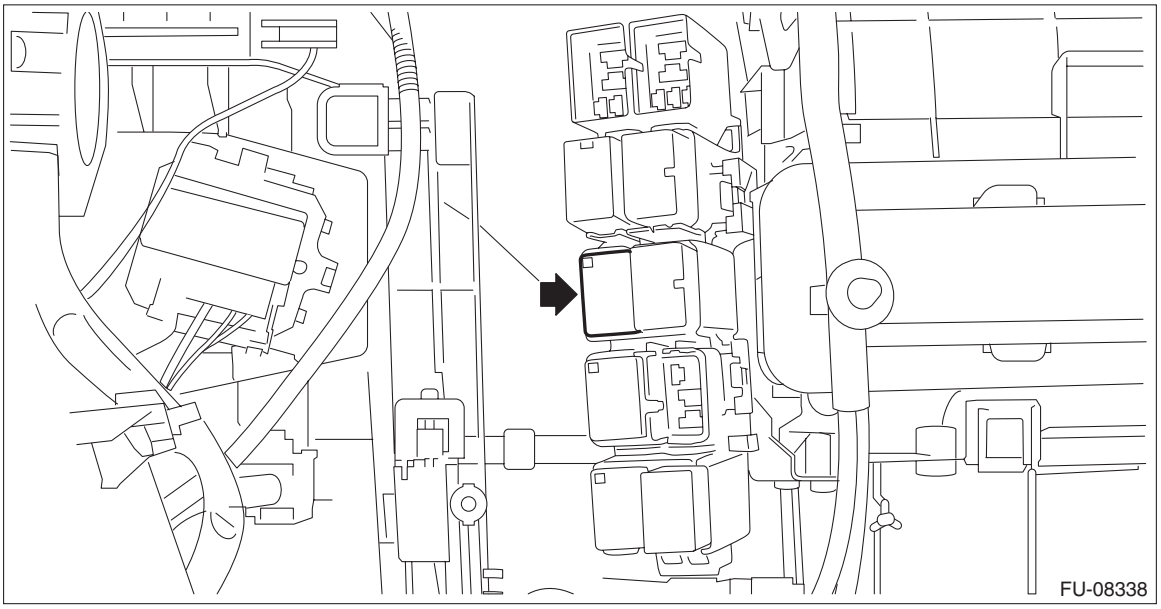

B: INSTALLATION

Install in the reverse order of removal.

C: INSPECTION

1) Check that the main relay has no deformation, cracks or other damages.
2) Measure the resistance between main relay terminals.

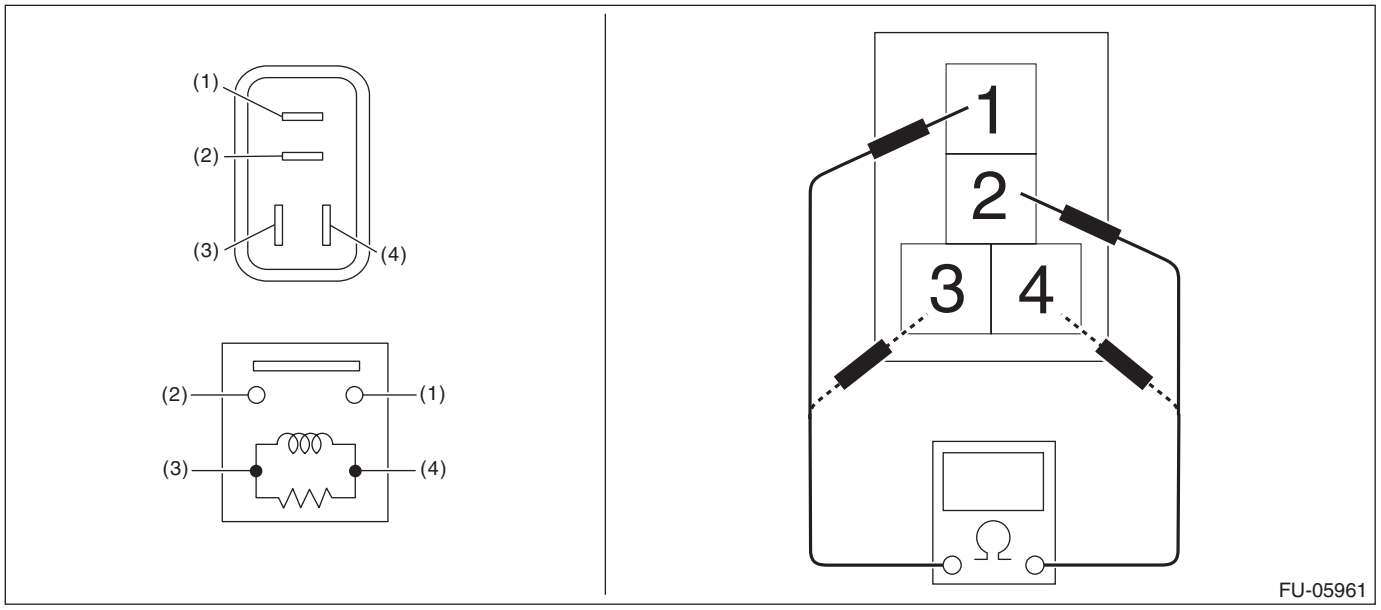

Terminal No.	Standard
1 and 2	1 MΩ or more
3 and 4	130.4 — 230.8 Ω (when 20°C (68°F))

3) Connect battery positive terminal to terminal No. 3 and battery ground terminal to terminal No. 4, and measure the resistance between the main relay terminals.

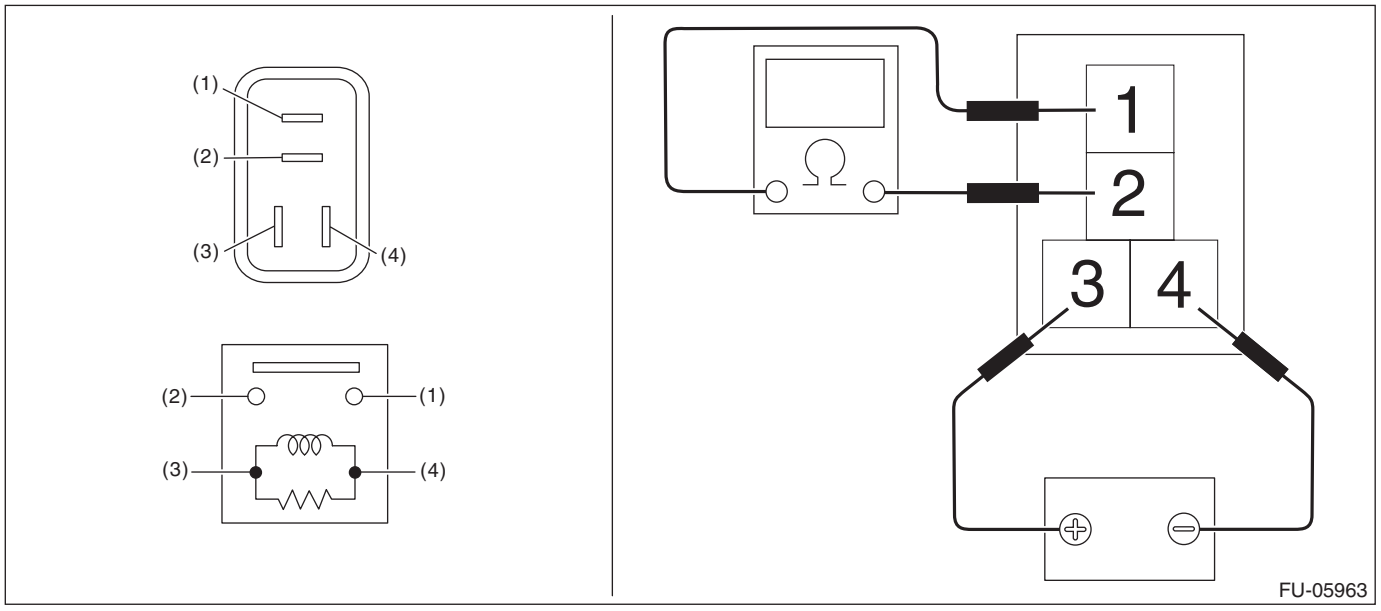

Terminal No.	Standard
1 and 2	Less than 1 Ω

28.Oxygen Sensor Relay

A: REMOVAL

1) Disconnect the ground terminal from battery sensor. <Ref. to NT-6, BATTERY, NOTE, Note.>
2) Remove the instrument panel lower cover. <Ref. to EI-62, REMOVAL, Instrument Panel Lower Cover.>
3) Remove the nut and bolt, and move the fuse block downwards.

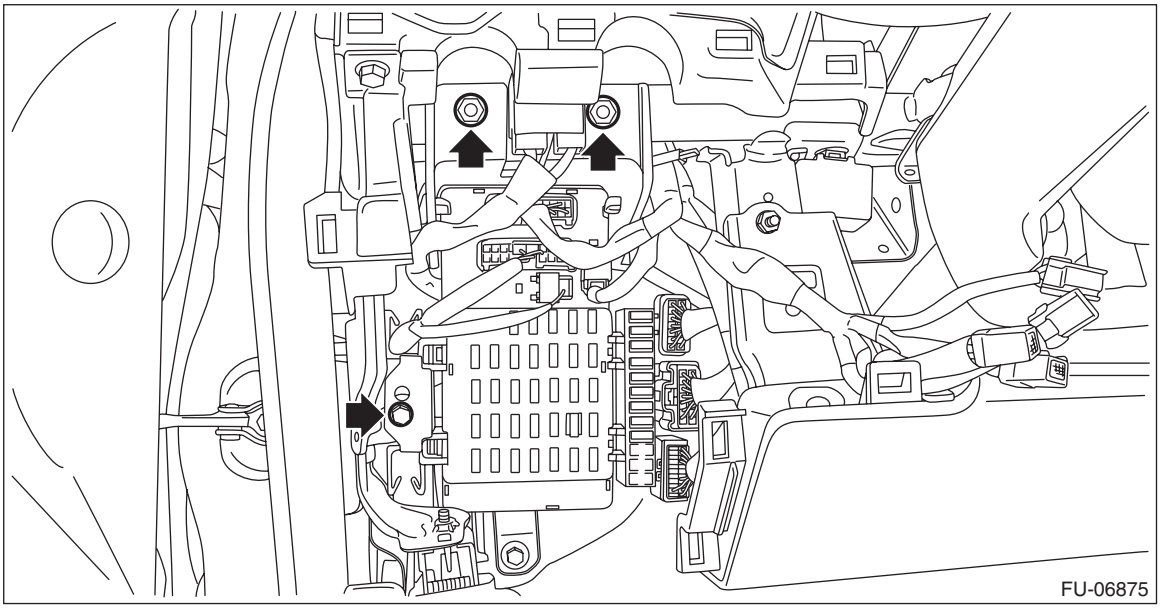

4) Remove the oxygen sensor relay from the relay block.

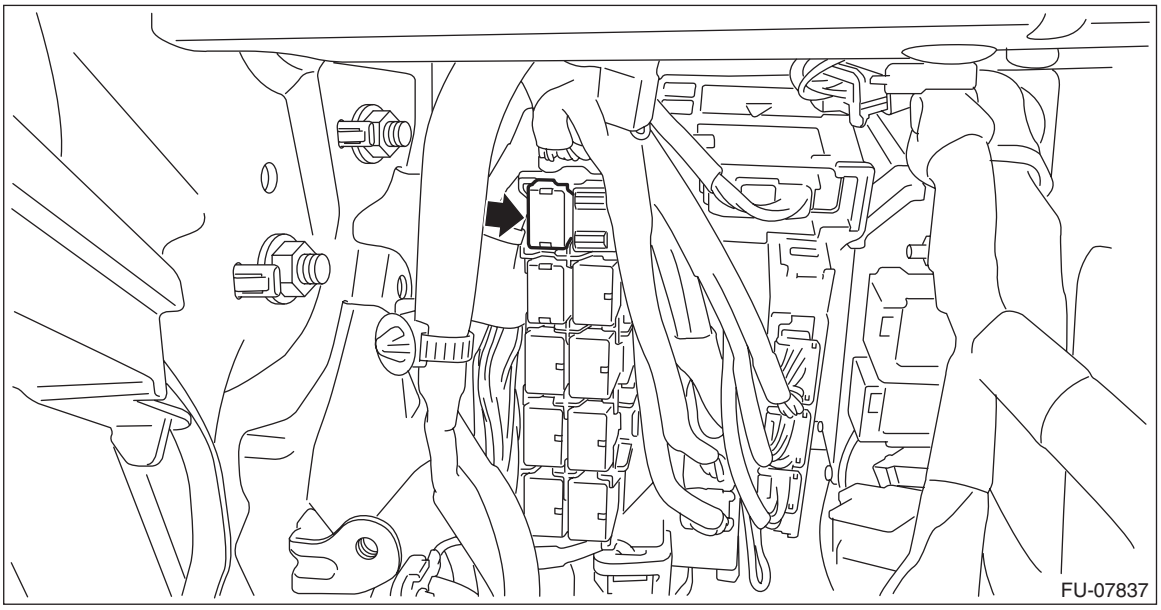

B: INSTALLATION

Install in the reverse order of removal.

Tightening torque:
7.5 N·m (0.8 kgf-m, 5.5 ft-lb)

C: INSPECTION

1) Check that the oxygen sensor relay has no deformation, cracks or other damages.
2) Measure the resistance between oxygen sensor relay terminals.

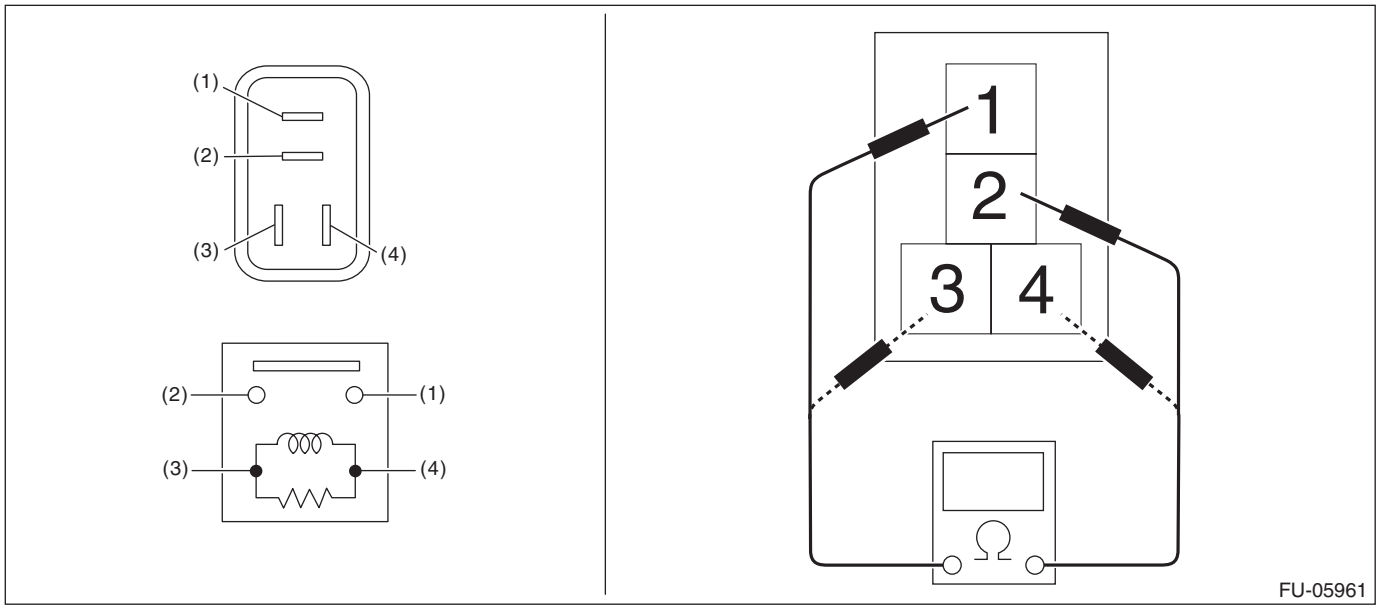

Terminal No.	Standard
1 and 2	1 MΩ or more
3 and 4	93.8 — 136.4 Ω (when 20°C (68°F))

3) Connect battery positive terminal to terminal No. 3 and battery ground terminal to terminal No. 4, and measure the resistance between oxygen sensor relay terminals.

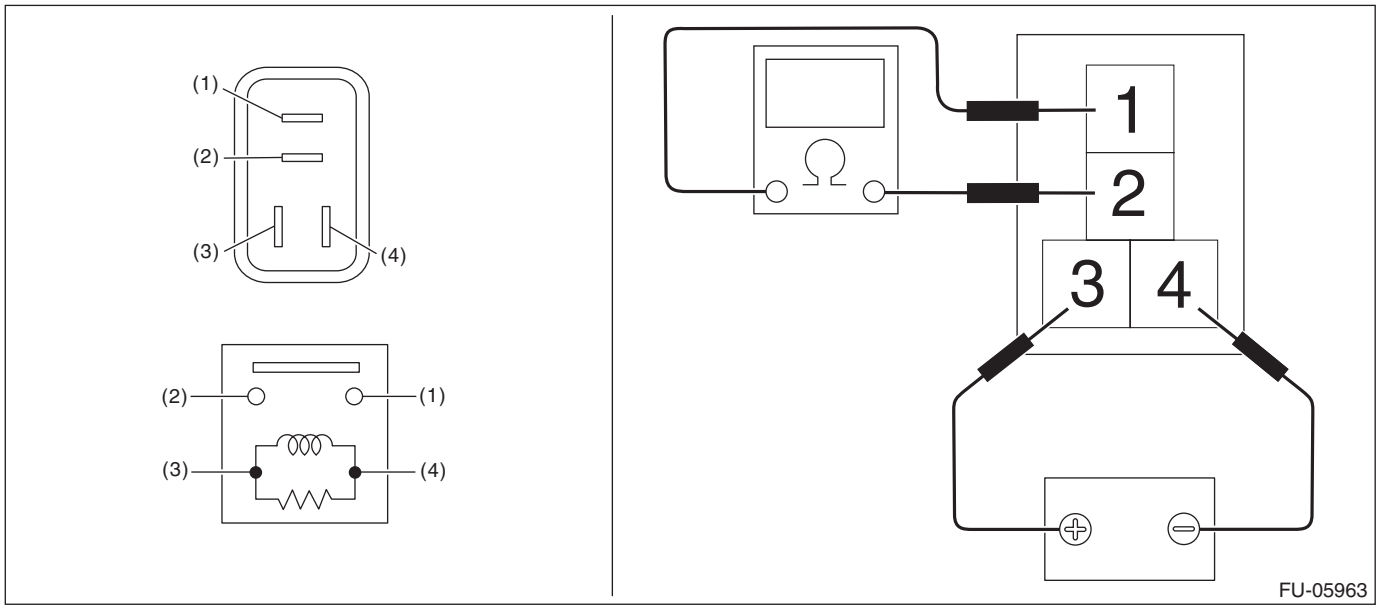

Terminal No.	Standard
1 and 2	Less than 1 Ω

29.Electronic Throttle Control Relay

A: REMOVAL

1) Disconnect the ground terminal from battery sensor. <Ref. to NT-6, BATTERY, NOTE, Note.>
2) Remove the instrument panel lower cover. <Ref. to EI-62, REMOVAL, Instrument Panel Lower Cover.>
3) Remove the nut and bolt, and move the fuse block downwards.

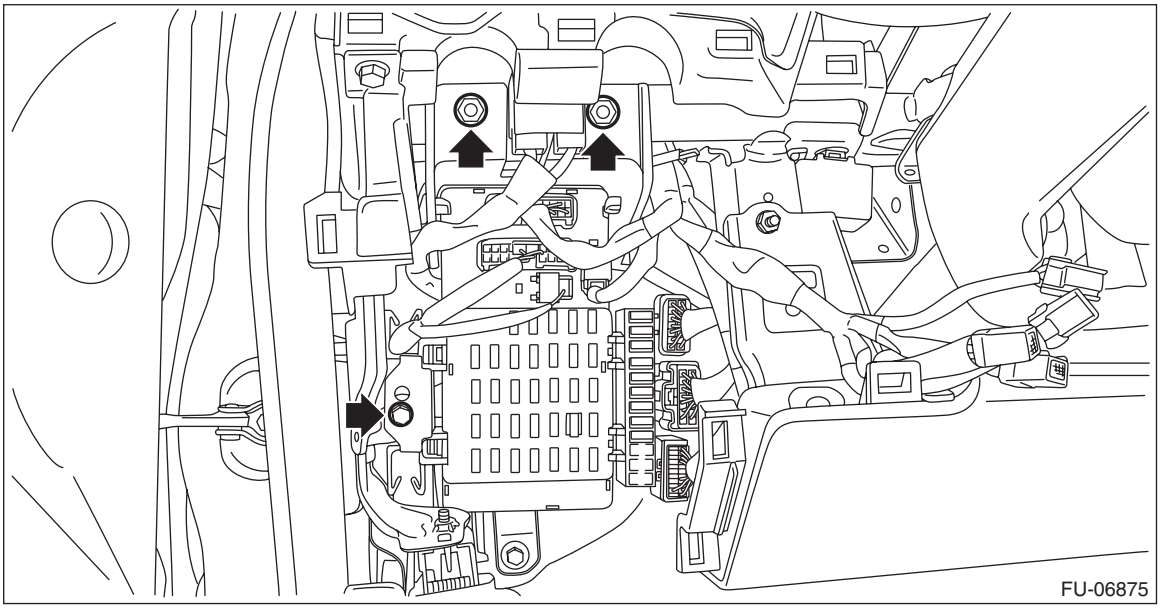

4) Remove the electronic throttle control relay from the relay block.

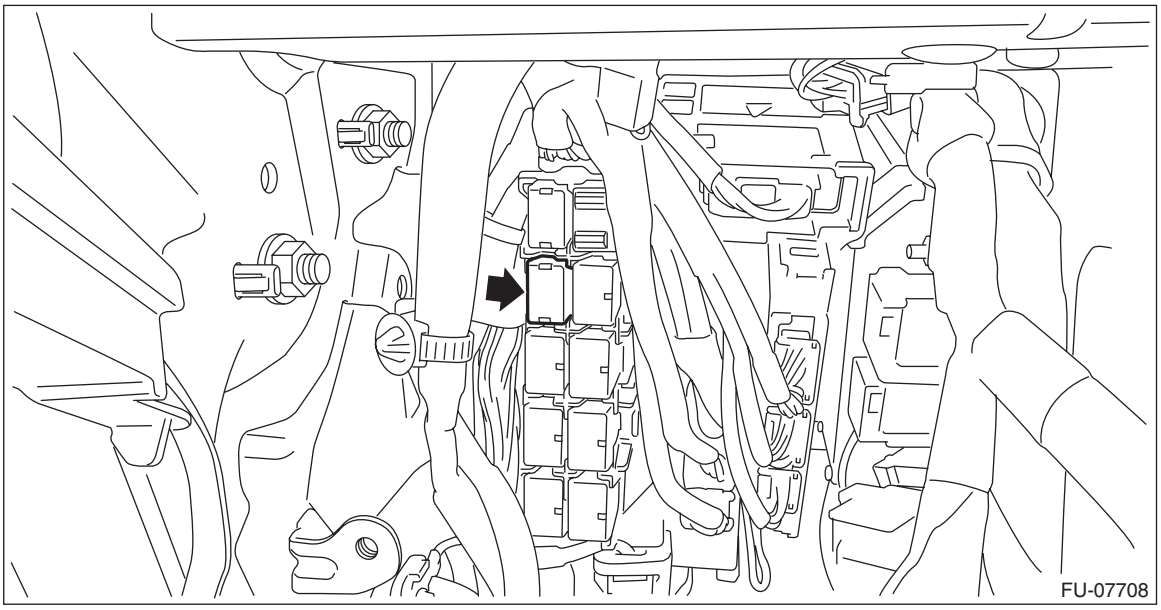

B: INSTALLATION

Install in the reverse order of removal.

Tightening torque:
7.5 N·m (0.8 kgf-m, 5.5 ft-lb)

C: INSPECTION

1) Check that the electronic throttle control relay has no deformation, cracks or other damages.
2) Measure the resistance between electronic throttle control relay terminals.

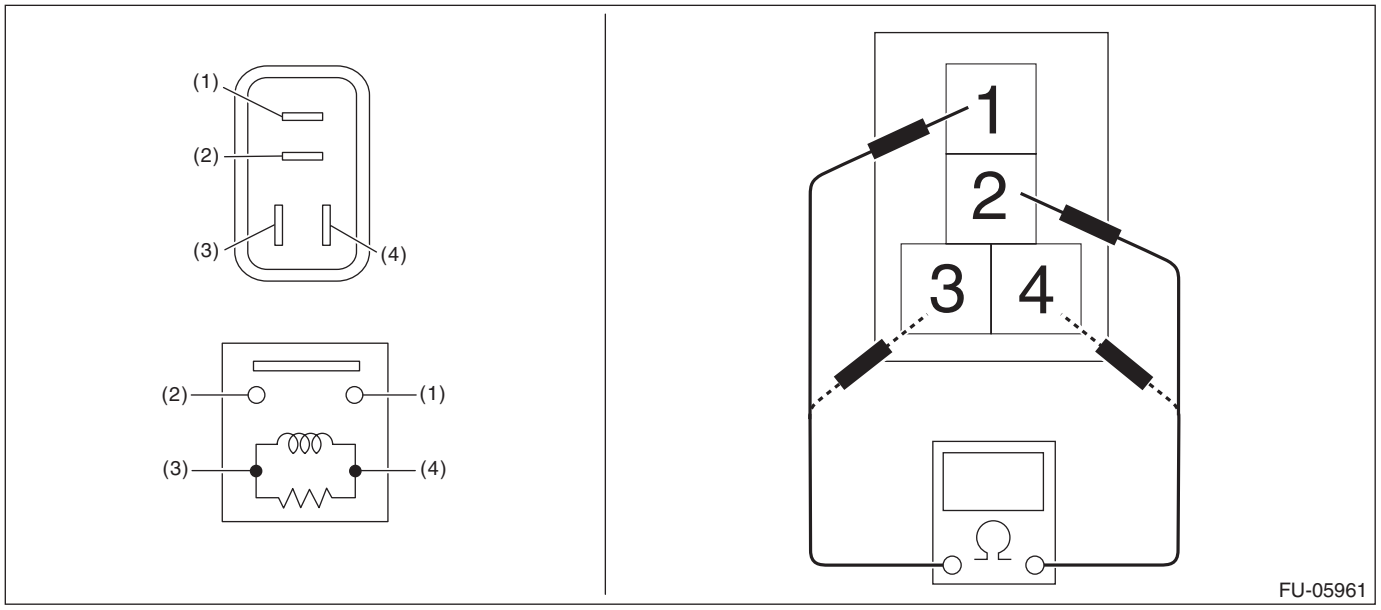

Terminal No.	Standard
1 and 2	1 MΩ or more
3 and 4	93.8 — 136.4 Ω (when 20°C (68°F))

3) Connect battery positive terminal to terminal No. 3 and battery ground terminal to terminal No. 4, and measure the resistance between the electronic throttle control relay terminals.

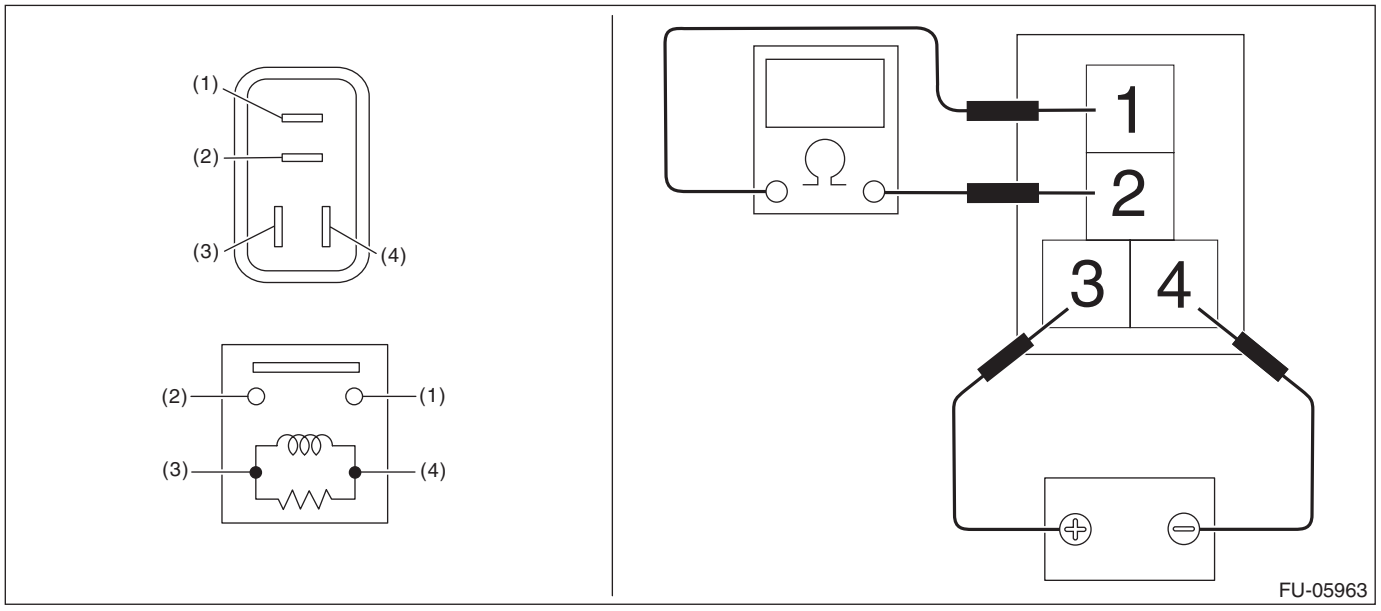

Terminal No.	Standard
1 and 2	Less than 1 Ω

30.Fuel Pump Relay

A: REMOVAL

1) Disconnect the ground terminal from battery sensor. <Ref. to NT-6, BATTERY, NOTE, Note.>
2) Remove the glove box. <Ref. to EI-64, REMOVAL, Glove Box.>
3) Remove the fuel pump relay.

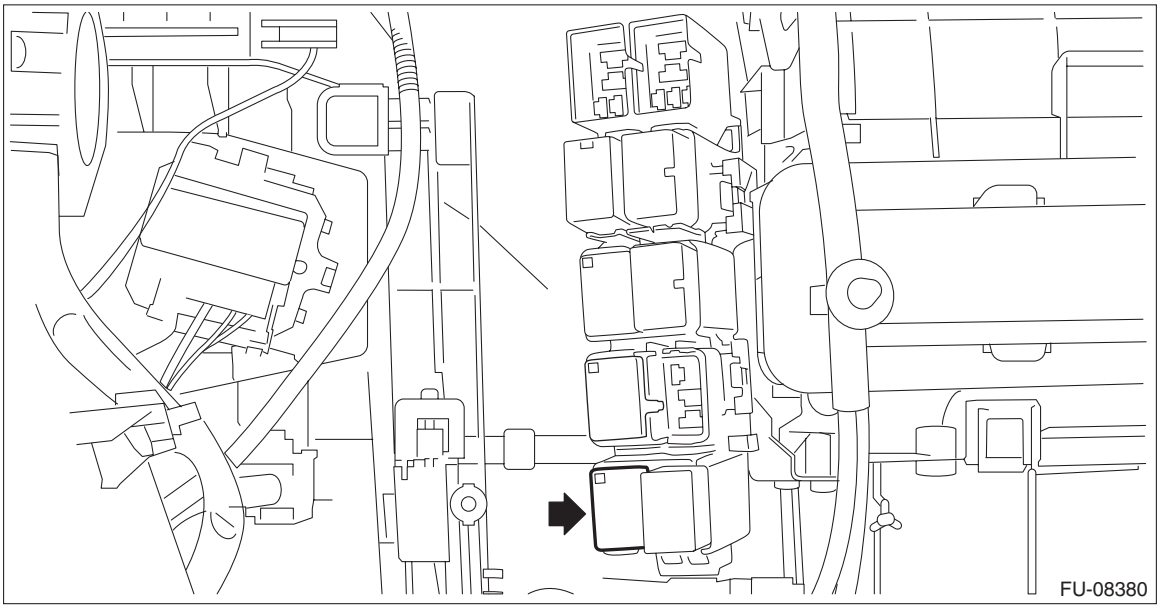

B: INSTALLATION

Install in the reverse order of removal.

C: INSPECTION

1) Check that the fuel pump relay has no deformation, cracks or other damages.
2) Measure the resistance between fuel pump relay terminals.

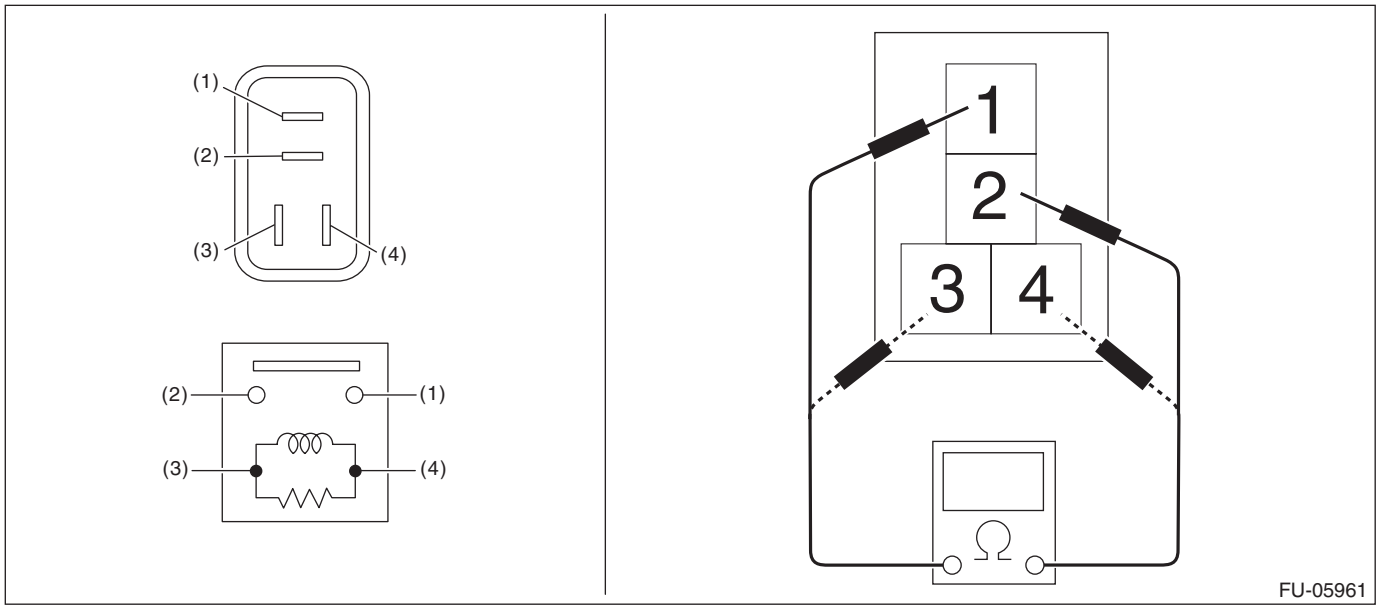

Terminal No.	Standard
1 and 2	1 MΩ or more
3 and 4	93.8 — 136.4 Ω (when 20°C (68°F))

3) Connect battery positive terminal to terminal No. 3 and battery ground terminal to terminal No. 4, and measure the resistance between the fuel pump relay terminals.

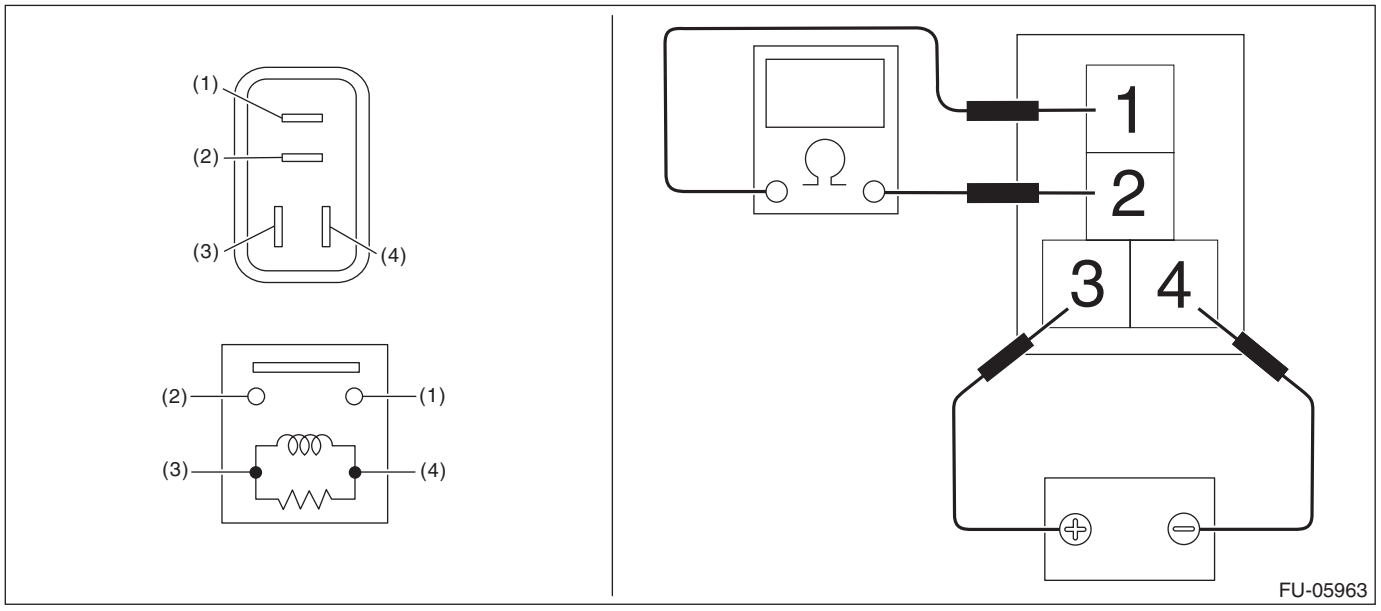

Terminal No.	Standard
1 and 2	Less than 1 Ω

31.Fuel Injector Relay

A: REMOVAL

1) Disconnect the ground terminal from battery sensor. <Ref. to NT-6, BATTERY, NOTE, Note.>
2) Remove the fuel injector relay from main fuse box.

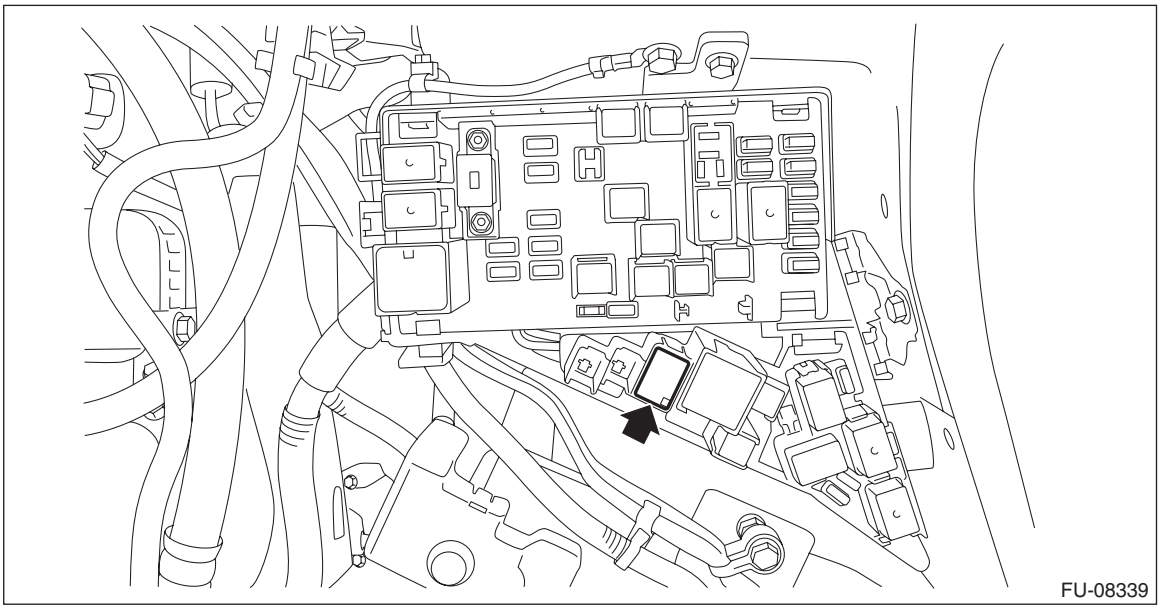

B: INSTALLATION

Install in the reverse order of removal.

C: INSPECTION

1) Check that the fuel injector relay has no deformation, cracks or other damages.
2) Measure the resistance between fuel injector relay terminals.

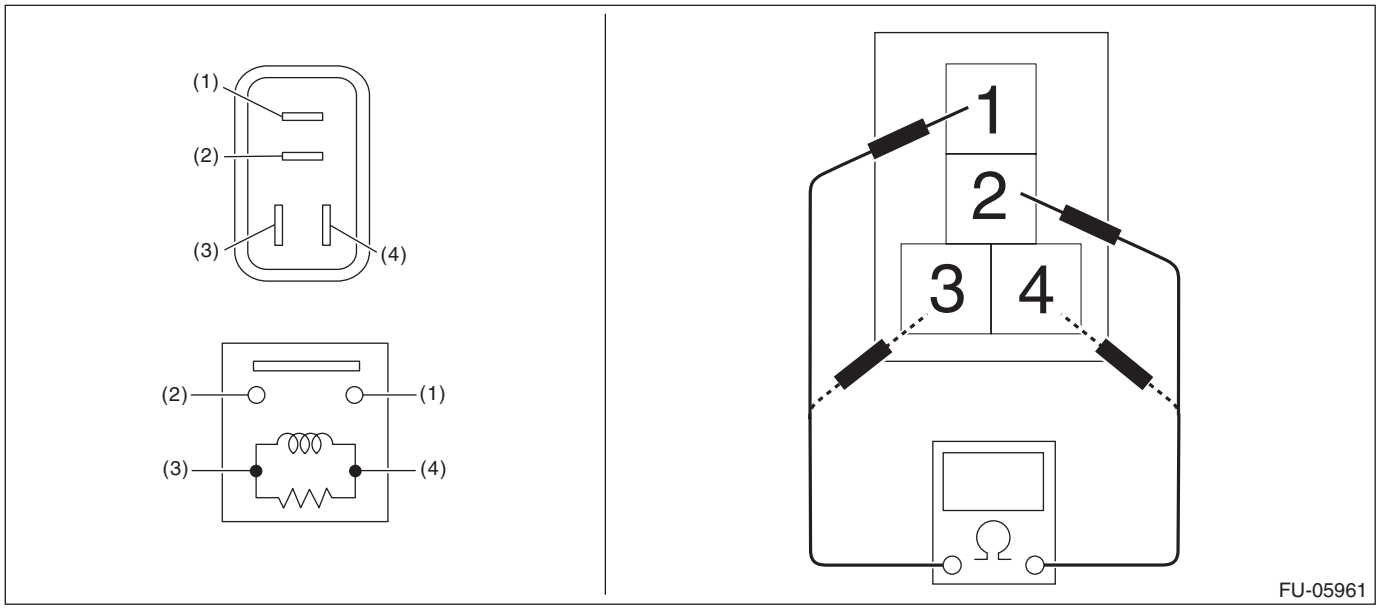

Terminal No.	Standard
1 and 2	1 MΩ or more
3 and 4	93.8 — 136.4 Ω (when 20°C (68°F))

3) Connect battery positive terminal to terminal No. 3 and battery ground terminal to terminal No. 4, and measure the resistance between the fuel injector relay terminals.

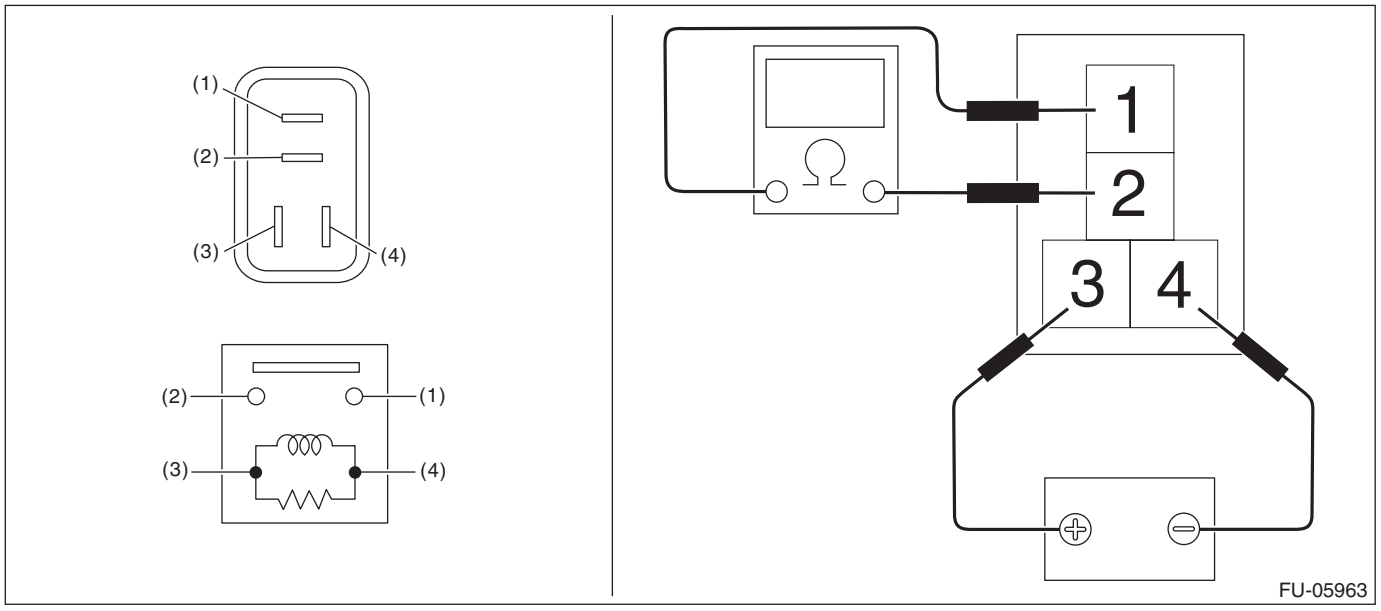

Terminal No.	Standard
1 and 2	Less than 1 Ω

32.Fuel Pump Control Unit

A: REMOVAL

1) Disconnect the ground terminal from battery sensor. <Ref. to NT-6, BATTERY, NOTE, Note.>
2) Remove the right side trunk side trim. <Ref. to EI-98, REMOVAL, Trunk Room Trim.>
3) Disconnect the connector (A), and remove the fuel pump control unit.

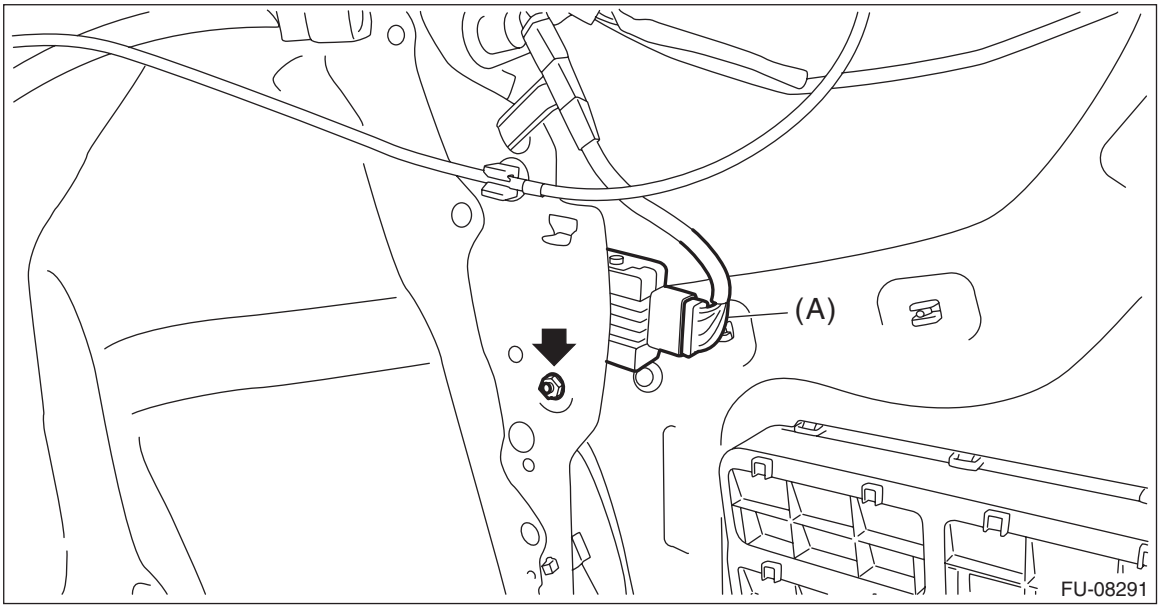

B: INSTALLATION

Install in the reverse order of removal.

Tightening torque:
5 N·m (0.5 kgf-m, 3.7 ft-lb)

C: INSPECTION

Check that the fuel pump control unit has no deformation, cracks or other damages.

33.Fuel

A: PROCEDURE

1. RELEASING OF FUEL PRESSURE

WARNING:
Place “NO OPEN FLAMES” signs near the working area.

CAUTION:
Be careful not to spill fuel.

1) Remove the fuse of fuel pump from main fuse box.

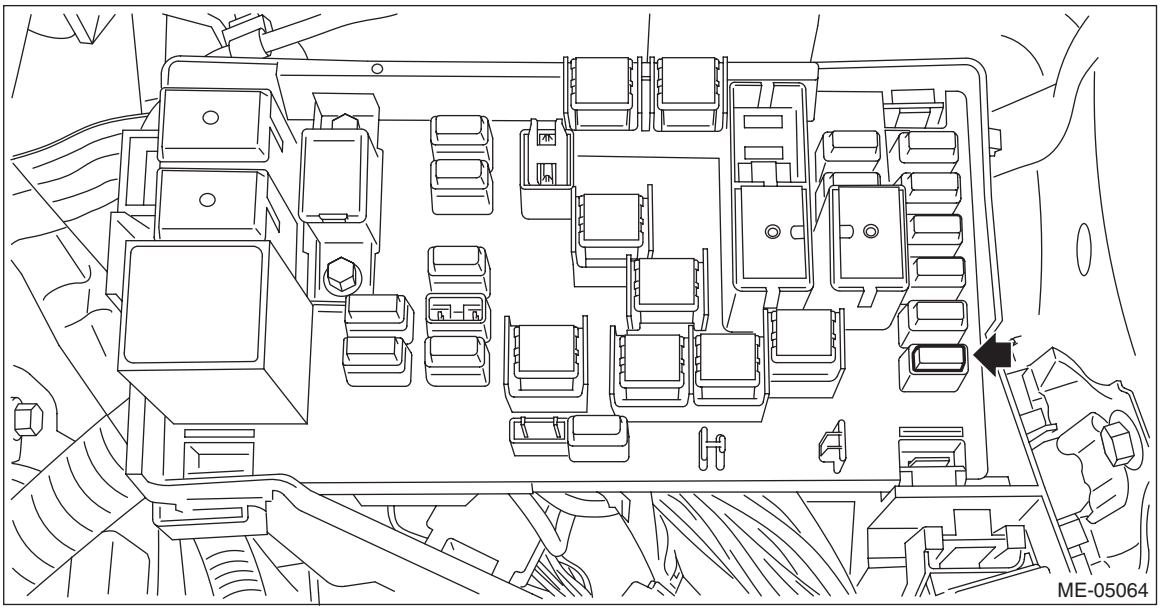

2) Start the engine and run it until it stalls.
3) After the engine stalls, crank it for five more seconds.
4) Turn the ignition switch to OFF.
5) Install the fuse of fuel pump to the main fuse box.
6) Make sure that the malfunction indicator light is not lit.

NOTE:
When the fuel pressure is released, the malfunction indicator light illuminates and DTC (P0087) may be stored in ECM. When the malfunction indicator light has illuminated, perform the Clear Memory Mode. <Ref. to EN(w/o STI)(diag)-82, Clear Memory Mode.>

2. DRAINING FUEL (WITH SUBARU SELECT MONITOR)

WARNING:
Place “NO OPEN FLAMES” signs near the working area.

CAUTION:
Be careful not to spill fuel.

NOTE:
• If the fuel pump cannot be driven, refer to the procedures for draining from the fuel filler hose. <Ref. to FU(w/o STI)-142, DRAINING FUEL (THROUGH THE FUEL FILLER HOSE), PROCEDURE, Fuel.>
• Be careful not to let the battery run-out.
• Be aware that the fuel may remain in the fuel tank after draining the fuel.

1) Release the fuel pressure. <Ref. to FU(w/o STI)-138, RELEASING OF FUEL PRESSURE, PROCEDURE, Fuel.>
2) Disconnect the fuel delivery tube from the fuel pipe assembly, and remove the clip (A) securing the fuel delivery tube.

CAUTION:
- **Be careful not to spill fuel.**
- **Catch the fuel from the tubes using a container or cloth.**

NOTE:
Disconnect the quick connector as shown in the figure.

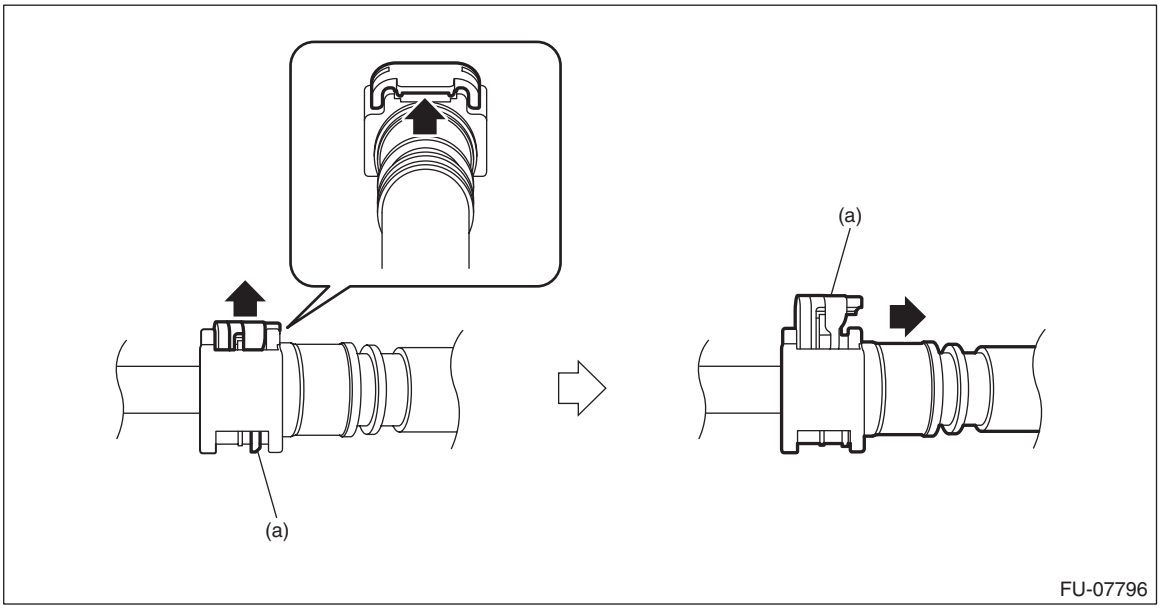

(a) Slider

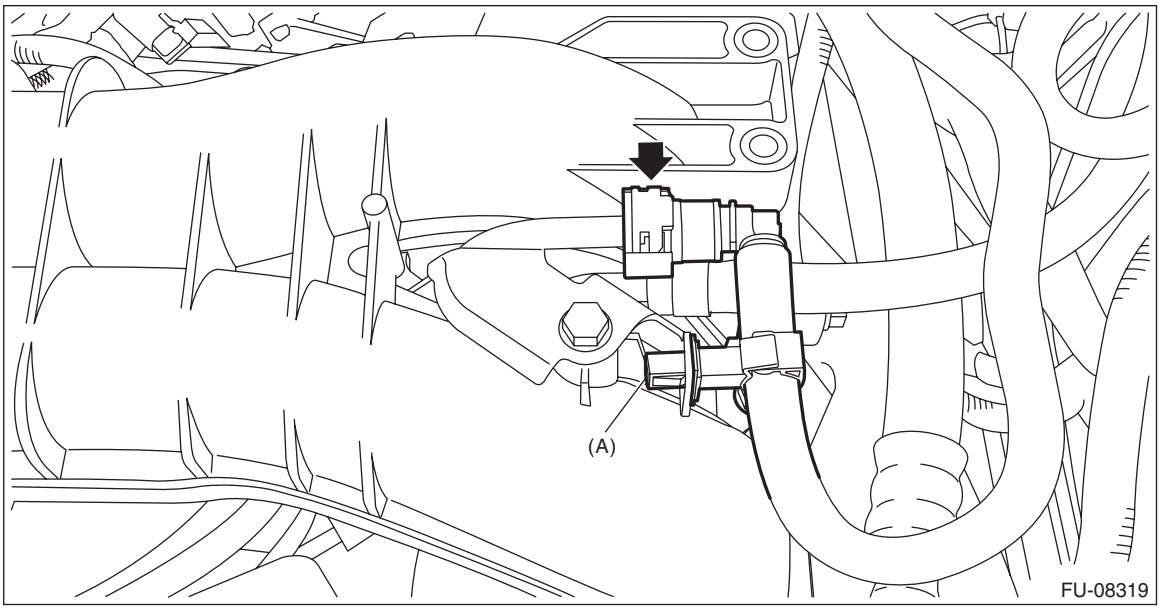

3) Connect ST to the fuel delivery tube.
ST 18471AA000 FUEL PIPE ADAPTER
4) Connect the gasoline proof hose to ST and put the end of the hose in the container.
5) Drive the fuel pump and drain the fuel using Subaru Select Monitor.

CAUTION:
Be careful not to spill fuel.

NOTE:
For detailed operation procedures of Subaru Select Monitor 4, refer to “Application help”.

6) Install the related parts in the reverse order after draining the fuel.

CAUTION:
- **Be careful not to spill fuel.**
- **Catch the fuel from the tubes using a container or cloth.**
- **Check that there is no damage or dust on the quick connector. If necessary, clean the seal surface of the pipe.**
- **When connecting the quick connector, make sure to insert it all the way in before locking the slider.**
- **When it is difficult to lock the slider, check that the connector is fully inserted.**
- **After locking the slider, check again that the quick connector is securely connected.**

NOTE:
- Disconnect the quick connector on the fuel delivery tube as shown in the figure.

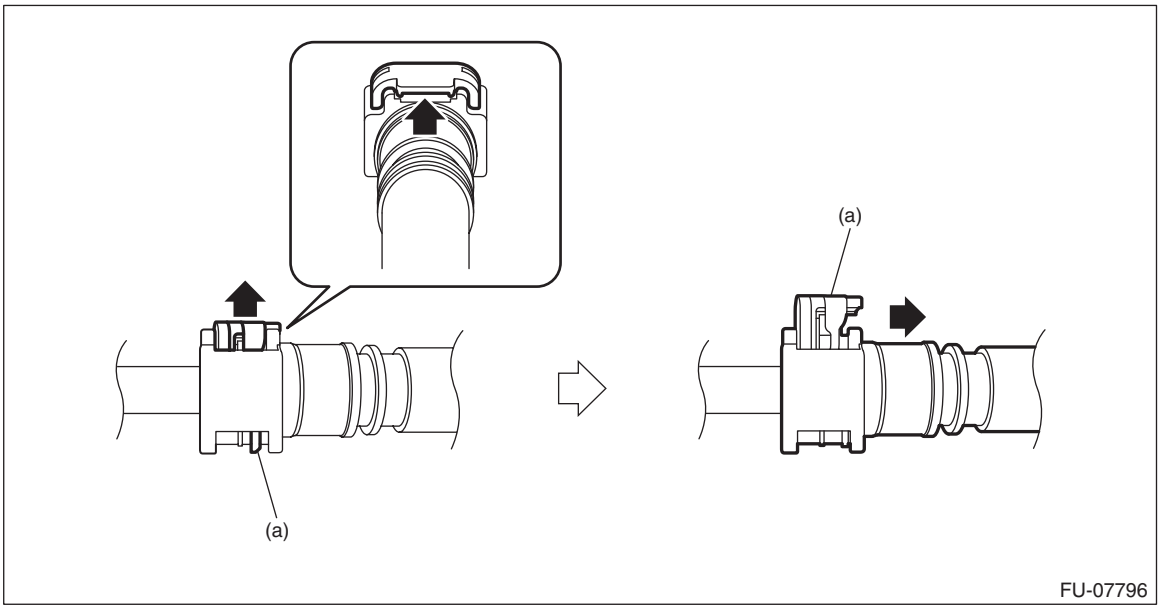

(a) Slider

- Connect the quick connector on the fuel delivery tube as shown in the figure.

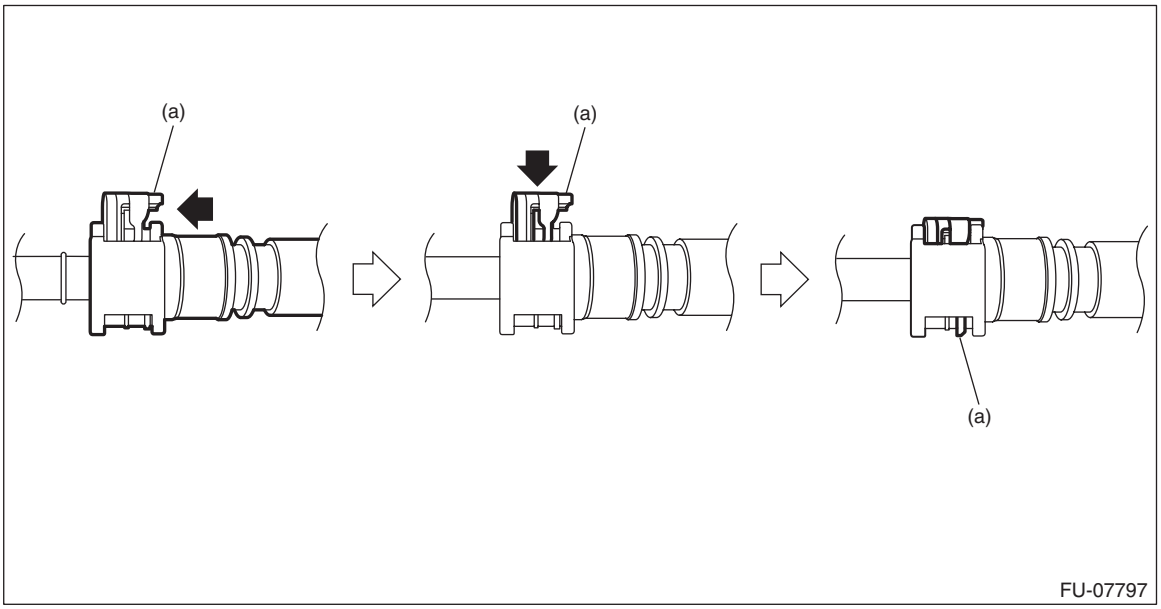

(a) Slider

3. DRAINING FUEL (THROUGH THE FUEL FILLER HOSE)

WARNING:
Place “NO OPEN FLAMES” signs near the working area.

CAUTION:
- **Be careful not to spill fuel.**
- **Fuel may remain in the fuel filler pipe. Drain the fuel from the fuel filler pipe through the fill opening using the gasoline proof pump and the gasoline proof hose (ø10 or less) before the operation.**

NOTE:
Be aware that the fuel may remain in the fuel tank after draining the fuel.
1) Lift up the vehicle.
2) Open the fuel filler lid and remove the fuel filler cap.

NOTE:
This operation is required to release the inner pressure of the fuel tank.
3) Drain the fuel from the fuel filler pipe through the filler opening using the gasoline proof pump and the gasoline proof hose (ø10 or less).
4) Disconnect the fuel filler hose from the fuel filler pipe assembly.

CAUTION:
- **Be careful not to spill fuel.**
- **Catch the fuel from hoses using a container or cloth.**

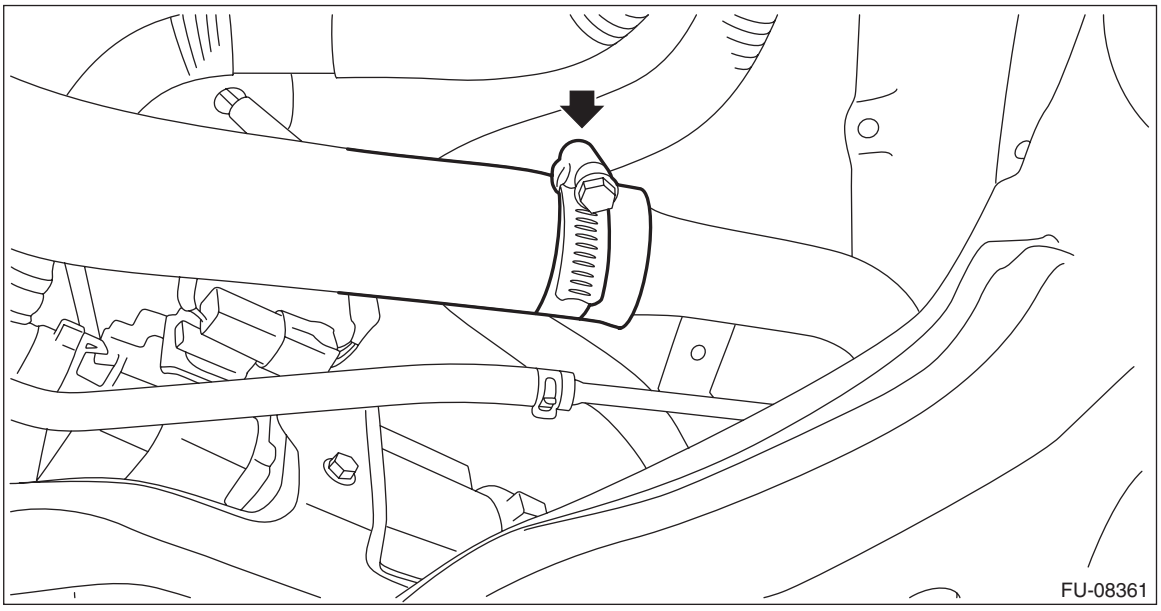

5) Set the container under the vehicle and insert the gasoline proof hose (ø10 or less) into the fuel filler hose to drain the fuel.

CAUTION:
Be careful not to spill fuel.

6) Install the related parts in the reverse order after draining the fuel.

NOTE:
Correctly insert the fuel filler hose to the spool, and then install the clamp as shown.

Tightening torque:
2.5 N·m (0.3 kgf-m, 1.8 ft-lb)

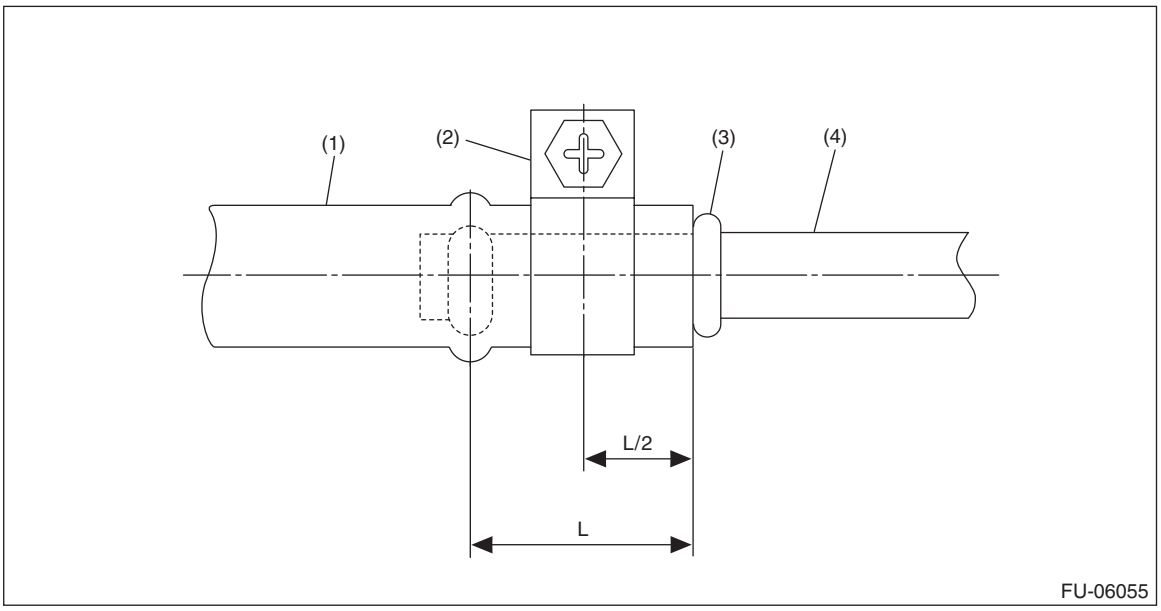

(1) Fuel filler hose
(2) Clamp
(3) Spool
(4) Fuel filler pipe

34.Fuel Tank Protector

A: REMOVAL

1) Lift up the vehicle.
2) Remove the bolt and nuts and remove the fuel tank protector.

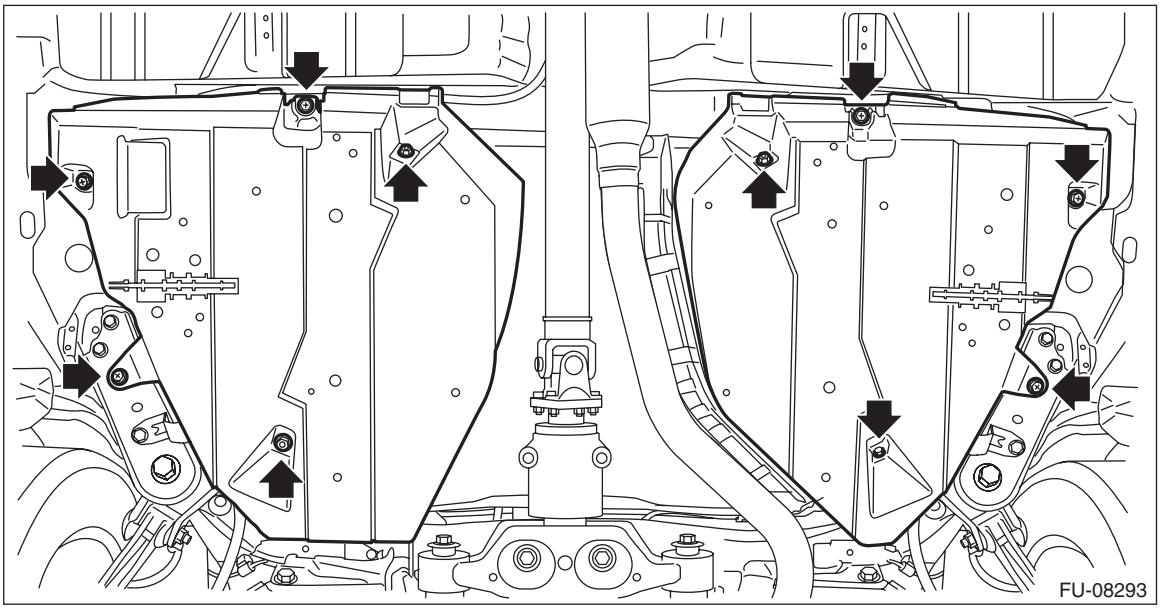

B: INSTALLATION

Install in the reverse order of removal.

NOTE:
Use a new self-locking nut.

Tightening torque:
T1: 9 N·m (0.9 kgf-m, 6.6 ft-lb)
T2: 18 N·m (1.8 kgf-m, 13.3 ft-lb)

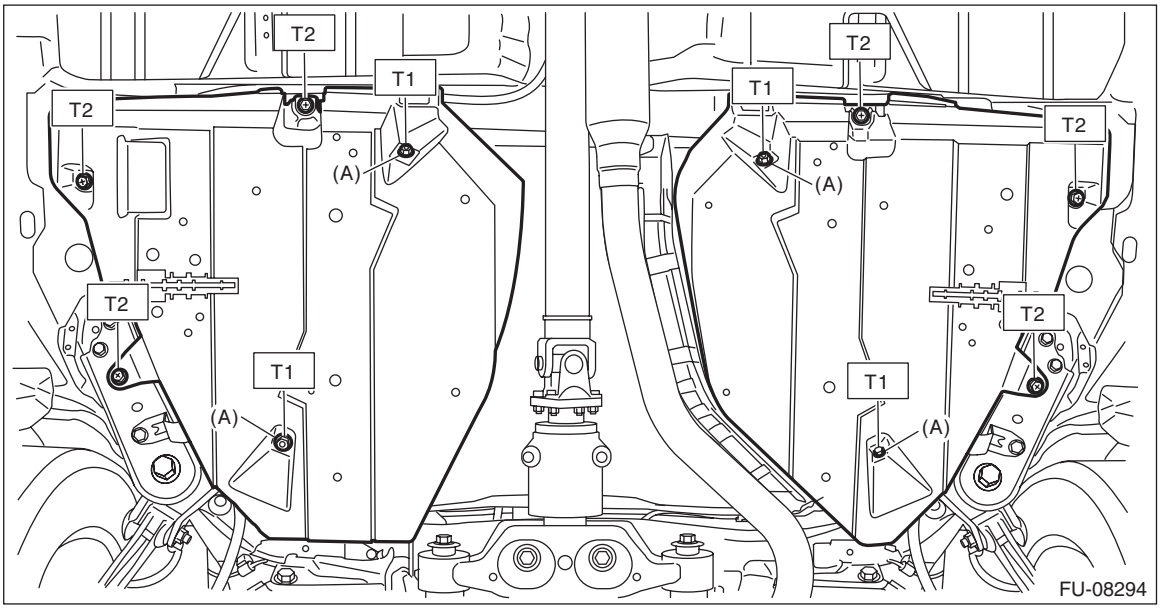

(A) Self-locking nut

35.Fuel Tank

A: REMOVAL

WARNING:
Place “NO OPEN FLAMES” signs near the working area.

CAUTION:
- **Be careful not to spill fuel.**
- **Catch the fuel from the tubes using a container or cloth.**

1) Release the fuel pressure. <Ref. to FU(w/o STI)-138, RELEASING OF FUEL PRESSURE, PROCEDURE, Fuel.>
2) Drain fuel. <Ref. to FU(w/o STI)-139, DRAINING FUEL (WITH SUBARU SELECT MONITOR), PROCEDURE, Fuel.>
3) Disconnect the ground terminal from battery sensor. <Ref. to NT-6, BATTERY, NOTE, Note.>
4) Remove the rear seat cushion. <Ref. to SE-30, REMOVAL, Rear Seat.>
5) Remove the service hole cover of fuel pump.

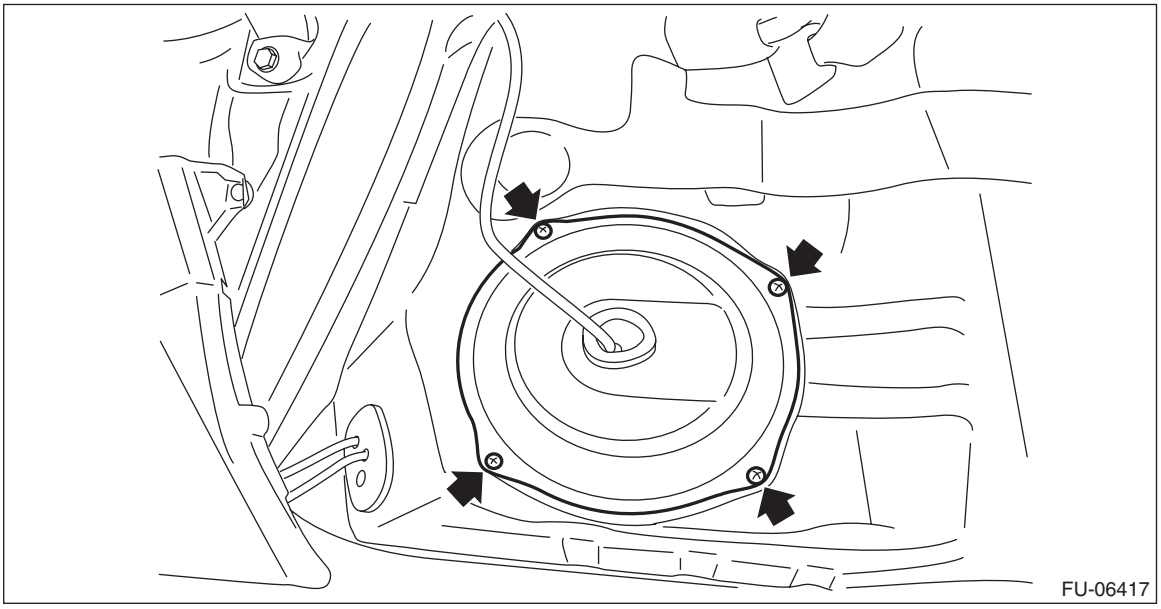

6) Disconnect connectors from the fuel pump, and move aside the service hole cover.

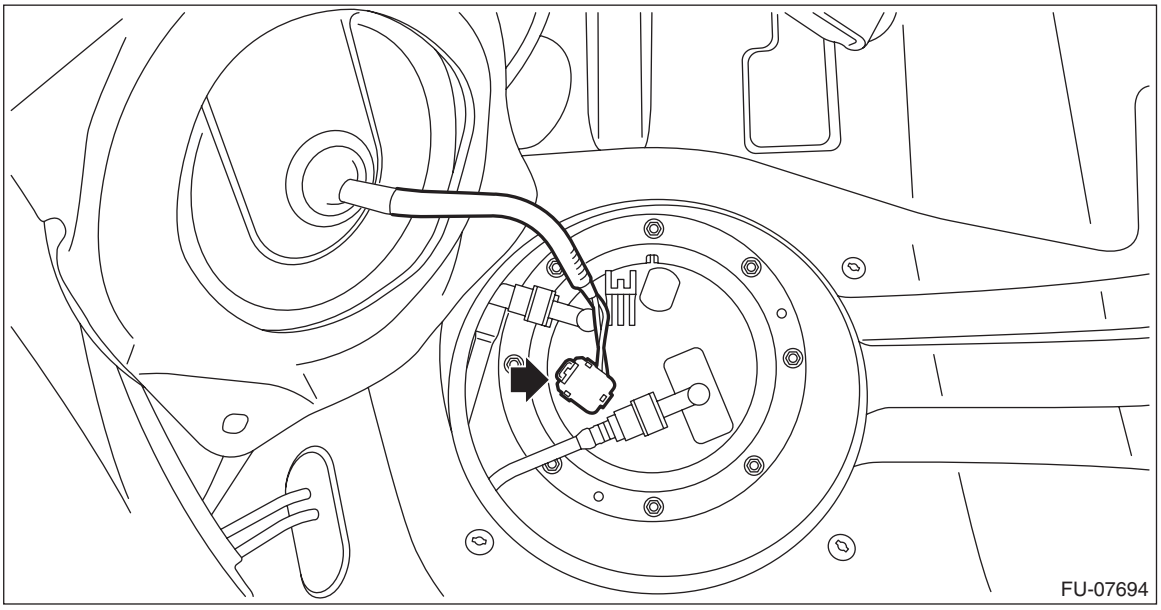

7) Remove the service hole cover of fuel sub level sensor.

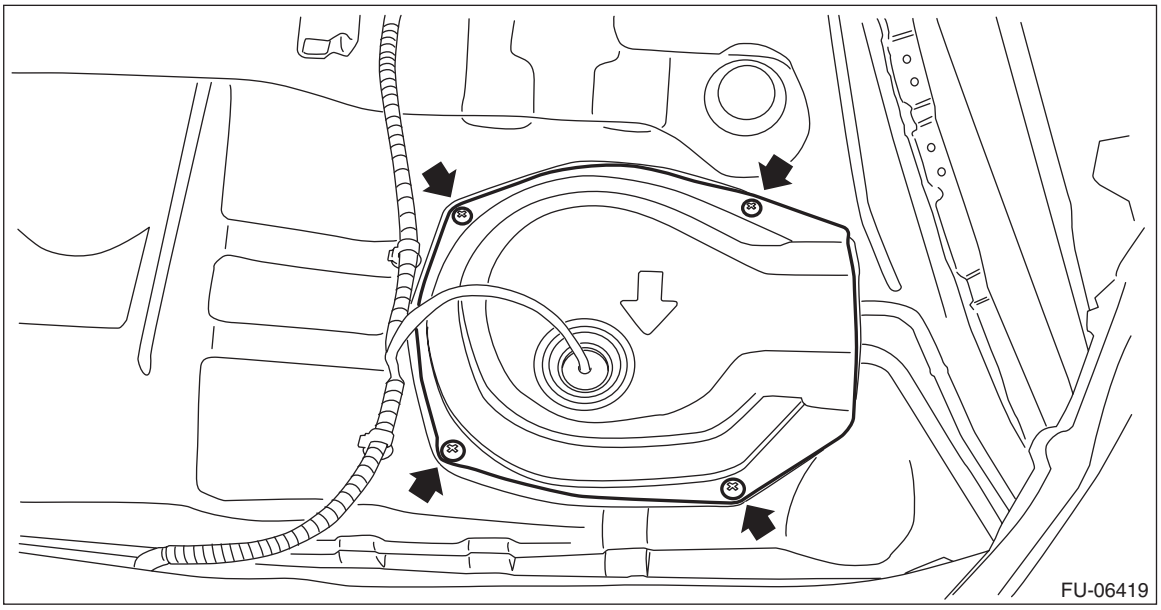

8) Disconnect the connector from the fuel sub level sensor, and move aside the service hole cover.

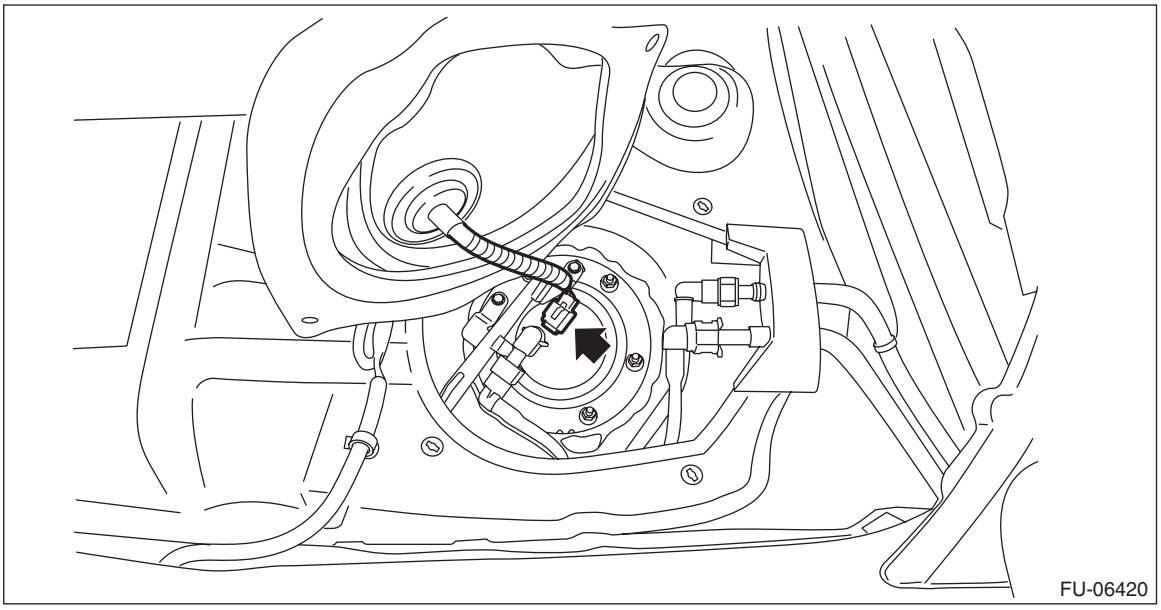

9) Disconnect the quick connector on the fuel delivery tube.

NOTE:
Disconnect the quick connector as shown in the figure.

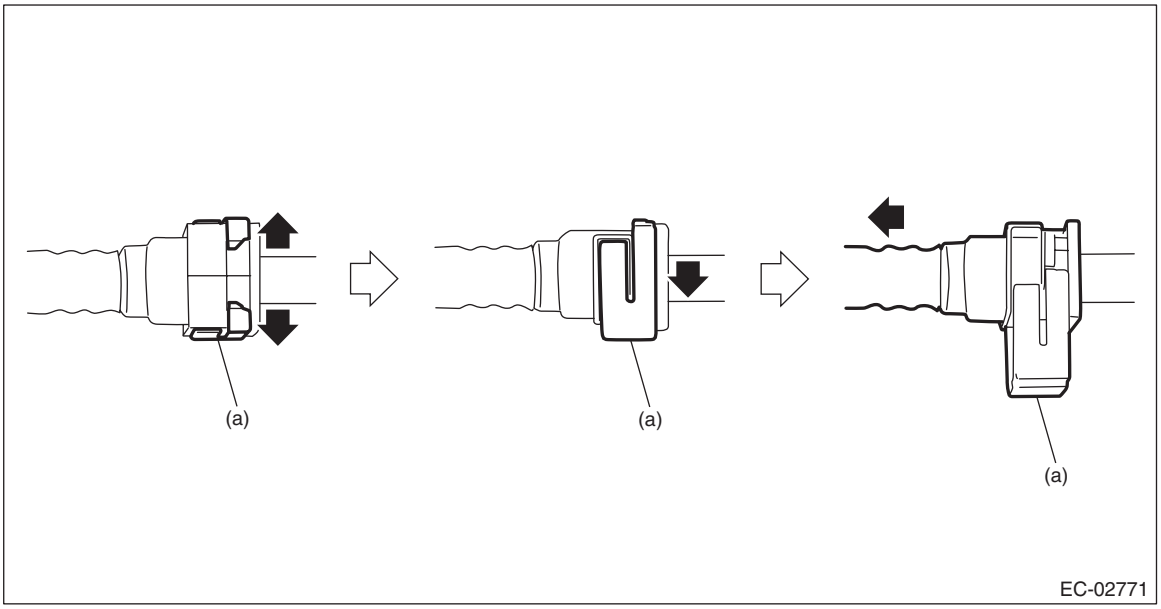

(a) Slider

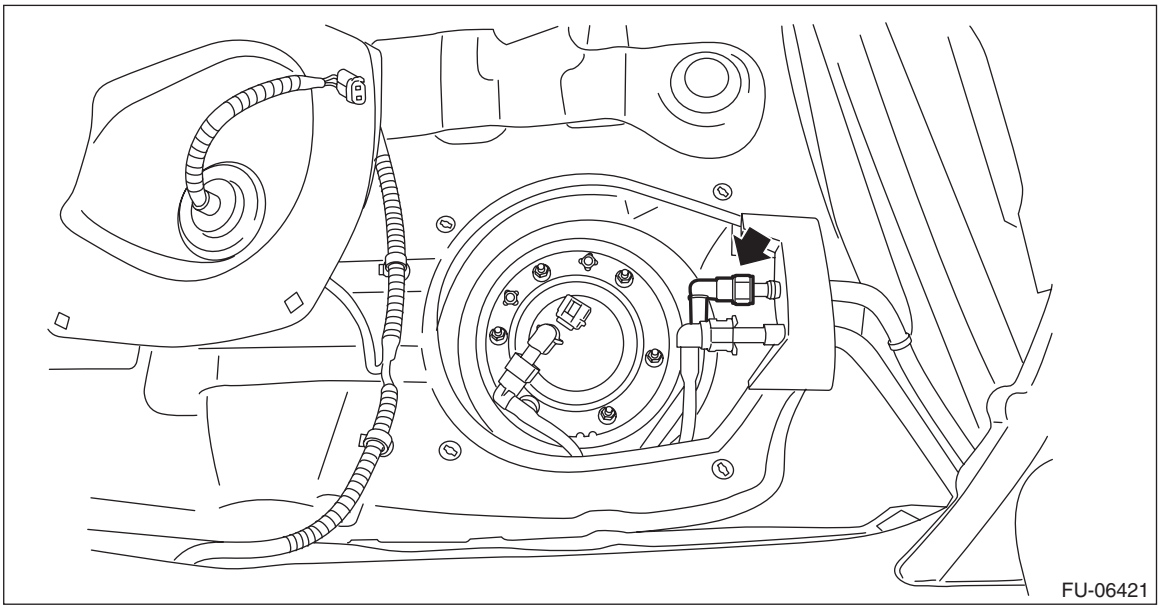

10) Lift up the vehicle.
11) Remove the rear exhaust pipe. <Ref. to EX(w/o STI)-47, REMOVAL, Rear Exhaust Pipe.>
12) Remove the rear differential. <Ref. to DI-21, REMOVAL, Rear Differential (T-type).>

13) Disconnect the fuel filler hose (A) and evaporation hose (B) from the fuel filler pipe assembly.

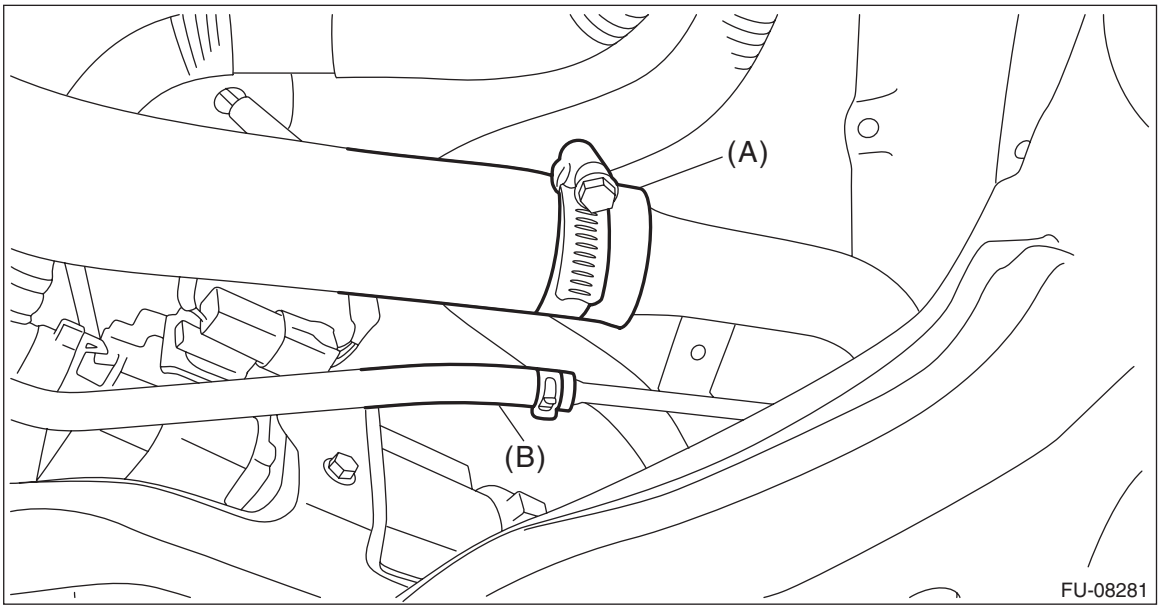

14) Disconnect the vent tube from vent hose.

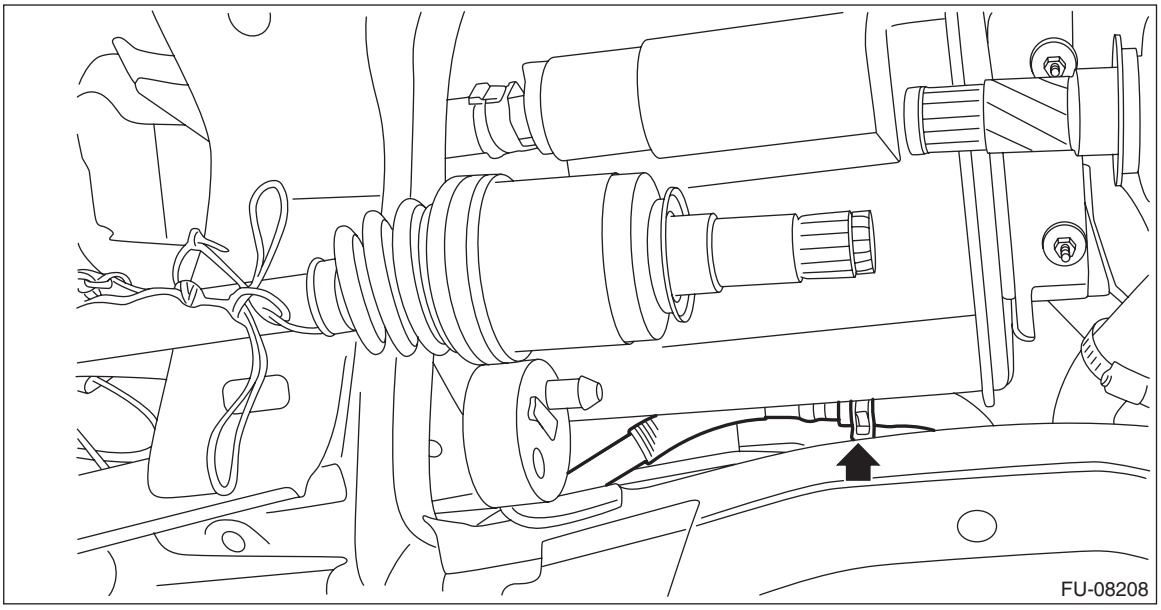

15) Remove the fuel tank protector. <Ref. to FU(w/o STI)-144, REMOVAL, Fuel Tank Protector.>

16) Remove the heat shield cover and stopper.

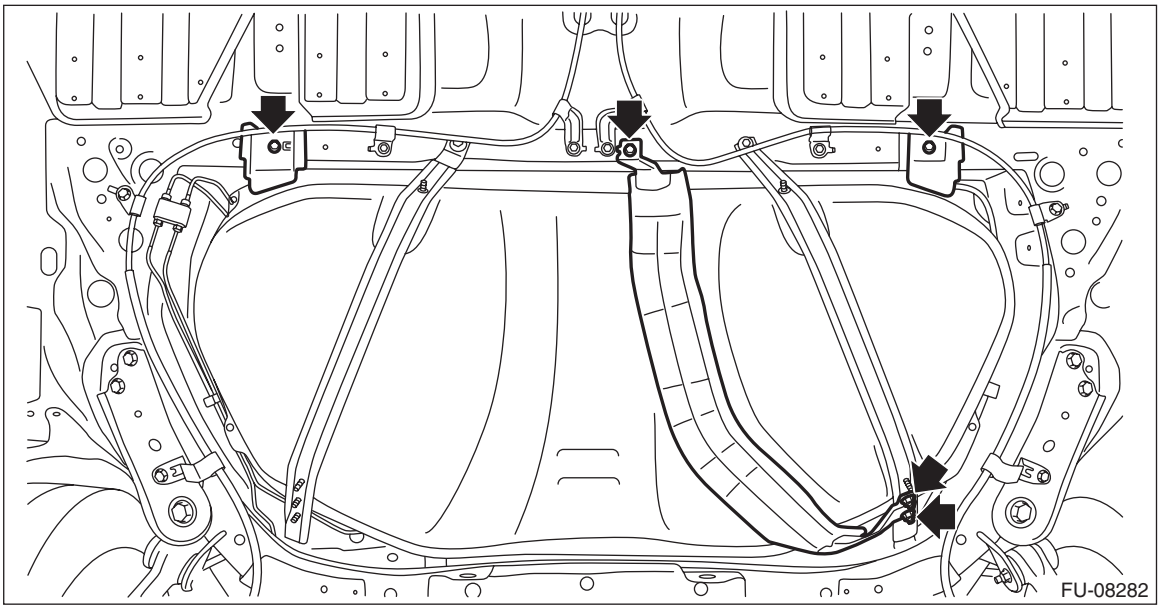

17) Support the fuel tank with a transmission jack, remove the bolts from the fuel tank band, and remove the fuel tank from the vehicle.

WARNING:
- **A helper is required to perform this work.**
- **Fuel may remain in the fuel tank. This will cause the left and right sides to be unbalanced. Be careful not to drop the fuel tank.**

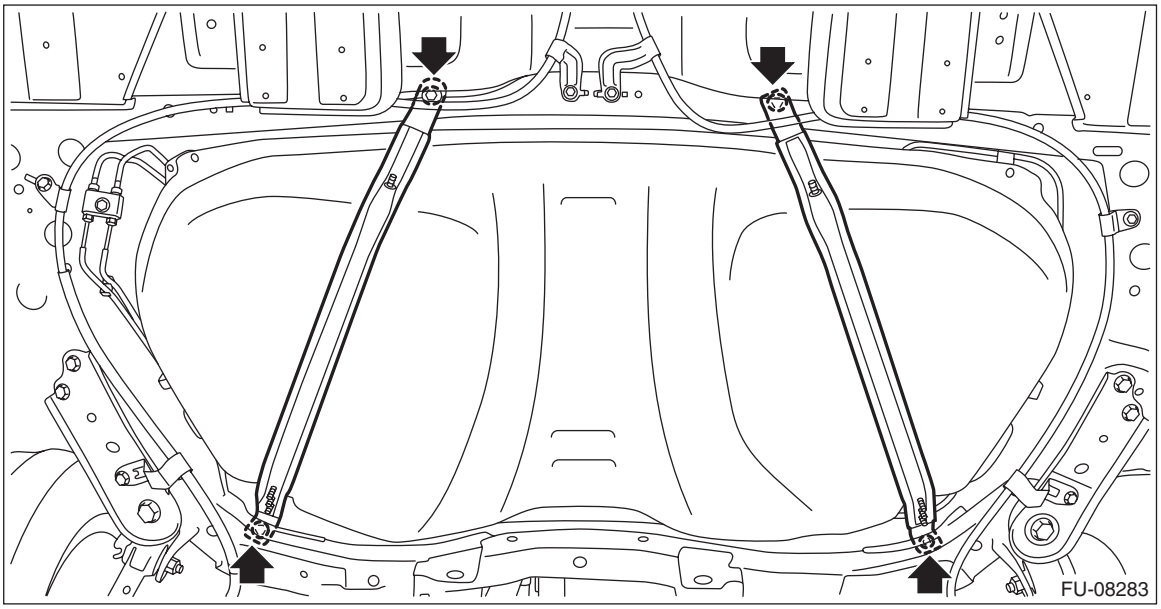

B: INSTALLATION

1) Support the fuel tank with a transmission jack, set the fuel tank in place, and temporarily tighten the bolts of the fuel tank band.

WARNING:
A helper is required to perform this work.

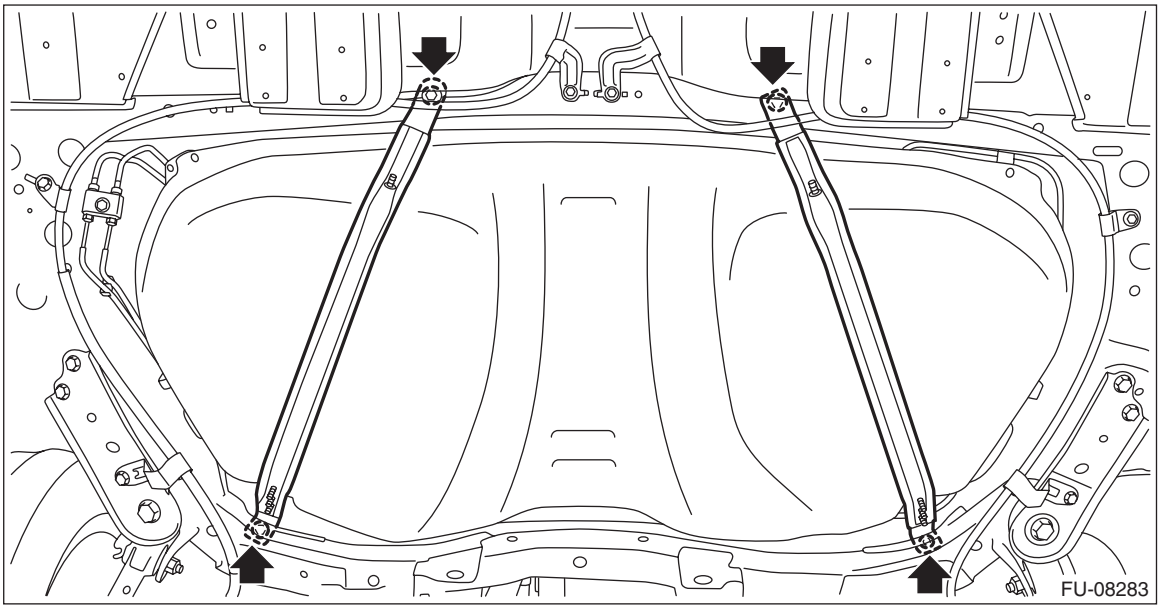

2) Tighten the bolts of the fuel tank band in the order shown in the figure.

Tightening torque:
33 N·m (3.4 kgf-m, 24.3 ft-lb)

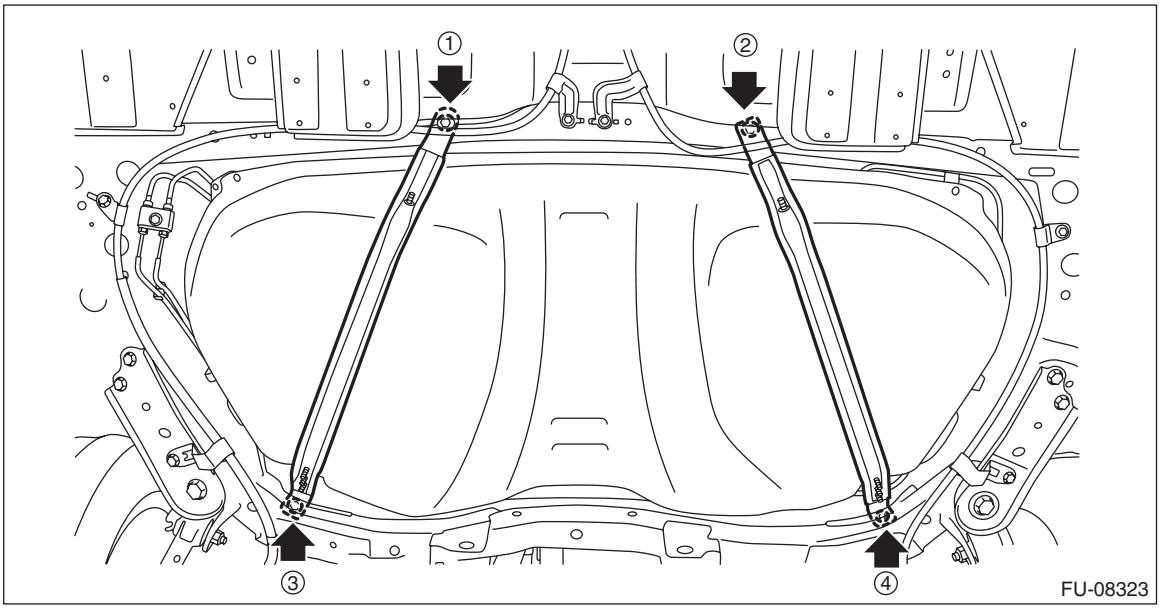

3) Install the heat shield cover and stopper.

Tightening torque:
18 N·m (1.8 kgf-m, 13.3 ft-lb)

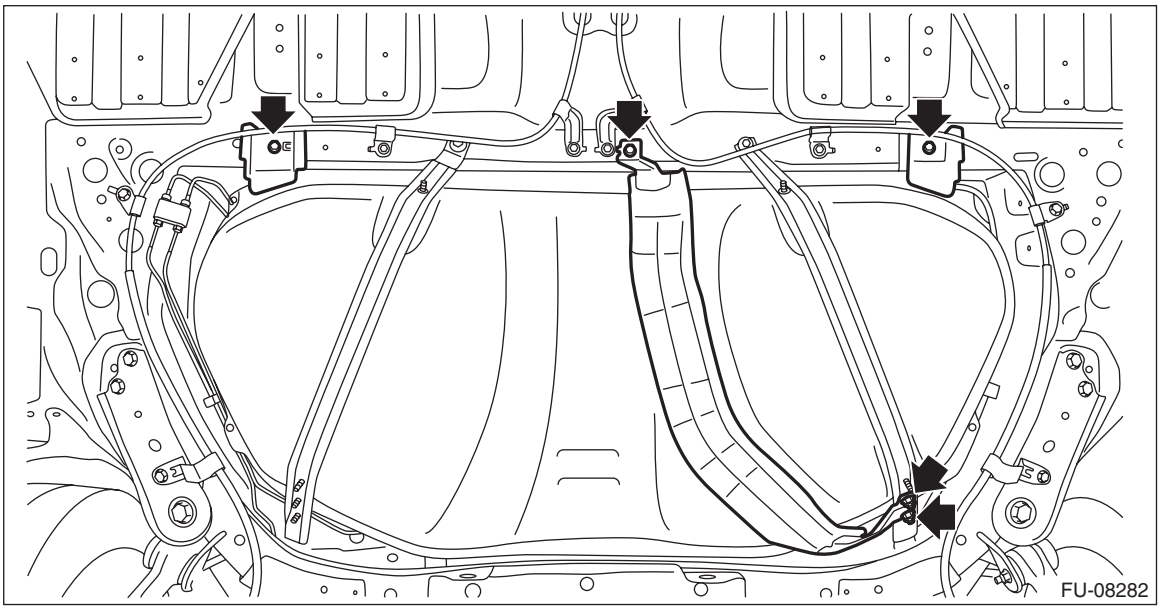

4) Install the fuel tank protector. <Ref. to FU(w/o STI)-144, INSTALLATION, Fuel Tank Protector.>
5) Connect the vent tube to the vent hose.

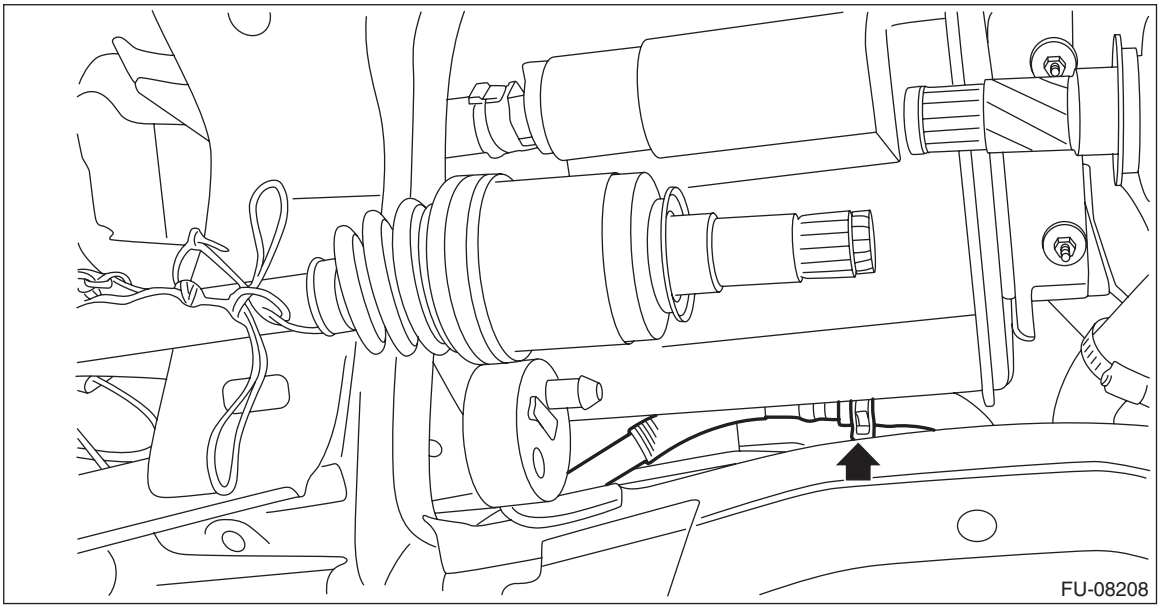

6) Securely insert the fuel filler hose (A) and evaporation hose (B) until the hose end contacts the spool, then attach the clamp or clip as shown in the figure.

Tightening torque:
2.5 N·m (0.3 kgf-m, 1.8 ft-lb)

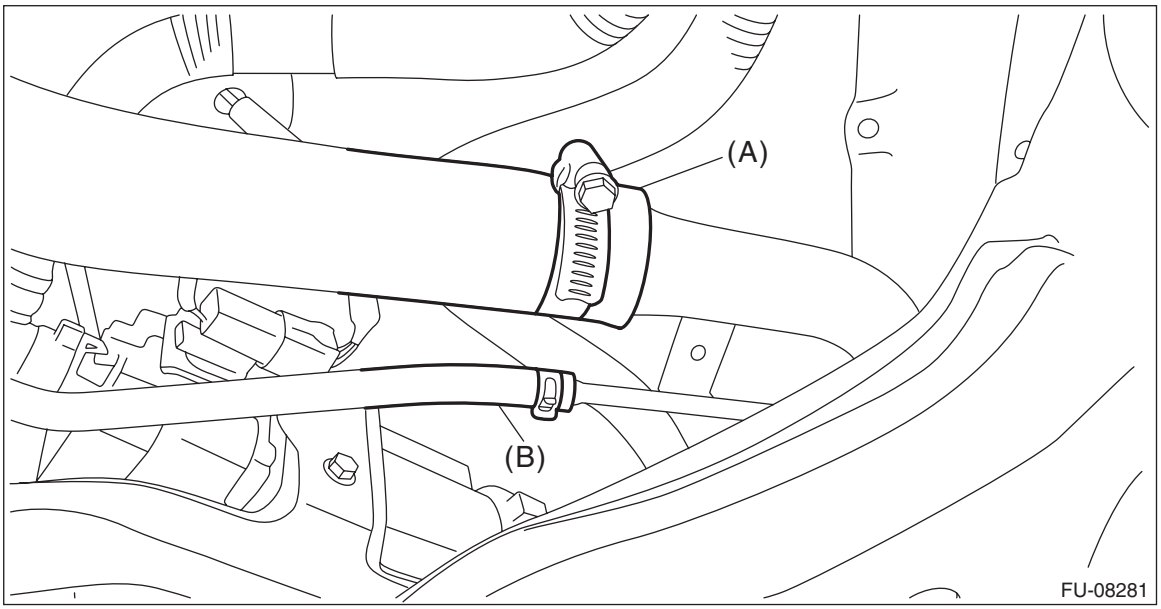

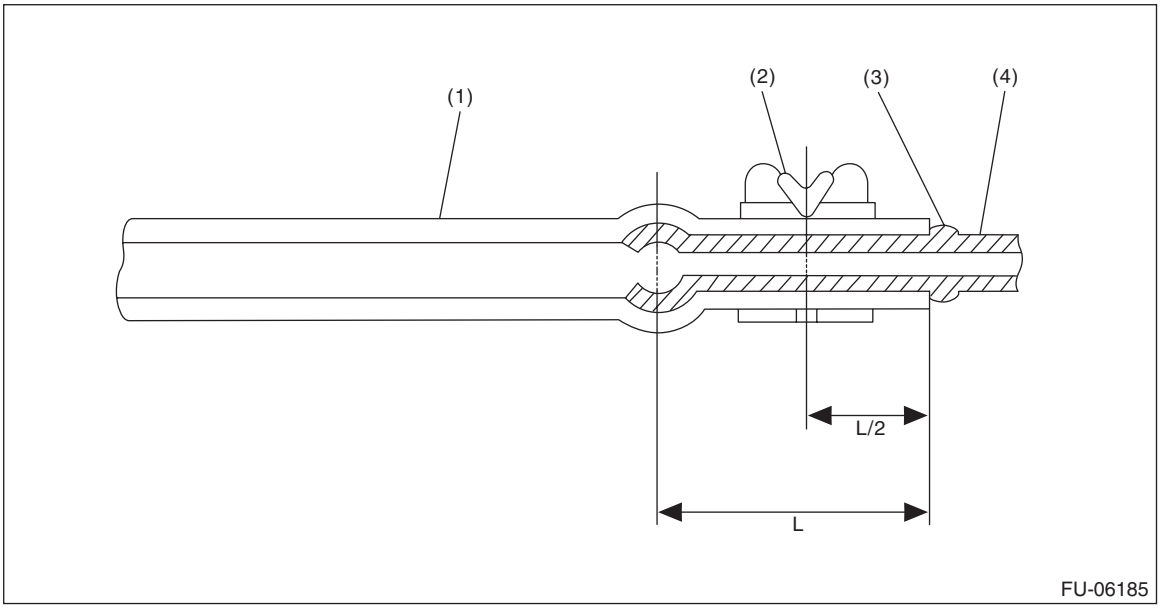

(1) Hose
(2) Clamp or clip
(3) Spool
(4) Pipe

7) Install the rear differential. <Ref. to DI-23, INSTALLATION, Rear Differential (T-type).>
8) Install the rear exhaust pipe. <Ref. to EX(w/o STI)-48, INSTALLATION, Rear Exhaust Pipe.>

9) Connect the quick connector of the fuel delivery tube.

CAUTION:
• Check that there is no damage or dust on the quick connector. If necessary, clean the seal surface of the pipe.
• When connecting the quick connector, make sure to insert it all the way in before locking the slider.
• When it is difficult to lock the slider, check that the connector is fully inserted.
• After locking the slider, check again that the quick connector is securely connected.

NOTE:
Connect the quick connector as shown in the figure.

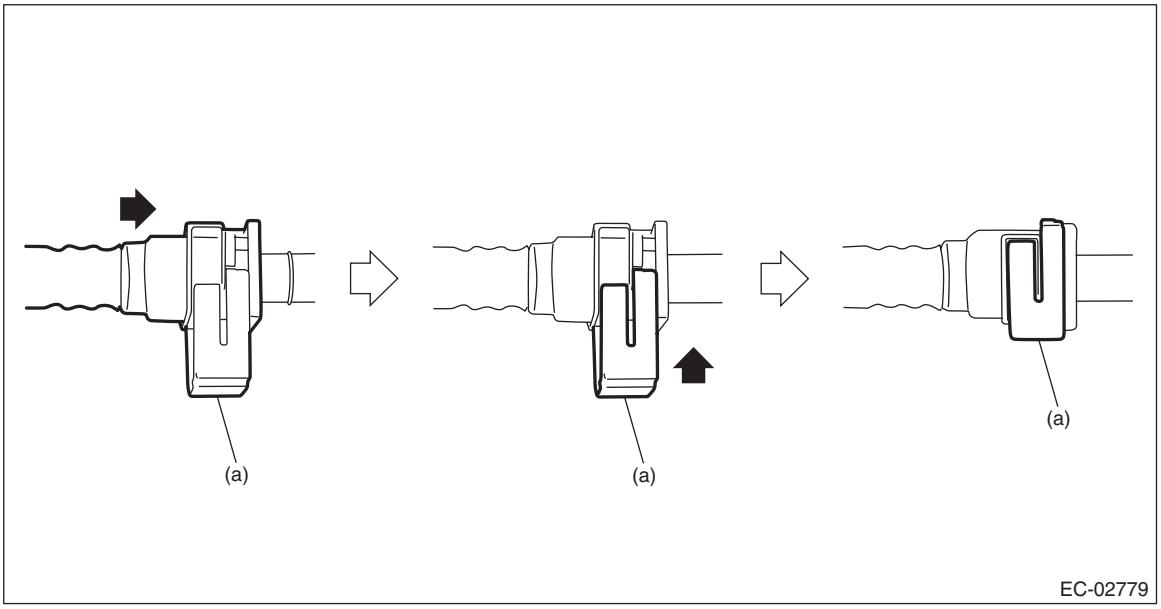

(a) Slider

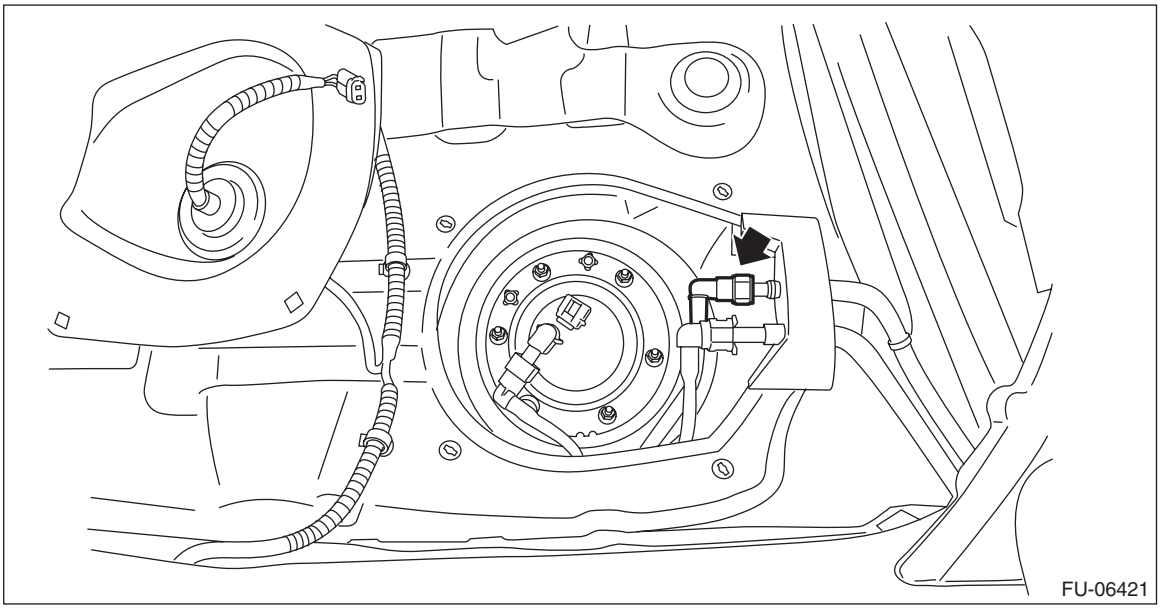

10) Connect the connector to the fuel sub level sensor.

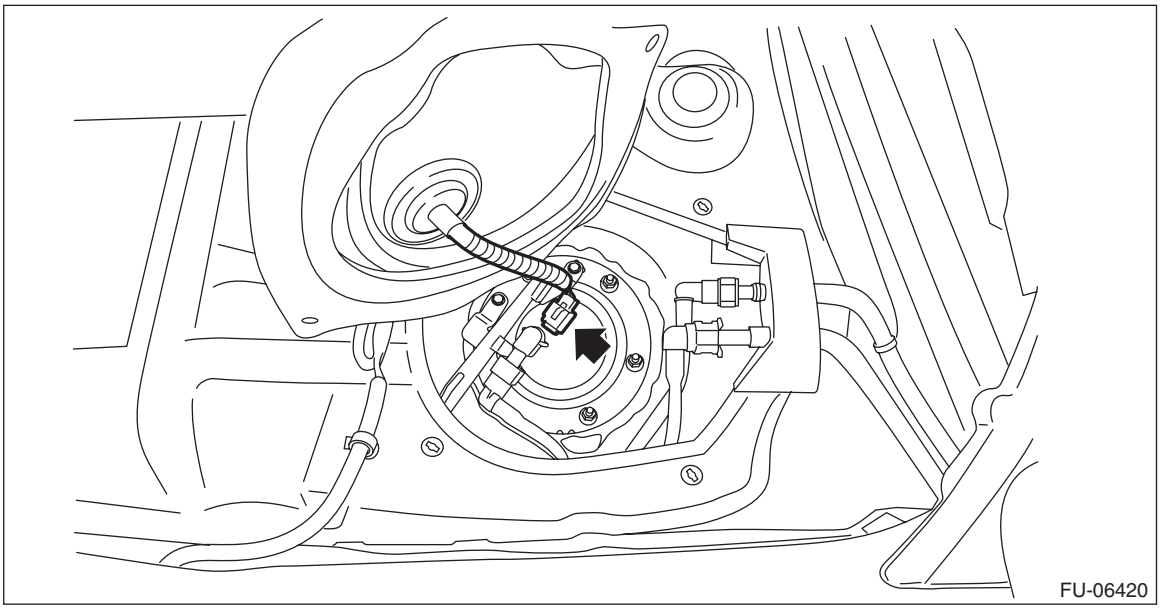

11) Install the service hole cover of fuel sub level sensor.

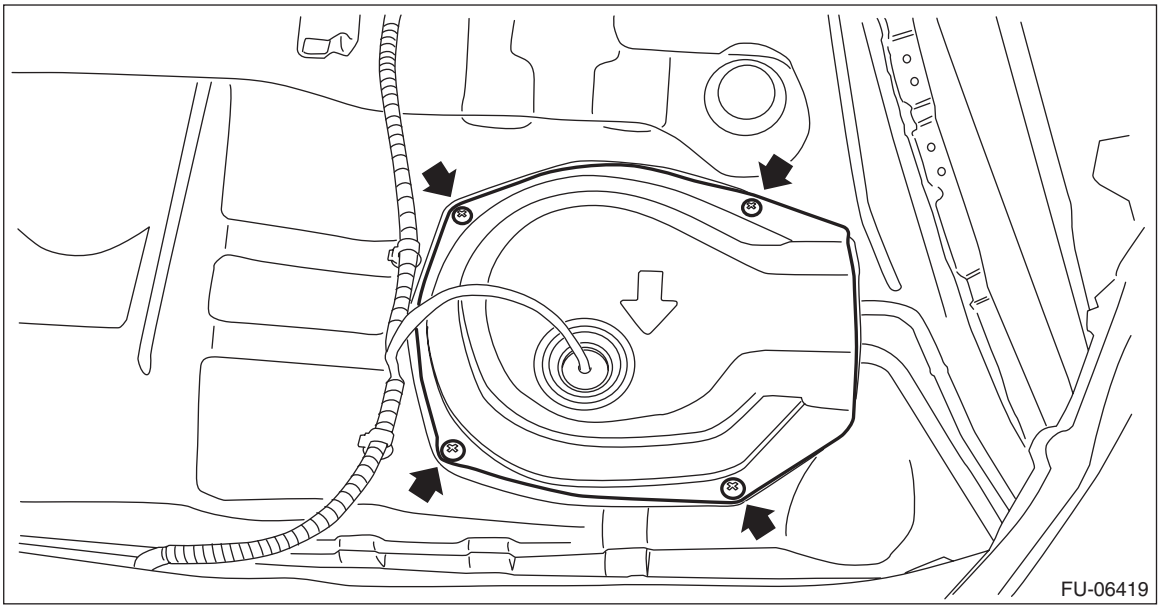

12) Connect the connector to the fuel pump.

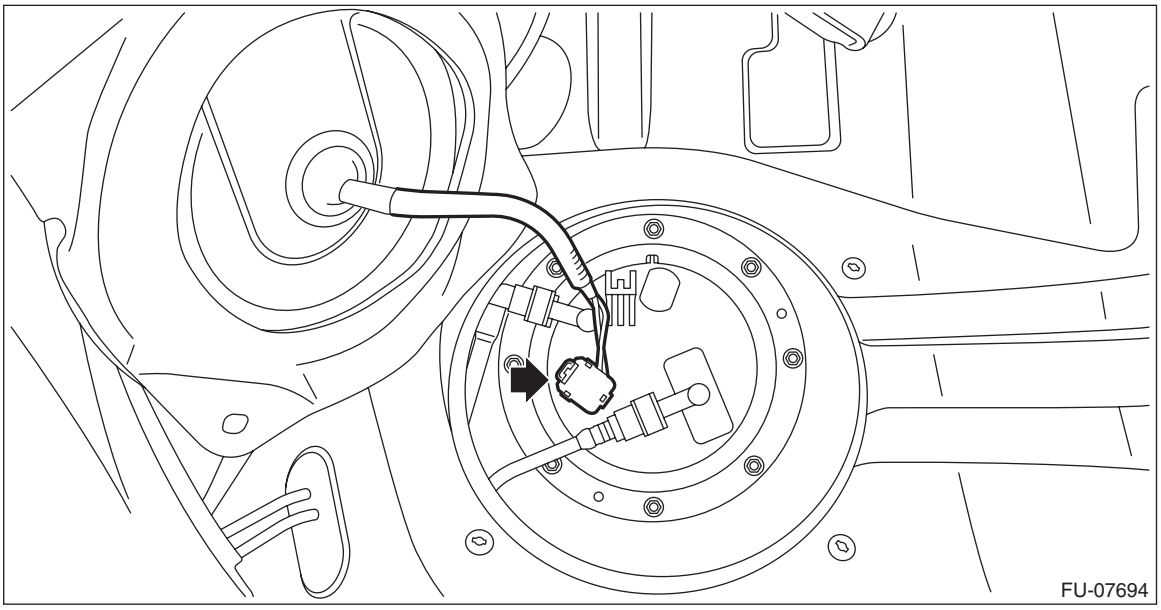

13) Install the service hole cover of fuel pump.

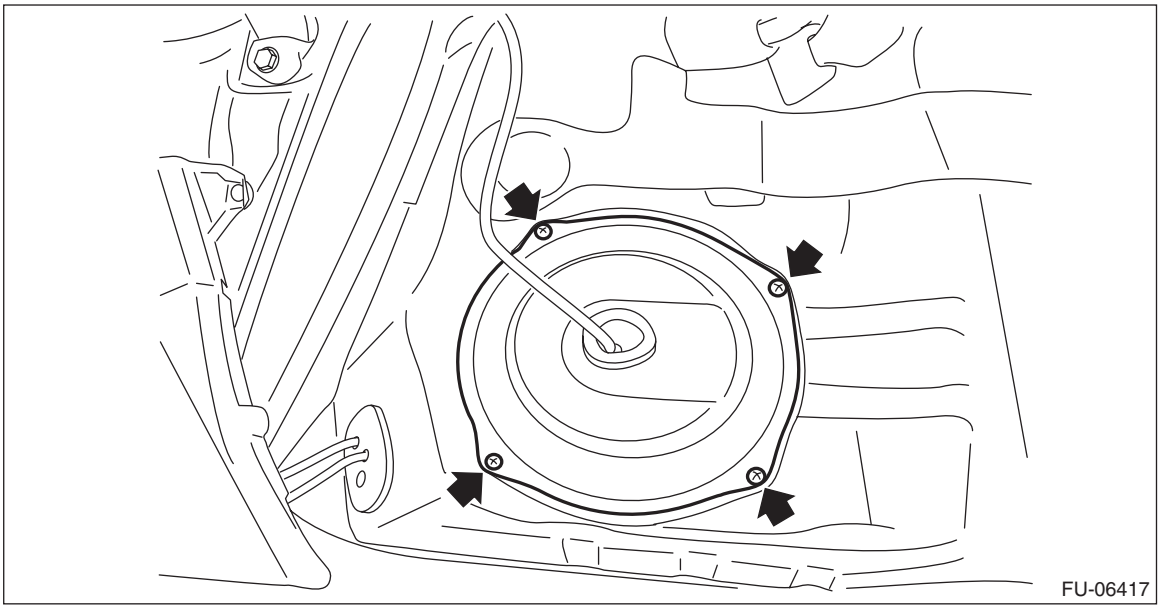

14) Install the rear seat cushion. <Ref. to SE-33, INSTALLATION, Rear Seat.>
15) Connect the ground terminal to battery sensor. <Ref. to NT-6, BATTERY, NOTE, Note.>

C: INSPECTION

1) Check that the fuel tank and fuel pipe have no deformation, cracks and other damages.
2) Check that the fuel hose and tube have no cracks, damage or loose part.

36.Fuel Filler Pipe

A: REMOVAL

WARNING:
Place “NO OPEN FLAMES” signs near the working area.

CAUTION:
Be careful not to spill fuel.

1) Release the fuel pressure. <Ref. to FU(w/o STI)-138, RELEASING OF FUEL PRESSURE, PROCEDURE, Fuel.>
2) Drain fuel. <Ref. to FU(w/o STI)-139, DRAINING FUEL (WITH SUBARU SELECT MONITOR), PROCEDURE, Fuel.>
3) Open the fuel filler lid and remove the fuel filler cap.
4) Turn the fuel filler pipe protector in the direction of the arrow to unlock and remove it.

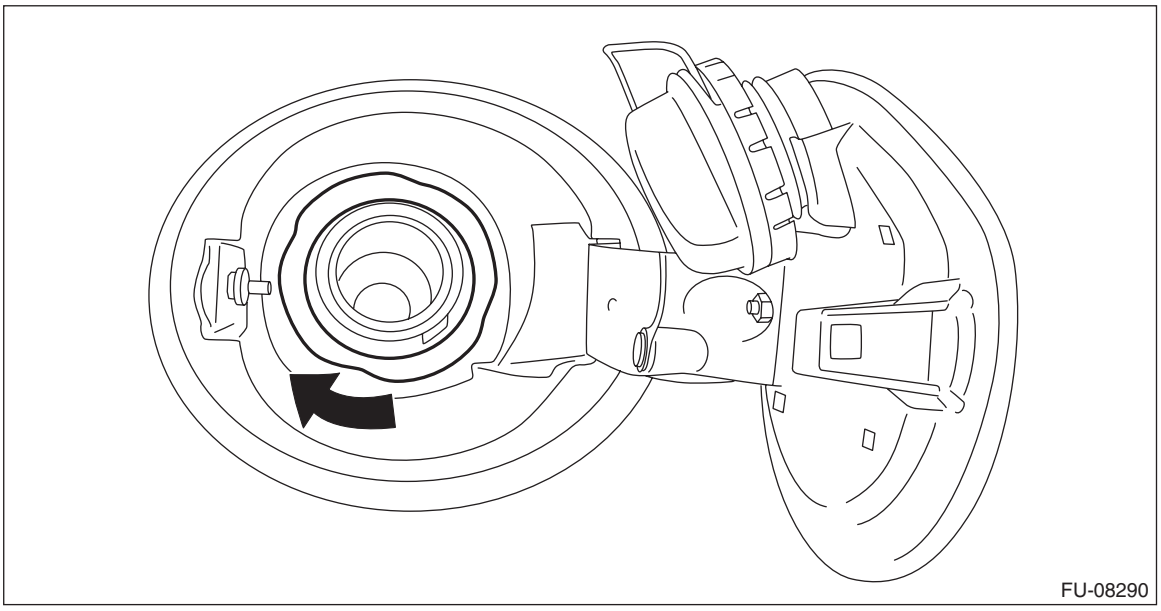
FU-08290

5) Remove the rear sub frame assembly. <Ref. to RS-9, REMOVAL, Rear Sub Frame.>
6) Remove the rear mud guard RH. <Ref. to EI-24, REMOVAL, Mud Guard.>
7) Disconnect the fuel filler hose (A) and evaporation hose (B) from the fuel filler pipe assembly.

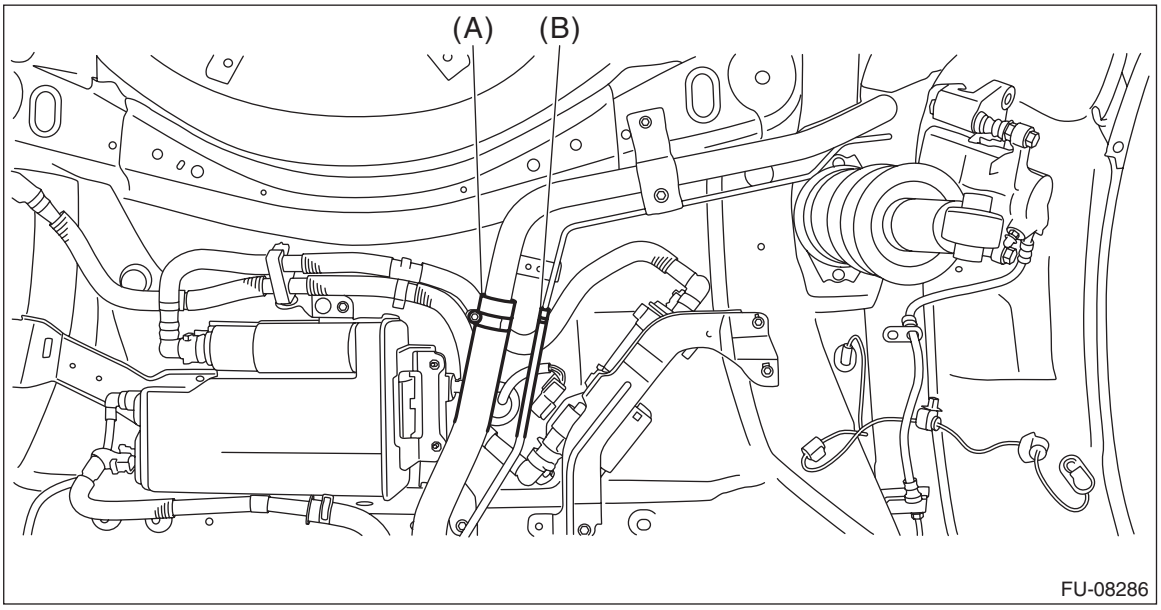

FU-08286

8) Remove the bolts and nuts which secure the fuel filler pipe assembly to the vehicle.

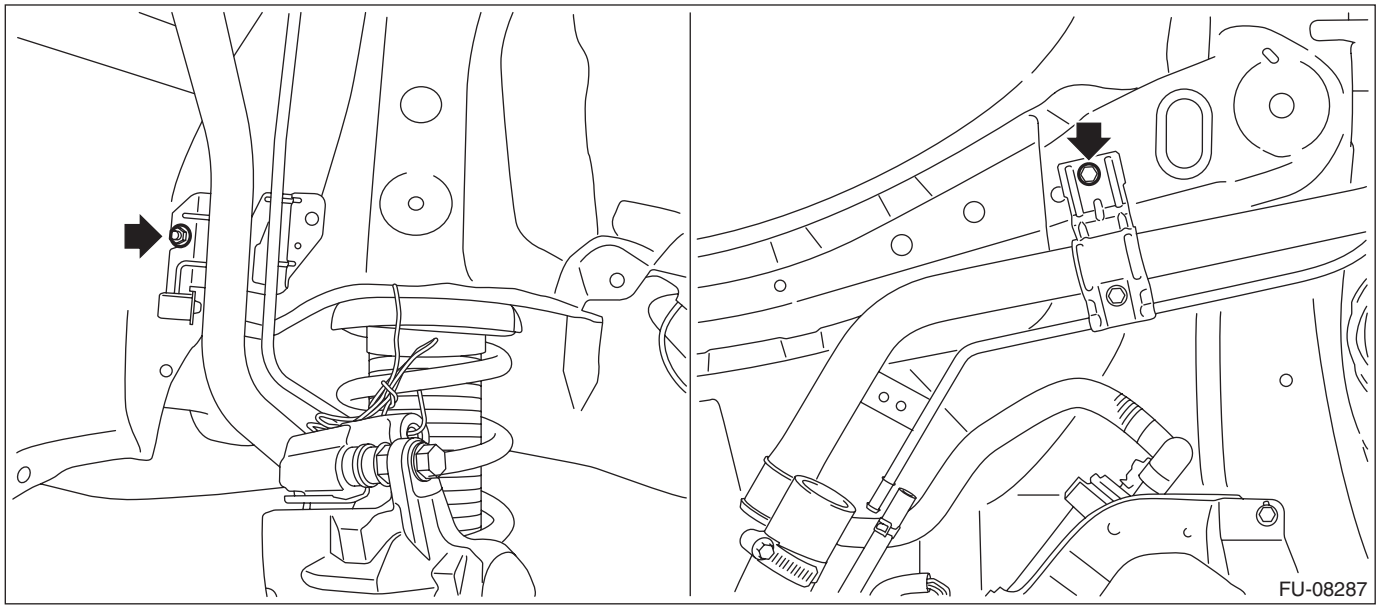

9) Remove the fuel filler pipe assembly from the underside of the vehicle.

B: INSTALLATION

1) Open the fuel filler lid.
2) Insert the fuel filler pipe assembly from inside of the rear fender.
3) Install the fuel filler pipe assembly to the vehicle.

Tightening torque:
7.5 N·m (0.8 kgf-m, 5.5 ft-lb)

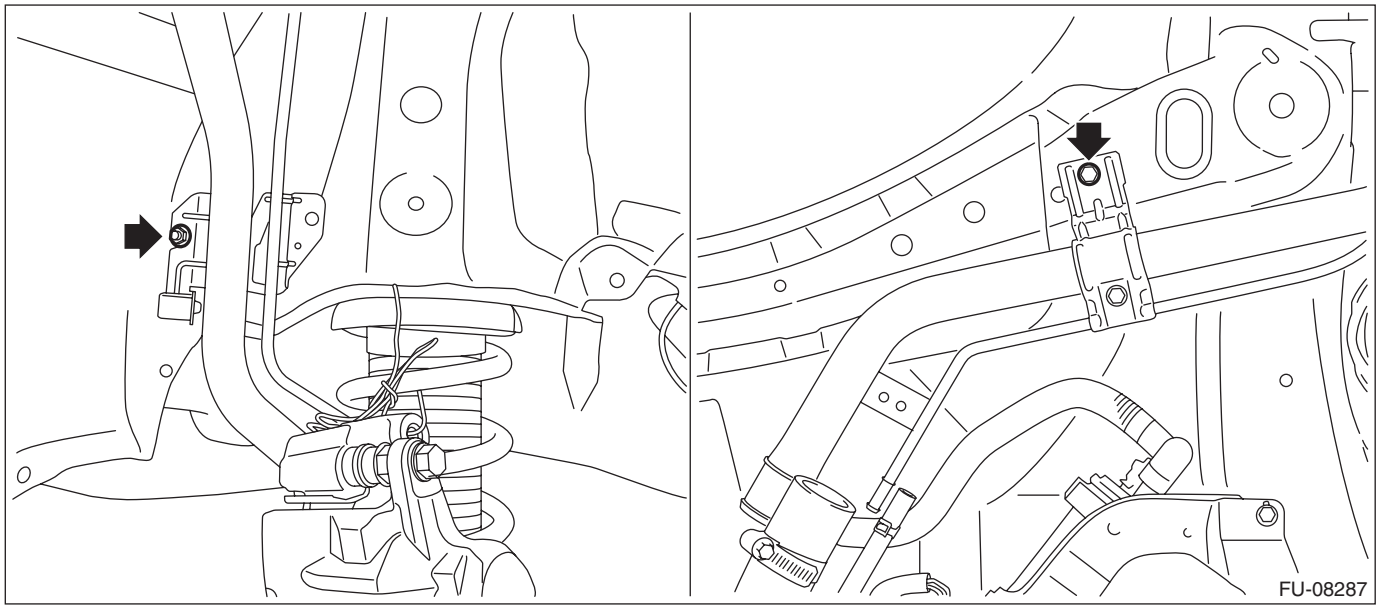

4) Align the cutout on the fuel filler pipe protector and the protrusion of the neck holder and insert them all the way, and then turn the fuel filler pipe protector in the direction of the arrow until it is locked.

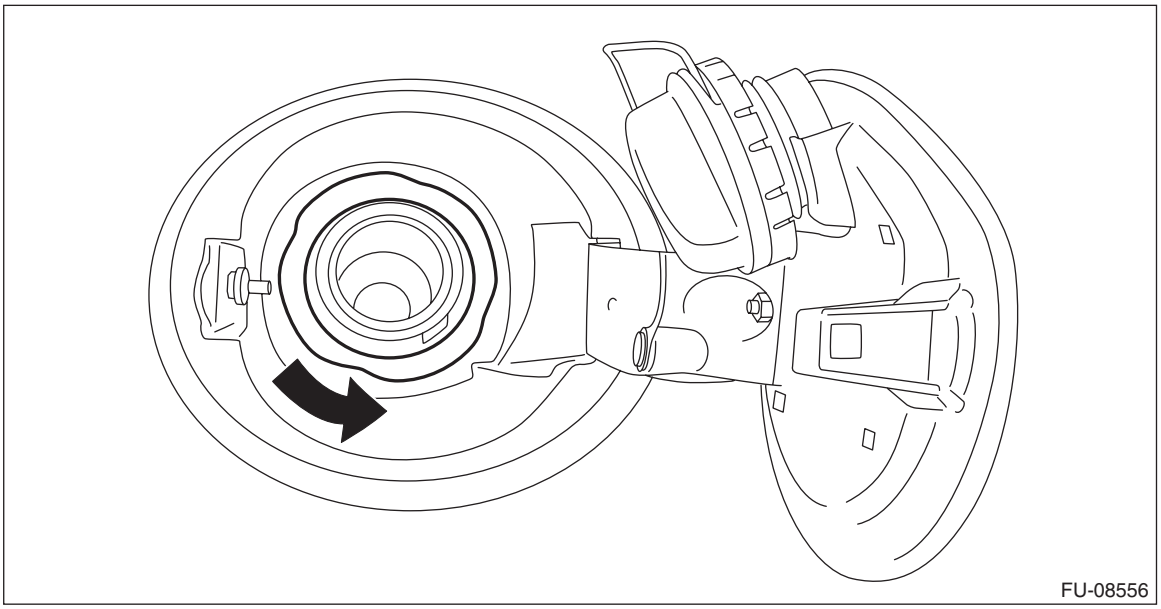

5) Securely insert the fuel filler hose (A) and evaporation hose (B) until the hose end contacts the spool, then attach the clamp or clip as shown in the figure.

Tightening torque:
2.5 N·m (0.3 kgf-m, 1.8 ft-lb)

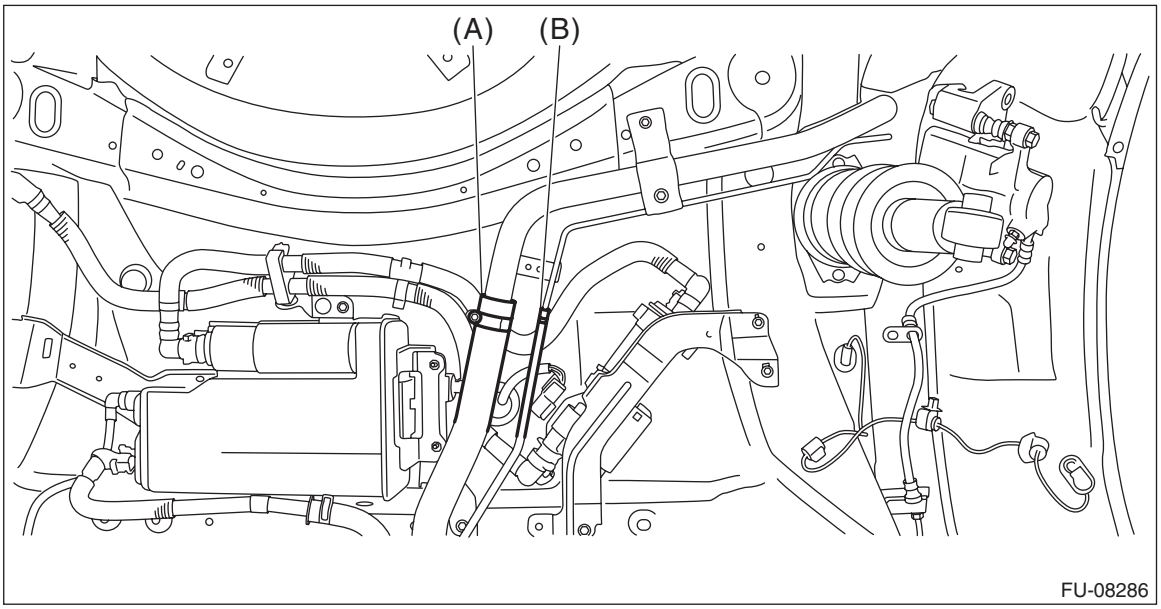

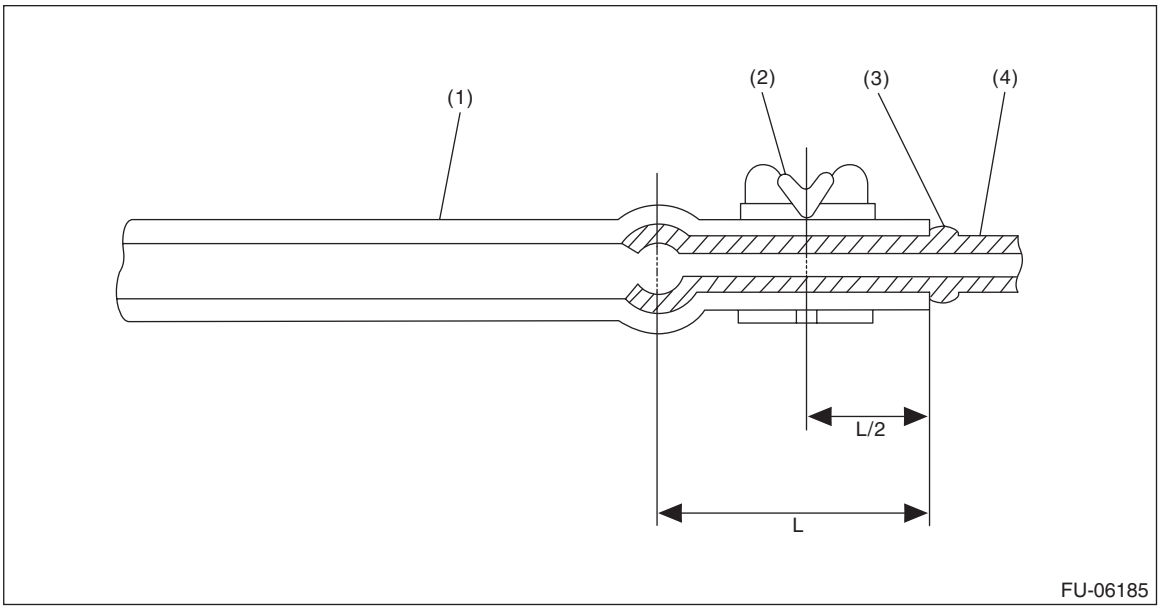

(1) Hose
(2) Clamp or clip
(3) Spool
(4) Pipe

6) Install the rear mud guard RH. <Ref. to EI-25, INSTALLATION, Mud Guard.>
7) Install the rear sub frame assembly. <Ref. to RS-12, INSTALLATION, Rear Sub Frame.>

C: DISASSEMBLY

1) Using a marker pen, make alignment marks (A) on the fuel filler pipe and the bracket.
2) Remove the bracket bolt (B) which secures the fuel filler pipe.
3) Remove the neck holder from the fuel filler pipe.

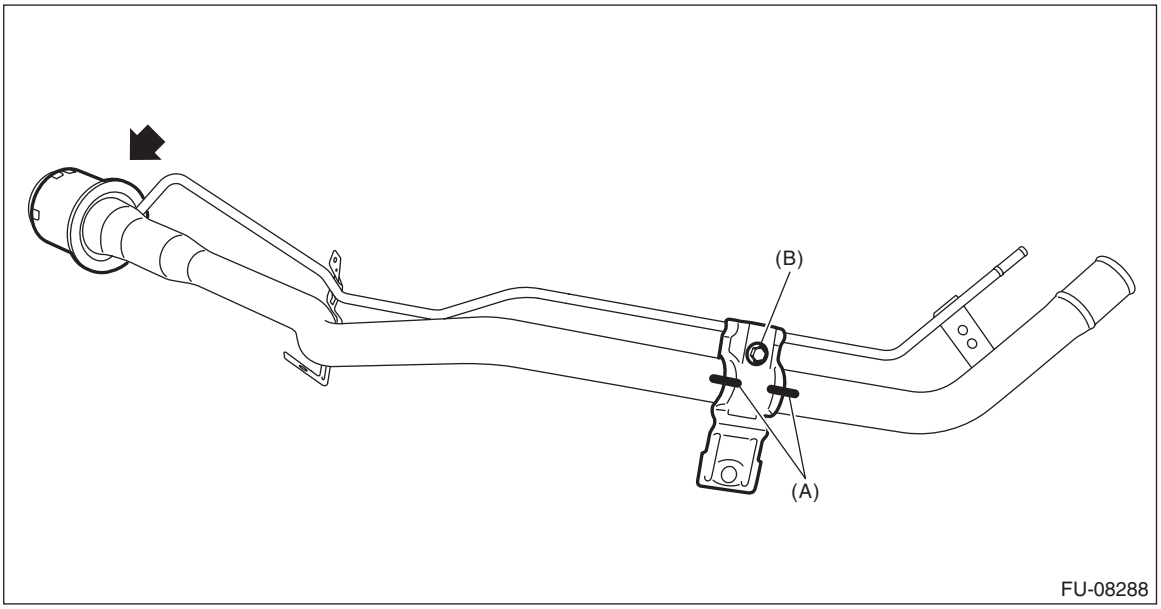

D: ASSEMBLY

Assemble in the reverse order of disassembly.

NOTE:
- Use a new neck holder.
- Install the bracket to the fuel filler pipe by aligning the alignment marks (A).

Tightening torque:
7.5 N·m (0.8 kgf-m, 5.5 ft-lb)

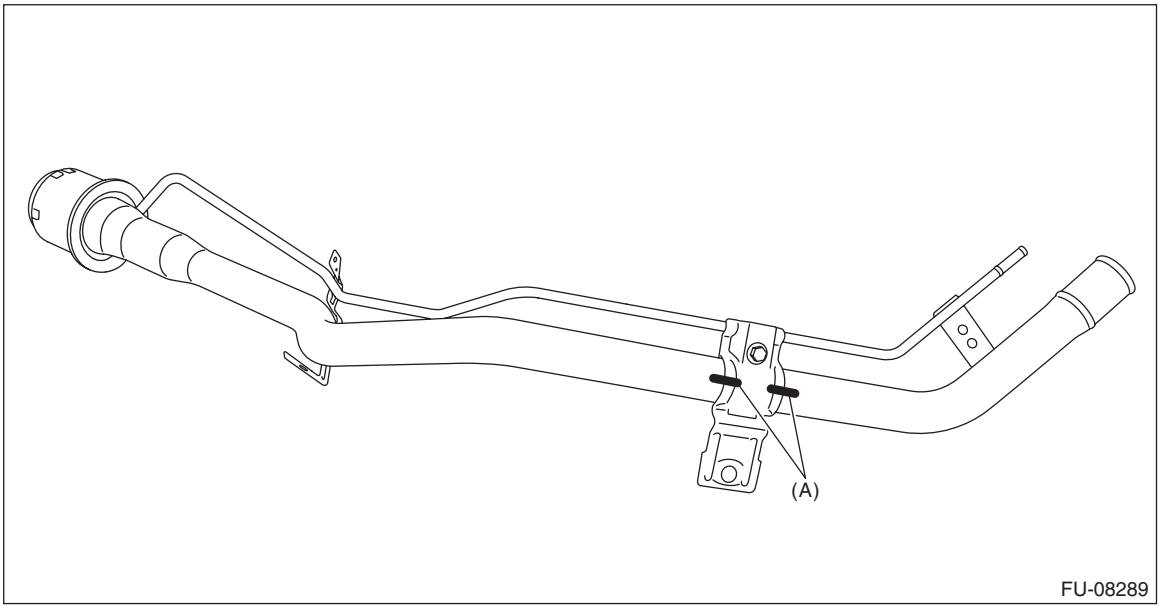

E: INSPECTION

1) Check that the fuel filler pipe assembly has no deformation, cracks or other damages.
2) Check that the fuel hose has no cracks, damage or loose part.

37.Fuel Pump

A: REMOVAL

WARNING:
Place “NO OPEN FLAMES” signs near the working area.

CAUTION:
- **Be careful not to spill fuel.**
- **Catch the fuel from the tubes using a container or cloth.**
- **If the fuel gauge indicates that two thirds or more of the fuel is remaining, be sure to drain fuel before starting work to avoid the fuel to spill.**

NOTE:
Fuel pump assembly consists of fuel pump, fuel filter and fuel level sensor.
1) Release the fuel pressure. <Ref. to FU(w/o STI)-138, RELEASING OF FUEL PRESSURE, PROCEDURE, Fuel.>
2) Drain fuel. <Ref. to FU(w/o STI)-139, DRAINING FUEL (WITH SUBARU SELECT MONITOR), PROCEDURE, Fuel.>
3) Disconnect the ground terminal from battery sensor. <Ref. to NT-6, BATTERY, NOTE, Note.>
4) Remove the rear seat cushion. <Ref. to SE-30, REMOVAL, Rear Seat.>
5) Remove the service hole cover of fuel pump.

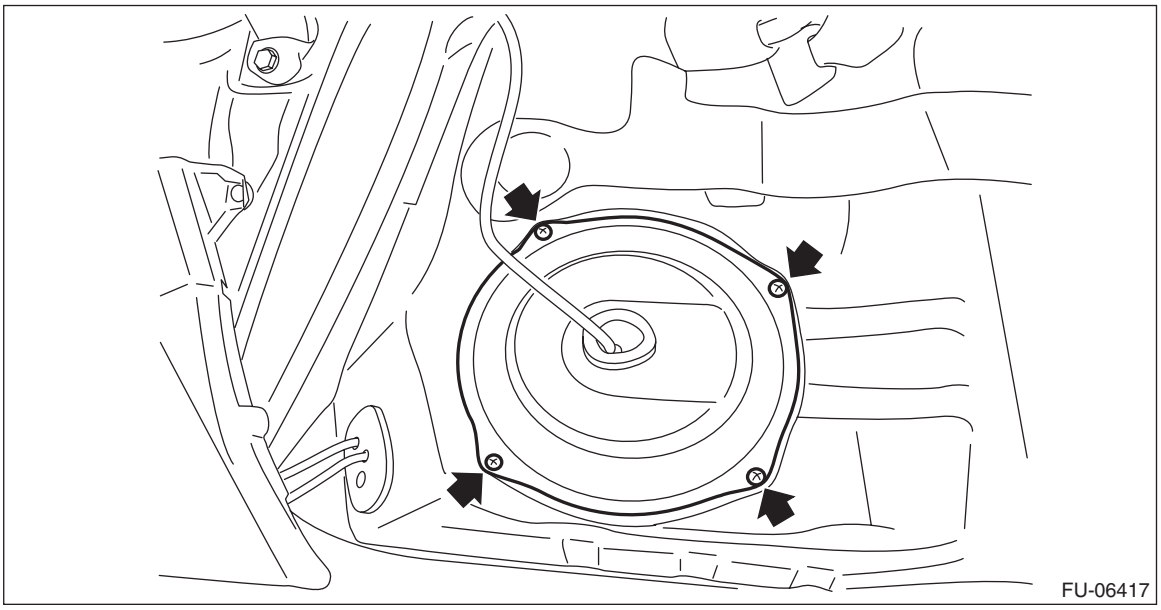

6) Disconnect connectors from the fuel pump, and move aside the service hole cover.

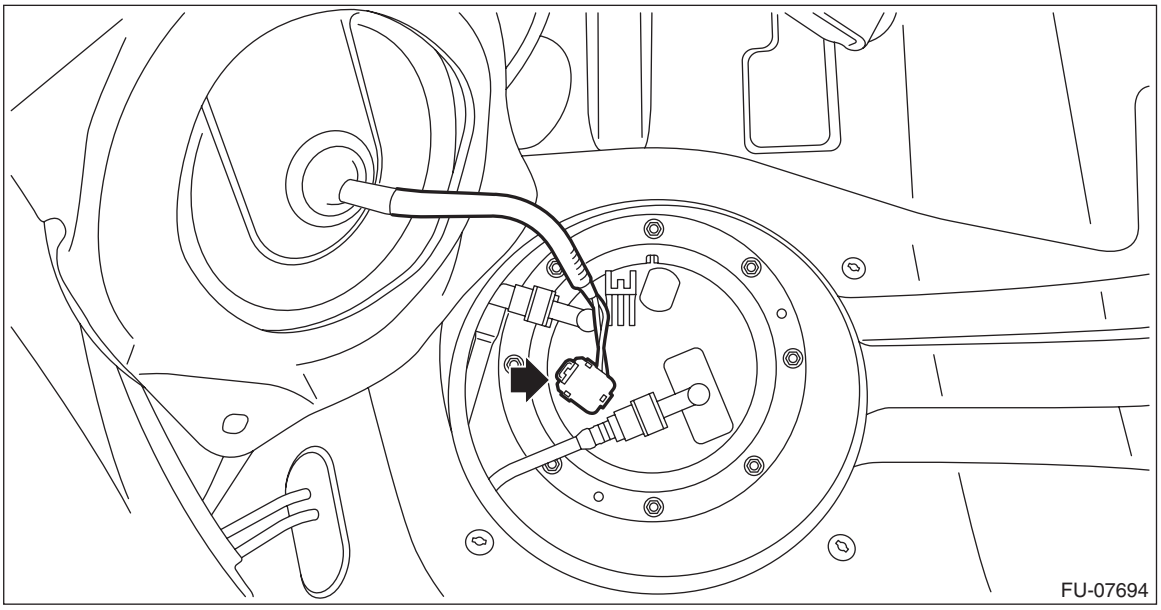

7) Disconnect the quick connector of fuel delivery tube and jet pump tube.

NOTE:
Disconnect the quick connector as shown in the figure.

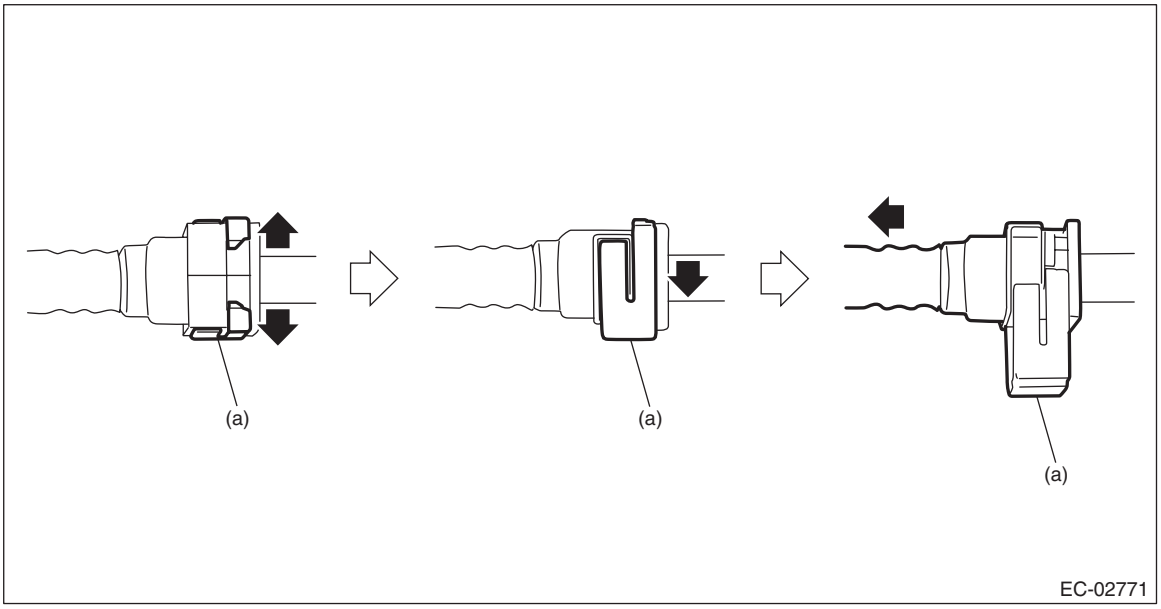

(a) Slider

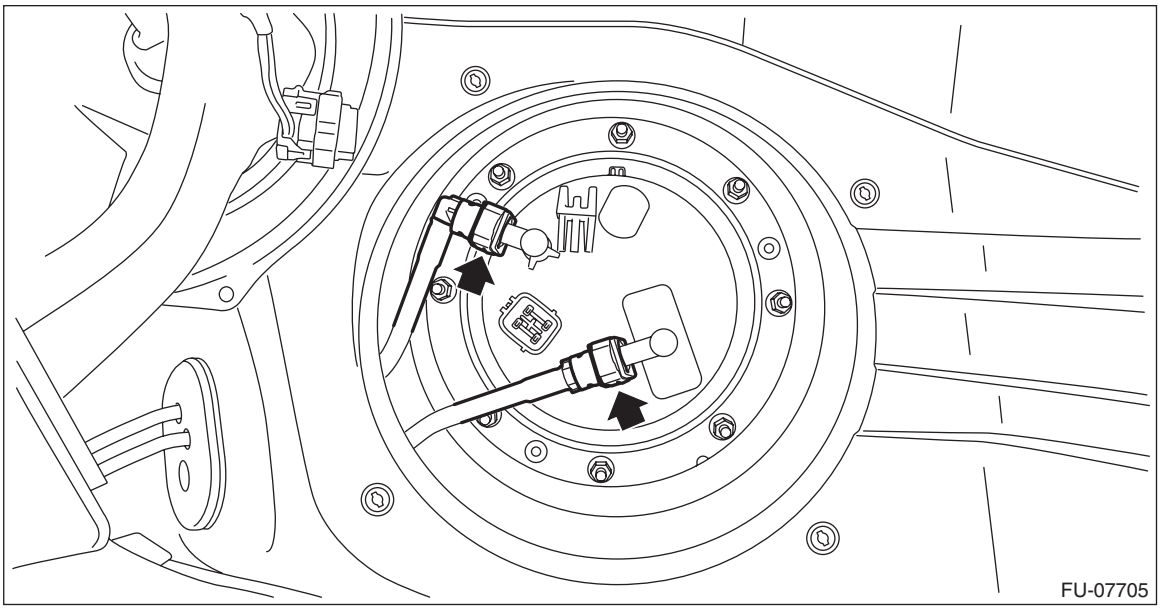

8) Remove the nuts which hold the fuel pump upper plate to the fuel tank.

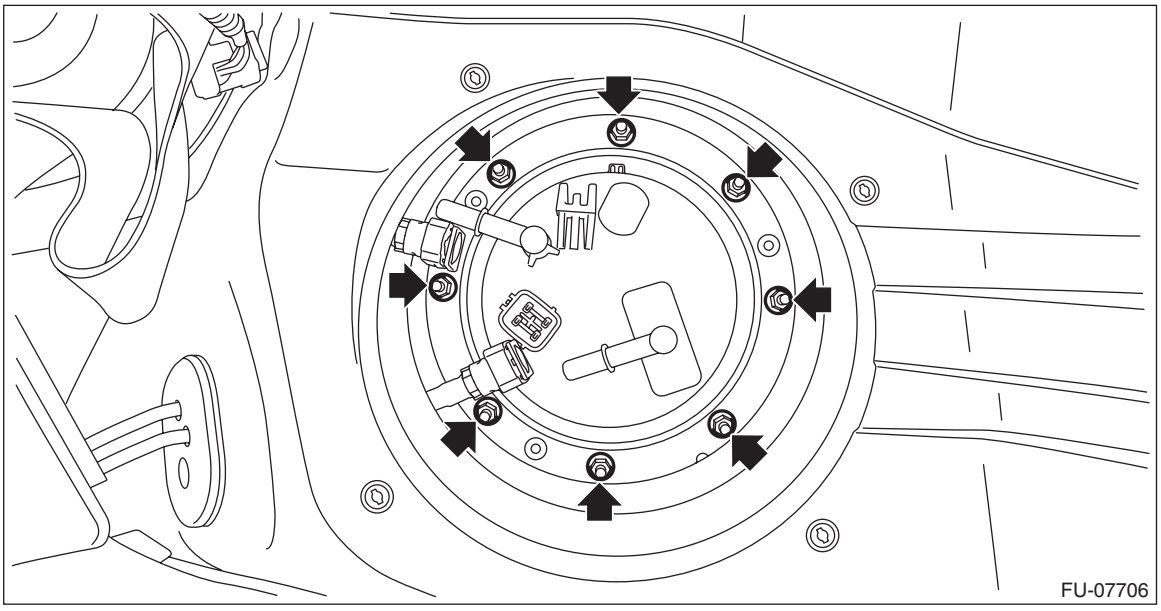

9) Remove the fuel pump assembly from the fuel tank.

CAUTION:
Be careful not to let the arm and float of fuel level sensor contact the fuel tank.

B: INSTALLATION

1) Install the fuel pump assembly to the fuel tank.
   (1) Make sure the sealing portion is free from fuel or foreign matter before installation.
   (2) Align the protrusion (A) of the gasket to the position shown in the figure, and install the gasket from the lower side of the fuel pump assembly.

NOTE:
Use a new gasket.

   (3) Align the protrusion (C) of fuel pump upper plate cushion with the protrusion (C) of the fuel pump assembly as shown in the figure, and install the fuel pump upper plate cushion from the upper side of the fuel pump assembly.
   (4) Align the cutout of the fuel pump upper plate with the protrusion (C), and install the fuel pump upper plate from the upper side of the fuel pump assembly so that the protrusions (B) (3 places) of the gasket fit the holes of the fuel pump upper plate.

(5) Install the fuel pump assembly to the fuel tank in the direction shown in the figure, and tighten the nuts to the specified torque in the order as shown in the figure.

CAUTION:
Set the arm and float of the fuel level sensor while paying attention to prevent them from contacting the fuel tank. If the arm of the fuel level sensor is bent, the fuel gauge may not read correctly.

Tightening torque:
4.4 N·m (0.4 kgf-m, 3.2 ft-lb)

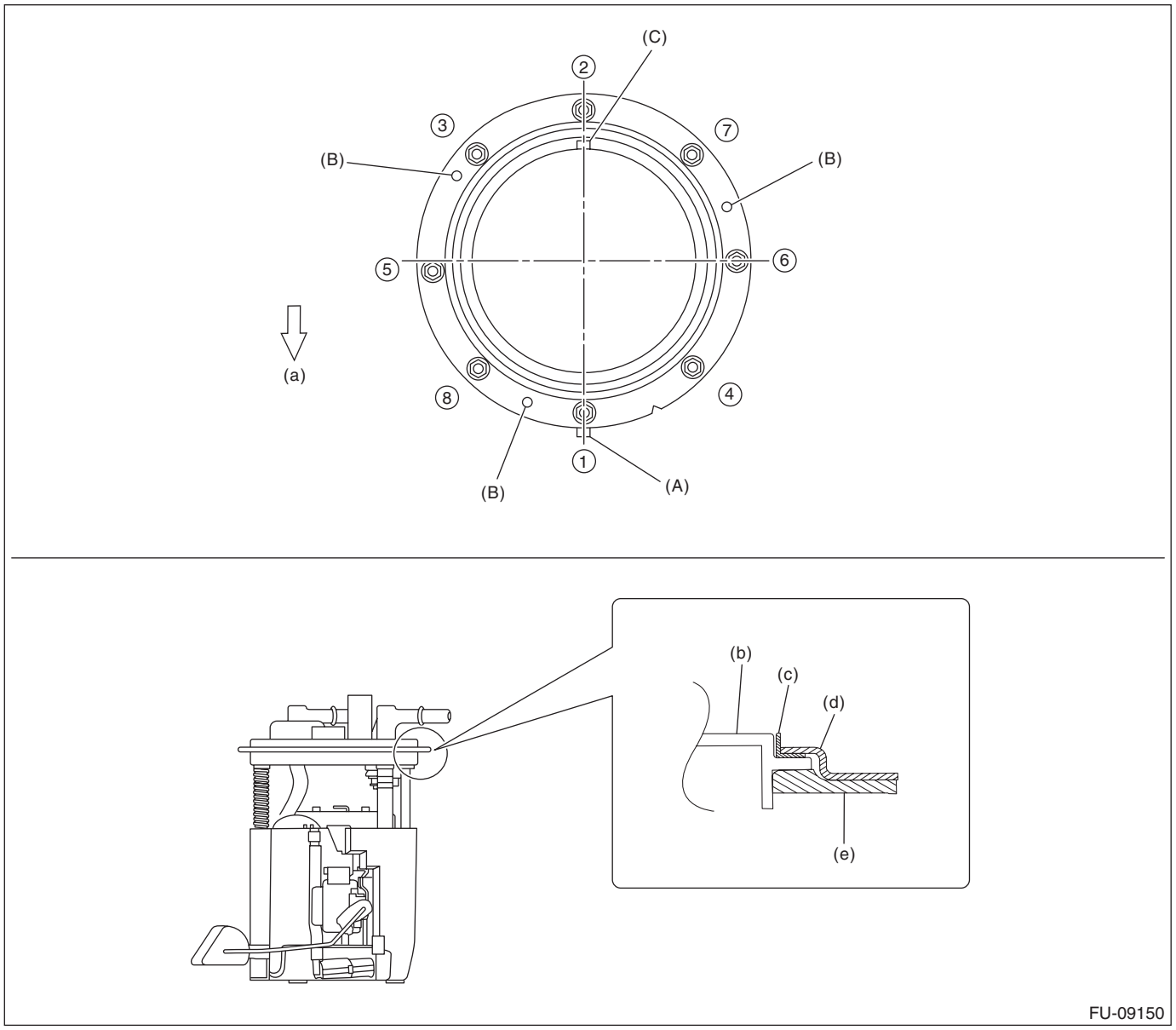

(a) Front side of vehicle
(b) Fuel pump ASSY
(c) Fuel pump upper plate cushion
(d) Fuel pump upper plate
(e) Gasket

2) Connect the quick connector of the fuel delivery tube and the jet pump tube.

CAUTION:
- **Check that there is no damage or dust on the quick connector. If necessary, clean the seal surface of the pipe.**
- **When connecting the quick connector, make sure to insert it all the way in before locking the slider.**
- **When it is difficult to lock the slider, check that the connector is fully inserted.**
- **After locking the slider, check again that the quick connector is securely connected.**

NOTE:
Connect the quick connector as shown in the figure.

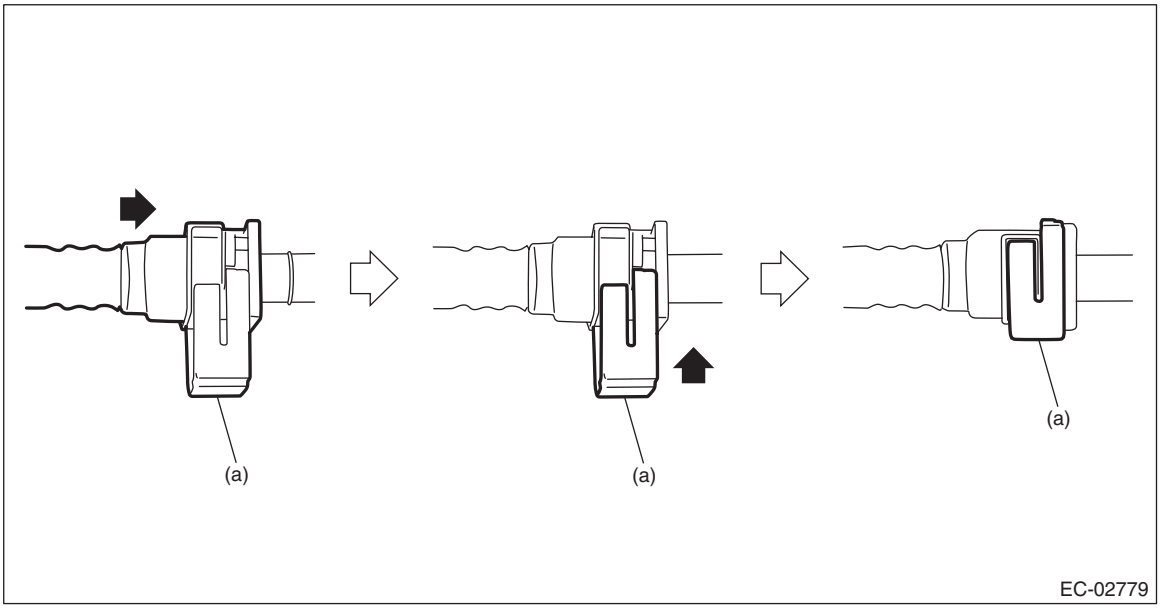

(a) Slider

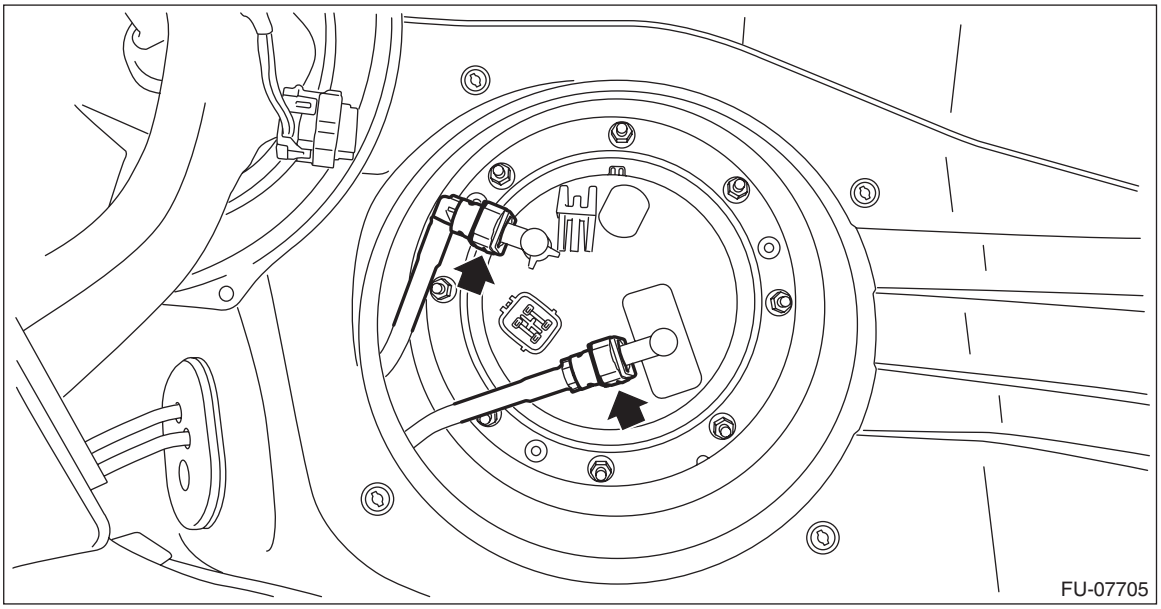

3) Connect the connector to the fuel pump.

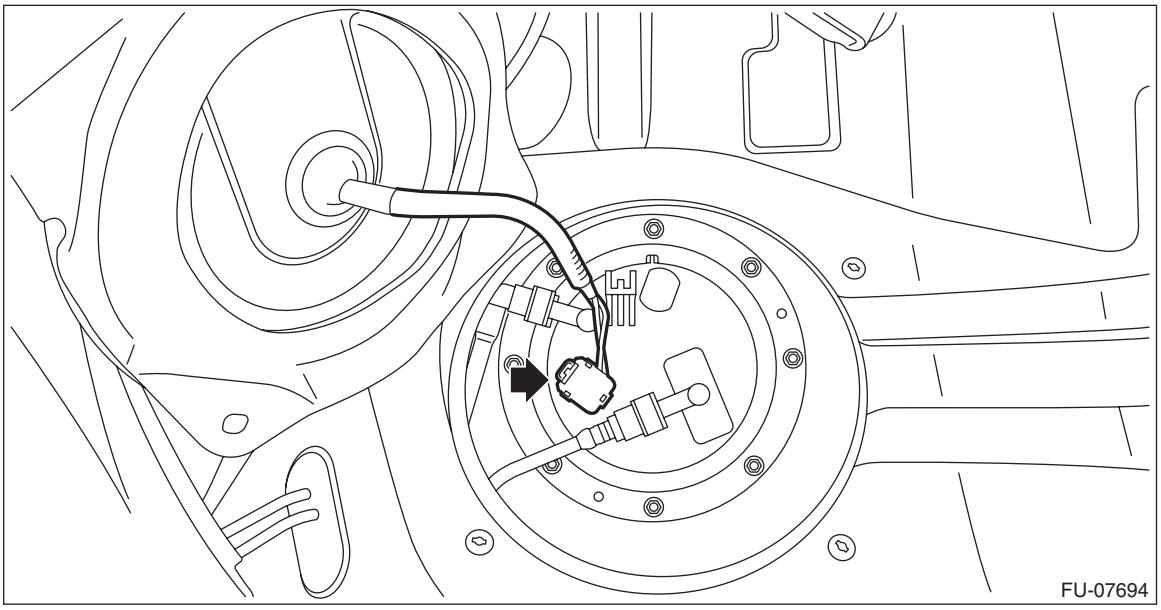

4) Install the service hole cover of fuel pump.

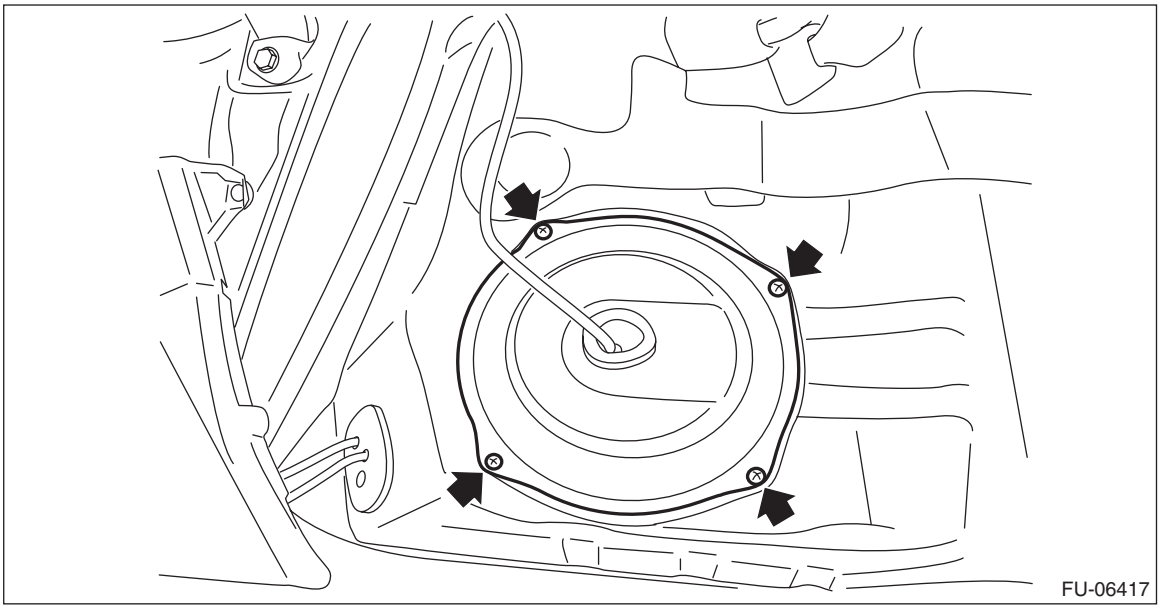

5) Install the rear seat cushion. <Ref. to SE-33, INSTALLATION, Rear Seat.>
6) Connect the ground terminal to battery sensor. <Ref. to NT-6, BATTERY, NOTE, Note.>

C: INSPECTION

1) Check that the fuel pump has no deformation, cracks or other damages.
2) Connect the battery positive terminal to terminal No. 3 and the battery ground terminal to terminal No. 4, and inspect the fuel pump operation.

WARNING:
- **Wipe off fuel completely.**
- **Keep the battery as far apart from fuel pump as possible.**
- **Do not run the fuel pump for a long time under non-load condition.**

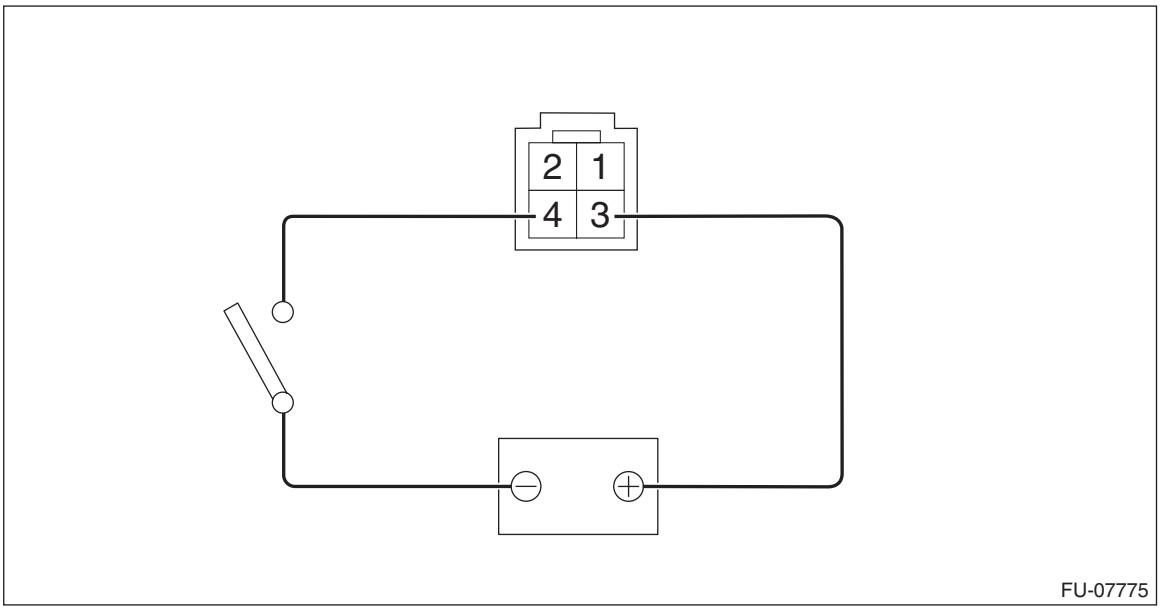

38.Fuel Level Sensor

A: REMOVAL

WARNING:
Place “NO OPEN FLAMES” signs near the working area.

CAUTION:
- **Be careful not to spill fuel.**
- **If the fuel gauge indicates that two thirds or more of the fuel is remaining, be sure to drain fuel before starting work to avoid the fuel to spill.**

NOTE:
The fuel level sensor is built in fuel pump assembly.
1) Remove the fuel pump assembly. <Ref. to FU(w/o STI)-161, REMOVAL, Fuel Pump.>
2) Disconnect the fuel level sensor connector (A), and pull out the connector cable and fuel level sensor harness from the clip.

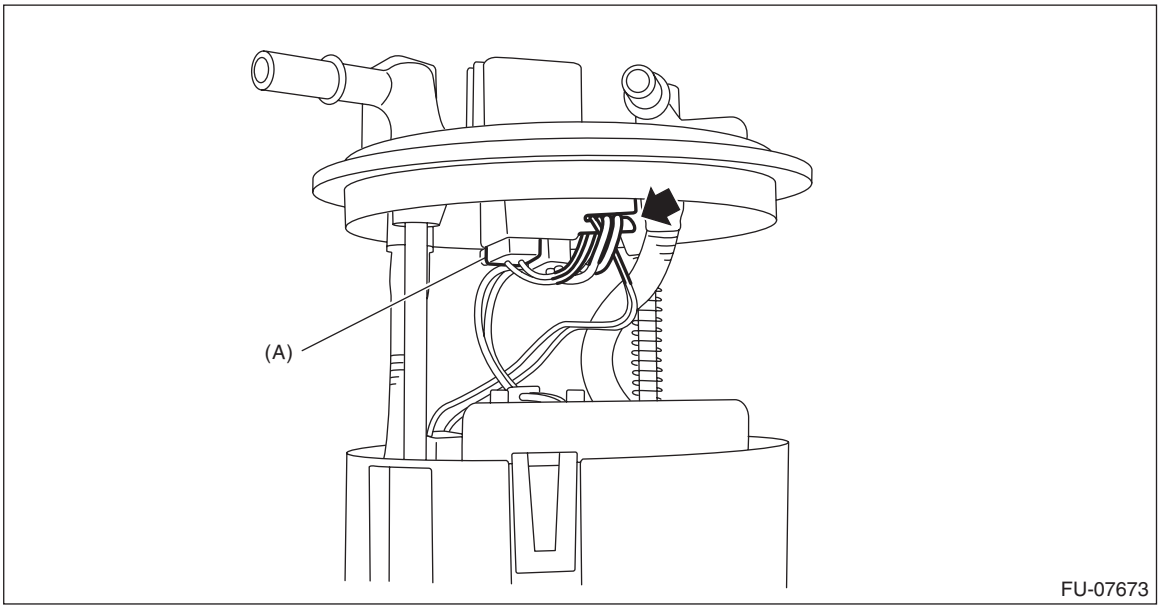

3) While pressing the claw (A) of the fuel level sensor, slide the fuel level sensor in the direction of the arrow, and remove the fuel level sensor.

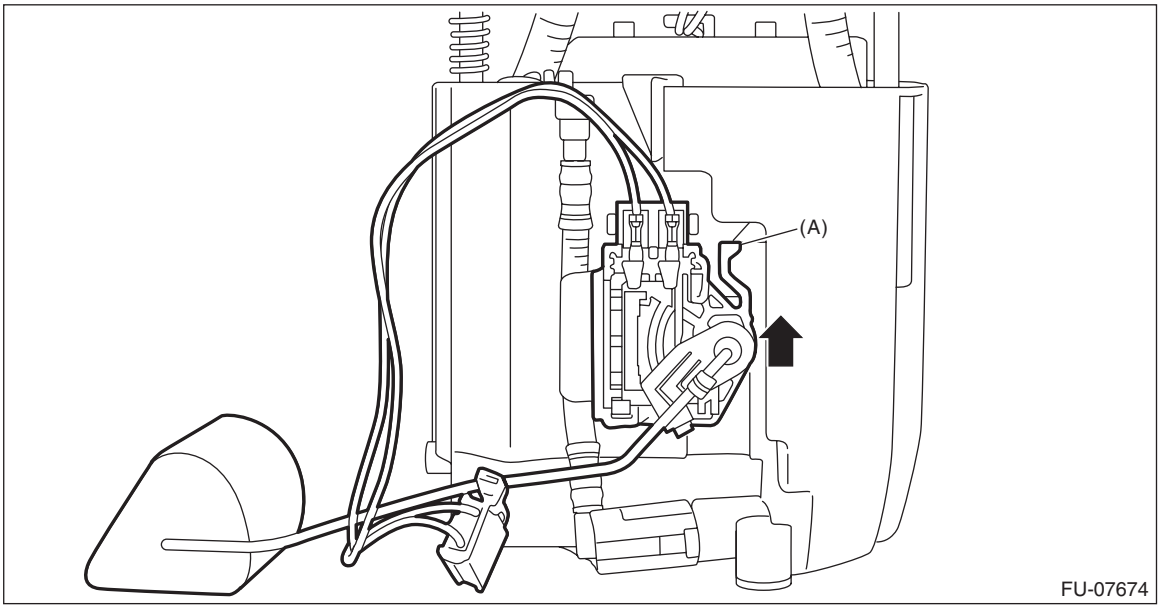

B: INSTALLATION

Install in the reverse order of removal.

CAUTION:
Be sure to install the fuel level sensor harness to the clip first, then install the connector cable. Otherwise, malfunction may occur.

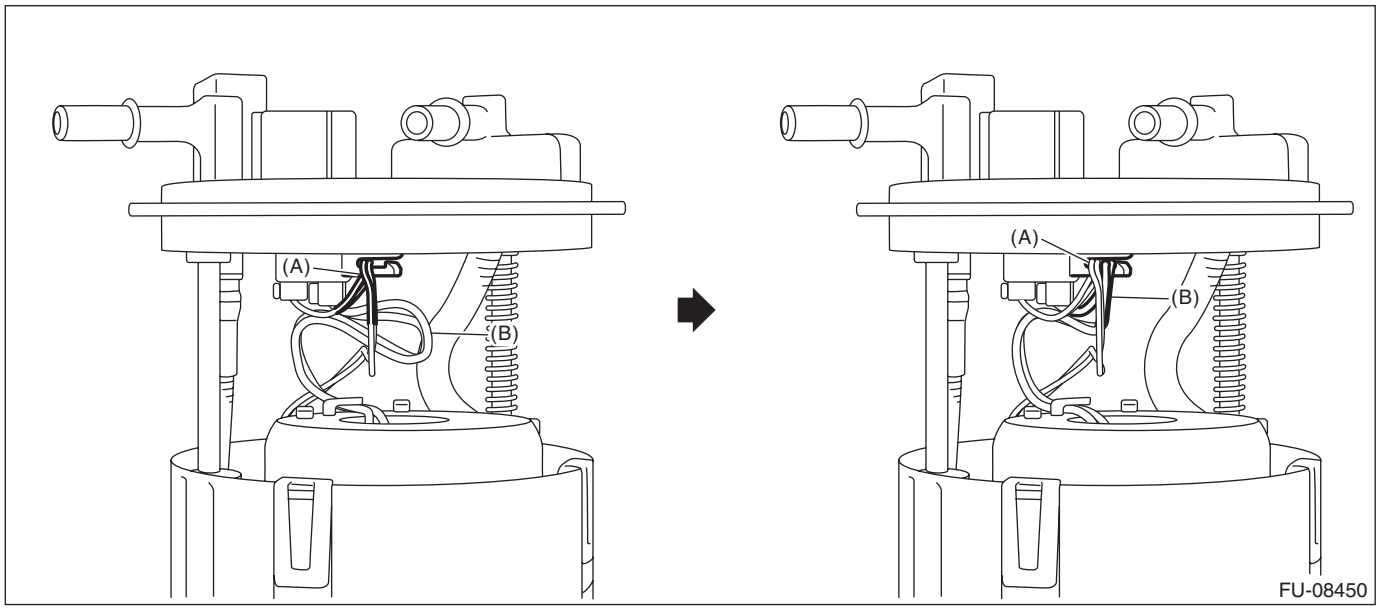

(A) Fuel level sensor harness (B) Connector cable

C: INSPECTION

1) Check that the fuel level sensor has no damage.
2) Measure the fuel level sensor float position.

NOTE:
When inspecting the fuel level sensor, perform the work with the sensor installed to the fuel pump.

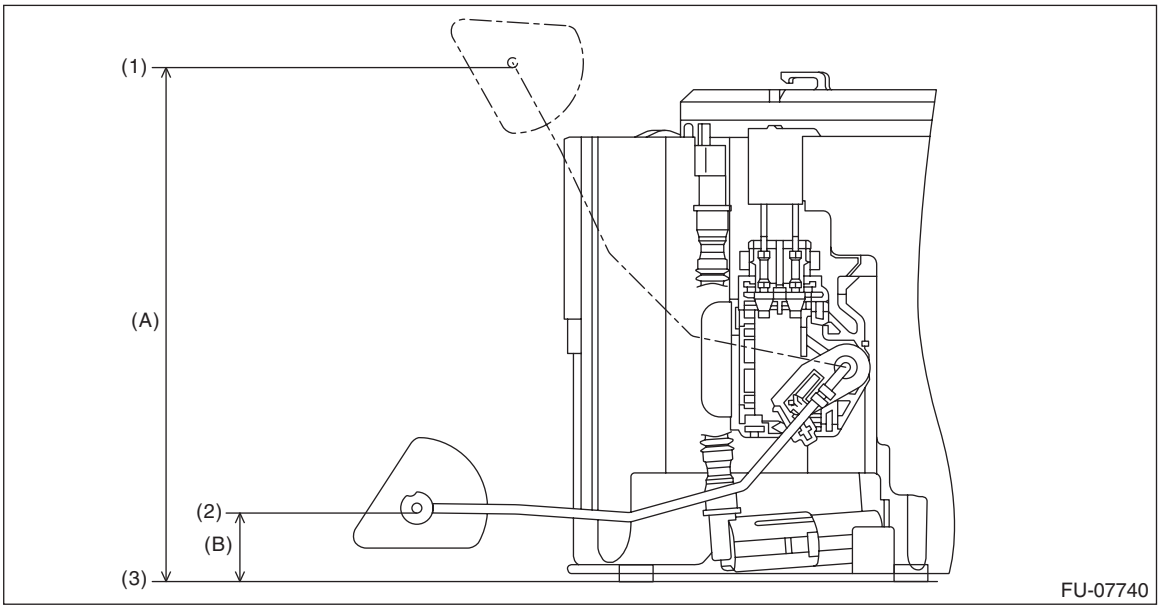

(1) FULL (2) EMPTY (3) Fuel tank seating surface

Float position	Standard
FULL to Fuel tank seating surface (A)	133.0±4 mm (5.236±0.157 in)
EMPTY to Fuel tank seating surface (B)	21.6±4 mm (0.850±0.157 in)

3) Check the resistance between fuel level sensor terminals by the connector on top of the fuel pump.

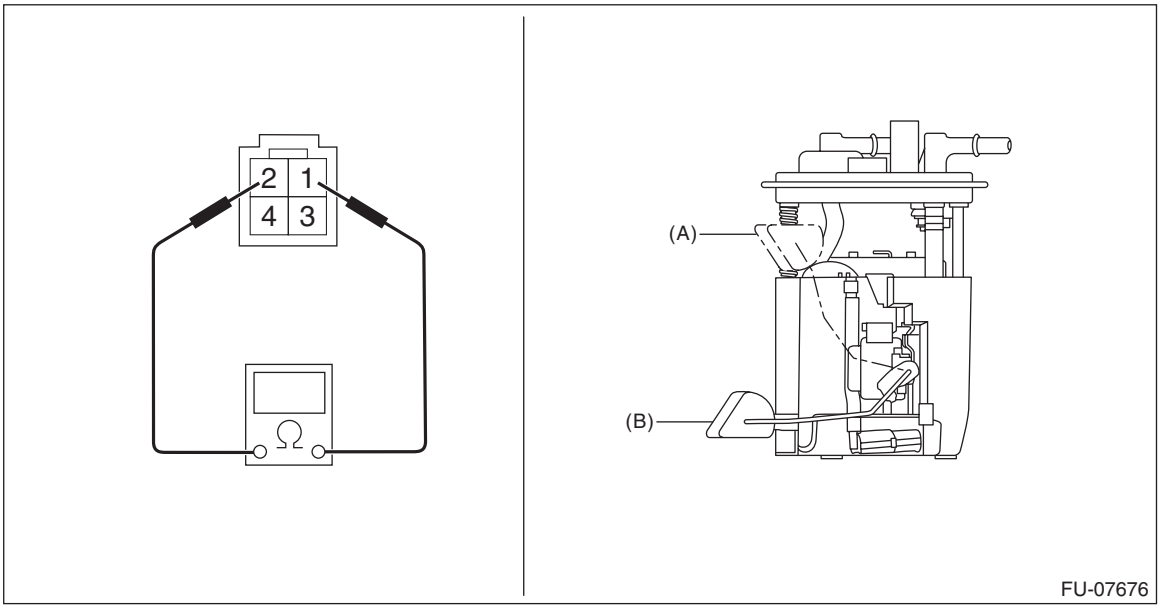

Float position	Terminal No.	Standard
FULL (A)	1 and 2	8.7±1.0 Ω
EMPTY (B)		139.1±2.0 Ω

39.Fuel Sub Level Sensor

A: REMOVAL

WARNING:
Place “NO OPEN FLAMES” signs near the working area.

CAUTION:
- **Be careful not to spill fuel.**
- **Catch the fuel from the tubes using a container or cloth.**
- **If the fuel gauge indicates that two thirds or more of the fuel is remaining, be sure to drain fuel before starting work to avoid the fuel to spill.**

1) Release the fuel pressure. <Ref. to FU(w/o STI)-138, RELEASING OF FUEL PRESSURE, PROCEDURE, Fuel.>
2) Drain fuel. <Ref. to FU(w/o STI)-139, DRAINING FUEL (WITH SUBARU SELECT MONITOR), PROCEDURE, Fuel.>
3) Disconnect the ground terminal from battery sensor. <Ref. to NT-6, BATTERY, NOTE, Note.>
4) Remove the rear seat cushion. <Ref. to SE-30, REMOVAL, Rear Seat.>
5) Remove the service hole cover of fuel sub level sensor.

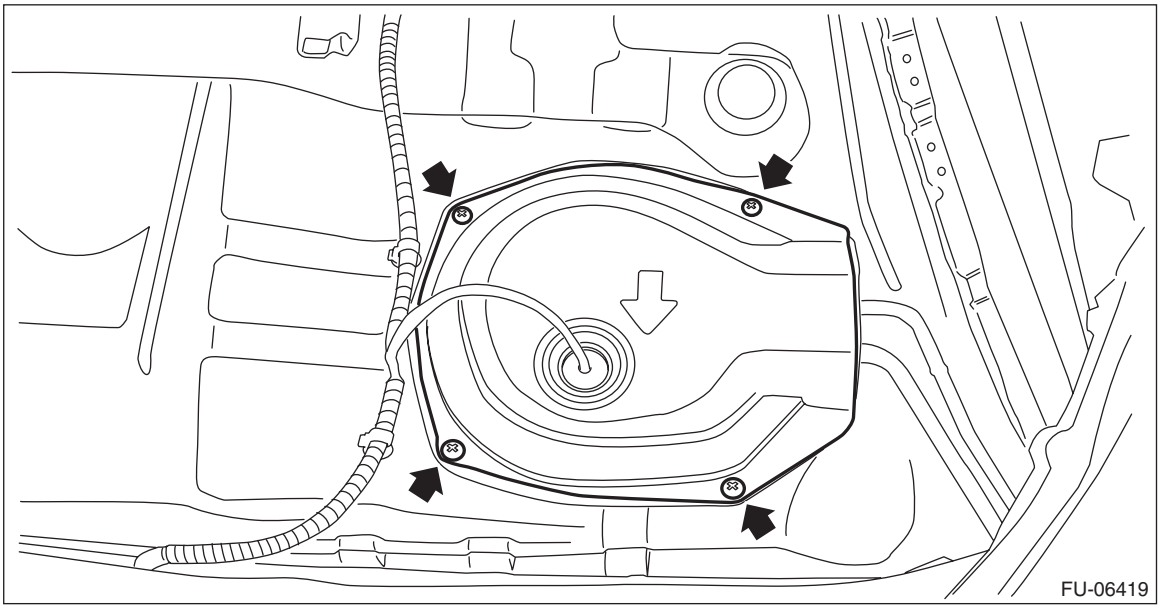

6) Disconnect the connector from the fuel sub level sensor, and move aside the service hole cover.

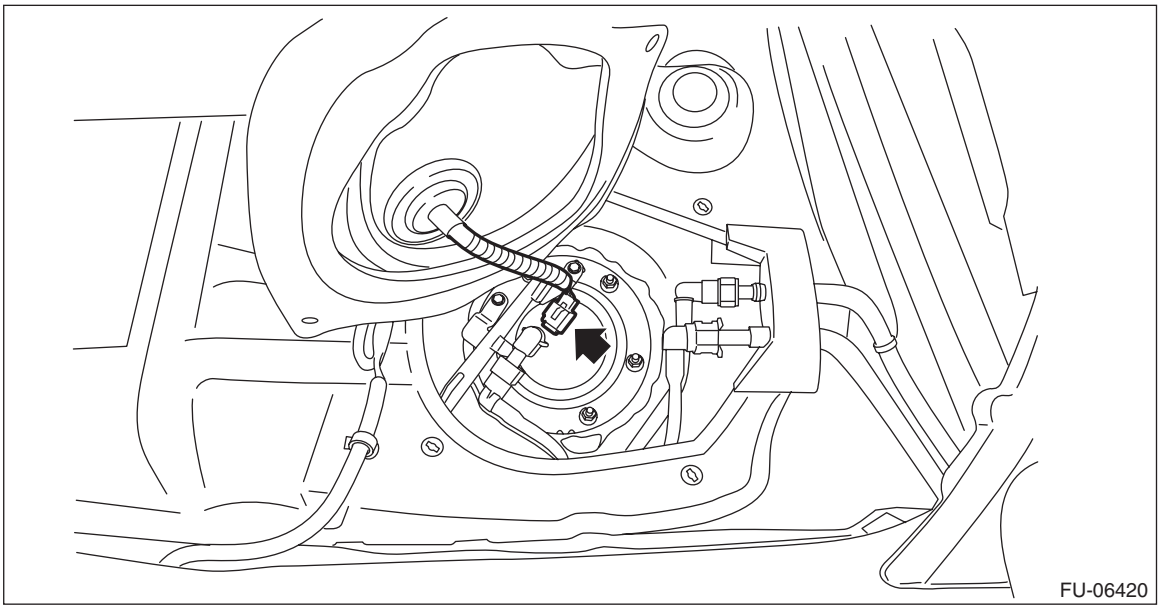

7) Disconnect the quick connector of the jet pump tube.

NOTE:
Disconnect the quick connector as shown in the figure.

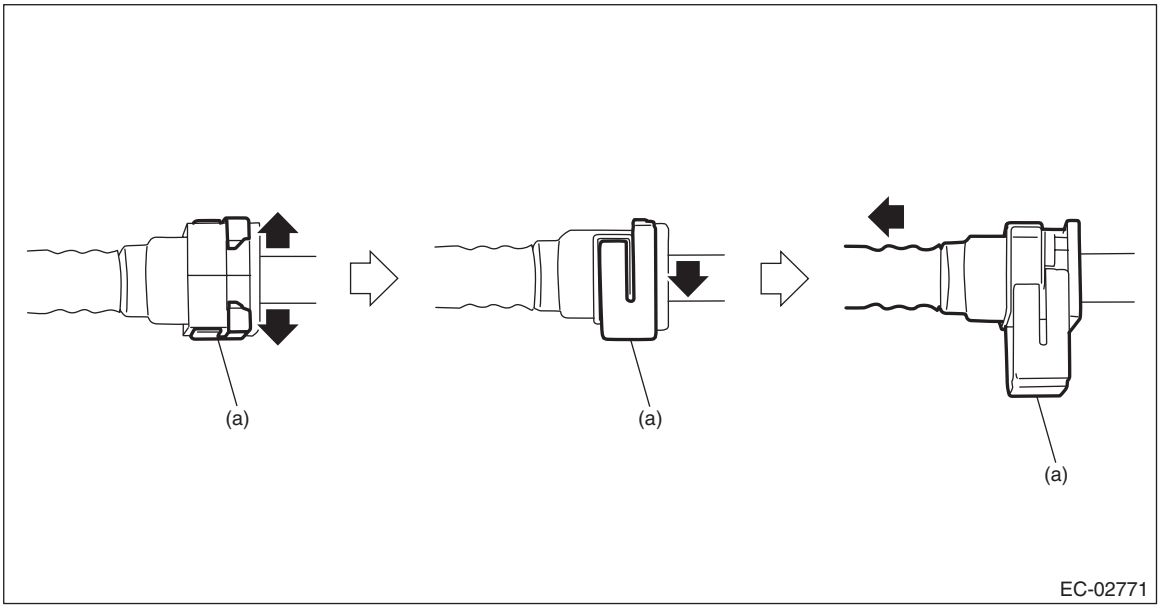

(a) Slider

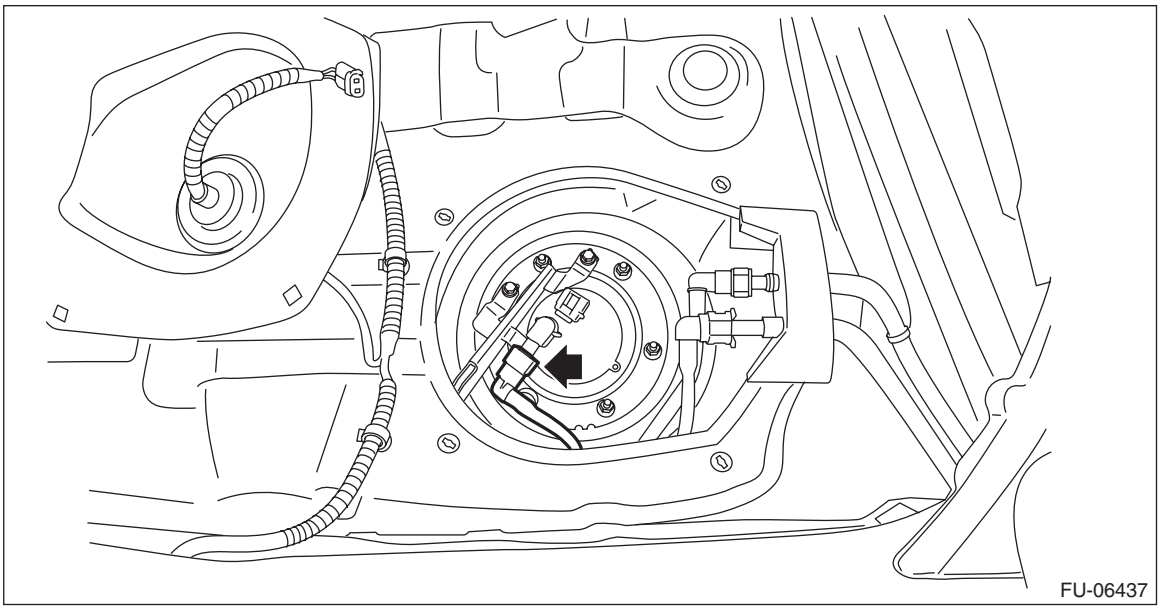

8) Remove the fuel sub level sensor protector, and remove the rubber cap (A) from nut.

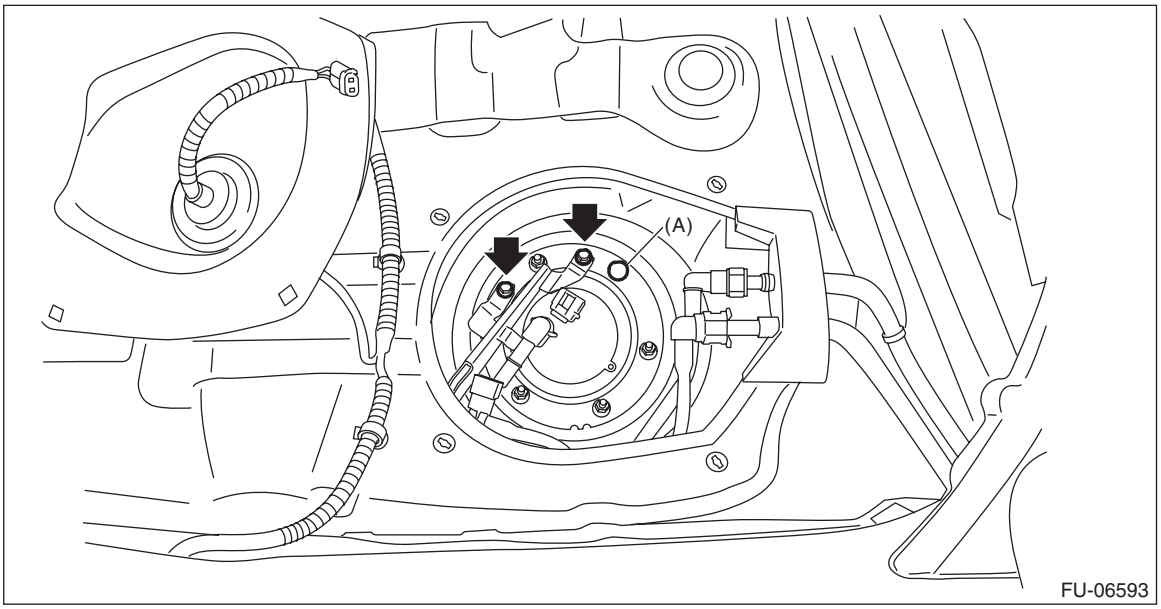

9) Remove the bolts and nuts which hold fuel sub level sensor protector and fuel sub level sensor upper plate to the fuel tank.

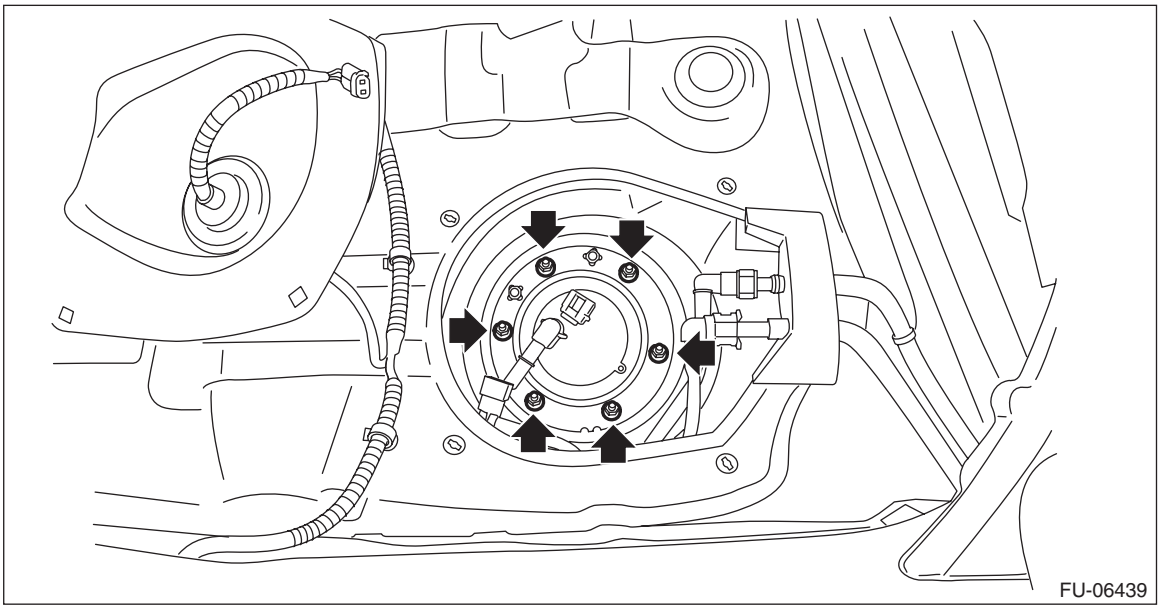

10) Remove the fuel sub level sensor from the fuel tank.

CAUTION:
Be careful not to let the arm and float of the fuel sub level sensor contact the fuel tank.

B: INSTALLATION

1) Install the fuel sub level sensor to the fuel tank.
   (1) Make sure the sealing portion is free from fuel or foreign matter before installation.
   (2) Align the cutout (B) as shown in the figure, and install the fuel sub level sensor upper plate cushion to the fuel sub level sensor upper plate.
   (3) Align the cutout of the fuel sub level sensor upper plate with the protrusion (B) of the fuel sub level sensor as shown in the figure, and install the fuel sub level sensor upper plate from the upper side of the fuel sub level sensor.
   (4) Install the gasket from the lower side of the fuel sub level sensor so that the protrusion (B) of the fuel sub level sensor and the protrusion (A) of the gasket are positioned as shown in the figure.

NOTE:
Use a new gasket.

(5) Install the fuel sub level sensor to the fuel tank in the direction shown in the figure, and tighten the nuts to the specified torque in the order as shown in the figure.

CAUTION:
Set the arm and float of the fuel sub level sensor while paying attention to prevent them from contacting the fuel tank. If the arm of the fuel sub level sensor is bent, the fuel gauge may not read correctly.

Tightening torque:
4.4 N·m (0.4 kgf-m, 3.2 ft-lb)

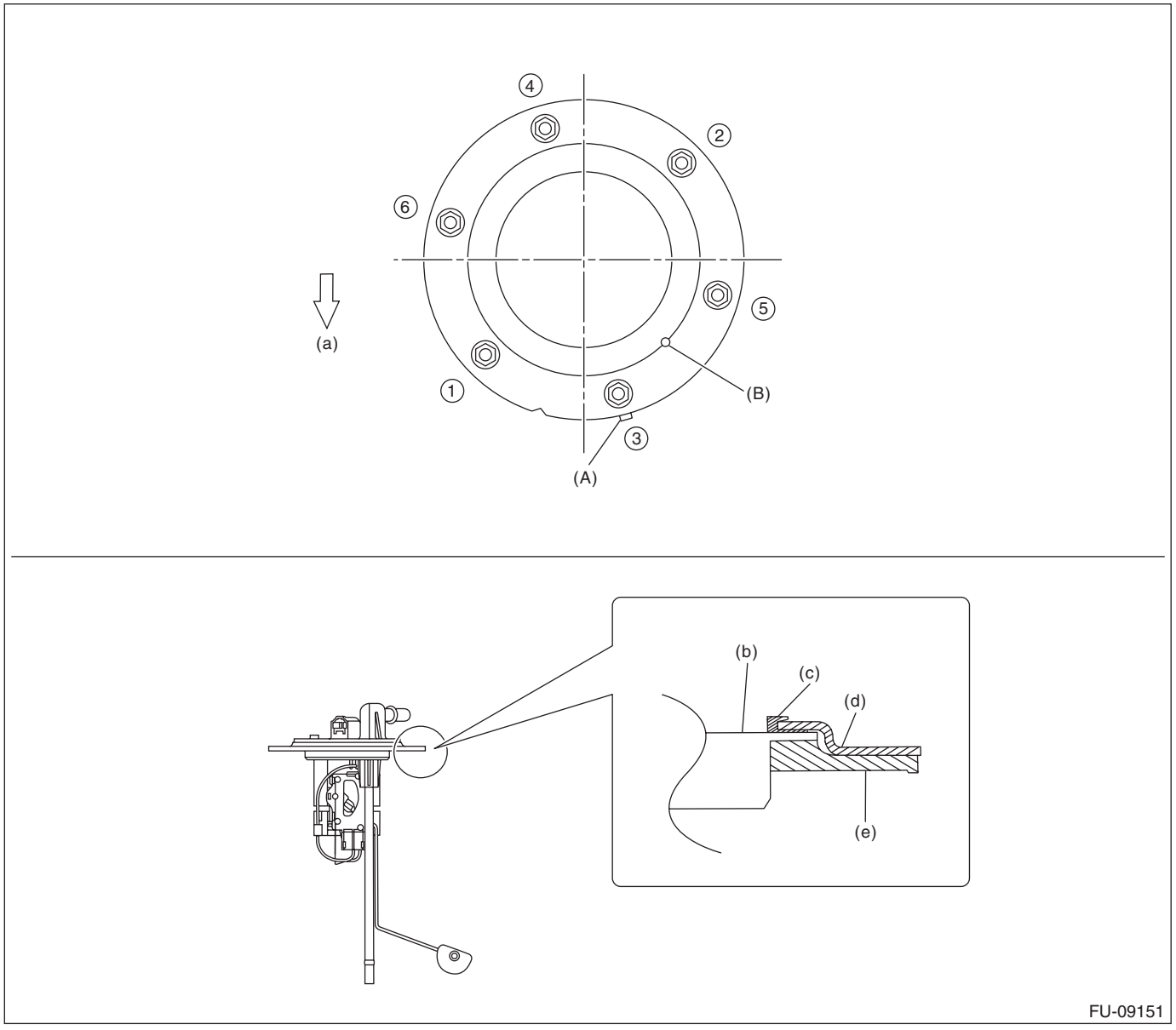

(a) Front side of vehicle
(b) Fuel sub level sensor
(c) Fuel sub level sensor upper plate cushion
(d) Fuel sub level sensor upper plate
(e) Gasket

2) Install the fuel sub level sensor protector, and install the rubber cap (A).

Tightening torque:
4.4 N·m (0.4 kgf-m, 3.2 ft-lb)

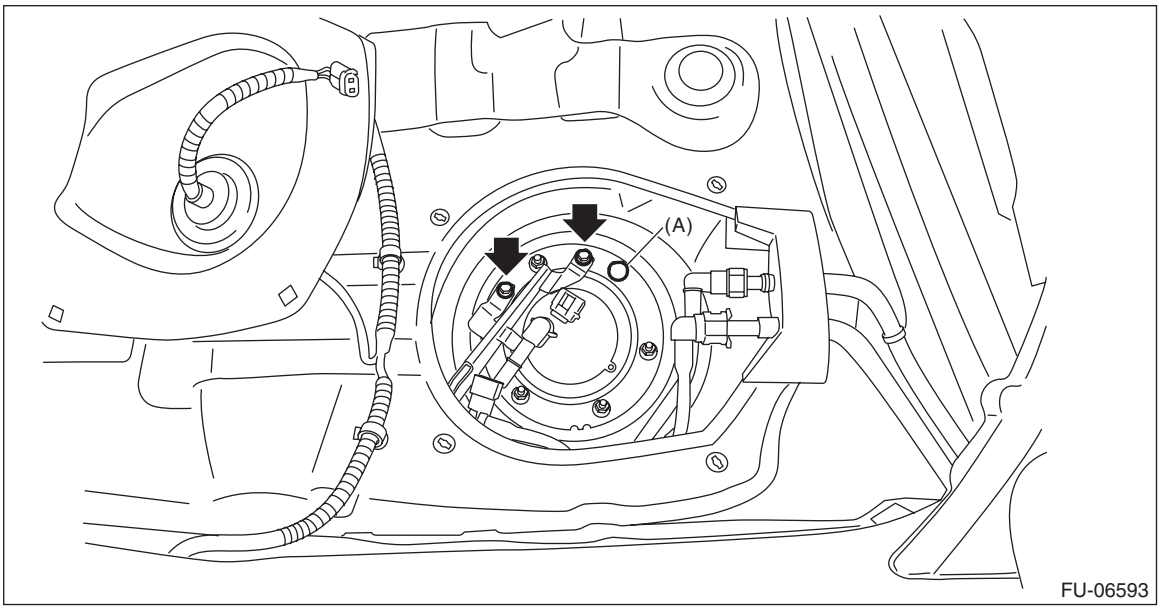

3) Connect the quick connector of the jet pump tube.

CAUTION:
• Check that there is no damage or dust on the quick connector. If necessary, clean the seal surface of the pipe.
• When connecting the quick connector, make sure to insert it all the way in before locking the slider.
• When it is difficult to lock the slider, check that the connector is fully inserted.
• After locking the slider, check again that the quick connector is securely connected.

NOTE:
Connect the quick connector as shown in the figure.

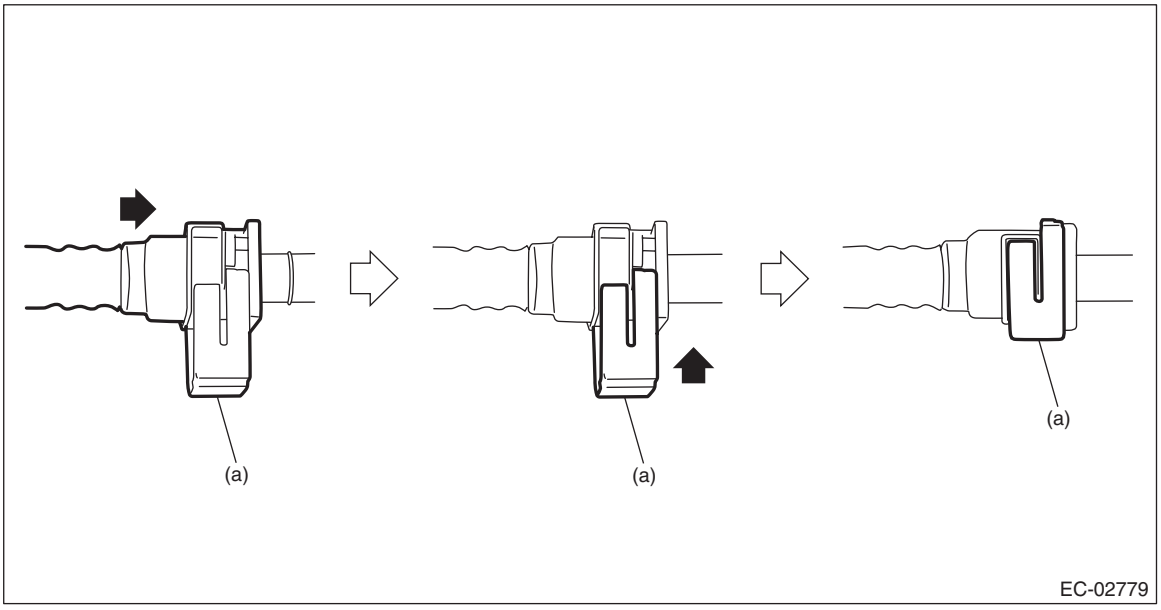

(a) Slider

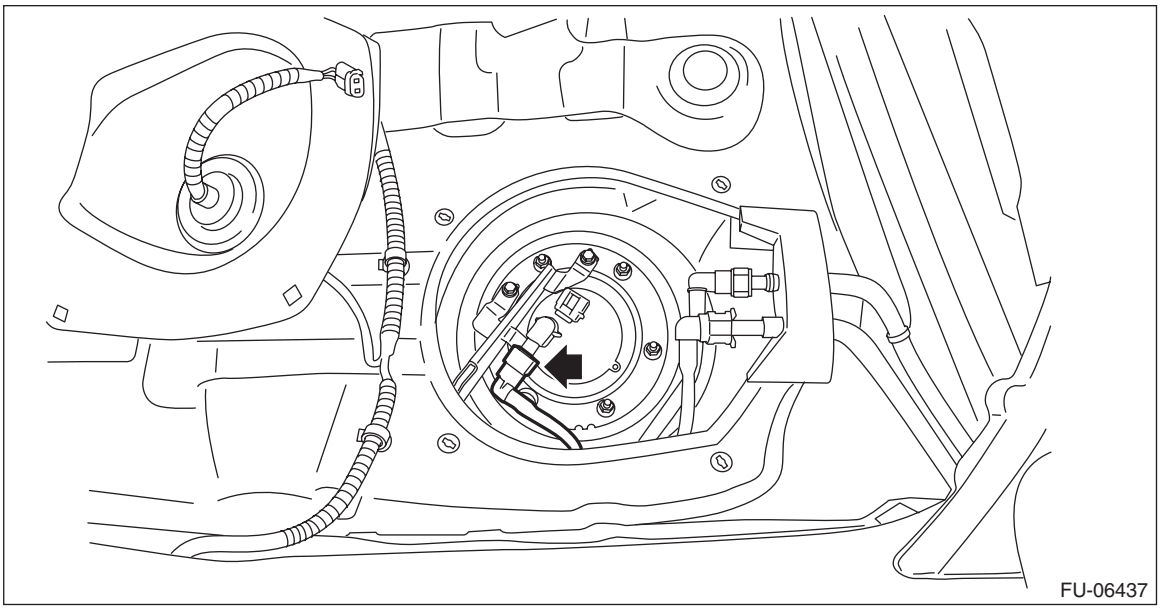

4) Connect the connector to the fuel sub level sensor.

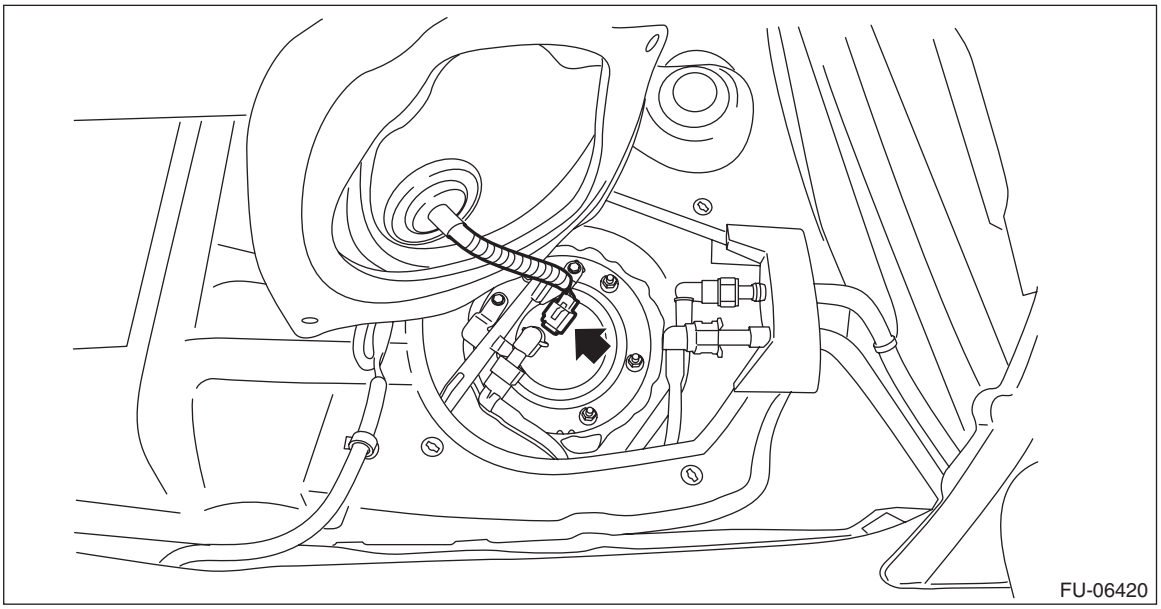

5) Install the service hole cover of fuel sub level sensor.

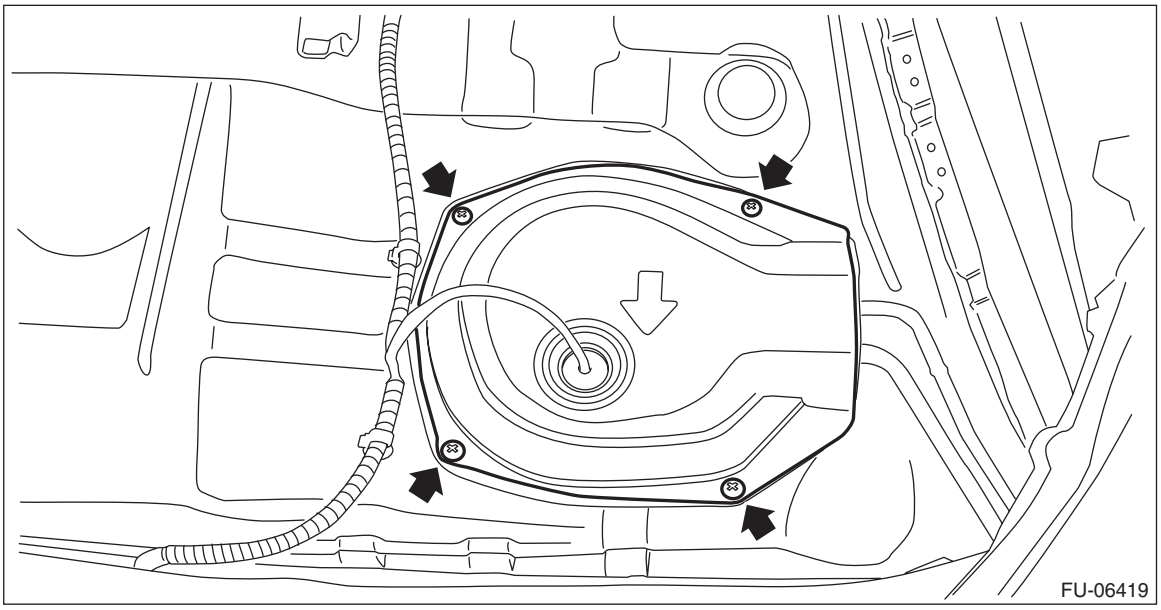

6) Install the rear seat cushion. <Ref. to SE-33, INSTALLATION, Rear Seat.>
7) Connect the ground terminal to battery sensor. <Ref. to NT-6, BATTERY, NOTE, Note.>

C: INSPECTION

1) Check that the fuel sub level sensor has no damage.
2) Measure the fuel sub level sensor float position.

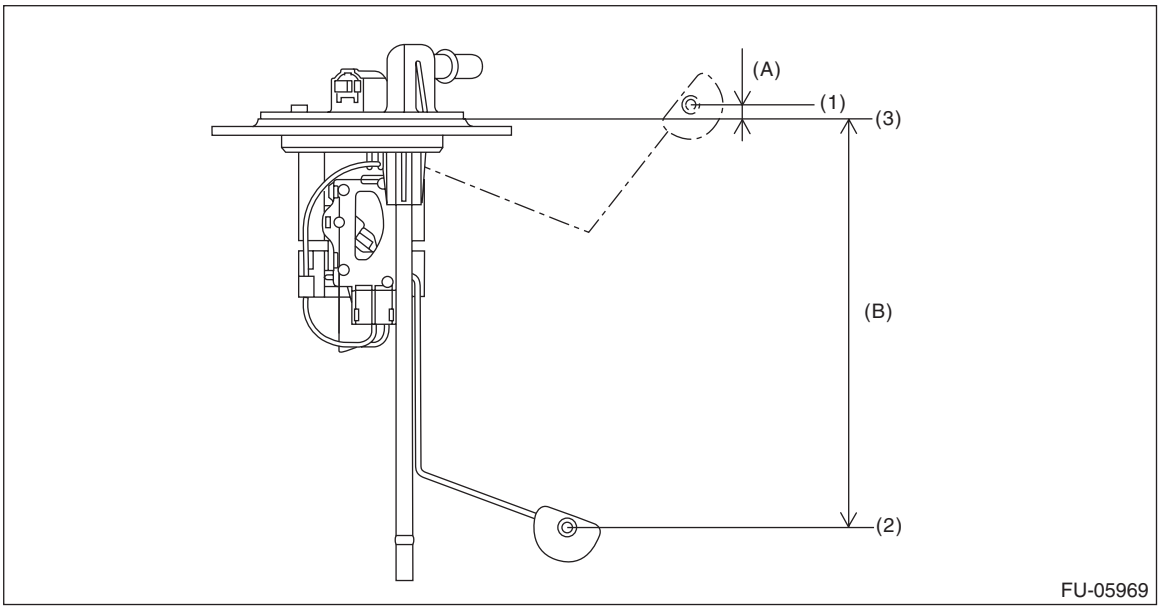

(1) FULL (2) EMPTY (3) Datum points

Float position	Standard
FULL to Datum point (A)	5.31±3.5 mm (0.209±0.138 in)
EMPTY to Datum point (B)	160.6±3.5 mm (6.32±0.138 in)

3) Measure the resistance between fuel sub level sensor terminals.

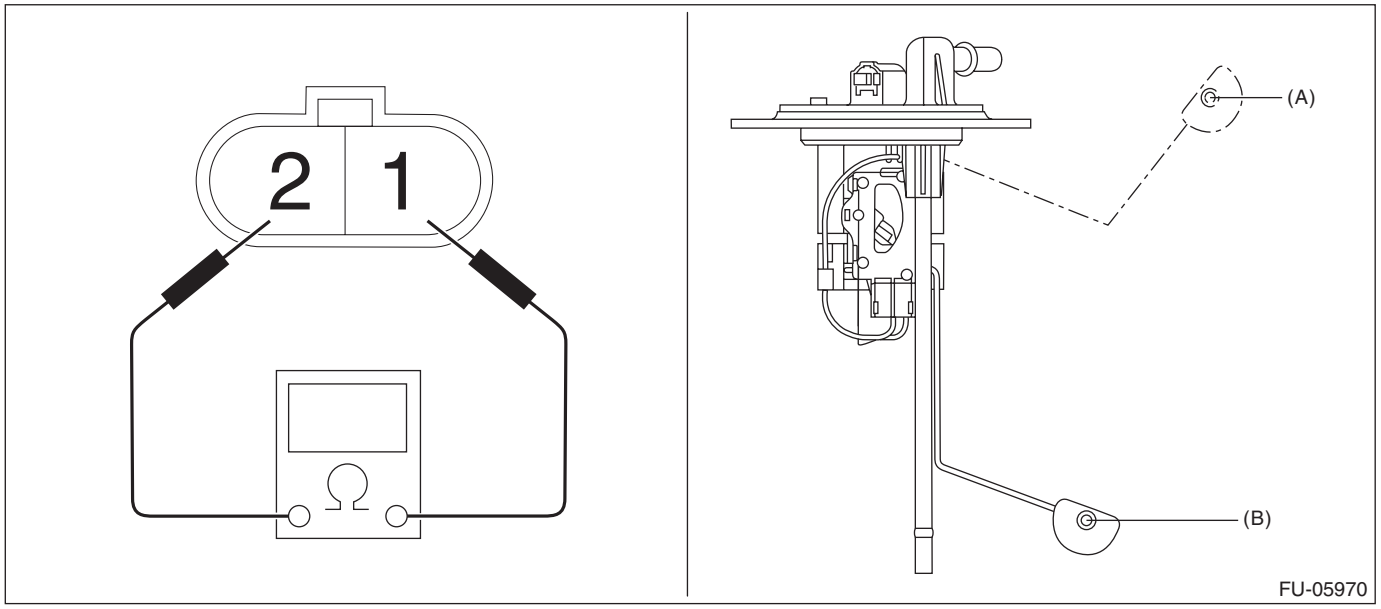

Float position	Terminal No.	Standard
FULL (A)	1 and 2	8.7±1.0 Ω
EMPTY (B)		270.9±4.0 Ω

40.Fuel Filter

A: REMOVAL

WARNING:
Place “NO OPEN FLAMES” signs near the working area.

CAUTION:
- **Be careful not to spill fuel.**
- **If the fuel gauge indicates that two thirds or more of the fuel is remaining, be sure to drain fuel before starting work to avoid the fuel to spill.**
- **Be careful not to drop or apply any impact to the fuel pump during work. This may deteriorate its performance.**

NOTE:
The fuel filter is built in fuel pump assembly.
1) Remove the fuel pump assembly. <Ref. to FU(w/o STI)-161, REMOVAL, Fuel Pump.>
2) Remove the fuel level sensor. <Ref. to FU(w/o STI)-168, REMOVAL, Fuel Level Sensor.>
3) Remove the connector cable from the clip, and disconnect the connector (A) of the connector cable.

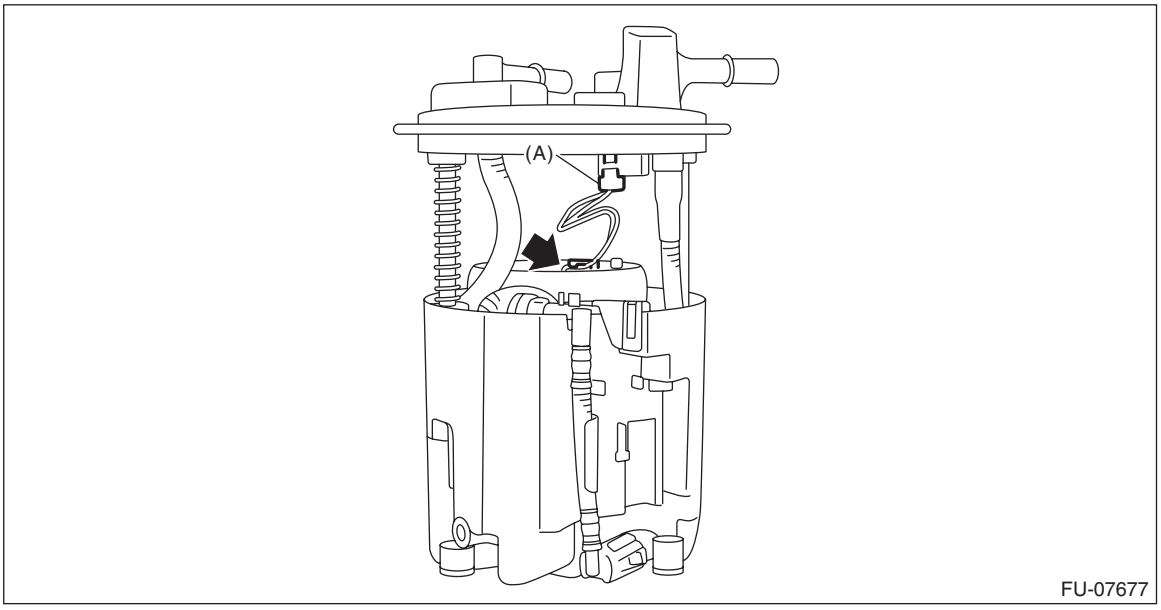

4) Push the fuel filter assembly in the direction of the arrow to compress, and detach the clip.

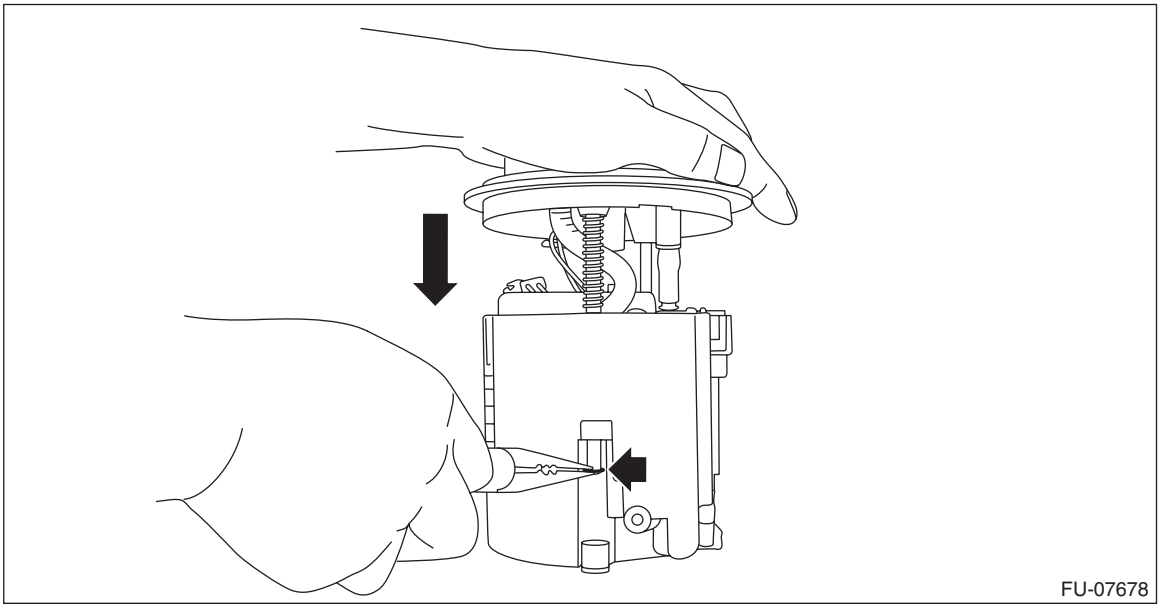

5) Release the claw of the tube assembly using a flat tip screwdriver or similar tool wrapped with a protection tape, and remove the tube assembly from the fuel chamber assembly.

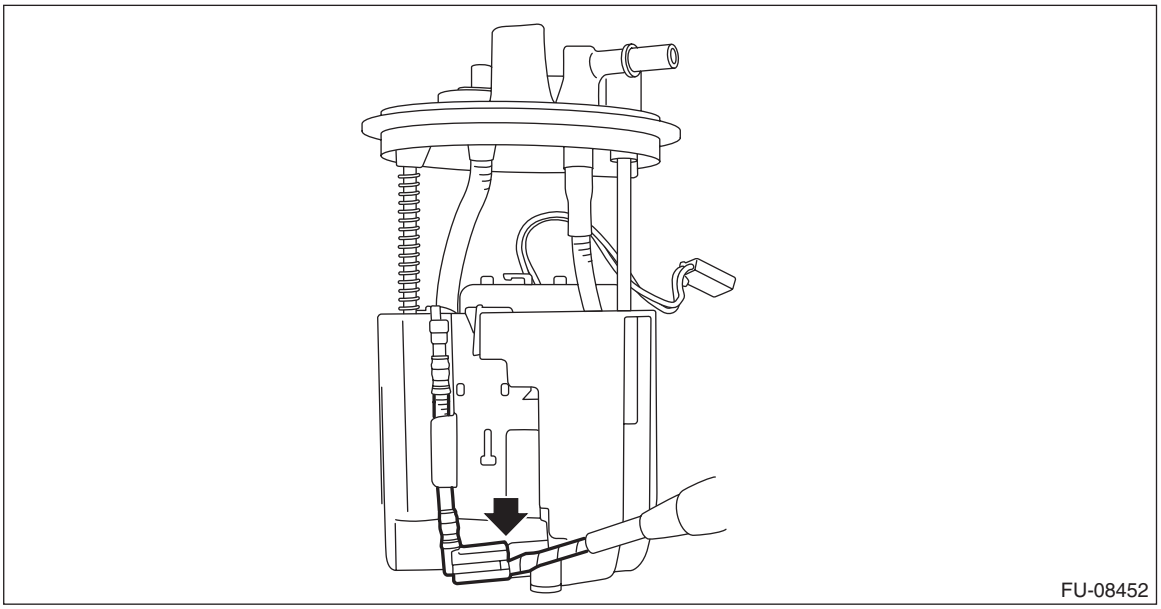

6) Release three claws on the fuel pump holder from the fuel chamber assembly, and raise the fuel filter assembly.

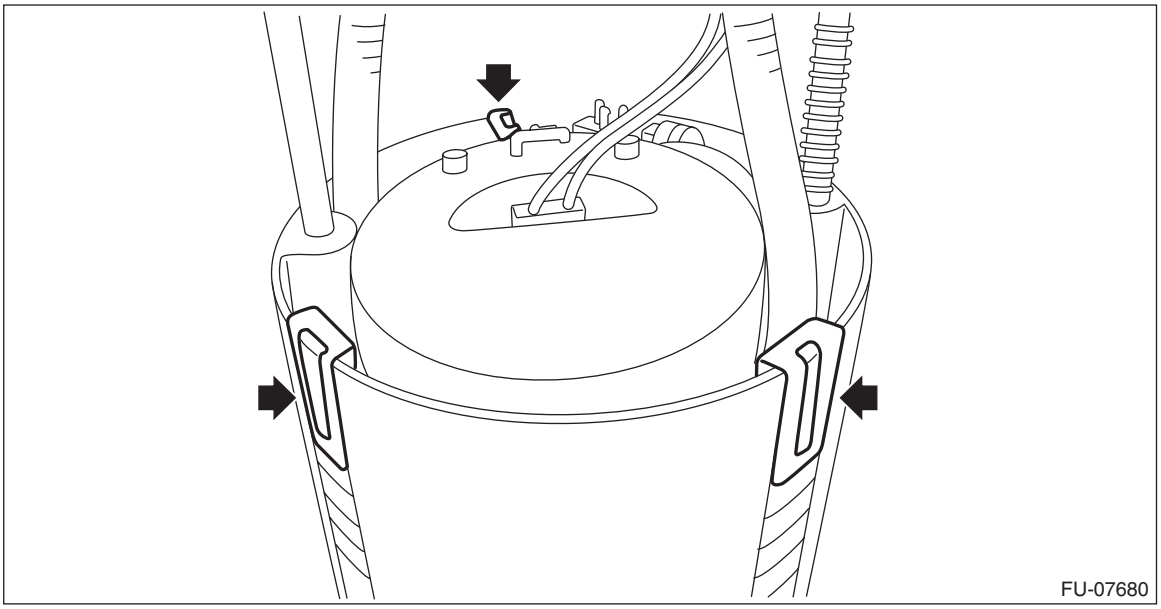

7) Using a flat tip screwdriver or similar tool wrapped with a protection tape, remove the tube assembly from the fuel chamber assembly, and separate the fuel filter assembly and fuel chamber assembly.

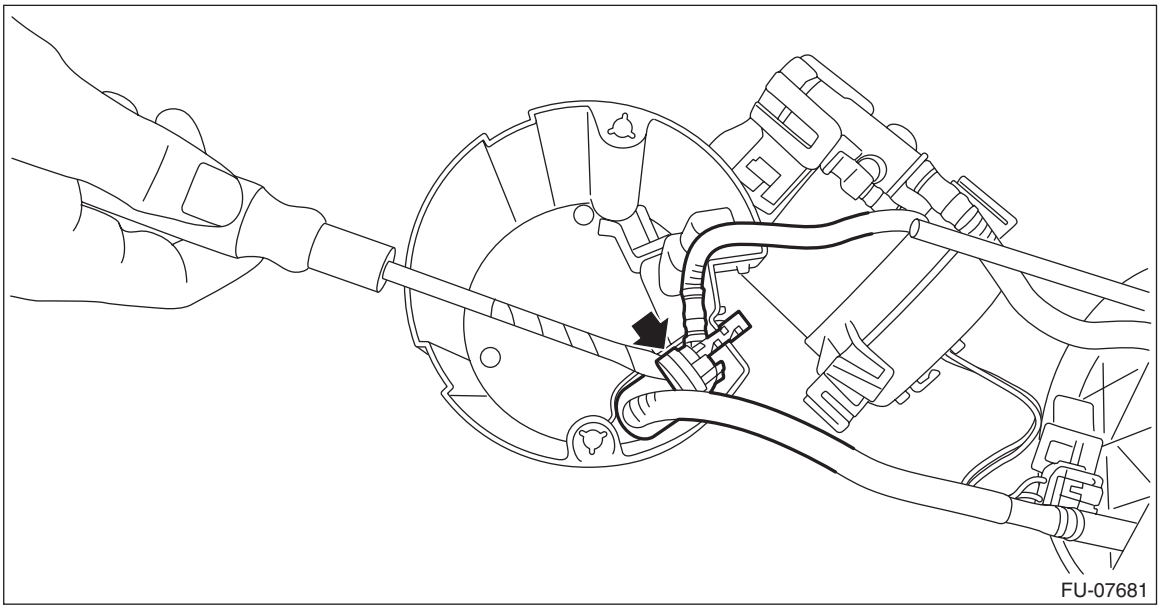

8) Using a precision driver or similar tool wrapped with a protection tape, expand the claws on the fuel pump.

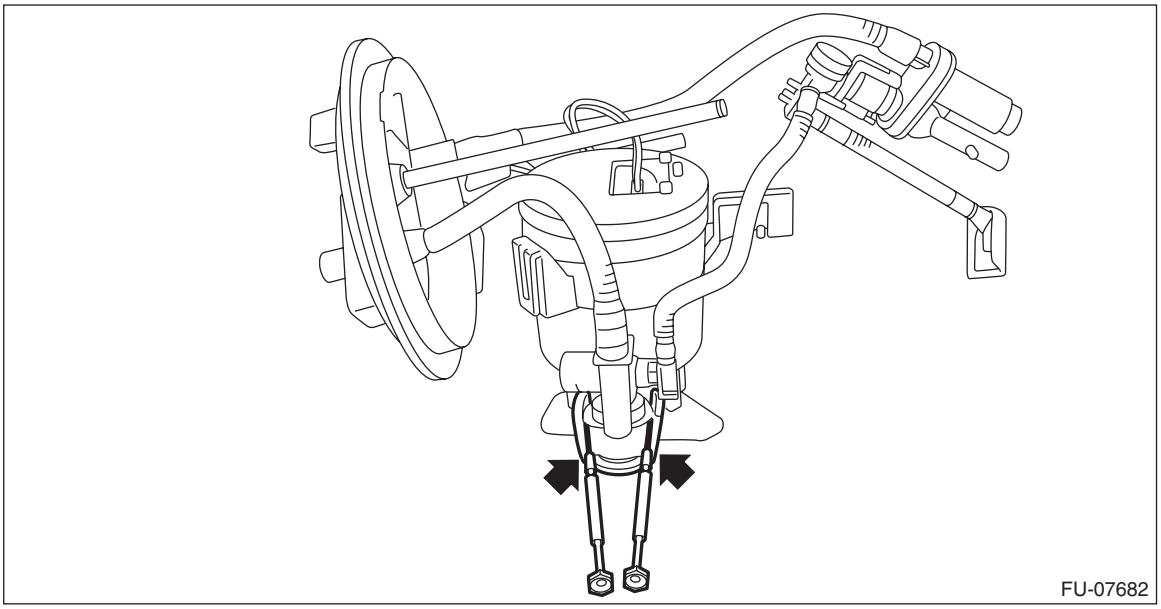

9) Release the claws on the fuel pump.

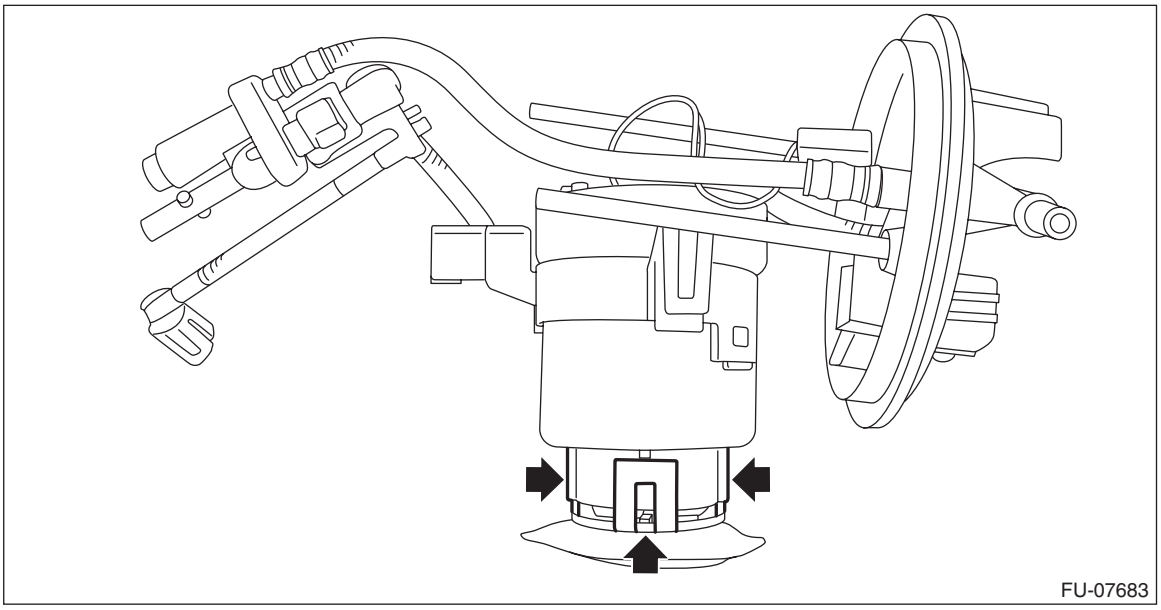

10) Using a flat tip screwdriver or similar tool wrapped with a protection tape, press on the fuel pump and remove the fuel pump together with the fuel pump holder from the fuel filter assembly.

CAUTION:
If O-rings remain on the fuel filter assembly side, carefully remove them with a precision screwdriver or similar tool wrapped with a protection tape.

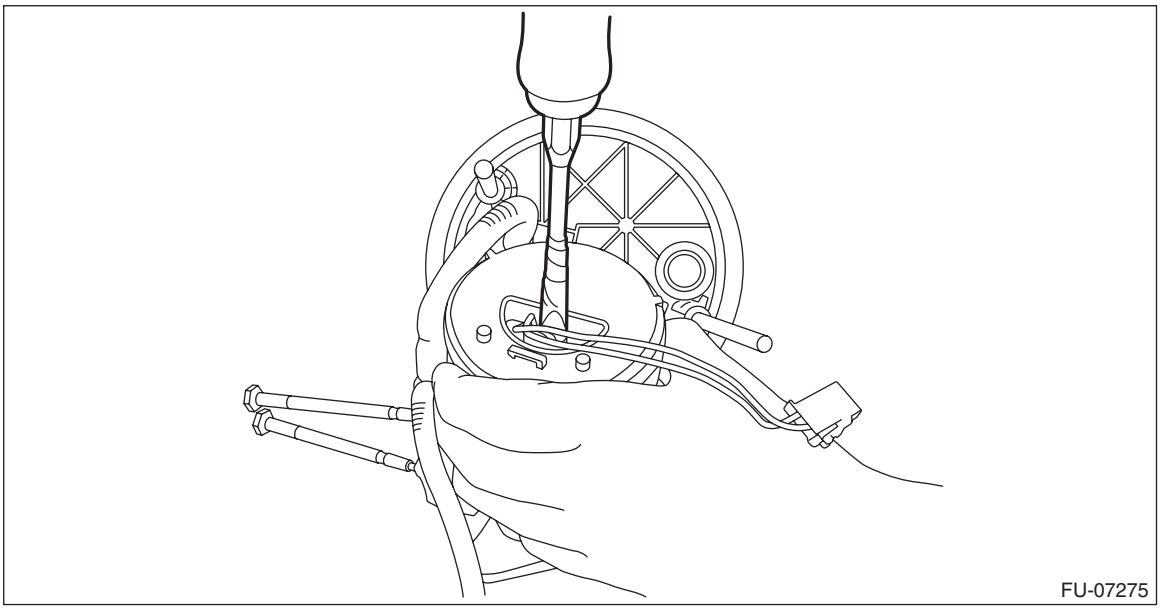

11) Remove the spacer (A) and connector cable (B) from the fuel pump.

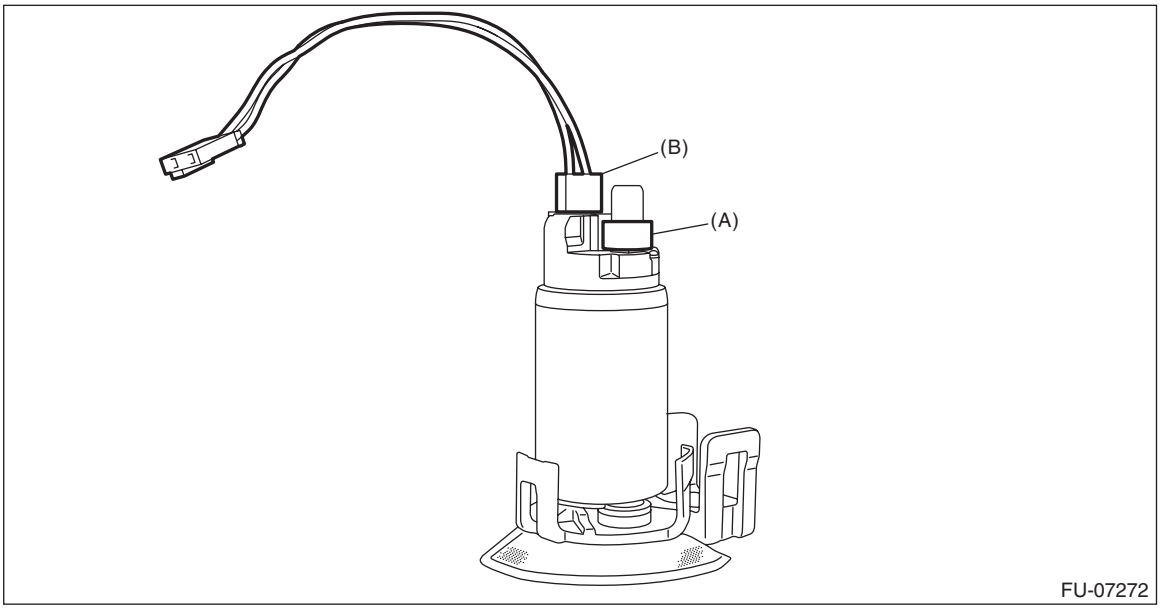

12) Remove the pressure regulator from the fuel filter assembly.

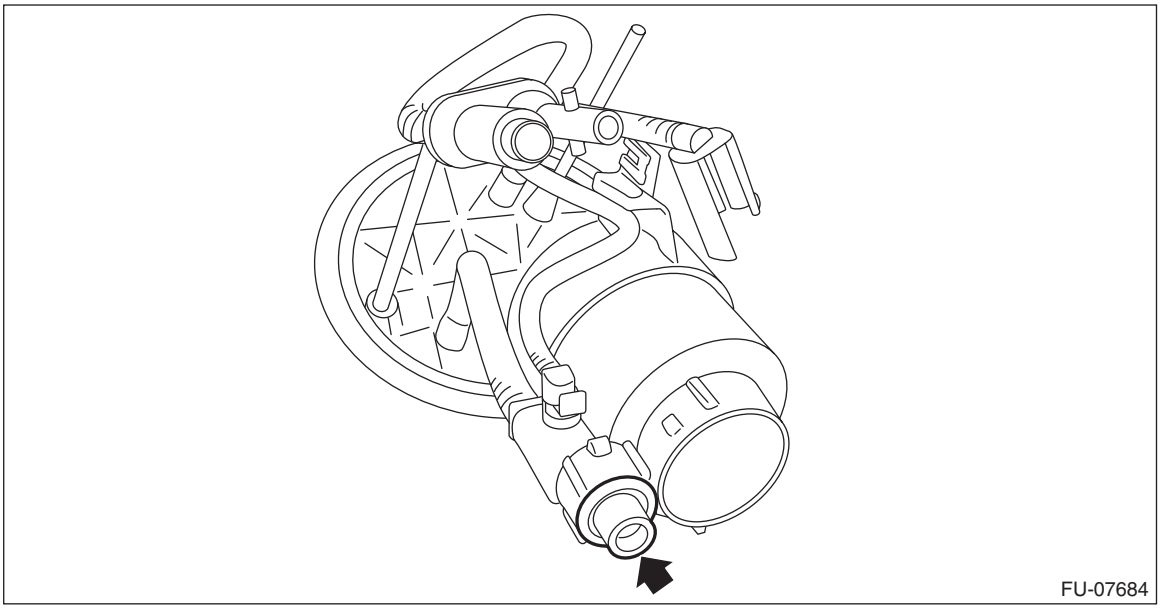

13) Remove O-ring (A), O-ring (B), and backup ring (C) from the pressure regulator.

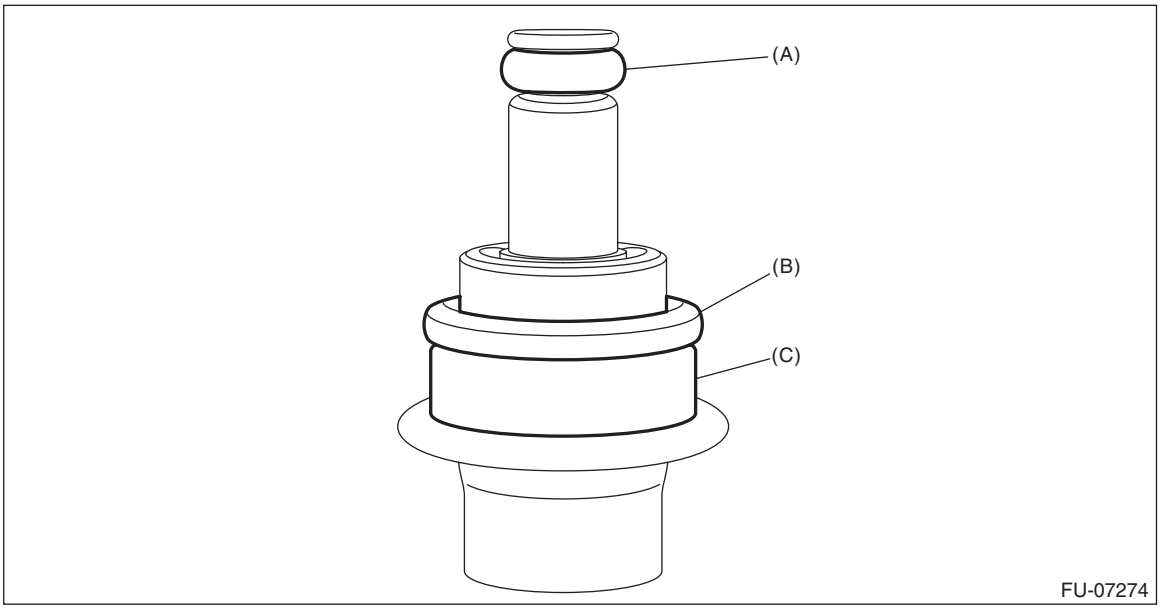

B: INSTALLATION

1) Install O-ring (A), O-ring (B), and backup ring (C) to the pressure regulator.

NOTE:
- Use new O-rings.
- Apply gasoline to the O-ring and backup ring.

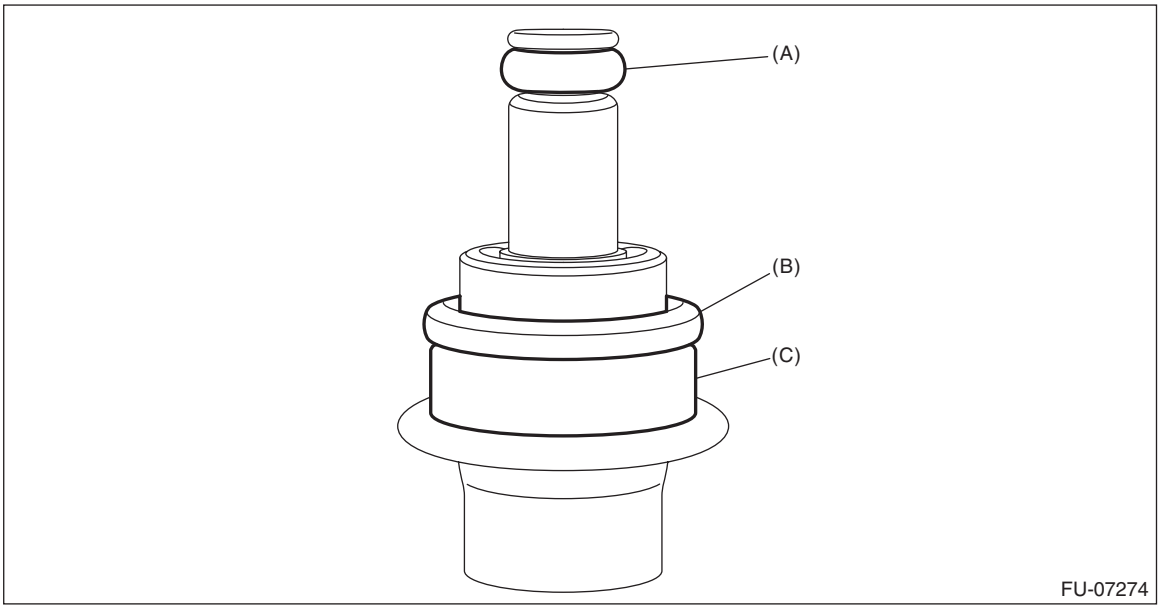

2) Install the pressure regulator to the fuel filter assembly.

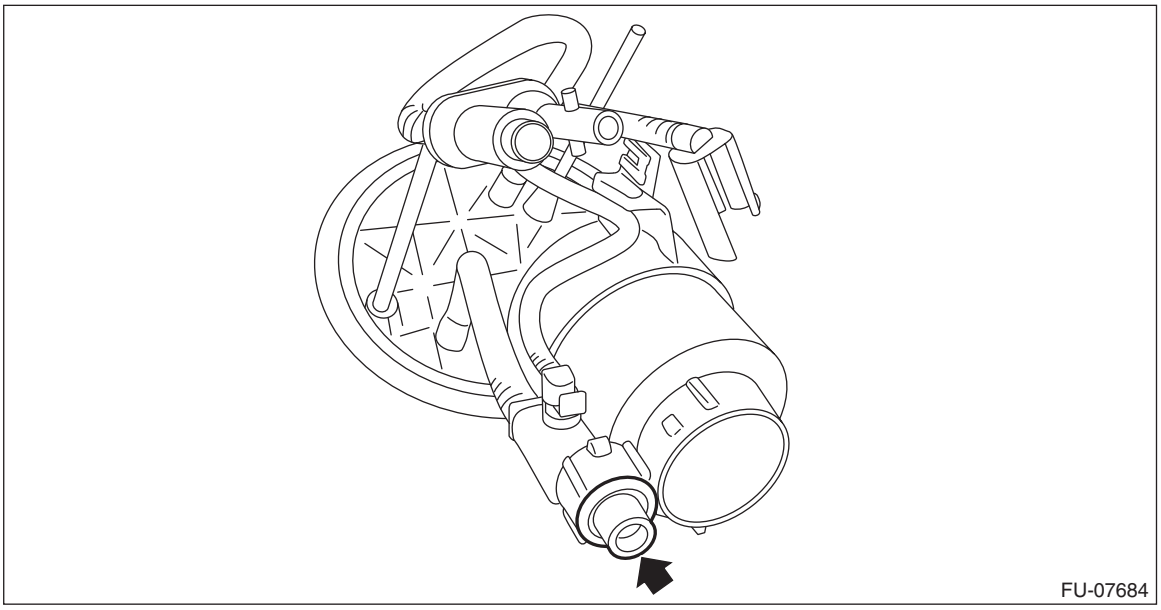

3) Install O-ring (A), spacer (B), and connector cable (C) to the fuel pump.

NOTE:
- Use new O-rings and the connector cable.
- Apply gasoline to the O-rings and the spacer.

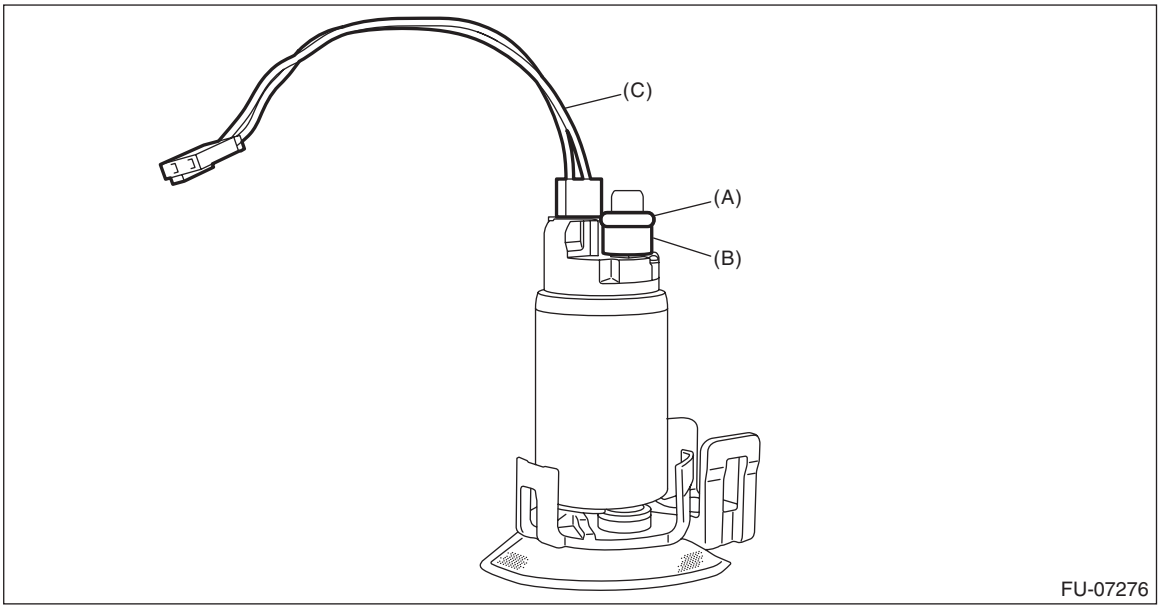

4) Install the fuel pump to the fuel filter assembly.

NOTE:
After installation, make sure five claws are correctly engaged in each position.

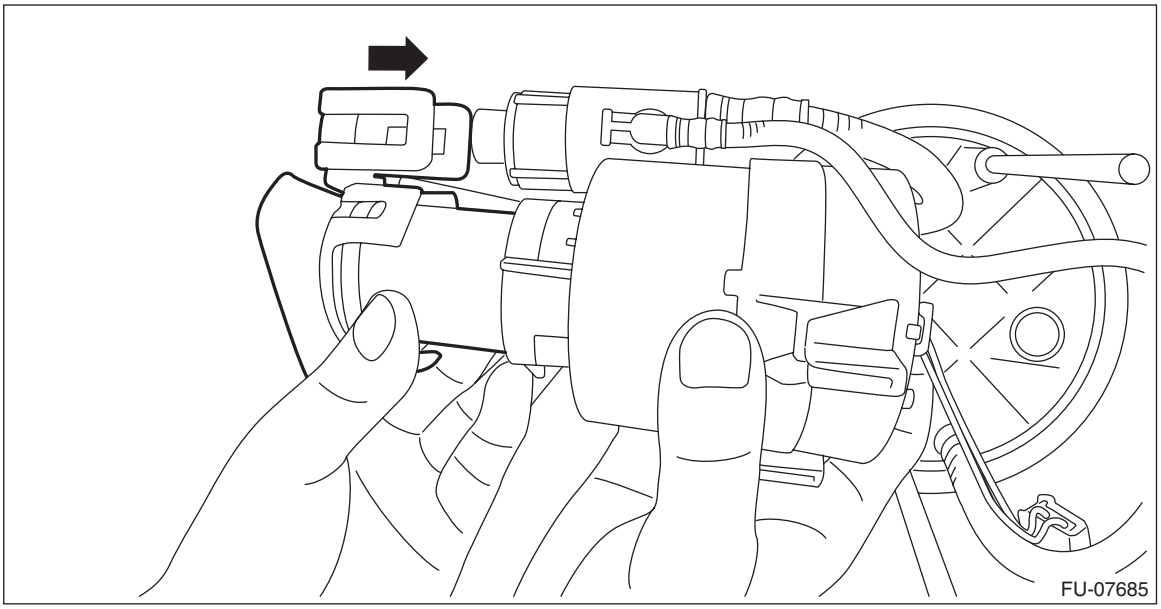

5) Check that the cushions of the fuel chamber assembly for dislocation. If any of them is dislocated, install a new cushion.

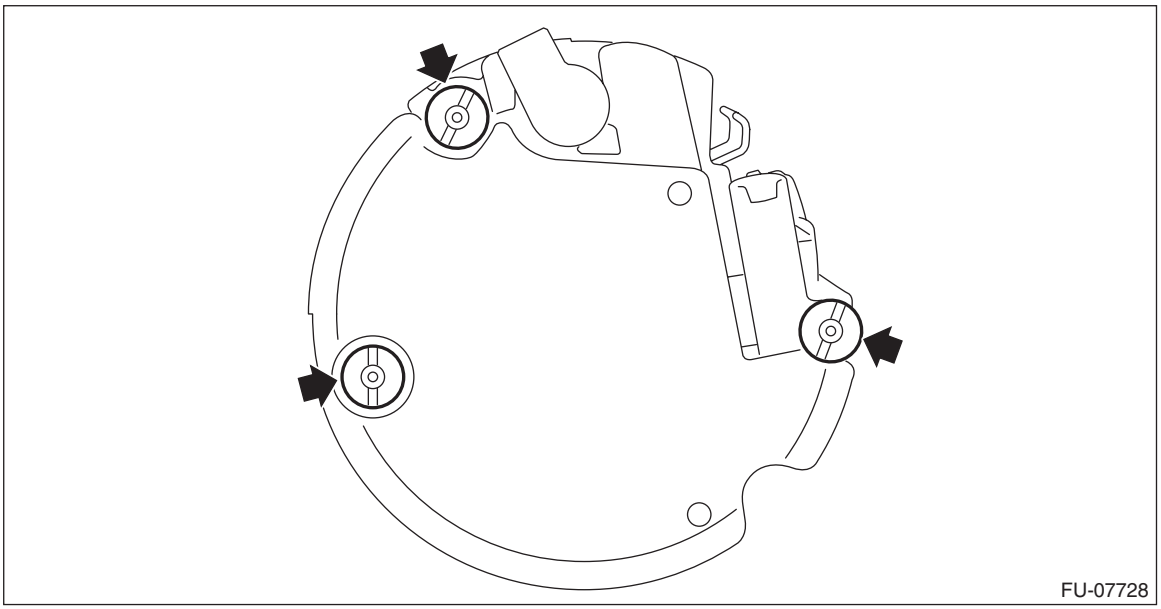

6) Slowly press in and install the tube assembly to the fuel chamber assembly until a clicking sound is heard.

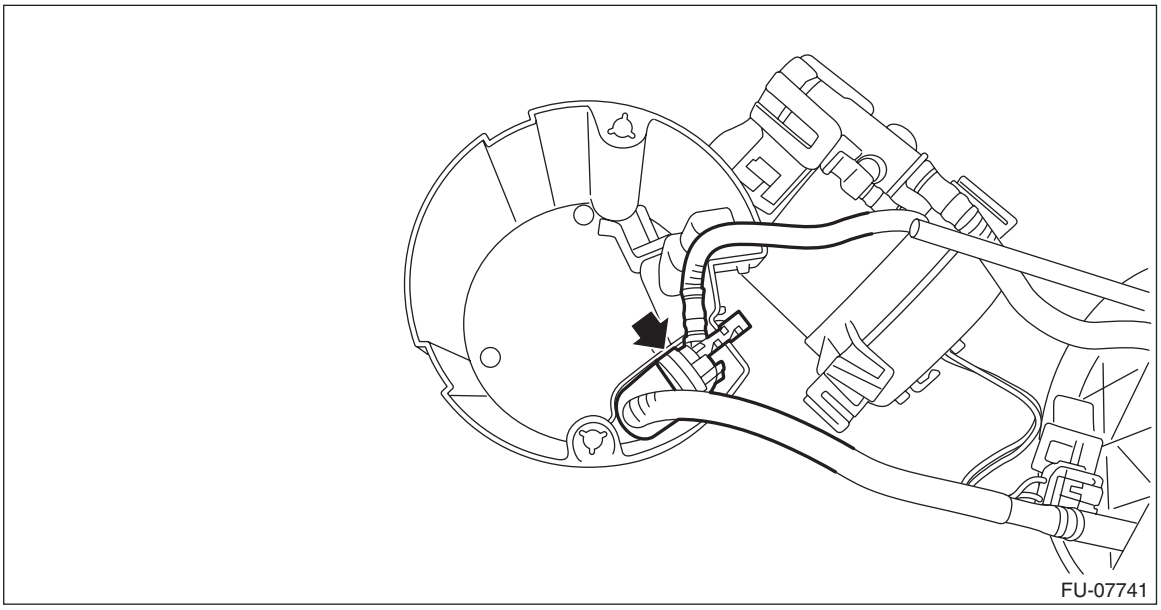

7) Install the tube assembly to the fuel chamber assembly, and connect the tube assembly to the fuel chamber assembly.

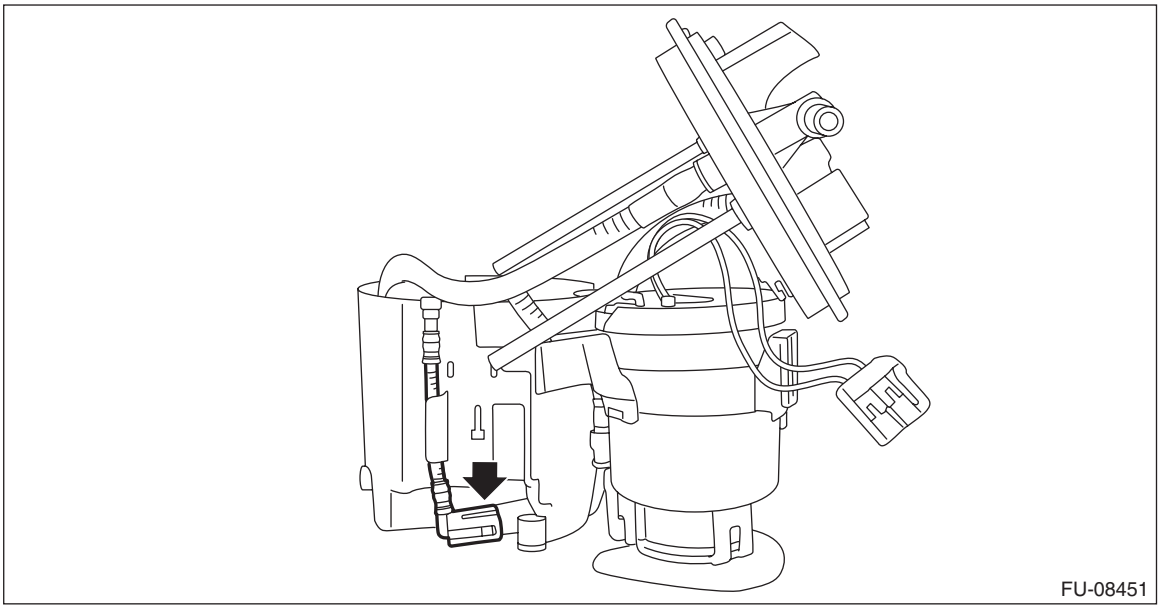

8) Install the fuel filter assembly to the fuel chamber assembly.

NOTE:

- Set the tube (A) and spring (B) for the fuel filter assembly as shown in the figure.

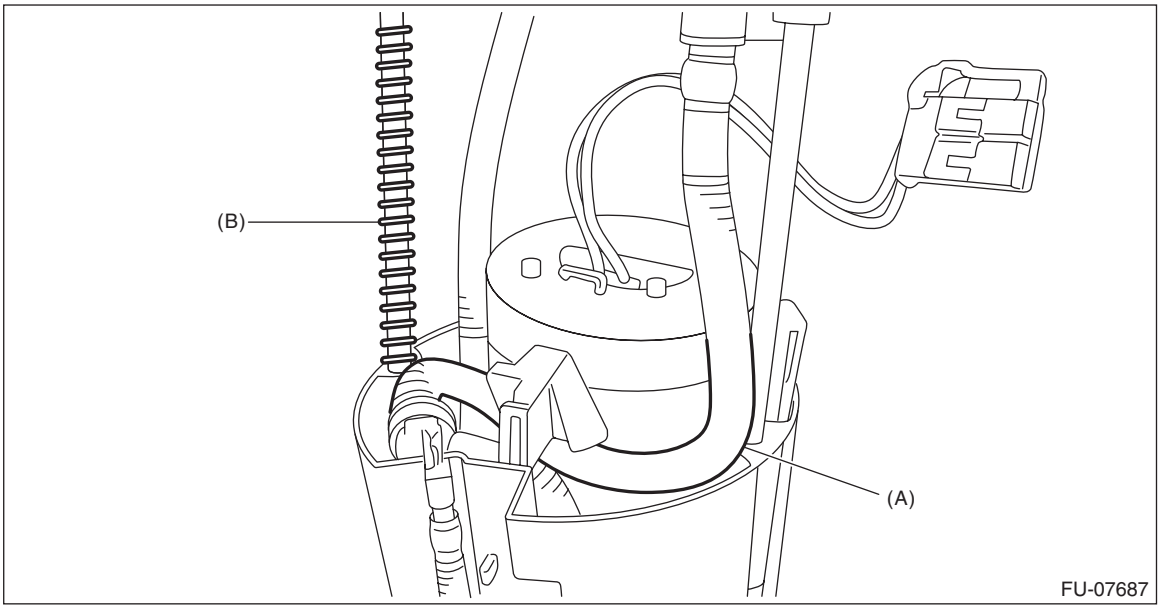

- Check that the claw connecting the fuel camber assembly and the fuel filter assembly is securely fastened.

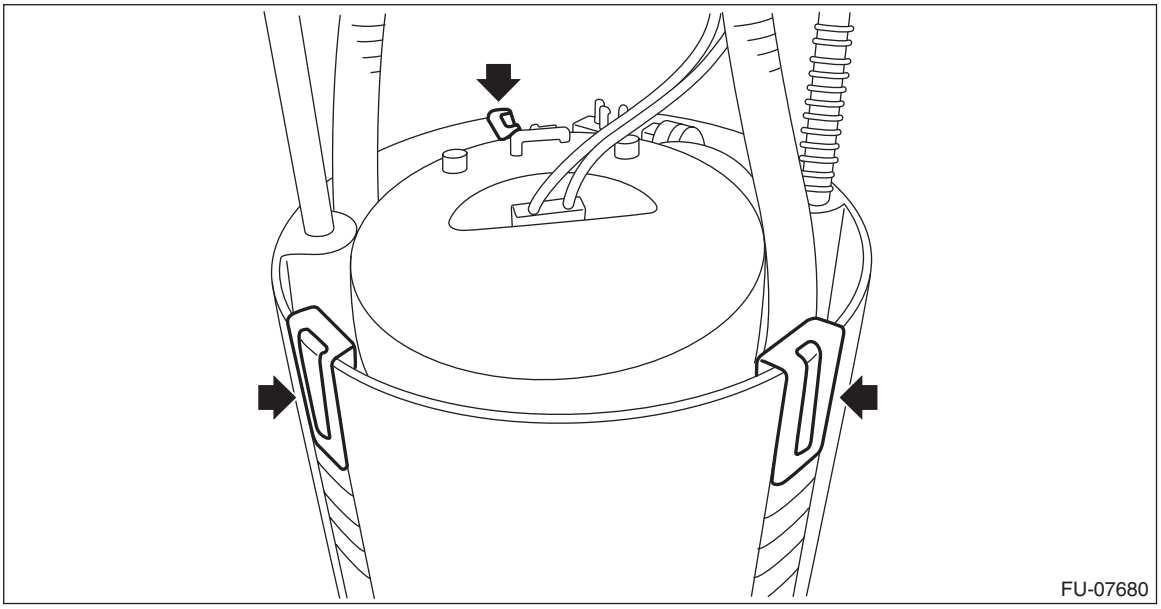

9) Push the fuel filter assembly in the direction of the arrow to compress, and attach the clip.

NOTE:
Use a new clip.

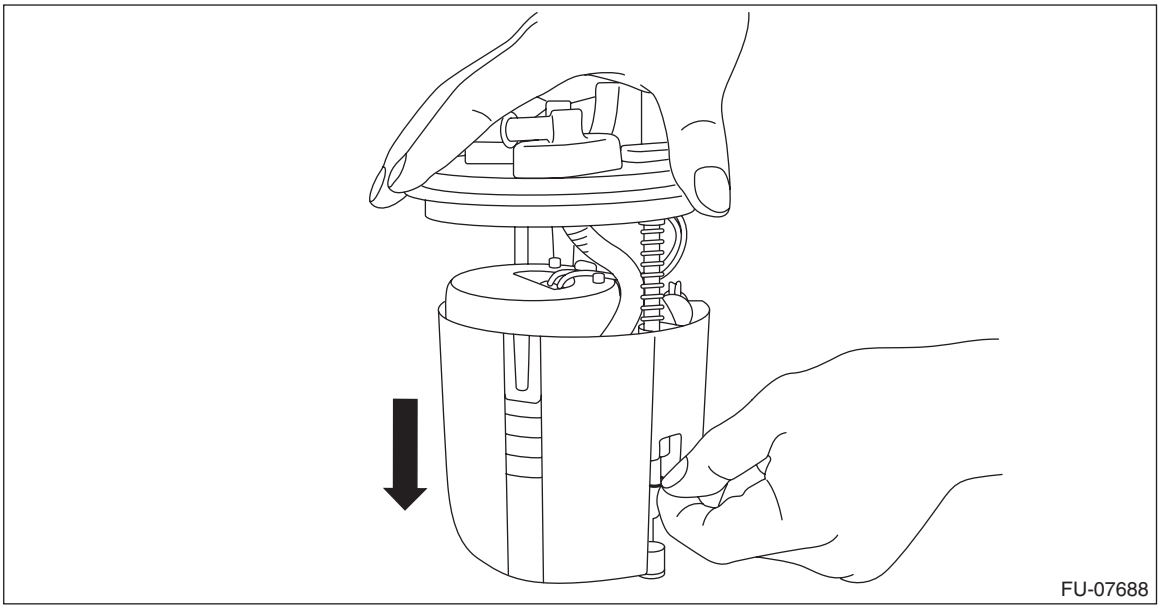

10) Secure the connector cable with the clip, and connect the connector (A) of the connector cable.

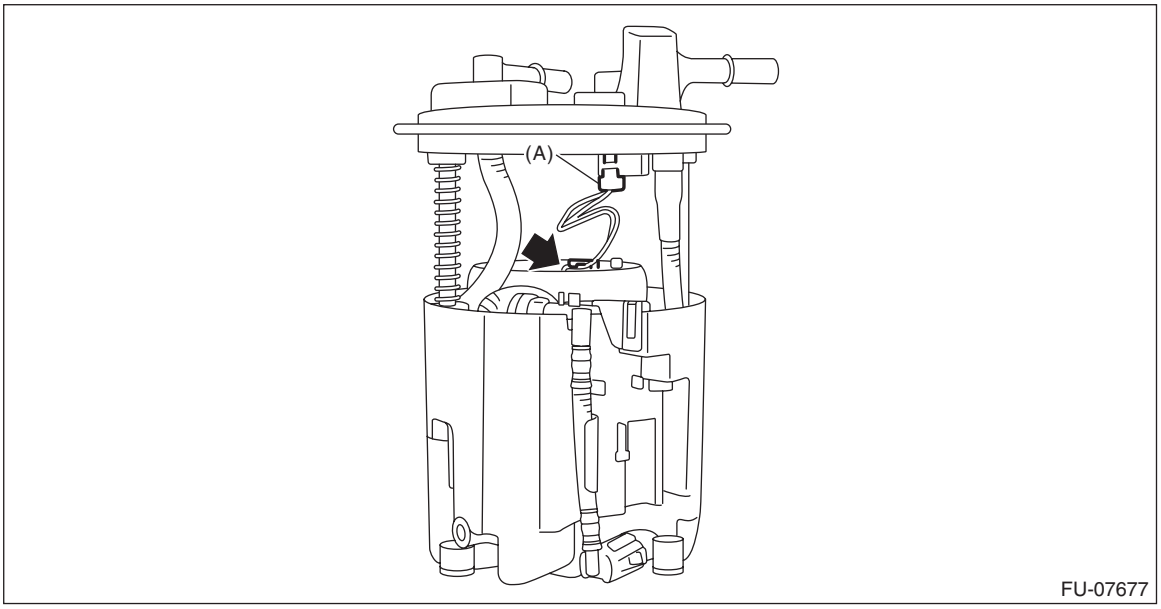

11) Install the fuel level sensor. <Ref. to FU(w/o STI)-169, INSTALLATION, Fuel Level Sensor.>
12) Inspect the fuel level sensor. <Ref. to FU(w/o STI)-170, INSPECTION, Fuel Level Sensor.>
13) Install the fuel pump assembly. <Ref. to FU(w/o STI)-163, INSTALLATION, Fuel Pump.>

41.Fuel Delivery and Evaporation Lines

A: REMOVAL

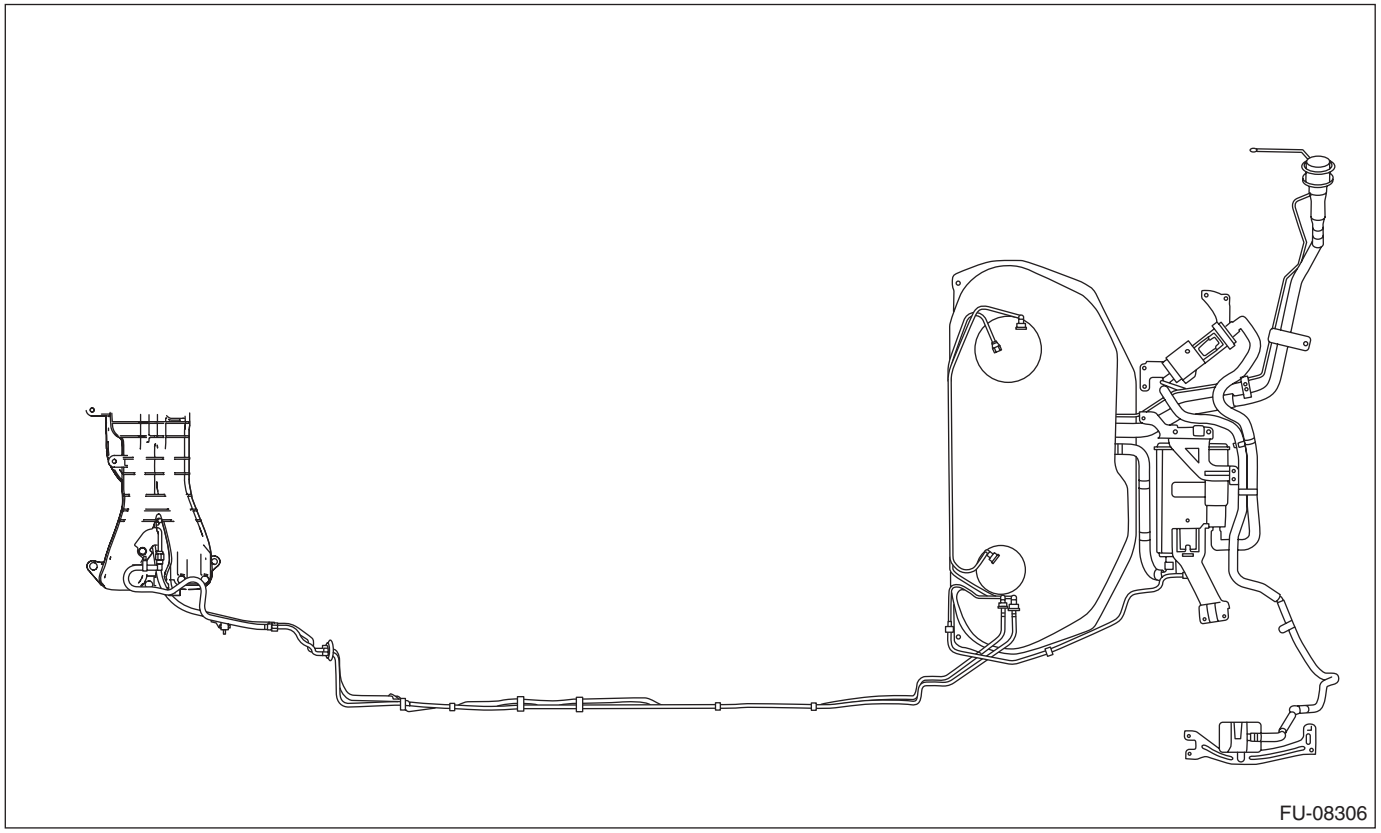

WARNING:
Place “NO OPEN FLAMES” signs near the working area.

CAUTION:
Be careful not to spill fuel.

1) Release the fuel pressure. <Ref. to FU(w/o STI)-138, RELEASING OF FUEL PRESSURE, PROCEDURE, Fuel.>
2) Open the fuel filler lid and remove the fuel filler cap.

NOTE:
This operation is required to release the inner pressure of the fuel tank.

3) Remove the floor mat. <Ref. to EI-107, REMOVAL, Floor Mat.>

4) In the engine compartment, disconnect the fuel delivery tube (A) and evaporation hose (B).

CAUTION:
- **Be careful not to spill fuel.**
- **Catch the fuel from the tubes using a container or cloth.**

NOTE:
Disconnect the quick connector as shown in the figure.

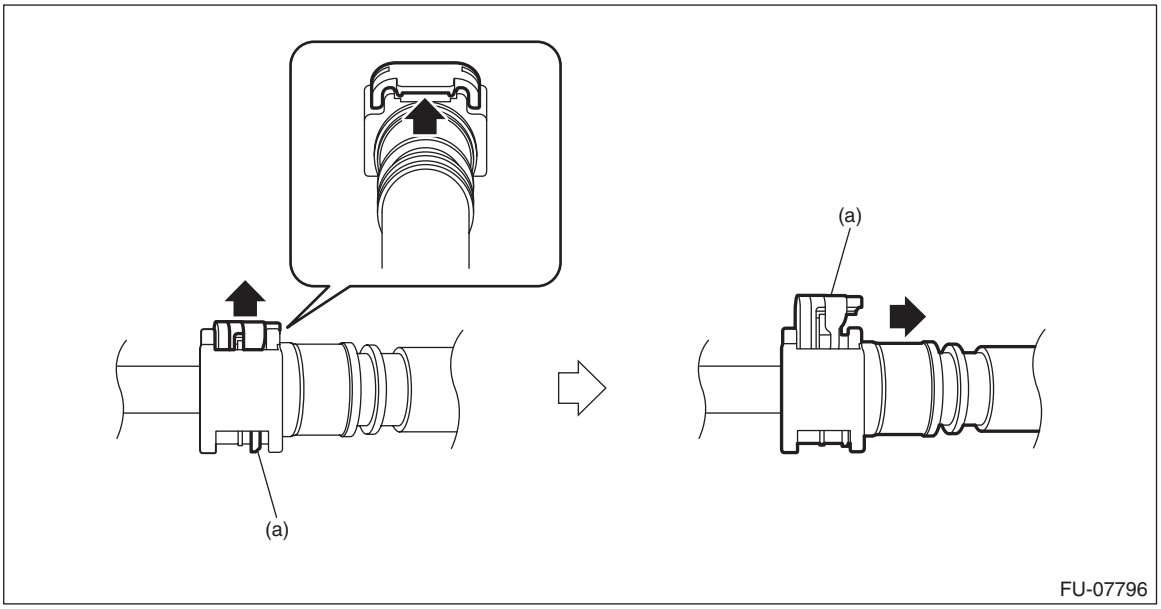

(a) Slider

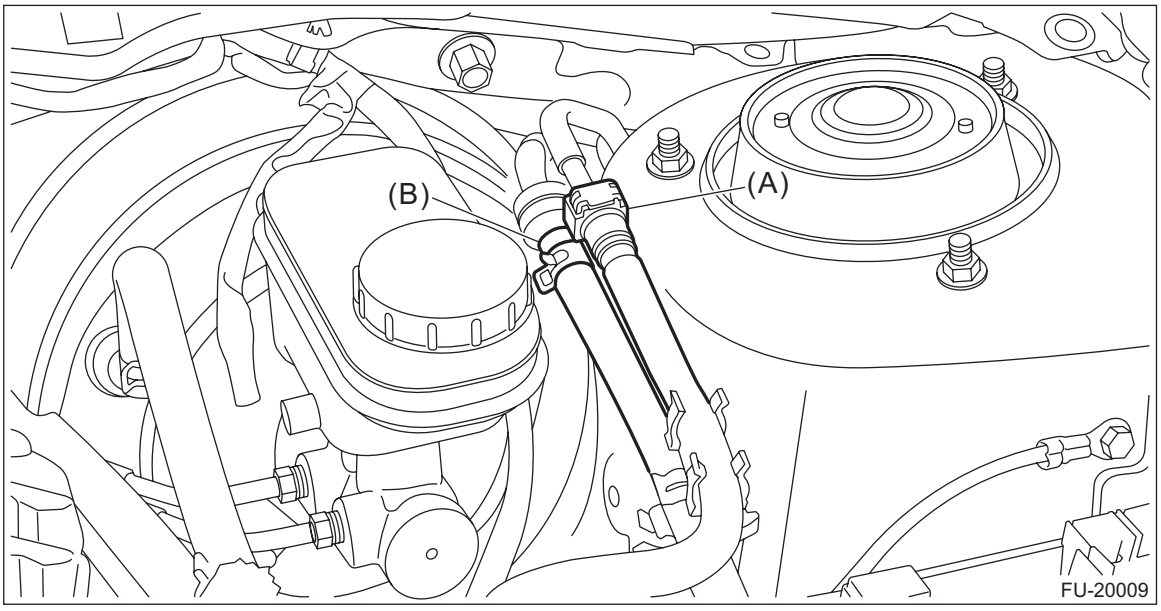

5) Remove the fuel tank. <Ref. to FU(w/o STI)-145, REMOVAL, Fuel Tank.>

6) Disconnect the quick connector, and remove the fuel delivery tube and jet pump tube from the fuel tank.

CAUTION:
- **Be careful not to spill fuel.**
- **Catch the fuel from the tubes using a container or cloth.**

NOTE:
Disconnect the quick connector as shown in the figure.

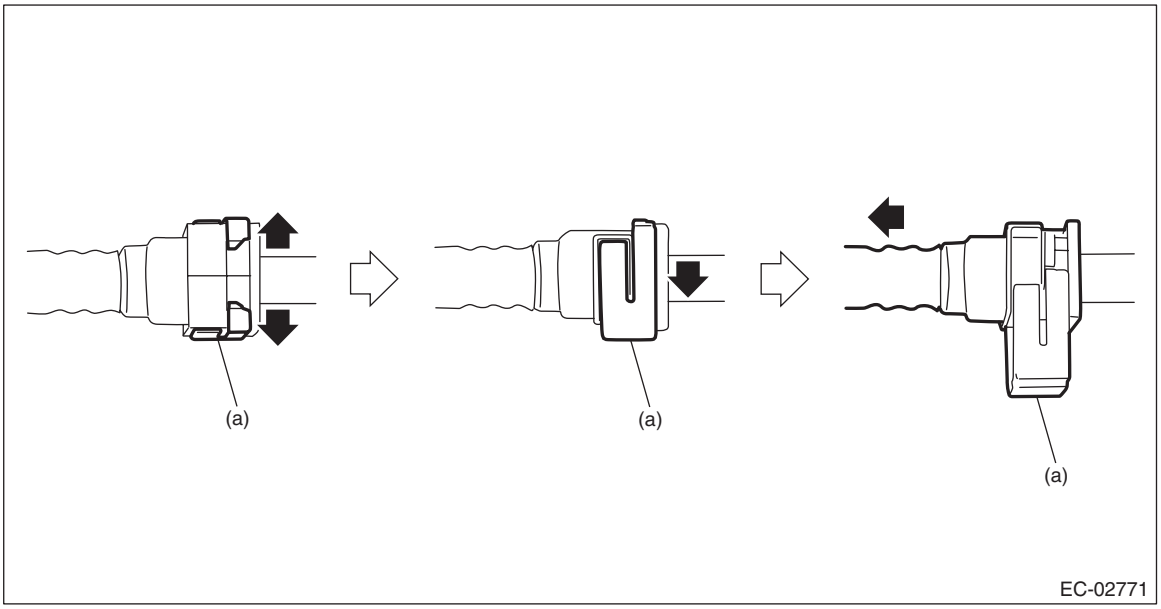

(a) Slider

7) Disconnect the quick connector and remove the purge pipe.

NOTE:
Disconnect the quick connector as shown in the figure.

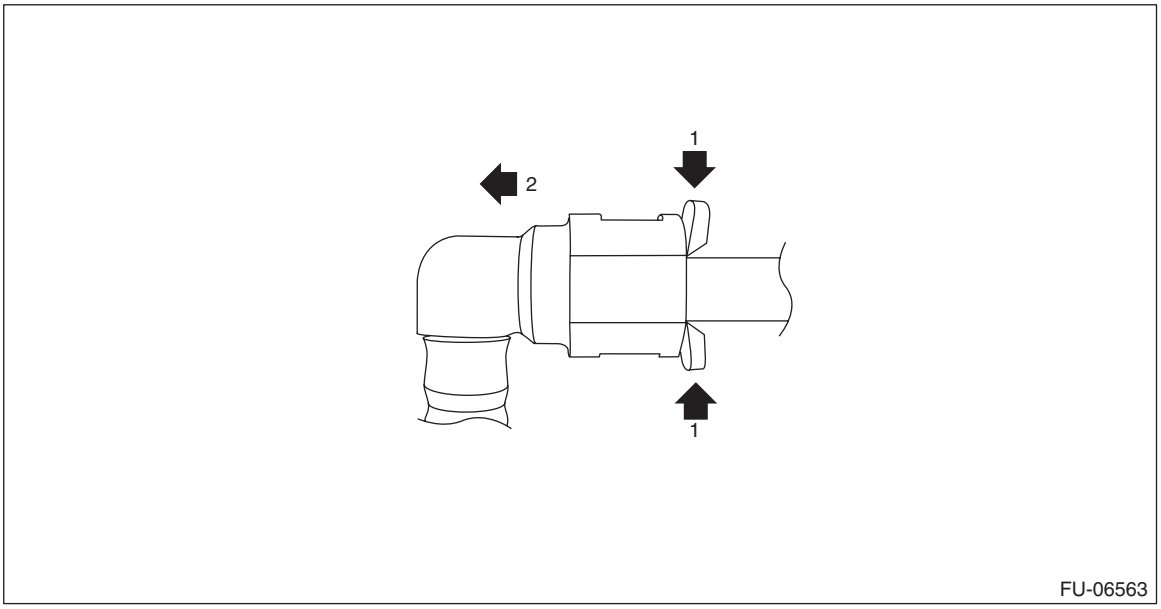

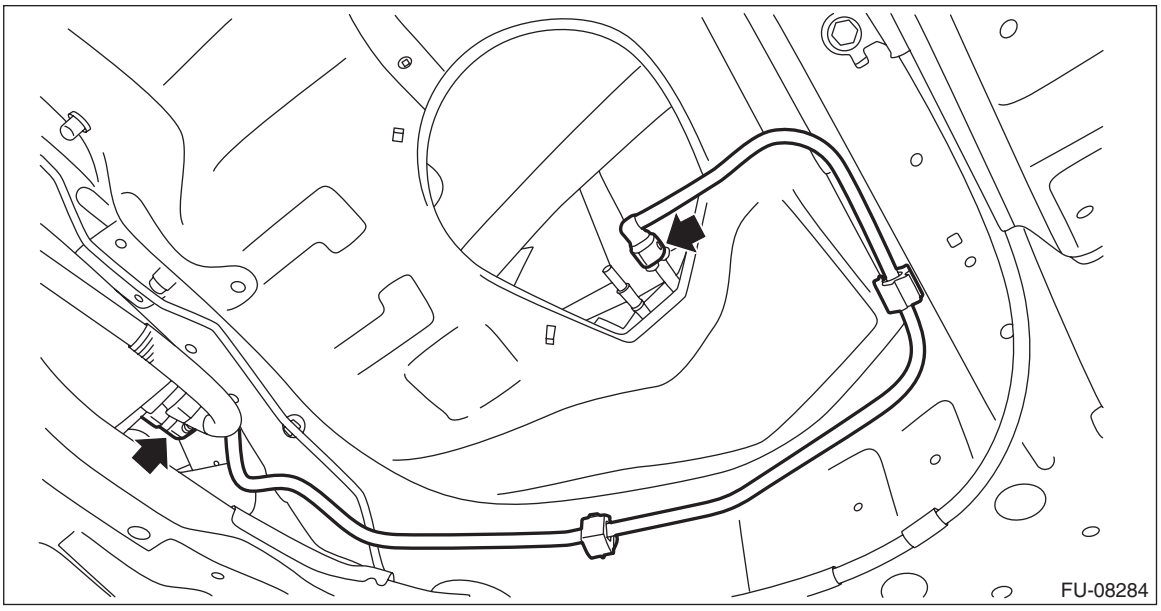

8) Remove the body integrated unit. <Ref. to SL-81, REMOVAL, Body Integrated Unit.>
9) Remove the fuel pipe assembly from vehicle.

B: INSTALLATION

Install in the reverse order of removal while being careful of the following.

1. CONNECTING THE EVAPORATION LINE QUICK CONNECTOR

NOTE:
Connect the quick connector as shown in the figure.

CAUTION:
• Check that there is no damage or dust on the quick connector. If necessary, clean the seal surface of the pipe.
• Make sure that the quick connector is securely connected.

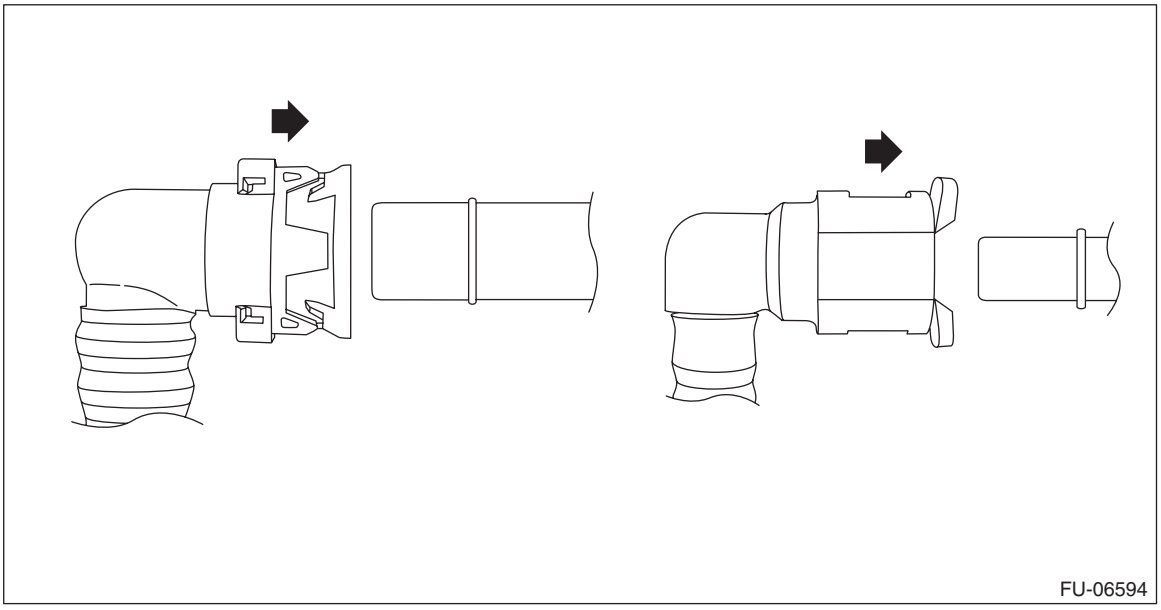

2. CONNECTING THE FUEL LINE QUICK CONNECTOR

Connect the quick connector as shown in the figure.

CAUTION:

- **Check that there is no damage or dust on the quick connector. If necessary, clean the seal surface of the pipe.**
- **When connecting the quick connector, make sure to insert it all the way in before locking the slider.**
- **When it is difficult to lock the slider, check that the connector is fully inserted.**
- **After locking the slider, check again that the quick connector is securely connected.**

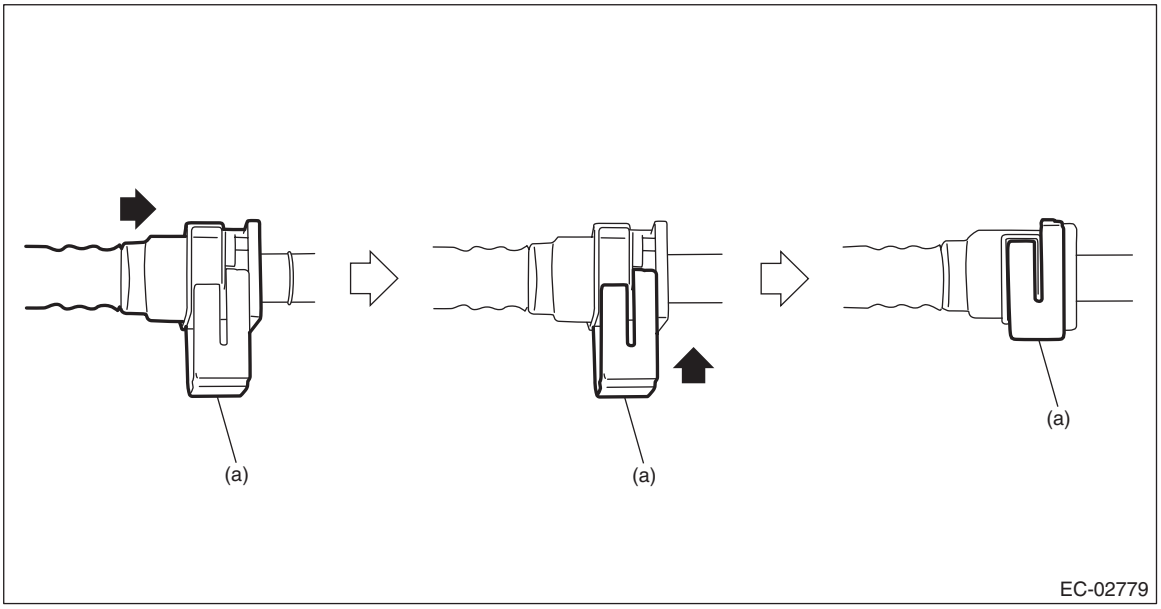

(a) Slider

3. EVAPORATION HOSE CONNECTION

Connect the evaporation hose by inserting it to the pipe until the hose reaches the spool or bump.

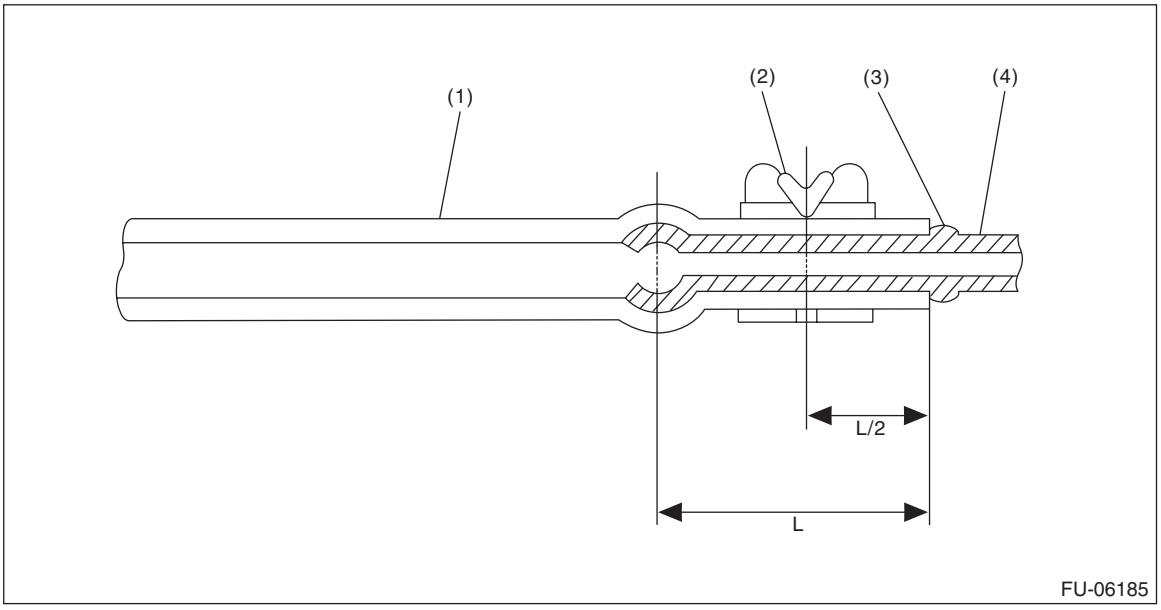

(1) Hose
(2) Clip
(3) Spool or bump
(4) Pipe

C: INSPECTION

1) Check that the fuel pipe has no deformation, cracks or other damages.
2) Check that the hose and tube have no cracks, damage or loose part.

42.Fuel System Trouble in General

A: INSPECTION

Trouble	Possible cause	Corrective action
Insufficient fuel supply to fuel injector	a. Fuel pump does not operate.	
	❍ Defective terminal contact	Inspect contact, especially ground, and tighten it securely.
	❍ Trouble in electromagnetic or electronic circuit parts	Replace the faulty parts.
	b. Decline of fuel pump function	Replace the fuel pump.
	c. Clogged fuel filter	Replace the fuel filter. Clean or replace the fuel tank if necessary.
	d. Clogged or bent fuel line pipe, hose or tube	Clean, correct or replace the fuel line pipe, hose or tube.
	e. Air is mixed in fuel system.	Check the fuel line connections, correct or replace the defective part.
	f. Damaged diaphragm of pressure regulator	Replace the pressure regulator.
Leakage or blow out of fuel	a. Loose connections of fuel line pipe, hose or tube	Check the fuel line connections, correct or replace the defective part.
	b. Cracked fuel line pipe, hose or tube	Replace the fuel line pipe, hose or tube.
	c. Cracked fuel tank or defective welding part	Replace the fuel tank.
	d. Clogged or bent fuel line pipe, hose or tube	Clean, correct or replace the fuel line pipe, hose or tube.
Gasoline smell inside of compartment	a. Loose connections of fuel line pipe, hose or tube	Check the fuel line connections, correct or replace the defective part.
	b. Defective canister	Replace the canister.
Defective fuel gauge	a. Defective operation of fuel level sensor	Replace the fuel level sensor.
	b. Defective operation of combination meter <Ref. to IDI(diag)-2, COMBINATION METER, PROCEDURE, Basic Diagnostic Procedure.>	Replace the combination meter.
Noise	a. Large operation noise or vibration of fuel pump	Replace the fuel pump.

NOTE:
• When the vehicle is left unattended for an extended period of time, water may accumulate in the fuel tank. Fill fuel fully to prevent the problem.
• In snow-covered areas, mountainous areas, skiing areas, etc. where ambient temperatures drop to 0°C (32°F) or less throughout the winter season, use a water removing agent in the fuel system to prevent freezing fuel system and accumulating water.
• When water is accumulated in fuel filter, fill the water removing agent in the fuel tank.
• Before using water removing agent, follow the cautions noted on the bottle.

EMISSION CONTROL (AUX. EMISSION CONTROL DEVICES)

EC(w/o STI)

		Page
1.	General Description	2
2.	Front Catalytic Converter	6
3.	Rear Catalytic Converter	7
4.	Canister	8
5.	Purge Control Solenoid Valve	22
6.	EGR Pipe	31
7.	EGR Control Valve	34
8.	EGR Cooler	38
9.	Fuel Level Sensor	46
10.	Fuel Sub Level Sensor	47
11.	Drain Filter	48
12.	Leak Check Valve Assembly	52
13.	PCV Pipe	70
14.	PCV Connector	75
15.	PCV Hose	76
16.	PCV Hose Assembly	77
17.	PCV Valve	83

1. General Description

A: COMPONENT

1. CANISTER, PURGE CONTROL SOLENOID VALVE, AND LEAK CHECK VALVE ASSEMBLY

For components of canister, purge control solenoid valve, and leak check valve assembly, refer to FU(w/o STI). <Ref. to FU(w/o STI)-3, COMPONENT, General Description.>

2. EXHAUST GAS RECIRCULATION CONTROL CIRCUIT RANGE/PERFORMANCE

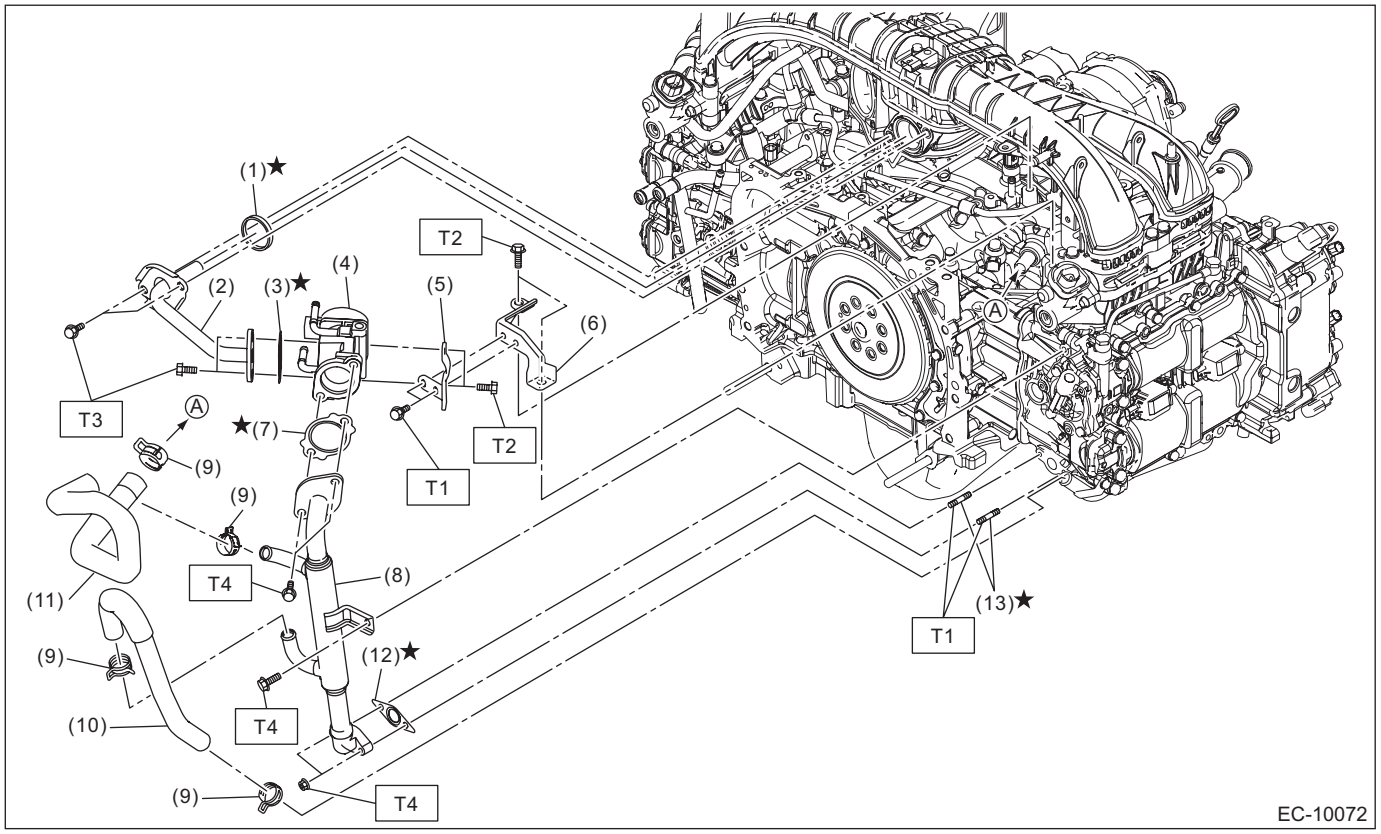

(1)	O-ring	(8)	EGR cooler
(2)	EGR pipe	(9)	Clip
(3)	Gasket	(10)	Water hose A
(4)	EGR control valve	(11)	Water hose B (MT model)
(5)	EGR control valve bracket A	(12)	Gasket
(6)	EGR control valve bracket B	(13)	Stud bolt
(7)	Gasket		

Tightening torque: N·m (kgf-m, ft-lb)

- ***T1: 6.4 (0.7, 4.7)***
- ***T2: 19 (1.9, 14.0)***
- ***T3: <Ref. to EC(w/o STI)-32, INSTALLATION, EGR Pipe.>***
- ***T4: <Ref. to EC(w/o STI)-41, INSTALLATION, EGR Cooler.>***

3. PCV SYSTEM 1

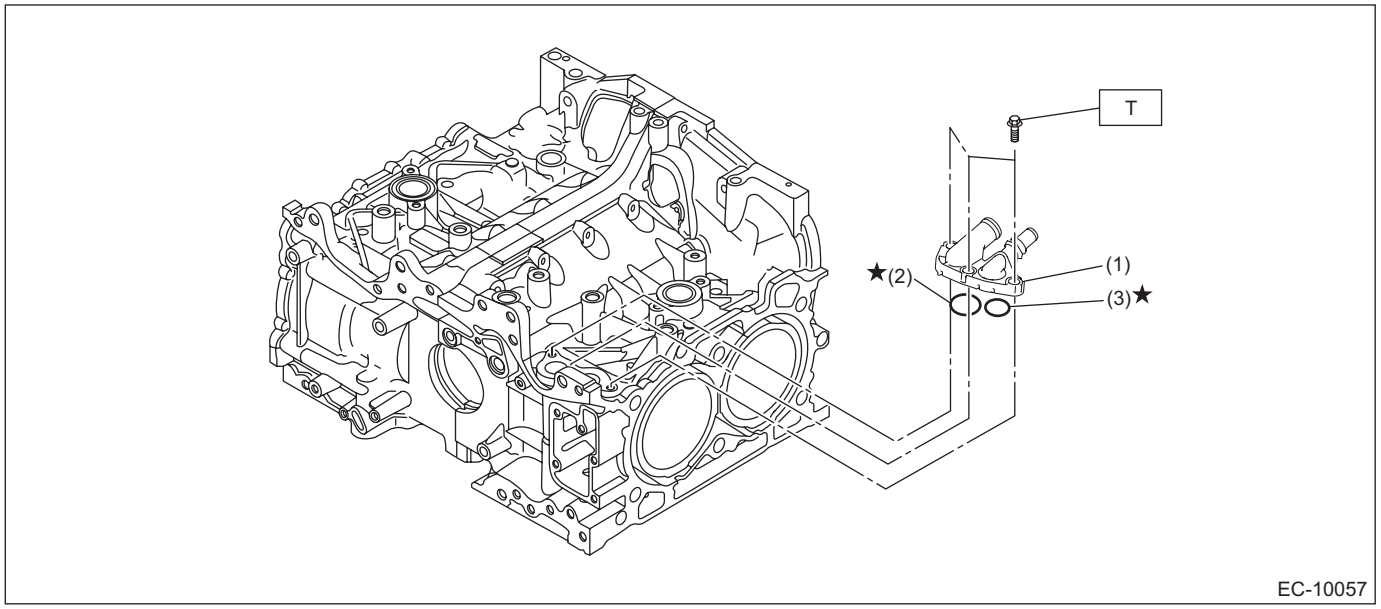

(1) PCV connector
(2) O-ring
(3) O-ring

Tightening torque: N·m (kgf-m, ft-lb)
T: 6.4 (0.7, 4.7)

4. PCV SYSTEM 2

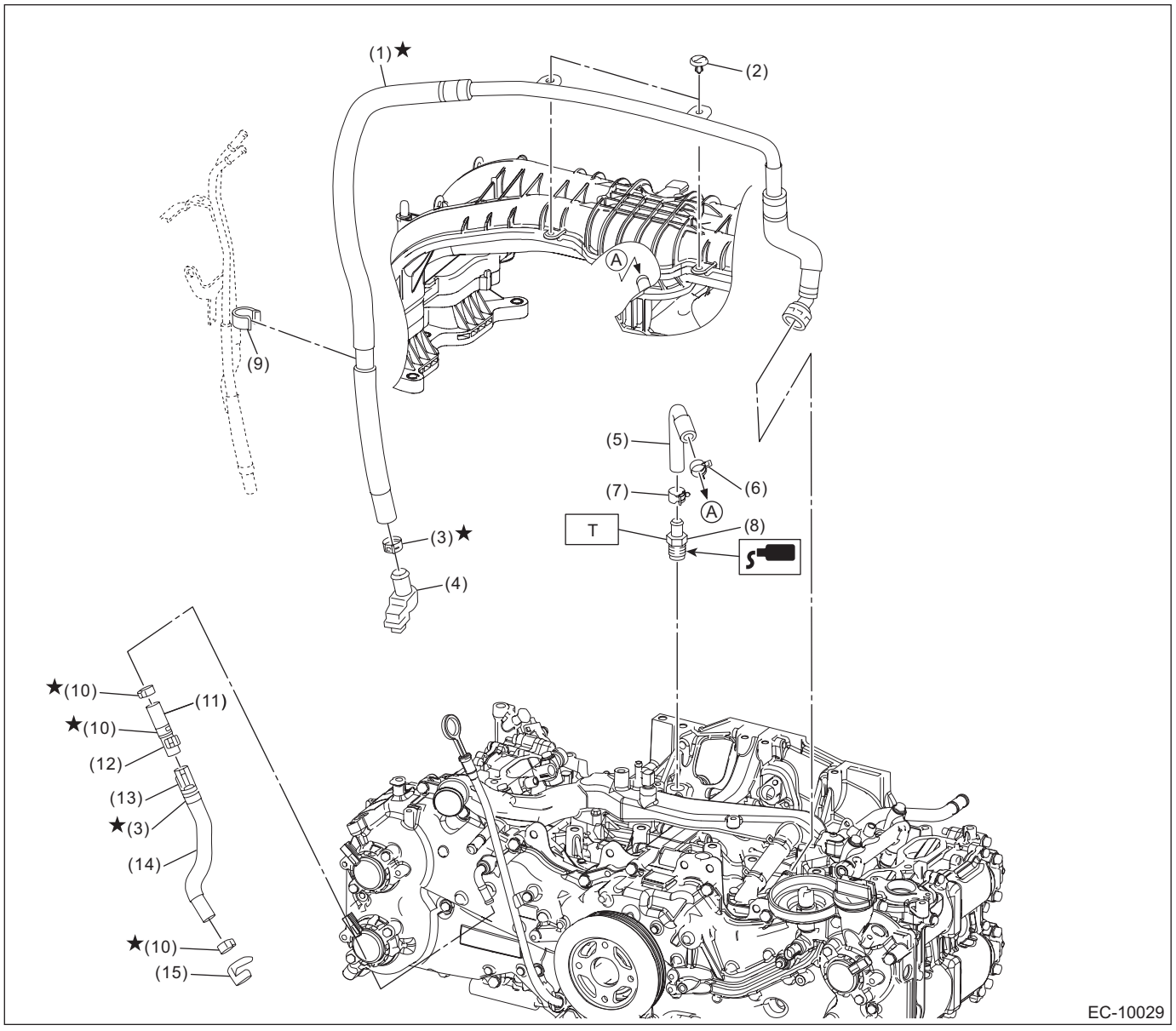

(1) PCV pipe ASSY
(2) Clip
(3) Clamp
(4) Blow-by diagnosis connector A
(5) PCV hose
(6) Clip
(7) Clip
(8) PCV valve
(9) Clip
(10) Clamp
(11) PCV hose ASSY No. 1
(12) Blow-by diagnosis connector B
(13) Blow-by diagnosis connector C
(14) PCV hose ASSY No. 2
(15) Clamp cover

Tightening torque: N·m (kgf-m, ft-lb)
T: 23 (2.3, 17.0)

B: CAUTION

- Prior to starting work, pay special attention to the following:
  1. Always wear work clothes, a work cap, and protective shoes. Additionally, wear a helmet, protective goggles, etc. if necessary.
  2. Protect the vehicle using a seat cover, fender cover, etc.
  3. Prepare the service tools, clean cloth, containers to catch grease and oil, etc.
- Vehicle components are extremely hot immediately after driving. Be wary of receiving burns from heated parts.
- When performing a repair, identify the cause of trouble and avoid unnecessary removal, disassembly and replacement.
- Before disconnecting connectors of sensors or units, be sure to disconnect the ground cable from battery.
- Always use the jack-up point when the shop jacks or rigid racks are used to support the vehicle.
- Remove contamination including dirt and corrosion before removal, installation, disassembly or assembly.
- Keep the removed parts in order and protect them from dust and dirt.
- All removed parts, if to be reused, should be reinstalled in the original positions with attention to the correct directions, etc.
- Bolts, nuts and washers should be replaced with new parts as required.
- Be sure to tighten the fasteners including bolts and nuts to the specified torque.

C: PREPARATION TOOL

1. GENERAL TOOL

TOOL NAME	REMARKS
Circuit tester	Used for measuring resistance, voltage and current.
Clamp pincer	• Used for installing PCV pipe assembly and PCV hose assembly. • This tool is made by OETIKER. Product No. 14100134

2. Front Catalytic Converter

A: REMOVAL

The front catalytic converter is integrated into the center exhaust pipe (front). Refer to “Center Exhaust Pipe” for removal procedures. <Ref. to EX(w/o STI)-32, REMOVAL, Center Exhaust Pipe.>

B: INSTALLATION

The front catalytic converter is integrated into the center exhaust pipe (front). Refer to “Center Exhaust Pipe” for installation procedures. <Ref. to EX(w/o STI)-37, INSTALLATION, Center Exhaust Pipe.>

C: INSPECTION

1) Check the connections and welded parts for exhaust leaks.
2) Make sure there are no holes or rusting.

3. Rear Catalytic Converter

A: REMOVAL

The rear catalytic converter is integrated into the center exhaust pipe (rear). Refer to “Center Exhaust Pipe” for removal procedures. <Ref. to EX(w/o STI)-32, REMOVAL, Center Exhaust Pipe.>

B: INSTALLATION

The rear catalytic converter is integrated into the center exhaust pipe (rear). Refer to “Center Exhaust Pipe” for installation procedures. <Ref. to EX(w/o STI)-37, INSTALLATION, Center Exhaust Pipe.>

C: INSPECTION

1) Check the connections and welded parts for exhaust leaks.
2) Make sure there are no holes or rusting.

4. Canister

A: REMOVAL

WARNING:
Place "NO OPEN FLAMES" signs near the working area.

CAUTION:
Be careful not to spill fuel.

1) Release the fuel pressure. <Ref. to FU(w/o STI)-138, RELEASING OF FUEL PRESSURE, PROCEDURE, Fuel.>
2) Drain fuel. <Ref. to FU(w/o STI)-139, DRAINING FUEL (WITH SUBARU SELECT MONITOR), PROCEDURE, Fuel.>
3) Lift up the vehicle.
4) Remove the rear exhaust pipe. <Ref. to EX(w/o STI)-47, REMOVAL, Rear Exhaust Pipe.>
5) Remove the propeller shaft. <Ref. to DS-12, REMOVAL, Propeller Shaft.>
6) Support the rear differential with the transmission jack.
7) Remove the self-locking nuts which hold the rear differential to the rear sub frame assembly.

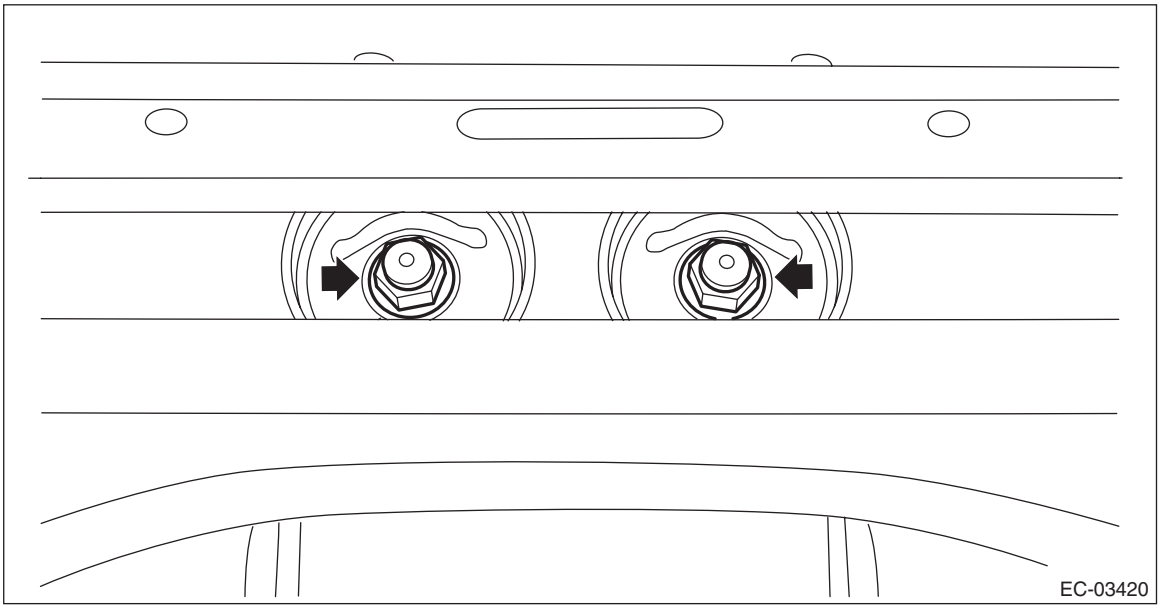

8) Remove the rear differential member from the rear sub frame assembly and the rear differential.

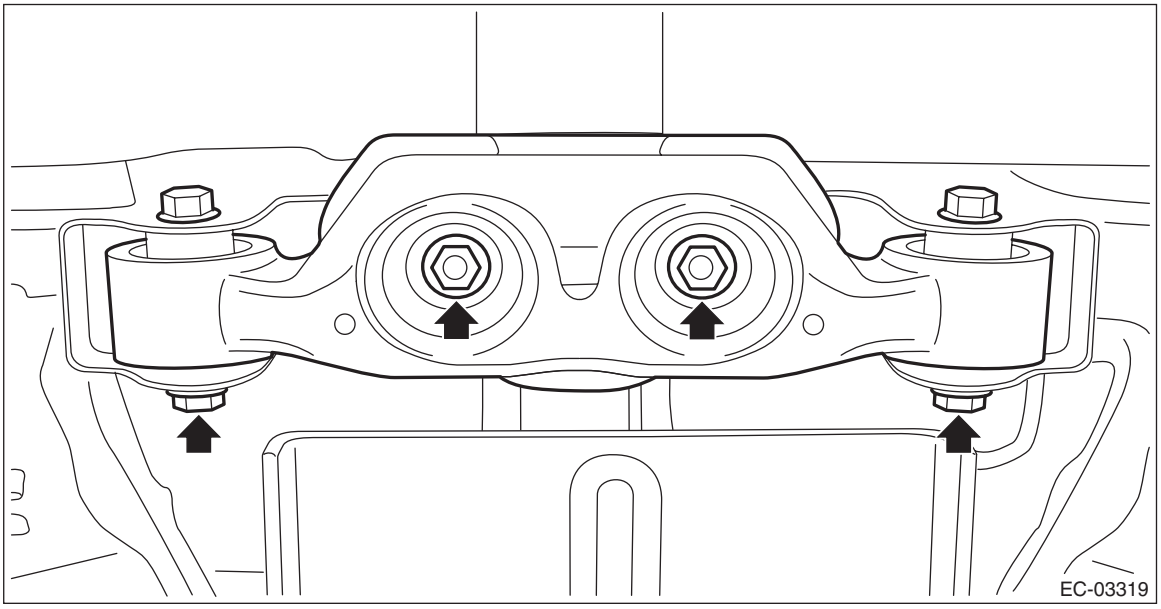

9) Lower the transmission jack gradually until the rear differential is at the position shown in the figure.

NOTE:

• When pulling out the stud bolt from the bushing portion of the rear sub frame assembly, adjust the angle and location of transmission jack and jack stand.

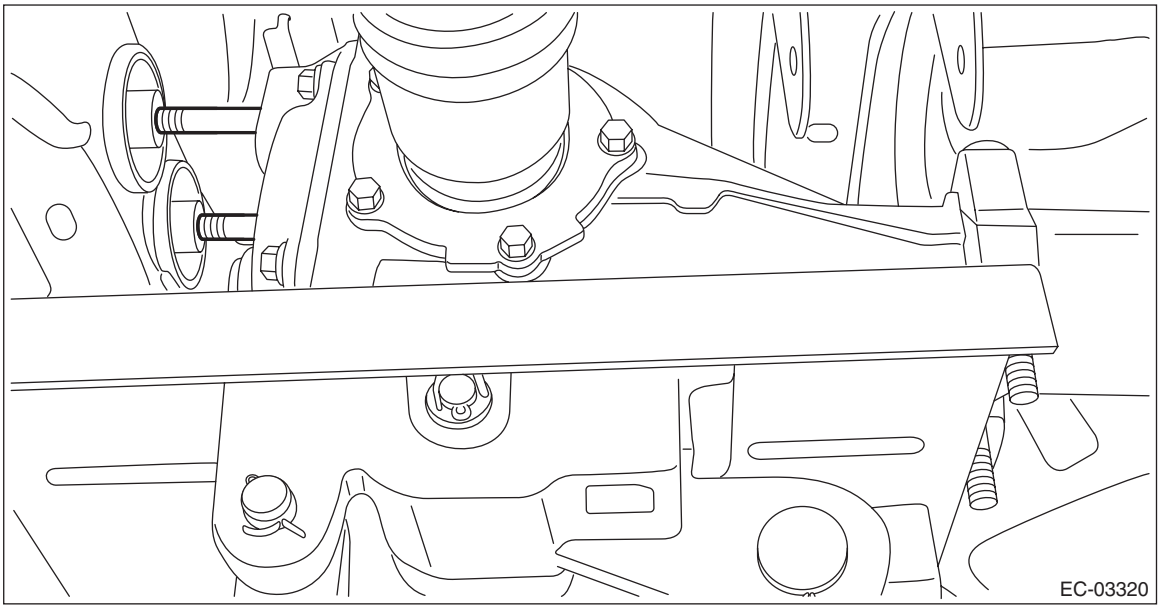

• Do not lower the rear differential excessively. Doing so may add extra load to the drive shaft or cause the falling-off of the drive shaft.

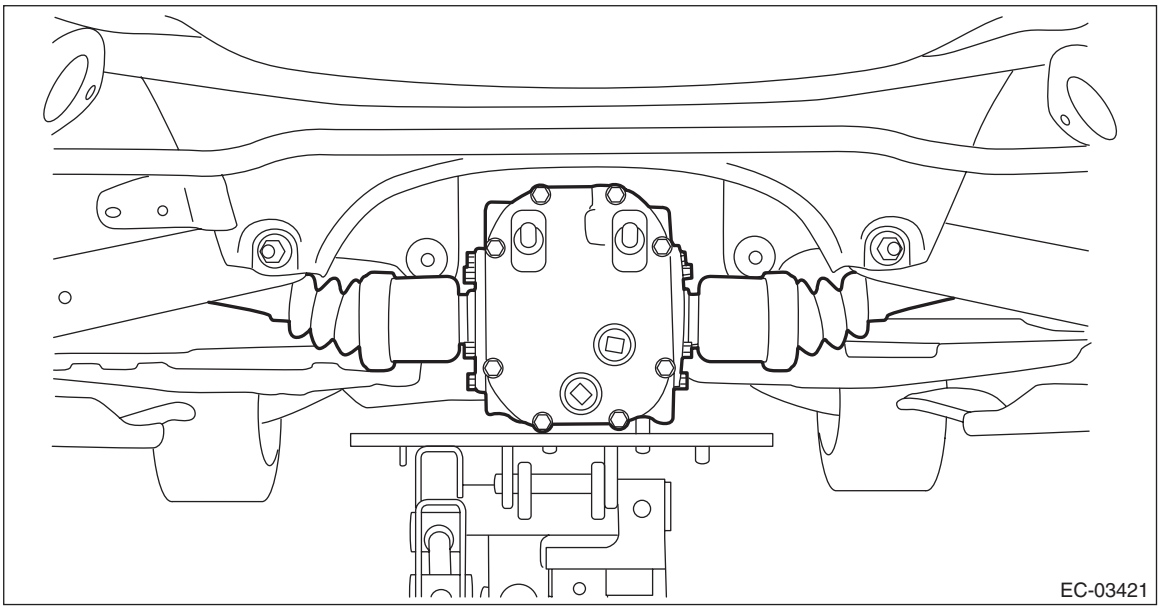

10) Disconnect the vent tube from vent hose.

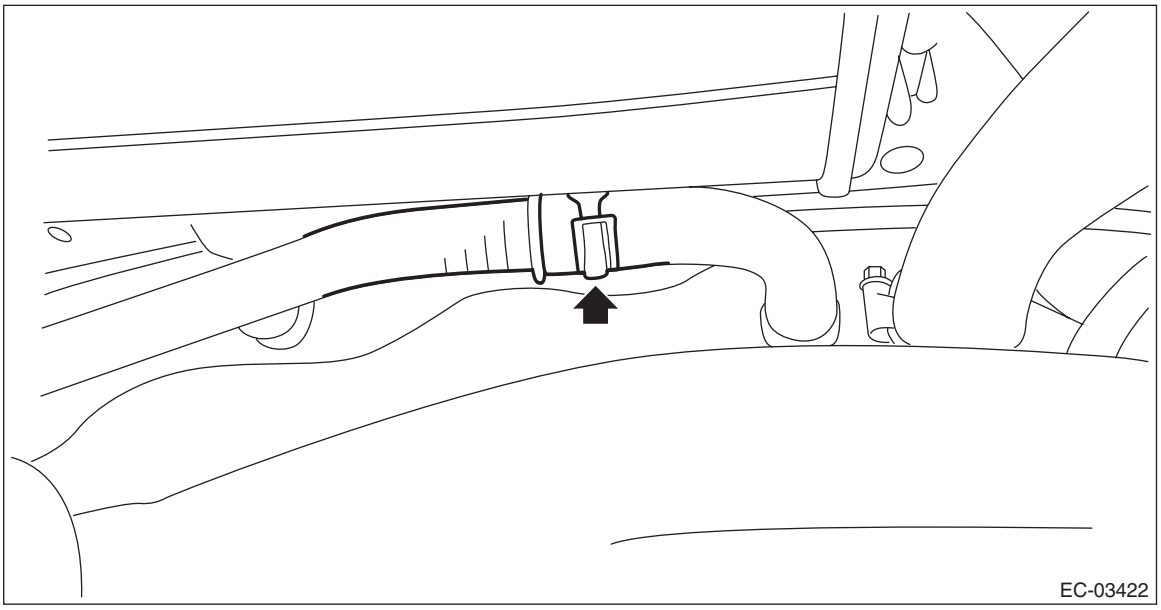

11) Disconnect the drain tube (A) and purge tube (B) from the canister.

NOTE:
Disconnect the quick connector as shown in the figure.

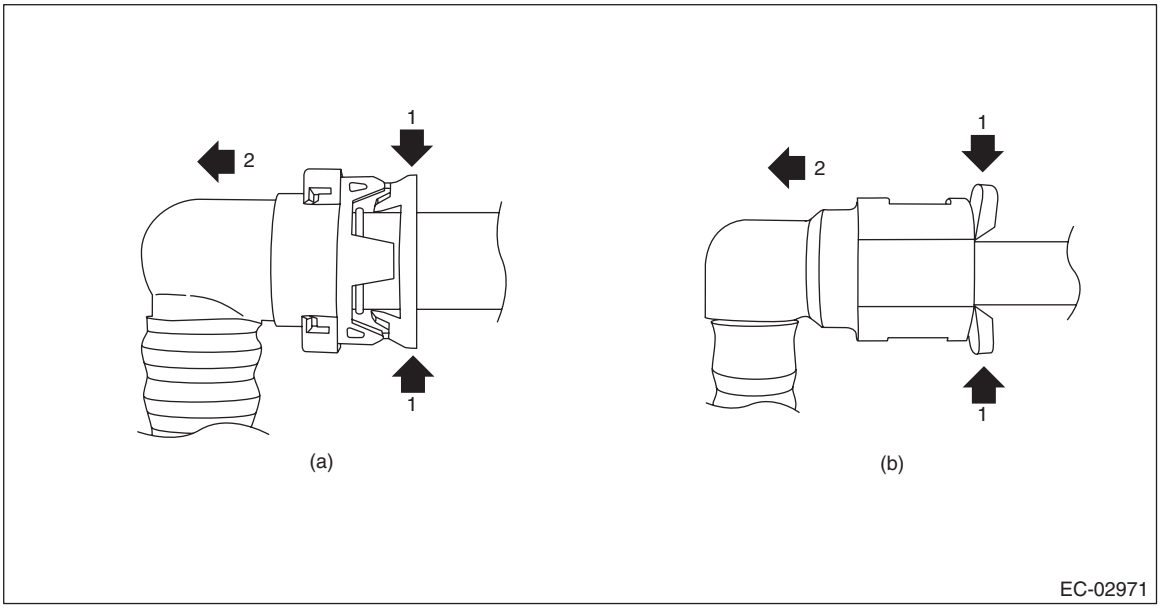

(a) Drain tube (b) Purge tube

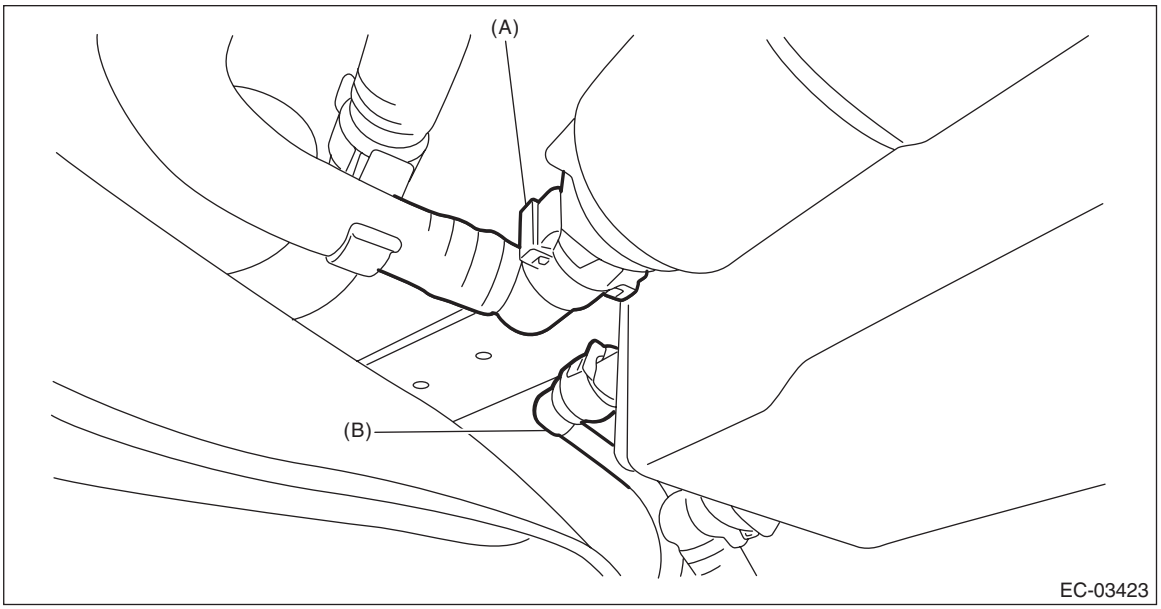

12) Disconnect the fuel filler hose from the fuel filler pipe assembly.

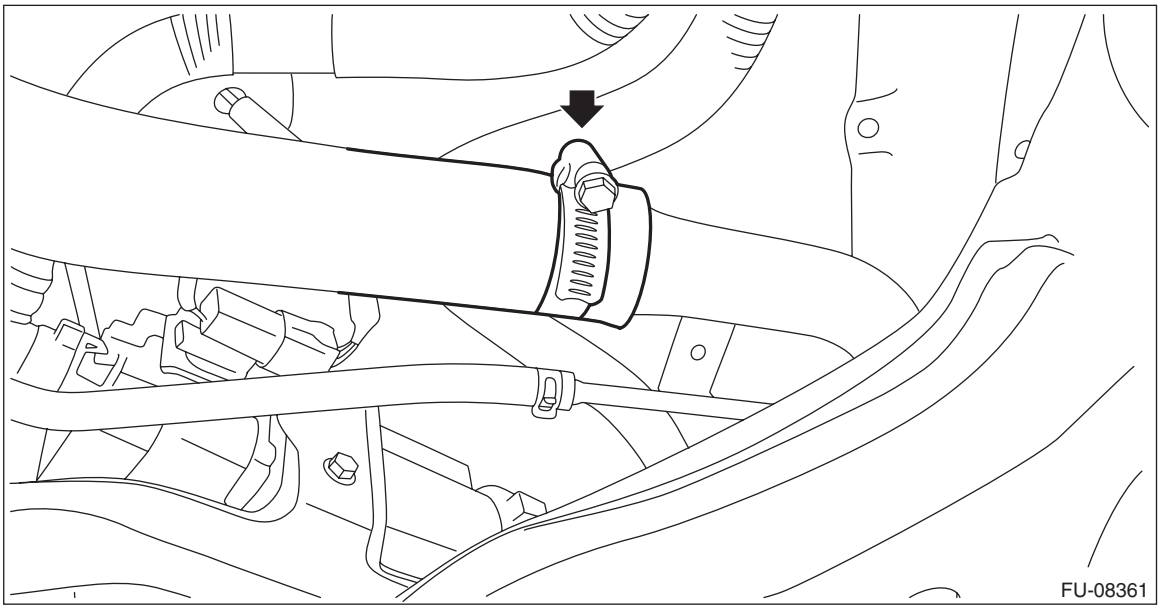

13) Remove the tube clamp from the canister bracket A, and remove the drain tube from the tube clamp.

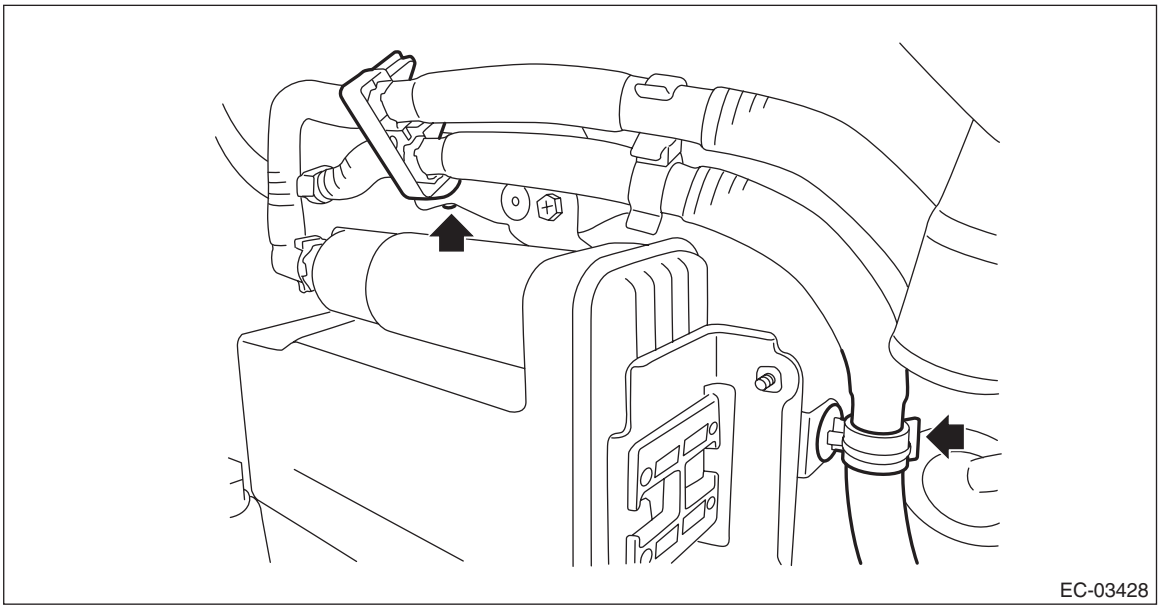

14) Remove the bolts and clip (A) securing the canister to the vehicle, and remove the canister.

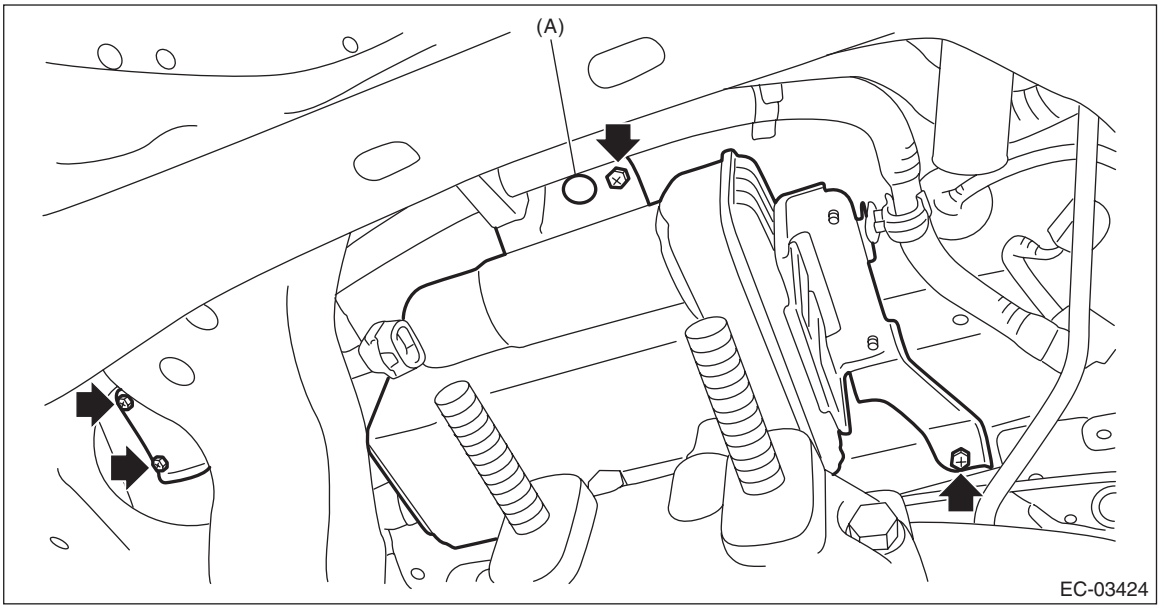

15) Disconnect the vent tube (B) from the canister and remove the canister bracket A (A).

NOTE:
- Disconnect the quick connector as shown in the figure.

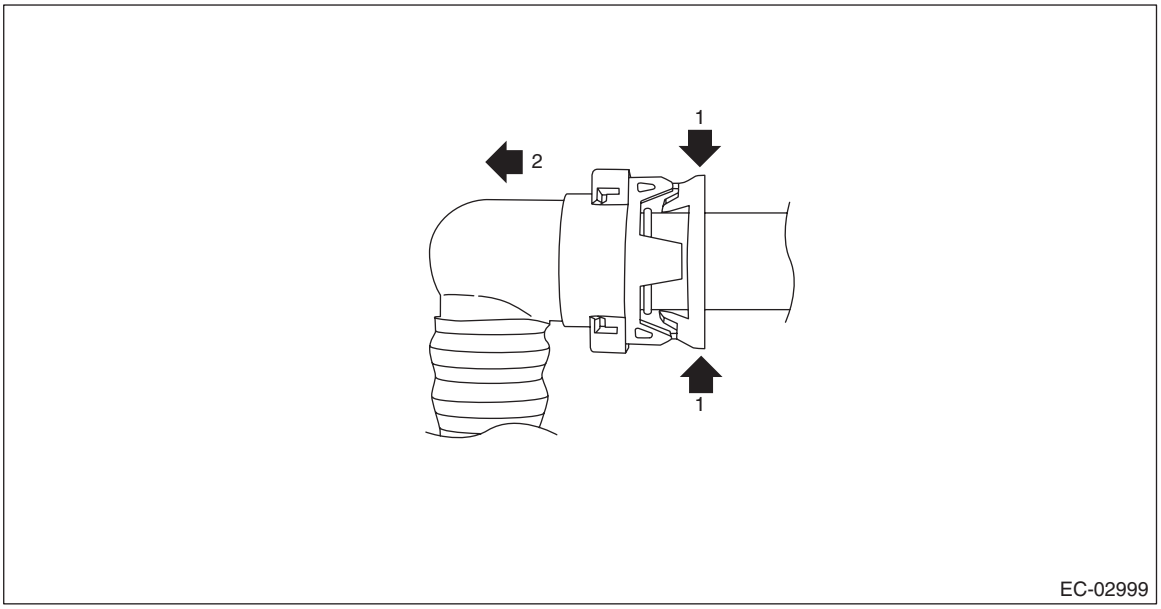

- The canister bracket cannot be separated from the canister. Therefore, be sure to replace both of them with new ones when replacing the canister or canister bracket.

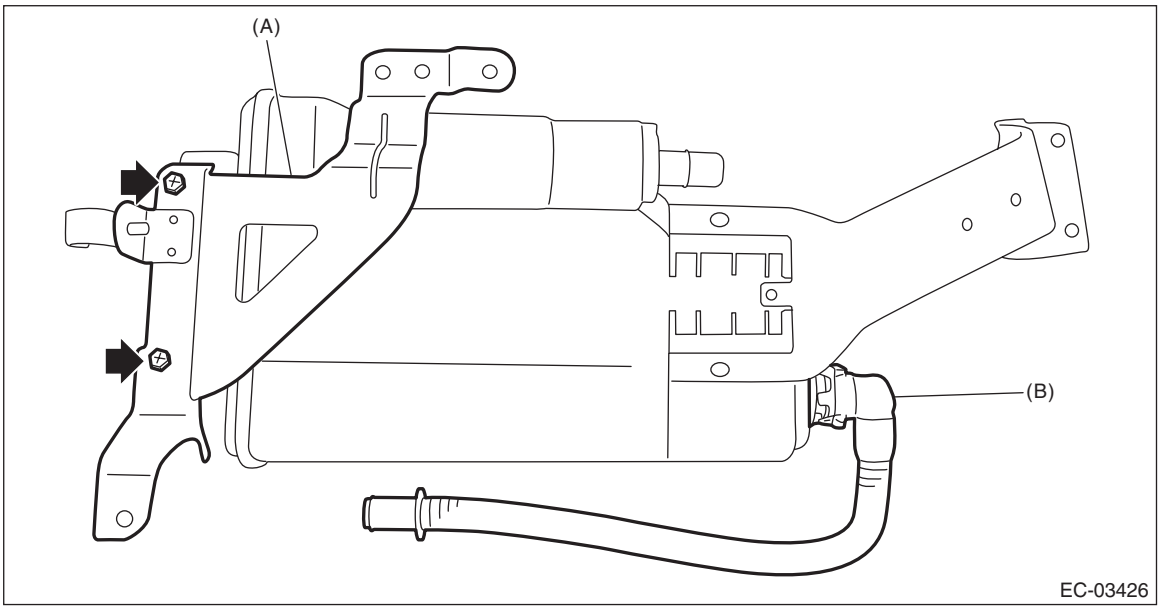

B: INSTALLATION

1) Move it in the direction of the arrow and install the canister bracket B (A) and canister bracket C (B) to the canister.

NOTE:
- Use a new canister and a canister bracket.
- Check that the claw (a) is securely tightened.

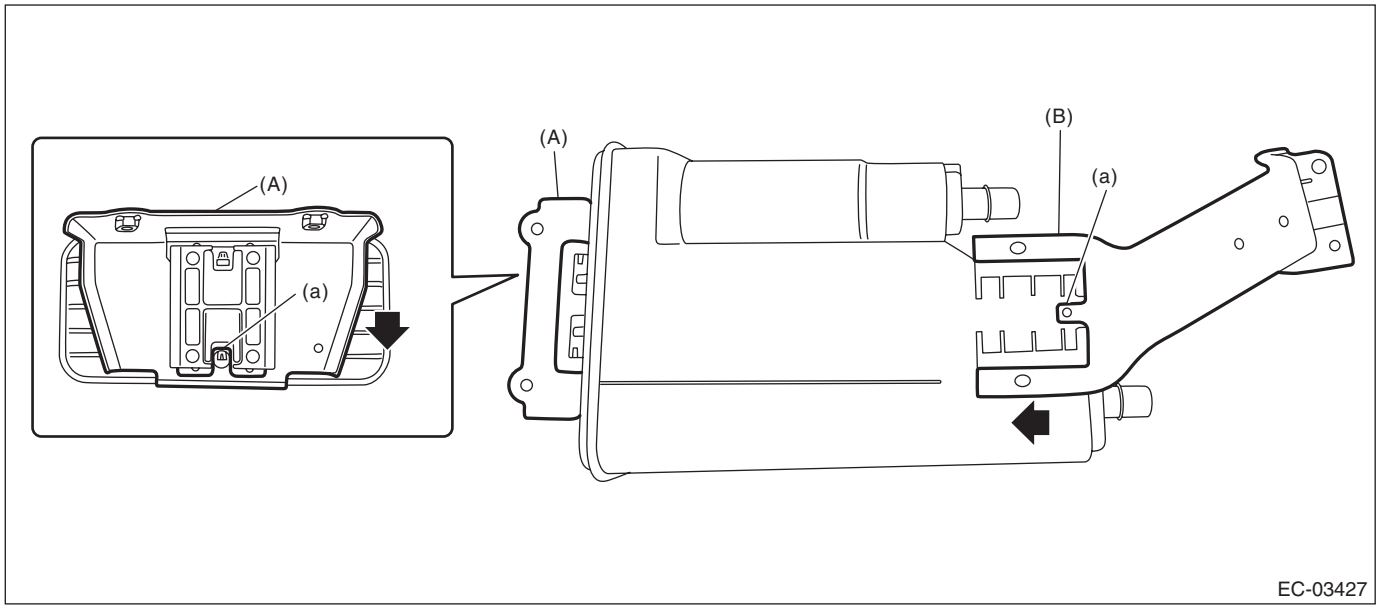

2) Connect the vent tube (B) to the canister and remove the canister bracket A (A).

CAUTION:
- **Check that there is no damage or dust on the quick connector. If necessary, clean the seal surface of the pipe.**
- **Make sure that the quick connector is securely connected.**

NOTE:
Install the quick connector as shown in the figure.

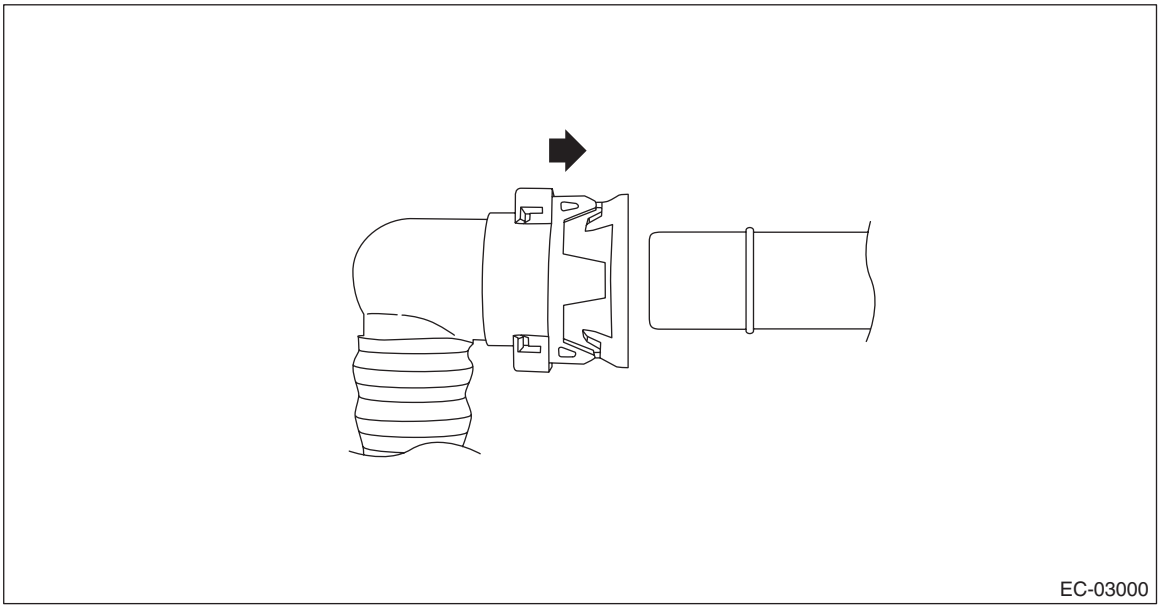

Tightening torque:
7.5 N·m (0.8 kgf-m, 5.5 ft-lb)

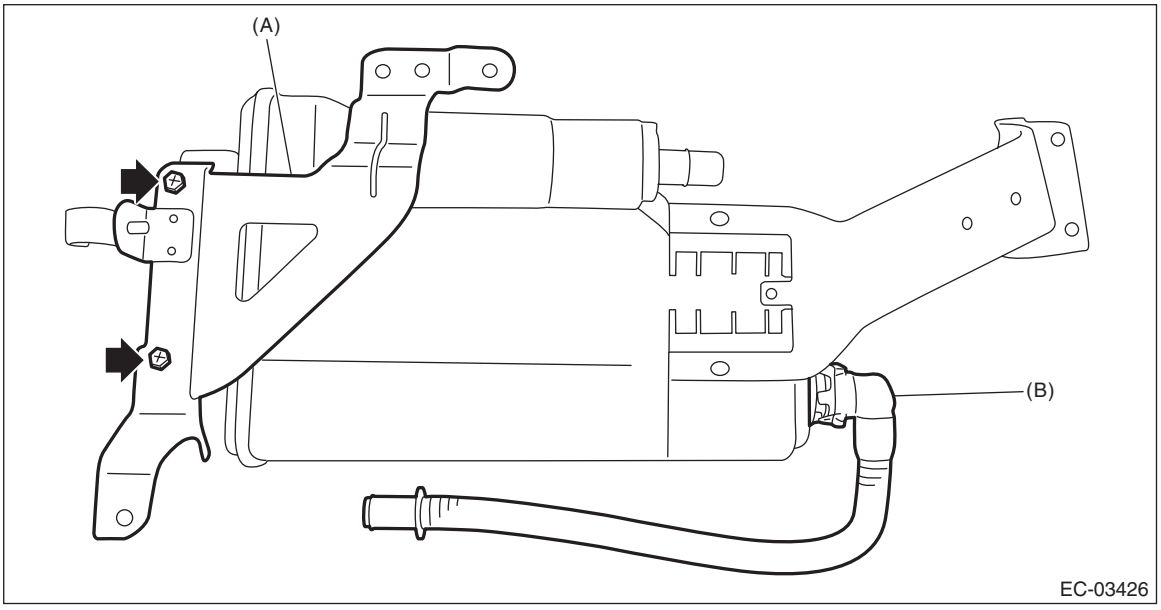

3) Set the canister to the vehicle, and attach the bolts and clip (A) which secure the canister.

Tightening torque:
7.5 N·m (0.8 kgf-m, 5.5 ft-lb)

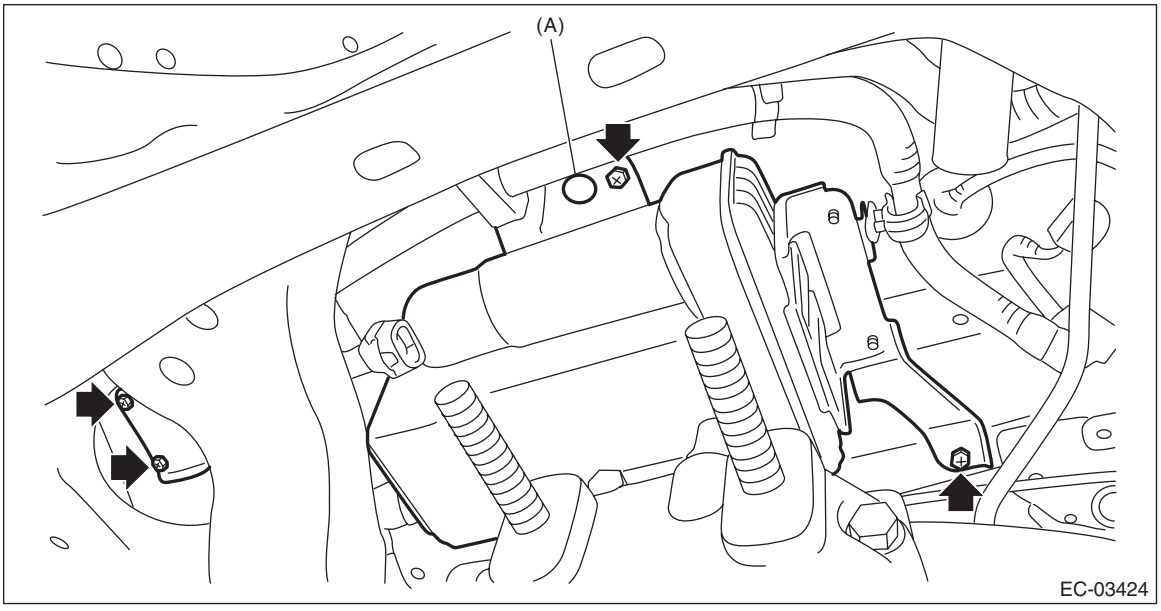

4) Correctly insert the fuel filler hose to the spool, and then install the clamp as shown.

Tightening torque:
2.5 N·m (0.3 kgf-m, 1.8 ft-lb)

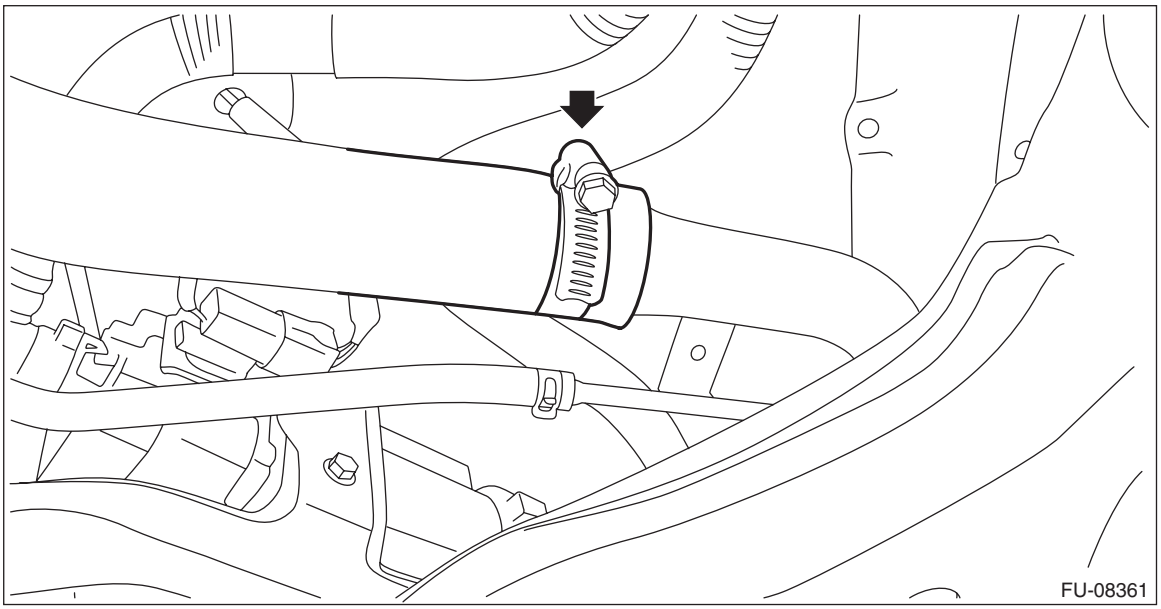

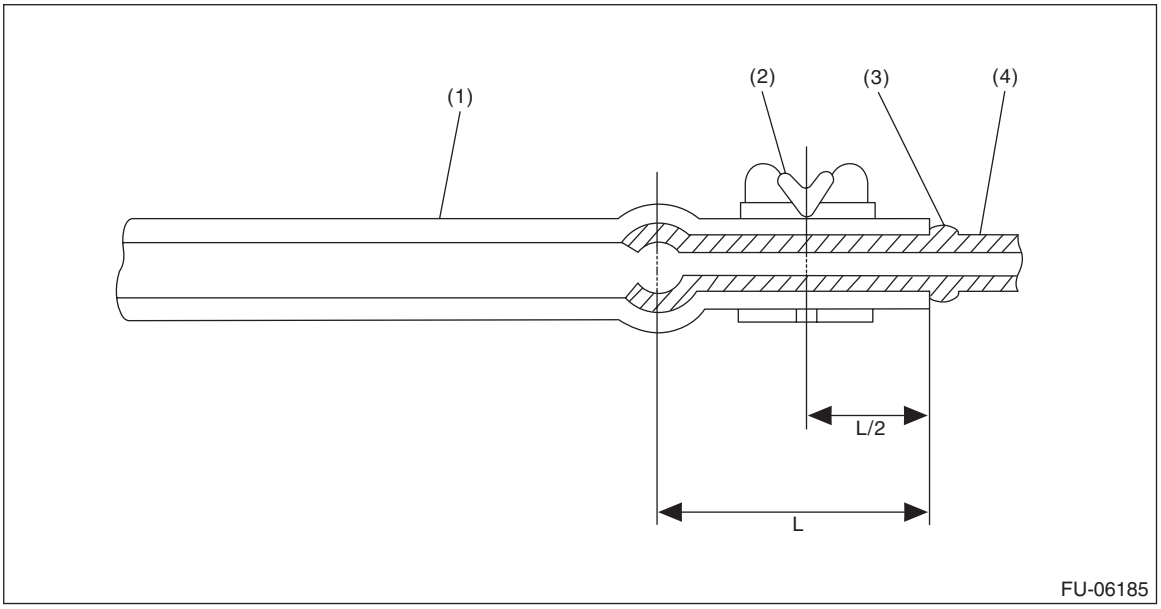

(1) Hose
(2) Clamp
(3) Spool
(4) Pipe

5) Install the tube clamp to the canister bracket A, and install the drain tube to the tube clamp.

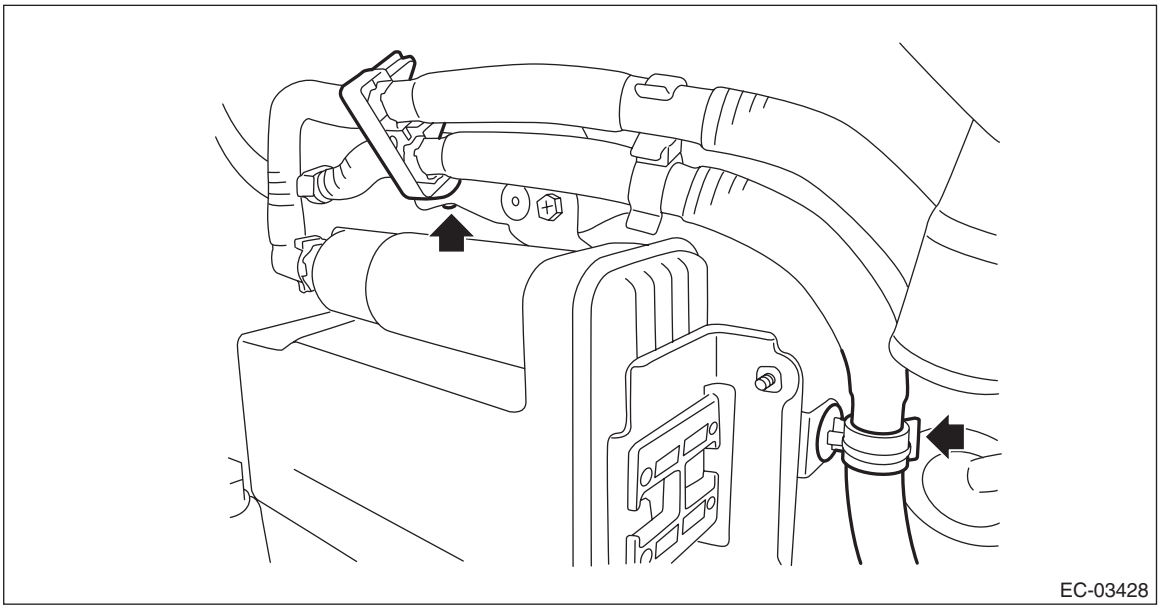

6) Connect the drain tube (A) and purge tube (B) to the canister.

CAUTION:
• Check that there is no damage or dust on the quick connector. If necessary, clean the seal surface of the pipe.
• Make sure that the quick connector is securely connected.

NOTE:
Install the quick connector as shown in the figure.

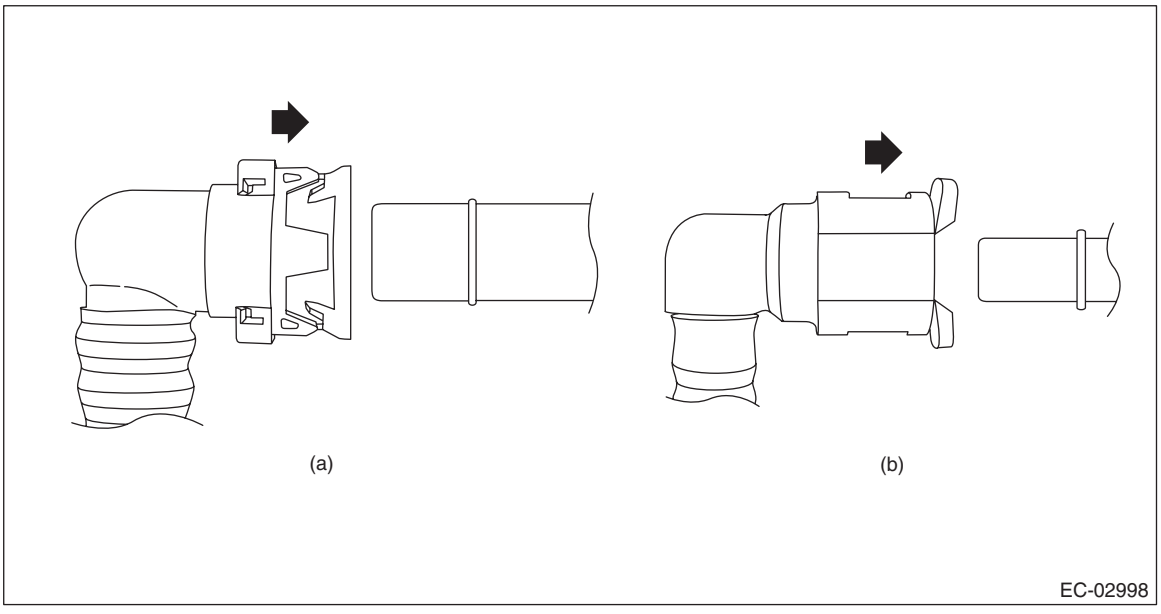

(a) Drain tube (b) Purge tube

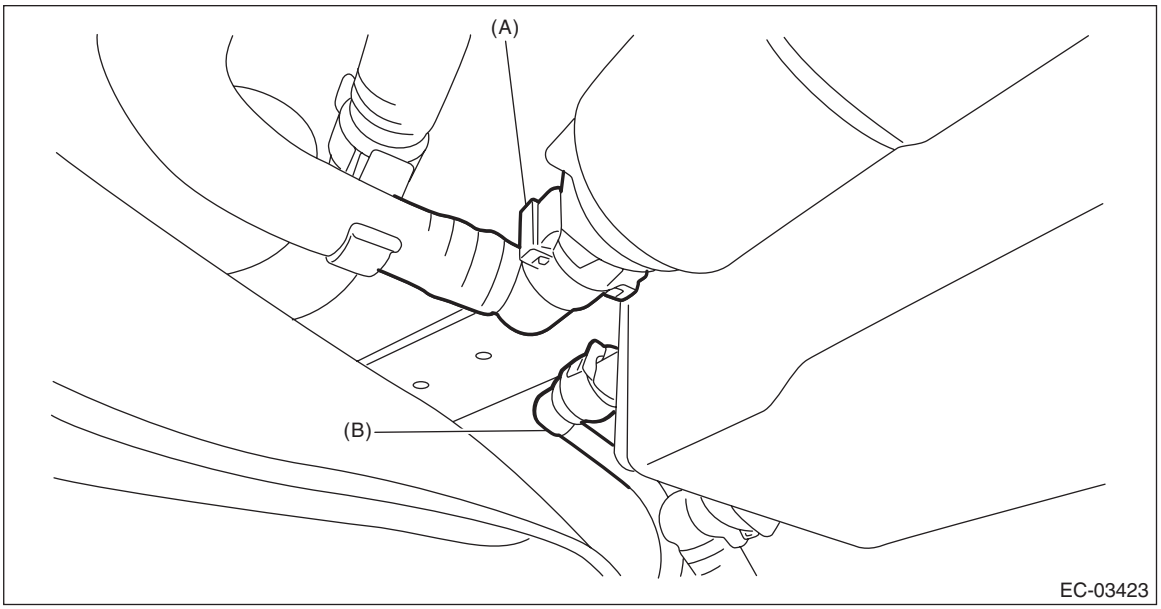

7) Connect the vent tube to the vent hose.

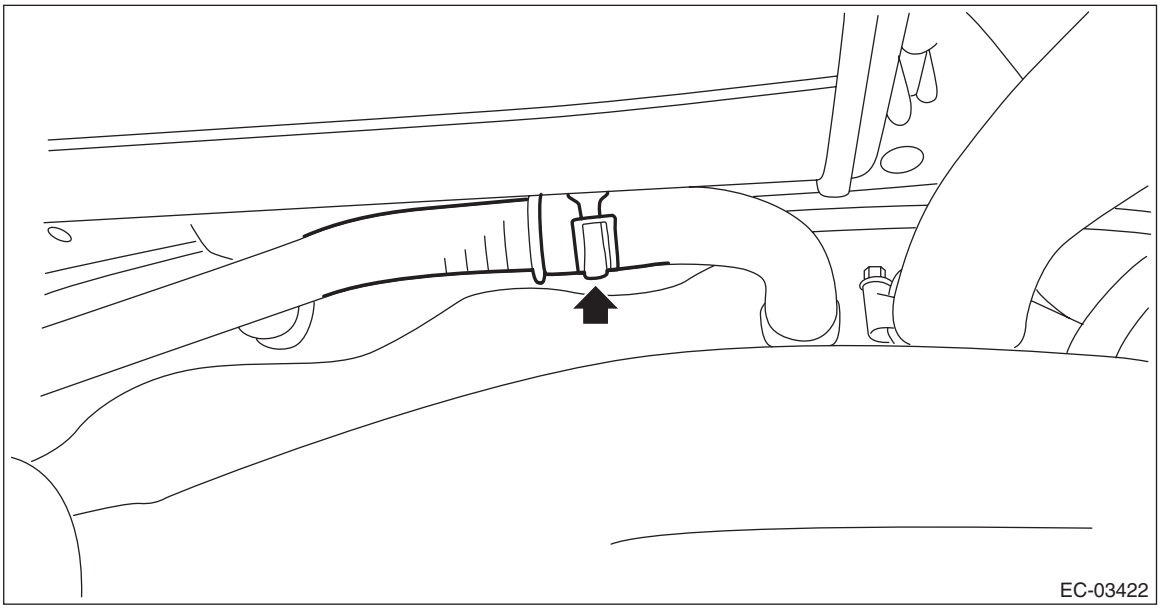

8) Lift up the transmission jack gradually, and set the rear differential to the rear sub frame assembly.

NOTE:
When inserting the stud bolt into the bushing portion of the rear sub frame assembly, adjust the angle and location of transmission jack and jack stand.

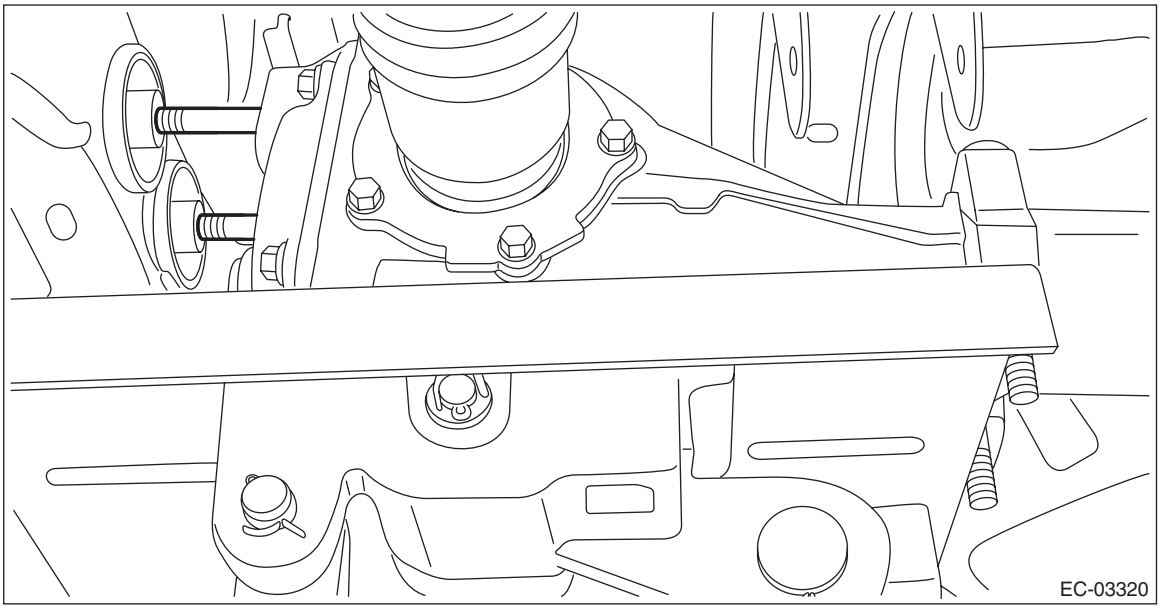

9) Temporarily tighten the self-locking nuts which hold the rear differential to the rear sub frame assembly.

NOTE:
Use a new self-locking nut.

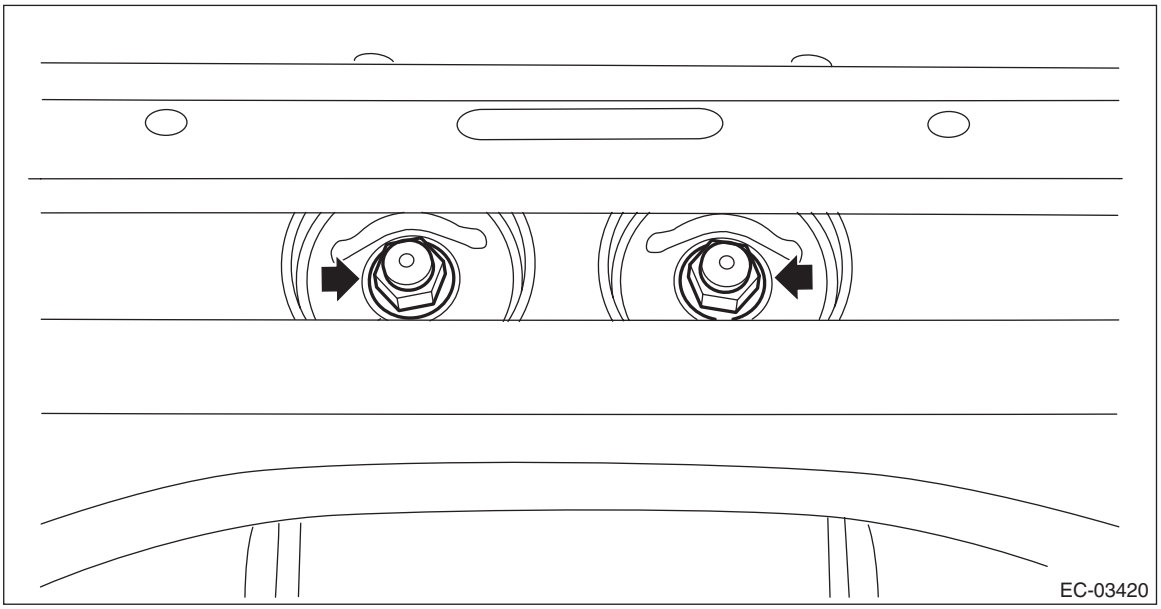

10) Set the rear differential member to the rear sub frame assembly and rear differential, and temporarily tighten the self-lock nuts which secure the rear differential member to the rear sub frame assembly and rear differential.

NOTE:
Use a new self-locking nut.

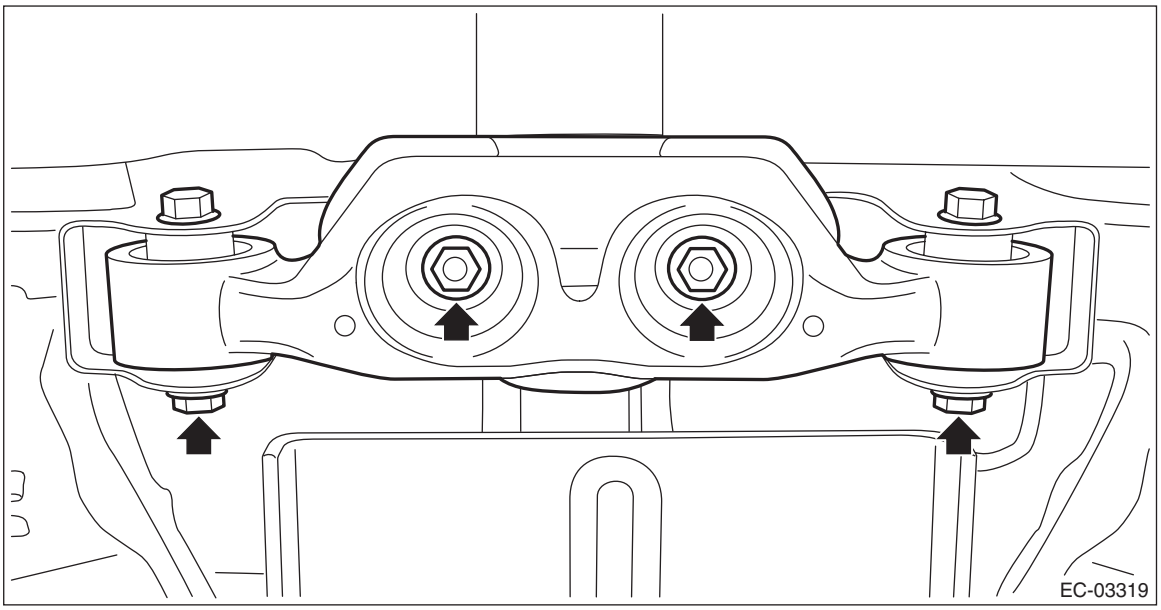

11) Remove the transmission jack from the rear differential.
12) Tighten the self-locking nuts which secure the rear differential member to the rear sub frame assembly and rear differential.

Tightening torque:
T1: 50 N·m (5.1 kgf-m, 36.9 ft-lb)
T2: 110 N·m (11.2 kgf-m, 81.1 ft-lb)

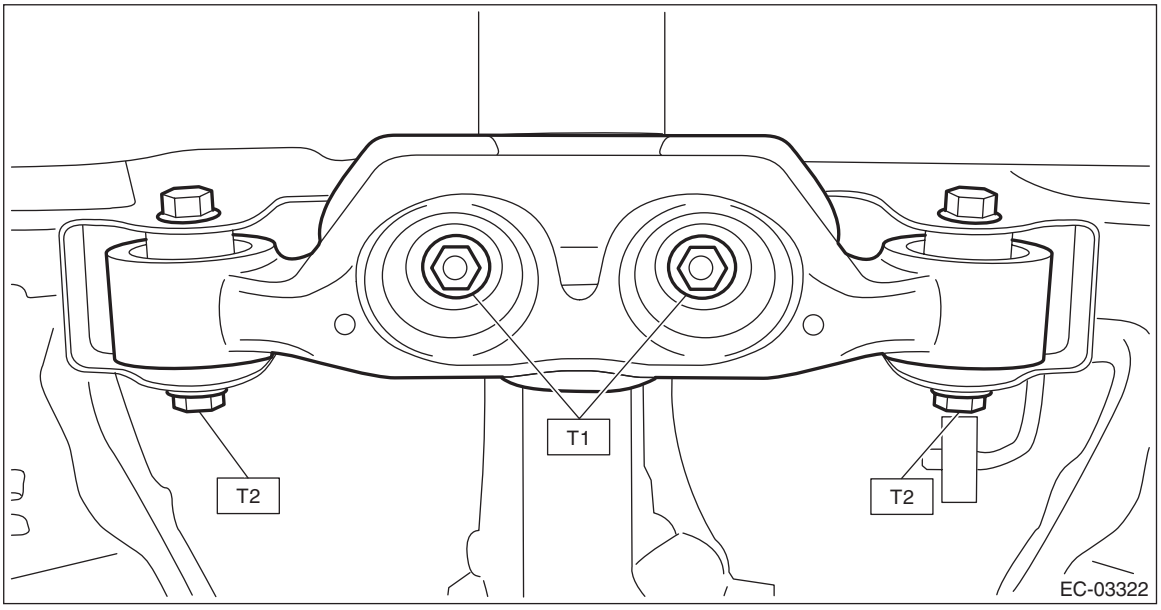

13) Tighten the self-locking nuts which secure the rear differential to the rear sub frame assembly.

Tightening torque:
70 N·m (7.1 kgf-m, 51.6 ft-lb)

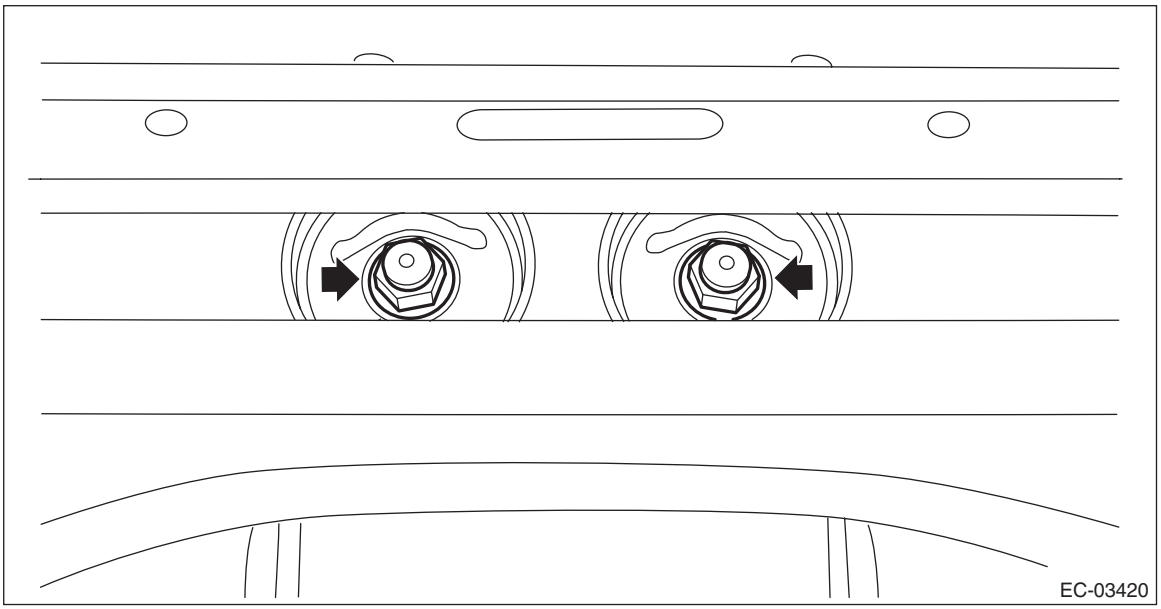

14) Install the propeller shaft. <Ref. to DS-14, INSTALLATION, Propeller Shaft.>
15) Install the rear exhaust pipe. <Ref. to EX(w/o STI)-48, INSTALLATION, Rear Exhaust Pipe.>
16) Lower the vehicle.

C: INSPECTION

1) Check that the canister has no deformation, cracks or other damages.
2) Check that the tube has no cracks, damage or loose part.

5. Purge Control Solenoid Valve

A: REMOVAL

1. PURGE CONTROL SOLENOID VALVE 1

1) Remove the collector cover. <Ref. to IN(w/o STI)-7, REMOVAL, Collector Cover.>
2) Disconnect the ground terminal from battery sensor. <Ref. to NT-6, BATTERY, NOTE, Note.>
3) Remove the brake vacuum pump. <Ref. to BR-104, REMOVAL, Brake Vacuum Pump.>
4) Remove the bolt which secures the solenoid valve bracket from the intake manifold.

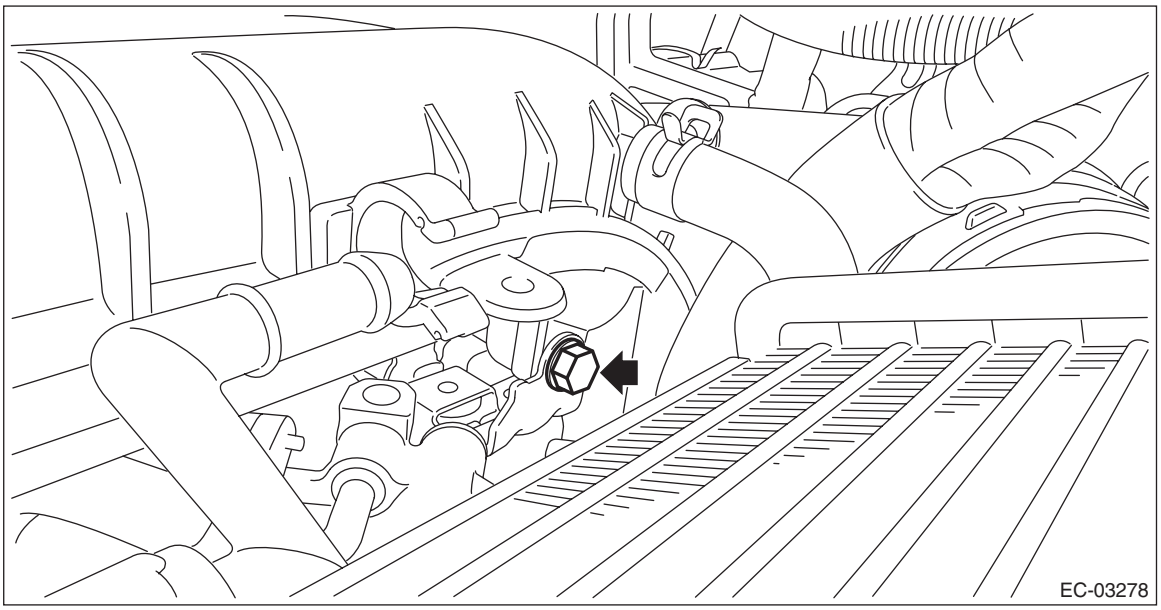

5) Remove the nut which secures the purge control solenoid valve 1 to the solenoid valve bracket.

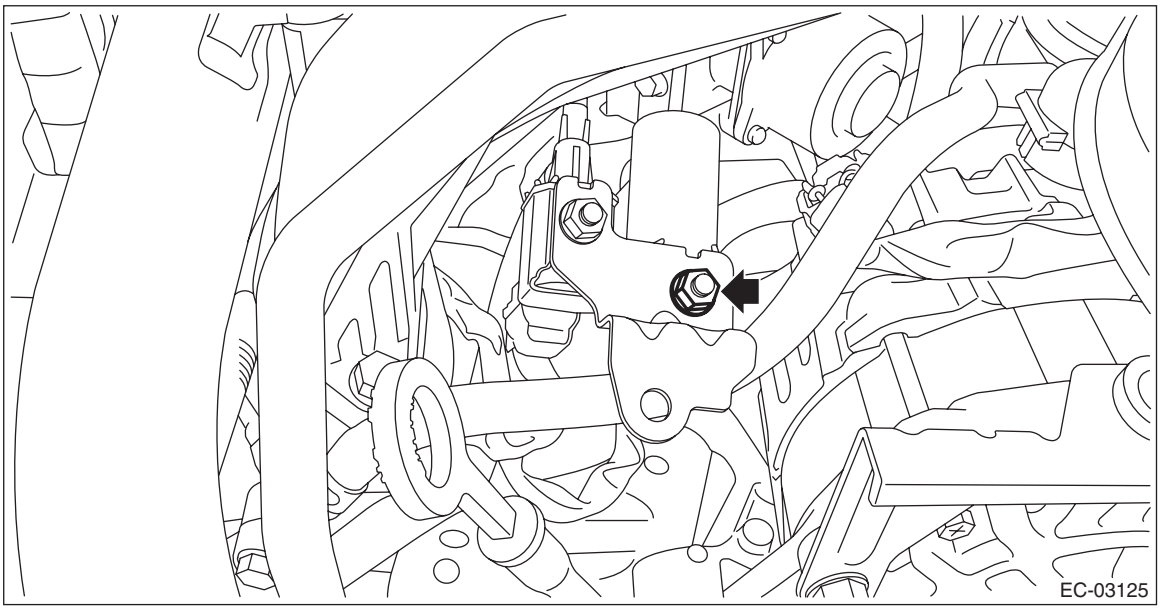

6) Disconnect the connector (A) and vacuum hose (B) from the purge control solenoid valve 1, and remove the purge control solenoid valve 1.

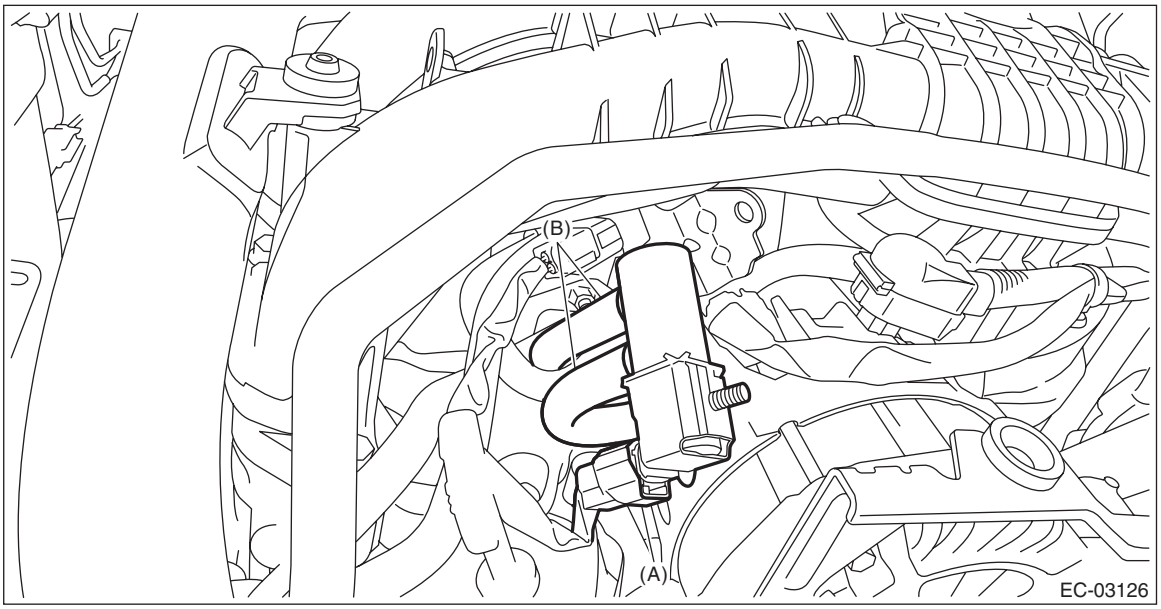

2. PURGE CONTROL SOLENOID VALVE 2

1) Remove the collector cover. <Ref. to IN(w/o STI)-7, REMOVAL, Collector Cover.>
2) Disconnect the ground terminal from battery sensor. <Ref. to NT-6, BATTERY, NOTE, Note.>
3) Remove the brake vacuum pump. <Ref. to BR-104, REMOVAL, Brake Vacuum Pump.>
4) Remove the bolt which secures the solenoid valve bracket from the intake manifold.

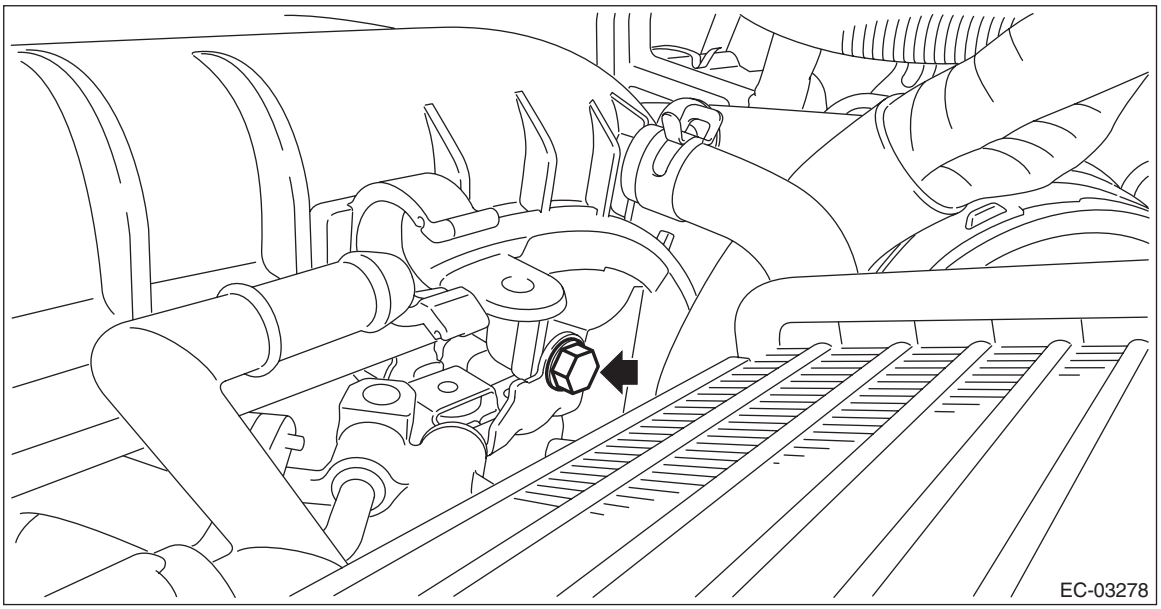

5) Remove the nut which secures the purge control solenoid valve 2 to the solenoid valve bracket.

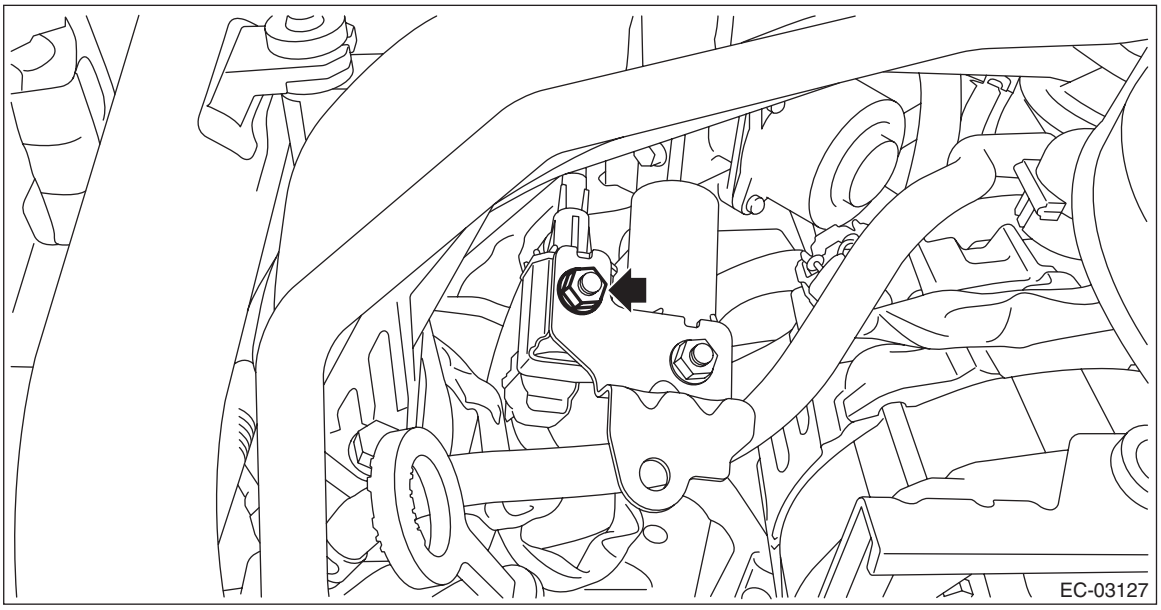

6) Disconnect the connector (A) and vacuum hose (B) from the purge control solenoid valve 2, and remove the purge control solenoid valve 2.

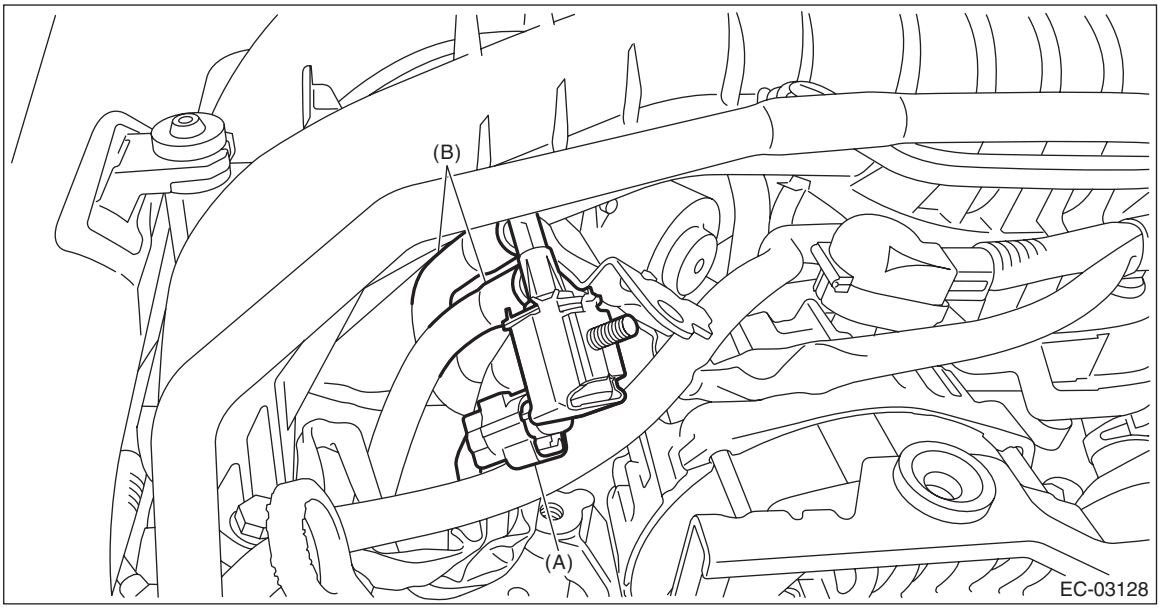

B: INSTALLATION

1. PURGE CONTROL SOLENOID VALVE 1

Install in the reverse order of removal.

NOTE:
Connect the vacuum hose as shown in the figure.

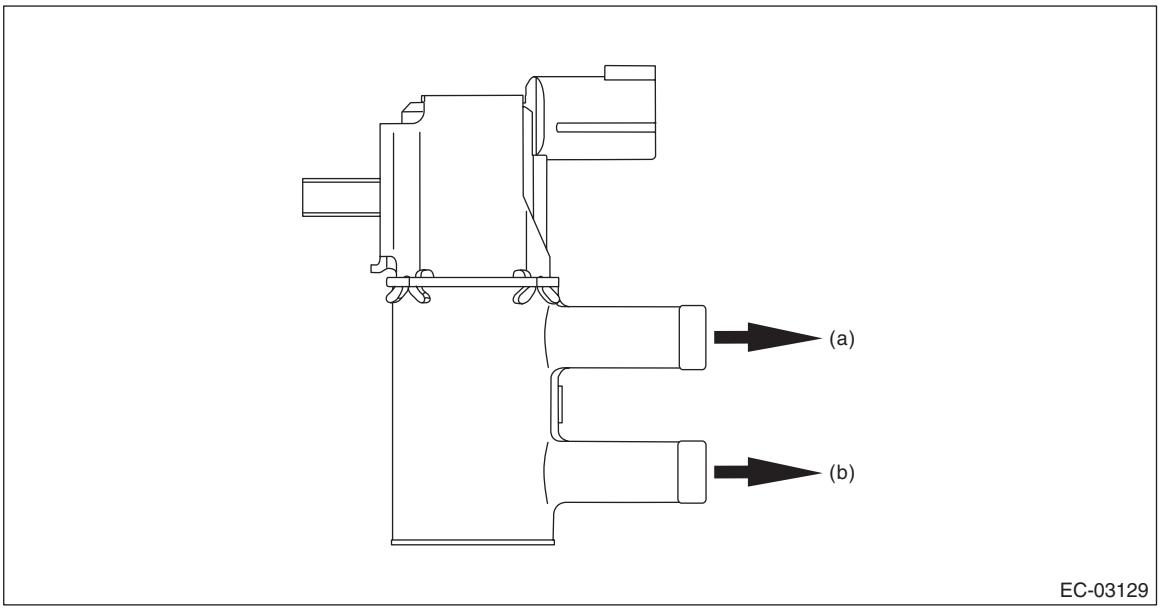

(a) To intake manifold (b) To fuel pipe

Tightening torque:
6.4 N·m (0.7 kgf-m, 4.7 ft-lb)

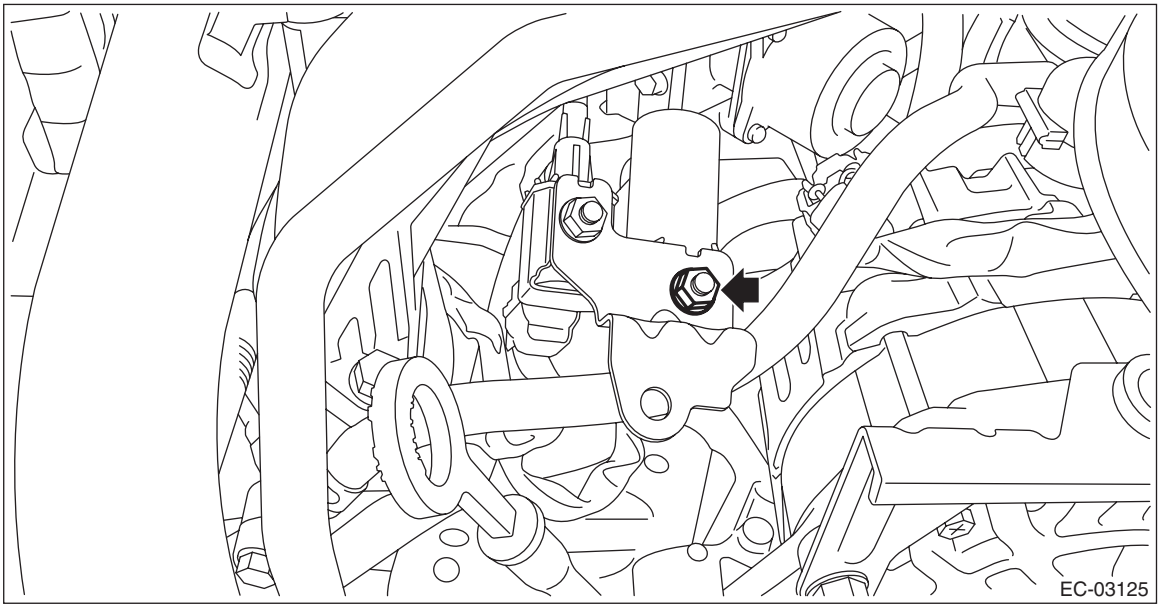

Tightening torque:
19 N·m (1.9 kgf-m, 14.0 ft-lb)

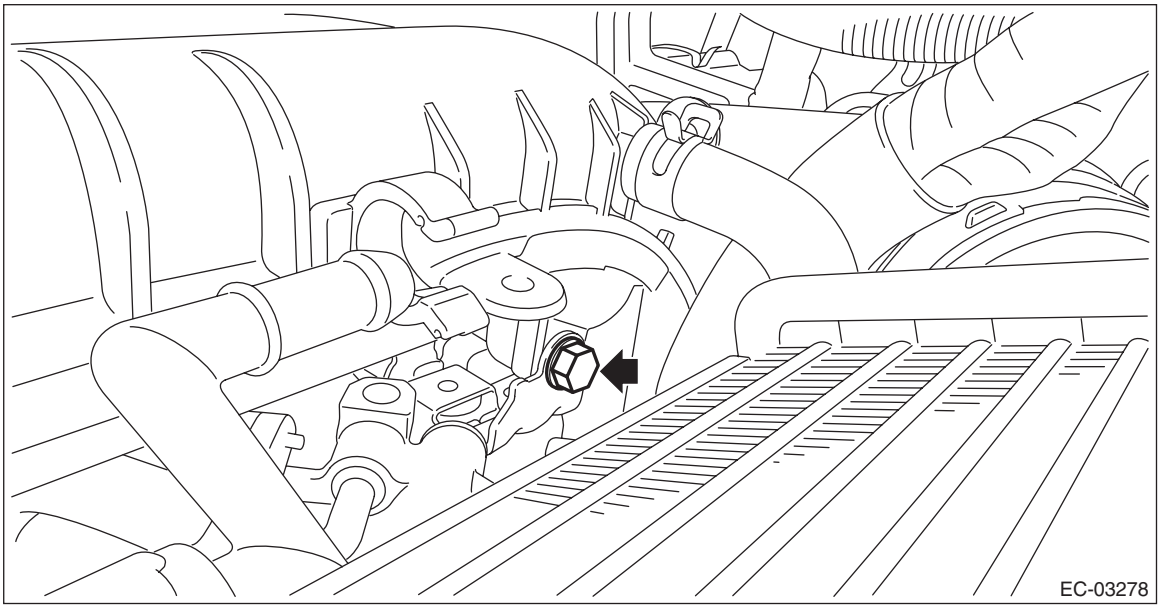

2. PURGE CONTROL SOLENOID VALVE 2

Install in the reverse order of removal.

NOTE:
Connect the vacuum hose as shown in the figure.

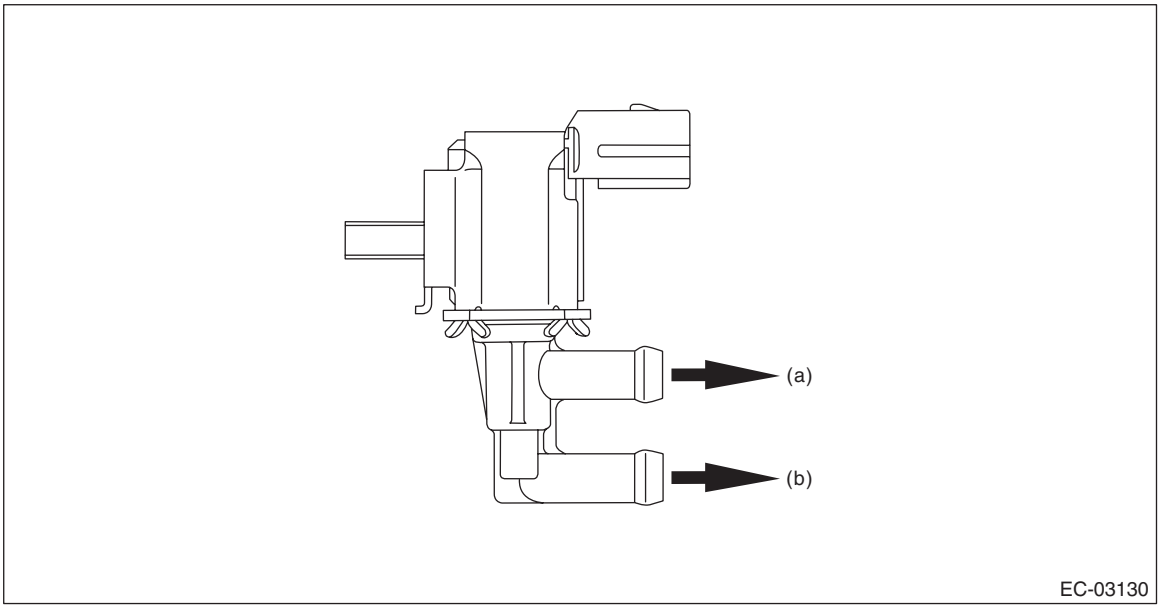

(a) To intake duct
(b) To fuel pipe

Tightening torque:
6.4 N·m (0.7 kgf-m, 4.7 ft-lb)

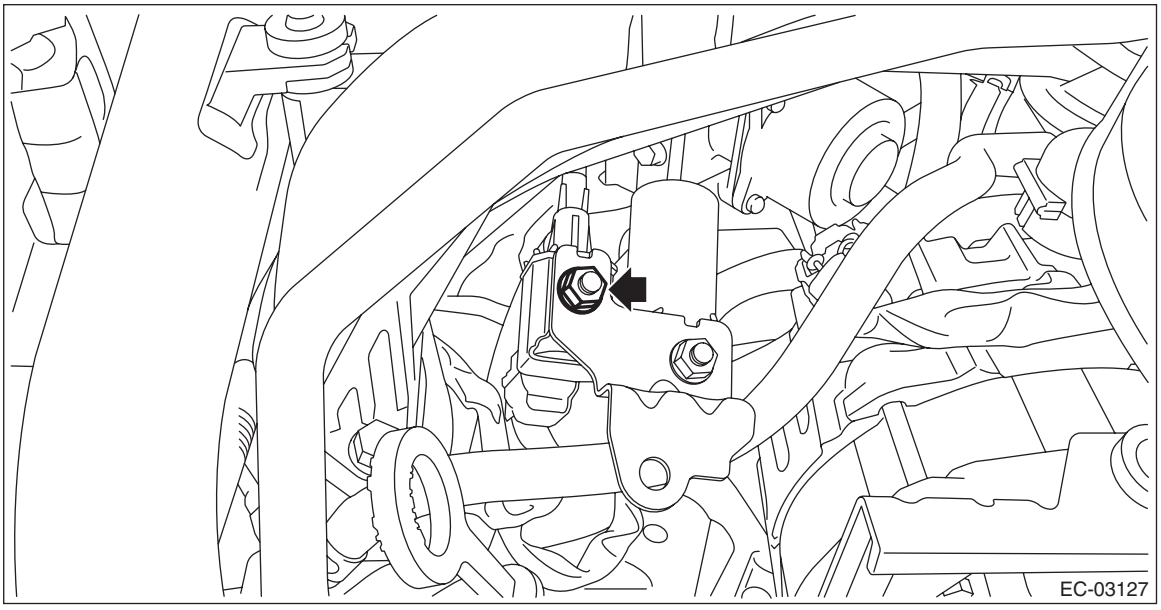

Tightening torque:
19 N·m (1.9 kgf-m, 14.0 ft-lb)

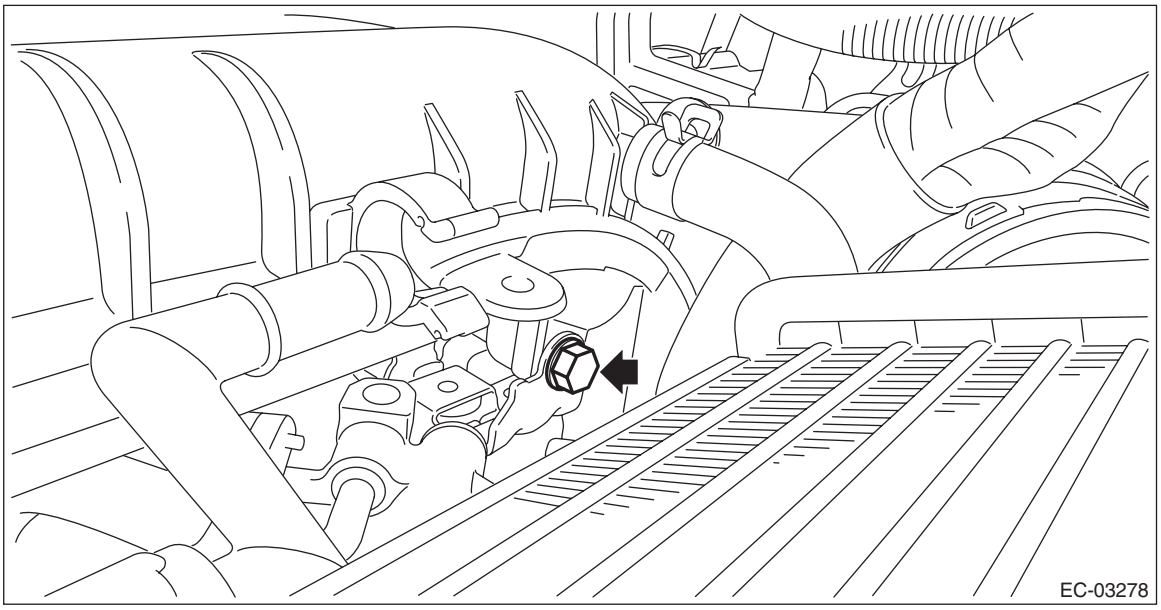

C: INSPECTION

1. PURGE CONTROL SOLENOID VALVE

1) Check that the purge control solenoid valve has no deformation, cracks or other damages.
2) Measure the resistance between the purge control solenoid valve terminals.

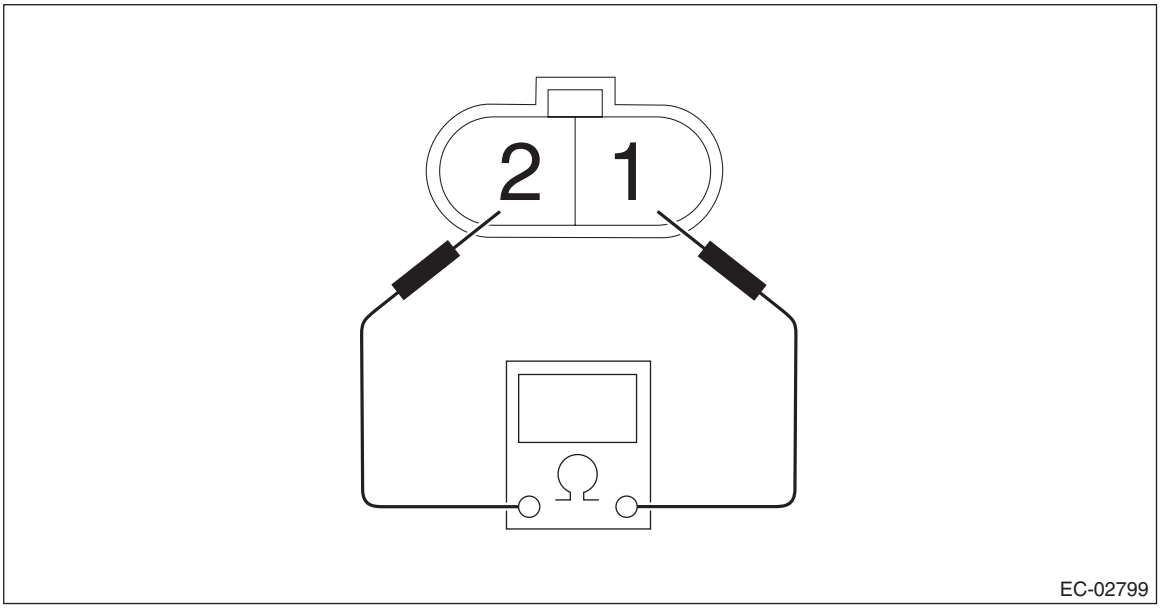

Terminal No.	Standard
1 and 2	24±3 Ω (20°C (68°F))

3) Check that air does not come out from (B) when air is blown into (A).
- Purge control solenoid valve 1

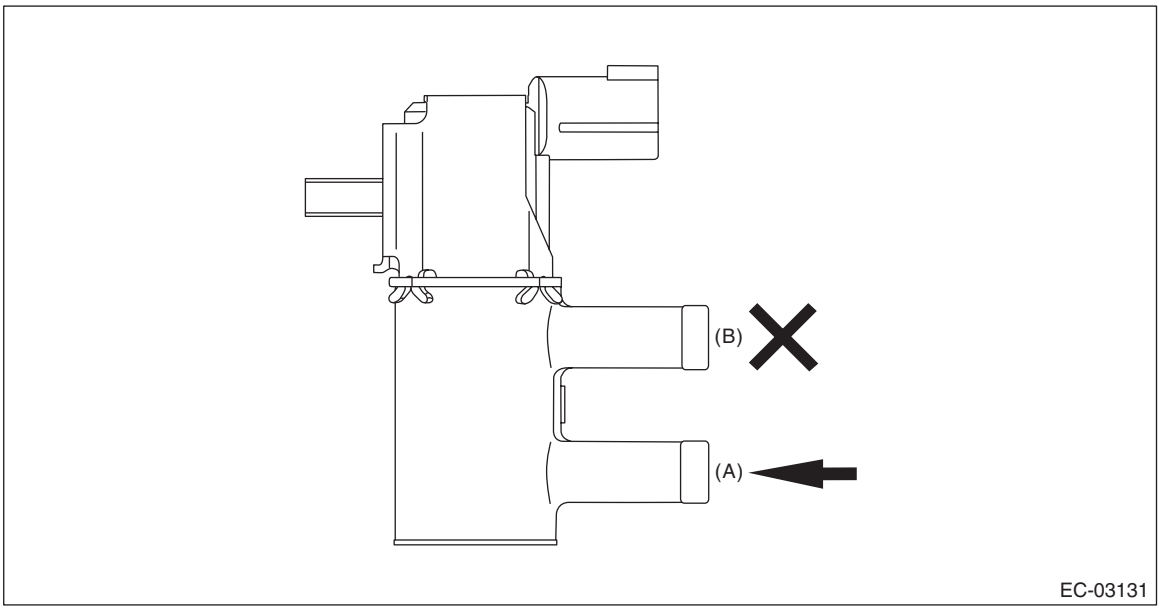

- Purge control solenoid valve 2

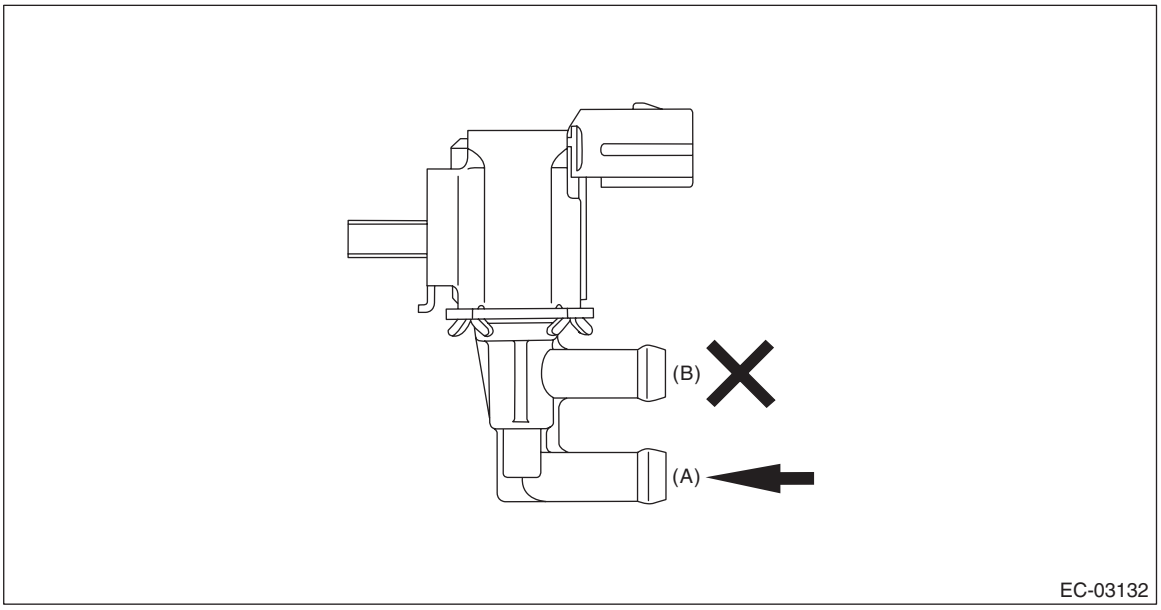

4) Connect the battery positive terminal to the terminal No. 1 and the battery negative terminal to the terminal No. 2. Check that air is discharged from (B), when supplying air to (A).

- Purge control solenoid valve 1

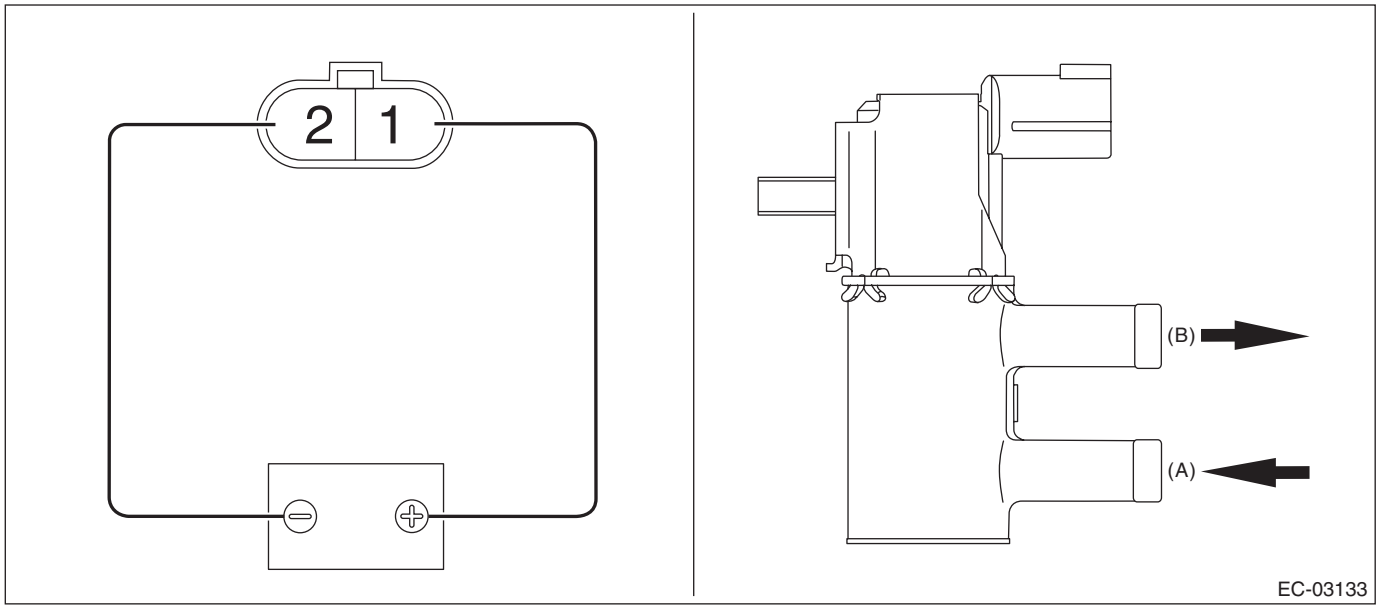

- Purge control solenoid valve 2

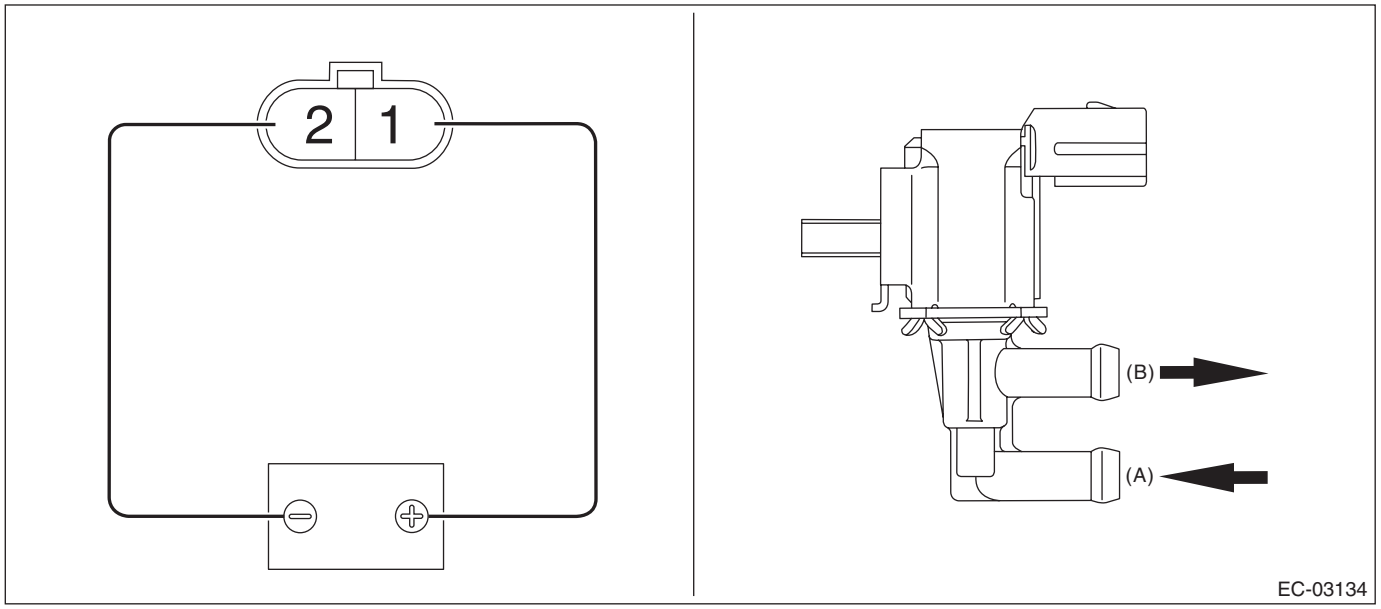

2. OTHER INSPECTIONS

Check the vacuum hose for cracks, damage or looseness.

6. EGR Pipe

A: REMOVAL

1) Remove the collector cover. <Ref. to IN(w/o STI)-7, REMOVAL, Collector Cover.>
2) Disconnect the ground terminal from battery sensor. <Ref. to NT-6, BATTERY, NOTE, Note.>
3) Remove the intercooler. <Ref. to IN(w/o STI)-43, REMOVAL, Intercooler.>
4) Remove the brake booster vacuum hose from the clip, and place the brake booster vacuum hose aside so that it does not interfere with the work.

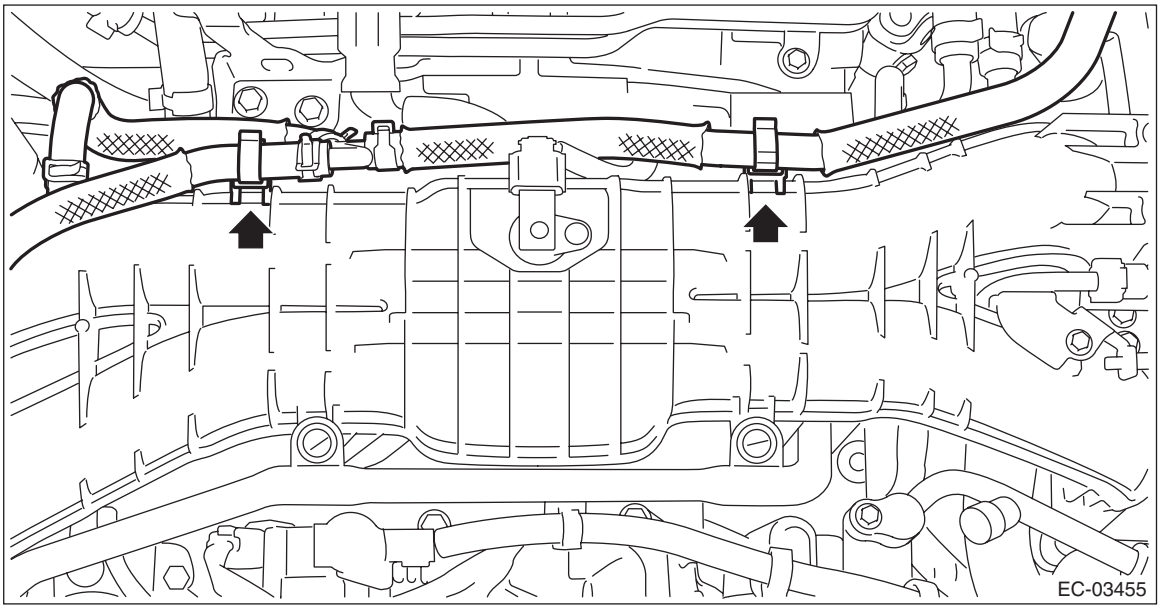

5) Remove the bolts which secure the EGR pipe to the intake manifold and EGR control valve, and remove the EGR pipe.

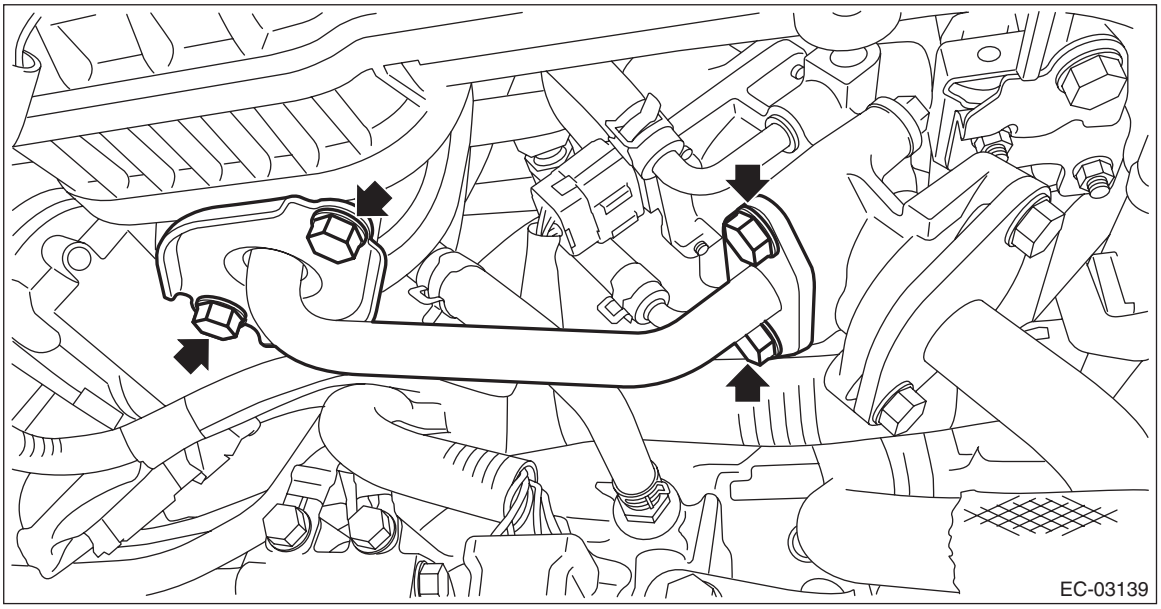

B: INSTALLATION

1) Install the EGR pipe to the intake manifold and EGR control valve.
   (1) Set the EGR pipe to the intake manifold and EGR control valve, and temporarily tighten the bolts which secure the EGR pipe to the intake manifold and EGR control valve.

NOTE:
Use new gaskets and O-rings.

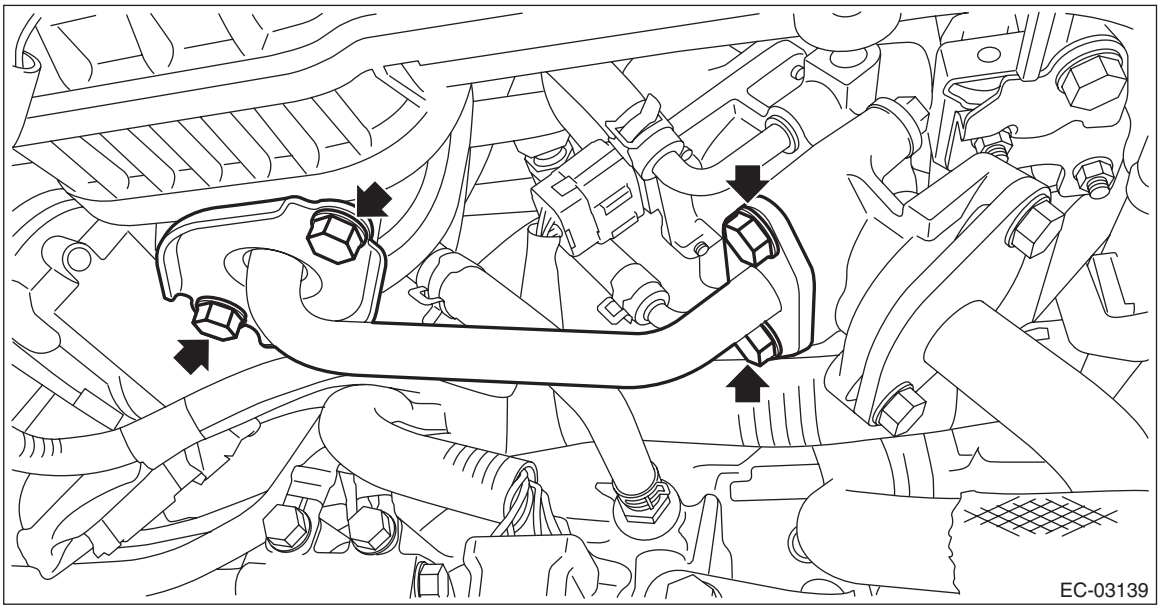

   (2) Tighten the bolts which secure the EGR pipe to the intake manifold and EGR control valve in numerical order as shown in the figure.

Tightening torque:
19 N·m (1.9 kgf-m, 14.0 ft-lb)

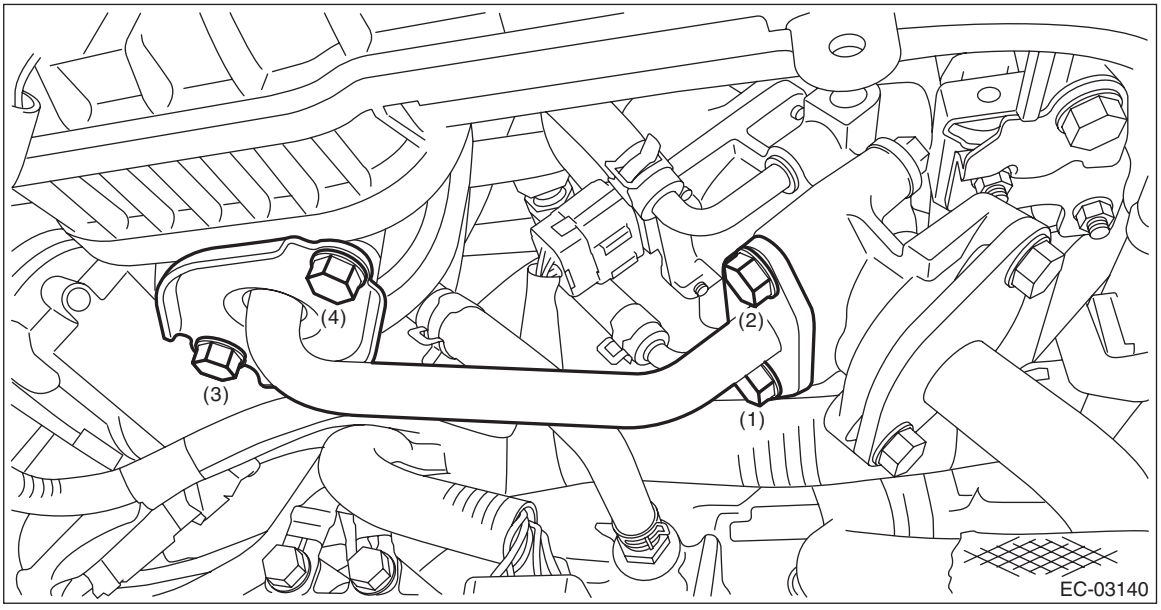

2) Install the brake booster vacuum hose to the clip.

NOTE:
If the clip is removed from the intake manifold, install the clip to the position of alignment mark ▼ of intake manifold.

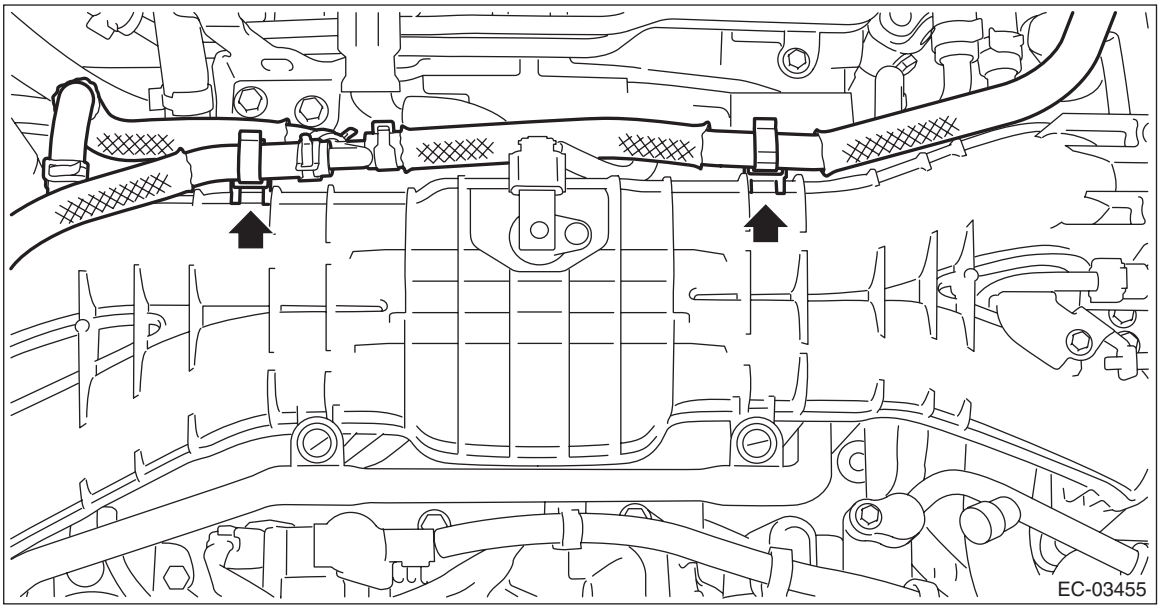

3) Install the intercooler. <Ref. to IN(w/o STI)-45, INSTALLATION, Intercooler.>
4) Connect the ground terminal to battery sensor. <Ref. to NT-6, BATTERY, NOTE, Note.>
5) Install the collector cover. <Ref. to IN(w/o STI)-10, INSTALLATION, Collector Cover.>

C: INSPECTION

Check that the EGR pipe has no deformation, cracks or other damages.

7. EGR Control Valve

A: REMOVAL

1) Remove the collector cover. <Ref. to IN(w/o STI)-7, REMOVAL, Collector Cover.>
2) Disconnect the ground terminal from battery sensor. <Ref. to NT-6, BATTERY, NOTE, Note.>
3) Lift up the vehicle.
4) Remove the under cover. <Ref. to EI-22, REMOVAL, Front Under Cover.>
5) Drain approximately 3.0 L (3.2 US qt, 2.6 Imp qt) of coolant. <Ref. to CO(w/o STI)-13, DRAINING OF ENGINE COOLANT, REPLACEMENT, Engine Coolant.>
6) Remove the intercooler. <Ref. to IN(w/o STI)-43, REMOVAL, Intercooler.>
7) Remove the EGR pipe. <Ref. to EC(w/o STI)-31, REMOVAL, EGR Pipe.>
8) Remove the bolts which secure the EGR cooler to the EGR control valve, and remove the bolts which secure the EGR control valve bracket A to the EGR control valve bracket B.

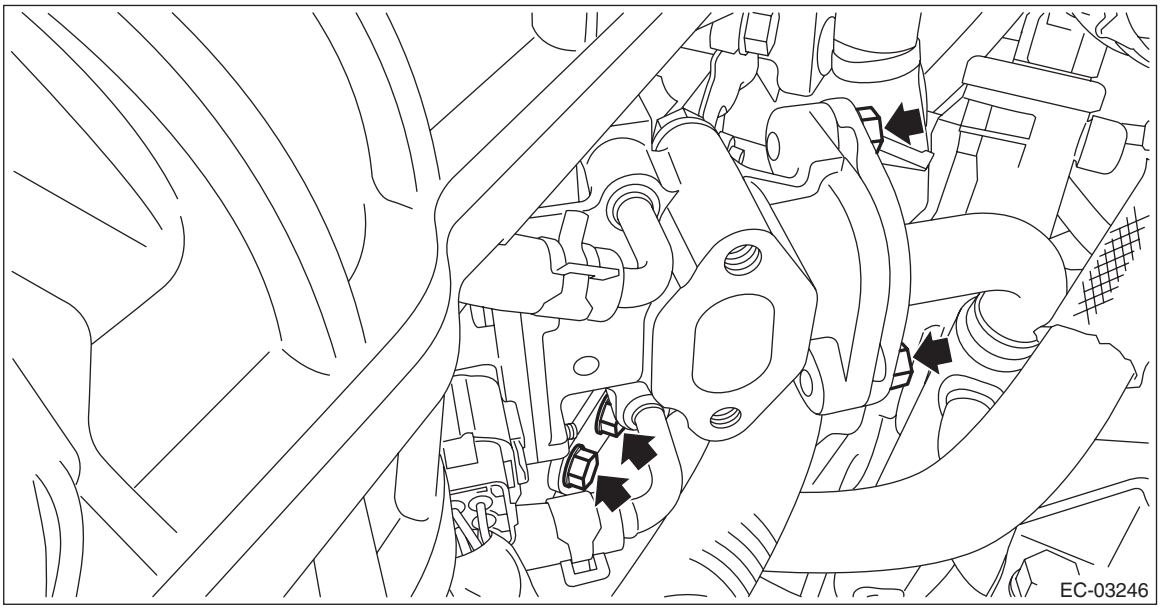

9) Disconnect the connector (A) and preheater hose (B) from EGR control valve, and remove the EGR control valve.

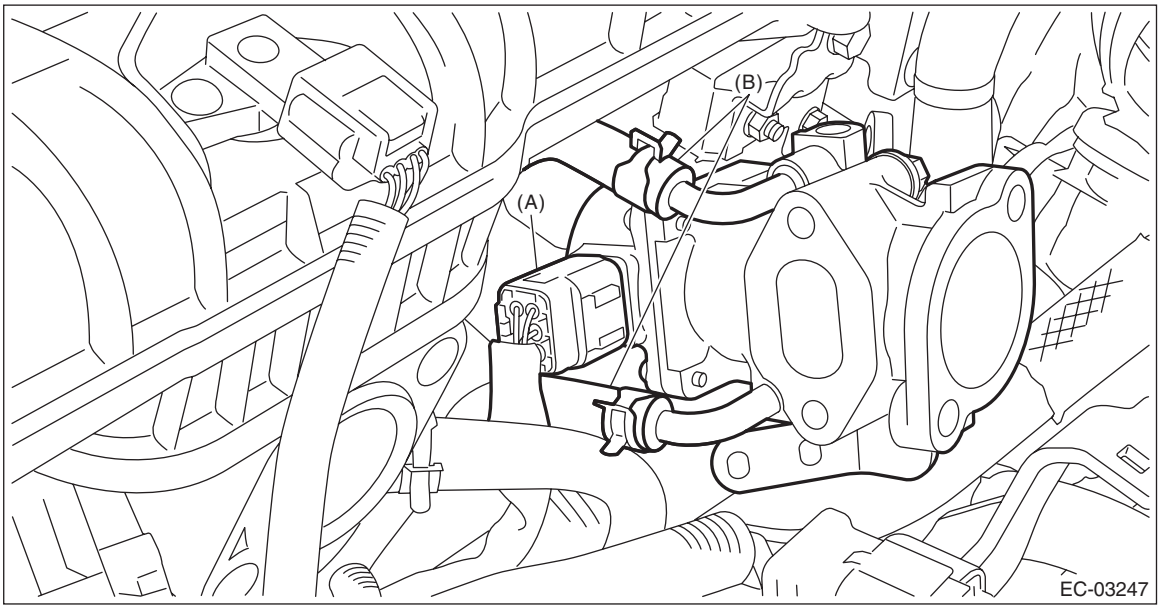

B: INSTALLATION

1) Connect the preheater hose (B) and connector (A) to the EGR control valve.

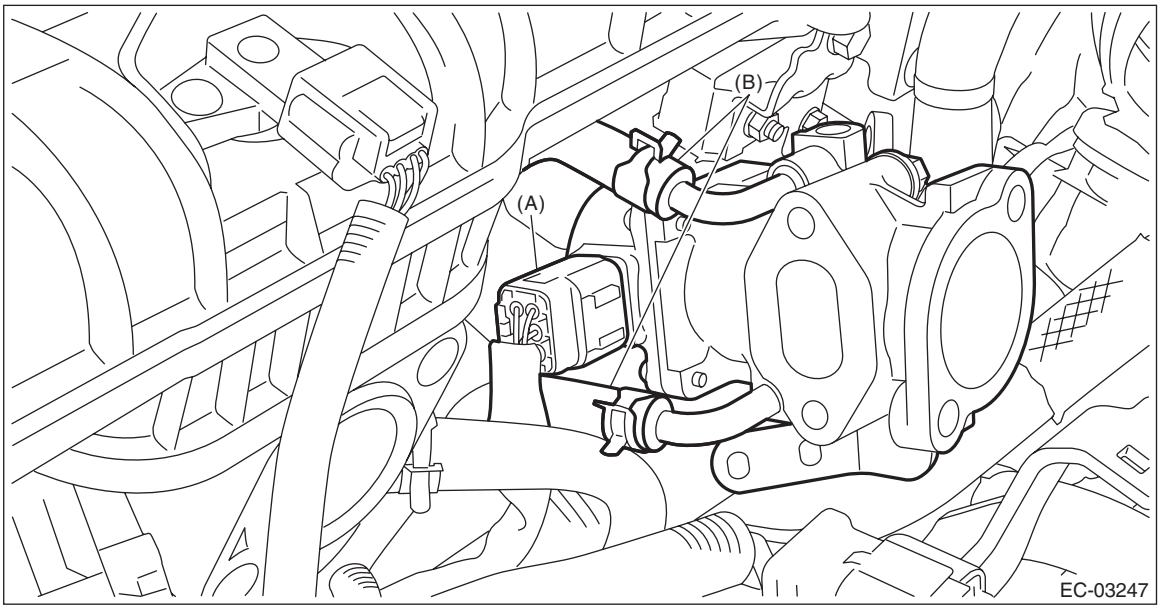

2) Install the EGR control valve and EGR control valve bracket A to the EGR cooler and EGR control valve bracket B.

(1) Set the EGR control valve and EGR control valve bracket A to the EGR cooler and EGR control valve bracket B, and temporarily tighten the bolts which secure the EGR control valve and EGR control valve bracket A to the EGR cooler and EGR control valve bracket B.

NOTE:
Use a new gasket.

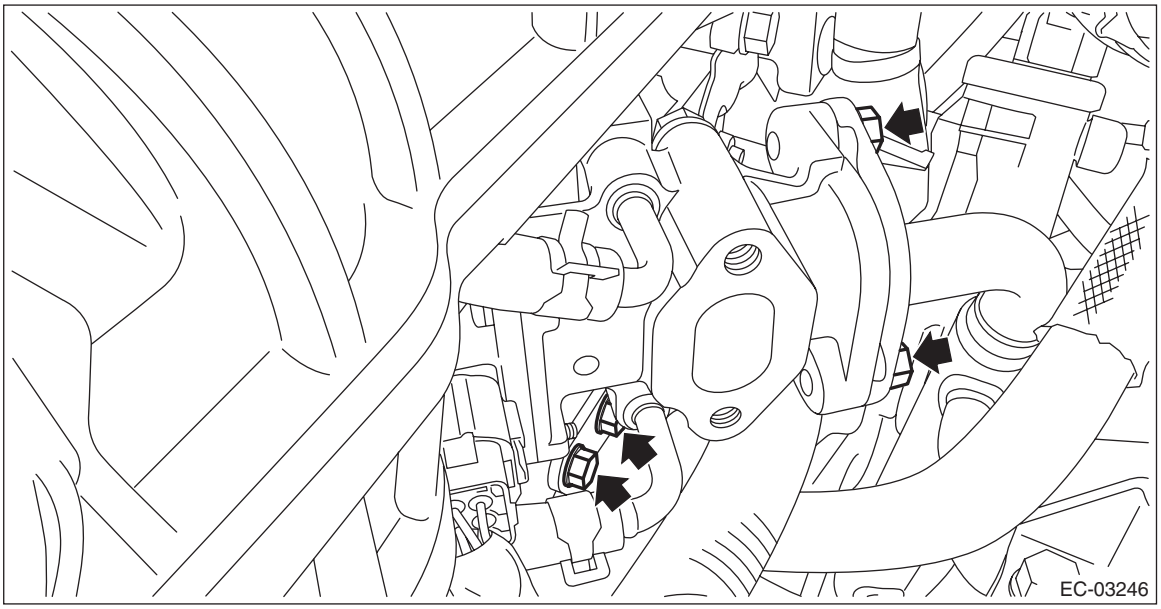

(2) Tighten the bolts which secure the EGR control valve and EGR control valve bracket A to the EGR cooler and EGR control valve bracket B in numerical order as shown in the figure.

Tightening torque:
T1: 6.4 N·m (0.7 kgf-m, 4.7 ft-lb)
T2: 19 N·m (1.9 kgf-m, 14.0 ft-lb)

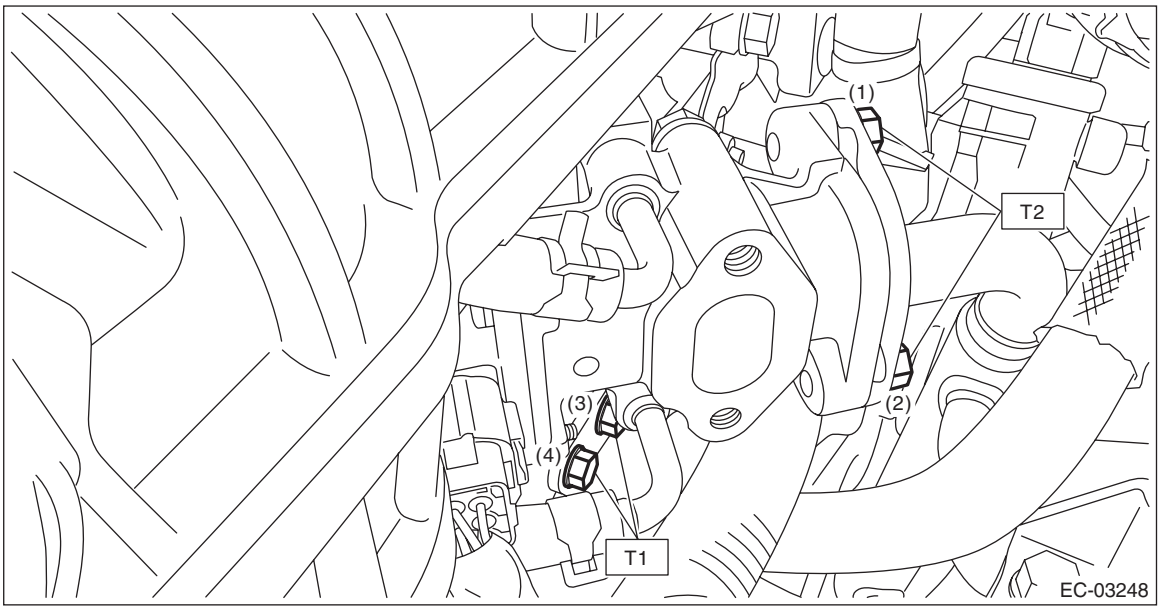

3) Install the EGR pipe. <Ref. to EC(w/o STI)-32, INSTALLATION, EGR Pipe.>
4) Install the intercooler. <Ref. to IN(w/o STI)-45, INSTALLATION, Intercooler.>
5) Lift up the vehicle.
6) Install the under cover. <Ref. to EI-23, INSTALLATION, Front Under Cover.>
7) Lower the vehicle.
8) Connect the ground terminal to battery sensor. <Ref. to NT-6, BATTERY, NOTE, Note.>
9) Fill engine coolant. <Ref. to CO(w/o STI)-14, FILLING OF ENGINE COOLANT, REPLACEMENT, Engine Coolant.>
10) Install the collector cover. <Ref. to IN(w/o STI)-10, INSTALLATION, Collector Cover.>

C: DISASSEMBLY

Remove the EGR control valve bracket A from the EGR control valve.

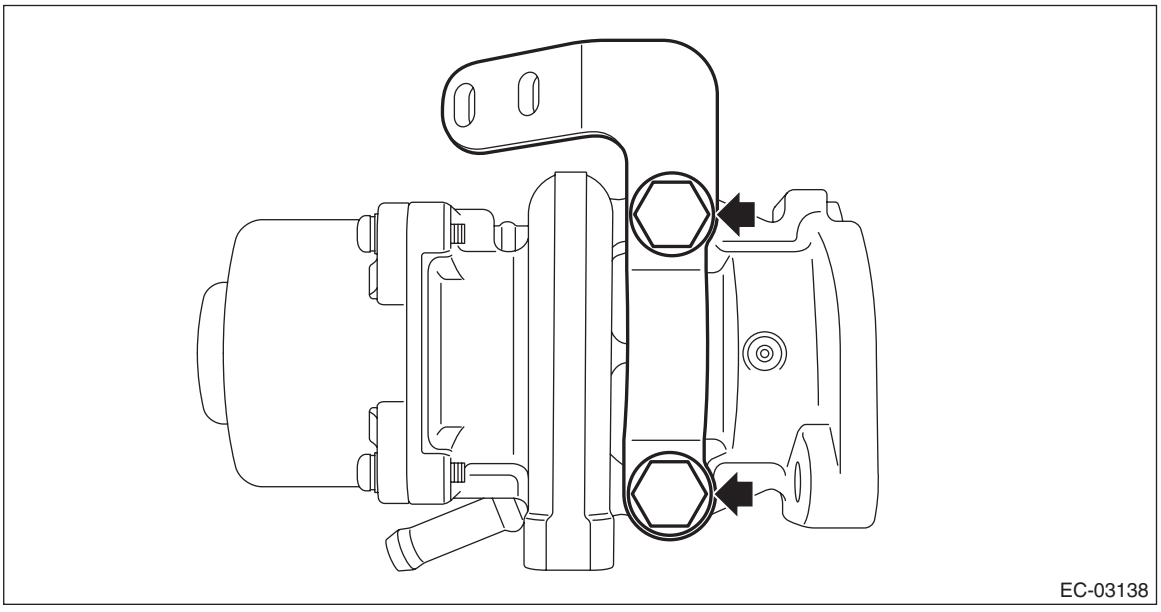

D: ASSEMBLY

Assemble in the reverse order of disassembly.

Tightening torque:
19 N·m (1.9 kgf-m, 14.0 ft-lb)

E: INSPECTION

1) Check that the EGR control valve and EGR control valve bracket A have no deformation, cracks or other damages.
2) Measure the resistance between EGR control valve terminals.

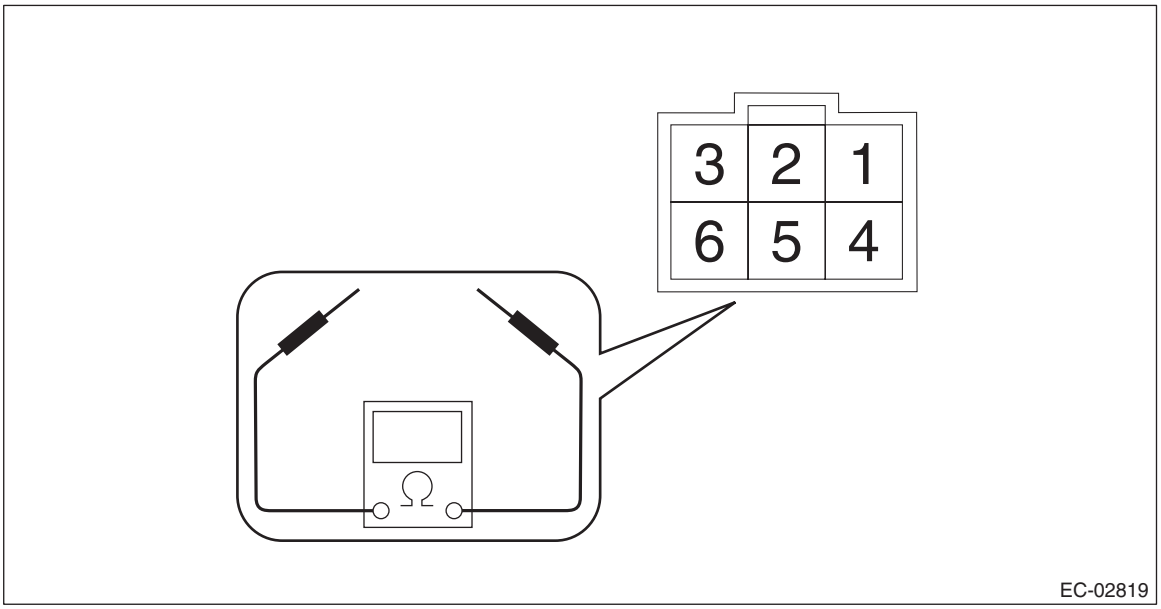

Terminal No.	Standard
2 and 1	15±2 Ω (20°C (68°F))
2 and 3	
5 and 4	
5 and 6	

8. EGR Cooler

A: REMOVAL

1) Remove the collector cover. <Ref. to IN(w/o STI)-7, REMOVAL, Collector Cover.>
2) Disconnect the ground terminal from battery sensor. <Ref. to NT-6, BATTERY, NOTE, Note.>
3) Remove the intercooler. <Ref. to IN(w/o STI)-43, REMOVAL, Intercooler.>
4) Remove the brake booster vacuum hose from the clip, and place the brake booster vacuum hose aside so that it does not interfere with the work.

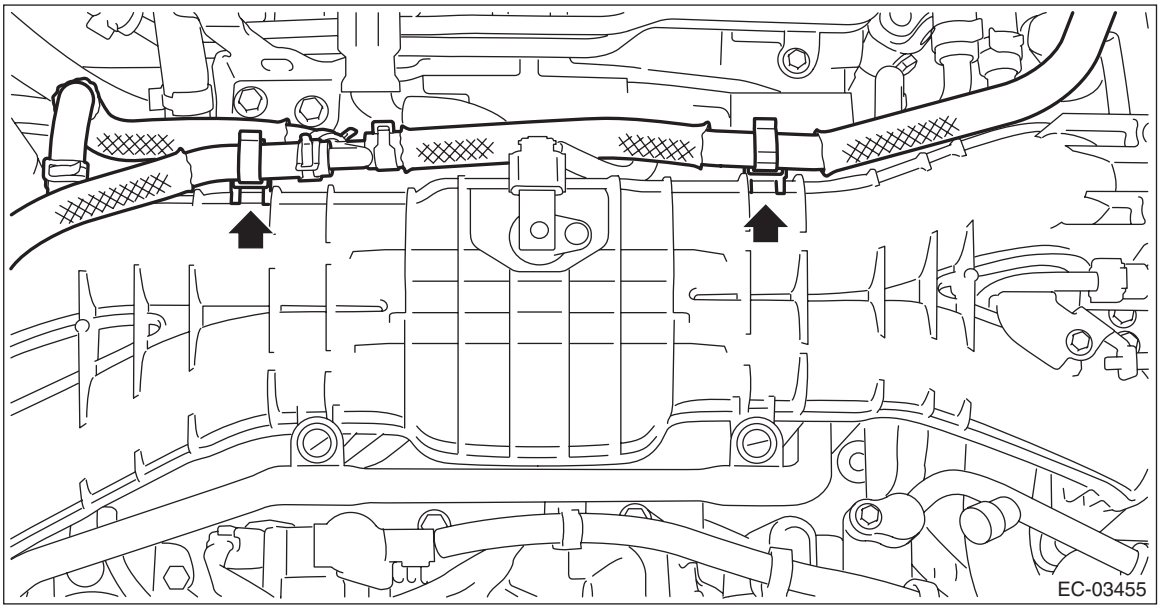

5) Lift up the vehicle.
6) Drain engine coolant. <Ref. to CO(w/o STI)-13, DRAINING OF ENGINE COOLANT, REPLACEMENT, Engine Coolant.>
7) Remove the nuts which secure the EGR cooler to the cylinder head RH.

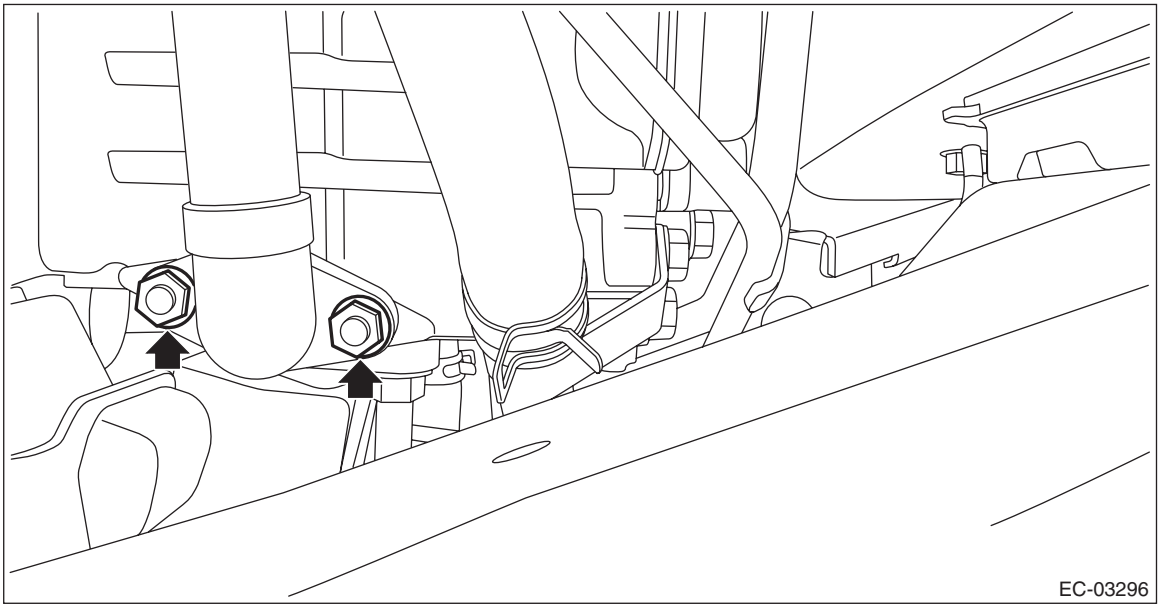

8) Disconnect the water hose A from the water pipe RH.

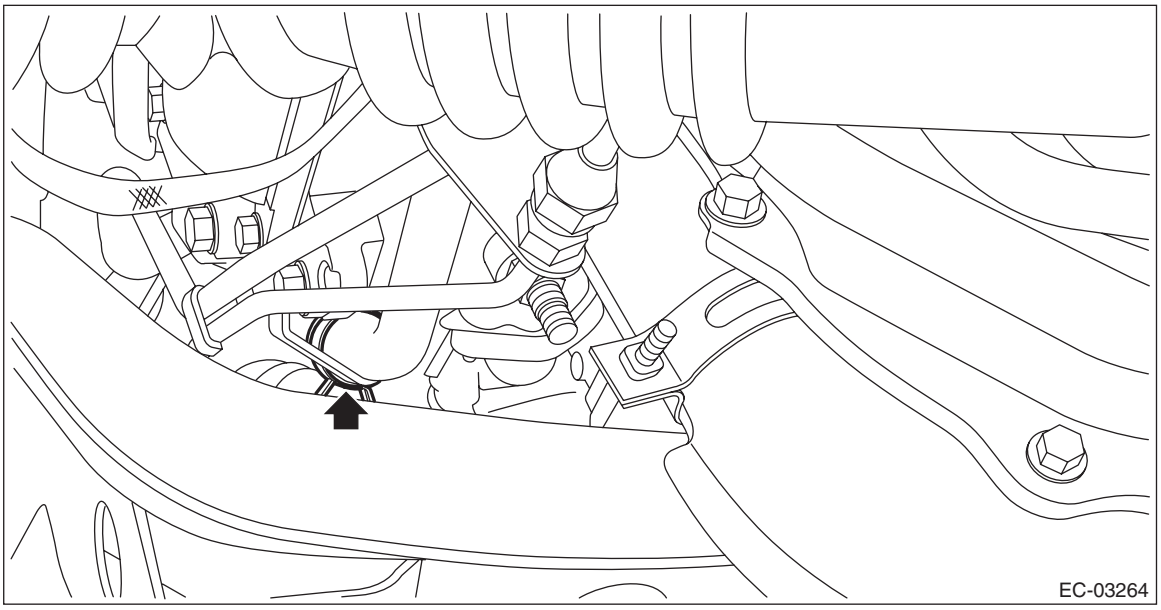

9) Lower the vehicle.

10) Disconnect the engine coolant inlet hose (CVT model) or water hose B (MT model) from the EGR cooler.

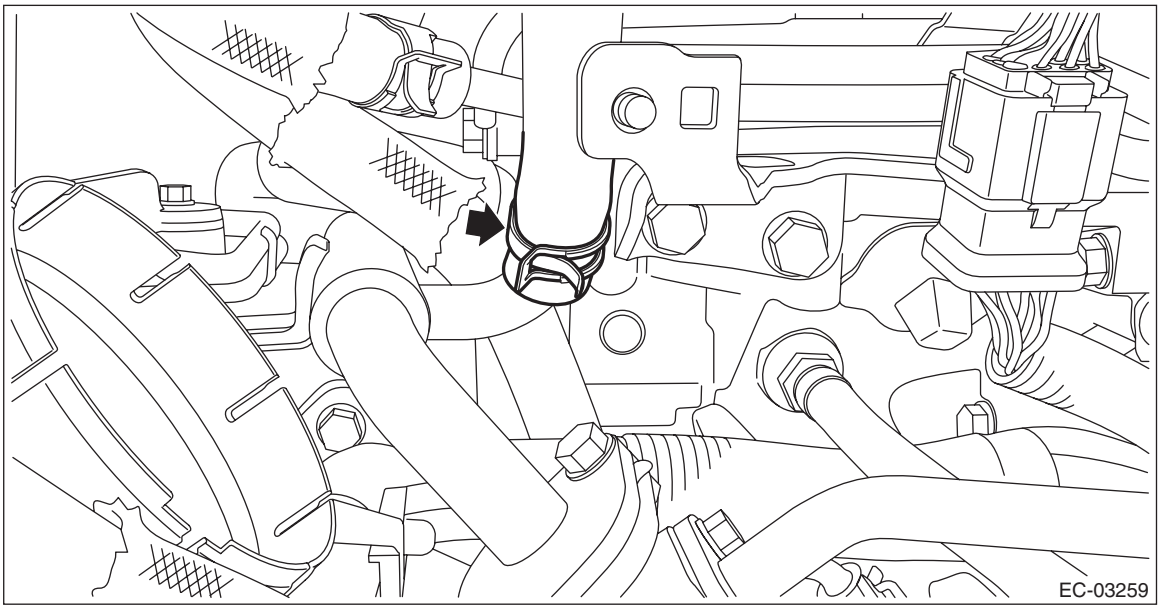

11) Remove the bolts which secure the EGR cooler to the EGR control valve and cylinder head RH, and remove the EGR cooler.

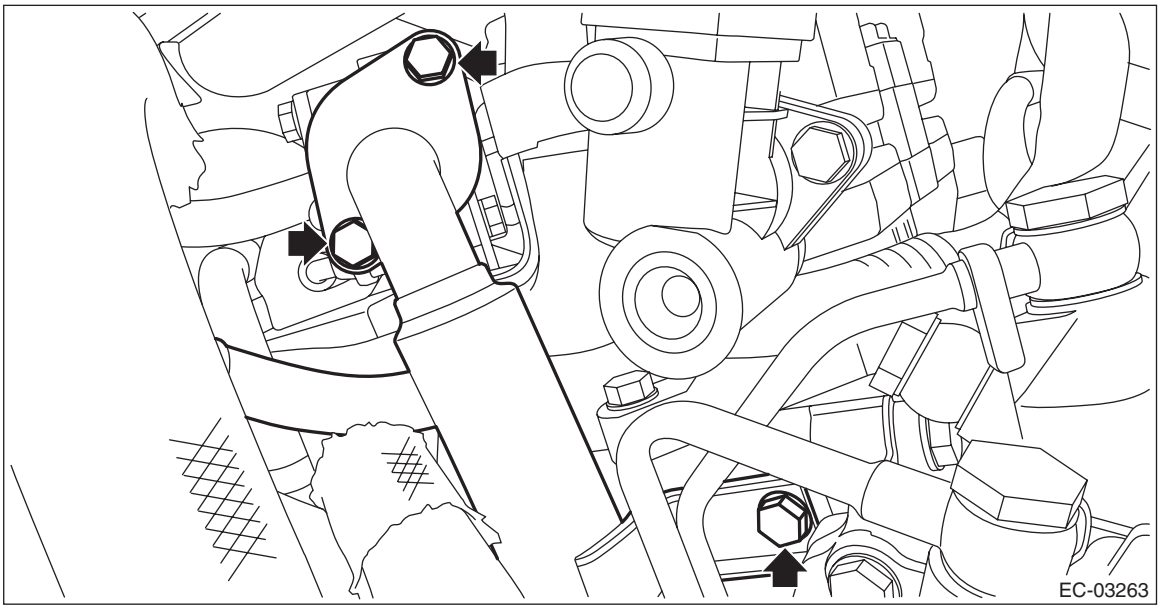

12) Remove the gasket (A) from the stud bolt, and remove the stud bolt from the cylinder head RH.

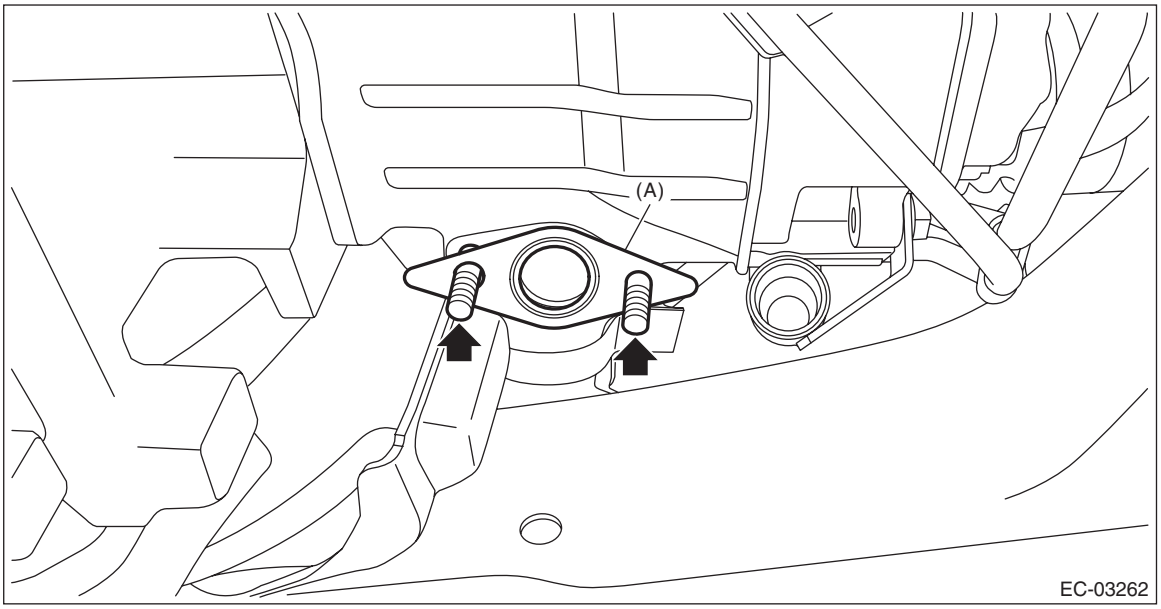

B: INSTALLATION

1) Install the stud bolt to the cylinder head RH, and set the gasket (A) to the stud bolt.

NOTE:
Use a new stud bolt and gasket.

Tightening torque:
6.4 N·m (0.7 kgf-m, 4.7 ft-lb)

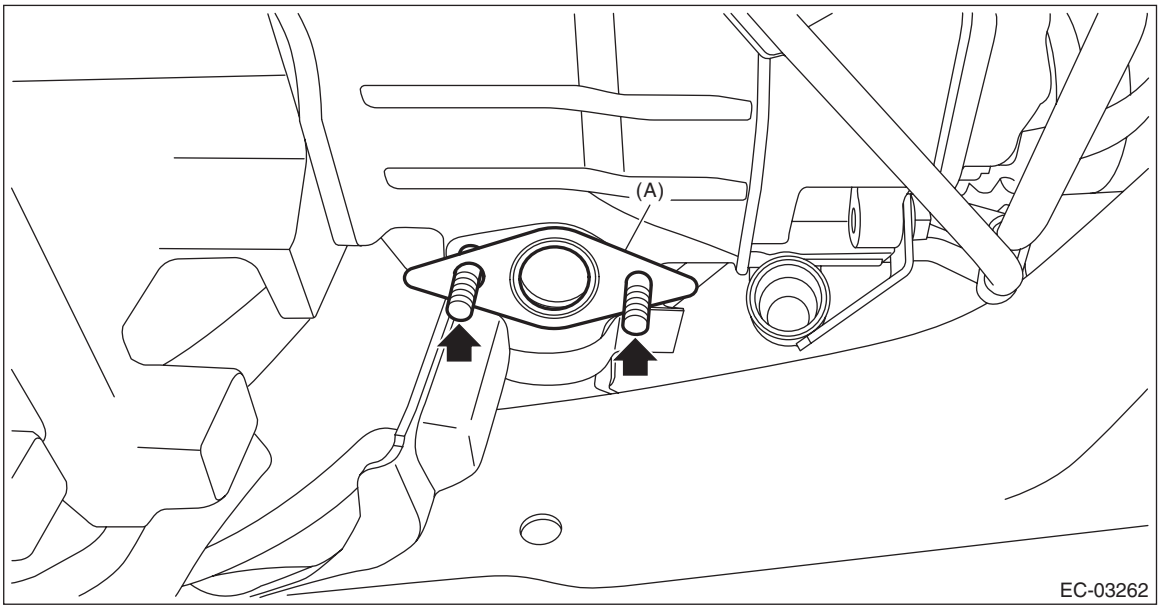

2) Lower the vehicle.
3) Set the EGR cooler to the EGR control valve and cylinder head RH, and temporarily tighten the bolts which secure the EGR cooler to the EGR control valve and cylinder head RH.

NOTE:
Use a new gasket.

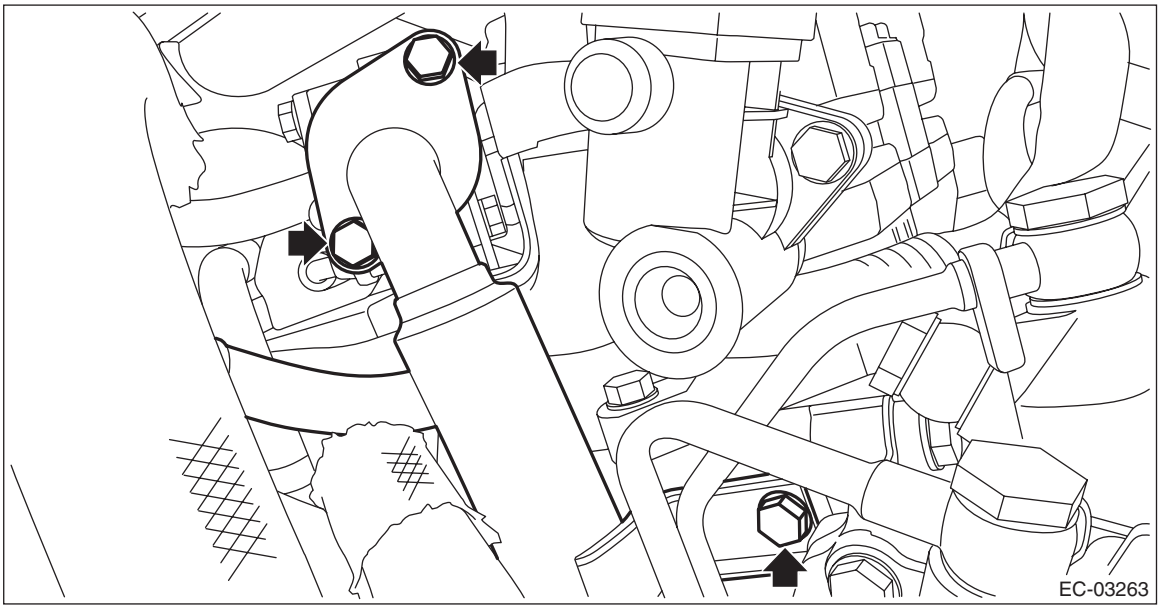

4) Connect the engine coolant inlet hose (CVT model) or water hose B (MT model) to the EGR cooler.

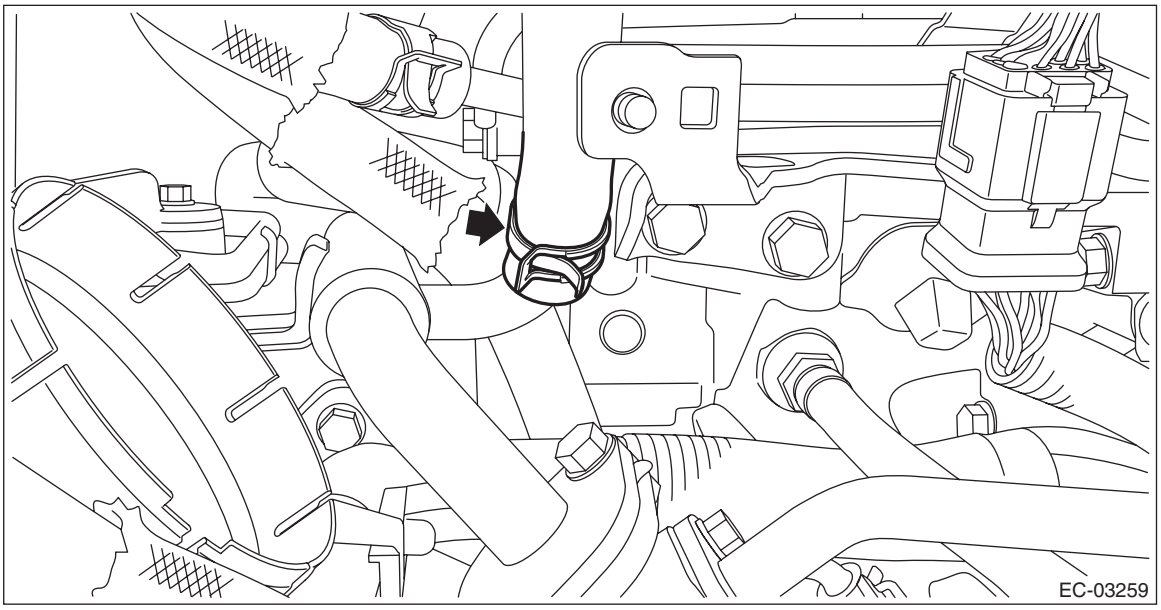

5) Lift up the vehicle.
6) Connect the water hose A to the water pipe RH.

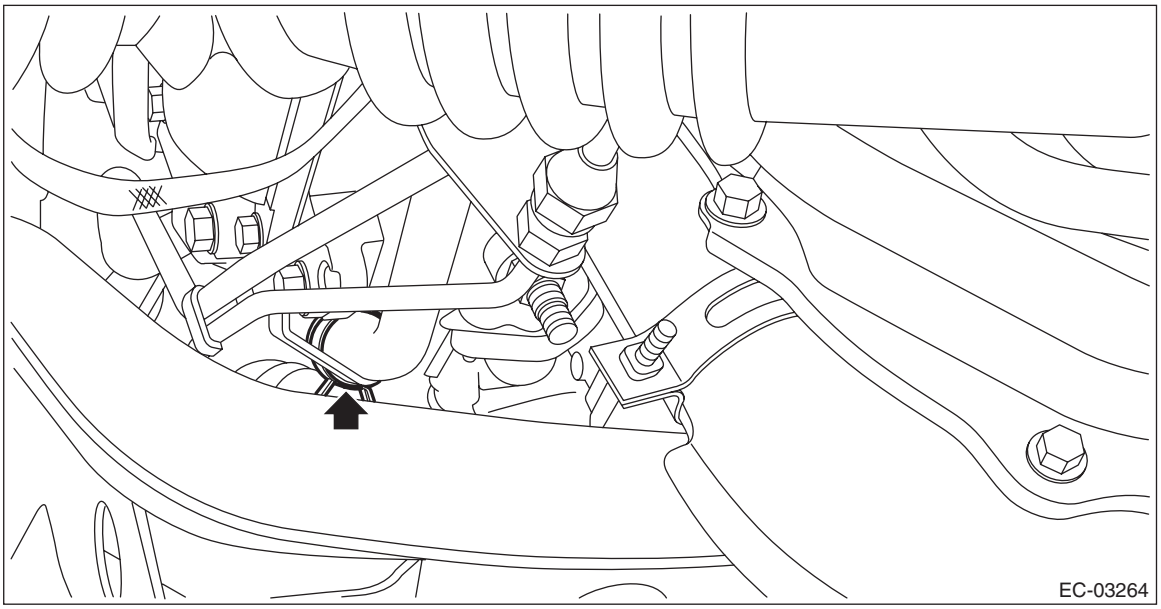

7) Install the EGR cooler to the cylinder head RH.
(1) Tighten the nuts which secure the EGR cooler to the cylinder head RH in numerical order as shown in the figure.

Tightening torque:
9 N·m (0.9 kgf-m, 6.6 ft-lb)

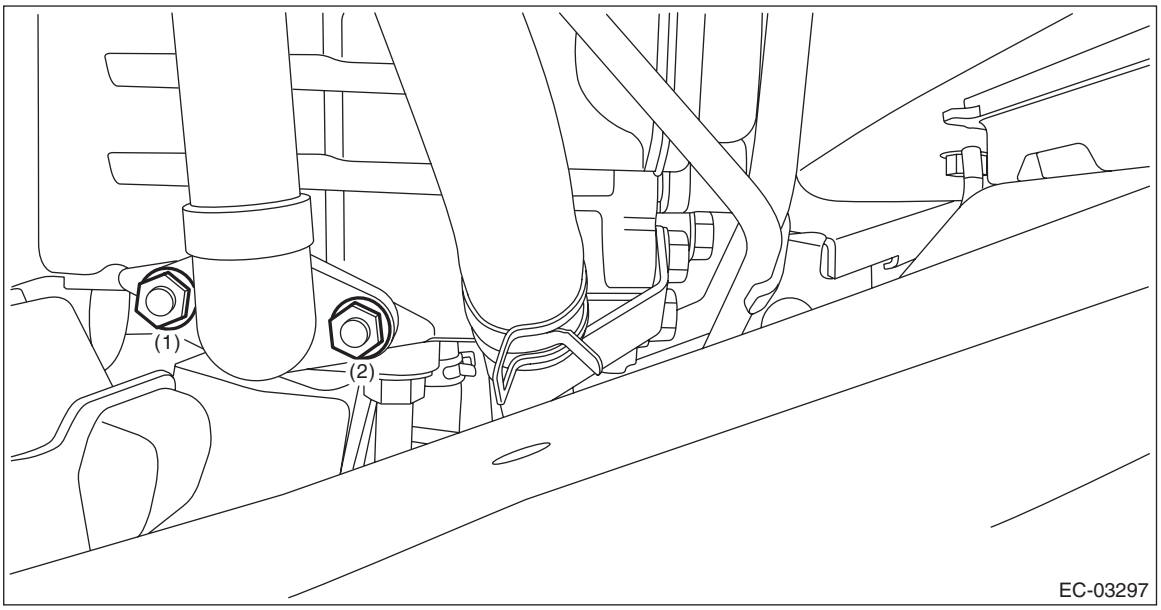

(2) Retighten the nut shown in the figure.

Tightening torque:
9 N·m (0.9 kgf-m, 6.6 ft-lb)

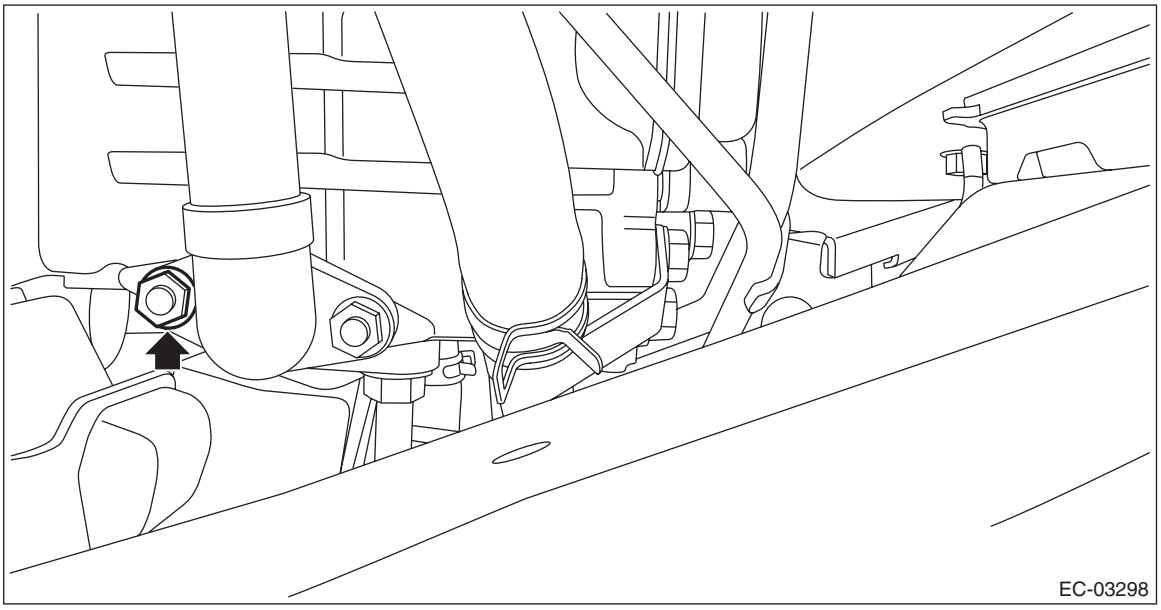

8) Tighten the bolts holding the EGR cooler to the cylinder head RH.

Tightening torque:
T1: 6.4 N·m (0.7 kgf-m, 4.7 ft-lb)

9) Tighten the bolt securing the EGR cooler to the EGR control valve.

Tightening torque:
T2: 19 N·m (1.9 kgf-m, 14.0 ft-lb)

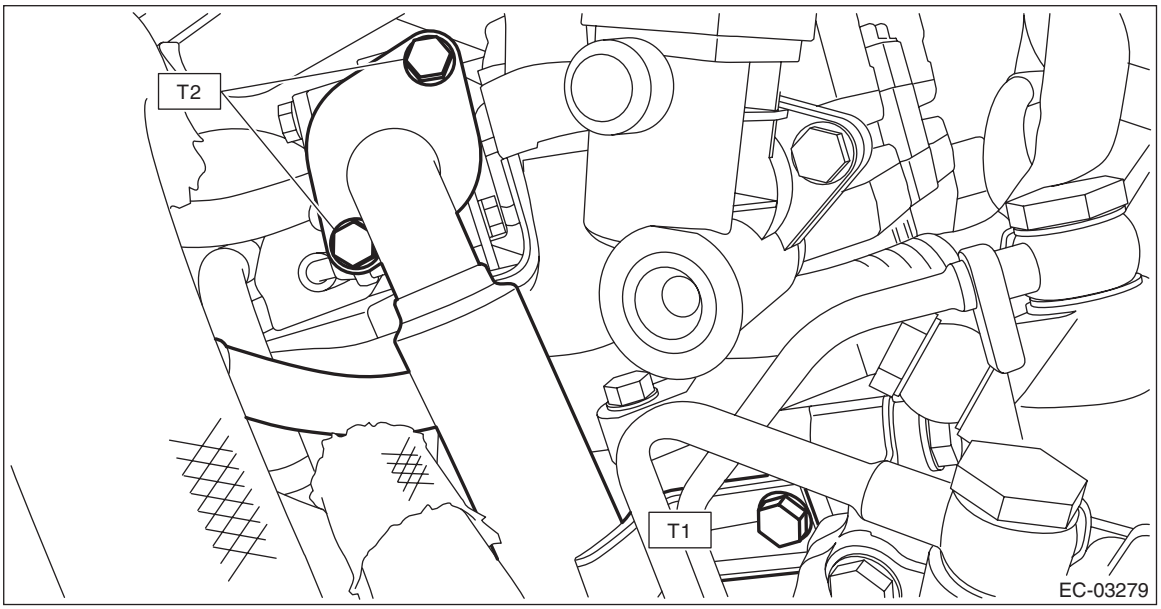

10) Lower the vehicle.
11) Install the brake booster vacuum hose to the clip.

NOTE:
If the clip is removed from the intake manifold, install the clip to the position of alignment mark ▼ of intake manifold.

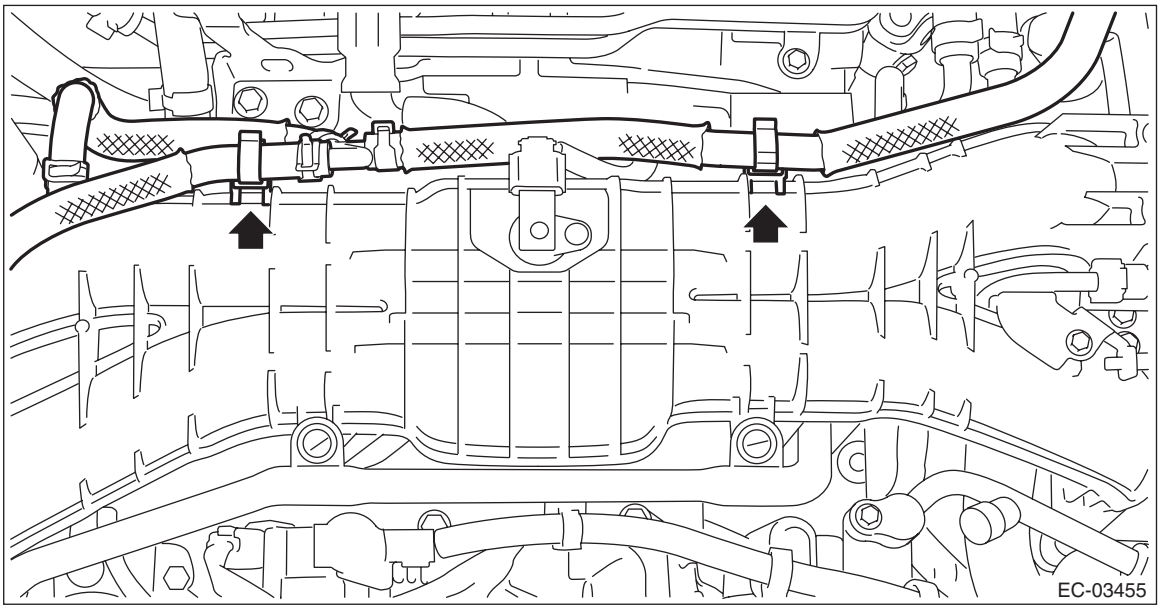

12) Install the intercooler. <Ref. to IN(w/o STI)-45, INSTALLATION, Intercooler.>
13) Connect the ground terminal to battery sensor. <Ref. to NT-6, BATTERY, NOTE, Note.>
14) Fill engine coolant. <Ref. to CO(w/o STI)-14, FILLING OF ENGINE COOLANT, REPLACEMENT, Engine Coolant.>
15) Install the collector cover. <Ref. to IN(w/o STI)-10, INSTALLATION, Collector Cover.>

C: DISASSEMBLY

Remove the water hose A from EGR cooler.

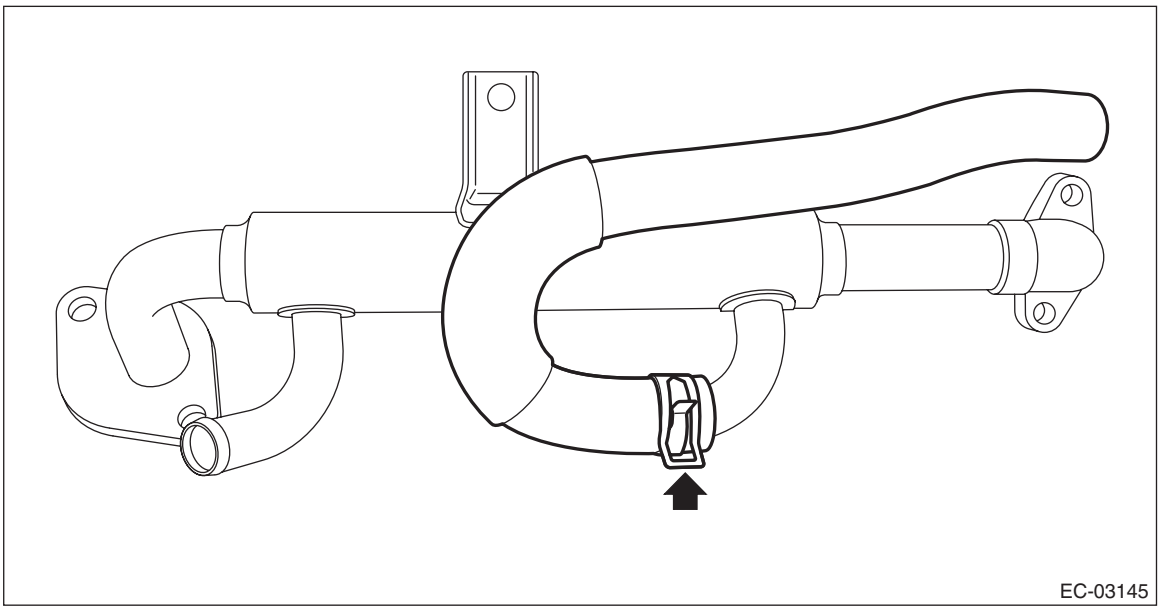

D: ASSEMBLY

Assemble in the reverse order of disassembly.

E: INSPECTION

1) Check that the EGR cooler has no deformation, cracks or other damages.
2) Check that the water hose has no cracks, damage or loose part.

9. Fuel Level Sensor

A: REMOVAL

Refer to “Fuel Level Sensor” for removal procedure of the fuel level sensor. <Ref. to FU(w/o STI)-168, REMOVAL, Fuel Level Sensor.>

B: INSTALLATION

Refer to “Fuel Level Sensor” for installation procedure of the fuel level sensor. <Ref. to FU(w/o STI)-169, INSTALLATION, Fuel Level Sensor.>

C: INSPECTION

Refer to “Fuel Level Sensor” for the fuel level sensor inspection procedure. <Ref. to FU(w/o STI)-170, INSPECTION, Fuel Level Sensor.>

10.Fuel Sub Level Sensor

A: REMOVAL

Refer to “Fuel Sub Level Sensor” for removal procedure of the fuel sub level sensor. <Ref. to FU(w/o STI)-171, REMOVAL, Fuel Sub Level Sensor.>

B: INSTALLATION

Refer to “Fuel Sub Level Sensor” for installation procedure of the fuel sub level sensor. <Ref. to FU(w/o STI)-174, INSTALLATION, Fuel Sub Level Sensor.>

C: INSPECTION

Refer to “Fuel Sub Level Sensor” for the fuel sub level sensor inspection procedure. <Ref. to FU(w/o STI)-179, INSPECTION, Fuel Sub Level Sensor.>

11.Drain Filter

A: REMOVAL

1) Remove the rear wheel LH. <Ref. to WT-5, REMOVAL, Tire and Wheel.>
2) Lift up the vehicle.
3) Remove the rear mud guard LH. <Ref. to EI-24, REMOVAL, Mud Guard.>
4) Disconnect the drain tube from the drain pipe.

NOTE:
Disconnect the quick connector as shown in the figure.

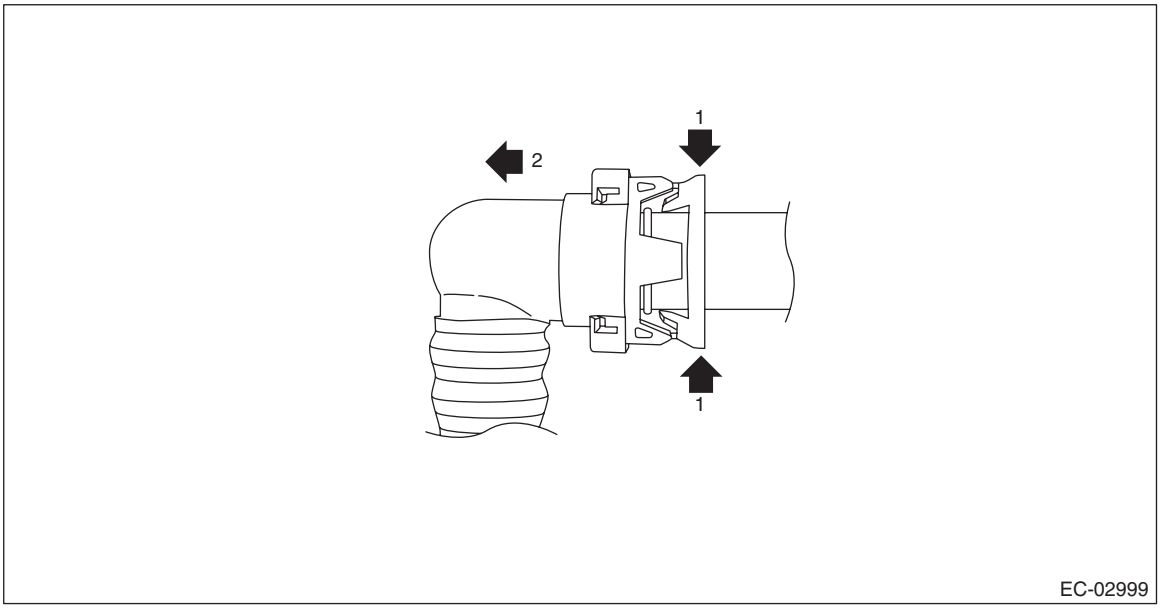

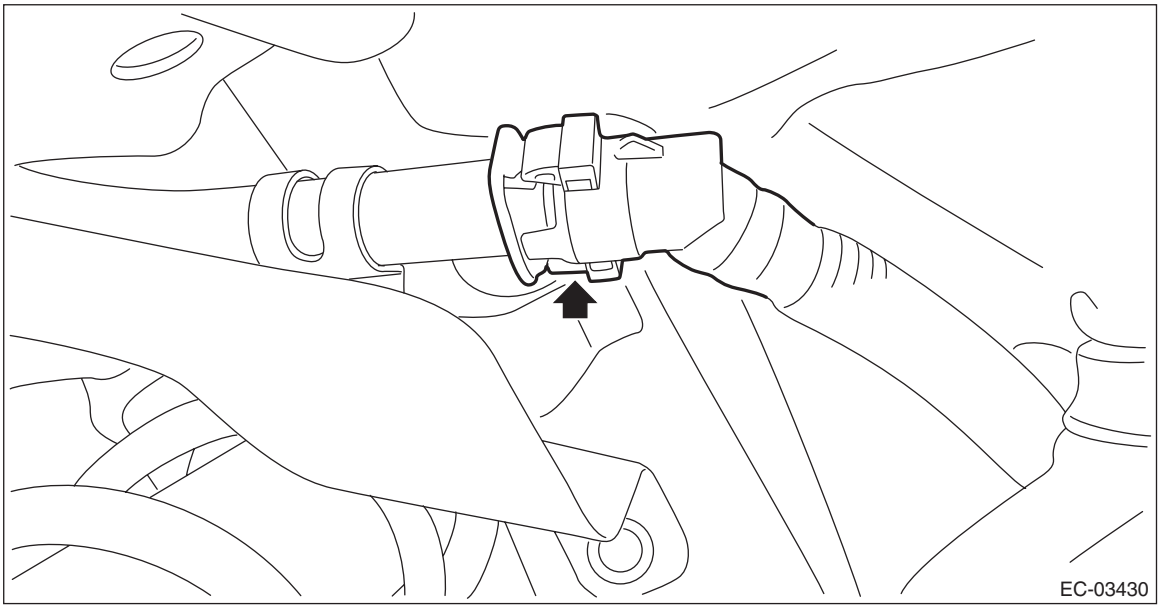

5) Remove the drain bracket and drain pipe from vehicle as a unit.

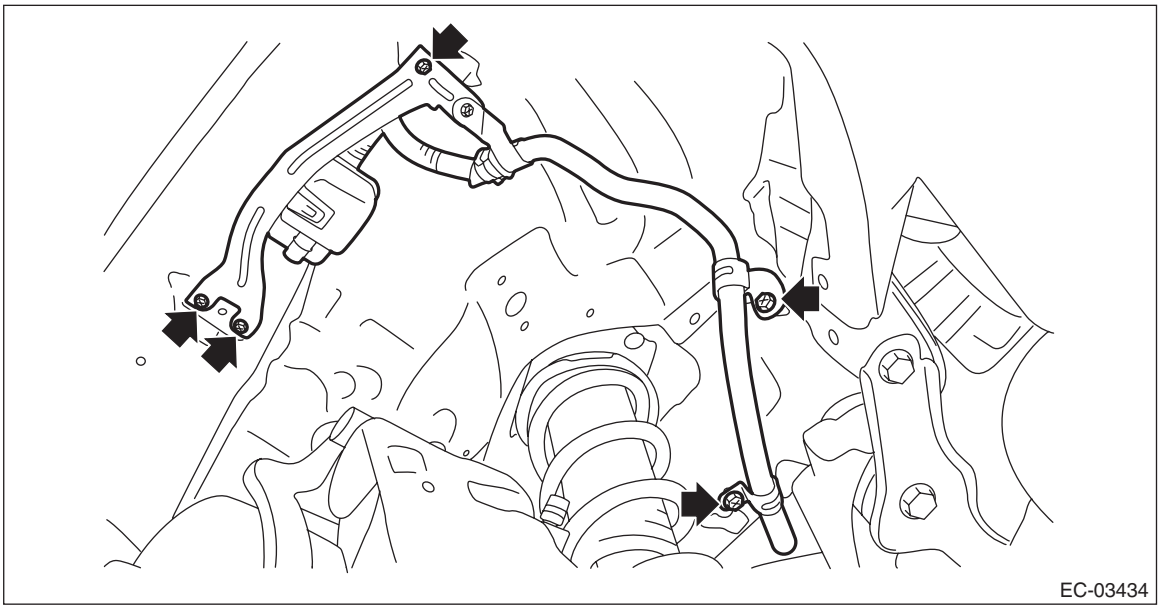
EC-03434

6) Remove the bolt (A) which holds drain pipe from the drain bracket.
7) Disconnect the drain tube (B) from the drain pipe.

NOTE:
- Disconnect the quick connector as shown in the figure.

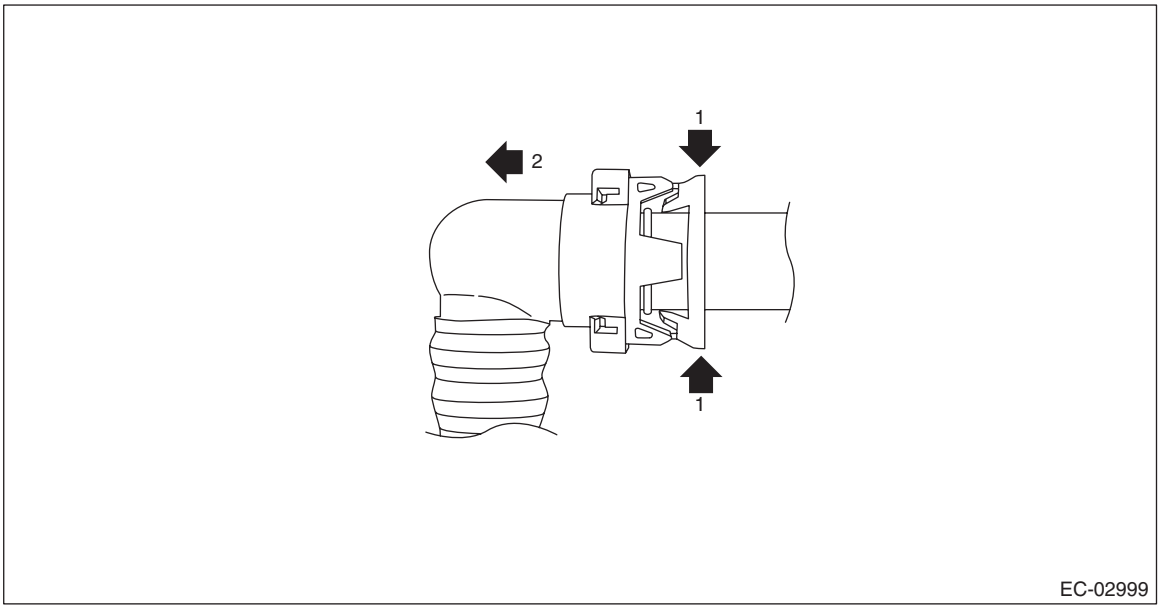

EC-02999

• The drain filter cannot be separated from the drain bracket. Therefore, be sure to replace both of them with new ones when replacing the drain bracket or drain filter.

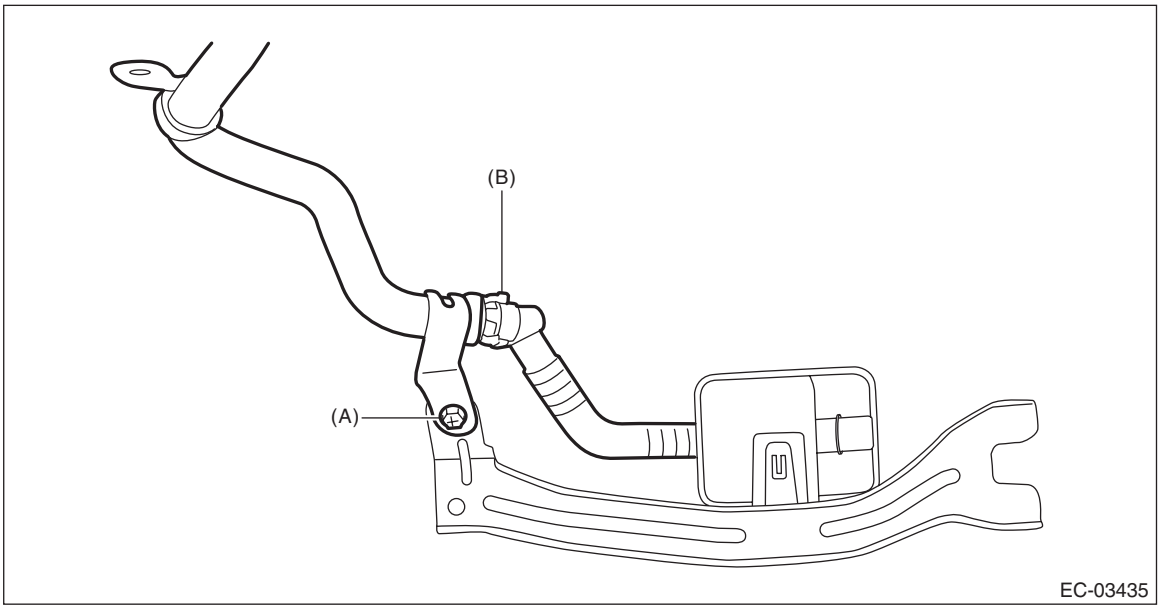

B: INSTALLATION

Install in the reverse order of removal.

CAUTION:
• Check that there is no damage or dust on the quick connector. If necessary, clean the seal surface of the pipe.
• Make sure that the quick connector is securely connected.

NOTE:
• Use a new drain bracket and a drain filter.
• Before installing the drain filter to the drain bracket, check that the claw (a) is securely tightened.

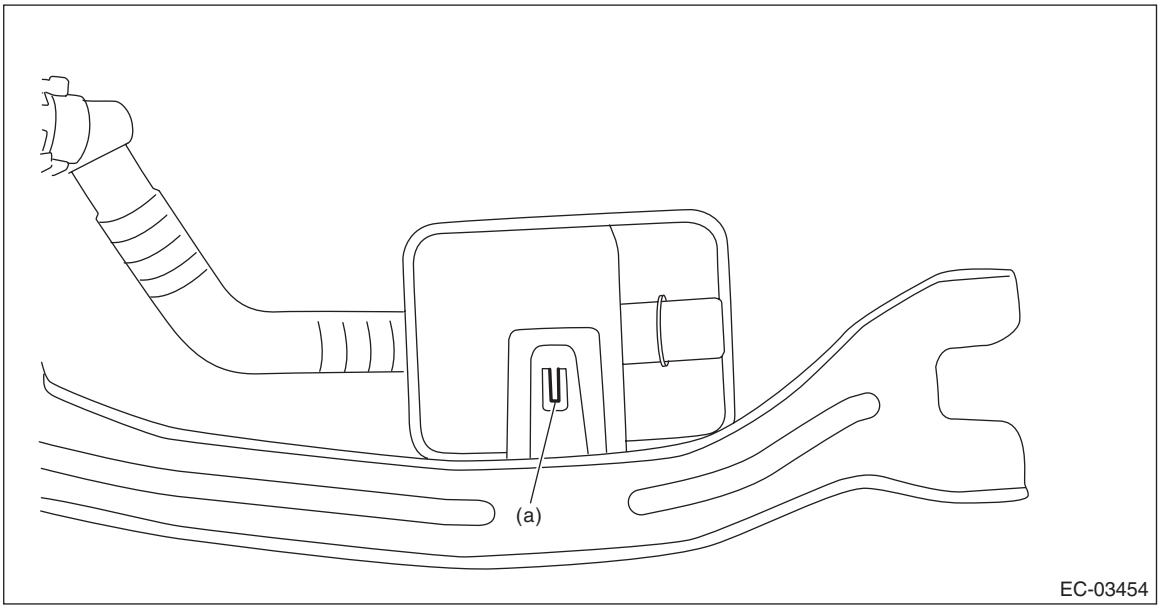

- Install the quick connector as shown in the figure.

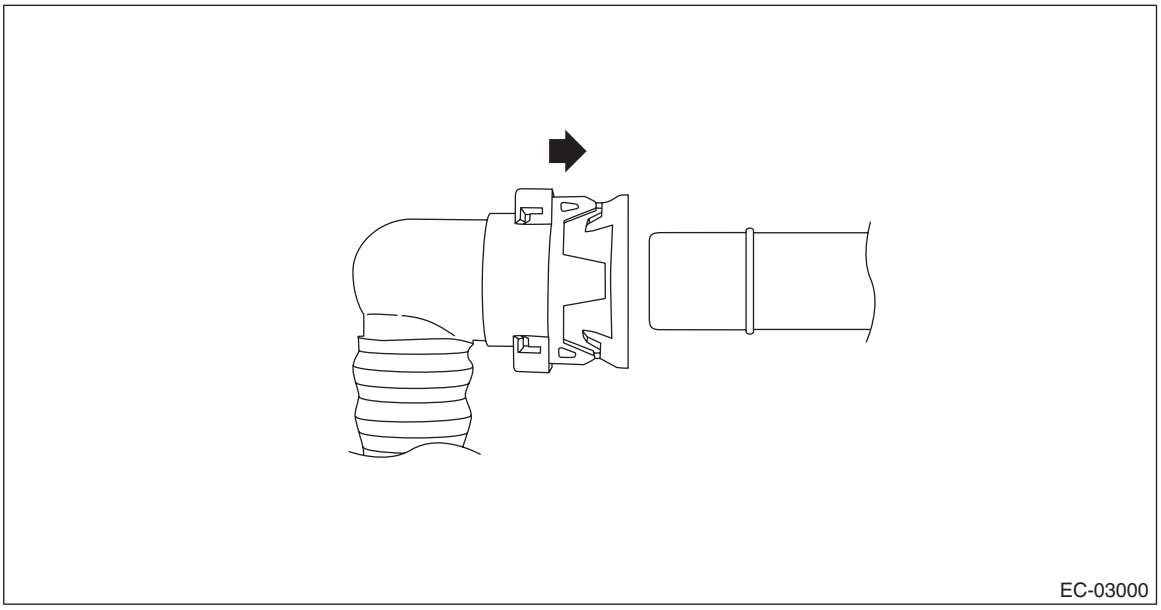

Tightening torque:
7.5 N·m (0.8 kgf-m, 5.5 ft-lb)

C: INSPECTION

1) Check that the drain filter has no deformation, cracks or other damages.
2) Check that the tube has no cracks, damage or loose part.

12.Leak Check Valve Assembly

A: REMOVAL

WARNING:
Place “NO OPEN FLAMES” signs near the working area.

CAUTION:
Be careful not to spill fuel.

1) Release the fuel pressure. <Ref. to FU(w/o STI)-138, RELEASING OF FUEL PRESSURE, PROCEDURE, Fuel.>
2) Drain fuel. <Ref. to FU(w/o STI)-139, DRAINING FUEL (WITH SUBARU SELECT MONITOR), PROCEDURE, Fuel.>
3) Disconnect the ground terminal from battery sensor. <Ref. to NT-6, BATTERY, NOTE, Note.>
4) Lift up the vehicle.
5) Remove the rear exhaust pipe. <Ref. to EX(w/o STI)-47, REMOVAL, Rear Exhaust Pipe.>
6) Remove the propeller shaft. <Ref. to DS-12, REMOVAL, Propeller Shaft.>
7) Support the rear differential with the transmission jack.
8) Remove the self-locking nuts which hold the rear differential to the rear sub frame assembly.

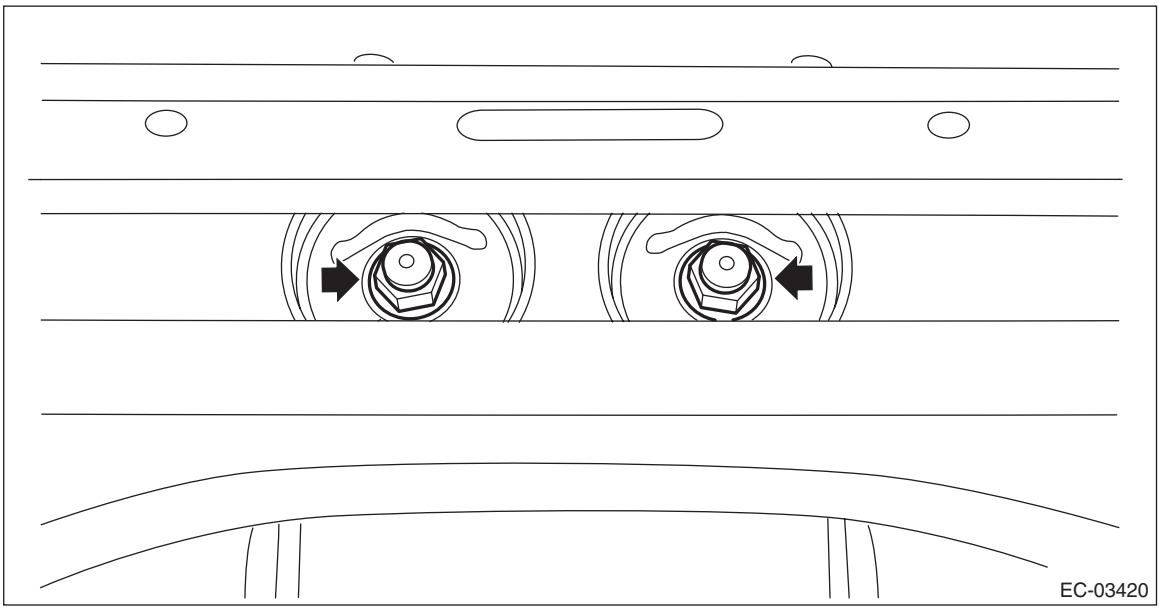

9) Remove the rear differential member from the rear sub frame assembly and the rear differential.

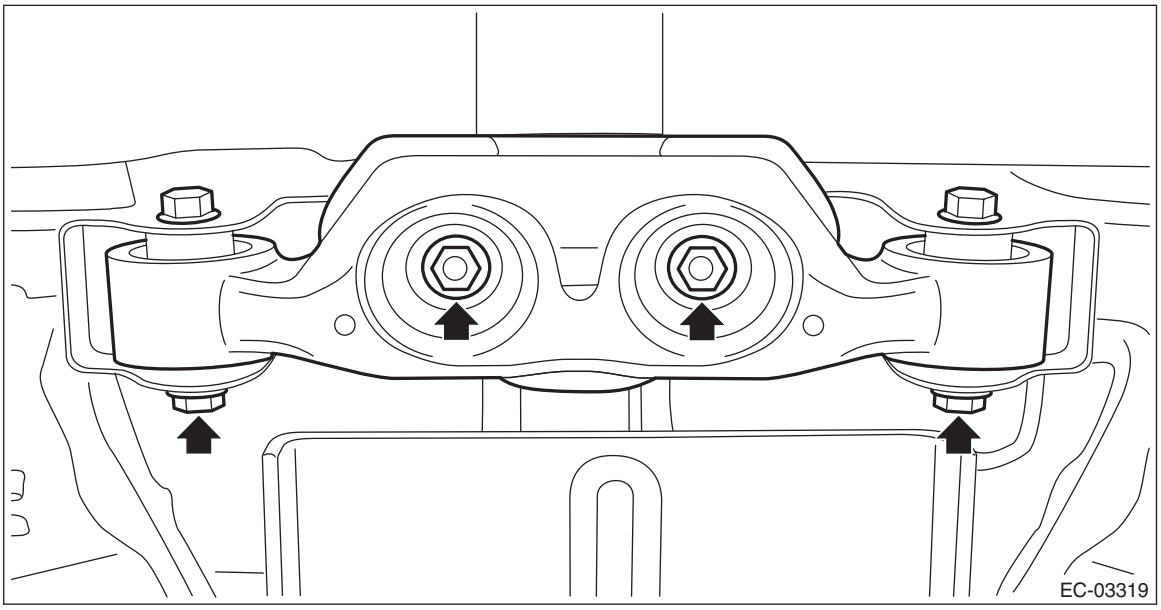

10) Lower the transmission jack gradually until the rear differential is at the position shown in the figure.

NOTE:
• When pulling out the stud bolt from the bushing portion of the rear sub frame assembly, adjust the angle and location of transmission jack and jack stand.

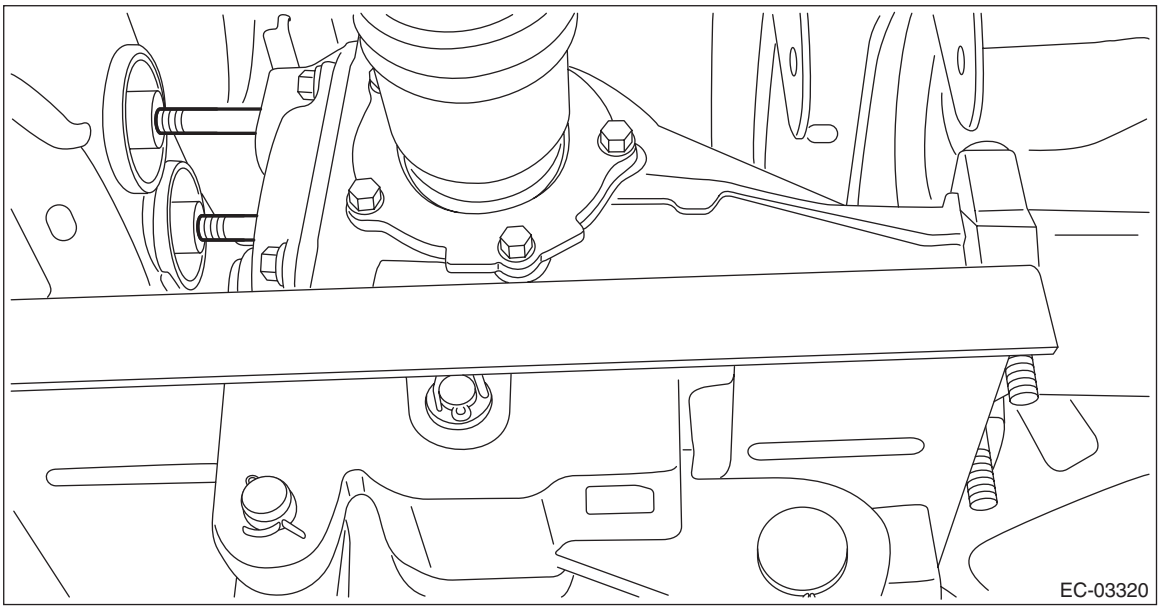

• Do not lower the rear differential excessively. Doing so may add extra load to the drive shaft or cause the falling-off of the drive shaft.

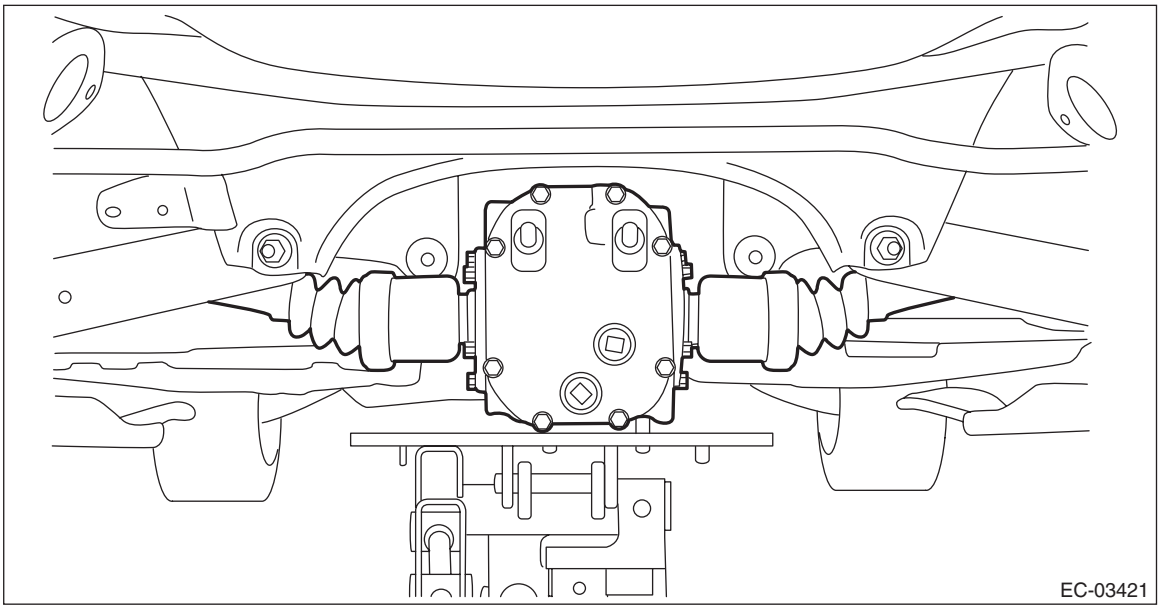

11) Disconnect the fuel filler hose (A) and evaporation hose (B) from the fuel filler pipe assembly.

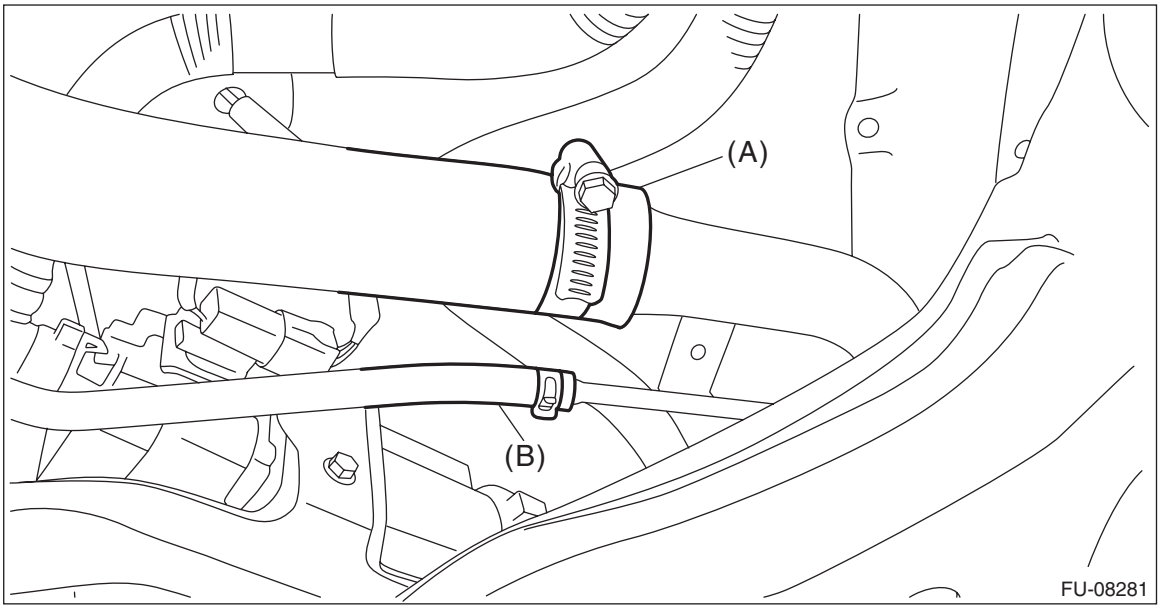

12) Disconnect the drain tube from the drain pipe.

NOTE:
Disconnect the quick connector as shown in the figure.

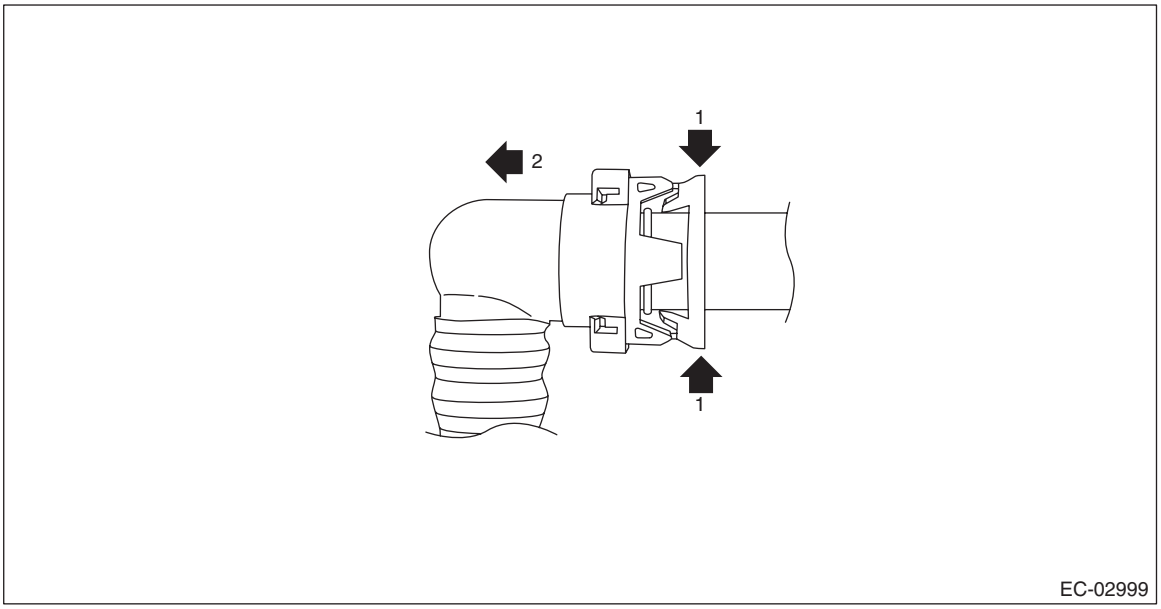

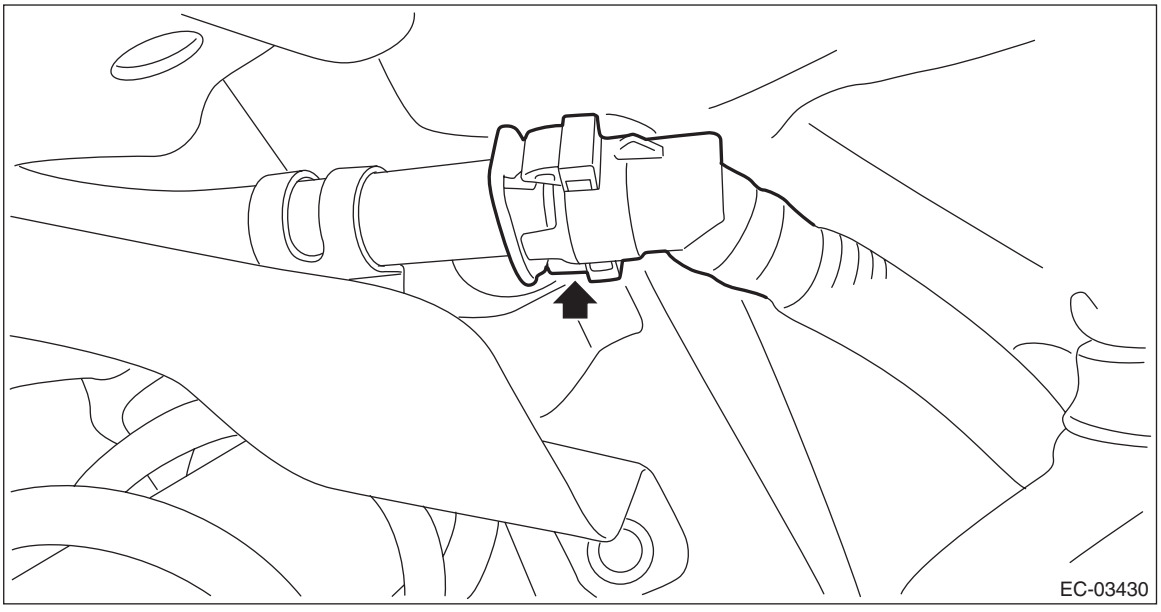

13) Disconnect the drain tube (A) from the canister.

NOTE:
Disconnect the quick connector as shown in the figure.

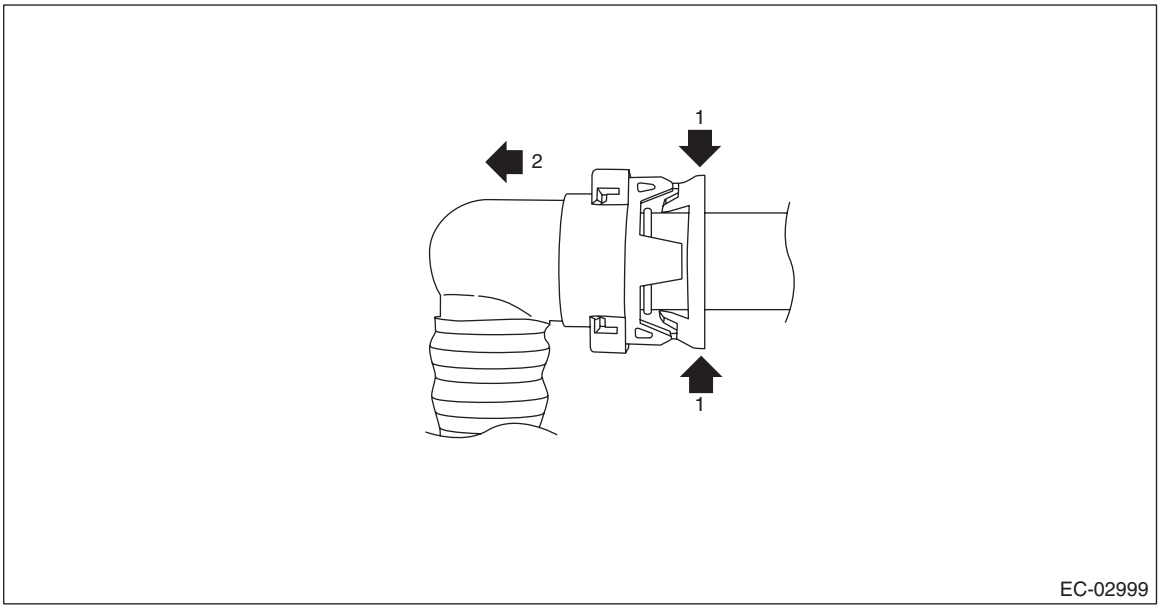

14) Remove the tube clamp (B) from the canister bracket A, and remove the drain tube from the tube clamp.

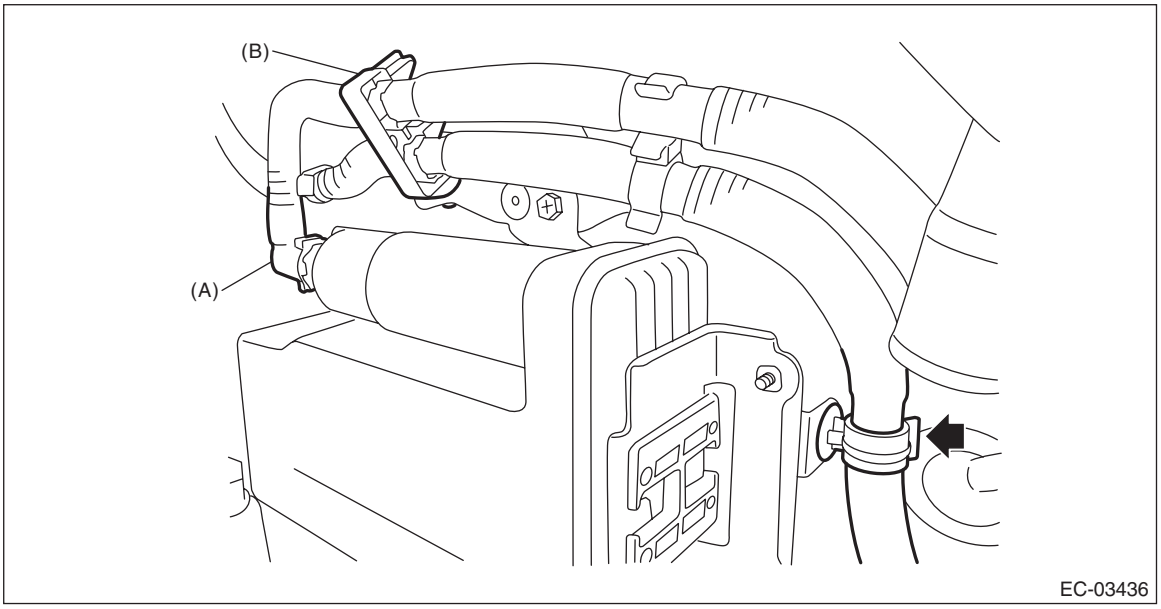

15) Disconnect the connector (A) from the leak check valve assembly.

16) Remove the bolts which hold the leak check valve assembly and remove the leak check valve assembly together with drain tube from vehicle.

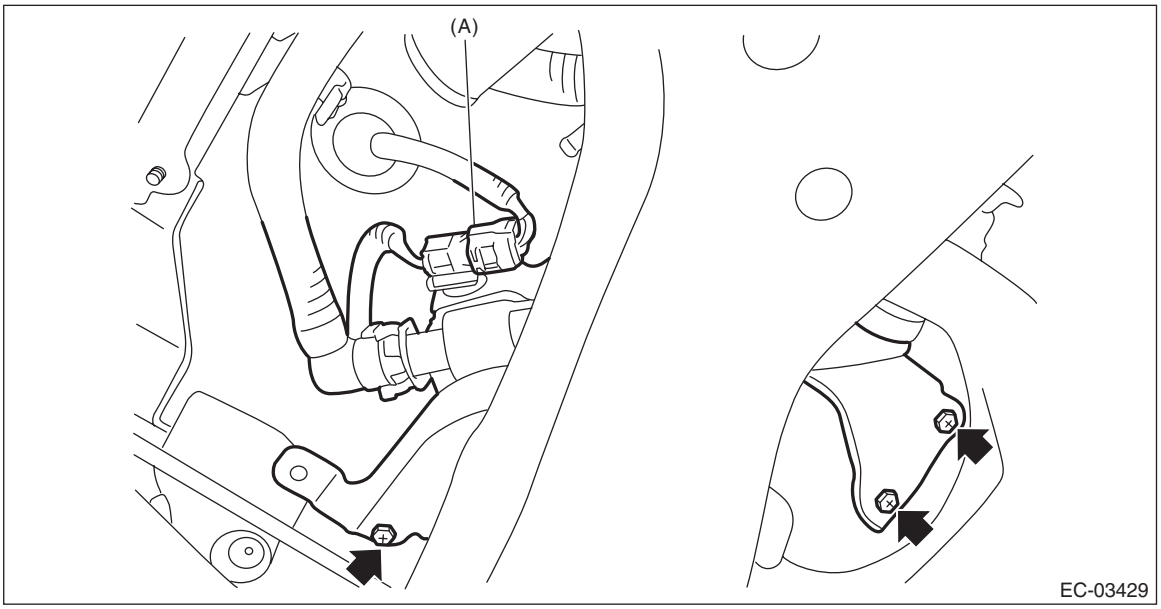

17) Disconnect the drain tube A (A) and drain tube B (B) from the leak check valve assembly.

NOTE:
Disconnect the quick connector as shown in the figure.

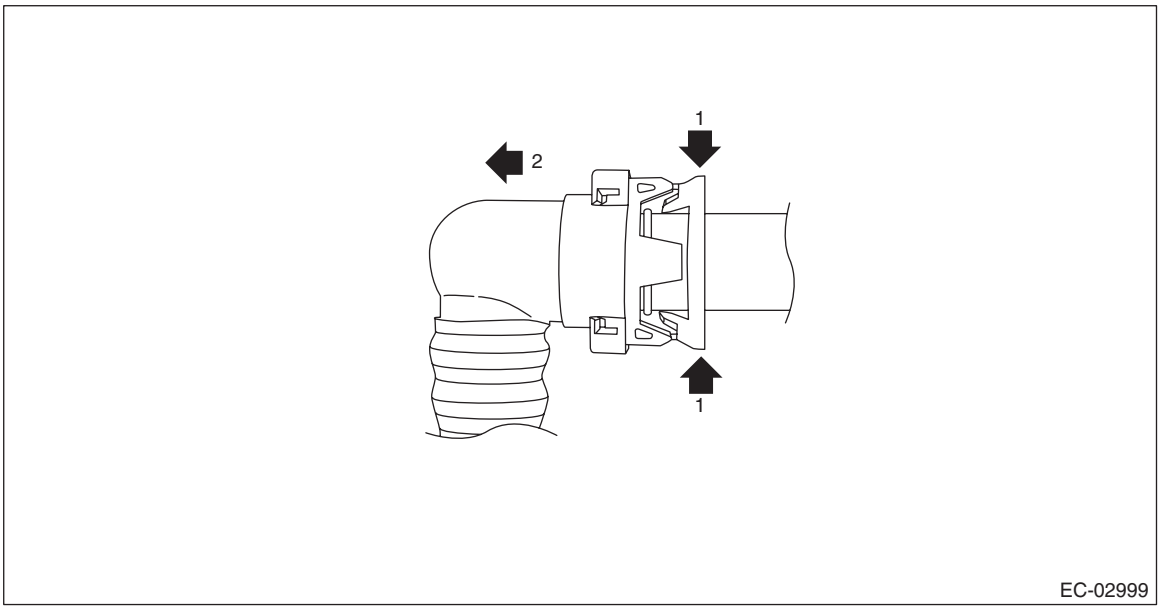

18) Remove the tube clamp from the drain tube A (A) and drain tube B (B).

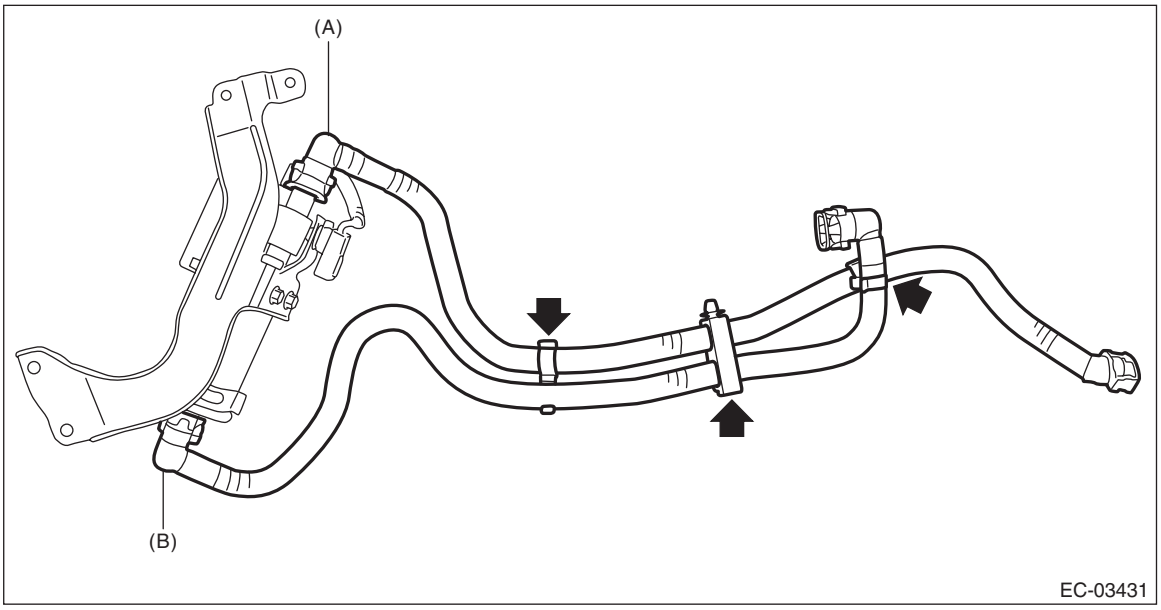

B: INSTALLATION

1) Connect the drain tube A (A) and drain tube B (B) to the leak check valve assembly.

CAUTION:
- **Check that there is no damage or dust on the quick connector. If necessary, clean the seal surface of the pipe.**
- **Make sure that the quick connector is securely connected.**

NOTE:
Connect the quick connector as shown in the figure.

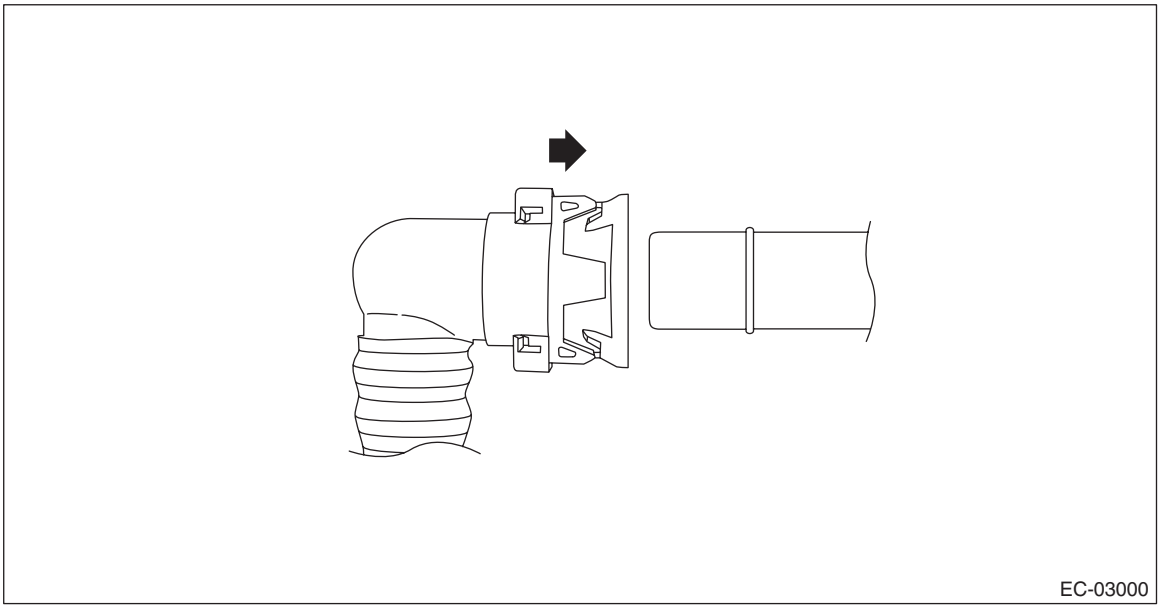

2) Install the tube clamp to the drain tube A (A) and drain tube B (B).

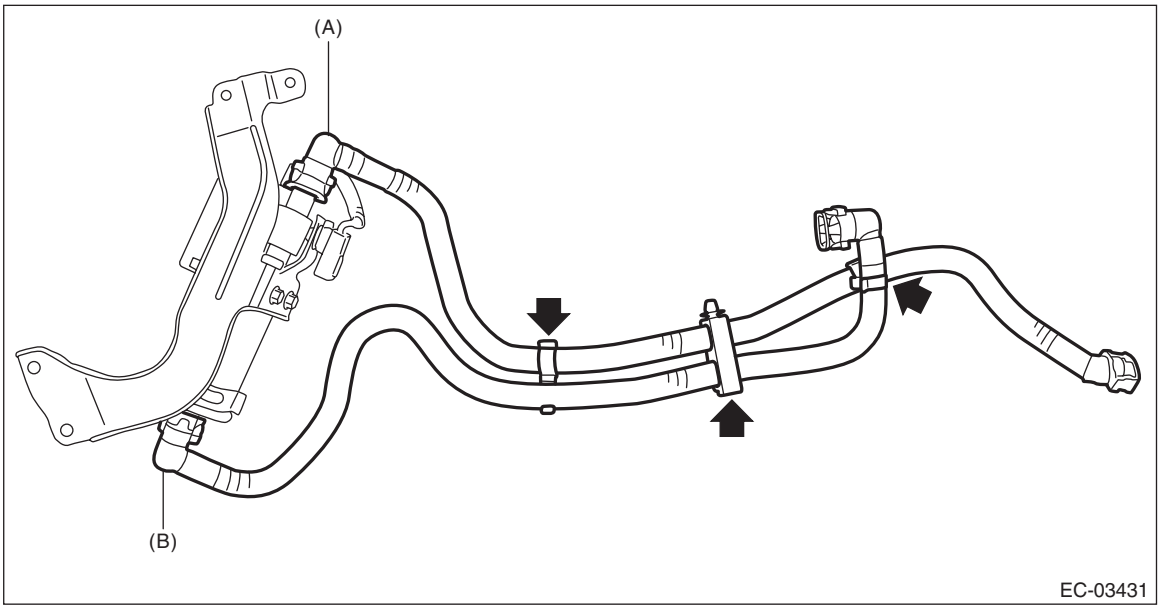

3) Set the leak check valve assembly together with drain tube to the vehicle and install the bolt which holds the leak check valve assembly.

Tightening torque:
7.5 N·m (0.8 kgf-m, 5.5 ft-lb)

4) Connect the connector (A) to the leak check valve assembly.

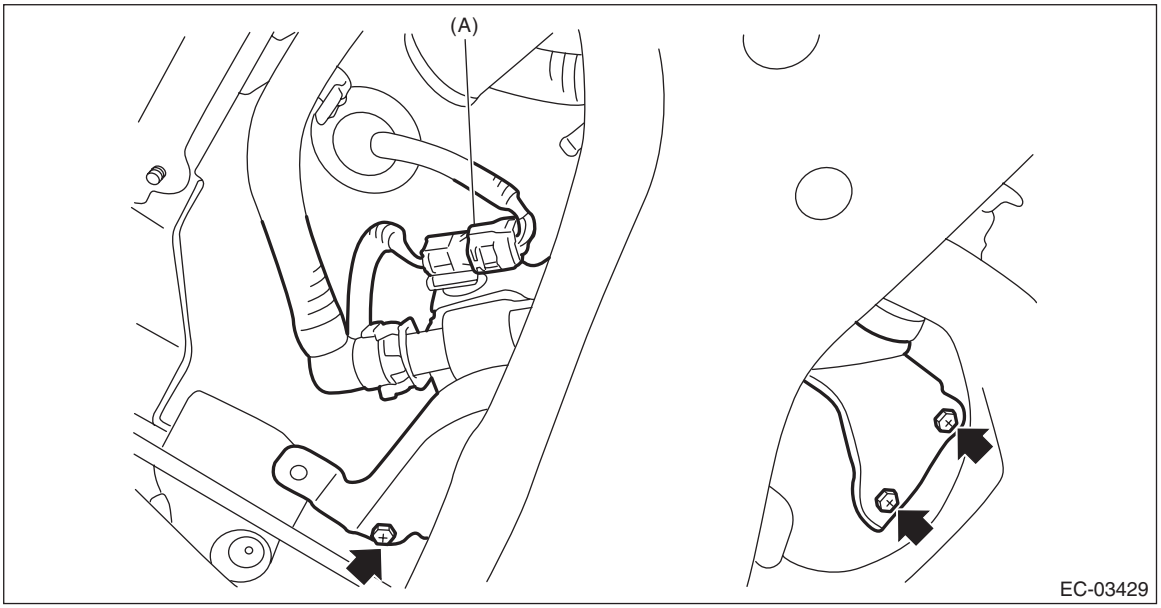

5) Connect the drain tube (A) to the canister.

CAUTION:
• Check that there is no damage or dust on the quick connector. If necessary, clean the seal surface of the pipe.
• Make sure that the quick connector is securely connected.

NOTE:
Connect the quick connector as shown in the figure.

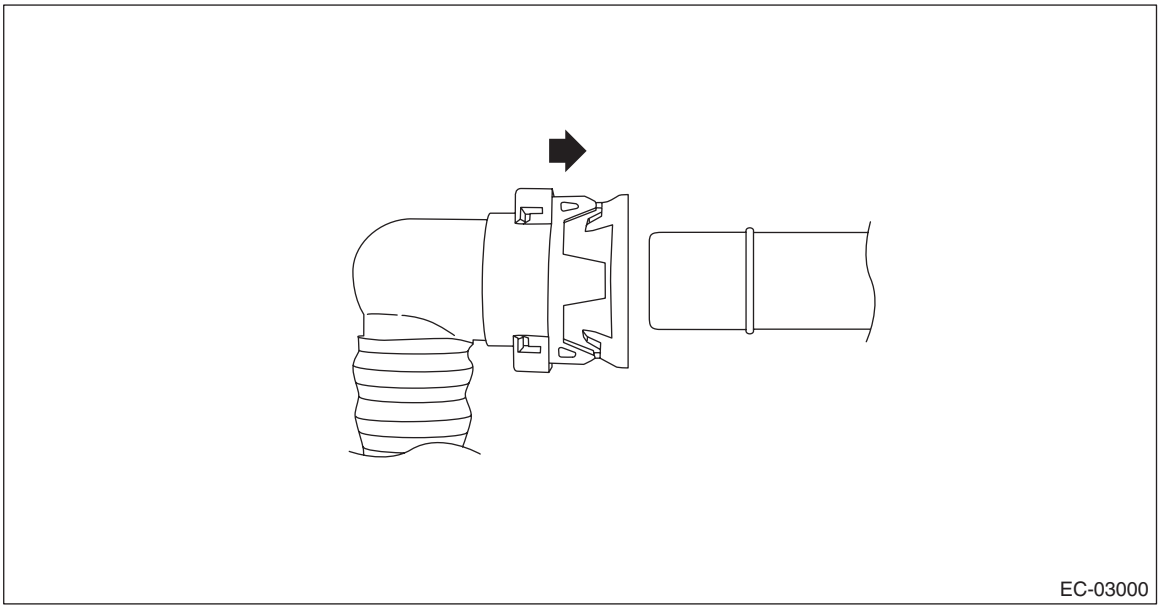

6) Install the tube clamp (B) to the canister bracket A, and install the drain tube to the tube clamp.

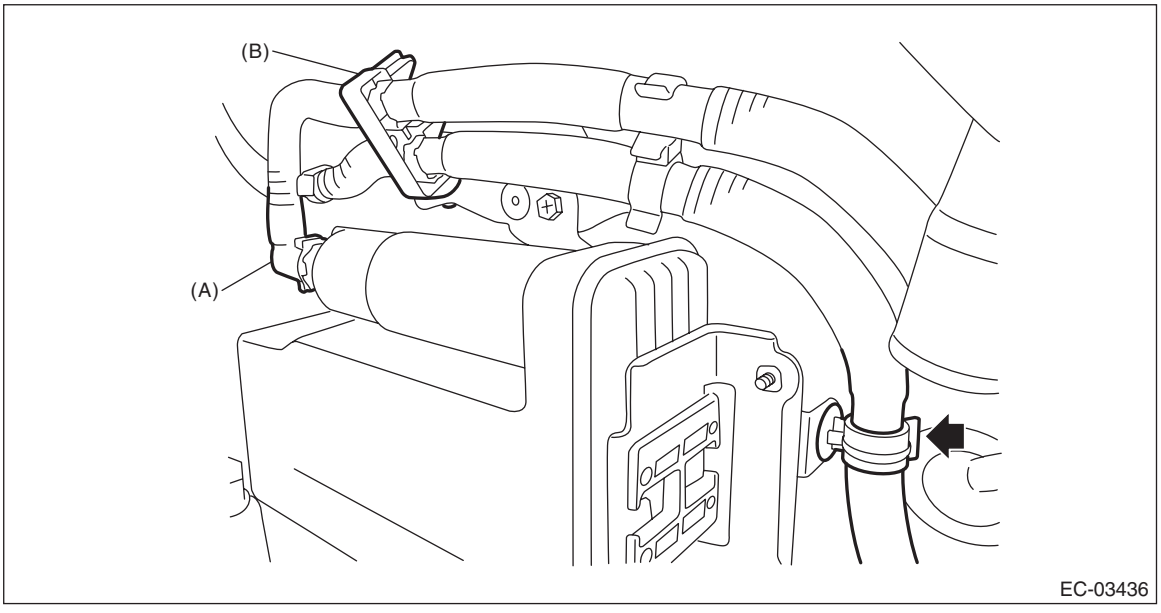

7) Connect the drain tube to the drain pipe.

CAUTION:
• Check that there is no damage or dust on the quick connector. If necessary, clean the seal surface of the pipe.
• Make sure that the quick connector is securely connected.

NOTE:
Connect the quick connector as shown in the figure.

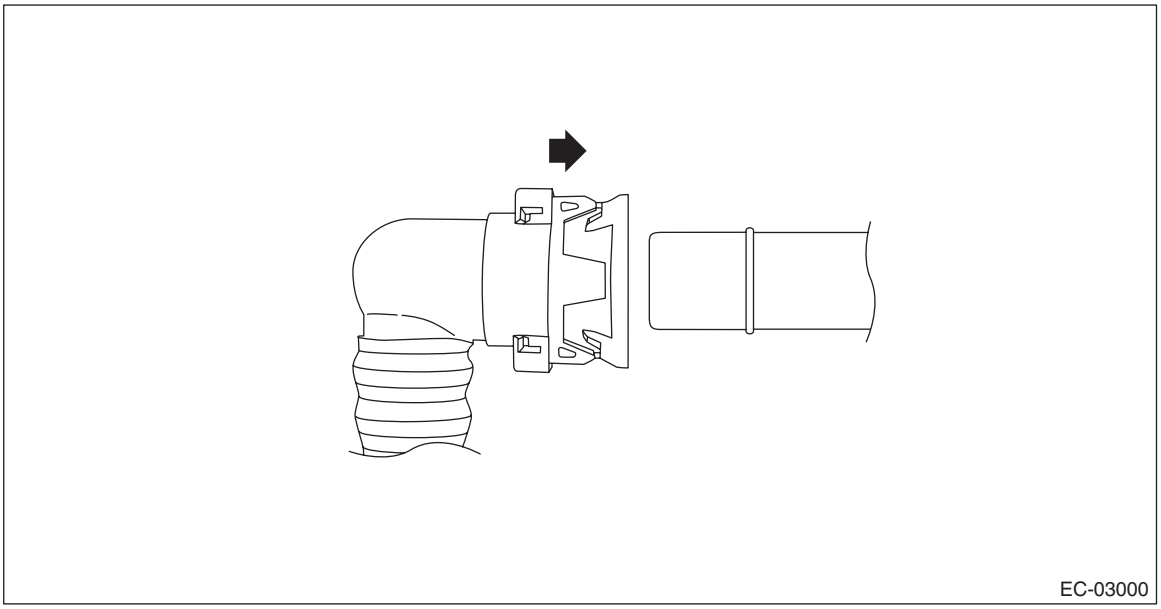
EC-03000

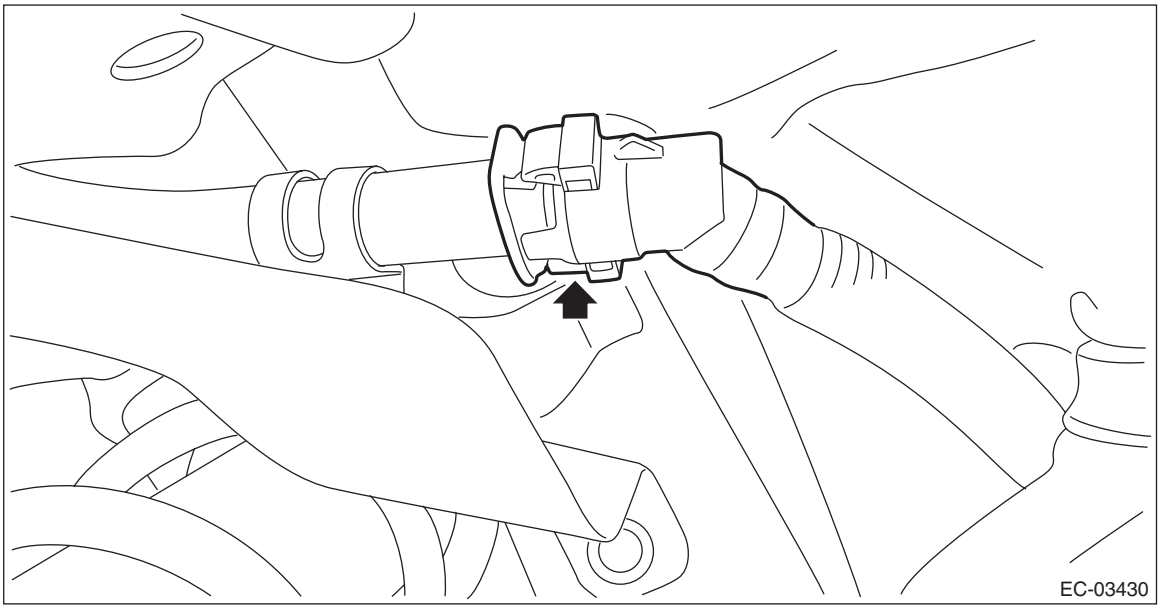
EC-03430

8) Securely insert the fuel filler hose (A) and evaporation hose (B) until the hose end contacts the spool, then attach the clamp and clip as shown in the figure.

Tightening torque:
2.5 N·m (0.3 kgf-m, 1.8 ft-lb)

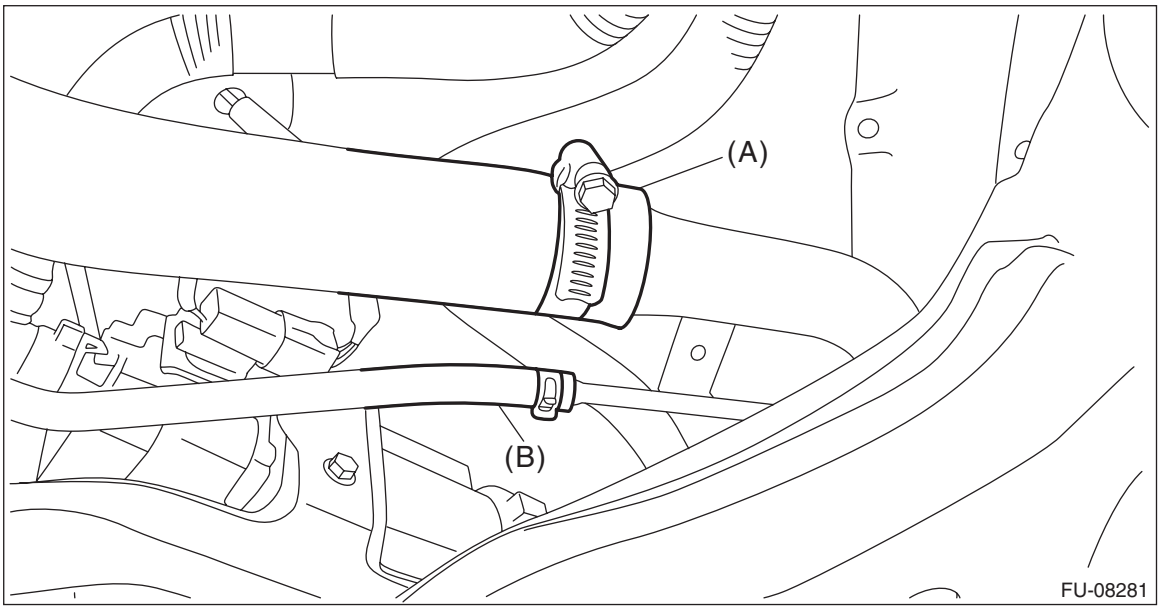

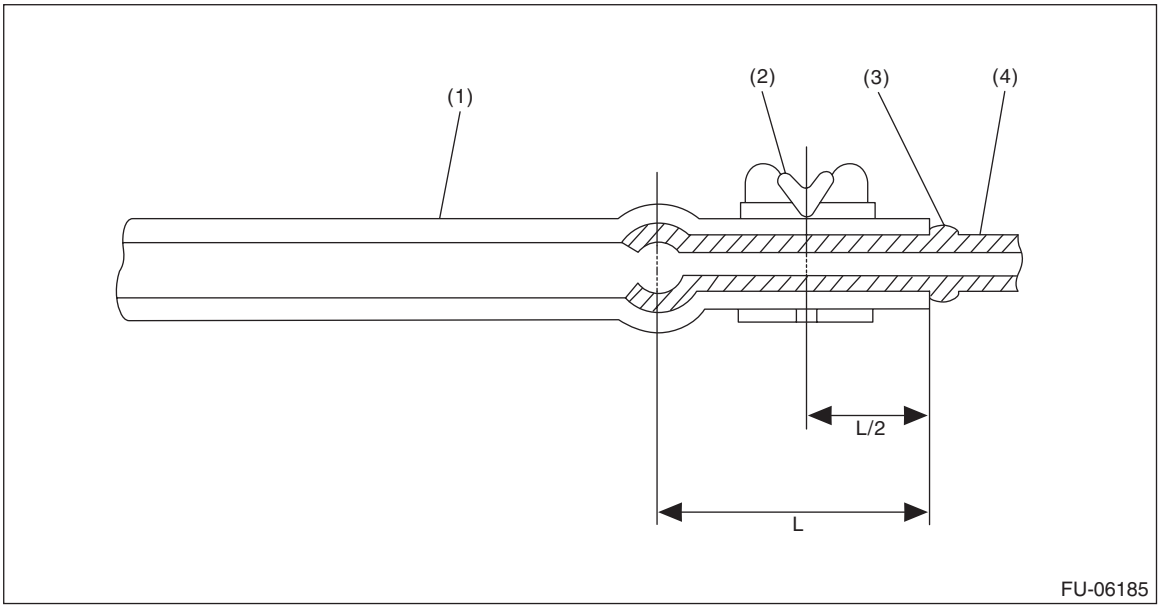

(1) Hose
(2) Clamp and clip
(3) Spool
(4) Pipe

9) Lift up the transmission jack gradually, and set the rear differential to the rear sub frame assembly.

NOTE:
When inserting the stud bolt into the bushing portion of the rear sub frame assembly, adjust the angle and location of transmission jack and jack stand.

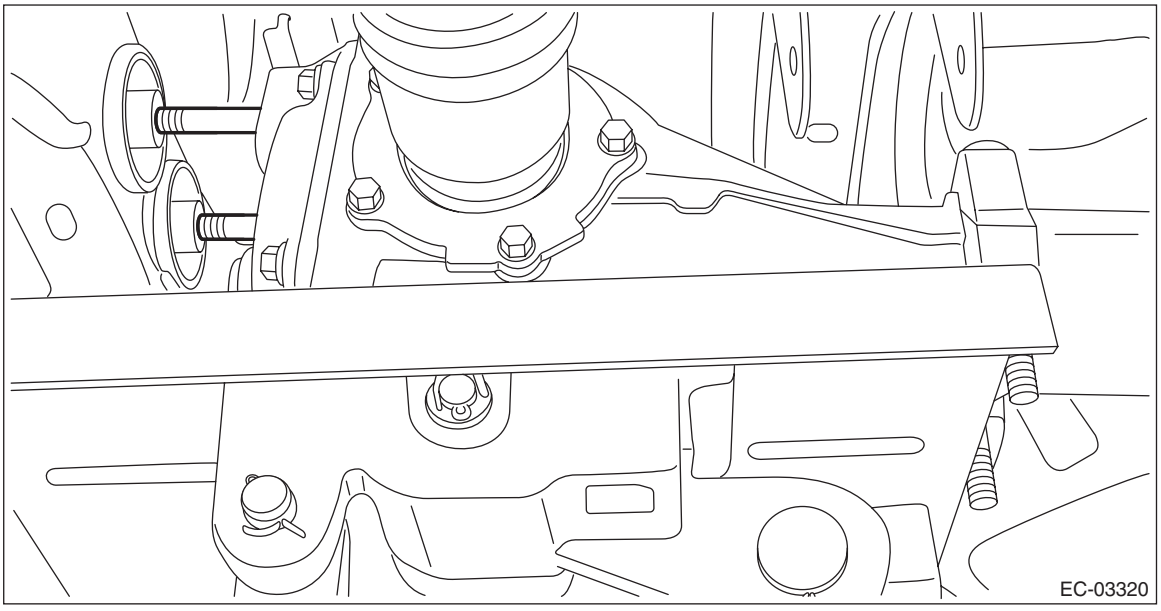

10) Temporarily tighten the self-locking nuts which hold the rear differential to the rear sub frame assembly.

NOTE:
Use a new self-locking nut.

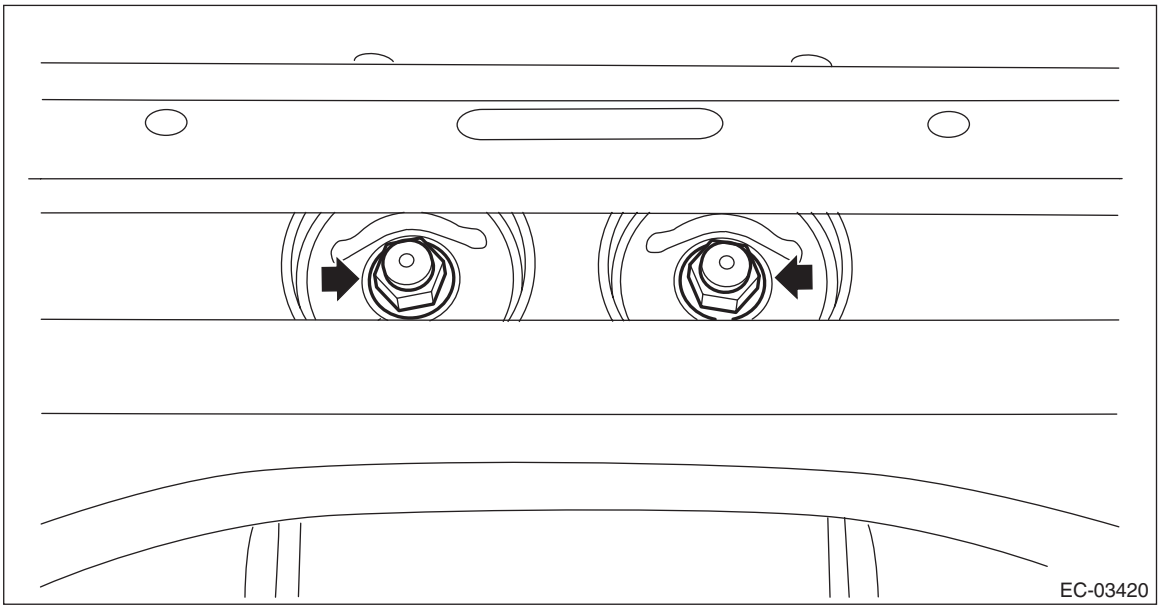

11) Set the rear differential member to the rear sub frame assembly and rear differential, and temporarily tighten the self-lock nuts which secure the rear differential member to the rear sub frame assembly and rear differential.

NOTE:
Use a new self-locking nut.

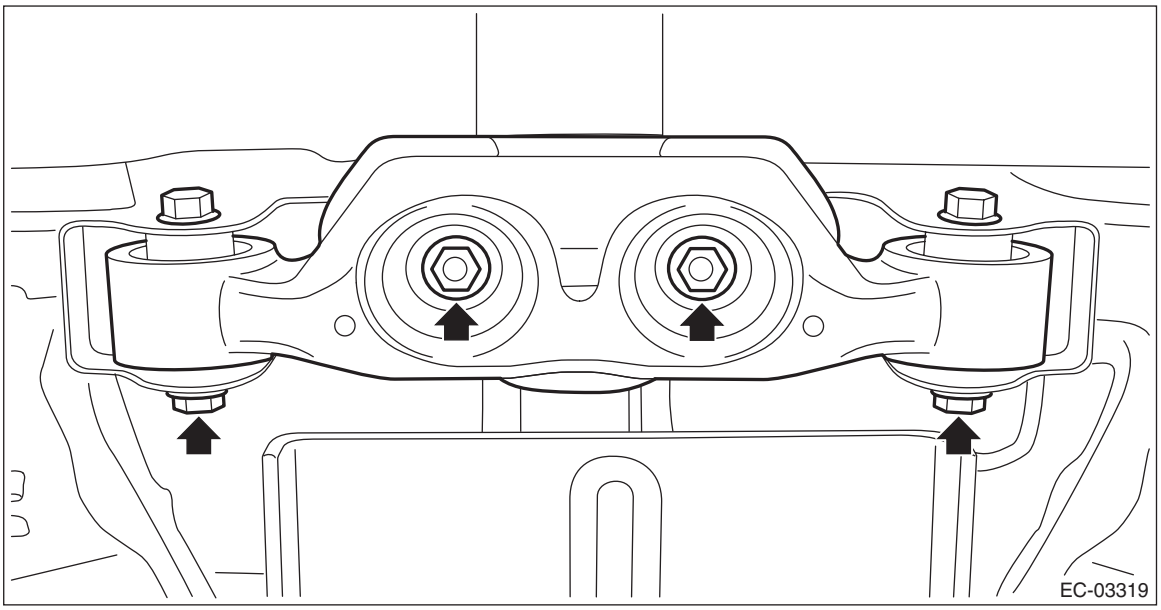

12) Remove the transmission jack from the rear differential.
13) Tighten the self-locking nuts which secure the rear differential member to the rear sub frame assembly and rear differential.

Tightening torque:
T1: 50 N·m (5.1 kgf-m, 36.9 ft-lb)
T2: 110 N·m (11.2 kgf-m, 81.1 ft-lb)

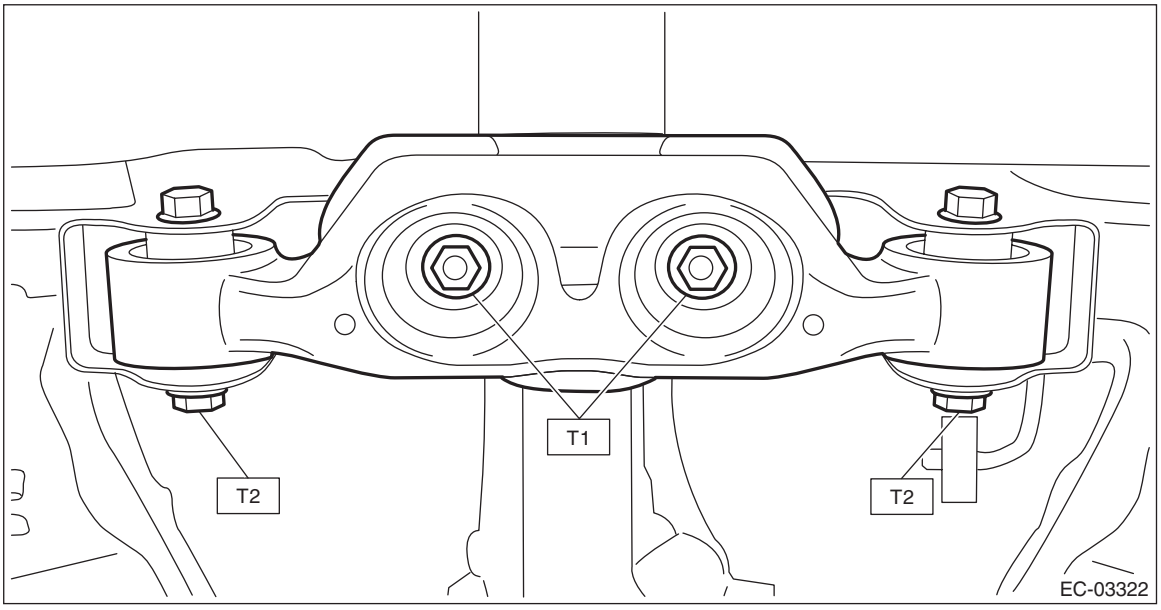

14) Tighten the self-locking nuts which secure the rear differential to the rear sub frame assembly.

Tightening torque:
70 N·m (7.1 kgf-m, 51.6 ft-lb)

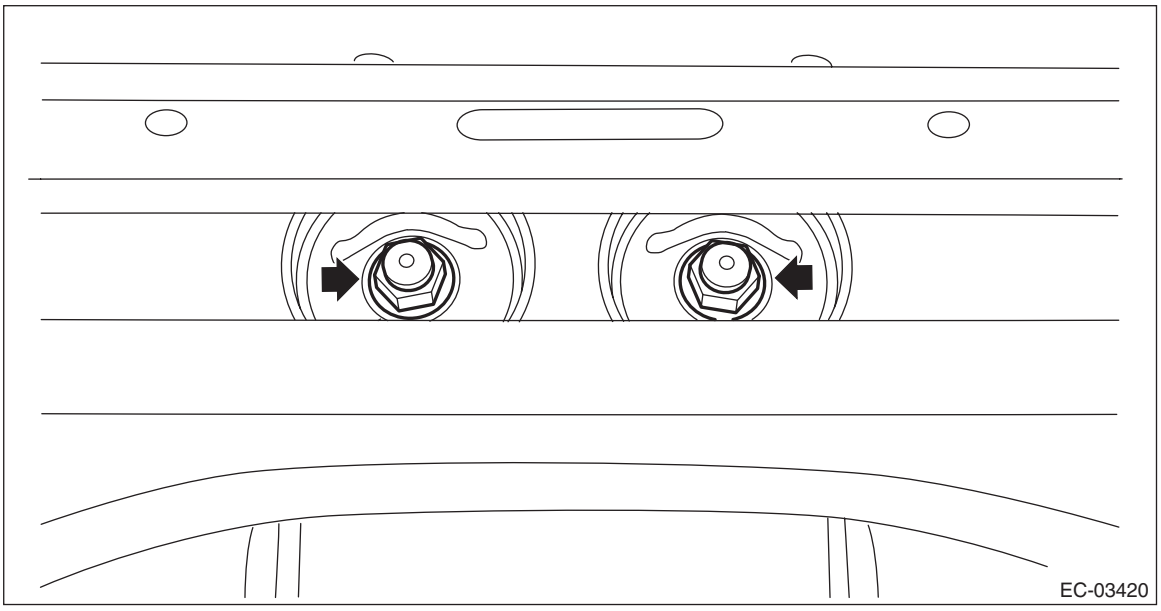

15) Install the propeller shaft. <Ref. to DS-14, INSTALLATION, Propeller Shaft.>
16) Install the rear exhaust pipe. <Ref. to EX(w/o STI)-48, INSTALLATION, Rear Exhaust Pipe.>
17) Lower the vehicle.
18) Connect the ground terminal to battery sensor. <Ref. to NT-6, BATTERY, NOTE, Note.>

C: DISASSEMBLY

1) Disconnect the connector (A) from the leak check valve assembly.
2) Remove the bolt (B) securing the leak check valve assembly to the leak check valve bracket.
3) Remove the clamp B (C) which secures the leak check valve assembly, and remove the leak check valve assembly.

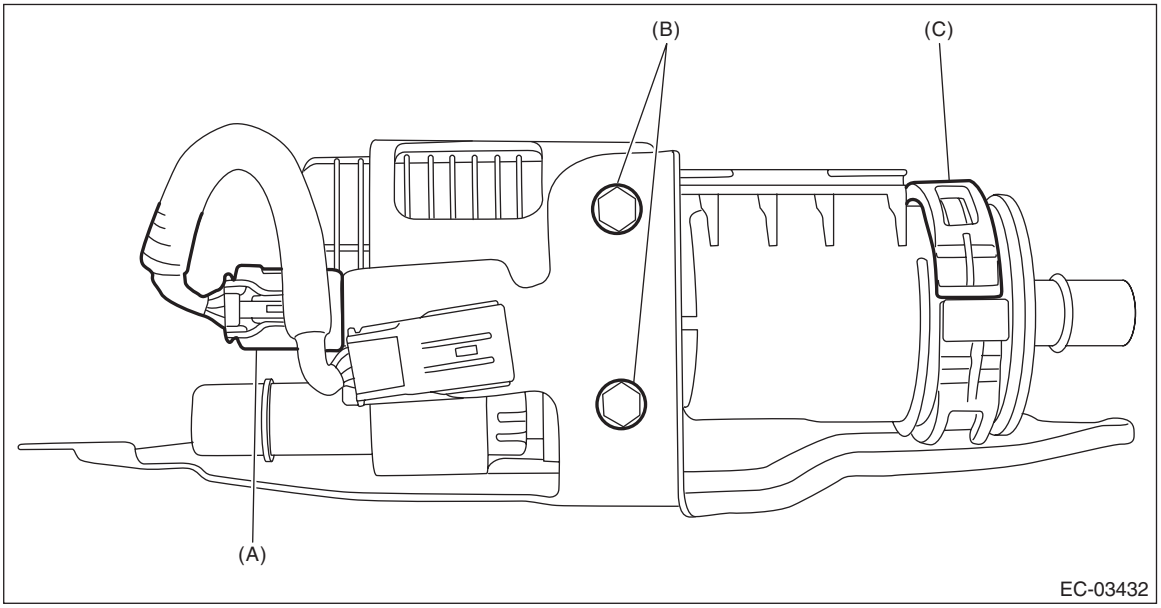

4) Remove the harness (A) from the leak check valve bracket.

5) Rotate the clamp A (B) in the direction of the arrow and remove it from the leak check valve bracket.

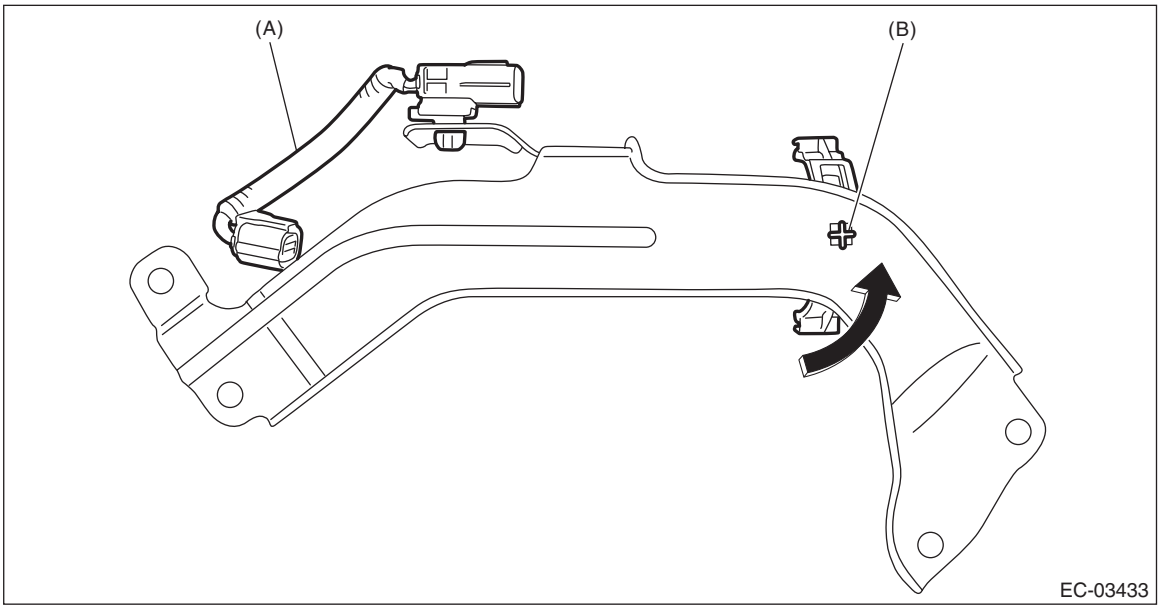

D: ASSEMBLY

Assemble in the reverse order of disassembly.

Tightening torque:
5.4 N·m (0.6 kgf-m, 4.0 ft-lb)

E: INSPECTION

1. CHECK SWITCHING VALVE

1) Check the resistance between switching valve terminals.

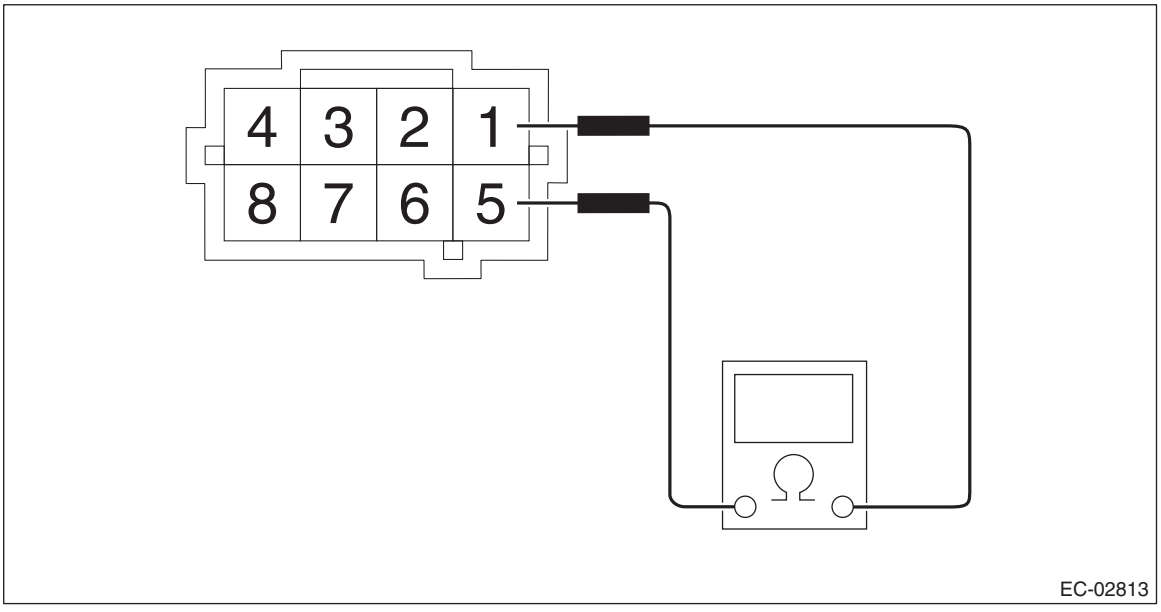

Terminal No.	Standard
1 and 5	27^{+3}_{-2} Ω (when 20°C (68°F))
	31±4 Ω (60°C (140°F))

2) Check that air is discharged from (B) when air is blown into (A).

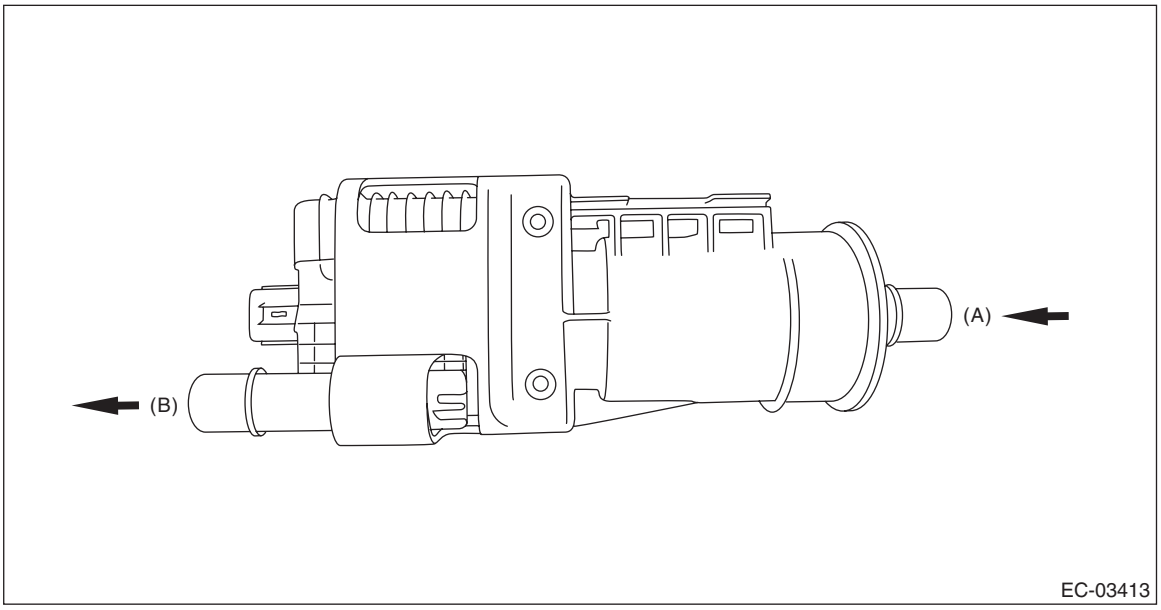

3) Connect the battery positive terminal to the terminal No. 5 and the battery negative terminal to the terminal No. 1. Check that air does not come out from (B) when air is blown into (A).

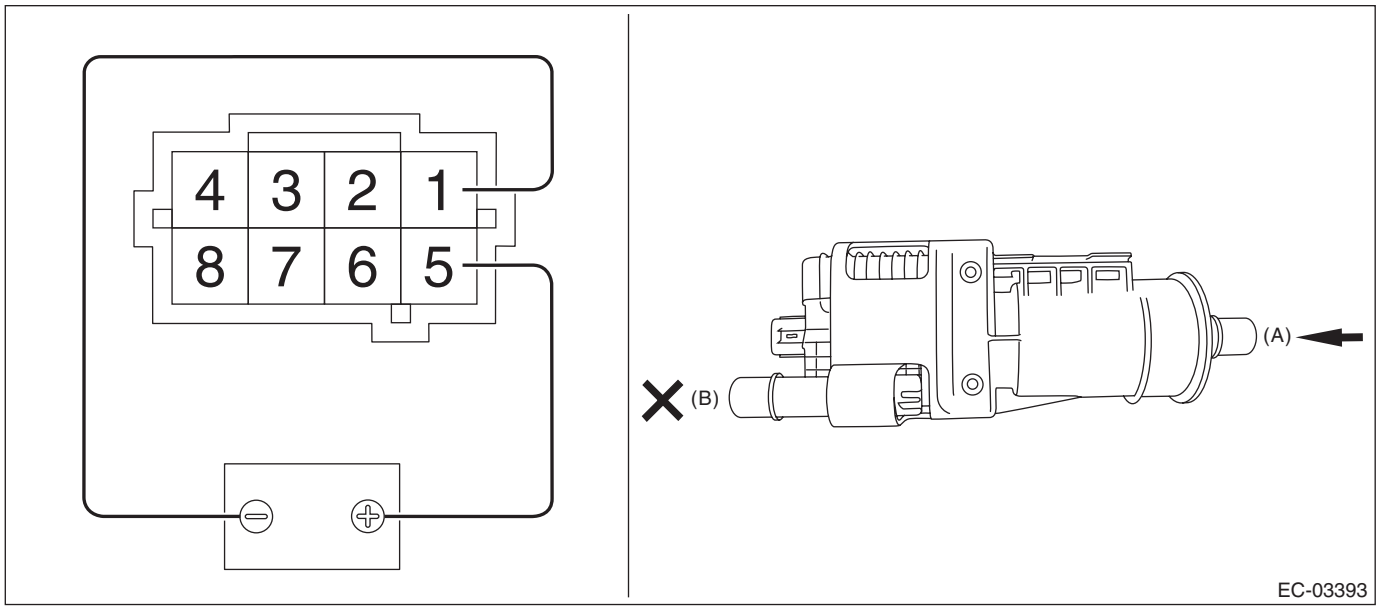

2. CHECK VACUUM PUMP

1) Connect the battery positive terminal to terminal No. 3 and the battery ground terminal to terminal No. 4, and inspect the vacuum pump operation.

CAUTION:
Do not operate the vacuum pump for 5 minutes or more.

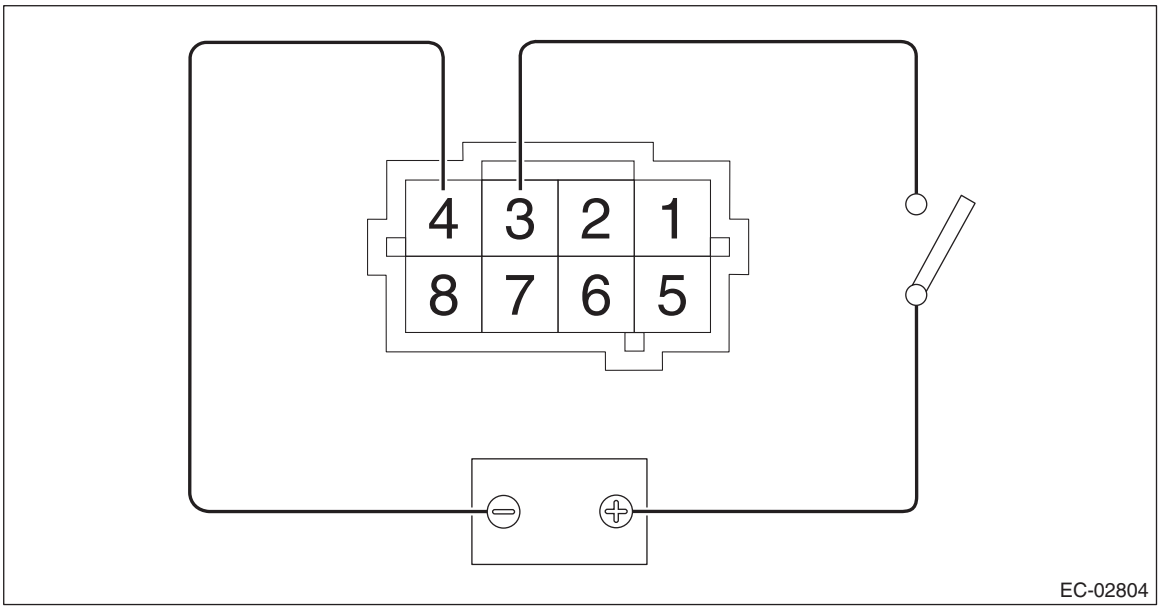

3. CHECK PRESSURE SENSOR

1) Connect dry-cell battery positive terminal to terminal No. 6 and dry-cell battery ground terminal to terminal No. 8, circuit tester positive terminal to terminal No. 7 and the circuit tester ground terminal to terminal No. 8.

NOTE:
- Use new dry-cell batteries.
- Using a circuit tester, check that the initial voltage of each dry-cell battery is 1.6 V or more. And also check that the voltage of three batteries in series is between 4.8 V and 5.2 V.
- For power supply, 5 V DC constant voltage power source can also be used.

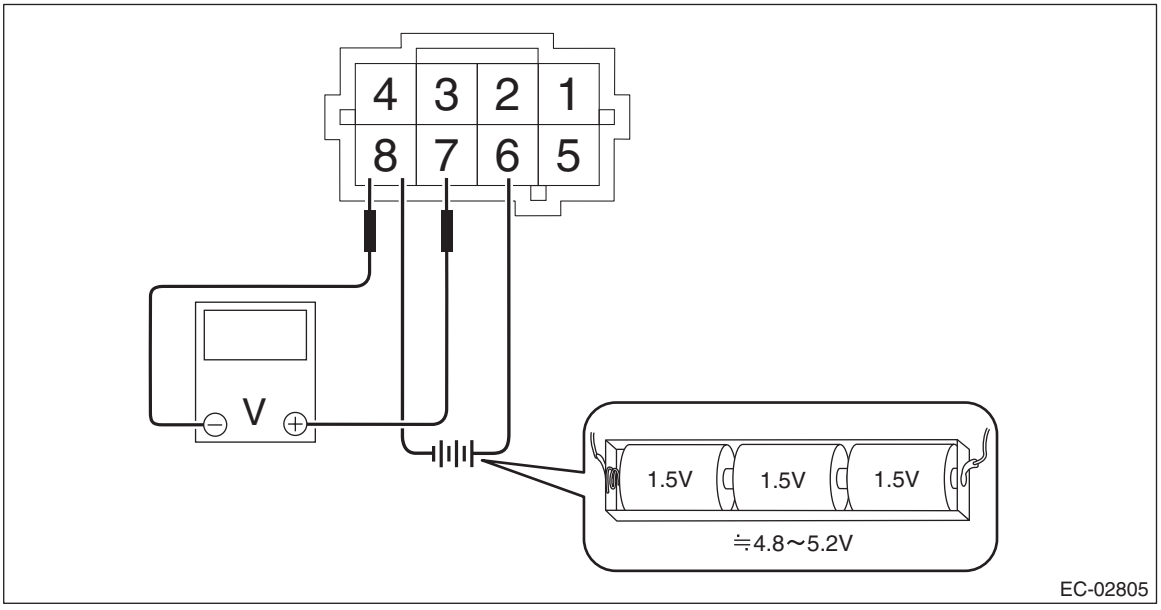

2) Check the voltage at a normal atmospheric pressure.

NOTE:
The atmospheric pressure at higher altitude is lower than normal. Therefore, the voltage is lower than the standard value.

Terminal No.	Standard
7 (+) and 8 (–)	Approx. 3.5 V (when 25°C (77°F))

3) Connect the battery positive terminal to terminal No. 3 and the battery ground terminal to terminal No. 4, and check that there is a voltage drop from the voltage measured in step 2) when the vacuum pump is operated.

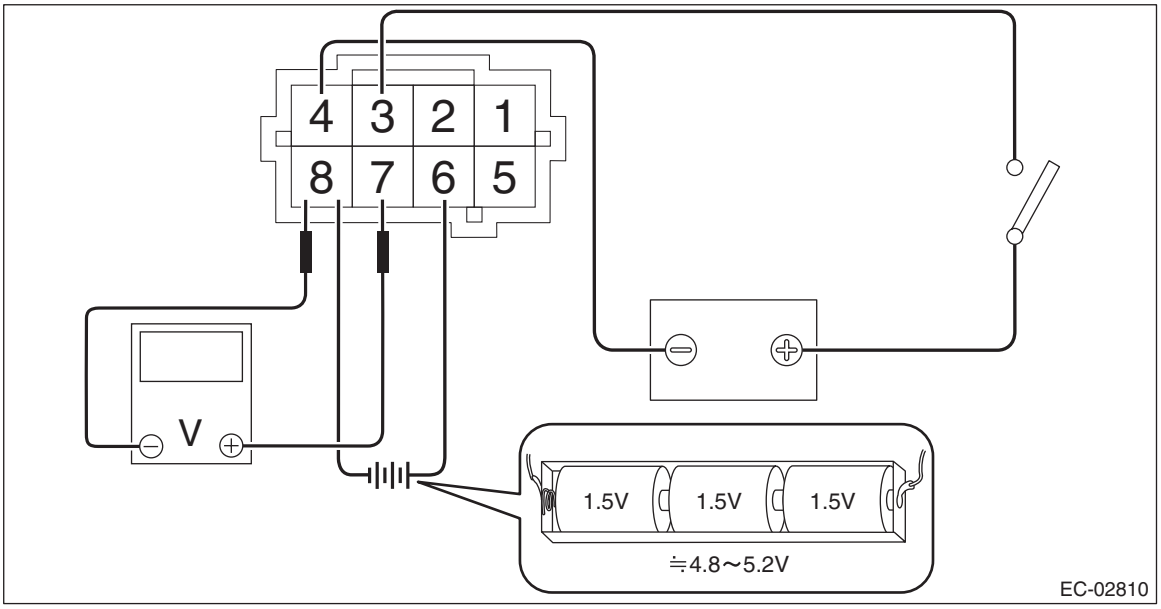

4. OTHER INSPECTIONS

1) Check that the leak check valve assembly and leak check valve bracket have no deformation, cracks or other damages.
2) Check that the tube has no cracks, damage or loose part.

13.PCV Pipe

A: REMOVAL

CAUTION:
Do not remove except when the PCV pipe assembly is broken.

1) Remove the collector cover. <Ref. to IN(w/o STI)-7, REMOVAL, Collector Cover.>
2) Collect the refrigerant from A/C system. <Ref. to AC-26, Refrigerant Recovery Procedure.>
3) Disconnect the ground terminal from battery sensor. <Ref. to NT-6, BATTERY, NOTE, Note.>
4) Remove the intake duct No. 2. <Ref. to IN(w/o STI)-30, INTAKE DUCT NO. 2, REMOVAL, Intake Duct.>
5) Remove the PCV pipe assembly from the clip.

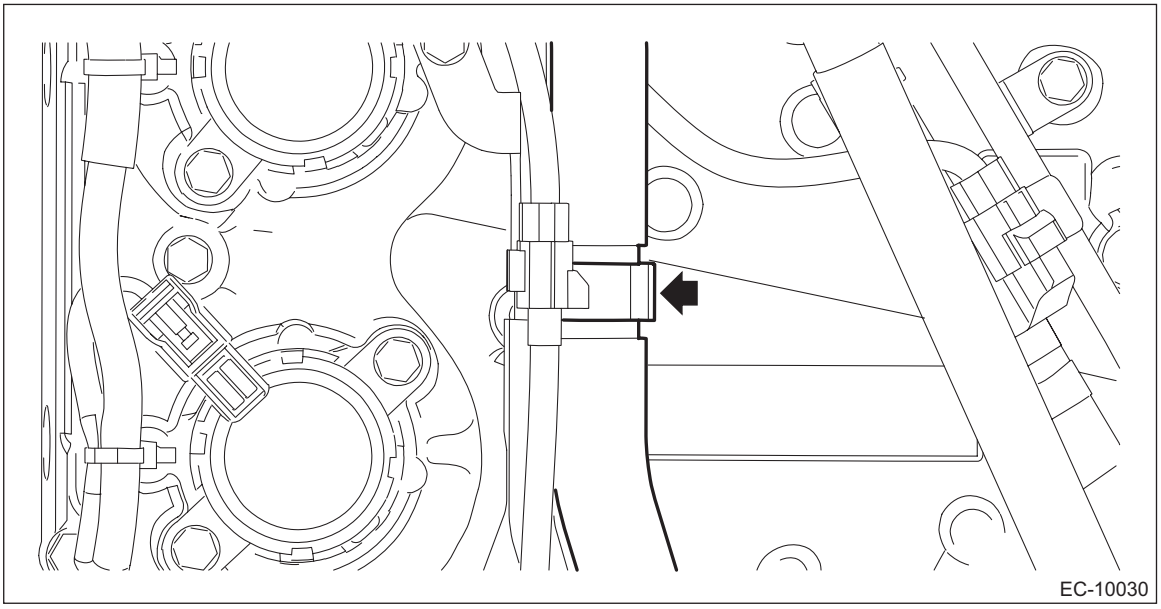

6) Remove the clip securing the PCV pipe assembly to the intake manifold.

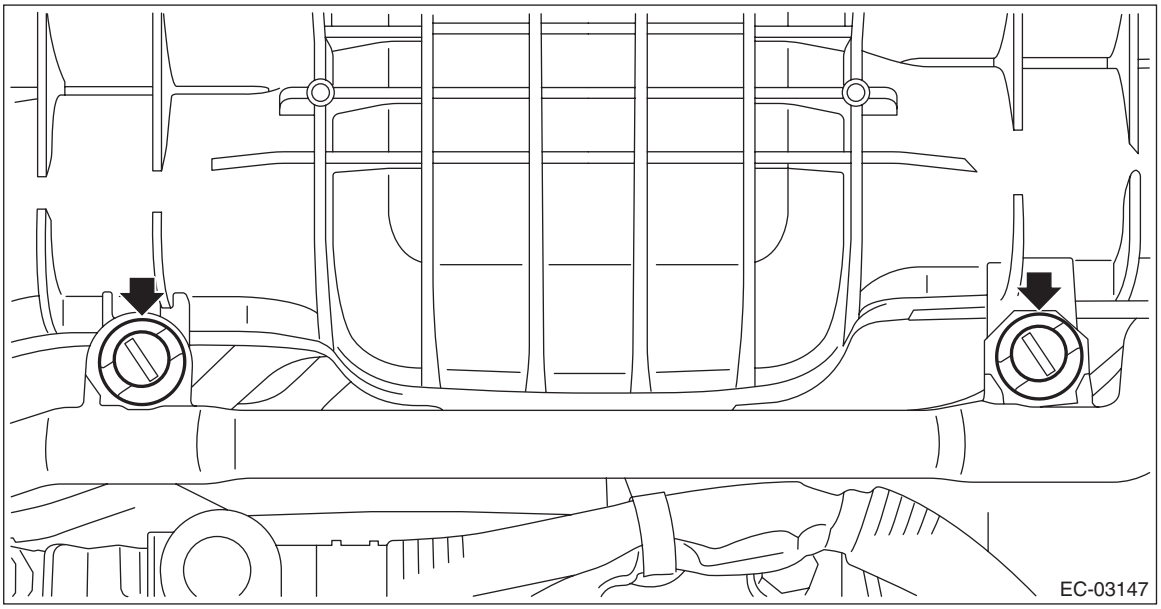

7) Remove the A/C compressor. <Ref. to AC-45, REMOVAL, Compressor.>

8) Remove the PCV pipe assembly from the PCV connector.
(1) Pinch the quick connector of the PCV pipe assembly using pliers and break the quick connector by twisting to the arrow direction. And then, remove the PCV pipe assembly from the PCV connector.

CAUTION:
Be careful not to damage the PCV connector and preheater hose.

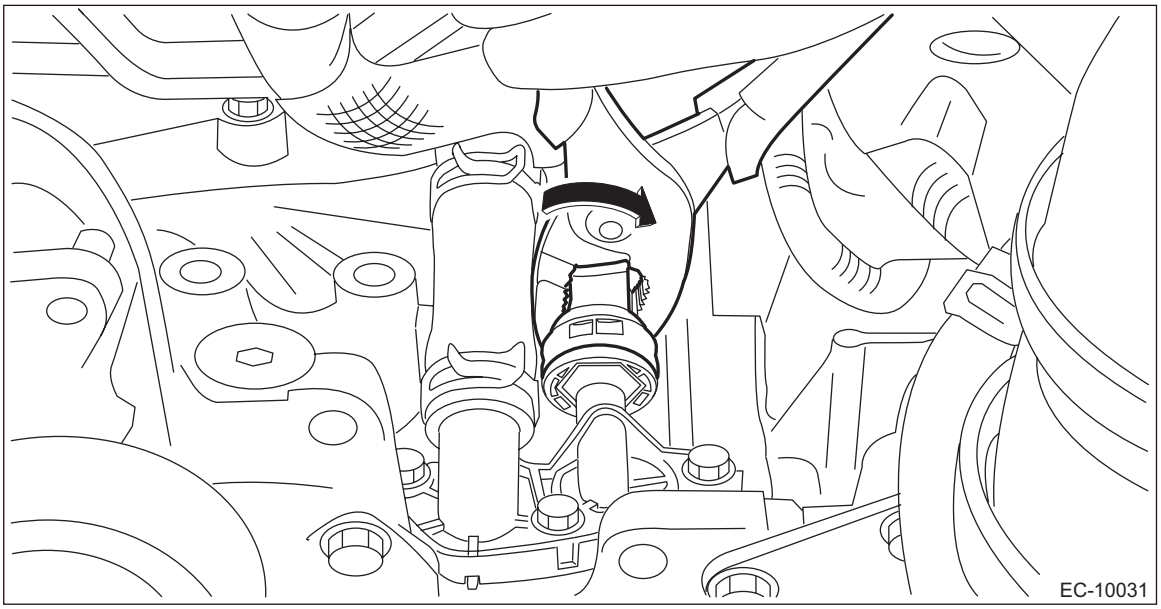

(2) If the PCV pipe assembly cannot be removed after performing the step (1), cut out the shaded area shown in the figure using a pair of nippers and open the spring in the arrow direction to unlock using snap ring pliers. And then, remove the PCV pipe assembly from the PCV connector.

CAUTION:
Be careful not to damage the PCV connector and preheater hose.

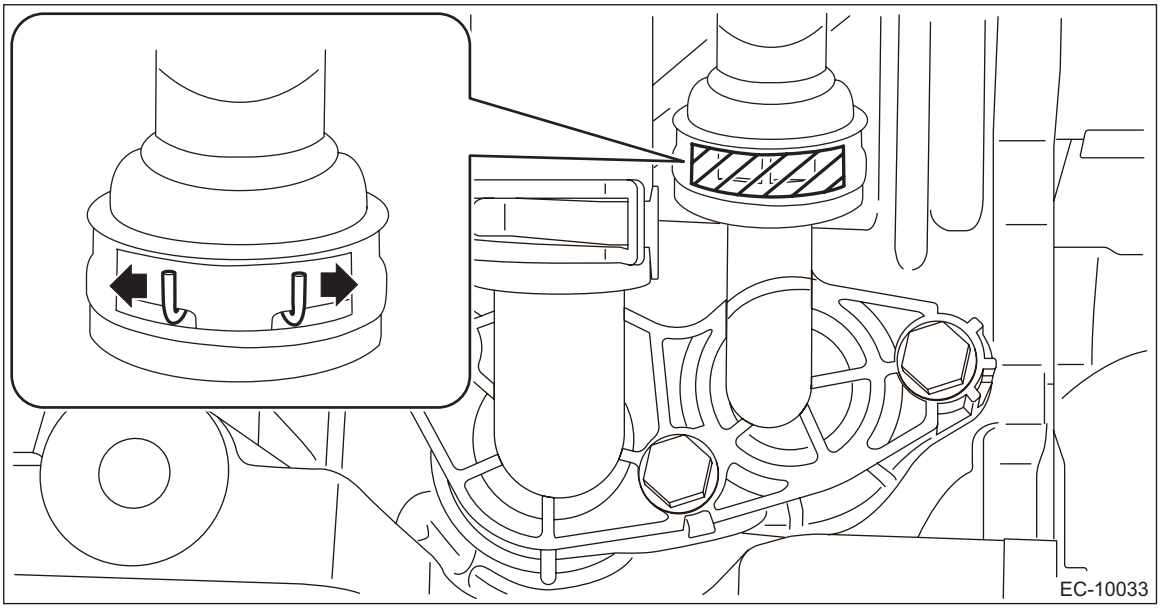

9) Break the clamp, and remove the blow-by diagnosis connector from the PCV pipe assembly.

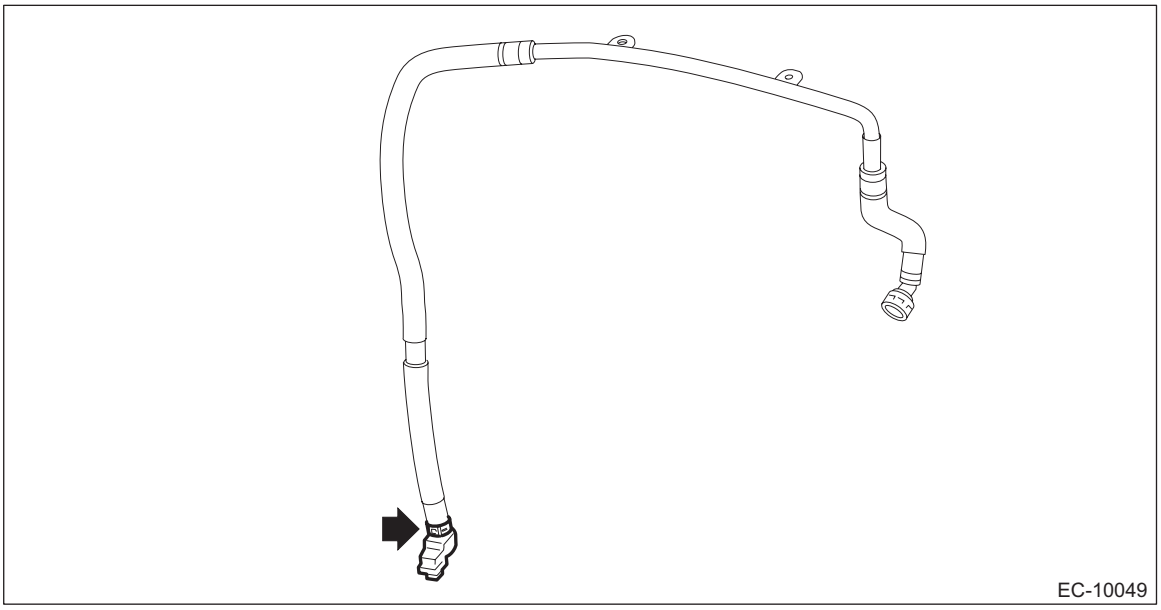

B: INSTALLATION

1) Install the blow-by diagnosis connector to the PCV pipe assembly, and install the clamp using the Clamp pincer (14100134).

NOTE:
Use a new PCV pipe assembly and clamp.

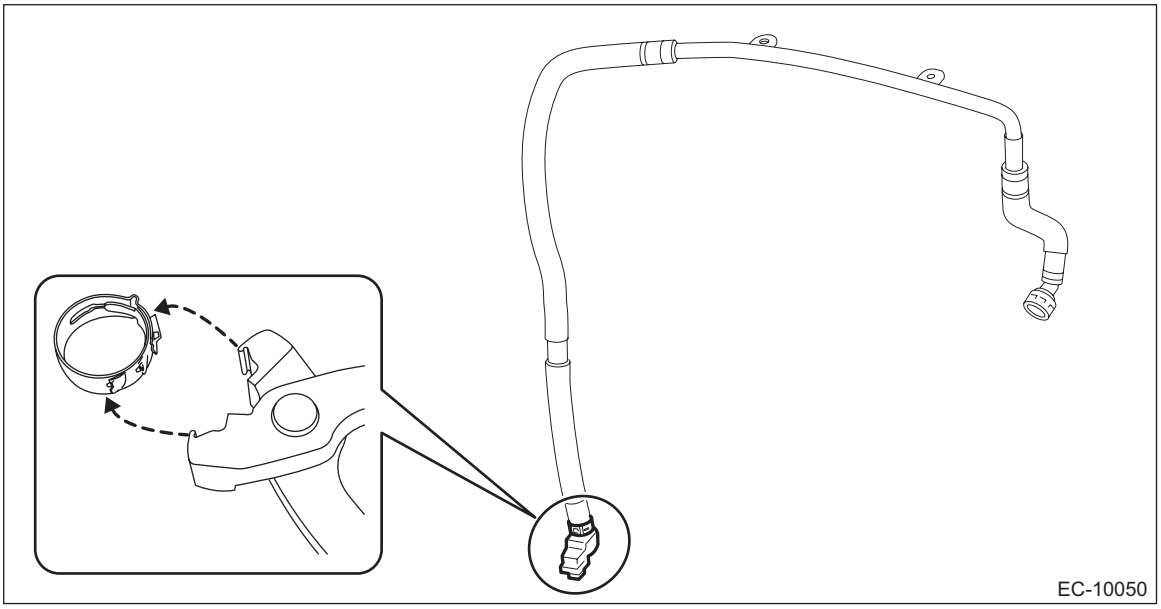

2) Connect the quick connector of the PCV pipe assembly to the PCV connector.

CAUTION:
• Check that there is no damage or dust on the quick connector. If necessary, clean the seal surface of the pipe.
• Make sure that the quick connector is securely connected.

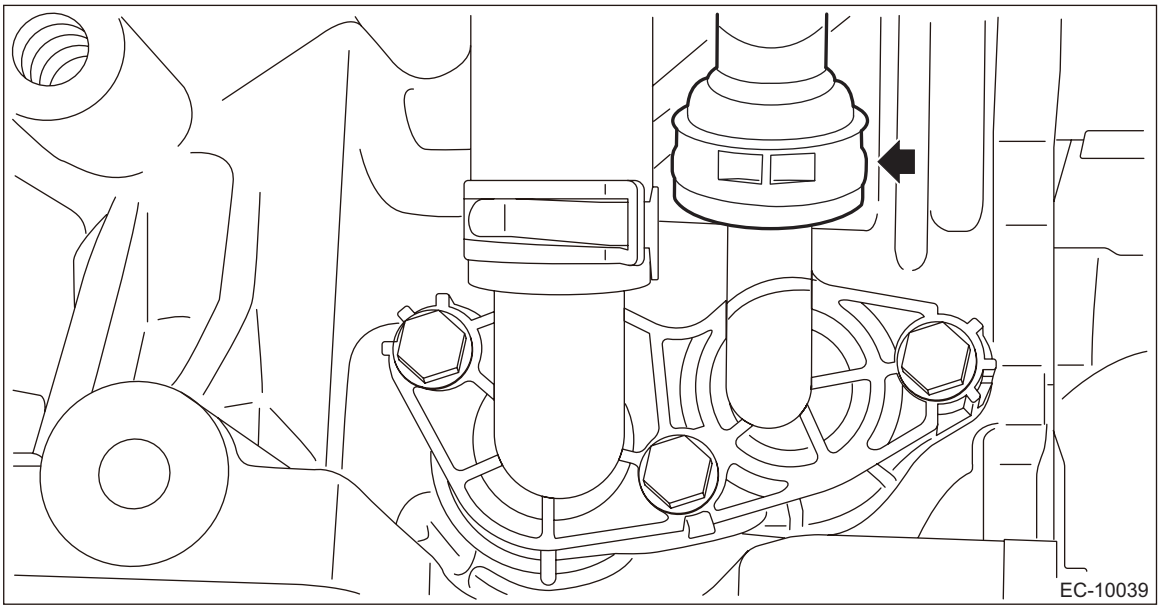

3) Install the A/C compressor. <Ref. to AC-48, INSTALLATION, Compressor.>
4) Attach the clips which secure the PCV pipe assembly to the intake manifold.

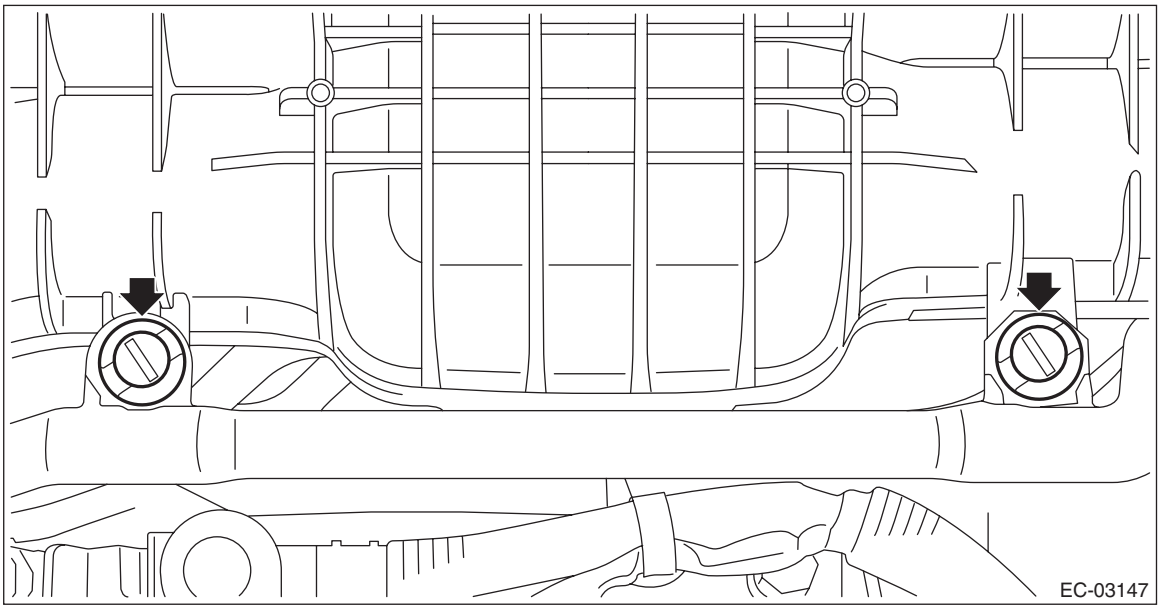

5) Install the PCV pipe assembly to the clip.

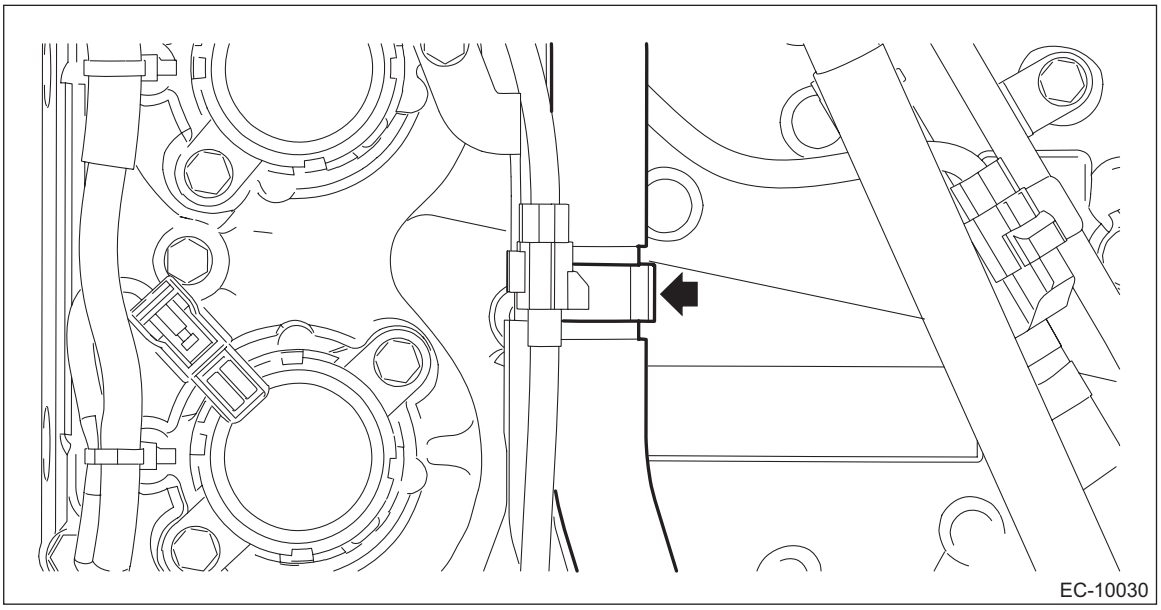

6) Install the intake duct No. 2. <Ref. to IN(w/o STI)-36, INTAKE DUCT NO. 2, INSTALLATION, Intake Duct.>
7) Connect the ground terminal to battery sensor. <Ref. to NT-6, BATTERY, NOTE, Note.>
8) Charge the A/C system with refrigerant. <Ref. to AC-27, PROCEDURE, Refrigerant Charging Procedure.>
9) Install the collector cover. <Ref. to IN(w/o STI)-10, INSTALLATION, Collector Cover.>

C: INSPECTION

1. BLOW-BY DIAGNOSIS CONNECTOR

1) Check that the blow-by diagnosis connector has no deformation, cracks or other damages.
2) Check the resistance between blow-by diagnosis connector terminals.

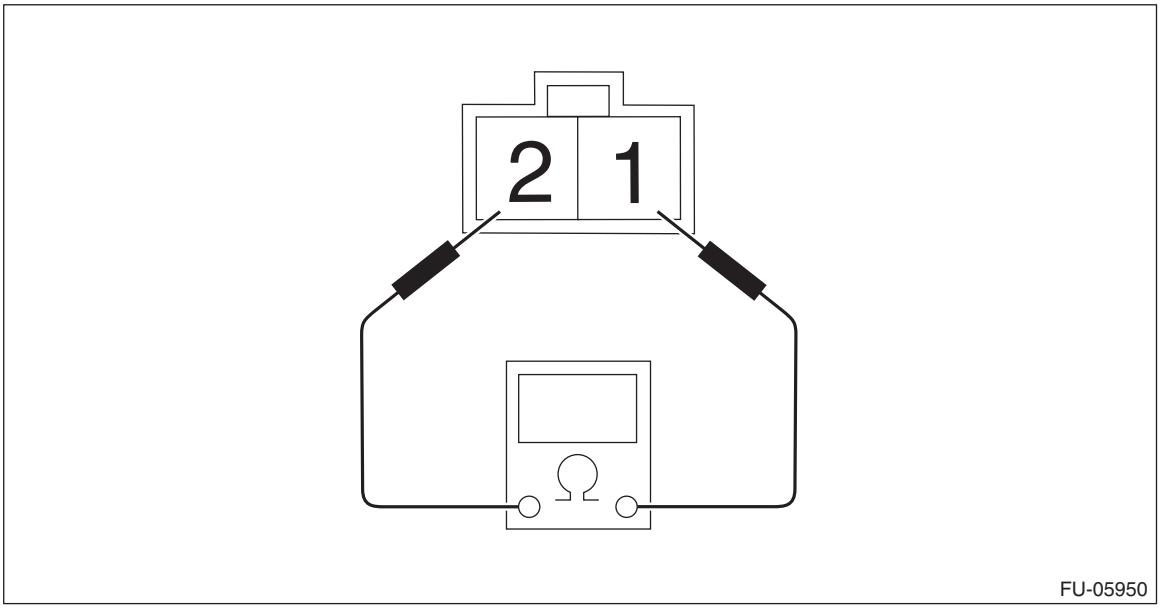

Terminal No.	Standard
1 and 2	Less than 1 Ω

2. OTHER INSPECTIONS

Check that the PCV pipe assembly has no cracks, damage or loose part.

14.PCV Connector

A: REMOVAL

1) Remove the collector cover. <Ref. to IN(w/o STI)-7, REMOVAL, Collector Cover.>
2) Disconnect the ground terminal from battery sensor. <Ref. to NT-6, BATTERY, NOTE, Note.>
3) Drain engine coolant. <Ref. to CO(w/o STI)-13, DRAINING OF ENGINE COOLANT, REPLACEMENT, Engine Coolant.>
4) Remove the PCV pipe assembly. <Ref. to EC(w/o STI)-70, REMOVAL, PCV Pipe.>
5) Disconnect the preheater hose from the PCV connector, and remove the PCV connector from the cylinder block LH.

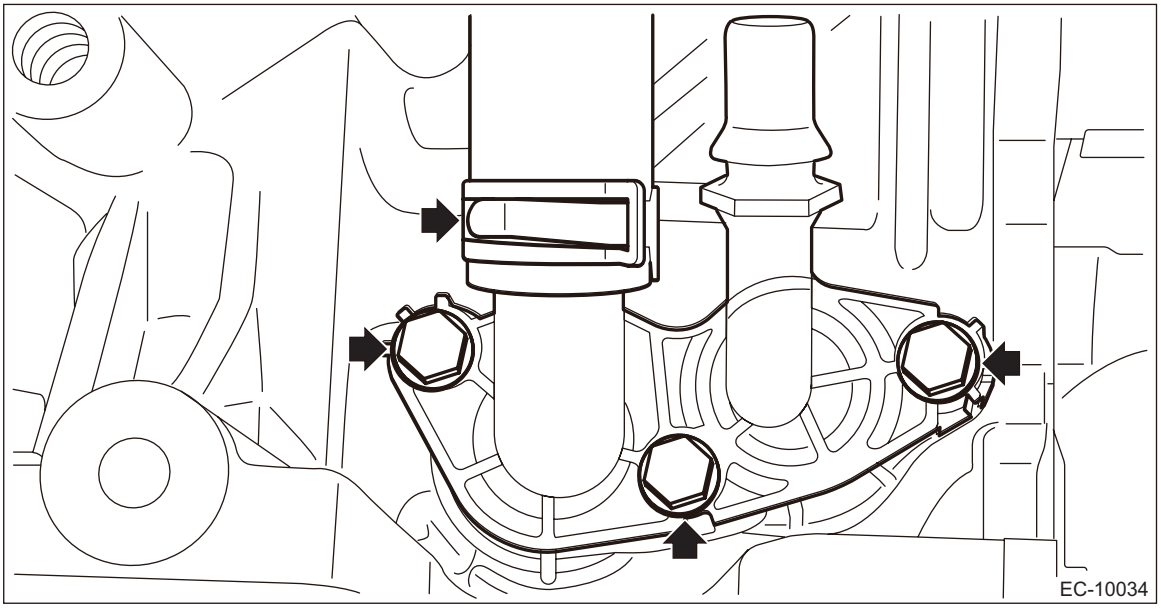

B: INSTALLATION

Install in the reverse order of removal.

NOTE:
Use new O-rings.

Tightening torque:
6.4 N·m (0.7 kgf-m, 4.7 ft-lb)

C: INSPECTION

Check that the PCV connector has no deformation, cracks or other damages.

15.PCV Hose

A: REMOVAL

1) Remove the collector cover. <Ref. to IN(w/o STI)-7, REMOVAL, Collector Cover.>
2) Disconnect the ground terminal from battery sensor. <Ref. to NT-6, BATTERY, NOTE, Note.>
3) Remove the intercooler. <Ref. to IN(w/o STI)-43, REMOVAL, Intercooler.>
4) Remove the brake booster vacuum hose from the clip, and place the brake booster vacuum hose aside so that it does not interfere with the work.

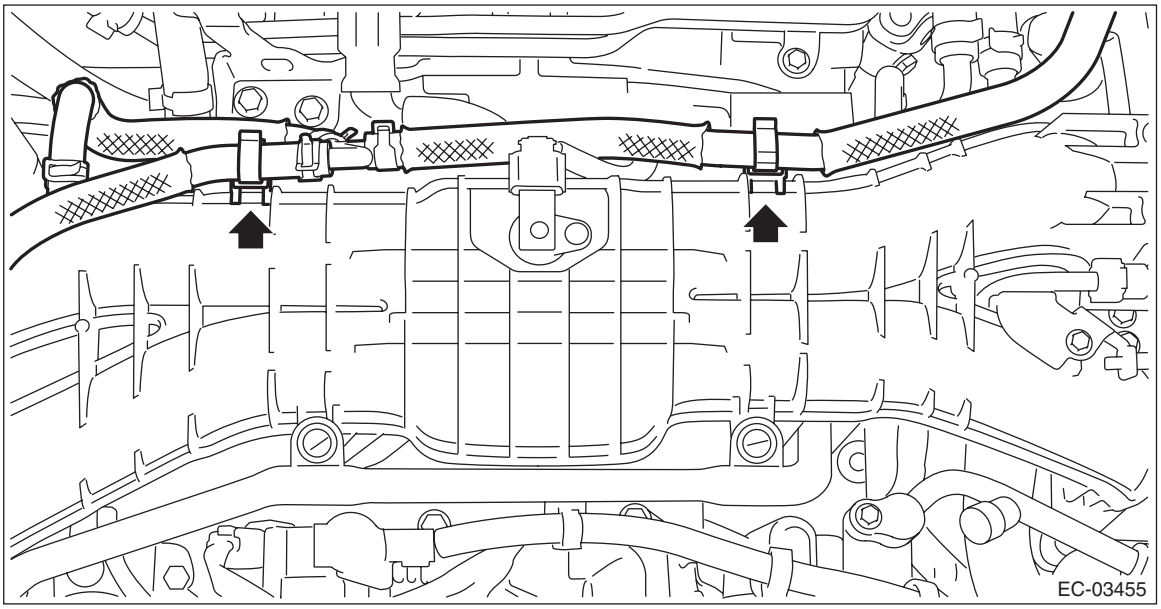

5) Disconnect the PCV hose from the intake manifold, and remove the PCV hose from the PCV valve.

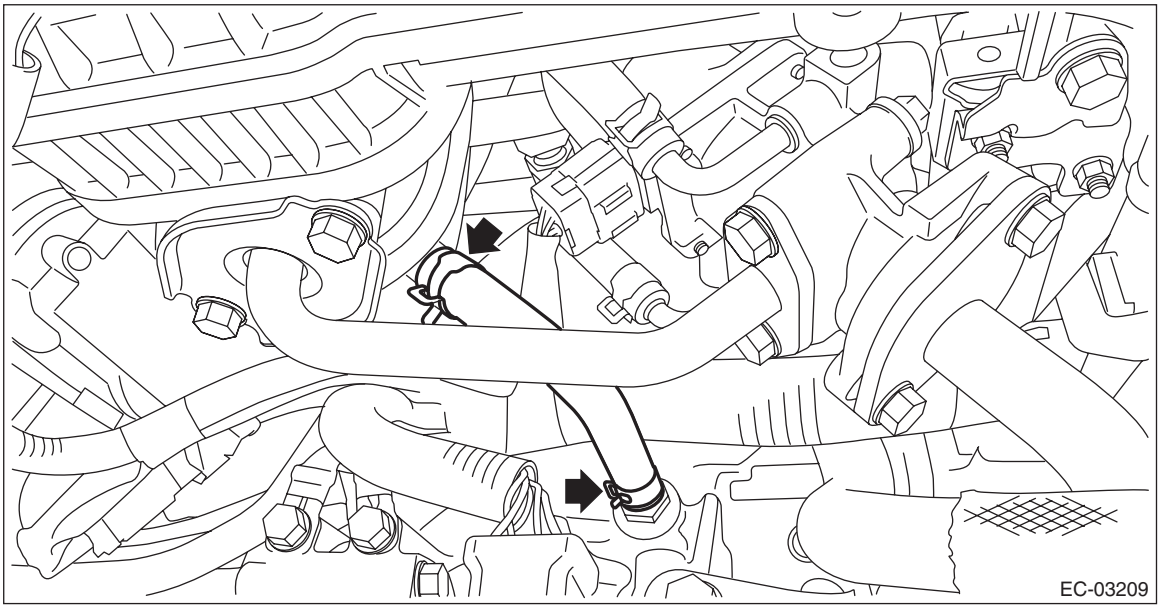

B: INSTALLATION

Install in the reverse order of removal.

NOTE:
If the brake booster vacuum hose securing clip is removed from the intake manifold, install the clip to the position of alignment mark ▼ of intake manifold.

C: INSPECTION

Check that the PCV hose has no cracks, damage or loose part.

16.PCV Hose Assembly

A: REPLACEMENT

CAUTION:
Do not remove except when the PCV hose assembly is broken.

1. PCV HOSE ASSY NO. 1

1) Disconnect the ground terminal from battery sensor. <Ref. to NT-6, BATTERY, NOTE, Note.>
2) Remove the radiator. <Ref. to CO(w/o STI)-36, REMOVAL, Radiator.>
3) Remove the condenser. <Ref. to AC-50, REMOVAL, Condenser.>
4) Unlock the blow-by diagnosis connector, and disconnect the PCV hose assembly No. 2 from the PCV hose assembly No. 1.

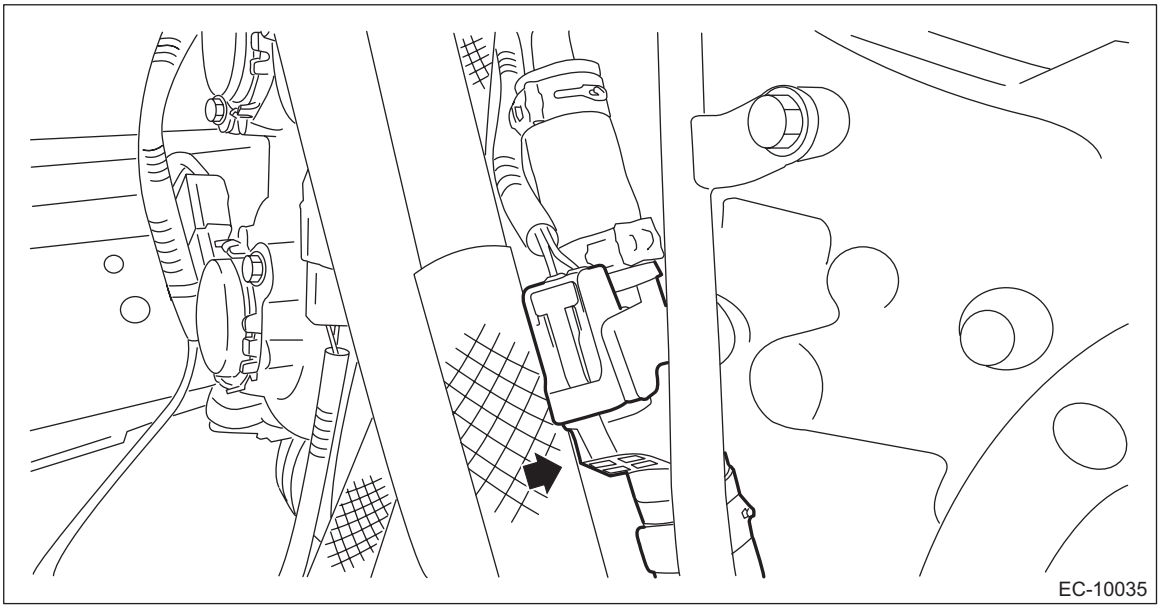

5) Remove the blow-by diagnosis connector harness from the PCV hose assembly No. 1.
6) Break the clamp, and remove the PCV hose assembly No. 1 from the chain cover.

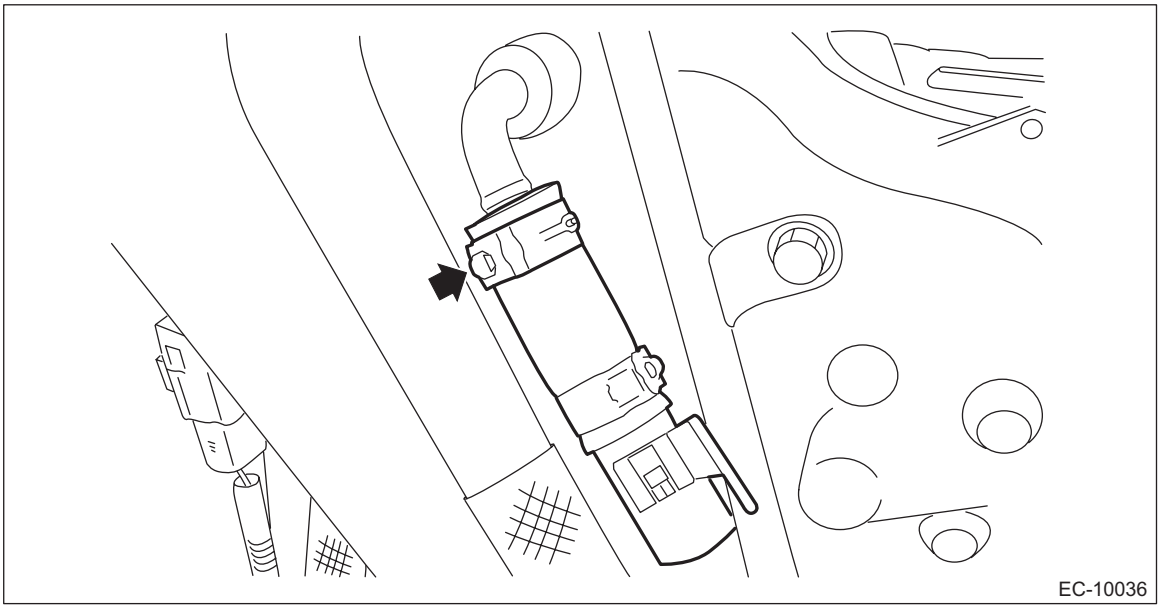

7) Break the clamp, and remove the hose connector from the PCV hose No. 1.

8) Install the hose connector to the PCV hose No. 1, and install the clamp using the Clamp pincer (14100134).

NOTE:
Use a new clamp.

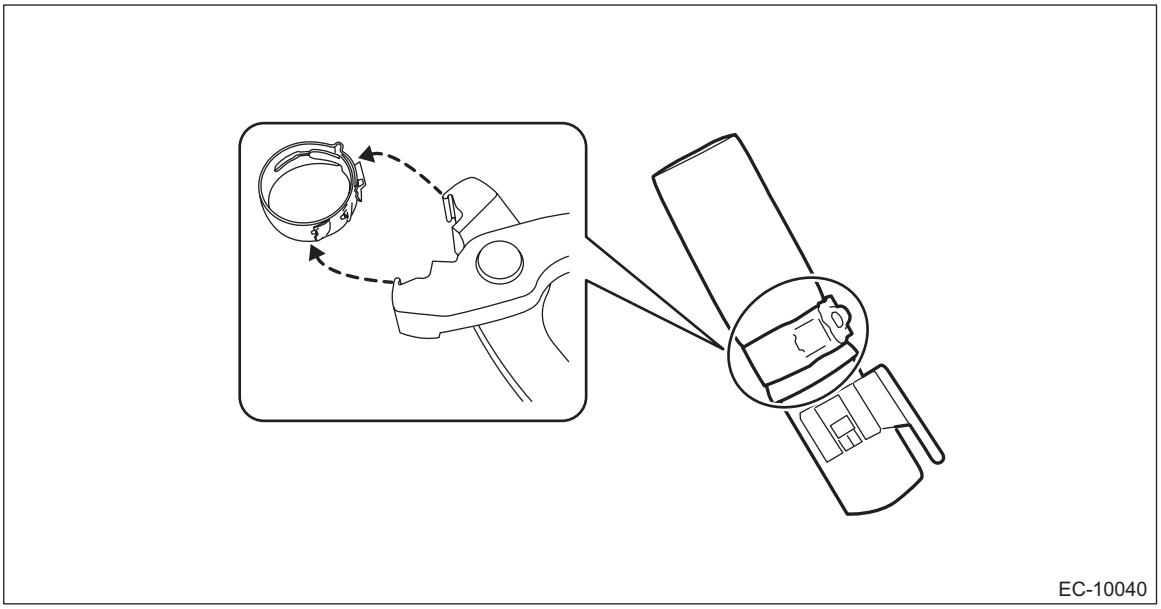

9) Install the PCV hose assembly No. 1 to the chain cover, and install the clamp using the Clamp pincer (14100134).

NOTE:
Use a new clamp.

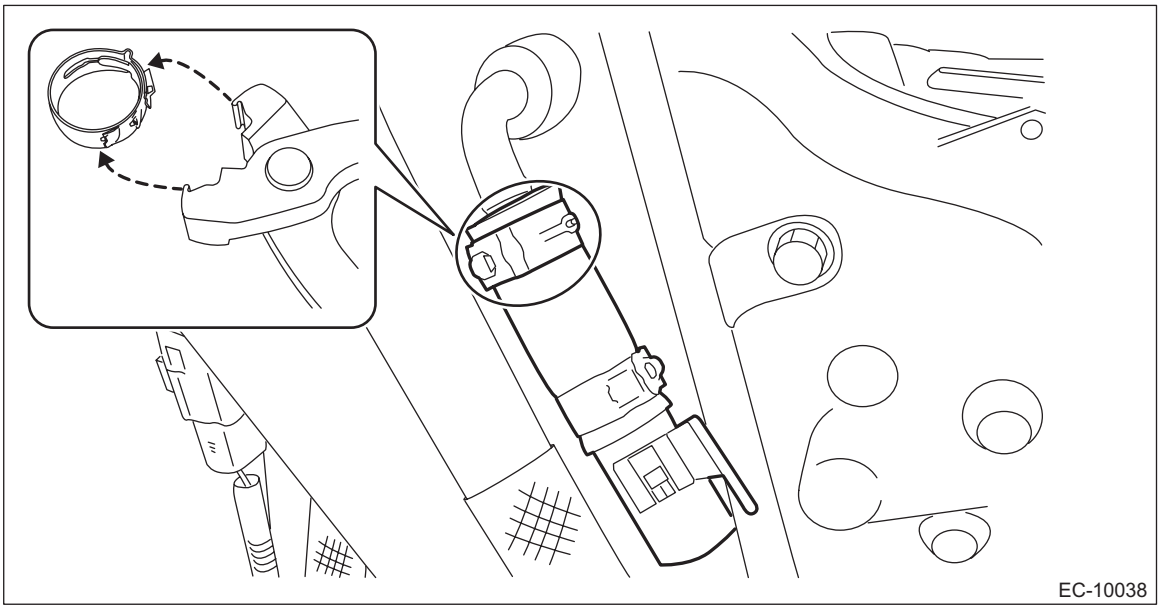

10) Install the blow-by diagnosis connector harness to the PCV hose assembly No. 1, and connect the PCV hose assembly No. 2 to the PCV hose assembly No. 1.

NOTE:
- There are multiple blow-by diagnosis connectors. Be careful not to connect incorrectly.
- Make sure that the blow-by diagnosis connector is connected securely.

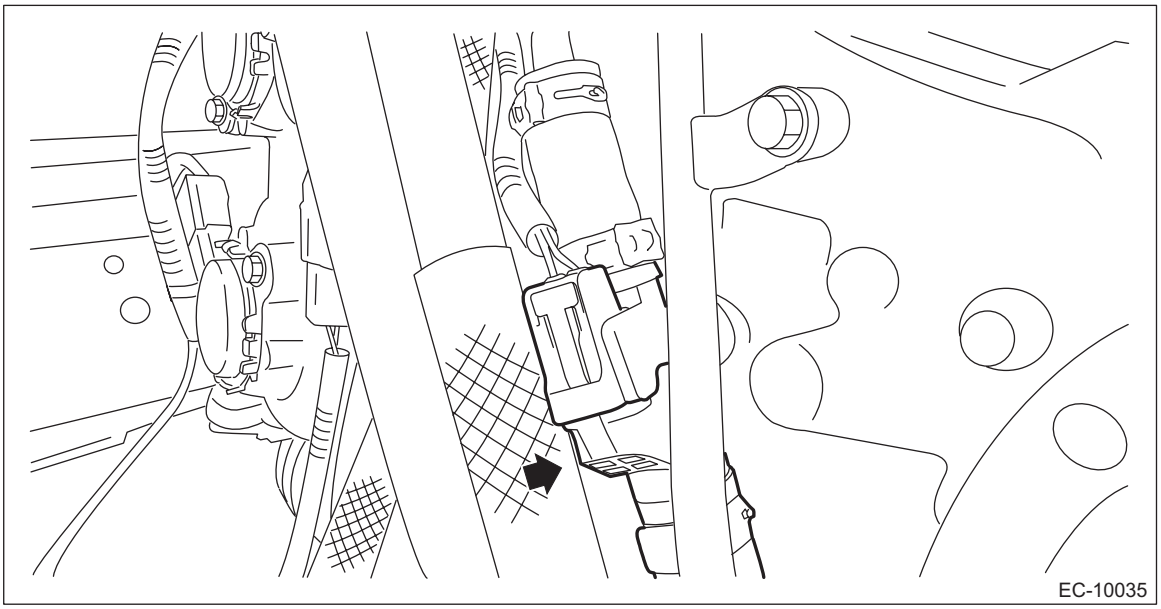

11) Install the condenser. <Ref. to AC-52, INSTALLATION, Condenser.>
12) Install the radiator. <Ref. to CO(w/o STI)-39, INSTALLATION, Radiator.>
13) Connect the ground terminal to battery sensor. <Ref. to NT-6, BATTERY, NOTE, Note.>
14) Charge the A/C system with refrigerant. <Ref. to AC-27, PROCEDURE, Refrigerant Charging Procedure.>
15) Fill engine coolant. <Ref. to CO(w/o STI)-14, FILLING OF ENGINE COOLANT, REPLACEMENT, Engine Coolant.>

2. PCV HOSE ASSY NO. 2

1) Disconnect the ground terminal from battery sensor. <Ref. to NT-6, BATTERY, NOTE, Note.>
2) Remove the oil catch tank. <Ref. to IN(w/o STI)-56, REMOVAL, Oil Catch Tank.>
3) Remove the clamp cover.

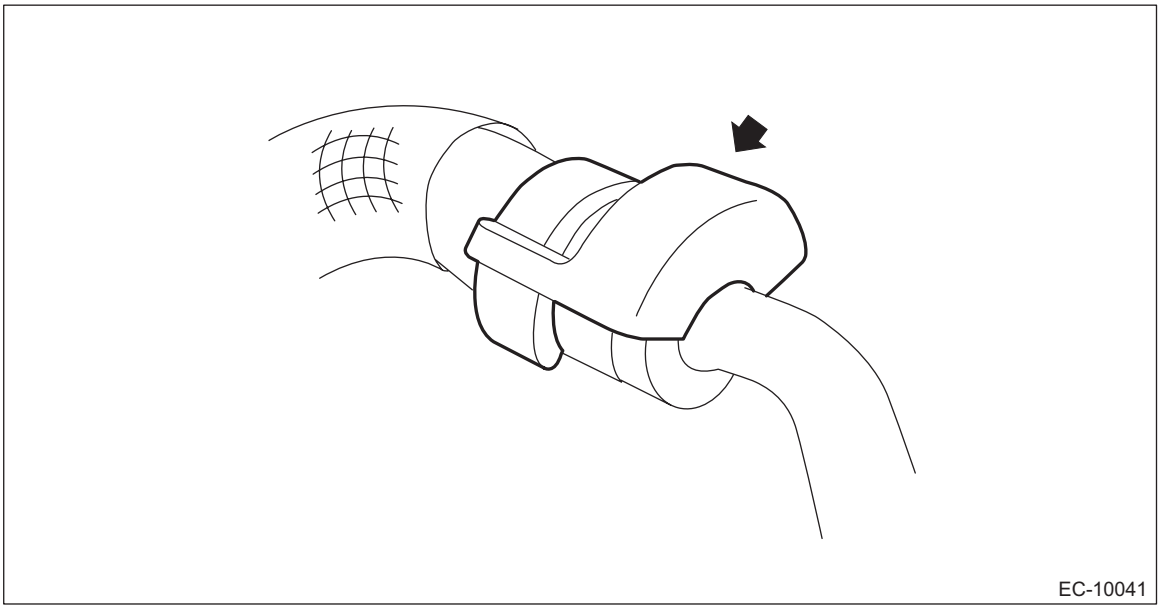

4) Break the clamp, and remove the PCV hose assembly No. 2 from the oil catch tank.

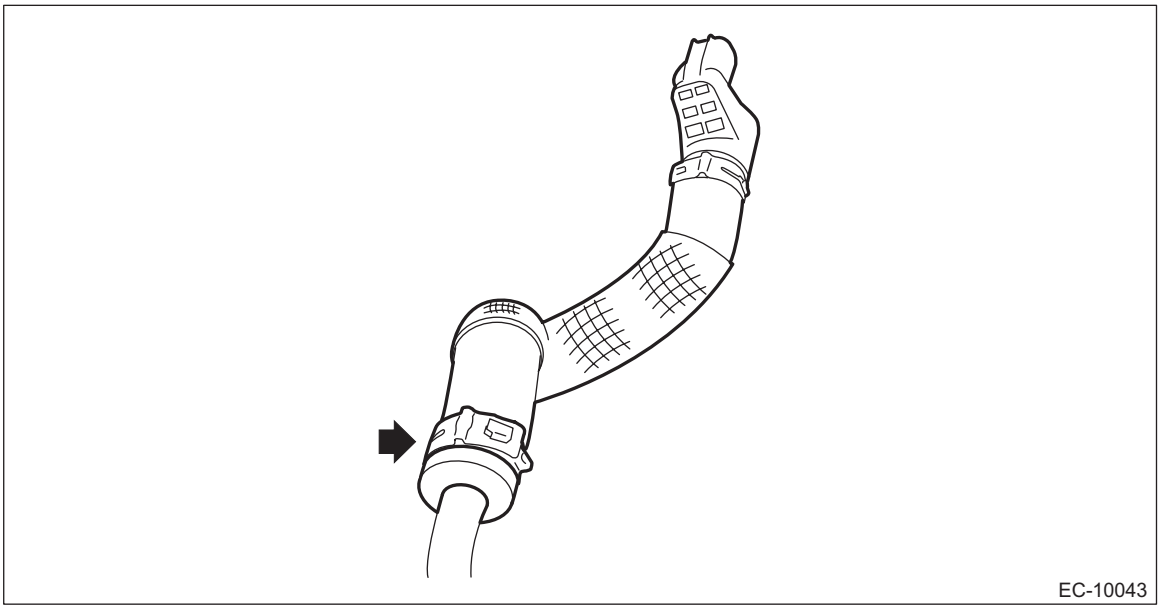

5) Break the clamp, and remove the blow-by diagnosis connector from the PCV hose No. 2.
6) Install the blow-by diagnosis connector to the PCV hose No. 2, and install the clamp using the Clamp pincer (14100134).

NOTE:
Use a new clamp.

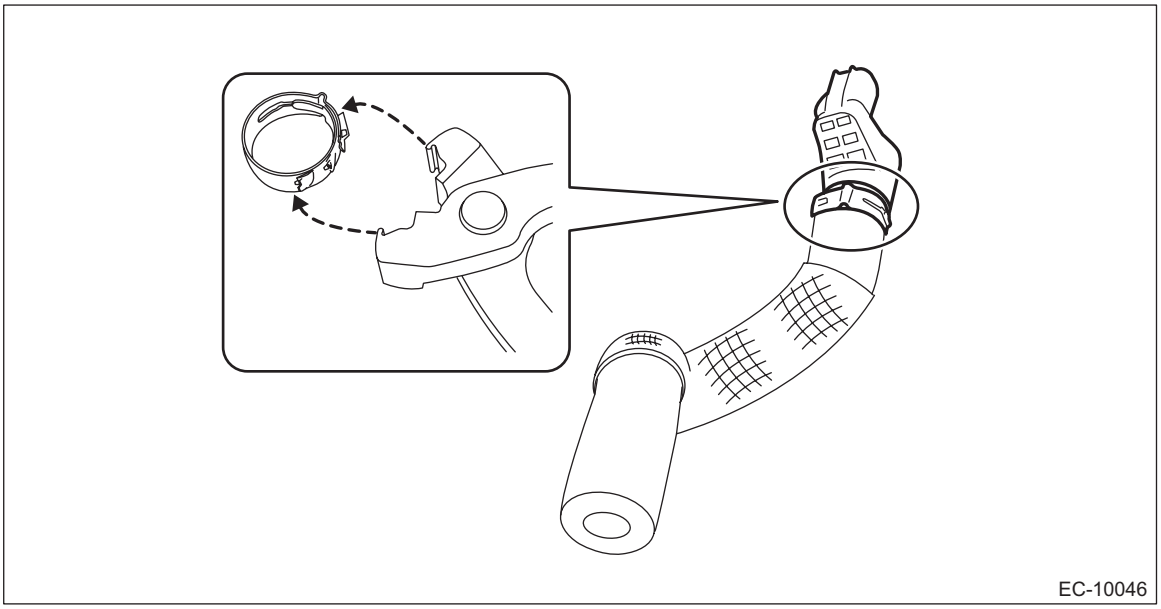

7) Install the PCV hose assembly No. 2 to the oil catch tank, and install the clamp using the Clamp pincer (14100134).

NOTE:
Use a new clamp.

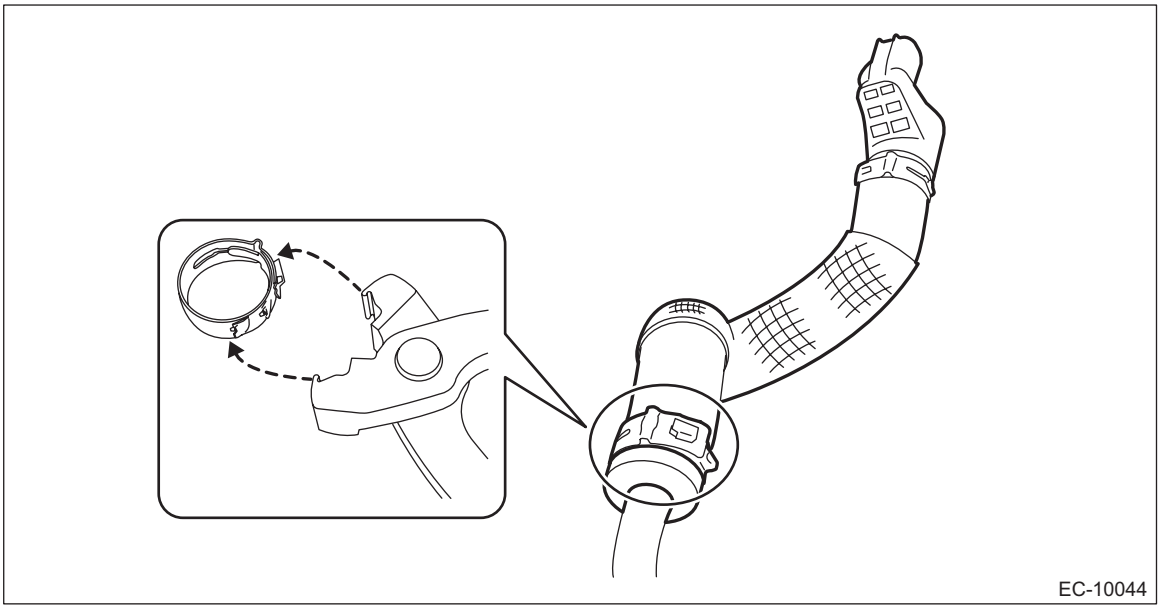

8) Install the clamp cover.

CAUTION:
Be careful not to allow the lower part of the clamp cover to ride over the PCV hose assembly No. 2.

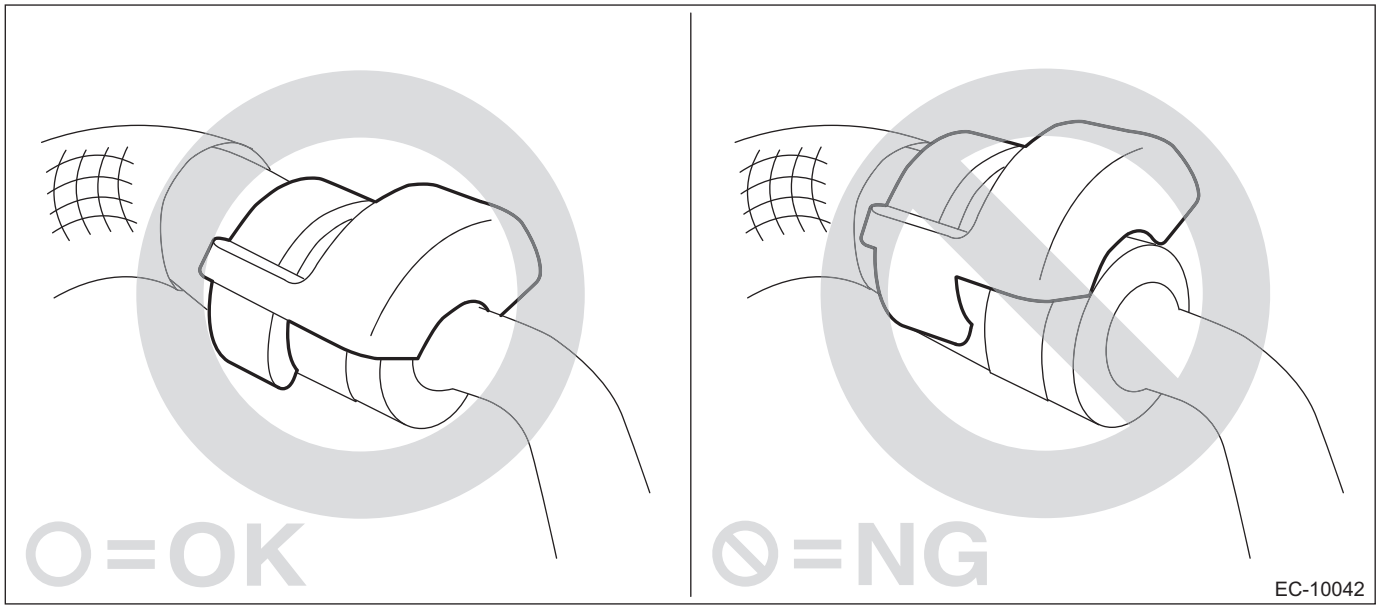

9) Install the oil catch tank. <Ref. to IN(w/o STI)-57, INSTALLATION, Oil Catch Tank.>
10) Connect the ground terminal to battery sensor. <Ref. to NT-6, BATTERY, NOTE, Note.>

B: INSPECTION

1. BLOW-BY DIAGNOSIS CONNECTOR

1) Check that the blow-by diagnosis connector has no deformation, cracks or other damages.
2) Check the resistance between blow-by diagnosis connector terminals.

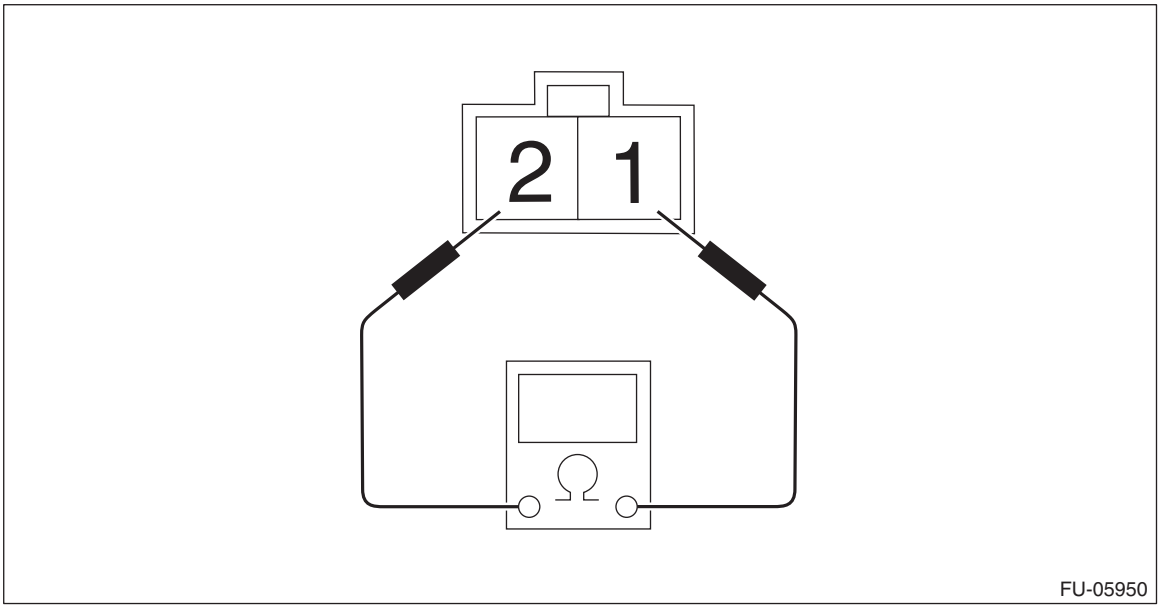

Terminal No.	Standard
1 and 2	Less than 1 Ω

2. OTHER INSPECTIONS

Check the PCV hose assembly for cracks, damage or looseness.

17.PCV Valve

A: REMOVAL

CAUTION:
Do not remove unless the PCV valve is broken.

1) Remove the collector cover. <Ref. to IN(w/o STI)-7, REMOVAL, Collector Cover.>
2) Disconnect the ground terminal from battery sensor. <Ref. to NT-6, BATTERY, NOTE, Note.>
3) Remove the intercooler. <Ref. to IN(w/o STI)-43, REMOVAL, Intercooler.>
4) Remove the brake booster vacuum hose from the clip, and place the brake booster vacuum hose aside so that it does not interfere with the work.

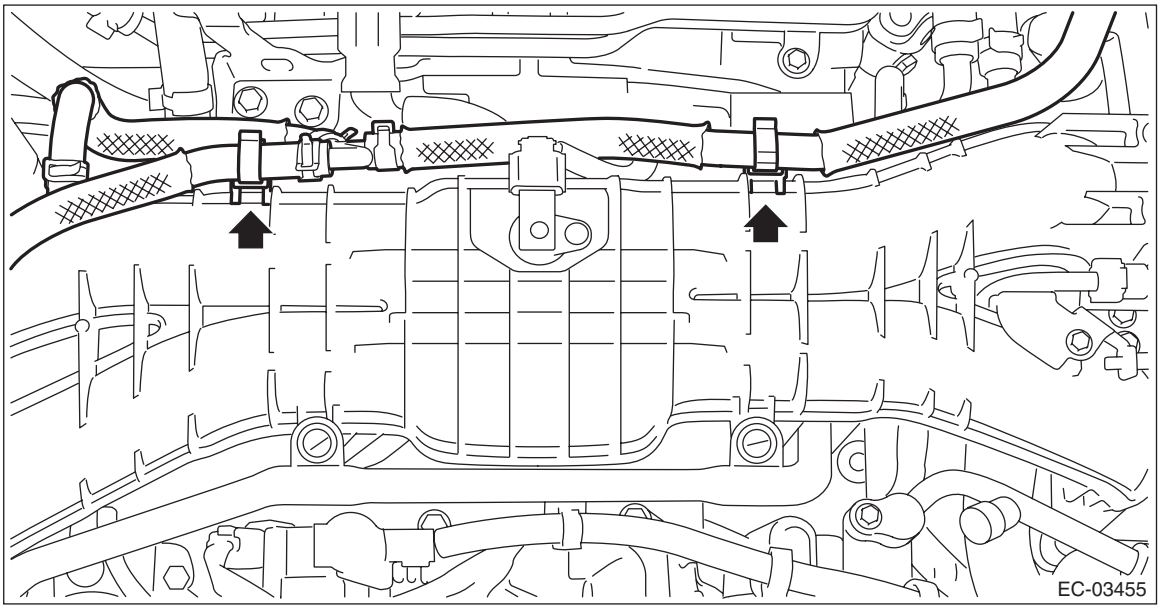

5) Disconnect the PCV hose from the PCV valve.

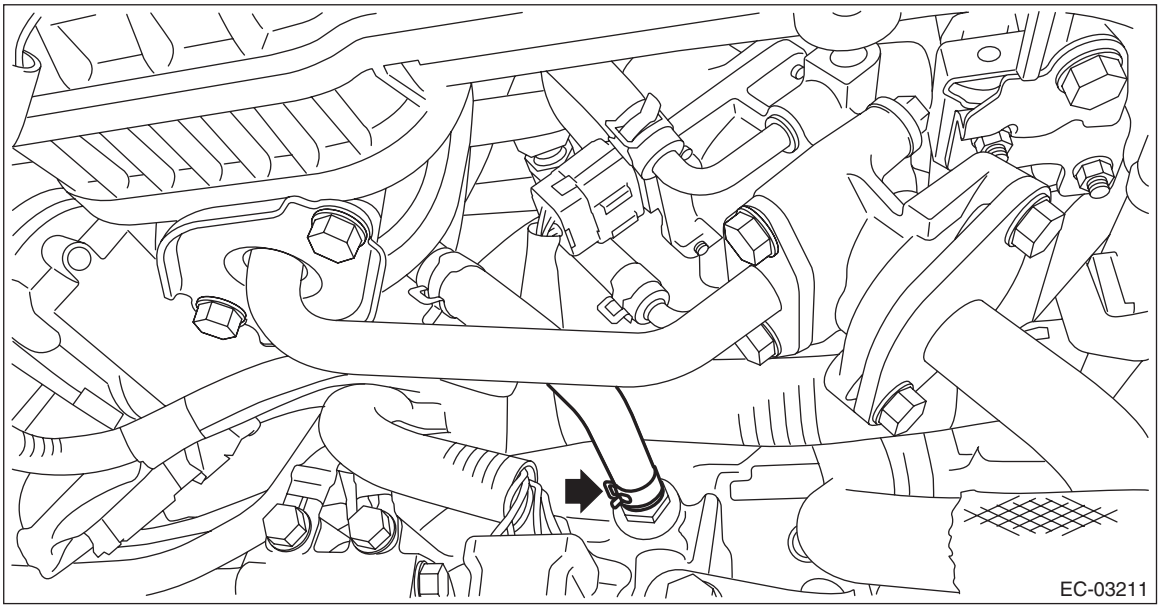

6) Remove the PCV valve from the cylinder block RH.

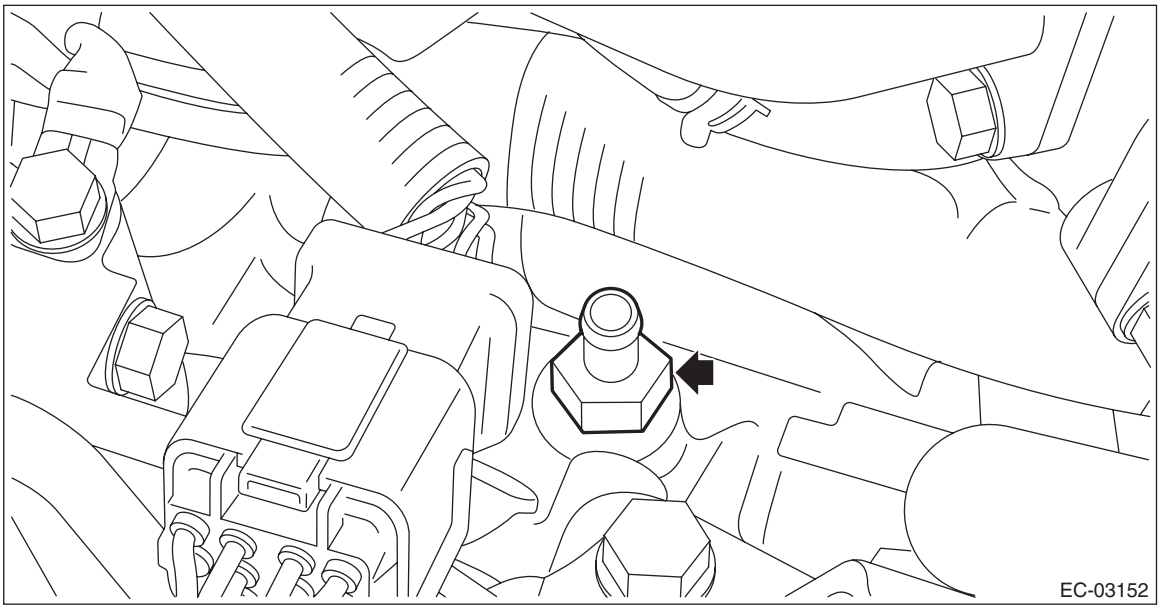

B: INSTALLATION

Install in the reverse order of removal.

NOTE:
- Apply liquid gasket to the bolt threads of PCV valve.

Liquid gasket:
THREE BOND 1324 (Part No. 004403042) or equivalent

Tightening torque:
23 N·m (2.3 kgf-m, 17.0 ft-lb)
- If the brake booster vacuum hose securing clip is removed from the intake manifold, install the clip to the position of alignment mark ▼ of intake manifold.

C: INSPECTION

1) Check that the PCV valve has no deformation, cracks or other damages.
2) Check that air is discharged from (B) when air is blown into (A).

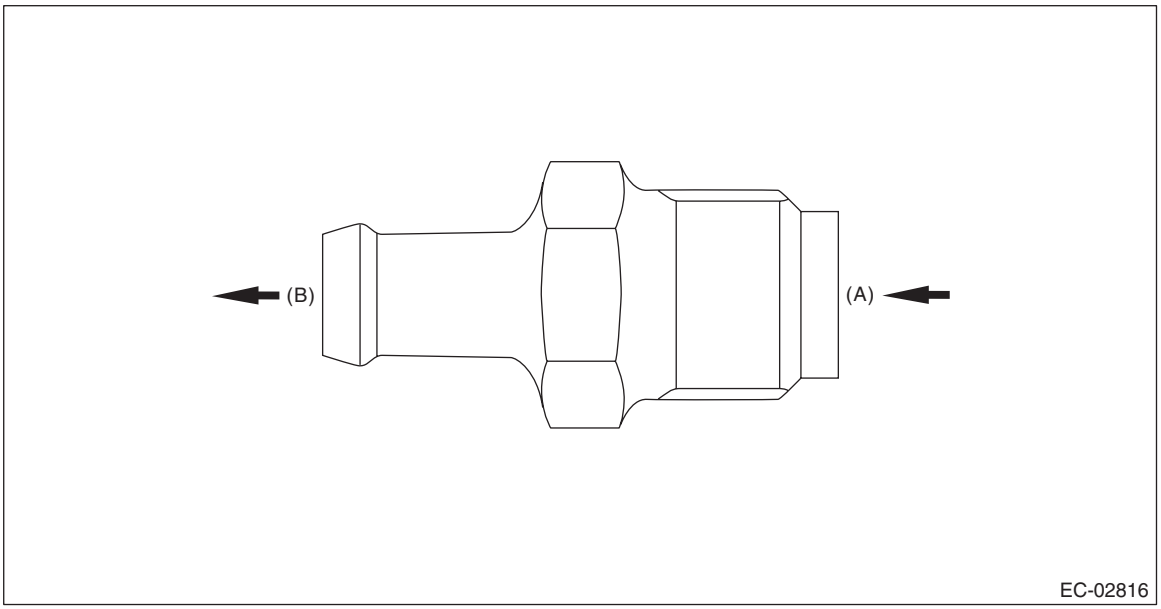

3) Check that air does not come out from (B) when air is blown into (A).

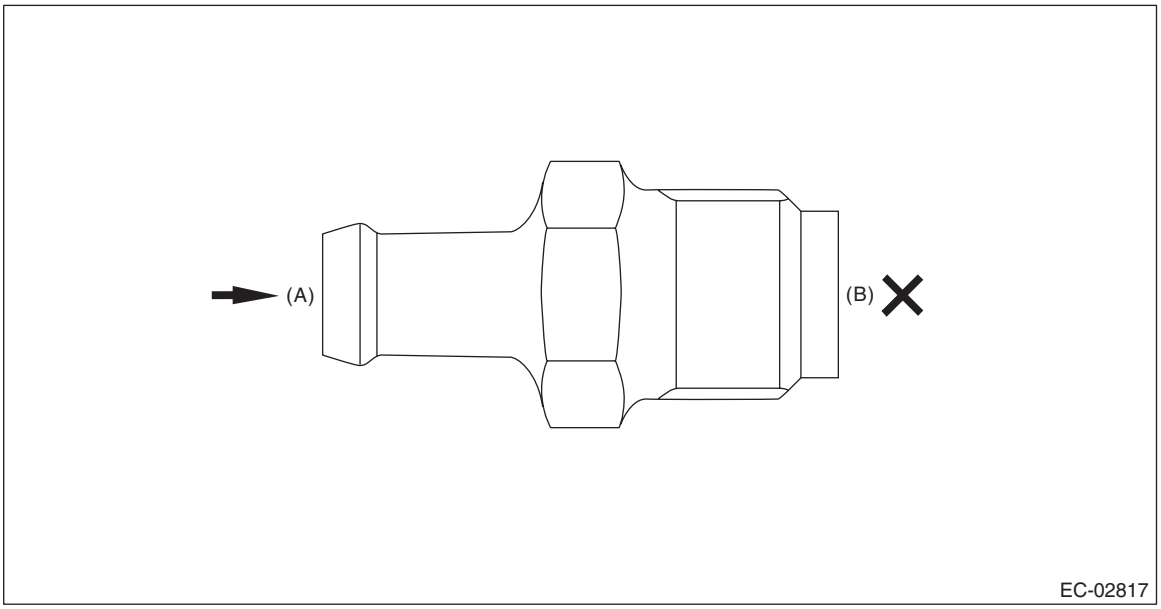

INTAKE (INDUCTION)

IN(w/o STI)

		Page
1.	General Description	2
2.	Collector Cover	7
3.	Air Cleaner Element	11
4.	Air Cleaner Case	13
5.	Air Intake Boot	21
6.	Air Intake Duct	26
7.	Intake Duct	27
8.	Intercooler	43
9.	Turbocharger	49
10.	Oil Catch Tank	56
11.	Scavenge Pump	61
12.	Air By-pass Valve	62
13.	Resonator Chamber	64

1. General Description

A: COMPONENT

1. AIR CLEANER

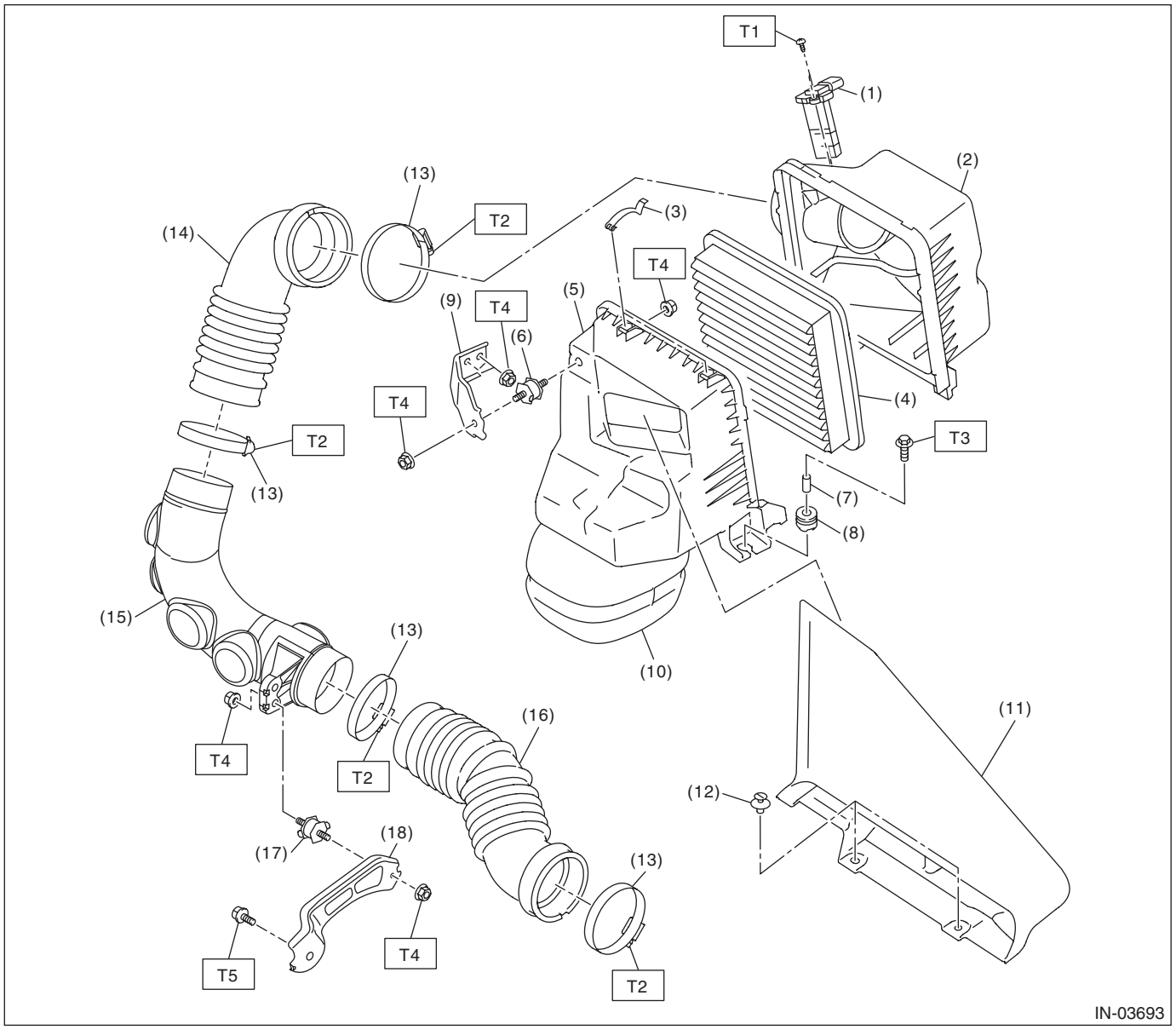

(1)	Mass air flow and intake air temperature sensor	(10)	Resonator chamber
(2)	Air cleaner case (rear)	(11)	Air intake duct
(3)	Clip	(12)	Clip
(4)	Air cleaner element	(13)	Clamp
(5)	Air cleaner case (front)	(14)	Air intake boot A
(6)	Cushion	(15)	Turbo duct
(7)	Spacer	(16)	Air intake boot B
(8)	Cushion	(17)	Cushion
(9)	Air cleaner case bracket	(18)	Duct bracket

Tightening torque: N·m (kgf-m, ft-lb)

T1: 1 (0.1, 0.7)
T2: 2.5 (0.3, 1.8)
T3: 6 (0.6, 4.4)
T4: 7.5 (0.8, 5.5)
T5: 18 (1.8, 13.3)

2. INTAKE DUCT

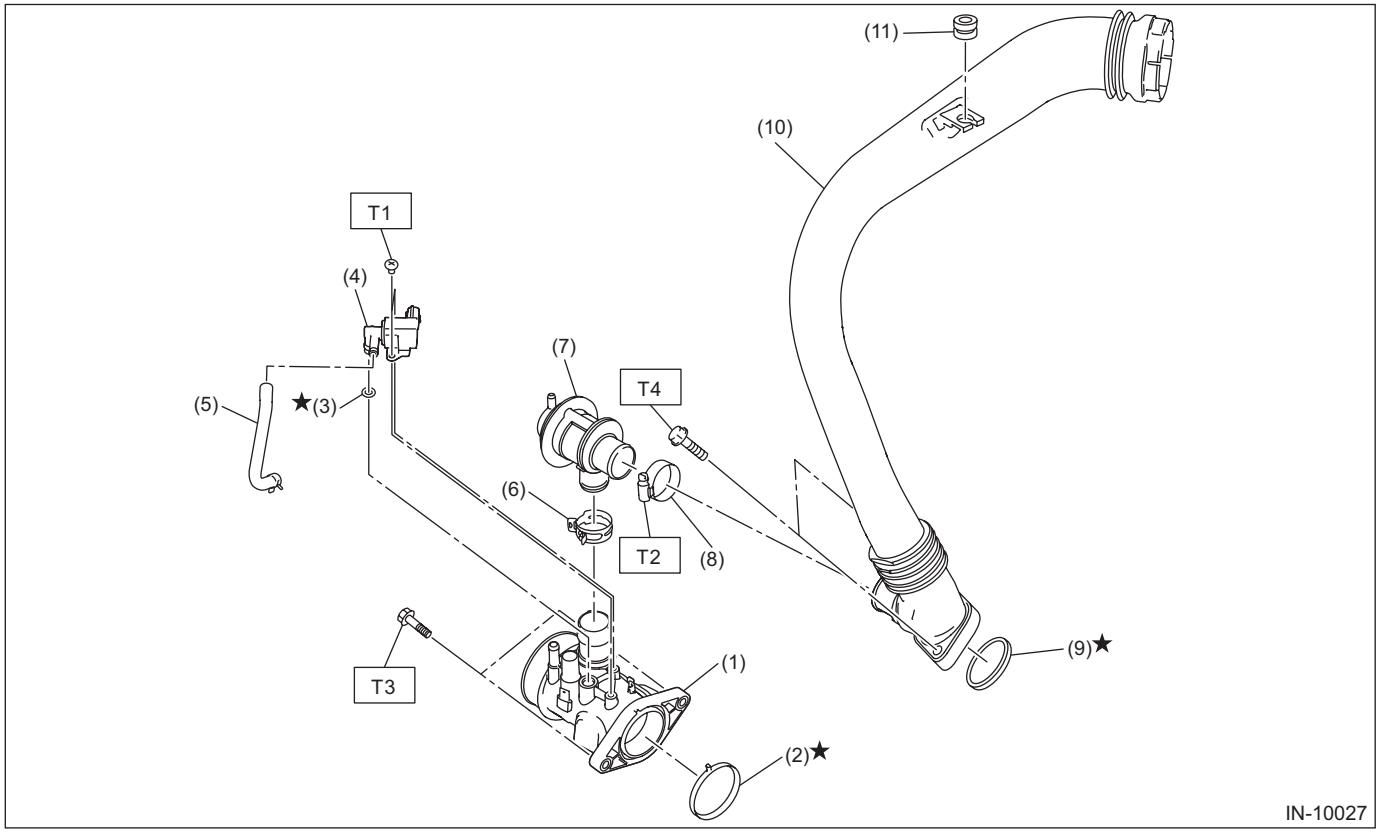

(1)	Intake duct No. 1	(7)	Air by-pass valve	***Tightening torque: N·m (kgf-m, ft-lb)***
(2)	O-ring	(8)	Clamp	***T1: 2.8 (0.3, 2.1)***
(3)	O-ring	(9)	O-ring	***T2: 3 (0.3, 2.2)***
(4)	Wastegate control solenoid valve	(10)	Intake duct No. 2	***T3: 7.5 (0.8, 5.5)***
(5)	Vacuum control hose	(11)	Cushion	***T4: 16 (1.6, 11.8)***
(6)	Clip			

3. INTAKE DUCT AND INTERCOOLER

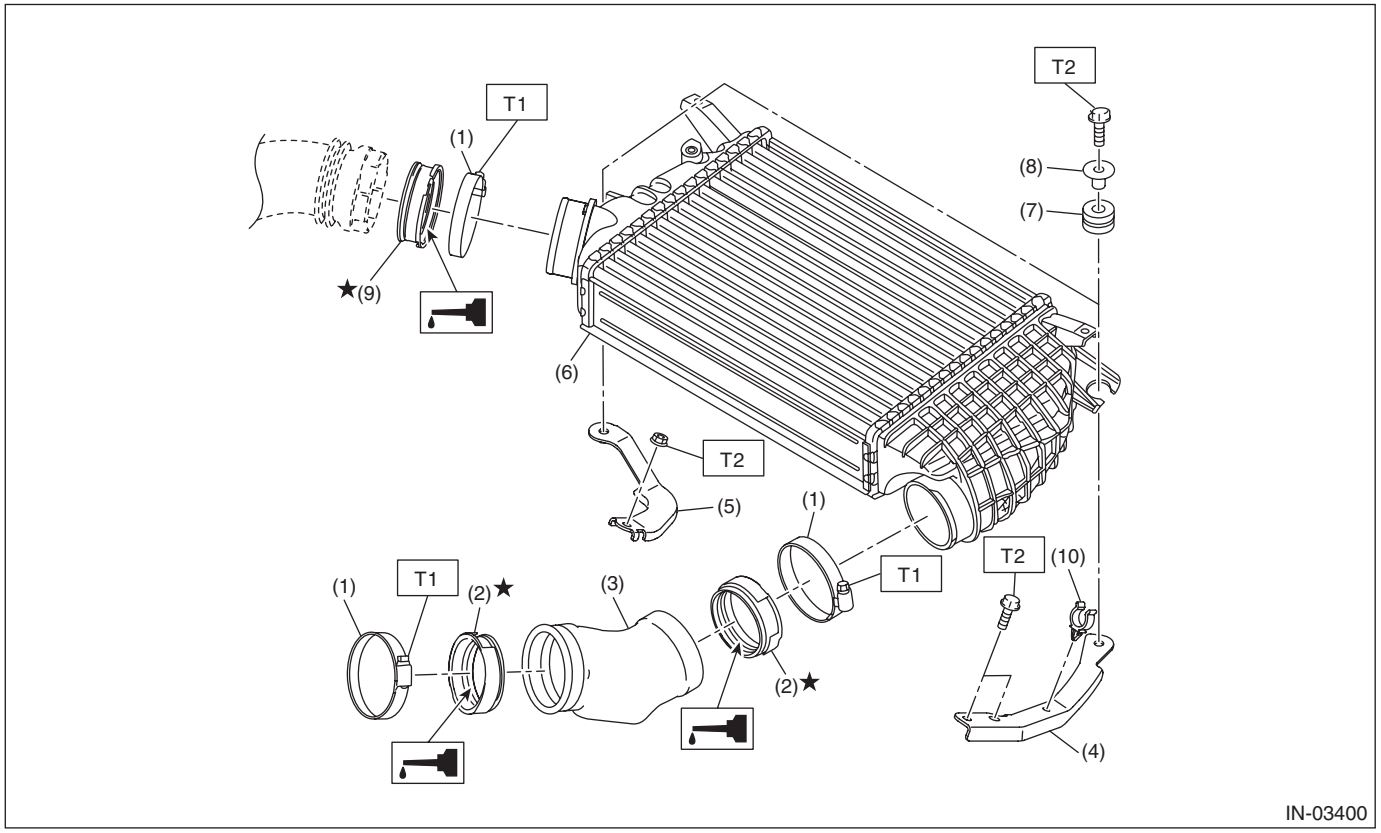

(1)	Clamp	(6)	Intercooler
(2)	Insulator	(7)	Cushion
(3)	Intake duct No. 3	(8)	Spacer
(4)	Intercooler stay LH	(9)	Insulator
(5)	Intercooler stay RH	(10)	Clip

Tightening torque: N·m (kgf-m, ft-lb)
T1: 3 (0.3, 2.2)
T2: 16 (1.6, 11.8)

4. TURBOCHARGER

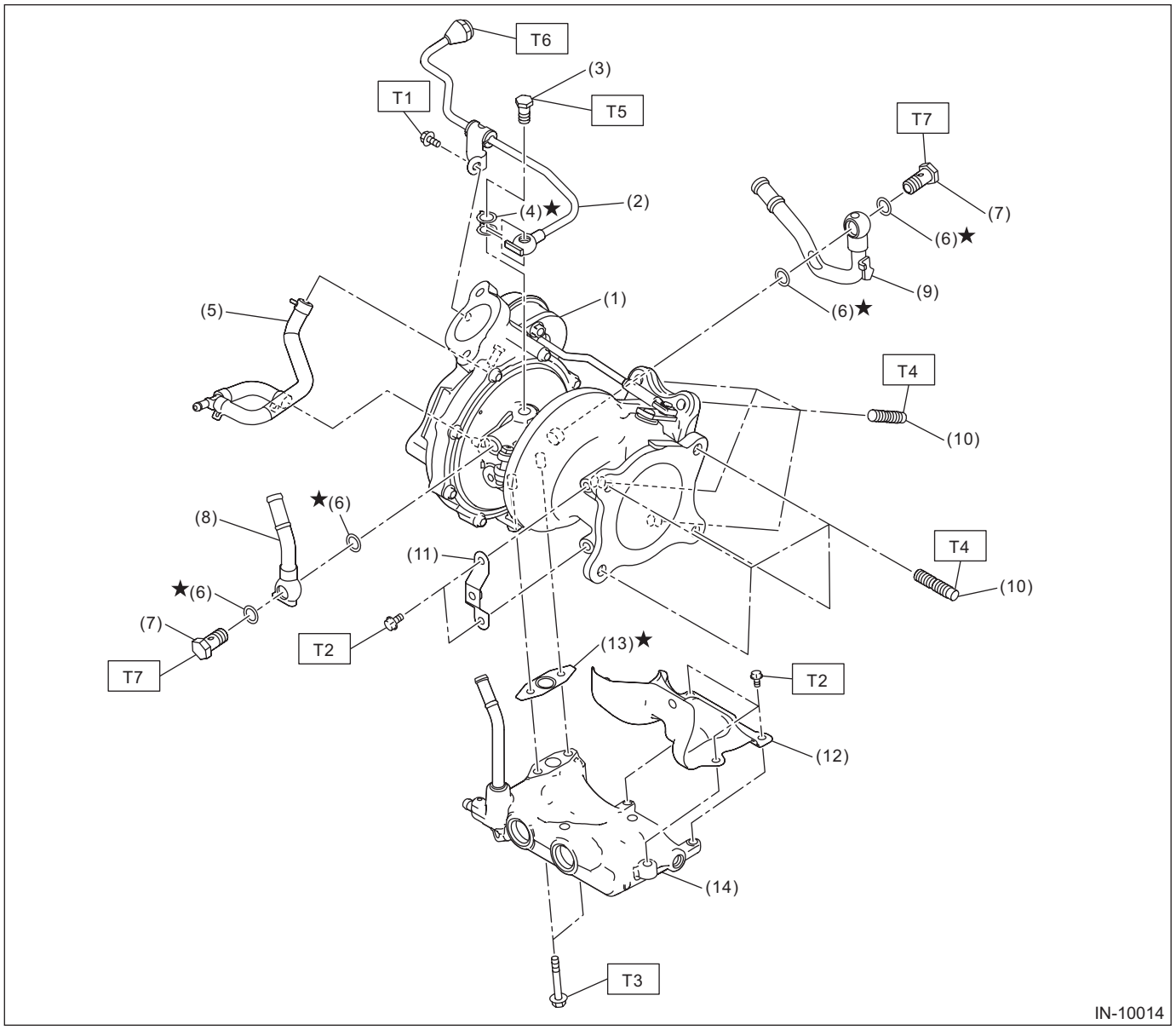

(1)	Turbocharger	(9)	Turbocharger pipe B
(2)	Union screw pipe ASSY	(10)	Stud bolt
(3)	Union bolt	(11)	Exhaust stay
(4)	Gasket	(12)	Exhaust cover
(5)	Air control hose ASSY	(13)	Gasket
(6)	Gasket	(14)	Oil catch tank
(7)	Union bolt		
(8)	Turbocharger pipe A		

Tightening torque: N·m (kgf-m, ft-lb)

T1: 6.8 (0.7, 5.1)
T2: 7.15 (0.7, 5.3)
T3: 10.5 (1.1, 7.7)
T4: 14.7 (1.5, 10.8)
T5: 16 (1.6, 11.8)
T6: 20 (2.0, 14.8)
T7: 31.5 (3.2, 23.2)

B: CAUTION

- Prior to starting work, pay special attention to the following:
  1. Always wear work clothes, a work cap, and protective shoes. Additionally, wear a helmet, protective goggles, etc. if necessary.
  2. Protect the vehicle using a seat cover, fender cover, etc.
  3. Prepare the service tools, clean cloth, containers to catch grease and oil, etc.
- Vehicle components are extremely hot immediately after driving. Be wary of receiving burns from heated parts.
- When performing a repair, identify the cause of trouble and avoid unnecessary removal, disassembly and replacement.
- Before disconnecting connectors of sensors or units, be sure to disconnect the ground cable from battery.
- Always use the jack-up point when the shop jacks or rigid racks are used to support the vehicle.
- Remove contamination including dirt and corrosion before removal, installation, disassembly or assembly.
- Keep the removed parts in order and protect them from dust and dirt.
- All removed parts, if to be reused, should be reinstalled in the original positions with attention to the correct directions, etc.
- Bolts, nuts and washers should be replaced with new parts as required.
- Be sure to tighten the fasteners including bolts and nuts to the specified torque.

C: PREPARATION TOOL

1. GENERAL TOOL

TOOL NAME	REMARKS
TORX® socket E10	Used for disassembling and assembling the turbocharger.
Mighty Vac	Used for checking waste gate actuator and air by-pass valve.
Urethane sheet Width × Height × Thickness Approx. 300 mm × approx. 200 mm × approx. 10 mm (Approx. 11.81 in × approx. 7.87 in × approx. 0.39 in)	Used for removing and installing intercooler. (MT model)

2. Collector Cover

A: REMOVAL

CAUTION:
The operation must be carefully performed; otherwise the collector cover may be damaged.
1) Remove the clip holding the collector cover.

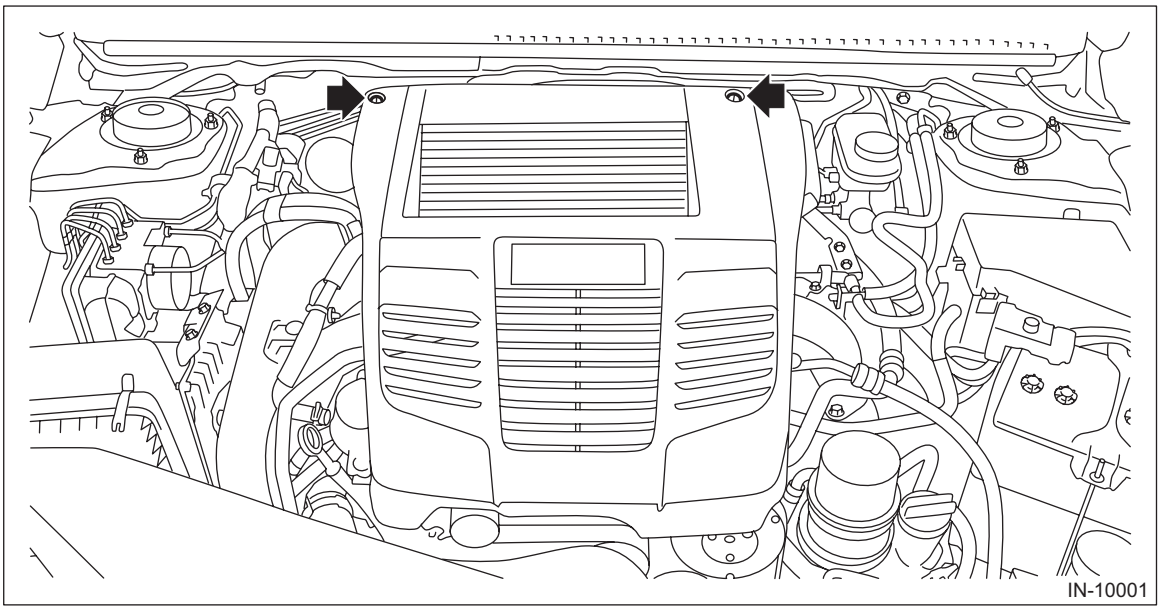

2) Insert a cloth, etc. (A) between the collector cover and bulkhead.

NOTE:
This procedure is required to prevent the collector cover from touching the vehicle during collector cover removal.

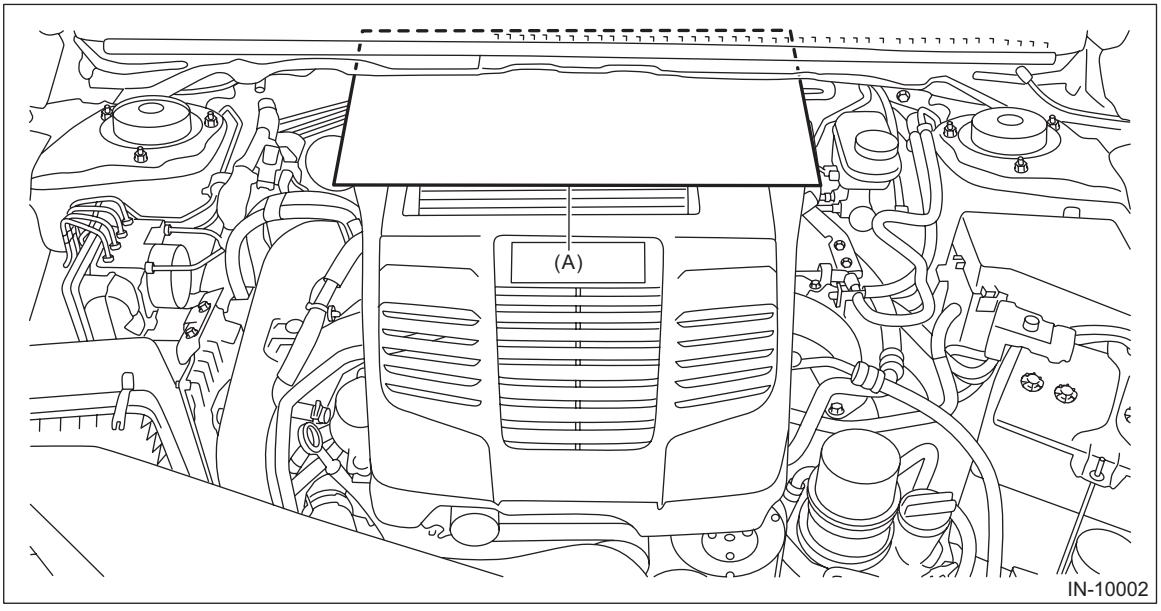

3) Remove the bushing inserted section, and remove the collector cover.
(1) Hold the shaded section (A) of the collector cover LH side by hand, and lift up the section (B) in the direction of the arrow with fingers to remove the bushing inserted section.

CAUTION:
When removing the collector cover from the collector cover bracket, lift up in parallel to the insertion direction of installation part.

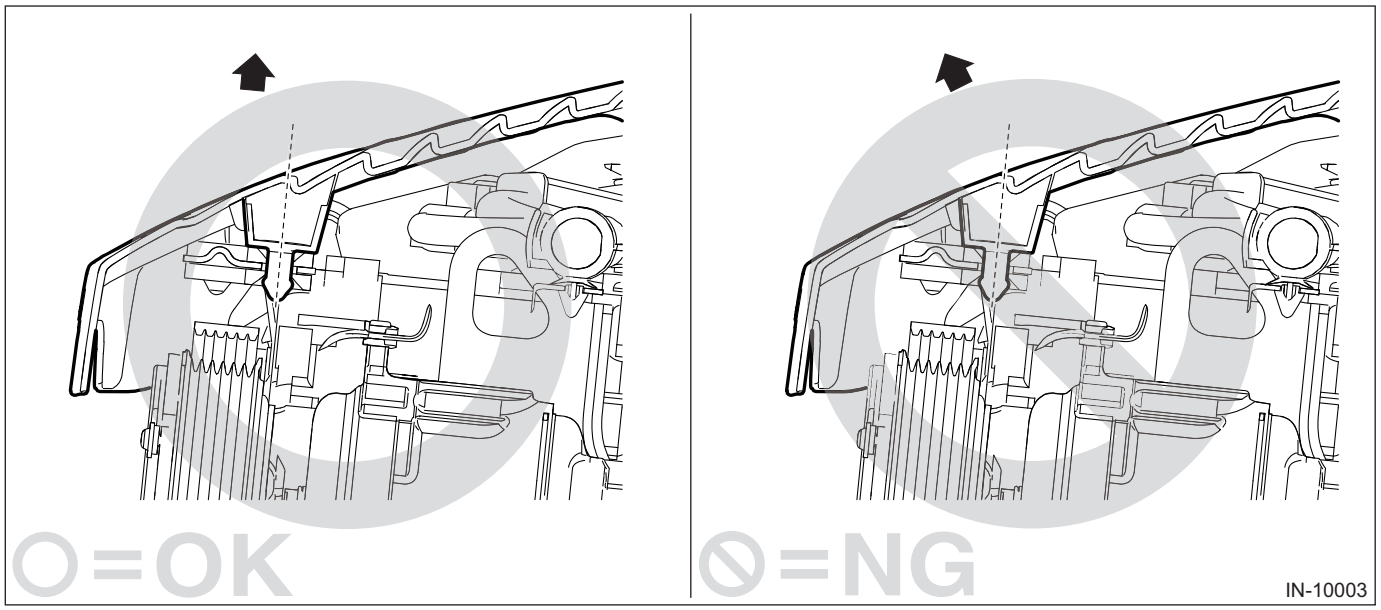

NOTE:
Be careful not to deform the collector cover when holding the shaded section (A) by hand.

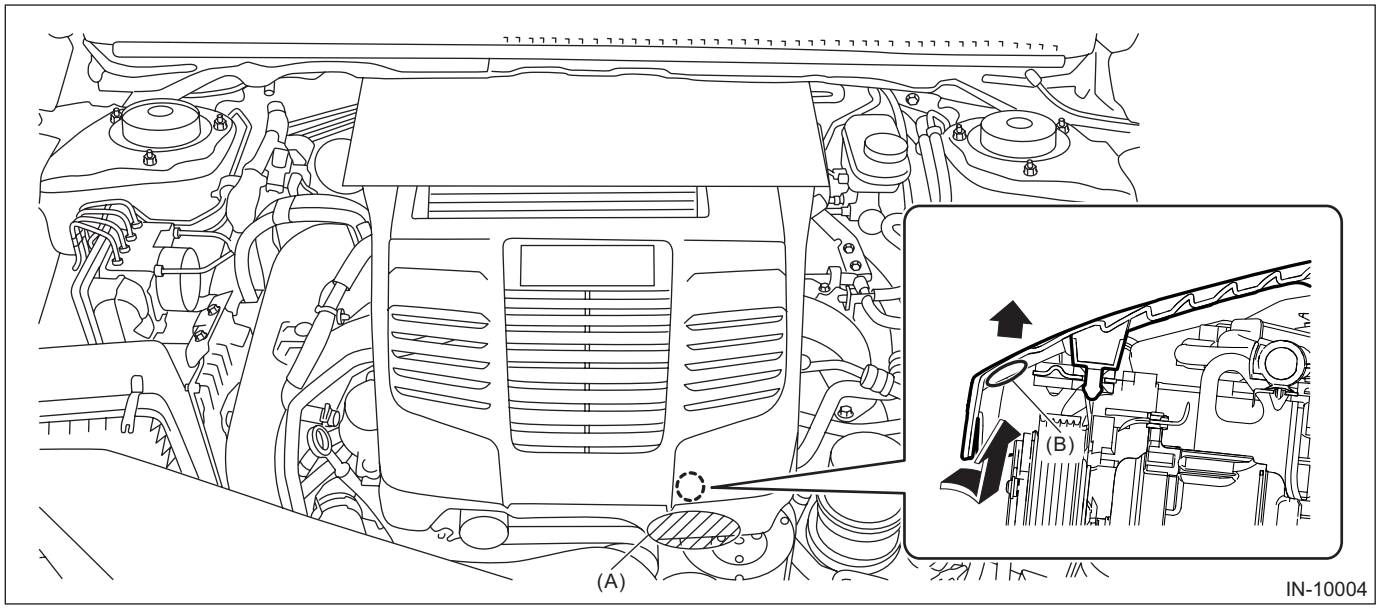

(2) Hold the shaded section (A) of the collector cover RH side by hand, and lift up the section (B) in the direction of the arrow with fingers to remove the bushing inserted section. Then, remove the collector cover.

CAUTION:
When removing the collector cover from the collector cover bracket, lift up in parallel to the insertion direction of installation part.

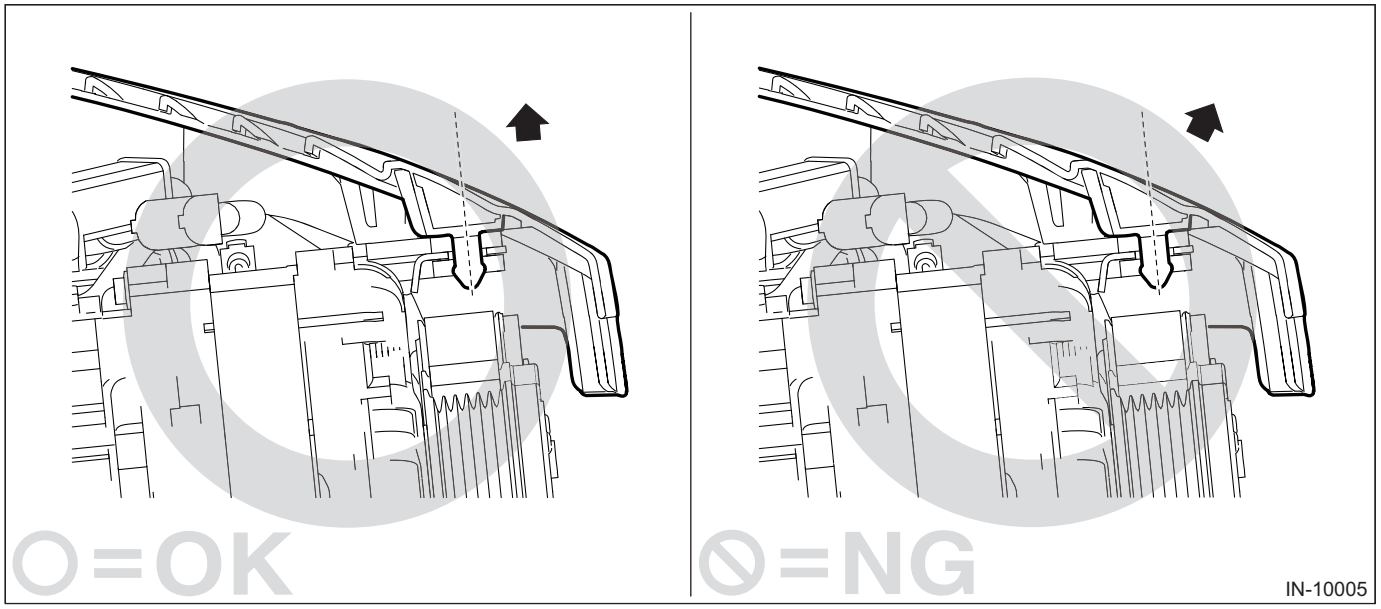

NOTE:
Be careful not to deform the collector cover when holding the shaded section (A) by hand.

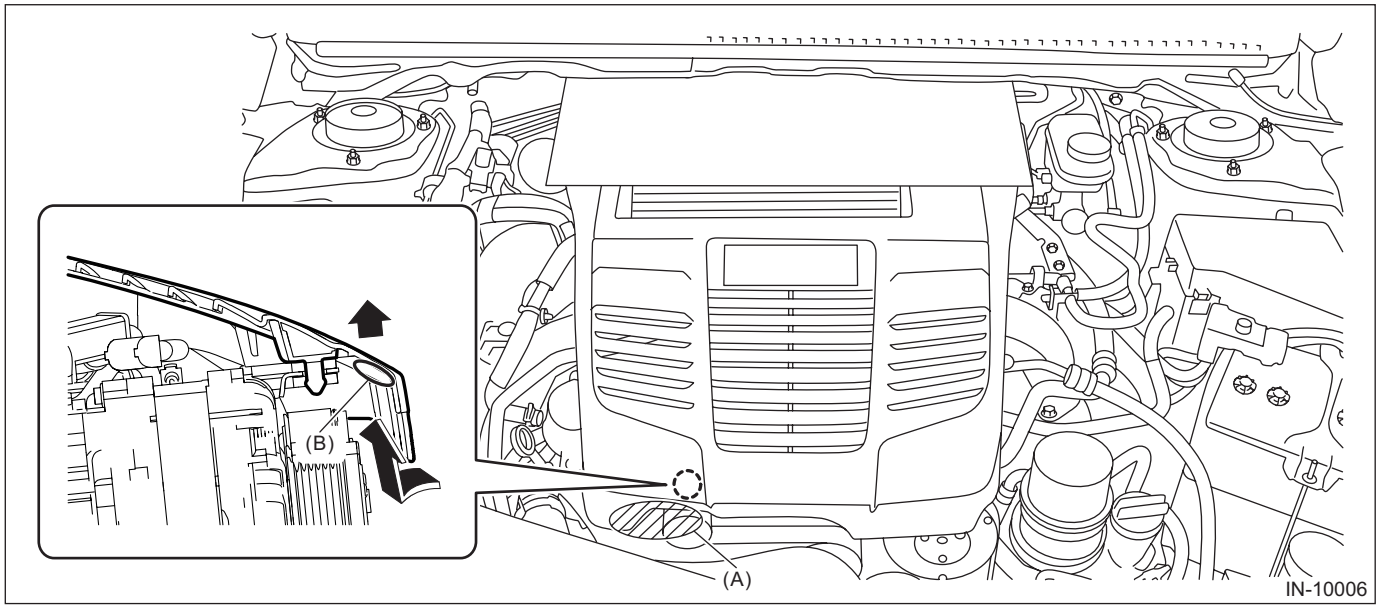

B: INSTALLATION

Install in the reverse order of removal.

NOTE:
Insert the collector cover installation part into the collector cover bracket cushion.

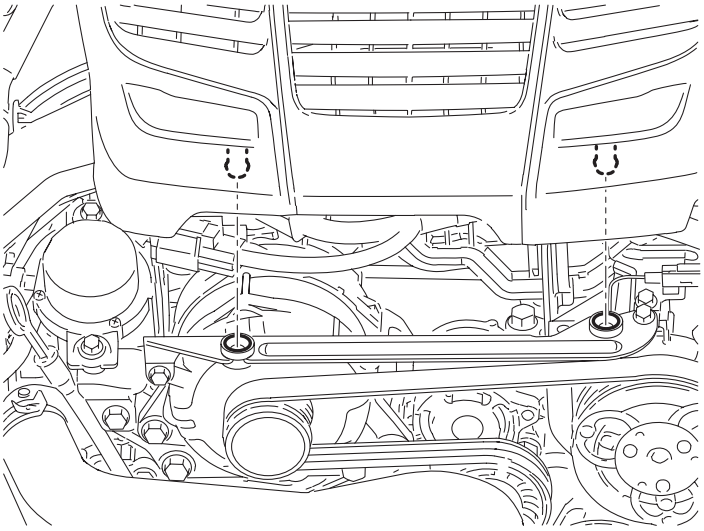
IN-10007

C: INSPECTION

Check that the collector cover does not have deformation, cracks and any other damage.

3. Air Cleaner Element

A: REMOVAL

1) Remove the clip (A) from the air cleaner case (rear).

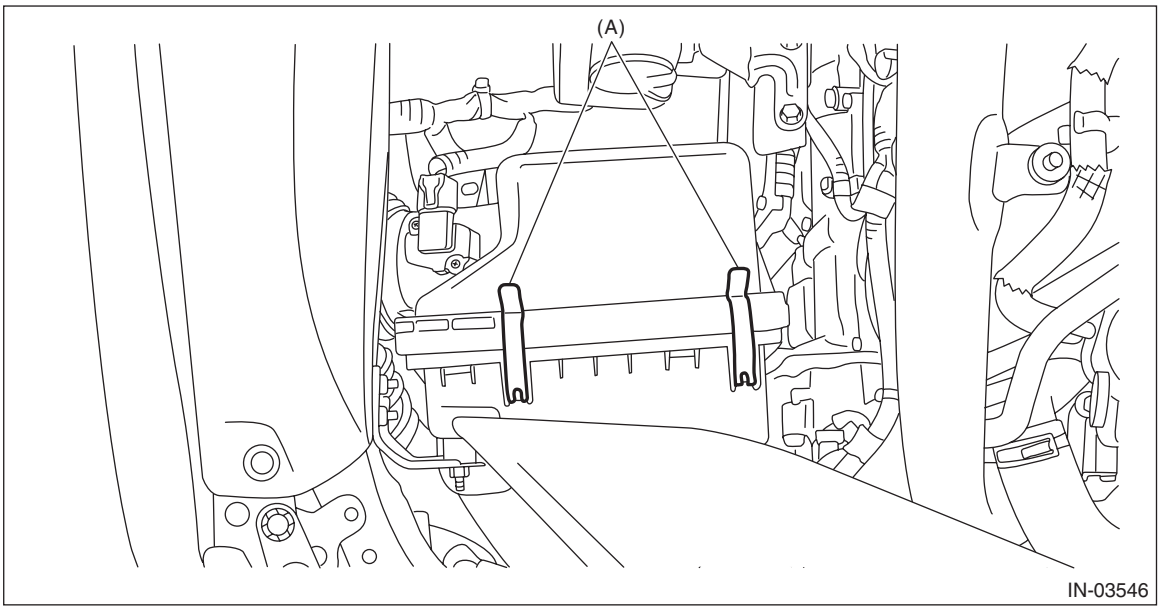

2) Open the air cleaner case (rear) while lifting it up, and remove the protrusion of the air cleaner case (rear) from the hole on the air cleaner case (front) to remove the air cleaner element.

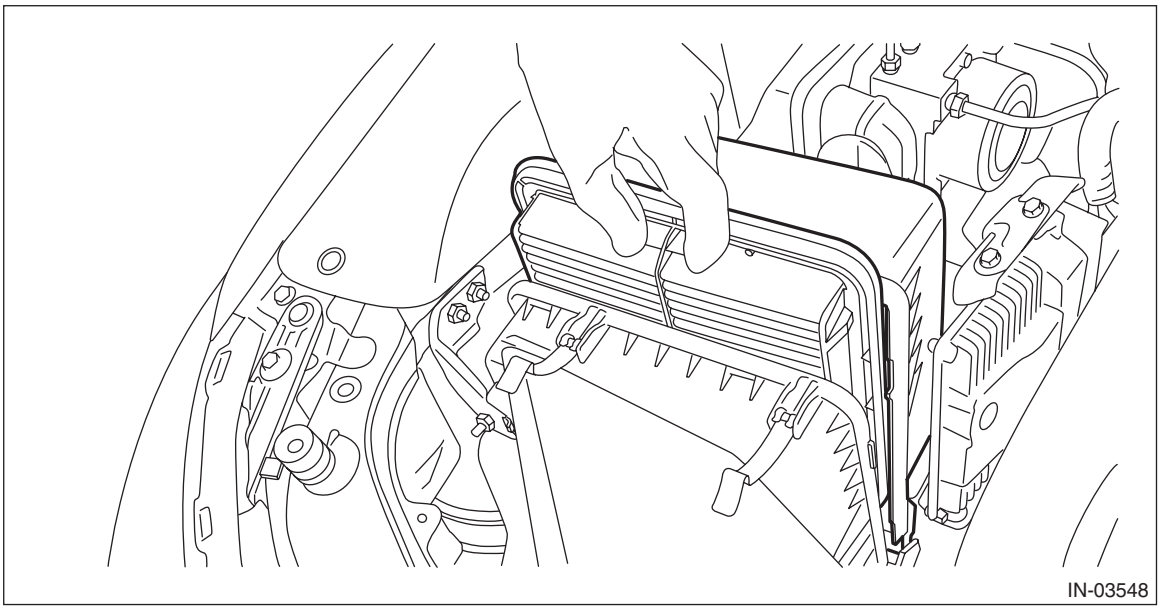

B: INSTALLATION

Install in the reverse order of removal.

CAUTION:
Be sure to use SUBARU genuine air cleaner element depending on the engine type when replacing the air cleaner elements. Using other air cleaner element may affect the engine performance.

NOTE:
- Check that there is no dirt or dust within the air cleaner case. If any dirt or dust is found, clean it.
- Install the air cleaner element as shown in the figure.

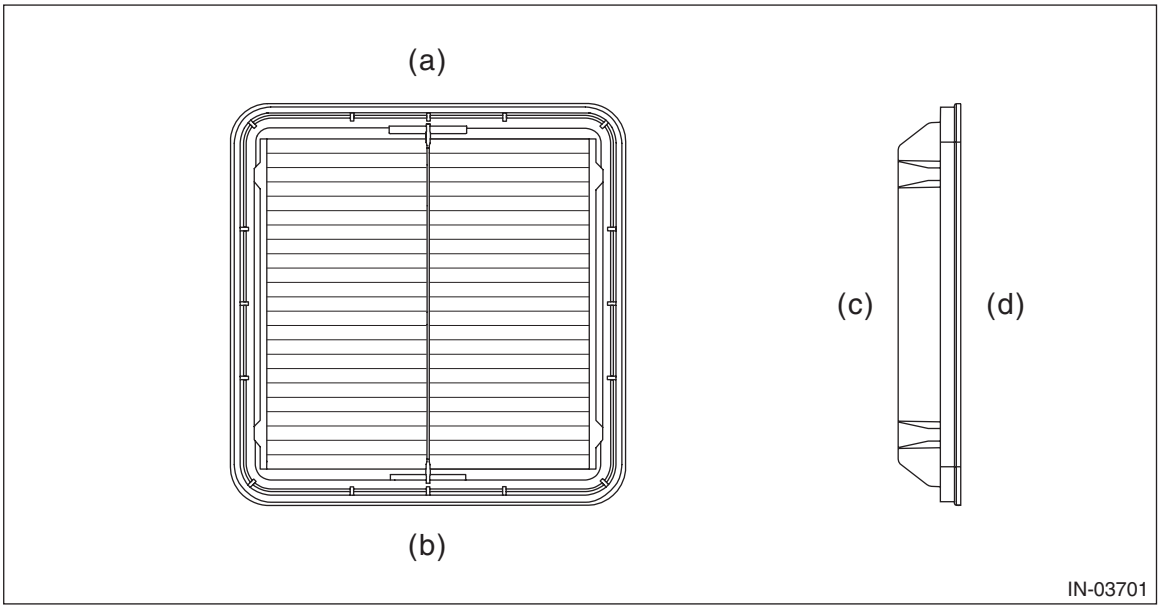

(a) Upside (b) Downside (c) Air cleaner case (front) side
(d) Air cleaner case (rear) side

- When installing the air cleaner case (rear), align the protrusion of the air cleaner case (rear) to the hole on the air cleaner case (front) to install.

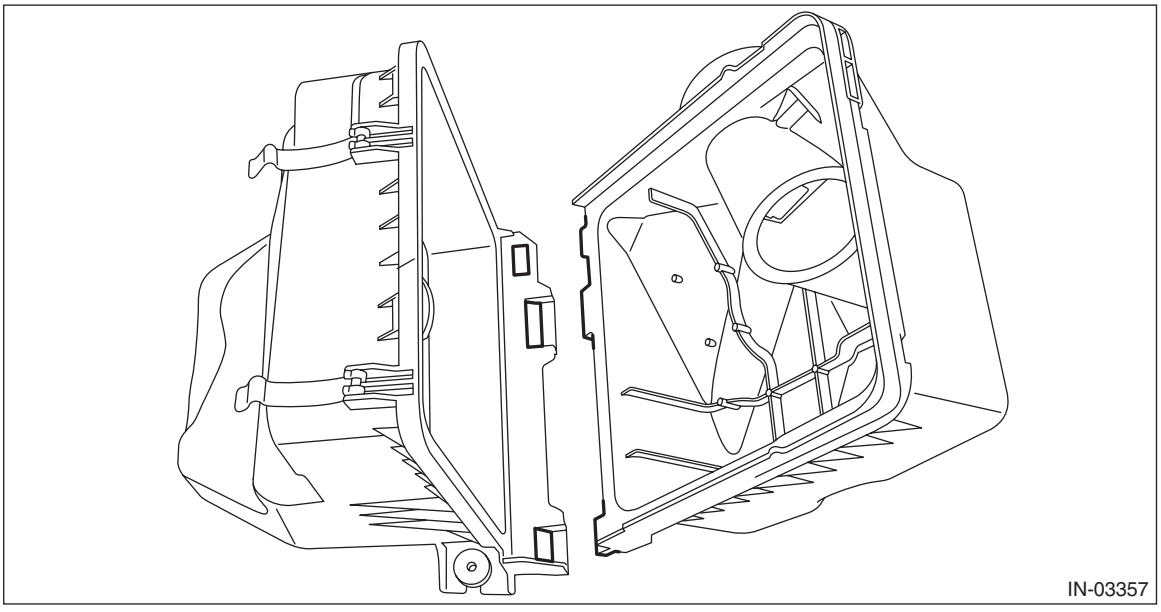

C: INSPECTION

1) Check that the air cleaner element has no deformation, cracks or other damages.
2) Check the air cleaner element for excessive dirt.

4. Air Cleaner Case

A: REMOVAL

1) Disconnect the ground terminal from battery sensor. <Ref. to NT-6, BATTERY, NOTE, Note.>
2) Remove the air intake duct. <Ref. to IN(w/o STI)-26, REMOVAL, Air Intake Duct.>
3) Remove the clip (A) and clip (B) which secure the engine harness and bulkhead harness to the bracket, and remove the bolt which secures the engine control module (ECM) to the bracket.

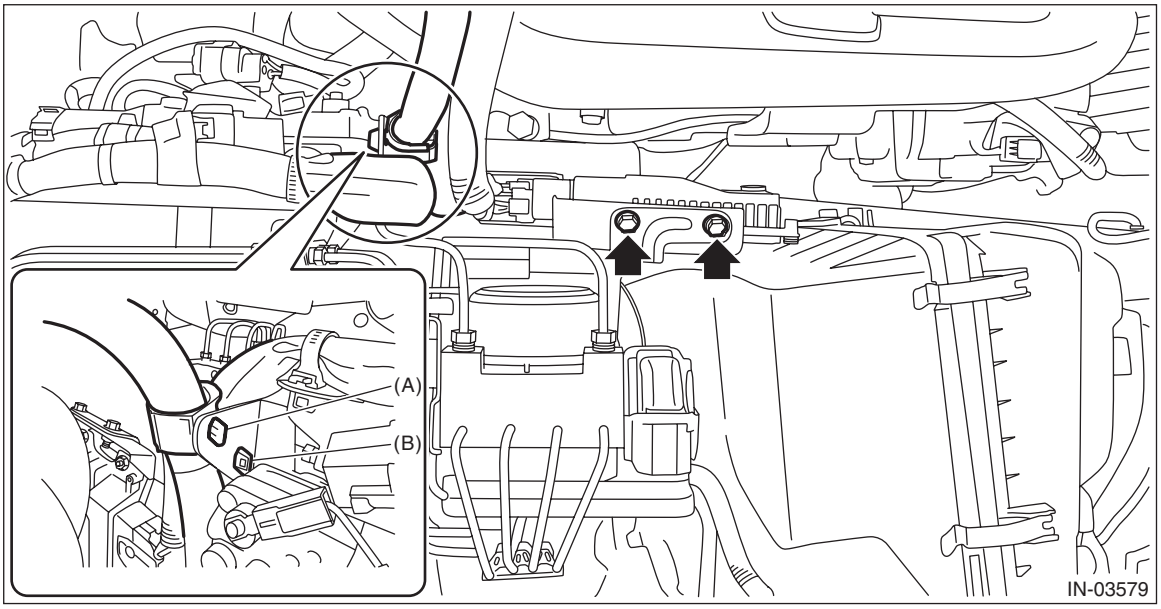

4) Pull out the engine control module (ECM) from the bracket, and move it to a location that does not interfere operation.

NOTE:
When performing the pulling out operation, pay attention not to apply excessive load to the breather filter portion (a) in order to avoid the damage.

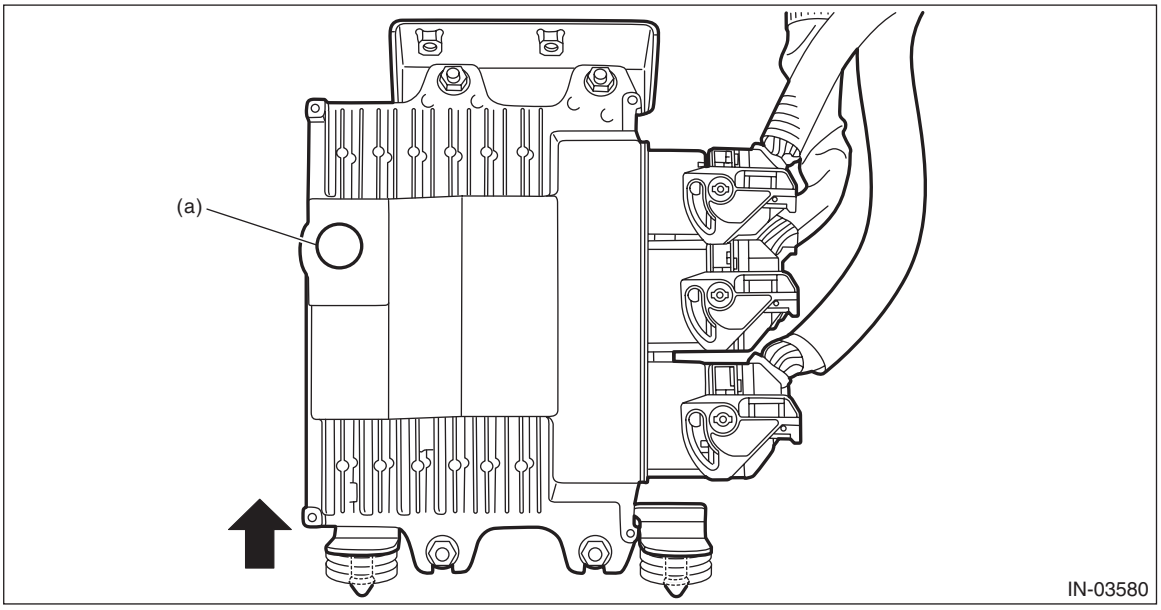

5) Remove the clips (3 places) which secure the front mud guard RH to the vehicle.

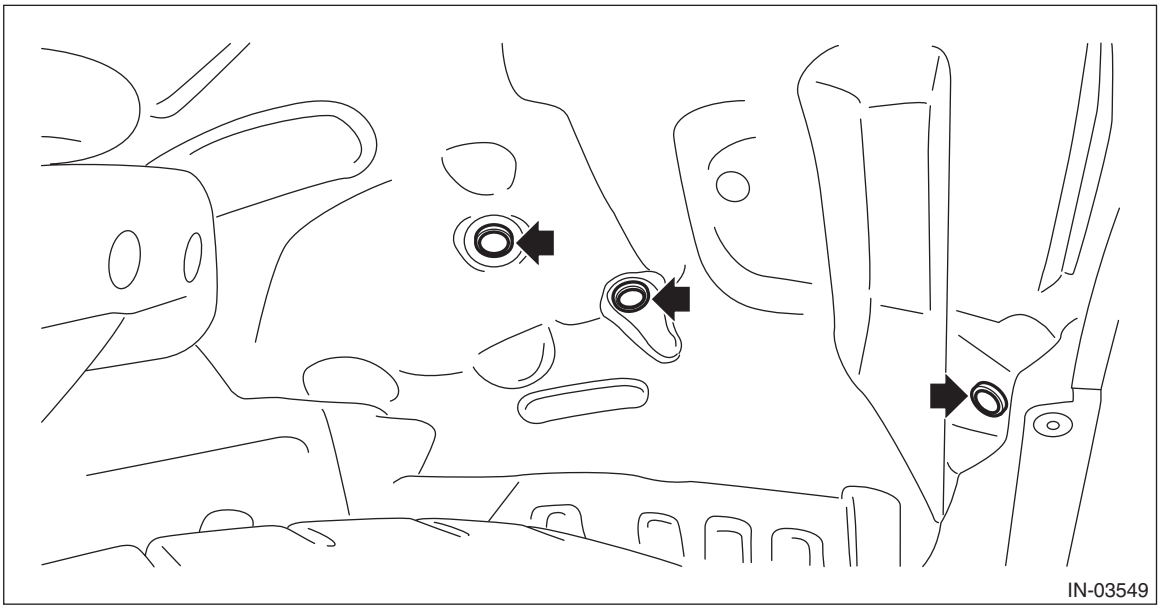

6) Turn over the front mud guard RH, and loosen the clamp which secures the air intake boot to the air cleaner case (rear).

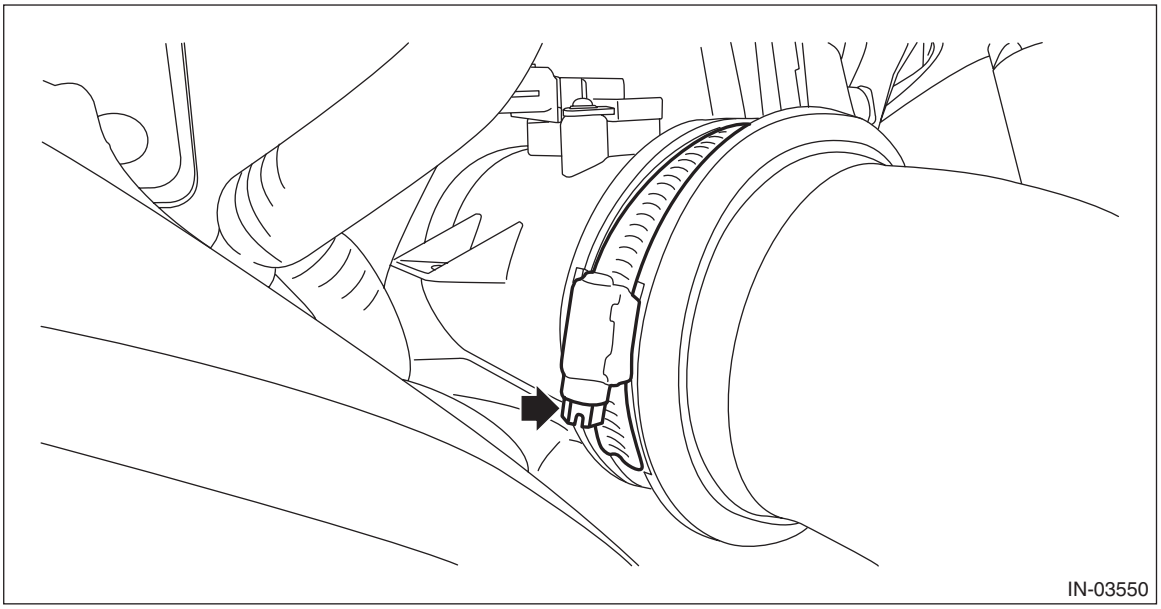

7) Disconnect the connector (A) from the mass air flow and intake air temperature sensor, and remove the clip (B) from the air cleaner case (rear).

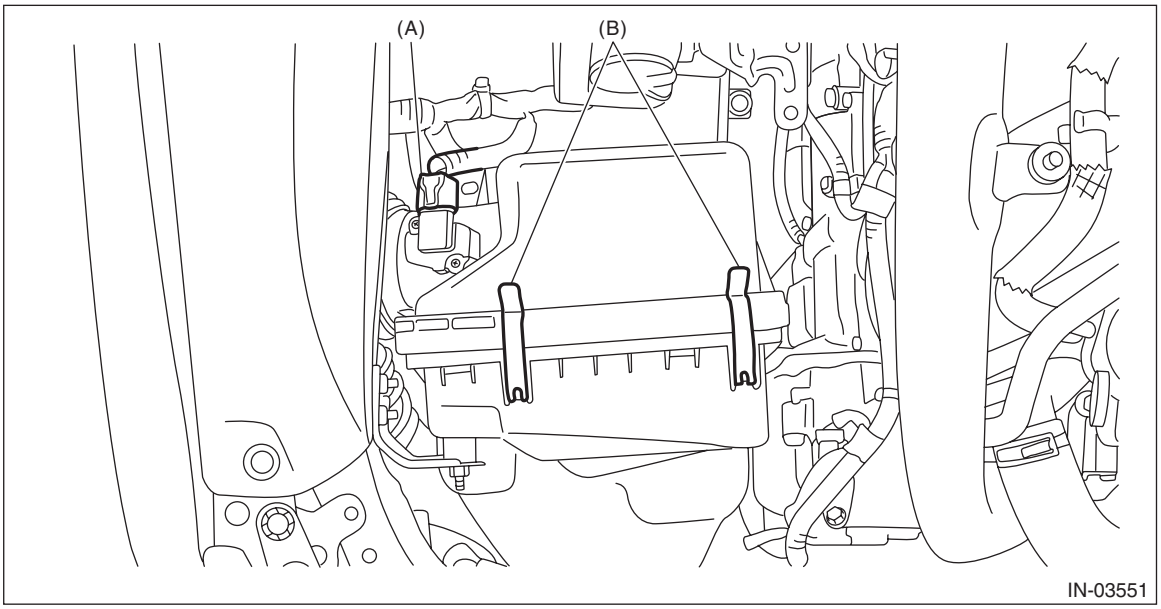

8) Remove the air cleaner case (rear) and air cleaner element.
9) Remove bolts (A) and nuts (B) which secure the air cleaner case (front) to the body and air cleaner case bracket, and remove the air cleaner case (front).

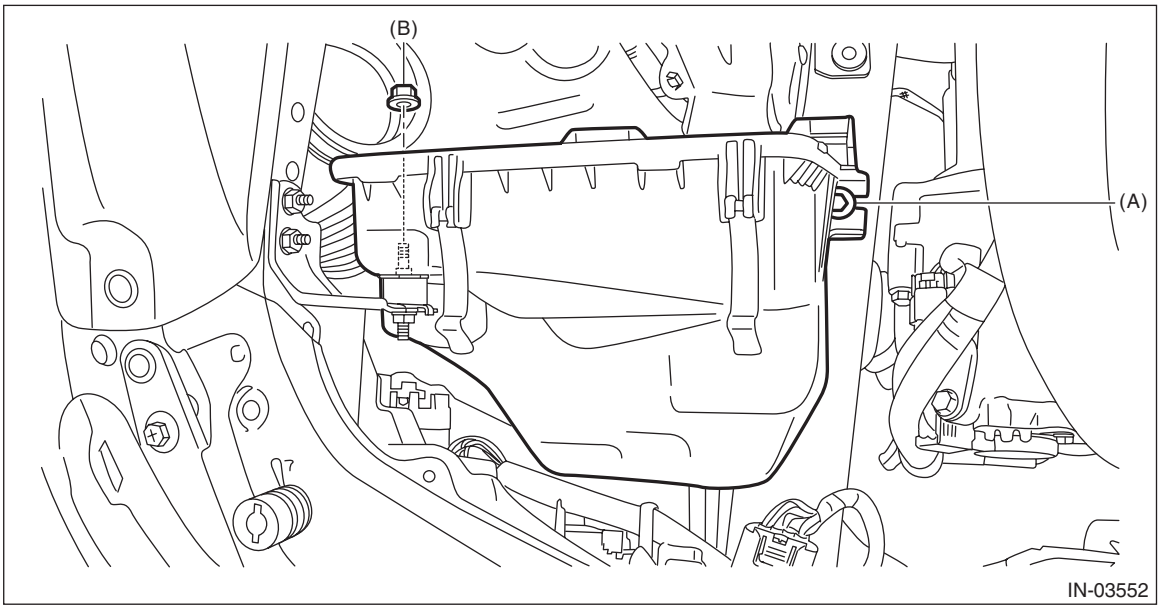

10) Remove the air cleaner case bracket from the vehicle.

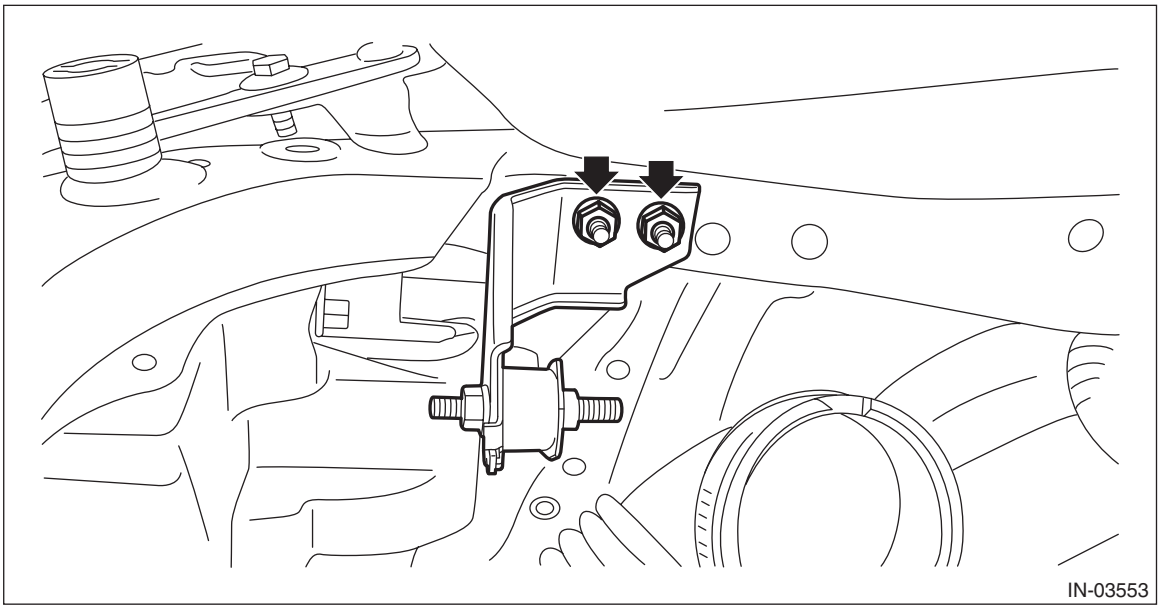

B: INSTALLATION

1) Install the air cleaner case bracket to the vehicle.

Tightening torque:
7.5 N·m (0.8 kgf-m, 5.5 ft-lb)

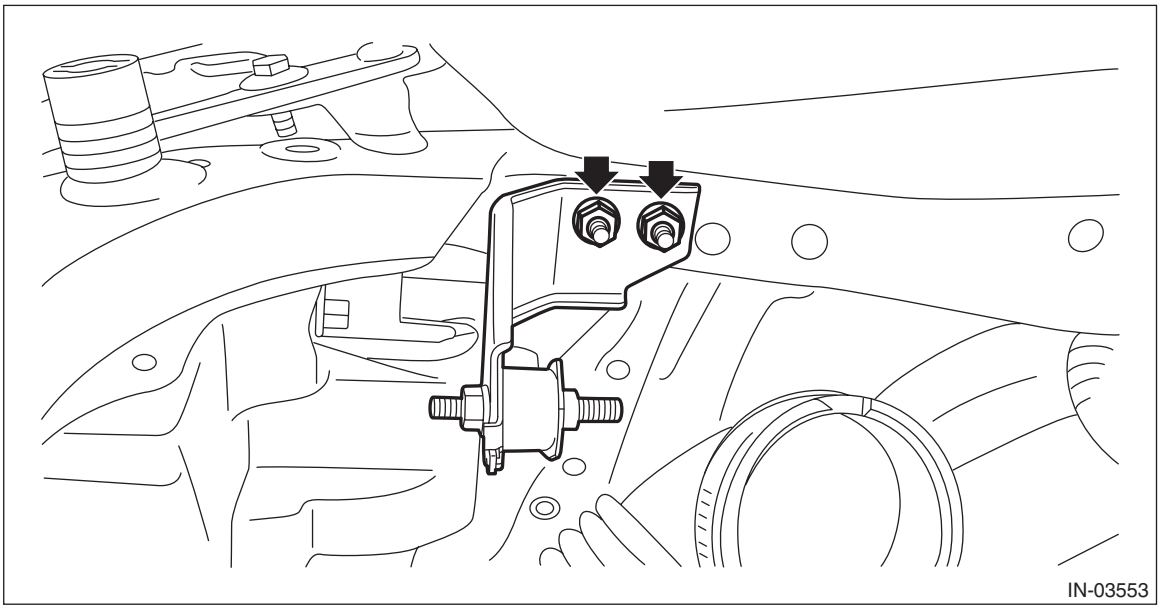

2) Install the bolt (A) and nut (B) which secure the air cleaner case (front) to the vehicle and to the air cleaner case bracket.

Tightening torque:
Bolt (A)
6 N·m (0.6 kgf-m, 4.4 ft-lb)
Nut (B)
7.5 N·m (0.8 kgf-m, 5.5 ft-lb)

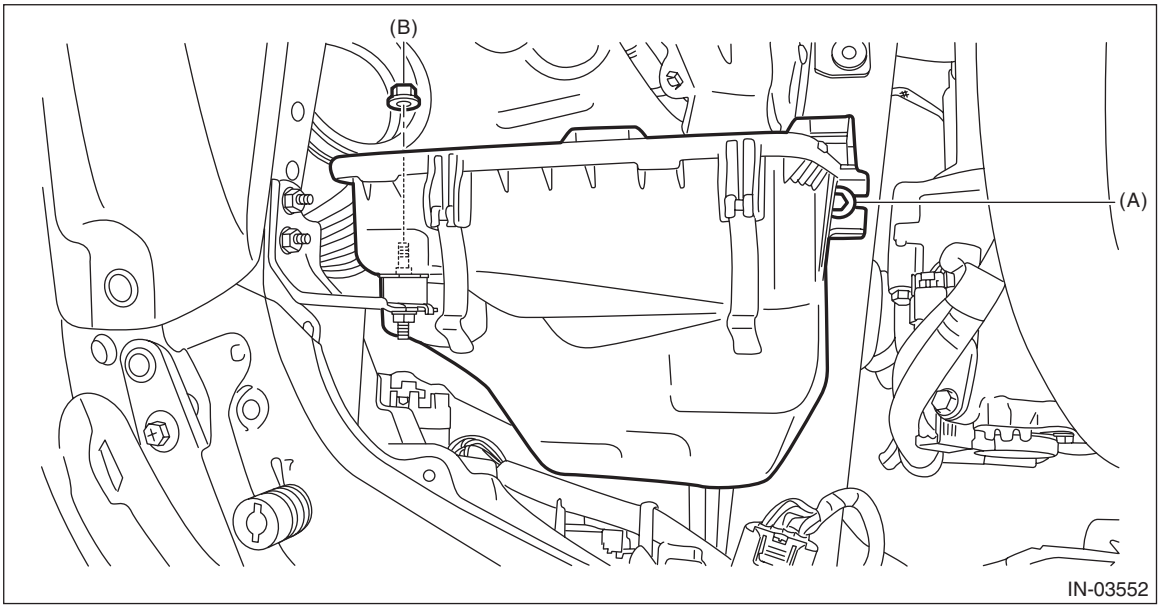

3) Set the air cleaner element to the air cleaner case (front), and install the air cleaner case (rear).

NOTE:
- Check that there is no dirt or dust within the air cleaner case. If any dirt or dust is found, clean it.
- Install the air cleaner element as shown in the figure.

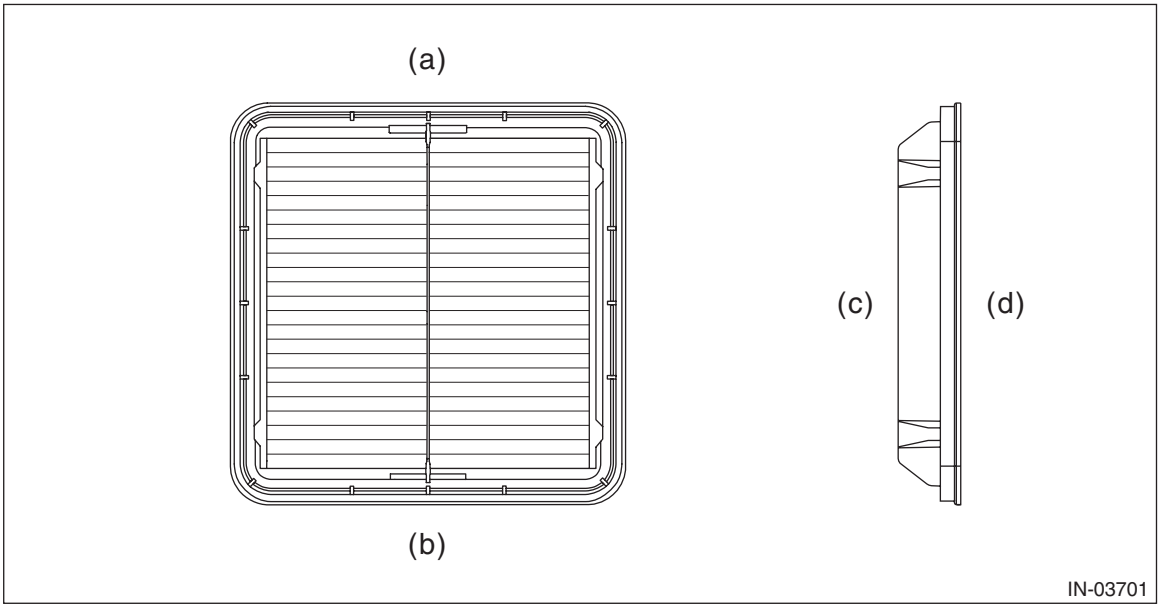

(a) Upside
(b) Downside
(c) Air cleaner case (front) side
(d) Air cleaner case (rear) side

• When installing the air cleaner case (rear), align the protrusion of the air cleaner case (rear) to the hole on the air cleaner case (front) to install.

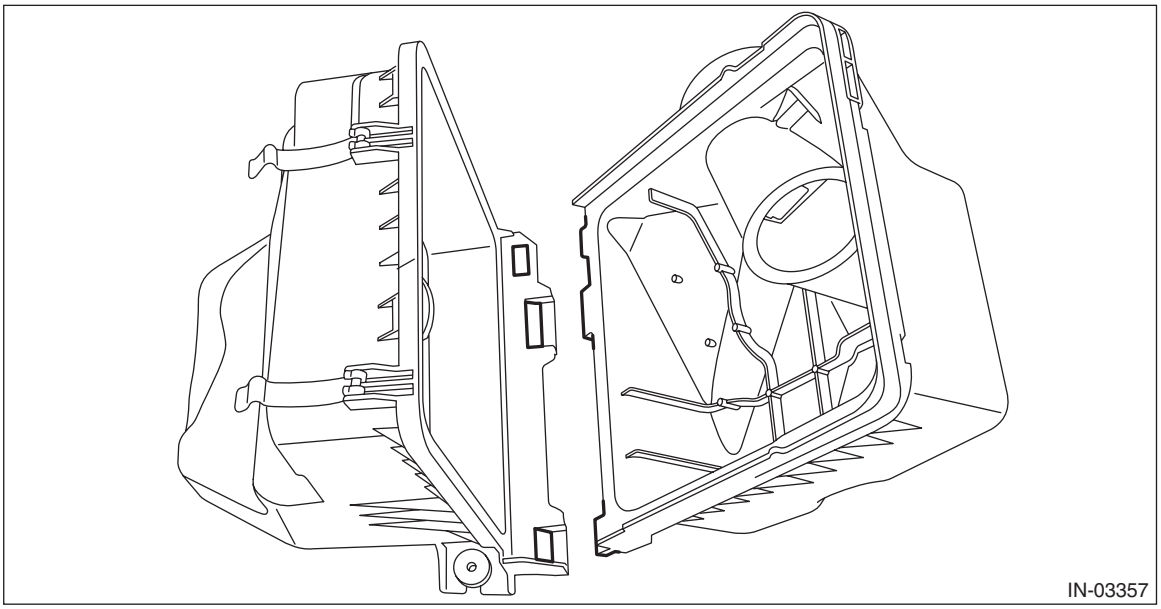

4) Install the clip (B) to the air cleaner case (rear), and connect the connector (A) to the mass air flow and intake air temperature sensor.

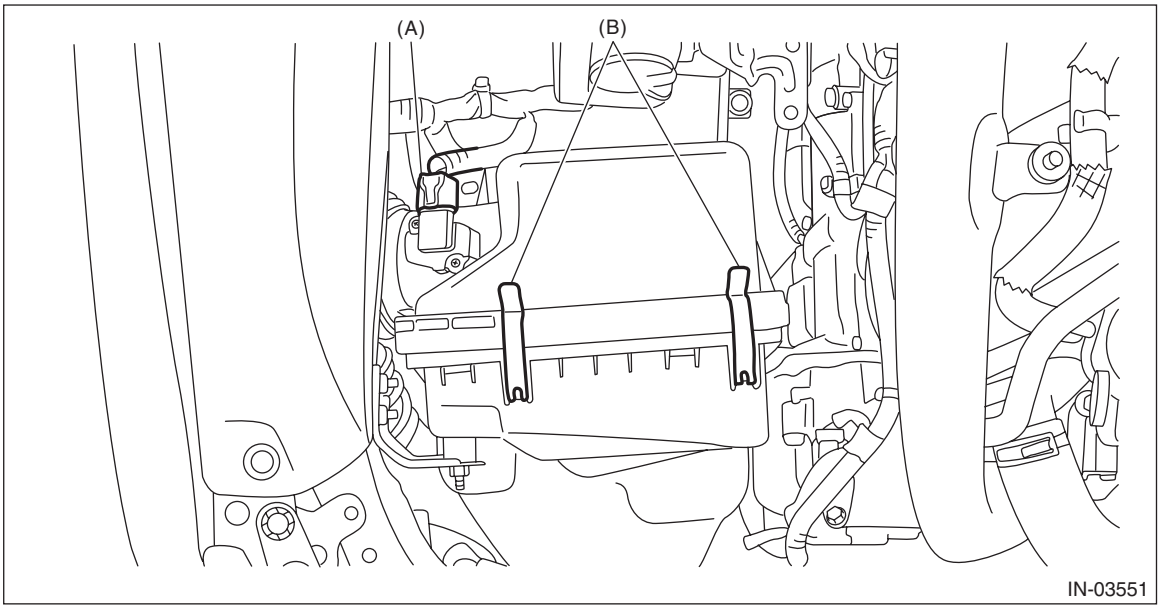

5) Tighten the clamp which secures the air intake boot to the air cleaner case (rear).

Tightening torque:
2.5 N·m (0.3 kgf-m, 1.8 ft-lb)

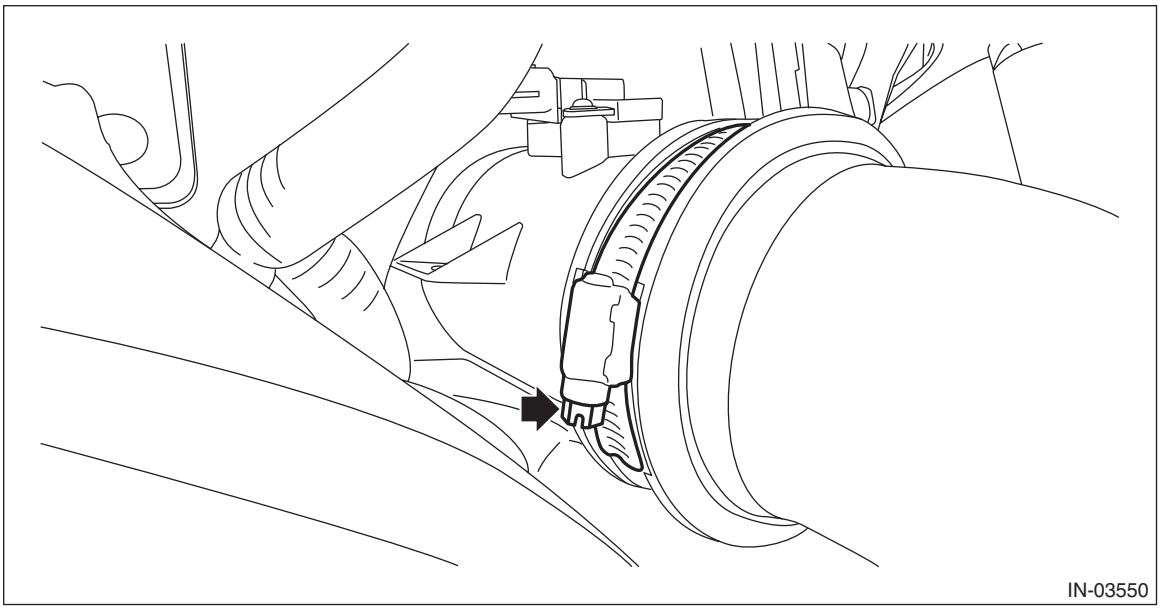

6) Set the front mud guard RH to the vehicle, and install the clips which secure the front mud guard RH.

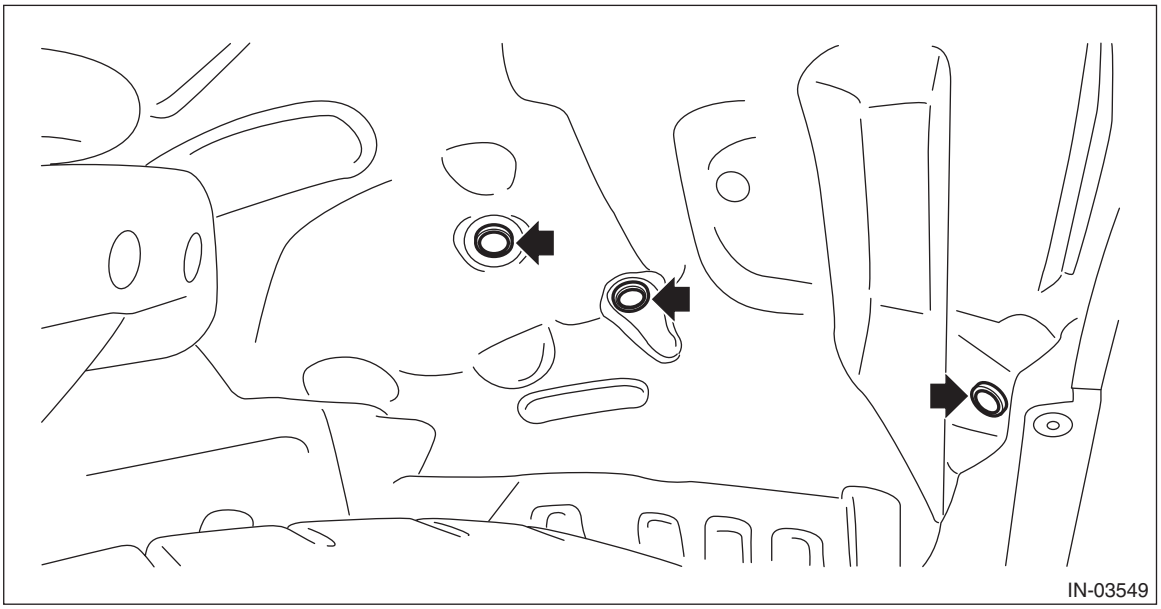

7) Insert the engine control module (ECM) to the bracket.

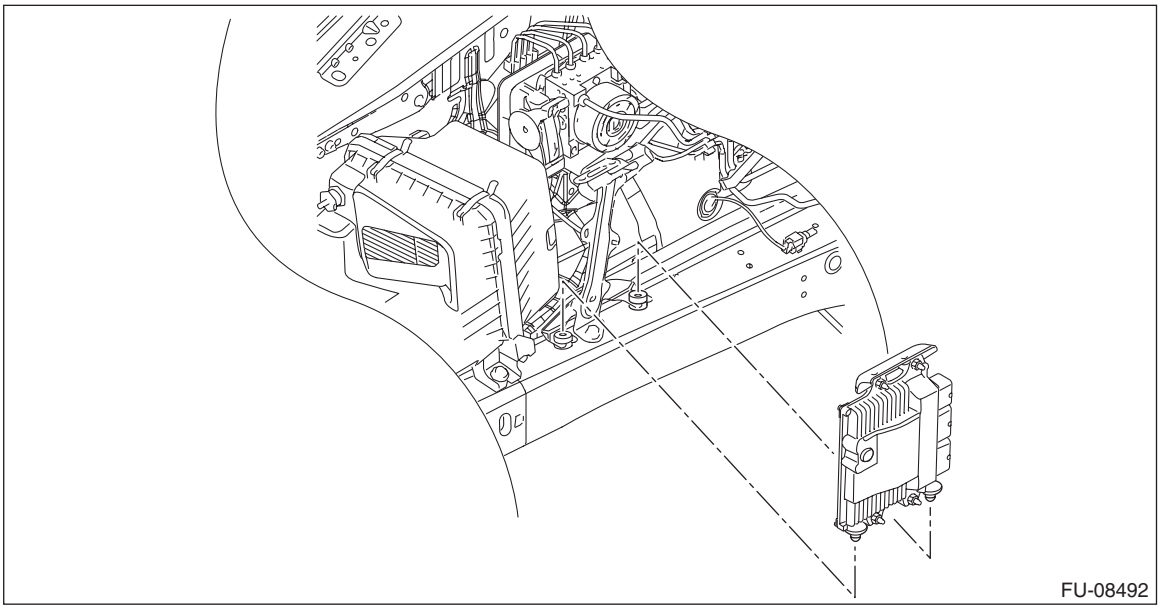

8) Install the bolt which secures the engine control module (ECM) to the bracket, and then secure the engine harness and bulkhead harness to the bracket with clip (A) and clip (B).

Tightening torque:
7.5 N·m (0.8 kgf-m, 5.5 ft-lb)

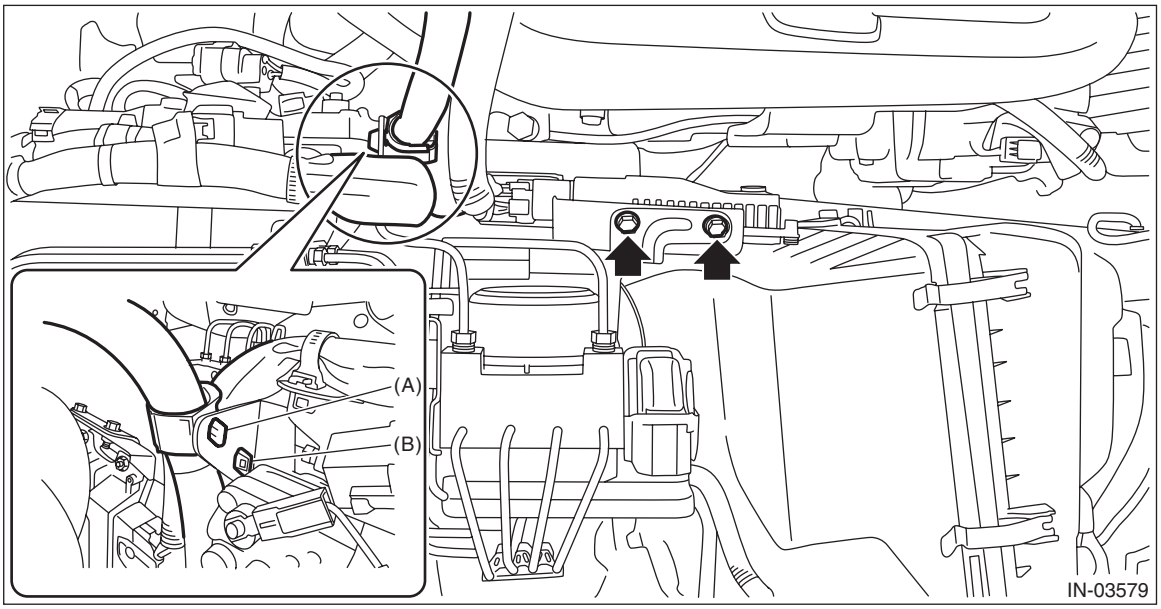

9) Install the air intake duct. <Ref. to IN(w/o STI)-26, INSTALLATION, Air Intake Duct.>
10) Connect the ground terminal to battery sensor. <Ref. to NT-6, BATTERY, NOTE, Note.>

C: INSPECTION

Check that the air cleaner case has no deformation, cracks or other damages.

5. Air Intake Boot

A: REMOVAL

1) Disconnect the ground terminal from battery sensor. <Ref. to NT-6, BATTERY, NOTE, Note.>
2) Remove the air cleaner case. <Ref. to IN(w/o STI)-13, REMOVAL, Air Cleaner Case.>
3) Lift up the vehicle.
4) Remove the under cover. <Ref. to EI-22, REMOVAL, Front Under Cover.>
5) Remove the air intake boot from the intake duct No. 1.

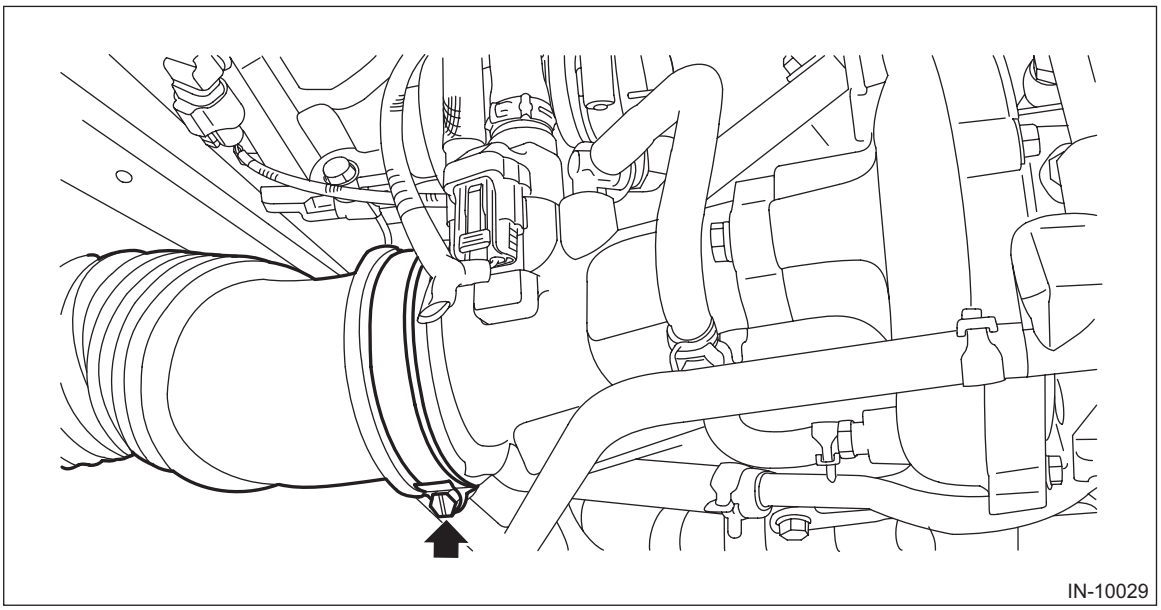

6) Lower the vehicle.
7) Remove the nuts which secure the turbo duct to the vehicle, and remove the air intake boot from the upper side of the vehicle together with the turbo duct.

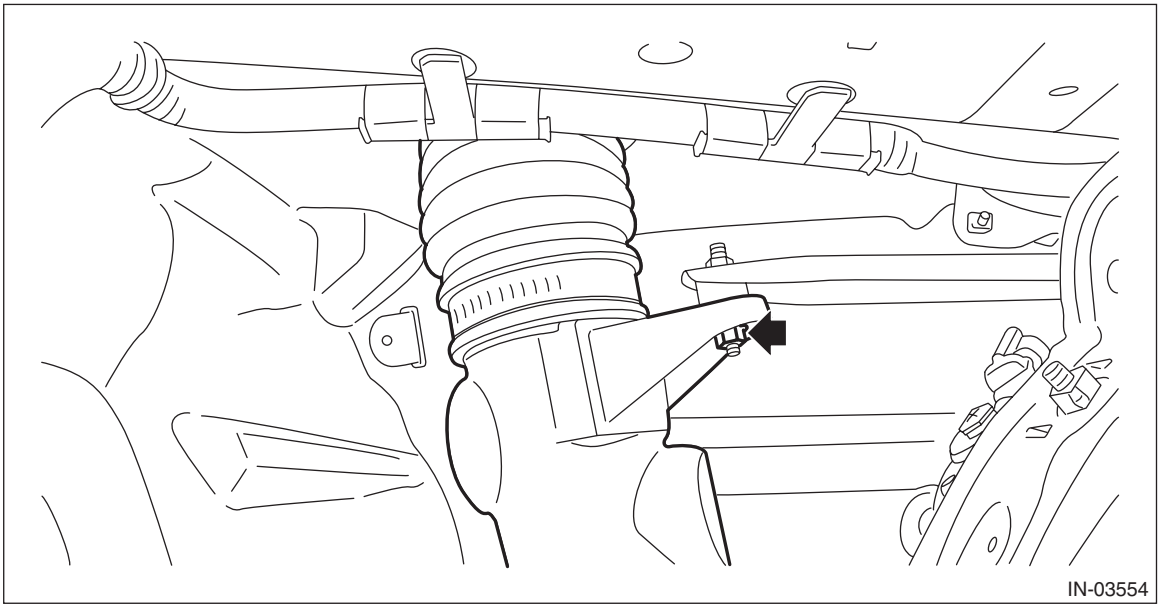

8) Lift up the vehicle.

9) Remove the clips (A) which secure the front mud guard RH to the front bumper, and remove the screw which secures the front mud guard RH to the vehicle.

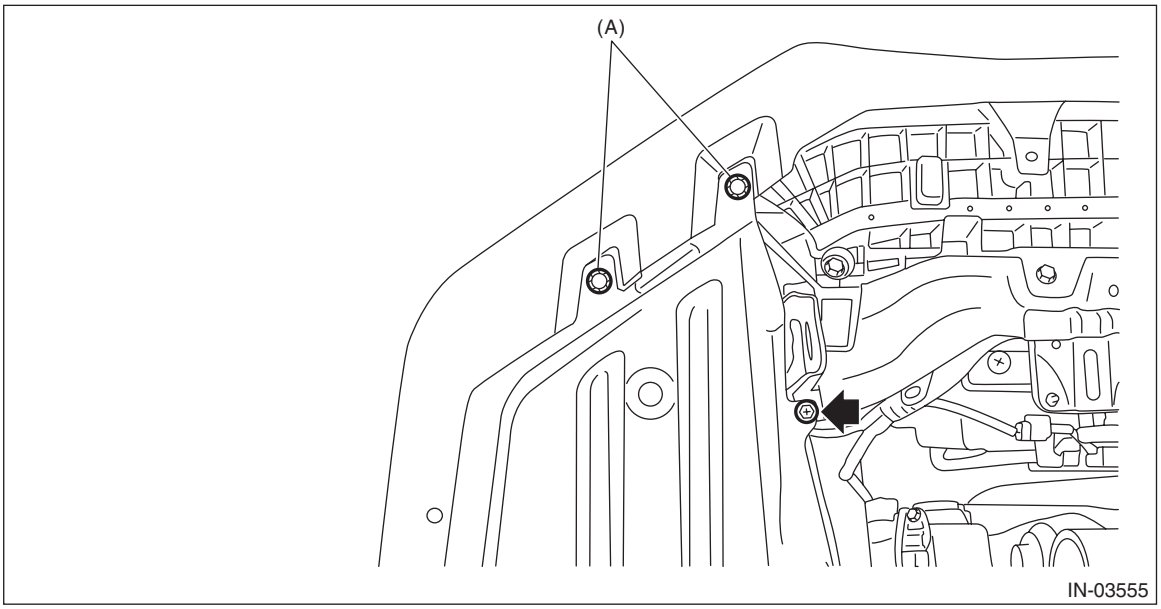

10) Turn over the front mud guard RH and remove the duct bracket from the vehicle.

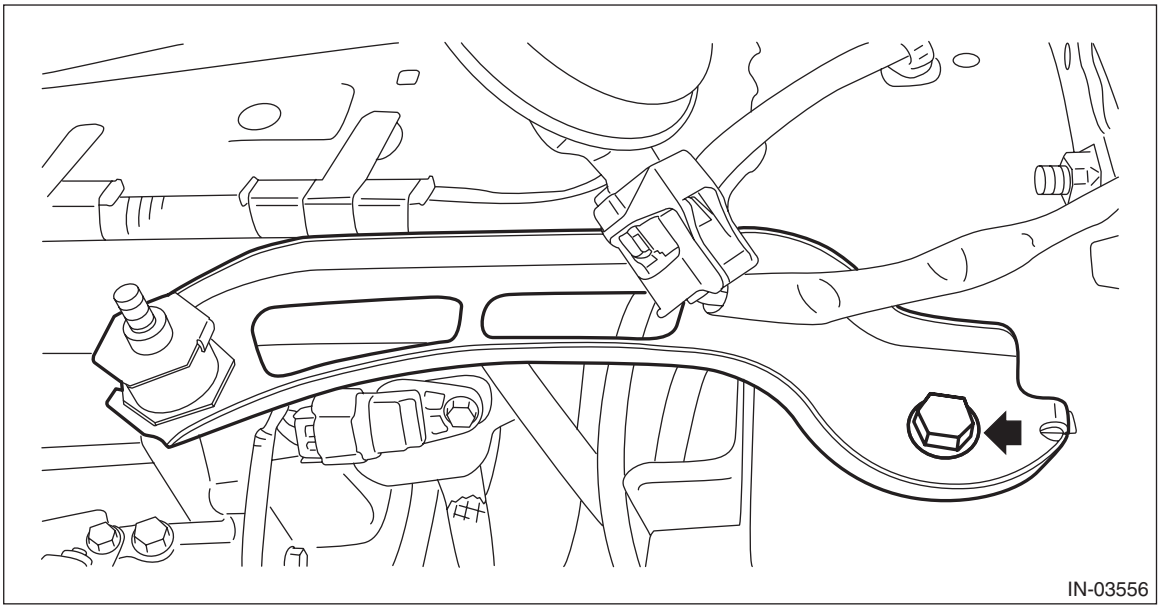

B: INSTALLATION

Install in the reverse order of removal.

NOTE:
When installing the air intake boot to the vehicle, pay attention to the mounting hole position, and align the protrusion for stopping rotation of cushion to the cutout portion on the turbo duct.

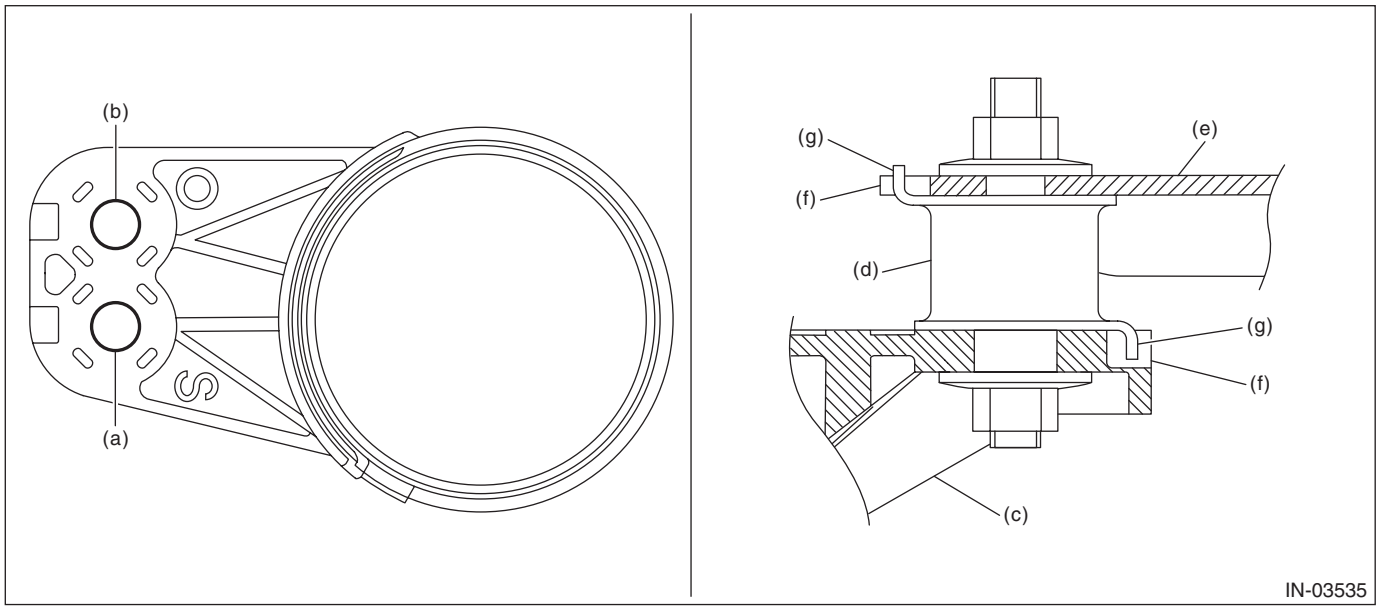

(a) Attachment hole
(b) Not used
(c) Turbo duct
(d) Cushion
(e) Duct bracket
(f) Cutout portion
(g) Protrusion portion

Tightening torque:
18 N·m (1.8 kgf-m, 13.3 ft-lb)

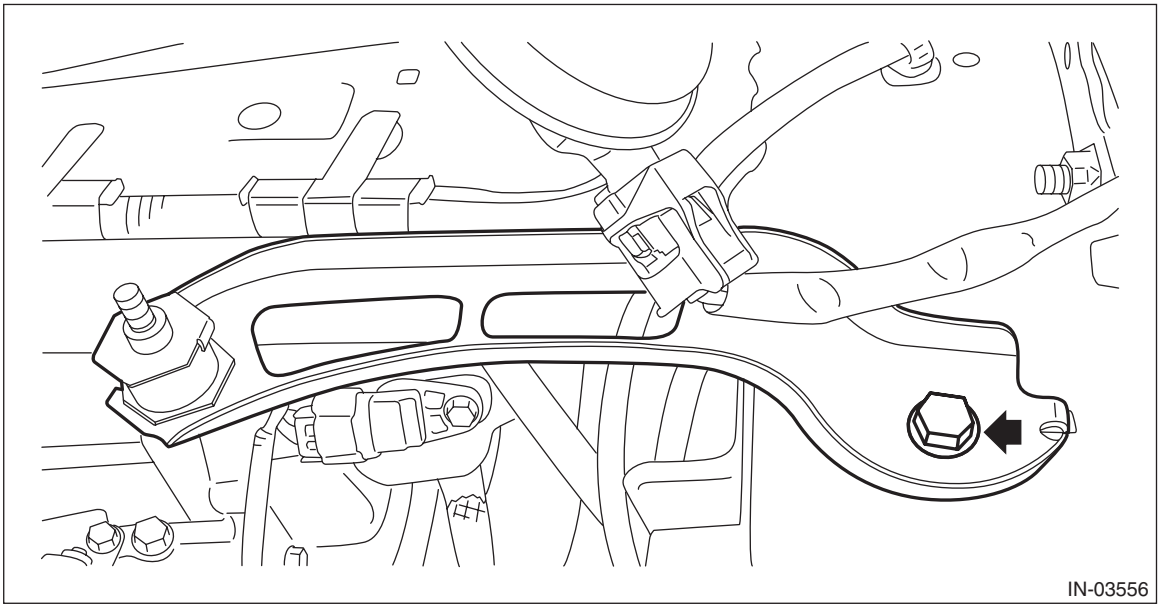

Tightening torque:
7.5 N·m (0.8 kgf-m, 5.5 ft-lb)

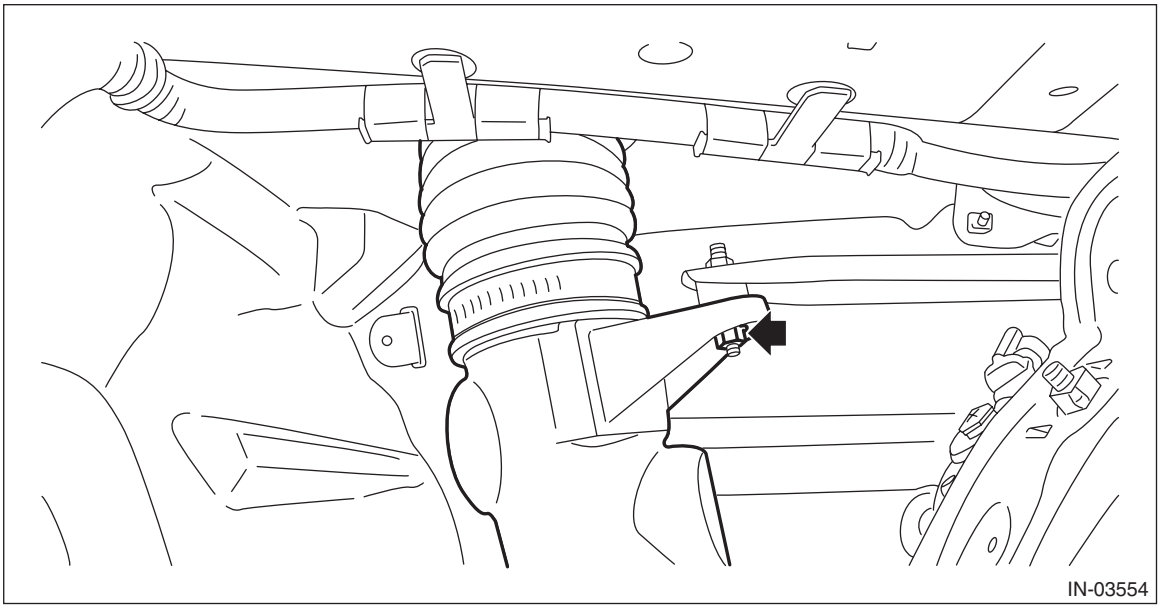

Tightening torque:
2.5 N·m (0.3 kgf-m, 1.8 ft-lb)

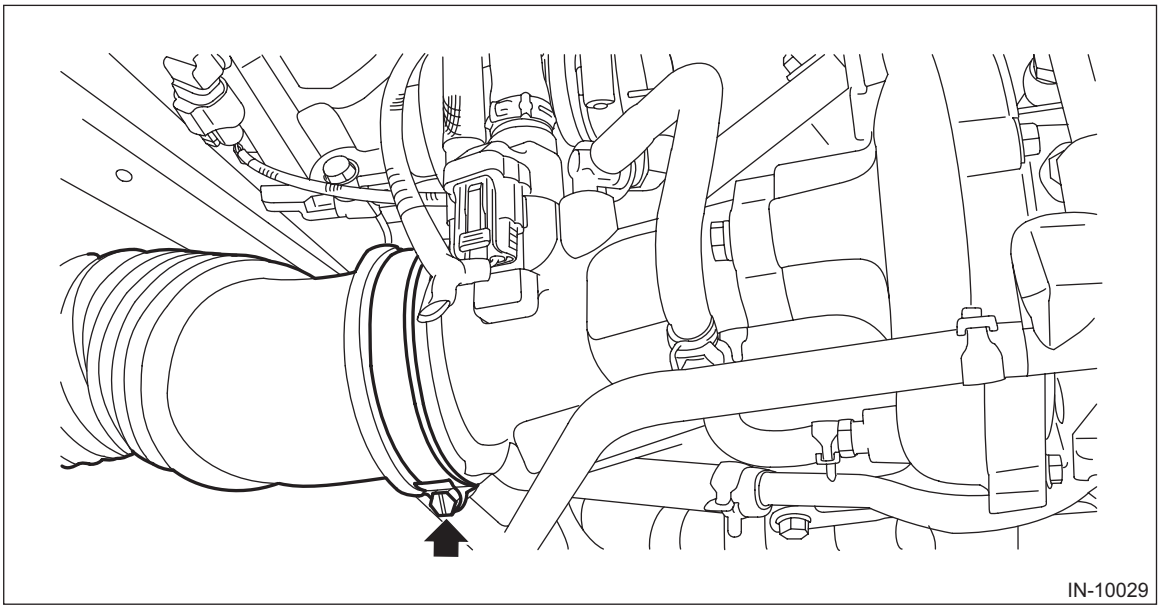

C: DISASSEMBLY

Remove the air intake boot from the turbo duct.

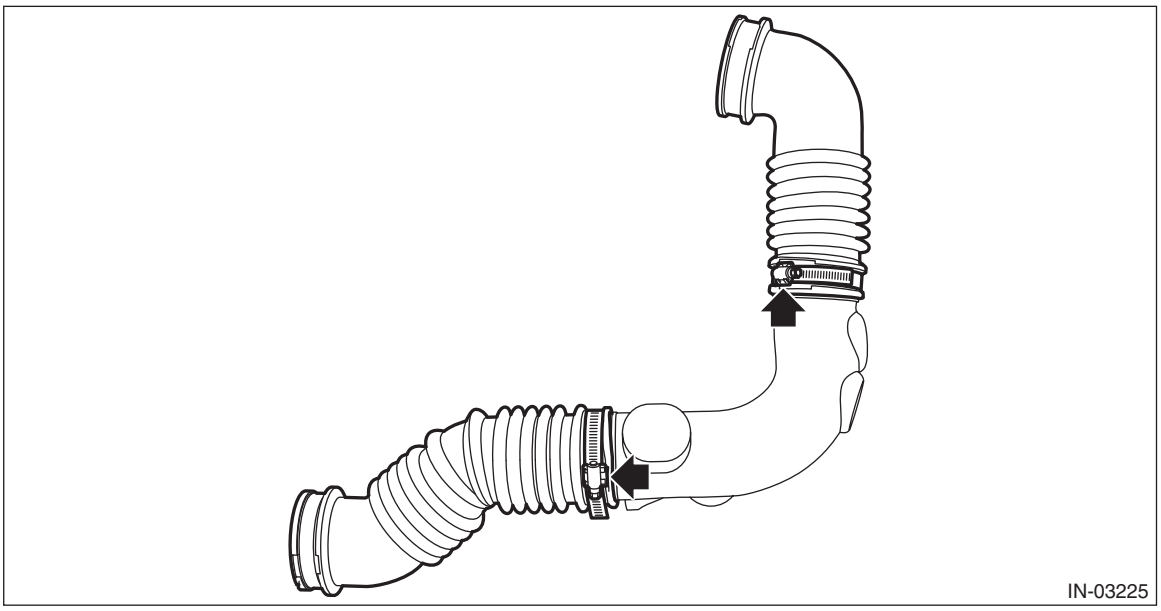

D: ASSEMBLY

Assemble in the reverse order of disassembly.

Tightening torque:
2.5 N·m (0.3 kgf-m, 1.8 ft-lb)

E: INSPECTION

Check that the air intake boot and turbo duct have no cracks, damage or loose part.

6. Air Intake Duct

A: REMOVAL

Remove the clip which secures the air intake duct, and remove the air intake duct.

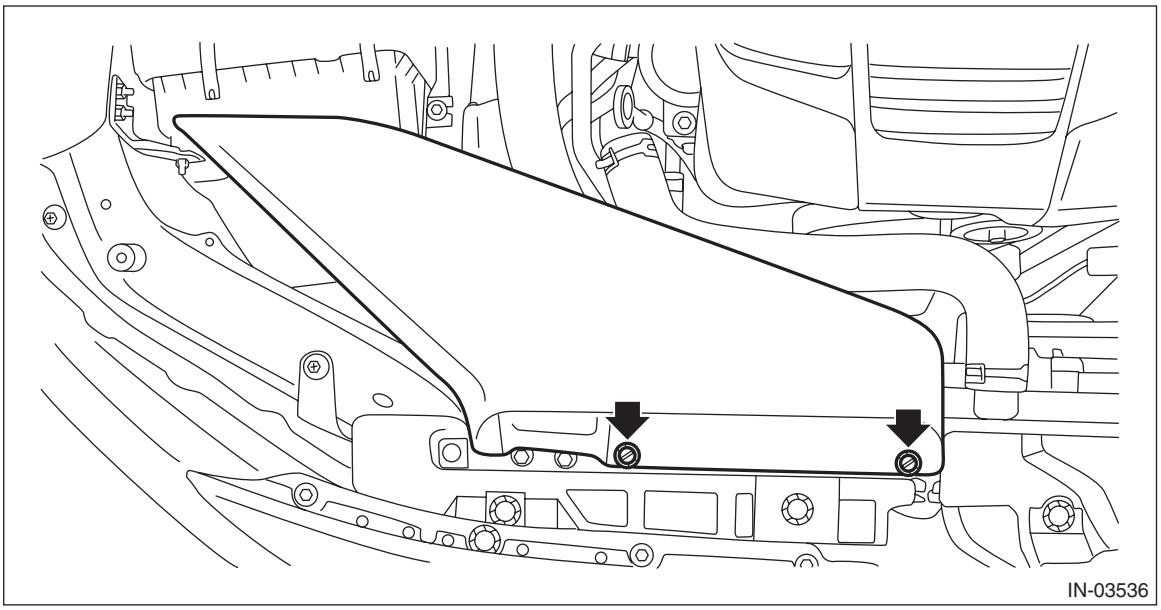

B: INSTALLATION

Install in the reverse order of removal.

C: INSPECTION

1) Check that the air intake duct has no deformation, cracks or other damages.
2) Inspect that no foreign objects are mixed in the air intake duct.

7. Intake Duct

A: REMOVAL

1. INTAKE DUCT NO. 1

1) Disconnect the ground terminal from battery sensor. <Ref. to NT-6, BATTERY, NOTE, Note.>
2) Remove the air intake duct. <Ref. to IN(w/o STI)-26, REMOVAL, Air Intake Duct.>
3) Lift up the vehicle.
4) Remove the under cover. <Ref. to EI-22, REMOVAL, Front Under Cover.>
5) Disconnect the blow-by diagnosis connector (A) from the engine wiring harness, and disconnect the vacuum hose (B) from the vacuum pipe assembly.

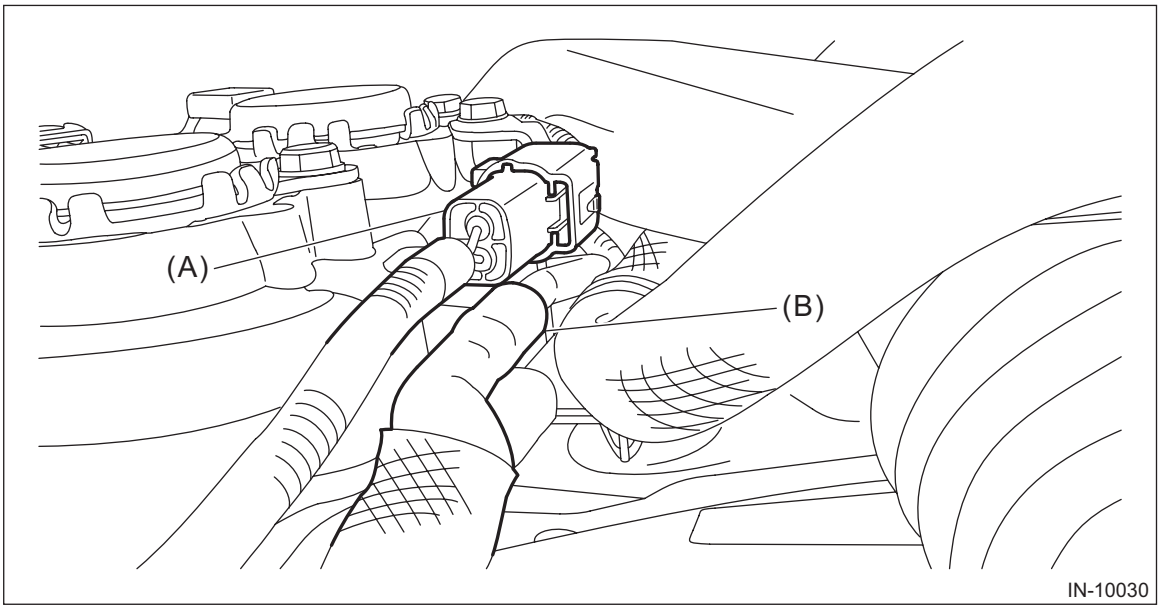

6) Disconnect the connector from the wastegate control solenoid valve.

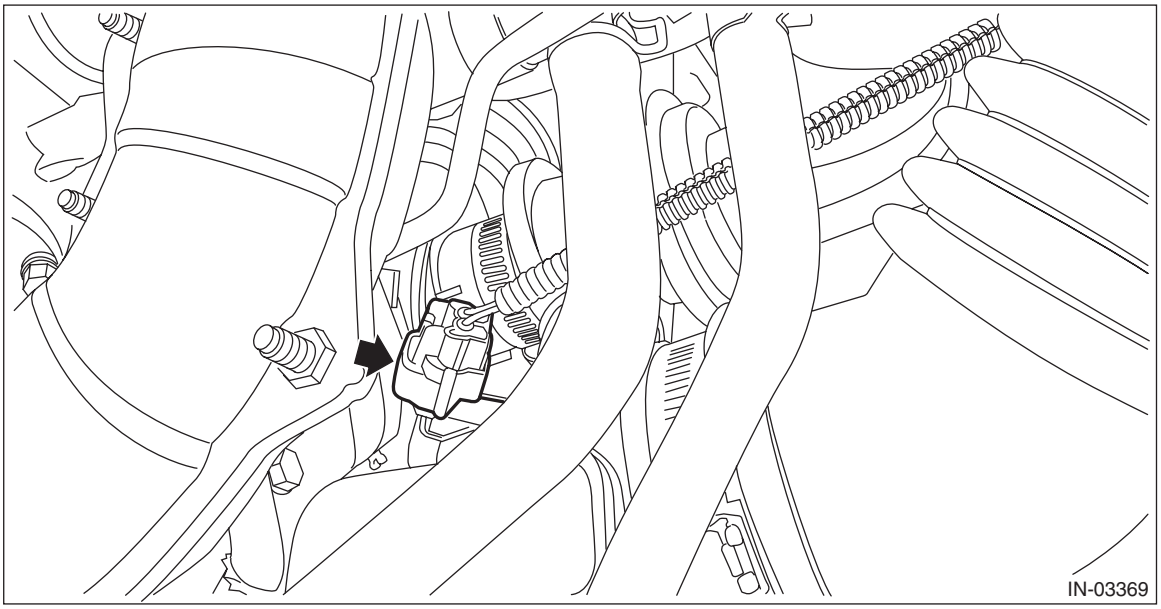

7) Unlock the blow-by diagnosis connector, and disconnect the PCV pipe assembly from the intake duct No. 1.

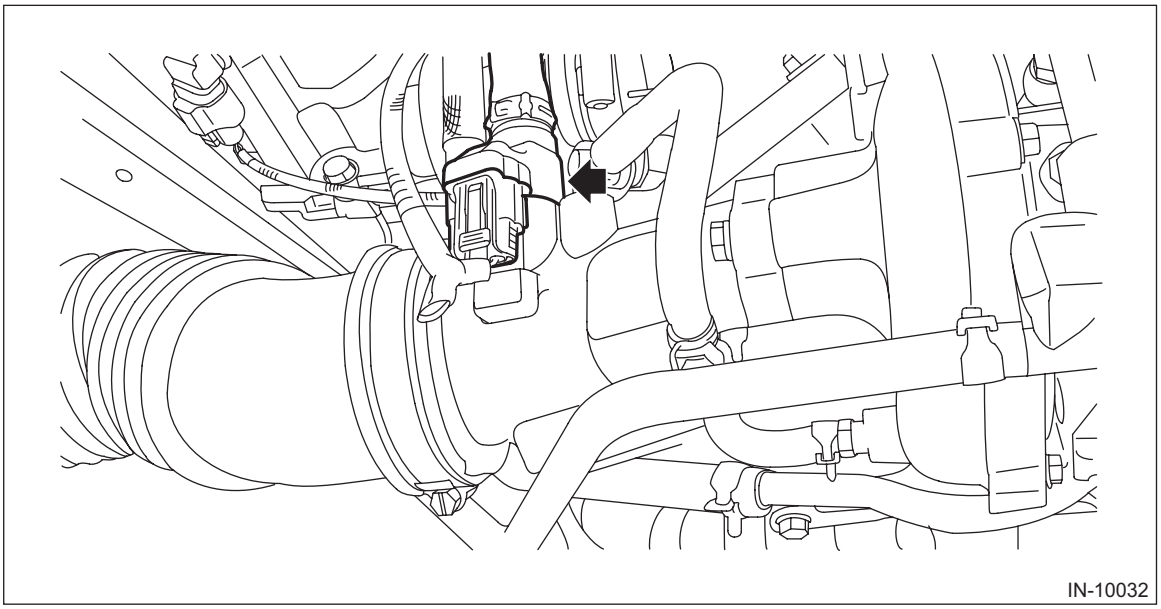

8) Disconnect the vacuum control hose from the wastegate control solenoid valve.

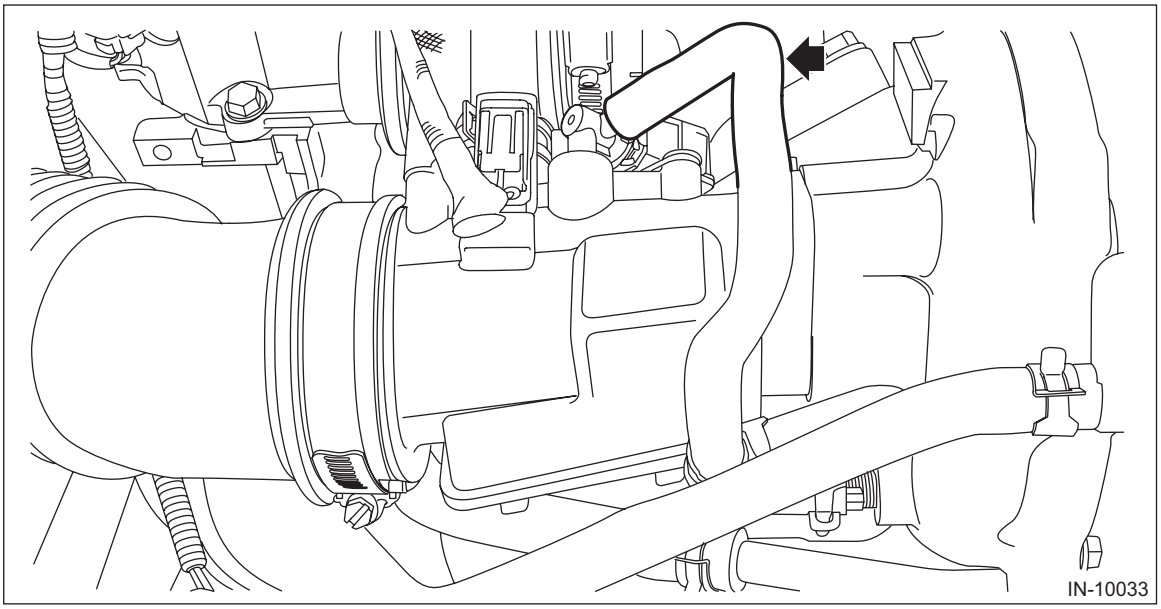

9) Remove the air intake boot (A) from the intake duct No. 1, and disengage the clip (B) which secures the air by-pass valve to the intake duct No. 1.

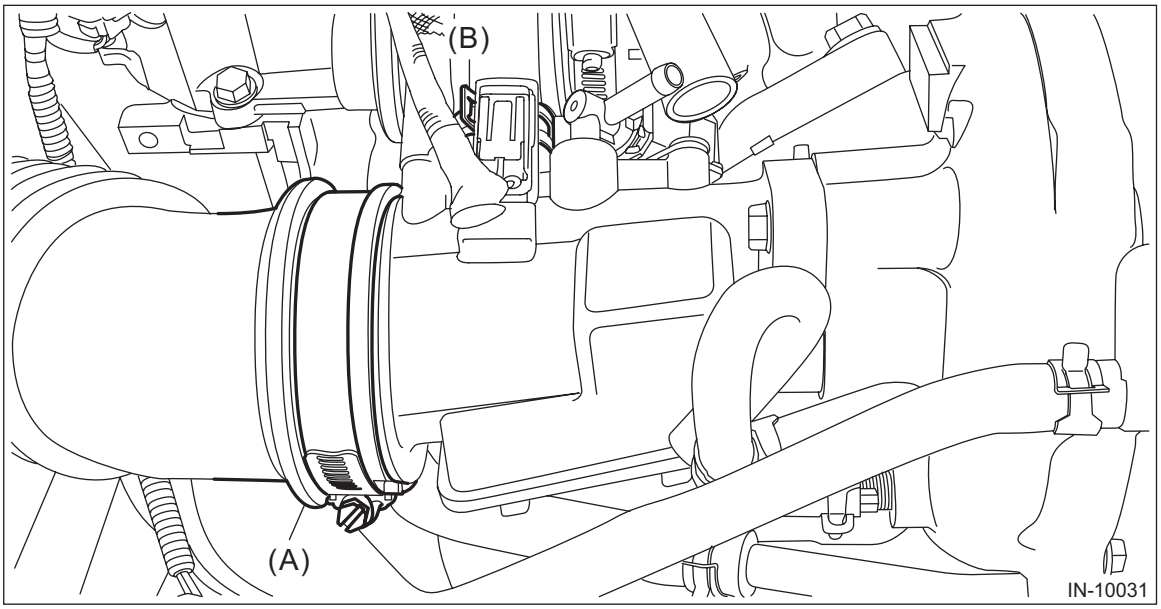

10) Remove the bolts which secure the intake duct No. 1 to the turbocharger, and remove the intake duct No. 1.

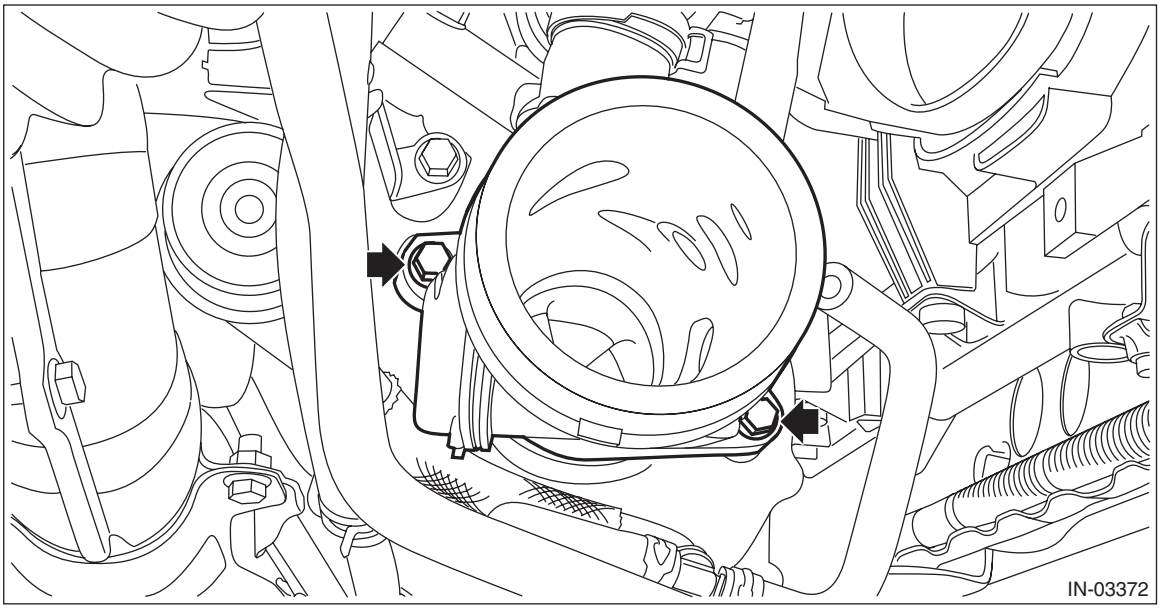

2. INTAKE DUCT NO. 2

1) Remove the collector cover. <Ref. to IN(w/o STI)-7, REMOVAL, Collector Cover.>
2) Disconnect the ground terminal from battery sensor. <Ref. to NT-6, BATTERY, NOTE, Note.>
3) Remove the air intake duct. <Ref. to IN(w/o STI)-26, REMOVAL, Air Intake Duct.>
4) Remove the intercooler. <Ref. to IN(w/o STI)-43, REMOVAL, Intercooler.>
5) Remove the radiator sub fan and fan motor. <Ref. to CO(w/o STI)-47, REMOVAL, Radiator Sub Fan and Fan Motor.>
6) Lift up the vehicle.
7) Remove the under cover. <Ref. to EI-22, REMOVAL, Front Under Cover.>
8) Unlock the blow-by diagnosis connector, and disconnect the PCV pipe assembly from the intake duct No. 1.

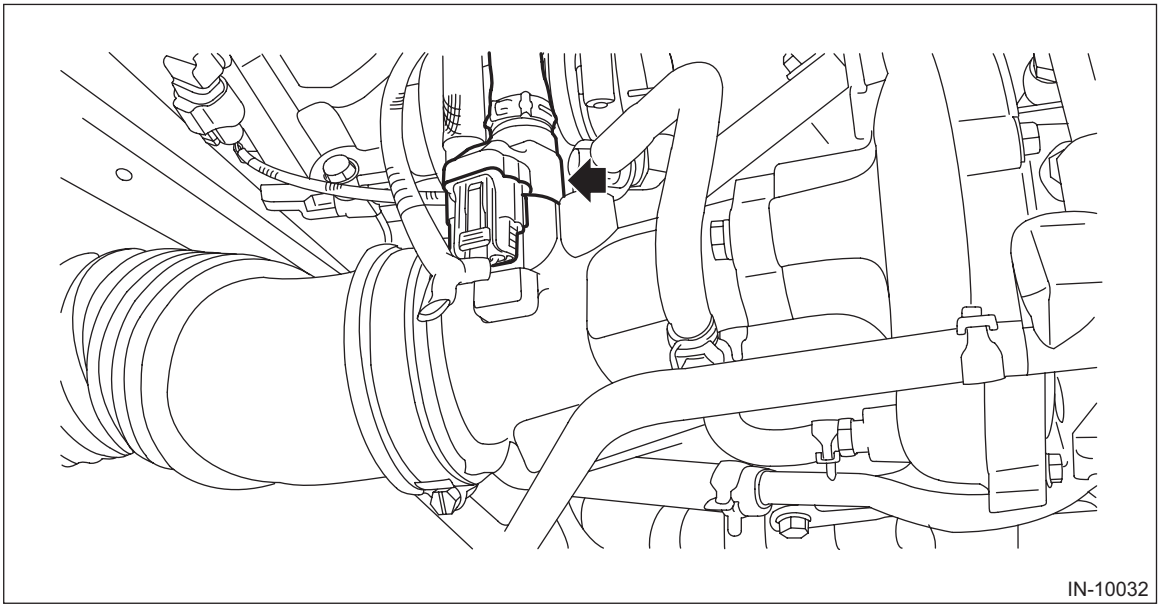

9) Disconnect the vacuum hose (A) from the intake duct No. 1, and disconnect the vacuum hose (B) from the air by-pass valve.

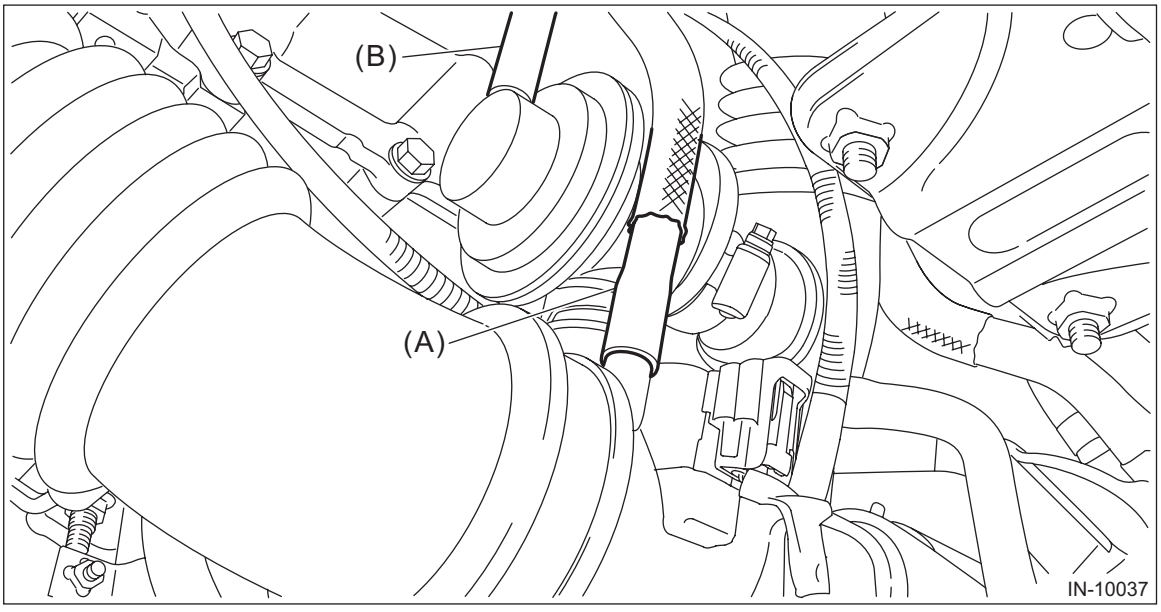

10) Disengage the clip which secures the air by-pass valve to the intake duct No. 1.

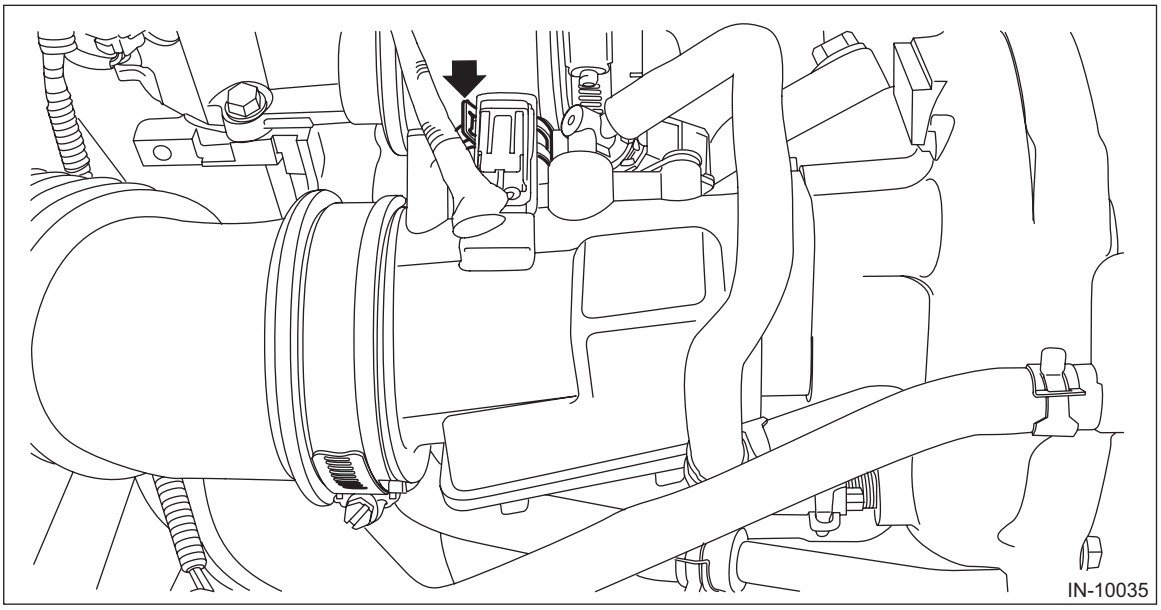

11) Lower the vehicle.
12) Remove the bolts which secure the intake duct No. 2 to the turbocharger.

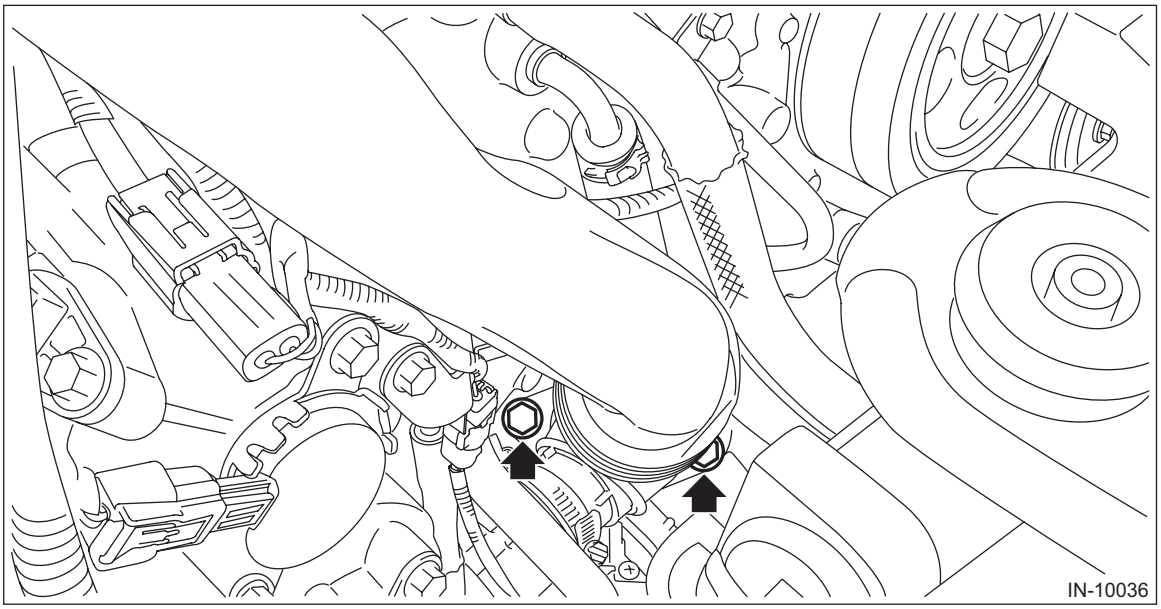

13) Pull out the air by-pass valve from the intake duct No. 1, and remove the intake duct No. 2 from the intake manifold.

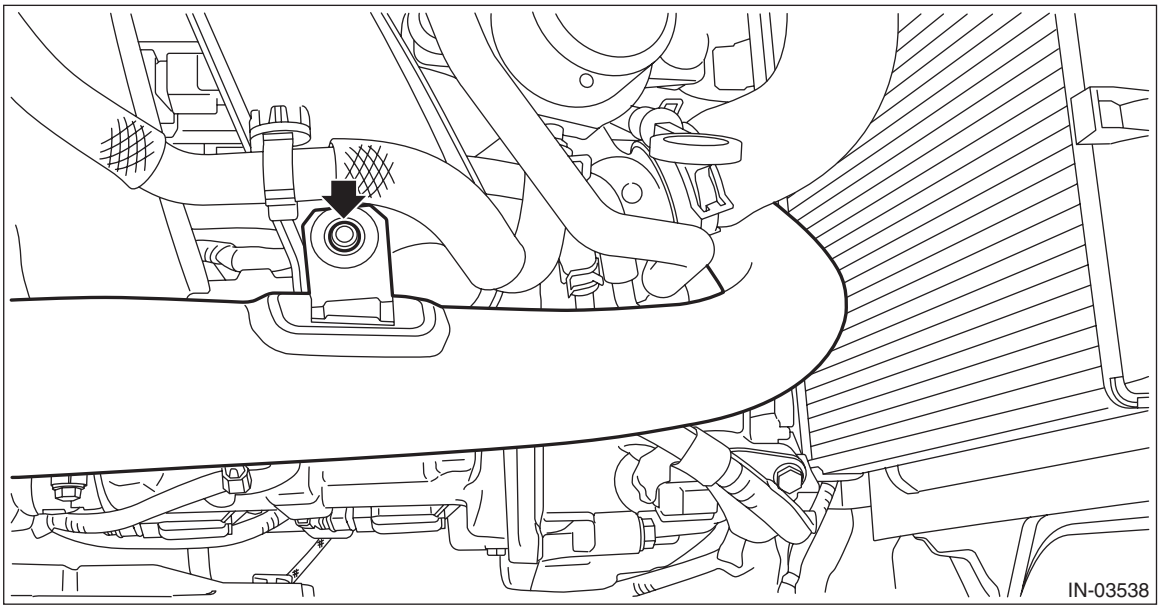

3. INTAKE DUCT NO. 3

1) Remove the collector cover. <Ref. to IN(w/o STI)-7, REMOVAL, Collector Cover.>
2) Remove the intercooler. <Ref. to IN(w/o STI)-43, REMOVAL, Intercooler.>
3) Remove the brake booster vacuum hose from the clip, and place the brake booster vacuum hose aside so that it does not interfere with the work.

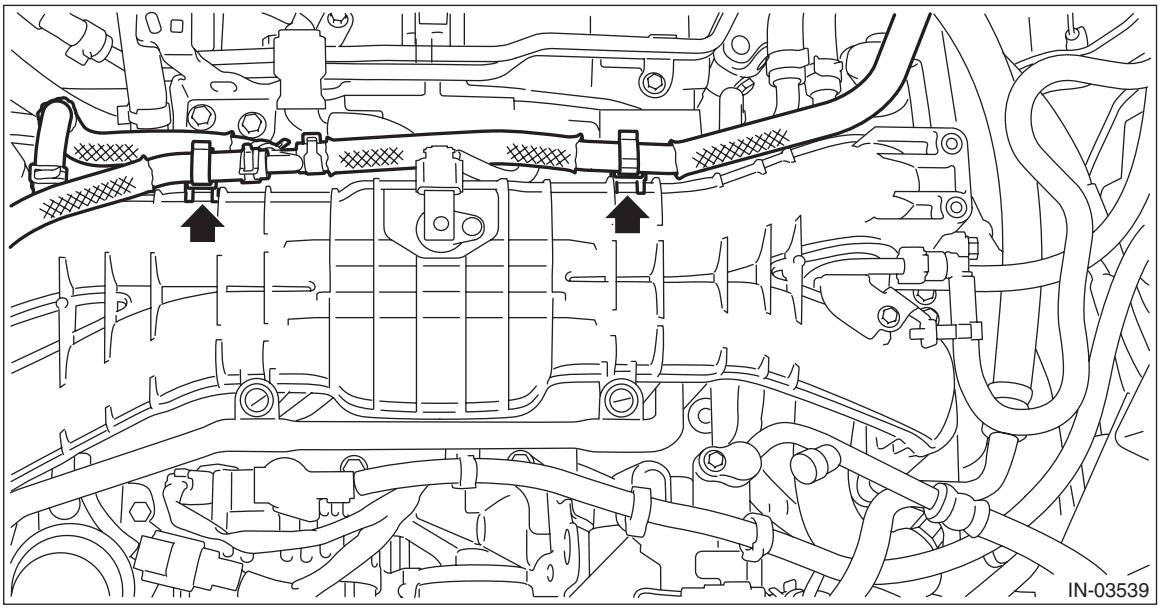

4) Remove the intake duct No. 3 from the throttle body.

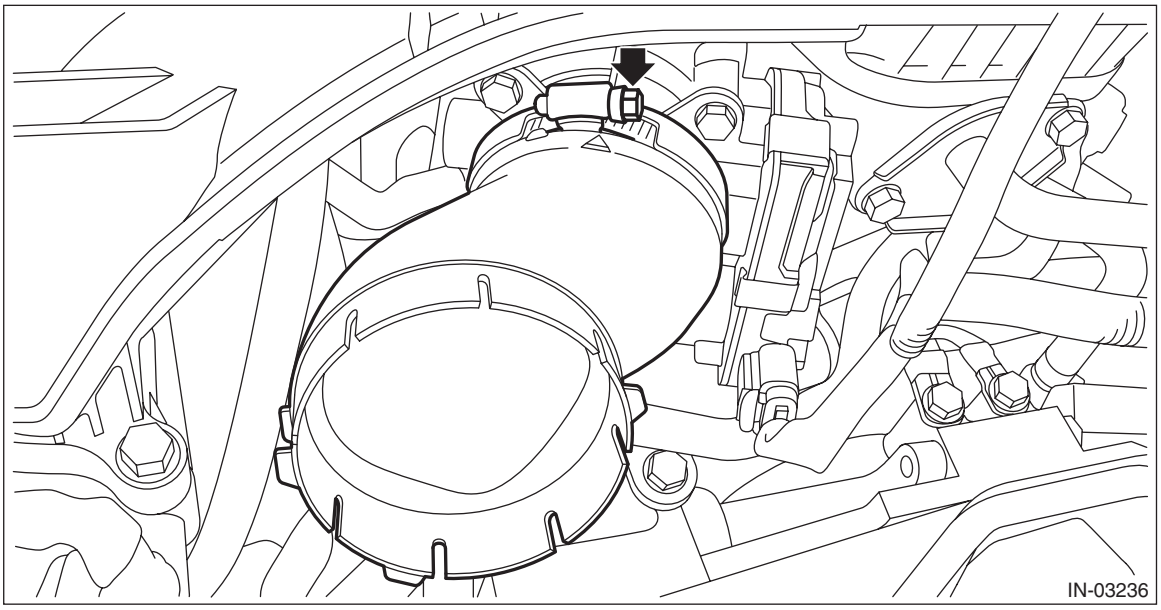

B: INSTALLATION

1. INTAKE DUCT NO. 1

1) Install the intake duct No. 1 to the turbocharger.

NOTE:
- Use new O-rings.
- Be careful not to pinch the O-ring.
- Check that the air by-pass valve is firmly inserted into the intake duct No. 1.

Tightening torque:
7.5 N·m (0.8 kgf-m, 5.5 ft-lb)

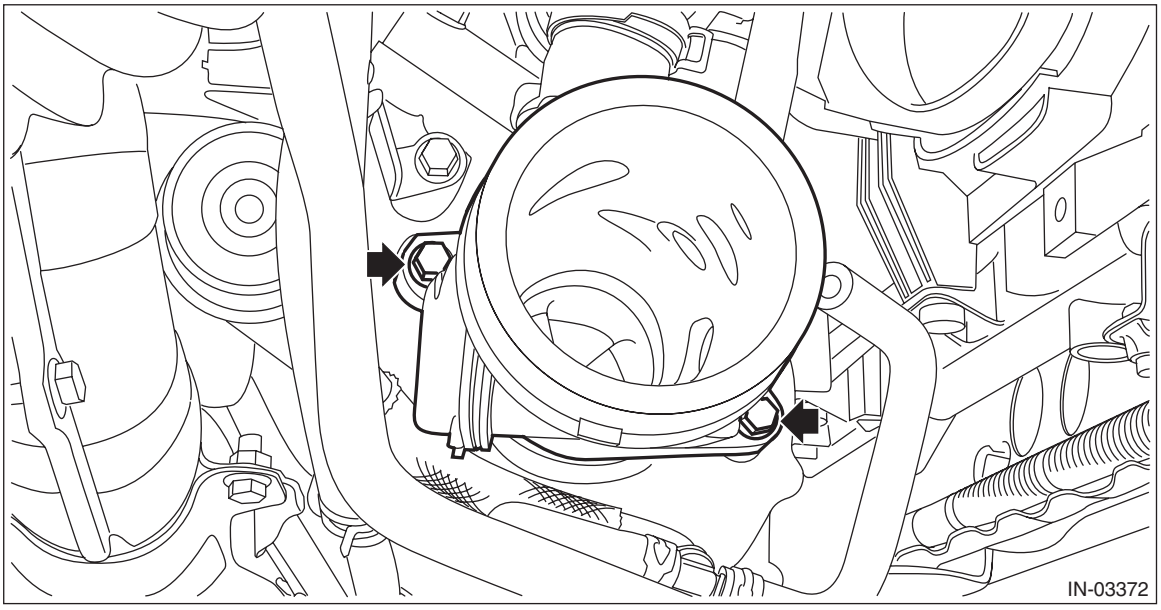

2) Install the air intake boot (A) to the intake duct No. 1, and engage the clip (B) which secures the air by-pass valve to the intake duct No. 1.

Tightening torque:
2.5 N·m (0.3 kgf-m, 1.8 ft-lb)

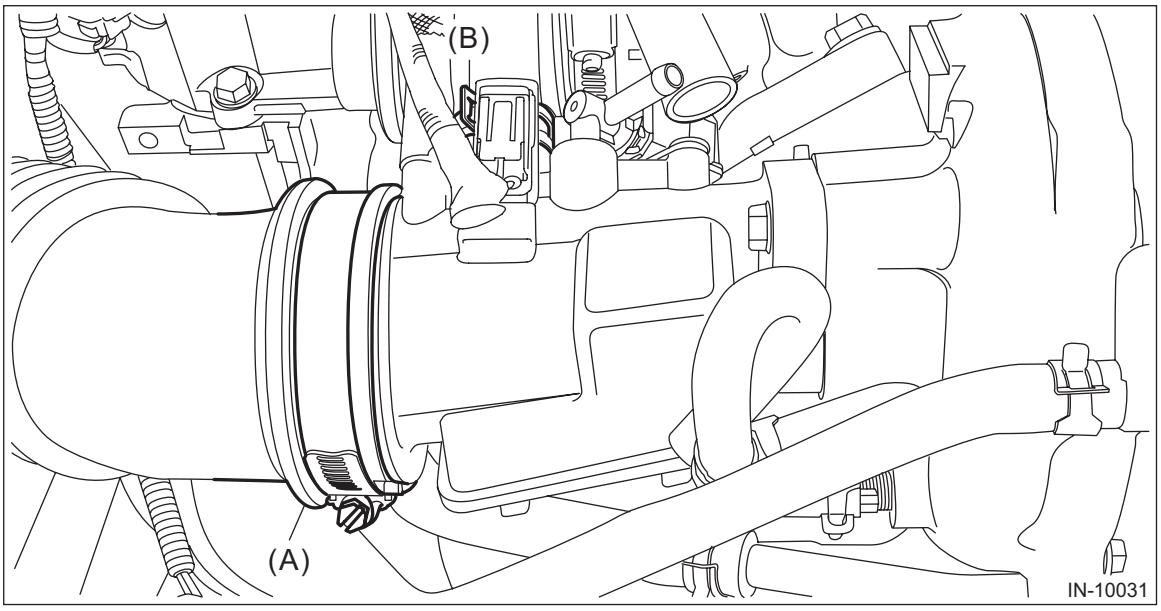

3) Connect the vacuum control hose to the wastegate control solenoid valve.

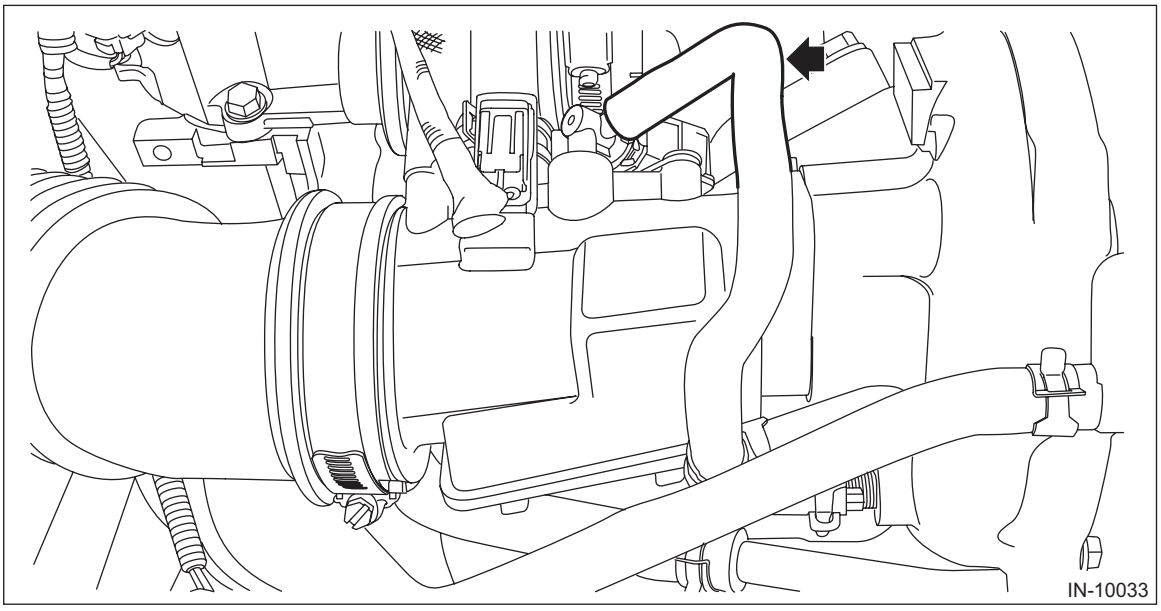

4) Connect the PCV pipe assembly to the intake duct No. 1.

NOTE:
Make sure that the blow-by diagnosis connector is connected securely.

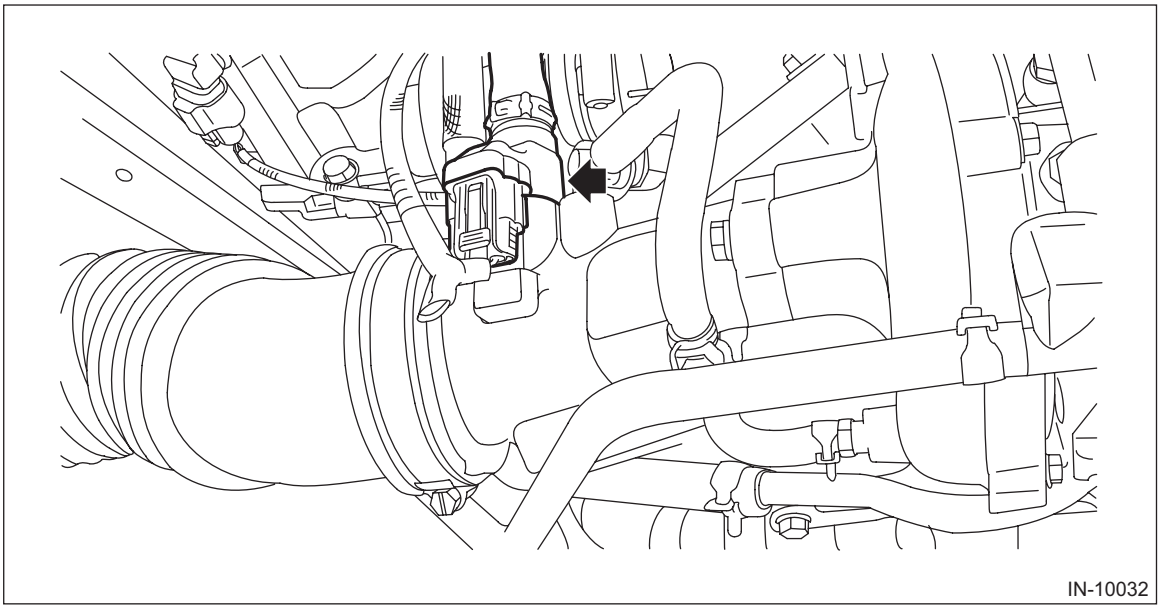

5) Connect the connector to the wastegate control solenoid valve.

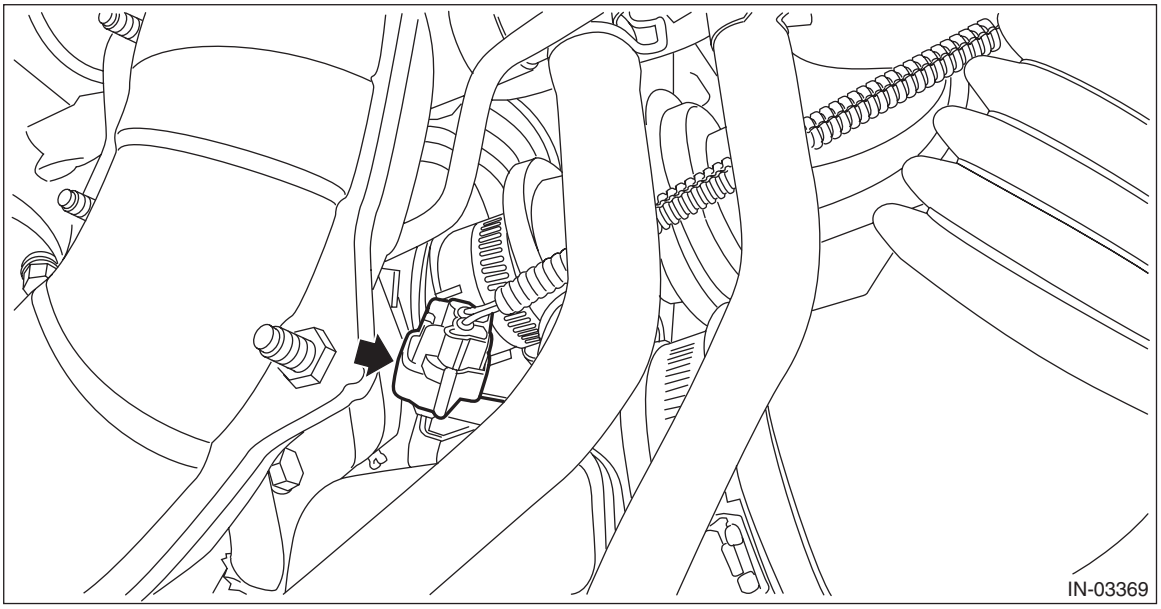

6) Connect the blow-by diagnosis connector (A) to the engine wiring harness, and connect the vacuum hose (B) to the vacuum pipe assembly.

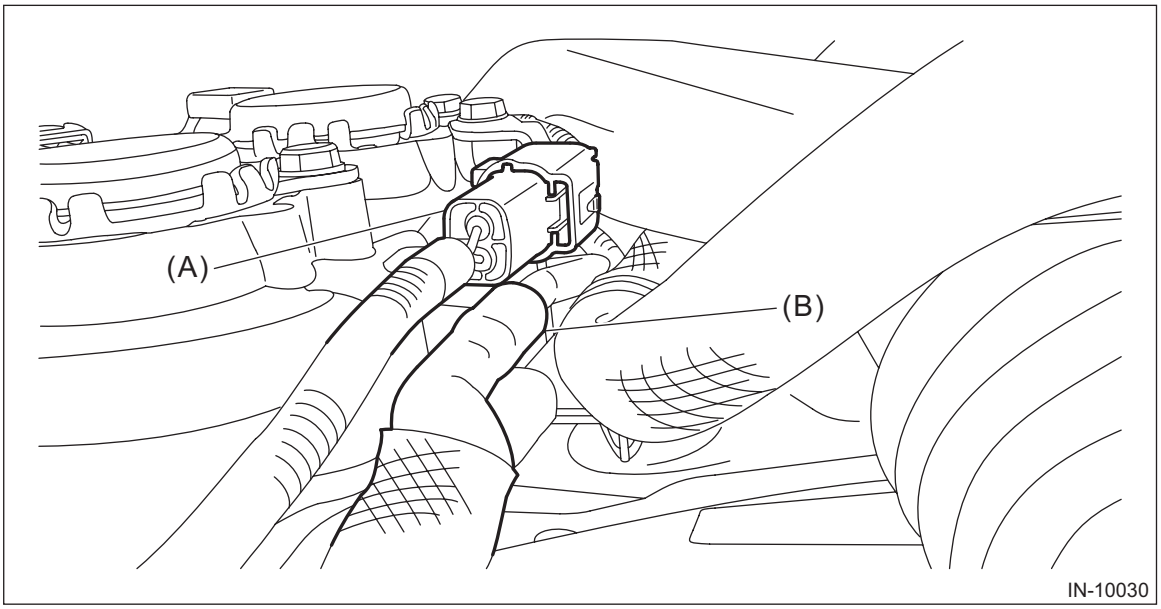

7) Install the under cover. <Ref. to EI-23, INSTALLATION, Front Under Cover.>
8) Lower the vehicle.
9) Install the air intake duct. <Ref. to IN(w/o STI)-26, INSTALLATION, Air Intake Duct.>
10) Connect the ground terminal to battery sensor. <Ref. to NT-6, BATTERY, NOTE, Note.>

2. INTAKE DUCT NO. 2

1) Set the air by-pass valve to the intake duct No. 1, and install the intake duct No. 2 to the intake manifold.

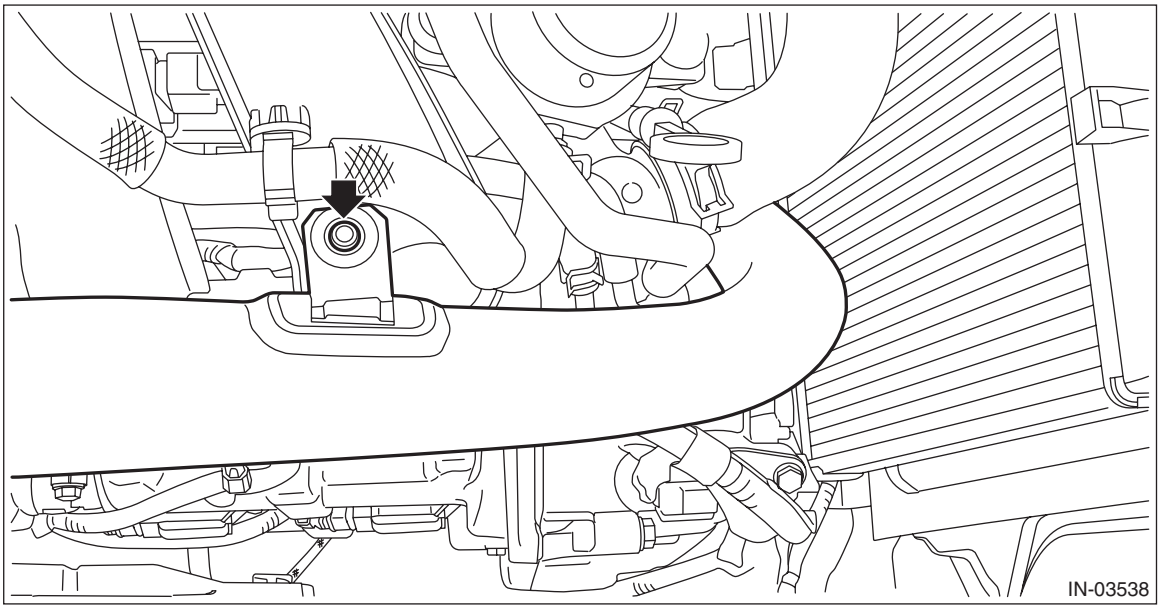

2) Install the bolt which secures the intake duct No. 2 to the turbocharger.

NOTE:
- Use new O-rings.
- Be careful not to pinch the O-ring.
- Check that the air by-pass valve is firmly inserted into the intake duct No. 1.

Tightening torque:
16 N·m (1.6 kgf-m, 1.8 ft-lb)

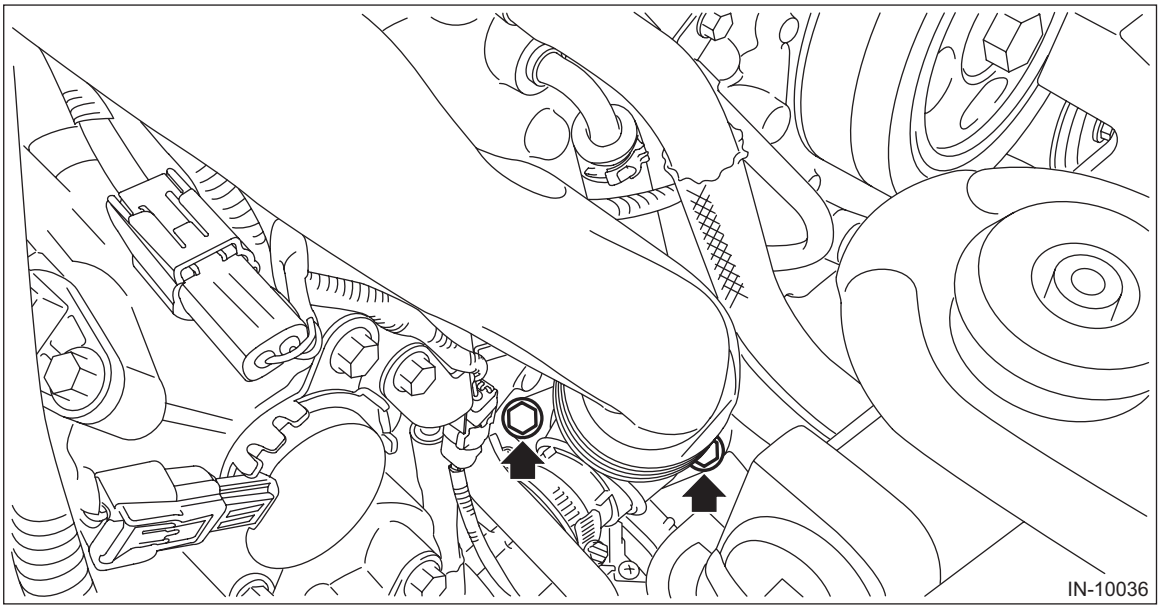

3) Lift up the vehicle.
4) Engage the clip which secures the air by-pass valve to the intake duct No. 1.

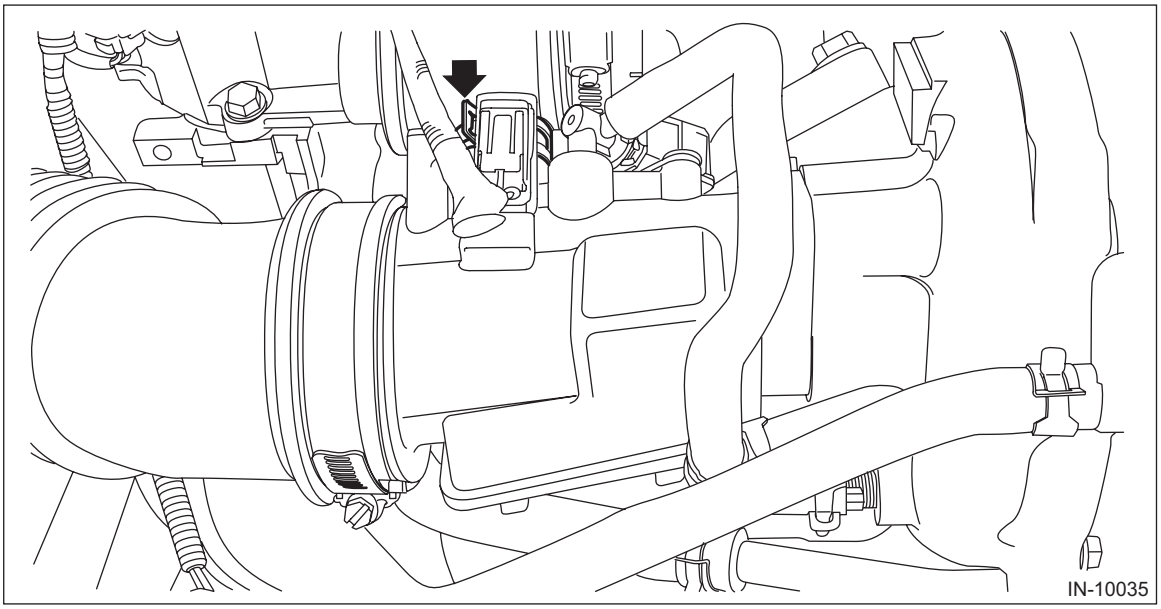

5) Connect the vacuum hose (A) to the intake duct No. 1, and connect the vacuum hose (B) to the air by-pass valve.

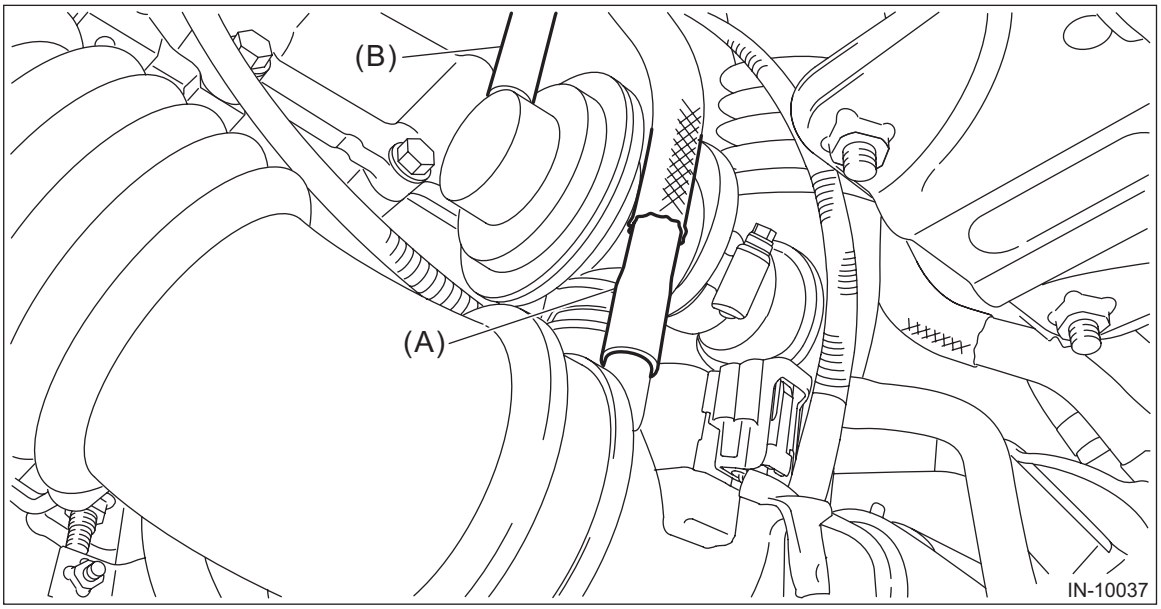

6) Connect the PCV pipe assembly to the intake duct No. 1.

NOTE:
Make sure that the blow-by diagnosis connector is connected securely.

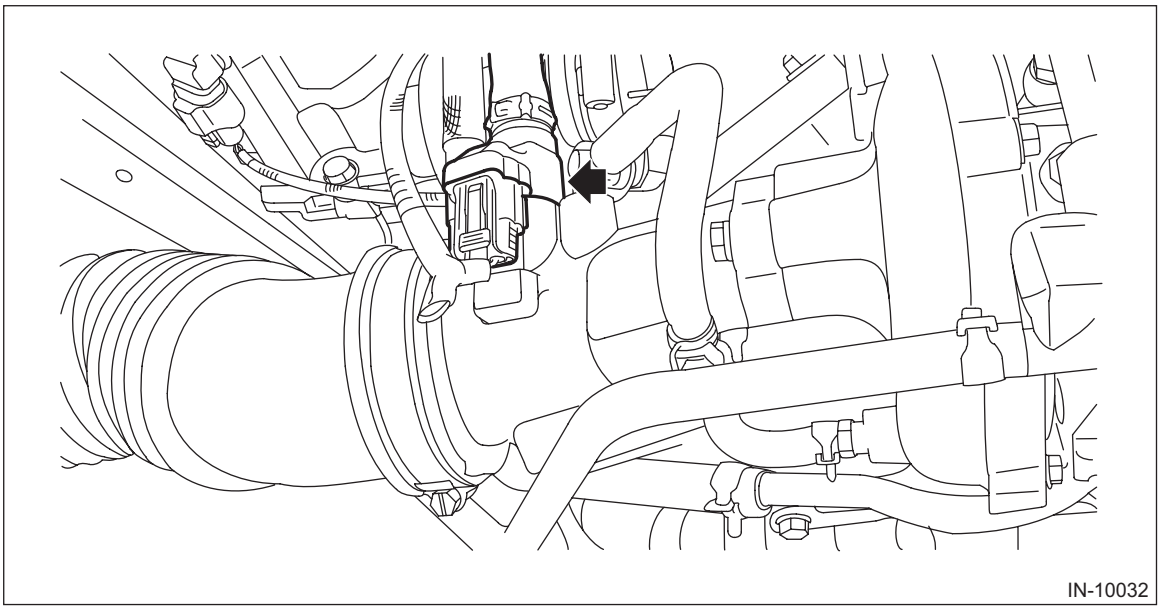

7) Install the under cover. <Ref. to EI-23, INSTALLATION, Front Under Cover.>
8) Lower the vehicle.
9) Install the radiator sub fan and fan motor. <Ref. to CO(w/o STI)-47, INSTALLATION, Radiator Sub Fan and Fan Motor.>
10) Install the intercooler. <Ref. to IN(w/o STI)-45, INSTALLATION, Intercooler.>
11) Install the air intake duct. <Ref. to IN(w/o STI)-26, INSTALLATION, Air Intake Duct.>
12) Connect the ground terminal to battery sensor. <Ref. to NT-6, BATTERY, NOTE, Note.>
13) Install the collector cover. <Ref. to IN(w/o STI)-10, INSTALLATION, Collector Cover.>

3. INTAKE DUCT NO. 3

1) Align the triangle mark (A) on the intake duct No. 3 to the rib (B) on the throttle body, and install the intake duct No. 3 to the throttle body.

NOTE:
- Use a new insulator.
- Apply a thin coat of SUBARU PS fluid (K0515YA000) or liquid paraffin to the inner periphery of the insulator.
- When inserting the intake duct No. 3 to the throttle body, be careful that the insulator is not turned over.

Tightening torque:
3 N·m (0.3 kgf-m, 2.2 ft-lb)

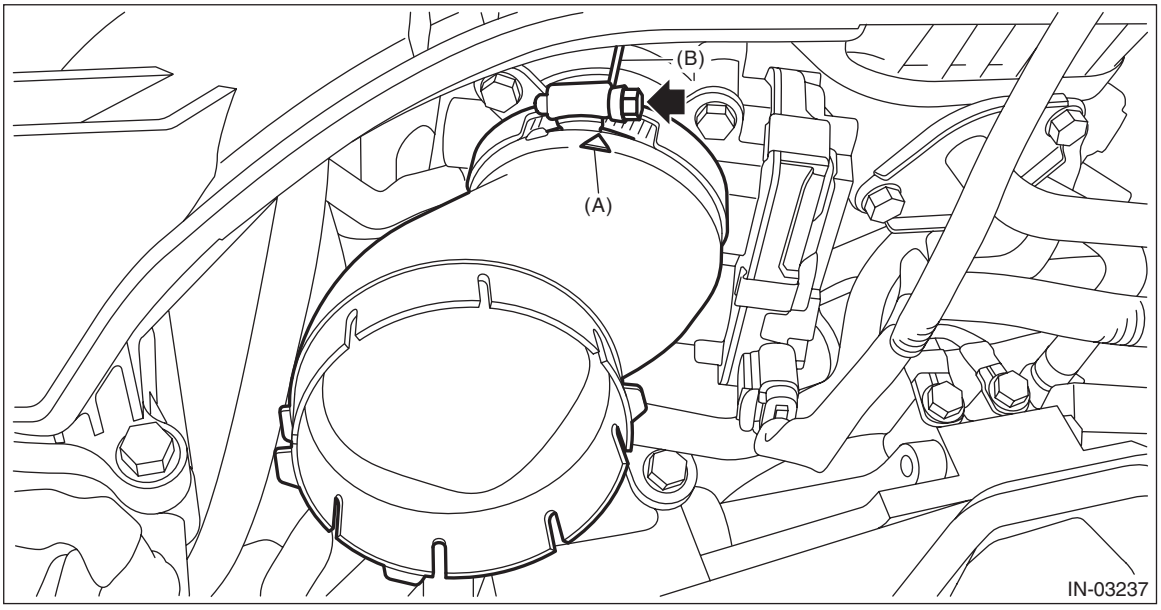

2) Install the brake booster vacuum hose to the clip.

NOTE:
If the clip is removed from the intake manifold, install the clip to the position of alignment mark ▼ of intake manifold.

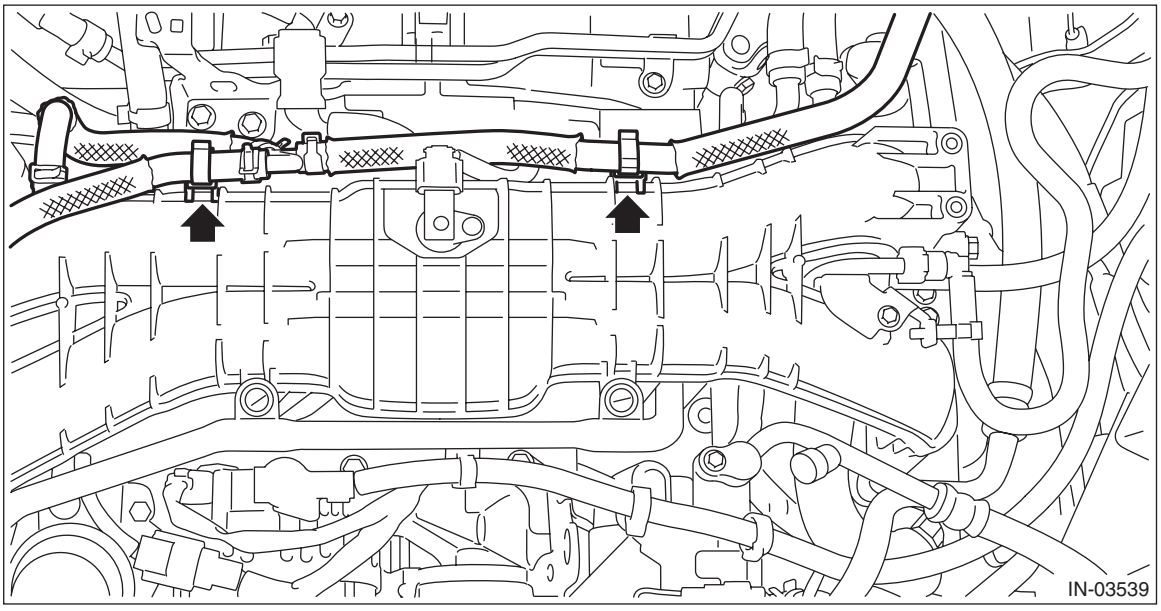

3) Install the intercooler. <Ref. to IN(w/o STI)-45, INSTALLATION, Intercooler.>
4) Install the collector cover. <Ref. to IN(w/o STI)-10, INSTALLATION, Collector Cover.>

C: DISASSEMBLY

1. INTAKE DUCT NO. 1

Remove the vacuum hose, blow-by diagnosis connector harness and wastegate control solenoid valve from the intake duct.

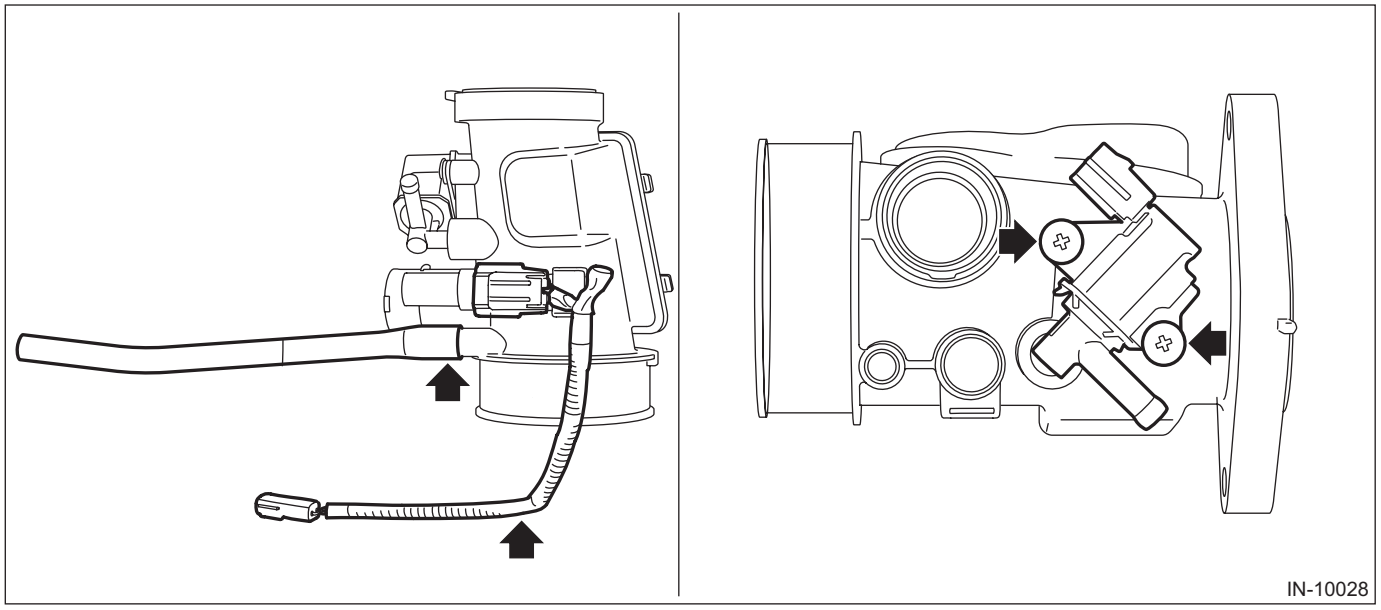

2. INTAKE DUCT NO. 2

Remove the air by-pass valve from the intake duct No. 2.

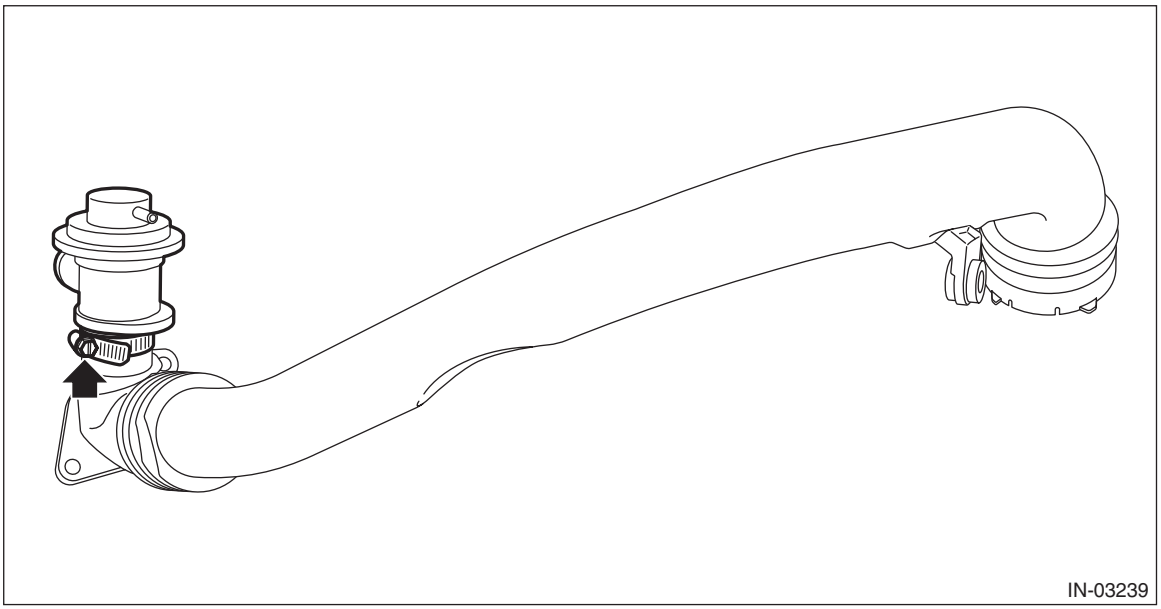

3. INTAKE DUCT NO. 3

Remove the insulator from the intake duct No. 3.

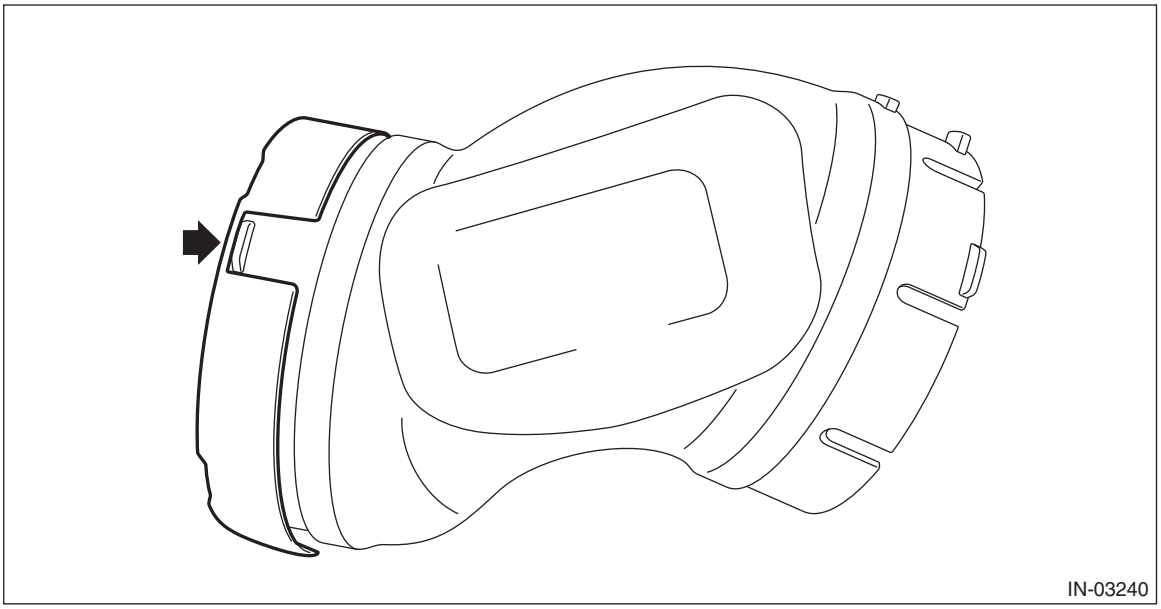

D: ASSEMBLY

1. INTAKE DUCT NO. 1

Install the vacuum hose, blow-by diagnosis connector harness and wastegate control solenoid valve to the intake duct No. 1.

NOTE:
- Use new O-rings.
- When tightening the wastegate control solenoid valve, check that it is securely seated.

Tightening torque:
2.8 N·m (0.3 kgf-m, 2.1 ft-lb)

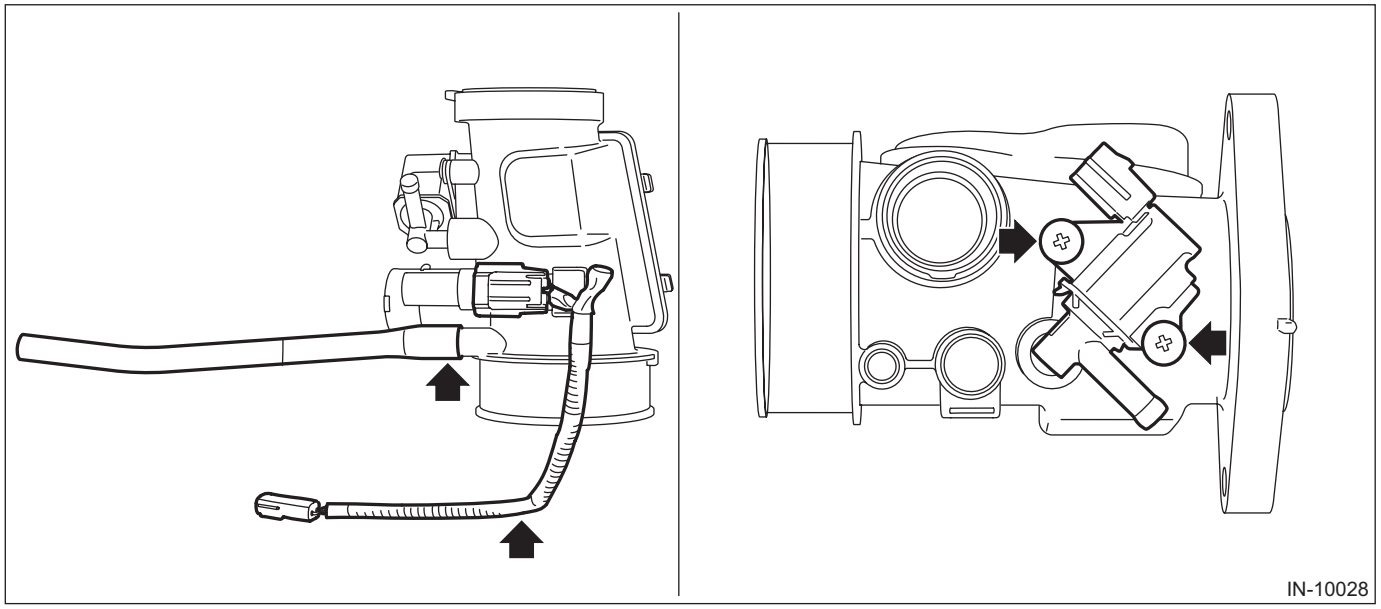

2. INTAKE DUCT NO. 2

Assemble in the reverse order of disassembly.

Tightening torque:
3 N·m (0.3 kgf-m, 2.2 ft-lb)

3. INTAKE DUCT NO. 3

Assemble in the reverse order of disassembly.

NOTE:
Use a new insulator.

E: INSPECTION

1) Check that the intake duct has no deformation, cracks or other damages.
2) Check the vacuum hose for cracks, damage or looseness.

8. Intercooler

A: REMOVAL

1) Remove the collector cover. <Ref. to IN(w/o STI)-7, REMOVAL, Collector Cover.>
2) Remove the brake booster vacuum hose from the clip (A).
3) Remove the bolts which secure the intercooler stay LH to the intercooler and intake manifold, and remove the intercooler stay LH.

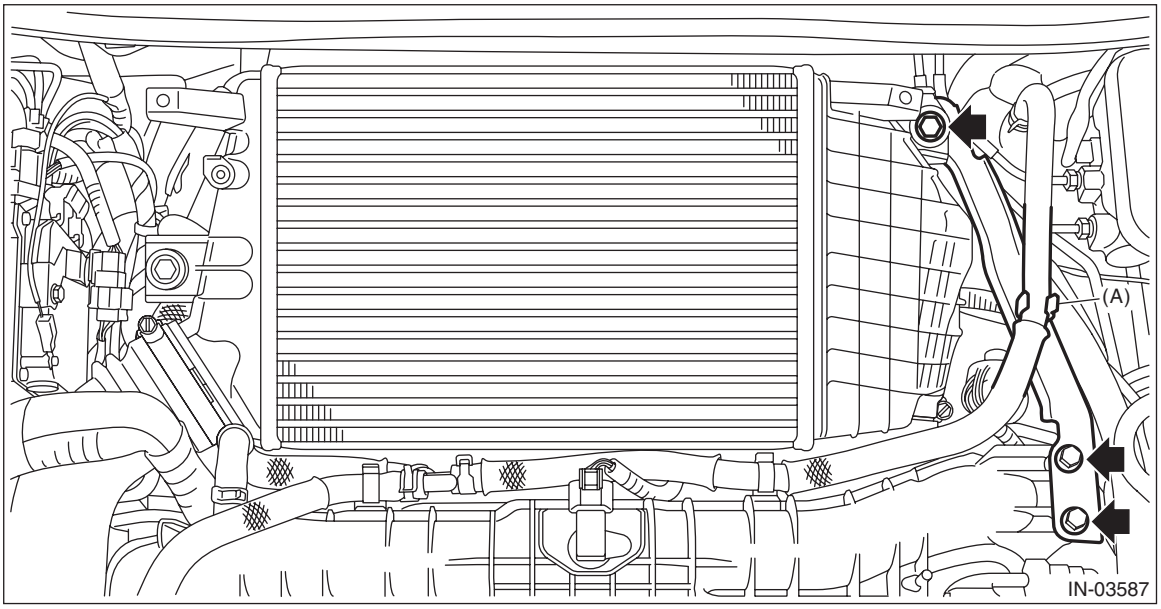

4) Insert the urethane sheet (A) between intercooler and operating cylinder. (MT model)

NOTE:
• This procedure is required to prevent the intercooler from touching the operating cylinder during intercooler removal.
• Use the urethane sheet with the size (width × height × thickness) of approx. 300 mm × approx. 200 mm × approx. 10 mm (approx. 11.81 in × approx. 7.87 in × approx. 0.39 in).

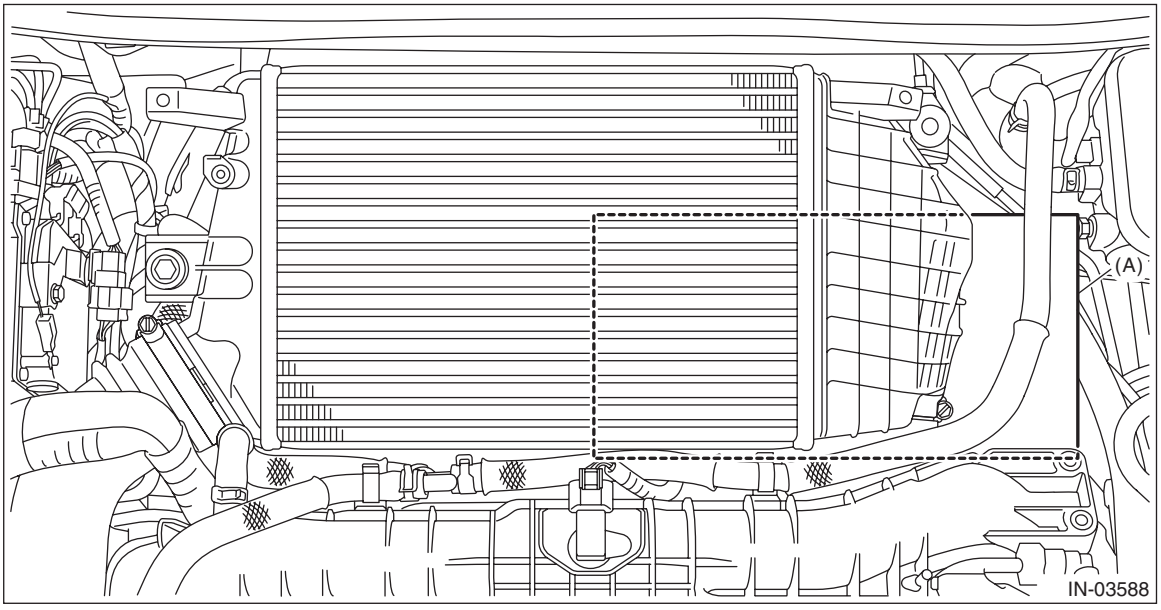

5) Loosen the clamp (A) which holds the intake duct to intercooler.
6) Remove the bolts which secure the intercooler to the intercooler stay RH, and remove the intercooler.

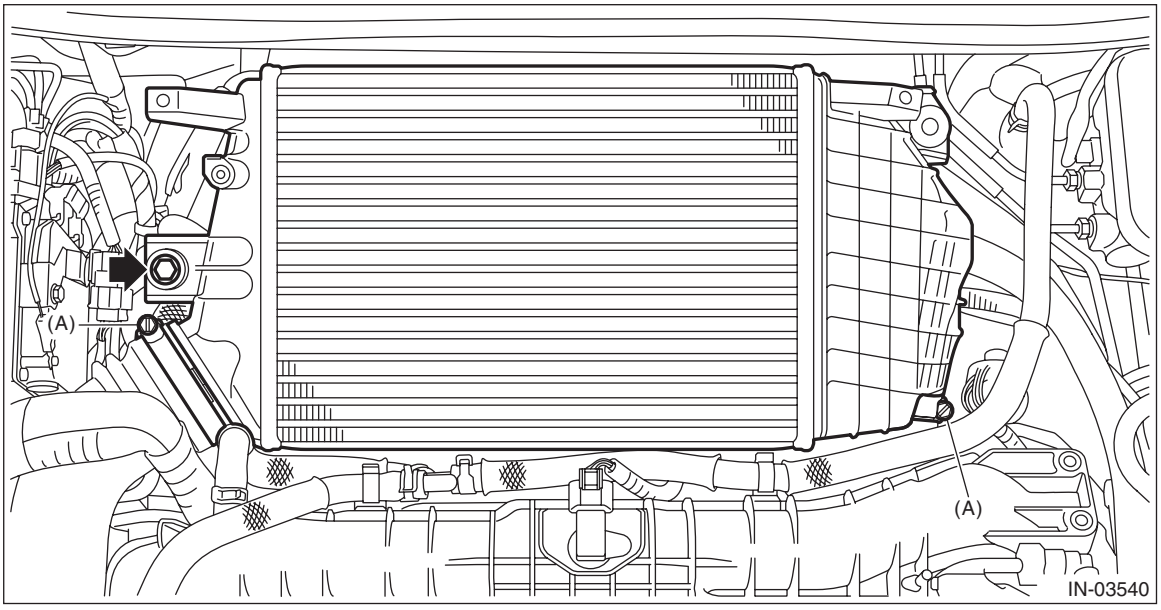

7) Remove the intercooler stay RH from the engine hanger stay.

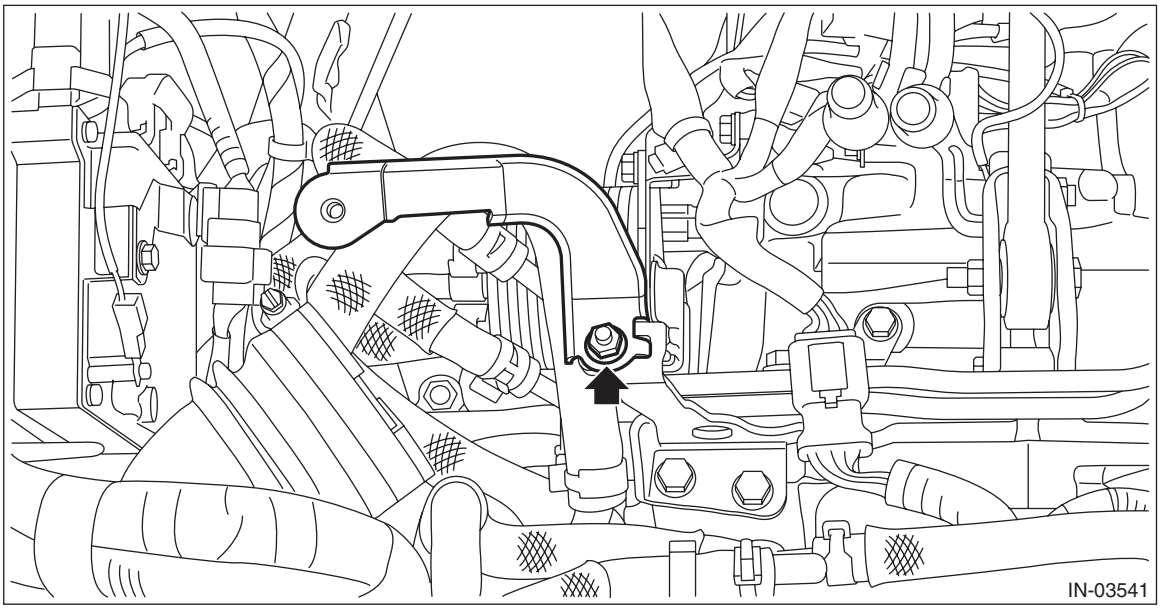

8) Remove the insulator and clamp from intake duct.

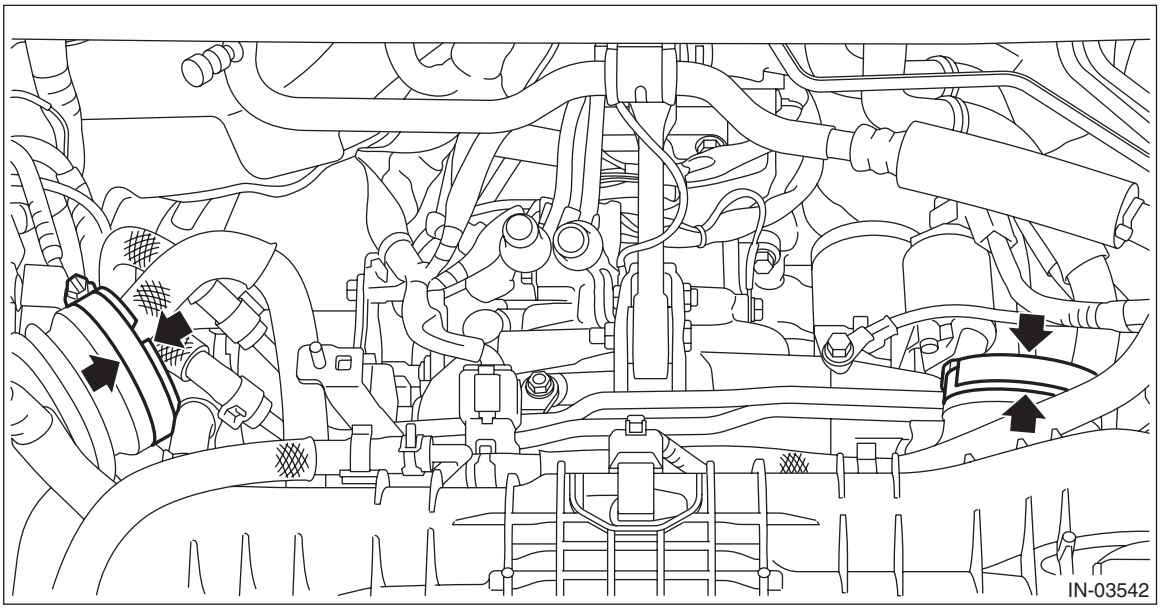

B: INSTALLATION

1) Install the insulator and clamp to the intake duct.

NOTE:
- Use a new insulator.
- Apply a thin coat of SUBARU PS fluid (K0515YA000) or liquid paraffin to the inner periphery of the insulator.

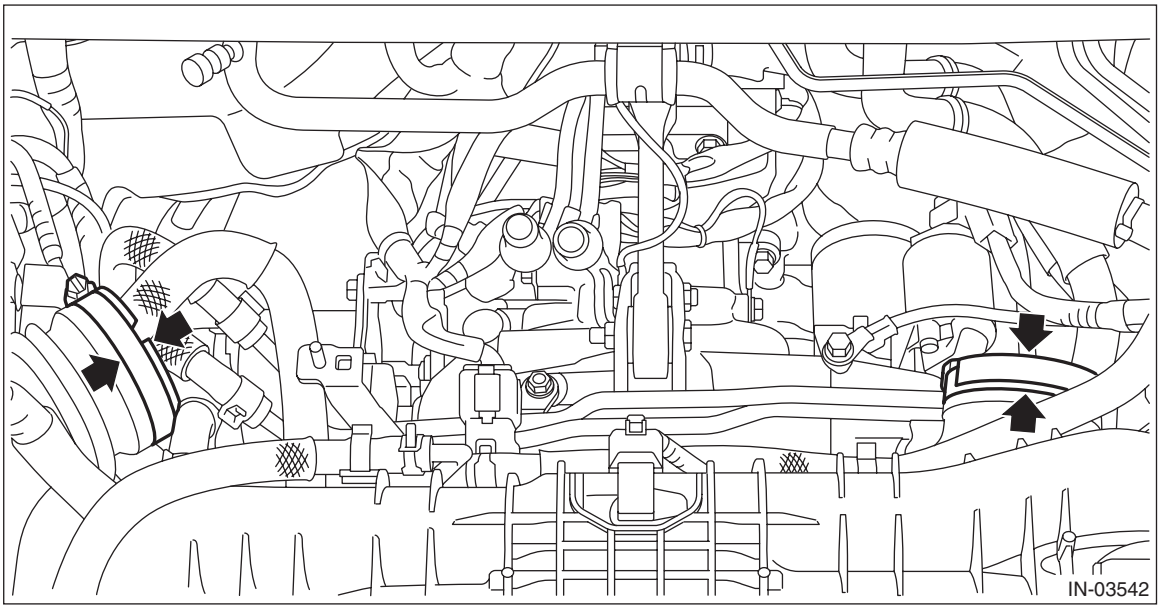

2) Install the intercooler stay RH to the engine hanger stay.

Tightening torque:
16 N·m (1.6 kgf-m, 11.8 ft-lb)

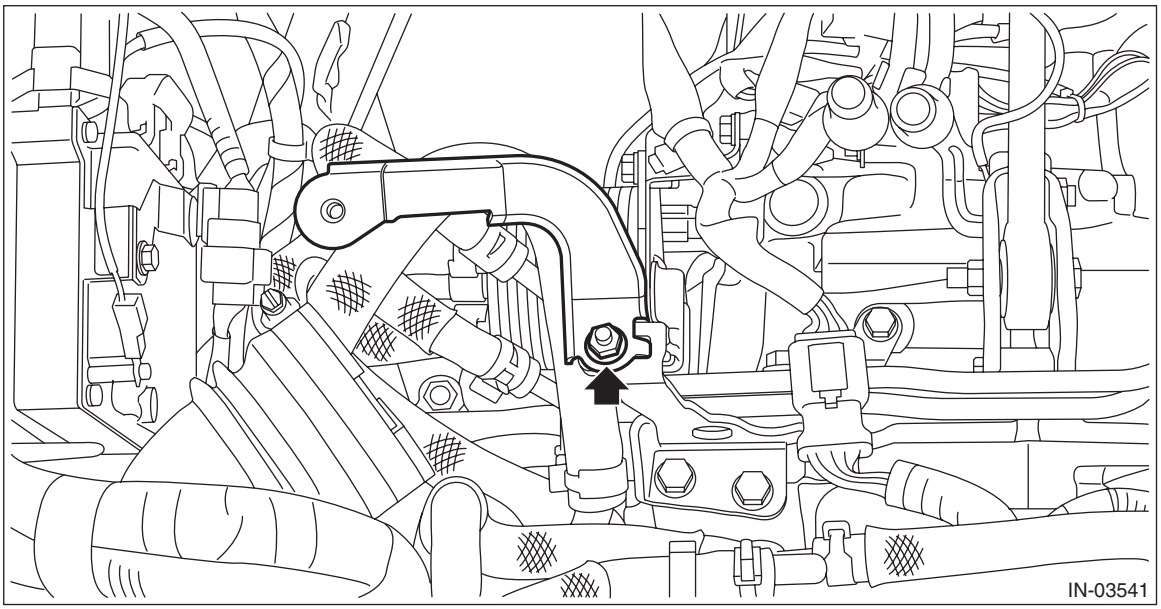

3) Set the urethane sheet (A) so that it covers the operating cylinder. (MT model)

NOTE:
• This procedure is required to prevent the intercooler from touching the operating cylinder during intercooler installation.
• Use the urethane sheet with the size (width × height × thickness) of approx. 300 mm × approx. 200 mm × approx. 10 mm (approx. 11.81 in × approx. 7.87 in × approx. 0.39 in).

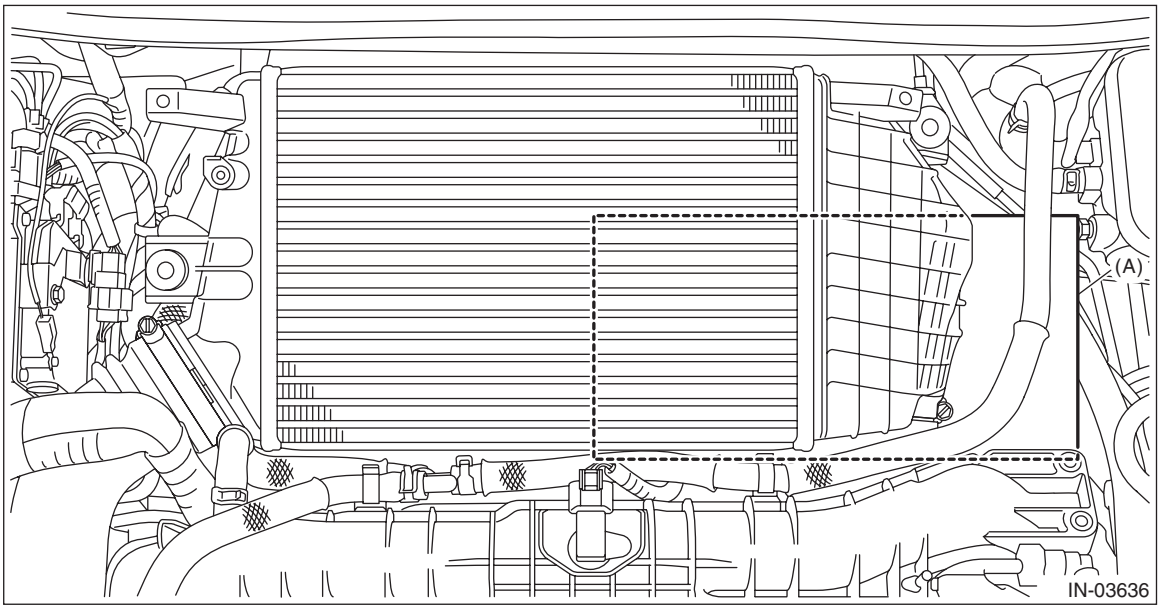

4) Insert the intercooler into the intake duct No. 2, and temporarily tighten the clamp which secures the intake duct No. 2 to the intercooler.

NOTE:
When inserting the intercooler into the intake duct No. 2, be careful that the insulator is not turned over.

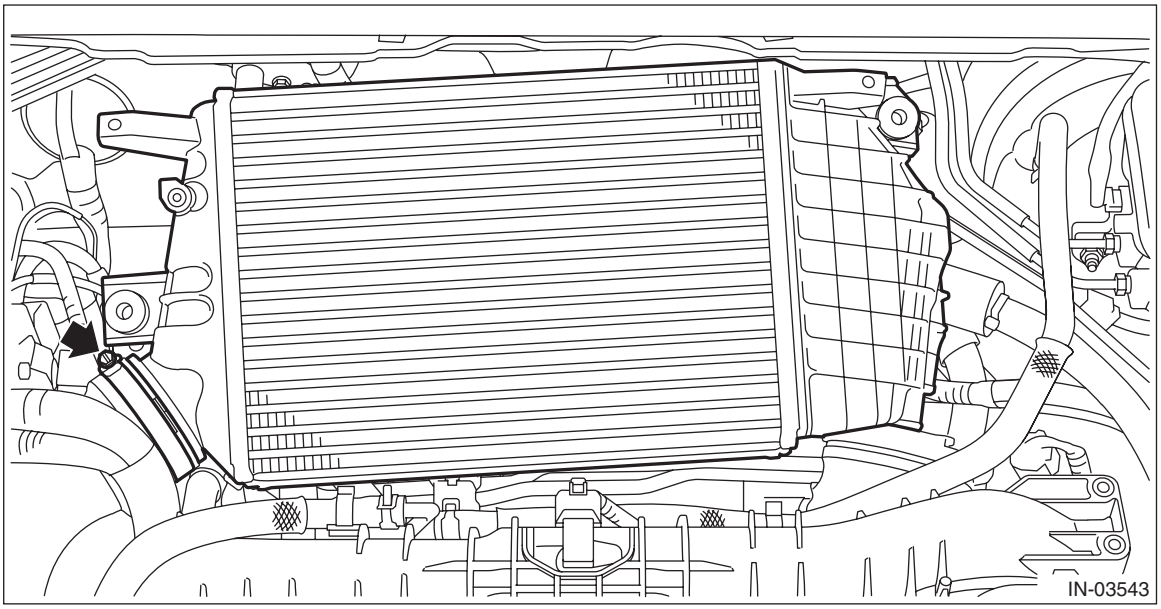

5) Insert the intercooler into the intake duct No. 3, and tighten the clamp which secures the intake duct to the intercooler.

NOTE:
When inserting the intercooler into the intake duct No. 3, be careful that the insulator is not turned over.

Tightening torque:
3 N·m (0.3 kgf-m, 2.2 ft-lb)

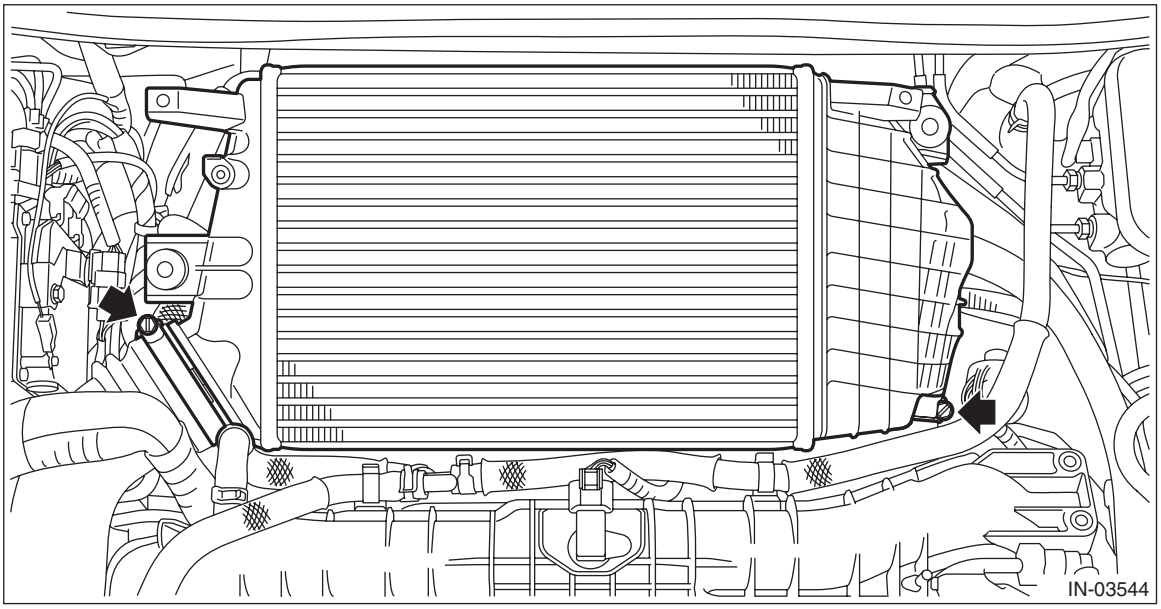

6) Pull out the urethane sheet (A) between intercooler and operating cylinder. (MT model)

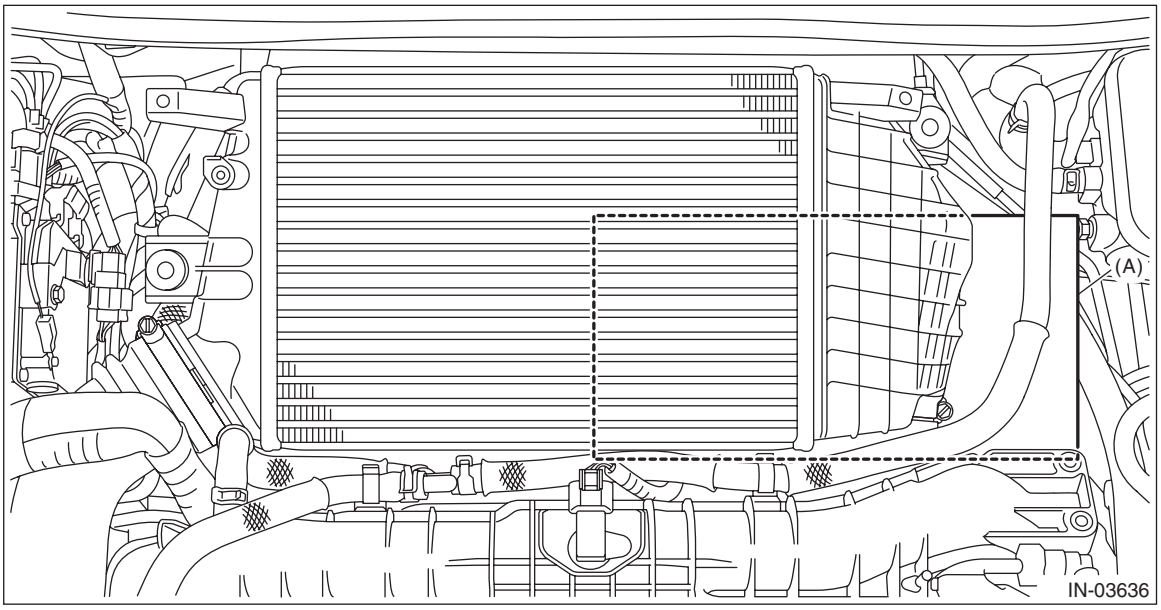

7) Set the intercooler stay LH to the intake manifold, and temporarily tighten the bolts which secure intercooler stay LH to the intake manifold.
8) Install the bolt which secures the intercooler to the intercooler stay.
9) Tighten the bolts which secure the intercooler stay LH to the intake manifold, and install the brake booster vacuum hose to the clip (A).

Tightening torque:
16 N·m (1.6 kgf-m, 11.8 ft-lb)

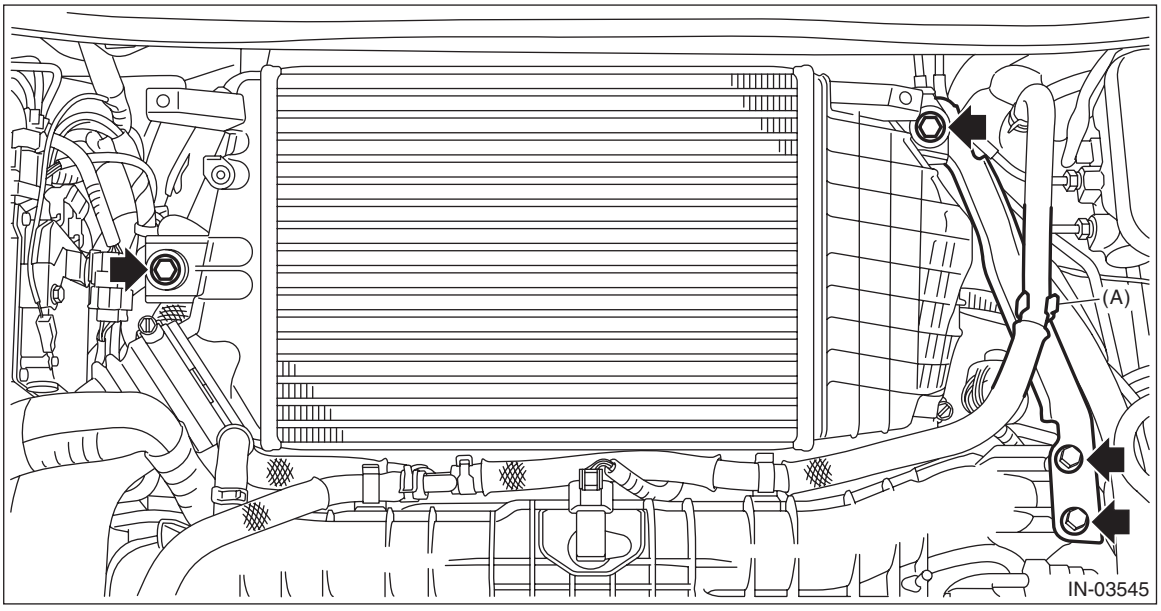

10) Install the collector cover. <Ref. to IN(w/o STI)-10, INSTALLATION, Collector Cover.>

C: INSPECTION

Check that the intercooler and intercooler stay have no deformation, cracks or other damages.

9. Turbocharger

A: REMOVAL

Remove the turbo charger and front exhaust pipe as a unit. Refer to “Front Exhaust Pipe” for the removal procedure. <Ref. to EX(w/o STI)-9, REMOVAL, Front Exhaust Pipe.> <Ref. to EX(w/o STI)-26, DISASSEMBLY, Front Exhaust Pipe.>

B: INSTALLATION

Refer to “Front Exhaust Pipe” for the installation procedure. <Ref. to EX(w/o STI)-17, INSTALLATION, Front Exhaust Pipe.> <Ref. to EX(w/o STI)-29, ASSEMBLY, Front Exhaust Pipe.>

C: DISASSEMBLY

1) Remove the union screw pipe assembly from the turbocharger.

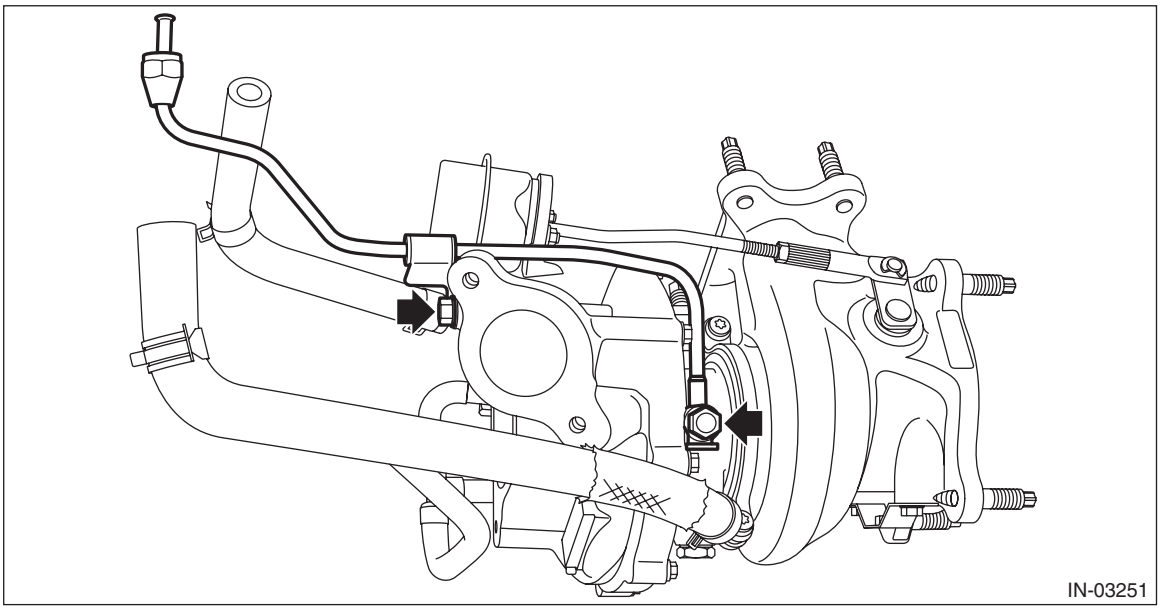

2) Remove the turbocharger pipe from the turbocharger.

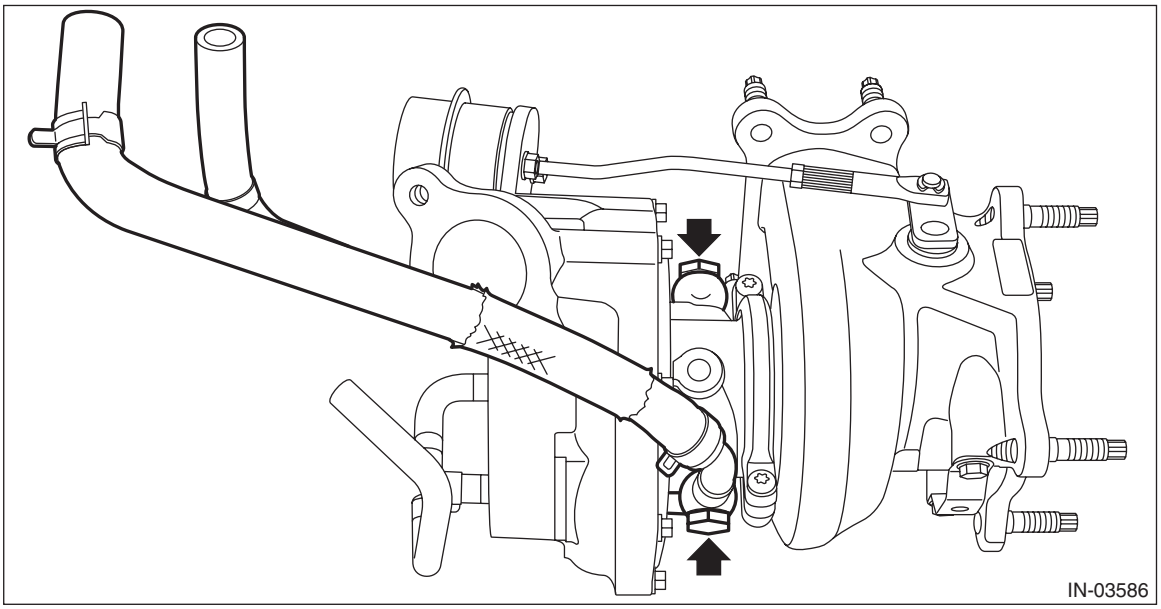

3) Remove the air control hose from the turbocharger.

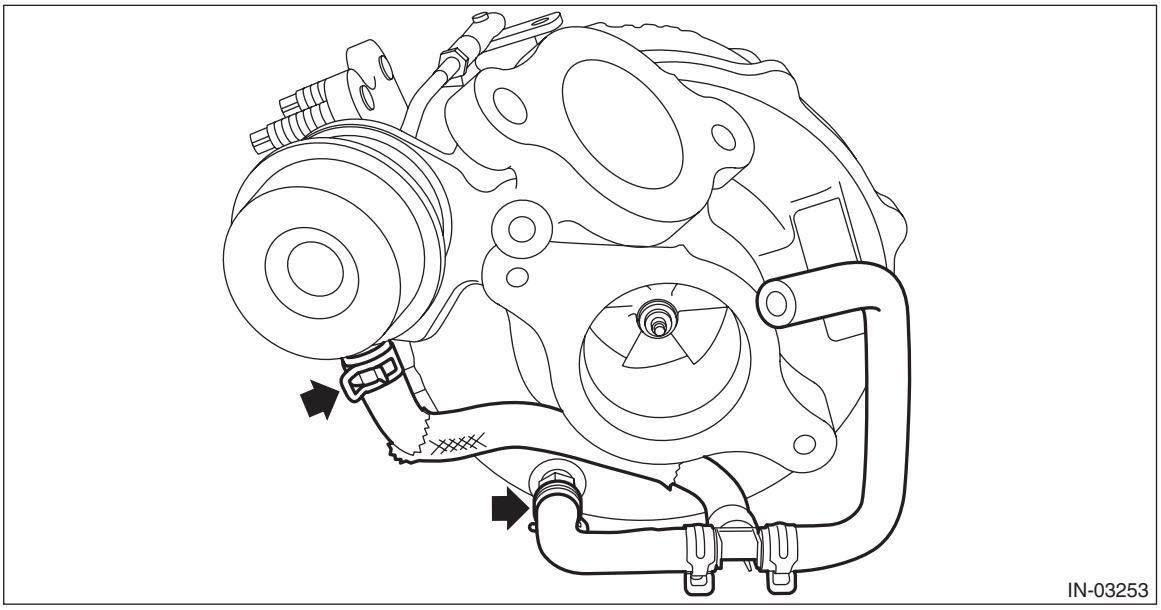

4) Remove the stud bolt from the turbocharger.

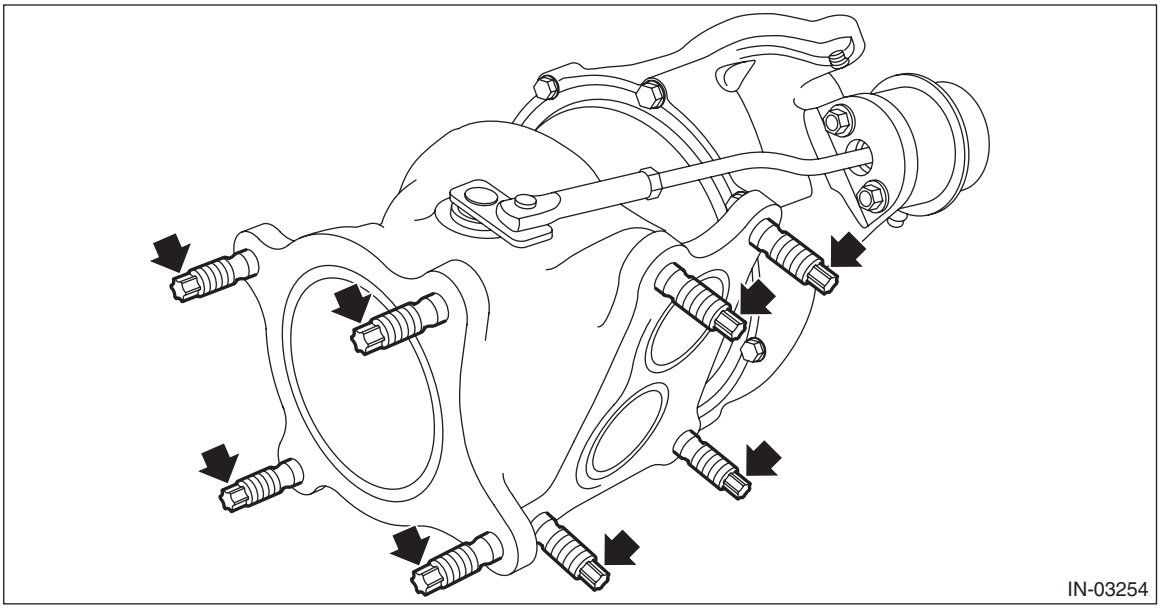

5) Remove the exhaust stay from the turbocharger.

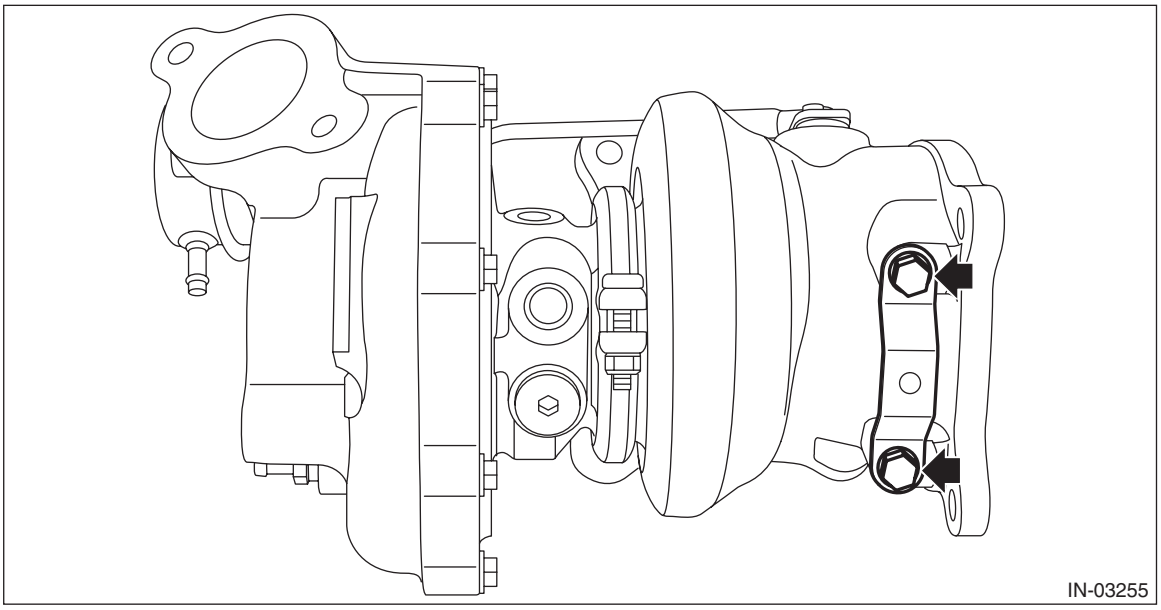

D: ASSEMBLY

1) Install the exhaust stay to the turbocharger.

Tightening torque:
7.15 N·m (0.7 kgf-m, 5.3 ft-lb)

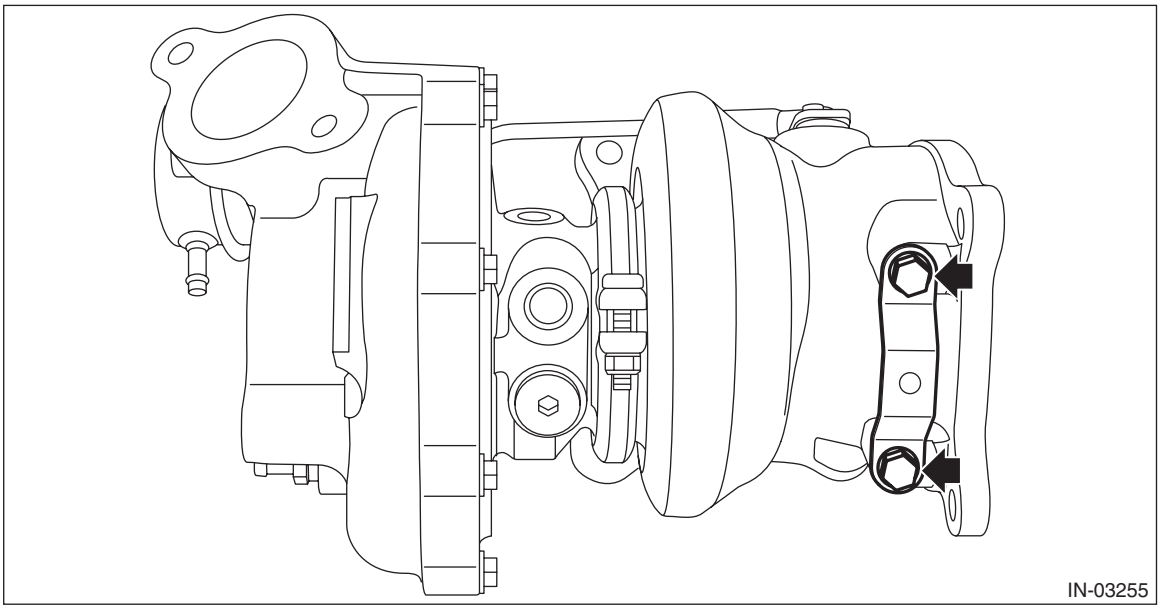

2) Attach the stud bolts to the turbocharger.

Tightening torque:
14.7 N·m (1.5 kgf-m, 10.8 ft-lb)

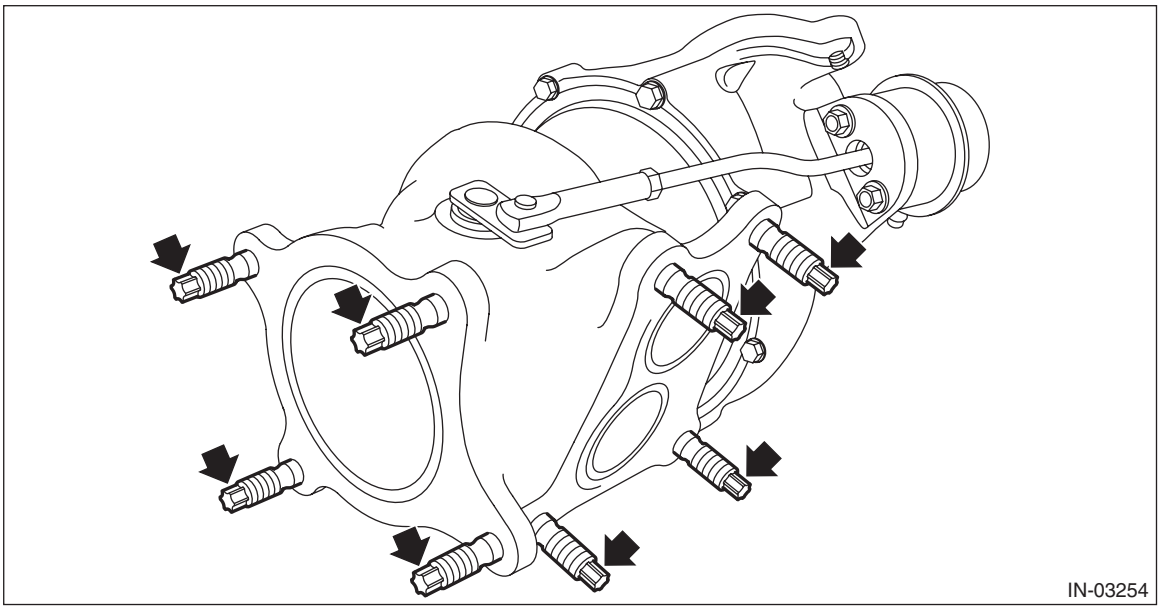

3) Install the air control hose to the turbocharger.

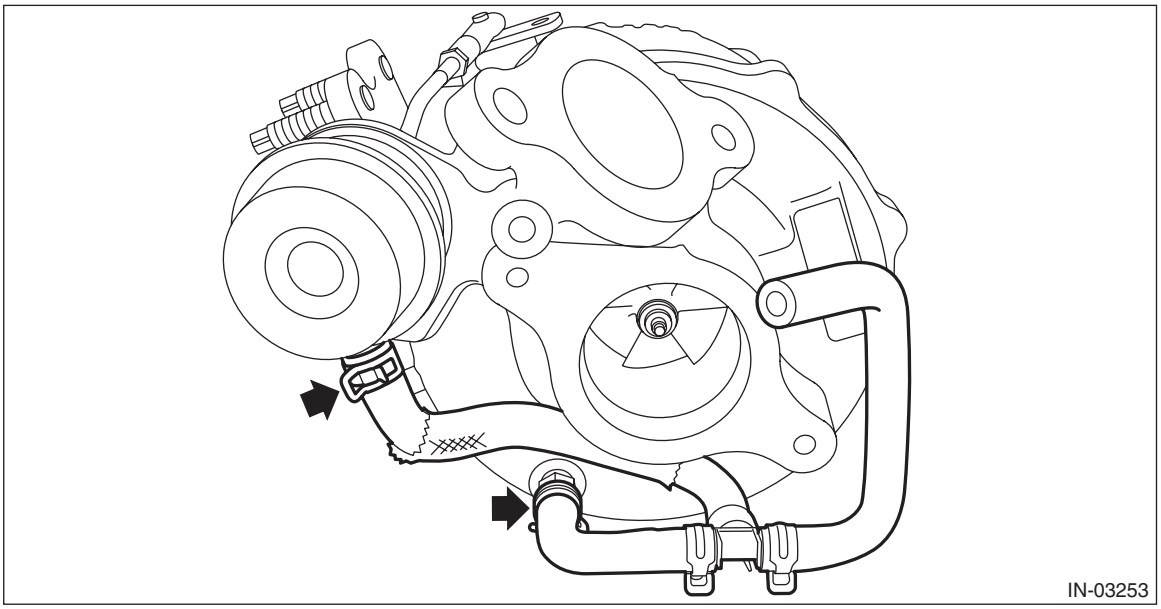

4) Install the turbocharger pipe to the turbocharger.

NOTE:
Use a new gasket.

Tightening torque:
31.5 N·m (3.2 kgf-m, 23.2 ft-lb)

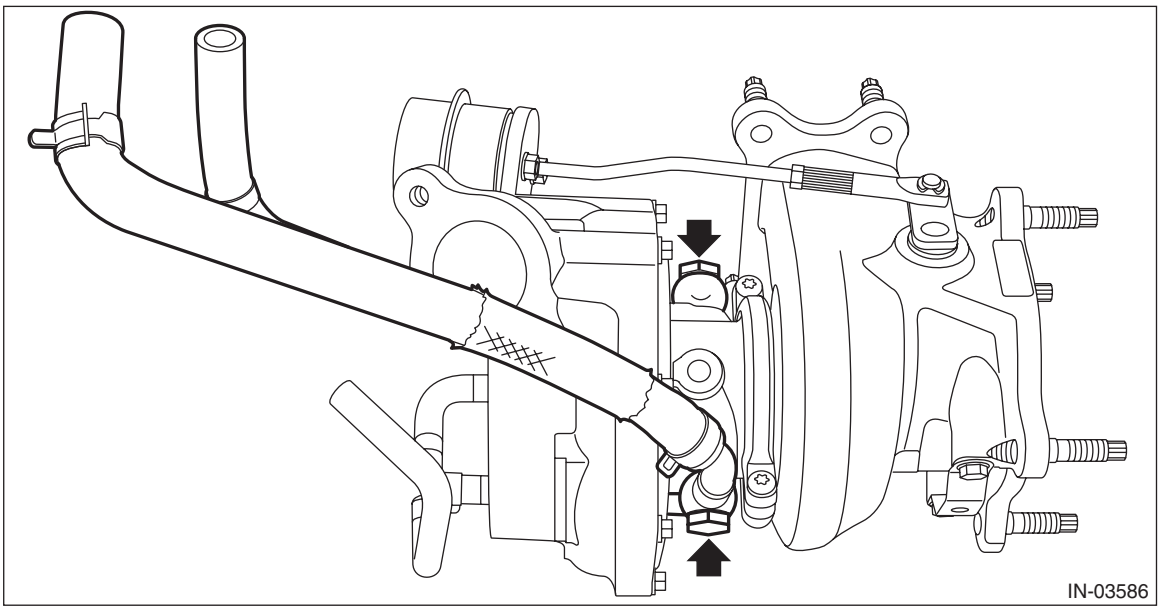

5) Install the union screw pipe assembly to the turbocharger.

NOTE:
Use a new gasket.

Tightening torque:
T1: 6.8 N·m (0.7 kgf-m, 5.1 ft-lb)
T2: 16 N·m (1.6 kgf-m, 11.8 ft-lb)

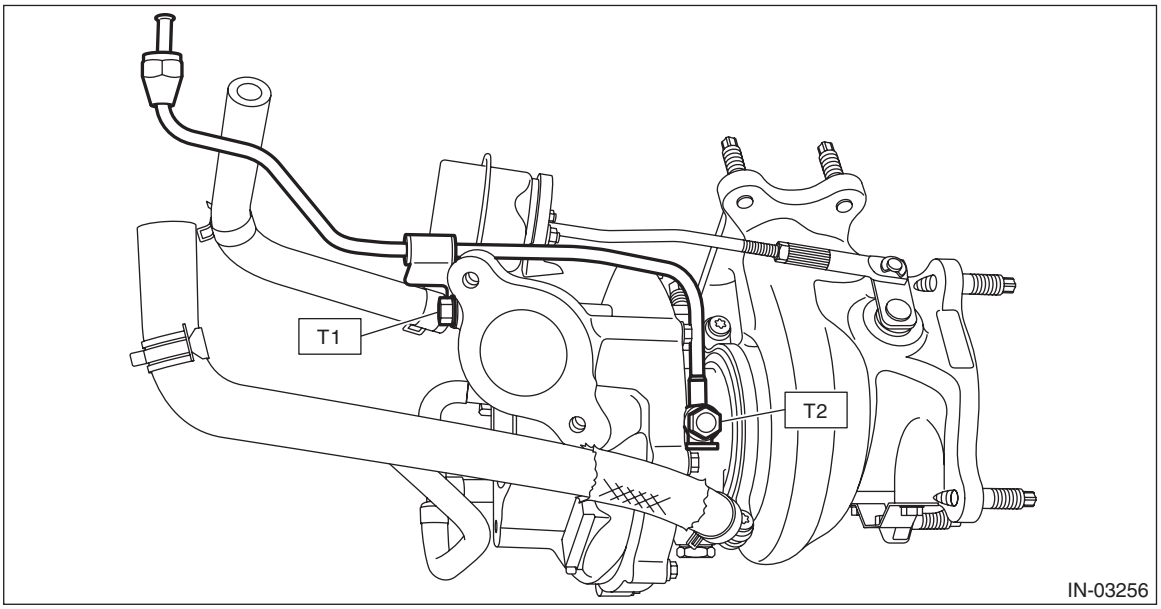

E: INSPECTION

1. WASTE GATE ACTUATOR

1) Remove the front exhaust pipe. <Ref. to EX(w/o STI)-9, REMOVAL, Front Exhaust Pipe.>
2) Remove the exhaust cover.

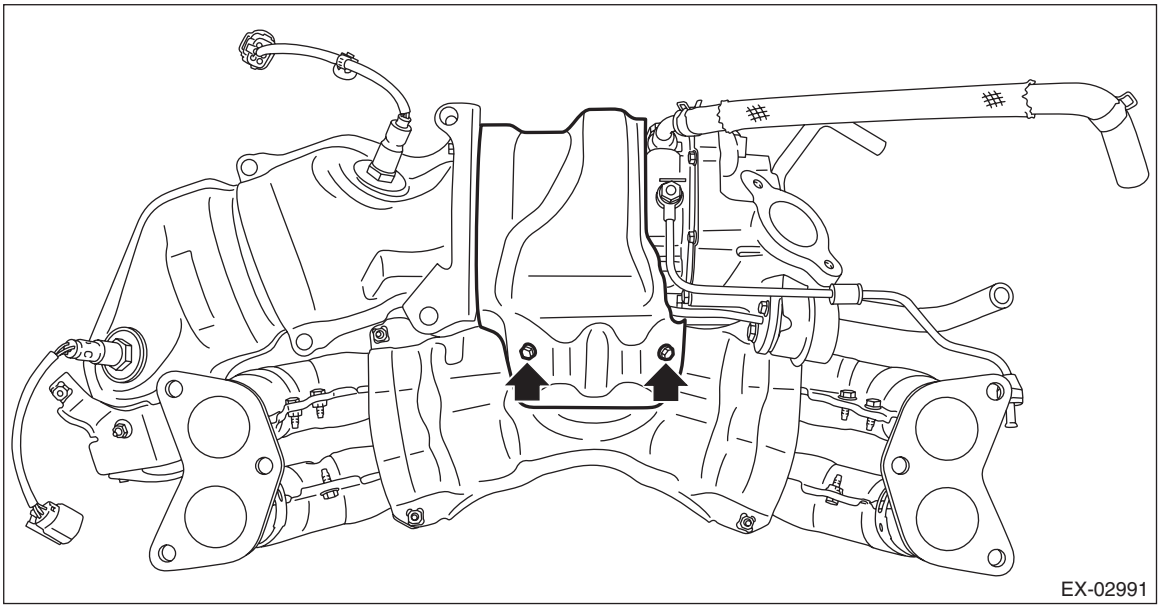

3) Remove the vacuum control hose (B) from the waste gate actuator (A) of the turbocharger, and connect the Mighty Vac to the waste gate actuator (A).

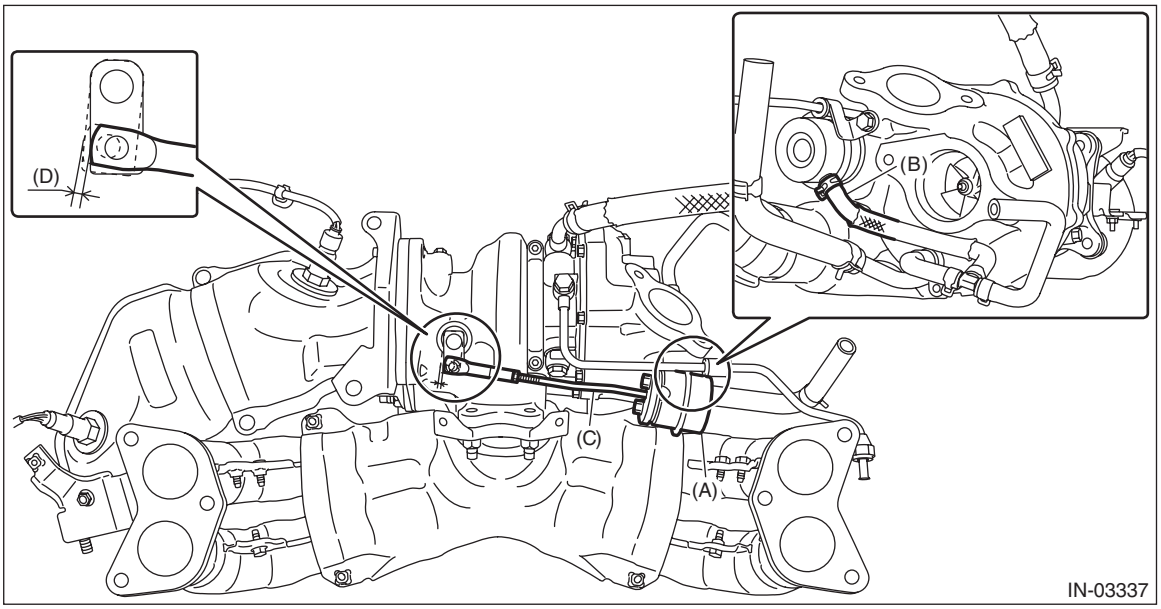

(A) Waste gate actuator
(B) Vacuum control hose
(C) Control rod
(D) Control rod stroke

4) Pressurize slowly with the Mighty Vac, and check the pressure when the control rod stroke (D) becomes 1±0.15 mm (0.0394±0.0059 in). If it is not within the standard, replace the turbocharger assembly.

CAUTION:
Do not pressurize over 112.7 kPa (1.15 kg/cm^2, 16.34 psi) to prevent damaging the waste gate actuator.

Operating pressure (control rod stroke 1±0.15 mm (0.0394±0.0059 in)):
Standard
84.0 — 88.0 kPa (0.86 — 0.90 kg/cm^2, 12.18 — 12.76 psi)

5) After inspection, install the related parts in the reverse order of removal.

Tightening torque:
7.5 N·m (0.8 kgf-m, 5.5 ft-lb)

2. OTHER INSPECTIONS

1) Check that the turbocharger and pipe have no deformation, cracks or other damages.
2) Check that the hose has no cracks, damage or loose part.
3) Check that there are no oil leakage or water leakage from the pipe attachment section.

10.Oil Catch Tank

A: REMOVAL

1) Disconnect the ground terminal from battery sensor. <Ref. to NT-6, BATTERY, NOTE, Note.>
2) Remove the air intake duct. <Ref. to IN(w/o STI)-26, REMOVAL, Air Intake Duct.>
3) Unlock the blow-by diagnosis connector, and disconnect the PCV hose assembly No. 2 from the PCV hose assembly No. 1.

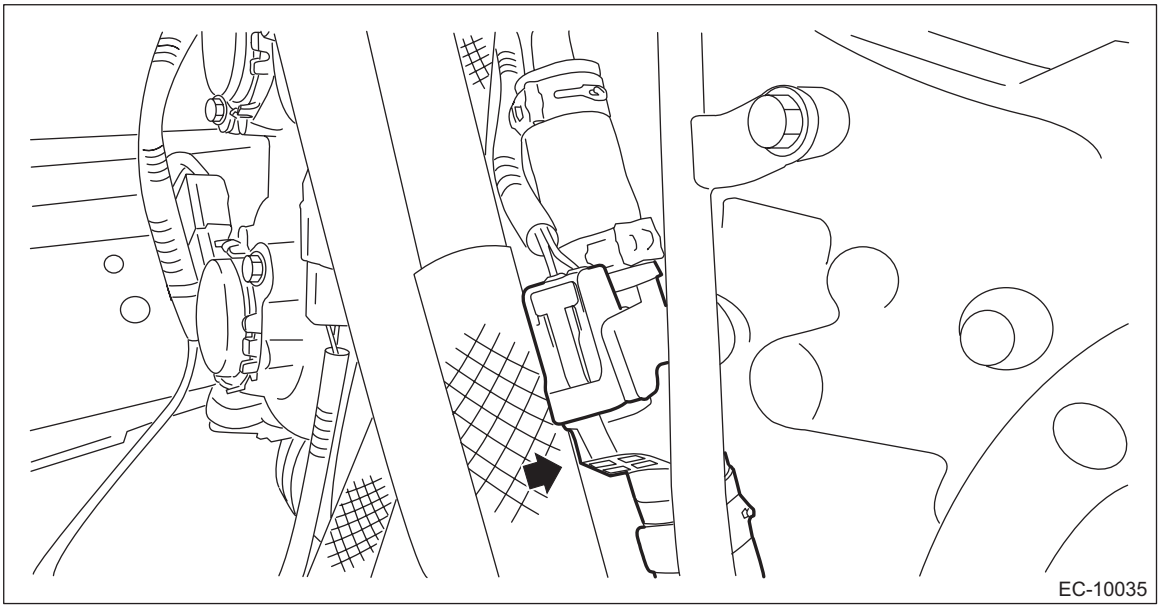

4) Lift up the vehicle.
5) Remove the under cover. <Ref. to EI-22, REMOVAL, Front Under Cover.>
6) Disconnect the turbocharger hose from the oil pipe, and drain the engine oil in the oil catch tank.

NOTE:
Prepare the container for draining of engine oil.

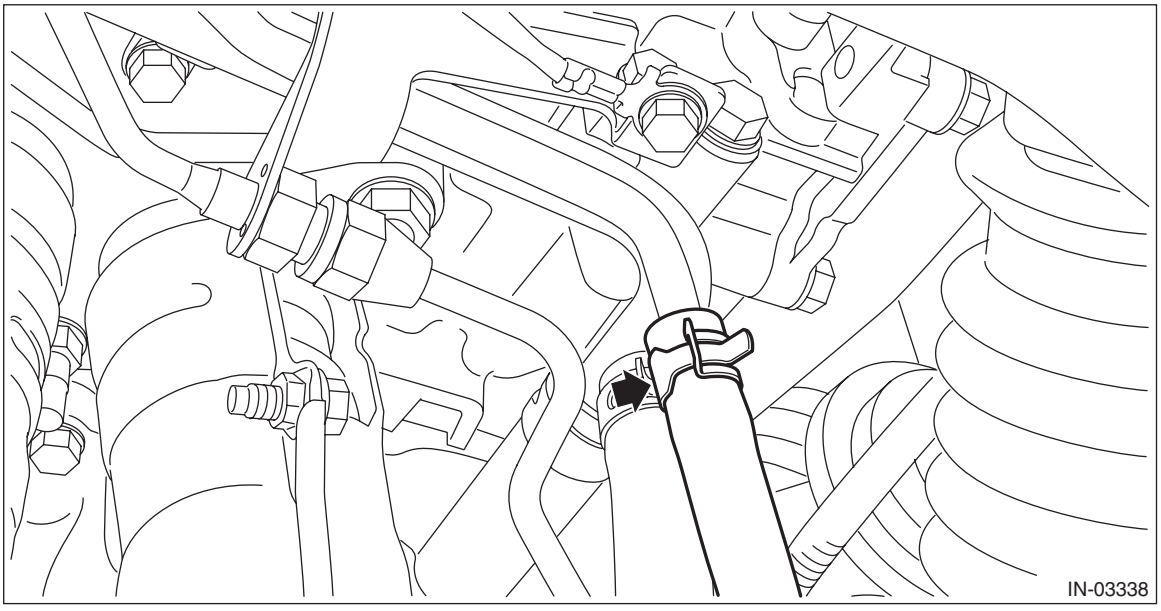

7) Remove bolts which secure the oil catch tank to the turbocharger and exhaust stay, and remove the oil catch tank.

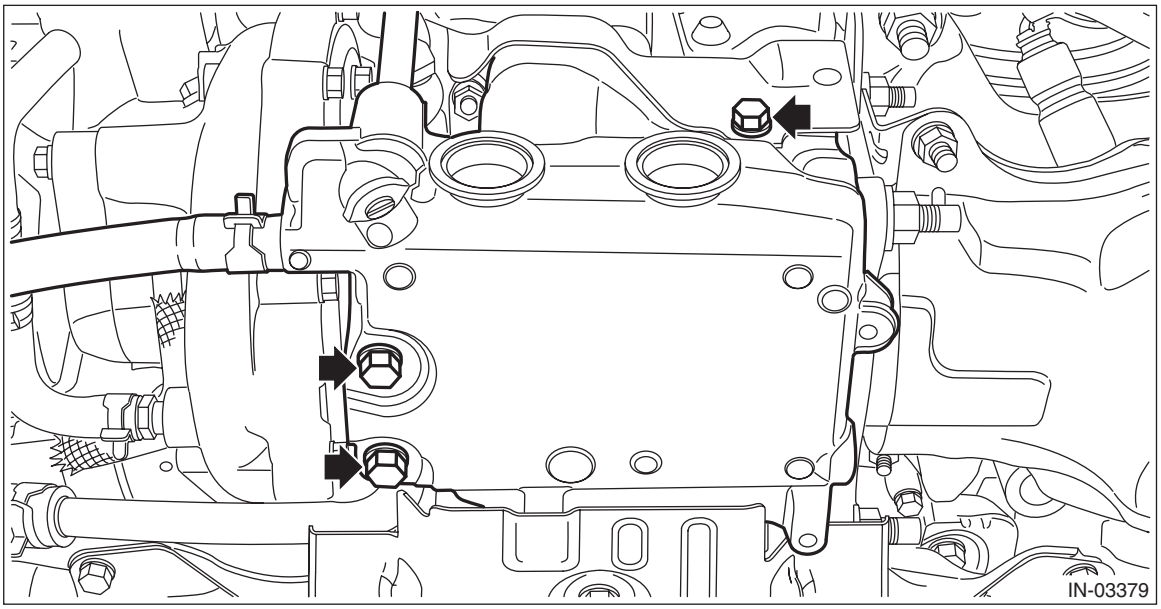

B: INSTALLATION

1) Install the oil catch tank to the turbocharger and exhaust stay.
   (1) Set the oil catch tank to the turbocharger, and temporarily tighten the bolts which secure the oil catch tank to the turbocharger and exhaust stay.

NOTE:
Use a new gasket.

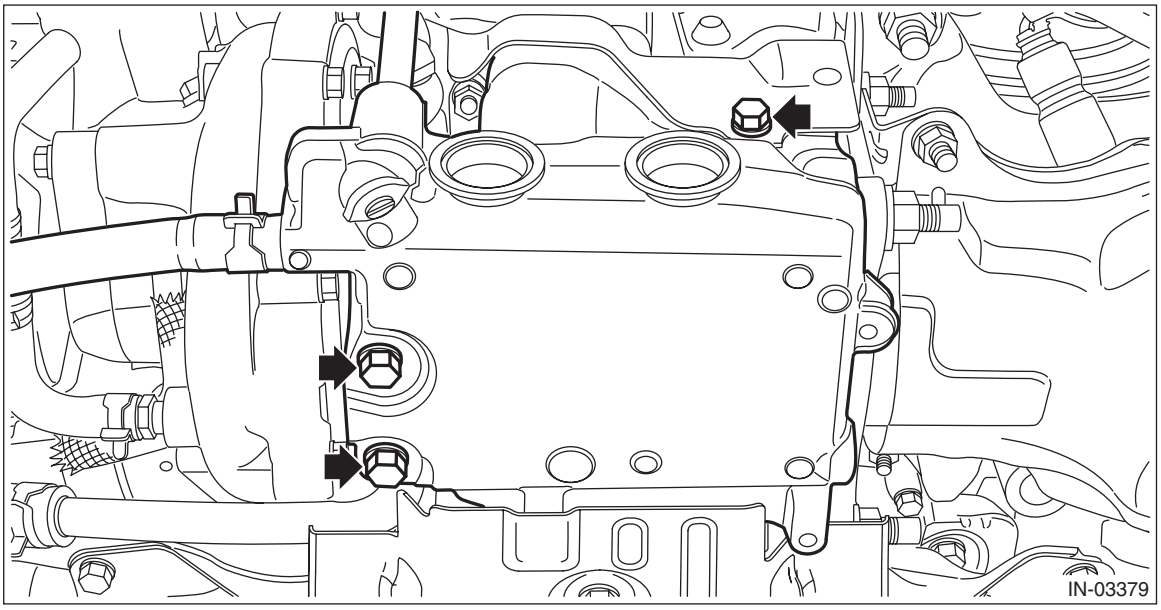

(2) Tighten the bolts which secure the oil catch tank to the turbocharger and exhaust stay in numerical order as shown in the figure.

Tightening torque:
T1: 7.5 N·m (0.8 kgf-m, 5.5 ft-lb)
T2: 10.5 N·m (1.1 kgf-m, 7.7 ft-lb)

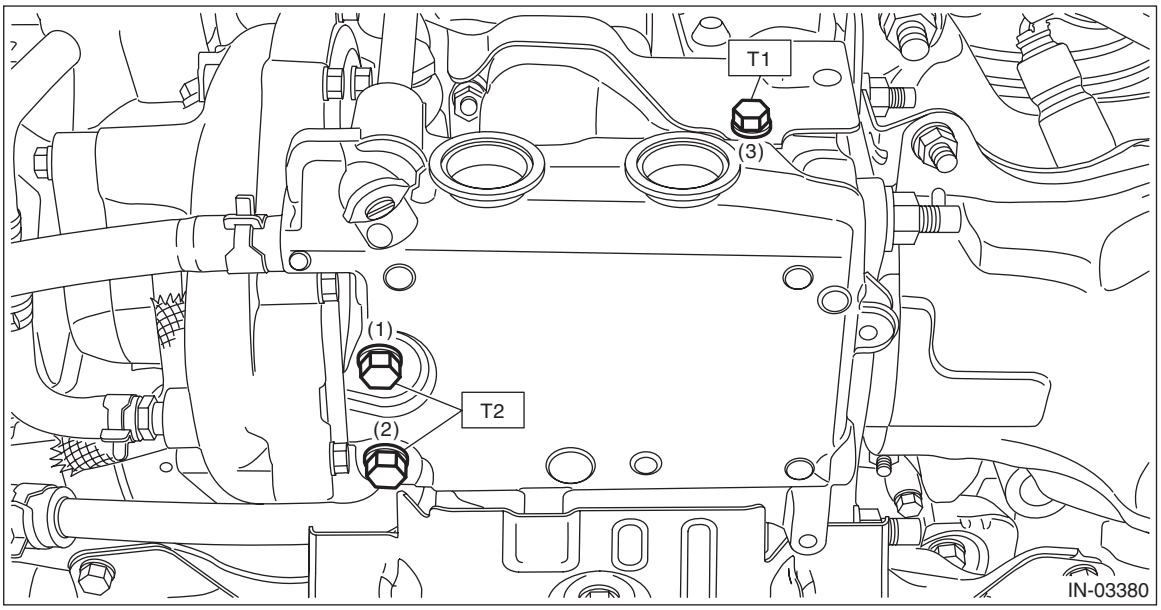

2) Connect the turbocharger hose to the oil pipe.

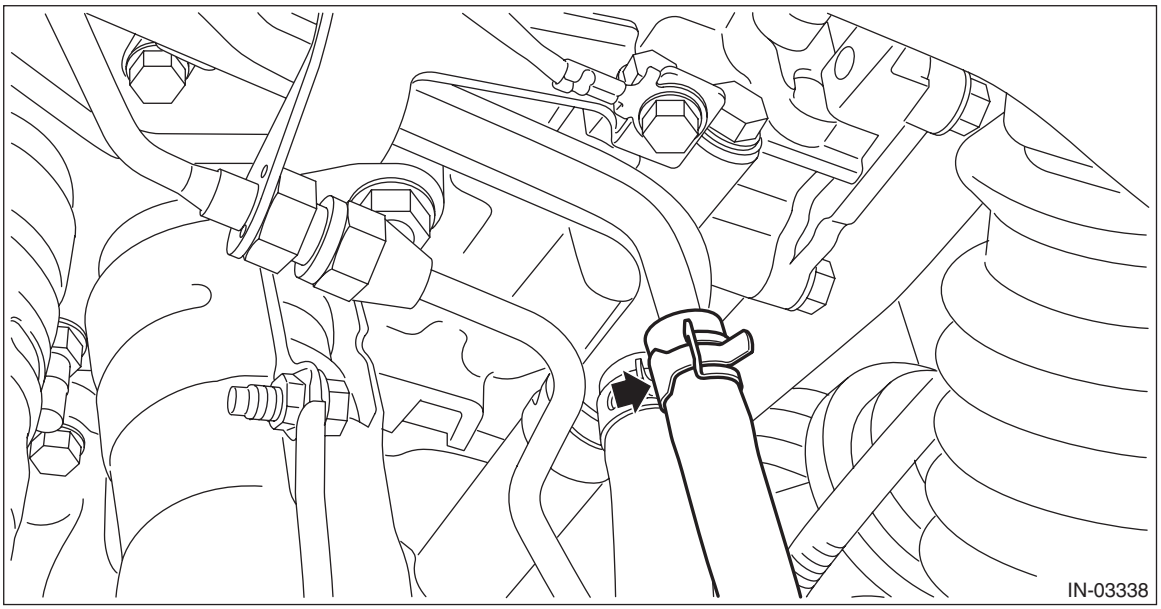

3) Install the under cover. <Ref. to EI-23, INSTALLATION, Front Under Cover.>
4) Lower the vehicle.
5) Connect the PCV hose assembly No. 2 to the PCV hose assembly No. 1.

NOTE:
- There are multiple blow-by diagnosis connectors. Be careful not to connect incorrectly.

- Make sure that the blow-by diagnosis connector is connected securely.

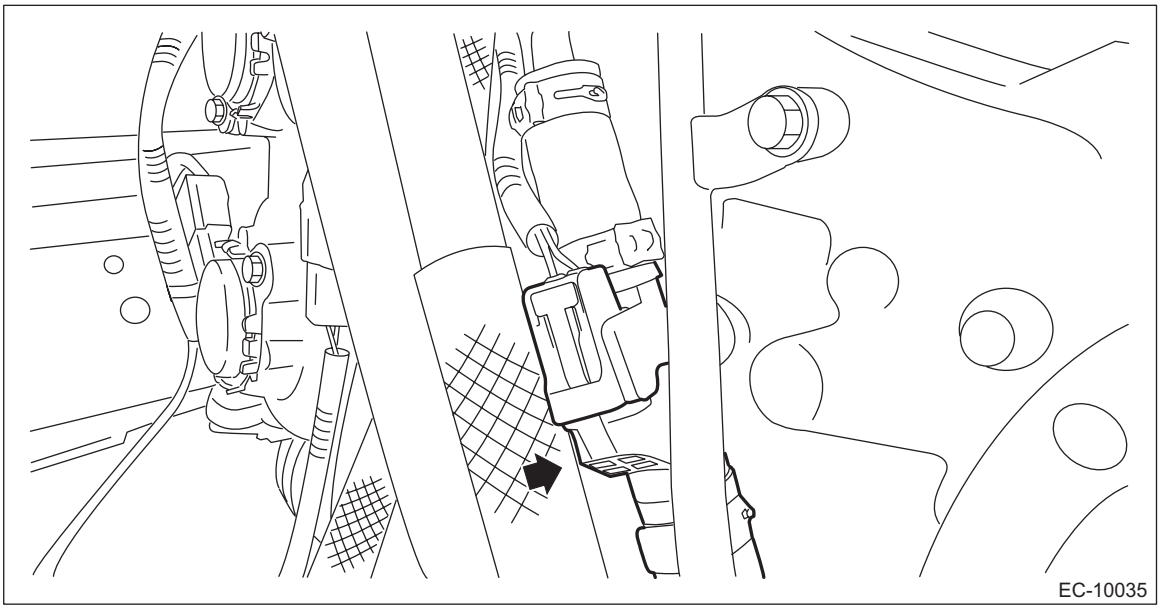

6) Install the air intake duct. <Ref. to IN(w/o STI)-26, INSTALLATION, Air Intake Duct.>
7) Check the engine oil level and replenish the engine oil if necessary. <Ref. to LU(w/o STI)-10, INSPECTION, Engine Oil.>
8) Connect the ground terminal to battery sensor. <Ref. to NT-6, BATTERY, NOTE, Note.>

C: DISASSEMBLY

1) Remove the PCV hose assembly No. 2. <Ref. to EC(w/o STI)-79, PCV HOSE ASSY NO. 2, REPLACEMENT, PCV Hose Assembly.>
2) Disconnect the turbo charger hose (A) from the oil catch tank, and remove the exhaust cover from the oil catch tank.

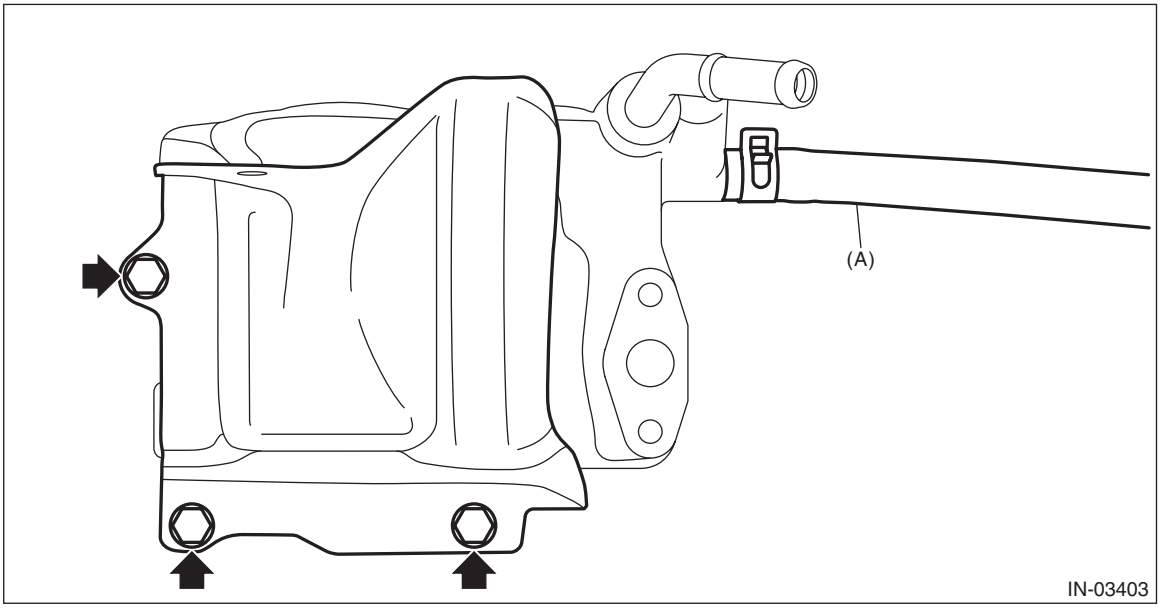

D: ASSEMBLY

Assemble in the reverse order of disassembly.

Tightening torque:
7.15 N·m (0.7 kgf-m, 5.3 ft-lb)

E: INSPECTION

1) Check that the oil catch tank does not have deformation, cracks or damage.
2) Check that the PCV hose and turbocharger hose have no cracks, damage or loose part.

11.Scavenge Pump

A: REMOVAL

Refer to “Scavenge Pump” for removal procedure of scavenge pump. <Ref. to LU(w/o STI)-39, REMOVAL, Scavenge Pump.>

B: INSTALLATION

Refer to “Scavenge Pump” for installation procedure of scavenge pump. <Ref. to LU(w/o STI)-40, INSTALLATION, Scavenge Pump.>

C: INSPECTION

Refer to “Scavenge Pump” for inspection procedure of scavenge pump. <Ref. to LU(w/o STI)-40, INSPECTION, Scavenge Pump.>

12.Air By-pass Valve

A: REMOVAL

1) Remove the intake duct No. 1. <Ref. to IN(w/o STI)-27, INTAKE DUCT NO. 1, REMOVAL, Intake Duct.>
2) Disconnect the vacuum hose from the air by-pass valve, and remove the air by-pass valve from the intake duct No. 2.

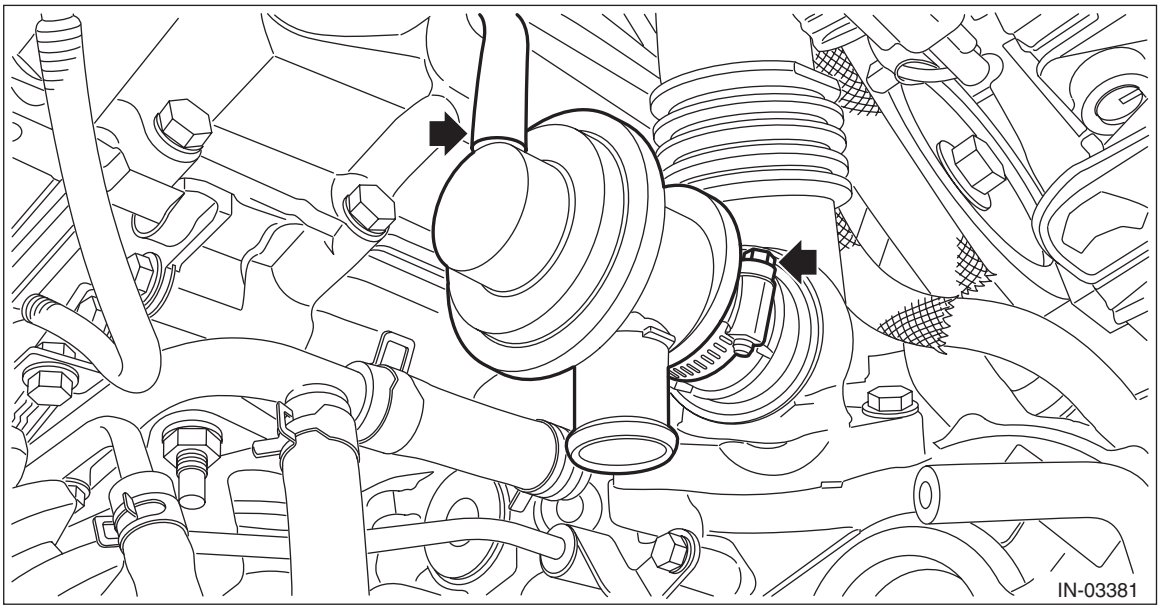

B: INSTALLATION

Install in the reverse order of removal.

Tightening torque:
3 N·m (0.3 kgf-m, 2.2 ft-lb)

C: INSPECTION

1. AIR BY-PASS VALVE

1) Check that the air by-pass valve has no deformation, cracks or other damages.
2) Connect the Mighty Vac to the nipple (A) of the air by-pass valve.

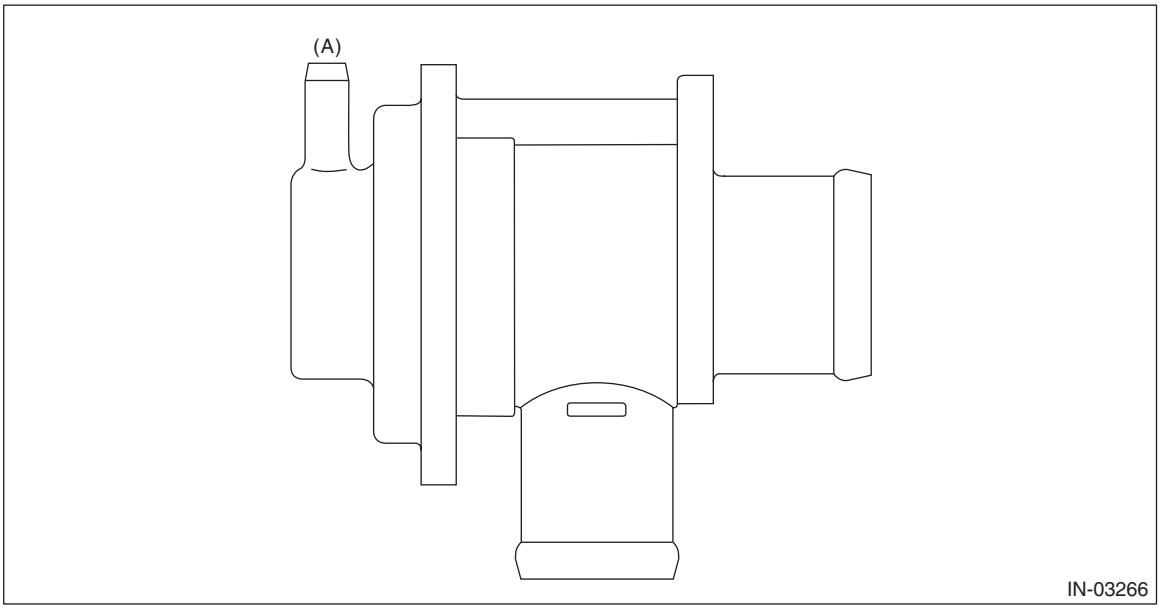

3) Using the Mighty Vac, generate the vacuum pressure to –93.3 kPa (–0.95 kg/cm^2, –13.5 psi). Check that the Mighty Vac gauge needle indication holds 10 seconds without dropping down to lower than –92.6 kPa (–0.94 kg/cm^2, –13.4 psi).
4) Set a dial gauge to the end of valve rod of the air by-pass valve.

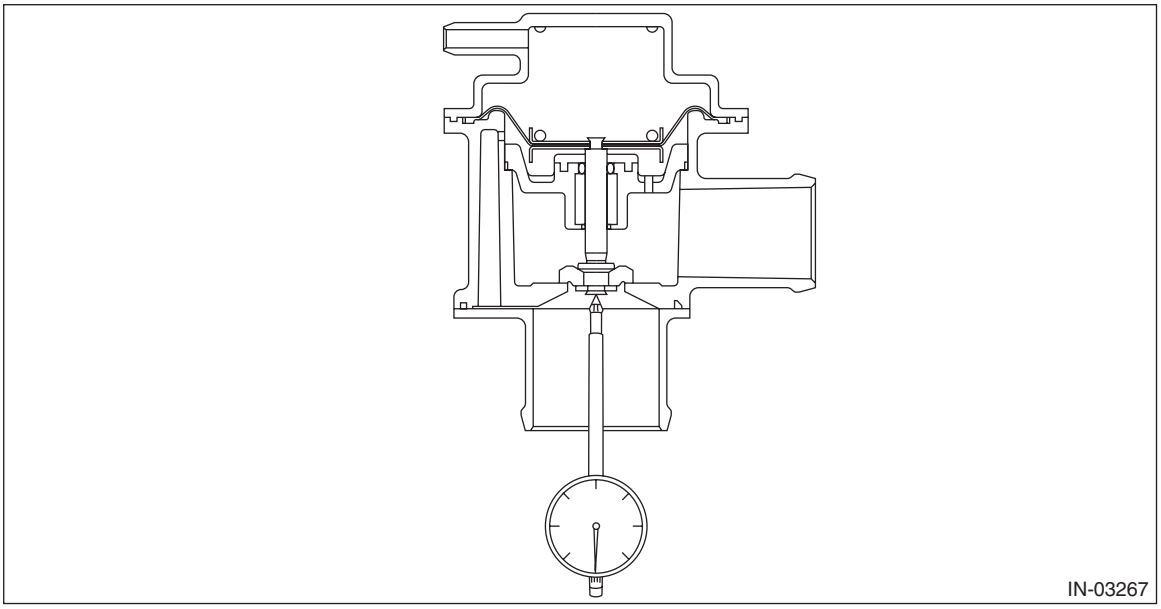

5) Using the Mighty Vac, generate the vacuum pressure, and check the pressure when dial gauge needle (valve stroke) shows 0.5 mm (0.02 in). If it is not within the standard, replace the air by-pass valve.

Opening pressure (valve stroke 0.5 mm (0.02 in)):
Standard
–13.3 — –21.3 kPa (–0.14 — –0.22 kg/cm^2, –1.93 — –3.09 psi)

2. OTHER INSPECTIONS

Check that the vacuum hose and air by-pass pipe have no cracks, damage or loose part.

13.Resonator Chamber

A: REMOVAL

The resonator chamber and air cleaner case are integrated into one unit; therefore, refer to “Air Cleaner Case” for removal procedure. <Ref. to IN(w/o STI)-13, REMOVAL, Air Cleaner Case.>

B: INSTALLATION

The resonator chamber and air cleaner case are integrated into one unit; therefore, refer to “Air Cleaner Case” for installation procedure. <Ref. to IN(w/o STI)-16, INSTALLATION, Air Cleaner Case.>

C: INSPECTION

Check that the resonator chamber has no deformation, cracks or other damages.

MECHANICAL

ME(w/o STI)

		Page
1.	General Description	2
2.	Compression	23
3.	Idle Speed	26
4.	Ignition Timing	27
5.	Intake Manifold Vacuum	28
6.	Engine Oil Pressure	30
7.	Fuel Pressure	31
8.	Cam Clearance	36
9.	Engine Assembly	45
10.	Engine Mounting	73
11.	Preparation for Overhaul	74
12.	V-belt	75
13.	Crank Pulley	81
14.	Chain Cover	89
15.	Timing Chain Assembly	111
16.	Cam Sprocket	133
17.	Crank Sprocket	142
18.	Rocker Cover	144
19.	Camshaft	163
20.	Cam Carrier	164
21.	Cylinder Head	206
22.	Cylinder Block	247
23.	Intake and Exhaust Valve	325
24.	Piston	326
25.	Connecting Rod	327
26.	Crankshaft	328
27.	Engine Trouble in General	329
28.	Engine Noise	335

1. General Description

A: SPECIFICATION

Engine	Model				2.0 L
	Cylinder arrangement				Horizontally opposed, liquid cooled, 4-cylinder, 4-stroke gasoline engine
	Valve system mechanism				Chain driven, double overhead camshaft, 4-valve/cylinder
	Bore × Stroke	mm (in)			86.0 × 86.0 (3.39 × 3.39)
	Displacement	cm^3 (cu in)			1,998 (122)
	Compression ratio				10.6
	Compression pressure (at 200 — 300 r/min)	kPa (kg/cm^2, psi)		Standard	1,350 — 1,750 (14 — 18, 196 — 254)
	Number of piston rings				Compression ring: 2 Oil ring: 1
	Intake valve timing		Open	Max. retard	ATDC 26°
				Min. advance	BTDC 42°
			Close	Max. retard	ABDC 82°
				Min. advance	ABDC 14°
	Exhaust valve timing		Open	Max. retard	BBDC 11°
				Min. advance	BBDC 66°
			Close	Max. retard	ATDC 55°
				Min. advance	ATDC 0°
	Cam clearance mm (in)	Intake		Standard	$0.13^{+0.02}_{-0.03}$ ($0.0051^{+0.0008}_{-0.0012}$)
		Exhaust		Standard	0.22±0.02 (0.0087±0.0008)
	Idle speed (For CVT model, select lever in “P” or “N” range. For MT model, gear shift lever in neutral position.)	r/min	No load	Standard	700±100
			A/C ON	Standard	700 — 865±50
	Ignition order				1 → 3 → 2 → 4
	Ignition timing	BTDC/{r/min}		Standard	CVT model: 8°±10°/700
					MT model: 6°±10°/700

NOTE:
OS: Oversize US: Undersize

Camshaft	Bending				mm (in)	Limit	0.020 (0.0008)
	Cam lobe height mm (in)	Intake	Valve drive section			Standard	40.34 — 40.44 (1.588 — 1.592)
			Fuel pump drive section			Standard	41.95 — 42.05 (1.652 — 1.656)
		Exhaust				Standard	40.20 — 40.30 (1.583 — 1.587)
	Cam base circle diameter				mm (in)	Standard	34.0 (1.339)
	Journal outer diameter				mm (in)	Standard	25.946 — 25.963 (1.0215 — 1.0222)
	Thrust clearance				mm (in)	Standard	0.068 — 0.116 (0.0027 — 0.0047)
	Oil clearance				mm (in)	Standard	0.037 — 0.072 (0.0015 — 0.0028)
Cylinder head	Warpage (mating surface with cylinder block)				mm (in)	Limit	0.020 (0.0008)
	Grinding limit					mm (in)	To 98.4 (3.874)
	Height				mm (in)	Standard	98.5 (3.878)
Valve & valve guide	Valve overall length				mm (in)	Intake	104.95 (4.132)
						Exhaust	97.9 (3.854)
	Valve head edge thickness				mm (in)	Intake	Standard	0.8 — 1.2 (0.031 — 0.047)
						Exhaust	Standard	1.0 — 1.4 (0.039 — 0.055)
	Valve stem outer diameter				mm (in)	Intake	Standard	5.455 — 5.470 (0.2148 — 0.2154)
						Exhaust	Standard	5.445 — 5.460 (0.2144 — 0.2150)
	Valve guide inner diameter				mm (in)	Standard	5.500 — 5.512 (0.2165 — 0.2170)
	Clearance between valve and valve guide				mm (in)	Intake	Standard	0.030 — 0.057 (0.0012 — 0.0022)
						Exhaust	Standard	0.040 — 0.067 (0.0016 — 0.0026)
	Valve guide protrusion amount				mm (in)	Standard	11.4 — 11.8 (0.449 — 0.465)
Valve & valve shim	Valve stem end outer diameter				mm (in)	Intake	Standard	5.455 — 5.470 (0.2148 — 0.2154)
						Exhaust	Standard	5.445 — 5.460 (0.2144 — 0.2150)
	Valve shim inner diameter				mm (in)	Standard	5.500 — 5.560 (0.2165 — 0.2189)
	Clearance between valve and valve shim				mm (in)	Intake	Standard	0.030 — 0.105 (0.0012 — 0.0041)
						Exhaust	Standard	0.040 — 0.115 (0.0016 — 0.0045)
Valve seat	Seating width between valve and valve seat				mm (in)	Intake	Standard	0.8 — 1.6 (0.031 — 0.063)
						Exhaust	Standard	1.1 — 1.7 (0.043 — 0.067)
	Seating angle between valve and valve seat							45°
	Seating position between valve and valve seat							Valve face center
Valve spring	Free length				mm (in)	Standard	CVT model: 41.68 (1.641)
							MT model: 41.06 (1.617)
	Tension/spring height				N (kgf, lb)/mm (in)	Set	Standard	182 — 210 (18.56 — 21.41, 40.92 — 47.22)/ 33.0 (1.299)
						Lift	Standard	CVT model: 502 — 554 (51.19 — 56.49, 112.87 — 124.56)/ 22.0 (0.866)
								MT model: 552 — 610 (56.29 — 62.20, 124.11 — 137.15)/ 22.0 (0.866)
	Squareness						Standard	2.5°, 1.8 mm (0.071 in) or less

Cylinder block & piston	Cylinder block warpage (Mating surface with cylinder head) mm (in)			Limit	0.025 (0.0010)
	Grinding limit of cylinder block mm (in)				To 204.9 (8.067)
	Height of cylinder block mm (in)			Standard	205.0 (8.071)
	Inner diameter of cylinder liner mm (in)	Cylinder bore size mark A		Standard	86.005 — 86.015 (3.3860 — 3.3864)
		Cylinder bore size mark B		Standard	85.995 — 86.005 (3.3856 — 3.3860)
	Cylindricality of cylinder liner mm (in)			Limit	0.030 (0.0012)
	Out-of-roundness of cylinder liner mm (in)			Limit	0.030 (0.0012)
	Piston grade point mm (in)				40.0 (1.57)
	Piston outer diameter mm (in)	Standard Size	Grade A	Standard	85.985 — 85.995 (3.3852 — 3.3856)
			Grade B	Standard	85.975 — 85.985 (3.3848 — 3.3852)
		0.25 (0.0098) OS		Standard	86.225 — 86.245 (3.3947 — 3.3955)
		0.50 (0.0197) OS		Standard	86.475 — 86.495 (3.4045 — 3.4053)
	Clearance between cylinder liner and piston mm (in)			Standard	0.010 — 0.030 (0.0004 — 0.0012)
	Inner diameter of cylinder liner boring limit (diameter) mm (in)				To 86.505 (3.4057)
Piston and piston pin	Degree of fit				Piston pin must be fitted into position with thumb at 20°C (68°F).
	Clearance between piston and piston pin mm (in)			Standard	0.004 — 0.008 (0.0002 — 0.0003)
Piston ring	Closed gap mm (in)	Compression ring	Top ring	Standard	0.20 — 0.25 (0.0079 — 0.0098)
			Second ring	Standard	0.40 — 0.50 (0.0157 — 0.0197)
		Oil ring (Upper rail and lower rail)		Standard	0.10 — 0.35 (0.0039 — 0.0138)
	Clearance between compression ring and piston mm (in)		Top ring	Standard	0.040 — 0.080 (0.0016 — 0.0031)
			Second ring	Standard	0.045 — 0.085 (0.0018 — 0.0033)
Connecting rod and connecting rod bearing	Bend or twist per 100 mm (3.94 in) in length mm (in)			Limit	0.10 (0.0039)
	Thrust clearance mm (in)			Standard	0.070 — 0.330 (0.0028 — 0.0130)
	Connecting rod bearing thickness (at center) mm (in)	Standard size		Standard	1.492 — 1.508 (0.0587 — 0.0594)
		0.03 (0.0012) US		Standard	1.511 — 1.515 (0.0595 — 0.0596)
		0.05 (0.0020) US		Standard	1.521 — 1.525 (0.0599 — 0.0600)
		0.25 (0.0098) US		Standard	1.621 — 1.625 (0.0638 — 0.0640)
	Oil clearance mm (in)			Standard	0.025 — 0.055 (0.0010 — 0.0022)
Piston pin & connecting rod bushing	Clearance between piston pin and connecting rod bushing mm (in)			Standard	0.004 — 0.026 (0.0002 — 0.0010)

Crankshaft and crankshaft bearing	Bending		mm (in)	Limit	0.035 (0.0014)
	Crankshaft pin	Cylindricality	mm (in)	Limit	0.006 (0.0002)
		Out-of-roundness	mm (in)	Limit	0.005 (0.0002)
		Grinding limit (dia.)	mm (in)		To 49.726 (1.9577)
	Crankshaft journal	Cylindricality	mm (in)	Limit	0.006 (0.0002)
		Out-of-roundness	mm (in)	Limit	0.005 (0.0002)
		Grinding limit (dia.)	mm (in)		To 67.735 (2.6667)
	Crankshaft pin outer diameter	mm (in)	Standard size	Standard	49.976 — 50.000 (1.9676 — 1.9685)
			0.03 (0.0012) US	Standard	49.946 — 49.970 (1.9664 — 1.9673)
			0.05 (0.0020) US	Standard	49.926 — 49.950 (1.9656 — 1.9665)
			0.25 (0.0098) US	Standard	49.726 — 49.750 (1.9577 — 1.9587)
	Crankshaft journal outer diameter	mm (in)	Standard size	Standard	67.985 — 68.003 (2.6766 — 2.6773)
			0.03 (0.0012) US	Standard	67.955 — 67.979 (2.6754 — 2.6763)
			0.05 (0.0020) US	Standard	67.935 — 67.959 (2.6746 — 2.6755)
			0.25 (0.0098) US	Standard	67.735 — 67.759 (2.6667 — 2.6677)
	Crankshaft bearing thickness (at center)	mm (in)	#1, #2, #3, #4	Standard size	Standard	2.498 — 2.513 (0.0983 — 0.0989)
				0.03 (0.0012) US	Standard	2.519 — 2.522 (0.0992 — 0.0993)
				0.05 (0.0020) US	Standard	2.529 — 2.532 (0.0996 — 0.0997)
				0.25 (0.0098) US	Standard	2.629 — 2.632 (0.1035 — 0.1036)
			#5	Standard size	Standard	2.496 — 2.511 (0.0983 — 0.0989)
				0.03 (0.0012) US	Standard	2.517 — 2.520 (0.0991 — 0.0992)
				0.05 (0.0020) US	Standard	2.527 — 2.530 (0.0995 — 0.0996)
				0.25 (0.0098) US	Standard	2.627 — 2.630 (0.1034 — 0.1035)
	Thrust clearance		mm (in)	Standard	0.130 — 0.308 (0.0051 — 0.0121)
	Oil clearance		mm (in)	Standard	0.013 — 0.031 (0.0005 — 0.0012)

B: COMPONENT

1. CRANK PULLEY

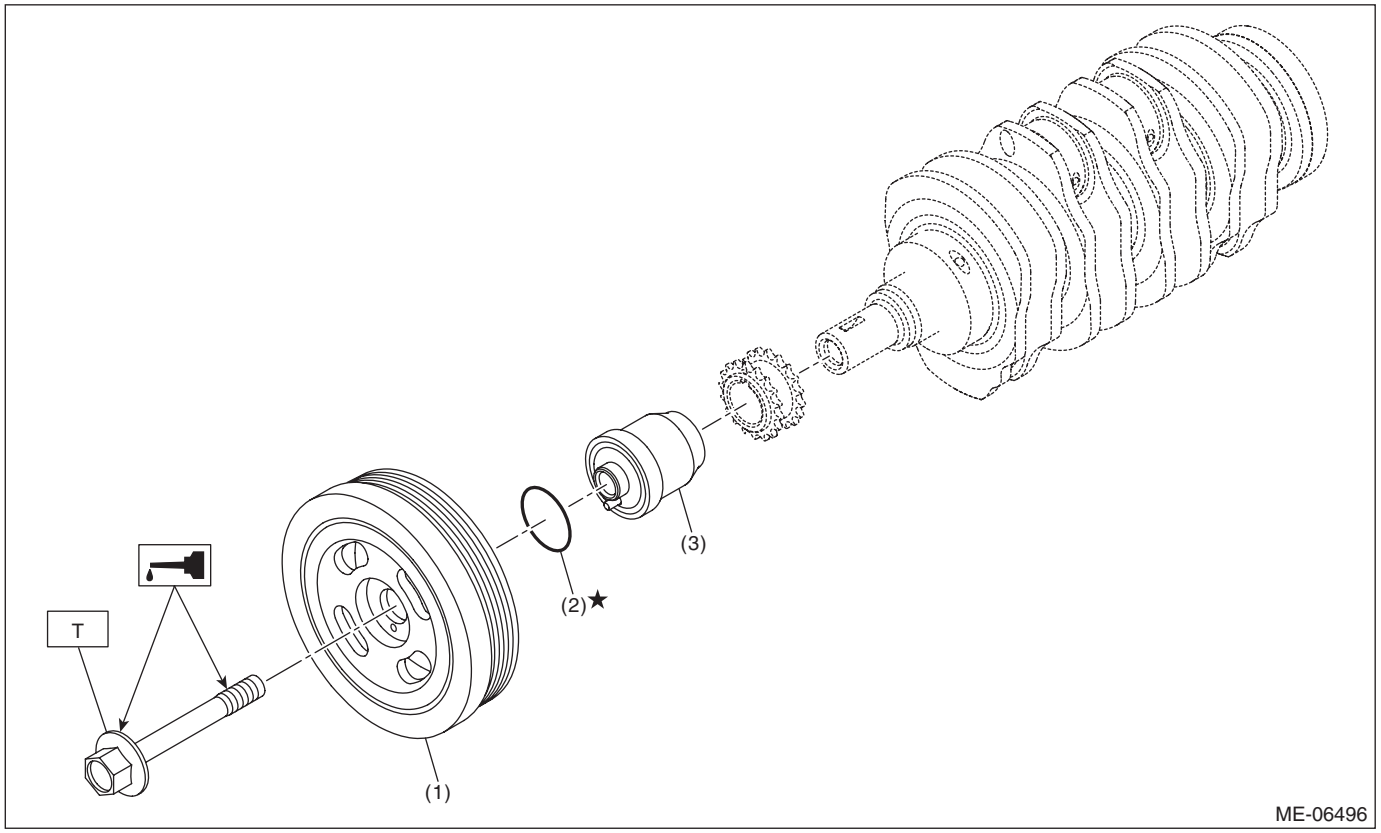

(1) Crank pulley
(2) O-ring
(3) Crank pulley boss

Tightening torque: N·m (kgf-m, ft-lb)
T: <Ref. to ME(w/o STI)-83, INSTALLATION, Crank Pulley.>

2. TIMING CHAIN & CAMSHAFT

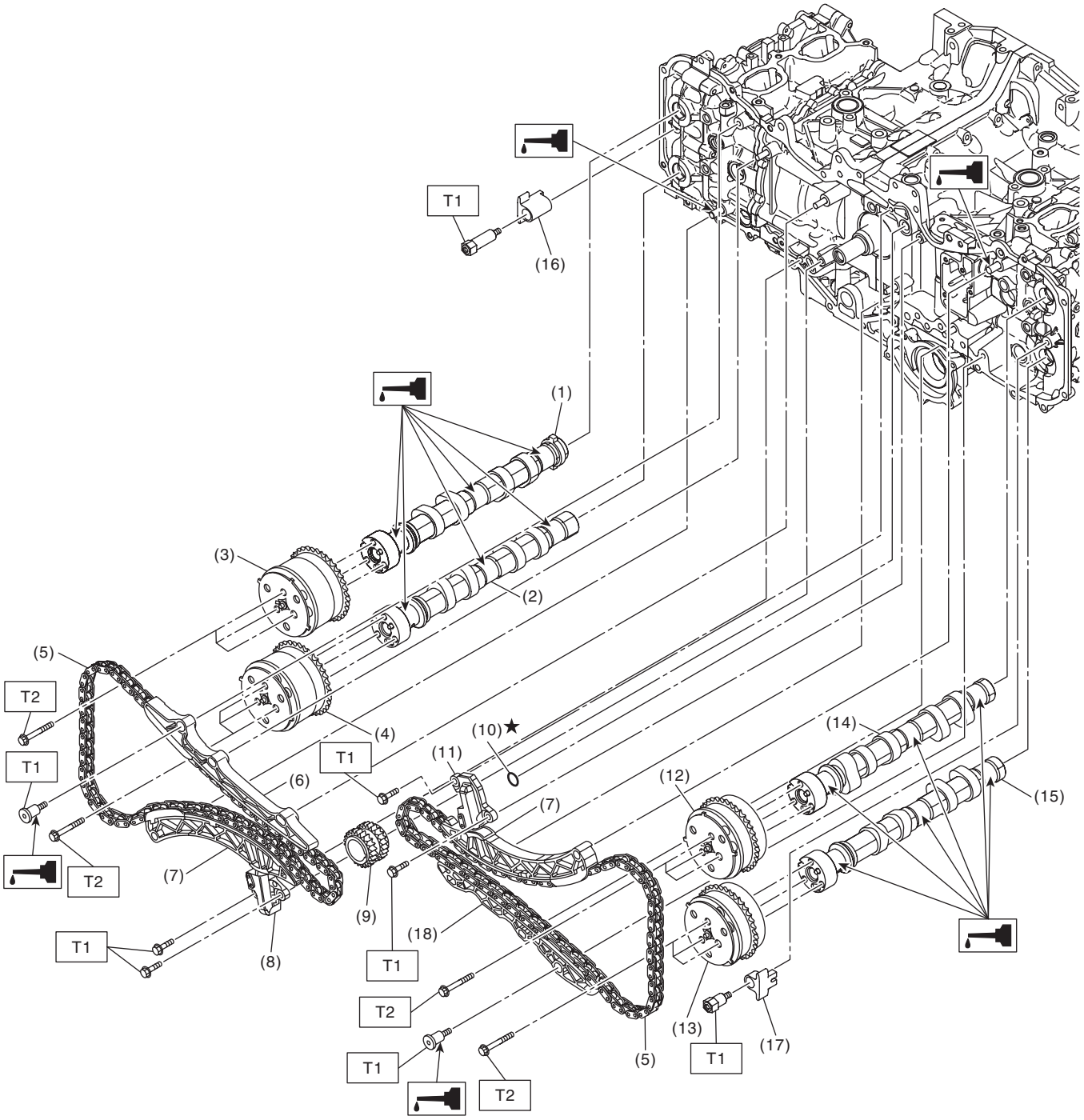

ME-07893

(1) Intake camshaft RH
(2) Exhaust camshaft RH
(3) Intake cam sprocket RH
(4) Exhaust cam sprocket RH
(5) Timing chain
(6) Chain guide A
(7) Chain tension lever
(8) Chain tensioner RH
(9) Crank sprocket
(10) O-ring
(11) Chain tensioner LH
(12) Intake cam sprocket LH
(13) Exhaust cam sprocket LH
(14) Intake camshaft LH
(15) Exhaust camshaft LH
(16) Chain guide B
(17) Chain guide C
(18) Chain guide D

Tightening torque: N·m (kgf-m, ft-lb)
T1: 6.4 (0.7, 4.7)
T2: 18 (1.8, 13.3)

3. CHAIN COVER

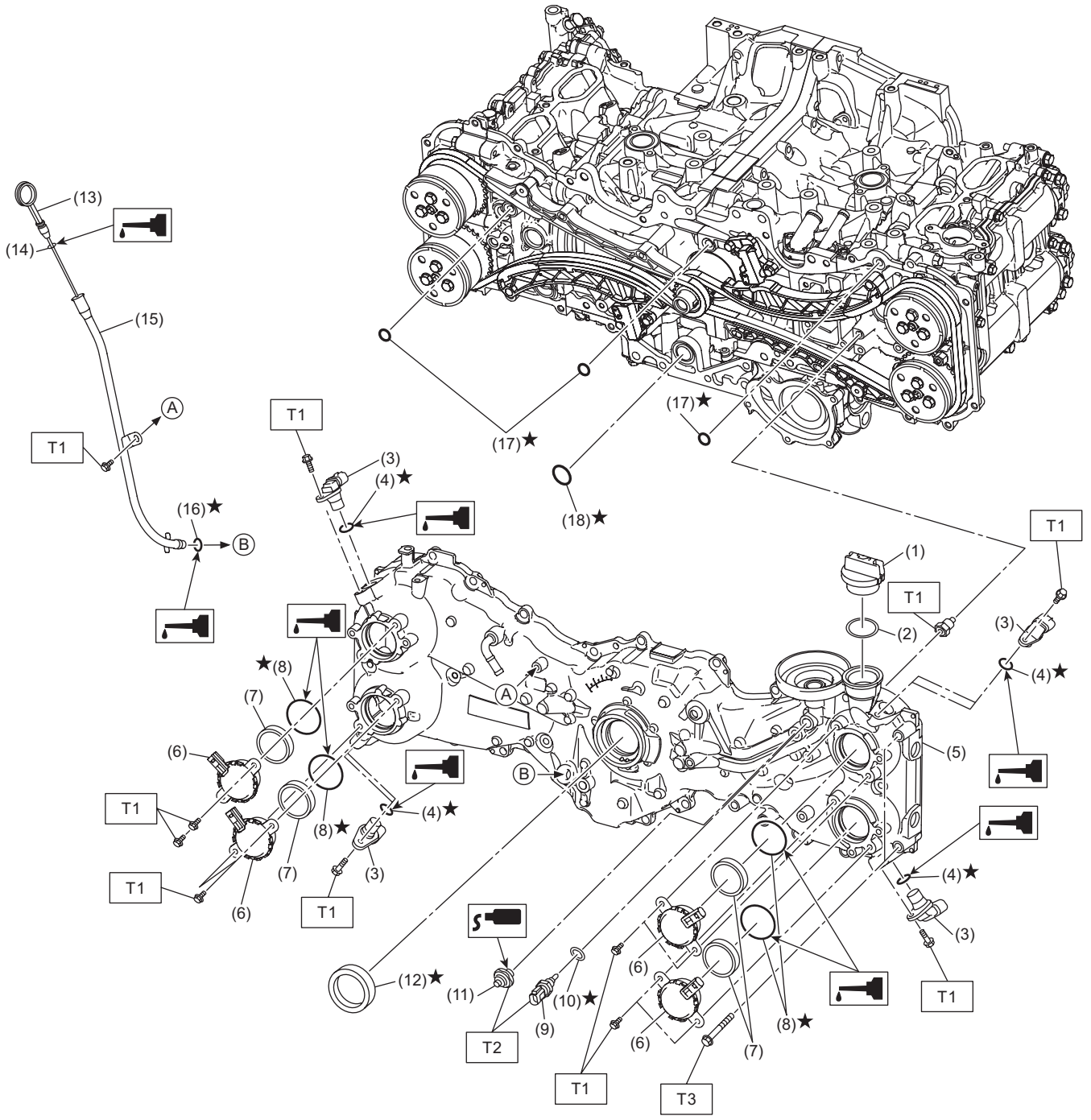

(1) Oil filler cap
(2) Gasket
(3) Camshaft position sensor
(4) O-ring
(5) Chain cover
(6) Oil control solenoid
(7) Back-up ring
(8) O-ring
(9) Engine oil temperature sensor
(10) Gasket
(11) Oil pressure switch
(12) Front oil seal
(13) Oil level gauge
(14) O-ring
(15) Oil level gauge guide
(16) O-ring
(17) O-ring
(18) O-ring

Tightening torque: N·m (kgf-m, ft-lb)
T1: 6.4 (0.7, 4.7)
T2: 18 (1.8, 13.3)
T3: <Ref. to ME(w/o STI)-97, INSTALLATION, Chain Cover.>

4. ROCKER COVER

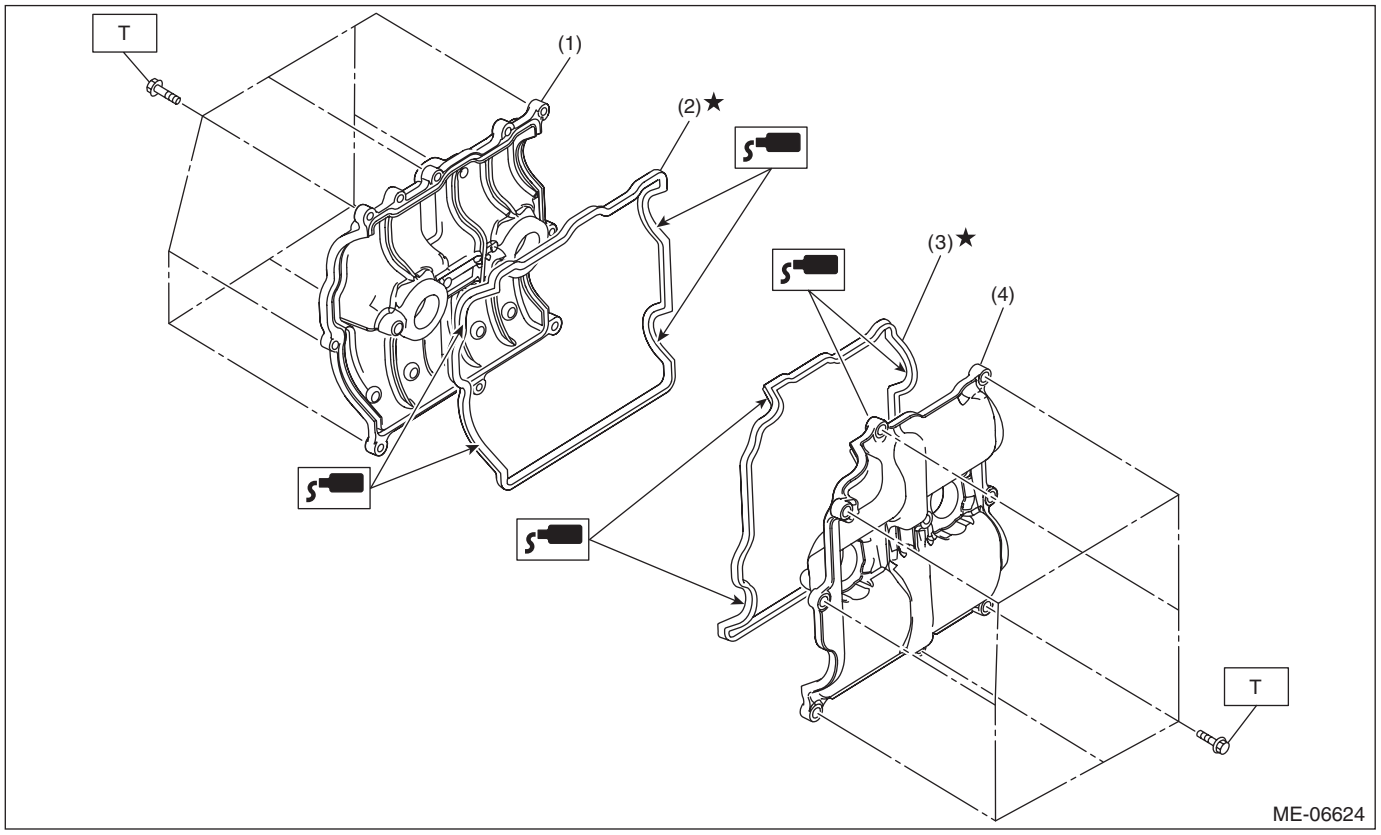

(1) Rocker cover RH
(2) Rocker cover gasket RH
(3) Rocker cover gasket LH
(4) Rocker cover LH

Tightening torque: N·m (kgf-m, ft-lb)
T: <Ref. to ME(w/o STI)-153, INSTALLATION, Rocker Cover.>

5. CAM CARRIER

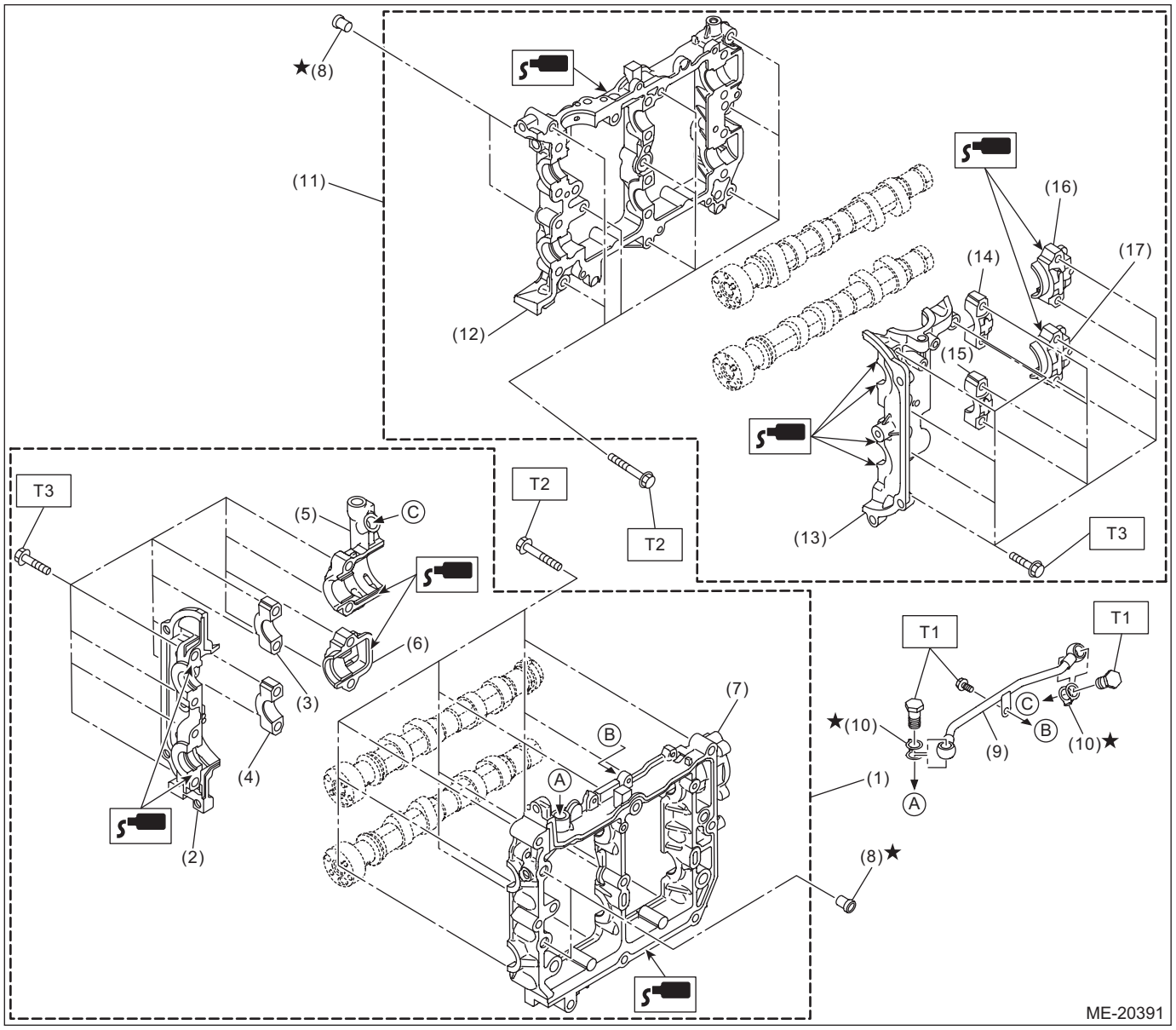

(1) Cam carrier ASSY RH
(2) Front camshaft cap RH
(3) Intake center camshaft cap RH
(4) Exhaust center camshaft cap RH
(5) Intake rear camshaft cap RH
(6) Exhaust rear camshaft cap RH
(7) Cam carrier RH
(8) Filter
(9) Oil pipe
(10) Gasket
(11) Cam carrier ASSY LH
(12) Cam carrier LH
(13) Front camshaft cap LH
(14) Intake center camshaft cap LH
(15) Exhaust center camshaft cap LH
(16) Intake rear camshaft cap LH
(17) Exhaust rear camshaft cap LH

Tightening torque: N·m (kgf-m, ft-lb)

T1: ***<Ref. to ME(w/o STI)-195, CAM CARRIER RH, ASSEMBLY, Cam Carrier.>***

T2: ***<Ref. to ME(w/o STI)-172, INSTALLATION, Cam Carrier.>***

T3: ***<Ref. to ME(w/o STI)-195, ASSEMBLY, Cam Carrier.>***

6. CYLINDER HEAD

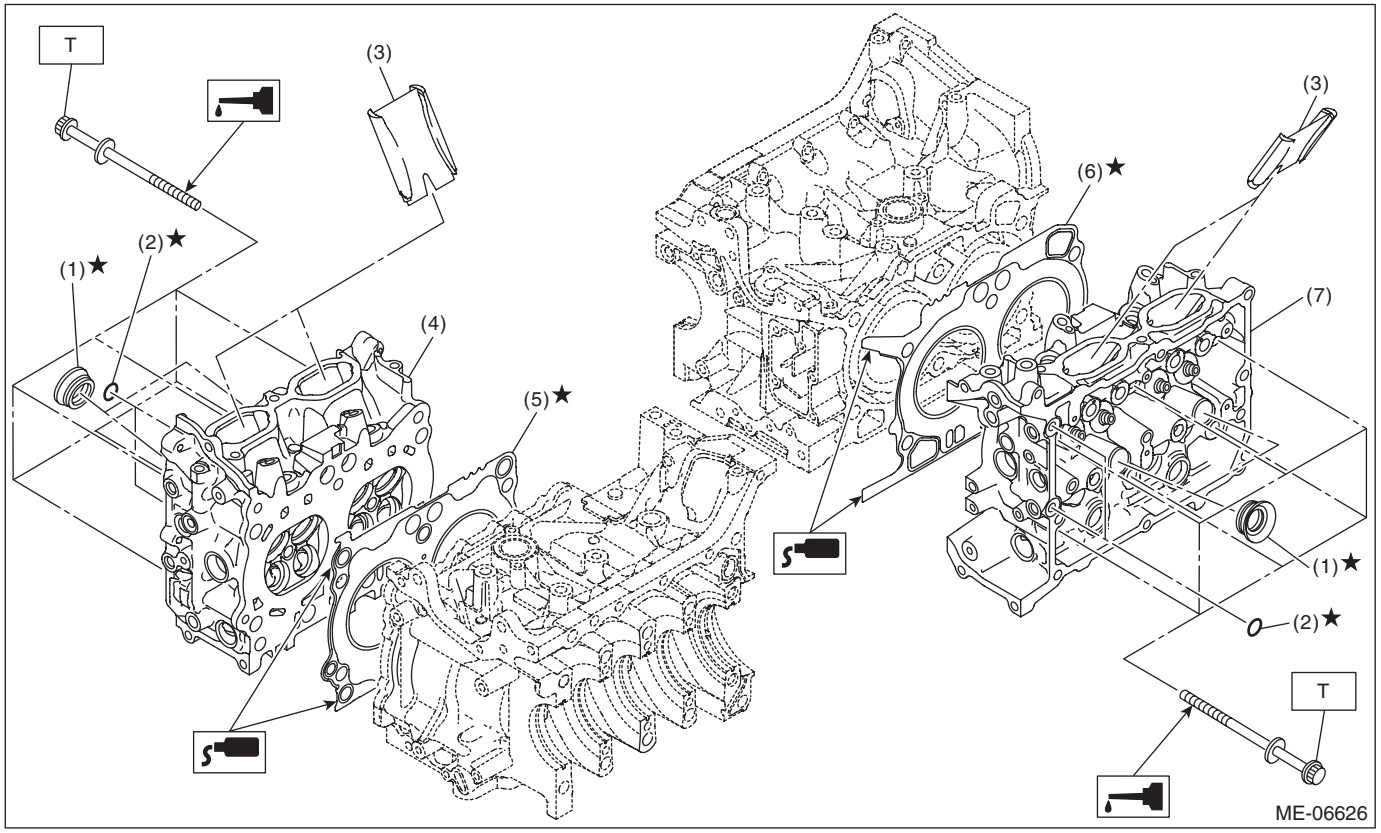

(1) Spark plug pipe gasket
(2) O-ring
(3) Cylinder head plate
(4) Cylinder head RH
(5) Cylinder head gasket RH
(6) Cylinder head gasket LH
(7) Cylinder head LH

Tightening torque: N·m (kgf-m, ft-lb)

T: <Ref. to ME(w/o STI)-208, INSTALLATION, Cylinder Head.>

7. VALVE ASSEMBLY

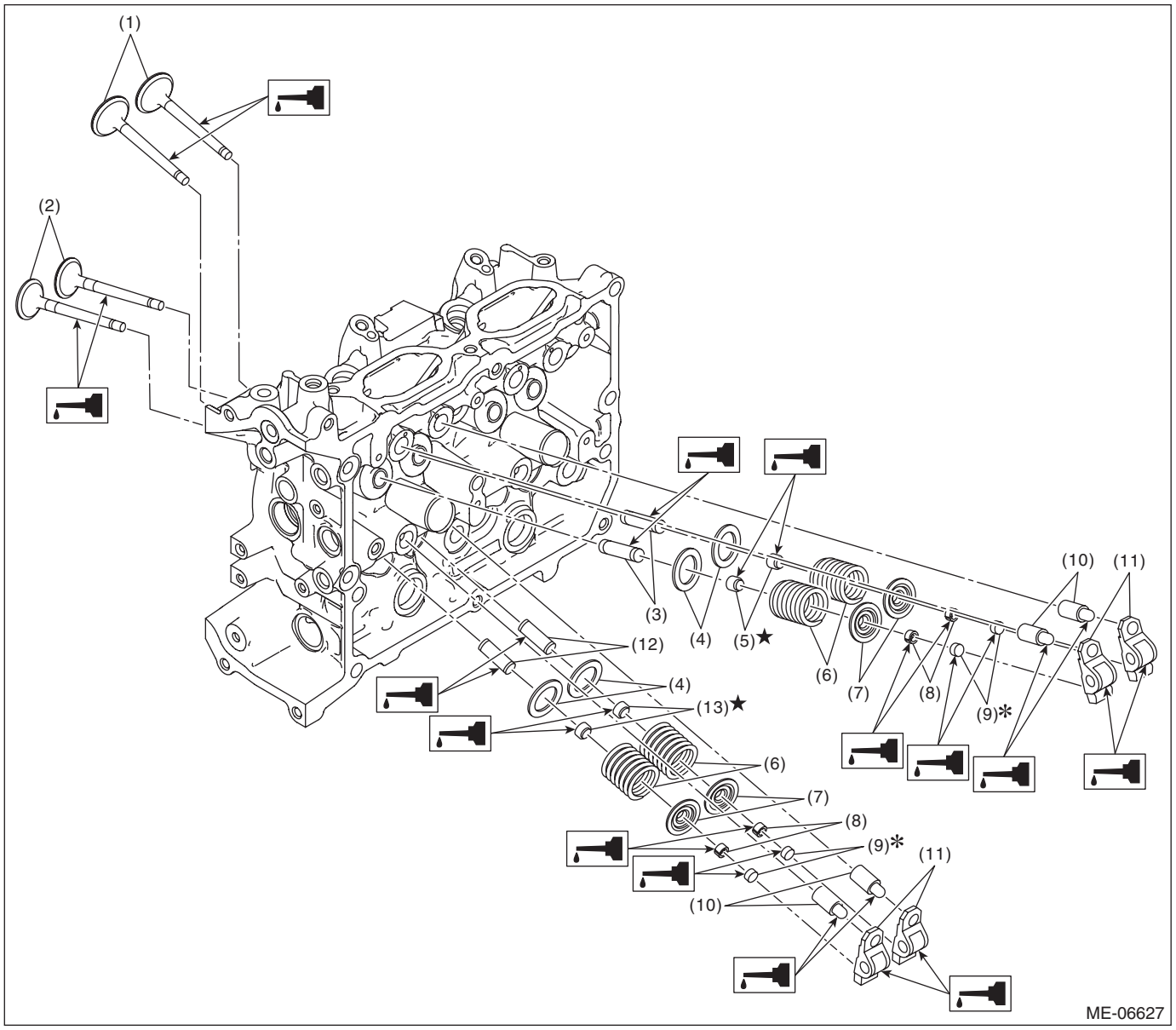

(1) Exhaust valve
(2) Intake valve
(3) Intake valve guide
(4) Valve spring seat
(5) Intake valve oil seal
(6) Valve spring
(7) Valve spring retainer
(8) Valve collet
(9) Valve shim
(10) Roller rocker arm pivot
(11) Roller rocker arm
(12) Exhaust valve guide
(13) Exhaust valve oil seal

8. CYLINDER BLOCK 1

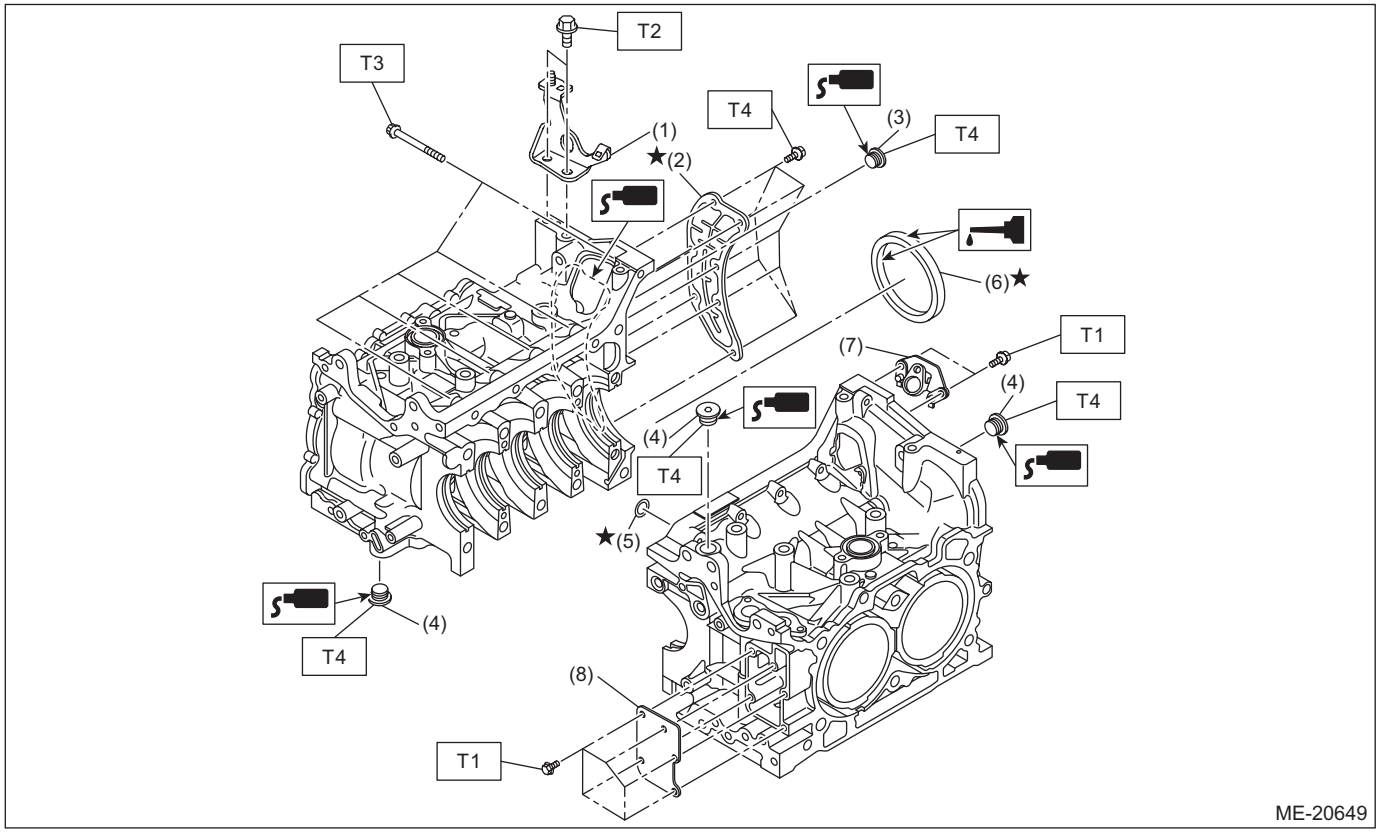

(1) Engine rear hanger
(2) Oil separator cover
(3) Cylinder block plug
(4) Main gallery plug
(5) O-ring
(6) Rear oil seal
(7) Crankshaft position sensor holder
(8) Cylinder block plate

Tightening torque: N·m (kgf-m, ft-lb)

T1: 6.4 (0.7, 4.7)
T2: 21 (2.1, 15.5)
T3: 25 (2.5, 18.4)
T4: <Ref. to ME(w/o STI)-284, CYLINDER BLOCK, ASSEMBLY, Cylinder Block.>

9. CYLINDER BLOCK 2

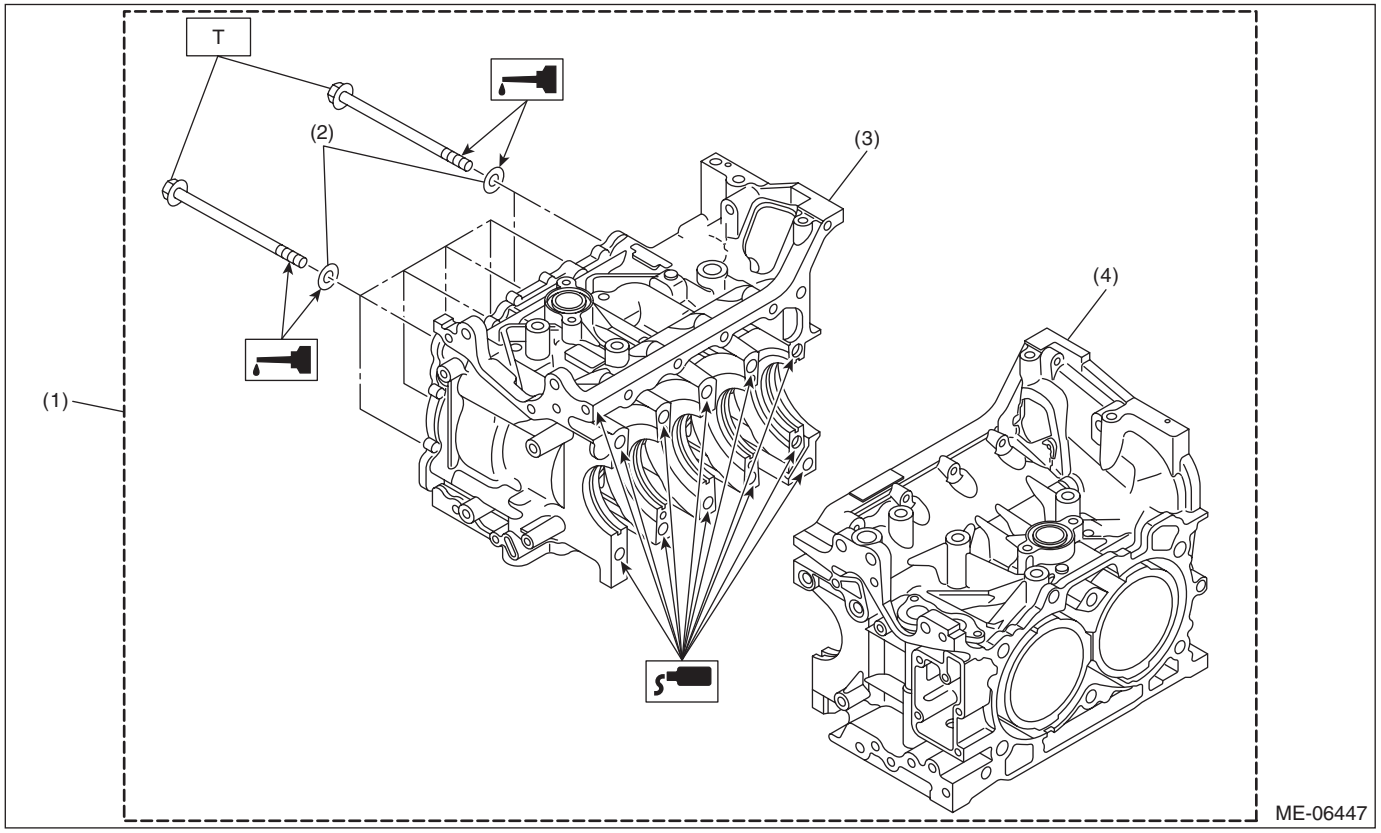

(1) Cylinder block ASSY
(2) Washer
(3) Cylinder block RH
(4) Cylinder block LH

Tightening torque: N·m (kgf-m, ft-lb)

T: <Ref. to ME(w/o STI)-258, INSTALLATION, Cylinder Block.>

10.CRANKSHAFT AND PISTON

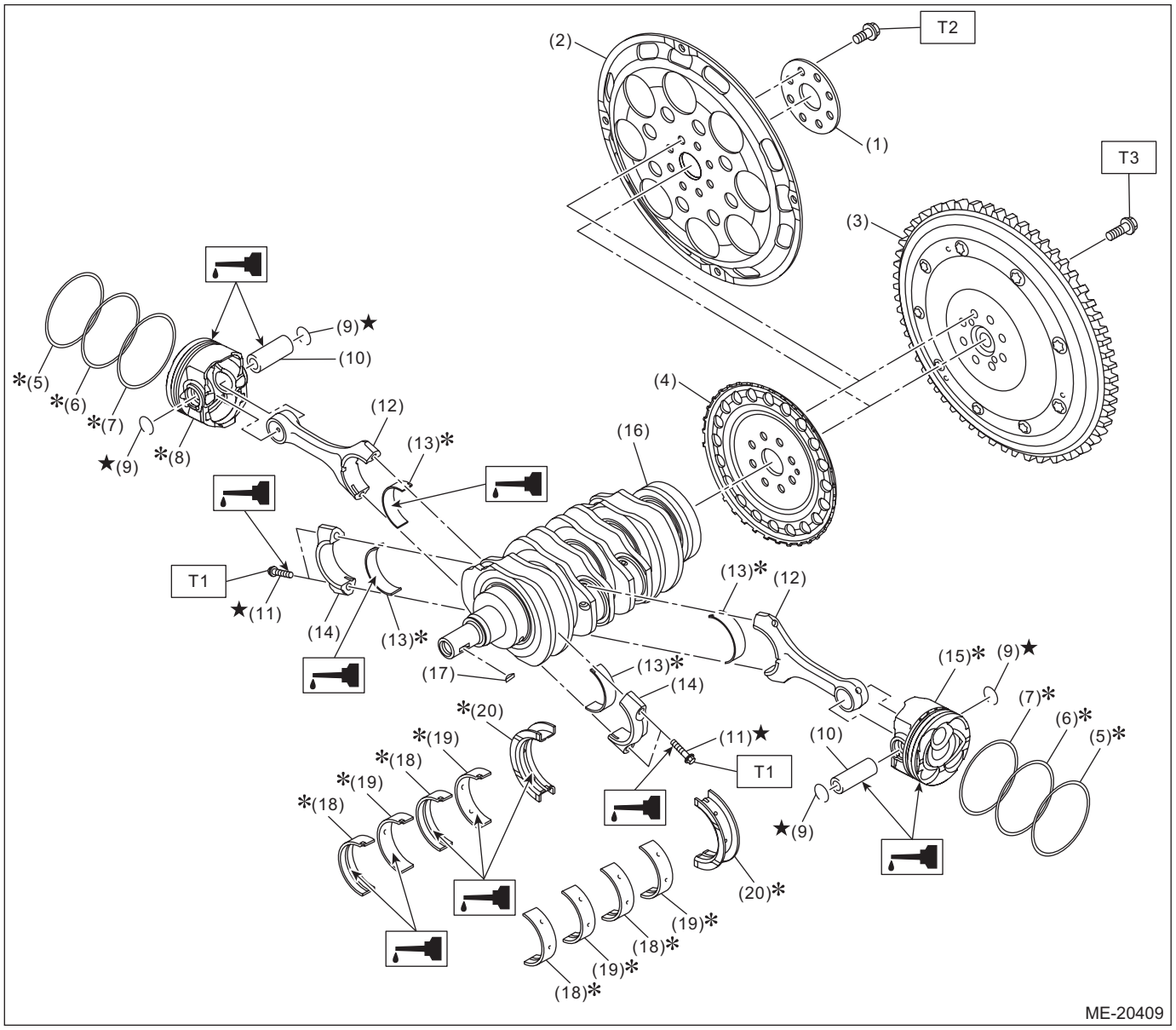

(1)	Reinforcement drive plate (CVT model)	(10)	Piston pin	(19)	Crankshaft bearing #2, #4
(2)	Drive plate (CVT model)	(11)	Connecting rod cap bolt	(20)	Crankshaft bearing #5
(3)	Flywheel (MT model)	(12)	Connecting rod		
(4)	Crankshaft position sensor plate	(13)	Connecting rod bearing		
(5)	Top ring	(14)	Connecting rod cap		
(6)	Second ring	(15)	Piston LH		
(7)	Oil ring	(16)	Crankshaft		
(8)	Piston RH	(17)	Woodruff key		
(9)	Circlip	(18)	Crankshaft bearing #1, #3		

Tightening torque: N·m (kgf-m, ft-lb)

T1: <Ref. to ME(w/o STI)-258, INSTALLATION, Cylinder Block.>

T2: <Ref. to CVT(TR690)-138, INSTALLATION, Drive Plate.>

T3: <Ref. to CL-15, INSTALLATION, Flywheel.>

11.ENGINE MOUNTING

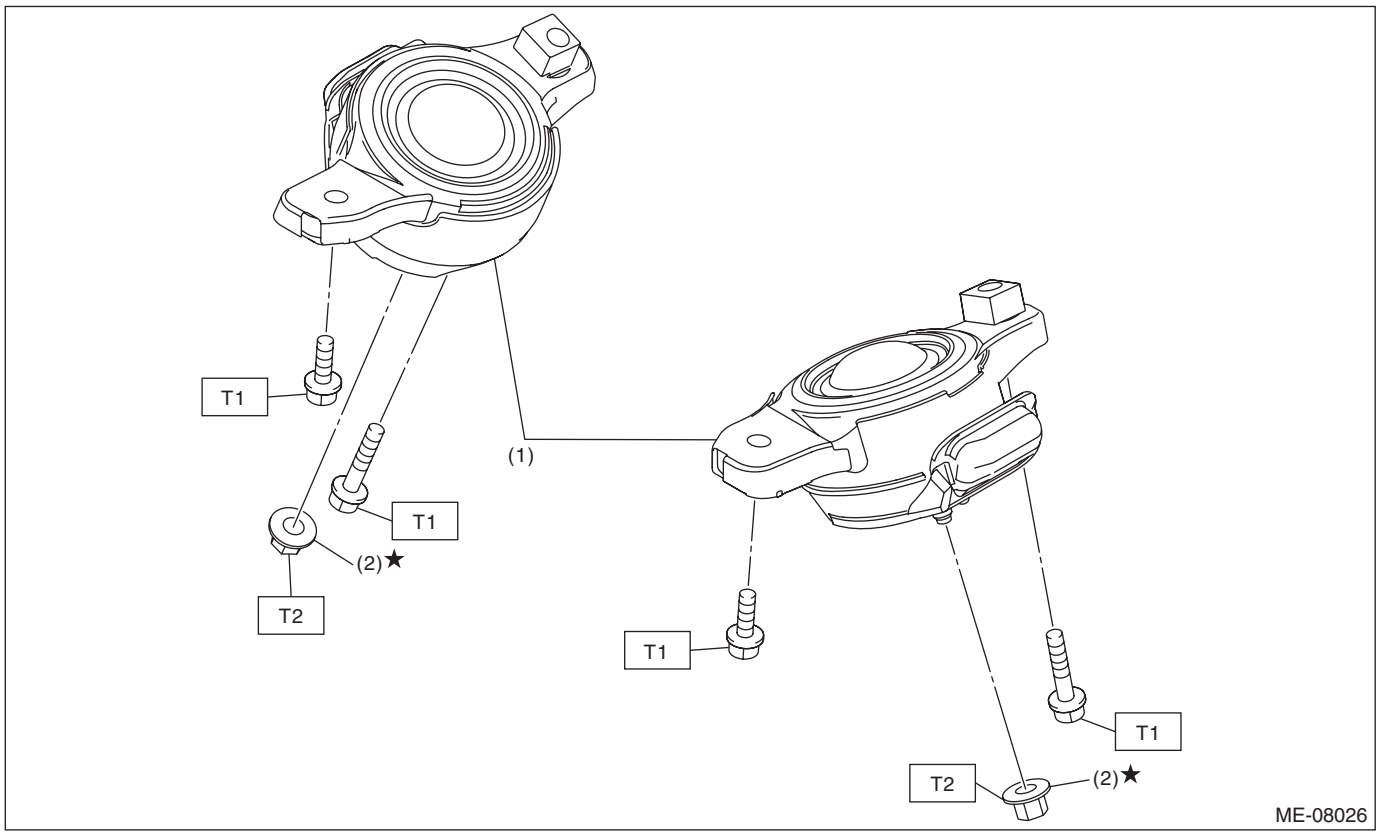

(1) Front cushion rubber (2) Nut

Tightening torque: N·m (kgf-m, ft-lb)
T1: 35 (3.6, 25.8)
T2: 60 (6.1, 44.3)

C: CAUTION

- Prior to starting work, pay special attention to the following:
  1. Always wear work clothes, a work cap, and protective shoes. Additionally, wear a helmet, protective goggles, etc. if necessary.
  2. Protect the vehicle using a seat cover, fender cover, etc.
  3. Prepare the service tools, clean cloth, containers to catch grease and oil, etc.
- Vehicle components are extremely hot immediately after driving. Be wary of receiving burns from heated parts.
- When performing a repair, identify the cause of trouble and avoid unnecessary removal, disassembly and replacement.
- Before disconnecting connectors of sensors or units, be sure to disconnect the ground cable from battery.
- Always use the jack-up point when the shop jacks or rigid racks are used to support the vehicle.
- Remove or install the engine in an area where chain hoists, lifting devices, etc. are available for ready use. When lifting up the vehicle, make sure to support the vehicle at the jack-up points.
- Be careful not to let any oil or grease contact the clutch disc or flywheel.
- Remove contamination including dirt and corrosion before removal, installation, disassembly or assembly.
- Keep the removed parts in order and protect them from dust and dirt.
- All removed parts, if to be reused, should be reinstalled in the original positions with attention to the correct directions, etc.
- Rotating parts and sliding parts such as piston, bearing and gear should be coated with oil when being assembled.
- Bolts, nuts and washers should be replaced with new parts as required.
- Be sure to tighten the fasteners including bolts and nuts to the specified torque.

D: PREPARATION TOOL

1. SPECIAL TOOL

ILLUSTRATION	TOOL NUMBER	DESCRIPTION	REMARKS
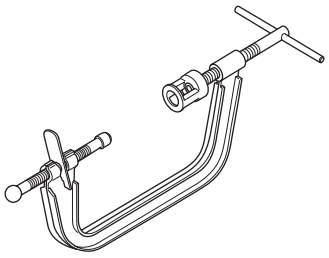 ST0920287002000	0920287002000	REMOVER AND REPLACER	Used for removing and installing valve spring.
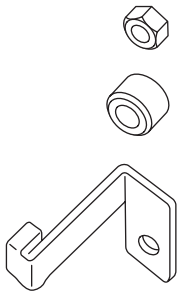 ST-498277200	498277200	STOPPER SET	Used for preventing the torque converter from falling when removing and installing the engine. (CVT model)
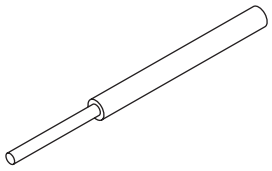 ST-499765700	499765700	VALVE GUIDE REMOVER AND INSTALLER	Used for removing and installing valve guide.
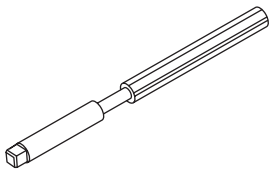 ST-499765900	499765900	VALVE GUIDE REAMER	Used for reaming valve guides.

ILLUSTRATION	TOOL NUMBER	DESCRIPTION	REMARKS
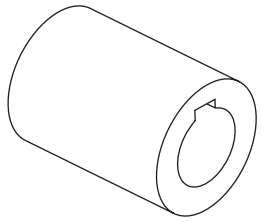 ST18252AA000	18252AA000	CRANKSHAFT SOCKET	Used for rotating crankshaft.
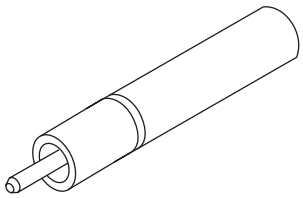 ST18261AA010	18261AA010	VALVE OIL SEAL GUIDE	Used for press-fitting of intake valve oil seals and exhaust valve oil seals.
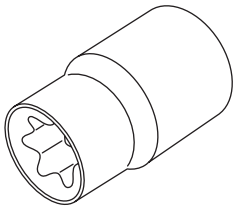 ST18270AA020	18270AA020	SOCKET	Used for removing and installing connecting rod.
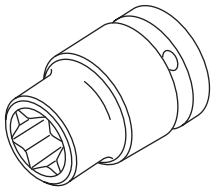 ST18270KA010	18270KA010	SOCKET	Used for installing and removing cam sprocket.
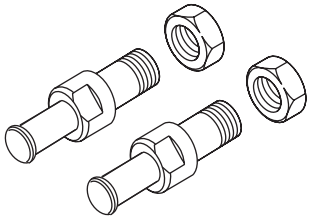 ST18334AA000	18334AA000	PULLEY WRENCH PIN SET	• Used for removing and installing the crank pulley. • Used together with PULLEY WRENCH (18355AA000).

ILLUSTRATION	TOOL NUMBER	DESCRIPTION	REMARKS
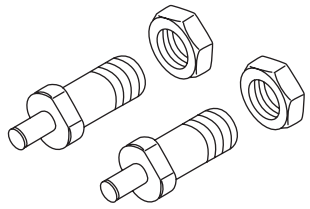 ST18334AA020	18334AA020	PULLEY WRENCH PIN SET	• Used for rotating the intake cam sprocket LH. • Used for removing and installing cam sprocket. • Used together with PULLEY WRENCH (18355AA000).
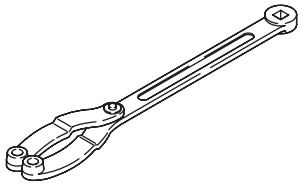 ST18355AA000	18355AA000	PULLEY WRENCH	• Used for removing and installing the crank pulley. • Used for rotating the intake cam sprocket LH. • Used for removing and installing cam sprocket. • Used together with PULLEY WRENCH PIN SET (18334AA000) or PULLEY WRENCH PIN SET (18334AA020).
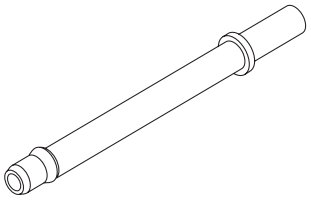 ST18471AA000	18471AA000	FUEL PIPE ADAPTER	Used for inspecting the fuel pressure.
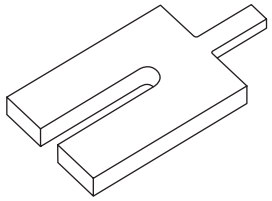 ST18632AA030	18632AA030	STAND ASSY	Used for removing and installing rocker cover LH.
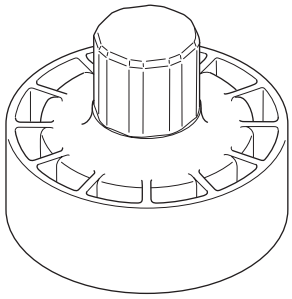 ST18657AA030	18657AA030	OIL SEAL INSTALLER	• Used for installing the rear oil seal of engine. • Used together with OIL SEAL GUIDE (18671AA020).

ILLUSTRATION	TOOL NUMBER	DESCRIPTION	REMARKS
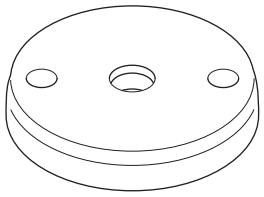 ST18671AA020	18671AA020	OIL SEAL GUIDE	• Used for installing the rear oil seal of engine. • Used together with OIL SEAL INSTALLER (18657AA030).
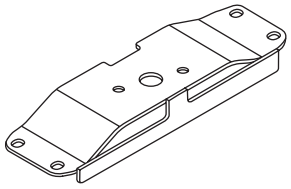 ST41099YC001	41099YC001	ST REAR MOUNT	Used for removing and installing engine. (CVT model)
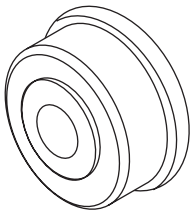 ST41399FG020	41399FG020	SPECIAL TOOL B	Used for installing the front oil seal of engine.
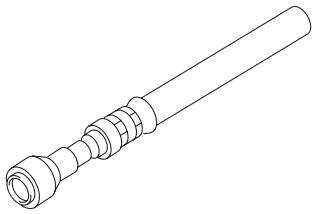 ST42075AG690	42075AG690	FUEL HOSE	Used for inspecting the fuel pressure. NOTE: This is the SUBARU genuine part.
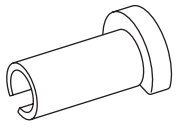 ST42099AE000	42099AE000	QUICK CONNECTOR RELEASE	Used for removing FUEL HOSE (42075AG690). NOTE: FUEL HOSE (42075AG690) is used for checking the fuel pressure.

ILLUSTRATION	TOOL NUMBER	DESCRIPTION	REMARKS
 STSSM4	—	SUBARU SELECT MONITOR 4	Used for setting of each function and trouble-shooting for electrical system. NOTE: For detailed operation procedures of Subaru Select Monitor 4, refer to “Application help”.

2. GENERAL TOOL

TOOL NAME	REMARKS
Compression gauge	Used for measuring compression.
Vacuum gauge	Used for measuring intake manifold vacuum.
Oil pressure gauge	Used for measuring engine oil pressure.
Fuel pressure gauge	Used for measuring fuel pressure.
Thickness gauge	Used for various inspections.
Engine stand	Used for disassembling and assembling engine.
Angle gauge	Used for angle tightening.
Piston ring compressor	Used for installing the piston into the cylinder block.
DST-i	Used together with Subaru Select Monitor 4.

2. Compression

A: INSPECTION

CAUTION:
After warming-up, engine becomes very hot. Be careful not to burn yourself during measurement.

NOTE:
• Before checking the compression pressure, the compression condition of each cylinder can be confirmed as a guide by using the compression measurement mode in Subaru Select Monitor. <Ref. to EN(w/o STI)(diag)-83, OPERATION, Active Test.>
• In the compression measurement mode, the compression condition is judged by each cylinder speed. The high speed cylinder has low compression pressure and low speed cylinder has high compression pressure.
1) After warming-up the engine, turn the ignition switch to OFF.
2) Make sure that the battery is fully charged.
3) Check the starter motor for satisfactory performance and operation.
4) Remove the fuse of fuel pump from main fuse box.

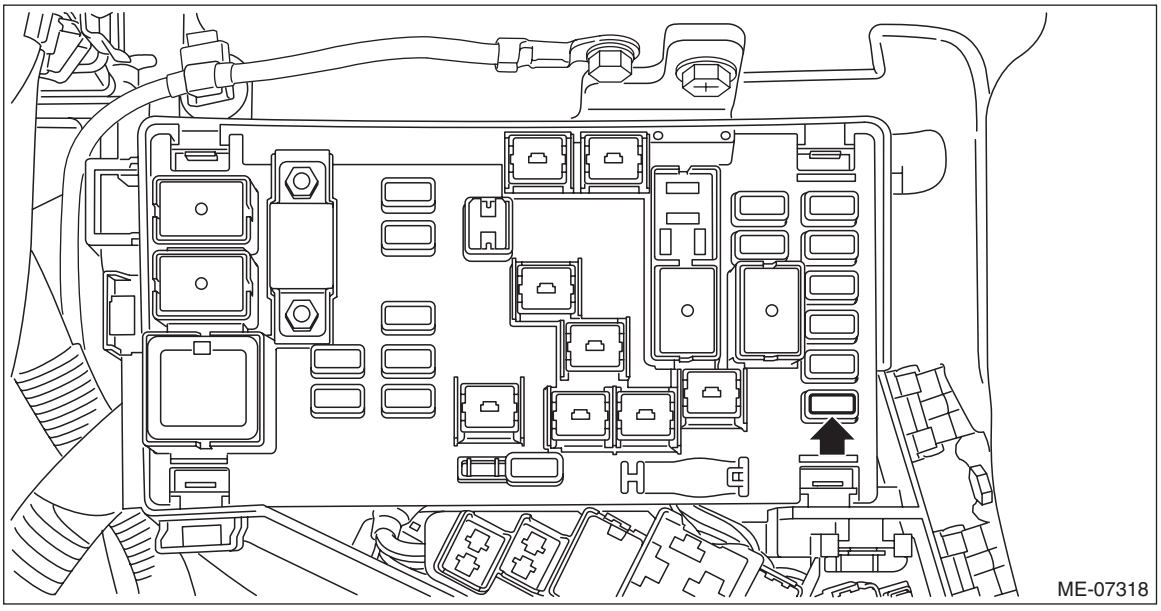

5) Start the engine and run it until it stalls.
6) After the engine stalls, crank it for five more seconds.
7) Turn the ignition switch to OFF.
8) Remove all spark plugs. <Ref. to IG(w/o STI)-4, REMOVAL, Spark Plug.>

9) Install the compression gauge to the spark plug hole.

NOTE:
When using a screw-in type compression gauge, the screw should be less than 25 mm (0.98 in) long.

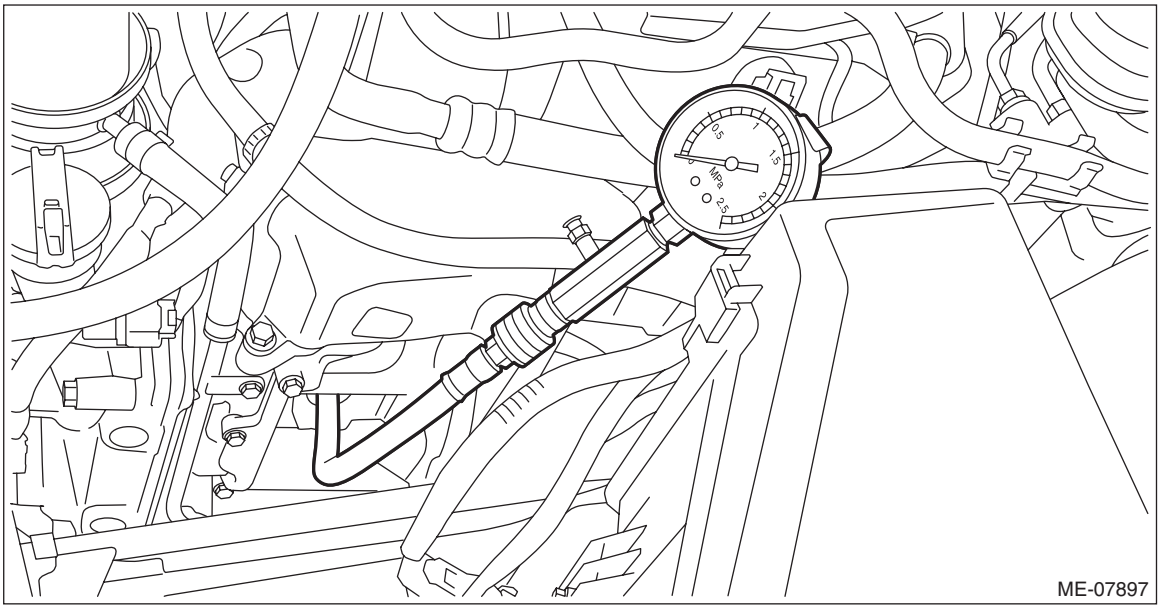

ME-07897

10) Insert the engine control module (ECM) to the bracket.

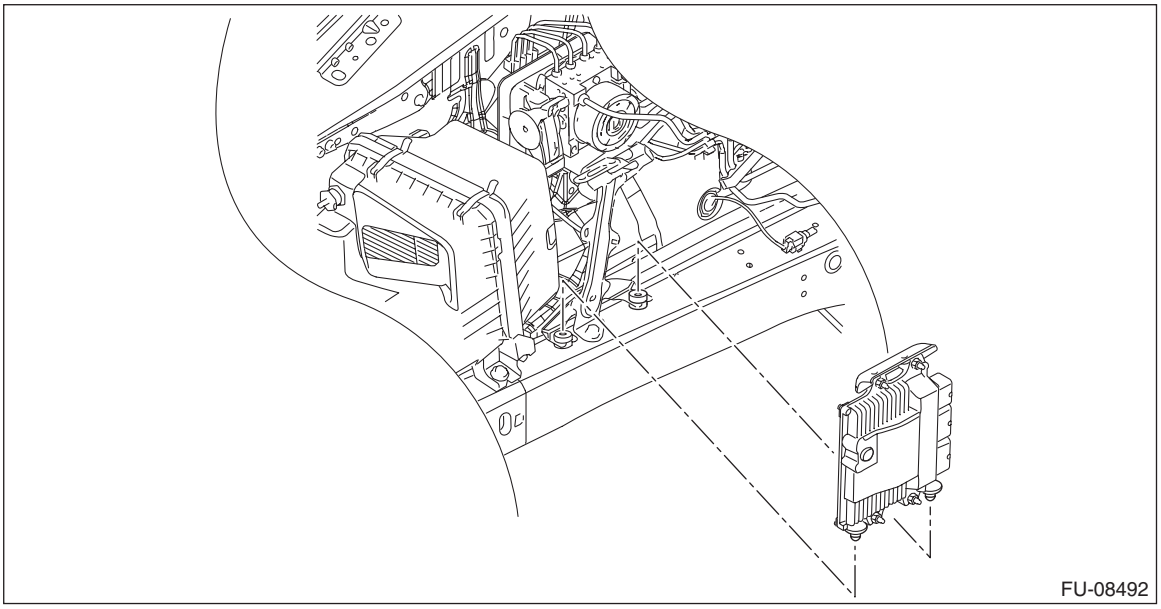
FU-08492

11) Install the bolt which secures the engine control module (ECM) to the bracket, and then secure the engine harness and bulkhead harness to the bracket with clip (A) and clip (B).

Tightening torque:
7.5 N·m (0.8 kgf-m, 5.5 ft-lb)

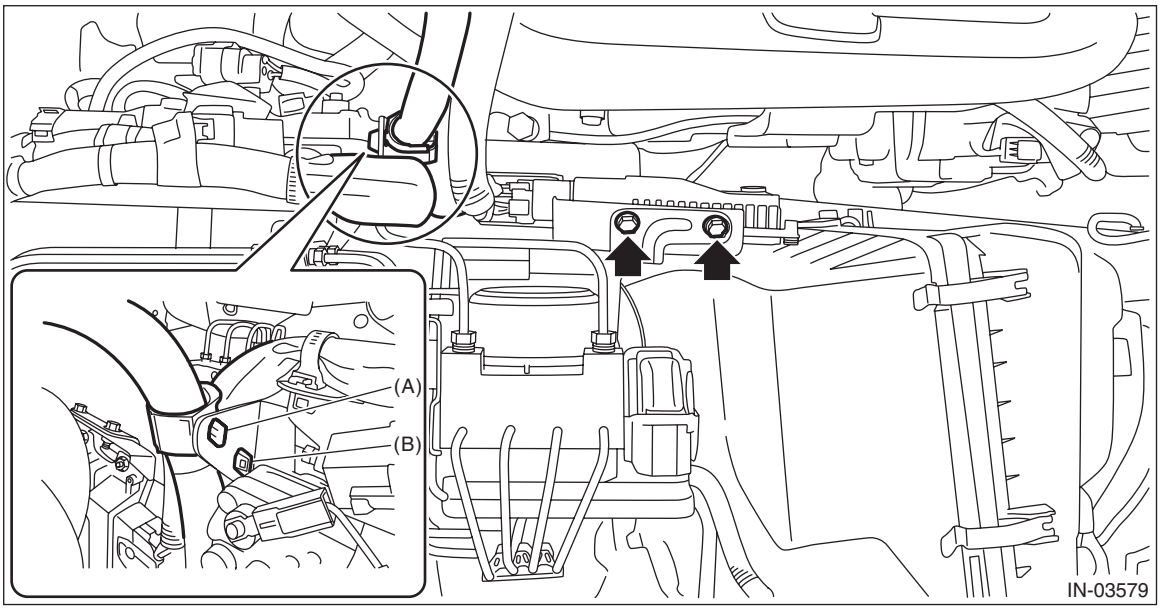

12) Install the battery. <Ref. to SC(w/o STI)-50, INSTALLATION, Battery.>
13) Turn the ignition switch to ON.
14) Depress the accelerator pedal to full throttle.
15) Crank the engine by starter motor and read the value when the needle of the compression gauge becomes stable.

NOTE:
- Perform at least two measurements per cylinder, and make sure that the values are correct.
- If the compression pressure is out of standard, check or adjust the pistons, valves and cylinders.

Compression pressure (at 200 — 300 r/min):
Standard
1,350 — 1,750 kPa (14 — 18 kg/cm^2, 196 — 254 psi)
Difference between cylinders
100 kPa (1 kg/cm^2, 14 psi) or less

16) After inspection, install the related parts in the reverse order of removal.

NOTE:
When compression pressure is checked, the malfunction indicator light illuminates and DTC (P0087) may be stored in ECM. When the malfunction indicator light has illuminated, perform the Clear Memory Mode. <Ref. to EN(w/o STI)(diag)-82, Clear Memory Mode.>

3. Idle Speed

A: INSPECTION

1) Before checking the idle speed, check the following item:
   (1) Check the air cleaner element is free from clogging, ignition timing is correct, spark plugs are in good condition, and hoses are connected properly.
   (2) Check the malfunction indicator light does not illuminate.
2) Warm up the engine.
3) Read the engine idle speed using Subaru Select Monitor. <Ref. to EN(w/o STI)(diag)-46, DISPLAY CURRENT ENGINE DATA, OPERATION, Subaru Select Monitor.>

NOTE:
- Idle speed cannot be adjusted manually, because the idle speed is automatically adjusted.
- If idle speed is out of standard, refer to the General Diagnosis Table under “Engine Control System”. <Ref. to EN(w/o STI)(diag)-2, Basic Diagnostic Procedure.>

   (1) Check the idle speed when no-loaded. (Headlight, blower fan, rear defroster, radiator fan, A/C and etc. are OFF)

Idle speed (No load, and for CVT model, select lever in “P” or “N” range, for MT model, gear shift lever in neutral position.):

Standard

700±100 r/min

   (2) Check the idle speed when loaded. (Turn the A/C switch to ON and operate the compressor for at least one minute before measurement.)

Idle speed (A/C on, and for CVT model, select lever in “P” or “N” range, for MT model, gear shift lever in neutral position.):

Standard

700 — 865±50 r/min

4. Ignition Timing

A: INSPECTION

CAUTION:
After warming-up, engine becomes very hot. Be careful not to burn yourself at measurement.

1) Before checking the ignition timing, check the following item:
   (1) Check the air cleaner element is free from clogging, spark plugs are in good condition, and hoses are connected properly.
   (2) Check the malfunction indicator light does not illuminate.
2) Warm up the engine.
3) Read the ignition timing using Subaru Select Monitor. <Ref. to EN(w/o STI)(diag)-46, DISPLAY CURRENT ENGINE DATA, OPERATION, Subaru Select Monitor.>

NOTE:
If ignition timing is out of standard, check the ignition control system. Refer to “Engine Control System”. <Ref. to EN(w/o STI)(diag)-2, Basic Diagnostic Procedure.>

Ignition timing [BTDC/{r/min}]:
Standard
8°±10°/700 (CVT model)
6°±10°/700 (MT model)

5. Intake Manifold Vacuum

A: INSPECTION

1) Remove the collector cover. <Ref. to IN(w/o STI)-7, REMOVAL, Collector Cover.>
2) Warm up the engine.
3) Disconnect the brake booster vacuum hose from the intake manifold.

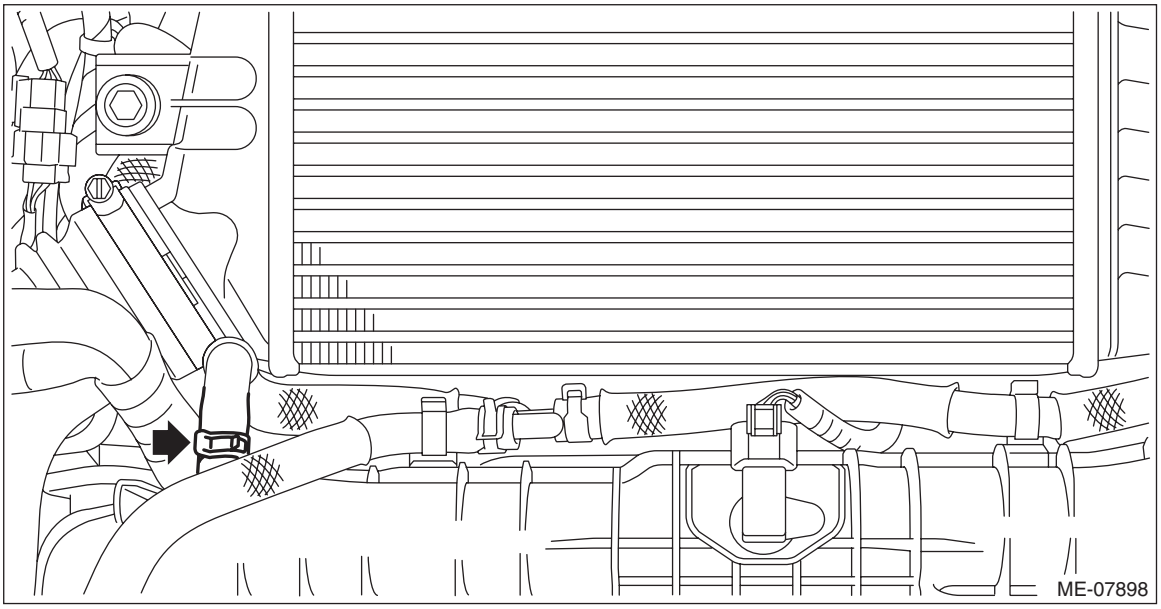

4) Connect the vacuum gauge to the intake manifold.

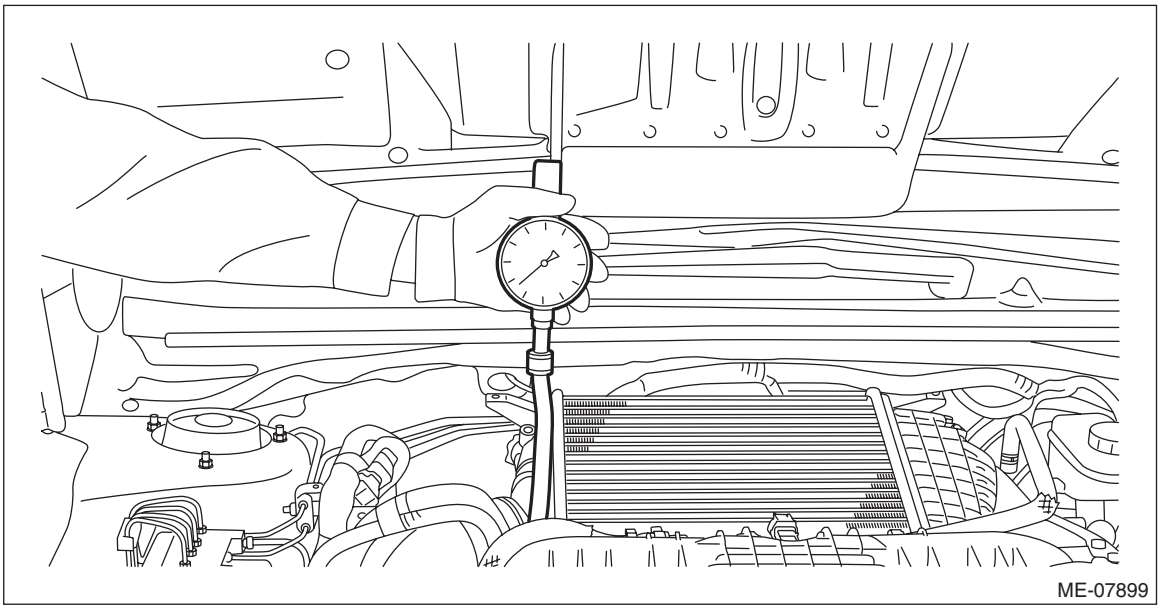

5) Keep the engine at idle speed and read the vacuum gauge indication.

NOTE:
Condition of engine inside can be diagnosed by observing the behavior of the vacuum gauge needle as described in table below.

Intake manifold vacuum (at idling, A/C OFF):
Standard
–60.0 kPa (–450 mmHg, –17.72 inHg) or more

Diagnosis of engine condition by inspection of intake manifold vacuum	
Vacuum gauge needle behavior	Possible engine condition
1. Needle is steady but lower than standard value. This tendency becomes more evident as engine temperature rises.	Leakage around intake manifold gasket, disconnection or damage of vacuum hose
2. Needle intermittently drops to position lower than standard value.	Leakage around cylinder
3. Needle drops suddenly and intermittently from standard value.	Sticky valve
4. When engine speed is gradually increased, needle begins to vibrate rapidly at certain speed, and then vibration increases as engine speed increases.	Weak or broken valve springs
5. Needle vibrates above and below standard value in narrow range.	Defective ignition system

6) After inspection, install the related parts in the reverse order of removal.

6. Engine Oil Pressure

A: INSPECTION

1) Disconnect the ground terminal from battery sensor. <Ref. to NT-6, BATTERY, NOTE, Note.>
2) Remove the oil pressure switch. <Ref. to LU(w/o STI)-28, REMOVAL, Oil Pressure Switch.>
3) Install the oil pressure gauge to the chain cover.

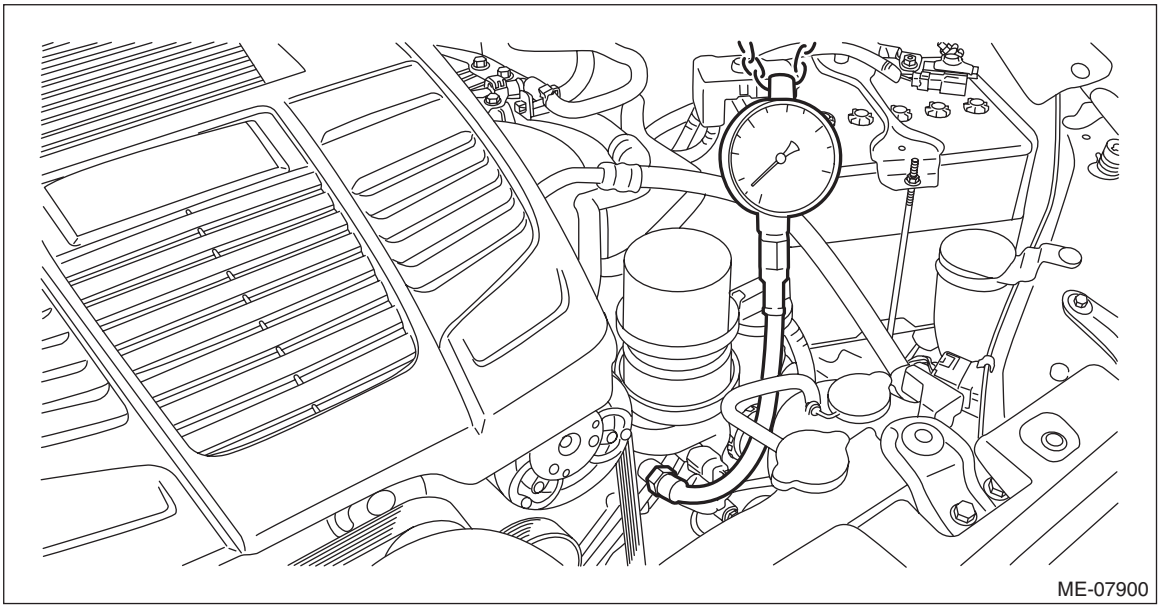

4) Connect the ground terminal to battery sensor. <Ref. to NT-6, BATTERY, NOTE, Note.>
5) Start the engine, and check the oil pressure.

NOTE:
- Standard value is based on an engine oil temperature of 80°C (176°F).
- If the oil pressure is out of specification, check oil pump, oil filter and lubrication line. <Ref. to LU(w/o STI)-67, INSPECTION, Engine Lubrication System Trouble in General.>
- If the oil pressure warning light is ON and oil pressure is within standard, check the oil pressure switch. <Ref. to LU(w/o STI)-67, INSPECTION, Engine Lubrication System Trouble in General.>

Engine oil pressure:
Standard
50 kPa (0.5 kg/cm^2, 7 psi) or more (at 600 r/min)
350 kPa (3.6 kg/cm^2, 51 psi) or more (at 6,000 r/min)

6) After inspection, install the related parts in the reverse order of removal.

7. Fuel Pressure

A: INSPECTION

1) Remove the collector cover. <Ref. to IN(w/o STI)-7, REMOVAL, Collector Cover.>
2) Release the fuel pressure. <Ref. to FU(w/o STI)-138, RELEASING OF FUEL PRESSURE, PROCEDURE, Fuel.>
3) Open the fuel filler lid and remove the fuel filler cap.

NOTE:
This operation is required to release the inner pressure of the fuel tank.
4) Disconnect the fuel delivery tube from the fuel delivery pipe, and connect the fuel pressure gauge.

CAUTION:
- **Be careful not to spill fuel.**
- **Catch the fuel from the tubes using a container or cloth.**

(1) Disconnect the quick connector on the fuel delivery tube from the fuel pipe assembly, and remove the clip (A) securing the fuel delivery tube to the fuel pipe assembly.

NOTE:
Disconnect the quick connector as shown in the figure.

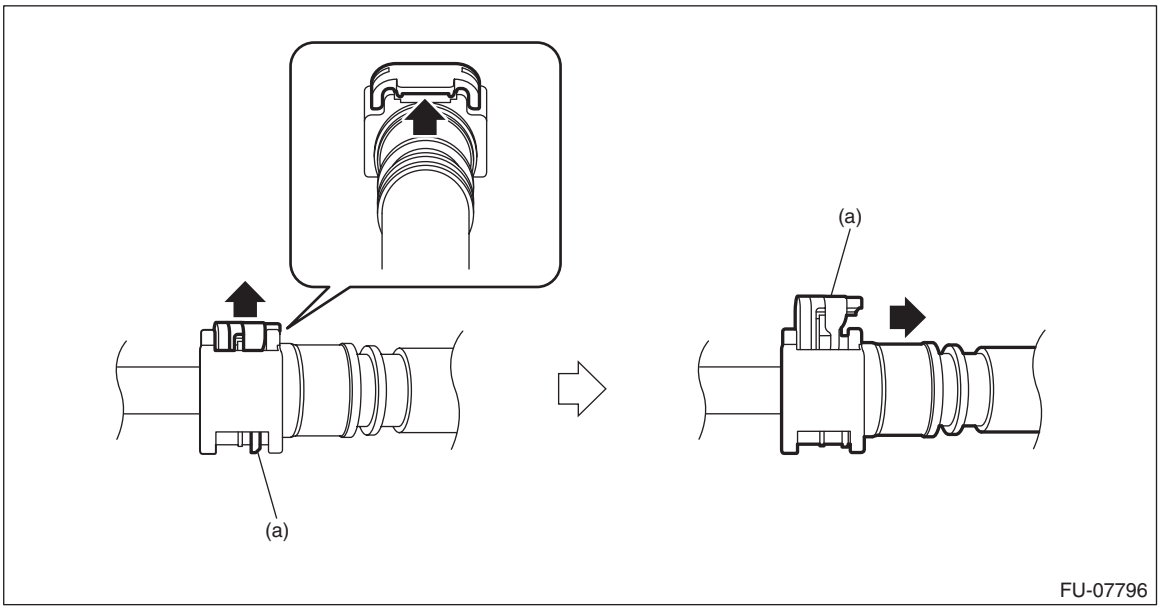

(a) Slider

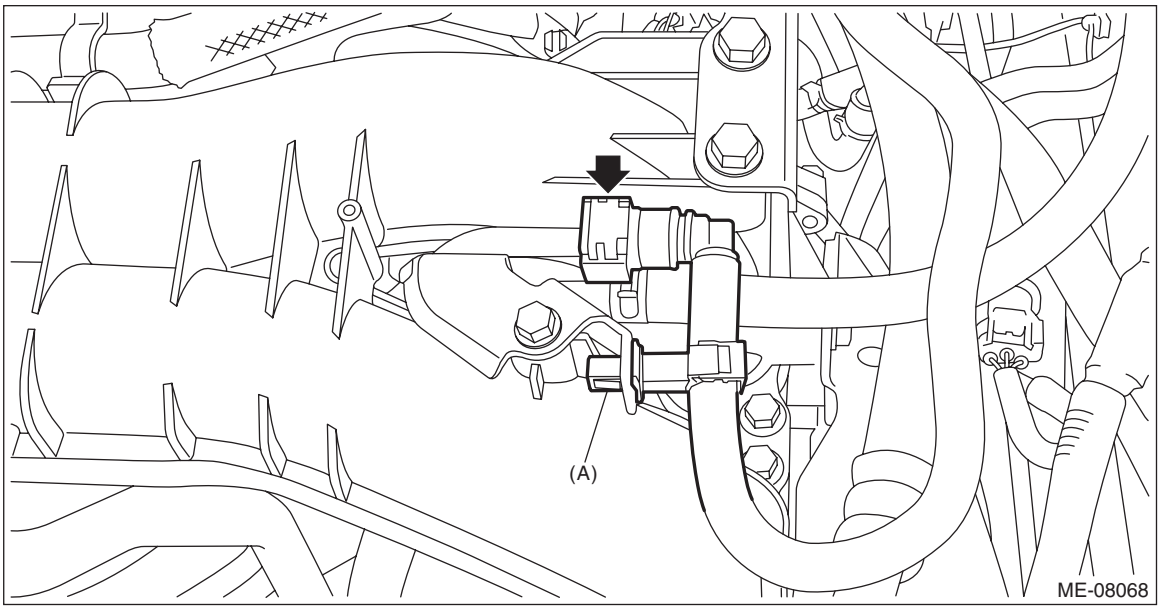

(2) Connect the fuel pressure gauge with ST1 and ST2.

CAUTION:
• Check that there is no damage or dust on the quick connector. If necessary, clean the seal surface of the pipe.
• When connecting the quick connector with slider, make sure to insert it all the way in before locking the slider.
• When it is difficult to lock the slider, check that the connector is fully inserted.
• After locking the slider, check that the quick connector is securely connected.

NOTE:
• ST1 is a SUBARU genuine part.
• When connecting the ST2 to the quick connector on the fuel delivery tube, connect as shown in the figure.

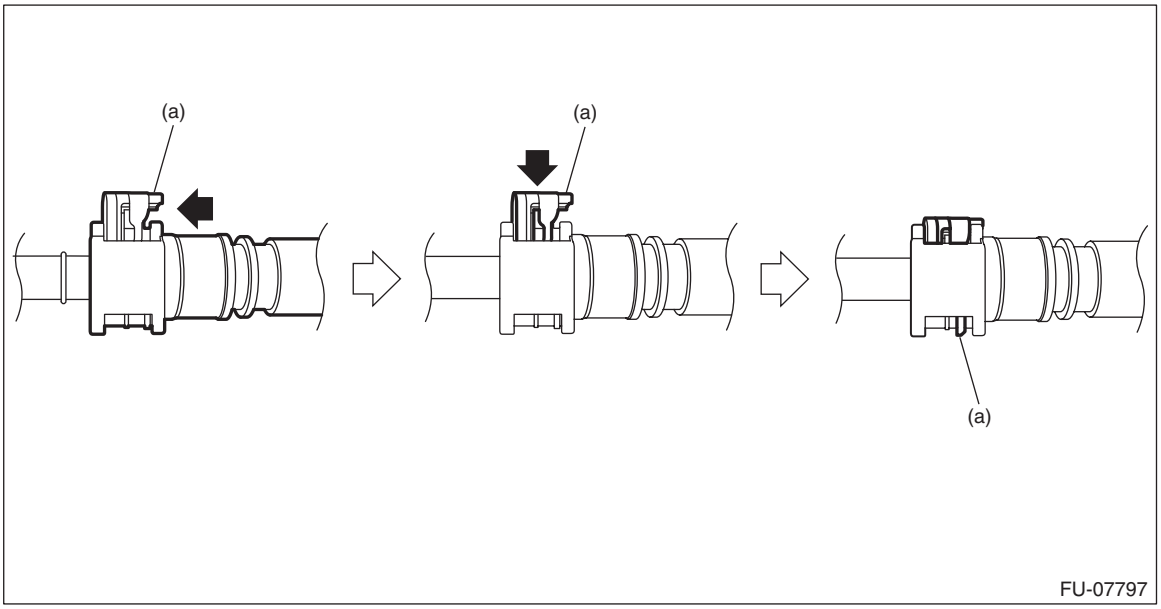

(a) Slider

ST1 42075AG690 FUEL HOSE
ST2 18471AA000 FUEL PIPE ADAPTER

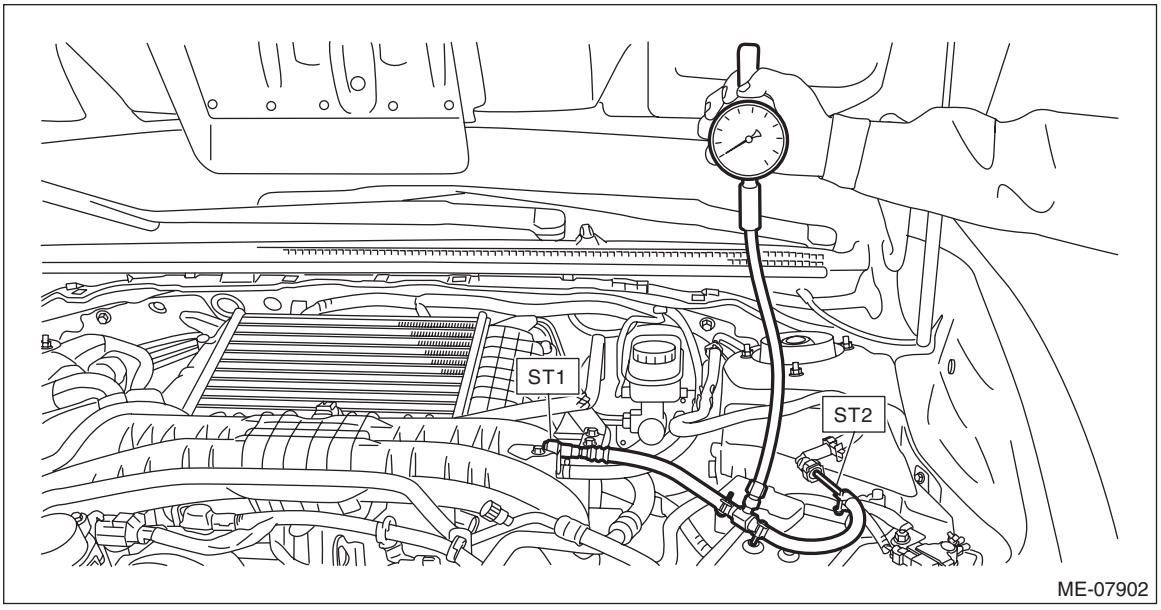

5) Start the engine.
6) Check the fuel pressure after warming up the engine.

NOTE:
• The fuel pressure gauge registers 10 to 20 kPa (0.1 to 0.2 kg/cm^2, 1 to 3 psi) higher than standard values during high-altitude operations.
• Check or replace the fuel pump and fuel delivery line if the fuel pressure is out of the standard.

Fuel pressure:
Standard
340 — 400 kPa (3.5 — 4.1 kg/cm^2, 49 — 58 psi)

7) After inspection, install the related parts in the reverse order of removal.

CAUTION:
- **Before removing the fuel pressure gauge, release the fuel pressure.**
- **Be careful not to spill fuel.**
- **Catch the fuel from hoses and tubes using a container or cloth.**
- **Check that there is no damage or dust on the quick connector. If necessary, clean the seal surface of the pipe.**
- **When connecting the quick connector with slider, make sure to insert it all the way in before locking the slider.**
- **When it is difficult to lock the slider, check that the connector is fully inserted.**
- **After locking the slider, check that the quick connector is securely connected.**

NOTE:
- When disconnecting the ST1, install the ST2 to the fuel pipe assembly, and press the ST2 in the direction of arrow to disconnect the quick connector on the ST1.

ST1 42075AG690 FUEL HOSE
ST2 42099AE000 QUICK CONNECTOR RELEASE

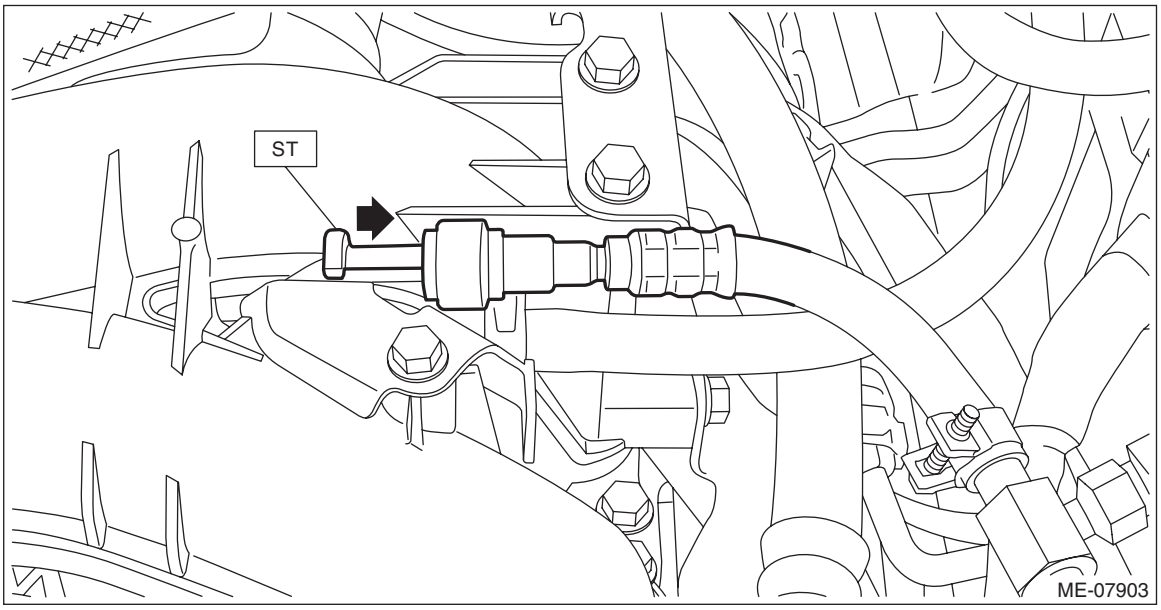

- Disconnect the quick connector on the fuel delivery tube as shown in the figure.

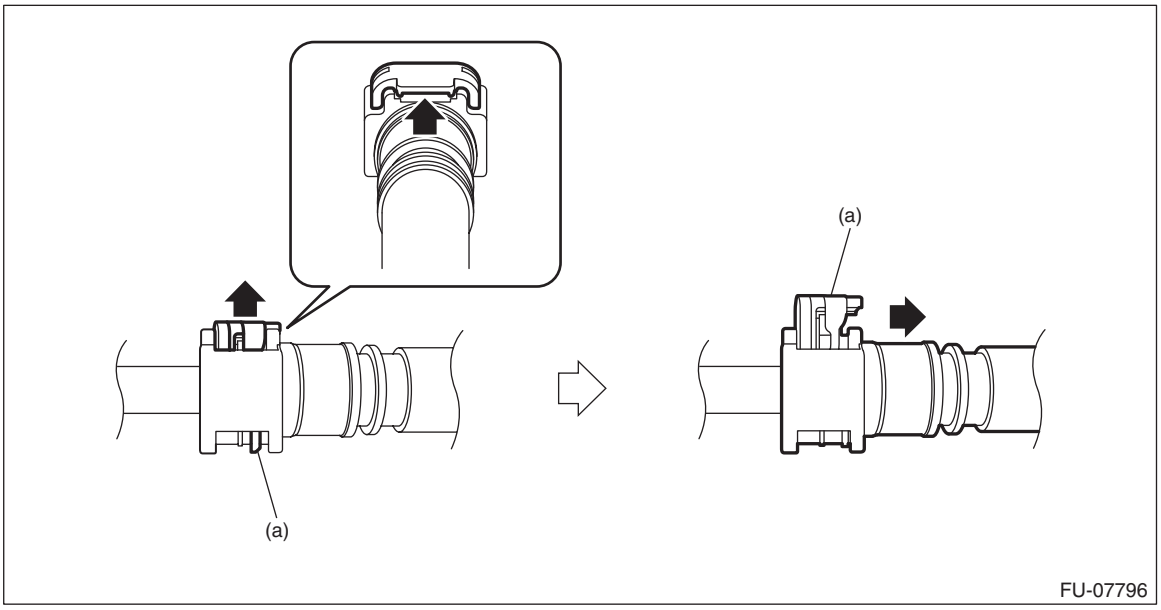

(a) Slider

- Connect the quick connector on the fuel delivery tube as shown in the figure.

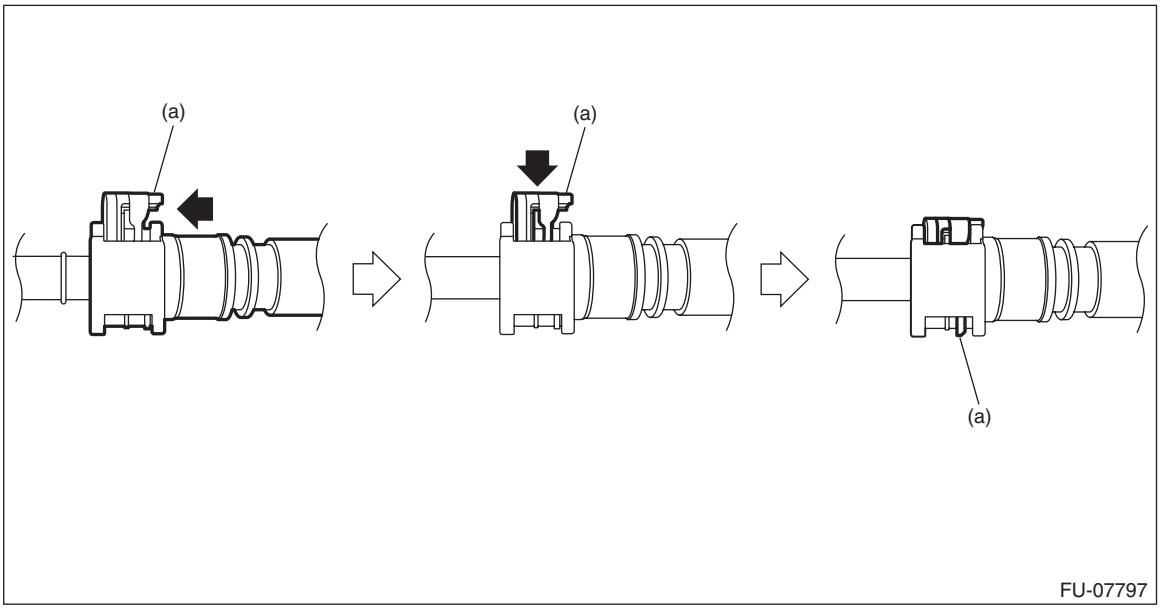

(a) Slider

8. Cam Clearance

A: INSPECTION

1. WHEN TIMING CHAIN ASSEMBLY IS NOT REMOVED

CAUTION:
When working on the vehicle, if engine oil is spilt onto the exhaust pipe, wipe it off with cloth to avoid emission of smoke or causing a fire.

NOTE:
- Inspection of cam clearance should be performed while engine is cold.
- If the engine is removed from vehicle, performing the steps 1) to 2) is not necessary.

1) Disconnect the ground terminal from battery sensor. <Ref. to NT-6, BATTERY, NOTE, Note.>
2) Remove the collector cover. <Ref. to IN(w/o STI)-7, REMOVAL, Collector Cover.>
3) Remove the V-belts. <Ref. to ME(w/o STI)-75, REMOVAL, V-belt.>
4) When inspecting #1 and #3 cylinders
   (1) Remove the rocker cover RH. <Ref. to ME(w/o STI)-144, ROCKER COVER RH, REMOVAL, Rocker Cover.>

NOTE:
When working on the vehicle, place a suitable container under the vehicle.

   (2) Set #1 cylinder piston to top dead center of compression stroke by rotating the crank pulley clockwise using the socket wrench.

NOTE:
When the timing mark (B) on crank pulley is aligned to the 0° in timing gauge (A) on chain cover as shown in the figure, the #1 cylinder piston is located at TDC of compression stroke if the intake camshaft and exhaust camshaft does not depress the #1 cylinder intake side roller rocker arm (intake valve) and exhaust side roller rocker arm (exhaust valve). If roller rocker arm (valve) is depressed, turn the crank pulley by 360° in order to make #1 cylinder piston at TDC of compression stroke.

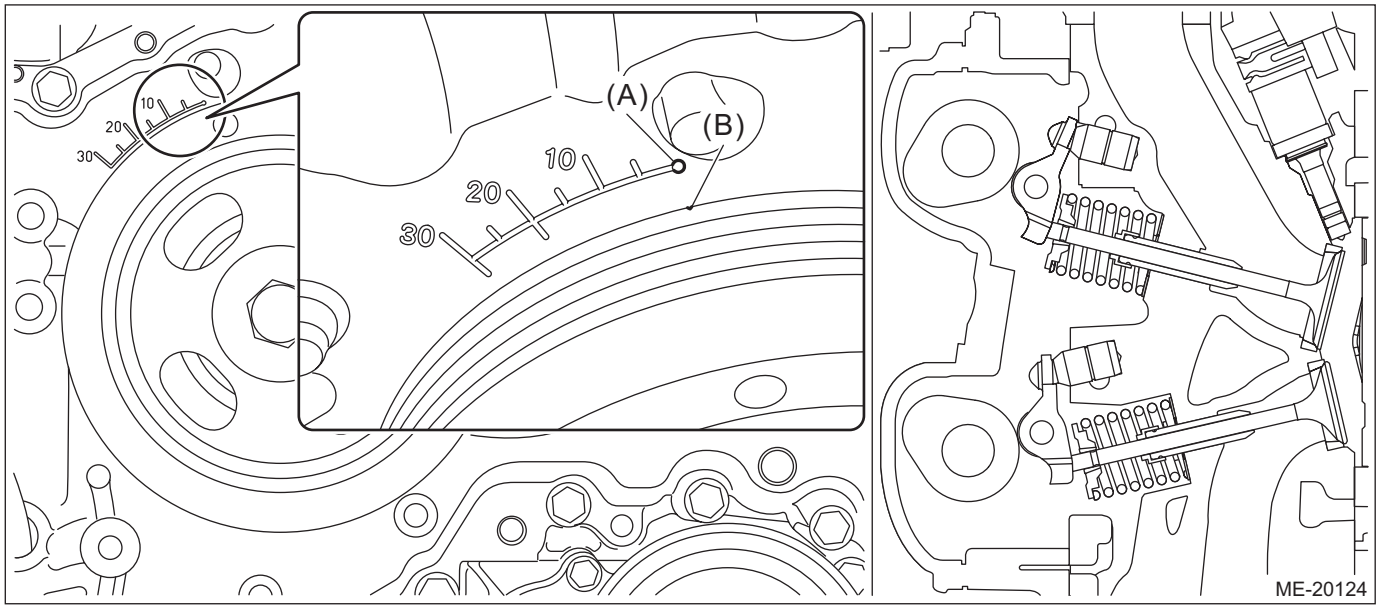

(3) Check the cam clearance for #1 cylinder intake, #1 cylinder exhaust and #3 cylinder exhaust.

NOTE:
- Measure the roller surface of cam base circle and roller rocker arm using thickness gauge (A).
- If the measured value is out of standard, take notes of the value in order to adjust the cam clearance later on.

Cam clearance:
Intake
Standard
$0.13^{+0.02}_{-0.03}$ mm ($0.0051^{+0.0008}_{-0.0012}$ in)
Exhaust
Standard
0.22±0.02 mm (0.0087±0.0008 in)

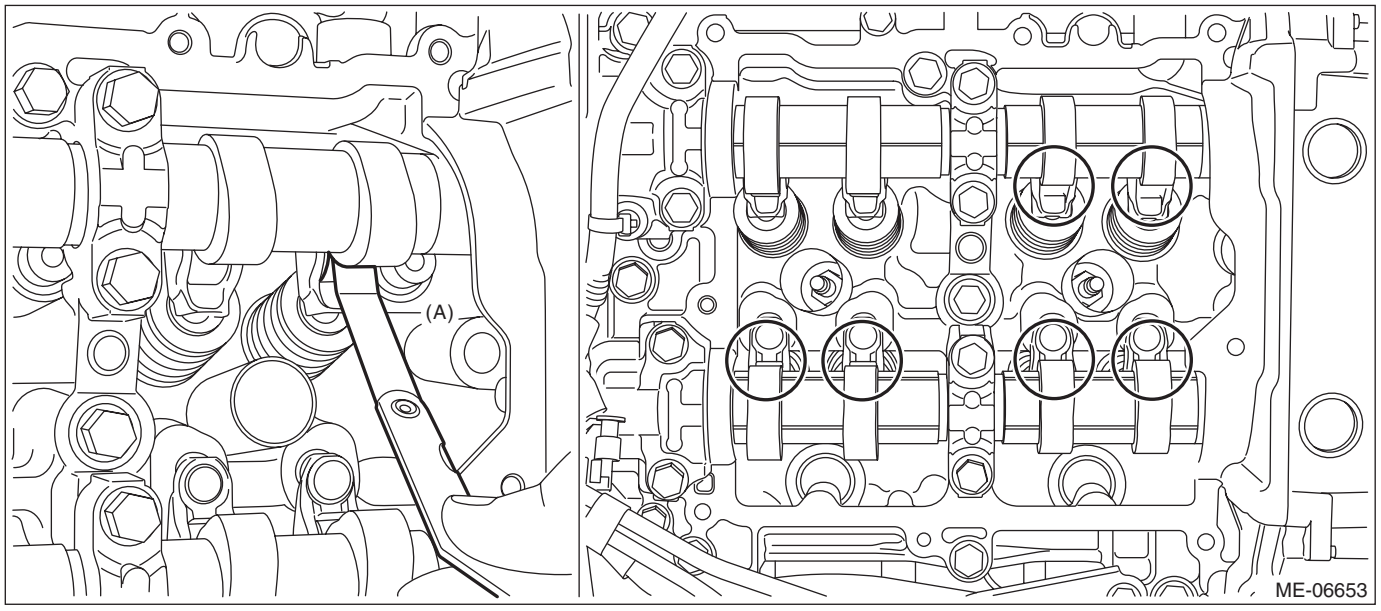

(4) Turn the crank pulley by 360°.

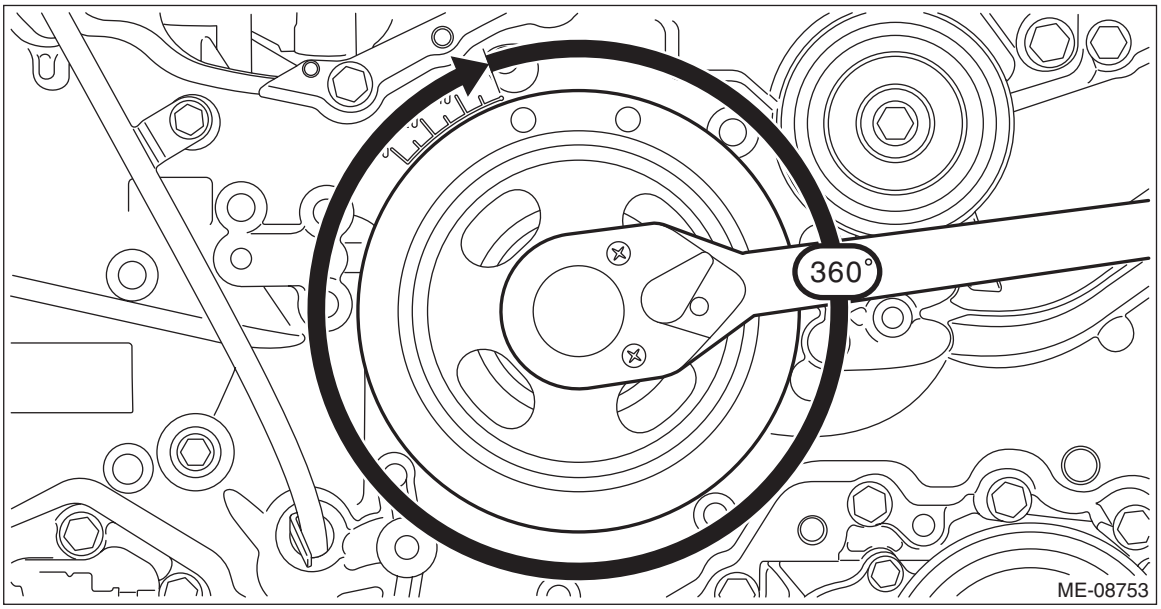

(5) Check the clearance of #3 cylinder intake.

NOTE:
- Measure the roller surface of cam base circle and roller rocker arm using thickness gauge (A).
- If the measured value is out of standard, take notes of the value in order to adjust the cam clearance later on.

Cam clearance:
Standard
$0.13^{+0.02}_{-0.03}$ mm ($0.0051^{+0.0008}_{-0.0012}$ in)

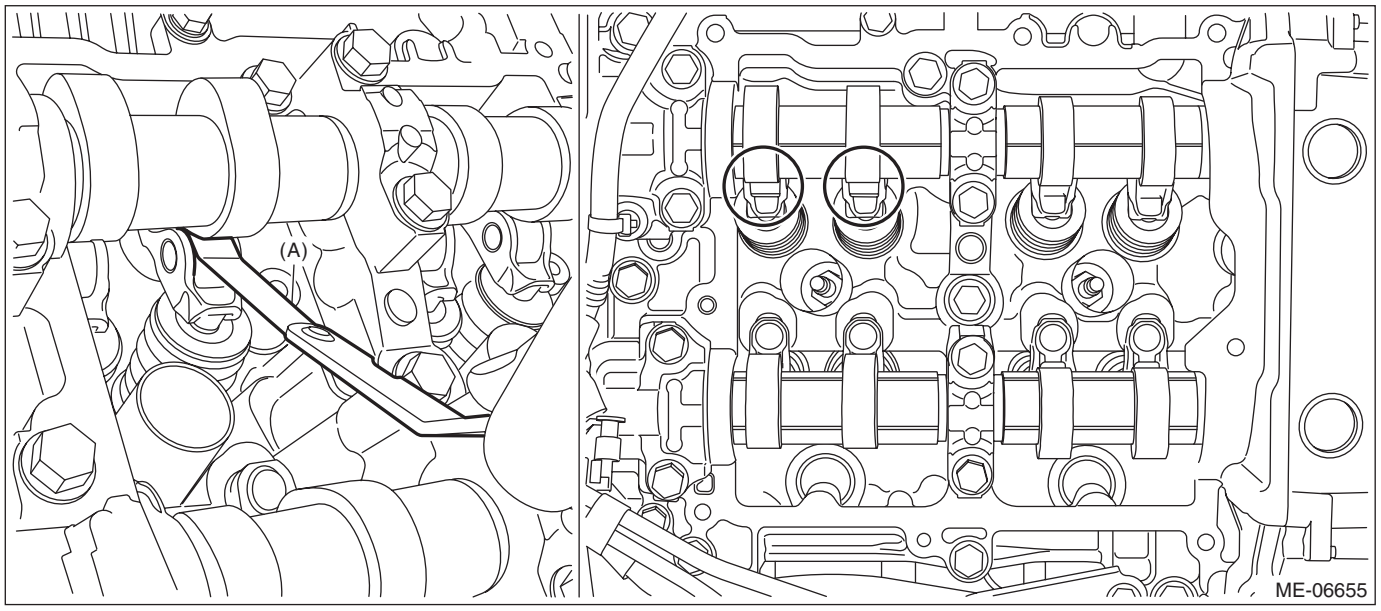

5) When inspecting #2 and #4 cylinders
(1) Remove the rocker cover LH. <Ref. to ME(w/o STI)-146, ROCKER COVER LH, REMOVAL, Rocker Cover.>

NOTE:
When working on the vehicle, place a suitable container under the vehicle.
(2) Set #2 cylinder piston to top dead center of compression stroke by rotating the crank pulley clockwise using the socket wrench.

NOTE:
When the timing mark (B) on crank pulley is aligned to the 0° in timing gauge (A) on chain cover as shown in the figure, the #2 cylinder piston is located at TDC of compression stroke if the intake camshaft and exhaust camshaft does not depress the #2 cylinder intake side roller rocker arm (intake valve) and exhaust side roller rocker arm (exhaust valve). If roller rocker arm (valve) is depressed, turn the crank pulley by 360° in order to make #2 cylinder piston at TDC of compression stroke.

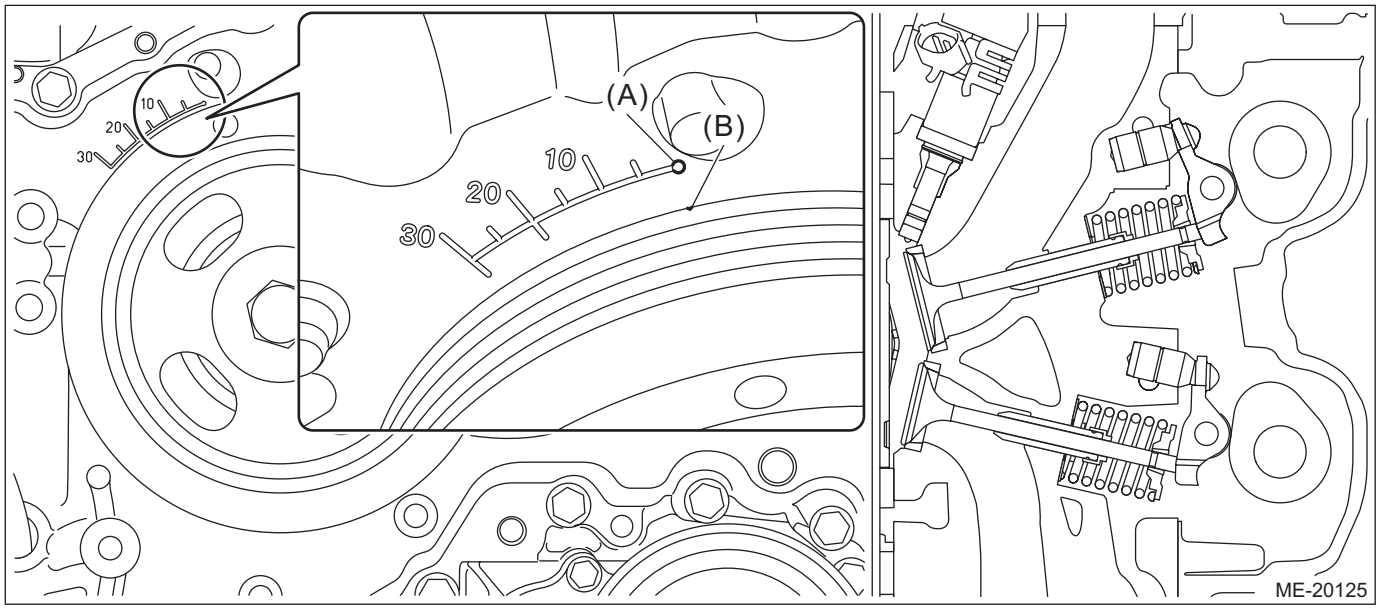

(3) Check the cam clearance for #2 cylinder intake, #2 cylinder exhaust and #4 cylinder exhaust.

NOTE:
- Measure the roller surface of cam base circle and roller rocker arm using thickness gauge (A).
- If the measured value is out of standard, take notes of the value in order to adjust the cam clearance later on.

Cam clearance:
Intake
Standard
$0.13^{+0.02}_{-0.03}$ mm ($0.0051^{+0.0008}_{-0.0012}$ in)
Exhaust
Standard
0.22±0.02 mm (0.0087±0.0008 in)

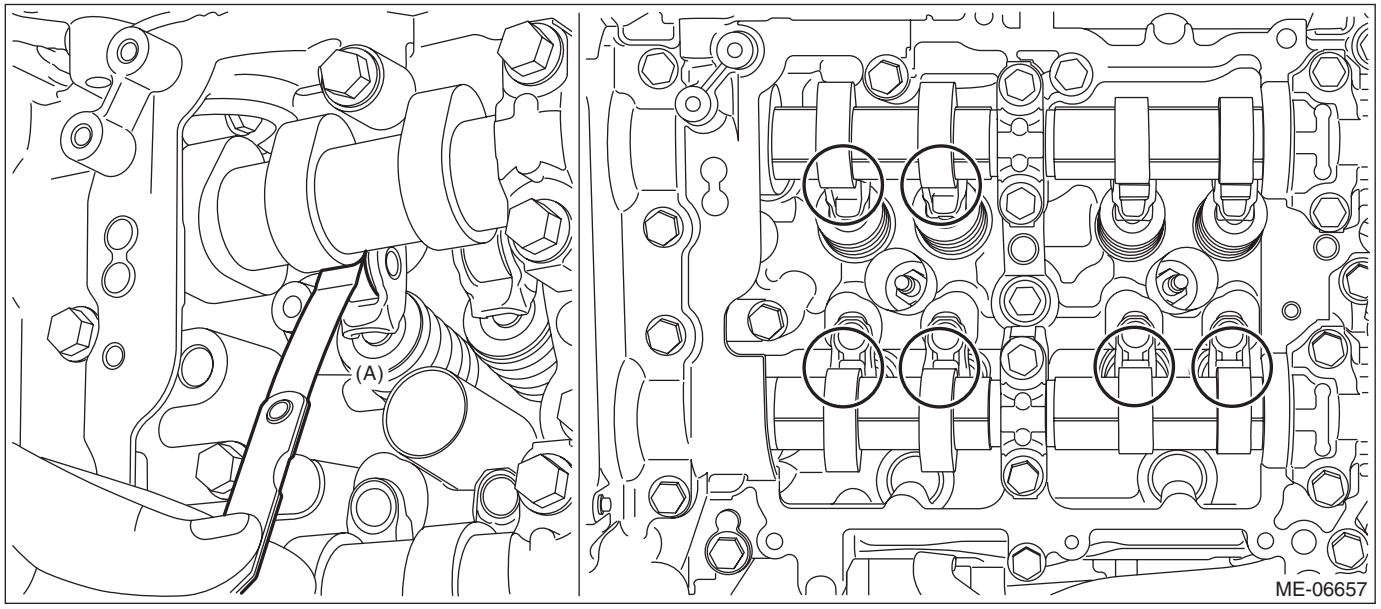

(4) Turn the crank pulley by 360°.

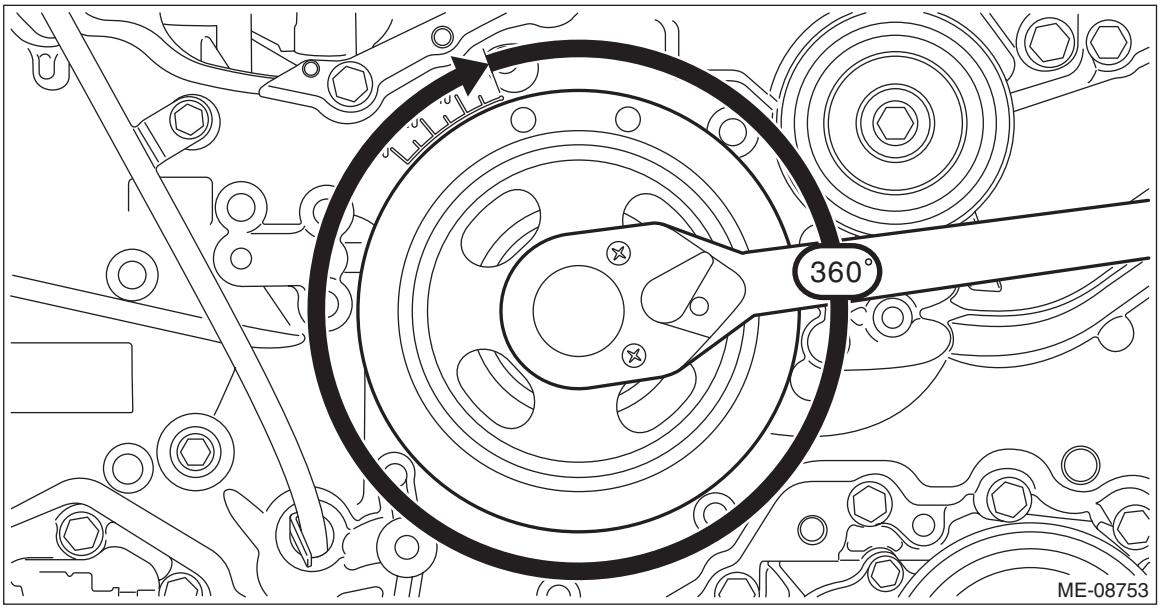

(5) Check the clearance of #4 cylinder intake.

NOTE:
- Measure the roller surface of cam base circle and roller rocker arm using thickness gauge (A).
- If the measured value is out of standard, take notes of the value in order to adjust the cam clearance later on.

Cam clearance:
Standard
$0.13^{+0.02}_{-0.03}$ mm ($0.0051^{+0.0008}_{-0.0012}$ in)

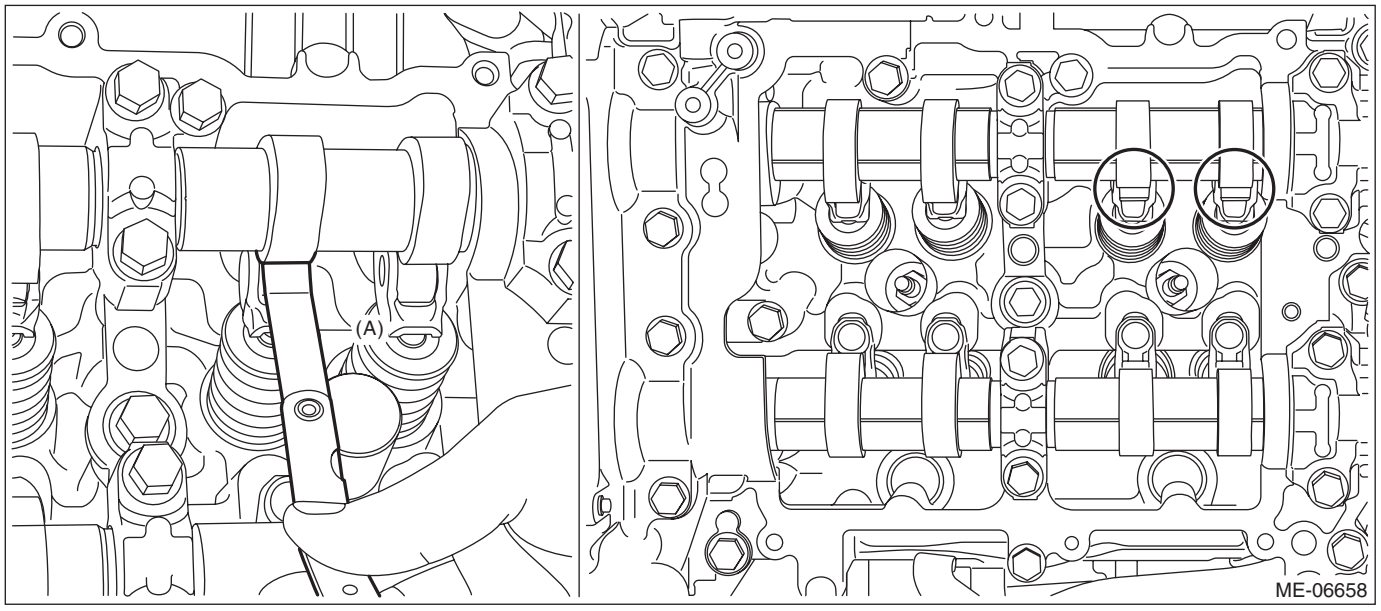

6) If necessary, adjust the cam clearance. <Ref. to ME(w/o STI)-42, ADJUSTMENT, Cam Clearance.>
7) After inspection, install the related parts in the reverse order of removal.

2. WHEN TIMING CHAIN ASSEMBLY IS REMOVED

NOTE:
Inspection of cam clearance should be performed while engine is cold.

1) When inspecting #1 and #3 cylinders
   (1) Remove the rocker cover RH. <Ref. to ME(w/o STI)-144, ROCKER COVER RH, REMOVAL, Rocker Cover.>

NOTE:
When working on the vehicle, place a suitable container under the vehicle.

   (2) Check the #1 and #3 cylinder cam clearance.

CAUTION:
Intake and exhaust camshafts can be independently rotated with the timing chain removed. When the intake valve and exhaust valve lift at the same time, the valve heads contact each other and valve stem may bend. Do not turn it to the outside of range of zero lift (cam base circle position) (in range where it can be turned lightly by hand).

NOTE:
- For cam clearance inspection, adjust the cam base circle position so that the thickness gauge (A) can be inserted easily by hand turning the camshaft (cam sprocket) to be measured.
- Measure the roller surface of cam base circle and roller rocker arm using thickness gauge (A).
- If the measured value is out of standard, take notes of the value in order to adjust the cam clearance later on.

Cam clearance:
Intake
Standard
$0.13^{+0.02}_{-0.03}$ mm ($0.0051^{+0.0008}_{-0.0012}$ in)
Exhaust
Standard
0.22±0.02 mm (0.0087±0.0008 in)

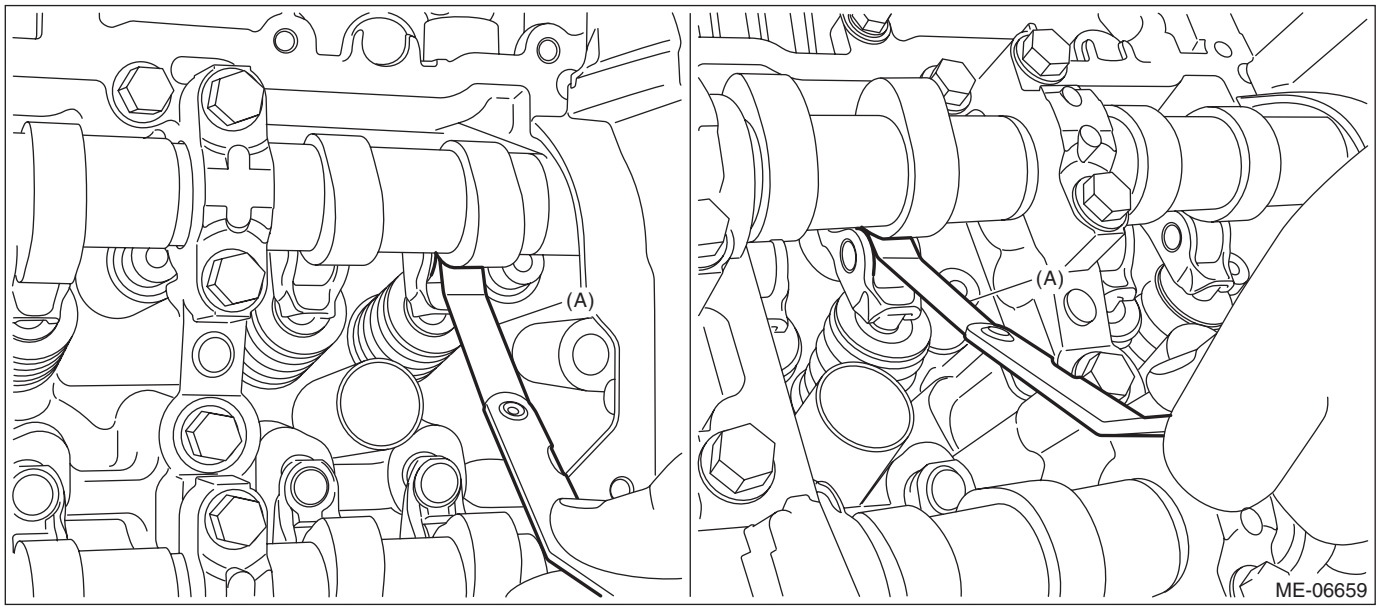

2) When inspecting #2 and #4 cylinders
(1) Remove the rocker cover LH. <Ref. to ME(w/o STI)-146, ROCKER COVER LH, REMOVAL, Rocker Cover.>

NOTE:
When working on the vehicle, place a suitable container under the vehicle.
(2) Check the #2 and #4 cylinder cam clearance.

CAUTION:
Intake and exhaust camshafts can be independently rotated with the timing chain removed. When the intake valve and exhaust valve lift at the same time, the valve heads contact each other and valve stem may bend. Do not turn it to the outside of range of zero lift (cam base circle position) (in range where it can be turned lightly by hand).

NOTE:
• Because the intake camshaft is pressurized by the high-pressure fuel pump, it is almost impossible to turn the intake camshaft lightly by hand. Since the zero-lift position is adjusted at the removal of the timing chain LH, measure the cam clearance at that position.
• For cam clearance inspection on exhaust side, adjust the cam base circle position so that the thickness gauge (A) can be inserted easily by hand turning the exhaust camshaft (cam sprocket).
• Measure the roller surface of cam base circle and roller rocker arm using thickness gauge (A).
• If the measured value is out of standard, take notes of the value in order to adjust the cam clearance later on.

Cam clearance:
Intake
Standard
$0.13^{+0.02}_{-0.03}$ mm ($0.0051^{+0.0008}_{-0.0012}$ in)
Exhaust
Standard
0.22±0.02 mm (0.0087±0.0008 in)

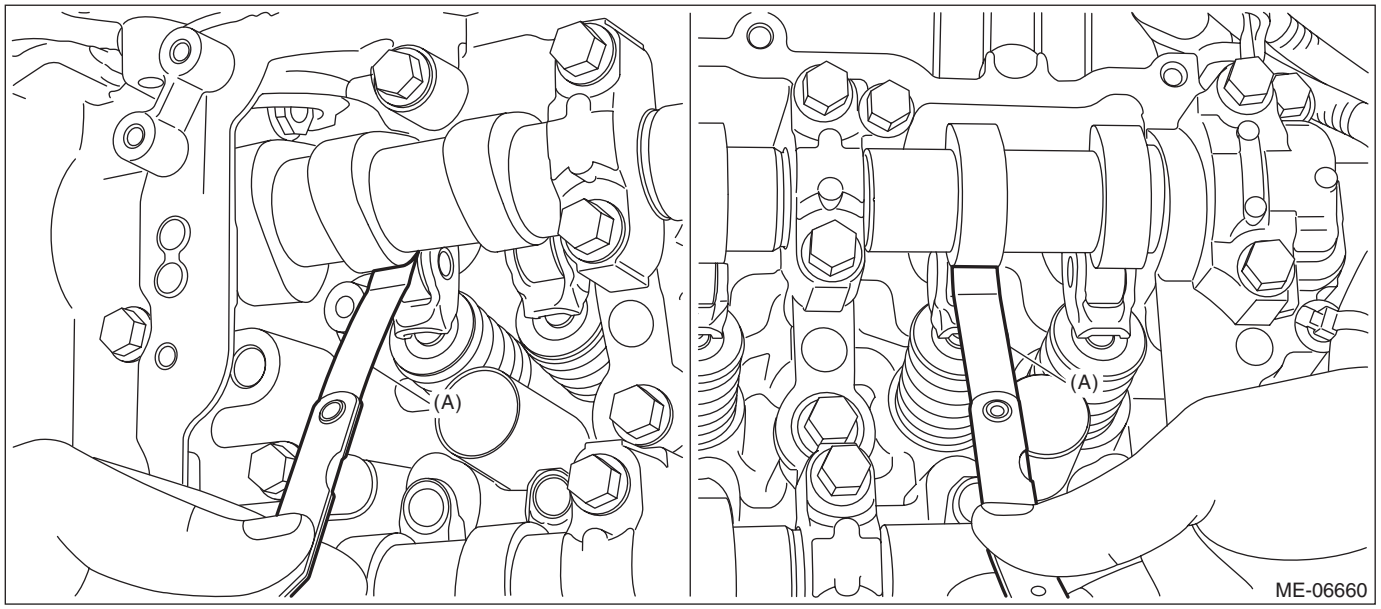

3) If necessary, adjust the cam clearance. <Ref. to ME(w/o STI)-42, ADJUSTMENT, Cam Clearance.>
4) After inspection, install the related parts in the reverse order of removal.

B: ADJUSTMENT

1) Remove the engine from the vehicle. <Ref. to ME(w/o STI)-45, REMOVAL, Engine Assembly.>
2) Remove the chain cover. <Ref. to ME(w/o STI)-89, REMOVAL, Chain Cover.>
3) When adjusting #1 and #3 cylinders
(1) Remove the timing chain RH. <Ref. to ME(w/o STI)-111, TIMING CHAIN RH, REMOVAL, Timing Chain Assembly.>

(2) Remove the cam carrier RH. <Ref. to ME(w/o STI)-164, CAM CARRIER RH, REMOVAL, Cam Carrier.>
(3) Measure the thickness of valve shim using micrometer.

NOTE:
Measurement should be performed at a temperature of 20°C (68°F).

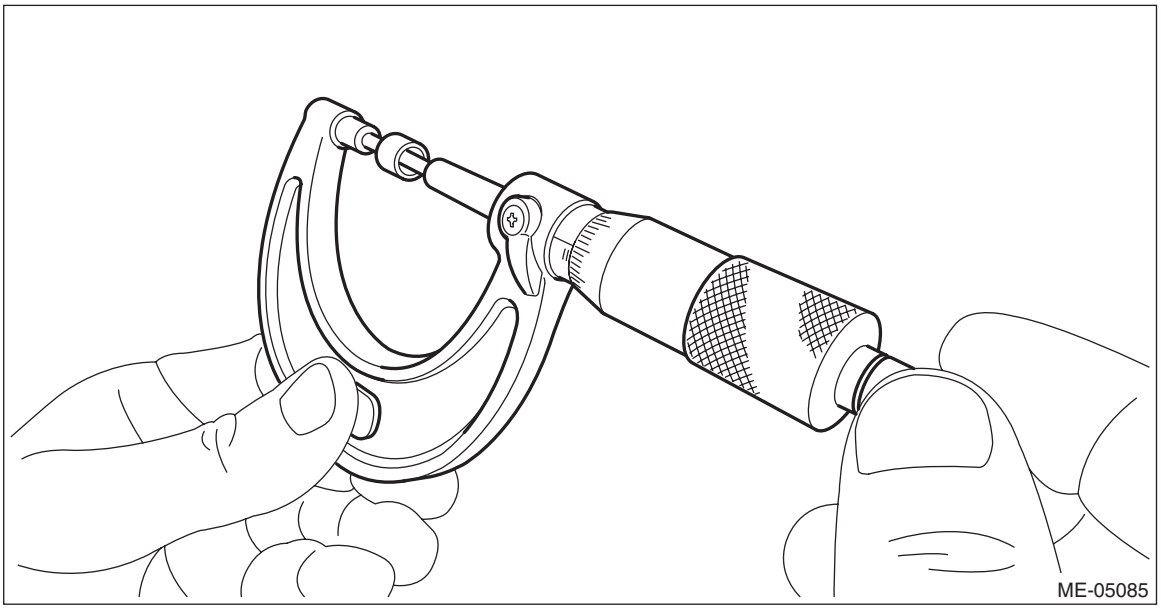

(4) Select a valve shim of suitable thickness using the measured cam clearance and valve shim thickness.

NOTE:
Use a new valve shim.

Intake side: S = T + 1.69 × (V – 0.13 mm (0.0051 in)) Exhaust side: S = T + 1.87 × (V – 0.22 mm (0.0087 in))
S: Valve shim thickness required V: Measured cam clearance T: Current valve shim thickness

(5) Install the cam carrier RH. <Ref. to ME(w/o STI)-172, CAM CARRIER RH, INSTALLATION, Cam Carrier.>
(6) Check all the cam clearance of RH side at this time. If the cam clearance is not within the standard value, repeat the procedure over again from step 2).

NOTE:
When the removing/installing of cam carrier RH has been performed, cam clearance may be outside the standard value. Checking of all cam clearance of RH side is necessary. Refer to INSPECTION of “Cam Clearance” for the cam clearance inspection. <Ref. to ME(w/o STI)-41, WHEN TIMING CHAIN ASSEMBLY IS REMOVED, INSPECTION, Cam Clearance.>

Cam clearance:
Intake
Standard
$0.13^{+0.02}_{-0.03}$ mm ($0.0051^{+0.0008}_{-0.0012}$ in)
Exhaust
Standard
0.22±0.02 mm (0.0087±0.0008 in)

4) When adjusting #2 and #4 cylinders
(1) Remove the timing chain LH. <Ref. to ME(w/o STI)-114, TIMING CHAIN LH, REMOVAL, Timing Chain Assembly.>
(2) Remove the intake manifold. <Ref. to FU(w/o STI)-18, REMOVAL, Intake Manifold.>
(3) Remove the cam carrier LH. <Ref. to ME(w/o STI)-167, CAM CARRIER LH, REMOVAL, Cam Carrier.>
(4) Measure the thickness of valve shim using micrometer.

NOTE:
Measurement should be performed at a temperature of 20°C (68°F).

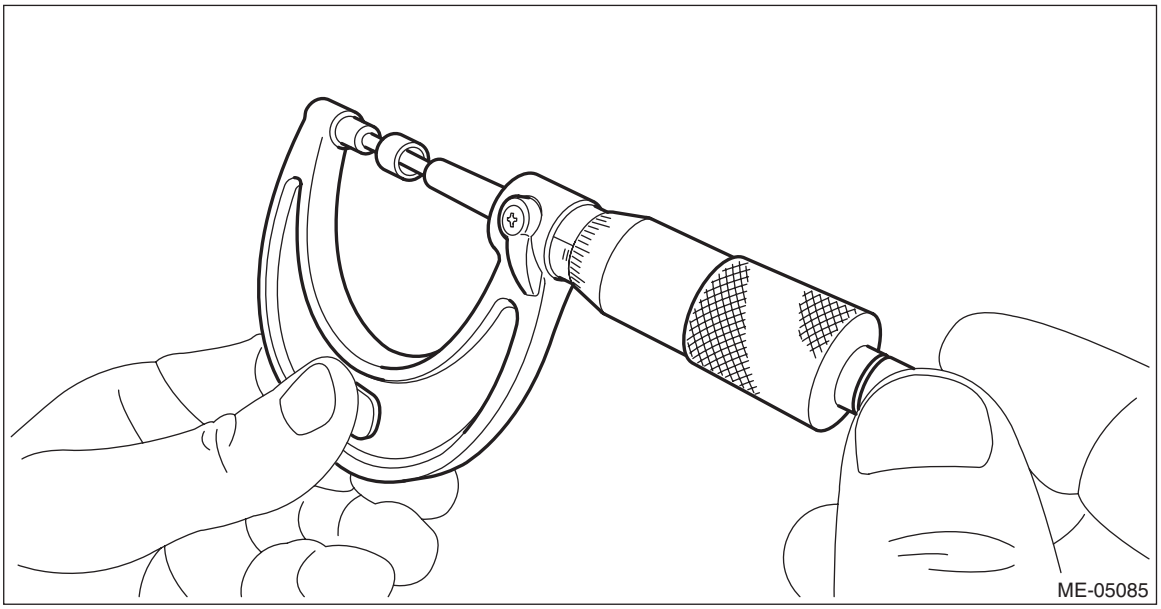

(5) Select a valve shim of suitable thickness using the measured cam clearance and valve shim thickness.

NOTE:
Use a new valve shim.

Intake side: S = T + 1.69 × (V – 0.13 mm (0.0051 in)) Exhaust side: S = T + 1.87 × (V – 0.22 mm (0.0087 in))
S: Valve shim thickness required V: Measured cam clearance T: Current valve shim thickness

(6) Install the cam carrier LH. <Ref. to ME(w/o STI)-181, CAM CARRIER LH, INSTALLATION, Cam Carrier.>
(7) Check all the cam clearance of LH side at this time. If the cam clearance is not within the standard value, repeat the procedure over again from step 3).

NOTE:
When the removing/installing of cam carrier LH has been performed, cam clearance may be outside the standard value. Checking of all cam clearance of LH side is necessary. Refer to INSPECTION of “Cam Clearance” for the cam clearance inspection. <Ref. to ME(w/o STI)-41, WHEN TIMING CHAIN ASSEMBLY IS REMOVED, INSPECTION, Cam Clearance.>

Cam clearance:
Intake
Standard
$0.13^{+0.02}_{-0.03}$ mm ($0.0051^{+0.0008}_{-0.0012}$ in)
Exhaust
Standard
0.22±0.02 mm (0.0087±0.0008 in)

5) After adjustment, install the related parts in the reverse order of removal.

9. Engine Assembly

A: REMOVAL

1) Remove the striker - front hood. <Ref. to EB-11, DISASSEMBLY, Front Hood.>
2) Fully open the front hood. <Ref. to NT-23, FRONT HOOD DAMPER STAY, NOTE, Note.>
3) Remove the collector cover. <Ref. to IN(w/o STI)-7, REMOVAL, Collector Cover.>
4) Collect the refrigerant from A/C system. <Ref. to AC-26, Refrigerant Recovery Procedure.>
5) Release the fuel pressure. <Ref. to FU(w/o STI)-138, RELEASING OF FUEL PRESSURE, PROCEDURE, Fuel.>
6) Open the fuel filler lid and remove the fuel filler cap.

NOTE:
This operation is required to release the inner pressure of the fuel tank.
7) Disconnect the ground terminal from battery sensor. <Ref. to NT-6, BATTERY, NOTE, Note.>
8) Remove the air intake duct. <Ref. to IN(w/o STI)-26, REMOVAL, Air Intake Duct.>
9) Remove the intercooler. <Ref. to IN(w/o STI)-43, REMOVAL, Intercooler.>
10) Remove the ECM. <Ref. to FU(w/o STI)-124, REMOVAL, Engine Control Module (ECM).>
11) Remove the intake duct No. 1 and intake duct No. 2. <Ref. to IN(w/o STI)-27, INTAKE DUCT NO. 1, REMOVAL, Intake Duct.> <Ref. to IN(w/o STI)-30, INTAKE DUCT NO. 2, REMOVAL, Intake Duct.>
12) Remove the radiator. <Ref. to CO(w/o STI)-36, REMOVAL, Radiator.>
13) Disconnect sections (A) and (B) of the brake booster vacuum hose from the brake vacuum pump and intake manifold, and remove the brake booster vacuum hose from the clip (C).
14) Remove the brake booster vacuum hose from the clip (D), and place the brake booster vacuum hose aside so that it does not interfere with the work.

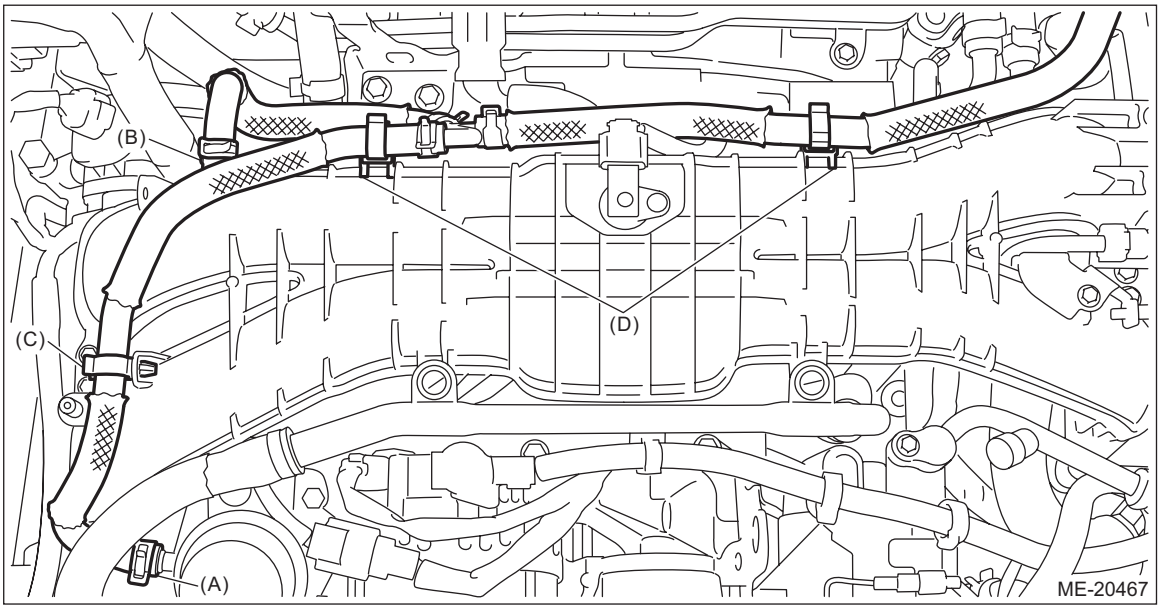

15) Disconnect the bulkhead harness connectors from the engine harness connectors.

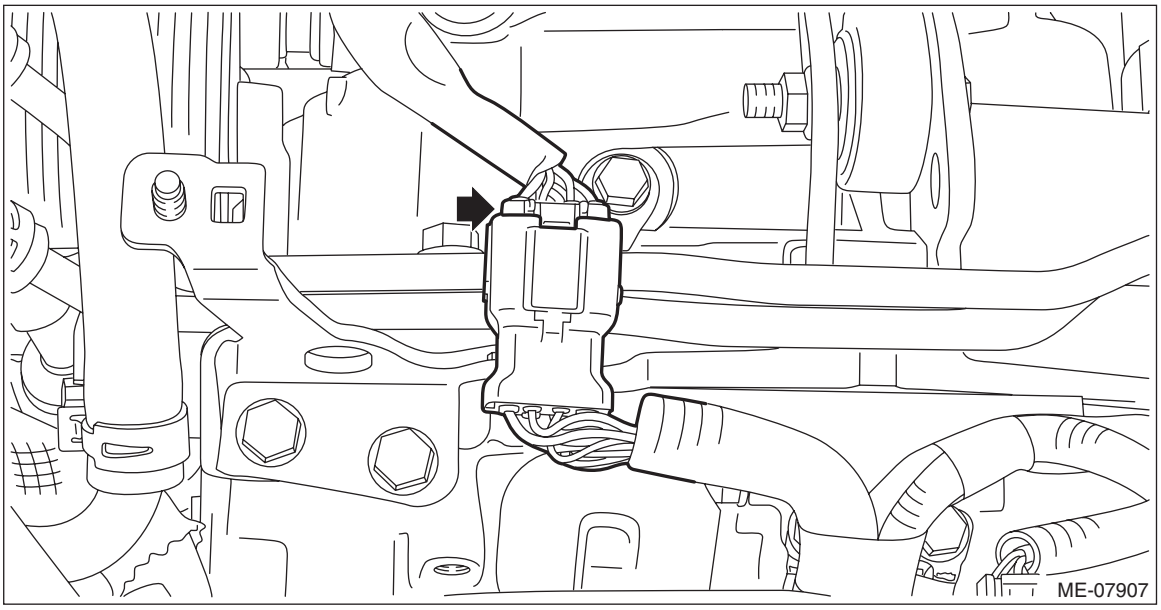

16) Disconnect the connector (A) from the brake vacuum pump.
17) Disconnect connector (B) and terminal (C) from the generator, and remove the clip (D) securing the generator cord to the intake manifold.

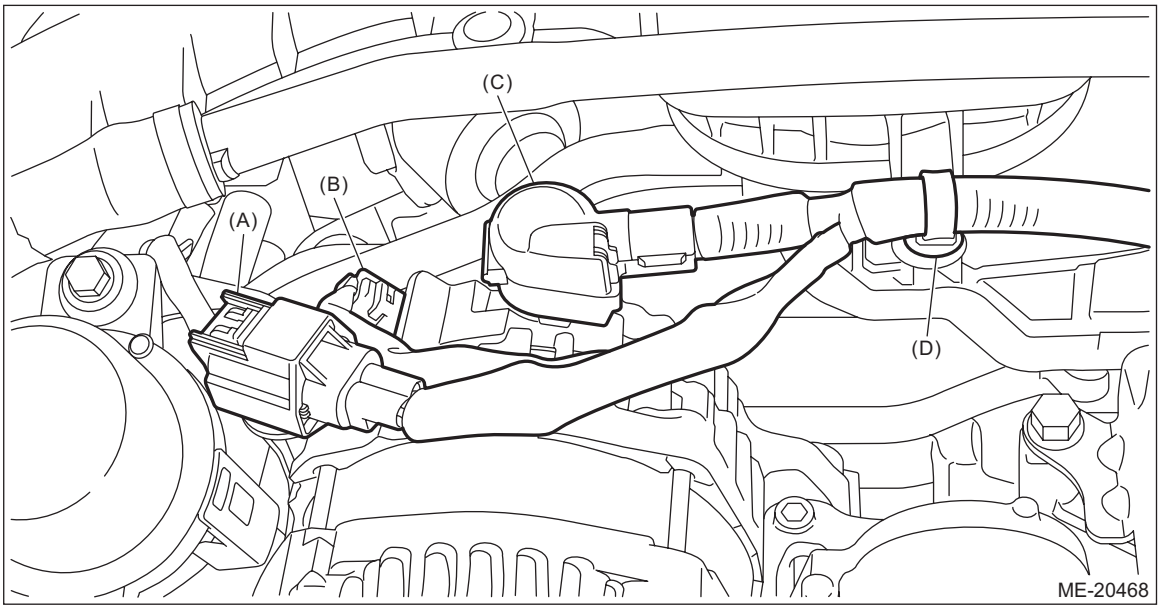

18) Disconnect connector (A) from A/C compressor, and remove the generator cord from clip (B).
19) Remove the clip (C) securing the generator cord to the fuel pipe protector, and move the generator cord aside so that it does not interfere with the work.

20) Remove the bolts securing the hose - pressure suction and the hose - pressure discharge to the A/C compressor, and disconnect the hose - pressure suction and the hose - pressure discharge from the A/C compressor. <Ref. to AC-63, REMOVAL, Hose and Pipe.>

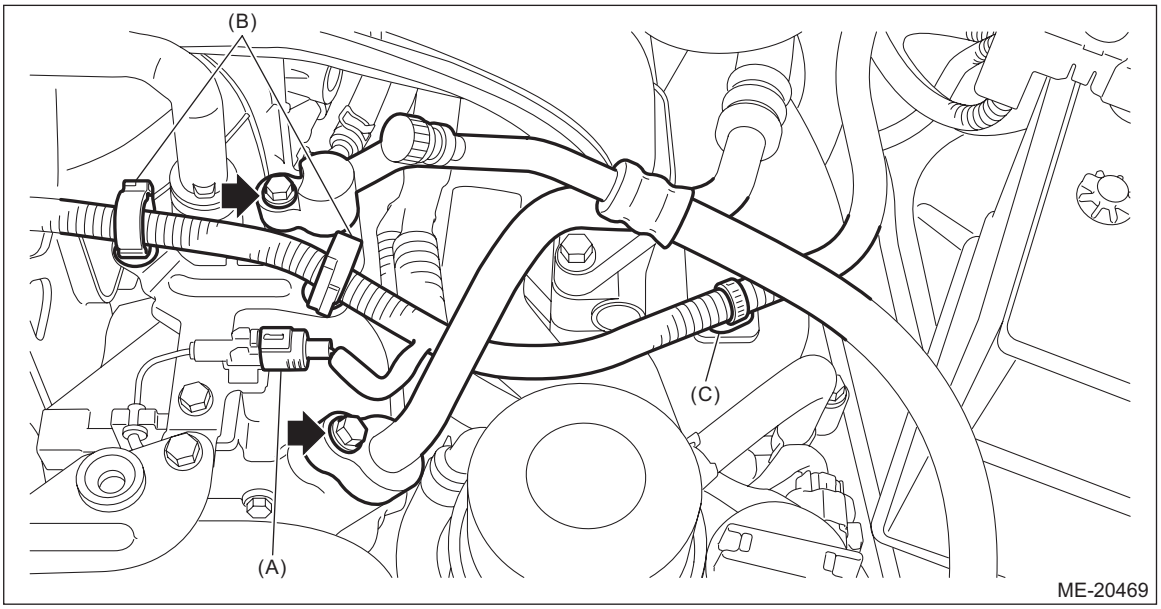

21) Disconnect the heater inlet hose (A) from the water pipe assembly, and disconnect the heater outlet hose (B) from the water pipe LH.

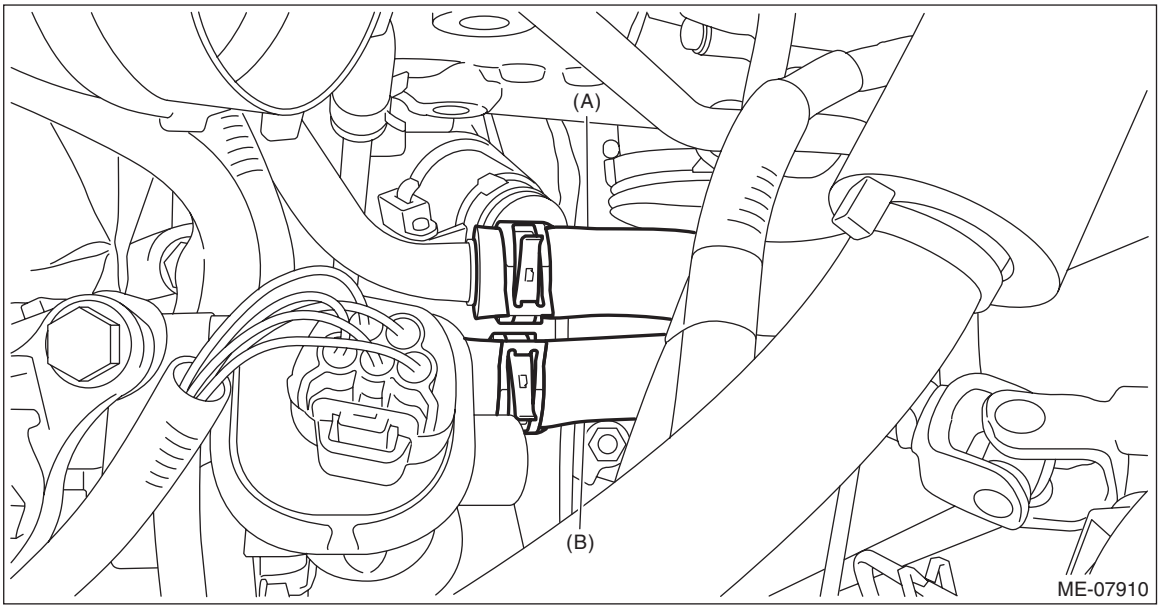

22) Disconnect the engine coolant inlet hose and engine coolant outlet hose from the CVTF cooler (with warmer feature) and EGR cooler. (CVT model)

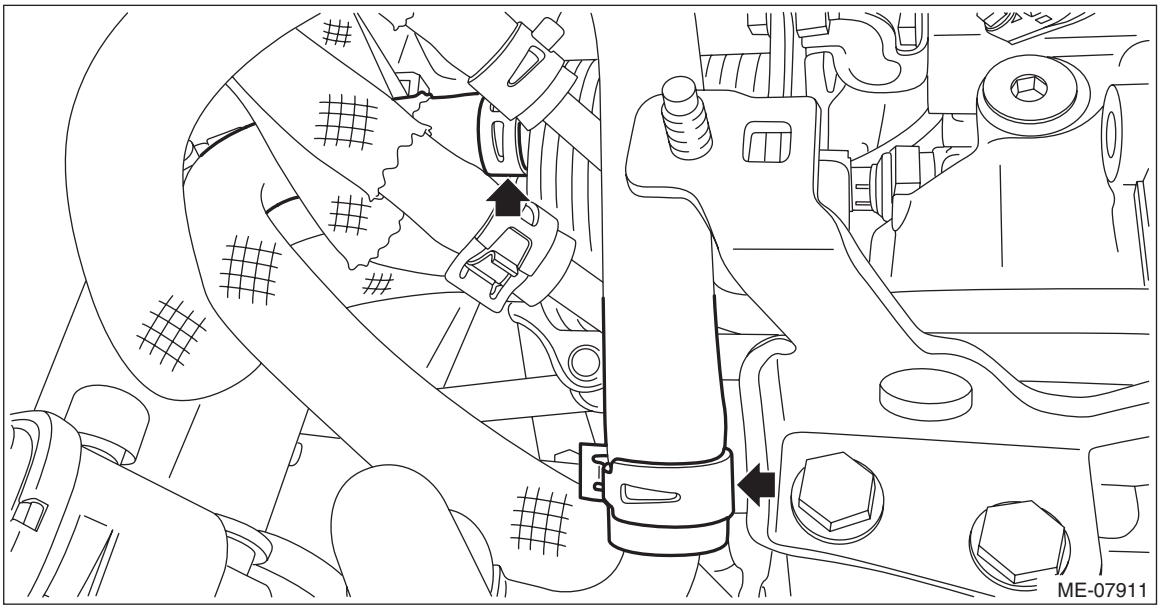

23) Remove the pitching stopper.

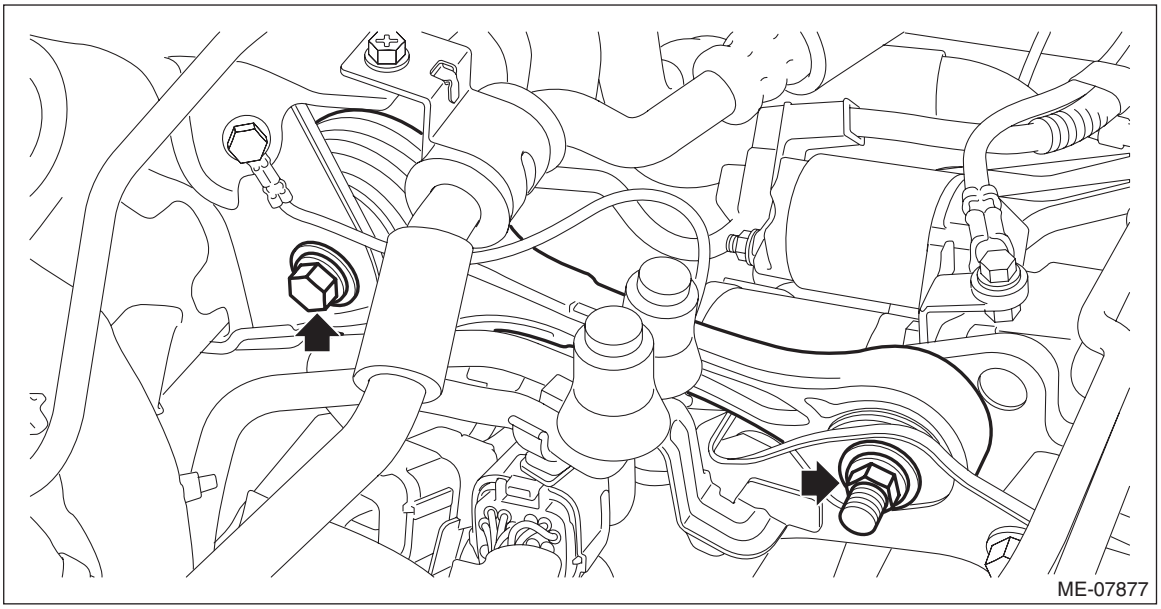

24) Remove the front exhaust pipe. <Ref. to EX(w/o STI)-9, REMOVAL, Front Exhaust Pipe.>
25) Set the transmission jack to the transmission. (CVT model)

NOTE:
Be careful that the support plate of transmission jack does not touch the transmission oil pan.

26) Remove the rear crossmember and attach the ST. (CVT model)
ST 41099YC001 ST REAR MOUNT

Tightening torque:
T1: 35 N·m (3.6 kgf-m, 25.8 ft-lb)
T2: 70 N·m (7.1 kgf-m, 51.6 ft-lb)

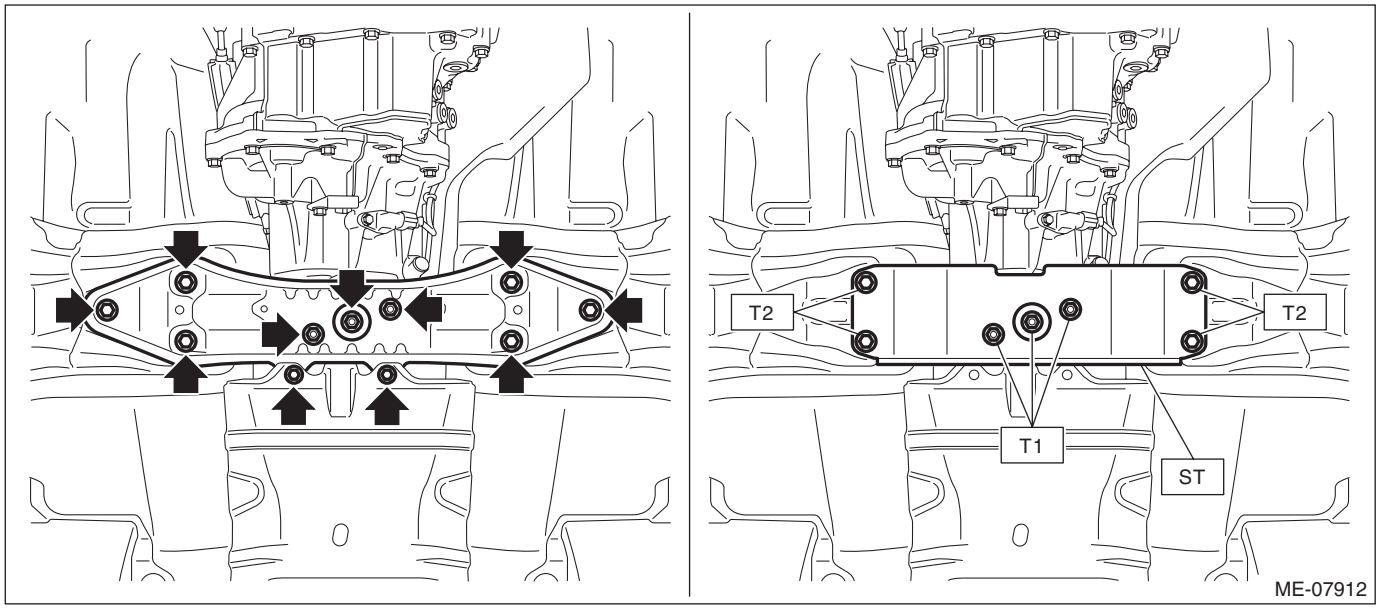

27) Remove the transmission jack. (CVT model)
28) Disconnect the ground cable from the oil pipe assembly.

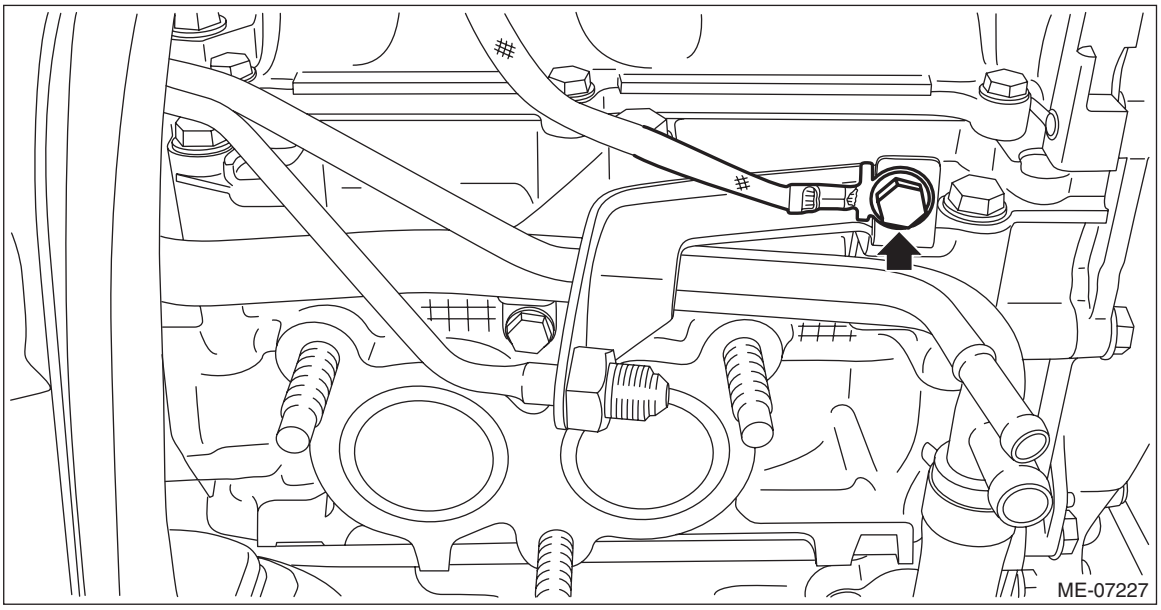

29) Remove the lower bolt securing the CVTF cooler (with warmer feature) to the CVT. (CVT model)

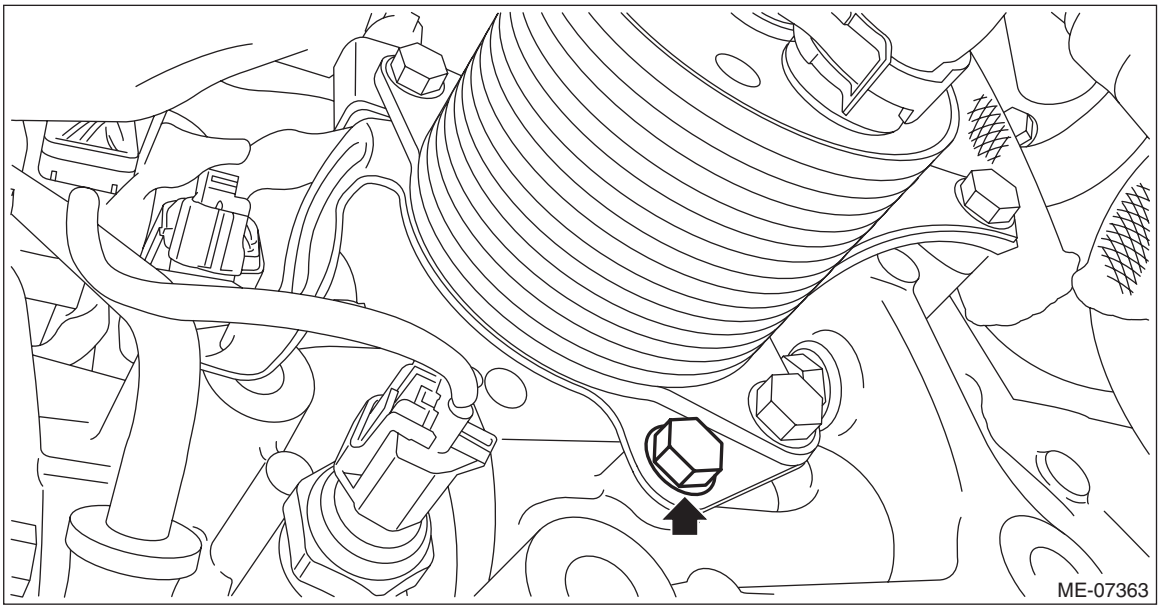

30) Remove the bolts and nuts which hold the lower side of transmission to the engine.

- CVT model

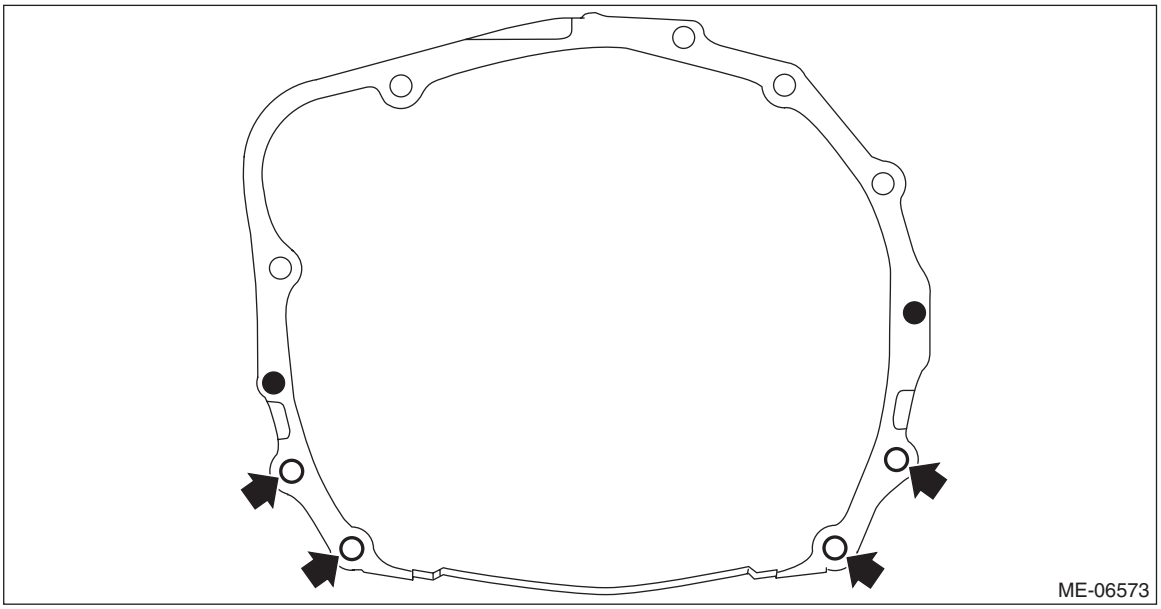

- MT model

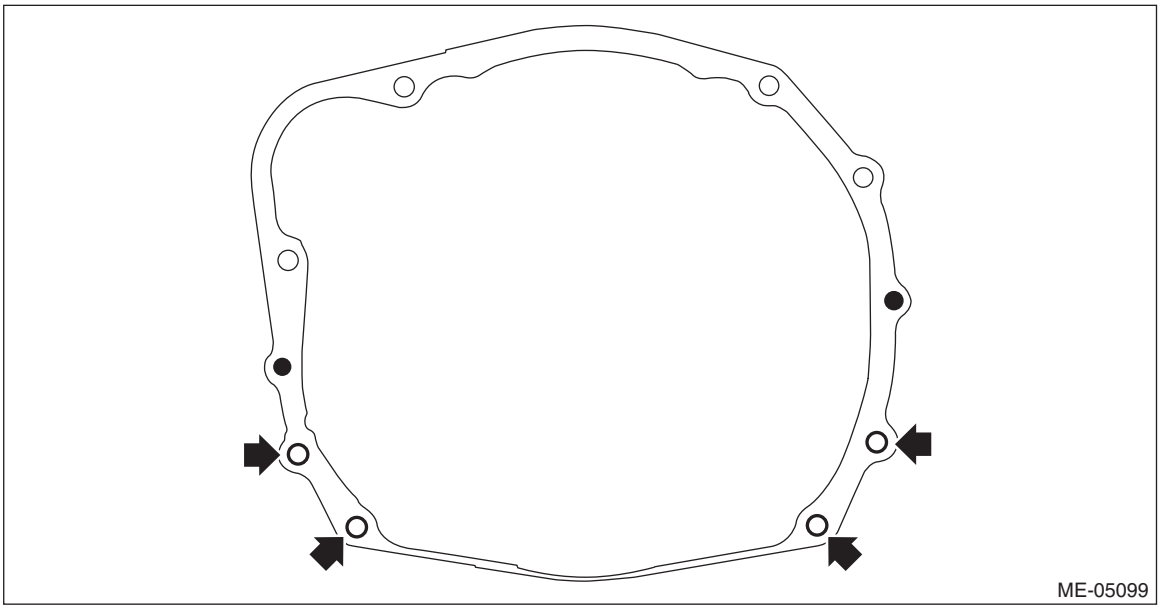

31) Remove the nuts which secure the engine mounting to the front crossmember.

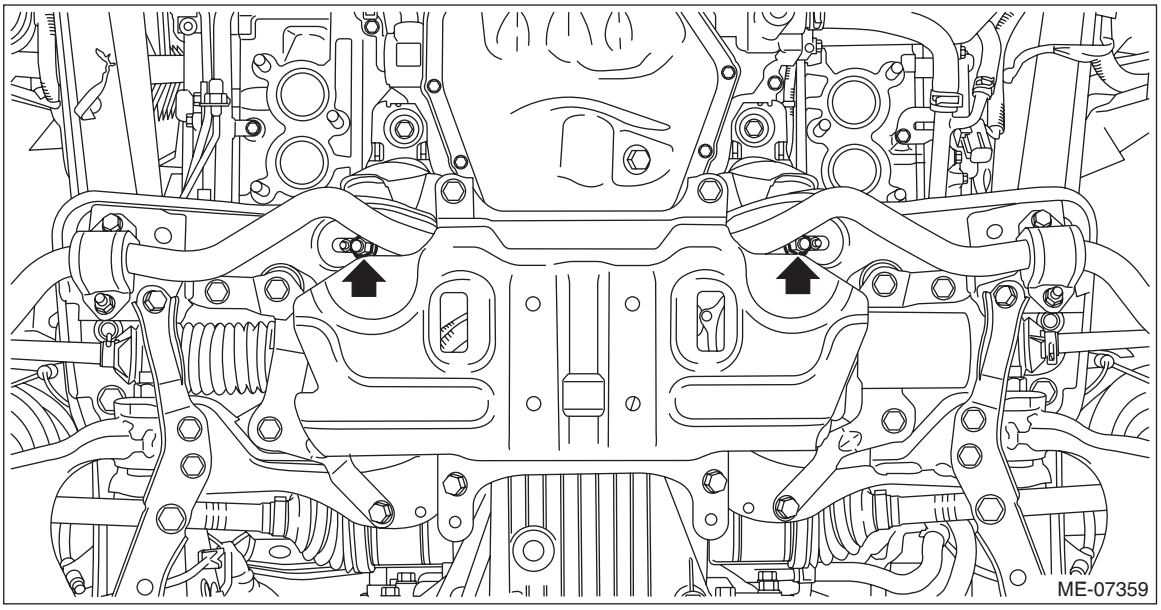

32) Lower the vehicle.
33) Remove the starter. <Ref. to SC(w/o STI)-7, REMOVAL, Starter.>

34) Separate the torque converter clutch from the drive plate. (CVT model)
(1) Remove the service hole plug.

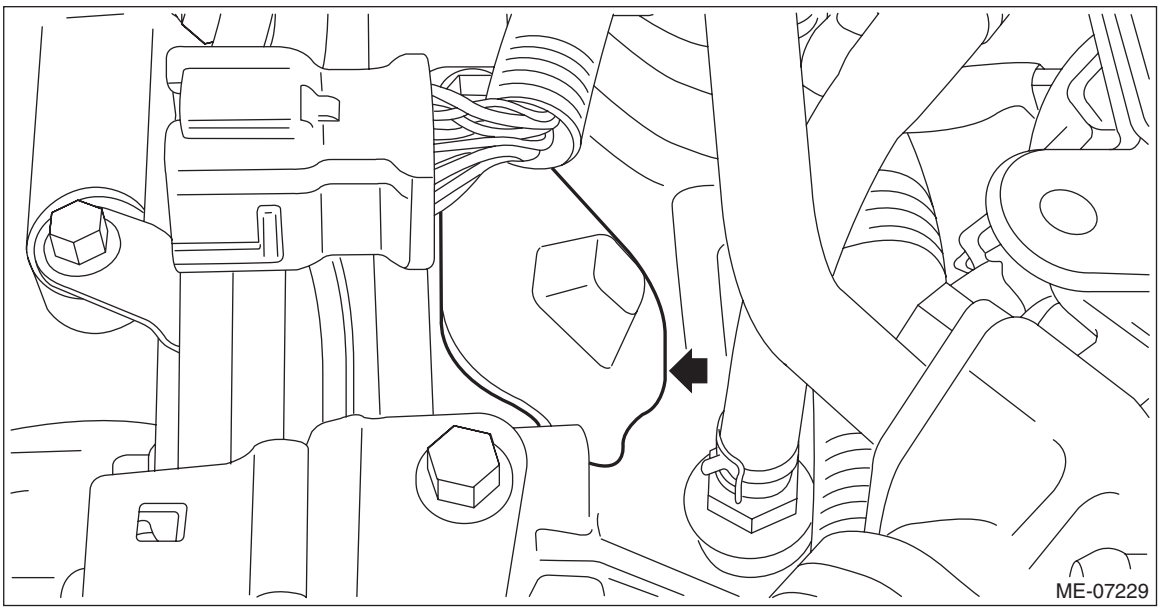

(2) Insert the wrench into the crank pulley bolt and rotate the crank pulley to remove the bolts which hold torque converter clutch to drive plate.

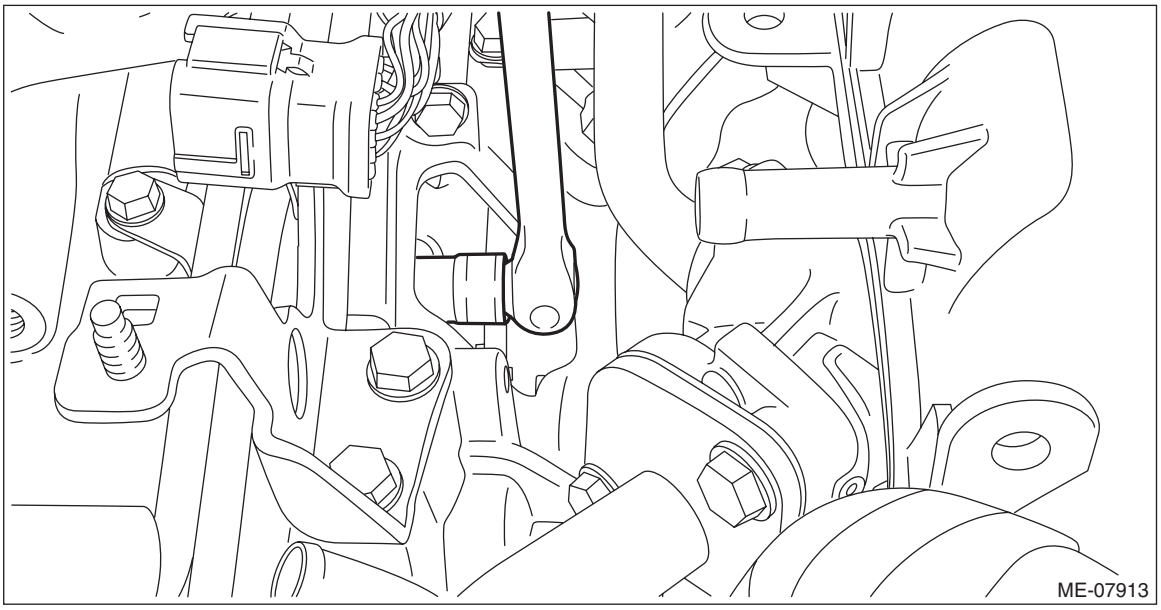

(3) Attach the ST to the torque converter clutch case.
ST 498277200 STOPPER SET

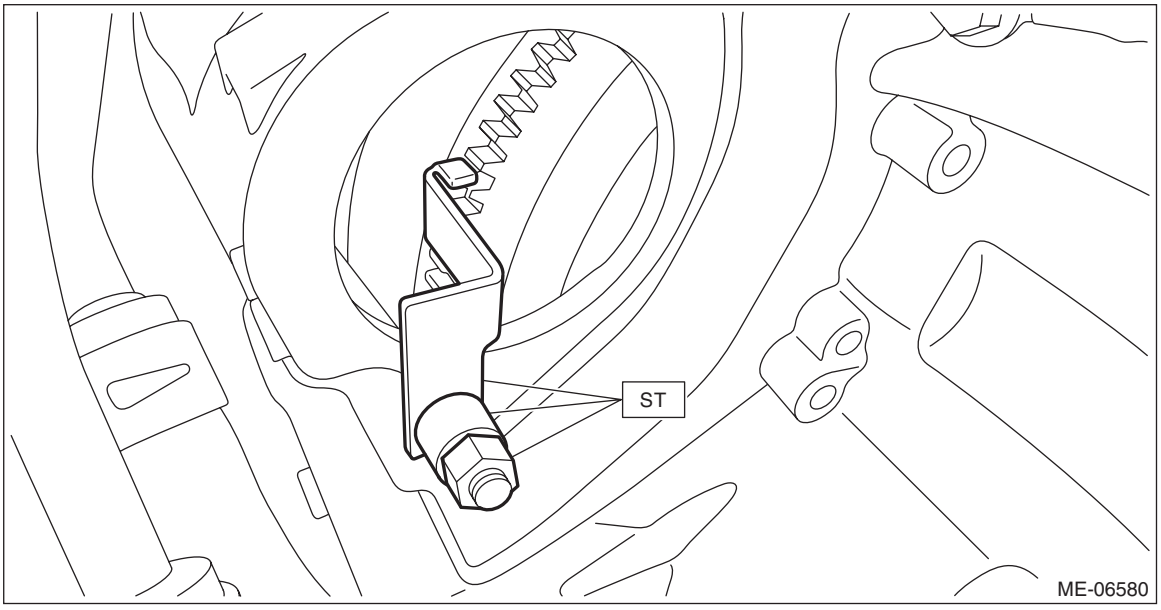

35) Remove the clip (A) securing the bulkhead harness to the CVTF cooler (with warmer feature). (CVT model)
36) Remove the upper bolt securing the CVTF cooler (with warmer feature) to the CVT, and move the CVTF cooler (with warmer feature) at the locations that do not interfere operation. (CVT model)

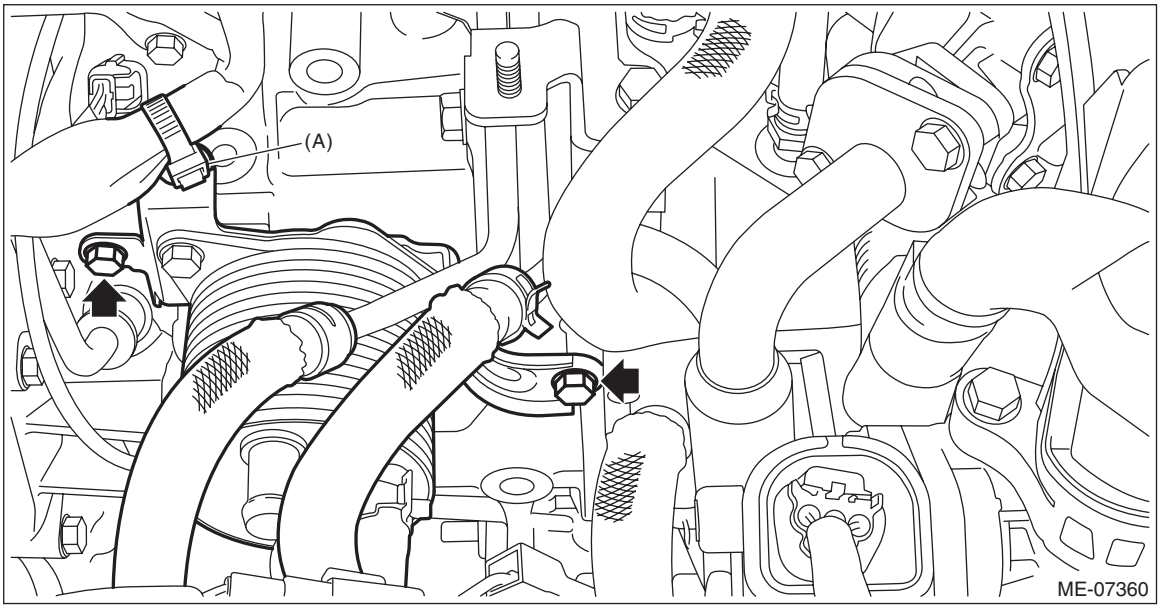

37) Remove the bolt (A) securing the transmission harness stay to the CVT. (CVT model)

NOTE:
This procedure is required to prevent the transmission connector from touching the A/C pressure hose during engine removal/installation.

38) Remove the air breather hose from the clip (B), and then remove the clip (B) from the pitching stopper bracket. (CVT model)

NOTE:
This procedure is required to prevent the clip from touching the A/C pressure hose during engine removal/installation.

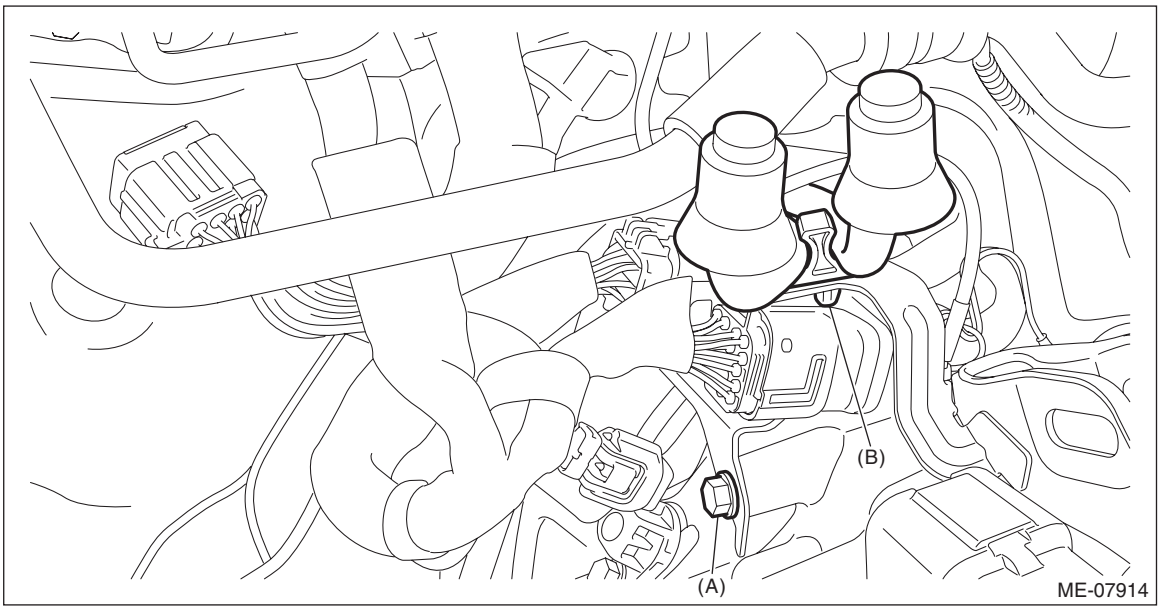

39) Disconnect the fuel delivery tube and evaporation hose.

CAUTION:
- **Be careful not to spill fuel.**
- **Catch the fuel from the tubes using a container or cloth.**

(1) Disconnect the quick connector on the fuel delivery tube from the fuel pipe assembly, and remove the clip (A) securing the fuel delivery tube.

NOTE:
Disconnect the quick connector as shown in the figure.

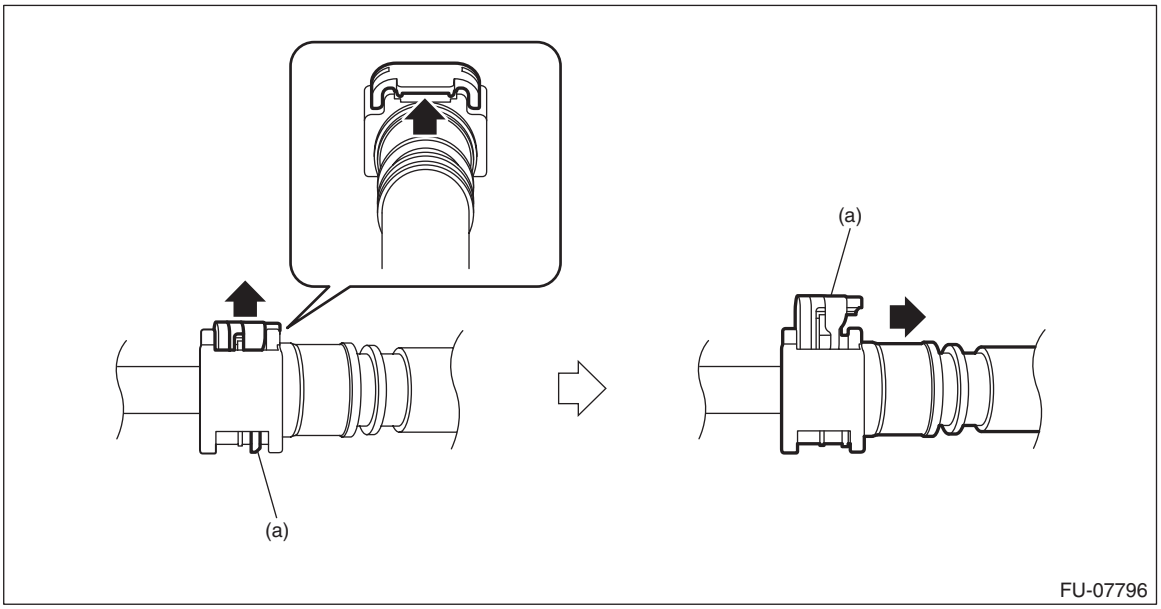

(a) Slider

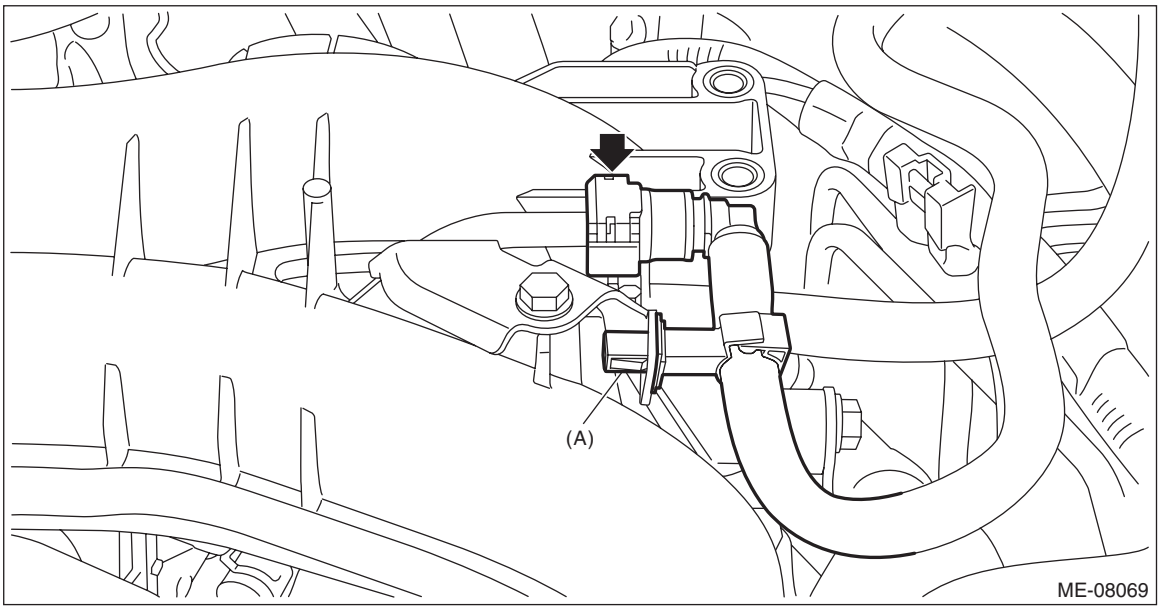

(2) Disconnect the evaporation hose from the fuel pipe assembly.

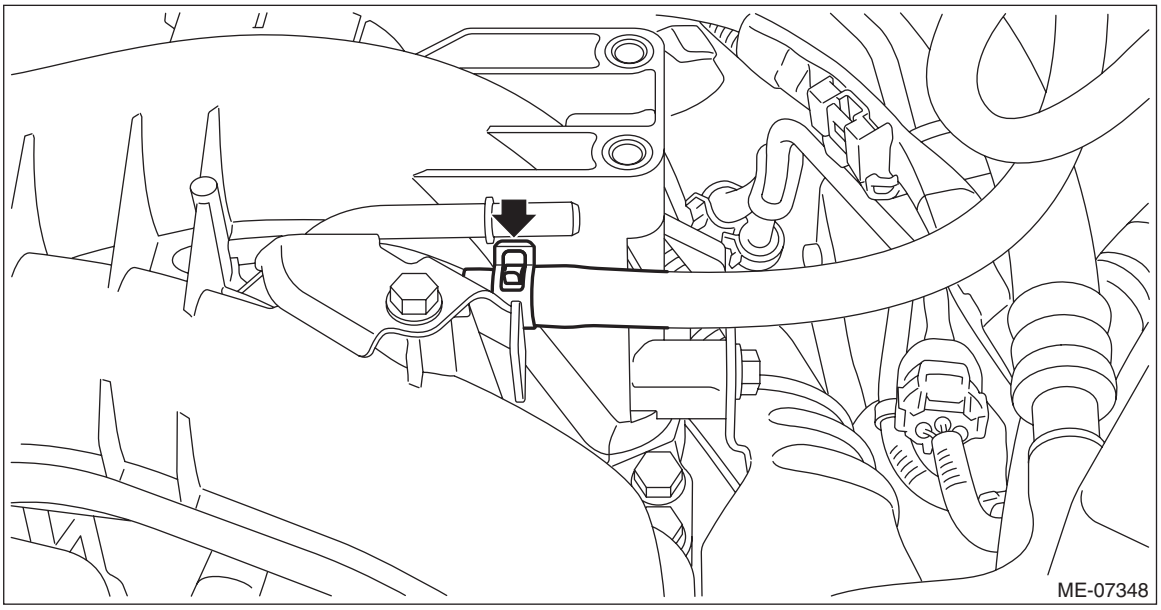

40) Separate the engine and transmission.

CAUTION:
Before removing the engine away from transmission, check to be sure no work has been overlooked.

(1) Support the engine with a lifting device and wire ropes.

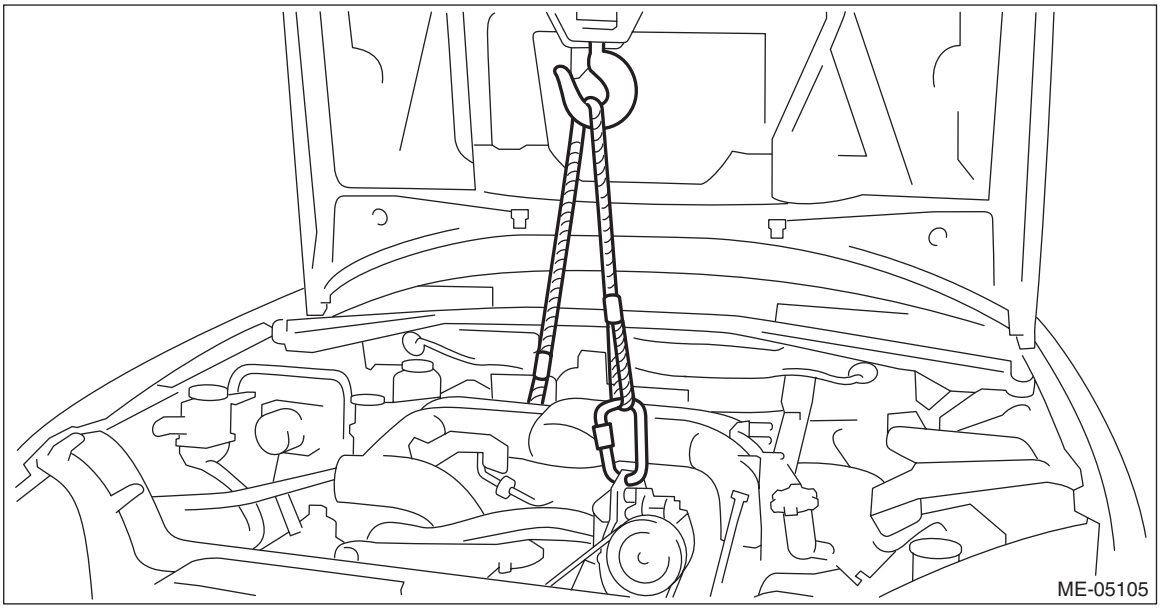

(2) Support the transmission with a garage jack.

CAUTION:
Be sure to perform this procedure to prevent the transmission from lowering by its own weight.

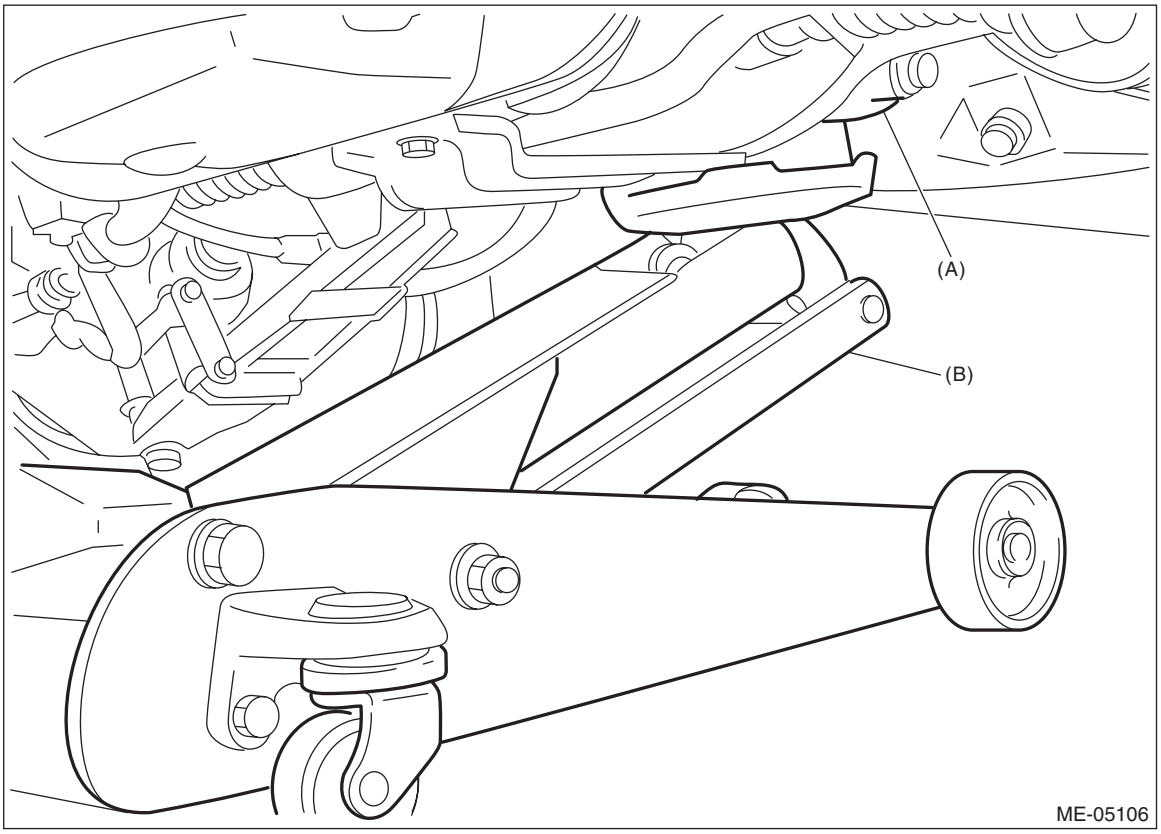

(A) Transmission (B) Garage jack

(3) Remove the bolts which hold the upper side of the transmission to the engine.

- CVT model

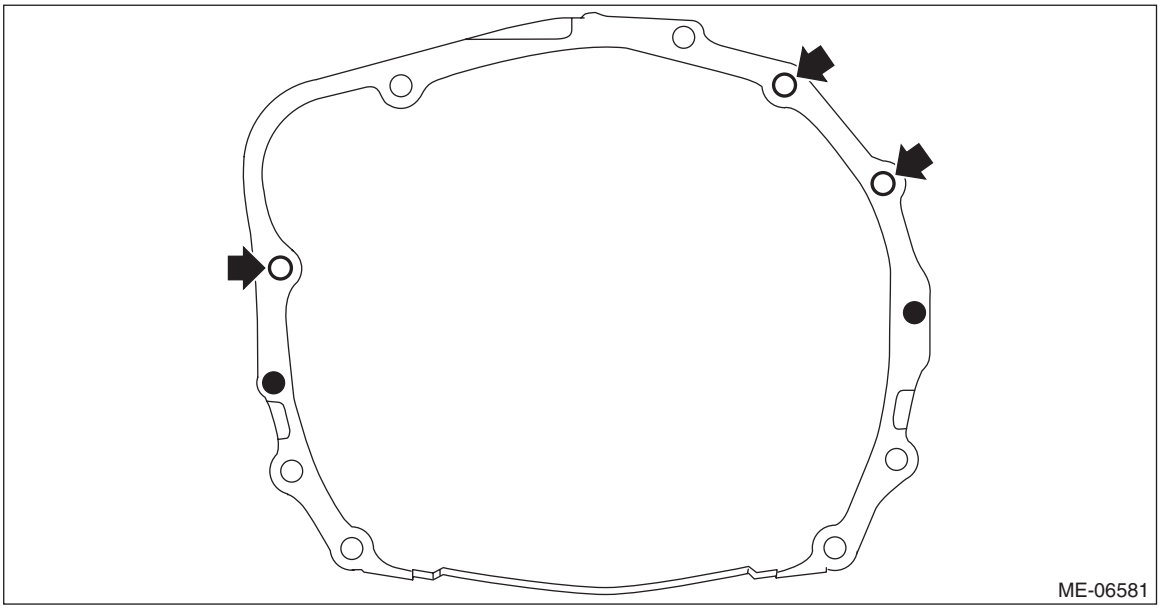

- MT model

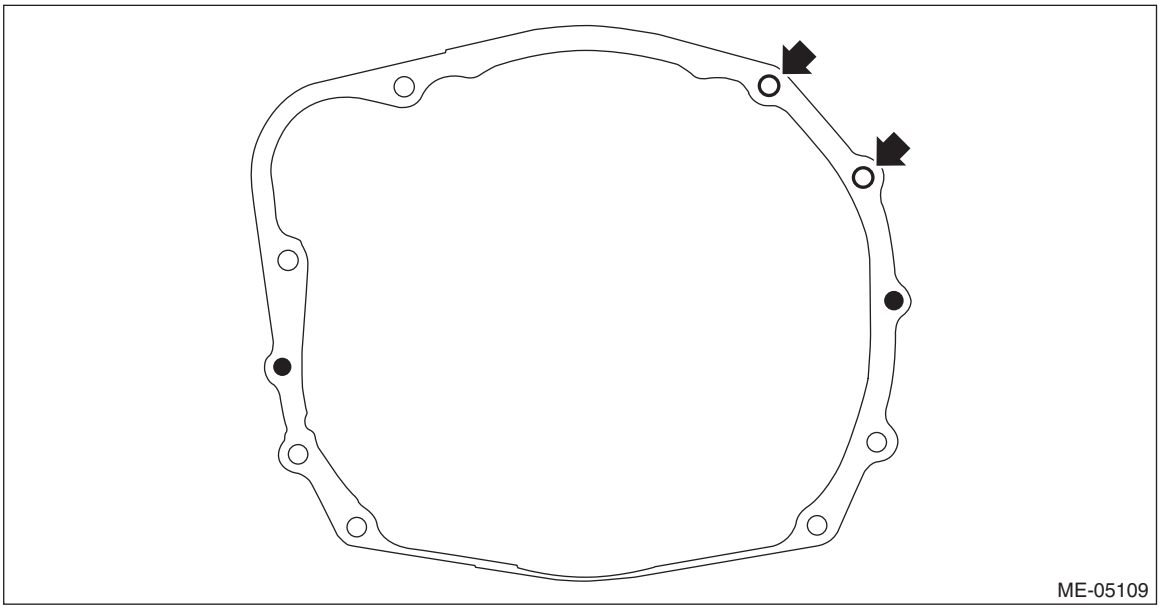

41) Remove the engine from the vehicle.

NOTE:
Be careful not to damage adjacent parts or body panels with crank pulley, oil level gauge, etc.

(1) Slightly raise the engine.
(2) Raise the transmission with garage jack.
(3) Move the engine horizontally until engine is withdrawn from transmission. (CVT model)
(4) Move the engine horizontally until main shaft is withdrawn from clutch cover. (MT model)
(5) Slowly move the engine away from engine compartment.

42) Remove the engine mounting from the engine.

B: INSTALLATION

1) Install the engine mounting onto the engine.

Tightening torque:
35 N·m (3.6 kgf-m, 25.8 ft-lb)

2) Apply a small amount of grease to splines of main shaft. (MT model)

Grease:
NICHIMOLY N-130 or equivalent

3) Position the engine in engine compartment and align it with transmission.

NOTE:
Be careful not to damage adjacent parts or body panels with crank pulley, oil level gauge, etc.

4) Install the bolts which hold upper side of transmission to engine.

Tightening torque:
50 N·m (5.1 kgf-m, 36.9 ft-lb)

- CVT model

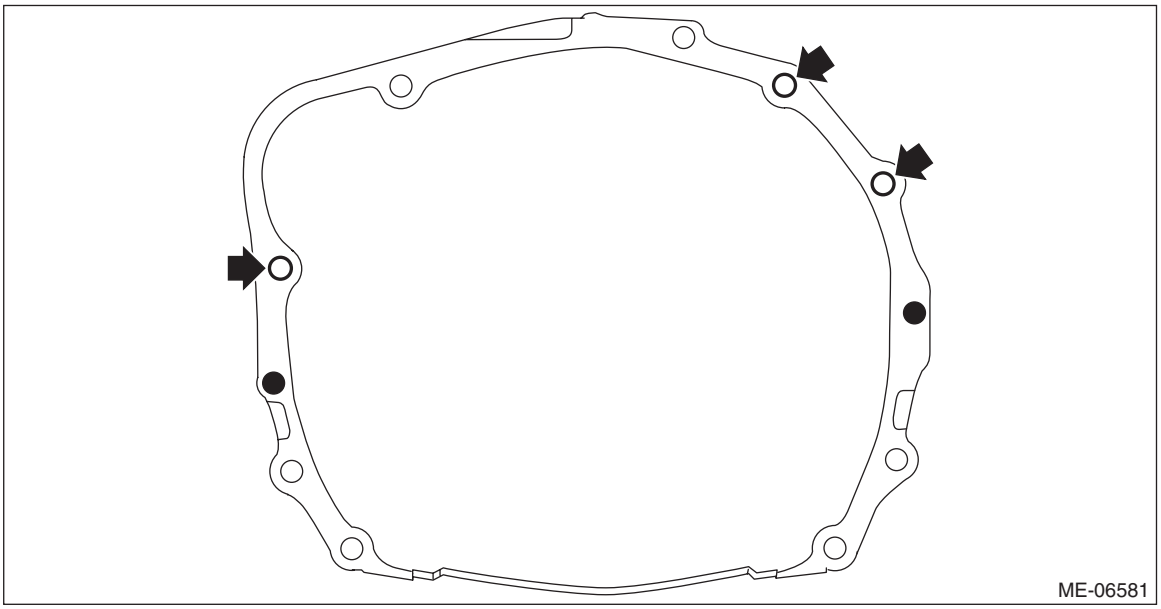

- MT model

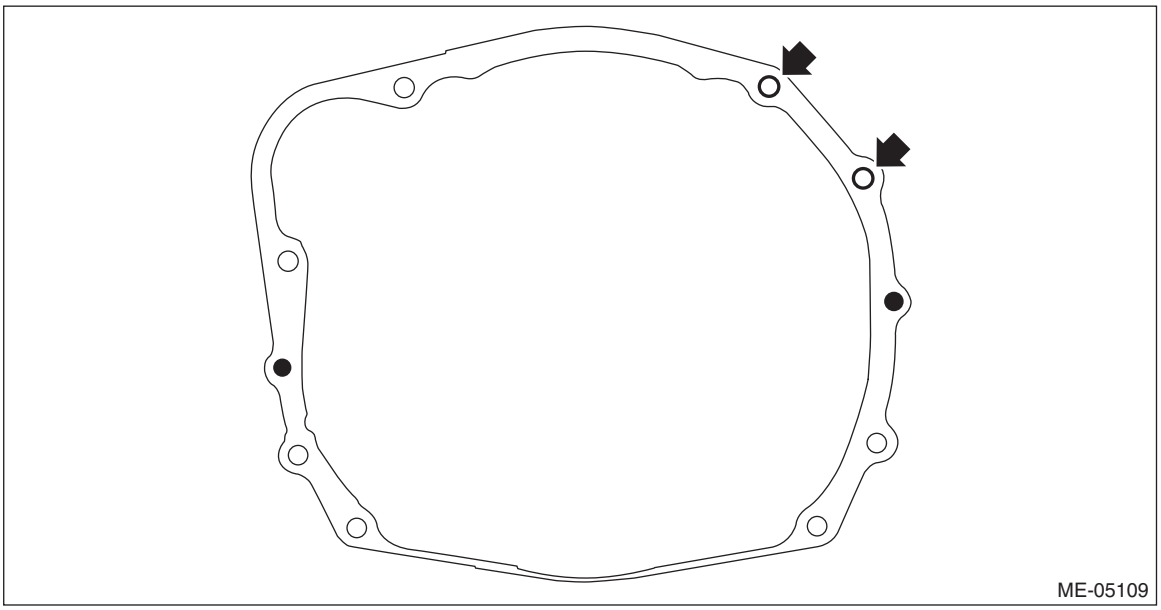

5) Remove the lifting device and wire ropes.

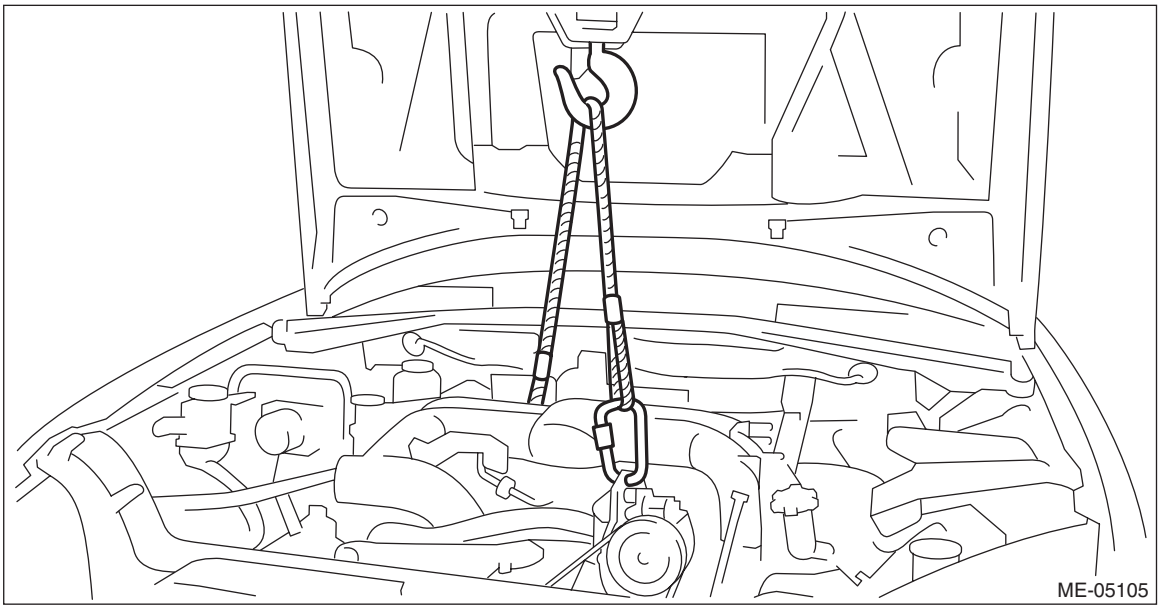

6) Remove the garage jack.
7) Install the clip (B) to the pitching stopper bracket, and then install the air breather hose to the clip (B). (CVT model)
8) Install the bolt (A) which secures the transmission harness stay to the CVT. (CVT model)

Tightening torque:
16 N·m (1.6 kgf-m, 11.8 ft-lb)

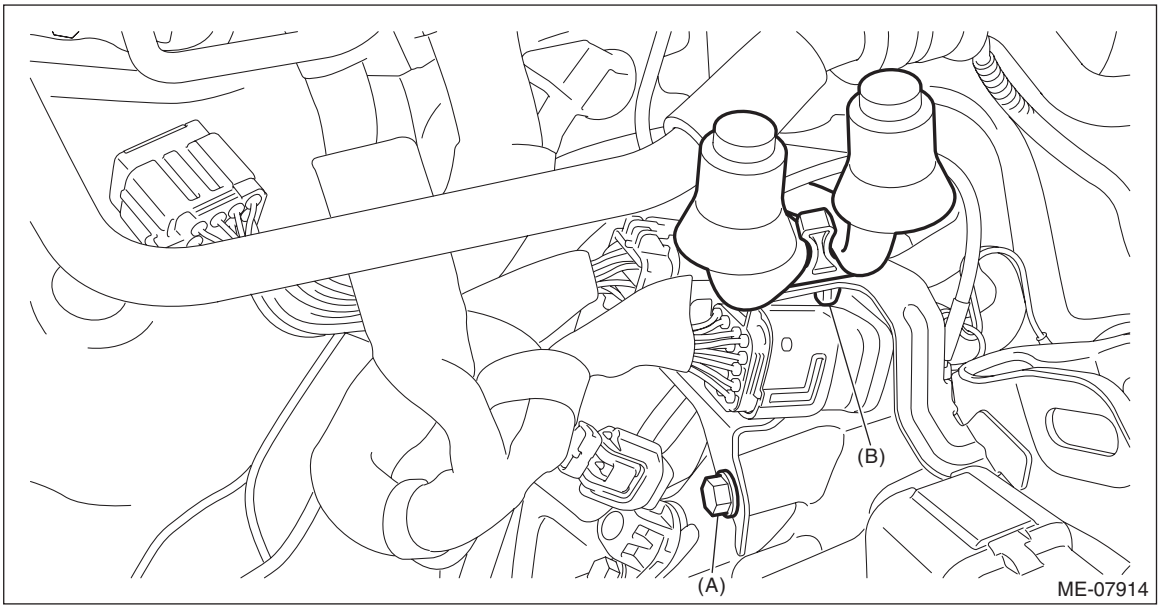

9) Install the CVTF cooler (with warmer feature) to the CVT. (CVT model)
(1) Temporarily tighten the upper bolt which secures the CVTF cooler (with warmer feature) to the CVT.
(2) Using clip (A), fix the bulkhead harness to the CVTF cooler (with warmer feature).

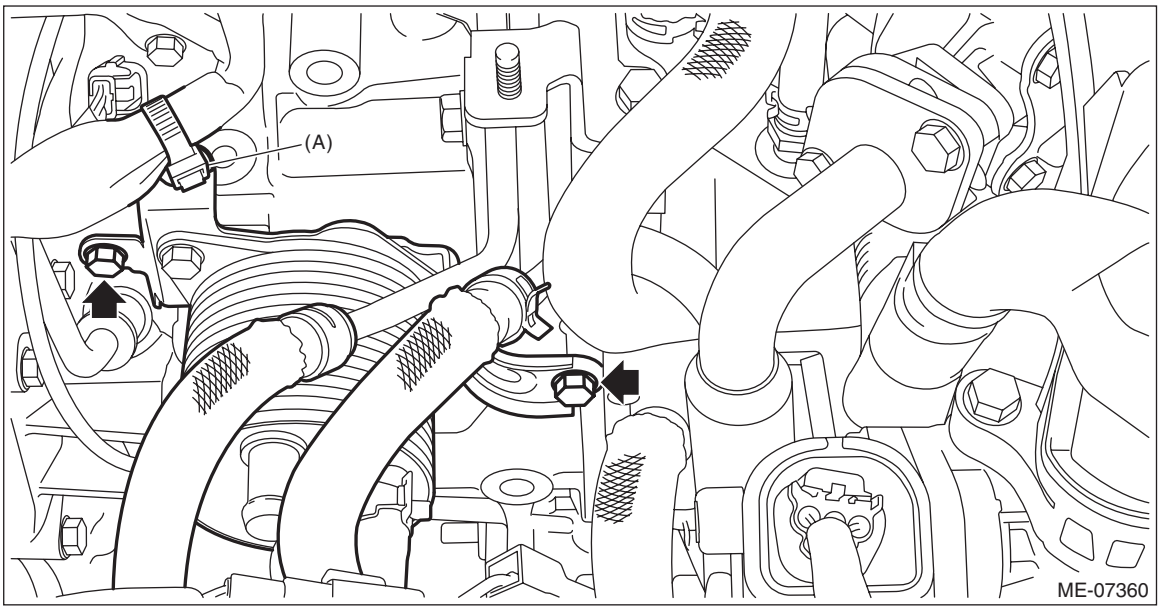

(3) Lift up the vehicle.
(4) Install the lower bolt which secures CVTF cooler (with warmer feature) to the CVT.

Tightening torque:
23 N·m (2.3 kgf-m, 17.0 ft-lb)

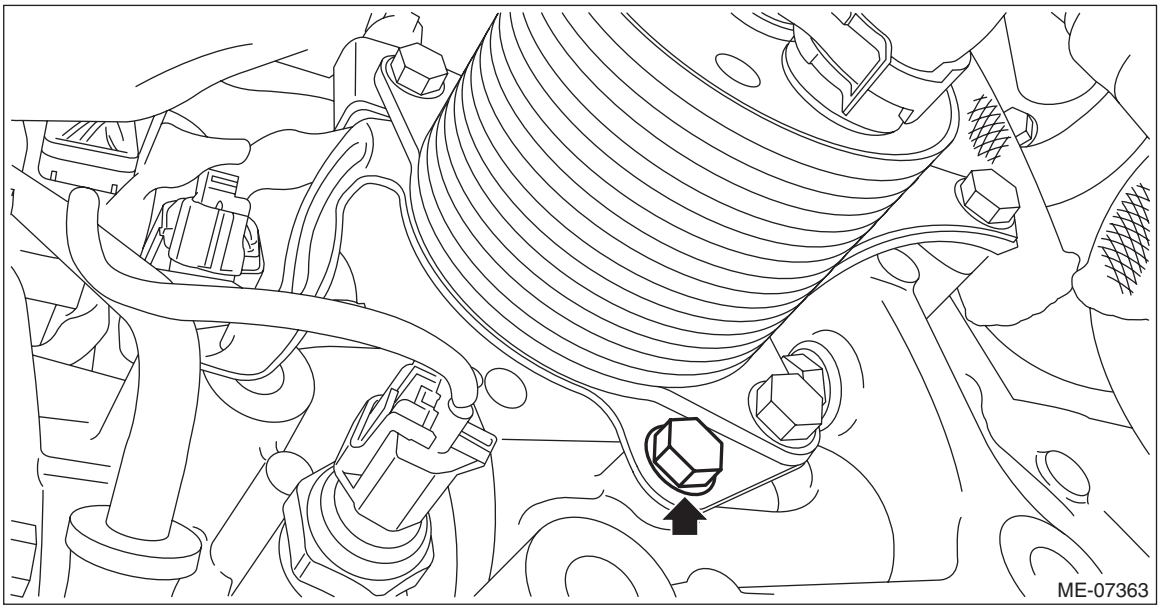

(5) Lower the vehicle.

(6) Tighten the upper bolt which secures the CVTF cooler (with warmer feature) to the CVT.

Tightening torque:
23 N·m (2.3 kgf-m, 17.0 ft-lb)

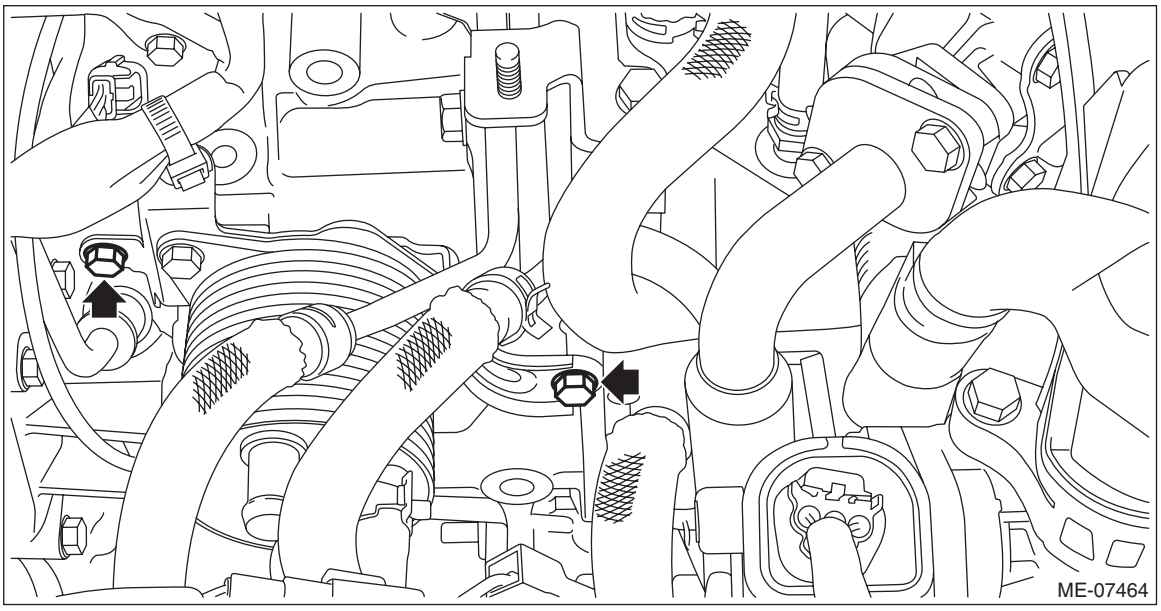

10) Install the torque converter clutch to drive plate. (CVT model)
(1) Remove the ST from torque converter clutch case.

NOTE:
Be careful not to drop the ST into the torque converter clutch case when removing the ST.
ST 498277200 STOPPER SET

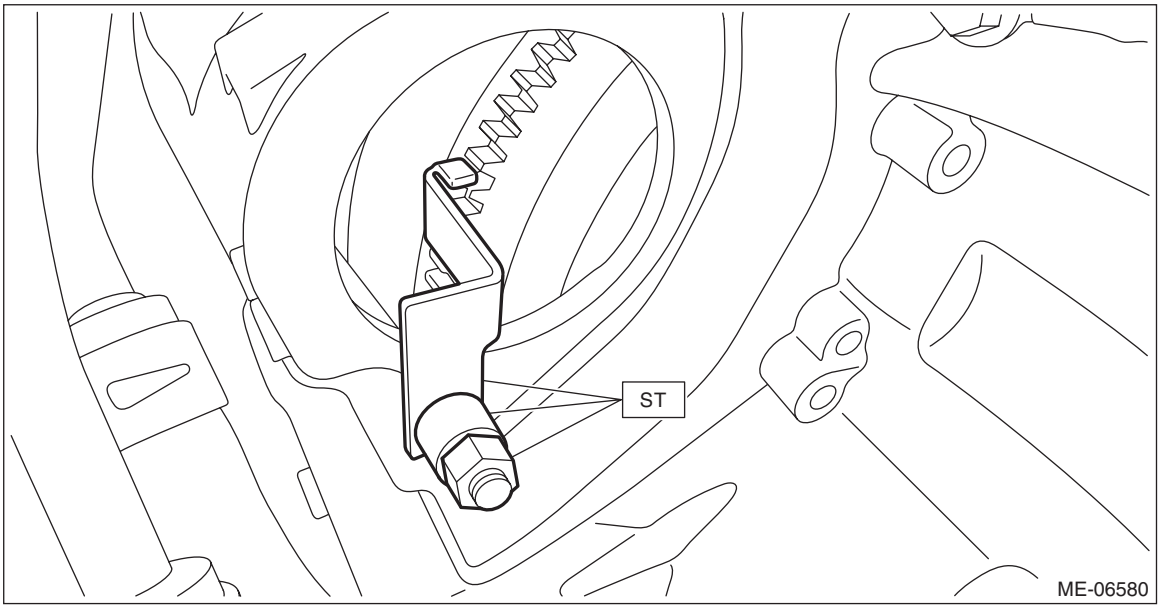

(2) Insert the wrench into the crank pulley bolt and rotate the crank pulley to install the bolts which hold torque converter clutch to drive plate.

NOTE:
Be careful not to drop bolts into the torque converter clutch case.

Tightening torque:
25 N·m (2.5 kgf-m, 18.4 ft-lb)

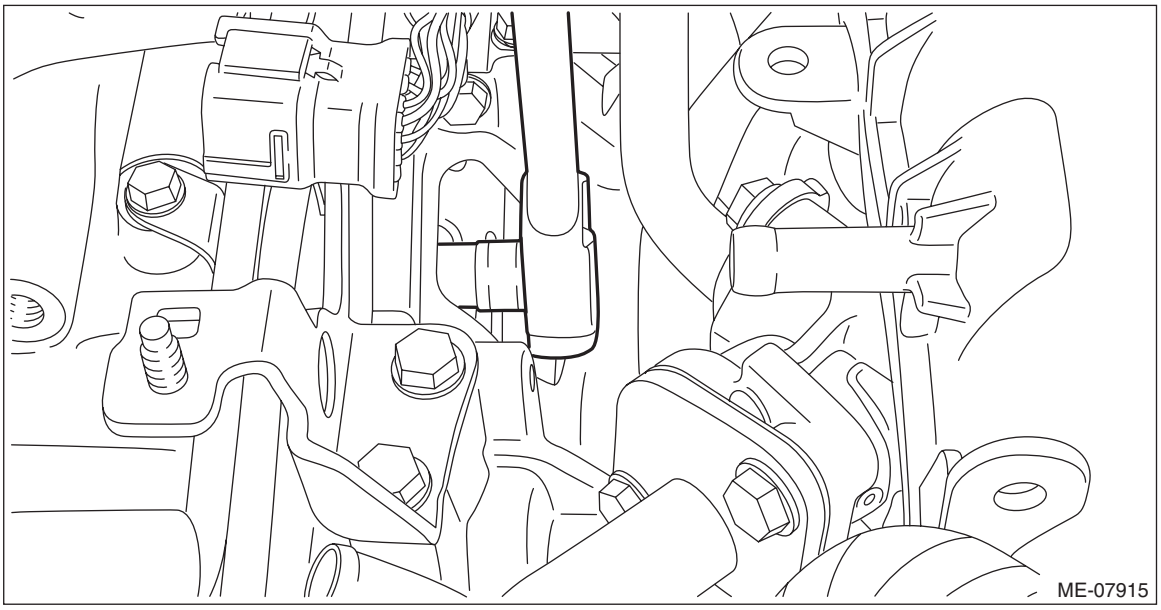

(3) Fit the plug to service hole.

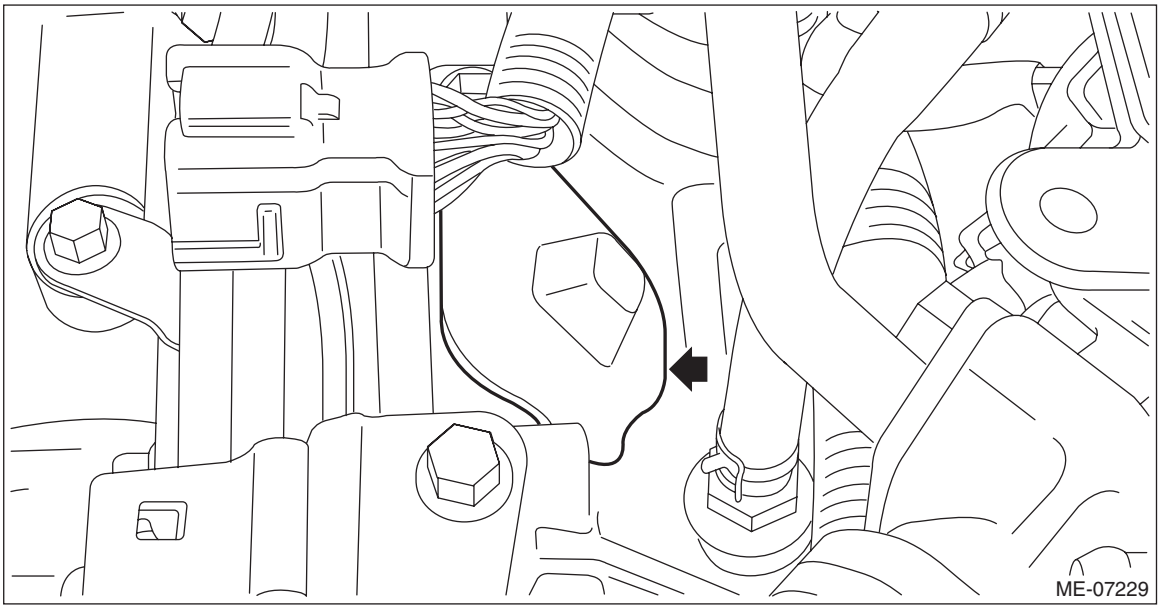

11) Install the starter. <Ref. to SC(w/o STI)-8, INSTALLATION, Starter.>
12) Lift up the vehicle.

13) Install the bolts and nuts which hold lower side of the transmission to engine.

Tightening torque:
50 N·m (5.1 kgf-m, 36.9 ft-lb)

- CVT model

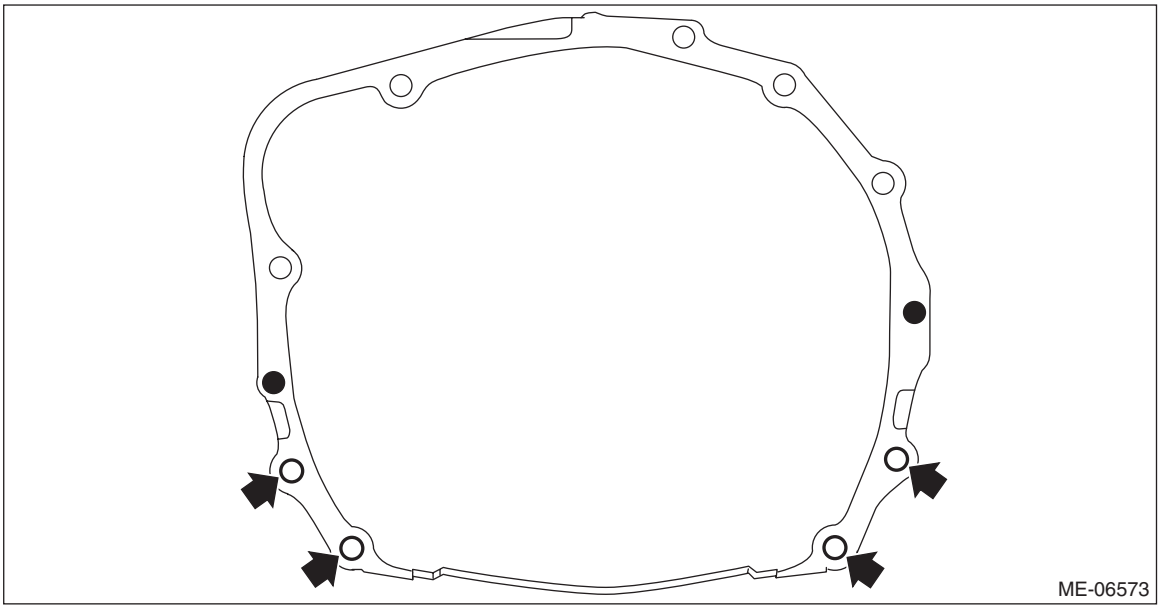

- MT model

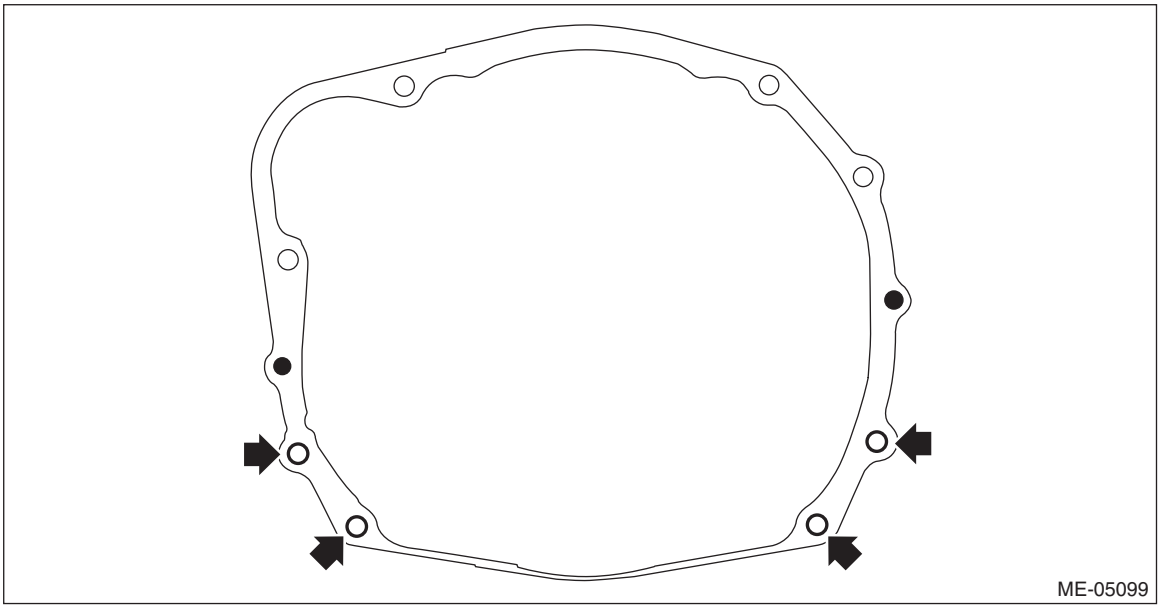

14) Install the nuts which hold the engine mounting to the front crossmember.

NOTE:
- Make sure that locators (a) of the engine mounting are securely inserted.
- Use a new nut.

Tightening torque:
60 N·m (6.1 kgf-m, 44.3 ft-lb)

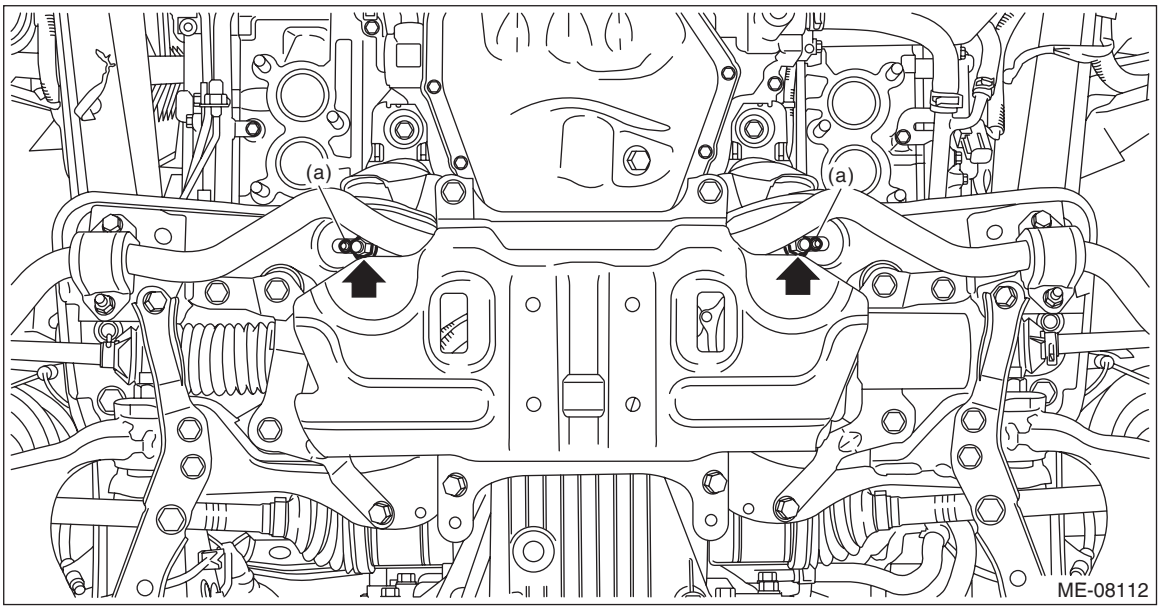

15) Connect the ground cable to the oil pipe assembly.

Tightening torque:
7 N·m (0.7 kgf-m, 5.2 ft-lb)

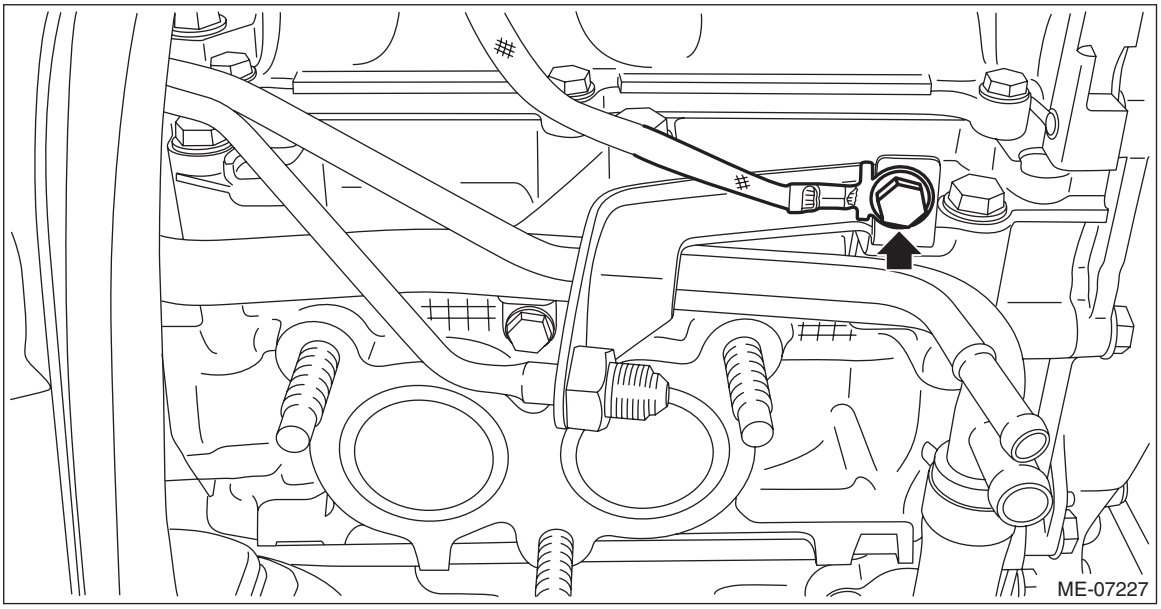

16) Set the transmission jack to the transmission. (CVT model)

NOTE:
Be careful that the support plate of transmission jack does not touch the transmission oil pan.

17) Remove the ST and install the rear crossmember. (CVT model)
ST 41099YC001 ST REAR MOUNT

Tightening torque:
T1: 18 N·m (1.8 kgf-m, 13.3 ft-lb)
T2: 35 N·m (3.6 kgf-m, 25.8 ft-lb)
T3: 70 N·m (7.1 kgf-m, 51.6 ft-lb)

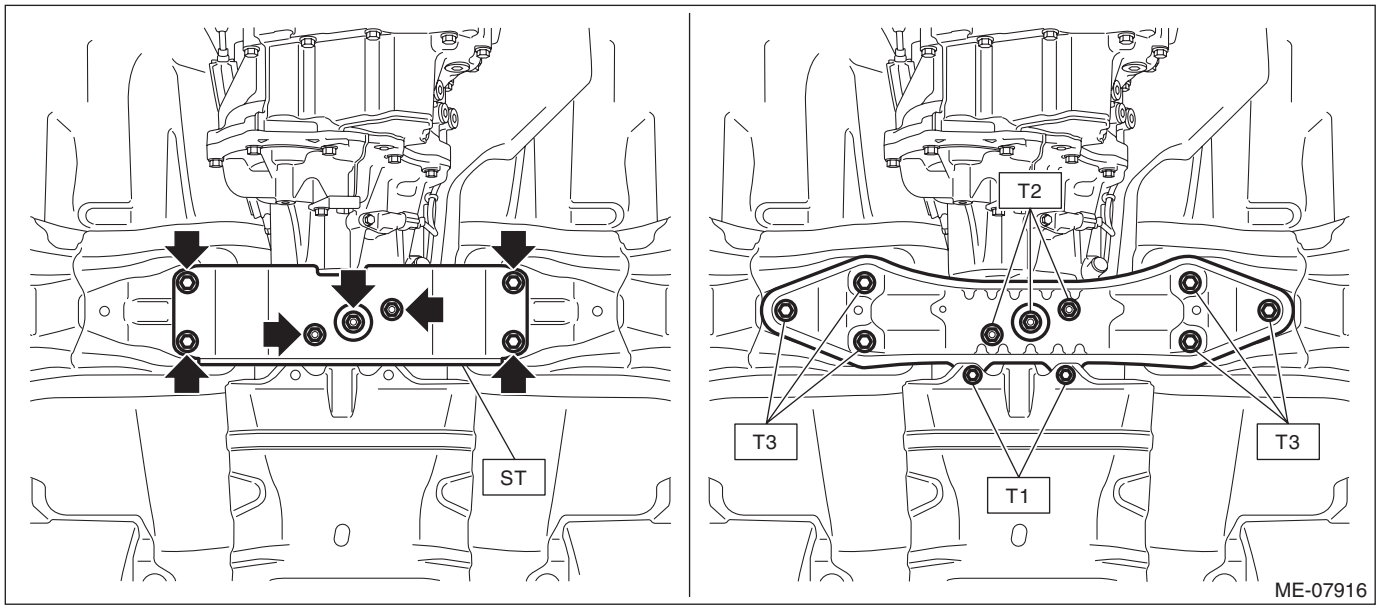

18) Remove the transmission jack. (CVT model)
19) Install the front exhaust pipe. <Ref. to EX(w/o STI)-17, INSTALLATION, Front Exhaust Pipe.>
20) Install the pitching stopper.

Tightening torque:
T1: 50 N·m (5.1 kgf-m, 36.9 ft-lb)
T2: 58 N·m (5.9 kgf-m, 42.8 ft-lb)

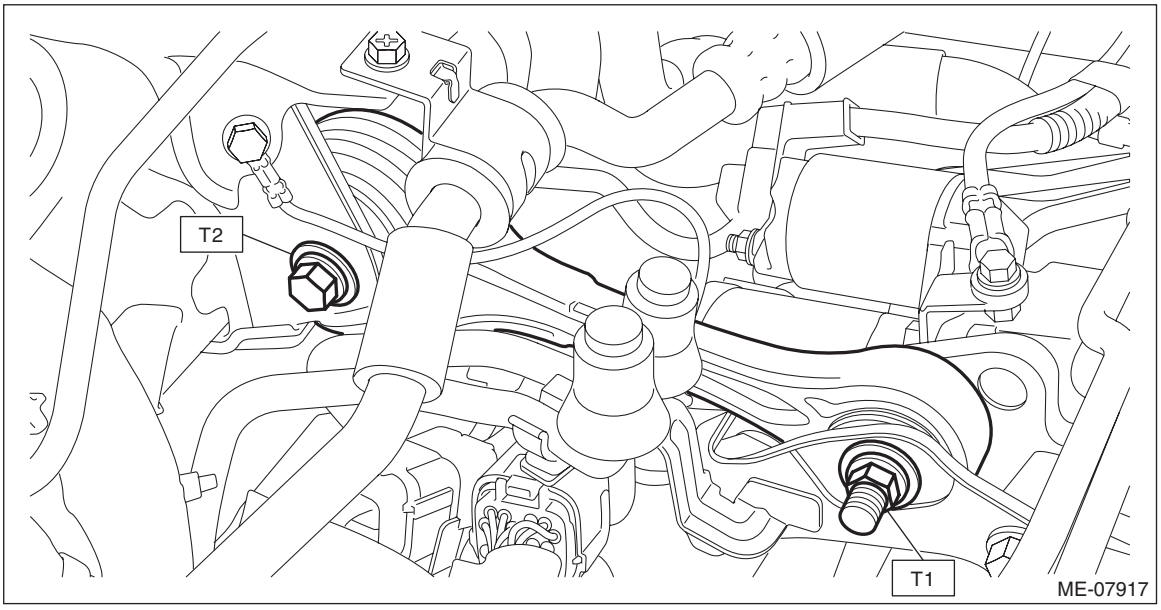

21) Connect the fuel delivery tube and evaporation hose.
(1) Connect the evaporation hose to fuel pipe assembly.

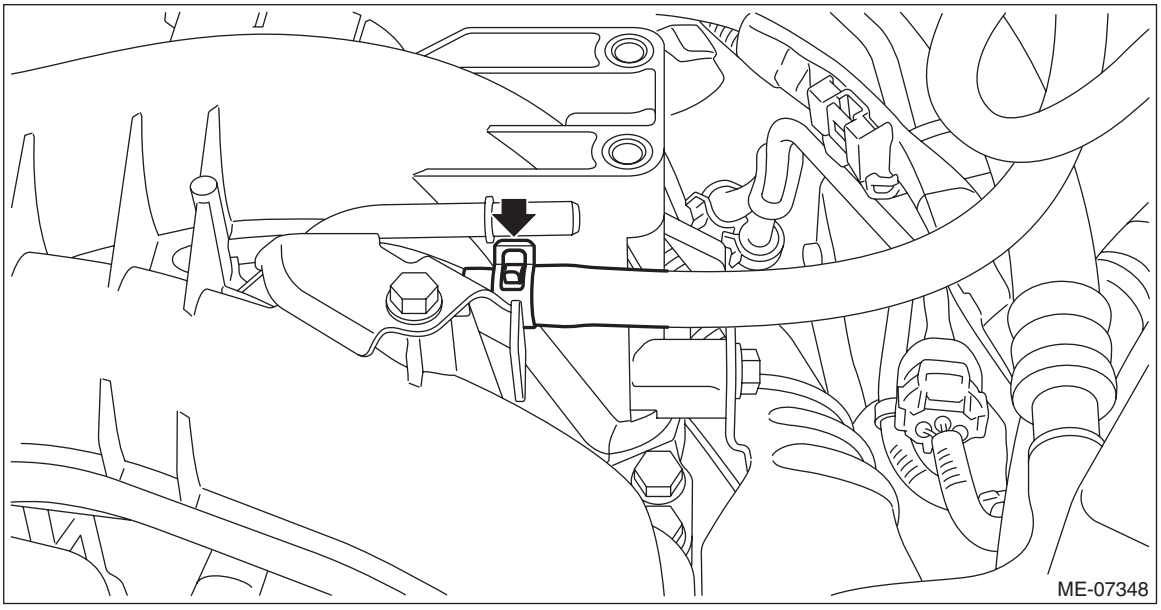

(2) Connect the quick connector on the fuel delivery tube to the fuel pipe assembly, and fix the fuel delivery tube using clip (A).

CAUTION:
• Check that there is no damage or dust on the quick connector. If necessary, clean the seal surface of the pipe.
• When connecting the quick connector, make sure to insert it all the way in before locking the slider.
• When it is difficult to lock the slider, check that the connector is fully inserted.
• After locking the slider, check that the quick connector is securely connected.

NOTE:
Connect the quick connector as shown in the figure.

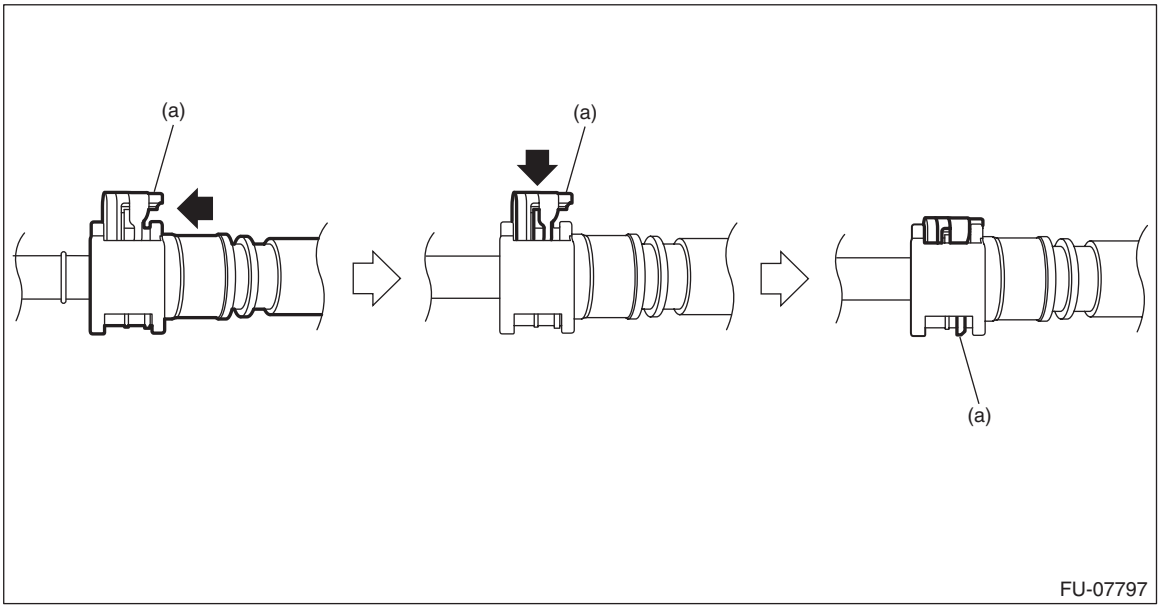

(a) Slider

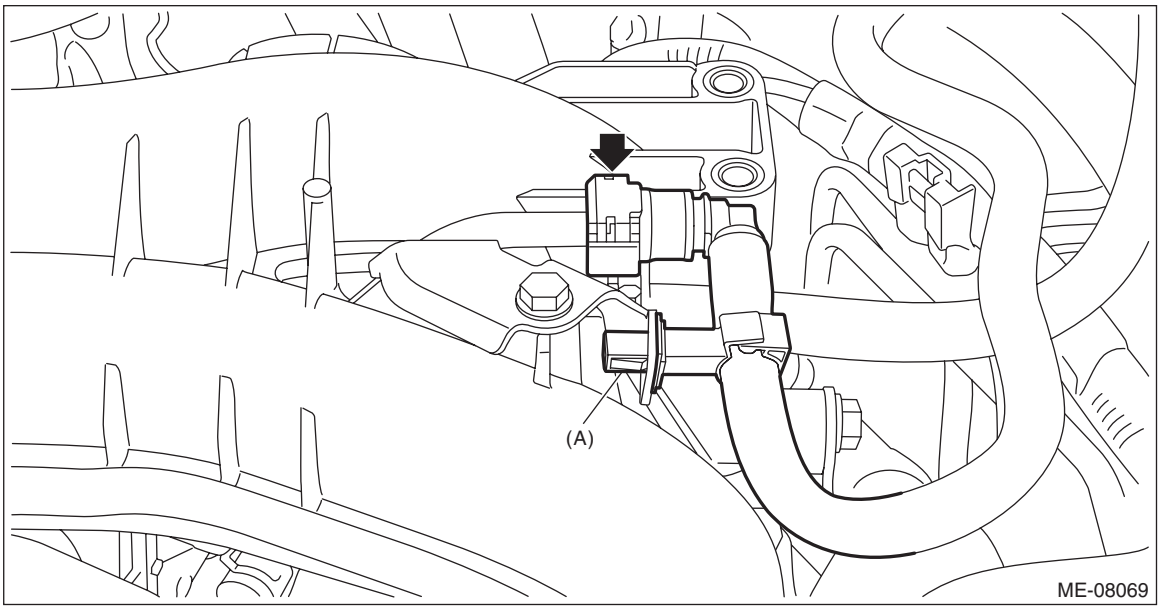

22) Connect the engine coolant inlet hose and engine coolant outlet hose to the CVTF cooler (with warmer feature) and EGR cooler. (CVT model)

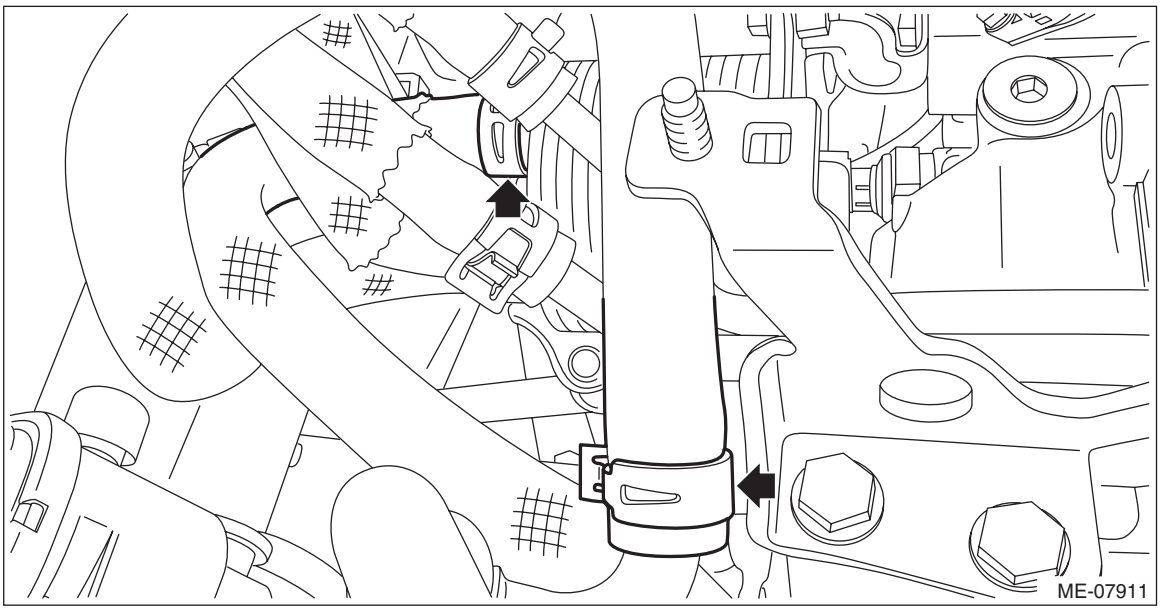

23) Connect the heater inlet hose (A) to the water pipe assembly, and connect the heater outlet hose (B) to the water pipe LH.

NOTE:
Be careful not to mix up the heater inlet hose and the heater outlet hose when connecting them.

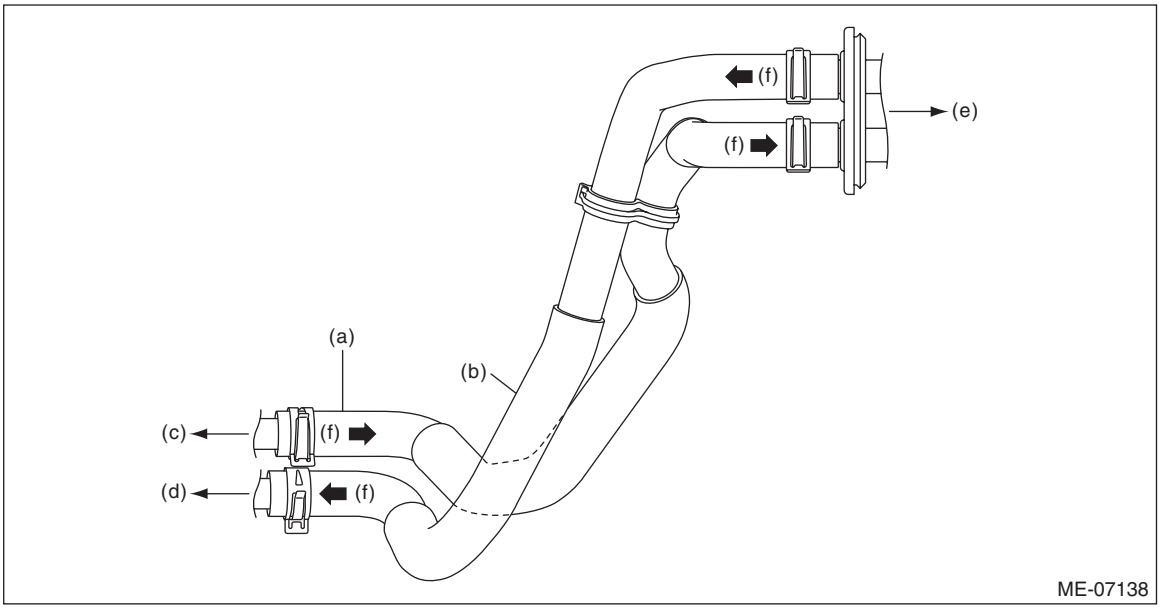

(a)	Heater inlet hose	(c)	To water pipe ASSY	(e)	To heater core ASSY
(b)	Heater outlet hose	(d)	To water pipe LH	(f)	Engine coolant flow

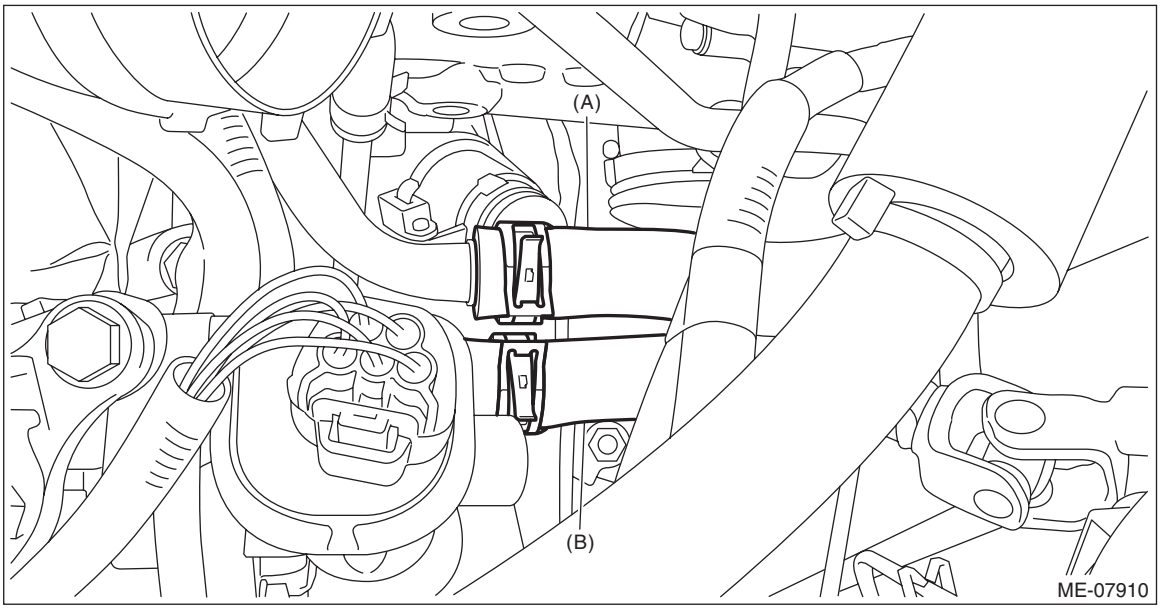

24) Connect the hose - pressure suction and the hose - pressure discharge to the A/C compressor. <Ref. to AC-67, INSTALLATION, Hose and Pipe.>

25) Set the generator cord, and fix the generator cord to the fuel pipe protector using clip (C).
26) Install the generator cord to clip (B), and connect the connector (A) to A/C compressor.

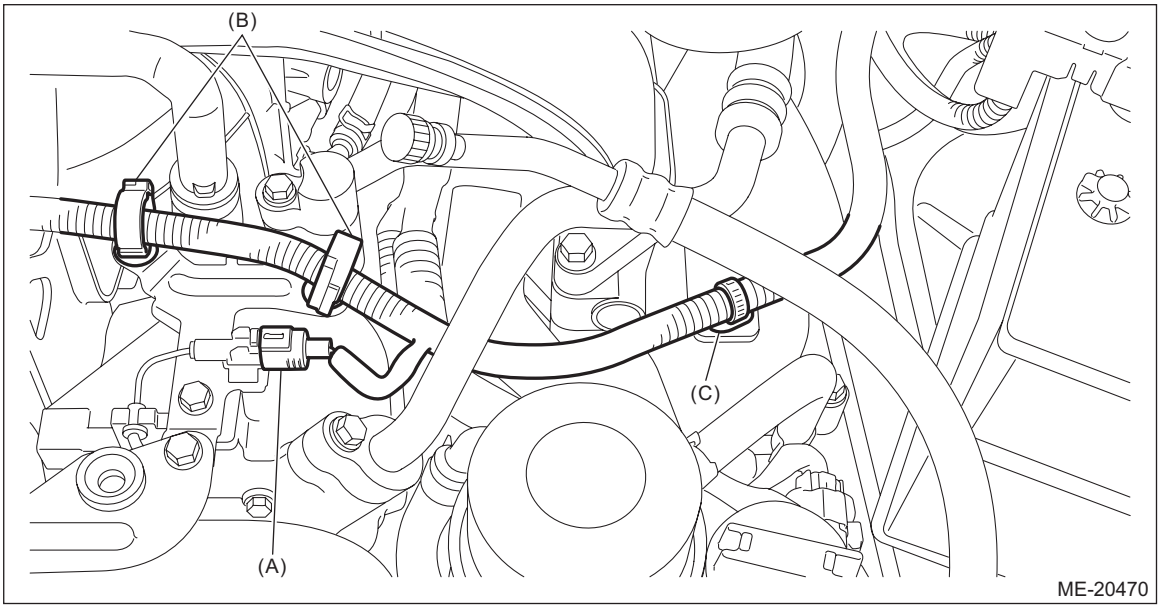

27) Using clip (D), fix the generator cord to the generator cord stay, and connect the connector (B) and the terminal (C) to the generator.

Tightening torque:
15 N·m (1.5 kgf-m, 11.1 ft-lb)

28) Connect the connector (A) to the brake vacuum pump.

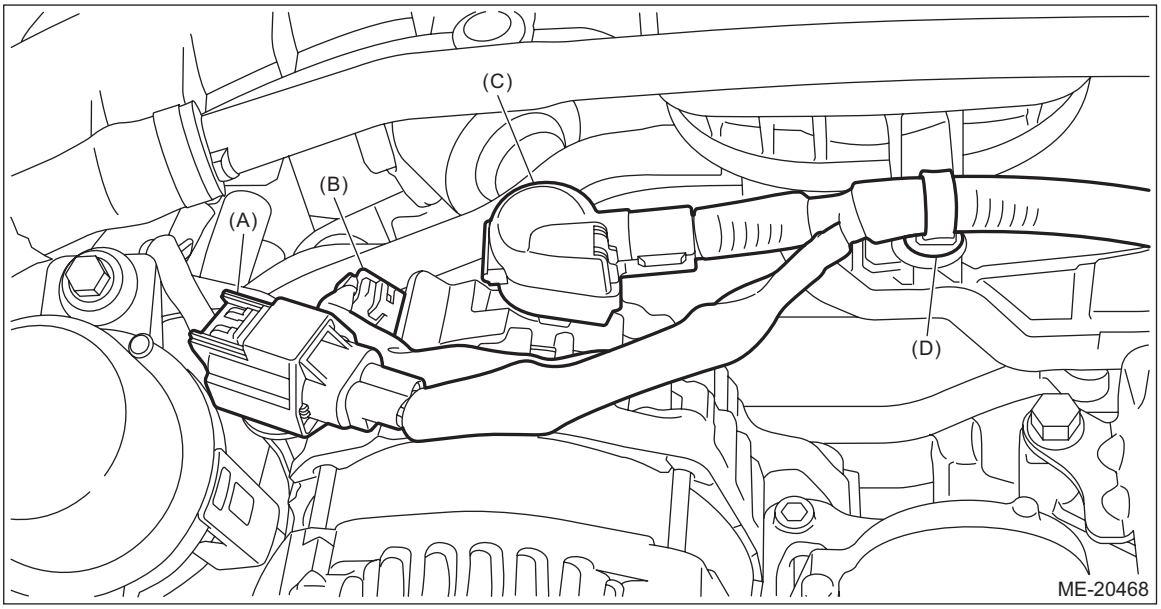

29) Connect the bulkhead harness connector to the engine harness connector.

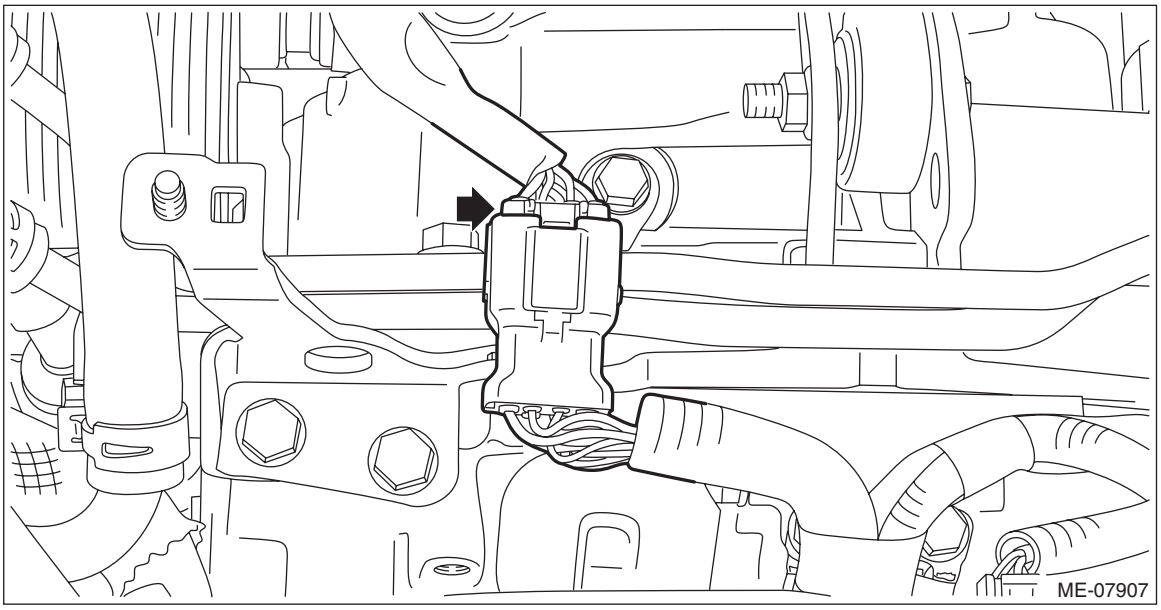

30) Install the brake booster vacuum hose to the clip (D).

NOTE:
If the clip is removed from the intake manifold, install the clip to the position of alignment mark ▼ of intake manifold.

31) Connect sections (A) and (B) of the brake booster vacuum hose to the brake vacuum pump and intake manifold, and install the brake booster vacuum hose to the clip (C).

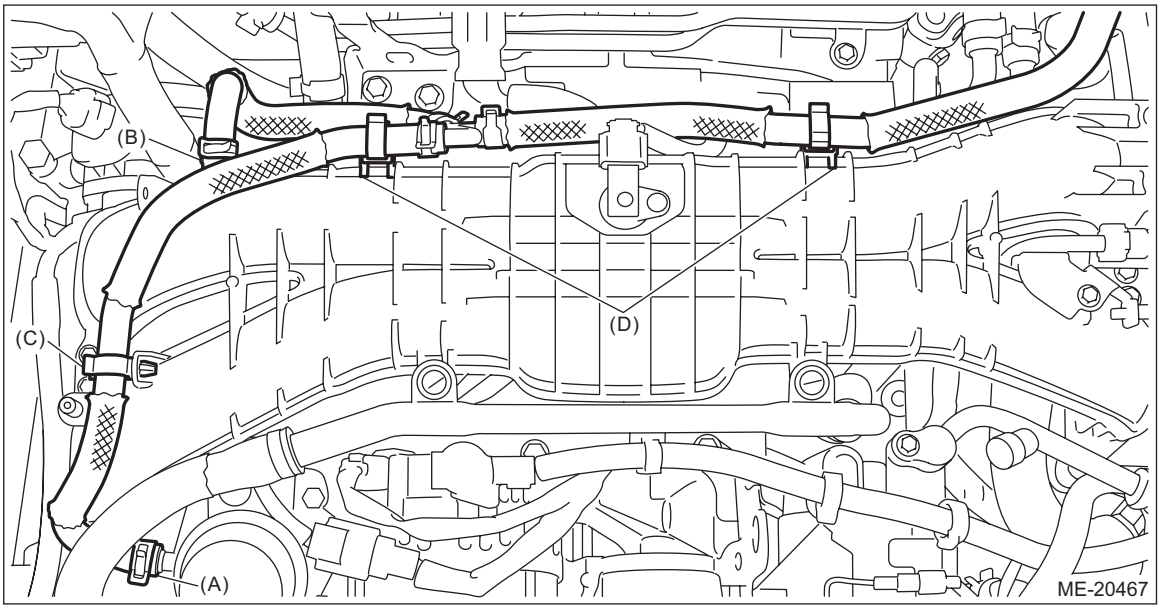

32) Install the radiator. <Ref. to CO(w/o STI)-39, INSTALLATION, Radiator.>
33) Install the intake duct No. 1 and intake duct No. 2. <Ref. to IN(w/o STI)-33, INTAKE DUCT NO. 1, INSTALLATION, Intake Duct.> <Ref. to IN(w/o STI)-36, INTAKE DUCT NO. 2, INSTALLATION, Intake Duct.>
34) Install the ECM. <Ref. to FU(w/o STI)-125, INSTALLATION, Engine Control Module (ECM).>
35) Install the intercooler. <Ref. to IN(w/o STI)-45, INSTALLATION, Intercooler.>
36) Install the air intake duct. <Ref. to IN(w/o STI)-26, INSTALLATION, Air Intake Duct.>
37) Connect the ground terminal to battery sensor. <Ref. to NT-6, BATTERY, NOTE, Note.>
38) Charge the A/C system with refrigerant. <Ref. to AC-27, PROCEDURE, Refrigerant Charging Procedure.>
39) Fill engine coolant. <Ref. to CO(w/o STI)-14, FILLING OF ENGINE COOLANT, REPLACEMENT, Engine Coolant.>

40) Install the collector cover. <Ref. to IN(w/o STI)-10, INSTALLATION, Collector Cover.>
41) Set the front hood to the normal position. <Ref. to NT-23, FRONT HOOD DAMPER STAY, NOTE, Note.>
42) Install the striker - front hood. <Ref. to EB-15, ASSEMBLY, Front Hood.>
43) Close the front hood.

C: INSPECTION

1) Check that pipes, hoses, connectors and clamps are installed firmly.
2) Check the engine coolant is at specified level.
3) Start the engine and check for exhaust gas, engine coolant, leaks of fuel, etc. Also check for noise and vibrations.

10.Engine Mounting

A: REMOVAL

1) Remove the front crossmember. <Ref. to FS-20, REMOVAL, Front Crossmember.>
2) Remove the engine mounting from the engine.

B: INSTALLATION

Install in the reverse order of removal.

Tightening torque:
35 N·m (3.6 kgf-m, 25.8 ft-lb)

C: INSPECTION

Make sure that there are no cracks or other damages.

11.Preparation for Overhaul

A: PROCEDURE

1) After engine has been removed from the vehicle, mount the engine to the engine stand while being careful of the following.

(1) When mounting the engine stand, follow the instructions of engine stand used.

(2) When disassembling the cylinder block, remove the following parts first, and then mount the engine stand.

1. Remove the crankshaft position sensor plate with drive plate. (CVT model) <Ref. to CVT(TR690)-138, REMOVAL, Drive Plate.>
2. Remove the clutch disc and cover. (MT model) <Ref. to CL-12, REMOVAL, Clutch Disc and Cover.>
3. Remove the crankshaft position sensor plate with flywheel. (MT model) <Ref. to CL-15, REMOVAL, Flywheel.>

(3) Mount the engine stand using the points shown by the arrows in the figure.

CAUTION:
Be sure to mount the engine stand at four points. Otherwise, the engine damage may occur.

NOTE:
- For points (A), either of them can be used for mounting the engine stand.
- The engine stand shown in the figure is just for reference.

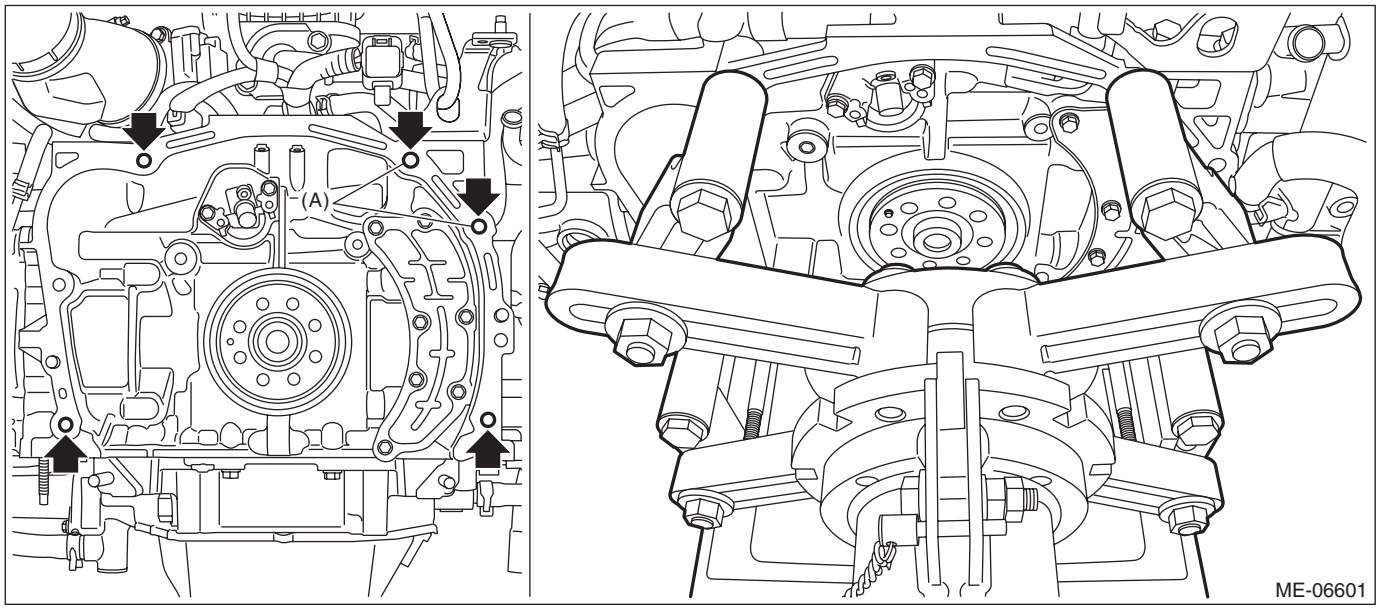

2) In this section the procedures described under each index are all connected and stated in order. The procedure for overhauling of the engine will be completed when you go through all steps in the process. Therefore, in this section, to conduct the particular procedure within the flow of a section, you need to go back and conduct the procedure described previously in order to do that particular procedure.

12.V-belt

A: REMOVAL

NOTE:
When replacing a single part, perform the work with the engine assembly installed to body.

1. V-BELT

1) When working on the vehicle

NOTE:
When working on the vehicle, perform the following steps also.
(1) Remove the collector cover. <Ref. to IN(w/o STI)-7, REMOVAL, Collector Cover.>
(2) Remove the air intake duct. <Ref. to IN(w/o STI)-26, REMOVAL, Air Intake Duct.>

2) Attach the tool to the V-belt tensioner assembly, and rotate the tool clockwise to loosen and remove the V-belt.

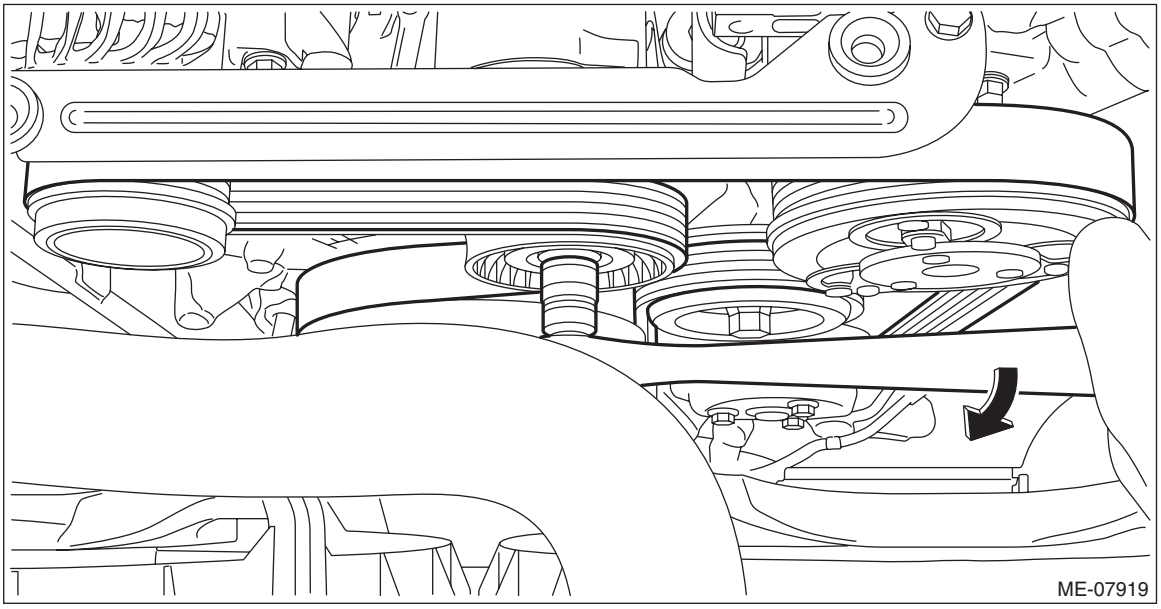

2. V-BELT TENSIONER ASSEMBLY

1) Remove the V-belts. <Ref. to ME(w/o STI)-75, V-BELT, REMOVAL, V-belt.>
2) Remove the cap from V-belt tensioner assembly.

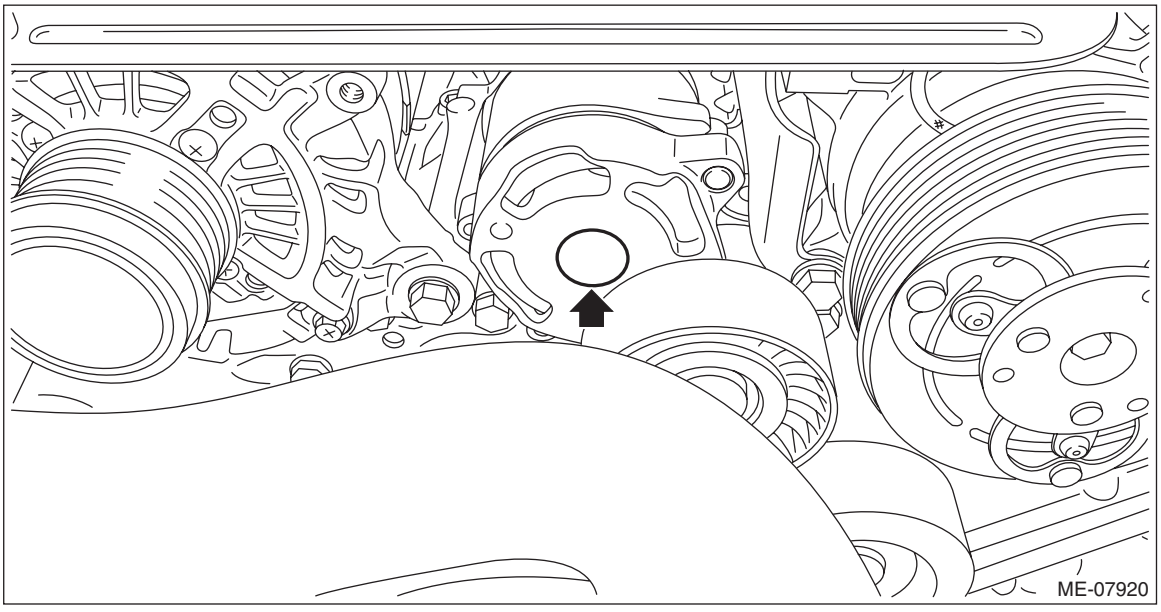

3) Remove the bolt securing the V-belt tensioner assembly to the generator bracket, and remove the V-belt tensioner assembly.

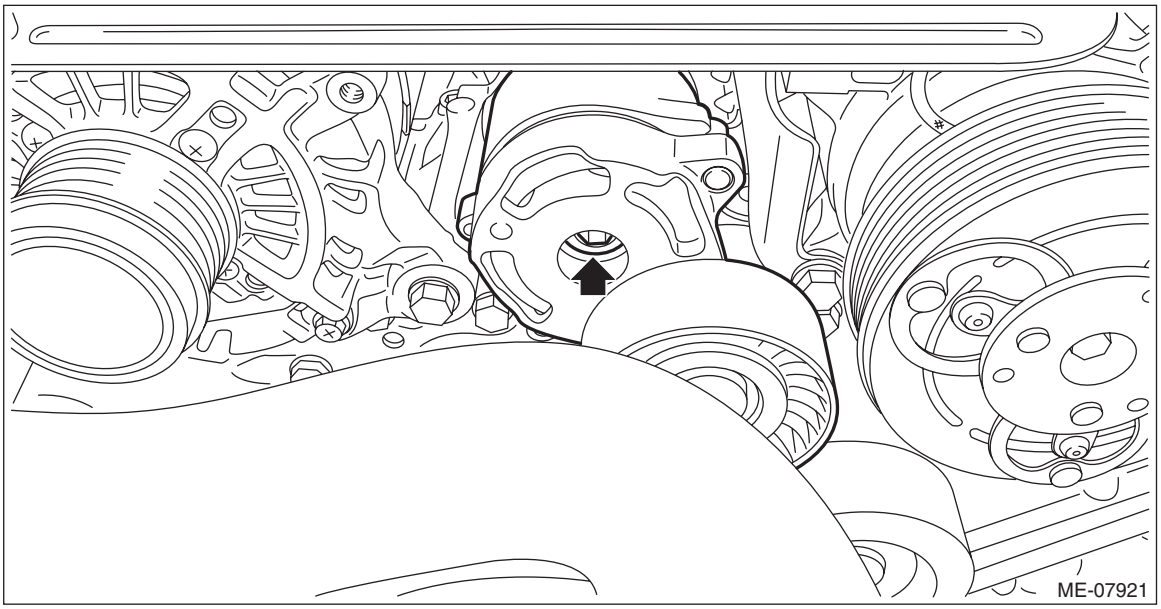

3. IDLER PULLEY

1) Remove the V-belts. <Ref. to ME(w/o STI)-75, V-BELT, REMOVAL, V-belt.>
2) Remove the bolts which secure the idler pulley to the chain cover, and remove the idler pulley.

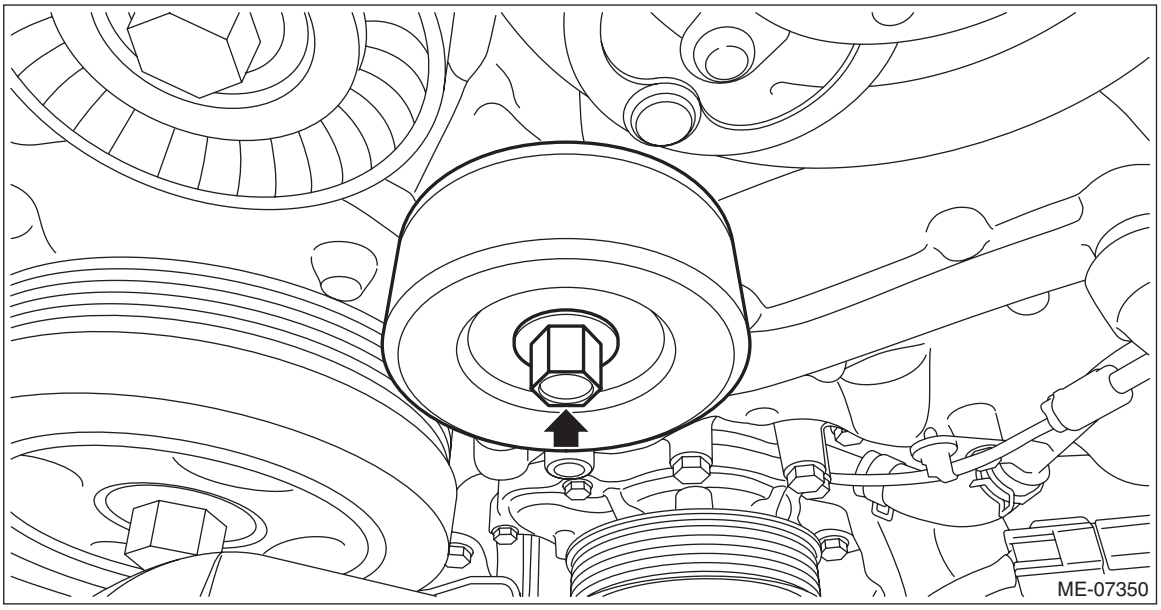

B: INSTALLATION

1. V-BELT

Install in the reverse order of removal.

CAUTION:
- **When reusing the V-belt, wipe off dust and water with cloth.**
- **Do not use the V-belt if there is any oil, grease or coolant on the belt.**
- **Be careful not to rub the V-belt end surface with bare hands; exposed core may cause injury.**
- **Wipe off any dust, oil and water on the groove of each pulley with cloth.**

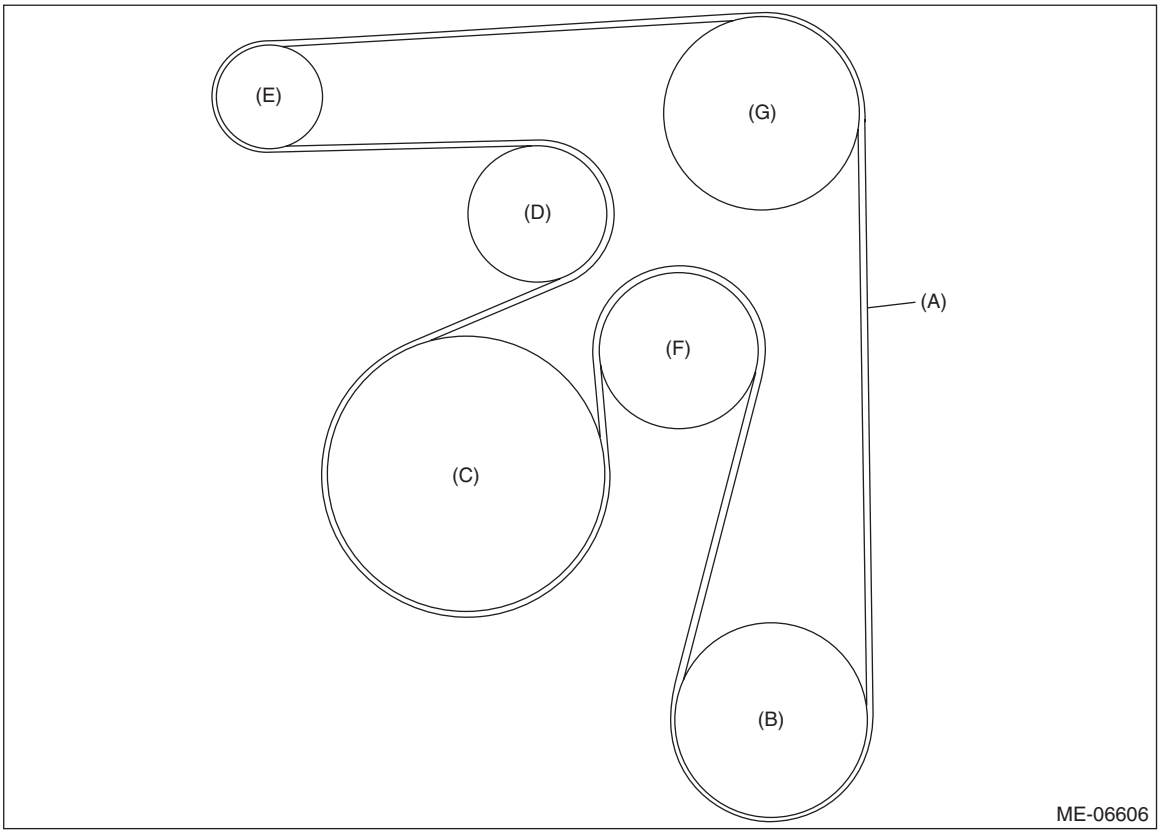

(A) V-belt
(B) Water pump pulley
(C) Crank pulley
(D) V-belt tensioner ASSY
(E) Generator pulley
(F) Idler pulley
(G) A/C compressor pulley

2. V-BELT TENSIONER ASSEMBLY

Install in the reverse order of removal.

NOTE:
When installing the V-belt tensioner assembly, insert the protrusion of V-belt tensioner assembly into the hole for preventing rotation at the generator bracket.

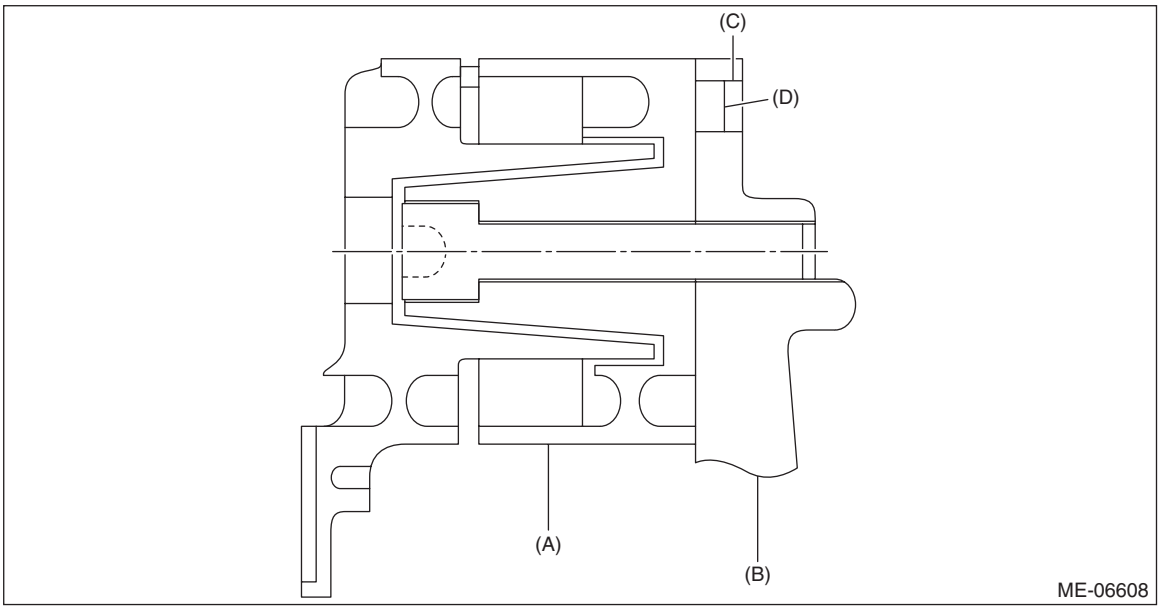

(A) V-belt tensioner ASSY
(B) Generator bracket
(C) Hole to prevent rotation
(D) Protrusion portion

Tightening torque:
25 N·m (2.5 kgf-m, 18.4 ft-lb)



3. IDLER PULLEY

Install in the reverse order of removal.

NOTE:
When installing the idler pulley, be careful of the idler pulley cover direction.

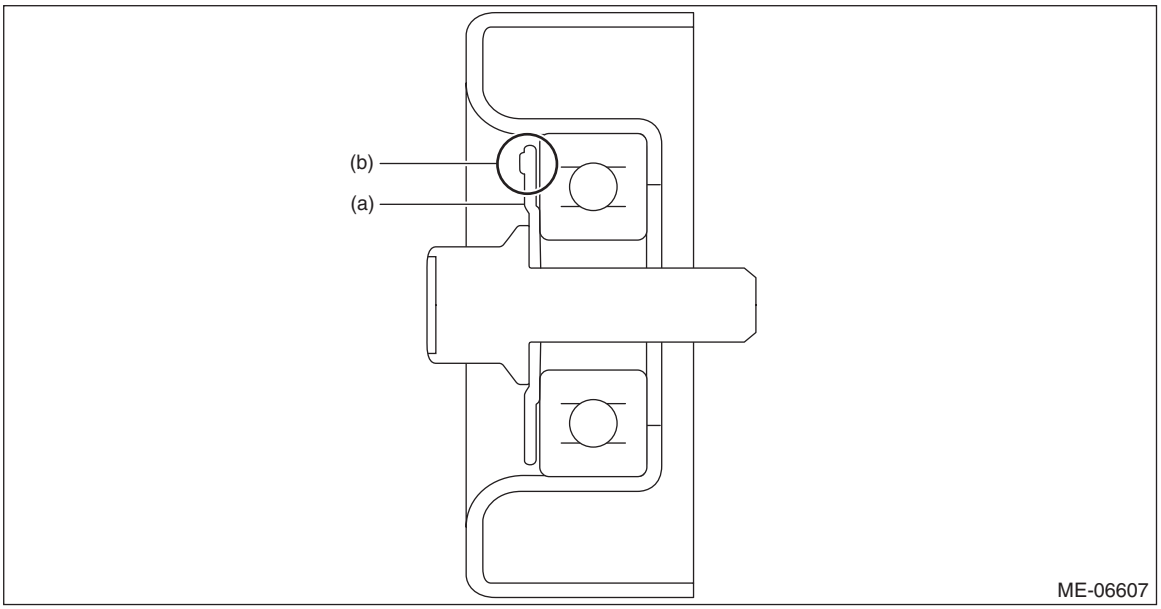

(a) Idler pulley cover (b) Protrusion (3 places)

Tightening torque:
36 N·m (3.7 kgf-m, 26.6 ft-lb)

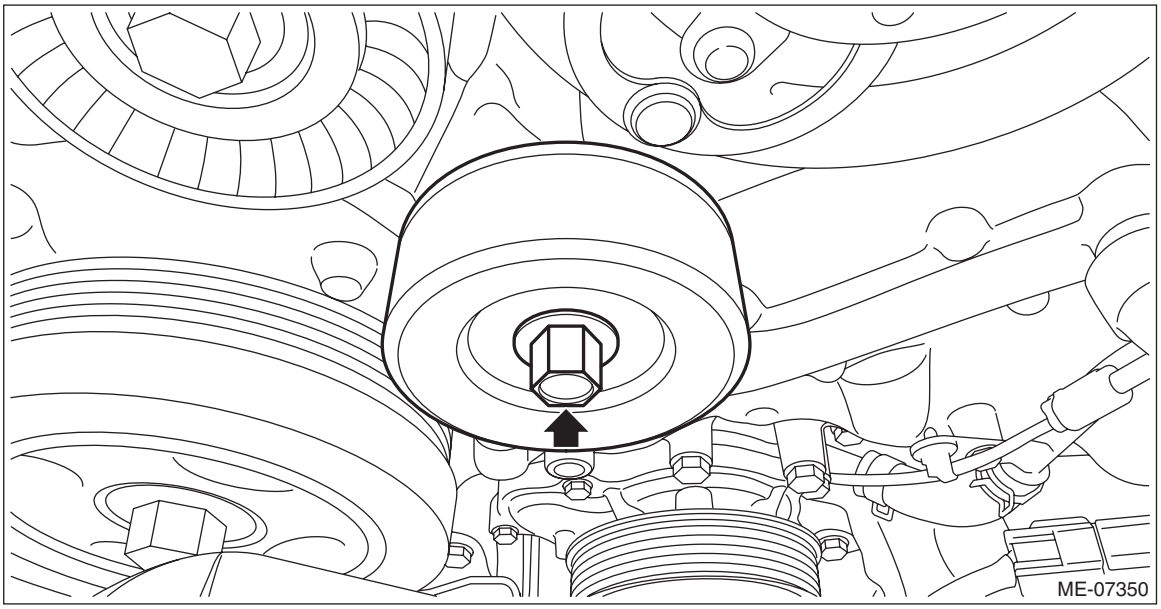

C: INSPECTION

1) Check the V-belt for cracks, tear or wear.
2) Check the V-belt tensioner assembly and idler pulley for deformation, cracks or other damages.
3) Check that the V-belt ribs are securely placed on the rib grooves for each pulley.

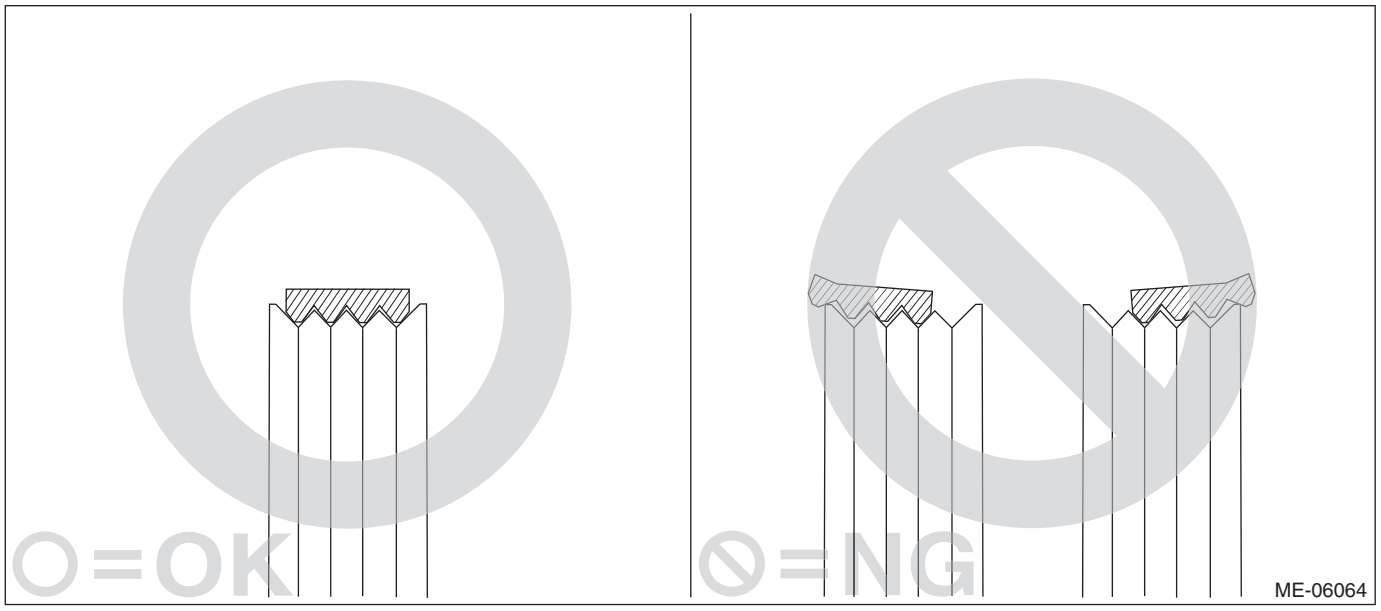

4) Check that the V-belt tensioner assembly (C) moves in the direction of arrow (D), when the V-belt (A) is pushed and released by the area indicated by the arrow (B).

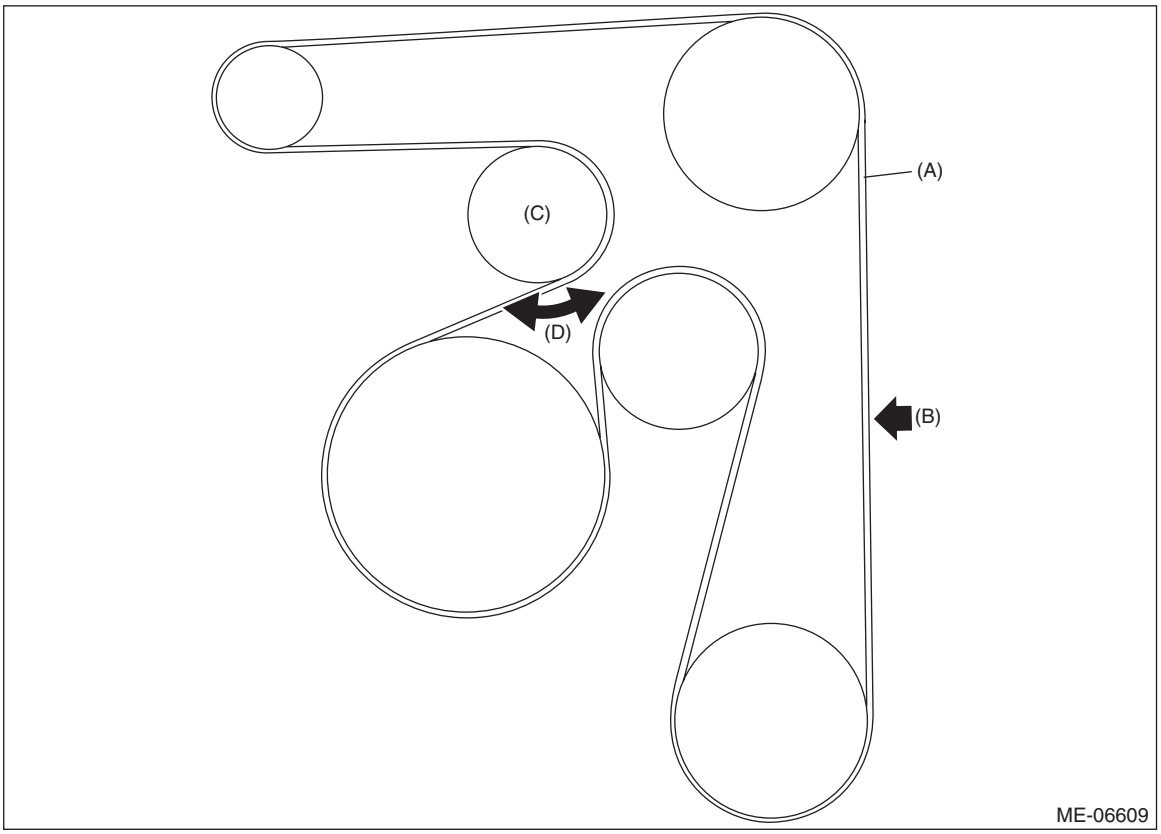

5) Start the engine and confirm that the V-belt rotates smoothly and no abnormal noise is emitted.

13.Crank Pulley

A: REMOVAL

NOTE:
When replacing a single part, perform the work with the engine assembly installed to body.
1) When working on the vehicle

NOTE:
When working on the vehicle, perform the following steps also.
(1) Remove the radiator main fan & fan motor assembly and radiator sub fan & fan motor assembly. <Ref. to CO(w/o STI)-44, REMOVAL, Radiator Main Fan and Fan Motor.> <Ref. to CO(w/o STI)-47, REMOVAL, Radiator Sub Fan and Fan Motor.>
2) Remove the V-belts. <Ref. to ME(w/o STI)-75, V-BELT, REMOVAL, V-belt.>
3) Use the ST to lock the crank pulley, and remove the crank pulley bolt.

NOTE:
To prevent damaging ST1, attach the ST2 onto the ST1 as shown.
ST1 18355AA000 PULLEY WRENCH
ST2 18334AA000 PULLEY WRENCH PIN SET

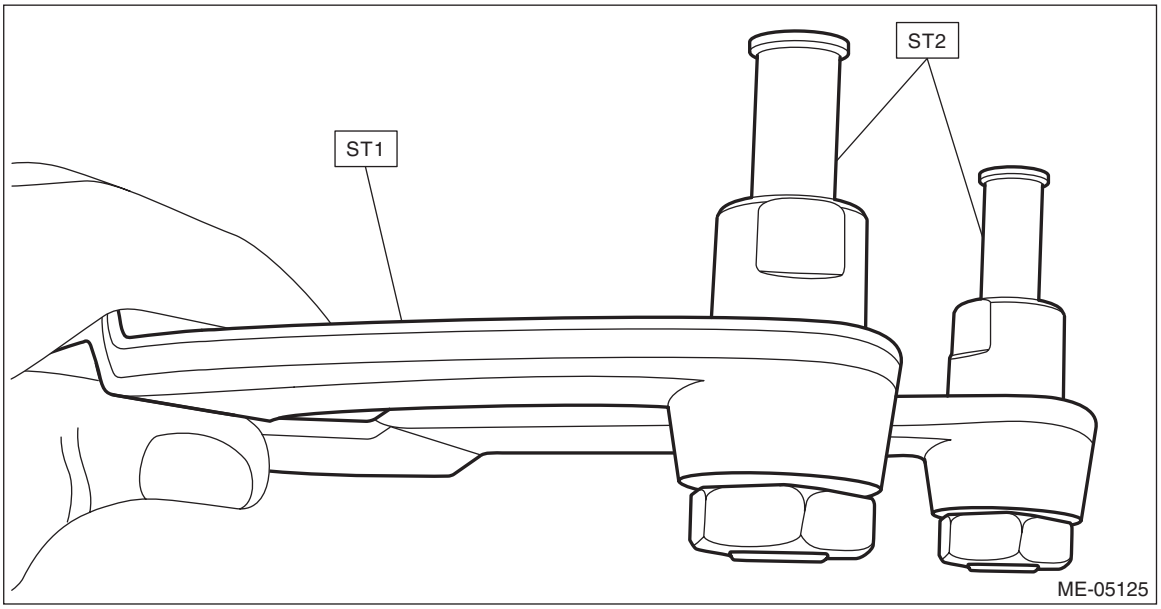

ST1 18355AA000 PULLEY WRENCH
ST2 18334AA000 PULLEY WRENCH PIN SET

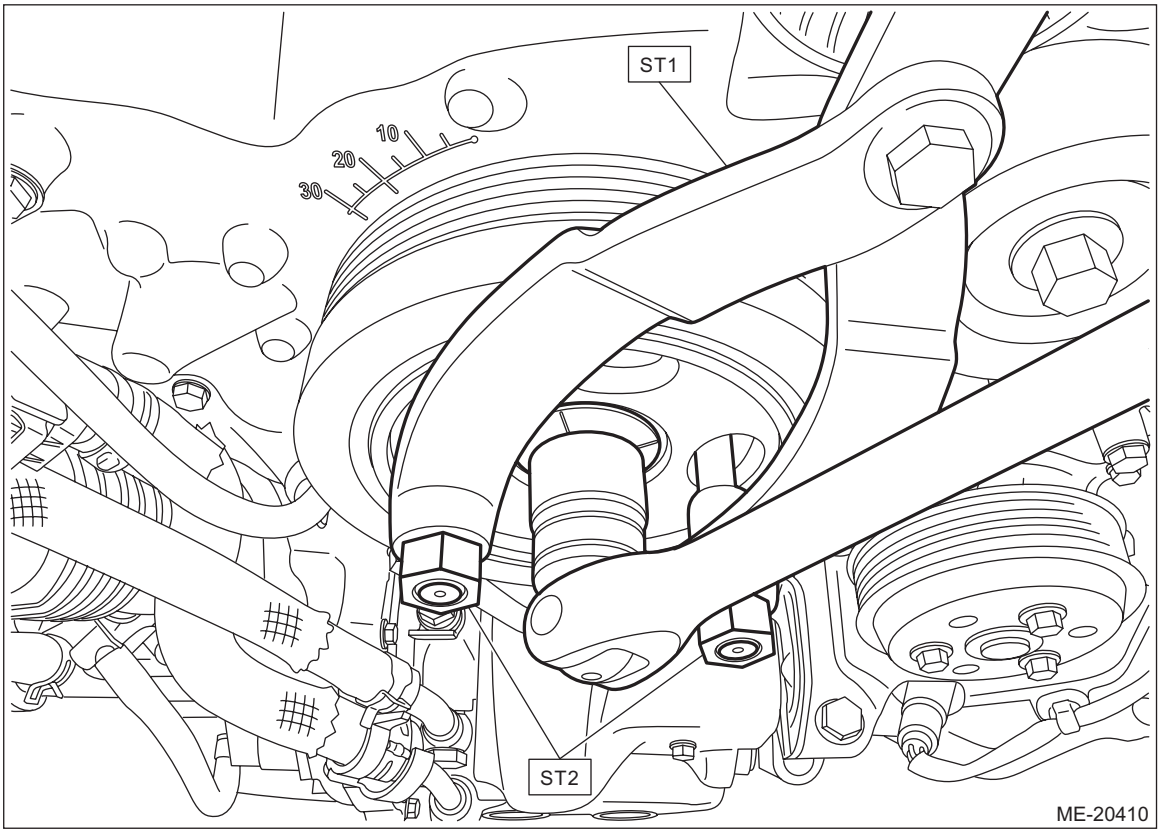

4) Remove the crank pulley.

B: INSTALLATION

1) Clean the crankshaft thread using compressed air.
2) Apply engine oil to the crank pulley bolt seat and thread.
3) Install the crank pulley.
   (1) Install the crank pulley to the crank pulley boss.

NOTE:
- Use new O-rings.
- Install the crank pulley by aligning the crank pulley knock hole (A) and crank pulley boss knock pin (B).

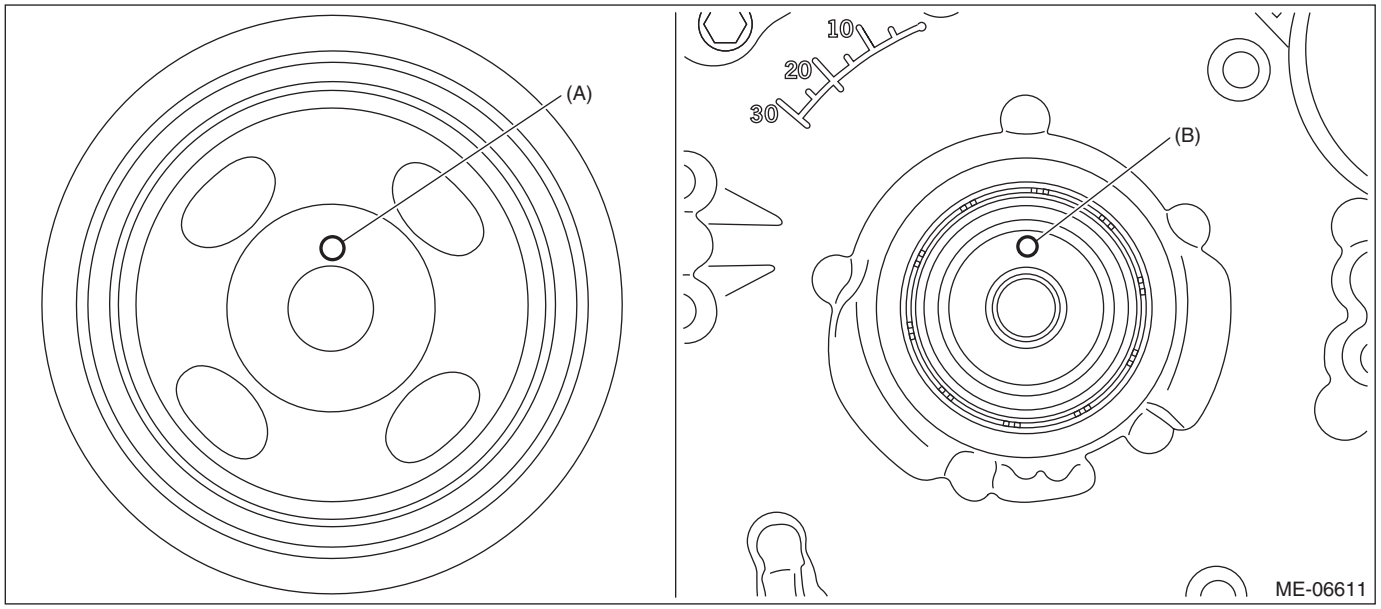

   (2) Use the ST to lock the crank pulley, and temporarily tighten the crank pulley bolt.

NOTE:
To prevent damaging ST1, attach the ST2 onto the ST1 as shown.
ST1 18355AA000 PULLEY WRENCH
ST2 18334AA000 PULLEY WRENCH PIN SET

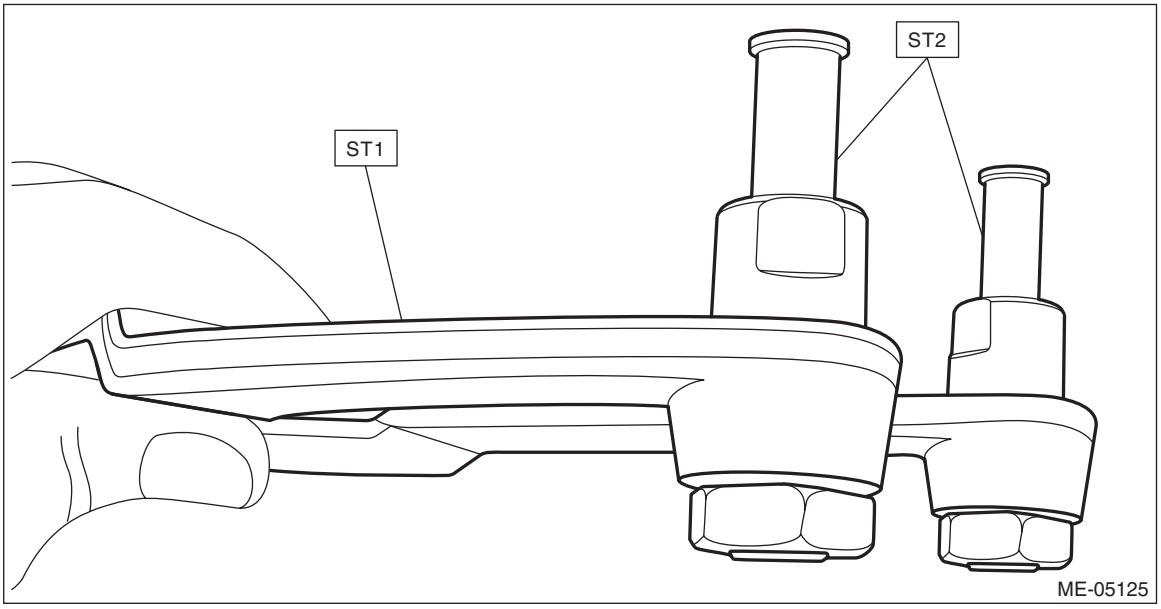

ST1 18355AA000 PULLEY WRENCH
ST2 18334AA000 PULLEY WRENCH PIN SET

Tightening torque:
20 N·m (2.0 kgf-m, 14.8 ft-lb)

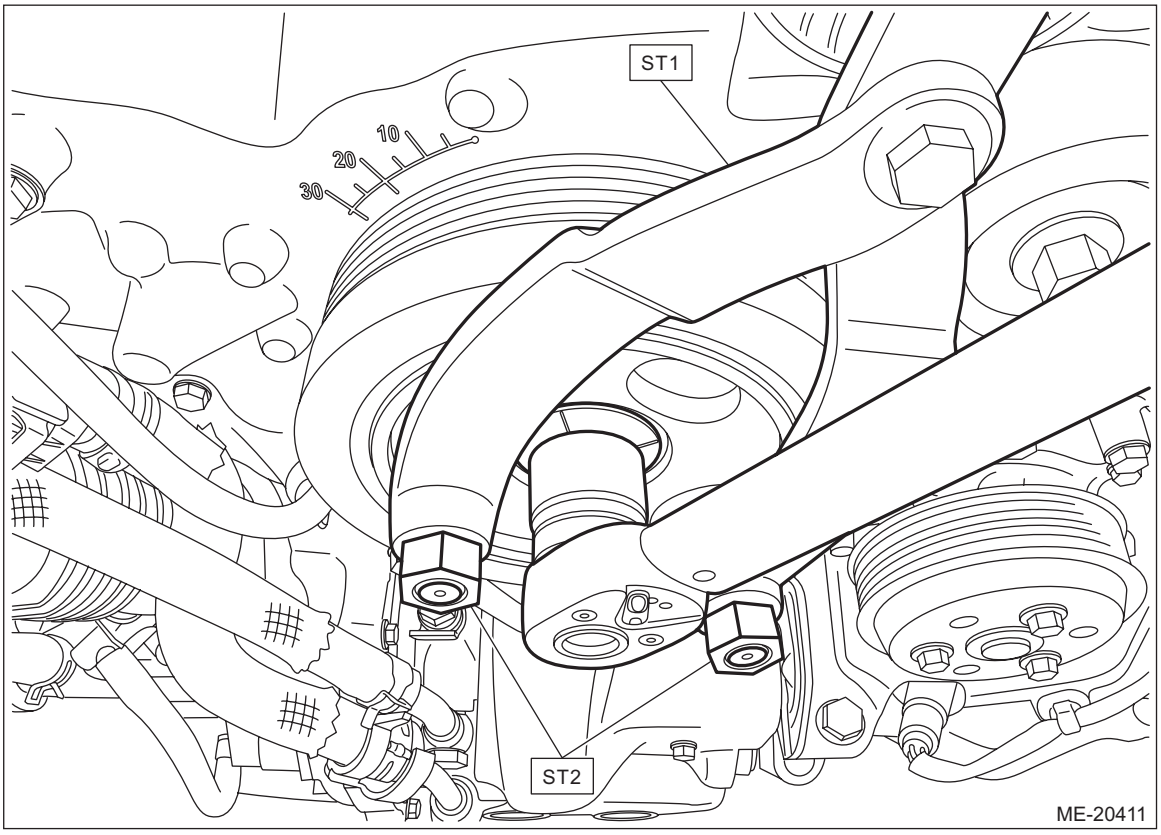

(3) Use the marker as shown in the figure, draw the reference line (A) on the crank pulley bolt according to the indented line on the crank pulley bolt head, and draw the end line (B) on the crank pulley.

NOTE:
- Four lines are indented by 90° on the crank pulley bolt head.

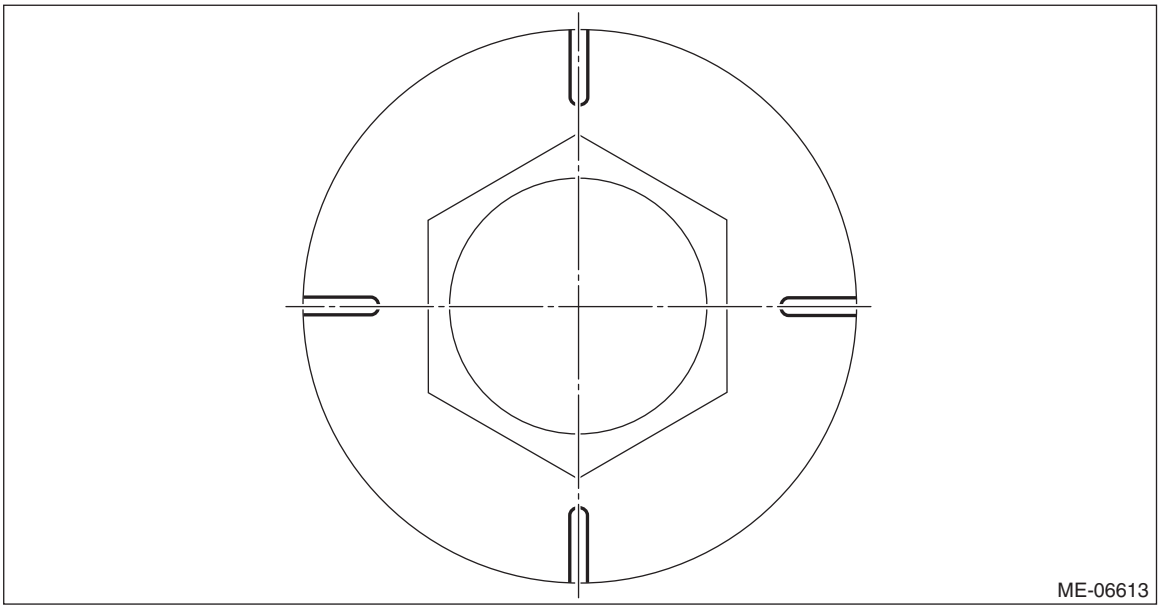

- Reference line is drawn for better visibility.

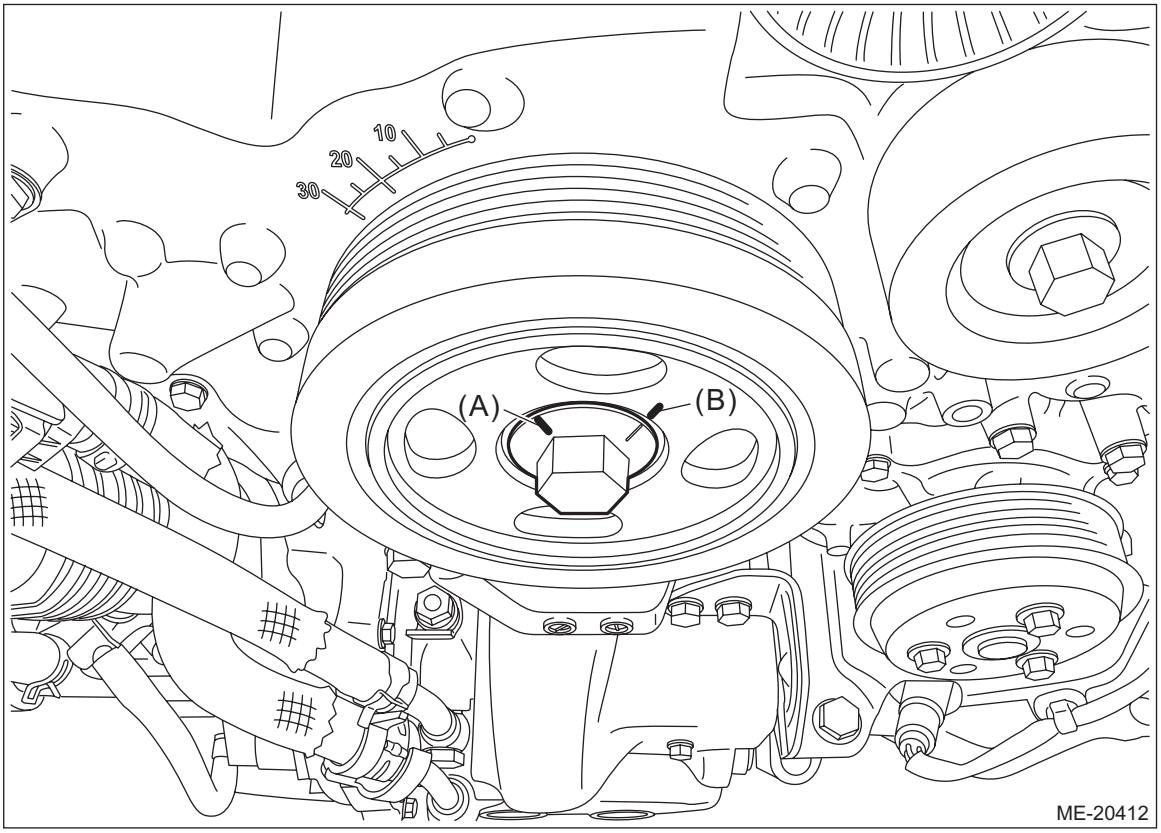

(4) Use the ST to lock the crank pulley, and tighten the crank pulley bolt to the angle where reference line (A) and end line (B) are aligned.

NOTE:
It should be approx. 90° when reference line (A) and end line (B) are aligned.
ST1 18355AA000 PULLEY WRENCH
ST2 18334AA000 PULLEY WRENCH PIN SET

Tightening angle:
90°±5°

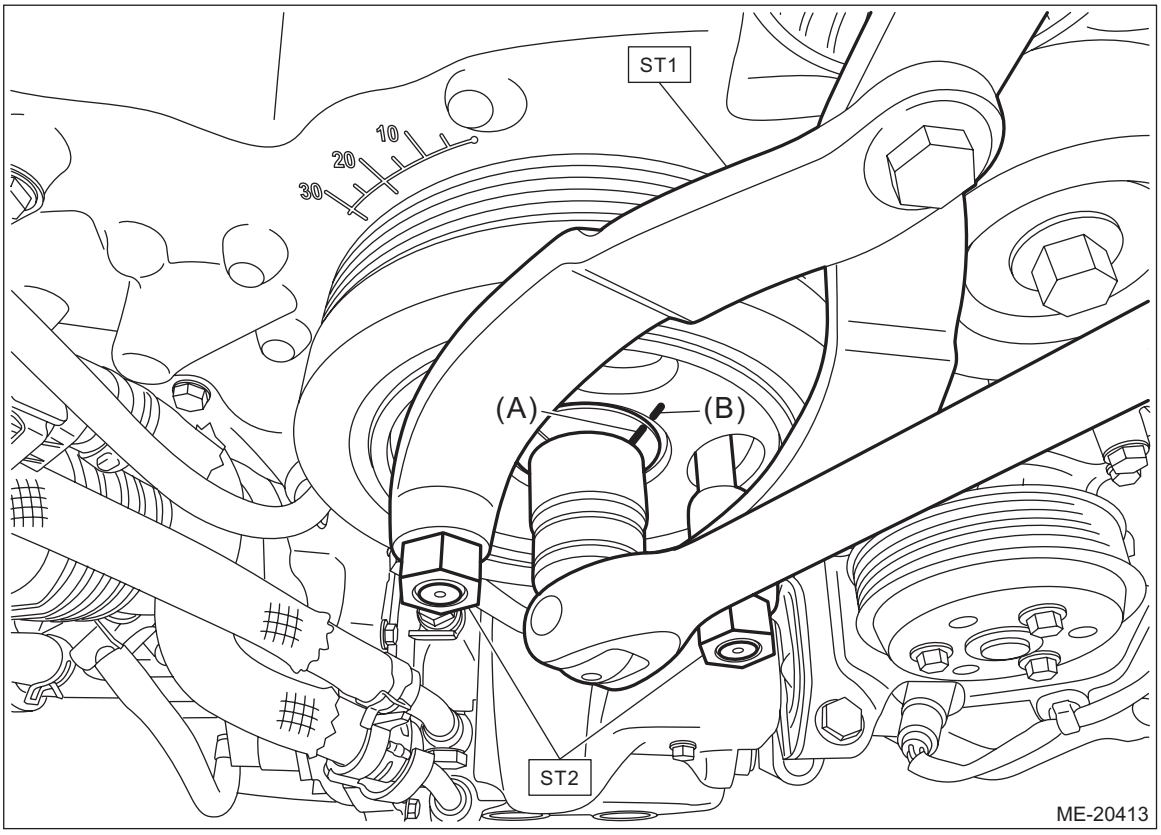

4) Install the V-belts. <Ref. to ME(w/o STI)-77, V-BELT, INSTALLATION, V-belt.>
5) When working on the vehicle

NOTE:
When working on the vehicle, perform the following steps also.
(1) Install the radiator main fan & fan motor assembly and radiator sub fan & fan motor assembly. <Ref. to CO(w/o STI)-44, INSTALLATION, Radiator Main Fan and Fan Motor.> <Ref. to CO(w/o STI)-47, INSTALLATION, Radiator Sub Fan and Fan Motor.>

C: INSPECTION

1) Check that the crank pulley and crank pulley boss have no deformation, cracks or other damages.
2) Inspect for oil leakage from the front oil seal. If there is an oil leak, replace the front oil seal with a new part according to the following procedures.
(1) Remove the crank pulley. <Ref. to ME(w/o STI)-81, REMOVAL, Crank Pulley.>
(2) Remove the crank pulley boss from the chain cover.

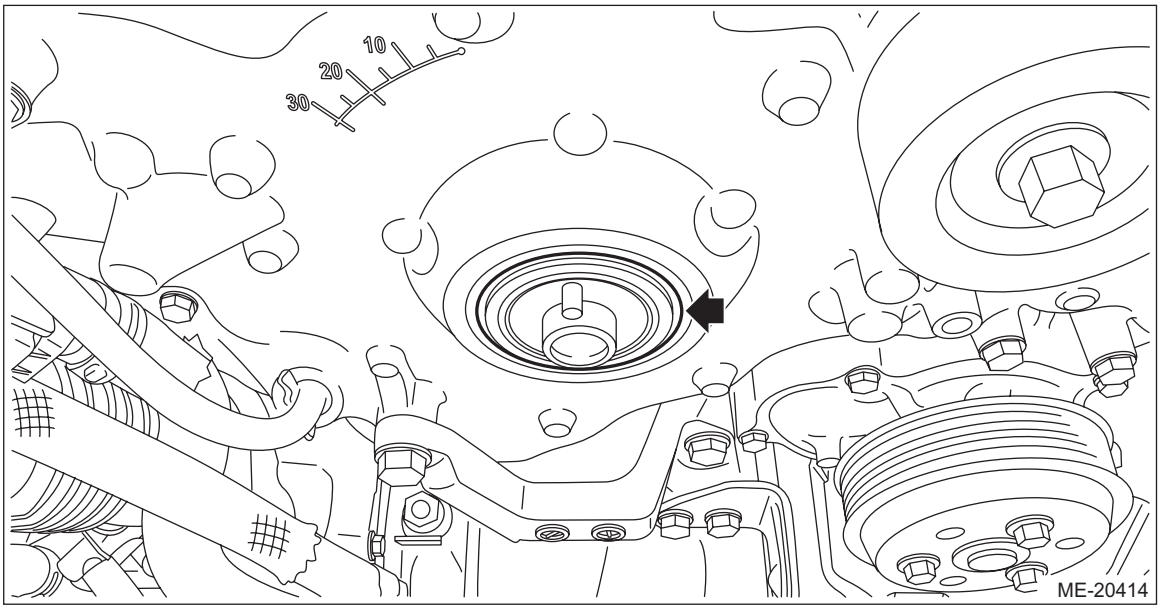

(3) Remove the front oil seal from the chain cover.

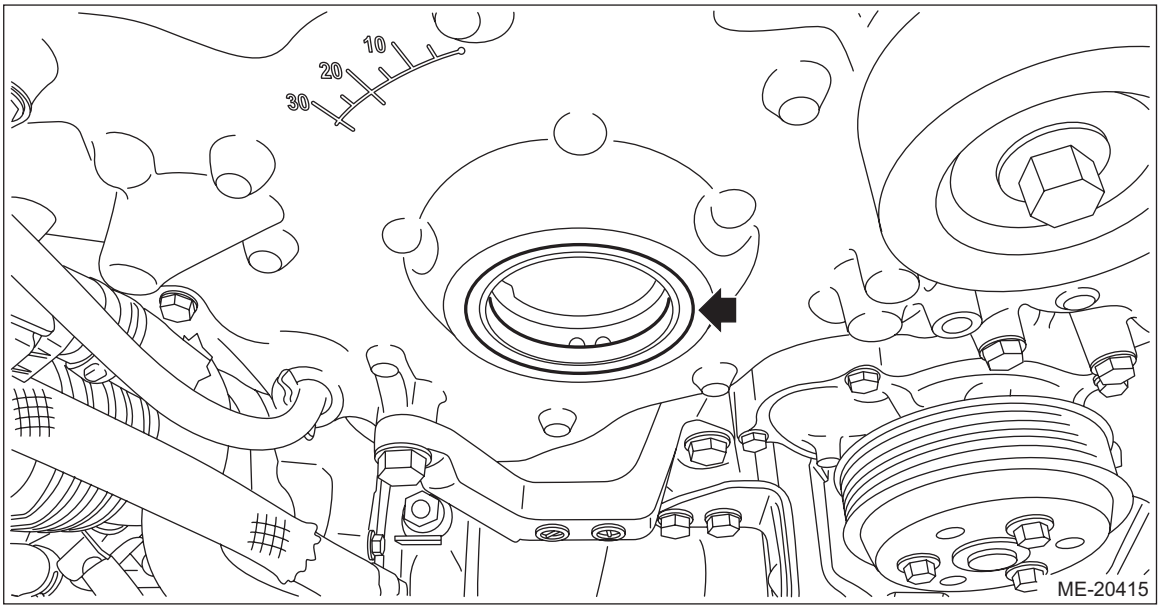

(4) Degrease the press-fit section for the chain cover front oil seal, and install the front oil seal to the chain cover using ST.

CAUTION:
Do not apply fluid such as engine oil to the front oil seal and the chain cover; otherwise engine oil leakage may occur.

NOTE:
When tapping the front oil seal in, protect the radiator fin with cardboards etc. so as not to damage the radiator fin by the plastic hammer.
ST 41399FG020 SPECIAL TOOL B

Front oil seal press-fit position:
1^{+0}_{-1} mm ($0.0039^{+0}_{-0.0039}$ in) position from chain cover end face

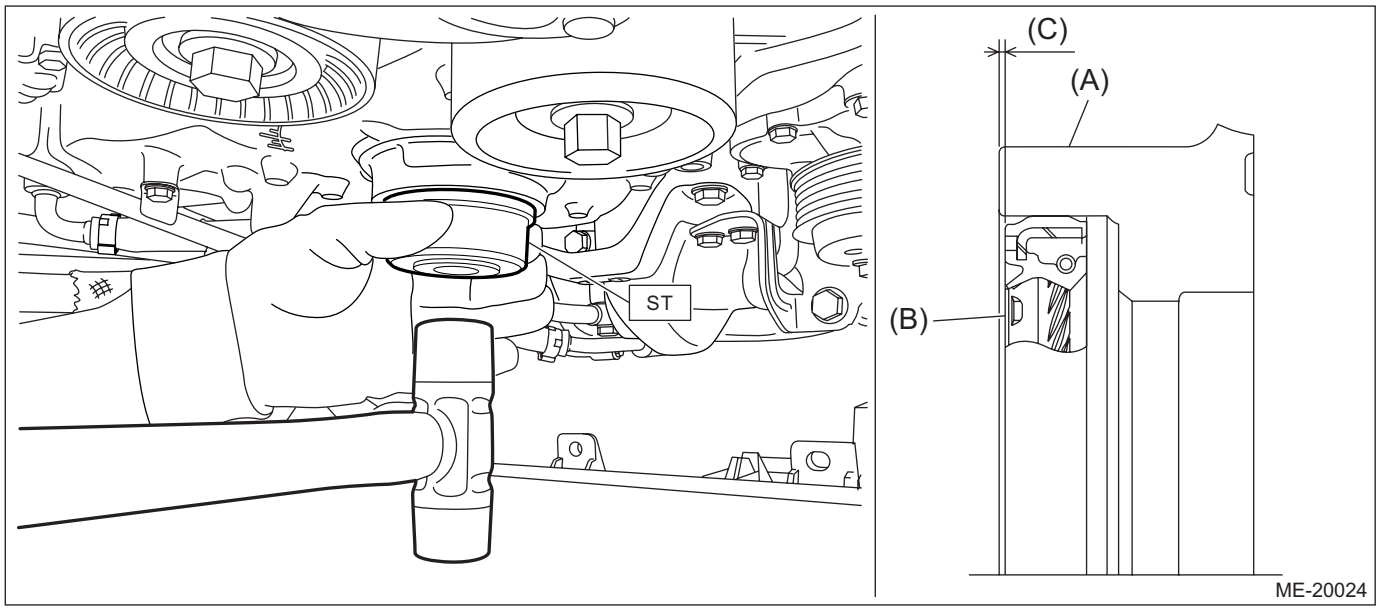

(A) Chain cover
(B) Oil seal
(C) Front oil seal press-fit position (1^{+0}_{-1} mm ($0.0039^{+0}_{-0.0039}$ in) position from chain cover end face)

3) Install in the reverse order of removal after replacement.

14.Chain Cover

A: REMOVAL

NOTE:
When replacing a single part, perform the work with the engine assembly installed to body.
1) When working on the vehicle

NOTE:
When working on the vehicle, perform the following steps also.
(1) Remove the intercooler. <Ref. to IN(w/o STI)-43, REMOVAL, Intercooler.>
(2) Remove the intake duct No. 1 and intake duct No. 2. <Ref. to IN(w/o STI)-27, INTAKE DUCT NO. 1, REMOVAL, Intake Duct.> <Ref. to IN(w/o STI)-30, INTAKE DUCT NO. 2, REMOVAL, Intake Duct.>
(3) Remove the radiator. <Ref. to CO(w/o STI)-36, REMOVAL, Radiator.>
(4) Remove the front exhaust pipe. <Ref. to EX(w/o STI)-9, REMOVAL, Front Exhaust Pipe.>
2) Drain the engine oil. <Ref. to LU(w/o STI)-11, REPLACEMENT, Engine Oil.>
3) Remove the V-belts. <Ref. to ME(w/o STI)-75, V-BELT, REMOVAL, V-belt.>
4) Remove the generator. <Ref. to SC(w/o STI)-31, REMOVAL, Generator.>
5) Remove the water pump pulley. <Ref. to CO(w/o STI)-16, WATER PUMP, REMOVAL, Water Pump.>
6) Remove the crank pulley. <Ref. to ME(w/o STI)-81, REMOVAL, Crank Pulley.>
7) Remove the engine oil cooler. <Ref. to LU(w/o STI)-32, REMOVAL, Engine Oil Cooler.>
8) Remove the front engine oil cooler pipe assembly. <Ref. to LU(w/o STI)-34, FRONT ENGINE OIL COOLER PIPE, REMOVAL, Engine Oil Cooler Pipe.>
9) Remove the clip securing the PCV pipe to the intake manifold.

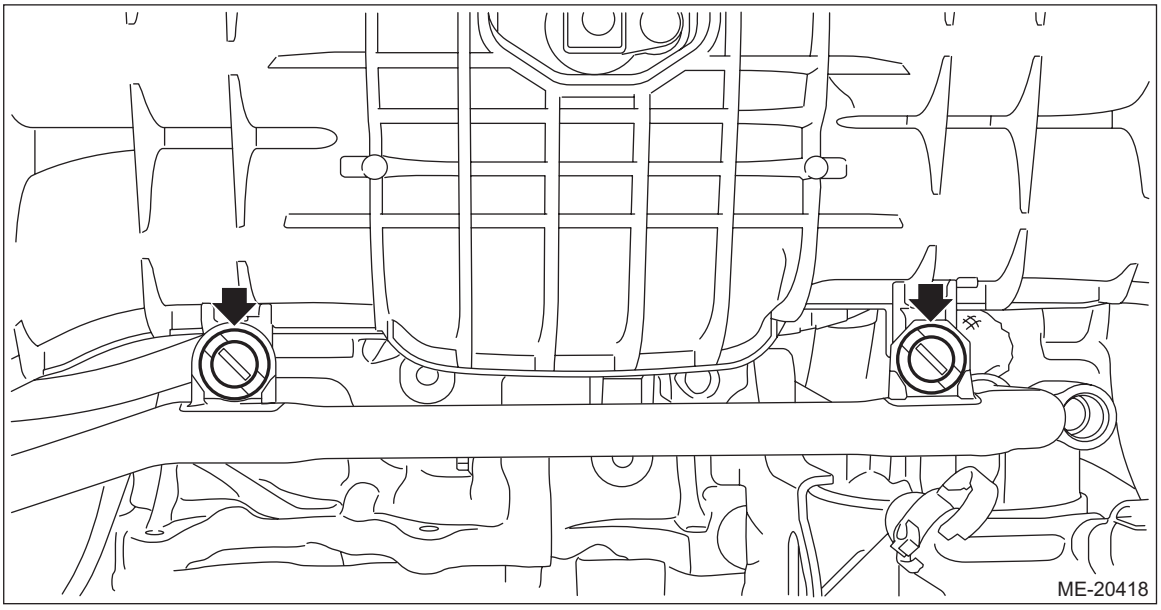

10) Remove the PCV pipe from the clip (A), and place the PCV pipe aside so that it does not interfere with the work.

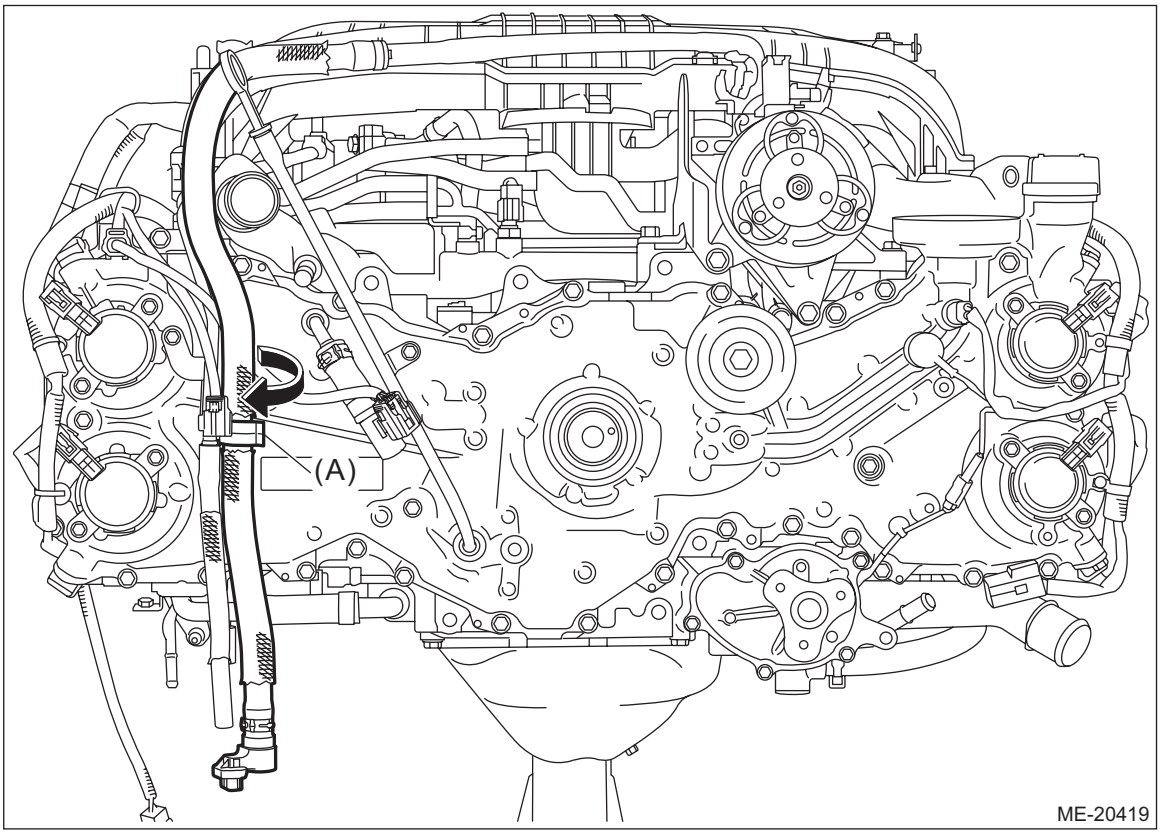

11) Disconnect the connector (A) from the engine wiring harness, and remove the blow-by diagnosis connector harness from the PCV hose assembly No. 1.

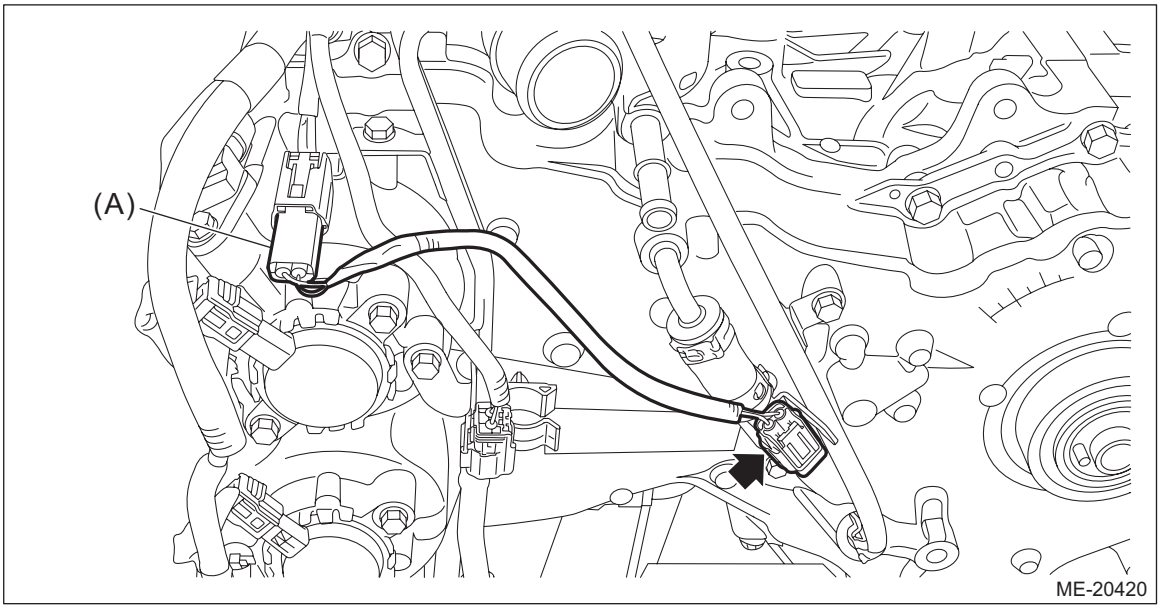

12) Remove the connector (A) and connector (B) from the vacuum pipe assembly.
13) Disconnect the vacuum control hose (C) and vacuum hose (D) from the vacuum pipe assembly, and remove the vacuum pipe assembly from the chain cover.

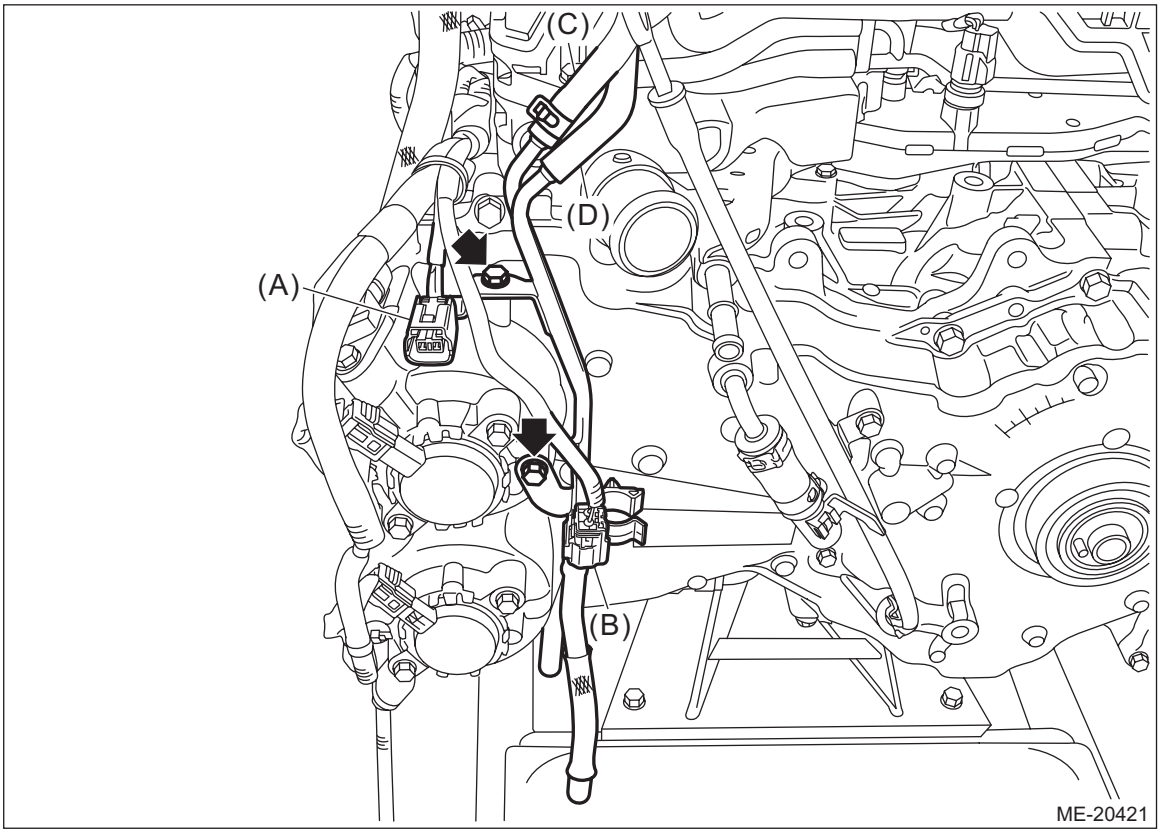

14) Disconnect the connector (A) from the intake oil control solenoid RH, connector (B) from the exhaust oil control solenoid RH, connector (C) from the intake camshaft position sensor RH, and the connector (D) from the exhaust camshaft position sensor RH, and then remove the clips (E) and (F) securing the engine harness.

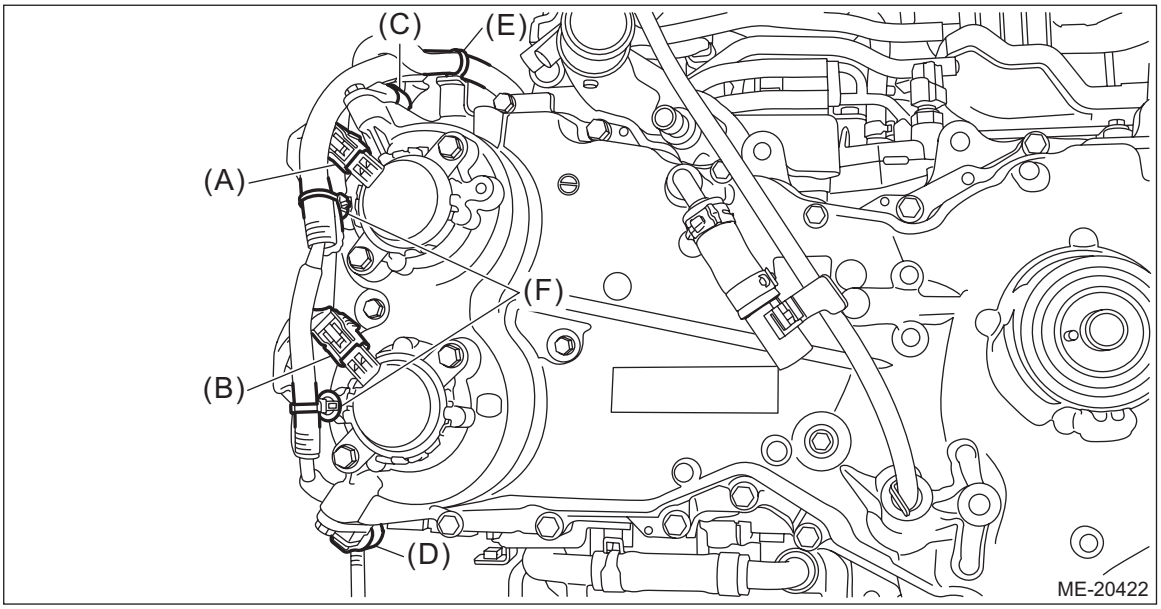

15) Disconnect the connector (A) from the exhaust camshaft position sensor LH and the connector (B) from the oil level switch, and remove the engine harness stay from the chain cover.

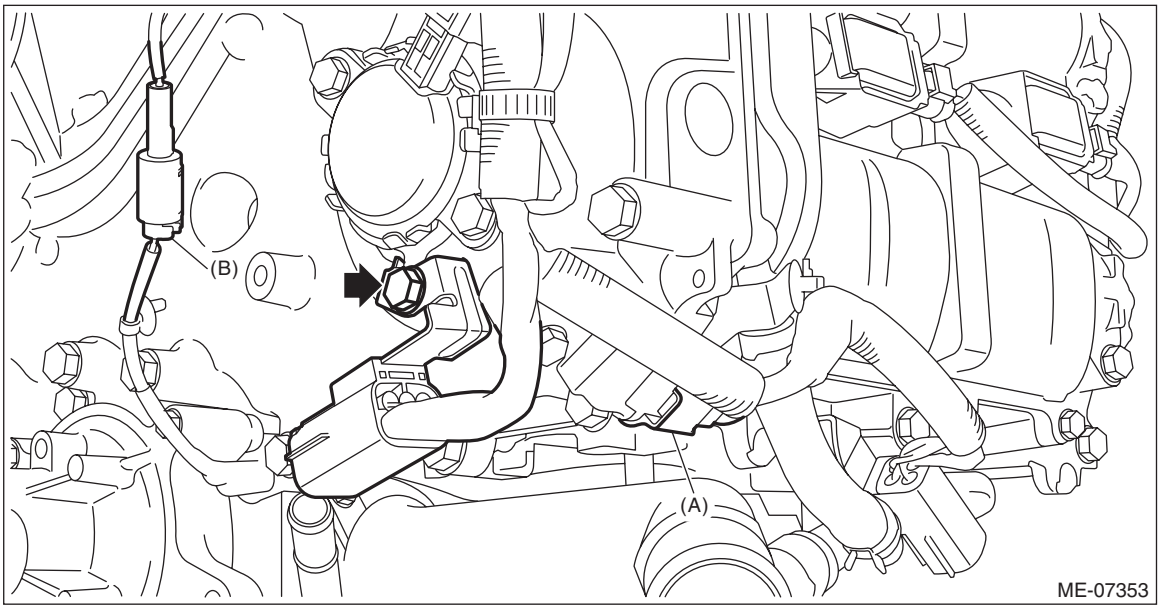

16) Remove the rubber cap from the oil pressure switch.

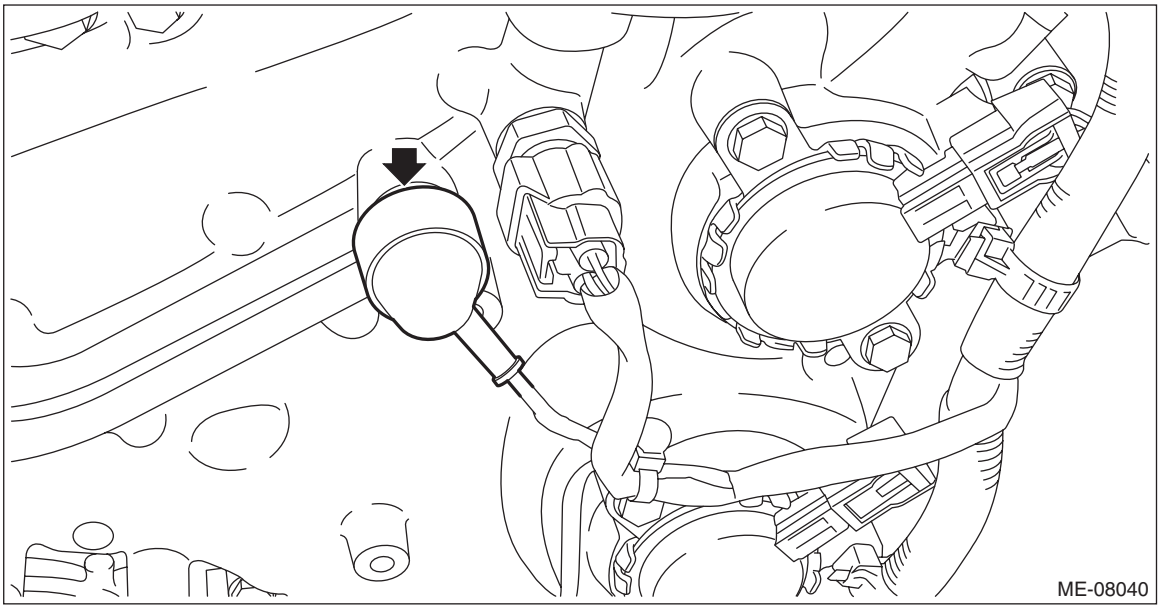

17) Disconnect the terminal (A) from the oil pressure switch, connector (B) from the engine oil temperature sensor, connector (C) from the intake oil control solenoid LH, connector (D) from the exhaust oil control solenoid LH, and the connector (E) from the intake camshaft position sensor LH, and then remove the clip (F) securing the engine harness.

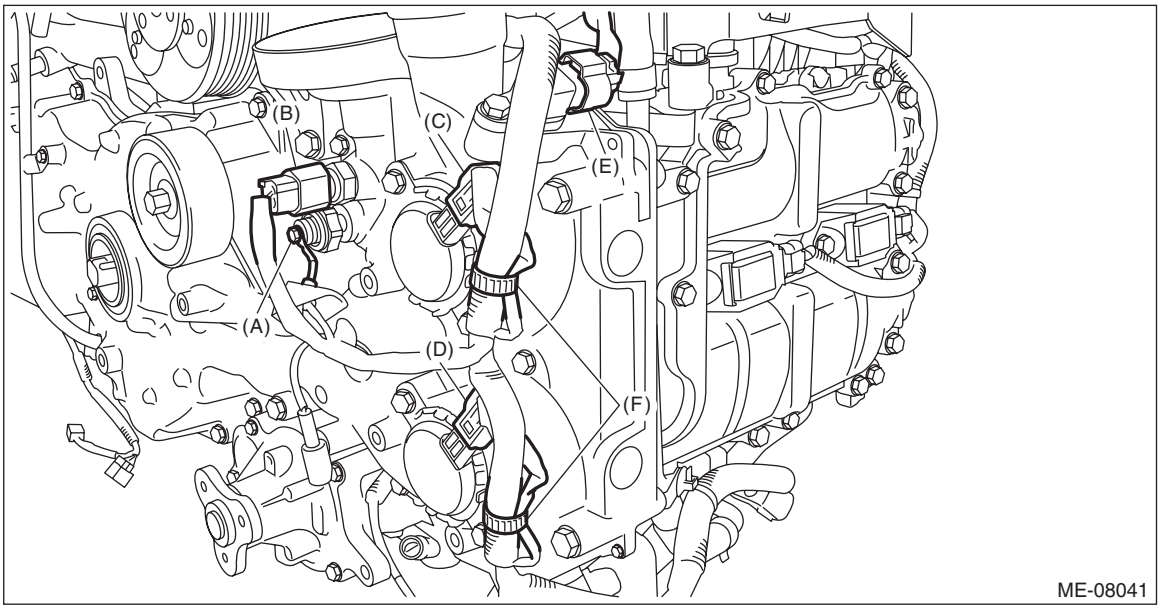

18) Pull out the oil level gauge (A), and remove the oil level gauge guide (B), crank pulley boss (C), and idler pulley (D).

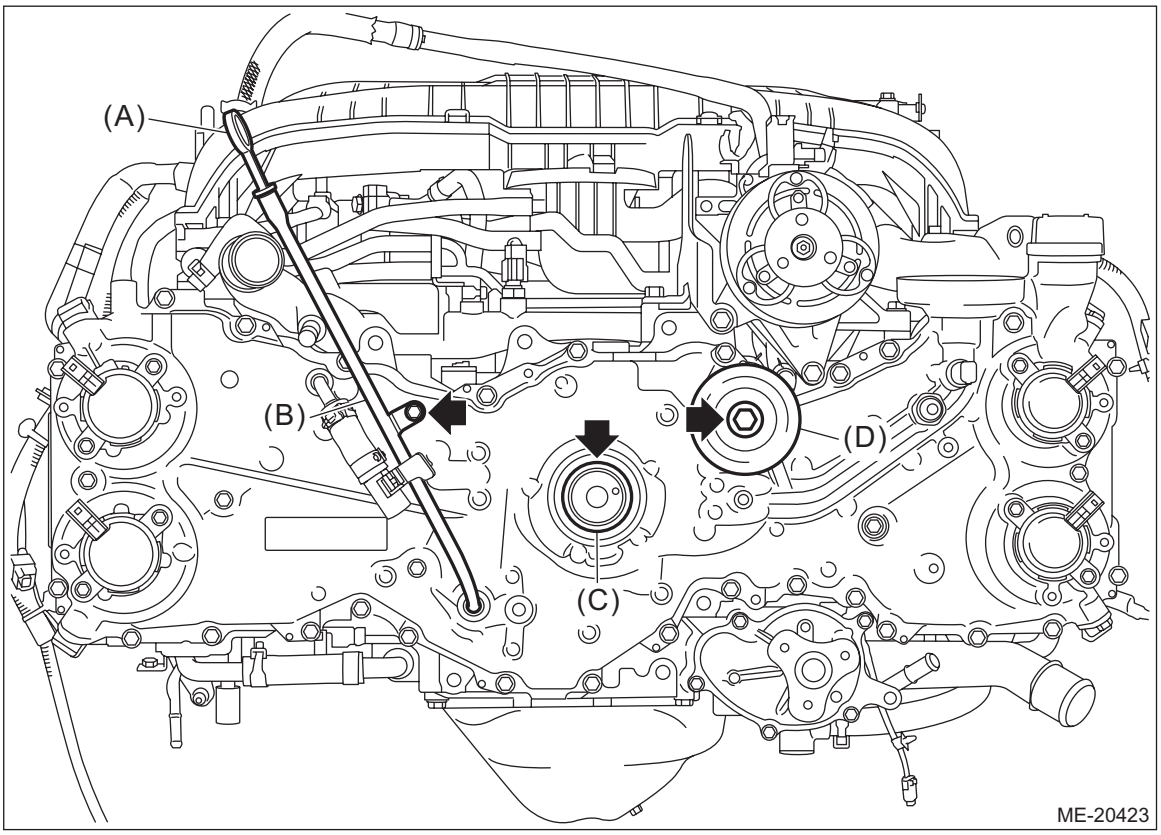

19) Remove the bolts securing the chain cover to engine.

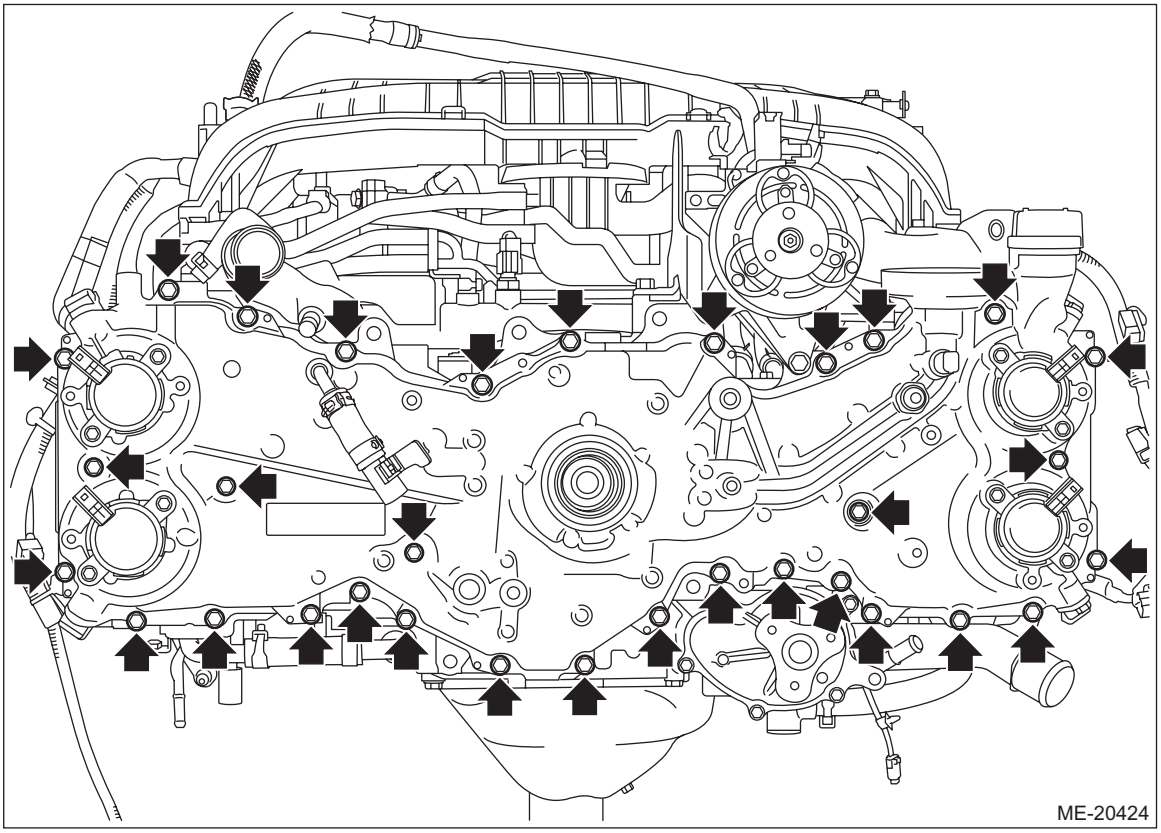

20) Pry the points shown in the figure with a crowbar wrapped by protective tape, and then remove the chain cover from the engine.

CAUTION:
The chain cover may contact the protrusion (a) of cam sprocket sensor plate and cause damage. When removing the chain cover, move the chain cover horizontally until it cannot contact with the cam sprocket, and then remove it carefully.

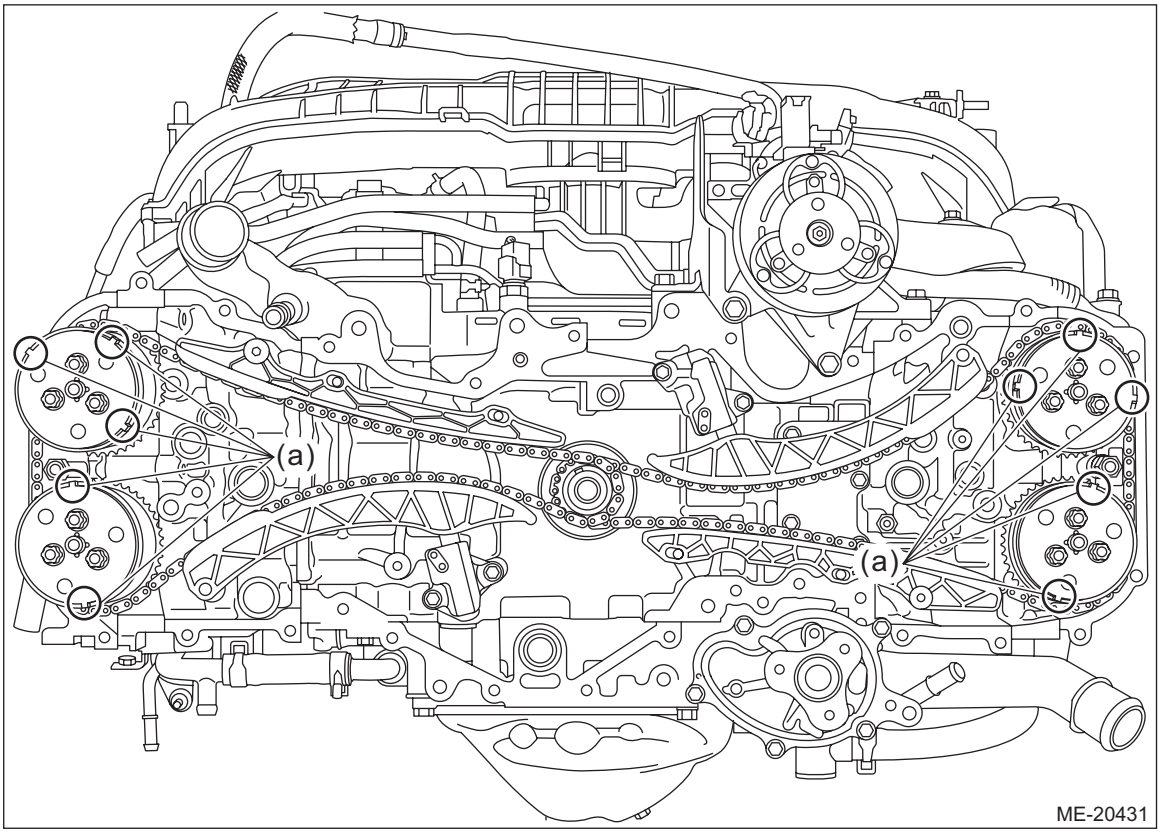

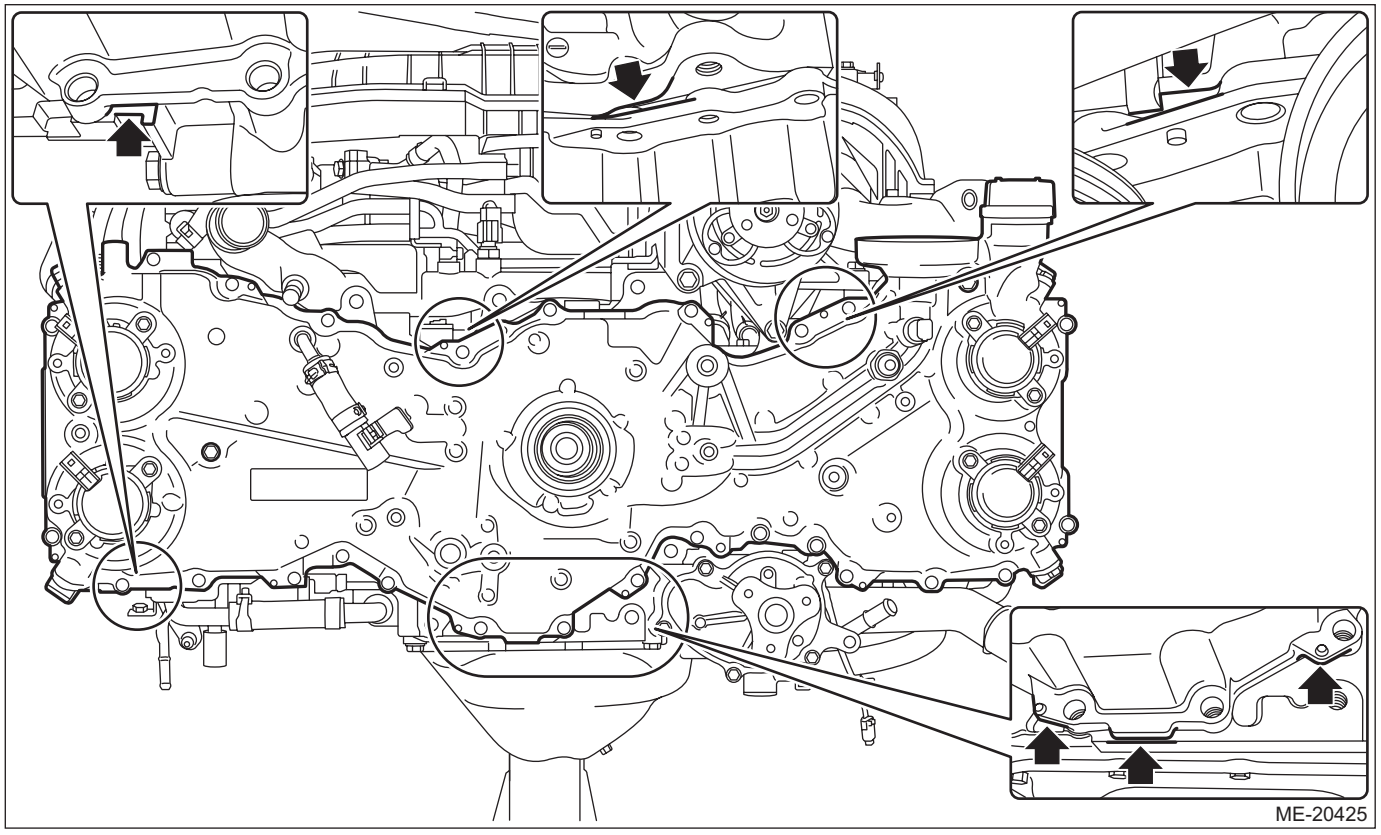

21) Remove the O-rings from cylinder head RH, cylinder head LH, cylinder block LH and oil pan upper.

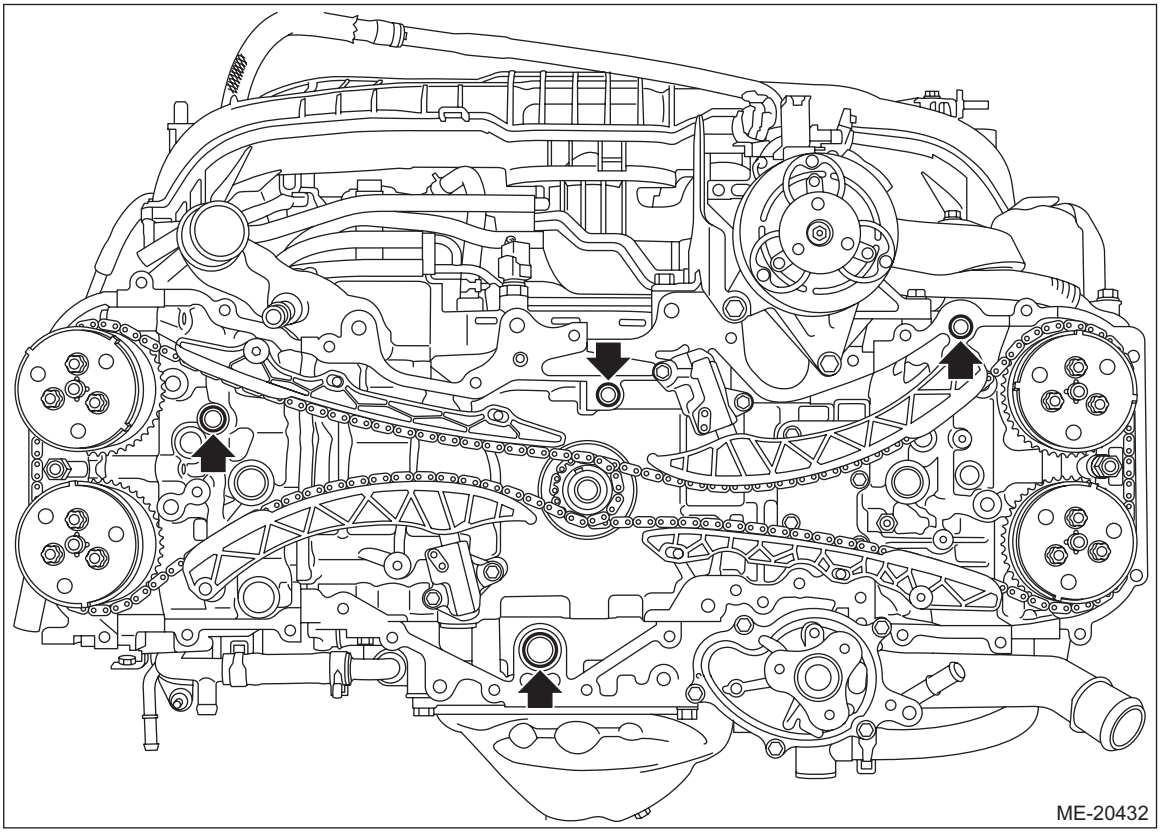

22) Remove the liquid gasket from the chain cover and engine unit.
23) Remove the front oil seal from the chain cover.

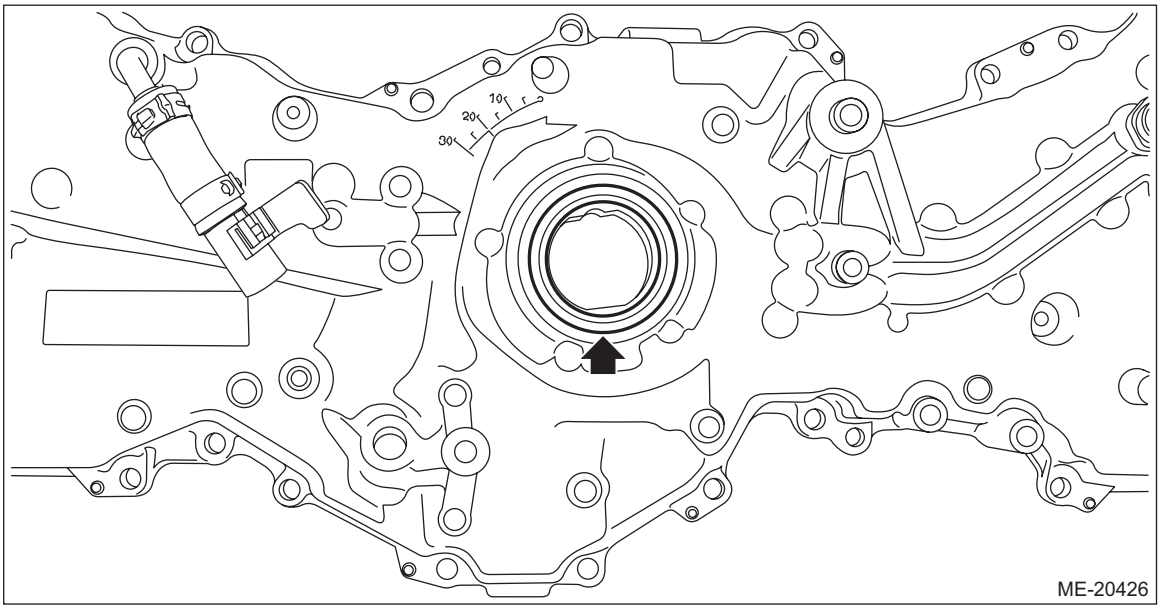

B: INSTALLATION

1) Degrease the press-fit section for the chain cover front oil seal, and install the front oil seal to the chain cover using ST.

CAUTION:
Do not apply fluid such as engine oil to the front oil seal and the chain cover; otherwise engine oil leakage may occur.

NOTE:
Use a new front oil seal.
ST 41399FG020 SPECIAL TOOL B

Front oil seal press-fit position:
1^{+0}_{-1} mm ($0.0039^{+0}_{-0.0039}$ in) position from chain cover end face

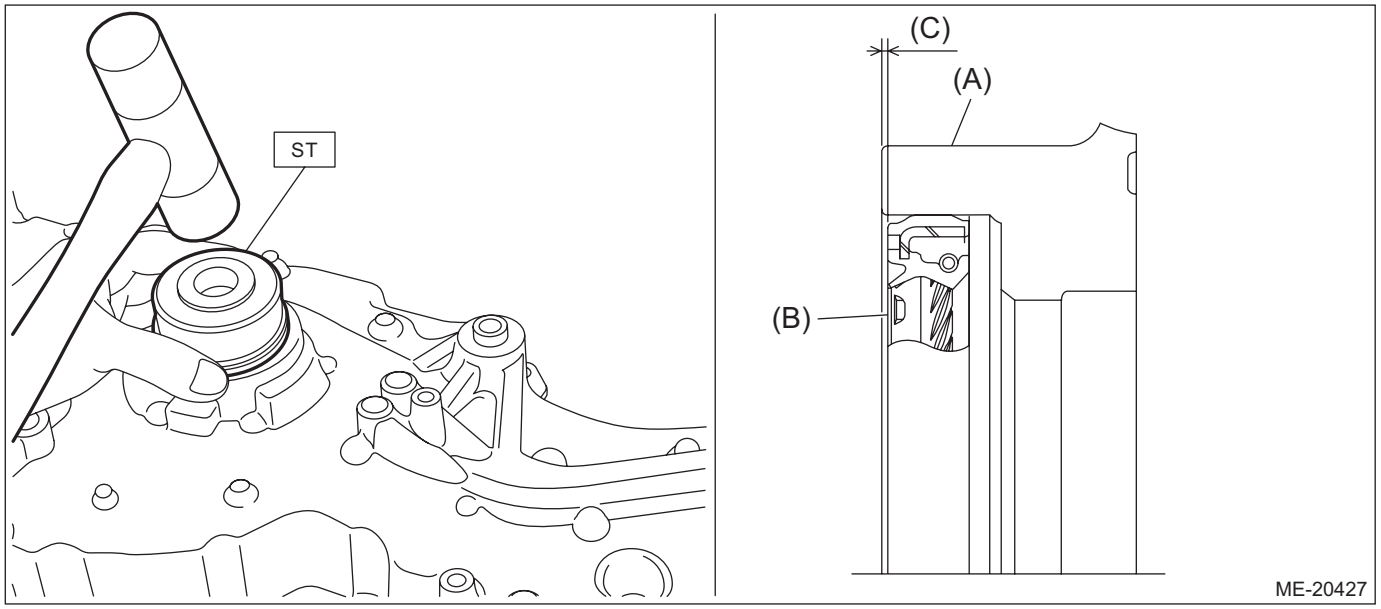

(A) Chain cover
(B) Oil seal
(C) Front oil seal press-fit position (1^{+0}_{-1} mm ($0.0039^{+0}_{-0.0039}$ in) position from chain cover end face)

2) Install the O-rings to cylinder head RH, cylinder head LH, cylinder block LH and oil pan upper.

NOTE:
- Use new O-rings.
- Apply a coat of engine oil to the O-rings.

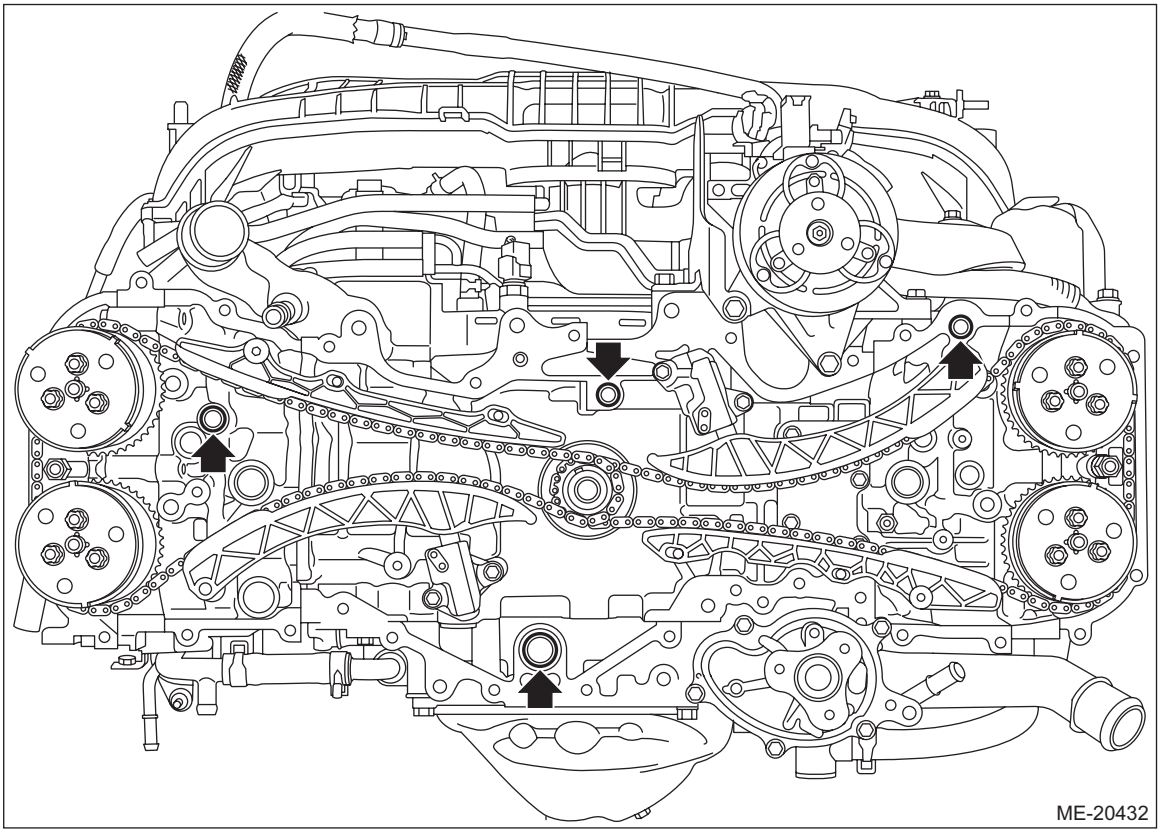

3) Apply liquid gasket if there are gaps between front camshaft cap and cam carrier (A), cam carrier and cylinder head (B), and cylinder head and cylinder block (C) as shown in the figure.

Liquid gasket:
THREE BOND 1217G (Part No. K0877Y0100), THREE BOND 1217H or equivalent

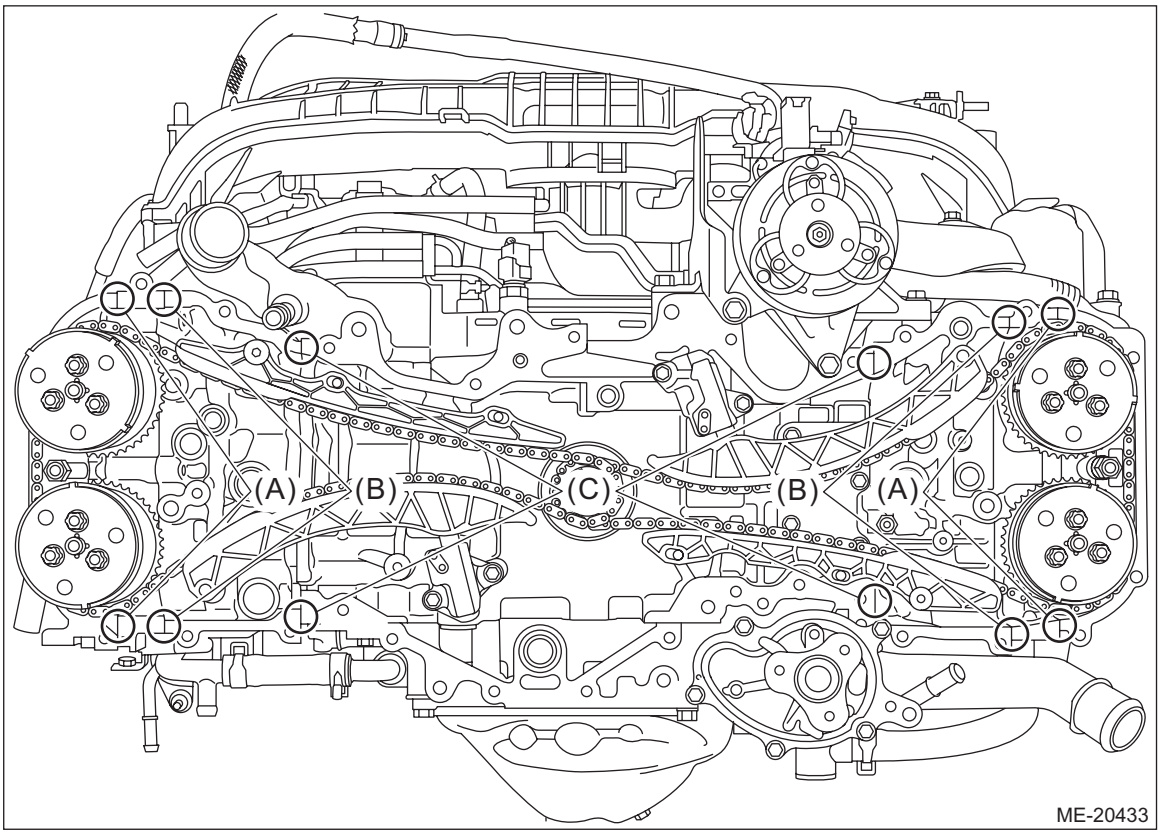

4) Apply liquid gasket to the chain cover mating surface and center boss (5 places) as shown in the figure.

NOTE:
- Before applying liquid gasket, degrease the old liquid gasket seal surface of the engine and chain cover.
- Install within 5 min. after applying liquid gasket.

Liquid gasket:
THREE BOND 1217G (Part No. K0877Y0100), THREE BOND 1217H or equivalent

Liquid gasket applying diameter:
4±0.5 mm (0.1575±0.0197 in)

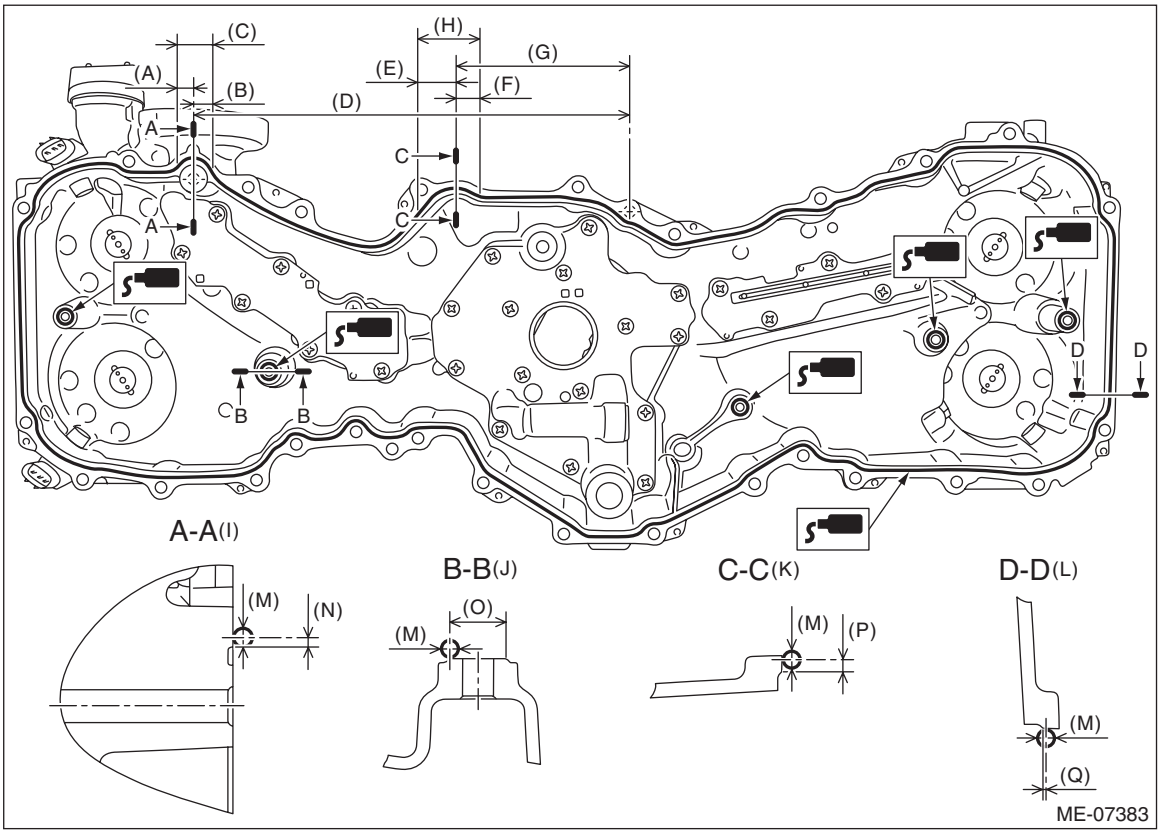

(A)	14.5 mm (0.5709 in)	(G)	127 mm (5.0000 in)	(M)	ϕ4±0.5 mm (0.1575±0.0197 in)
(B)	17.5 mm (0.6890 in)	(H)	Range B	(N)	2 mm (0.0787 in)
(C)	Range A	(I)	Liquid gasket applying position of mating surfaces of range A	(O)	ϕ12 mm (0.4724 in)
(D)	316.2 mm (12.4488 in)	(J)	Liquid gasket applying position of center boss (5 places)	(P)	2.5 mm (0.0984 in)
(E)	24.5 mm (0.9646 in)	(K)	Liquid gasket applying position of mating surfaces of range B	(Q)	0.5 mm (0.0197 in)
(F)	18.5 mm (0.7283 in)	(L)	Liquid gasket applying position of mating surfaces other than range A and range B		

5) Set the chain cover, and tighten the bolts in numerical order as shown in the figure.

CAUTION:
The chain cover may contact the protrusion (a) of cam sprocket sensor plate and cause damage. When setting the chain cover, move the chain cover horizontally and set it while taking care not to contact with the cam sprocket.

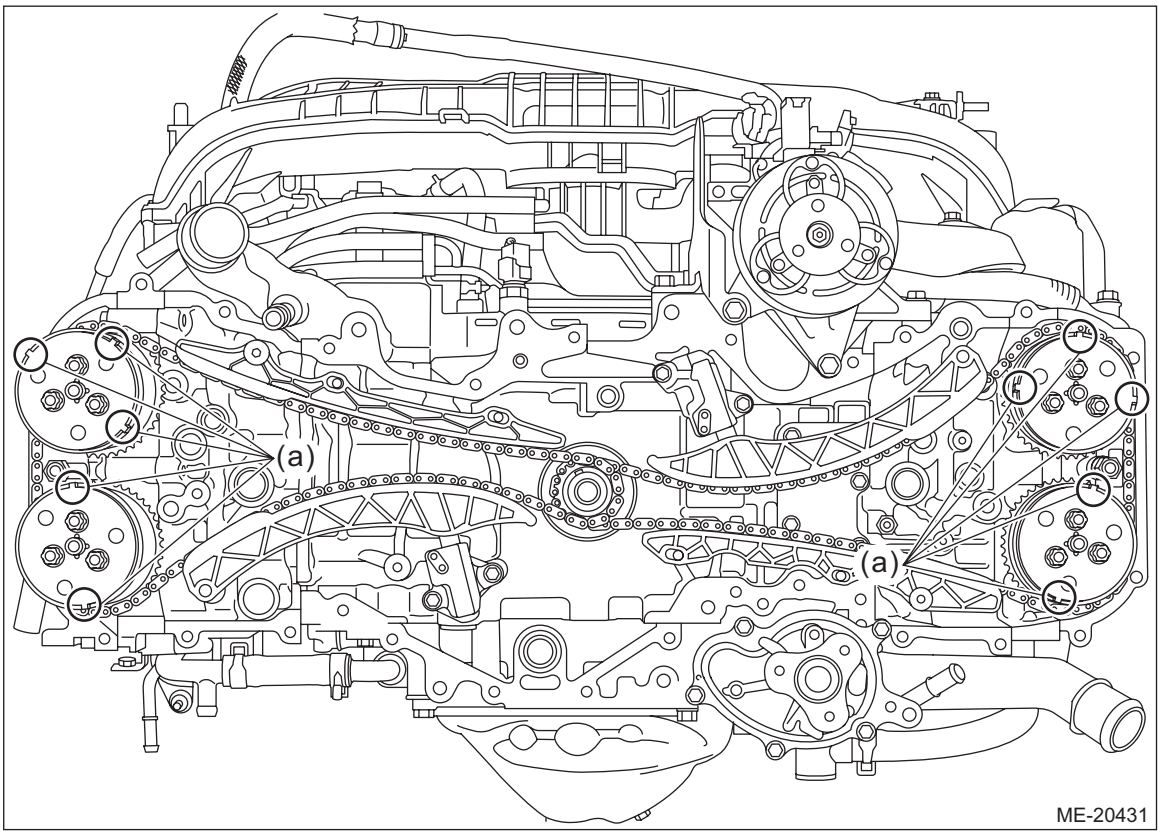

Tightening torque:
T1: 10 N·m (1.0 kgf-m, 7.4 ft-lb)
T2: 25 N·m (2.5 kgf-m, 18.4 ft-lb)

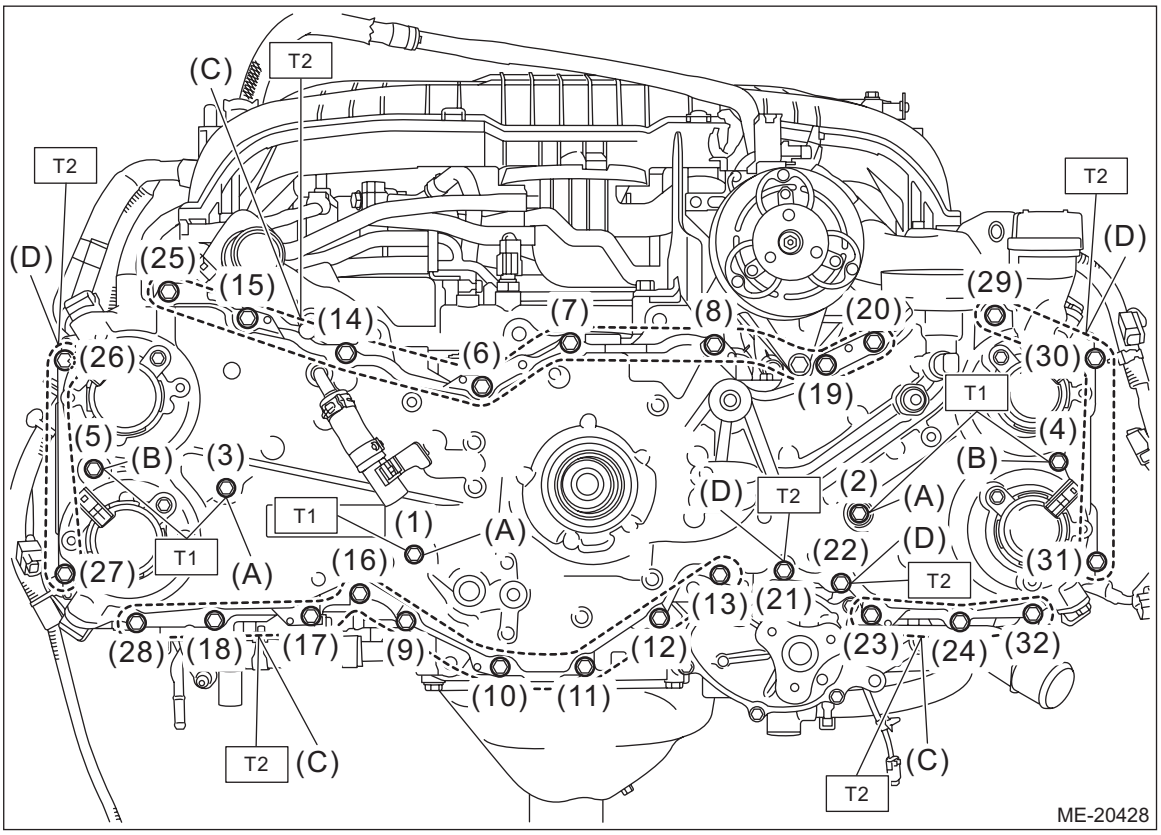

(A) M6 × 20
(B) M6 × 50
(C) M8 × 25
(D) M8 × 60

6) Install the idler pulley (D), crank pulley boss (C) and oil level gauge guide (B), and insert the oil level gauge (A).

NOTE:
- When installing the idler pulley, be careful of the idler pulley cover direction.

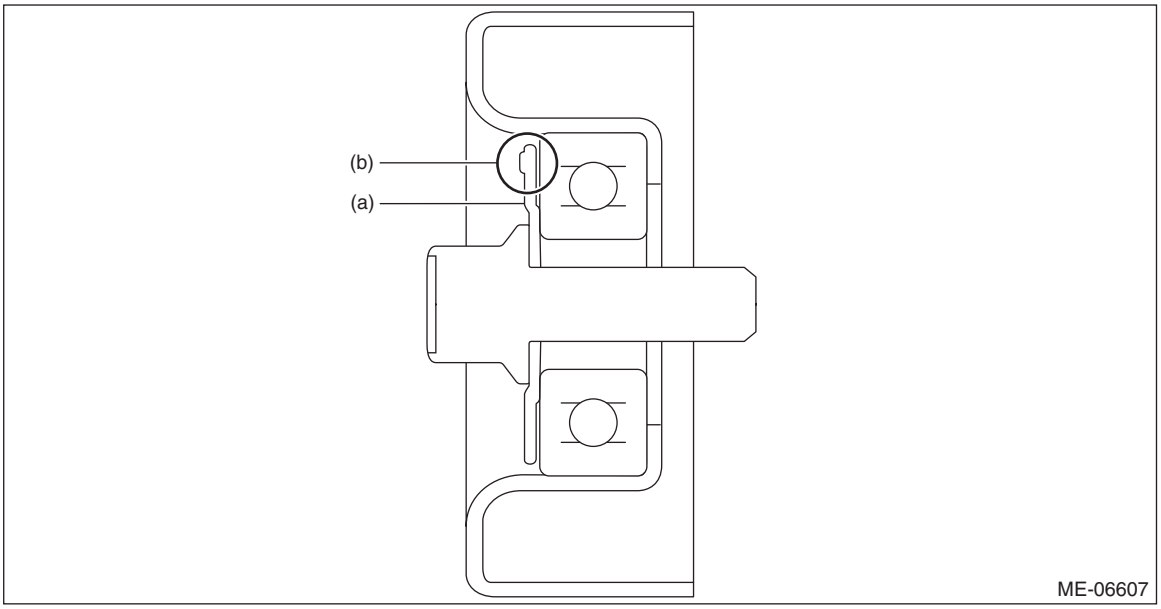

(a) Idler pulley cover (b) Protrusion (3 places)

- Use a new O-ring to the oil level gauge guide.
- Apply a light coat of engine oil to the O-rings of the oil level gauge guide and the oil level gauge.

Tightening torque:
T1: 6.4 N·m (0.7 kgf-m, 4.7 ft-lb)
T2: 36 N·m (3.7 kgf-m, 26.6 ft-lb)

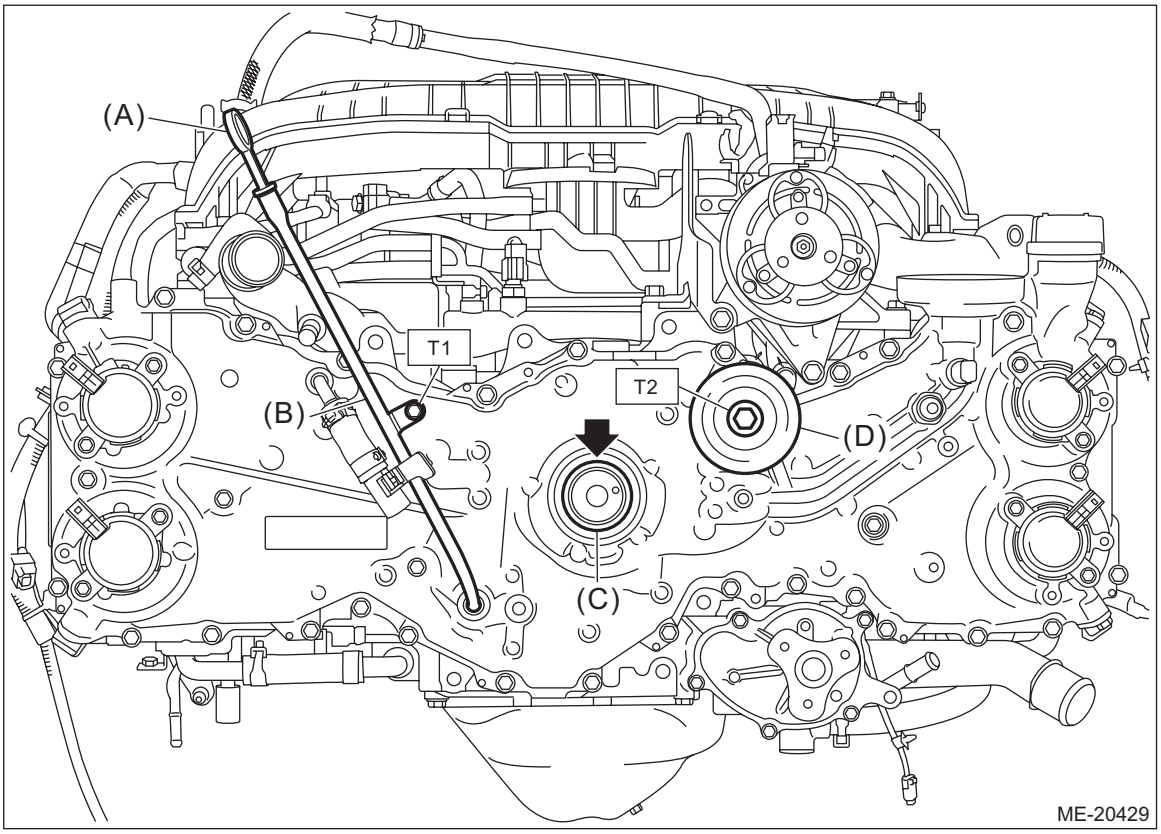

7) Connect the terminal (A) to the oil pressure switch, connector (B) to the engine oil temperature sensor, connector (C) to the intake oil control solenoid LH, connector (D) to the exhaust oil control solenoid LH, and the connector (E) to the intake camshaft position sensor LH, and fix the engine harness using the clip (F).

NOTE:
The oil pressure switch harness must be positioned toward the left lower side of the vehicle within the range of 90°.

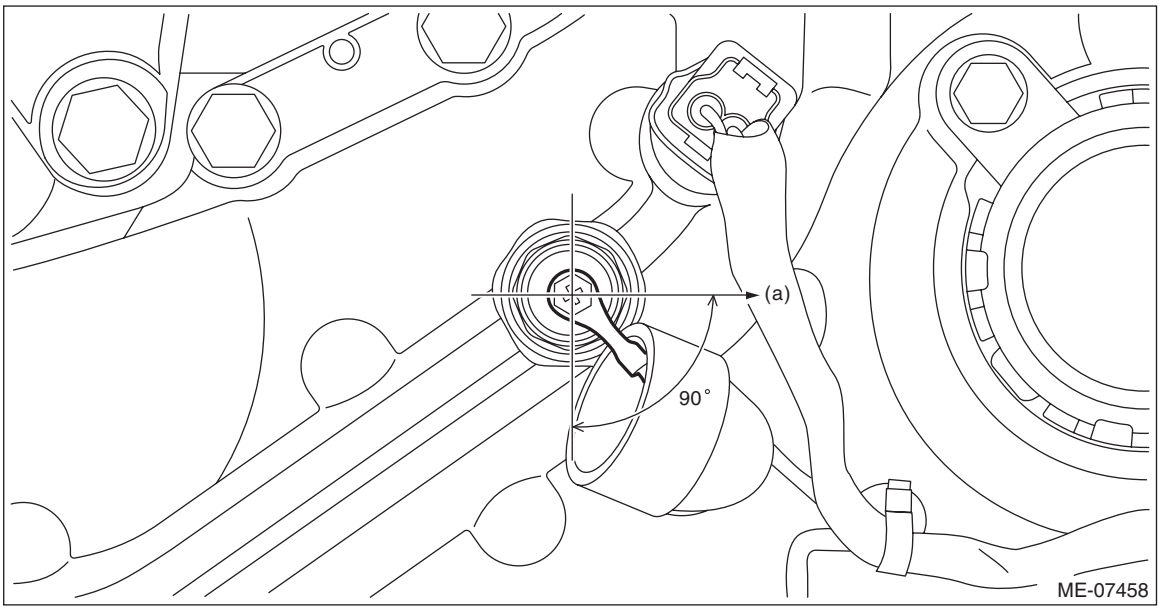

(a) Left side of vehicle

Tightening torque:
1.5 N·m (0.2 kgf-m, 1.1 ft-lb)

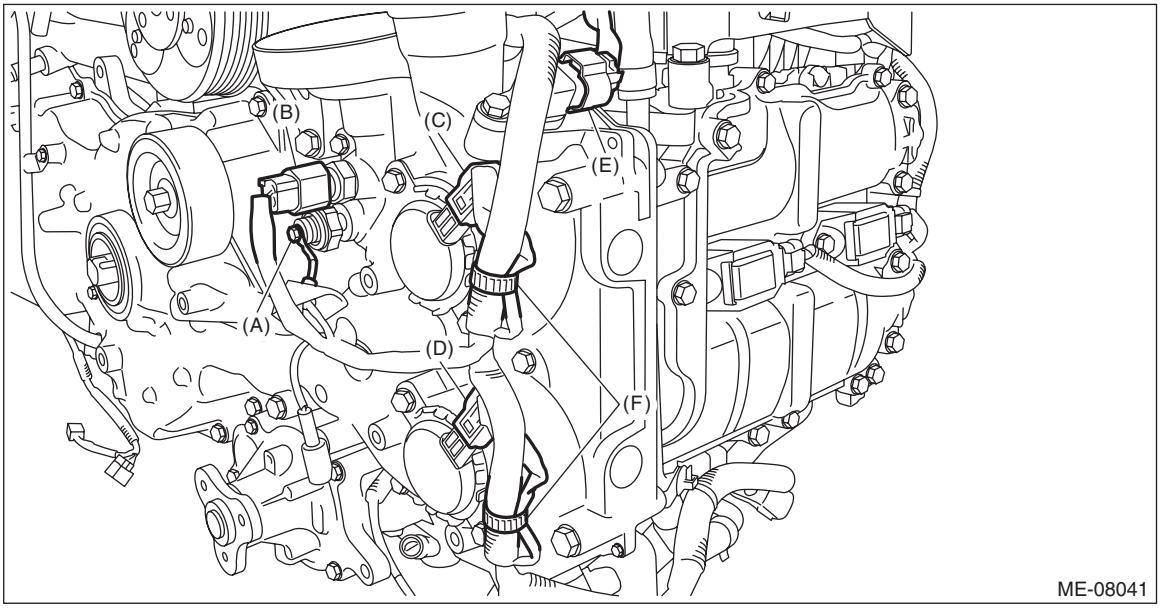

8) Attach the rubber cap to the oil pressure switch.

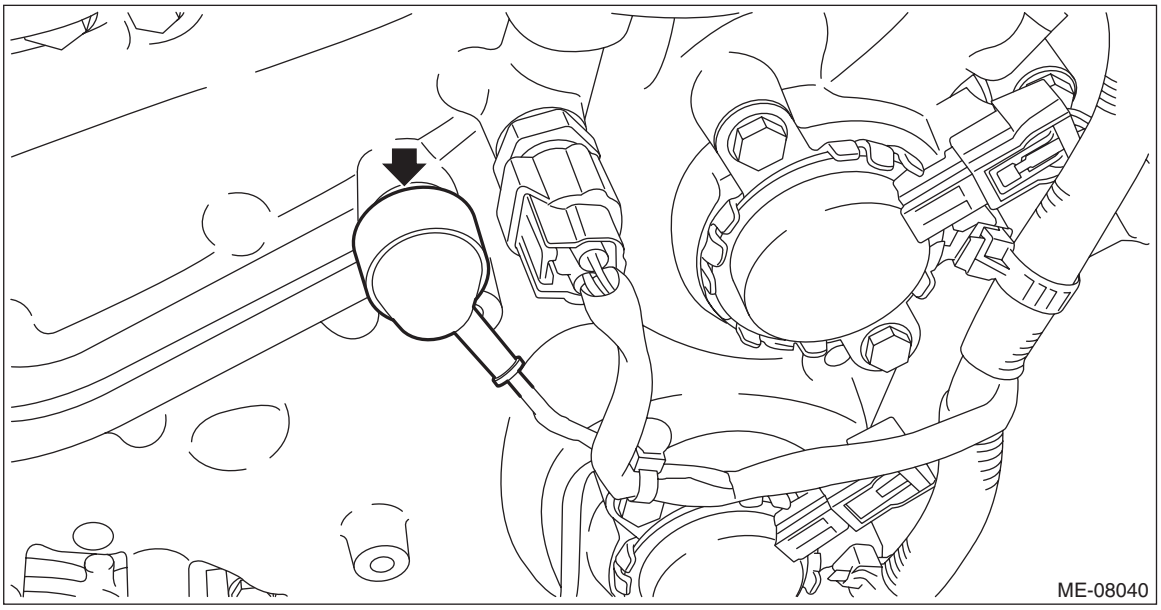

9) Connect the connector (A) to the exhaust camshaft position sensor LH and the connector (B) to the oil level switch, and install the engine harness stay to the chain cover.

Tightening torque:
6.4 N·m (0.7 kgf-m, 4.7 ft-lb)

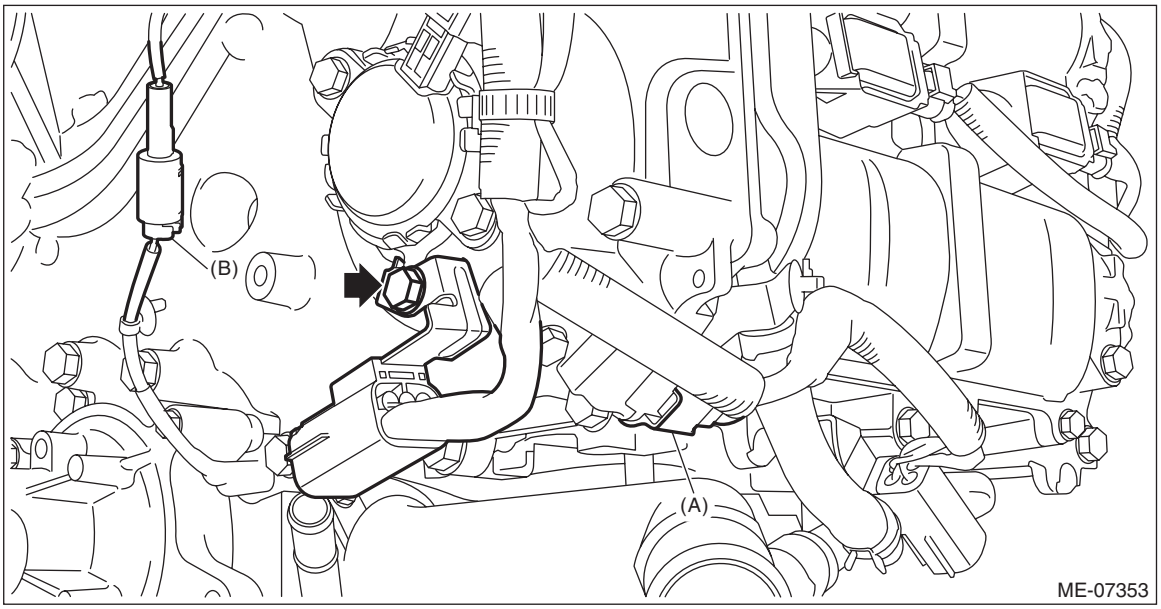

10) Connect the connector (A) to the intake oil control solenoid RH, connector (B) to the exhaust oil control solenoid RH, connector (C) to the intake camshaft position sensor RH, and the connector (D) to the exhaust camshaft position sensor RH, and then fix the engine harness using the clips (E) and (F).

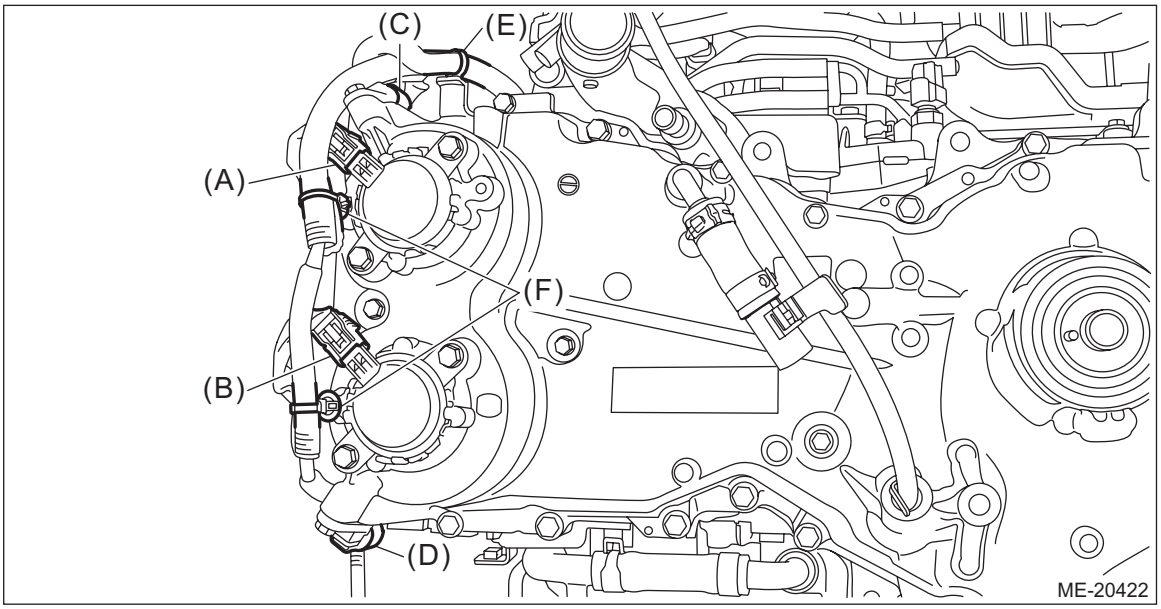

11) Install the vacuum pipe assembly to the chain cover, and connect the vacuum control hose (C) and vacuum hose (D) to the vacuum pipe assembly.

Tightening torque:
6.4 N·m (0.7 kgf-m, 4.7 ft-lb)

12) Install the connector (A) and connector (B) to the vacuum pipe assembly.

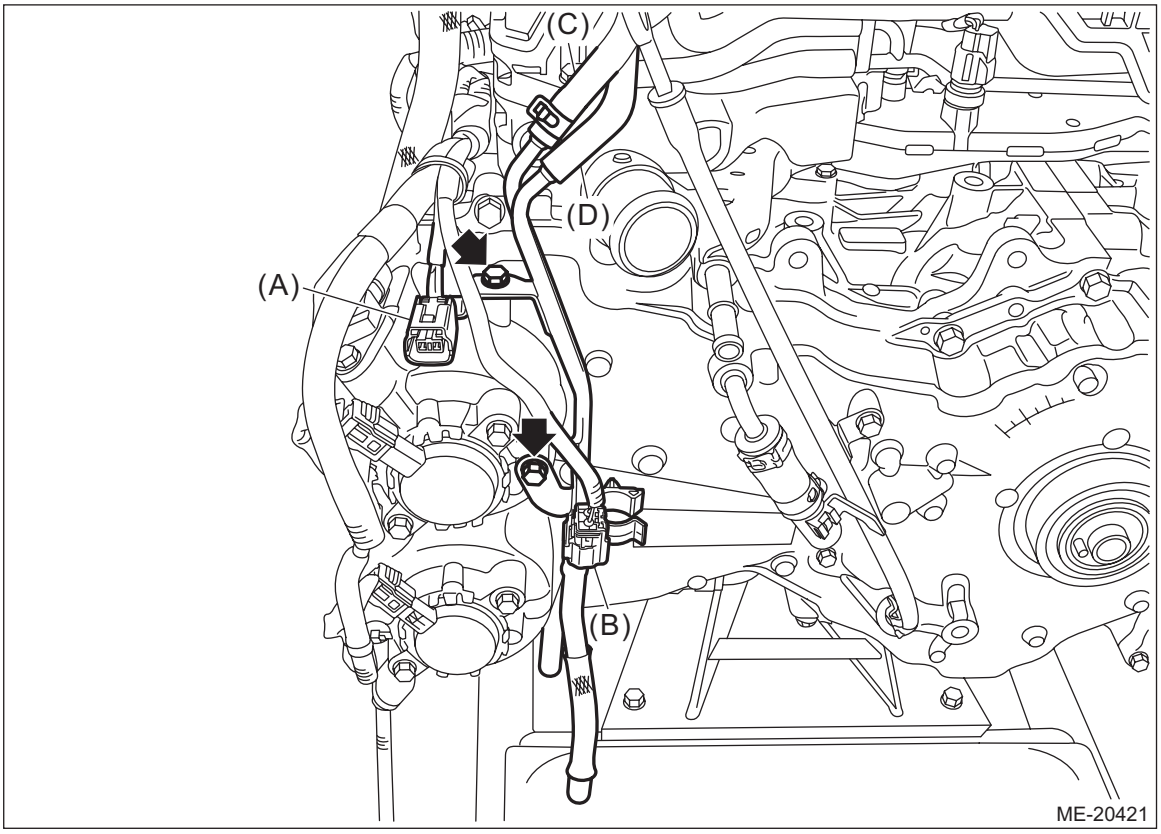

13) Install the blow-by diagnosis connector harness to the PCV hose assembly No. 1, and connect the connector (A) to the engine wiring harness.

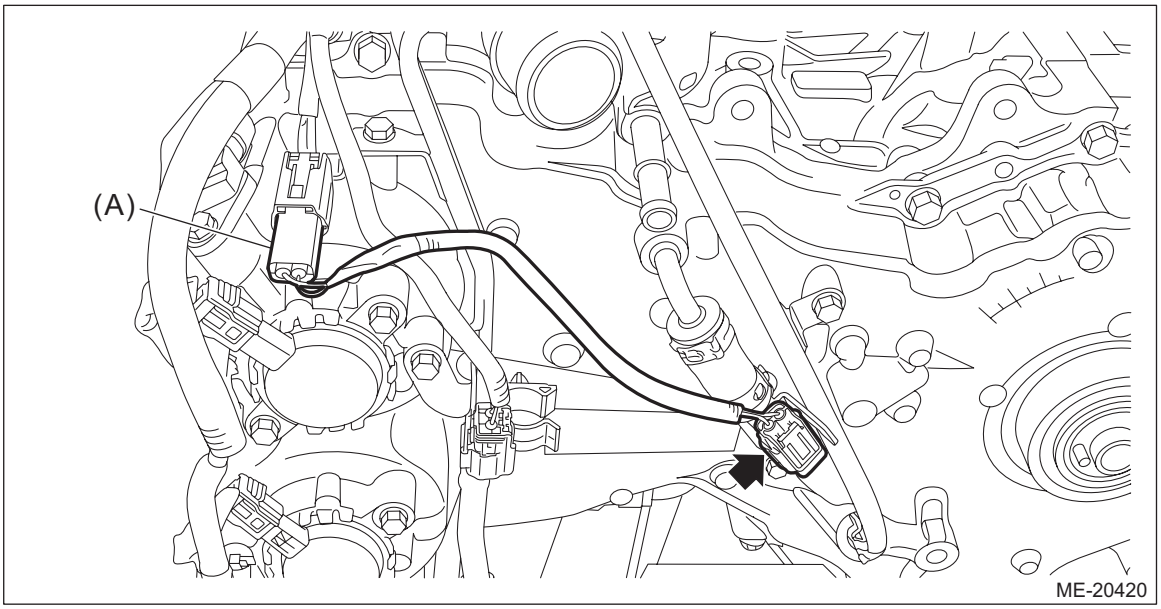

14) Install the PCV pipe to the clip (A).

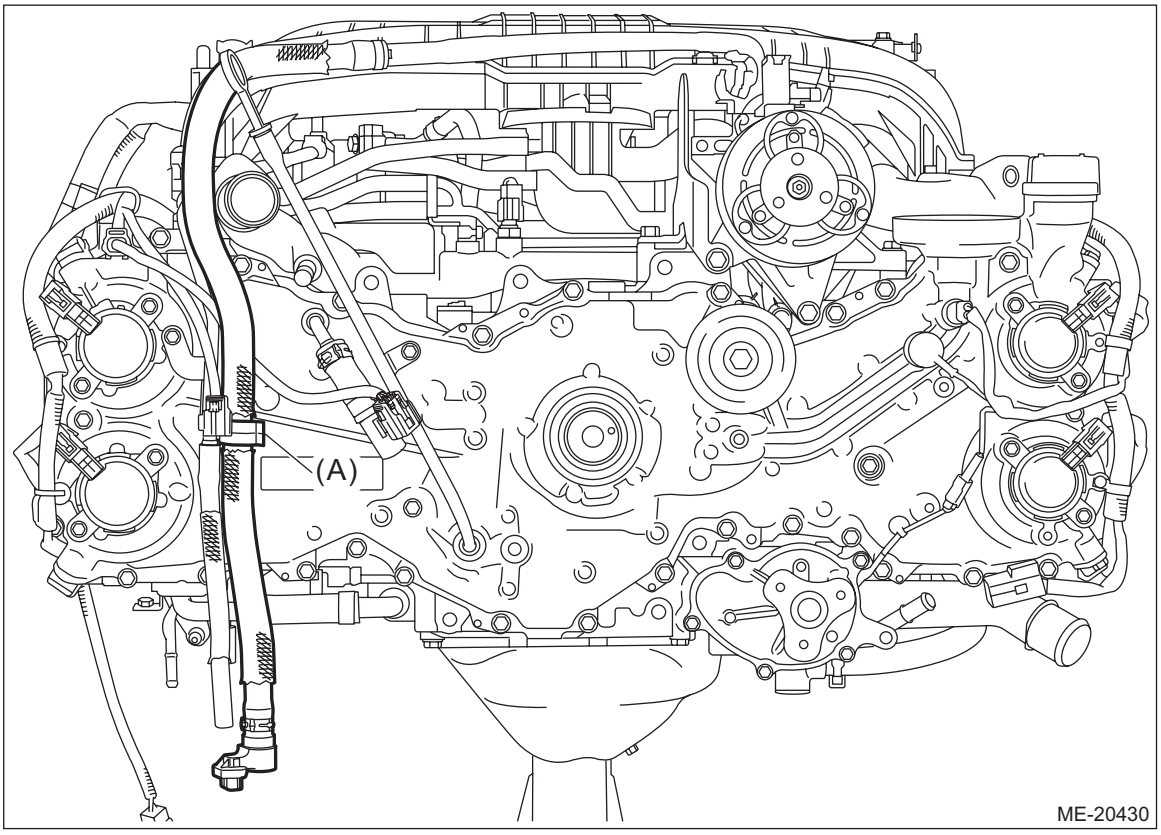

15) Fix the PCV pipe to the intake manifold using the clip.

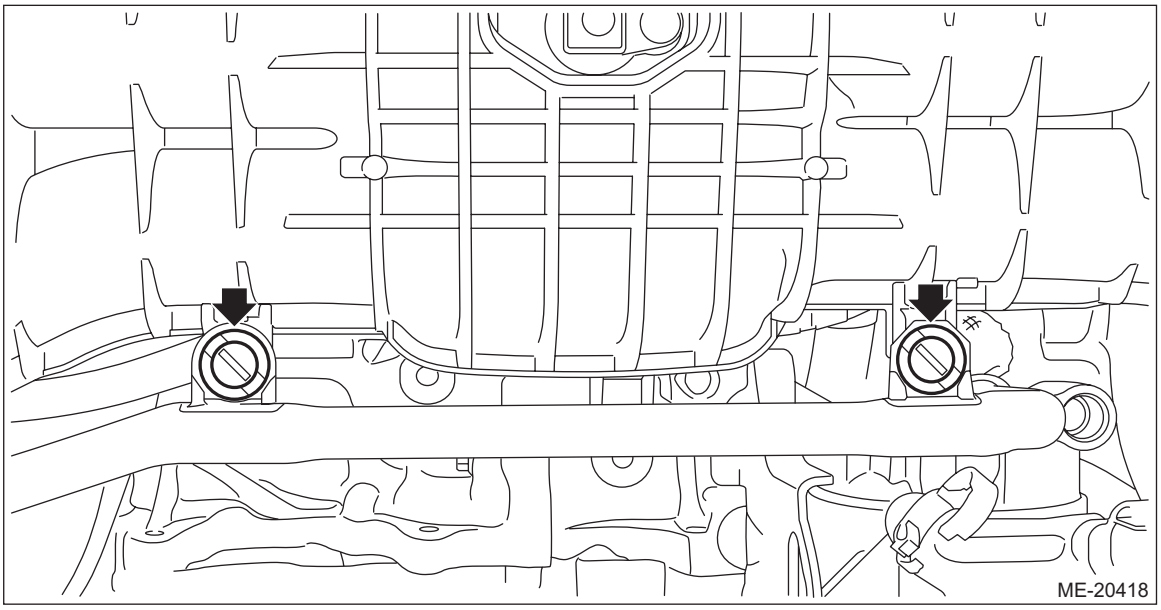

16) Install the front engine oil cooler pipe assembly. <Ref. to LU(w/o STI)-37, FRONT ENGINE OIL COOLER PIPE, INSTALLATION, Engine Oil Cooler Pipe.>
17) Attach the engine oil cooler. <Ref. to LU(w/o STI)-33, INSTALLATION, Engine Oil Cooler.>
18) Install the crank pulley. <Ref. to ME(w/o STI)-83, INSTALLATION, Crank Pulley.>
19) Install the water pump pulley. <Ref. to CO(w/o STI)-17, WATER PUMP, INSTALLATION, Water Pump.>
20) Install the generator. <Ref. to SC(w/o STI)-33, INSTALLATION, Generator.>
21) Install the V-belts. <Ref. to ME(w/o STI)-77, V-BELT, INSTALLATION, V-belt.>
22) Fill engine oil. <Ref. to LU(w/o STI)-11, REPLACEMENT, Engine Oil.>
23) When working on the vehicle

NOTE:
When working on the vehicle, perform the following steps also.
(1) Install the front exhaust pipe. <Ref. to EX(w/o STI)-17, INSTALLATION, Front Exhaust Pipe.>
(2) Install the intake duct No. 1 and intake duct No. 2. <Ref. to IN(w/o STI)-33, INTAKE DUCT NO. 1, INSTALLATION, Intake Duct.> <Ref. to IN(w/o STI)-36, INTAKE DUCT NO. 2, INSTALLATION, Intake Duct.>
(3) Install the radiator. <Ref. to CO(w/o STI)-39, INSTALLATION, Radiator.>

C: DISASSEMBLY

1) Remove the oil filler cap.

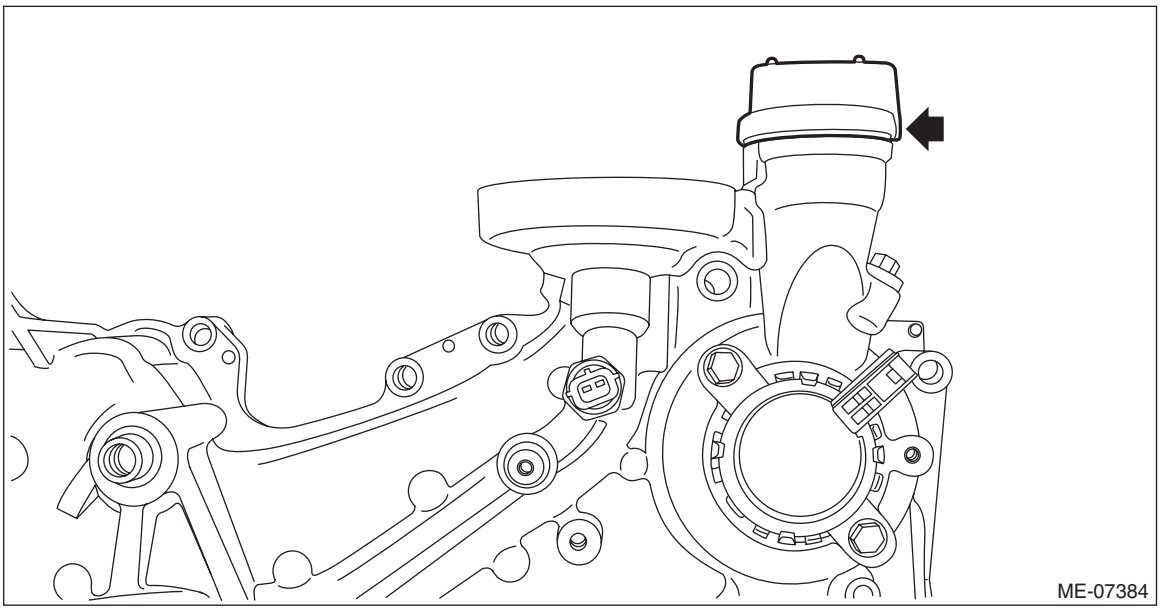

2) Remove the PCV hose assembly No. 1. <Ref. to EC(w/o STI)-77, PCV HOSE ASSY NO. 1, REPLACEMENT, PCV Hose Assembly.>
3) Remove the oil pressure switch. <Ref. to LU(w/o STI)-28, REMOVAL, Oil Pressure Switch.>
4) Remove the engine oil temperature sensor. <Ref. to FU(w/o STI)-91, REMOVAL, Engine Oil Temperature Sensor.>
5) Remove the oil control solenoid. <Ref. to FU(w/o STI)-101, REMOVAL, Oil Control Solenoid.>
6) Remove the camshaft position sensor. <Ref. to FU(w/o STI)-97, REMOVAL, Camshaft Position Sensor.>

D: ASSEMBLY

1) Install the camshaft position sensor. <Ref. to FU(w/o STI)-98, INSTALLATION, Camshaft Position Sensor.>
2) Install the oil control solenoid. <Ref. to FU(w/o STI)-102, INSTALLATION, Oil Control Solenoid.>
3) Install the engine oil temperature sensor. <Ref. to FU(w/o STI)-91, INSTALLATION, Engine Oil Temperature Sensor.>
4) Install the oil pressure switch. <Ref. to LU(w/o STI)-29, INSTALLATION, Oil Pressure Switch.>
5) Install the PCV hose assembly No. 1. <Ref. to EC(w/o STI)-77, PCV HOSE ASSY NO. 1, REPLACEMENT, PCV Hose Assembly.>

6) Install the oil filler cap.

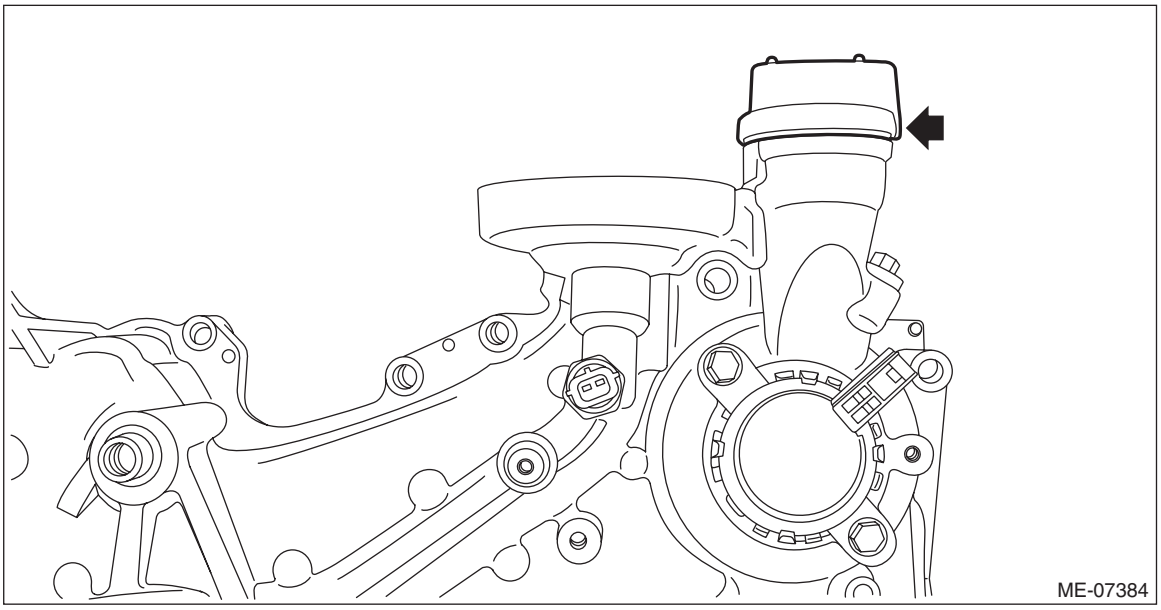

E: INSPECTION

Check that the chain cover does not have deformation, cracks and any other damage.

15.Timing Chain Assembly

A: REMOVAL

1. TIMING CHAIN RH

NOTE:
When replacing a single part, perform the work with the engine assembly installed to body.
1) Remove the chain cover. <Ref. to ME(w/o STI)-89, REMOVAL, Chain Cover.>
2) Using ST and by turning the crankshaft, align the alignment marks of crank sprocket, intake cam sprocket RH and exhaust cam sprocket RH to the positions as shown in the figure.

NOTE:
If the alignment marks are aligned to the positions as shown in the figure, the crankshaft key is located at six o'clock position.
ST 18252AA000 CRANKSHAFT SOCKET

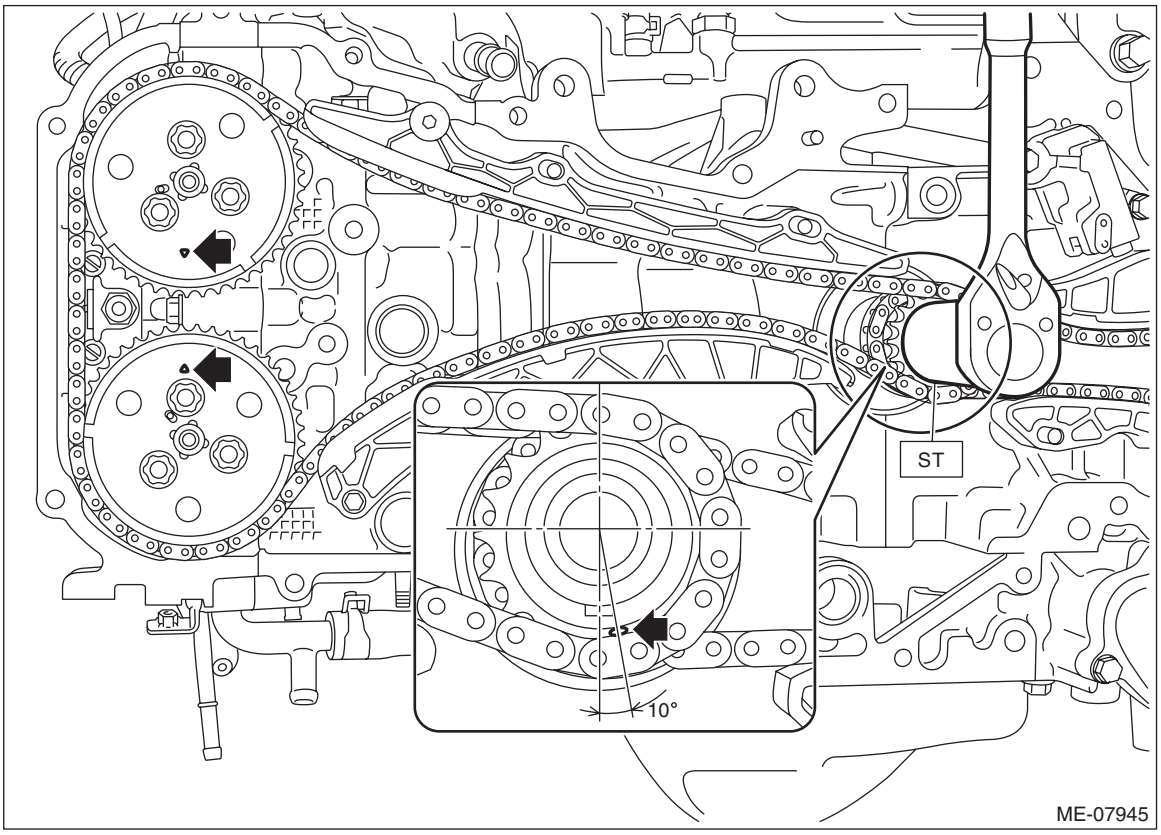

3) Push down the chain lever tensioner RH, and with a 2.5 mm (0.098 in) dia. stopper pin or a 2.5 mm dia. hex wrench inserted into the stopper pin hole in the chain tensioner RH, secure the plunger (A).

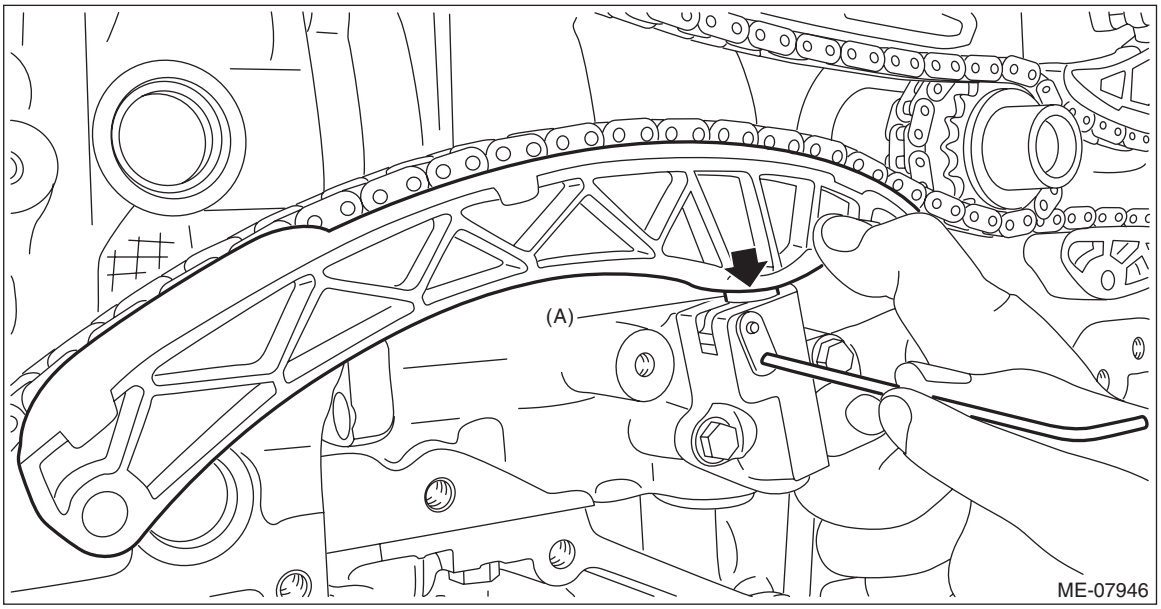

4) Remove the chain tensioner RH, and remove the chain tensioner lever RH (A).

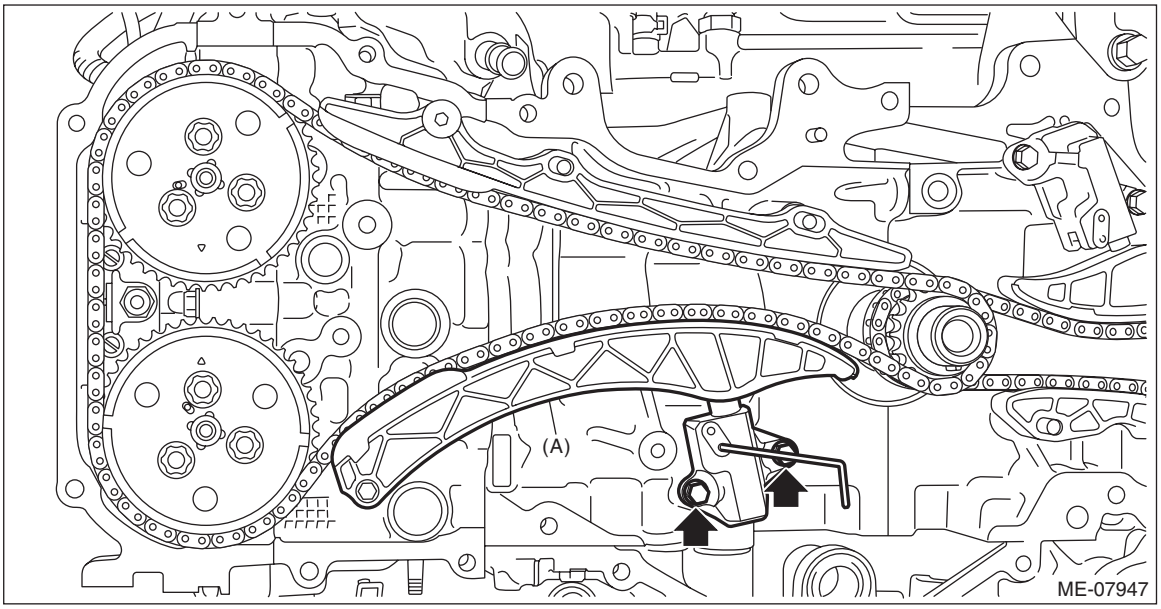

5) Remove the chain guide RH, and remove the timing chain RH (A).

CAUTION:
• If the timing chain RH is not installed, the intake camshaft RH and exhaust camshaft RH are kept at zero-lift position. All cams on the camshaft are not pressing down the roller rocker arm (intake valve and exhaust valve). (Under this condition, all valves remain unlifted.)
• Intake camshaft RH and exhaust camshaft RH can be independently rotated with the timing chain RH removed. When the intake valve and exhaust valve lift at the same time, the valve heads contact each other and valve stem may bend. Do not turn it to the outside of range of zero-lift (in range where it can be turned lightly by hand).

NOTE:
To avoid mixing with LH side, keep the removed part in order.

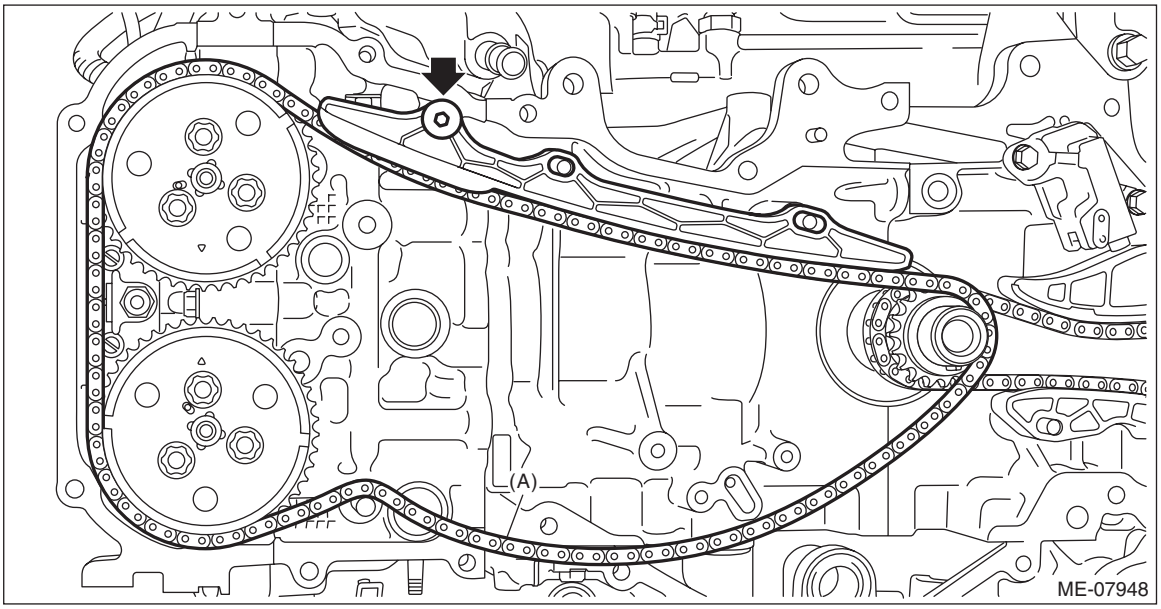

6) Remove the chain guide RH from the front camshaft cap RH.

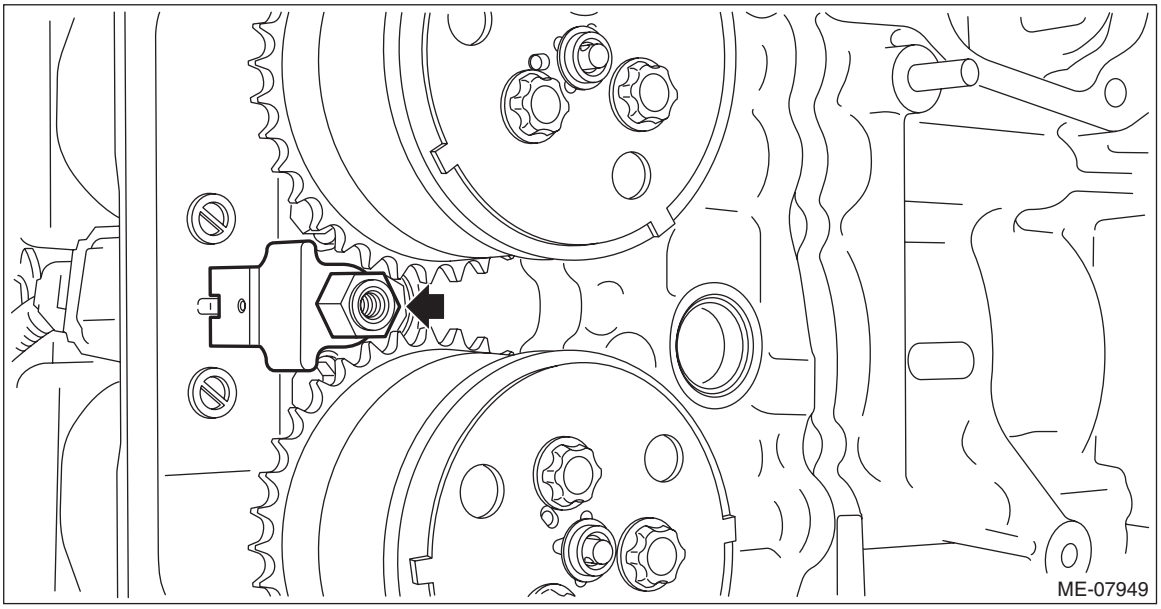

2. TIMING CHAIN LH

1) Remove the timing chain RH. <Ref. to ME(w/o STI)-111, TIMING CHAIN RH, REMOVAL, Timing Chain Assembly.>
2) Using ST and by turning the crankshaft, align the alignment marks of crankshaft key, intake cam sprocket LH and exhaust cam sprocket LH to the positions as shown in the figure.
ST 18252AA000 CRANKSHAFT SOCKET

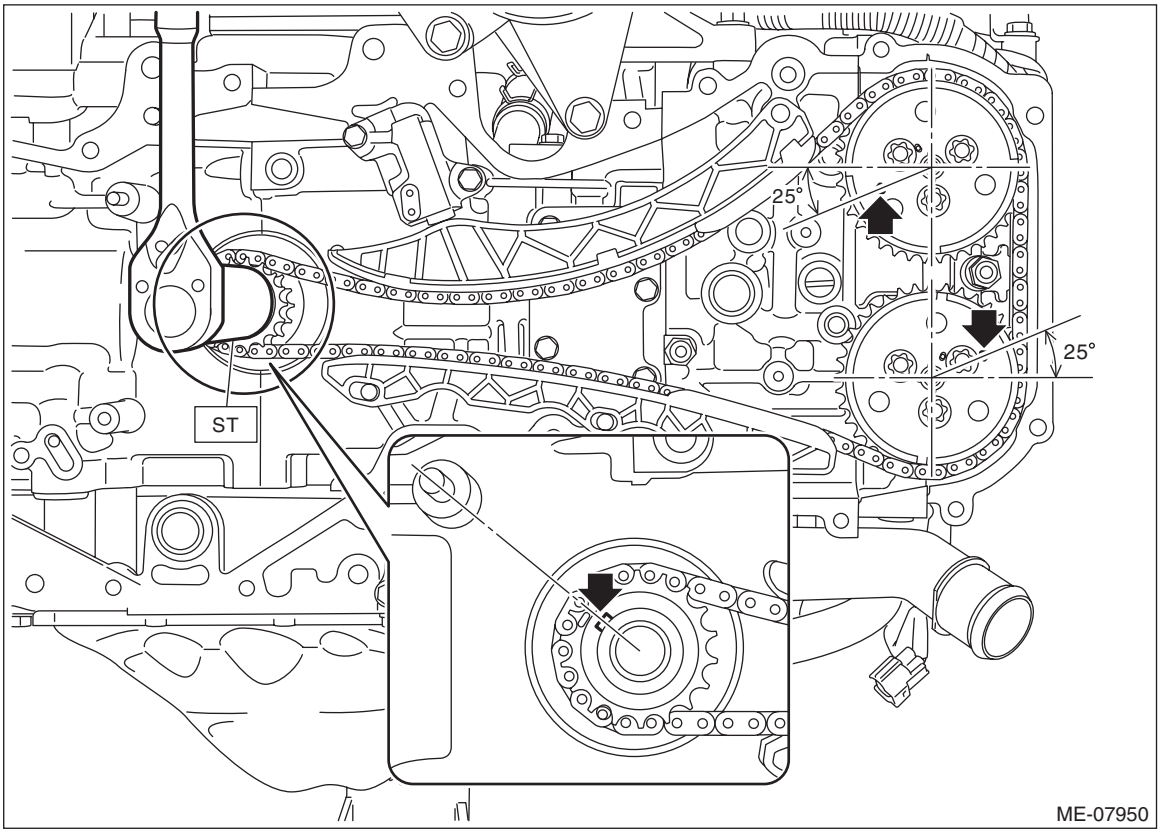

3) Push up the chain tensioner lever LH as shown in the figure, and with a stopper pin measuring 1.3 mm (0.05 in) dia. or less (clips, etc.), or with a hex wrench measuring 1.3 mm dia. inserted into the stopper pin hole in the chain tensioner LH, secure the plunger (A).

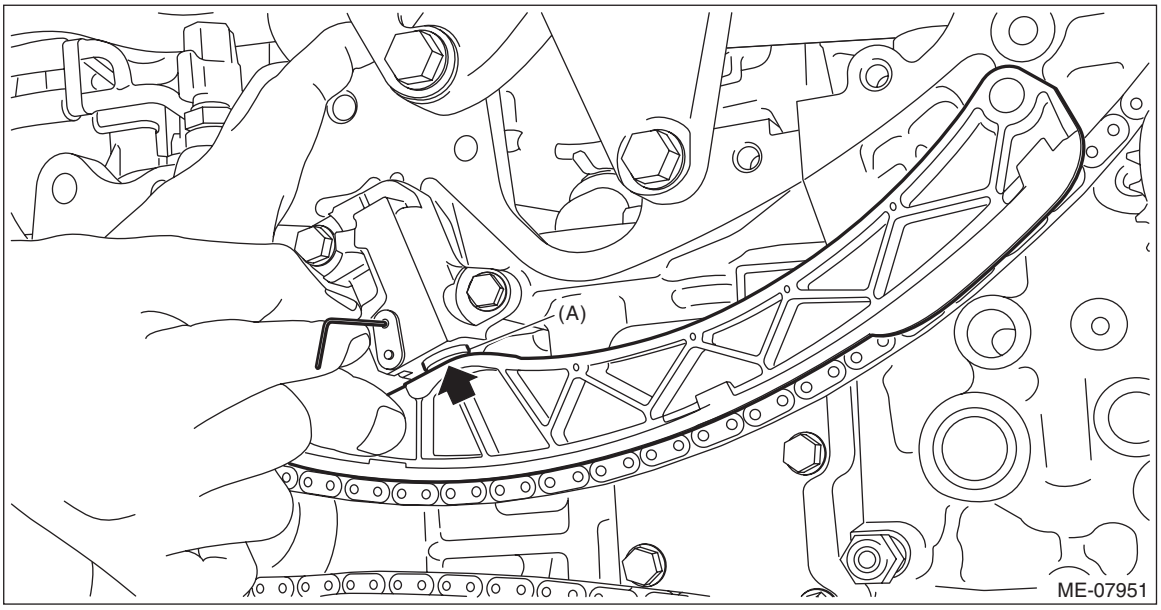

4) Remove the chain tensioner LH, and remove the chain tensioner lever LH (A).

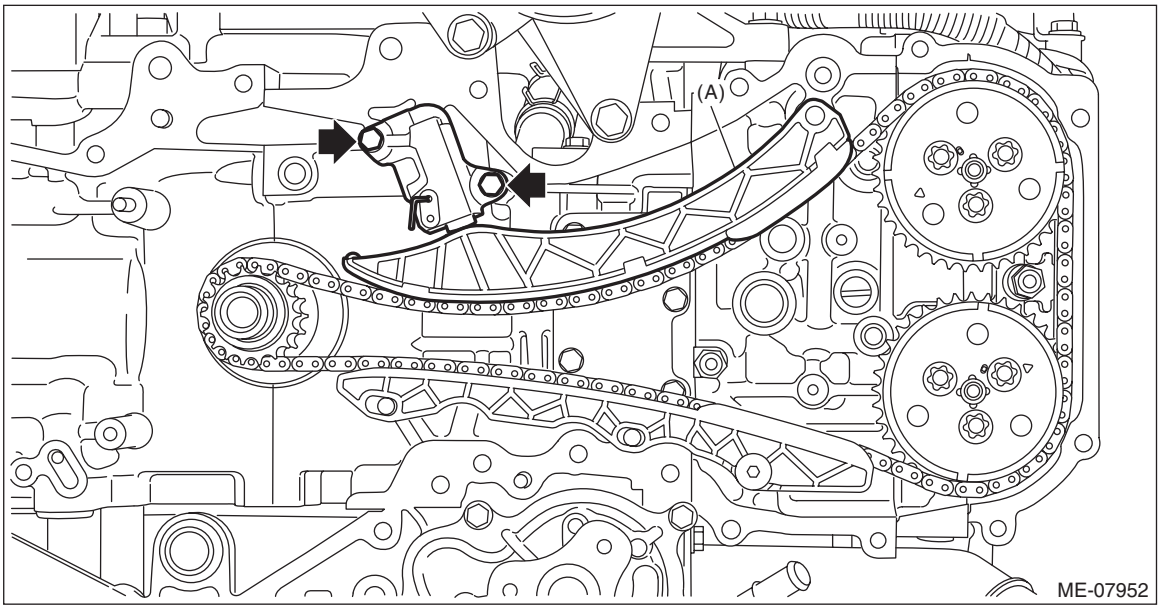

5) Remove the O-ring from the cylinder block LH.

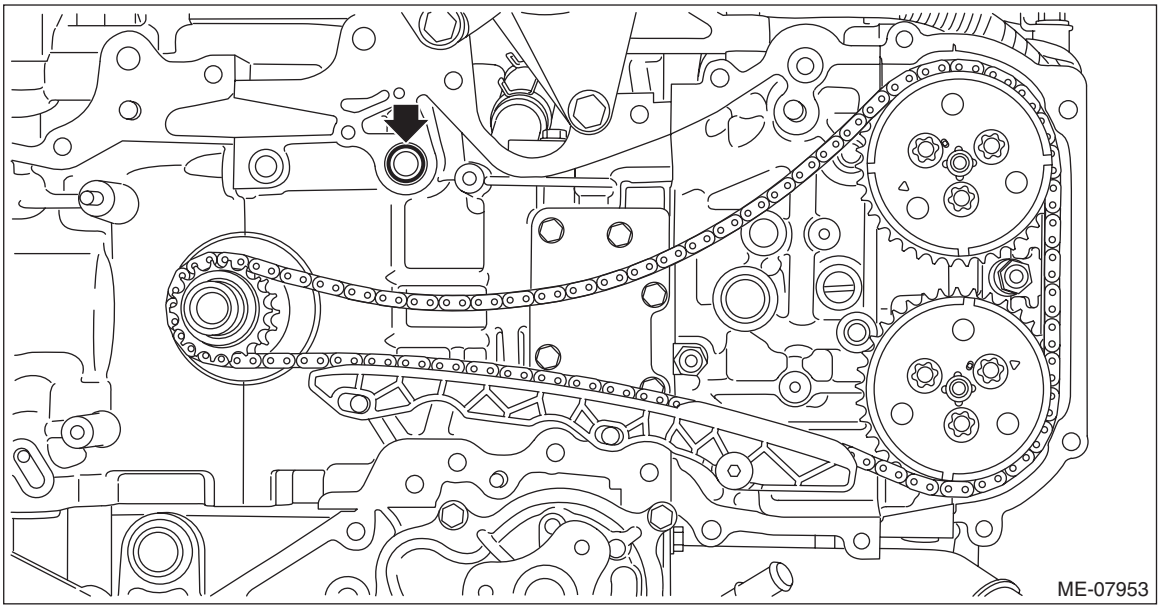

6) Remove the chain guide LH, and remove the timing chain LH (A).

CAUTION:
• If the timing chain LH is not installed, the exhaust camshaft LH is kept at zero-lift position. All cams on the exhaust camshaft LH are not pressing down the roller rocker arm (exhaust valve). (Under this condition, exhaust valves remain unlifted.)
• Intake camshaft LH is kept at lift position. All cams on the intake camshaft LH are pressing down the roller rocker arm (intake valve). (Under this condition, intake valves remain lifted.)
• Intake camshaft LH and exhaust camshaft RH can be independently rotated with the timing chain LH removed. When the exhaust camshaft LH is turned, the valve heads contact each other and valve stem may bend as described in above. Do not turn the exhaust camshaft LH to the outside of range of zero-lift (in range where it can be turned lightly by hand).
• #1 piston and #4 piston are located near TDC. If the intake camshaft LH is turned, the valve and the piston may contact and valve stem may bend. Do not turn the intake camshaft LH at this time.

NOTE:
To avoid mixing with RH side, keep the removed part in order.

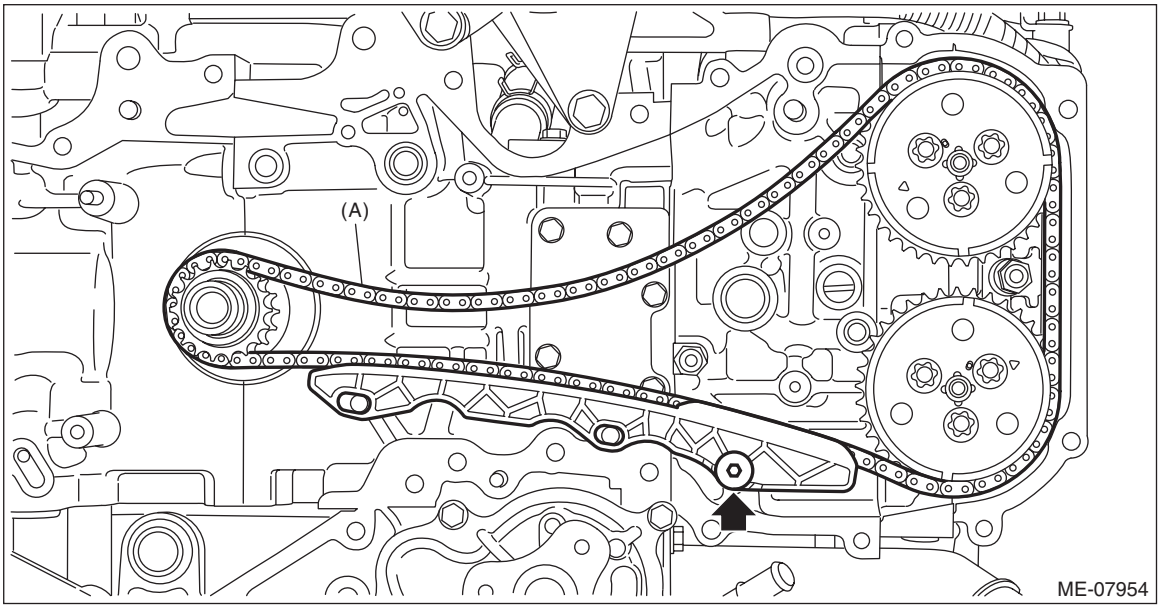

7) Using ST and by turning the crankshaft approximately 200° clockwise, align the alignment marks of crank sprocket to the positions as shown in the figure.

CAUTION:
• This procedure is required to prevent the valve and piston contacting with each other, by moving the all pistons to the middle of the cylinders.
• Never turn counterclockwise because the valve and piston may contact. Counterclockwise turn is allowed only when adjusting precisely the alignment marks, after turning the crank sprocket alignment mark clockwise near the position as shown in the figure.
ST 18252AA000 CRANKSHAFT SOCKET

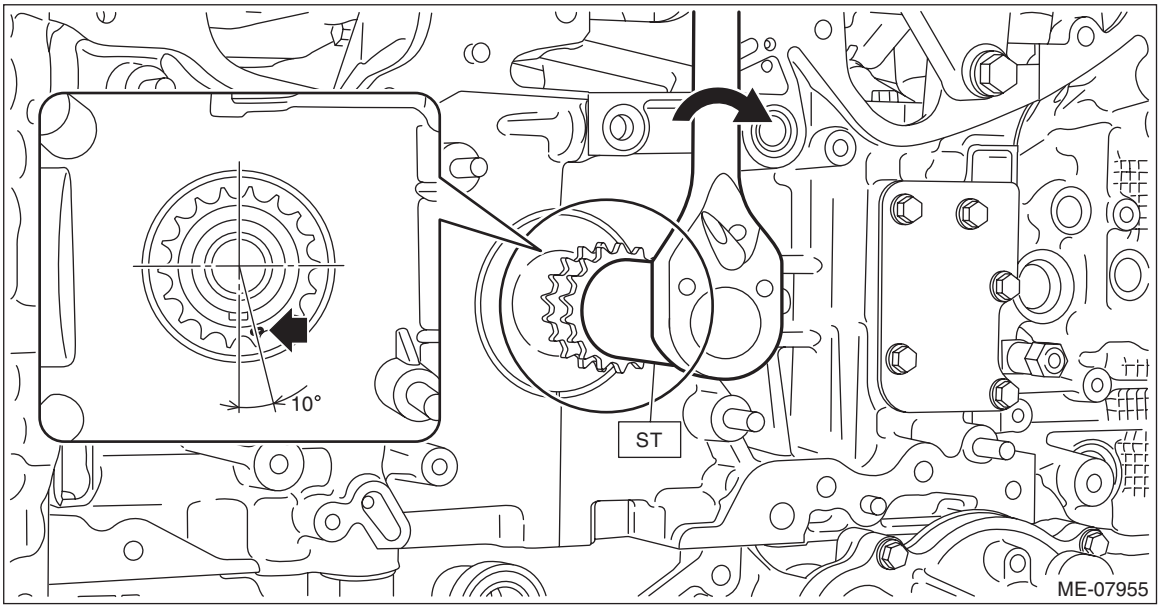

8) Using ST and by turning the intake cam sprocket LH approximately 130° clockwise, align the alignment marks of intake cam sprocket LH to the positions (zero-lift position) as shown in the figure.

CAUTION:
• After this work, when the intake valve and exhaust valve lift at the same time, the valve heads contact each other and valve stem may bend. Do not turn the intake camshaft LH and exhaust camshaft LH to the outside of range of zero-lift (in range where it can be turned lightly by hand).
• Perform the operation carefully since the ST comes off easily.

NOTE:
Intake camshaft LH has three peaks of drive sections for the high-pressure fuel pump. Therefore, there is little range where it can be turned lightly by hand in zero-lift position.
ST1 18355AA000 PULLEY WRENCH
ST2 18334AA020 PULLEY WRENCH PIN SET

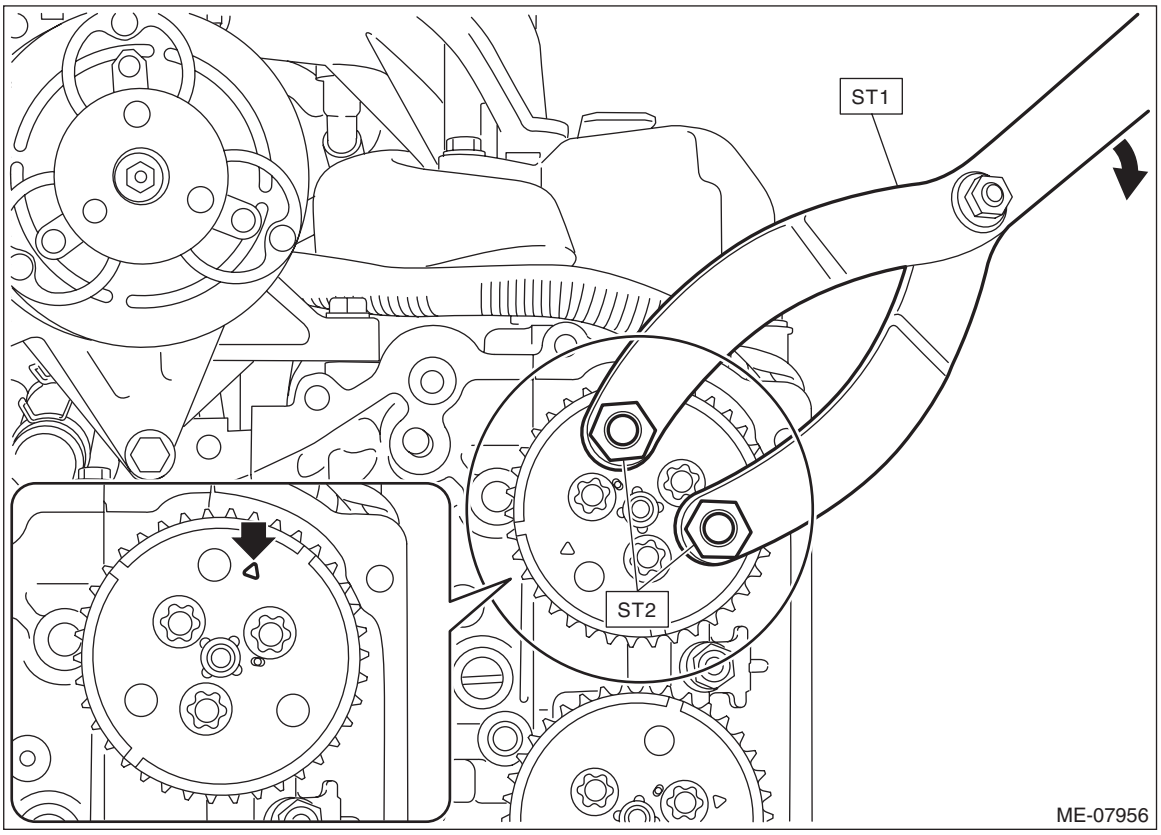

9) Remove the chain guide LH from the front camshaft cap LH.

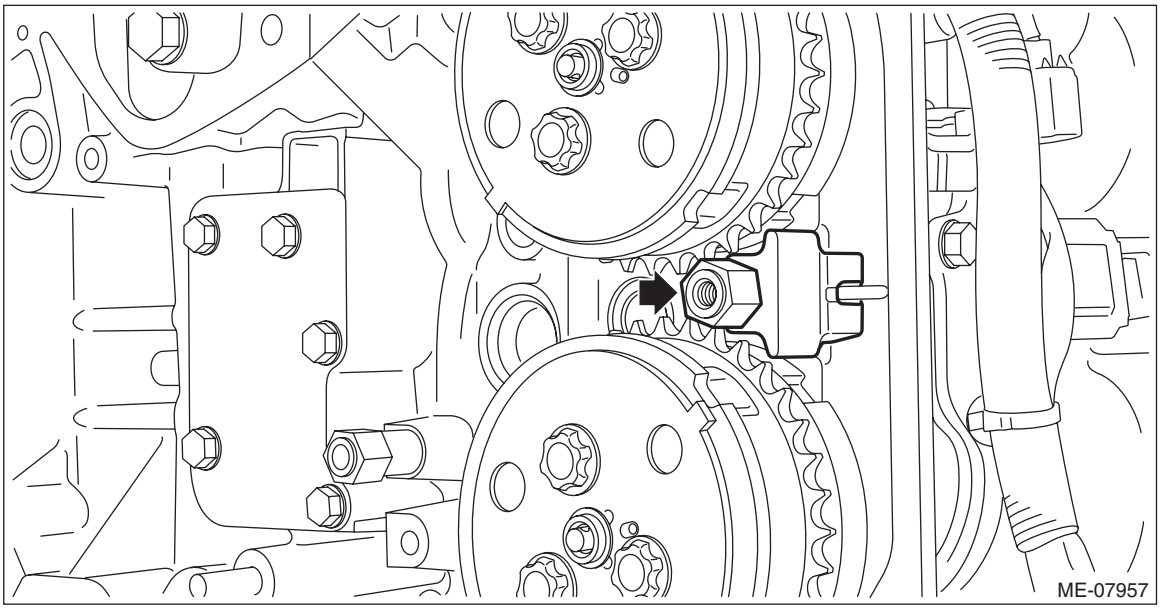

B: INSTALLATION

1. TIMING CHAIN LH

NOTE:
- Be careful that the foreign matter is not into or onto the assembled component during installation.
- Apply engine oil to all component parts of the timing chain.

1) Install the chain guide LH to the front camshaft cap LH.

Tightening torque:
6.4 N·m (0.7 kgf-m, 4.7 ft-lb)

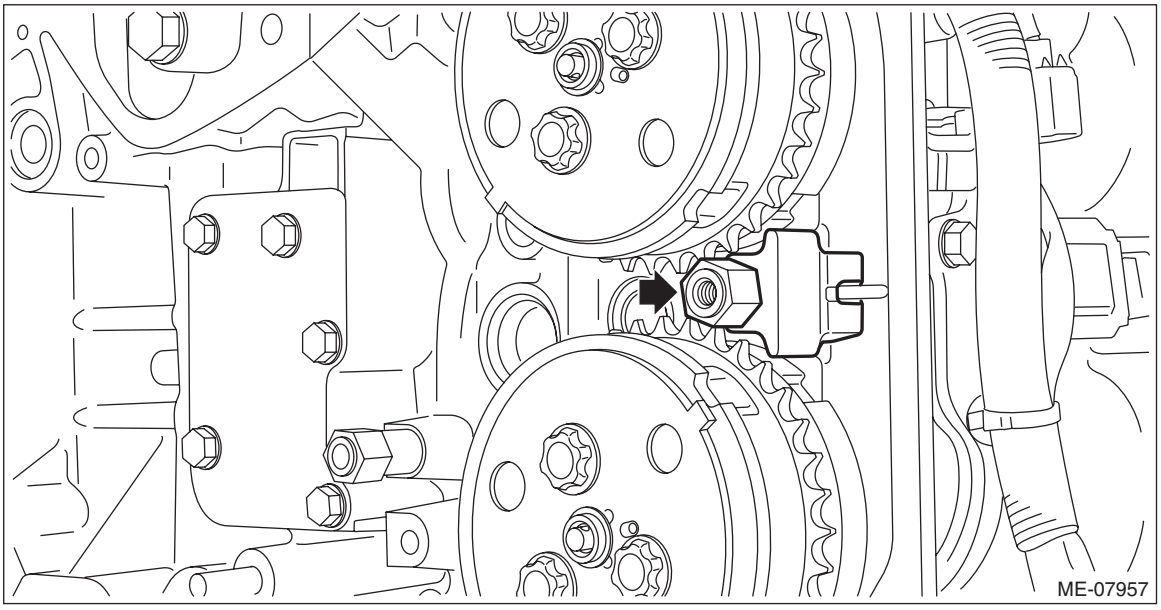

2) Prepare to attach the chain tensioner LH.
(1) Move the link plate (A) in the direction of arrow to press in the plunger (B).

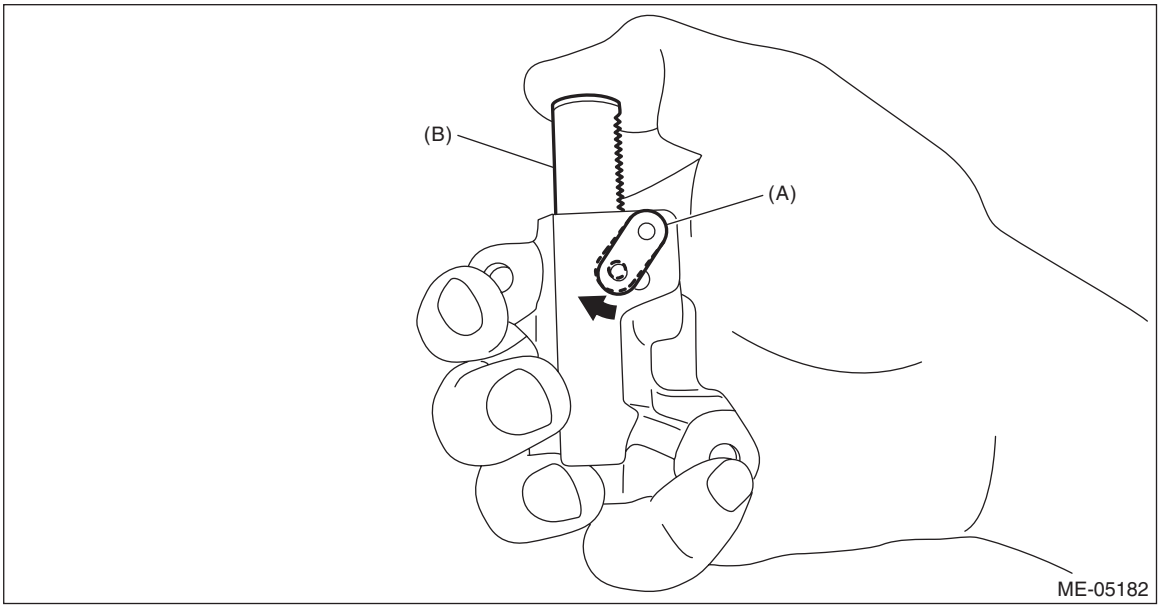

(2) With a stopper pin measuring 1.3 mm (0.05 in) dia. or less (clips, etc.) or a hex wrench measuring 1.3 mm dia. inserted into the stopper pin hole, secure the plunger.

NOTE:
If the stopper pin hole on the link plate and the stopper pin hole on the chain tensioner are not aligned, check that the first notch of plunger rack (A) is engaged with the stopper tooth (B). If not engaged, retract the plunger a little so that the first notch of plunger rack (A) is engaged with the stopper tooth (B).

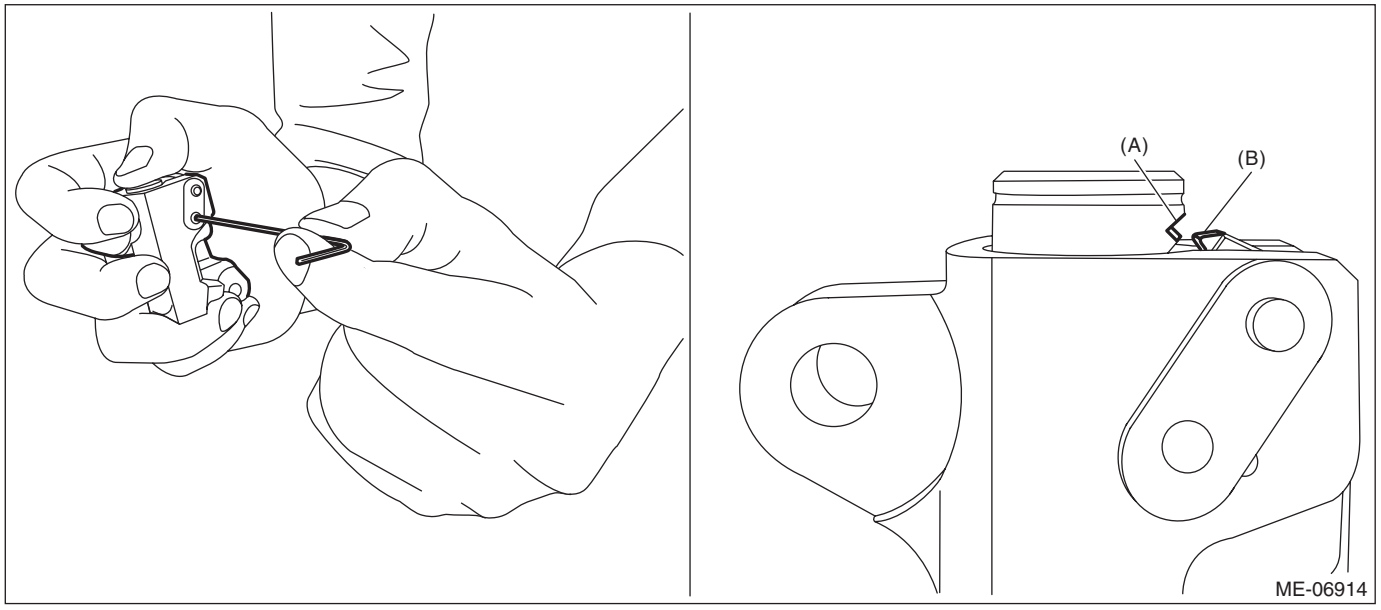

3) Check that the crank sprocket is located at the position shown in the figure. If not aligned, using ST turn the crankshaft to align the crank sprocket alignment mark to the position shown in the figure.

NOTE:
This procedure is required to prevent the valve and piston contacting with each other in the next step.
ST 18252AA000 CRANKSHAFT SOCKET

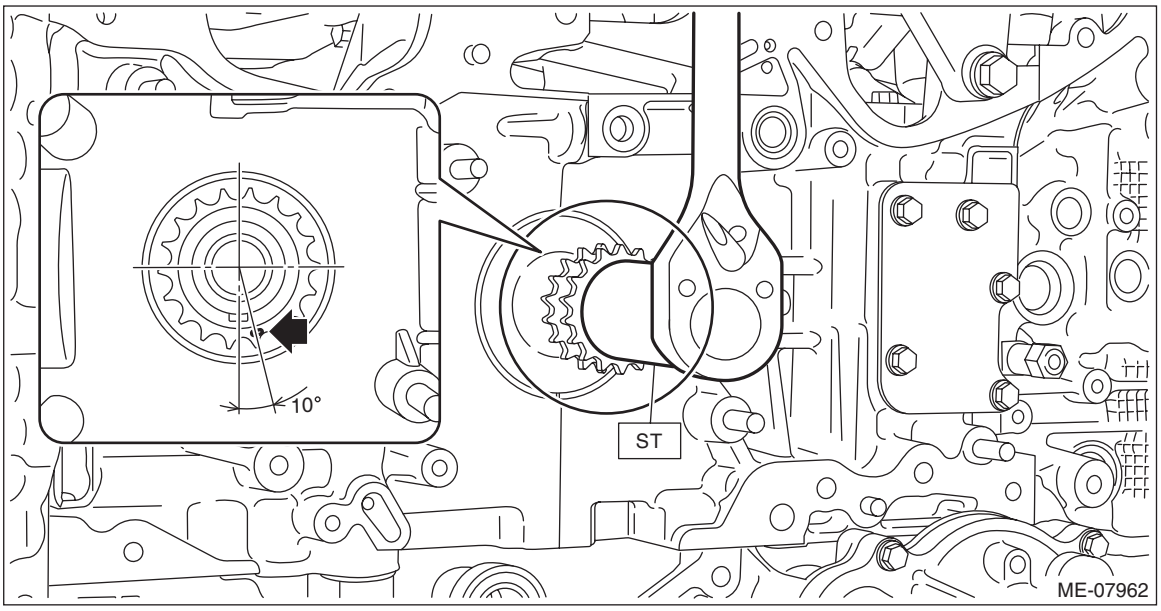

4) Using ST and by turning the intake cam sprocket LH, align the alignment marks to the positions as shown in the figure.

CAUTION:
• When the intake valve and exhaust valve lift at the same time, the valve heads contact each other and valve stem may bend. Do not turn the exhaust camshaft LH.
• Perform the operation carefully since the ST comes off easily.
ST1 18355AA000 PULLEY WRENCH
ST2 18334AA020 PULLEY WRENCH PIN SET

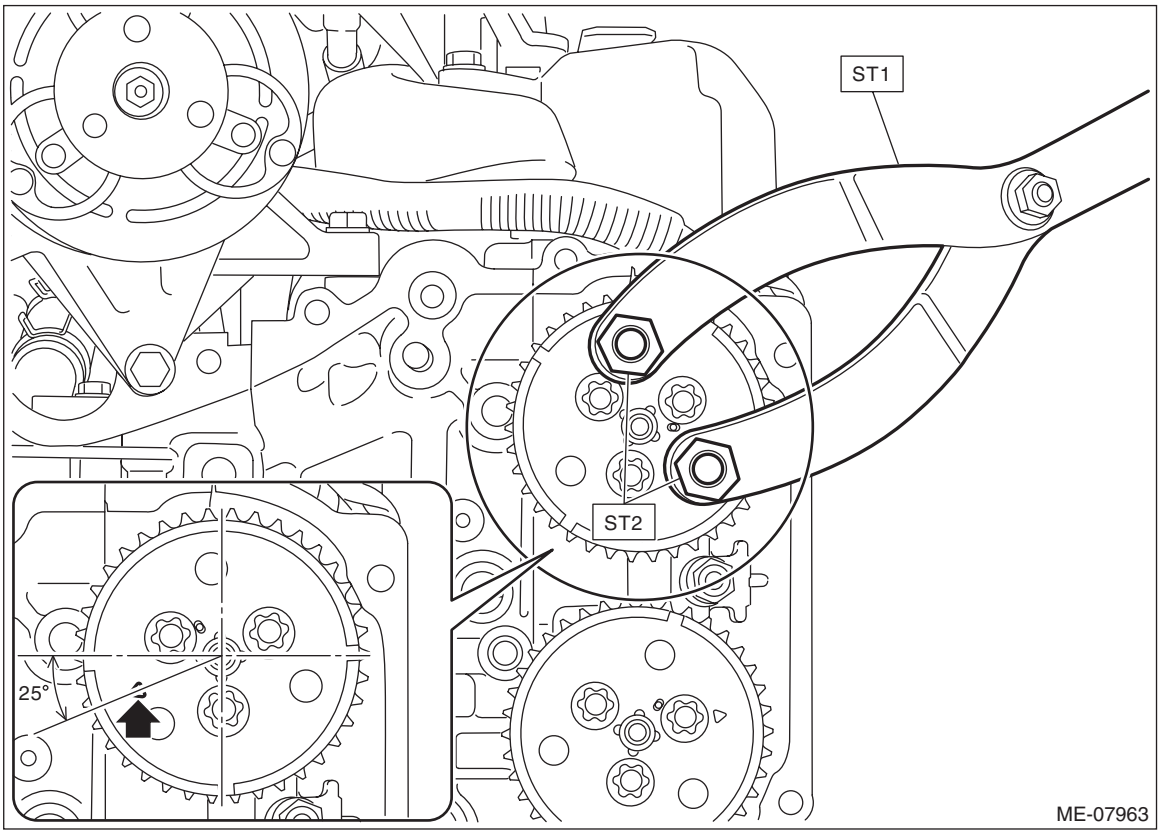

5) Using ST and by turning the crankshaft approximately 130° counterclockwise, align the alignment marks of crankshaft key to the positions as shown in the figure.

CAUTION:
Never turn clockwise because the valve and piston may contact. Clockwise turn is allowed only when adjusting the key position precisely, after turning the crankshaft counterclockwise to bring the key near the position as shown in the figure.

ST 18252AA000 CRANKSHAFT SOCKET

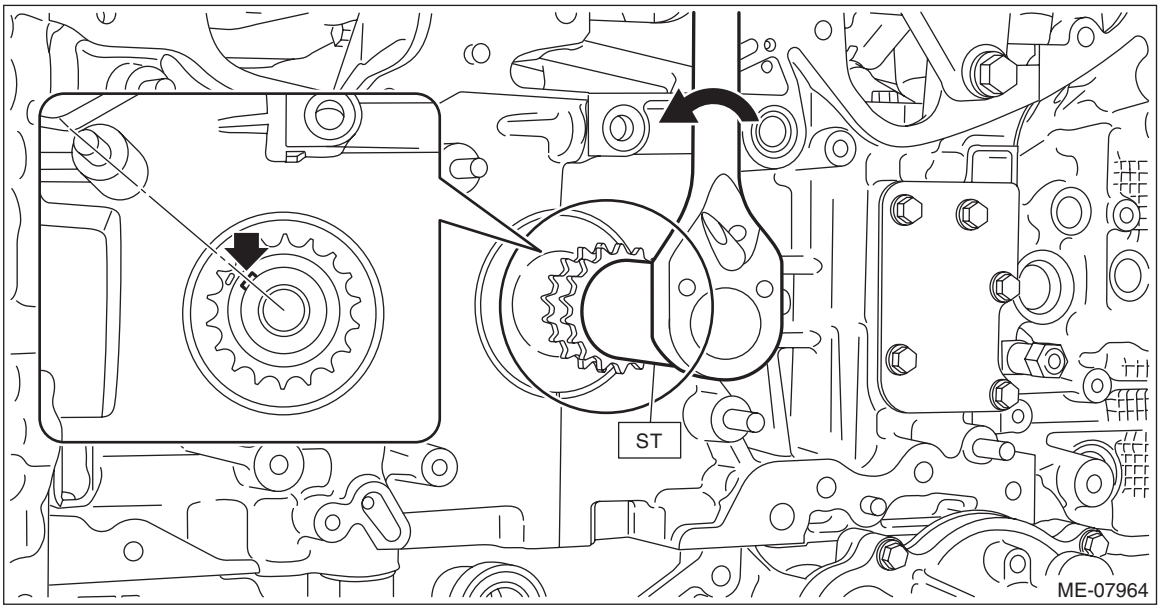

6) Align the alignment mark of exhaust cam sprocket LH to the position shown in the figure.

CAUTION:
To prevent valve damage, turn the exhaust cam sprocket LH only within the range of zero-lift (in range where it can be turned lightly by hand).

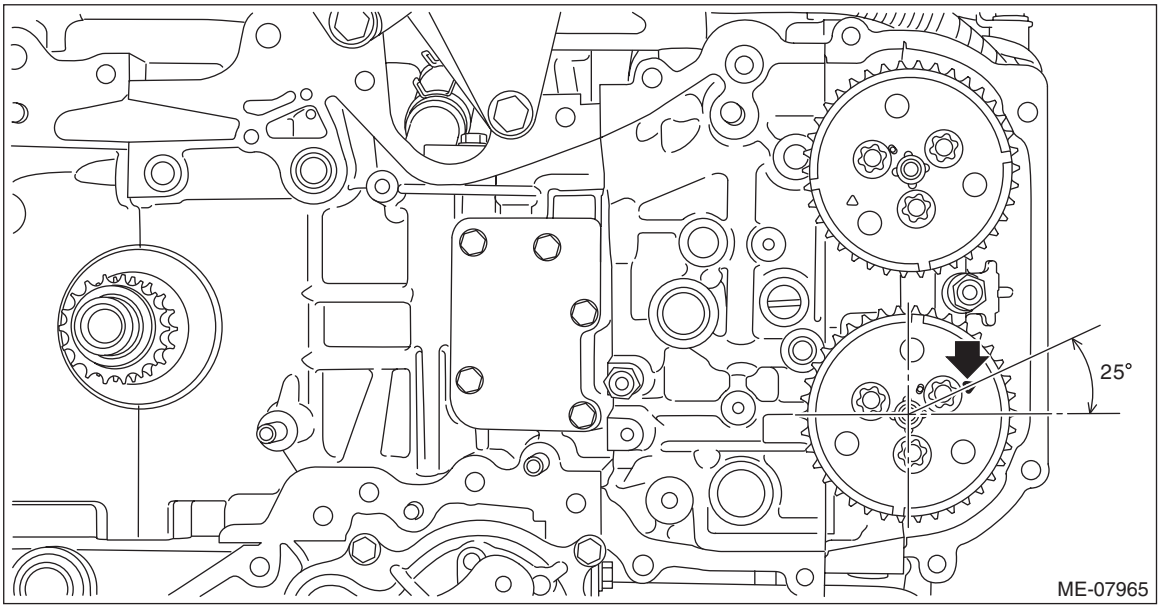

7) Install the timing chain LH and the timing chain guide LH.
   (1) Match the timing chain mark (blue) to the alignment mark of the crank sprocket.
   (2) Match the timing chain mark (pink) to the timing mark position of the intake cam sprocket LH.
   (3) Match the timing chain mark (pink) to the timing mark position of the exhaust cam sprocket LH.
   (4) Install timing chain guide LH.

Tightening torque:
6.4 N·m (0.7 kgf-m, 4.7 ft-lb)

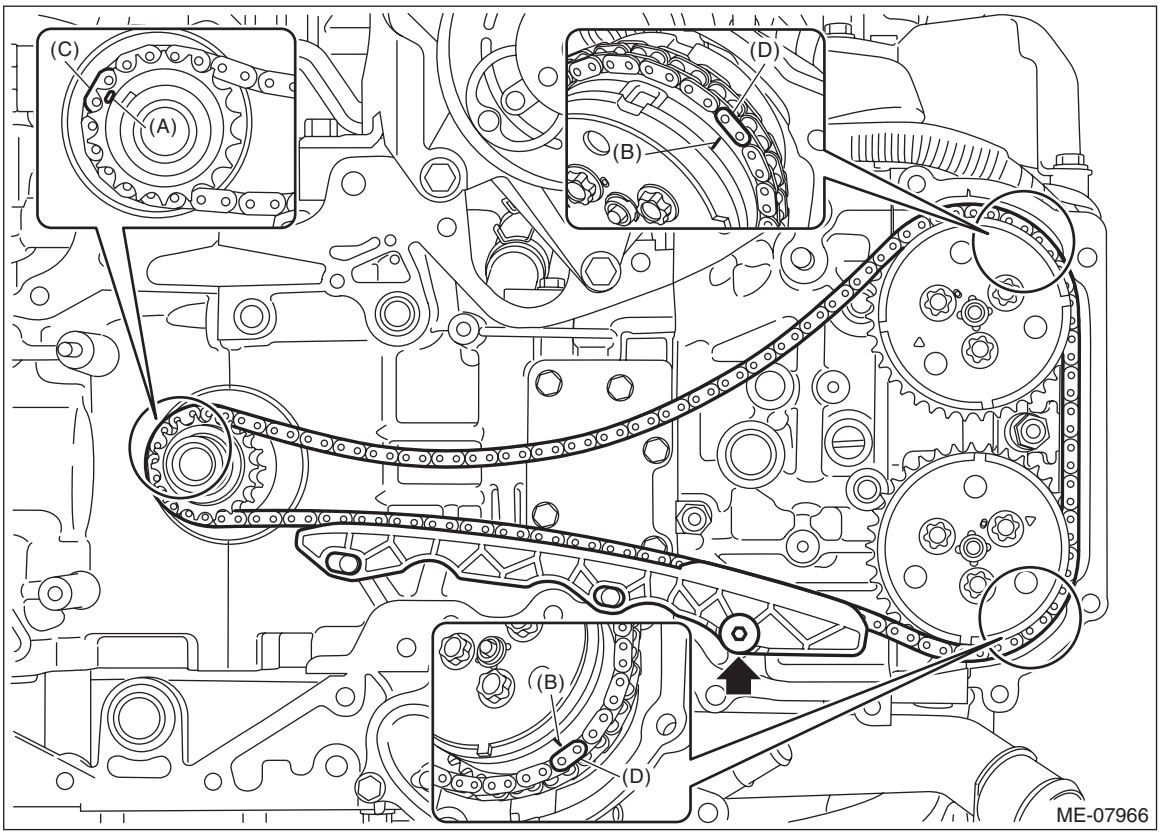

(A) Alignment mark
(B) Timing mark
(C) Blue
(D) Pink

8) Install O-rings to the cylinder block LH.

NOTE:
Use new O-rings.

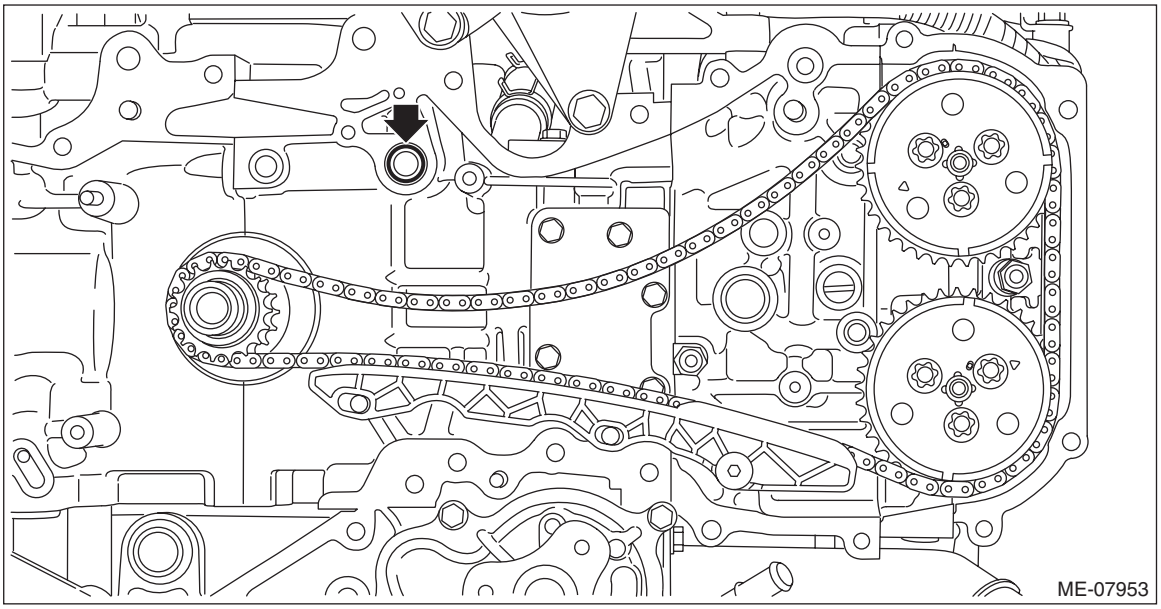

9) Install the chain tensioner lever LH (A) and chain tensioner LH.

Tightening torque:
6.4 N·m (0.7 kgf-m, 4.7 ft-lb)

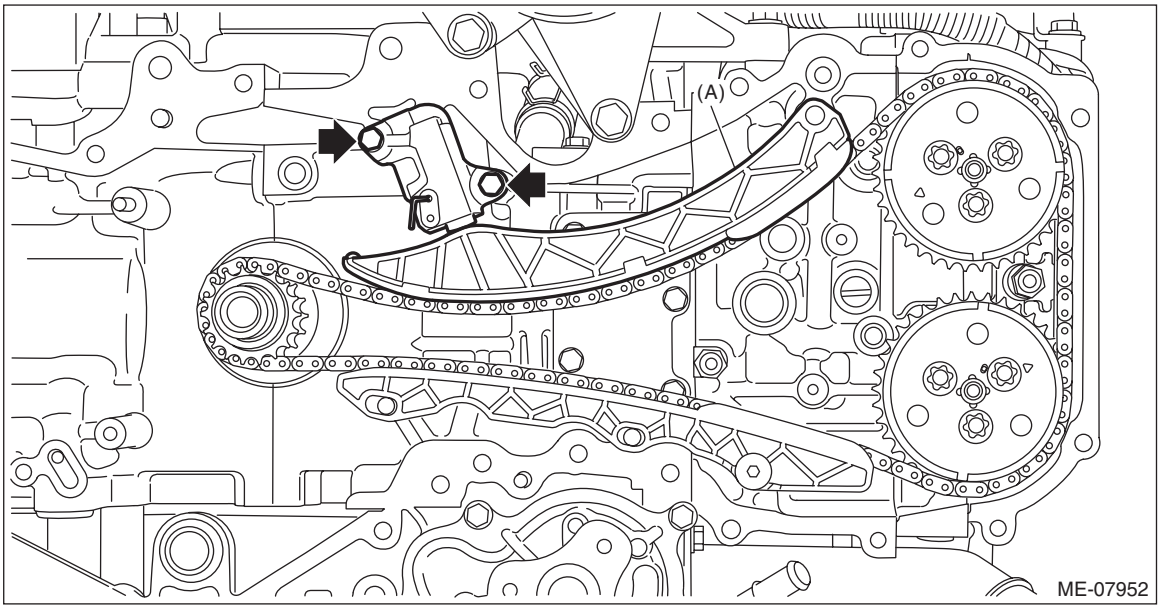

10) Pull out the stopper pin from the chain tensioner LH.

CAUTION:
Confirm the following before pulling out the stopper pin.
- **Matching of the timing chain mark (blue) to the alignment mark of the crank sprocket.**
- **Matching of the timing chain mark (pink) to the timing mark position of the intake cam sprocket LH.**
- **Matching of the timing chain mark (pink) to the timing mark position of the exhaust cam sprocket LH.**

NOTE:
If the stopper pin cannot be removed, lift the chain tension lever LH to remove as shown in the figure.

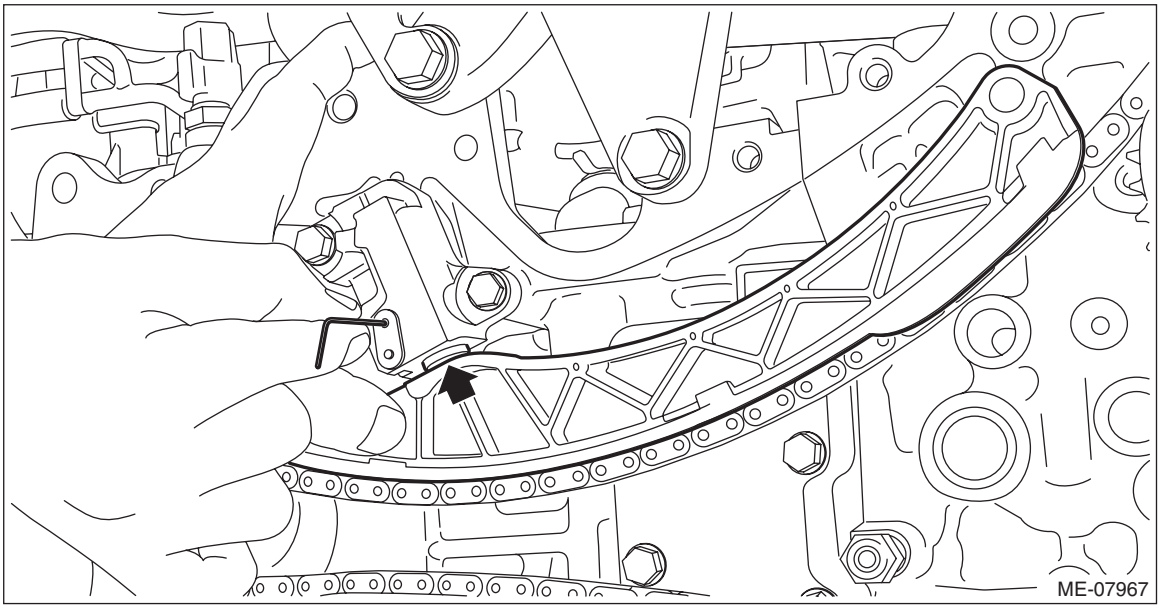

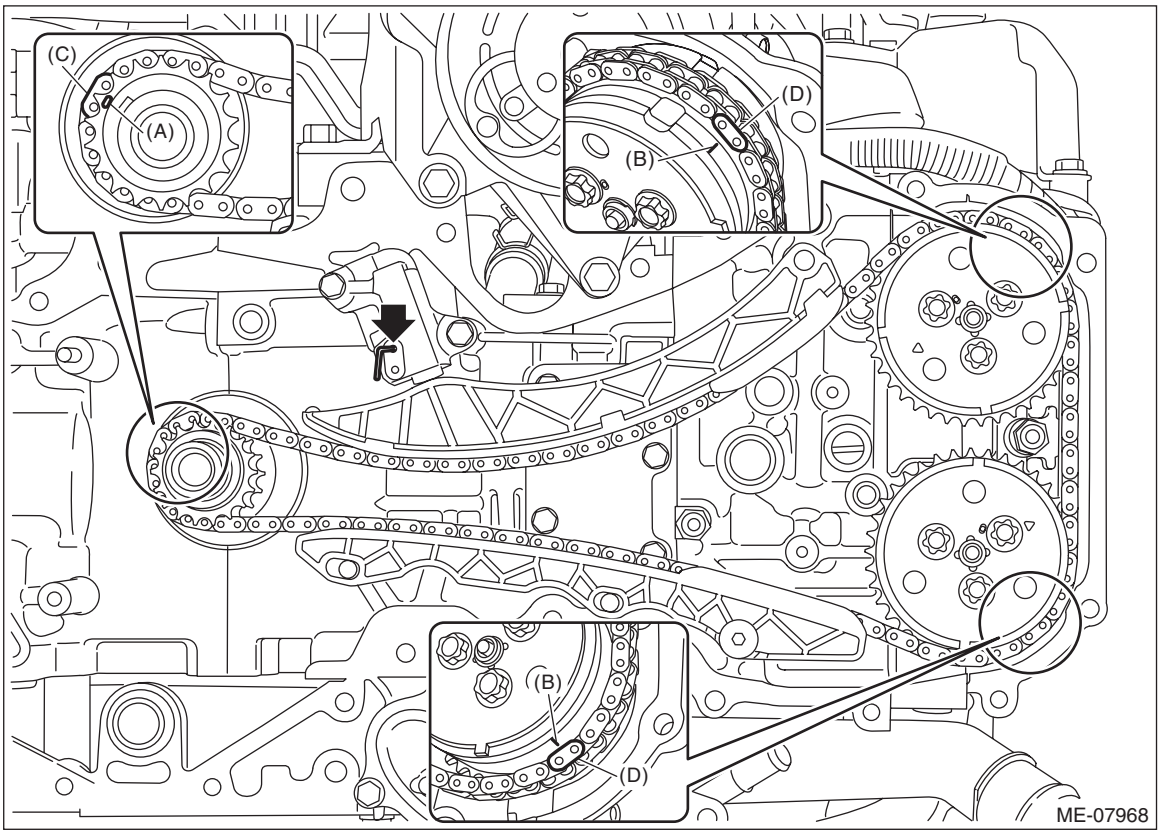

(A) Alignment mark
(B) Timing mark
(C) Blue
(D) Pink

11) Using the ST, turn the crankshaft clockwise, and make sure that there are no abnormal conditions.

CAUTION:
Always make sure to perform this confirmation.
ST 18252AA000 CRANKSHAFT SOCKET

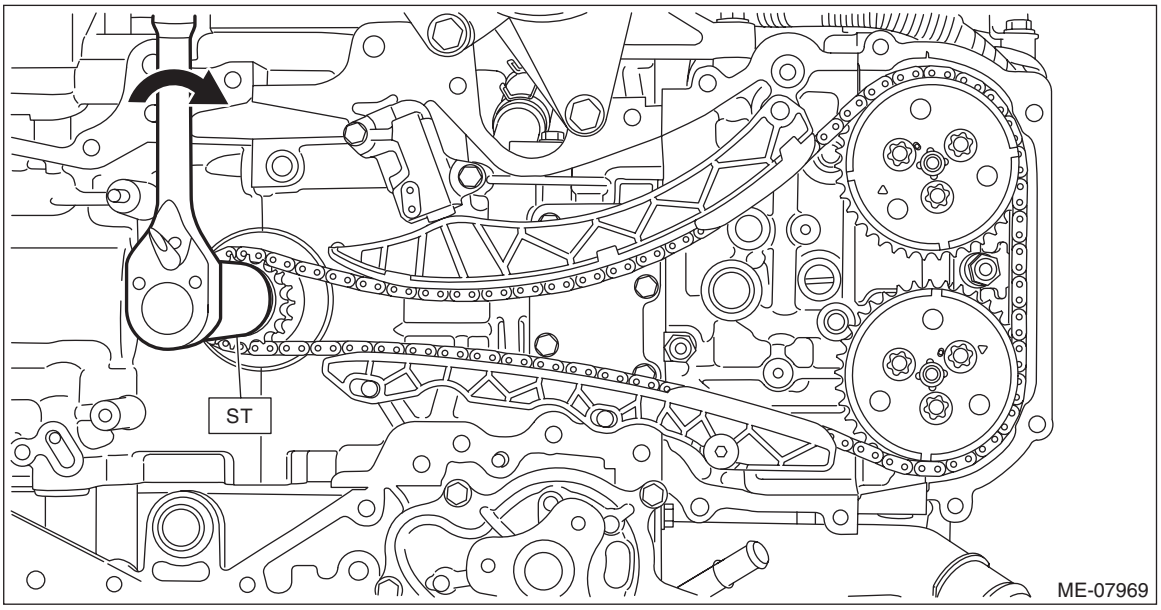

12) Using ST and by turning the crankshaft, align the alignment marks of crank sprocket, intake cam sprocket LH and exhaust cam sprocket LH to the positions as shown in the figure.

NOTE:
If the alignment marks are aligned to the positions as shown in the figure, the crankshaft key is located at six o'clock position.
ST 18252AA000 CRANKSHAFT SOCKET

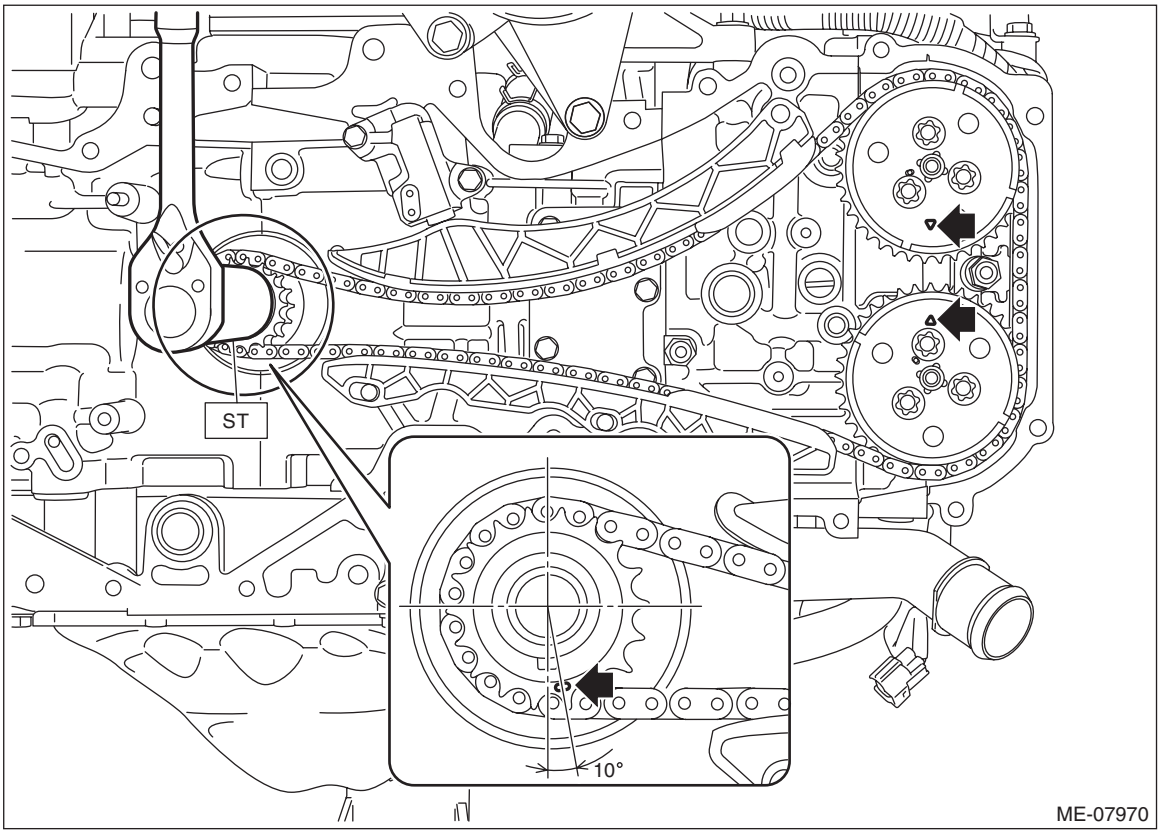

13) Install the timing chain RH. <Ref. to ME(w/o STI)-126, TIMING CHAIN RH, INSTALLATION, Timing Chain Assembly.>

2. TIMING CHAIN RH

NOTE:
- Be careful that the foreign matter is not into or onto the assembled component during installation.
- Apply engine oil to all component parts of the timing chain.

1) Install timing chain LH. <Ref. to ME(w/o STI)-118, TIMING CHAIN LH, INSTALLATION, Timing Chain Assembly.>
2) Install the chain guide RH to the front camshaft cap RH.

Tightening torque:
6.4 N·m (0.7 kgf-m, 4.7 ft-lb)

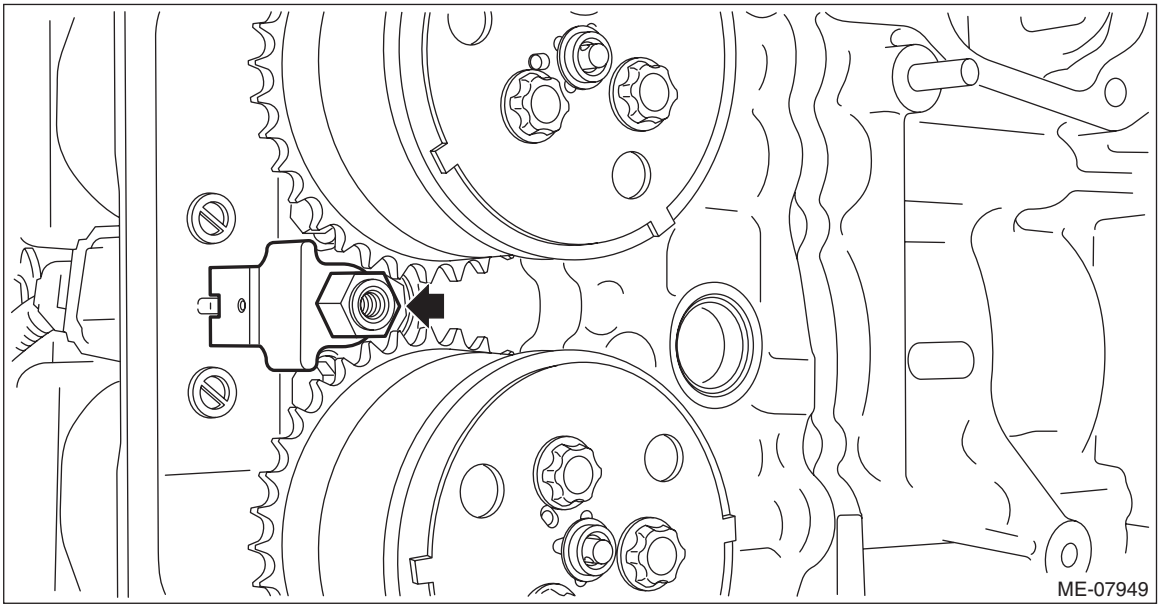

3) Prepare to attach the chain tensioner RH.
(1) Move the link plate (A) in the direction of arrow to press in the plunger (B).

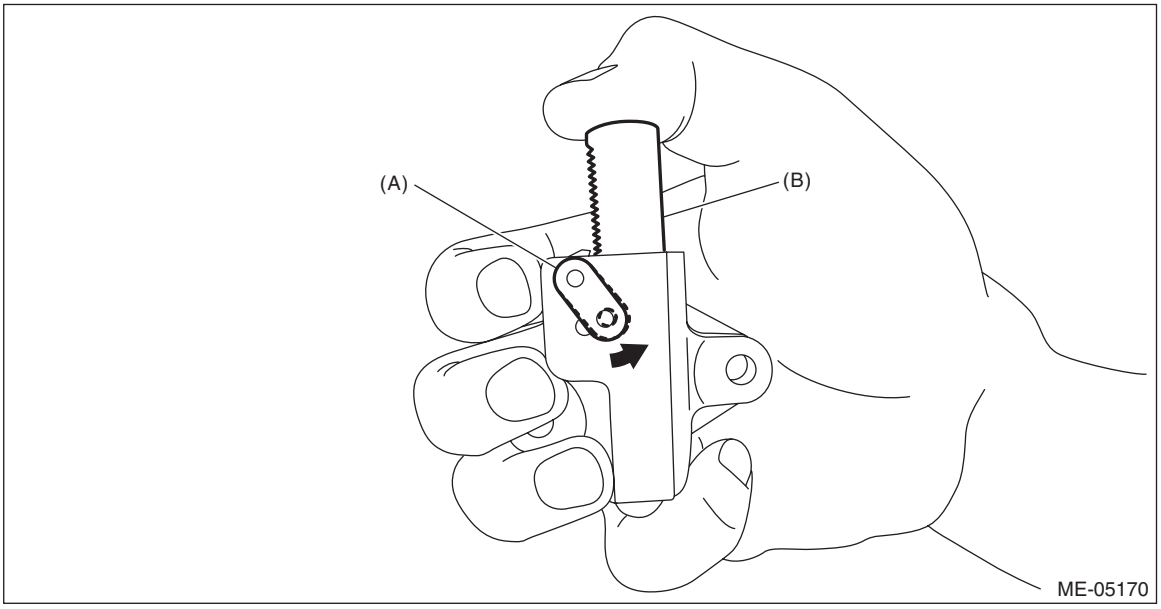

(2) With a 2.5 mm (0.098 in) dia. stopper pin or a 2.5 mm dia. hex wrench inserted into the stopper pin hole, secure the plunger.

NOTE:
If the stopper pin hole on the link plate and the stopper pin hole on the chain tensioner are not aligned, check that the first notch of plunger rack (A) is engaged with the stopper tooth (B). If not engaged, retract the plunger a little so that the first notch of plunger rack (A) is engaged with the stopper tooth (B).

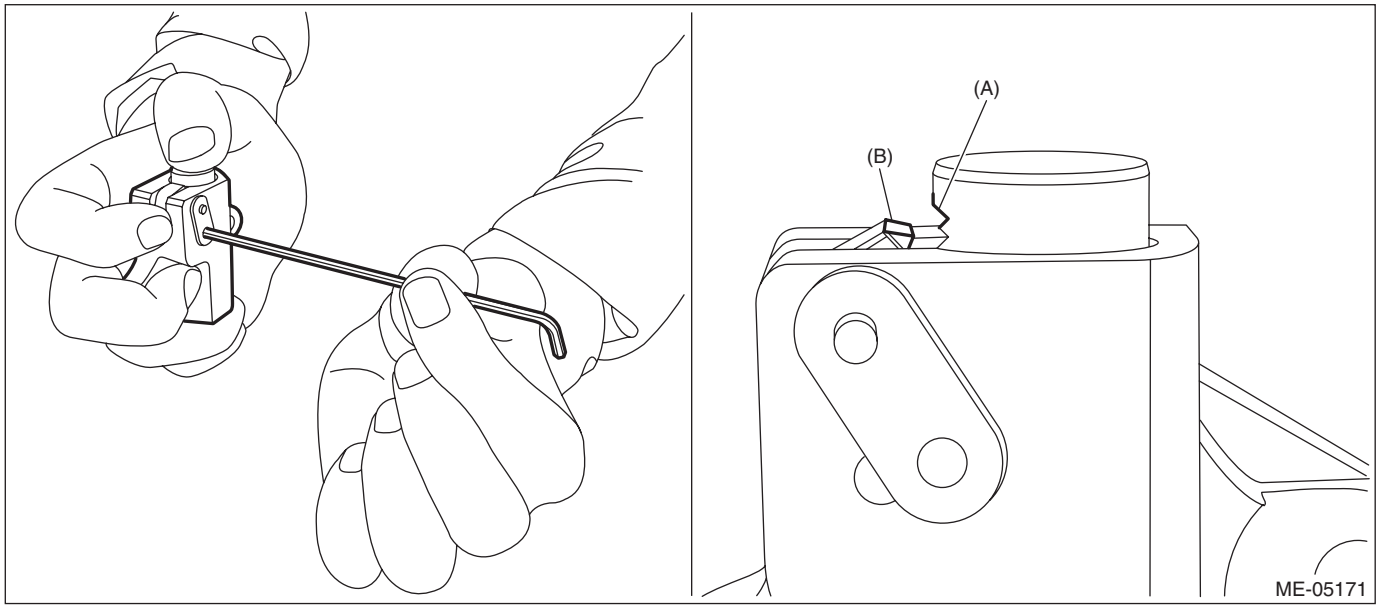

4) Make sure that the alignment marks of the crank sprocket, intake cam sprocket LH and exhaust cam sprocket LH are aligned to the positions as shown in the figure.

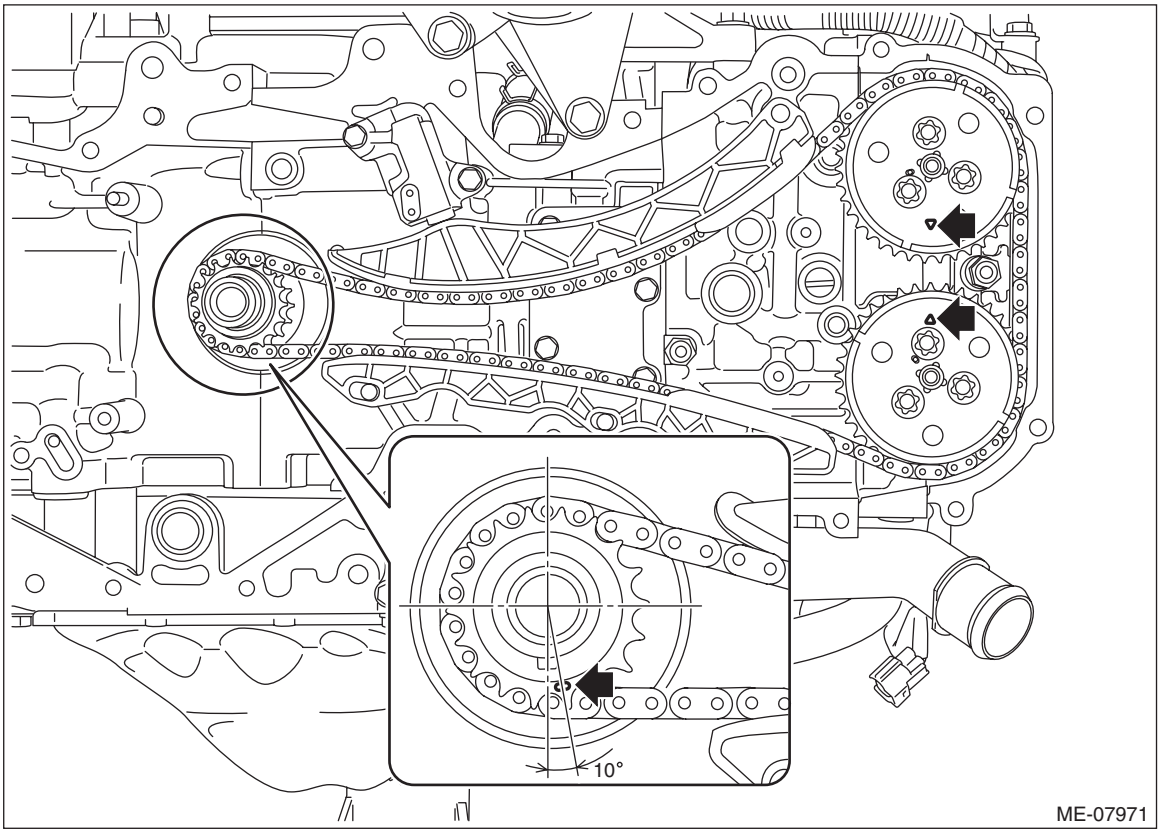

5) Align the alignment marks of intake cam sprocket RH and exhaust cam sprocket RH to the positions as shown in the figure.

CAUTION:
To prevent valve damage, turn the intake cam sprocket RH and exhaust cam sprocket RH only within the range of zero-lift (in range where it can be turned lightly by hand).

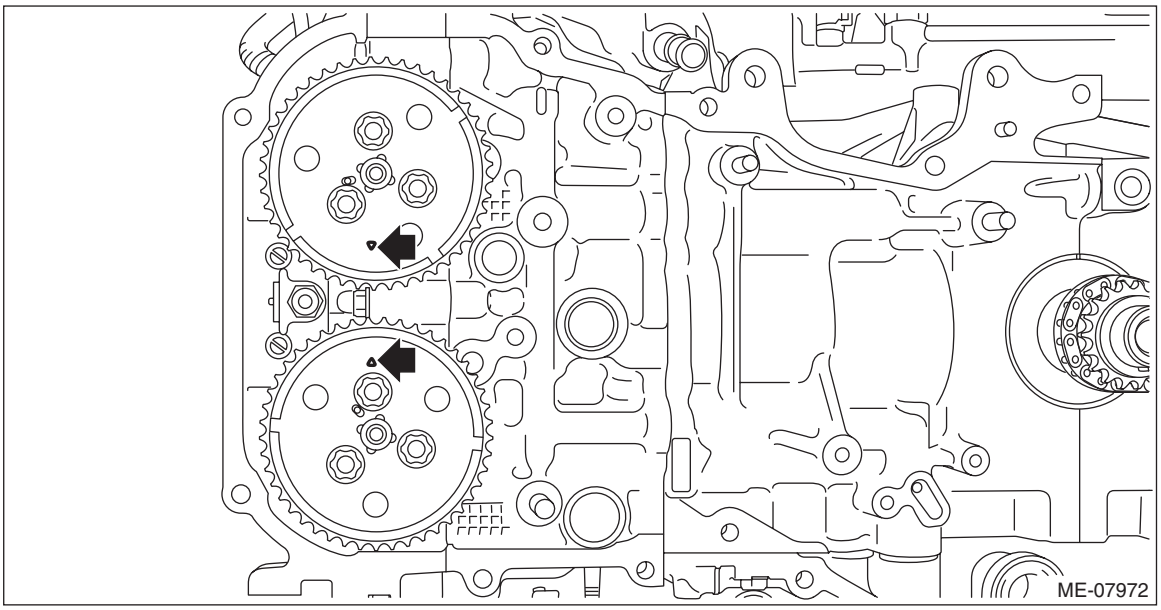

6) Install the timing chain RH and the timing chain guide RH.
   (1) Match the timing chain mark (blue) to the alignment mark of the crank sprocket.
   (2) Match the timing chain mark (pink) to the timing mark position of the intake cam sprocket RH.
   (3) Match the timing chain mark (pink) to the timing mark position of the exhaust cam sprocket RH.

(4) Install the timing chain guide RH.

Tightening torque:
6.4 N·m (0.7 kgf-m, 4.7 ft-lb)

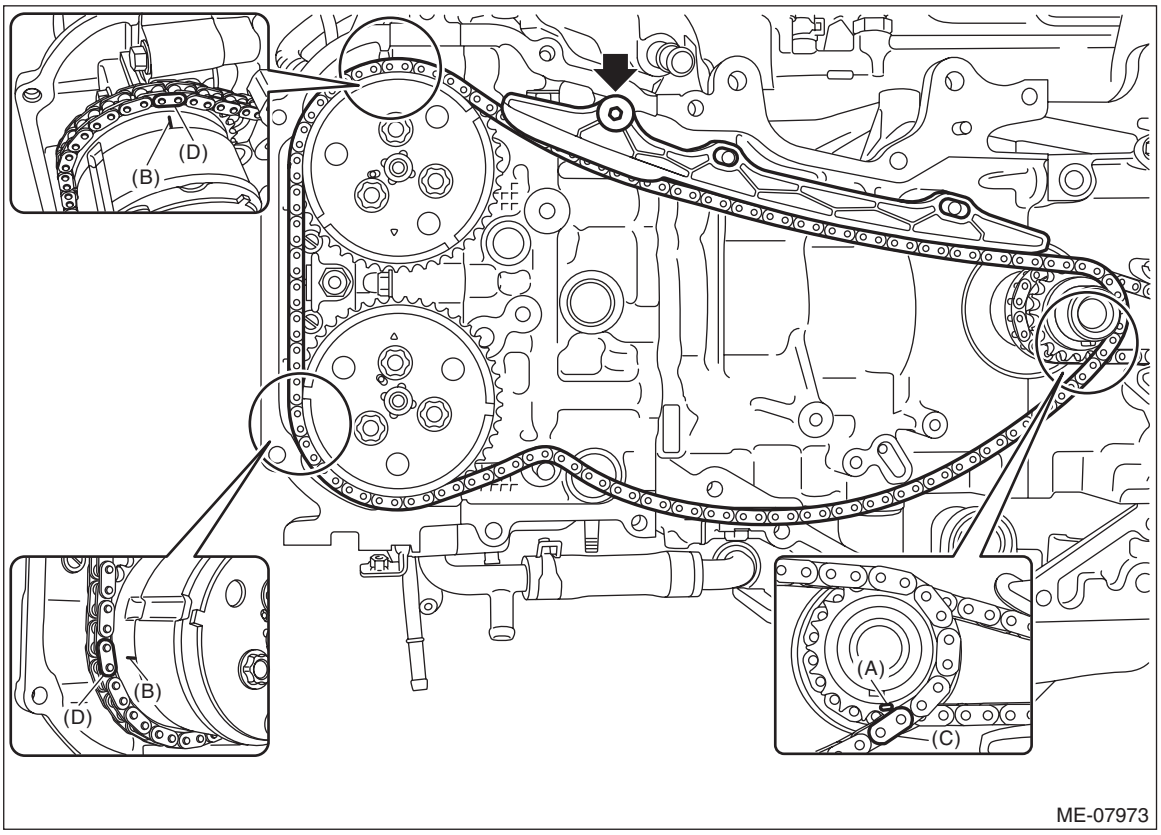

(A) Alignment mark
(B) Timing mark
(C) Blue
(D) Pink

7) Install the chain tensioner lever RH (A) and chain tensioner RH.

Tightening torque:
6.4 N·m (0.7 kgf-m, 4.7 ft-lb)

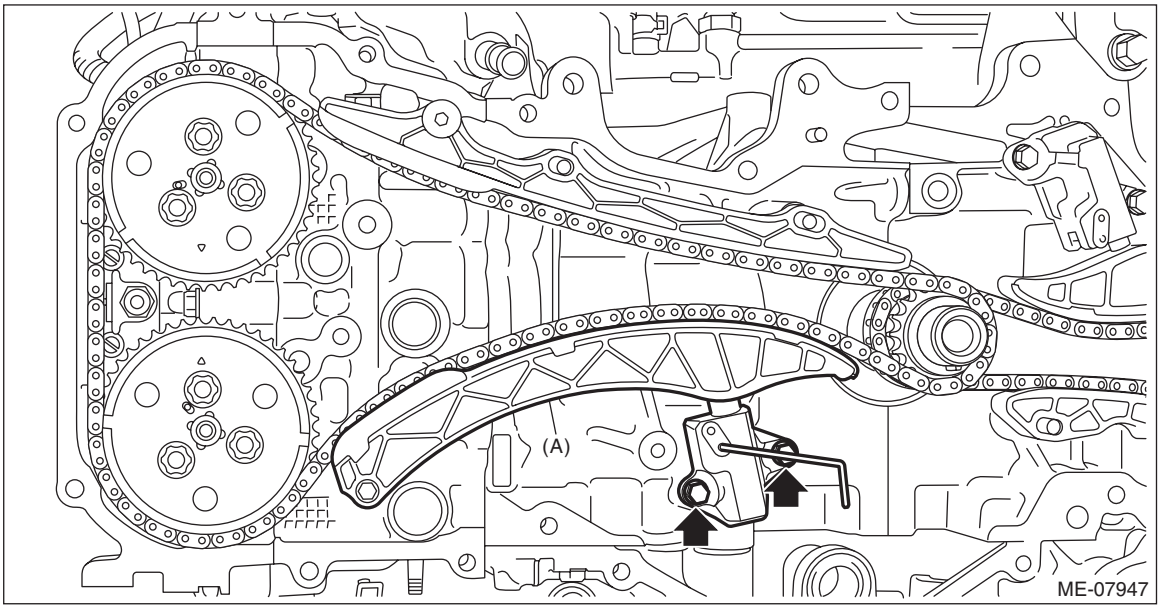

8) Pull out the stopper pin from the chain tensioner RH.

CAUTION:
Confirm the following before pulling out the stopper pin.
- **Matching of the timing chain mark (blue) to the alignment mark of the crank sprocket.**
- **Matching of the timing chain mark (pink) to the timing mark position of the intake cam sprocket RH.**
- **Matching of the timing chain mark (pink) to the timing mark position of the exhaust cam sprocket RH.**

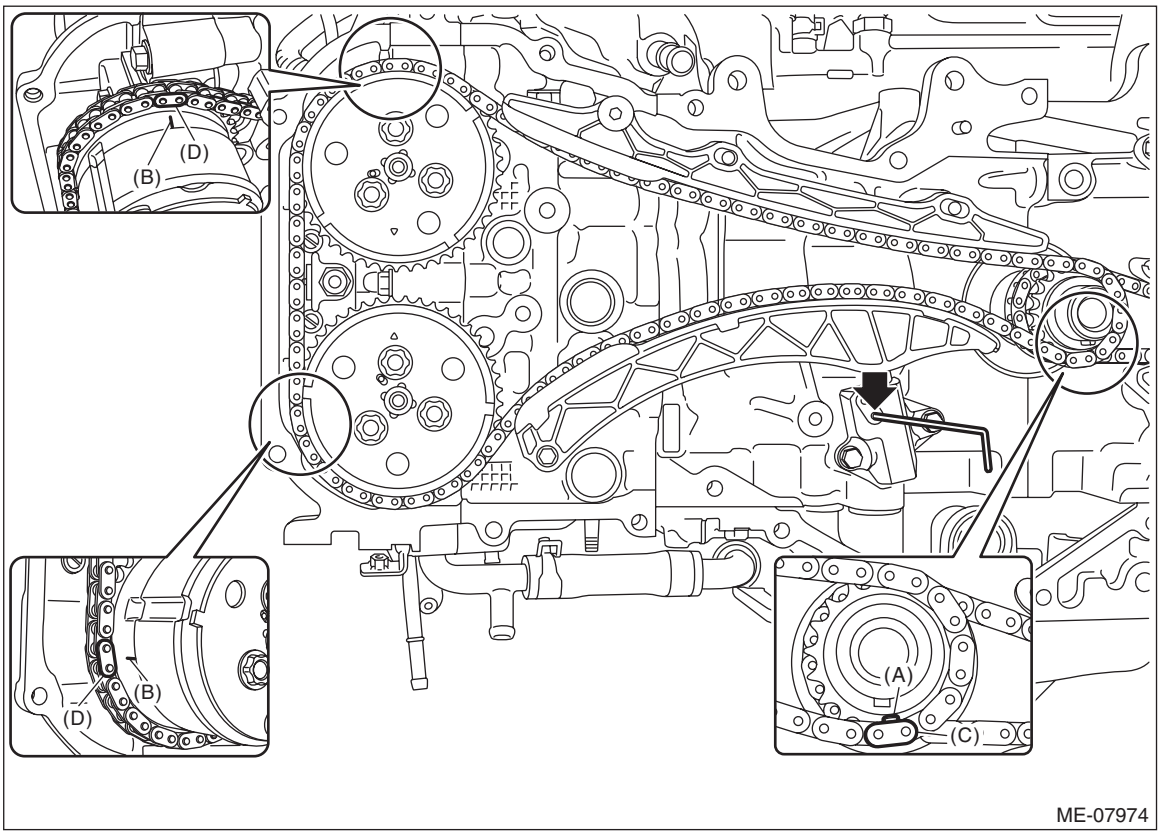

(A) Alignment mark
(B) Timing mark
(C) Blue
(D) Pink

9) Make sure that the alignment marks of the cam sprocket and crank sprocket are aligned to the positions as shown in the figure.

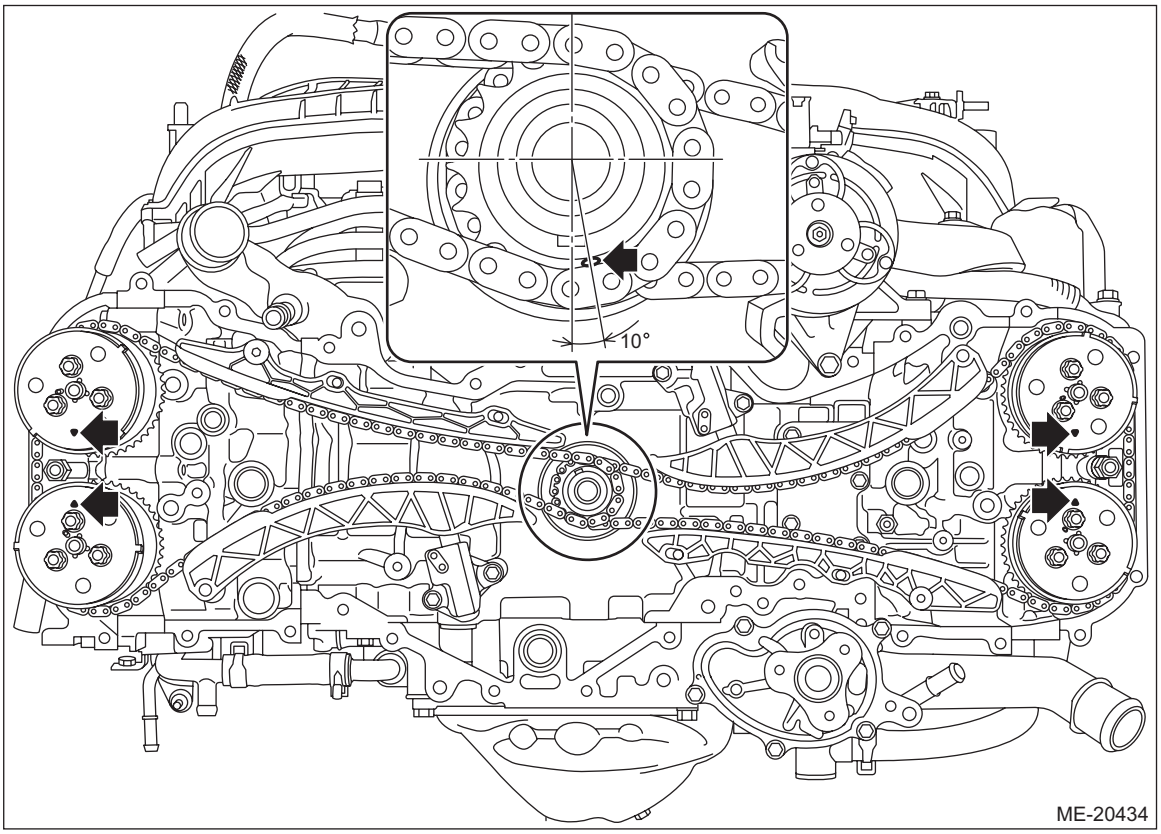

10) Using the ST, turn the crankshaft clockwise, and make sure that there are no abnormal conditions.

CAUTION:
Always make sure to perform this confirmation.
ST 18252AA000 CRANKSHAFT SOCKET

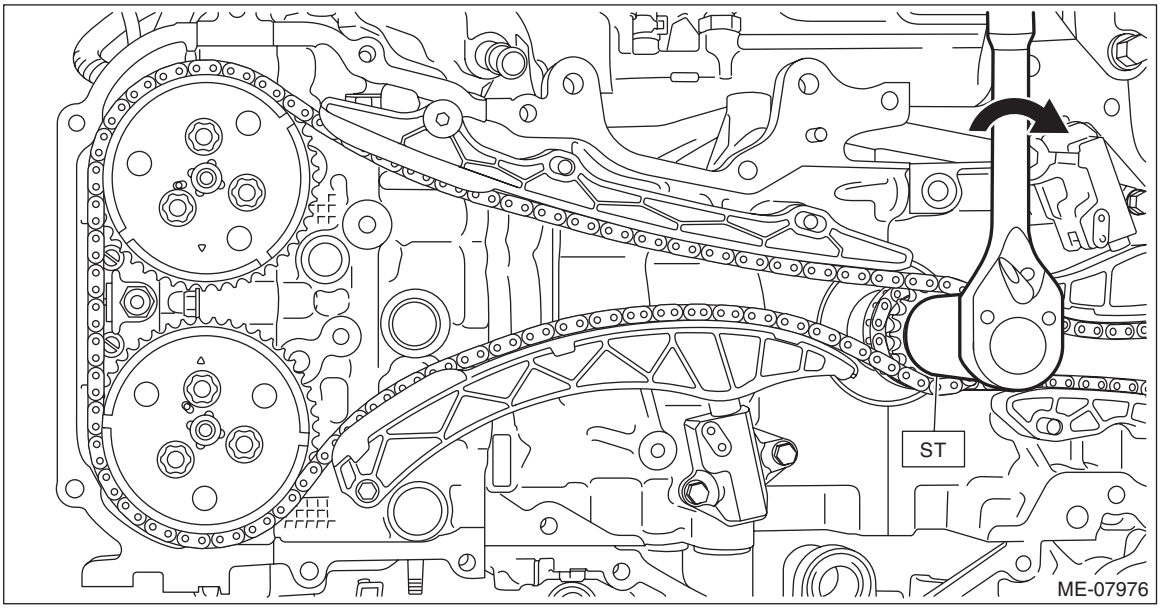

11) Install the chain cover. <Ref. to ME(w/o STI)-97, INSTALLATION, Chain Cover.>

C: INSPECTION

1) Check the timing chain, chain guide, chain tensioner lever and chain tensioner for deformation, cracks or other damages.
2) Check the chain guide and chain tensioner lever for abnormal wear.

16.Cam Sprocket

A: REMOVAL

1. CAM SPROCKET RH

NOTE:
When replacing a single part, perform the work with the engine assembly installed to body.

- **Intake cam sprocket RH**

1) Remove the chain cover. <Ref. to ME(w/o STI)-89, REMOVAL, Chain Cover.>
2) Remove the timing chain RH. <Ref. to ME(w/o STI)-111, TIMING CHAIN RH, REMOVAL, Timing Chain Assembly.>
3) Hold the intake cam sprocket RH using the ST1 and ST2, and remove the bolts using the ST3.

CAUTION:
Perform the operation carefully since the ST comes off easily.
ST1 18355AA000 PULLEY WRENCH
ST2 18334AA020 PULLEY WRENCH PIN SET
ST3 18270KA010 SOCKET

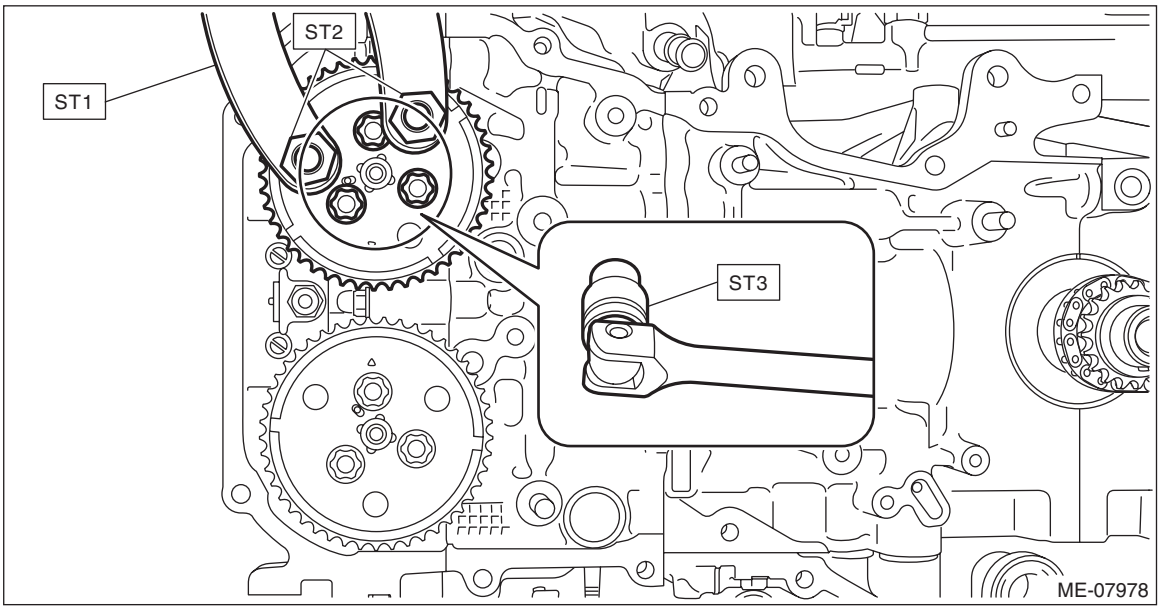

4) Remove the intake cam sprocket RH.

• Exhaust cam sprocket RH

1) Remove the chain cover. <Ref. to ME(w/o STI)-89, REMOVAL, Chain Cover.>
2) Remove the timing chain RH. <Ref. to ME(w/o STI)-111, TIMING CHAIN RH, REMOVAL, Timing Chain Assembly.>
3) Hold the exhaust cam sprocket RH using the ST1 and ST2, and remove the bolts using the ST3.

CAUTION:
Perform the operation carefully since the ST comes off easily.
ST1 18355AA000 PULLEY WRENCH
ST2 18334AA020 PULLEY WRENCH PIN SET
ST3 18270KA010 SOCKET

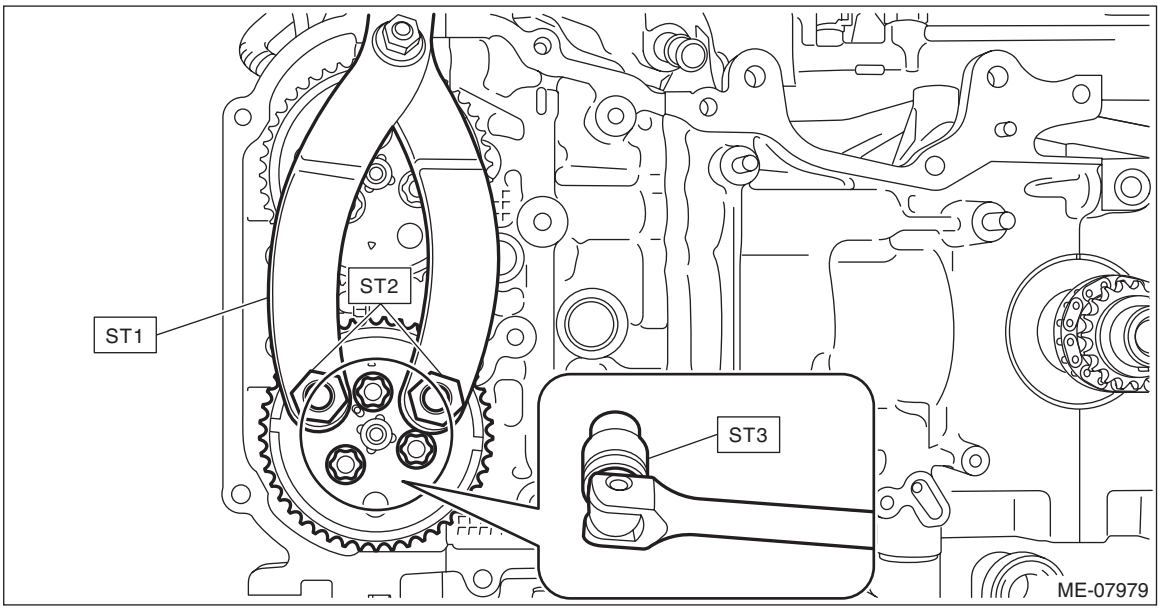

4) Remove the exhaust cam sprocket RH.

2. CAM SPROCKET LH

NOTE:
When replacing a single part, perform the work with the engine assembly installed to body.

• Intake cam sprocket LH

1) Remove the chain cover. <Ref. to ME(w/o STI)-89, REMOVAL, Chain Cover.>
2) Remove the timing chain LH. <Ref. to ME(w/o STI)-114, TIMING CHAIN LH, REMOVAL, Timing Chain Assembly.>
3) Hold the intake cam sprocket LH using the ST1 and ST2, and remove the bolts using the ST3.

CAUTION:
Perform the operation carefully since the ST comes off easily.
ST1 18355AA000 PULLEY WRENCH
ST2 18334AA020 PULLEY WRENCH PIN SET
ST3 18270KA010 SOCKET

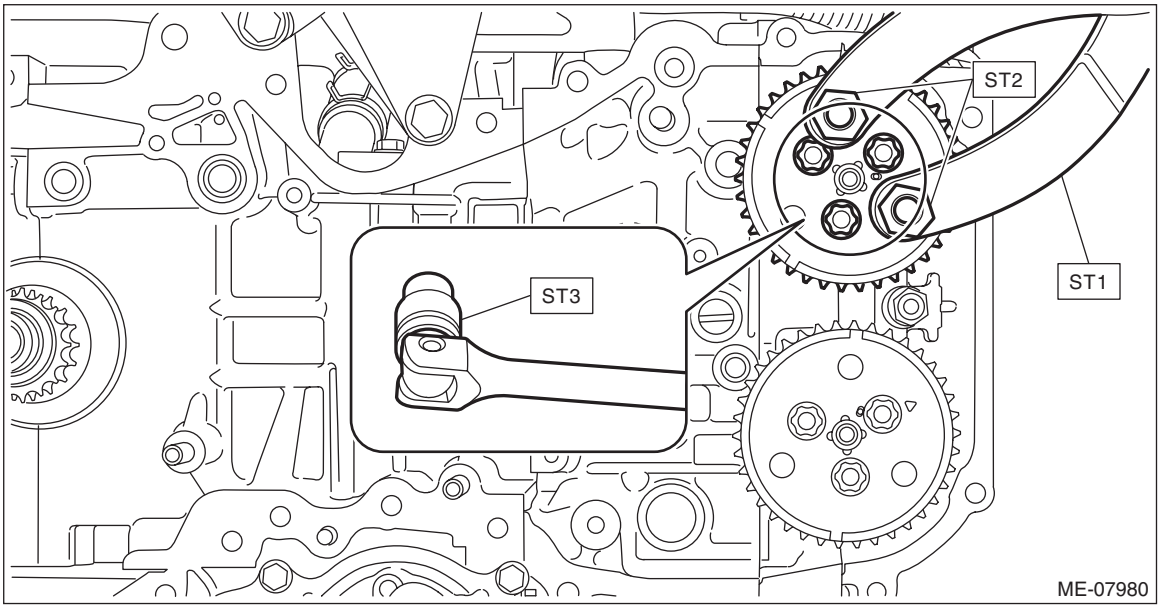

4) Remove the intake cam sprocket LH.

- **Exhaust cam sprocket LH**

1) Remove the chain cover. <Ref. to ME(w/o STI)-89, REMOVAL, Chain Cover.>
2) Remove the timing chain LH. <Ref. to ME(w/o STI)-114, TIMING CHAIN LH, REMOVAL, Timing Chain Assembly.>
3) Hold the exhaust cam sprocket LH using the ST1 and ST2, and remove the bolts using the ST3.

CAUTION:
Perform the operation carefully since the ST comes off easily.
ST1 18355AA000 PULLEY WRENCH
ST2 18334AA020 PULLEY WRENCH PIN SET
ST3 18270KA010 SOCKET

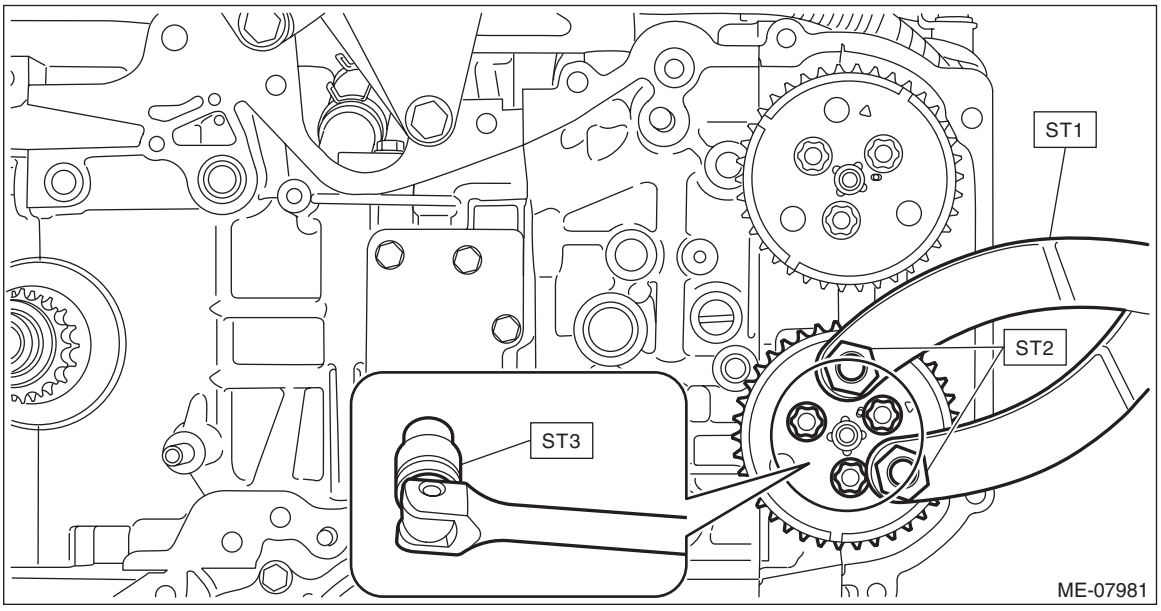

4) Remove the exhaust cam sprocket LH.

B: INSTALLATION

1. CAM SPROCKET RH

• Intake cam sprocket RH

1) Install the intake cam sprocket RH by aligning the knock hole (A) of intake cam sprocket RH and the knock pin (B) of intake camshaft RH.

NOTE:
Before installation, check that there is no foreign matter on the intake cam sprocket RH and intake camshaft RH.

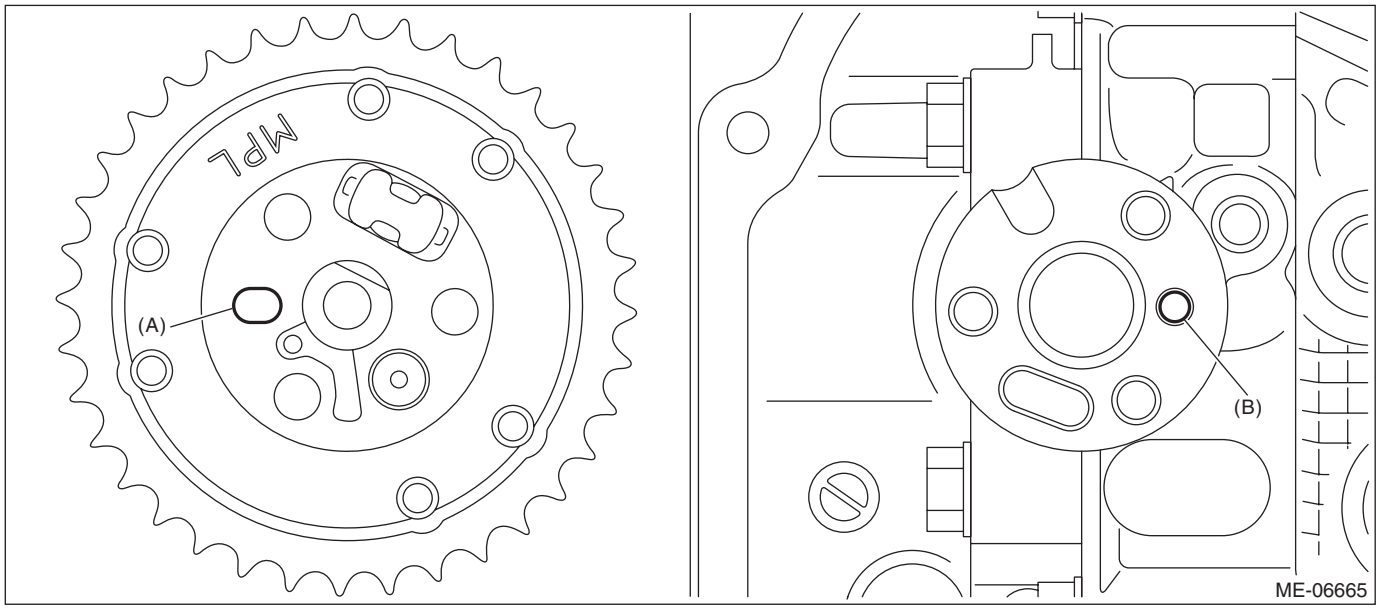

2) Hold the intake cam sprocket RH using the ST1 and ST2, and install the bolts using the ST3.

CAUTION:
Perform the operation carefully since the ST comes off easily.

ST1 18355AA000 PULLEY WRENCH
ST2 18334AA020 PULLEY WRENCH PIN SET
ST3 18270KA010 SOCKET

Tightening torque:
18 N·m (1.8 kgf-m, 13.3 ft-lb)

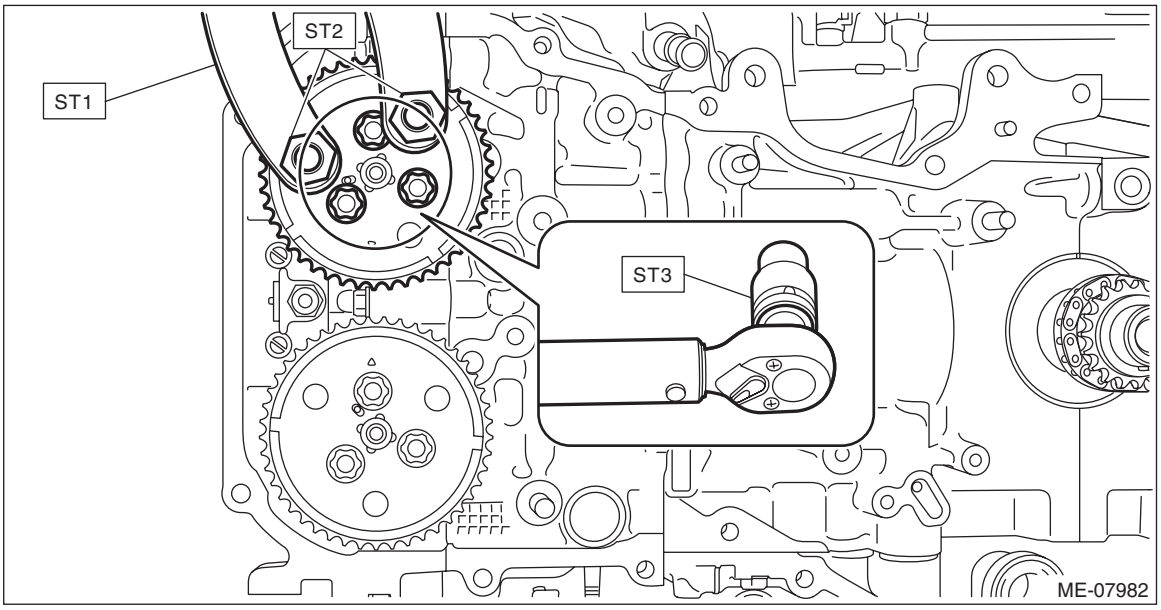

3) Install the timing chain RH. <Ref. to ME(w/o STI)-126, TIMING CHAIN RH, INSTALLATION, Timing Chain Assembly.>
4) Install the chain cover. <Ref. to ME(w/o STI)-97, INSTALLATION, Chain Cover.>

- **Exhaust cam sprocket RH**

1) Install the exhaust cam sprocket RH by aligning the knock hole (A) of exhaust cam sprocket RH and the knock pin (B) of exhaust camshaft RH.

NOTE:
Before installation, check that there is no foreign matter on the exhaust cam sprocket RH and exhaust camshaft RH.

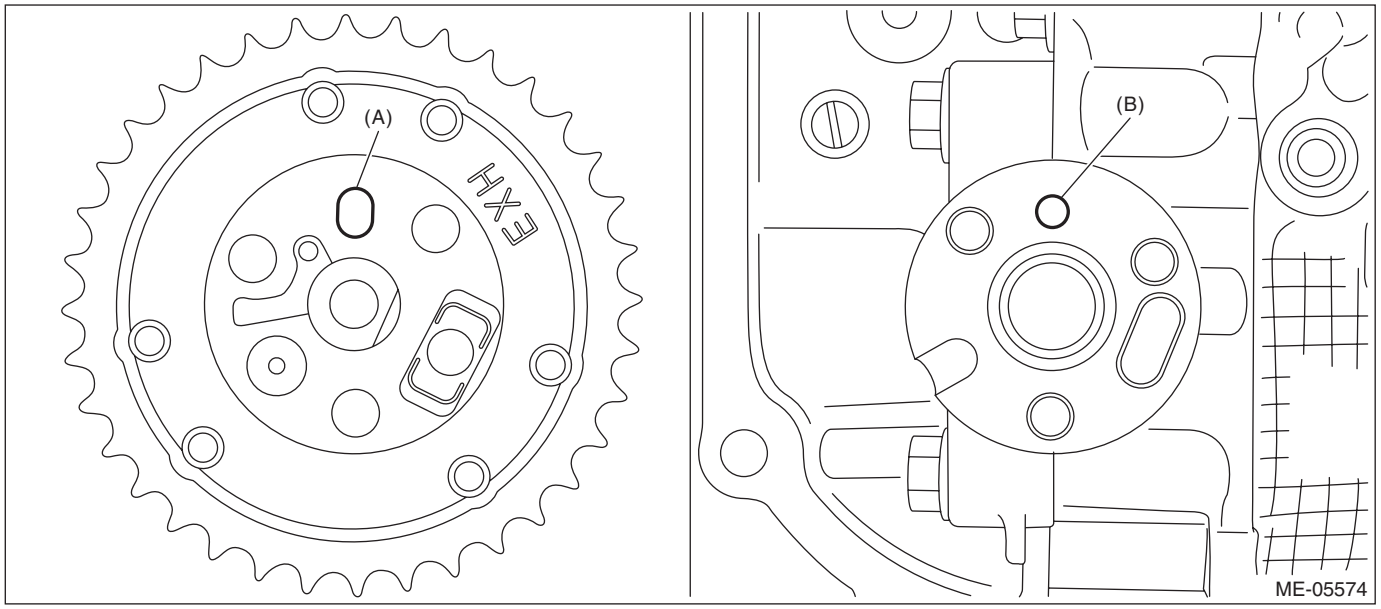

2) Hold the exhaust cam sprocket RH using ST1 and ST2, and install the bolts using ST3.

CAUTION:
Perform the operation carefully since the ST comes off easily.
ST1 18355AA000 PULLEY WRENCH
ST2 18334AA020 PULLEY WRENCH PIN SET
ST3 18270KA010 SOCKET

Tightening torque:
18 N·m (1.8 kgf-m, 13.3 ft-lb)

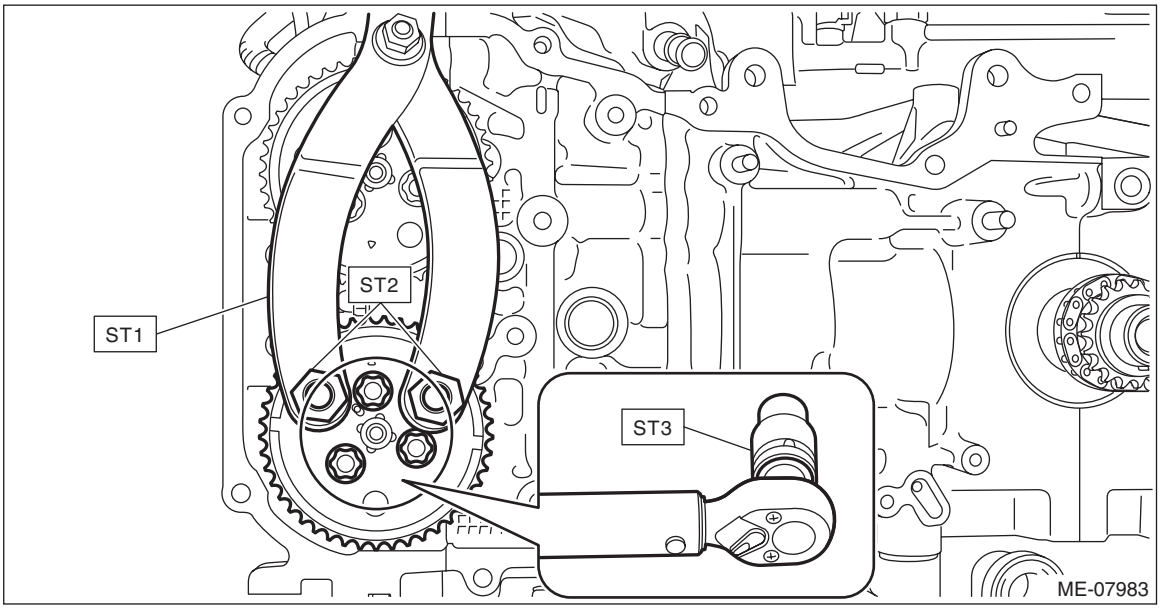

3) Install the timing chain RH. <Ref. to ME(w/o STI)-126, TIMING CHAIN RH, INSTALLATION, Timing Chain Assembly.>
4) Install the chain cover. <Ref. to ME(w/o STI)-97, INSTALLATION, Chain Cover.>

2. CAM SPROCKET LH

• Intake cam sprocket LH

1) Install the intake cam sprocket LH by aligning the knock hole (A) of intake cam sprocket LH and the knock pin (B) of intake camshaft LH.

NOTE:
Before installation, check that there is no foreign matter on the intake cam sprocket LH and intake camshaft LH.

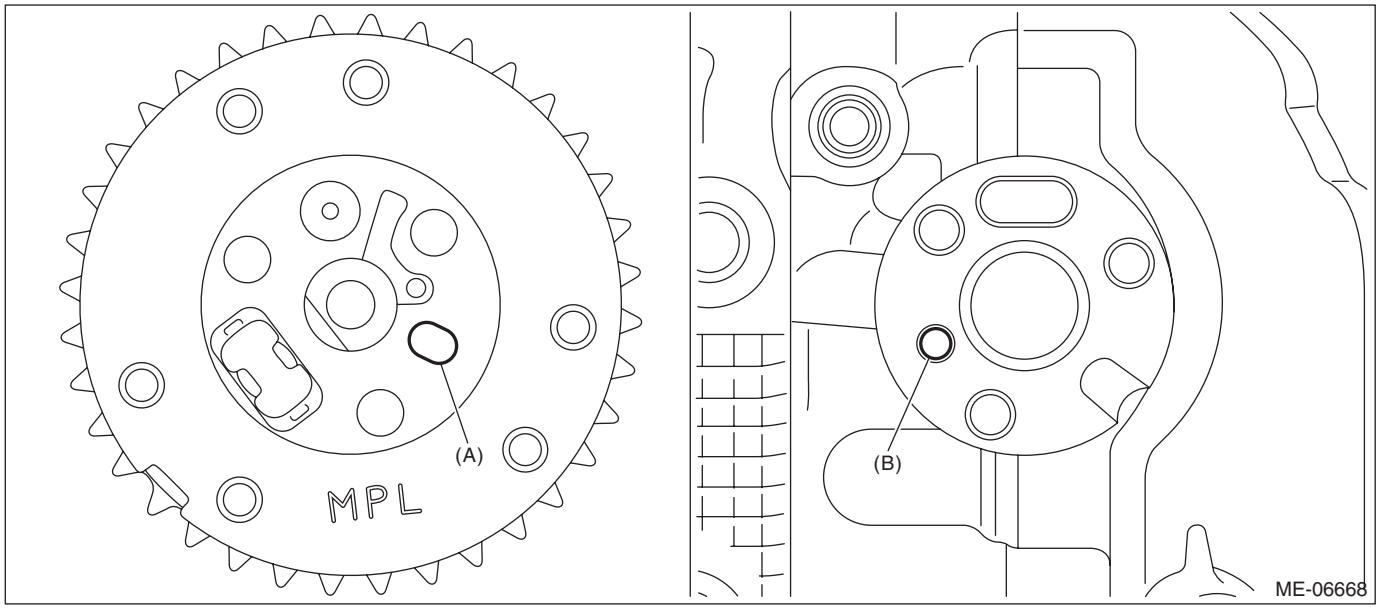

2) Hold the intake cam sprocket LH using the ST1 and ST2, and install the bolts using the ST3.

CAUTION:
Perform the operation carefully since the ST comes off easily.

ST1 18355AA000 PULLEY WRENCH
ST2 18334AA020 PULLEY WRENCH PIN SET
ST3 18270KA010 SOCKET

Tightening torque:
18 N·m (1.8 kgf-m, 13.3 ft-lb)

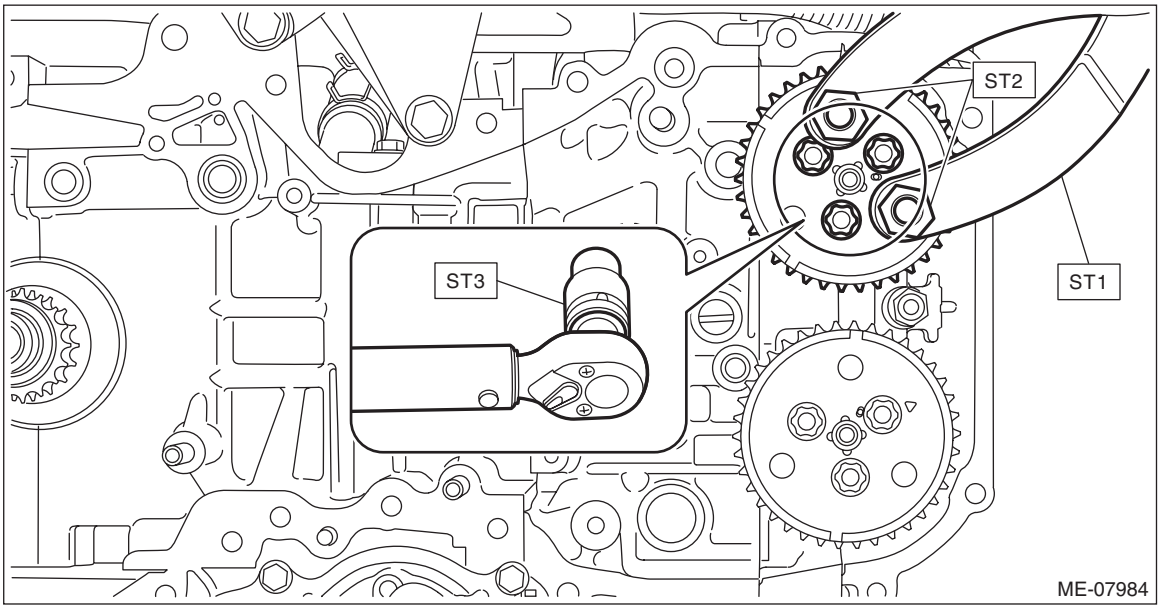

3) Install timing chain LH. <Ref. to ME(w/o STI)-118, TIMING CHAIN LH, INSTALLATION, Timing Chain Assembly.>
4) Install the chain cover. <Ref. to ME(w/o STI)-97, INSTALLATION, Chain Cover.>

- **Exhaust cam sprocket LH**

1) Install the exhaust cam sprocket LH by aligning the knock hole (A) of exhaust cam sprocket LH and the knock pin (B) of exhaust camshaft LH.

NOTE:
Before installation, check that there is no foreign matter on the exhaust cam sprocket LH and exhaust camshaft LH.

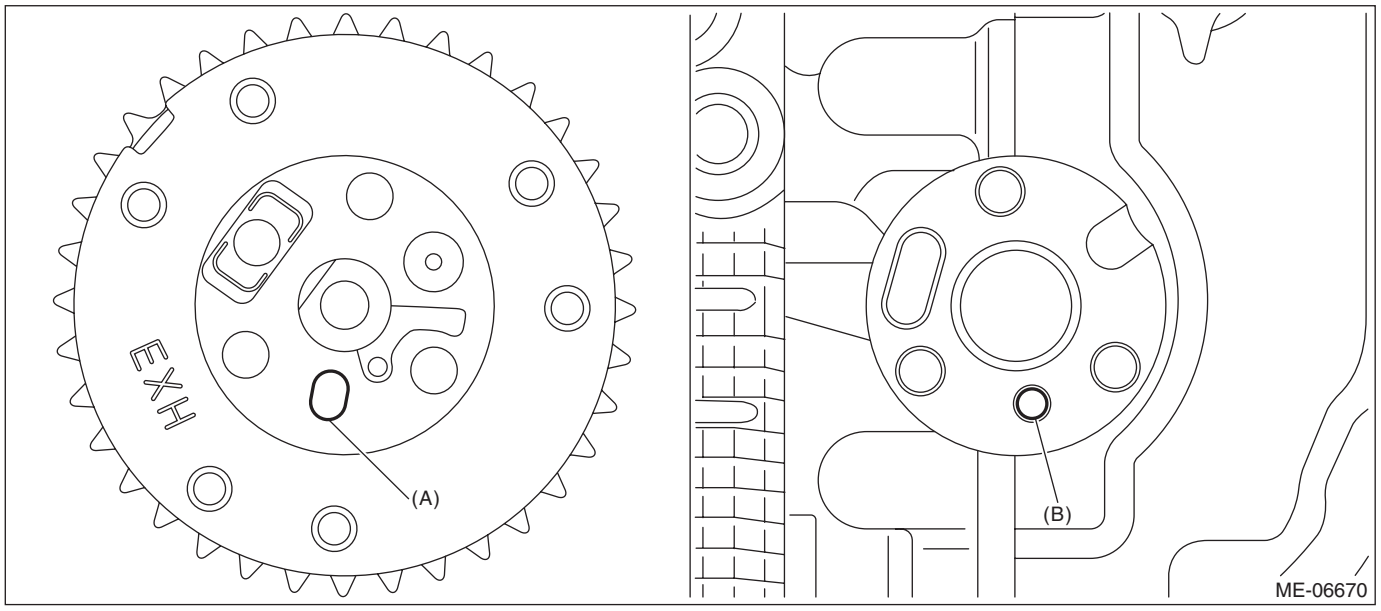

2) Hold the exhaust cam sprocket LH using the ST1 and ST2, and install the bolts using the ST3.

CAUTION:
Perform the operation carefully since the ST comes off easily.

ST1 18355AA000 PULLEY WRENCH
ST2 18334AA020 PULLEY WRENCH PIN SET
ST3 18270KA010 SOCKET

Tightening torque:
18 N·m (1.8 kgf-m, 13.3 ft-lb)

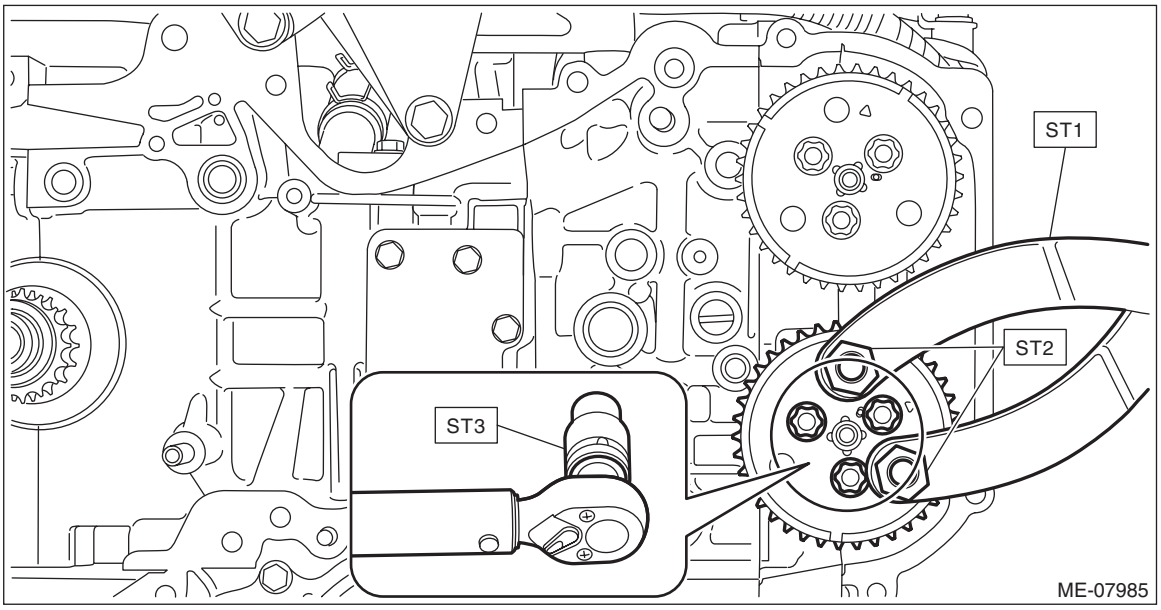

3) Install timing chain LH. <Ref. to ME(w/o STI)-118, TIMING CHAIN LH, INSTALLATION, Timing Chain Assembly.>
4) Install the chain cover. <Ref. to ME(w/o STI)-97, INSTALLATION, Chain Cover.>

C: INSPECTION

Check the cam sprocket teeth for abnormal wear and scratches.

17.Crank Sprocket

A: REMOVAL

NOTE:
When replacing a single part, perform the work with the engine assembly installed to body.
1) Remove the chain cover. <Ref. to ME(w/o STI)-89, REMOVAL, Chain Cover.>
2) Remove the timing chain. <Ref. to ME(w/o STI)-111, REMOVAL, Timing Chain Assembly.>
3) Remove the crank sprocket.

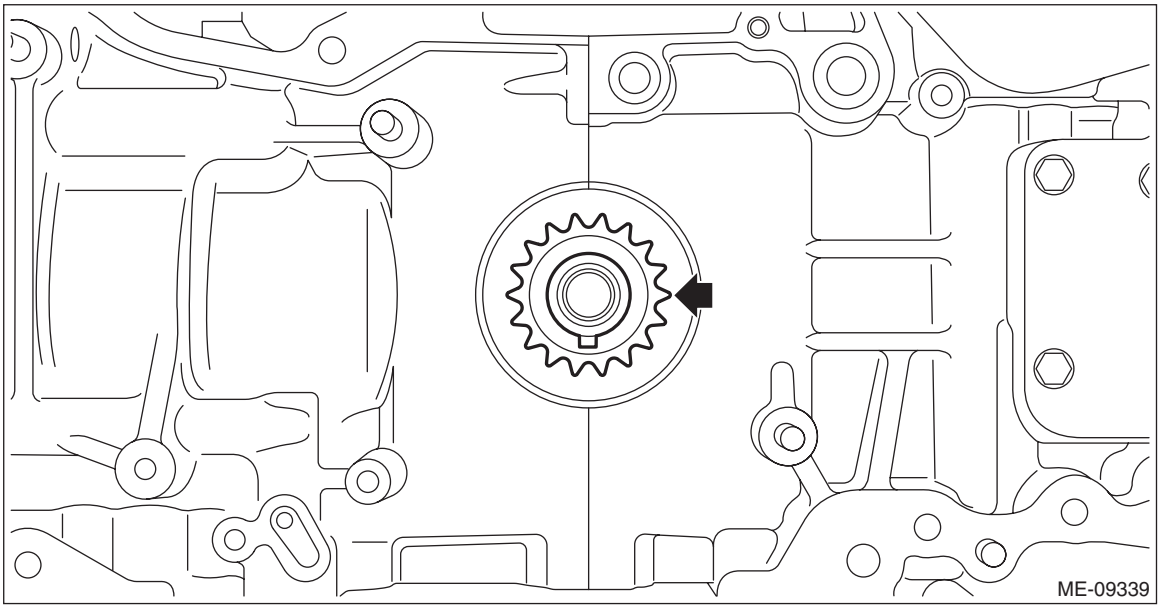

B: INSTALLATION

1) Install the crank sprocket.

NOTE:
The direction of installation is not specified for the crank sprocket.

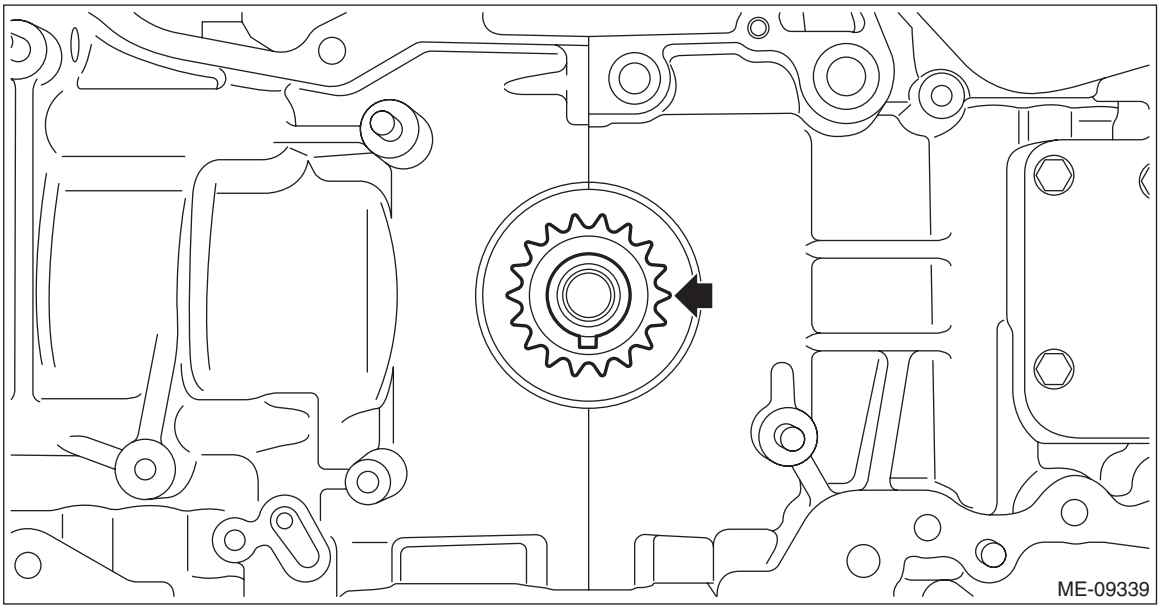

2) Install the timing chain. <Ref. to ME(w/o STI)-118, INSTALLATION, Timing Chain Assembly.>
3) Install the chain cover. <Ref. to ME(w/o STI)-97, INSTALLATION, Chain Cover.>

C: INSPECTION

1) Check the crank sprocket teeth for abnormal wear and scratches.
2) Make sure there is no free play between crank sprocket and key.

18.Rocker Cover

A: REMOVAL

1. ROCKER COVER RH

NOTE:
When replacing a single part, perform the work with the engine assembly installed to body.
1) When working on the vehicle

NOTE:
When working on the vehicle, perform the following steps also.
(1) Remove the air cleaner case. <Ref. to IN(w/o STI)-13, REMOVAL, Air Cleaner Case.>
2) Remove the #1 ignition coil and the #3 ignition coil. <Ref. to IG(w/o STI)-11, REMOVAL, Ignition Coil.>
3) Remove the rocker cover RH.

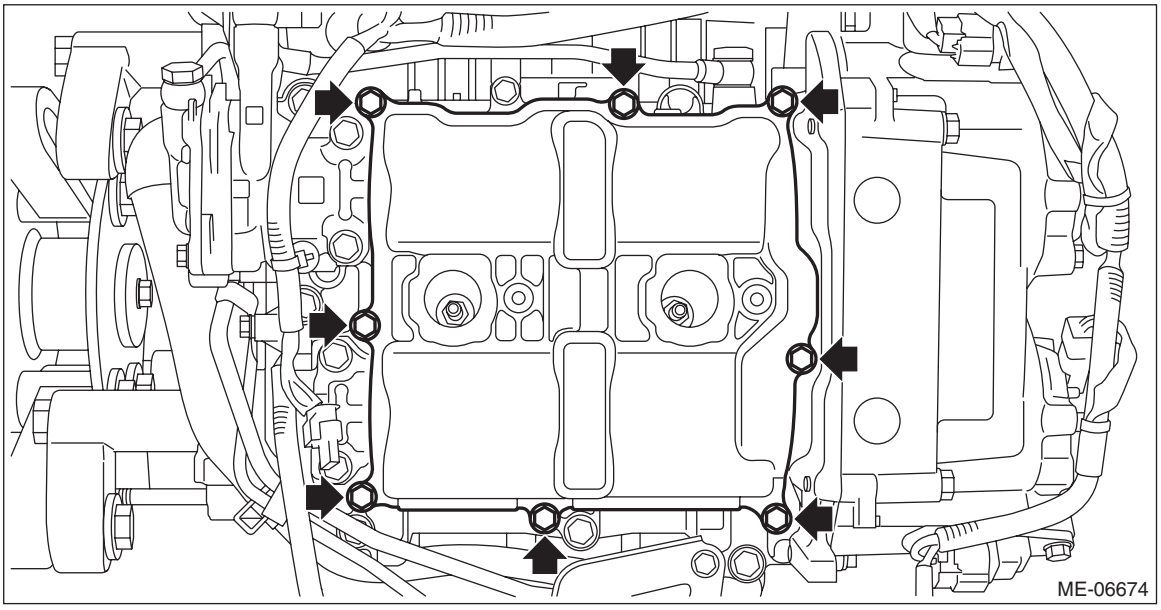

4) Remove the rocker cover gasket RH, #1 spark plug pipe gasket and #3 spark plug pipe gasket, and remove the liquid gasket.

CAUTION:
• When removing the liquid gasket from engine unit using scraper, use special care not to damage the cam lobe of camshaft RH.
• If the cam lobe of camshaft RH interferes, turn the crankshaft to the position where the scraper does not touch.

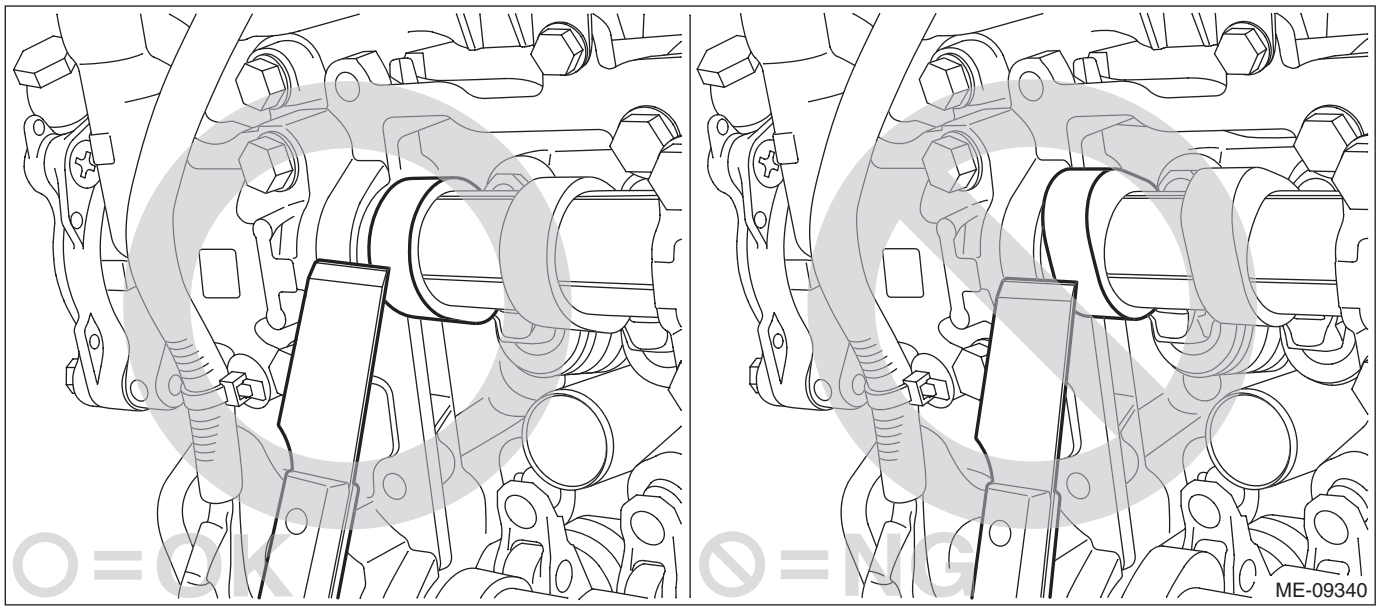

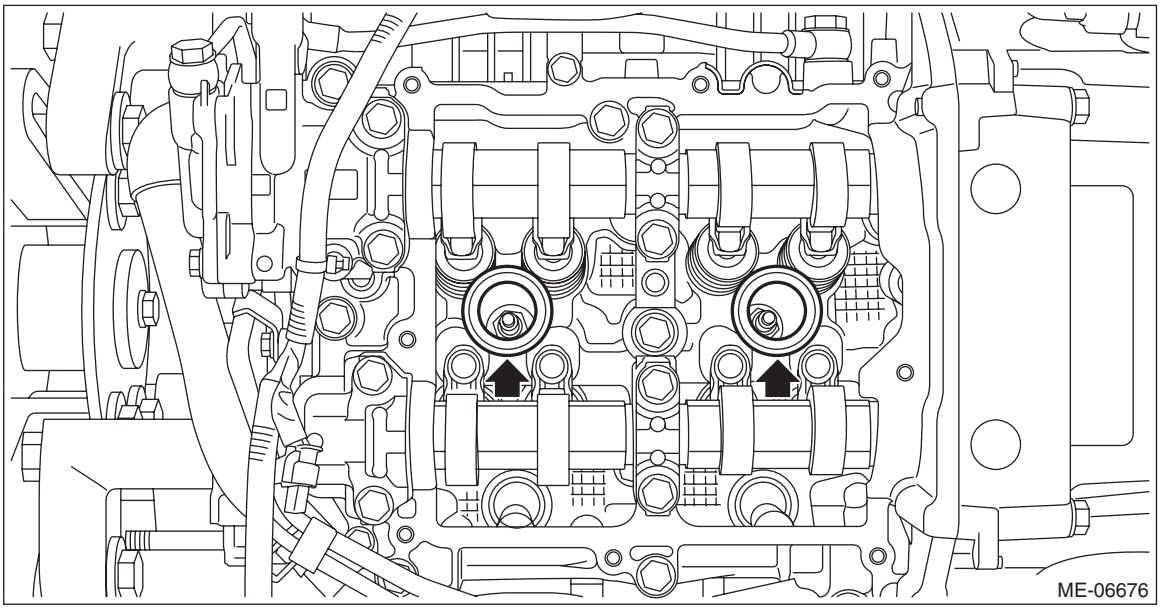

2. ROCKER COVER LH

NOTE:
When replacing a single part, perform the work with the engine assembly installed to body.
1) When working on the vehicle

NOTE:
When working on the vehicle, perform the following steps also.

(1) Remove the striker - front hood. <Ref. to EB-11, DISASSEMBLY, Front Hood.>
(2) Fully open the front hood. <Ref. to NT-23, FRONT HOOD DAMPER STAY, NOTE, Note.>
(3) Remove the collector cover. <Ref. to IN(w/o STI)-7, REMOVAL, Collector Cover.>
(4) Remove the battery. <Ref. to SC(w/o STI)-50, REMOVAL, Battery.>
(5) Remove the air intake duct. <Ref. to IN(w/o STI)-26, REMOVAL, Air Intake Duct.>
(6) Remove the center exhaust pipe. <Ref. to EX(w/o STI)-32, REMOVAL, Center Exhaust Pipe.>
(7) Remove the nuts which secure the engine mounting to the front crossmember.

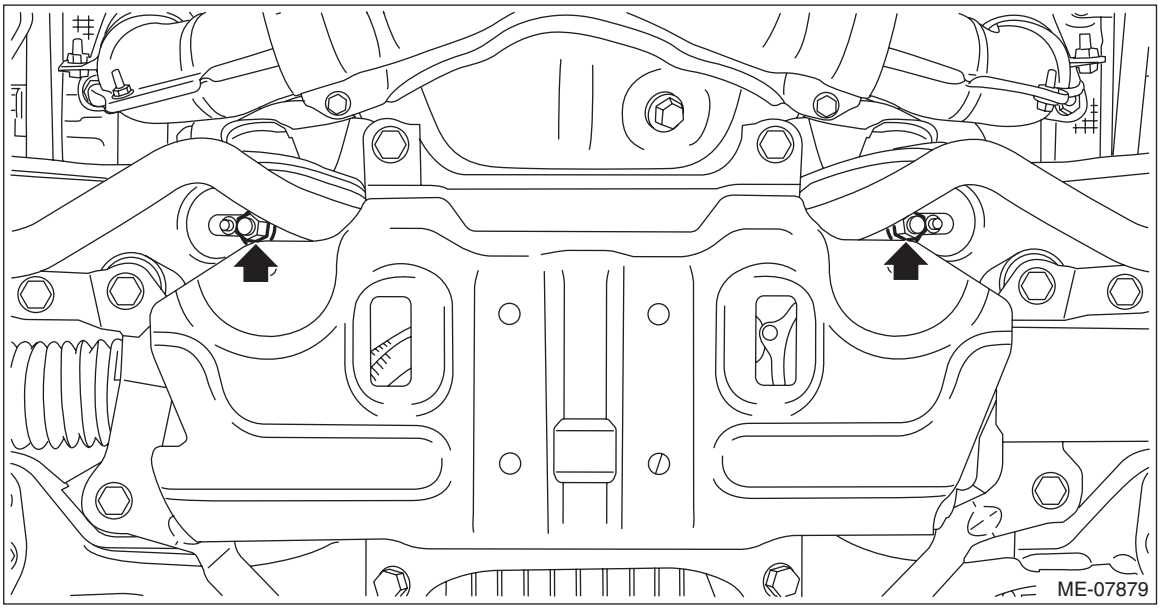

(8) Lower the vehicle.
(9) Remove the clip (A) and clip (B) which secure the engine harness and bulkhead harness to the bracket, and remove the bolt which secures the engine control module (ECM) to the bracket.

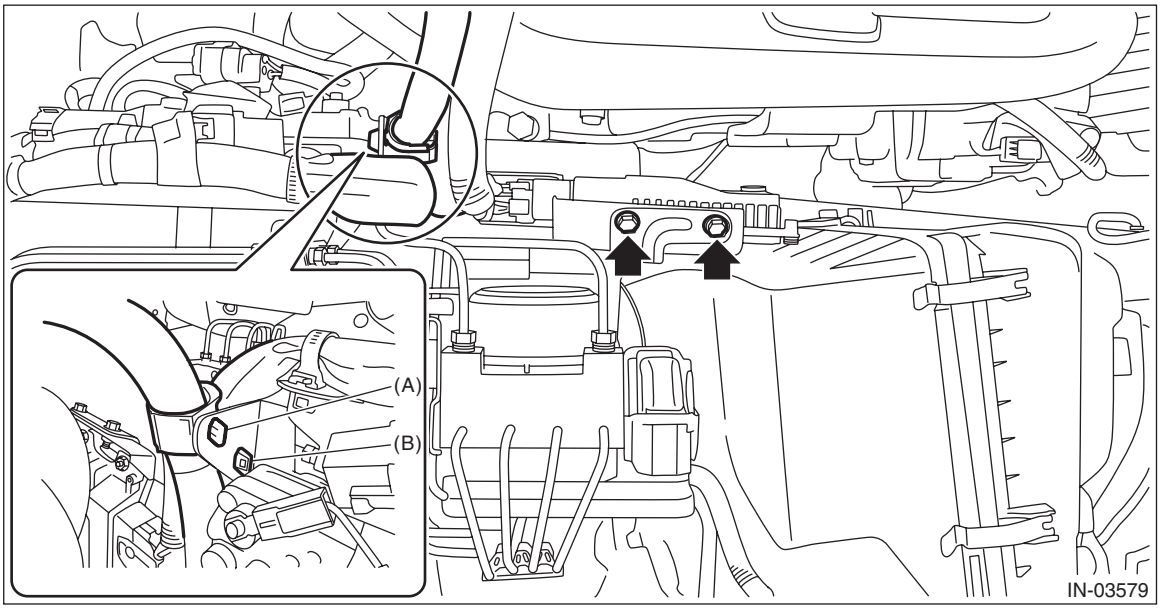

(10) Pull out the engine control module (ECM) from the bracket, and move it to a location that does not interfere operation.

NOTE:
When performing the pulling out operation, pay attention not to apply excessive load to the breather filter portion (a) in order to avoid the damage.

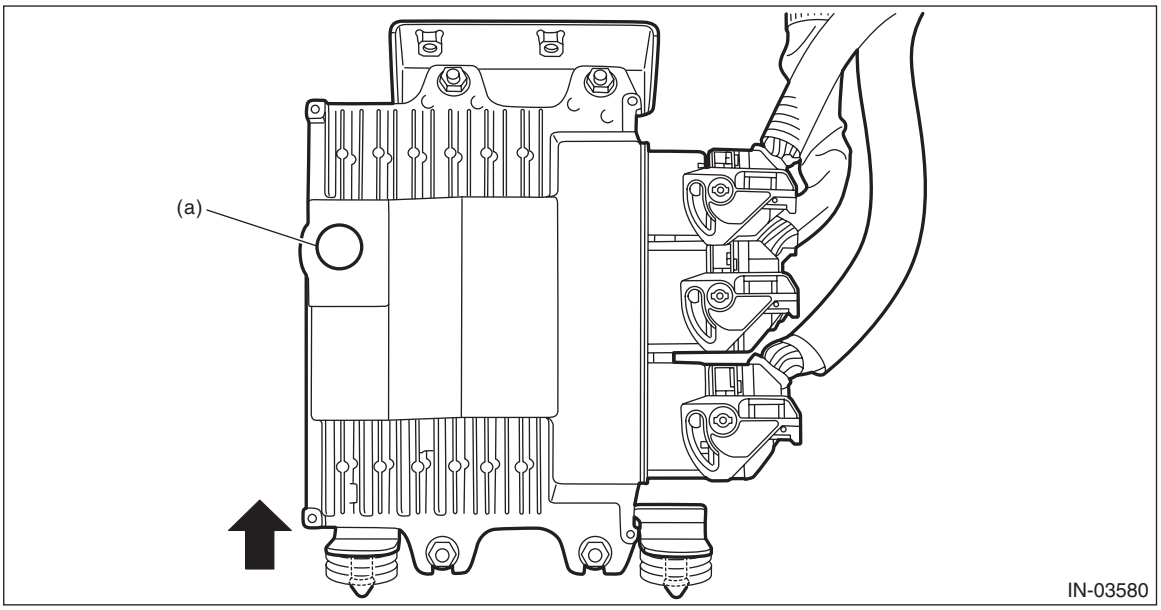

(11) Remove the intercooler. <Ref. to IN(w/o STI)-43, REMOVAL, Intercooler.>
(12) Remove the clip (A) securing the generator cord to the fuel pipe protector, and remove the fuel pipe protector from the high-pressure fuel pump case and intake manifold.

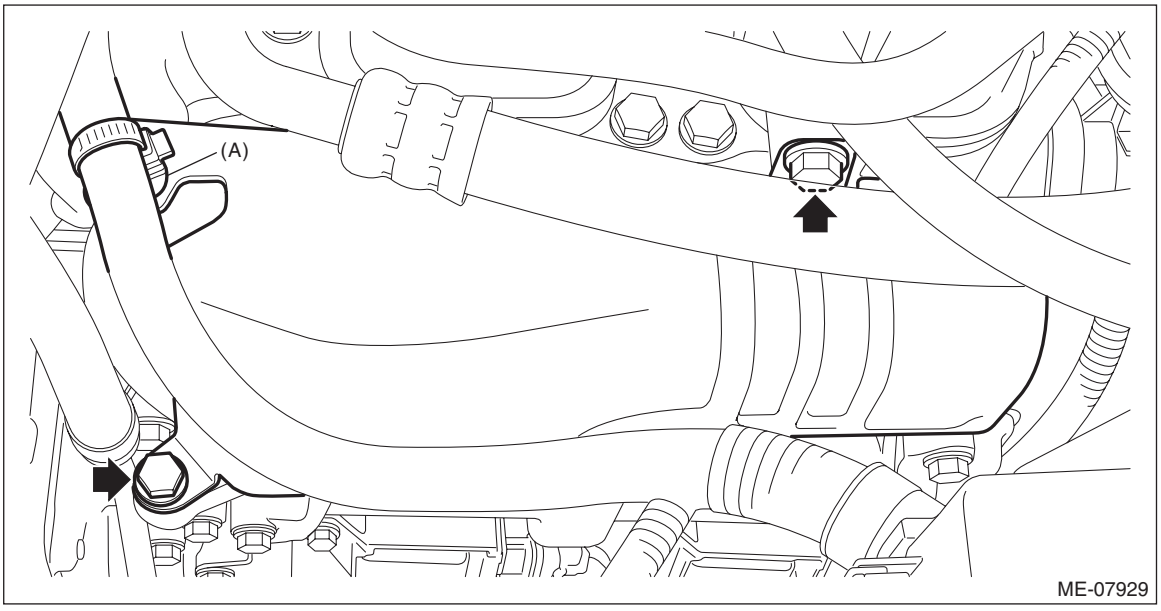

(13) Disconnect the connector from pressure switch (triple pressure switch).

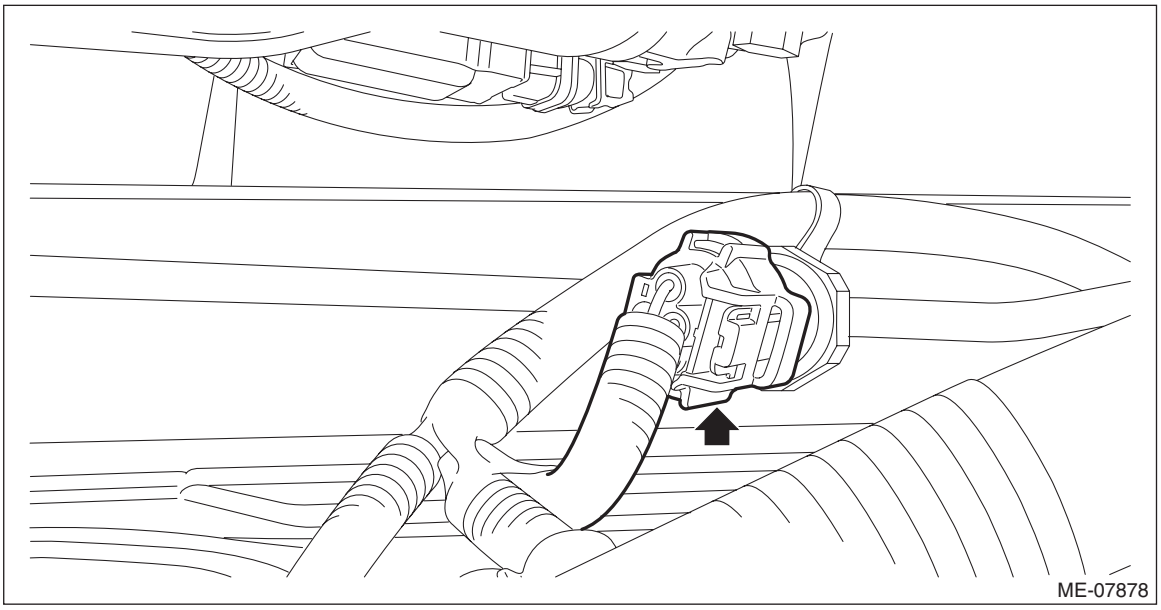

(14) Remove the pitching stopper.

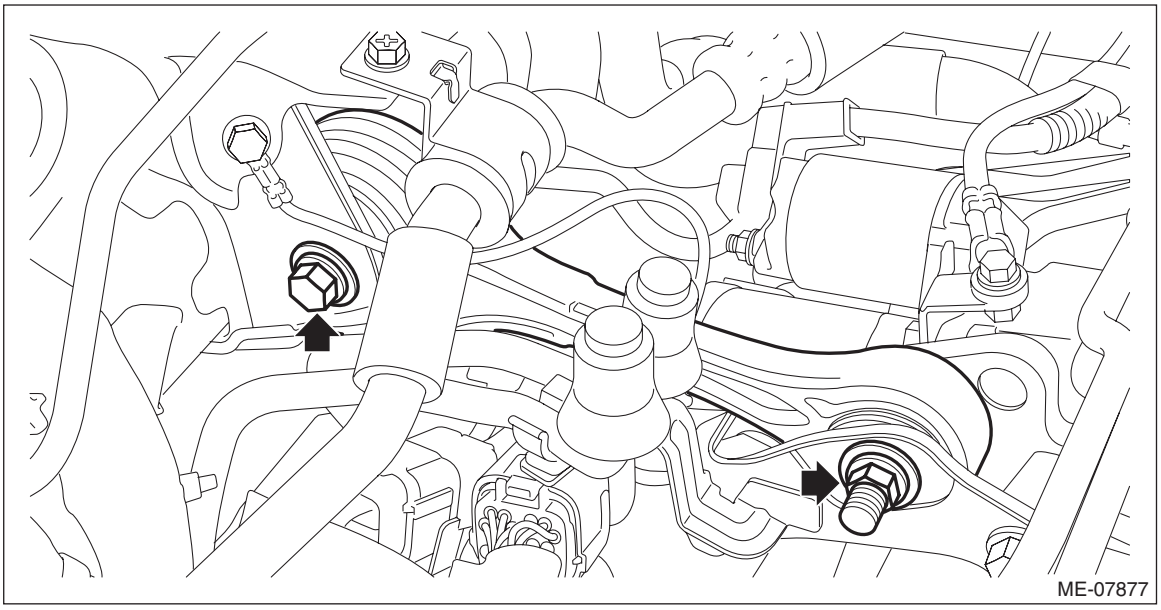

(15) Support the engine with a lifting device and wire ropes.

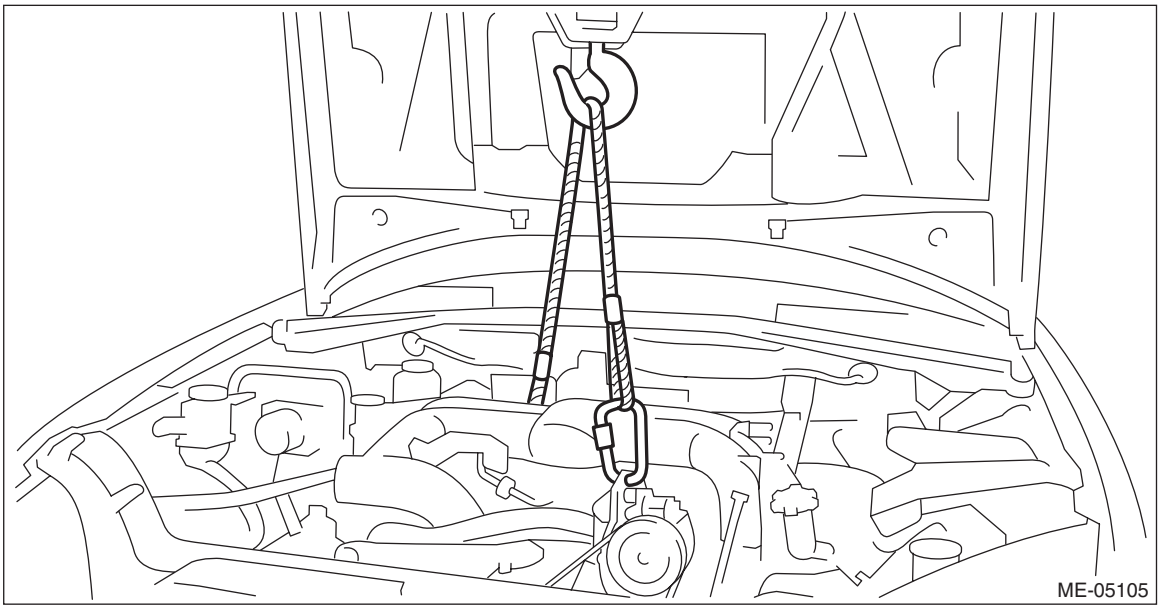

(16) While gradually lifting up the engine, set the ST between the engine mount LH and front crossmember, and then slowly lower the engine.

CAUTION:
• When lifting up the engine, pay attention to the clearance of each part and be careful not to lift the engine too much, in order to prevent damaging the vehicle.
• To avoid the damage, be sure to set the ST as shown in the figure.

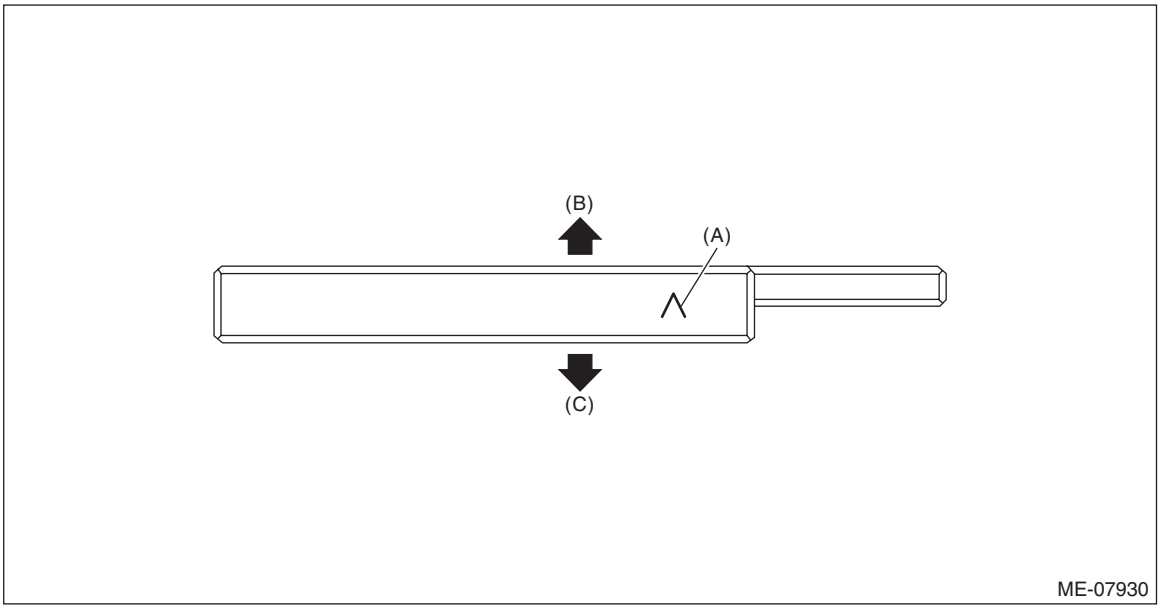

(A) Direction mark (B) Engine mounting side (C) Front crossmember side

- **After lowering the engine, check that the ST does not come off even if the engine is bounced.**

ST 18632AA030 STAND ASSY

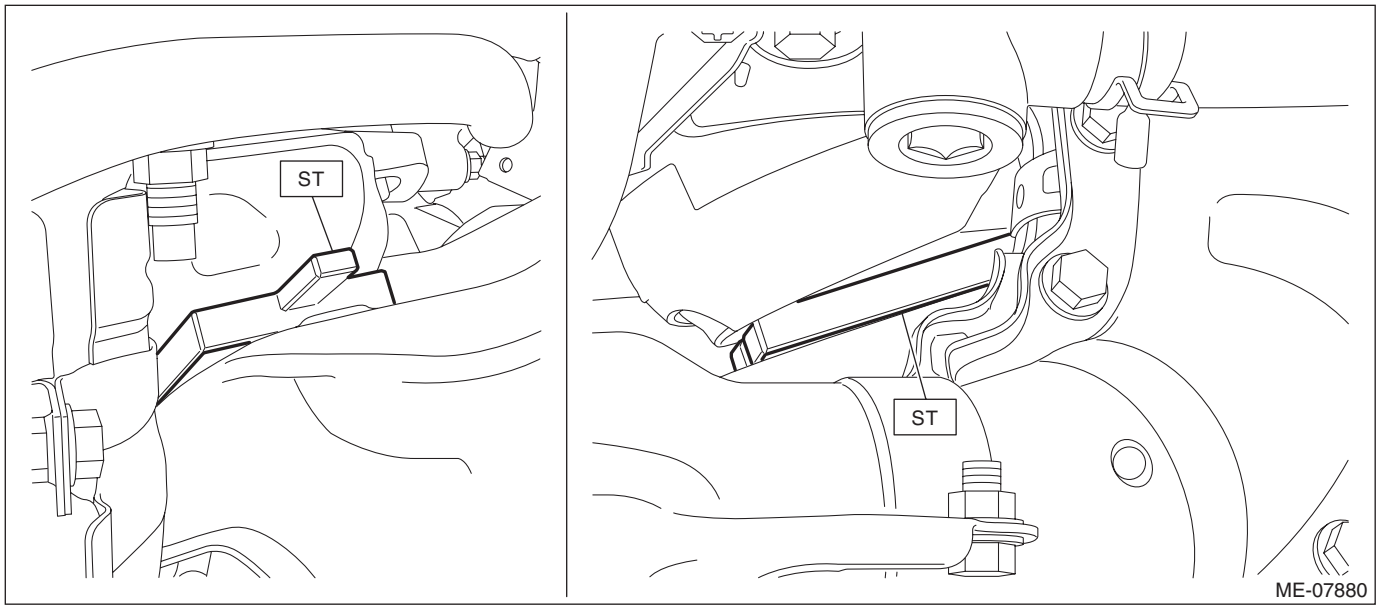

(17) Remove the lifting device and wire ropes.

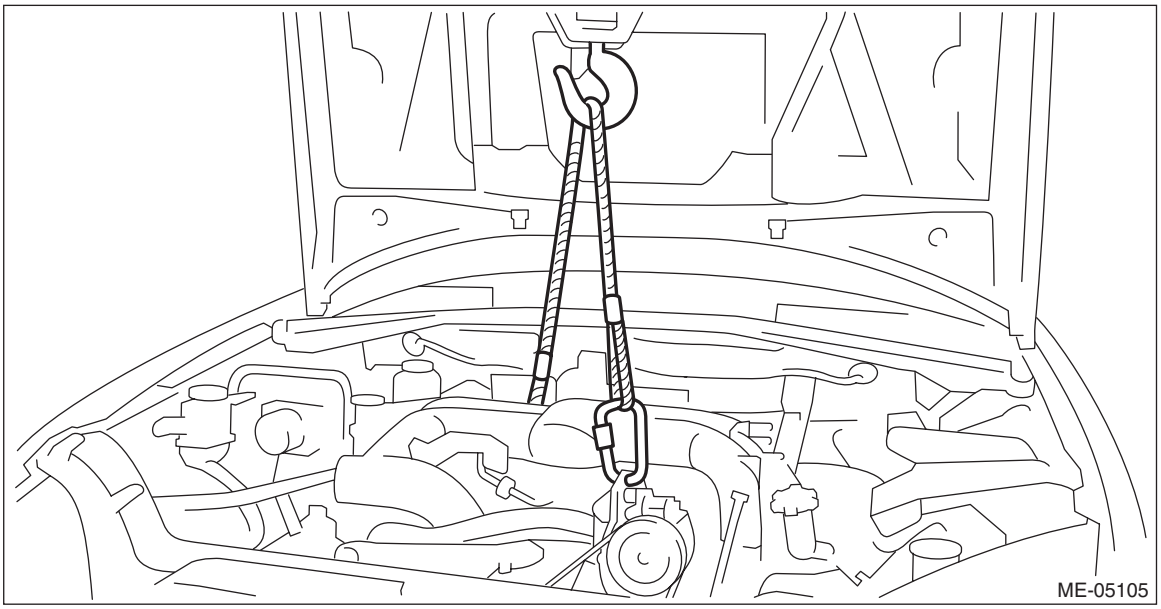

2) Remove the side engine oil cooler pipe assembly. <Ref. to LU(w/o STI)-35, SIDE ENGINE OIL COOLER PIPE, REMOVAL, Engine Oil Cooler Pipe.>

3) Remove the #2 ignition coil and the #4 ignition coil. <Ref. to IG(w/o STI)-11, REMOVAL, Ignition Coil.>

4) Remove the connector from the water pipe LH.

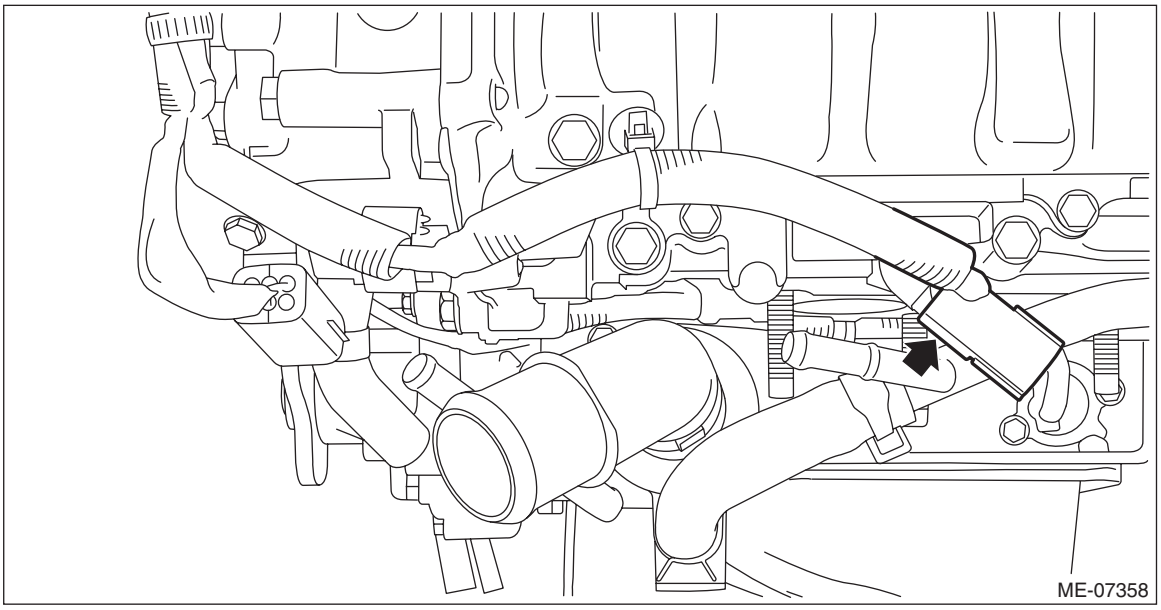

5) Remove the rocker cover LH.

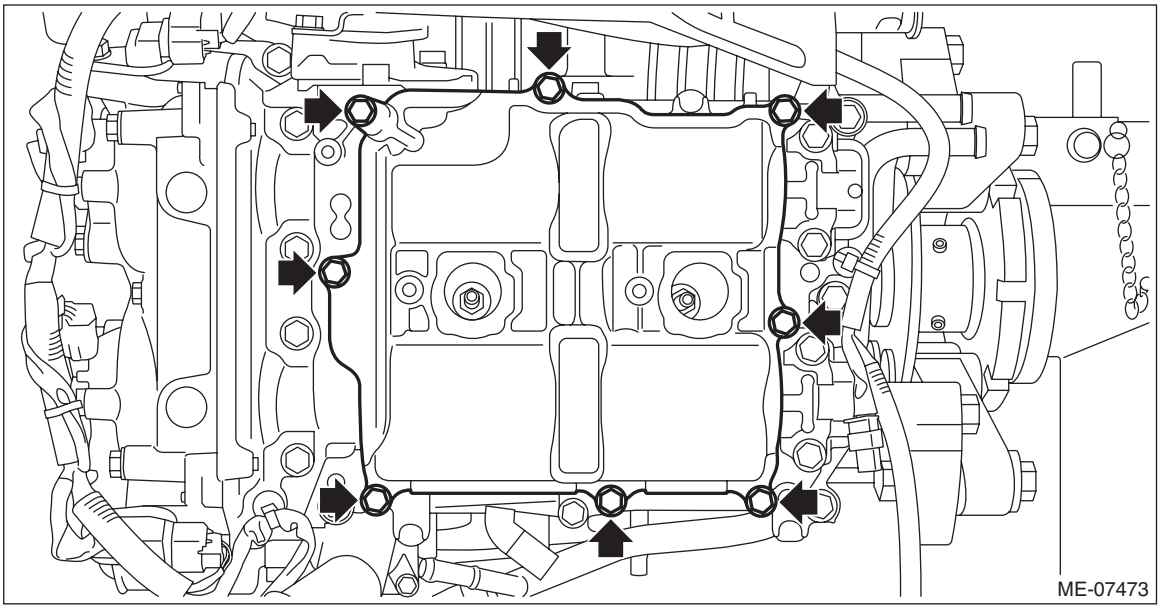

6) Remove the rocker cover gasket LH, #2 spark plug pipe gasket and #4 spark plug pipe gasket, and remove the liquid gasket.

CAUTION:
• When removing the liquid gasket from engine unit using scraper, use special care not to damage the cam lobe of camshaft LH.
• If the cam lobe of camshaft LH interferes, turn the crankshaft to the position where the scraper does not touch.

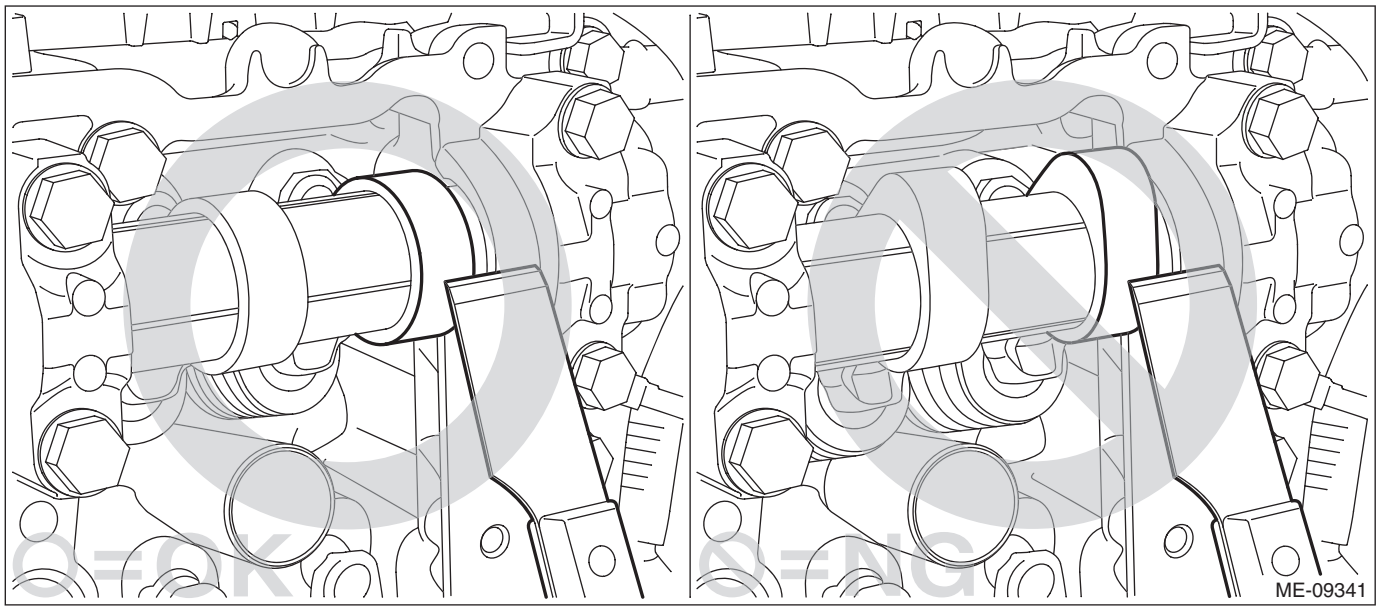

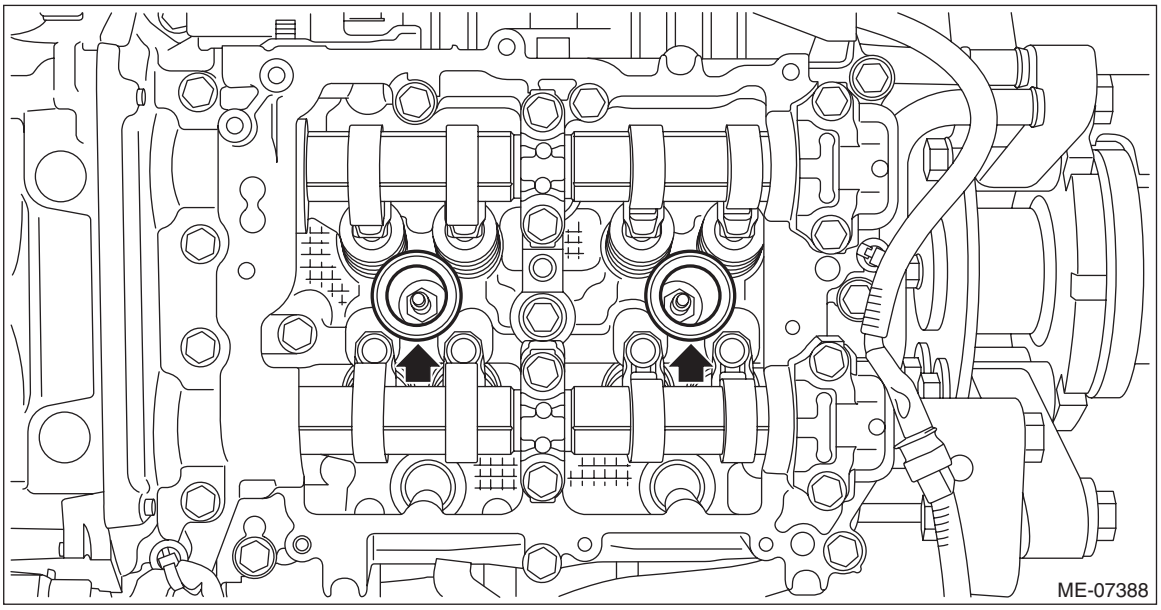

B: INSTALLATION

1. ROCKER COVER RH

1) Install the #1 spark plug pipe gasket and #3 spark plug pipe gasket to the #1 spark plug pipe and #3 spark plug pipe.

NOTE:
- Use a new #1 spark plug pipe gasket and #3 spark plug pipe gasket.
- Apply a light coat of engine oil to the #1 spark plug pipe gasket and #3 spark plug pipe gasket, and insert them onto the spark plug pipe edge (A).

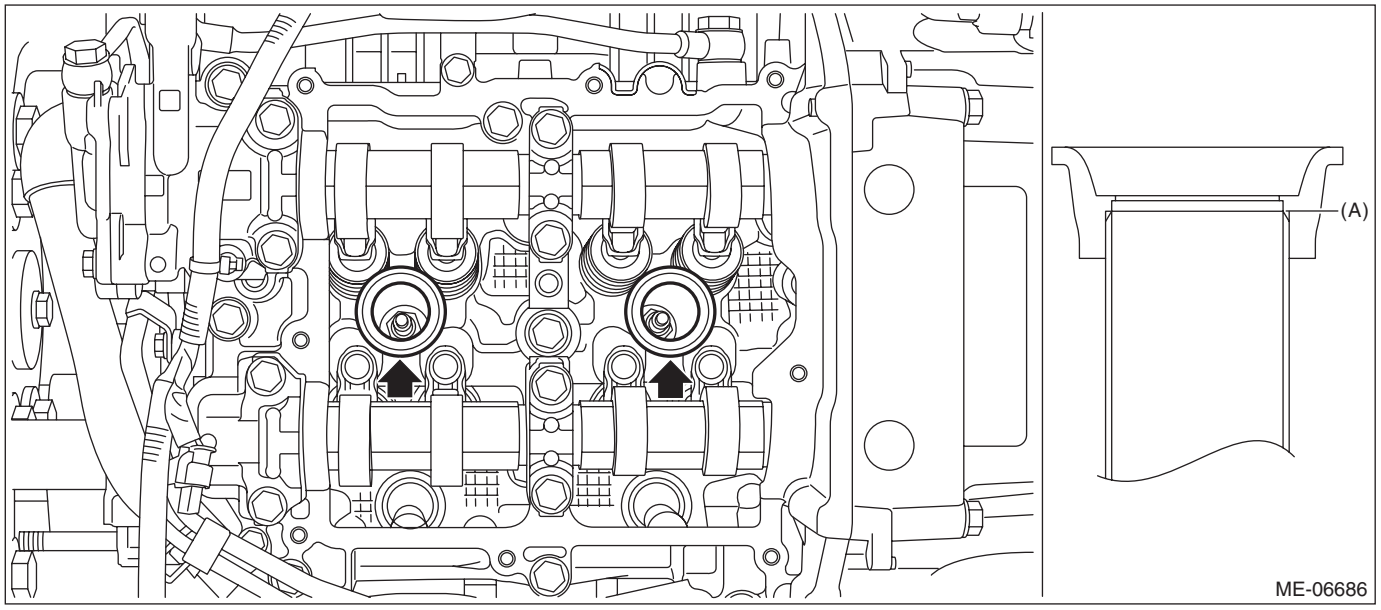

2) Install the rocker cover gasket RH to the rocker cover RH.

NOTE:
Use a new rocker cover gasket RH.

3) Apply liquid gasket to the mating surface of rocker cover RH as shown in the figure.

NOTE:
- Before applying liquid gasket, degrease the old liquid gasket seal surface of the engine.
- Be careful not to allow liquid gasket to be squeezed out from rocker cover RH.
- Install within 5 min. after applying liquid gasket.

Liquid gasket:
THREE BOND 1217G (Part No. K0877Y0100), THREE BOND 1217H or equivalent

Liquid gasket applying diameter:
3±1 mm (0.1181±0.0394 in)

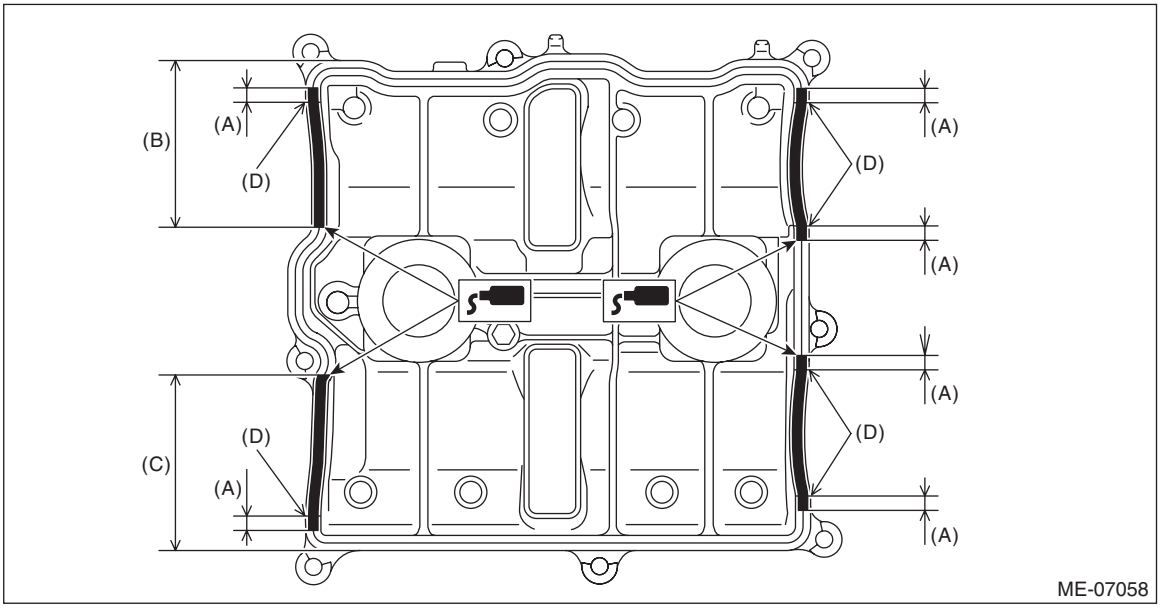

(A) 10 mm (0.394 in) or more
(B) 68 mm (2.677 in) or more
(C) 70.7 mm (2.783 in) or more
(D) Arch starting point

4) Set the rocker cover RH, and tighten the bolts in numerical order as shown in the figure.

Tightening torque:
6.4 N·m (0.7 kgf-m, 4.7 ft-lb)

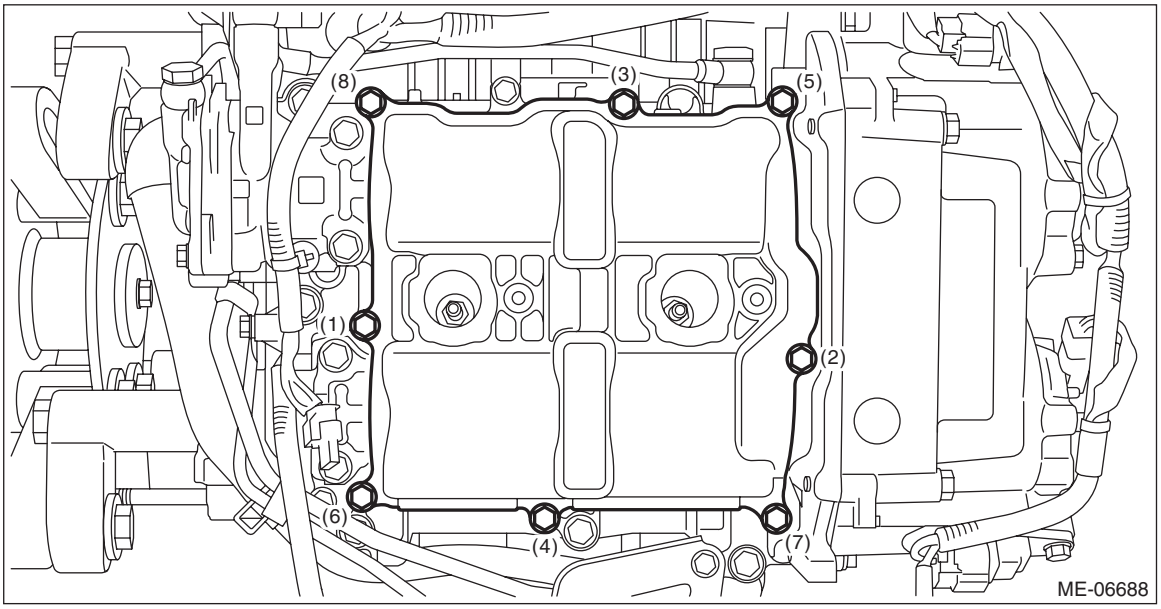

5) Install the #1 ignition coil and the #3 ignition coil. <Ref. to IG(w/o STI)-11, INSTALLATION, Ignition Coil.>
6) When working on the vehicle

NOTE:
When working on the vehicle, perform the following steps also.
(1) Install the air cleaner case. <Ref. to IN(w/o STI)-16, INSTALLATION, Air Cleaner Case.>

2. ROCKER COVER LH

1) Install the #2 spark plug pipe gasket and #4 spark plug pipe gasket to the #2 spark plug pipe and #4 spark plug pipe.

NOTE:
- Use a new #2 spark plug pipe gasket and #4 spark plug pipe gasket.
- Apply a light coat of engine oil to the #2 spark plug pipe gasket and #4 spark plug pipe gasket, and insert them onto the spark plug pipe edge (A).

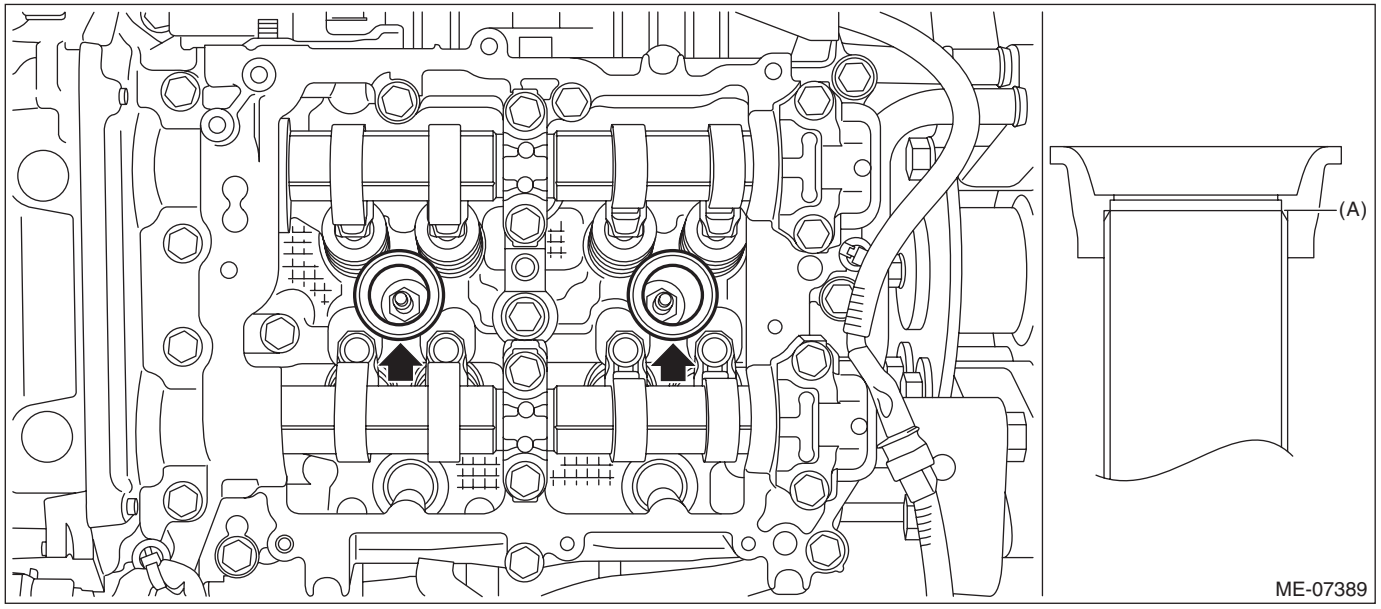

2) Install the rocker cover gasket LH to the rocker cover LH.

NOTE:
Use a new rocker cover gasket LH.

3) Apply liquid gasket to the mating surface of rocker cover LH as shown in the figure.

NOTE:
- Before applying liquid gasket, degrease the old liquid gasket seal surface of the engine.
- Be careful not to allow liquid gasket to be squeezed out from rocker cover LH.
- Install within 5 min. after applying liquid gasket.

Liquid gasket:
THREE BOND 1217G (Part No. K0877Y0100), THREE BOND 1217H or equivalent

Liquid gasket applying diameter:
3±1 mm (0.1181±0.0394 in)

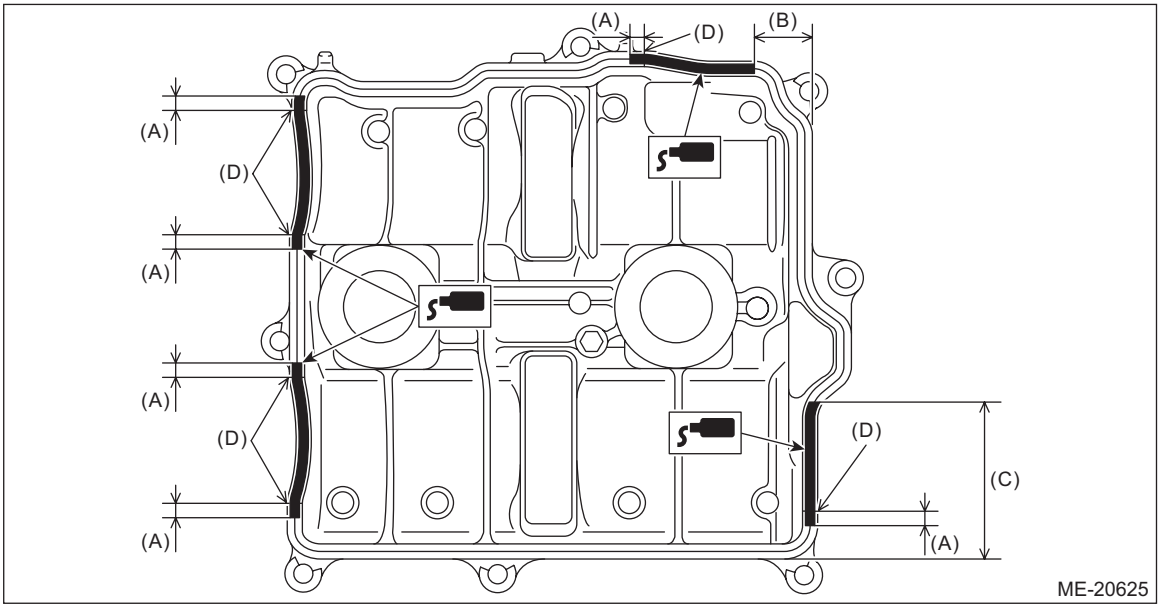

(A) 10 mm (0.394 in) or more
(B) 18.8 mm (0.7402 in) or less
(C) 63 mm (2.480 in) or more
(D) Arch starting point

4) Set the rocker cover LH, and tighten the bolts in numerical order as shown in the figure.

Tightening torque:
6.4 N·m (0.7 kgf-m, 4.7 ft-lb)

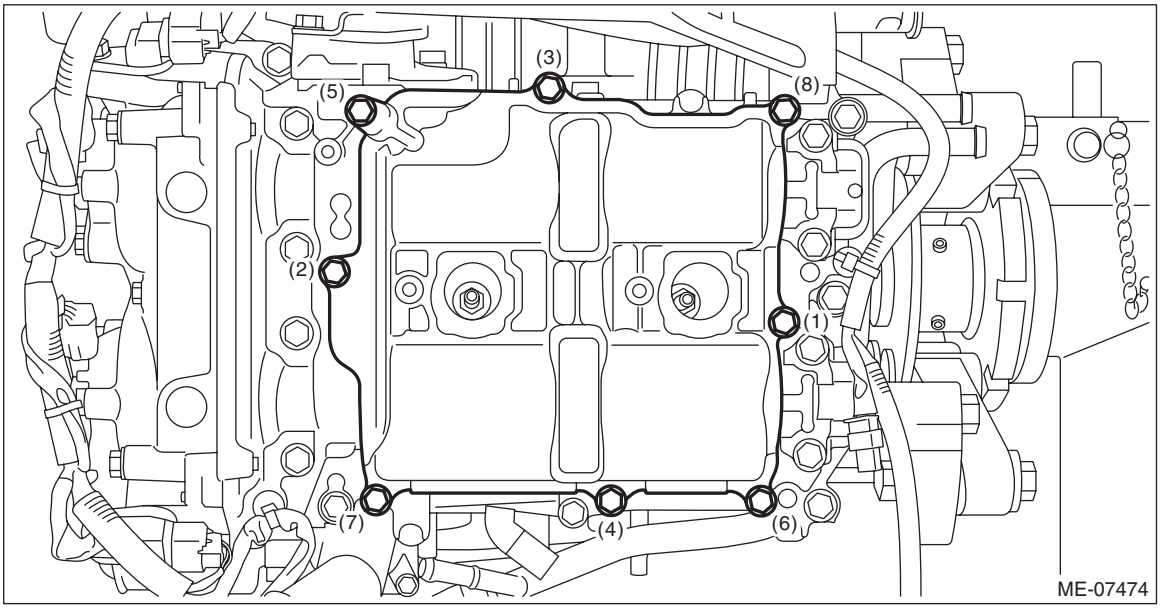

5) Connect the connector to the water pipe LH.

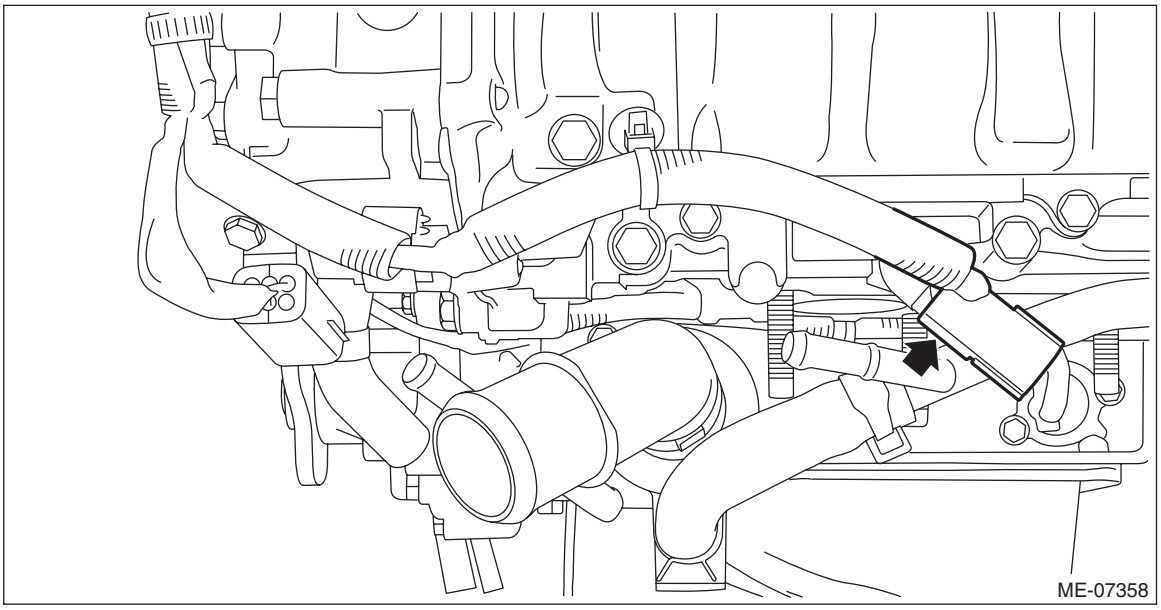

6) Install the #2 ignition coil and the #4 ignition coil. <Ref. to IG(w/o STI)-11, INSTALLATION, Ignition Coil.>
7) Install the side engine oil cooler pipe assembly. <Ref. to LU(w/o STI)-37, SIDE ENGINE OIL COOLER PIPE, INSTALLATION, Engine Oil Cooler Pipe.>
8) When working on the vehicle

NOTE:
When working on the vehicle, perform the following steps also.
(1) Support the engine with a lifting device and wire ropes.

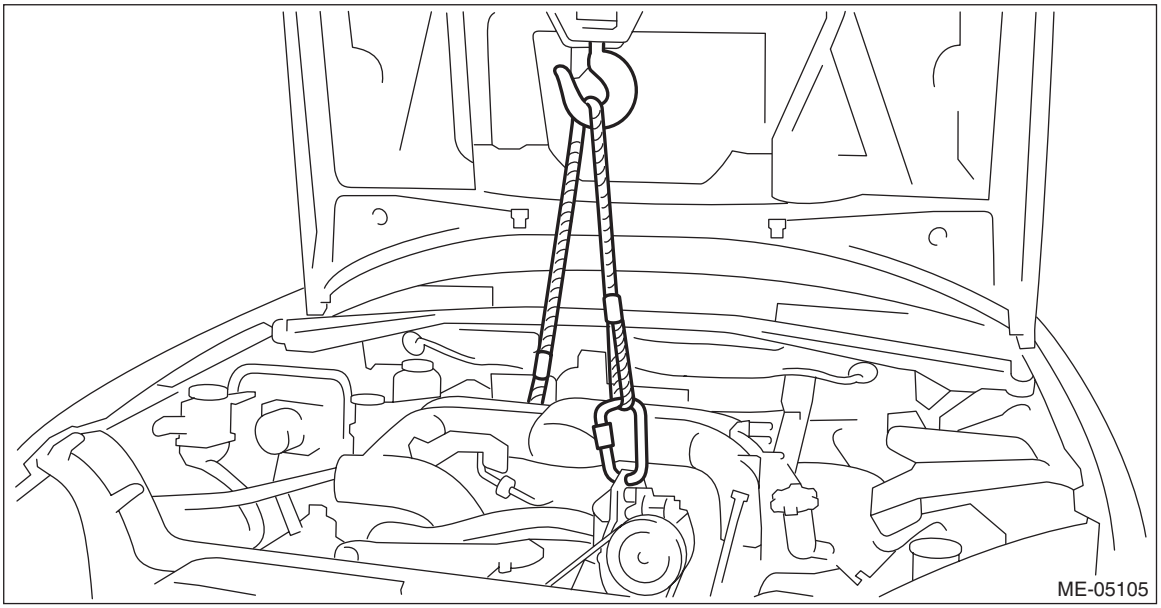

(2) Lift the engine a little, and remove the ST.

CAUTION:
When lifting up the engine, pay attention to the clearance of each part and be careful not to lift the engine too much, in order to prevent damaging the vehicle.
ST 18632AA030 STAND ASSY

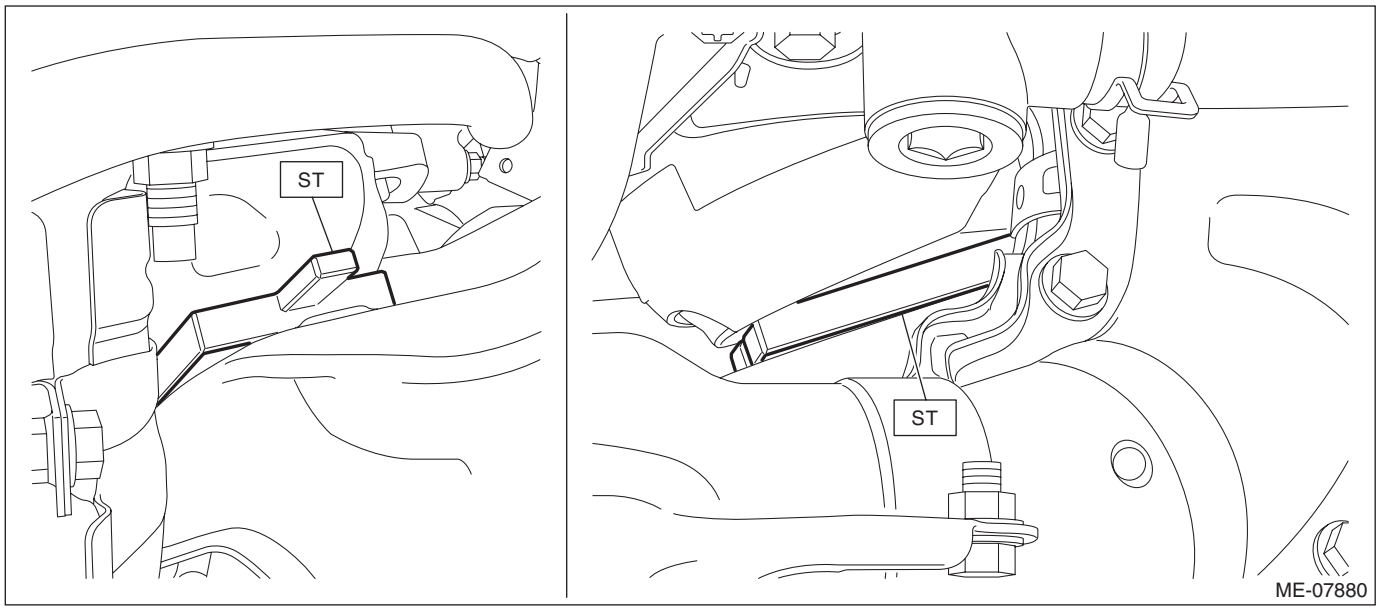

(3) Lower the engine and remove the lifting device and wire ropes.

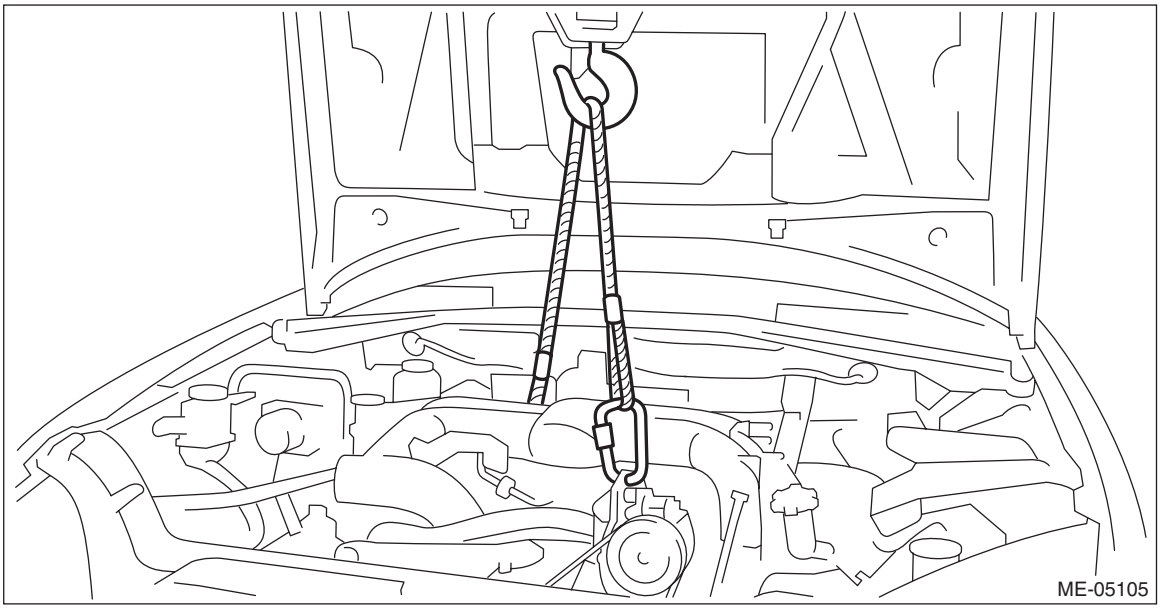

(4) Install the pitching stopper.

Tightening torque:
T1: 50 N·m (5.1 kgf-m, 36.9 ft-lb)
T2: 58 N·m (5.9 kgf-m, 42.8 ft-lb)

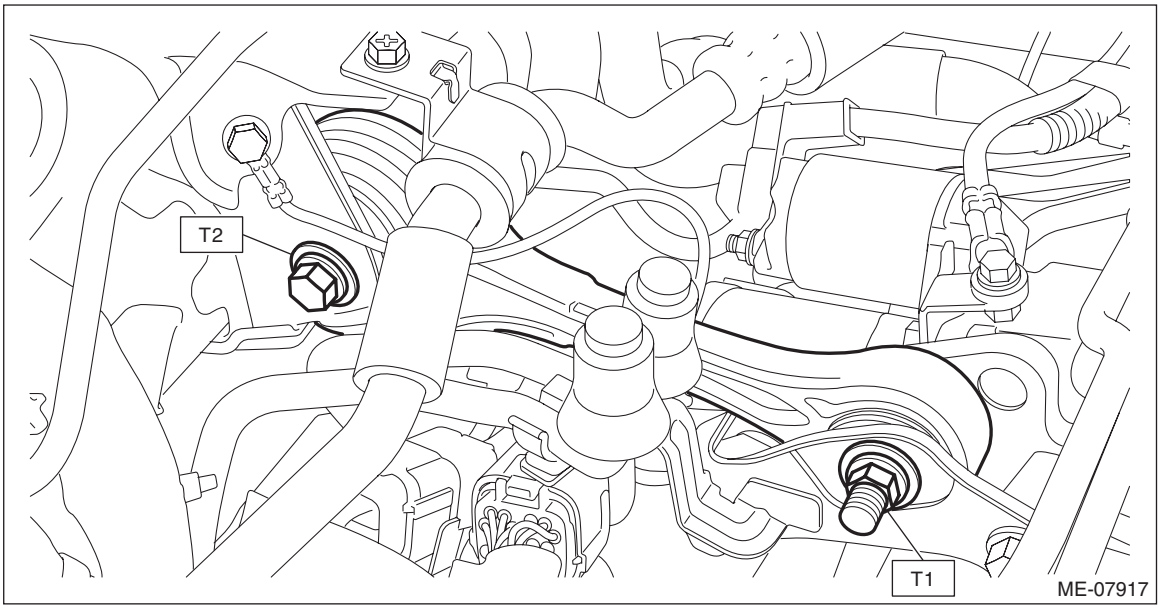

(5) Connect the connector to the pressure switch (triple pressure switch).

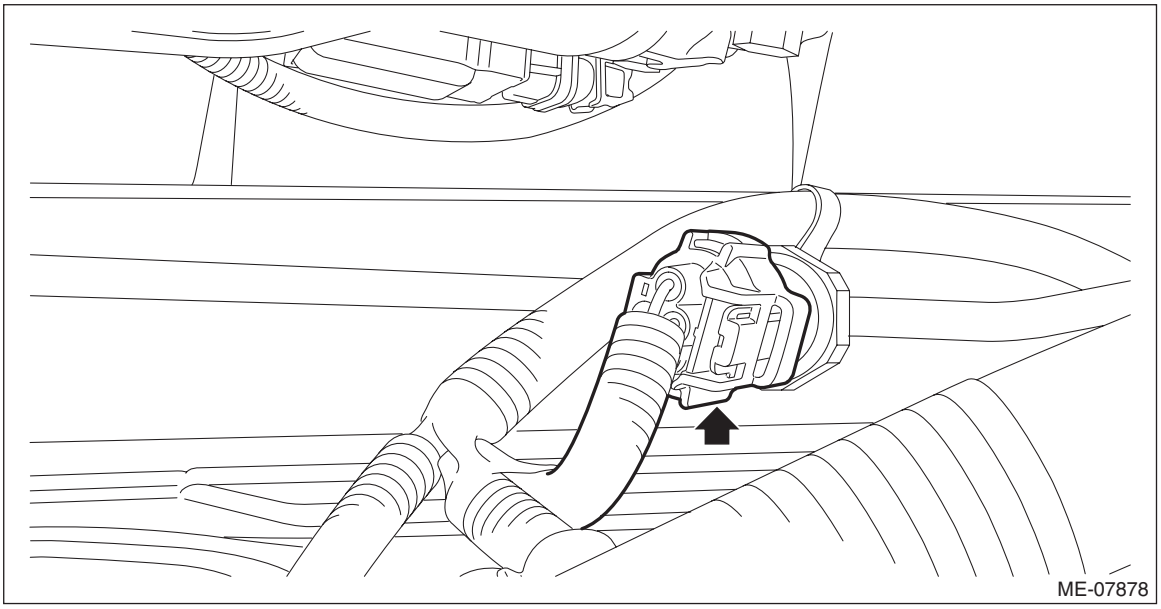

(6) Install the fuel pipe protector to the high-pressure fuel pump case and intake manifold, and secure the generator cord to the fuel pipe protector using the clip (A).

Tightening torque:
19 N·m (1.9 kgf-m, 14.0 ft-lb)

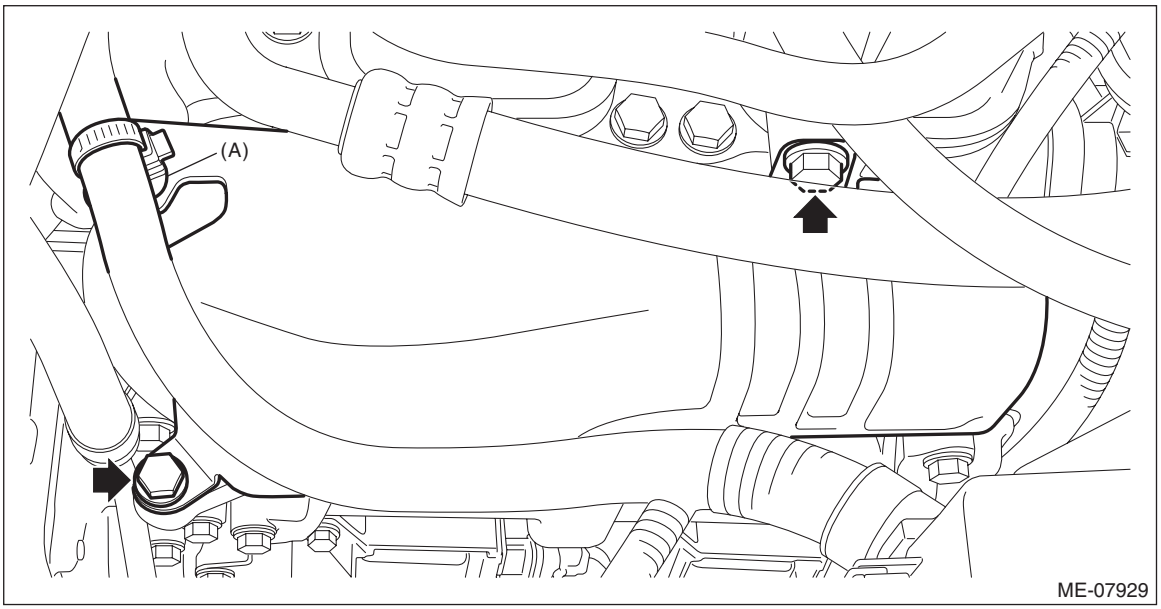

(7) Install the intercooler. <Ref. to IN(w/o STI)-45, INSTALLATION, Intercooler.>
(8) Insert the engine control module (ECM) to the bracket.

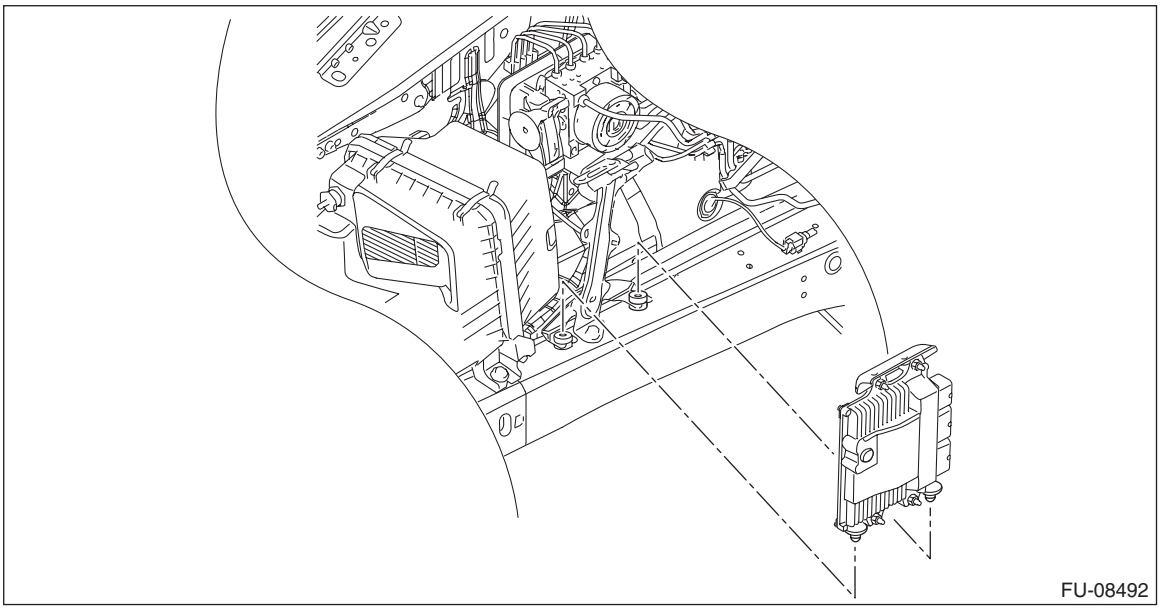

(9) Install the bolt which secures the engine control module (ECM) to the bracket, and then secure the engine harness and bulkhead harness to the bracket with clip (A) and clip (B).

Tightening torque:
7.5 N·m (0.8 kgf-m, 5.5 ft-lb)

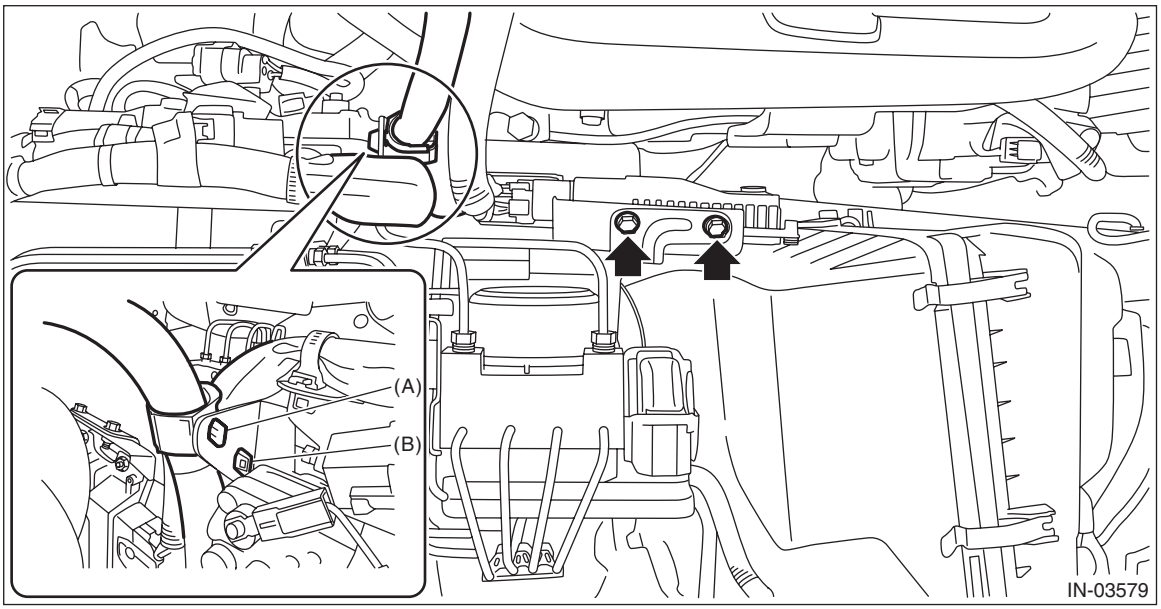

(10) Lift up the vehicle.
(11) Install the nuts which hold the engine mounting to the front crossmember.

NOTE:
- Make sure that locators (a) of the engine mounting are securely inserted.
- Use a new nut.

Tightening torque:
60 N·m (6.1 kgf-m, 44.3 ft-lb)

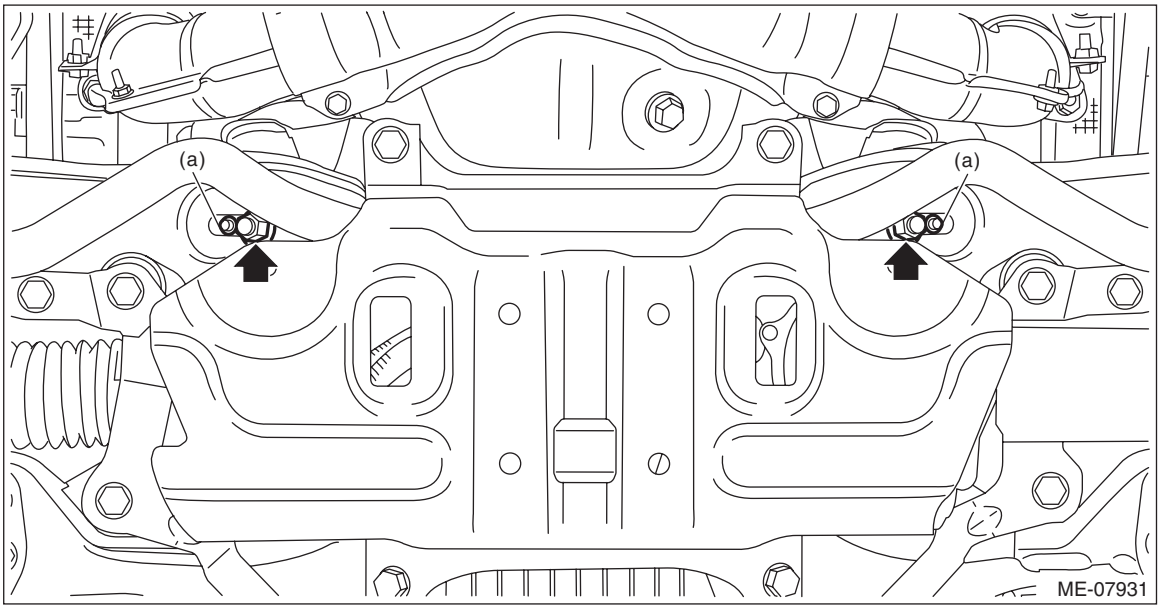

(12) Install the center exhaust pipe. <Ref. to EX(w/o STI)-37, INSTALLATION, Center Exhaust Pipe.>
(13) Lower the vehicle.
(14) Install the air intake duct. <Ref. to IN(w/o STI)-26, INSTALLATION, Air Intake Duct.>
(15) Install the battery. <Ref. to SC(w/o STI)-50, INSTALLATION, Battery.>
(16) Fill engine coolant. <Ref. to CO(w/o STI)-14, FILLING OF ENGINE COOLANT, REPLACEMENT, Engine Coolant.>

(17) Install the collector cover. <Ref. to IN(w/o STI)-10, INSTALLATION, Collector Cover.>
(18) Set the front hood to the normal position. <Ref. to NT-23, FRONT HOOD DAMPER STAY, NOTE, Note.>
(19) Install the striker - front hood. <Ref. to EB-15, ASSEMBLY, Front Hood.>
(20) Close the front hood.

C: INSPECTION

Check that the rocker cover does not have deformation, cracks and any other damage.

19.Camshaft

A: REMOVAL

1. CAMSHAFT RH

The camshaft RH and cam carrier are designed as removing as a unit. Refer to “Cam Carrier” for removal procedures of camshaft RH. <Ref. to ME(w/o STI)-164, CAM CARRIER RH, REMOVAL, Cam Carrier.> <Ref. to ME(w/o STI)-192, CAM CARRIER RH, DISASSEMBLY, Cam Carrier.>

2. CAMSHAFT LH

The camshaft LH and cam carrier are designed as removing as a unit. Refer to “Cam Carrier” for removal procedures of camshaft LH. <Ref. to ME(w/o STI)-167, CAM CARRIER LH, REMOVAL, Cam Carrier.> <Ref. to ME(w/o STI)-194, CAM CARRIER LH, DISASSEMBLY, Cam Carrier.>

B: INSTALLATION

1. CAMSHAFT RH

The camshaft RH and cam carrier are designed as installing as a unit. Refer to “Cam Carrier” for installation procedures of camshaft RH. <Ref. to ME(w/o STI)-195, CAM CARRIER RH, ASSEMBLY, Cam Carrier.> <Ref. to ME(w/o STI)-172, CAM CARRIER RH, INSTALLATION, Cam Carrier.>

2. CAMSHAFT LH

The camshaft LH and cam carrier are designed as installing as a unit. Refer to “Cam Carrier” for installation procedures of camshaft LH. <Ref. to ME(w/o STI)-198, CAM CARRIER LH, ASSEMBLY, Cam Carrier.> <Ref. to ME(w/o STI)-181, CAM CARRIER LH, INSTALLATION, Cam Carrier.>

20.Cam Carrier

A: REMOVAL

1. CAM CARRIER RH

1) Remove the engine from the vehicle. <Ref. to ME(w/o STI)-45, REMOVAL, Engine Assembly.>
2) Remove the chain cover. <Ref. to ME(w/o STI)-89, REMOVAL, Chain Cover.>
3) Remove the timing chain RH. <Ref. to ME(w/o STI)-111, TIMING CHAIN RH, REMOVAL, Timing Chain Assembly.>
4) Remove the rocker cover RH. <Ref. to ME(w/o STI)-144, ROCKER COVER RH, REMOVAL, Rocker Cover.>
5) Remove the clip holding the engine harness from cam carrier RH.

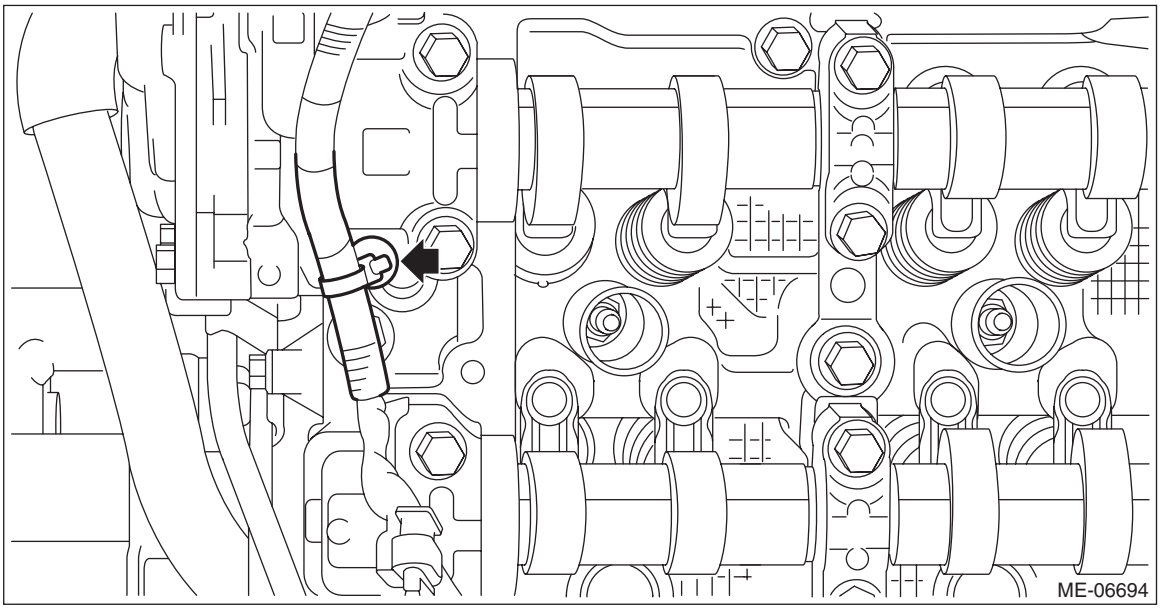

6) Remove the oil pipe assembly from the scavenge pump and cam carrier RH.

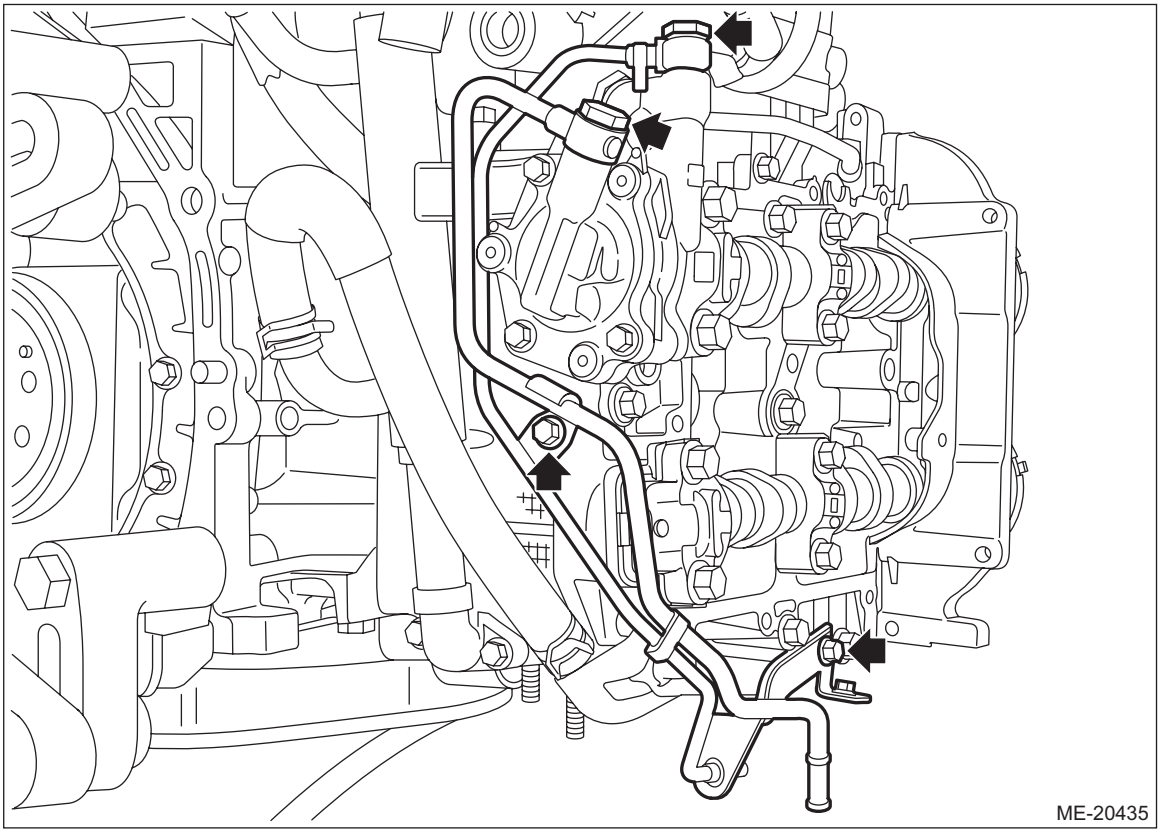

7) Disconnect the water pipe hose from oil pan upper and EGR cooler, and remove the water pipe assembly.

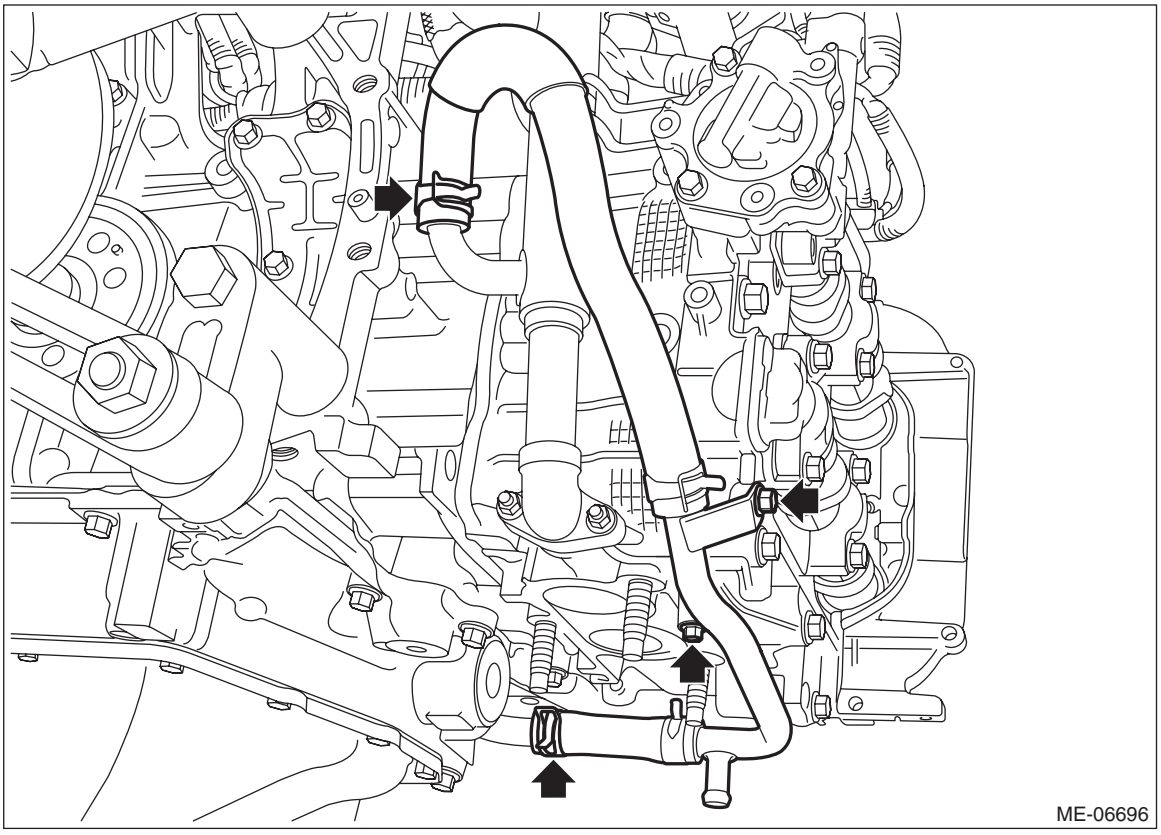

8) When disassembling the cam carrier RH

NOTE:
When disassembling the cam carrier RH, perform the following steps also.
(1) Remove the scavenge pump. <Ref. to LU(w/o STI)-39, REMOVAL, Scavenge Pump.>
(2) Remove the cam sprocket RH. <Ref. to ME(w/o STI)-133, CAM SPROCKET RH, REMOVAL, Cam Sprocket.>

9) Set the part so that the cam carrier RH is on the upper side.

10) Loosen the bolts holding the cam carrier RH equally, a little at a time in numerical sequence as shown in the figure and remove the cam carrier RH.

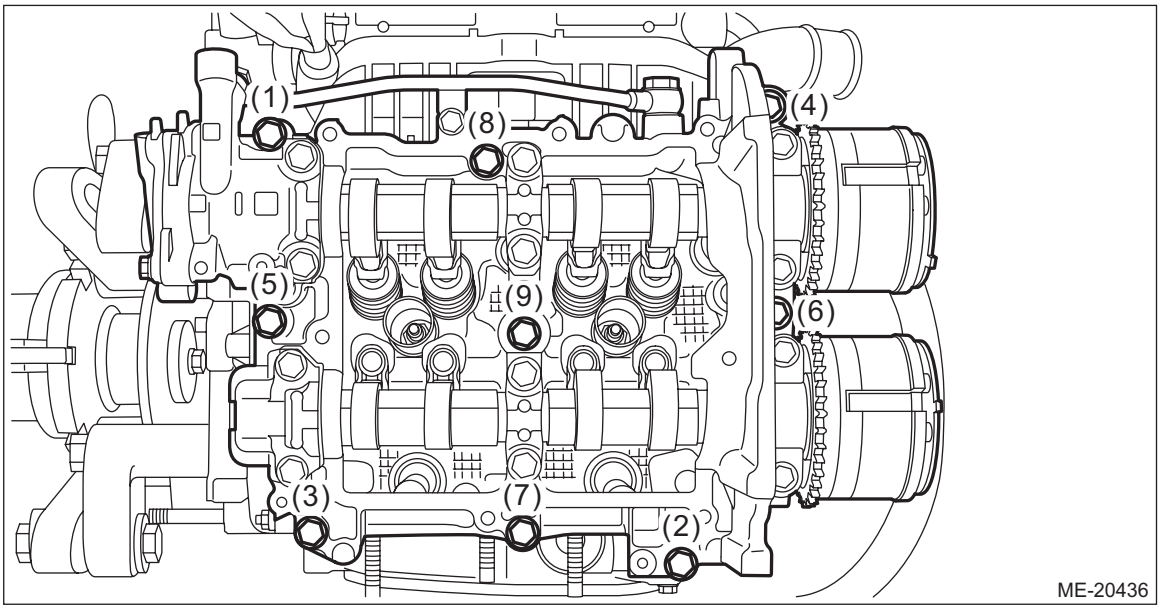

11) Remove the O-ring and the roller rocker arm from cylinder head RH.

NOTE:
Be careful not to confuse the roller rocker arms.

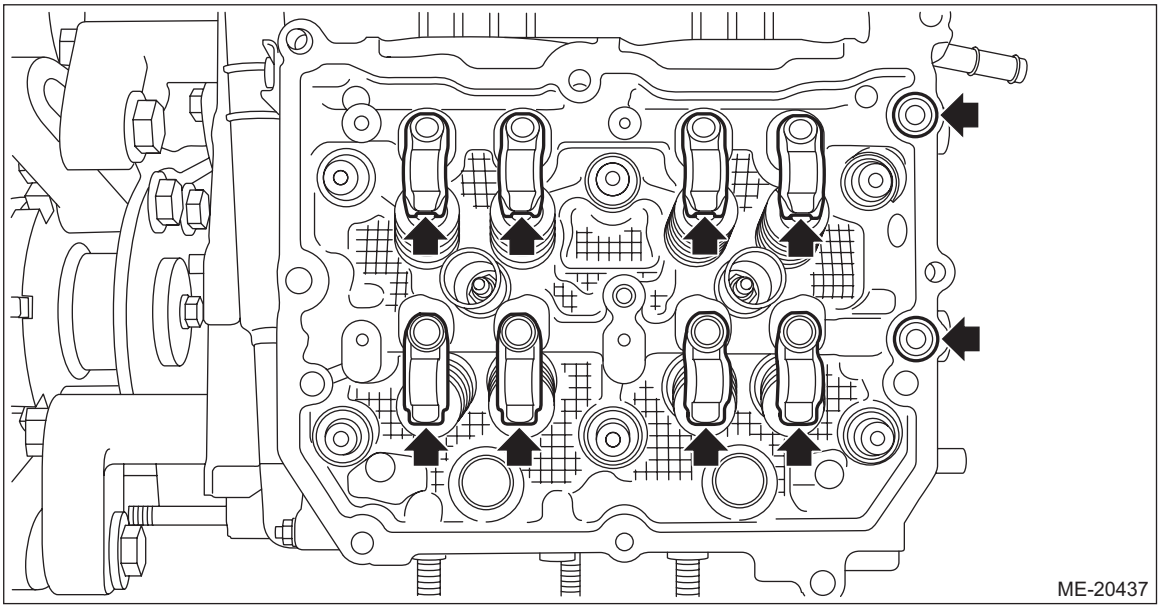

12) Remove the valve shim and the roller rocker arm pivot from cylinder head RH.

NOTE:
Be careful not to confuse the valve shim and the roller rocker arm pivot.

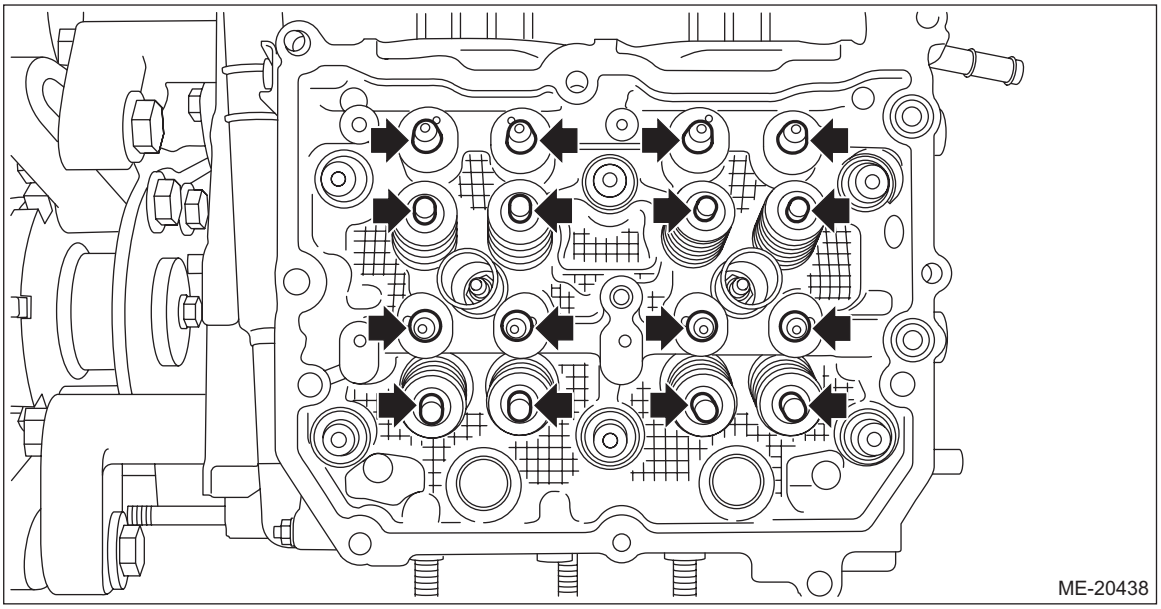

13) Remove the liquid gasket from cam carrier RH and cylinder head RH.

2. CAM CARRIER LH

1) Remove the engine from the vehicle. <Ref. to ME(w/o STI)-45, REMOVAL, Engine Assembly.>
2) Remove the chain cover. <Ref. to ME(w/o STI)-89, REMOVAL, Chain Cover.>
3) Remove the timing chain LH. <Ref. to ME(w/o STI)-114, TIMING CHAIN LH, REMOVAL, Timing Chain Assembly.>
4) Remove the intake manifold. <Ref. to FU(w/o STI)-18, REMOVAL, Intake Manifold.>
5) Remove the rocker cover LH. <Ref. to ME(w/o STI)-146, ROCKER COVER LH, REMOVAL, Rocker Cover.>
6) Remove the clip holding the engine harness from cam carrier LH.

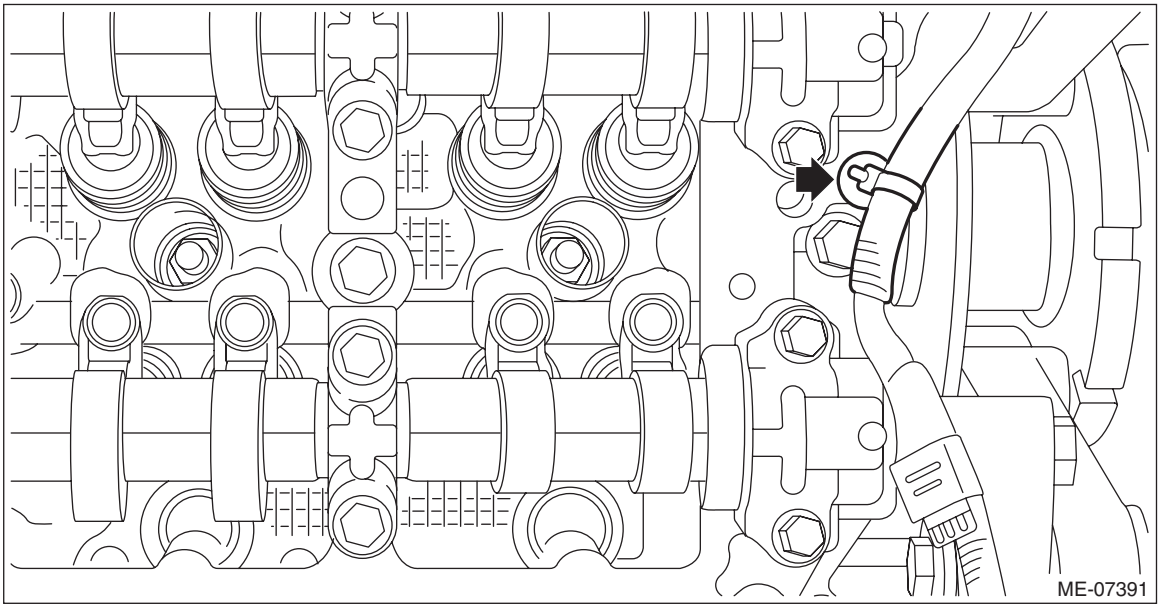

7) Remove the fuel pipe protector from the high-pressure fuel pump case.

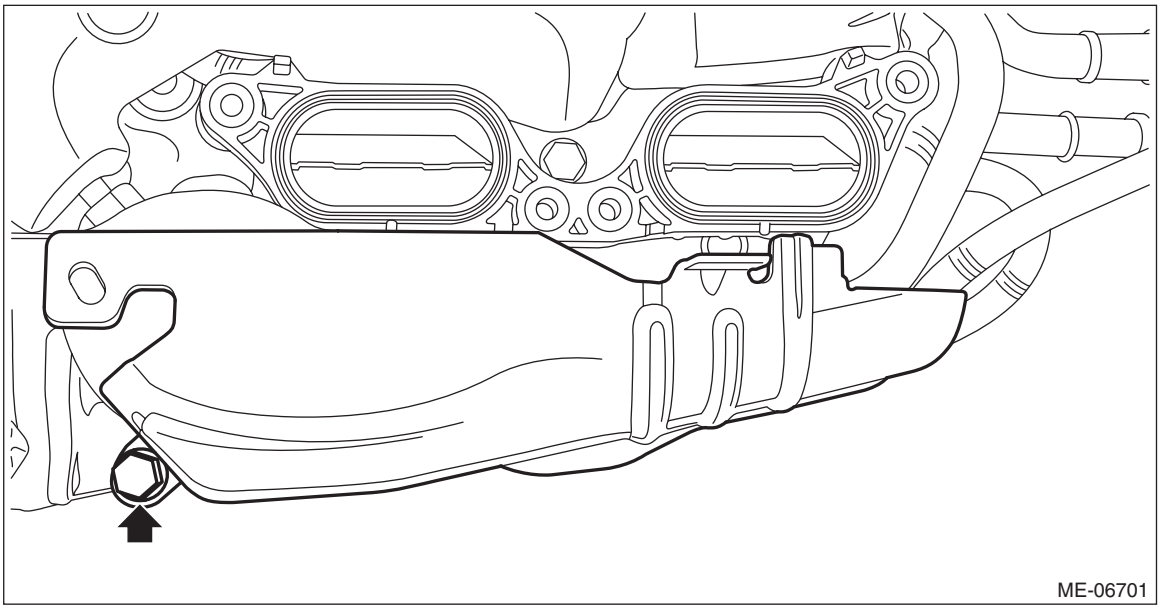

8) Remove the fuel pump insulator (A) from the high-pressure fuel pump, and then remove the fuel pipe insulator No. 1 (B) from the high-pressure fuel delivery pipe.

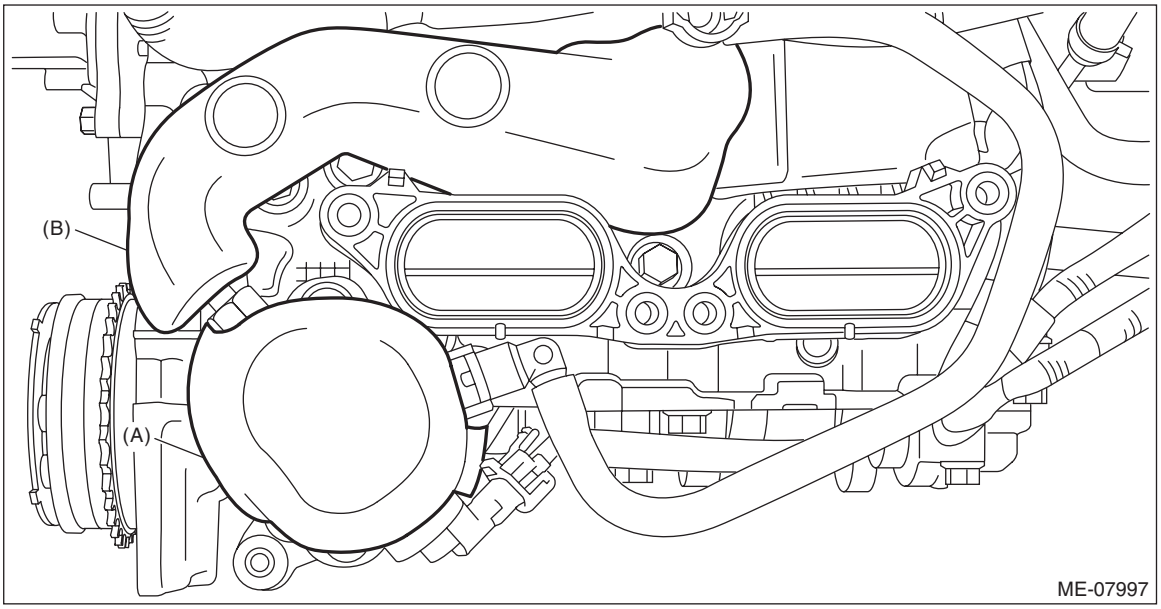

9) Disconnect the connector (A) from the high-pressure fuel pump, and remove the fuel delivery pipe from the high-pressure fuel pump.

NOTE:
Disconnect the quick connector as shown in the figure.

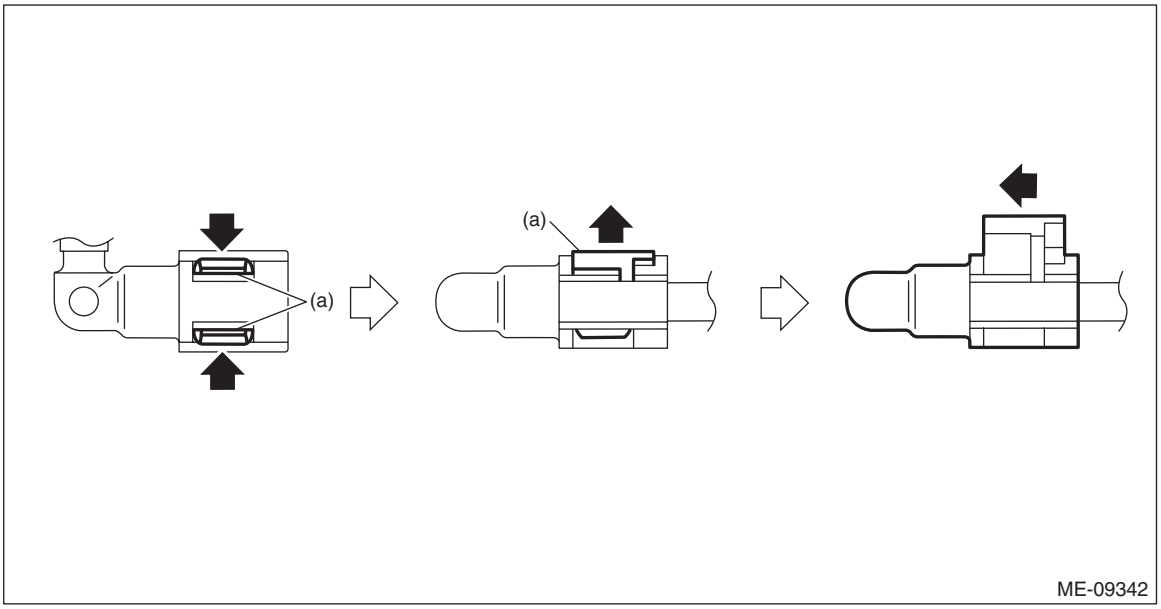

(a) Slider

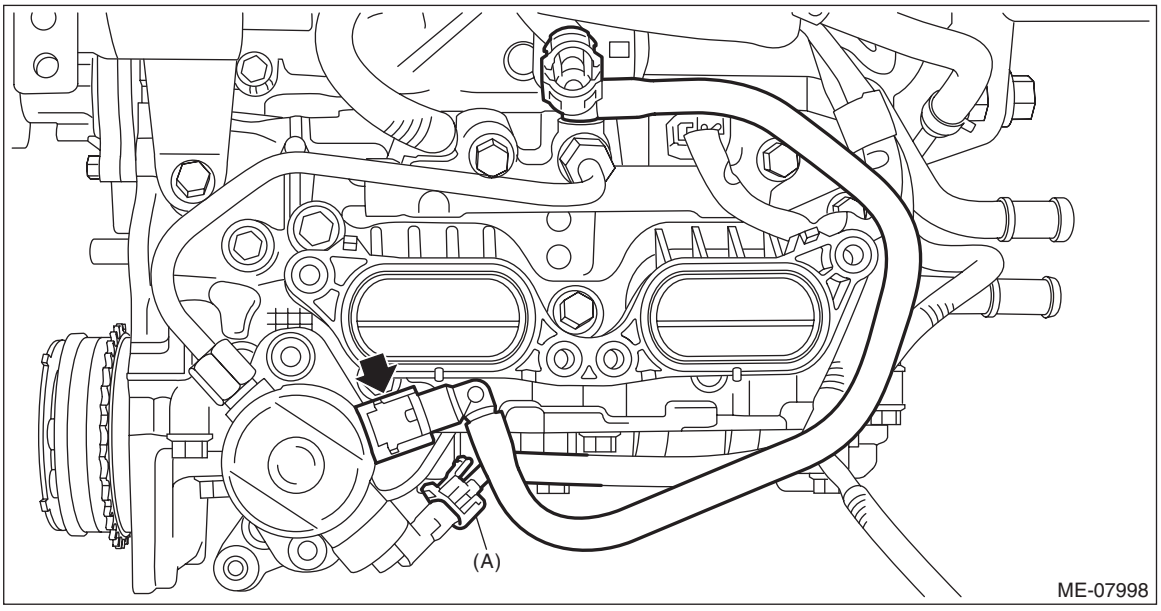

10) Remove the high-pressure fuel delivery pipe from the high-pressure fuel pump and fuel injector pipe.

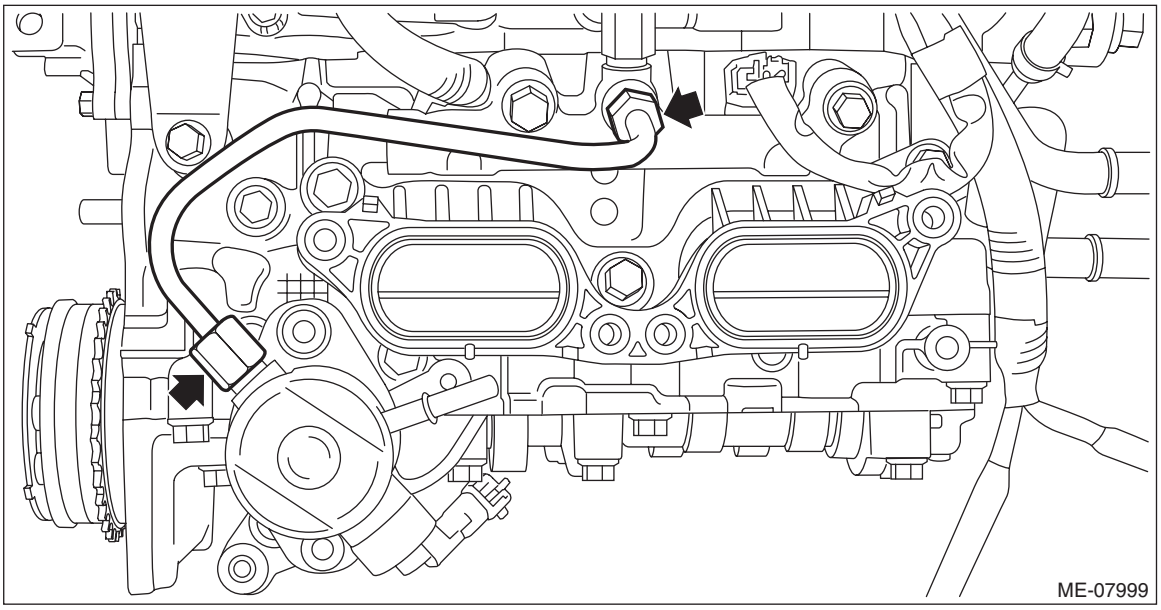

11) Disconnect the water pipe hose from oil pan upper, and remove the water pipe assembly.

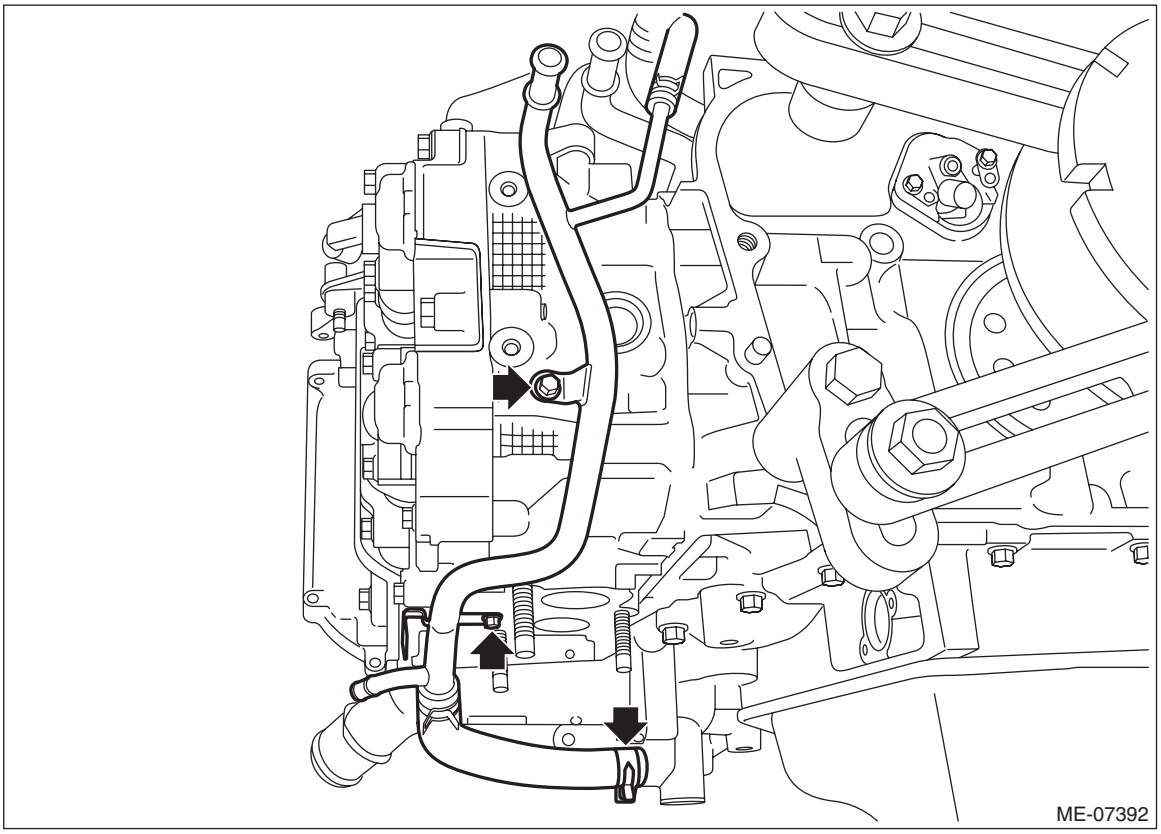

12) When disassembling the cam carrier LH

NOTE:
When disassembling the cam carrier LH, perform the following steps also.

(1) Remove the high-pressure fuel pump. <Ref. to FU(w/o STI)-69, REMOVAL, High Pressure Fuel Pump.>

(2) Remove the cam sprocket LH. <Ref. to ME(w/o STI)-134, CAM SPROCKET LH, REMOVAL, Cam Sprocket.>

13) Set the part so that the cam carrier LH is on the upper side.

14) Loosen the bolts holding the cam carrier LH equally, a little at a time in numerical sequence as shown in the figure and remove the cam carrier LH.

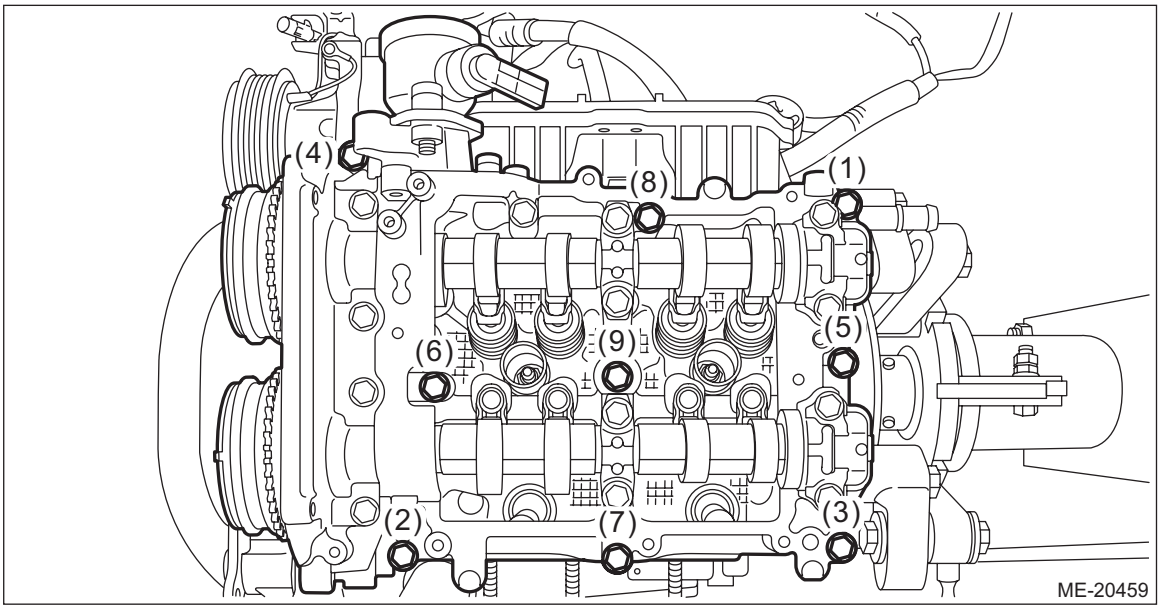

15) Remove the O-ring and the roller rocker arm from cylinder head LH.

NOTE:
Be careful not to confuse the roller rocker arms.

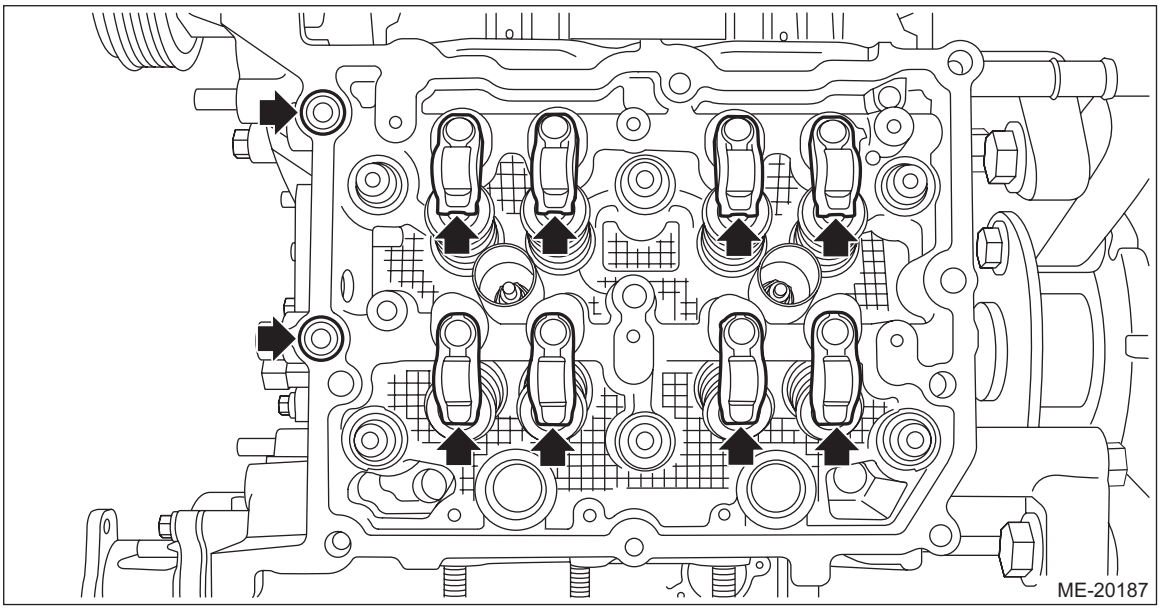

16) Remove the valve shim and the roller rocker arm pivot from cylinder head LH.

NOTE:
Be careful not to confuse the valve shim and the roller rocker arm pivot.

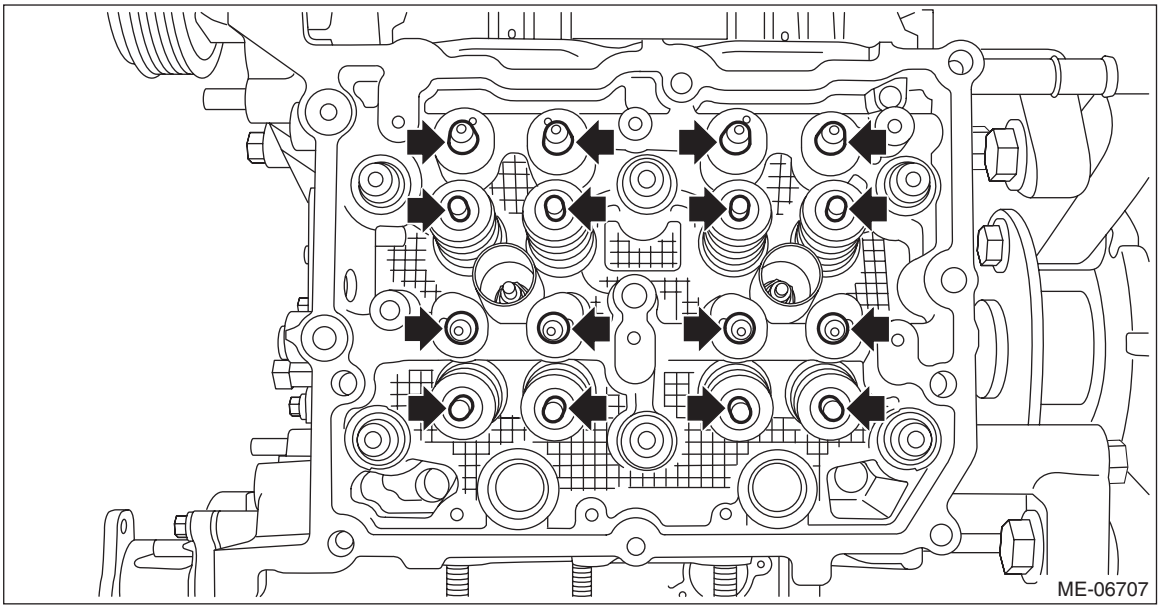

17) Remove the liquid gasket from cam carrier LH and cylinder head LH.

B: INSTALLATION

1. CAM CARRIER RH

1) Set the part so that the cylinder head RH is on the upper side.
2) Apply engine oil to the valve shim and the roller rocker arm pivot, and install the valve shim and the roller rocker arm pivot to the cylinder head RH.

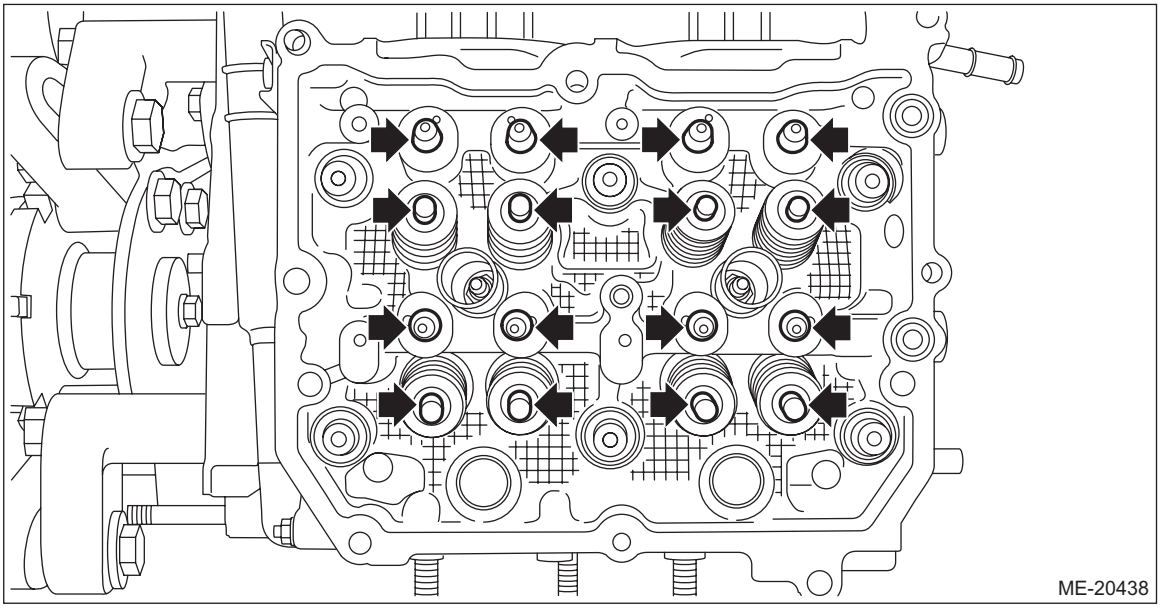

3) Apply engine oil to the O-ring and the roller rocker arm, and install the O-ring and the roller rocker arm to the cylinder head RH.

NOTE:
Use new O-rings.

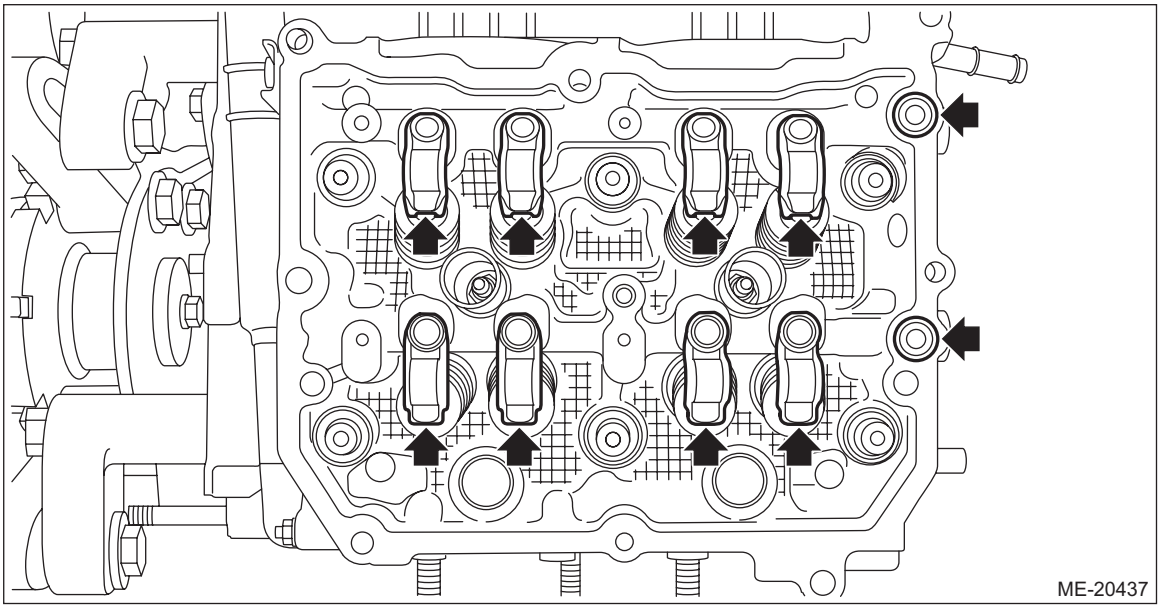

4) Apply liquid gasket to the mating surface of cam carrier RH as shown in the figure.

NOTE:
- Before applying liquid gasket, degrease the old liquid gasket seal surface of the cylinder head RH and cam carrier RH.
- Install within 5 min. after applying liquid gasket.

Liquid gasket:
THREE BOND 1217G (Part No. K0877Y0100), THREE BOND 1217H or equivalent

Liquid gasket applying diameter:
3±0.5 mm (0.1181±0.0197 in)

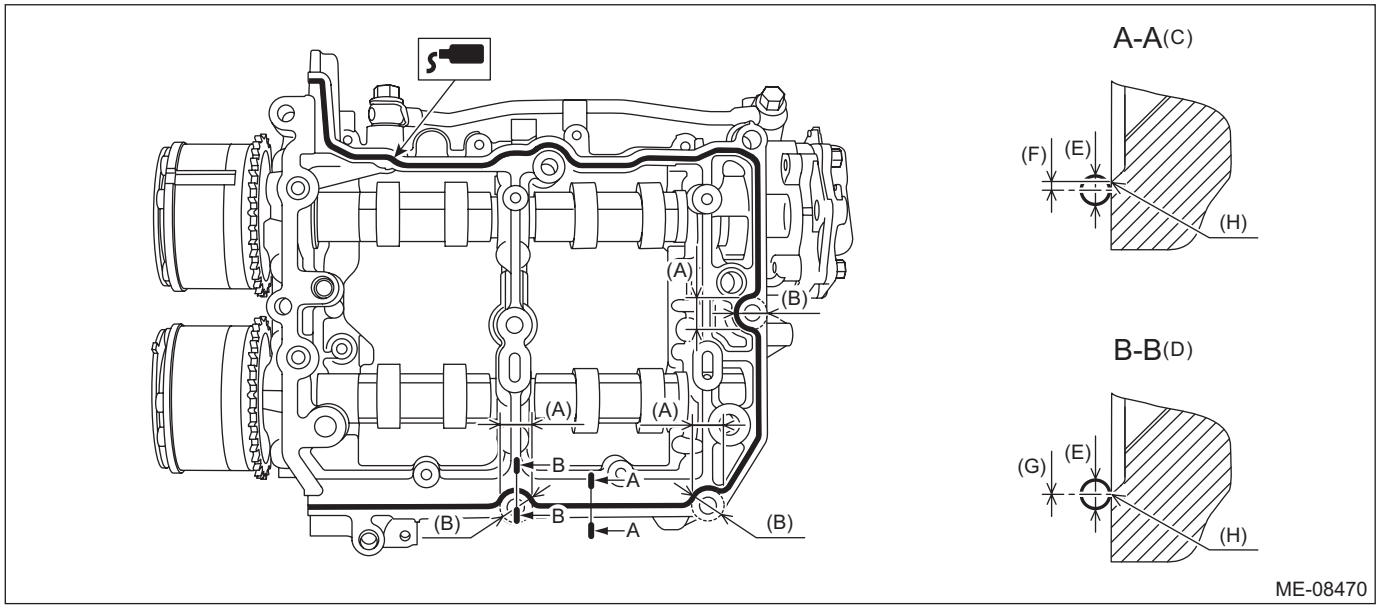

(A)	Range A	(D)	Liquid gasket applying position of mating surfaces of range A	(G)	0±0.5 mm (0±0.0197 in)
(B)	ϕ18 mm (0.7087 in)	(E)	ϕ3±0.5 mm (0.1181±0.0197 in)	(H)	Chamfer edge
(C)	Liquid gasket applying position of mating surfaces other than range A	(F)	1 mm (0.0394 in) or less		

5) Install the cam carrier RH to the cylinder head RH.
   (1) Mount the cam carrier RH, then tighten all bolts with a torque of 18 N·m (1.8 kgf-m, 13.3 ft-lb) in numerical order as shown in the figure.

NOTE:
Set the intake camshaft RH and the exhaust camshaft RH to the zero-lift position as shown in the figure.

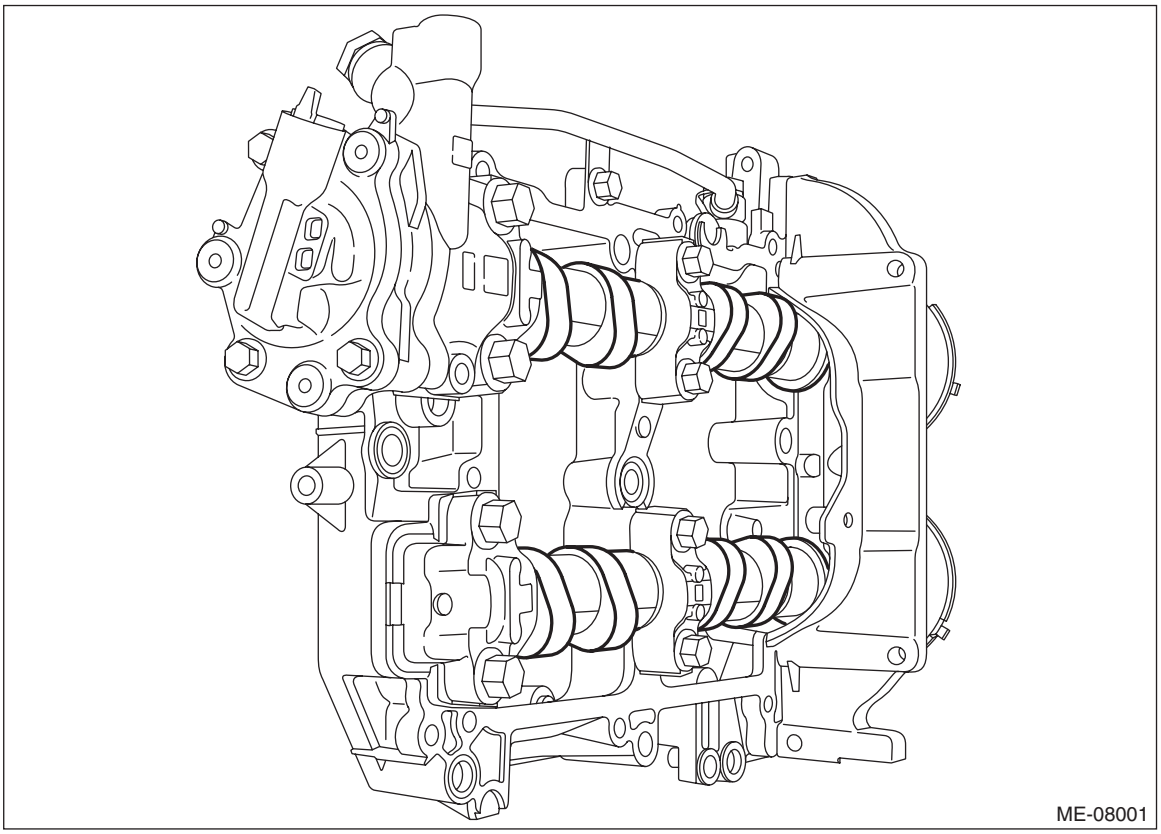
ME-08001

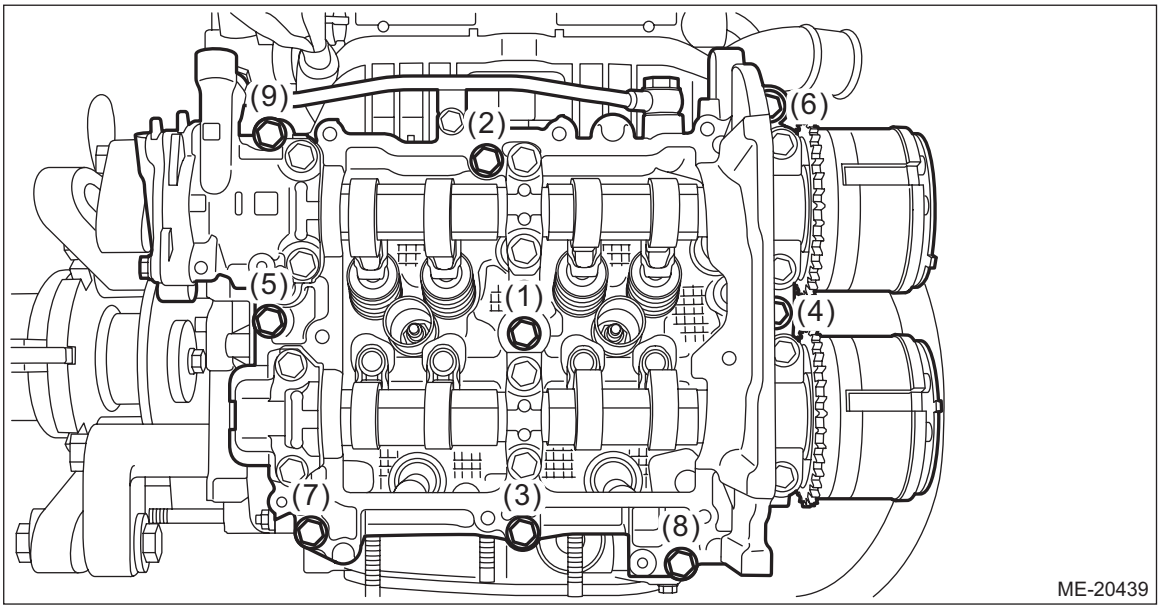

ME-20439

(2) Loosen the bolts (3 places) by 180° in numerical order as shown in the figure.

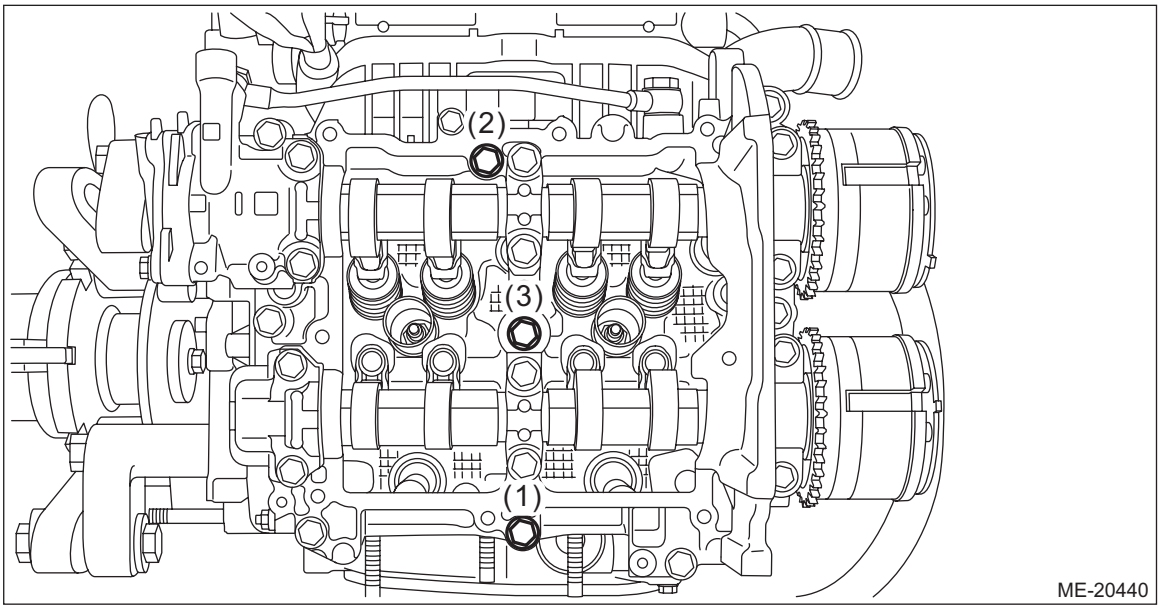

(3) Tighten the bolts (3 places) with a torque of 18 N·m (1.8 kgf-m, 13.3 ft-lb) in numerical order as shown in the figure.

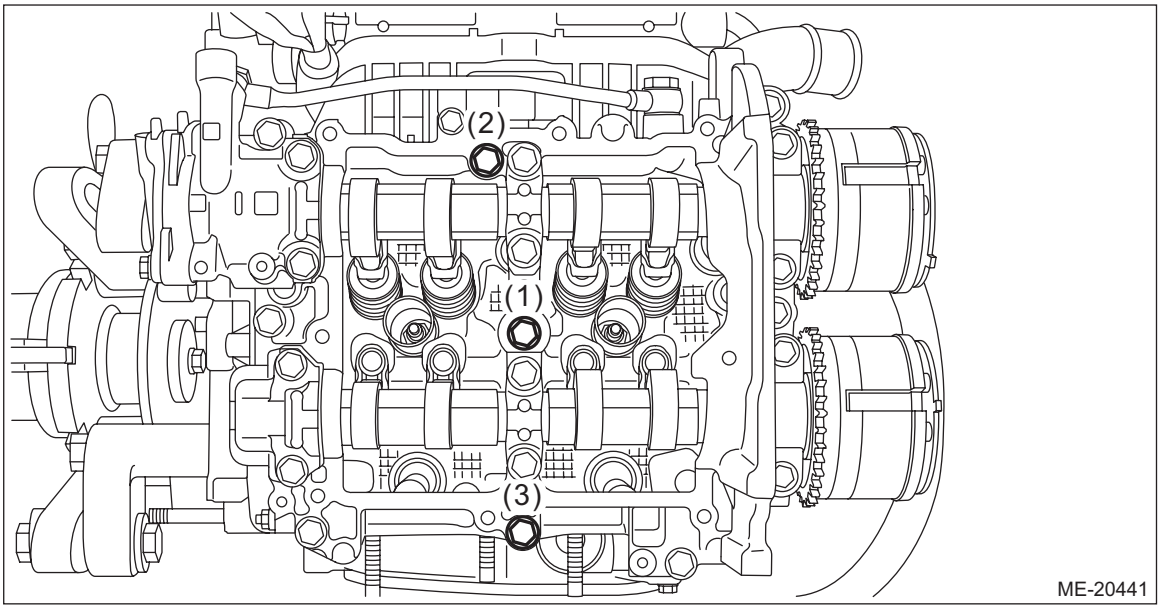

(4) Loosen the bolts (3 places) by 180° in numerical order as shown in the figure.

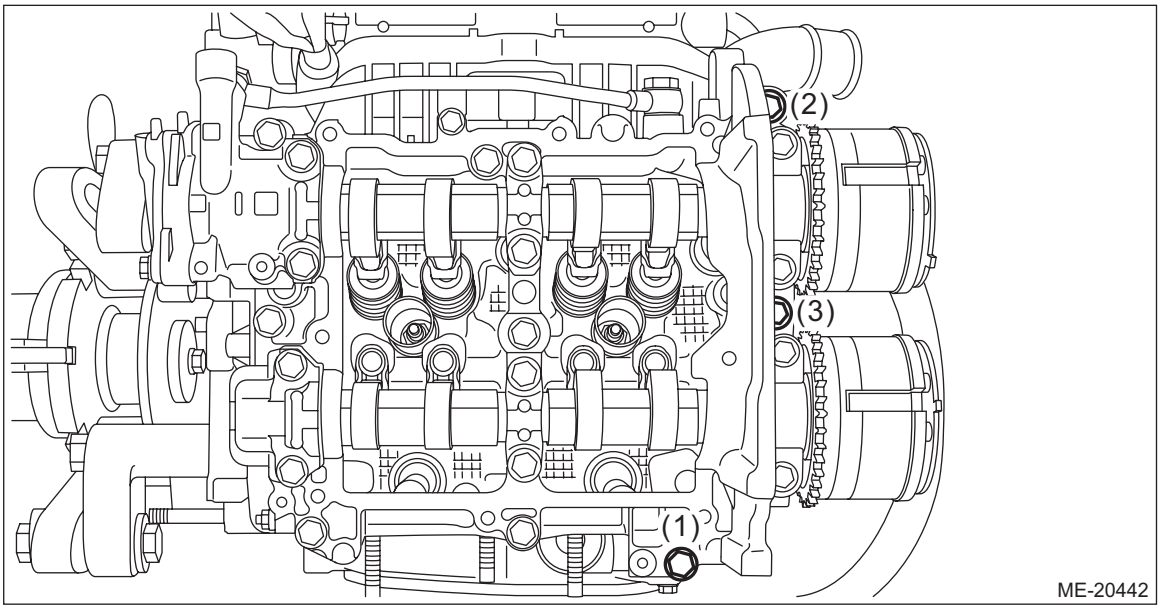

(5) Tighten the bolts (3 places) with a torque of 18 N·m (1.8 kgf-m, 13.3 ft-lb) in numerical order as shown in the figure.

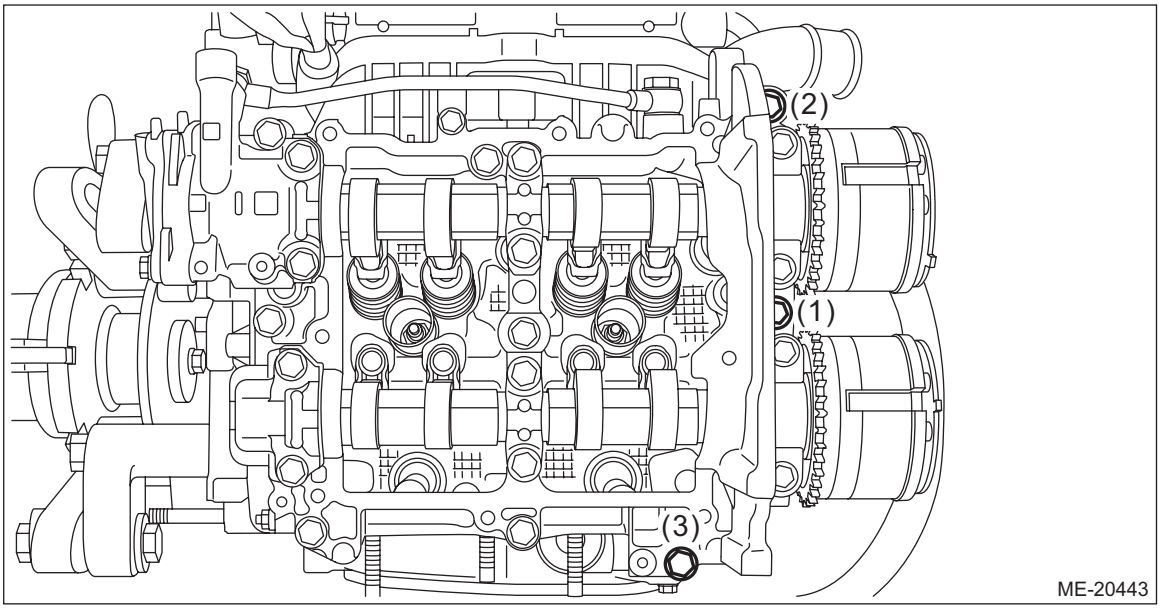

(6) Loosen the bolts (3 places) by 180° in numerical order as shown in the figure.

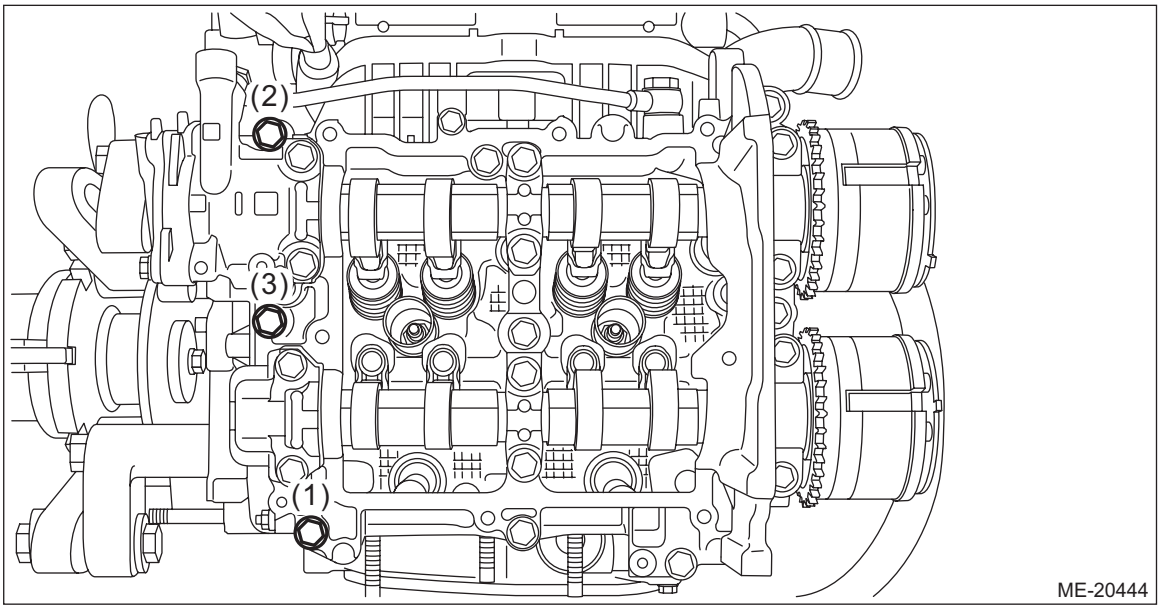

(7) Tighten the bolts (3 places) with a torque of 18 N·m (1.8 kgf-m, 13.3 ft-lb) in numerical order as shown in the figure.

NOTE:
After tightening, if the liquid gasket is squeezed out onto the seal surface of the chain cover, completely remove any squeezed-out liquid gasket.

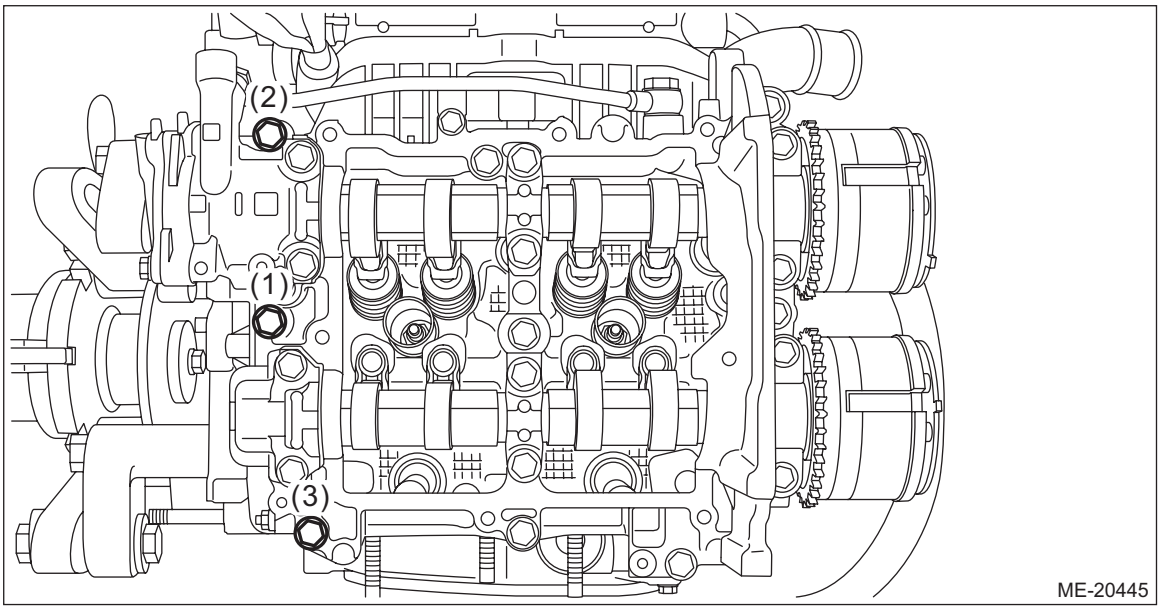

6) Set the part so that the intake manifold is on the upper side.
7) When the cam carrier RH has been disassembled

NOTE:
When the cam carrier RH has been disassembled, perform the following steps also.

(1) Install the cam sprocket RH. <Ref. to ME(w/o STI)-136, CAM SPROCKET RH, INSTALLATION, Cam Sprocket.>
(2) Install the scavenge pump. <Ref. to LU(w/o STI)-40, INSTALLATION, Scavenge Pump.>

NOTE:
When installing the scavenge pump, do not turn the intake camshaft RH to the outside of range of zero-lift (in range where it can be turned lightly by hand).

8) Check the cam clearance. <Ref. to ME(w/o STI)-41, WHEN TIMING CHAIN ASSEMBLY IS REMOVED, INSPECTION, Cam Clearance.>
9) Connect the water pipe hose to oil pan upper and EGR cooler, and install the water pipe assembly.

Tightening torque:
6.4 N·m (0.7 kgf-m, 4.7 ft-lb)

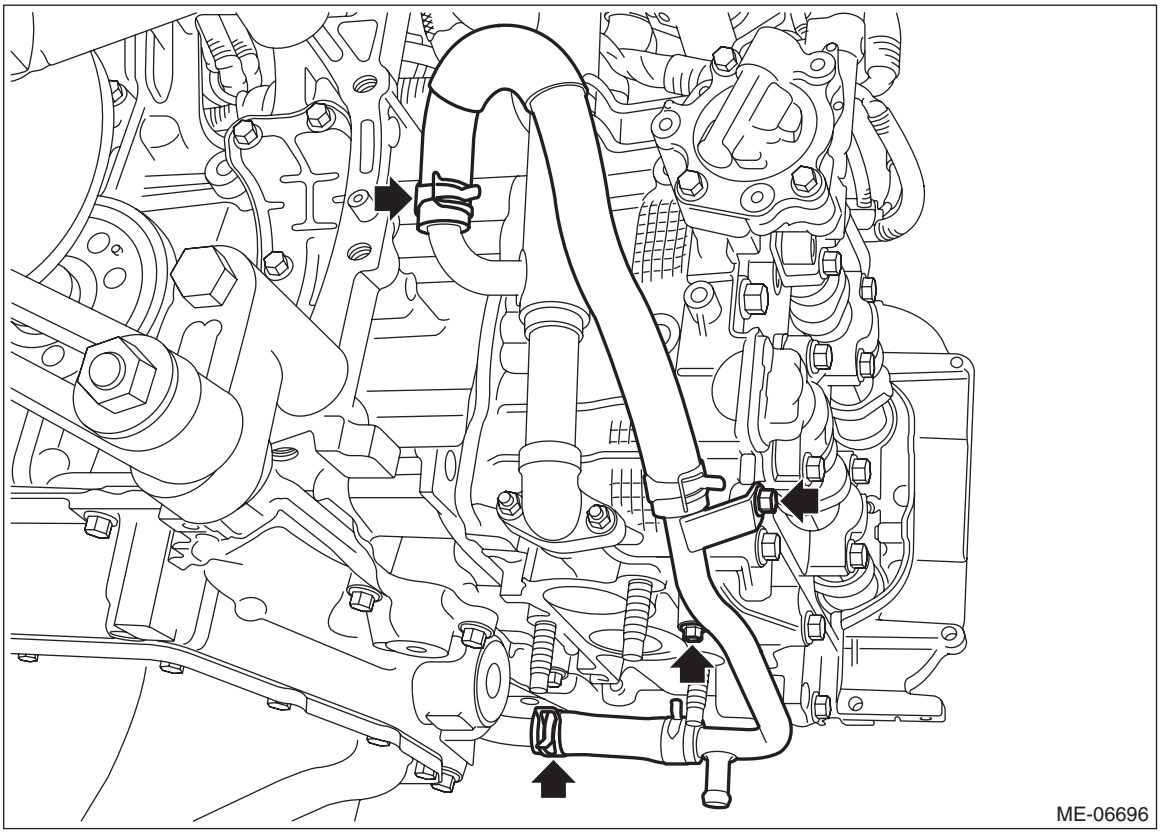

10) Install the oil pipe assembly to the scavenge pump and cam carrier RH.
(1) Set the oil pipe assembly to the scavenge pump and cam carrier RH, and temporarily tighten the bolts which secure the oil pipe assembly to the scavenge pump and cam carrier RH.

NOTE:
Use a new gasket.

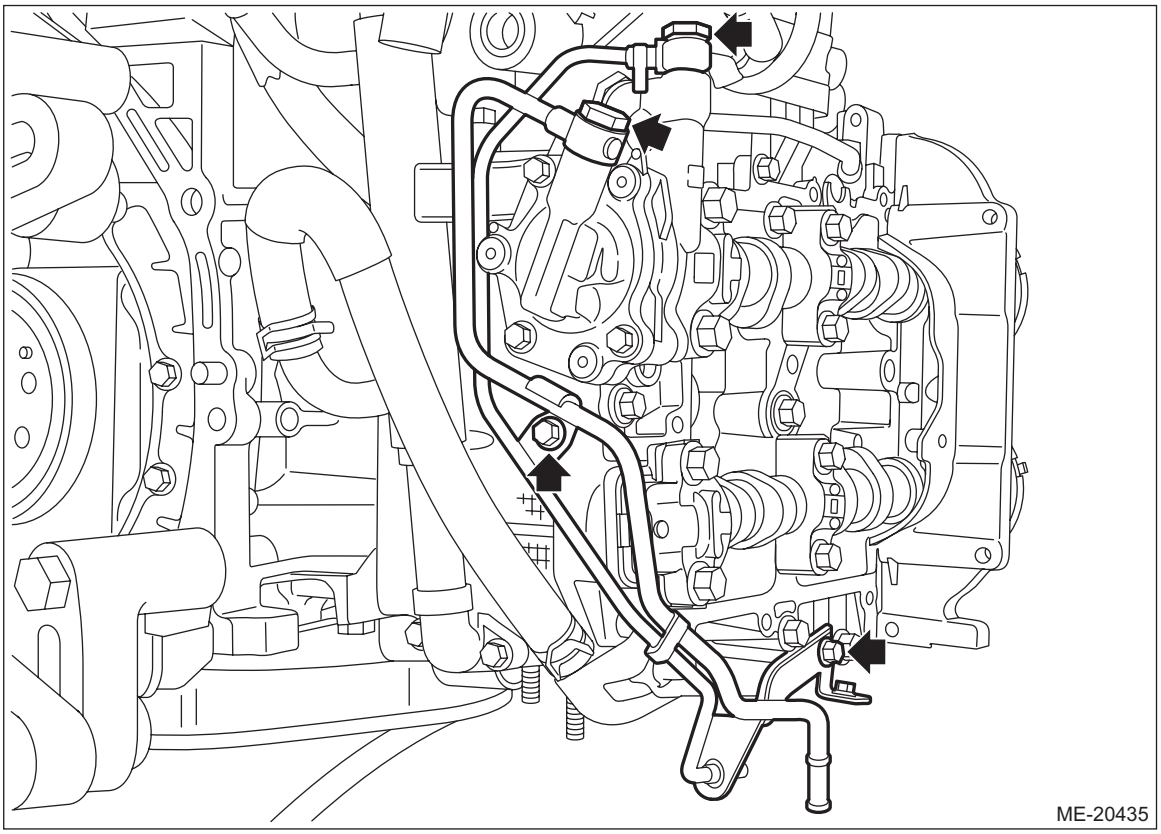

(2) Tighten the bolts which secure the oil pipe assembly to the scavenge pump and cam carrier RH in numerical order as shown in the figure.

Tightening torque:
T1: 6.8 N·m (0.7 kgf-m, 5.0 ft-lb)
T2: 31.5 N·m (3.2 kgf-m, 23.2 ft-lb)

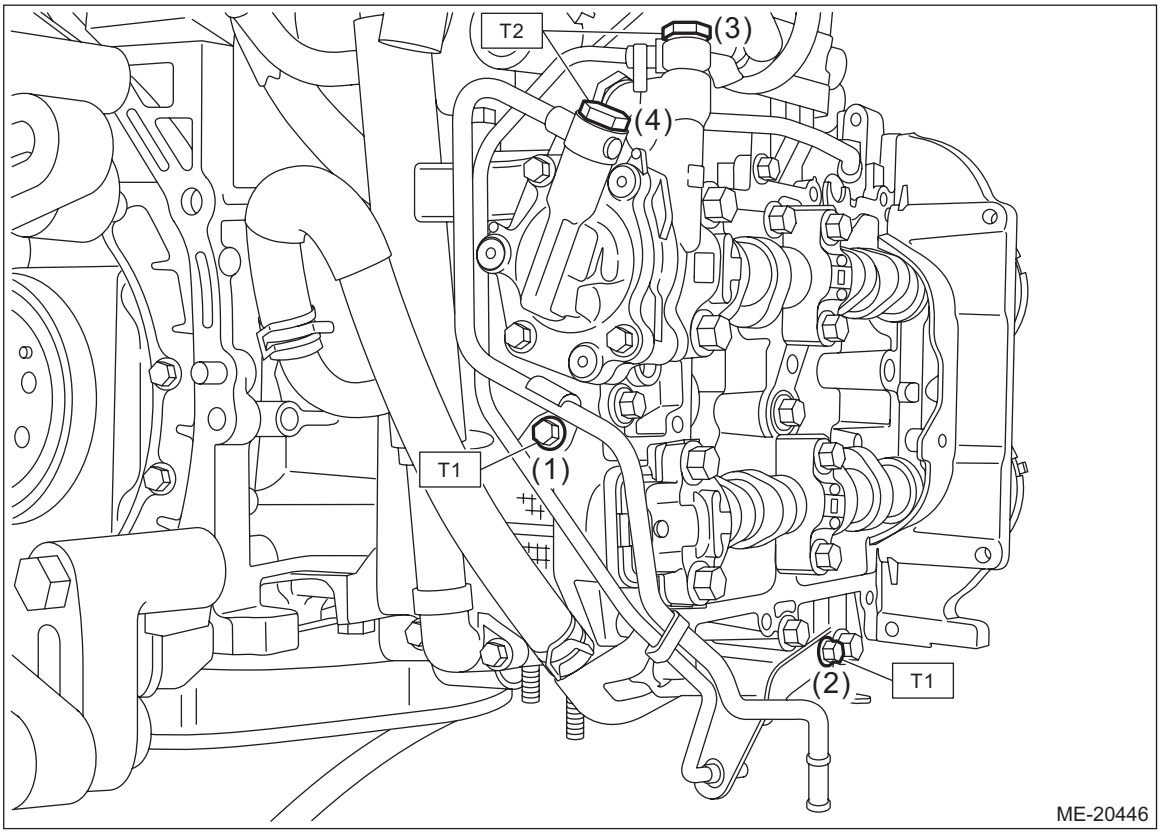

11) Secure the engine harness to the cam carrier RH with a clip.

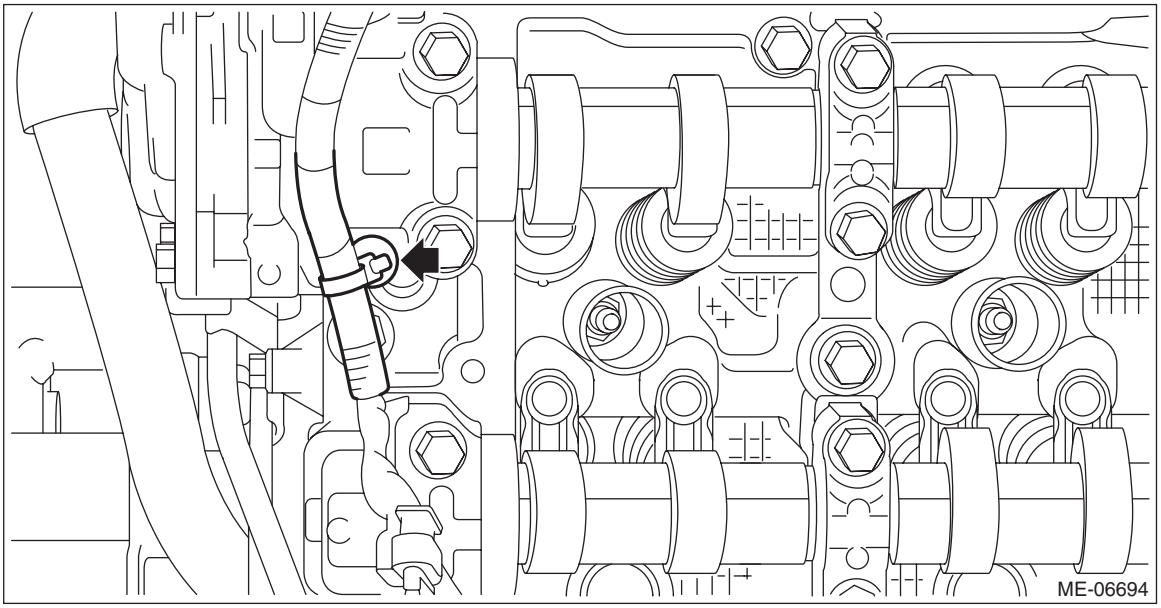

12) Install the rocker cover RH. <Ref. to ME(w/o STI)-153, ROCKER COVER RH, INSTALLATION, Rocker Cover.>
13) Install the timing chain RH. <Ref. to ME(w/o STI)-126, TIMING CHAIN RH, INSTALLATION, Timing Chain Assembly.>
14) Install the chain cover. <Ref. to ME(w/o STI)-97, INSTALLATION, Chain Cover.>

15) Install the engine to the vehicle. <Ref. to ME(w/o STI)-59, INSTALLATION, Engine Assembly.>

2. CAM CARRIER LH

1) Set the part so that the cylinder head LH is on the upper side.
2) Apply engine oil to the valve shim and the roller rocker arm pivot, and install the valve shim and the roller rocker arm pivot to the cylinder head LH.

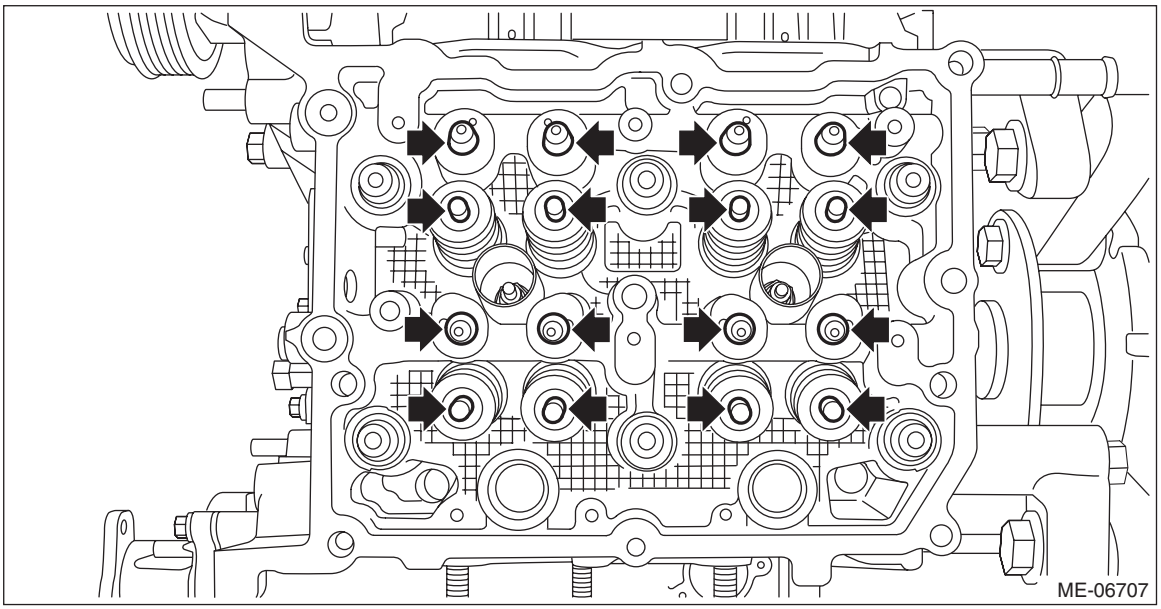

3) Apply engine oil to the O-ring and the roller rocker arm, and install the O-ring and the roller rocker arm to the cylinder head LH.

NOTE:
Use new O-rings.

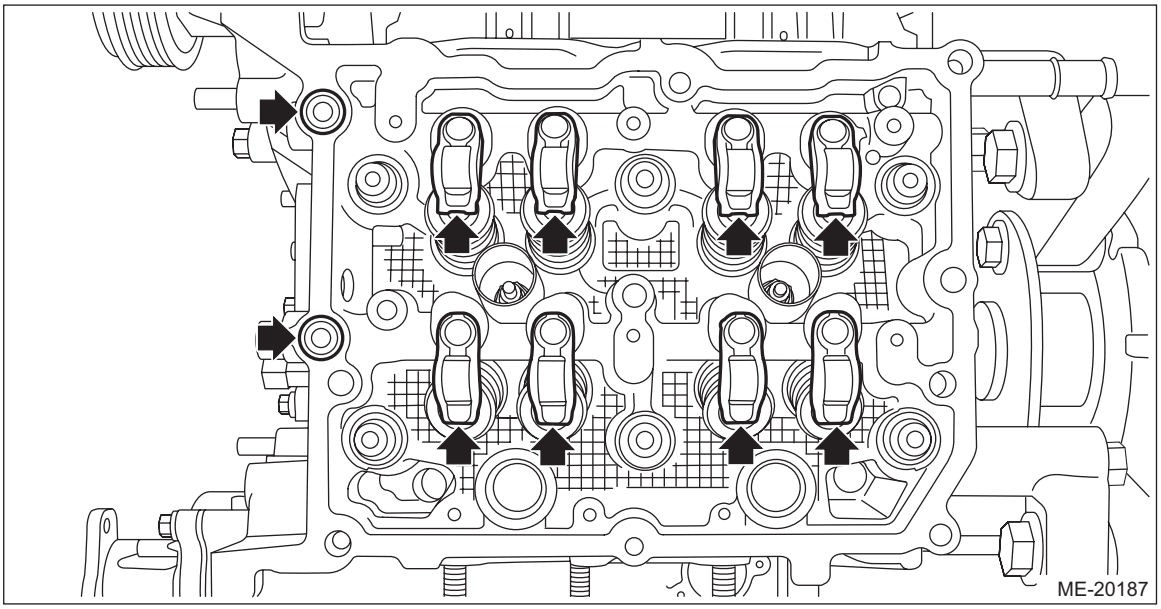

4) Apply liquid gasket to the mating surface of cam carrier LH as shown in the figure.

NOTE:
- Before applying liquid gasket, degrease the old liquid gasket seal surface of the cylinder head LH and cam carrier LH.
- Install within 5 min. after applying liquid gasket.

Liquid gasket:
THREE BOND 1217G (Part No. K0877Y0100), THREE BOND 1217H or equivalent

Liquid gasket applying diameter:
3±0.5 mm (0.1181±0.0197 in)

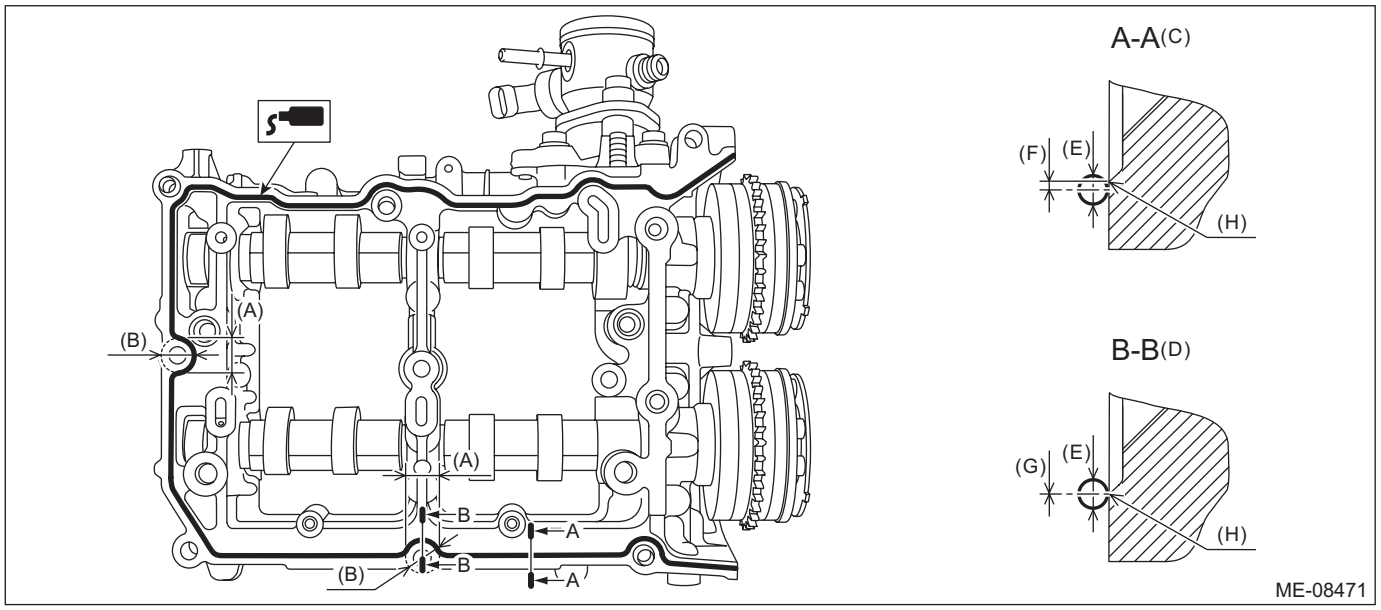

(A)	Range A	(D)	Liquid gasket applying position of mating surfaces of range A	(G)	0±0.5 mm (0±0.0197 in)
(B)	ϕ18 mm (0.7087 in)	(E)	ϕ3±0.5 mm (0.1181±0.0197 in)	(H)	Chamfer edge
(C)	Liquid gasket applying position of mating surfaces other than range A	(F)	1 mm (0.0394 in) or less		

5) Install the cam carrier LH to the cylinder head LH.
   (1) Mount the cam carrier LH, then tighten all bolts with a torque of 18 N·m (1.8 kgf-m, 13.3 ft-lb) in numerical order as shown in the figure.

NOTE:
Set the intake camshaft LH and the exhaust camshaft LH to the zero-lift position as shown in the figure.

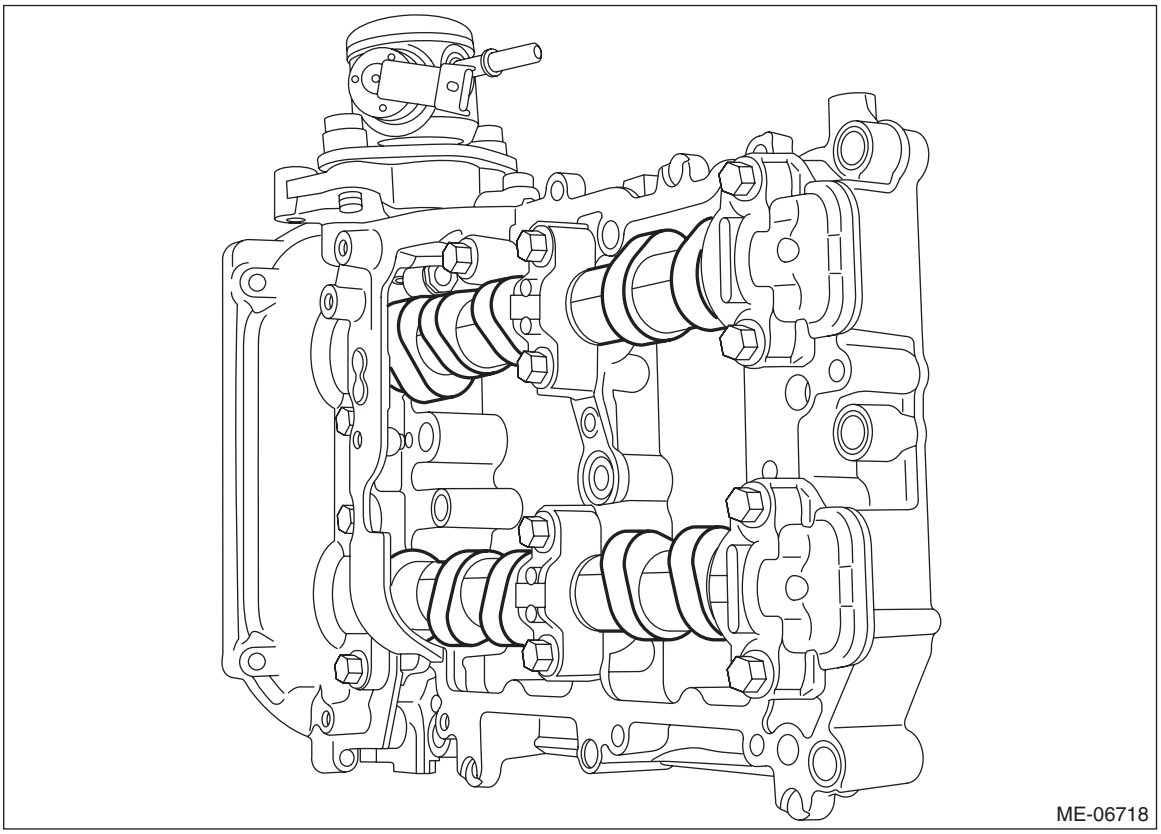

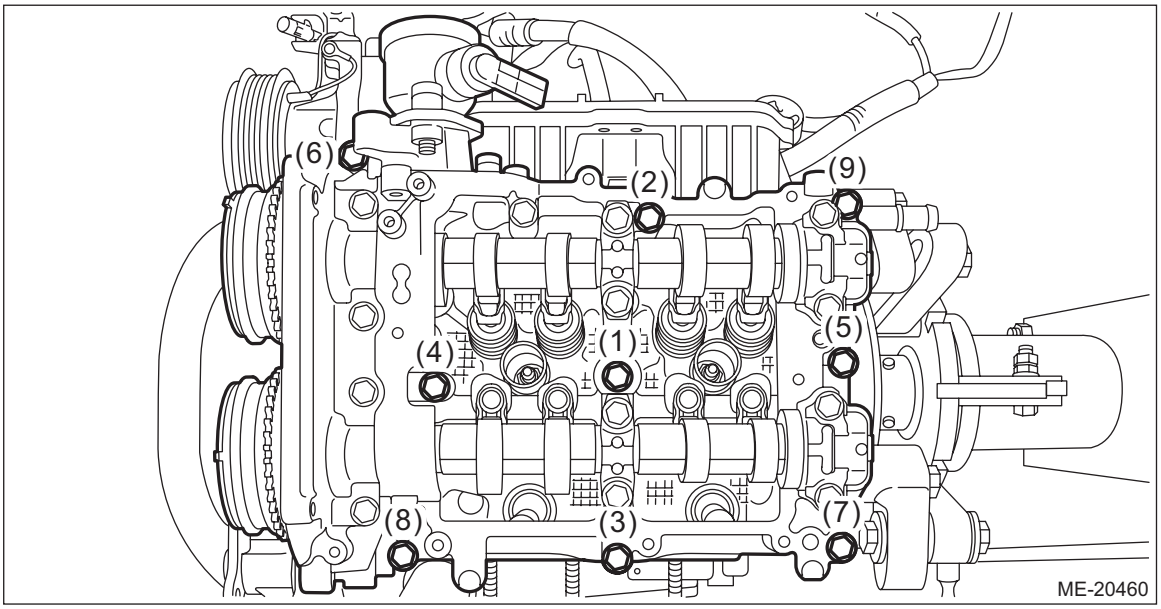

(2) Loosen the bolts (3 places) by 180° in numerical order as shown in the figure.

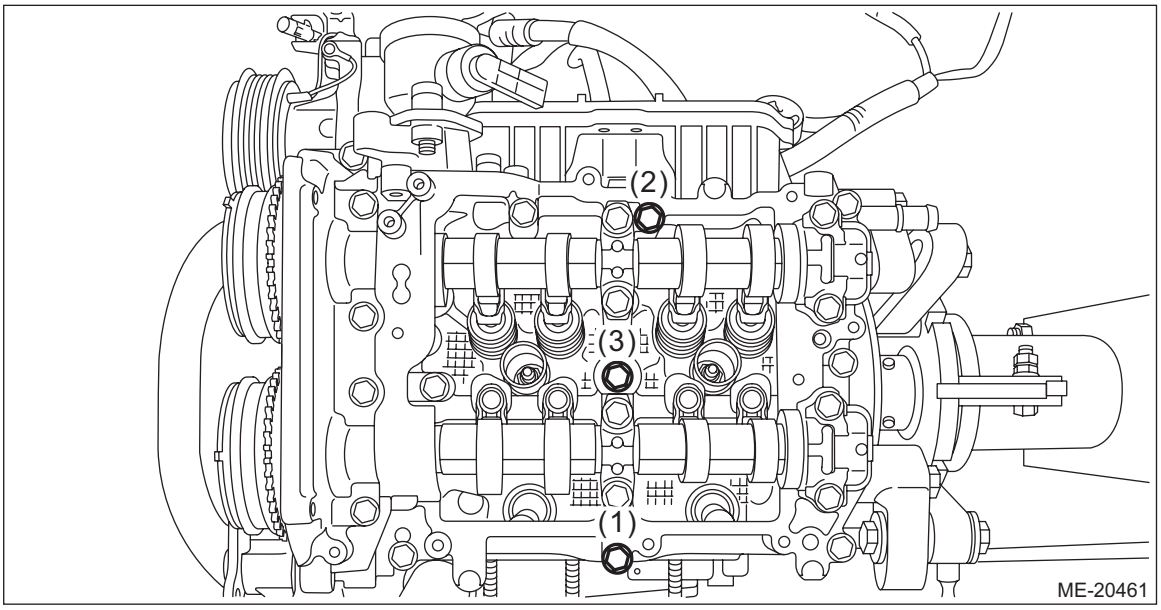

(3) Tighten the bolts (3 places) with a torque of 18 N·m (1.8 kgf-m, 13.3 ft-lb) in numerical order as shown in the figure.

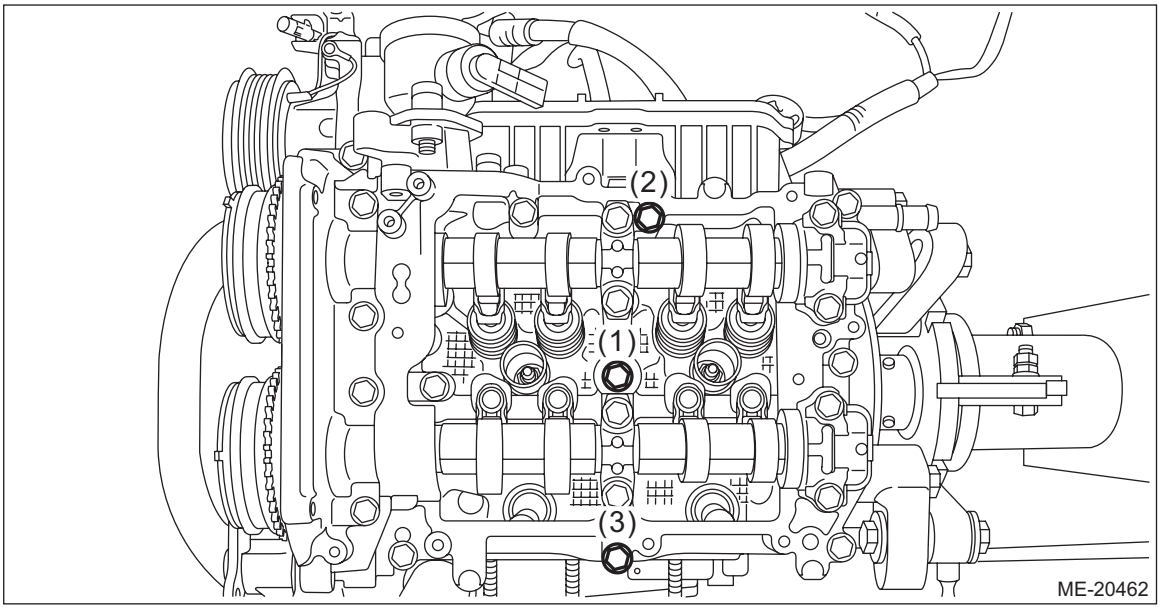

(4) Loosen the bolts (3 places) by 180° in numerical order as shown in the figure.

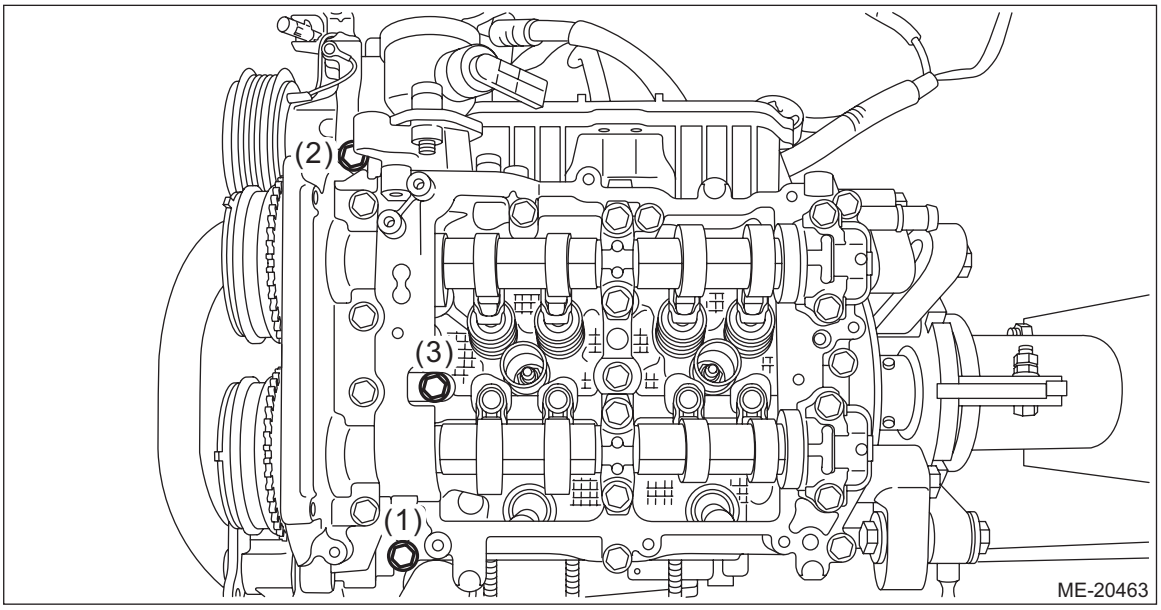

(5) Tighten the bolts (3 places) with a torque of 18 N·m (1.8 kgf-m, 13.3 ft-lb) in numerical order as shown in the figure.

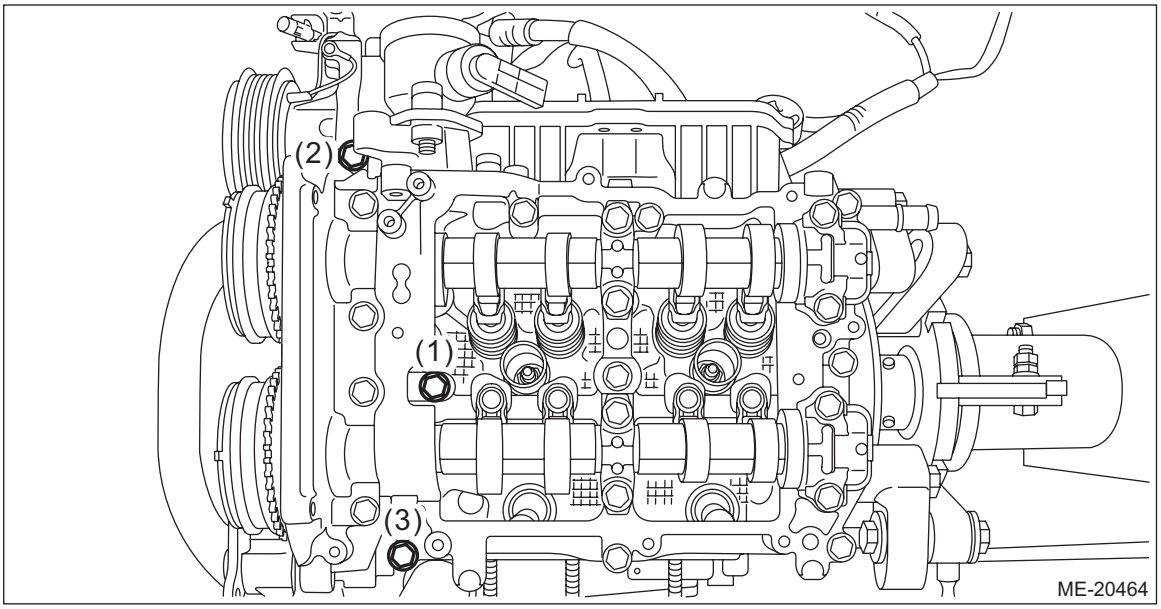

(6) Loosen the bolts (3 places) by 180° in numerical order as shown in the figure.

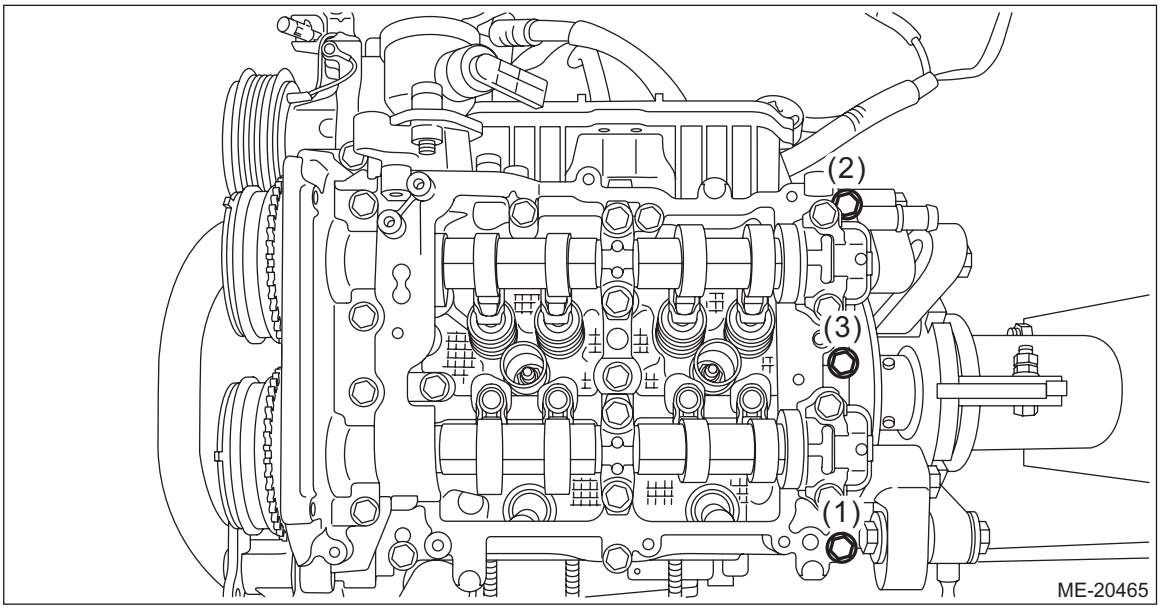

(7) Tighten the bolts (3 places) with a torque of 18 N·m (1.8 kgf-m, 13.3 ft-lb) in numerical order as shown in the figure.

NOTE:
After tightening, if the liquid gasket is squeezed out onto the seal surface of the chain cover, completely remove any squeezed-out liquid gasket.

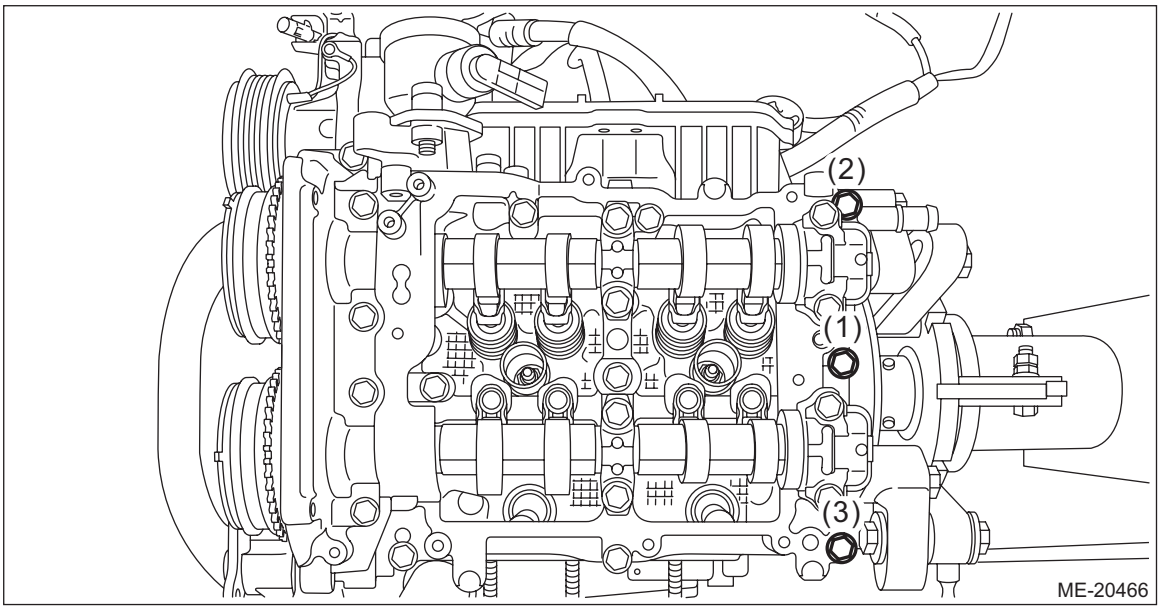

6) Set the part so that the installation surface of the intake manifold is on the upper side.
7) When the cam carrier LH has been disassembled

NOTE:
When the cam carrier LH has been disassembled, perform the following steps also.

(1) Install the cam sprocket LH. <Ref. to ME(w/o STI)-139, CAM SPROCKET LH, INSTALLATION, Cam Sprocket.>

(2) Install the high-pressure fuel pump. <Ref. to FU(w/o STI)-72, INSTALLATION, High Pressure Fuel Pump.>

NOTE:
Install the high-pressure fuel pump so that the cam lobes on the intake camshaft LH are positioned as shown in the figure. Perform adjustment within the range of zero-lift (in range where it can be turned lightly by hand).

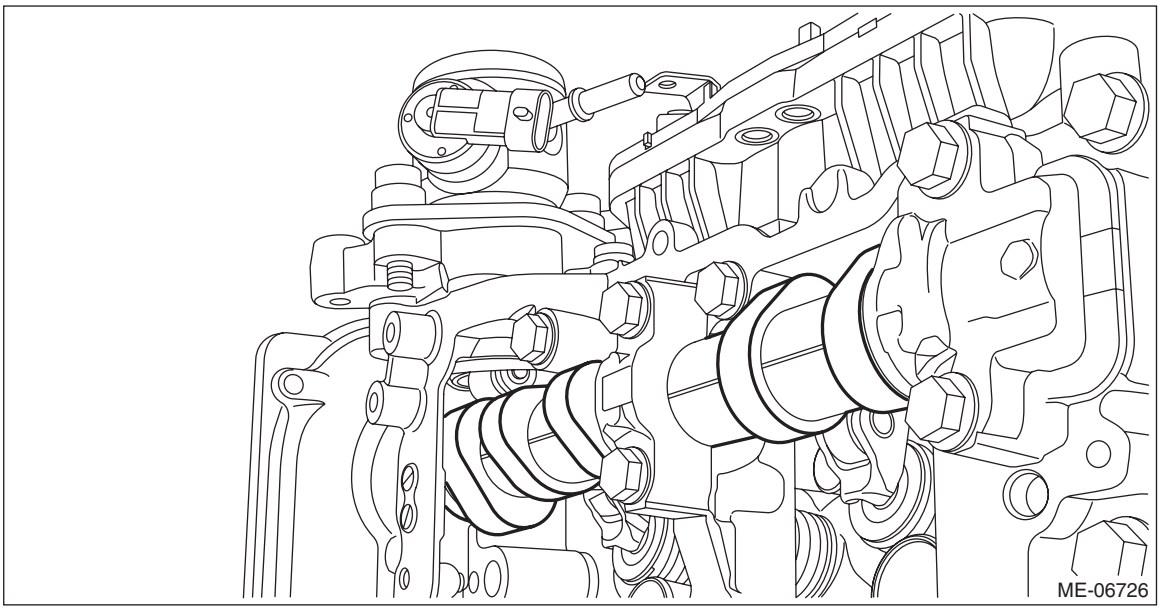

8) Check the cam clearance. <Ref. to ME(w/o STI)-41, WHEN TIMING CHAIN ASSEMBLY IS REMOVED, INSPECTION, Cam Clearance.>
9) Connect the water pipe hose to oil pan upper, and install the water pipe assembly.

Tightening torque:
6.4 N·m (0.7 kgf-m, 4.7 ft-lb)

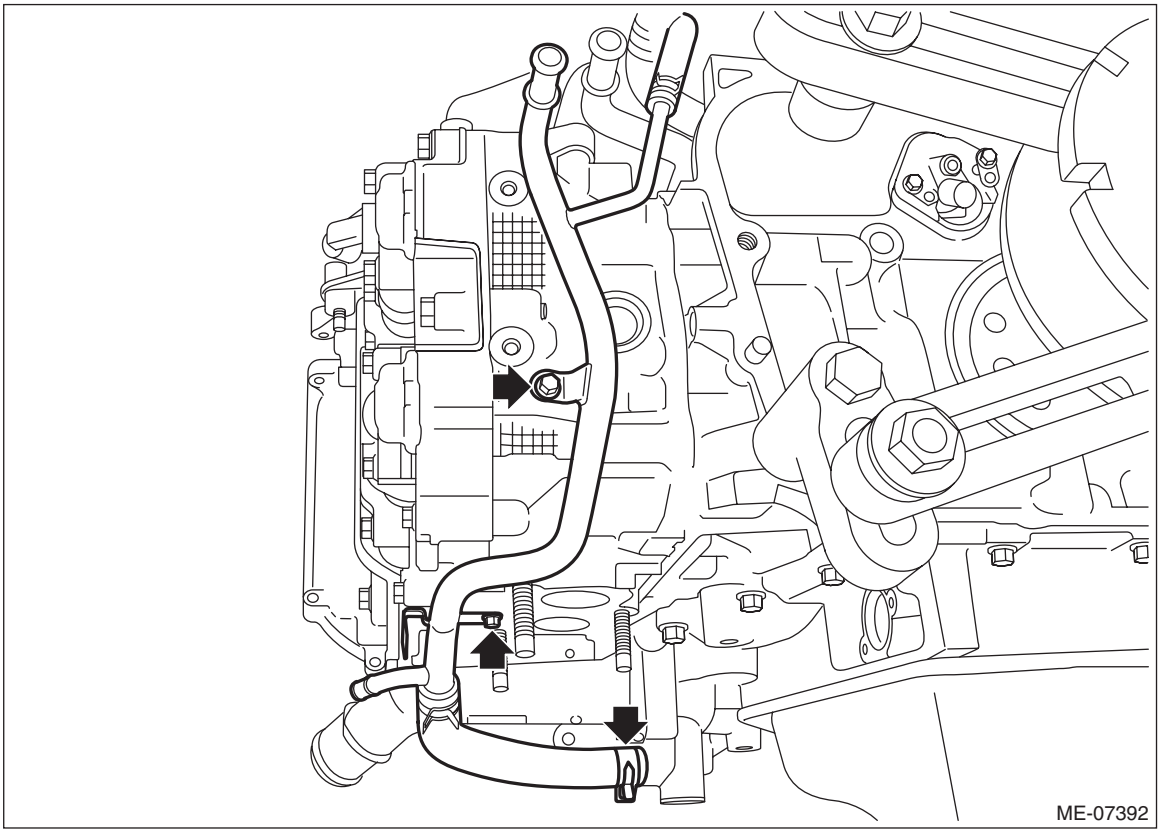

10) Temporarily tighten the flare nuts of the high-pressure fuel delivery pipe to the high-pressure fuel pump and fuel injector pipe by hand until they are seated, and then tighten the flare nuts.

CAUTION:
Always use a new high-pressure fuel delivery pipe.

Tightening torque:
25 N·m (2.5 kgf-m, 18.4 ft-lb)

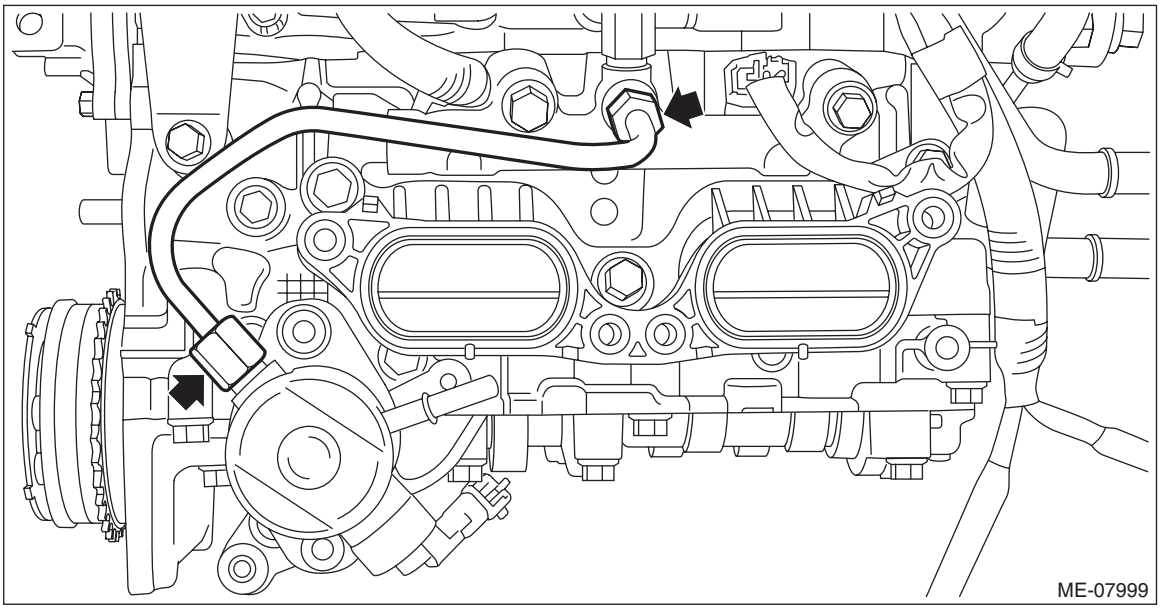

11) Install the fuel delivery pipe to the high-pressure fuel pump, and connect the connector (A) to the high-pressure fuel pump.

CAUTION:
• Check that there is no damage or dust on the quick connector. If necessary, clean the seal surface of the pipe.
• When connecting the quick connector, make sure to insert it all the way in before locking the slider.
• When it is difficult to lock the slider, check that the connector is fully inserted.
• After locking the slider, check that the quick connector is securely connected.

NOTE:
Connect the quick connector as shown in the figure.

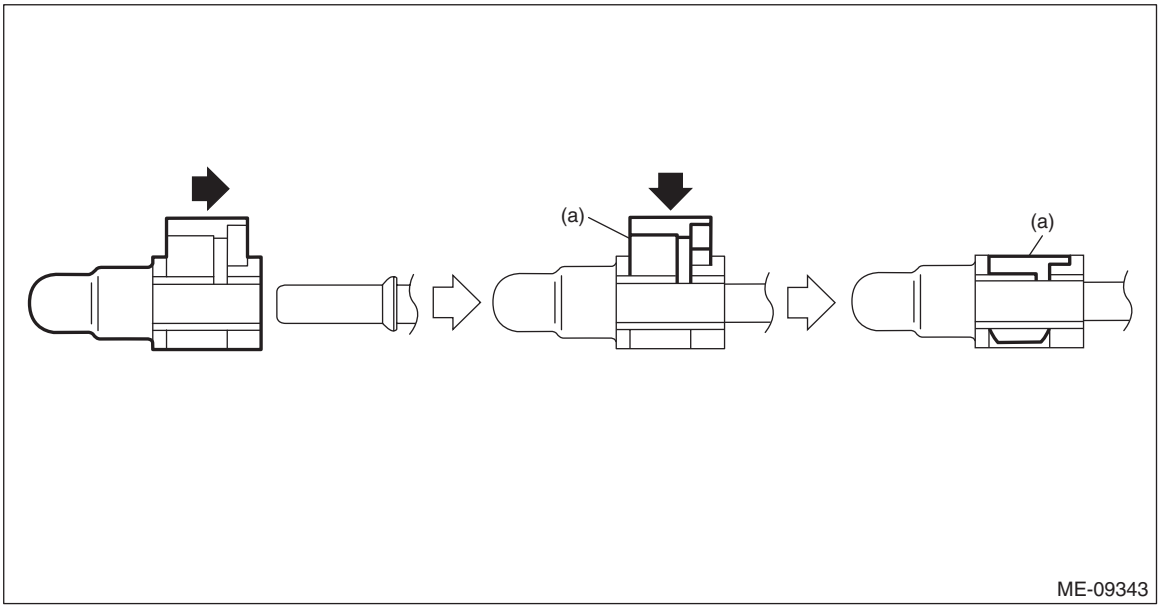

(a) Slider

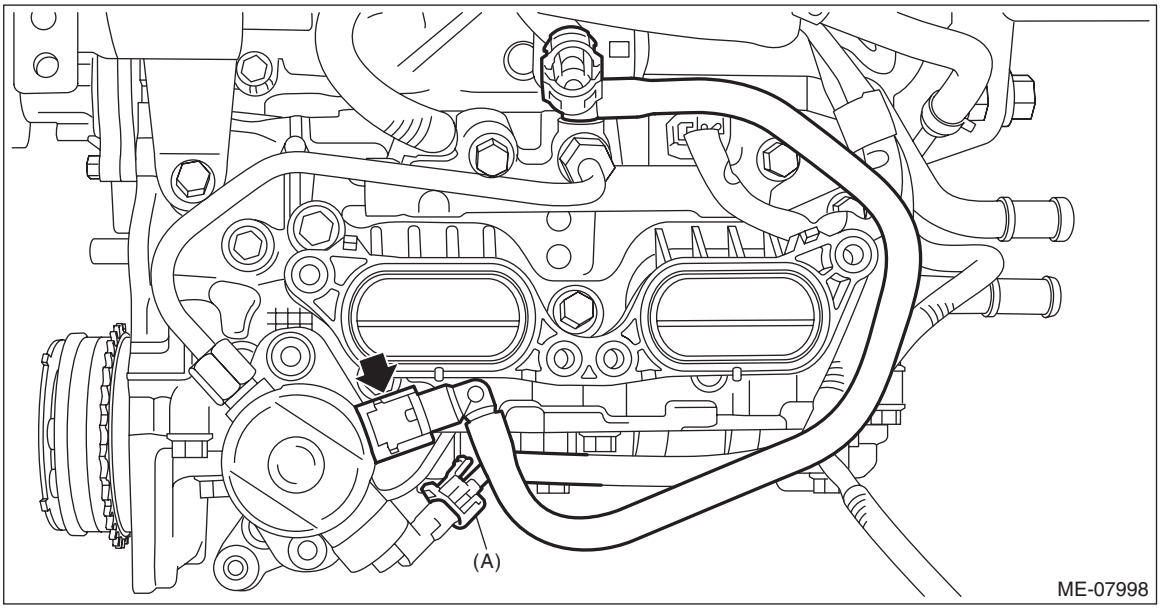

12) Install the fuel pump insulator (A) to the high-pressure fuel pump, and then install the fuel pipe insulator No. 1 (B) to the high-pressure fuel delivery pipe.

NOTE:
By pushing the sections (a) shown in the figure, fix the fuel pipe insulator No. 1 (B) to the high-pressure fuel delivery pipe.

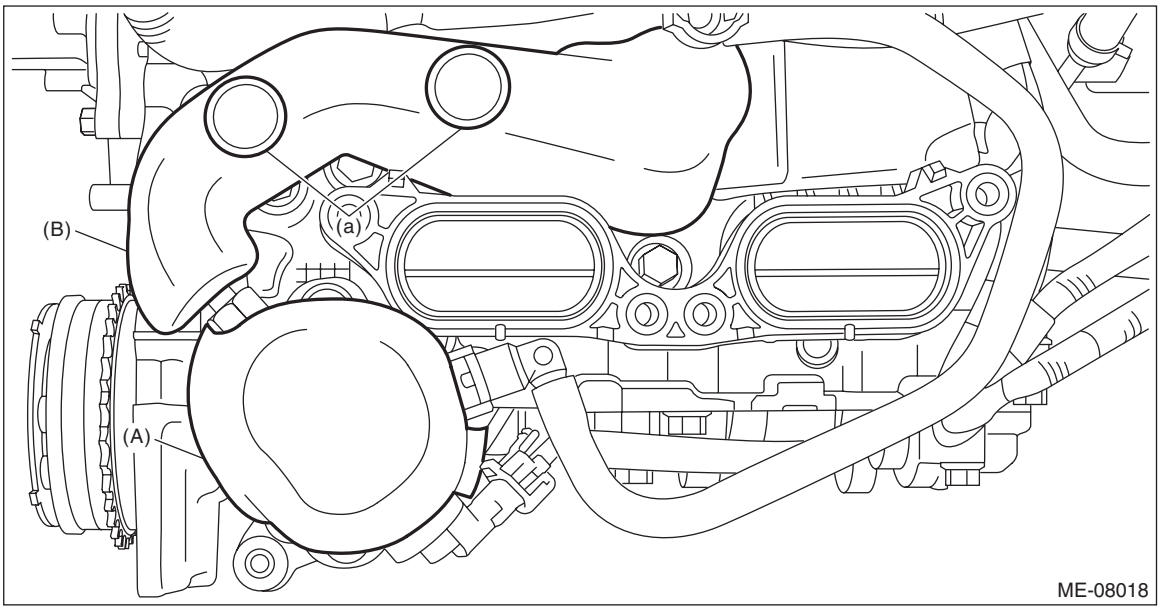

13) Temporarily tighten the bolts securing the fuel pipe protector to the high-pressure fuel pump case.

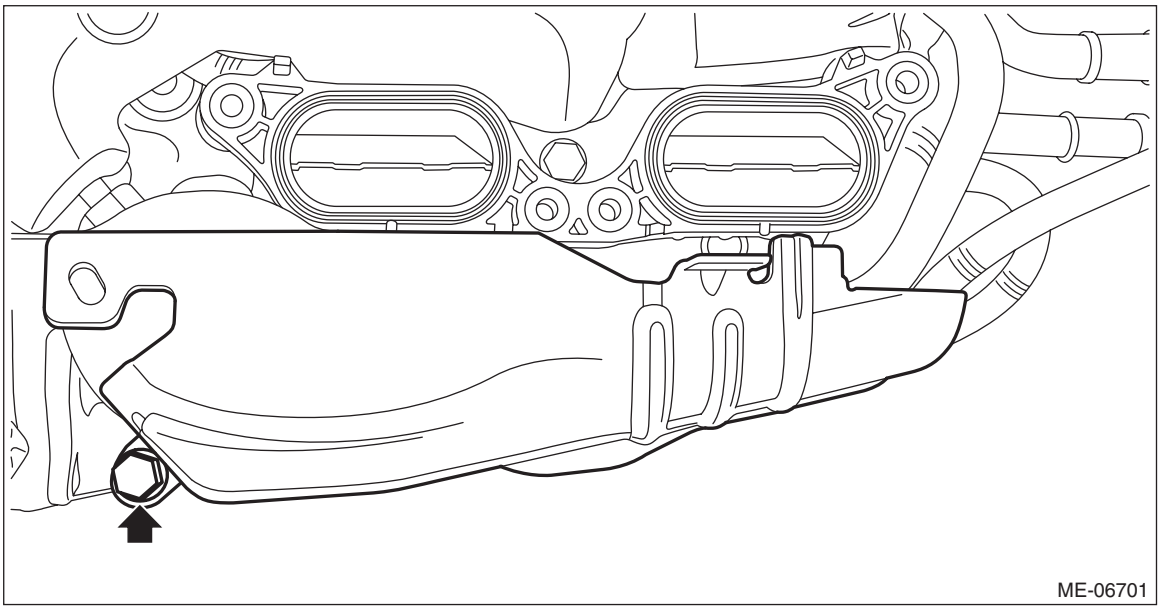

14) Secure the engine harness to the cam carrier LH with a clip.

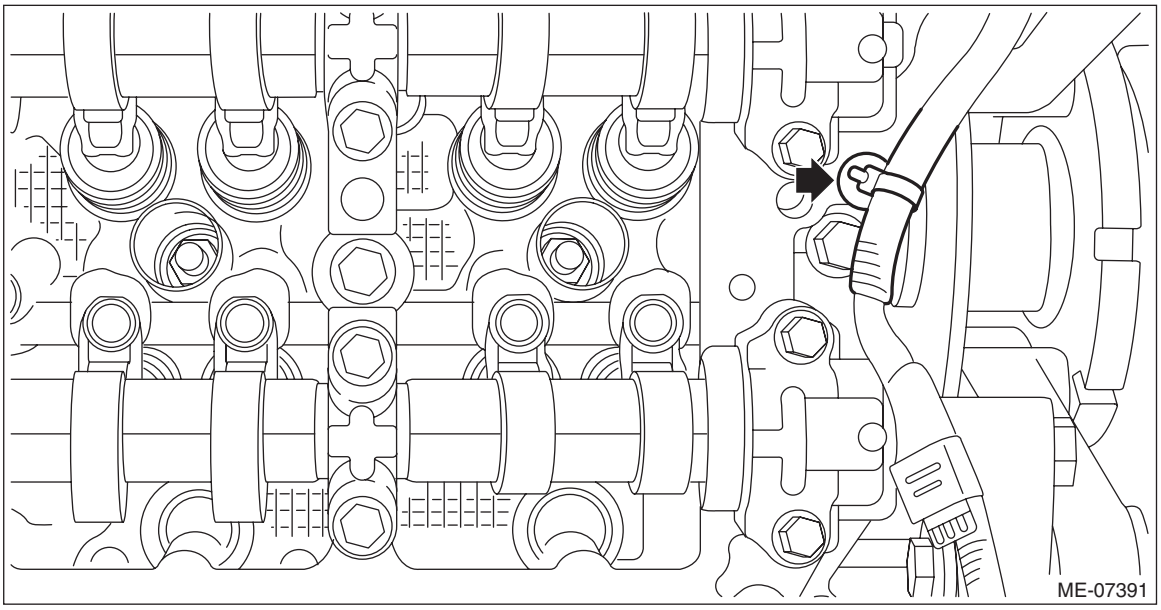

15) Install the rocker cover LH. <Ref. to ME(w/o STI)-155, ROCKER COVER LH, INSTALLATION, Rocker Cover.>
16) Install the intake manifold. <Ref. to FU(w/o STI)-28, INSTALLATION, Intake Manifold.>
17) Tighten the bolts securing the fuel pipe protector to the high-pressure fuel pump case.

Tightening torque:
19 N·m (1.9 kgf-m, 14.0 ft-lb)

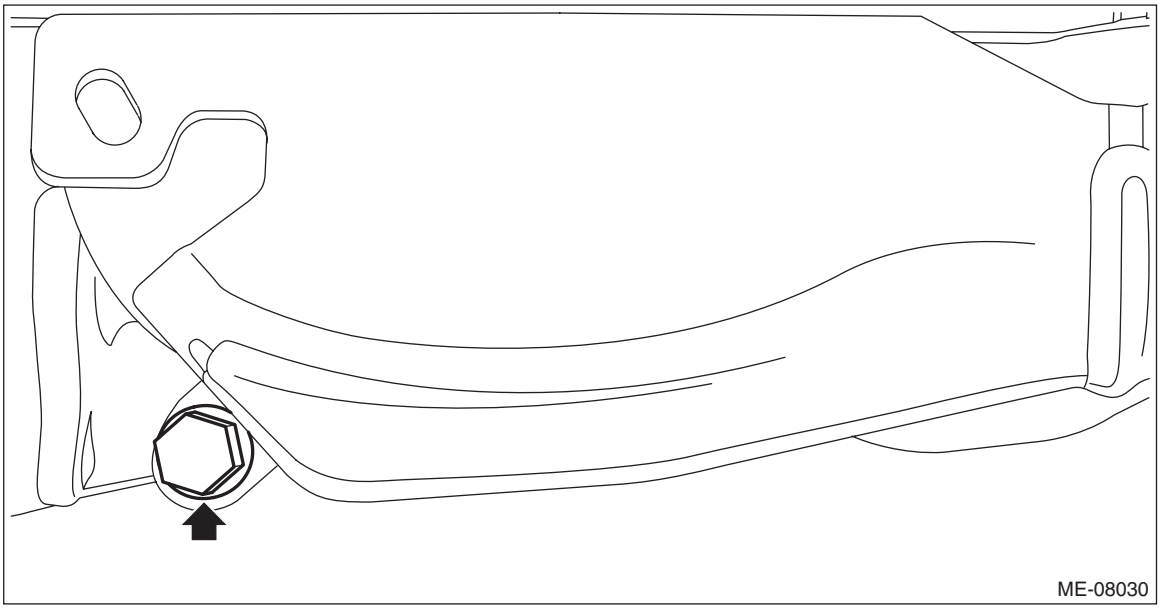

18) Install timing chain LH. <Ref. to ME(w/o STI)-118, TIMING CHAIN LH, INSTALLATION, Timing Chain Assembly.>
19) Install the chain cover. <Ref. to ME(w/o STI)-97, INSTALLATION, Chain Cover.>
20) Install the engine to the vehicle. <Ref. to ME(w/o STI)-59, INSTALLATION, Engine Assembly.>

C: DISASSEMBLY

1. CAM CARRIER RH

1) Remove the oil pipe from cam carrier RH.

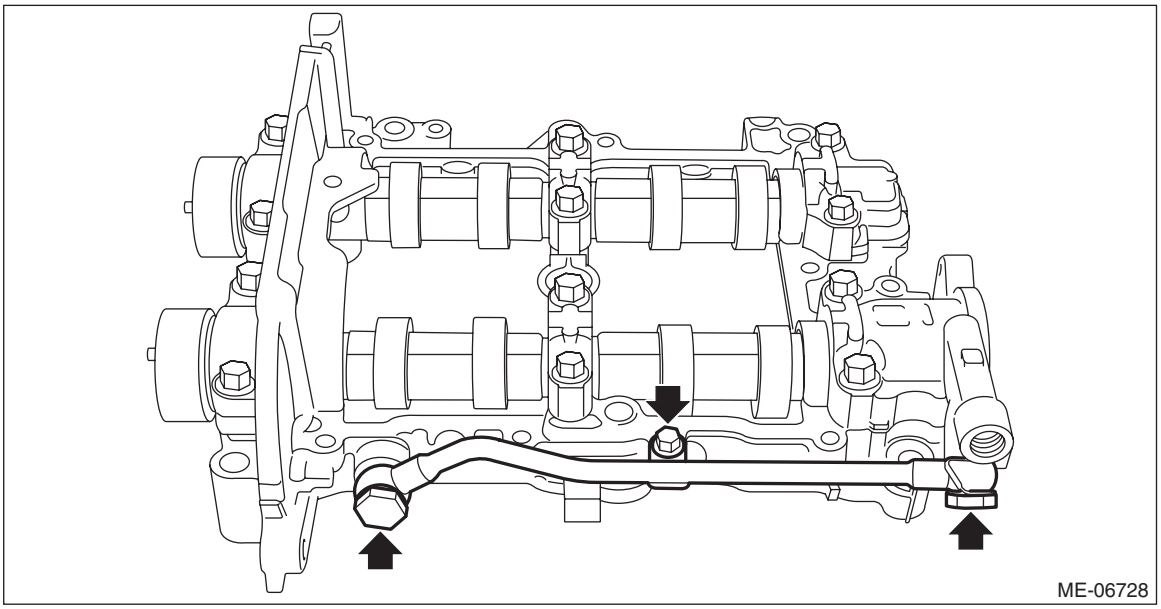

2) Loosen the bolts (front camshaft cap RH, intake center camshaft cap RH, intake rear camshaft cap RH, exhaust center camshaft cap RH, and exhaust rear camshaft cap RH) equally, a little at a time in numerical sequence as shown in the figure, and remove each camshaft cap.

NOTE:
Arrange camshaft caps in order so that they can be installed in their original positions.

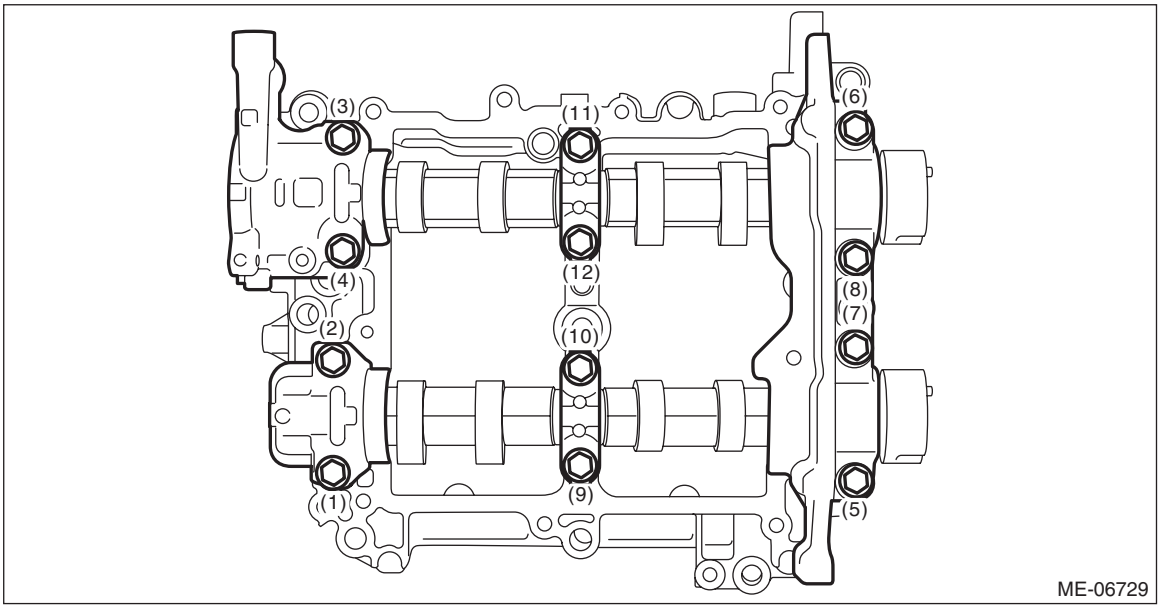

3) Remove the intake camshaft RH and the exhaust camshaft RH from cam carrier RH.

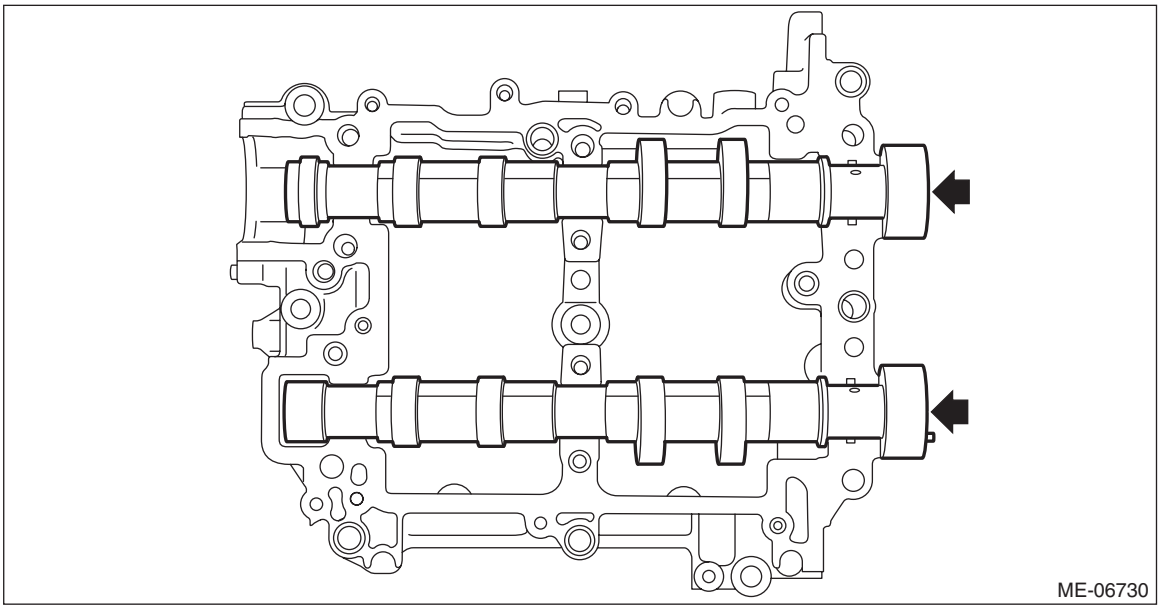

4) Remove the filter from cam carrier RH.

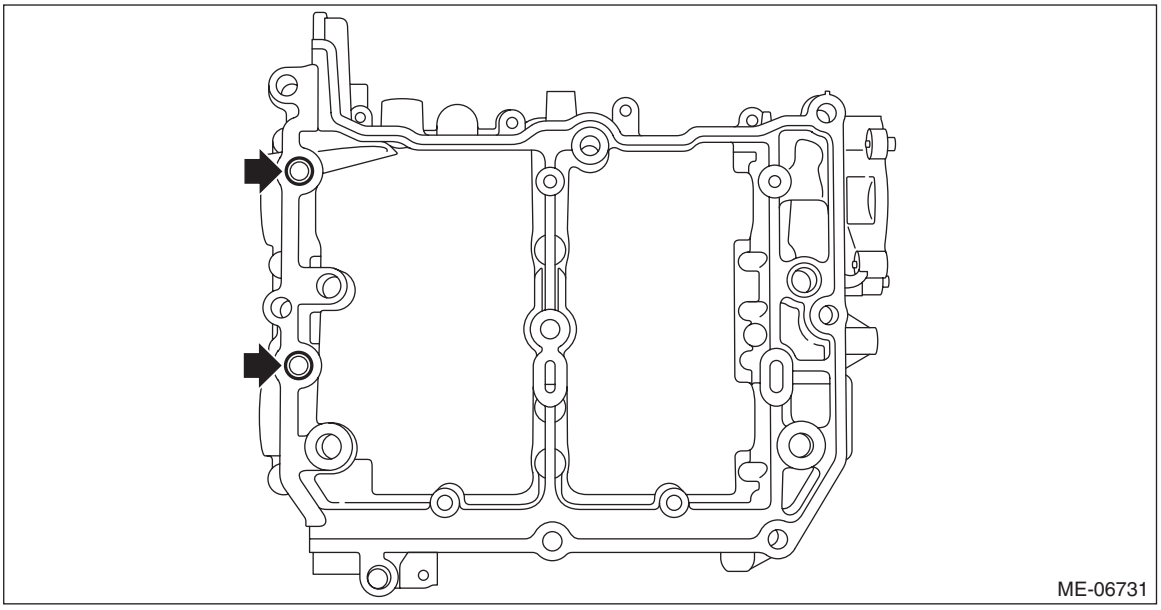

5) Remove the liquid gasket from cam carrier RH and front camshaft cap RH, intake rear camshaft cap RH and exhaust rear camshaft cap RH.

2. CAM CARRIER LH

1) Loosen the bolts (front camshaft cap LH, intake center camshaft cap LH, intake rear camshaft cap LH, exhaust center camshaft cap LH and exhaust rear camshaft cap LH) equally, a little at a time in numerical sequence as shown in the figure, and remove each camshaft cap.

NOTE:
Arrange camshaft caps in order so that they can be installed in their original positions.

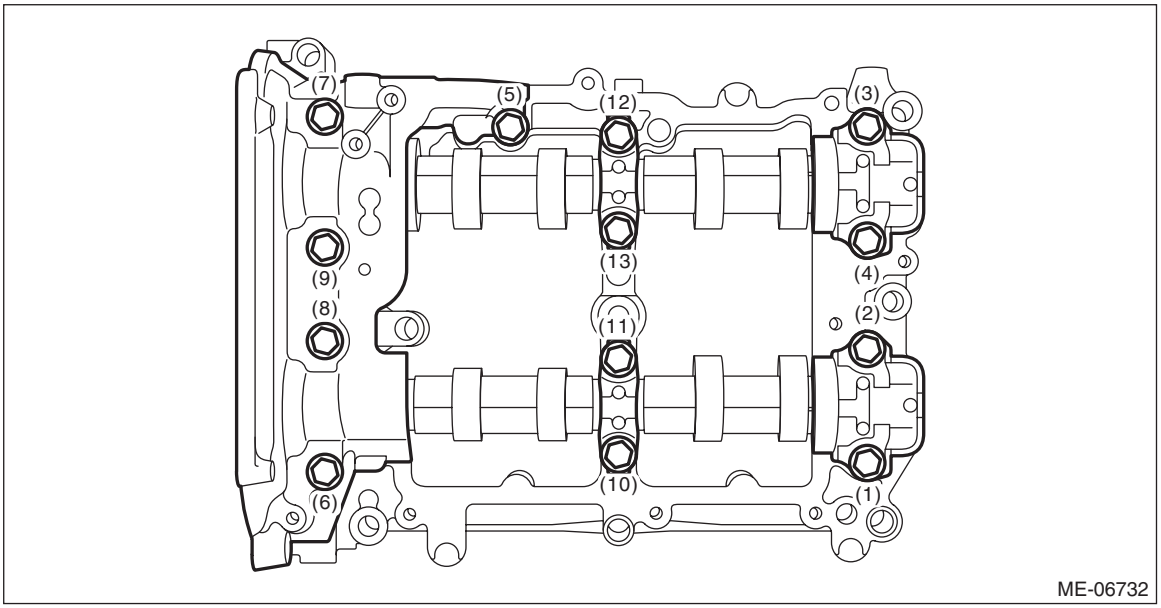

2) Remove the intake camshaft LH and the exhaust camshaft LH from cam carrier LH.

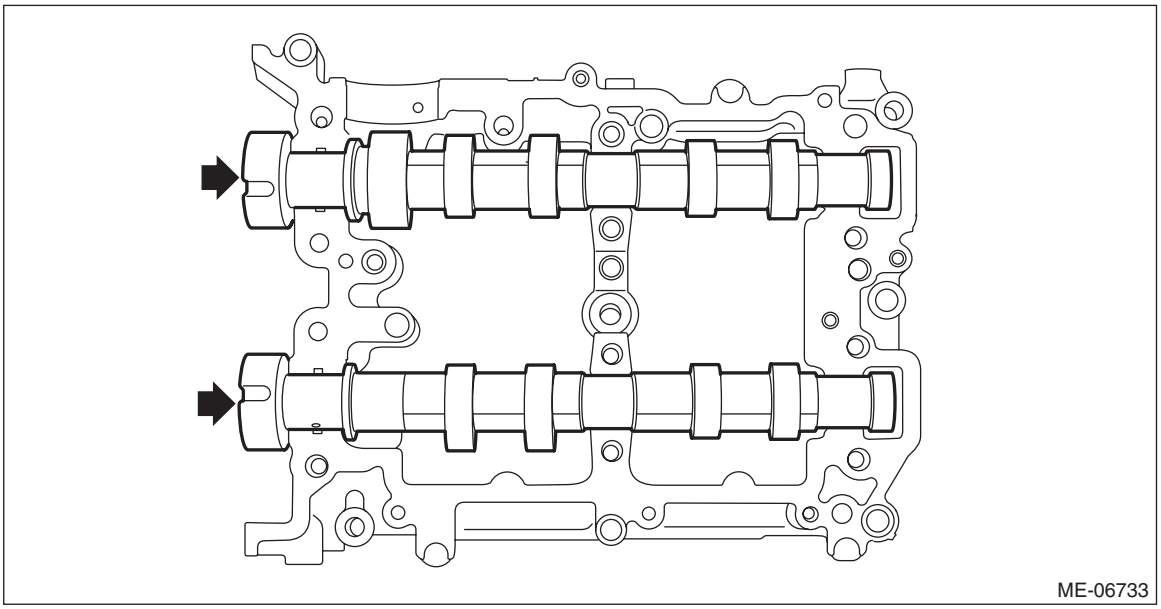

3) Remove the filter from cam carrier LH.

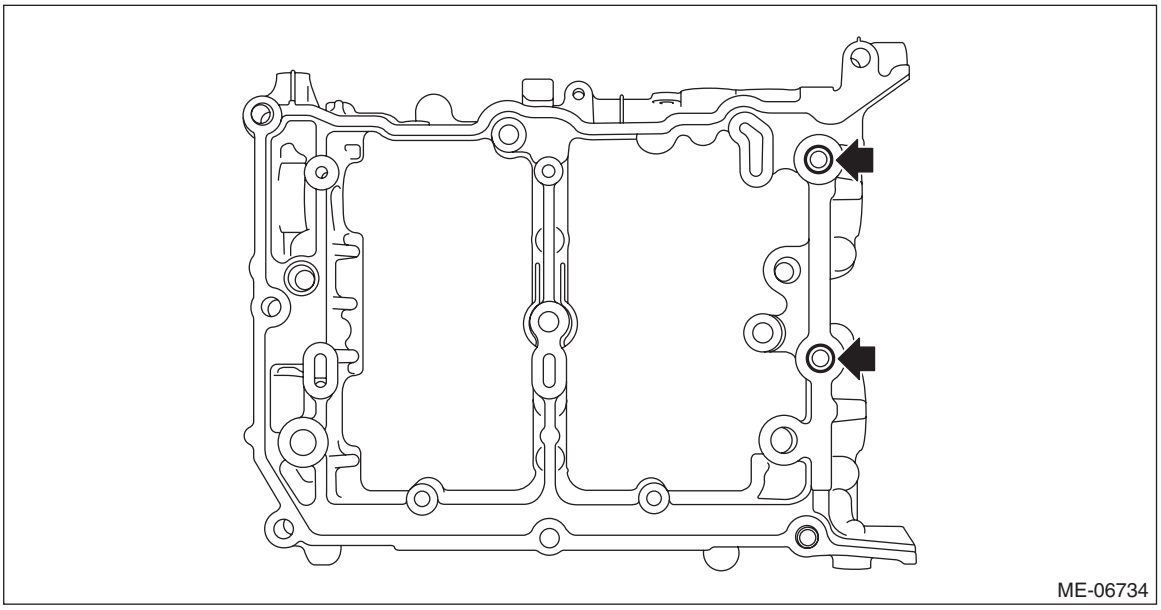

4) Remove the liquid gasket from cam carrier LH and front camshaft cap LH, intake rear camshaft cap LH and exhaust rear camshaft cap LH.

D: ASSEMBLY

1. CAM CARRIER RH

1) Install the filter to the cam carrier RH.

NOTE:
Use a new filter.

Filter insert position:
Cam carrier RH end face $0^{+0}_{-0.5}$ mm ($^{+0}_{-0.0197}$ in) position

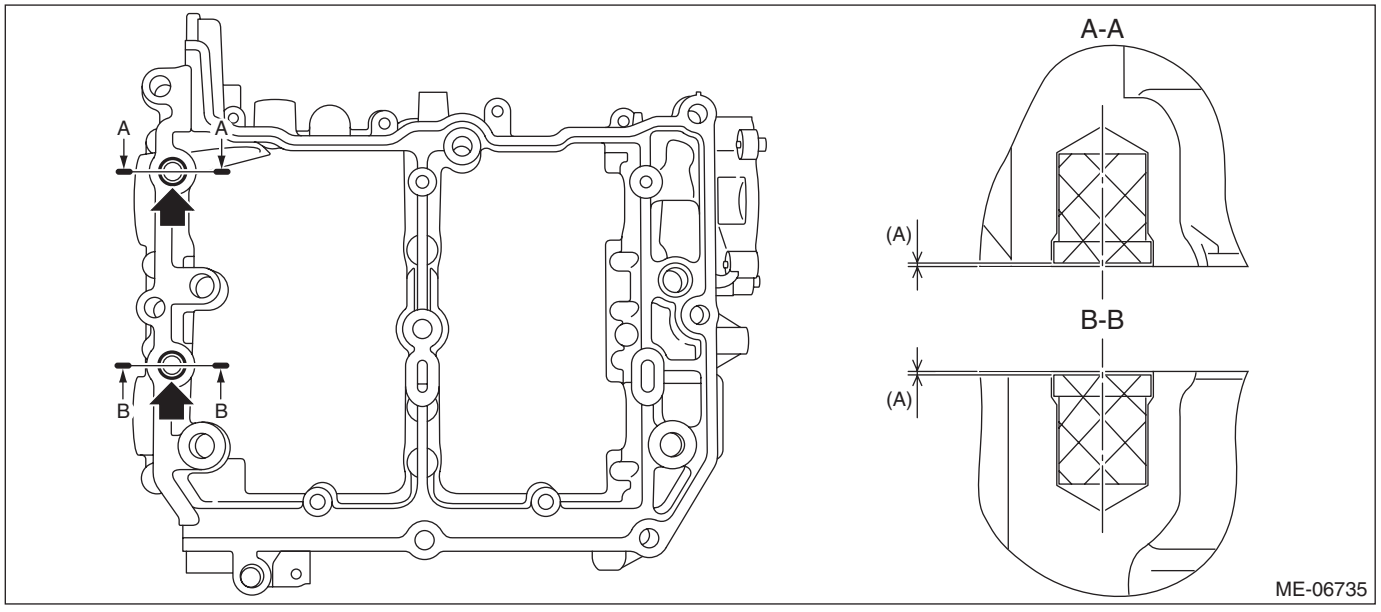

(A) 0 — 0.5 mm (0 — 0.0197 in)

2) Set the intake camshaft RH and the exhaust camshaft RH to the cam carrier RH.

NOTE:
Apply engine oil to the journals of cam carrier RH before setting the intake camshaft RH and exhaust camshaft RH.

3) Install the front camshaft cap RH, intake center camshaft cap RH, intake rear camshaft cap RH, exhaust center camshaft cap RH and exhaust rear camshaft cap RH.

(1) Apply liquid gasket to the mating surface of front camshaft cap RH, intake rear camshaft cap RH and exhaust rear camshaft cap RH as shown in the figure.

CAUTION:
• Do not apply liquid gasket excessively. Applying excessively may cause excess gasket to flow toward camshaft journal, resulting in engine seizure.
• Do not apply liquid gasket excessively to the intake center camshaft cap RH and exhaust center camshaft cap RH.

NOTE:
• Before applying liquid gasket, degrease the old liquid gasket seal surface of the front camshaft cap RH, intake rear camshaft cap RH, exhaust rear camshaft cap RH, and cam carrier RH.
• Install within 5 min. after applying liquid gasket.

Liquid gasket:
THREE BOND 1217G (Part No. K0877Y0100), THREE BOND 1217H or equivalent

Liquid gasket applying diameter:
Mating surfaces other than ranges A and B
2±0.5 mm (0.0787±0.0197 in)
Mating surfaces of range A
$3^{+1}_{-0.5}$ mm ($0.1181^{+0.0394}_{-0.0197}$ in)
Mating surfaces of range B
3.5±0.5 mm (0.1378±0.0197 in)

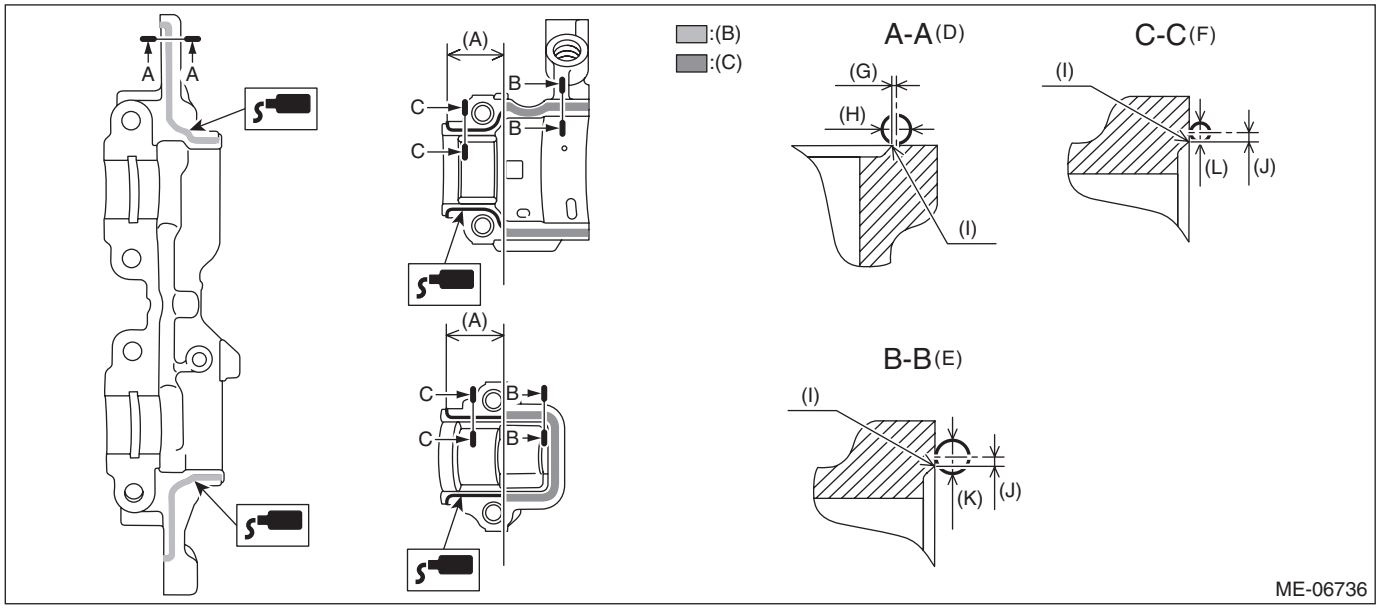

(A)	28.5 mm (1.122 in)	(E)	Liquid gasket applying position of mating surfaces of range B	(I)	Chamfer edge
(B)	Range A	(F)	Liquid gasket applying position of mating surfaces other than range A and range B	(J)	1 mm (0.0394 in) or less
(C)	Range B	(G)	0.5 mm (0.0197 in)	(K)	ϕ3.5±0.5 mm (0.1378±0.0197 in)
(D)	Liquid gasket applying position of mating surfaces of range A	(H)	$\phi 3^{+1}_{-0.5}$ mm ($0.1181^{+0.0394}_{-0.0197}$ in)	(L)	ϕ2±0.5 mm (0.0787±0.0197 in)

(2) Apply engine oil to the journals of each camshaft cap before setting the camshaft cap.
(3) Tighten the bolts which secure front camshaft cap RH, intake center camshaft cap RH, intake rear camshaft cap RH, exhaust center camshaft cap RH and exhaust rear camshaft cap RH in numerical order as shown in the figure.

Tightening torque:
18 N·m (1.8 kgf-m, 13.3 ft-lb)

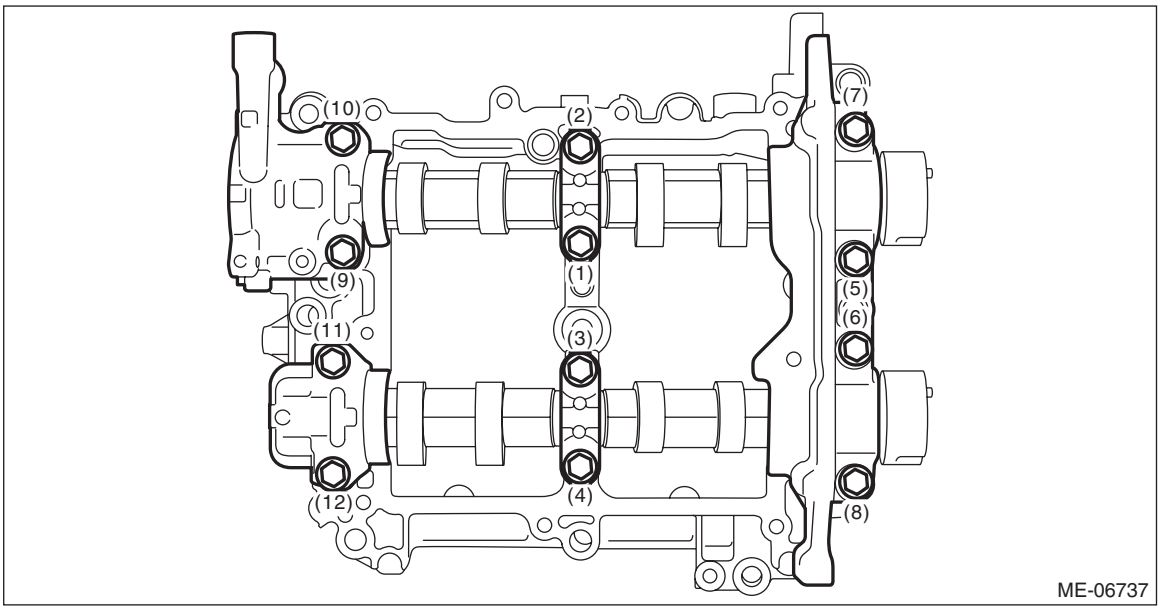

4) Install the oil pipe to the cam carrier RH.
(1) Set the oil pipe to the cam carrier RH, and temporarily tighten the bolts which secure the oil pipe to the cam carrier RH.

NOTE:
Use a new gasket.

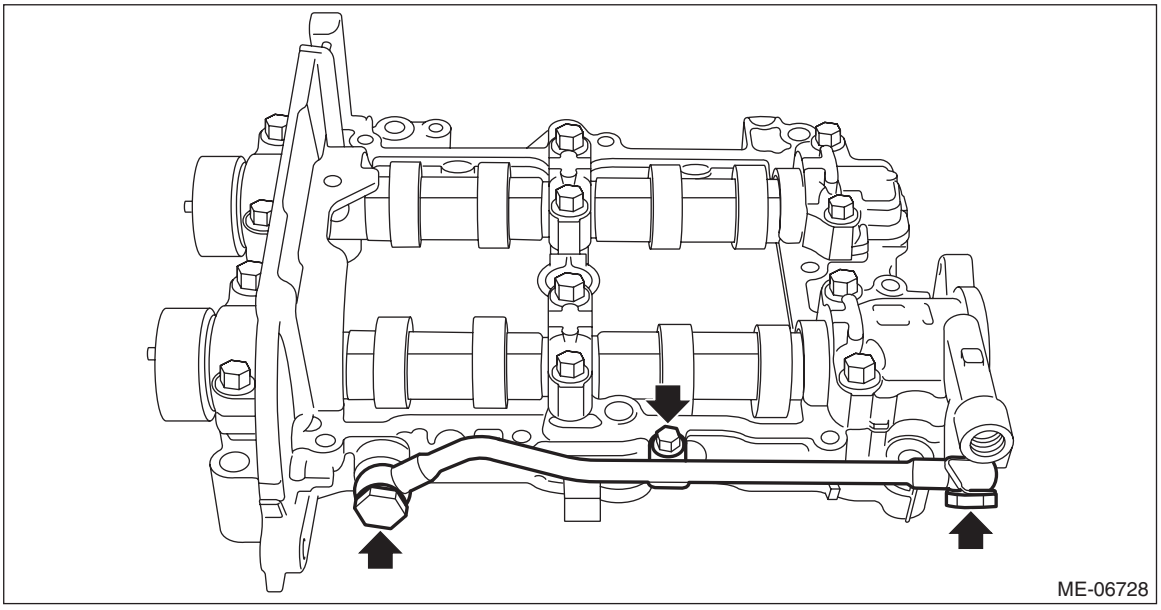

(2) Tighten the bolts which secures the oil pipe to the cam carrier RH in numerical order as shown in the figure.

Tightening torque:
T1: 6.4 N·m (0.7 kgf-m, 4.7 ft-lb)
T2: 31 N·m (3.2 kgf-m, 22.9 ft-lb)

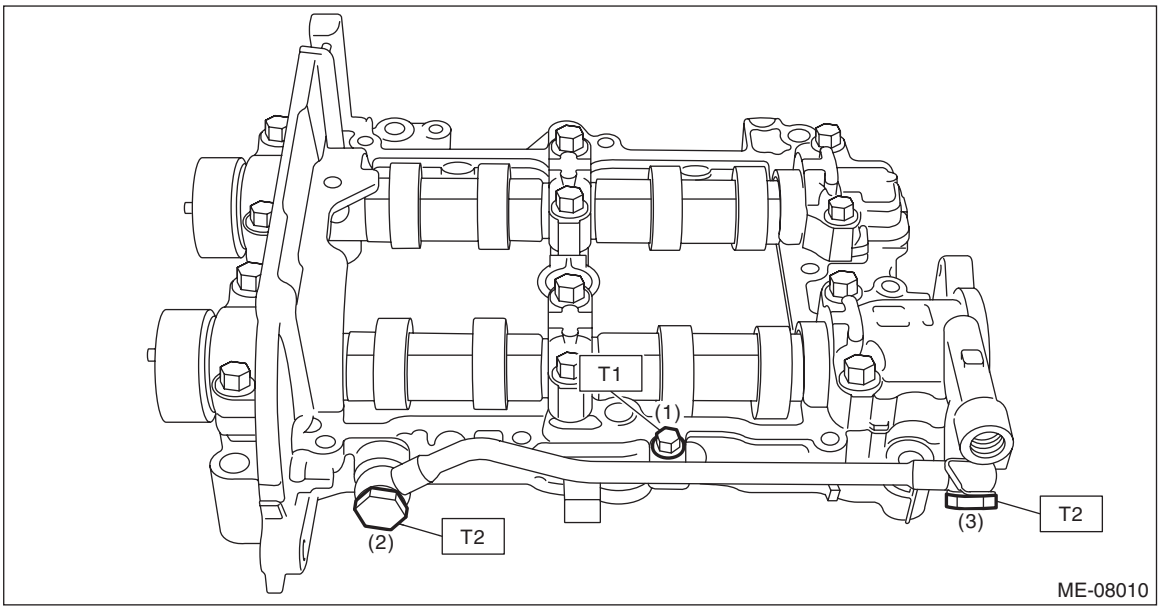

2. CAM CARRIER LH

1) Install the filter to the cam carrier LH.

NOTE:
Use a new filter.

Filter insert position:
Cam carrier LH end face $0^{+0}_{-0.5}$ mm ($^{+0}_{-0.0197}$ in) position

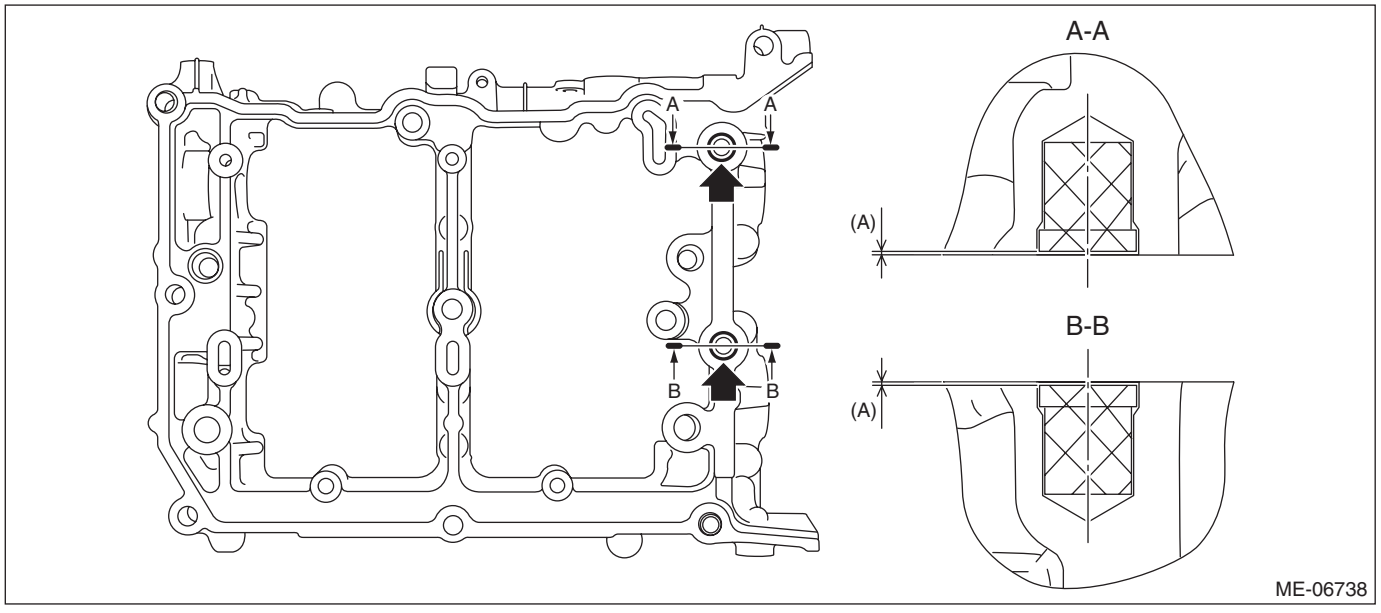

(A) 0 — 0.5 mm (0 — 0.0197 in)

2) Set the intake camshaft LH and the exhaust camshaft LH to the cam carrier LH.

NOTE:
Apply engine oil to the journals of cam carrier LH before setting the intake camshaft LH and exhaust camshaft LH.

3) Install the front camshaft cap LH, intake center camshaft cap LH, intake rear camshaft cap LH, exhaust center camshaft cap LH and exhaust rear camshaft cap LH.

(1) Apply liquid gasket to the mating surface of front camshaft cap LH, intake rear camshaft cap LH and exhaust rear camshaft cap LH as shown in the figure.

CAUTION:

• Do not apply liquid gasket excessively. Applying excessively may cause excess gasket to flow toward camshaft journal, resulting in engine seizure.

• Do not apply liquid gasket excessively to the intake center camshaft cap LH and exhaust center camshaft cap LH.

NOTE:

• Before applying liquid gasket, degrease the old liquid gasket seal surface of the front camshaft cap LH, intake rear camshaft cap LH, exhaust rear camshaft cap LH, and cam carrier LH.

• Install within 5 min. after applying liquid gasket.

Liquid gasket:

THREE BOND 1217G (Part No. K0877Y0100), THREE BOND 1217H or equivalent

Liquid gasket applying diameter:

Mating surfaces other than ranges A, B and C

2±0.5 mm (0.0787±0.0197 in)

Mating surfaces of range A

3.5±0.5 mm (0.1378±0.0197 in)

Mating surfaces of range B

3±0.5 mm (0.1181±0.0197 in)

Mating surfaces of range C

$3^{+1}_{-0.5}$ mm ($0.1181^{+0.0394}_{-0.0197}$ in)

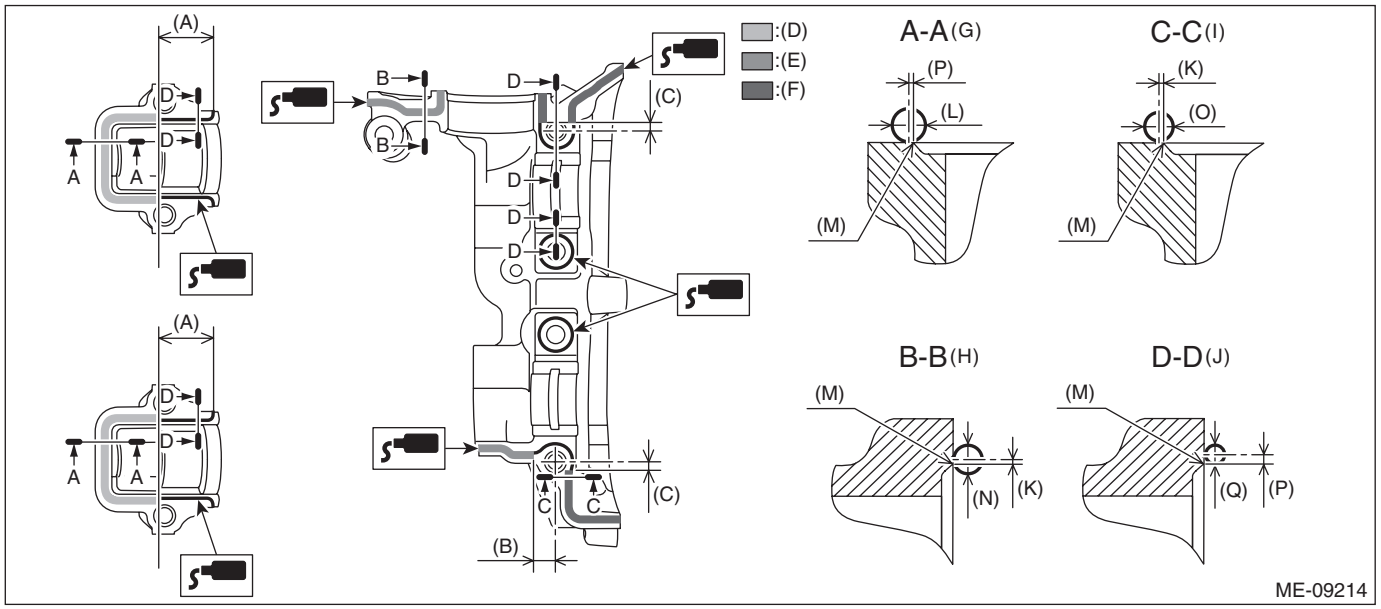

(A)	28.5 mm (1.122 in)	(G)	Liquid gasket applying position of mating surfaces of range A	(M)	Chamfer edge
(B)	11.6 mm (0.4567 in)	(H)	Liquid gasket applying position of mating surfaces of range B	(N)	ϕ3±0.5 mm (0.1181±0.0197 in)
(C)	5.1 mm (0.2008 in)	(I)	Liquid gasket applying position of mating surfaces of range C	(O)	$\phi 3^{+1}_{-0.5}$ mm ($0.1181^{+0.0394}_{-0.0197}$ in)
(D)	Range A	(J)	Liquid gasket applying position of mating surfaces other than range A, range B and range C	(P)	1 mm (0.0394 in) or less
(E)	Range B	(K)	0.5 mm (0.0197 in)	(Q)	ϕ2±0.5 mm (0.0787±0.0197 in)
(F)	Range C	(L)	ϕ3.5±0.5 mm (0.1378±0.0197 in)		

(2) Apply engine oil to the journals of each camshaft cap before setting the camshaft cap.
(3) Tighten the bolts which secure front camshaft cap LH, intake center camshaft cap LH, intake rear camshaft cap LH, exhaust center camshaft cap LH and exhaust rear camshaft cap LH in numerical order as shown in the figure.

Tightening torque:
18 N·m (1.8 kgf-m, 13.3 ft-lb)

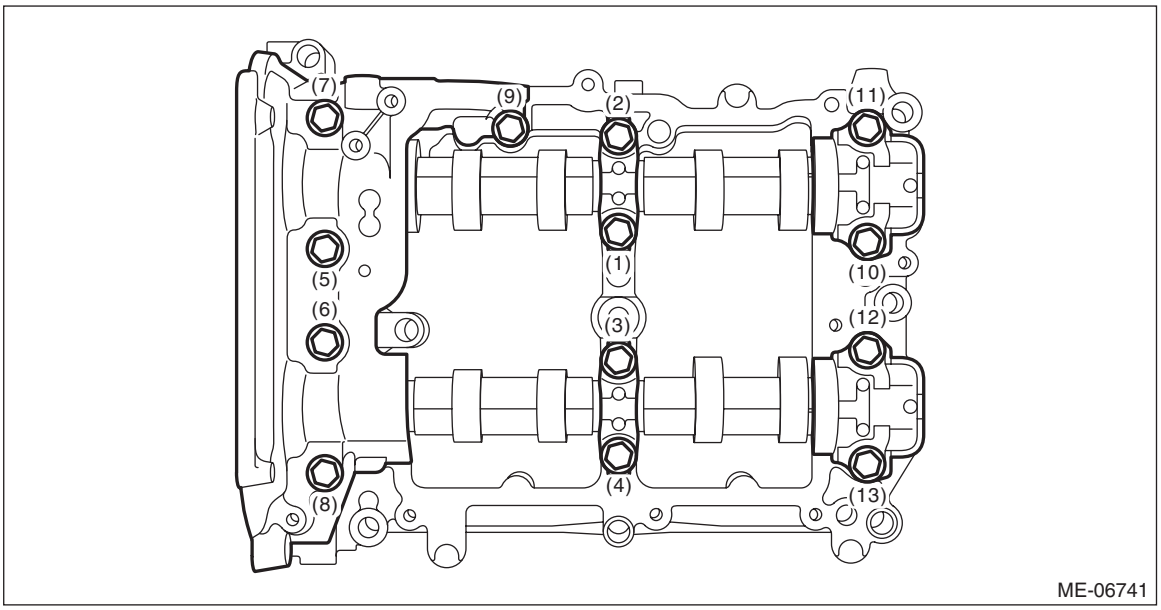

E: INSPECTION

1) Visually check the cam carrier filter, and if clogging is found, replace with a new part.

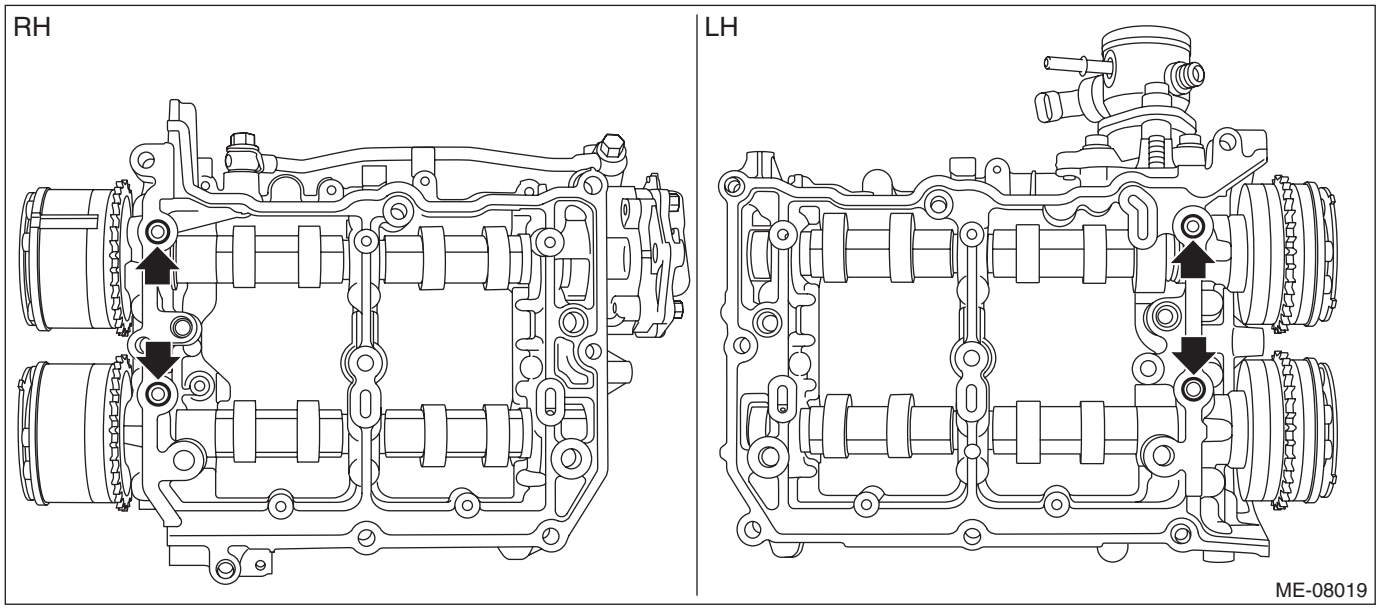

2) Check the camshaft journals for damage and wear. Replace the camshaft if faulty.
3) Check the cam face condition of camshaft, and remove the minor faults by grinding with oil stone. Replace the camshaft if uneven wear is found.

4) Using a dial gauge, check the camshaft bend. If it exceeds the limit, replace the camshaft.

NOTE:
Measurement should be performed at a temperature of 20°C (68°F).

Camshaft bend:
Limit
0.020 mm (0.0008 in)

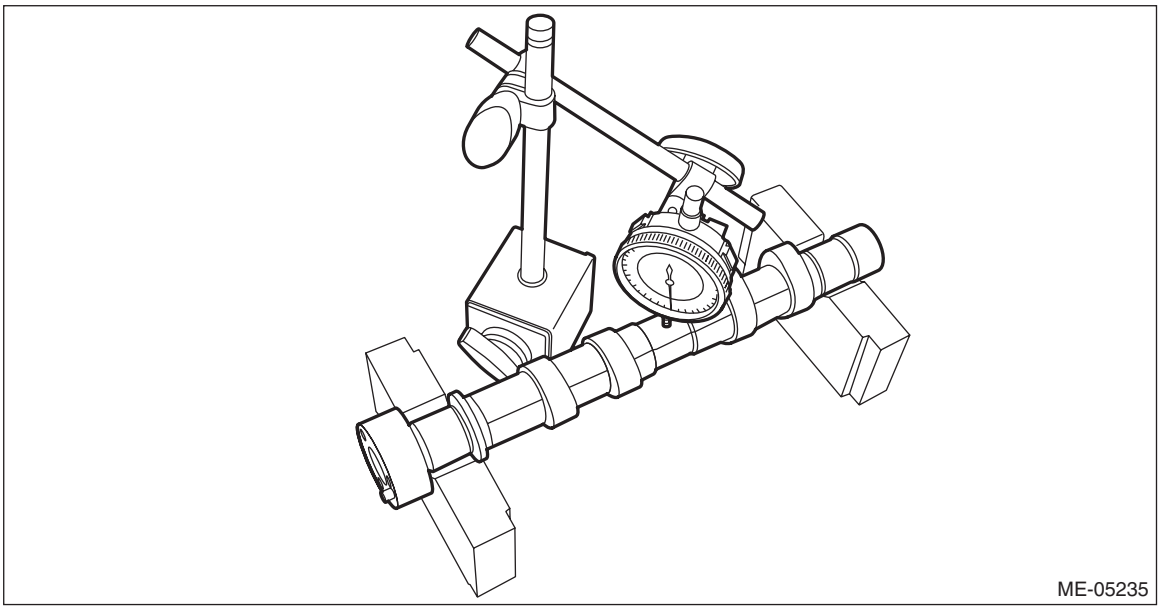

5) Check the cam lobe height “H” and cam base circle diameter “A” of camshaft as shown in the figure, using micrometer. If it is not within the standard, replace the camshaft.

NOTE:
- Measurement should be performed at a temperature of 20°C (68°F).
- Perform measurement of cam lobe height for fuel pump drive section at three points.

Camshaft cam lobe overall height H:

Intake
Valve drive section
Standard
40.34 — 40.44 mm (1.588 — 1.592 in)
Fuel pump drive section
Standard
41.95 — 42.05 mm (1.652 — 1.656 in)

Exhaust
Standard
40.20 — 40.30 mm (1.583 — 1.587 in)

Camshaft cam base circle diameter A:
Standard
34.0 mm (1.339 in)

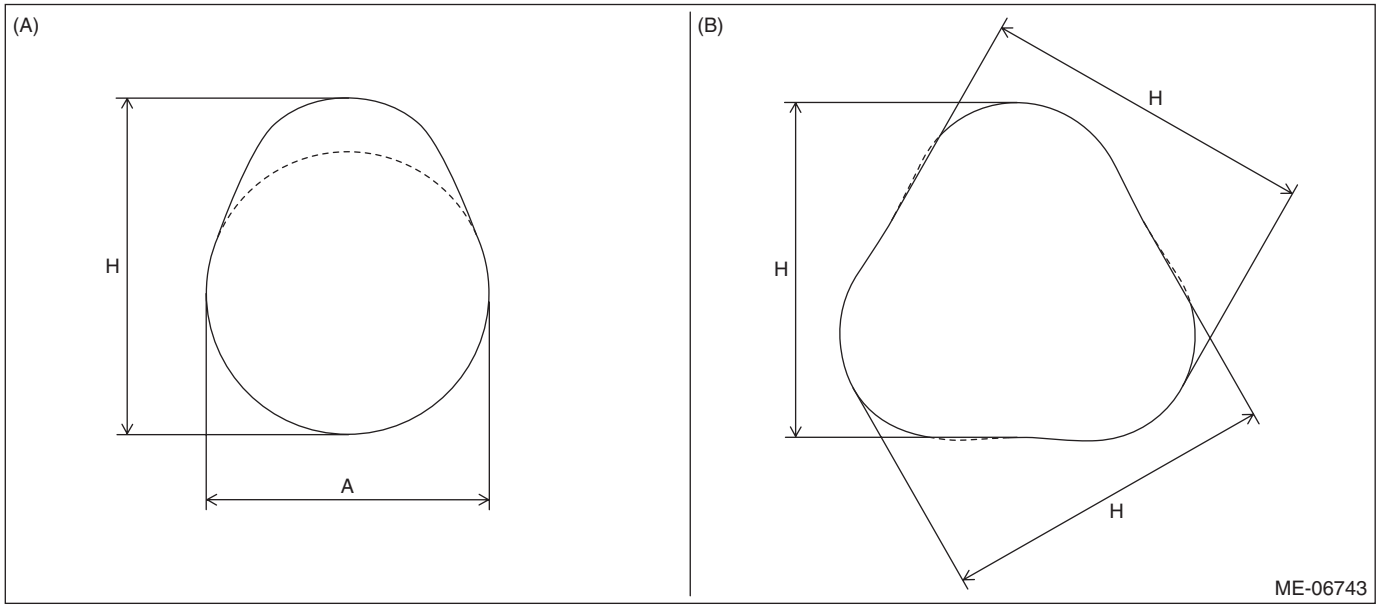

(A) Valve drive section (B) Fuel pump drive section

6) Check the camshaft journal outer diameter using micrometer. If it is not within the standard, replace the camshaft.

NOTE:
- Measurement should be performed at a temperature of 20°C (68°F).
- Measure outer diameter of each journal at several points, and read the value of most worn location.

Camshaft journal outer diameter:
Standard
25.946 — 25.963 mm (1.0215 — 1.0222 in)

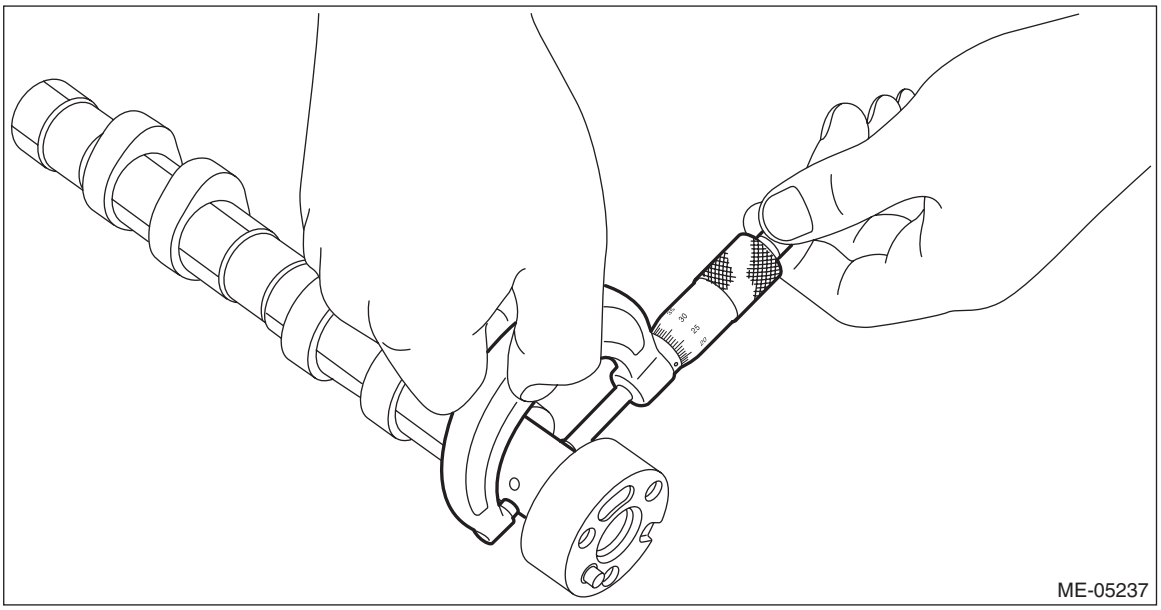

7) Using a dial gauge, check the thrust clearance of the camshaft. If it is not within the standard or if uneven wear is found, replace each camshaft cap and cam carrier as a set. If necessary replace the camshaft.

NOTE:
- Measurement should be performed at a temperature of 20°C (68°F).
- Set the dial gauge at end surface of camshaft.

Camshaft thrust clearance:
Standard
0.068 — 0.116 mm (0.0027 — 0.0047 in)

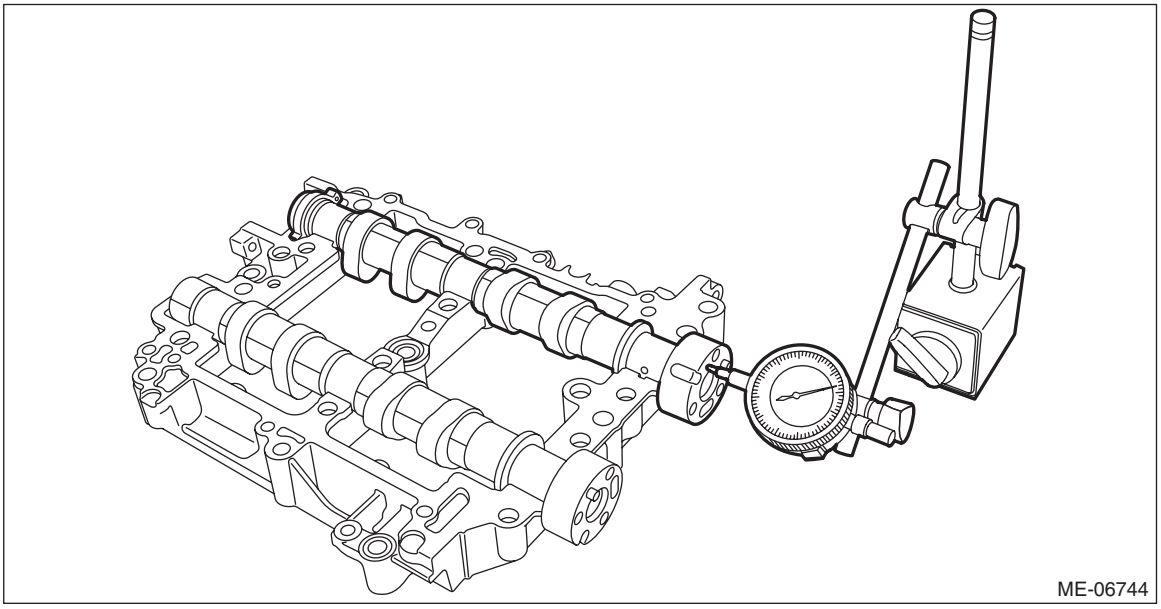

8) Check the oil clearance on the camshaft using a plastigauge.

NOTE:
Measurement should be performed at a temperature of 20°C (68°F).

(1) Remove the liquid gasket from cam carrier and front camshaft cap, intake rear camshaft cap and exhaust rear camshaft cap.
(2) Clean each camshaft cap and cam carrier journals.
(3) Set the camshaft to the cam carrier.
(4) Place a plastigauge across the camshaft journals of each camshaft and set the camshaft caps.
(5) Tighten the bolts which secure front camshaft cap, intake center camshaft cap, intake rear camshaft cap, exhaust center camshaft cap and exhaust rear camshaft cap in numerical order as shown in the figure.

Tightening torque:
18 N·m (1.8 kgf-m, 13.3 ft-lb)

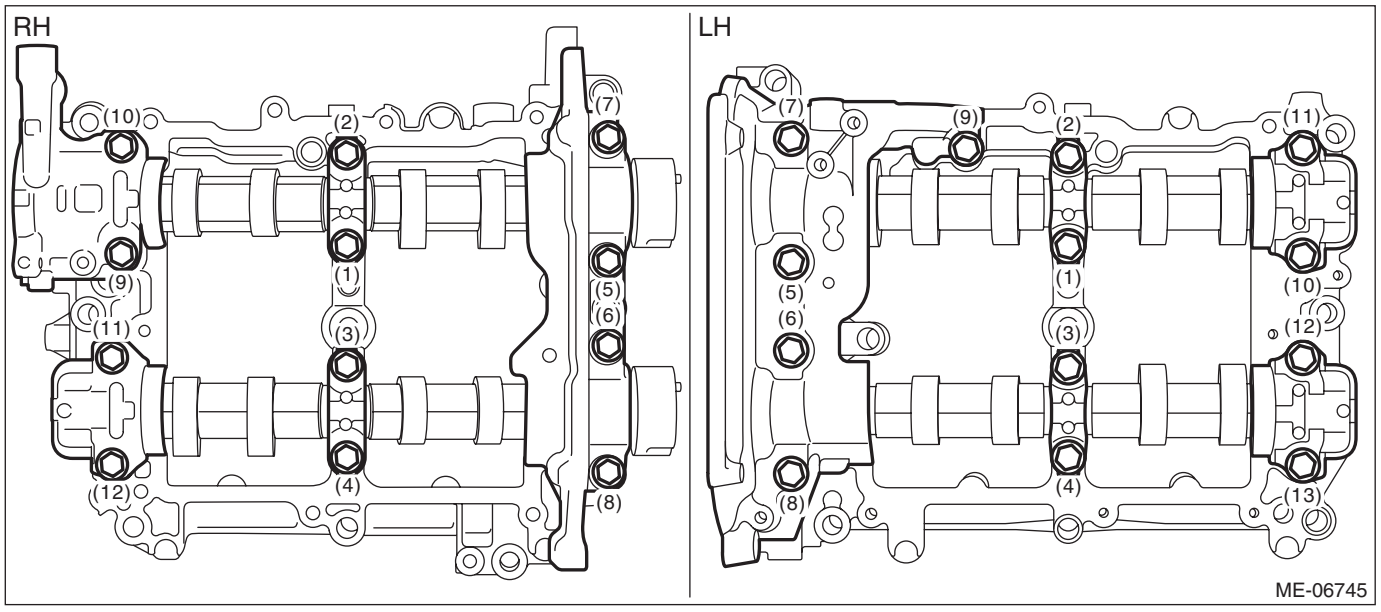

(6) Loosen the bolts (front camshaft cap, intake center camshaft cap, intake rear camshaft cap, exhaust center camshaft cap and exhaust rear camshaft cap) equally, a little at a time in numerical sequence as shown in the figure, and remove each camshaft cap.

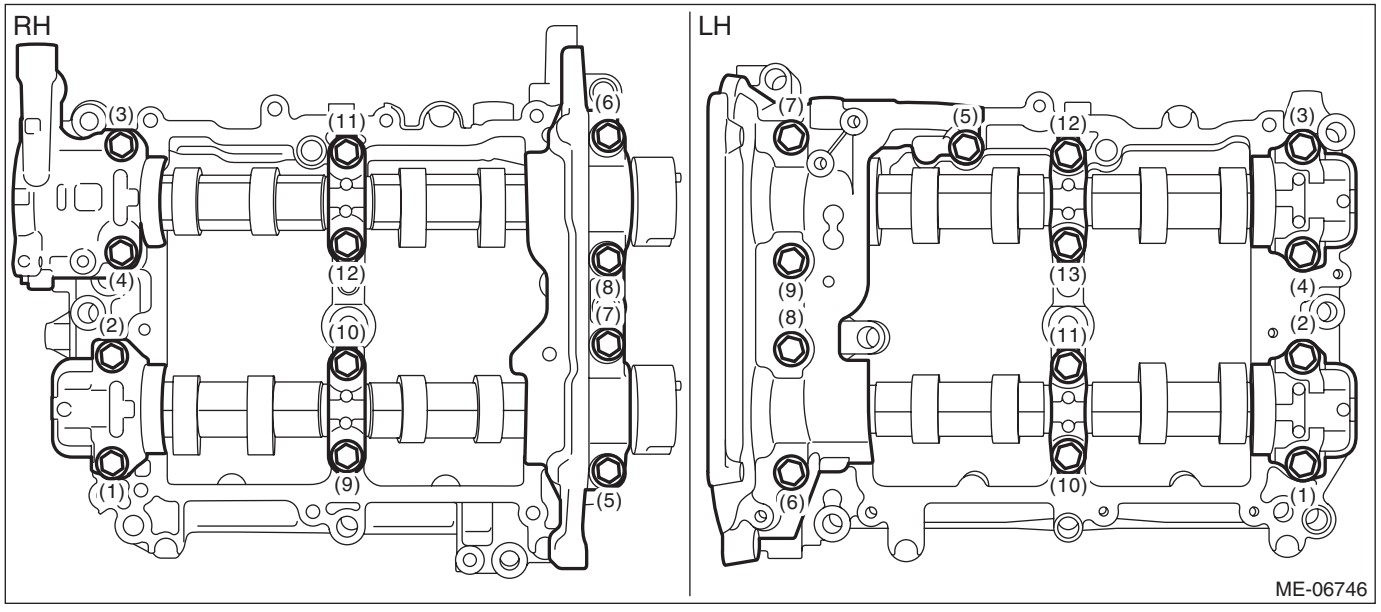

(7) Determine camshaft oil clearance by matching the widest point of plastigauge on each journal against scale printed on a package of plastigauge. If it is not within the standard, replace each camshaft cap and cam carrier as a set. If necessary replace the camshaft.

Camshaft oil clearance:

Standard

0.037 — 0.072 mm (0.0015 — 0.0028 in)

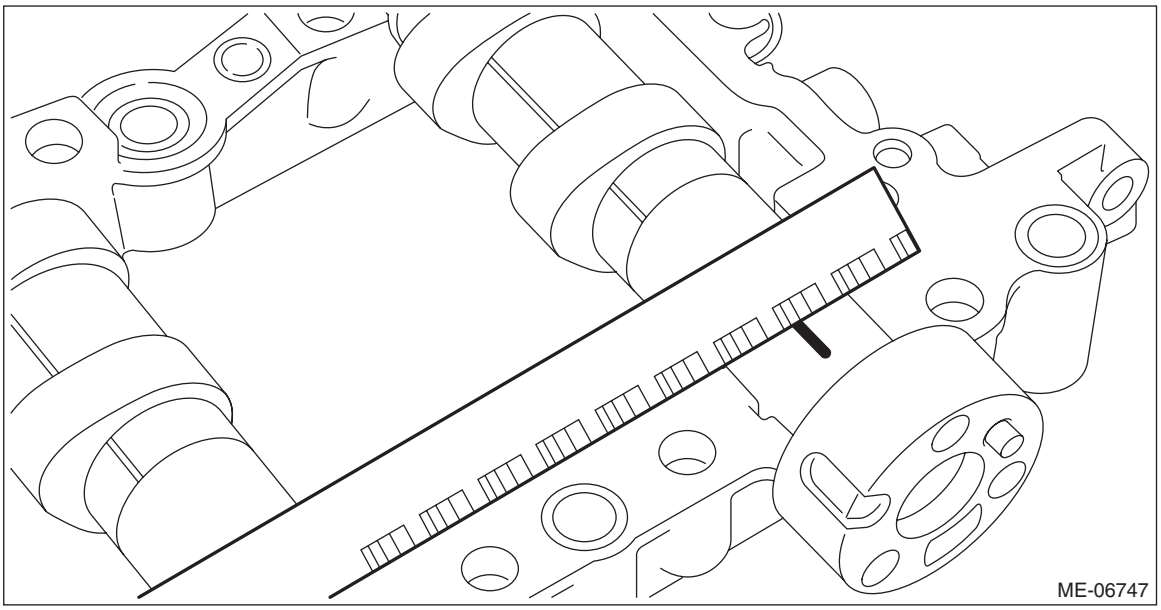

(8) Completely remove the plastigauge.

21.Cylinder Head

A: REMOVAL

1. CYLINDER HEAD RH

1) Remove the engine from the vehicle. <Ref. to ME(w/o STI)-45, REMOVAL, Engine Assembly.>
2) Remove the intake manifold. <Ref. to FU(w/o STI)-18, REMOVAL, Intake Manifold.>
3) Remove the engine wiring harness. <Ref. to FU(w/o STI)-81, REMOVAL, Engine Wiring Harness.>
4) Remove the chain cover. <Ref. to ME(w/o STI)-89, REMOVAL, Chain Cover.>
5) Remove the rocker cover RH. <Ref. to ME(w/o STI)-144, ROCKER COVER RH, REMOVAL, Rocker Cover.>
6) Remove the cam carrier RH. <Ref. to ME(w/o STI)-164, CAM CARRIER RH, REMOVAL, Cam Carrier.>
7) Remove the high-pressure fuel delivery pipe assembly. <Ref. to FU(w/o STI)-78, HIGH-PRESSURE FUEL DELIVERY PIPE ASSEMBLY, REMOVAL, High Pressure Fuel Delivery Pipe.>
8) When disassembling the cylinder head RH

NOTE:
When disassembling the cylinder head RH, perform the following steps also.
(1) Remove the air intake adapter RH. <Ref. to FU(w/o STI)-42, REMOVAL, Tumble Generator Valve Assembly.>
(2) Remove the fuel injector RH. <Ref. to FU(w/o STI)-50, FUEL INJECTOR RH, REMOVAL, Fuel Injector.>
(3) Remove the EGR cooler. <Ref. to EC(w/o STI)-38, REMOVAL, EGR Cooler.>
9) Set the part so that the cylinder head RH is on the upper side.
10) Loosen the bolts securing the cylinder head RH equally, a little at a time in numerical sequence as shown in the figure and remove the cylinder head bolt.

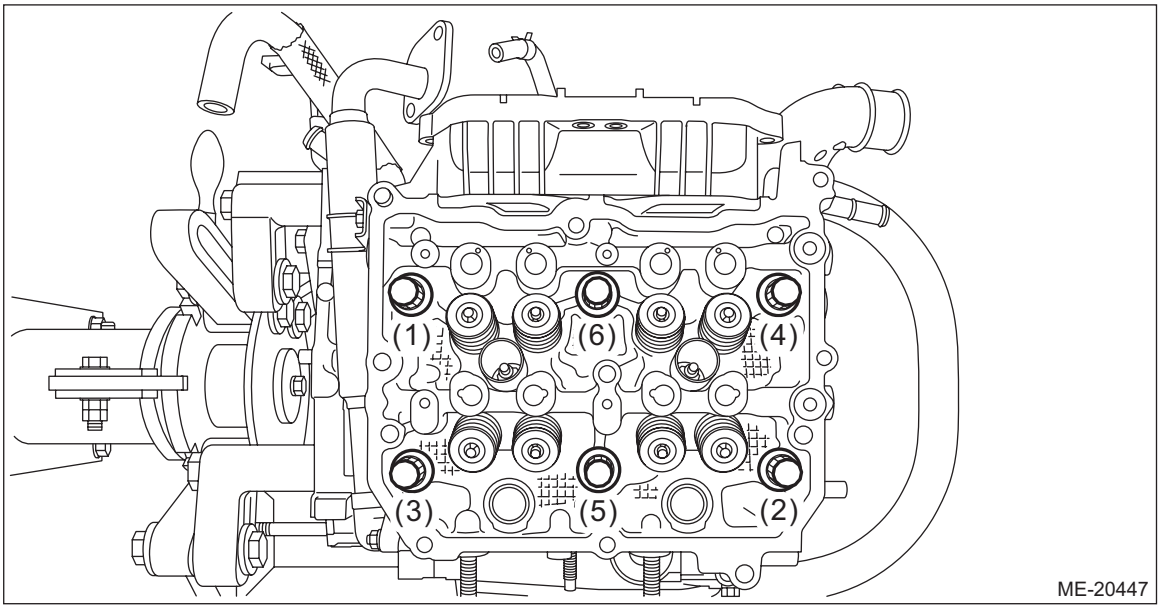

11) While tapping the cylinder head RH with a plastic hammer, separate to remove it from the cylinder block RH.
12) Remove the cylinder head gasket RH.

CAUTION:
Be careful not to scratch the mating surface of cylinder head and cylinder block.
13) Remove the liquid gasket from the cylinder head RH and cylinder block RH.

2. CYLINDER HEAD LH

1) Remove the engine from the vehicle. <Ref. to ME(w/o STI)-45, REMOVAL, Engine Assembly.>
2) Remove the intake manifold. <Ref. to FU(w/o STI)-18, REMOVAL, Intake Manifold.>
3) Remove the engine wiring harness. <Ref. to FU(w/o STI)-81, REMOVAL, Engine Wiring Harness.>
4) Remove the chain cover. <Ref. to ME(w/o STI)-89, REMOVAL, Chain Cover.>
5) Remove the rocker cover LH. <Ref. to ME(w/o STI)-146, ROCKER COVER LH, REMOVAL, Rocker Cover.>
6) Remove the cam carrier LH. <Ref. to ME(w/o STI)-167, CAM CARRIER LH, REMOVAL, Cam Carrier.>
7) Remove the high-pressure fuel delivery pipe assembly. <Ref. to FU(w/o STI)-78, HIGH-PRESSURE FUEL DELIVERY PIPE ASSEMBLY, REMOVAL, High Pressure Fuel Delivery Pipe.>
8) Remove the A/C compressor. <Ref. to AC-45, REMOVAL, Compressor.>
9) When disassembling the cylinder head LH

NOTE:
When disassembling the cylinder head LH, perform the following steps also.
(1) Remove the air intake adapter LH. <Ref. to FU(w/o STI)-42, REMOVAL, Tumble Generator Valve Assembly.>
(2) Remove the fuel injector LH. <Ref. to FU(w/o STI)-53, FUEL INJECTOR LH, REMOVAL, Fuel Injector.>

10) Set the part so that the cylinder head LH is on the upper side.
11) Loosen the bolts securing the cylinder head LH equally, a little at a time in numerical sequence as shown in the figure and remove the cylinder head bolt.

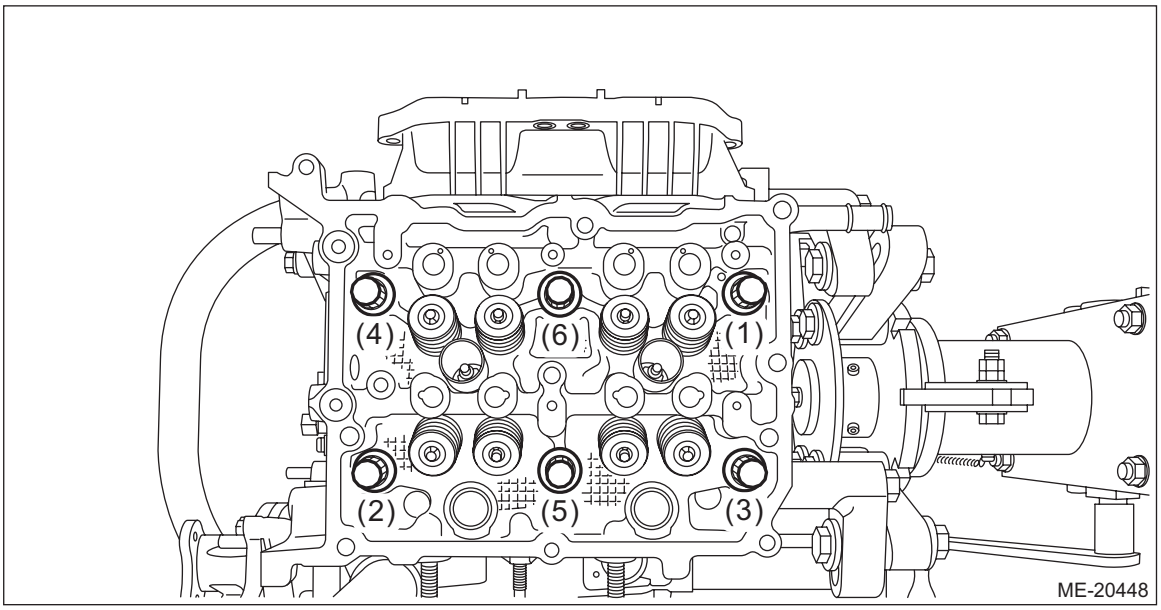

12) While tapping the cylinder head LH with a plastic hammer, separate to remove it from the cylinder block LH.
13) Remove the cylinder head gasket LH.

CAUTION:
Be careful not to scratch the mating surface of cylinder head and cylinder block.
14) Remove the liquid gasket from cylinder head LH and cylinder block LH.

B: INSTALLATION

1. CYLINDER HEAD RH

1) Set the part so that the cylinder block RH is on the upper side.
2) Clean the bolt holes in the cylinder block RH.

CAUTION:
To avoid erroneous tightening of the bolts, clean out the bolt holes sufficiently by blowing with compressed air to eliminate engine coolant etc.
3) Apply liquid gasket to both sides of the cylinder head gasket RH as shown in the figure.

NOTE:
- Use a new cylinder head gasket RH.
- Before applying liquid gasket, degrease the mating surface of cylinder blocks RH and cylinder head RH.
- Install within 5 min. after applying liquid gasket.

Liquid gasket:
THREE BOND 1217G (Part No. K0877Y0100), THREE BOND 1217H or equivalent

Liquid gasket applying diameter:
3±1 mm (0.1181±0.0394 in)

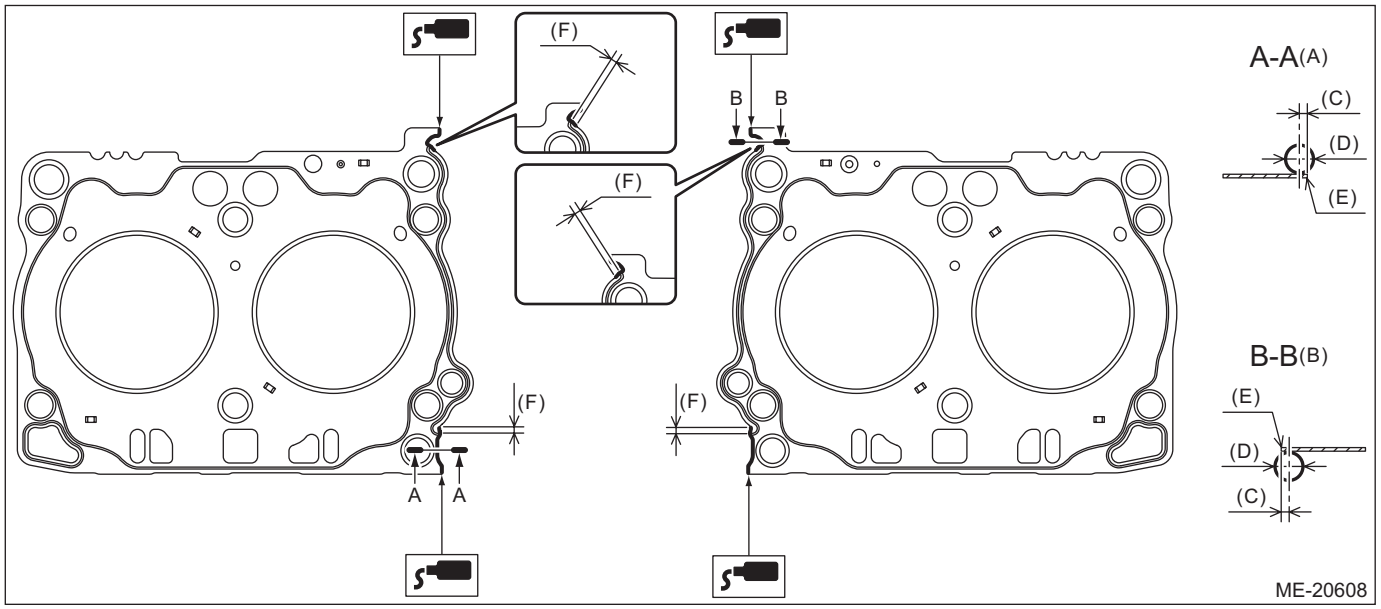

(A)	Liquid gasket applying position to the cylinder head side	(C)	1 mm (0.0394 in) or less	(E)	Cylinder head gasket edge
(B)	Liquid gasket applying position to the cylinder block side	(D)	ϕ3±1 mm (0.1181±0.0394 in)	(F)	Overlap margin of bead end and liquid gasket: 3 — 10 mm (0.1181 — 0.3937 in)

4) Attach the cylinder head gasket RH.

NOTE:
Check that liquid gasket RH is squeezed out from the cylinder head gasket.
5) Install the cylinder head RH to the cylinder block RH.

CAUTION:
Be careful not to scratch the mating surface of cylinder head RH and cylinder block RH.
(1) Clean the cylinder head bolt threads and apply sufficient engine oil to the washer and cylinder head bolts threads.

(2) Mount the cylinder head RH onto the cylinder block RH, and tighten all bolts with a torque of 20 N·m (2.0 kgf-m, 14.8 ft-lb) in numerical order as shown in the figure.

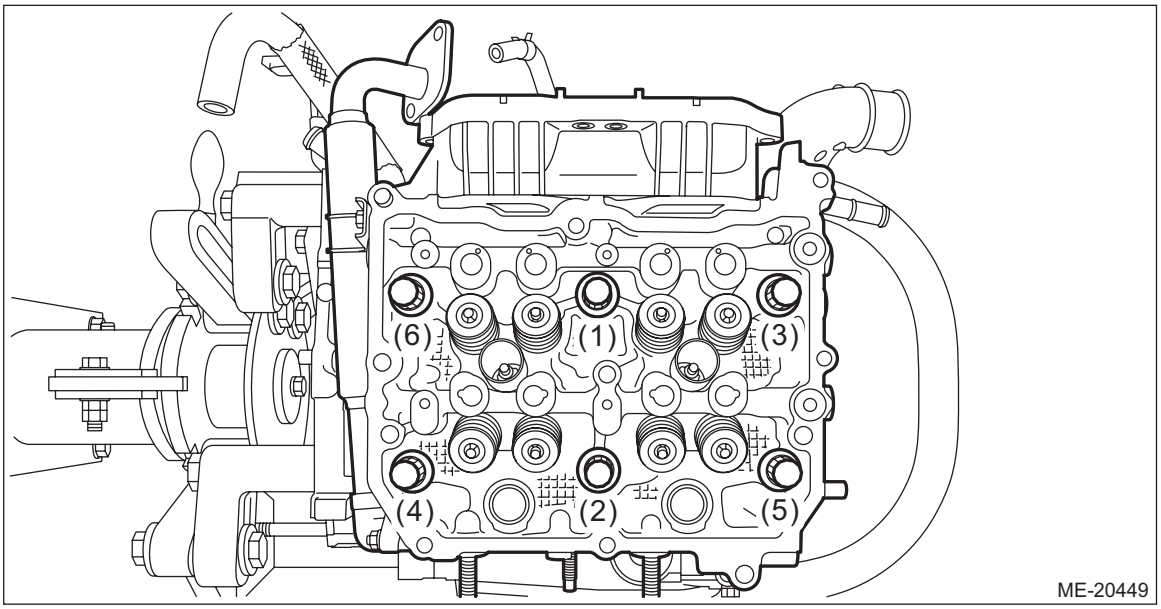

(3) Tighten all cylinder head bolts further with a torque of 100 N·m (10.2 kgf-m, 73.8 ft-lb) in numerical order as shown in the figure.

CAUTION:
If the bolt makes stick-slip sound during tightening, repeat the procedure from step 1). In that case, the cylinder head gasket RH can be reused. But it is necessary to remove liquid gasket completely from cylinder block RH, cylinder head RH and cylinder head gasket RH and re-apply to them.

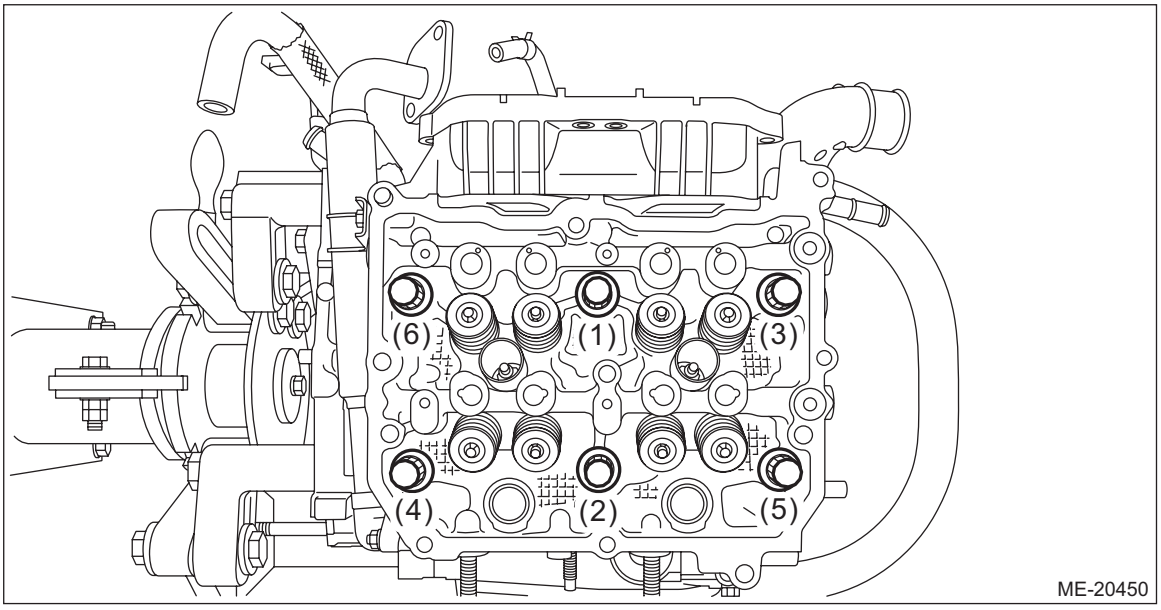

(4) Loosen all cylinder head bolts by 360° in the numerical order as shown in the figure.

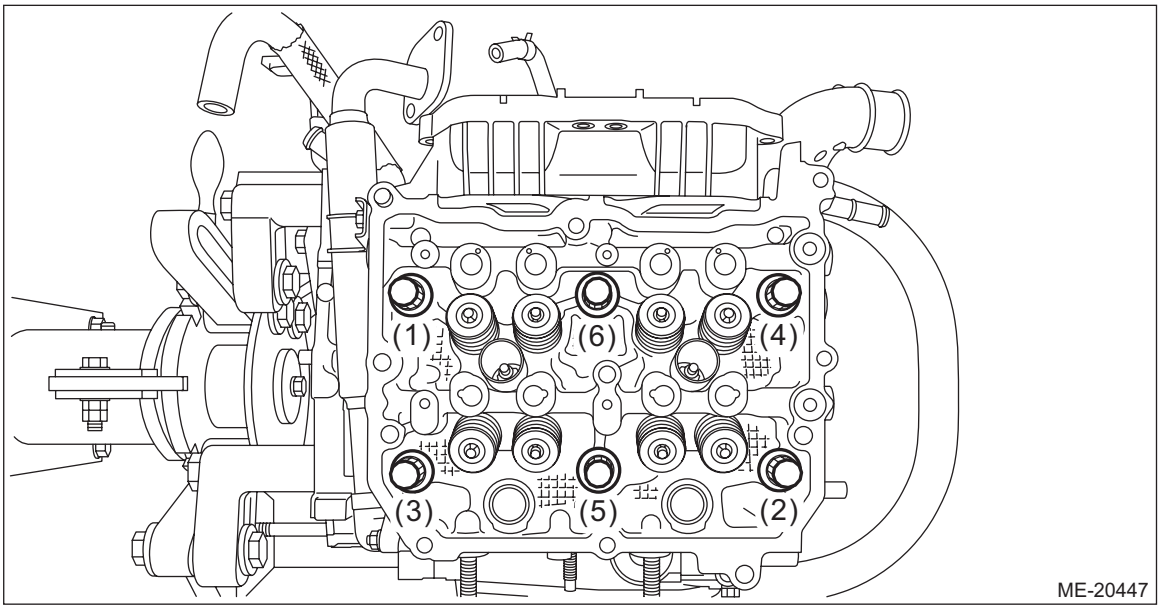

(5) Tighten all bolts with torque of 20 N·m (2.0 kgf-m, 14.8 ft-lb) in numerical sequence as shown in the figure.

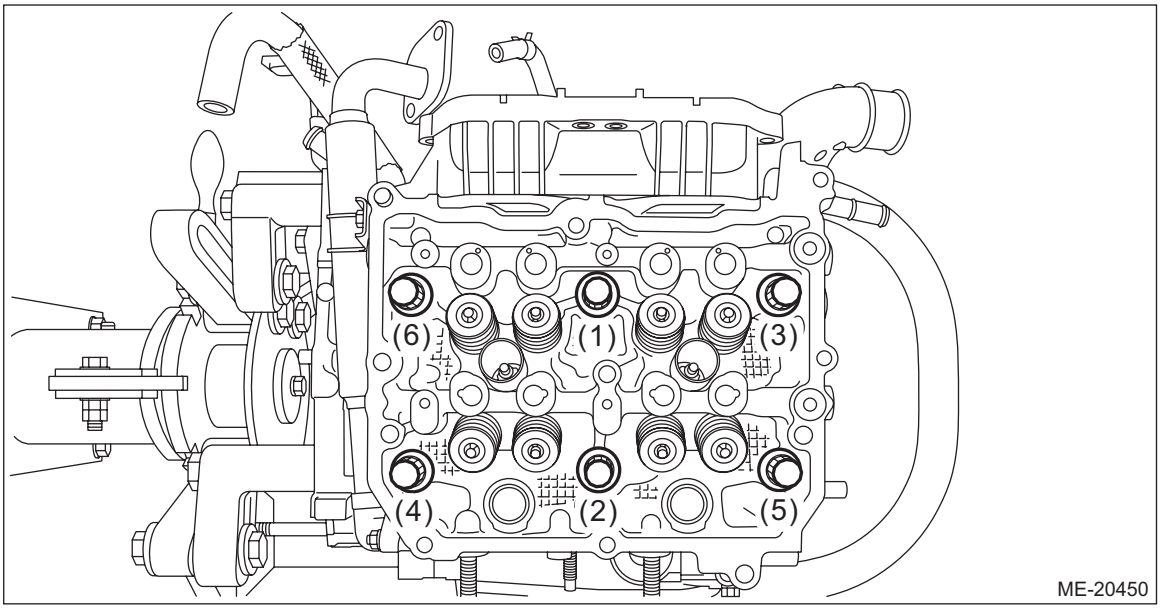

(6) Tighten all cylinder head bolts with a torque of 42 N·m (4.3 kgf-m, 31.0 ft-lb) in numerical order as shown in the figure.

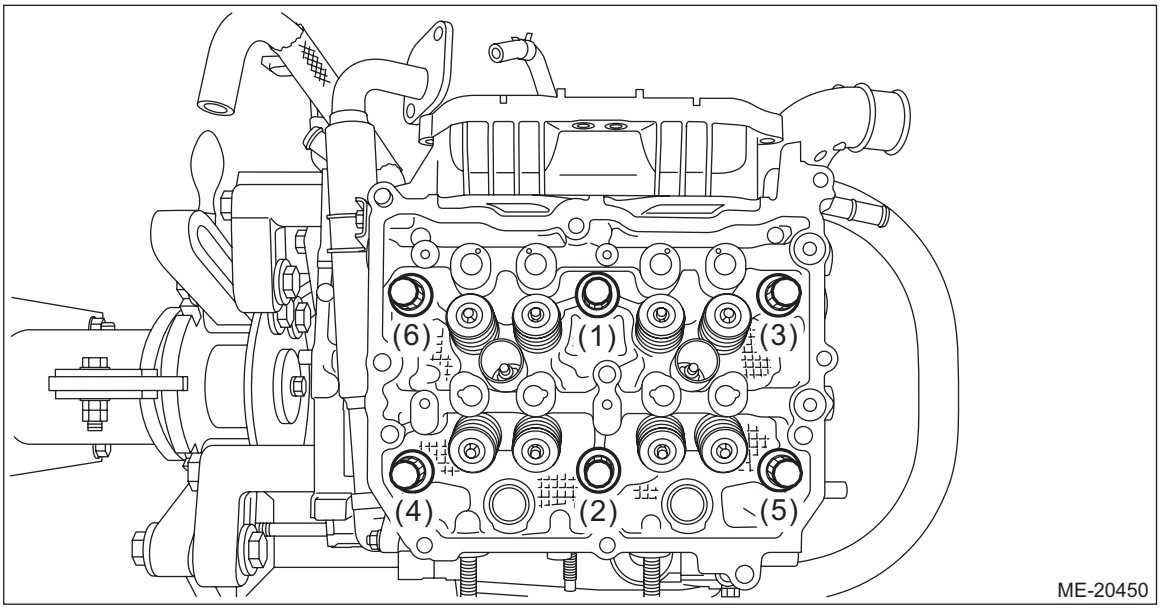

(7) Using angle gauge, tighten all cylinder head bolts with specified angle in numerical order as shown in the figure.

Tightening angle:
100°±2°

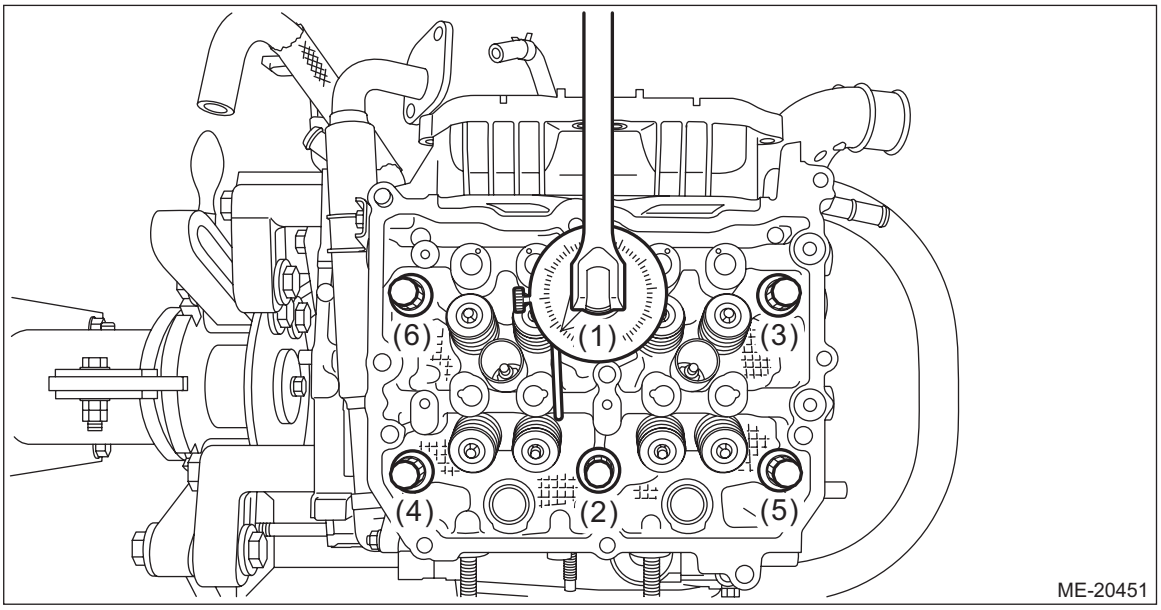

(8) Using angle gauge, tighten the cylinder head bolts (2 places) with specified angle in numerical order as shown in the figure.

Tightening angle:
100°±2°

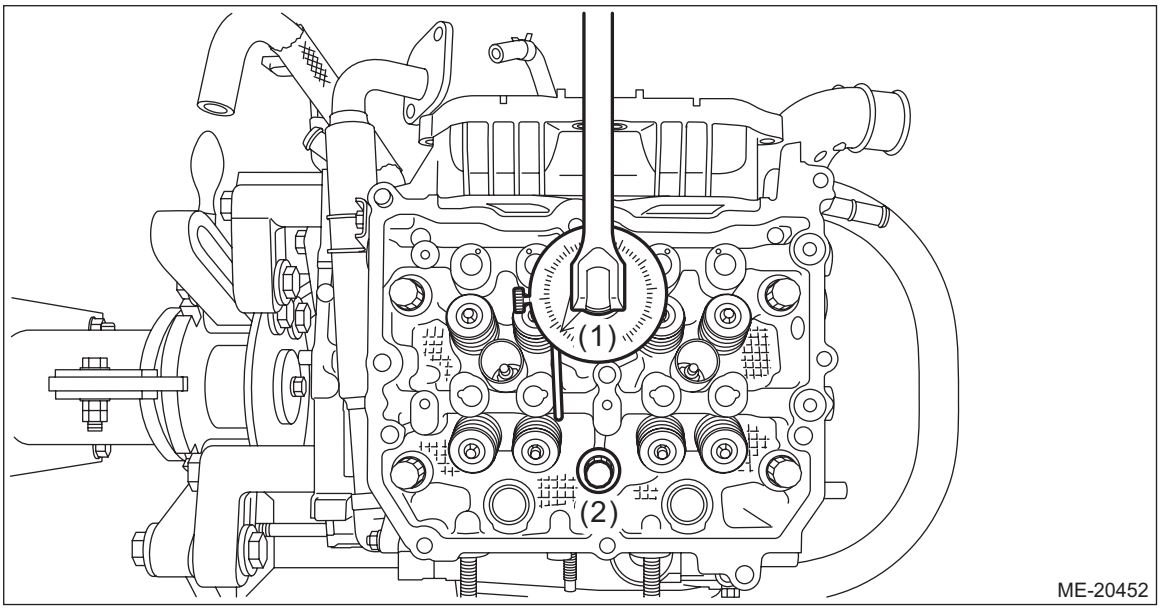

(9) Using angle gauge, tighten the cylinder head bolts (4 places) with specified angle in numerical order as shown in the figure.

NOTE:
After tightening, if the liquid gasket is squeezed out onto the seal surface of the chain cover, completely remove any squeezed-out liquid gasket.

Tightening angle:
50°±2°

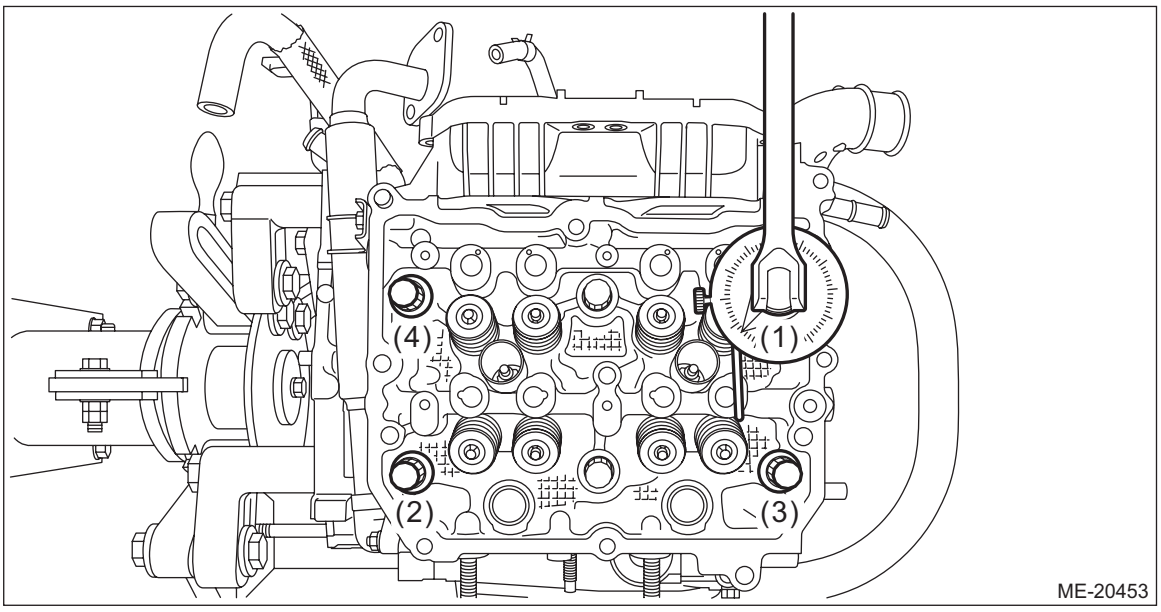

6) Set the part so that the installation surface of the intake manifold is on the upper side.
7) When the cylinder head RH has been disassembled

NOTE:
When the cylinder head RH has been disassembled, perform the following steps also.
(1) Install the EGR cooler. <Ref. to EC(w/o STI)-41, INSTALLATION, EGR Cooler.>

(2) Install the fuel injector RH. <Ref. to FU(w/o STI)-56, FUEL INJECTOR RH, INSTALLATION, Fuel Injector.>
(3) Install the air intake adapter RH. <Ref. to FU(w/o STI)-43, INSTALLATION, Tumble Generator Valve Assembly.>
8) Install the high-pressure fuel delivery pipe assembly. <Ref. to FU(w/o STI)-80, HIGH-PRESSURE FUEL DELIVERY PIPE ASSEMBLY, INSTALLATION, High Pressure Fuel Delivery Pipe.>
9) Install the cam carrier RH. <Ref. to ME(w/o STI)-172, CAM CARRIER RH, INSTALLATION, Cam Carrier.>
10) Install the rocker cover RH. <Ref. to ME(w/o STI)-153, ROCKER COVER RH, INSTALLATION, Rocker Cover.>
11) Install the chain cover. <Ref. to ME(w/o STI)-97, INSTALLATION, Chain Cover.>
12) Install the engine wiring harness. <Ref. to FU(w/o STI)-84, INSTALLATION, Engine Wiring Harness.>
13) Install the intake manifold. <Ref. to FU(w/o STI)-28, INSTALLATION, Intake Manifold.>
14) Install the engine to the vehicle. <Ref. to ME(w/o STI)-59, INSTALLATION, Engine Assembly.>

2. CYLINDER HEAD LH

1) Set the part so that the cylinder block LH is on the upper side.
2) Clean the bolt holes in the cylinder block LH.

CAUTION:
To avoid erroneous tightening of the bolts, clean out the bolt holes sufficiently by blowing with compressed air to eliminate engine coolant etc.
3) Apply liquid gasket to both sides of the cylinder head gasket LH as shown in the figure.

NOTE:
- Use a new cylinder head gasket LH.
- Before applying liquid gasket, degrease the mating surface of cylinder blocks LH and cylinder head LH.
- Install within 5 min. after applying liquid gasket.

Liquid gasket:
THREE BOND 1217G (Part No. K0877Y0100), THREE BOND 1217H or equivalent

Liquid gasket applying diameter:
3±1 mm (0.1181±0.0394 in)

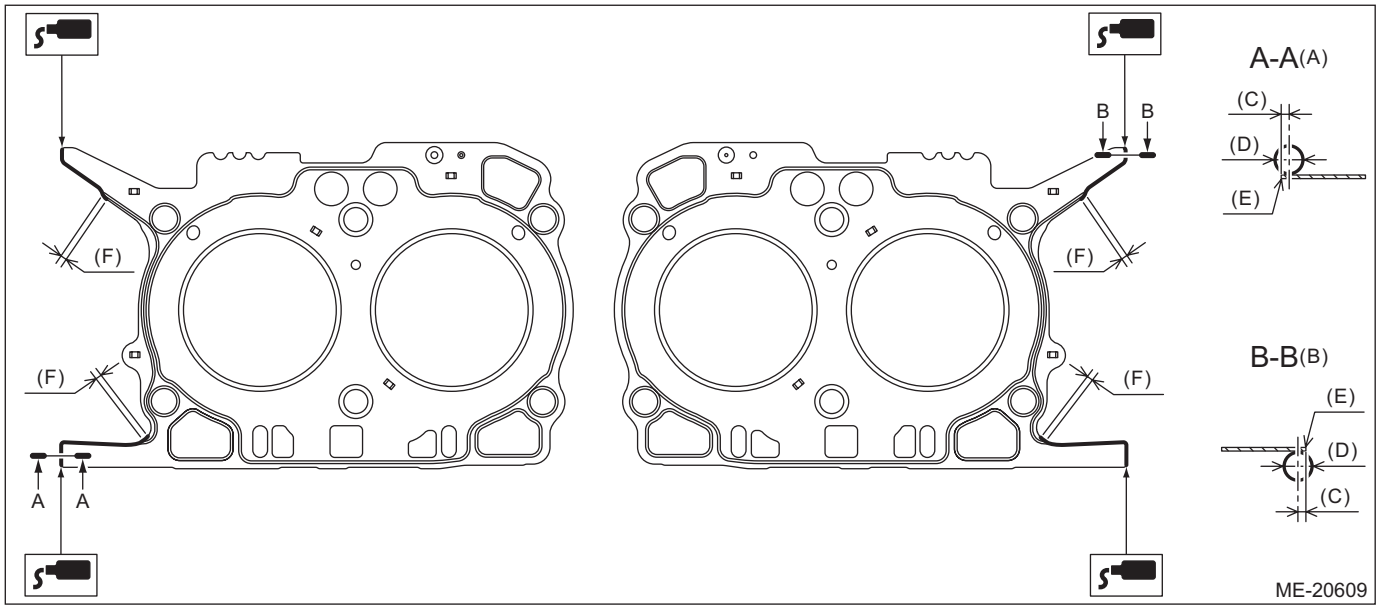

(A)	Liquid gasket applying position to the cylinder head side	(C)	1 mm (0.0394 in) or less	(E)	Cylinder head gasket edge
(B)	Liquid gasket applying position to the cylinder block side	(D)	ϕ3±1 mm (0.1181±0.0394 in)	(F)	Overlap margin of bead end and liquid gasket: 3 — 10 mm (0.1181 — 0.3937 in)

4) Attach the cylinder head gasket LH.

NOTE:
Check that liquid gasket is squeezed out from the cylinder head gasket LH.
5) Install the cylinder head LH to the cylinder block LH.

CAUTION:
Be careful not to scratch the mating surface of cylinder head LH and cylinder block LH.

(1) Clean the cylinder head bolt threads and apply sufficient engine oil to the washer and cylinder head bolts threads.

(2) Set the cylinder head LH to the cylinder block LH, then tighten all bolts with a torque of 20 N·m (2.0 kgf-m, 14.8 ft-lb) in numerical order as shown in the figure.

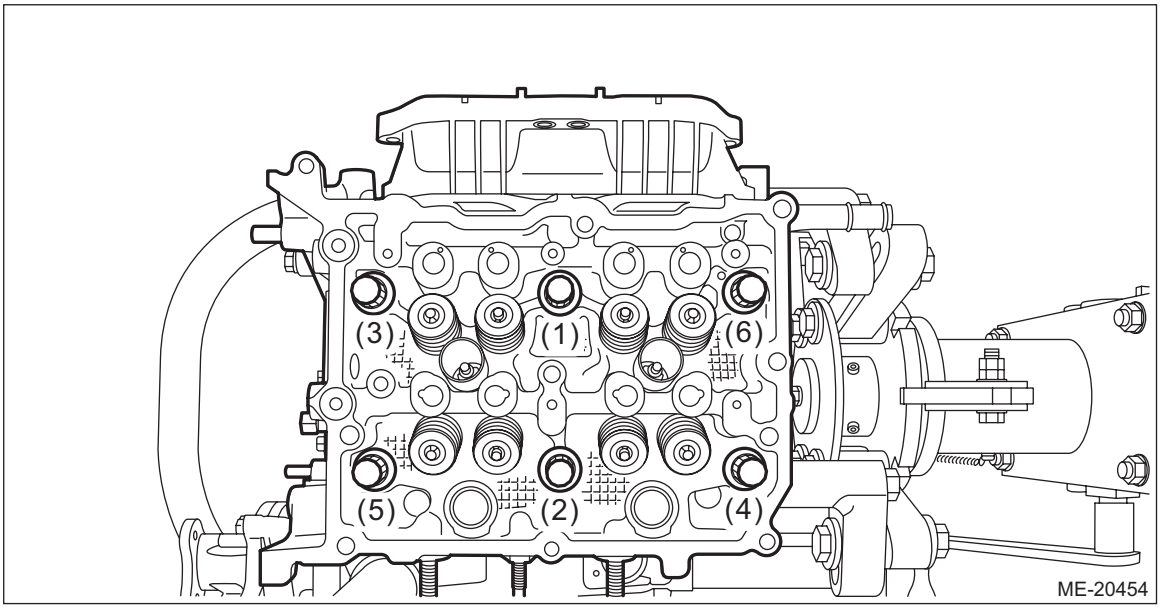

(3) Tighten all cylinder head bolts further with a torque of 100 N·m (10.2 kgf-m, 73.8 ft-lb) in numerical order as shown in the figure.

CAUTION:
If the bolt makes stick-slip sound during tightening, repeat the procedure from step 1). In that case, the cylinder head gasket LH can be reused. But it is necessary to remove liquid gasket completely from cylinder block LH, cylinder head LH and cylinder head gasket LH and re-apply to them.

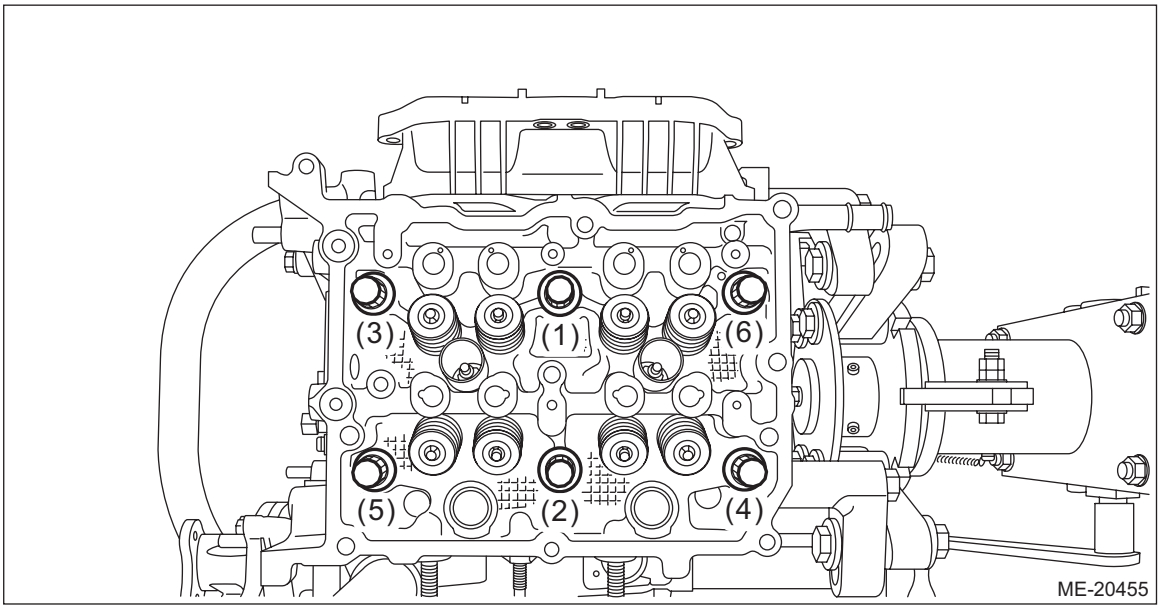

(4) Loosen all cylinder head bolts by 360° in the numerical order as shown in the figure.

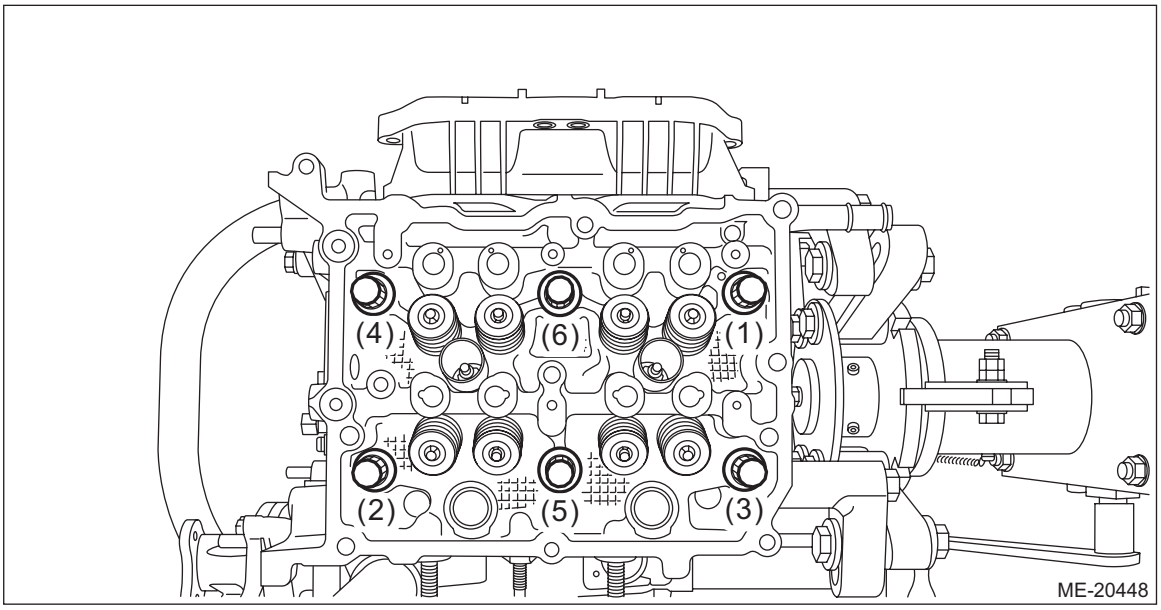

(5) Tighten all bolts with torque of 20 N·m (2.0 kgf-m, 14.8 ft-lb) in numerical sequence as shown in the figure.

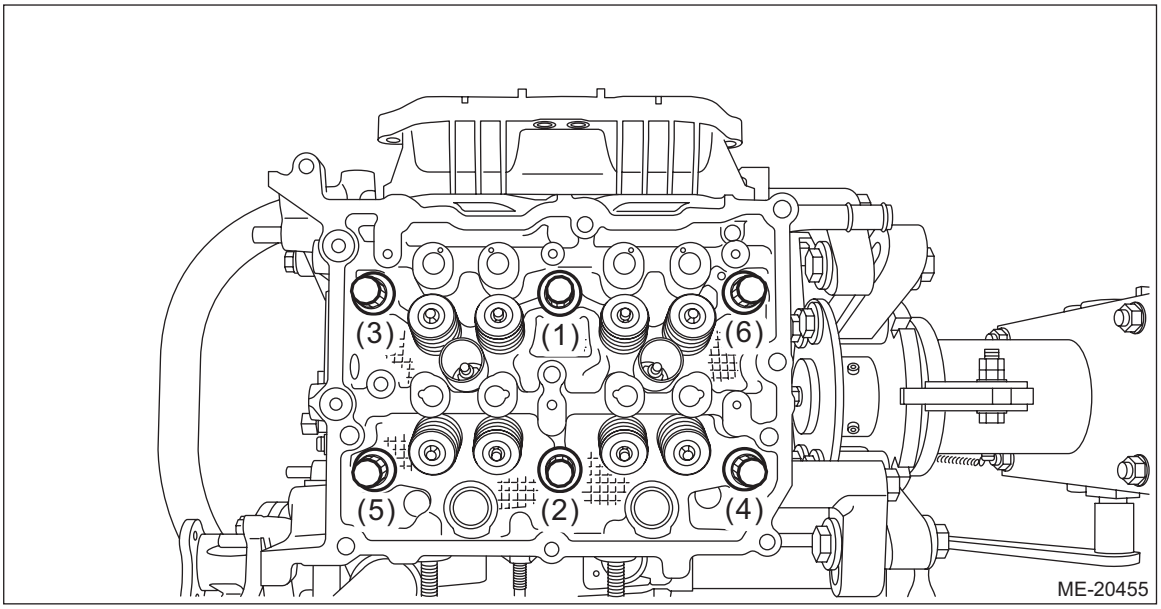

(6) Tighten all cylinder head bolts with a torque of 42 N·m (4.3 kgf-m, 31.0 ft-lb) in numerical order as shown in the figure.

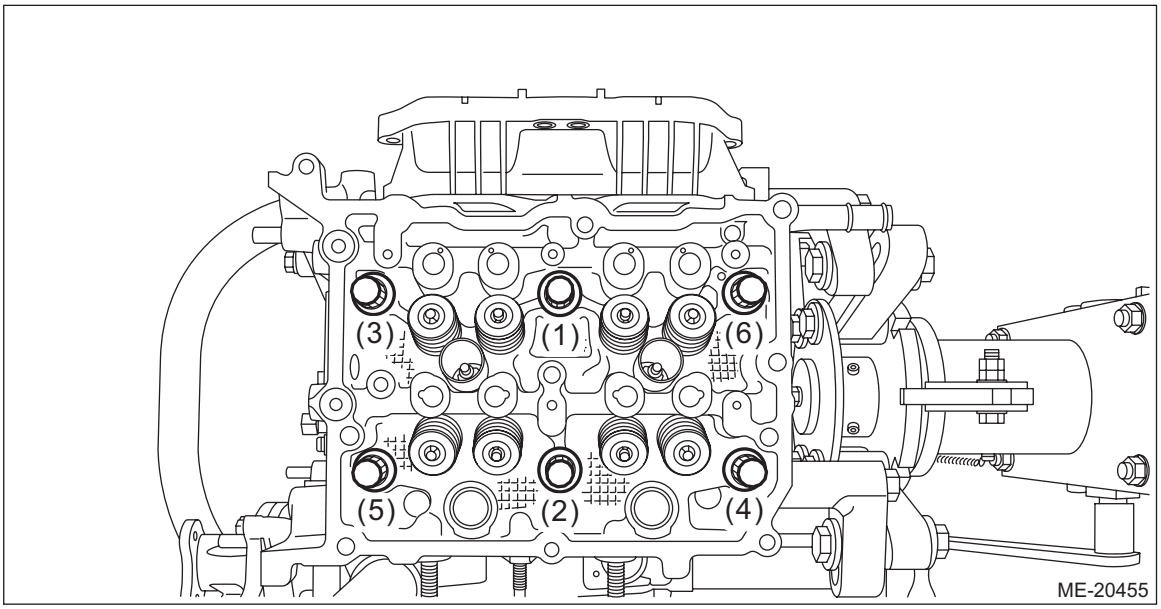

(7) Using angle gauge, tighten all cylinder head bolts with specified angle in numerical order as shown in the figure.

Tightening angle:
100°±2°

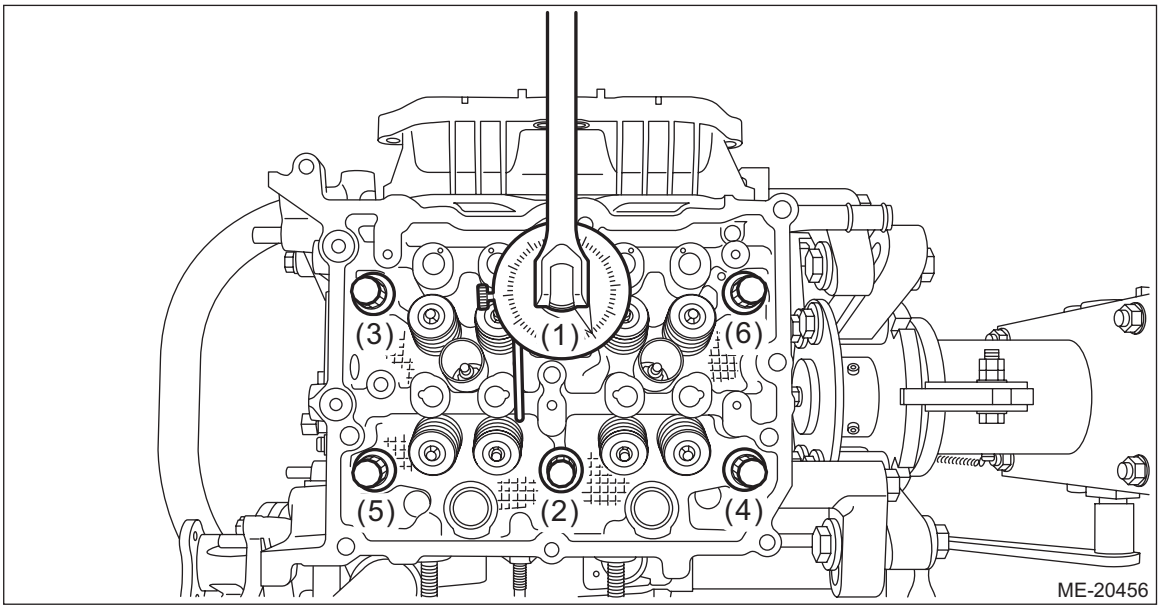

(8) Using angle gauge, tighten the cylinder head bolts (2 places) with specified angle in numerical order as shown in the figure.

Tightening angle:
100°±2°

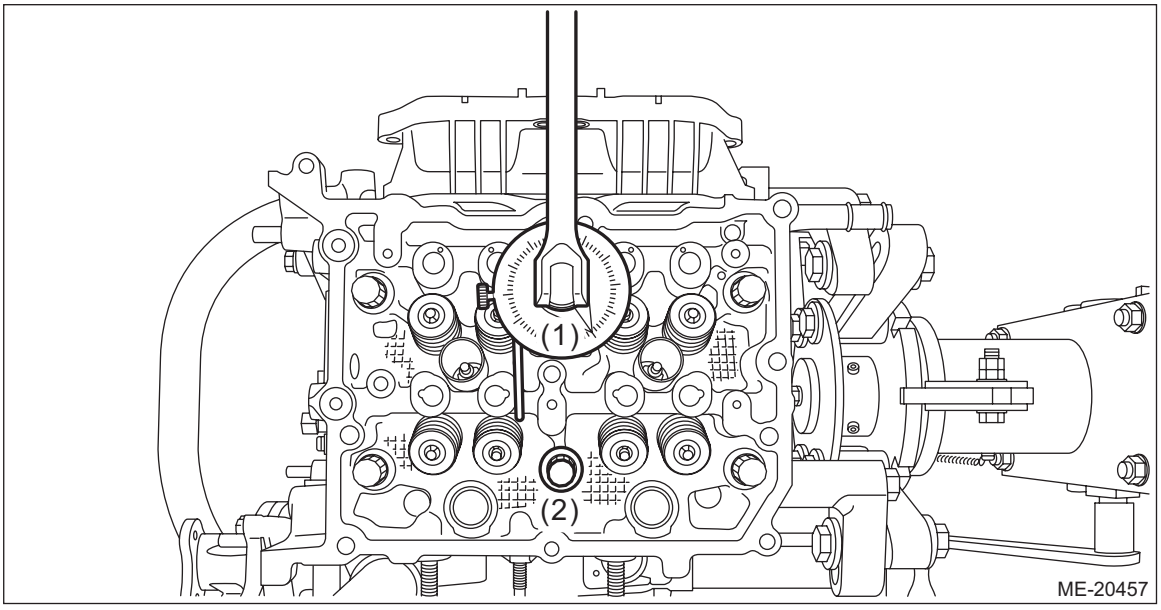

(9) Using angle gauge, tighten the cylinder head bolts (4 places) with specified angle in numerical order as shown in the figure.

NOTE:
After tightening, if the liquid gasket is squeezed out onto the seal surface of the chain cover, completely remove any squeezed-out liquid gasket.

Tightening angle:
50°±2°

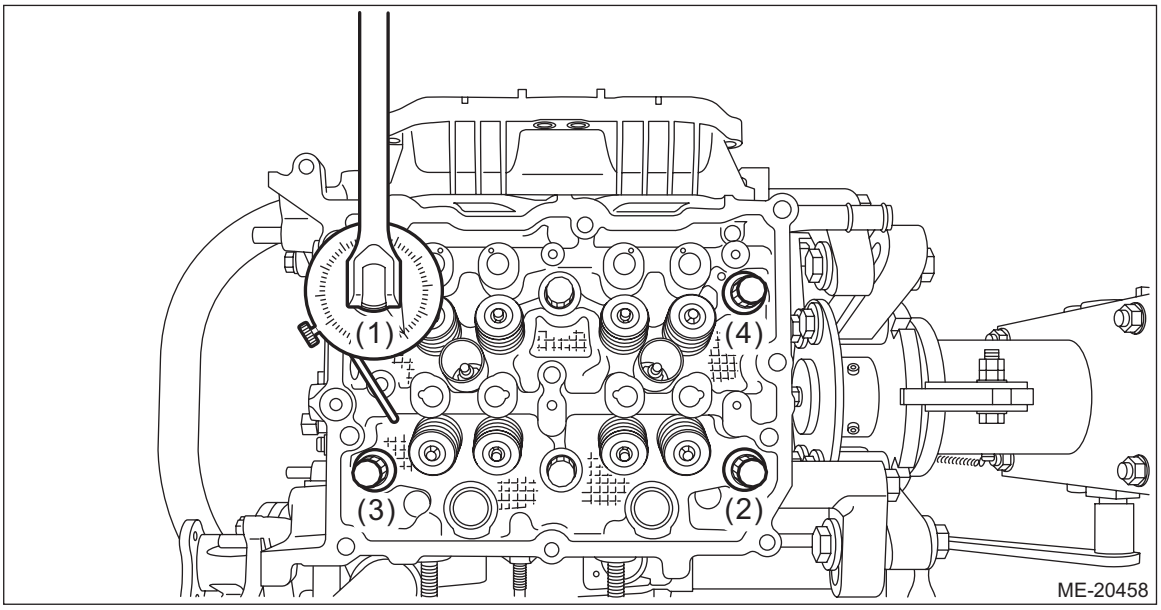

6) Set the part so that the installation surface of the intake manifold is on the upper side.
7) When the cylinder head LH has been disassembled

NOTE:
When the cylinder head LH has been disassembled, perform the following steps also.

(1) Install the fuel injector LH. <Ref. to FU(w/o STI)-57, FUEL INJECTOR LH, INSTALLATION, Fuel Injector.>

(2) Install the air intake adapter LH. <Ref. to FU(w/o STI)-43, INSTALLATION, Tumble Generator Valve Assembly.>

8) Install the A/C compressor. <Ref. to ME(w/o STI)-181, CAM CARRIER LH, INSTALLATION, Cam Carrier.>
9) Install the high-pressure fuel delivery pipe assembly. <Ref. to FU(w/o STI)-80, HIGH-PRESSURE FUEL DELIVERY PIPE ASSEMBLY, INSTALLATION, High Pressure Fuel Delivery Pipe.>
10) Install the cam carrier LH. <Ref. to ME(w/o STI)-181, CAM CARRIER LH, INSTALLATION, Cam Carrier.>
11) Install the rocker cover LH. <Ref. to ME(w/o STI)-155, ROCKER COVER LH, INSTALLATION, Rocker Cover.>
12) Install the chain cover. <Ref. to ME(w/o STI)-97, INSTALLATION, Chain Cover.>
13) Install the engine wiring harness. <Ref. to FU(w/o STI)-84, INSTALLATION, Engine Wiring Harness.>
14) Install the intake manifold. <Ref. to FU(w/o STI)-28, INSTALLATION, Intake Manifold.>
15) Install the engine to the vehicle. <Ref. to ME(w/o STI)-59, INSTALLATION, Engine Assembly.>

C: DISASSEMBLY

1) Remove the chain cover securing bolt from the cylinder head LH.

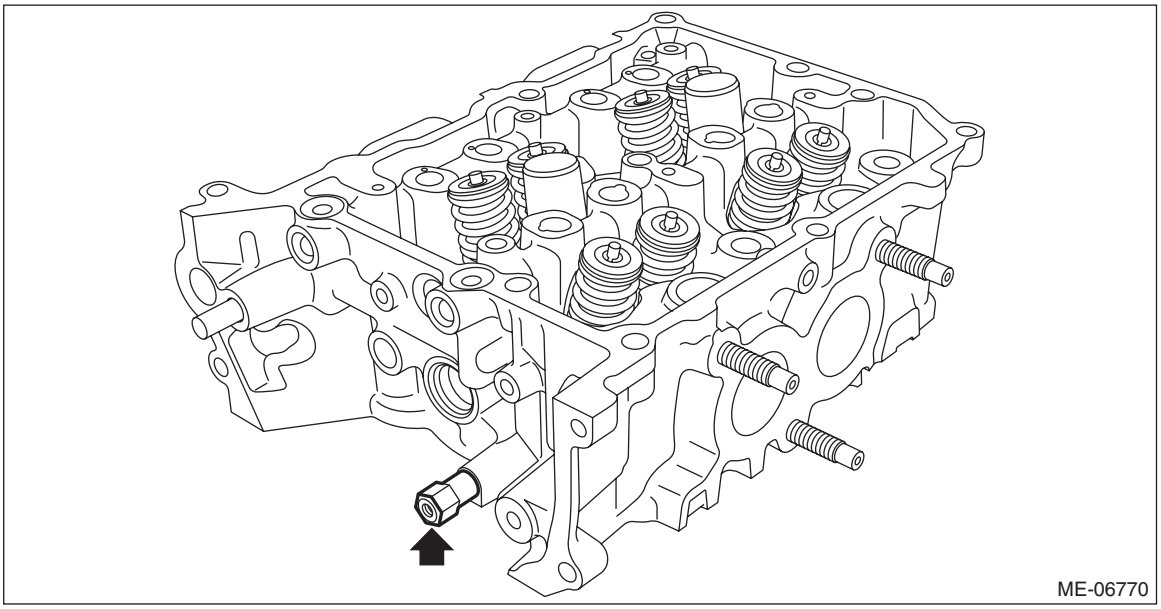

2) Remove the stud bolts from the cylinder head.

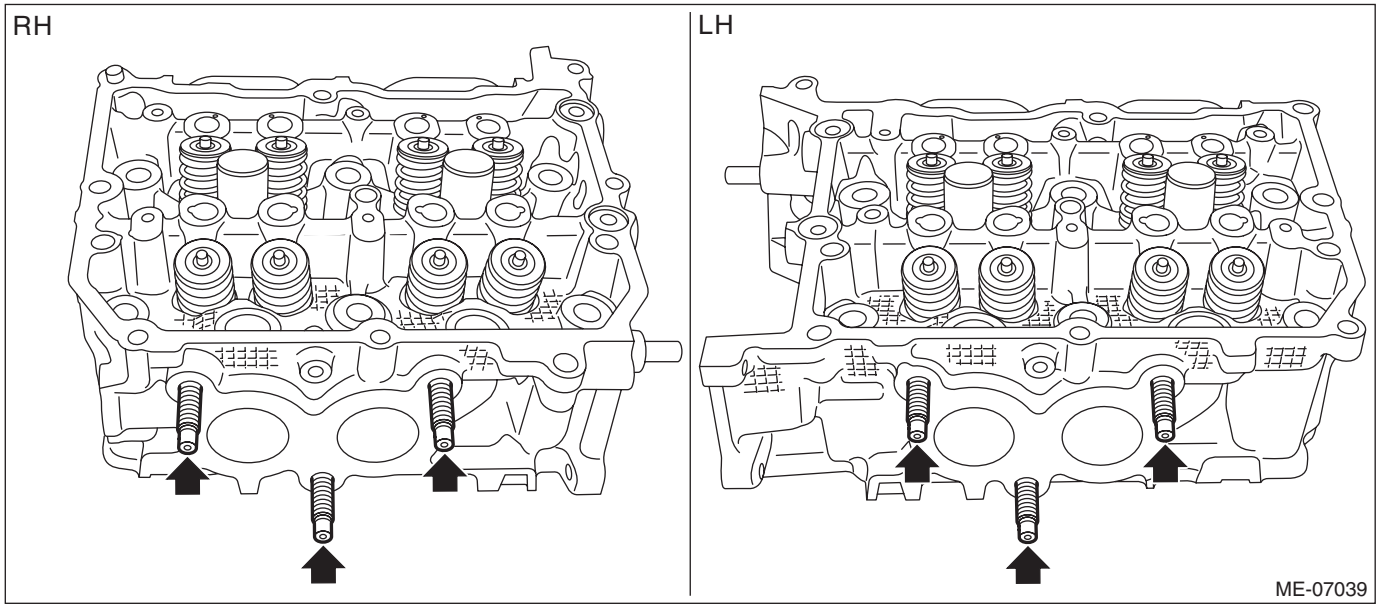

3) Remove the valve collet, valve, valve spring retainer, valve spring and valve spring seat from the cylinder head RH.

WARNING:
Metallic sodium is encapsulated in the exhaust valve. Metallic sodium is a strong alkaline material and thus prone to serious chemical reaction. When handling or disposing of the valve, be sure to confirm "DISPOSAL". <Ref. to ME(w/o STI)-245, DISPOSAL, Cylinder Head.>

CAUTION:
During work, place a waste cloth, etc. to avoid scratching the mating surface of the cylinder head RH.

NOTE:
- Mark each part to prevent confusion.
- Keep all the removed parts in order for re-installing in their original positions.

(1) Compress the valve spring and remove the valve collet using ST.

ST 0920287002000 REMOVER AND REPLACER

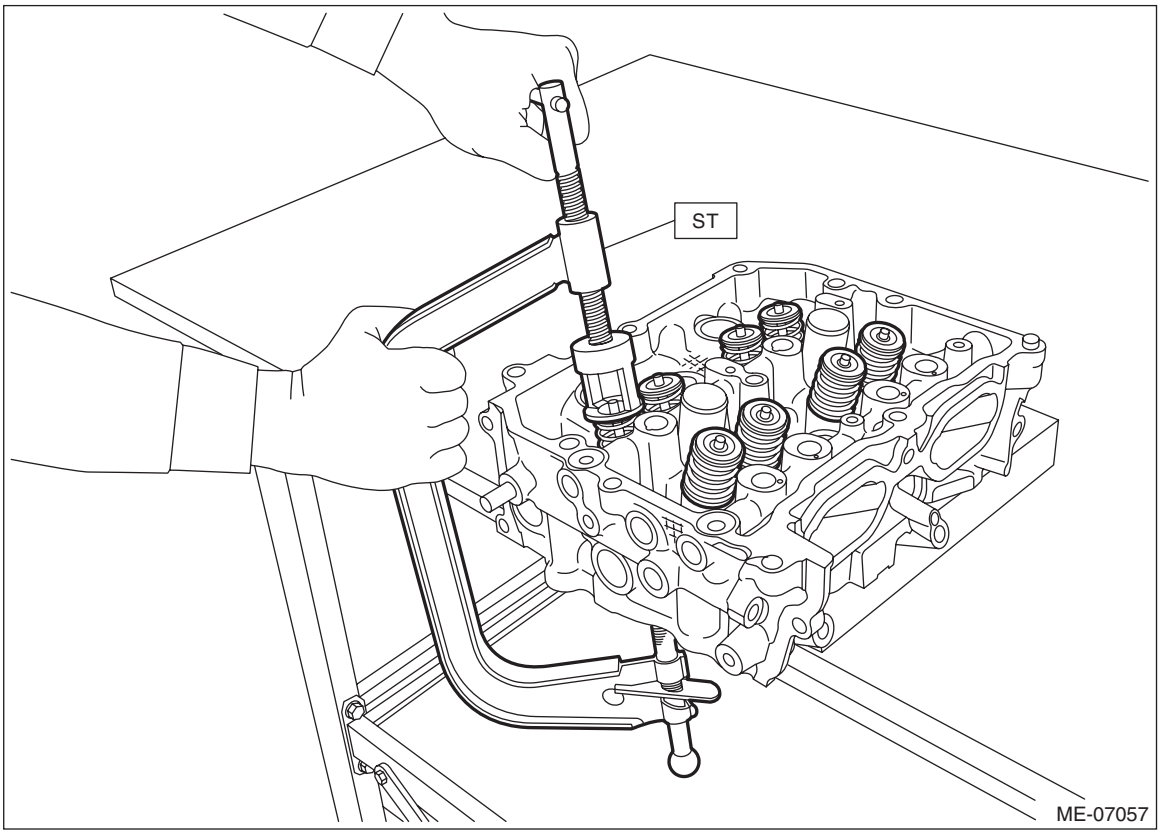

(2) Remove valve, valve spring retainer, valve spring and valve spring seat.

4) Remove the valve collet, valve, valve spring retainer, valve spring and valve spring seat from the cylinder head LH.

5) Remove the valve oil seals from valve guides of cylinder head RH.

CAUTION:
• During work, place a waste cloth, etc. to avoid scratching the mating surface of the cylinder head RH.
• Use special care not to damage the cylinder head RH and guide during work.

NOTE:
For removal of valve guide, refer to INSPECTION. <Ref. to ME(w/o STI)-226, VALVE & VALVE GUIDE, INSPECTION, Cylinder Head.>

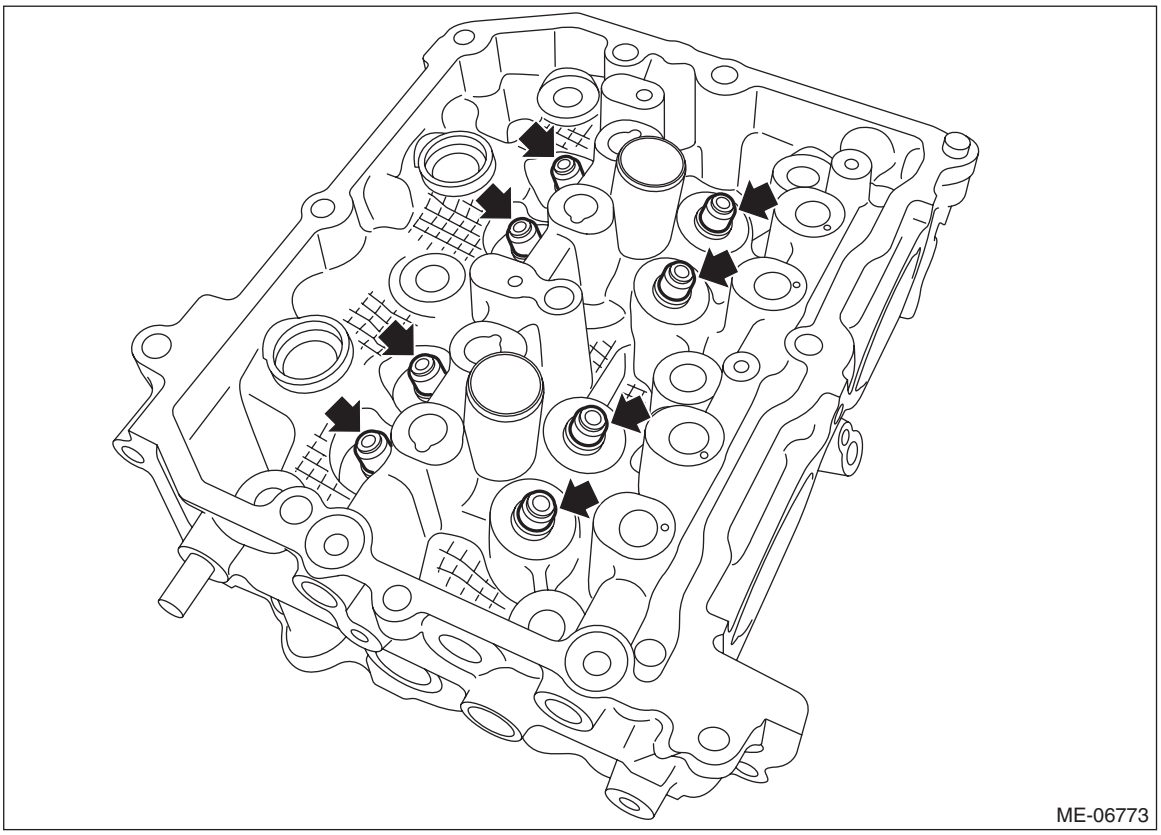

6) For cylinder head LH, remove the valve oil seal in the same manner.

D: ASSEMBLY

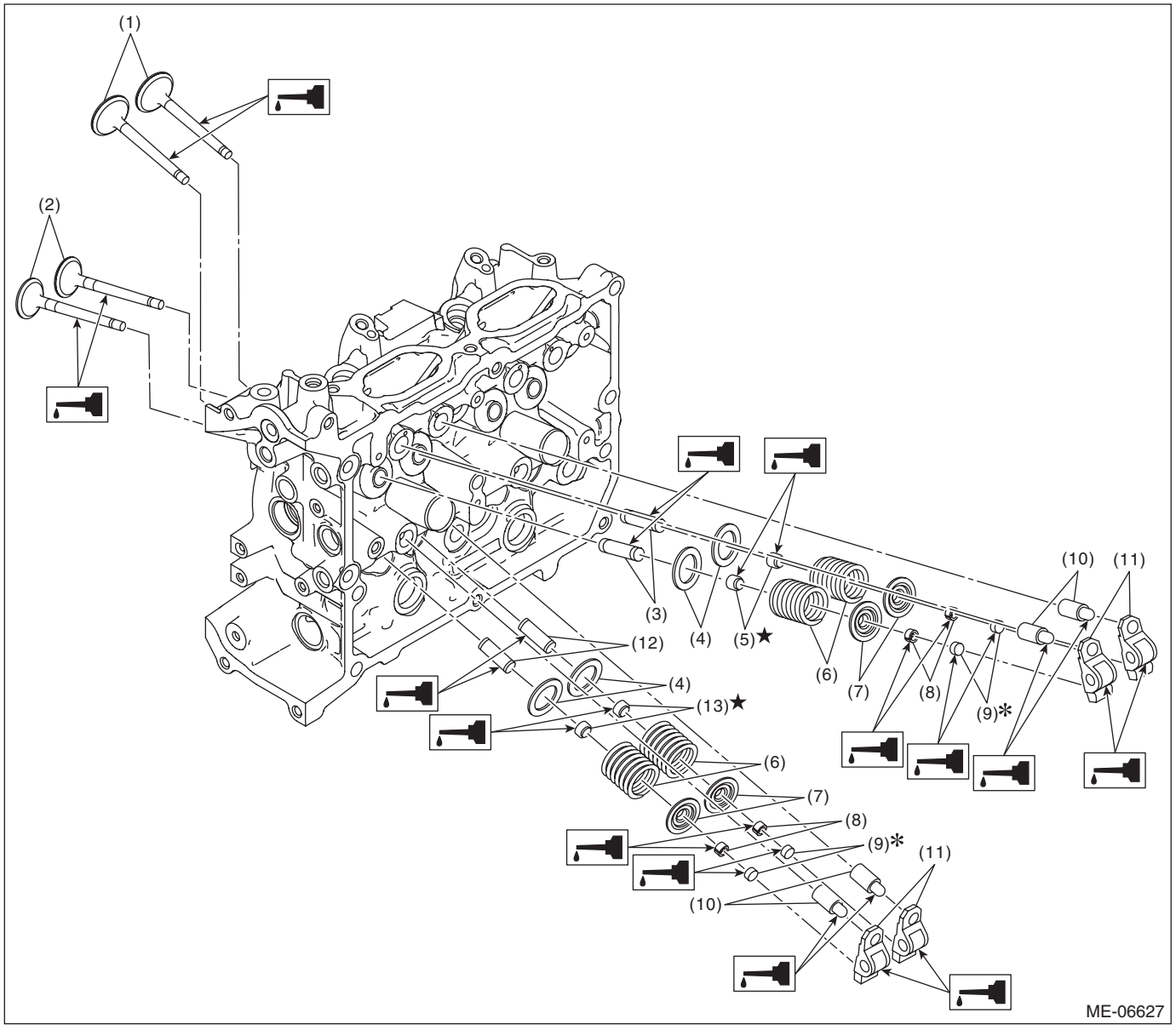

(1) Exhaust valve
(2) Intake valve
(3) Intake valve guide
(4) Valve spring seat
(5) Intake valve oil seal
(6) Valve spring
(7) Valve spring retainer
(8) Valve collet
(9) Valve shim
(10) Roller rocker arm pivot
(11) Roller rocker arm
(12) Exhaust valve guide
(13) Exhaust valve oil seal

1) Using the ST, install the valve oil seals to valve guides of cylinder head RH.

CAUTION:
• During work, place a waste cloth, etc. to avoid scratching the mating surface of the cylinder head RH.
• Use special care not to damage the cylinder head RH and guide during work.
• When installing the valve oil seal, press the ST with hands to install it and never drive the ST with a plastic hammer, otherwise the valve oil seal can be damaged.

NOTE:
- Use a new valve oil seal.
- Apply engine oil to valve oil seal before installing.
- The intake valve oil seals and exhaust valve oil seals are distinguished by their colors.

Identification colors:
Intake [Gray]
Exhaust [Green]

- For installation of valve guide, refer to INSPECTION. <Ref. to ME(w/o STI)-226, VALVE & VALVE GUIDE, INSPECTION, Cylinder Head.>

ST 18261AA010 VALVE OIL SEAL GUIDE

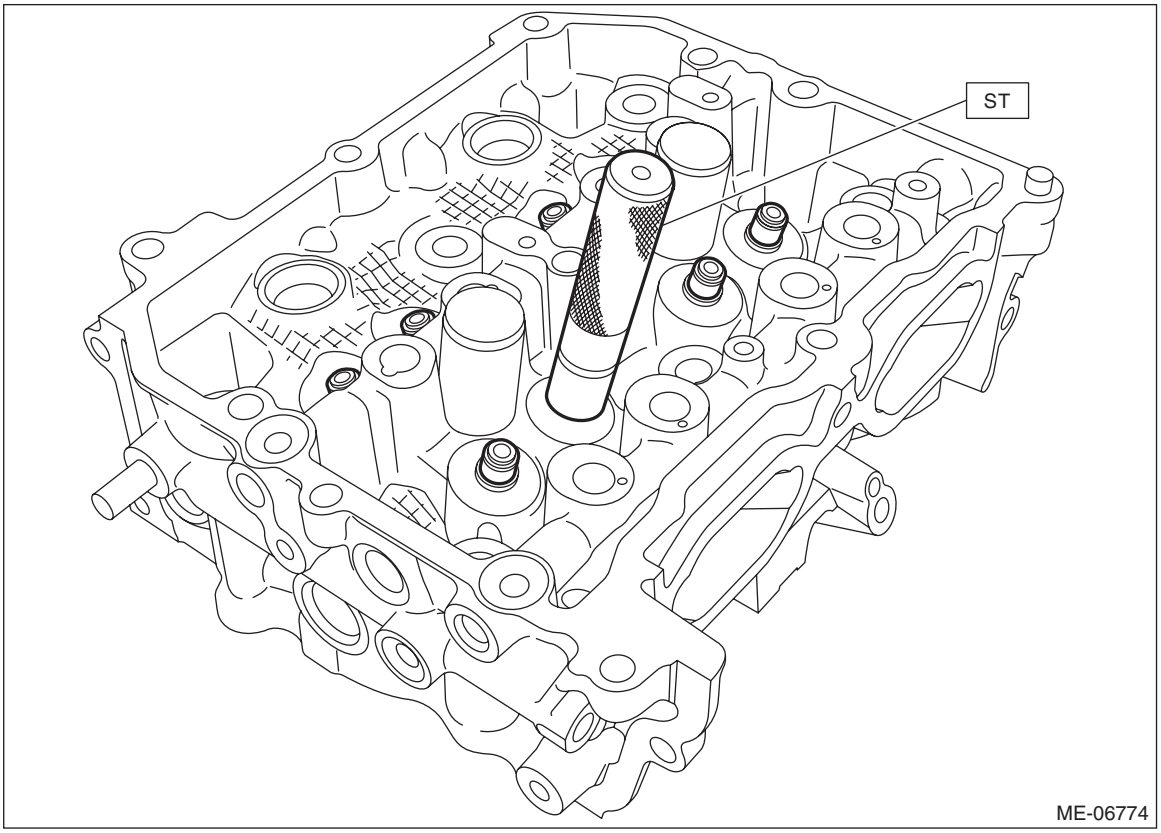

2) For cylinder head LH, install the valve oil seal in the same manner.
3) Install the valve spring seat, valve spring, valve spring retainer, valve and valve collet to the cylinder head RH.

CAUTION:
During work, place a waste cloth, etc. to avoid scratching the mating surface of the cylinder head RH.

(1) Set the valve spring seat, valve spring and valve spring retainer onto the cylinder head RH.

NOTE:
Be sure to install the valve spring with its close-coiled end facing the cylinder head side.

(2) Coat the valve stem of each valve with engine oil and insert the valve into valve guide.

NOTE:
When inserting the valve into valve guide, use special care not to damage the oil seal lip.

(3) Compress the valve spring and install the valve collet using ST.
ST 0920287002000 REMOVER AND REPLACER

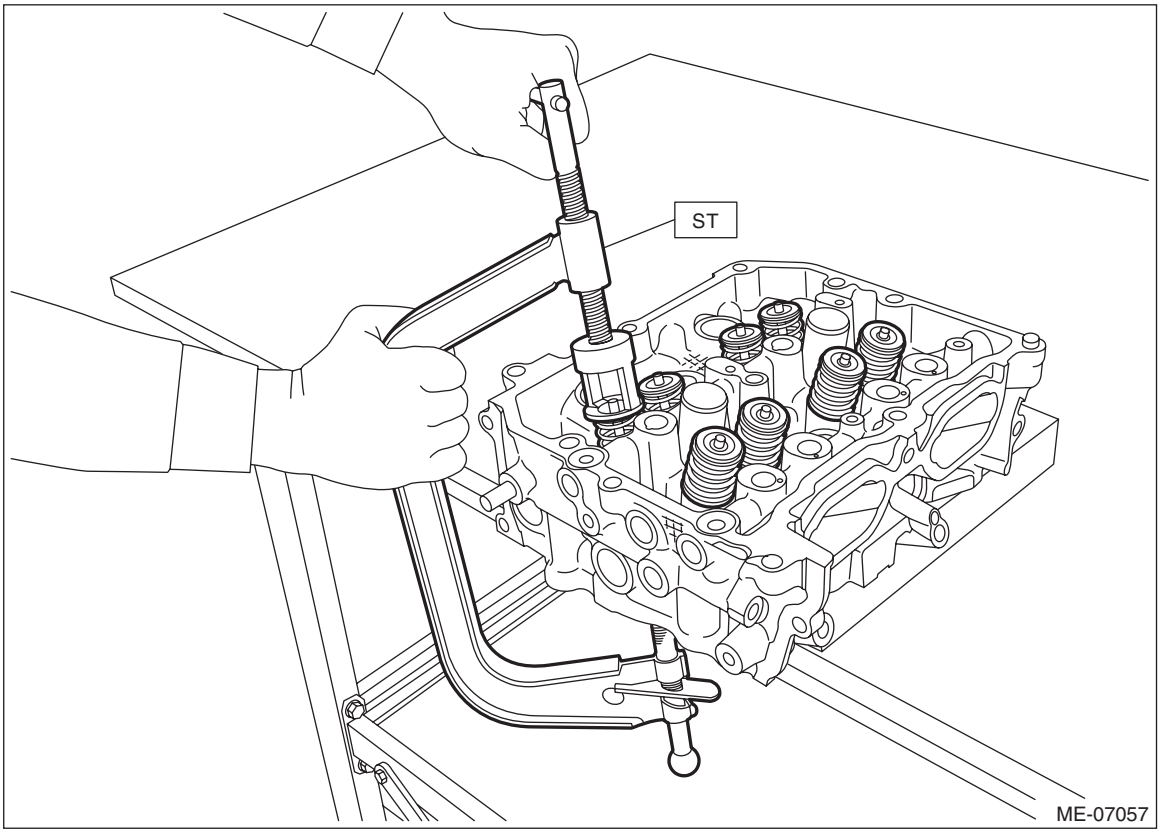

4) Install the valve spring seat, valve spring, valve spring retainer, valve and valve collet to the cylinder head LH.
5) Lightly tap the valve spring retainer with a plastic hammer, and make sure that the valve collet is securely attached.
6) Install the stud bolts onto cylinder heads.

Tightening torque:
18 N·m (1.8 kgf-m, 13.3 ft-lb)

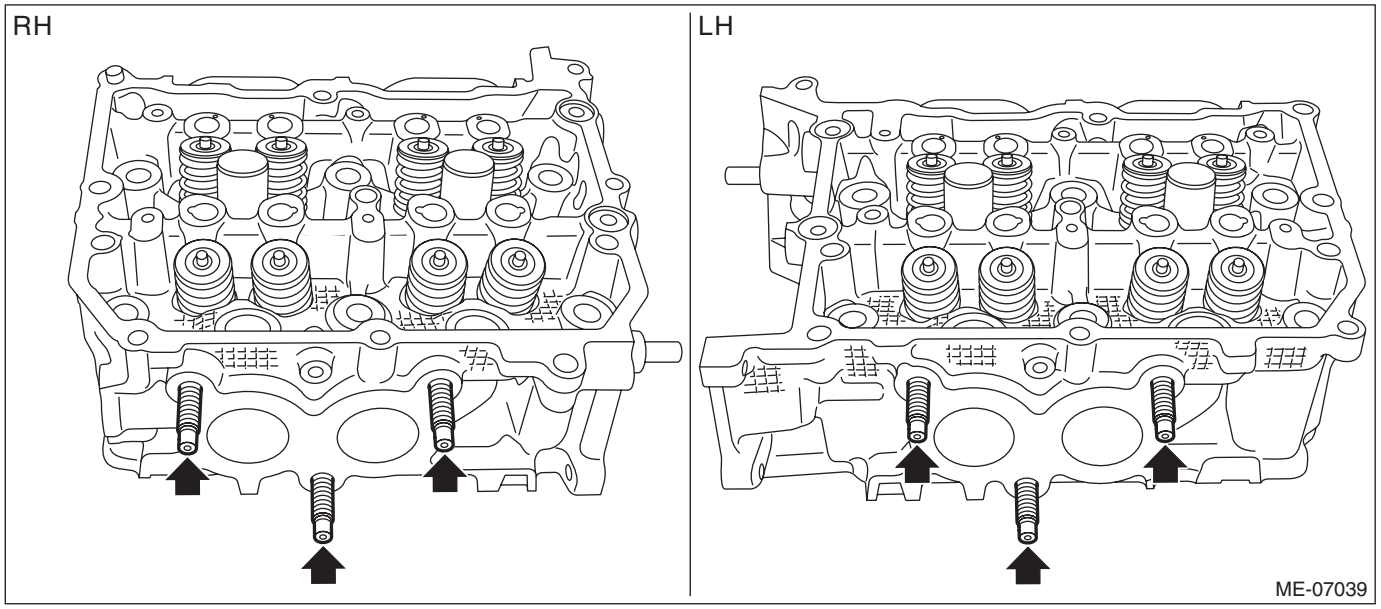

7) Install the chain cover securing bolt to the cylinder head LH.

Tightening torque:
6.4 N·m (0.7 kgf-m, 4.7 ft-lb)

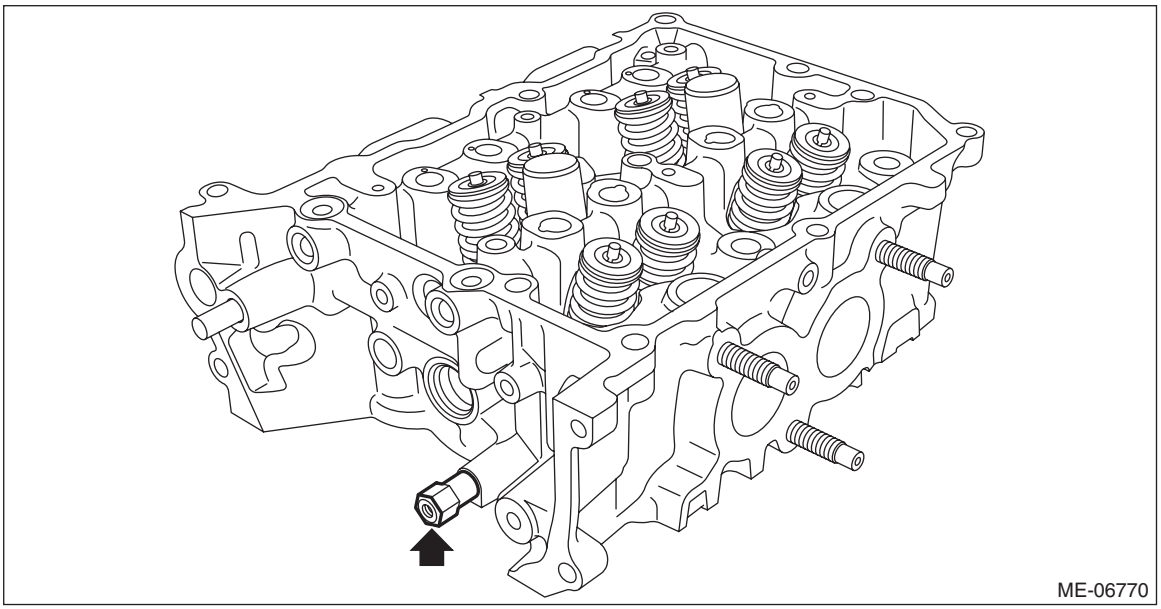

E: INSPECTION

1. CYLINDER HEAD

1) Visually inspect to make sure that there are no cracks, scratches or other damage.
2) Use liquid penetrant tester on the important sections to check for fissures.
3) Check that there are no marks of gas leaking or water leaking on gasket attachment surface.
4) Check the warping of the cylinder head mating surface that mates with cylinder block at the locations shown in the figure using a straight edge (A) and thickness gauge (B). If it exceeds the limit, correct the surface by grinding it with a surface grinder or replace the cylinder head.

NOTE:
- Measurement should be performed at a temperature of 20°C (68°F).
- If there is warpage on the cylinder head mating surface, the cylinder head bolt tightening torque and angle tightening may be improper. When installing the cylinder head, make sure that tightening torque and angle tightening work is performed precisely according to the operation procedures.
- When the cylinder head is replaced, lap each valve. Refer to “VALVE SEAT” for lapping. <Ref. to ME(w/o STI)-236, VALVE SEAT, INSPECTION, Cylinder Head.>

Cylinder head warpage:
Limit
0.020 mm (0.0008 in)

Cylinder head grinding limit:
To 98.4 mm (3.874 in)

Cylinder head height:
Standard
98.5 mm (3.878 in)

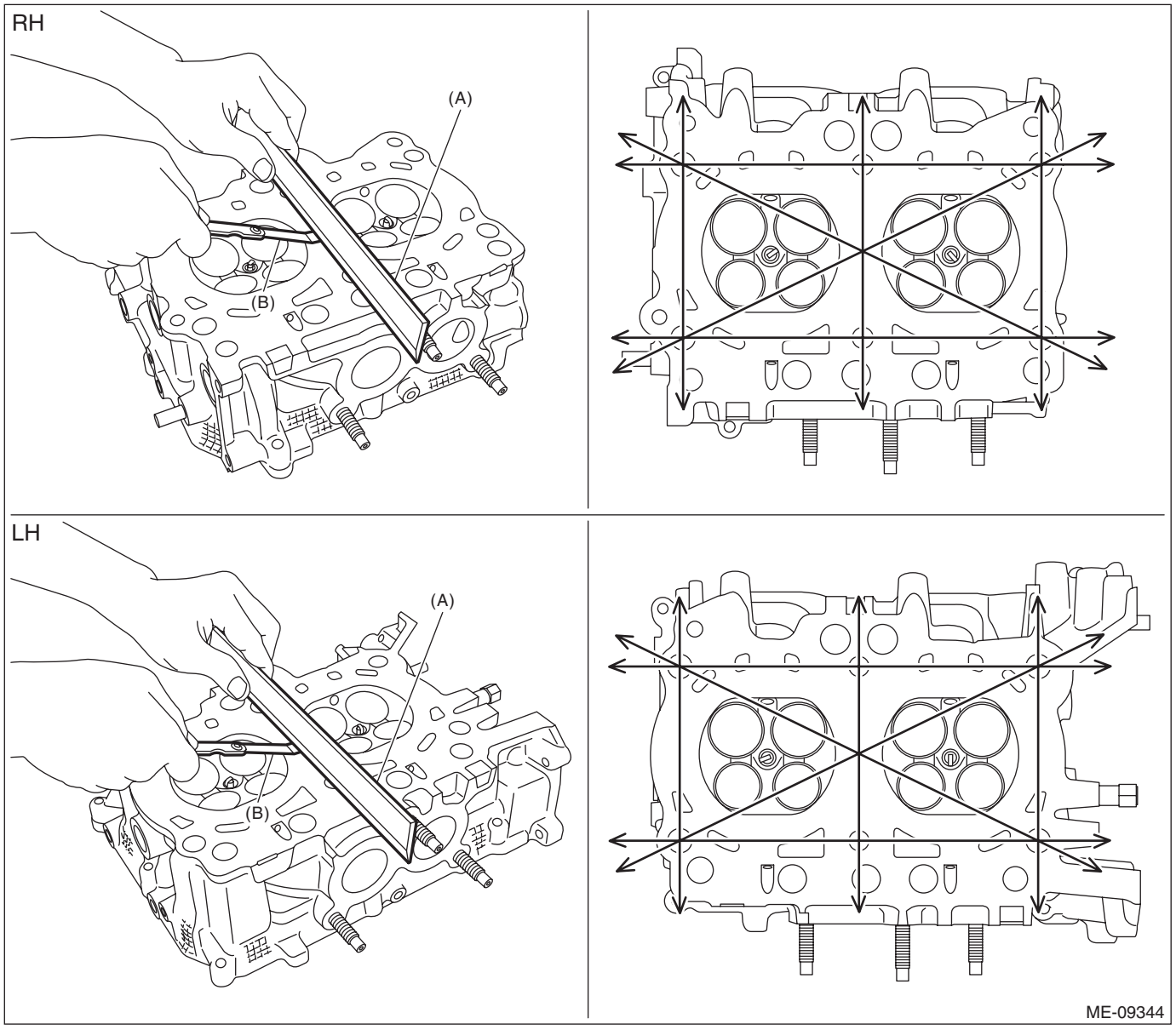

2. VALVE & VALVE GUIDE

WARNING:
Metallic sodium is encapsulated in the exhaust valve. Metallic sodium is a strong alkaline material and thus prone to serious chemical reaction. When handling or disposing of the valve, be sure to confirm "DISPOSAL". <Ref. to ME(w/o STI)-245, DISPOSAL, Cylinder Head.>
1) Check the valve flange and stem for damage, wear or deformation.
2) Measure the thickness "H" of valve head edge as shown in the figure using a caliper gauge. If it is not within the standard, replace the valve.

NOTE:
- It is possible to differentiate between the intake valve and the exhaust valve by their overall length.

Valve overall length:
Intake
104.95 mm (4.132 in)
Exhaust
97.9 mm (3.854 in)

- When the valve is replaced, lap the valve. Refer to "VALVE SEAT" for lapping. <Ref. to ME(w/o STI)-236, VALVE SEAT, INSPECTION, Cylinder Head.>

Valve head edge thickness H:

Intake (A)
Standard
0.8 — 1.2 mm (0.031 — 0.047 in)

Exhaust (B)
Standard
1.0 — 1.4 mm (0.039 — 0.055 in)

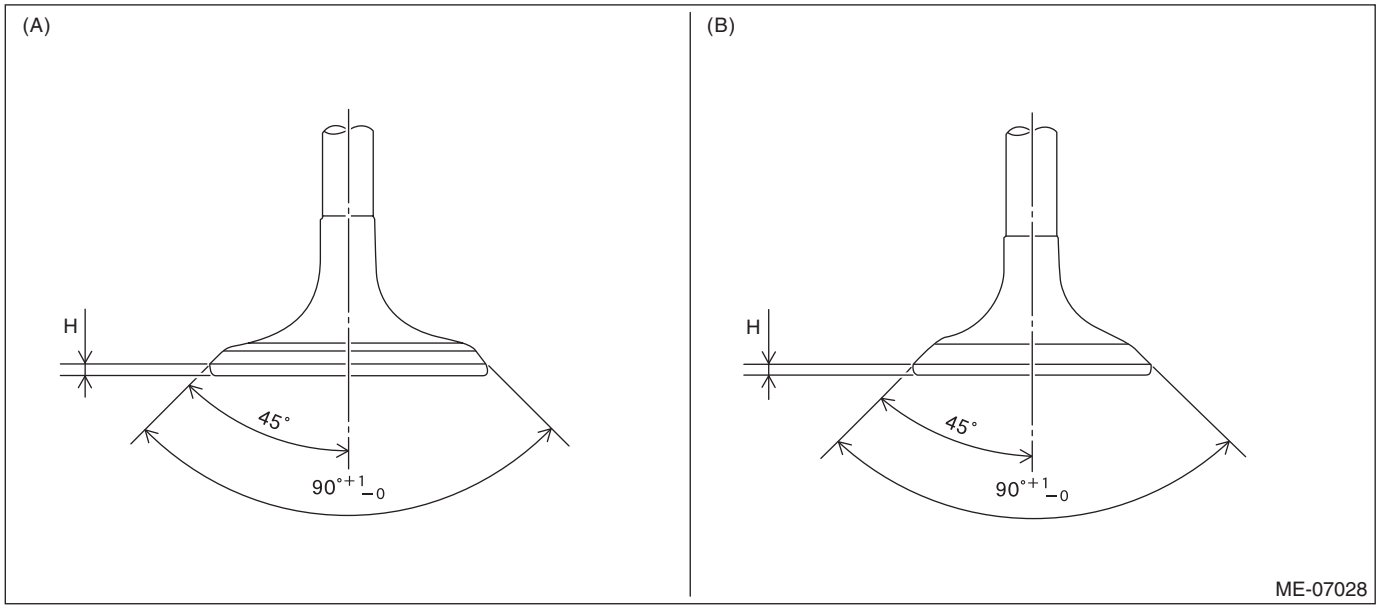

3) Check the clearance between valve and valve guide. Check the clearance between valve and valve guide by measuring the outer diameter of valve stem and the inner diameter of valve guide respectively.

(1) Measure the outer diameter of valve stem with a micrometer. If it is not within the standard, replace the valve.

NOTE:
- Measurement should be performed at a temperature of 20°C (68°F).
- Measure the outer diameter of the valve stem at the six locations as shown in the figure, and read the value of most worn location.
- When the valve is replaced, lap the valve. Refer to “VALVE SEAT” for lapping. <Ref. to ME(w/o STI)-236, VALVE SEAT, INSPECTION, Cylinder Head.>

Valve stem outer diameter:

Intake

Standard

5.455 — 5.470 mm (0.2148 — 0.2154 in)

Exhaust

Standard

5.445 — 5.460 mm (0.2144 — 0.2150 in)

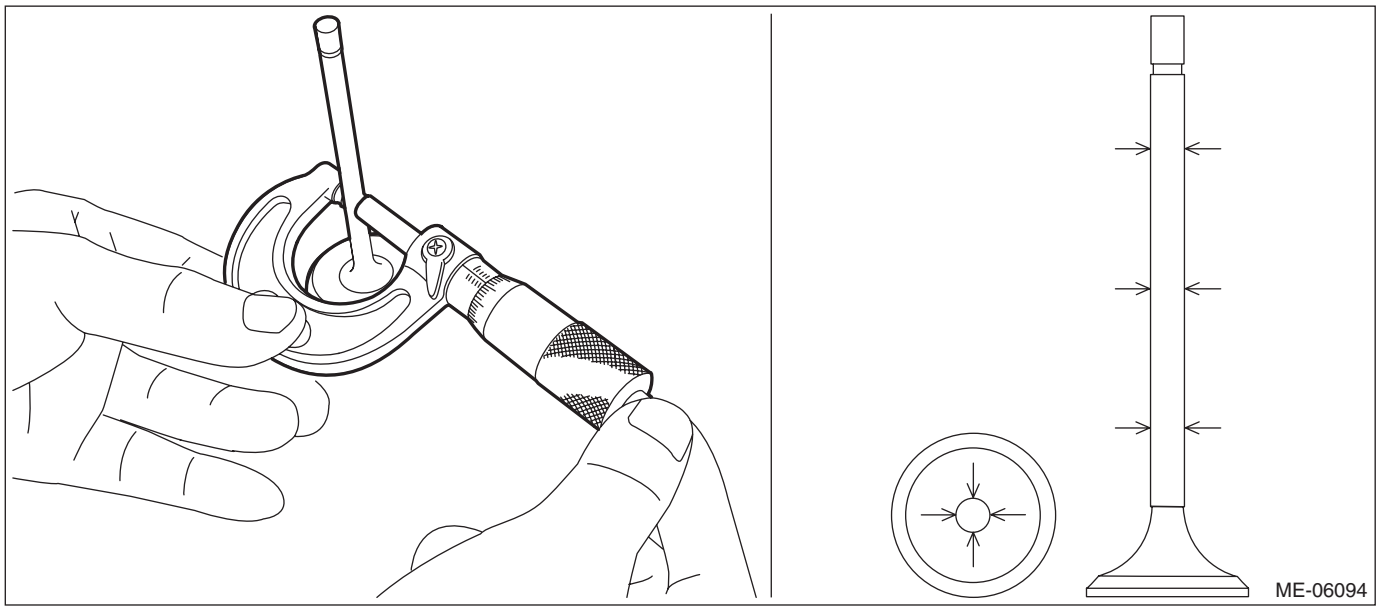

(2) Using a caliper gauge, measure the inner diameter of valve guide. If it is not within the standard, replace the valve guide. For replacement procedure, refer to step 4).

NOTE:
- Measurement should be performed at a temperature of 20°C (68°F).
- Measure the inner diameter of the valve guide at the six locations as shown in the figure, and read the value of most worn location.

Valve guide inner diameter:
Standard
5.500 — 5.512 mm (0.2165 — 0.2170 in)

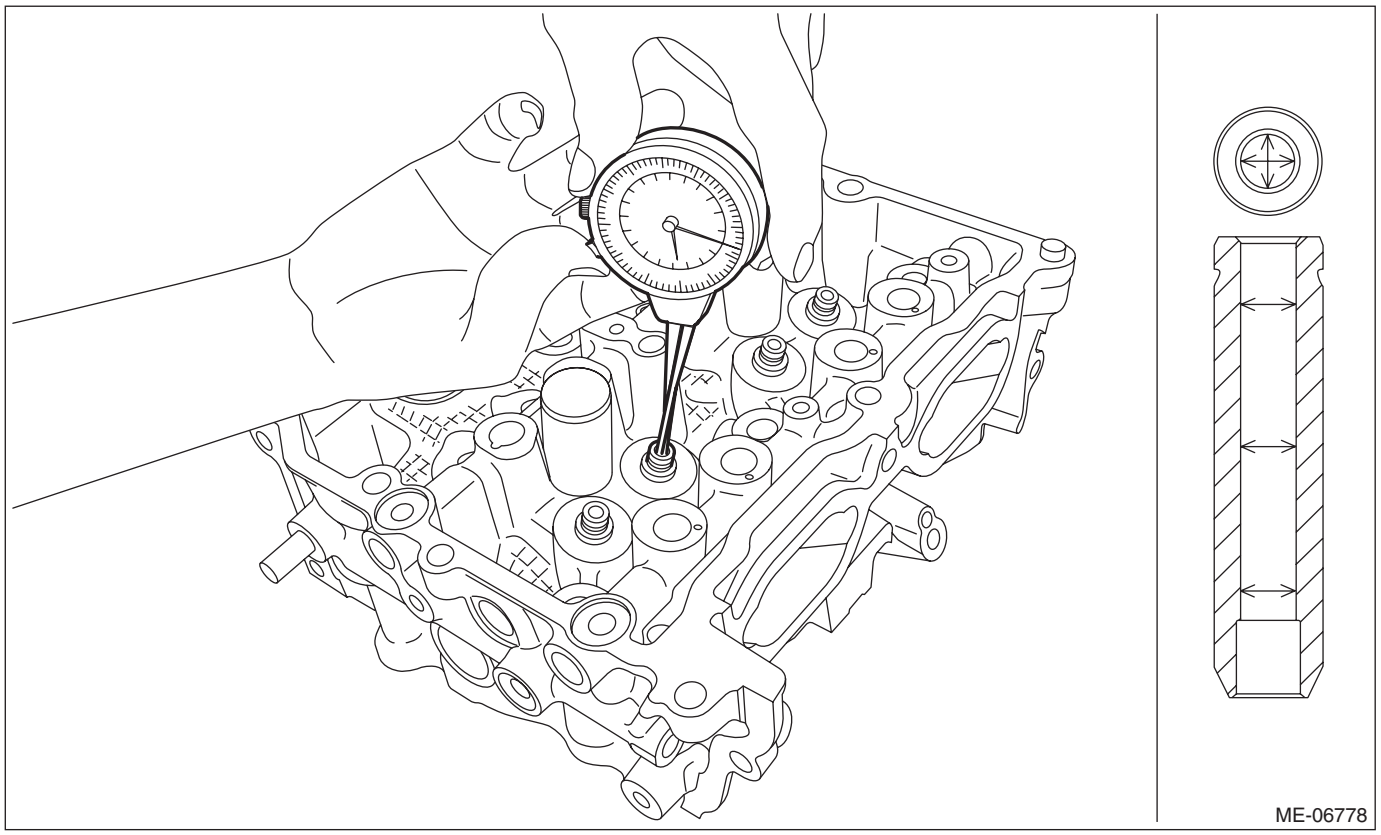

(3) Calculate the clearance between valve and valve guide.

Clearance between valve and valve guide:

Intake
Standard
0.030 — 0.057 mm (0.0012 — 0.0022 in)

Exhaust
Standard
0.040 — 0.067 mm (0.0016 — 0.0026 in)

4) If the clearance between valve and valve guide exceeds the standard, replace the valve or valve guide, whichever shows the greater amount of wear or damage. For replacement procedure of valve guide, refer to the following.

NOTE:
When the valve is replaced, lap the valve. Refer to “VALVE SEAT” for lapping. <Ref. to ME(w/o STI)-236, VALVE SEAT, INSPECTION, Cylinder Head.>

(1) Insert ST into the valve guide with the combustion chamber upward and remove the valve guide using plastic hammer.

CAUTION:
- **Place a wood board wrapped with a waste cloth to stabilize the cylinder head before work.**
- **Use special care not to damage the cylinder head during work.**
- **Always strike the ST vertically with a plastic hammer. Otherwise, the ST can be damaged.**

ST 499765700 VALVE GUIDE REMOVER AND INSTALLER

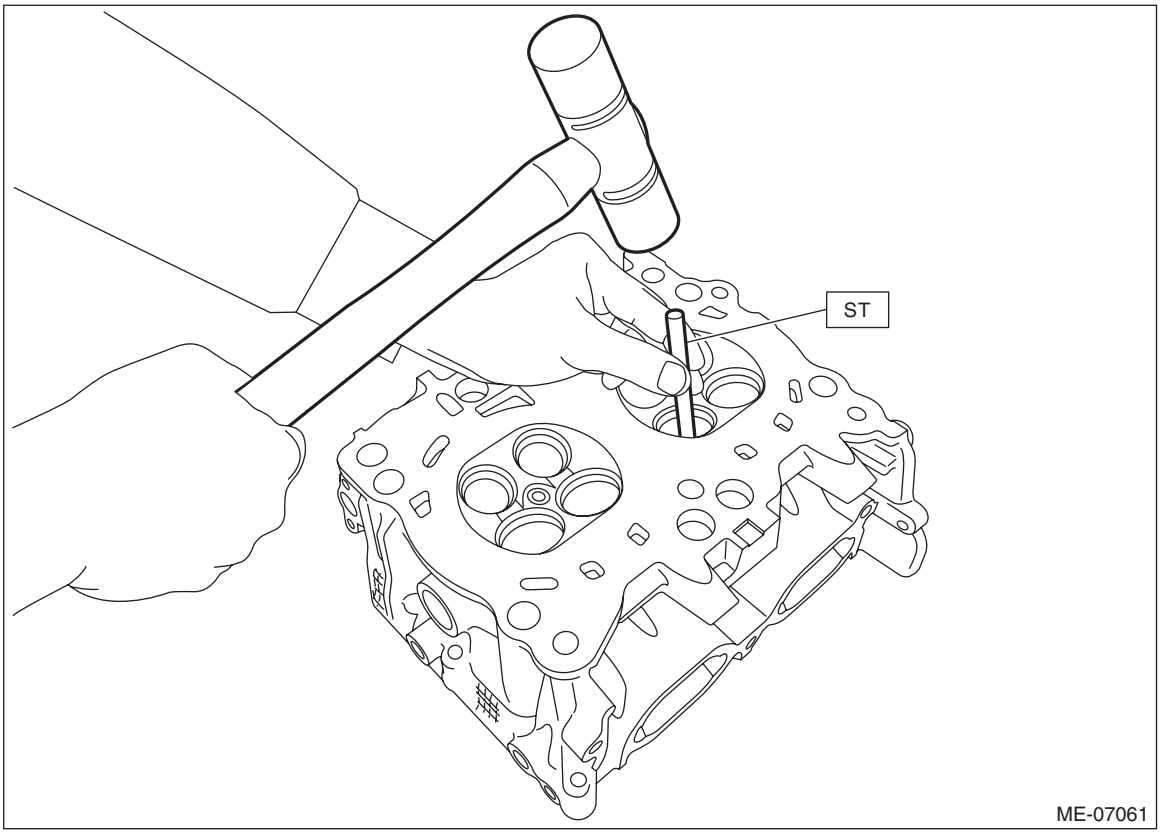

(2) Before installing the valve guide, make sure that neither scratches nor damages exist on the inner surface of valve guide installation holes of cylinder head.

(3) Draw a reference line (A) for insert on the valve guide using a marker as shown in the figure.

NOTE:
- Use a new valve guide.
- A reference line for insert is used as a guide when tapping-in the valve guide.

Valve guide inserting reference line position L:
15 mm (0.5906 in)

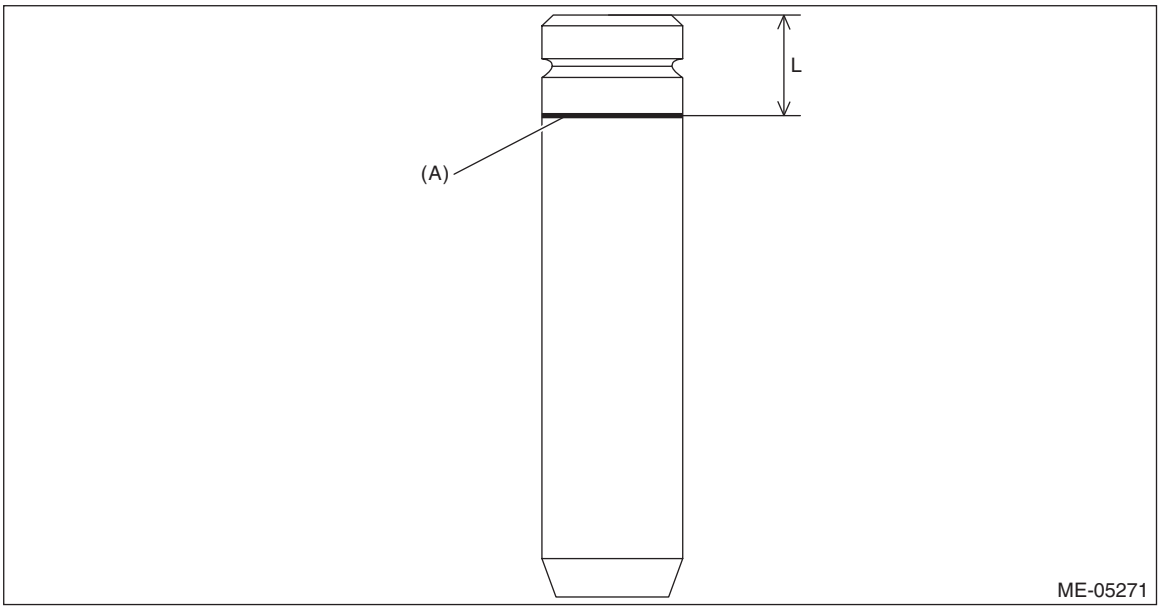

(4) Apply a enough coat of engine oil to the valve guide, and set the valve guide on the cylinder head with the combustion chamber downward.

(5) Insert the ST into the valve guide, and tap-in the valve guide to the reference line (A) for insert using plastic hammer.

CAUTION:
- **During work, place a waste cloth, etc. to avoid scratching the mating surface of the cylinder head.**
- **Use special care not to damage the cylinder head during work.**
- **Always strike the ST vertically with a plastic hammer. Otherwise, the ST can be damaged.**

ST 499765700 VALVE GUIDE REMOVER AND INSTALLER

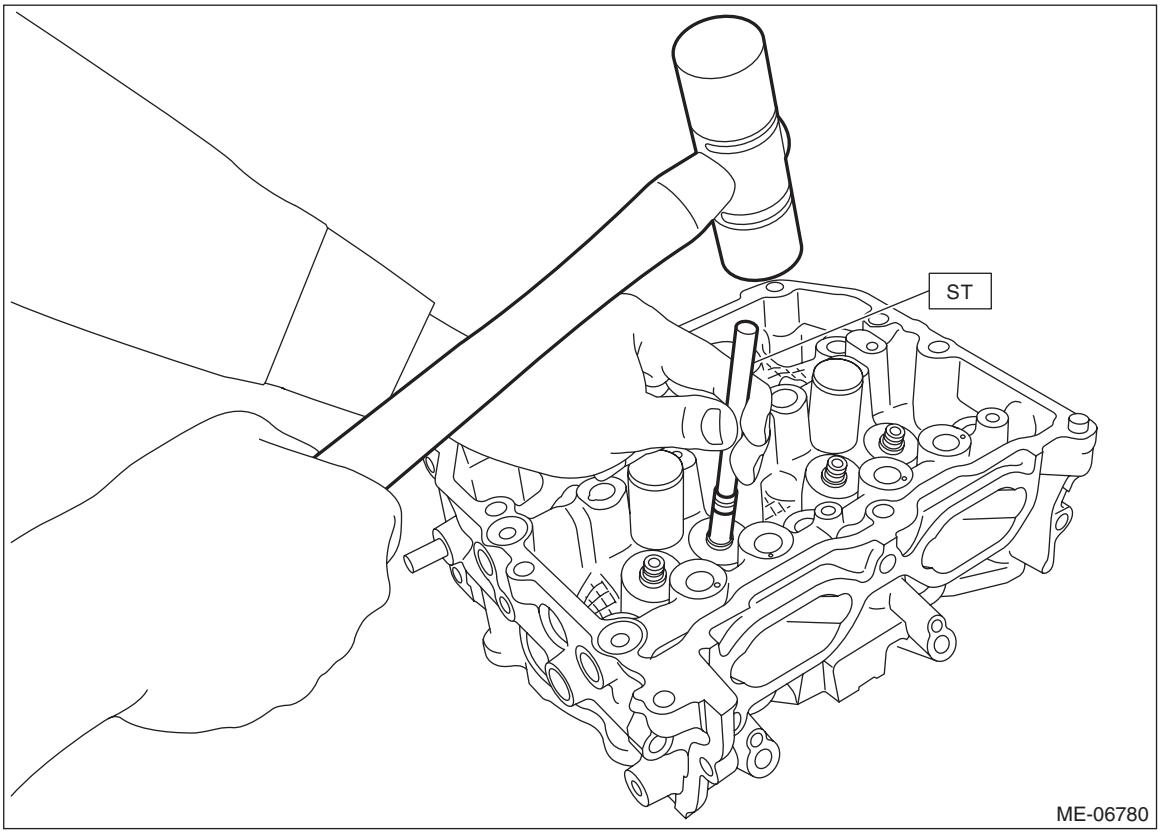

(6) Measure the valve guide protrusion amount “L” as shown in the figure using a caliper gauge. Insert the ST into the valve guide again, and tap-in the valve guide so that it is positioned within standard by referring to the measured value using plastic hammer.

CAUTION:
- **During work, place a waste cloth, etc. to avoid scratching the mating surface of the cylinder head.**
- **Use special care not to damage the cylinder head during work.**
- **Always strike the ST vertically with a plastic hammer. Otherwise, the ST can be damaged.**

NOTE:
Be careful not to tap-in excessively by repeating the steps of Tapping-in → Measurement → Tapping-in → Measurement … when installing the valve guide.
ST 499765700 VALVE GUIDE REMOVER AND INSTALLER

Valve guide protrusion amount L:
Standard
11.4 — 11.8 mm (0.449 — 0.465 in)

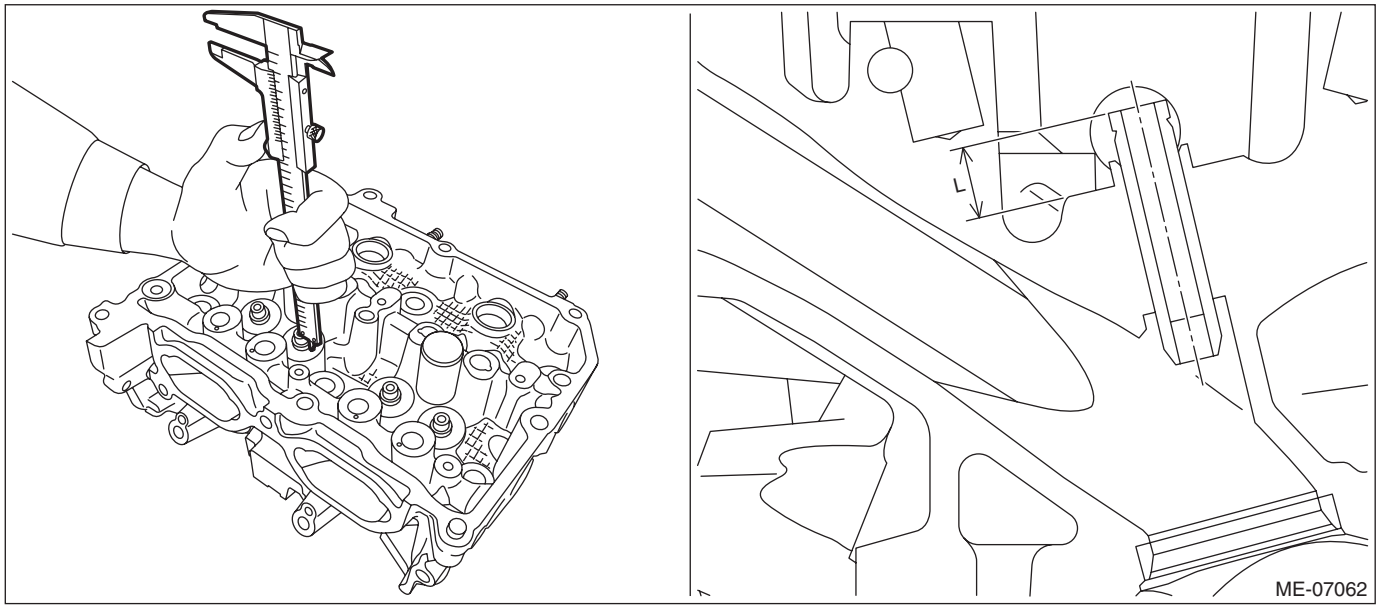

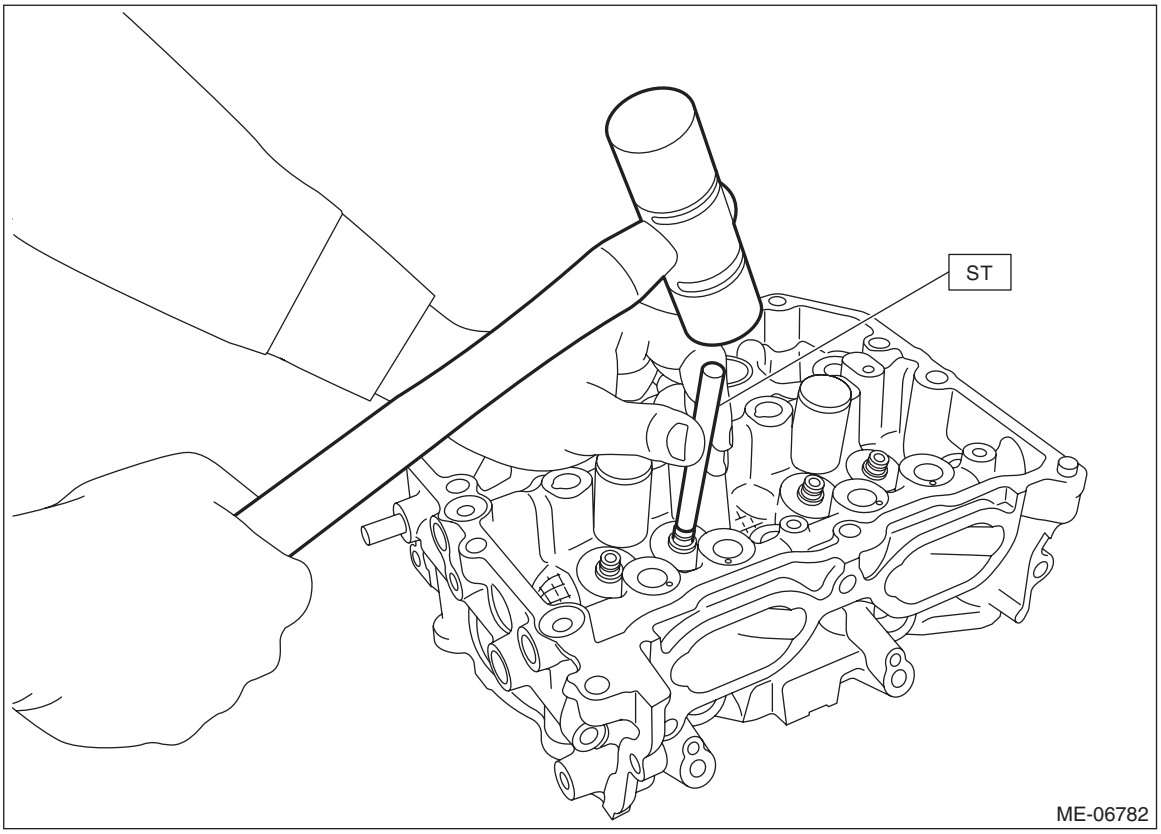

(7) Ream the inside of valve guide with the combustion chamber upward using the ST. Put the ST in valve guide, and rotate the ST slowly clockwise while pushing it lightly. Bring the ST back while rotating it clockwise.

CAUTION:
- **Place a wood board wrapped with a waste cloth to stabilize the cylinder head before work.**
- **Use special care not to damage the cylinder head during work.**

NOTE:
- Apply engine oil to the ST.
- If the inner surface of valve guide is damaged, the edge of ST should be slightly ground with oil stone.
- If the inner surface of valve guide becomes lustrous and the ST does not chip, use a new ST or remedy the ST.

ST 499765900 VALVE GUIDE REAMER

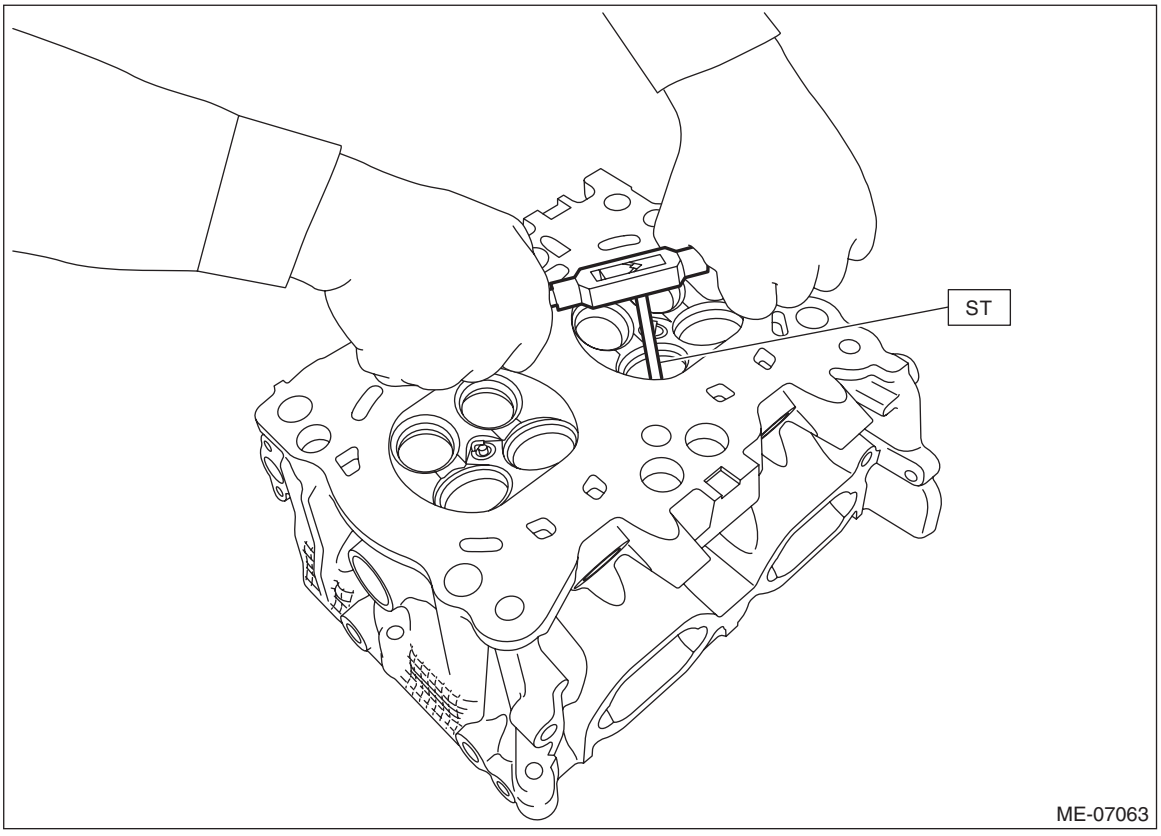

(8) After reaming, clean the valve guide to remove chips.
(9) Check the seating width between valve and valve seat. <Ref. to ME(w/o STI)-236, VALVE SEAT, INSPECTION, Cylinder Head.>

3. VALVE & VALVE SHIM

WARNING:
Metallic sodium is encapsulated in the exhaust valve. Metallic sodium is a strong alkaline material and thus prone to serious chemical reaction. When handling or disposing of the valve, be sure to confirm "DISPOSAL". <Ref. to ME(w/o STI)-245, DISPOSAL, Cylinder Head.>

1) Visually check the valve shim for damage.
2) Check the clearance between valve and valve shim. Check the clearance between valve and valve shim by measuring the outer diameter of valve stem end and the inner diameter of valve shim respectively.
   (1) Measure the outer diameter of valve stem end with a micrometer. If it is not within the standard, replace the valve.

NOTE:
- Measurement should be performed at a temperature of 20°C (68°F).
- Measure the outer diameter of the valve stem end at the two locations as shown in the figure, and read the value of most worn location.
- When the valve is replaced, lap the valve. Refer to "VALVE SEAT" for lapping. <Ref. to ME(w/o STI)-236, VALVE SEAT, INSPECTION, Cylinder Head.>

Valve stem end outer diameter:

Intake
Standard
5.455 — 5.470 mm (0.2148 — 0.2154 in)

Exhaust
Standard
5.445 — 5.460 mm (0.2144 — 0.2150 in)

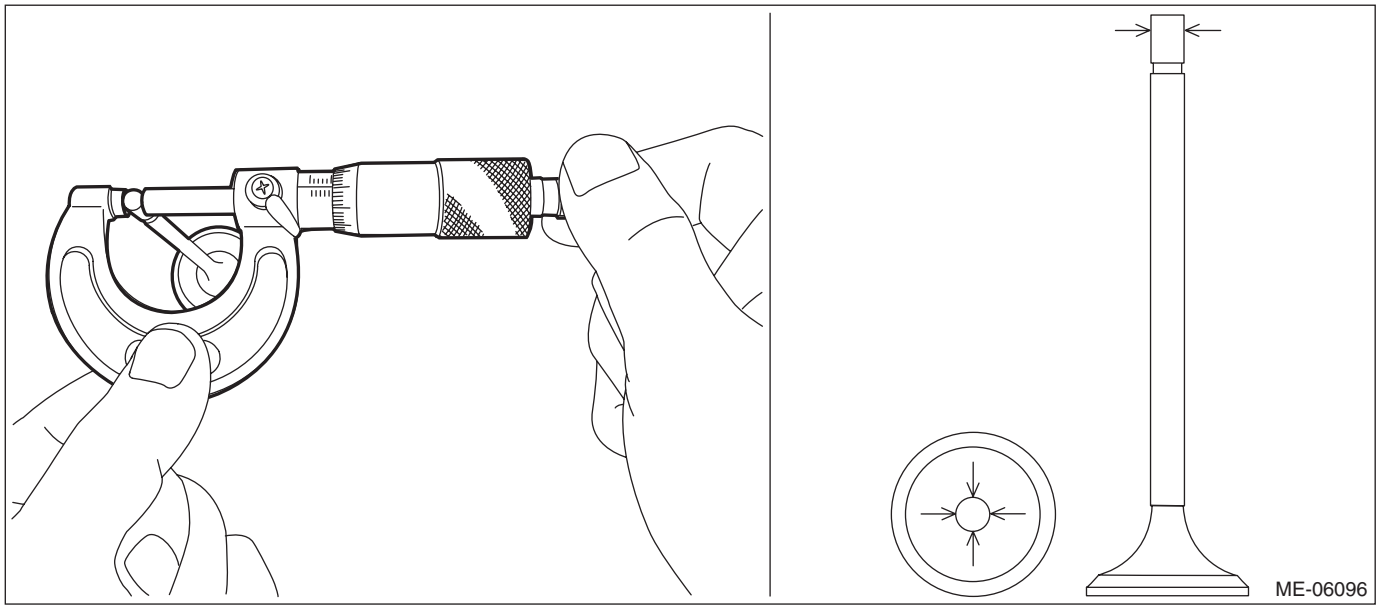

(2) Using a caliper gauge, measure the inner diameter of valve shim. If it is not within the standard, replace the valve shim.

NOTE:
• Measurement should be performed at a temperature of 20°C (68°F).
• Measure the inner diameter of the valve shim at the two locations as shown in the figure, and read the value of most worn location.
• If the valve shim has to be replaced, check the cam clearance and replace with the suitable valve shim. <Ref. to ME(w/o STI)-41, WHEN TIMING CHAIN ASSEMBLY IS REMOVED, INSPECTION, Cam Clearance.>

Valve shim inner diameter:
Standard
5.500 — 5.560 mm (0.2165 — 0.2189 in)

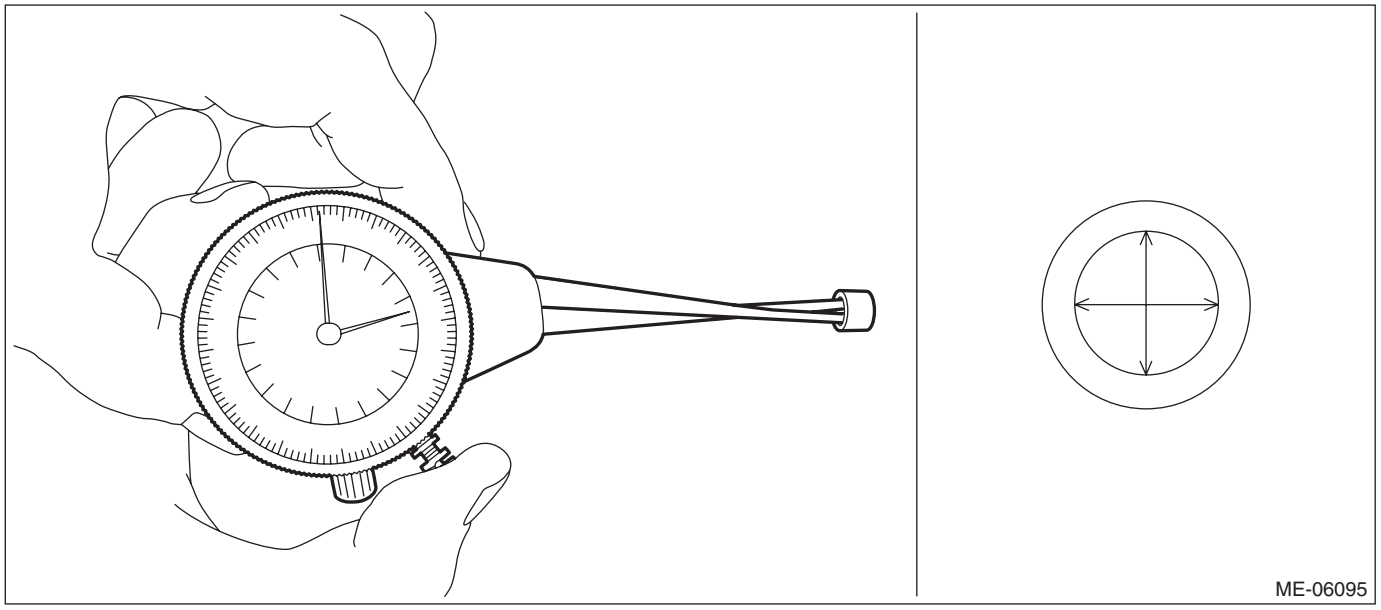

(3) Calculate the clearance between valve and valve shim. If the clearance exceeds the standard, replace the valve or valve shim, whichever shows the greater amount of wear or damage.

NOTE:
• When the valve is replaced, lap the valve. Refer to “VALVE SEAT” for lapping. <Ref. to ME(w/o STI)-236, VALVE SEAT, INSPECTION, Cylinder Head.>
• If the valve shim has to be replaced, check the cam clearance and replace with the suitable valve shim. <Ref. to ME(w/o STI)-41, WHEN TIMING CHAIN ASSEMBLY IS REMOVED, INSPECTION, Cam Clearance.>

Clearance between valve and valve shim:

Intake
Standard
0.030 — 0.105 mm (0.0012 — 0.0041 in)

Exhaust
Standard
0.040 — 0.115 mm (0.0016 — 0.0045 in)

4. VALVE SEAT

1) Check the valve seat for damage and deformation.
2) Check the seating width and seating position between valve and valve seat for the intake valve seat and exhaust valve seat.
   (1) Clean the valve and valve seat.
   (2) Coat the stem (A) of the valve lightly with engine oil and apply red dye evenly on the valve face (B).

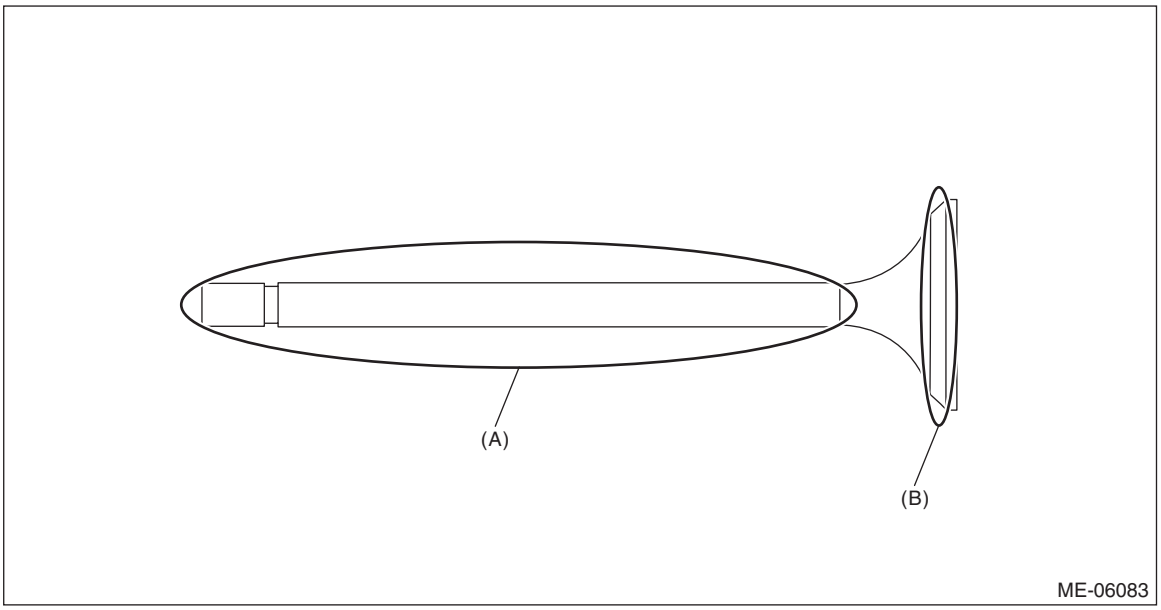

   (3) Using the valve lapper, slowly insert the valve with red dye applied into the valve guide. Lightly press the valve against the valve seat without turning the valve, and then slowly pull out the valve.
   (4) Check the seating width “W” of valve seat as shown in the figure, using a caliper gauge. Check the seating width “W” between valve and valve seat by measuring the width of red dye on the seating surface of valve seat. If the seating width “W” between valve and valve seat is out of the standard, correct the seating surface of valve seat using the valve seat cutter. For correcting procedures of the valve seat seating surface, refer to step 3).

NOTE:
• When the red dye does not appear seamlessly on the valve seat seating surface, lap the valve. For lapping procedure, refer to step 4).
• When the red dye does not appear seamlessly on the valve seat seating surface even after lapping the valve, correct the valve seat seating surface using the valve seat cutter. For correcting procedures of the valve seat seating surface, refer to step 3).

Seating width W between valve and valve seat:

Intake
Standard
0.8 — 1.6 mm (0.031 — 0.063 in)

Exhaust
Standard
1.1 — 1.7 mm (0.043 — 0.067 in)

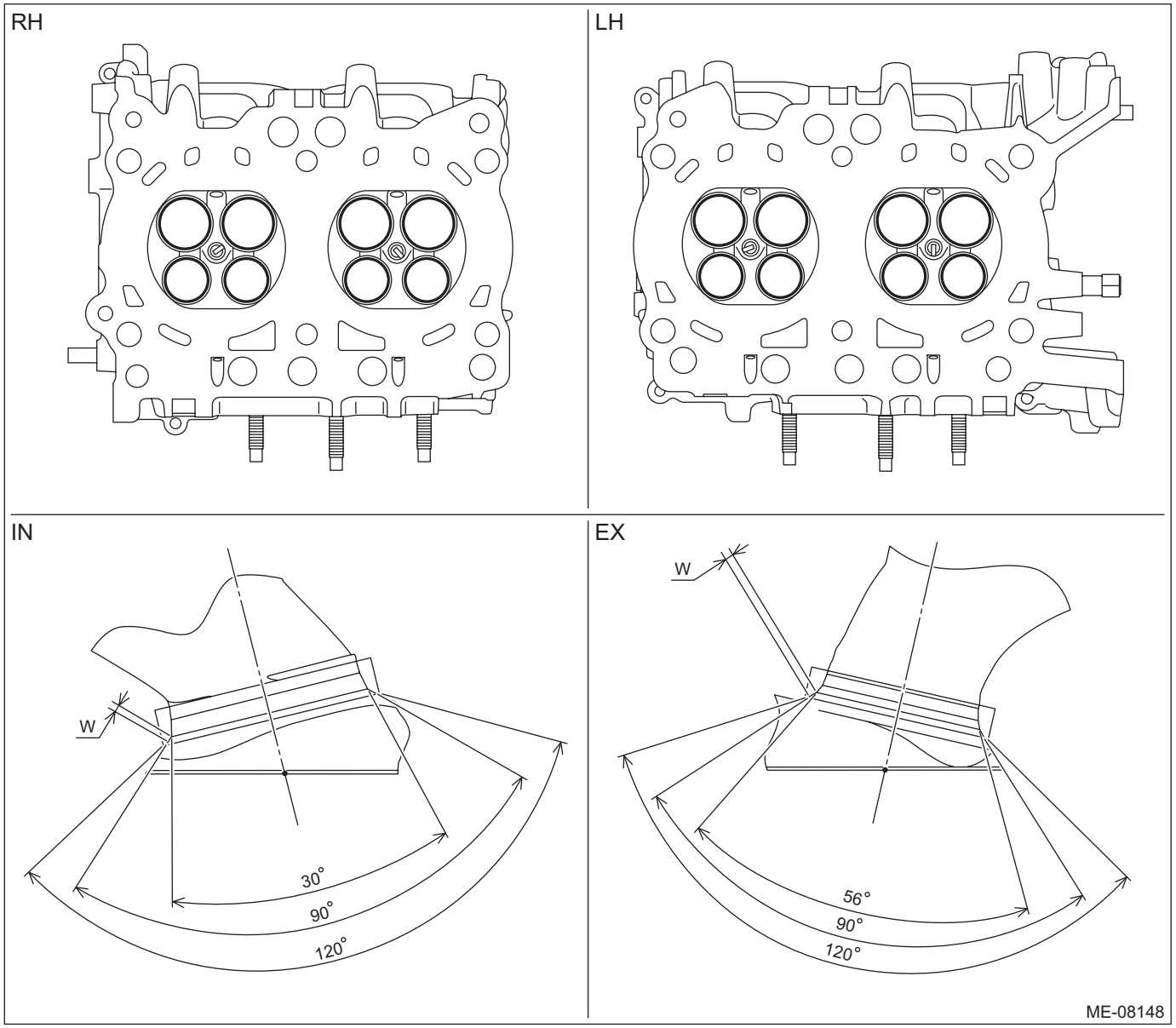

(5) Wipe off the red dye on the valve and valve seat completely.
(6) Coat the stem (A) of the valve lightly with engine oil and apply red dye evenly on the seating surface (B) between valve and valve seat.

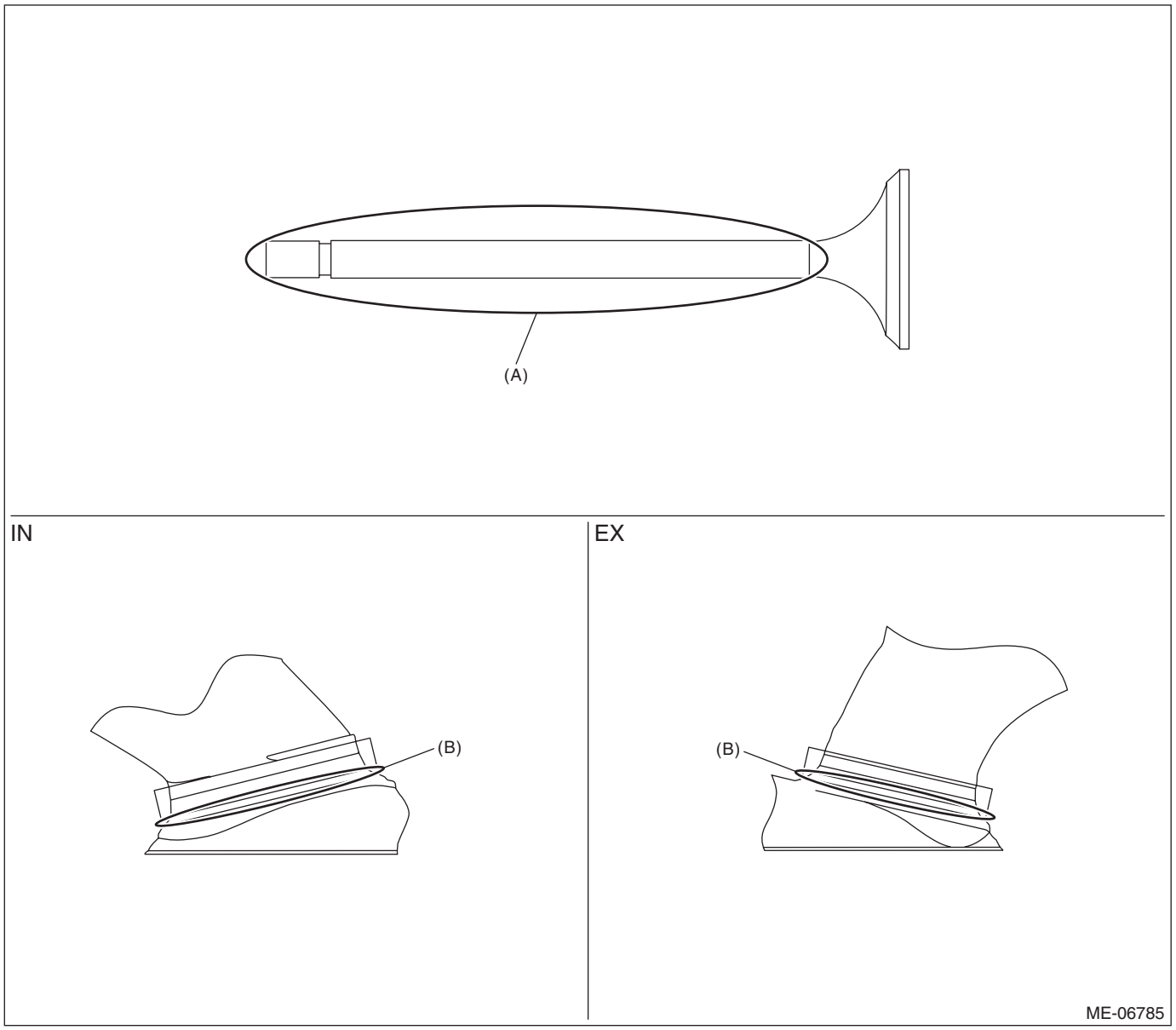

(7) Using the valve lapper, slowly insert the valve into the valve guide. Lightly press the valve against the valve seat without turning the valve, and then slowly pull out the valve.
(8) Check the seating position between valve and valve seat. Check the seating position between valve and valve seat by checking the position of red dye on the valve face. If the seating position between valve and valve seat is not at the center of valve face, correct the seating surface of valve seat using the valve seat cutter. For correcting procedures of the valve seat seating surface, refer to step 3).

Seating position between valve and valve seat:
Valve face center

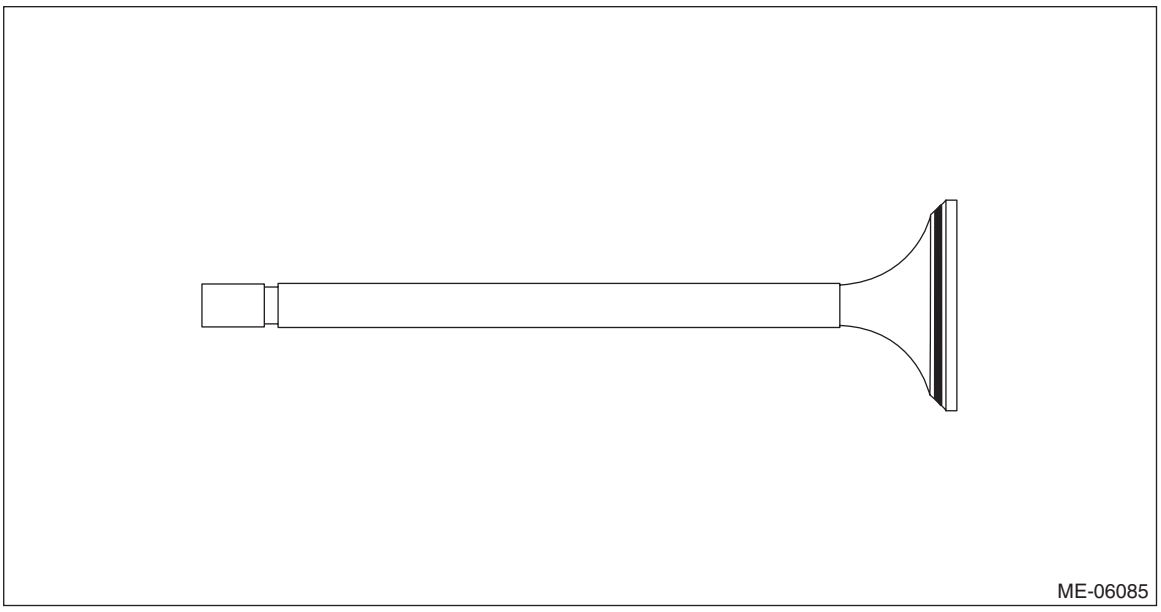

(9) After inspection, wipe off the red dye completely.

3) When correcting the seating surfaces of valve seat
(1) Correct the seating angle between valve and valve seat using the 45° valve seat cutter.

NOTE:
• Select the size of the valve seat cutter by referring to the outer diameters of the intake valve and exhaust valve.

Valve outer diameter:

Intake
Standard
33.9 — 34.1 mm (1.335 — 1.343 in)

Exhaust
Standard
28.9 — 29.1 mm (1.138 — 1.146 in)

• Grind the seating surface so that the seating width between valve and valve seat becomes slightly larger than the standard value.
• Gradually reduce pressure at the end of grinding process in order to avoid creating a gap on the valve seat correcting surface.

Seating angle between valve and valve seat:
45°

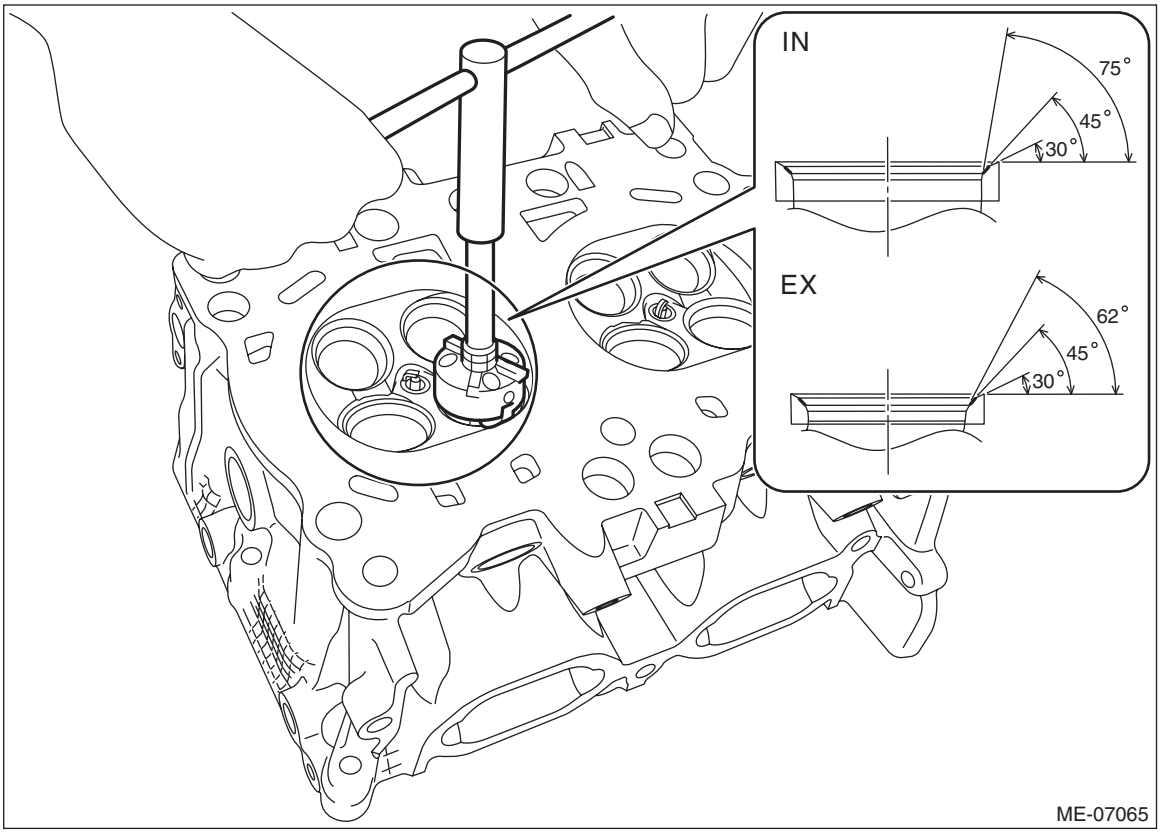

(2) Lap the valve. For lapping procedure of the valve, refer to step 4).
(3) Check the seating position between valve and valve seat. For inspection of the seating position between valve and valve seat, refer to step 2).

NOTE:
This procedure is necessary to select a seat cutter to be used in step (4).
(4) Using the 30°, 75° (IN) or 62° (EX) seat cutter, correct the valve seat so that the seating width between valve and valve seat becomes the standard value.

NOTE:
- Select a proper valve seat cutter according to the following table.

Seating position between valve and valve seat	Seat cutter selection
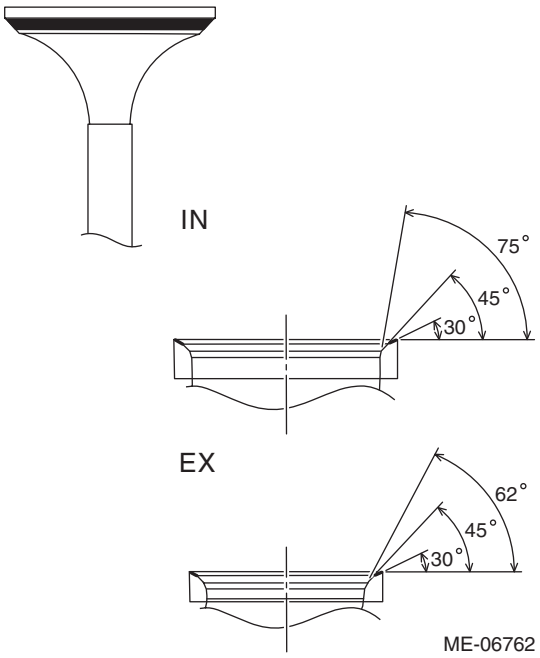	When the seating position of valve face is high, grind the surface using the 30° seat cutter until seating width between valve and valve seat becomes the standard value.
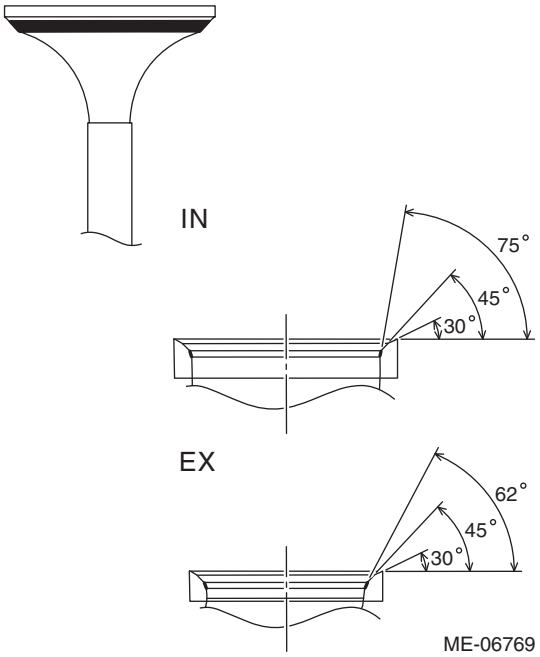	When the seating position of valve face is low, grind the surface using the 75° (IN) or 62° (EX) seat cutter until seating width between valve and valve seat becomes the standard value.

Seating position between valve and valve seat	Seat cutter selection
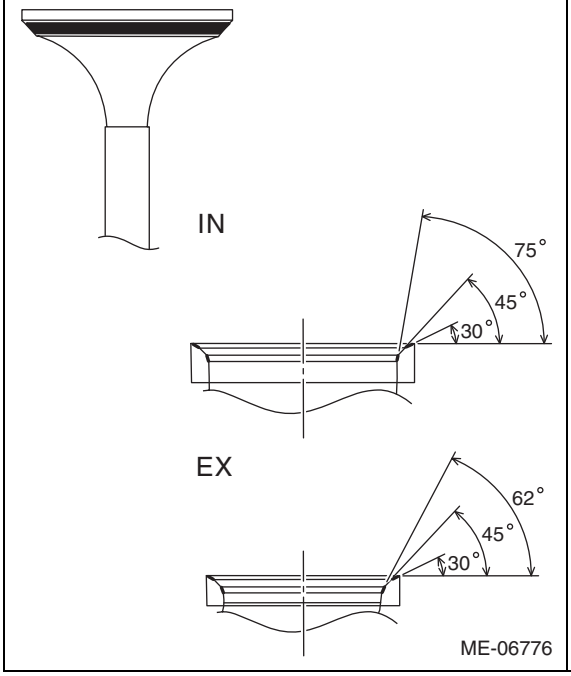	When the seating position of valve face is at center, grind the surface evenly using the 30° and 75° (IN) or 62° (EX) seat cutters until seating width between valve and valve seat becomes the standard value.

• Gradually reduce pressure at the end of grinding process in order to avoid creating a gap on the valve seat correcting surface.

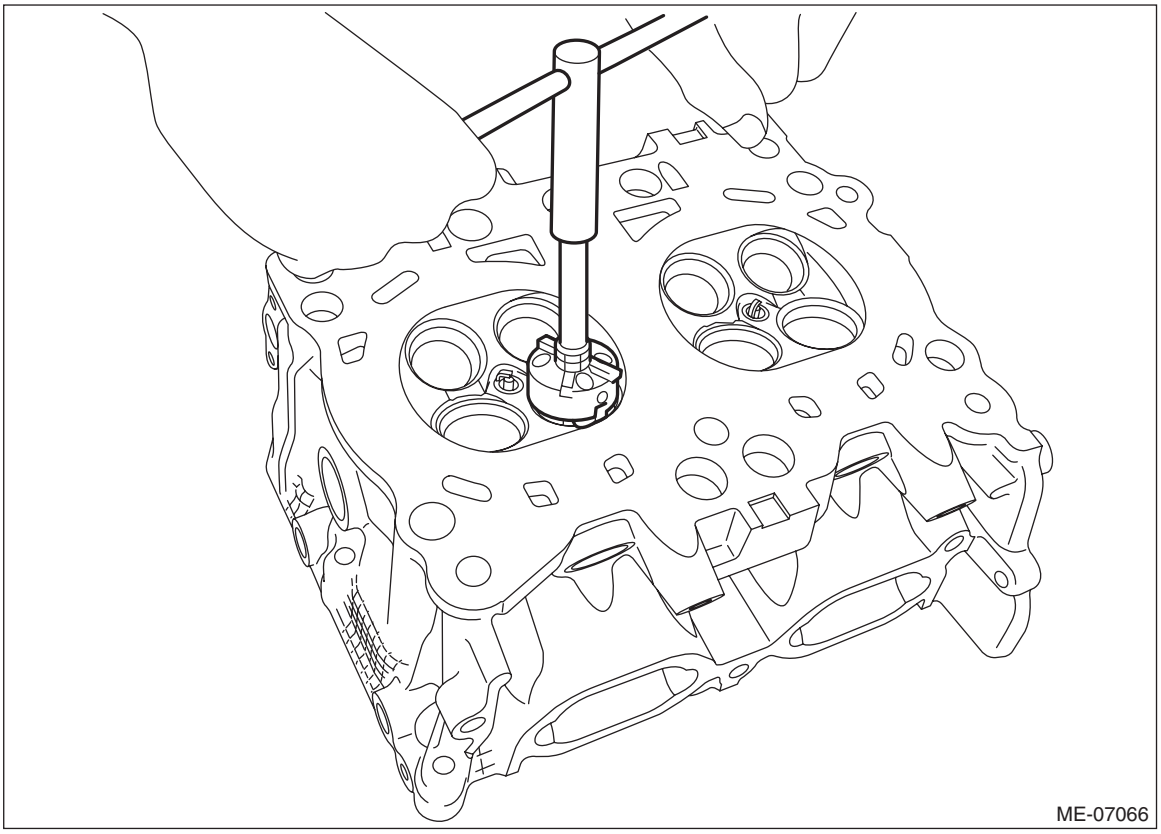

(5) Lap the valve. For lapping procedure of the valve, refer to step 4).

4) When lapping the valve

(1) Coat the stem (A) of the valve lightly with engine oil and put a small amount of valve compound evenly on the valve face (B).

NOTE:
- Be careful not to put the valve compound more than necessary.
- To avoid damaging the valve guide and valve stem, be careful not to let the valve compound contact the valve stem.

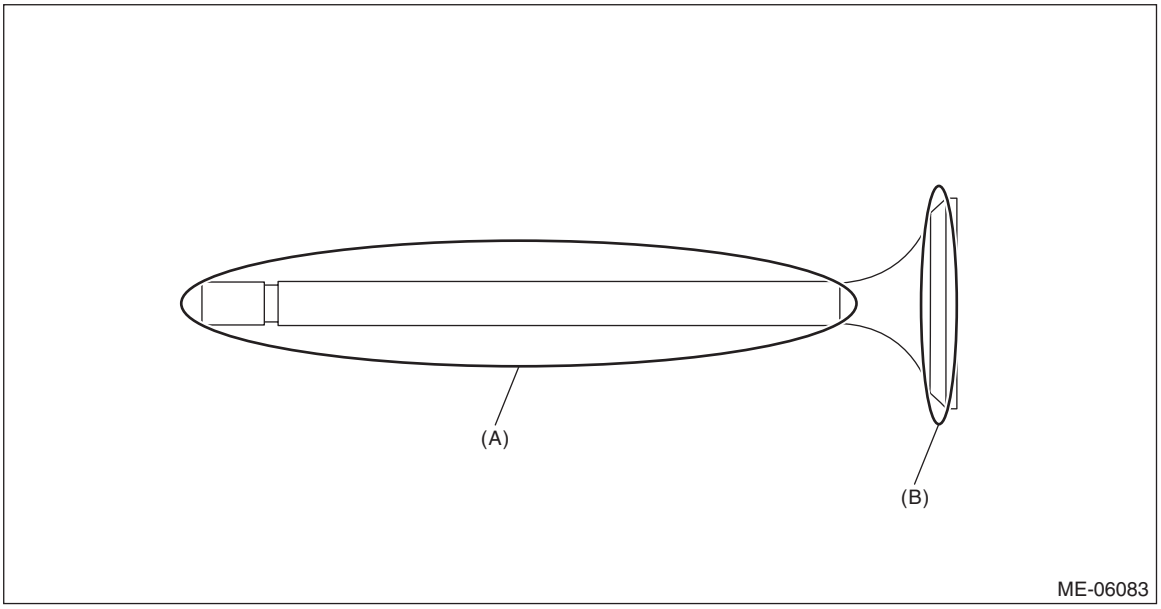

(2) Using the valve lapper, slowly insert the valve with the valve compound applied into the valve guide, and lap the seating surface between valve and valve seat. First, lift the valve and strike it against the valve seat twice, and then slightly turn the valve once. Repeat these steps as one set.

NOTE:
- To prevent the seating width between valve and valve seat from exceeding the standard value, be careful not to keep turning the valve while pressing it against the valve seat during lapping.
- Be careful not to lift the valve too far during lapping in order to prevent the valve from coming off the valve guide.

(3) Wipe off the valve compound on the valve and valve seat completely after lapping.

NOTE:
Be careful not to leave any valve compound in order to avoid malfunction.

(4) Check the seating width and seating position between valve and valve seat.

5. VALVE SPRING

1) Check the valve spring for damage and deformation.
2) Using a caliper gauge, valve spring tester, surface plate and try square, check the valve spring free length, tension/spring height and squareness. If it is not within the standard, replace the valve spring.

NOTE:
- Measurement should be performed at a temperature of 20°C (68°F).
- To check the squareness of the valve spring, stand the valve spring on a surface plate and check its deflection at the top of the valve spring using a try square.

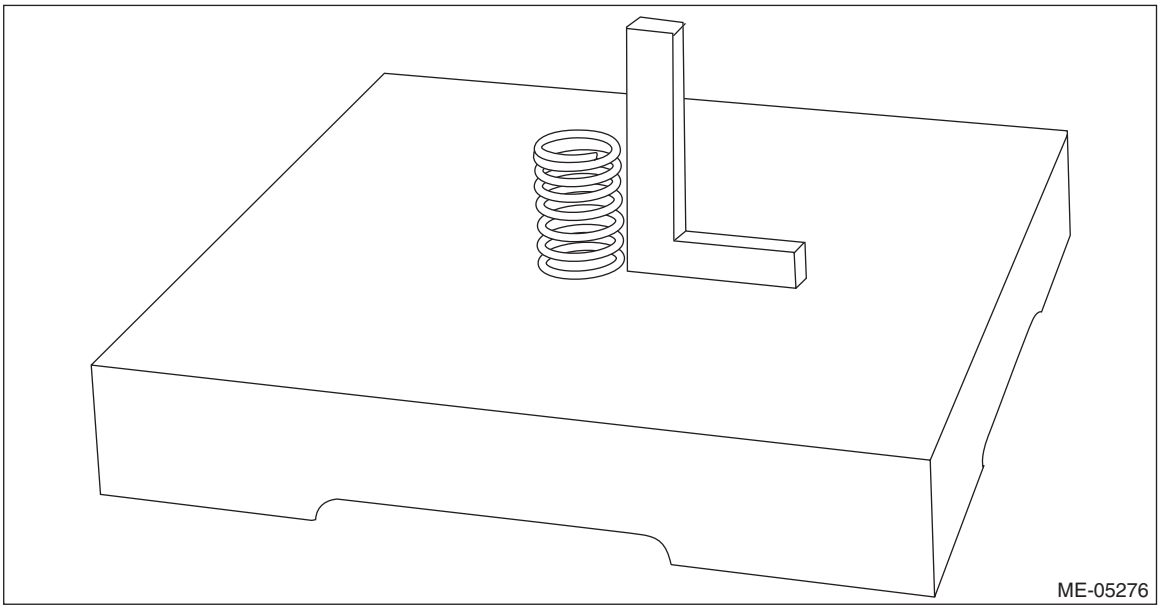

Valve spring free length:

CVT model
Standard
41.68 mm (1.641 in)

MT model
Standard
41.06 mm (1.617 in)

Valve spring tension/spring height:

CVT model
Set
Standard
182 — 210 N (18.56 — 21.41 kgf, 40.92 — 47.22 lbf)/33.0 mm (1.299 in)
Lift
Standard
502 — 554 N (51.19 — 56.49 kgf, 112.87 — 124.56 lbf)/22.0 mm (0.866 in)

MT model
Set
Standard
182 — 210 N (18.56 — 21.41 kgf, 40.92 — 47.22 lbf)/33.0 mm (1.299 in)
Lift
Standard
552 — 610 N (56.29 — 62.20 kgf, 124.11 — 137.15 lbf)/22.0 mm (0.866 in)

Valve spring squareness:
Standard
2.5°, 1.8 mm (0.071 in) or less

F: DISPOSAL

WARNING:
• Metallic sodium is encapsulated in the exhaust valve. Metallic sodium is a strong alkaline material and poses a risk of causing a severe chemical reaction. Use great care when handling and disposing it.
• If the metallic sodium gets into your eyes, you may lose your sight. If it touches the skin, you may get burned severely or if it touches flame, fire may be caused by chemical reaction. Therefore, do not disassemble the exhaust valve.
• It is safe when the metallic sodium encapsulated in the exhaust valve is not exposed to the air.
• When the exhaust valve is broken, remove the broken exhaust valve, and dispose of the metallic sodium.
• Do not intentionally break the exhaust valve and take out the metallic sodium.
• Identify the exhaust valve in which the metallic sodium is encapsulated with the embossed mark.

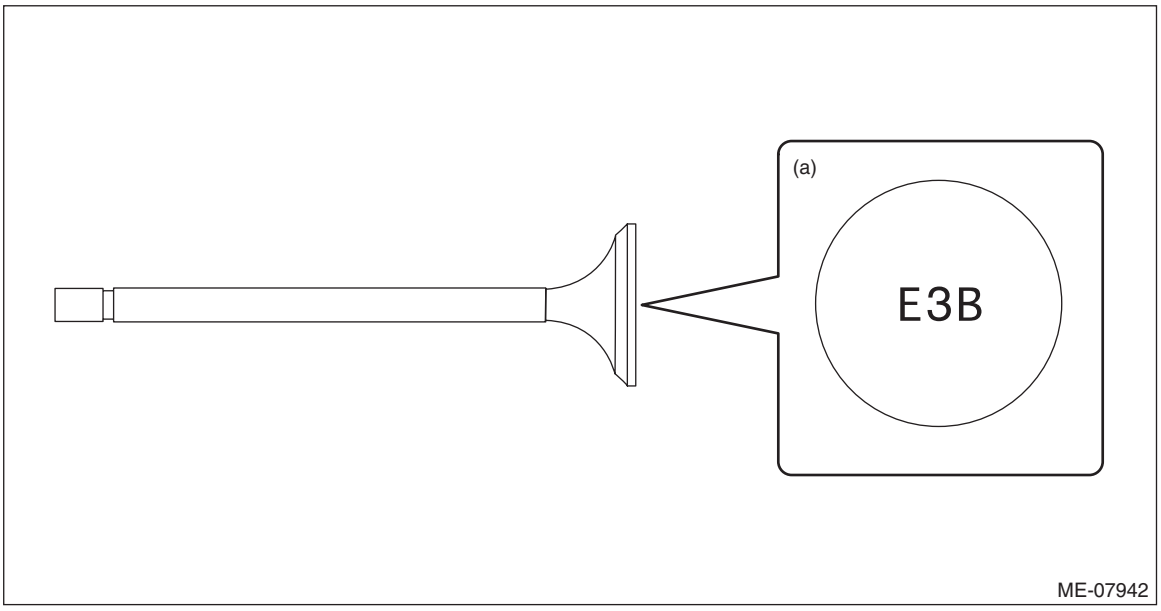

(a) Embossed mark (Identification: E3B)

CAUTION:
• When disposing of the exhaust valve that is not broken, entrust the disposal processing to the industrial waste disposer in charge of dissolution treatment.
• When the exhaust valve is broken, remove it from the cylinder head, perform appropriate processing in the same manner as the general steel material.
• When performing processing, be careful of the following.
1. Prepare the fire extinguisher nearby.
2. Wear the protective goggles.
3. Wear rubber gloves.
1) Wear rubber gloves and remove the broken exhaust valve from the cylinder head.
2) Prepare large container (bucket or oil can) in well-ventilated place, and fill the container with water (10 L or more).

3) Using a pair of large tweezers or pliers, immerse the broken exhaust valve in the water vertically.

CAUTION:
• Completely immerse the broken exhaust valve in the water.
• Hydrogen gas is produced by the chemical reaction. Therefore, always keep the container away from open flames such as sparks.
• Because the severe chemical reaction is developed, keep at least 2 to 3 m away from the container.

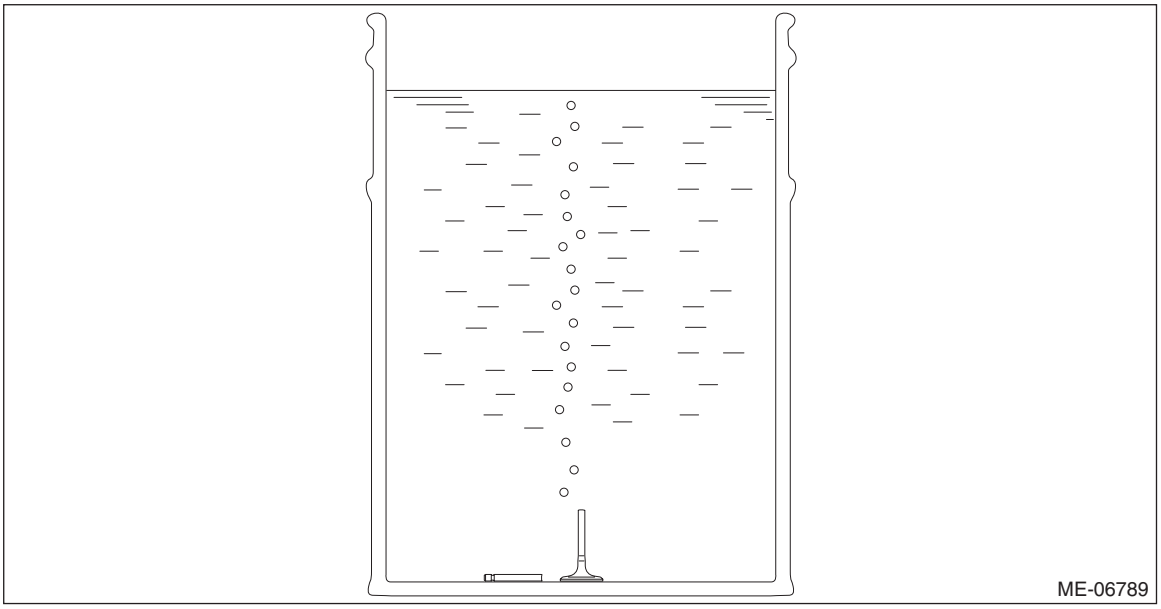

4) After completion of chemical reaction (after the elapse of 4 to 5 hours), carefully take out the exhaust valve using a pair of large tweezers or pliers, and dispose of the exhaust valve according to the same disposal procedure as other parts.

CAUTION:
• Concerning the liquid waste disposal of the liquid (sodium hydrate) produced in a chemical reaction, follow all governmental regulations and local regulations related to the liquid waste disposal.
• If the liquid produced in a chemical reaction (sodium hydrate) should touch the skin, immediately wash it away with plenty water.

22.Cylinder Block

A: REMOVAL

1) Remove the engine from the vehicle. <Ref. to ME(w/o STI)-45, REMOVAL, Engine Assembly.>
2) Remove the crankshaft position sensor plate with drive plate. (CVT model) <Ref. to CVT(TR690)-138, REMOVAL, Drive Plate.>
3) Remove the clutch disc and cover. (MT model) <Ref. to CL-12, REMOVAL, Clutch Disc and Cover.>
4) Remove the crankshaft position sensor plate with flywheel. (MT model) <Ref. to CL-15, REMOVAL, Flywheel.>
5) Remove the intake manifold. <Ref. to FU(w/o STI)-18, REMOVAL, Intake Manifold.>
6) Remove the air intake adapter. <Ref. to FU(w/o STI)-42, REMOVAL, Tumble Generator Valve Assembly.>
7) Remove the engine wiring harness. <Ref. to FU(w/o STI)-81, REMOVAL, Engine Wiring Harness.>
8) Remove the chain cover. <Ref. to ME(w/o STI)-89, REMOVAL, Chain Cover.>
9) Remove the rocker cover. <Ref. to ME(w/o STI)-144, REMOVAL, Rocker Cover.>
10) Remove the cam carrier. <Ref. to ME(w/o STI)-164, REMOVAL, Cam Carrier.>
11) Remove the cylinder head. <Ref. to ME(w/o STI)-206, REMOVAL, Cylinder Head.>
12) Remove the crank sprocket. <Ref. to ME(w/o STI)-142, REMOVAL, Crank Sprocket.>
13) Remove the engine rear hanger from cylinder block RH.

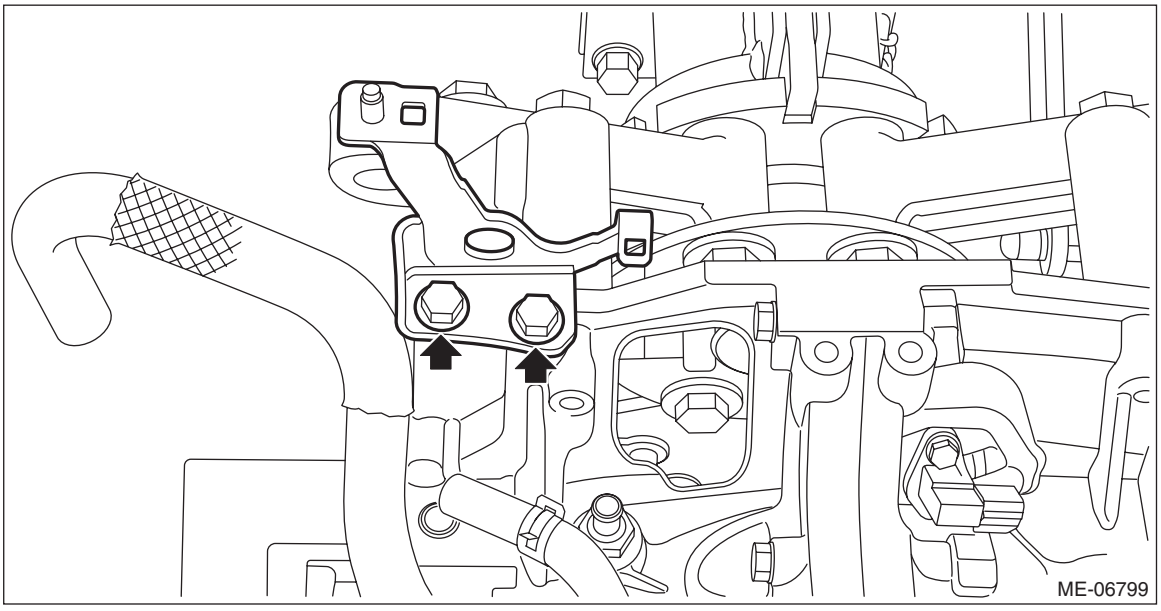

14) Remove the bolts securing the water pipe assembly and PCV connector to the cylinder block, and remove the water pipe assembly and PCV connector as a set from cylinder block.

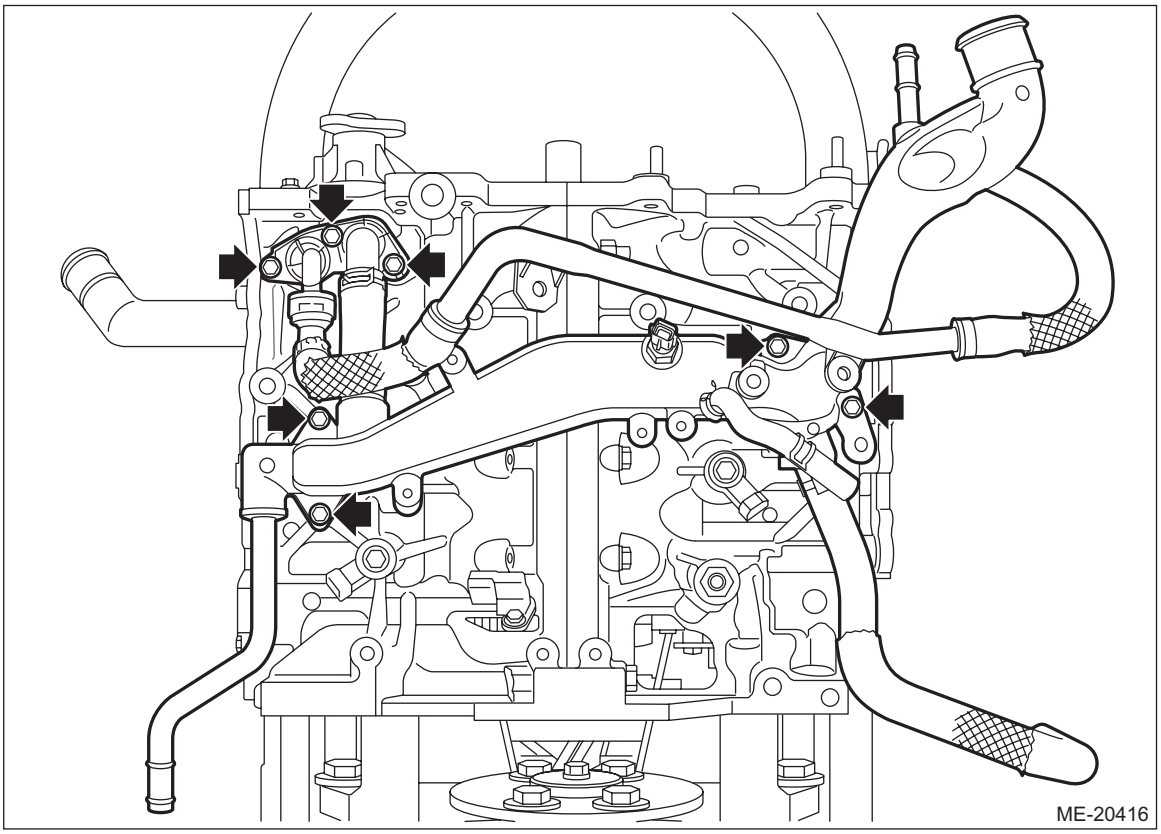

15) Remove the O-ring from the cylinder block and PCV connector.

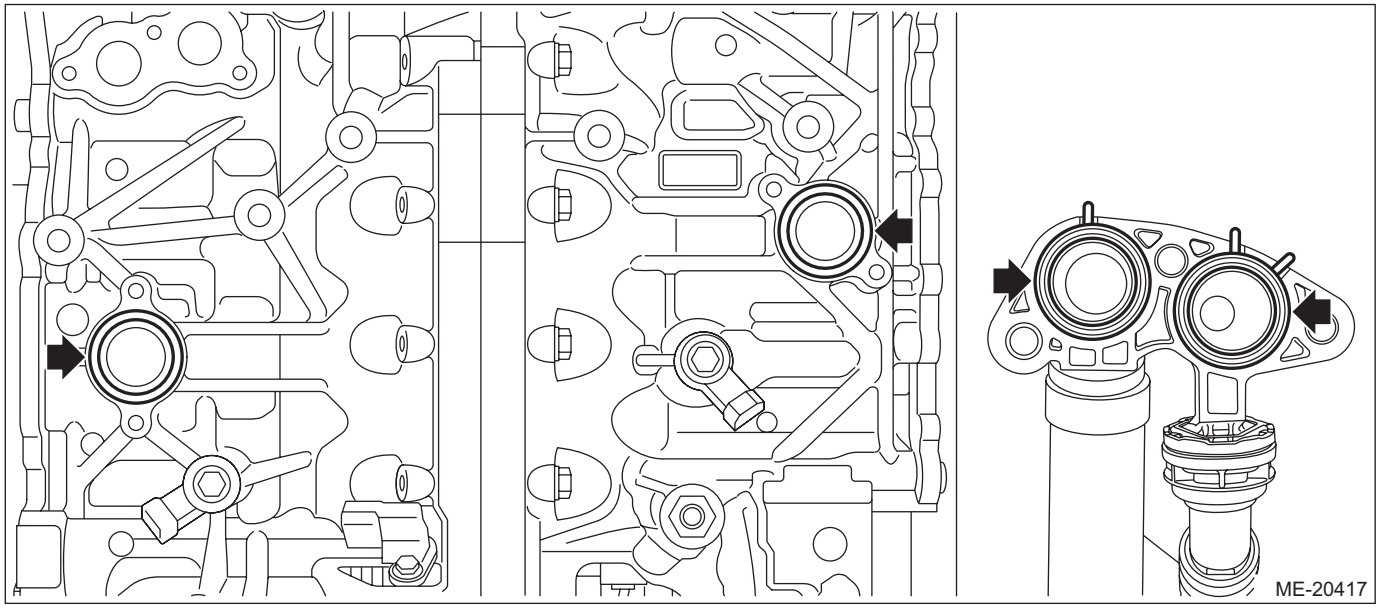

16) Remove the knock sensor from cylinder block LH.

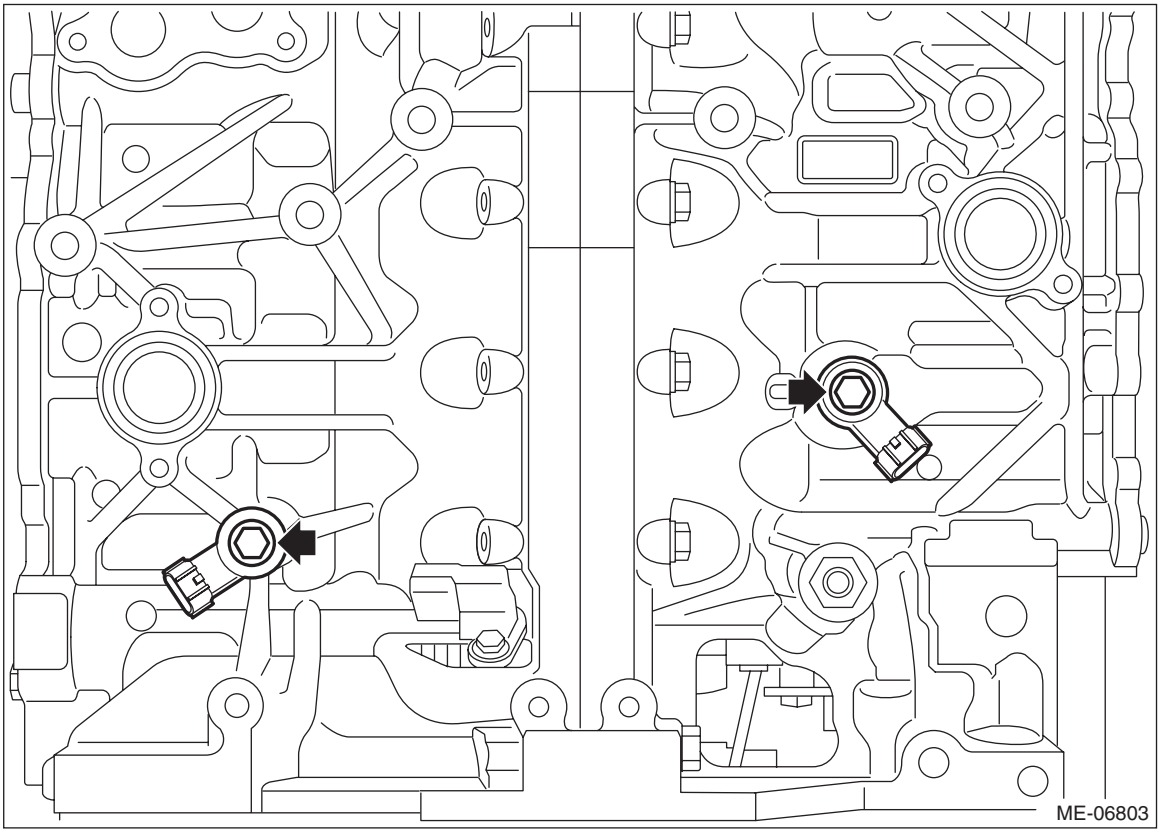

17) Remove the PCV valve from the cylinder block RH.

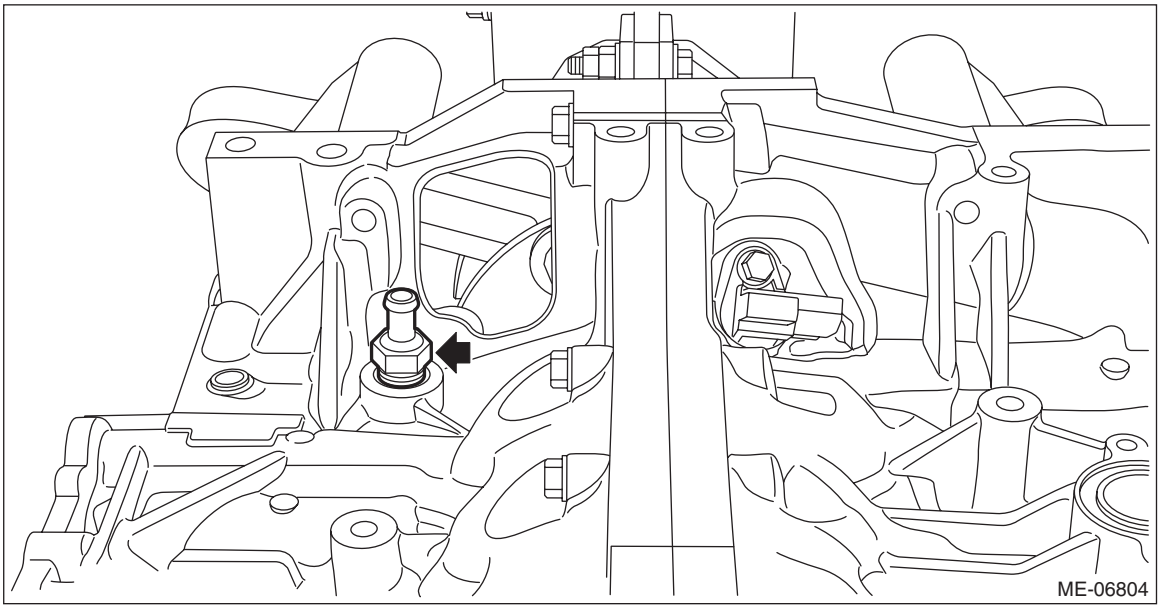

18) Remove the bolts securing the crankshaft position sensor holder from the cylinder block LH, and remove the crankshaft position sensor with crankshaft position sensor holder.

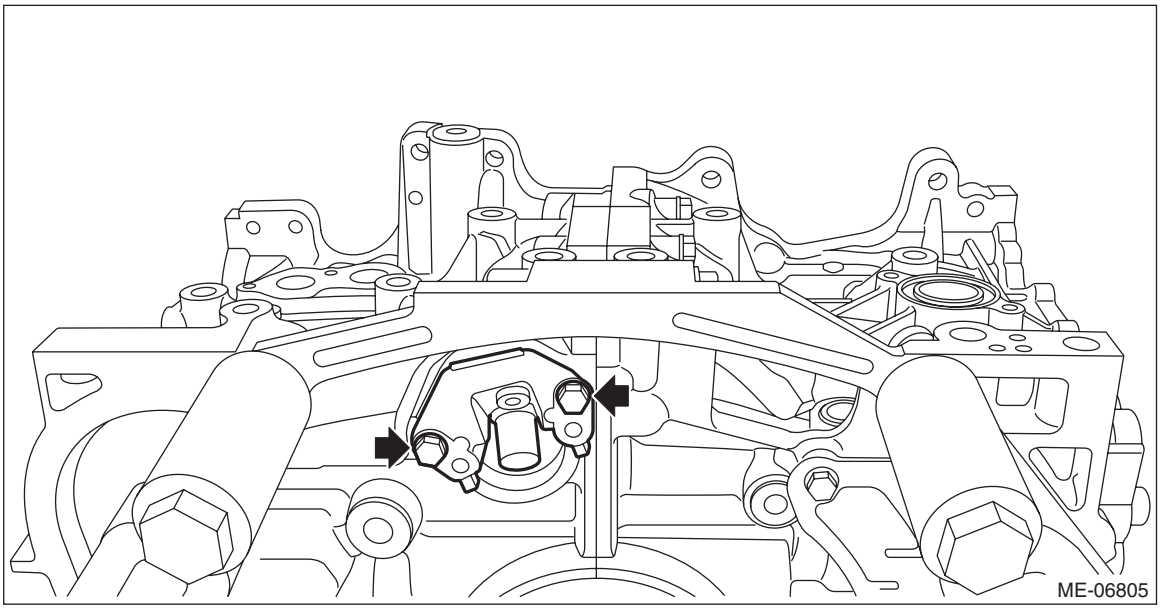

19) Remove the oil pan upper. <Ref. to LU(w/o STI)-18, OIL PAN UPPER, REMOVAL, Oil Pan.>
20) Set the part so that the cylinder block RH is on the upper side.
21) Remove the #1 and #3 connecting rod caps and pistons from the cylinder block.

NOTE:
Mark each connecting rod cap and piston with a cylinder number.

(1) Turn the crankshaft so that the #1 connecting rod cap (A) is located at the position shown in the figure using ST.

ST 18252AA000 CRANKSHAFT SOCKET

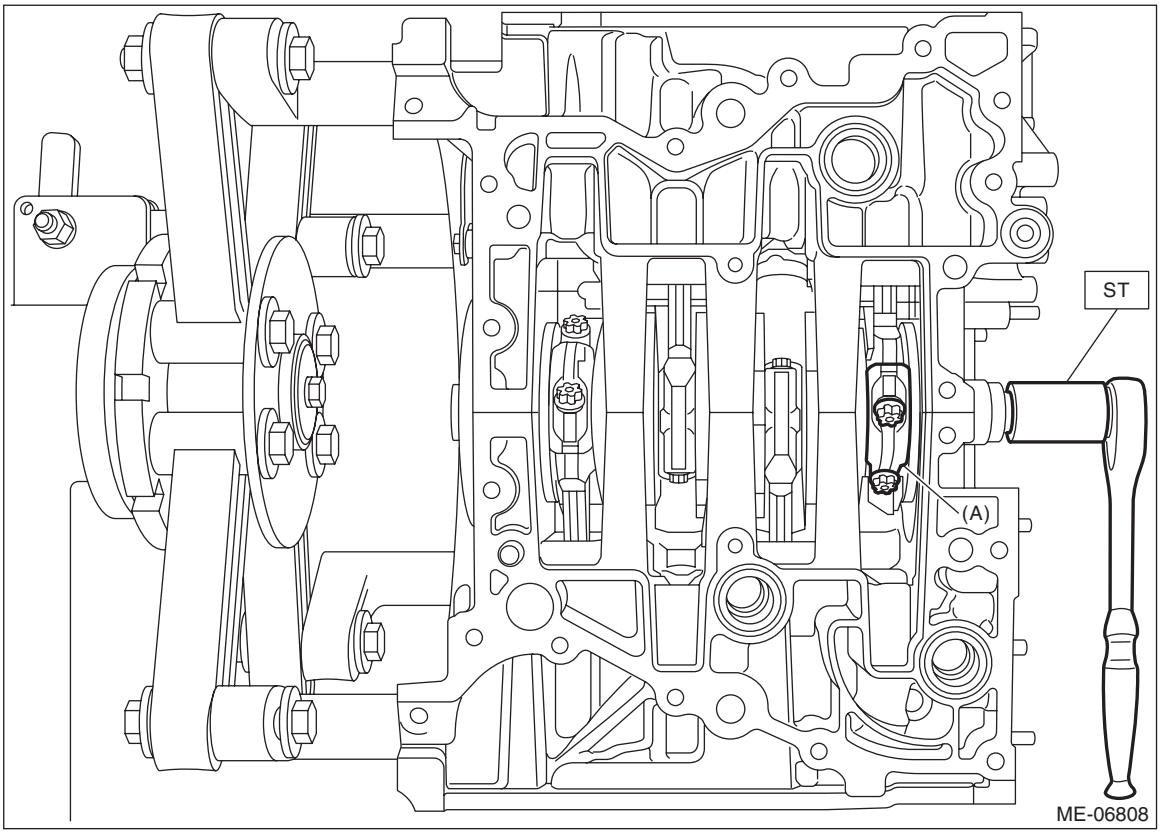

(2) Using ST, loosen the #1 connecting rod cap bolt, and remove the #1 connecting rod cap bolt and #1 connecting rod cap.

ST 18270AA020 SOCKET

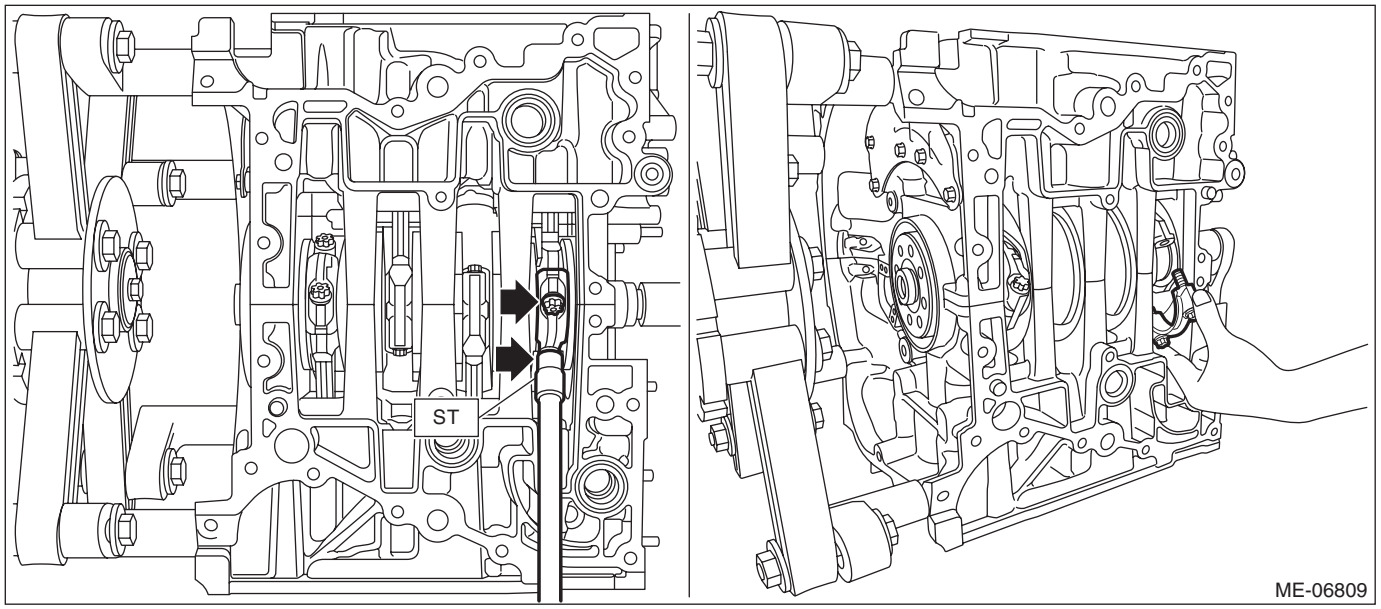

(3) Using the ST, turn the crankshaft counterclockwise and separate the positions of the #1 pin (A) of crankshaft and the large end (B) of #1 connecting rod.

ST 18252AA000 CRANKSHAFT SOCKET

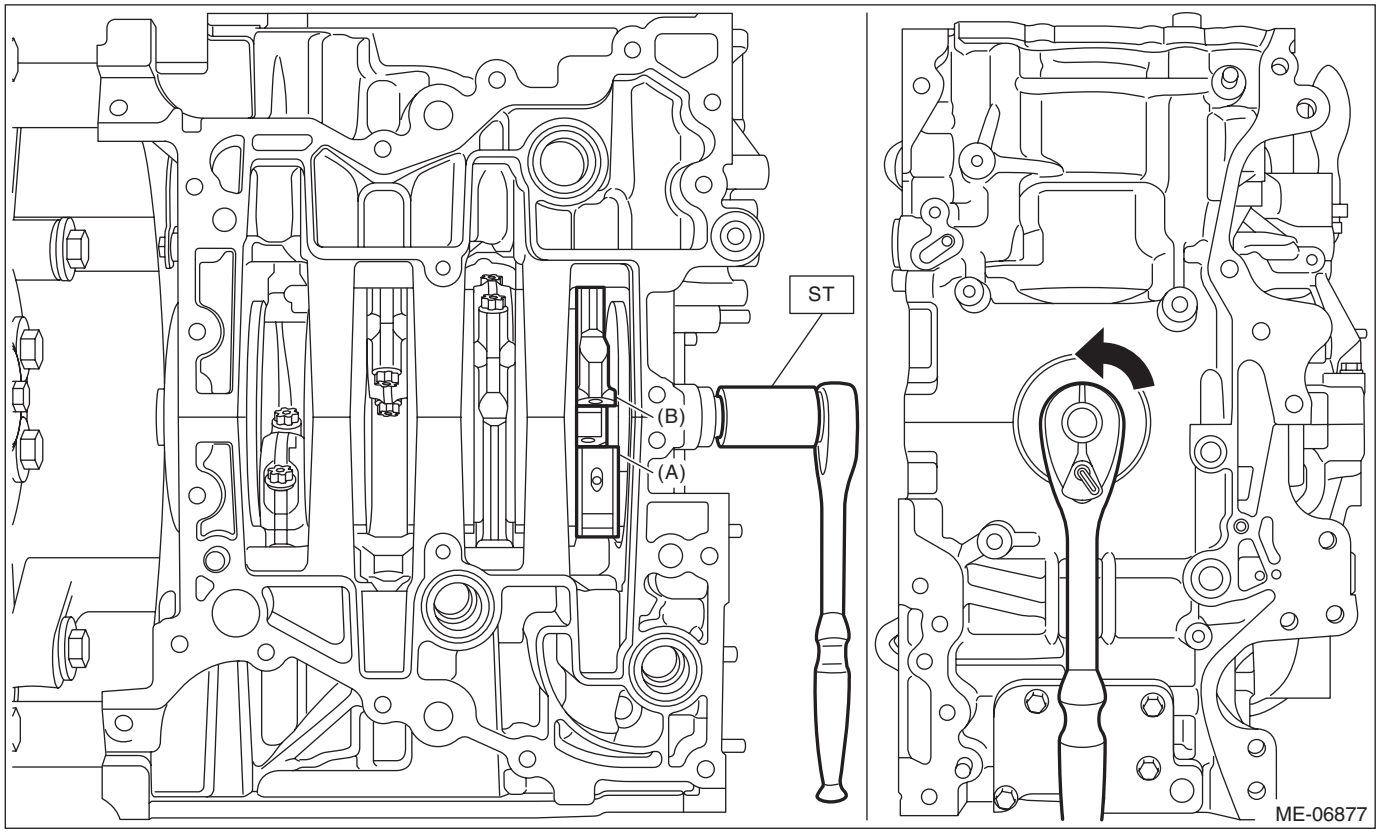

(4) Push the #1 connecting rod in the direction of the arrow, and remove the #1 piston with #1 connecting rod from the cylinder block.

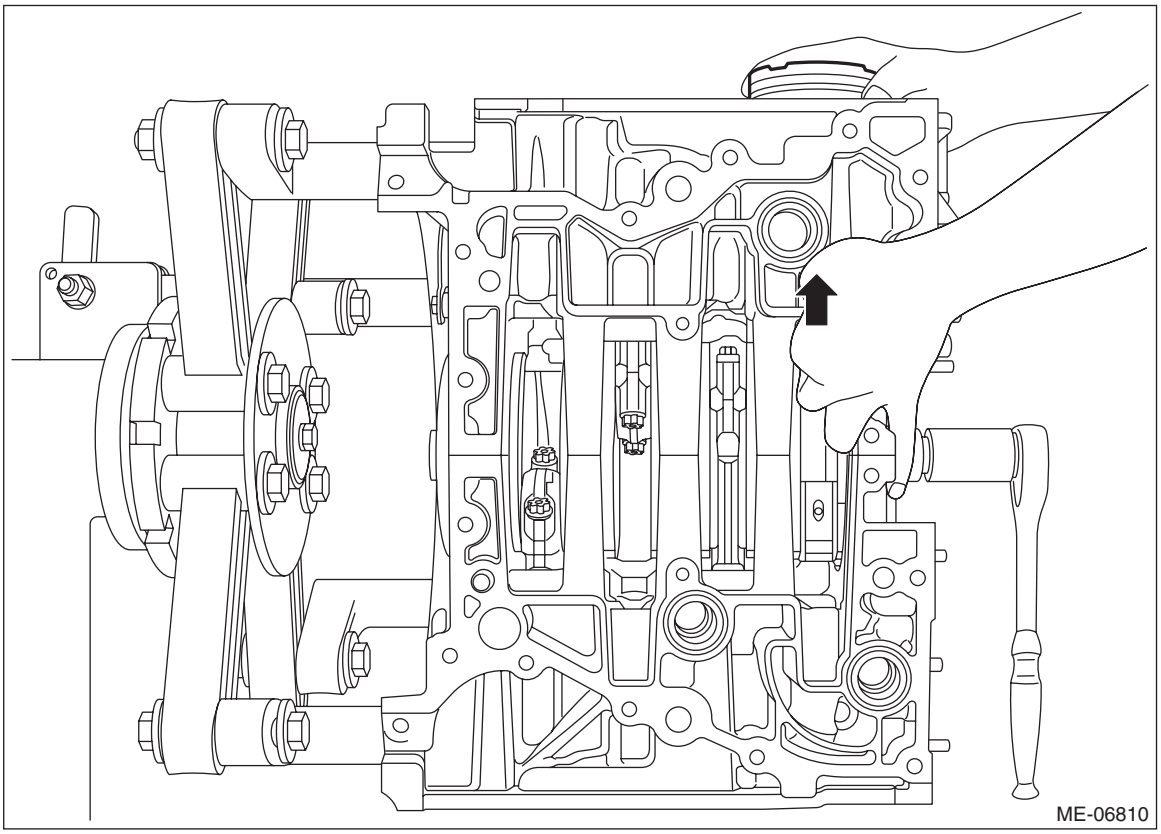

(5) Turn the crankshaft so that the #3 connecting rod cap (A) is located at the position shown in the figure using ST.

ST 18252AA000 CRANKSHAFT SOCKET

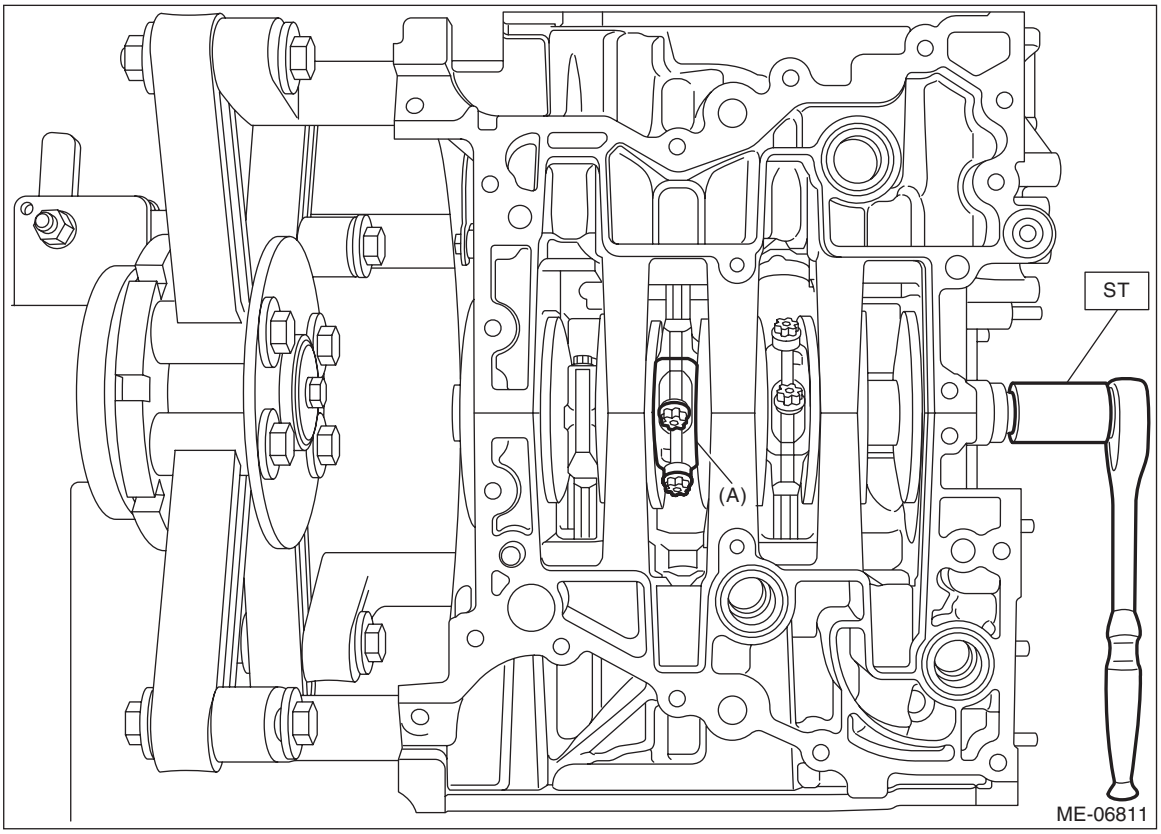

(6) Using ST, loosen the #3 connecting rod cap bolt, and remove the #3 connecting rod cap bolt and #3 connecting rod cap.

ST 18270AA020 SOCKET

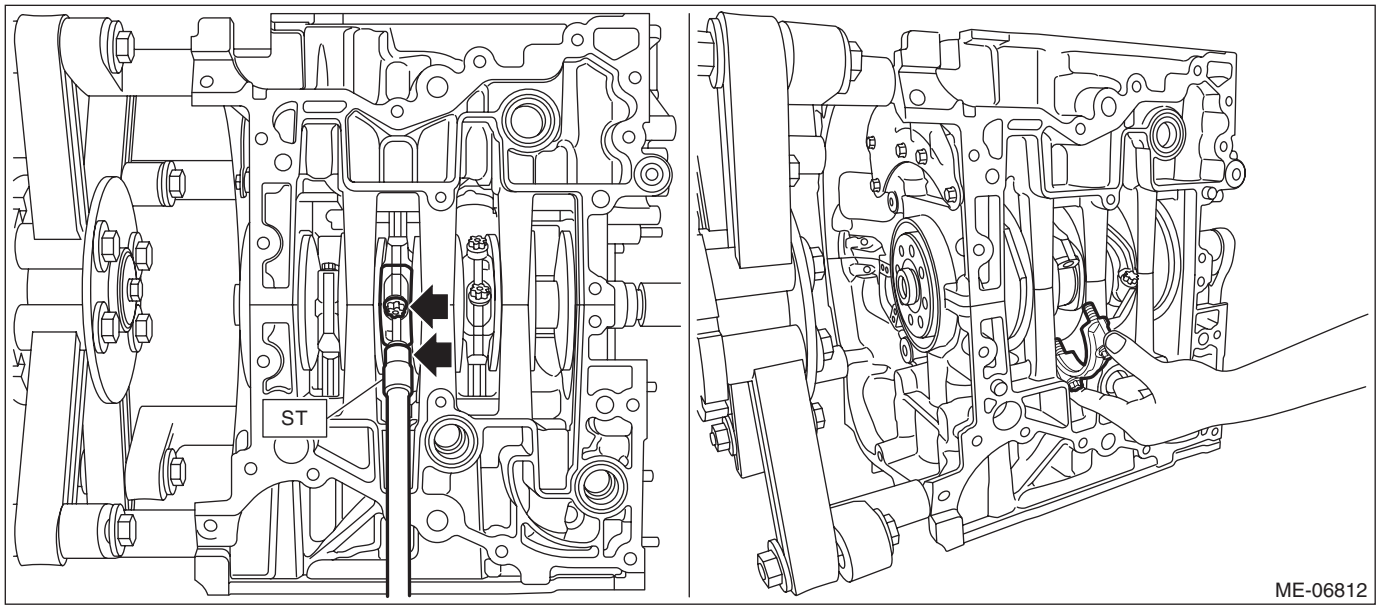

(7) Using the ST, turn the crankshaft counterclockwise and separate the positions of the #3 pin (A) of crankshaft and the large end (B) of #3 connecting rod.

ST 18252AA000 CRANKSHAFT SOCKET

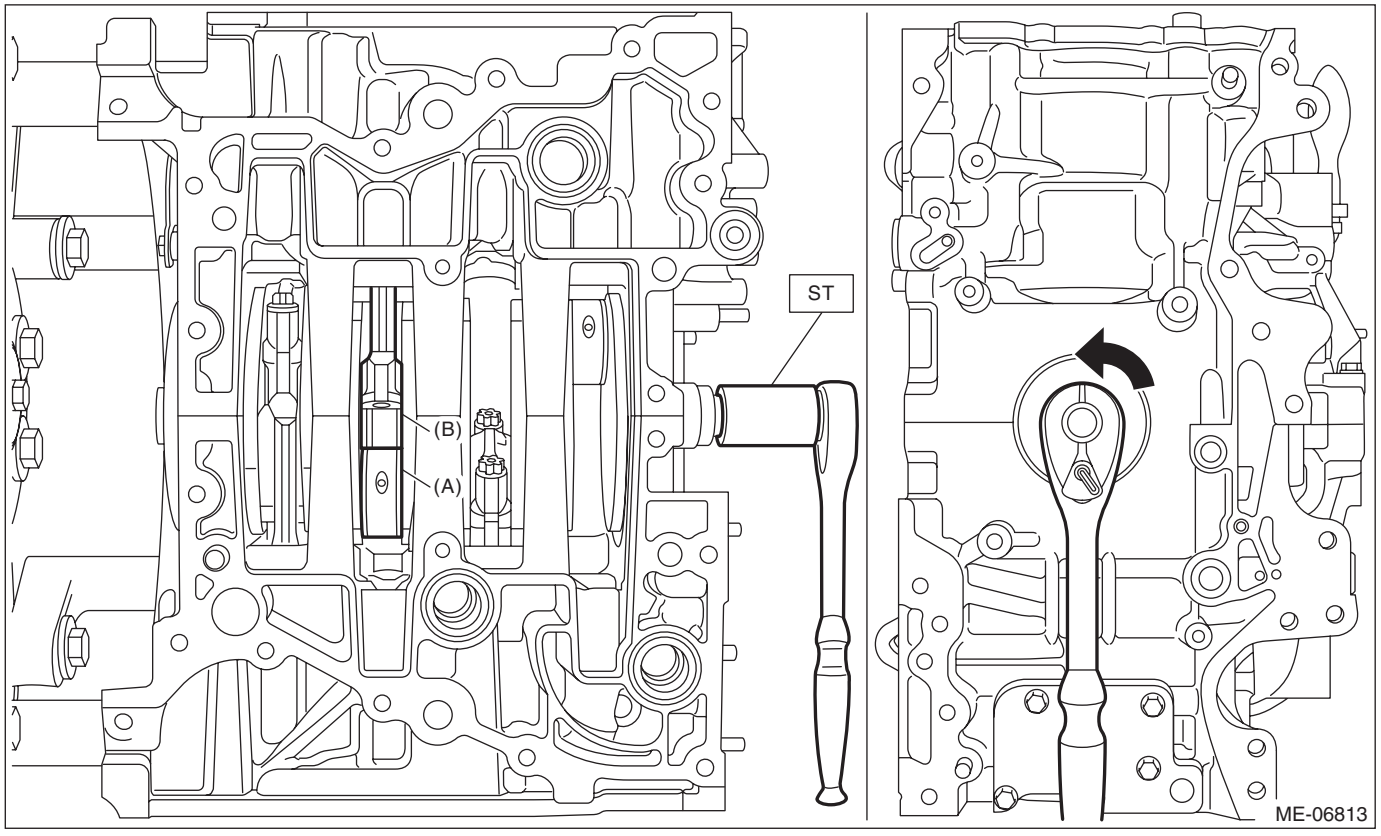

(8) Push the #3 connecting rod in the direction of the arrow, and remove the #3 piston with #3 connecting rod from the cylinder block.

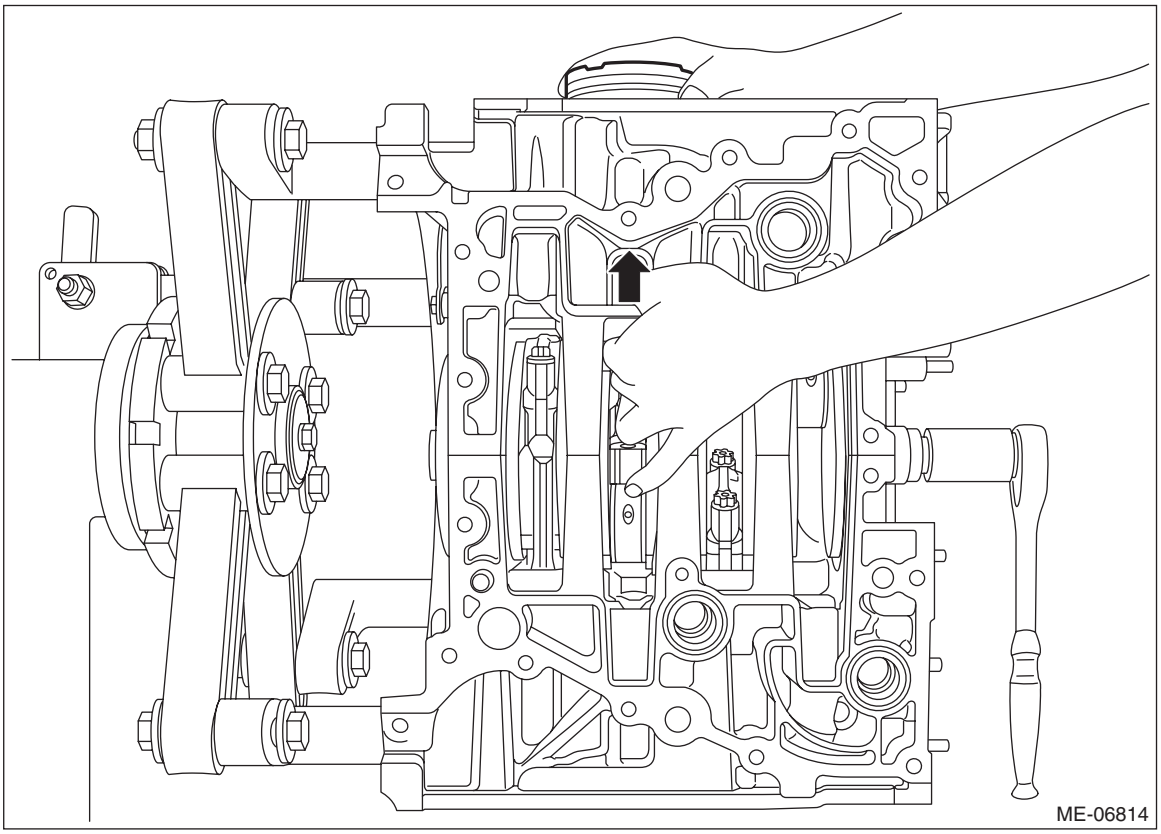

22) Set the part so that the cylinder block LH is on the upper side.
23) Remove #2 and #4 connecting rod caps and pistons in the same removal procedure as #1 and 3# connecting rod caps and pistons.

24) Set the part so that the cylinder block RH is on the upper side, and separate the cylinder block.
(1) Remove the engine stand from the cylinder block RH.

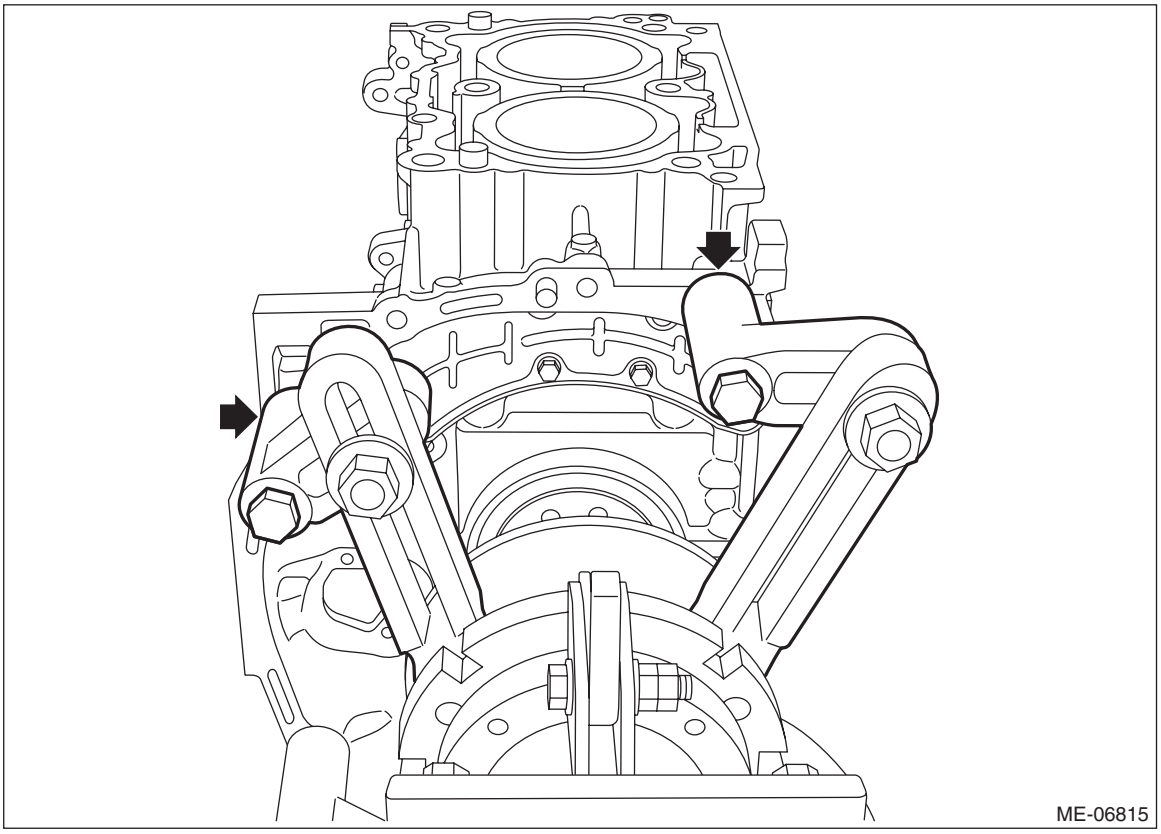

(2) Remove the bolt shown in the figure.

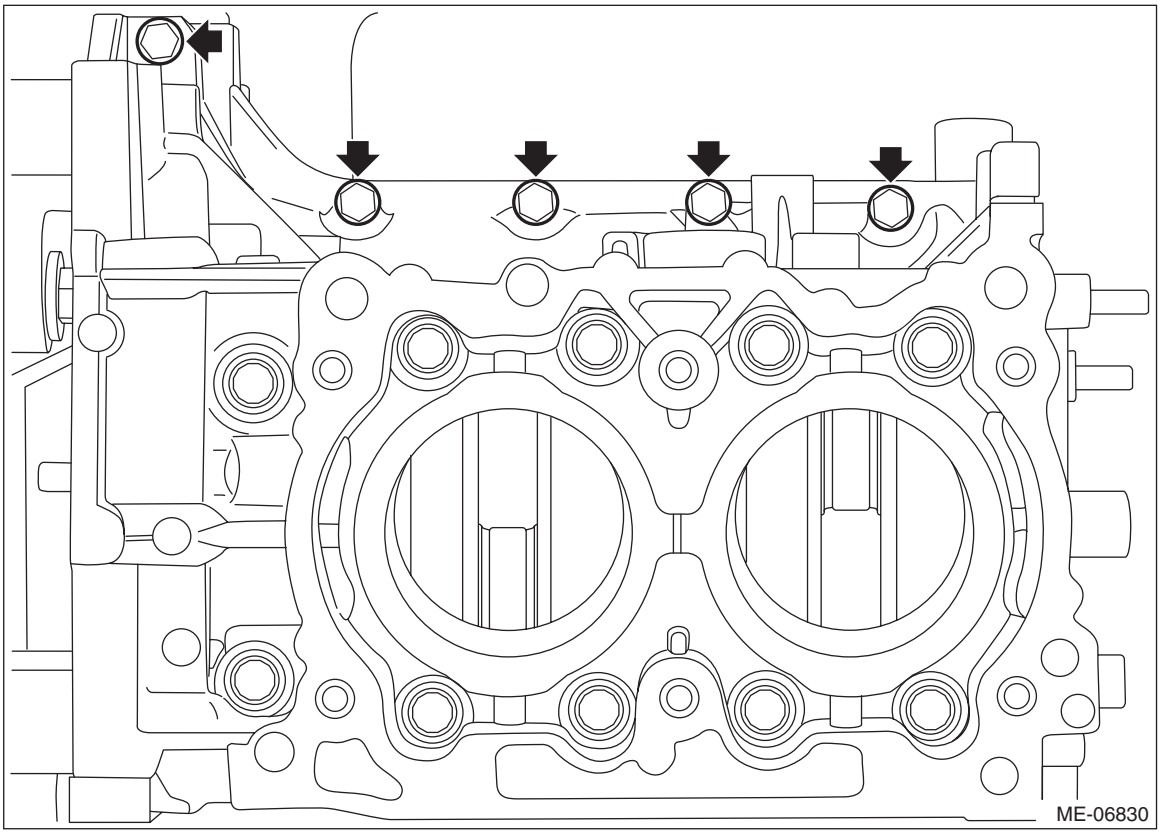

(3) Loosen the cylinder block mounting bolts in numerical order as shown in the figure.

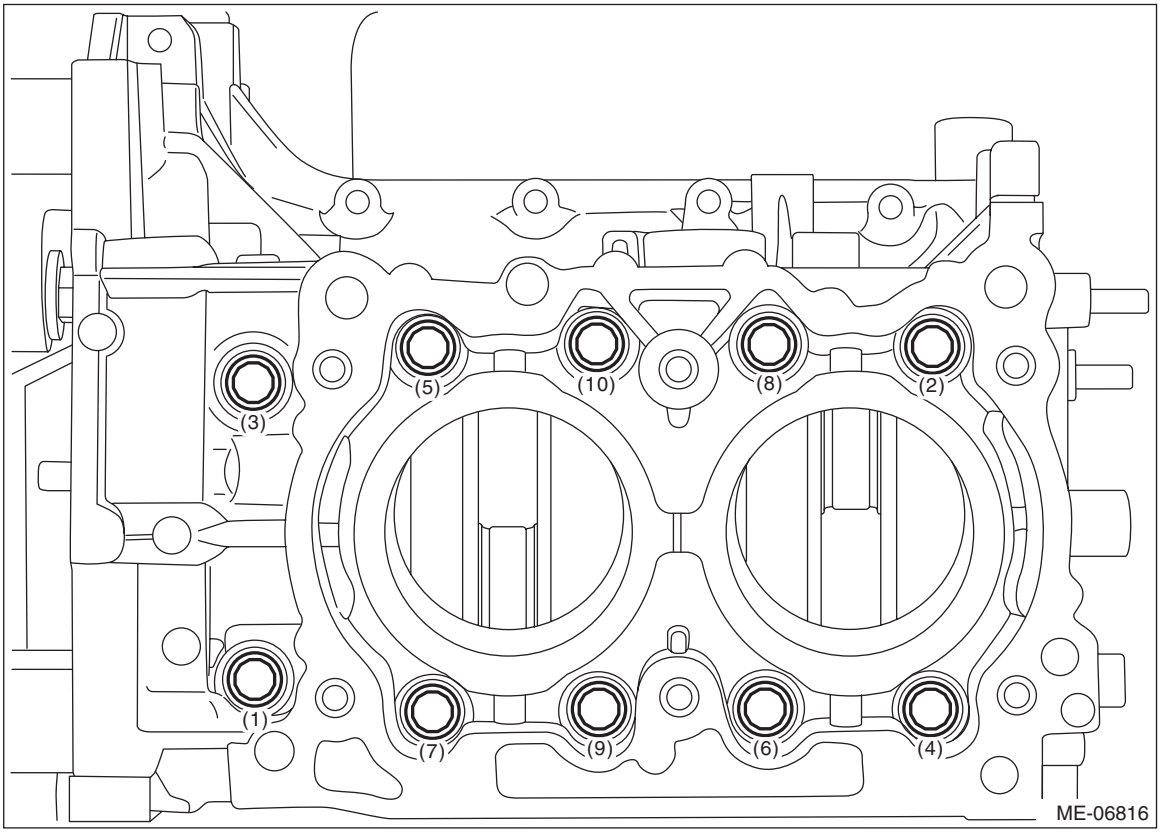

(4) While tapping the cylinder block RH with a plastic hammer, separate the cylinder block RH from the cylinder block LH.

NOTE:
Lift the cylinder block RH gradually, and confirm that the crankshaft is remaining in the cylinder block LH. If the cylinder block RH is lifted carelessly when separating, the crankshaft may stick to cylinder block RH, then fall off.

25) Remove the crankshaft from cylinder block LH, and remove the rear oil seal.

26) Remove the O-ring from the cylinder block LH.

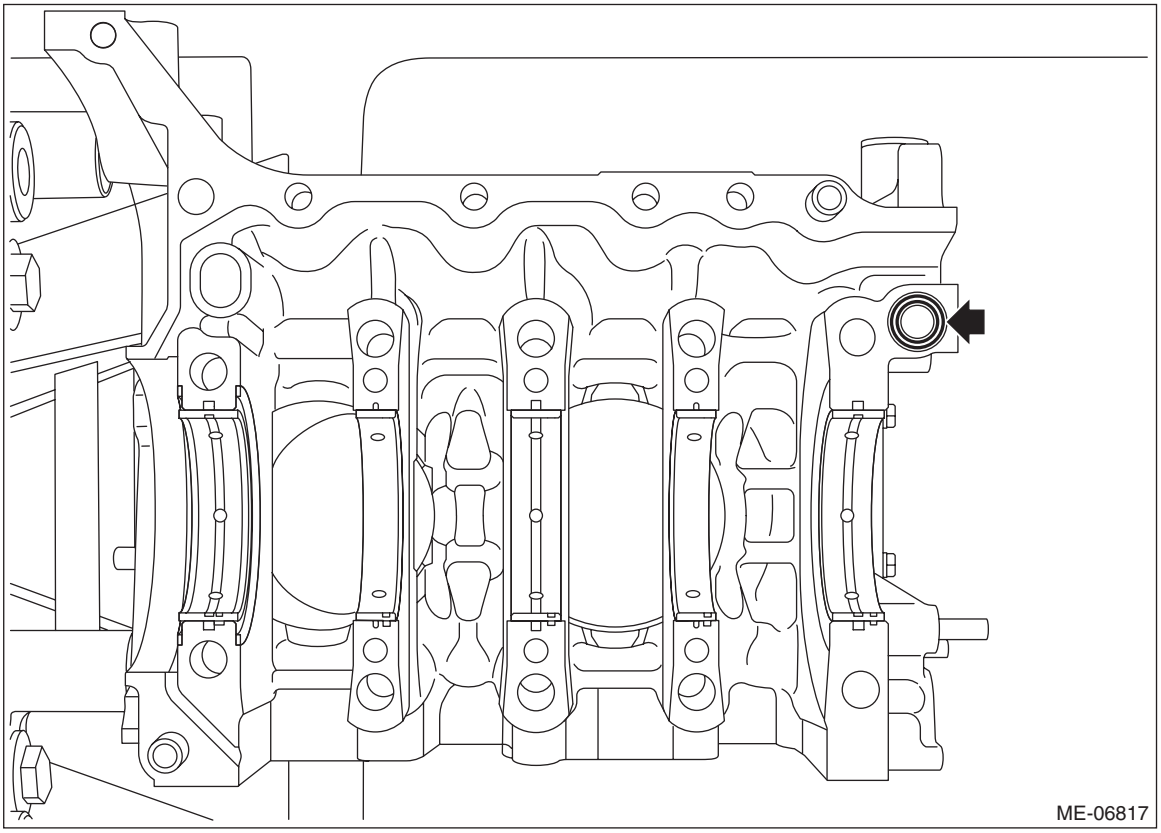

27) Remove the crankshaft bearings from the cylinder block.

NOTE:
- Be careful not to confuse the crankshaft bearing combination.
- Press the bearing at the end opposite to locking lip (A).

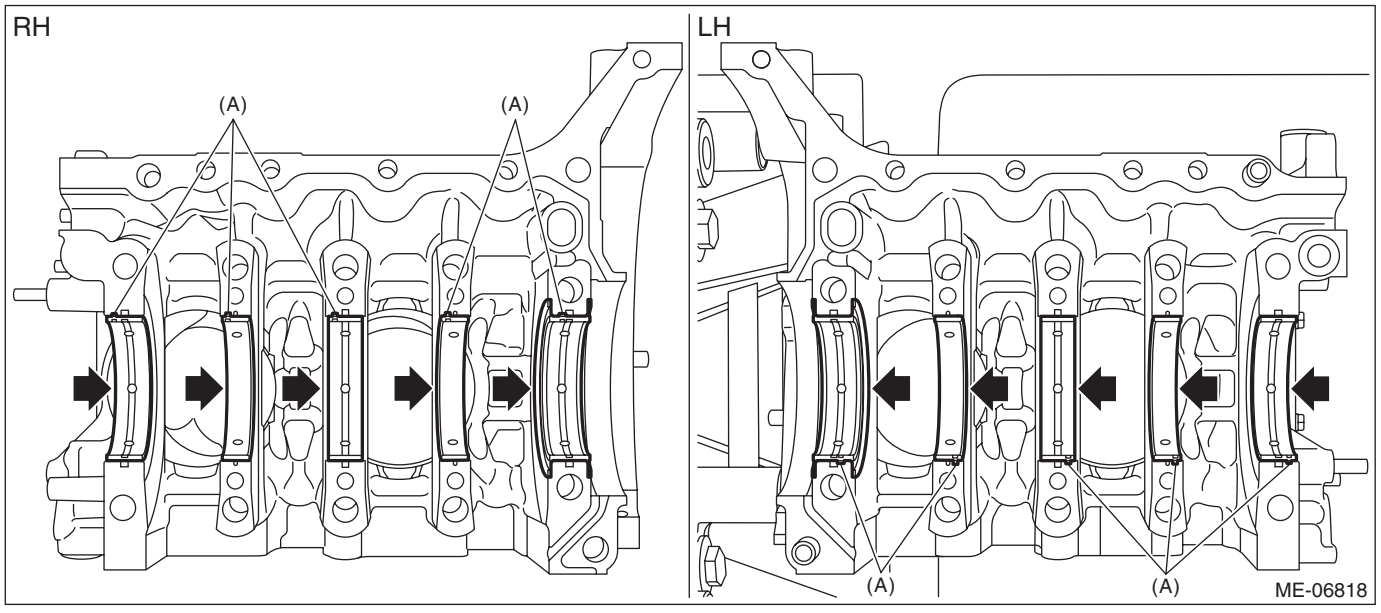

28) Remove the liquid gasket from cylinder block.
29) Remove the cylinder block LH from the engine stand.

B: INSTALLATION

1) Install the cylinder block LH to the engine stand.
2) Apply engine oil to the crankshaft bearing, and install the crankshaft bearing to the cylinder block.

CAUTION:
When performing the operation of the cylinder block RH, be careful of the following.
1. Place a wood board wrapped with a waste cloth to prevent the knock pin damage and to stabilize the cylinder block before work.
2. Be careful not to scratch the mating surface of cylinder block during work.

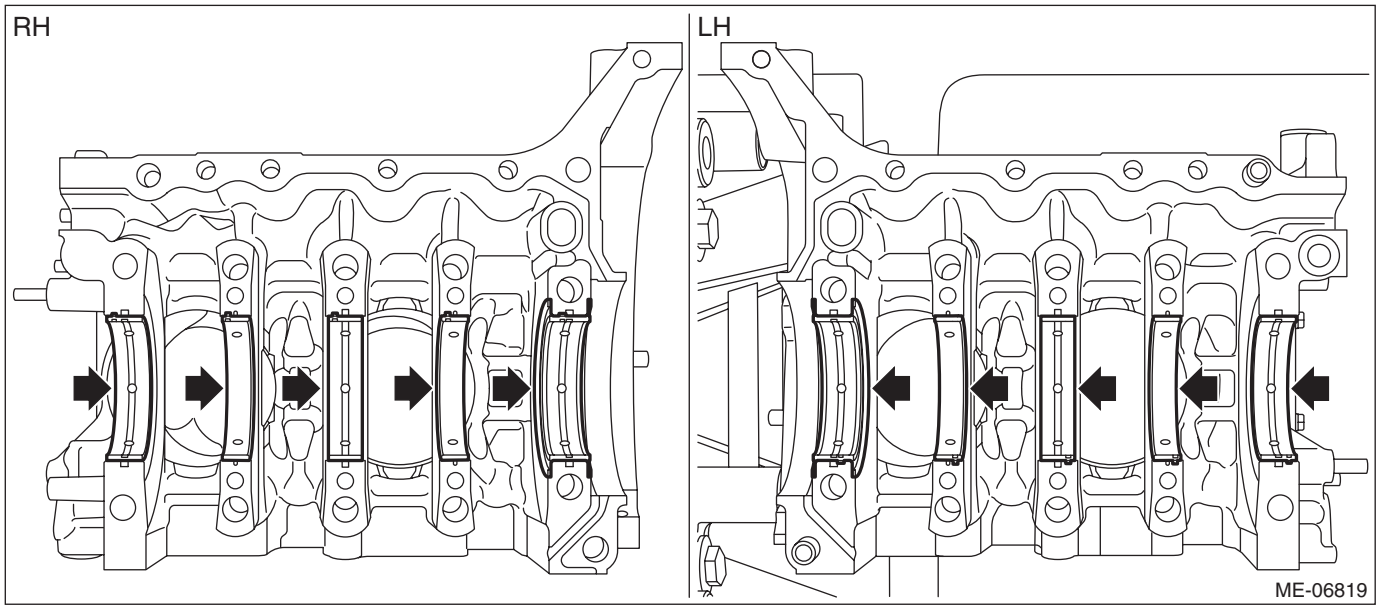

3) Install O-rings to the cylinder block LH.

NOTE:
Use new O-rings.

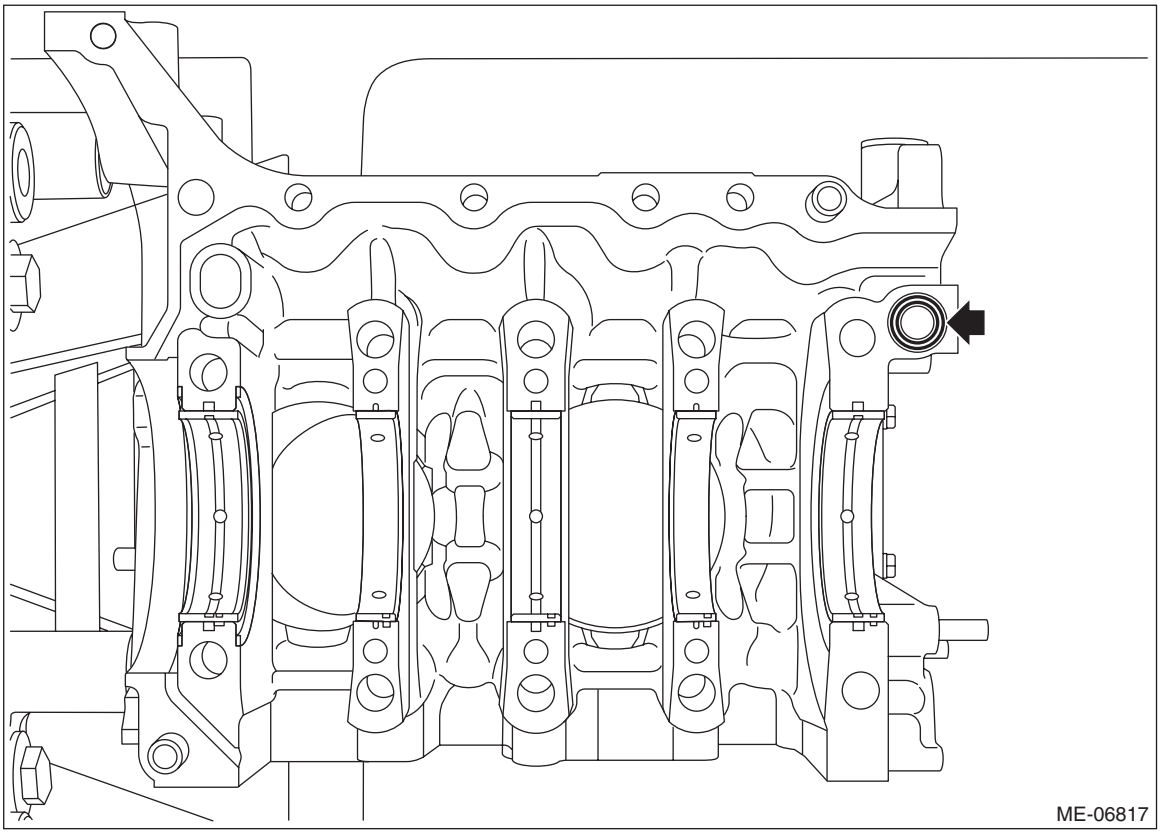

4) Apply engine oil to the crankshaft journal, and set the crankshaft to cylinder block LH.

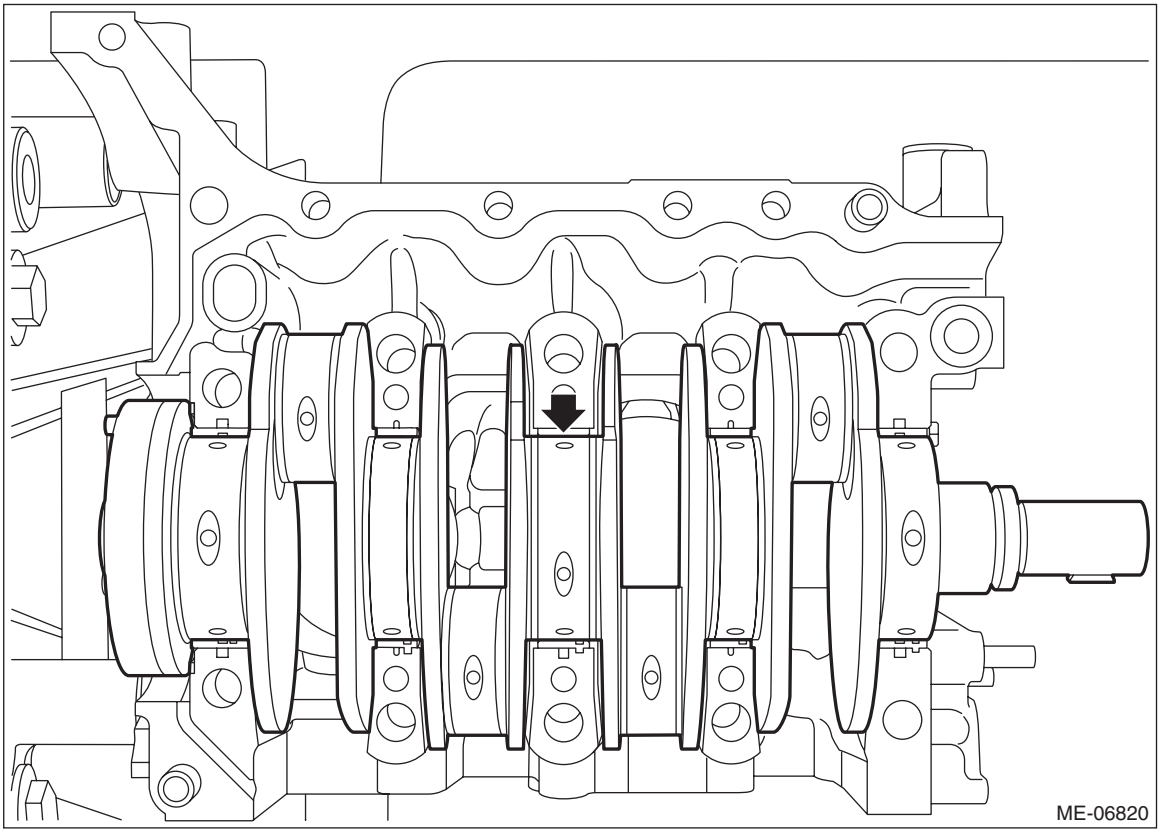

5) Apply liquid gasket to the mating surface of cylinder block RH as shown in the figure.

CAUTION:
• Place a wood board wrapped with a waste cloth to prevent the knock pin damage and to stabilize the cylinder block before work.
• Be careful not to scratch the mating surface of cylinder block during work.
• Do not let the liquid gasket overflow to the oil passage and crankshaft bearing portions, because the engine seizure may result.

NOTE:
• Before applying liquid gasket, degrease the old liquid gasket seal surface of the cylinder block RH and cylinder block LH.
• Install within 5 min. after applying liquid gasket.

Liquid gasket:
THREE BOND 1217G (Part No. K0877Y0100), THREE BOND 1217H or equivalent

Liquid gasket applying diameter:
Mating surfaces other than ranges A, B and C
1±0.5 mm (0.0394±0.0197 in)
Mating surfaces of ranges A and C
4±0.5 mm (0.1575±0.0197 in)
Mating surfaces of range B
3.2±0.5 mm (0.1260±0.0197 in)

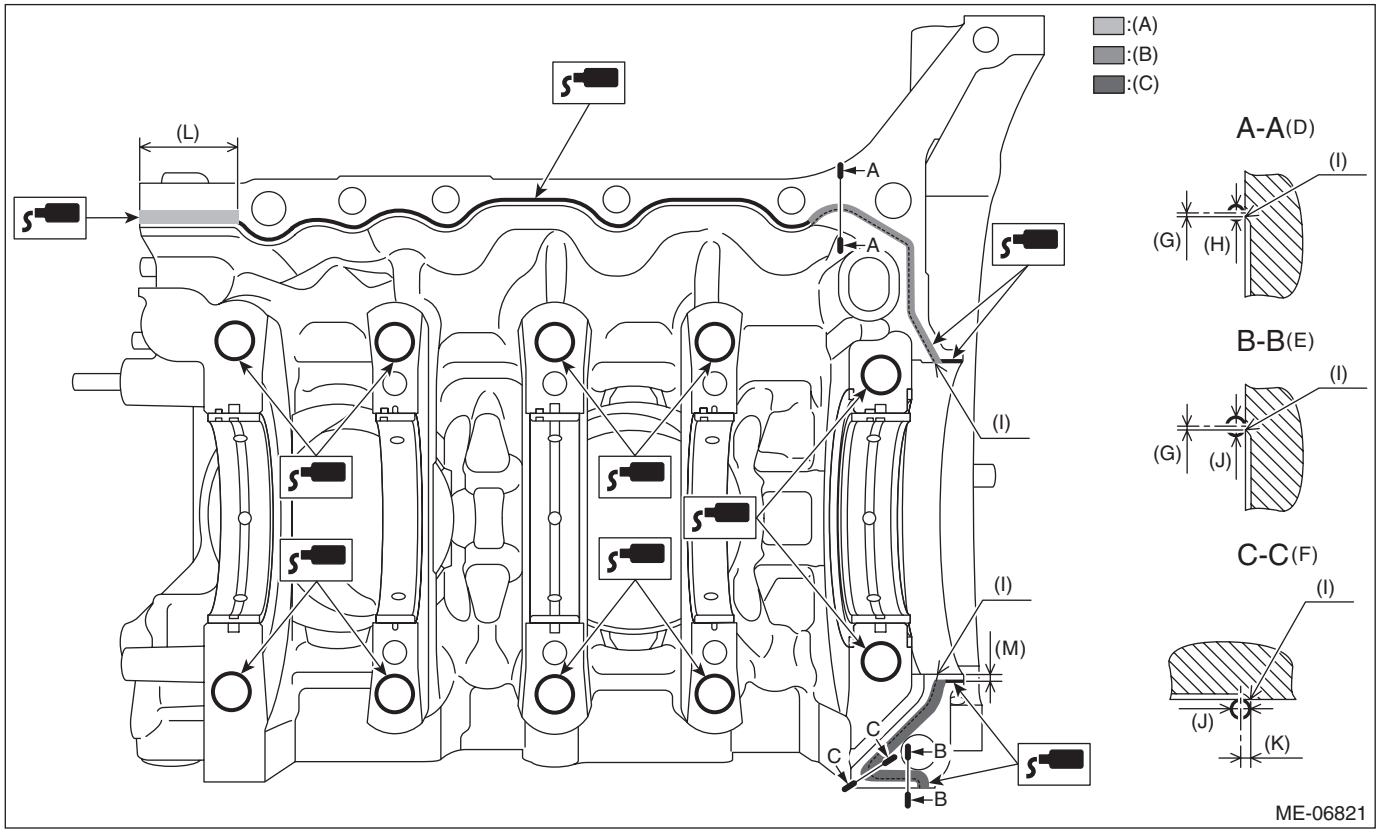

(A)	Range A	(F)	Liquid gasket applying position of mating surfaces (the edge) of range C	(K)	2 mm (0.0787 in)
(B)	Range B	(G)	1 mm (0.0394 in) or less	(L)	36 mm (1.4173 in)
(C)	Range C	(H)	ϕ3.2±0.5 mm (0.1260±0.0197 in)	(M)	2.5 mm (0.0984 in)
(D)	Liquid gasket applying position of mating surfaces of range B	(I)	Chamfer edge		
(E)	Liquid gasket applying position of mating surfaces (other than the edge) of range C	(J)	ϕ4±0.5 mm (0.1575±0.0197 in)		

6) Install the cylinder block RH to the cylinder block LH.

7) Join the cylinder blocks.
(1) Apply a coat of engine oil to the washers and cylinder block mounting bolt threads.

NOTE:
To prevent mixture of engine oil into the water jacket, do not apply a large amount.
(2) Tighten all mounting bolts with a torque of 35 N·m (3.6 kgf-m, 25.8 ft-lb) in numerical order as shown in the figure.

CAUTION:
When tightening the mounting bolts with specified torque, hold the cylinder block LH while not holding the cylinder block RH to ensure the joint accuracy of the cylinder block.

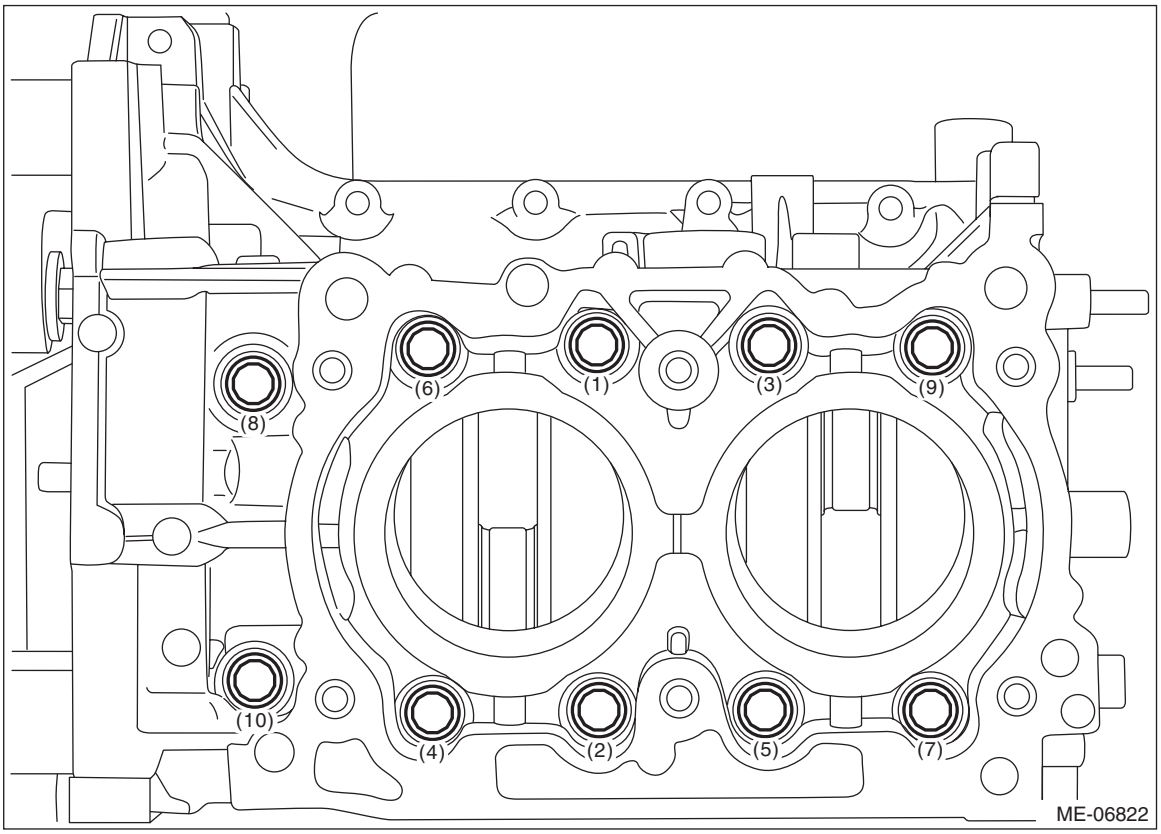

(3) Loosen all mounting bolts by 180° in numerical order as shown in the figure.

CAUTION:
When loosening the mounting bolts, hold the cylinder block LH while not holding the cylinder block RH to ensure the joint accuracy of the cylinder block.

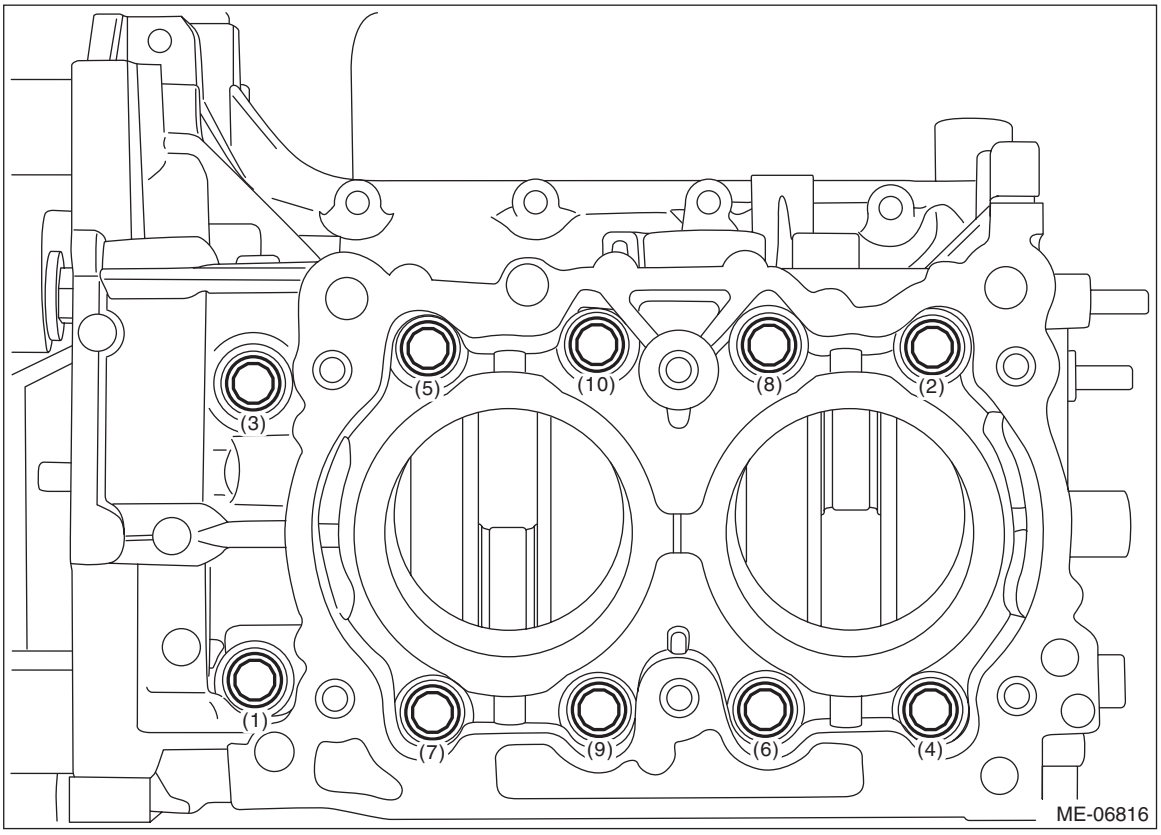

(4) Tighten all mounting bolts with a torque of 35 N·m (3.6 kgf-m, 25.8 ft-lb) in numerical order as shown in the figure.

CAUTION:
When tightening the mounting bolts with specified torque, hold the cylinder block LH while not holding the cylinder block RH to ensure the joint accuracy of the cylinder block.

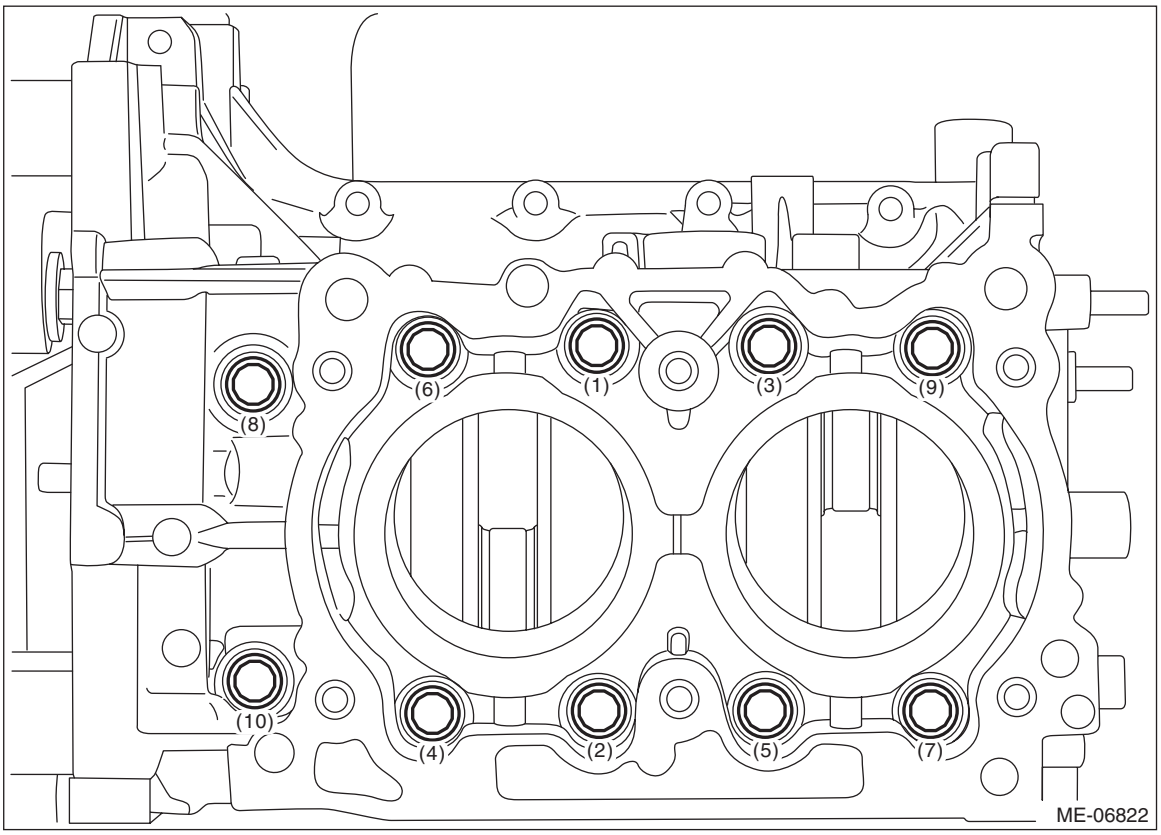

(5) Loosen the mounting bolts (4 places) by 180° in numerical order as shown in the figure.

CAUTION:
When loosening the mounting bolts, hold the cylinder block LH while not holding the cylinder block RH to ensure the joint accuracy of the cylinder block.

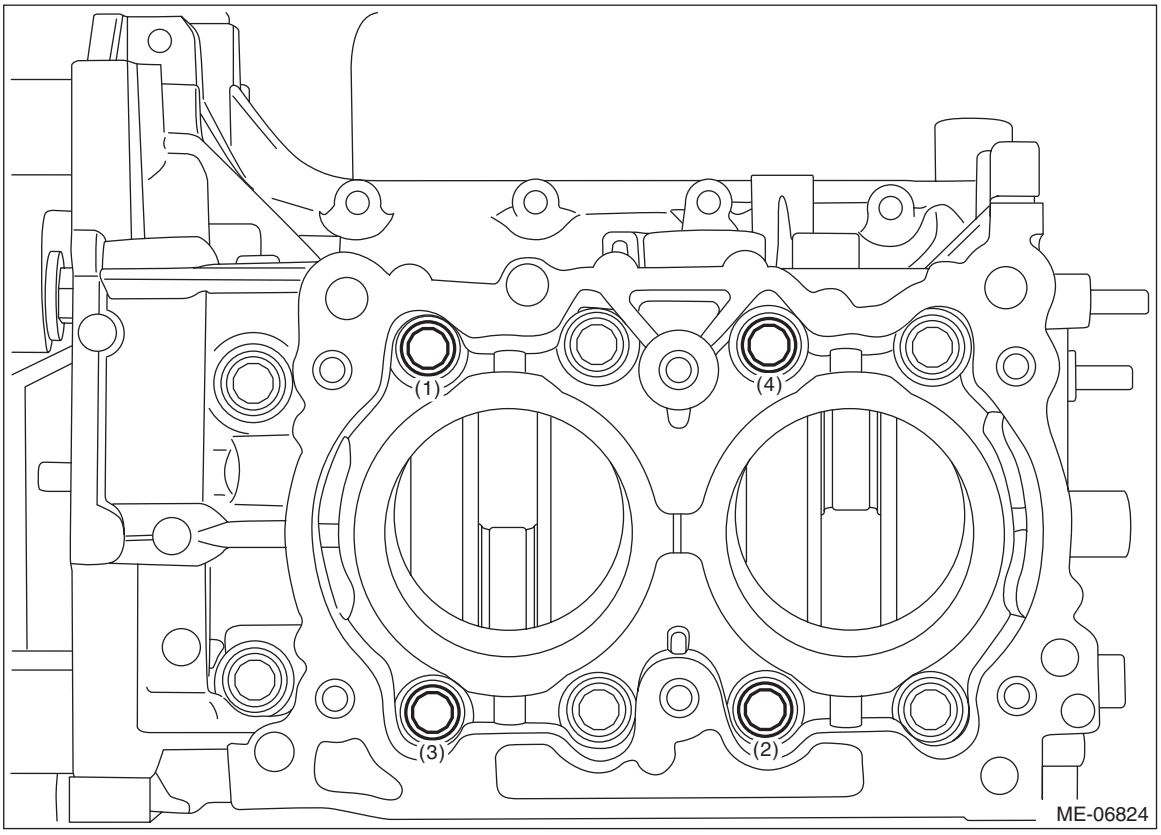

(6) Tighten the mounting bolts (4 places) with a torque of 17 N·m (1.7 kgf-m, 12.5 ft-lb) in numerical order as shown in the figure.

CAUTION:
When tightening the mounting bolts with specified torque, hold the cylinder block LH while not holding the cylinder block RH to ensure the joint accuracy of the cylinder block.

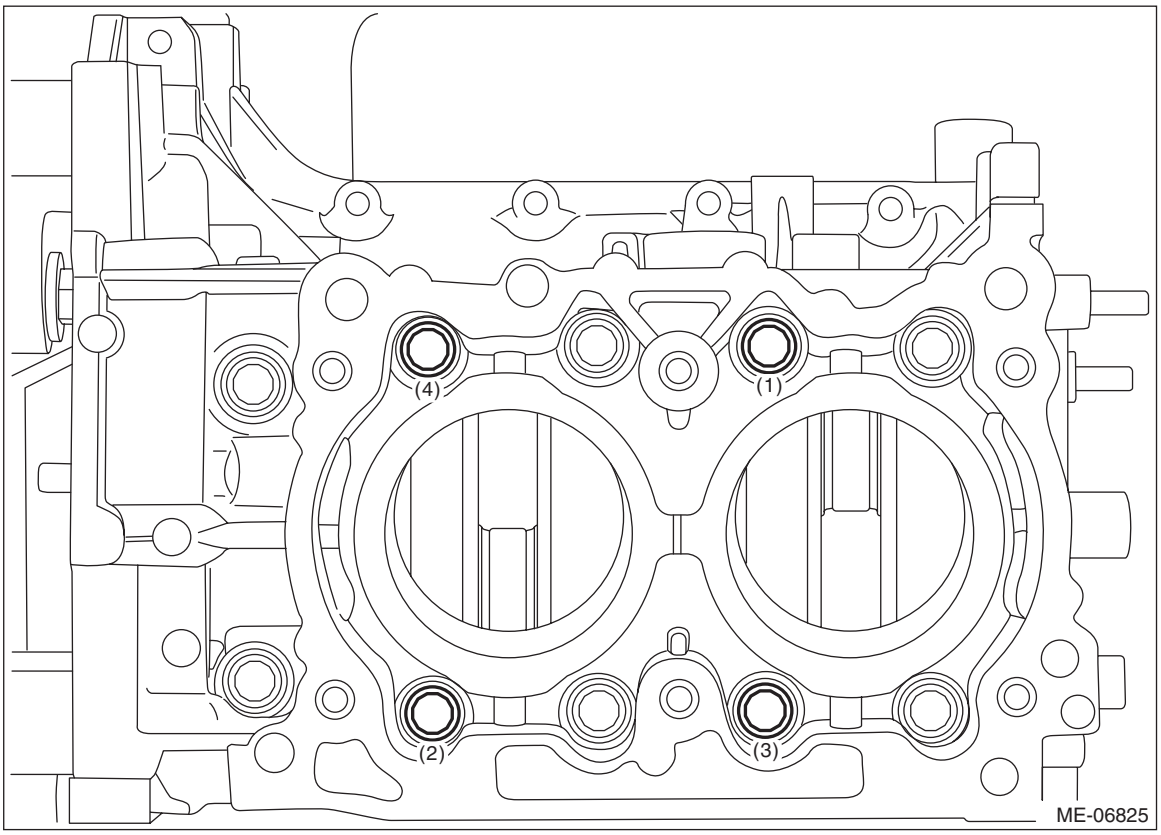

(7) Using angle gauge, tighten the mounting bolts (4 places) with specified angle in numerical order as shown in the figure.

CAUTION:
When tightening the mounting bolts with specified angle, hold the cylinder block LH while not holding the cylinder block RH to ensure the joint accuracy of the cylinder block.

Tightening angle:
60°±2°

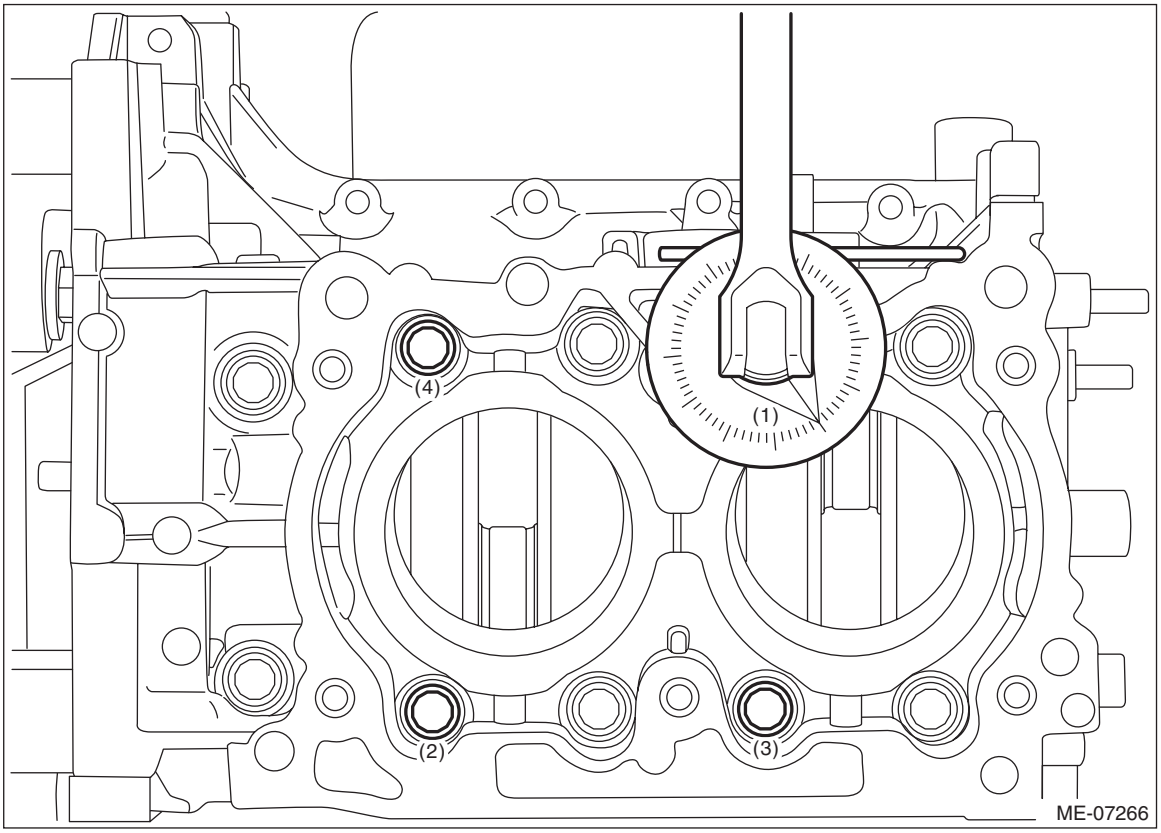

(8) Loosen the mounting bolts (6 places) by 180° in numerical order as shown in the figure.

CAUTION:
When loosening the mounting bolts, hold the cylinder block LH while not holding the cylinder block RH to ensure the joint accuracy of the cylinder block.

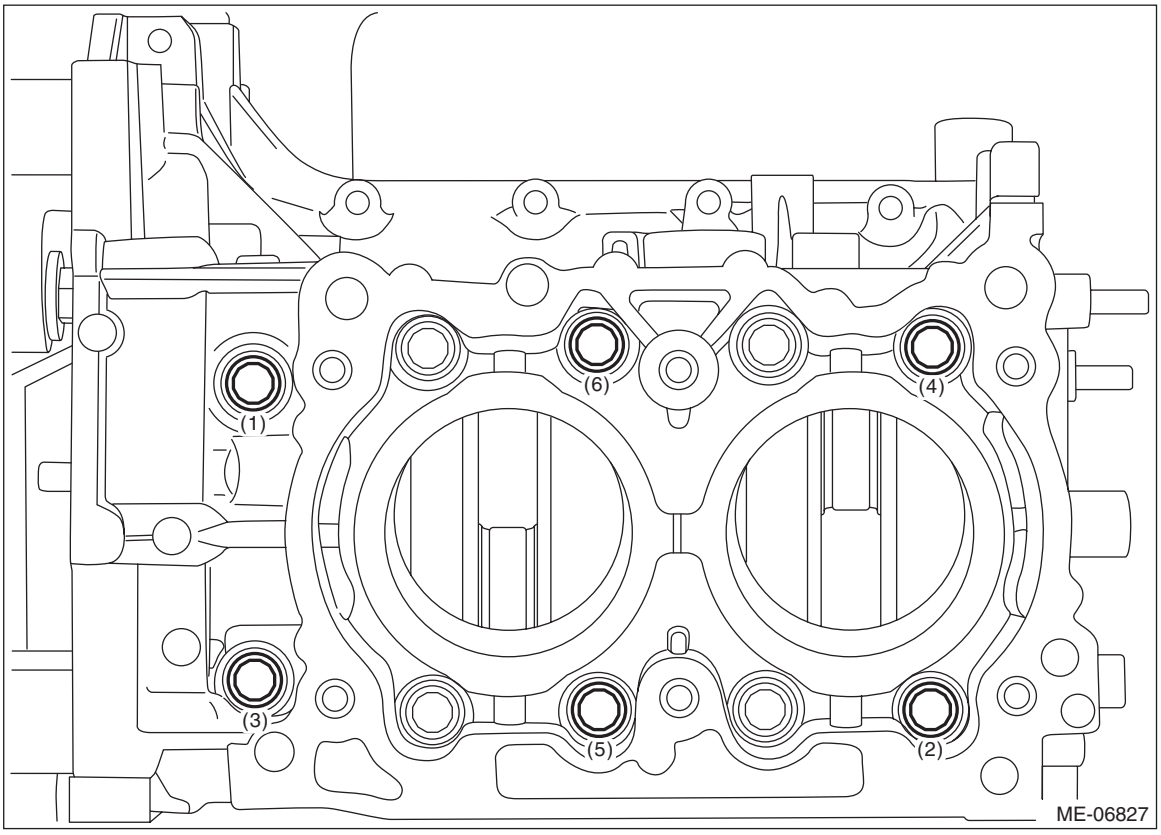

(9) Tighten the mounting bolts (6 places) with a torque of 17 N·m (1.7 kgf-m, 12.5 ft-lb) in numerical order as shown in the figure.

CAUTION:
When tightening the mounting bolts with specified torque, hold the cylinder block LH while not holding the cylinder block RH to ensure the joint accuracy of the cylinder block.

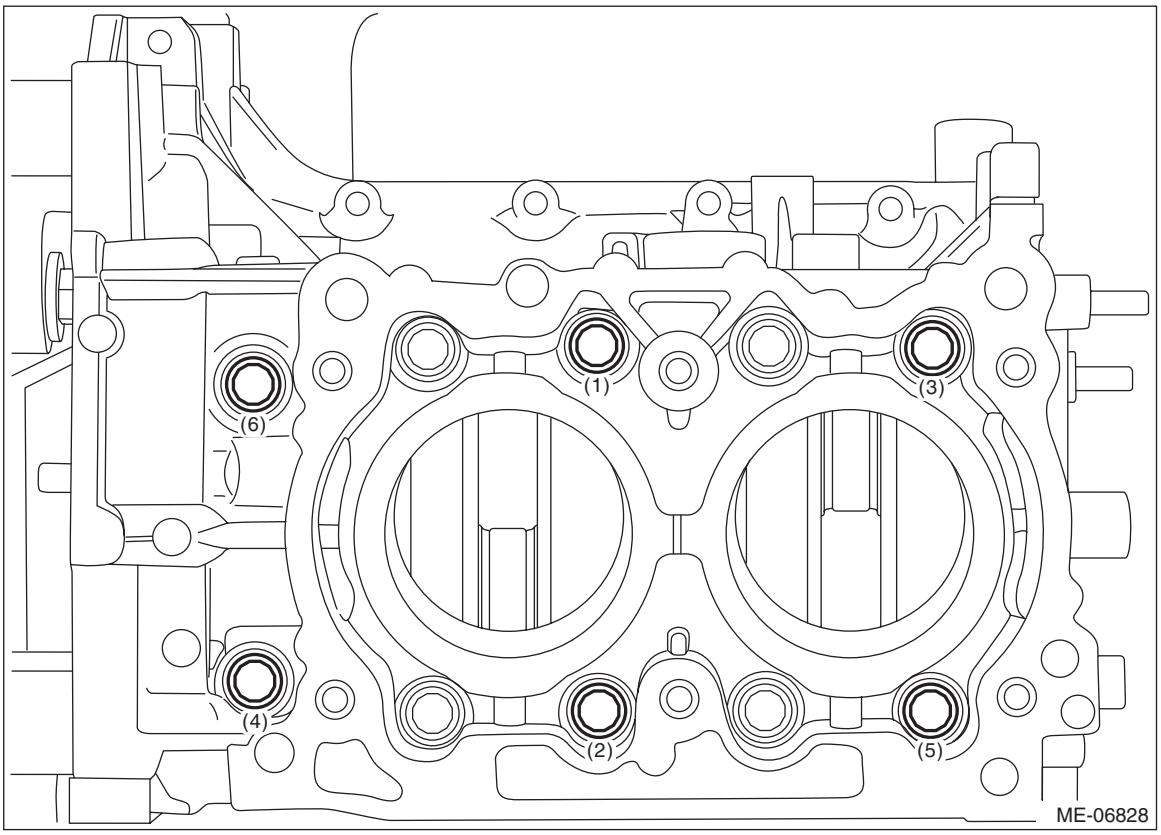

(10) Using angle gauge, tighten the mounting bolts (6 places) with specified angle in numerical order as shown in the figure.

CAUTION:
When tightening the mounting bolts with specified angle, hold the cylinder block LH while not holding the cylinder block RH to ensure the joint accuracy of the cylinder block.

Tightening angle:
60°±2°

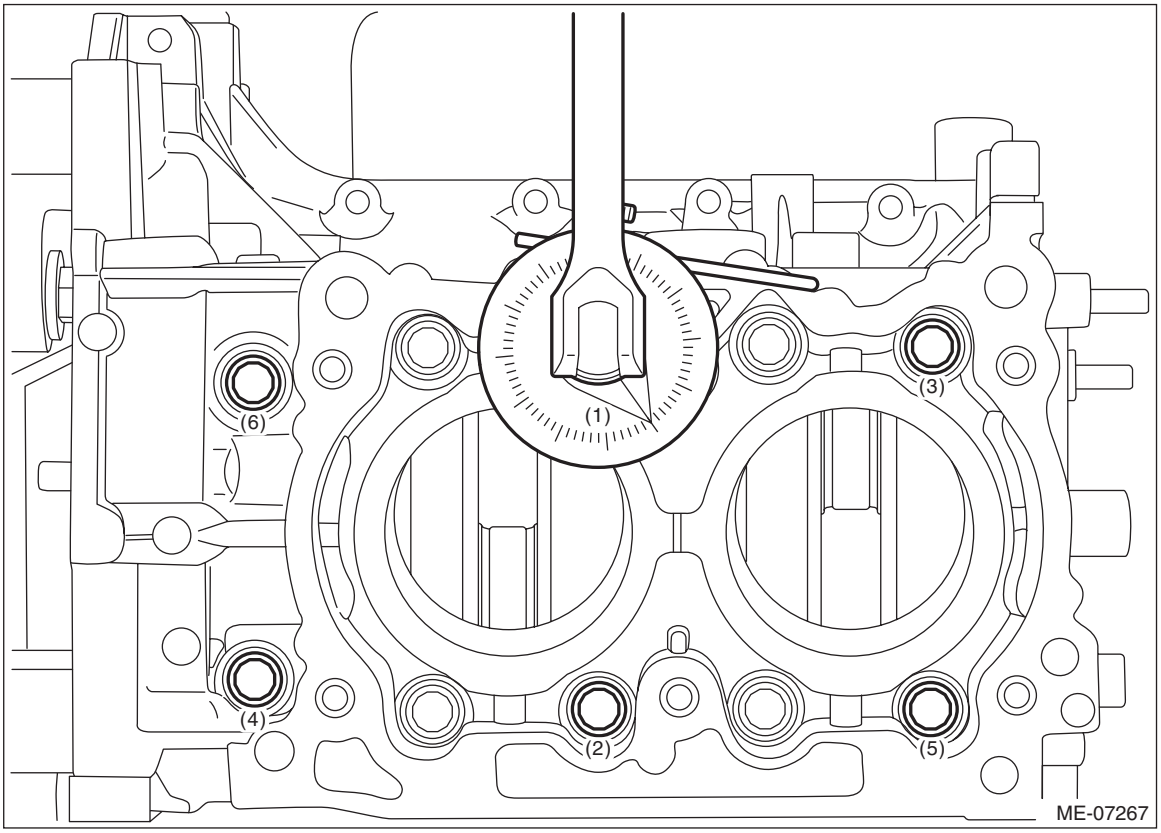

(11) Install the bolt shown in the figure.

NOTE:
After tightening, if the liquid gasket is squeezed out in the seal surface area of the chain cover and oil pan upper, completely remove any liquid gasket that is squeezed out. Any liquid gasket on the chamfer area, however, should not be removed.

Tightening torque:
25 N·m (2.5 kgf-m, 18.4 ft-lb)

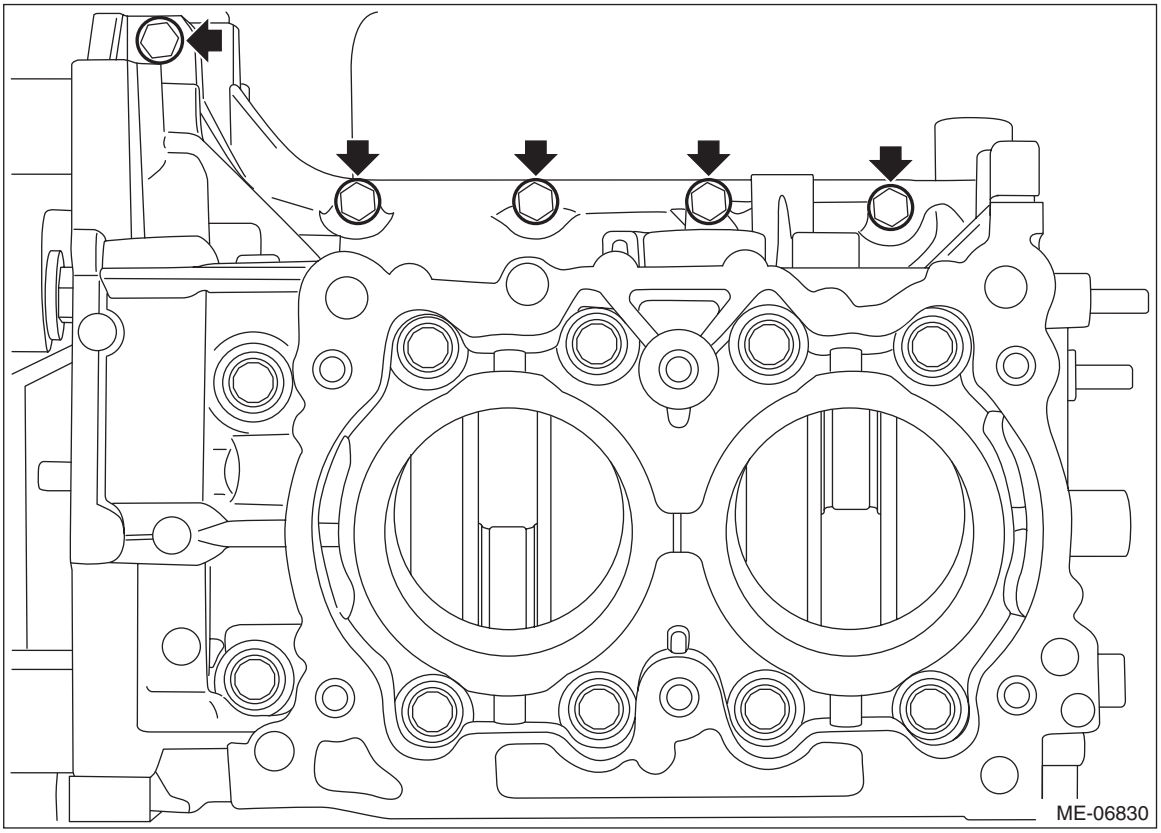

8) Set the part so that the installation surface of the oil pan upper is on the upper side.
9) Check that the piston ring gap for each piston is positioned correctly. <Ref. to ME(w/o STI)-288, PISTON AND CONNECTING ROD, ASSEMBLY, Cylinder Block.>

10) Install the piston and connecting rod to the cylinder block.
(1) Apply engine oil to the outer circumference of each piston, crankshaft pin, and in the cylinder block.
(2) Turn the crankshaft so that the #1 pin (A) of crankshaft is positioned at TDC using ST.

ST 18252AA000 CRANKSHAFT SOCKET

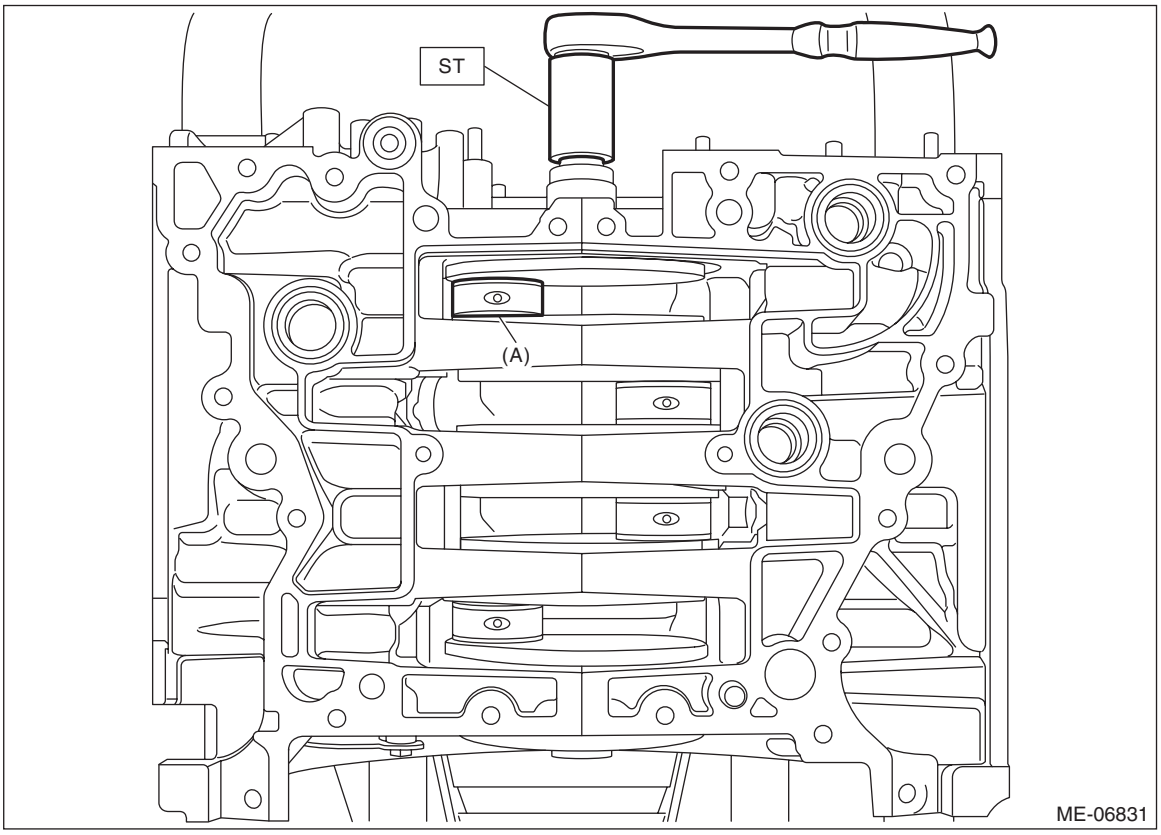

(3) Compress the piston ring using piston ring compressor, and insert the #1 connecting rod with #1 piston into cylinder block.

CAUTION:
• Be careful not to damage the cylinder liner and #1 pin of crankshaft by the #1 connecting rod large end.
• Be careful not to apply strong impact when inserting to prevent connecting rod bearing from falling off.

NOTE:
• Face the piston front mark (round mark) towards the front of the engine.

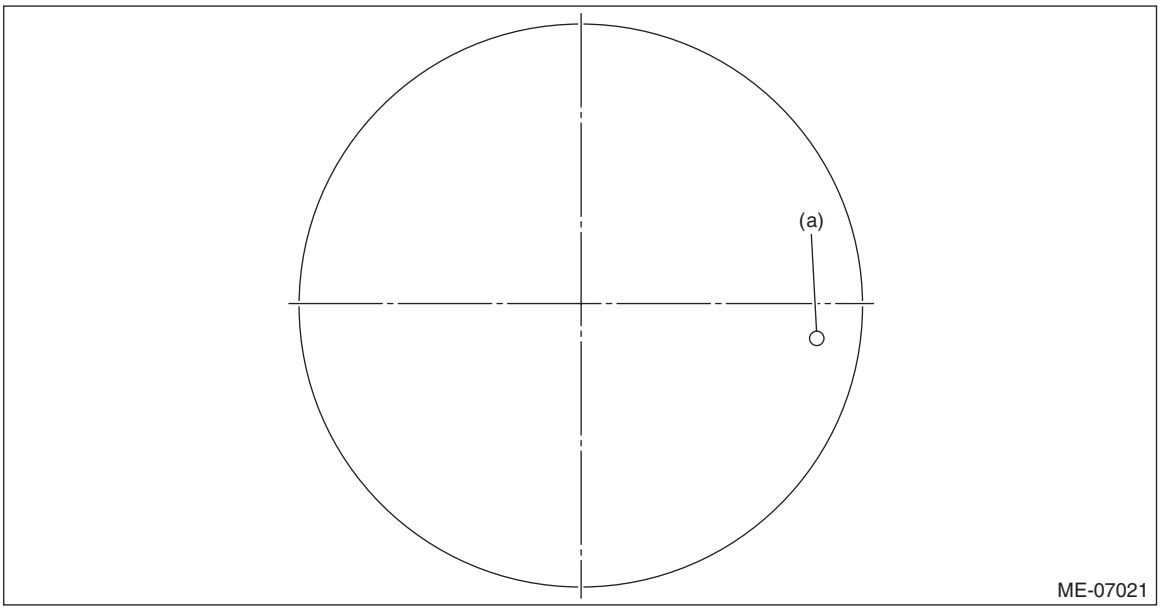

(a) Front mark

• Insert while lightly tapping the crown of the piston with the handle of a plastic hammer.

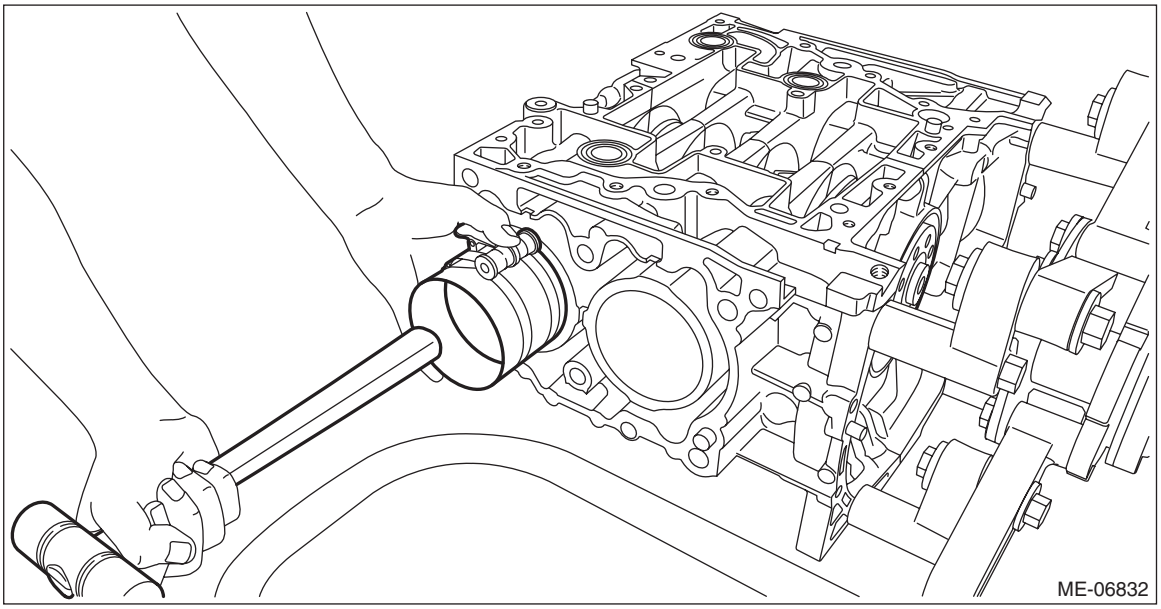

(4) Turn the crankshaft counterclockwise so that the #1 pin of crankshaft and the large end (A) of #1 connecting rod are positioned as shown in the figure using ST, while pressing the #1 piston crown, and then set the #1 connecting rod cap and #1 connecting rod cap bolt.

NOTE:
• Each connecting rod has its own mating cap. Make sure that they are assembled correctly by checking their matching symbol.
• Use a new connecting rod cap bolt.
• Apply a coat of engine oil to the #1 connecting rod cap seat and the connecting rod cap bolt threads.
ST 18252AA000 CRANKSHAFT SOCKET

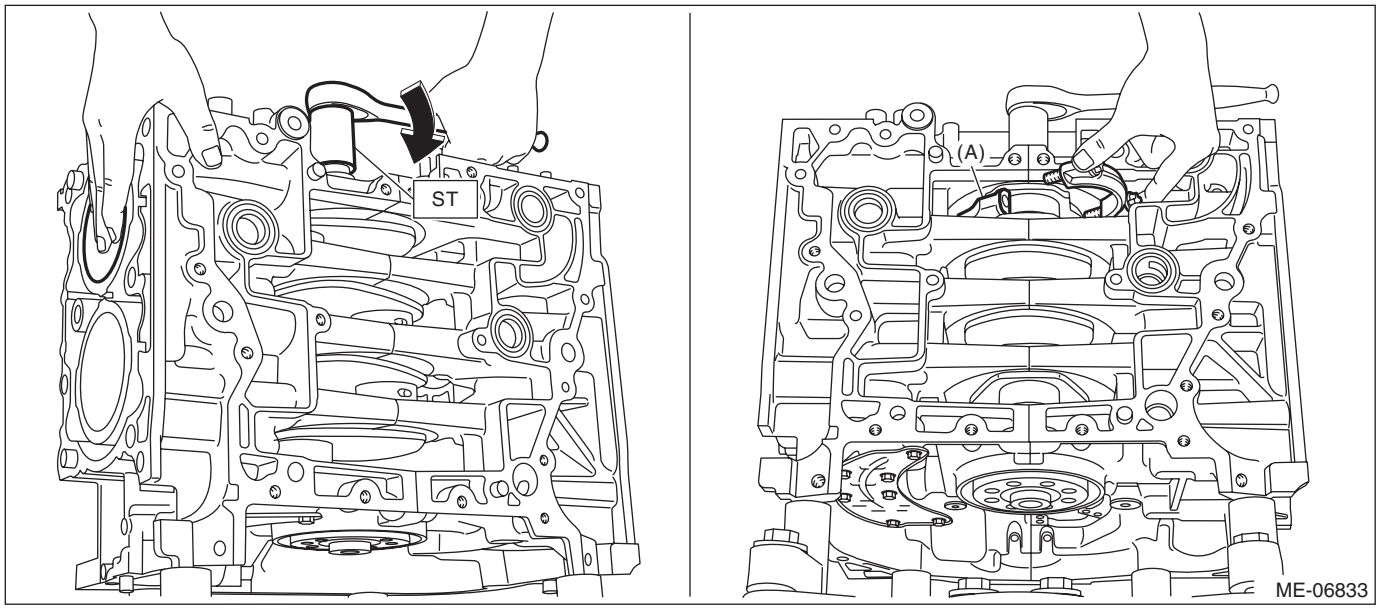

(5) Using ST, tighten the #1 connecting rod cap bolts to 10 N·m (1.0 kgf-m, 7.4 ft-lb) in numerical order as shown in the figure, then retighten the bolts to 25 N·m (2.5 kgf-m, 18.4 ft-lb) in numerical order as shown in the figure.
ST 18270AA020 SOCKET

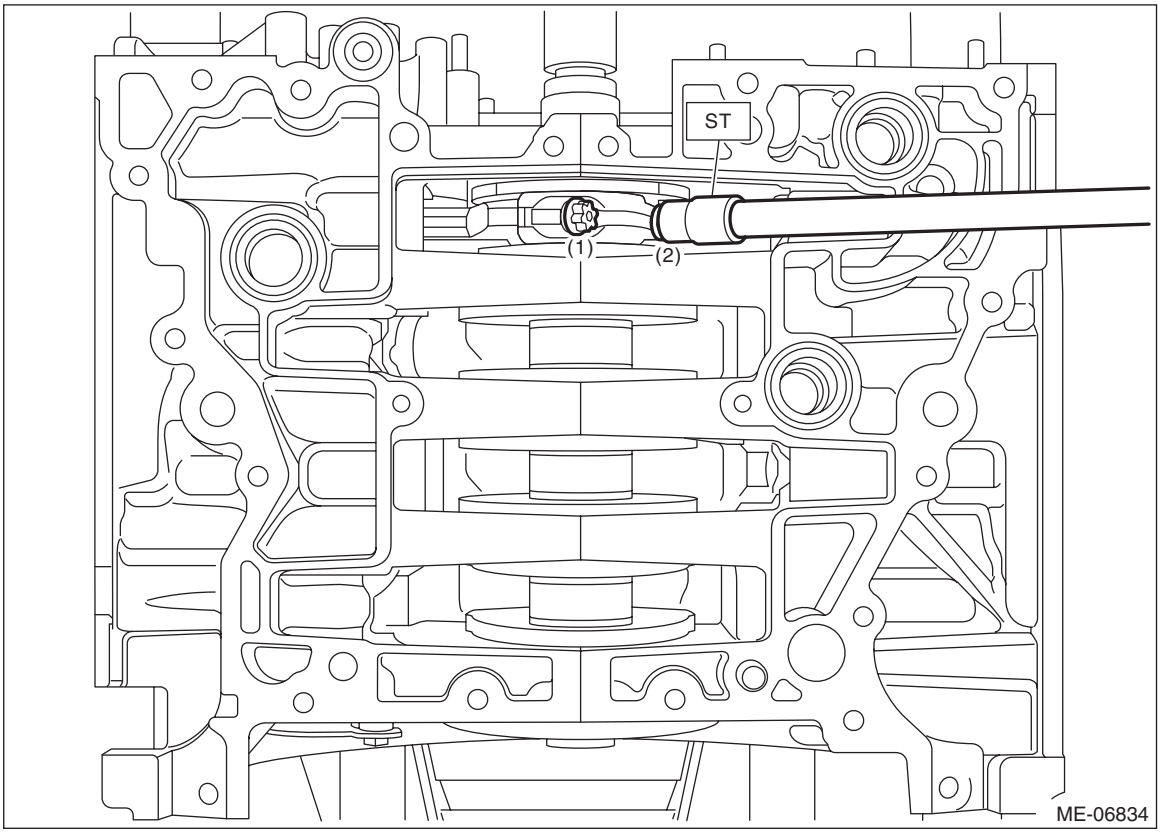

(6) Turn the crankshaft clockwise so that the #2 pin (A) of crankshaft is positioned at TDC using ST.
ST 18252AA000 CRANKSHAFT SOCKET

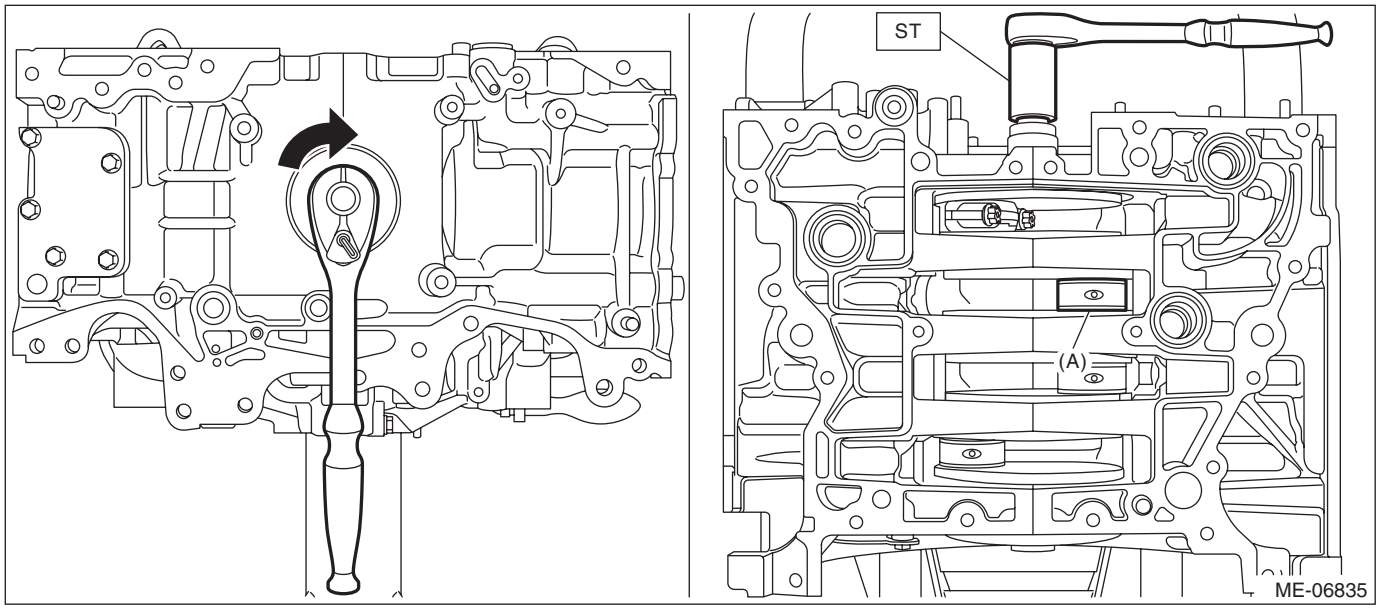

(7) Compress the piston ring using piston ring compressor, and insert the #2 connecting rod with #2 piston into cylinder block.

CAUTION:
• Be careful not to damage the cylinder liner and #2 pin of crankshaft by the #2 connecting rod large end.
• Be careful not to apply strong impact when inserting to prevent connecting rod bearing from falling off.

NOTE:
• Face the piston front mark (round mark) towards the front of the engine.

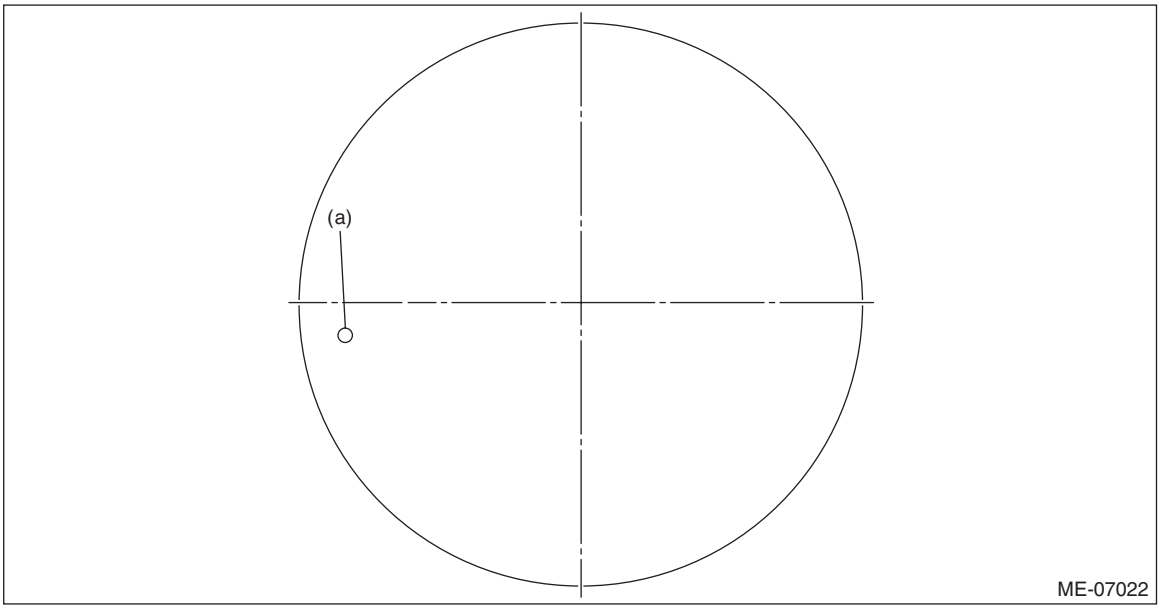

(a) Front mark

• Insert while lightly tapping the crown of the piston with the handle of a plastic hammer.

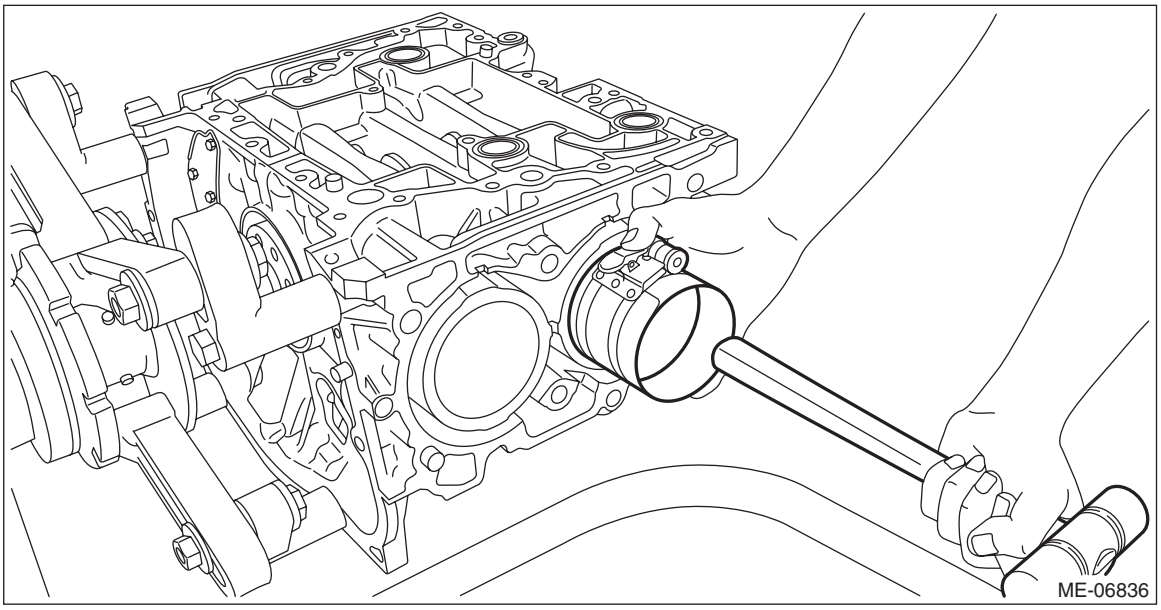

(8) Turn the crankshaft clockwise so that the #2 pin of crankshaft and the large end (A) of #2 connecting rod are positioned as shown in the figure using ST, while pressing the #2 piston crown, and then set the #2 connecting rod cap and #2 connecting rod cap bolt.

NOTE:
• Each connecting rod has its own mating cap. Make sure that they are assembled correctly by checking their matching symbol.
• Use a new connecting rod cap bolt.
• Apply a coat of engine oil to the #2 connecting rod cap seat and the connecting rod cap bolt threads.
ST 18252AA000 CRANKSHAFT SOCKET

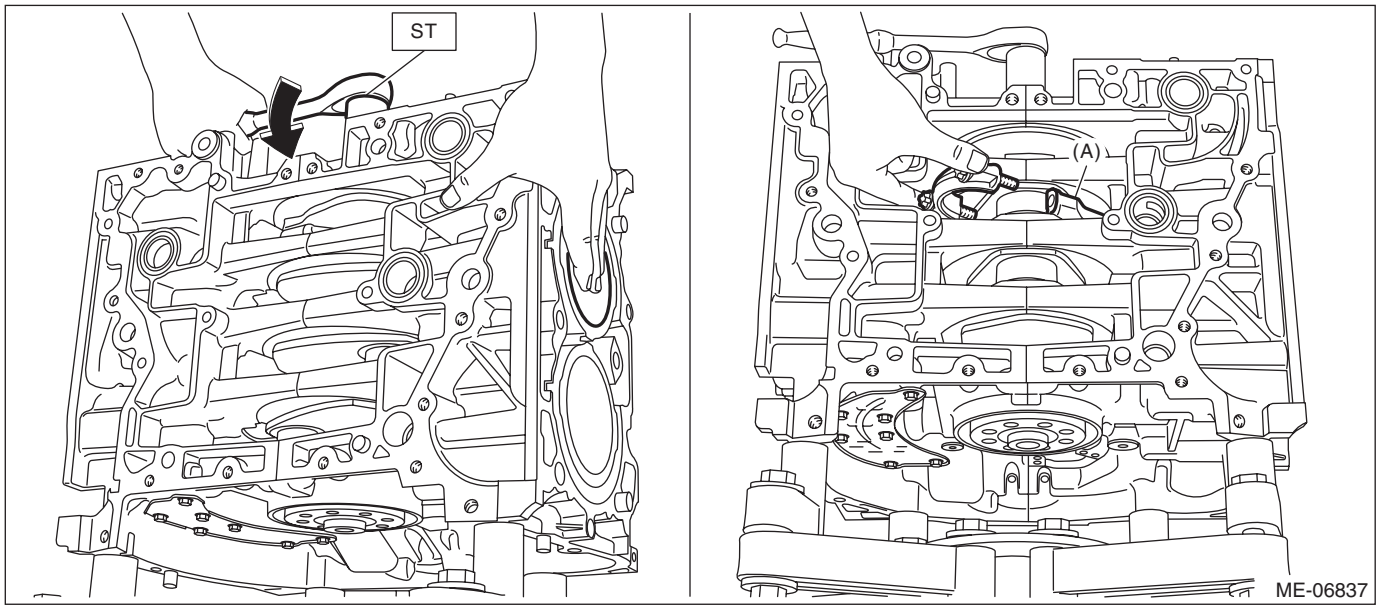

(9) Using ST, tighten the #2 connecting rod cap bolts to 10 N·m (1.0 kgf-m, 7.4 ft-lb) in numerical order as shown in the figure, then retighten the bolts to 25 N·m (2.5 kgf-m, 18.4 ft-lb) in numerical order as shown in the figure.

ST 18270AA020 SOCKET

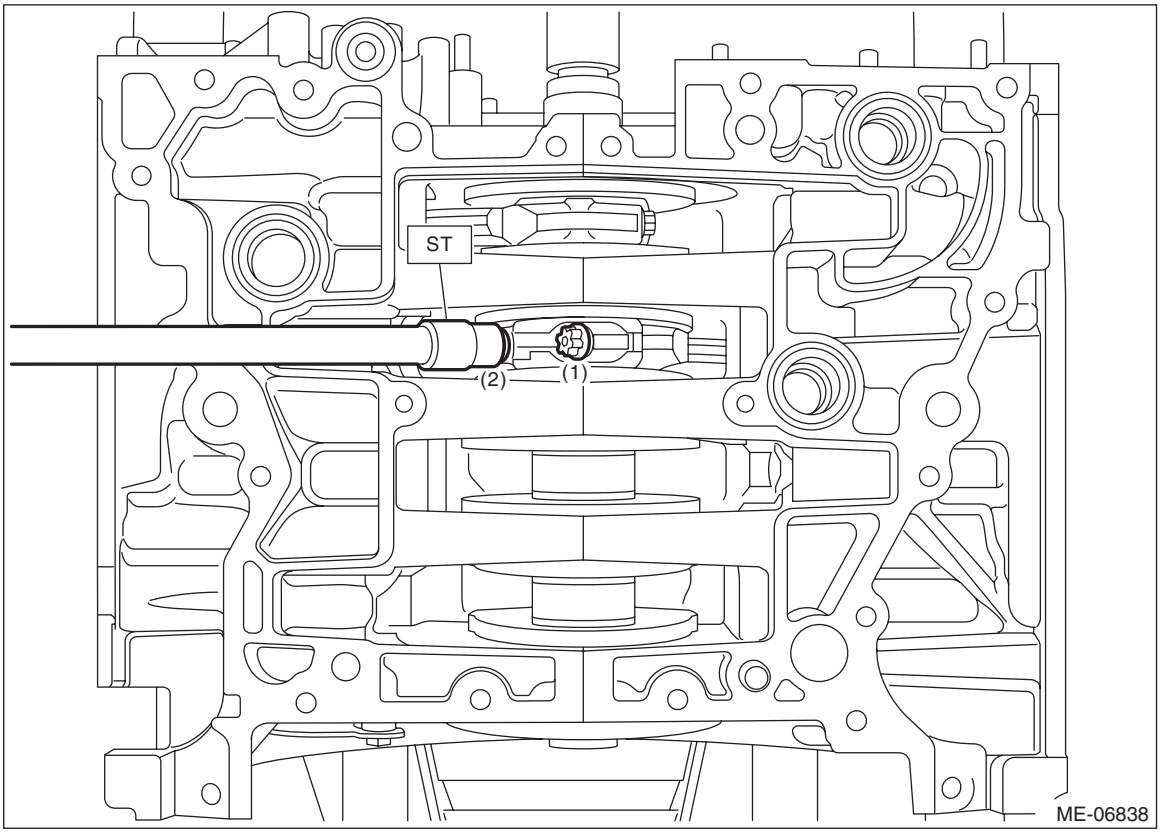

(10) Install #3 and #4 pistons and connecting rod caps in the same installation procedure as #1 and #2 pistons and connecting rod caps.

(11) Using ST and angle gauge, tighten the #1 connecting rod cap bolts and #4 connecting rod cap bolts with specified angle in numerical order as shown in the figure.

ST 18270AA020 SOCKET

Tightening angle:

$90^{\circ}{}^{+5^{\circ}}_{-0^{\circ}}$

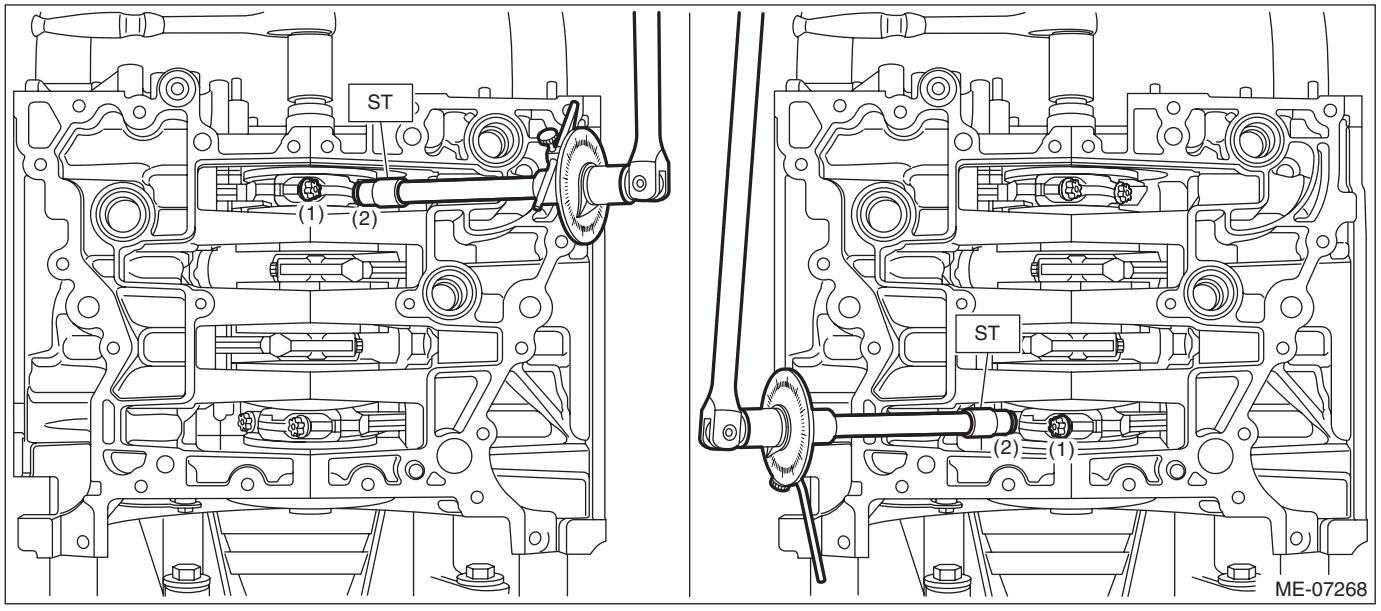

(12) Turn the crankshaft so that the #2 connecting rod cap (A) and #3 connecting rod cap (B) is located at the position shown in the figure using ST.

ST 18252AA000 CRANKSHAFT SOCKET

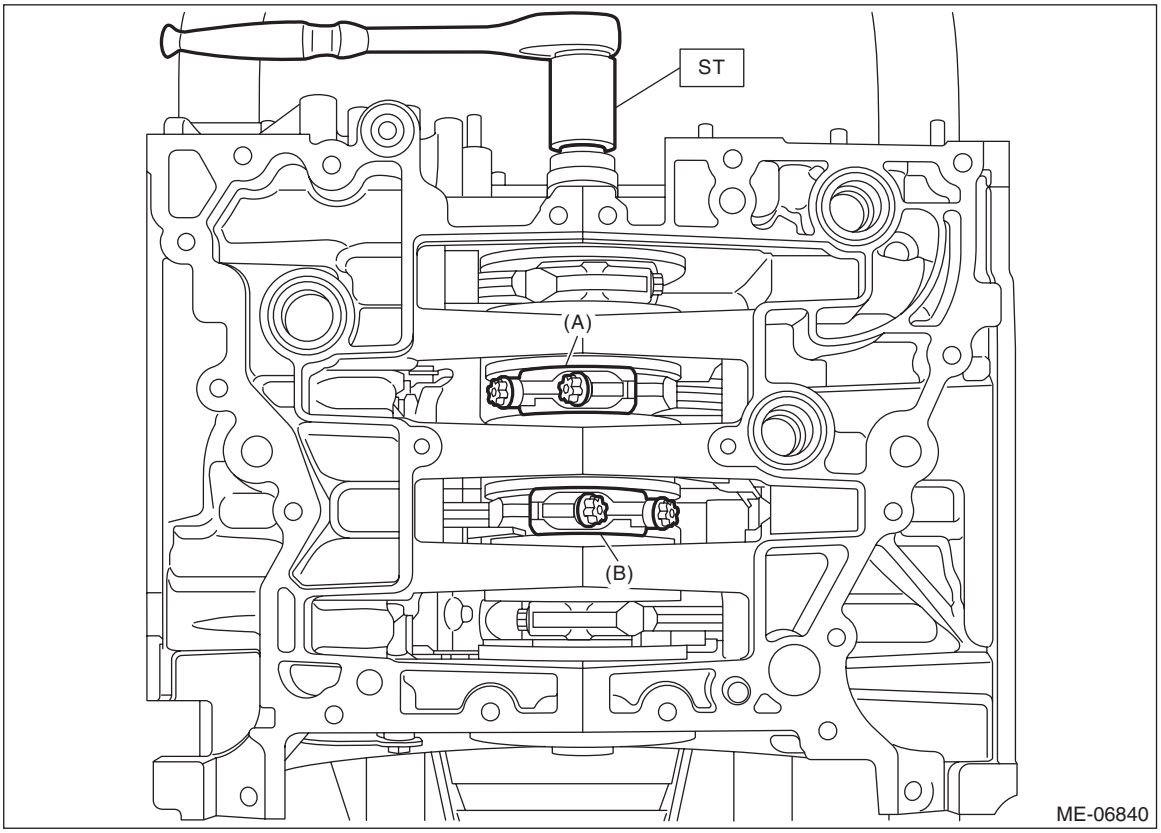

(13) Using ST and angle gauge, tighten the #2 connecting rod cap bolts and #3 connecting rod cap bolts with specified angle in numerical order as shown in the figure.

ST 18270AA020 SOCKET

Tightening angle:
90°+5°–0°

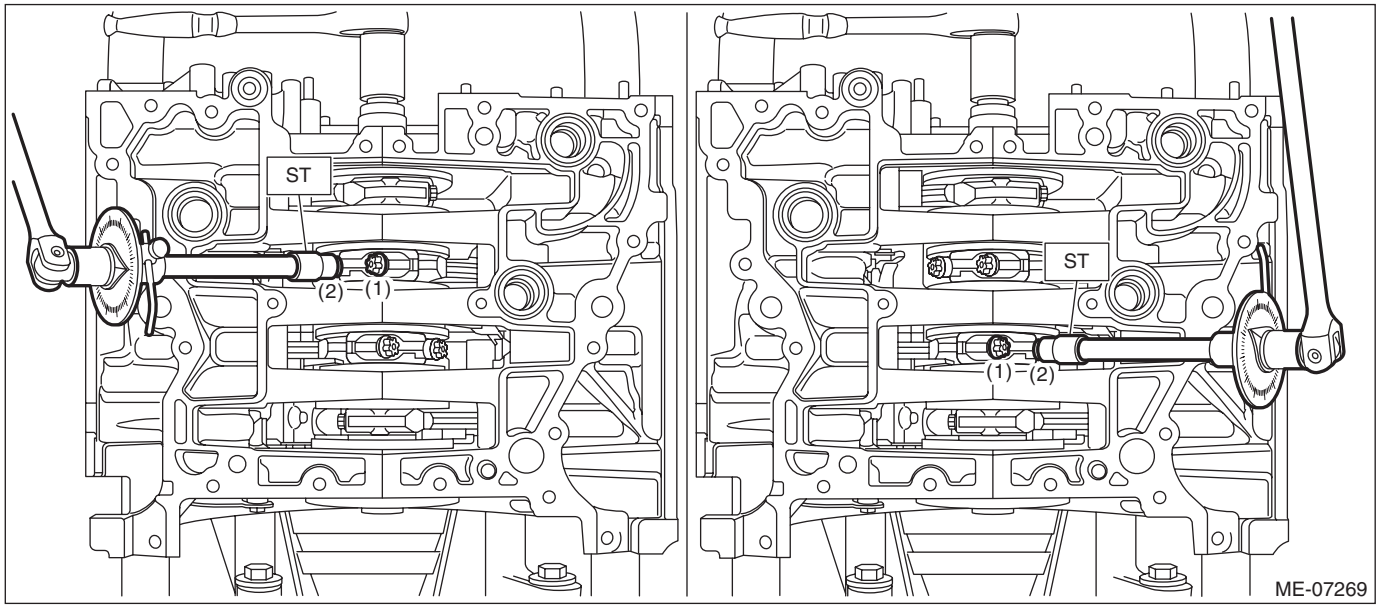

11) Install the oil pan upper. <Ref. to LU(w/o STI)-25, OIL PAN UPPER, INSTALLATION, Oil Pan.>
12) Set the part so that the installation surface of the intake manifold is on the upper side.

13) Install the crankshaft position sensor with crankshaft position sensor holder to the cylinder block LH.

Tightening torque:
6.4 N·m (0.7 kgf-m, 4.7 ft-lb)

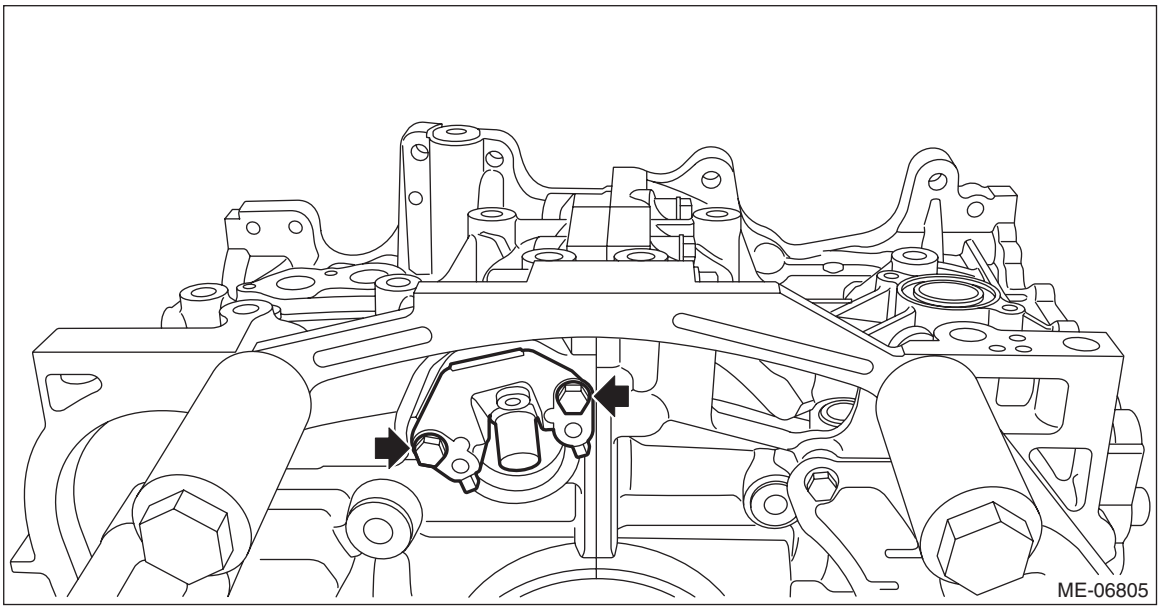

14) Install the PCV valve onto the cylinder block RH.

NOTE:
Apply liquid gasket to the bolt threads of PCV valve.

Liquid gasket:
THREE BOND 1324 (Part No. 004403042) or equivalent

Tightening torque:
23 N·m (2.3 kgf-m, 17.0 ft-lb)

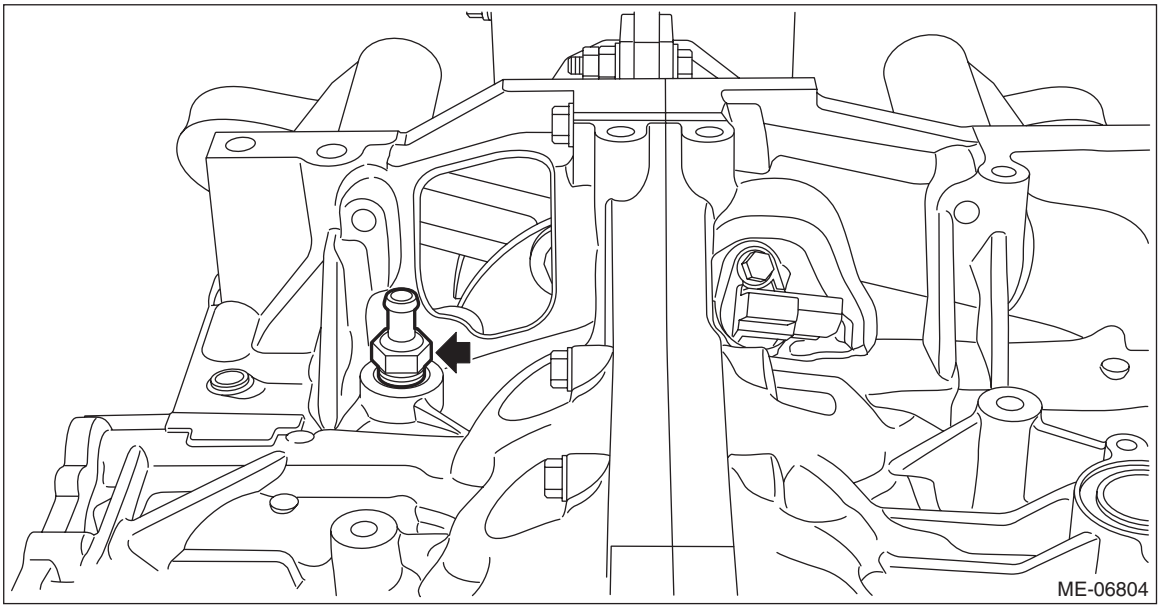

15) Install the knock sensor to the cylinder block LH.

NOTE:
Knock sensor must be positioned toward engine front so that the connector center position is within the range of shaded area shown in the figure.

Tightening torque:
24 N·m (2.4 kgf-m, 17.7 ft-lb)

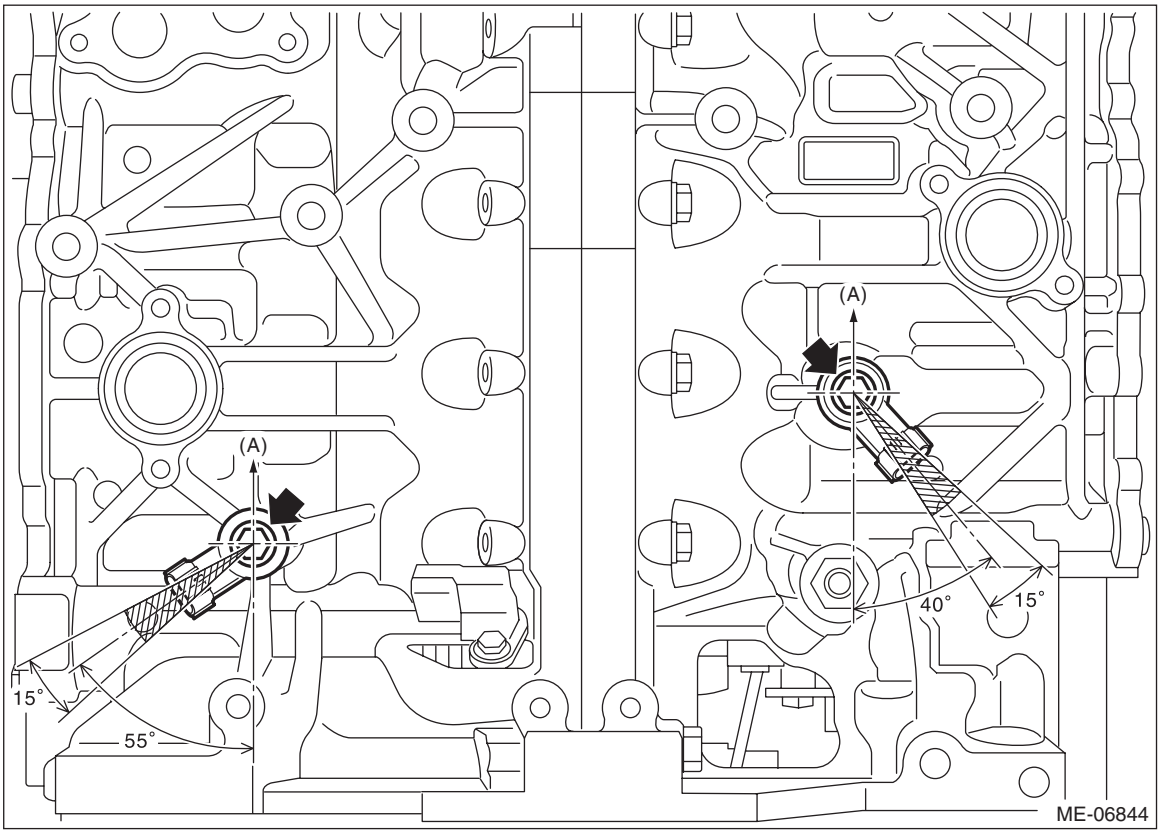

(A) Front of engine

16) Install the O-ring to the cylinder block and PCV connector.

NOTE:
Use new O-rings.

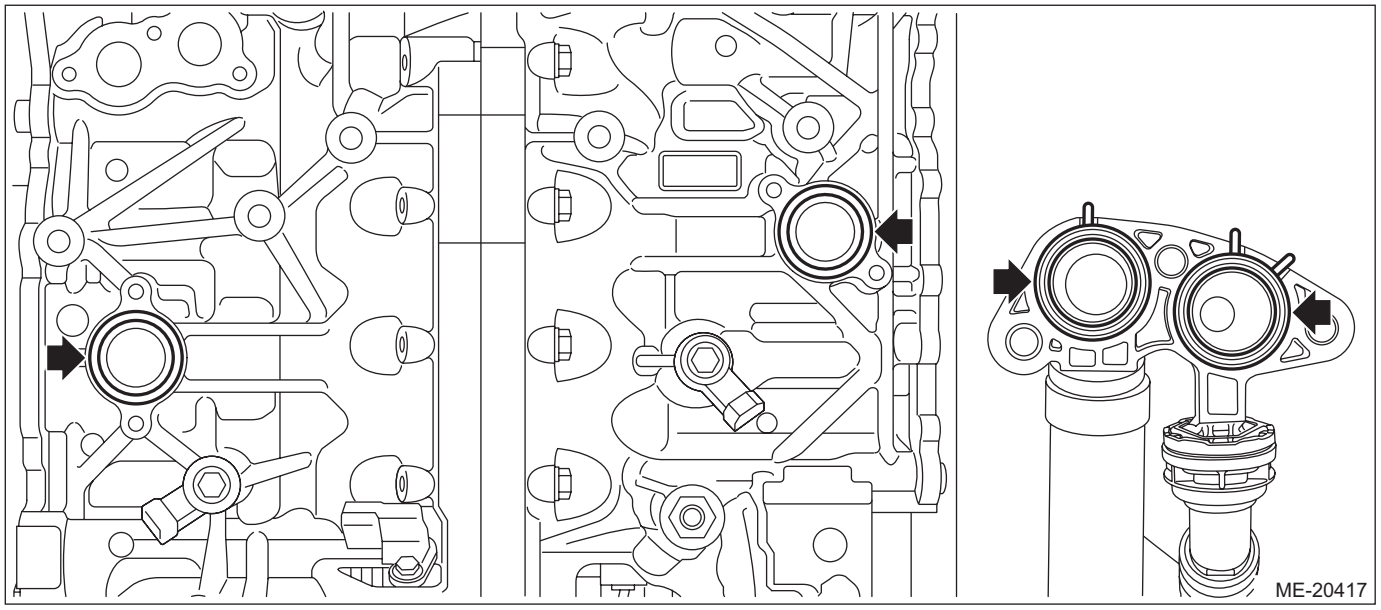

17) Install the water pipe assembly and PCV connector to the cylinder block.

Tightening torque:
6.4 N·m (0.7 kgf-m, 4.7 ft-lb)

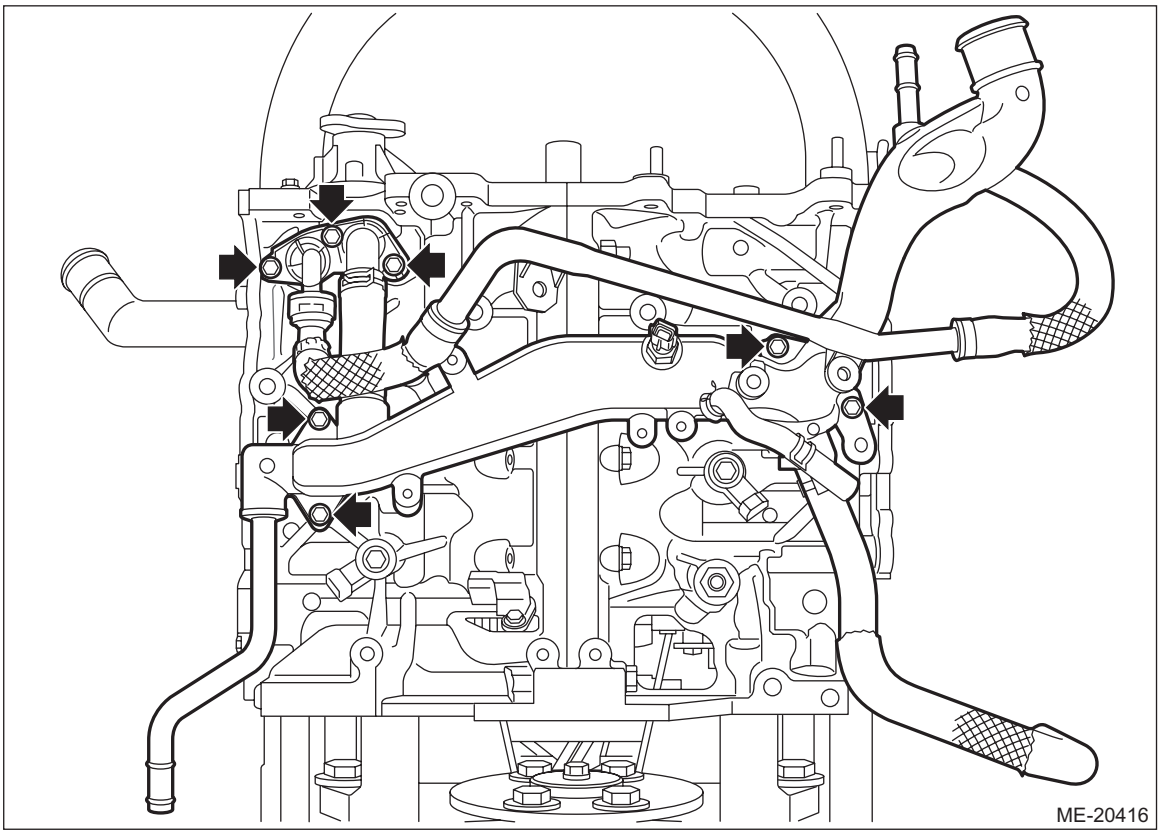

18) Install the engine rear hanger to the cylinder block RH.

Tightening torque:
21 N·m (2.1 kgf-m, 15.5 ft-lb)

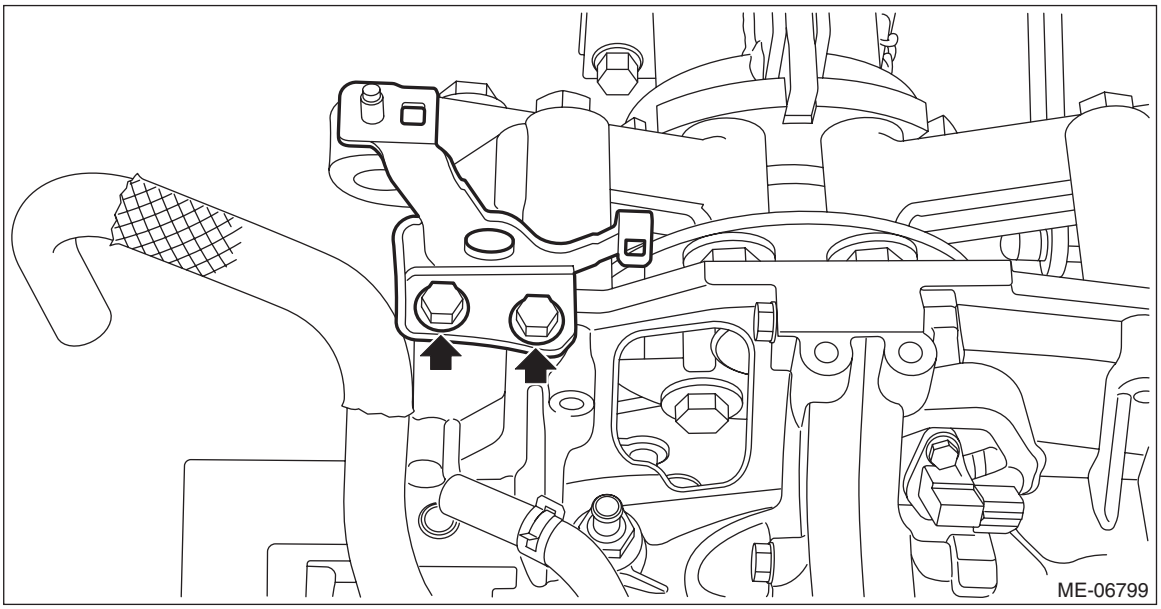

19) Install the crank sprocket. <Ref. to ME(w/o STI)-142, INSTALLATION, Crank Sprocket.>
20) Install the cylinder head. <Ref. to ME(w/o STI)-208, INSTALLATION, Cylinder Head.>
21) Install the cam carrier. <Ref. to ME(w/o STI)-172, INSTALLATION, Cam Carrier.>
22) Install the rocker cover. <Ref. to ME(w/o STI)-153, INSTALLATION, Rocker Cover.>

23) Install the chain cover. <Ref. to ME(w/o STI)-97, INSTALLATION, Chain Cover.>
24) Install the engine wiring harness. <Ref. to FU(w/o STI)-84, INSTALLATION, Engine Wiring Harness.>
25) Install the air intake adapter. <Ref. to FU(w/o STI)-43, INSTALLATION, Tumble Generator Valve Assembly.>
26) Install the intake manifold. <Ref. to FU(w/o STI)-28, INSTALLATION, Intake Manifold.>
27) Apply a coat of engine oil to the oil seal inner periphery and outer periphery, and install the rear oil seal using ST1 and ST2.

NOTE:
Use a new rear oil seal.
ST1 18671AA020 OIL SEAL GUIDE
ST2 18657AA030 OIL SEAL INSTALLER

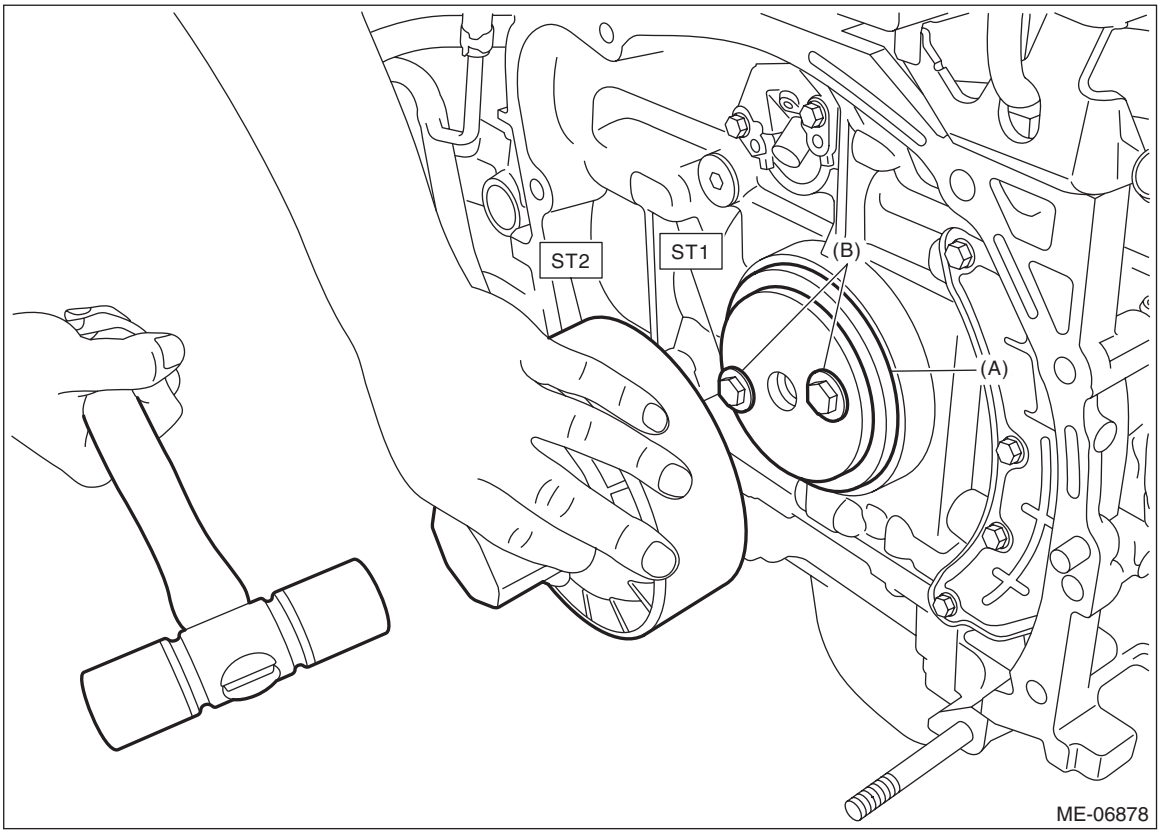

(A) Rear oil seal
(B) Drive plate or flywheel mounting bolt

28) Install the crankshaft position sensor plate with drive plate. (CVT model) <Ref. to CVT(TR690)-138, INSTALLATION, Drive Plate.>
29) Install the crankshaft position sensor plate with flywheel. (MT model) <Ref. to CL-15, INSTALLATION, Flywheel.>
30) Install the clutch disc and cover. (MT model) <Ref. to CL-12, INSTALLATION, Clutch Disc and Cover.>
31) Install the engine to the vehicle. <Ref. to ME(w/o STI)-59, INSTALLATION, Engine Assembly.>

C: DISASSEMBLY

1. CYLINDER BLOCK

1) Remove the oil separator cover from cylinder block RH.

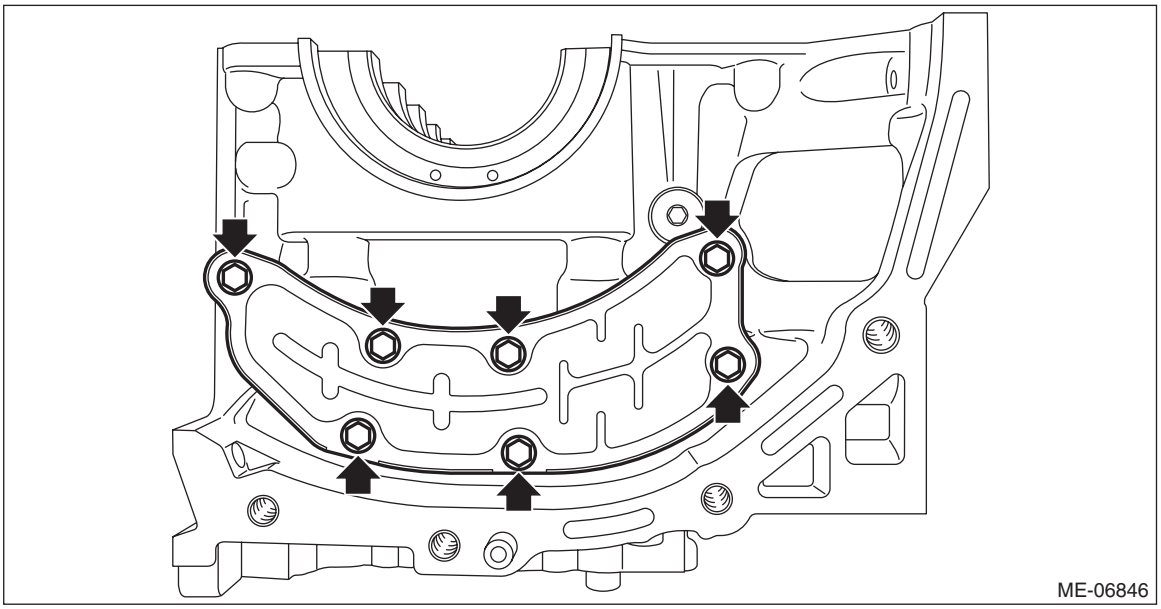

2) Remove the liquid gasket from cylinder block RH.
3) Remove the cylinder block plug (A) and the main gallery plug (B) from cylinder block RH.

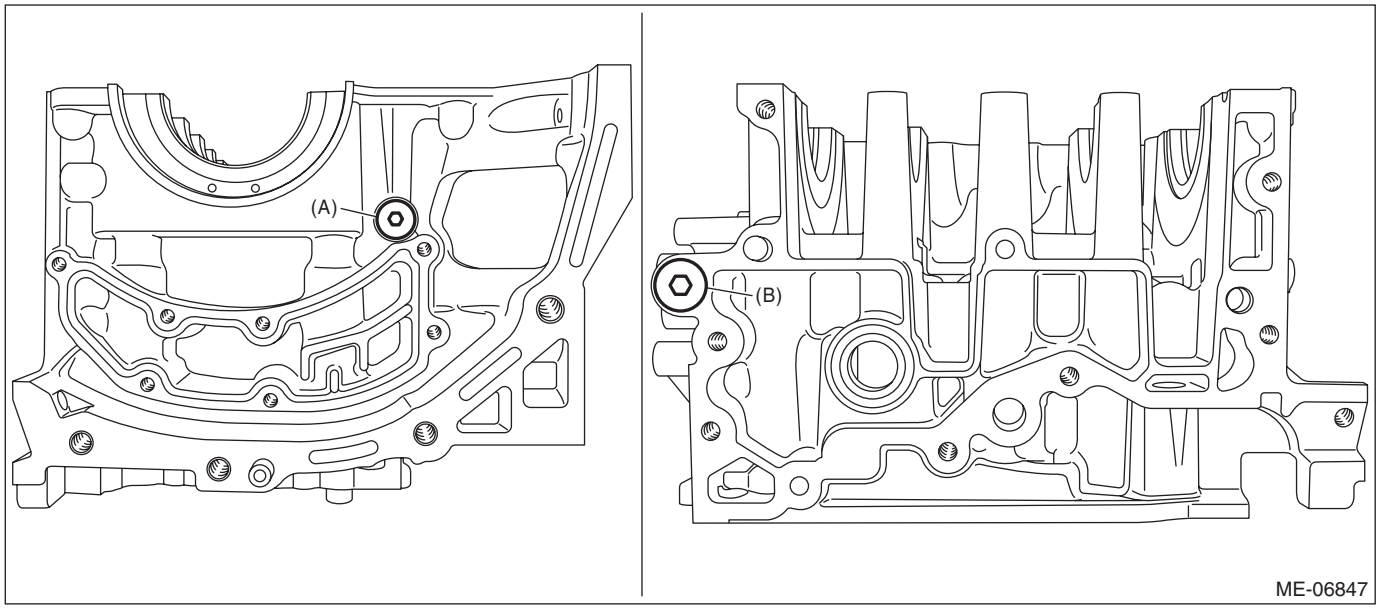

4) Remove the liquid gasket from the thread holes of the cylinder block RH, and from the threaded portions of cylinder block plug and main gallery plug.

5) Remove the cylinder block plate from cylinder block LH.

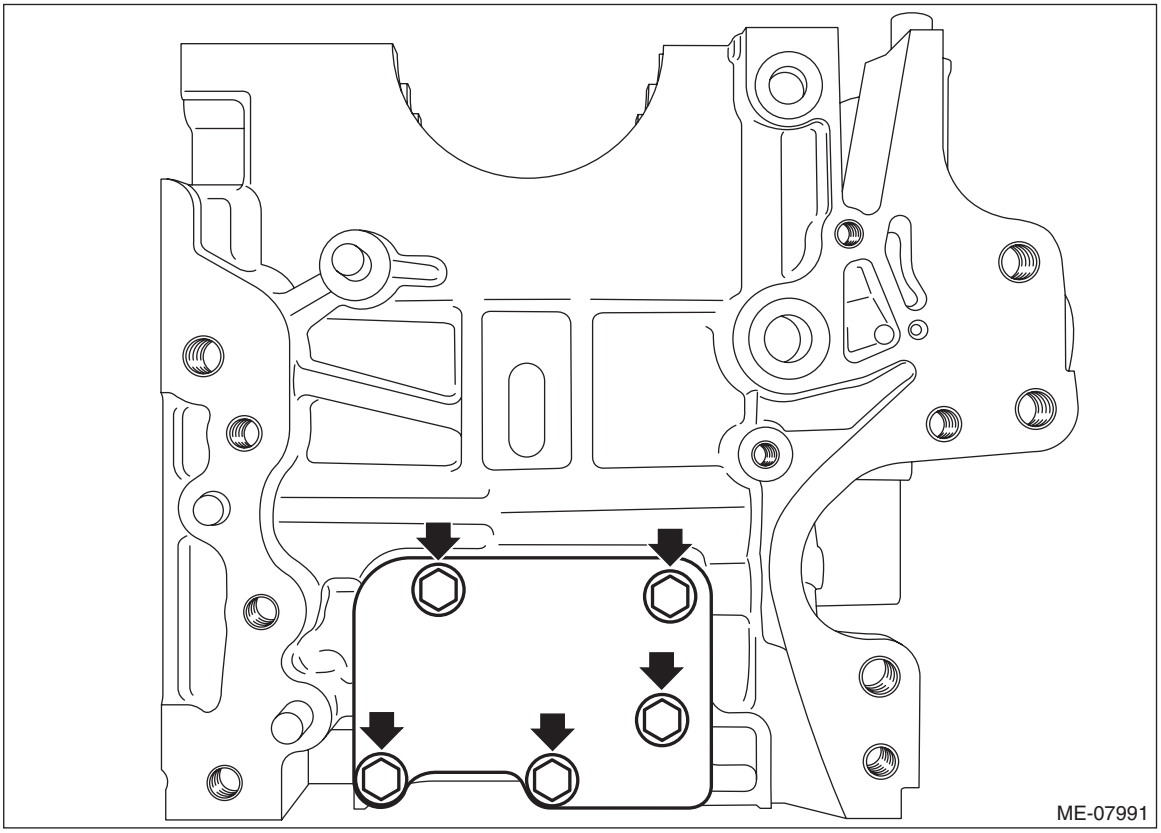

6) Remove the main gallery plug from cylinder block LH.

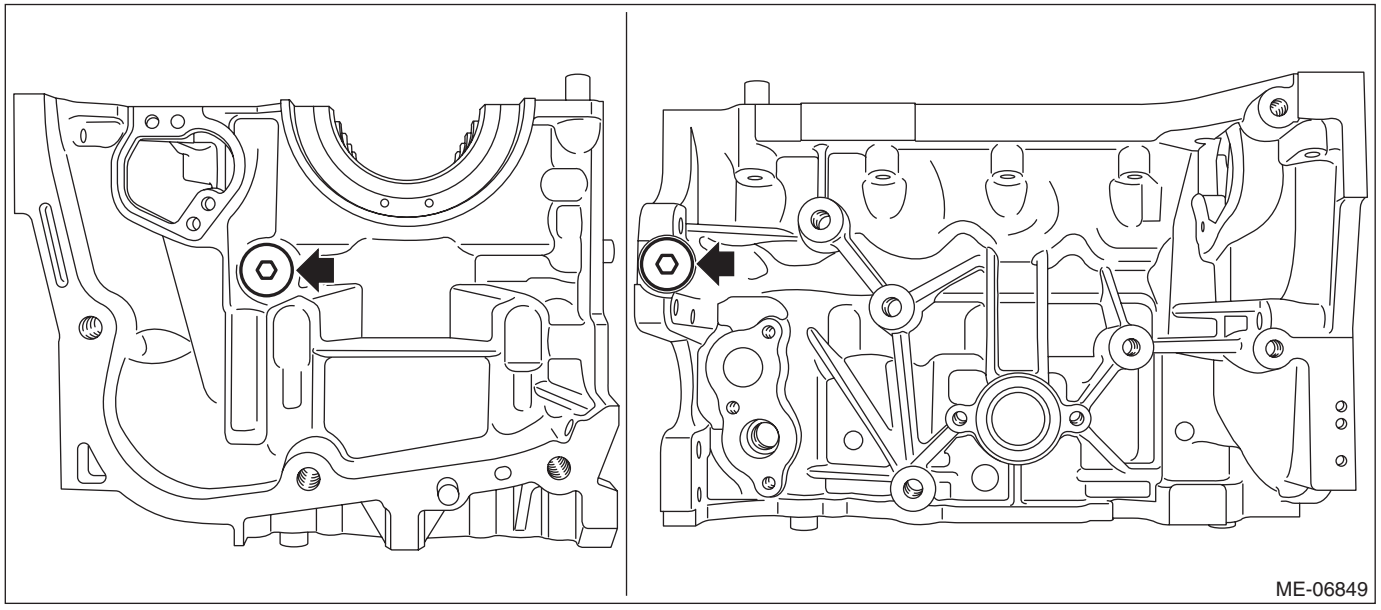

7) Remove the liquid gasket from the thread holes of the cylinder block LH and main gallery plug.

2. PISTON AND CONNECTING ROD

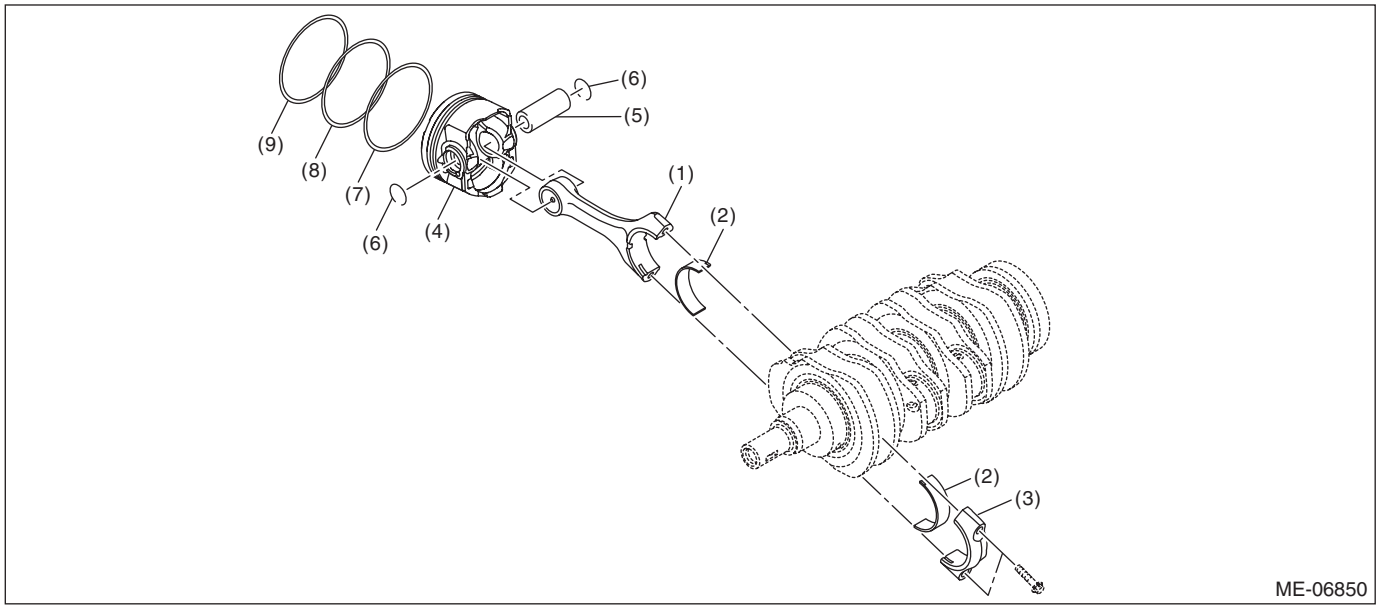

(1)	Connecting rod	(4)	Piston	(7)	Oil ring
(2)	Connecting rod bearing	(5)	Piston pin	(8)	Second ring
(3)	Connecting rod cap	(6)	Circlip	(9)	Top ring

NOTE:
To prevent confusion of various parts, mark each part.
1) Remove the connecting rod bearing from connecting rod and connecting rod cap.
2) Remove the piston rings from the piston.

NOTE:
Arrange the piston rings in order so that they can be installed in their original positions without confusion.
(1) Remove the compression rings in the order of top ring and second ring, using piston ring expander.
(2) Remove the oil rings in the order of upper rail, lower rail and expander by hand.
3) Remove the circlip on one end from the piston using a flat tip screwdriver.

NOTE:
Be careful not damage the piston and piston pin, by wrapping the tip of flat tip screwdriver with tape.
4) Remove the piston pin from piston, and remove the connecting rod from piston.
5) Remove the circlip on other end from the piston using a flat tip screwdriver.

NOTE:
Be careful not damage the piston and piston pin, by wrapping the tip of flat tip screwdriver with tape.

D: ASSEMBLY

1. CYLINDER BLOCK

1) Apply liquid gasket to the threaded portion of the main gallery plug, and install the main gallery plug to the cylinder block LH.

NOTE:
Before applying liquid gasket, degrease the thread holes of the cylinder block LH and main gallery plug.

Liquid gasket:
THREE BOND 1105 (Part No. 004403010) or equivalent

Tightening torque:
37 N·m (3.8 kgf-m, 27.3 ft-lb)

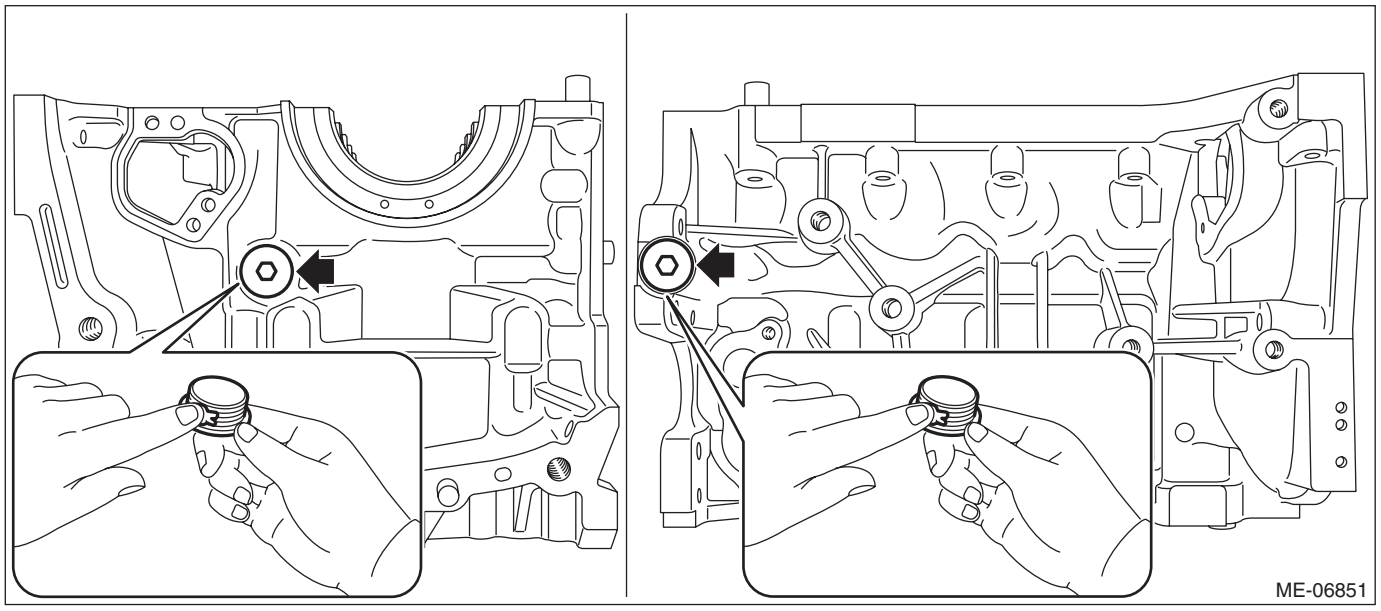

2) Install the cylinder block plate onto cylinder block LH.

Tightening torque:
6.4 N·m (0.7 kgf-m, 4.7 ft-lb)

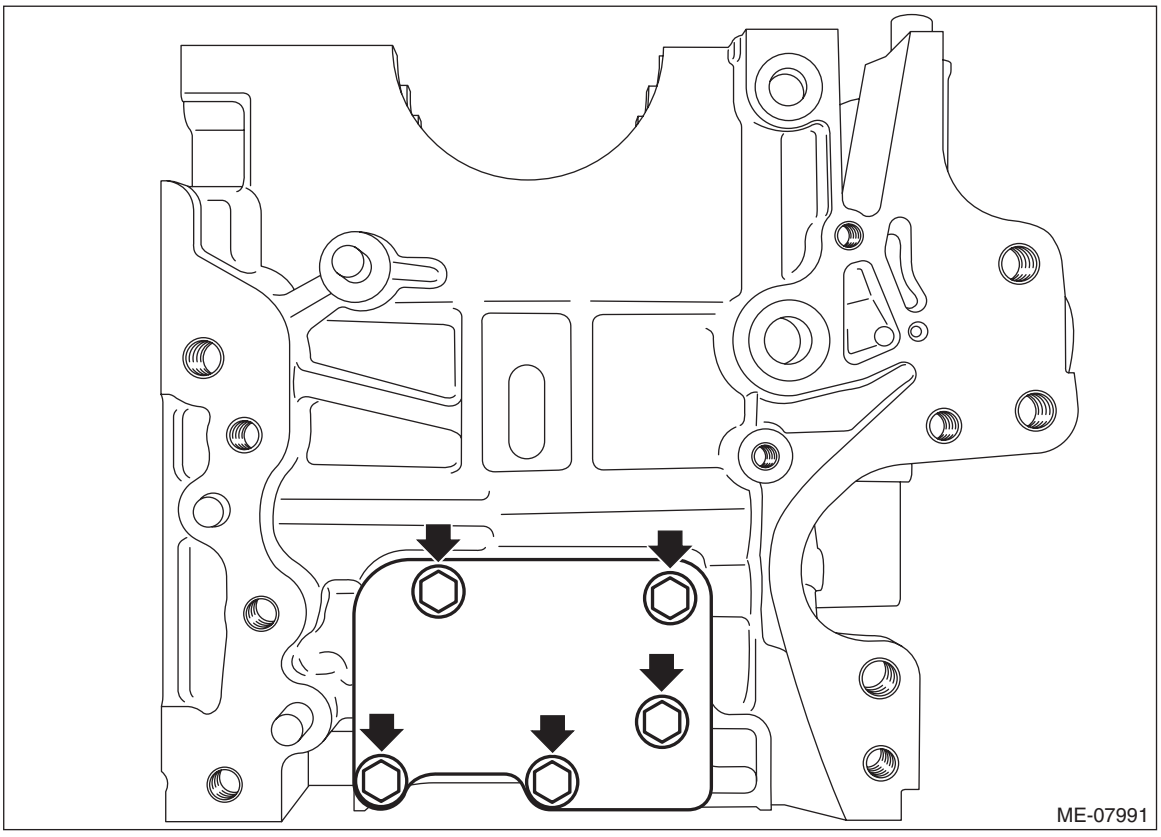

3) Apply liquid gasket to the threaded portions of cylinder block plug and main gallery plug, and install the cylinder block plug (A) and main gallery plug (B) to cylinder block RH.

NOTE:
Before applying liquid gasket, degrease the thread holes of the cylinder block RH, and the threaded portions of cylinder block plug and main gallery plug.

Liquid gasket:
THREE BOND 1105 (Part No. 004403010) or equivalent

Tightening torque:
T1: 16 N·m (1.6 kgf-m, 11.8 ft-lb)
T2: 37 N·m (3.8 kgf-m, 27.3 ft-lb)

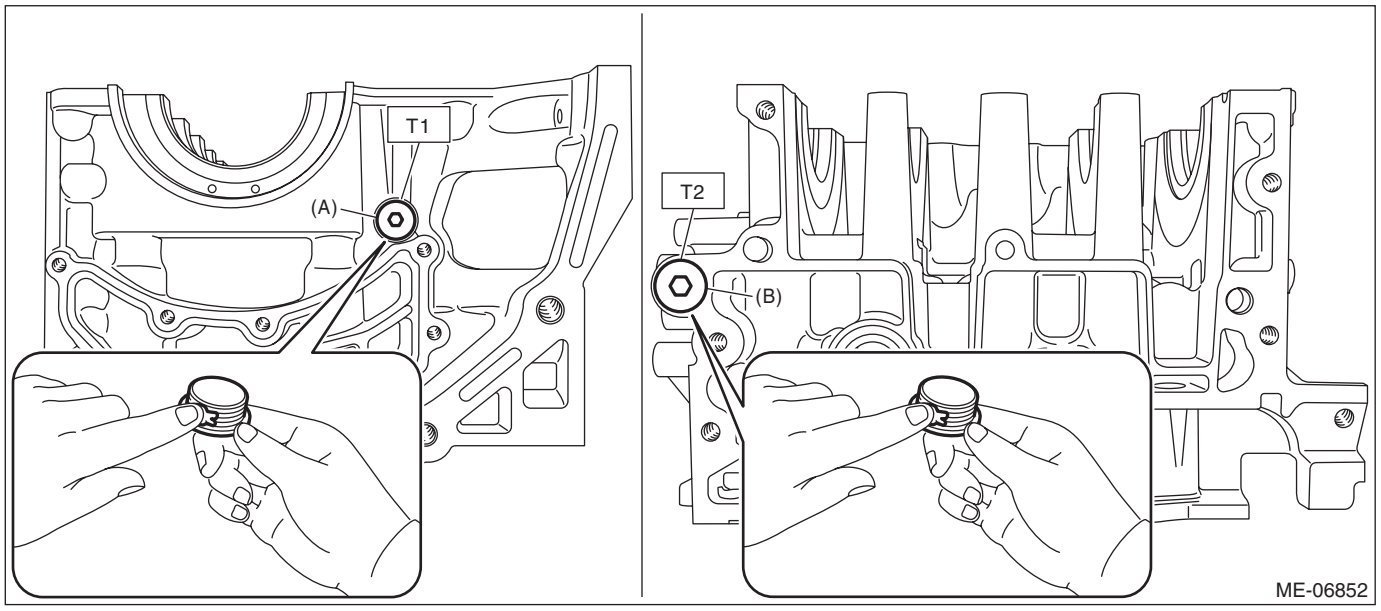

4) Install the oil separator cover to the cylinder block RH.
(1) Apply liquid gasket to the mating surfaces of oil separator cover.

NOTE:
- Use new oil separator cover.
- Before applying liquid gasket, degrease the old liquid gasket seal surface of cylinder block RH.
- Install within 5 min. after applying liquid gasket.

Liquid gasket:
THREE BOND 1217G (Part No. K0877Y0100), THREE BOND 1217H or equivalent

Liquid gasket applying diameter:
4±1 mm (0.1772±0.0394 in)

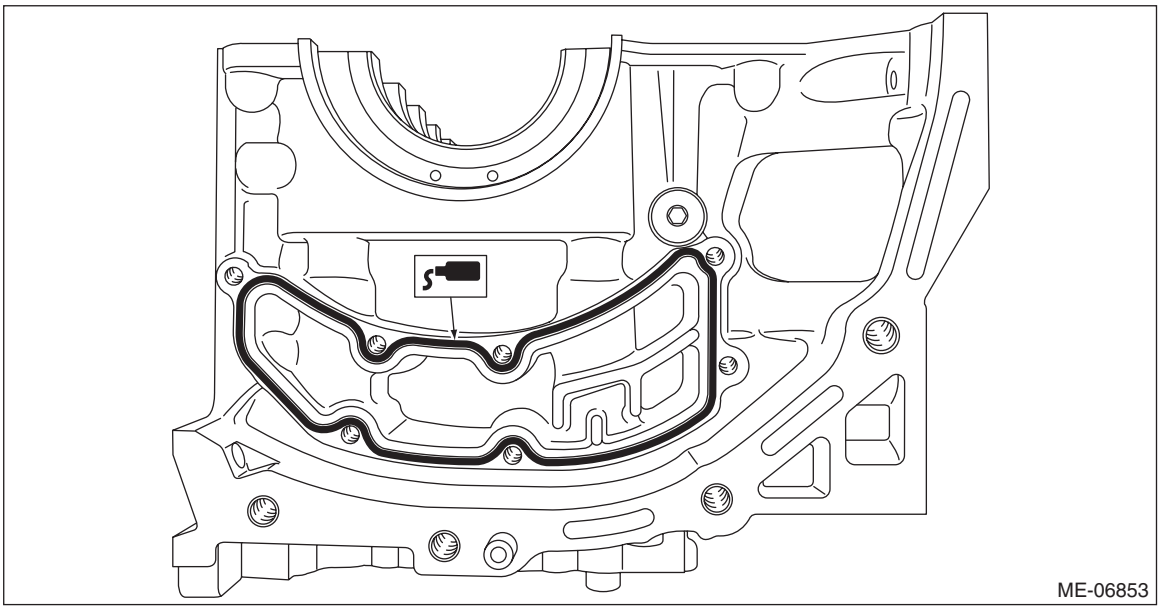

(2) Install the oil separator cover to the cylinder block RH, and tighten the oil separator cover bolts in numerical order as shown in the figure.

Tightening torque:
6.4 N·m (0.7 kgf-m, 4.7 ft-lb)

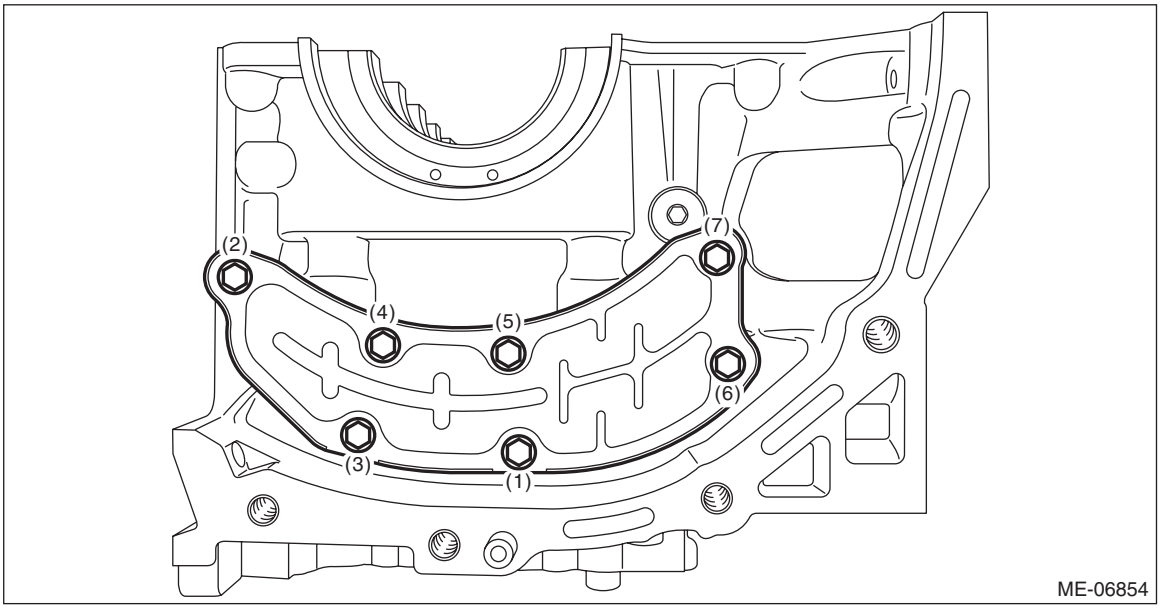

2. PISTON AND CONNECTING ROD

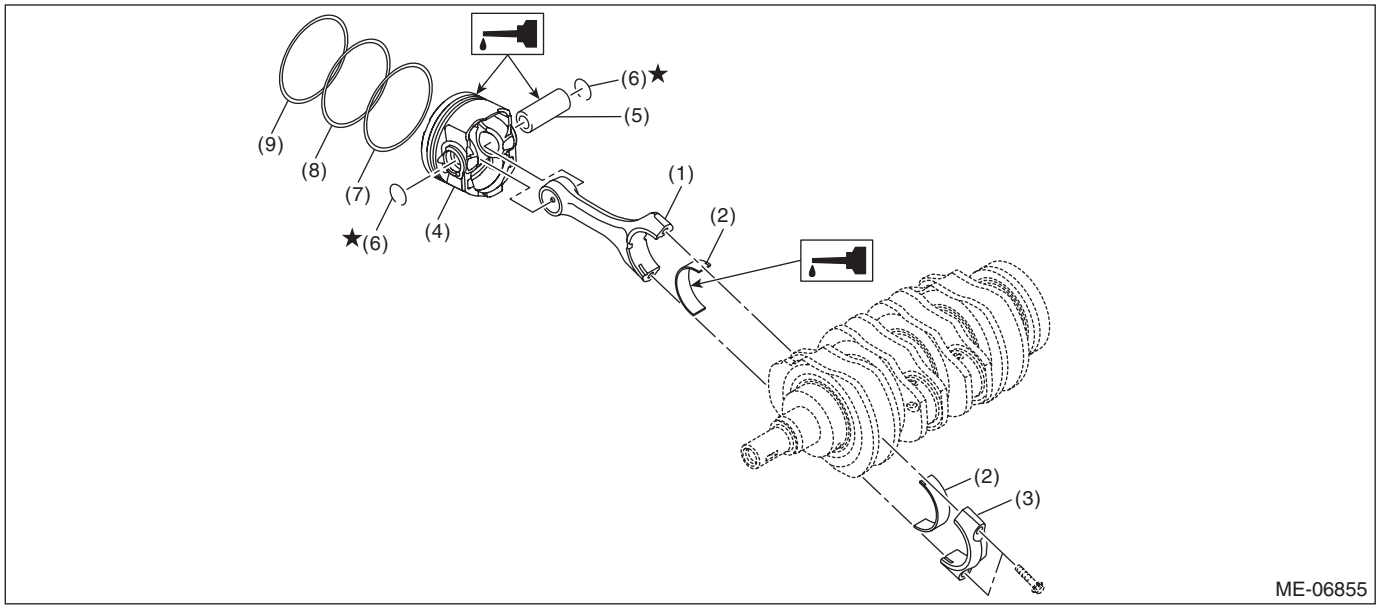

(1)	Connecting rod	(4)	Piston	(7)	Oil ring
(2)	Connecting rod bearing	(5)	Piston pin	(8)	Second ring
(3)	Connecting rod cap	(6)	Circlip	(9)	Top ring

1) Install the connecting rod bearing to the connecting rod and connecting rod cap.
2) Install the circlip on one end of the piston using a flat tip screwdriver.

NOTE:
- Be careful not damage the piston, by wrapping the tip of flat tip screwdriver with tape.
- Make sure the circlip is firmly inserted into the circlip groove.
- After installing the circlip, rotate the circlip so that its end part (a) and the cutout portion of circlip groove (b) do not match.

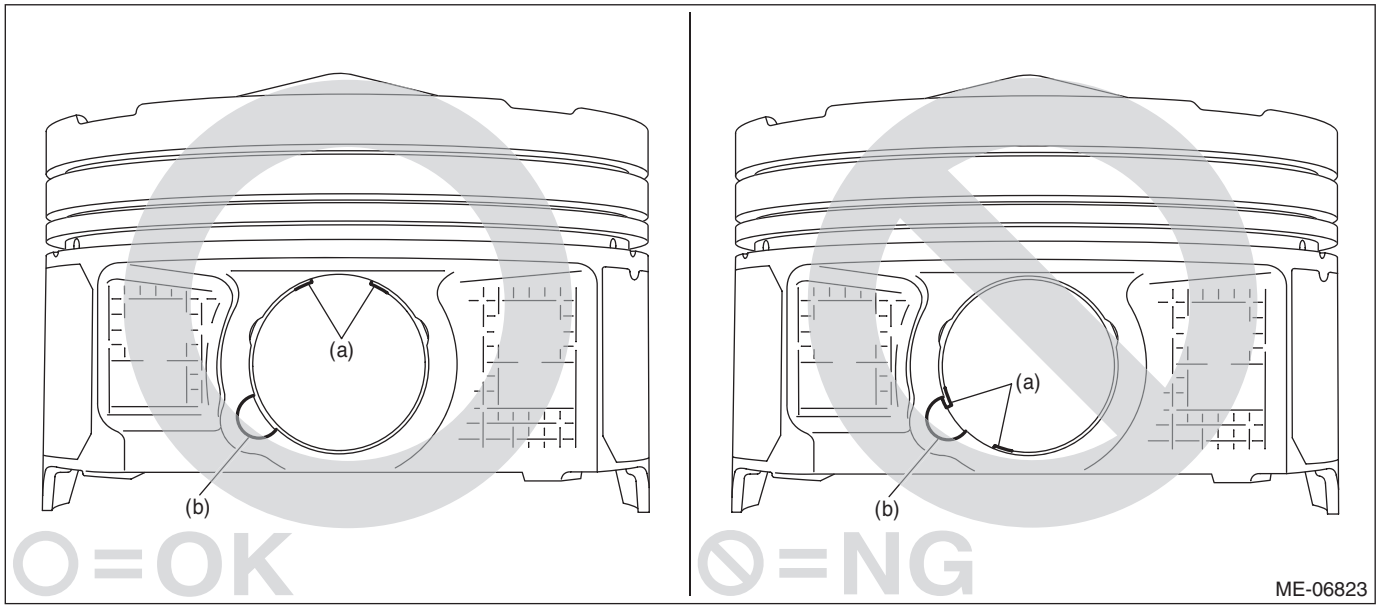

3) Set the piston to the connecting rod.

NOTE:
Align the front mark of piston and the connecting rod direction correctly as shown in the figure.

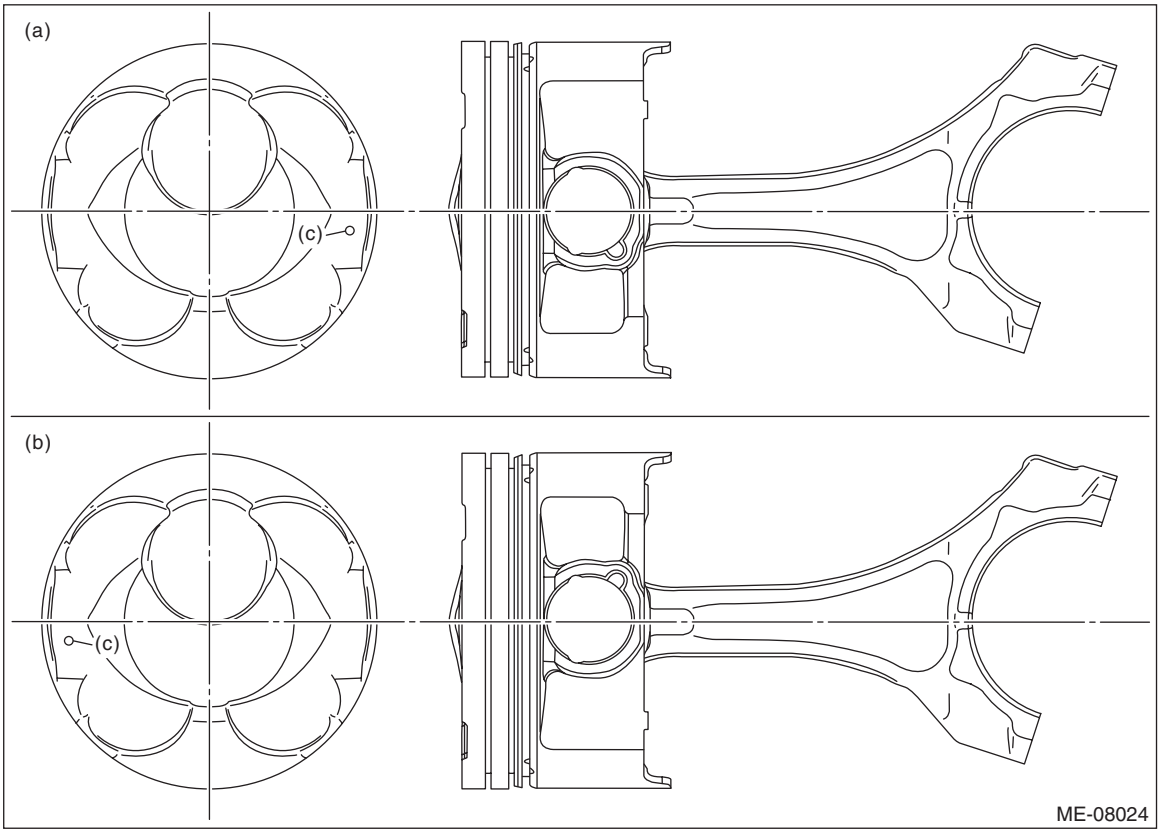

(a) RH side (#1 and #3) (b) LH side (#2 and #4) (c) Front mark

4) Apply engine oil to the piston pin, and attach the piston pin.
5) Install the circlip on the piston using a flat tip screwdriver.

NOTE:
- Be careful not damage the piston and piston pin, by wrapping the tip of flat tip screwdriver with tape.
- Make sure the circlip is firmly inserted into the circlip groove.
- After installing the circlip, rotate the circlip so that its end part (a) and the cutout portion of circlip groove (b) do not match.

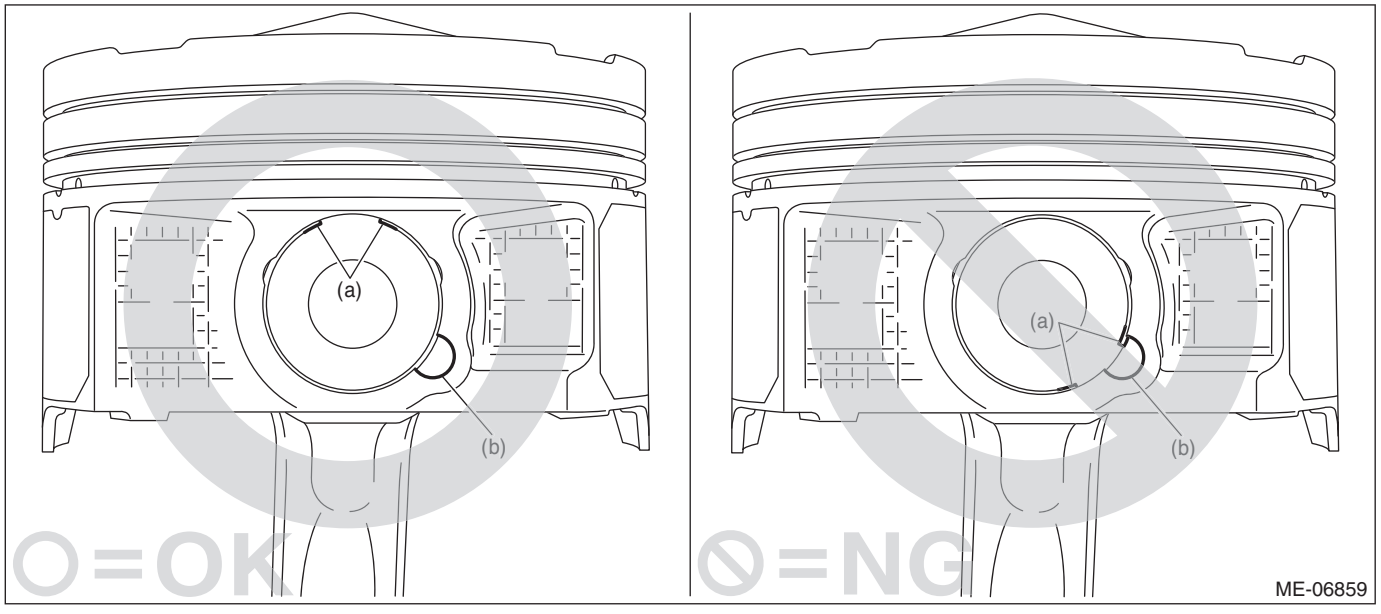

6) Install the oil rings to the piston in the order of expander, lower rail and upper rail by hand.

NOTE:
Oil ring consists of the upper rail, expander and lower rail.

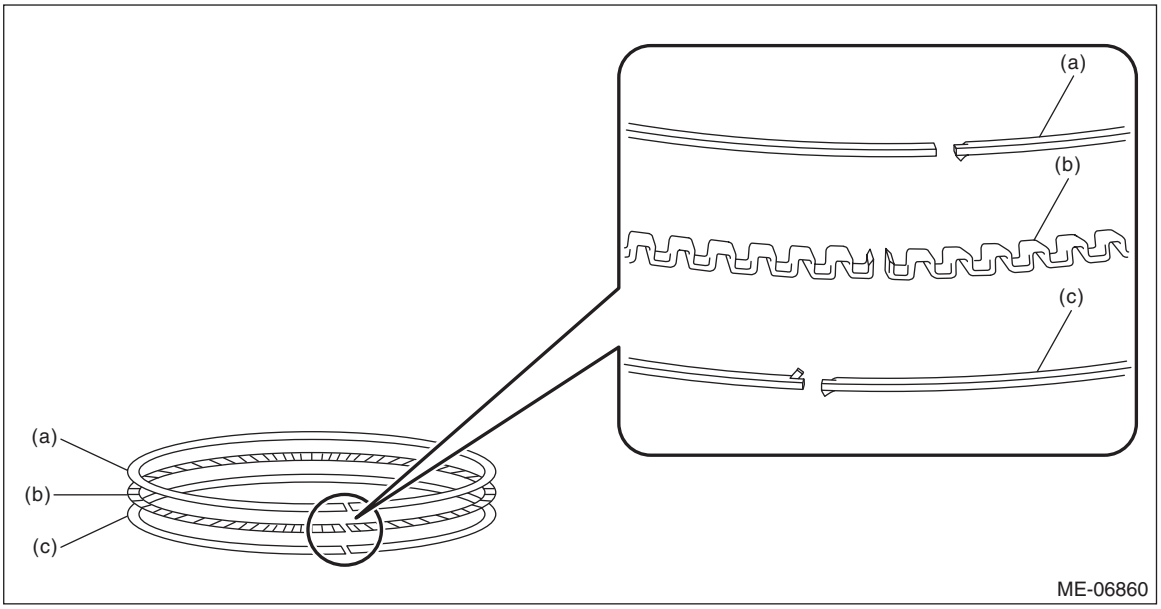

(a) Upper rail (b) Expander (c) Lower rail

(1) Set the ring gap of the expander to the position (A).

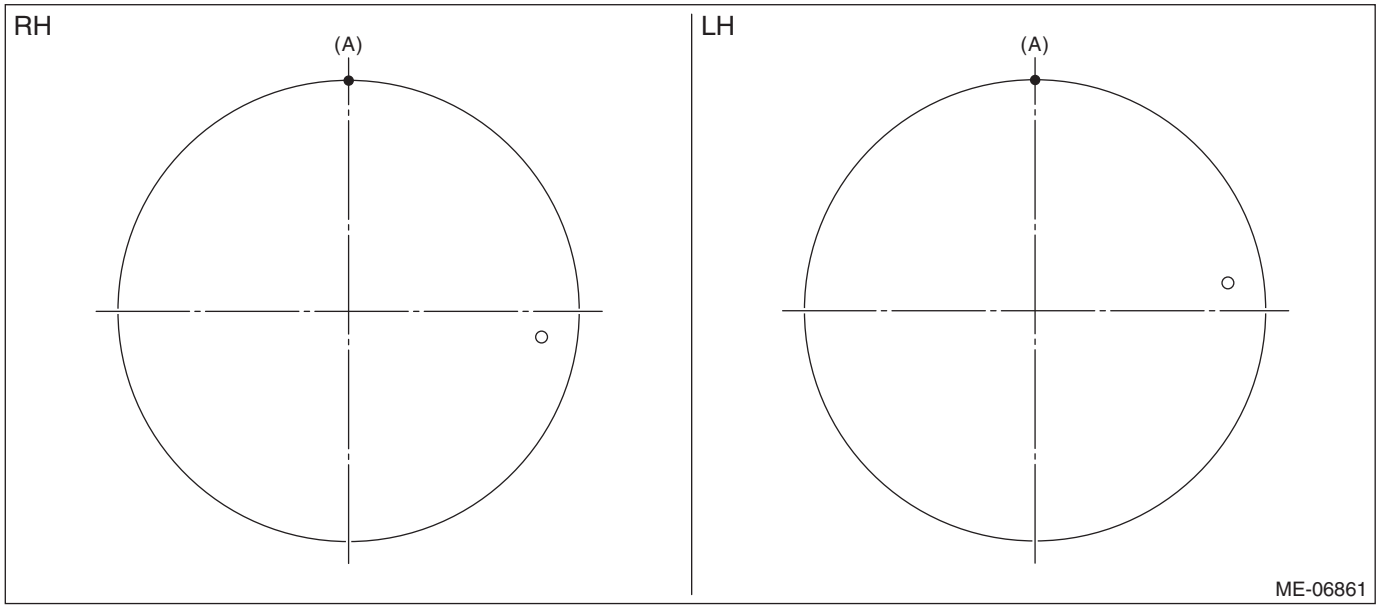

(2) Set the lower rail spin stopper (D) to the oil groove (C) located above the cutout portion (B) of the piston skirt coating, and hook the lower rail spin stopper (F) to the expander (E).

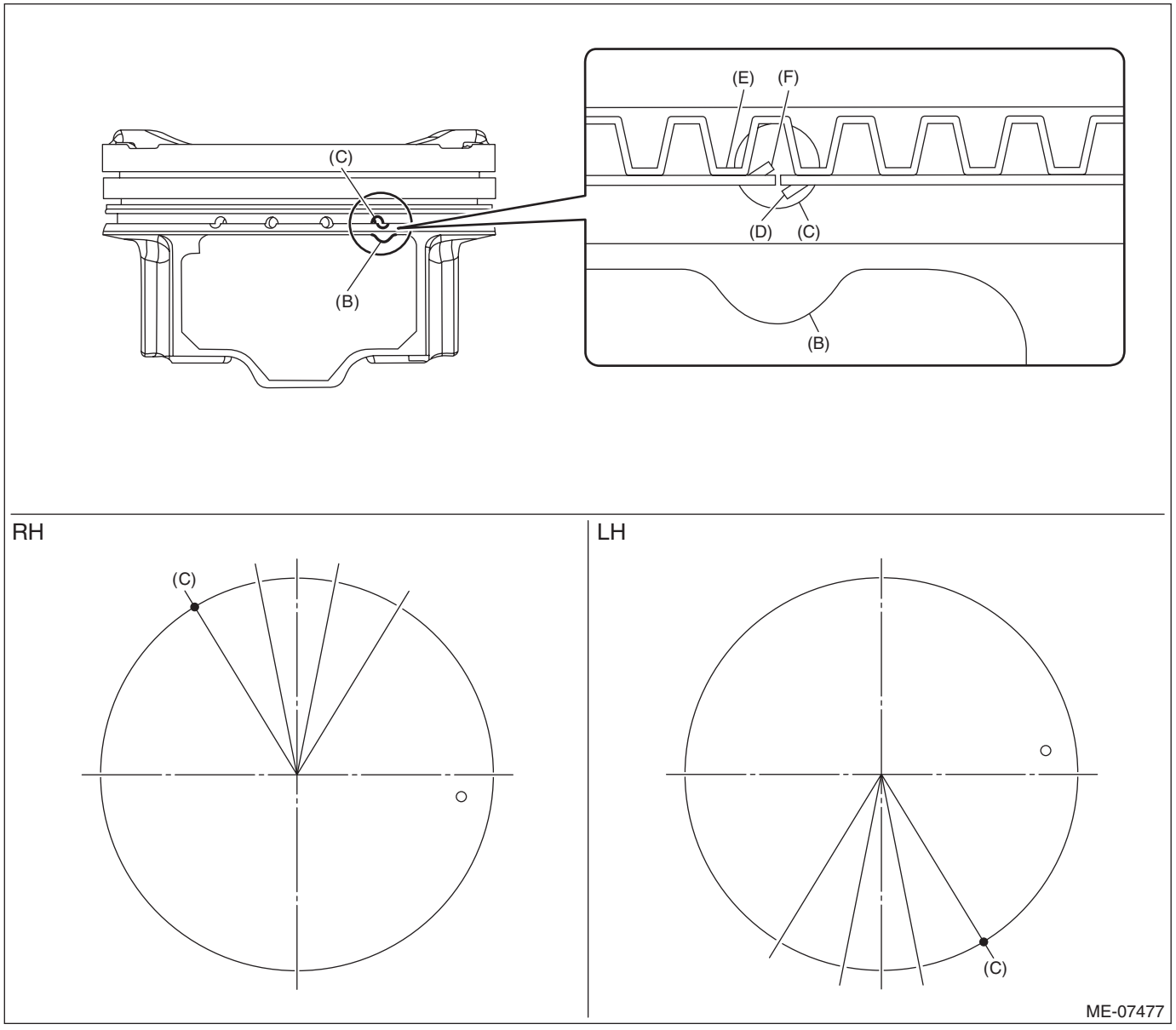

(3) Set the upper rail gap to the position (G), and hook the upper rail spin stopper (H) to the expander (E).

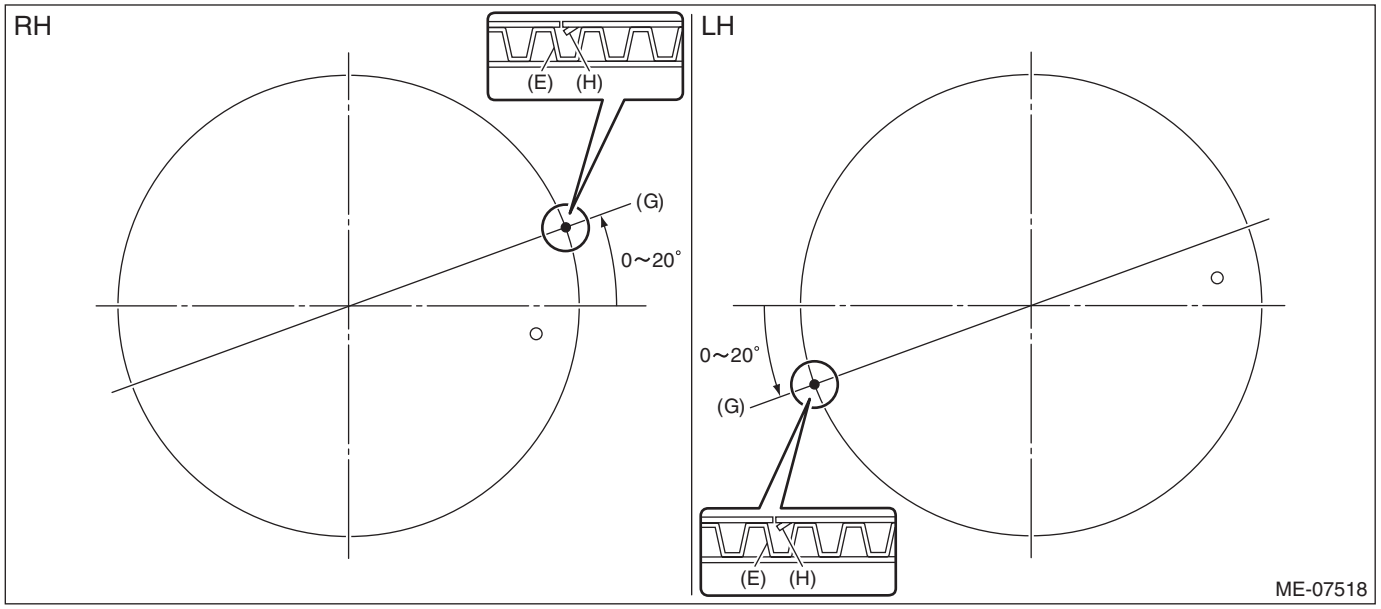

7) Install the compression rings to the piston in the order of second ring and top ring, using piston ring expander.

(1) Set the ring gap of the second ring to the position (A) in the figure.

NOTE:
Install the second ring so that the ring mark (2N) faces the piston crown.

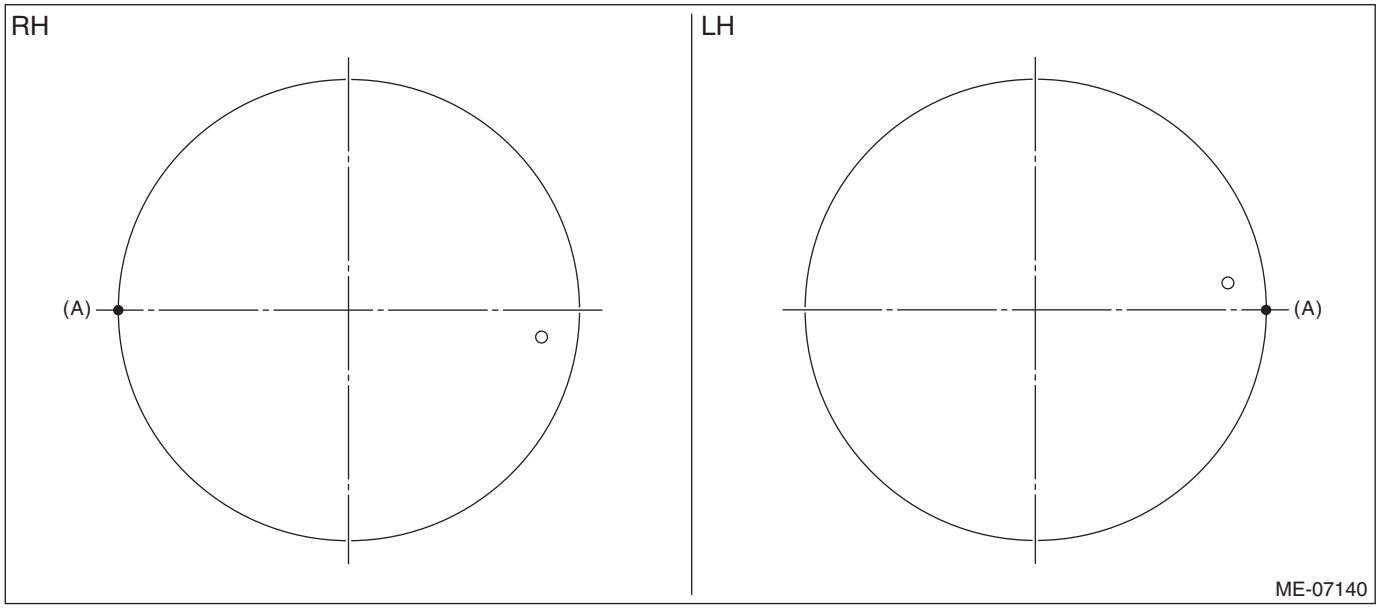

(2) Set the ring gap of top ring at (B) in the figure on the 180° opposite direction of (A).

NOTE:
Install the top ring so that the ring mark (TN) faces the piston crown.

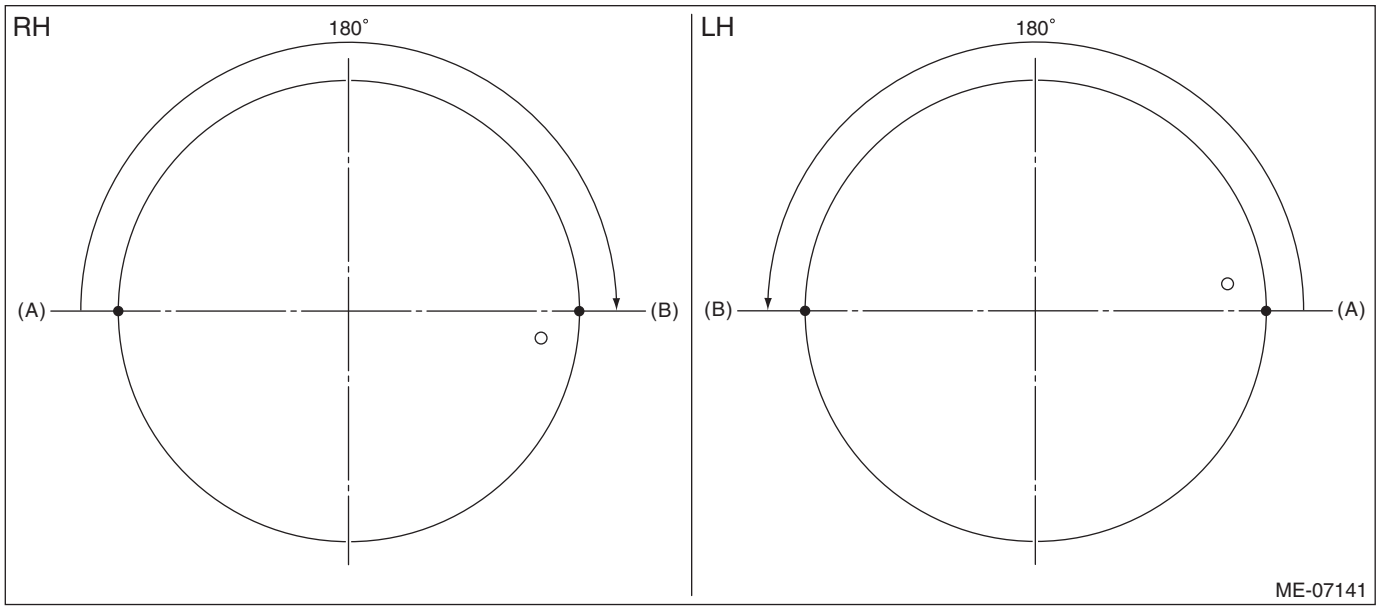

8) Check that the piston ring is installed correctly.

E: INSPECTION

1. CYLINDER BLOCK & PISTON

1) Visually inspect to make sure that there are no cracks, scratches or other damage.
2) Use liquid penetrant tester on the important sections to check for fissures.
3) Check that there are no traces of gas leaking or water leaking on the gasket attachment surface.
4) Check the oil passages for clogging.
5) Check for warpage of mating surfaces of the cylinder block that contacts cylinder head using a straight edge and thickness gauge. If it exceeds the limit, correct the surface by grinding it with a surface grinder or replace the cylinder block.

NOTE:
Measurement should be performed at a temperature of 20°C (68°F).

Cylinder block warpage:
Limit
0.025 mm (0.0010 in)

Grinding limit of cylinder block :
To 204.9 mm (8.067 in)

Height of cylinder block:
Standard
205.0 mm (8.071 in)

6) Using a cylinder bore gauge, check the cylindricality and out-of-roundness of cylinder liner. If it is not within the standard, perform reboring (including honing), or replace the cylinder block and piston as a set. For reboring and honing procedure, refer to step 8).

NOTE:
- Measure the cylinder liner with cylinder blocks separated (into cylinder block RH and cylinder block LH).
- Measurement should be performed at a temperature of 20°C (68°F).
- Write down all measurement values as the values are used in the next procedure.
- Measure the inner diameter of each cylinder liner in both the thrust and piston pin directions at the heights as shown in the figure.

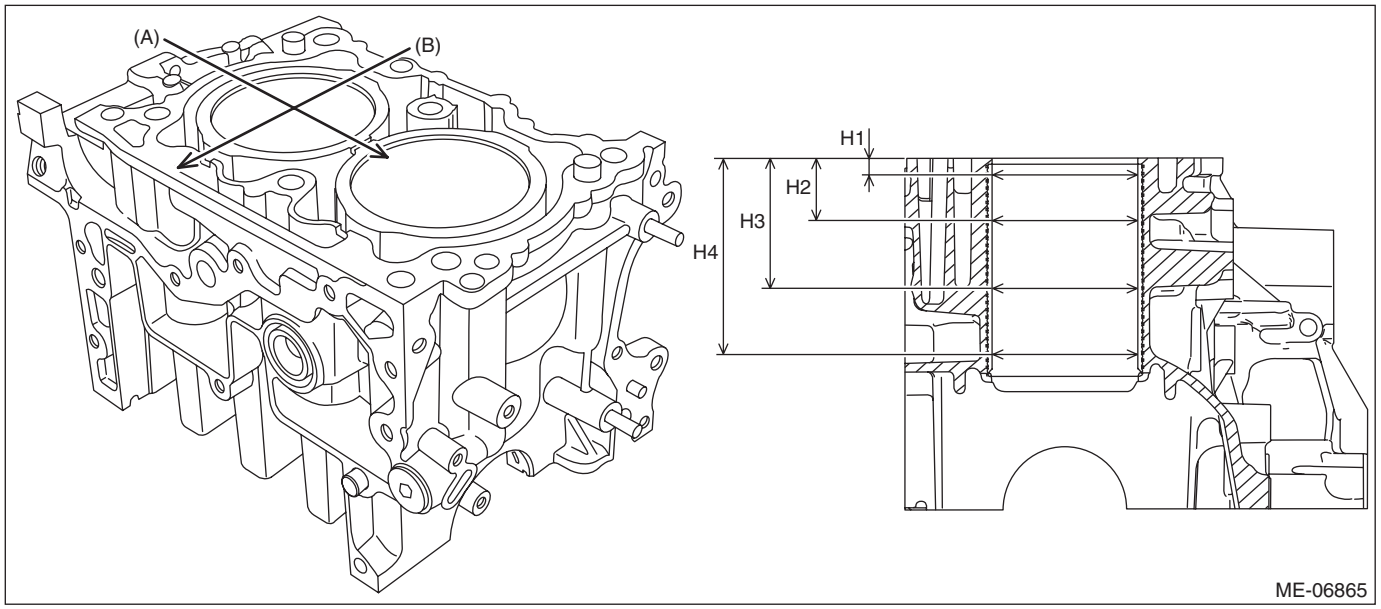

(A) Piston pin direction (B) Thrust direction

H1: 10 mm (0.3937 in) H2: 45 mm (1.7717 in) H3: 80 mm (3.1496 in)
H4: 105 mm (4.1339 in)

- Calculate the cylindricality of cylinder liner by using the following formula.

Calculation formula
C = The larger value between the calculation values C' and C'' C' = (D(a)–D(b))/2 C'' = (D(c)–D(d))/2
C: Cylindricality of cylinder liner D(a): The largest value of all the values obtained by measuring the cylinder liner inner diameter in the direction of the piston pin D(b): The smallest value of all the values obtained by measuring the cylinder liner inner diameter in the direction of the piston pin D(c): The largest value of all the values obtained by measuring the cylinder liner inner diameter in the thrust direction D(d): The smallest value of all the values obtained by measuring the cylinder liner inner diameter in the thrust direction

- Calculate the out-of-roundness of cylinder liner at each measurement height by using the following formula.

Calculation formula
R = (D(e)–D(f))/2
R: Out-of-roundness of cylinder liner D(e): The larger value between the measurement values in the piston pin direction and in the thrust direction of cylinder liner inner diameter D(f): The smaller value between the measurement values in the piston pin direction and in the thrust direction of cylinder liner inner diameter

Cylindricality of cylinder liner:
Limit
0.030 mm (0.0012 in)

Out-of-roundness of cylinder liner:
Limit
0.030 mm (0.0012 in)

7) Check the clearance between cylinder liner and piston. Check the clearance between cylinder liner and piston by measuring the inner diameter of cylinder liner and the outer diameter of piston respectively.

(1) Measure the inner diameter of cylinder liner. If it is not within the standard, perform reboring (including honing), or replace the cylinder block and piston as a set. For reboring and honing procedure, refer to step 8).

NOTE:

- Measure the cylinder liner with cylinder blocks separated (into cylinder block RH and cylinder block LH).
- Measurement should be performed at a temperature of 20°C (68°F).
- The cylinder bore size mark is stamped on the upper face of the cylinder block.

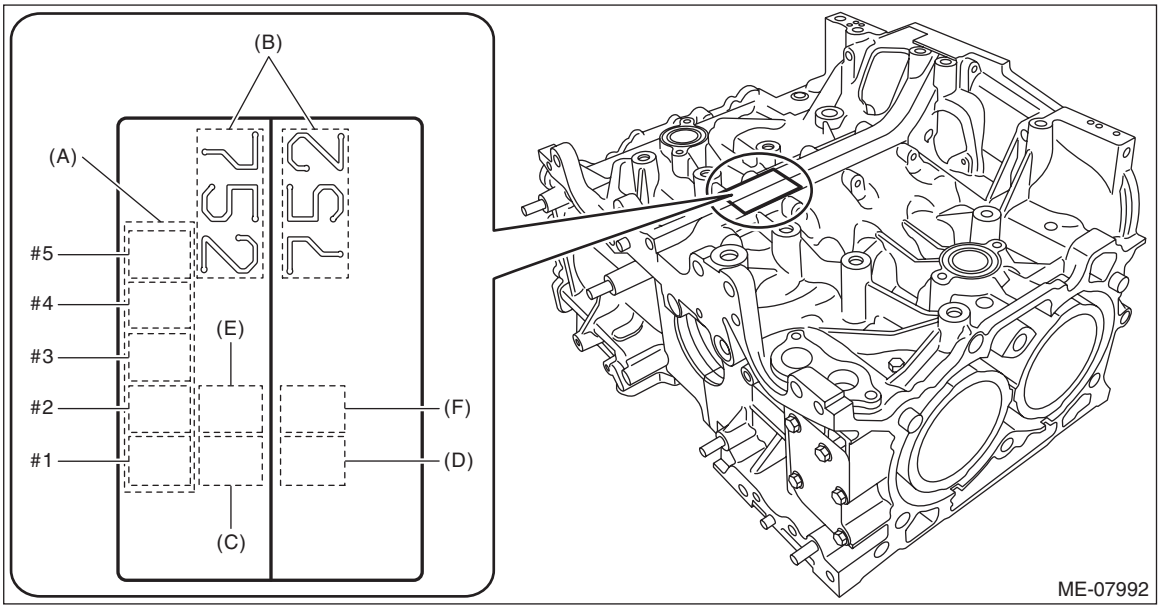

(A) Main journal size mark
(B) Cylinder block (RH) – (LH) combination mark
(C) #1 cylinder bore size mark
(D) #2 cylinder bore size mark
(E) #3 cylinder bore size mark
(F) #4 cylinder bore size mark

• Measure the inner diameter of each cylinder liner in both the thrust and piston pin directions at the heights as shown in the figure and read the value of the most worn location.

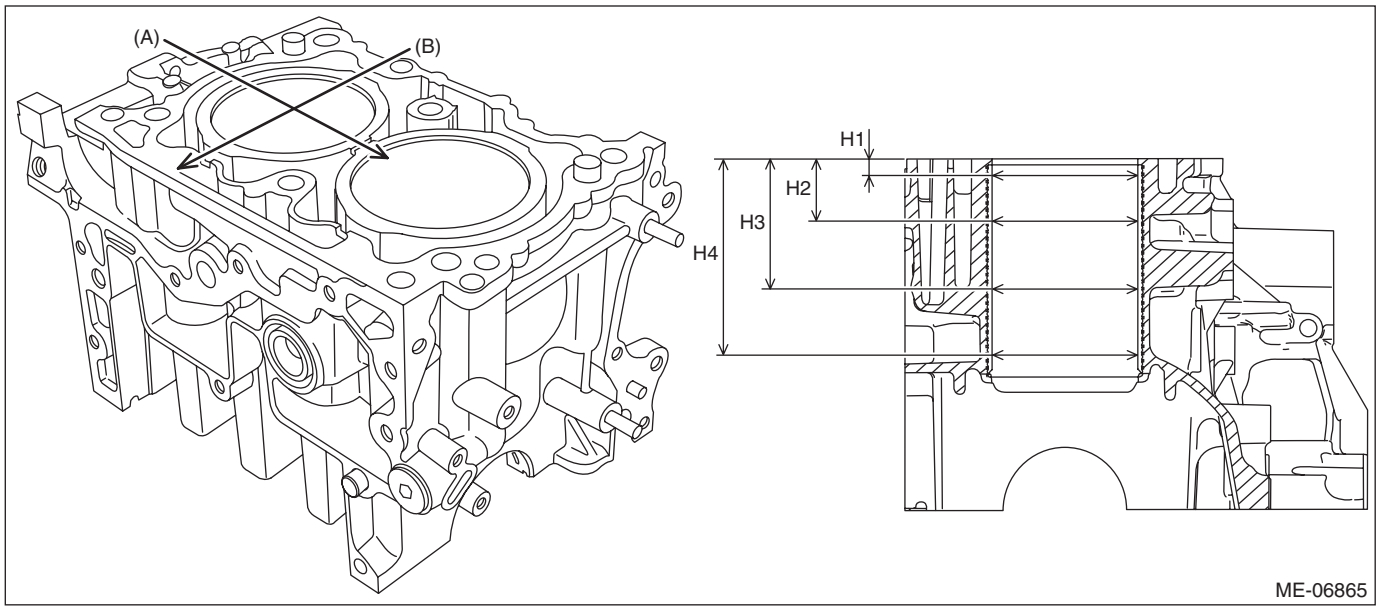

(A) Piston pin direction (B) Thrust direction

H1: 10 mm (0.3937 in) H2: 45 mm (1.7717 in) H3: 80 mm (3.1496 in)
H4: 105 mm (4.1339 in)

Inner diameter of cylinder liner:
Cylinder bore size mark A
Standard
86.005 — 86.015 mm (3.3860 — 3.3864 in)
Cylinder bore size mark B
Standard
85.995 — 86.005 mm (3.3856 — 3.3860 in)

(2) Check the outer diameter of piston with a micrometer. If it is not within the standard, replace the piston.

NOTE:
- Measurement should be performed at a temperature of 20°C (68°F).
- Measure the outer diameter of each piston in thrust direction at the height as shown in the figure.
- Standard sized pistons are classified into two grades, “A” and “B”. These grades should be used as guide lines in selecting a standard piston.
- The grade can be judged by the stamp of cylinder bore size mark on the upper face of the cylinder block.

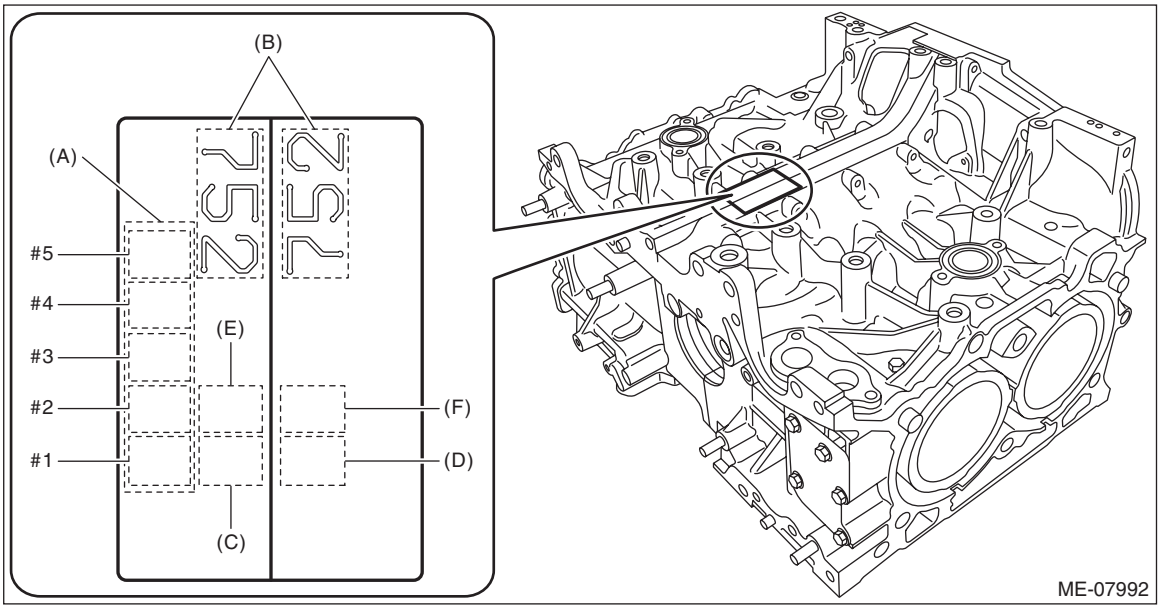

(A) Main journal size mark
(B) Cylinder block (RH) – (LH) combination mark
(C) #1 cylinder bore size mark
(D) #2 cylinder bore size mark
(E) #3 cylinder bore size mark
(F) #4 cylinder bore size mark

• If the piston is replaced, check the clearance between cylinder liner and piston in the step (3), and select a suitable sized piston.

Piston grade point H:
40.0 mm (1.57 in)

Piston outer diameter:
Standard size (grade A = cylinder bore size mark A)
Standard
85.985 — 85.995 mm (3.3852 — 3.3856 in)
Standard size (grade B = cylinder bore size mark B)
Standard
85.975 — 85.985 mm (3.3848 — 3.3852 in)

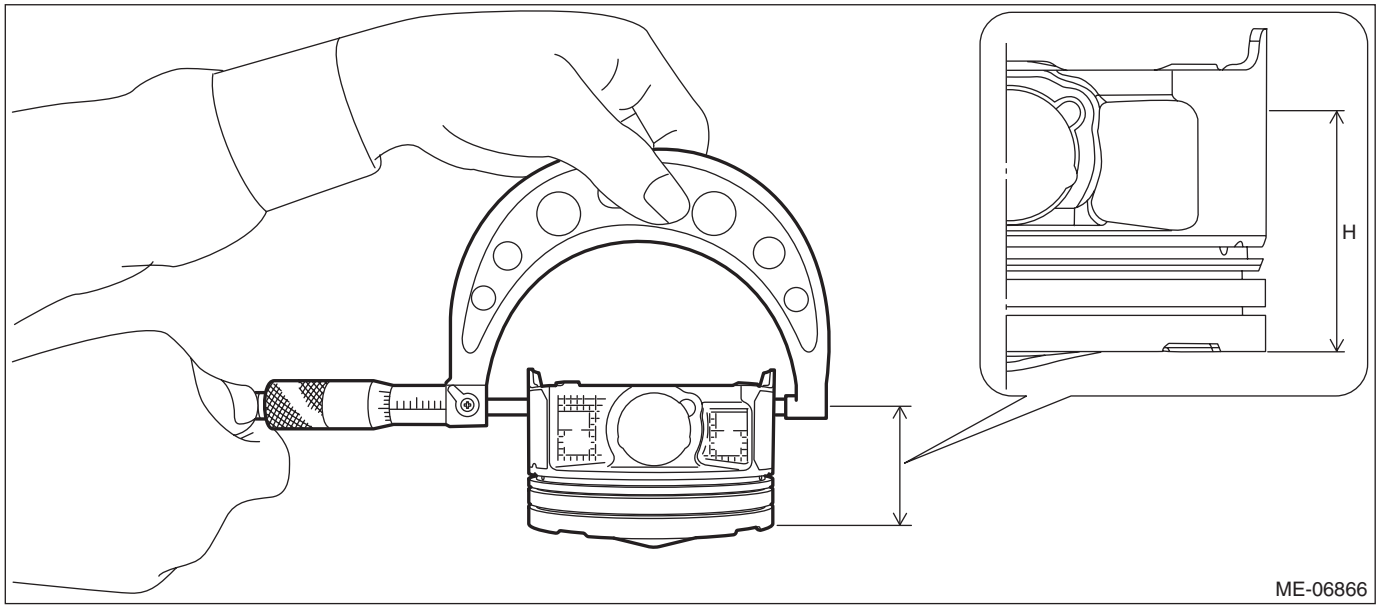

(3) Calculate the clearance between cylinder liner and piston. If it is not within the standard, perform reboring (including honing), or replace the cylinder block and piston as a set. For reboring and honing procedure, refer to step 8).

NOTE:
The clearance between cylinder liner and piston is decided by matching the cylinder block bore size mark and the grade of piston outer diameter (grade A or B).

Clearance between cylinder liner and piston:
Standard
0.010 — 0.030 mm (0.0004 — 0.0012 in)

8) Reboring and honing
(1) If any of the cylindricality, out-of-roundness, inner diameter or clearance between cylinder liner and piston is out of standard or if there is any damage on the cylinder liner, perform reboring (including honing).

CAUTION:
When any of the cylinder liner needs reboring, all other cylinder liners must be rebored at the same time, and replaced with proper size pistons.

Oversize piston outer diameter:
0.25 mm (0.0098 in) oversize
Standard
86.225 — 86.245 mm (3.3947 — 3.3955 in)
0.50 mm (0.0197 in) oversize
Standard
86.475 — 86.495 mm (3.4045 — 3.4053 in)

(2) If the inner diameter of cylinder liner exceeds the limit after reboring (including honing), replace the cylinder block and piston as a set.

NOTE:
• Immediately after reboring (including honing), the inner diameter of cylinder liner may differ from its real diameter due to temperature rise. Thus, when measuring the inner diameter of cylinder liner, wait until the temperature has cooled to 20°C (68°F).
• For the measurement of the inner diameter of cylinder liner, refer to step 7).

Inner diameter of cylinder liner boring limit (diameter):
To 86.505 mm (3.4057 in)

2. PISTON AND PISTON PIN

1) Check the piston and piston pin for wear or crack.
2) Check the snap ring for distortion or wear.
3) Check the piston ring groove for damage.
4) Check the circlip groove (A) for burr.

NOTE:
If the burr is found, remove the burr from groove.

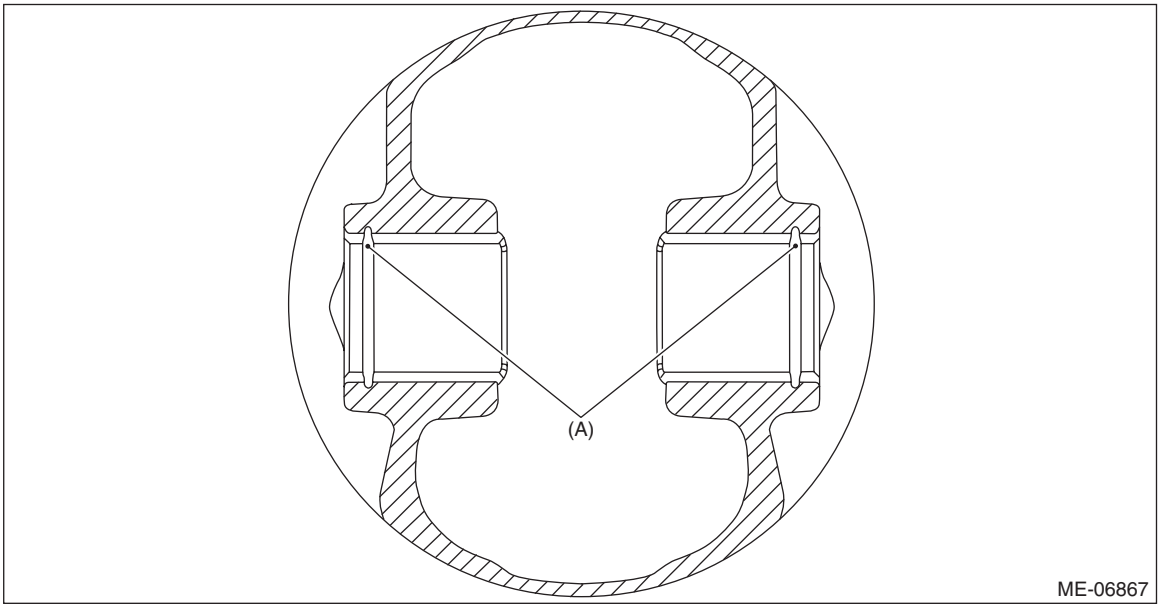

5) Check that the piston pin can be inserted into the piston with a thumb at 20°C (68°F).

6) Check the clearance between piston and piston pin. Check the clearance between piston and piston pin by measuring the inner diameter of piston pin hole and the outer diameter of piston pin respectively.

(1) Using a caliper gauge, measure the inner diameter of piston pin hole.

NOTE:
- Measurement should be performed at a temperature of 20°C (68°F).
- Measure the inner diameter of the piston pin hole at the four locations as shown in the figure, and read the value of most worn location.
- Record the measured value.

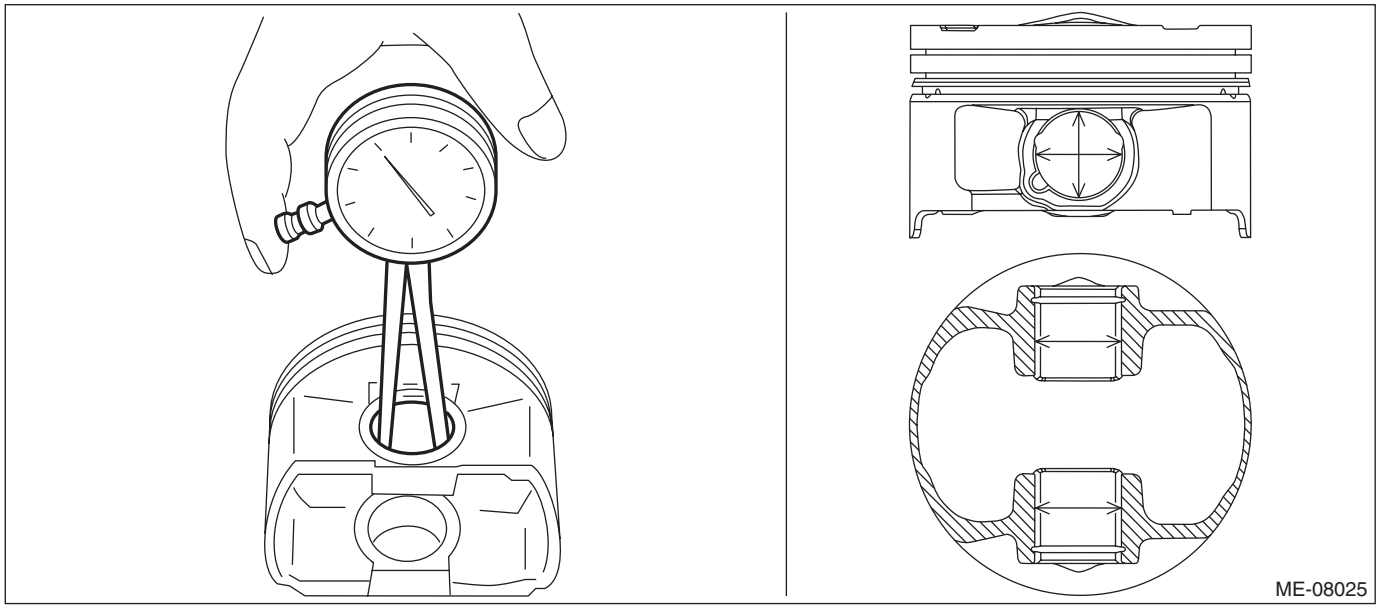

(2) Measure the outer diameter of piston pin with a micrometer.

NOTE:
- Measurement should be performed at a temperature of 20°C (68°F).
- Measure the outer diameter of the piston pin at the four locations as shown in the figure, and read the value of most worn location.
- Record the measured value.

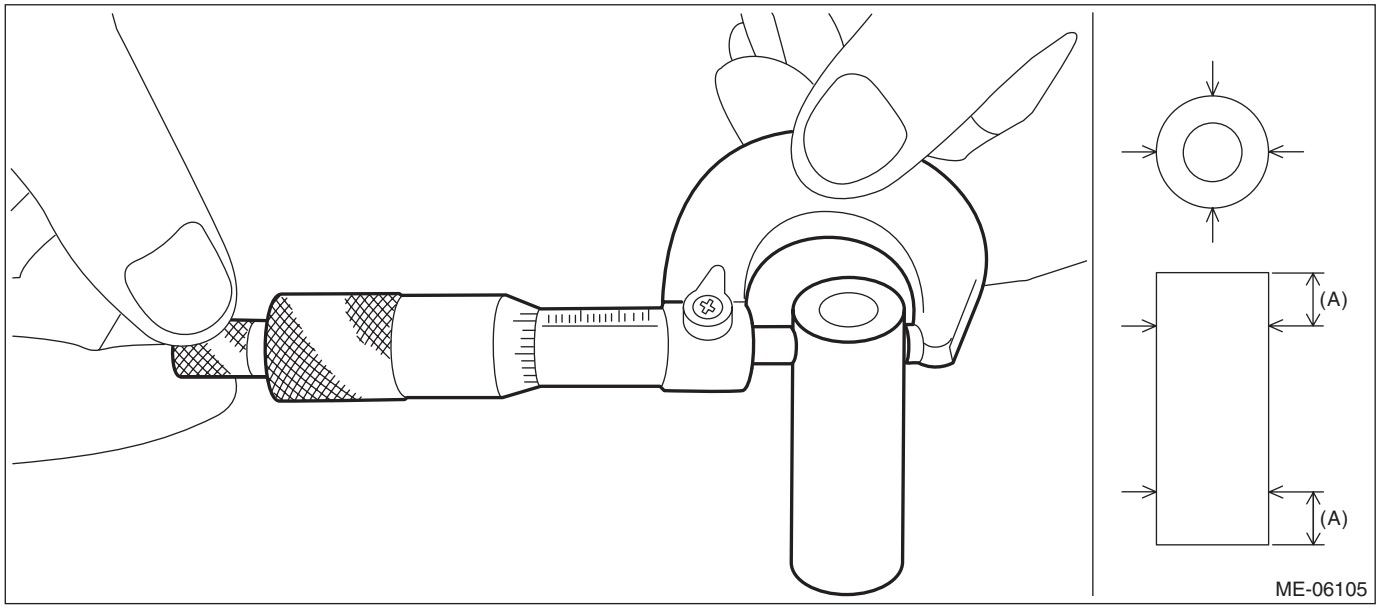

(A) 10 mm (0.394 in)

(3) Calculate the clearance between piston and piston pin. If it is not within the standard, replace the piston and piston pin as a set.

Clearance between piston and piston pin:
Standard
0.004 — 0.008 mm (0.0002 — 0.0003 in)

3. PISTON RING

1) Make sure the piston ring is not broken or damaged.
2) Using a cylindrical guide, insert the piston ring into the cylinder liner so that they are perpendicular to the cylinder wall, and check the piston ring gap using a thickness gauge. If it is not within the standard, replace the piston ring.

NOTE:
- Measurement should be performed at a temperature of 20°C (68°F).
- Use piston ring with same size as piston when replacing piston ring.

Piston ring gap:
Compression ring (top ring)
Standard
0.20 — 0.25 mm (0.0079 — 0.0098 in)
Compression ring (second ring)
Standard
0.40 — 0.50 mm (0.0157 — 0.0197 in)
Oil ring (upper rail and lower rail)
Standard
0.10 — 0.35 mm (0.0039 — 0.0138 in)

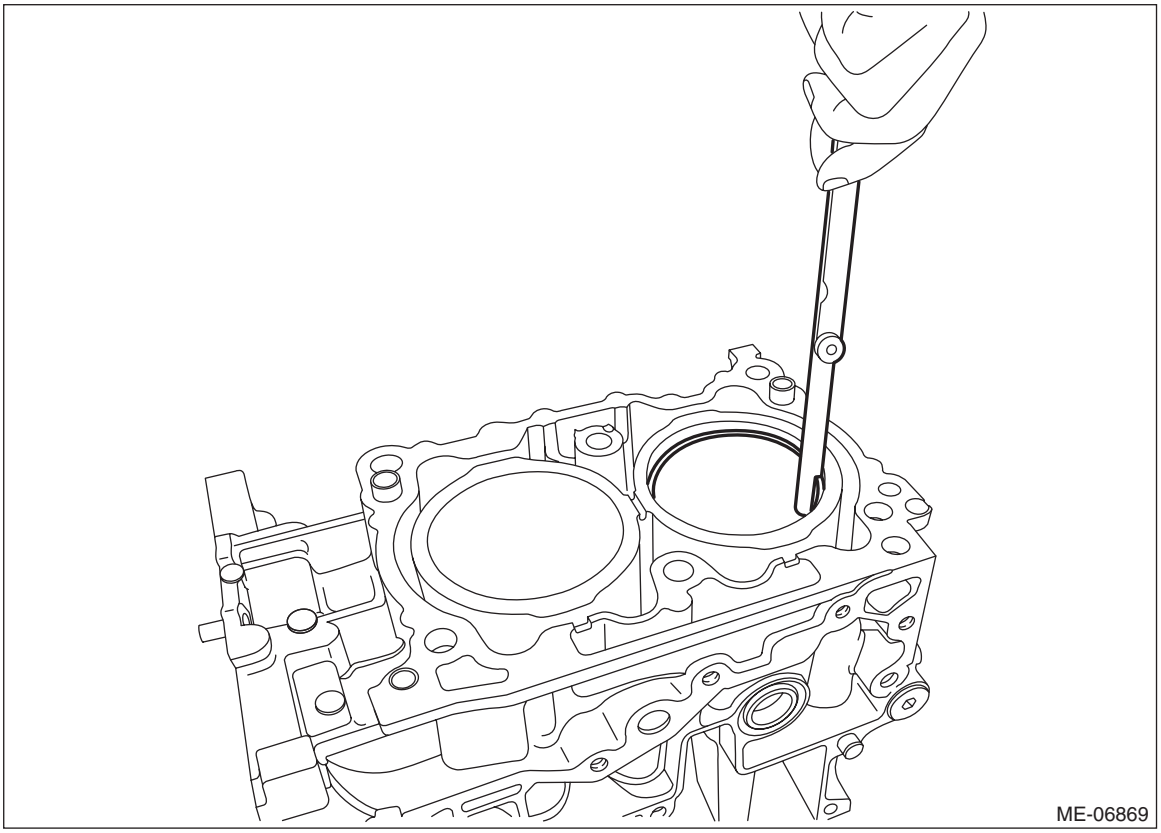

3) Fit the compression ring straight into the piston ring groove, then check the clearance between compression ring and piston with a thickness gauge. If it is not within the standard, replace the compression ring.

NOTE:
- Measurement should be performed at a temperature of 20°C (68°F).
- Before inspecting the clearance, clean the piston ring groove and compression ring.
- Use compression ring with same size as piston when replacing compression ring.

Clearance between compression ring and piston:
Top ring
Standard
0.040 — 0.080 mm (0.0016 — 0.0031 in)
Second ring
Standard
0.045 — 0.085 mm (0.0018 — 0.0033 in)

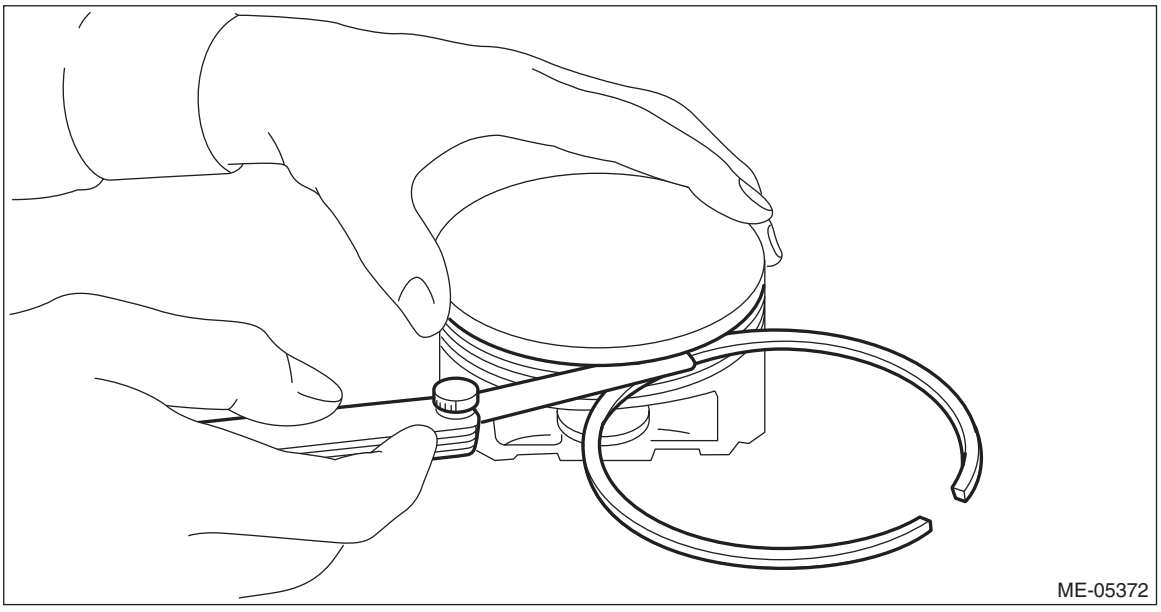

4. CONNECTING ROD AND CONNECTING ROD BEARING

1) Check for bend or twist using a connecting rod aligner. If it exceeds the limit, replace the connecting rod.

NOTE:
Measurement should be performed at a temperature of 20°C (68°F).

Bend or twist per 100 mm (3.94 in) in length:
Limit
0.10 mm (0.0039 in)

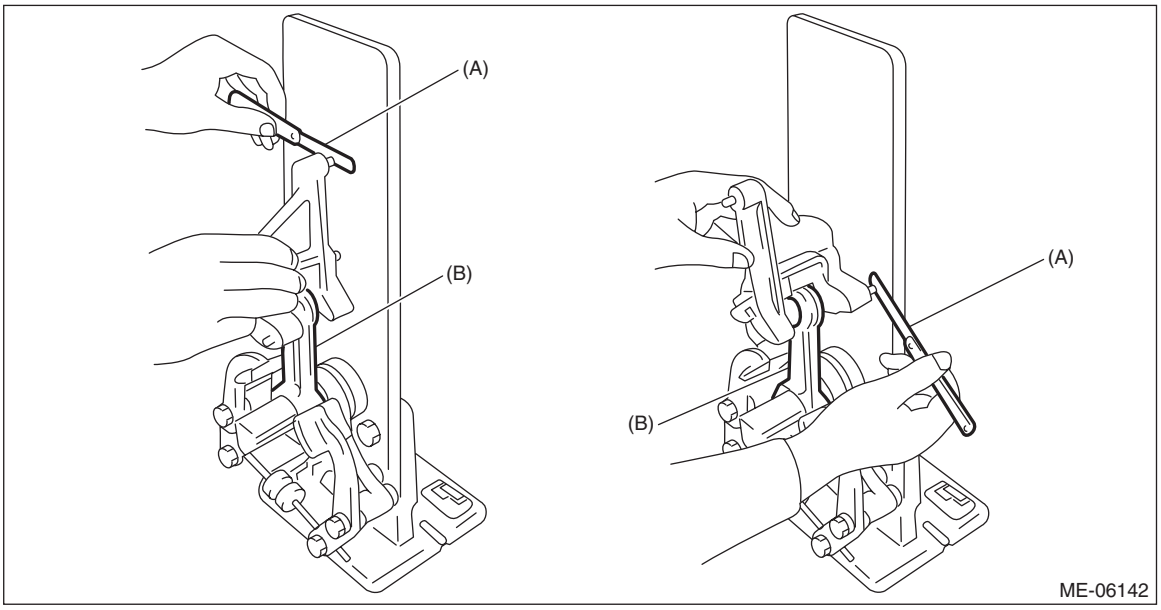

(A) Thickness gauge (B) Connecting rod

2) Check that the large or small end thrust surface of each connecting rod is not damaged.
3) Check each connecting rod bearing for scar, peeling, seizure, melting or wear, etc.
4) Check the thrust clearance of each connecting rod using a thickness gauge.

NOTE:
Measurement should be performed at a temperature of 20°C (68°F).

(1) Clean the #1 connecting rod bearing and the #1 pin of crankshaft, and apply engine oil to the #1 pin of crankshaft.
(2) Set the #1 connecting rod bearing to the #1 connecting rod and #1 connecting rod cap.
(3) Set the #1 connecting rod, #1 connecting rod cap and #1 connecting rod cap bolt to the #1 pin of crankshaft.

NOTE:
• Each connecting rod has its own mating cap. Make sure that they are assembled correctly by checking their matching symbol.
• Use a new connecting rod cap bolt.
• Apply a coat of engine oil to the #1 connecting rod cap bolt thread.

(4) Using ST, tighten the #1 connecting rod cap bolts to 10 N·m (1.0 kgf-m, 7.4 ft-lb) in numerical order as shown in the figure, then retighten the bolts to 25 N·m (2.5 kgf-m, 18.4 ft-lb) in numerical order as shown in the figure.

CAUTION:
- **Make sure to hold the crankshaft securely during work.**
- **When holding the crankshaft, be careful not to damage the crankshaft.**

ST 18270AA020 SOCKET

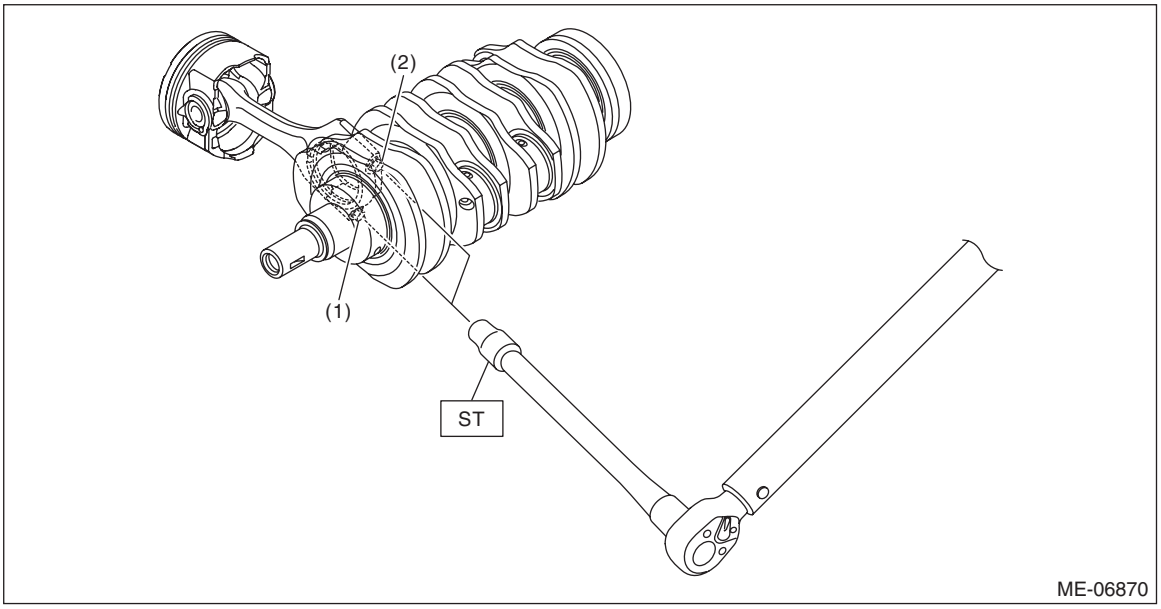

(5) Using ST and angle gauge, tighten the #1 connecting rod cap bolts with specified angle in numerical order as shown in the figure.

CAUTION:
- **Make sure to hold the crankshaft securely during work.**
- **When holding the crankshaft, be careful not to damage the crankshaft.**

NOTE:
Prevent angle gauge from rotating using a V-block, etc.
ST 18270AA020 SOCKET

Tightening angle:
$90^{\circ}{}^{+5^{\circ}}_{-0^{\circ}}$

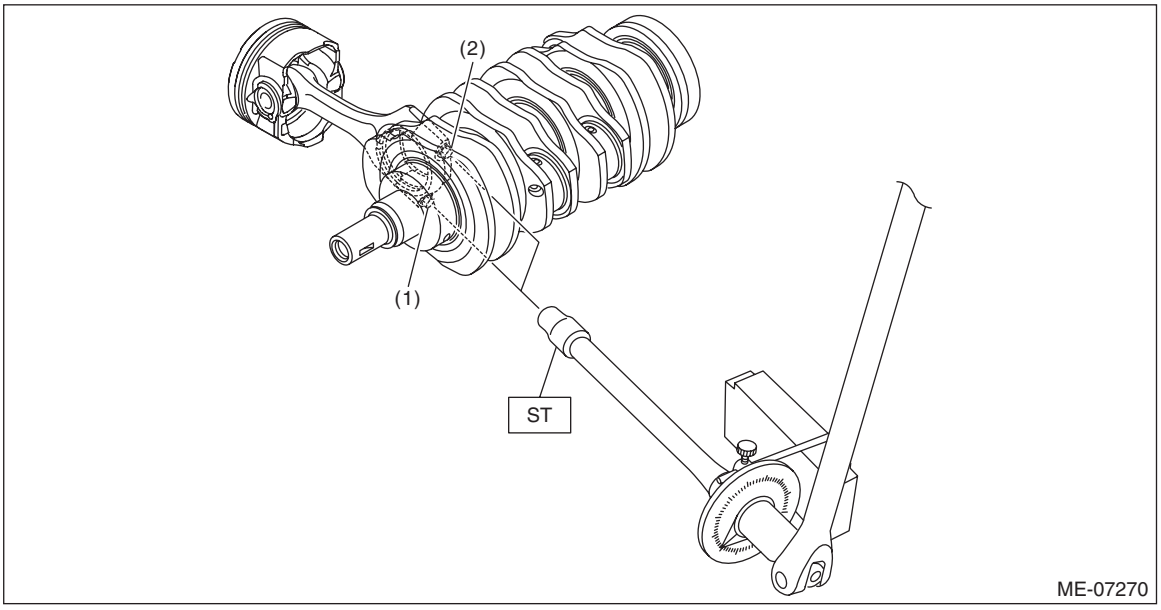

(6) In the same manner, install the #2, #3 and #4 connecting rods.
(7) Check the thrust clearance of each connecting rod using a thickness gauge. If it is not within the standard, replace the connecting rod.

NOTE:
Measure the thrust clearance of each connecting rod at several points, and replace the connecting rod if there is uneven wear.

Connecting rod thrust clearance:
Standard
0.070 — 0.330 mm (0.0028 — 0.0130 in)

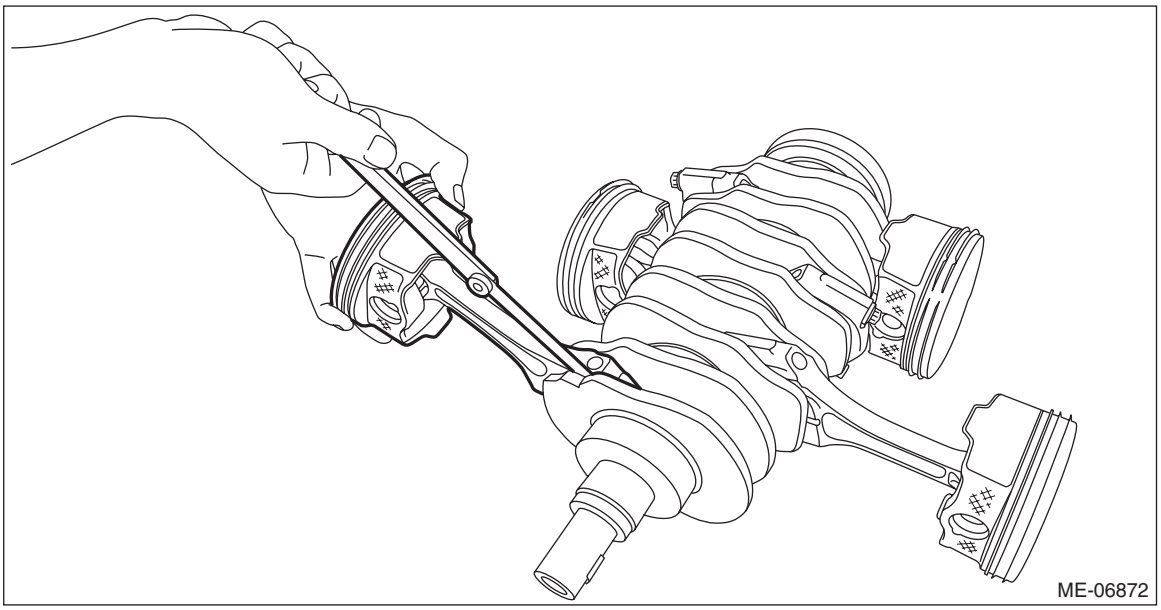

5) Check the oil clearance on each connecting rod bearing using plastigauge.

NOTE:
Measurement should be performed at a temperature of 20°C (68°F).
(1) Clean the #1 connecting rod bearing and the #1 pin of crankshaft.
(2) Set the #1 connecting rod bearing to the #1 connecting rod and #1 connecting rod cap.
(3) Place a plastigauge across the #1 pin of crankshaft, and set the #1 connecting rod, #1 connecting rod cap and #1 connecting rod cap bolt to the #1 pin of crankshaft.

NOTE:
• Each connecting rod has its own mating cap. Make sure that they are assembled correctly by checking their matching symbol.
• Use a new connecting rod cap bolt.
• Apply a coat of engine oil to the #1 connecting rod cap bolt thread.
(4) Using ST, tighten the #1 connecting rod cap bolts to 10 N·m (1.0 kgf-m, 7.4 ft-lb) in numerical order as shown in the figure, then retighten the bolts to 25 N·m (2.5 kgf-m, 18.4 ft-lb) in numerical order as shown in the figure.

CAUTION:
- **Make sure to hold the crankshaft securely during work.**
- **When holding the crankshaft, be careful not to damage the crankshaft.**
- **During tightening, be careful not to move the #1 connecting rod and the #1 connecting rod cap.**

ST 18270AA020 SOCKET

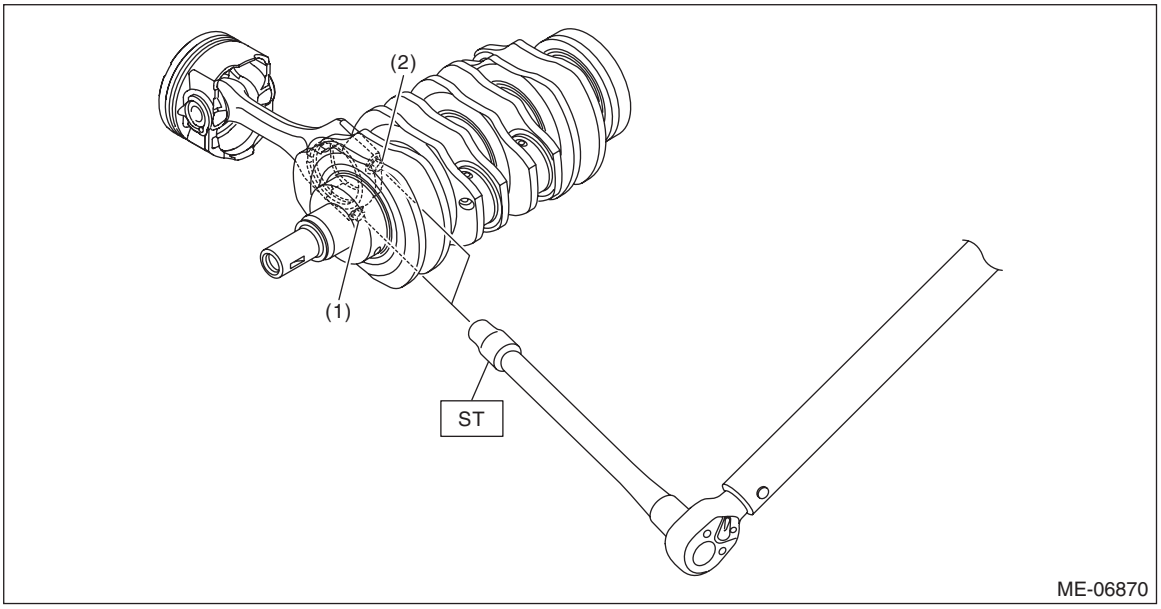

(5) Using ST and angle gauge, tighten the #1 connecting rod cap bolts with specified angle in numerical order as shown in the figure.

CAUTION:
- **Make sure to hold the crankshaft securely during work.**
- **When holding the crankshaft, be careful not to damage the crankshaft.**
- **During tightening, be careful not to move the #1 connecting rod and the #1 connecting rod cap.**

NOTE:
Prevent angle gauge from rotating using a V-block, etc.
ST 18270AA020 SOCKET

Tightening angle:
$90^{\circ}{}_{-0^{\circ}}^{+5^{\circ}}$

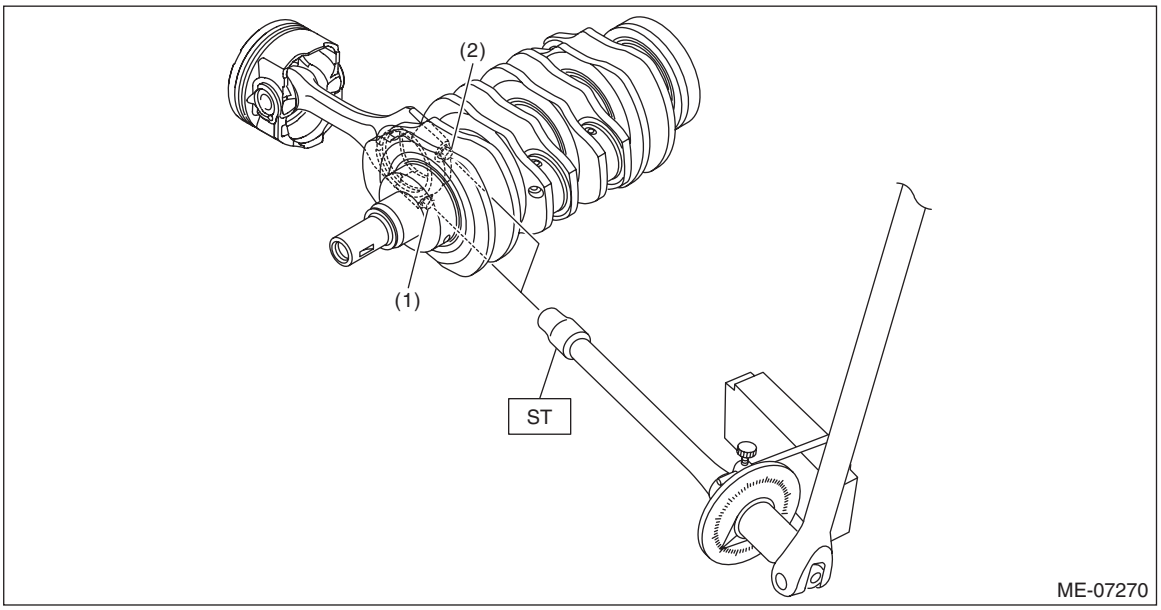

(6) Using ST, loosen the #1 connecting rod cap bolt, and remove the #1 connecting rod cap bolt and #1 connecting rod cap.

CAUTION:
- **Make sure to hold the crankshaft securely during work.**
- **When holding the crankshaft, be careful not to damage the crankshaft.**
- **During removal, be careful not to move the #1 connecting rod and the #1 connecting rod cap.**

ST 18270AA020 SOCKET

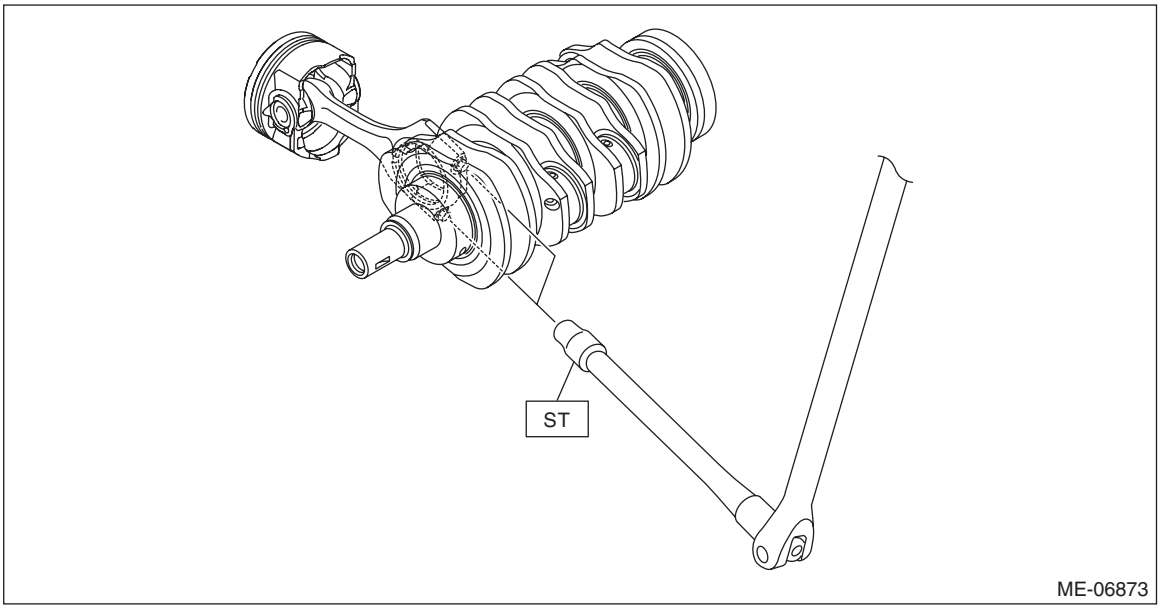

(7) Determine oil clearance of the #1 connecting rod bearing by matching the widest point of the plastigauge on #1 pin of crankshaft against scale printed on a package of the plastigauge. If it is not within the standard, replace the #1 connecting rod bearing.

NOTE:
Measure the outer diameter of crankshaft pin using micrometer, and select the suitable size connecting rod bearing when replacing the connecting rod bearing.

Unit: mm (in)

Bearing	Connecting rod bearing thickness (at center)	Crankshaft pin outer diameter
	Standard	Standard
Standard size	1.492 — 1.508 (0.0587 — 0.0594)	49.976 — 50.000 (1.9676 — 1.9685)
0.03 (0.0012) Undersize	1.511 — 1.515 (0.0595 — 0.0596)	49.946 — 49.970 (1.9664 — 1.9673)
0.05 (0.0020) Undersize	1.521 — 1.525 (0.0599 — 0.0600)	49.926 — 49.950 (1.9656 — 1.9665)
0.25 (0.0098) Undersize	1.621 — 1.625 (0.0638 — 0.0640)	49.726 — 49.750 (1.9577 — 1.9587)

Connecting rod bearing oil clearance:
Standard
0.025 — 0.055 mm (0.0010 — 0.0022 in)

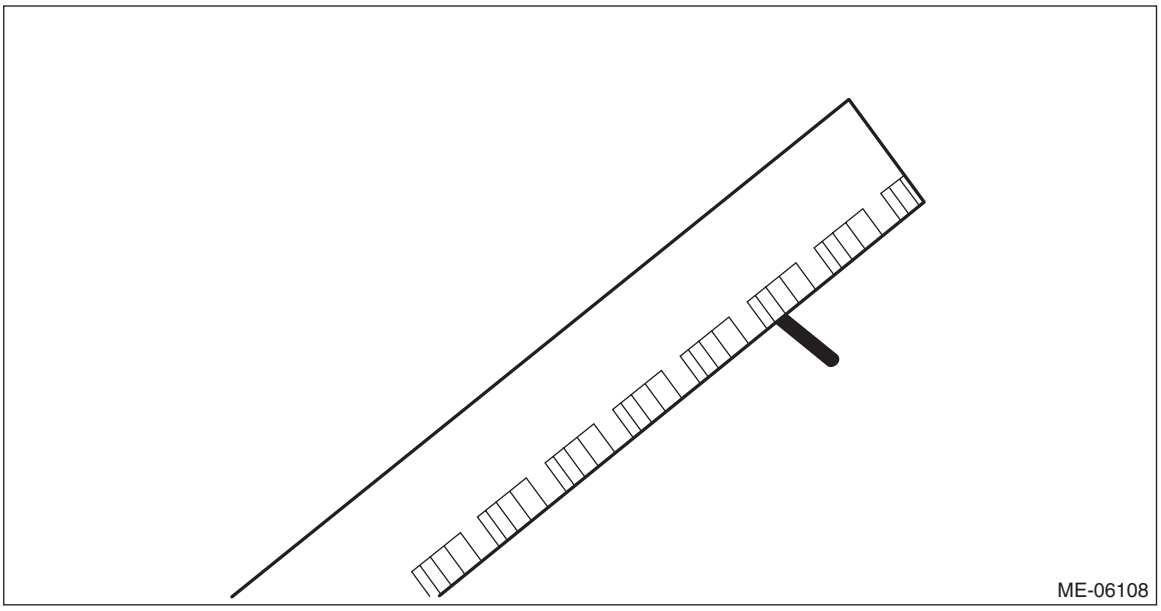

(8) Completely remove the plastigauge.
(9) In the same manner, check oil clearance of the #2, #3 and #4 connecting rod bearings.

5. PISTON PIN & CONNECTING ROD BUSHING

1) Check that the connecting rod bushing is not damaged.
2) Check the clearance between piston pin and connecting rod bushing. Check the clearance between piston pin and connecting rod bushing by measuring the outer diameter of piston pin and the inner diameter of connecting rod bushing respectively.
(1) Measure the outer diameter of piston pin with a micrometer.

NOTE:
- Measurement should be performed at a temperature of 20°C (68°F).
- Measure the outer diameter of the piston pin at the two locations as shown in the figure, and read the value of most worn location.
- Record the measured value.

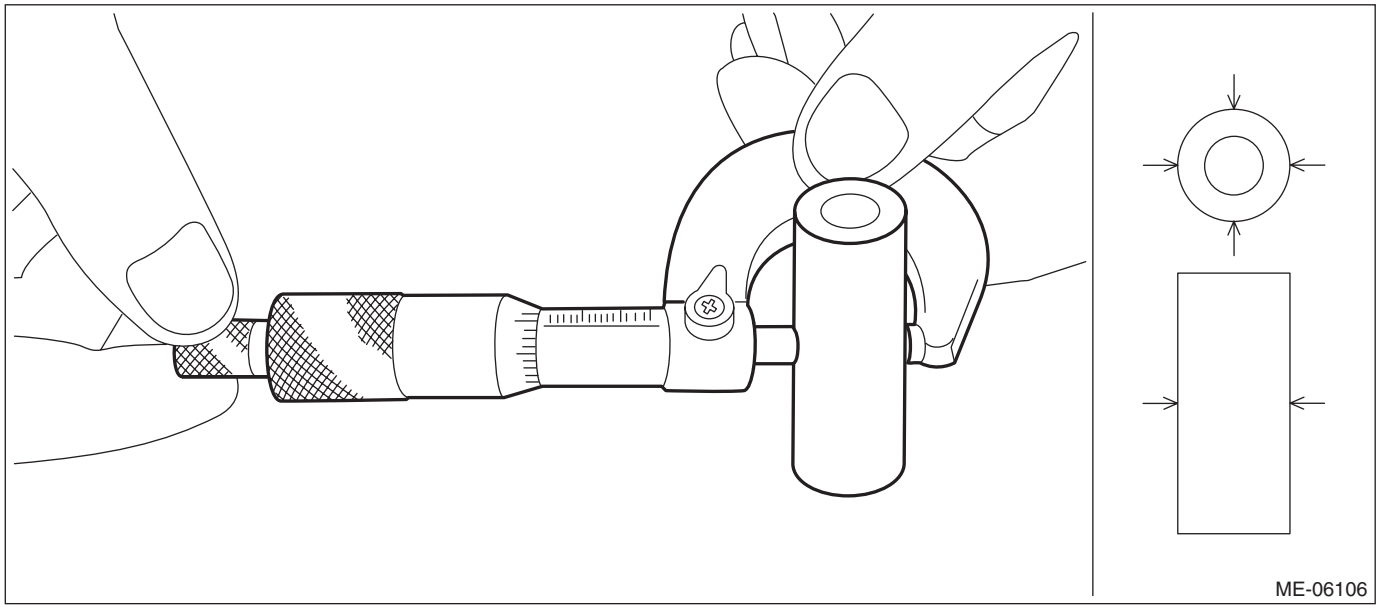

(2) Using a caliper gauge, measure the inner diameter of connecting rod bushing.

NOTE:
- Measurement should be performed at a temperature of 20°C (68°F).
- Measure the inner diameter of the connecting rod bushing at the two locations as shown in the figure, and read the value of most worn location.
- Record the measured value.

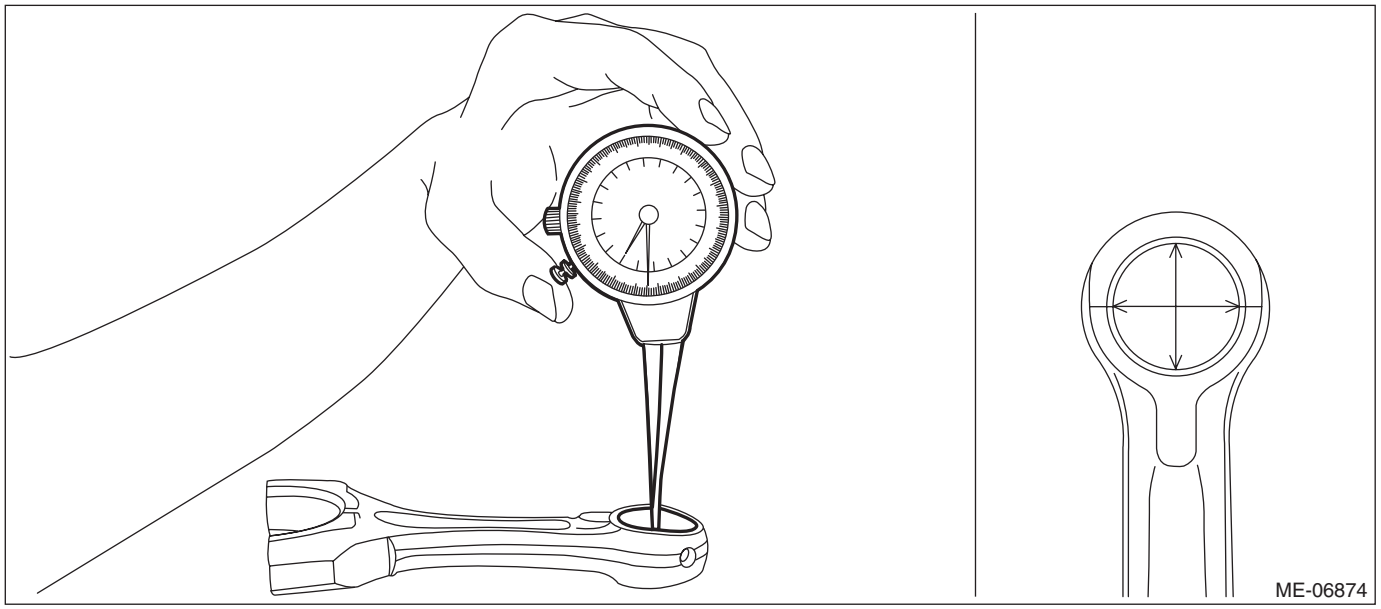

(3) Calculate the clearance between piston pin and connecting rod bushing.

Clearance between piston pin and connecting rod bushing:
Standard
0.004 — 0.026 mm (0.0002 — 0.0010 in)

3) If the clearance between piston pin and connecting rod bushing is not within the standard, replace the connecting rod and piston pin as a set.

6. CRANKSHAFT AND CRANKSHAFT BEARING

1) Clean the crankshaft completely, and check it for cracks using liquid penetrant tester.
2) Using a dial gauge, check the crankshaft bend. If it exceeds the limit, grind to correct the crankshaft journal or replace the crankshaft.

NOTE:
- Measurement should be performed at a temperature of 20°C (68°F).
- If a suitable V-block is not available, using just the #1 and #5 crankshaft bearings on cylinder block, position the crankshaft on cylinder block. Then, measure the crankshaft bend using a dial gauge.
- When grinding to correct the crankshaft journal, refer to step 3).

Crankshaft bend:
Limit
0.035 mm (0.0014 in)

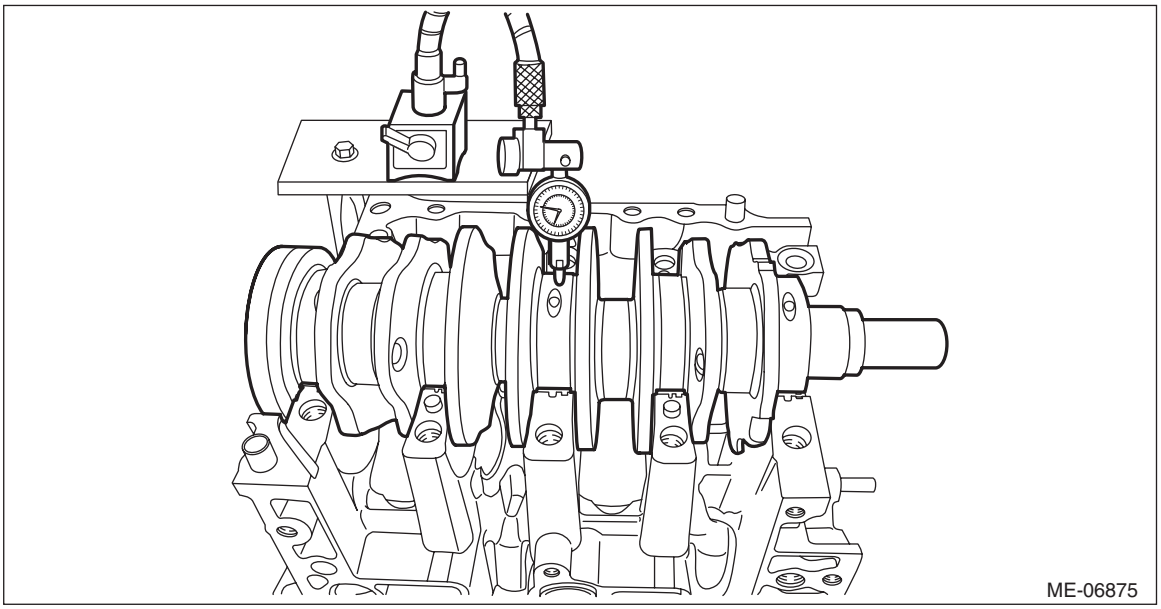

3) Using a micrometer, check the outer diameter of crankshaft pin, outer diameter of journal, cylindricality, and out-of-roundness. If it is not within the standard, replace the connecting rod bearing or crankshaft bearing, and grind to correct the crankshaft pin or journal or replace the crankshaft as required.

NOTE:
- Measurement should be performed at a temperature of 20°C (68°F).
- Select the suitable size connecting rod bearing or crankshaft bearing when replacing the connecting rod bearing or crankshaft bearing.
- When grinding to correct the crankshaft pin or journal, finish them to the suitable outer diameter as shown in the table below according to the undersize bearing to be used.

Unit: mm (in)

Bearing	Connecting rod bearing thickness (at center)	Crankshaft pin outer diameter	Crankshaft bearing thickness (at center)		Crankshaft journal outer diameter
			#1, #2, #3, #4	#5	
	Standard	Standard	Standard	Standard	Standard
Standard size	1.492 — 1.508 (0.0587 — 0.0594)	49.976 — 50.000 (1.9676 — 1.9685)	2.498 — 2.513 (0.0983 — 0.0989)	2.496 — 2.511 (0.0983 — 0.0989)	67.985 — 68.003 (2.6766 — 2.6773)
0.03 (0.0012) Undersize	1.511 — 1.515 (0.0595 — 0.0596)	49.946 — 49.970 (1.9664 — 1.9673)	2.519 — 2.522 (0.0992 — 0.0993)	2.517 — 2.520 (0.0991 — 0.0992)	67.955 — 67.979 (2.6754 — 2.6763)
0.05 (0.0020) Undersize	1.521 — 1.525 (0.0599 — 0.0600)	49.926 — 49.950 (1.9656 — 1.9665)	2.529 — 2.532 (0.0996 — 0.0997)	2.527 — 2.530 (0.0995 — 0.0996)	67.935 — 67.959 (2.6746 — 2.6755)
0.25 (0.0098) Undersize	1.621 — 1.625 (0.0638 — 0.0640)	49.726 — 49.750 (1.9577 — 1.9587)	2.629 — 2.632 (0.1035 — 0.1036)	2.627 — 2.630 (0.1034 — 0.1035)	67.735 — 67.759 (2.6667 — 2.6677)

Crankshaft pin:
Cylindricality
Limit
0.006 mm (0.0002 in)
Out-of-roundness
Limit
0.005 mm (0.0002 in)
Grinding limit (dia.)
To 49.726 mm (1.9577 in)

Crankshaft journal:
Cylindricality
Limit
0.006 mm (0.0002 in)
Out-of-roundness
Limit
0.005 mm (0.0002 in)
Grinding limit (dia.)
To 67.735 mm (2.6667 in)

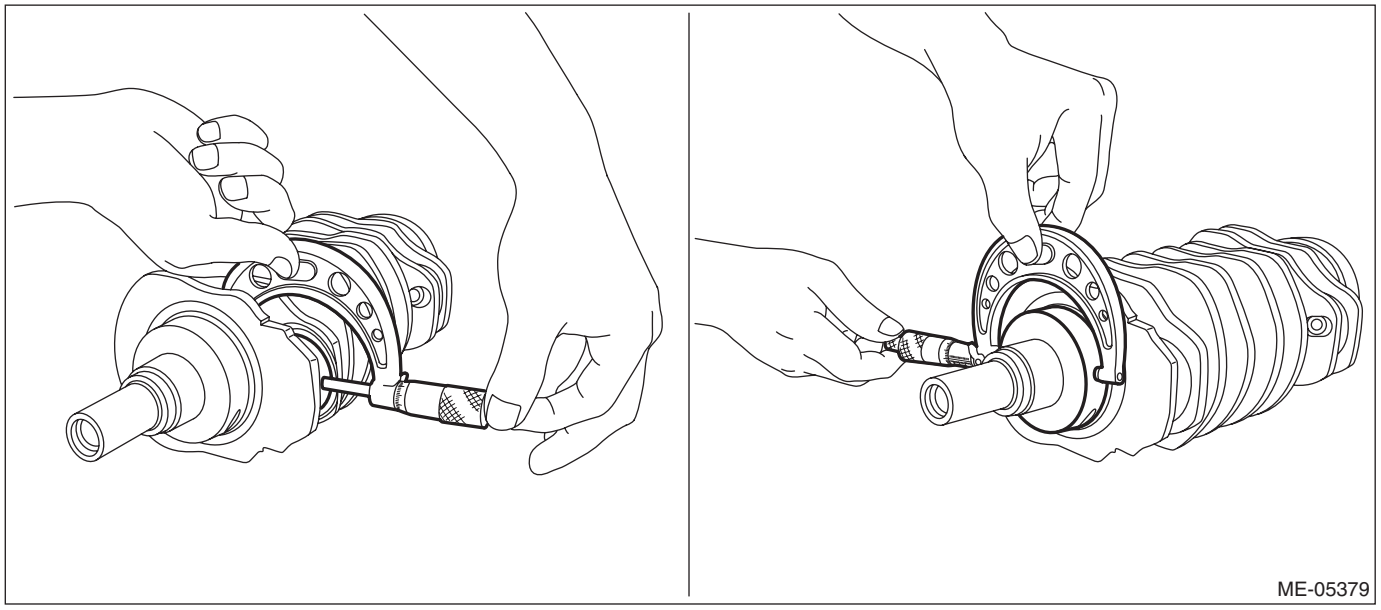

4) Inspect the crankshaft bearing for scar, peeling, seizure, melting or wear, etc.

5) Use a thickness gauge to check the thrust clearance of crankshaft at thrust of #5 crankshaft bearing. If it is not within the standard, replace the #5 crankshaft bearing.

NOTE:
- Measurement should be performed at a temperature of 20°C (68°F).
- Set all the crankshaft bearings onto the cylinder block, then mount the crankshaft on the cylinder block, and use a thickness gauge to measure the thrust clearance of crankshaft.
- Select the #5 crankshaft bearing of suitable size by referring to step 3) when replacing #5 crankshaft bearing.

Crankshaft thrust clearance:
Standard
0.130 — 0.308 mm (0.0051 — 0.0121 in)

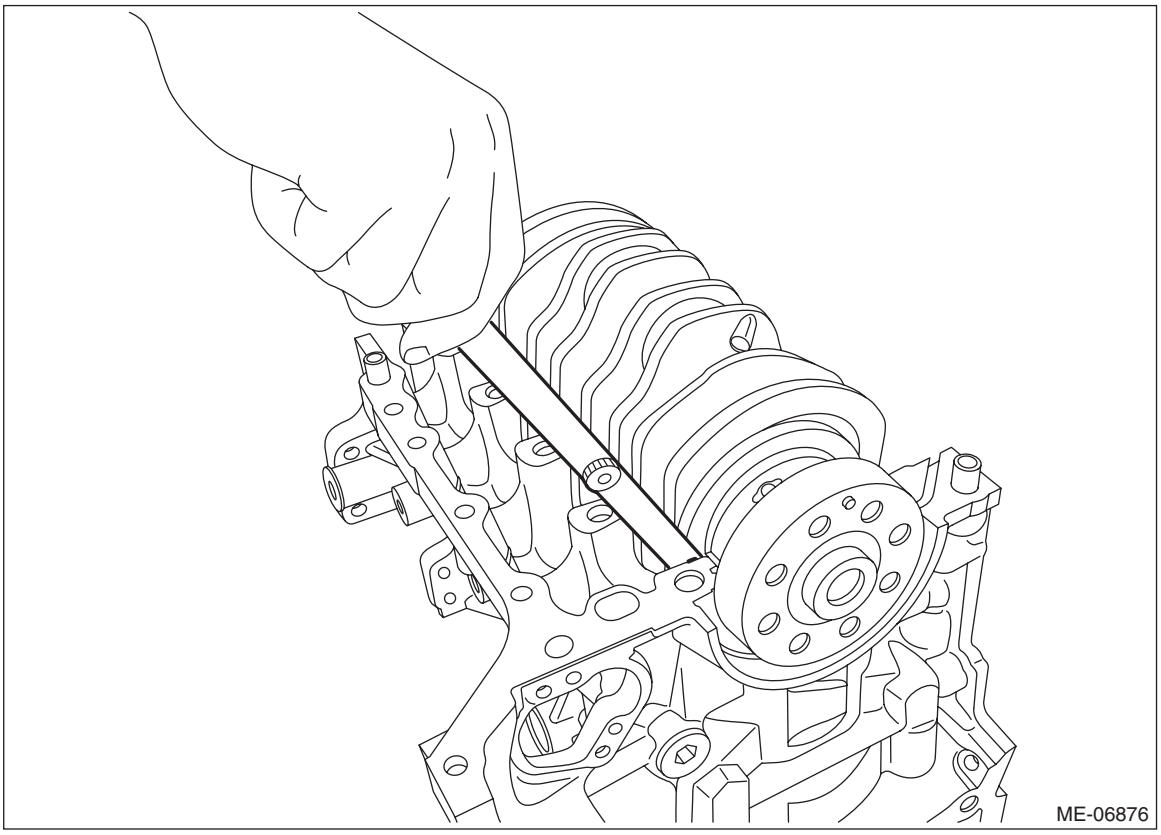

6) Check the oil clearance on each crankshaft bearing using plastigauge.

NOTE:
Measurement should be performed at a temperature of 20°C (68°F).

(1) Install the cylinder block LH to the engine stand.

CAUTION:
- **When the engine stand is not used, place a wood board wrapped with a waste cloth to prevent the knock pin damage and to stabilize the cylinder block before work.**
- **Be careful not to scratch the mating surface of cylinder block during work.**

(2) Remove the liquid gasket from cylinder block.

(3) Clean each crankshaft bearing and crankshaft journal.

(4) Set each crankshaft bearing to the cylinder block.

CAUTION:
When performing the operation of the cylinder block RH, be careful of the following.
1. Place a wood board wrapped with a waste cloth to prevent the knock pin damage and to stabilize the cylinder block before work.
2. Be careful not to scratch the mating surface of cylinder block during work.

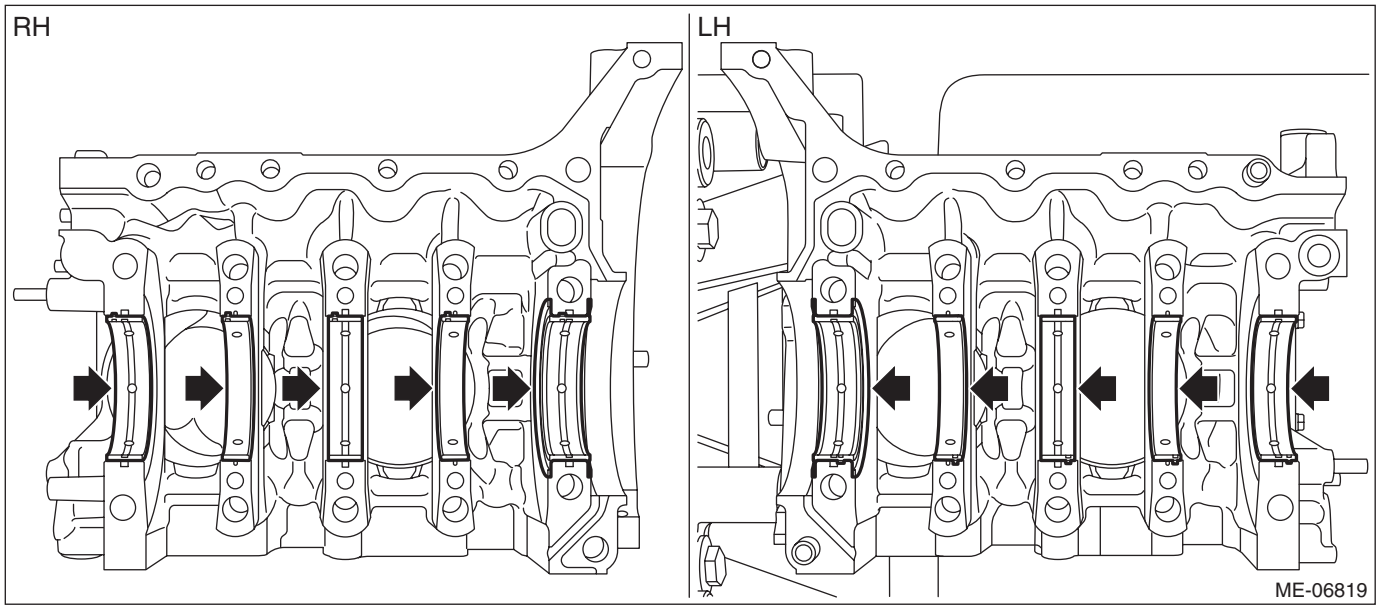

(5) Set the crankshaft to the cylinder block LH.

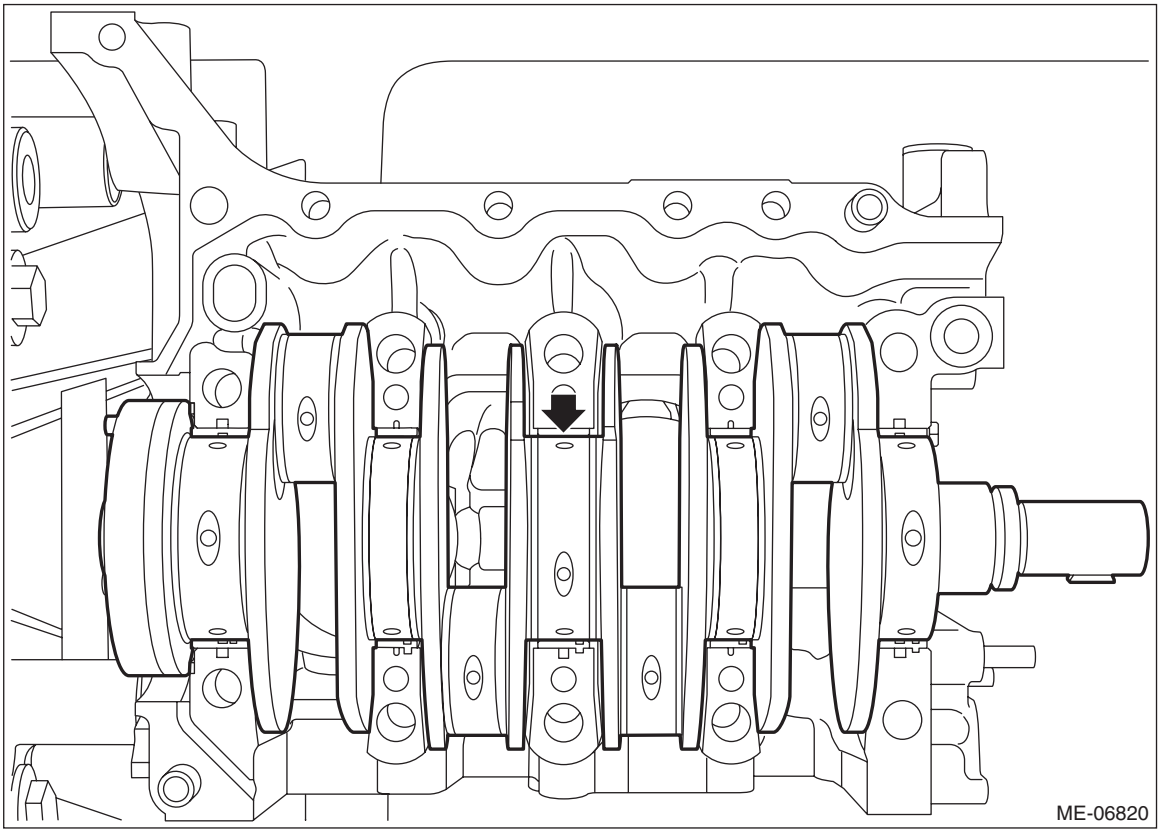

(6) Place a plastigauge across the crankshaft journals and set the cylinder block RH to the cylinder block LH.

(7) Apply a coat of engine oil to the washers and cylinder block mounting bolt threads.

NOTE:
To prevent mixture of engine oil into the water jacket, do not apply a large amount.

(8) Tighten all mounting bolts with a torque of 35 N·m (3.6 kgf-m, 25.8 ft-lb) in numerical order as shown in the figure.

CAUTION:
When tightening the mounting bolts with specified torque, hold the cylinder block LH while not holding the cylinder block RH to ensure the joint accuracy of the cylinder block.

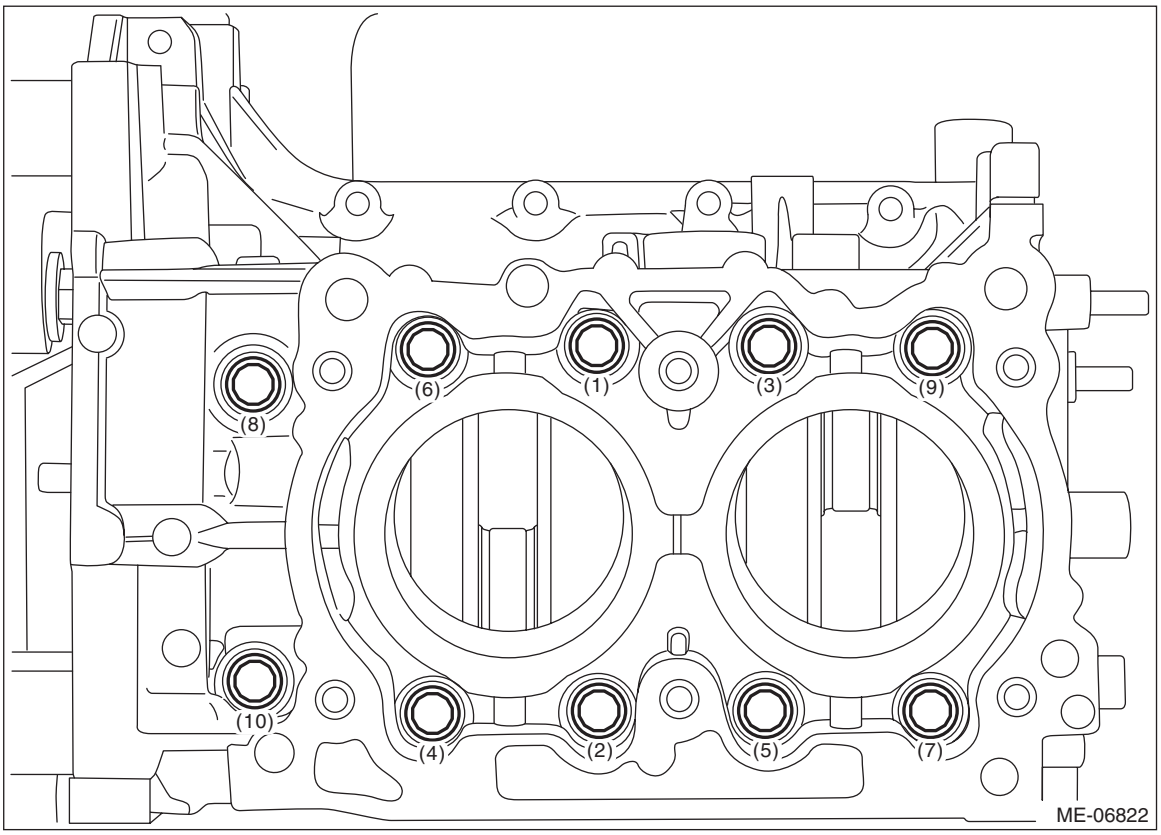

(9) Loosen all mounting bolts by 180° in numerical order as shown in the figure.

CAUTION:
When loosening the mounting bolts, hold the cylinder block LH while not holding the cylinder block RH to ensure the joint accuracy of the cylinder block.

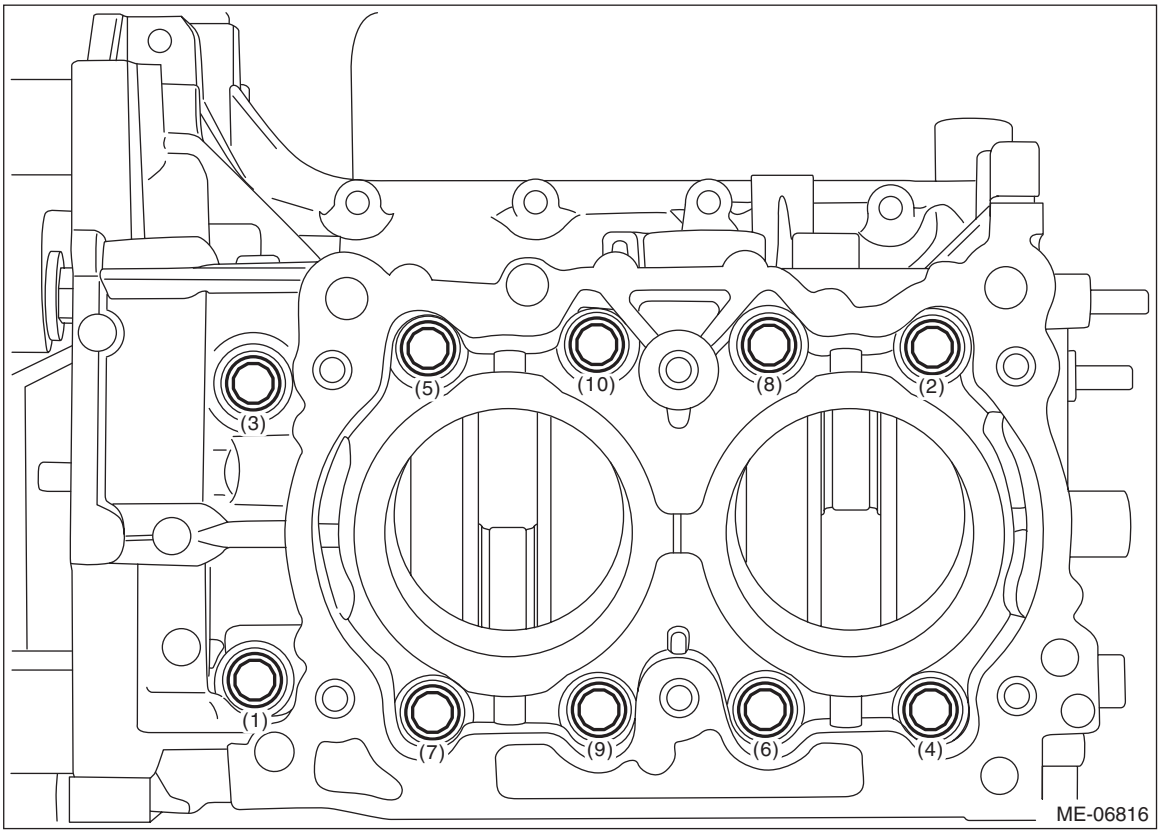

(10) Tighten all mounting bolts with a torque of 35 N·m (3.6 kgf-m, 25.8 ft-lb) in numerical order as shown in the figure.

CAUTION:
When tightening the mounting bolts with specified torque, hold the cylinder block LH while not holding the cylinder block RH to ensure the joint accuracy of the cylinder block.

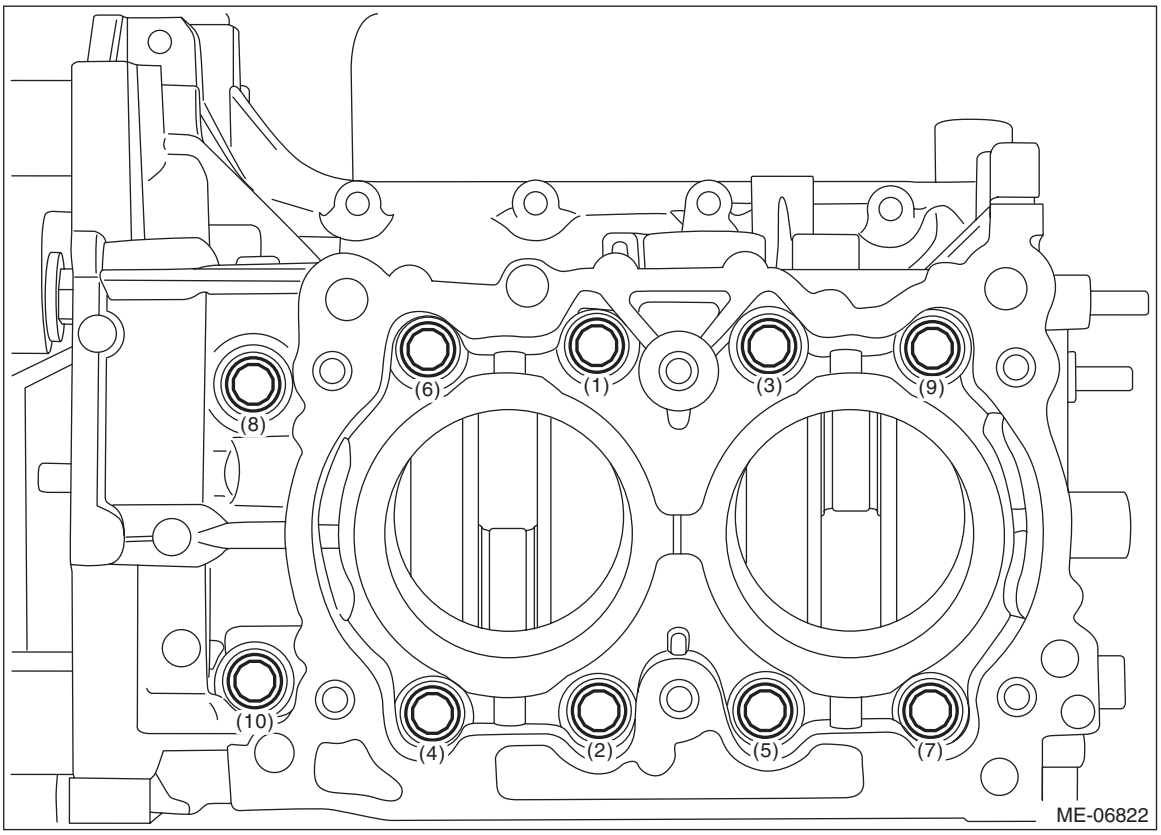

(11) Loosen the mounting bolts (4 places) by 180° in numerical order as shown in the figure.

CAUTION:
When loosening the mounting bolts, hold the cylinder block LH while not holding the cylinder block RH to ensure the joint accuracy of the cylinder block.

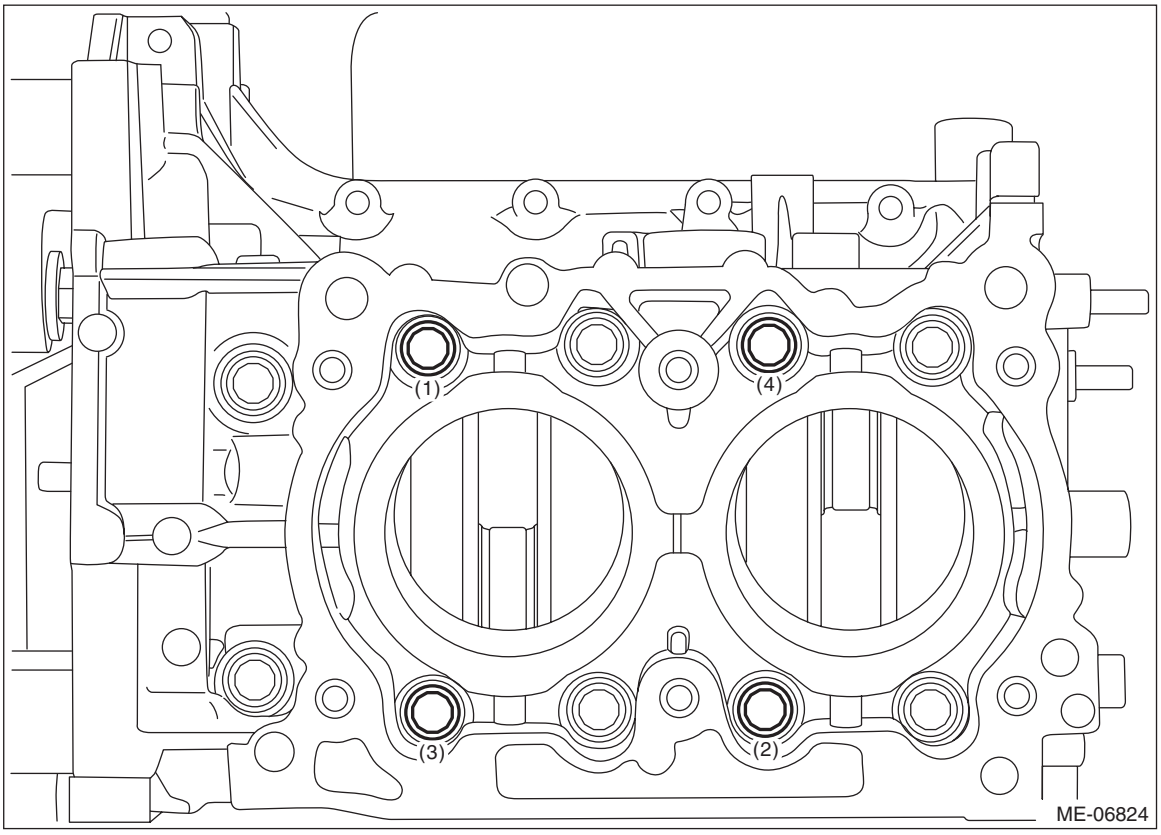

(12) Tighten the mounting bolts (4 places) with a torque of 17 N·m (1.7 kgf-m, 12.5 ft-lb) in numerical order as shown in the figure.

CAUTION:
When tightening the mounting bolts with specified torque, hold the cylinder block LH while not holding the cylinder block RH to ensure the joint accuracy of the cylinder block.

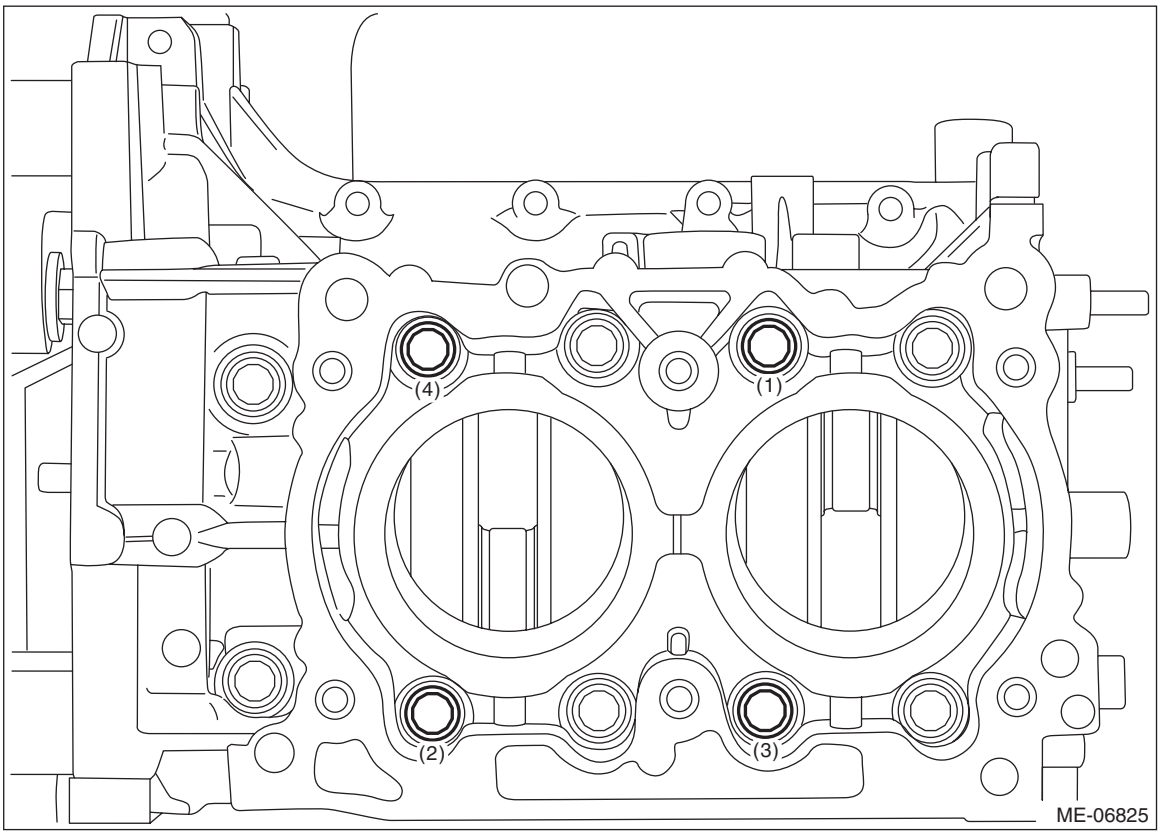

(13) Using angle gauge, tighten the mounting bolts (4 places) with specified angle in numerical order as shown in the figure.

CAUTION:
When tightening the mounting bolts with specified angle, hold the cylinder block LH while not holding the cylinder block RH to ensure the joint accuracy of the cylinder block.

Tightening angle:
60°±2°

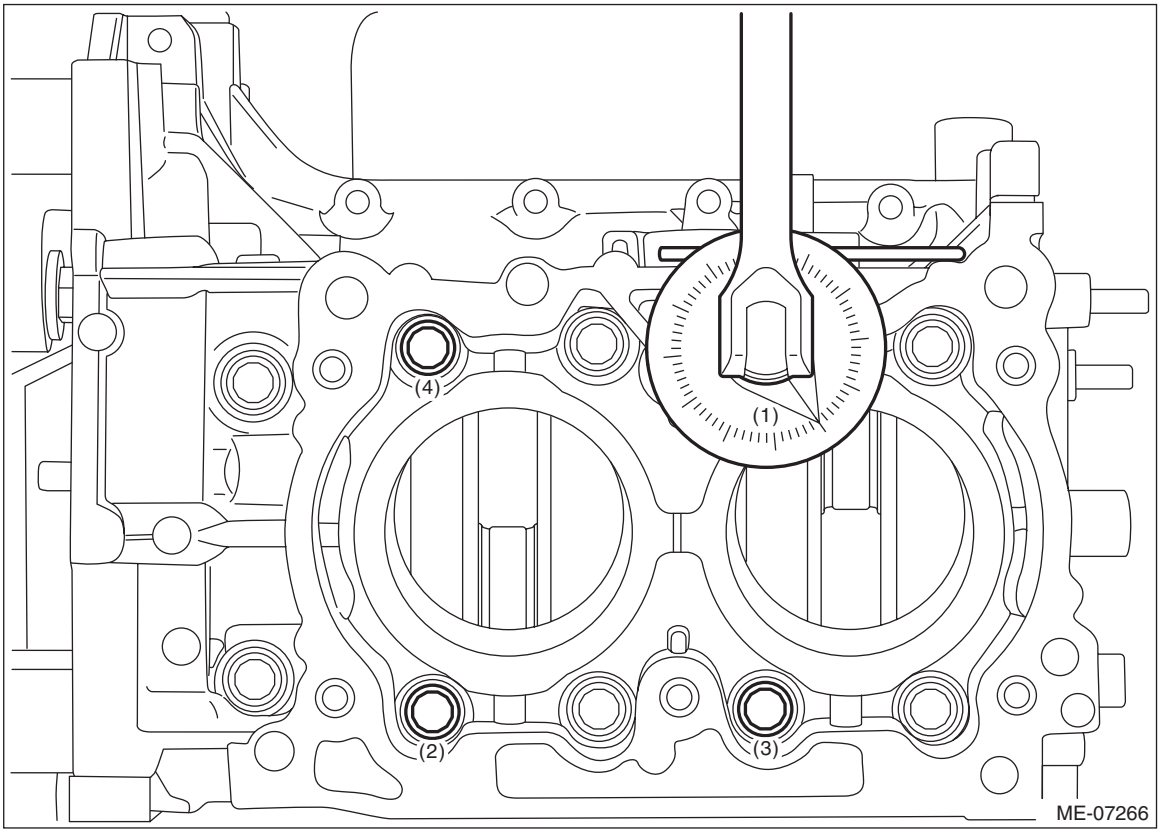

(14) Loosen the mounting bolts (6 places) by 180° in numerical order as shown in the figure.

CAUTION:
When loosening the mounting bolts, hold the cylinder block LH while not holding the cylinder block RH to ensure the joint accuracy of the cylinder block.

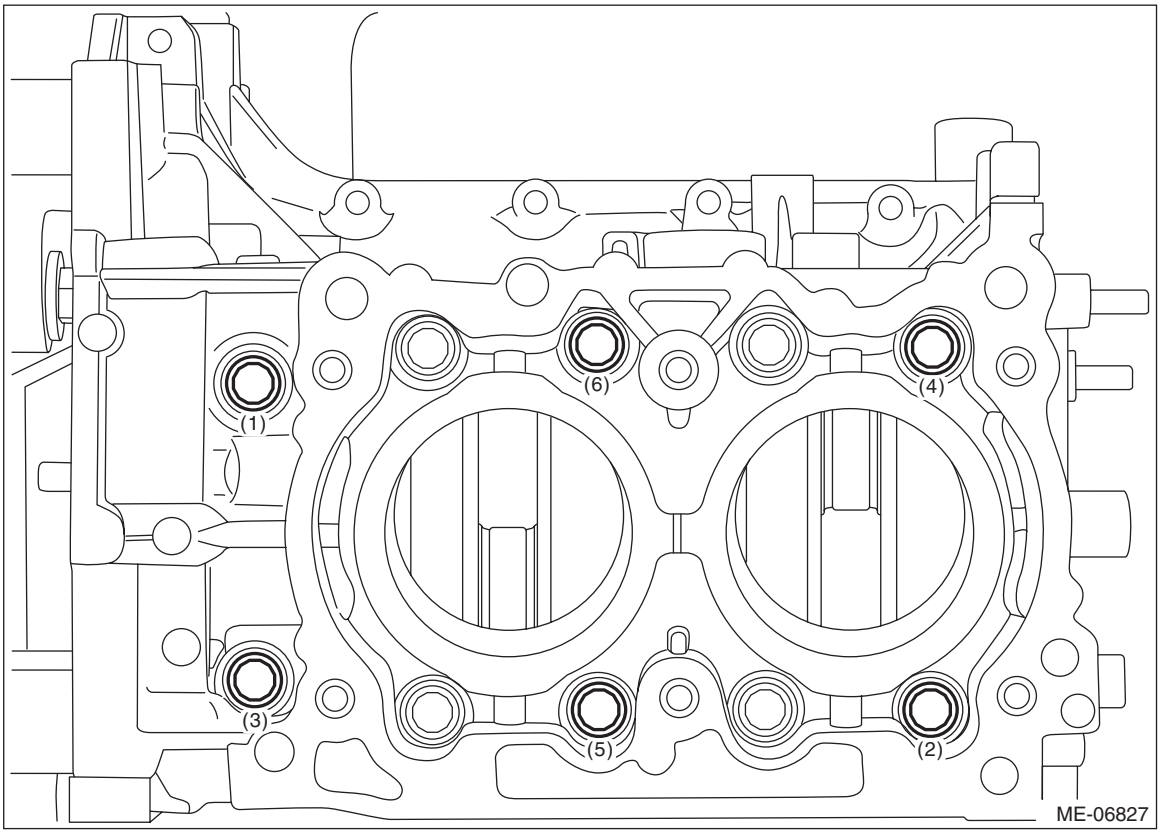

(15) Tighten the mounting bolts (6 places) with a torque of 17 N·m (1.7 kgf-m, 12.5 ft-lb) in numerical order as shown in the figure.

CAUTION:
When tightening the mounting bolts with specified torque, hold the cylinder block LH while not holding the cylinder block RH to ensure the joint accuracy of the cylinder block.

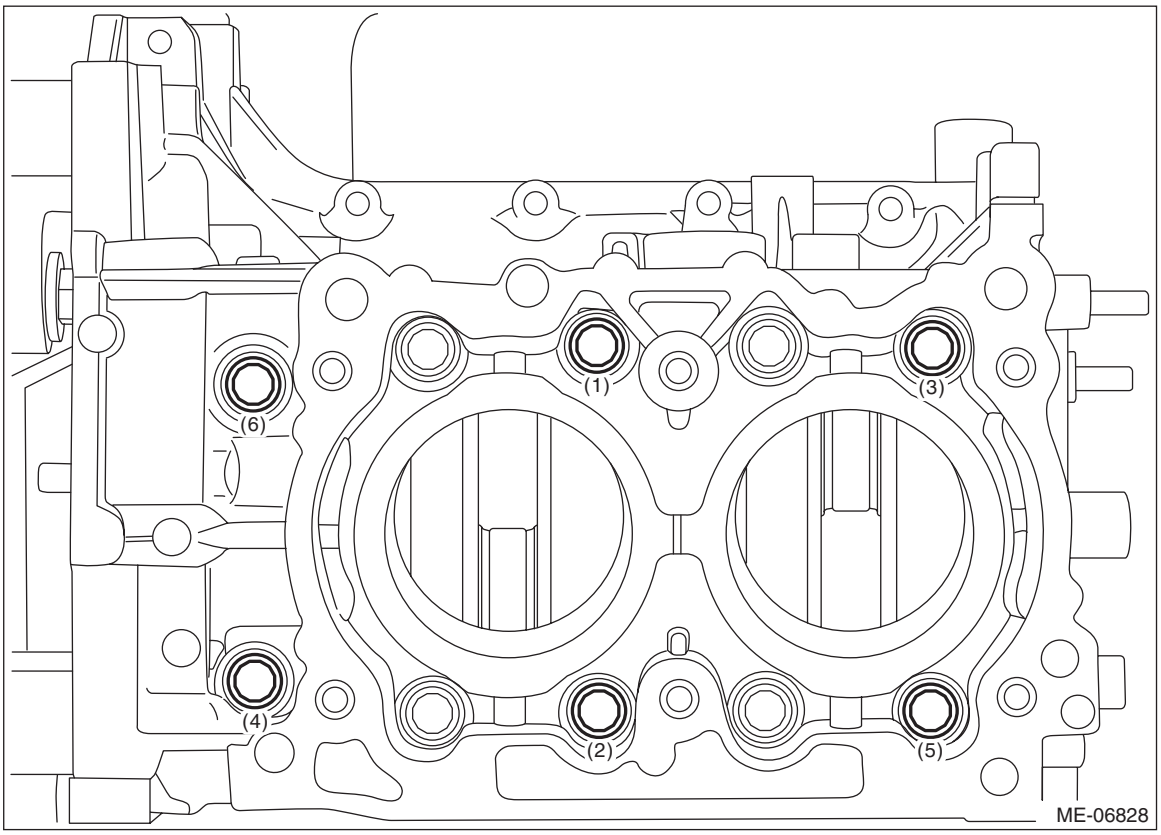

(16) Using angle gauge, tighten the mounting bolts (6 places) with specified angle in numerical order as shown in the figure.

CAUTION:
When tightening the mounting bolts with specified angle, hold the cylinder block LH while not holding the cylinder block RH to ensure the joint accuracy of the cylinder block.

Tightening angle:
60°±2°

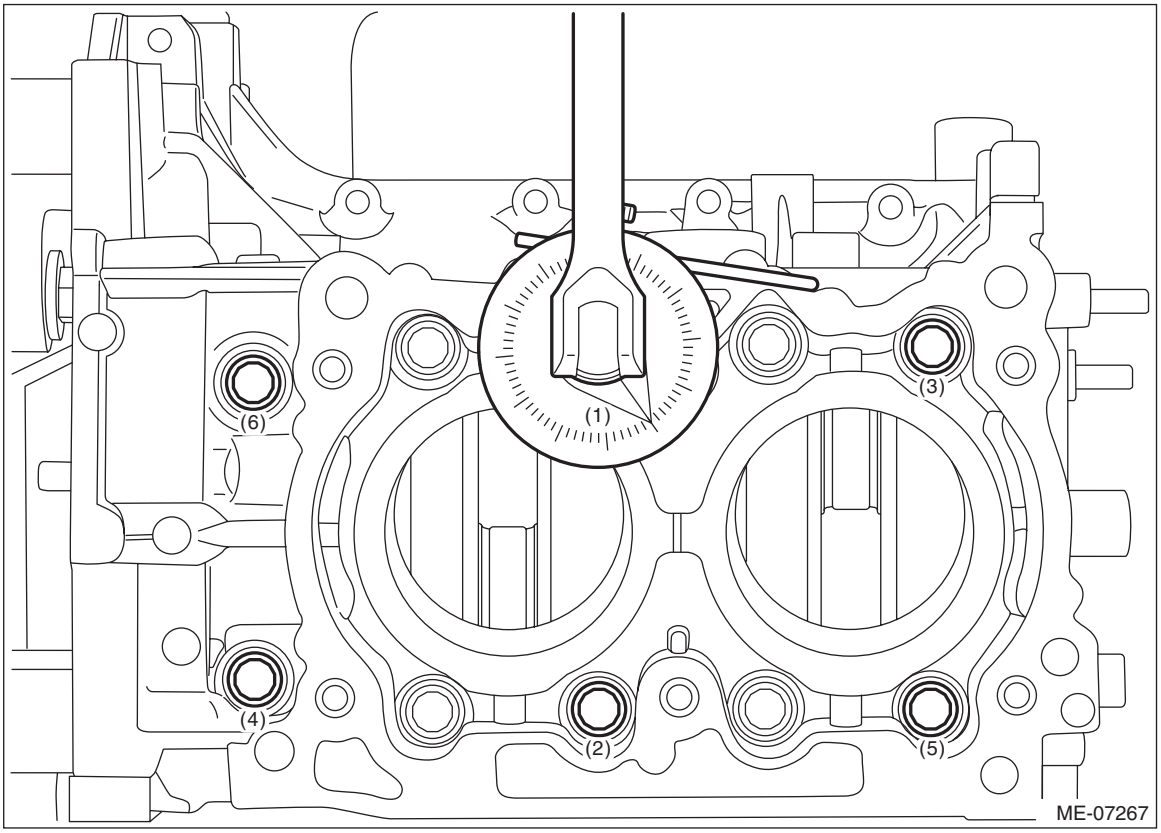

(17) Loosen the cylinder block mounting bolts in numerical order as shown in the figure, and separate the cylinder block RH and LH.

NOTE:
Lift the cylinder block RH slightly, and confirm that the crankshaft is remaining in the cylinder block LH. If the cylinder block RH is lifted carelessly when separating, the crankshaft may stick to cylinder block RH, then fall off.

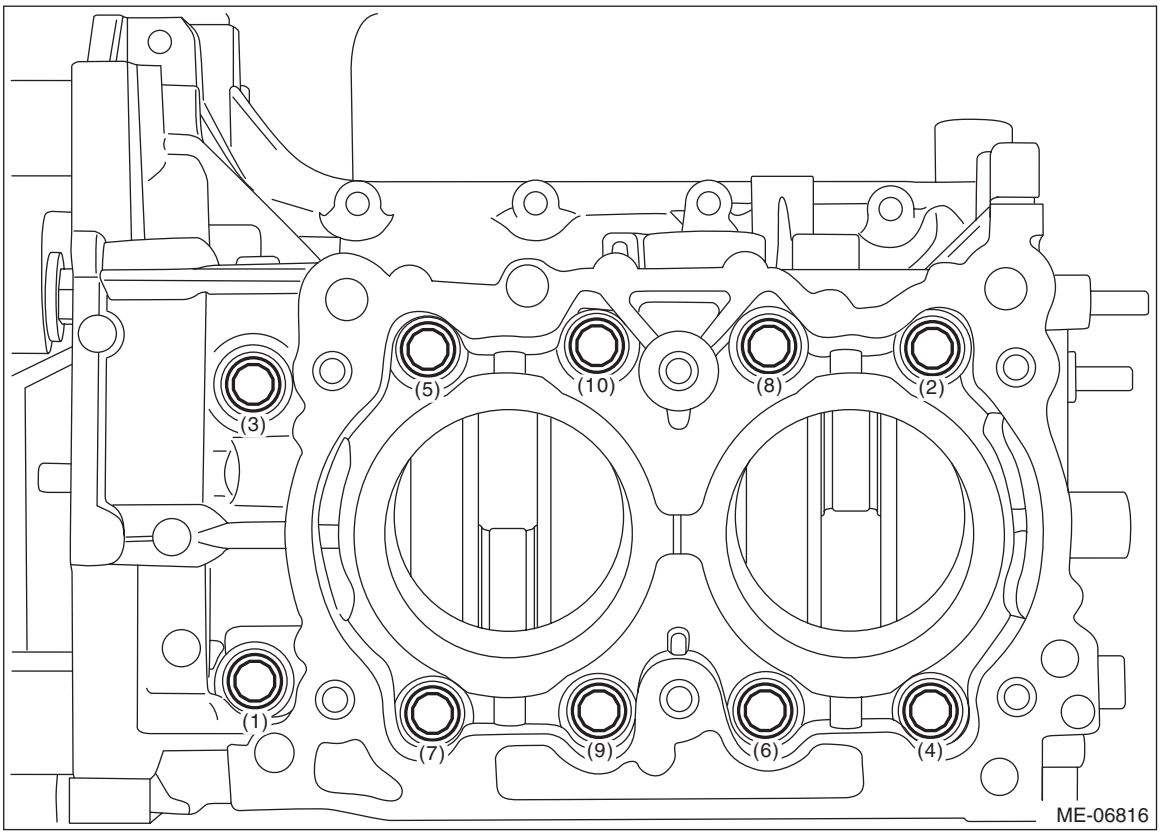

(18) Determine the crankshaft oil clearance by matching the widest point of the plastigauge on each journal against scale printed on a package of the plastigauge. If it is not within the standard, replace the crankshaft bearing, and grind to correct the crankshaft journal or replace the crankshaft as required.

NOTE:
- Select the crankshaft bearing of suitable size by referring to step 3) when replacing crankshaft bearing.
- When grinding to correct the crankshaft journal, finish it to the suitable outer diameter by referring to step 3) according to the undersize bearing to be used.

Crankshaft oil clearance:
Standard
0.013 — 0.031 mm (0.0005 — 0.0012 in)

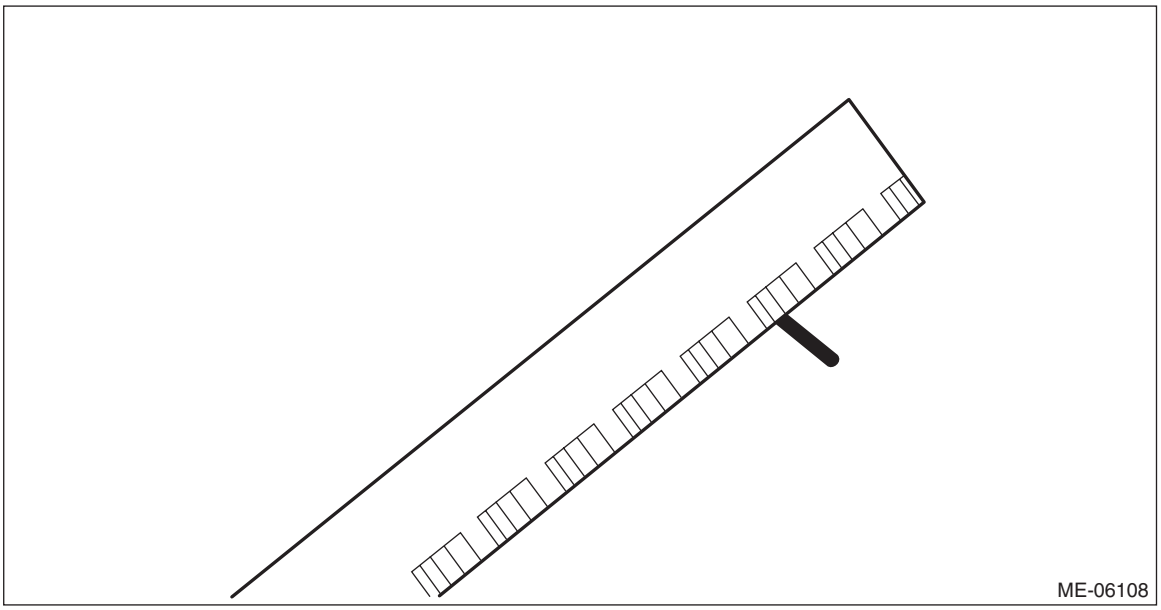

(19) Completely remove the plastigauge.

23.Intake and Exhaust Valve

A: SPECIFICATION

Refer to “Cylinder Head” for removal and installation procedures of the intake and exhaust valves.
<Ref. to ME(w/o STI)-206, REMOVAL, Cylinder Head.> <Ref. to ME(w/o STI)-208, INSTALLATION, Cylinder Head.> <Ref. to ME(w/o STI)-218, DISASSEMBLY, Cylinder Head.> <Ref. to ME(w/o STI)-221, ASSEMBLY, Cylinder Head.>

24.Piston

A: SPECIFICATION

Refer to “Cylinder Block” for removal and installation procedures of pistons.
<Ref. to ME(w/o STI)-247, REMOVAL, Cylinder Block.> <Ref. to ME(w/o STI)-258, INSTALLATION, Cylinder Block.> <Ref. to ME(w/o STI)-284, PISTON AND CONNECTING ROD, DISASSEMBLY, Cylinder Block.> <Ref. to ME(w/o STI)-288, PISTON AND CONNECTING ROD, ASSEMBLY, Cylinder Block.>

25.Connecting Rod

A: SPECIFICATION

Refer to “Cylinder Block” for removal and installation procedures of connecting rod.
<Ref. to ME(w/o STI)-247, REMOVAL, Cylinder Block.> <Ref. to ME(w/o STI)-258, INSTALLATION, Cylinder Block.> <Ref. to ME(w/o STI)-284, PISTON AND CONNECTING ROD, DISASSEMBLY, Cylinder Block.> <Ref. to ME(w/o STI)-288, PISTON AND CONNECTING ROD, ASSEMBLY, Cylinder Block.>

26.Crankshaft

A: SPECIFICATION

Refer to “Cylinder Block” for removal and installation procedures of the crankshaft.
<Ref. to ME(w/o STI)-247, REMOVAL, Cylinder Block.> <Ref. to ME(w/o STI)-258, INSTALLATION, Cylinder Block.>

27.Engine Trouble in General

A: INSPECTION

NOTE:
The “RANK” shown in the chart shows the possibilities of the cause of trouble in order from “Very often” to “Rarely”.
A — Very often
B — Sometimes
C — Rarely

Symptoms	Problem parts etc.	Possible cause	RANK
1. Engine does not start.			
1) Starter does not turn.	Starter	Defective battery-to-starter harness	B
		Defective starter switch	C
		Defective relay	C
		Defective inhibitor switch	C
		Defective clutch start switch	C
		Defective starter	B
	Battery	Improper connection of terminal	A
		Run-down battery	A
		Defective charging system	B
	Friction	Seizure of crankshaft and connecting rod bearing	C
		Seized camshaft	C
		Seized or stuck piston and cylinder	C
	Immobilizer system <Ref. to IM(diag)-2, Basic Diagnostic Procedure.>		A
2) Initial combustion does not occur.	Starter	Defective starter	C
	Engine control system <Ref. to EN(w/o STI)(diag)-2, Basic Diagnostic Procedure.>		A
	Fuel line	Defective fuel pump and relay	A
		Clogged fuel line	C
		Lack of fuel or insufficient fuel	B
	Timing chain	Trouble	B
		Defective timing	B
	Compression	Incorrect cam clearance	C
		Loosened spark plug or defective gasket	C
		Loosened cylinder head bolt or defective cylinder head gasket	C
		Improper valve sealing	C
		Defective valve stem	C
		Worn or broken valve spring	B
		Worn or stuck piston rings, cylinder liner and piston	C
		Incorrect valve timing	B
		Improper engine oil (low viscosity)	B

Symptoms	Problem parts etc.	Possible cause	RANK
3) Initial combustion occurs.	Engine control system <Ref. to EN(w/o STI)(diag)-2, Basic Diagnostic Procedure.>		A
	Intake system	Defective intake manifold gasket	B
		Defective throttle body gasket	B
	Fuel line	Defective fuel pump and relay	C
		Clogged fuel line	C
		Lack of fuel or insufficient fuel	B
	Timing chain	Trouble	B
		Defective timing	B
	Compression	Incorrect cam clearance	C
		Loosened spark plug or defective gasket	C
		Loosened cylinder head bolt or defective cylinder head gasket	C
		Improper valve sealing	C
		Defective valve stem	C
		Worn or broken valve spring	B
		Worn or stuck piston rings, cylinder liner and piston	C
		Incorrect valve timing	B
		Improper engine oil (low viscosity)	B
4) Engine stalls after initial combustion.	Engine control system <Ref. to EN(w/o STI)(diag)-2, Basic Diagnostic Procedure.>		A
	Intake system	Loosened or cracked intake duct	B
		Loosened or cracked PCV hose	C
		Loosened or cracked vacuum hose	C
		Defective intake manifold gasket	B
		Defective throttle body gasket	B
		Dirty air cleaner element	C
	Fuel line	Clogged fuel line	C
		Lack of fuel or insufficient fuel	B
	Timing chain	Trouble	B
		Defective timing	B
	Compression	Incorrect cam clearance	C
		Loosened spark plug or defective gasket	C
		Loosened cylinder head bolt or defective cylinder head gasket	C
		Improper valve sealing	C
		Defective valve stem	C
		Worn or broken valve spring	B
		Worn or stuck piston rings, cylinder and piston	C
		Incorrect valve timing	B
		Improper engine oil (low viscosity)	B

Symptoms	Problem parts etc.	Possible cause	RANK
2. Rough idle and engine stall	Engine control system <Ref. to EN(w/o STI)(diag)-2, Basic Diagnostic Procedure.>		A
	Intake system	Loosened or cracked intake duct	A
		Loosened or cracked PCV hose	A
		Loosened or cracked vacuum hose	A
		Defective intake manifold gasket	B
		Defective throttle body gasket	B
		Defective PCV valve	C
		Loosened oil filler cap	B
		Dirty air cleaner element	C
	Fuel line	Defective fuel pump and relay	C
		Clogged fuel line	C
		Lack of fuel or insufficient fuel	B
	Timing chain	Defective timing	C
	Compression	Incorrect cam clearance	B
		Loosened spark plug or defective gasket	B
		Loosened cylinder head bolt or defective cylinder head gasket	B
		Improper valve sealing	B
		Defective valve stem	C
		Worn or broken valve spring	B
		Worn or stuck piston rings, cylinder and piston	B
		Incorrect valve timing	A
		Improper engine oil (low viscosity)	B
	Lubrication system	Incorrect oil pressure	B
		Defective rocker cover gasket	C
	Cooling system	Over-heating	C
	Other	Evaporative emission control system malfunction	A
		Stuck or damaged throttle valve	B

Symptoms	Problem parts etc.	Possible cause	RANK
3. Low output, hesitation and poor acceleration	Engine control system <Ref. to EN(w/o STI)(diag)-2, Basic Diagnostic Procedure.>		A
	Intake system	Loosened or cracked intake duct	A
		Loosened or cracked PCV hose	A
		Loosened or cracked vacuum hose	B
		Defective intake manifold gasket	B
		Defective throttle body gasket	B
		Defective PCV valve	B
		Loosened oil filler cap	B
		Dirty air cleaner element	A
	Fuel line	Defective fuel pump and relay	B
		Clogged fuel line	B
		Lack of fuel or insufficient fuel	C
	Timing chain	Defective timing	B
	Compression	Incorrect cam clearance	B
		Loosened spark plug or defective gasket	B
		Loosened cylinder head bolt or defective cylinder head gasket	B
		Improper valve sealing	B
		Defective valve stem	C
		Worn or broken valve spring	B
		Worn or stuck piston rings, cylinder and piston	C
		Incorrect valve timing	A
		Improper engine oil (low viscosity)	B
	Lubrication system	Incorrect oil pressure	B
	Cooling system	Over-heating	C
		Over-cooling	C
	Other	Evaporative emission control system malfunction	A

Symptoms	Problem parts etc.	Possible cause	RANK
4. Surging	Engine control system <Ref. to EN(w/o STI)(diag)-2, Basic Diagnostic Procedure.>		A
	Intake system	Loosened or cracked intake duct	A
		Loosened or cracked PCV hose	A
		Loosened or cracked vacuum hose	A
		Defective intake manifold gasket	B
		Defective throttle body gasket	B
		Defective PCV valve	B
		Loosened oil filler cap	B
		Dirty air cleaner element	B
	Fuel line	Defective fuel pump and relay	B
		Clogged fuel line	B
		Lack of fuel or insufficient fuel	C
	Timing chain	Defective timing	B
	Compression	Incorrect cam clearance	B
		Loosened spark plug or defective gasket	C
		Loosened cylinder head bolt or defective cylinder head gasket	C
		Improper valve sealing	C
		Defective valve stem	C
		Worn or broken valve spring	C
		Worn or stuck piston rings, cylinder and piston	C
		Incorrect valve timing	A
		Improper engine oil (low viscosity)	B
	Cooling system	Over-heating	B
	Other	Evaporative emission control system malfunction	C
5. Engine does not return to idle	Engine control system <Ref. to EN(w/o STI)(diag)-2, Basic Diagnostic Procedure.>		A
	Intake system	Loosened or cracked vacuum hose	A
	Other	Stuck or damaged throttle valve	A
6. Dieseling (run-on)	Engine control system <Ref. to EN(w/o STI)(diag)-2, Basic Diagnostic Procedure.>		A
	Cooling system	Over-heating	B
	Other	Evaporative emission control system malfunction	B
7. After burning in exhaust system	Engine control system <Ref. to EN(w/o STI)(diag)-2, Basic Diagnostic Procedure.>		A
	Intake system	Loosened or cracked intake duct	C
		Loosened or cracked PCV hose	C
		Loosened or cracked vacuum hose	B
		Defective PCV valve	B
		Loosened oil filler cap	C
	Timing chain	Defective timing	B
	Compression	Incorrect cam clearance	B
		Loosened spark plug or defective gasket	C
		Loosened cylinder head bolt or defective cylinder head gasket	C
		Improper valve sealing	B
		Defective valve stem	C
		Worn or broken valve spring	C
		Worn or stuck piston rings, cylinder and piston	C
		Incorrect valve timing	A
	Lubrication system	Incorrect oil pressure	C
	Cooling system	Over-cooling	C
	Other	Evaporative emission control system malfunction	C

Symptoms	Problem parts etc.	Possible cause	RANK
8. Knocking	Engine control system <Ref. to EN(w/o STI)(diag)-2, Basic Diagnostic Procedure.>		A
	Intake system	Loosened oil filler cap	B
	Timing chain	Defective timing	B
	Compression	Incorrect cam clearance	C
		Incorrect valve timing	B
	Cooling system	Over-heating	A
9. Excessive engine oil consumption	Intake system	Loosened or cracked PCV hose	A
		Defective PCV valve	B
		Loosened oil filler cap	C
	Compression	Defective valve stem	A
		Worn or stuck piston rings, cylinder and piston	A
	Lubrication system	Loosened chain cover attaching bolts and defective gasket	B
		Defective oil filter gasket	B
		Defective crankshaft oil seal	B
		Defective rocker cover gasket	B
		Loosened oil drain plug or defective gasket	B
		Loosened oil pan mounting bolt or defective oil pan	B
10. Excessive fuel consumption	Engine control system <Ref. to EN(w/o STI)(diag)-2, Basic Diagnostic Procedure.>		A
	Intake system	Dirty air cleaner element	A
	Timing chain	Defective timing	B
	Compression	Incorrect cam clearance	B
		Loosened spark plug or defective gasket	C
		Loosened cylinder head bolt or defective cylinder gasket	C
		Improper valve sealing	B
		Defective valve stem	C
		Worn or broken valve spring	C
		Worn or stuck piston rings, cylinder and piston	B
		Incorrect valve timing	B
	Lubrication system	Incorrect oil pressure	C
	Cooling system	Over-cooling	C

28.Engine Noise

A: INSPECTION

Type of sound	Condition	Possible cause
Regular clicking sound	Sound increases as engine speed increases.	• Valve mechanism is defective • Incorrect cam clearance • Worn camshaft • Broken valve spring • Defective valve shim
Heavy and dull clank	Oil pressure is low.	• Worn crankshaft bearing • Worn connecting rod bearing
	Oil pressure is normal.	• Loosened flywheel mounting bolt • Damaged engine mounting
High-pitched clank	Sound is noticeable when accelerating with an overload condition.	• Ignition timing advanced • Accumulation of carbon inside combustion chamber • Wrong heat range of spark plug • Improper octane value gasoline
Clank noise when engine speed is between 1,000 and 2,000 r/min	Sound is reduced when the fuel injector of the noisy cylinder is stopped.*	• Worn crankshaft bearing • Worn connecting rod bearing
Knocking sound when engine is operating under idling speed and engine is warm	Sound is reduced when the fuel injector of the noisy cylinder is stopped.*	• Worn cylinder liner and piston ring • Broken or stuck piston ring • Worn piston pin and piton pin hole of piston
	Sound is not reduced if each fuel injector is stopped in turn.*	• Unusually worn valve rocker • Unusually worn valve shim • Worn cam sprocket • Worn journal of cam carrier and camshaft cap
Squeaky sound	—	• Insufficient generator lubrication
Rubbing sound	—	• Poor contact of generator brush and rotor
Gear scream when starting engine	—	• Defective ignition starter switch • Worn gear and starter pinion
Sound like polishing glass with a dry cloth	—	• Defective V-belt tensioner assembly (loose V-belt) • Defective water pump shaft
Hissing sound	—	• Insufficient compression • Air leakage in air intake system, hose, connection or manifold
Timing chain noise	—	• Loose timing chain • Timing chain contacting with adjacent part
Valve noise	—	• Incorrect cam clearance

*Fuel injector can be stopped using the Subaru Select Monitor. <Ref. to EN(w/o STI)(diag)-83, OPERATION, Active Test.>

EXHAUST

EX(w/o STI)

Page

1. General Description 2
2. Front Exhaust Pipe 9
3. Center Exhaust Pipe 32
4. Rear Exhaust Pipe 47
5. Muffler 50

1. General Description

A: COMPONENT

1. FRONT EXHAUST PIPE

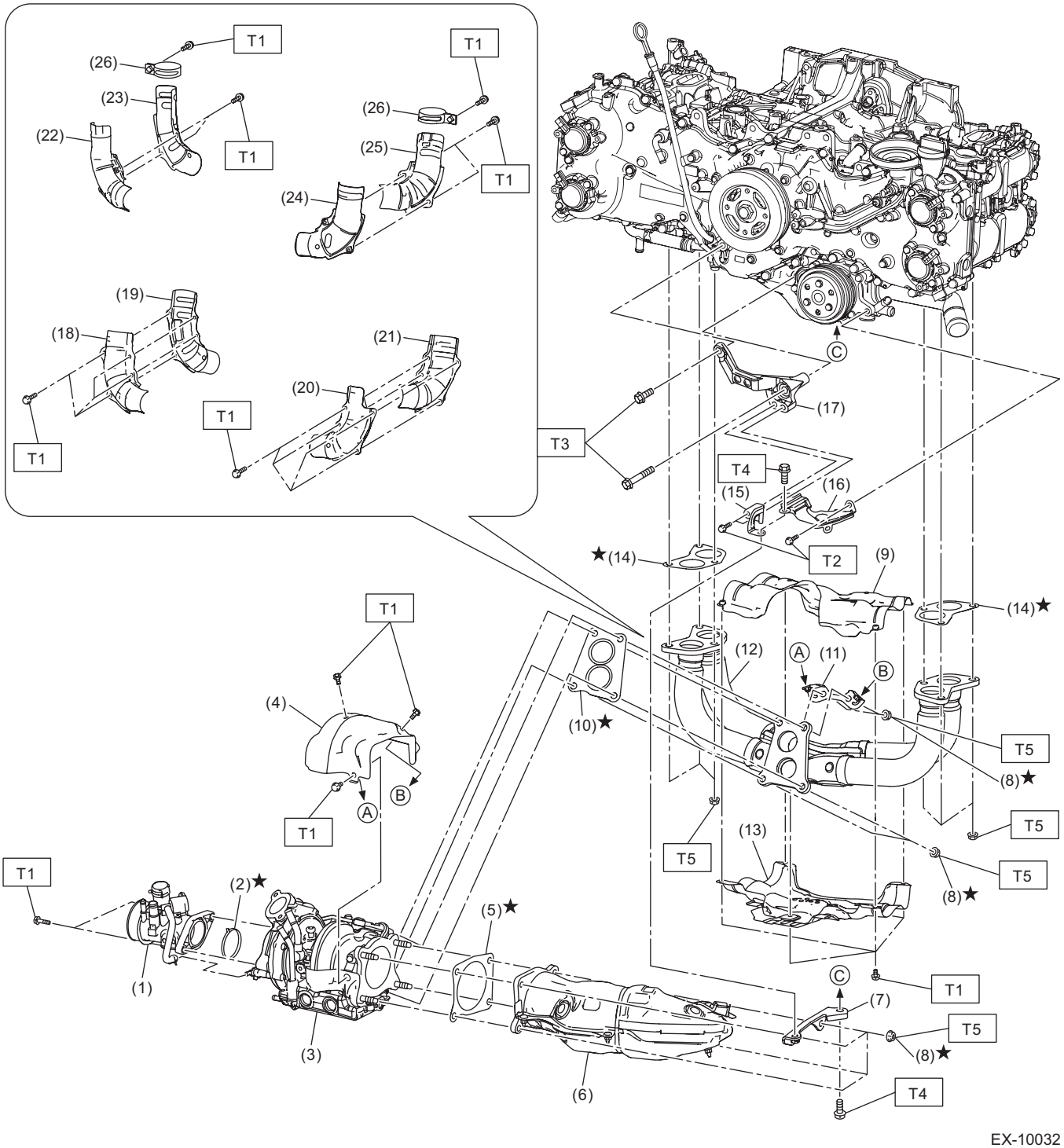

(1) Intake duct No. 1
(2) O-ring
(3) Turbocharger
(4) Exhaust pipe cover A
(5) Gasket
(6) Center exhaust pipe (front)
(7) Turbocharger stay A
(8) Self-locking nut
(9) Exhaust pipe cover B
(10) Gasket
(11) Exhaust pipe stay A
(12) Front exhaust pipe
(13) Exhaust pipe cover C
(14) Gasket
(15) Exhaust pipe stay B
(16) Water pump pulley cover
(17) Turbocharger stay B
(18) Exhaust pipe cover D
(19) Exhaust pipe cover E
(20) Exhaust pipe cover F
(21) Exhaust pipe cover G
(22) Exhaust pipe cover H
(23) Exhaust pipe cover I
(24) Exhaust pipe cover J
(25) Exhaust pipe cover K
(26) Front exhaust pipe band

Tightening torque: N·m (kgf-m, ft-lb)
T1: 7.5 (0.8, 5.5)
T2: 19 (1.9, 14.0)
T3: 30 (3.1, 22.1)
T4: 33 (3.4, 24.3)
T5: 42.5 (4.3, 31.3)

2. CENTER AND REAR EXHAUST PIPE, AND MUFFLER

- CVT model

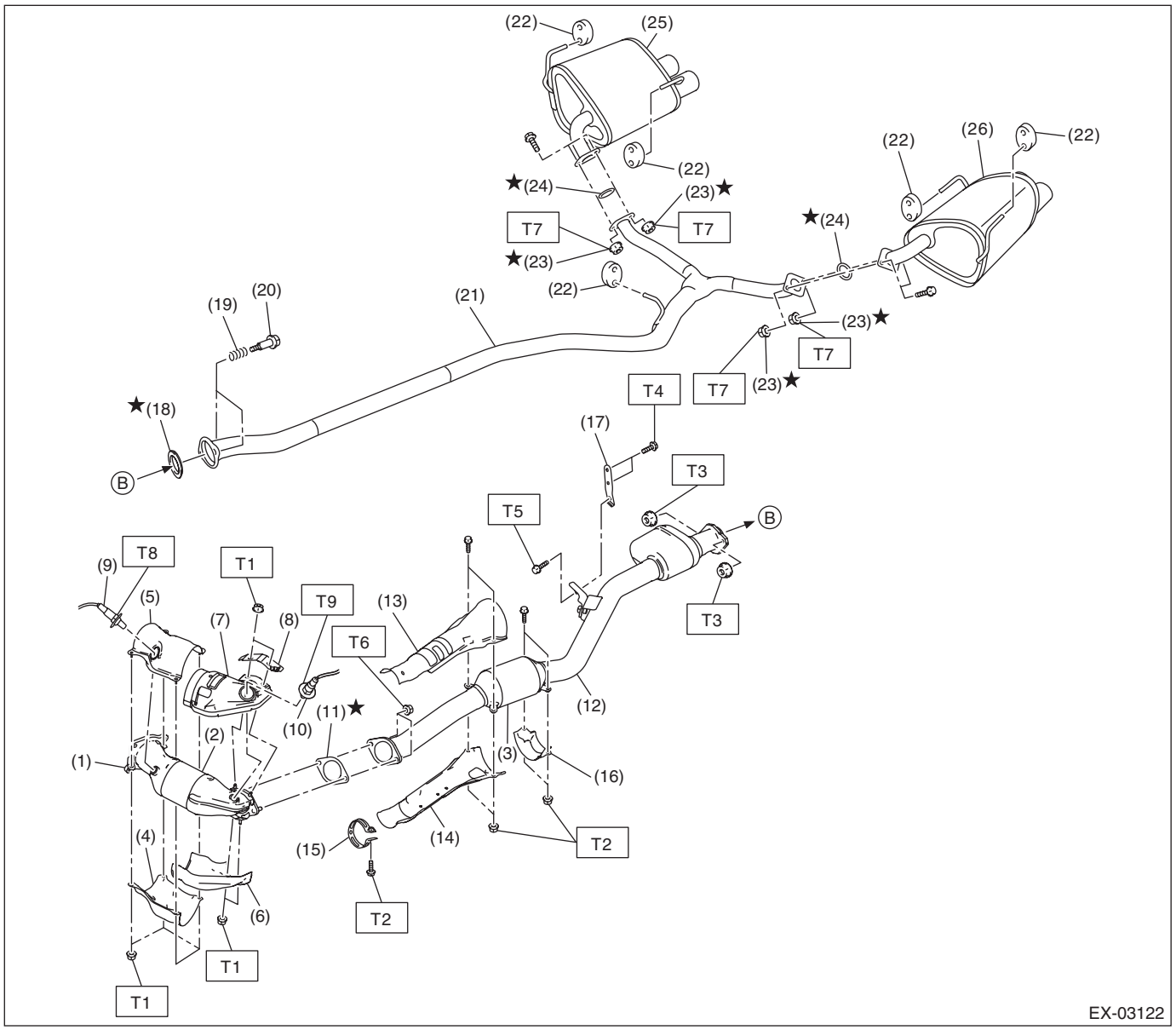

(1)	Center exhaust pipe (front)	(14)	Exhaust pipe cover G	
(2)	Front catalytic converter	(15)	Center exhaust pipe band	
(3)	Rear catalytic converter	(16)	Exhaust pipe cover H	
(4)	Exhaust pipe cover A	(17)	Hanger bracket	
(5)	Exhaust pipe cover B	(18)	Gasket	
(6)	Exhaust pipe cover C	(19)	Spring	
(7)	Exhaust pipe cover D	(20)	Bolt	
(8)	Exhaust pipe cover E	(21)	Rear exhaust pipe	
(9)	Front oxygen (A/F) sensor	(22)	Cushion rubber	
(10)	Rear oxygen sensor	(23)	Self-locking nut	
(11)	Gasket	(24)	Gasket	
(12)	Center exhaust pipe (rear)	(25)	Muffler RH	
(13)	Exhaust pipe cover F	(26)	Muffler LH	

Tightening torque: N·m (kgf-m, ft-lb)

- ***T1: 7.5 (0.8, 5.5)***
- ***T2: 13 (1.3, 9.6)***
- ***T3: 18 (1.8, 13.3)***
- ***T4: 23 (2.3, 17.0)***
- ***T5: 35 (3.6, 25.8)***
- ***T6: 42.5 (4.3, 31.3)***
- ***T7: 48 (4.9, 35.4)***
- ***T8: <Ref. to FU(w/o STI)-118, INSTALLATION, Front Oxygen (A/F) Sensor.>***
- ***T9: <Ref. to FU(w/o STI)-121, INSTALLATION, Rear Oxygen Sensor.>***

- MT model

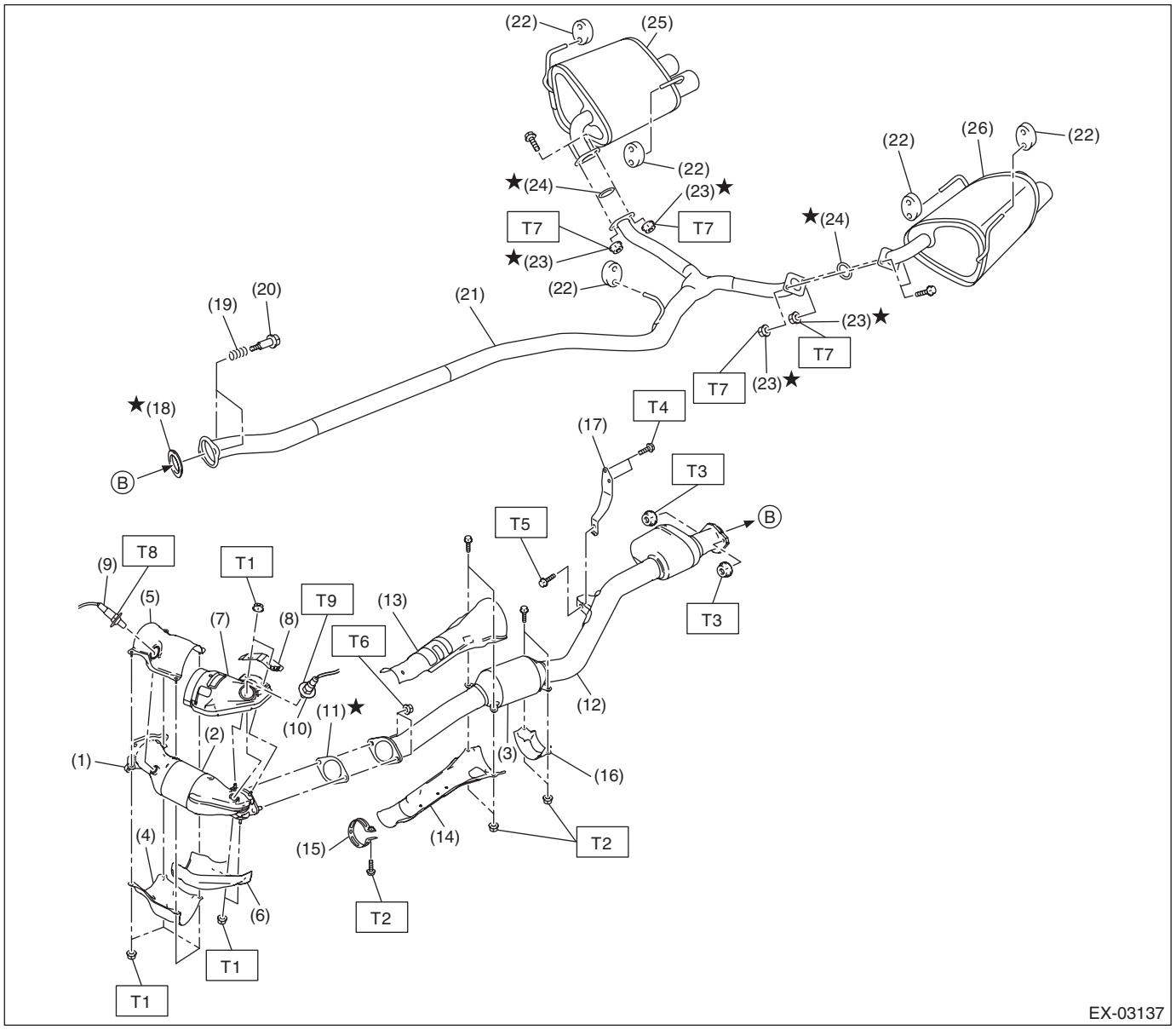
(22)
(25)
(22)
(26)
(22)
(22)
★(24)
(23)★
T7
T7
★(24)
★(23)
(22)
(19)
(20)
(21)
(23)★
T7
T7
(23)★
★(18)
T4
(17)
B
T3
T5
B
T8
T1
(9)
(5)
T9
(13)
(7)
(8)
T6
T3
(12)
(11)★
(10)
(2)
(1)
(3)
(16)
(4)
(15)
(14)
T2
T2
(6)
T1
T1
EX-03137

(1)	Center exhaust pipe (front)	(14)	Exhaust pipe cover G	***Tightening torque: N·m (kgf-m, ft-lb)***
(2)	Front catalytic converter	(15)	Center exhaust pipe band	***T1: 7.5 (0.8, 5.5)***
(3)	Rear catalytic converter	(16)	Exhaust pipe cover H	***T2: 13 (1.3, 9.6)***
(4)	Exhaust pipe cover A	(17)	Hanger bracket	***T3: 18 (1.8, 13.3)***
(5)	Exhaust pipe cover B	(18)	Gasket	***T4: 23 (2.3, 17.0)***
(6)	Exhaust pipe cover C	(19)	Spring	***T5: 35 (3.6, 25.8)***
(7)	Exhaust pipe cover D	(20)	Bolt	***T6: 42.5 (4.3, 31.3)***
(8)	Exhaust pipe cover E	(21)	Rear exhaust pipe	***T7: 48 (4.9, 35.4)***
(9)	Front oxygen (A/F) sensor	(22)	Cushion rubber	***T8: <Ref. to FU(w/o STI)-118, INSTALLATION, Front Oxygen (A/F) Sensor.>***
(10)	Rear oxygen sensor	(23)	Self-locking nut	***T9: <Ref. to FU(w/o STI)-121, INSTALLATION, Rear Oxygen Sensor.>***
(11)	Gasket	(24)	Gasket	
(12)	Center exhaust pipe (rear)	(25)	Muffler RH	
(13)	Exhaust pipe cover F	(26)	Muffler LH	

3. HEAT SHIELD COVER

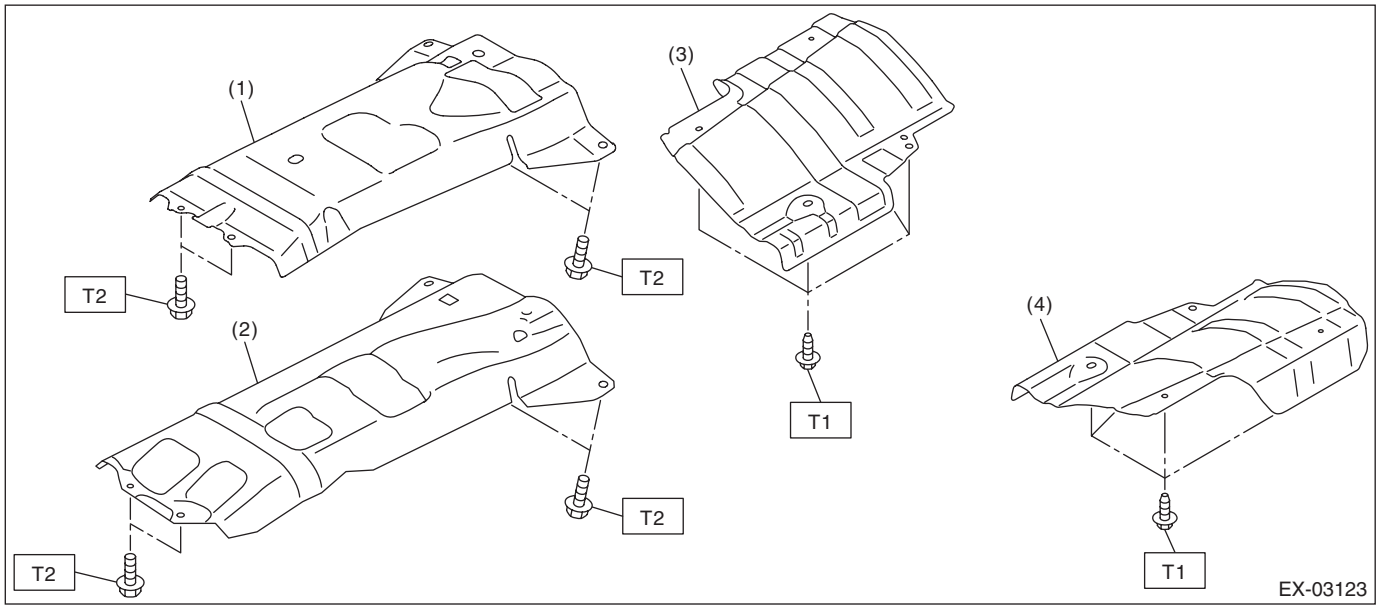

(1)	Center exhaust cover (CVT model)	(3)	Rear exhaust cover RH	***Tightening torque: N·m (kgf-m, ft-lb)***
(2)	Center exhaust cover (MT model)	(4)	Rear exhaust cover LH	***T1: 10 (1.0, 7.4)***
				T2: 18 (1.8, 13.3)

B: CAUTION

- Prior to starting work, pay special attention to the following:
  1. Always wear work clothes, a work cap, and protective shoes. Additionally, wear a helmet, protective goggles, etc. if necessary.
  2. Protect the vehicle using a seat cover, fender cover, etc.
  3. Prepare the service tools, clean cloth, containers to catch grease and oil, etc.
- Vehicle components are extremely hot immediately after driving. Be wary of receiving burns from heated parts.
- When performing a repair, identify the cause of trouble and avoid unnecessary removal, disassembly and replacement.
- Before disconnecting connectors of sensors or units, be sure to disconnect the ground cable from battery.
- Always use the jack-up point when the shop jacks or rigid racks are used to support the vehicle.
- Remove contamination including dirt and corrosion before removal, installation, disassembly or assembly.
- Keep the removed parts in order and protect them from dust and dirt.
- All removed parts, if to be reused, should be reinstalled in the original positions with attention to the correct directions, etc.
- Bolts, nuts and washers should be replaced with new parts as required.
- Be sure to tighten the fasteners including bolts and nuts to the specified torque.
- If any grease adheres to the exhaust pipe, wipe it off. Otherwise a fire may happen.

C: PREPARATION TOOL

1. SPECIAL TOOL

ILLUSTRATION	TOOL NUMBER	DESCRIPTION	REMARKS
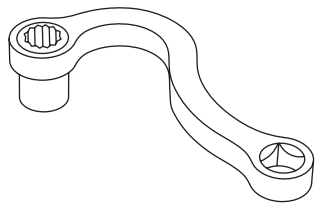 ST18283AA010	18283AA010	WRENCH ADAPTER	Used for removing and installing center exhaust pipe (front).

2. GENERAL TOOL

TOOL NAME	REMARKS
TORX® socket E10	Used for removing and installing center exhaust pipe (front).

2. Front Exhaust Pipe

A: REMOVAL

CAUTION:
Vehicle components are extremely hot after driving. Be wary of receiving burns from heated parts.
1) Remove the collector cover. <Ref. to IN(w/o STI)-7, REMOVAL, Collector Cover.>
2) Disconnect the ground terminal from battery sensor. <Ref. to NT-6, BATTERY, NOTE, Note.>
3) Remove the air intake duct. <Ref. to IN(w/o STI)-26, REMOVAL, Air Intake Duct.>
4) Remove the radiator sub fan and fan motor. <Ref. to CO(w/o STI)-47, REMOVAL, Radiator Sub Fan and Fan Motor.>
5) Drain engine coolant. <Ref. to CO(w/o STI)-13, DRAINING OF ENGINE COOLANT, REPLACEMENT, Engine Coolant.>
6) Lower the vehicle.
7) Remove the bolts which secure the water pump pulley cover to the turbocharger stay.

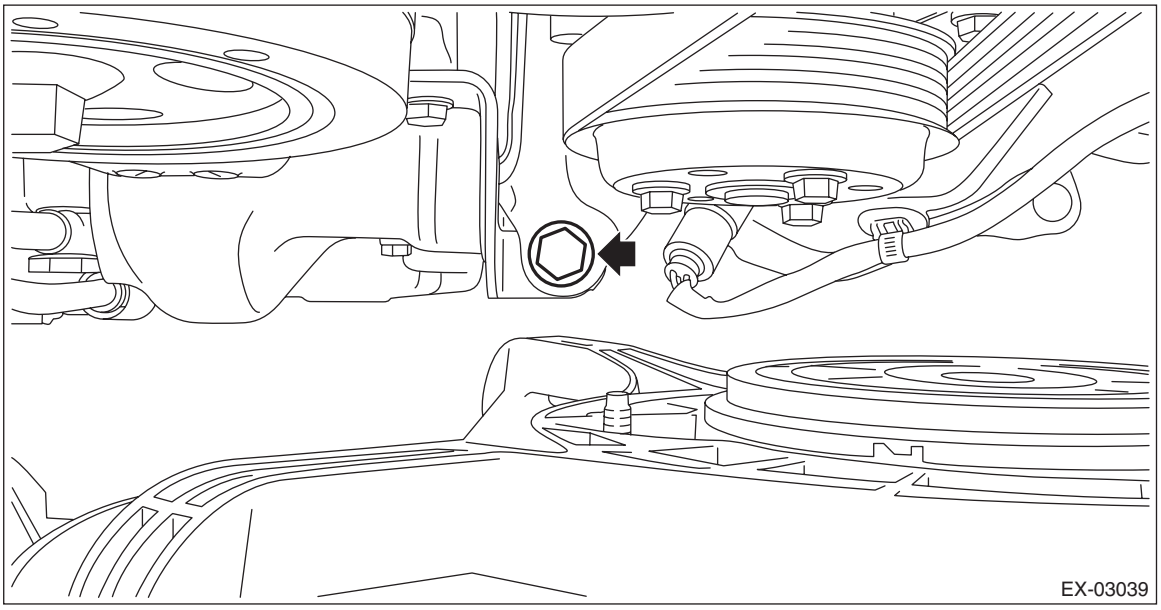

8) Disconnect the engine coolant hose from the water pipe assembly.

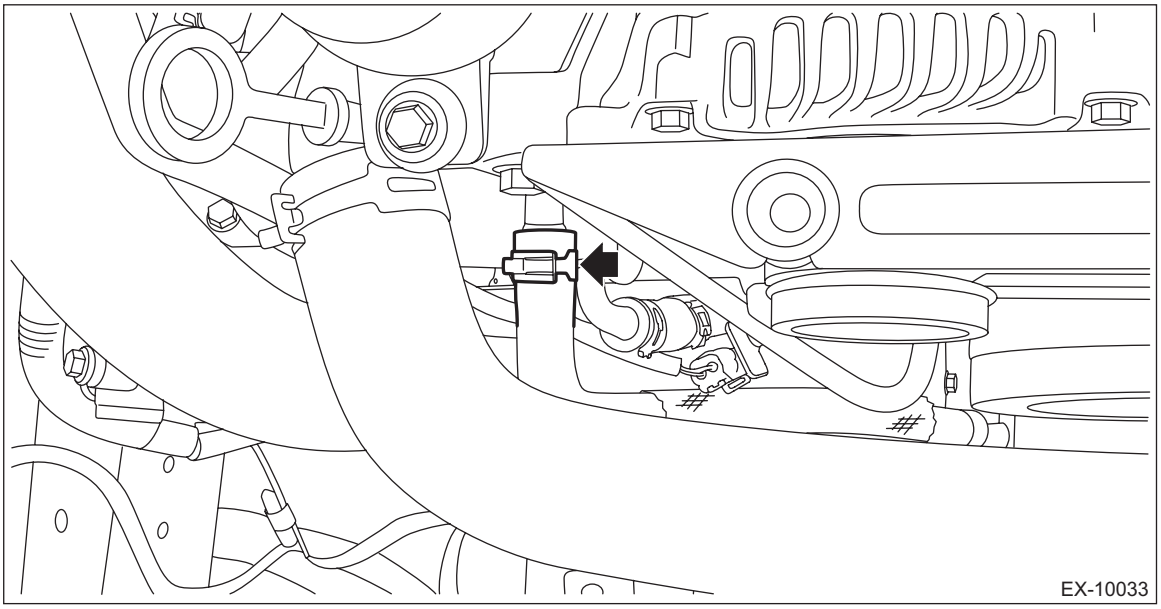

9) Remove the bolts which secure the intake duct No. 2 to the turbocharger.

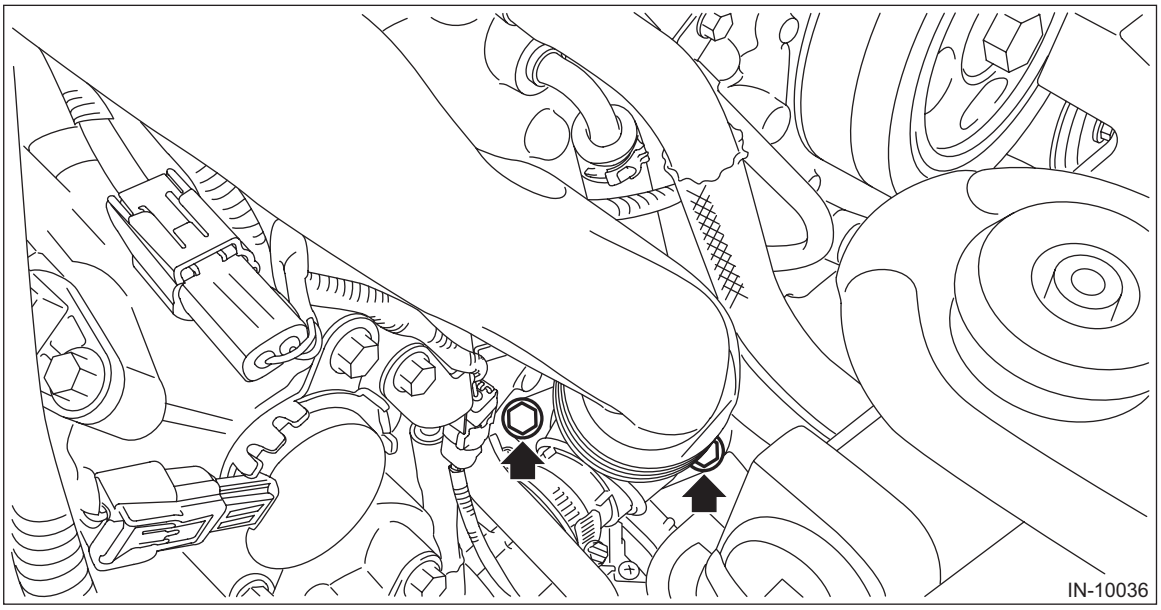

10) Lift up the vehicle.
11) Disconnect the connector on the front oxygen (A/F) sensor from the engine harness, and remove the clip (A) which secures the front oxygen (A/F) sensor harness to the water pump pulley cover.

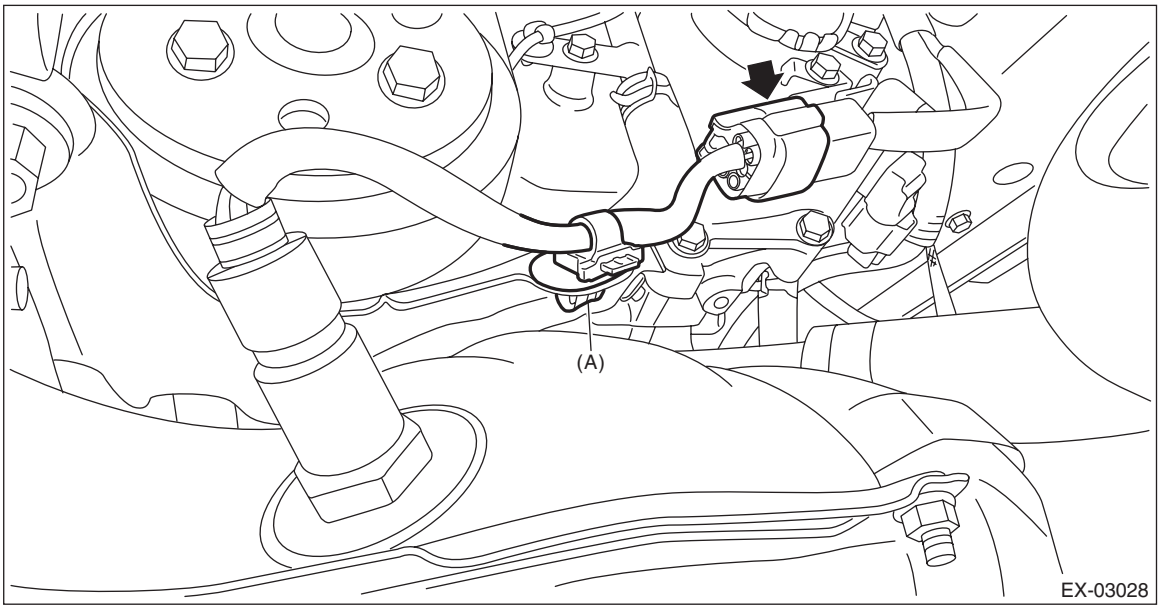

12) Disconnect the connector on the rear oxygen sensor from the engine harness, and disconnect the ground cable from the exhaust pipe cover.

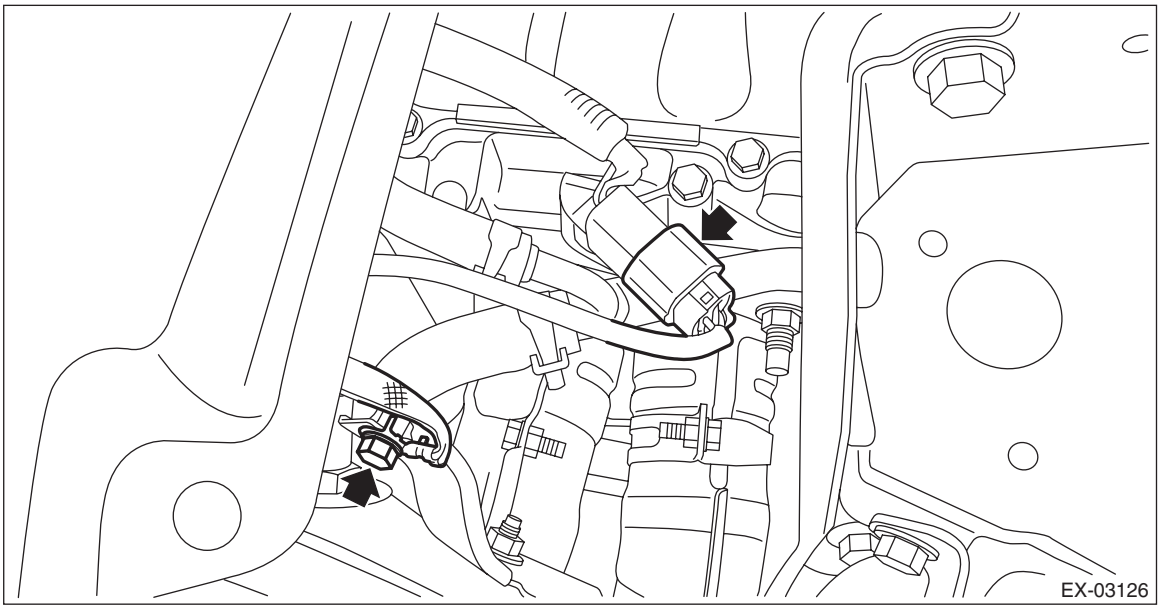

13) Disconnect the union screw pipe assembly from the oil pipe assembly, and disconnect the engine coolant hose from the water pipe RH.

CAUTION:
In order to prevent damaging the oil pipe assembly, fix the section (a) shown in the figure when loosing the flare nut on the union screw pipe assembly, and avoid the part from rotating together while loosening the nut.

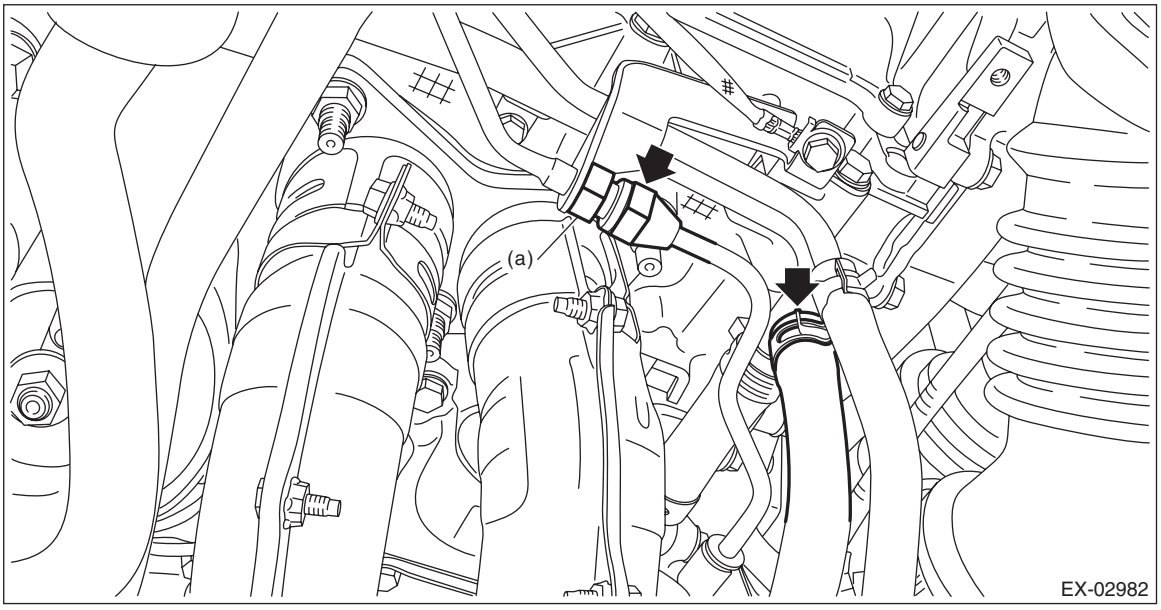

14) Disconnect the vacuum control hose from the wastegate control solenoid valve.

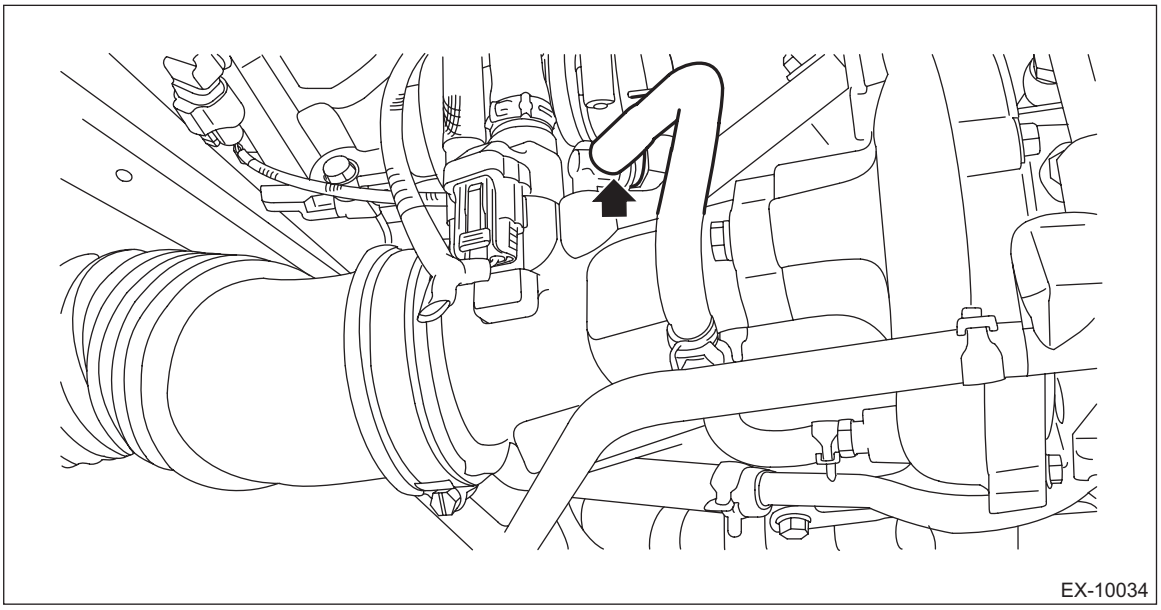

15) Remove the bolts which secure the intake duct No. 1 to the turbocharger.

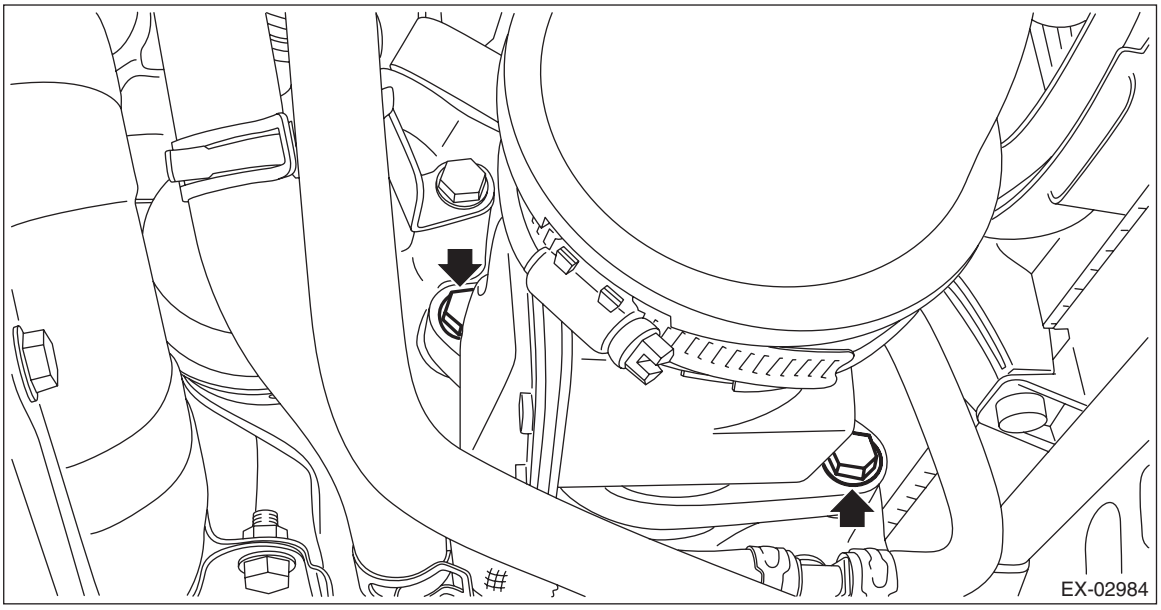

16) Remove the nuts which secure the center exhaust pipe (rear) to the center exhaust pipe (front).

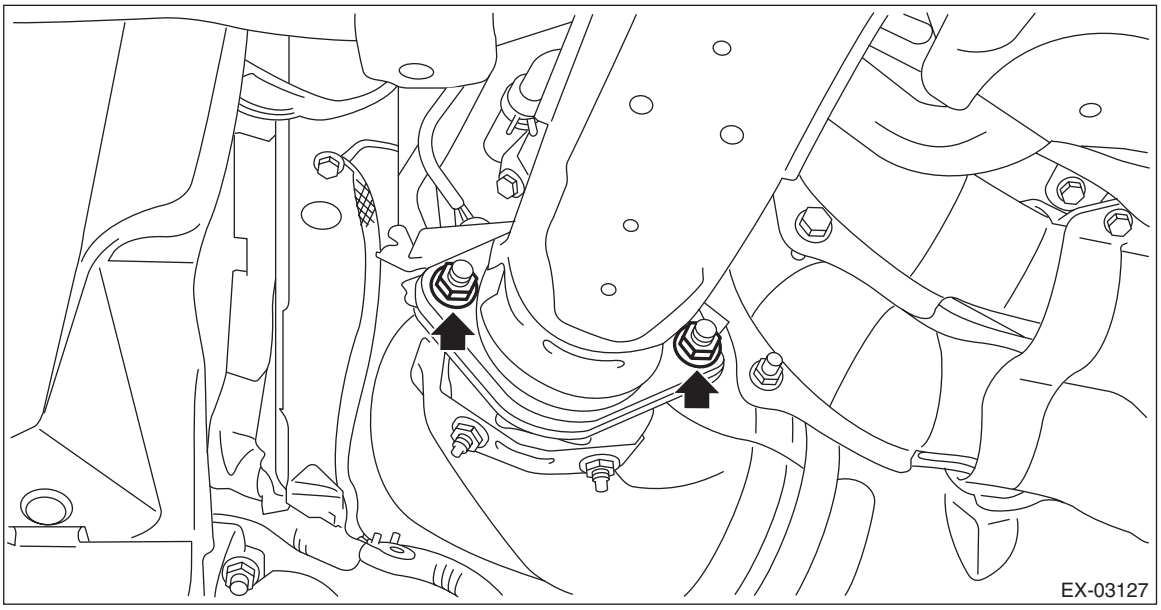

17) Remove the bolts, springs, and nuts which secure the rear exhaust pipe to the center exhaust pipe (rear).

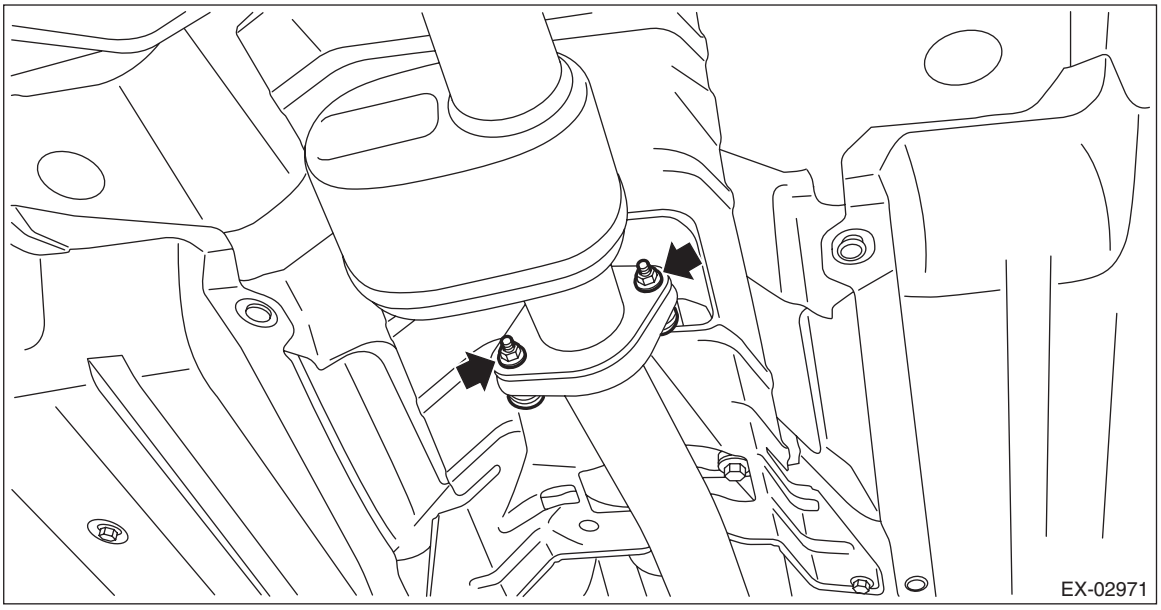

18) Remove the bolt which holds center exhaust pipe (rear) to the hanger bracket, and remove the center exhaust pipe (rear).

NOTE:
For CVT model, removing the exhaust pipe bracket from the center exhaust pipe (rear) will adversely affect the positioning accuracy. Therefore, do not remove the bolts in section (a) shown in the figure.

- CVT model

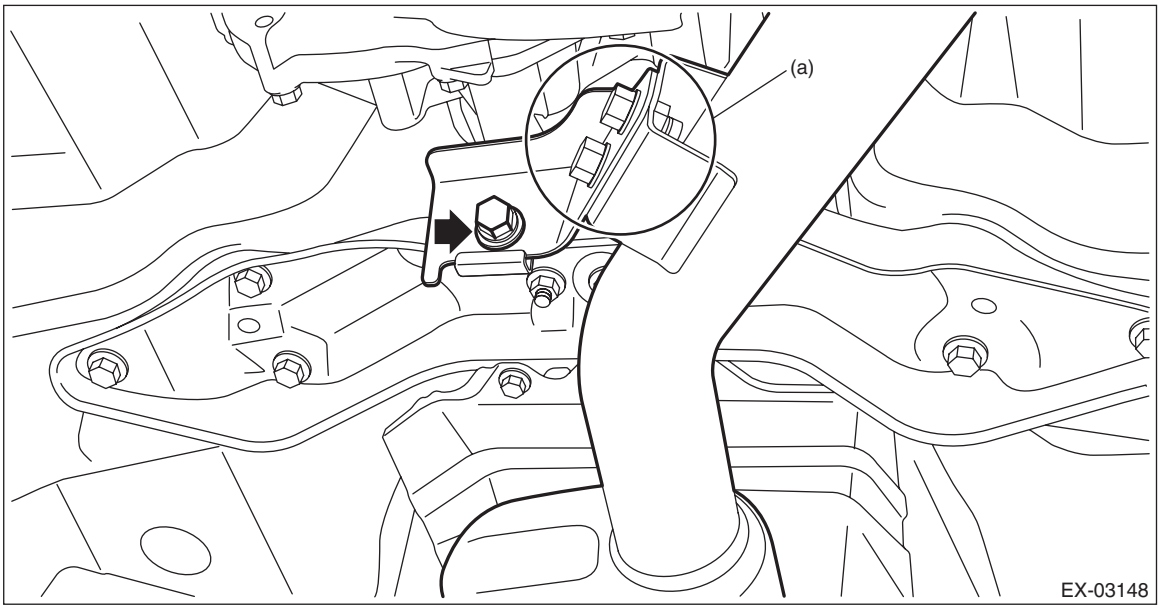

- MT model

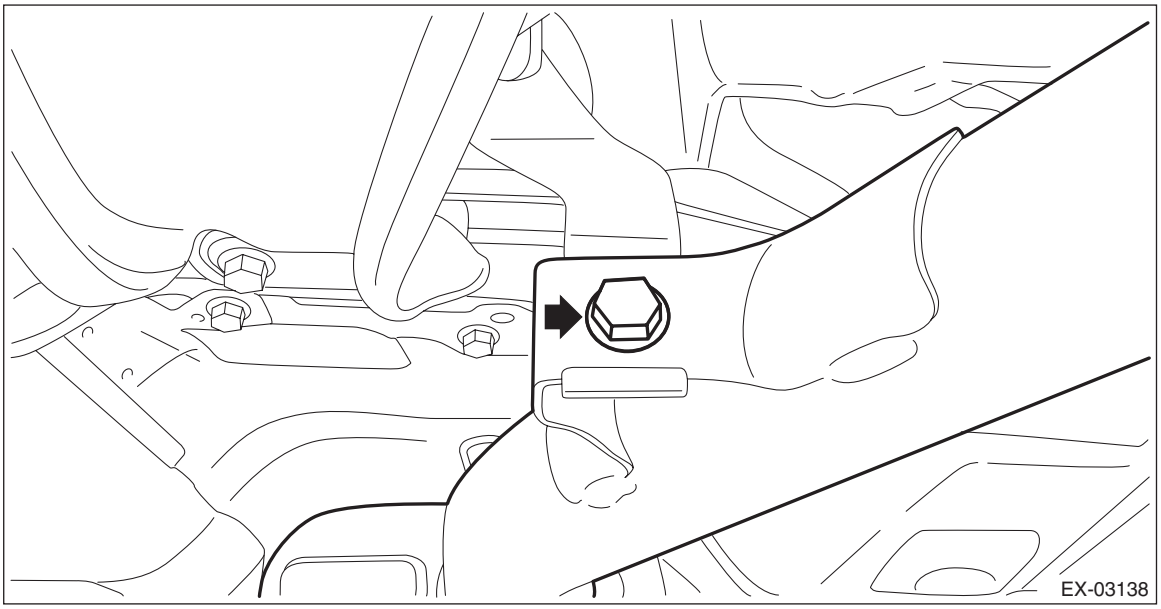

19) Remove the oil catch tank. <Ref. to IN(w/o STI)-56, REMOVAL, Oil Catch Tank.>

CAUTION:
This procedure is required to prevent oil from remaining in the compressor and turbine areas if the residual oil inside the oil catch tank back flows.

20) Remove the bolts which secure the turbocharger stay.

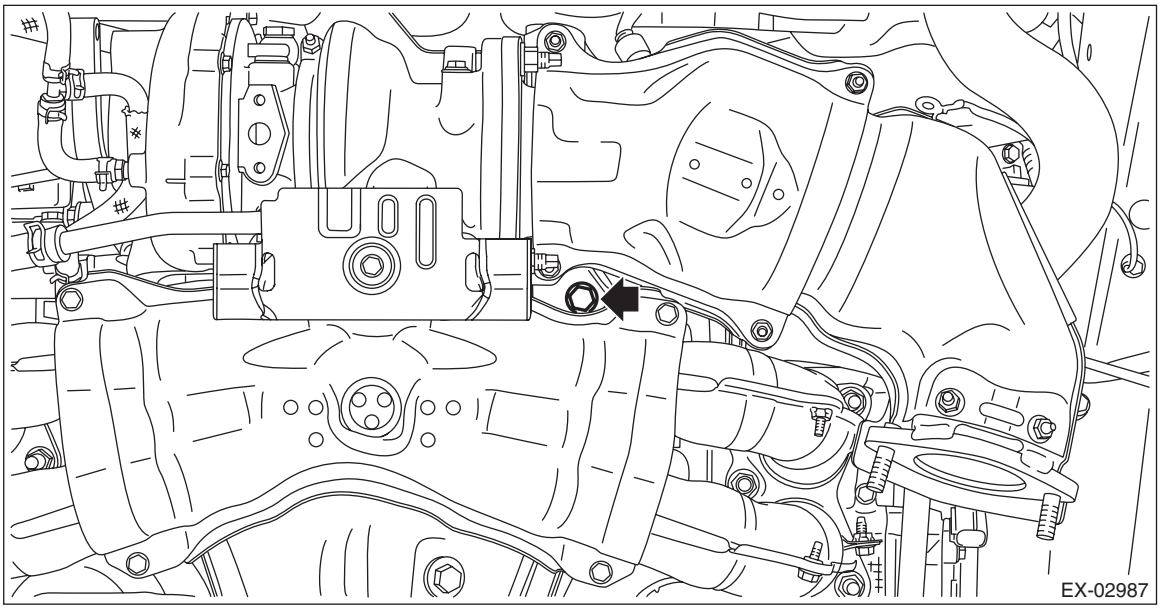

21) While holding the front exhaust pipe with transmission jack, remove the nuts which hold the front exhaust pipe to the cylinder head exhaust port, and remove the front exhaust pipe.

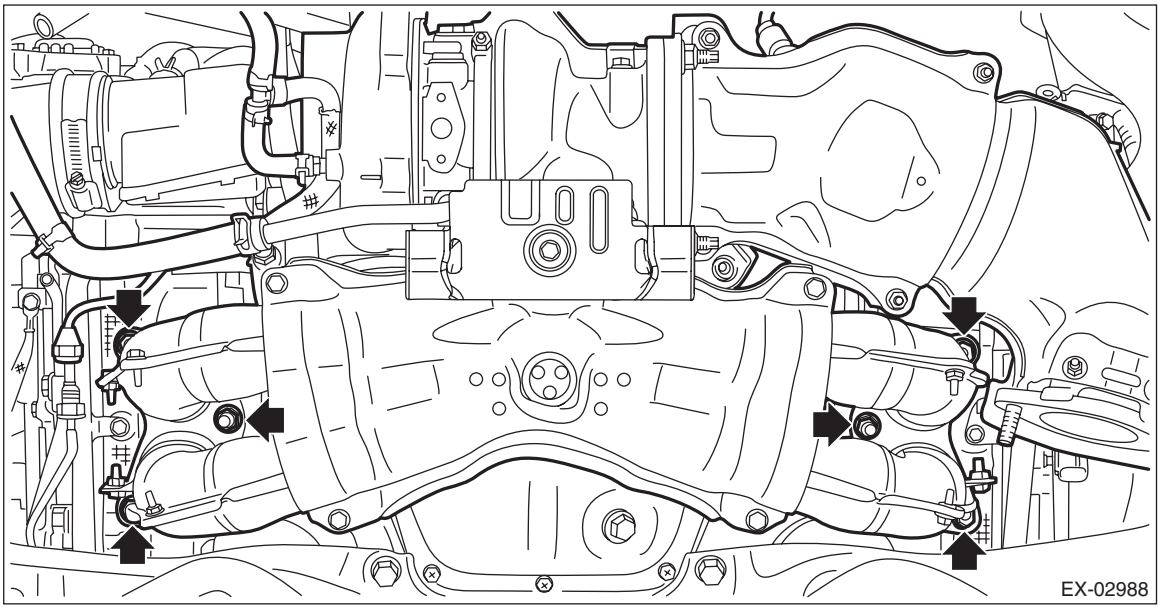

22) Remove the water pump pulley cover and exhaust pipe stay from the engine and turbocharger stay.

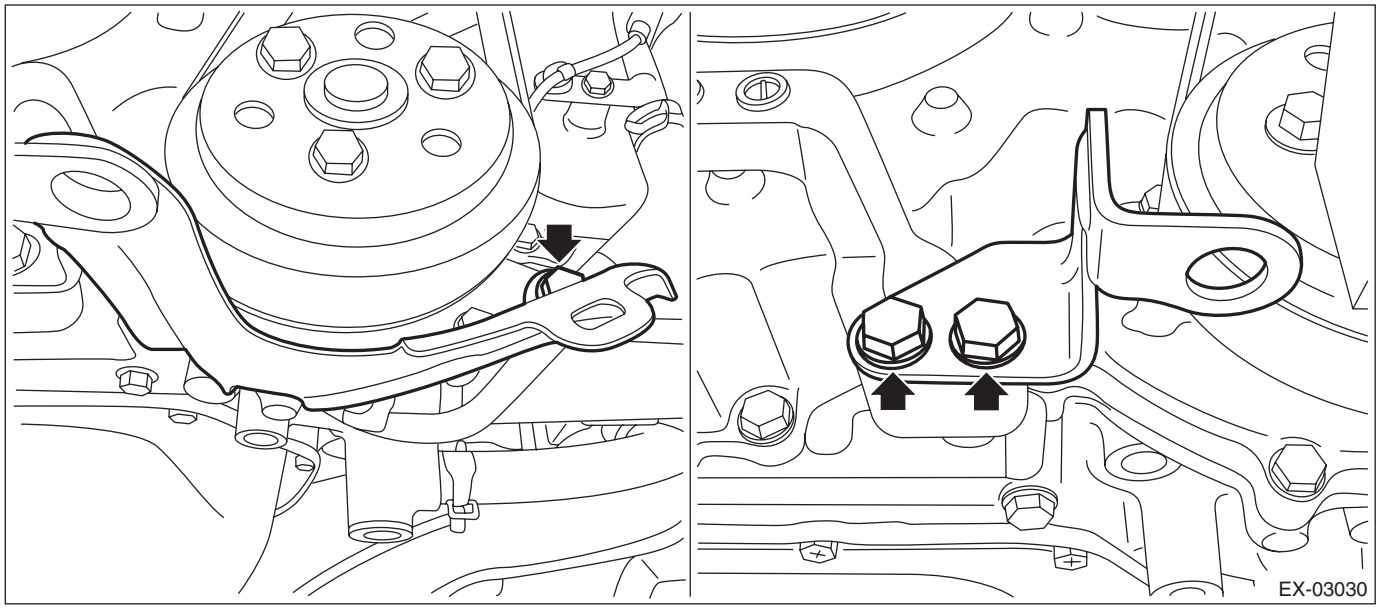

23) Remove the turbocharger stay from the engine.

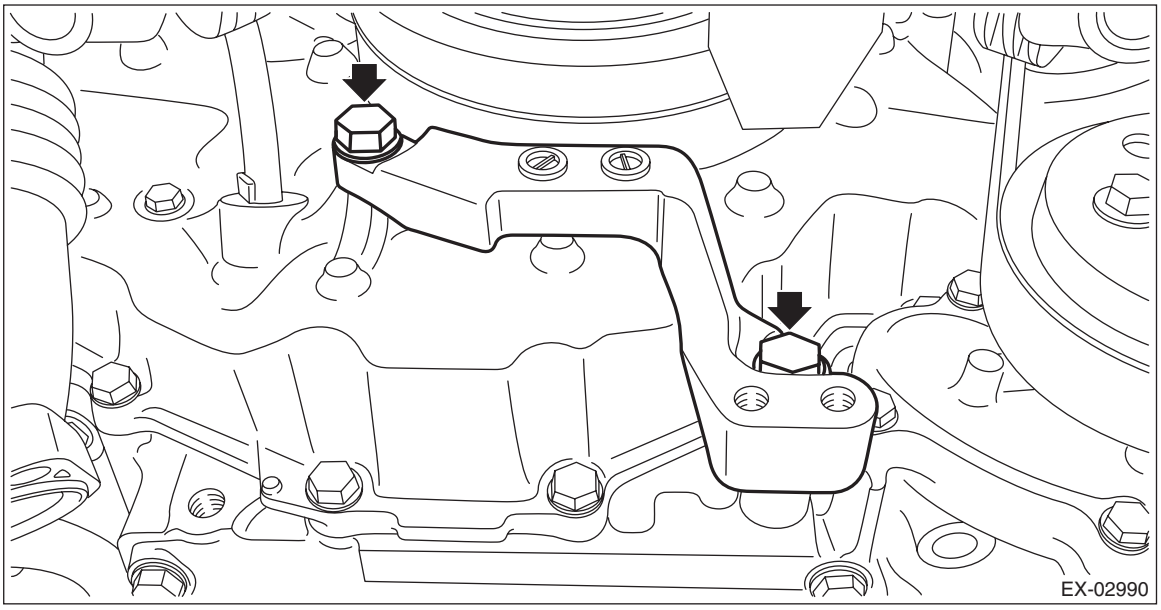

B: INSTALLATION

1) Install the turbocharger stay to the engine.

Tightening torque:
30 N·m (3.1 kgf-m, 22.1 ft-lb)

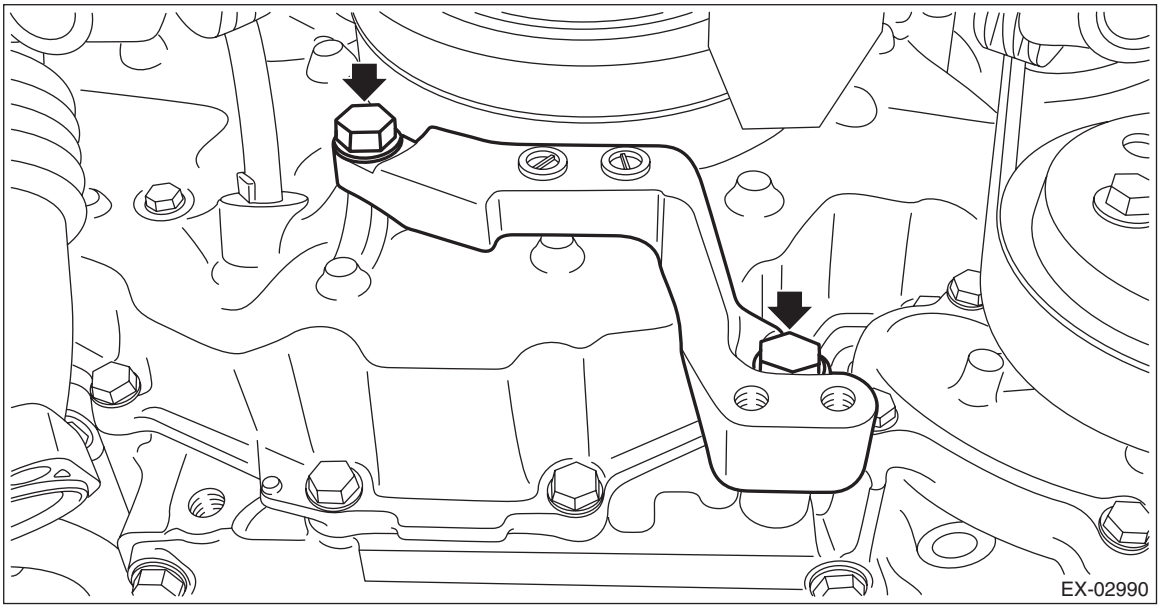

2) Install the water pump pulley cover and exhaust pipe stay to the engine and turbocharger stay.

Tightening torque:
19 N·m (1.9 kgf-m, 14.0 ft-lb)

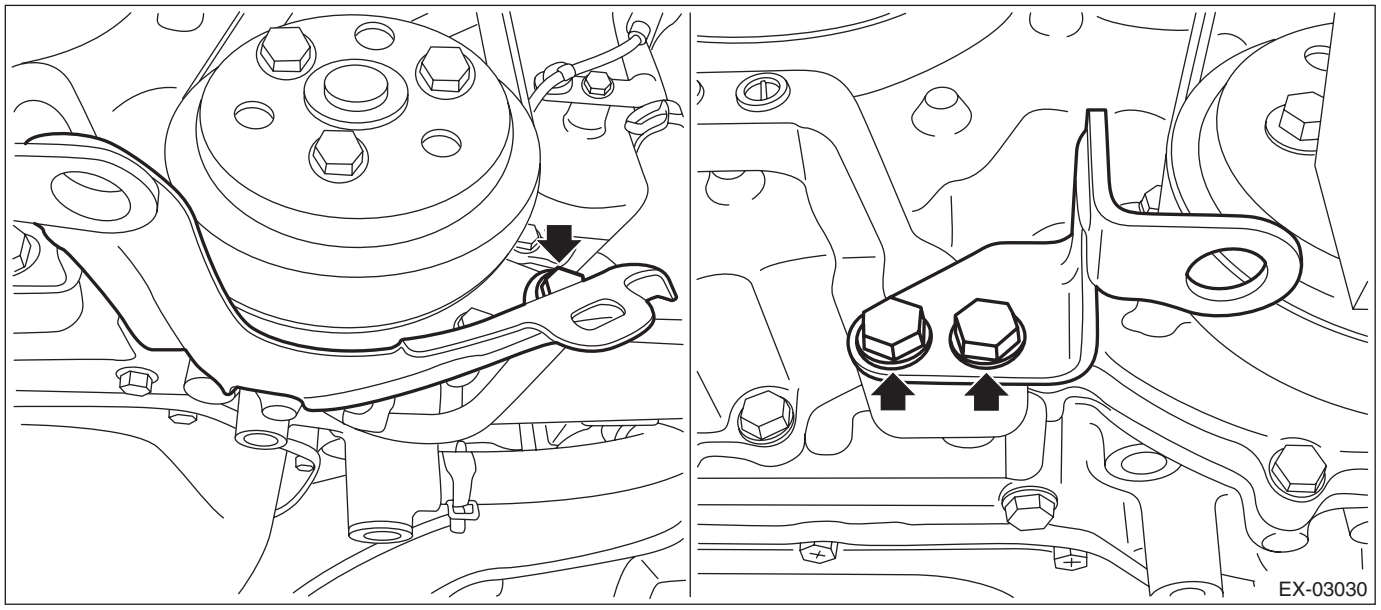

3) While holding the front exhaust pipe with transmission jack, set the front exhaust pipe, and install the nuts which hold the front exhaust pipe to the cylinder head exhaust port.

NOTE:
Use a new gasket.

Tightening torque:
42.5 N·m (4.3 kgf-m, 31.3 ft-lb)

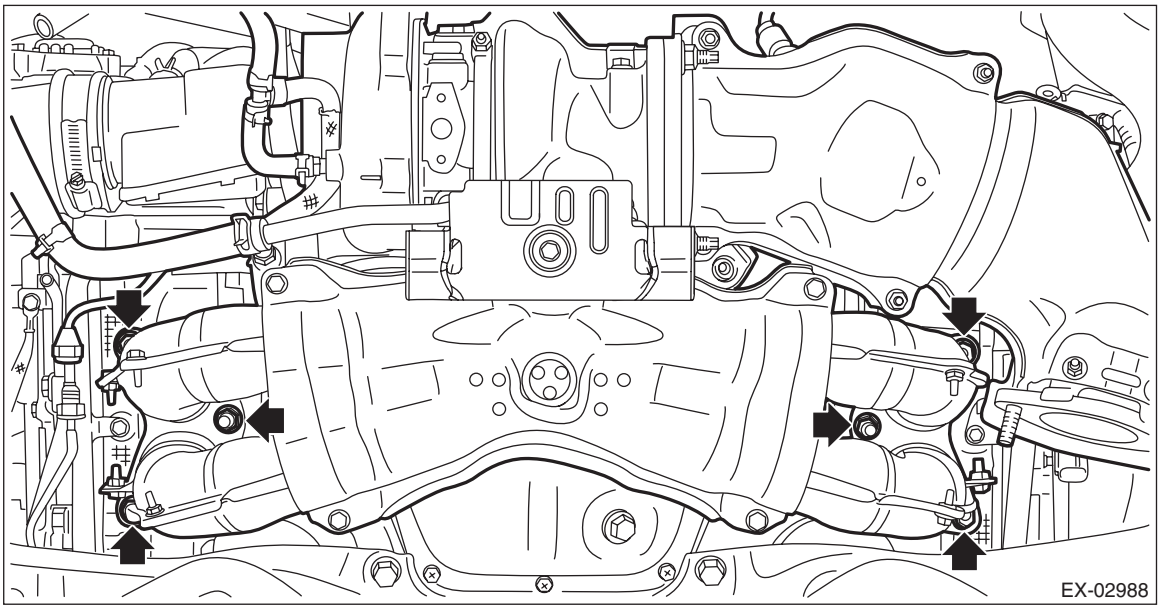

4) Attach the bolt which holds the turbocharger stay.

Tightening torque:
33 N·m (3.4 kgf-m, 24.3 ft-lb)

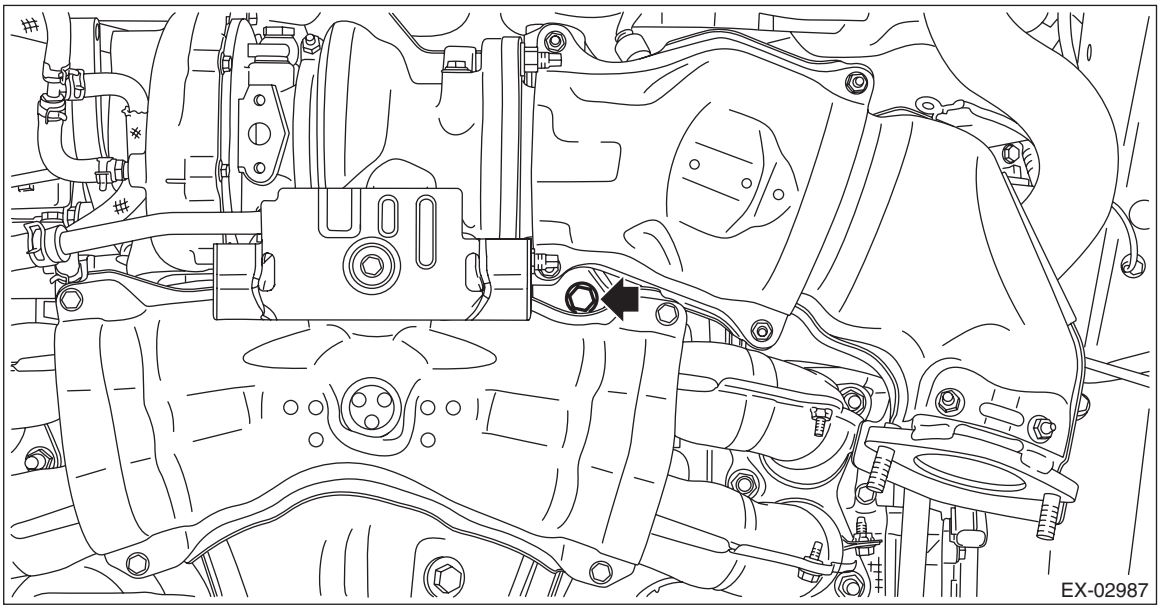

5) Install the oil catch tank. <Ref. to IN(w/o STI)-57, INSTALLATION, Oil Catch Tank.>
6) Set the center exhaust pipe (rear), and temporarily tighten the bolt which holds the center exhaust pipe (rear) to the hanger bracket.

- CVT model

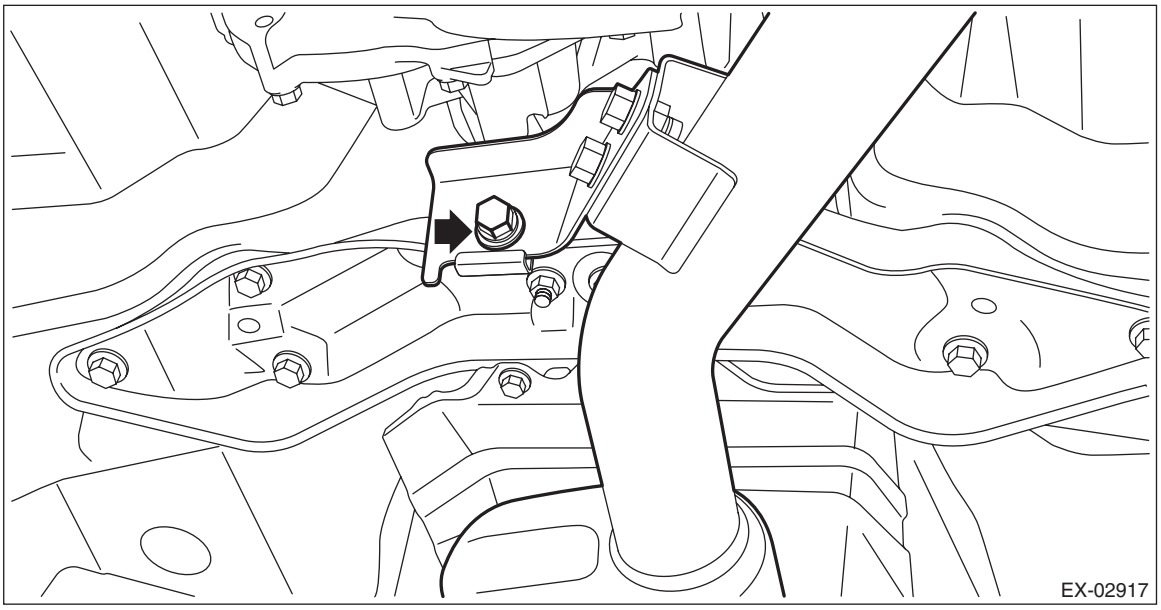

- MT model

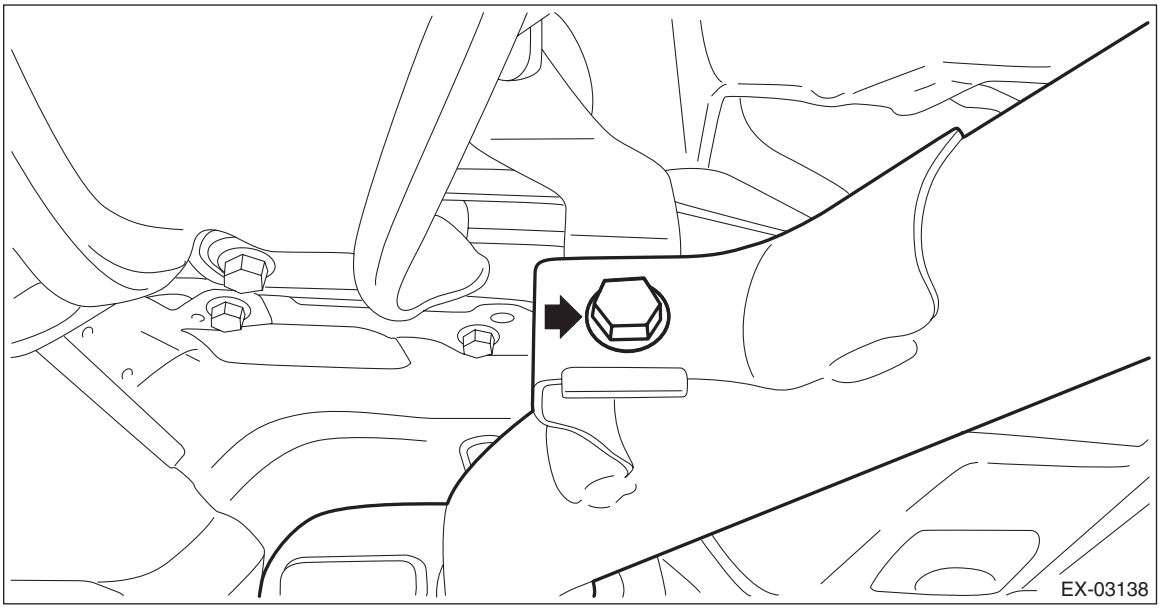

7) Install the bolts, springs, and nuts which secure the rear exhaust pipe to the center exhaust pipe (rear).

NOTE:
Use a new gasket.

Tightening torque:
18 N·m (1.8 kgf-m, 13.3 ft-lb)

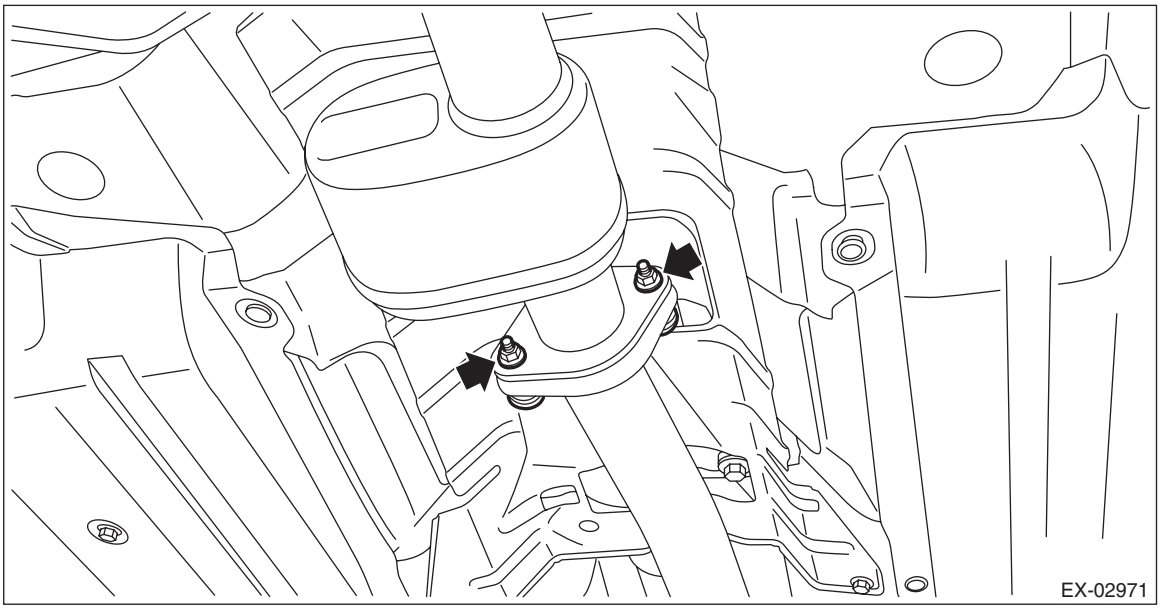

8) Install the nuts which secure the center exhaust pipe (rear) to the center exhaust pipe (front).

NOTE:
Use a new gasket.

Tightening torque:
42.5 N·m (4.3 kgf-m, 31.3 ft-lb)

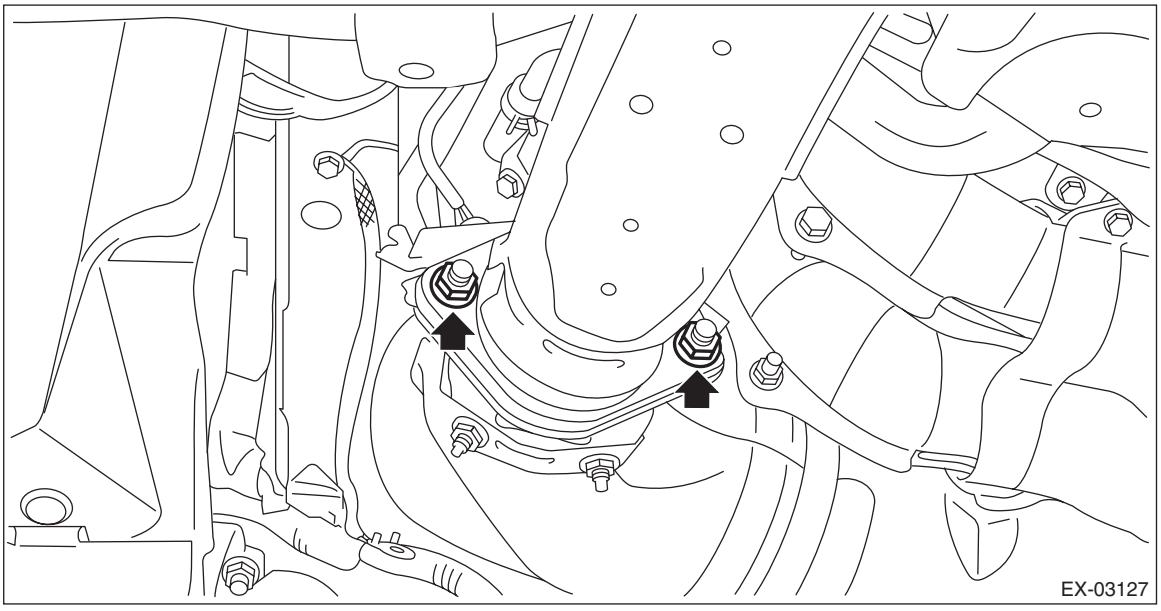

9) Tighten the bolts which hold center exhaust pipe (rear) to the hanger bracket.

Tightening torque:
35 N·m (3.6 kgf-m, 25.8 ft-lb)

- CVT model

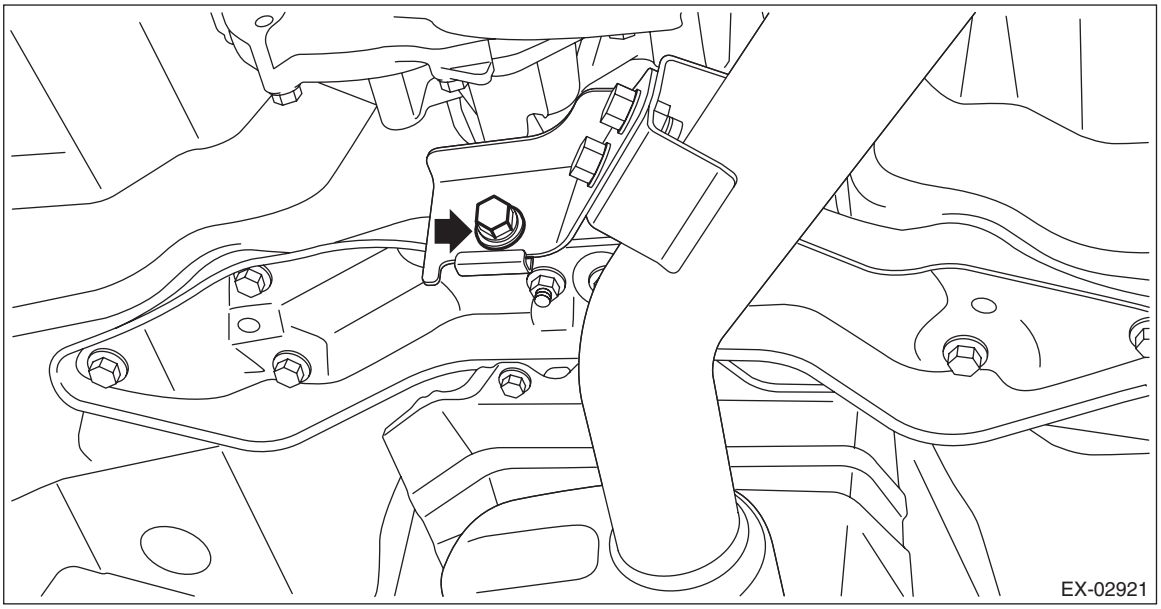

- MT model

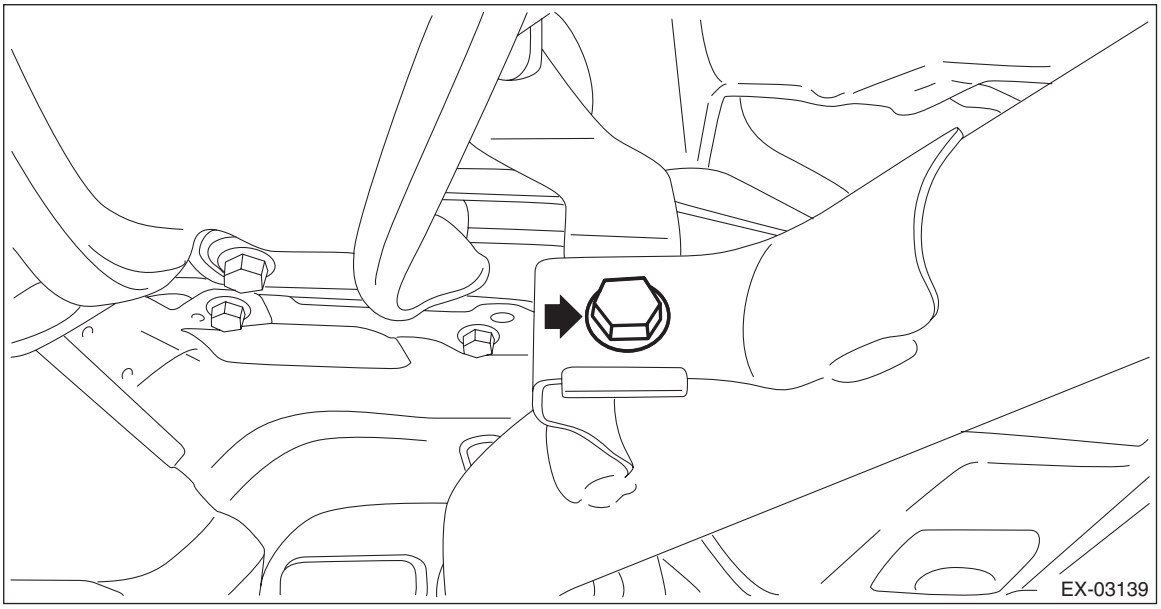

10) Install the bolt which secures the intake duct No. 1 to the turbocharger.

NOTE:
- Use new O-rings.
- Be careful not to pinch the O-ring.

Tightening torque:
7.5 N·m (0.8 kgf-m, 5.5 ft-lb)

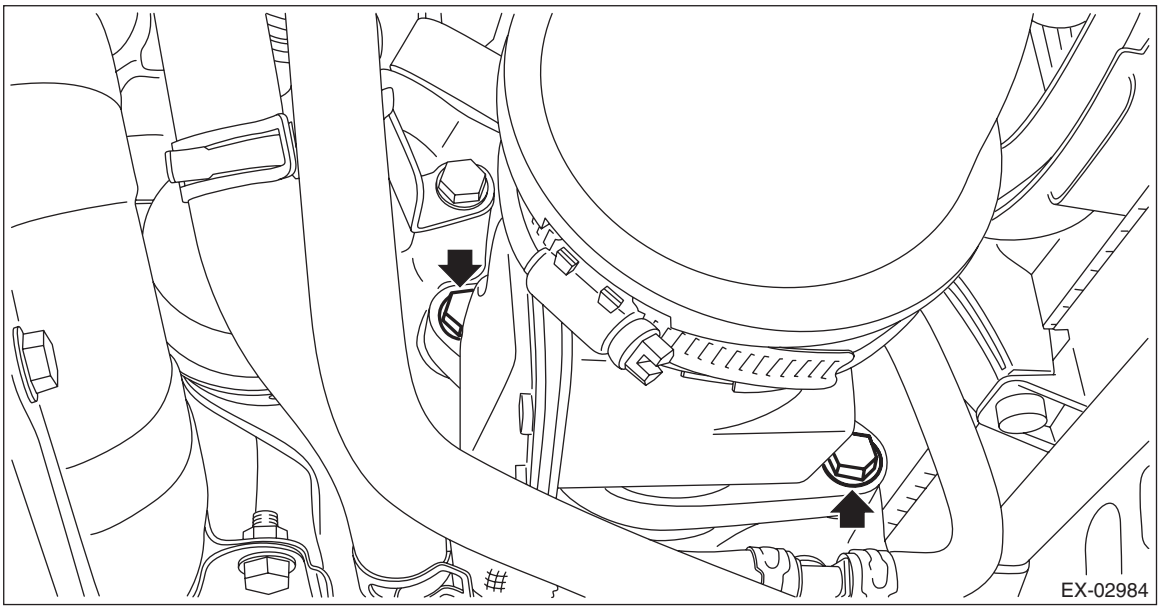

11) Connect the vacuum control hose to the wastegate control solenoid valve.

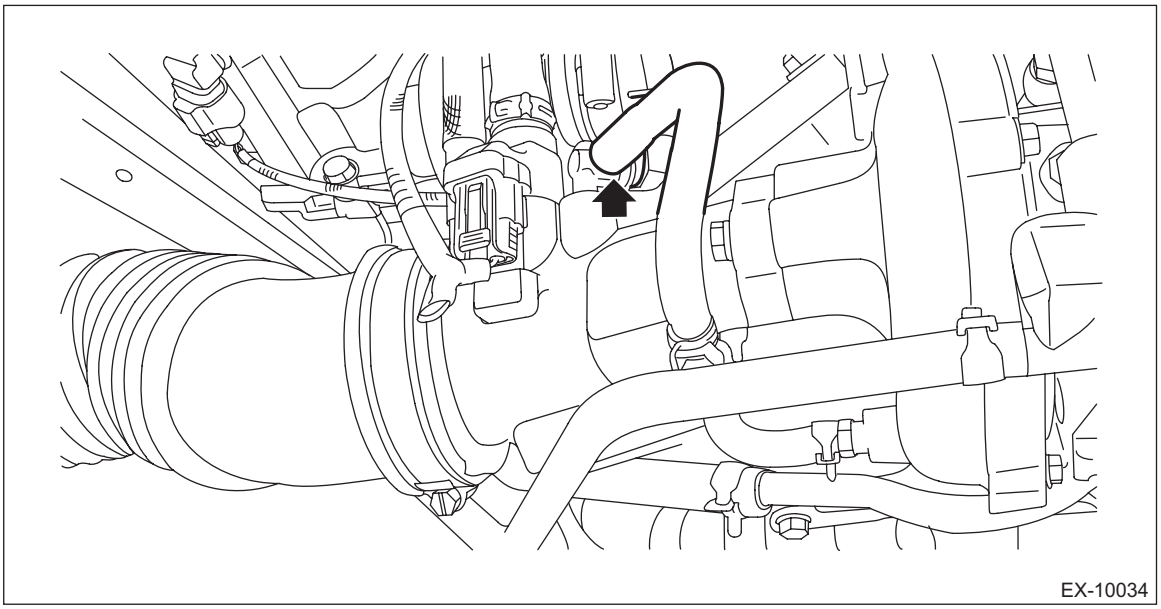

12) Connect the union screw pipe assembly to the oil pipe assembly, and connect the engine coolant hose to the water pipe RH.

CAUTION:
In order to prevent damaging the oil pipe assembly, fix the section (a) shown in the figure when tightening the flare nut on the union screw pipe assembly, and avoid the part from rotating together while tightening the nut.

Tightening torque:
20 N·m (2.0 kgf-m, 14.8 ft-lb)

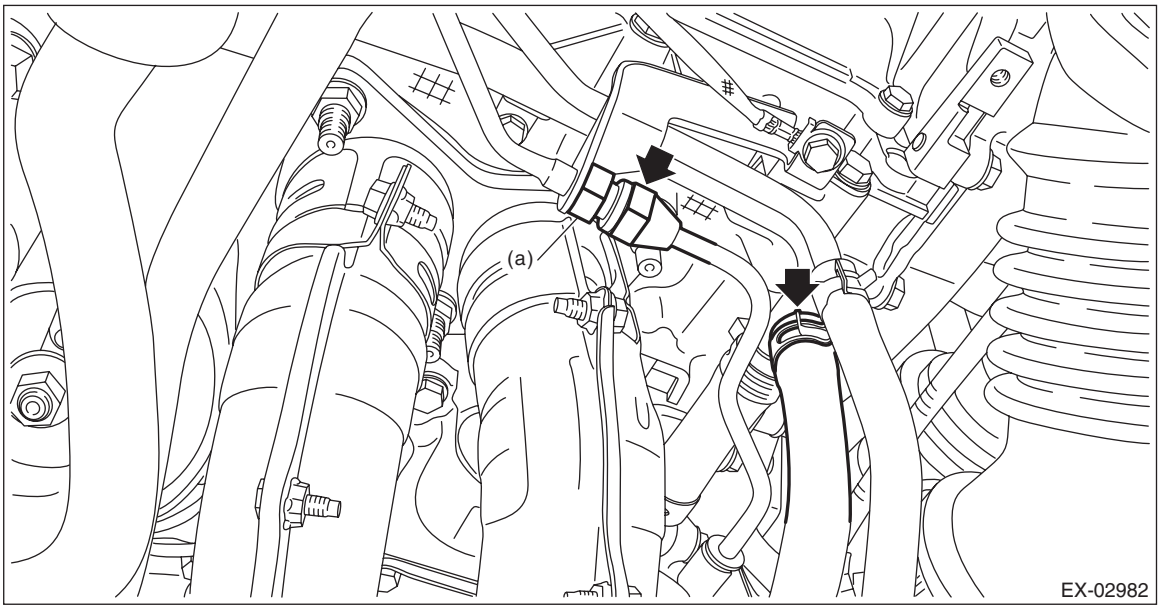

13) Connect the connector on the rear oxygen sensor to the engine harness, and connect the ground cable to the exhaust pipe cover.

Tightening torque:
7.5 N·m (0.8 kgf-m, 5.5 ft-lb)

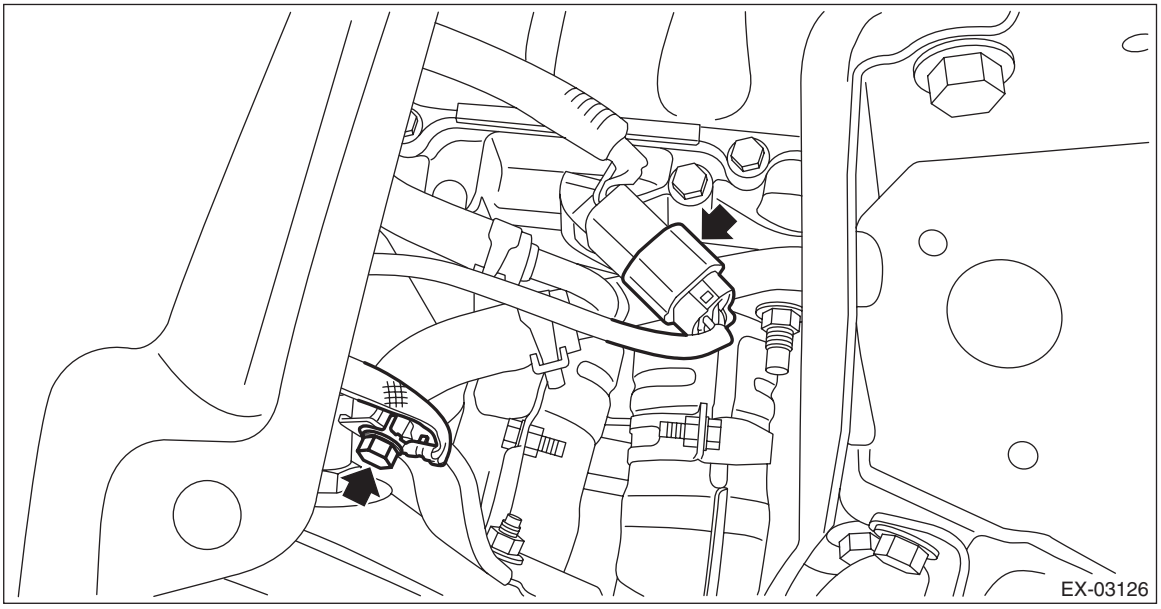

14) Secure the front oxygen (A/F) sensor harness to the water pump pulley cover with the clip (A), and connect the front oxygen (A/F) sensor connector to the engine harness.

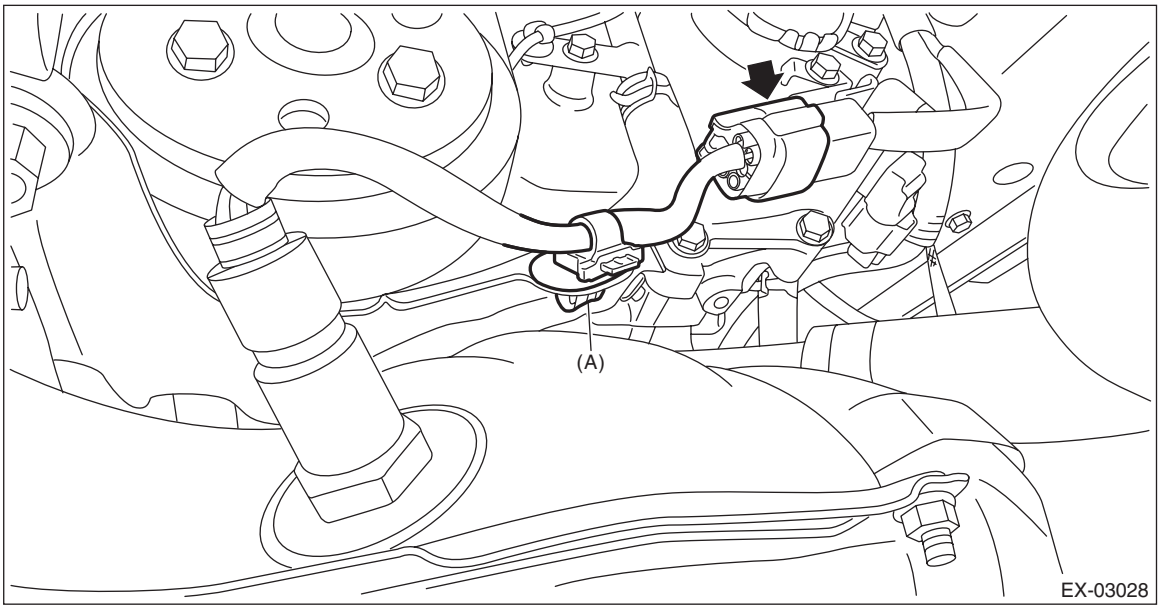

15) Install the under cover. <Ref. to EI-23, INSTALLATION, Front Under Cover.>
16) Lower the vehicle.
17) Install the bolt which secures the intake duct No. 2 to the turbocharger.

Tightening torque:
16 N·m (1.6 kgf-m, 11.8 ft-lb)

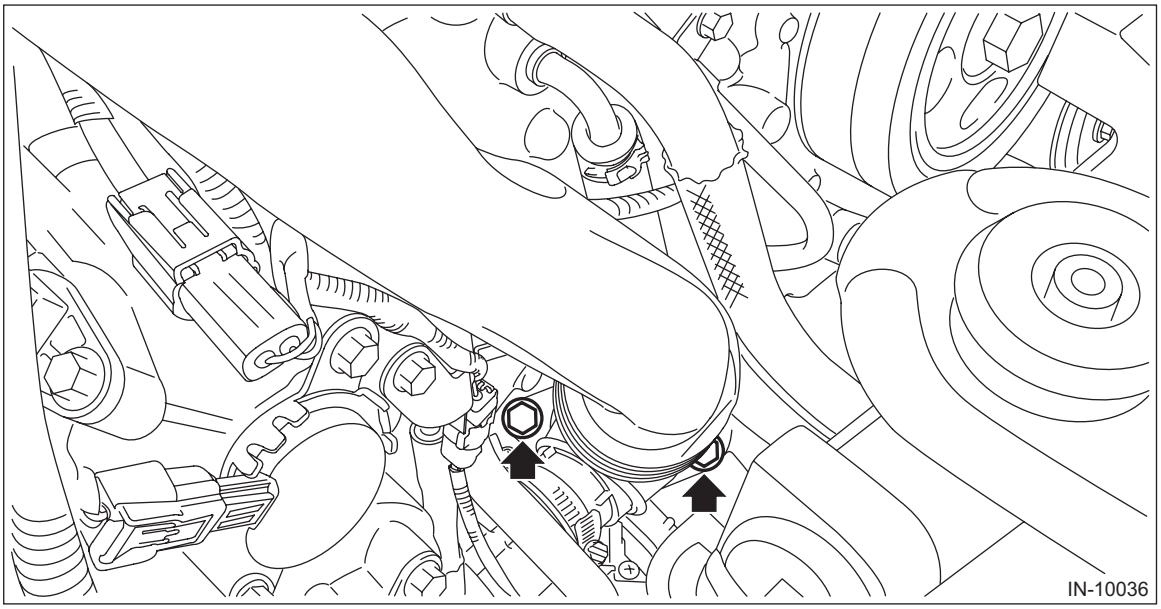

18) Connect the engine coolant hoses to the water pipe assembly.

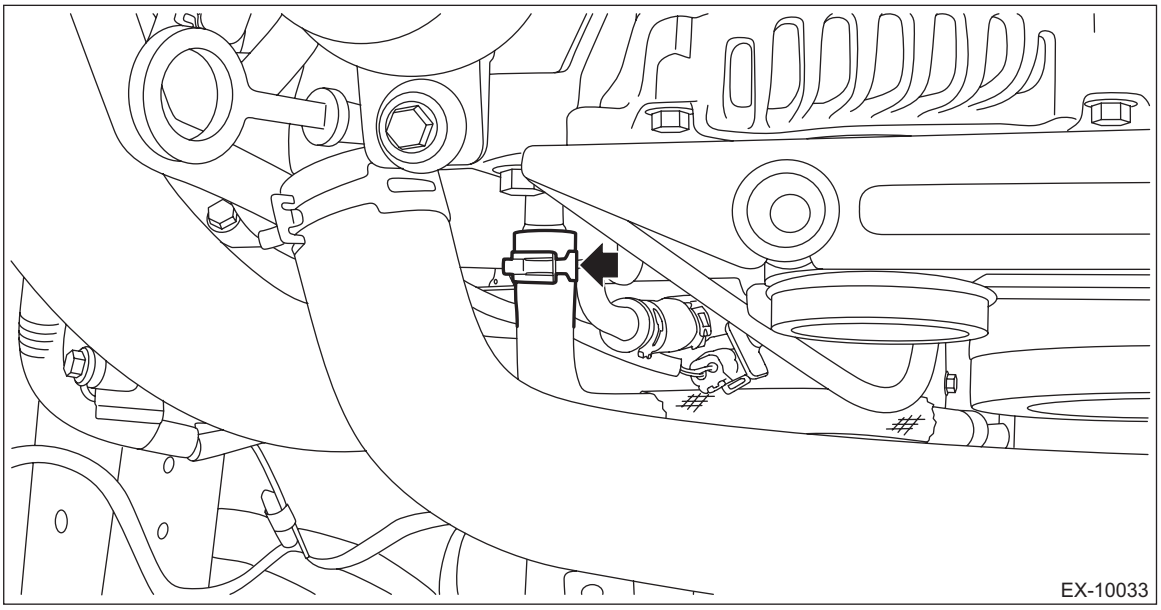

19) Attach the bolt which secures the water pump pulley cover to the turbocharger stay.

Tightening torque:
33 N·m (3.4 kgf-m, 24.3 ft-lb)

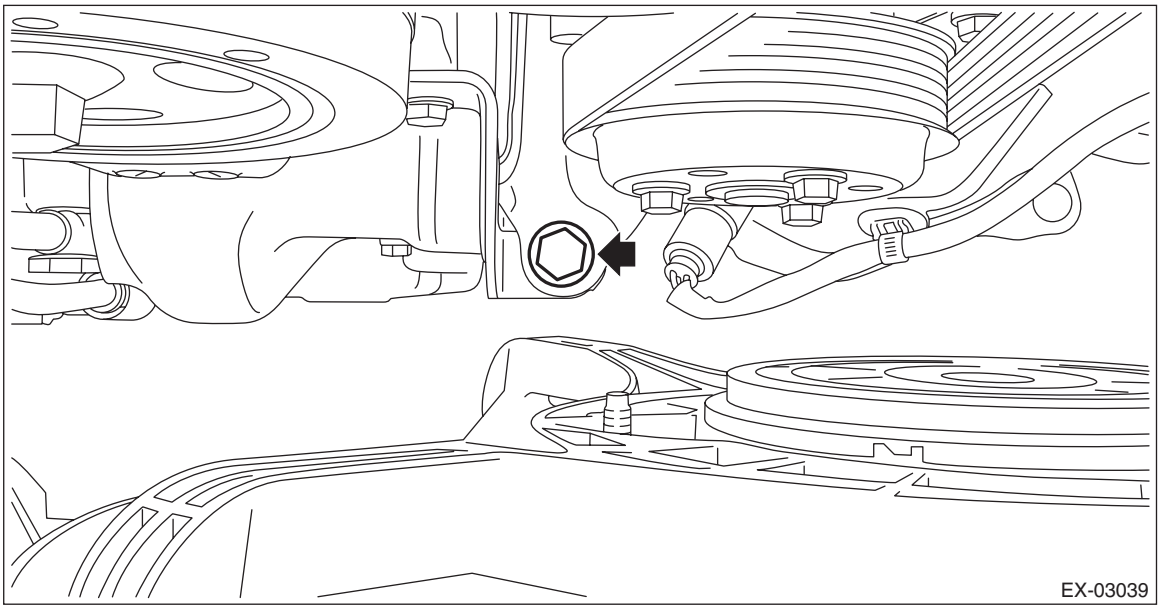

20) Install the radiator sub fan and fan motor. <Ref. to CO(w/o STI)-47, INSTALLATION, Radiator Sub Fan and Fan Motor.>
21) Install the air intake duct. <Ref. to IN(w/o STI)-26, INSTALLATION, Air Intake Duct.>
22) Check the engine oil level and replenish the engine oil if necessary. <Ref. to LU(w/o STI)-10, INSPECTION, Engine Oil.>
23) Connect the ground terminal to battery sensor. <Ref. to NT-6, BATTERY, NOTE, Note.>
24) Fill engine coolant. <Ref. to CO(w/o STI)-14, FILLING OF ENGINE COOLANT, REPLACEMENT, Engine Coolant.>
25) Install the collector cover. <Ref. to IN(w/o STI)-10, INSTALLATION, Collector Cover.>

C: DISASSEMBLY

1) Remove the exhaust pipe cover from the turbocharger stay.

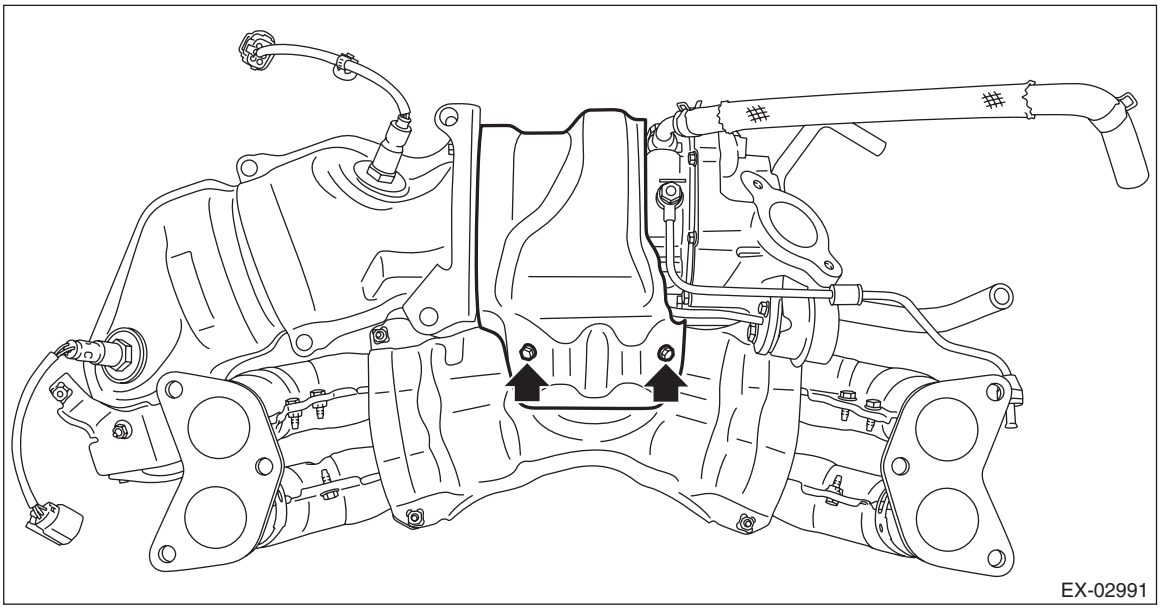

2) Remove nuts which hold the center exhaust pipe (front) to the turbocharger, and remove the center exhaust pipe (front) together with the turbocharger stay (A).

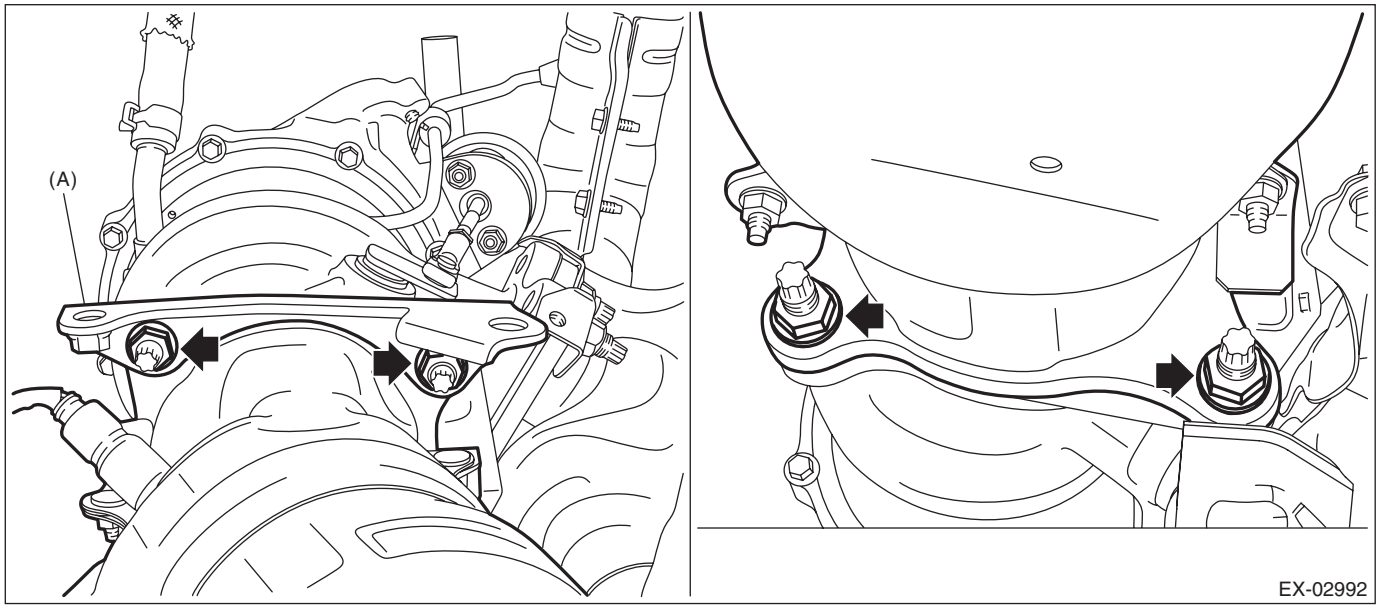

3) Remove the exhaust pipe cover from the front exhaust pipe.

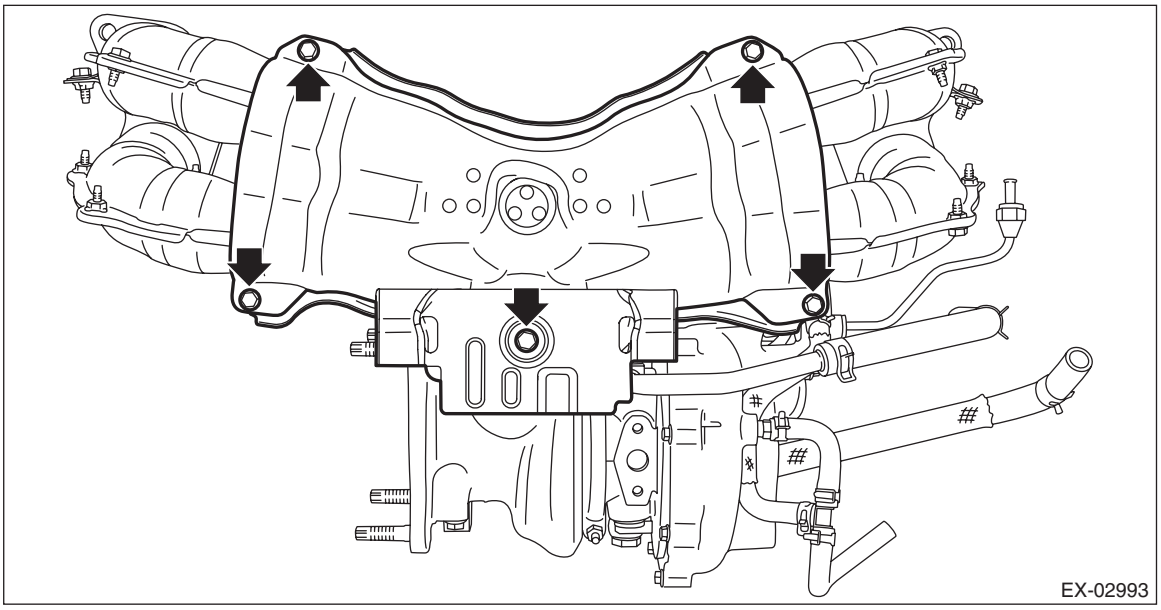

4) Remove nuts which secure the front exhaust pipe to the turbocharger, and remove the front exhaust pipe together with the turbocharger stay (A).

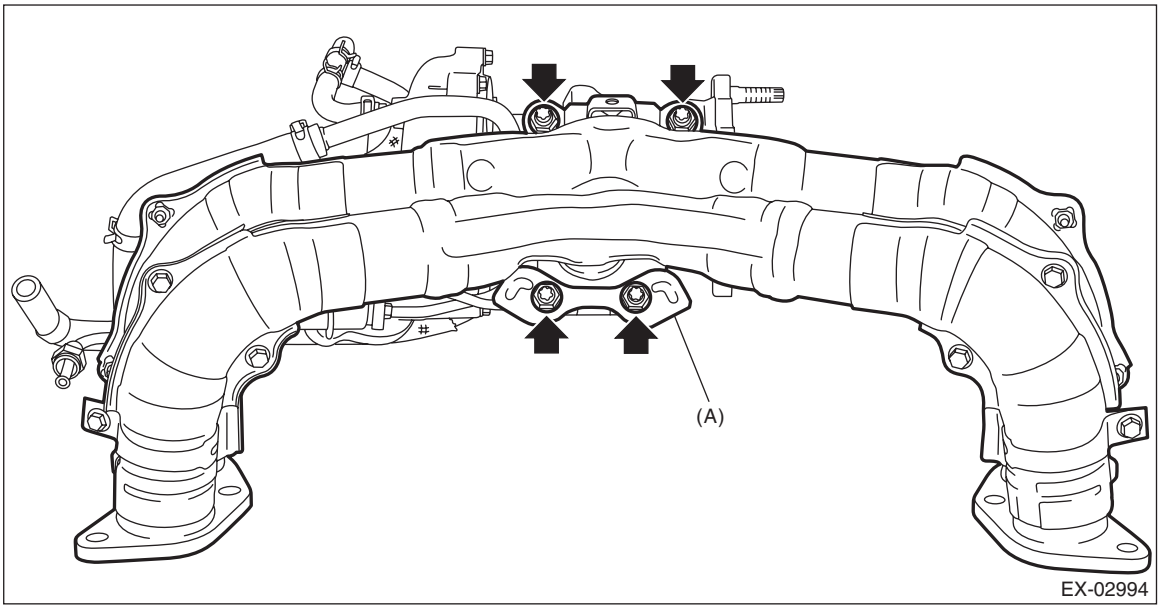

5) Remove the exhaust pipe cover from the front exhaust pipe.

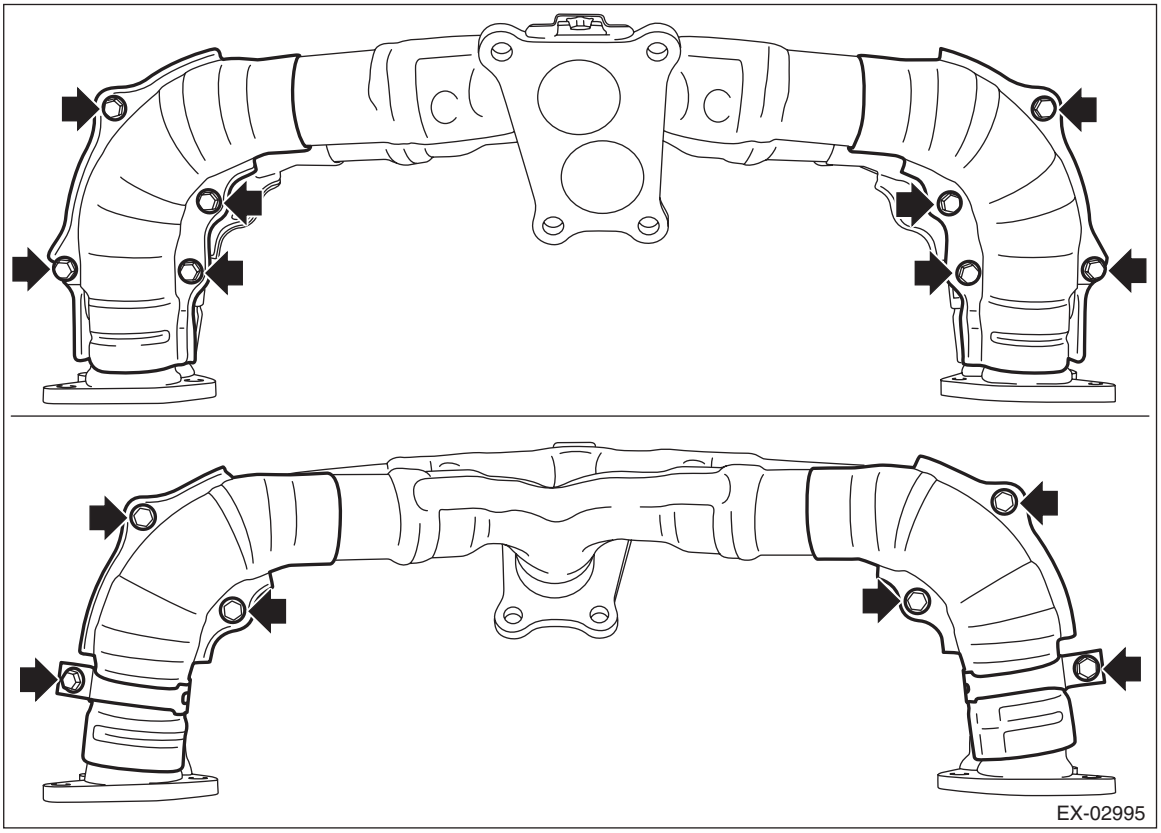

D: ASSEMBLY

1) Install the exhaust pipe cover to the front exhaust pipe.

Tightening torque:
7.5 N·m (0.8 kgf-m, 5.5 ft-lb)

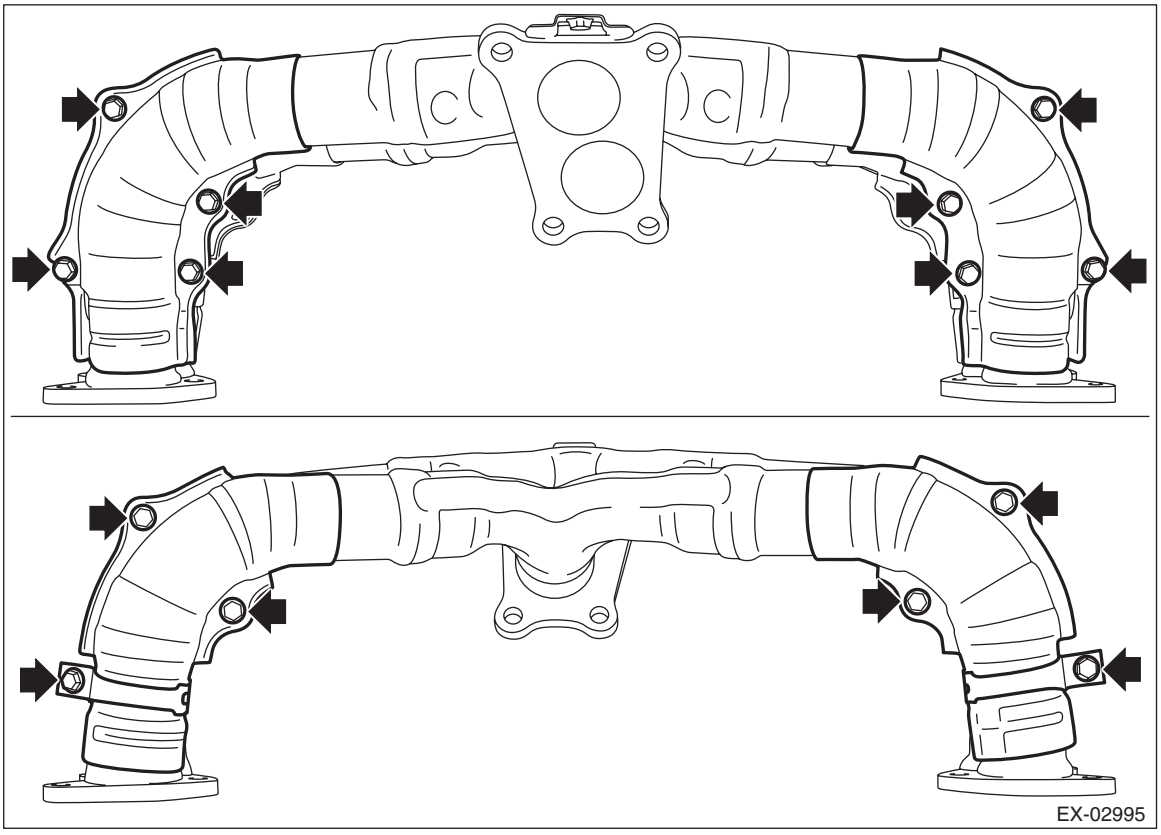

2) Install the front exhaust pipe together with the turbocharger stay (A) to the turbocharger.

NOTE:
Use a new gasket and self-locking nut.

Tightening torque:
42.5 N·m (4.3 kgf-m, 31.3 ft-lb)

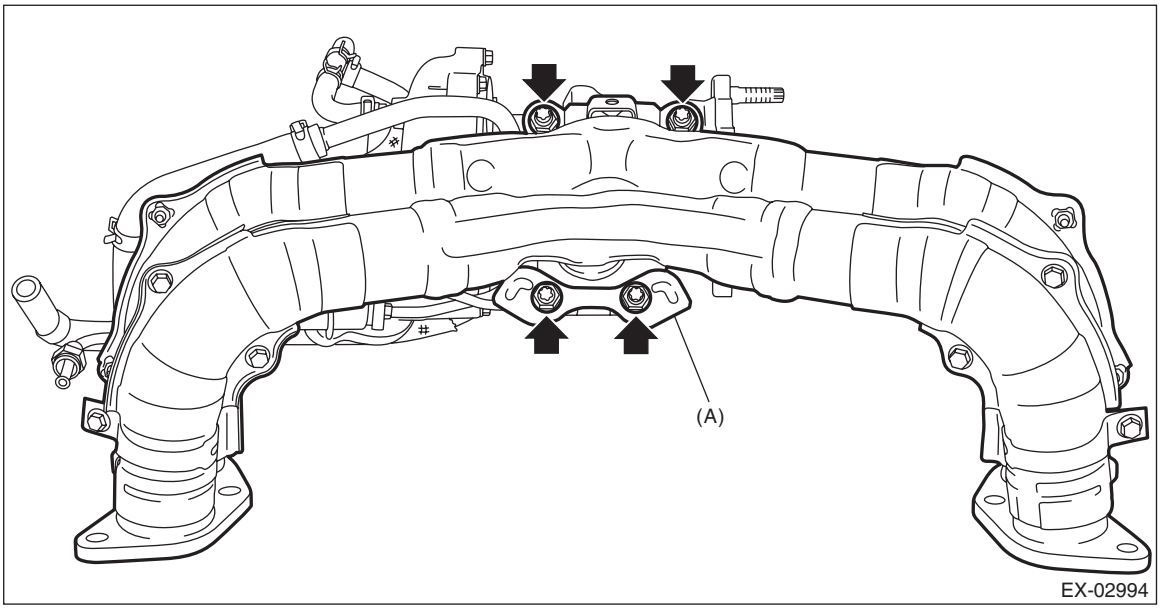

3) Install the exhaust pipe cover to the front exhaust pipe.

Tightening torque:
7.5 N·m (0.8 kgf-m, 5.5 ft-lb)

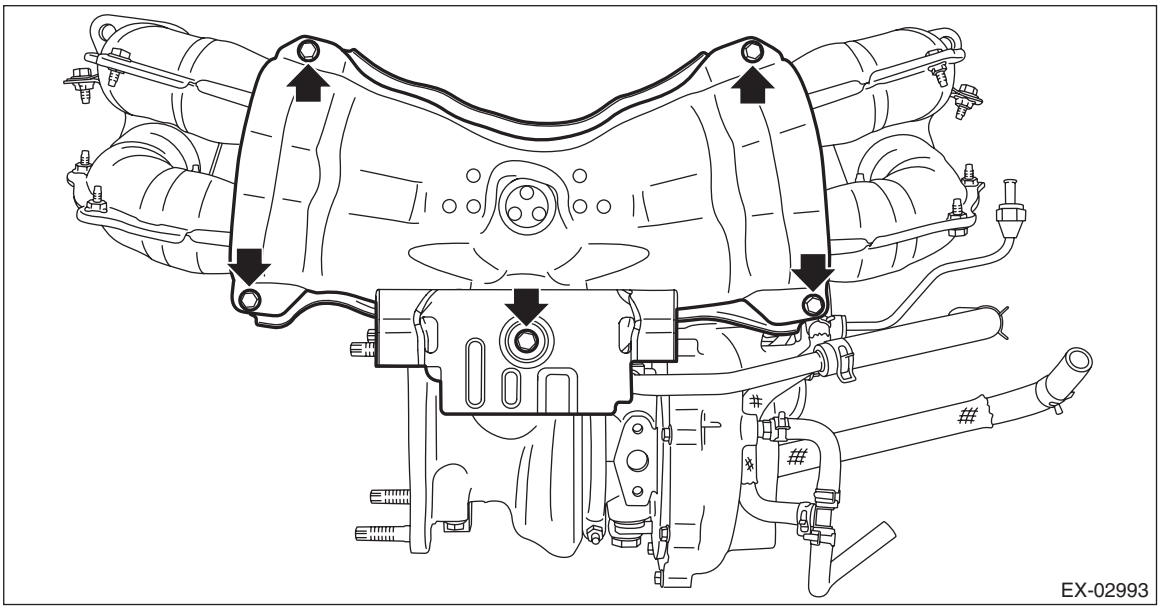

4) Install the center exhaust pipe (front) together with the turbocharger stay (A) to the turbocharger.

NOTE:
Use a new gasket and self-locking nut.

Tightening torque:
42.5 N·m (4.3 kgf-m, 31.3 ft-lb)

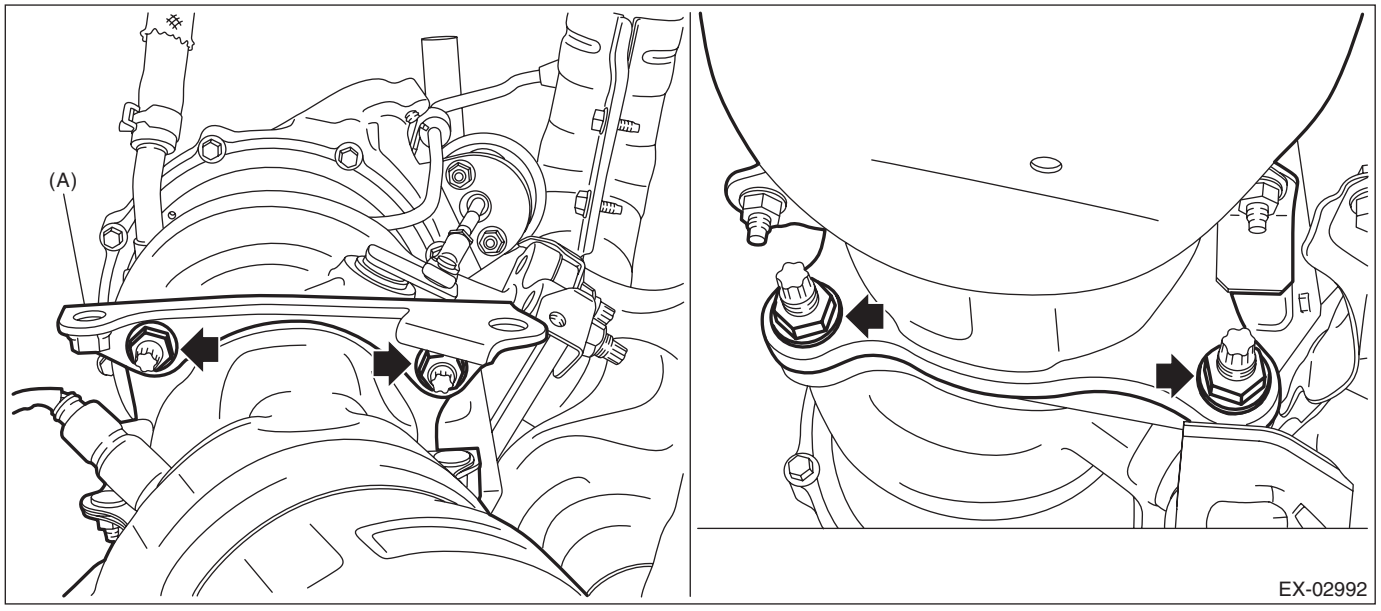

5) Install the exhaust pipe cover to the turbocharger stay.

Tightening torque:
7.5 N·m (0.8 kgf-m, 5.5 ft-lb)

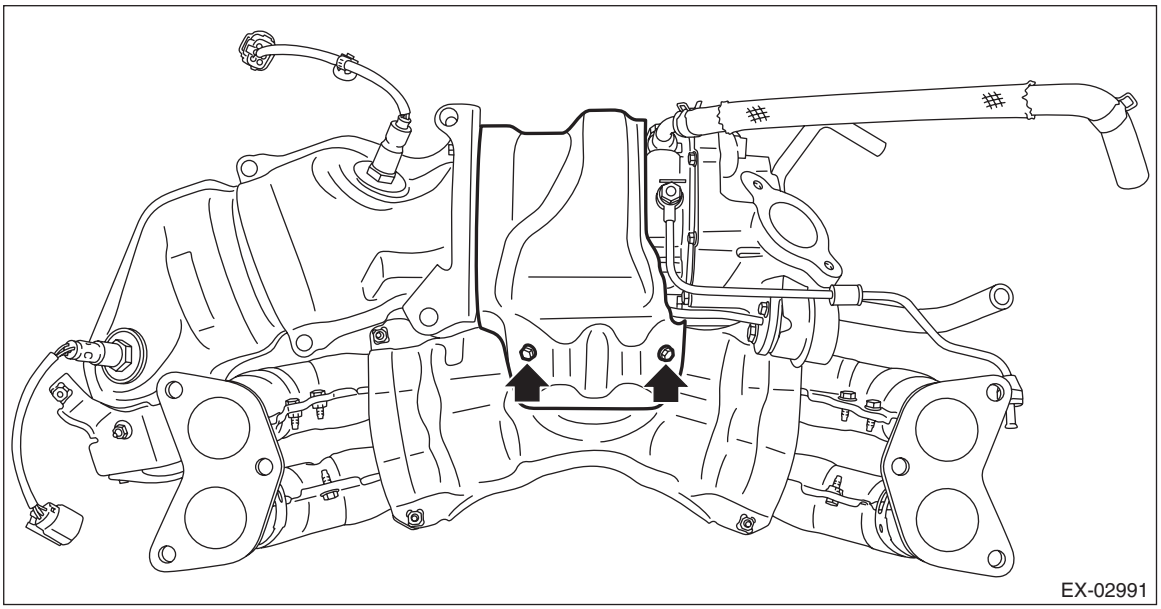

E: INSPECTION

1) Check the connections and welded parts for exhaust leaks.
2) Make sure there are no holes or rusting.

3. Center Exhaust Pipe

A: REMOVAL

1) Remove the collector cover. <Ref. to IN(w/o STI)-7, REMOVAL, Collector Cover.>
2) Disconnect the ground terminal from battery sensor. <Ref. to NT-6, BATTERY, NOTE, Note.>
3) Lift up the vehicle.
4) Remove the under cover. <Ref. to EI-22, REMOVAL, Front Under Cover.>
5) Disconnect the connector on the front oxygen (A/F) sensor from the engine harness, and remove the clip (A) which secures the front oxygen (A/F) sensor harness to the water pump pulley cover.

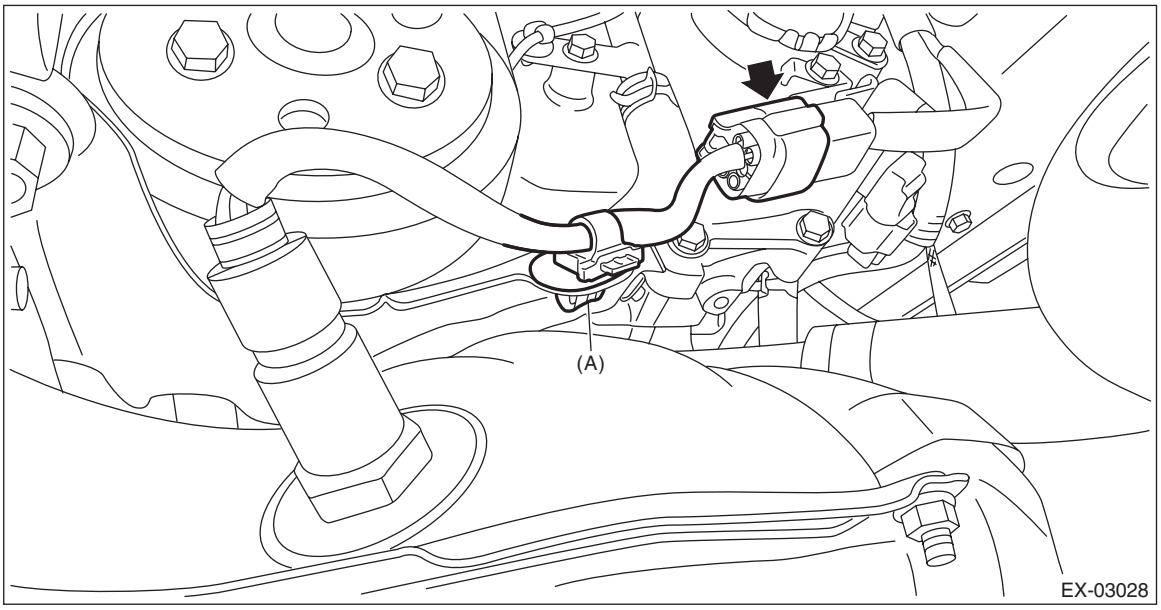

6) Disconnect the connector on the rear oxygen sensor from the engine harness, and disconnect the ground cable from the exhaust pipe cover.

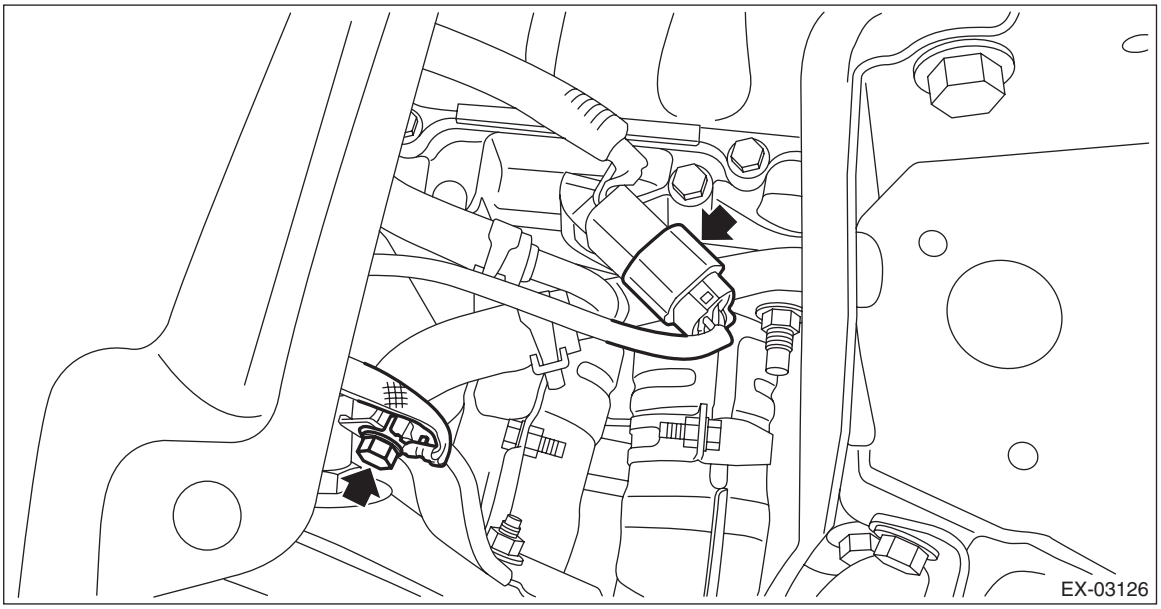

7) Lower the vehicle.

8) Remove the bolts which secure the water pump pulley cover (A) and exhaust pipe stay (B) to the turbocharger stay, and remove the water pump pulley cover (A) and exhaust pipe stay (B) from the water pump and turbocharger stay.

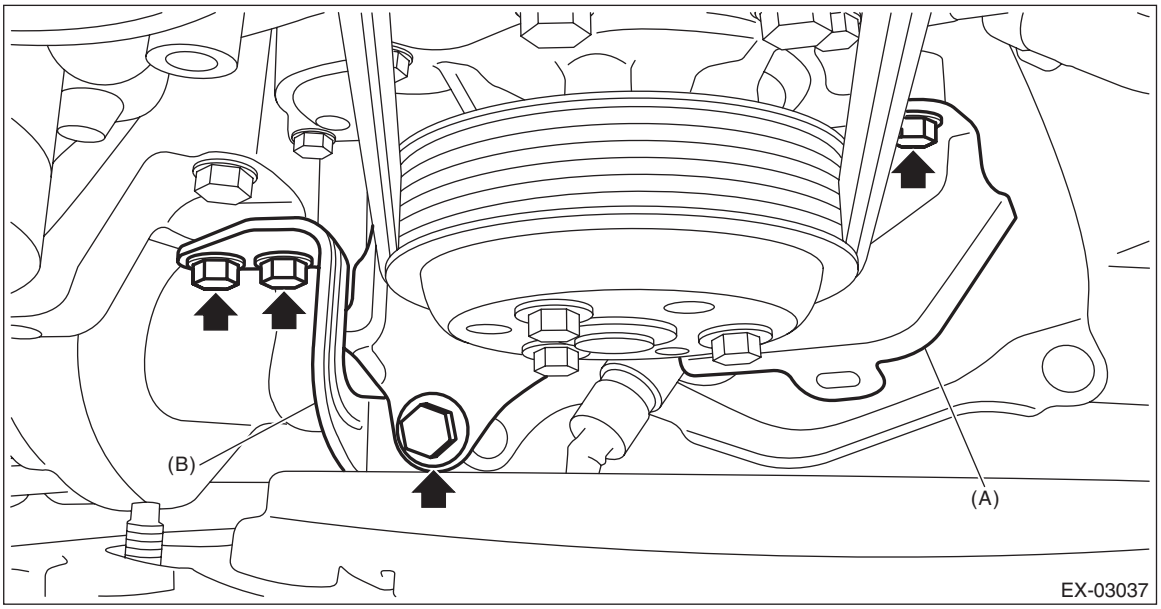

9) Lift up the vehicle.
10) Remove the nuts which secure the center exhaust pipe (rear) to the center exhaust pipe (front).

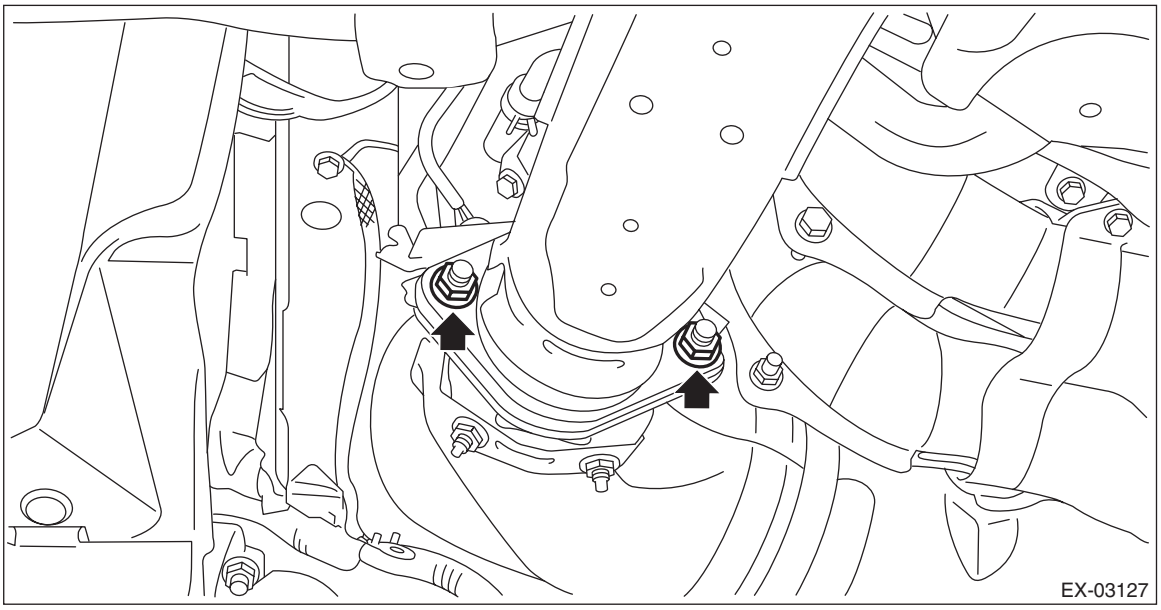

11) Remove the bolts, springs, and nuts which secure the rear exhaust pipe to the center exhaust pipe (rear).

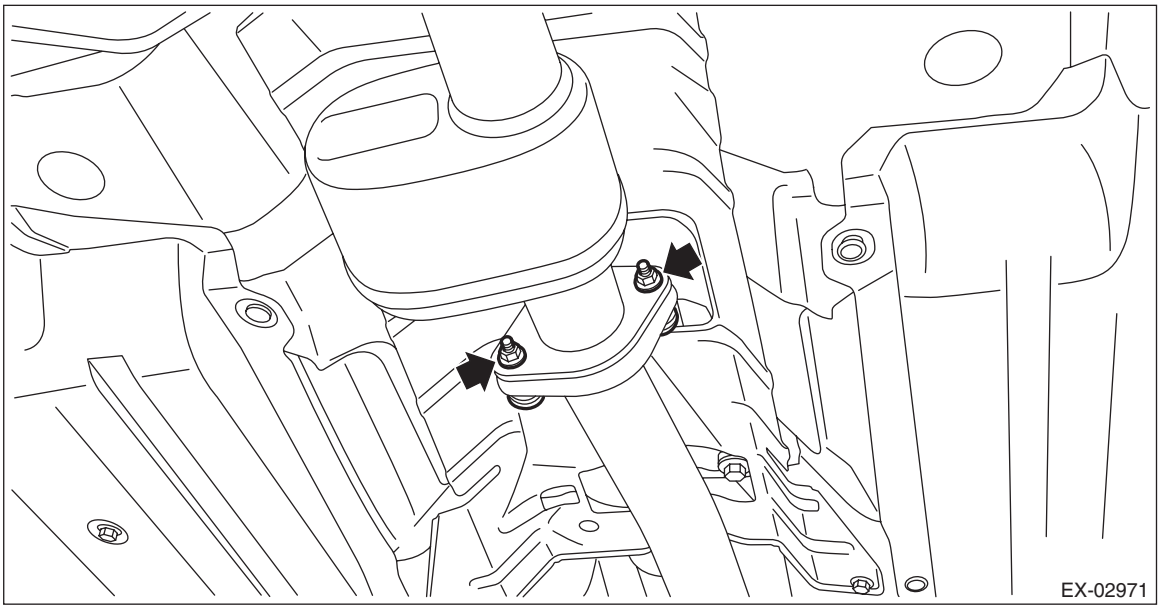

12) Remove the bolt which holds center exhaust pipe (rear) to the hanger bracket, and remove the center exhaust pipe (rear).

NOTE:
For CVT model, removing the exhaust pipe bracket from the center exhaust pipe (rear) will adversely affect the positioning accuracy. Therefore, do not remove the bolts in section (a) shown in the figure.

- CVT model

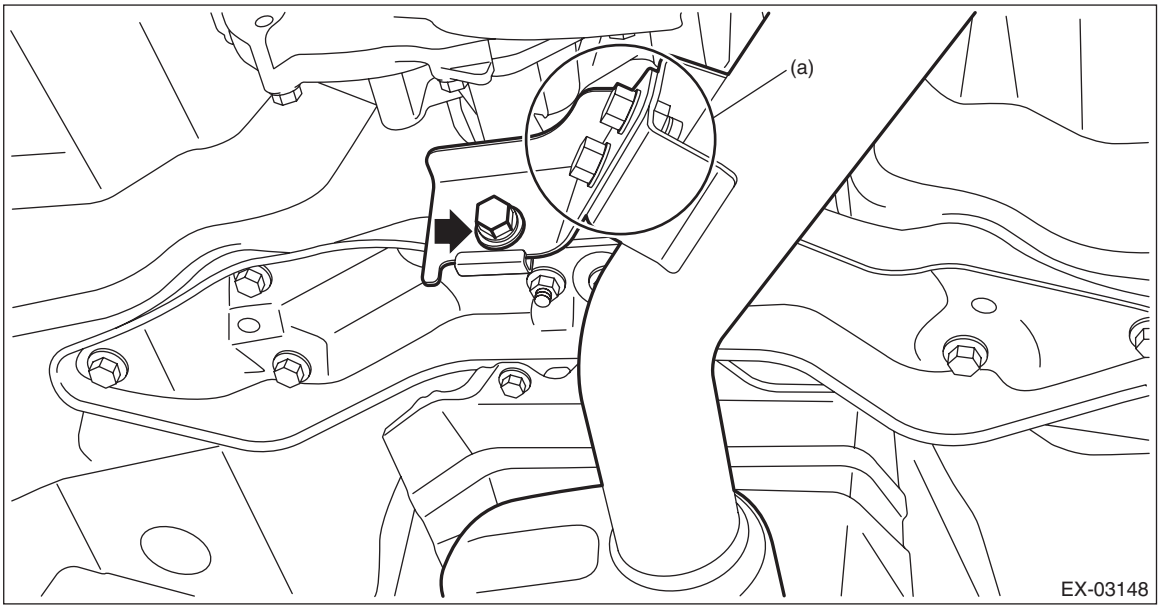

- MT model

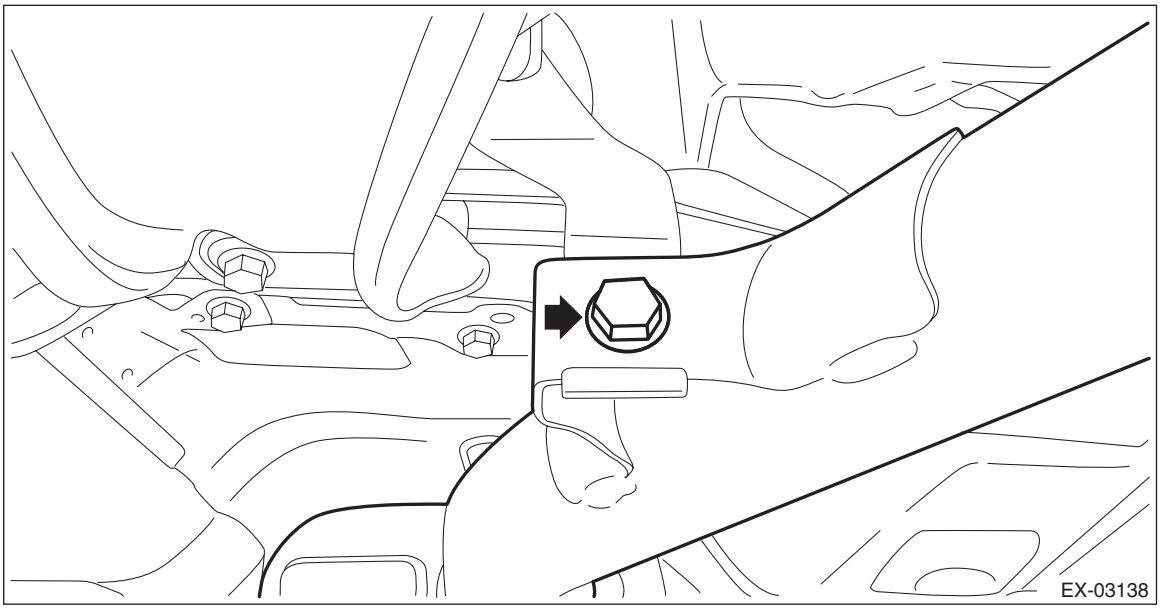

13) Remove the exhaust pipe cover (A) from the center exhaust pipe (front), and remove the bolts which secure the turbocharger stay.

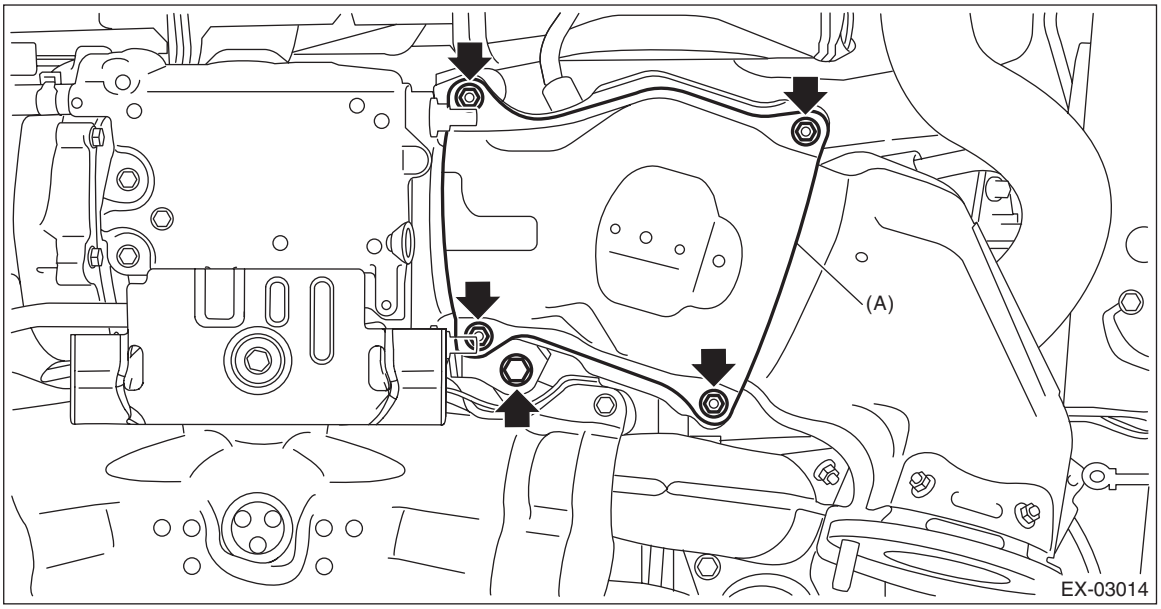

14) Using ST, remove the nut (1 place) which secures the center exhaust pipe (front) to the turbocharger.
ST 18283AA010 WRENCH ADAPTER

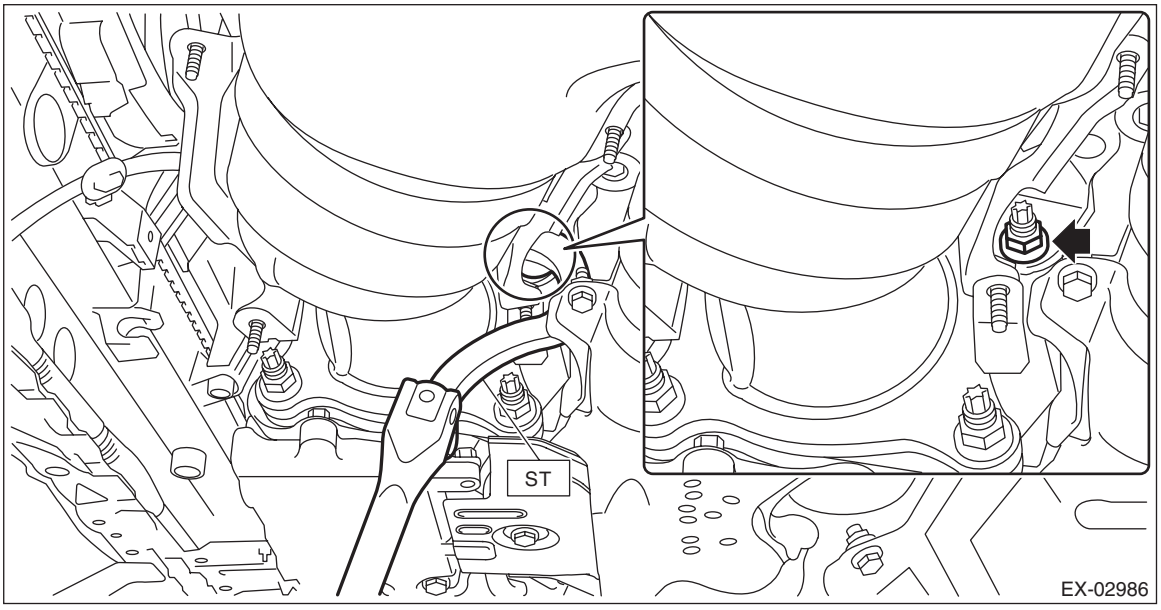

15) Remove the nuts (3 places) which secure the center exhaust pipe (front) to the turbocharger.

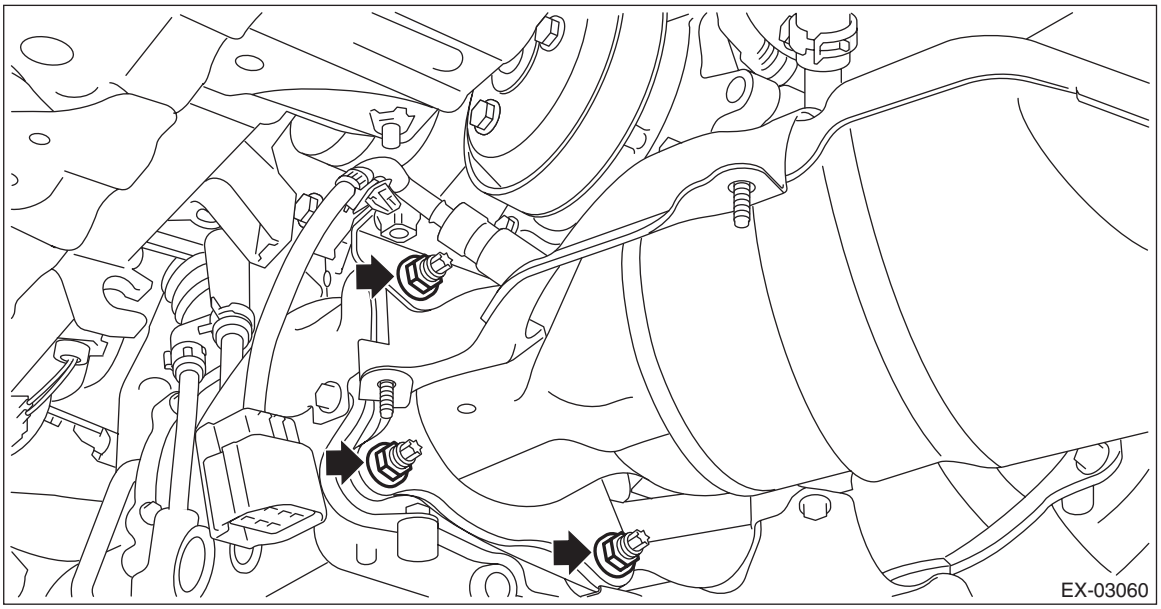

16) Using the TORX® socket E10, remove stud bolts (3 places) from the turbocharger, and remove the center exhaust pipe (front) together with turbocharger stay (A).

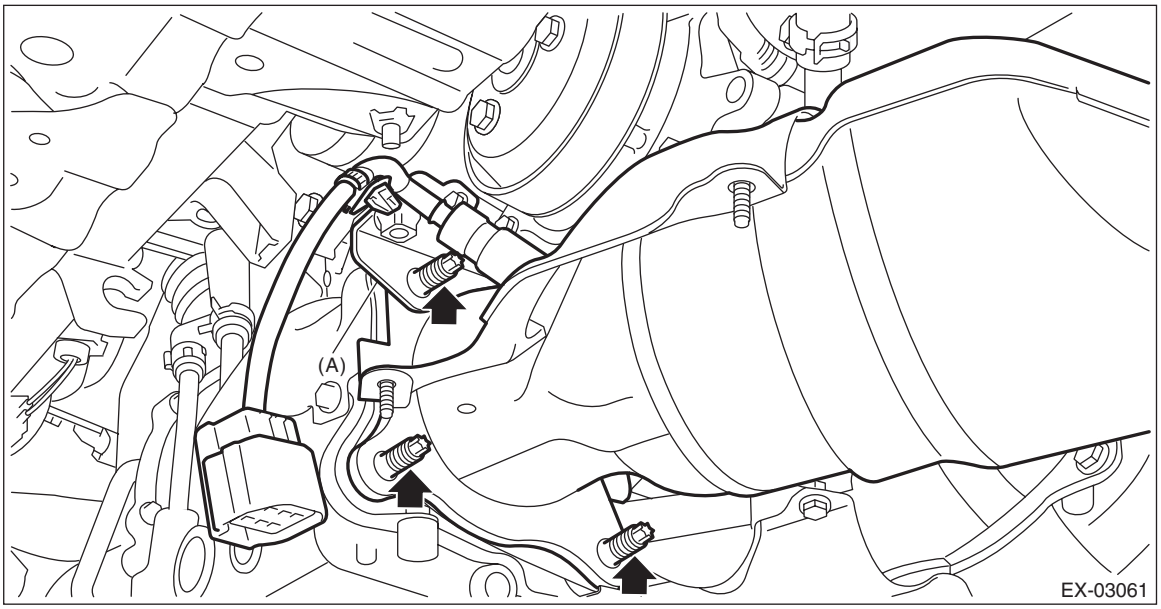

B: INSTALLATION

1) Set the center exhaust pipe (front) together with turbocharger upper stay (A), and install stud bolts (3 places) to the turbocharger by using the TORX® socket E10.

NOTE:
Use a new gasket.

Tightening torque:
14.7 N·m (1.5 kgf-m, 10.8 ft-lb)

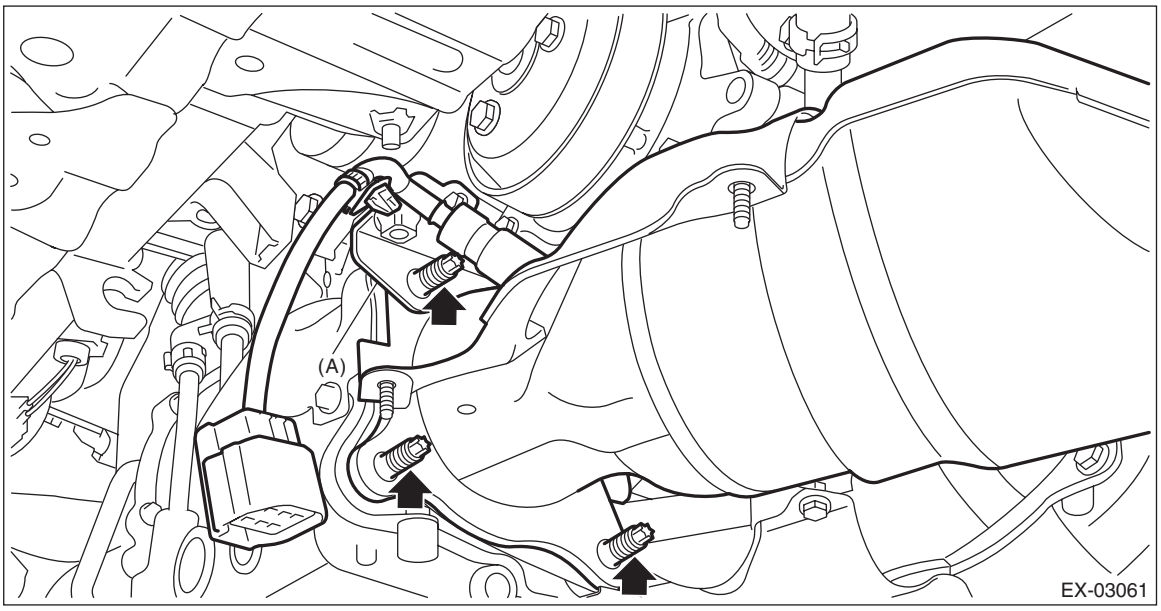

2) Temporarily tighten the nuts (3 places) which secure the center exhaust pipe (front) to the turbocharger together with the turbocharger upper stay (A).

NOTE:
Use a new self-locking nut.

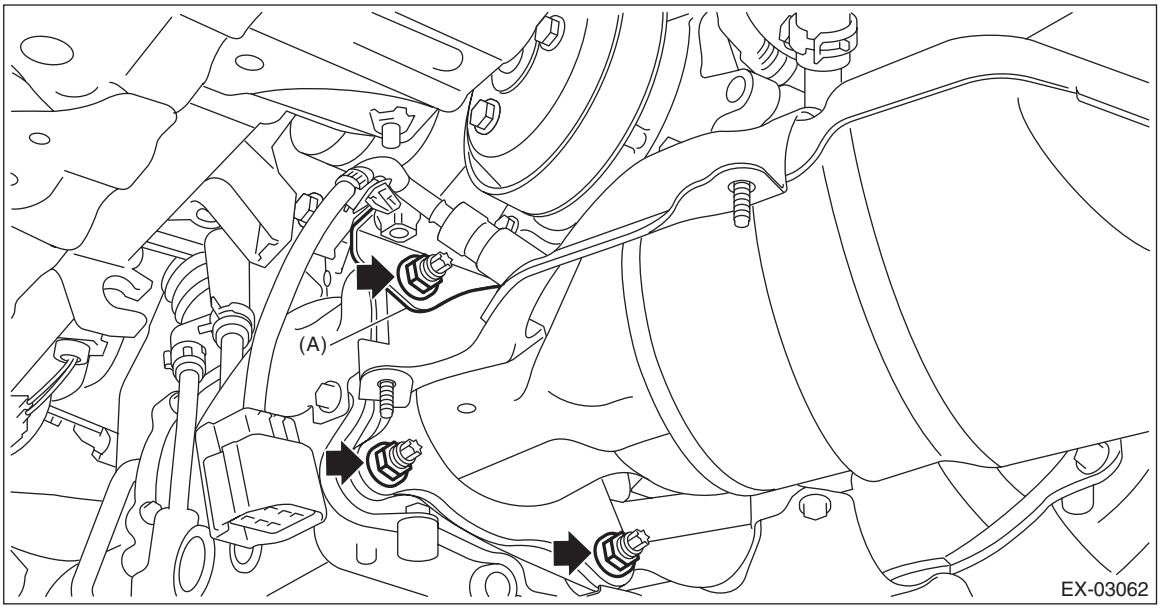

3) Using ST, install the nut (1 place) which secures the center exhaust pipe (front) to the turbocharger.

NOTE:
Use a new self-locking nut.
ST 18283AA010 WRENCH ADAPTER

Tightening torque:

Calculation formula
T = L/(120 mm (4.72 in) + L) × 42.5 N·m (4.3 kgf-m, 31.3 ft-lb)
T: Tightening torque L: Effective length of torque wrench NOTE: If the effective length of the torque wrench used is unknown, consult the manufacturer of the torque wrench.

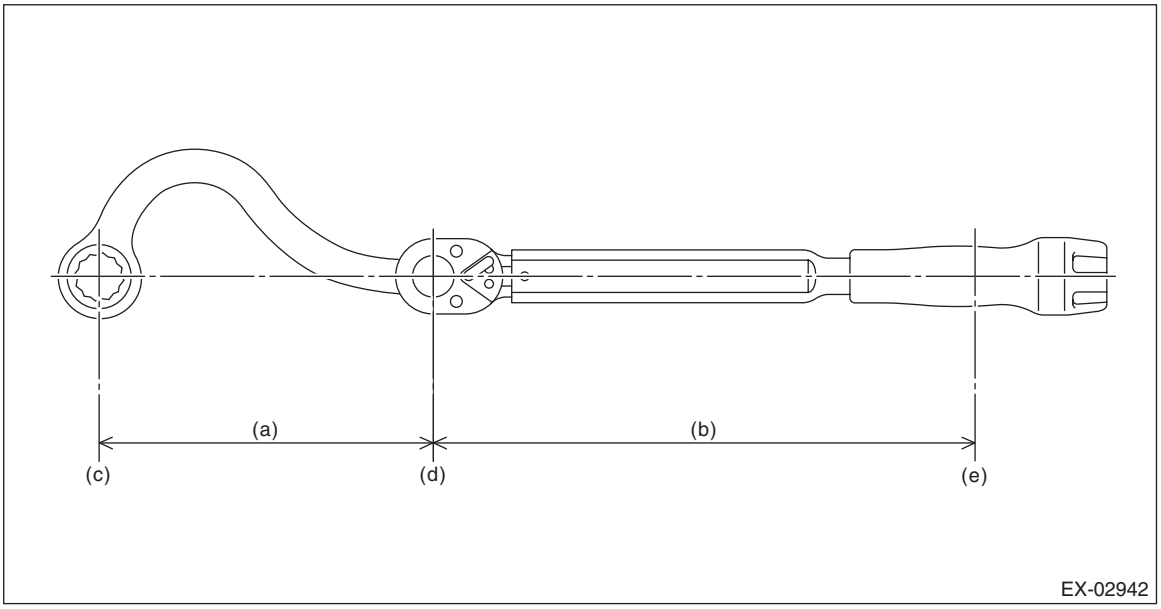

(a) Effective length of the ST
(b) Effective length of the torque wrench
(c) Center of drive angle of the ST
(d) Center of drive angle of the torque wrench
(e) Center of the position where a force is applied by hand

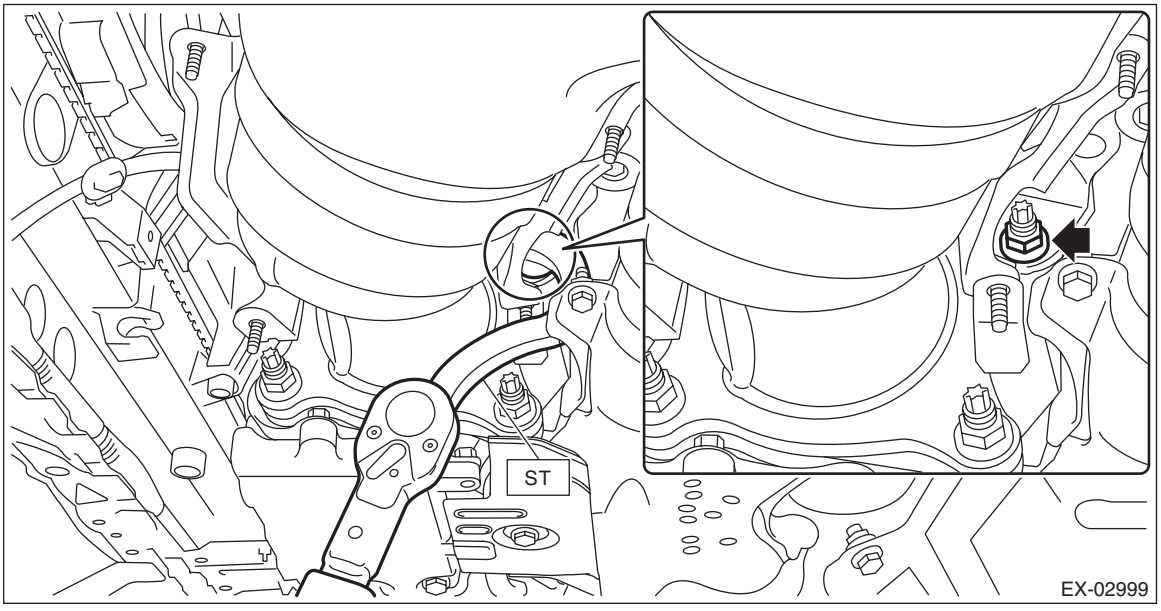

4) Temporarily tighten the nuts (3 places) which secure the center exhaust pipe (front) to the turbocharger together with the turbocharger stay (A).

Tightening torque:
42.5 N·m (4.3 kgf-m, 31.3 ft-lb)

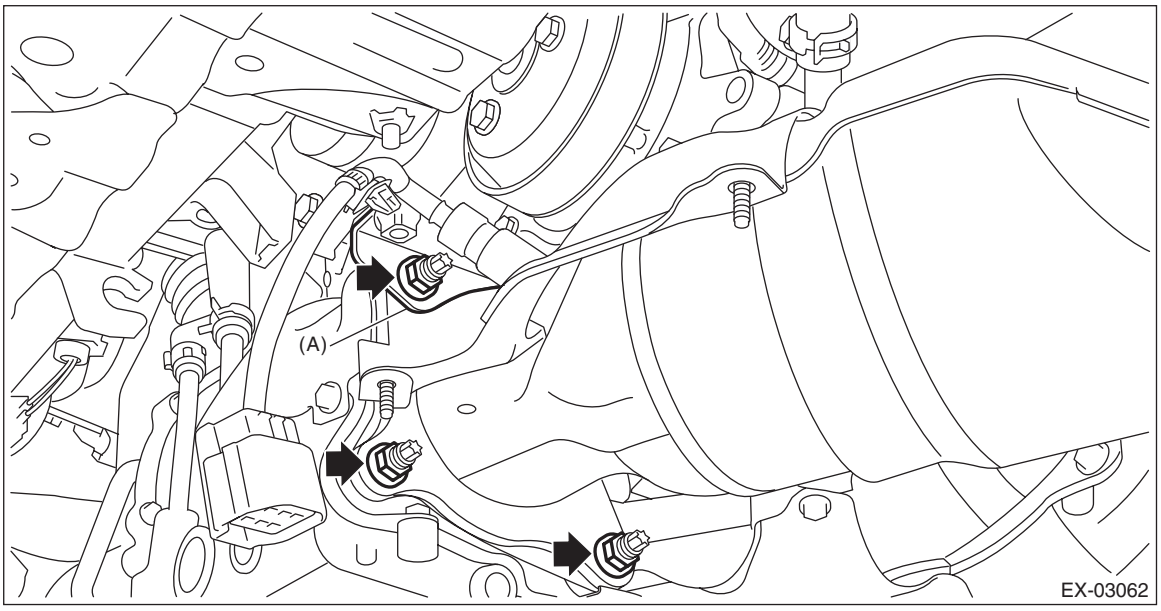

5) Install the bolt which secures the turbocharger stay, and install the exhaust pipe cover (A) to the center exhaust pipe (front).

Tightening torque:
T1: 7.5 N·m (0.8 kgf-m, 5.5 ft-lb)
T2: 33 N·m (3.4 kgf-m, 24.3 ft-lb)

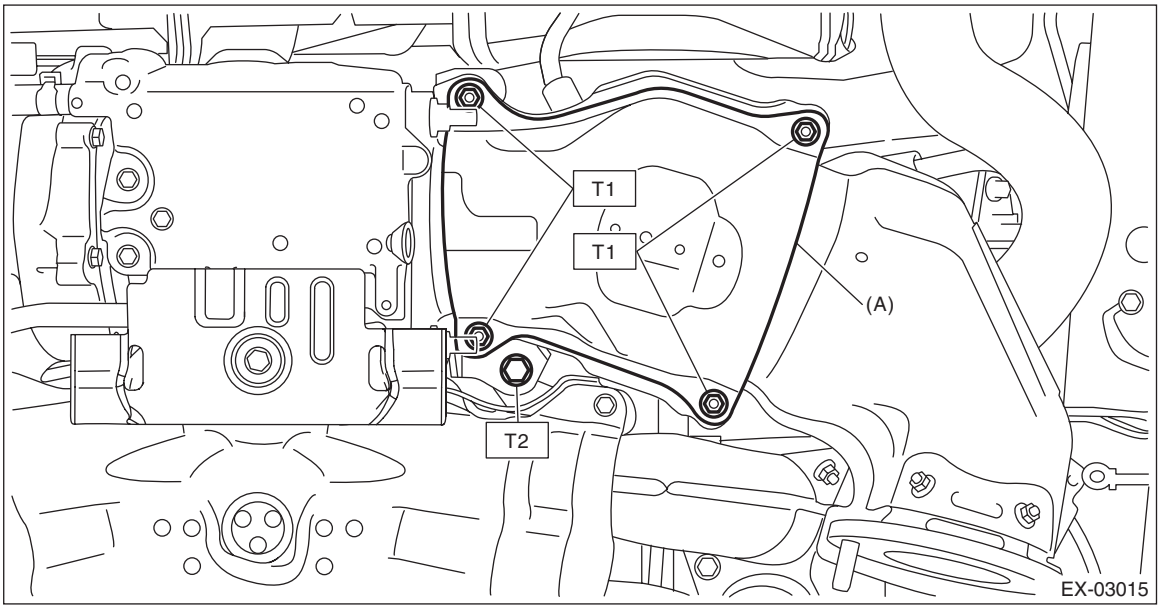

6) Install the center exhaust pipe (rear) and temporarily tighten the bolt which holds center exhaust pipe (rear) to the hanger bracket.

- CVT model

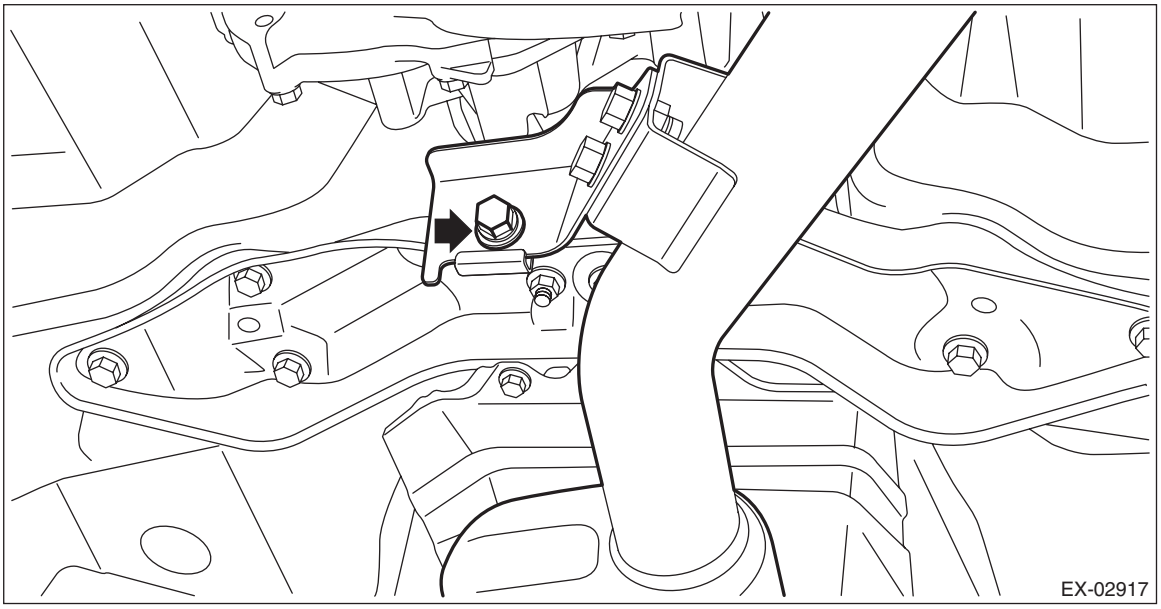

- MT model

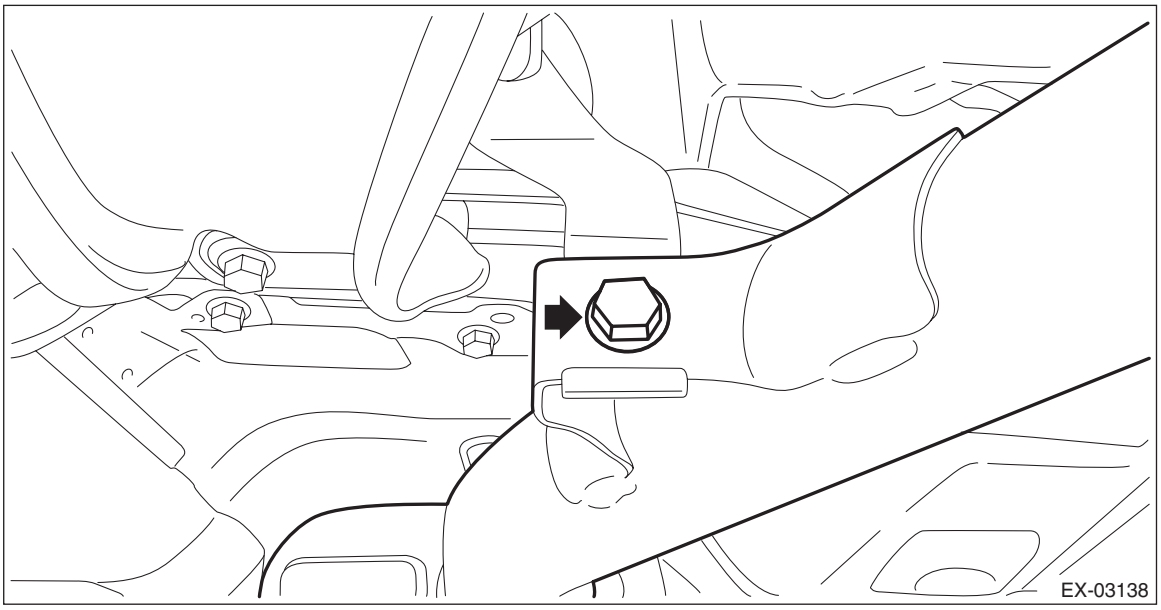

7) Install the bolts, springs, and nuts which secure the rear exhaust pipe to the center exhaust pipe (rear).

NOTE:
Use a new gasket.

Tightening torque:
18 N·m (1.8 kgf-m, 13.3 ft-lb)

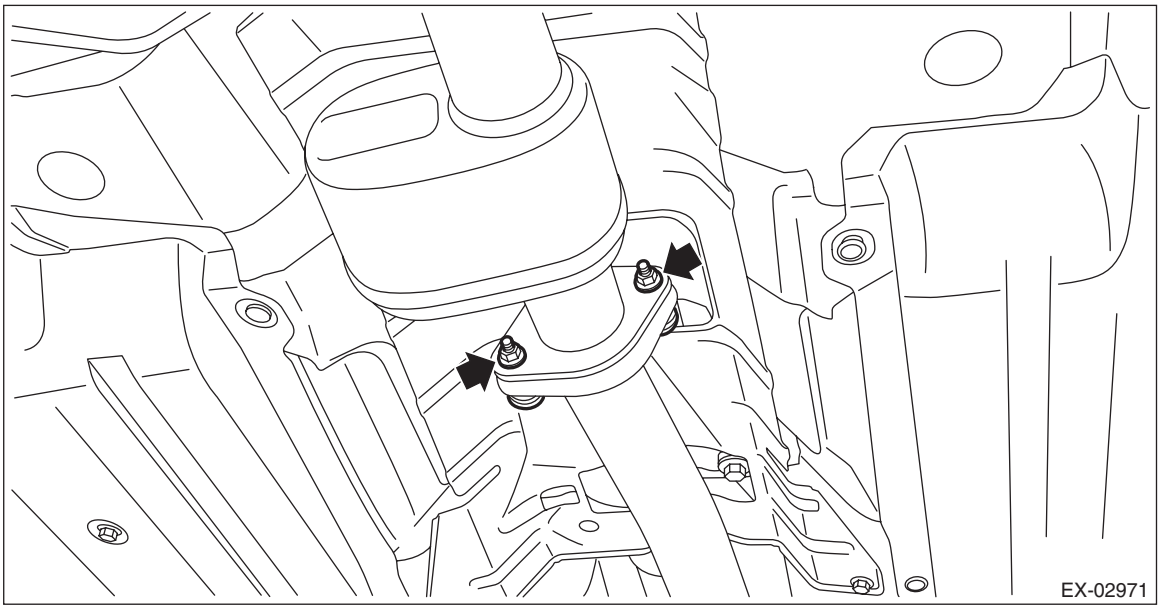

8) Install the nuts which secure the center exhaust pipe (front) to the center exhaust pipe (rear).

NOTE:
Use a new gasket.

Tightening torque:
42.5 N·m (4.3 kgf-m, 31.3 ft-lb)

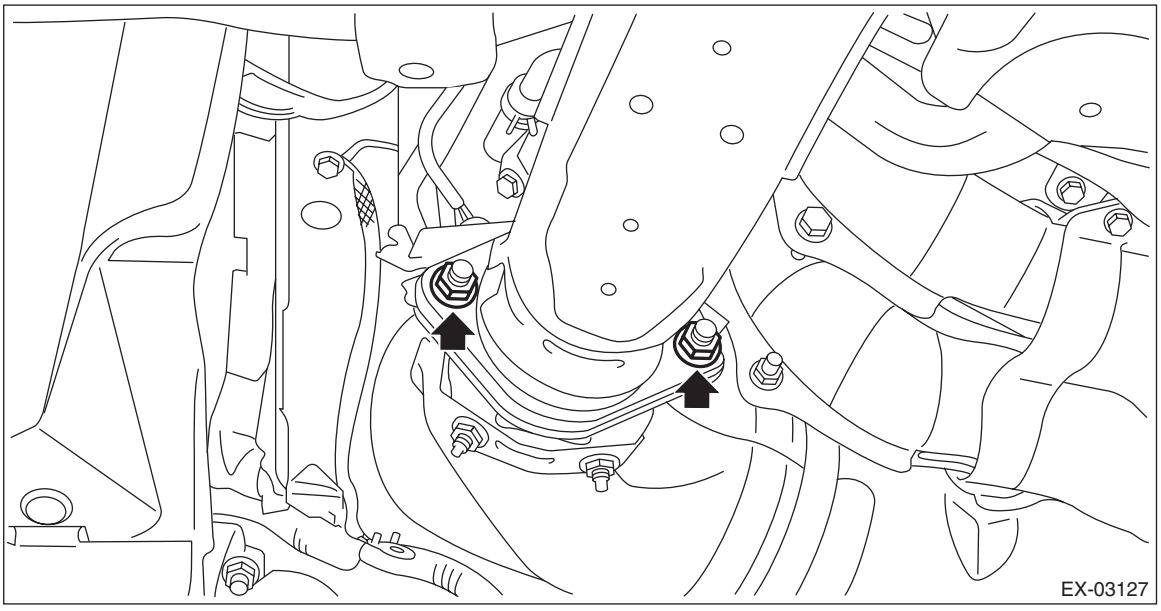

9) Tighten the bolts which hold center exhaust pipe (rear) to the hanger bracket.

Tightening torque:
35 N·m (3.6 kgf-m, 25.8 ft-lb)

- CVT model

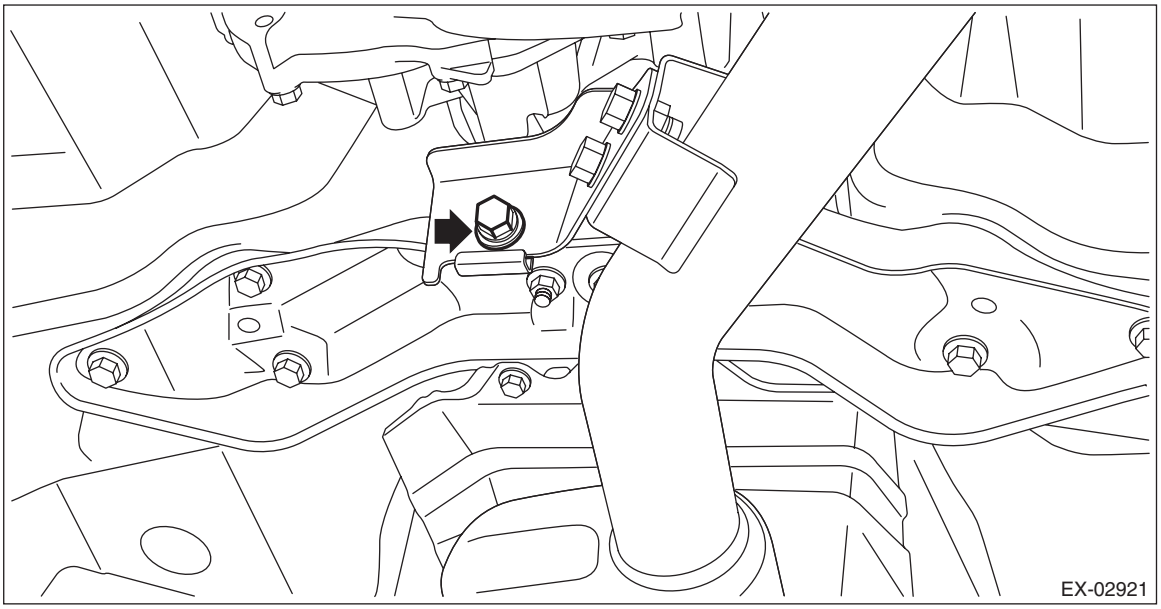

- MT model

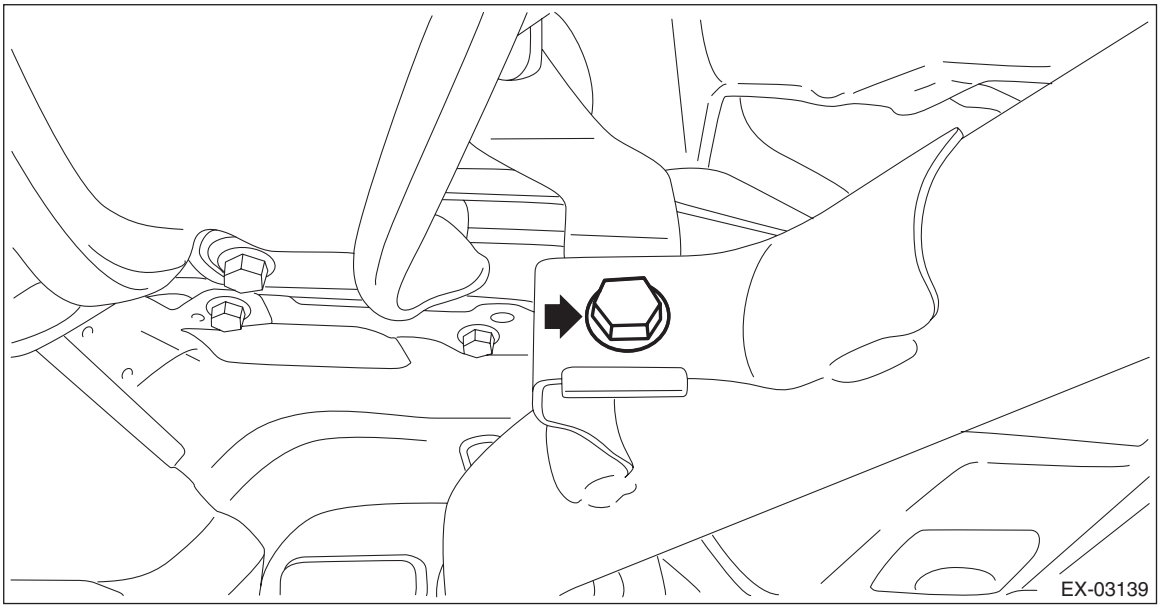

10) Lower the vehicle.

11) Install the exhaust pipe stay (B) and water pump pulley cover (A) to the turbocharger stay and water pump, and install the bolts which secure the water pump pulley cover (A) and exhaust pipe stay (B) to the turbocharger stay.

Tightening torque:
T1: 19 N·m (1.9 kgf-m, 14.0 ft-lb)
T2: 33 N·m (3.4 kgf-m, 24.3 ft-lb)

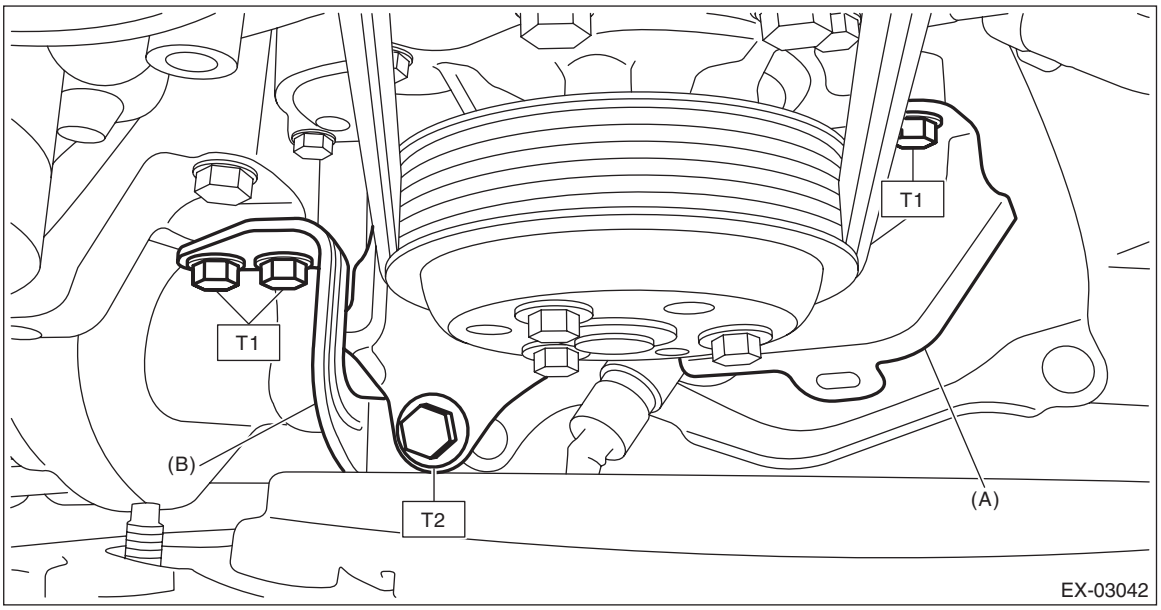

12) Lift up the vehicle.
13) Connect the connector on the rear oxygen sensor to the engine harness, and connect the ground cable to the exhaust pipe cover.

Tightening torque:
7.5 N·m (0.8 kgf-m, 5.5 ft-lb)

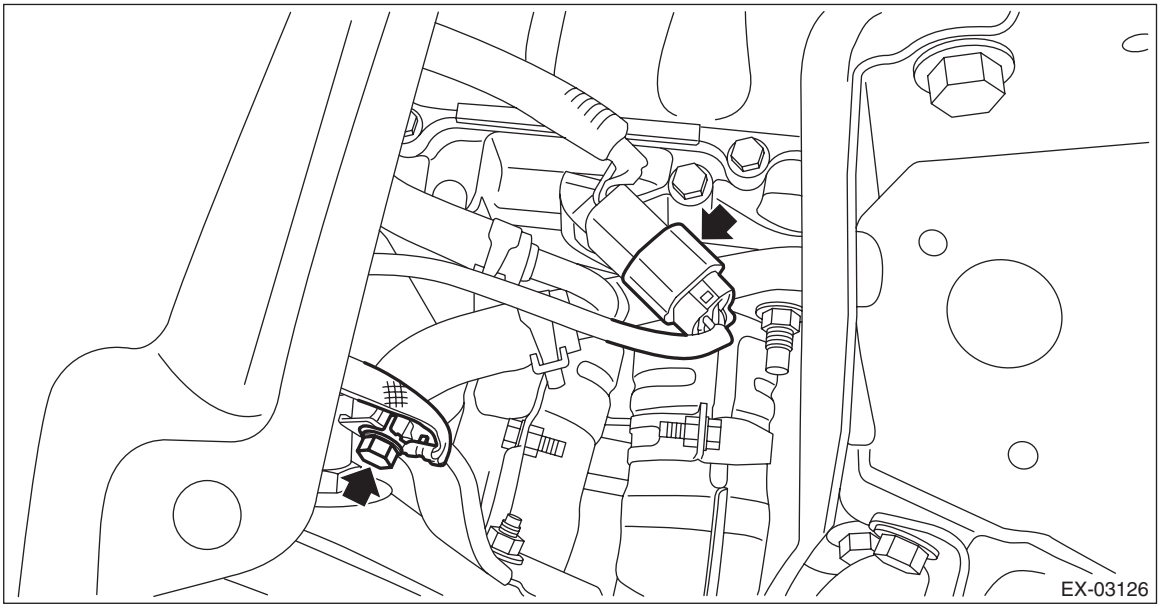

14) Secure the front oxygen (A/F) sensor harness to the water pump pulley cover with the clip (A), and connect the front oxygen (A/F) sensor connector to the engine harness.

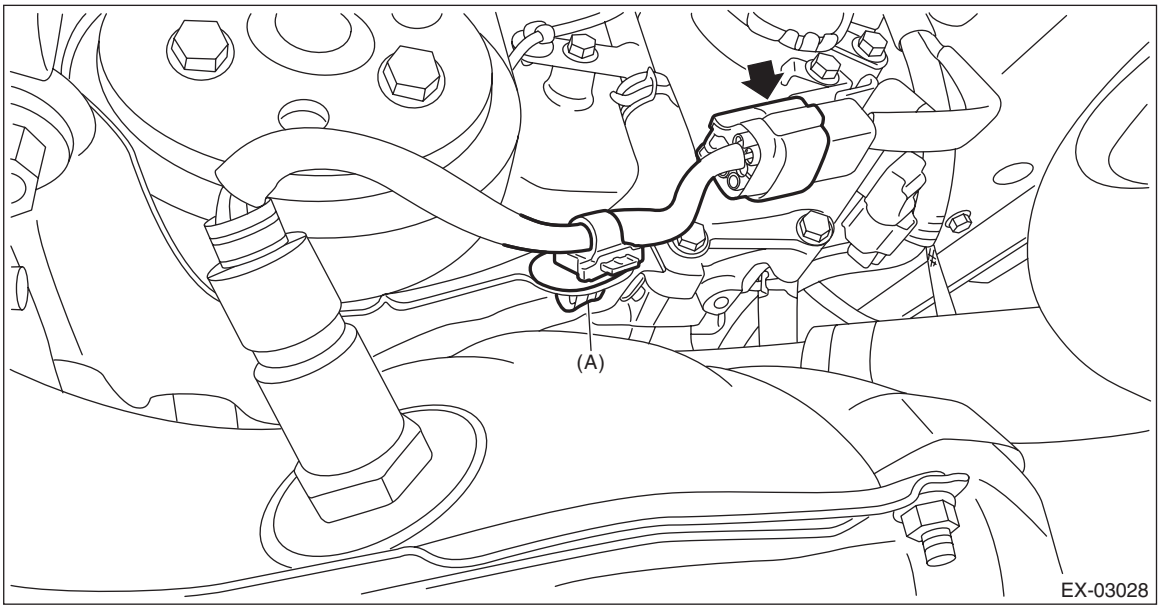

15) Install the under cover. <Ref. to EI-23, INSTALLATION, Front Under Cover.>
16) Lower the vehicle.
17) Connect the ground terminal to battery sensor. <Ref. to NT-6, BATTERY, NOTE, Note.>
18) Install the collector cover. <Ref. to IN(w/o STI)-10, INSTALLATION, Collector Cover.>

C: DISASSEMBLY

1) Remove the front oxygen (A/F) sensor and rear oxygen sensor. <Ref. to FU(w/o STI)-118, REMOVAL, Front Oxygen (A/F) Sensor.> <Ref. to FU(w/o STI)-120, REMOVAL, Rear Oxygen Sensor.>
2) Remove the exhaust pipe cover from the center exhaust pipe (front) and center exhaust pipe (rear).

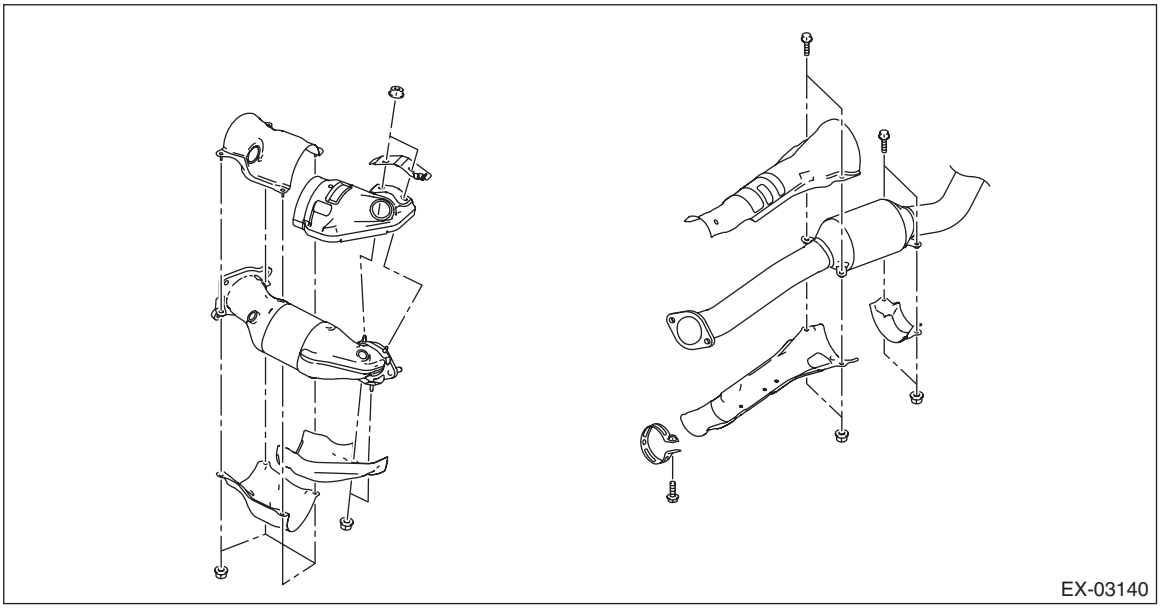

D: ASSEMBLY

1) Install the exhaust pipe cover to the center exhaust pipe (front) and center exhaust pipe (rear).

Tightening torque:
T1: 7.5 N·m (0.8 kgf-m, 5.5 ft-lb)
T2: 13 N·m (1.3 kgf-m, 9.6 ft-lb)

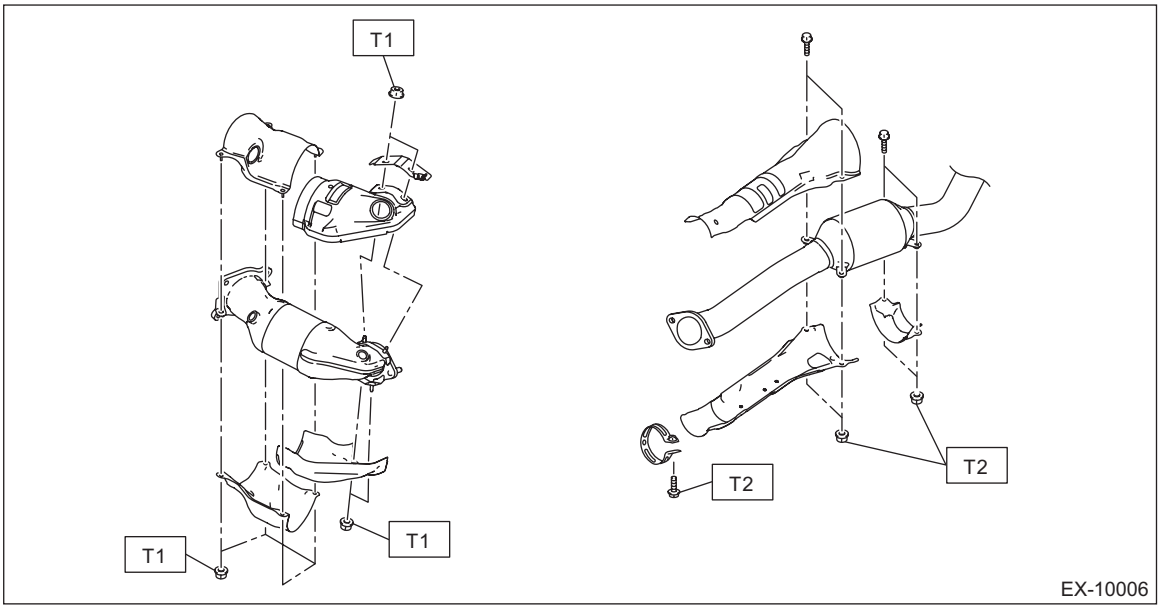

2) Install the front oxygen (A/F) sensor and rear oxygen sensor. <Ref. to FU(w/o STI)-118, INSTALLATION, Front Oxygen (A/F) Sensor.> <Ref. to FU(w/o STI)-121, INSTALLATION, Rear Oxygen Sensor.>

E: INSPECTION

1) Check the connections and welded parts for exhaust leaks.
2) Make sure there are no holes or rusting.

4. Rear Exhaust Pipe

A: REMOVAL

CAUTION:
Vehicle components are extremely hot after driving. Be wary of receiving burns from heated parts.
1) Lift up the vehicle.
2) Remove the bolts, springs, and nuts which secure the center exhaust pipe (rear) to the rear exhaust pipe.

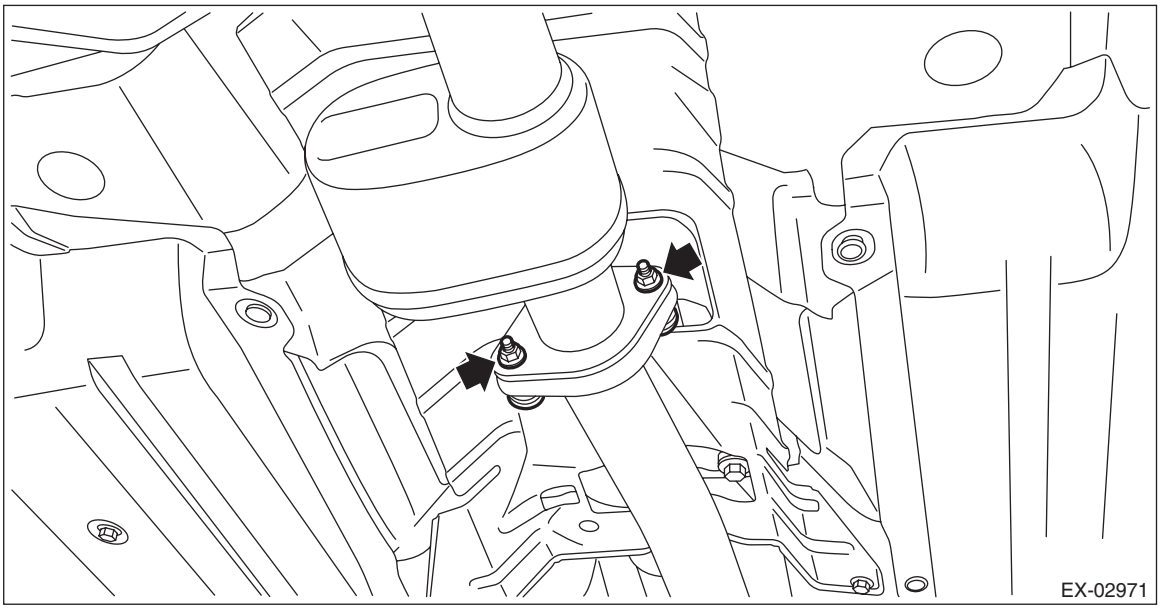

3) Remove the bolts and self-locking nuts securing the mufflers to the rear exhaust pipes.

CAUTION:
Be careful not to drop the rear exhaust pipe.

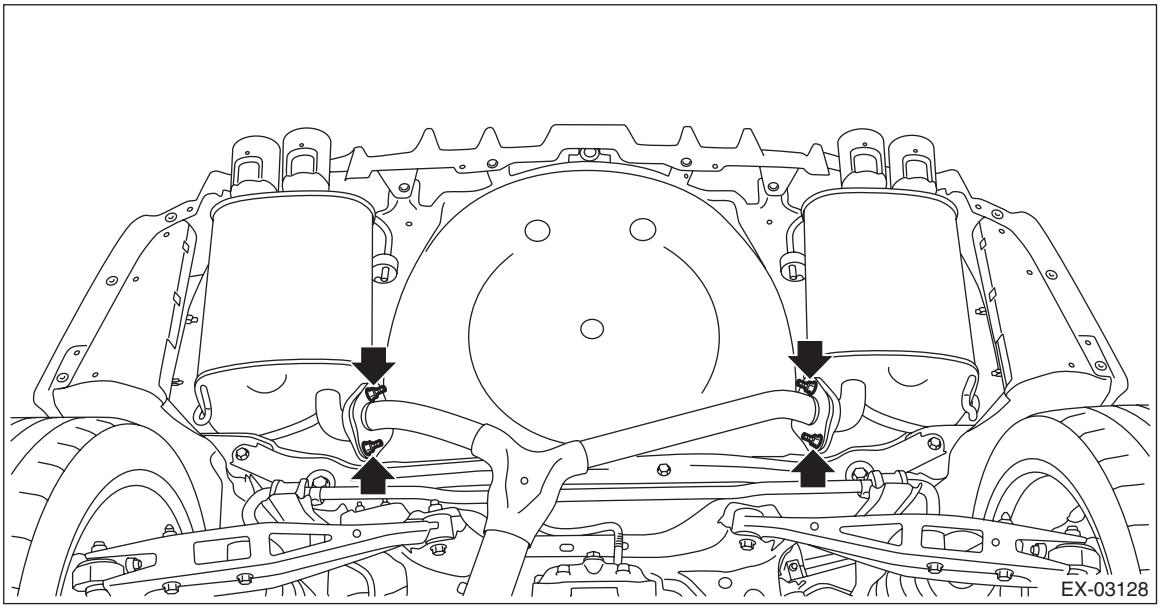

4) Apply a coat of spray type lubricant to the mating area of cushion rubber.

5) Remove the rear exhaust pipe from the cushion rubber.

CAUTION:
Be careful not to let the muffler contact the rear bumper.

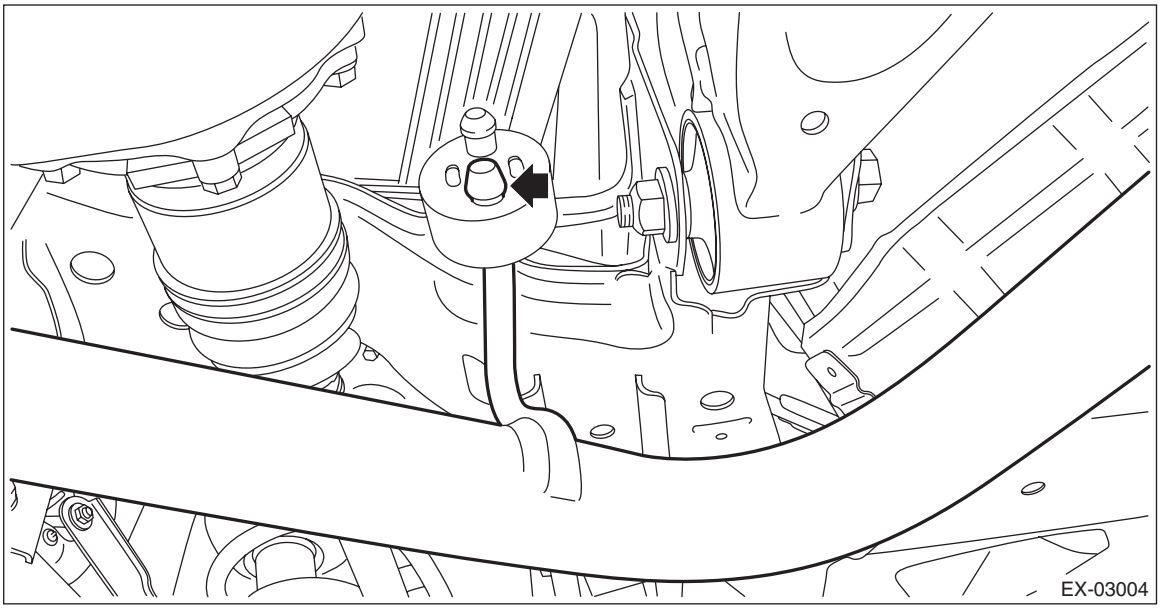

B: INSTALLATION

1) Apply a coat of spray type lubricant to the mating area of cushion rubber.
2) Install the rear exhaust pipe to cushion rubber.

NOTE:
After assembling, degrease the lubricant which was applied to the cushion rubber while removing/installing.

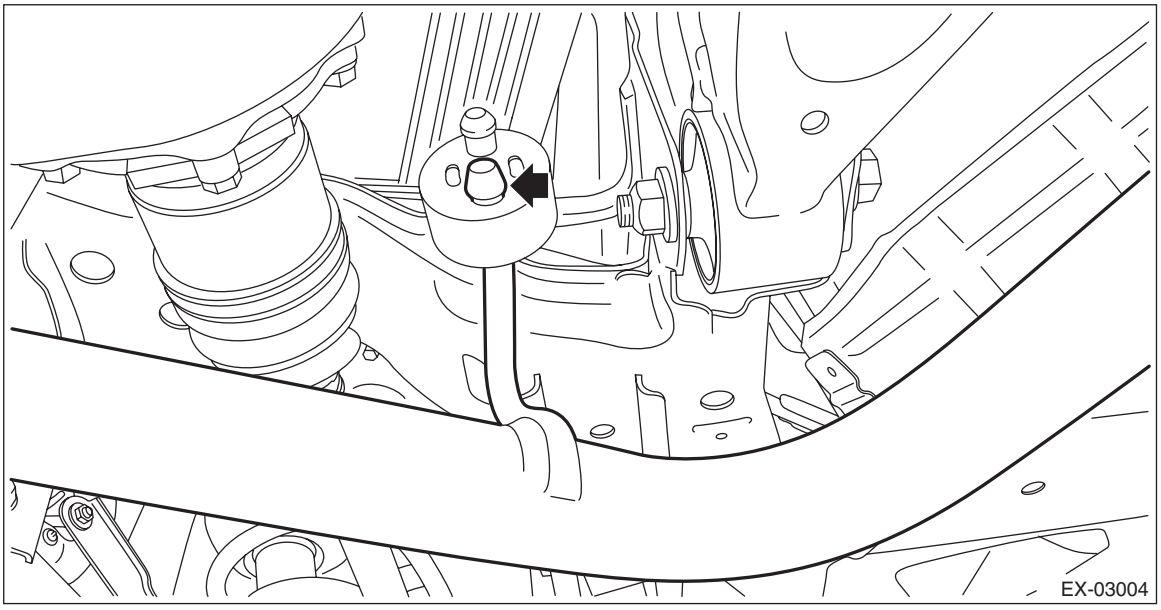

3) Install the bolts and self-locking nuts which secure the muffler to the rear exhaust pipe.

NOTE:
Use a new gasket and self-locking nut.

Tightening torque:
48 N·m (4.9 kgf-m, 35.4 ft-lb)

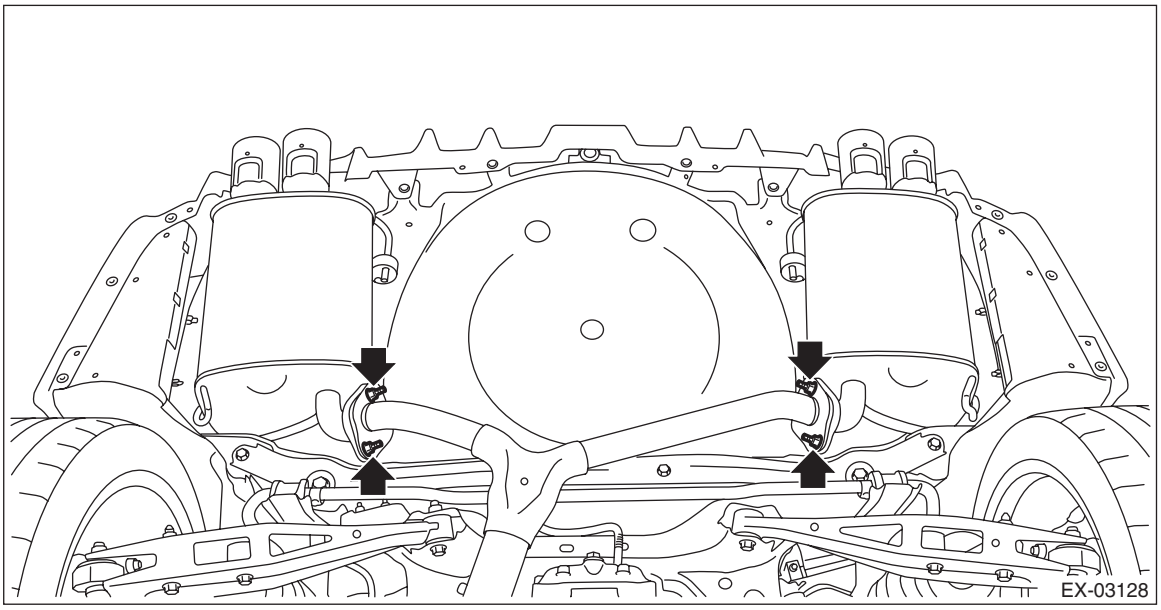

4) Install the bolts, springs, and nuts which secure the center exhaust pipe (rear) to the rear exhaust pipe.

NOTE:
Use a new gasket.

Tightening torque:
18 N·m (1.8 kgf-m, 13.3 ft-lb)

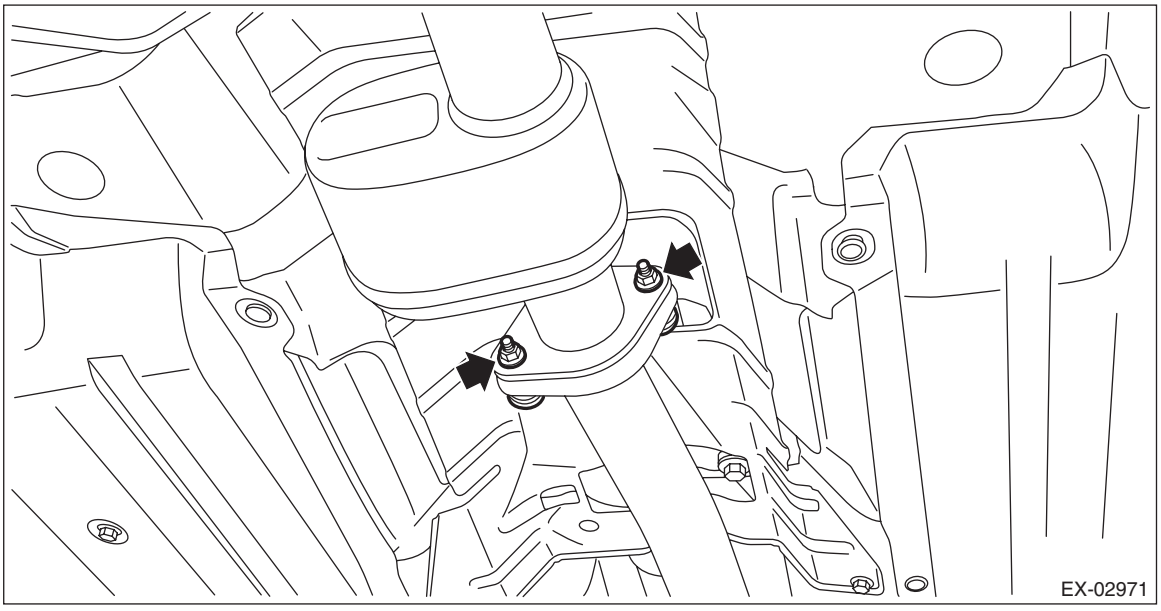

5) Lower the vehicle.

C: INSPECTION

1) Check the connections and welded parts for exhaust leaks.
2) Make sure there are no holes or rusting.
3) Check the cushion rubber for wear or crack.

5. Muffler

A: REMOVAL

CAUTION:
Vehicle components are extremely hot after driving. Be wary of receiving burns from heated parts.
1) Lift up the vehicle.
2) Remove the clip (A) which holds the cover - rear bumper side to the vehicle and rear bumper.

NOTE:
This procedure is required to facilitate the removal/installation of the muffler.
3) Remove the bolts and self-locking nuts which secure the rear exhaust pipe to the muffler.

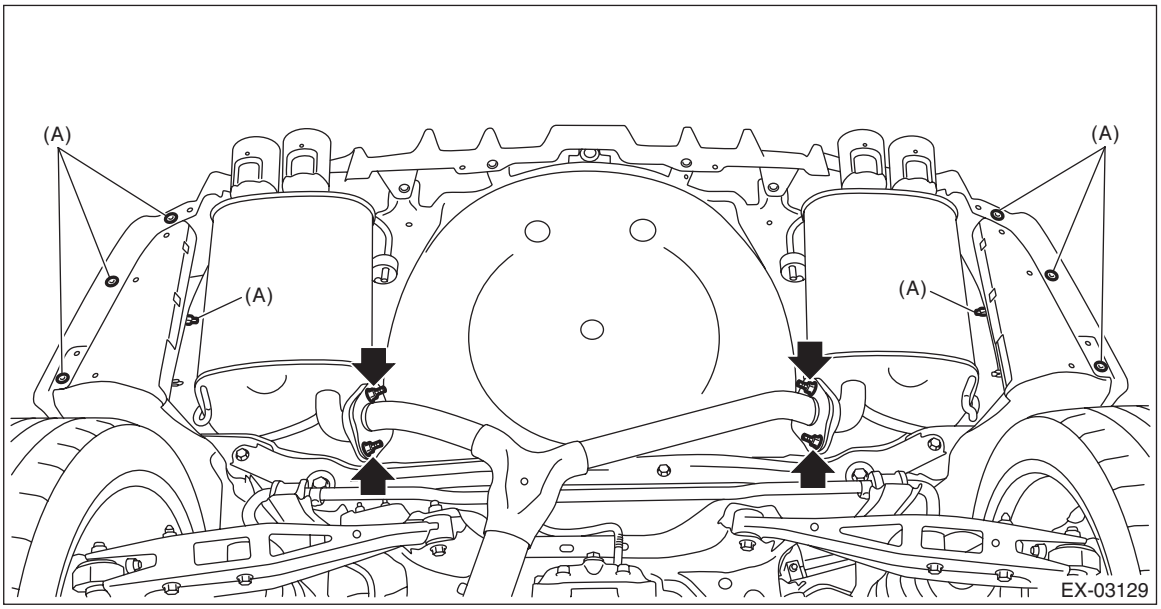

4) Apply a coat of spray type lubricant to the mating area of cushion rubber.
5) Remove the muffler from the cushion rubber.

CAUTION:
Be careful not to drop the muffler during removal.

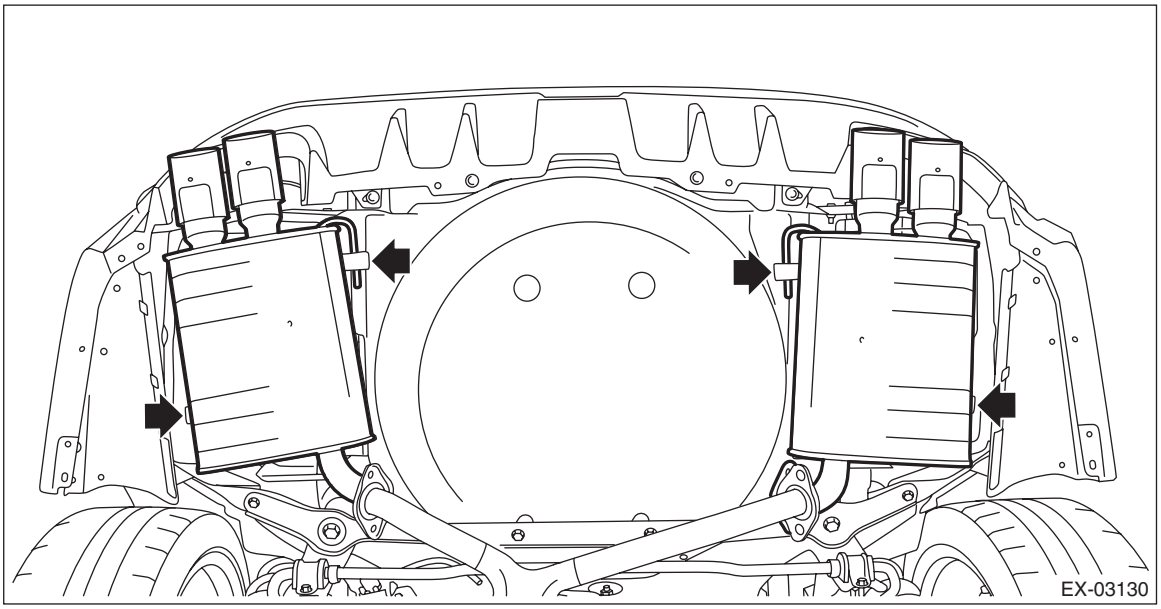

6) Remove the cushion rubber and rear exhaust cover from the vehicle.

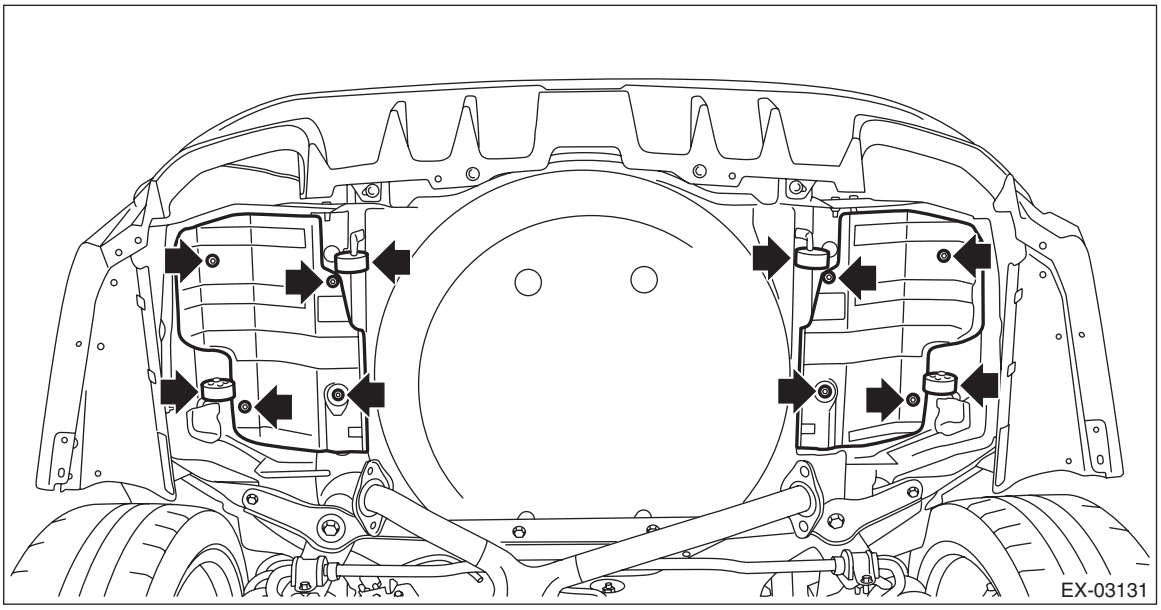

B: INSTALLATION

Install in the reverse order of removal.

NOTE:
- Use a new gasket and self-locking nut.
- After assembling, degrease the lubricant which was applied to the cushion rubber while removing/installing.

Tightening torque:
10 N·m (1.0 kgf-m, 7.4 ft-lb)

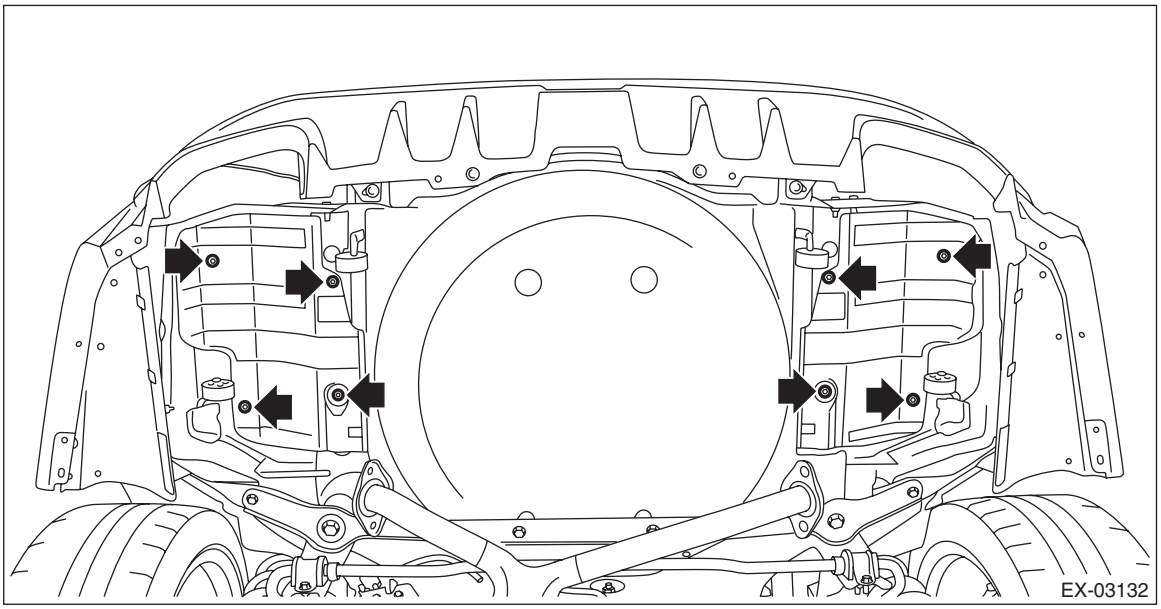

Tightening torque:
48 N·m (4.9 kgf-m, 35.4 ft-lb)

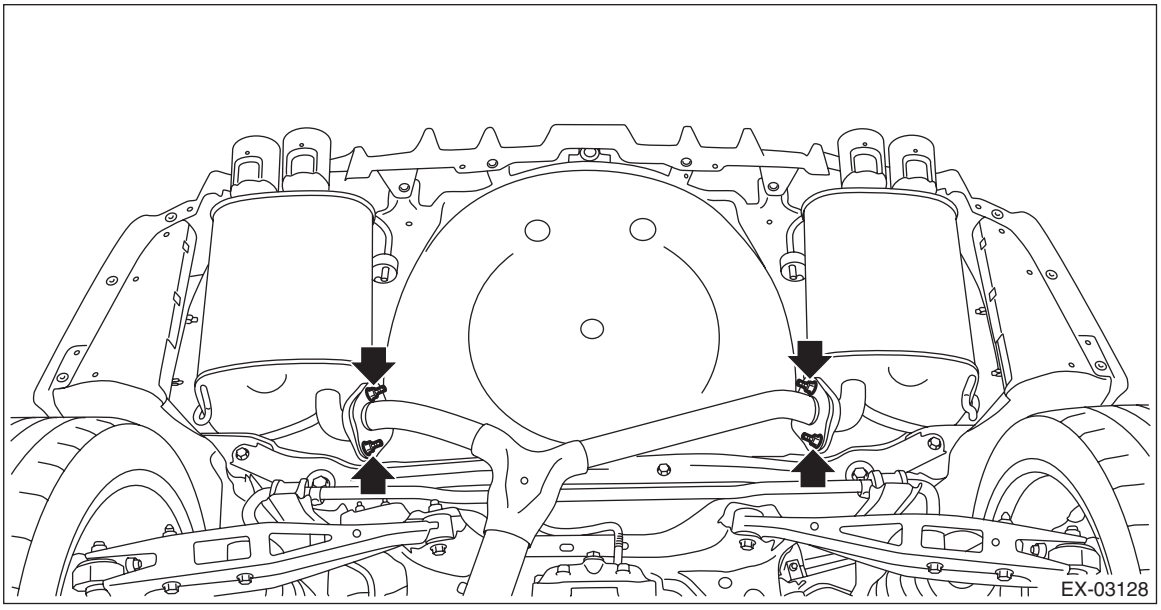

C: INSPECTION

1) Check the connections and welded parts for exhaust leaks.
2) Make sure there are no holes or rusting.
3) Check the cushion rubber for wear or crack.

COOLING

CO(w/o STI)

		Page
1.	General Description	2
2.	Radiator Fan System	8
3.	Engine Coolant	13
4.	Water Pump	16
5.	Water Pipe Assembly	19
6.	Thermostat	32
7.	Radiator	36
8.	Radiator Cap	43
9.	Radiator Main Fan and Fan Motor	44
10.	Radiator Sub Fan and Fan Motor	47
11.	Reservoir Tank	50
12.	Engine Cooling System Trouble in General	51

1. General Description

A: SPECIFICATION

Cooling system					Electric fan + Forced engine coolant circulation system
Total engine coolant capacity			L (US qt, Imp qt)		CVT model: Approx. 8.4 (8.9, 7.4) MT model: Approx. 8.2 (8.7, 7.2)
Water pump	Type				Centrifugal impeller type
	Discharge performance	Discharge rate	L (US gal, Imp gal)/min		248 (65.5, 54.6)
		Pump speed — Discharge pressure			8,580 r/min — 88 kPa (9.2 mAq)
		Engine coolant temperature			80°C (176°F)
	Impeller diameter		mm (in)		56 (2.2)
	Number of impeller vanes				7
	Pump pulley diameter		mm (in)		100 (3.9)
Thermostat	Type				Wax pellet type
	Starting temperature to open				86 — 90°C (187 — 194°F)
	Fully opens				95°C (203°F)
	Valve lift		mm (in)		8.0 (0.315) or more
	Valve opening size		mm (in)		32 (1.26)
Radiator fan	Motor input	Main fan	W		120
		Sub fan	W		120
	Fan diameter / Blade	Main fan			320 mm (12.6 in)/9
		Sub fan			320 mm (12.6 in)/11
Radiator	Type				Down flow, pressure type
	Core dimensions	Width × Height × Thickness	mm (in)		687.4 × 340 × 16 (27.06 × 13.39 × 0.63)
	Pressure range in which cap valve is open	kPa (kg/cm^2, psi)	Positive pressure side	Standard	93 — 123 (0.95 — 1.25, 14 — 18)
				Limit	83 (0.85, 12)
			Negative pressure side	Standard	–1.0 to –4.9 or less (–0.01 — –0.05, –0.1 — –0.7)
	Fins				Corrugated fin type
Reservoir tank	Capacity		L (US qt, Imp qt)		0.45 (0.48, 0.40)

	Recommended materials	Item number	Alternative
Coolant	SUBARU SUPER COOLANT (concentrated type)	—	—
	SUBARU SUPER COOLANT (diluted type)	K0670Y0001	
Water for dilution	Distilled water	—	Soft water or tap water
Cooling system protective agent	Cooling system conditioner	SOA345001	—

B: COMPONENT

1. WATER PUMP

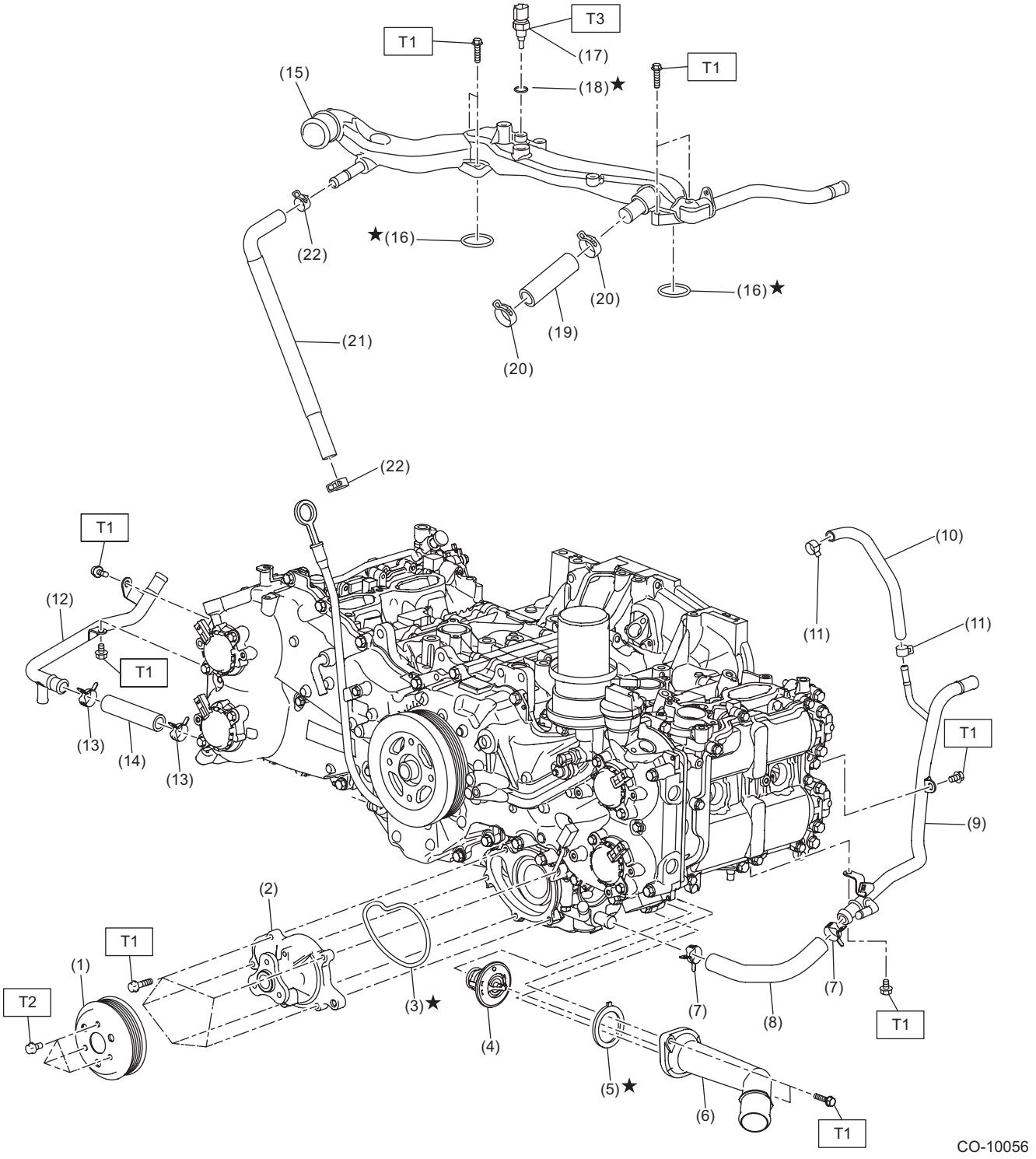

(1) Water pump pulley
(2) Water pump ASSY
(3) Gasket
(4) Thermostat
(5) Gasket
(6) Thermostat cover
(7) Clip
(8) Water pipe hose LH
(9) Water pipe LH
(10) Preheater hose
(11) Clip
(12) Water pipe RH
(13) Clip
(14) Water pipe hose RH
(15) Water pipe ASSY
(16) O-ring
(17) Engine coolant temperature sensor
(18) Gasket
(19) Preheater hose
(20) Clip
(21) Engine coolant hose
(22) Clip

Tightening torque: N·m (kgf-m, ft-lb)

T1: 6.4 (0.7, 4.7)
T2: 14 (1.4, 10.3)
T3: 18 (1.8, 13.3)

2. RADIATOR & RADIATOR FAN

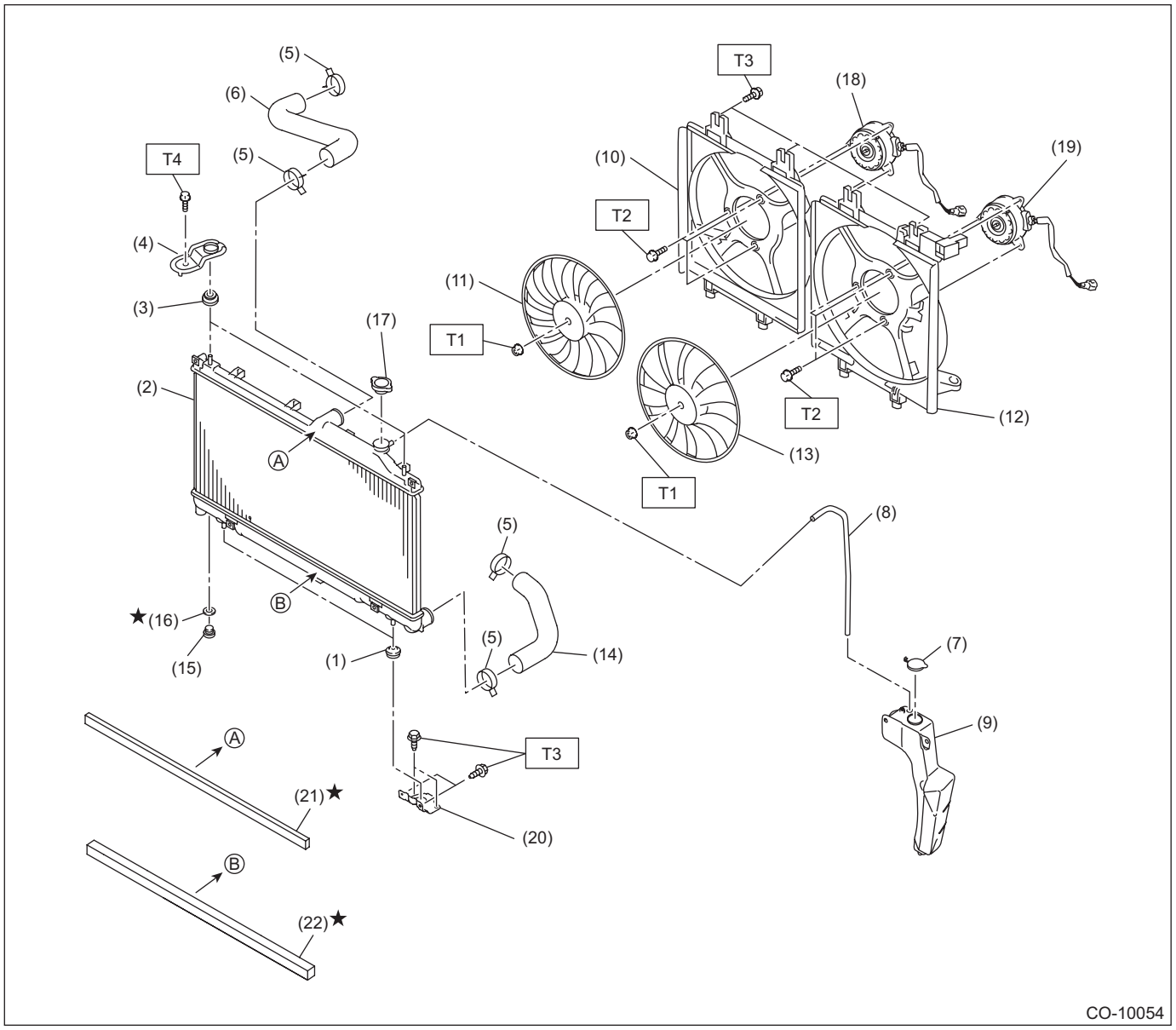

(1) Radiator lower cushion
(2) Radiator
(3) Radiator upper cushion
(4) Radiator upper bracket
(5) Clip
(6) Radiator inlet hose
(7) Engine coolant reservoir tank cap
(8) Over flow hose
(9) Engine coolant reservoir tank
(10) Radiator sub fan shroud
(11) Radiator sub fan
(12) Radiator main fan shroud
(13) Radiator main fan
(14) Radiator outlet hose
(15) Radiator drain plug
(16) O-ring
(17) Radiator cap
(18) Sub fan motor
(19) Main fan motor
(20) Radiator lower bracket
(21) Radiator upper gasket
(22) Radiator lower gasket

Tightening torque: N·m (kgf-m, ft-lb)
T1: 3.4 (0.3, 2.5)
T2: 4.41 (0.45, 3.25)
T3: 7.5 (0.8, 5.5)
T4: 12 (1.2, 8.9)

C: CAUTION

- Prior to starting work, pay special attention to the following:
  1. Always wear work clothes, a work cap, and protective shoes. Additionally, wear a helmet, protective goggles, etc. if necessary.
  2. Protect the vehicle using a seat cover, fender cover, etc.
  3. Prepare the service tools, clean cloth, containers to catch grease and oil, etc.
- Prepare a container and cloth to prevent scattering of engine coolant when performing work where engine coolant can be spilled. If the oil spills, wipe it off immediately to prevent from penetrating into floor or flowing out for environmental protection.
- Vehicle components are extremely hot immediately after driving. Be wary of receiving burns from heated parts.
- When performing a repair, identify the cause of trouble and avoid unnecessary removal, disassembly and replacement.
- Before disconnecting connectors of sensors or units, be sure to disconnect the ground cable from battery.
- Always use the jack-up point when the shop jacks or rigid racks are used to support the vehicle.
- Remove contamination including dirt and corrosion before removal, installation, disassembly or assembly.
- Keep the removed parts in order and protect them from dust and dirt.
- All removed parts, if to be reused, should be reinstalled in the original positions with attention to the correct directions, etc.
- Bolts, nuts and washers should be replaced with new parts as required.
- Be sure to tighten the fasteners including bolts and nuts to the specified torque.
- Follow all government and local regulations concerning disposal of refuse when disposing engine coolant.

D: PREPARATION TOOL

1. SPECIAL TOOL

ILLUSTRATION	TOOL NUMBER	DESCRIPTION	REMARKS
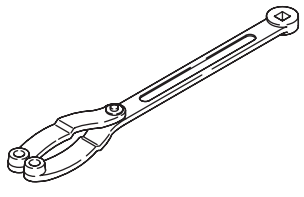 ST18355AA000	18355AA000	PULLEY WRENCH	• Used for removing and installing water pump pulley. • Used with PULLEY WRENCH PIN SET (18334AA030).
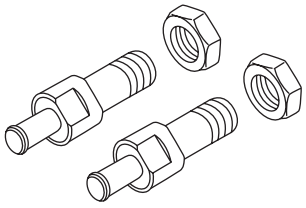 ST18334AA030	18334AA030	PULLEY WRENCH PIN SET	• Used for removing and installing water pump pulley. • Used together with PULLEY WRENCH (18355AA000).
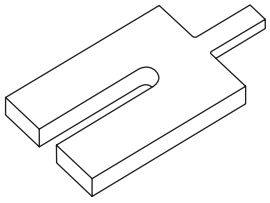 ST18632AA030	18632AA030	STAND ASSY	Used for removing and installing the water pipe assembly LH.
 STSSM4	—	SUBARU SELECT MONITOR 4	Used for setting of each function and trouble-shooting for electrical system. NOTE: For detailed operation procedures of Subaru Select Monitor 4, refer to “Application help”.

2. GENERAL TOOL

TOOL NAME	REMARKS
Circuit tester	Used for measuring resistance, voltage and current.
Radiator cap tester	Used for checking radiator and radiator cap.
DST-i	Used together with Subaru Select Monitor 4.

2. Radiator Fan System

A: WIRING DIAGRAM

Radiator fan system <Ref. to WI-312, WIRING DIAGRAM, Radiator Fan System.>

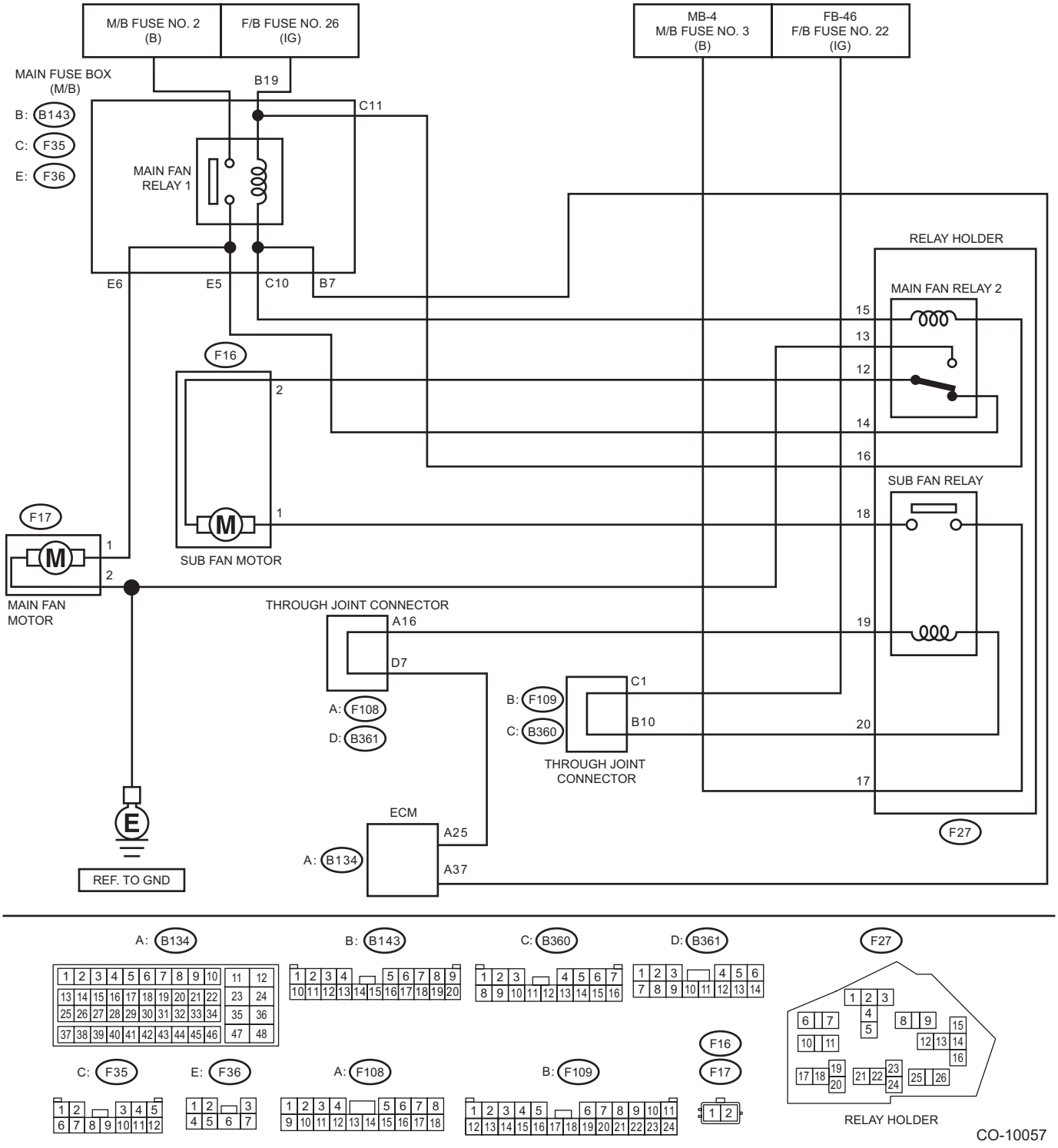

CO-10057

B: INSPECTION

Operating condition:

Vehicle speed	A/C compressor load	Engine coolant temperature		
		Increase: 94°C (201°F) or less Decrease: 92°C (198°F) or less	Increase: 95 — 99°C (203 — 210°F) Decrease: 93 — 94°C (199 — 201°F)	Increase: 100°C (212°F) or more Decrease: 95°C (203°F) or more
		Radiator fan operation	Radiator fan operation	Radiator fan operation
During acceleration: 19 km/h (12 MPH) or less[*1] During deceleration: 10 km/h (6 MPH) or less[*1]	OFF	OFF	Low-Speed	High-Speed
	Low	Low-Speed	Low-Speed	High-Speed
	High	High-Speed	High-Speed	High-Speed
During acceleration: 20 — 69 km/h (12 — 43 MPH) During deceleration: 11 — 64 km/h (7 — 40 MPH)	OFF	OFF	Low-Speed	High-Speed
	Low	High-Speed	High-Speed	High-Speed
	High	High-Speed	High-Speed	High-Speed
During acceleration: 70 — 134 km/h (43 — 83 MPH) During deceleration: 65 — 129 km/h (40 — 80 MPH)	OFF	OFF	Low-Speed	High-Speed
	Low	OFF[*2]	Low-Speed[*2]	High-Speed
	High	Low-Speed[*2]	High-Speed	High-Speed
During acceleration: 135 km/h (84 MPH) or more During deceleration: 130 km/h (81 MPH) or more	OFF	OFF	OFF	High-Speed
	Low	OFF	Low-Speed	High-Speed
	High	OFF	Low-Speed	High-Speed

[*1] Including the condition under which vehicle is stopped (0 km/h (0 MPH)).
[*2] The fan may run at High-Speed when ambient temperature is high.

DIAGNOSIS:

Radiator main fan and radiator sub fan do not rotate under the above operating conditions.

	Step	Check	Yes	No
1	**CHECK OPERATION OF RADIATOR FAN.** 1) Install the delivery mode fuse. 2) Turn the ignition switch to ON. 3) Using the Subaru Select Monitor, perform the active test for the radiator fan relay. NOTE: • When performing the active test for the radiator fan relay using the Subaru Select Monitor, the radiator main fan and radiator sub fan will repeat low speed revolution → high speed revolution → OFF in this order. • For detailed operation procedures of Subaru Select Monitor 4, refer to “Application help”.	Do the radiator main fans and radiator sub fans rotate at low speed?	Go to step **2**.	Go to step **3**.
2	**CHECK OPERATION OF RADIATOR FAN.** Using the Subaru Select Monitor, perform the active test for the radiator fan relay. NOTE: • When performing the active test for the radiator fan relay using the Subaru Select Monitor, the radiator main fan and radiator sub fan will repeat low speed revolution → high speed revolution → OFF in this order. • For detailed operation procedures of Subaru Select Monitor 4, refer to “Application help”.	Do the radiator main fans and radiator sub fans rotate at high speed?	Radiator main fan system is normal.	Go to step **27**.

	Step	Check	Yes	No
3	**CHECK POWER SUPPLY TO SUB FAN RELAY.** 1) Turn the ignition switch to OFF. 2) Remove the sub fan relay. 3) Measure the voltage between the sub fan relay terminal and chassis ground. ***Connector & terminal*** ***(F27) No. 17 (+) — Chassis ground (–):***	Is the voltage 10 V or more?	Go to step **4**.	Go to step **5**.
4	**CHECK POWER SUPPLY TO SUB FAN RELAY.** 1) Turn the ignition switch to ON. 2) Measure the voltage between the sub fan relay terminal and chassis ground. ***Connector & terminal*** ***(F27) No. 20 (+) — Chassis ground (–):***	Is the voltage 10 V or more?	Go to step **7**.	Go to step **6**.
5	**CHECK FUSE.** 1) Remove the fuse No. 3. 2) Check the condition of fuse.	Is the fuse blown out?	Replace the fuse.	Repair the power supply line.
6	**CHECK FUSE.** 1) Turn the ignition switch to OFF. 2) Remove the fuse No. 22. 3) Check the condition of fuse.	Is the fuse blown out?	Replace the fuse.	Repair the power supply line.
7	**CHECK SUB FAN RELAY.** Measure the resistance between sub fan relay switch terminals.	Is the resistance 1 MΩ or more?	Go to step **8**.	Replace the sub fan relay. <Ref. to AC-32, Relay and Fuse.>
8	**CHECK SUB FAN RELAY.** 1) Connect the battery to the terminal on the sub fan relay coil side. 2) Measure the resistance between sub fan relay switch terminals.	Is the resistance less than 1 Ω?	Go to step **9**.	Replace the sub fan relay. <Ref. to AC-32, Relay and Fuse.>
9	**CHECK HARNESS BETWEEN SUB FAN RELAY TERMINAL AND SUB FAN MOTOR CONNECTOR.** 1) Turn the ignition switch to OFF. 2) Disconnect the connector from the sub fan motor. 3) Measure the resistance of harness between the sub fan relay terminal and sub fan motor connector. ***Connector & terminal*** ***(F16) No. 1 — (F27) No. 18:***	Is the resistance less than 1 Ω?	Go to step **10**.	Repair the open circuit of harness between sub fan relay terminal and sub fan motor connector.
10	**CHECK HARNESS BETWEEN SUB FAN MOTOR CONNECTOR AND MAIN FAN RELAY 2 CONNECTOR.** 1) Remove the main fan relay 2. 2) Measure the resistance of harness between sub fan motor connector and main fan relay 2 connector. ***Connector & terminal*** ***(F16) No. 2 — (F27) No. 12:***	Is the resistance less than 1 Ω?	Go to step **11**.	Repair the open circuit of the harness between sub fan motor connector and main fan relay 2 connector.
11	**CHECK FOR POOR CONTACT.** Check poor contact of sub fan motor connector.	Is there poor contact of the sub fan motor connector?	Repair the poor contact of sub fan motor connector.	Go to step **12**.
12	**CHECK SUB FAN MOTOR.** Connect the battery positive (+) terminal to terminal No. 1 of the sub fan motor, and the ground (–) terminal to terminal No. 2.	Does the radiator sub fan rotate?	Go to step **13**.	Replace the sub fan motor. <Ref. to CO(w/o STI)-47, Radiator Sub Fan and Fan Motor.>

	Step	Check	Yes	No
13	**CHECK MAIN FAN RELAY 2.** Measure the resistance between terminals of main fan relay 2 switch (always ON side).	Is the resistance less than 1 Ω?	Go to step **14**.	Replace the main fan relay 2. <Ref. to AC-32, Relay and Fuse.>
14	**CHECK HARNESS BETWEEN MAIN FAN RELAY 2 AND MAIN FAN MOTOR CONNECTOR.** 1) Disconnect the connector from the main fan motor. 2) Measure the resistance of the harness between main fan relay 2 terminal and main fan motor connector. ***Connector & terminal*** ***(F17) No. 1 — (F27) No. 14:***	Is the resistance less than 1 Ω?	Go to step **15**.	Repair the open circuit of the harness between main fan relay 2 terminal and main fan motor connector.
15	**CHECK GROUND CIRCUIT OF MAIN FAN MOTOR.** Measure the resistance between main fan motor connector and chassis ground. ***Connector & terminal*** ***(F17) No. 2 — Chassis ground:***	Is the resistance less than 5 Ω?	Go to step **16**.	Repair the open circuit of the harness between main fan motor connector and chassis ground.
16	**CHECK FOR POOR CONTACT.** Check poor contact of main fan motor connector.	Is there poor contact of the main fan motor connector?	Repair the poor contact of main fan motor connector.	Go to step **17**.
17	**CHECK MAIN FAN MOTOR.** Connect the battery positive (+) terminal to terminal No. 1 of the main fan motor, and the ground (–) terminal to terminal No. 2.	Does the radiator main fan rotate?	Go to step **18**.	Replace the main fan motor. <Ref. to CO(w/o STI)-44, Radiator Main Fan and Fan Motor.>
18	**CHECK HARNESS BETWEEN SUB FAN RELAY AND ECM.** 1) Disconnect the connector from ECM. 2) Measure the resistance between the sub fan relay terminal and ECM connector. ***Connector & terminal*** ***(B134) No. 25 — (F27) No. 19:***	Is the resistance less than 1 Ω?	Go to step **19**.	Repair the open circuit of harness between sub fan relay terminal and ECM.
19	**CHECK FOR POOR CONTACT.** Check for poor contact of ECM connector.	Is there poor contact of ECM connector?	Repair the poor contact of ECM connector.	Check the DTC. Repair the trouble cause. <Ref. to EN(w/o STI)(diag)-63, Read Diagnostic Trouble Code (DTC).>
20	**CHECK MAIN FAN RELAY 1.** 1) Turn the ignition switch to OFF. 2) Remove the main fan relay 1. 3) Measure the resistance between terminals of main fan relay 1 switch.	Is the resistance 1 MΩ or more?	Go to step **21**.	Replace the main fan relay 1. <Ref. to AC-32, Relay and Fuse.>
21	**CHECK MAIN FAN RELAY 1.** 1) Connect the main fan relay 1 coil side terminal to the battery. 2) Measure the resistance between terminals of main fan relay 1 switch.	Is the resistance less than 1 Ω?	Go to step **22**.	Replace the main fan relay 1. <Ref. to AC-32, Relay and Fuse.>

	Step	Check	Yes	No
22	**CHECK HARNESS BETWEEN MAIN FAN RELAY 1 AND MAIN FAN MOTOR CONNECTOR.** 1) Disconnect the connector from the main fan motor. 2) Measure the resistance of the harness between main fan relay 1 terminal and main fan motor connector. ***Connector & terminal*** ***(F17) No. 1 — (F36) No. 6:***	Is the resistance less than 1 Ω?	Go to step **23**.	Repair the open circuit of the harness between main fan relay 1 terminal and main fan motor connector.
23	**CHECK HARNESS BETWEEN MAIN FAN RELAY 1 AND ECM.** 1) Disconnect the connector from ECM. 2) Measure the resistance between main fan relay 1 terminal and ECM connector. ***Connector & terminal*** ***(B134) No. 37 — (B143) No. 7:***	Is the resistance less than 1 Ω?	Go to step **24**.	Repair the open circuit of the harness between main fan relay 1 terminal and ECM.
24	**CHECK HARNESS BETWEEN MAIN FAN RELAY 2 AND ECM.** Measure the resistance between main fan relay 2 terminal and ECM connector. ***Connector & terminal*** ***(B134) No. 37 — (F27) No. 15:***	Is the resistance less than 1 Ω?	Go to step **25**.	Repair the open circuit of the harness between main fan relay 2 terminal and ECM.
25	**CHECK FUSE.** 1) Remove the fuse No. 2 and No. 26. 2) Check the condition of fuse.	Is the fuse blown out?	Replace the fuse.	Go to step **26**.
26	**CHECK FOR POOR CONTACT.** Check for poor contact of ECM connector.	Is there poor contact of ECM connector?	Repair the poor contact of ECM connector.	Repair the power supply circuit to the main fuse box.
27	**CHECK OPERATION OF RADIATOR FAN.** If the both fans do not rotate at high speed in the condition of step 2, check whether the radiator sub fan is rotating.	Does the radiator sub fan rotate?	Go to step **20**.	Go to step **28**.
28	**CHECK GROUND CIRCUIT OF MAIN FAN RELAY 2.** 1) Turn the ignition switch to OFF. 2) Remove the main fan relay 2. 3) Measure the resistance between main fan relay 2 terminal and chassis ground. ***Connector & terminal*** ***(F27) No. 13 — Chassis ground:***	Is the resistance less than 1 Ω?	Go to step **29**.	Repair the open circuit of harness between main fan relay 2 and chassis ground.
29	**CHECK POWER SUPPLY TO MAIN FAN RELAY 2.** 1) Turn the ignition switch to ON. 2) Measure the voltage between main fan relay 2 terminal and chassis ground. ***Connector & terminal*** ***(F27) No. 16 (+) — Chassis ground (–):***	Is the voltage 10 V or more?	Go to step **30**.	Repair the power supply line.
30	**CHECK MAIN FAN RELAY 2.** Measure the resistance between terminals of main fan relay 2 switch.	Is the resistance 1 MΩ or more?	Go to step **31**.	Replace the main fan relay 2. <Ref. to AC-32, Relay and Fuse.>
31	**CHECK MAIN FAN RELAY 2.** 1) Connect the main fan relay 2 coil side terminal to the battery. 2) Measure the resistance between terminals of main fan relay 2 switch (always OFF side).	Is the resistance less than 1 Ω?	Go to step **23**.	Replace the main fan relay 2. <Ref. to AC-32, Relay and Fuse.>

3. Engine Coolant

A: INSPECTION

NOTE:
When adding the engine coolant, always use SUBARU Super Coolant.
1) Park the vehicle on a level surface.
2) Check the engine coolant amount, and if the coolant level is low, check for the coolant leakage, and then add the engine coolant.
(1) Make sure the engine coolant level in the reservoir tank is between “FULL” and “LOW” with the engine in a cold condition.
(2) Open the radiator cap and make sure that the radiator is filled with the engine coolant up to its filler neck position.

B: REPLACEMENT

1. DRAINING OF ENGINE COOLANT

1) Lift up the vehicle.
2) Remove the under cover. <Ref. to EI-22, REMOVAL, Front Under Cover.>
3) Remove the drain plug to drain engine coolant into container.

NOTE:
Remove the radiator cap so that engine coolant will drain faster.

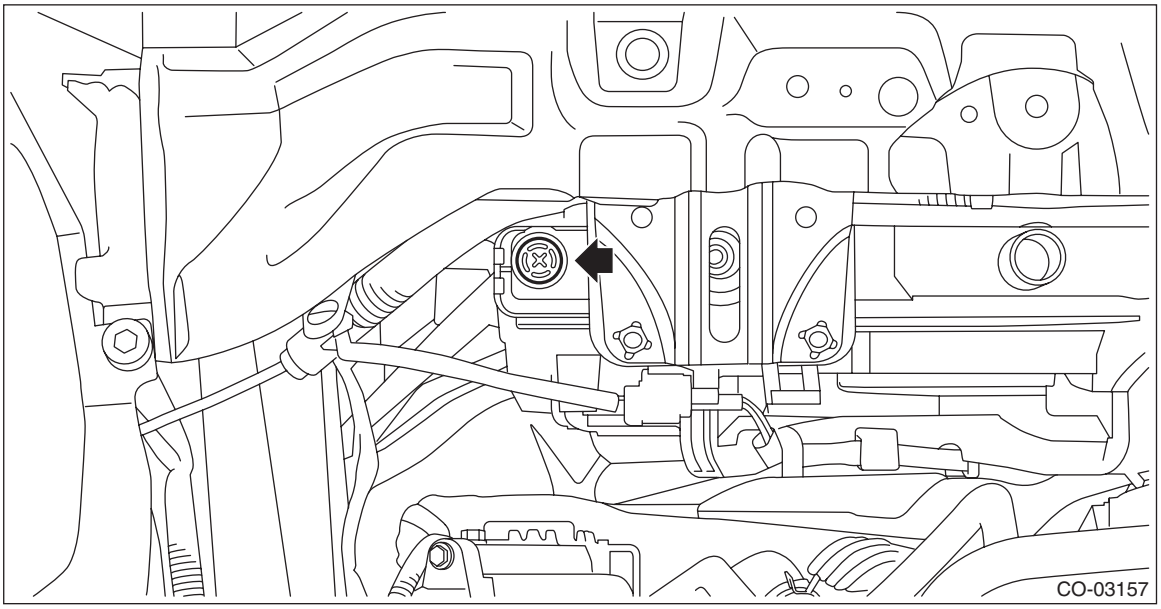

4) Install the drain plug.

NOTE:
Use new O-rings.
5) Install the under cover. <Ref. to EI-23, INSTALLATION, Front Under Cover.>

2. FILLING OF ENGINE COOLANT

CAUTION:
For CVT models, set the select lever to "P" or "N" range (for MT models, the shift lever in neutral) during work, and do not shift the lever.
1) Pour cooling system conditioner through the filler neck.

Cooling system protective agent:
Refer to "SPECIFICATION" for cooling system protective agent. <Ref. to CO(w/o STI)-2, SPECIFICATION, General Description.>
2) Pour engine coolant into the radiator up to the filler neck position.

Recommended engine coolant:
Refer to "SPECIFICATION" for recommended engine coolant. <Ref. to CO(w/o STI)-2, SPECIFICATION, General Description.>

Engine coolant level:
Refer to "SPECIFICATION" for engine coolant level. <Ref. to CO(w/o STI)-2, SPECIFICATION, General Description.>

Engine coolant concentration:
Refer to "ADJUSTMENT" for the recommended engine coolant concentration. <Ref. to CO(w/o STI)-15, ADJUSTMENT, Engine Coolant.>

NOTE:
The SUBARU Super Coolant contains anti-freeze and anti-rust agents, and is especially made for Subaru engines with an aluminum cylinder block. Be sure to use SUBARU Super Coolant, since other coolant may cause corrosion.
3) Fill engine coolant into the reservoir tank up to "FULL" level.

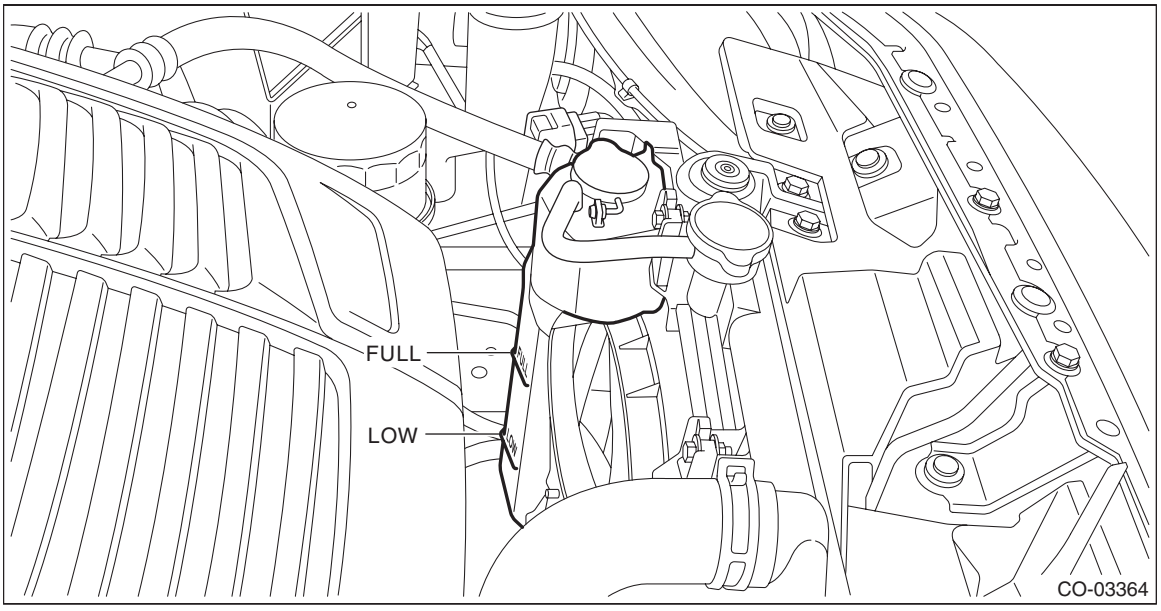

4) Close the radiator cap and start the engine. Race 5 to 6 times at 3,000 r/min or less, then stop the engine. (Complete this operation within 40 seconds.)
5) Wait for one minute after the engine stops, and open the radiator cap. If the engine coolant level drops, add engine coolant into radiator up to the filler neck position.
6) Perform the procedures 4) and 5) again.
7) Attach the radiator cap and reservoir tank cap properly.
8) Start the engine and operate the heater at maximum hot position and the blower speed setting to "LO". (A/C OFF)
9) Run the engine at 3,000 r/min or less until radiator fan starts and stops.

NOTE:
Be careful with the engine coolant temperature to prevent overheating.

10) Stop the engine and wait until the engine coolant temperature lowers to 30°C (86°F) or less.
11) Open the radiator cap. If the engine coolant level drops, add engine coolant into the radiator up to the filler neck position and the reservoir tank to “FULL” level.
12) Attach the radiator cap and reservoir tank cap properly.
13) Set the heater setting to maximum hot position and the blower speed setting to “LO” and start the engine. Perform racing at 3,000 r/min or less. If the flowing sound is heard from the heater core, repeat the procedures from step 9).

C: ADJUSTMENT

1. PROCEDURE TO ADJUST THE SUBARU SUPER COOLANT CONCENTRATION

CAUTION:
Use the SUBARU Super Coolant with a 50 — 60% concentration in order to obtain maximum anti-freeze and anti-rust performance.
To adjust the concentration of SUBARU Super Coolant according to temperature, find the proper SUBARU Super Coolant concentration in the table, and add dilution water to the SUBARU Super Coolant (concentrated type) until it reaches the proper dilution.

Relationship of SUBARU Super Coolant concentration and freezing temperature			
SUBARU Super Coolant concentration	50%	55%	60%
Freezing temperature	–36°C (–33°F)	–41°C (–42°F)	–50°C (–58°F)

Engine coolant and diluting water:
Refer to “SPECIFICATION” for recommended engine coolant and diluting water. <Ref. to CO(w/o STI)-2, SPECIFICATION, General Description.>

4. Water Pump

A: REMOVAL

1. WATER PUMP PULLEY

1) Remove the V-belts. <Ref. to ME(w/o STI)-75, REMOVAL, V-belt.>
2) Remove the water pump pulley using the ST.
ST1 18355AA000 PULLEY WRENCH
ST2 18334AA030 PULLEY WRENCH PIN SET

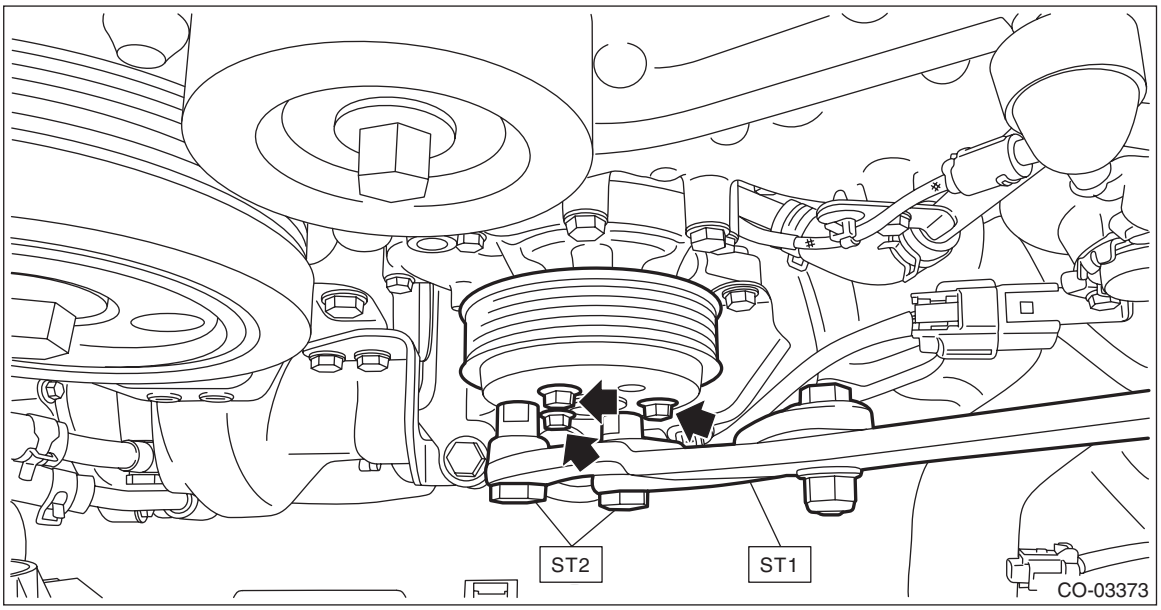

2. WATER PUMP

1) Disconnect the ground terminal from battery sensor. <Ref. to NT-6, BATTERY, NOTE, Note.>
2) Remove the water pump pulley. <Ref. to CO(w/o STI)-16, WATER PUMP PULLEY, REMOVAL, Water Pump.>
3) Drain engine coolant. <Ref. to CO(w/o STI)-13, DRAINING OF ENGINE COOLANT, REPLACEMENT, Engine Coolant.>
4) Remove the front exhaust pipe. <Ref. to EX(w/o STI)-9, REMOVAL, Front Exhaust Pipe.>
5) Remove the water pump from the oil pan upper.

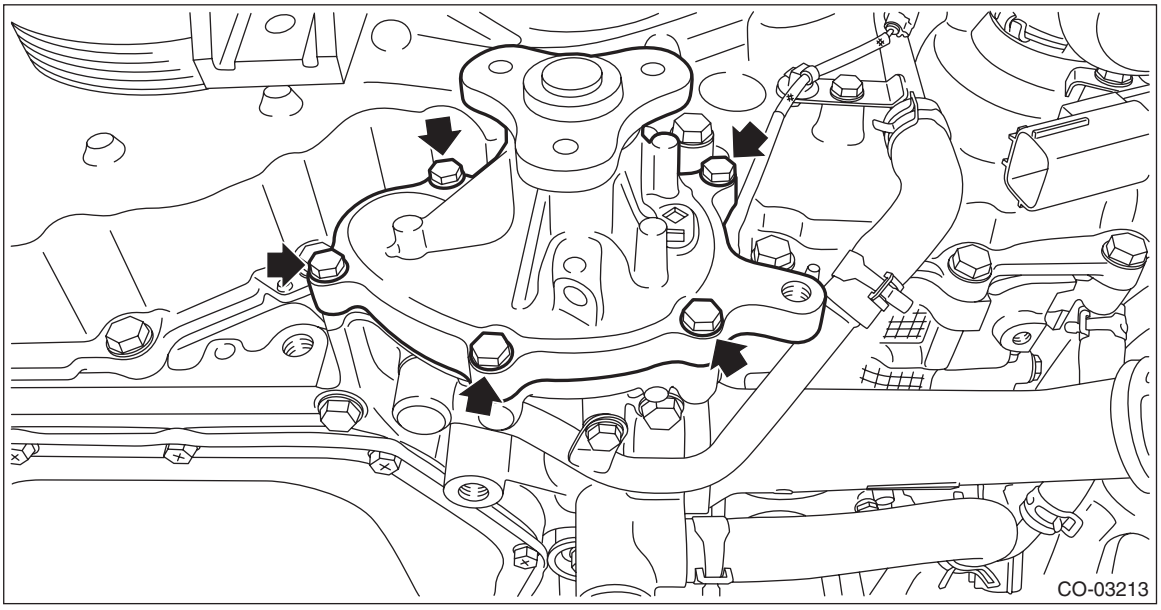

B: INSTALLATION

1. WATER PUMP PULLEY

1) Using the ST, install the water pump pulley.
ST1 18355AA000 PULLEY WRENCH
ST2 18334AA030 PULLEY WRENCH PIN SET

Tightening torque:
14 N·m (1.4 kgf-m, 10.3 ft-lb)

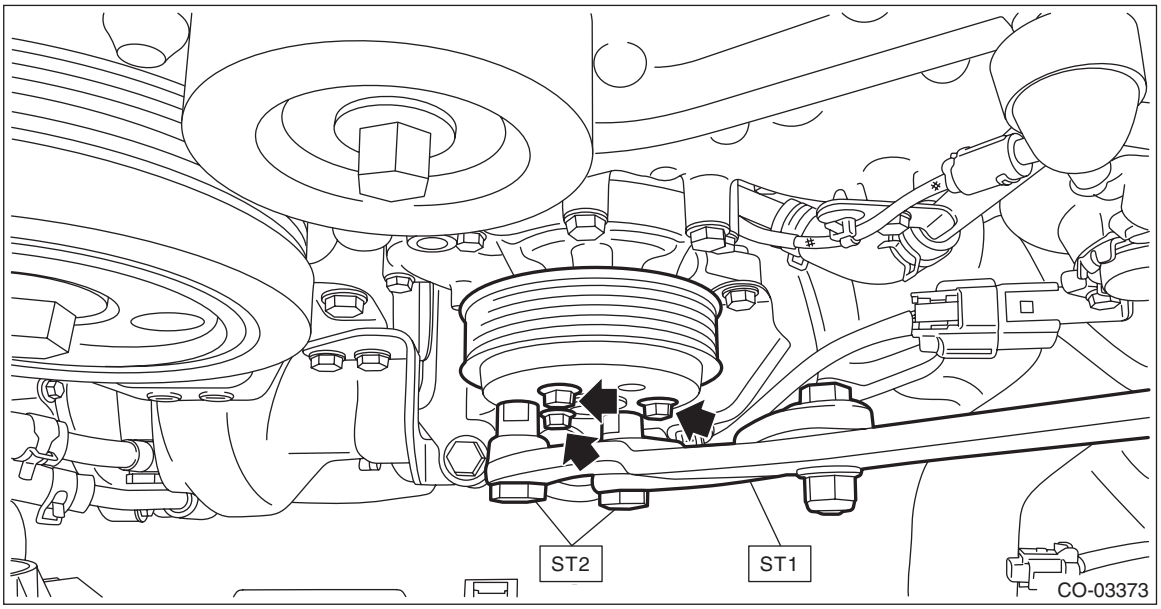

2) Install the V-belts. <Ref. to ME(w/o STI)-77, INSTALLATION, V-belt.>

2. WATER PUMP

1) Install the water pump to oil pan upper.

NOTE:
Use a new gasket.

Tightening torque:
6.4 N·m (0.7 kgf-m, 4.7 ft-lb)

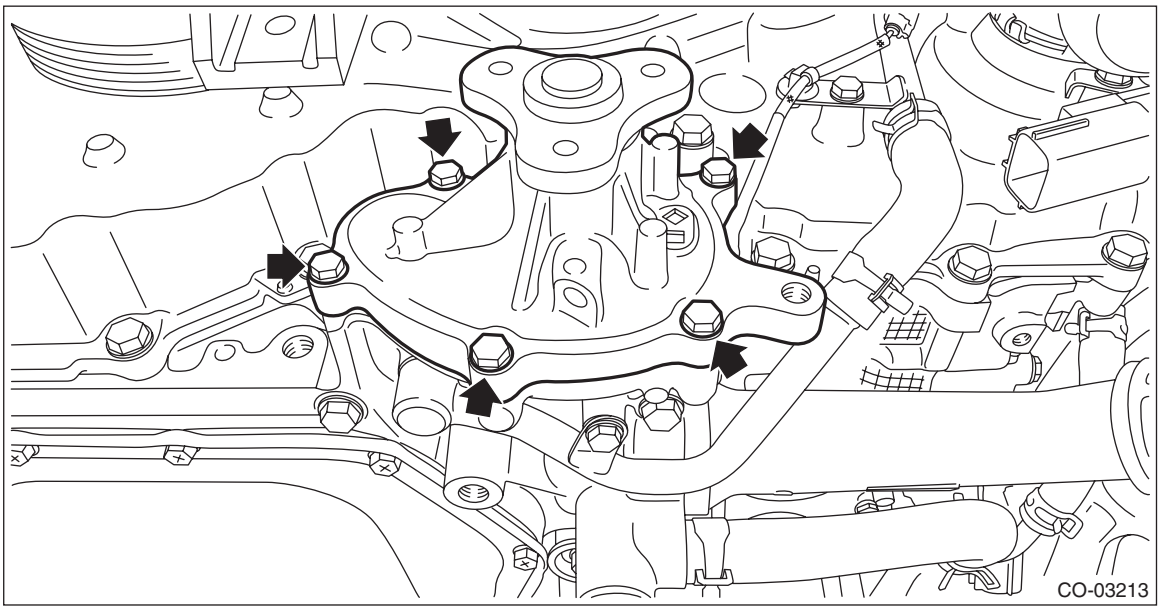

2) Install the front exhaust pipe. <Ref. to EX(w/o STI)-17, INSTALLATION, Front Exhaust Pipe.>

3) Install the water pump pulley. <Ref. to CO(w/o STI)-17, WATER PUMP PULLEY, INSTALLATION, Water Pump.>
4) Connect the ground terminal to battery sensor. <Ref. to NT-6, BATTERY, NOTE, Note.>
5) Fill engine coolant. <Ref. to CO(w/o STI)-14, FILLING OF ENGINE COOLANT, REPLACEMENT, Engine Coolant.>

C: INSPECTION

1) Check that the water pump pulley does not have deformation, cracks and any other damage.
2) Check the water pump bearing for smooth rotation.
3) Make sure the impeller is not abnormally deformed or damaged.

5. Water Pipe Assembly

A: REMOVAL

1. WATER PIPE ASSEMBLY RH

1) Disconnect the ground terminal from battery sensor. <Ref. to NT-6, BATTERY, NOTE, Note.>
2) Drain engine coolant. <Ref. to CO(w/o STI)-13, DRAINING OF ENGINE COOLANT, REPLACEMENT, Engine Coolant.>
3) Remove the oil pipe assembly. <Ref. to LU(w/o STI)-41, OIL PIPE ASSY, REMOVAL, Oil Pipe.>
4) Remove the front exhaust pipe. <Ref. to EX(w/o STI)-9, REMOVAL, Front Exhaust Pipe.>
5) Disconnect the water hose (A) from the water pipe assembly RH, and remove the bolt (B) securing the water pipe assembly RH to the cam carrier RH.

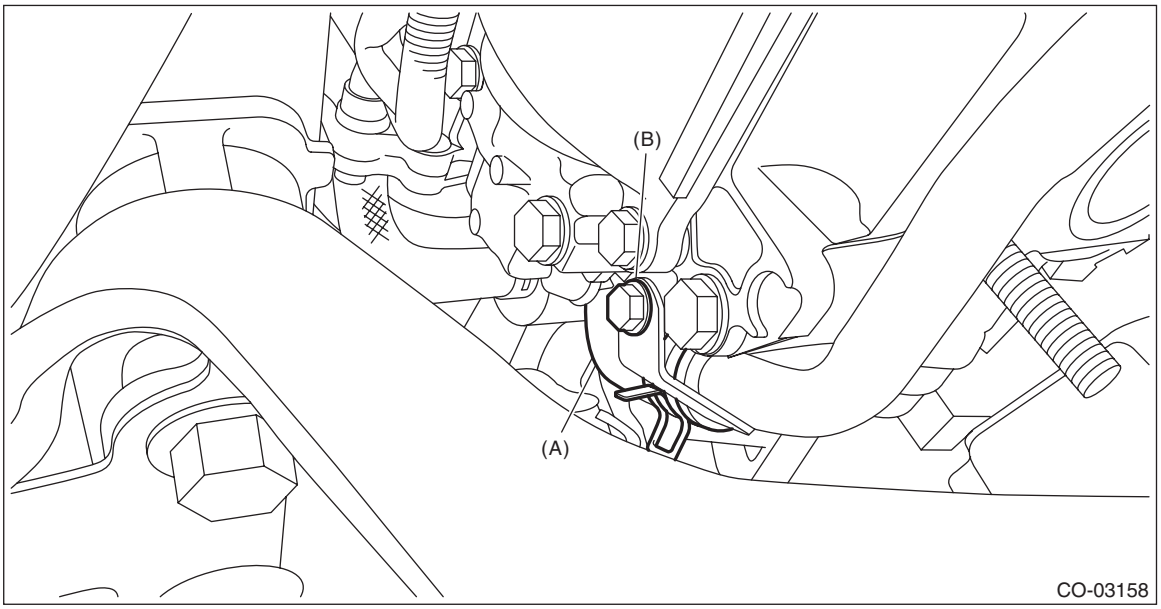

6) Remove the bolt (A) which secures the water pipe assembly RH to the cylinder head RH.
7) Disconnect the water pipe hose RH (B) from oil pan upper, and remove the water pipe assembly RH.

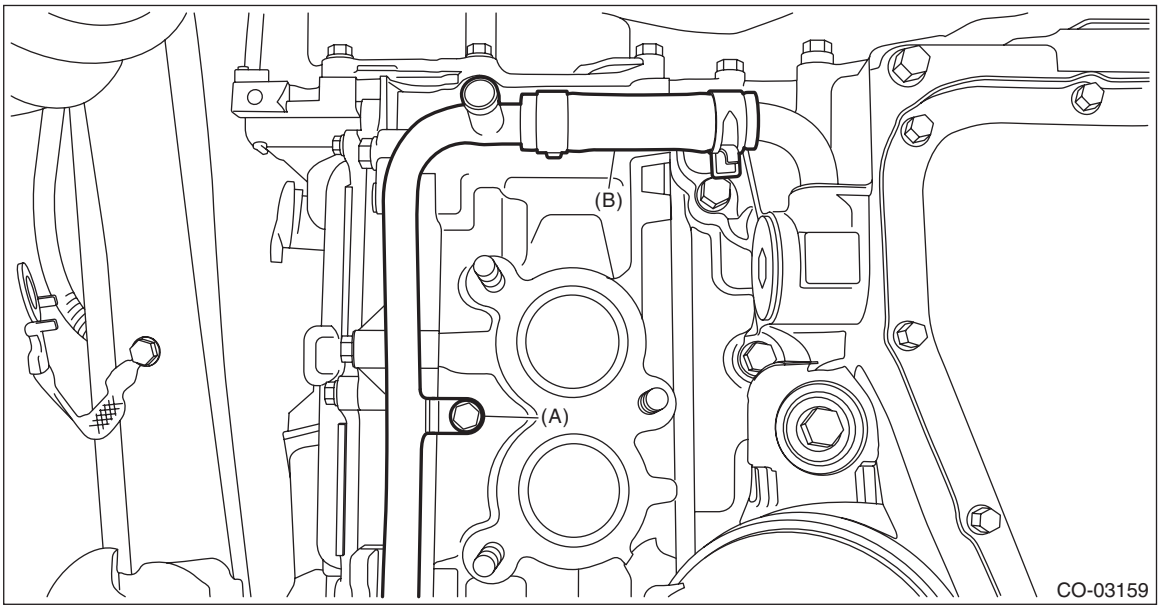

2. WATER PIPE ASSEMBLY LH

1) Remove the striker - front hood. <Ref. to EB-11, DISASSEMBLY, Front Hood.>
2) Fully open the front hood. <Ref. to NT-23, FRONT HOOD DAMPER STAY, NOTE, Note.>
3) Remove the collector cover. <Ref. to IN(w/o STI)-7, REMOVAL, Collector Cover.>
4) Disconnect the ground terminal from battery sensor. <Ref. to NT-6, BATTERY, NOTE, Note.>
5) Remove the air intake duct. <Ref. to IN(w/o STI)-26, REMOVAL, Air Intake Duct.>
6) Drain engine coolant. <Ref. to CO(w/o STI)-13, DRAINING OF ENGINE COOLANT, REPLACEMENT, Engine Coolant.>
7) Remove the center exhaust pipe. <Ref. to EX(w/o STI)-32, REMOVAL, Center Exhaust Pipe.>
8) Remove the nuts which secure the engine mounting to the front crossmember.

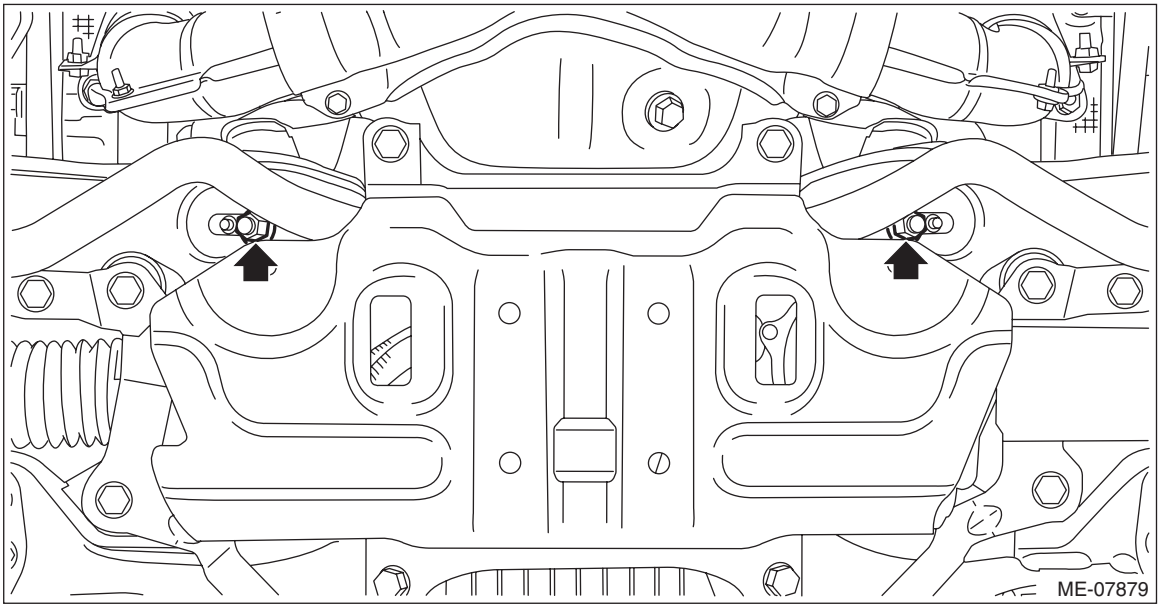

9) Lower the vehicle.
10) Remove the clip (A) and clip (B) which secure the engine harness and bulkhead harness to the bracket, and remove the bolt which secures the engine control module (ECM) to the bracket.

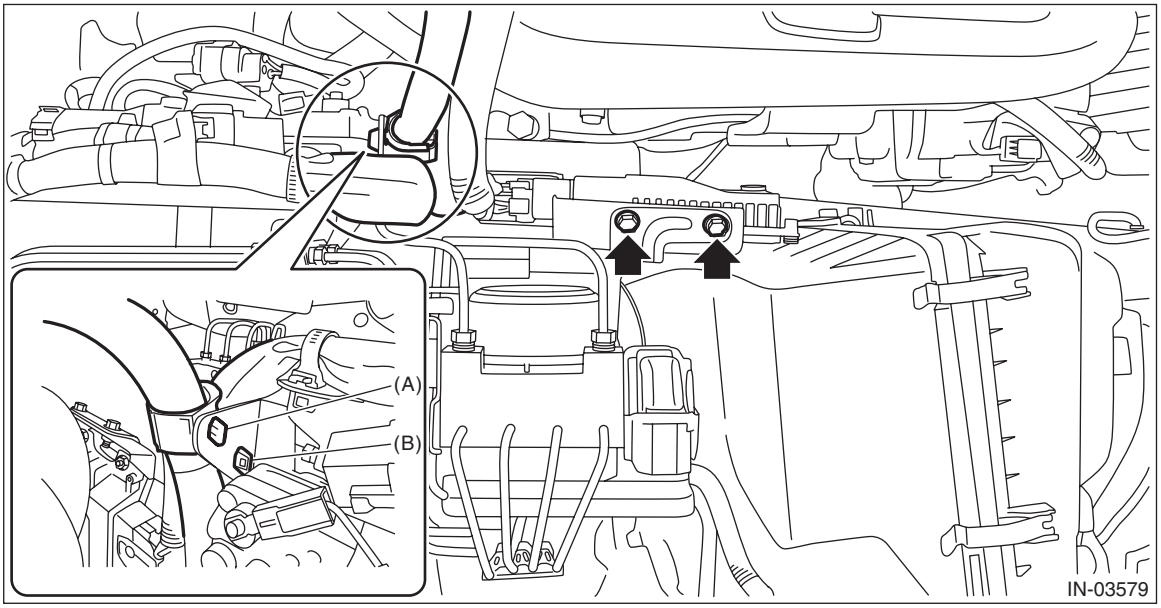

11) Pull out the engine control module (ECM) from the bracket, and move it to a location that does not interfere operation.

NOTE:
When performing the pulling out operation, pay attention not to apply excessive load to the breather filter portion (a) in order to avoid the damage.

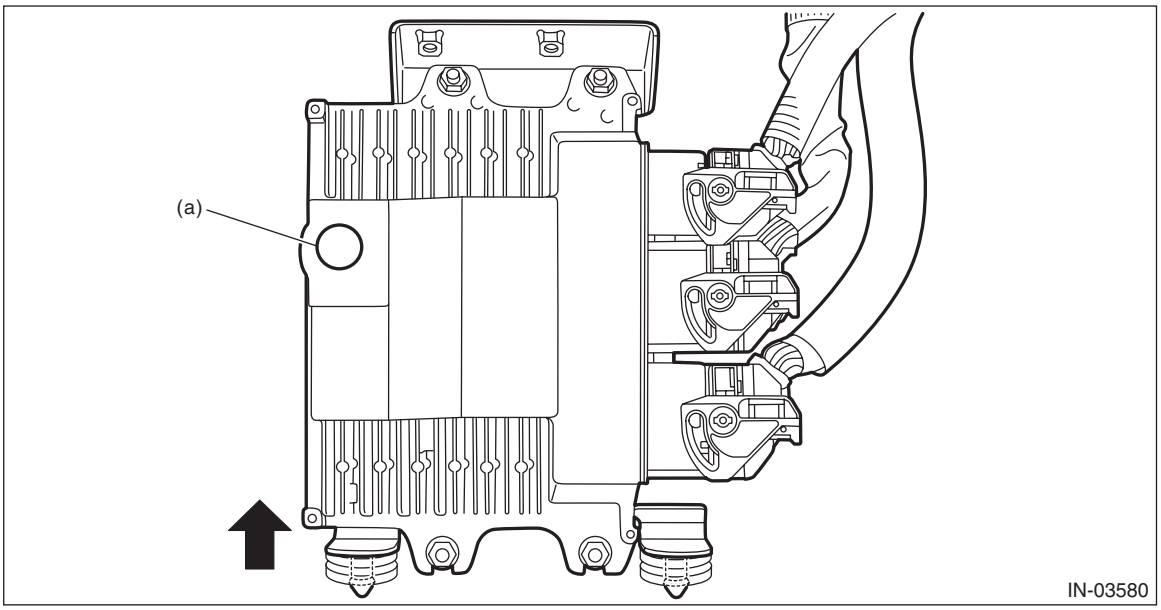

12) Remove the intercooler. <Ref. to IN(w/o STI)-43, REMOVAL, Intercooler.>
13) Disconnect the preheater hose (A) and the heater outlet hose (B) from the water pipe assembly LH.

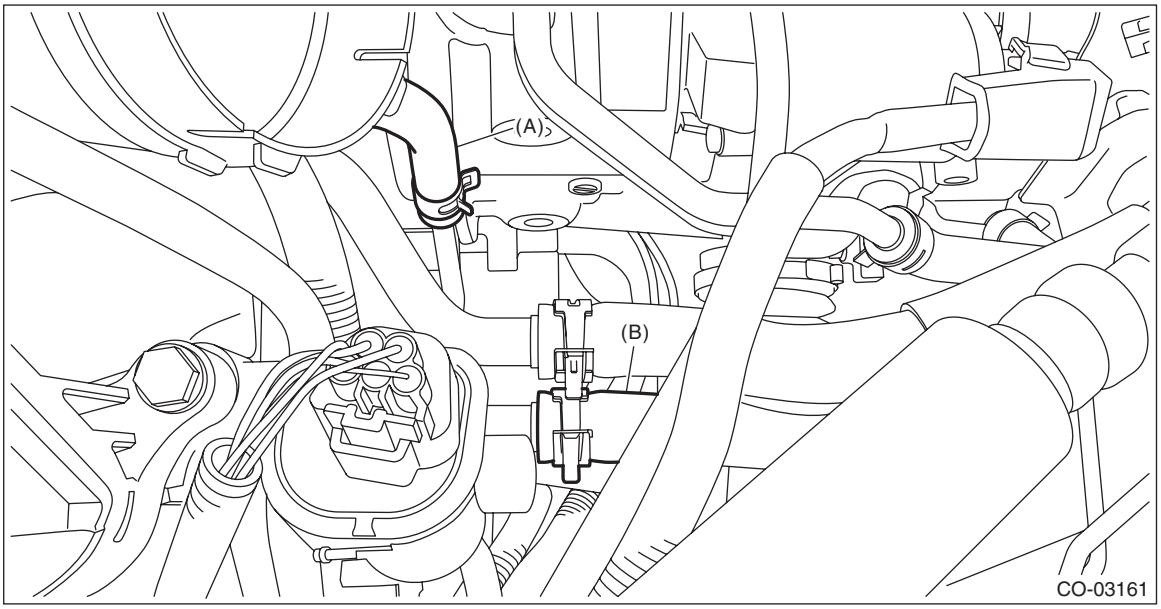

14) Remove the bolt which holds the water pipe assembly LH from the cylinder head LH.

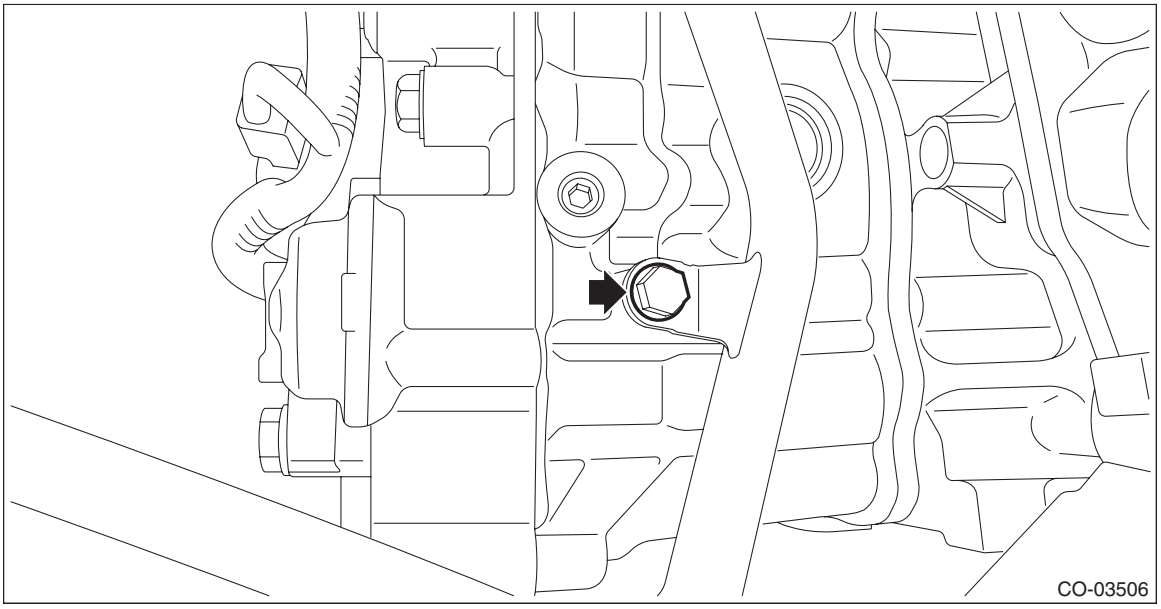

15) Remove the pitching stopper.

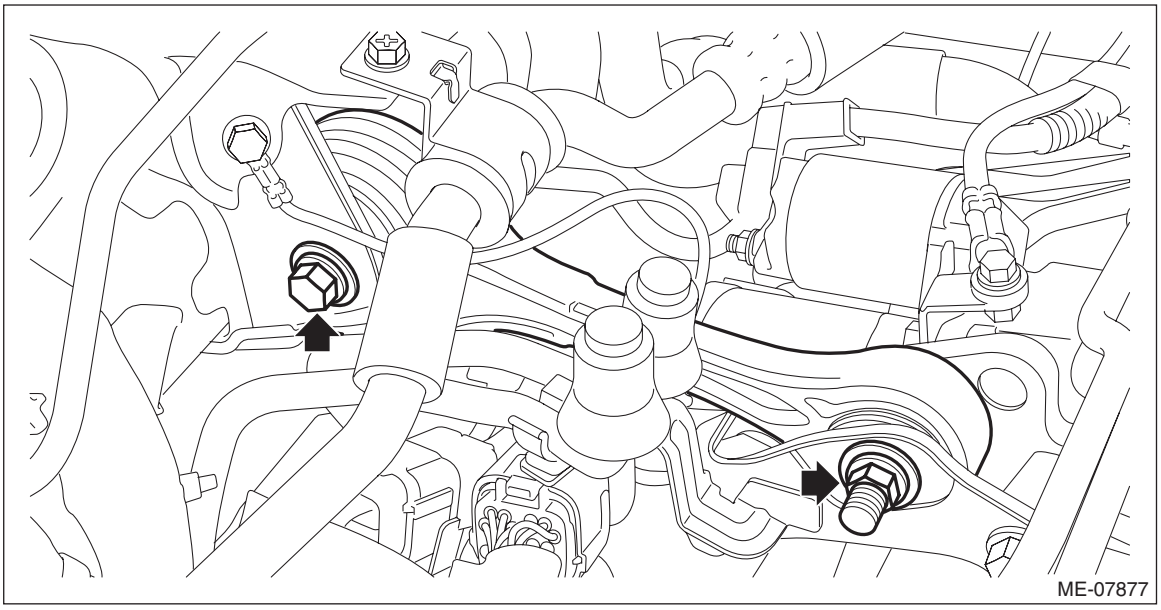

16) Support the engine with a lifting device and wire ropes.

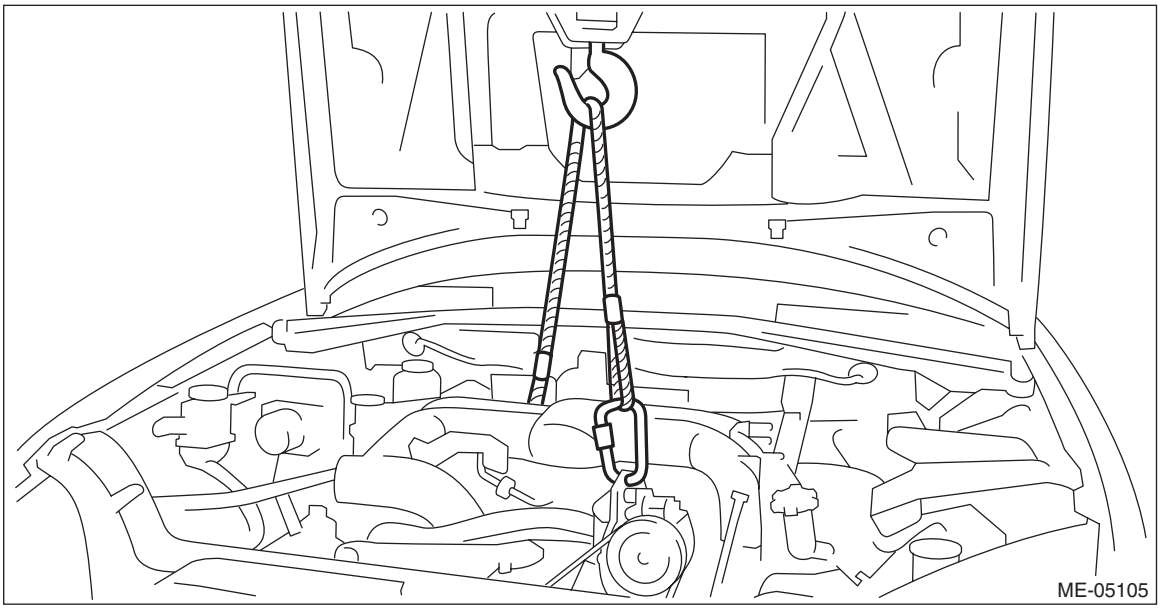

17) While gradually lifting up the engine, set the ST between the engine mount LH and front crossmember, and then slowly lower the engine.

CAUTION:
• When lifting up the engine, pay attention to the clearance of each part and be careful not to lift the engine too much, in order to prevent damaging the vehicle.
• To avoid the damage, be sure to set the ST as shown in the figure.

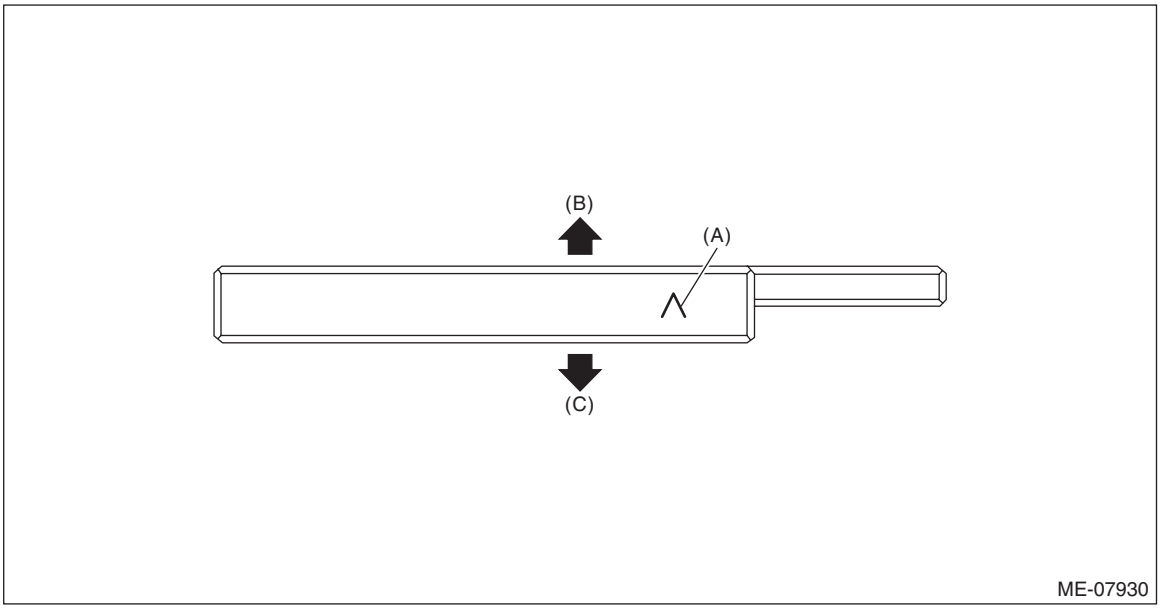

(A) Direction mark (B) Engine mounting side (C) Front crossmember side

- **After lowering the engine, check that the ST does not come off even if the engine is bounced.**

ST 18632AA030 STAND ASSY

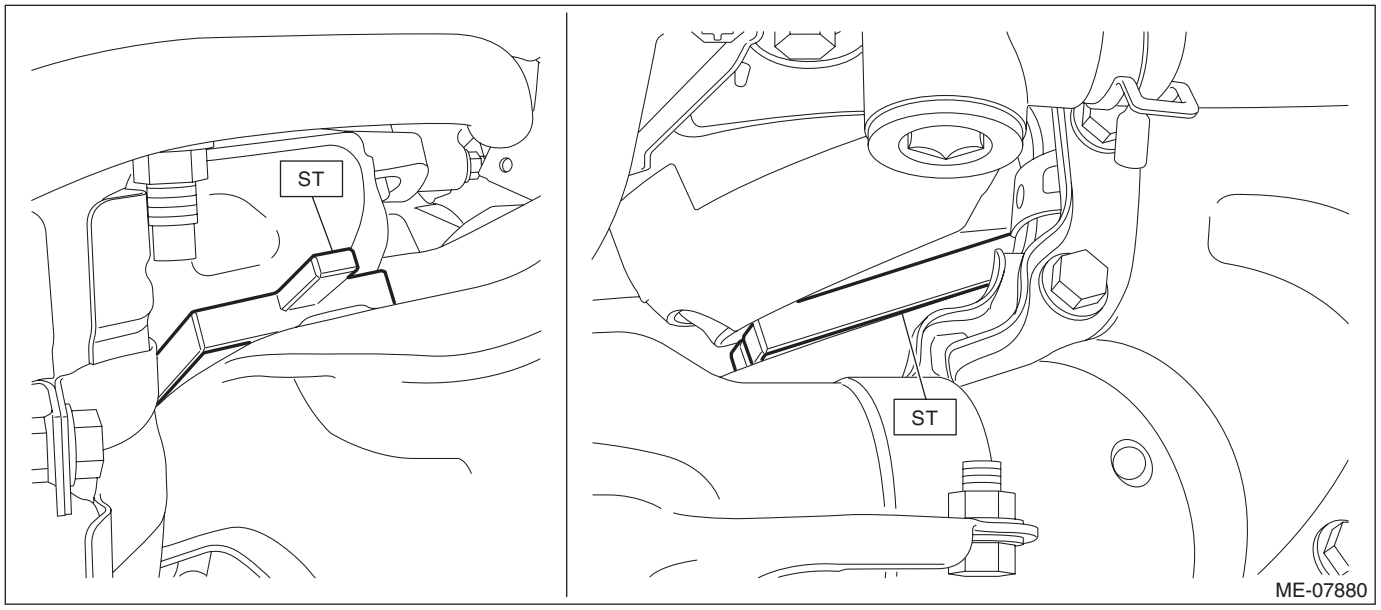

18) Remove the lifting device and wire ropes.

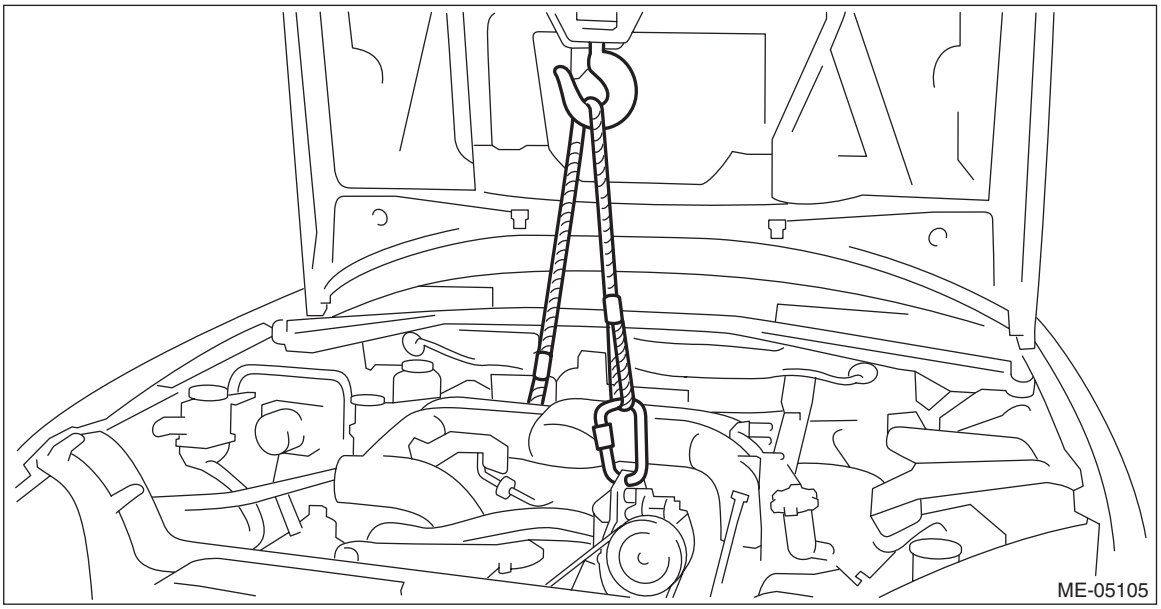

19) Lift up the vehicle.
20) Remove the rear oxygen sensor connector (A) from the water pipe assembly LH.
21) Disconnect the side engine oil cooler hose B (B) from the water pipe assembly LH.
22) Remove the bolt (C) which secures the water pipe assembly LH to the cylinder head LH.

23) Disconnect the water pipe hose LH (D) from oil pan upper, and remove the water pipe assembly LH.

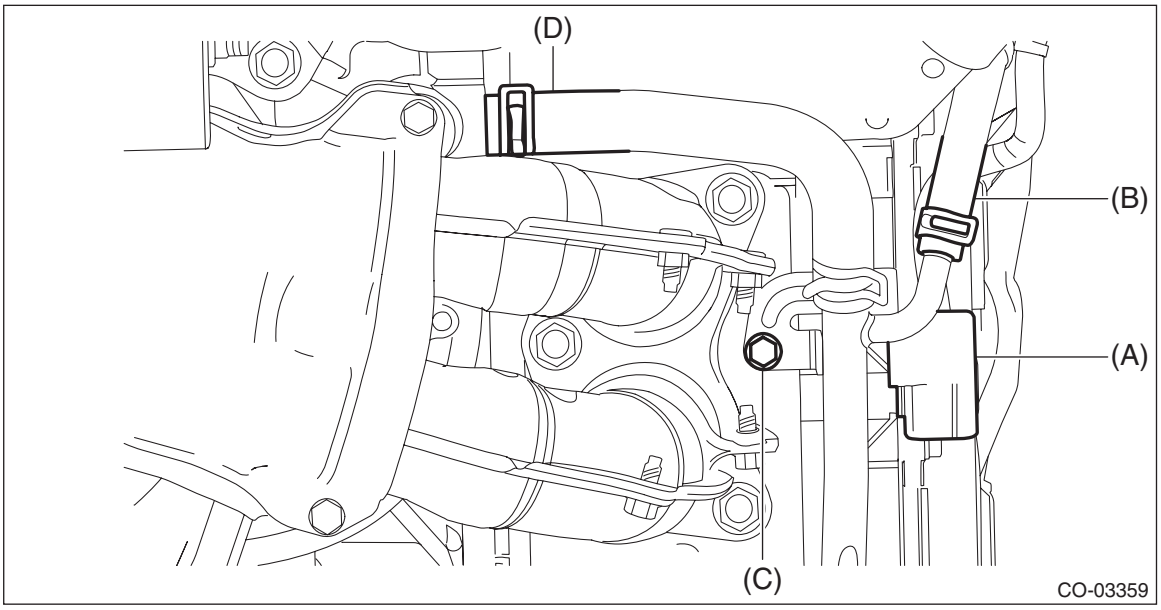

B: INSTALLATION

1. WATER PIPE ASSEMBLY RH

1) Set the water pipe assembly RH on the engine, and connect the water pipe hose RH (B) to the oil pan upper.
2) Install the bolt (A) which secures the water pipe assembly RH to the cylinder head RH.

Tightening torque:
6.4 N·m (0.7 kgf-m, 4.7 ft-lb)

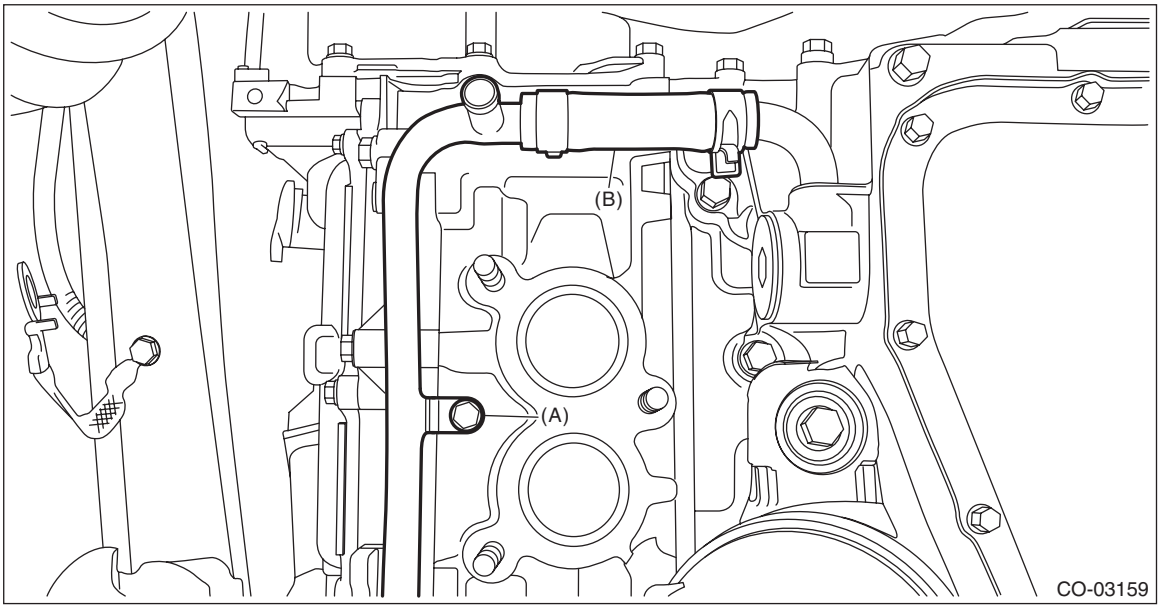

3) Connect the water hose (A) to the water pipe assembly RH, and install the bolt (B) which secures the water pipe assembly RH to the cam carrier RH.

Tightening torque:
6.4 N·m (0.7 kgf-m, 4.7 ft-lb)

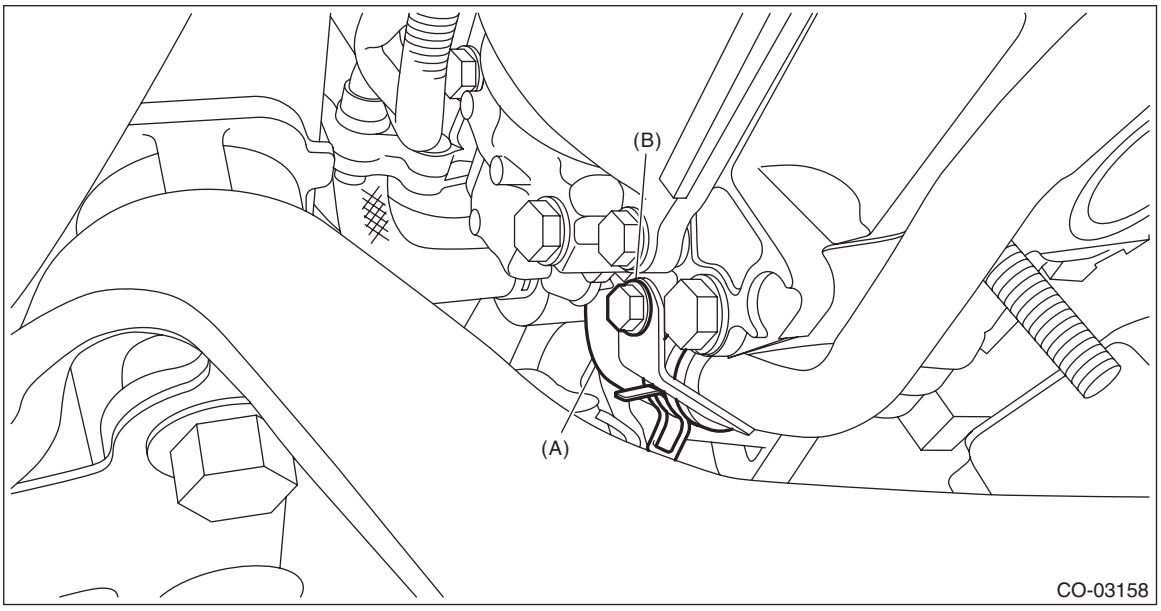

4) Install the front exhaust pipe. <Ref. to EX(w/o STI)-17, INSTALLATION, Front Exhaust Pipe.>
5) Install the oil pipe assembly. <Ref. to LU(w/o STI)-43, OIL PIPE ASSY, INSTALLATION, Oil Pipe.>
6) Connect the ground terminal to battery sensor. <Ref. to NT-6, BATTERY, NOTE, Note.>
7) Fill engine coolant. <Ref. to CO(w/o STI)-14, FILLING OF ENGINE COOLANT, REPLACEMENT, Engine Coolant.>

2. WATER PIPE ASSEMBLY LH

1) Set the water pipe assembly LH on the engine, and connect the water pipe hose LH (D) to the oil pan upper.
2) Install the bolt (C) which secures the water pipe assembly LH to the cylinder head LH.

Tightening torque:
6.4 N·m (0.7 kgf-m, 4.7 ft-lb)

3) Connect the side engine oil cooler hose B (B) to the water pipe assembly LH.
4) Install the rear oxygen sensor connector (A) to the water pipe assembly LH.

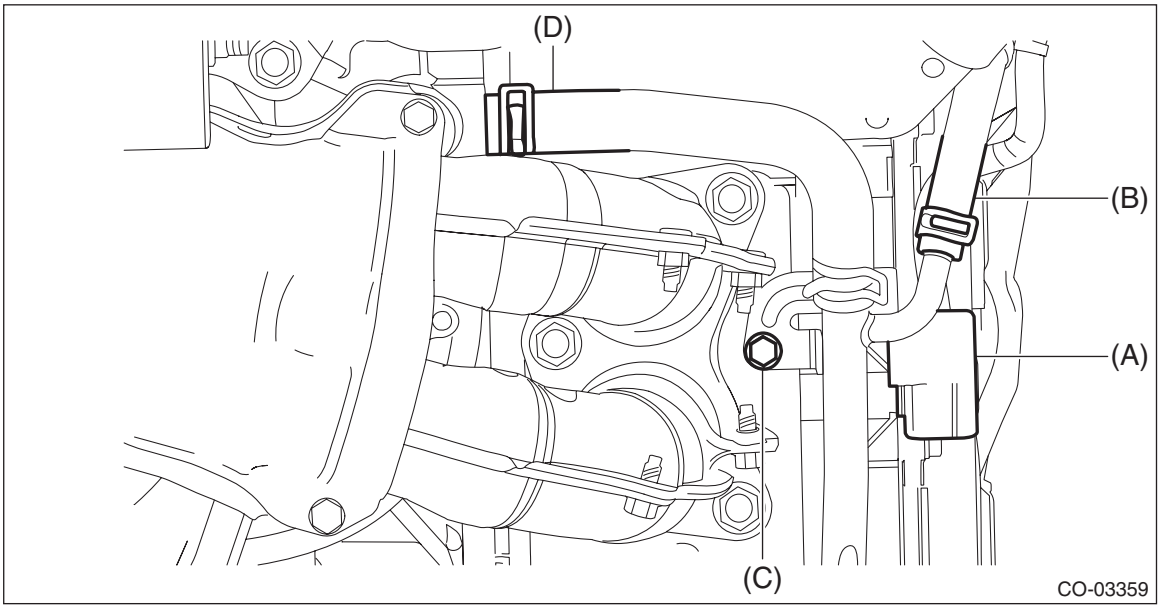

5) Lower the vehicle.
6) Support the engine with a lifting device and wire ropes.

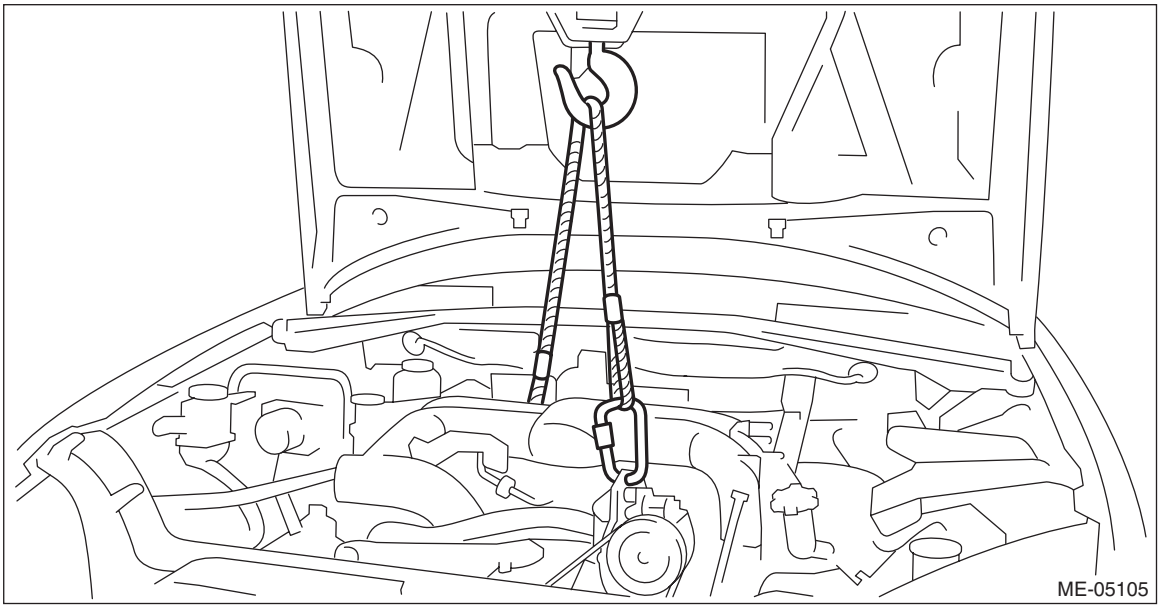

7) Lift the engine a little, and remove the ST.

CAUTION:
When lifting up the engine, pay attention to the clearance of each part and be careful not to lift the engine too much, in order to prevent damaging the vehicle.
ST 18632AA030 STAND ASSY

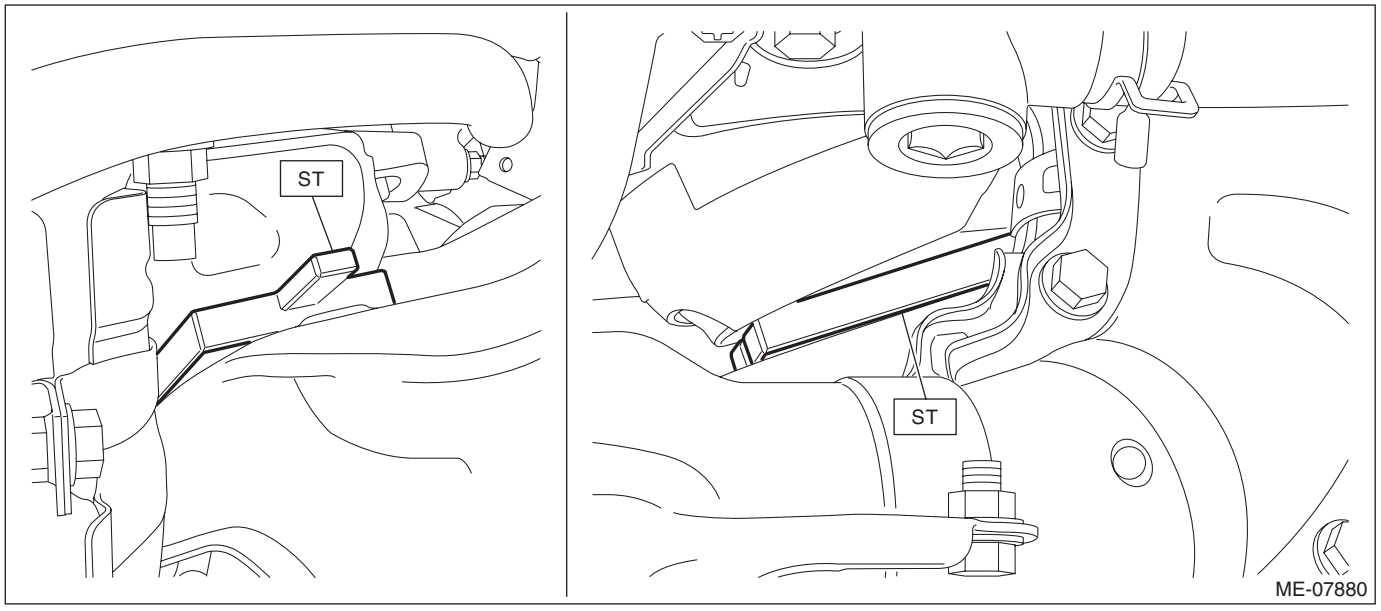

8) Lower the engine and remove the lifting device and wire ropes.

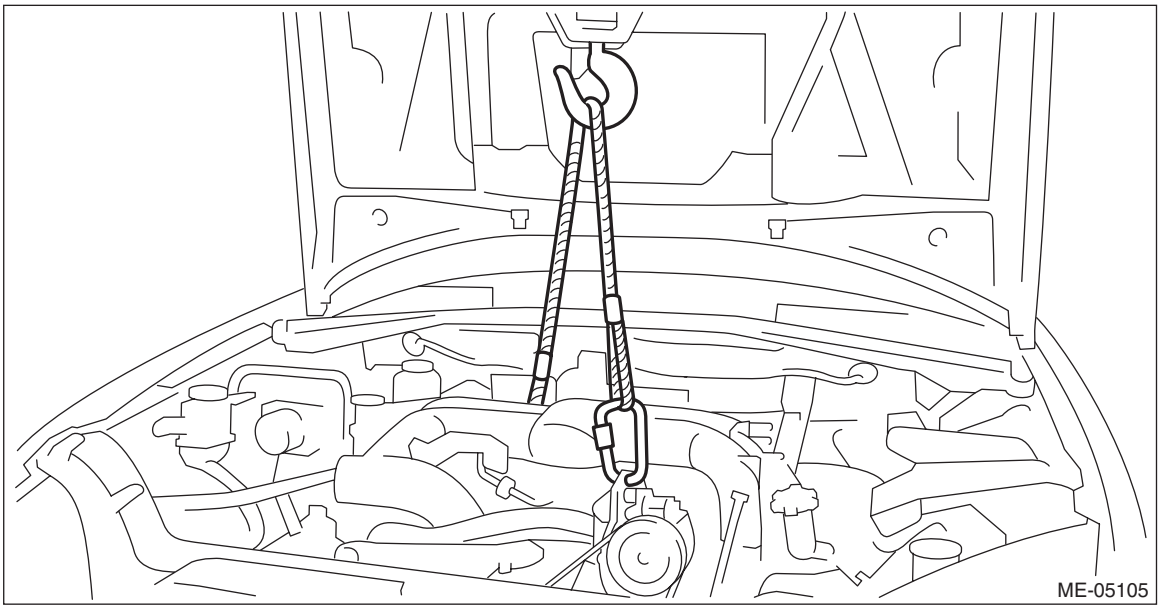

9) Install the pitching stopper.

Tightening torque:
T1: 50 N·m (5.1 kgf-m, 36.9 ft-lb)
T2: 58 N·m (5.9 kgf-m, 42.8 ft-lb)

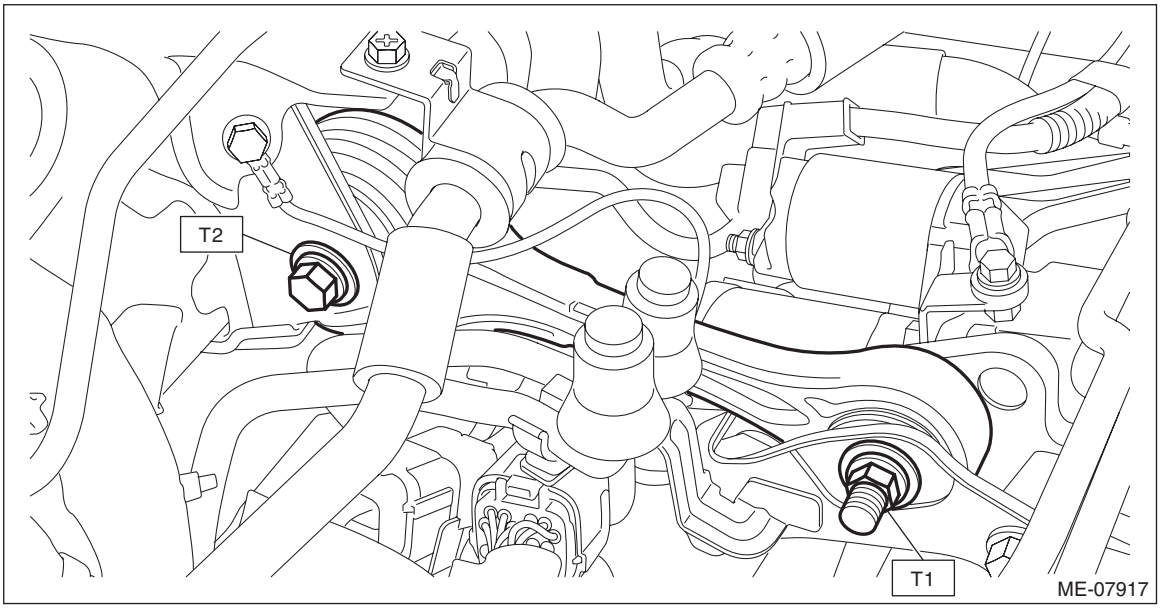

10) Connect the preheater hose (A) and the heater outlet hose (B) to the water pipe assembly LH.

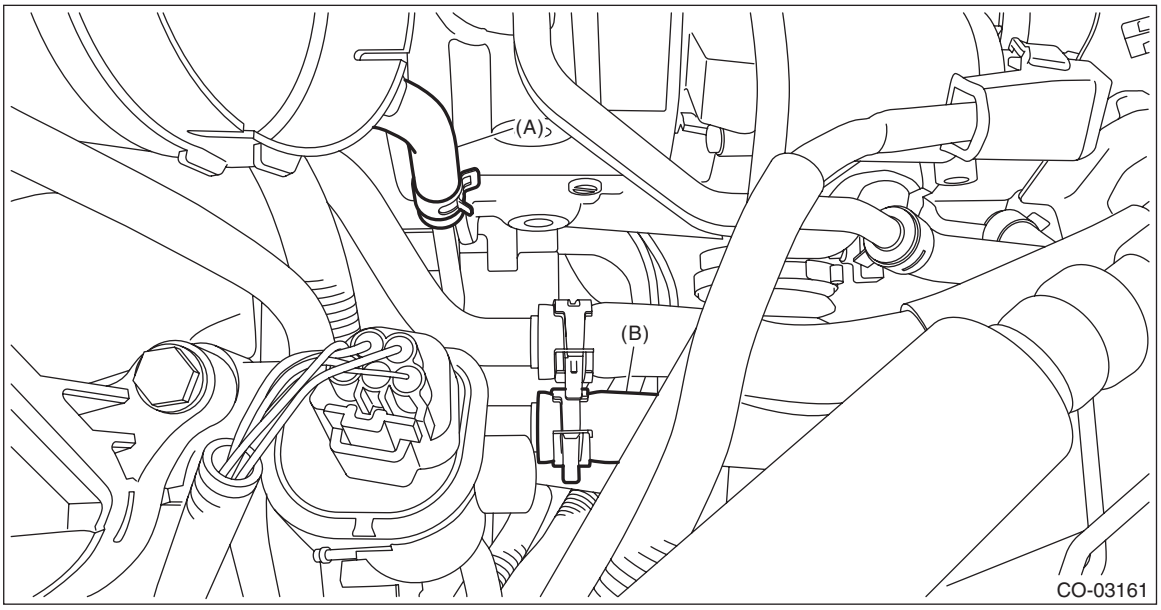

11) Install the bolt which secures the water pipe assembly LH to the cylinder head LH.

Tightening torque:
6.4 N·m (0.7 kgf-m, 4.7 ft-lb)

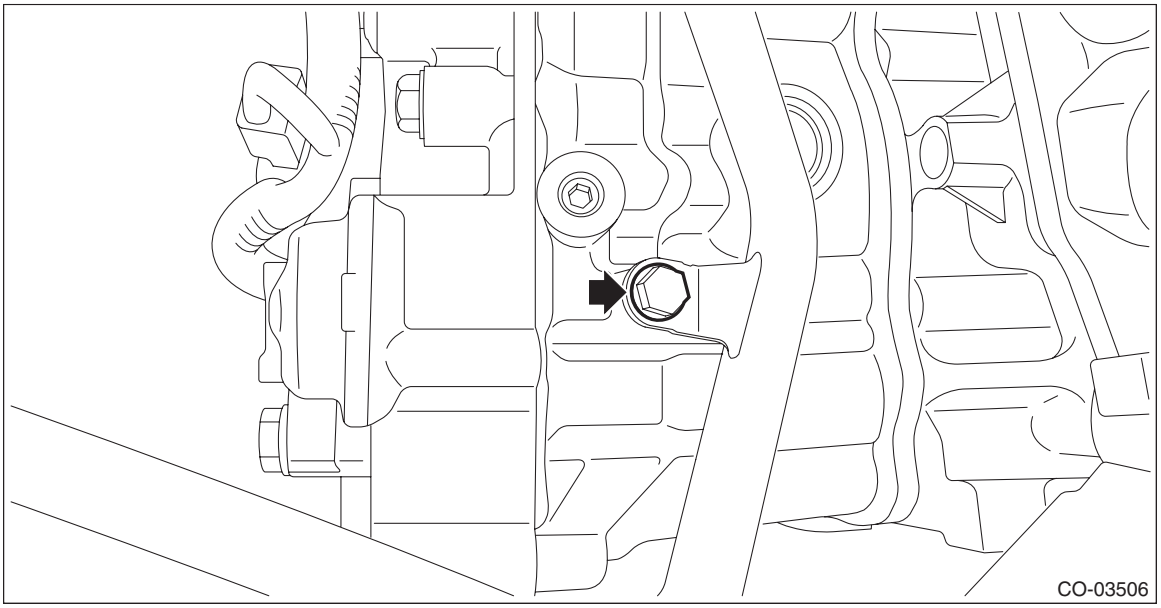

12) Install the intercooler. <Ref. to IN(w/o STI)-45, INSTALLATION, Intercooler.>

13) Insert the engine control module (ECM) to the bracket.

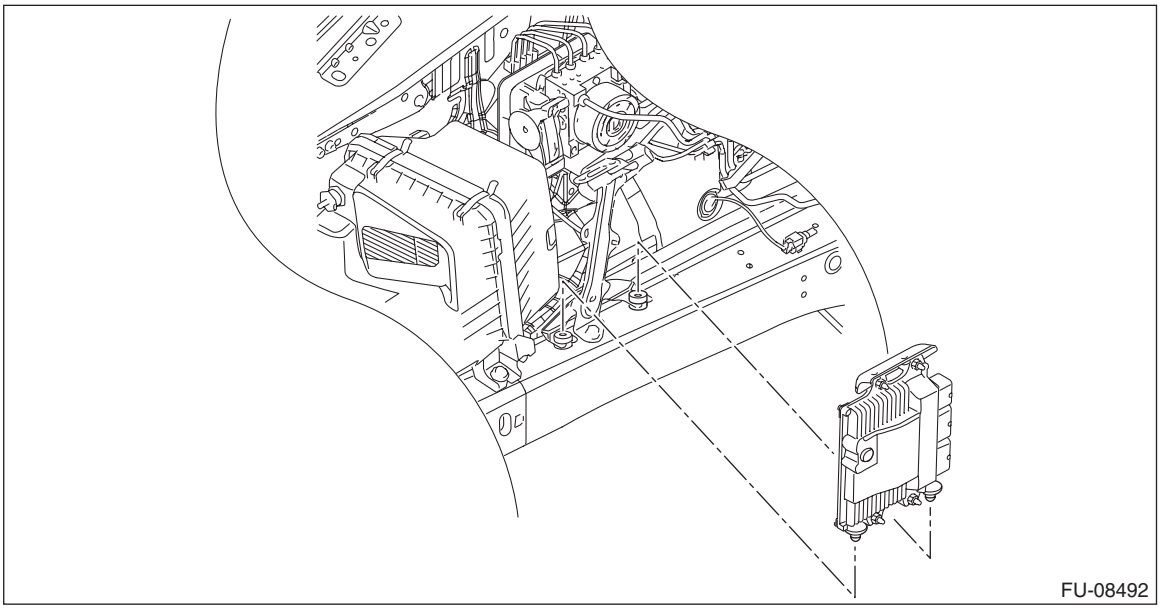

14) Install the bolt which secures the engine control module (ECM) to the bracket, and then secure the engine harness and bulkhead harness to the bracket with clip (A) and clip (B).

Tightening torque:
7.5 N·m (0.8 kgf-m, 5.5 ft-lb)

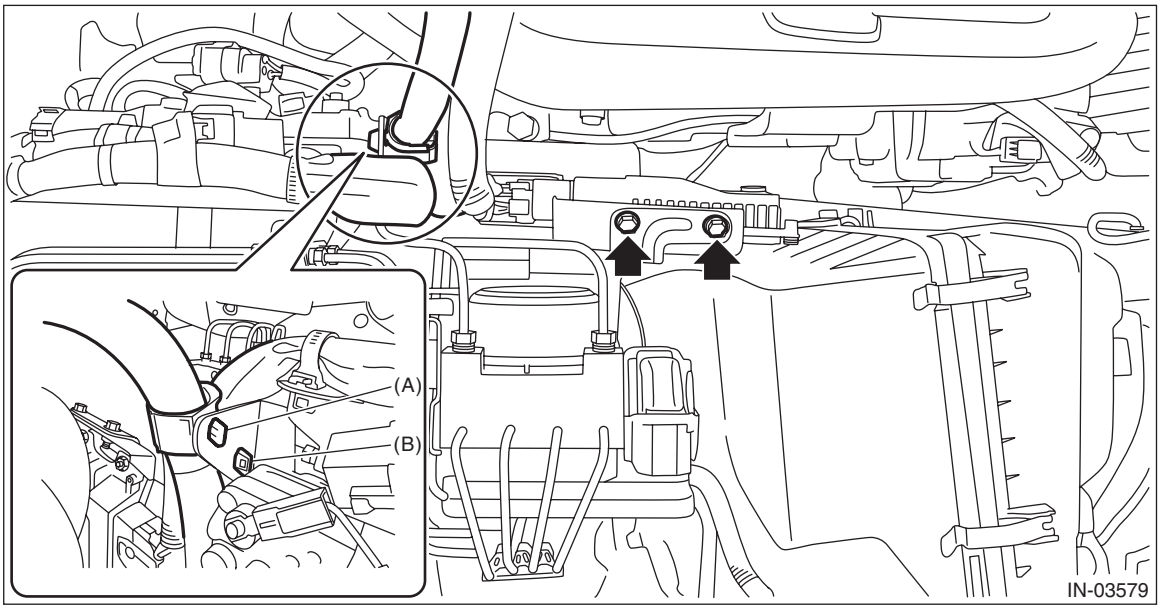

15) Lift up the vehicle.

16) Install the nuts which hold the engine mounting to the front crossmember.

NOTE:
- Use a new nut.
- Make sure that locators (a) of the engine mounting are securely inserted.

Tightening torque:
60 N·m (6.1 kgf-m, 44.3 ft-lb)

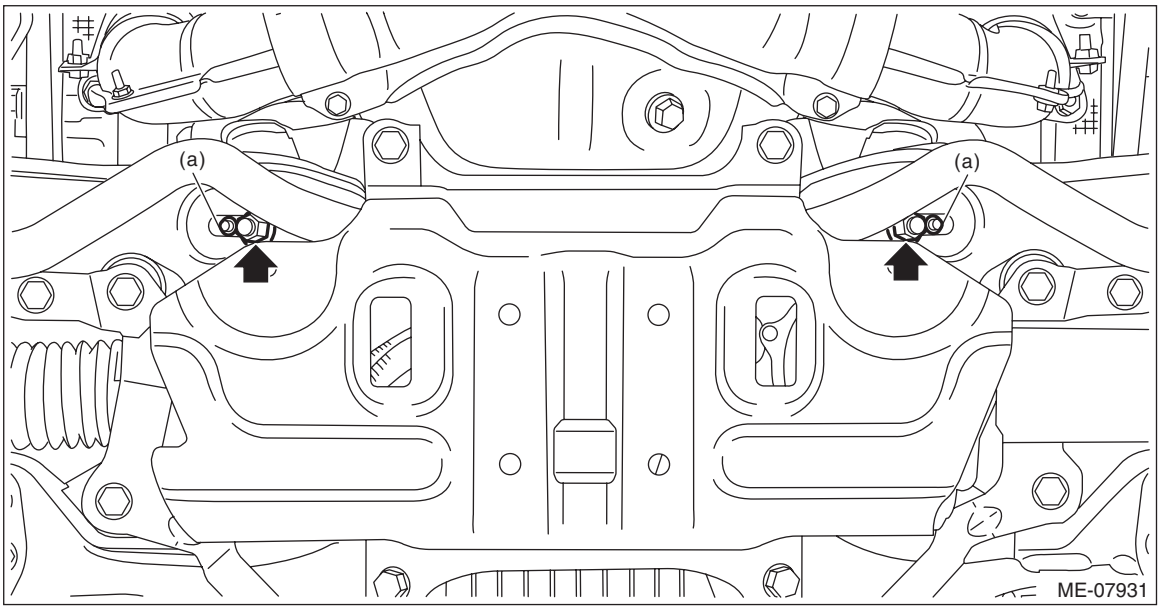

17) Install the center exhaust pipe. <Ref. to EX(w/o STI)-37, INSTALLATION, Center Exhaust Pipe.>
18) Install the air intake duct. <Ref. to IN(w/o STI)-26, INSTALLATION, Air Intake Duct.>
19) Connect the ground terminal to battery sensor. <Ref. to NT-6, BATTERY, NOTE, Note.>
20) Fill engine coolant. <Ref. to CO(w/o STI)-14, FILLING OF ENGINE COOLANT, REPLACEMENT, Engine Coolant.>
21) Install the collector cover. <Ref. to IN(w/o STI)-10, INSTALLATION, Collector Cover.>
22) Set the front hood to the normal position. <Ref. to NT-23, FRONT HOOD DAMPER STAY, NOTE, Note.>
23) Install the striker - front hood. <Ref. to EB-15, ASSEMBLY, Front Hood.>
24) Close the front hood.

C: INSPECTION

1) Check that the water pipe assembly has no deformation, cracks or other damages.
2) Check that the hose has no cracks, damage or loose part.

6. Thermostat

A: REMOVAL

1) Disconnect the ground terminal from battery sensor. <Ref. to NT-6, BATTERY, NOTE, Note.>
2) Drain engine coolant. <Ref. to CO(w/o STI)-13, DRAINING OF ENGINE COOLANT, REPLACEMENT, Engine Coolant.>
3) Remove the center exhaust pipe. <Ref. to EX(w/o STI)-32, REMOVAL, Center Exhaust Pipe.>
4) Disconnect the radiator outlet hose from thermostat cover.

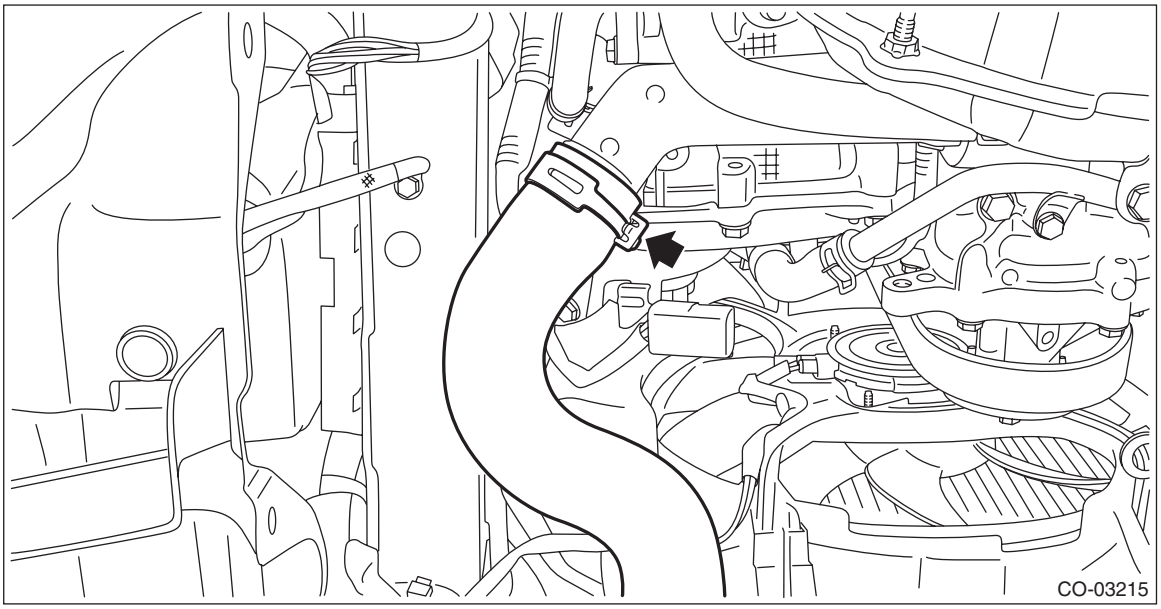

5) Remove the thermostat cover, and then remove the thermostat.

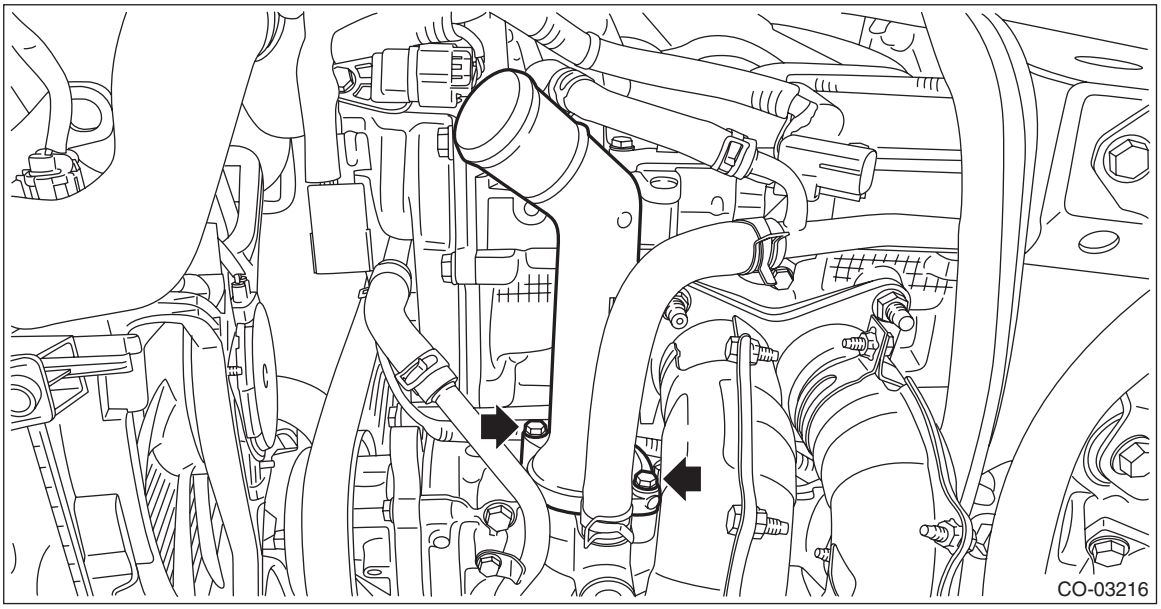

6) Remove the gasket from thermostat.

B: INSTALLATION

1) Install a gasket to thermostat.

NOTE:
- Use a new gasket.
- Align the positions of the jig pin (a) and gasket ribs (b).

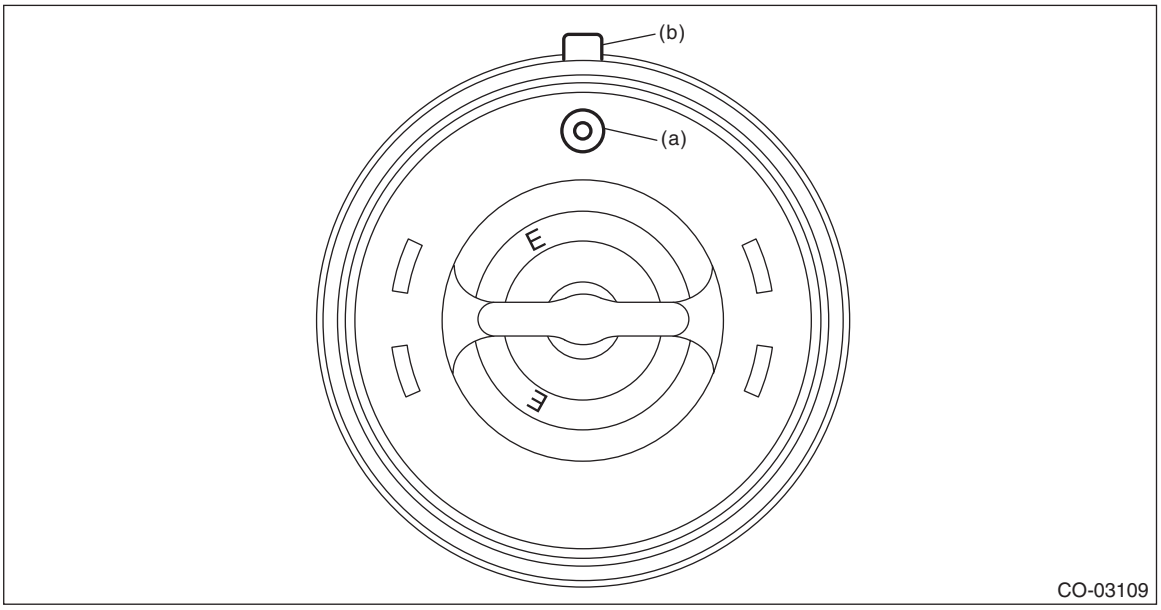

2) Install the thermostat and thermostat cover.

NOTE:
Align the oil pan upper cutout (a) with the position of the thermostat rib (b).

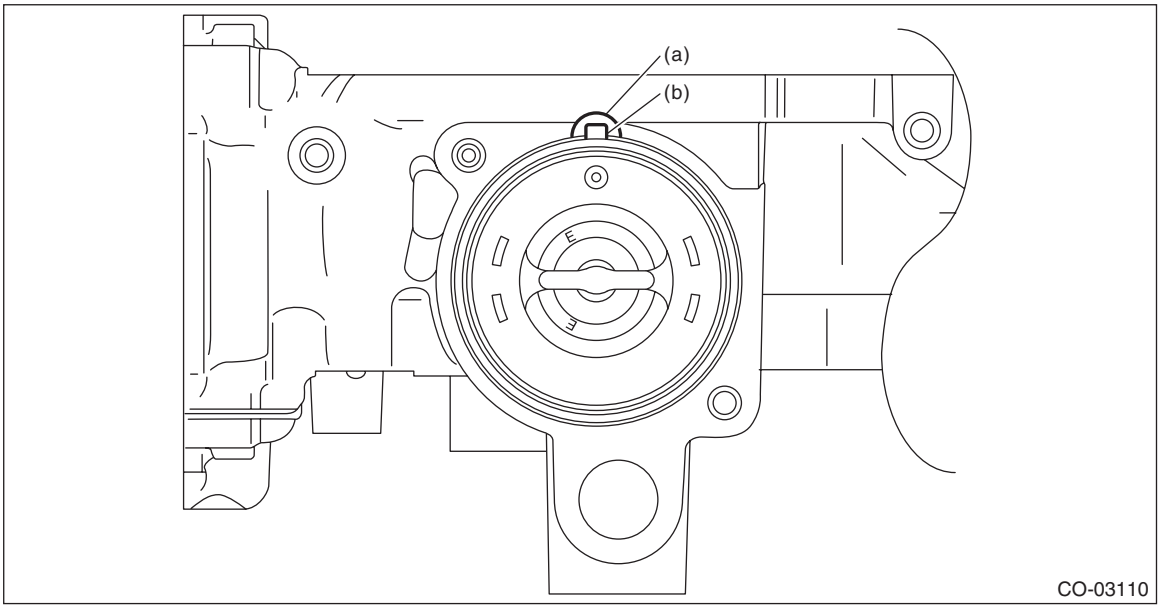

Tightening torque:
6.4 N·m (0.7 kgf-m, 4.7 ft-lb)

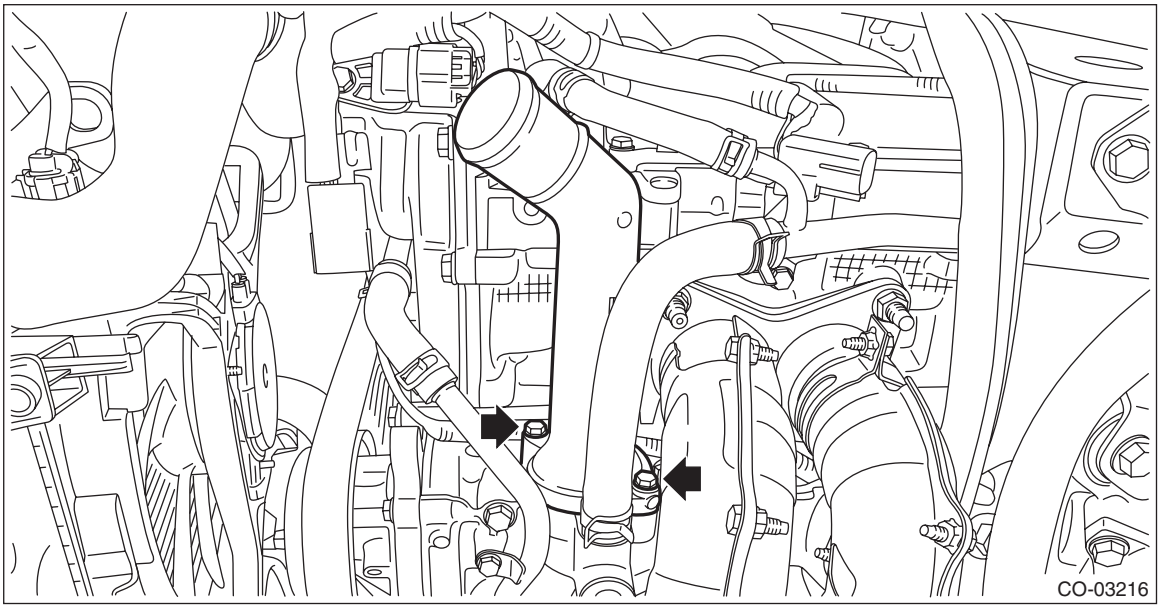

3) Connect the radiator outlet hose to thermostat cover.

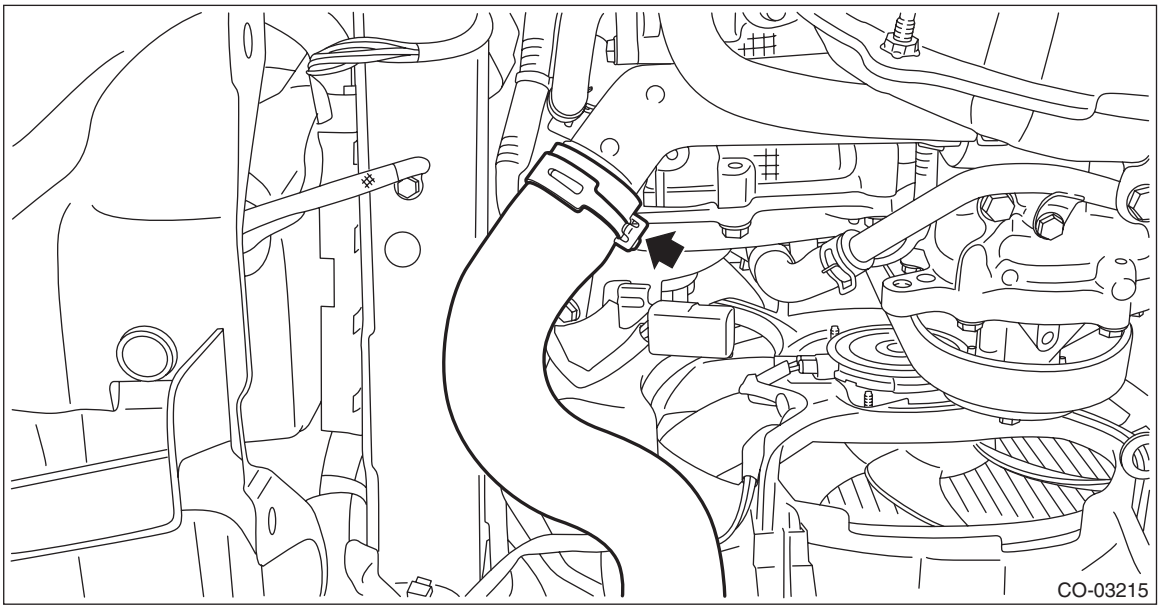

4) Install the center exhaust pipe. <Ref. to EX(w/o STI)-37, INSTALLATION, Center Exhaust Pipe.>
5) Install the under cover. <Ref. to EI-23, INSTALLATION, Front Under Cover.>
6) Lower the vehicle.
7) Connect the ground terminal to battery sensor. <Ref. to NT-6, BATTERY, NOTE, Note.>
8) Fill engine coolant. <Ref. to CO(w/o STI)-14, FILLING OF ENGINE COOLANT, REPLACEMENT, Engine Coolant.>

C: INSPECTION

1) Check that the thermostat does not have deformation, cracks or damage.
2) Check that the thermostat valve closes completely at an ambient temperature.
3) Immerse the thermostat and a thermometer in water. Raise water temperature gradually, and check the temperature and valve lift when the valve begins to open and when the valve is fully opened. Replace the thermostat if faulty.

NOTE:
- During the test, agitate the water for even temperature distribution.
- Leave the thermostat in the boiling water for five minutes or more before measuring the valve lift.
- Hold the thermostat with a wire or the like to avoid contacting with container bottom.

Starting temperature to open:
86 — 90°C (187 — 194°F)

Full open temperature:
95°C (203°F)

Total valve lift:
8.0 mm (0.315 in) or more

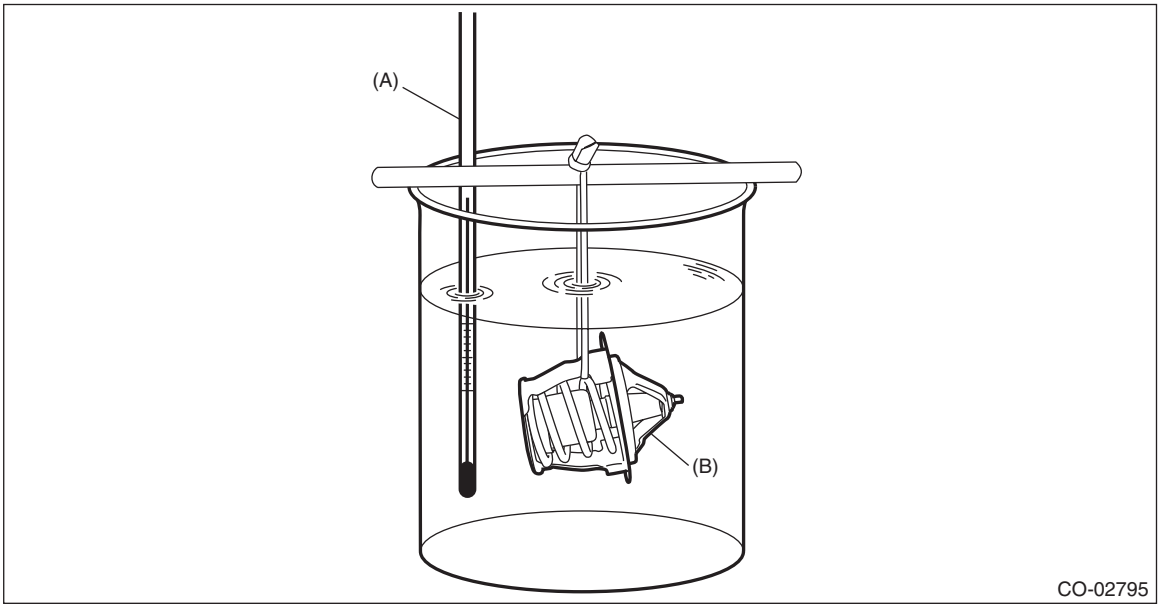

(A) Thermometer (B) Thermostat

7. Radiator

A: REMOVAL

CAUTION:
The radiator is pressurized when the engine and radiator are hot. Wait until engine and radiator cool down before working on the radiator.

1) Disconnect the ground terminal from battery sensor. <Ref. to NT-6, BATTERY, NOTE, Note.>
2) Remove the air intake duct. <Ref. to IN(w/o STI)-26, REMOVAL, Air Intake Duct.>
3) Remove the reservoir tank. <Ref. to CO(w/o STI)-50, REMOVAL, Reservoir Tank.>
4) Drain engine coolant. <Ref. to CO(w/o STI)-13, DRAINING OF ENGINE COOLANT, REPLACEMENT, Engine Coolant.>
5) Disconnect the radiator outlet hose from thermostat cover.

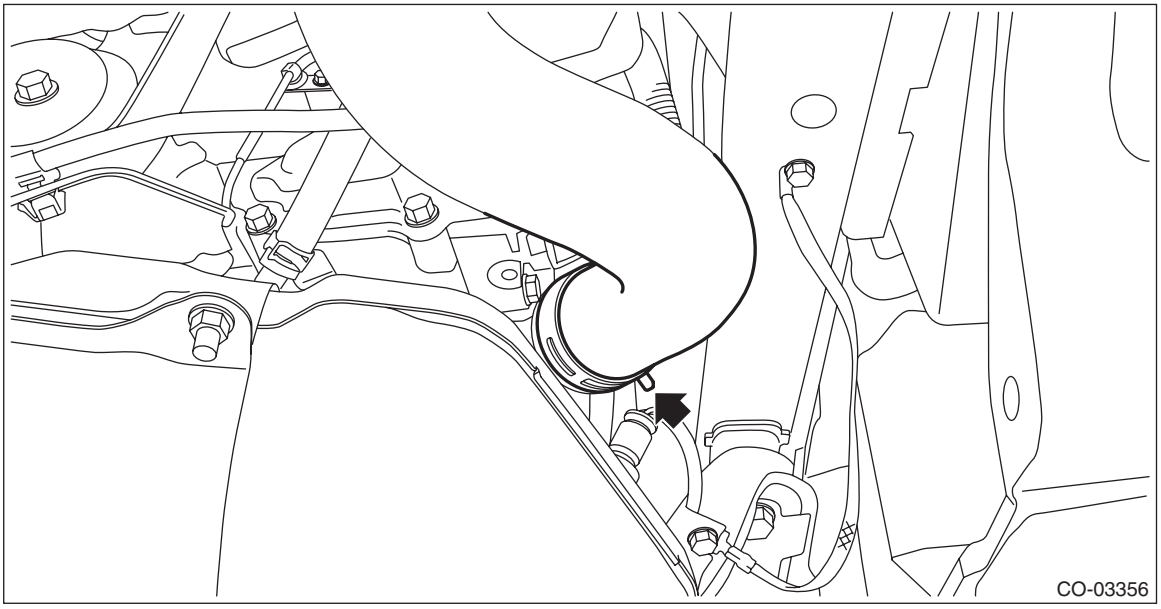

6) Lower the vehicle.
7) Disconnect the connector (A) from the main fan motor and the connector (B) from the sub fan motor.

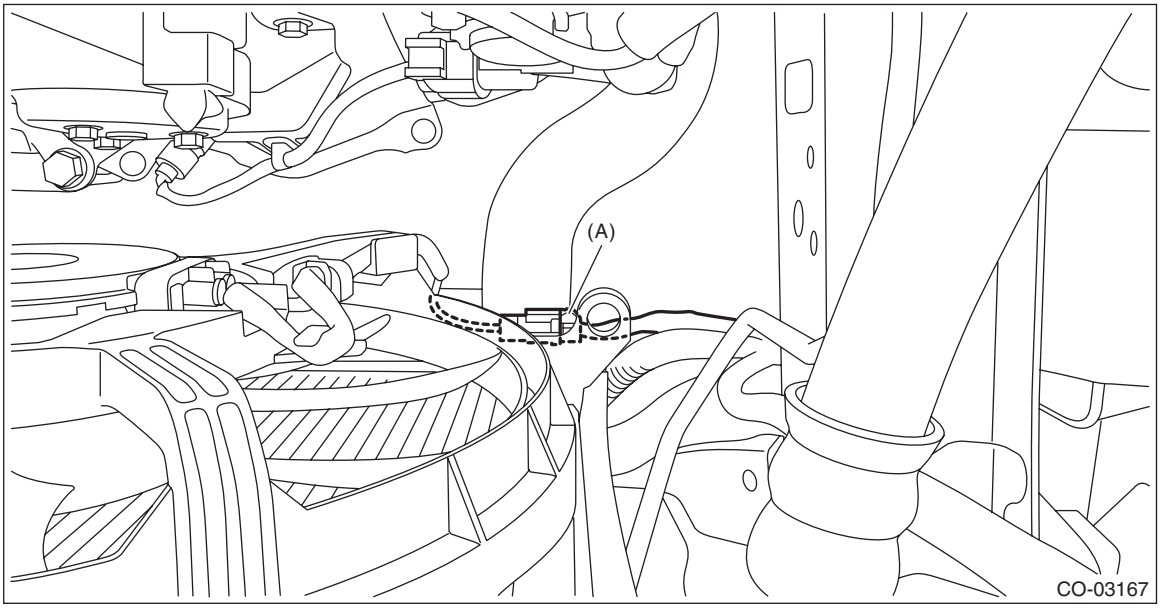

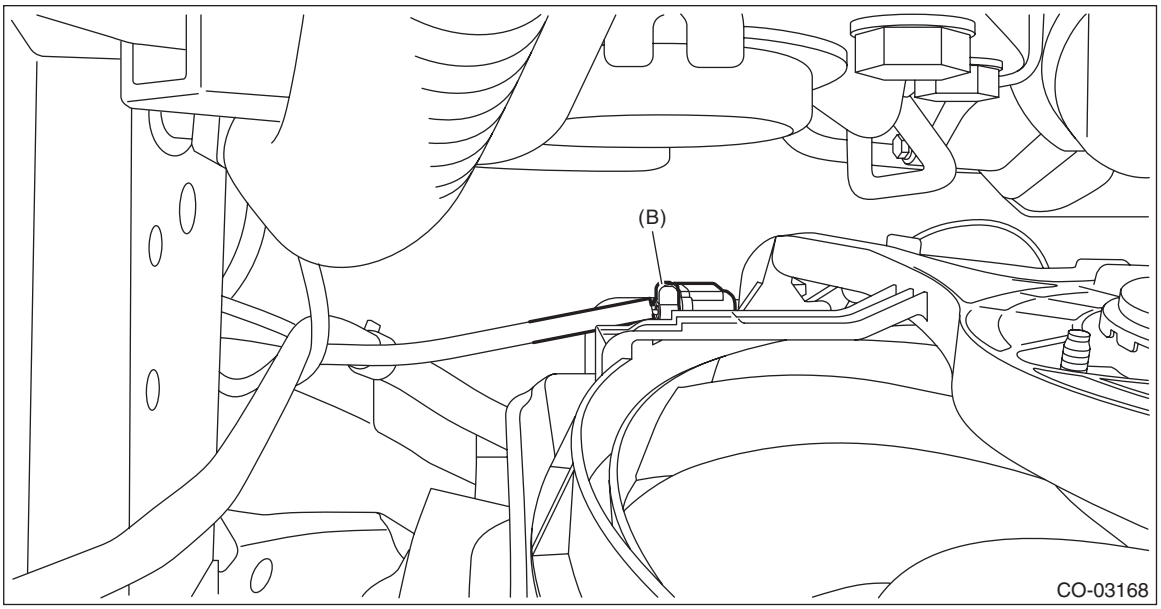

8) Disconnect the radiator inlet hose from the water tank pipe assembly.

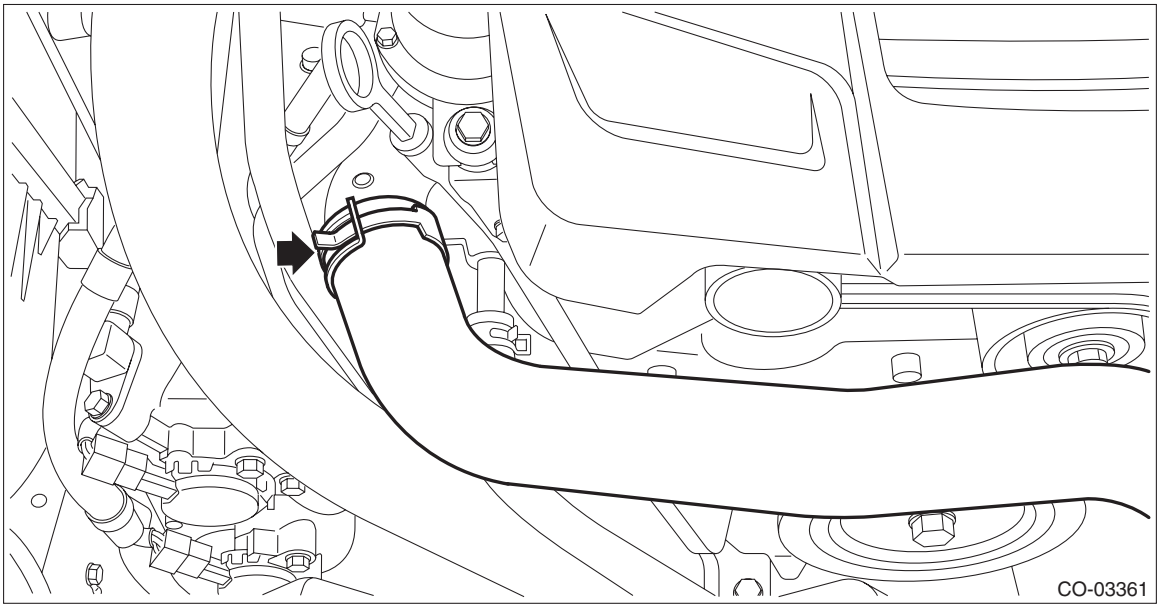

9) Remove the radiator upper brackets.

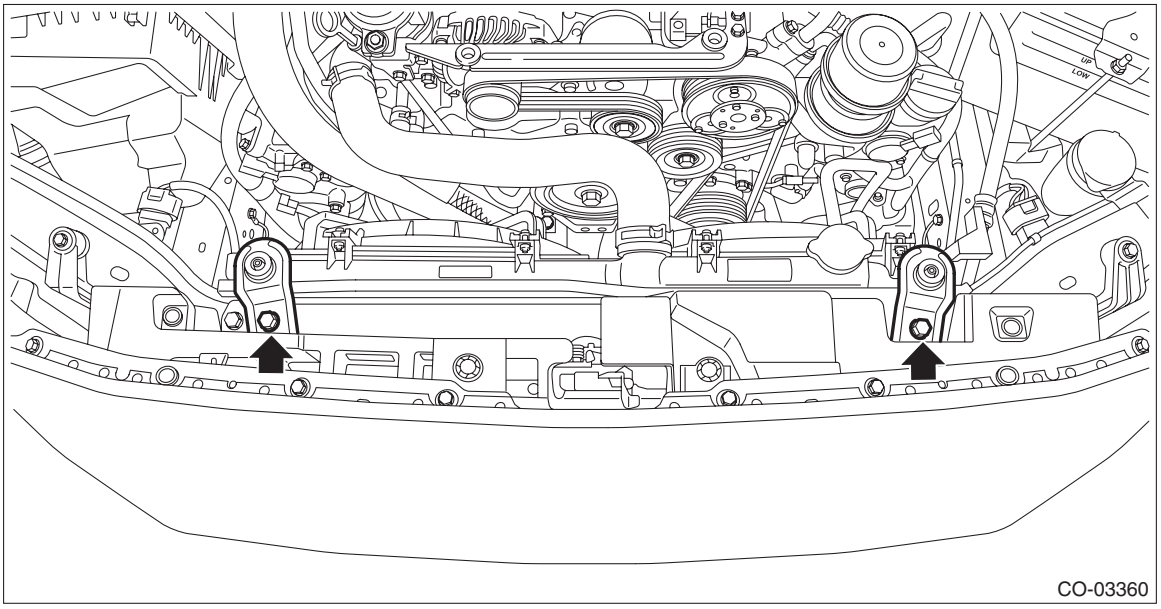

10) Remove the radiator from vehicle.
11) Remove the radiator lower cushion from the radiator lower bracket.

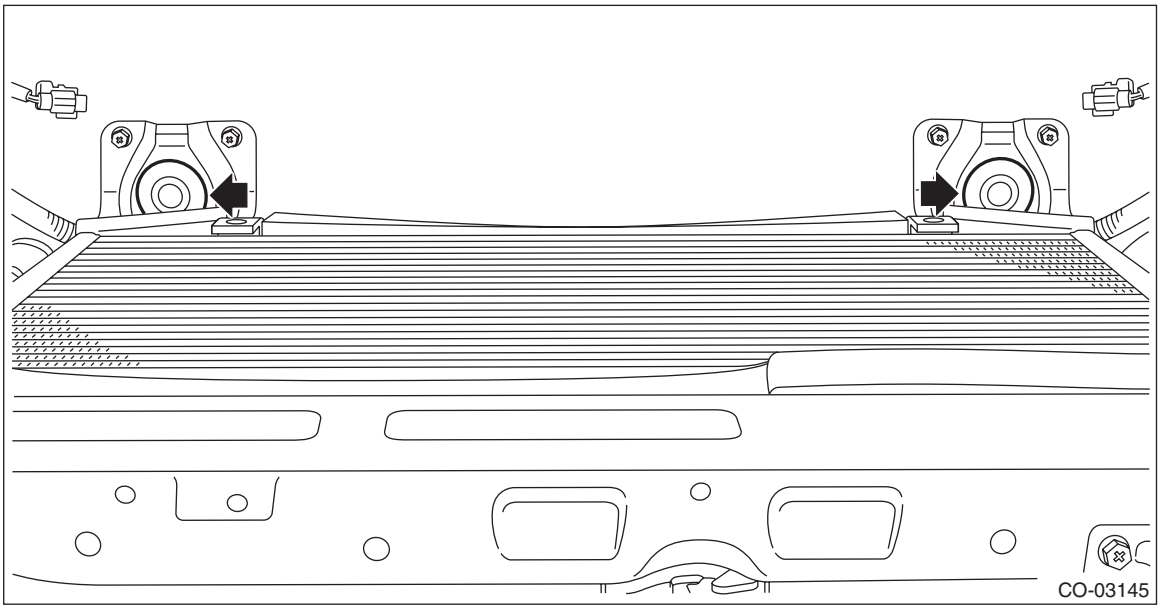

B: INSTALLATION

1) Attach the radiator lower cushion to the radiator lower bracket.

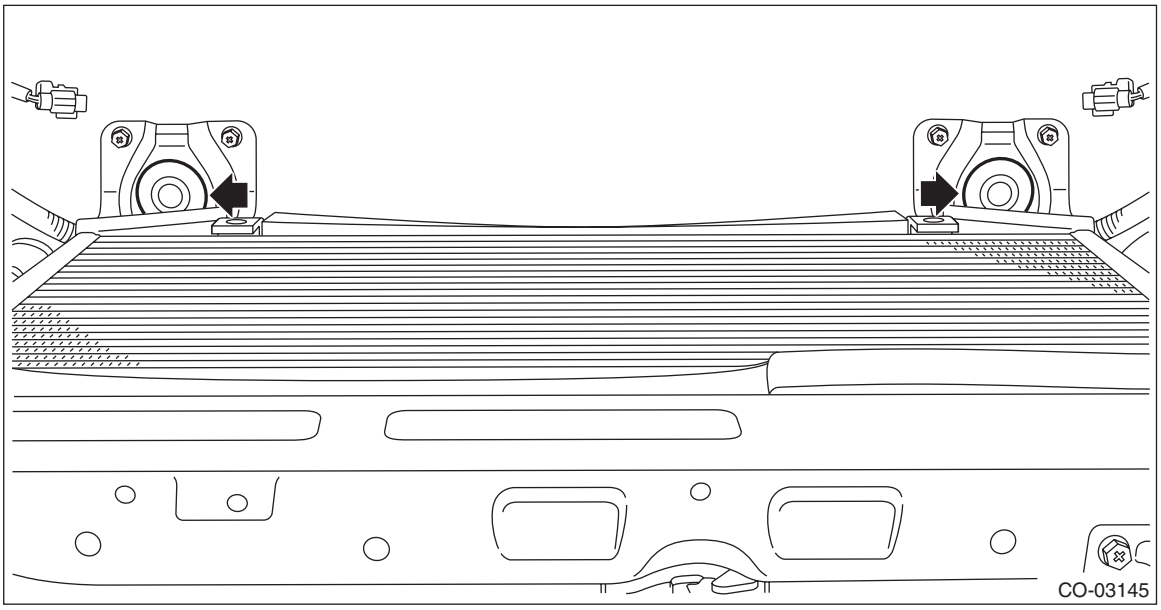

2) Install the radiator to vehicle.

NOTE:
Make pins on the lower side of radiator be fitted into the radiator lower cushions.

3) Install the radiator upper brackets.

Tightening torque:
12 N·m (1.2 kgf-m, 8.9 ft-lb)

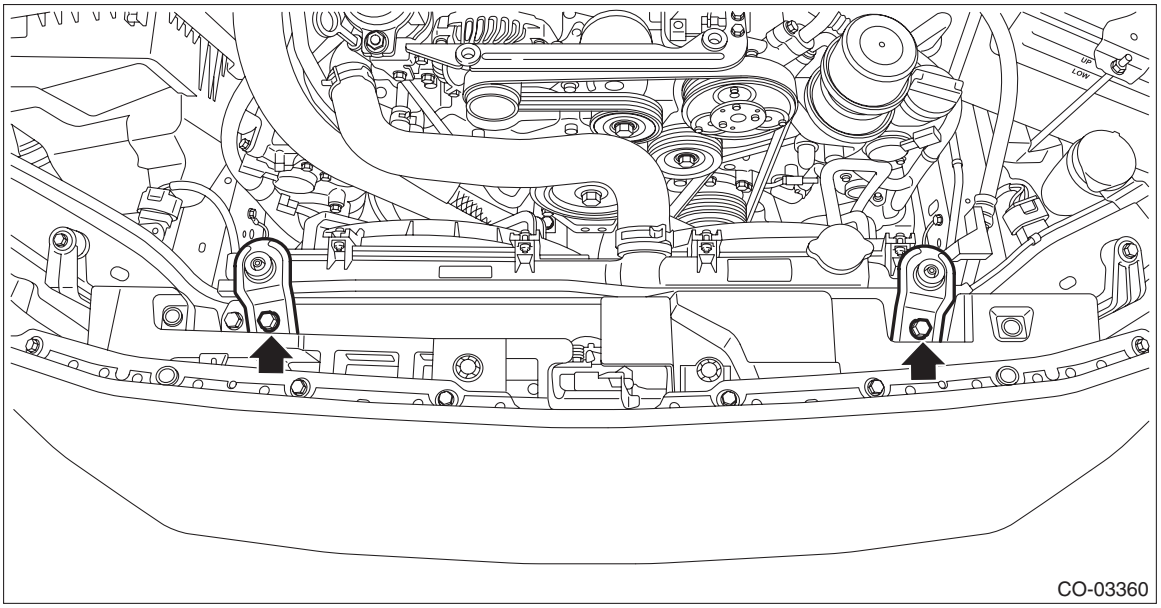

4) Connect the radiator inlet hose to the water tank pipe assembly.

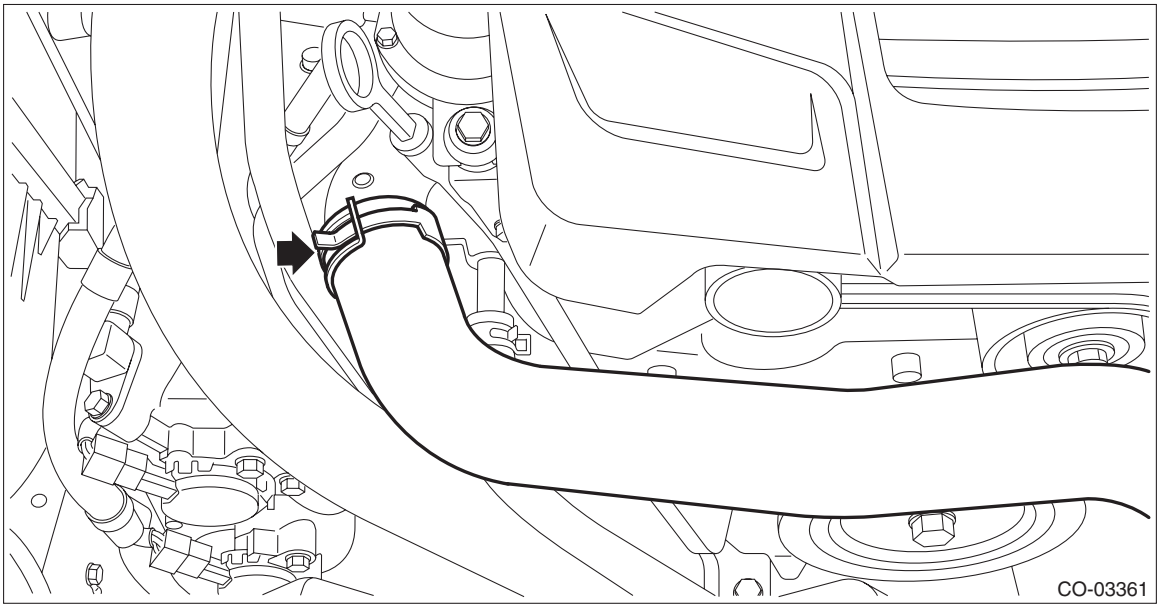

5) Connect the connector (A) to the main fan motor and the connector (B) to the sub fan motor.

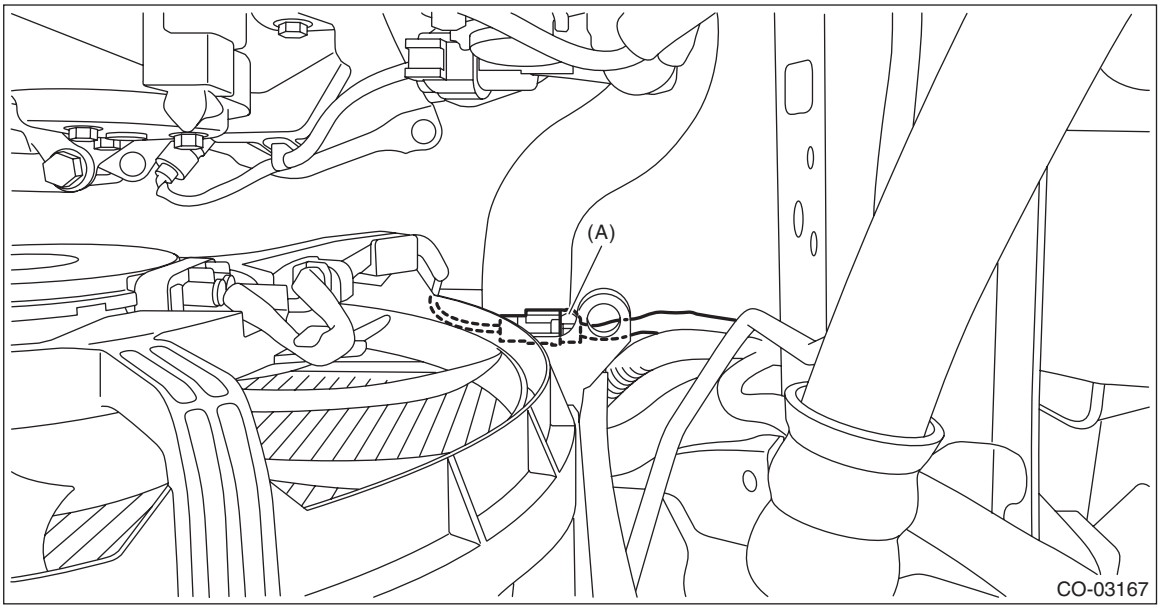

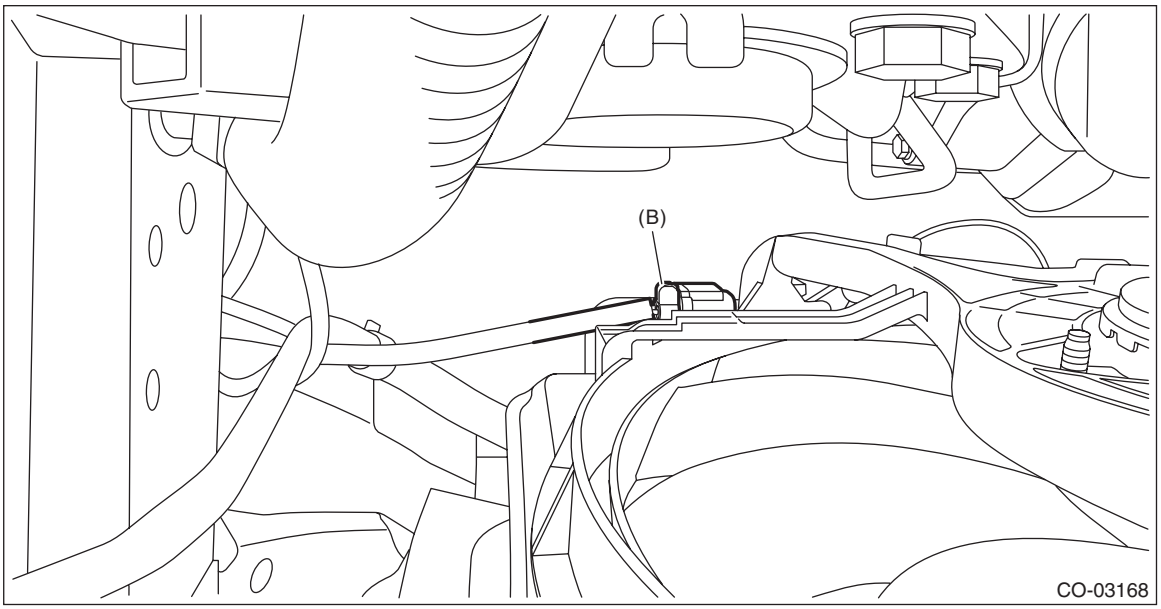

6) Lift up the vehicle.
7) Connect the radiator outlet hose to thermostat cover.

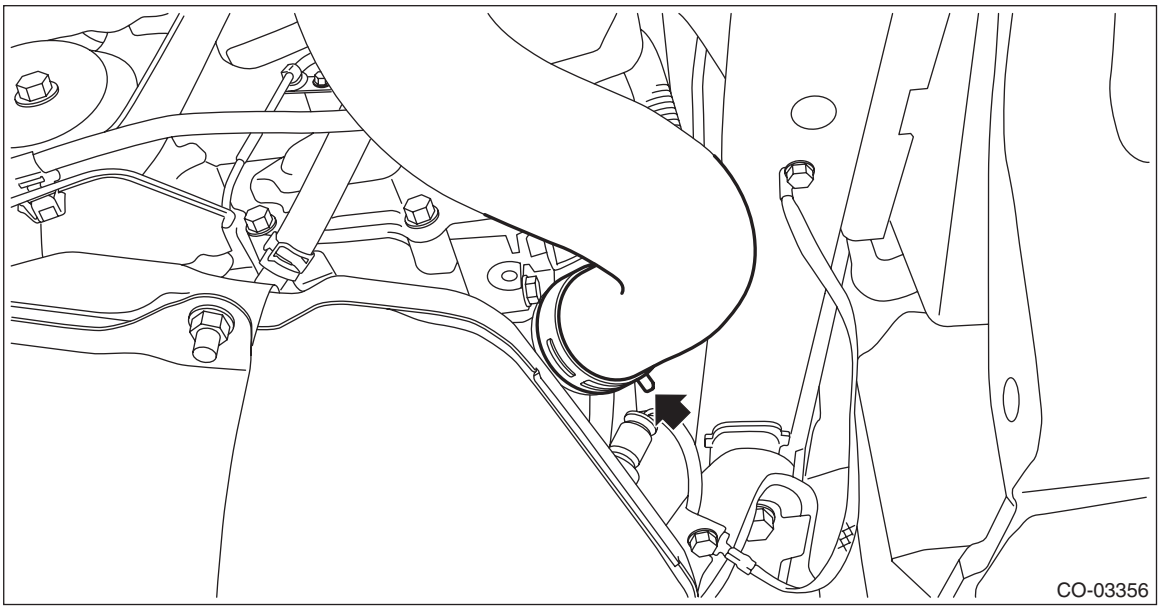

8) Install the under cover. <Ref. to EI-23, INSTALLATION, Front Under Cover.>
9) Lower the vehicle.
10) Install the reservoir tank. <Ref. to CO(w/o STI)-50, INSTALLATION, Reservoir Tank.>
11) Install the air intake duct. <Ref. to IN(w/o STI)-26, INSTALLATION, Air Intake Duct.>
12) Connect the ground terminal to battery sensor. <Ref. to NT-6, BATTERY, NOTE, Note.>
13) Fill engine coolant. <Ref. to CO(w/o STI)-14, FILLING OF ENGINE COOLANT, REPLACEMENT, Engine Coolant.>

C: INSPECTION

1) Check that the radiator does not have deformation, cracks or damage.
2) Check that the hose has no cracks, damage or loose part.
3) Remove the radiator cap, fill the radiator with engine coolant, and then install the radiator cap tester to the filler neck of radiator.

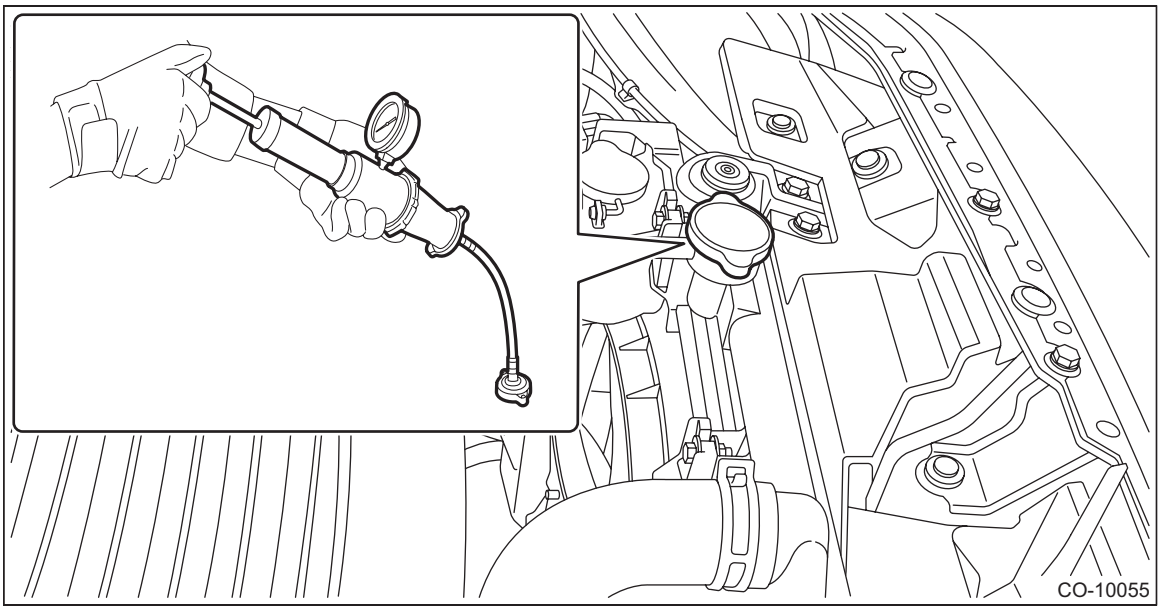

4) Apply a pressure of 157 kPa (1.6 kg/cm^2, 23 psi) to the radiator and check the following points:
- Leakage from the radiator or its vicinity
- Leakage from the hose or its connections

CAUTION:
- **Engine should be turned off.**
- **Clean the check points.**
- **Be careful not to deform the filler neck of radiator when installing and removing the radiator cap tester.**
- **Be careful of engine coolant from spurting out when removing the radiator cap tester.**

8. Radiator Cap

A: INSPECTION

1) Check that the radiator cap does not have deformation, cracks or damage.
2) Attach the radiator cap tester to radiator cap.

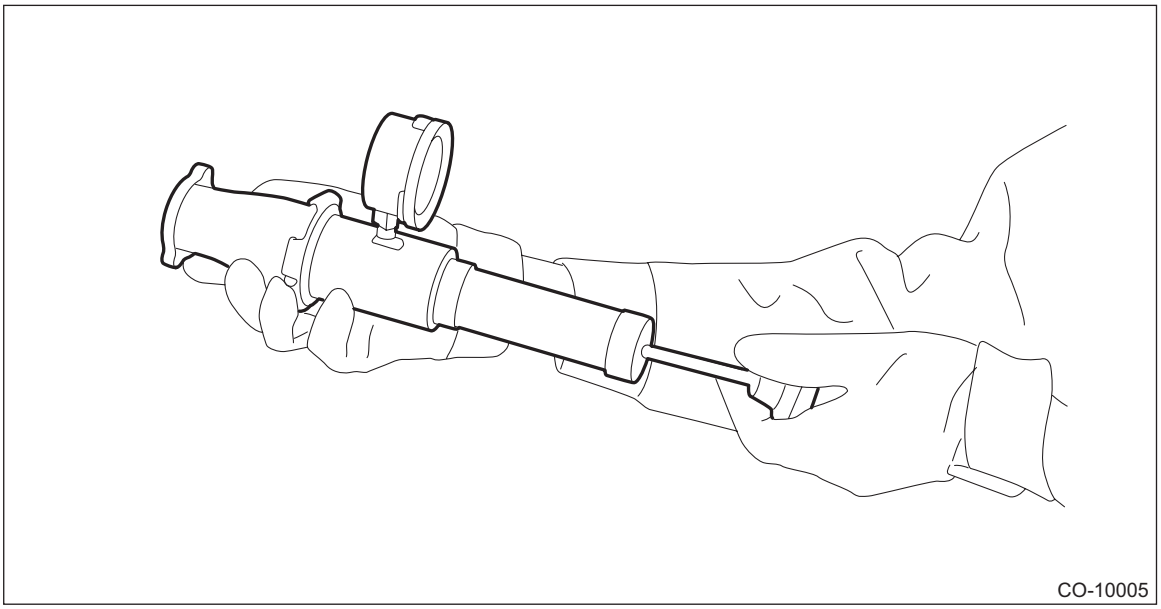

3) Increase pressure until the radiator cap tester gauge needle stops. Radiator cap is functioning properly if it holds the service limit pressure for 5 — 6 seconds. Replace the radiator cap if its valve opens at less than the service limit.

CAUTION:
Be sure to remove foreign matter and rust from the cap in advance. Otherwise, results of pressure test will be incorrect.

Standard:
93 — 123 kPa (0.95 — 1.25 kg/cm^2, 14 — 18 psi)

Service limit:
83 kPa (0.85 kg/cm^2, 12 psi)

9. Radiator Main Fan and Fan Motor

A: REMOVAL

1) Disconnect the ground terminal from battery sensor. <Ref. to NT-6, BATTERY, NOTE, Note.>
2) Remove the reservoir tank. <Ref. to CO(w/o STI)-50, REMOVAL, Reservoir Tank.>
3) Disconnect the connector from the main fan motor.

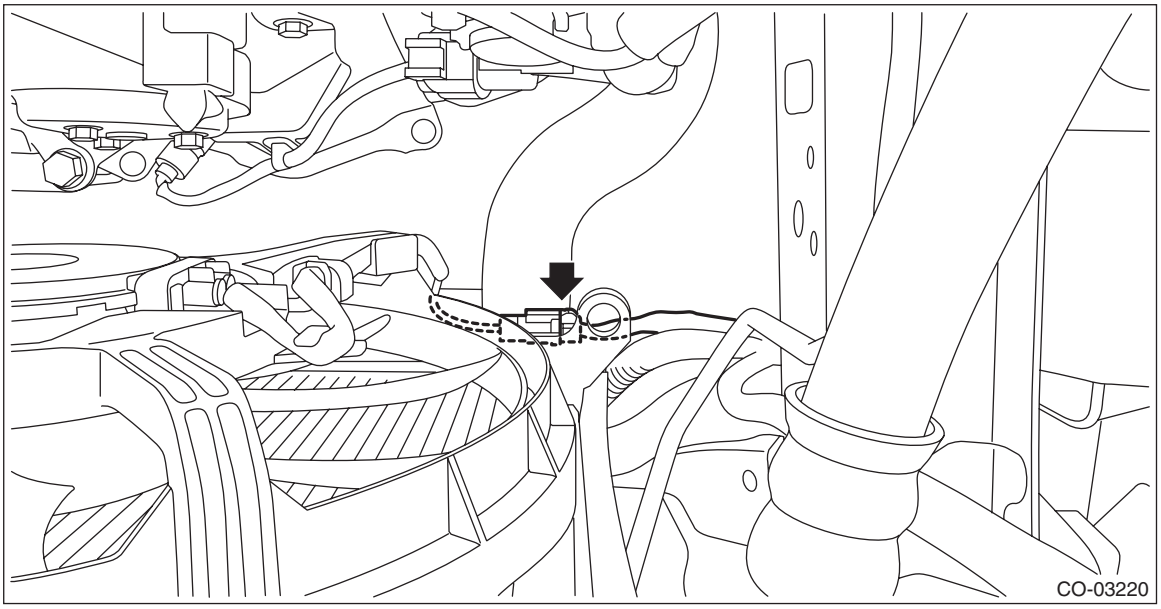

4) Remove the bolts which secure the radiator main fan motor assembly onto the radiator.

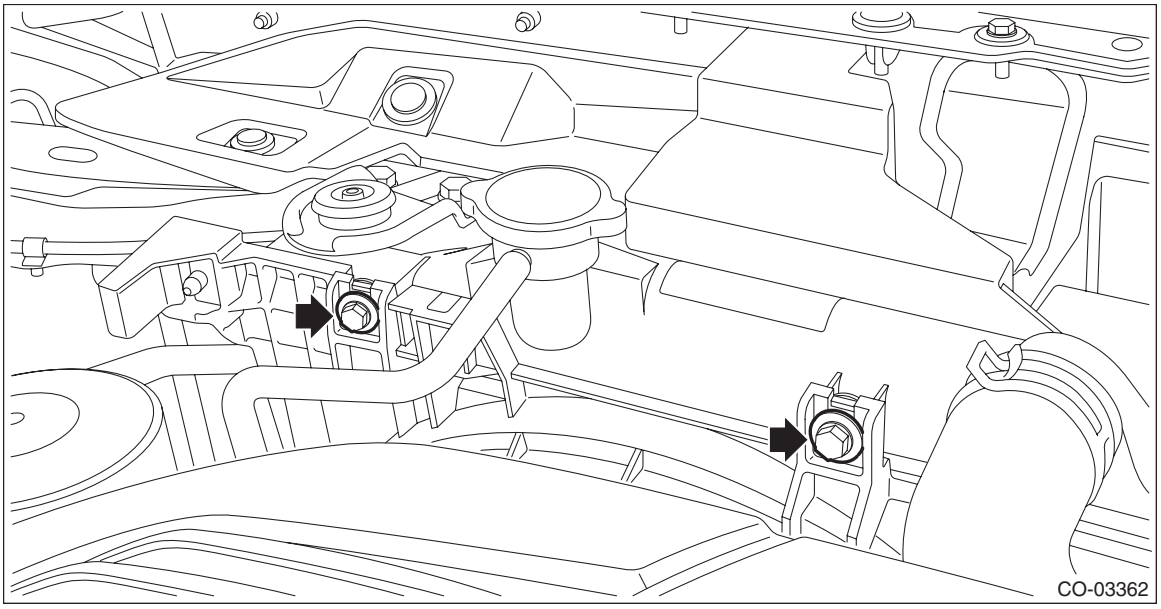

5) Remove the radiator main fan motor assembly from the vehicle.

B: INSTALLATION

Install in the reverse order of removal.

CAUTION:
Confirm that the radiator hose is securely connected.

Tightening torque:
7.5 N·m (0.8 kgf-m, 5.5 ft-lb)

C: DISASSEMBLY

1) Remove the clip which holds the main fan motor connector onto the radiator main fan shroud.
2) Disconnect the radiator main fan from the main fan motor.

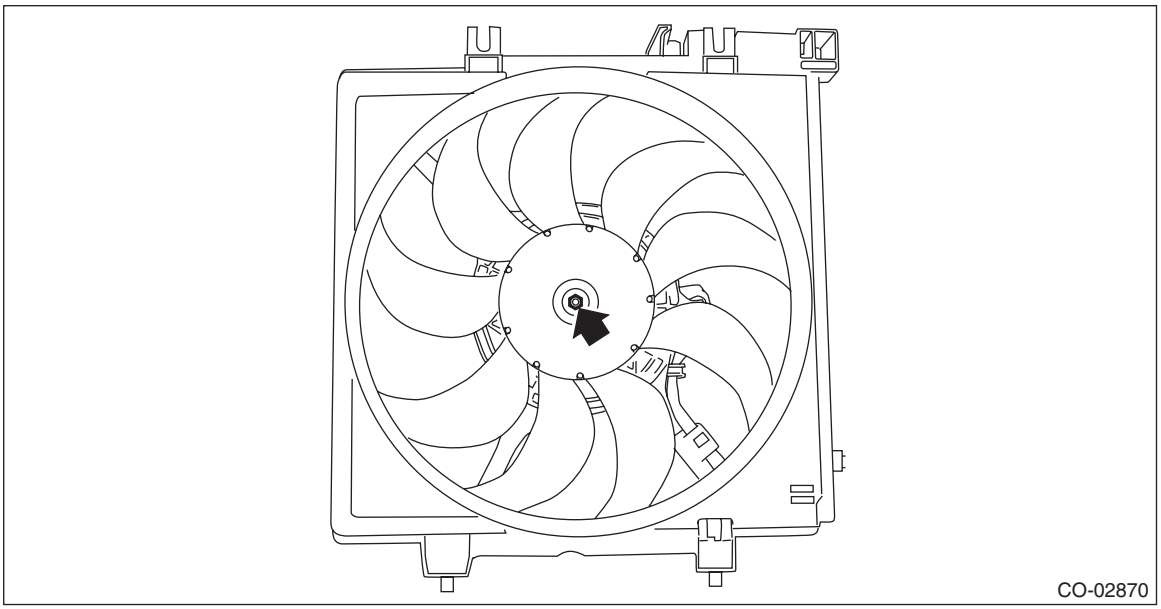

3) Disconnect the main fan motor from the radiator main fan shroud.

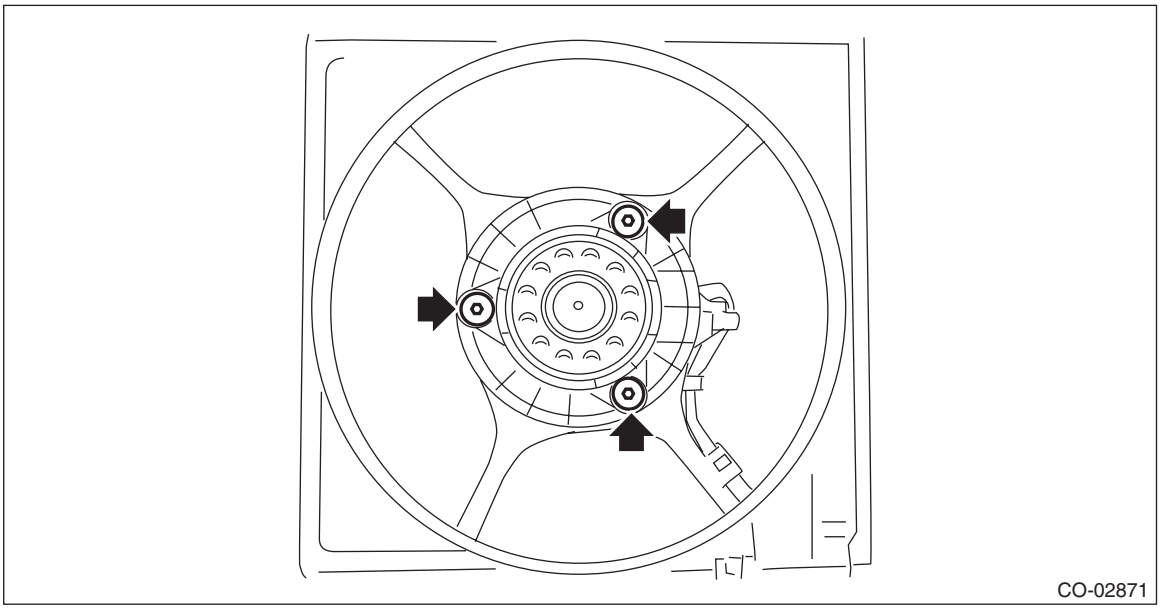

D: ASSEMBLY

Assemble in the reverse order of disassembly.

Tightening torque:
4.41 N·m (0.45 kgf-m, 3.25 ft-lb)

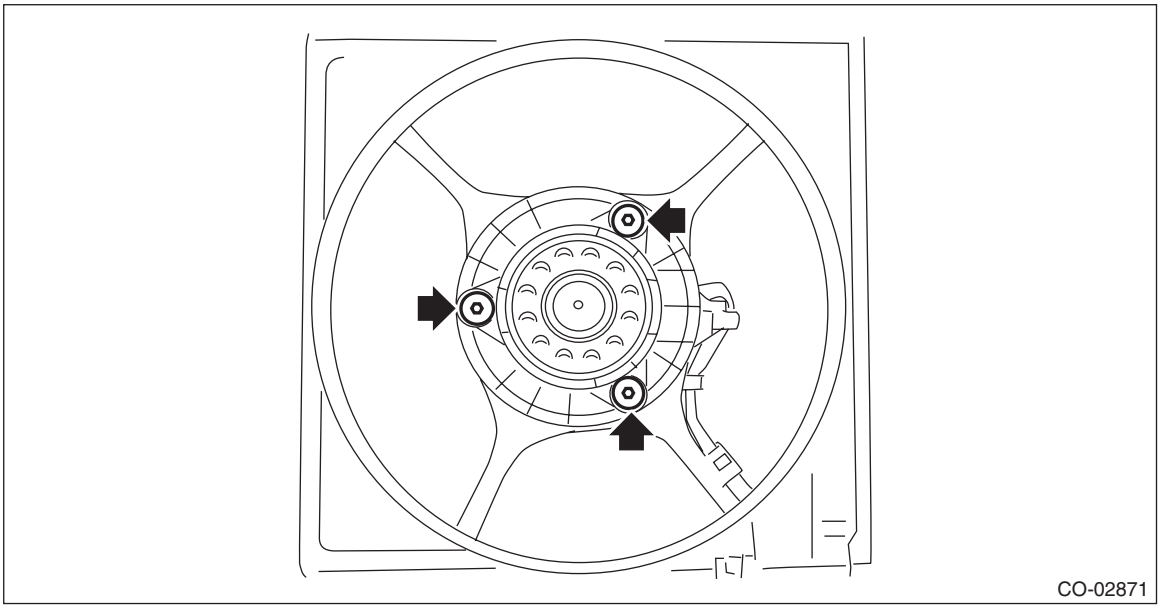

Tightening torque:
3.4 N·m (0.3 kgf-m, 2.5 ft-lb)

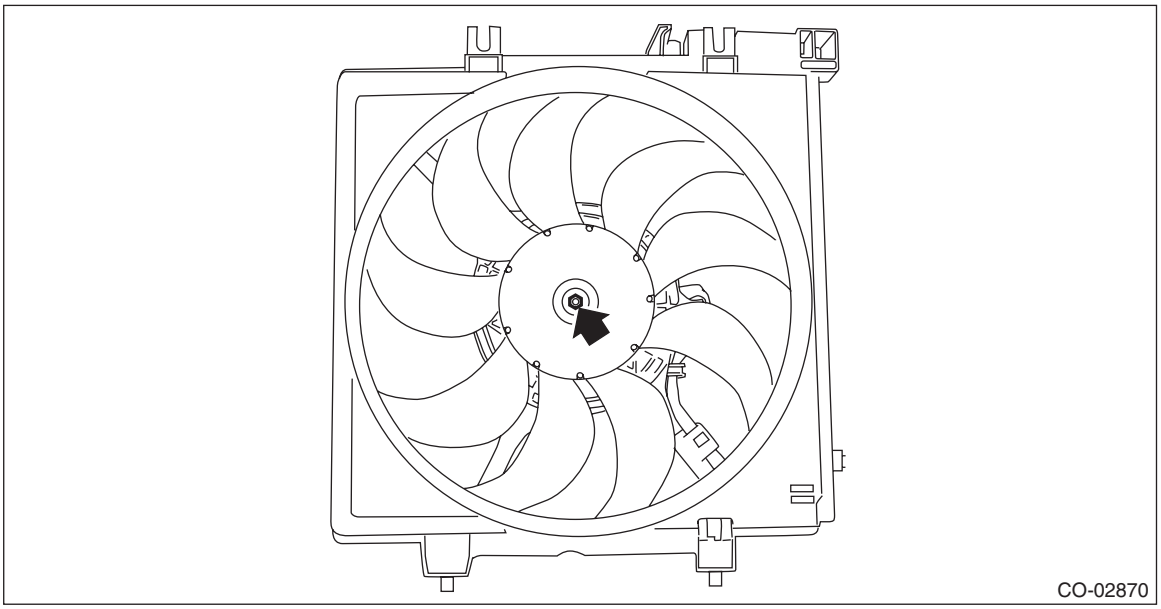

E: INSPECTION

Check that the radiator main fan, radiator main fan shroud and main fan motor do not have deformation, cracks or damage.

10.Radiator Sub Fan and Fan Motor

A: REMOVAL

1) Disconnect the ground terminal from battery sensor. <Ref. to NT-6, BATTERY, NOTE, Note.>
2) Remove the air intake duct. <Ref. to IN(w/o STI)-26, REMOVAL, Air Intake Duct.>
3) Disconnect the connector from the sub fan motor.

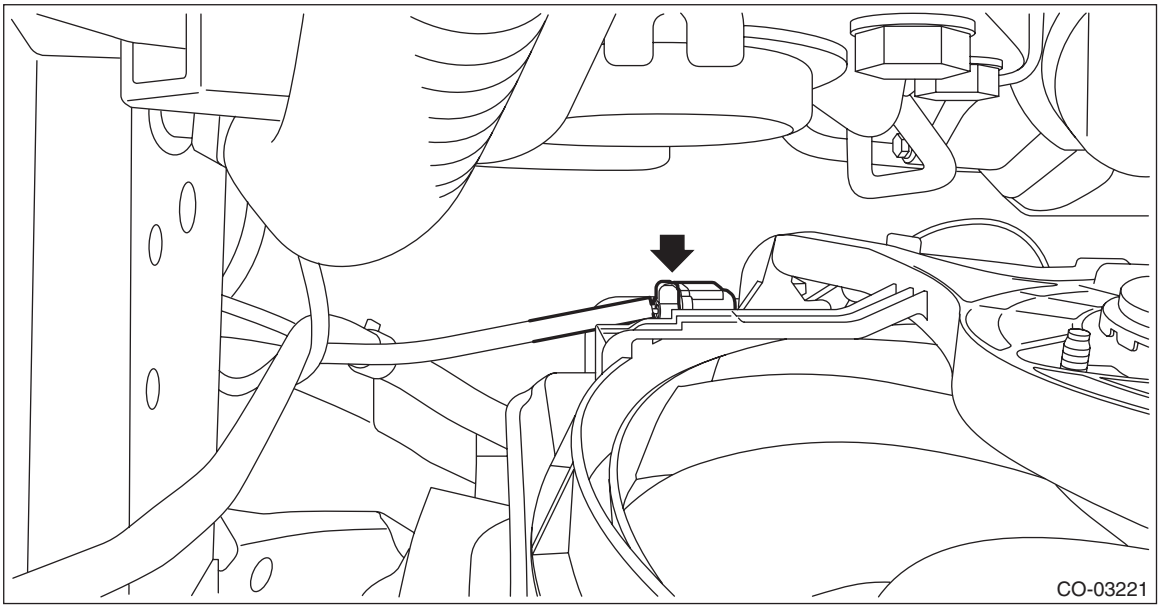

4) Remove the bolts which secure the radiator sub fan motor assembly onto the radiator.

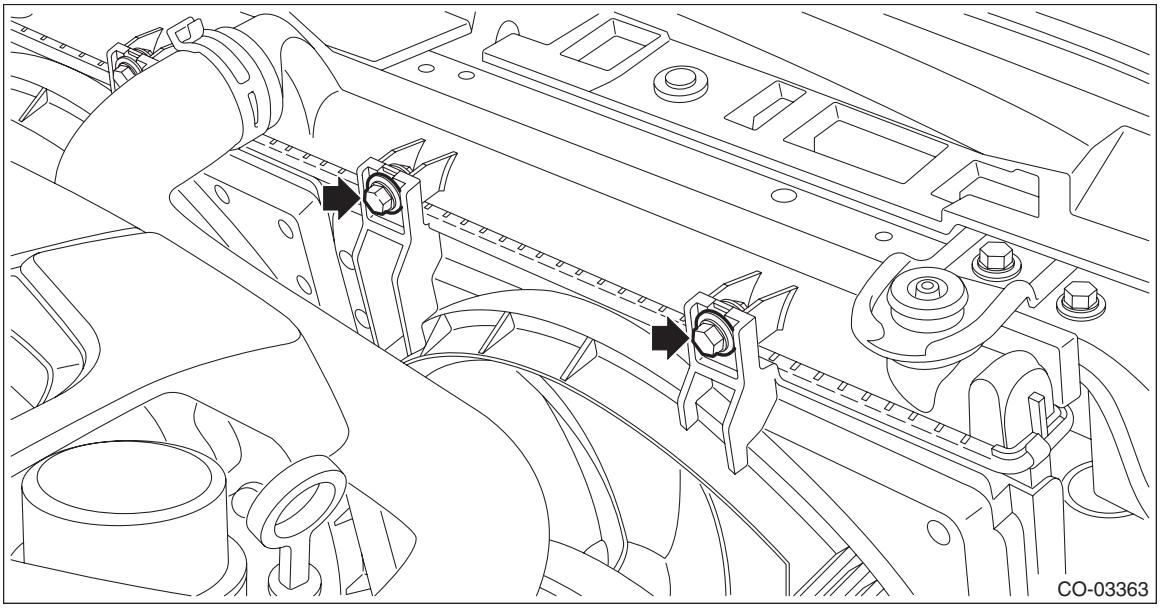

5) Remove the radiator sub fan motor assembly from the vehicle.

B: INSTALLATION

Install in the reverse order of removal.

CAUTION:
Confirm that the radiator hose is securely connected.

Tightening torque:
7.5 N·m (0.8 kgf-m, 5.5 ft-lb)

C: DISASSEMBLY

1) Remove the clip which holds the sub fan motor connector onto the radiator sub fan shroud.
2) Disconnect the radiator sub fan from the sub fan motor.

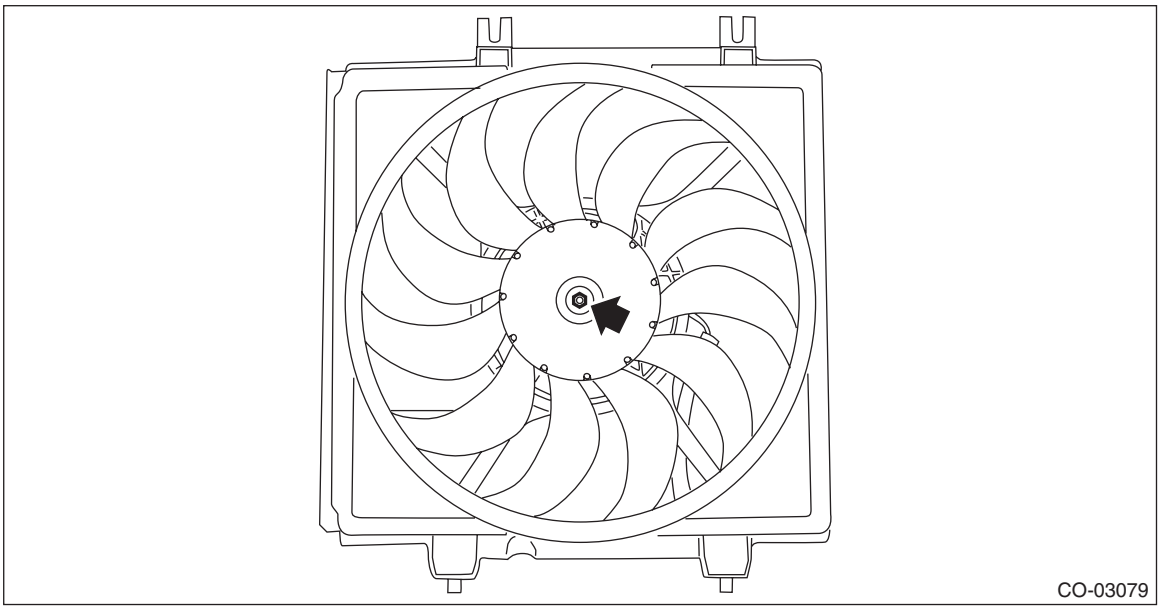

3) Disconnect the sub fan motor from the radiator sub fan shroud.

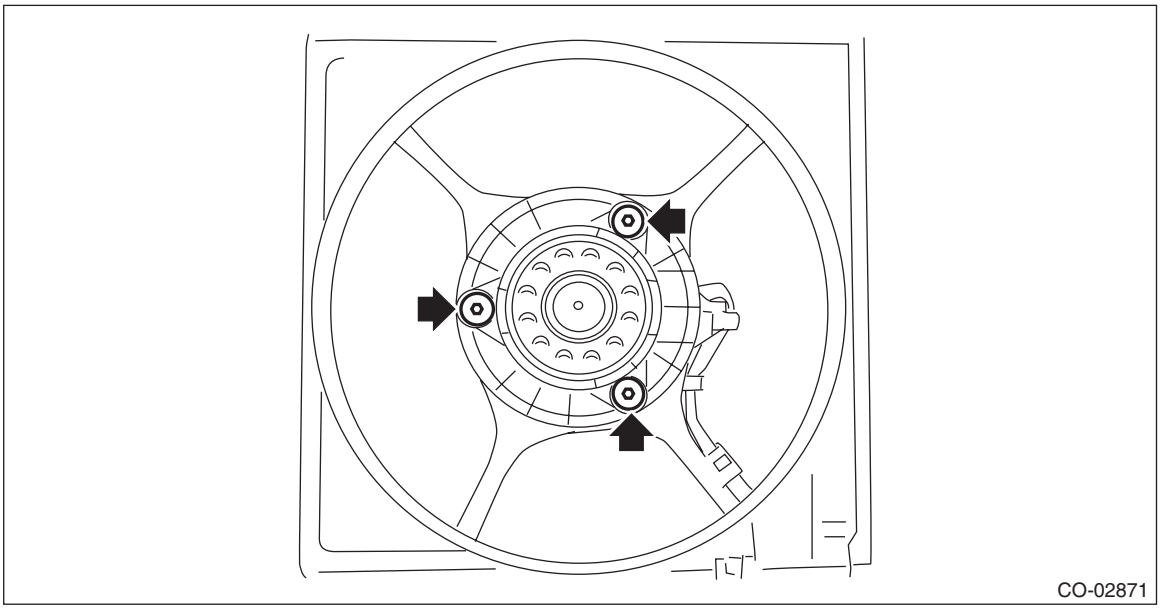

D: ASSEMBLY

Assemble in the reverse order of disassembly.

Tightening torque:
4.41 N·m (0.45 kgf-m, 3.25 ft-lb)

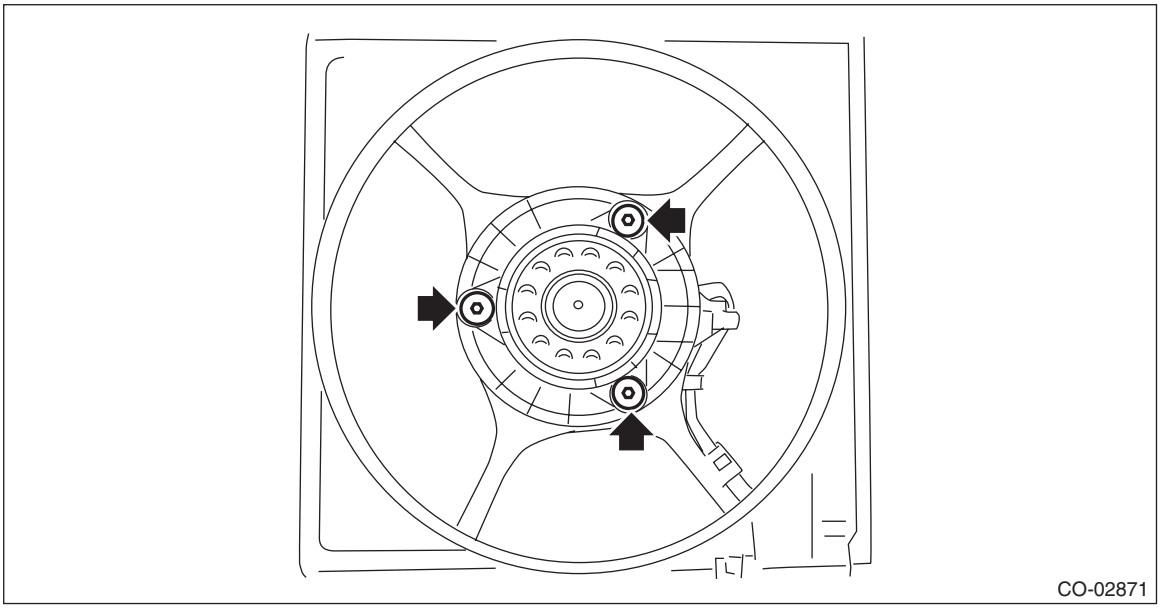

Tightening torque:
3.4 N·m (0.3 kgf-m, 2.5 ft-lb)

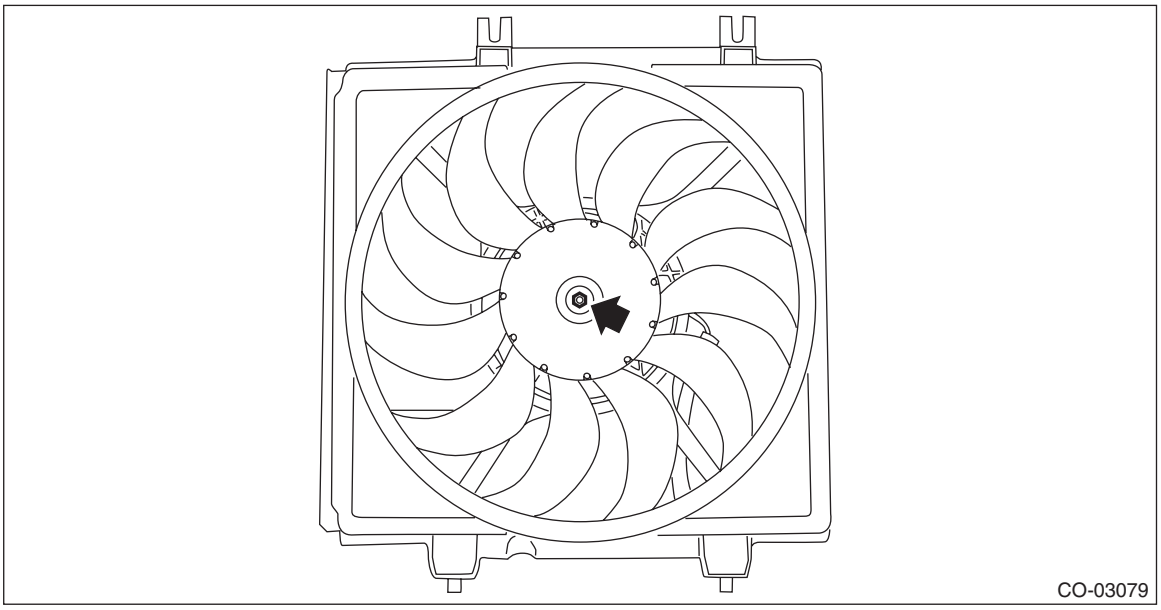

E: INSPECTION

Check that the radiator sub fan, radiator sub fan shroud and sub fan motor do not have deformation, cracks or damage.

11.Reservoir Tank

A: REMOVAL

1) Disconnect the over flow hose (A) connected to the radiator filler neck from the reservoir tank.
2) Pull out the reservoir tank in the direction of the arrow while pushing the claw (B).

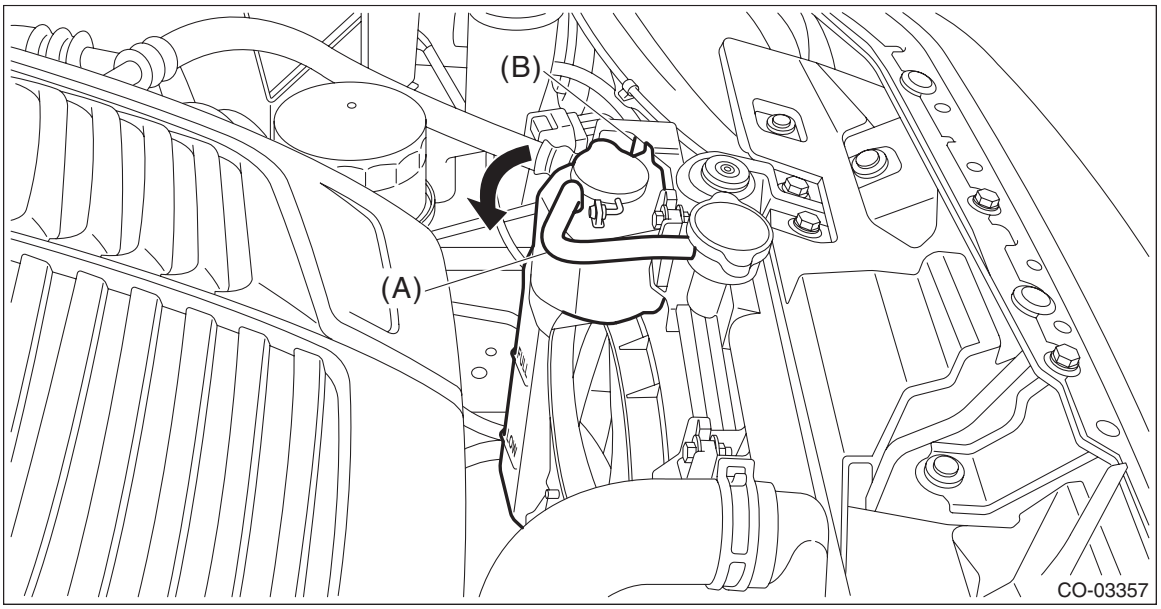

B: INSTALLATION

Install in the reverse order of removal.

C: INSPECTION

1) Check that the reservoir tank does not have deformation, cracks or damage.
2) Make sure the over flow hoses are not cracked, damaged or loose.
3) Make sure the engine coolant level is between “FULL” and “LOW”.

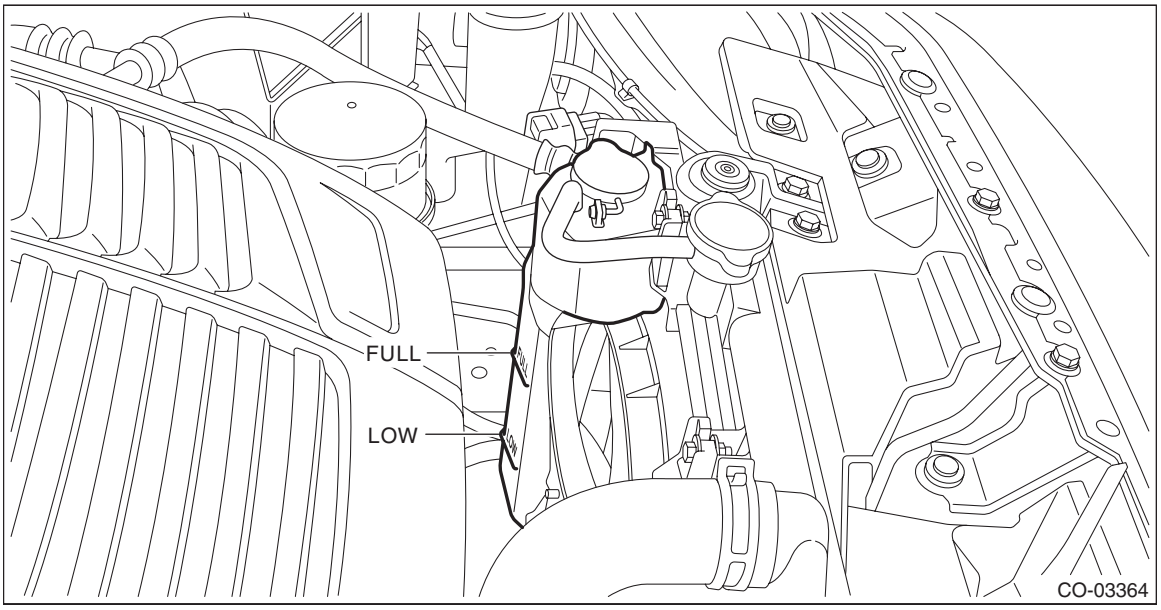

12.Engine Cooling System Trouble in General

A: INSPECTION

Trouble	Possible cause	Corrective action
Over-heating	a. Insufficient engine coolant	Replenish engine coolant, inspect for leakage, and repair it if necessary.
	b. Defective thermostat	Replace.
	c. Malfunction of water pump	Replace.
	d. Clogged engine coolant passage	Clean.
	e. Improper ignition timing	Inspect and repair ignition control system. <Ref. to EN(w/o STI)(diag)-2, Basic Diagnostic Procedure.>
	f. Clogged or leaking radiator	Clean, repair or replace.
	g. Defective radiator cap	Replace.
	h. Improper engine oil in engine coolant	Replace the engine coolant. If ineffective, check, repair or replace engine components.
	i. Air/fuel mixture ratio too lean	Inspect and repair the fuel injection system. <Ref. to EN(w/o STI)(diag)-2, Basic Diagnostic Procedure.>
	j. Excessive back pressure in exhaust system	Clean or replace.
	k. Insufficient clearance between piston and cylinder	Adjust or replace.
	l. Dragging brake	Adjust.
	m. Slipping clutch	Repair or replace.
	n. Malfunction of radiator fan	Inspect the radiator fan relay, engine coolant temperature sensor or fan motor and replace them.
Over-cooling	a. Ambient temperature extremely low	Partly cover radiator front area.
	b. Defective thermostat	Replace.
Engine coolant leaks	a. Loosened or damaged connecting units on hoses	Repair or replace.
	b. Leakage from water pump	Replace.
	c. Leakage from water pipe	Repair or replace.
	d. Leakage around cylinder head gasket	Retighten cylinder head bolts or replace cylinder head gasket.
	e. Damaged or cracked cylinder head and cylinder block	Repair or replace.
	f. Damaged or cracked thermostat cover	Repair or replace.
	g. Leakage from radiator	Repair or replace.
Noise	a. Defective radiator fan	Replace.
	b. Defective water pump bearing	Replace water pump.
	c. Defective water pump mechanical seal	Replace water pump.

LUBRICATION

LU(w/o STI)

		Page
1.	General Description	2
2.	Oil Pressure System	8
3.	Engine Oil	10
4.	Oil Pump	13
5.	Oil Pan	14
6.	Oil Pressure Switch	28
7.	Engine Oil Cooler	32
8.	Engine Oil Cooler Pipe	34
9.	Oil Catch Tank	38
10.	Scavenge Pump	39
11.	Oil Pipe	41
12.	Engine Oil Filter	48
13.	Oil Level Switch	49
14.	Engine Lubrication System Trouble in General	67

1. General Description

A: SPECIFICATION

Lubrication method					Forced lubrication
Oil pump	Pump type				Trochoid type
	Number of teeth	Inner rotor			11
		Outer rotor			12
	Outer rotor diameter × Thickness			mm (in)	77 × 14 (3.03 × 0.55)
	Performance (Oil temperature 120°C (248°F))	600 r/min	Discharge pressure	kPa (kg/cm^2, psi)	35 (0.4, 5.1)
			Discharge rate	L (US qt, Imp qt)/min	7.4 (7.8, 6.5) or more
		6,700 r/min	Discharge pressure	kPa (kg/cm^2, psi)	321 (3.3, 46.6)
			Discharge rate	L (US qt, Imp qt)/min	60.2 (63.6, 53.0) or more
	Relief valve working pressure			kPa (kg/cm^2, psi)	700 (7.1, 102)
Oil filter*	Filter type				Full-flow filter type
	Filtration area			cm^2 (sq in)	900 (139.5)
	By-pass valve opening pressure			kPa (kg/cm^2, psi)	160 (1.6, 23.2)
	Outer diameter × Width			mm (in)	80 × 65 (3.15 × 2.55)
	Installation screw specifications				M 20 × 1.5
Oil pressure switch	Type				Immersed contact point type
	Operating voltage				12 V
	Warning light operating pressure			kPa (kg/cm^2, psi)	14.7 (0.1, 2.1)
	Proof pressure			kPa (kg/cm^2, psi)	981 (10, 142.2)
Engine oil	Total capacity (at overhaul)			L (US qt, Imp qt)	6.0 (6.3, 5.3)
	When replacing engine oil and oil filter			L (US qt, Imp qt)	5.1 (5.4, 4.5)
	When replacing engine oil only			L (US qt, Imp qt)	4.9 (5.2, 4.3)

*Do not use any oil filters other than that of 80 mm (3.15 in) dia. × 65 mm (2.55 in) height.

Specified oil:

CAUTION:
- **Use 5W-30 (synthetic oil).**
- **It is acceptable to fill an engine with oil of another brand when replacing the oil, but make sure to use the following engine oil specified by Subaru.**

NOTE:
The proper viscosity oil helps the engine maintain its ideal temperature, and cranking speed increased by reducing viscosity friction in hot condition.

Engine oil standard		SAE viscosity No.
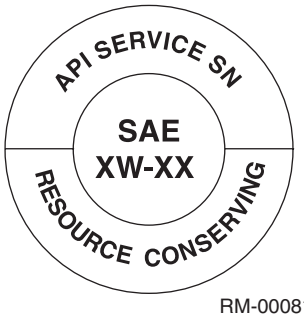 RM-00081 Those with SN "Resource Conserving" logo in case of API standard.	or	 RM-00002 Those with GF-5 "starburst mark" displayed on top of the container in case of ILSAC standard.	5W-30 (synthetic oil)

B: COMPONENT

1. OIL PAN

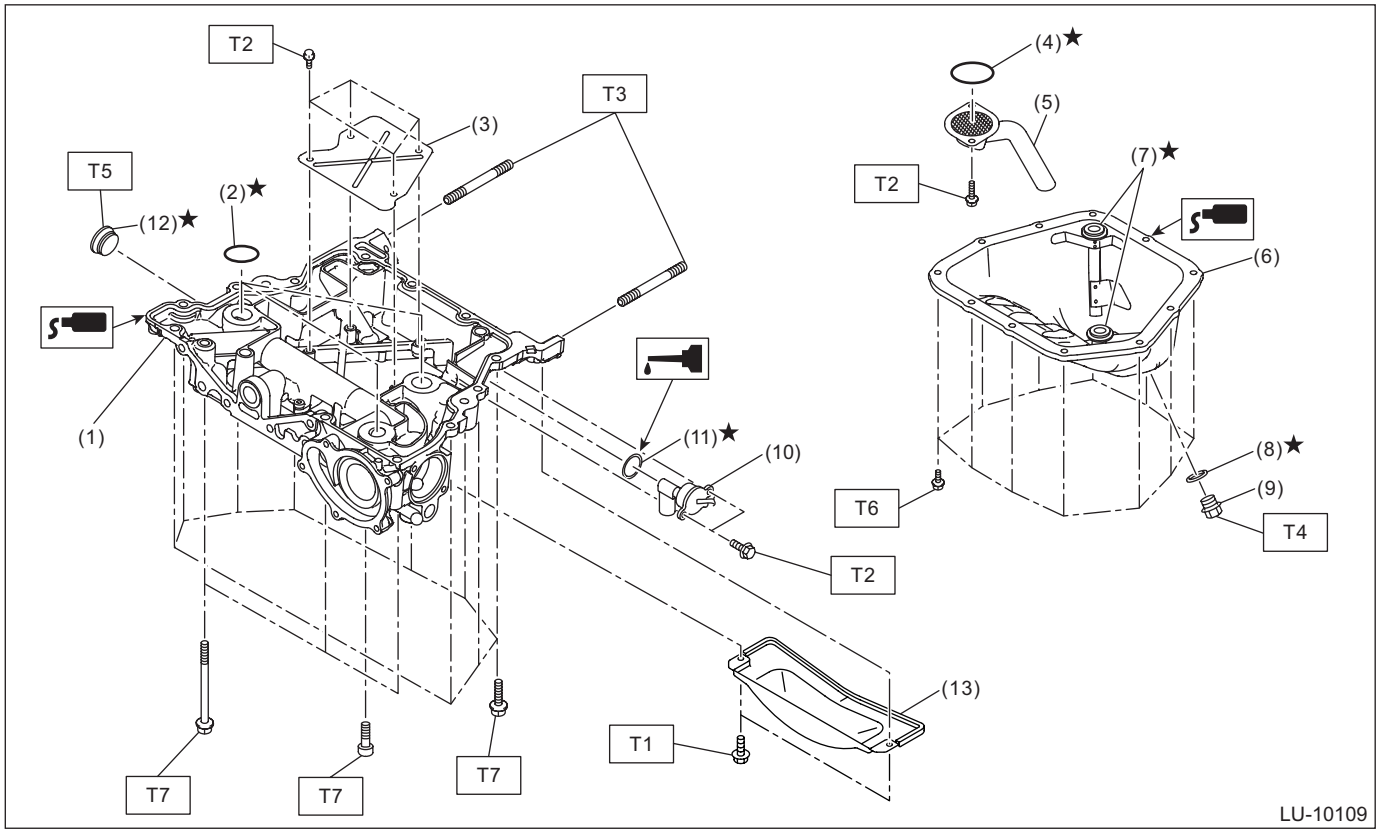

(1) Oil pan upper
(2) O-ring
(3) Baffle plate
(4) O-ring
(5) Oil strainer
(6) Oil pan
(7) Oil pan seal ring
(8) Drain plug gasket
(9) Drain plug
(10) Oil level switch
(11) O-ring
(12) Plug
(13) Clutch housing cover (MT model)

Tightening torque: N·m (kgf-m, ft-lb)

T1: 5 (0.5, 3.7)
T2: 6.4 (0.7, 4.7)
T3: 10 (1.0, 7.4)
T4: 41.7 (4.3, 30.8)
T5: 90 (9.2, 66.4)
T6: <Ref. to LU(w/o STI)-20, OIL PAN, INSTALLATION, Oil Pan.>
T7: <Ref. to LU(w/o STI)-25, OIL PAN UPPER, INSTALLATION, Oil Pan.>

2. OIL FILTER AND OIL LEVEL GAUGE

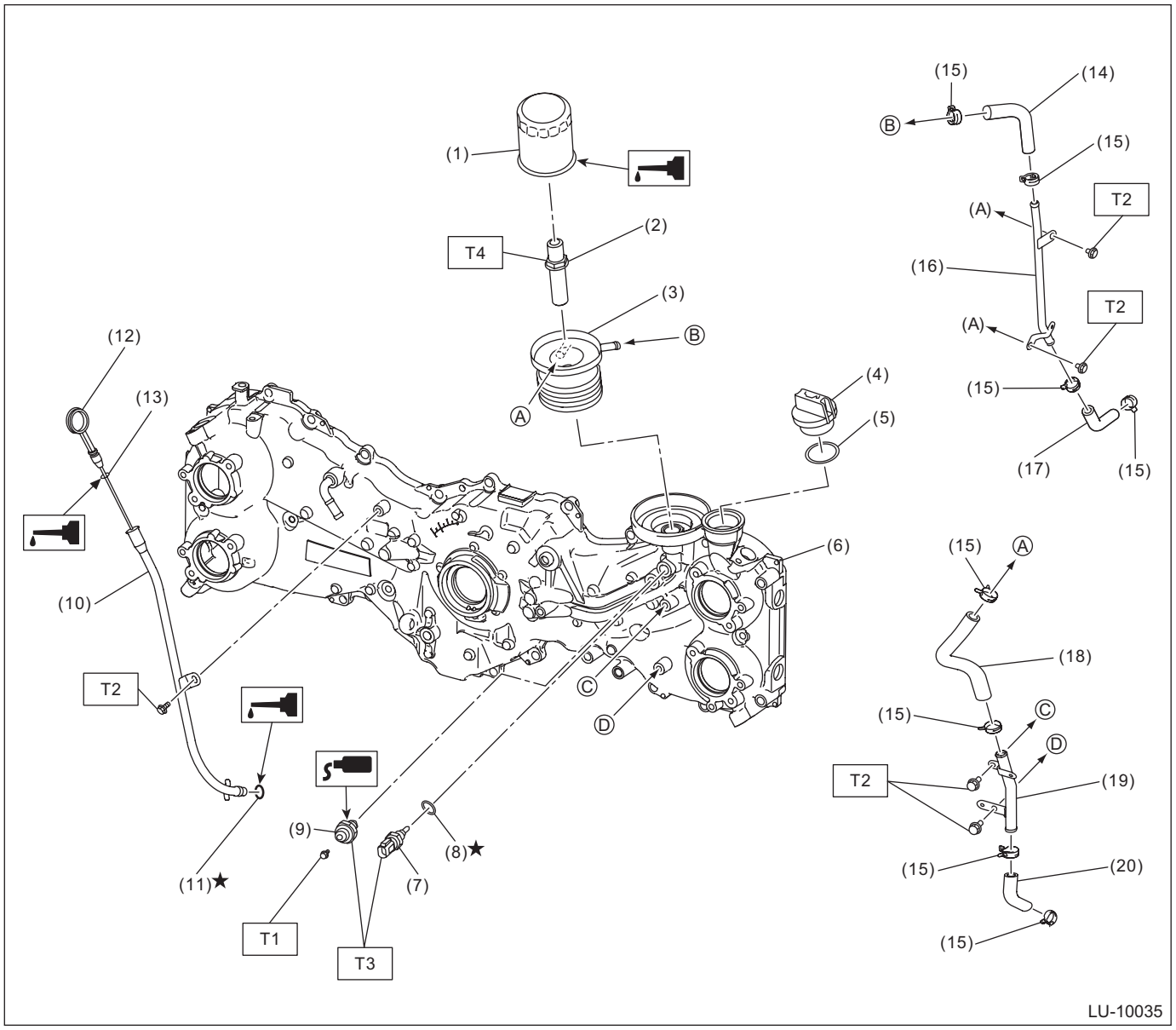

(A) To front camshaft cap LH

(1) Engine oil filter
(2) Oil cooler connector
(3) Engine Oil Cooler
(4) Oil filler cap
(5) Gasket
(6) Chain cover
(7) Engine oil temperature sensor
(8) Gasket
(9) Oil pressure switch
(10) Oil level gauge guide
(11) O-ring
(12) Oil level gauge
(13) O-ring
(14) Side engine oil cooler hose A
(15) Clip
(16) Side engine oil cooler pipe
(17) Side engine oil cooler hose B
(18) Front engine oil cooler hose A
(19) Front engine oil cooler pipe
(20) Front engine oil cooler hose B

Tightening torque: N·m (kgf-m, ft-lb)
T1: 1.5 (0.2, 1.1)
T2: 6.4 (0.7, 4.7)
T3: 18 (1.8, 13.3)
T4: 45 (4.6, 33.2)

3. SCAVENGE PUMP

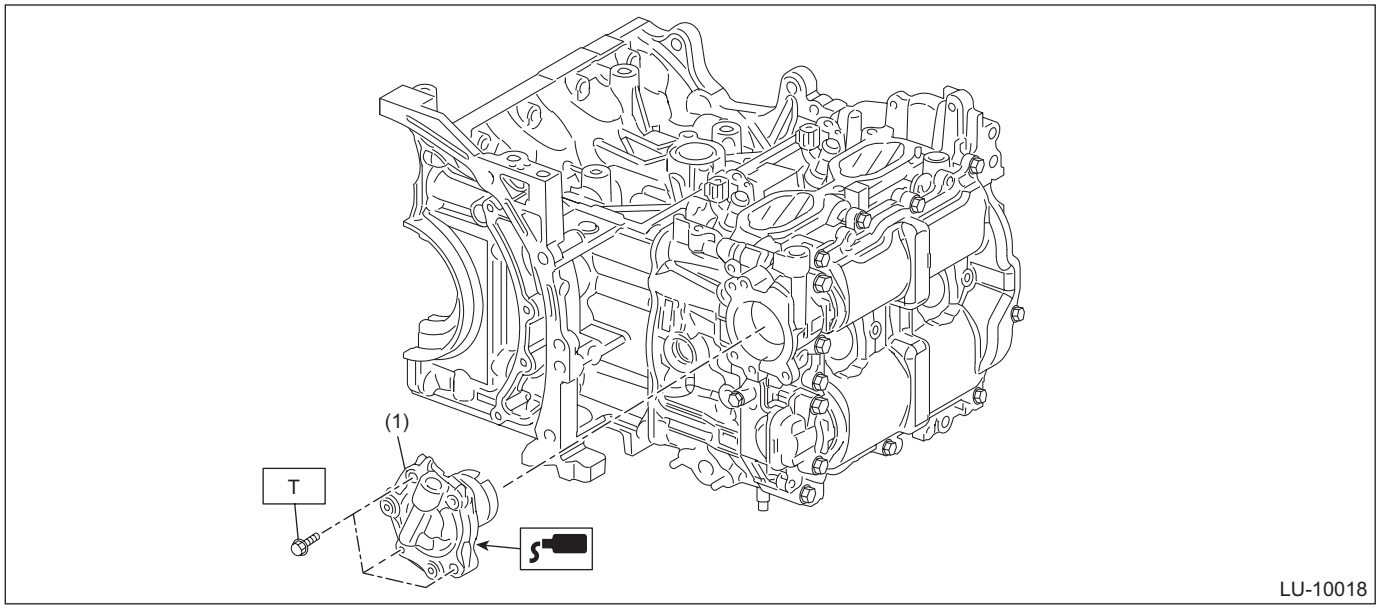

(1) Scavenge pump

Tightening torque: N·m (kgf-m, ft-lb)
T: 6.4 (0.7, 4.7)

C: CAUTION

- Prior to starting work, pay special attention to the following:
  1. Always wear work clothes, a work cap, and protective shoes. Additionally, wear a helmet, protective goggles, etc. if necessary.
  2. Protect the vehicle using a seat cover, fender cover, etc.
  3. Prepare the service tools, clean cloth, containers to catch grease and oil, etc.
- Prepare a container and cloth when performing work which oil possibly spills. If oil spills, wipe it off immediately to prevent from penetrating into floor or flowing out for environmental protection.
- Vehicle components are extremely hot immediately after driving. Be wary of receiving burns from heated parts.
- When performing a repair, identify the cause of trouble and avoid unnecessary removal, disassembly and replacement.
- Before disconnecting connectors of sensors or units, be sure to disconnect the ground cable from battery.
- Always use the jack-up point when the shop jacks or rigid racks are used to support the vehicle.
- Remove contamination including dirt and corrosion before removal, installation, disassembly or assembly.
- Keep the removed parts in order and protect them from dust and dirt.
- All removed parts, if to be reused, should be reinstalled in the original positions with attention to the correct directions, etc.
- Bolts, nuts and washers should be replaced with new parts as required.
- Be sure to tighten the fasteners including bolts and nuts to the specified torque.
- If the engine oil is spilt over exhaust pipe or the under cover, wipe it off with cloth to avoid emitting smoke or causing a fire.
- Follow all government and local regulations concerning disposal of refuse when disposing of oil.

D: PREPARATION TOOL

1. SPECIAL TOOL

ILLUSTRATION	TOOL NUMBER	DESCRIPTION	REMARKS
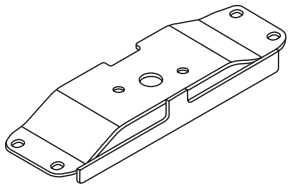 ST41099YC001	41099YC001	ST REAR MOUNT	Used for removing and installing oil level switch. (CVT model)
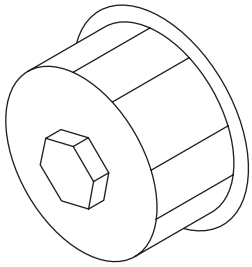 ST-498547000	498547000	OIL FILTER WRENCH	Used for removing and installing oil filter.
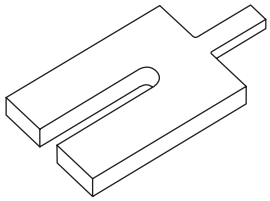 ST18632AA030	18632AA030	STAND ASSY	Used for removing and installing oil pan.
 STSSM4	—	SUBARU SELECT MONITOR 4	Used for setting of each function and trouble-shooting for electrical system. NOTE: For detailed operation procedures of Subaru Select Monitor 4, refer to “Application help”.

2. GENERAL TOOL

TOOL NAME	REMARKS
Circuit tester	Used for measuring resistance, voltage and current.
DST-i	Used together with Subaru Select Monitor 4.
TORX® bit T45	Used for removing and installing oil pan upper.

2. Oil Pressure System

A: WIRING DIAGRAM

Oil pressure warning system <Ref. to WI-294, WIRING DIAGRAM, Oil Pressure Warning Light System.>

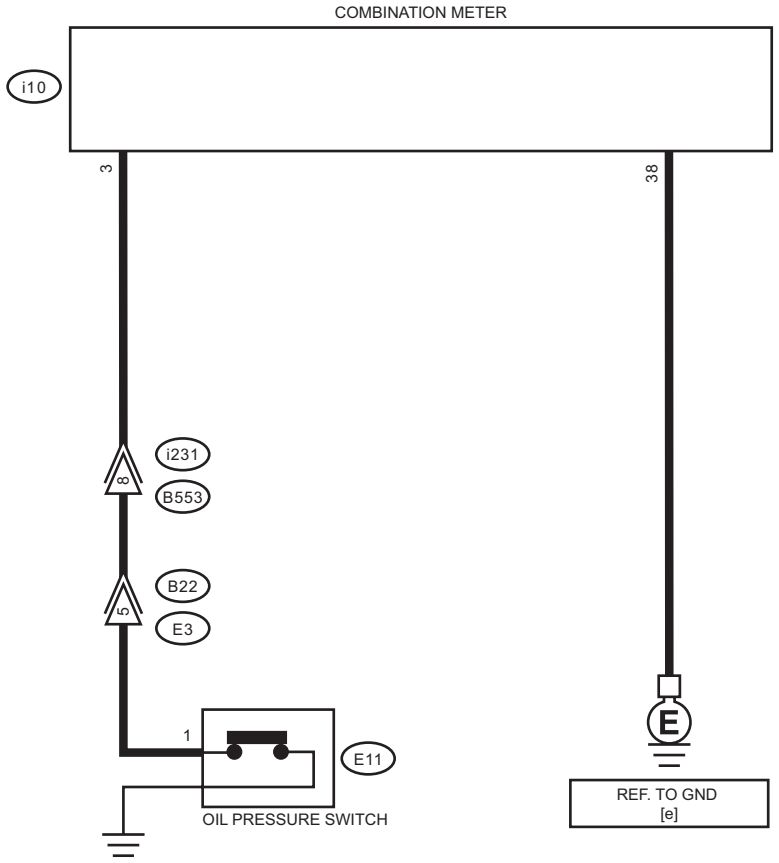

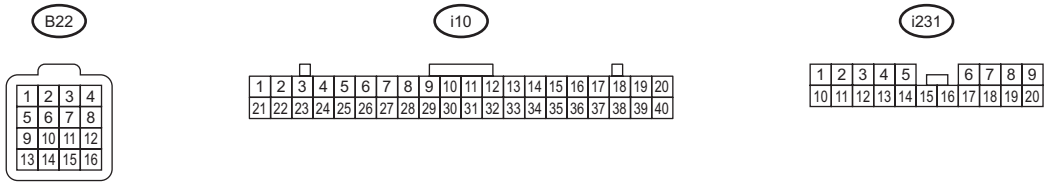

LU-10065

B: INSPECTION

Step		Check	Yes	No
1	**CHECK ENGINE OIL AMOUNT.**	Is the engine oil amount normal? <Ref. to LU(w/o STI)-10, INSPECTION, Engine Oil.>	Go to step **2**.	Adjust the engine oil amount. <Ref. to LU(w/o STI)-10, INSPECTION, Engine Oil.> After the operation is complete, go to the next step. Go to step **2**.
2	**CHECK DTC.**	Is DTC for engine displayed? <Ref. to EN(w/o STI)(diag)-63, Read Diagnostic Trouble Code (DTC).>	Check the appropriate DTC using the "List of Diagnostic Trouble Code (DTC)". <Ref. to EN(w/o STI)(diag)-106, List of Diagnostic Trouble Code (DTC).>	Go to step **3**.
3	**CHECK POWER SUPPLY TO OIL PRESSURE SWITCH.** 1) Turn the ignition switch to OFF. 2) Disconnect the terminal from oil pressure switch. 3) Turn the ignition switch to ON (engine OFF). 4) Measure the voltage of harness between oil pressure switch harness terminal and chassis ground. ***Terminals*** ***(E11) No. 1 (+) — Chassis ground (–):***	Is the voltage 10 V or more?	Replace the oil pressure switch. <Ref. to LU(w/o STI)-28, Oil Pressure Switch.>	Go to step **4**.
4	**CHECK COMBINATION METER.** Perform the self-diagnosis of combination meter to check if there are any faults in the combination meter. <Ref. to IDI-6, OPERATION, Combination Meter System.>	Is combination meter OK?	Repair the harness and connector. NOTE: In this case, repair the following item: • Open circuit or short circuit of harness between combination meter and oil pressure switch • Poor contact of combination meter connector • Poor contact of oil pressure switch terminal • Poor contact of coupling connector	Repair or replace the combination meter. <Ref. to IDI-9, INSPECTION, Combination Meter System.>

3. Engine Oil

A: INSPECTION

CAUTION:
If the engine oil is spilt over exhaust pipe or the under cover, wipe it off with cloth to avoid emission of smoke or causing a fire.

1) Park the vehicle on a level surface.
2) Remove the oil level gauge and wipe away the oil.
3) Reinsert the oil level gauge all the way. Be sure that the oil level gauge is correctly inserted and properly orientated.
4) Pull out the oil level gauge again, and check both sides of the oil level gauge. Use a lower side to determine the engine oil level. If the engine oil level is below “L” line, check for oil leakage from engine and add oil to bring the level up to “F” line.
5) Start the engine to circulate the oil in engine.
6) After turning off the engine, wait a few minutes for the oil to return to the oil pan before checking the level.

NOTE:
- To prevent overfilling of engine oil, do not add oil above “F” line when the engine is cold.
- As the oil level gauge is used for daily maintenance, “F” line and “L” line is set assuming that the engine is cold.

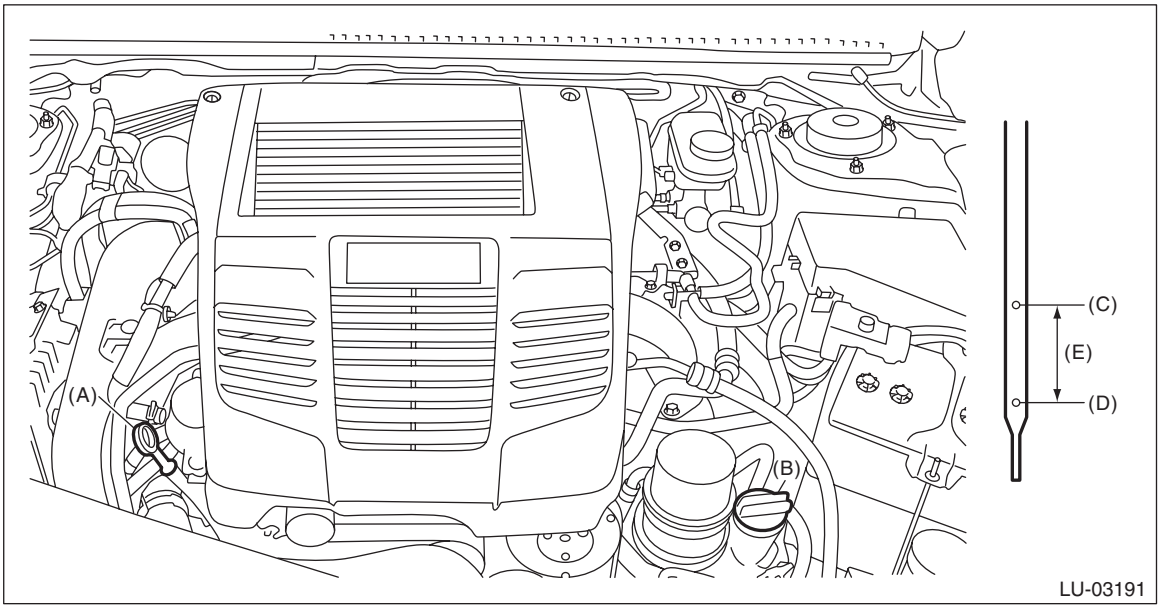

(A) Oil level gauge
(B) Oil filler cap
(C) “F” line
(D) “L” line
(E) Approx. 1.0 L (1.1 US qt, 0.9 Imp qt)

B: REPLACEMENT

CAUTION:
If the engine oil is spilt over exhaust pipe or the under cover, wipe it off with cloth to avoid emission of smoke or causing a fire.

1) Open the oil filler cap for quick draining of engine oil.
2) Lift up the vehicle.
3) Drain engine oil by loosening the drain plug.

NOTE:
Prepare the container for draining of engine oil.

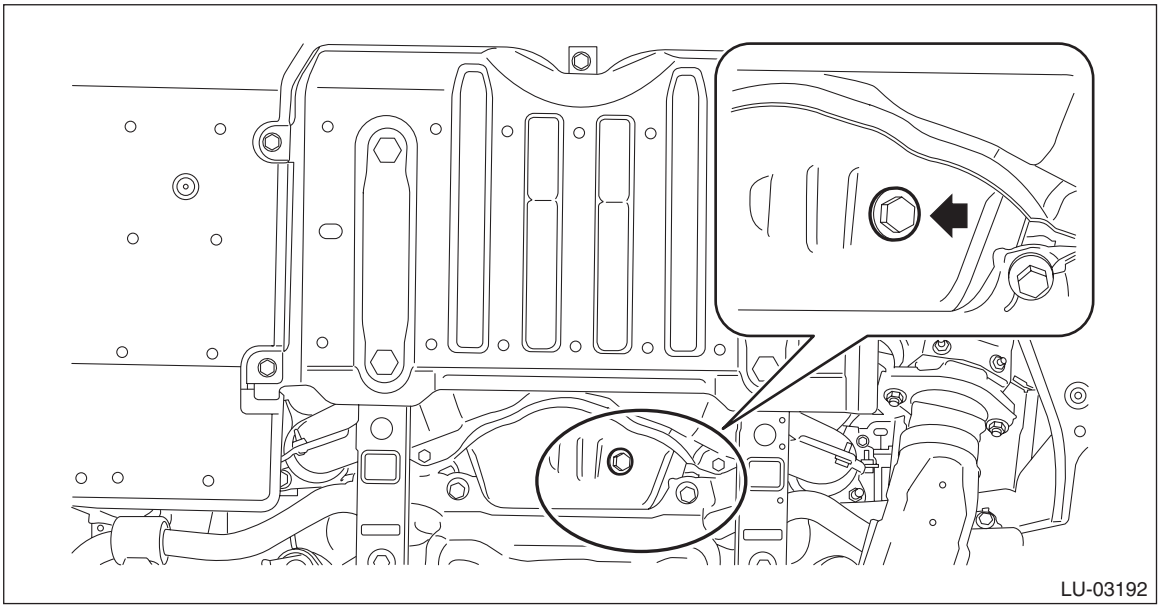

4) After draining the engine oil, tighten the engine oil drain plug.

NOTE:
Use a new drain plug gasket.

Tightening torque:
41.7 N·m (4.3 kgf-m, 30.8 ft-lb)

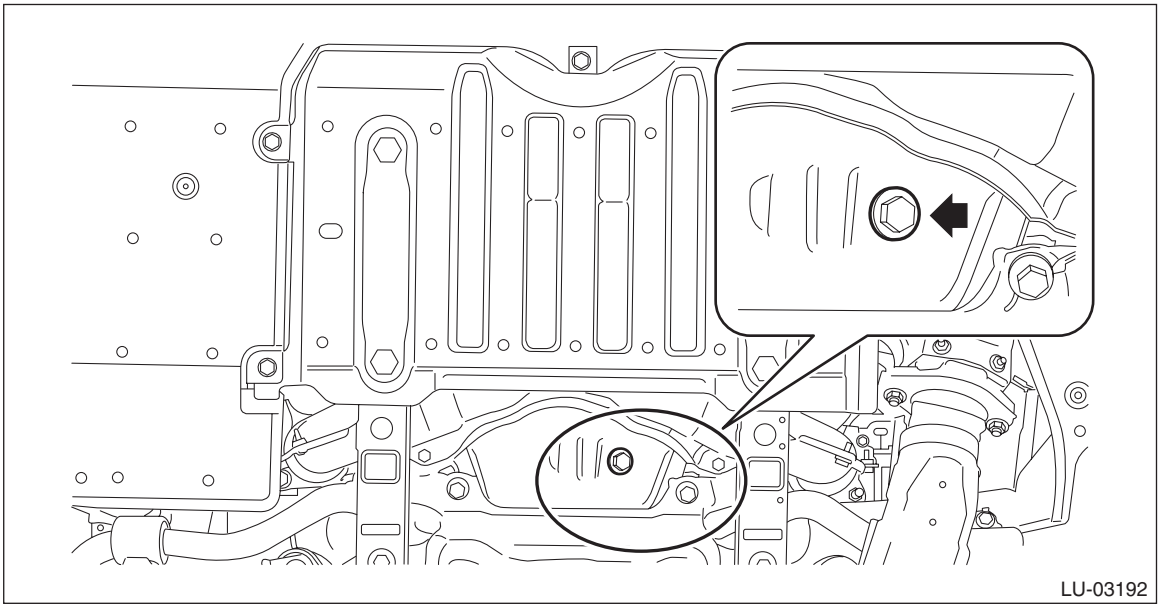

5) Lower the vehicle.

6) Select engine oil of adequate quality and viscosity and fill it through the chain cover to the “F” line on the oil level gauge. Make sure that the vehicle is parked on a level surface when checking oil level.

Recommended oil:

Refer to “SPECIFICATION” for recommended oil. <Ref. to LU(w/o STI)-2, SPECIFICATION, General Description.>

Engine oil capacity:

Refer to “SPECIFICATION” for engine oil capacity. <Ref. to LU(w/o STI)-2, SPECIFICATION, General Description.>

7) Close the oil filler cap.
8) Start the engine to circulate the oil in engine.
9) Stop the engine and pull out the oil level gauge again, and check both sides of the oil level gauge. Use a lower side to check the engine oil level. If necessary, add engine oil up to the “F” line on oil level gauge.

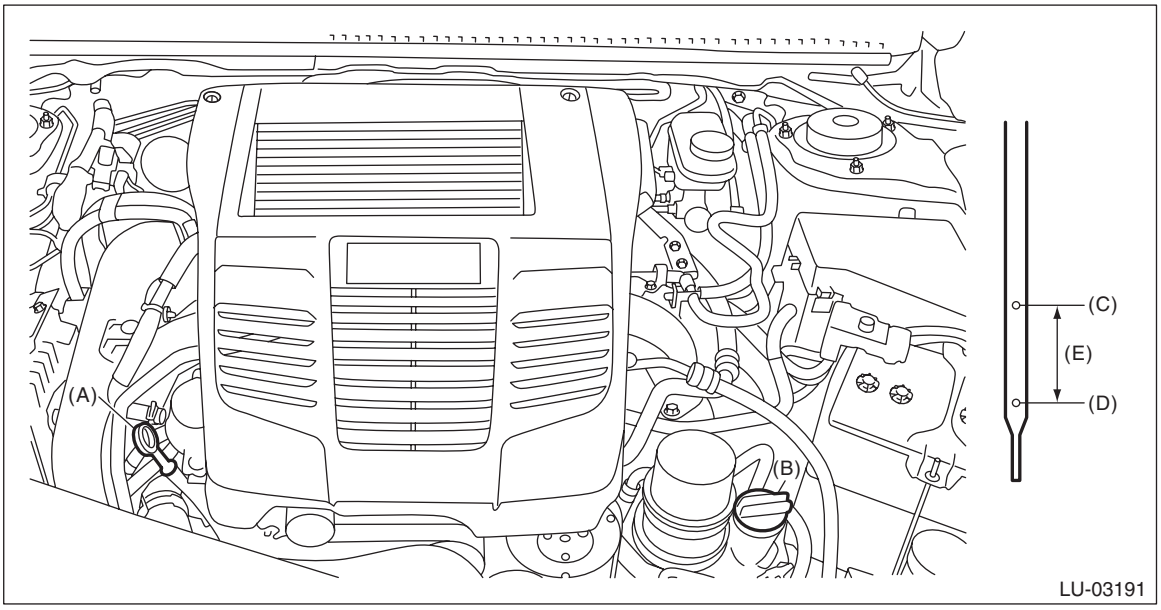

(A) Oil level gauge
(B) Oil filler cap
(C) “F” line
(D) “L” line
(E) Approx. 1.0 L (1.1 US qt, 0.9 Imp qt)

4. Oil Pump

A: SPECIFICATION

The oil pump cannot be disassembled.
Refer to “Chain Cover” for removal and installation procedures. <Ref. to ME(w/o STI)-89, REMOVAL, Chain Cover.> <Ref. to ME(w/o STI)-97, INSTALLATION, Chain Cover.>

5. Oil Pan

A: REMOVAL

1. OIL PAN

1) Remove the striker - front hood. <Ref. to EB-11, DISASSEMBLY, Front Hood.>
2) Fully open the front hood. <Ref. to NT-23, FRONT HOOD DAMPER STAY, NOTE, Note.>
3) Remove the collector cover. <Ref. to IN(w/o STI)-7, REMOVAL, Collector Cover.>
4) Disconnect the ground terminal from battery sensor. <Ref. to NT-6, BATTERY, NOTE, Note.>
5) Remove the air intake duct. <Ref. to IN(w/o STI)-26, REMOVAL, Air Intake Duct.>
6) Drain engine coolant. <Ref. to CO(w/o STI)-13, DRAINING OF ENGINE COOLANT, REPLACEMENT, Engine Coolant.>
7) Drain the engine oil. <Ref. to LU(w/o STI)-11, REPLACEMENT, Engine Oil.>
8) Remove the front exhaust pipe. <Ref. to EX(w/o STI)-9, REMOVAL, Front Exhaust Pipe.>
9) Remove the nuts which secure the engine mounting to the front crossmember.

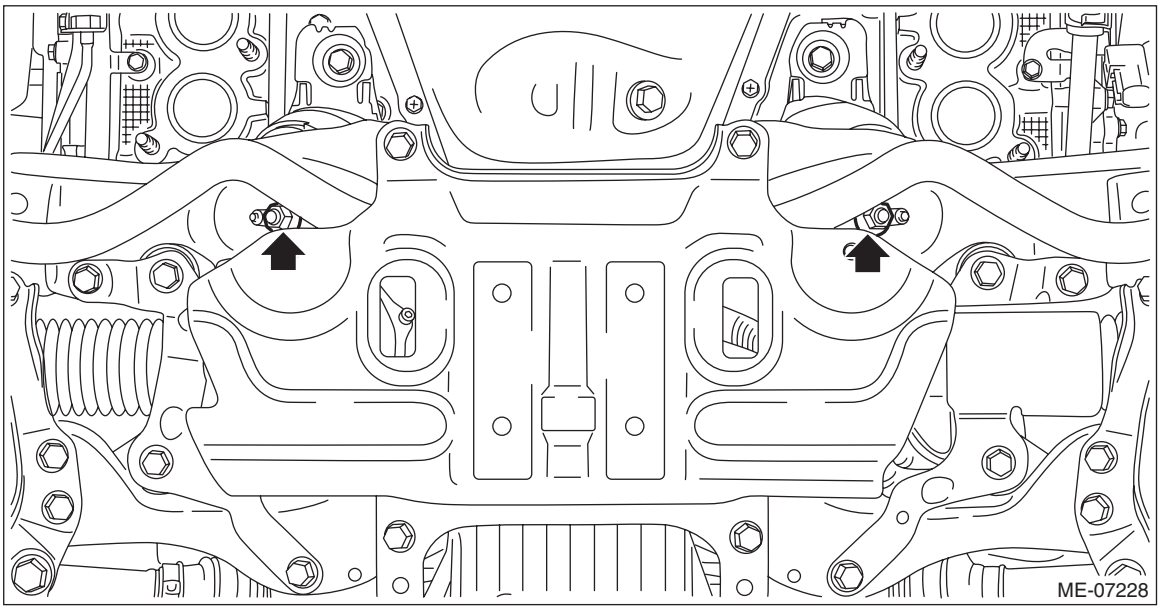

10) Lower the vehicle.
11) Remove the clip (A) and clip (B) which secure the engine harness and bulkhead harness to the bracket, and remove the bolt which secures the engine control module (ECM) to the bracket.

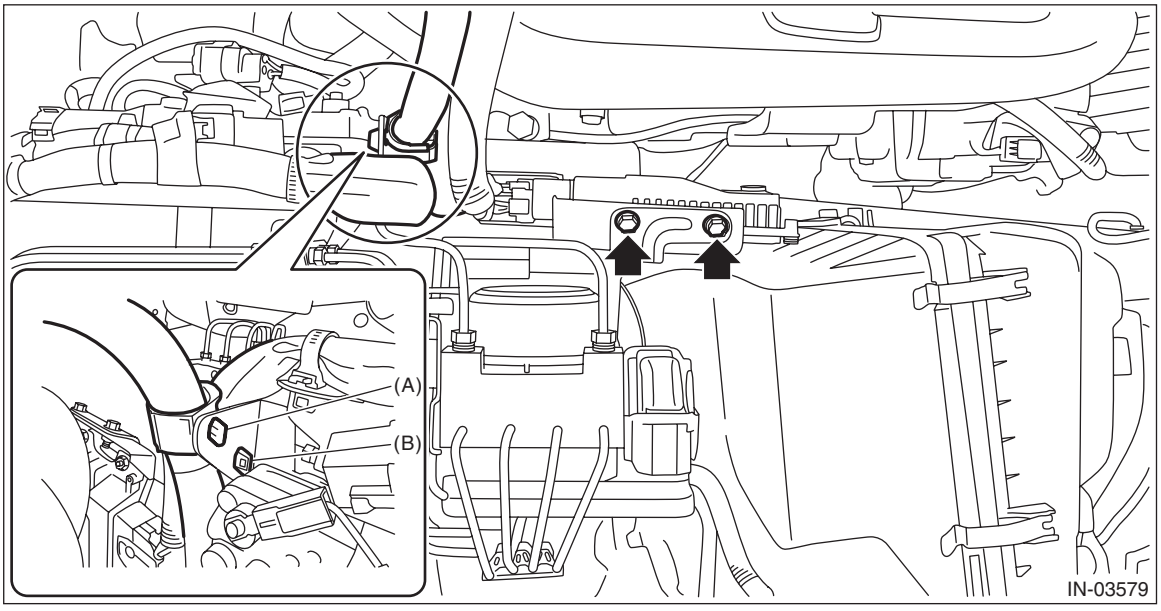

12) Pull out the engine control module (ECM) from the bracket, and move it to a location that does not interfere operation.

NOTE:
When performing the pulling out operation, pay attention not to apply excessive load to the breather filter portion (a) in order to avoid the damage.

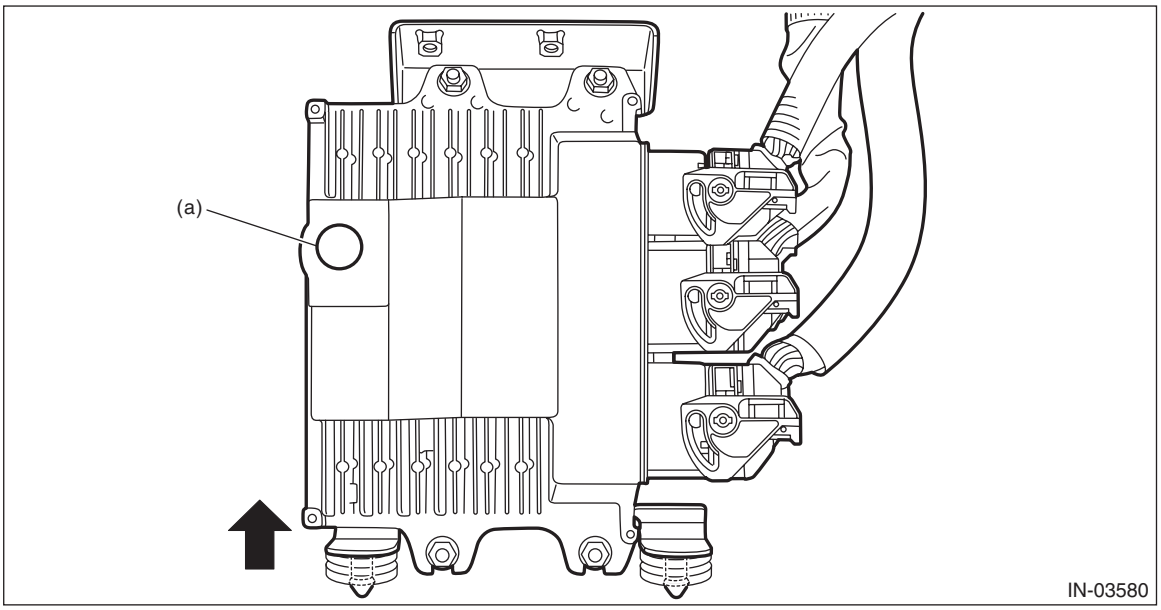

13) Remove the intercooler. <Ref. to IN(w/o STI)-43, REMOVAL, Intercooler.>
14) Remove the pitching stopper.

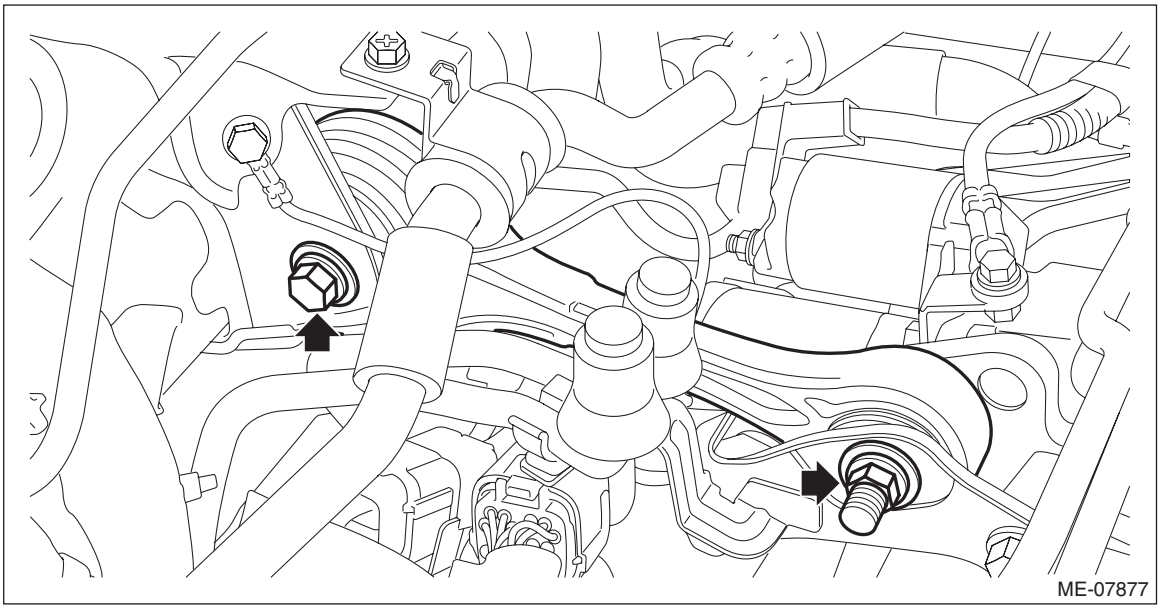

15) Support the engine with a lifting device and wire ropes.

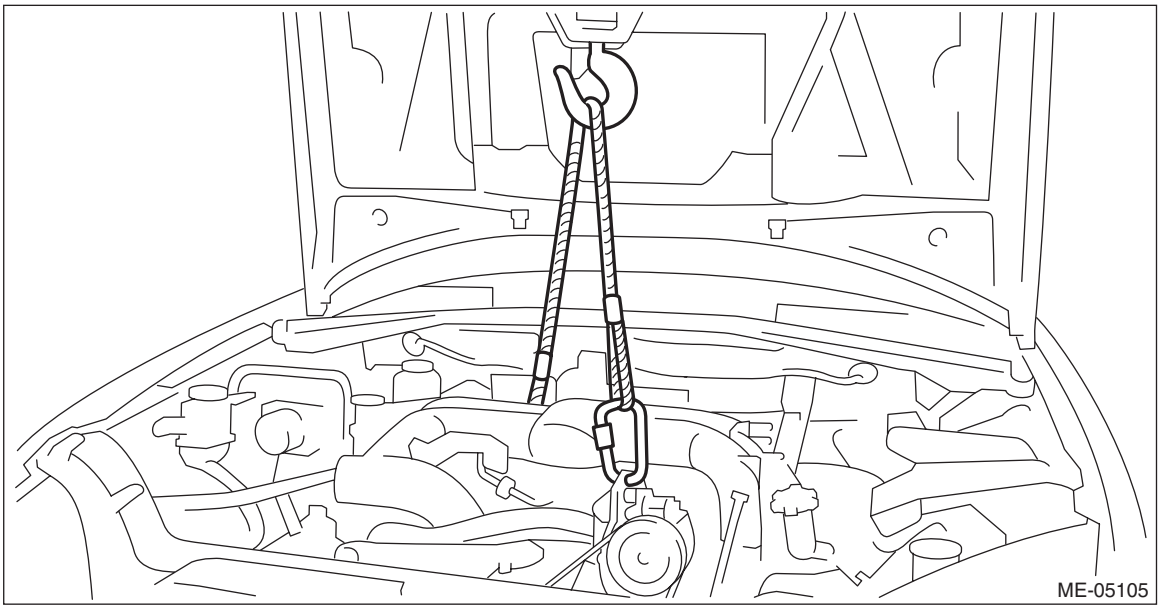

16) While gradually lifting up the engine, set the ST between the engine mount LH and front crossmember, and then slowly lower the engine.

CAUTION:
• When lifting up the engine, pay attention to the clearance of each part and be careful not to lift the engine too much, in order to prevent damaging the vehicle.
• To avoid the damage, be sure to set the ST as shown in the figure.

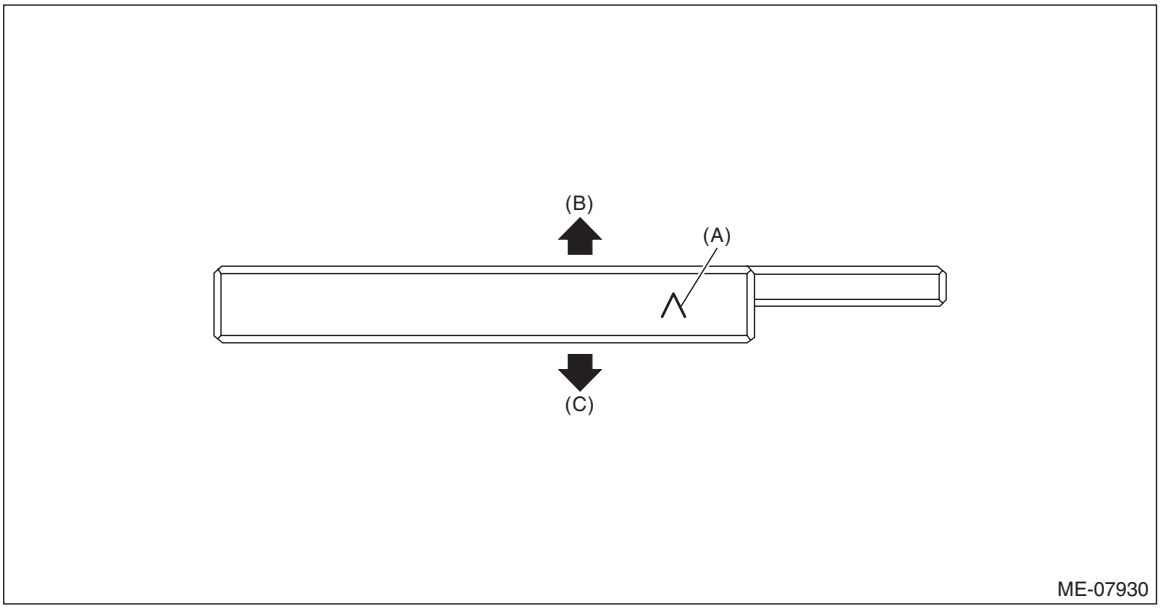

(A) Direction mark (B) Engine mounting side (C) Front crossmember side

- **After lowering the engine, check that the ST does not come off even if the engine is bounced.**

ST 18632AA030 STAND ASSY

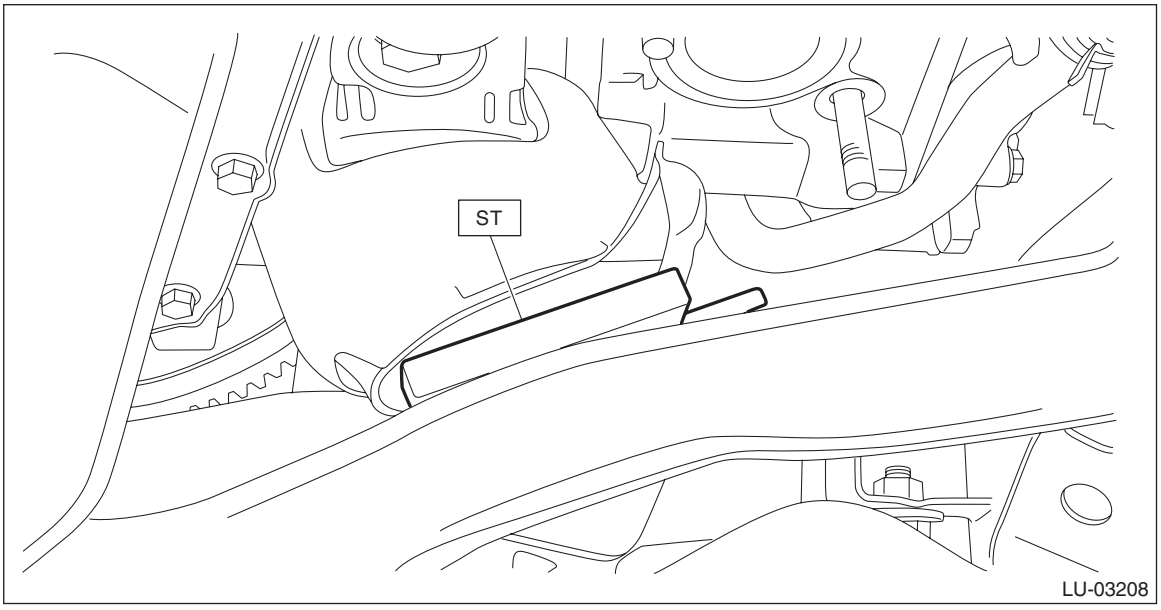

17) Remove the lifting device and wire ropes.

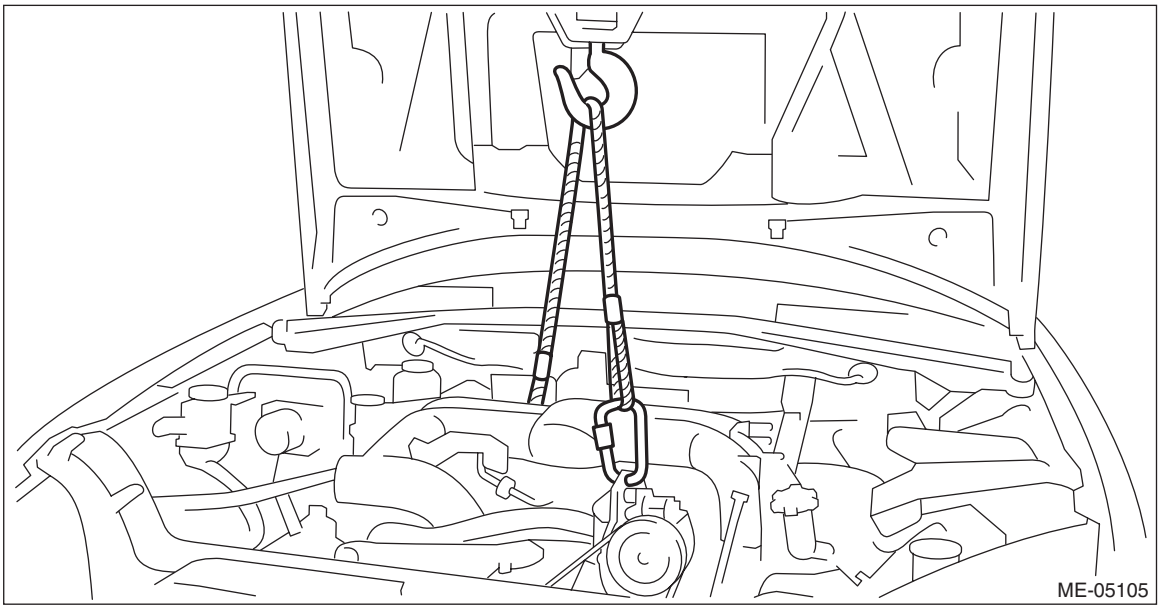

18) Lift up the vehicle.

19) Remove the bolts which secure oil pan to oil pan upper.

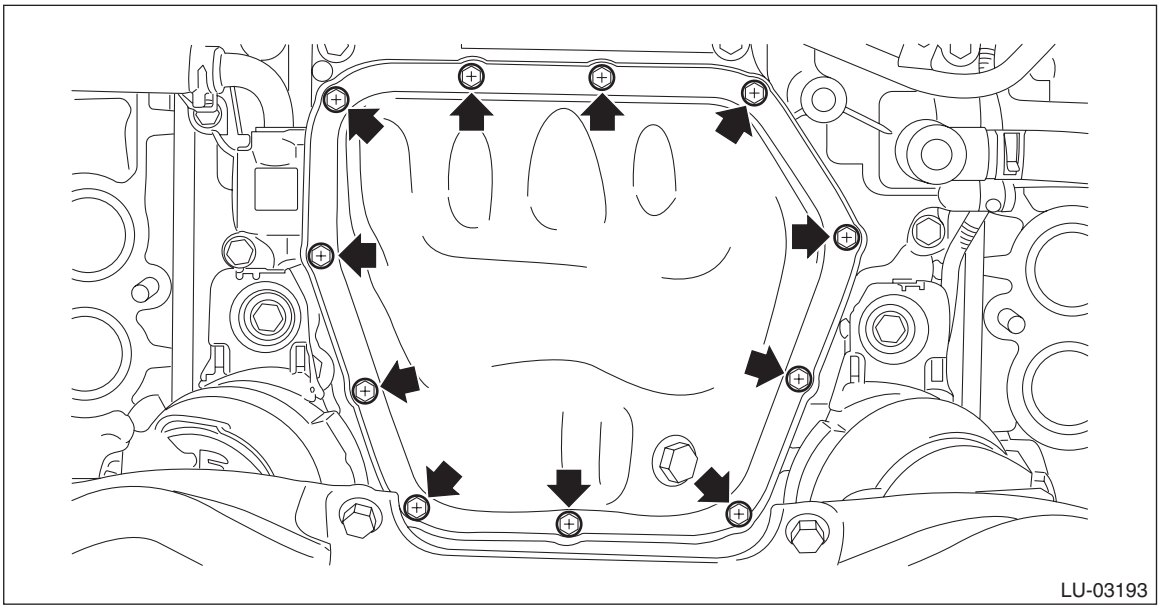

20) Insert an oil pan cutter blade into the gap between oil pan upper and oil pan, and remove the oil pan.

CAUTION:
Do not use a screwdriver or similar tool in place of oil pan cutter.

21) Remove the liquid gasket from the oil pan and the oil pan upper.

2. OIL PAN UPPER

1) Remove the engine from the vehicle. <Ref. to ME(w/o STI)-45, REMOVAL, Engine Assembly.>
2) Remove the water pump. <Ref. to CO(w/o STI)-16, REMOVAL, Water Pump.>
3) Remove the thermostat cover. <Ref. to CO(w/o STI)-32, REMOVAL, Thermostat.>
4) Remove the water pipe assembly. <Ref. to CO(w/o STI)-19, REMOVAL, Water Pipe Assembly.>
5) Remove the chain cover. <Ref. to ME(w/o STI)-89, REMOVAL, Chain Cover.>
6) Remove the oil pan. <Ref. to LU(w/o STI)-14, OIL PAN, REMOVAL, Oil Pan.>
7) Remove the oil level switch. <Ref. to LU(w/o STI)-49, REMOVAL, Oil Level Switch.>
8) Remove the bolts which secure oil pan upper to cylinder block, and remove the oil pan upper.

NOTE:
Remove the bolt (a) shown in the figure using TORX® bit T45.

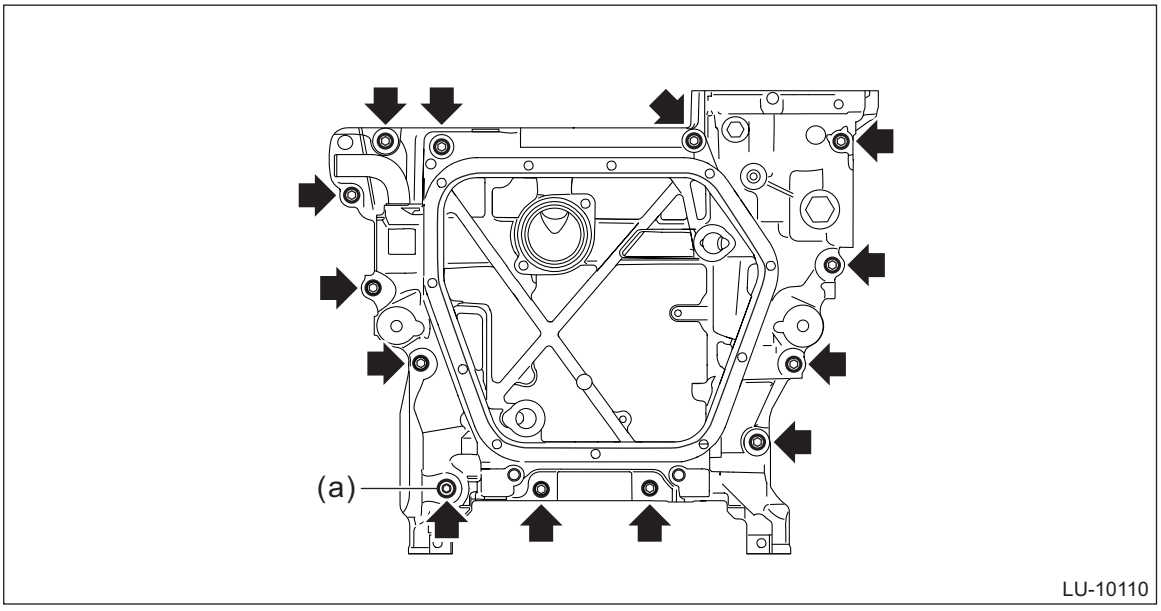

9) Remove the baffle plate from the oil pan upper.
10) Remove the oil strainer from the oil pan upper.
11) Remove stud bolts from the oil pan upper.
12) Remove the clutch housing cover from the oil pan upper. (MT model)
13) Remove the O-ring from the cylinder block.

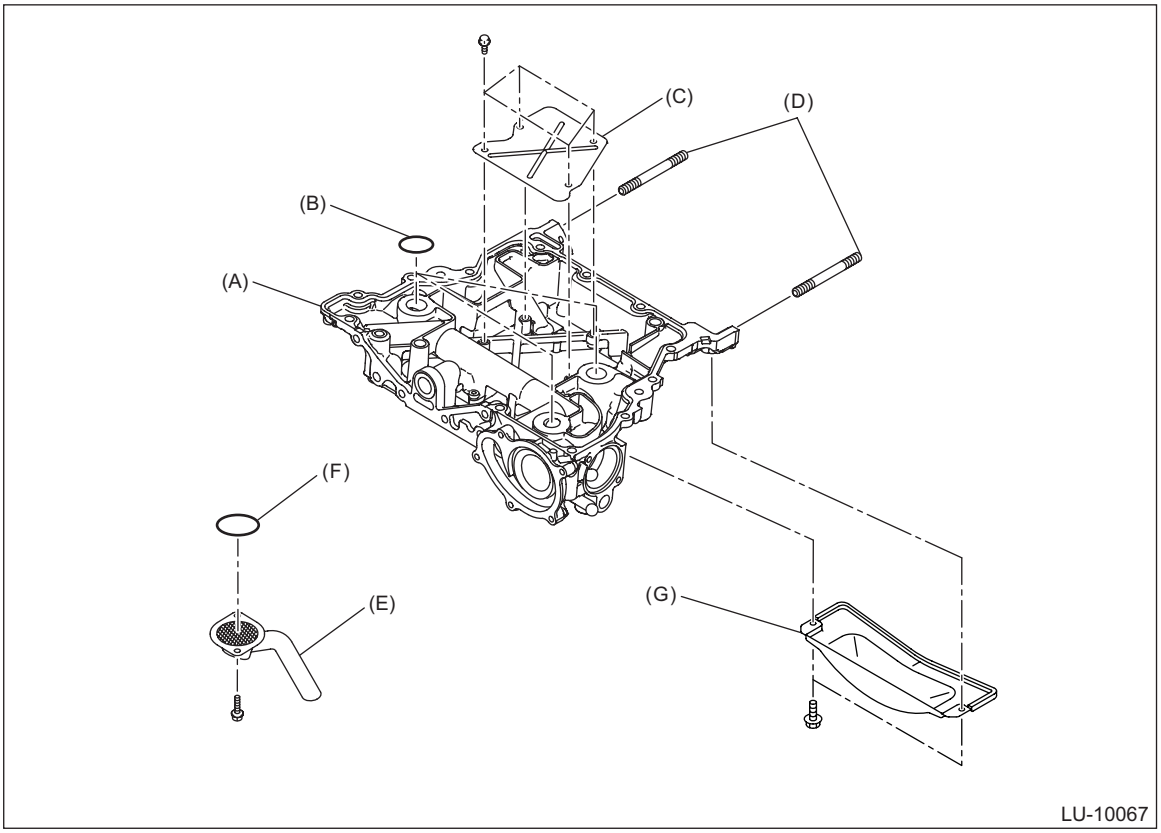

(A) Oil pan upper
(B) O-ring
(C) Baffle plate
(D) Stud bolt
(E) Oil strainer
(F) O-ring
(G) Clutch housing cover (MT model)

14) Remove the liquid gasket from oil pan upper and cylinder block.

B: INSTALLATION

1. OIL PAN

1) Apply liquid gasket to the mating surface of the oil pan upper as shown in the figure, and install the oil pan.

NOTE:
- Before applying liquid gasket, degrease the old liquid gasket seal surface of the oil pan and the oil pan upper.
- Use a new oil pan seal ring.
- Install within 5 min. after applying liquid gasket.

Liquid gasket:
THREE BOND 1217G (Part No. K0877Y0100), THREE BOND 1217H or equivalent

Liquid gasket applying diameter:
5±1 mm (0.1969±0.0394 in)

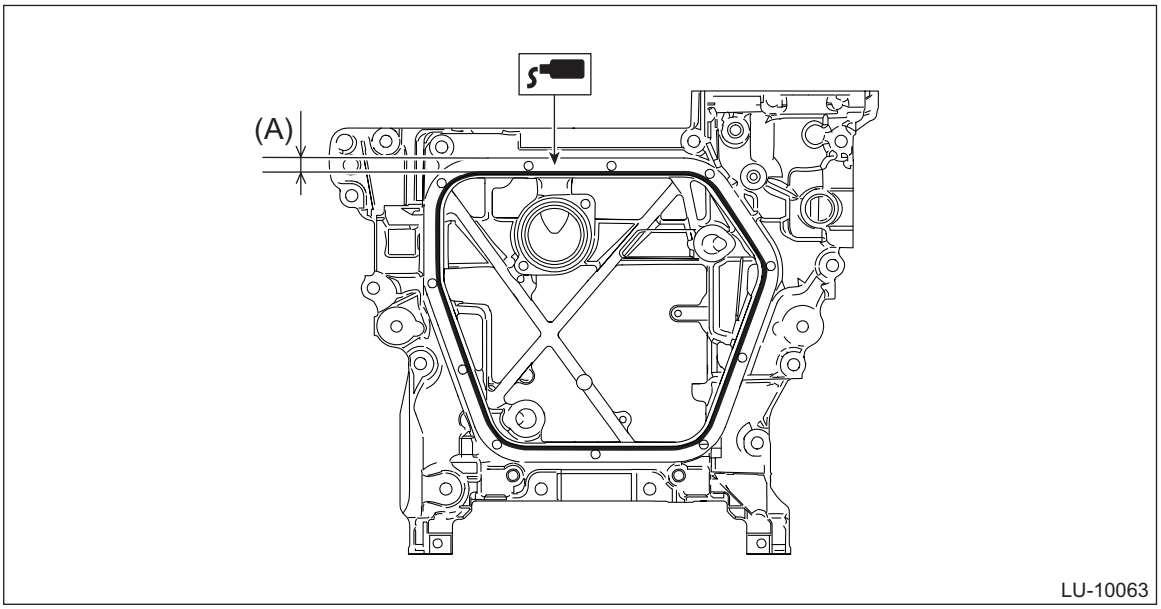

(A) 9.5 mm (0.374 in)

2) Tighten the bolts to secure the oil pan to the oil pan upper in the numerical order shown in the figure.

Tightening torque:
6.4 N·m (0.7 kgf-m, 4.7 ft-lb)

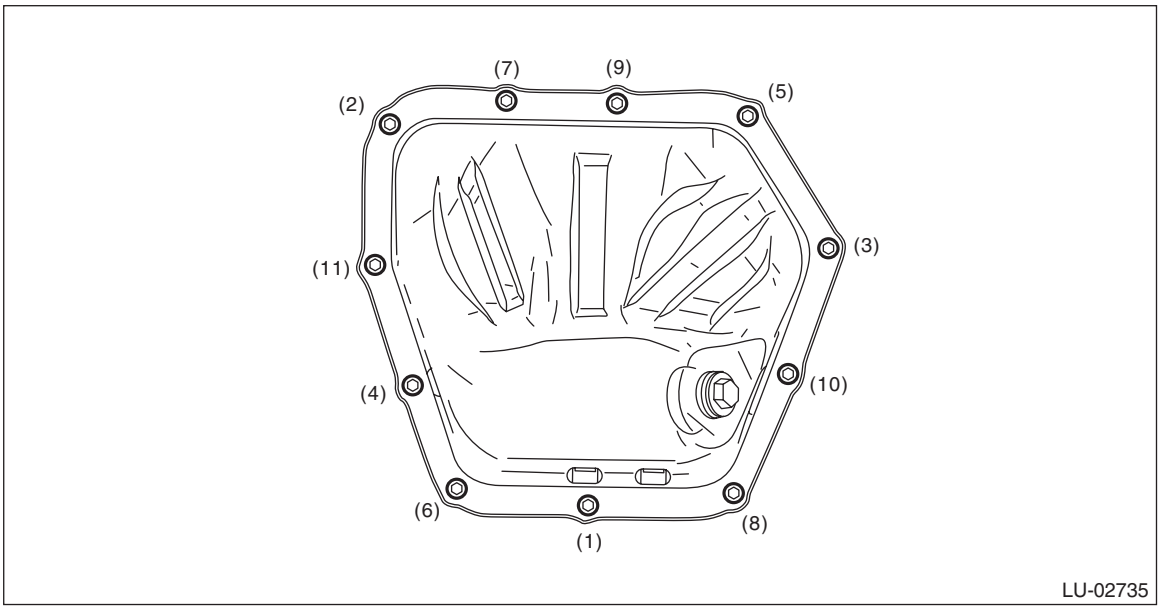

3) Lower the vehicle.
4) Support the engine with a lifting device and wire ropes.

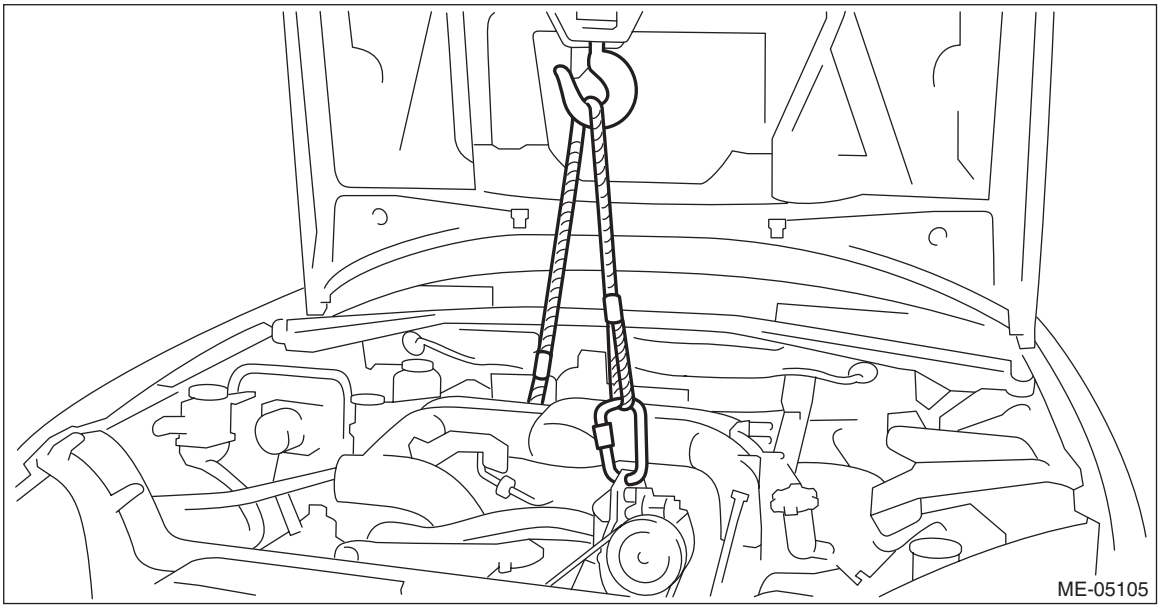

5) Lift the engine a little, and remove the ST.

CAUTION:
When lifting up the engine, pay attention to the clearance of each part and be careful not to lift the engine too much, in order to prevent damaging the vehicle.
ST 18632AA030 STAND ASSY

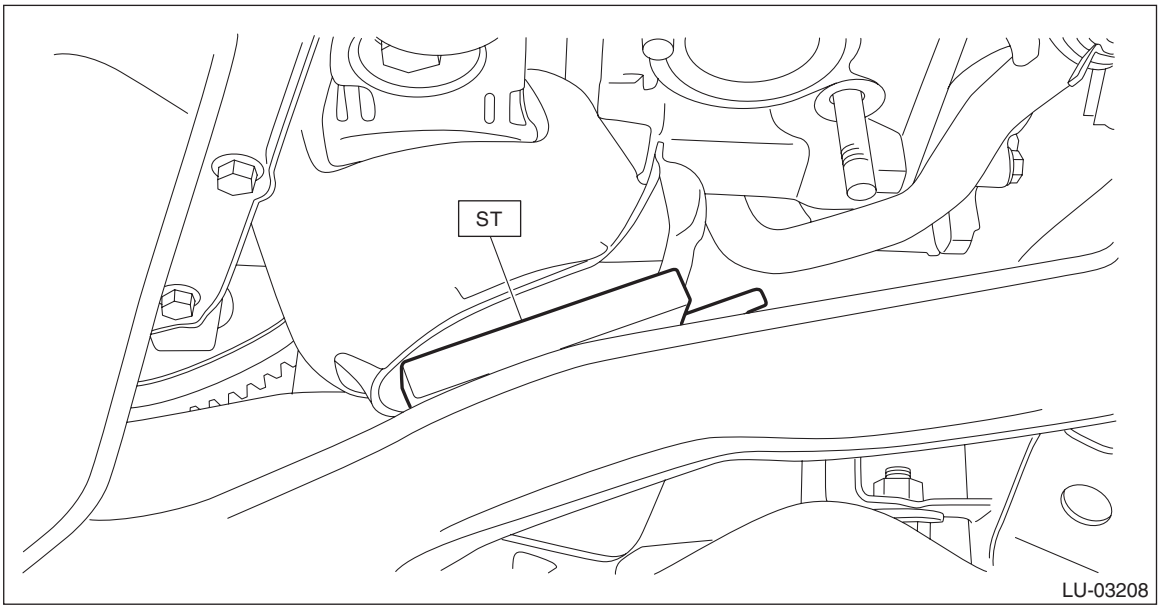

6) Lower the engine and remove the lifting device and wire ropes.

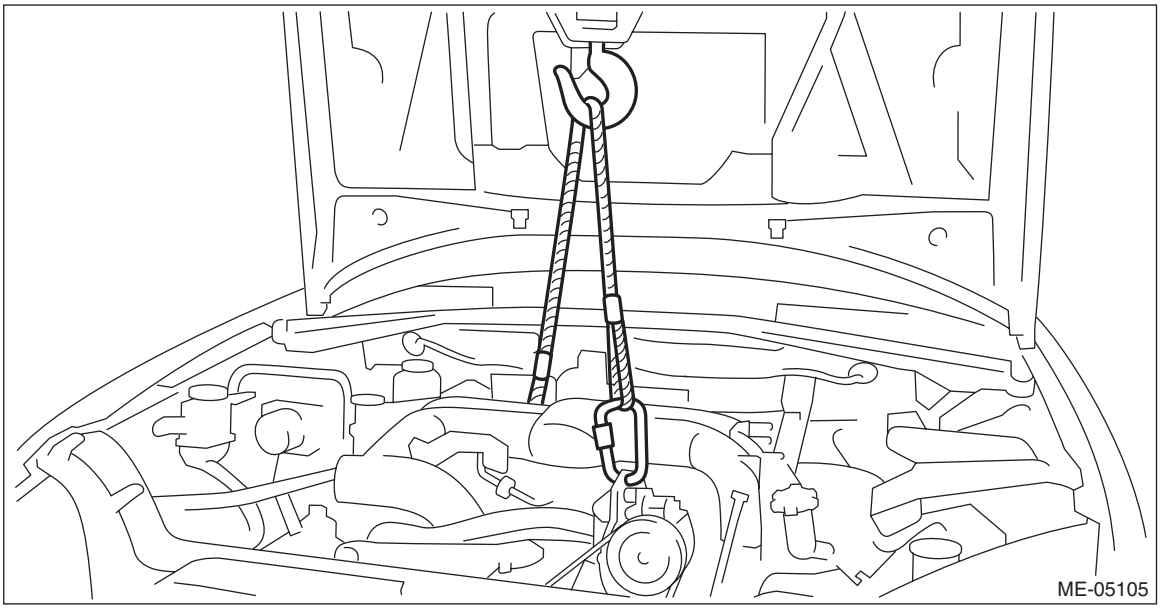

7) Install the pitching stopper.

Tightening torque:
T1: 50 N·m (5.1 kgf-m, 36.9 ft-lb)
T2: 58 N·m (5.9 kgf-m, 42.8 ft-lb)

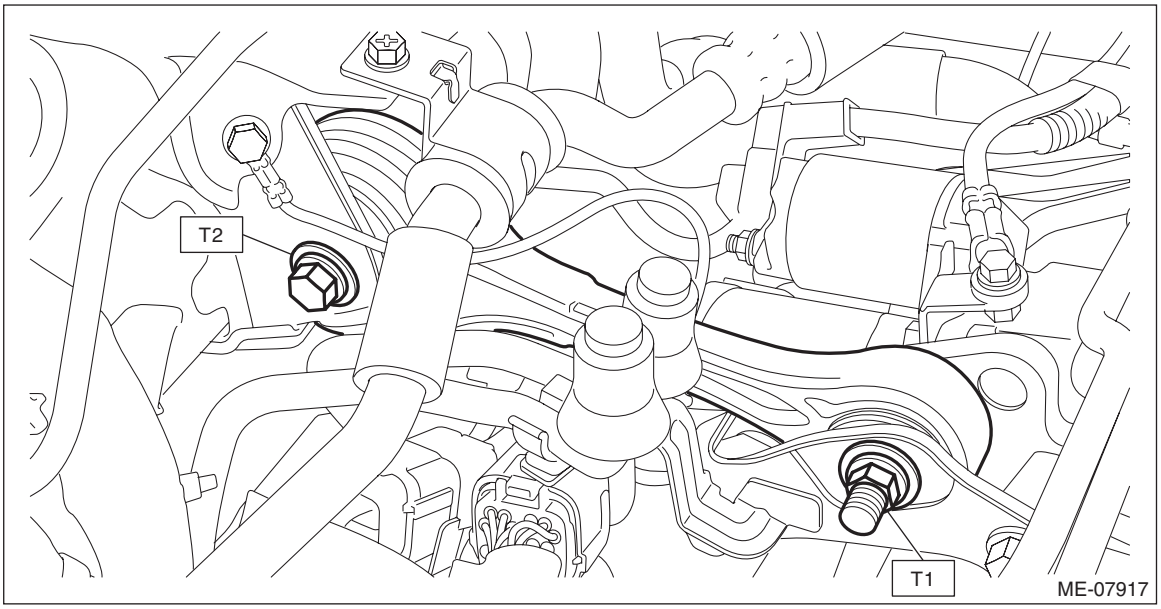

8) Install the intercooler. <Ref. to IN(w/o STI)-45, INSTALLATION, Intercooler.>
9) Insert the engine control module (ECM) to the bracket.

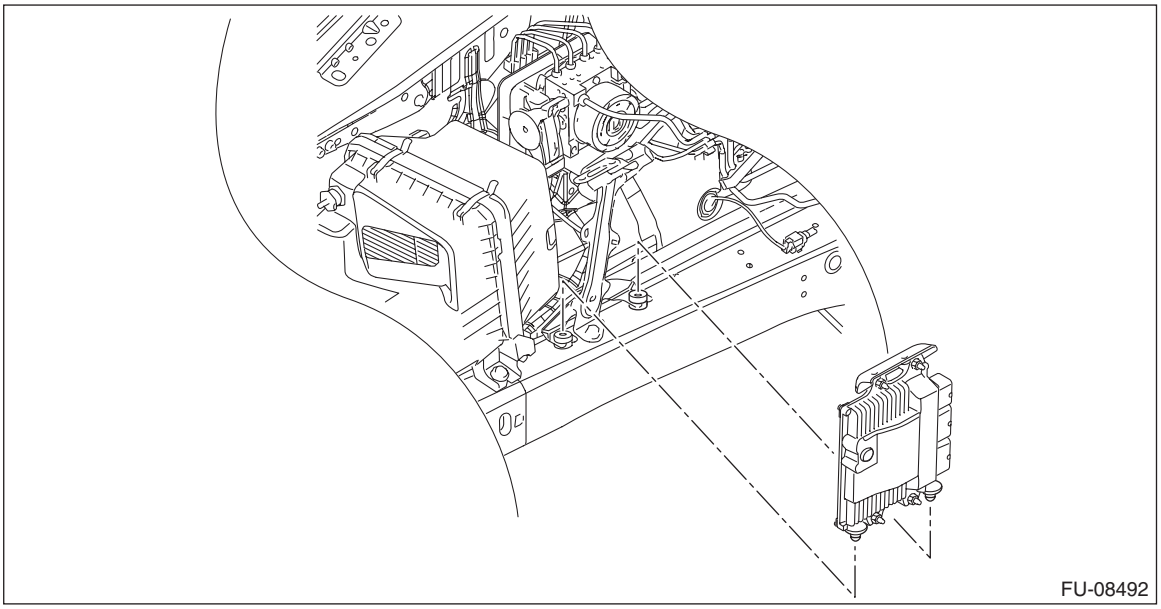

10) Install the bolt which secures the engine control module (ECM) to the bracket, and then secure the engine harness and bulkhead harness to the bracket with clip (A) and clip (B).

Tightening torque:
7.5 N·m (0.8 kgf-m, 5.5 ft-lb)

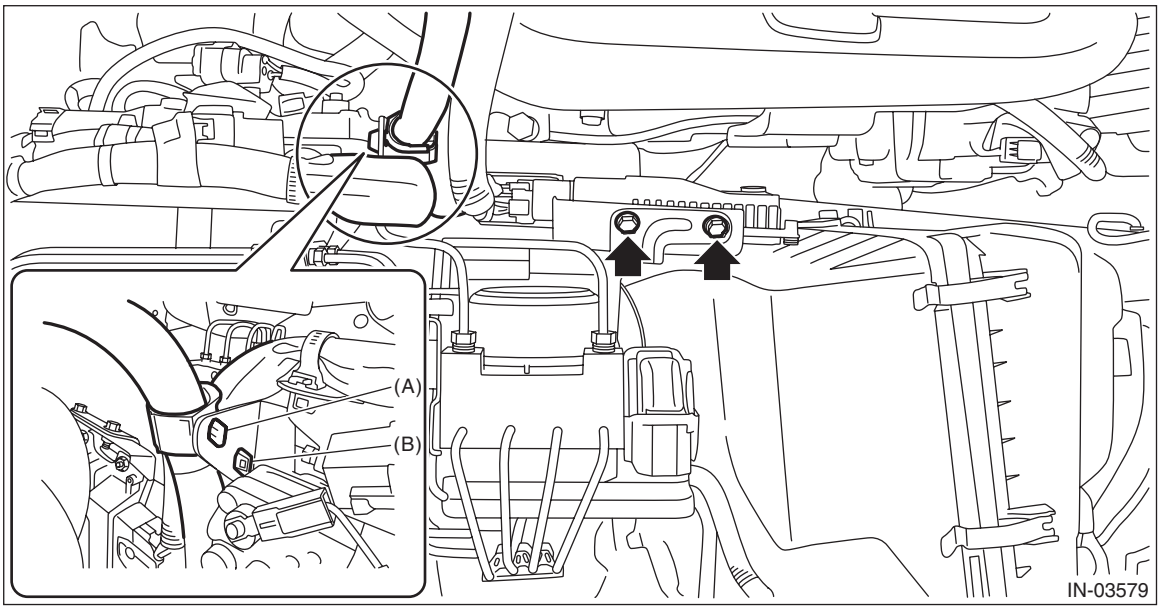

11) Lift up the vehicle.
12) Install the nuts which hold the engine mounting to the front crossmember.

NOTE:
- Use a new nut.
- Make sure that locators (a) of the engine mounting are securely inserted.

Tightening torque:
60 N·m (6.1 kgf-m, 44.3 ft-lb)

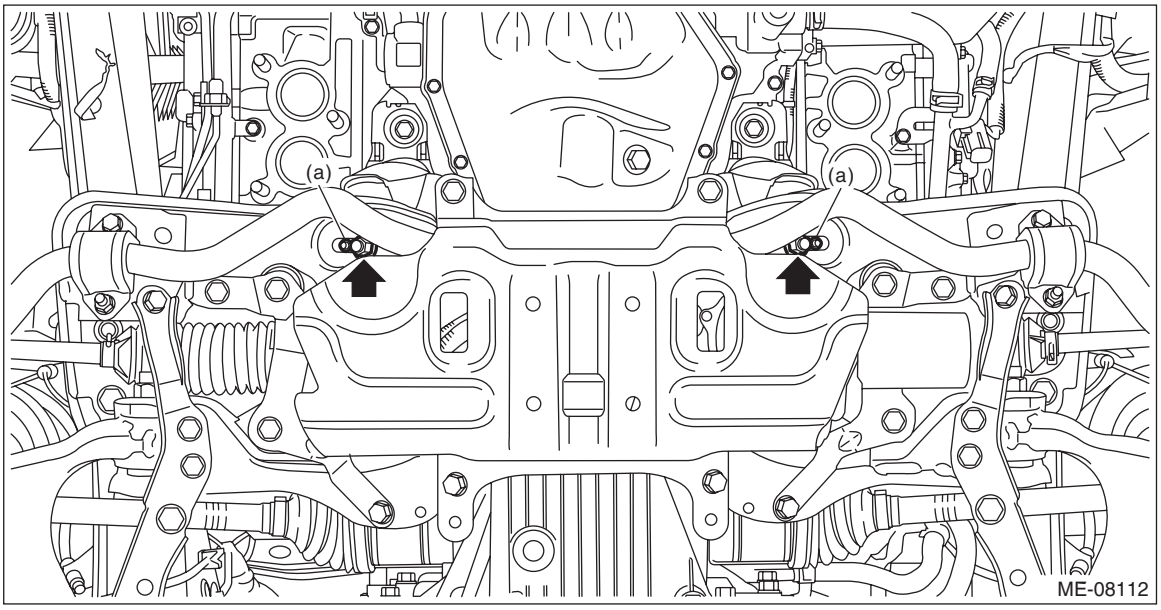

13) Install the front exhaust pipe. <Ref. to EX(w/o STI)-17, INSTALLATION, Front Exhaust Pipe.>
14) Install the under cover. <Ref. to EI-23, INSTALLATION, Front Under Cover.>
15) Lower the vehicle.
16) Install the air intake duct. <Ref. to IN(w/o STI)-26, INSTALLATION, Air Intake Duct.>
17) Refill the engine oil. <Ref. to LU(w/o STI)-11, REPLACEMENT, Engine Oil.>
18) Connect the ground terminal to battery sensor. <Ref. to NT-6, BATTERY, NOTE, Note.>

19) Fill engine coolant. <Ref. to CO(w/o STI)-14, FILLING OF ENGINE COOLANT, REPLACEMENT, Engine Coolant.>
20) Install the collector cover. <Ref. to IN(w/o STI)-10, INSTALLATION, Collector Cover.>
21) Set the front hood to the normal position. <Ref. to NT-23, FRONT HOOD DAMPER STAY, NOTE, Note.>
22) Install the striker - front hood. <Ref. to EB-15, ASSEMBLY, Front Hood.>
23) Close the front hood.

2. OIL PAN UPPER

1) Install the O-ring to the cylinder block.

NOTE:
Use new O-rings.
2) Attach the clutch housing cover to the oil pan upper. (MT model)
3) Attach the stud bolts to the oil pan upper.
4) Attach the oil strainer to the oil pan upper.

NOTE:
Use new O-rings.
5) Attach the baffle plate to the oil pan upper.

Tightening torque:
T1: 5 N·m (0.5 kgf-m, 3.7 ft-lb)
T2: 6.4 N·m (0.7 kgf-m, 4.7 ft-lb)
T3: 10 N·m (1.0 kgf-m, 7.4 ft-lb)

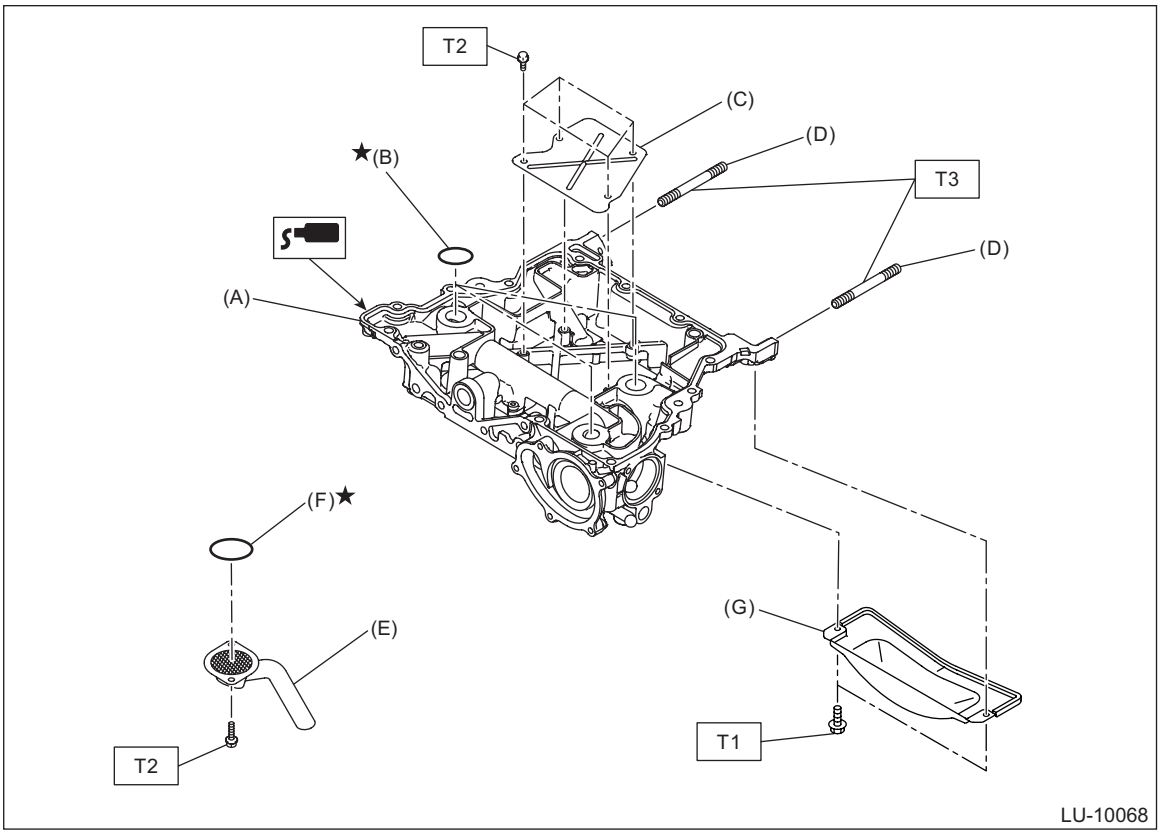

(A) Oil pan upper
(B) O-ring
(C) Baffle plate
(D) Stud bolt
(E) Oil strainer
(F) O-ring
(G) Clutch housing cover (MT model)

6) Apply liquid gasket to the mating surface of the oil pan upper as shown in the figure, and install the oil pan upper to the cylinder block.

NOTE:
- Before applying liquid gasket, degrease the old liquid gasket seal surface of the oil pan upper and the cylinder block.
- Install within 5 min. after applying liquid gasket.
- Apply liquid gasket 1.5 mm (0.0591 in) outside from the chamfer surface. However, application of liquid gasket on the chamfer surface around the bolt hole is allowed.

Liquid gasket:
THREE BOND 1217G (Part No. K0877Y0100), THREE BOND 1217H or equivalent

Liquid gasket applying diameter:
5±1 mm (0.1969±0.0394 in)

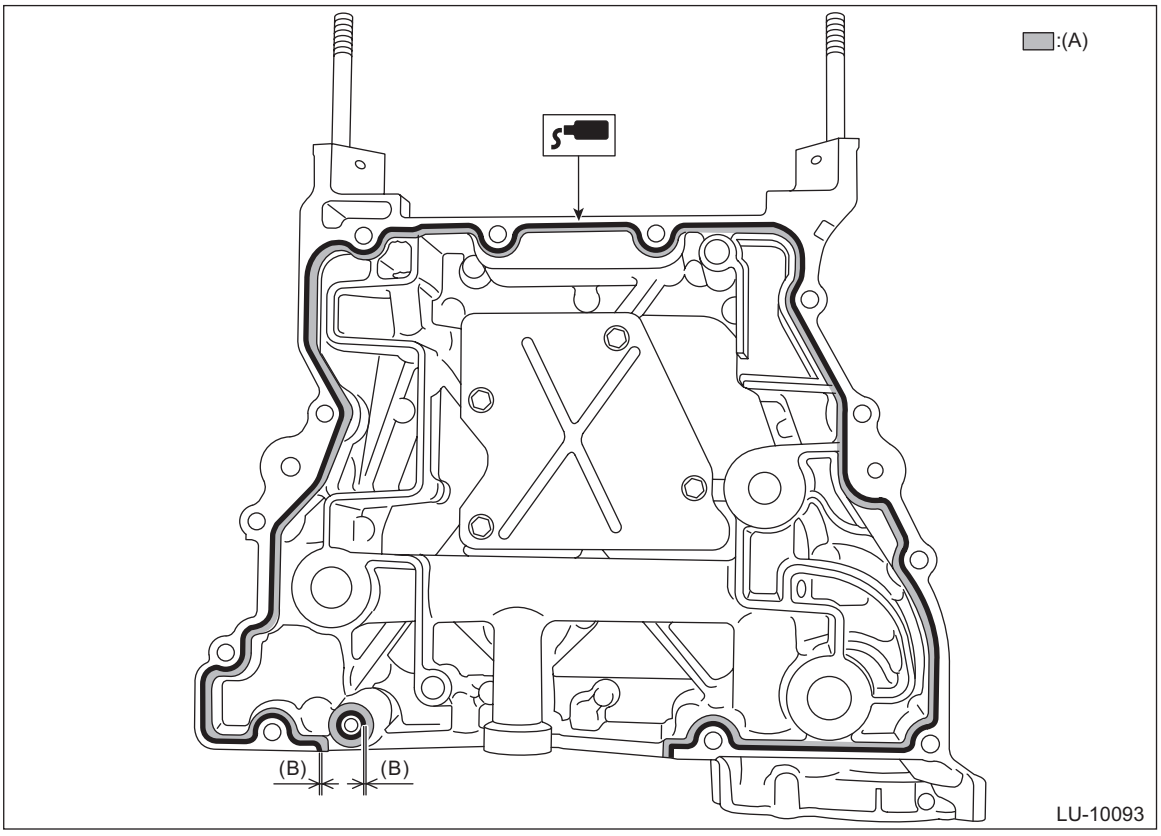

(A) Chamfer surface (B) 1.5 mm (0.0591 in)

7) Tighten the bolts to secure the oil pan upper to the cylinder block in the numerical order shown in the figure.

NOTE:
- Install the bolt (a) shown in the figure using TORX® bit T45.
- After tightening, if the liquid gasket is squeezed out onto the seal surface of the chain cover, completely remove any squeezed-out liquid gasket.

Tightening torque:
18 N·m (1.8 kgf-m, 13.3 ft-lb)

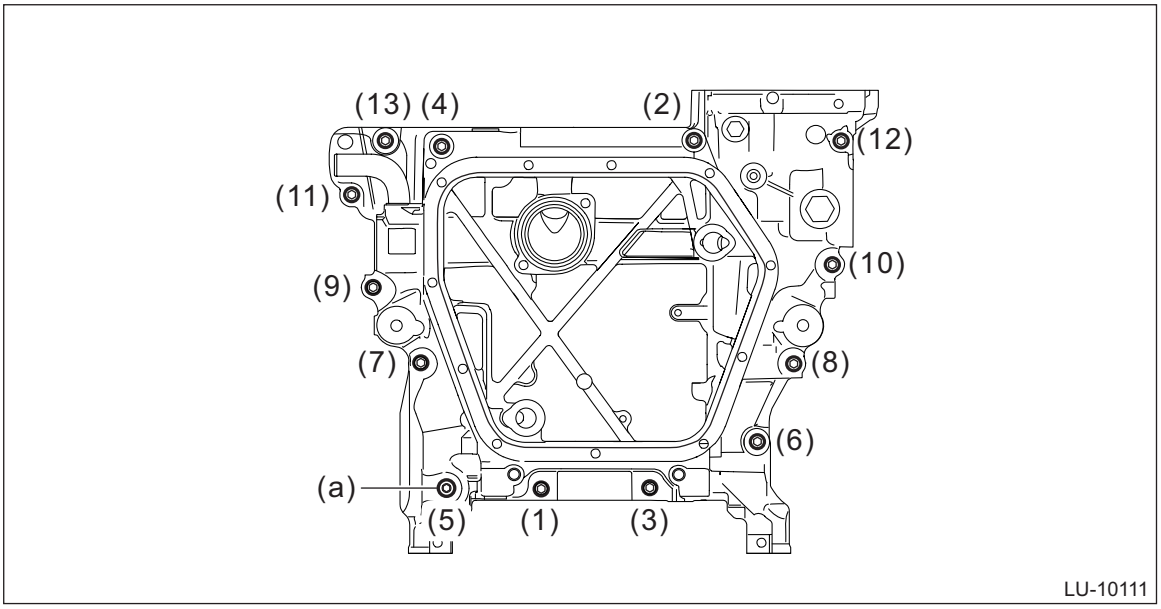

8) Install the oil level switch. <Ref. to LU(w/o STI)-56, INSTALLATION, Oil Level Switch.>
9) Install the oil pan. <Ref. to LU(w/o STI)-20, OIL PAN, INSTALLATION, Oil Pan.>
10) Install the chain cover. <Ref. to ME(w/o STI)-97, INSTALLATION, Chain Cover.>
11) Install the water pipe assembly. <Ref. to CO(w/o STI)-25, INSTALLATION, Water Pipe Assembly.>
12) Install the thermostat cover. <Ref. to CO(w/o STI)-33, INSTALLATION, Thermostat.>
13) Install the water pump. <Ref. to CO(w/o STI)-17, INSTALLATION, Water Pump.>
14) Install the engine to the vehicle. <Ref. to ME(w/o STI)-59, INSTALLATION, Engine Assembly.>
15) Refill the engine oil. <Ref. to LU(w/o STI)-11, REPLACEMENT, Engine Oil.>
16) Fill engine coolant. <Ref. to CO(w/o STI)-14, FILLING OF ENGINE COOLANT, REPLACEMENT, Engine Coolant.>

C: INSPECTION

Check that the oil pan, oil pan upper, oil strainer and baffle plate do not have deformation, cracks or damage.

6. Oil Pressure Switch

A: REMOVAL

CAUTION:
If the engine oil is spilt over exhaust pipe or the under cover, wipe it off with cloth to avoid emitting smoke or causing a fire.

1) Disconnect the ground terminal from battery sensor. <Ref. to NT-6, BATTERY, NOTE, Note.>
2) Remove the rubber cap.

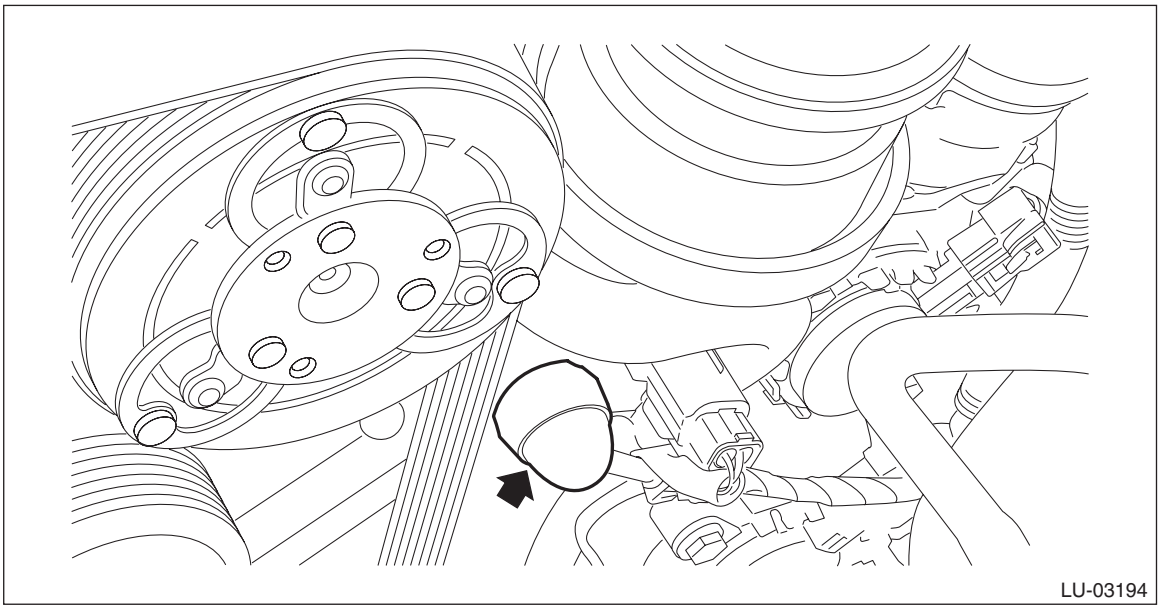

3) Disconnect the terminal from oil pressure switch.

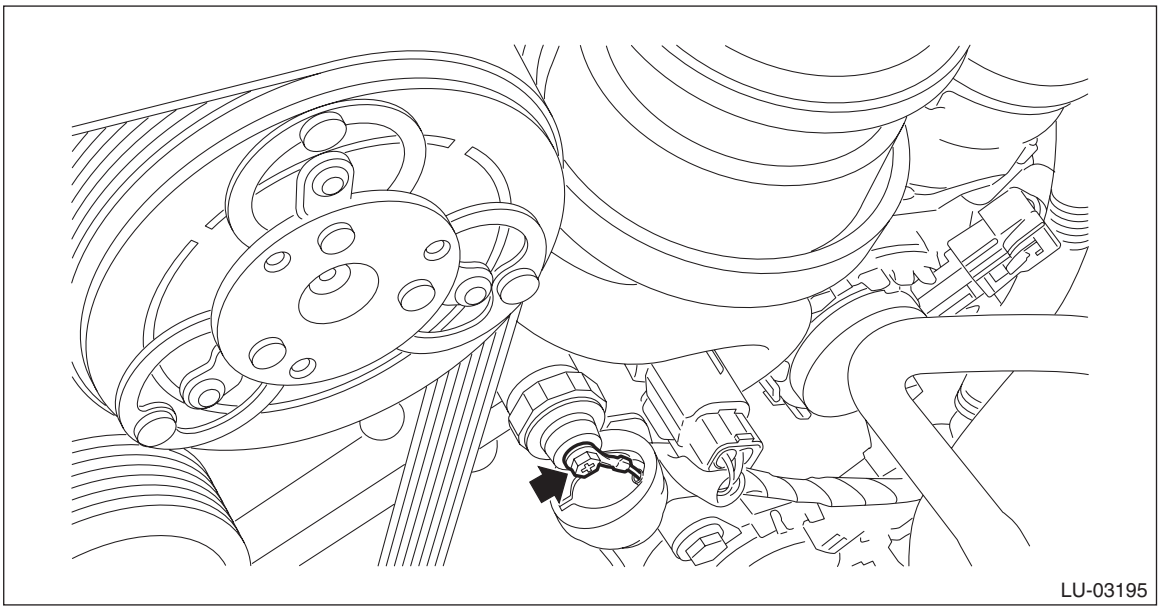

4) Remove the oil pressure switch.

CAUTION:
Catch the engine oil using cloth to prevent it from splashing.

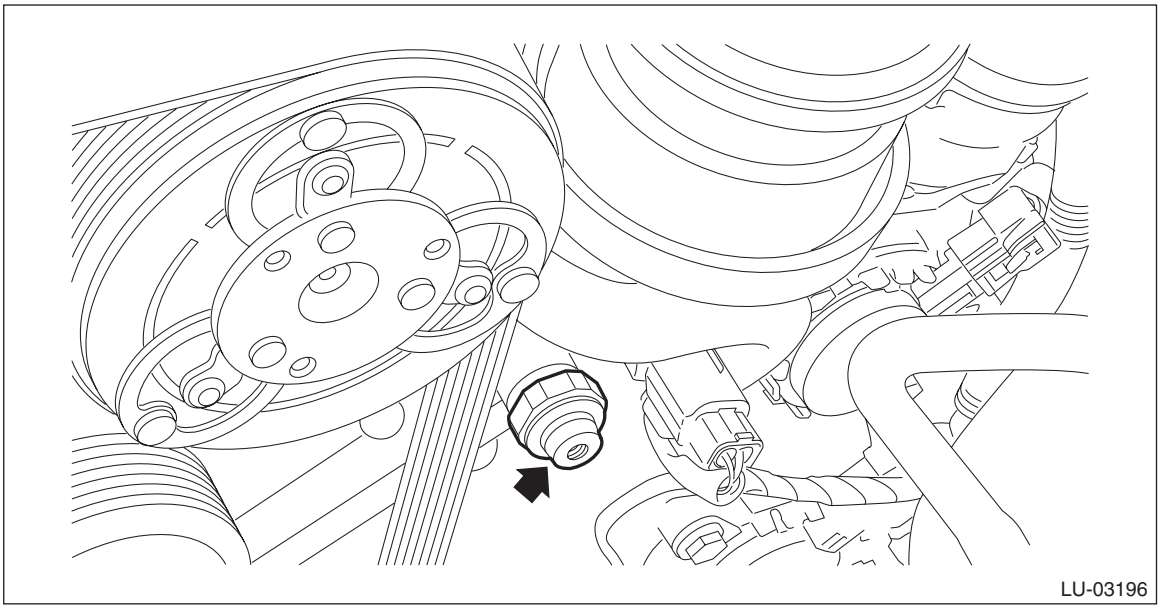
LU-03196

B: INSTALLATION

1) Apply liquid gasket to the oil pressure switch threads.

Liquid gasket:
THREE BOND 1324 (Part No. 004403042) or equivalent

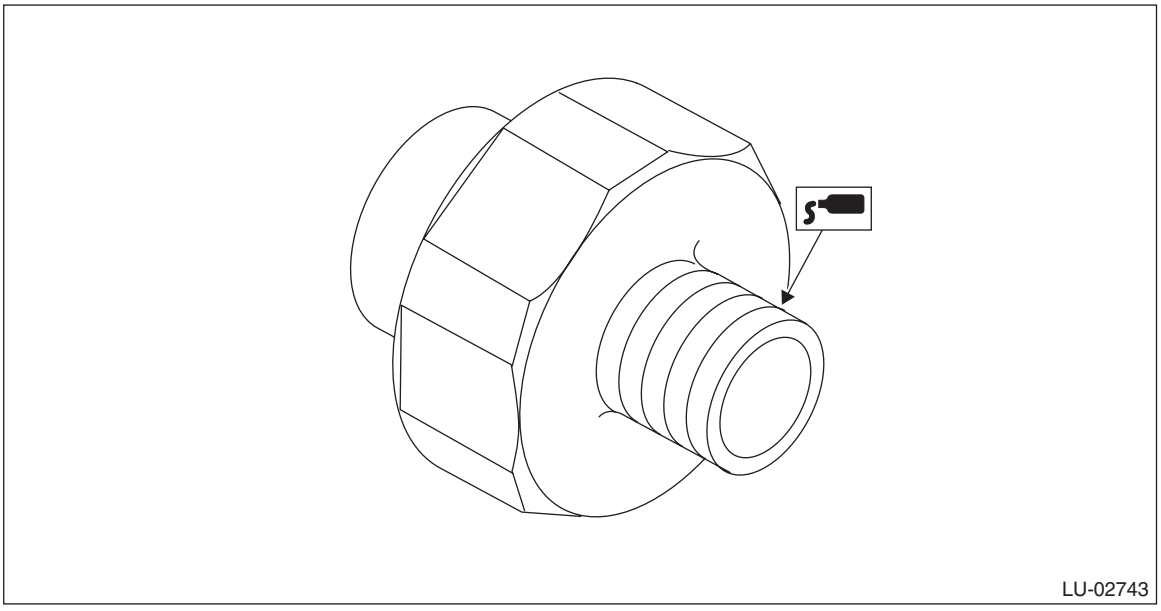
LU-02743

2) Install the oil pressure switch to the chain cover.

Tightening torque:
18 N·m (1.8 kgf-m, 13.3 ft-lb)

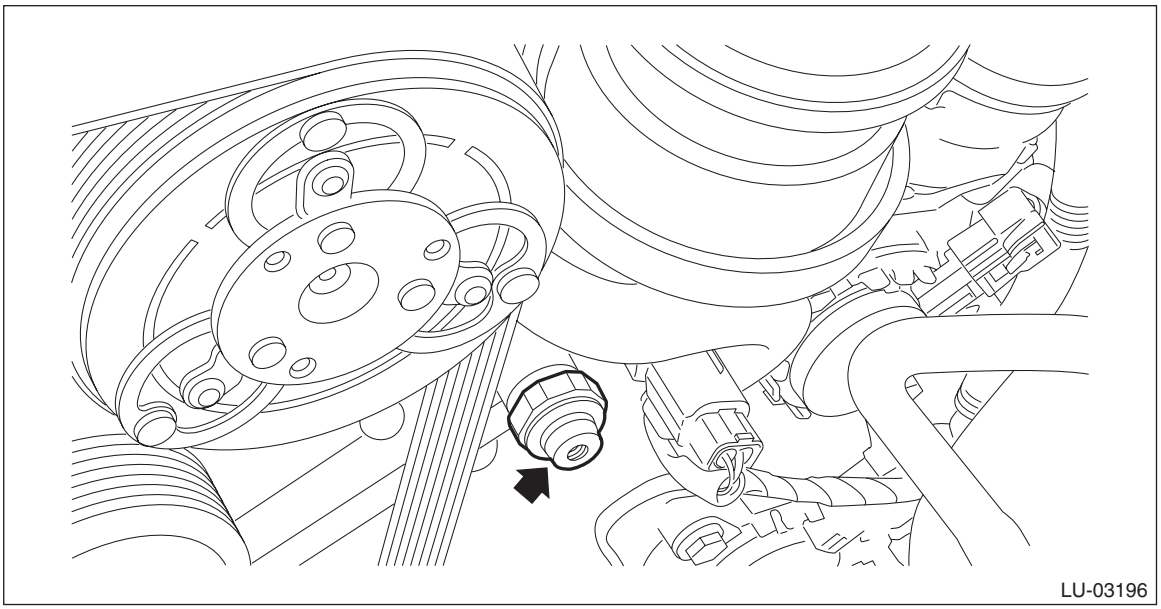

3) Connect the terminal to the oil pressure switch.

NOTE:
The oil pressure switch harness must be tightened within the range of a 90° angle as shown below.

Tightening torque:
1.5 N·m (0.2 kgf-m, 1.1 ft-lb)

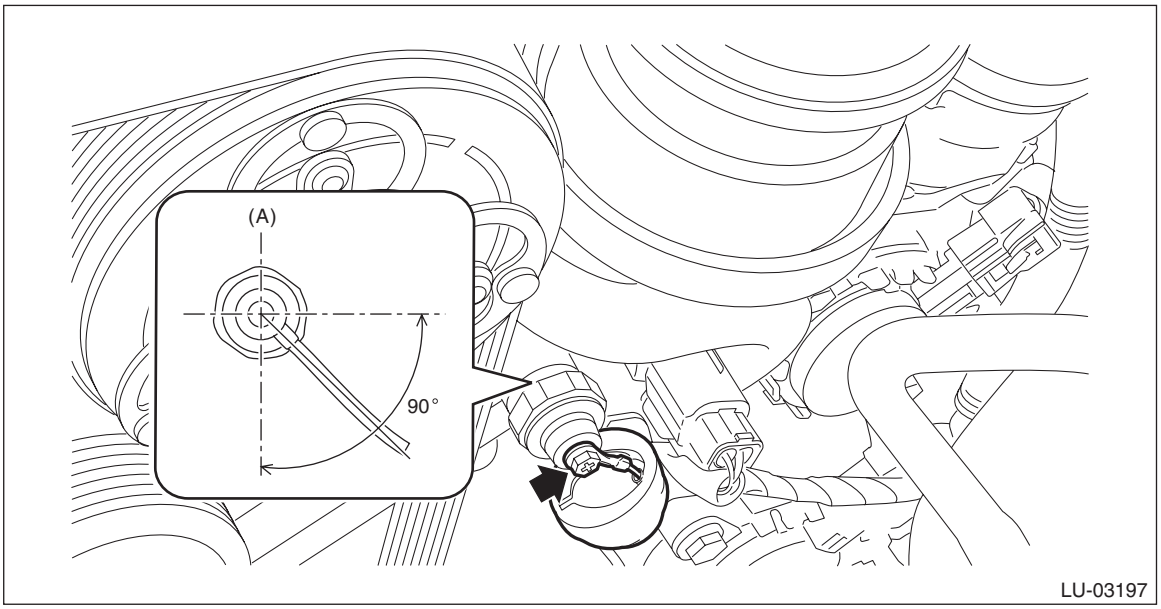

(A) Upper side of the engine

4) Attach the rubber cap.

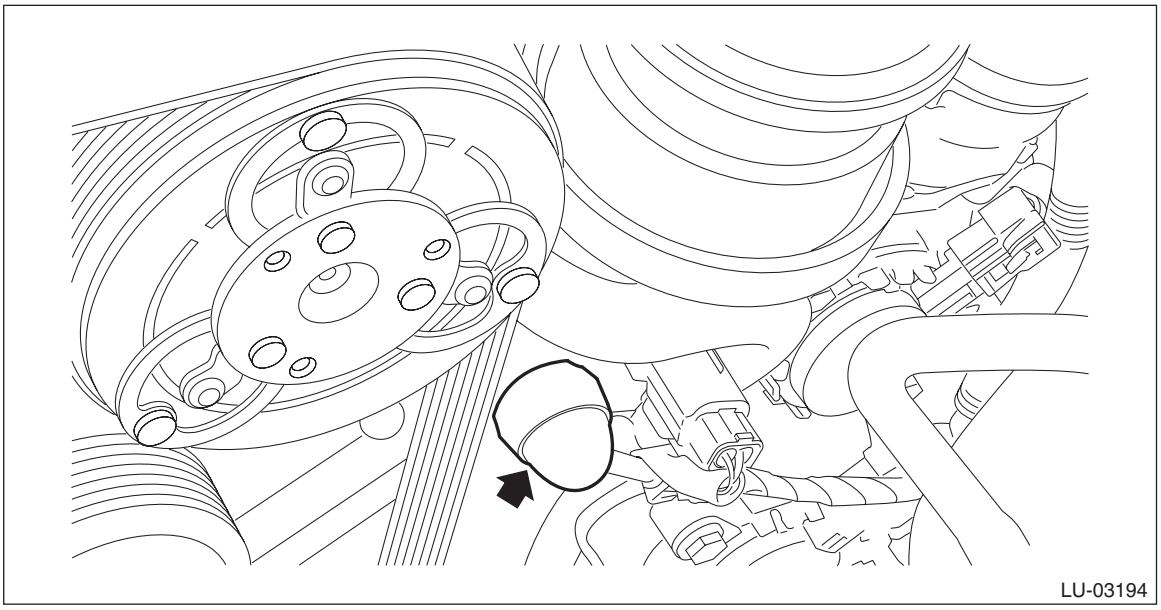

5) Connect the ground terminal to battery sensor. <Ref. to NT-6, BATTERY, NOTE, Note.>

C: INSPECTION

1) Check that the oil pressure switch does not have deformation, cracks or damage.
2) Check the oil pressure switch installation portion for oil leakage and oil seepage.

7. Engine Oil Cooler

A: REMOVAL

CAUTION:
If the engine oil is spilt over exhaust pipe or the under cover, wipe it off with cloth to avoid emission of smoke or causing a fire.

1) Remove the collector cover. <Ref. to IN(w/o STI)-7, REMOVAL, Collector Cover.>
2) Drain engine coolant. <Ref. to CO(w/o STI)-13, DRAINING OF ENGINE COOLANT, REPLACEMENT, Engine Coolant.>
3) Lower the vehicle.
4) Remove the engine oil filter. <Ref. to LU(w/o STI)-48, REMOVAL, Engine Oil Filter.>
5) Disconnect the front engine oil cooler hose A (A) and the side engine oil cooler hose A (B) from the engine oil cooler.

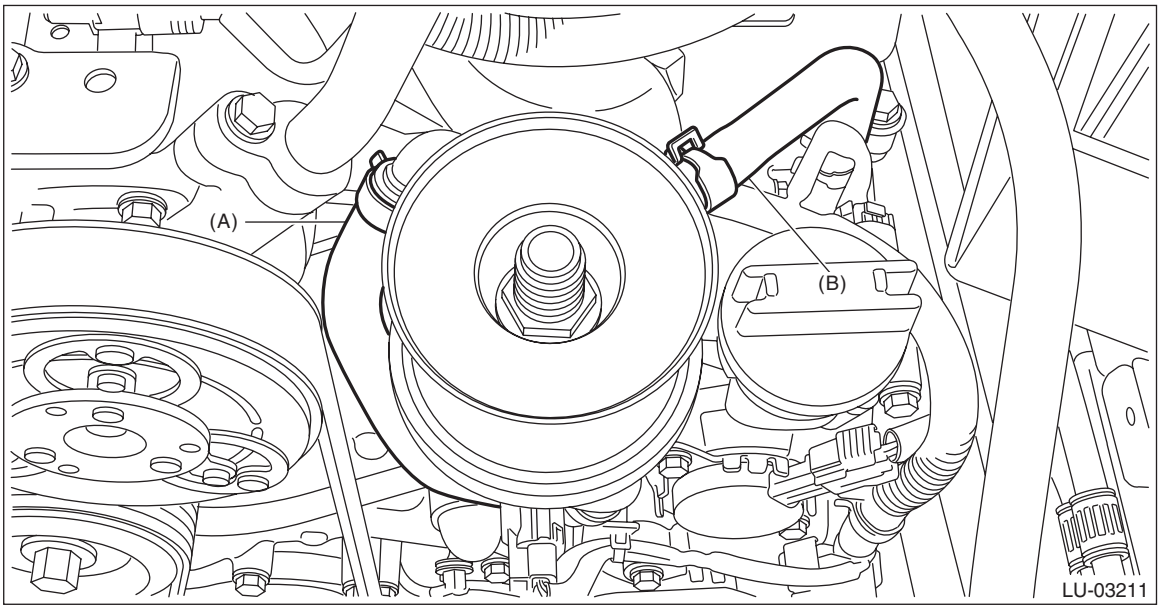

6) Remove the oil cooler connector and remove the engine oil cooler.

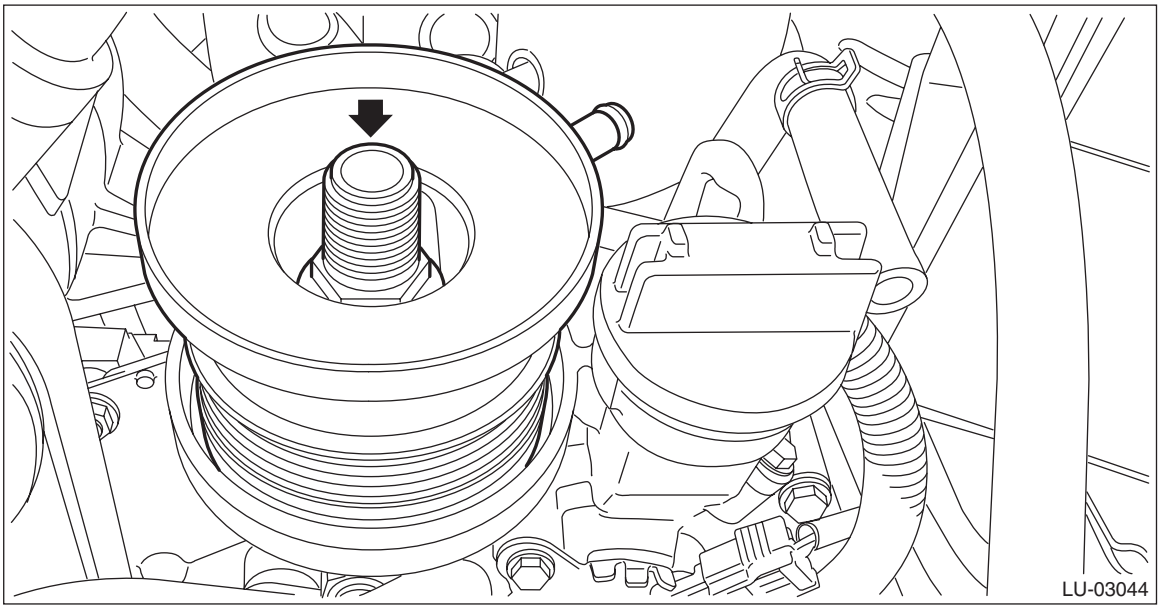

B: INSTALLATION

Install in the reverse order of removal.

NOTE:
- Use a new gasket.
- After installing, check the engine oil level and replenish it if necessary. <Ref. to LU(w/o STI)-10, INSPECTION, Engine Oil.>

Tightening torque:
45 N·m (4.6 kgf-m, 33.2 ft-lb)

C: INSPECTION

1) Check that the engine oil cooler, engine oil cooler pipe, and oil cooler connector do not have deformation, cracks or damage.
2) Make sure the engine oil cooler hoses are not cracked, damaged or loose.
3) Blow with compressed air to make sure the coolant passages are not clogged.
4) Make sure the mating surfaces of the chain cover do not have damage.

8. Engine Oil Cooler Pipe

A: REMOVAL

1. FRONT ENGINE OIL COOLER PIPE

1) Remove the collector cover. <Ref. to IN(w/o STI)-7, REMOVAL, Collector Cover.>
2) Disconnect the ground terminal from battery sensor. <Ref. to NT-6, BATTERY, NOTE, Note.>
3) Drain engine coolant. <Ref. to CO(w/o STI)-13, DRAINING OF ENGINE COOLANT, REPLACEMENT, Engine Coolant.>
4) Remove the center exhaust pipe. <Ref. to EX(w/o STI)-32, REMOVAL, Center Exhaust Pipe.>
5) Remove the clip (B) which holds the front engine oil cooler hose B (A) and the oil level switch harness from the front engine oil cooler pipe. Remove the bolt which secures the front engine oil cooler pipe to the chain cover.

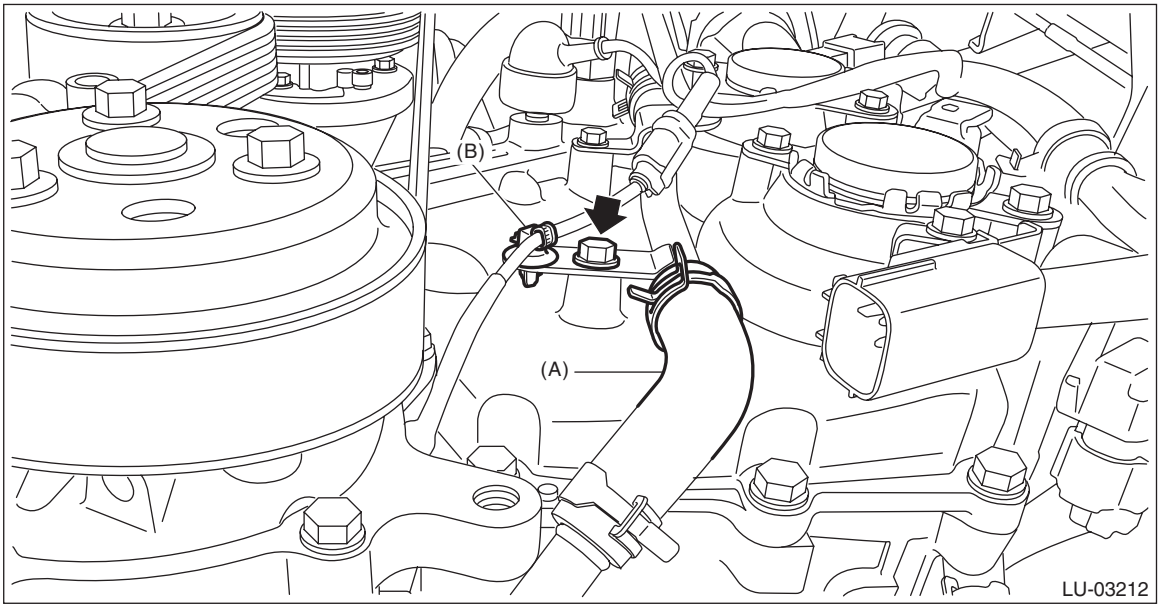

6) Lower the vehicle.
7) Disconnect the front engine oil cooler hose A from the engine oil cooler.

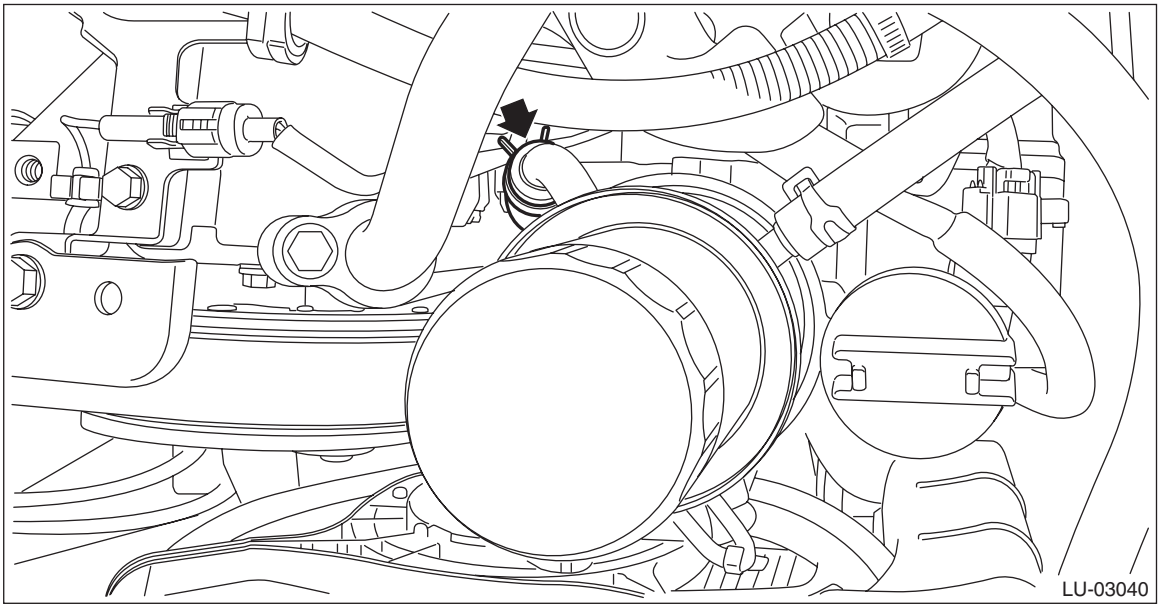

8) Remove the clip (A) holding the engine oil temperature sensor harness from the front engine oil cooler pipe.

9) Remove the bolt which secures the front engine oil cooler pipe to the chain cover. Remove the front engine oil cooler pipe together with the front engine oil cooler hose A.

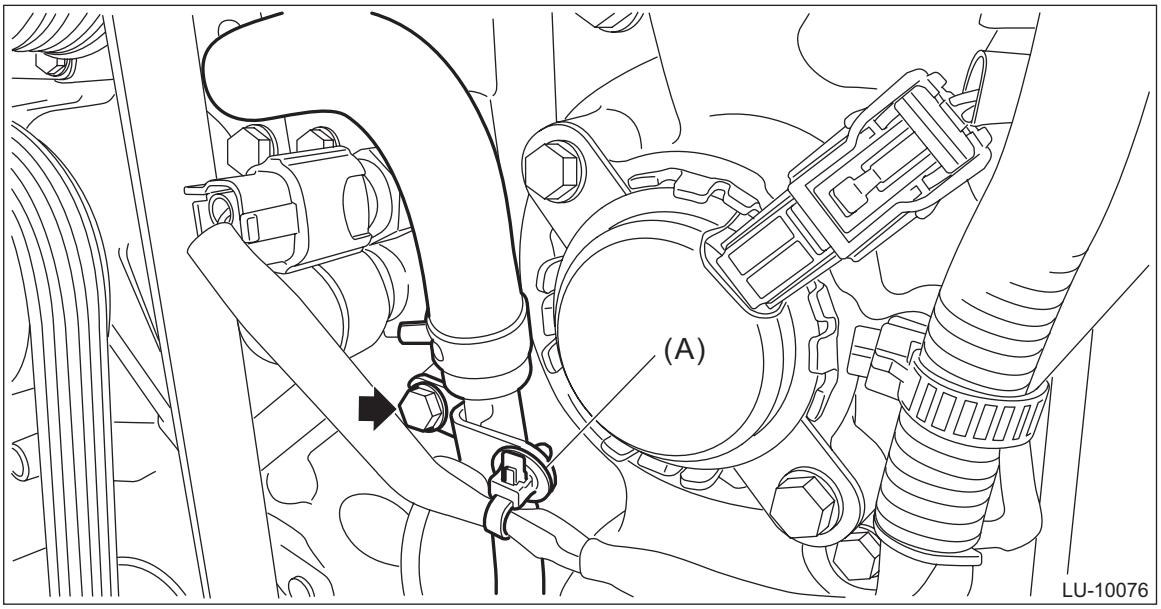

10) Remove the front engine oil cooler hose A from the front engine oil cooler pipe.

2. SIDE ENGINE OIL COOLER PIPE

1) Remove the collector cover. <Ref. to IN(w/o STI)-7, REMOVAL, Collector Cover.>
2) Disconnect the ground terminal from battery sensor. <Ref. to NT-6, BATTERY, NOTE, Note.>
3) Drain engine coolant. <Ref. to CO(w/o STI)-13, DRAINING OF ENGINE COOLANT, REPLACEMENT, Engine Coolant.>
4) Remove the center exhaust pipe. <Ref. to EX(w/o STI)-32, REMOVAL, Center Exhaust Pipe.>
5) Remove the clip (B) which holds the side engine oil cooler hose B (A) and the rear oxygen sensor harness from the side engine oil cooler pipe. Remove the bolt which secures the side engine oil cooler pipe to the cam carrier RH.

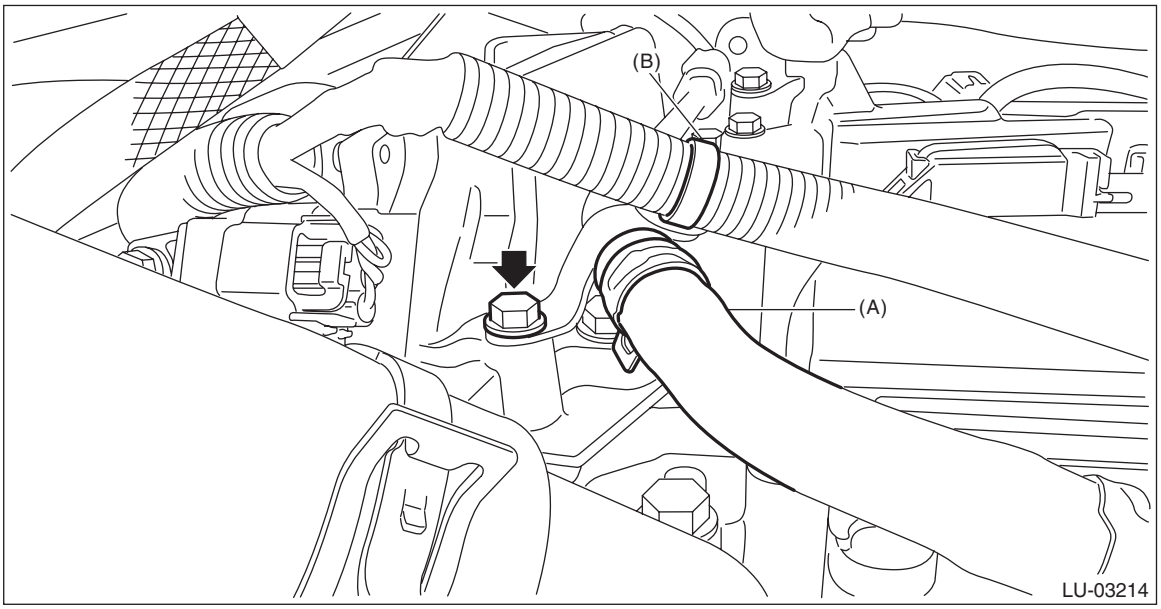

6) Lower the vehicle.

7) Disconnect the side engine oil cooler hose A from the engine oil cooler.

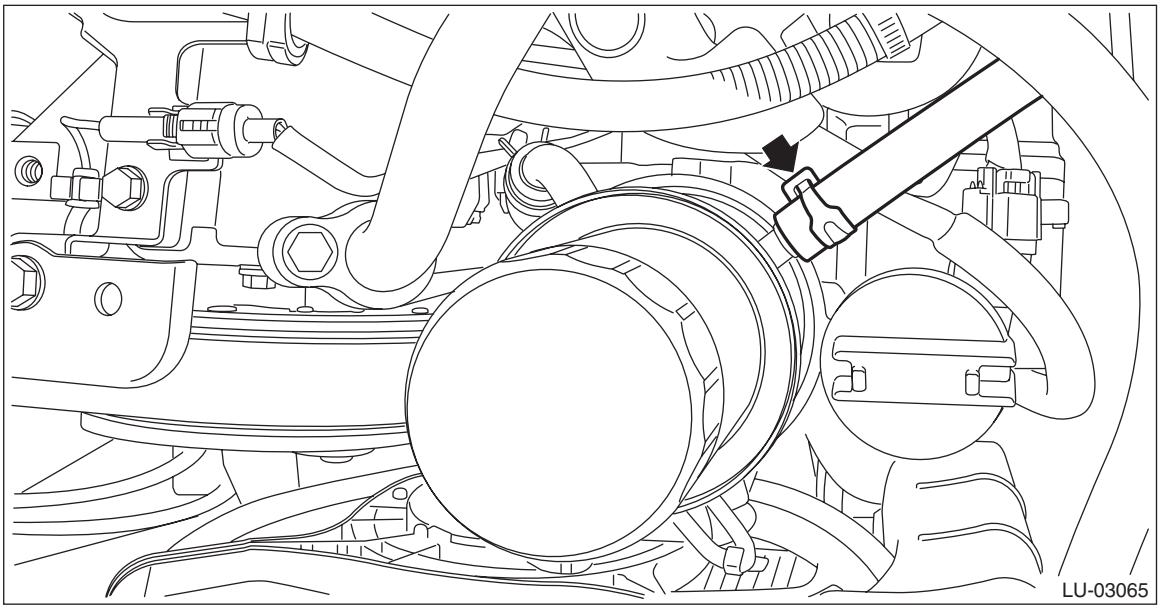

8) Remove the bolt which secures the side engine oil cooler pipe to the cam carrier RH. Remove the side engine oil cooler pipe together with the side engine oil cooler hose A.

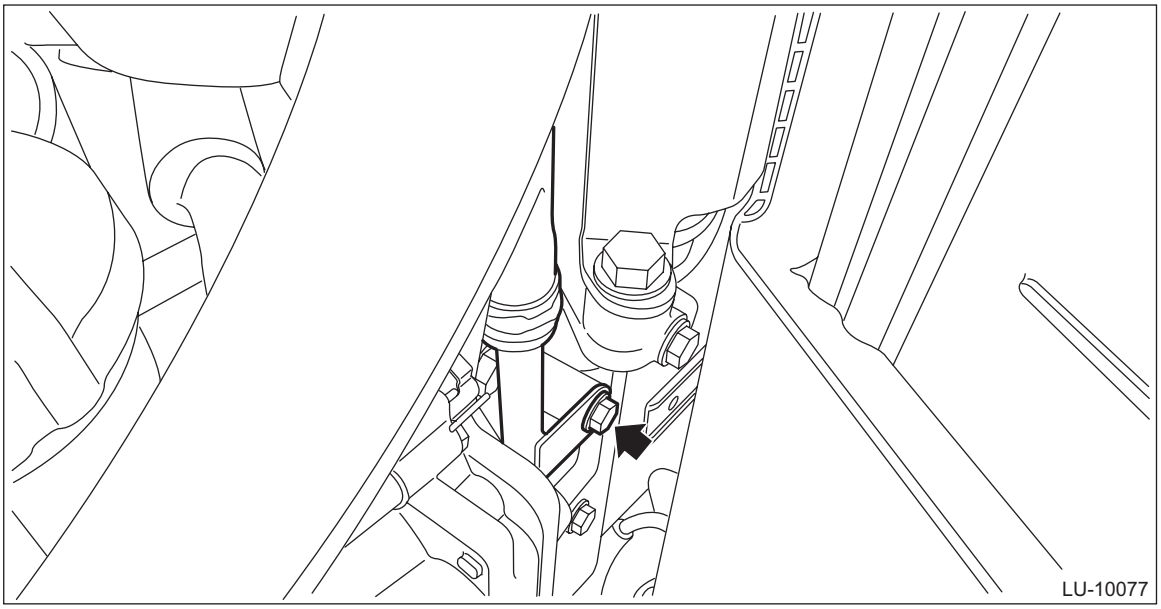

9) Remove the side engine oil cooler hose A from the side engine oil cooler pipe.

B: INSTALLATION

1. FRONT ENGINE OIL COOLER PIPE

Install in the reverse order of removal.

Tightening torque:
6.4 N·m (0.7 kgf-m, 4.7 ft-lb)

2. SIDE ENGINE OIL COOLER PIPE

Install in the reverse order of removal.

NOTE:
When connecting the side engine oil cooler hose A to the engine oil cooler, be careful of the clip direction.

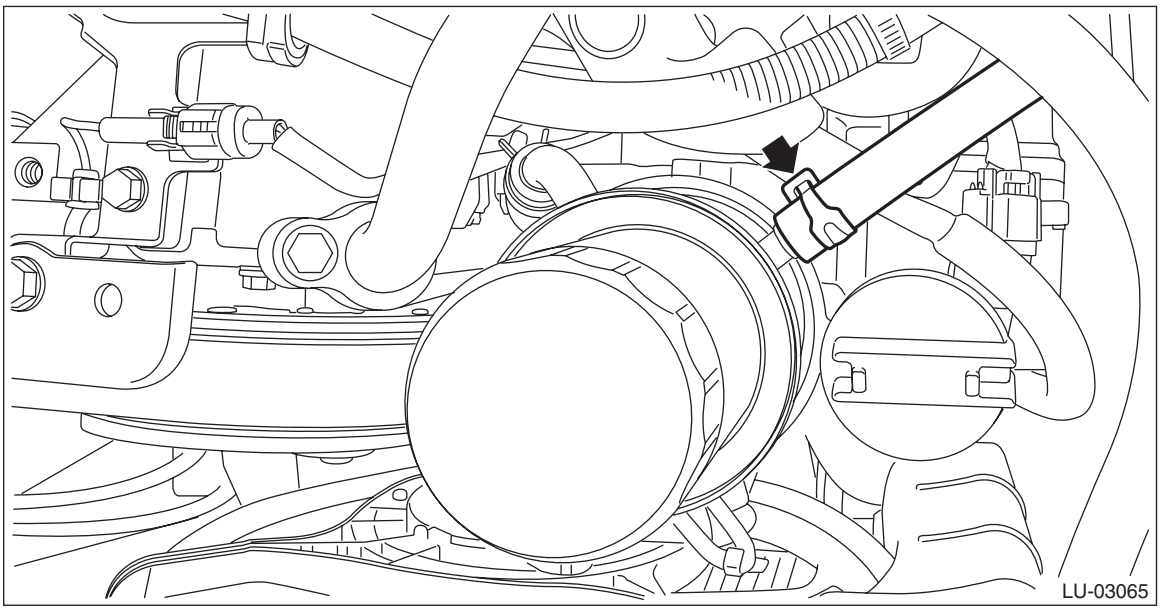

Tightening torque:
6.4 N·m (0.7 kgf-m, 4.7 ft-lb)

C: INSPECTION

1) Check that the engine oil cooler pipes have no deformation, cracks or other damages.
2) Make sure the engine oil cooler hoses are not cracked, damaged or loose.

9. Oil Catch Tank

A: REMOVAL

Refer to “Oil Catch Tank” for removal procedure of the oil catch tank. <Ref. to IN(w/o STI)-56, REMOVAL, Oil Catch Tank.>

B: INSTALLATION

Refer to “Oil Catch Tank” for installation procedure of the oil catch tank. <Ref. to IN(w/o STI)-57, INSTALLATION, Oil Catch Tank.>

C: INSPECTION

Refer to “Oil Catch Tank” for inspection procedure of the oil catch tank. <Ref. to IN(w/o STI)-60, INSPECTION, Oil Catch Tank.>

10.Scavenge Pump

A: REMOVAL

CAUTION:
If engine oil is spilt onto the exhaust pipe, wipe it off with cloth to avoid emission of smoke or causing a fire.

1) Remove the oil pipe assembly. <Ref. to LU(w/o STI)-41, OIL PIPE ASSY, REMOVAL, Oil Pipe.>
2) Remove the bolts which secure the scavenge pump to the intake rear camshaft cap RH and the cam carrier RH. Using a crowbar, remove the scavenge pump.

CAUTION:
Be careful not to damage the mating surfaces of the cylinder head and scavenge pump.

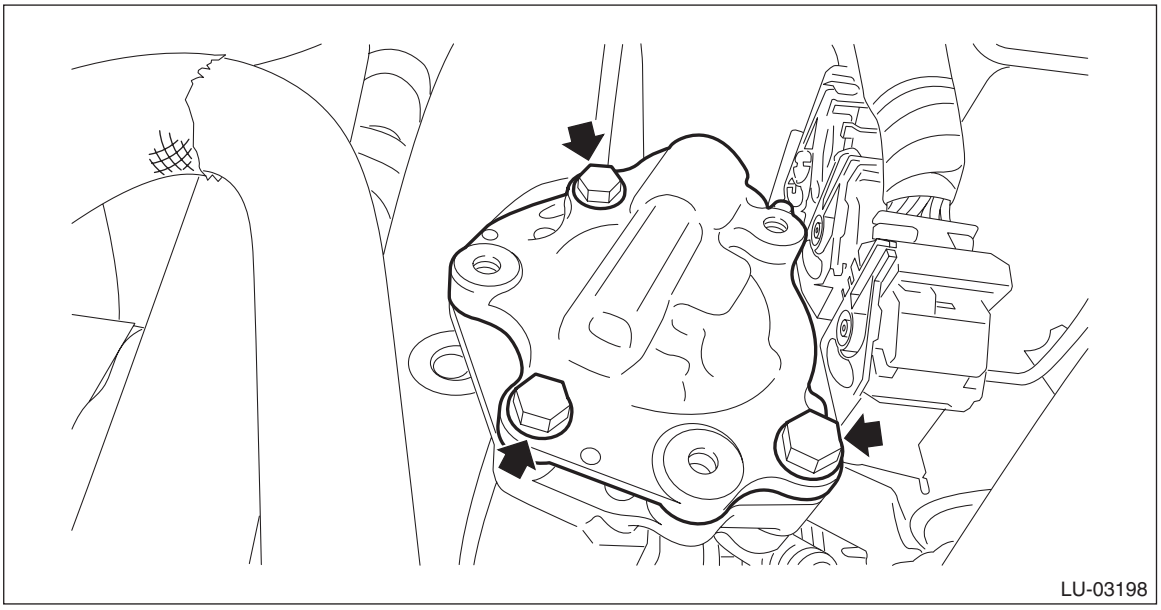

3) Remove the liquid gasket from the scavenge pump, intake rear camshaft cap RH, and cam carrier RH.

B: INSTALLATION

Install in the reverse order of removal.

CAUTION:
Do not start applying the gasket in the (a) range shown in the figure.

NOTE:
• Before applying liquid gasket, degrease the liquid gasket seal surface of the scavenge pump, intake rear camshaft cap RH, and cam carrier RH.
• Install within 5 min. after applying liquid gasket.

Liquid gasket:
THREE BOND 1217G (Part No. K0877Y0100), THREE BOND 1217H or equivalent

Liquid gasket applying diameter:
3±1 mm (0.1181±0.0394 in)

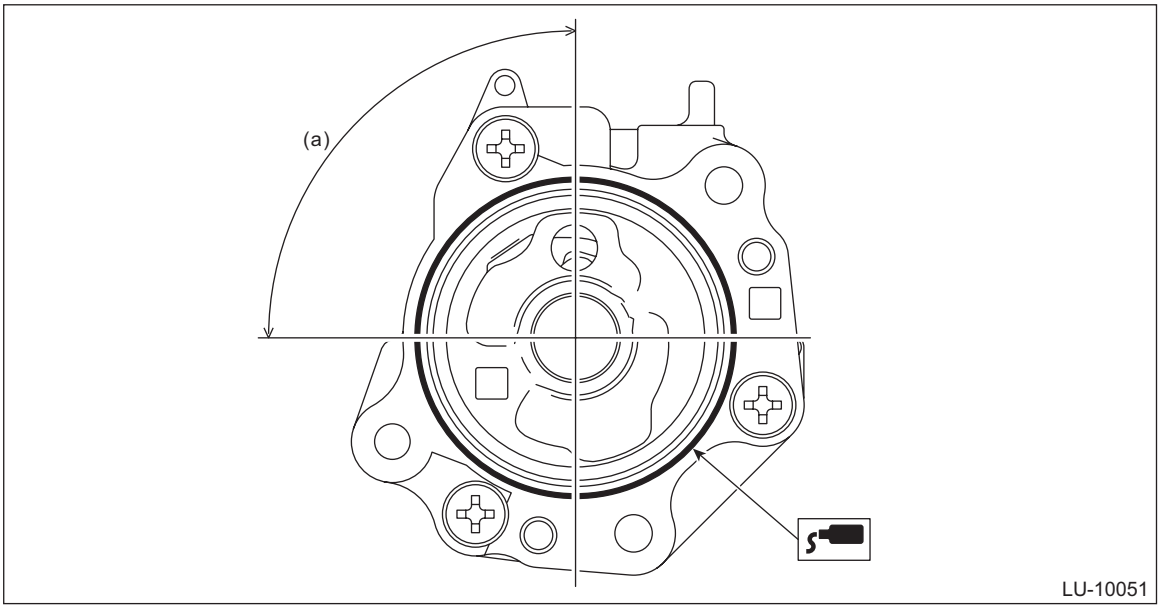

Tightening torque:
6.4 N·m (0.7 kgf-m, 4.7 ft-lb)

C: INSPECTION

1) Check that the scavenge hose has no deformation, cracks or other damages.
2) Check that the scavenge pump has no crack, damage, or looseness.

11.Oil Pipe

A: REMOVAL

1. OIL PIPE ASSY

1) Remove the collector cover. <Ref. to IN(w/o STI)-7, REMOVAL, Collector Cover.>
2) Disconnect the ground terminal from battery sensor. <Ref. to NT-6, BATTERY, NOTE, Note.>
3) Remove the intake duct No. 2. <Ref. to IN(w/o STI)-30, INTAKE DUCT NO. 2, REMOVAL, Intake Duct.>
4) Lift up the vehicle.
5) Remove the ground cable (A) from the oil pipe assembly, and disconnect the oil outlet hose (B) from the oil pipe assembly.

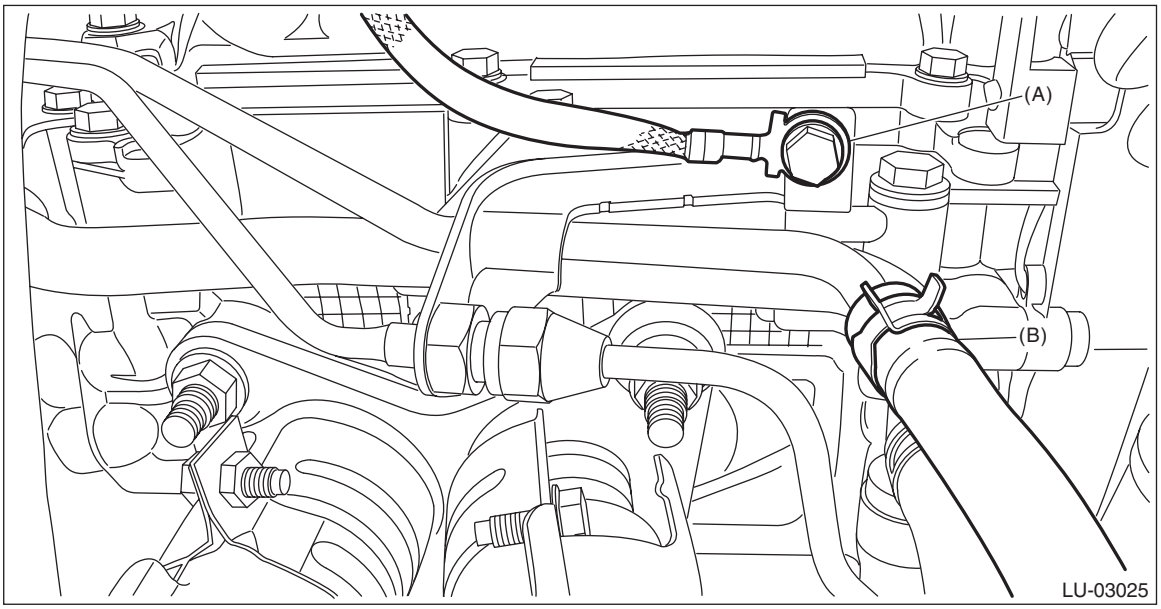

6) Disconnect the union screw pipe assembly from the oil pipe assembly, and remove the bolt which holds the oil pipe assembly.

CAUTION:
In order to prevent damaging the oil pipe assembly, fix the section (a) shown in the figure when loosing the flare nut on the union screw pipe assembly, and avoid the part from rotating together while loosening the nut.

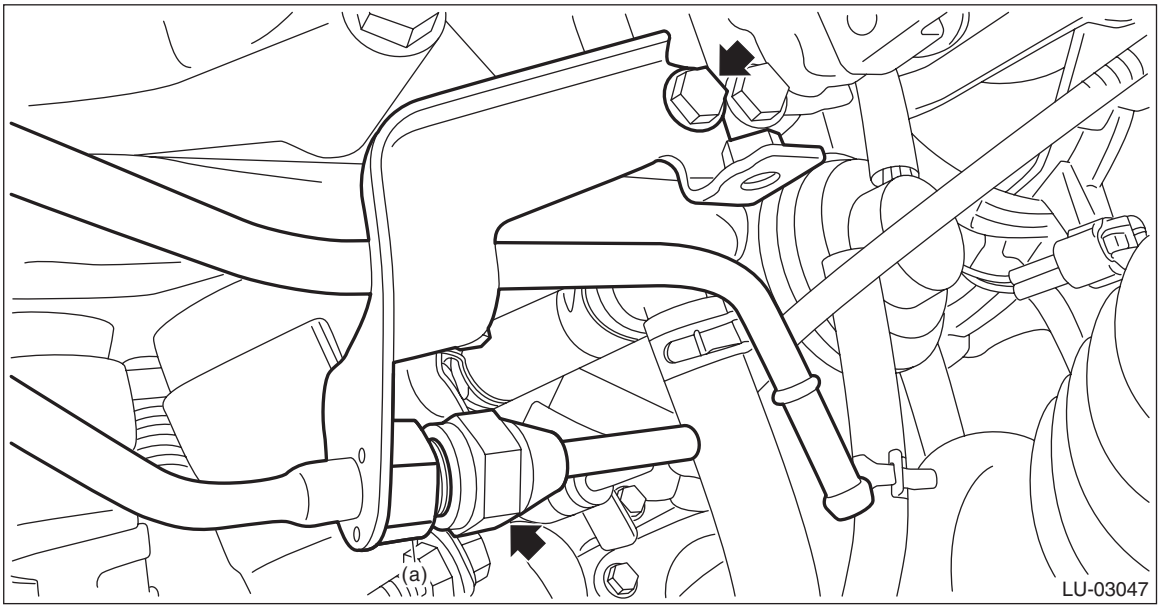

7) Remove the bolt which secures the oil pipe assembly to the cam carrier RH.

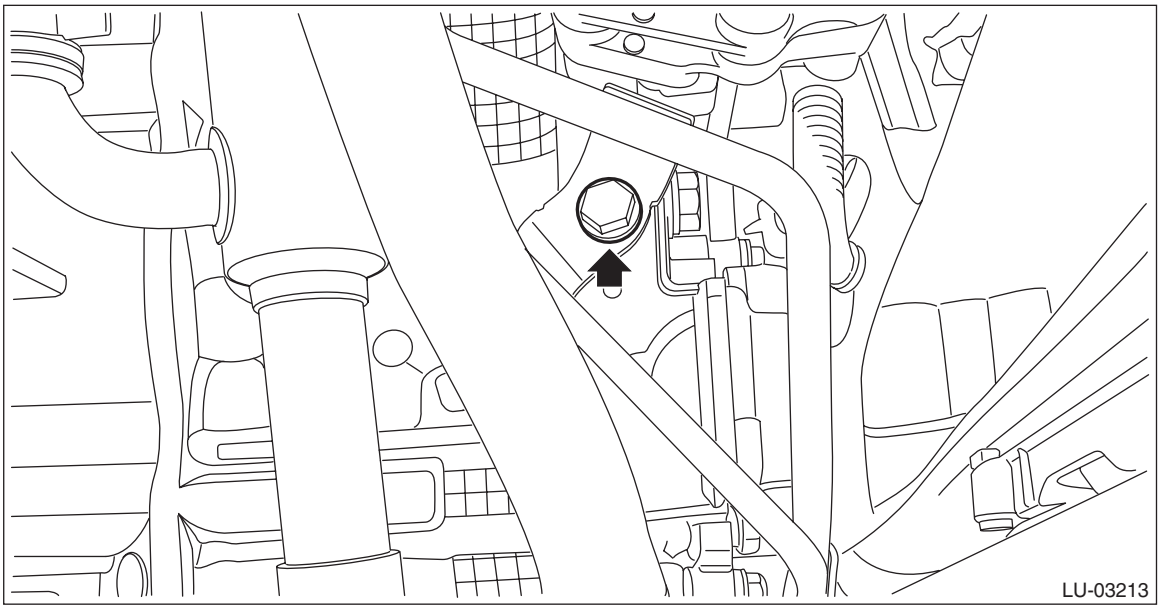

8) Lower the vehicle.
9) Remove the union bolts which secure the oil pipe assembly from the scavenge pump and the intake rear camshaft cap RH, and remove the oil pipe assembly.

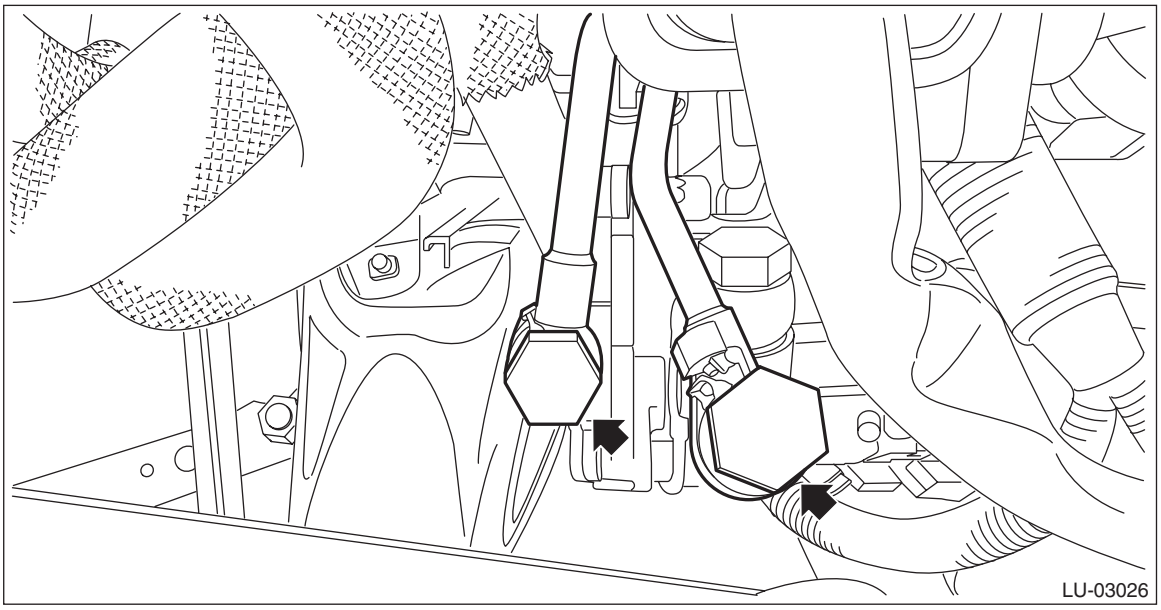

2. OIL PIPE

1) Remove the collector cover. <Ref. to IN(w/o STI)-7, REMOVAL, Collector Cover.>
2) Remove the intake duct No. 2. <Ref. to IN(w/o STI)-30, INTAKE DUCT NO. 2, REMOVAL, Intake Duct.>
3) Remove the clip (A) which secures the engine harness to the oil pipe and the bolt (B) which secures the oil pipe to the cam carrier RH.

4) Remove the union bolts which secure the oil pipes from the intake rear camshaft cap RH and the cam carrier RH.

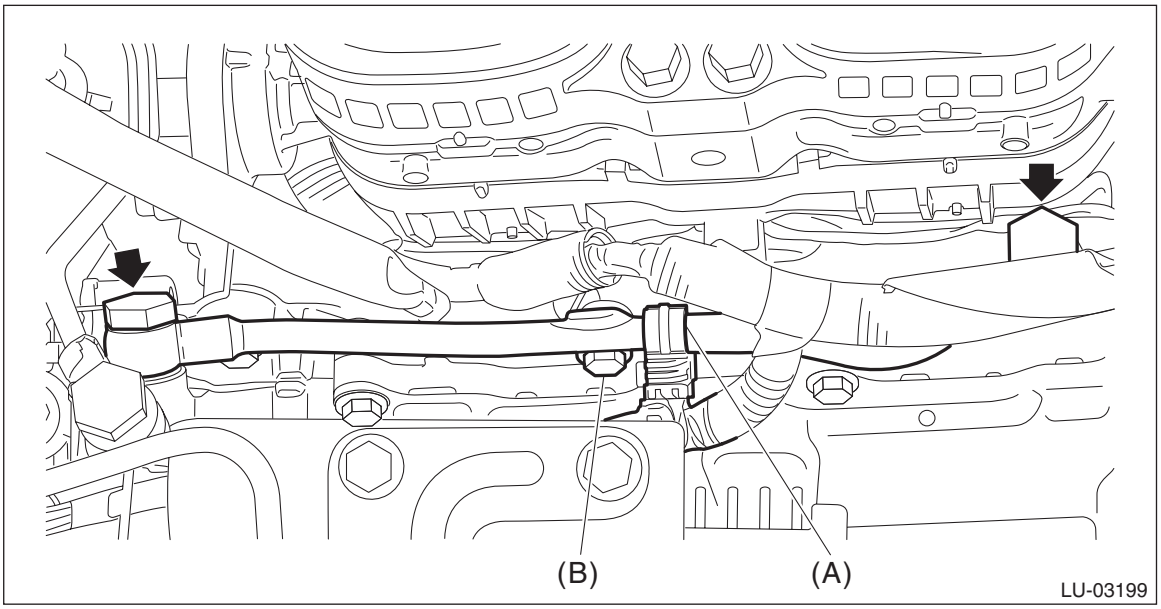

B: INSTALLATION

1. OIL PIPE ASSY

1) Temporarily install the oil pipe assembly.
   (1) Temporarily tighten the union bolts (B) and (C) which secure the oil pipe assembly (A) to the scavenge pump and the intake rear camshaft cap RH.

NOTE:
Use a new gasket.
   (2) Temporarily tighten the bolts (D) and (E) which secure the oil pipe assembly (A) to the cam carrier RH.

(3) Temporarily tighten the union screw pipe assembly (F) to the oil pipe assembly (A).

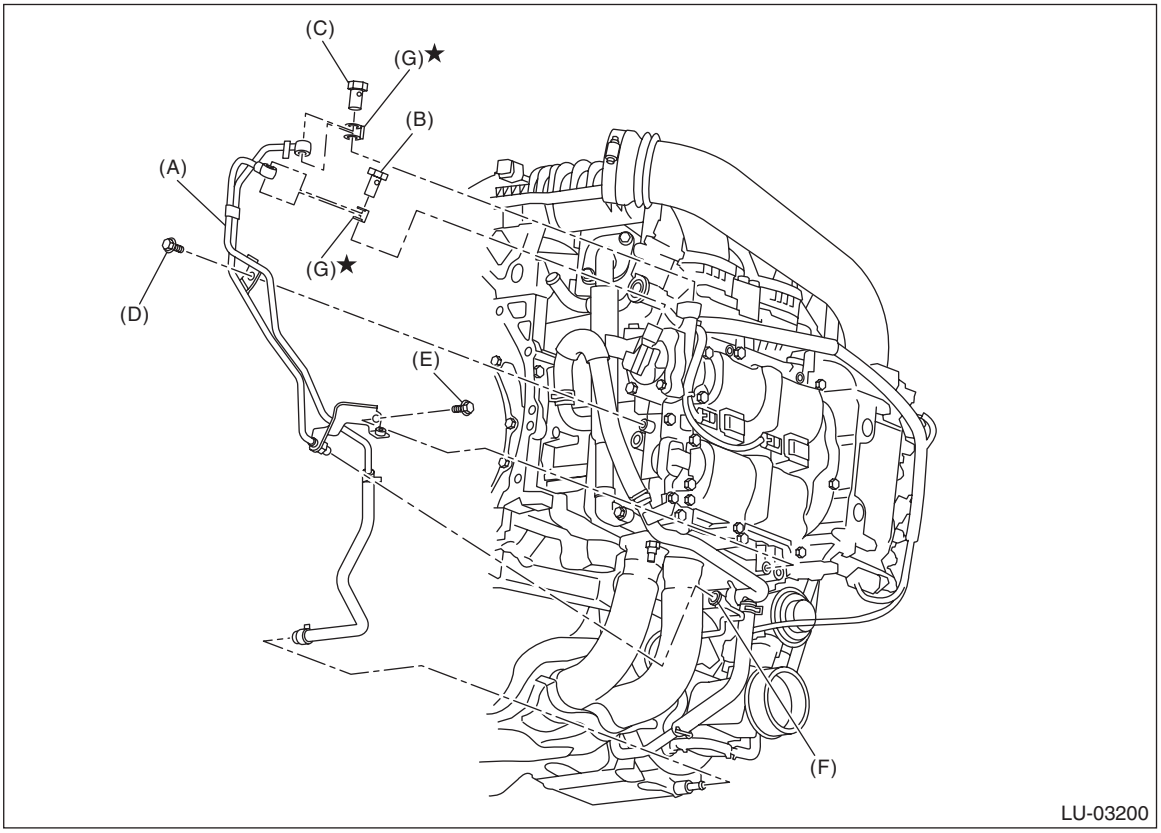

(A) Oil pipe ASSY
(B) Union bolt
(C) Union bolt
(D) Bolt
(E) Bolt
(F) Union screw pipe ASSY
(G) Gasket

2) Tighten the union bolts which secure the oil pipe assembly to the scavenge pump and the intake rear camshaft cap RH.

Tightening torque:
29 N·m (3.0 kgf-m, 21.4 ft-lb)

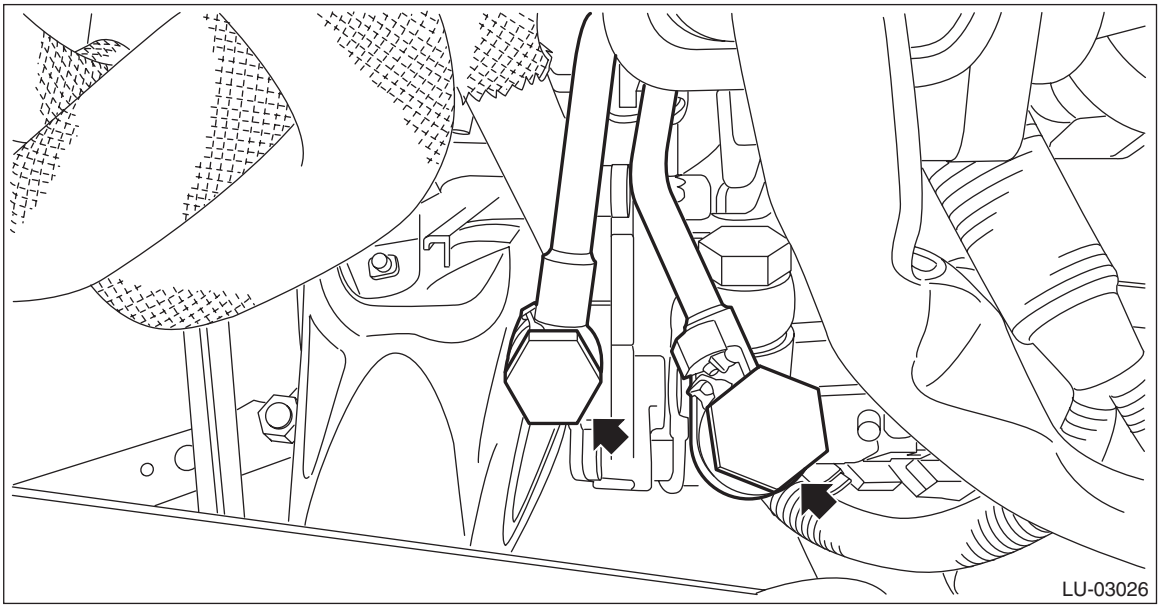

3) Lift up the vehicle.

4) Tighten the bolt which secures the oil pipe assembly to the cam carrier RH.

Tightening torque:
6.4 N·m (0.7 kgf-m, 4.7 ft-lb)

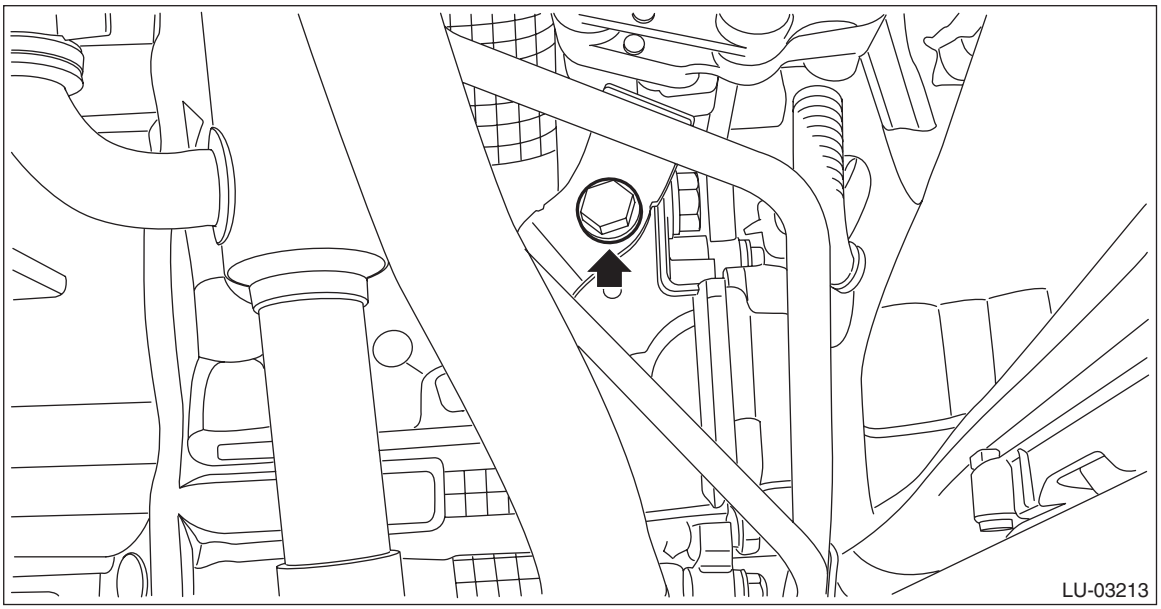

5) Tighten the union screw pipe assembly to the oil pipe assembly, and tighten the oil pipe assembly mounting bolts.

CAUTION:
In order to prevent damaging the oil pipe assembly, fix the section (a) shown in the figure when tightening the flare nut on the union screw pipe assembly, and avoid the part from rotating together while tightening the nut.

Tightening torque:
T1: 6.4 N·m (0.7 kgf-m, 4.7 ft-lb)
T2: 20 N·m (2.0 kgf-m, 14.8 ft-lb)

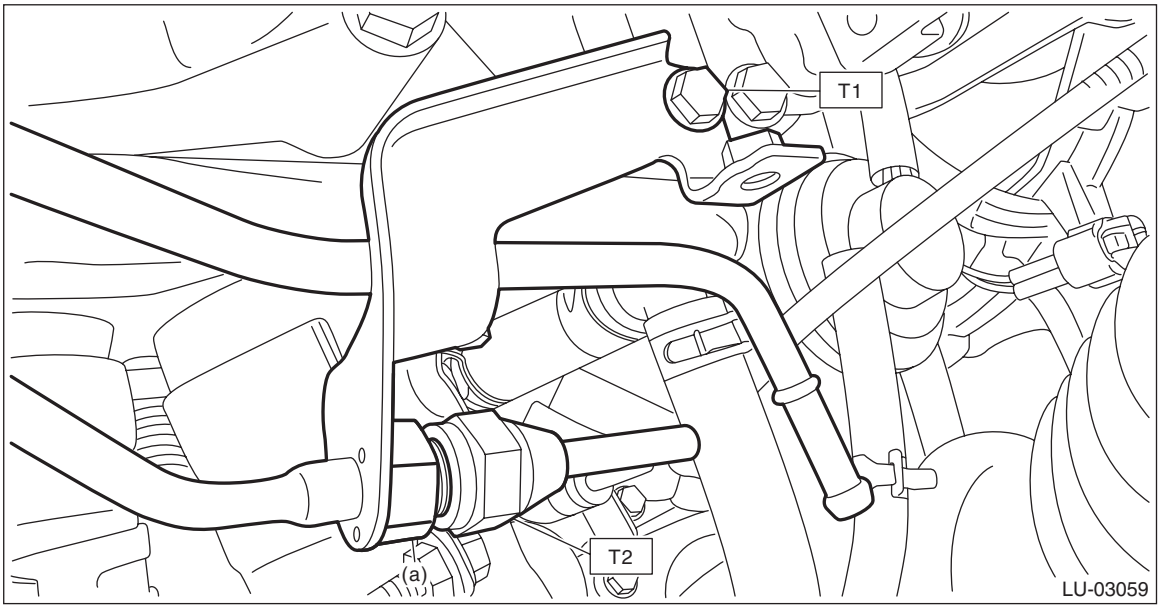

6) Connect the oil outlet hose (B) to the oil pipe assembly, and install the ground cable (A) to the oil pipe assembly.

Tightening torque:
7.5 N·m (0.8 kgf-m, 5.5 ft-lb)

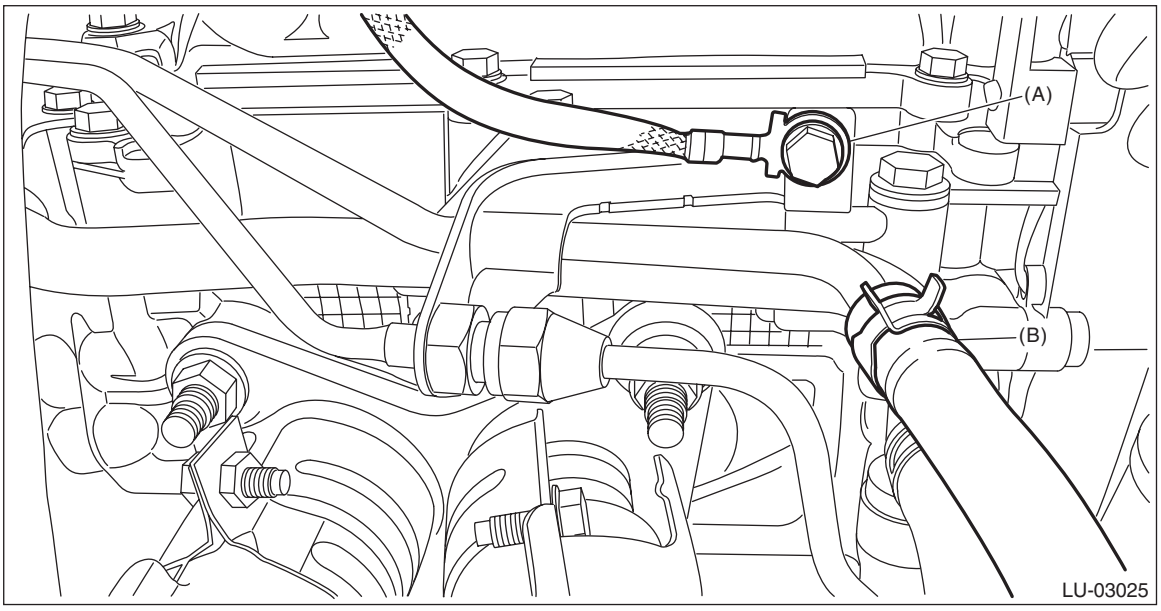

7) Lower the vehicle.
8) Install the intake duct No. 2. <Ref. to IN(w/o STI)-36, INTAKE DUCT NO. 2, INSTALLATION, Intake Duct.>
9) After installing, check the engine oil level and replenish it if necessary. <Ref. to LU(w/o STI)-10, INSPECTION, Engine Oil.>
10) Connect the ground terminal to battery sensor. <Ref. to NT-6, BATTERY, NOTE, Note.>
11) Install the collector cover. <Ref. to IN(w/o STI)-10, INSTALLATION, Collector Cover.>

2. OIL PIPE

1) Temporarily tighten the union bolts which secure the oil pipes to the intake rear camshaft cap RH and the cam carrier RH.

NOTE:
Use a new gasket.

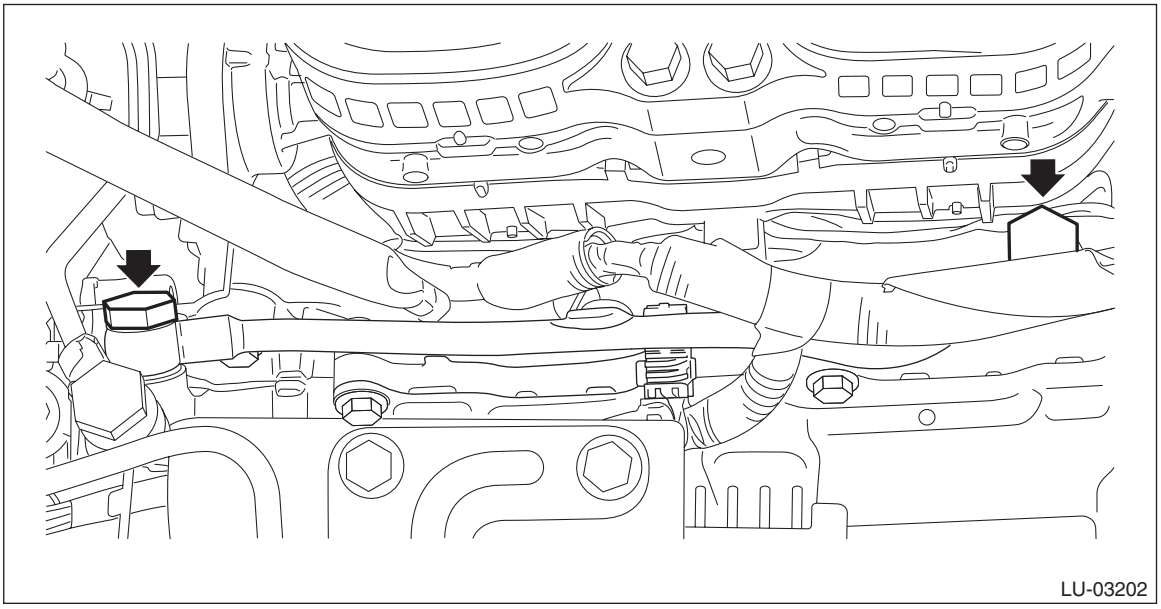

2) Install the bolt (A) which secures the oil pipe to the cam carrier RH, and install the clip (B) which secures the engine harness to the oil pipe.

Tightening torque:
T1: 6.4 N·m (0.7 kgf-m, 4.7 ft-lb)
3) Tighten the union bolts which secure the oil pipes to the intake rear camshaft cap RH and the cam carrier RH.

Tightening torque:
T2: 31 N·m (3.2 kgf-m, 22.9 ft-lb)

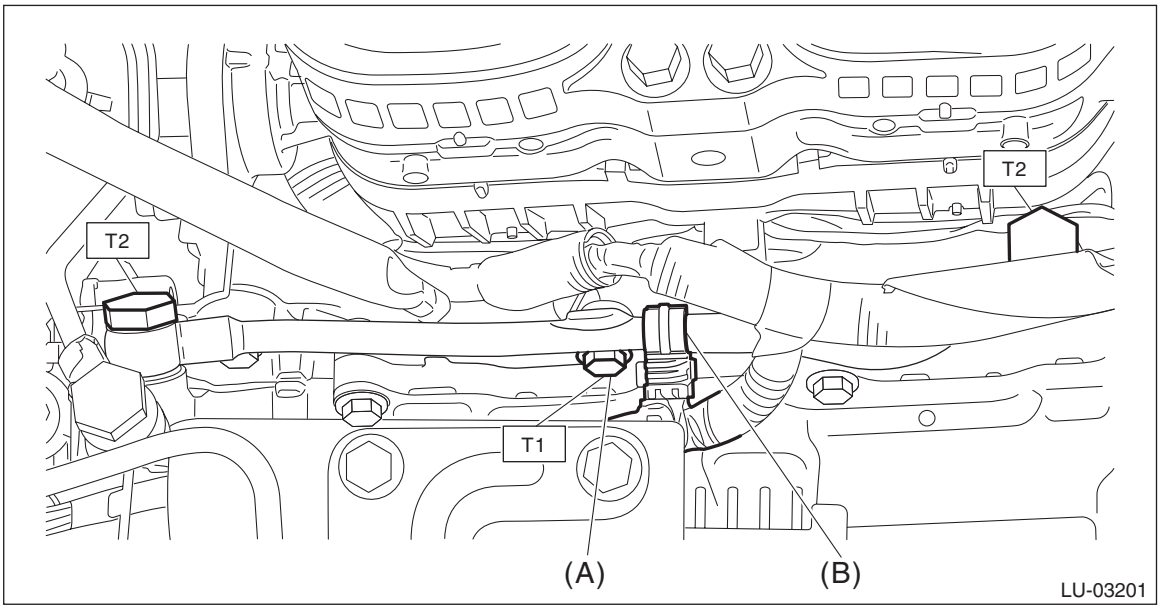

4) Install the intake duct No. 2. <Ref. to IN(w/o STI)-36, INTAKE DUCT NO. 2, INSTALLATION, Intake Duct.>
5) After installing, check the engine oil level and replenish it if necessary. <Ref. to LU(w/o STI)-10, INSPECTION, Engine Oil.>
6) Install the collector cover. <Ref. to IN(w/o STI)-10, INSTALLATION, Collector Cover.>

C: INSPECTION

1) Check that the oil pipe assembly, oil pipes, and the union bolts have no deformation, cracks and other damages.
2) Check that there are no oil leaks or oil oozing from the areas where the oil pipe assembly and oil pipes are installed.

12.Engine Oil Filter

A: REMOVAL

CAUTION:
If the engine oil is spilt over exhaust pipe or the under cover, wipe it off with cloth to avoid emission of smoke or causing a fire.
Remove the oil filter using ST.

NOTE:
Clean off water or dust from the oil element mating surface using air.
ST 498547000 OIL FILTER WRENCH

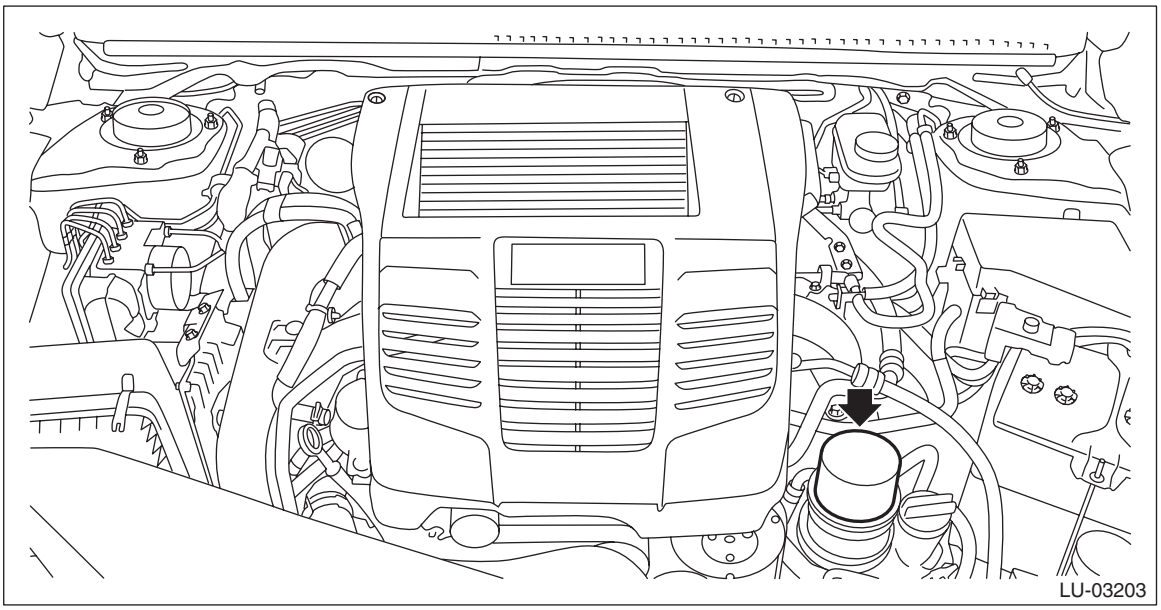

B: INSTALLATION

CAUTION:
- **Do not use any oil filters other than that of 80 mm (3.15 in) dia. × 65 mm (2.55 in) height.**
- **Do not tighten excessively, or oil may leak.**

1) Clean the oil filter installation surface.
2) Obtain a new oil filter and apply a thin coat of engine oil to the seal rubber.
3) Install the oil filter by turning it by hand, being careful not to damage the seal rubber of the oil filter.
4) Further tighten the oil filter (approx. 3/4 rotation) after the seal rubber of the oil filter comes in contact with the oil cooler. When using a torque wrench, tighten it to 14 N·m (1.4 kgf-m, 10.3 ft-lb).
5) After installing, check the engine oil level and replenish it if necessary. <Ref. to LU(w/o STI)-10, INSPECTION, Engine Oil.>

C: INSPECTION

1) After installing the oil filter, run the engine and check for oil leakage.

NOTE:
The filter element and filter case are permanently jointed; therefore, interior cleaning is not necessary.
2) Check the engine oil level. <Ref. to LU(w/o STI)-10, INSPECTION, Engine Oil.>

13.Oil Level Switch

A: REMOVAL

1. WHEN REMOVING FRONT CROSSMEMBER

1) Remove the front crossmember. <Ref. to FS-20, REMOVAL, Front Crossmember.>
2) Disconnect the oil level switch connector from the engine harness, and remove the clip (A) securing the harness.

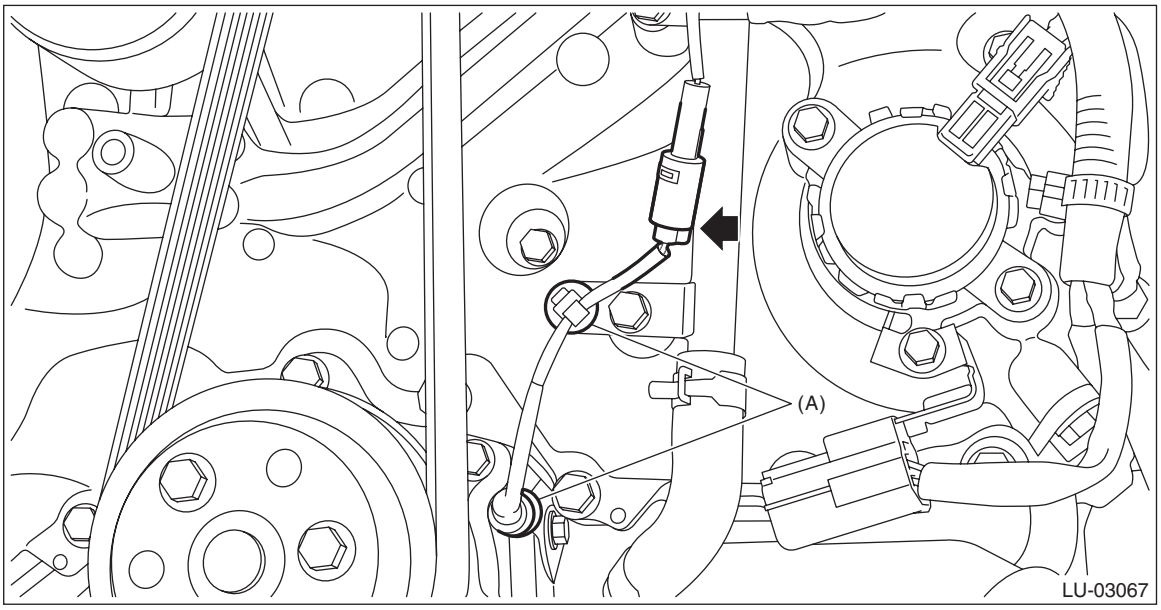

3) Remove clip (A) from the oil pan upper, and remove the oil level switch.

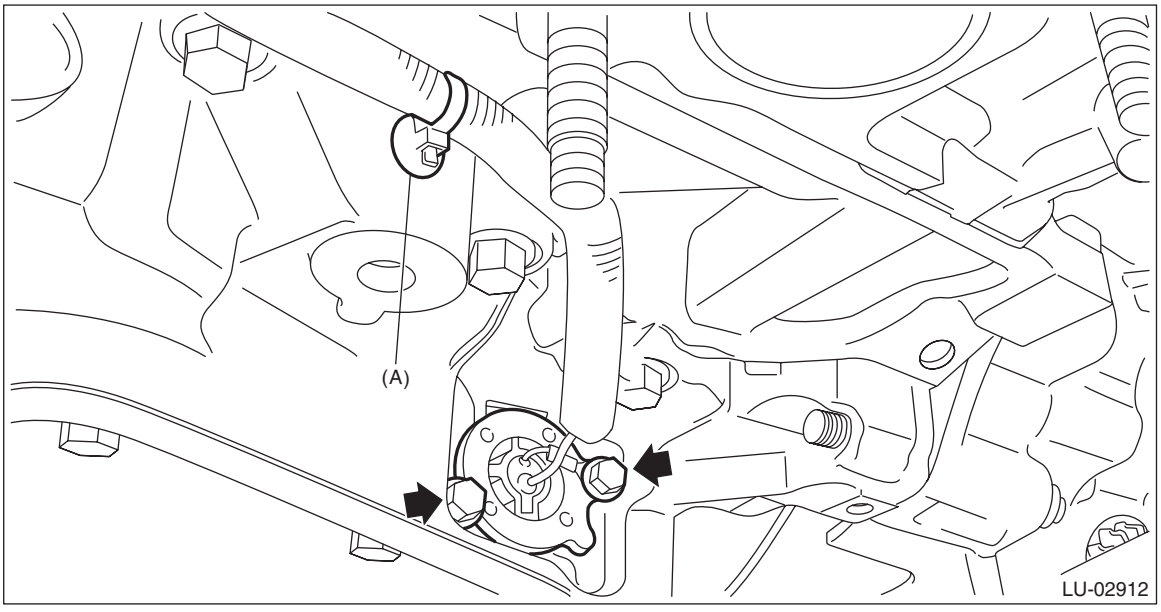

2. WHEN NOT REMOVING FRONT CROSSMEMBER

1) Remove the striker - front hood. <Ref. to EB-11, DISASSEMBLY, Front Hood.>
2) Fully open the front hood. <Ref. to NT-23, FRONT HOOD DAMPER STAY, NOTE, Note.>
3) Remove the collector cover. <Ref. to IN(w/o STI)-7, REMOVAL, Collector Cover.>
4) Disconnect the ground terminal from battery sensor. <Ref. to NT-6, BATTERY, NOTE, Note.>
5) Remove the air intake duct. <Ref. to IN(w/o STI)-26, REMOVAL, Air Intake Duct.>
6) Remove the clip (A) and clip (B) which secure the engine harness and bulkhead harness to the bracket, and remove the bolt which secures the engine control module (ECM) to the bracket.

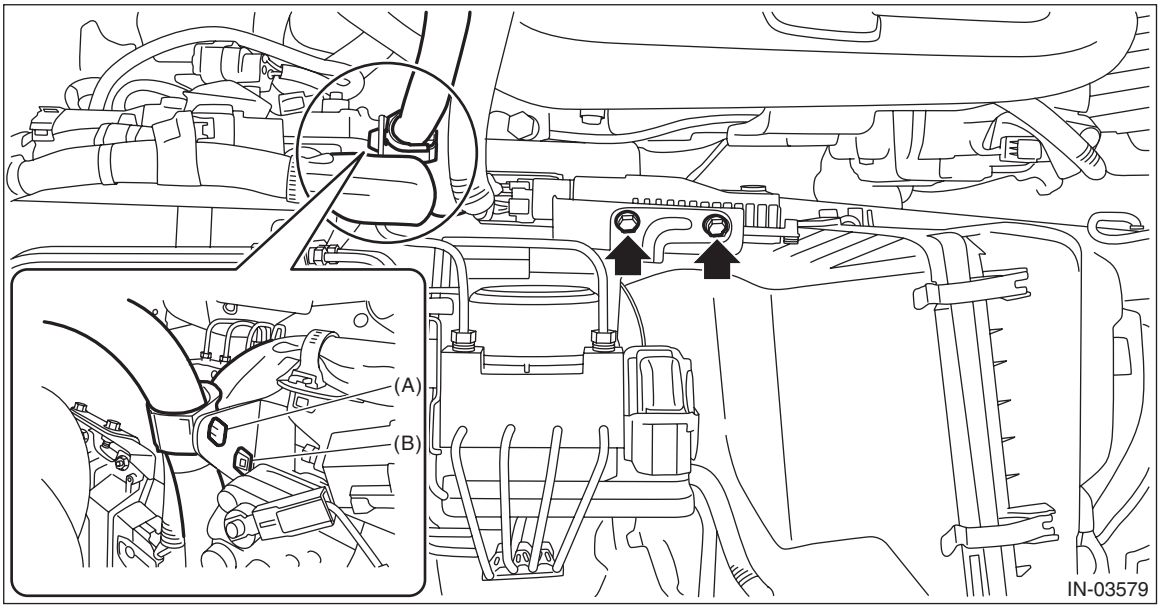

7) Pull out the engine control module (ECM) from the bracket, and move it to a location that does not interfere operation.

NOTE:
When performing the pulling out operation, pay attention not to apply excessive load to the breather filter portion (a) in order to avoid the damage.

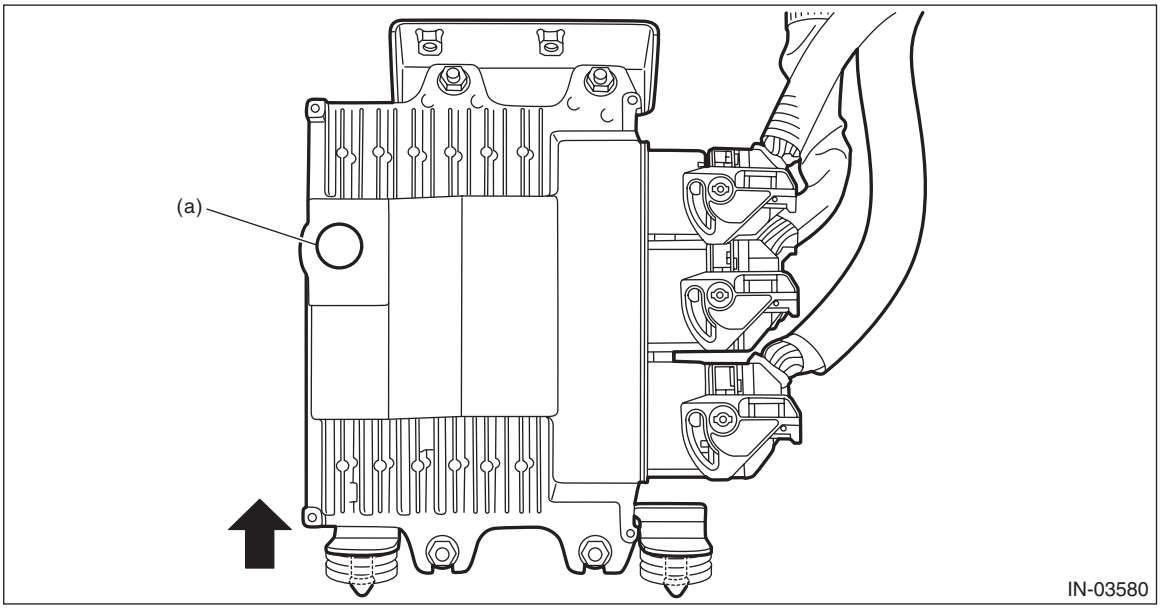

8) Drain engine coolant. <Ref. to CO(w/o STI)-13, DRAINING OF ENGINE COOLANT, REPLACEMENT, Engine Coolant.>
9) Drain the engine oil. <Ref. to LU(w/o STI)-11, REPLACEMENT, Engine Oil.>
10) Remove the front exhaust pipe. <Ref. to EX(w/o STI)-9, REMOVAL, Front Exhaust Pipe.>

11) Disconnect the oil level switch connector from the engine harness, and remove the clip (A) securing the harness.

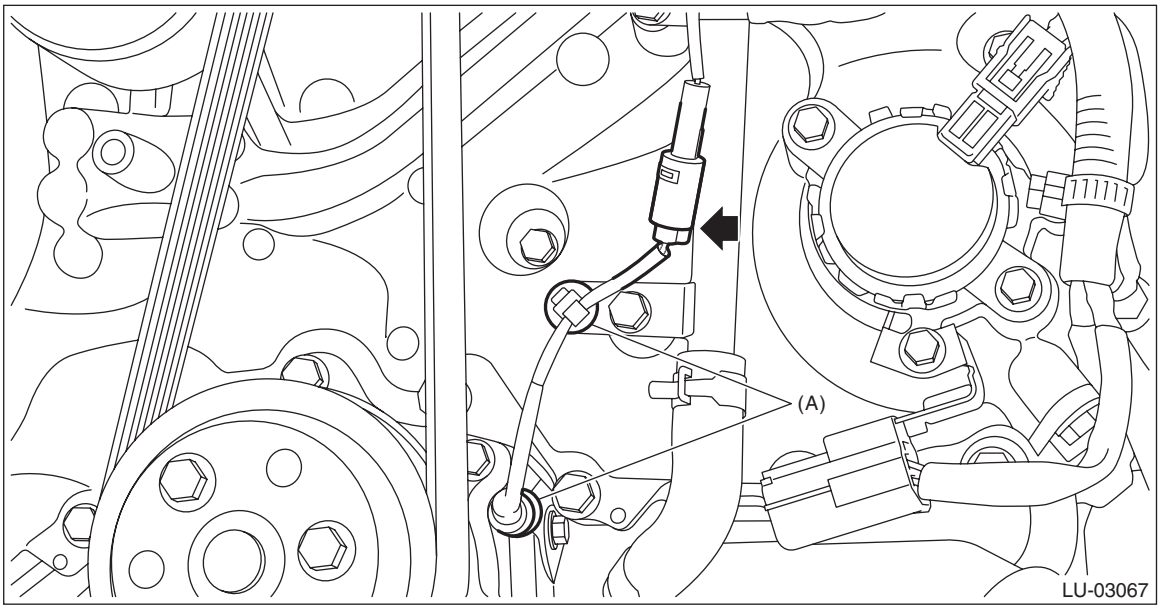

12) Remove the nuts which secure the engine mounting to the front crossmember.

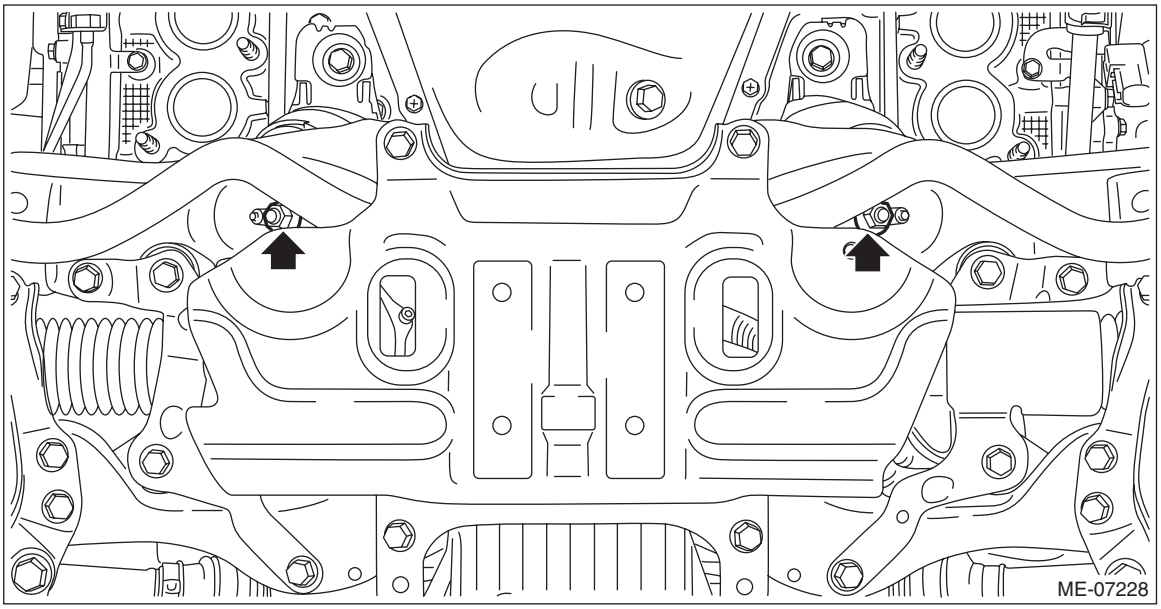

13) Remove the electric power steering gearbox. <Ref. to PS-66, REMOVAL, Electric Power Steering Gearbox.>
14) Remove the front drive shaft LH. <Ref. to DS-45, REMOVAL, Front Drive Shaft.>
15) Lower the vehicle.
16) Remove the intercooler. <Ref. to IN(w/o STI)-43, REMOVAL, Intercooler.>
17) Disconnect the connector (A) from the brake vacuum pump.

18) Disconnect connector (B) and terminal (C) from the generator, and remove the clip (D) securing the generator cord to the intake manifold.

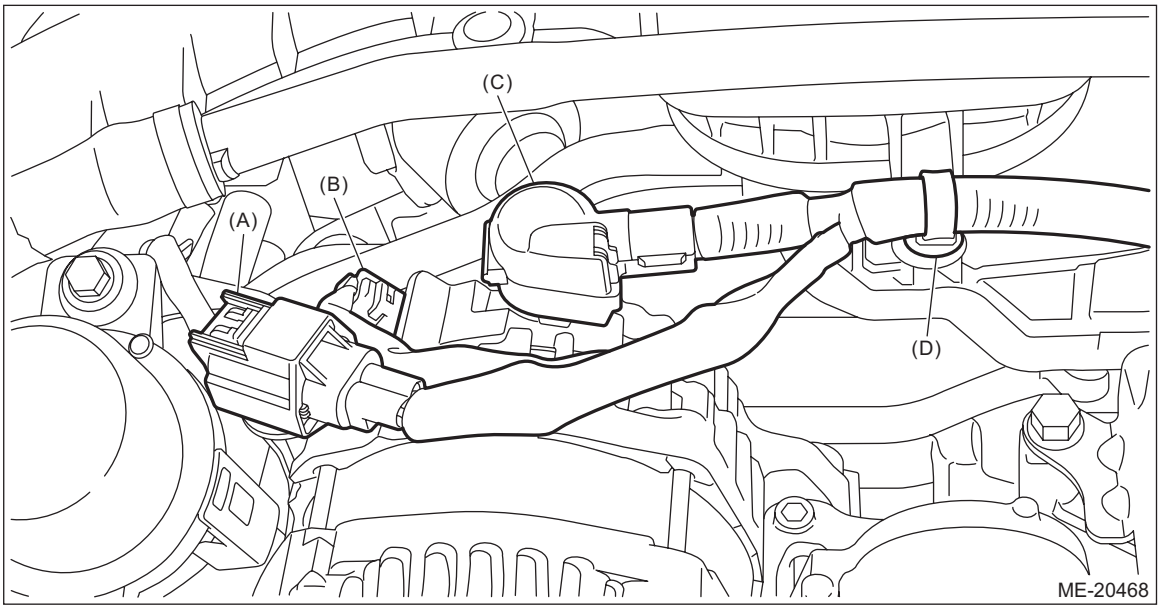

19) Disconnect connector (A) from A/C compressor, and remove the generator cord from clip (B).
20) Remove the clip (C) securing the generator cord to the fuel pipe protector, and move the generator cord aside so that it does not interfere with the work.

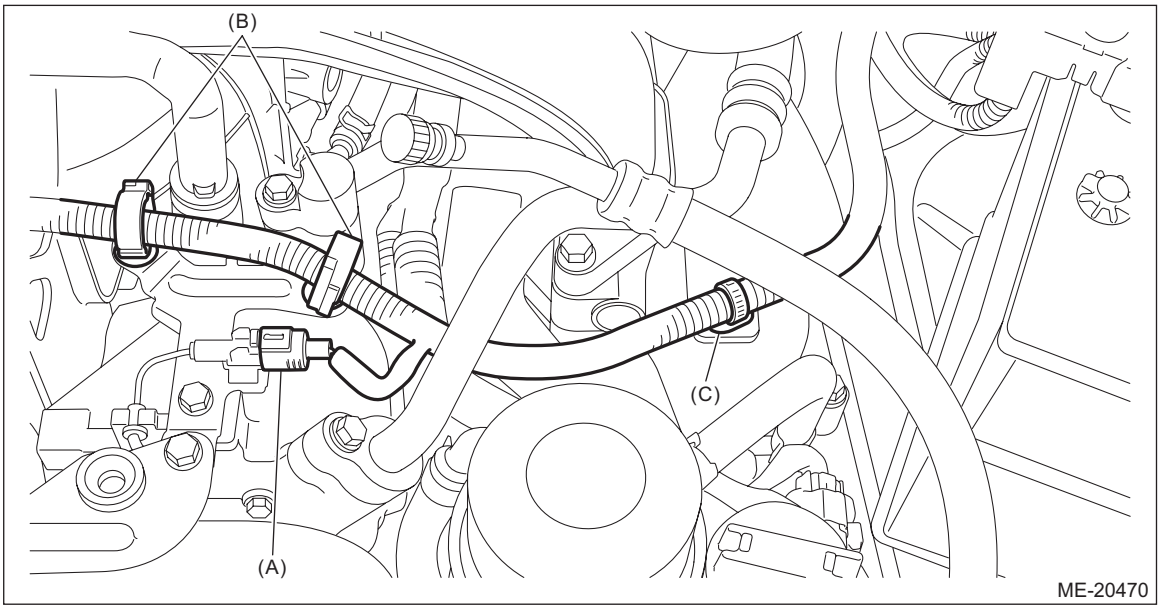

21) Remove the pitching stopper.

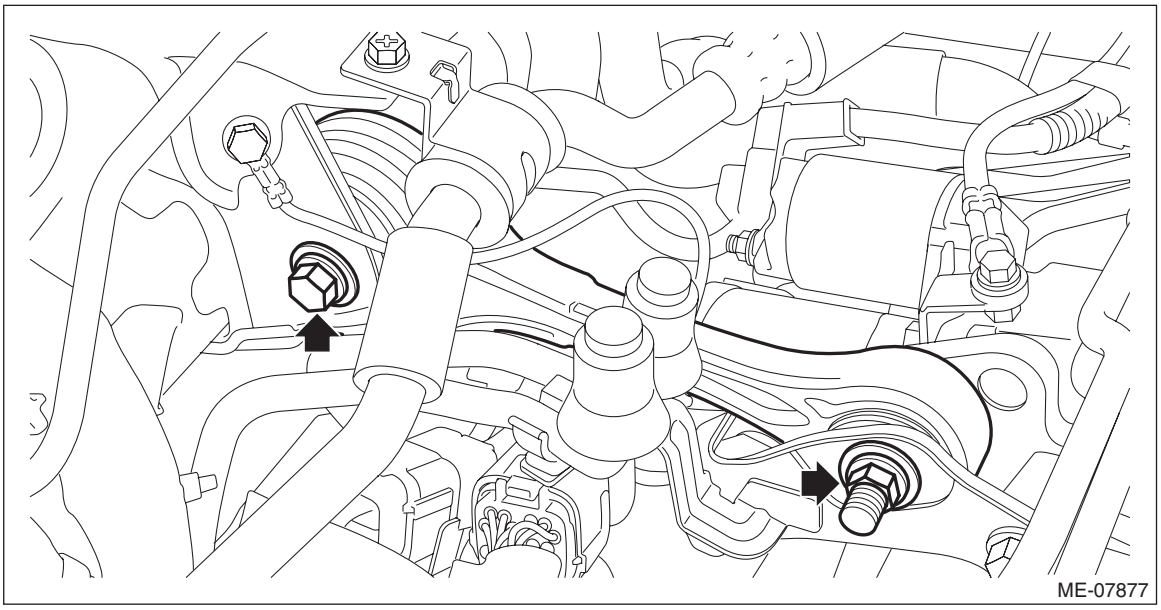

22) Lift up the vehicle. (CVT model)
23) Set the transmission jack to the transmission. (CVT model)

NOTE:
Be careful that the support plate of transmission jack does not touch the transmission oil pan.

24) Remove the rear crossmember and attach the ST. (CVT model)
ST 41099YC001 ST REAR MOUNT

Tightening torque:
T1: 35 N·m (3.6 kgf-m, 25.8 ft-lb)
T2: 70 N·m (7.1 kgf-m, 51.6 ft-lb)

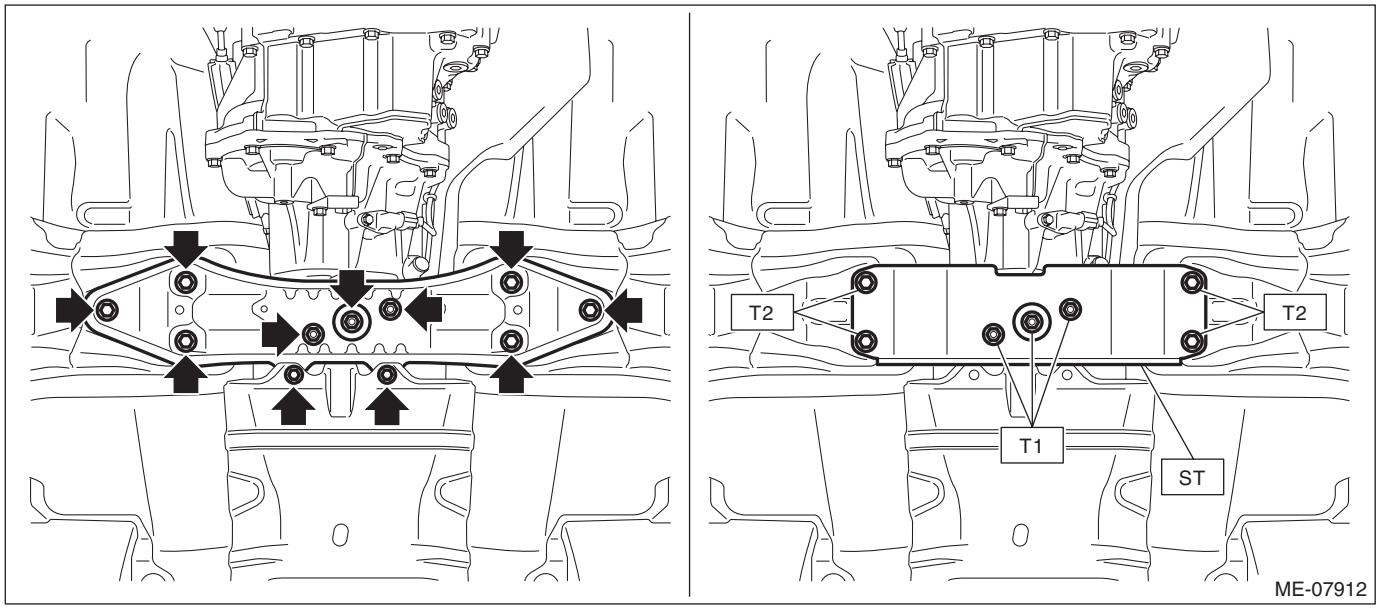

25) Remove the transmission jack. (CVT model)
26) Lower the vehicle. (CVT model)
27) Remove the bolt (A) securing the transmission harness stay to the CVT. (CVT model)

NOTE:
This procedure is required to prevent the transmission connector from touching the A/C pressure hose during engine lift-up.

28) Remove the air breather hose from the clip (B), and then remove the clip (B) from the pitching stopper bracket. (CVT model)

NOTE:
This procedure is required to prevent the clip from touching the A/C pressure hose during engine lift-up.

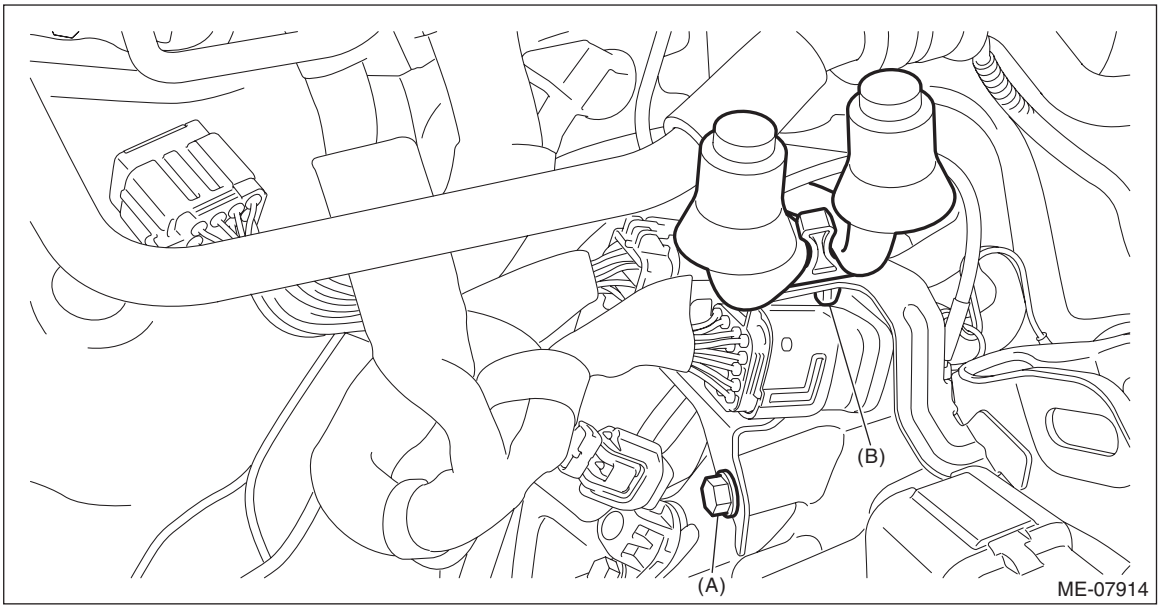

29) Lift up the engine with a lifting device and wire ropes.

CAUTION:
When lifting up the engine, pay attention to the clearance of each part and be careful not to lift the engine too much, in order to prevent damaging the vehicle.

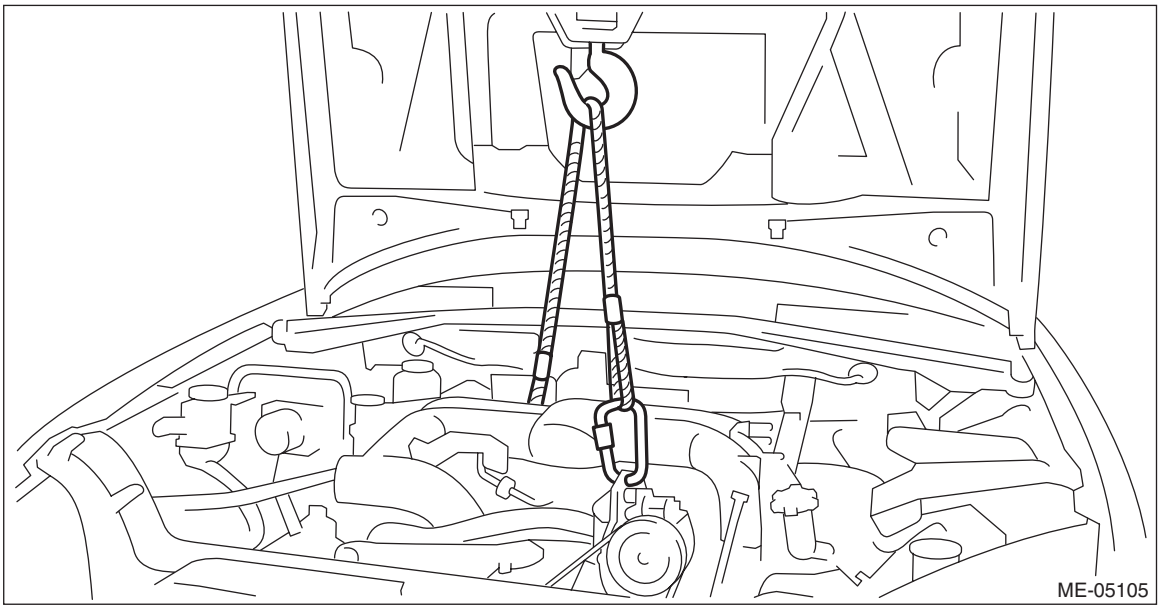

30) Remove the engine mounting LH from the engine.

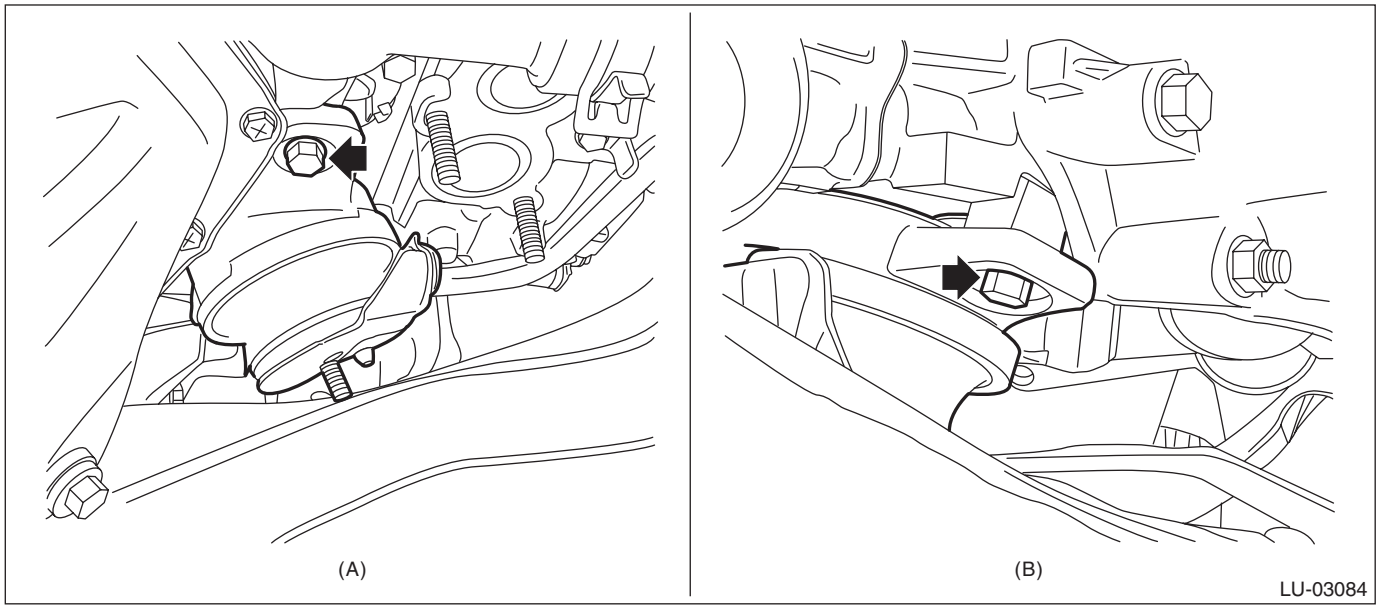

(A) Front side (B) Rear side

31) Remove clip (A) from the oil pan upper, and remove the oil level switch.

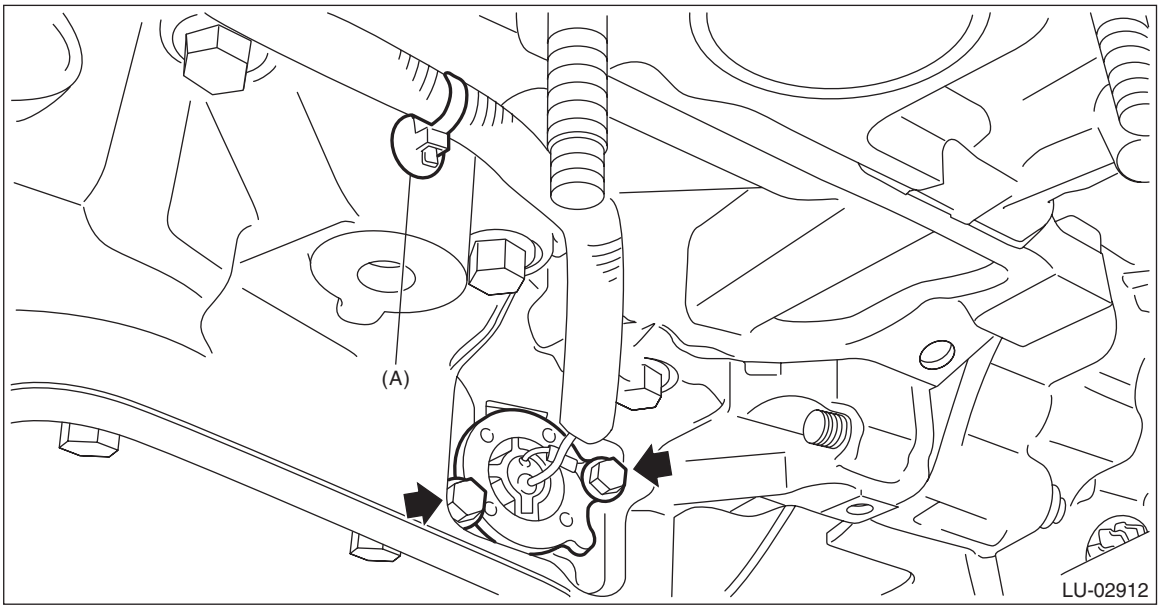

B: INSTALLATION

1. WHEN FRONT CROSSMEMBER HAS BEEN REMOVED

1) Install the oil level switch and the clip (A) to the oil pan upper.

NOTE:
- Use new O-rings.
- Apply a coat of engine oil to the O-rings.

Tightening torque:
6.4 N·m (0.7 kgf-m, 4.7 ft-lb)

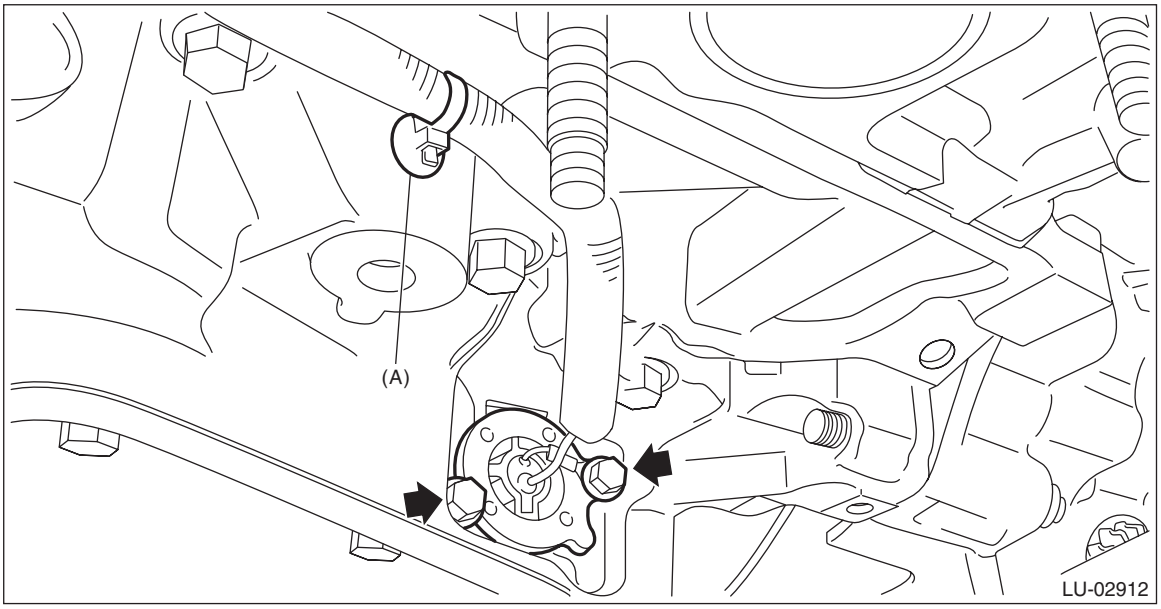

2) Connect the connector of oil level switch to the engine harness, and install the clip (A) securing the harness.

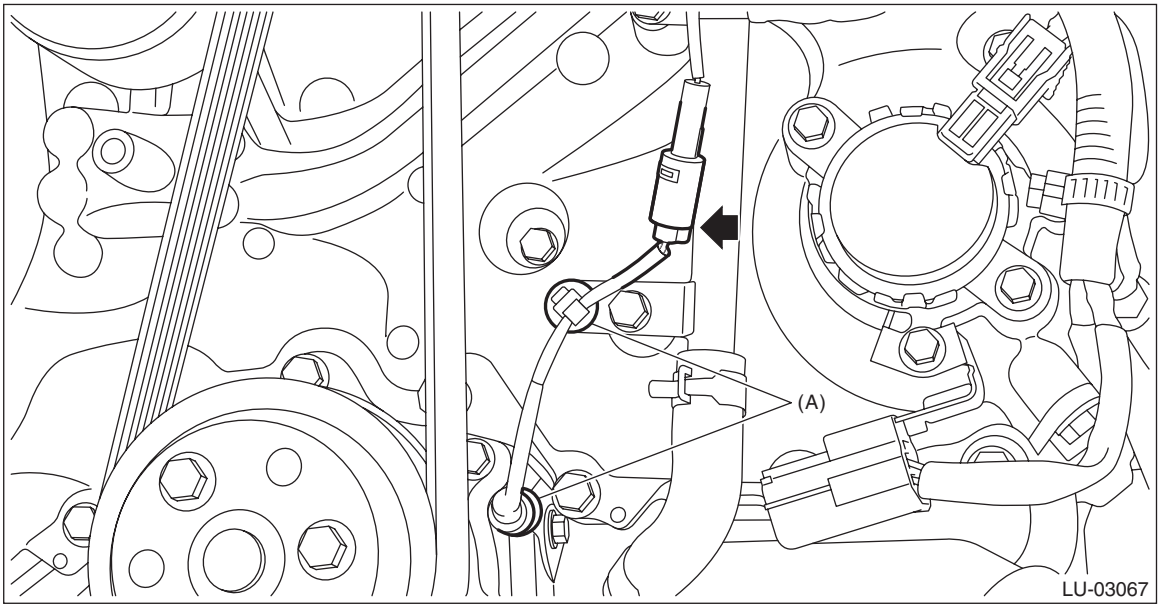

3) Install the front crossmember. <Ref. to FS-24, INSTALLATION, Front Crossmember.>

2. WHEN FRONT CROSSMEMBER HAS NOT BEEN REMOVED

1) Install the oil level switch and the clip (A) to the oil pan upper.

NOTE:
- Use new O-rings.
- Apply a coat of engine oil to the O-rings.

Tightening torque:
6.4 N·m (0.7 kgf-m, 4.7 ft-lb)

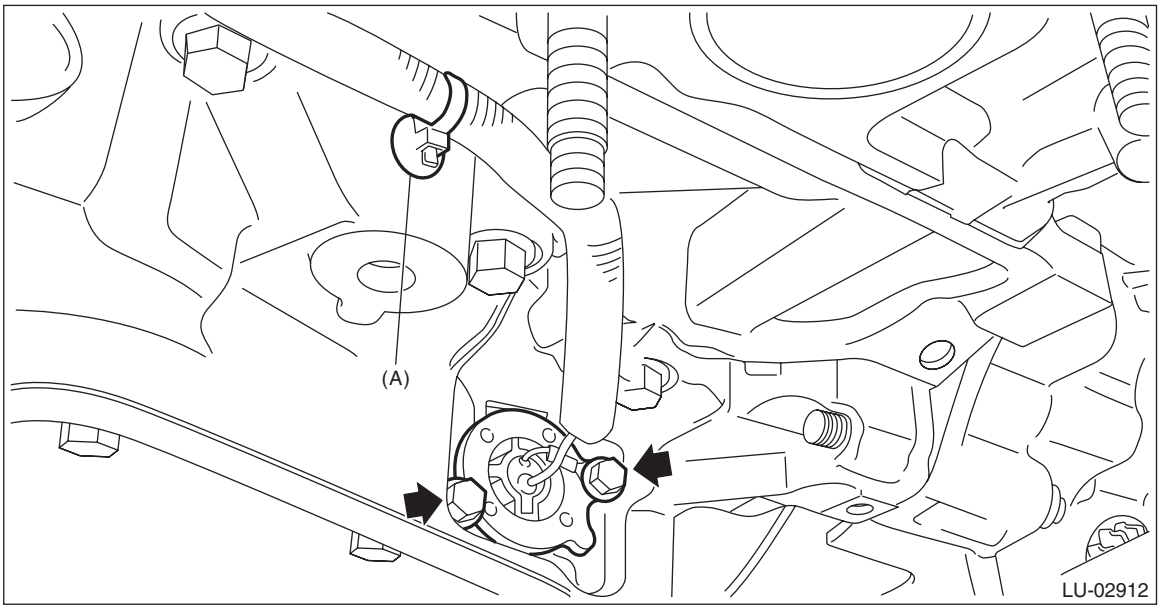

2) Install the engine mounting LH onto the engine.

Tightening torque:
35 N·m (3.6 kgf-m, 25.8 ft-lb)

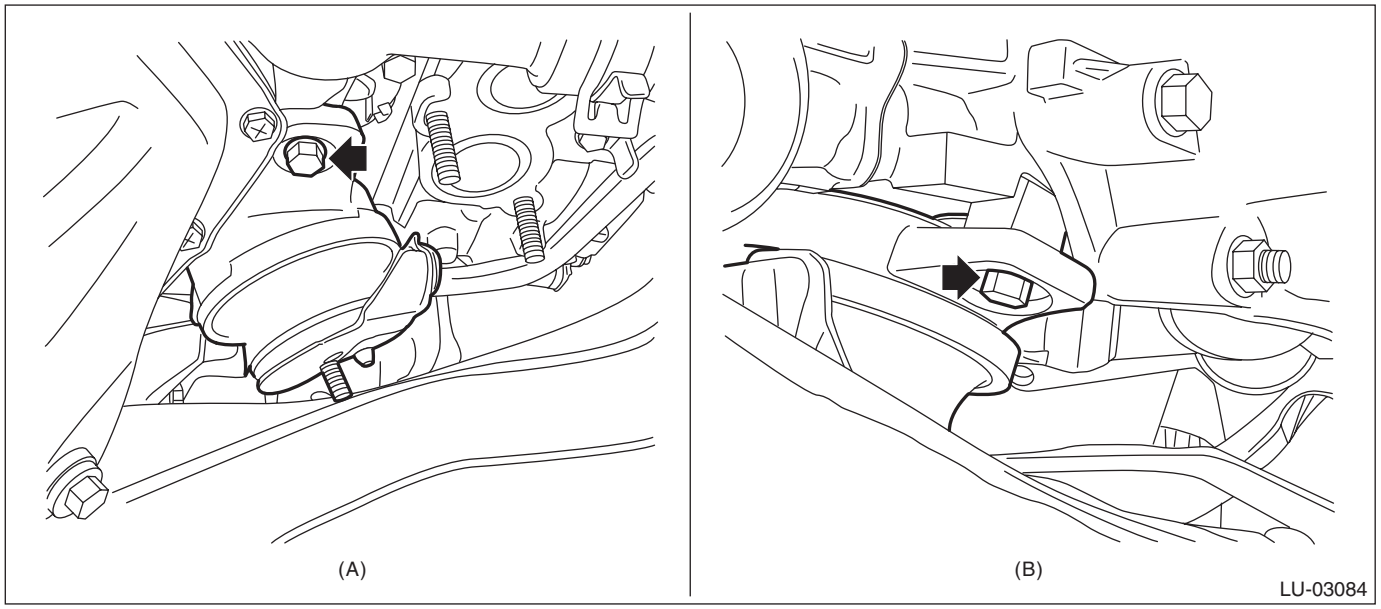

(A) Front side (B) Rear side

3) Lower the engine and remove the lifting device and wire ropes.

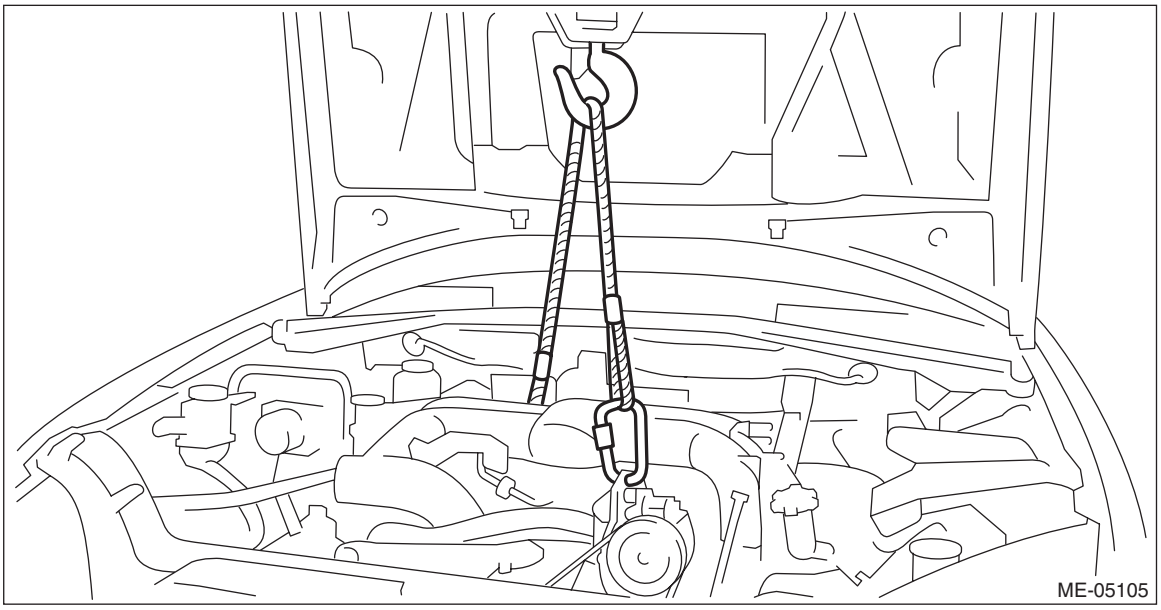

4) Install the clip (B) to the pitching stopper bracket, and then install the air breather hose to the clip (B). (CVT model)
5) Install the bolt (A) which secures the transmission harness stay to the CVT. (CVT model)

Tightening torque:
16 N·m (1.6 kgf-m, 11.8 ft-lb)

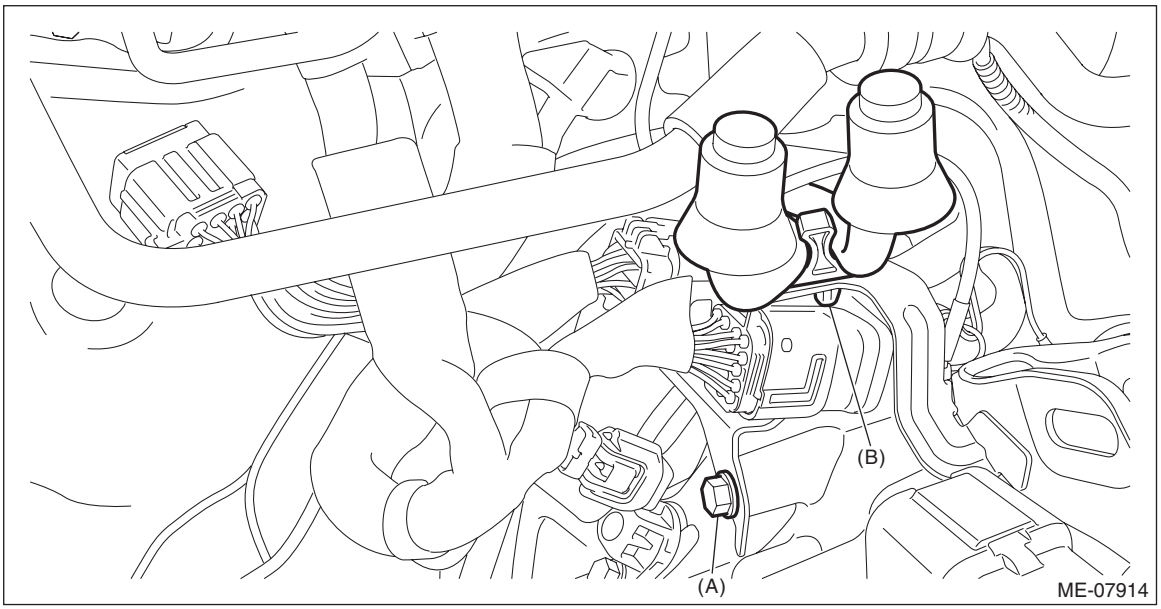

6) Lift up the vehicle. (CVT model)
7) Set the transmission jack to the transmission. (CVT model)

NOTE:
Be careful that the support plate of transmission jack does not touch the transmission oil pan.

8) Remove the ST and install the rear crossmember. (CVT model)
ST 41099YC001 ST REAR MOUNT

Tightening torque:
T1: 18 N·m (1.8 kgf-m, 13.3 ft-lb)
T2: 35 N·m (3.6 kgf-m, 25.8 ft-lb)
T3: 70 N·m (7.1 kgf-m, 51.6 ft-lb)

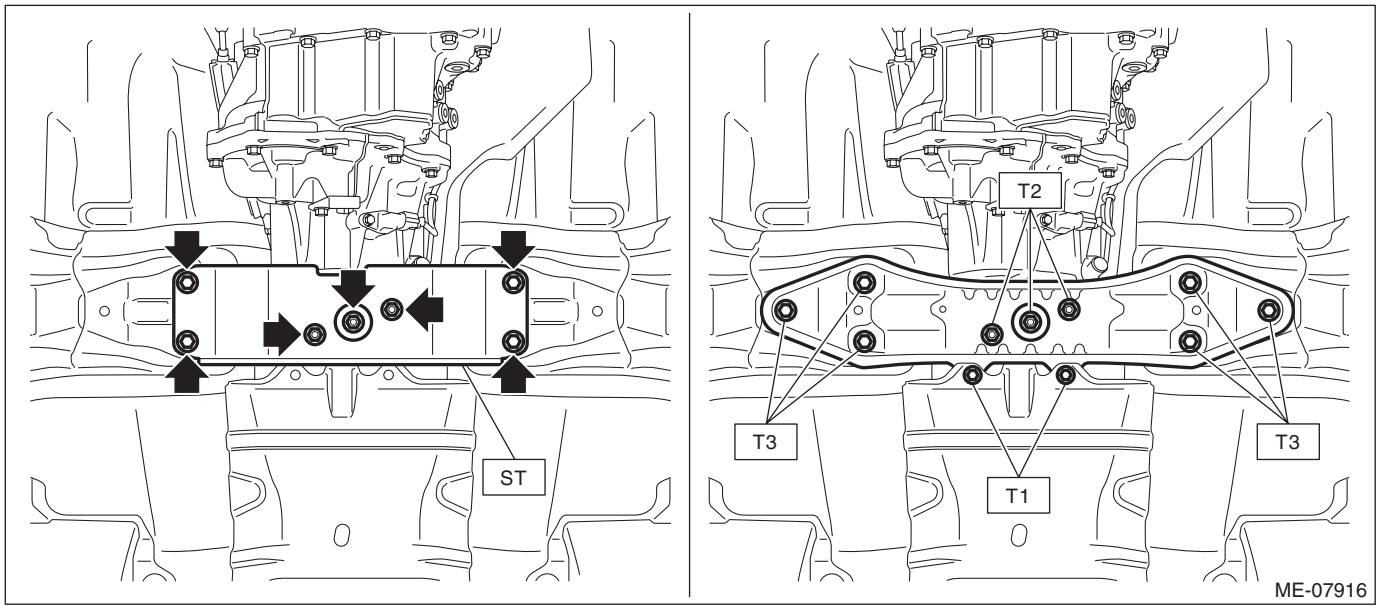

9) Remove the transmission jack. (CVT model)
10) Lower the vehicle. (CVT model)
11) Install the pitching stopper.

Tightening torque:
T1: 50 N·m (5.1 kgf-m, 36.9 ft-lb)
T2: 58 N·m (5.9 kgf-m, 42.8 ft-lb)

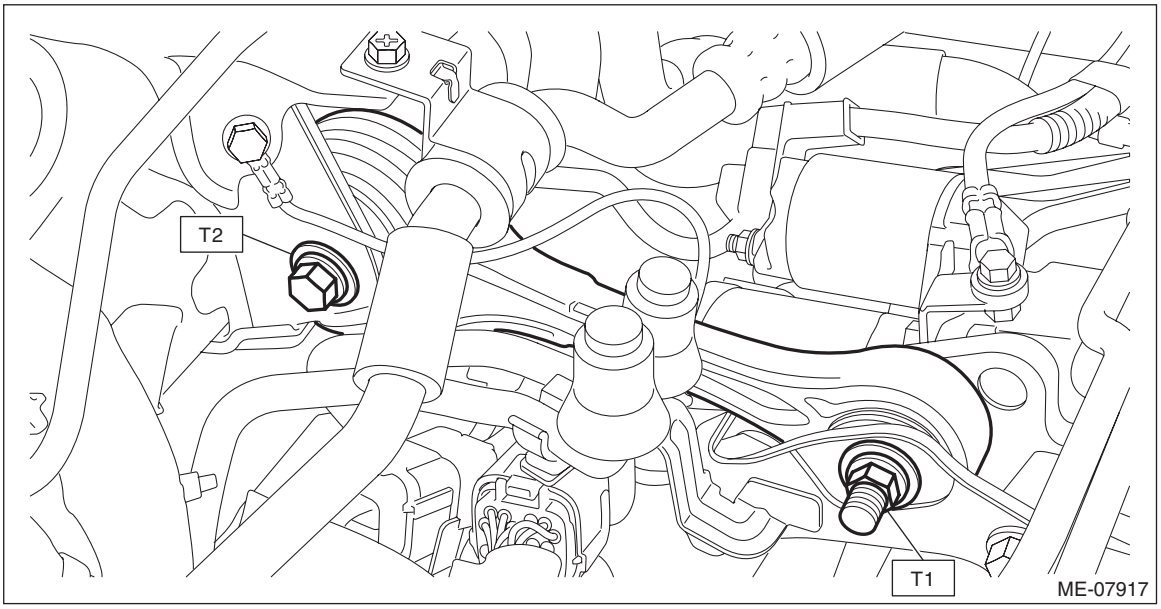

12) Set the generator cord, and fix the generator cord to the fuel pipe protector using clip (C).

13) Install the generator cord to clip (B), and connect the connector (A) to A/C compressor.

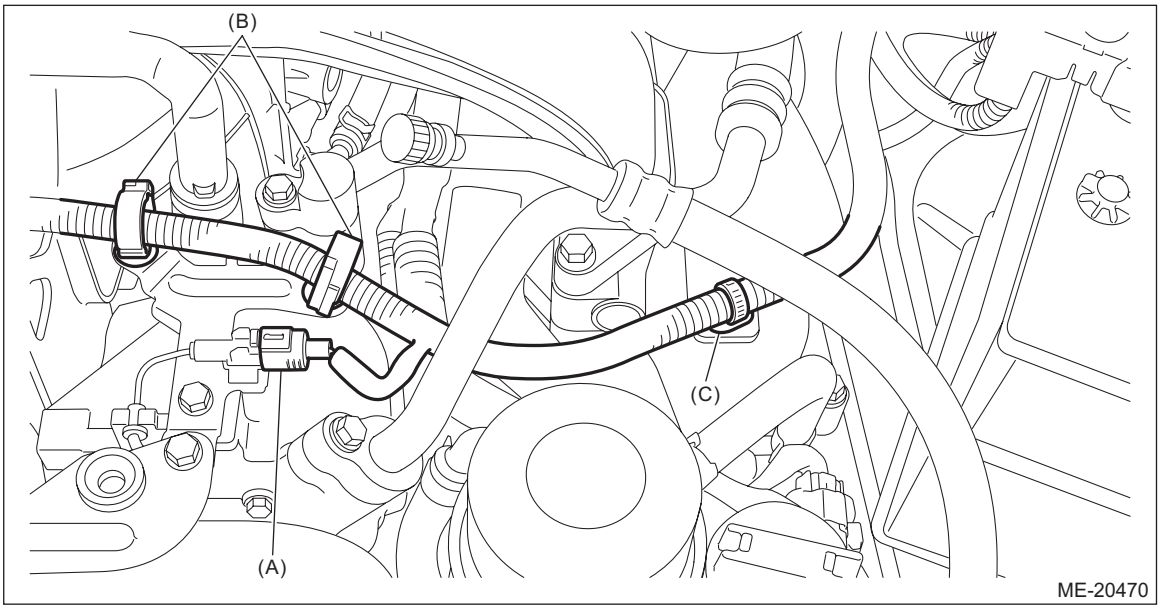

14) Using clip (D), fix the generator cord to the generator cord stay, and connect the connector (B) and the terminal (C) to the generator.

Tightening torque:
15 N·m (1.5 kgf-m, 11.1 ft-lb)

15) Connect the connector (A) to the brake vacuum pump.

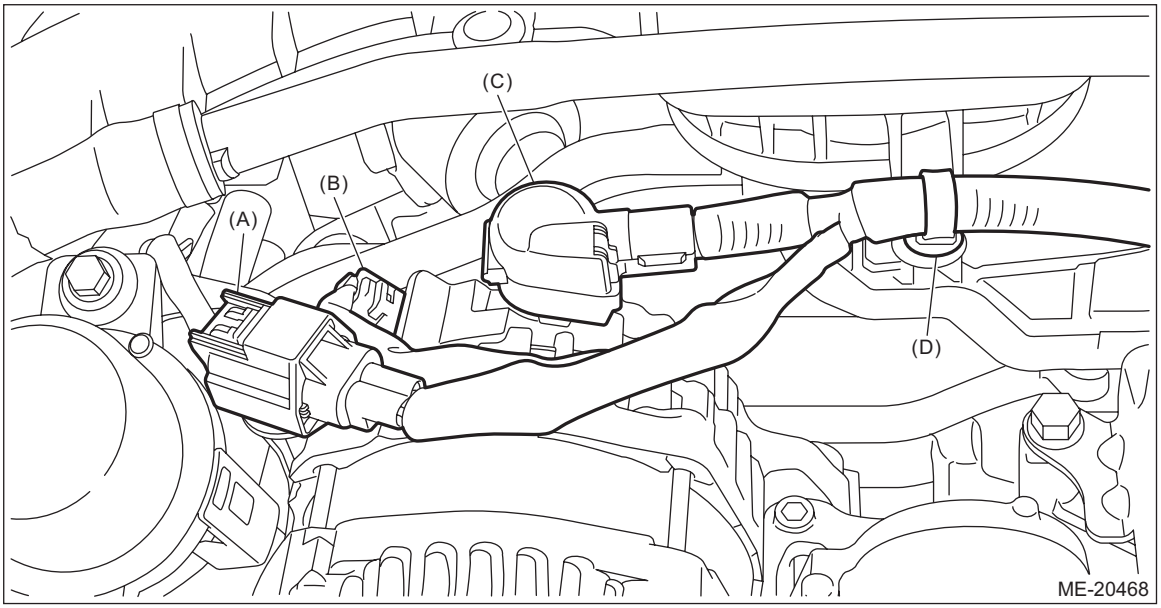

16) Install the intercooler. <Ref. to IN(w/o STI)-45, INSTALLATION, Intercooler.>
17) Lift up the vehicle.
18) Install the electric power steering gearbox. <Ref. to PS-68, INSTALLATION, Electric Power Steering Gearbox.>
19) Install the front drive shaft LH. <Ref. to DS-46, INSTALLATION, Front Drive Shaft.>

20) Install the nuts which hold the engine mounting to the front crossmember.

NOTE:
- Use a new nut.
- Make sure that locators (a) of the engine mounting are securely inserted.

Tightening torque:
60 N·m (6.1 kgf-m, 44.3 ft-lb)

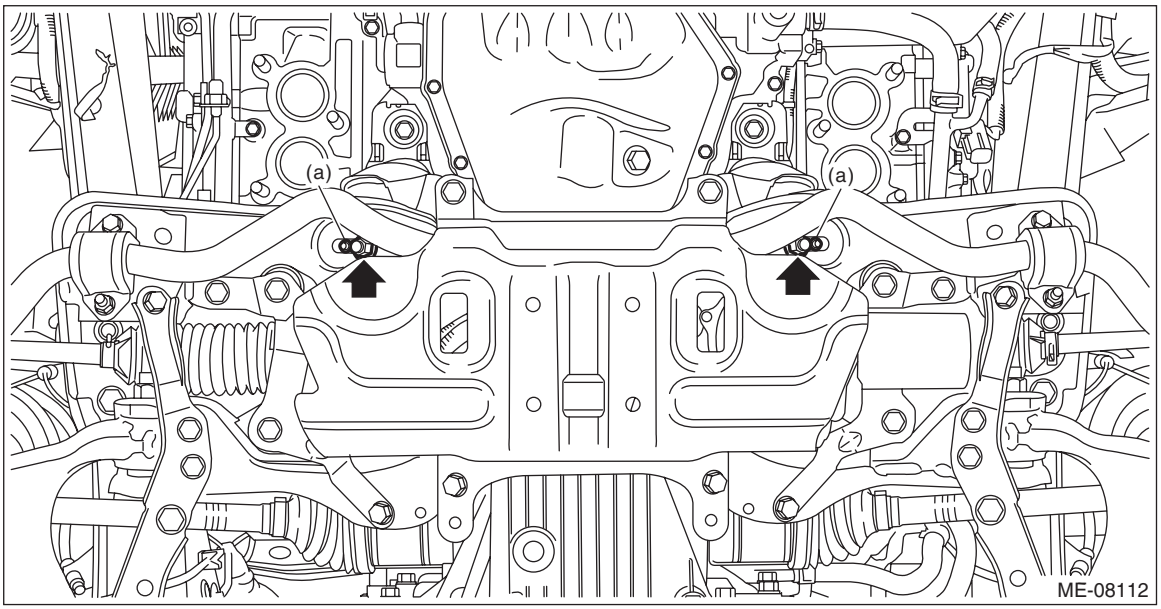

21) Connect the connector of oil level switch to the engine harness, and install the clip (A) securing the harness.

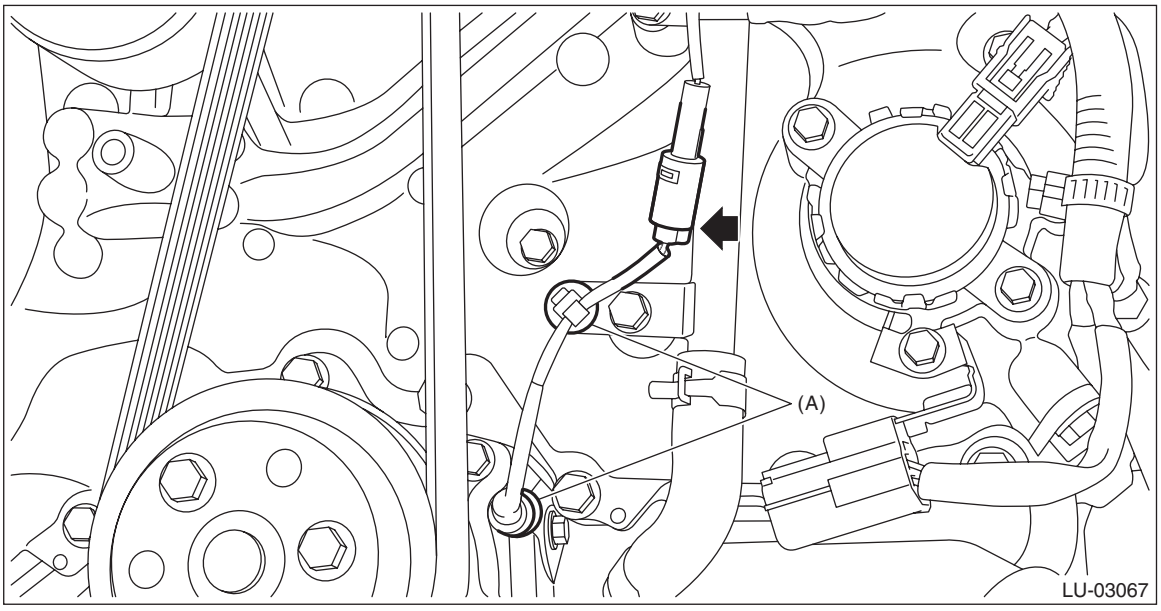

22) Install the front exhaust pipe. <Ref. to EX(w/o STI)-17, INSTALLATION, Front Exhaust Pipe.>

23) Insert the engine control module (ECM) to the bracket.

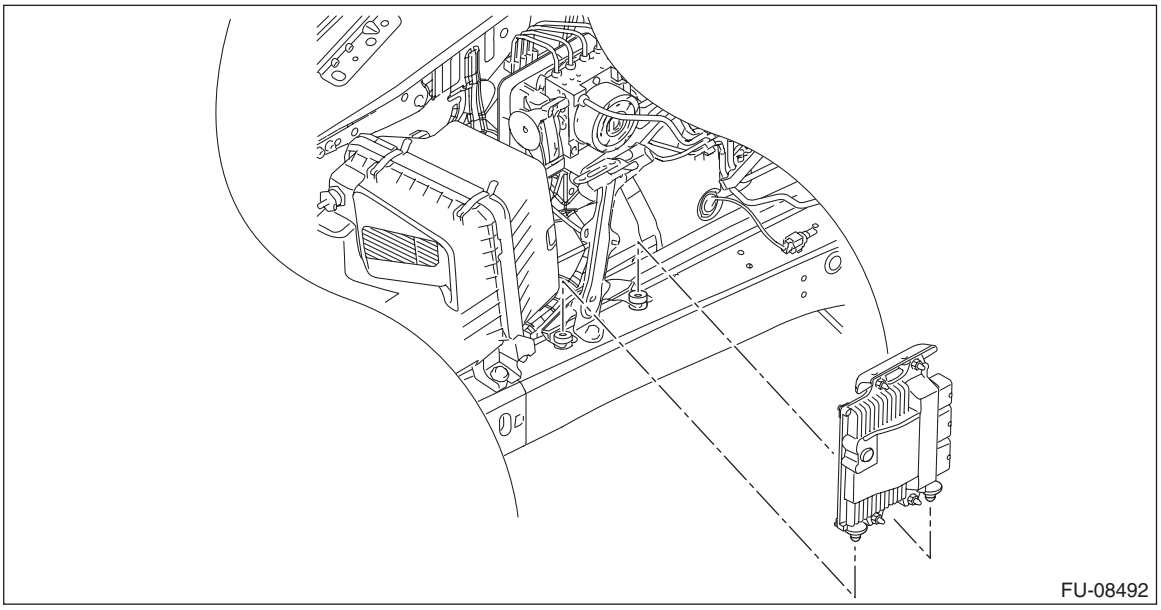

24) Install the bolt which secures the engine control module (ECM) to the bracket, and then secure the engine harness and bulkhead harness to the bracket with clip (A) and clip (B).

Tightening torque:
7.5 N·m (0.8 kgf-m, 5.5 ft-lb)

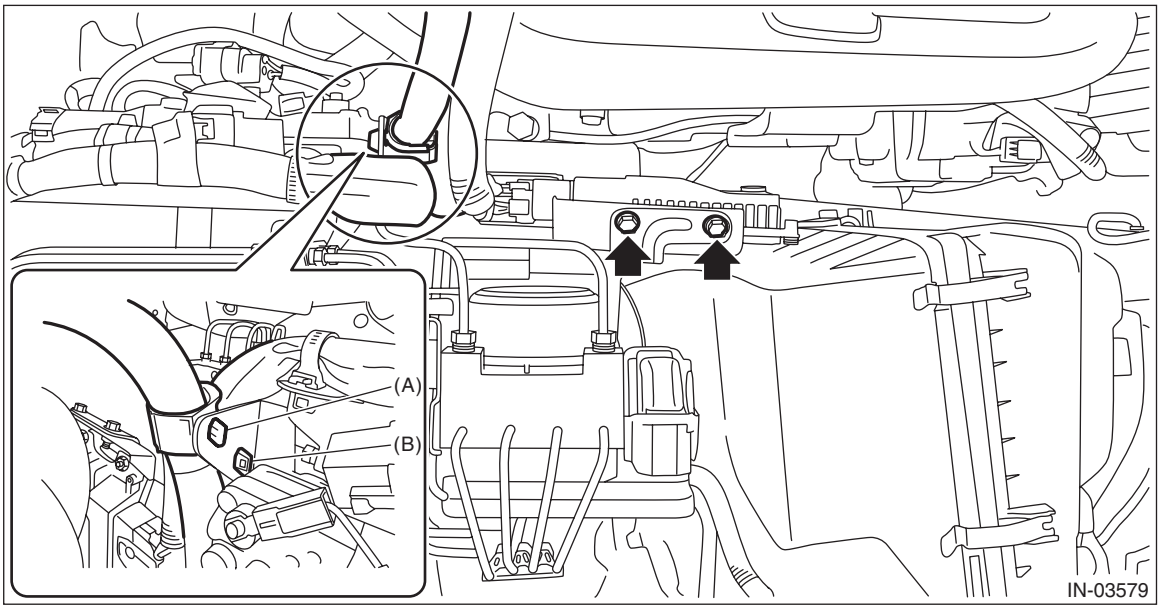

25) Install the air intake duct. <Ref. to IN(w/o STI)-26, INSTALLATION, Air Intake Duct.>
26) Refill the engine oil. <Ref. to LU(w/o STI)-11, REPLACEMENT, Engine Oil.>
27) Connect the ground terminal to battery sensor. <Ref. to NT-6, BATTERY, NOTE, Note.>
28) Install the collector cover. <Ref. to IN(w/o STI)-10, INSTALLATION, Collector Cover.>
29) Fill engine coolant. <Ref. to CO(w/o STI)-14, FILLING OF ENGINE COOLANT, REPLACEMENT, Engine Coolant.>
30) Set the front hood to the normal position. <Ref. to NT-23, FRONT HOOD DAMPER STAY, NOTE, Note.>
31) Install the striker - front hood. <Ref. to EB-15, ASSEMBLY, Front Hood.>
32) Close the front hood.

C: WIRING DIAGRAM

- Engine electrical system <Ref. to WI-154, WIRING DIAGRAM, Engine Electrical System.>
- CAN communication system <Ref. to WI-113, WIRING DIAGRAM, CAN Communication System.>

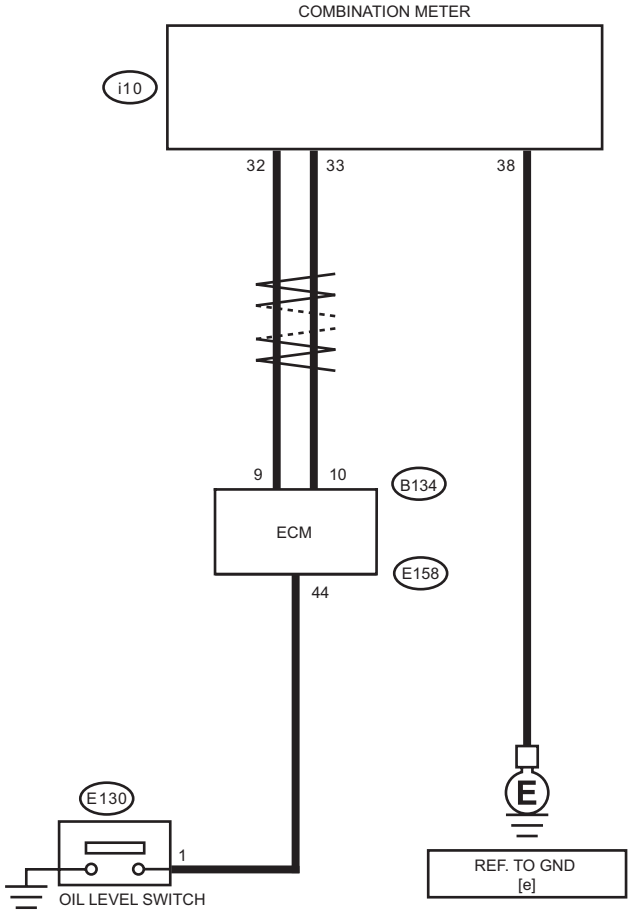

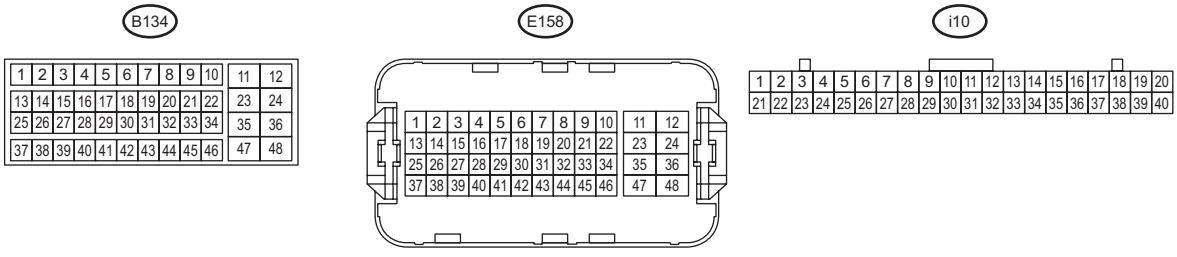

LU-10070

D: INSPECTION

1. INSPECTION WHEN LOW ENGINE OIL WARNING LIGHT ILLUMINATES ON LCD

Step		Check	Yes	No
1	**CHECK ENGINE OIL LEVEL.**	Is engine oil level normal?	Go to step **2**.	Replace engine oil or refill, and check again while the oil level is normal condition. <Ref. to LU(w/o STI)-11, REPLACEMENT, Engine Oil.> To disable the low engine oil warning, install the spare fuse at the delivery mode fuse in the main fuse box. Then turn the ignition switch to ON (engine off) again, to confirm the low engine oil warning is not displayed. Remove the spare fuse installed to finish. NOTE: The engine oil level switch is normal if the low engine oil level warning is not displayed with the delivery mode fuse inserted.
2	**CHECK LAN SYSTEM.**	Has a DTC of the LAN system been input?	Perform the diagnosis according to DTC.	Go to step **3**.
3	**CHECK OIL LEVEL SWITCH CIRCUIT.** 1) Turn the ignition switch to ON (engine OFF). 2) Read the current data for engine in the Subaru Select Monitor to confirm the item for “Oil level switch”. <Ref. to EN(w/o STI)(diag)-46, DISPLAY CURRENT ENGINE DATA, OPERATION, Subaru Select Monitor.>	Is the “Oil level switch” signal displayed in Subaru Select Monitor HIGH?	To disable the low engine oil warning, install the spare fuse at the delivery mode fuse in the main fuse box. Then turn the ignition switch to ON (engine off) again, to confirm the low engine oil warning is not displayed. Remove the spare fuse installed to finish. NOTE: The engine oil level switch is normal if the low engine oil level warning is not displayed with the delivery mode fuse inserted.	Go to step **4**.

	Step	Check	Yes	No
4	**CHECK COMBINATION METER.** Perform the self-diagnosis of combination meter to check if there are any faults in the combination meter. <Ref. to IDI-6, OPERATION, Combination Meter System.>	Is combination meter OK?	Go to step **5**.	Replace the combination meter. <Ref. to IDI-13, REMOVAL, Combination Meter.>
5	**CHECK SECURE CONNECTION OF CONNECTOR BETWEEN ENGINE HARNESS AND OIL LEVEL SWITCH.**	Is there any insecure connection?	Repair the connection condition. Then, to disable the low engine oil warning display, install the spare fuse at the delivery mode fuse in the main fuse box. Then turn the ignition switch to ON (engine OFF) again to confirm the low engine oil warning is not displayed. Remove the spare fuse installed to finish. NOTE: The engine oil level switch is normal if the low engine oil level warning is not displayed with the delivery mode fuse inserted.	Go to step **6**.
6	**CHECK OIL LEVEL SWITCH.** 1) Deliberately short circuits by connecting the engine harness connector terminal and chassis ground. 2) Turn the ignition switch to ON (engine OFF). 3) Read the current data for engine in the Subaru Select Monitor to confirm the item for “Oil level switch”. <Ref. to EN(w/o STI)(diag)-46, DISPLAY CURRENT ENGINE DATA, OPERATION, Subaru Select Monitor.> ***Connector & terminal*** ***(E130) No. 1 — Chassis ground:***	Is the “Oil level switch” signal displayed in Subaru Select Monitor HIGH?	Replace the oil level switch. <Ref. to LU(w/o STI)-49, REMOVAL, Oil Level Switch.>	Go to step **7**.

Step		Check	Yes	No
7	**CHECK SECURE CONNECTION OF CONNECTOR BETWEEN ENGINE CONTROL MODULE (ECM) AND ENGINE HARNESS.**	Is there any insecure connection?	Repair the connection condition. Then, to disable the low engine oil warning display, install the spare fuse at the delivery mode fuse in the main fuse box. Then turn the ignition switch to ON (engine OFF) again to confirm the low engine oil warning is not displayed. Remove the spare fuse installed to finish. NOTE: The engine oil level switch is normal if the low engine oil level warning is not displayed with the delivery mode fuse inserted.	Go to step **8**.
8	**CHECK ENGINE HARNESS.** 1) Disconnect the engine control module (ECM) side connector. 2) Disconnect the connector between the engine harness and the oil level switch. 3) Measure the resistance between connector terminals. ***Connector & terminal*** ***(B158) No. 44 — (E130) No. 1:***	Is the resistance less than 1 Ω?	Replace the engine control module (ECM). <Ref. to FU(w/o STI)-124, REMOVAL, Engine Control Module (ECM).>	Repair or replace the open circuit of engine harness.

2. OTHER INSPECTIONS

1) Check that the oil level switch does not have deformation, cracks, or damage.
2) Check the oil level switch installation part for oil leakage and oil seepage.

14.Engine Lubrication System Trouble in General

A: INSPECTION

Before performing diagnostics, make sure that the engine oil level is correct and no oil leakage exists.

Trouble	Possible cause	Corrective action
Warning light remains ON.	a. Oil pressure switch failure	
	❍ Cracked diaphragm or oil leakage within switch	Replace.
	❍ Broken spring or seized contacts	Replace.
	b. Low oil pressure	
	❍ Clogging of oil filter	Replace.
	❍ Malfunction of oil by-pass valve in oil filter	Replace.
	❍ Clogged oil passage	Clean.
	❍ Excessive tip clearance and side clearance of oil pump rotor	Replace.
	❍ Clogged oil strainer or broken pipe	Clean or replace.
	c. No oil pressure	
	❍ Insufficient engine oil (degradation, etc.)	Replace.
	❍ Broken pipe of oil strainer	Replace.
	❍ Stuck oil pump rotor	Replace.
Warning light does not illuminate.	a. Malfunction of combination meter	Replace.
	b. Poor contact of switch contact points	Replace.
	c. Disconnection of wiring	Repair.
Warning light flickers momentarily.	a. Defective terminal contact	Repair.
	b. Defective wiring harness	Repair.
	c. Oil pressure switch failure	
	❍ Cracked diaphragm or oil leakage within switch	Replace.
	❍ Broken spring or seized contacts	Replace.
	d. Low oil pressure	
	❍ Clogging of oil filter	Replace.
	❍ Malfunction of oil by-pass valve in oil filter	Replace.
	❍ Clogged oil passage	Clean.
	❍ Excessive tip clearance and side clearance of oil pump rotor	Replace.
	❍ Clogged oil strainer or broken pipe	Clean or replace.

SPEED CONTROL SYSTEMS

SP(w/o STI)

Page

1. General Description 2
2. Accelerator Pedal 4

1. General Description

A: SPECIFICATION

Accelerator pedal	Stroke	At pedal pad	50 — 59 mm (1.97 — 2.32 in)

B: COMPONENT

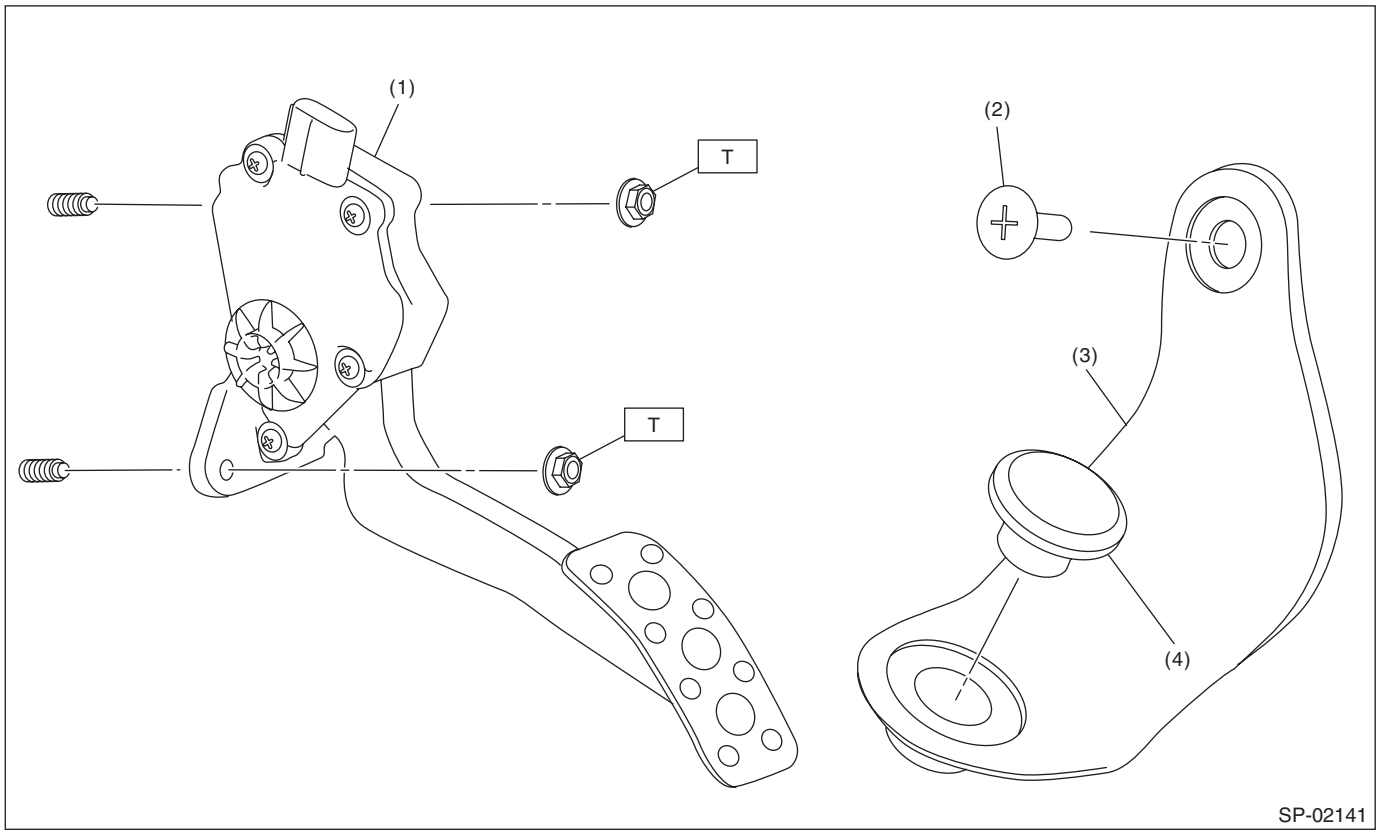

(1) Accelerator pedal ASSY
(2) Clip
(3) Accelerator plate
(4) Accelerator stopper

Tightening torque: N·m (kgf-m, ft-lb)
T: 7.5 (0.8, 5.5)

C: CAUTION

- Prior to starting work, pay special attention to the following:
  1. Always wear work clothes, a work cap, and protective shoes. Additionally, wear a helmet, protective goggles, etc. if necessary.
  2. Protect the vehicle using a seat cover, fender cover, etc.
  3. Prepare the service tools, clean cloth, containers to catch grease and oil, etc.
- Vehicle components are extremely hot immediately after driving. Be wary of receiving burns from heated parts.
- When performing a repair, identify the cause of trouble and avoid unnecessary removal, disassembly and replacement.
- Before disconnecting connectors of sensors or units, be sure to disconnect the ground cable from battery.
- Always use the jack-up point when the shop jacks or rigid racks are used to support the vehicle.
- Remove contamination including dirt and corrosion before removal, installation, disassembly or assembly.
- Keep the removed parts in order and protect them from dust and dirt.
- All removed parts, if to be reused, should be reinstalled in the original positions with attention to the correct directions, etc.
- Bolts, nuts and washers should be replaced with new parts as required.
- Be sure to tighten the fasteners including bolts and nuts to the specified torque.

D: PREPARATION TOOL

1. SPECIAL TOOL

ILLUSTRATION	TOOL NUMBER	DESCRIPTION	REMARKS
 STSSM4	—	SUBARU SELECT MONITOR 4	Used for setting of each function and trouble-shooting for electrical system. NOTE: For detailed operation procedures of Subaru Select Monitor 4, refer to “Application help”.
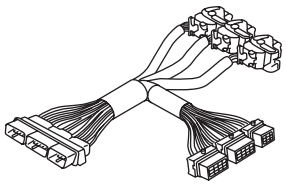 ST18460AA030	18460AA030	CHECK BOARD	Used for measuring voltage and resistance of ECM terminals.

2. GENERAL TOOL

TOOL NAME	REMARKS
Circuit tester	Used for measuring resistance, voltage and current.
DST-i	Used together with Subaru Select Monitor 4.

2. Accelerator Pedal

A: REMOVAL

1) Disconnect the ground terminal from battery sensor. <Ref. to NT-6, BATTERY, NOTE, Note.>
2) Disconnect the connector (A).
3) Remove the nut (B) securing accelerator pedal assembly, and remove the accelerator pedal assembly.

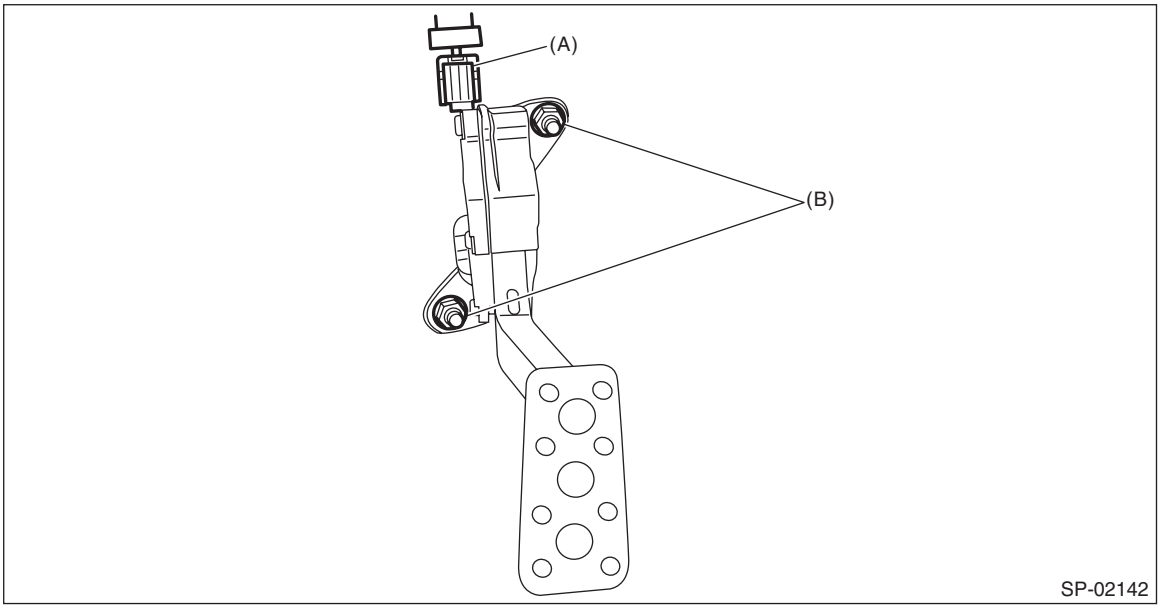

B: INSTALLATION

Install in the reverse order of removal.

Tightening torque:
7.5 N·m (0.8 kgf-m, 5.5 ft-lb)

C: DISASSEMBLY

NOTE:
The accelerator pedal cannot be disassembled.

D: INSPECTION

1. CHECK ACCELERATOR PEDAL SENSOR AREA (METHOD WITH CIRCUIT TESTER)

1) Disconnect the ground terminal from battery sensor. <Ref. to NT-6, BATTERY, NOTE, Note.>
2) Remove the ECM. <Ref. to FU(w/o STI)-124, REMOVAL, Engine Control Module (ECM).>
3) Install the ST between the ECM and bulkhead harness and the engine harness. <Ref. to EN(w/o STI)(diag)-6, CAUTION, General Description.>
ST 18460AA030 CHECK BOARD
4) Connect the ground terminal to battery sensor. <Ref. to NT-6, BATTERY, NOTE, Note.>
5) Turn the ignition switch to ON. (Engine OFF)

6) Measure the voltage between ECM connector terminals using ST.

- Main sensor side

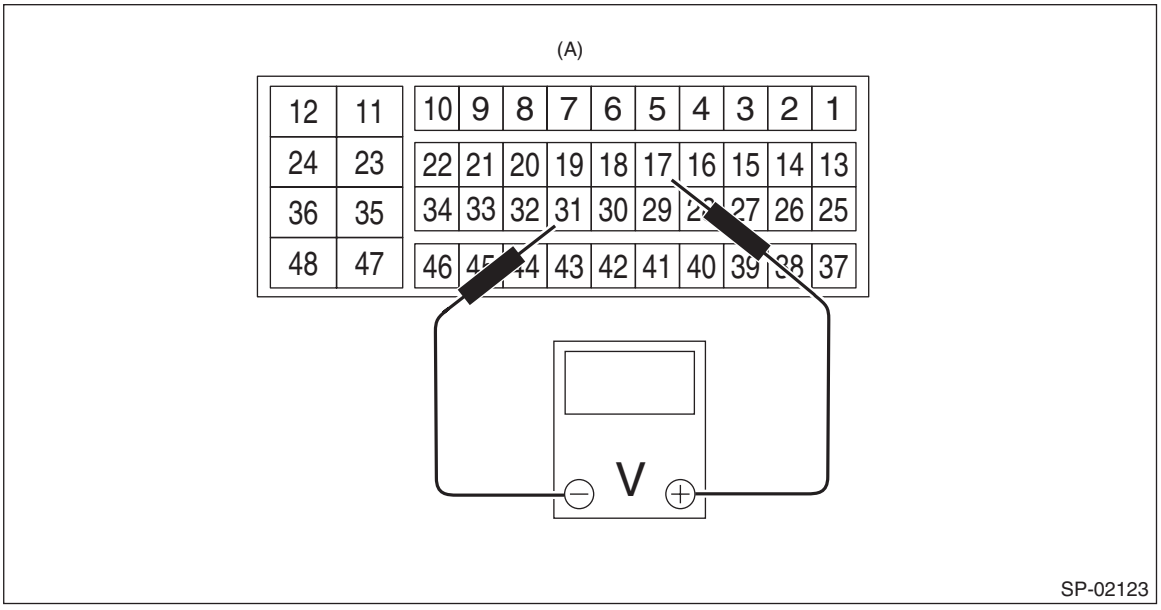

(A) To the check board connector (ECM connector)

- Sub sensor side

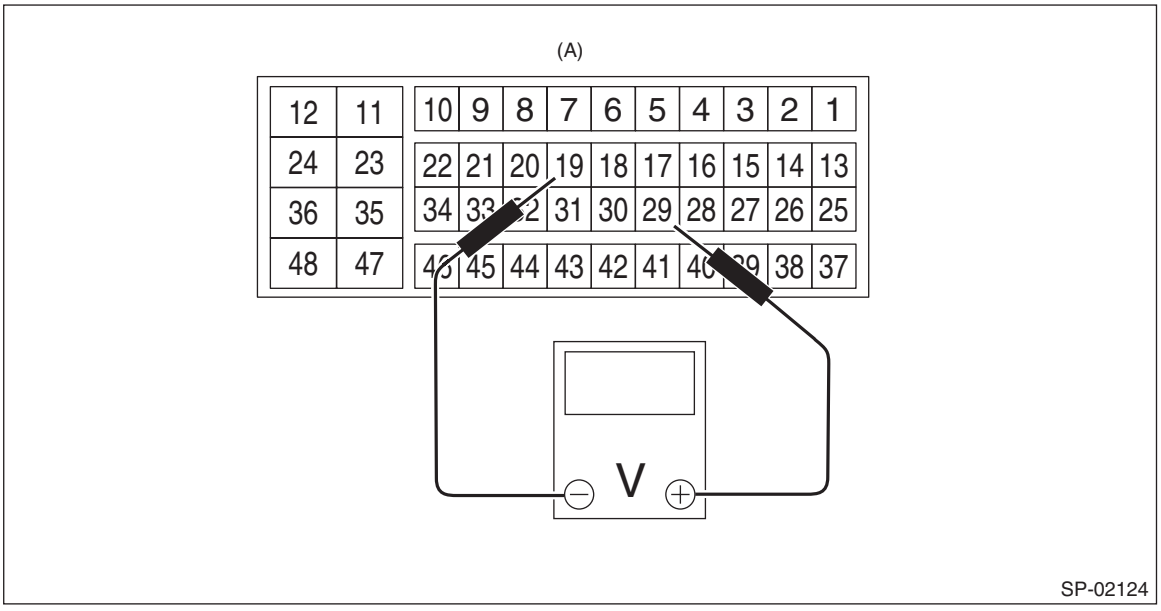

(A) To the check board connector (ECM connector)

Accelerator pedal sensor	Accelerator pedal	Terminal No.	Standard
Main	Not depressed (full closed)	17 (+) and 31 (–)	0.4 — 1.0 V
	Depressed (full opened)		2.4 — 3.7 V
Sub	Not depressed (full closed)	29 (+) and 19 (–)	0.4 — 1.0 V
	Depressed (full opened)		2.4 — 3.7 V

7) After inspection, install the related parts in the reverse order of removal.

2. CHECK ACCELERATOR PEDAL SENSOR AREA (METHOD WITH SUBARU SELECT MONITOR)

1) Turn the ignition switch to ON. (engine OFF)
2) Read the accelerator pedal opening angle signal and voltage of accelerator pedal sensor using Subaru Select Monitor. <Ref. to EN(w/o STI)(diag)-46, DISPLAY CURRENT ENGINE DATA, OPERATION, Subaru Select Monitor.>

Accelerator pedal sensor	Accelerator pedal opening angle signal	Standard
Main	0.0%	0.4 — 1.0 V
	100.0%	2.4 — 3.7 V
Sub	0.0%	0.4 — 1.0 V
	100.0%	2.4 — 3.7 V

3. OTHER INSPECTIONS

1) Check that the accelerator pedal does not have deformation, cracks or damage.
2) Check for smooth operation when the accelerator pedal is depressed.
3) Check if the accelerator pedal returns to its original position smoothly when the pedal is released.

IGNITION

IG(w/o STI)

Page

1. General Description 2
2. Spark Plug 4
3. Ignition Coil 11

1. General Description

A: SPECIFICATION

Item			Specifications
Ignition coil	Type		FK0463
	Ignition system		Independent ignition coil
	Manufacturer		Diamond Electric
Spark plug	Manufacturer and type		NGK: ILKAR8H6
	Thread size (diameter, pitch, length) mm		12, 1.25, 26.5
	Spark plug gap mm (in)	Standard	0.50 — 0.55 (0.020 — 0.022)
	Electrode		Center electrode: Iridium Ground electrode: Platinum

B: COMPONENT

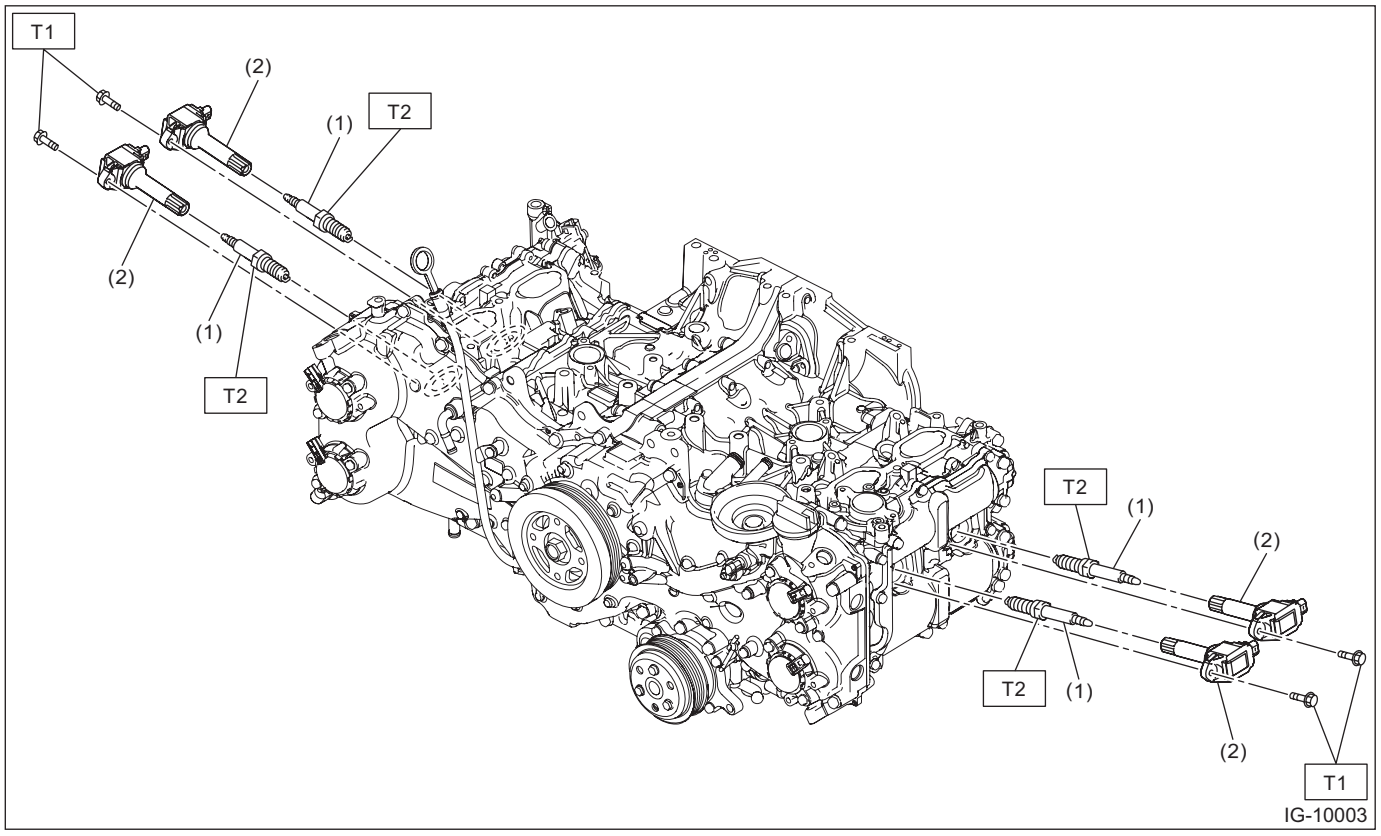

(1) Spark plug
(2) Ignition coil

Tightening torque: N·m (kgf-m, ft-lb)
T1: 8.5 (0.9, 6.3)
T2: 17.5 (1.8, 12.9)

C: CAUTION

- Prior to starting work, pay special attention to the following:
  1. Always wear work clothes, a work cap, and protective shoes. Additionally, wear a helmet, protective goggles, etc. if necessary.
  2. Protect the vehicle using a seat cover, fender cover, etc.
  3. Prepare the service tools, clean cloth, containers to catch grease and oil, etc.
- Vehicle components are extremely hot immediately after driving. Be wary of receiving burns from heated parts.
- When performing a repair, identify the cause of trouble and avoid unnecessary removal, disassembly and replacement.
- Before disconnecting connectors of sensors or units, be sure to disconnect the ground cable from battery.
- Always use the jack-up point when the shop jacks or rigid racks are used to support the vehicle.
- Remove contamination including dirt and corrosion before removal, installation, disassembly or assembly.
- Keep the removed parts in order and protect them from dust and dirt.
- All removed parts, if to be reused, should be reinstalled in the original positions with attention to the correct directions, etc.
- Bolts, nuts and washers should be replaced with new parts as required.
- Be sure to tighten the fasteners including bolts and nuts to the specified torque.

2. Spark Plug

A: REMOVAL

Spark plug:
Refer to "SPECIFICATION" for spark plug. <Ref. to IG(w/o STI)-2, SPECIFICATION, General Description.>

1. RH SIDE

1) Disconnect the ground terminal from battery sensor. <Ref. to NT-6, BATTERY, NOTE, Note.>
2) Remove the clip (A) and clip (B) which secure the engine harness and bulkhead harness to the bracket, and remove the bolt which secures the engine control module (ECM) to the bracket.

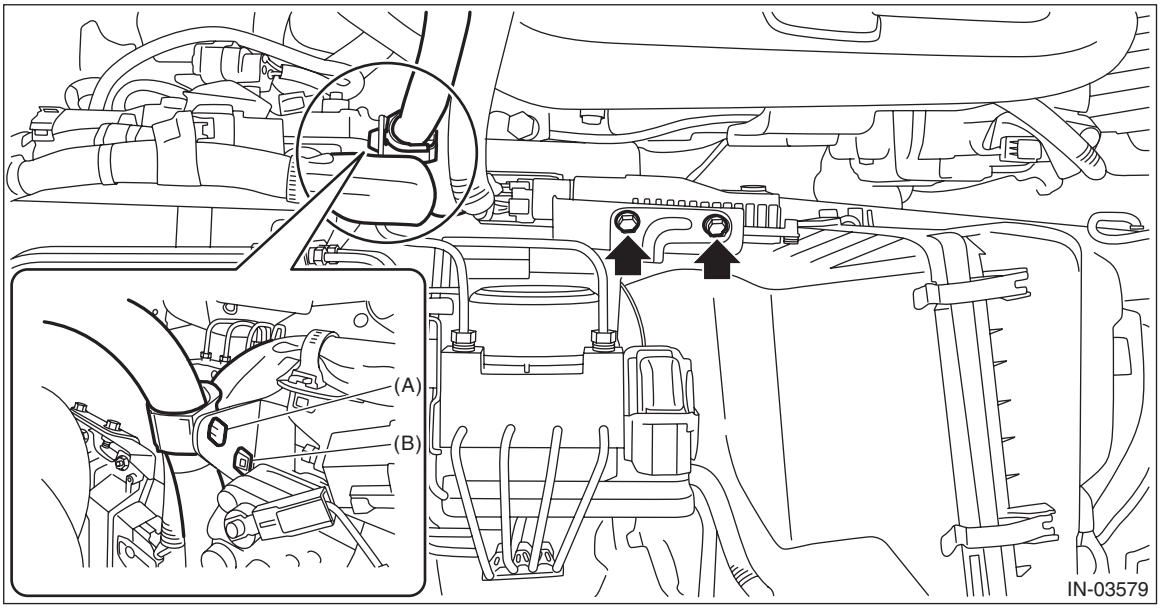

3) Pull out the engine control module (ECM) from the bracket, and move it to a location that does not interfere operation.

NOTE:
When performing the pulling out operation, pay attention not to apply excessive load to the breather filter portion (a) in order to avoid the damage.

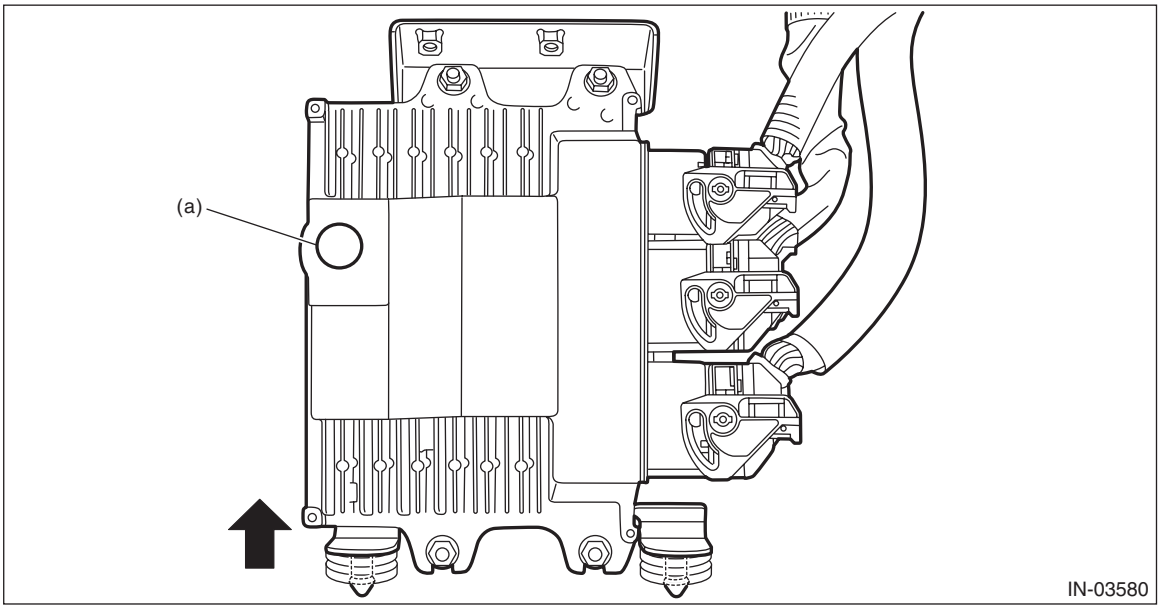

4) Disconnect the connector from ignition coil.

NOTE:
While pressing the spring (a) shown in the figure, slide it in the direction of the arrow with a clip remover.

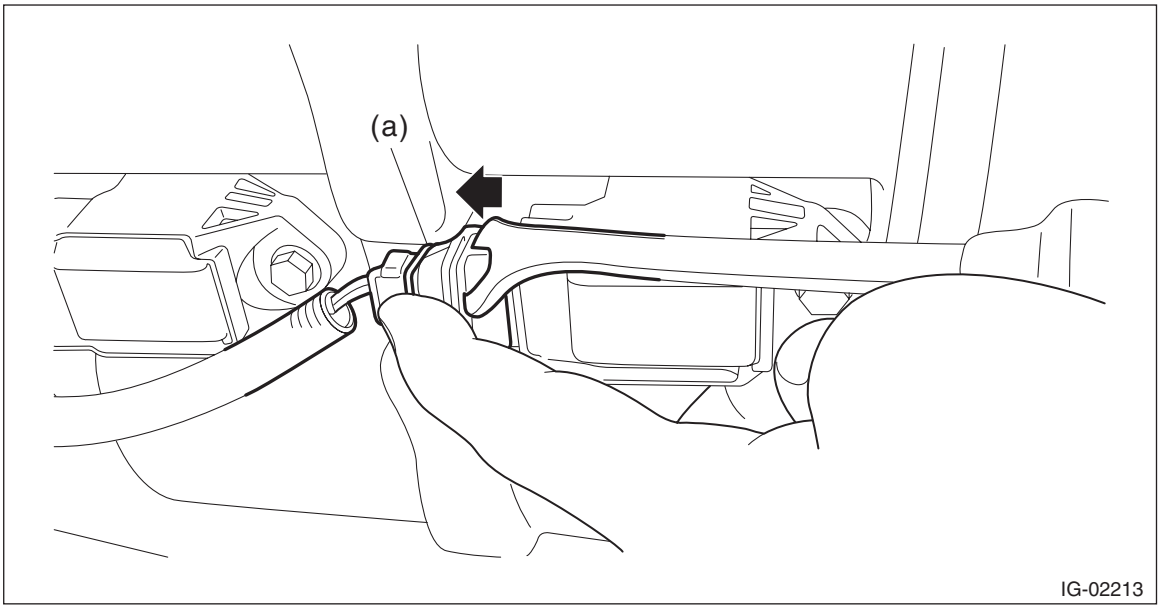

5) Remove the ignition coil.

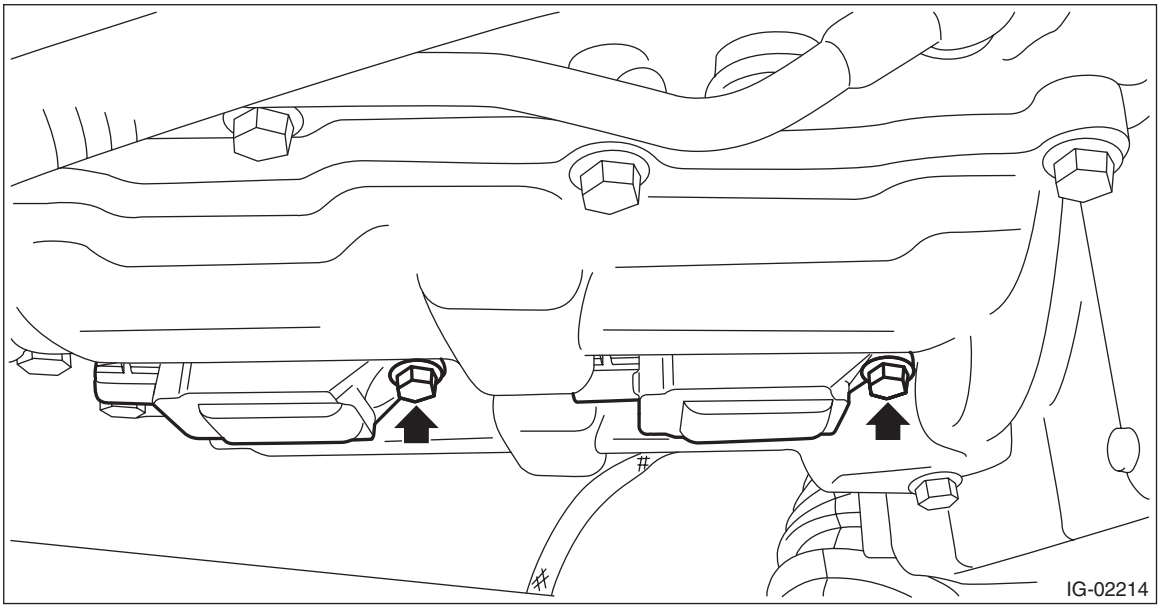

6) Remove the spark plug with a spark plug socket.

2. LH SIDE

1) Remove the battery. <Ref. to SC(w/o STI)-50, REMOVAL, Battery.>
2) Disconnect the connector from ignition coil.

NOTE:
While pressing the spring (a) shown in the figure, slide it in the direction of the arrow with a clip remover.

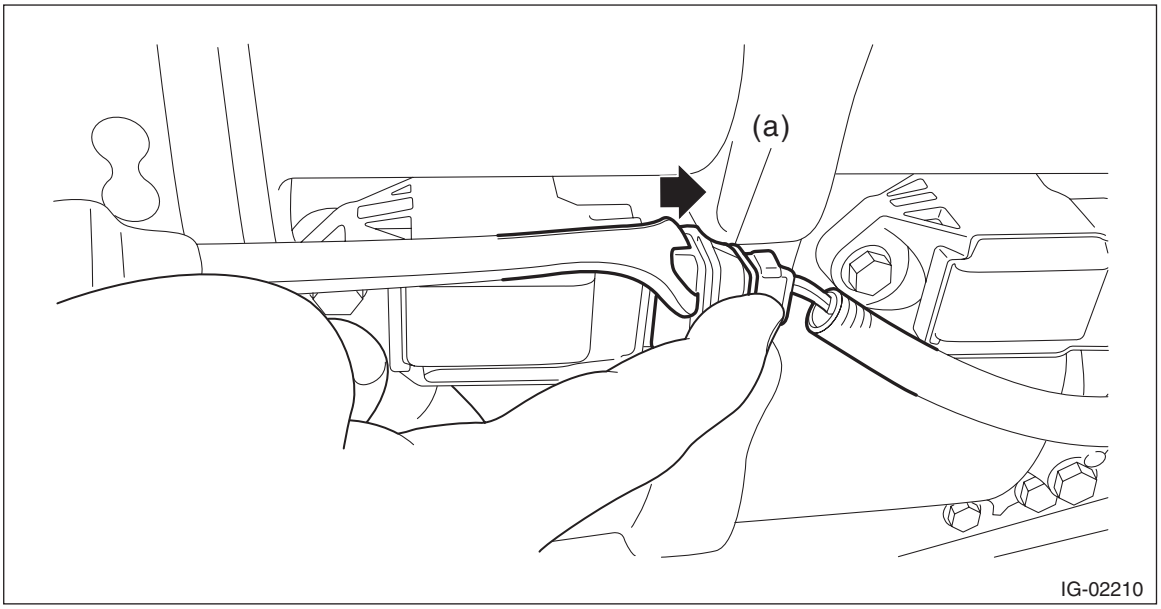

3) Remove the ignition coil.

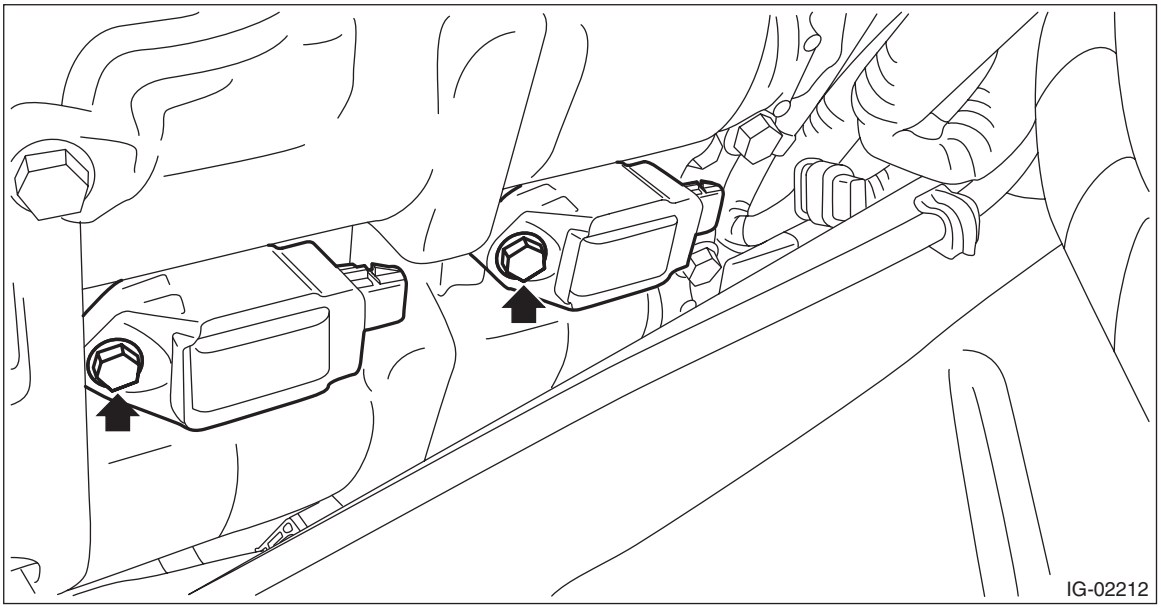

4) Remove the spark plug with a spark plug socket.

B: INSTALLATION

1. RH SIDE

Install in the reverse order of removal.

CAUTION:
Degrease the ignition coil fixing portion and the ignition coil mounting bolt.

NOTE:
Insert the engine control module (ECM) to the bracket cushion.

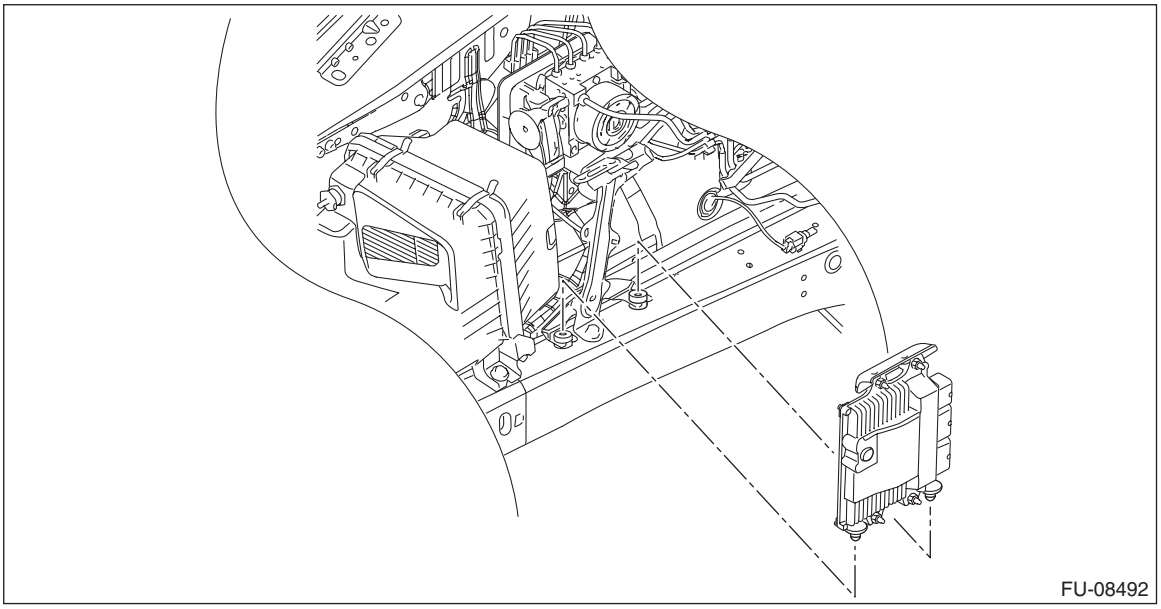

Tightening torque:
Spark plug:
17.5 N·m (1.8 kgf-m, 12.9 ft-lb)
Ignition coil:
8.5 N·m (0.9 kgf-m, 6.3 ft-lb)
Engine control module (ECM):
7.5 N·m (0.8 kgf-m, 5.5 ft-lb)

2. LH SIDE

Install in the reverse order of removal.

CAUTION:
Degrease the ignition coil fixing portion and the ignition coil mounting bolt.

Tightening torque:
Spark plug:
17.5 N·m (1.8 kgf-m, 12.9 ft-lb)
Ignition coil:
8.5 N·m (0.9 kgf-m, 6.3 ft-lb)

C: INSPECTION

1) Check the spark plug for abnormalities. If defective, replace the spark plug.

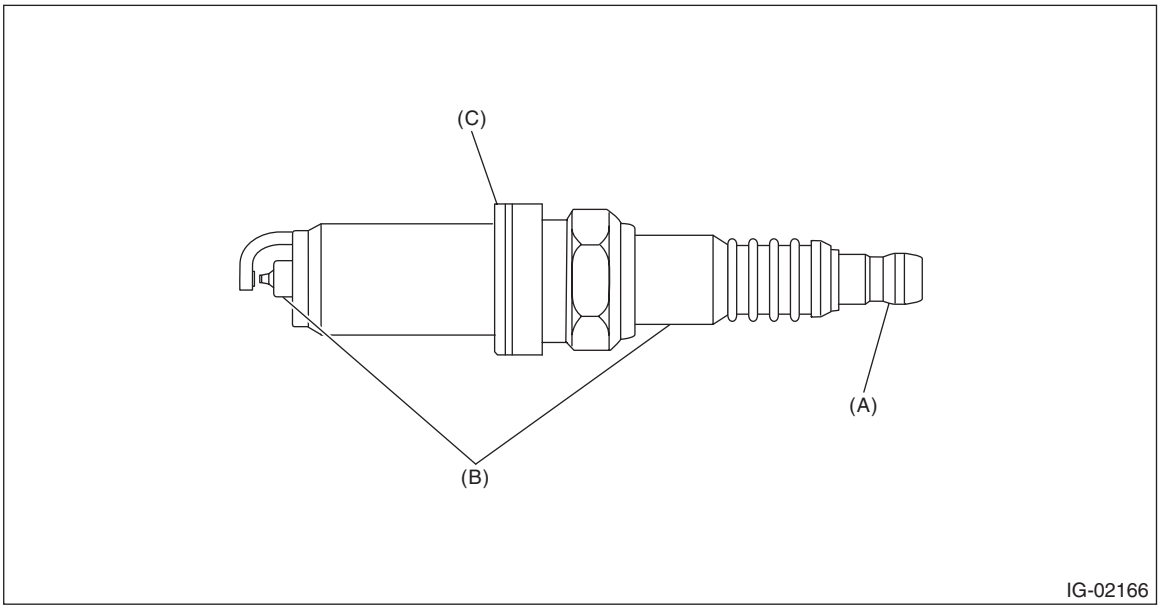

(A) Terminal damage (B) Crack or damage in insulator (C) Damaged gasket

2) Check the spark plug electrode and condition of the insulator. If abnormal, check and repair the cause and replace the spark plug.

(1) Normal:

Brown to grayish-tan deposits and slight electrode wear indicate correct spark plug heat range.

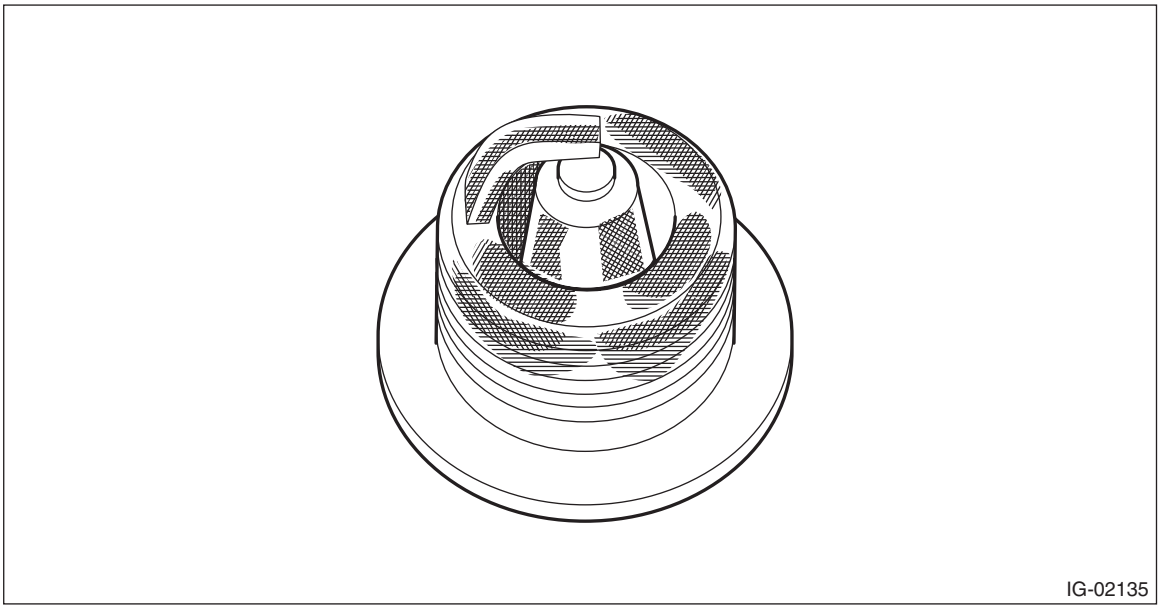

(2) Carbon fouled:
Dry fluffy carbon deposits on the insulator and electrode are mostly caused by slow-speed driving in town, weak ignition, too rich fuel mixture, etc.

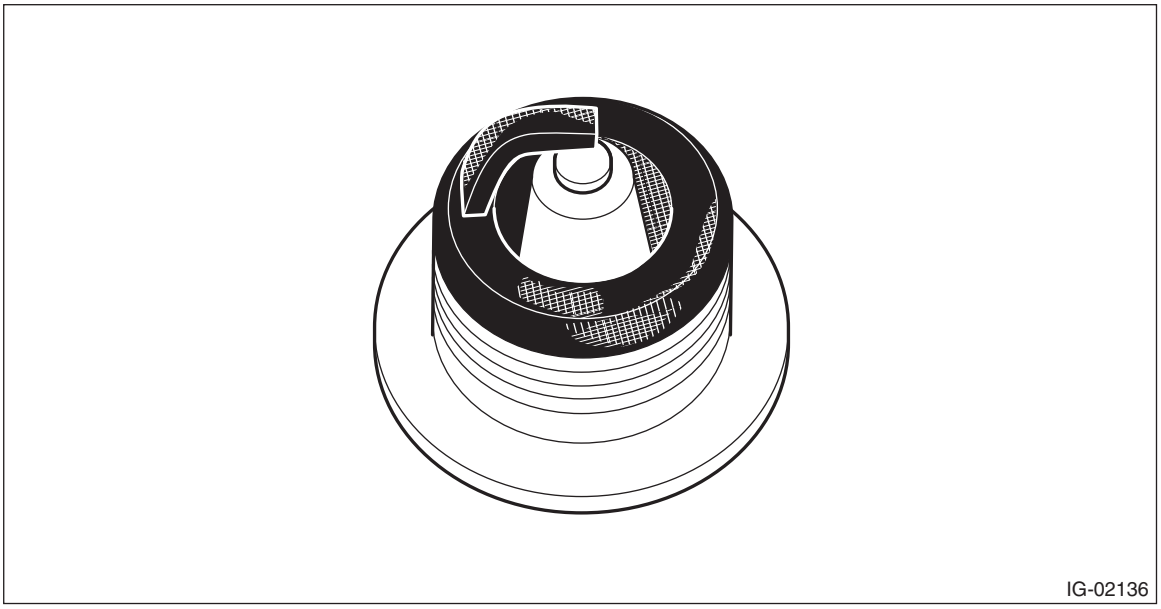
IG-02136

(3) Oil fouled:
Wet black deposits show oil entrance into combustion chamber through worn piston rings or increased clearance between valve guides and valve stems.

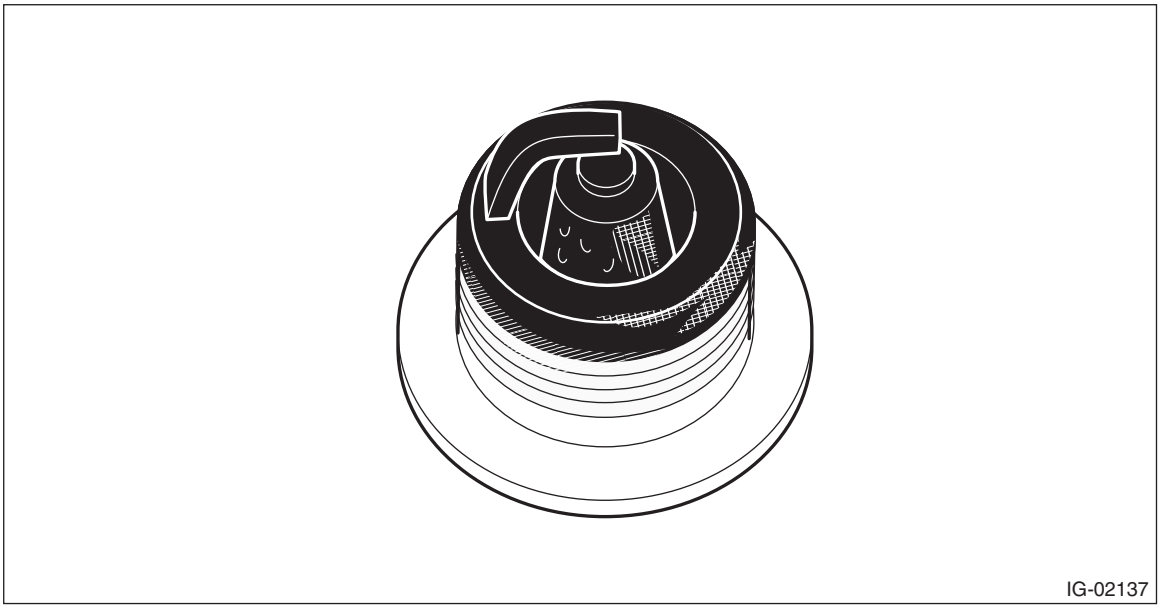
IG-02137

(4) Overheating:
A white or light gray insulator with black or brown spots and bluish burnt electrodes indicate engine overheating, wrong selection of fuel, or loose spark plugs.

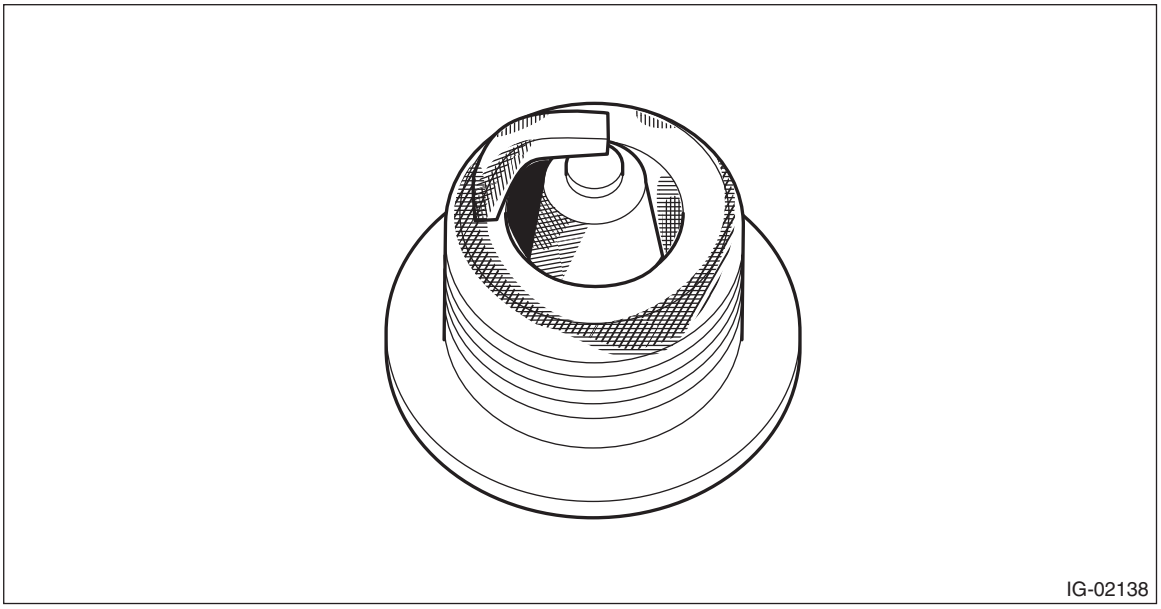
IG-02138

3) Using a nylon brush, etc., clean and remove the carbon or oxide deposits from the spark plug. If deposits are too stubborn, replace the spark plugs. After cleaning the spark plugs, check the spark plug gap “L” using a gap gauge. If it is not within the standard, replace the spark plug.

NOTE:
- Never use a plug cleaner.
- Do not use a metal brush as it may damage the electrode area.

Spark plug gap L:
Standard
0.50 — 0.55 mm (0.020 — 0.022 in)

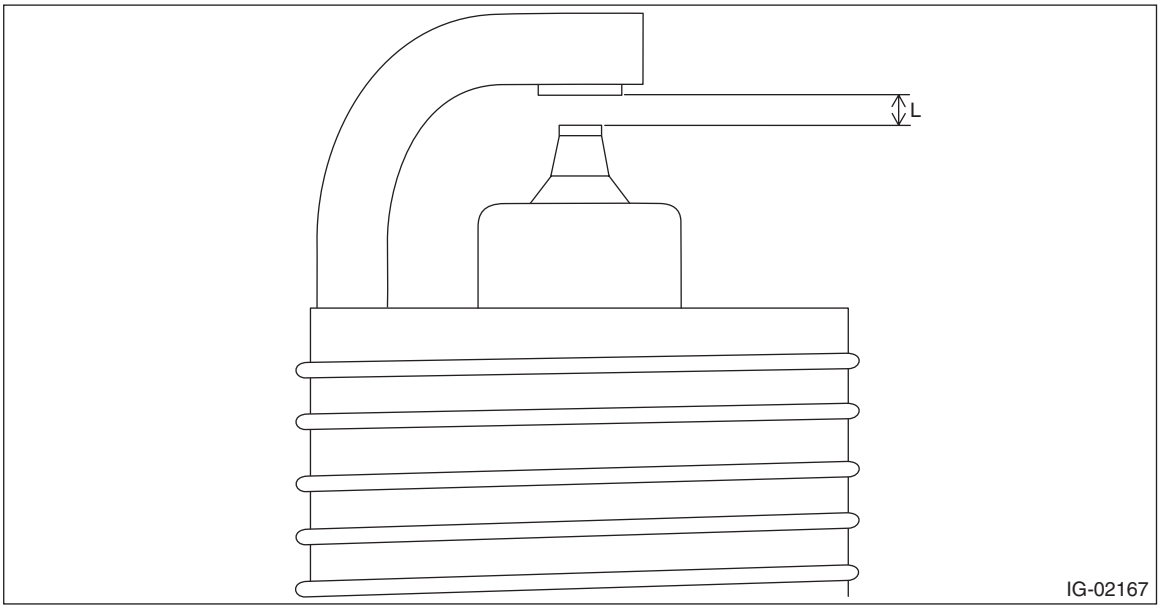

IG-02167

3. Ignition Coil

A: REMOVAL

Direct ignition type is adopted. Refer to “Spark Plug” for removal procedure. <Ref. to IG(w/o STI)-4, REMOVAL, Spark Plug.>

B: INSTALLATION

Direct ignition type is adopted. Refer to “Spark Plug” for the installation procedure. <Ref. to IG(w/o STI)-7, INSTALLATION, Spark Plug.>

C: INSPECTION

For inspection procedure, refer to “Diagnostics for Engine Starting Failure”. <Ref. to EN(w/o STI)(diag)-101, IGNITION CONTROL SYSTEM, Diagnostics for Engine Starting Failure.>

STARTING/CHARGING SYSTEMS

SC(w/o STI)

Page

1. General Description 2
2. Starter 7
3. Generator 31
4. Battery 50
5. Battery Sensor 58

1. General Description

A: SPECIFICATION

Item			Specifications	
Vehicle model			CVT	MT
Starter	Type		Reduction type	
	Model		M000T38571	M000T33176
	Manufacturer		Mitsubishi Electric	
	Voltage and output		12 V — 1.2 kW	12 V — 1.0 kW
	Direction of rotation		Counterclockwise (when observed from pinion)	
	Number of pinion teeth		9	8
	No-load characteristics	Voltage	11 V	
		Current	90 A or less	95 A or less
Generator	Type		Rotating-field three-phase type, voltage regulator built-in type, with load response control system	
	Model		A2TX5081	
	Manufacturer		Mitsubishi Electric	
	Voltage and output		12 V — 130 A	
	Polarity on ground side		Negative	
	Direction of rotation		Clockwise (when observed from pulley side)	
	Stator connection		3-phase △ type	
	Output current		1,500 r/min — 50 A or more 2,500 r/min — 111 A or more 5,000 r/min — 133 A or more	
	Regulated voltage		14.1 — 14.8 V [20°C (68°F)]	
	Rotor slip ring outer diameter	Standard	22.7 mm (0.894 in)	
		Limit	22.1 mm (0.870 in)	
	Brush length	Standard	22.5 mm (0.886 in)	
		Limit	5.0 mm (0.197 in)	
Battery	Type		55D23L	
	Nominal capacity		5 HR: 40 Ah [25°C (77°F)]	
	Nominal voltage		12 V	
	CCA		390 A	

B: COMPONENT

1. STARTER

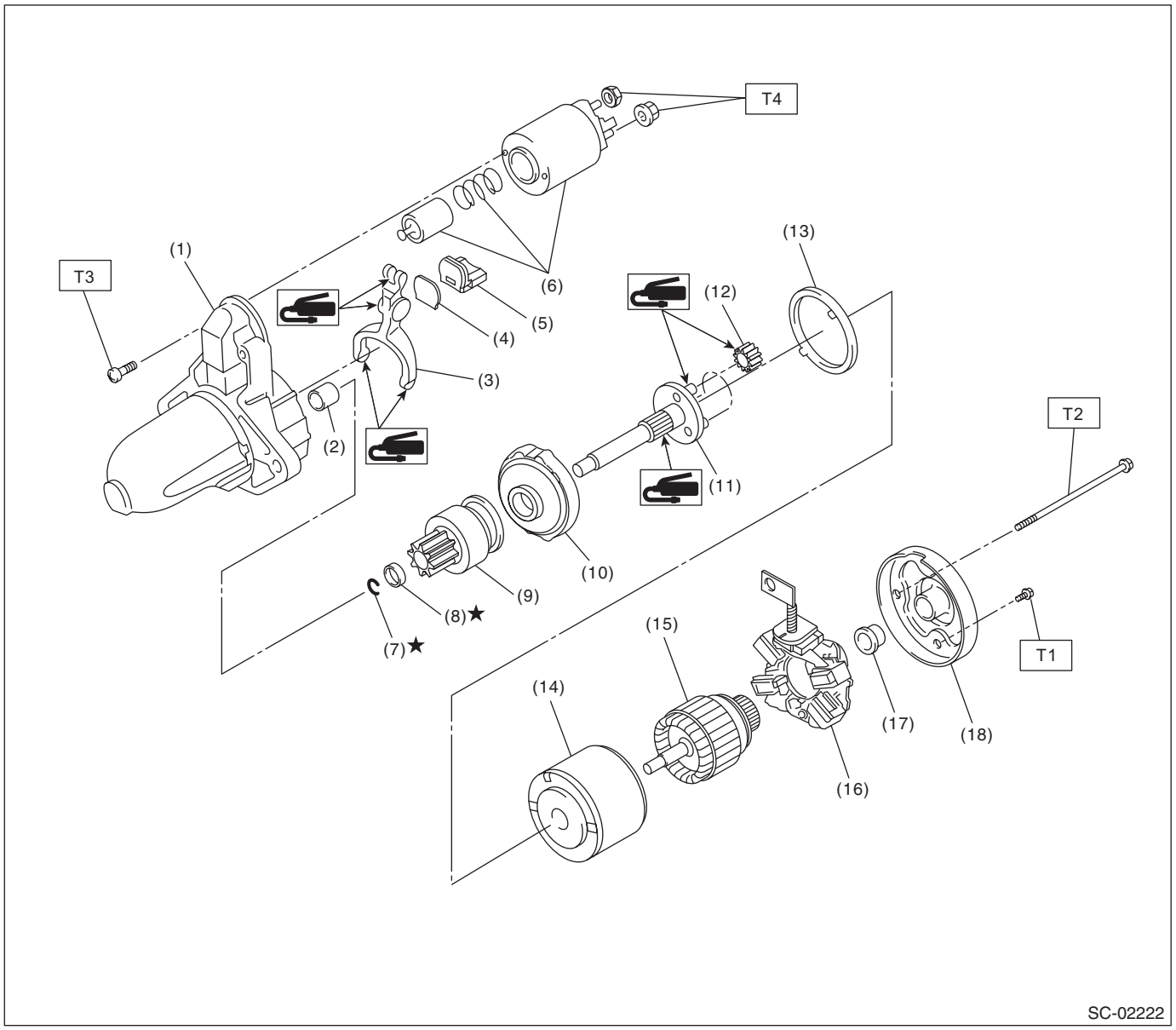

(1)	Starter housing ASSY	(9)	Overrunning clutch	(17)	Sleeve bearing
(2)	Sleeve bearing	(10)	Internal gear ASSY	(18)	Starter cover ASSY
(3)	Shift lever	(11)	Shaft		
(4)	Plate	(12)	Pinion gear	***Tightening torque: N·m (kgf-m, ft-lb)***	
(5)	Seal rubber	(13)	Seal rubber	***T1:***	***1.4 (0.1, 1.0)***
(6)	Magnet switch ASSY	(14)	Yoke ASSY	***T2:***	***6 (0.6, 4.4)***
(7)	Snap ring	(15)	Armature ASSY	***T3:***	***7.5 (0.8, 5.5)***
(8)	Stopper	(16)	Brush holder ASSY	***T4:***	***10 (1.0, 7.4)***

2. GENERATOR

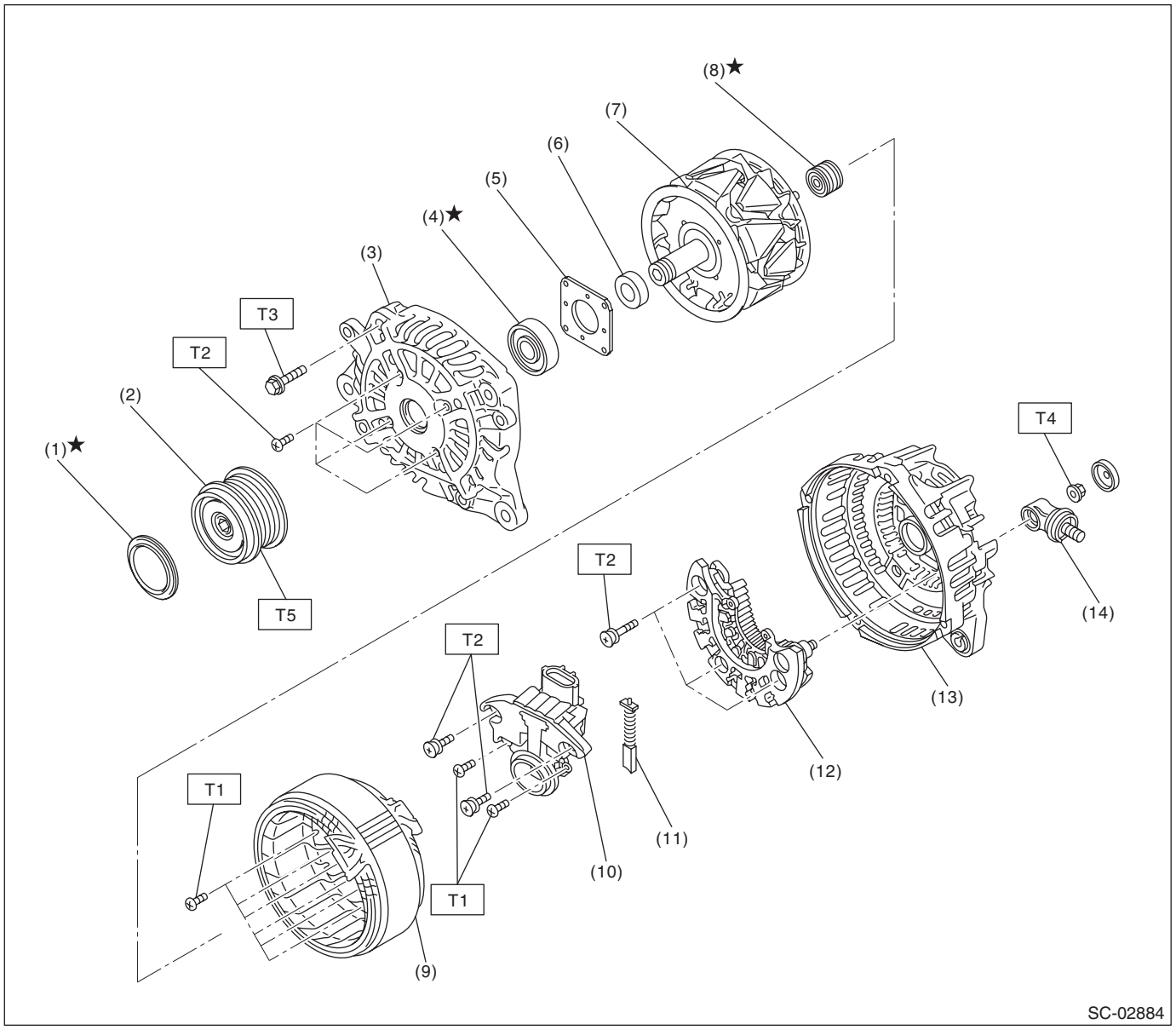

(1)	Cap	(8)	Bearing
(2)	Pulley	(9)	Stator coil
(3)	Front cover	(10)	IC regulator
(4)	Ball bearing	(11)	Brush
(5)	Bearing retainer	(12)	Rectifier
(6)	Spacer	(13)	Rear cover
(7)	Rotor	(14)	Terminal B

Tightening torque: N·m (kgf-m, ft-lb)
T1: 2 (0.2, 1.5)
T2: 3.9 (0.4, 2.9)
T3: 4.4 (0.4, 3.2)
T4: 8.9 (0.9, 6.6)
T5: 108 (11.0, 79.8)

3. GENERATOR BRACKET

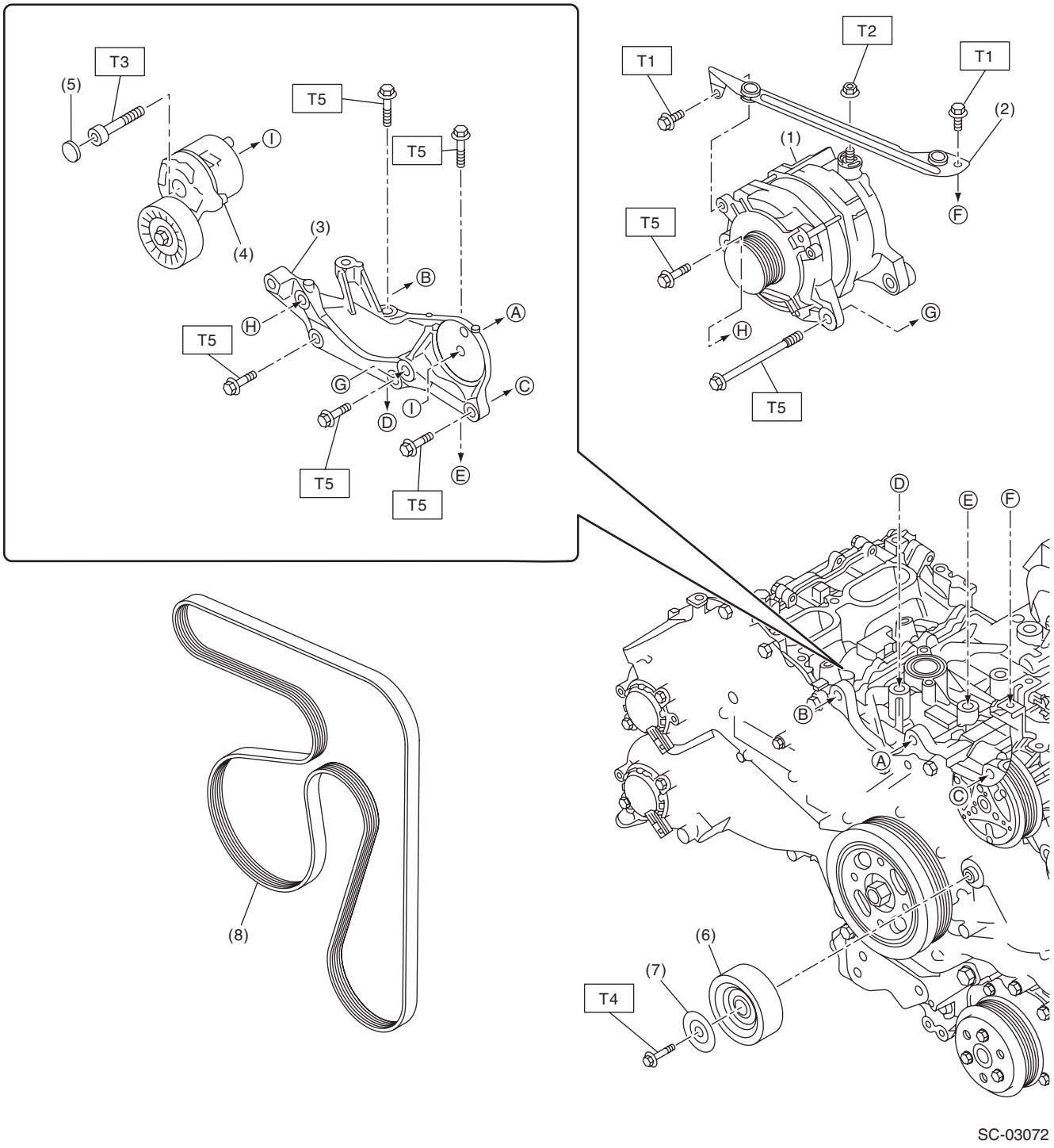

(1) Generator
(2) Collector cover bracket
(3) Generator bracket
(4) V-belt tensioner ASSY
(5) Cap
(6) Idler pulley
(7) Idler pulley cover
(8) V-belt

Tightening torque: N·m (kgf-m, ft-lb)
T1: 6.4 (0.7, 4.7)
T2: 15 (1.5, 11.1)
T3: 25 (2.5, 18.4)
T4: 36 (3.7, 26.6)
T5: <Ref. to SC(w/o STI)-33, INSTALLATION, Generator.>

4. BATTERY SENSOR

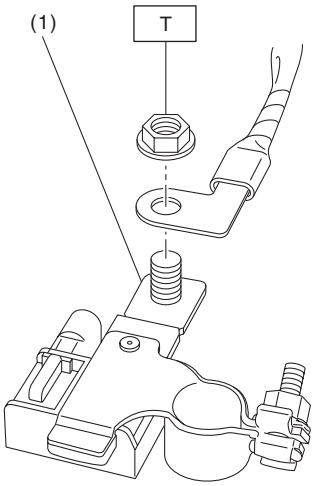

SC-03067

(1) Battery sensor

Tightening torque: N·m (kgf-m, ft-lb)
T: 7.5 (0.8, 5.5)

C: CAUTION

- Prior to starting work, pay special attention to the following:
  1. Always wear work clothes, a work cap, and protective shoes. Additionally, wear a helmet, protective goggles, etc. if necessary.
  2. Protect the vehicle using a seat cover, fender cover, etc.
  3. Prepare the service tools, clean cloth, containers to catch grease and oil, etc.
- Vehicle components are extremely hot immediately after driving. Be wary of receiving burns from heated parts.
- When performing a repair, identify the cause of trouble and avoid unnecessary removal, disassembly and replacement.
- Before disconnecting connectors of sensors or units, be sure to disconnect the ground cable from battery.
- Always use the jack-up point when the shop jacks or rigid racks are used to support the vehicle.
- Remove contamination including dirt and corrosion before removal, installation, disassembly or assembly.
- Keep the removed parts in order and protect them from dust and dirt.
- All removed parts, if to be reused, should be reinstalled in the original positions with attention to the correct directions, etc.
- Bolts, nuts and washers should be replaced with new parts as required.
- Be sure to tighten the fasteners including bolts and nuts to the specified torque.

D: PREPARATION TOOL

1. GENERAL TOOL

TOOL NAME	REMARKS
Circuit tester	Used for measuring resistance, voltage and current. NOTE: • When measuring the standby current, prepare a circuit tester which can measure down to 1 mA. • When measuring the standby current for models with keyless access function, prepare an analog type.

2. Starter

A: REMOVAL

1) Remove the collector cover. <Ref. to IN(w/o STI)-7, REMOVAL, Collector Cover.>
2) Disconnect the ground terminal from battery sensor. <Ref. to NT-6, BATTERY, NOTE, Note.>
3) Remove the intercooler. <Ref. to IN(w/o STI)-43, REMOVAL, Intercooler.>
4) Disconnect the connector (A) and terminal (B) from starter.

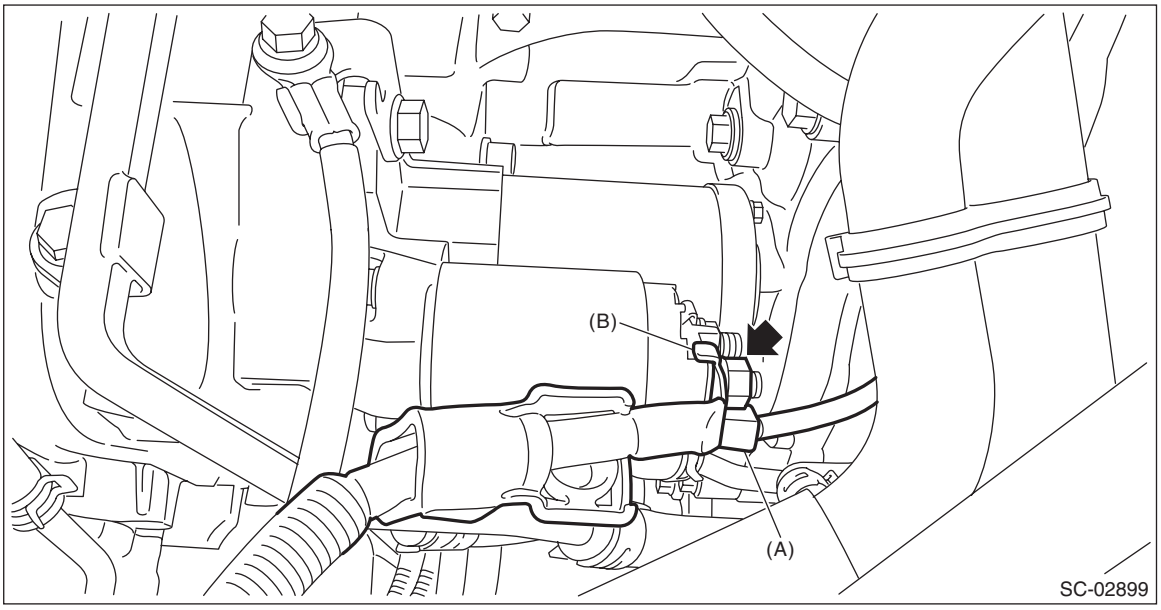

5) Lift up the vehicle.
6) Remove the nut or bolt at the bottom of the starter.

NOTE:
For the MT model, a bolt is used to the location (A).

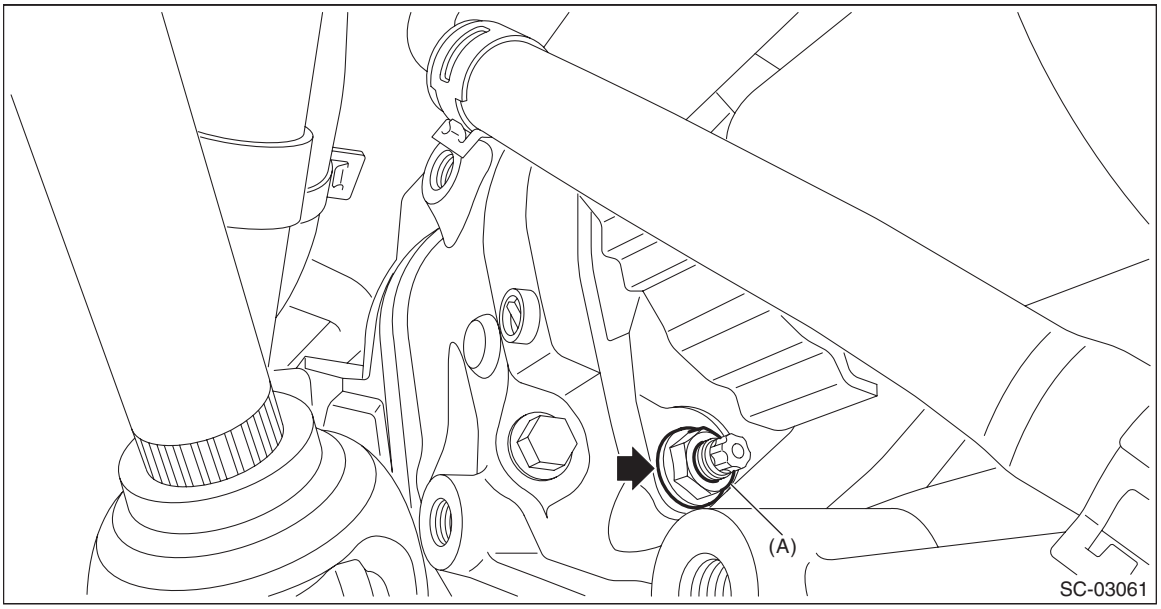

7) Lower the vehicle.

8) Disconnect the terminal (A) from the cable stay and remove the cable stay and starter from the transmission.

CAUTION:
In order to prevent damaging the terminal (A), fix the terminal (A) when loosing the bolt, and avoid the part from rotating together while loosening the bolt.

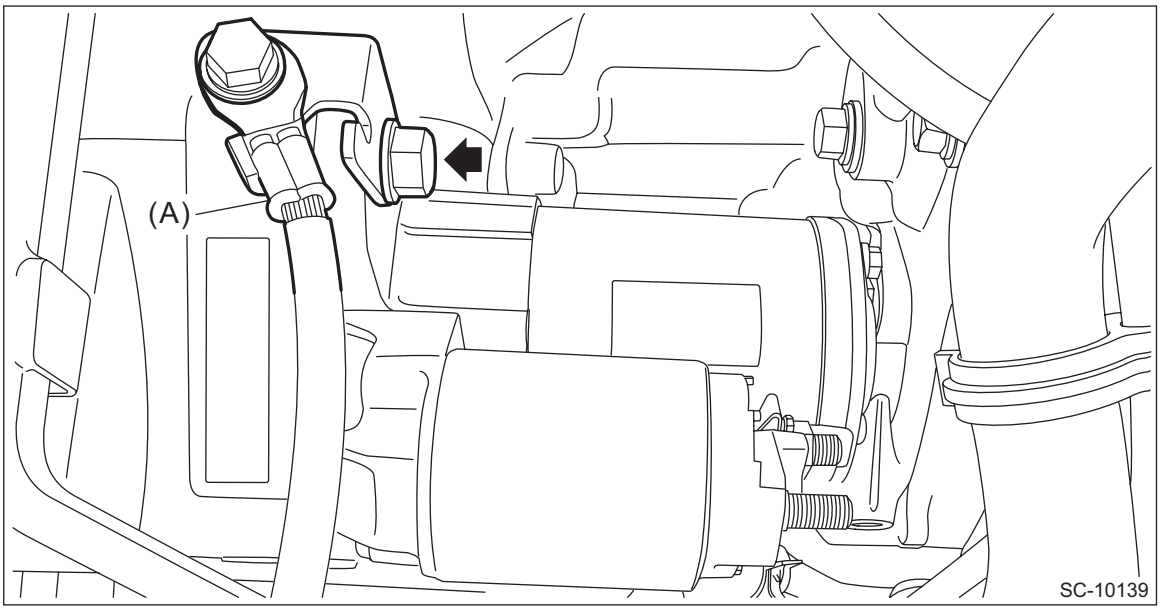

B: INSTALLATION

Install in the reverse order of removal.

NOTE:
- Tighten the starter and cable stay (a) together using the upper bolt securing the starter.
- For the MT model, a bolt is used to the location (b).

Tightening torque:
T1: 14 N·m (1.4 kgf-m, 10.3 ft-lb)
T2: 50 N·m (5.1 kgf-m, 36.9 ft-lb)

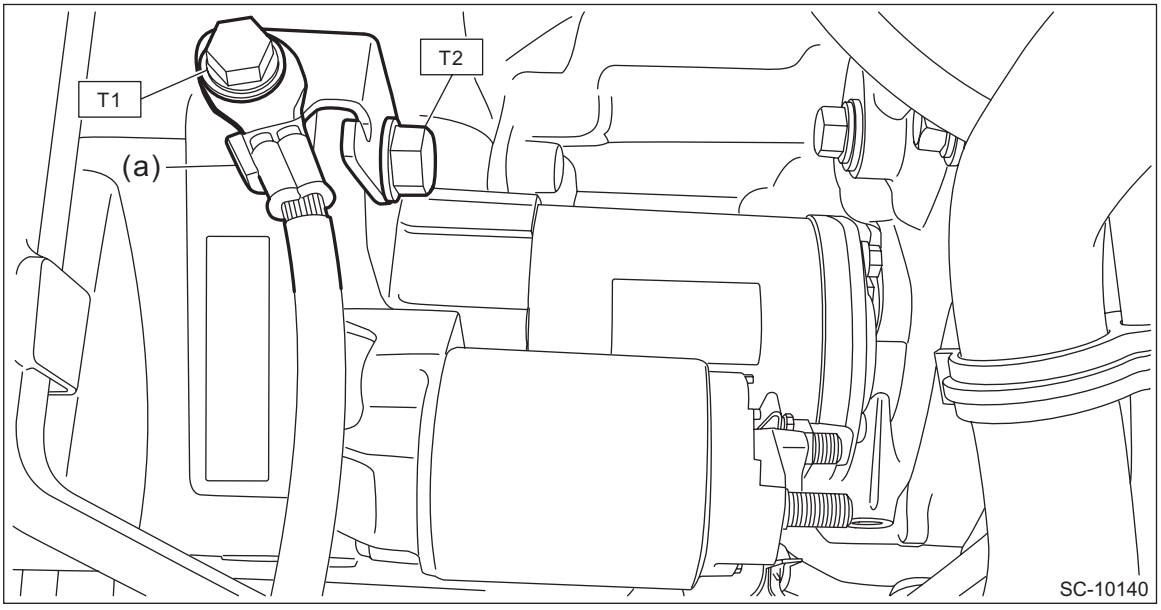

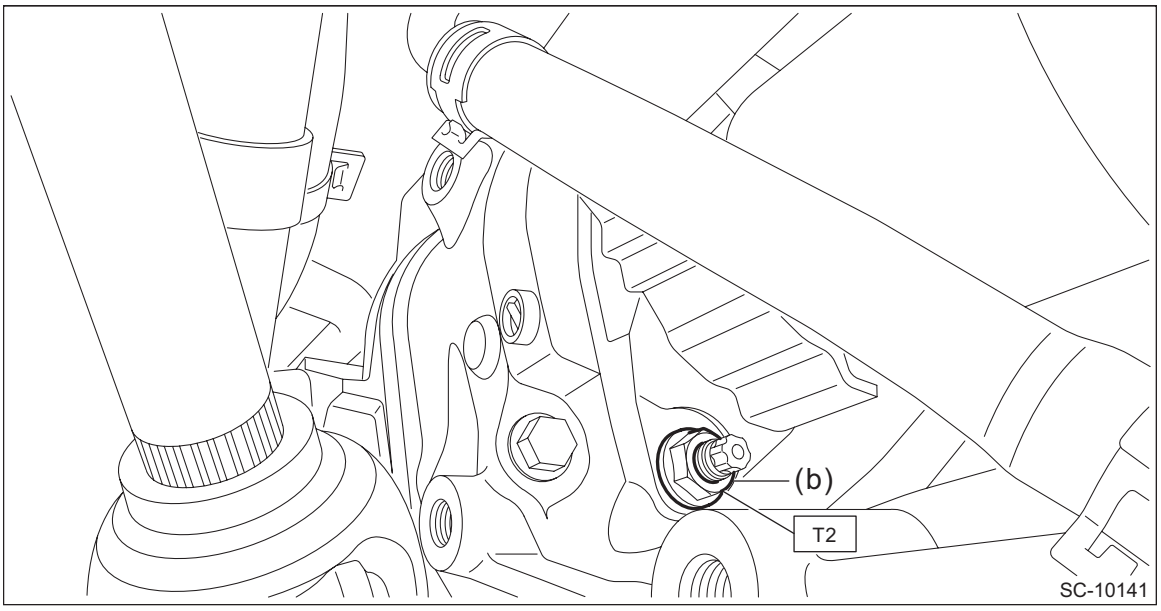

Tightening torque:
10 N·m (1.0 kgf-m, 7.4 ft-lb)

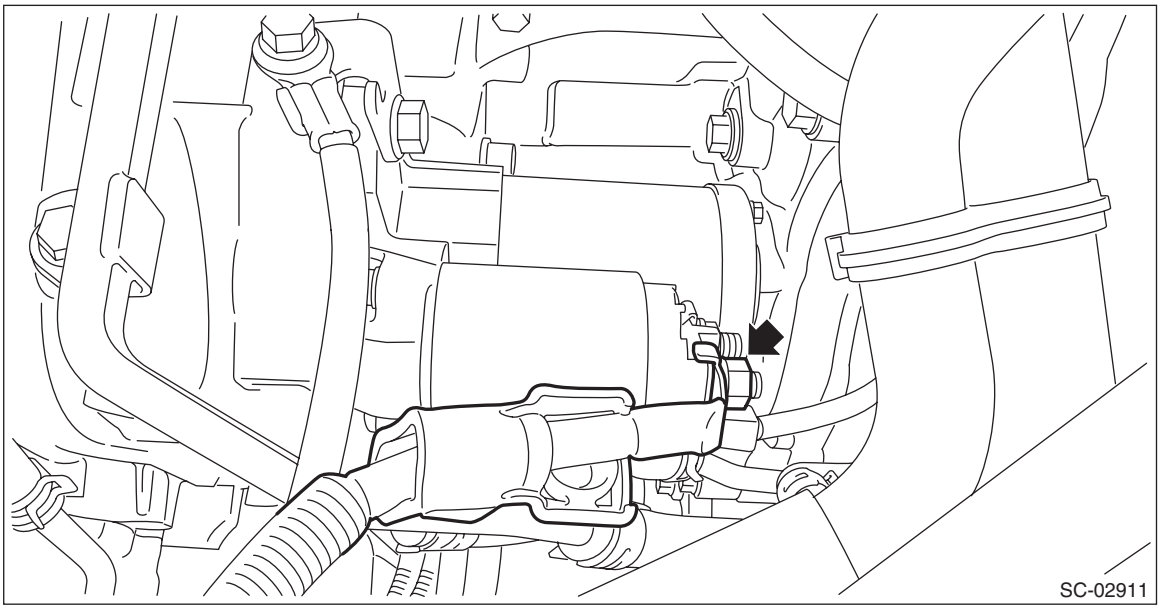

C: DISASSEMBLY

CAUTION:
The starter should be placed through a no-load test whenever it has been overhauled.

1) Disconnect the terminal M from the magnet switch assembly.

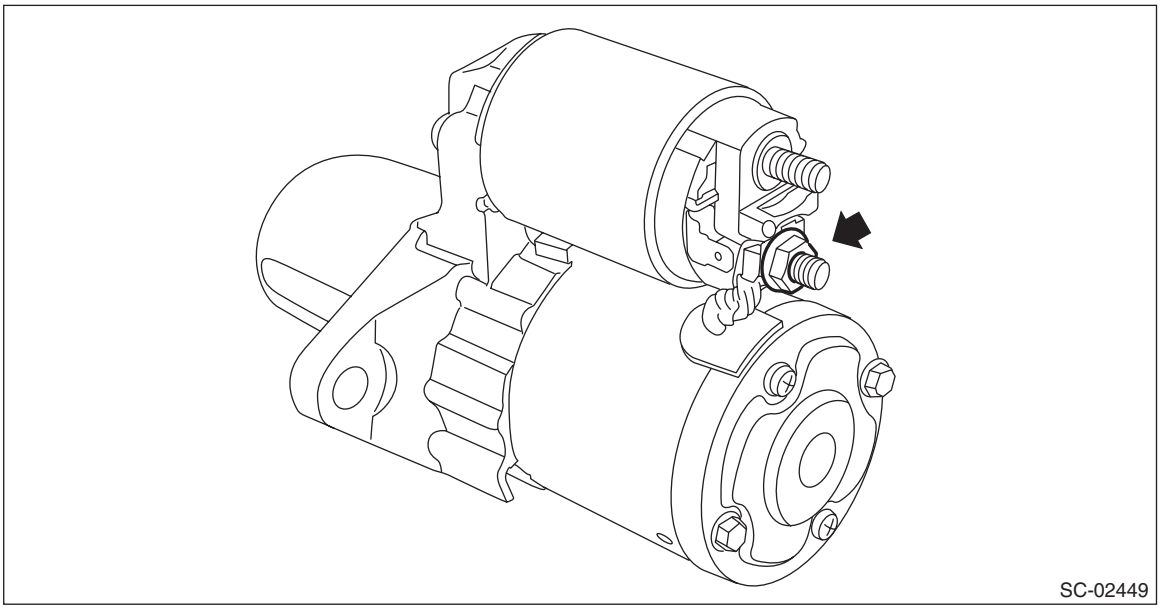
SC-02449

2) Remove the magnet switch assembly from the starter housing assembly.

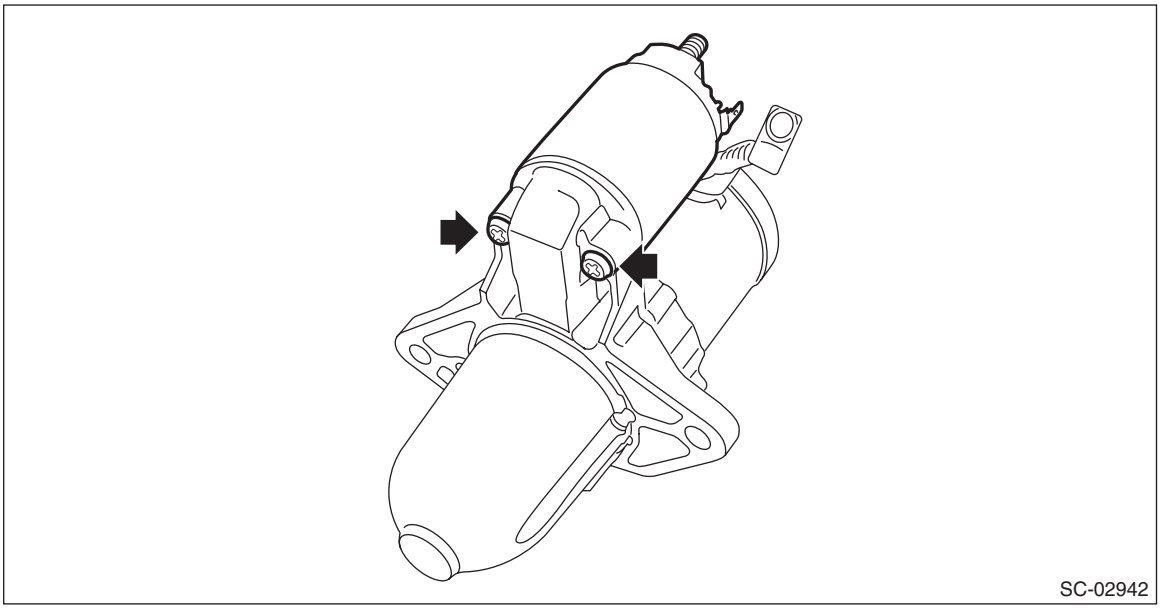
SC-02942

3) Remove screws (A) of the brush holder assembly, and through bolts (B) on both sides, and remove the starter cover assembly.

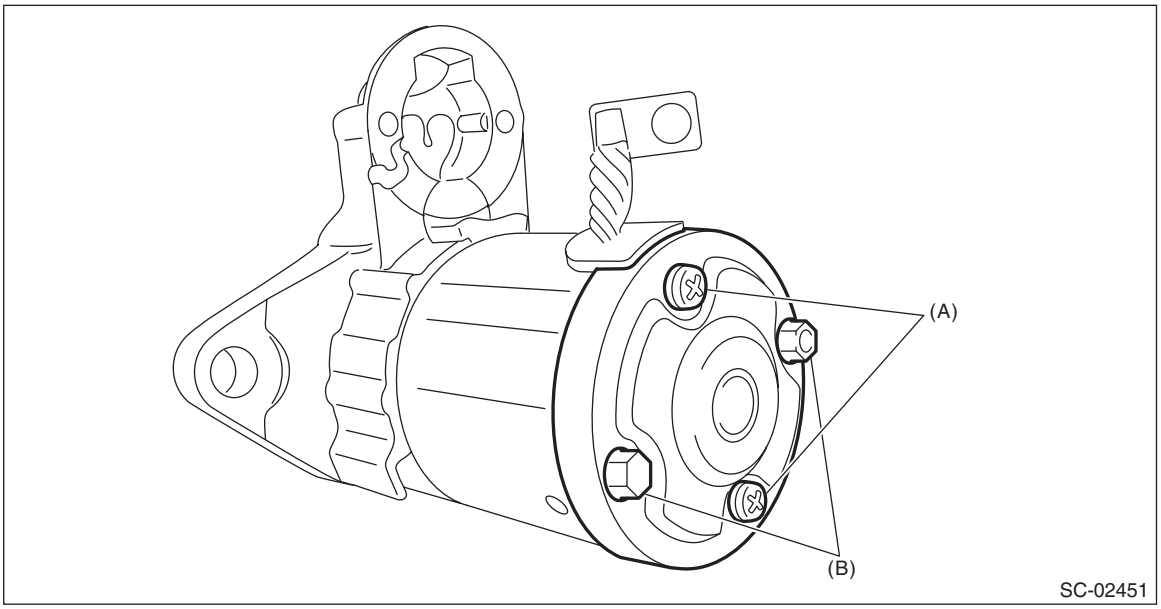

4) Remove the brush holder assembly from the armature assembly.

NOTE:
Hold the brush with your fingers so that the brush spring does not come flying out.

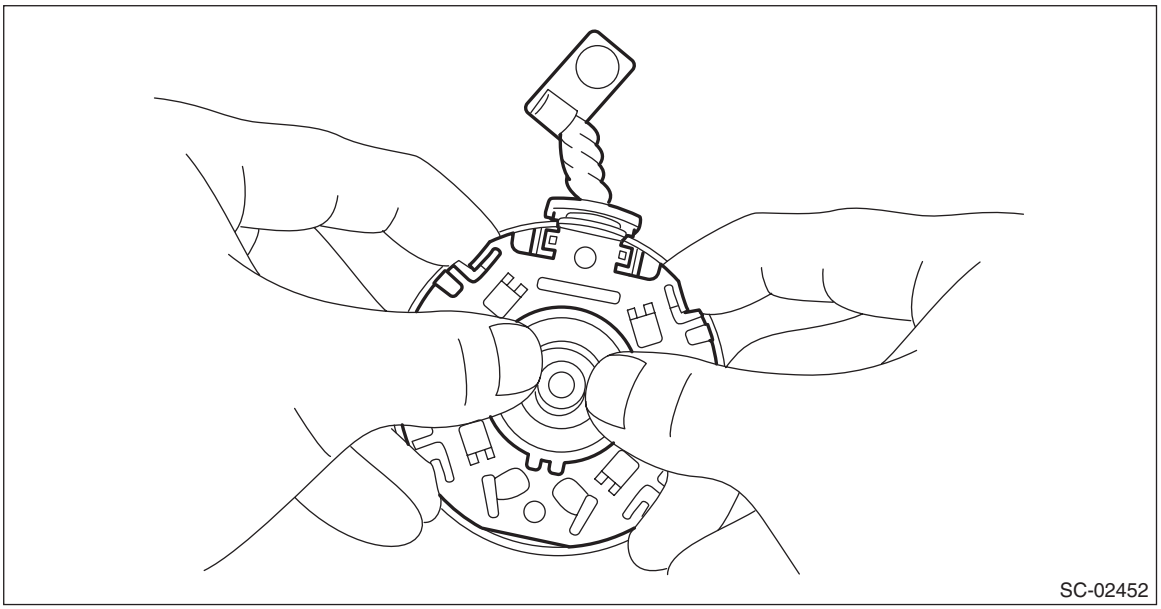

5) Remove the armature assembly and yoke assembly from the starter housing assembly together as a single unit.

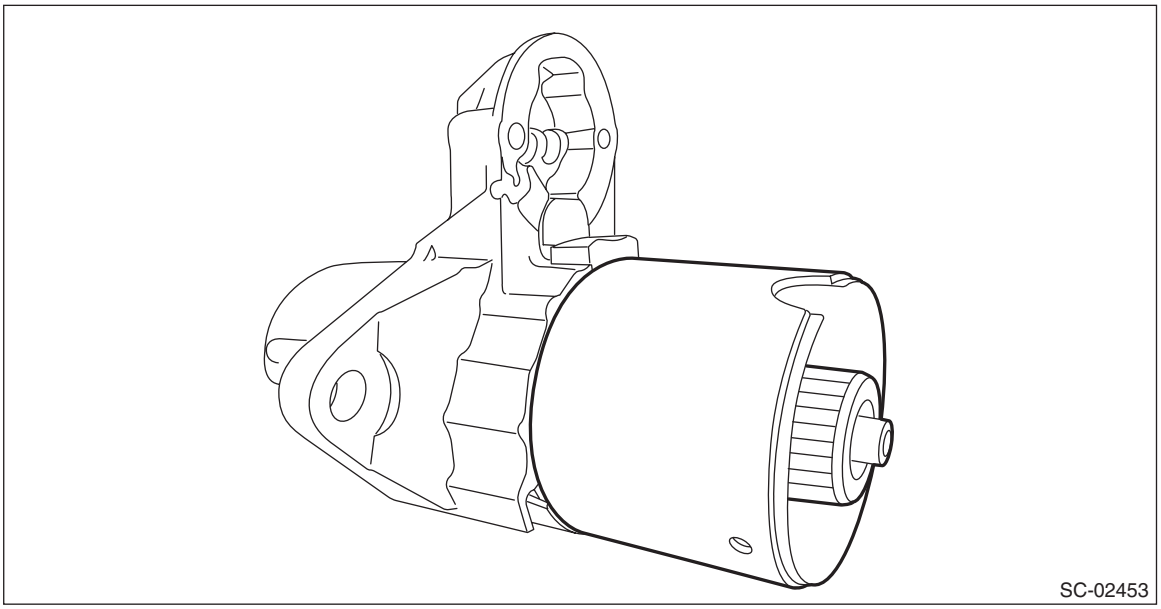
SC-02453

6) Separate the armature assembly and yoke assembly.

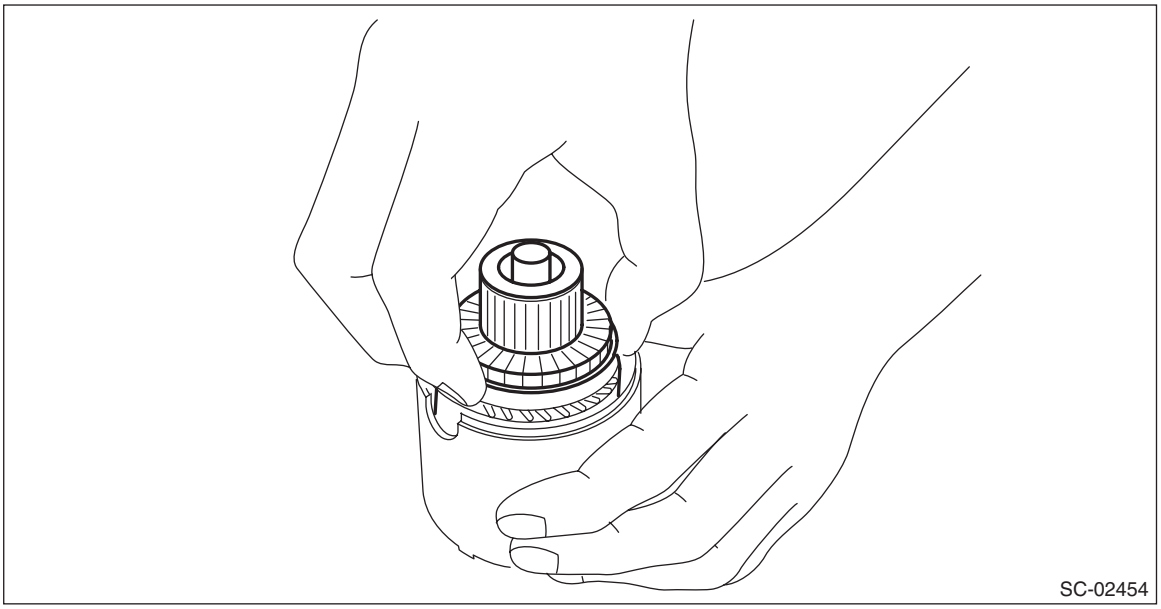
SC-02454

7) Remove the pinion gear from the internal gear assembly.

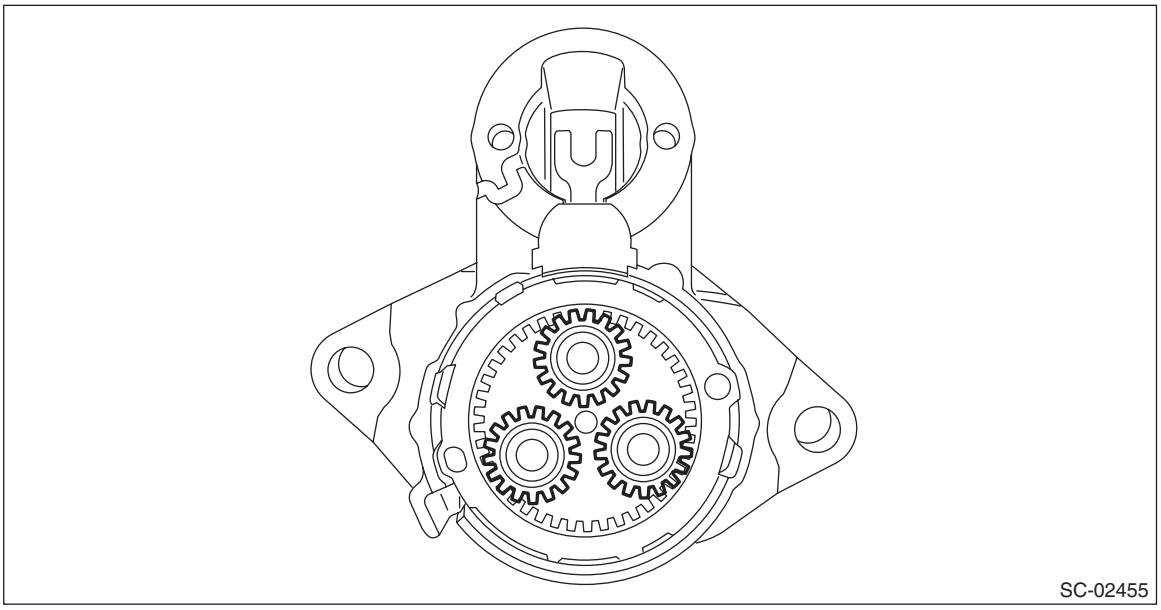

8) Remove seal rubber (A), plate (B), and seal rubber (C).

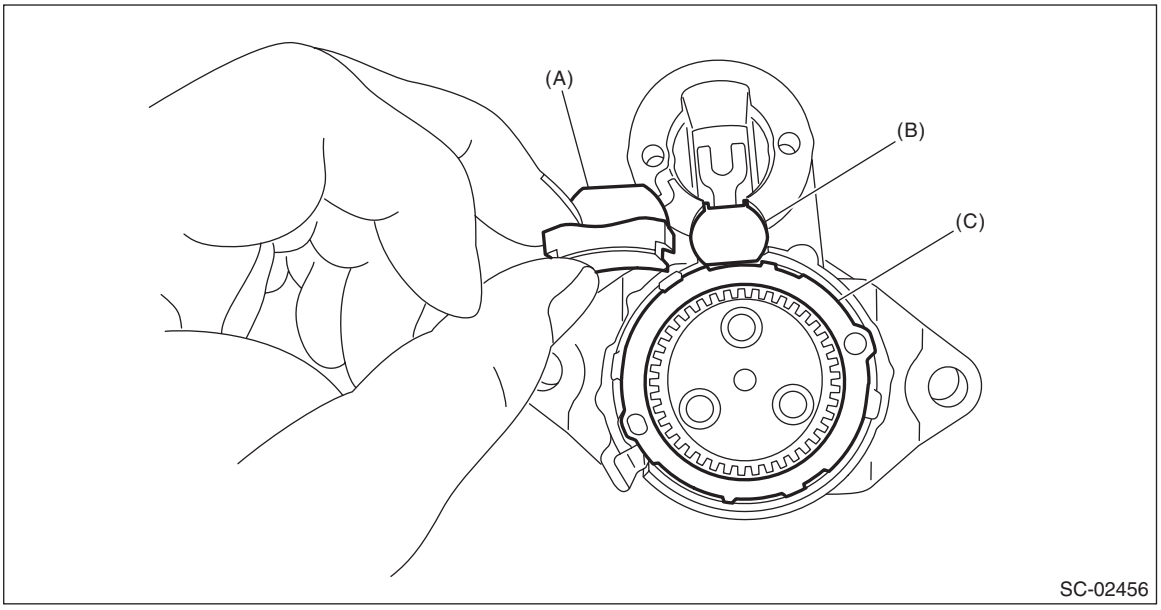

9) Lightly tap the starter housing assembly with a plastic hammer as shown in the figure, and remove the overrunning clutch, internal gear assembly, shaft and shift lever together as one unit.

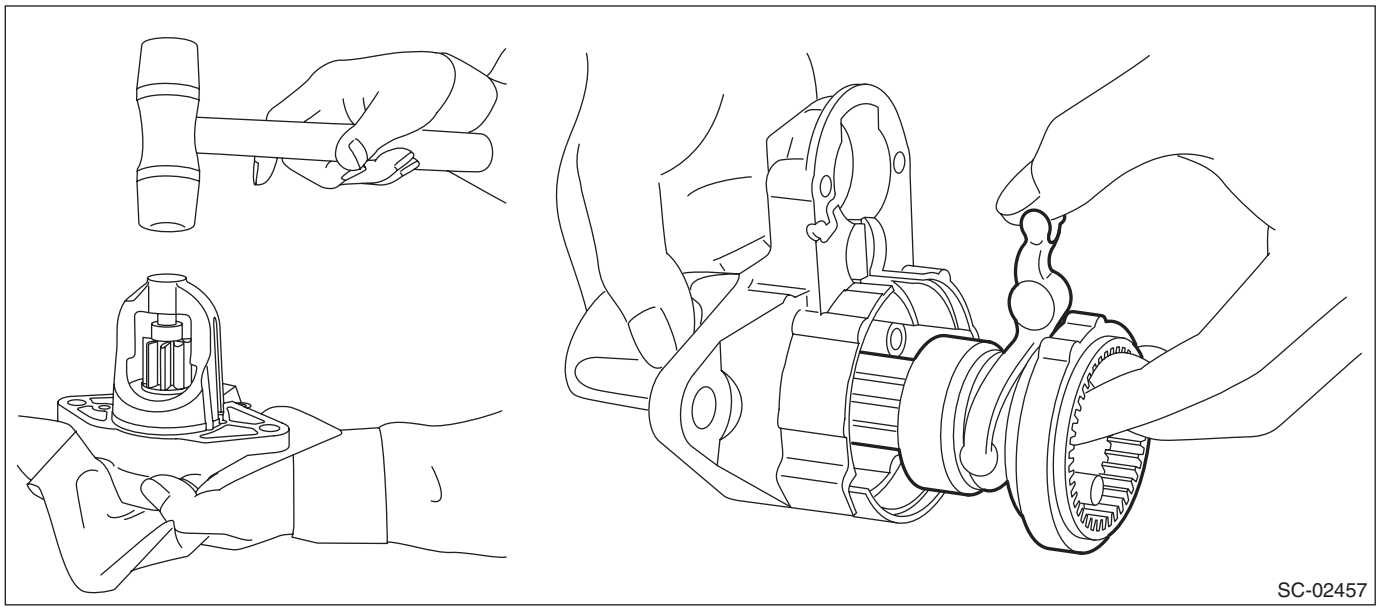
SC-02457

10) Use the following procedures to remove the overrunning clutch from the shaft.
(1) Use an appropriate tool (such as a fit socket wrench), and remove the stopper from snap ring by lightly tapping the stopper with a plastic hammer.

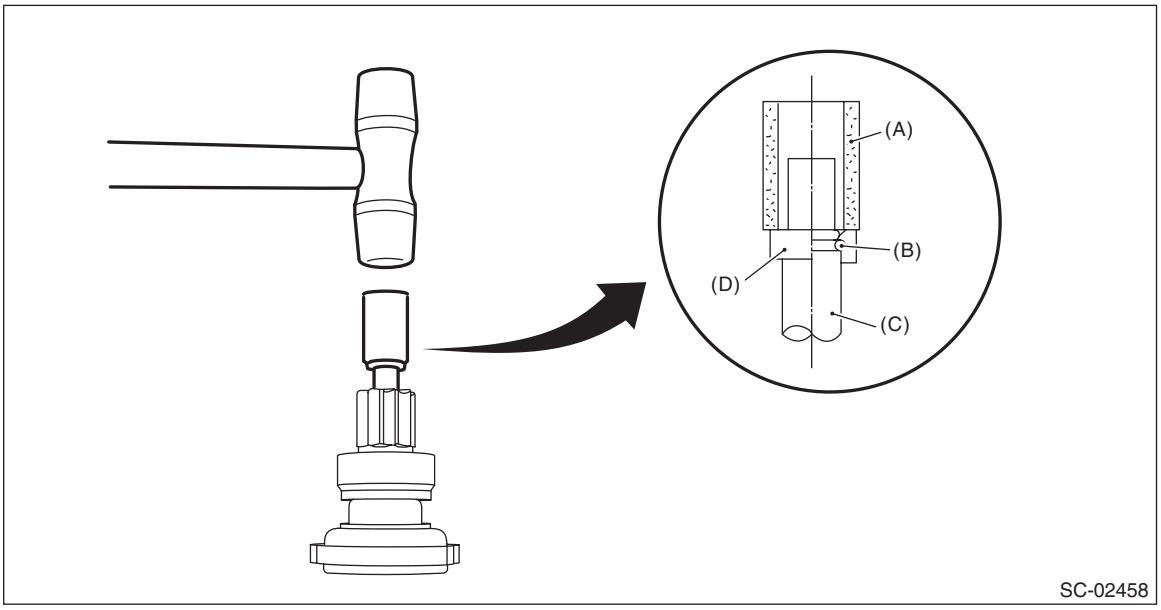

SC-02458

(A) Appropriate tool (B) Snap ring (C) Shaft
(D) Stopper

(2) Remove snap ring (A) from the shaft, and remove stopper (B).

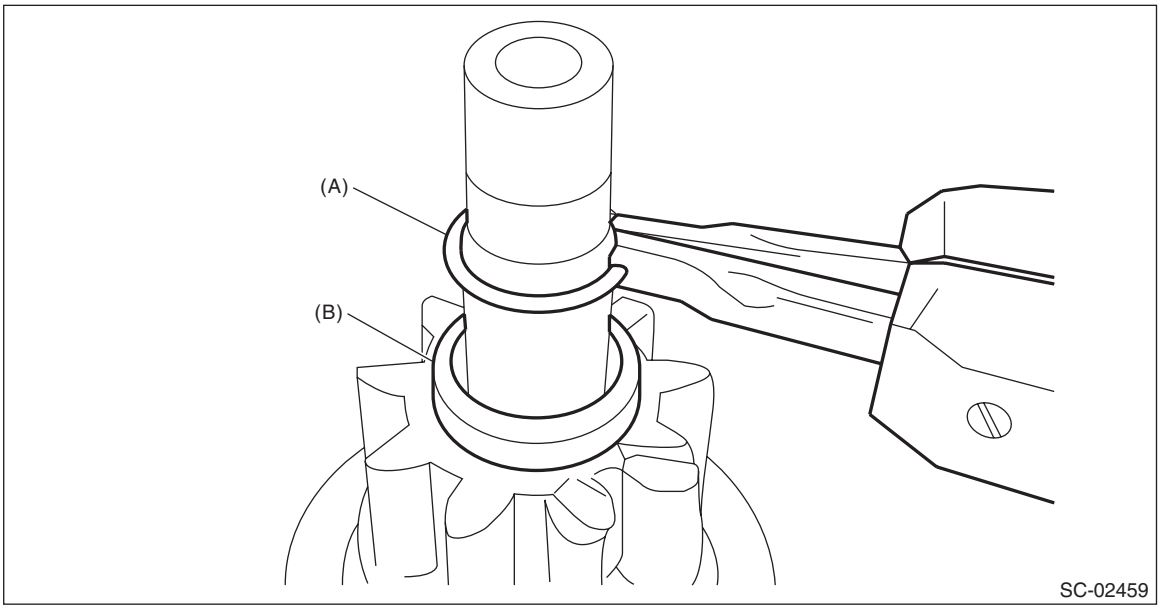

(3) Remove the overrunning clutch from the shaft.

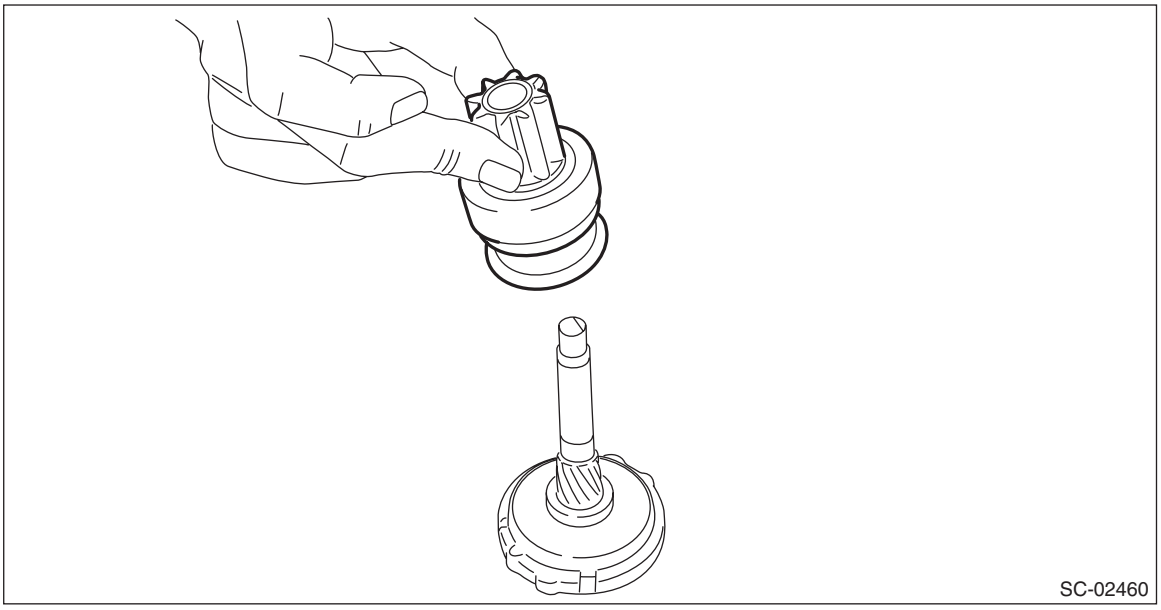

11) Separate the internal gear assembly and shaft.

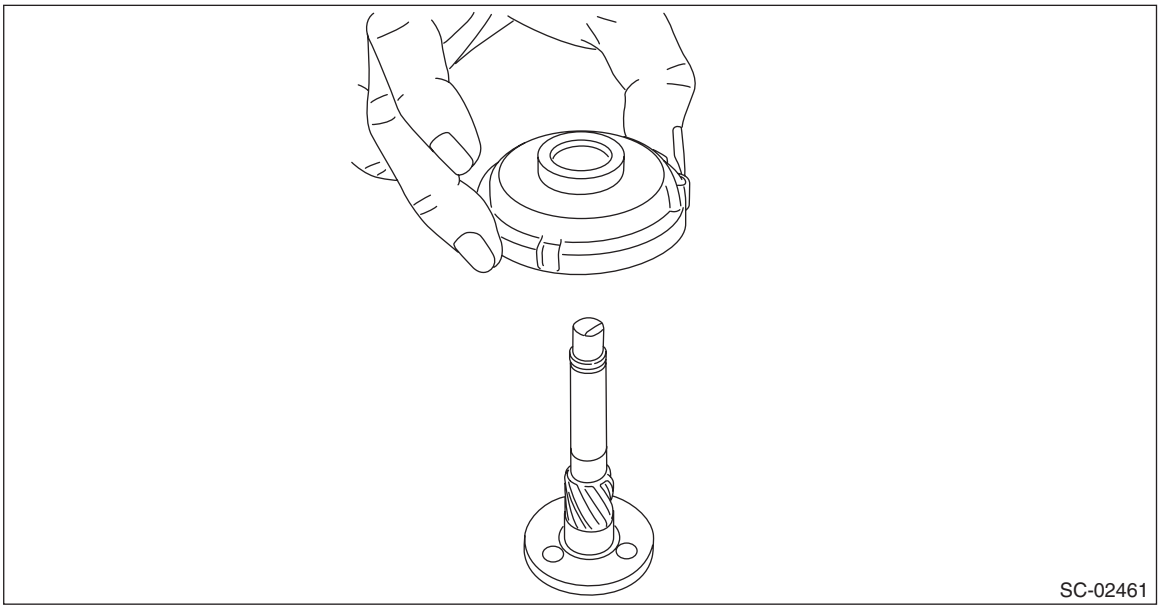

D: ASSEMBLY

1) Apply grease to the shaft sliding surfaces of the internal gear assembly.

Grease:
Multemp #6129 or equivalent

2) Assemble the shaft to the internal gear assembly.

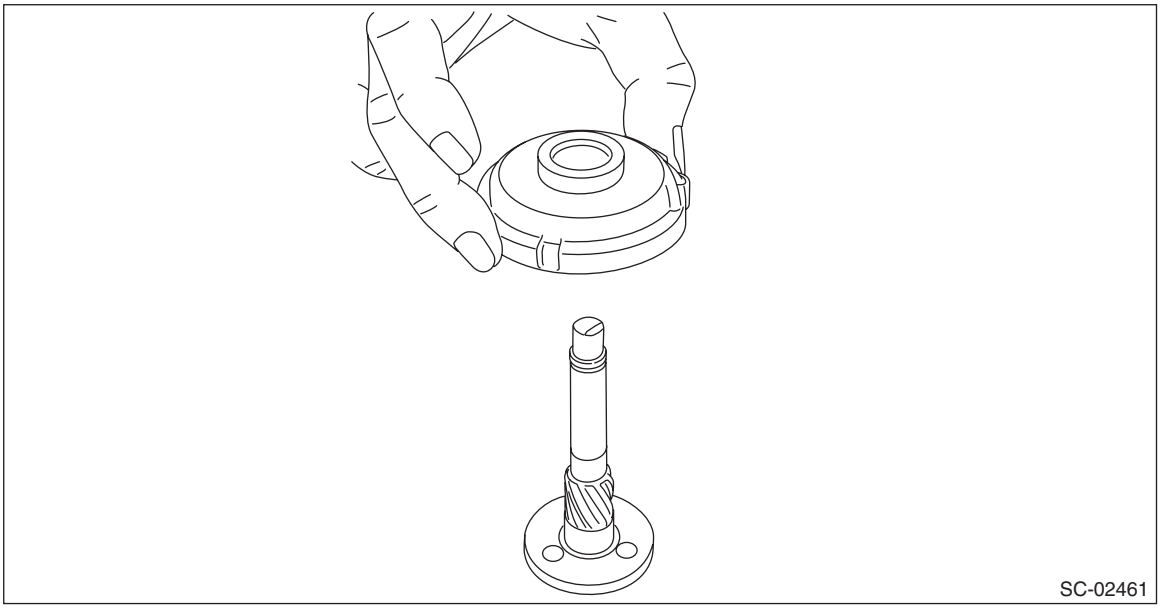

3) Assemble the overrunning clutch as follows:
(1) Apply grease to the spline portion of the shaft.

Grease:
Multemp #6129 or equivalent

(2) Install the overrunning clutch to shaft.

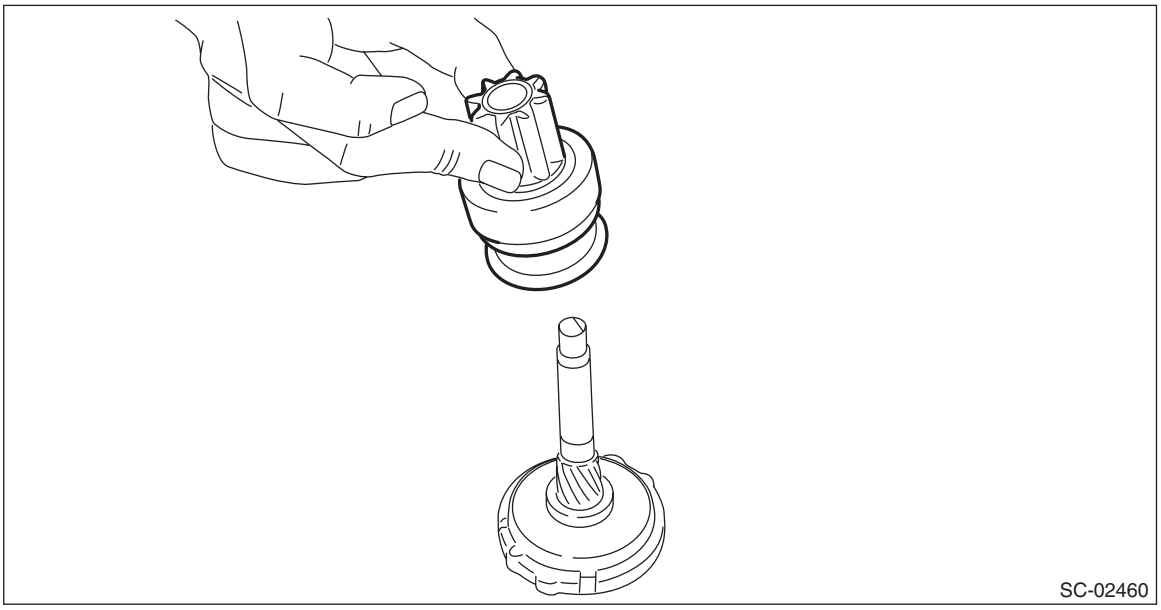

(3) Pass stopper (B) through the shaft assembly, and attach snap ring (A).

NOTE:
Use new stoppers and snap rings.

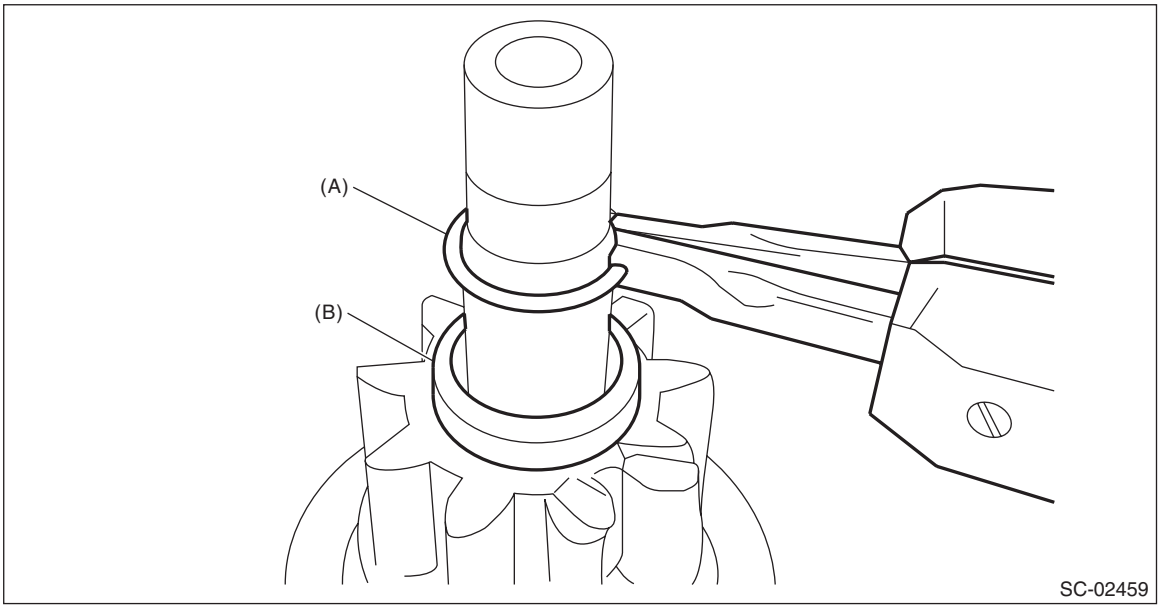

(4) Using a press, pressure fit stopper (B) into snap ring (A).

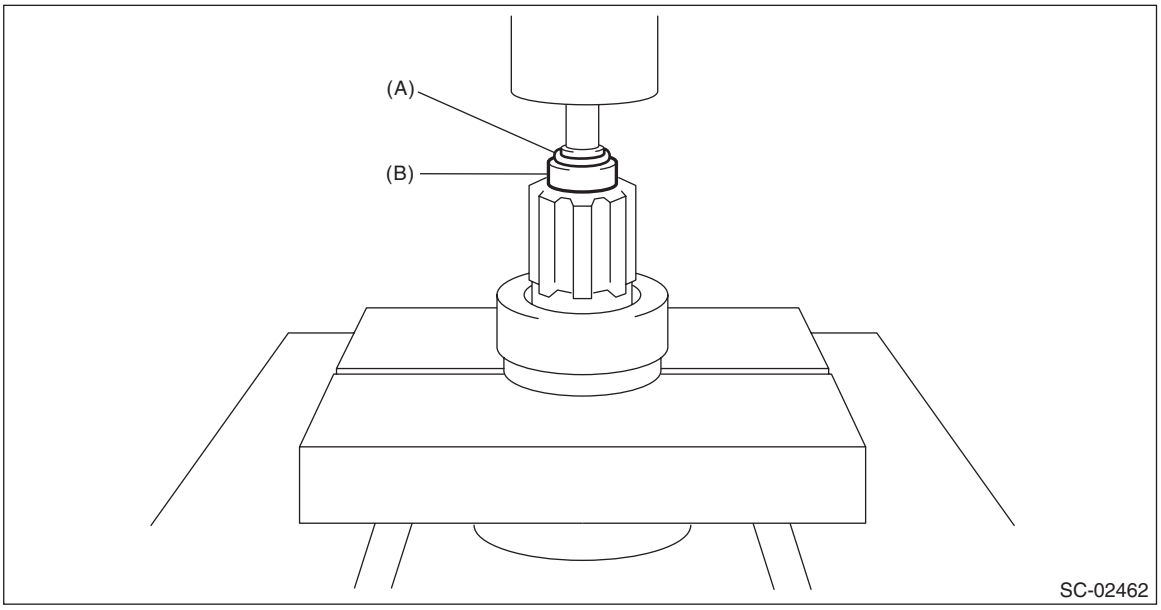

4) Assemble the overrunning clutch, internal gear assembly, shaft and shift lever as a single unit into the starter housing assembly.

NOTE:
Apply grease to the moving parts of the shift lever.

Grease:
Multemp #6129 or equivalent

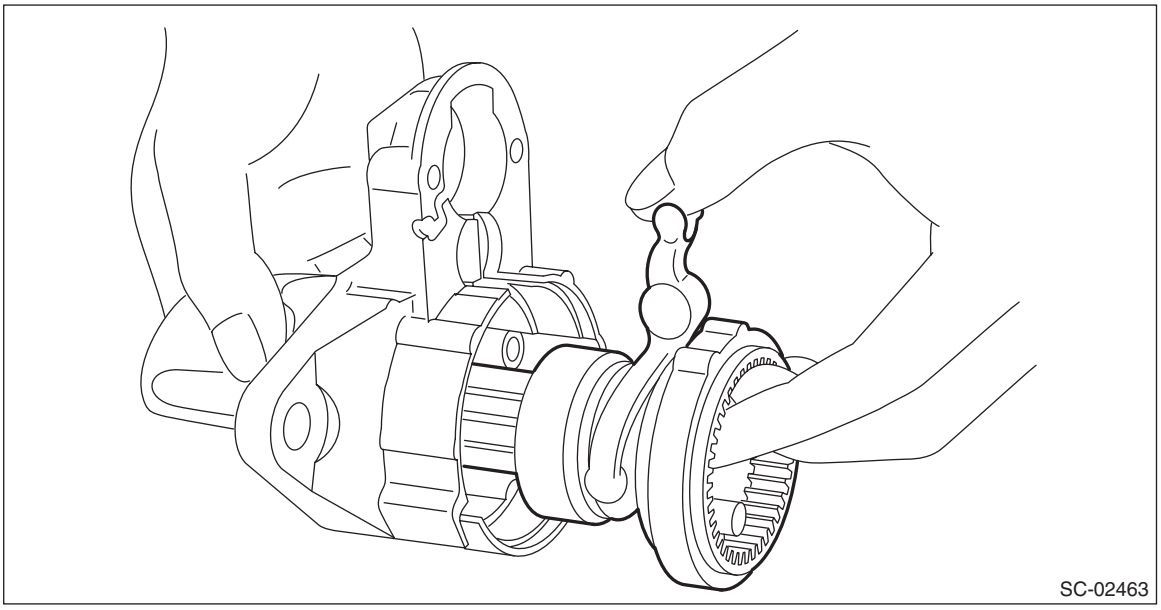

5) Apply grease to the inside of the internal gear assembly and pinion gear, and attach the pinion gear to the internal gear assembly.

NOTE:
- Apply grease evenly to the contact surfaces of each gear.
- Be careful that no debris becomes attached.

Grease:
Molykote® AG650 or equivalent

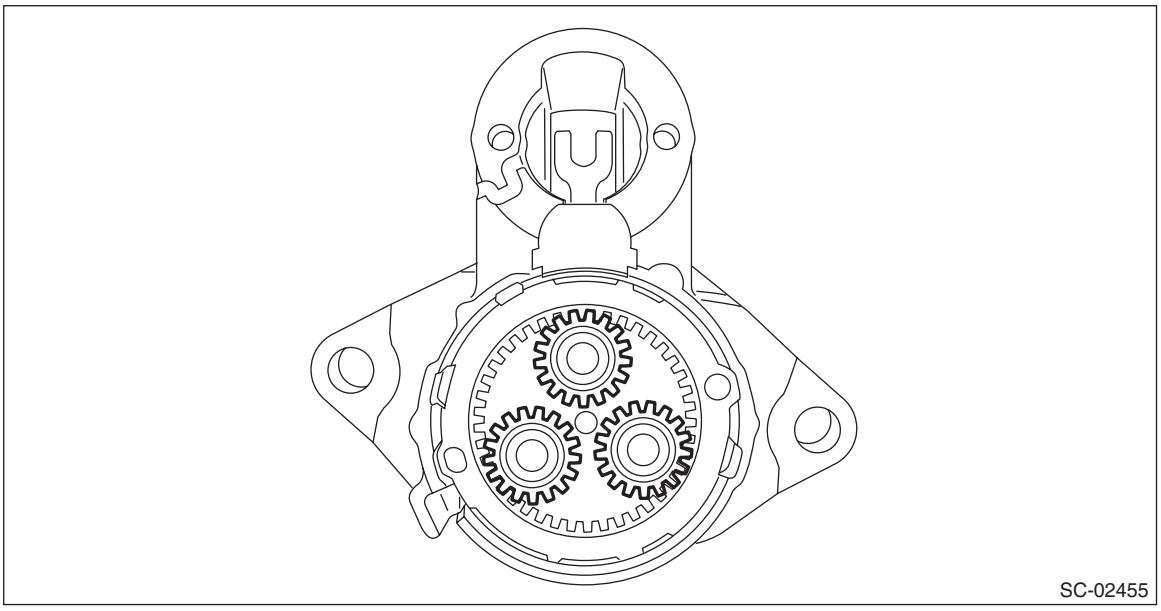

6) Install seal rubber (A), plate (B), and seal rubber (C).

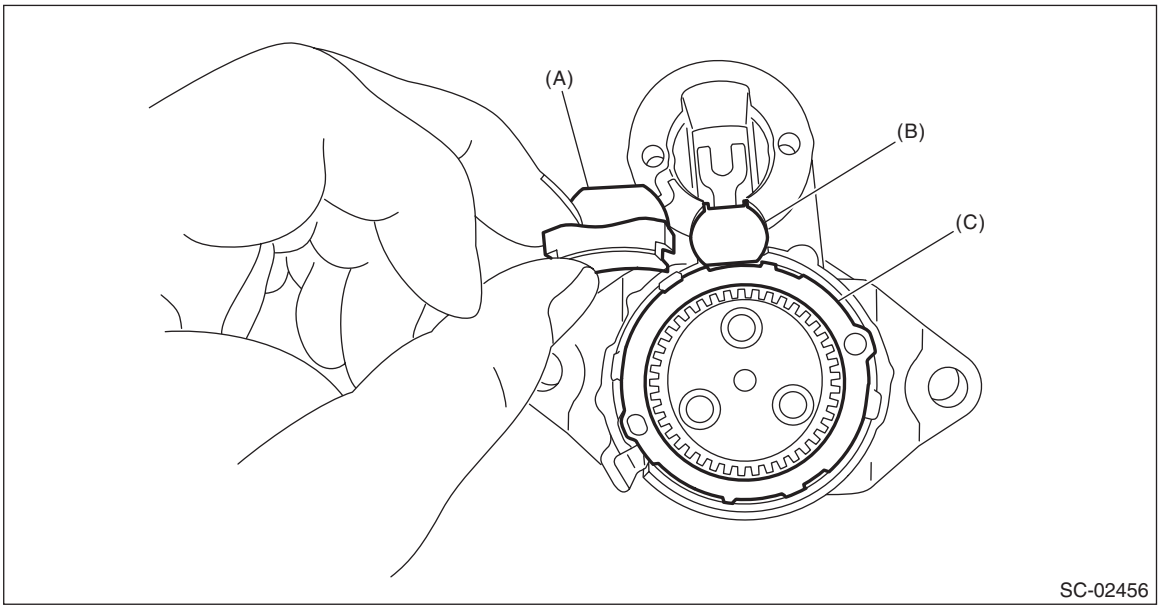

7) Assemble the armature assembly to the yoke assembly.

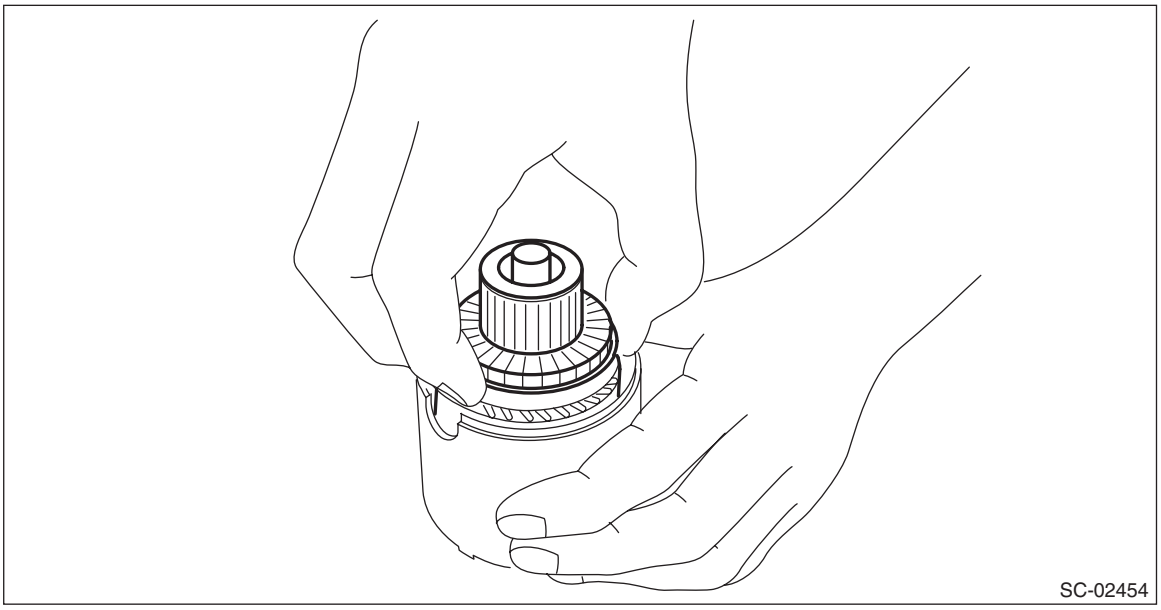

8) Attach the armature assembly and yoke assembly to the starter housing assembly together as a single unit.

NOTE:
As shown in the figure, match the protrusion of the yoke assembly to the cut out of the starter housing assembly.

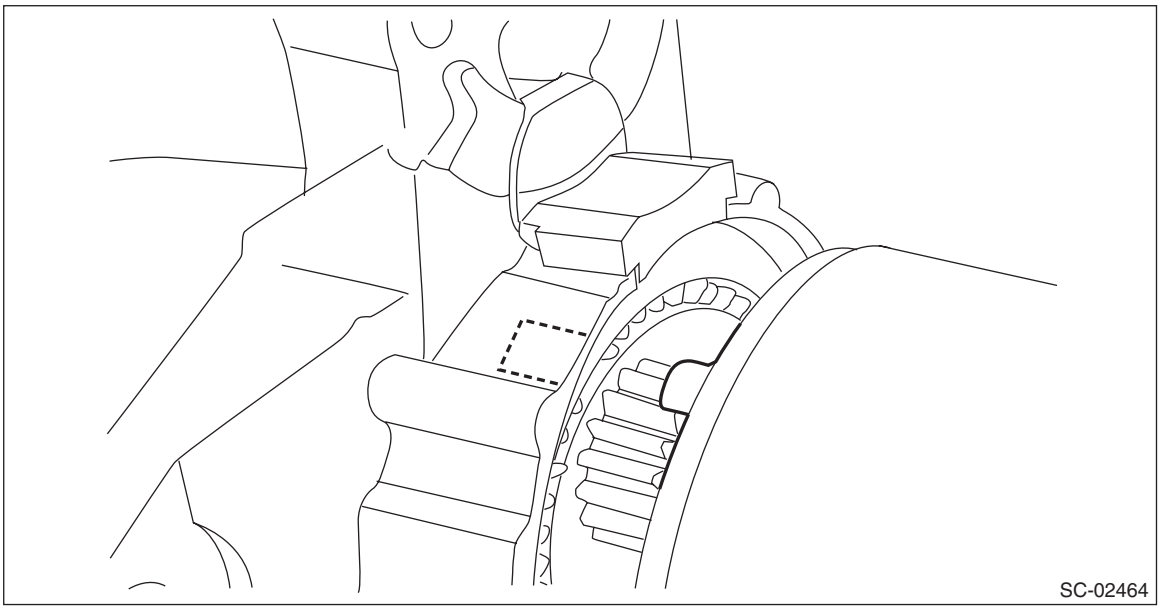

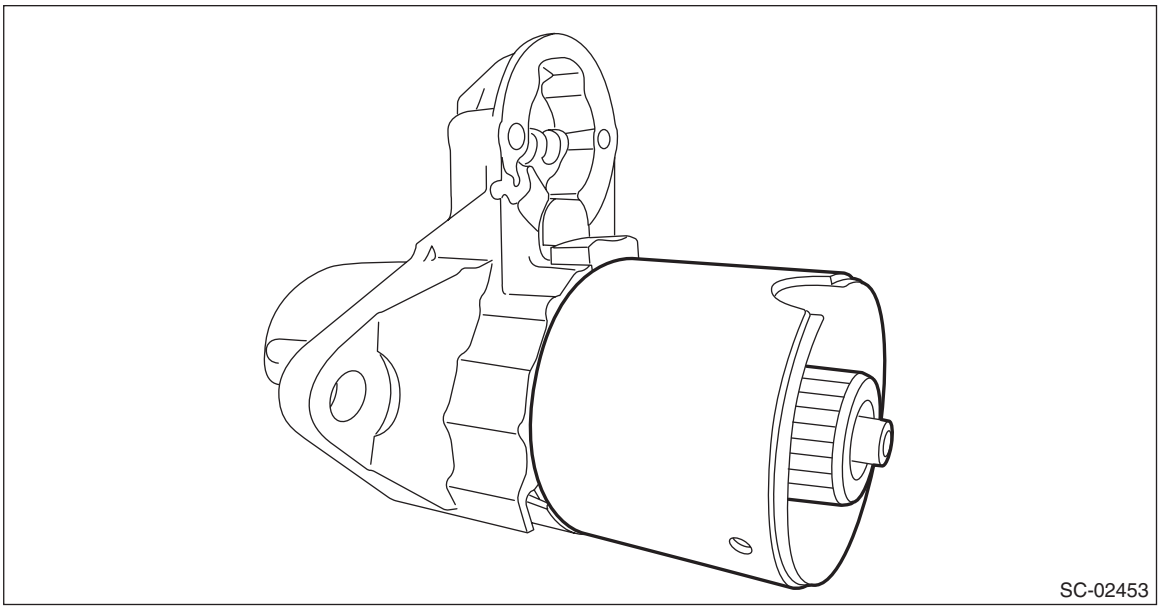
SC-02453

9) Use an appropriate tool (such as correctly sized socket wrenches) and attach the brush holder assembly to the armature assembly.

NOTE:
Be careful not to damage the brushes.

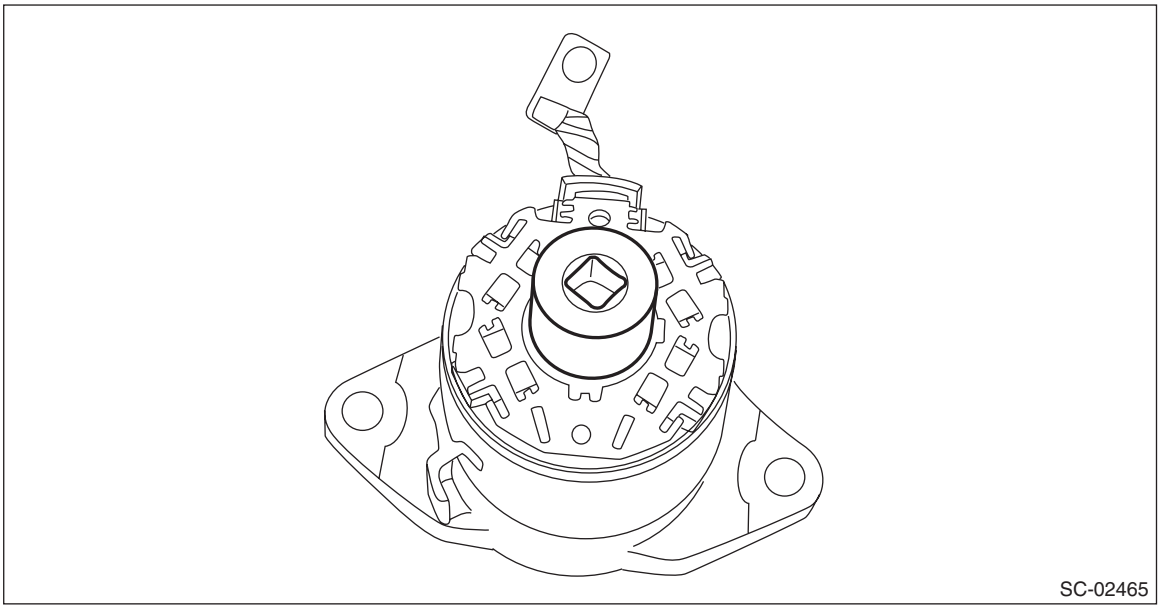
SC-02465

10) Secure starter cover assembly to the brush holder assembly with screws (A).

Tightening torque:
1.4 N·m (0.1 kgf-m, 1.0 ft-lb)

11) Tighten through bolts (B) on both sides.

Tightening torque:
6 N·m (0.6 kgf-m, 4.4 ft-lb)

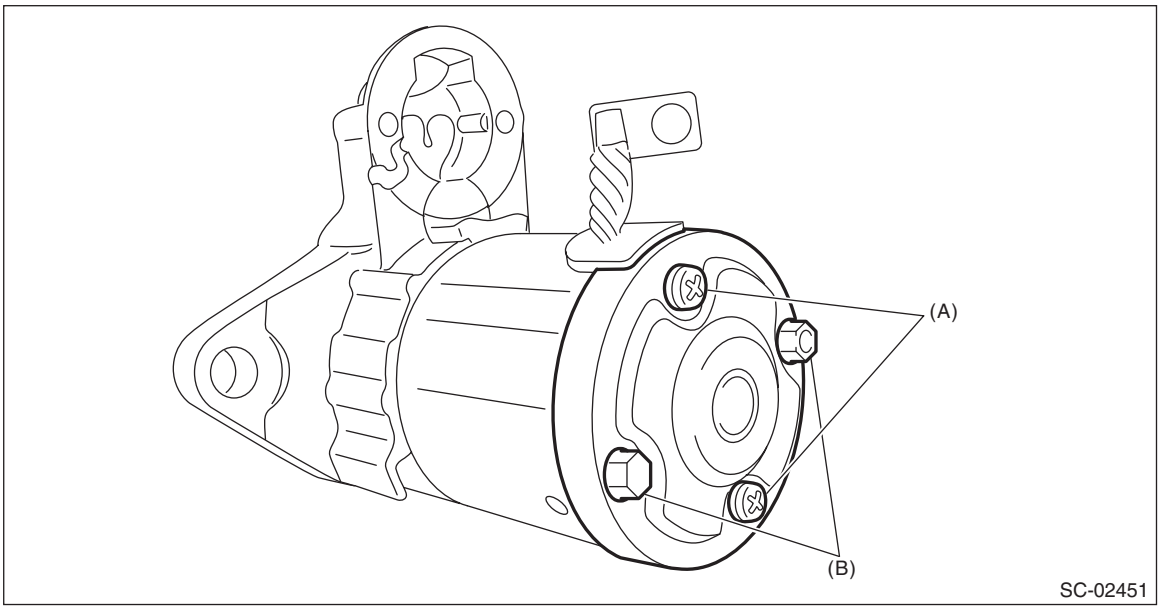

12) Attach the magnet switch assembly to the starter housing assembly.

Tightening torque:
7.5 N·m (0.8 kgf-m, 5.5 ft-lb)

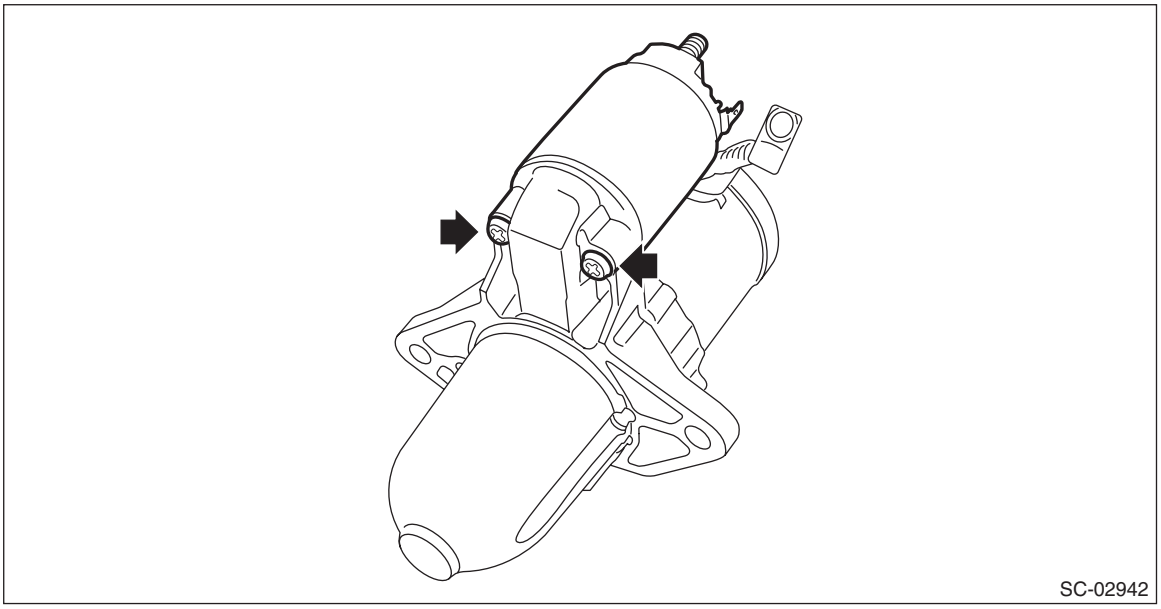

13) Attach the cable to the terminal M of the magnet switch assembly, and secure with nuts.

Tightening torque:
10 N·m (1.0 kgf-m, 7.4 ft-lb)

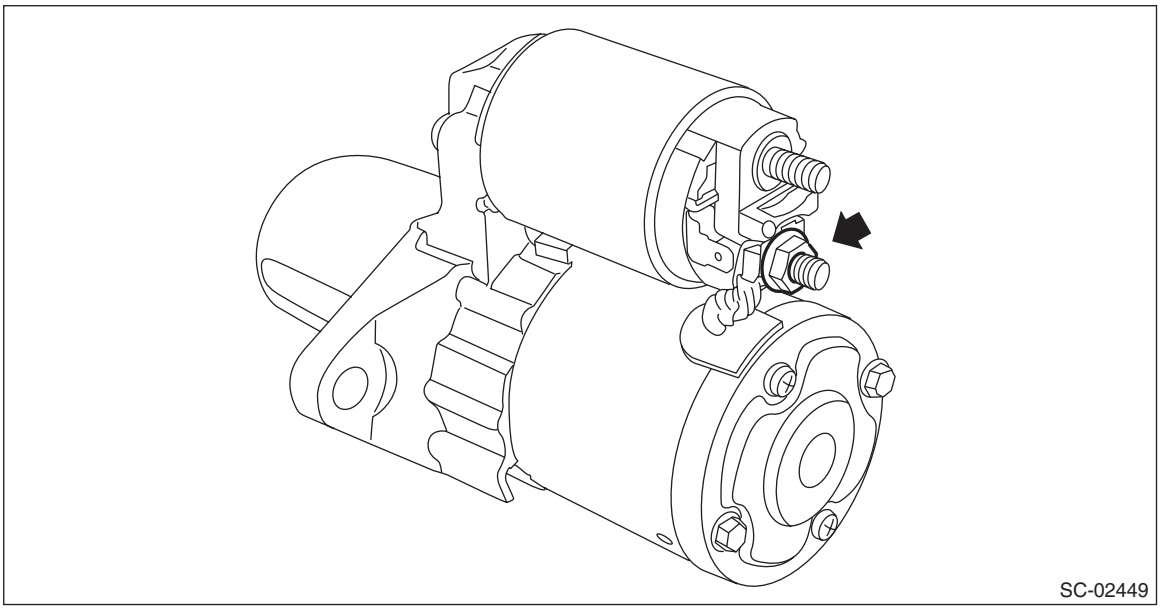

E: INSPECTION

NOTE:
• After the inspection, reinstall the disassembled or removed parts during the inspection in the reverse order of disassembly/removal procedure.
• Refer to component for tightening torque of each part. <Ref. to SC(w/o STI)-3, STARTER, COMPONENT, General Description.>

1. ARMATURE

1) Check the commutator for signs of seizure or stepped wear caused by roughness of the surface. If there is light wear, use sandpaper to repair.
2) Check for runout on the commutator. If excessive, replace the armature.

Commutator runout:
Standard
0.05 mm (0.0020 in)
Limit
0.10 mm (0.0039 in)

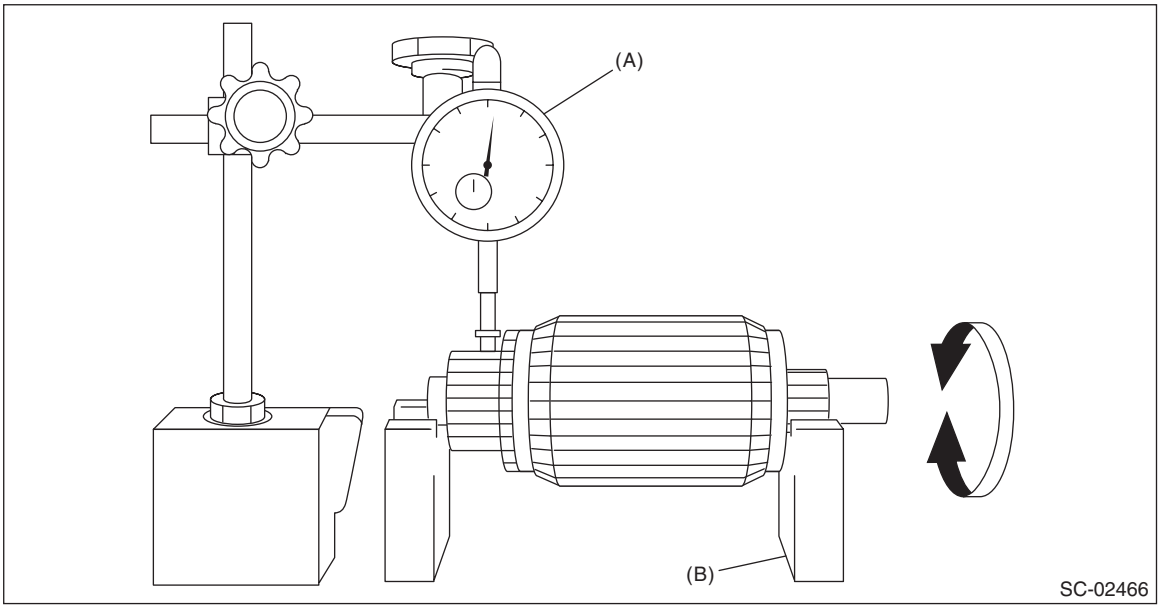

(A) Dial gauge (B) V-block

3) Check the depth of the segment mold. If it is not within the standard, replace the armature.

Depth of segment mold:
Standard
0.50 mm (0.020 in)

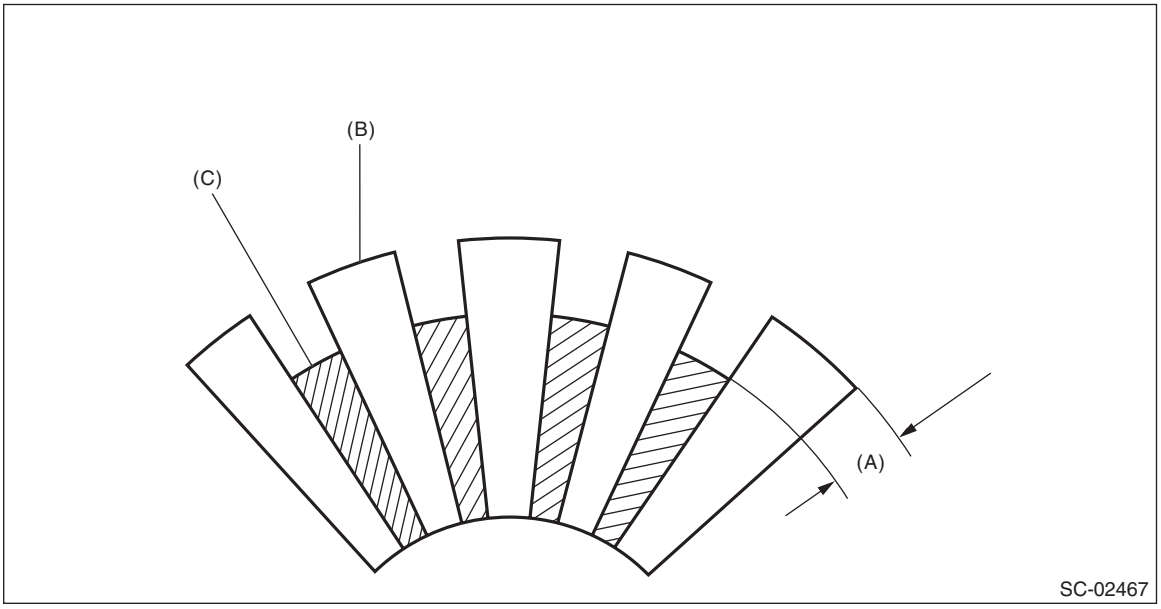

(A) Depth of mold (B) Segment (C) Mold

4) Place the armature on the growler tester to check for short circuits. While slowly turning the armature, support the steel sheet for the armature core. If the circuit of the armature is shorted, the steel sheet will vibrate, causing it to move towards the core. When the steel sheet has moved or vibrated, replace the armature.

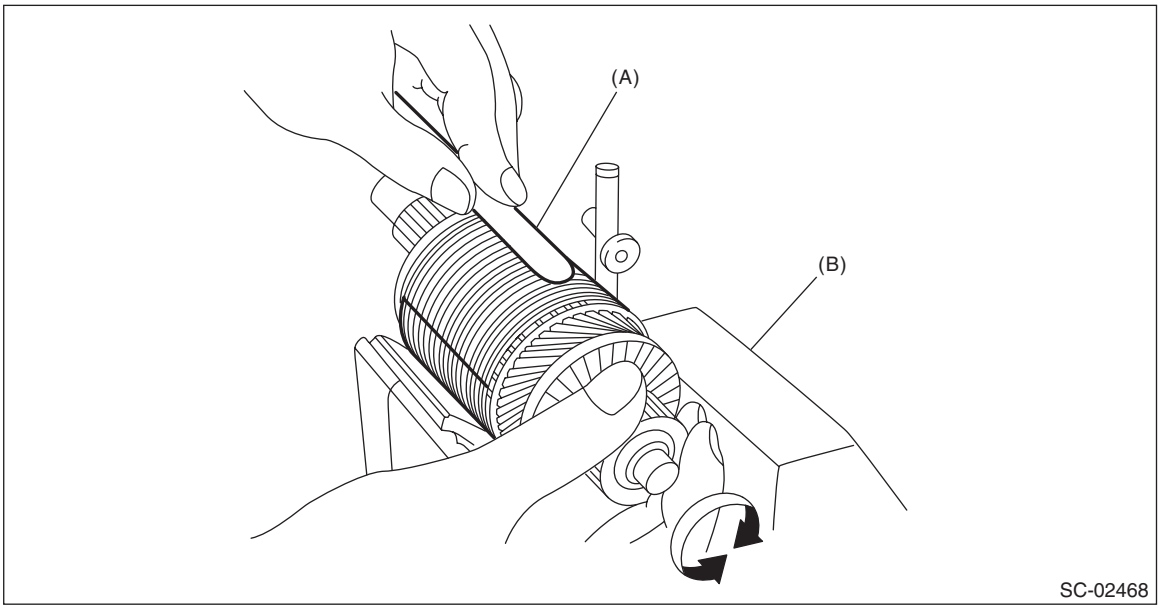

(A) Steel sheet (B) Growler tester

5) Use a circuit tester to touch the probe of one side to the commutator segment, and the other probe to the shaft. If there is continuity, replace the armature.

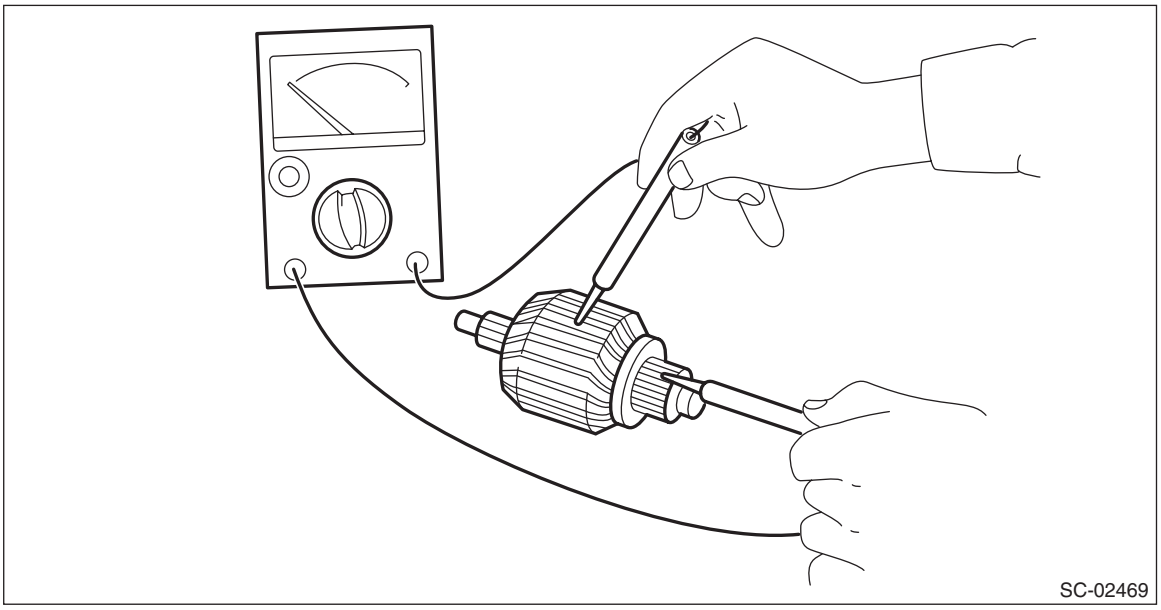

2. YOKE

Make sure that the pole is set at the predetermined position.

3. OVERRUNNING CLUTCH

Inspect the pinion, and if there is any wear or damage, replace the overrunning clutch. Also, check that the pinion rotates counterclockwise smoothly and does not rotate clockwise. If there is any fault, replace the overrunning clutch.

CAUTION:
To prevent spilling of grease, do not clean the overrunning clutch with oil.

4. BRUSH AND BRUSH HOLDER

1) Visually check the brush. If there is any abnormal wear or cracks, replace the brush.
2) Measure the length of the brush. If it exceeds service limits, replace the brush.

Brush length:
Standard
12.3 mm (0.484 in)
Limit
7.0 mm (0.276 in)

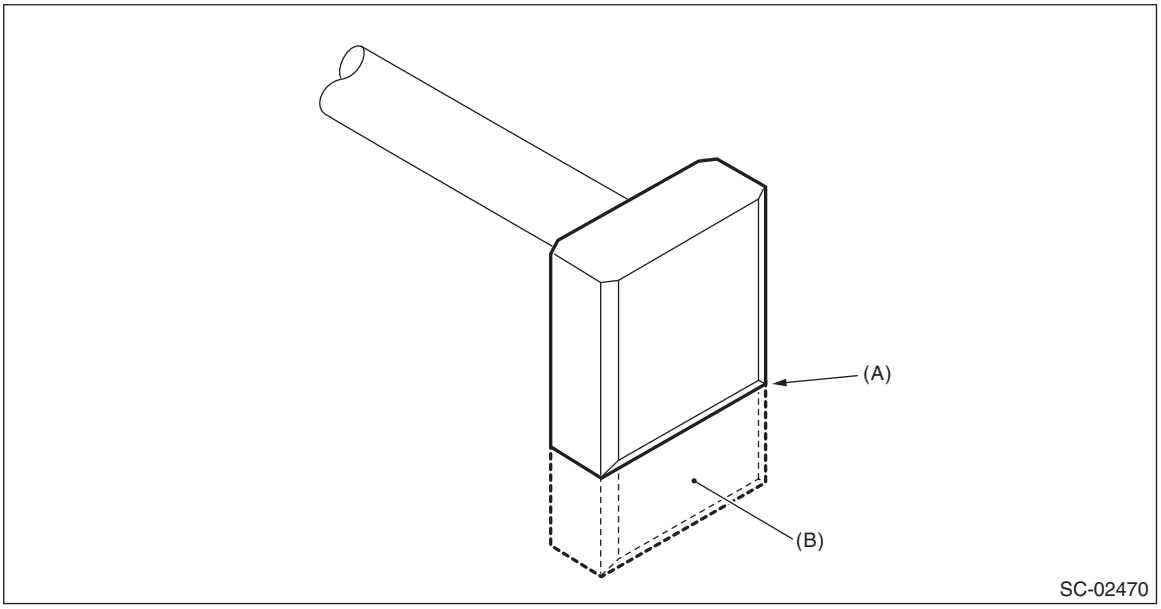

(A) Service limit line (B) Brush

3) Check that the brush moves smoothly in the brush holder.
4) Measure the brush spring force with a spring scale. Replace the brush holder if below the service limit.

Brush spring force:

Standard
15.9 — 19.5 N (1.62 — 1.99 kgf, 3.57 — 4.38 lbf) (when new)

Limit
2.5 N (0.25 kgf, 0.56 lbf)

5. SWITCH ASSEMBLY

Using a circuit tester, check there is continuity between S terminal and M terminal, and between S terminal and ground. Also, check that there is no continuity between M terminal and B terminal.

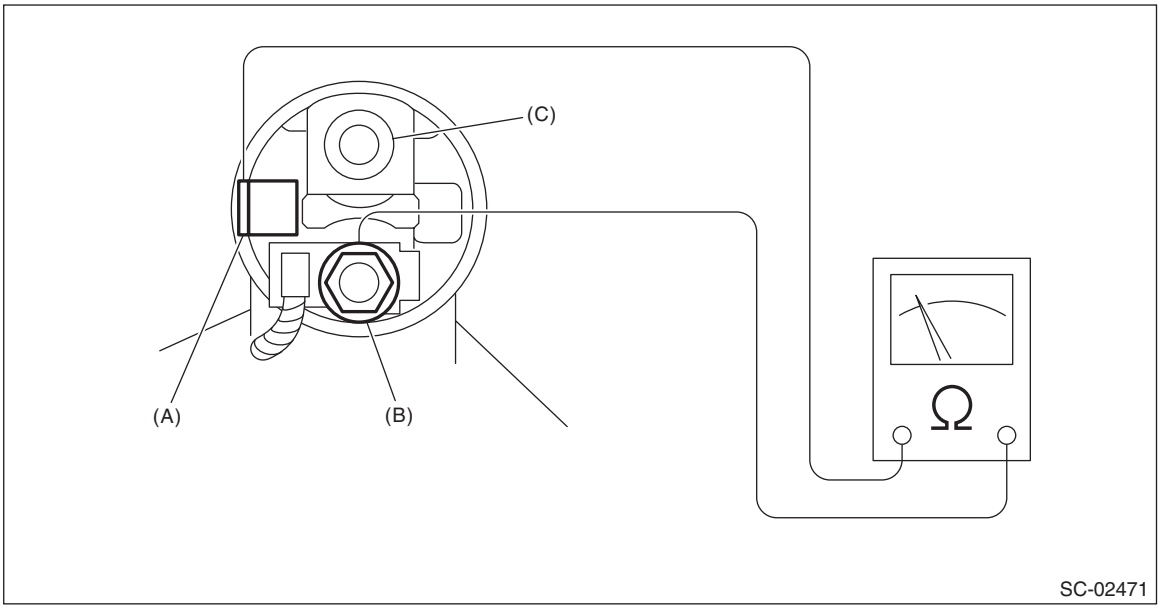

(A) Terminal S (B) Terminal M (C) Terminal B

Terminals	Standard
Terminal S — terminal M	1 Ω or less
Terminal S — Ground	1 Ω or less
Terminal M — terminal B	1 MΩ or more

6. SWITCH ASSEMBLY OPERATION

CAUTION:
Perform the inspection in a short period of time. (Within 3 to 5 seconds)

1) Loosen the nut which holds the M terminal to the starter body.

NOTE:
This procedure is required to facilitate the harness removal from the M terminal.

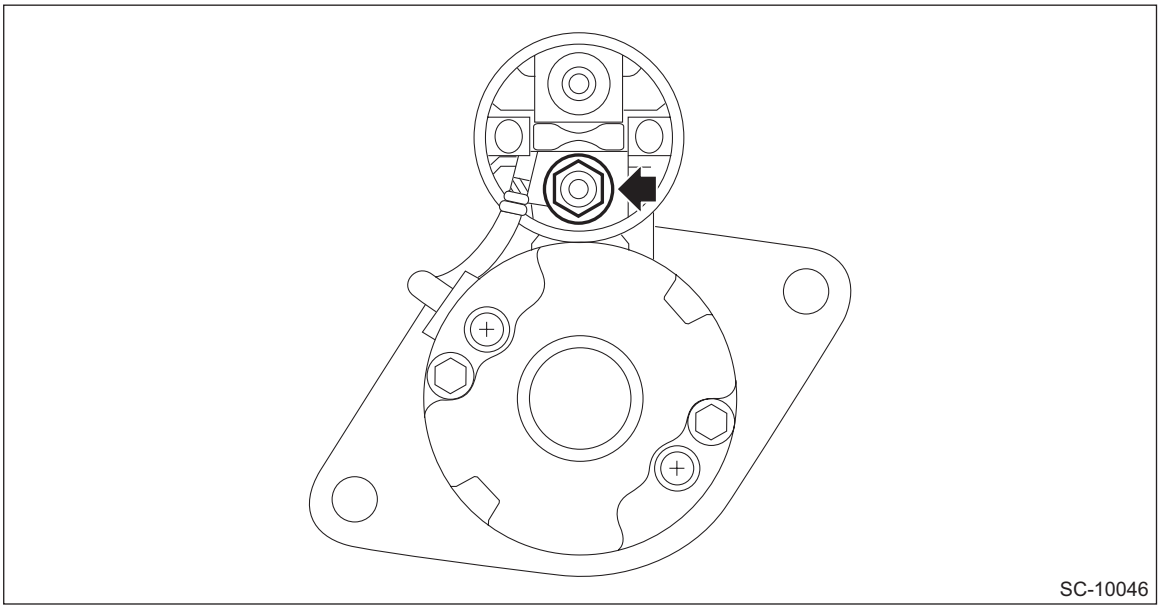

2) Connect the battery positive terminal to the switch assembly S terminal, and connect the battery negative terminal to the starter body. Then, if the pinion protrudes, it is normal.

NOTE:
The starter motor may rotate while the pinion protrudes. This occurs due to current that flows to the motor via pull-in coil. This is not a problem.

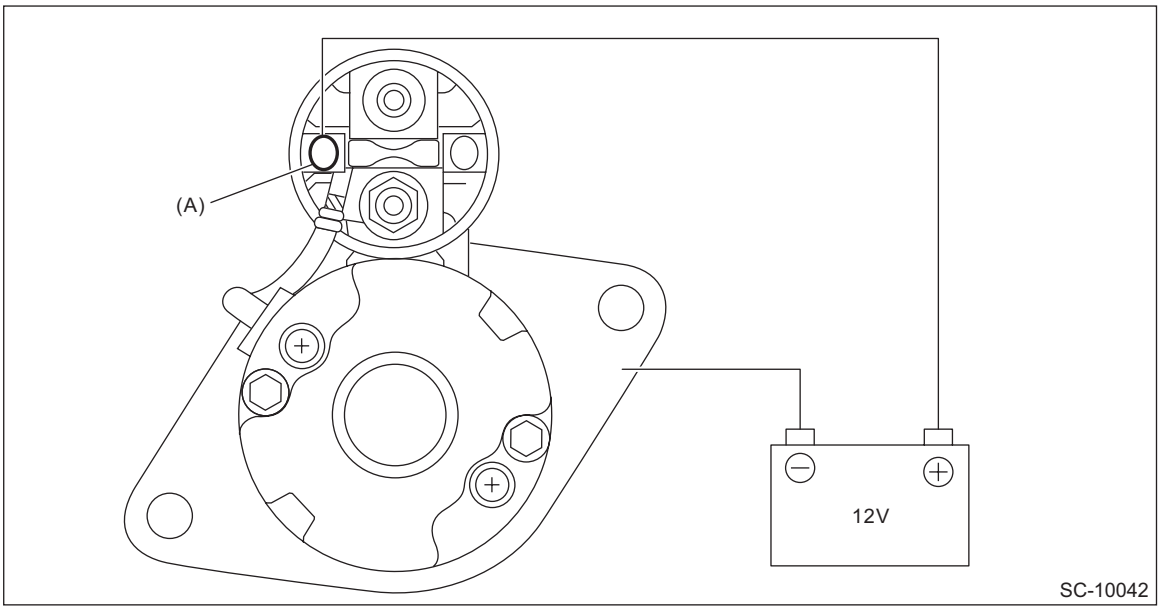

(A) Terminal S

3) Disconnect the harness from the M terminal. Check that the pinion is being protruded at this time.

CAUTION:
Hold the disconnected harness so that it does not contact the terminal or wiring.
4) Disconnect the battery negative terminal from the starter body. Then, if the pinion returns to its original position, it is normal.

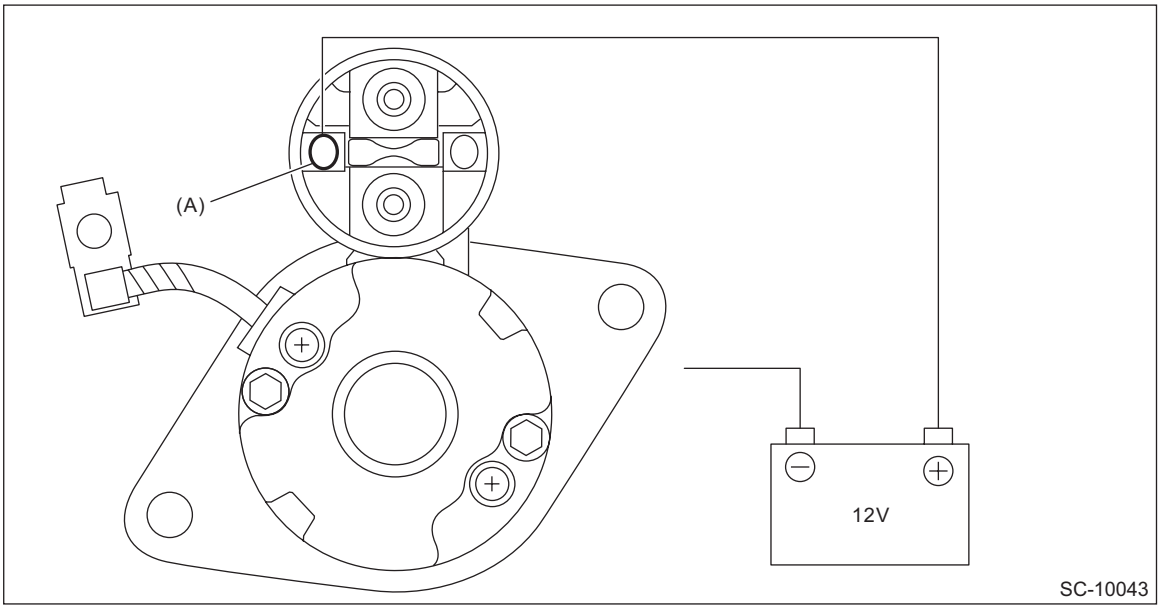

(A) Terminal S

7. NO-LOAD TEST

CAUTION:

- **Use a thick cable due to large current flowing through the cable.**
  - **For B terminal and ground, it is recommended that the cross-section area of continuity part (shaded part) should be 20 mm^2 (0.00310 sq in) or more. For S terminal, 1.25 mm^2 (0.00194 sq in) or more.**

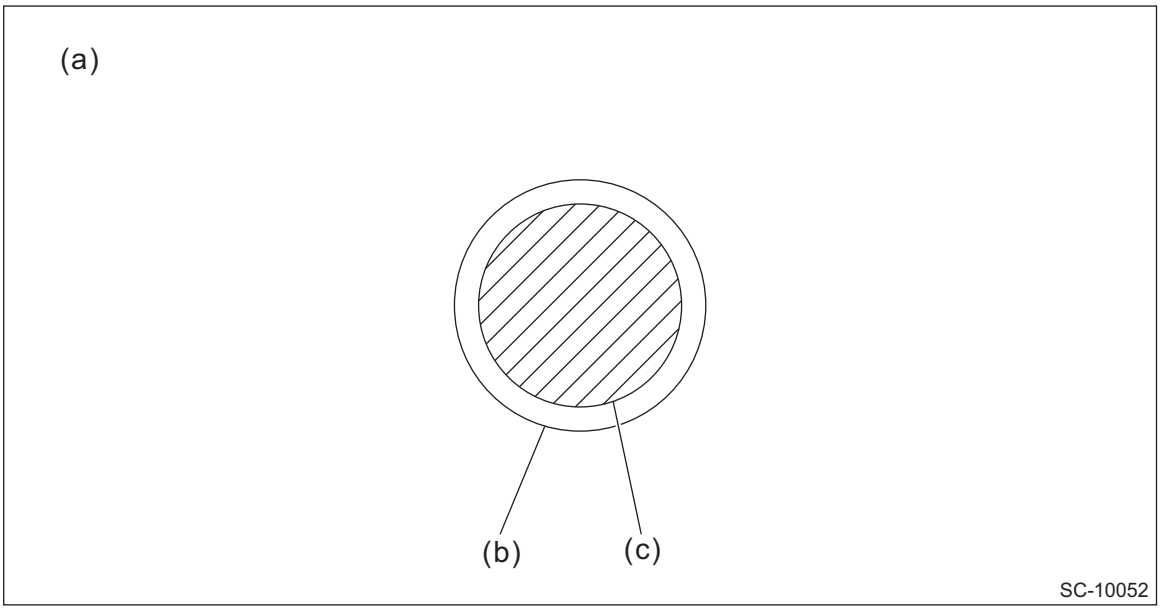

(a) Cable cross-section (b) Cable shield part (c) Cable continuity part

  - **It is possible to use a booster cable instead of wiring.**
- **Be careful not to burn yourself and cause a fire due to heat.**
- **Perform the no-load test in a short period of time. (Within 3 to 5 seconds)**

NOTE:
For no-load test, use the circuit shown in figure.

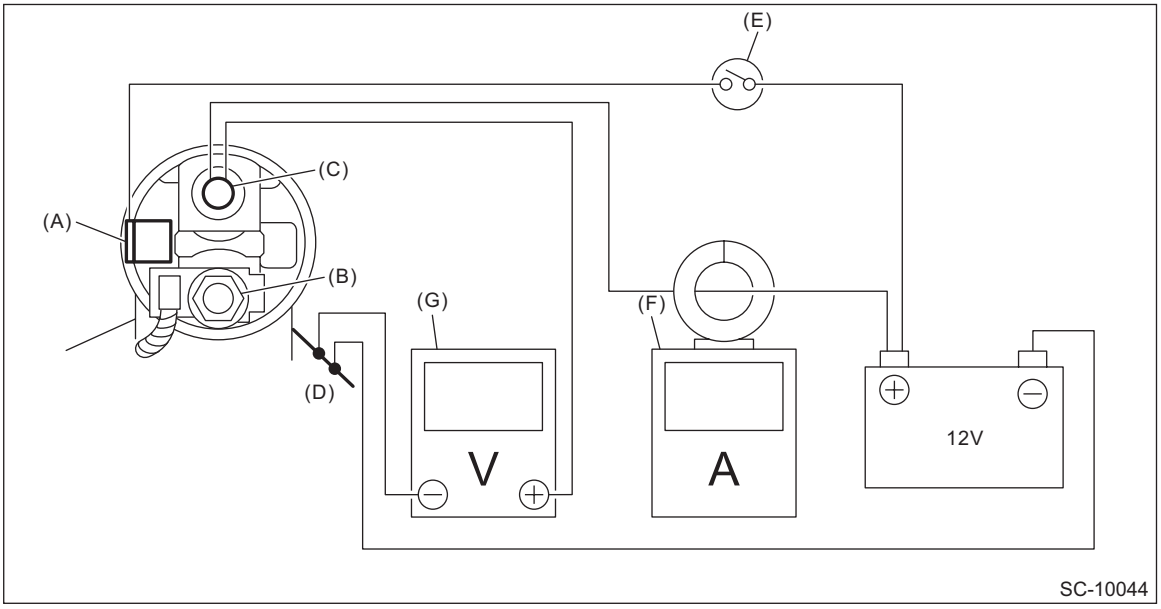

(A) Terminal S (B) Terminal M (C) Terminal B
(D) Magnet switch (E) Switch (F) Circuit tester with clamp-type ammeter
(G) Circuit tester

1) Using a vise, secure the starter.

CAUTION:
Be careful not to deform or damage the starter.
2) Turn the switch ON, and check that the pinion protrudes rapidly into the specified position and rotates powerfully without noise.
3) Check the current and voltage after its rotation speed stabilizes.

Current/Voltage
CVT model
90 A or less (approx. 11 V)
MT model
95 A or less (approx. 11 V)

8. OTHER INSPECTIONS

Check that the starter does not have deformation, cracks and any other damage.

3. Generator

A: REMOVAL

1) Remove the collector cover. <Ref. to IN(w/o STI)-7, REMOVAL, Collector Cover.>
2) Disconnect the ground terminal from battery sensor. <Ref. to NT-6, BATTERY, NOTE, Note.>
3) Remove the brake vacuum pump. <Ref. to BR-104, REMOVAL, Brake Vacuum Pump.>
4) Remove the V-belts. <Ref. to ME(w/o STI)-75, V-BELT, REMOVAL, V-belt.>
5) Remove the collector cover bracket.

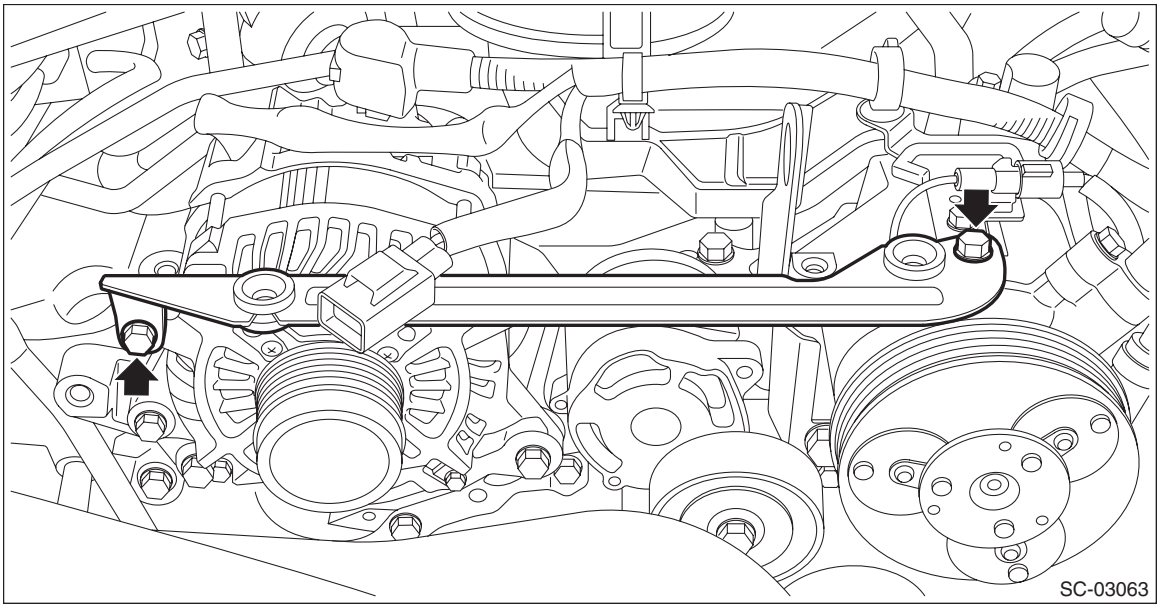

6) Disconnect the connector (A) and terminal (B) from the generator.

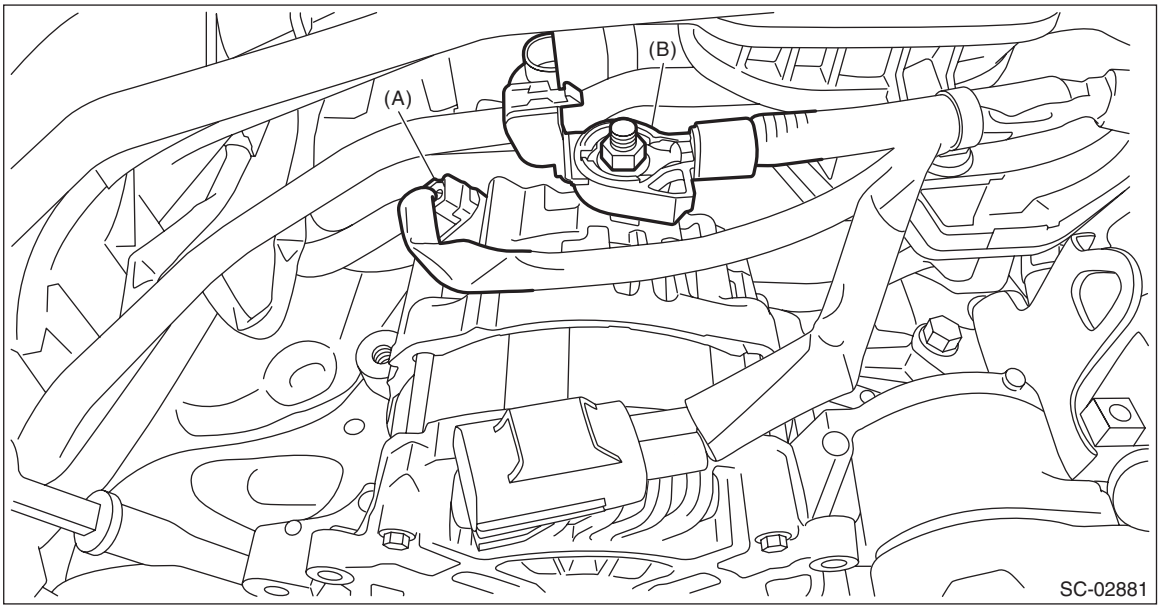

7) Remove the generator from the generator bracket.

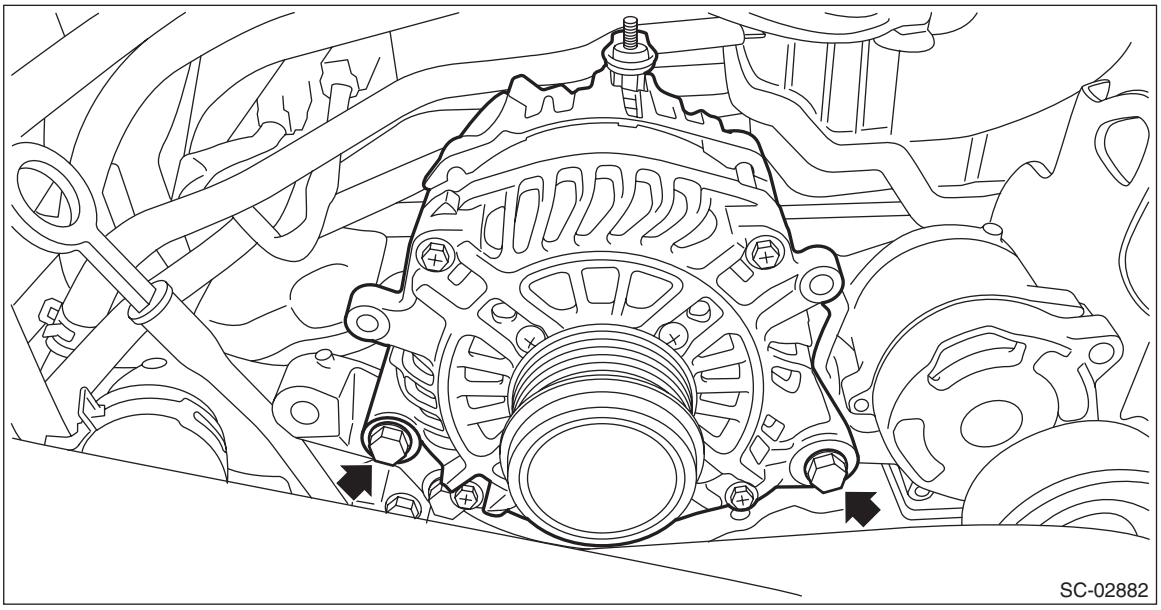

8) Remove the V-belt tensioner assembly. <Ref. to ME(w/o STI)-75, V-BELT TENSIONER ASSEMBLY, REMOVAL, V-belt.>

9) Remove the generator bracket from the engine.

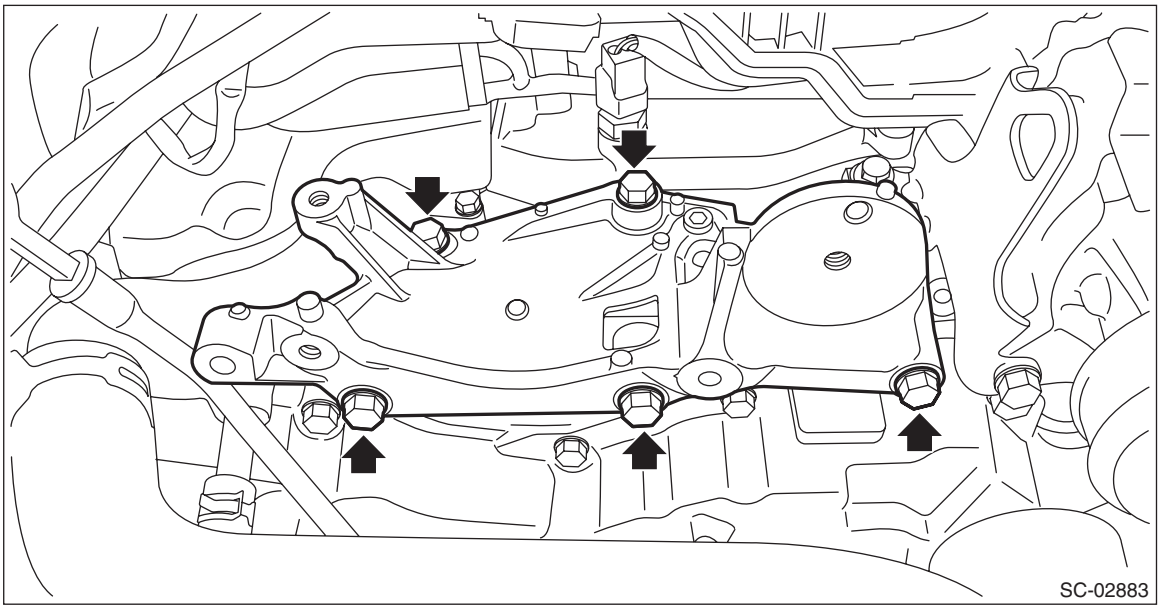

B: INSTALLATION

1) Temporarily install the generator bracket to the engine and tighten the bolts in the numerical order.

Tightening torque:
36 N·m (3.7 kgf-m, 26.6 ft-lb)

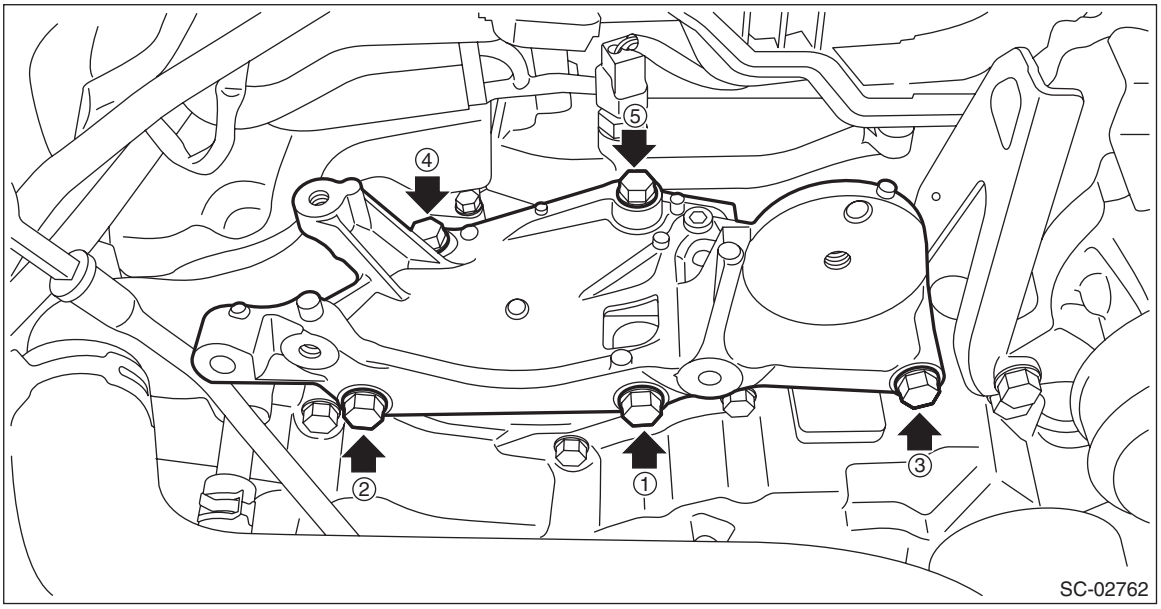

2) Install the V-belt tensioner assembly. <Ref. to ME(w/o STI)-78, V-BELT TENSIONER ASSEMBLY, INSTALLATION, V-belt.>
3) Temporarily install the generator bracket to the generator and tighten the bolts in the numerical order.

Tightening torque:
25 N·m (2.5 kgf-m, 18.4 ft-lb)

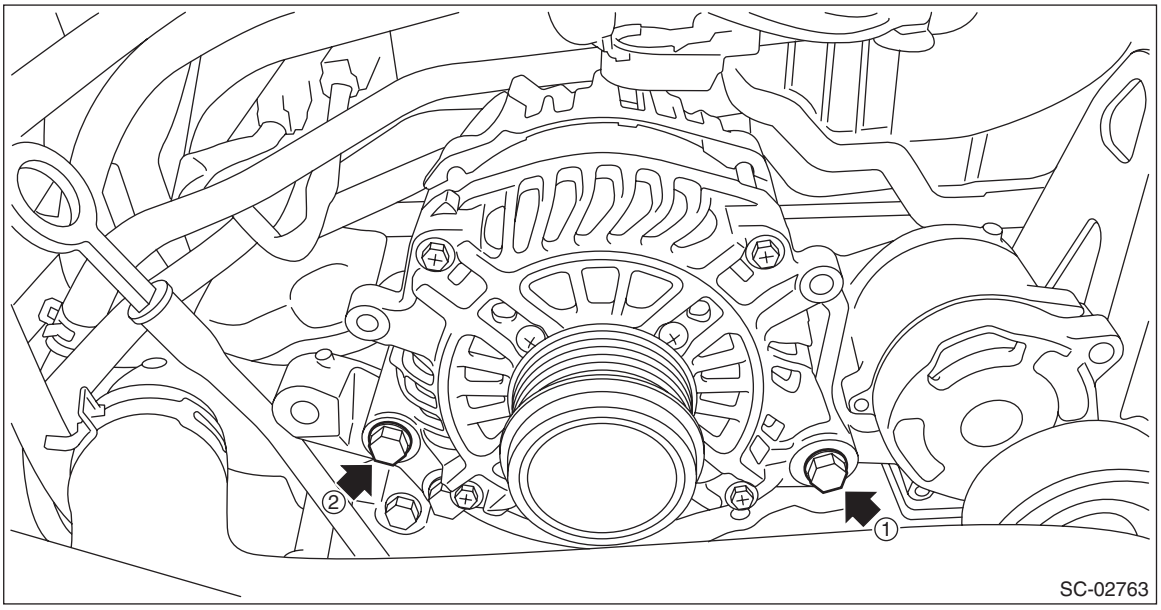

4) Connect the connector (A) and terminal (B) to the generator.

Tightening torque:
15 N·m (1.5 kgf-m, 11.1 ft-lb)

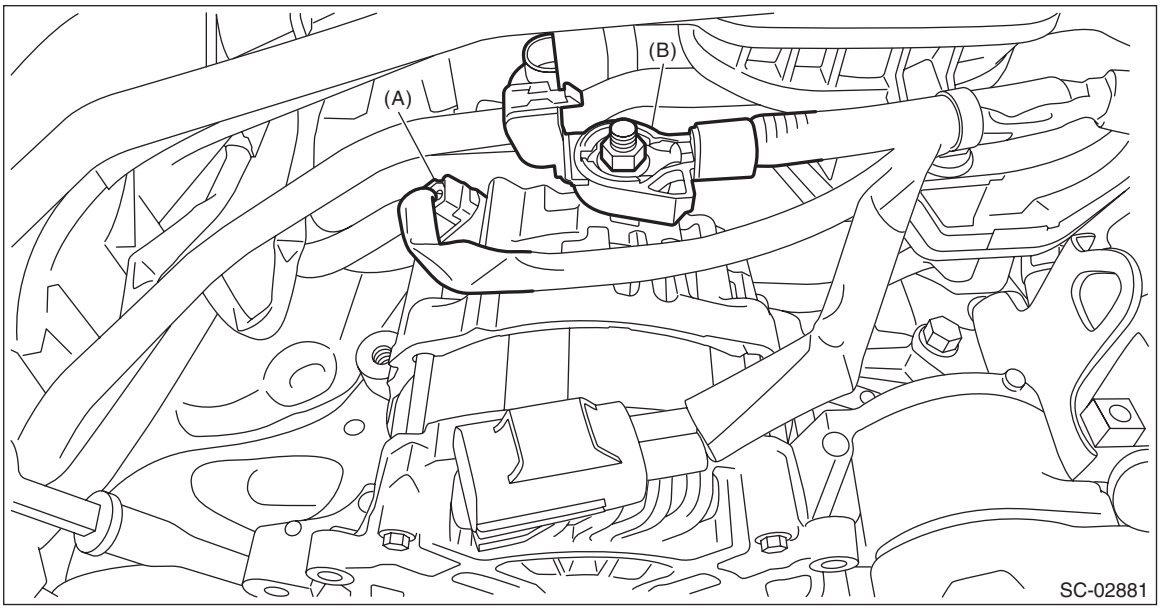

5) Install the collector cover bracket.

Tightening torque:
6.4 N·m (0.7 kgf-m, 4.7 ft-lb)

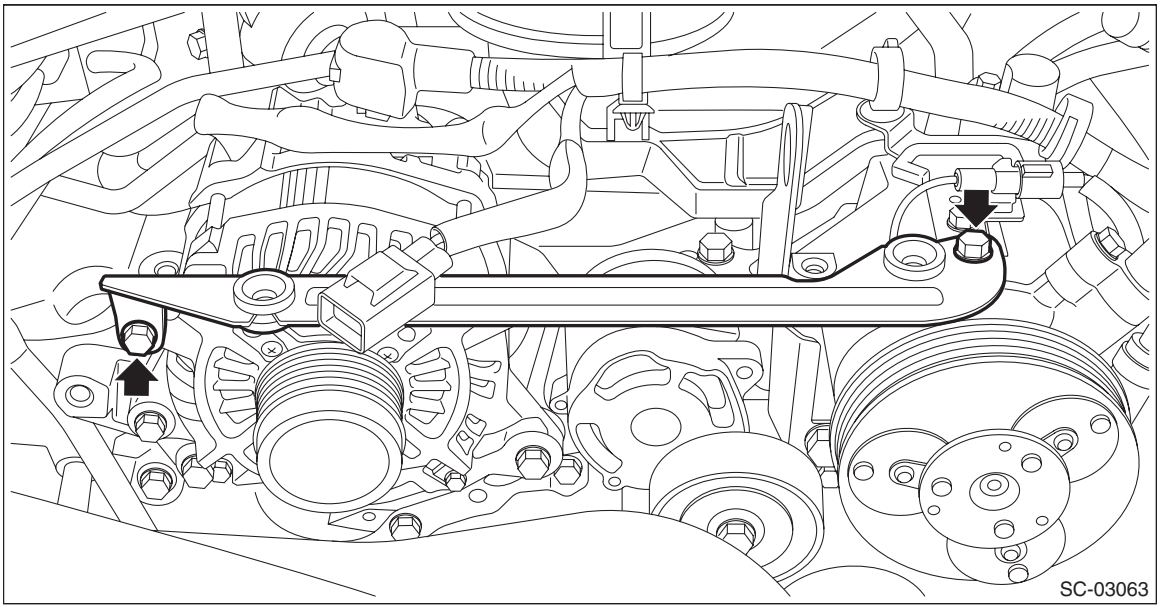

6) Install the V-belts. <Ref. to ME(w/o STI)-77, V-BELT, INSTALLATION, V-belt.>
7) Install the brake vacuum pump. <Ref. to BR-105, INSTALLATION, Brake Vacuum Pump.>
8) Connect the ground terminal to battery sensor. <Ref. to NT-6, BATTERY, NOTE, Note.>
9) Install the collector cover. <Ref. to IN(w/o STI)-10, INSTALLATION, Collector Cover.>

C: DISASSEMBLY

1) Remove the cap from the generator.

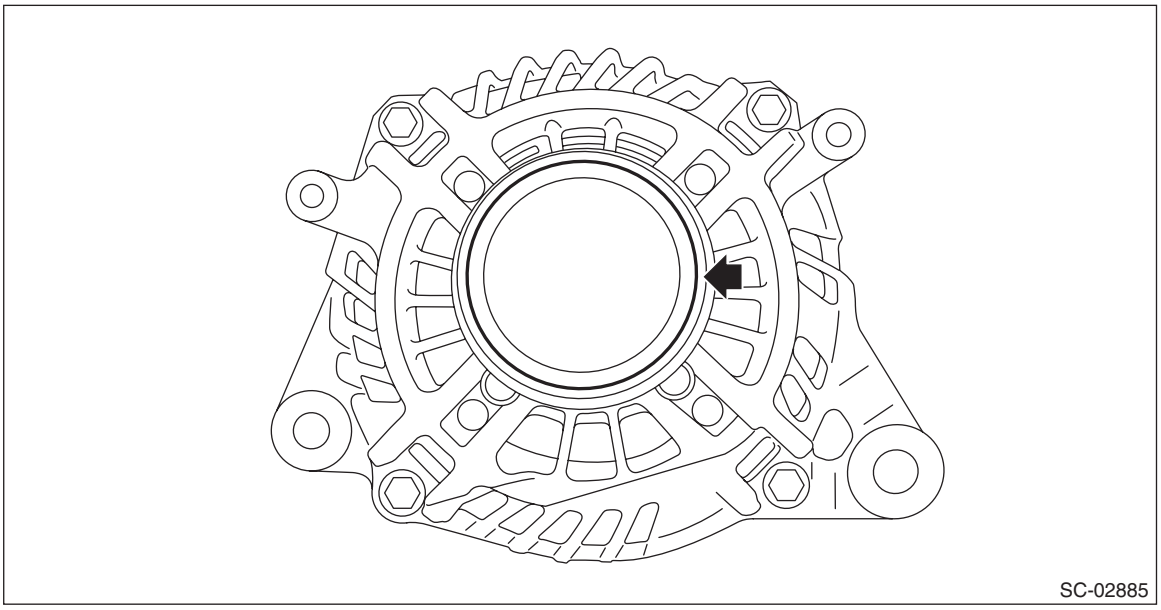
SC-02885

2) Remove the four through bolts.

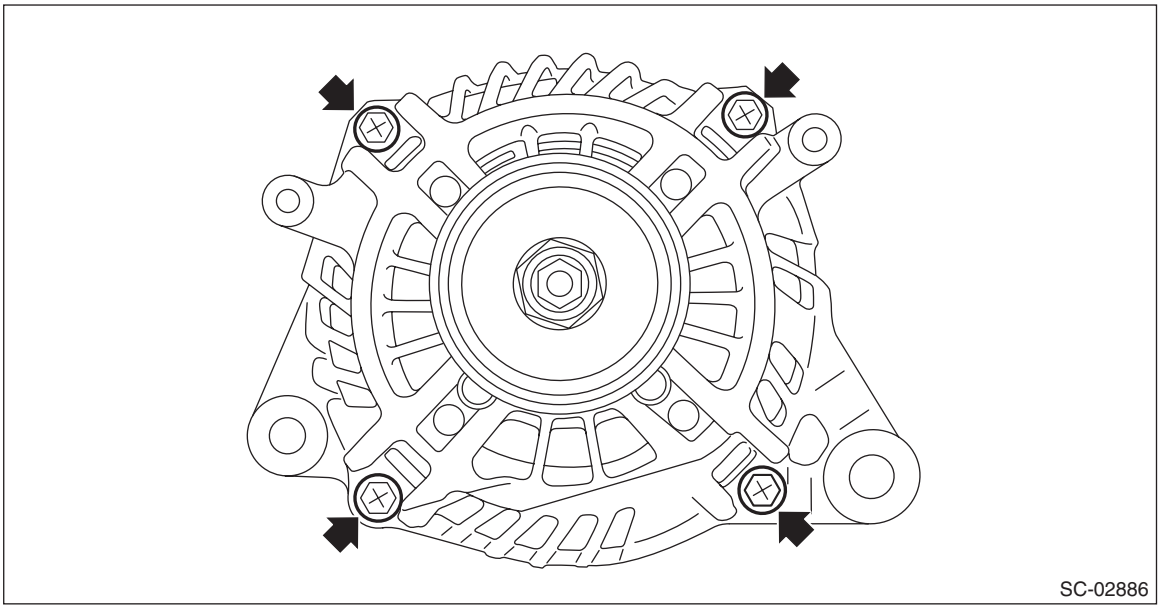
SC-02886

3) Use a drier to heat the rear cover (A) portion to 50 — 60°C (122 — 140°F).

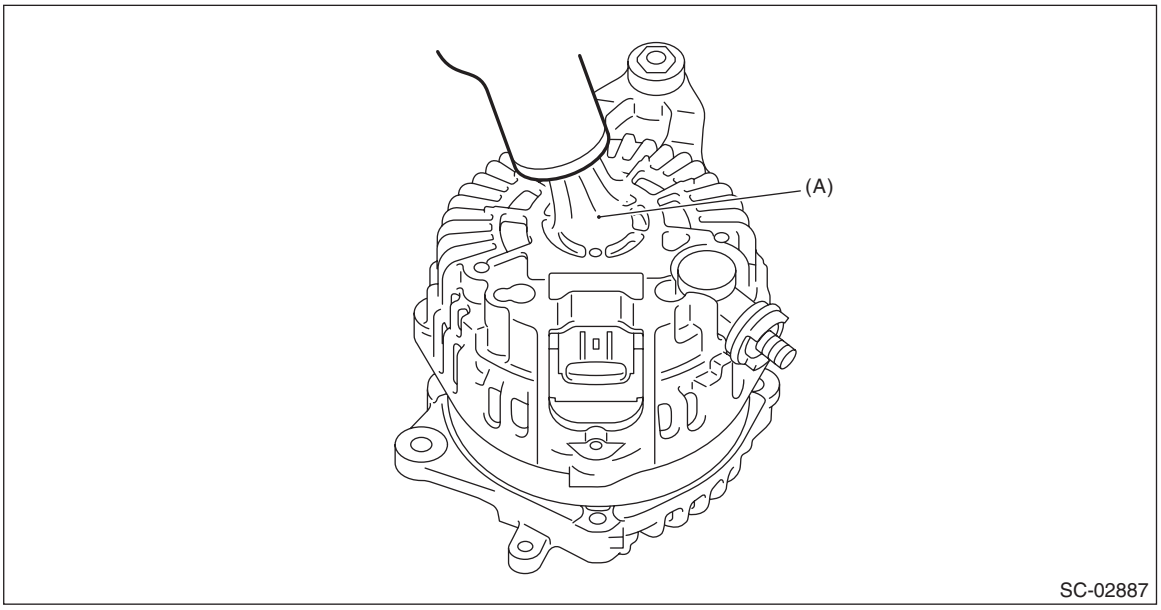

4) Insert a flat tip screwdriver or similar tool wrapped with protective tape into the gap between stator core and the front cover to disassemble.

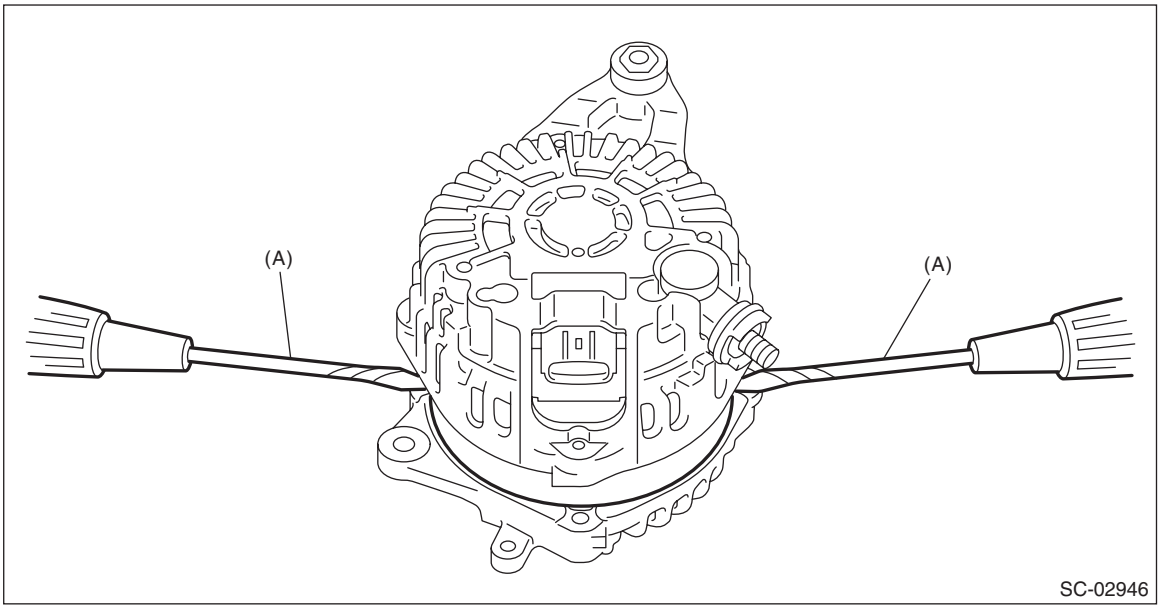

(A) Flat tip screwdriver

5) Hold the rotor on a vise and remove the pulley.

CAUTION:
When holding the rotor with a vise, place aluminum plates or wooden pieces on the vise jaws to prevent rotor from damage.

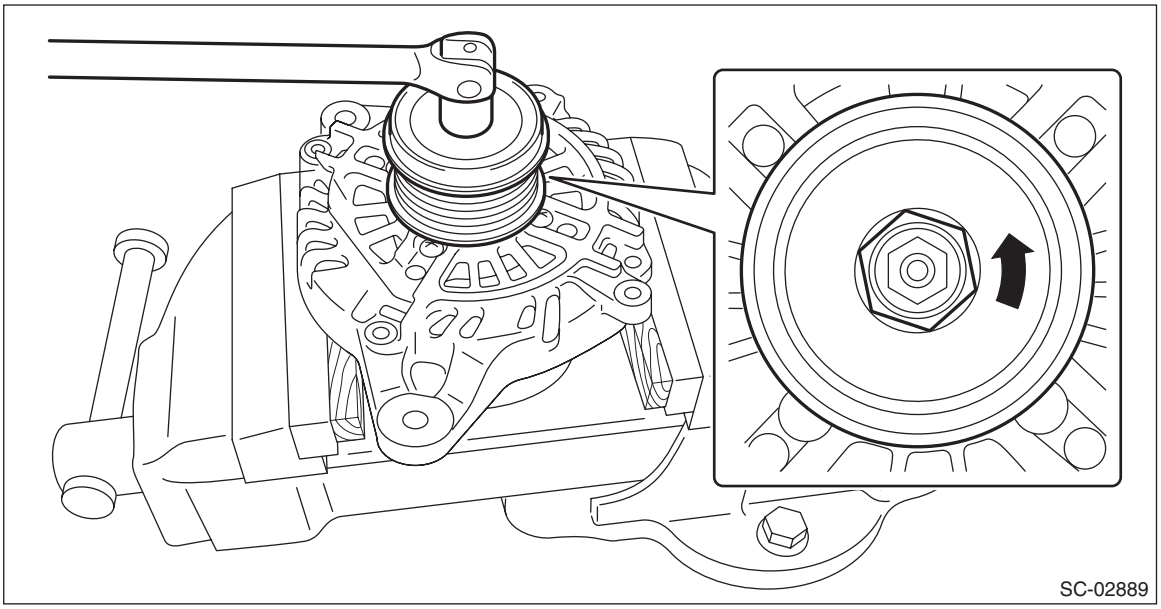

6) Remove the rotor from the front cover.

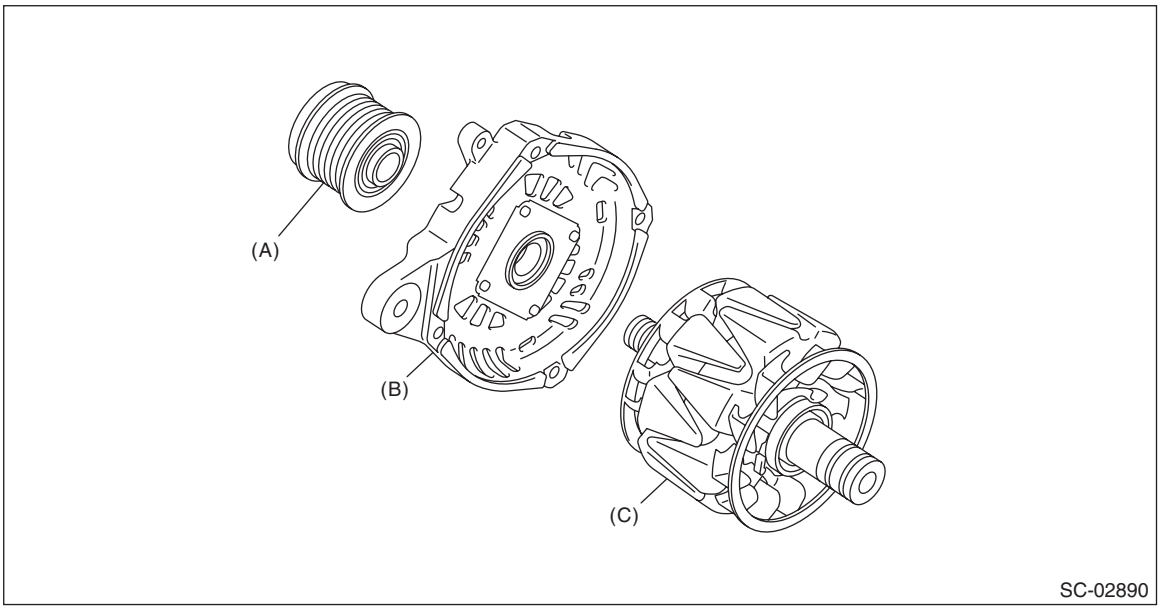

(A) Pulley (B) Front cover (C) Rotor

7) Use the following procedures to remove the ball bearings.
(1) Remove the bolt, and then detach the bearing retainer.

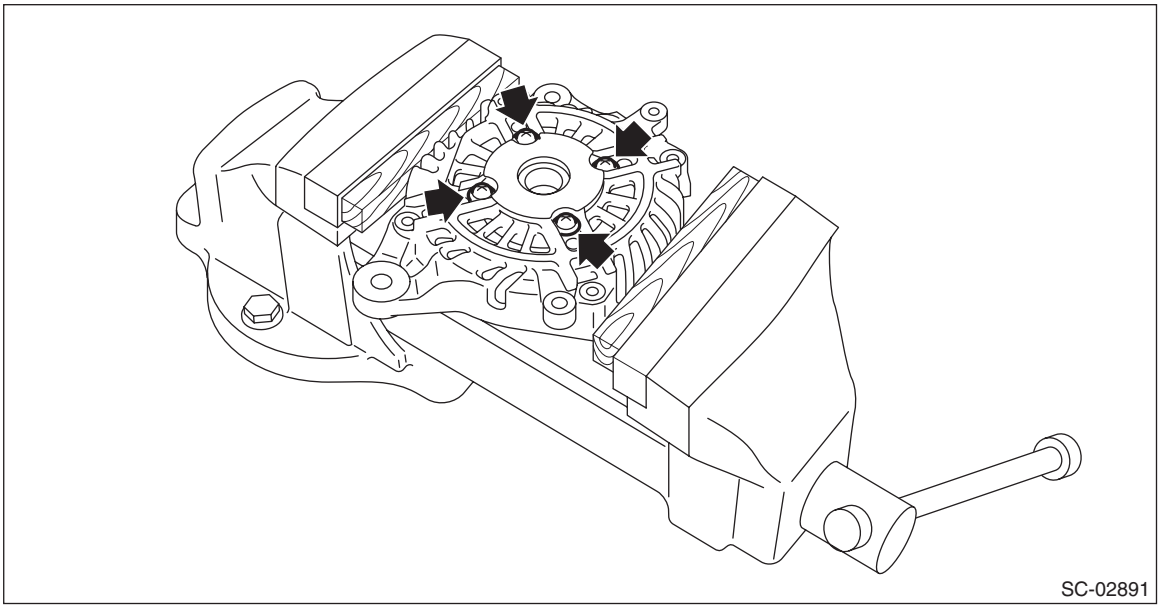
SC-02891

(2) Firmly attach an appropriate tool (such as a correct size socket wrench) to the bearing inner race.

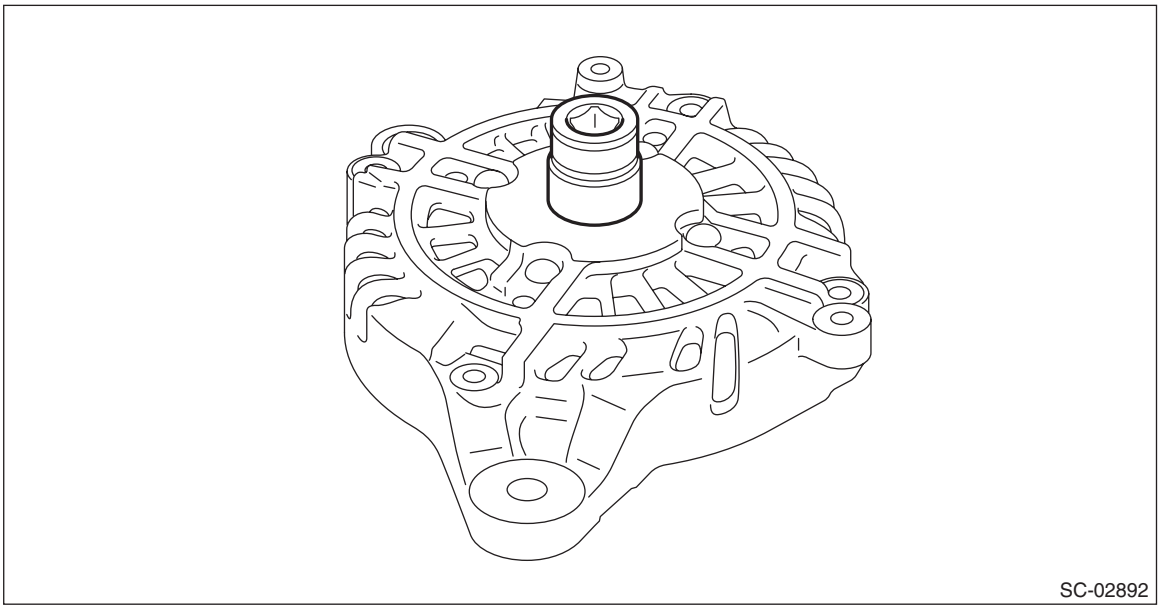
SC-02892

(3) Use the press to push the ball bearings out from the front cover.

8) Using the bearing puller, remove the bearings from the rotor.

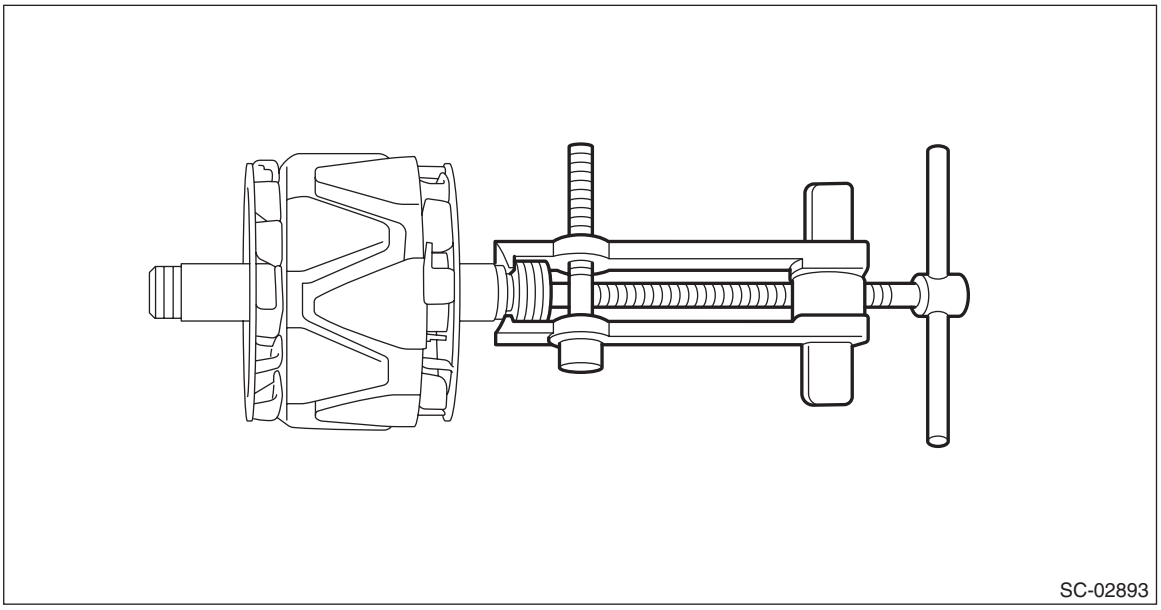
SC-02893

9) Remove six bolts which connect the rectifier and stator coil, then remove the stator coil.

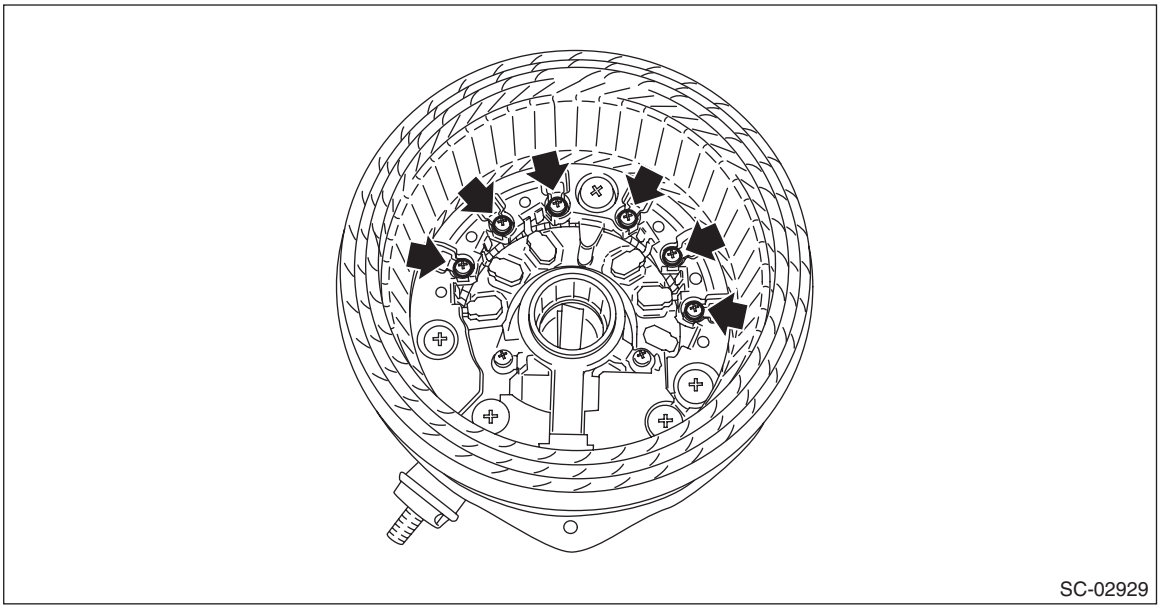
SC-02929

10) Remove four screws which secure the IC regulator to the rear cover, then remove the IC regulator.

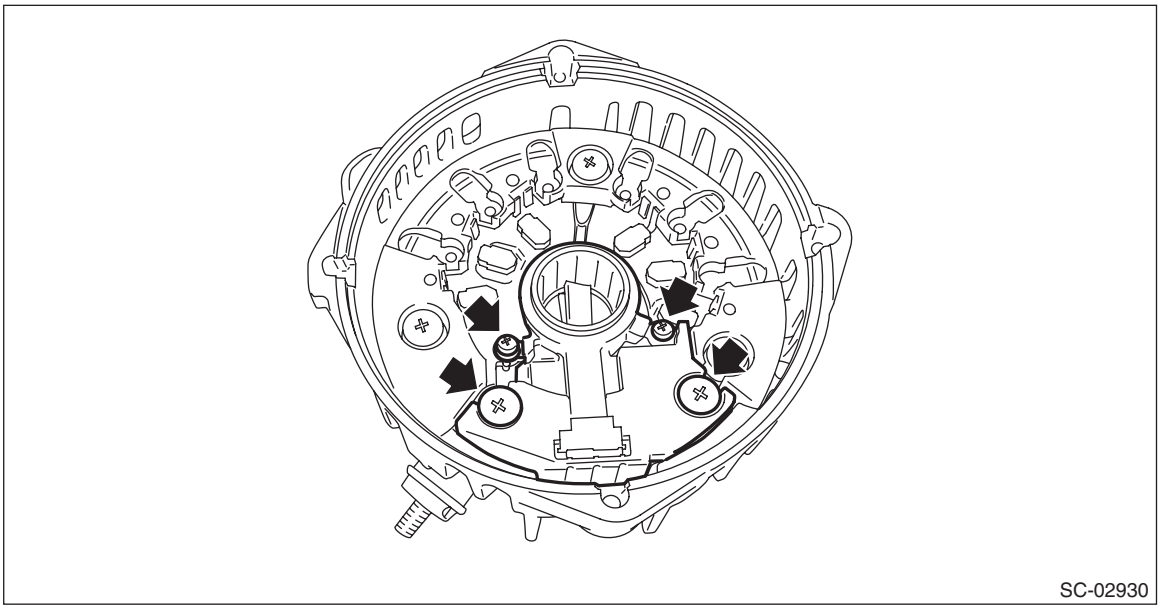
SC-02930

11) Use the following procedures to remove the brush.
(1) Remove the cover A.

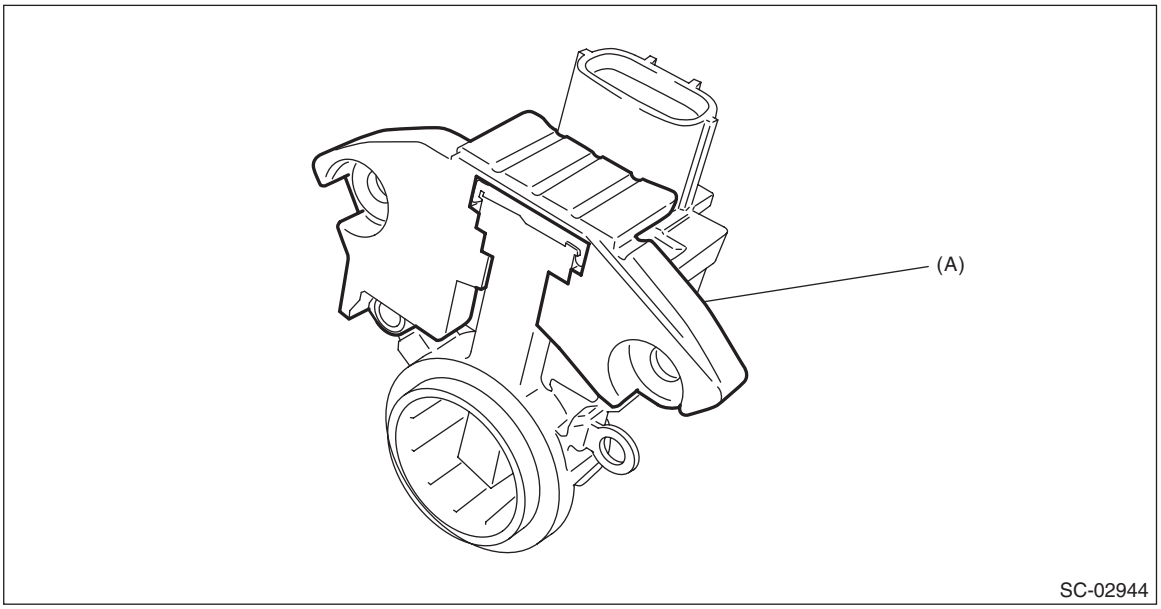

SC-02944

(A) Cover A

(2) Remove the cover B.

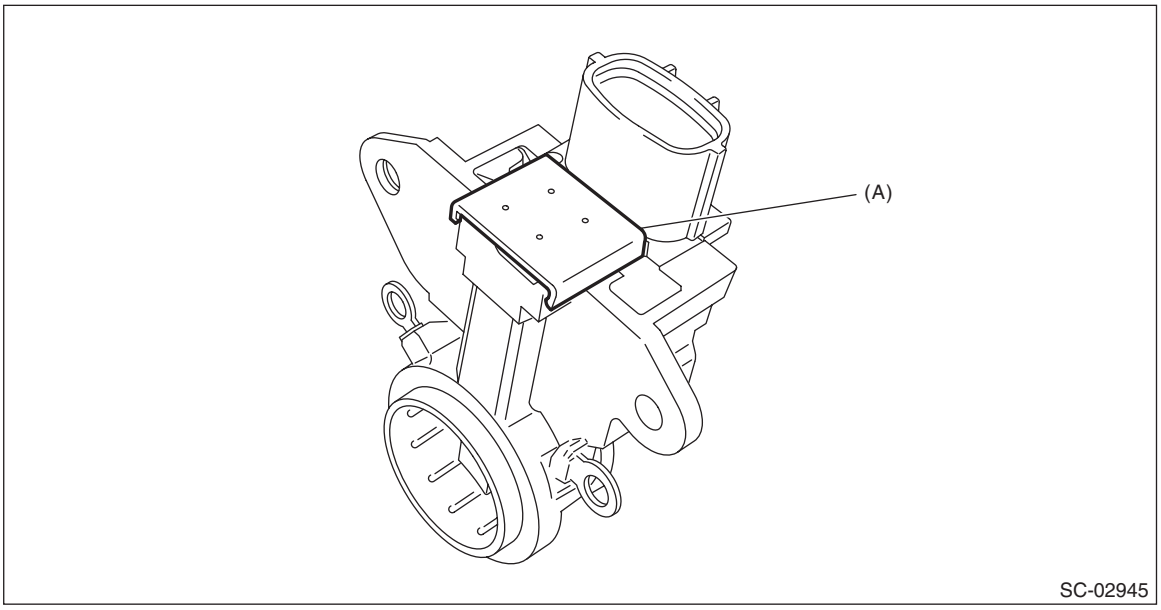

(A) Cover B

(3) Disconnect the connection and remove the brush.

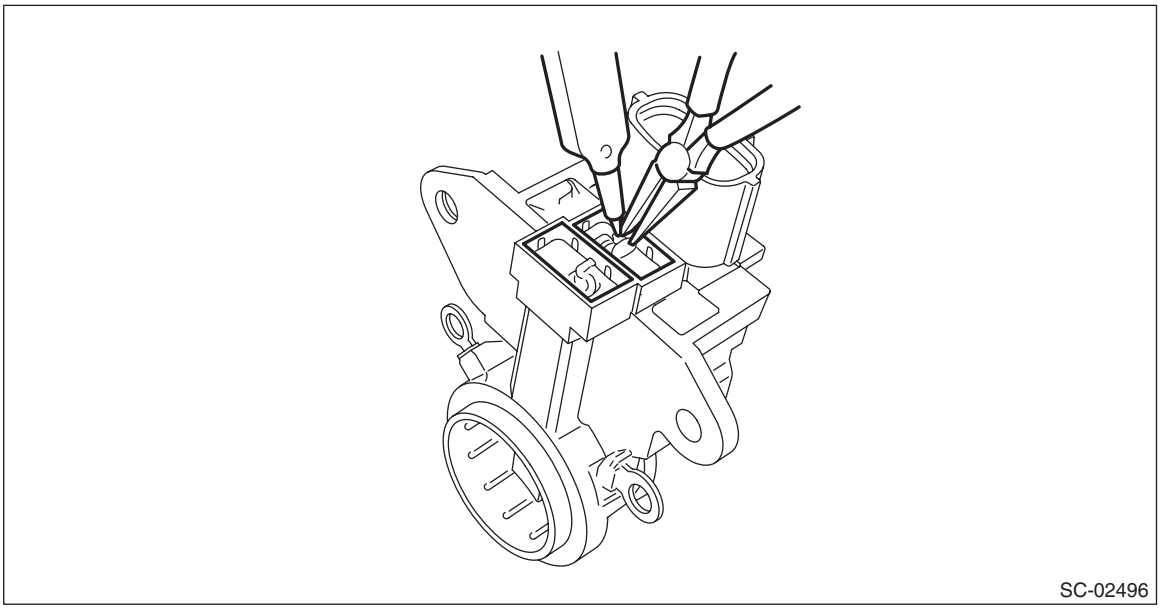

12) Remove the rectifier as follows.
(1) Remove the cover on terminal B.

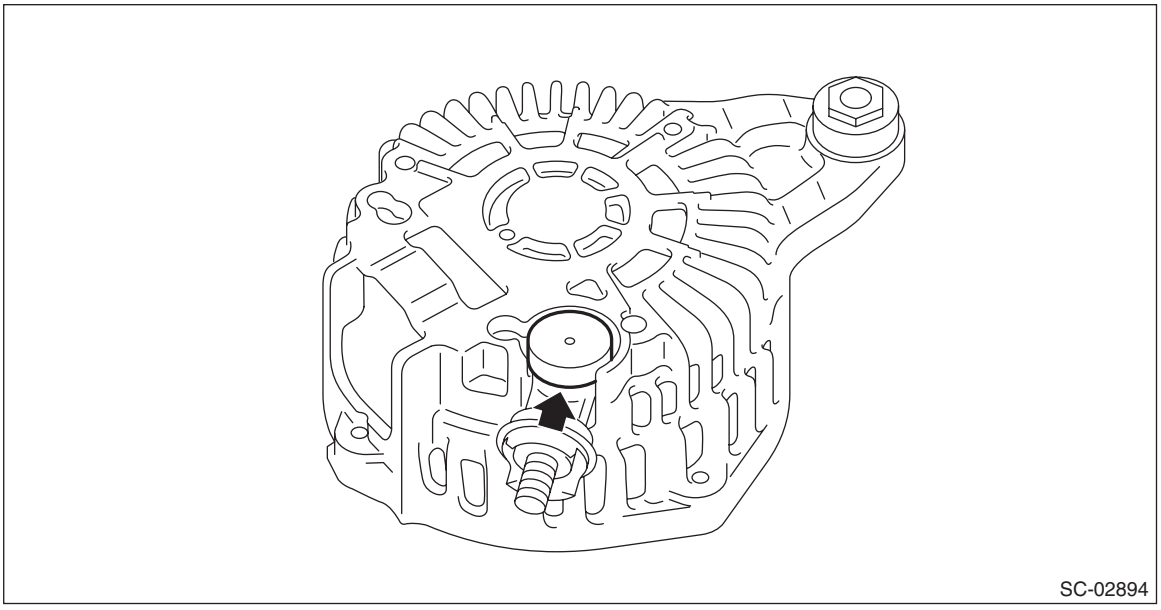
SC-02894

(2) Remove the nut on terminal B.

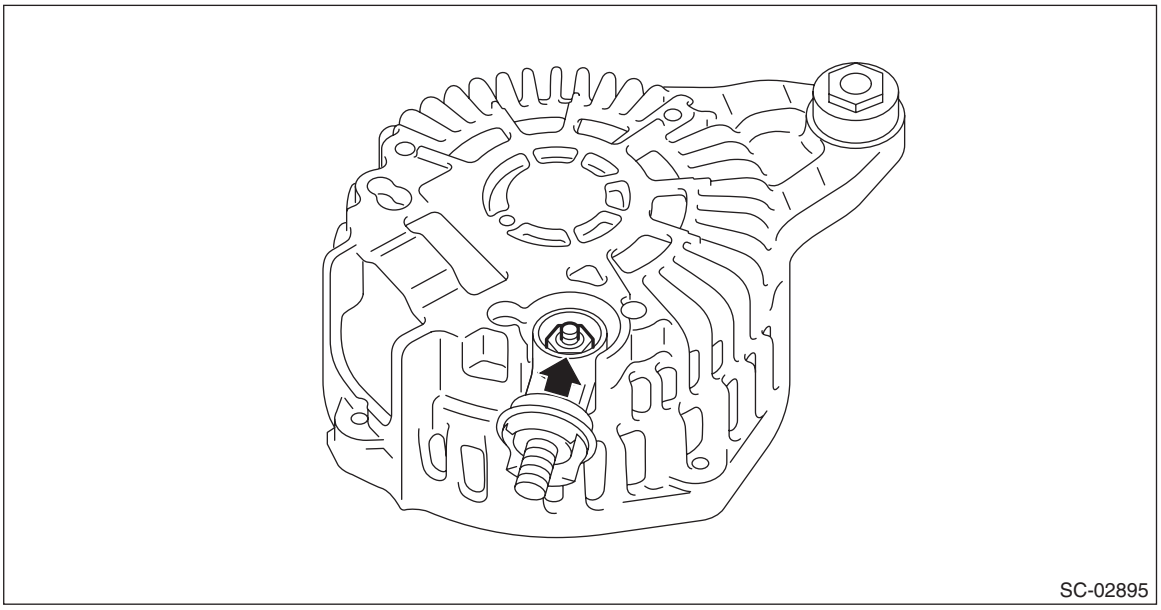
SC-02895

(3) Remove the bolts which secure the rectifier, and remove the rectifier.

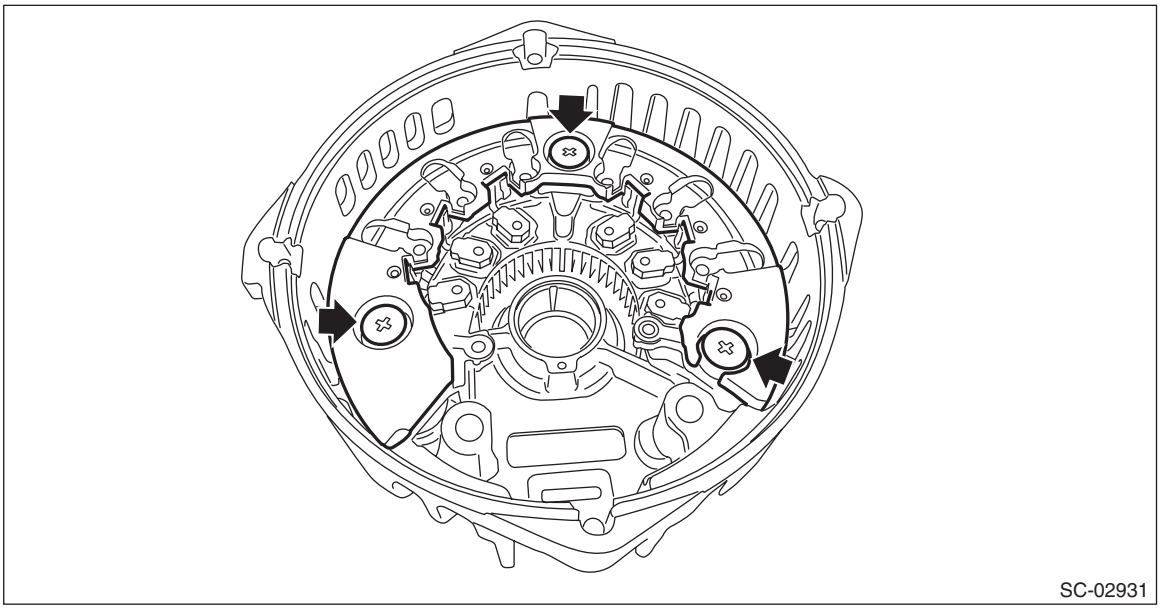

D: ASSEMBLY

Assemble in the reverse order of disassembly.

NOTE:

- Refer to component for tightening torque of each part. <Ref. to SC(w/o STI)-4, GENERATOR, COMPONENT, General Description.>
- After assembling, manually turn the pulley to check that the rotor rotates smoothly.

1) Assembling the rear cover and rectifier

Remove old silicone grease on the mating surface of rear cover and rectifier and apply new silicone grease.

CAUTION:
Do not apply silicone grease to the attachment threads of rectifier.

2) Push of the brush
Before assembling the front and rear parts, press the brush down into the brush holder, then fix the brush in that position by inserting a [1 mm (0.0394 in) dia., 40 — 50 mm (1.5748 — 1.9685 in) long] wire through the hole as shown in the figure.

CAUTION:
After assembling, remove the wire.

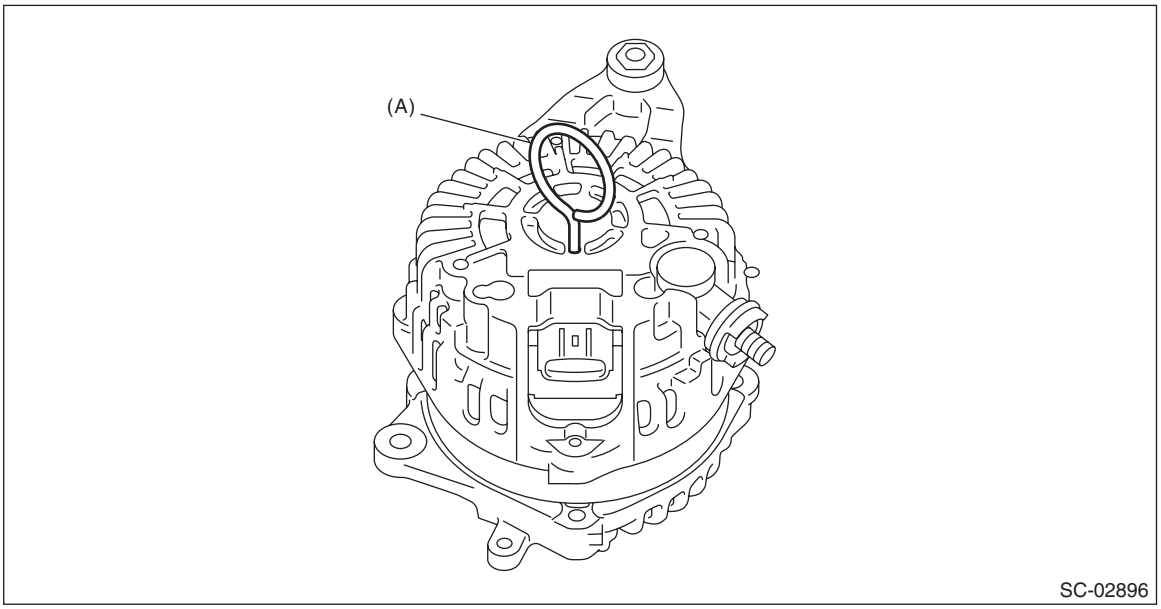

(A) Wire

3) Install the ball bearings.
(1) Set the ball bearings in the front cover, then securely install an appropriate tool (such as a socket wrench of proper size) to the bearing outer race.
(2) Using a press to press the ball bearings into the specified location.
(3) Install the bearing retainer.
4) Install the bearings.

CAUTION:
Do not apply grease to the bearings. If there is any oil on the bearing box, remove it completely.
(1) Use a press to install the bearings to the rotor shaft.
(2) Heat the bearing box in rear cover at 50 to 60°C (122 to 140°F), and then press the bearing into rear cover.

E: INSPECTION

1. DIODE

CAUTION:
There is the possibility of damaging the diodes if a mega-tester (used to measure high voltages) or a similar measuring instrument is used. Never use a mega tester or equivalent for this test.
1) Check for continuity between the diode lead and terminal E or B. If continuity is not as shown in the table, replace the rectifier.
• At analog type tester

Tester lead		Continuity
–lead	+lead	
E	P1, P2, P3, P4, P5, P6	Yes
B		No
P1, P2, P3, P4, P5, P6	E	No
	B	Yes

- At digital type tester

Tester lead		Continuity
–lead	+lead	
E	P1, P2, P3, P4, P5, P6	No
B		Yes
P1, P2, P3, P4, P5, P6	E	Yes
	B	No

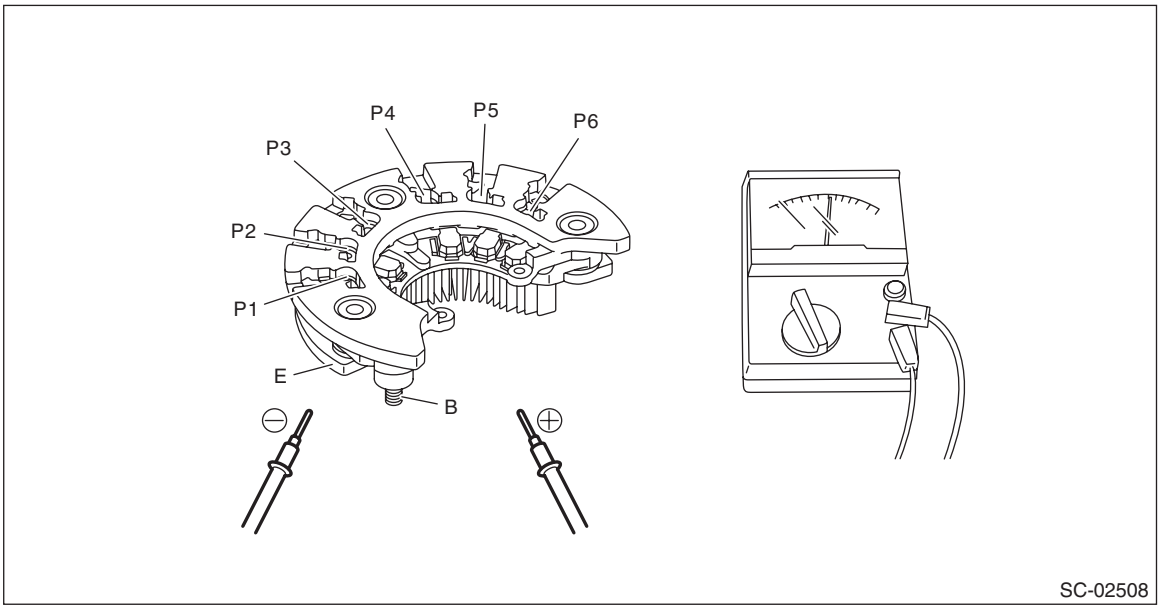

2. ROTOR

1) Slip ring surface
Inspect the slip rings for contamination or any roughness on the sliding surface. Repair the slip ring surface using a lathe or sand paper.
2) Slip ring outer diameter
Measure the slip ring outer diameter. Replace the rotor if the slip ring is worn.

Slip ring outer diameter:
Standard
22.7 mm (0.894 in)
Limit
22.1 mm (0.870 in)

3) Continuity test
Using a circuit tester, check the resistance between slip rings. If the resistance is not within the standard, replace the rotor.

Standard:
Approx. 2.0 — 2.4 Ω

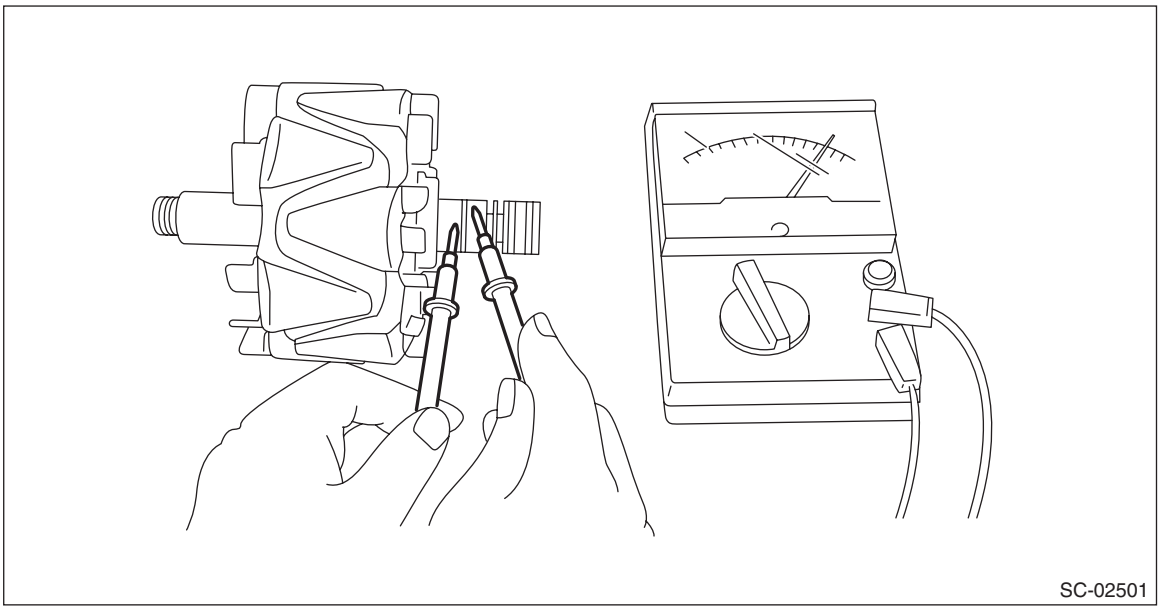
SC-02501

4) Insulation test
Check the continuity between slip ring and rotor core or shaft. If there is continuity, replace the rotor because the rotor coil is grounded.

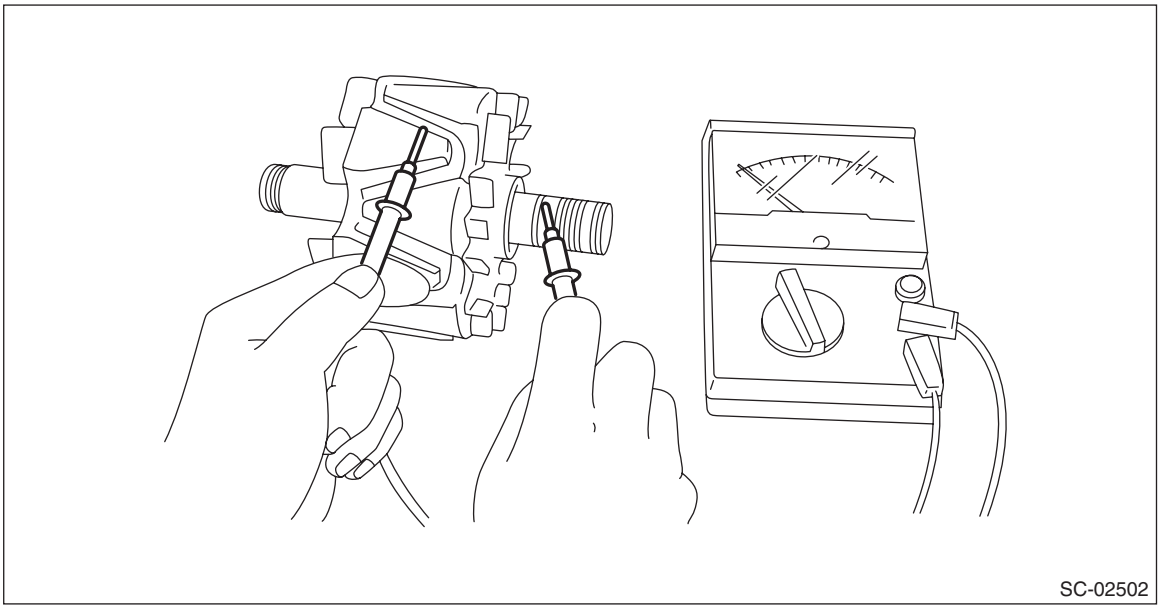
SC-02502

5) Bearing
Check the bearings. If there is any noise, or the rotor does not rotate smoothly, replace the bearings.

3. STATOR COIL

1) Continuity test

Inspect the continuity between the stator coil terminals. If continuity is not as shown in the table, replace the stator coil.

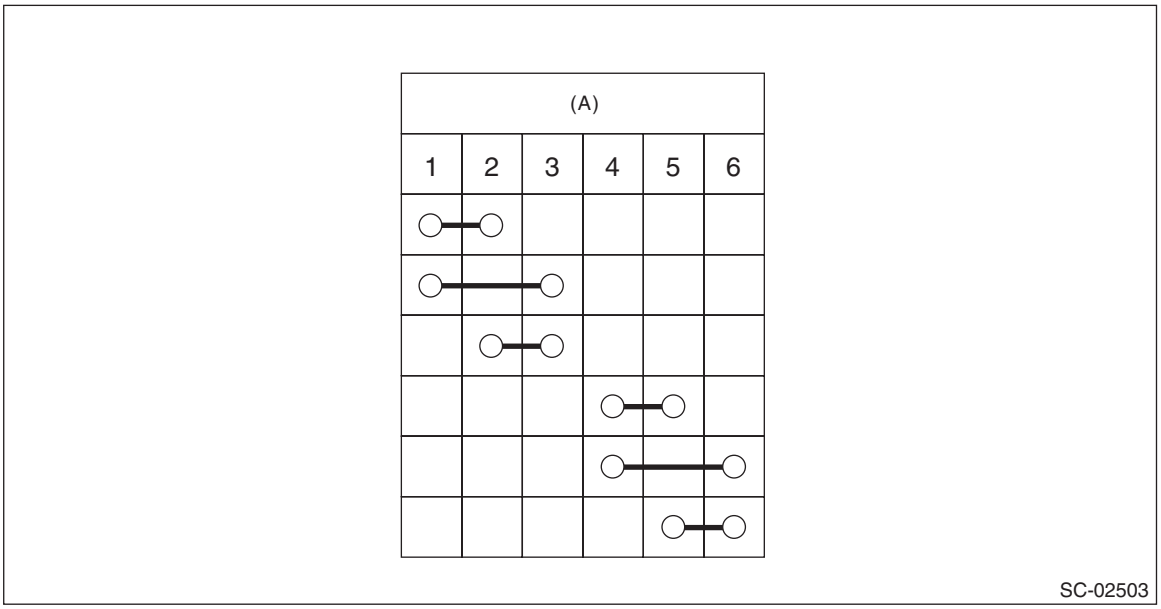

(A) Terminals

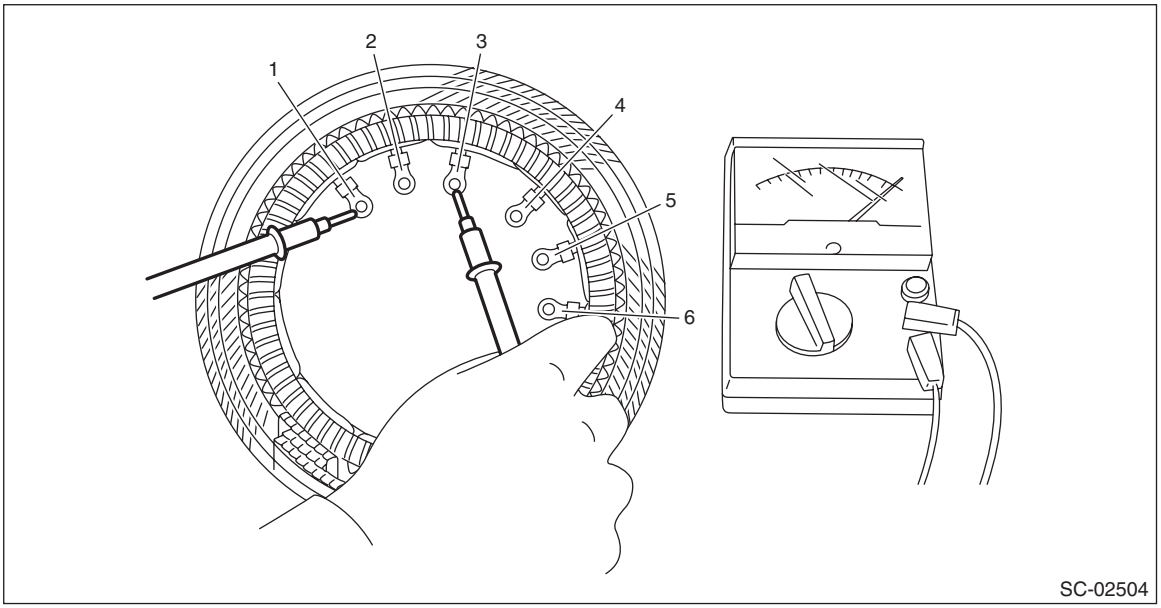

2) Insulation test
Inspect the continuity between the stator coil stator core and lead wire terminals. If there is continuity, replace the stator coil because the stator coil is grounded.

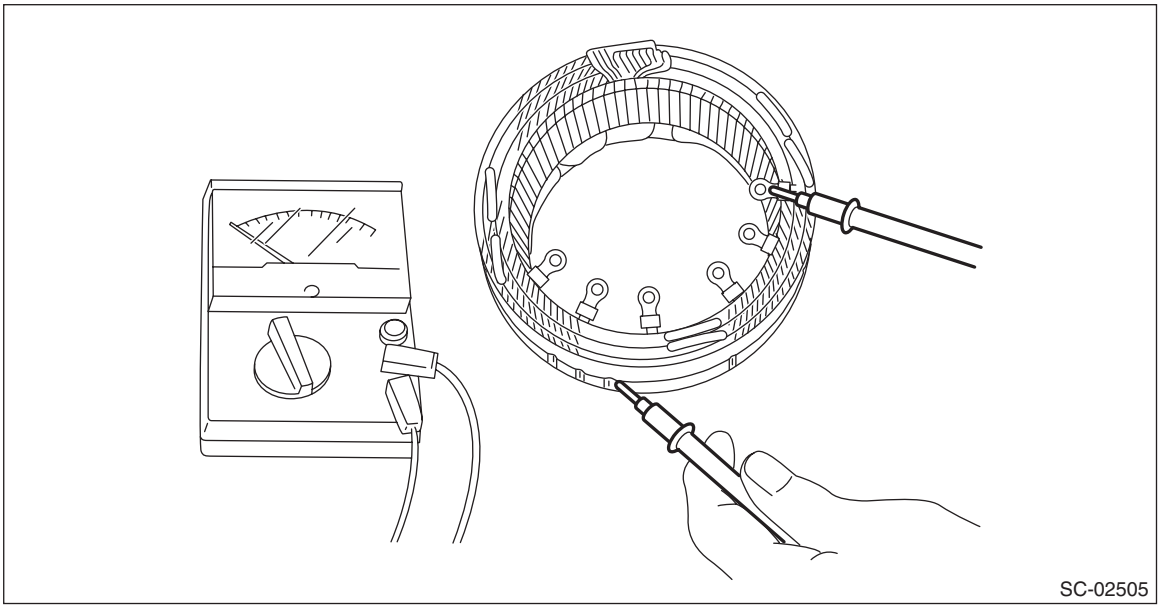
SC-02505

4. BRUSH

1) Measure the length of each brush. Replace the brush if wear exceeds service limits. There is a service limit mark (A) on each brush.

Brush length:
Standard (1)
22.5 mm (0.886 in)
Limit (2)
5.0 mm (0.197 in)

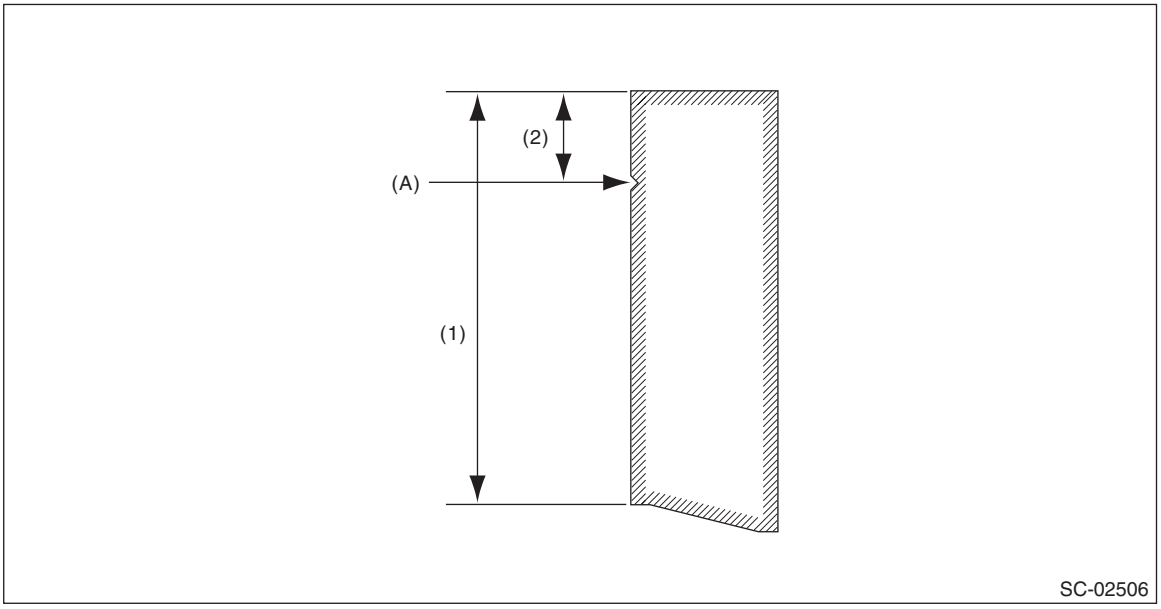

SC-02506

2) Check that there is appropriate pressure on the brush spring. Using a spring pressure indicator, push the brush into the brush holder until its tip protrudes 2 mm (0.0787 in). Then measure the pressure of brush spring. If the pressure is 1.7 N (173 gf, 6.11 ozf) or less, replace the brush spring. 4.1 — 5.3 N (418 — 540 gf, 14.75 — 19.06 ozf) pressure is required on the new spring.

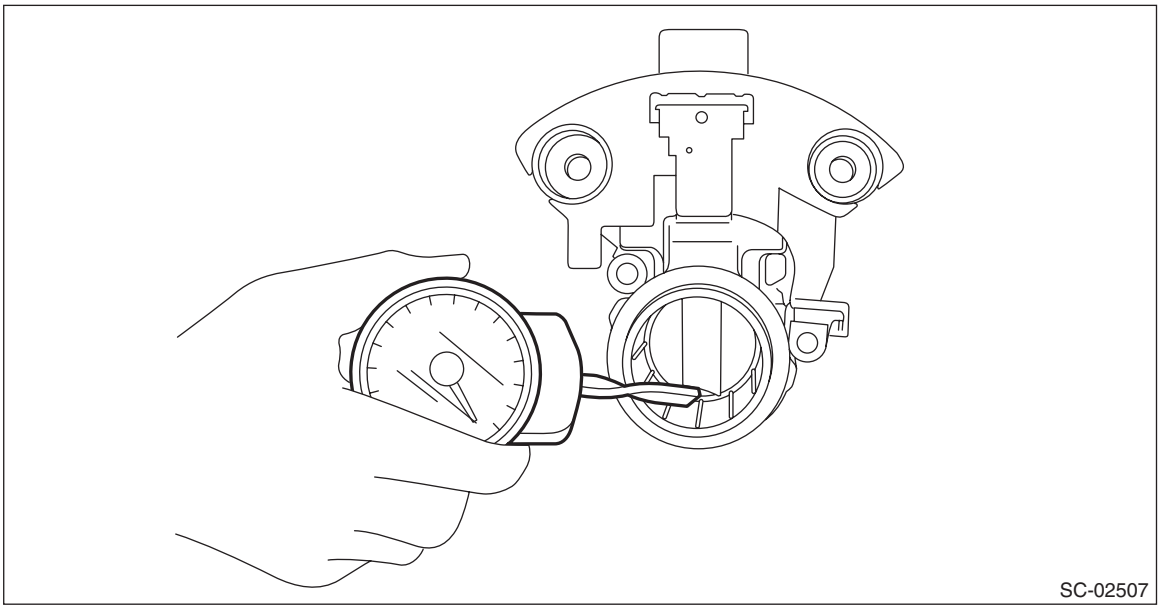

5. BALL BEARING

Check the ball bearings. Replace the ball bearings if there is resistance in the rotation, or if there is any abnormal noise.

4. Battery

A: REMOVAL

1) Disconnect the ground terminal from battery sensor. <Ref. to NT-6, BATTERY, NOTE, Note.>
2) Remove the battery sensor. <Ref. to SC(w/o STI)-58, REMOVAL, Battery Sensor.>
3) Disconnect the positive terminal of battery.
4) Remove the battery cable holder from the battery rod.
5) Remove the flange nut from battery rod and remove battery holder.

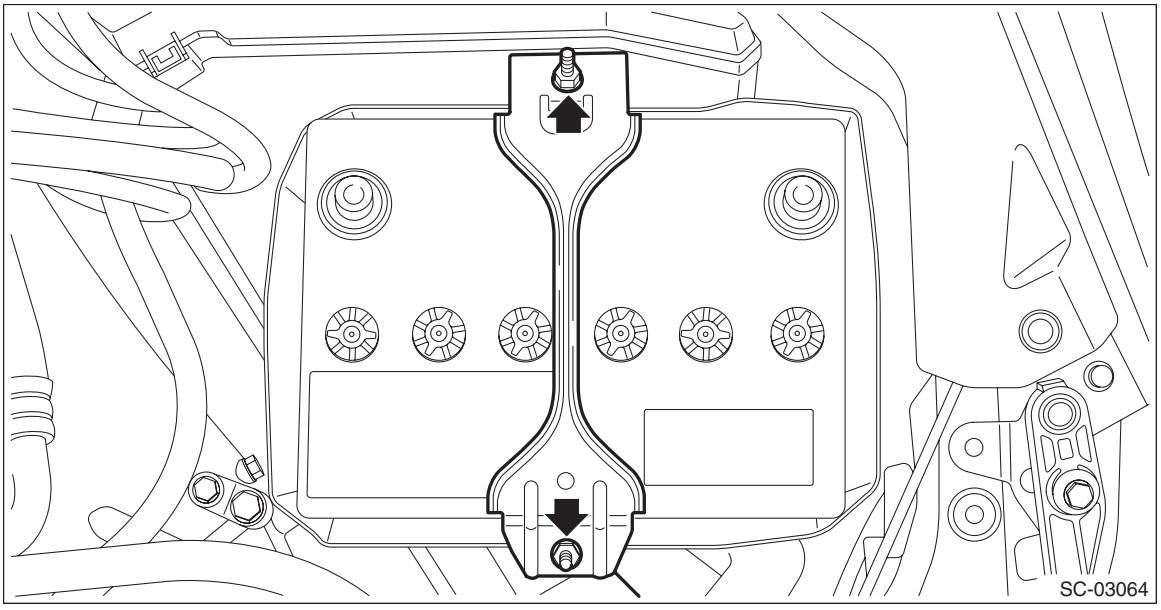

6) Remove the battery.

B: INSTALLATION

Install in the reverse order of removal.

Tightening torque:
3.5 N·m (0.4 kgf-m, 2.6 ft-lb)

NOTE:
- Clean the battery cable terminals and apply grease to retard the formation of corrosion.
- Connect the positive (+) terminal, and then connect the negative (–) terminal of the battery.
- After the battery is installed, initial diagnosis of the electronic throttle control is performed. Wait for 10 seconds or more after turning the ignition switch to ON, and then start the engine.

C: INSPECTION

WARNING:
- **As batteries produce flammable gases, be careful not to bring an open flame close to the batteries.**
- **Ventilate sufficiently when using or charging battery in enclosed space.**
- **Electrolyte is corrosive acid, and has toxicity; be careful of handling the fluid.**
- **For safety, in case an explosion does occur, wear eye protection or shield your eyes when working near any battery. In addition, never lean over the battery.**
- **Be careful that the electrode does not come into contact with skin, eyes or clothing. Especially at contact with eyes, flush with water for 15 minutes and get prompt medical attention.**
- **Be careful not to let the electrode contact with the coated parts.**
- **Before starting work, remove rings, metal watch-bands, and other metal jewelry.**
- **Be careful not to let the metal tools contact the positive battery terminal and anything connected to it. When the operation using a metal tool to the positive terminal or anything connected to it is required, disconnect the battery ground terminal before starting the operation.**

1. APPEARANCE

Check the battery case, top cover and terminal posts for dirt or cracks, and perform the following work as necessary.
- Clean the battery with water and wipe with a dry cloth.
- Apply a thin coat of grease on the terminal posts to prevent corrosion.

Check

- ***Normal → Go to the check item 2.***
- ***Abnormal → Replace the battery.***

2. ELECTROLYTE LEVEL

Check the electrolyte level in each cell.

CAUTION:
Do not fill beyond MAX level.

NOTE:
If the level is below the middle point between MIN level and MAX level, pour distilled water into the battery cell to bring the level to MAX.

Check

- ***MAX level → Go to the check item 3.***
- ***Below the middle point between MIN level and MAX level → Fill → Go to the check item 3.***

3. SPECIFIC GRAVITY OF ELECTROLYTE

Check the specific gravity of the electrolyte using a hydrometer and a thermometer.

NOTE:
- Specific gravity varies with temperature of electrolyte so that it must be corrected at 20°C (68°F) using the following calculation:

$S_{20} = St + 0.0007 \times (t - 20)$
- S_{20}: Specific gravity corrected at electrolyte temperature of 20°C
- St: Measured specific gravity
- t: Measured temperature (°C)

- When measuring in a simplified manner using the battery terminal voltage, calculate the specific gravity by the following formula.

Specific gravity = [0.187 × battery terminal voltage (V)] – 1.1
Perform the steps 1) and 2) before measuring the voltage in order to stabilize the voltage.
1) Turn the ignition switch to OFF and illuminate the headlight for 30 seconds.

2) After turning off the headlight, leave the vehicle for one minute.
• Measuring the specific gravity of the electrolyte in the battery will disclose the state of charge of the battery. The relation between specific gravity and state of charge is as shown in the figure.

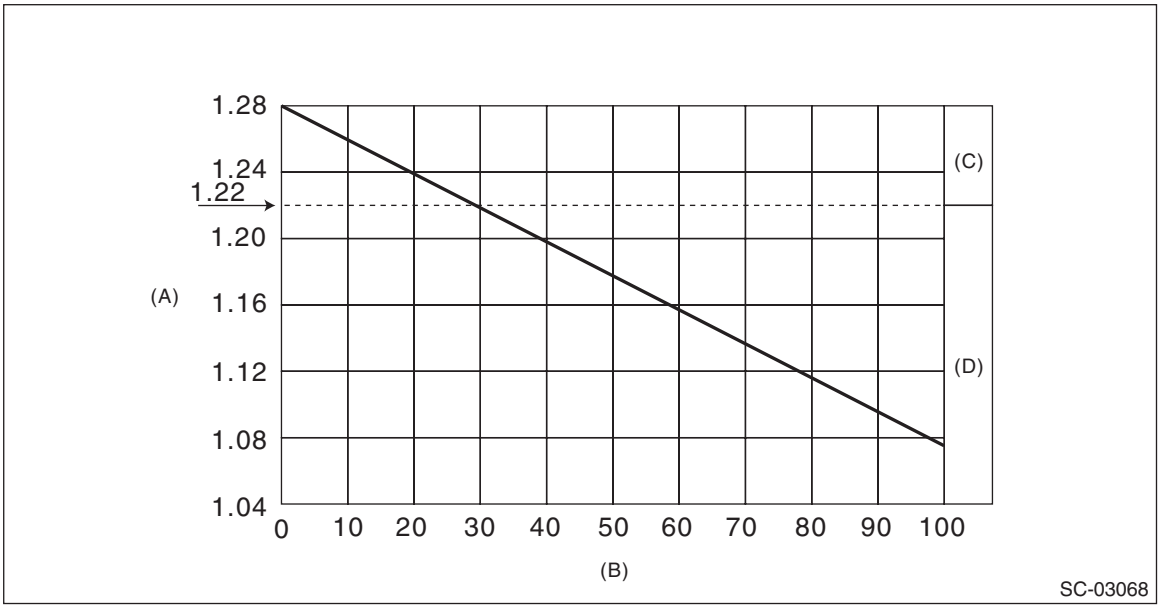

(A) Specific gravity [20°C (68°F)] (B) Amount of discharge (%) (C) Good
(D) Need to charge or replace

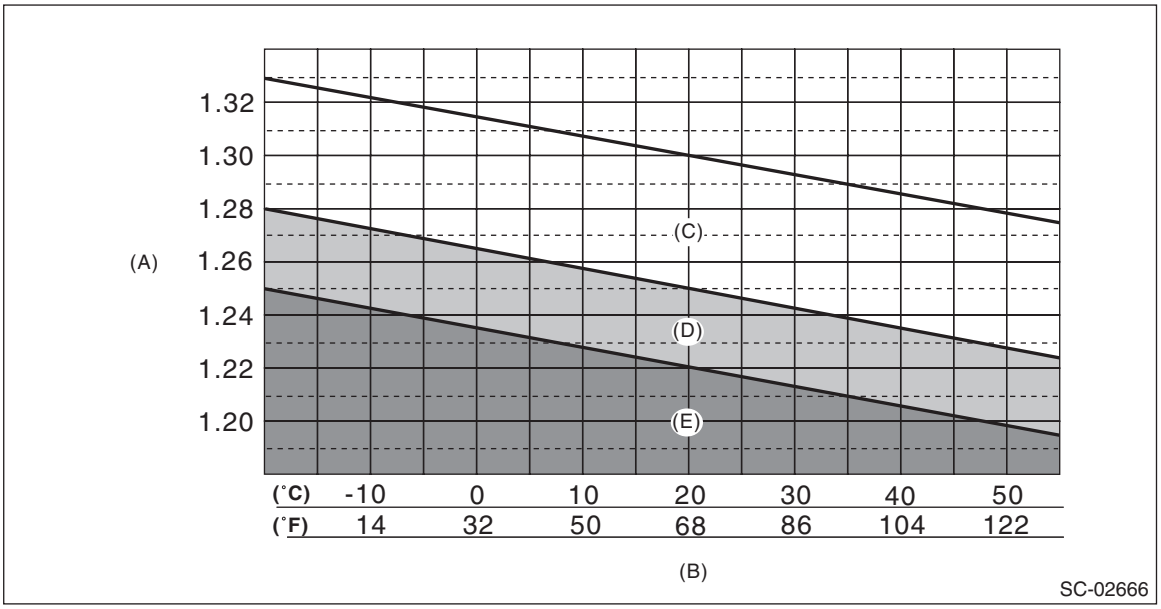

(A) Specific gravity [20°C (68°F)] (B) Electrolyte temperature (C) Good
(D) Caution (E) Need charging

Check

- ***Specific gravity: 1.250 — 1.290, and difference between cells is 0.04 or less → Battery is normal***
- ***Specific gravity: Less than 1.250, or difference between cells is 0.04 or more → Battery needs to be charged or replaced***

4. STANDBY CURRENT

1) Prepare the circuit tester which can measure down to 1 mA.

NOTE:
For model with keyless access function, the standby current changes regularly. Therefore, prepare the analog type circuit tester.

2) Using the circuit tester, check the standby current.

(1) Check the battery. <Ref. to SC(w/o STI)-51, APPEARANCE, INSPECTION, Battery.> <Ref. to SC(w/o STI)-51, ELECTROLYTE LEVEL, INSPECTION, Battery.> <Ref. to SC(w/o STI)-51, SPECIFIC GRAVITY OF ELECTROLYTE, INSPECTION, Battery.>

NOTE:
The standby current may be displayed lower than the actual value if the battery is weak, so be sure to check the battery. Charge or replace if necessary.

(2) Check that the fuse is not blown out and is properly inserted.

(3) When non-genuine electrical parts (including parts sold in authorized workshops) are installed, remove all parts except for genuine electrical parts.

(4) Check that back-up fuse is inserted. <Ref. to PI-5, FUSE, PRE-DELIVERY INSPECTION (PDI) PROCEDURE, Pre-delivery Inspection.>

(5) Start the engine, and set the switch positions for each system as shown in the following table.

NOTE:
Some of the listed systems are not equipped depending on the vehicle. Set only the systems equipped on the vehicle to the positions as shown.

System	Position
Headlight	ON or Auto
Fog light	ON
Wiper (front and rear)	ON or Low speed
Audio and navigation system	ON
Rear defogger	ON
Room light	DOOR
Luggage light	DOOR
Map light	OFF
Auto A/C	ON (AUTO)
Manual A/C	ON (Speed 1)
Electronic parking brake	ON
Electrical parts other than listed above (electrical parts that users can confirm the operation with the key removed)	OFF

(6) Turn the ignition switch to OFF.

(7) Operate the front hood lock release lever to unlock the front hood.

(8) Close all the doors (including rear gate and trunk lid) and then lock the doors. (Security alarm is in set condition)

NOTE:
For model with keyless access function, take the access key 1.5 m or more away from the vehicle after the door lock. And do not put the access key close to the vehicle while measuring the standby current.

(9) Wait for 5 minutes after door lock until the standby current stabilizes.

(10) Loosen the nut which holds the ground terminal to the battery sensor.

NOTE:
Do not remove the ground terminal.

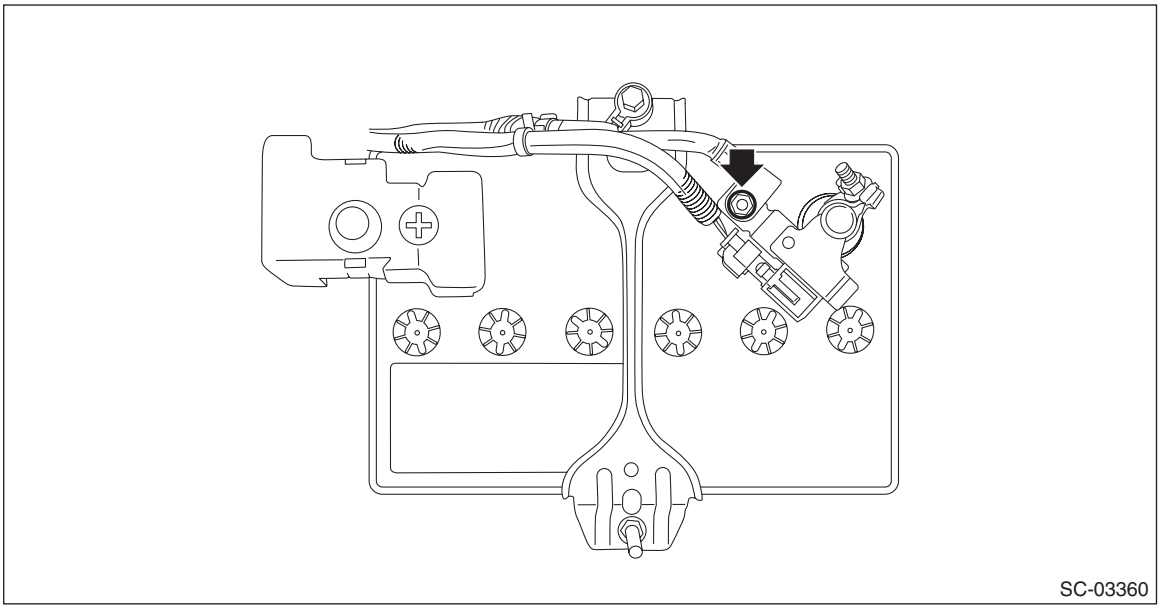

(11) Connect the circuit tester positive terminal to the ground terminal.

NOTE:
To prevent the damage to the circuit tester, set the circuit tester range to a large value first, then gradually change it to smaller values.

(12) Connect the circuit tester negative terminal to the ground terminal installation part of the battery sensor.

(13) While connecting the circuit tester positive terminal with the ground terminal as shown in the figure below, remove the ground terminal from the battery sensor.

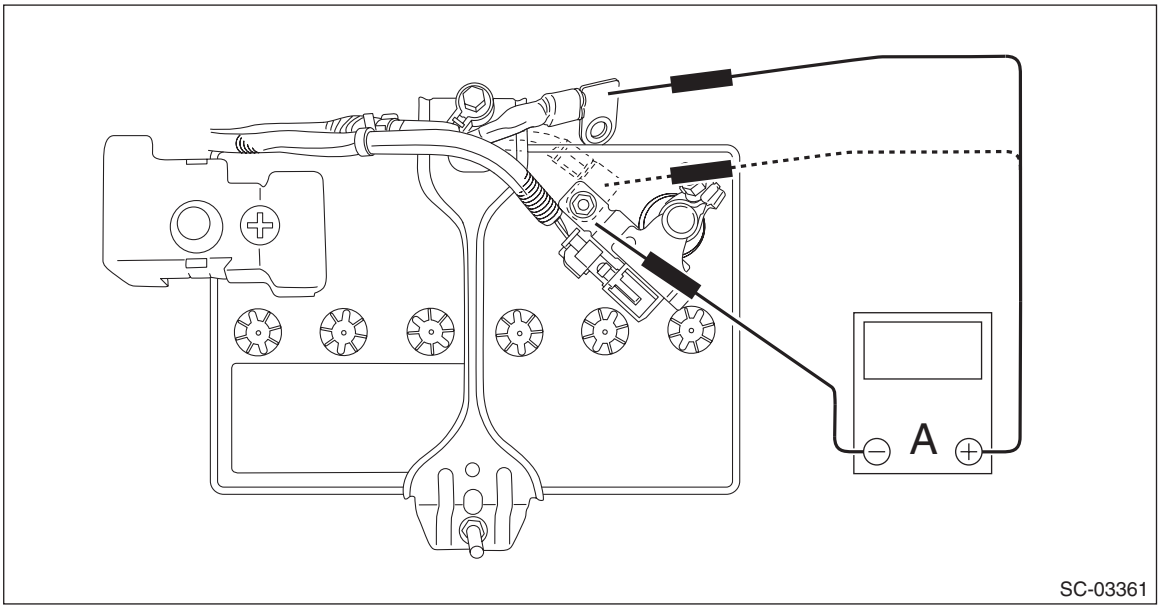

(14) Check the standby current.

NOTE:
• For model with keyless access function, the standby current changes periodically because the keyless access system continuously searches the access key (polling).
• When measuring the standby current, the reading of the circuit tester oscillates. Therefore, read the average value (median value).
• The standby current may become large when the vehicle system is activated 5 times at 30-minute intervals or 5 hours after turning the ignition switch to OFF. Therefore, the measurement should be completed in 20 minutes. If it takes more than 20 minutes, start the engine once, stop the engine, then perform the inspection.

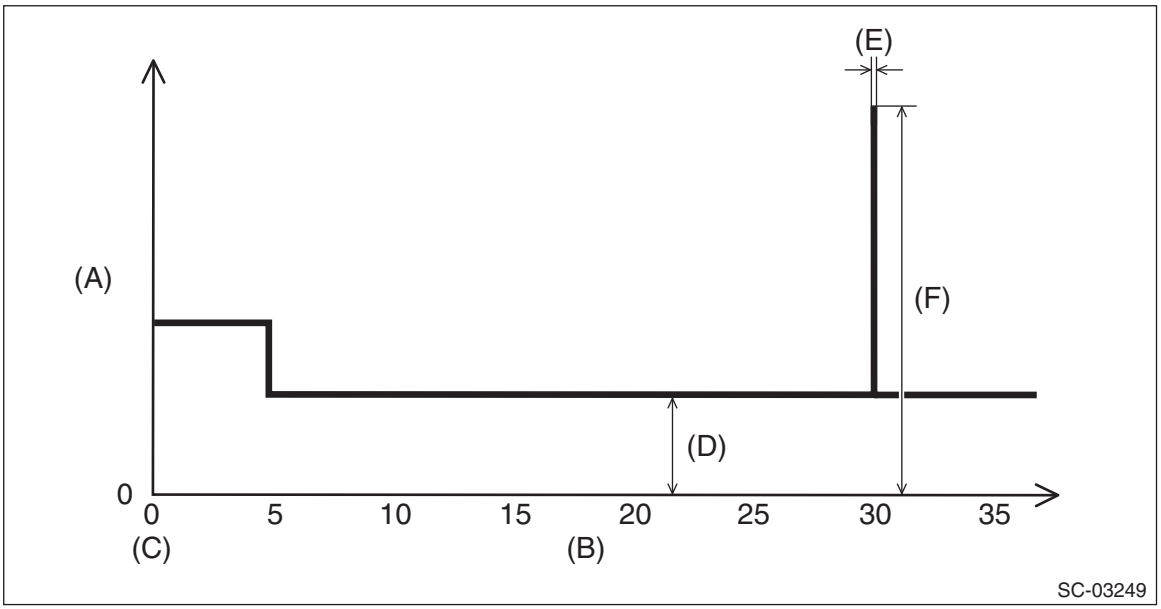

(A)	Current/mA	(B)	Time/min	(C)	Ignition OFF
(D)	Less than 70 mA	(E)	5 seconds (system operation)	(F)	300 mA or more

Check

- ***When the maximum measurement value is less than 70 mA → Standby current is normal.***
- ***When the maximum measurement value is 70 mA or more → Go to step (15).***

(15) Remove all fuses one by one to identify which system changes the standby current value significantly. <Ref. to WI-19, Fuse And Relay.>
(16) Check the harness and connector of the system whose standby current has changed significantly.

D: CHARGE

WARNING:
• Do not bring an open flame close to the battery when working.

CAUTION:
• Prior to charging, corroded terminals should be cleaned with a brush and common caustic soda solution.
• Be careful while charging the battery because it produces flammable gasses.
• Observe instructions when handling the battery charger.
• Before charging the battery on the vehicle, disconnect the battery ground terminal to prevent damage of generator diodes or other electrical units.

1. NORMAL CHARGE (CONSTANT CURRENT CHARGE)

Charge the battery with the current value specified by manufacturer or with approximately 1/10 of battery's rating capacity. (See the table below.)

Type	Charging current (A)	CCA (A)
55D23L	4.0 — 5.0	390

CAUTION:
• The charge control feature and specifications for judgment of charge completion depend on the device. Follow the instruction manual of the charger used.
• Keep the electrolyte temperature at 45°C (113°F) or less while charging. Stop charging when the temperature exceeds this value.

NOTE:
The characteristics of typical charging methods are as follows.
• Constant current charging
This method makes it easy to charge to 100%, since the electrolyte is agitated by the gassing occurred at the end of charging. However, the time for charging is comparatively long because the current value is kept constant.
• Constant voltage charging
This method completes charging in a short period of time due to the large current. However, it is difficult to charge to 100% because no gassing occurred at the end of charging and the electrolyte is not agitated. Therefore, the combined use with the constant current charging is preferable.
• Quasi-constant voltage charging
This method is widely used for commercially available chargers.
Compared to the constant voltage charging whose charging current at the beginning of charging becomes large, it reduces the charging current by lowering the voltage at the initial stage, resulting in battery load reduction. The time for charging is comparatively long. However, this type of chargers can be manufactured comparatively inexpensive due to the simple control circuit (or manual settings). After the initial stage of charging is completed, it gradually raises the charging voltage so that the charging current is within the specification, until the battery is fully charged.
• Constant voltage/current charging
In addition to the constant voltage charging, this method controls the upper limit of the current.
The constant current charging is applied at the beginning of charging, and the constant voltage charging is applied at the end. This makes battery charge comparatively efficient in a short period of time. Charging by generators is similar to this method.
Judgment of charge completion
1) Specific gravity of electrolyte should be held within the specific range of 1.250 — 1.290 for one hour or more.
2) Voltage while charging should be held within the specified range of 15.0 — 16.8 V for one hour or more.
3) Gas is actively generated in all cells.

4) The amount of charge reaches 1.2 — 1.5 times of the amount of discharge.

NOTE:
The amount of discharge/charge can be calculated by the following formula.
Amount of discharge (Ah) = Remaining capacity (%) calculated by specific gravity × 5 hour rate capacity (Ah)
Amount of charge (Ah) = Charging current value (A) × Time for charging

2. QUICK CHARGING

Charge the battery in a short period of time with a relatively large current by using a quick charger.
Charge the battery with the current value at approximately 1/2 of battery's rating capacity. (See the table below.)

CAUTION:
• Quick charging is accompanied by a large amount of heat generation. Charging should be completed in up to 30 minutes regardless of battery size.
• Quick charging is used to recover the battery until it can start the vehicle. For full charging, use the normal charging method.
• Keep the electrolyte temperature at 55°C (131°F) or less while quick charging. Stop charging when the temperature exceeds this value.

Type	Charging current (A)	CCA (A)
55D23L	20.0 — 25.0	390

5. Battery Sensor

A: REMOVAL

1) Disconnect the ground terminal from battery sensor. <Ref. to NT-6, BATTERY, NOTE, Note.>
2) Disconnect the connector (A) from the battery sensor, and remove the battery sensor.

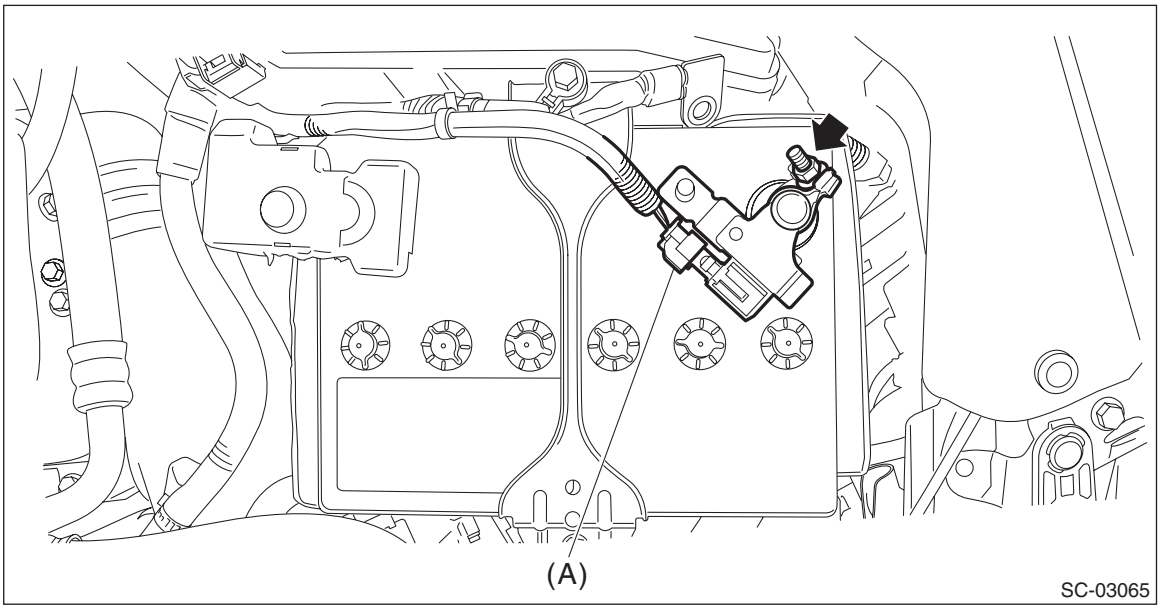

B: INSTALLATION

Install in the reverse order of removal.

NOTE:
Install the battery sensor to the position where removal/installation of the vent plug is not interfered.

Tightening torque:
6 N·m (0.6 kgf-m, 4.4 ft-lb)

C: INSPECTION

Check the battery sensor for deformation, cracks and any other damage.

ENGINE (DIAGNOSTICS)

EN(w/o STI)(diag)

		Page
1.	Basic Diagnostic Procedure	2
2.	Check List for Interview	4
3.	General Description	6
4.	Electrical Component Location	10
5.	Engine Control Module (ECM) I/O Signal	21
6.	Data Link Connector	40
7.	General Scan Tool	41
8.	Subaru Select Monitor	46
9.	Read Diagnostic Trouble Code (DTC)	63
10.	Inspection Mode	64
11.	Drive Cycle	67
12.	Clear Memory Mode	82
13.	Active Test	83
14.	Malfunction Indicator Light	84
15.	Diagnostics for Engine Starting Failure	87
16.	List of Diagnostic Trouble Code (DTC)	106
17.	Diagnostic Procedure with Diagnostic Trouble Code (DTC)	117
18.	Diagnostic Procedure without Diagnostic Trouble Code (DTC)	718
19.	General Diagnostic Table	722

1. Basic Diagnostic Procedure

A: PROCEDURE

1. ENGINE

	Step	Check	Yes	No
1	**CHECK ENGINE START FAILURE.** 1) Ask the customer when and how the trouble occurred using the interview check list. <Ref. to EN(w/o STI)(diag)-4, CHECK, Check List for Interview.> 2) Start the engine.	Does the engine start?	Go to step **2**.	Inspection using "Diagnostics for Engine Starting Failure" <Ref. to EN(w/o STI)(diag)-87, Diagnostics for Engine Starting Failure.>
2	**CHECK ILLUMINATION OF MALFUNCTION INDICATOR LIGHT.**	Does the malfunction indicator light illuminate?	Go to step **3**.	Inspection using "General Diagnostic Table". <Ref. to EN(w/o STI)(diag)-722, General Diagnostic Table.>
3	**CHECK COMMUNICATION STATUS.** 1) Turn the ignition switch to OFF. 2) Connect the Subaru Select Monitor or general scan tool to the data link connector. 3) Turn the ignition switch to ON, and run the Subaru Select Monitor or general scan tool. NOTE: • Subaru Select Monitor For detailed operation procedures, refer to the "Subaru Select Monitor". <Ref. to EN(w/o STI)(diag)-46, Subaru Select Monitor.> • General scan tool For detailed operation procedures, refer to the general scan tool operation manual.	Does Subaru Select Monitor communicate with vehicle normally?	Go to step **4**.	Inspection using "Basic Diagnostic Procedure" of LAN system <Ref. to LAN(diag)-2, Basic Diagnostic Procedure.>
4	**CHECK DTC.** Read DTC using Subaru Select Monitor or general scan tool. NOTE: • Subaru Select Monitor For detailed operation procedures, refer to "Read Diagnostic Trouble Code (DTC)". <Ref. to EN(w/o STI)(diag)-63, Read Diagnostic Trouble Code (DTC).> • General scan tool For detailed operation procedures, refer to the general scan tool operation manual.	Is DTC displayed on Subaru Select Monitor or general scan tool?	Record DTC, time stamp, and freeze frame data, then repair the trouble cause. <Ref. to EN(w/o STI)(diag)-106, List of Diagnostic Trouble Code (DTC).> After repair, go to the next step. Go to step **5**. NOTE: • For the time stamp, refer to LAN section. <Ref. to LAN(diag)-6, TIME STAMP, CAUTION, General Description.> • Depending on DTCs, time stamp may not be stored.	Repair the related parts. NOTE: If DTC is not shown on display although the malfunction indicator light illuminates, perform the diagnosis of malfunction indicator light circuit or combination meter. <Ref. to EN(w/o STI)(diag)-84, Malfunction Indicator Light.>

	Step	Check	Yes	No
5	**PERFORM DIAGNOSIS.** 1) Perform the Clear Memory Mode. <Ref. to EN(w/o STI)(diag)-82, Clear Memory Mode.> 2) Perform the Inspection Mode or Drive Cycle. <Ref. to EN(w/o STI)(diag)-64, Inspection Mode.> <Ref. to EN(w/o STI)(diag)-67, Drive Cycle.>	Is DTC displayed on Subaru Select Monitor or general scan tool?	Inspect using "Diagnostic Procedure with Diagnostic Trouble Code (DTC)". <Ref. to EN(w/o STI)(diag)-117, Diagnostic Procedure with Diagnostic Trouble Code (DTC).>	Finish the diagnosis.

2. Check List for Interview

A: CHECK

1. CHECK LIST NO. 1

Check the following item when problem has occurred.

NOTE:
Use copies of this page for interviewing customers.

Customer's name		Engine No.	
Date of purchase		Fuel type	
Date of repair		Odometer reading	km
V.I.N.			miles
Weather	❑ Fine ❑ Cloudy ❑ Rainy ❑ Snowy ❑ Various/Others:		
Ambient air temperature	°C (°F)		
	❑ Hot ❑ Warm ❑ Cool ❑ Cold		
Place	❑ Highway ❑ Suburbs ❑ Inner city ❑ Uphill ❑ Downhill ❑ Rough road ❑ Others:		
Engine temperature	❑ Cold ❑ Warming-up ❑ After warming-up ❑ Any temperature ❑ Others:		
Engine speed	rpm		
Vehicle speed	km/h (MPH)		
Driving conditions	❑ Not affected ❑ At starting ❑ While idling ❑ At racing ❑ While accelerating ❑ While cruising ❑ While decelerating ❑ While turning (RH/LH)		
Headlight	❑ ON/❑ OFF	Rear defogger	❑ ON/❑ OFF
Blower	❑ ON/❑ OFF	Audio	❑ ON/❑ OFF
A/C compressor	❑ ON/❑ OFF	Rear entertainment system	❑ ON/❑ OFF
Radiator fan	❑ ON/❑ OFF	Car phone	❑ ON/❑ OFF
Front wiper	❑ ON/❑ OFF	Wireless device	❑ ON/❑ OFF
Rear wiper	❑ ON/❑ OFF		

2. CHECK LIST NO. 2

Check the following item about the vehicle's state when the malfunction indicator light turns on.

NOTE:
Use copies of this page for interviewing customers.

a) Other warning lights or indicators illuminate. ❑ Yes / ❑ No
❑ Fuel level warning light ❑ Charge warning light ❑ Engine coolant temperature warning light ❑ Oil pressure warning light ❑ ATF temperature warning light or Sport indicator light ❑ Driver's control center differential indicator light ❑ ABS warning light ❑ VDC warning light ❑ Cruise indicator light ❑ SI-CRUISE warning light ❑ Immobilizer indicator light ❑ STEERING warning light ❑ Electronic parking brake warning light ❑ Glow indicator ❑ Sedimenter warning light ❑ Others:
b) Fuel level
• Lack of fuel: ❑ Yes / ❑ No • Indicator position of fuel gauge: • Experienced running out of fuel: ❑ Yes / ❑ No
c) Intentional connecting or disconnecting of harness connectors or spark plug cords: ❑ Yes / ❑ No
• What:
d) Intentional connecting or disconnecting of hoses: ❑ Yes / ❑ No
• What:
e) Installing of other parts except genuine parts: ❑ Yes / ❑ No
• What: • Where:
f) Occurrence of noise: ❑ Yes / ❑ No
• From where: • What kind:
g) Occurrence of smell: ❑ Yes / ❑ No
• From where: • What kind:
h) Intrusion of water into engine compartment or passenger compartment: ❑ Yes / ❑ No
i) Troubles occurred
❑ Engine does not start. ❑ Engine stalls during idling. ❑ Engine stalls while driving. ❑ Engine speed decreases. ❑ Engine speed does not decrease. ❑ Rough idling ❑ Poor acceleration ❑ Back fire ❑ After fire ❑ Does not shift. ❑ Excessive shift shock

3. General Description

A: CAUTION

1) Airbag system wiring harness is routed near the ECM, main relay and fuel pump relay.

CAUTION:
- **Do not use electrical test equipment on the airbag system circuits.**
- **Be careful not to damage the airbag system wiring harness when servicing the ECM, TCM, main relay and fuel pump relay.**

2) Never connect the battery in reverse polarity. Doing so will damage the ECM instantly, and other parts will also be damaged.
3) Do not disconnect the battery terminals while the engine is running. A large counter electromotive force will be generated in the generator, and this voltage may damage electronic parts such as ECM etc.
4) When disconnecting the connectors of the electrical components, always be sure to turn the ignition switch to OFF. Perform the Clear Memory Mode after connecting the connectors. <Ref. to EN(w/o STI)(diag)-82, Clear Memory Mode.>
5) When measuring the voltage or resistance of individual sensor or all electrical control modules, use a tapered pin with a diameter of 0.6 mm (0.024 in) or less and touch it to the tip of terminal.

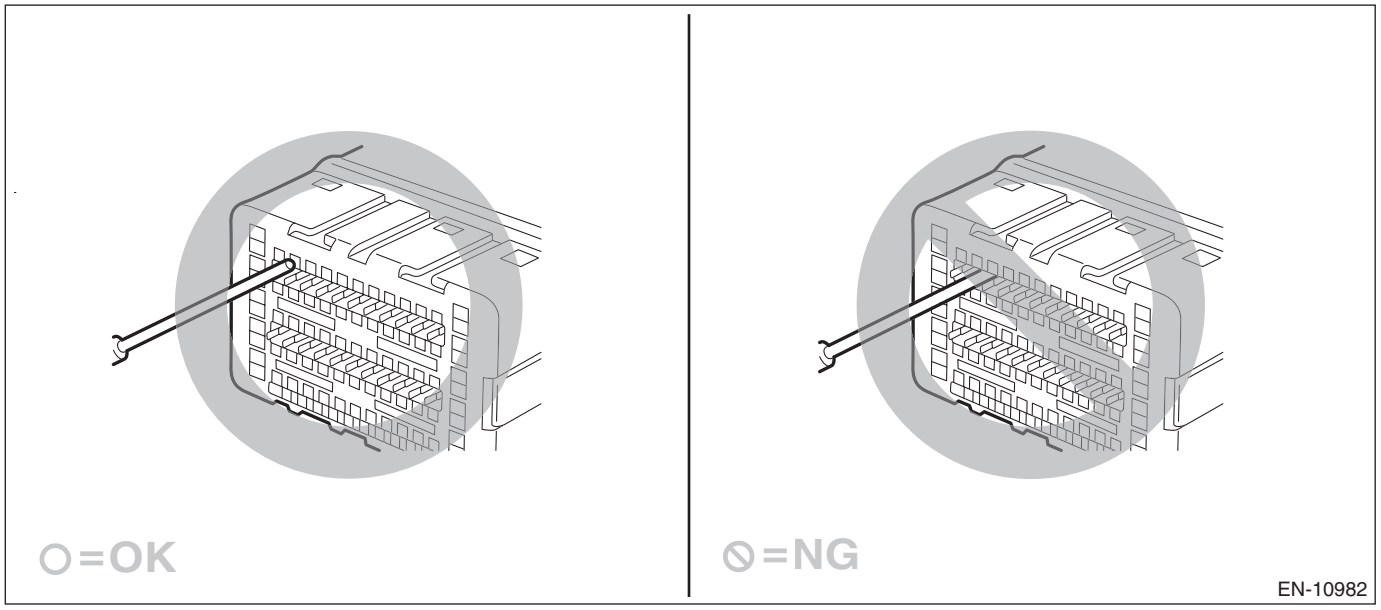

Never insert the tapered pin into the terminal because it deforms inside which may lead to a malfunction.

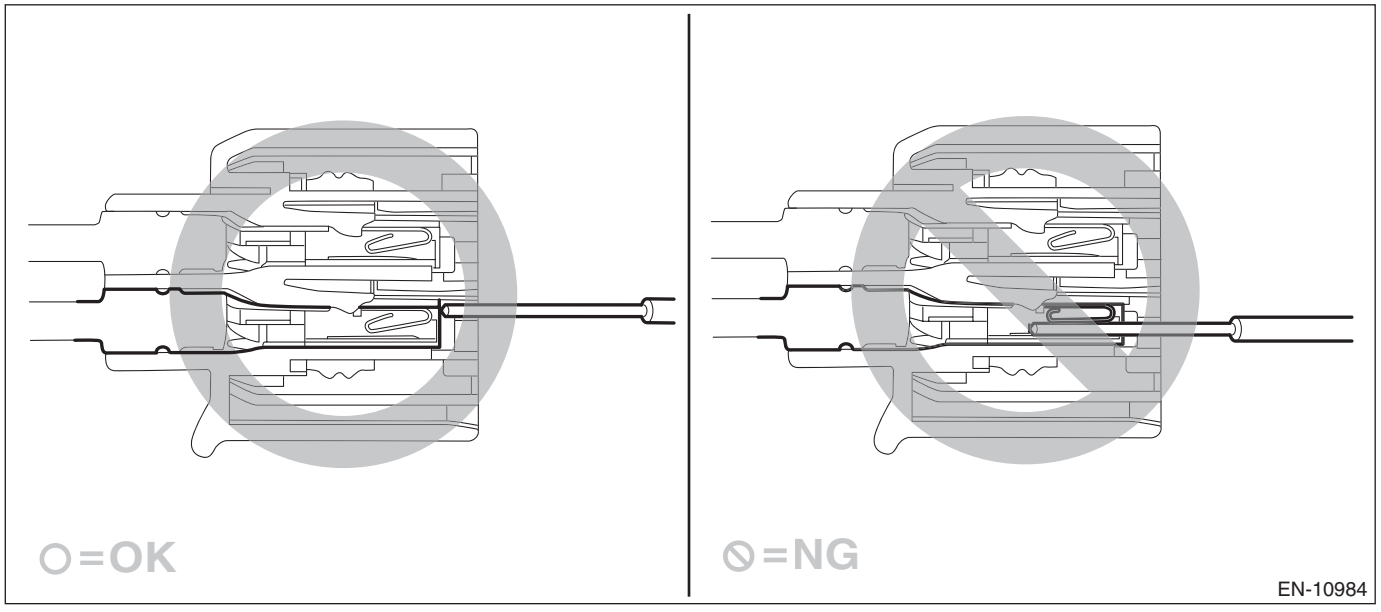

CAUTION:
When replacing the ECM, be careful not to use the ECM of wrong specification to avoid any damage on the fuel injection system.

NOTE:
When replacing the ECM of the models with immobilizer, immobilizer system must be registered. For detailed operation procedure, refer to the “REGISTRATION MANUAL FOR IMMOBILIZER”.
6) The ECM connector is waterproof. When measuring the ECM connector terminal voltages, or the resistance between the ECM connector terminals, use the ST.
ST 18460AA030 CHECK BOARD
7) Take care not to allow water to get into the connectors when servicing or washing the vehicle in rainy weather. Avoid exposure to water even if the connectors are waterproof.
8) Use the ground terminal of the bulkhead harness for the grounding point when measuring voltage and resistance inside the passenger compartment.

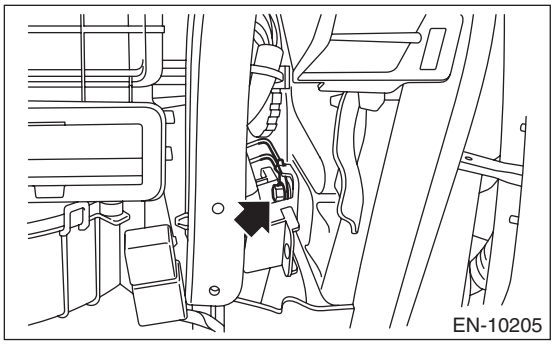

9) Use the engine ground terminal or engine assembly for the grounding point when measuring the voltage and resistance in engine compartment.

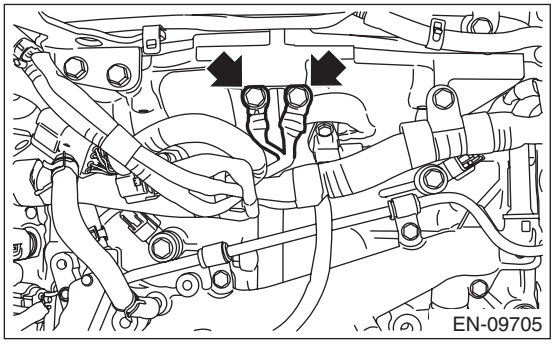

10) All parts related to the engine control system are precision parts. Do not drop or otherwise apply impact. Do not reuse the parts that are dropped accidentally.
11) Do not connect the wiring of electrical parts directly to the battery terminals. It may cause erroneous operation of the charge control, leading to early deterioration of the battery or discharged battery.
12) Observe the following cautions when installing a radio in vehicle.

CAUTION:
• The antenna must be kept as far apart as possible from the ECM. <Ref. to EN(w/o STI)(diag)-10, CONTROL MODULE, LOCATION, Electrical Component Location.>
• The antenna feeder must be placed as far apart as possible from the ECM and engine control system harness.
• Carefully adjust the antenna for correct matching.
• When mounting a large power type radio, pay special attention to the three items mentioned above.
• Incorrect installation of the radio may affect the operation of ECM.
13) When disconnecting the fuel hose, be sure to release the fuel pressure beforehand. <Ref. to FU(w/o STI)-138, RELEASING OF FUEL PRESSURE, PROCEDURE, Fuel.>
14) Warning lights may illuminate when performing driving test with jacked-up or lifted-up condition, but this is not a system malfunction. The reason for this is the rotating speed difference between the front and rear wheels. When engine control system diagnosis is finished, perform the VDC memory clearance procedure of self-diagnosis function. <Ref. to VDC(diag)-30, Clear Memory Mode.>

B: INSPECTION

Before performing diagnostics, check the following item which might affect engine problems.

1. BATTERY

1) Check the battery. <Ref. to SC(w/o STI)-51, INSPECTION, Battery.>
2) Check the condition of the main and other fuses, and harnesses and connectors. Also check for proper grounding.

2. ENGINE GROUND

Make sure that the engine ground terminal has no contamination, corrosion or looseness and is properly connected to the engine.

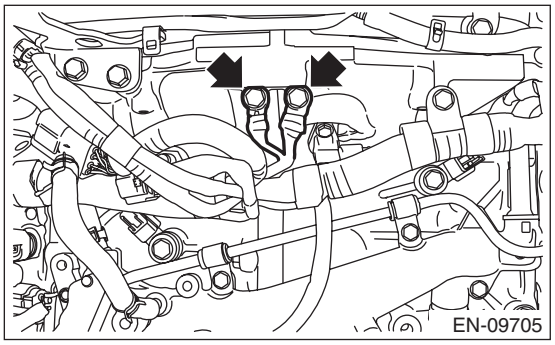

C: NOTE

• The on-board diagnostic (OBD) system detects and indicates a fault in various inputs and outputs of the complex electronic control. Malfunction indicator light in the combination meter indicates occurrence of a fault or trouble.
• Further, against any failure of sensors that would cause the vehicle to stop running, the fail-safe function is provided to ensure the minimal drivability.
• The OBD system incorporated with the vehicles within this type of engine complies with OBD-II regulations. The OBD system monitors the components and the system malfunction listed in “Engine Section” which affects on emissions.
• When the system decides that a malfunction occurs, malfunction indicator light illuminates. At the same time of the malfunction indicator light illumination or blinking, a DTC and a freeze frame engine conditions are stored into on-board computer.
• The OBD system stores freeze frame engine condition data (engine load, engine coolant temperature, fuel trim, engine speed and vehicle speed, etc.) into on-board computer when it detects a malfunction.
• Freeze frame engine condition data are stored until the DTCs are cleared. However when such malfunctions as fuel trim fault and misfire are detected with the freeze frame engine condition data stored, they are rewritten into those related to the fuel trim fault and misfire.
• When the malfunction does not occur again for three consecutive driving cycles*, malfunction indicator light is turned off, but DTC remains at on-board computer.
*: One driving cycle means the period between the ignition switch ON and the ignition switch OFF after driving.
• When performing diagnosis, connect the Subaru Select Monitor or general scan tool to the vehicle.

D: PREPARATION TOOL

1. SPECIAL TOOL

ILLUSTRATION	TOOL NUMBER	DESCRIPTION	REMARKS
 STSSM4	—	SUBARU SELECT MONITOR 4	Used for setting of each function and trouble-shooting for electrical system. NOTE: For detailed operation procedures of Subaru Select Monitor 4, refer to “Application help”.
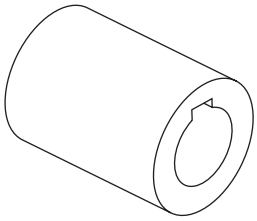 ST18252AA000	18252AA000	CRANKSHAFT SOCKET	Used for rotating crankshaft.
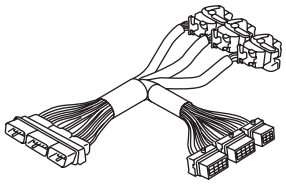 ST18460AA030	18460AA030	CHECK BOARD	Used for measuring voltage and resistance of ECM terminals.

2. GENERAL TOOL

TOOL NAME	REMARKS
Circuit tester	Used for measuring resistance, voltage and current.
Oscilloscope	Used for measuring the sensor.
DST-i	Used together with Subaru Select Monitor 4.

4. Electrical Component Location

A: LOCATION

1. CONTROL MODULE

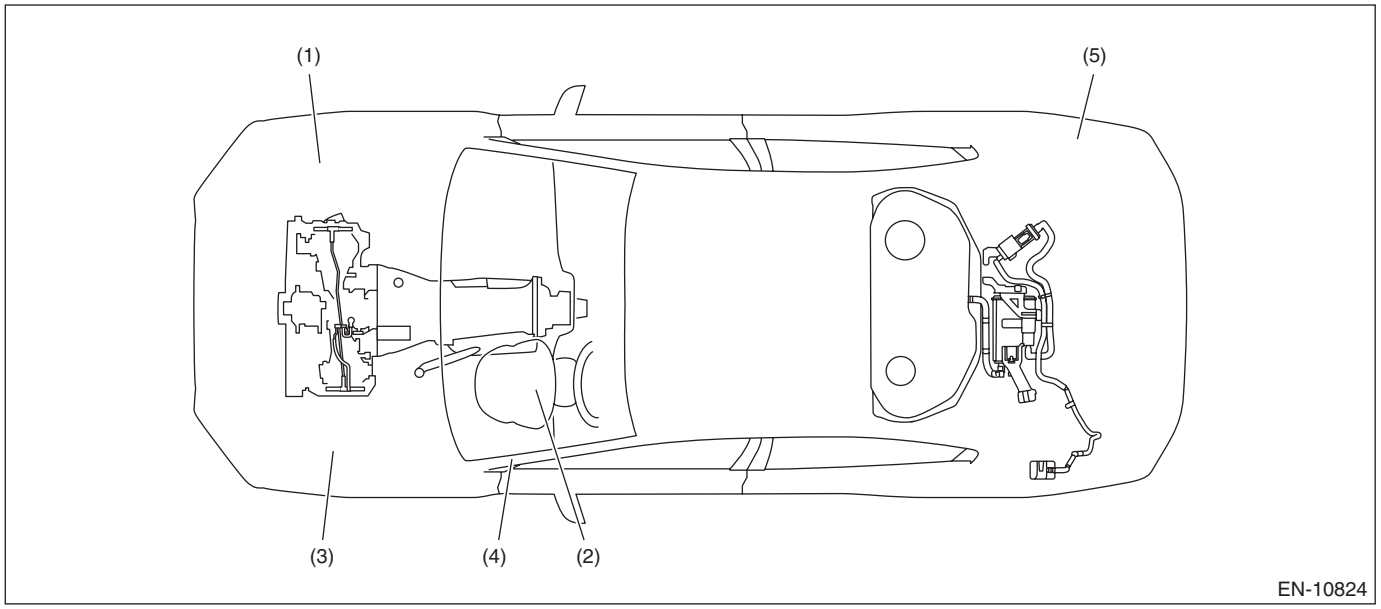

(1) Engine control module (ECM)
(2) Malfunction indicator light
(3) Delivery mode fuse
(4) Data link connector
(5) Fuel pump CM

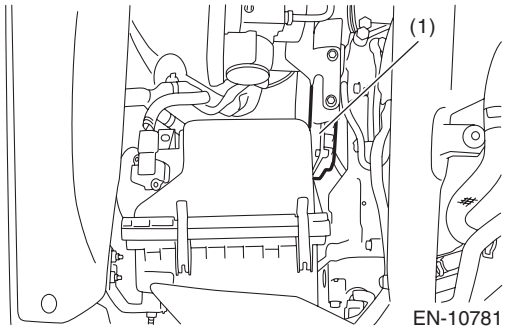

EN-10781

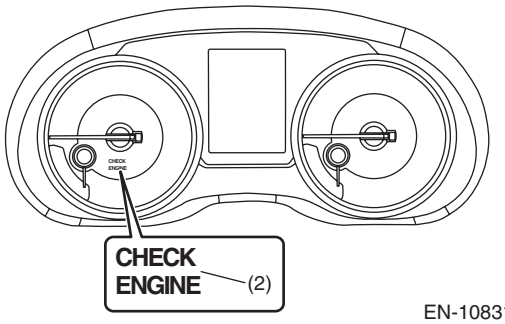

EN-10831

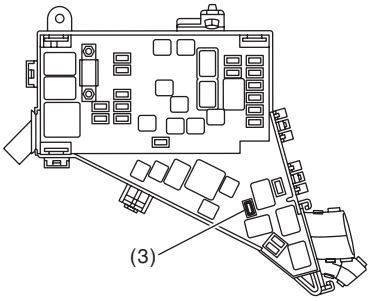

EN-10210

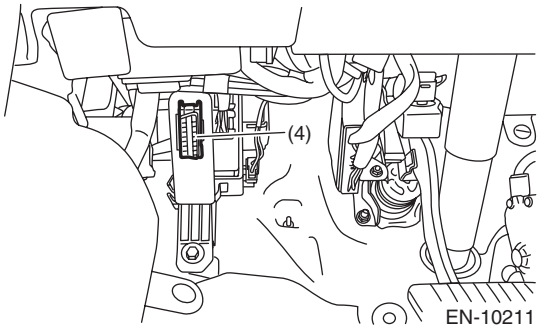

EN-10211

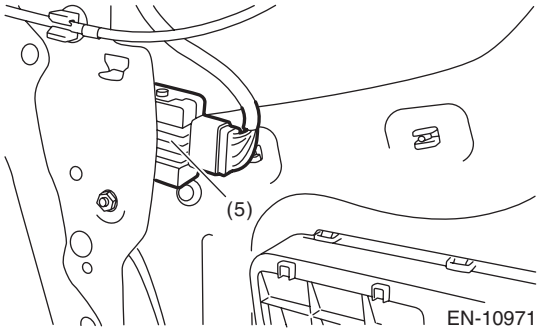

EN-10971

2. SENSOR

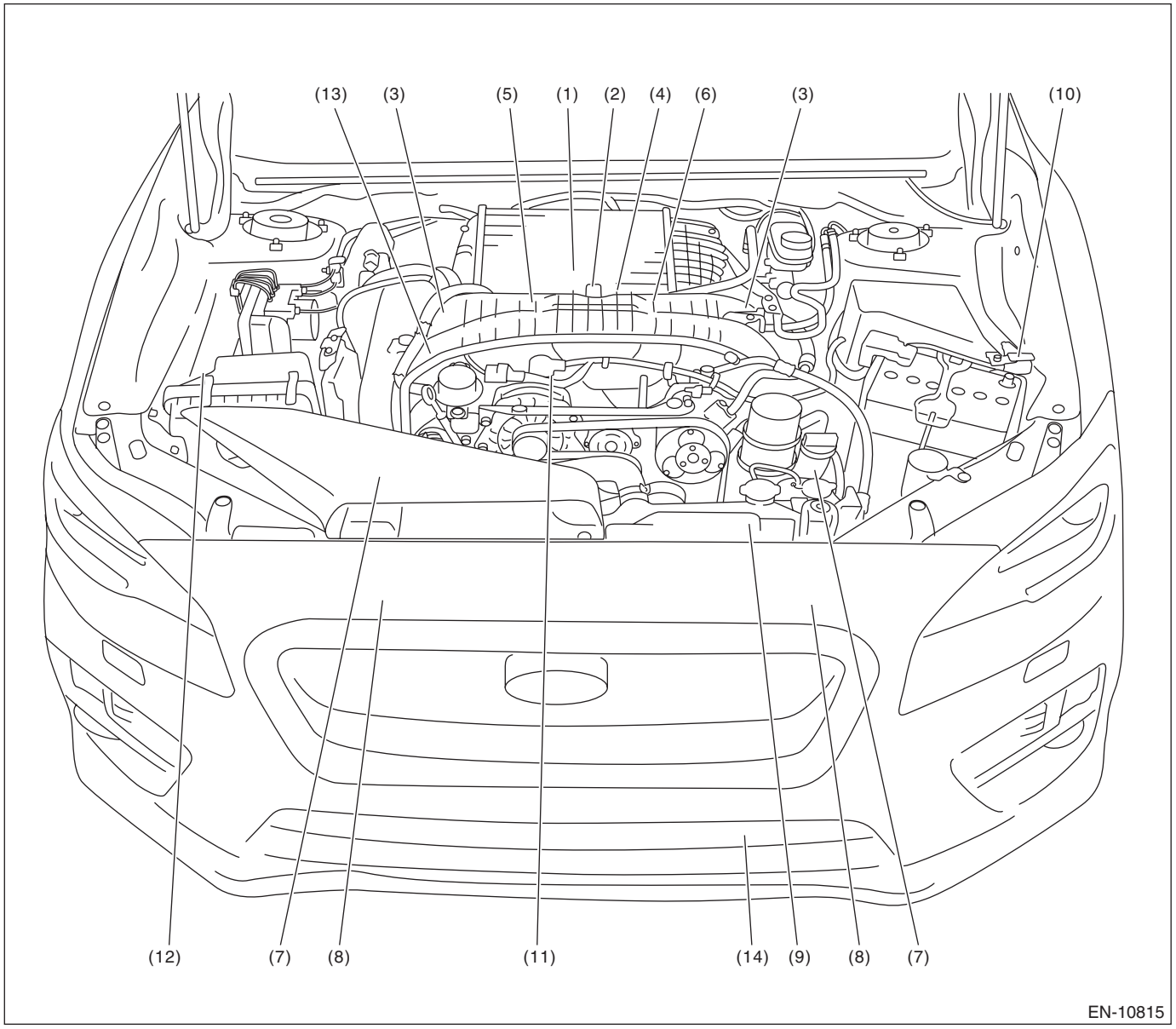

(1) Electronic throttle control
(2) Manifold absolute pressure and intake air temperature sensor
(3) Tumble generator valve ASSY (with built-in sensor)
(4) Crankshaft position sensor
(5) Knock sensor RH
(6) Knock sensor LH
(7) Intake camshaft position sensor
(8) Exhaust camshaft position sensor
(9) Engine oil temperature sensor
(10) Battery sensor
(11) Engine coolant temperature sensor
(12) Mass air flow and intake air temperature sensor
(13) Fuel pressure sensor
(14) Ambient sensor

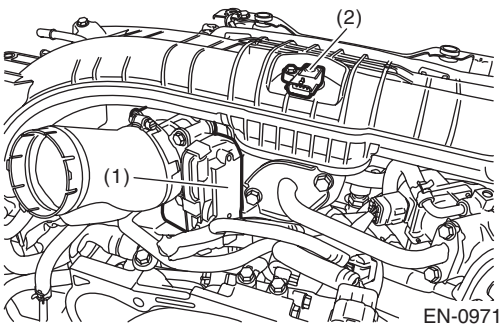
(2)
(1)
EN-09710

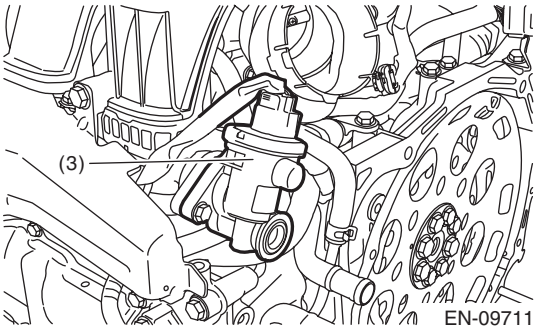
(3)
EN-09711

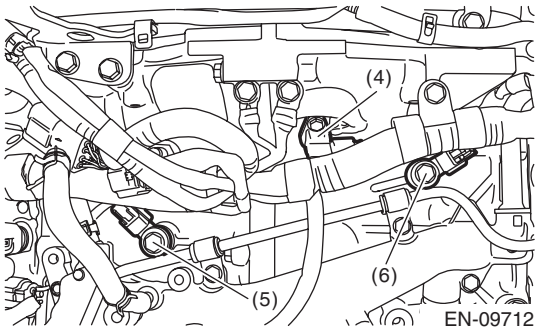
(4)
(6)
(5)
EN-09712

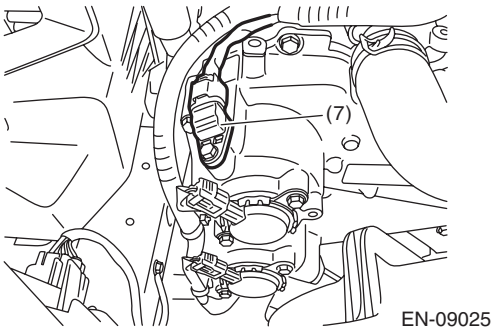
(7)
EN-09025

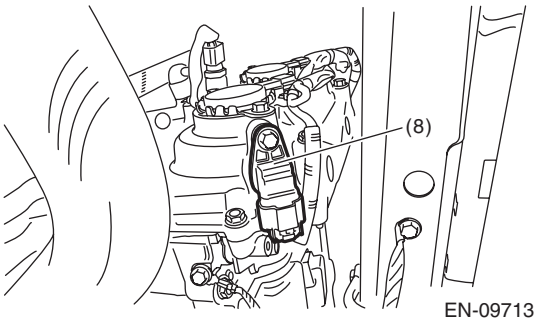
(8)
EN-09713

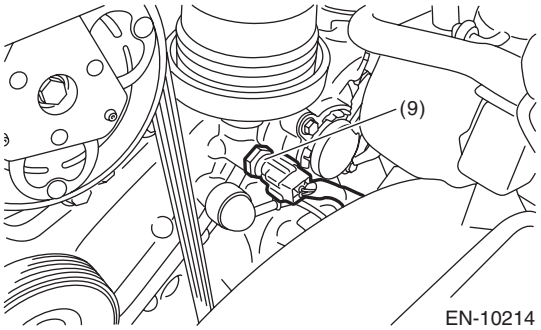
(9)
EN-10214

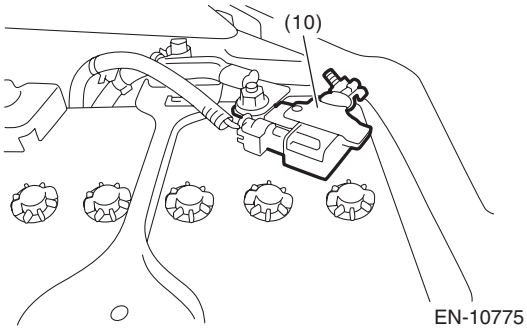
(10)
EN-10775

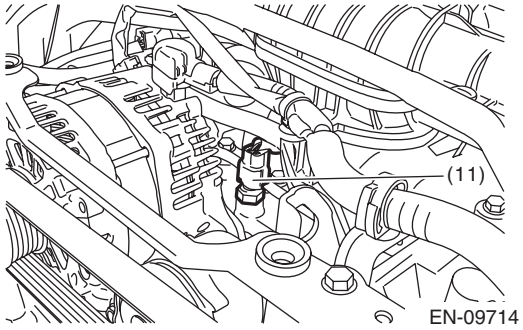
(11)
EN-09714

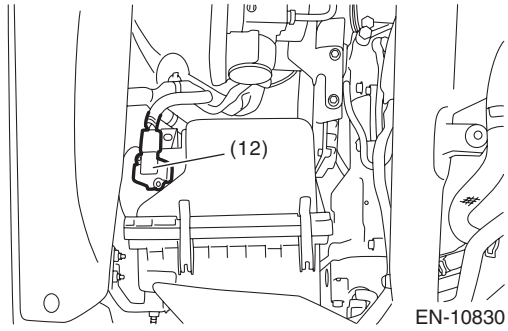
(12)
EN-10830

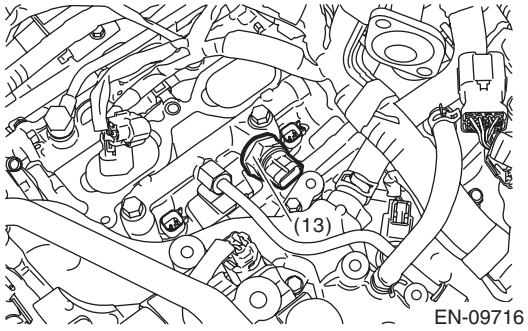
(13)
EN-09716

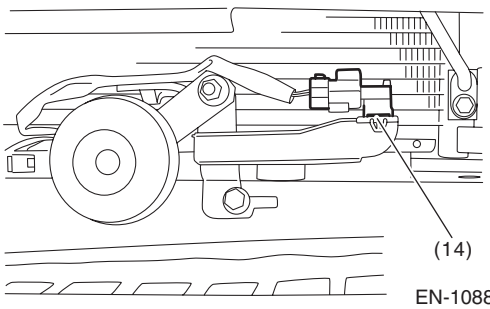

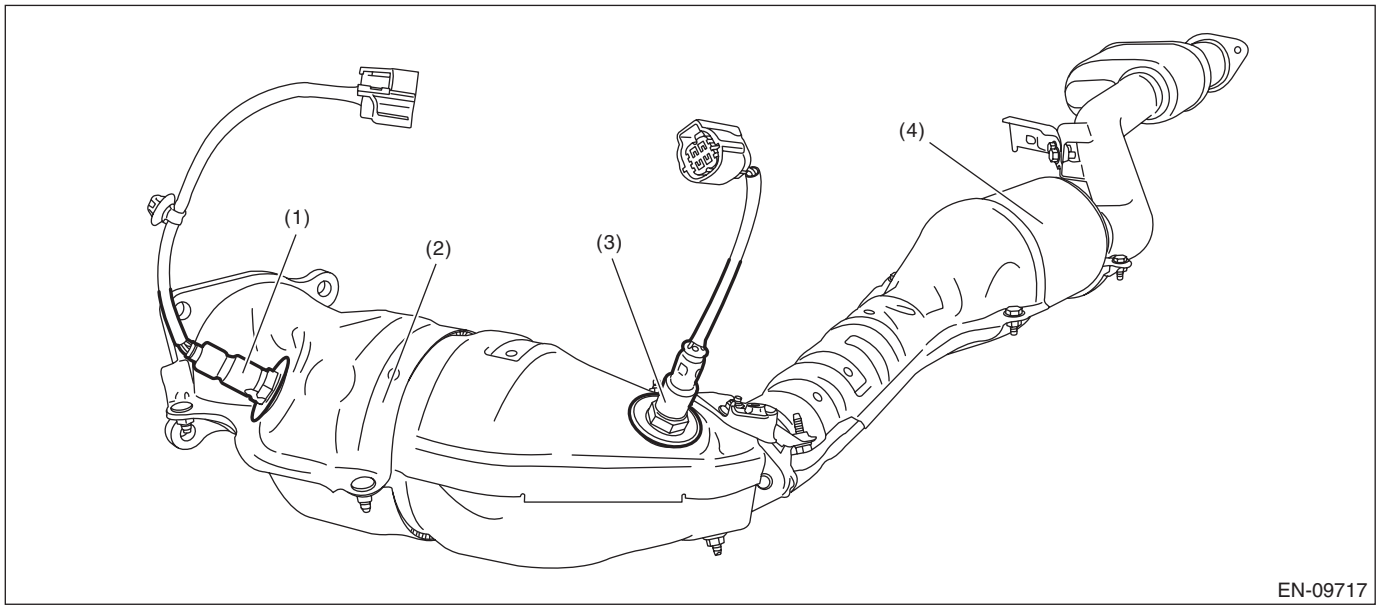

(1) Front oxygen (A/F) sensor
(2) Front catalytic converter
(3) Rear oxygen sensor
(4) Rear catalytic converter

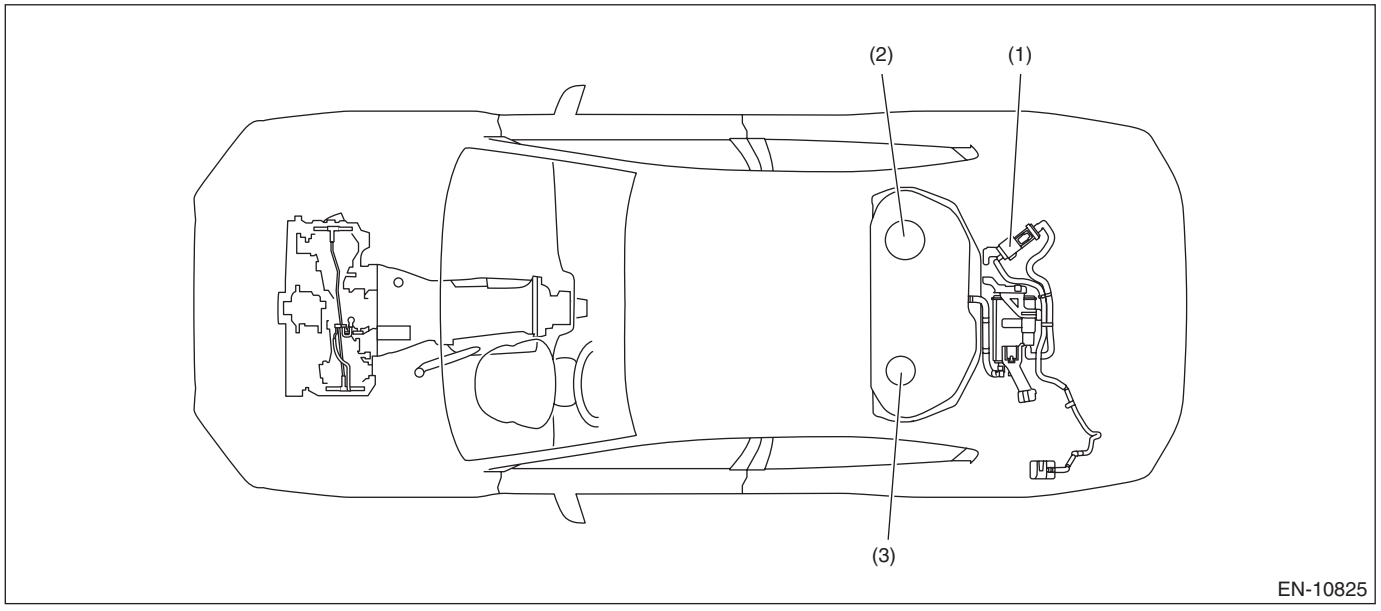

(1) Leak check valve ASSY (with built-in pressure sensor)
(2) Fuel level sensor
(3) Fuel sub level sensor

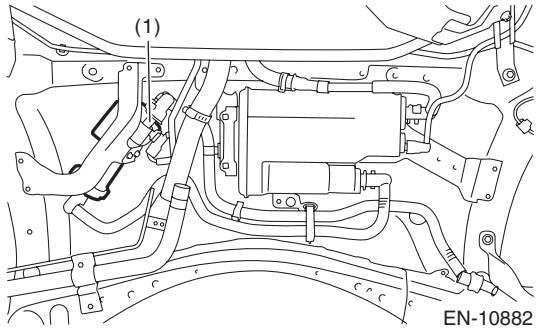

EN-10882

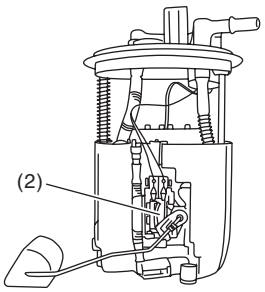

EN-10473

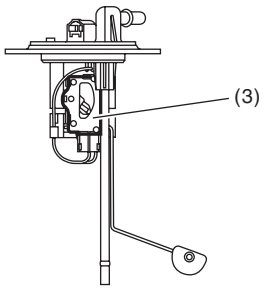

EN-08790

3. SOLENOID VALVE, ACTUATOR, EMISSION CONTROL SYSTEM PARTS AND IGNITION SYSTEM PARTS

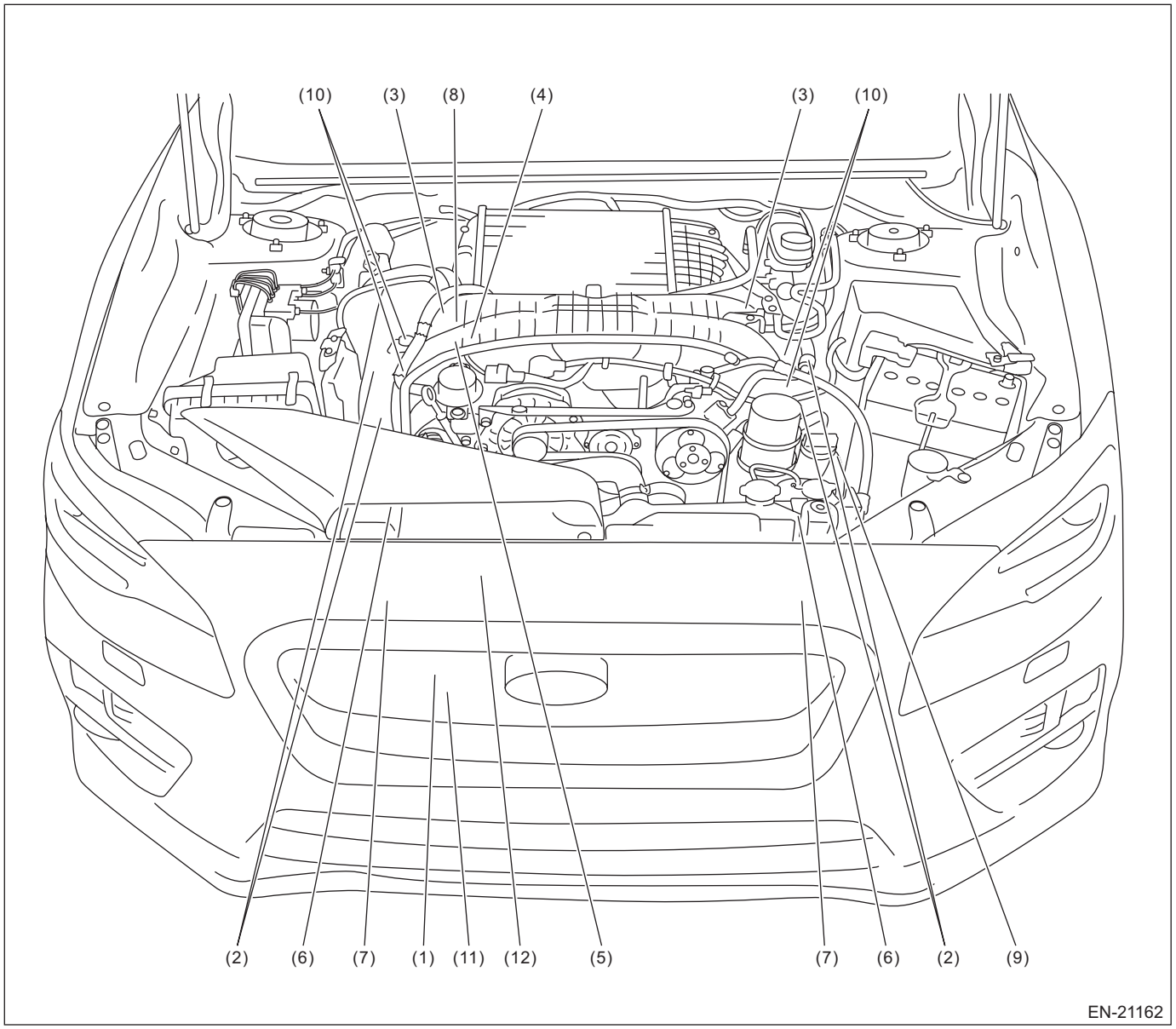

(1) Wastegate control solenoid valve
(2) Ignition coil
(3) Tumble generator valve ASSY
(4) Purge control solenoid valve 1
(5) Purge control solenoid valve 2
(6) Intake oil control solenoid
(7) Exhaust oil control solenoid
(8) EGR control valve
(9) High-pressure fuel pump
(10) Fuel injector
(11) Blow-by diagnosis connector 1
(12) Blow-by diagnosis connector 2

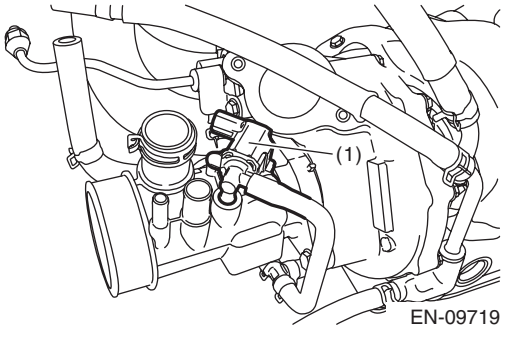

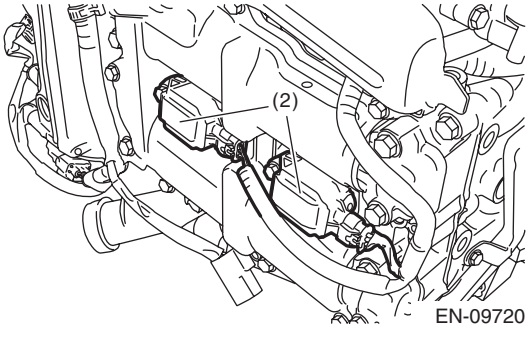

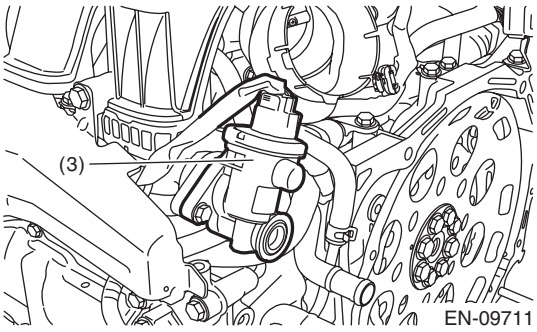
(3)
EN-09711

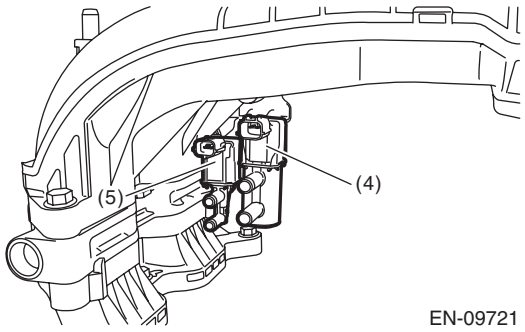
(5)
(4)
EN-09721

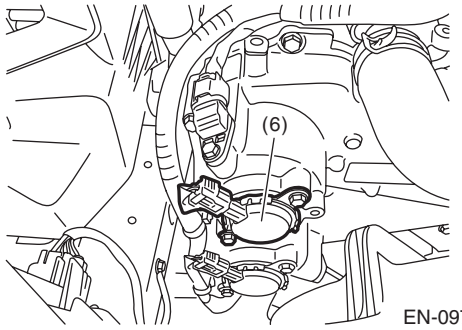
(6)
EN-09722

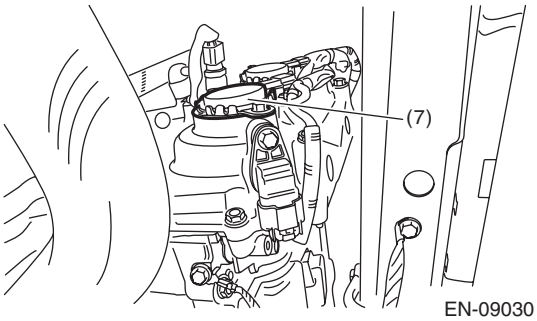
(7)
EN-09030

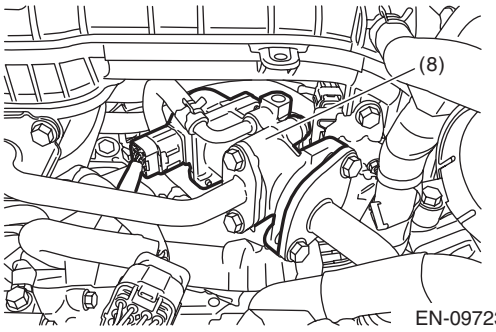
(8)
EN-09723

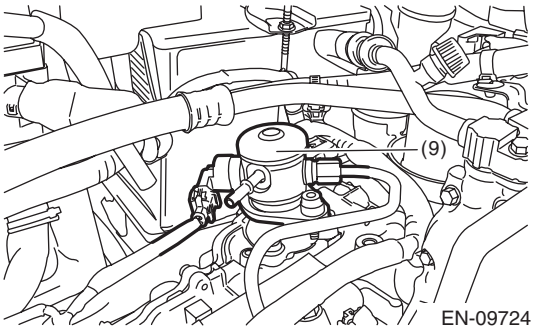
(9)
EN-09724

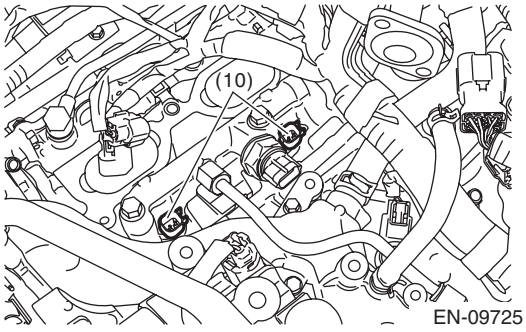
(10)
EN-09725

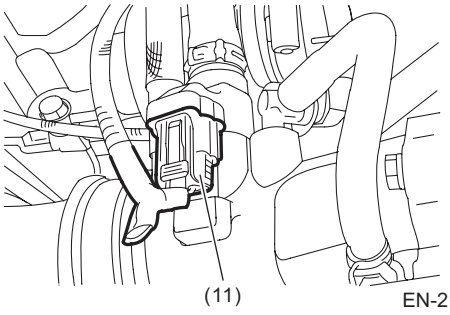
(11)
EN-21155

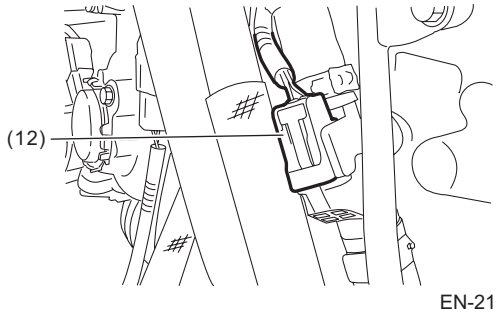
(12)
EN-21154

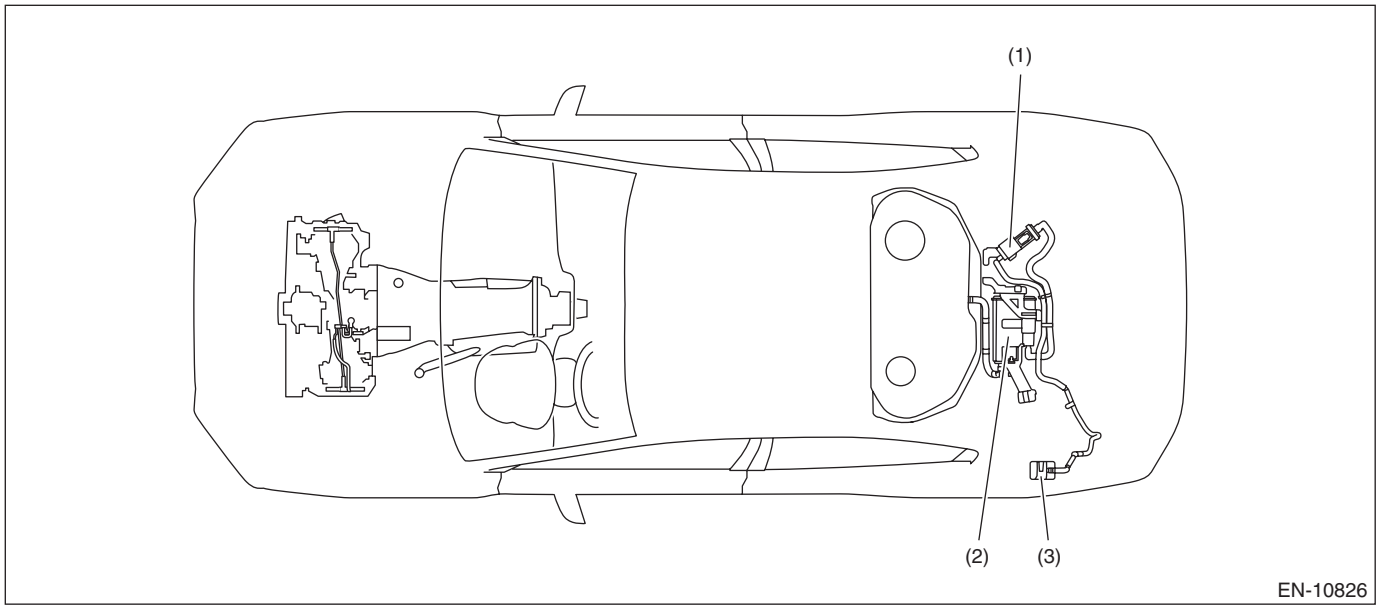

(1) Leak check valve ASSY (2) Canister (3) Drain filter

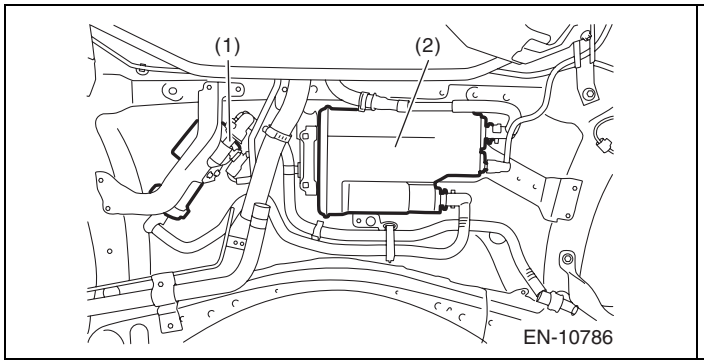

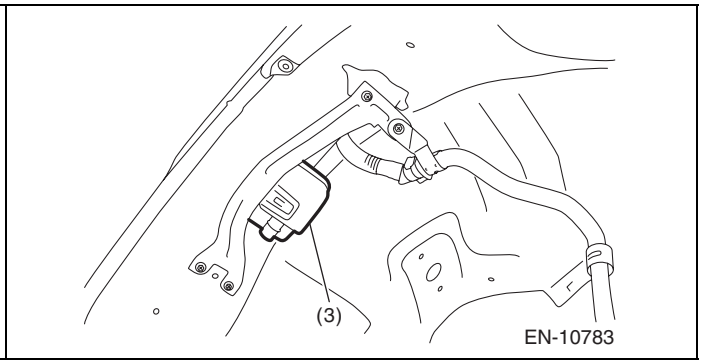

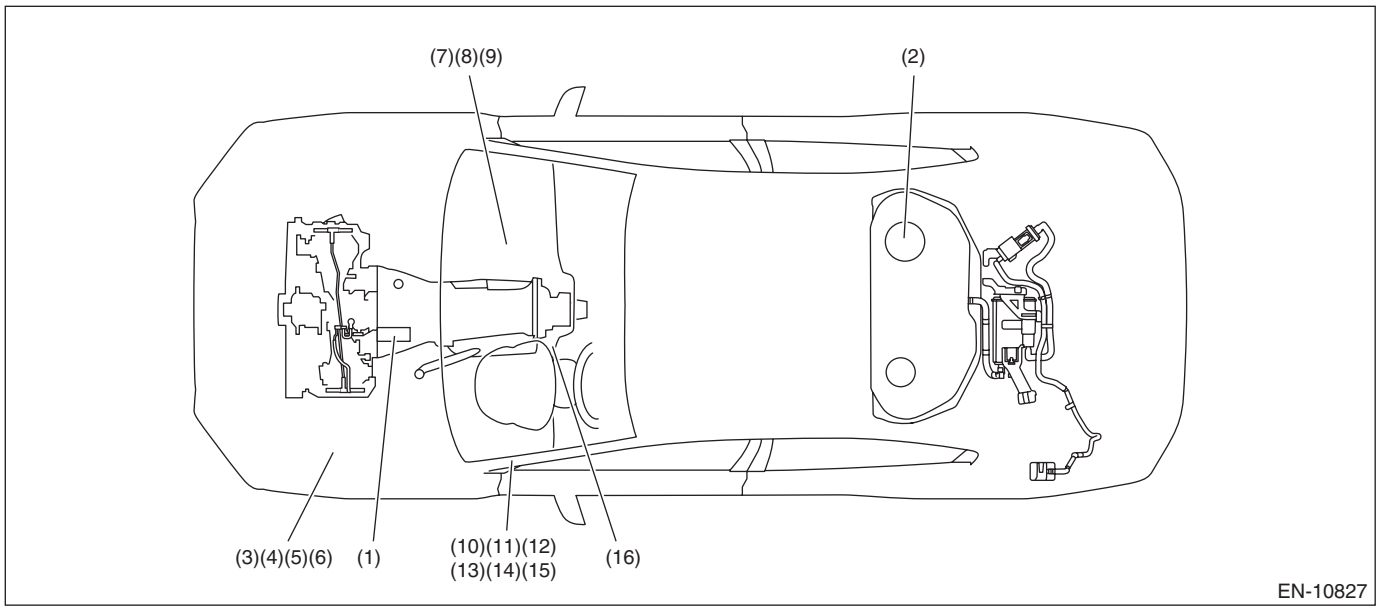

(1) Starter
(2) Fuel pump
(3) Radiator main fan relay 1
(4) Radiator main fan relay 2
(5) Radiator sub fan relay
(6) Fuel injector relay
(7) Main relay
(8) IG relay
(9) Fuel pump relay
(10) A/F, oxygen sensor relay
(11) Electronic throttle control relay
(12) Starter relay
(13) Starter cut relay (model with push button start)
(14) IG relay 1 (push button start) (model with push button start)
(15) Starter relay (push button start) (model with push button start)
(16) Push button ignition switch (model with push button start)

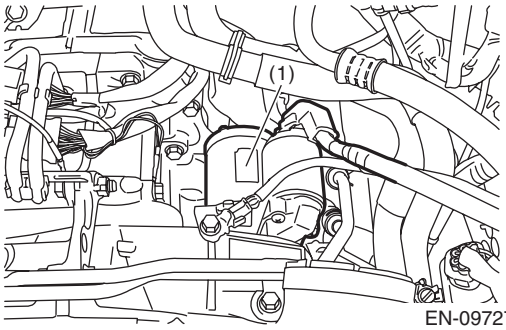

EN-09727

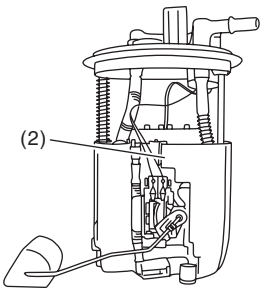

EN-10186

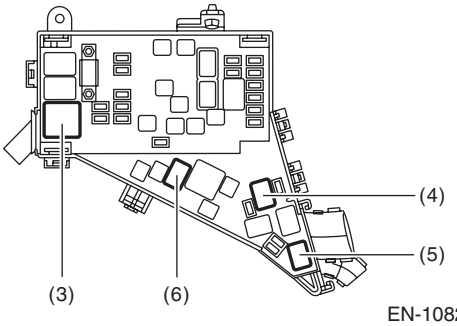

EN-10829

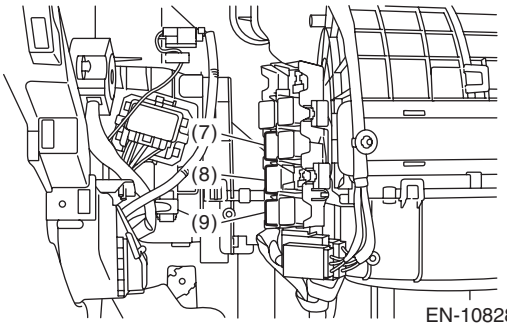

EN-10828

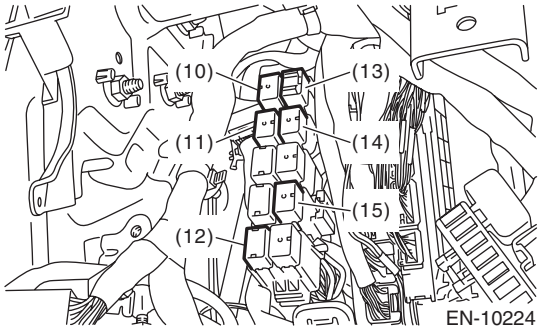

EN-10224

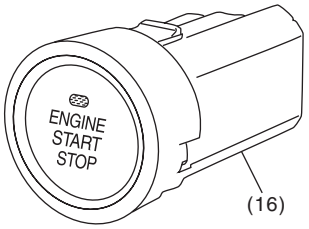

EN-10226

4. TRANSMISSION

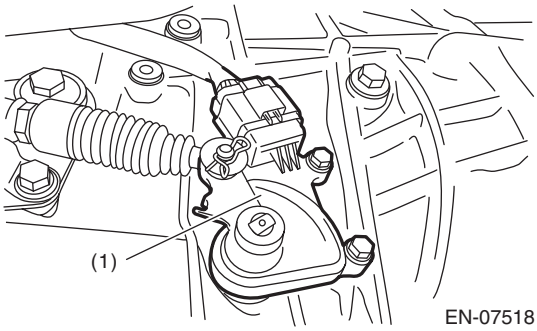

EN-07518

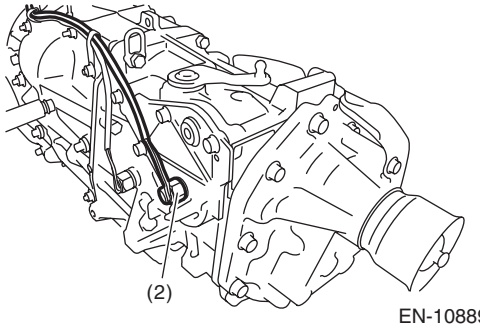

EN-10889

(1) Inhibitor switch (CVT model)
(2) Neutral position switch (MT model)

5. Engine Control Module (ECM) I/O Signal

A: ELECTRICAL SPECIFICATION

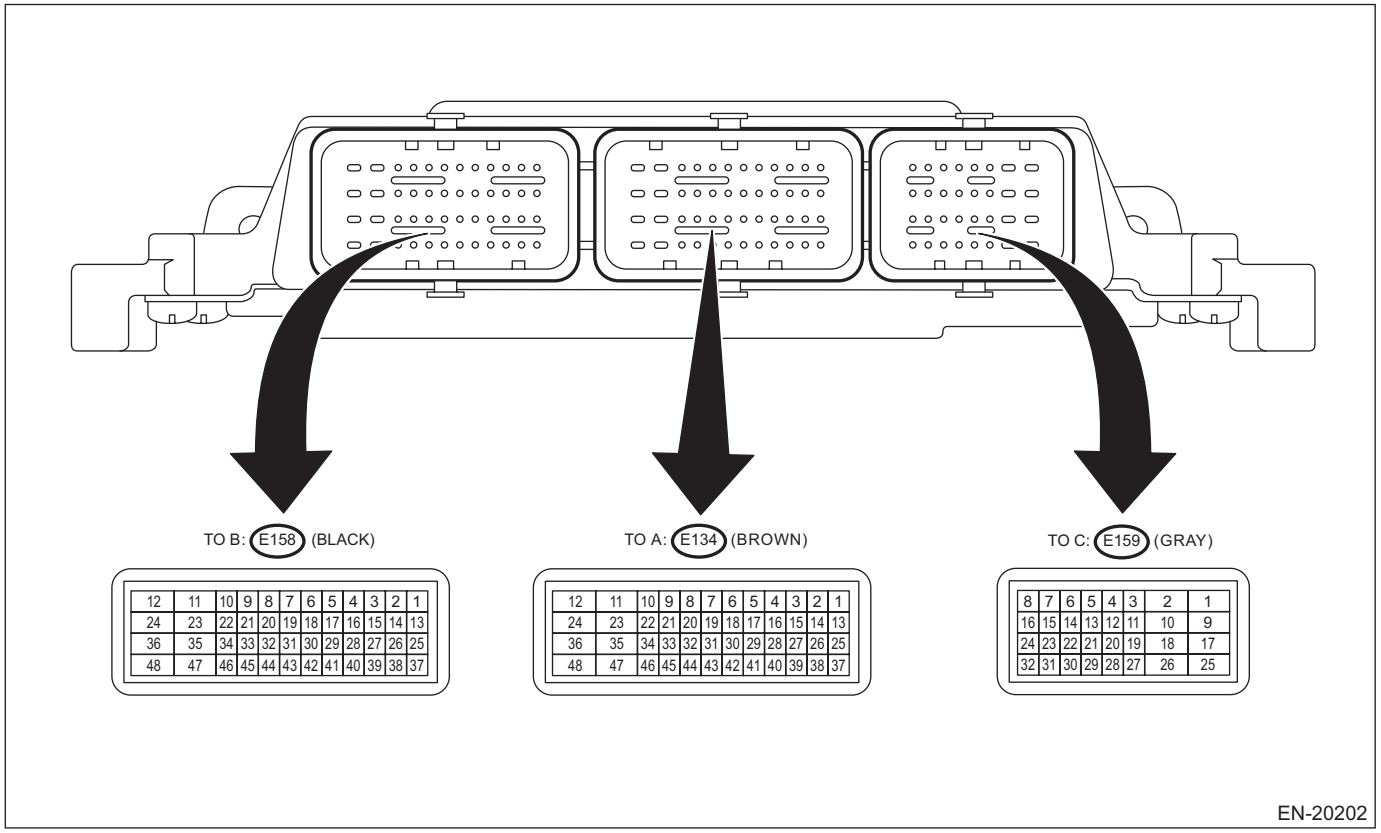

Description		Connector No.	Terminal No.	Signal (V)		Remarks
				Ignition SW ON (Engine OFF)	Engine ON (Idling)	
Crankshaft position sensor	(+) signal	E158	19	0 or 5	0 or 5	Waveforms 1 and 10
	Ground	E158	31	0	0	—
Intake camshaft position sensor RH		E158	20	0 or 5	0 or 5	Waveform 1
Intake camshaft position sensor LH		E158	21	0 or 5	0 or 5	Waveform 1
Exhaust camshaft position sensor RH		E158	32	0 or 5	0 or 5	Waveform 1
Exhaust camshaft position sensor LH		E158	33	0 or 5	0 or 5	Waveform 1
Camshaft position sensor ground		E158	34	0	0	—
Front oxygen (A/F) sensor	IP (+) signal	E158	15	2 — 3	2 — 4	Waveform 2
	VS (+) signal	E158	27	2 — 3	3 — 5	Waveform 2
	COM signal	E158	39	2 — 3	3 — 4	—
	Heater signal	E159	9	Battery voltage	0 or battery voltage	Waveform 4
Rear oxygen sensor	(+) signal	E158	16	2 — 3	2 — 3	Waveform 3
	(–) signal	E158	42	2 — 3	2 — 3	—
	Heater signal	E159	3	Battery voltage	0 or battery voltage	Waveform 4

Description		Connector No.	Terminal No.	Signal (V)		Remarks
				Ignition SW ON (Engine OFF)	Engine ON (Idling)	
Air flow sensor	Signal	B134	16	0	1	—
	Ground	B134	28	0	0	—
Intake air temperature sensor (integrated with air flow sensor)		E158	5	2 — 3	2 — 3	—
Engine coolant temperature sensor		E158	38	1 — 3	1 — 3	—
Engine oil temperature sensor		E158	2	1 — 3	1 — 3	—
Manifold absolute pressure sensor		E158	4	2	1	—
Intake air temperature sensor (integrated with manifold absolute pressure sensor)		E158	25	2 — 3	2 — 3	—
Fuel pressure sensor		E158	6	1	1	—
Knock sensor 1		E158	14	2.5	2.5	—
Knock sensor 2		E158	26	2.5	2.5	—
Accelerator pedal position sensor	Main power supply	B134	30	5	5	—
	Main signal	B134	17	Fully closed: 0.4 — 1 Fully opened: 2.4 — 3.7	Fully closed: 0.4 — 1 Fully opened: 2.4 — 3.7	Waveforms 2, 3, 5 and 6
	Main ground	B134	31	0	0	—
	Sub signal	B134	29	Fully closed: 0.4 — 1 Fully opened: 2.4 — 3.7	Fully closed: 0.4 — 1 Fully opened: 2.4 — 3.7	—
Tumble generator valve actuator RH	Position signal	E158	40	1	1	Fully closed: 1 Fully opened: 3 Waveform 5
	Motor open	E159	14	0	0	When in operation: Waveform Waveform 5
	Motor closed	E159	30	0	0	When in operation: Waveform Waveform 5
Tumble generator valve actuator LH	Position signal	E158	41	3	3	Fully closed: 3 Fully opened: 1 Waveform 6
	Motor open	E159	6	0	0	When in operation: Waveform Waveform 6
	Motor closed	E159	22	0	0	When in operation: Waveform Waveform 6
Intake oil control solenoid RH		E159	7	Battery voltage	0 or battery voltage	Drive frequency: 300 Hz Waveform 7
Intake oil control solenoid LH		E159	15	Battery voltage	0 or battery voltage	Drive frequency: 300 Hz Waveform 7
Exhaust oil control solenoid RH		E159	23	Battery voltage	0 or battery voltage	Drive frequency: 300 Hz Waveform 7
Exhaust oil control solenoid LH		E159	31	Battery voltage	0 or battery voltage	Drive frequency: 300 Hz Waveform 7

Description		Connector No.	Terminal No.	Signal (V)		Remarks
				Ignition SW ON (Engine OFF)	Engine ON (Idling)	
Wastegate control solenoid valve		E159	11	Battery voltage	Battery voltage	When in operation: 0 or battery voltage
Canister purge control solenoid valve 1		E159	4	Battery voltage	Battery voltage	When in operation: 0 or battery voltage Waveform 9
Canister purge control solenoid valve 2		E159	12	Battery voltage	Battery voltage	When in operation: 0 or battery voltage Waveform 9
Ignition control	#1	E159	8	0	0 or 5	Waveform 10
	#2	E159	16	0	0 or 5	Waveform 10
	#3	E159	24	0	0 or 5	Waveform 10
	#4	E159	32	0	0 or 5	Waveform 10
EGR control valve	A (+)	E159	5	0 or battery voltage	0 or battery voltage	—
	A (–)	E159	21	0 or battery voltage	0 or battery voltage	—
	B (+)	E159	13	0 or battery voltage	0 or battery voltage	—
	B (–)	E159	29	0 or battery voltage	0 or battery voltage	—
Fuel pump control unit	Control signal	B134	40	ON: 0 or battery voltage OFF: 0	0 or battery voltage	Waveform 8
	Diagnostic signal	B134	44	ON: Battery voltage OFF: 0	Battery voltage	—
High-pressure fuel pump (Hi)		E158	10	—	—	Measurement prohibited
High-pressure fuel pump (Lo)		E158	22	—	—	Measurement prohibited
Fuel injector	Power supply 1	B134	36	Battery voltage	Battery voltage	—
	Power supply 2	B134	48	Battery voltage	Battery voltage	—
	#1 (+)	E158	11	0	—	Measurement is prohibited while the engine is running.
	#1 (–)	E158	12	0	—	
	#2 (+)	E158	23	0	—	
	#2 (–)	E158	24	0	—	
	#3 (+)	E158	35	0	—	
	#3 (–)	E158	36	0	—	
	#4 (+)	E158	47	0	—	
	#4 (–)	E158	48	0	—	
Electronic throttle control	Sensor power supply	E158	18	5	5	—
	Main signal	E158	17	Fully closed: Approx. 0.7 Fully open: Approx. 3.9	Fully closed: Approx. 0.7 Fully open: Approx. 3.9	—
	Sub signal	E158	29	Fully closed: Approx. 4.4 Fully open: Approx. 1.1	Fully closed: Approx. 4.4 Fully open: Approx. 1.1	—
	Ground	E158	30	0	0	—
	Motor power supply	B134	11	Battery voltage	Battery voltage	—
Electronic throttle control motor (+)		E159	2	0	Duty waveform	Drive frequency: 10 kHz
Electronic throttle control motor (–)		E159	1	0	Duty waveform	Drive frequency: 10 kHz

Description		Connector No.	Terminal No.	Signal (V)		Remarks
				Ignition SW ON (Engine OFF)	Engine ON (Idling)	
Electronic throttle relay control		B134	39	0	Duty waveform	—
Starter relay control		B134	14	Model with push button start: 3 Models without push button start: 0	3	Cranking: Waveforms 11 and 12
Self-shutoff relay control		B134	38	1	1	—
Starter cut relay control		B134	13	Model with push button start: 0 Models without push button start: 3	Model with push button start: 0 Models without push button start: 3	Cranking: Waveform 11
Main fan relay control		B134	37	Battery voltage	Battery voltage	When in operation: 0 or battery voltage
Sub fan relay control		B134	25	Battery voltage	Battery voltage	When in operation: 0 or battery voltage
A/C relay control		B134	1	Battery voltage	Battery voltage	When in operation: 0 or battery voltage
A/C switch		B134	21	ON: Battery voltage OFF: 0	ON: Battery voltage OFF: 0	Manual A/C model
Blower fan switch		B134	22	ON: 0 OFF: Battery voltage	ON: 0 OFF: Battery voltage	Manual A/C model
Starter switch		B134	45	0	0	Model with push button start Cranking: Waveform 11
Starter switch 2		B134	8	0	0	Cranking: Battery voltage
Ignition switch		B134	32	Battery voltage	Battery voltage	—
Pressure switch		B134	7	Battery voltage	Battery voltage	—
Neutral position switch		B134	33	ON: 0 OFF: Battery voltage	ON: 0 OFF: Battery voltage	Switch is ON when select lever is in “P” range or “N” range.
Cruise control	Main switch	B134	20	ON: 0 OFF: 5	ON: 0 OFF: 5	—
	Command switch	B134	6	When operating nothing: 3.5 — 4.5 When operating RES/+: 2.5 — 3.5 When operating SET/–: 0.5 — 1.5 When operating CANCEL: 0 — 0.5	When operating nothing: 3.5 — 4.5 When operating RES/+: 2.5 — 3.5 When operating SET/–: 0.5 — 1.5 When operating CANCEL: 0 — 0.5	—
Clutch switch		B134	34	When clutch pedal is depressed: 0 When clutch pedal is released: Battery voltage	When clutch pedal is depressed: 0 When clutch pedal is released: Battery voltage	MT model
Brake switch 1 (Brake switch)		B134	43	When brake pedal is depressed: 0 When brake pedal is released: Battery voltage	When brake pedal is depressed: 0 When brake pedal is released: Battery voltage	—
Brake switch 2 (Stop light switch)		E158	8	When brake pedal is depressed: Battery voltage When brake pedal is released: 0	When brake pedal is depressed: Battery voltage When brake pedal is released: 0	—

Description		Connector No.	Terminal No.	Signal (V)		Remarks
				Ignition SW ON (Engine OFF)	Engine ON (Idling)	
Oil level switch		E158	44	0	0	Oil level LOW: Battery voltage
Accessory cut request		B134	2	Model with push button start: Battery voltage Models without push button start: 0	Model with push button start: Battery voltage Models without push button start: 0	Cranking: 0 Waveform 11
Engine speed output		B134	4	Battery voltage	0 or battery voltage	Waveform 12
Generator control		B134	26	0 or 6.4	0 or 6.4	—
CAN communication	(Hi)	B134	10	—	—	—
	(Lo)	B134	9	—	—	—
LIN communication		E158	3	—	—	—
Blow-by leak diagnosis		E158	7	0	0	At the time of open circuit (fault): 5
Immobilizer communication		E158	43	—	—	—
Delivery mode switch		E158	45	Battery voltage	Battery voltage	When the fuse is installed: 0
Control module power supply		B134	12	Battery voltage	Battery voltage	—
		B134	24	Battery voltage	Battery voltage	—
Back-up power supply		B134	23	Battery voltage	Battery voltage	—
Sensor power supply		B134	18	5	5	—
		E159	19	5	5	—
Leak check valve assembly	Switching valve	B134	27	Battery voltage	Battery voltage	Operating: 0
	Pressure sensor	B134	15	1 — 4	1 — 4	When ignition switch is turned to ON: atmospheric pressure
	Vacuum pump	B134	3	Battery voltage	Battery voltage	Operating: 0
Brake booster pressure sensor		E158	13	1 — 2	1 — 2	When brake pedal is released.
Brake vacuum pump		E158	1	0	0	—
Brake vacuum pump relay		E158	37	Battery voltage	Battery voltage	—
Sensor ground		B134	19	0	0	—
		E159	27	0	0	—
Ground	Engine 1	B134	35	0	0	—
	Engine 2	B134	47	0	0	—
	Engine 3	E159	10	0	0	—
	Engine 4	E159	18	0	0	—
	Engine 5	E159	26	0	0	—
	Engine 6	E159	17	0	0	—
	Engine 7	E159	25	0	0	—

Measuring condition:

NOTE:
- Perform measurement after warming up the engine.
- For measurement of the waveform of the crankshaft position sensor, we recommend using the DST-i oscilloscope function or a general oscilloscope.
- Place the select lever in “P” range or “N” range.
- Turn the A/C to OFF.
- Turn all the accessory switches to OFF.
- Waveforms vary depending on a measurement environment and vehicle condition.

1. Waveform 1

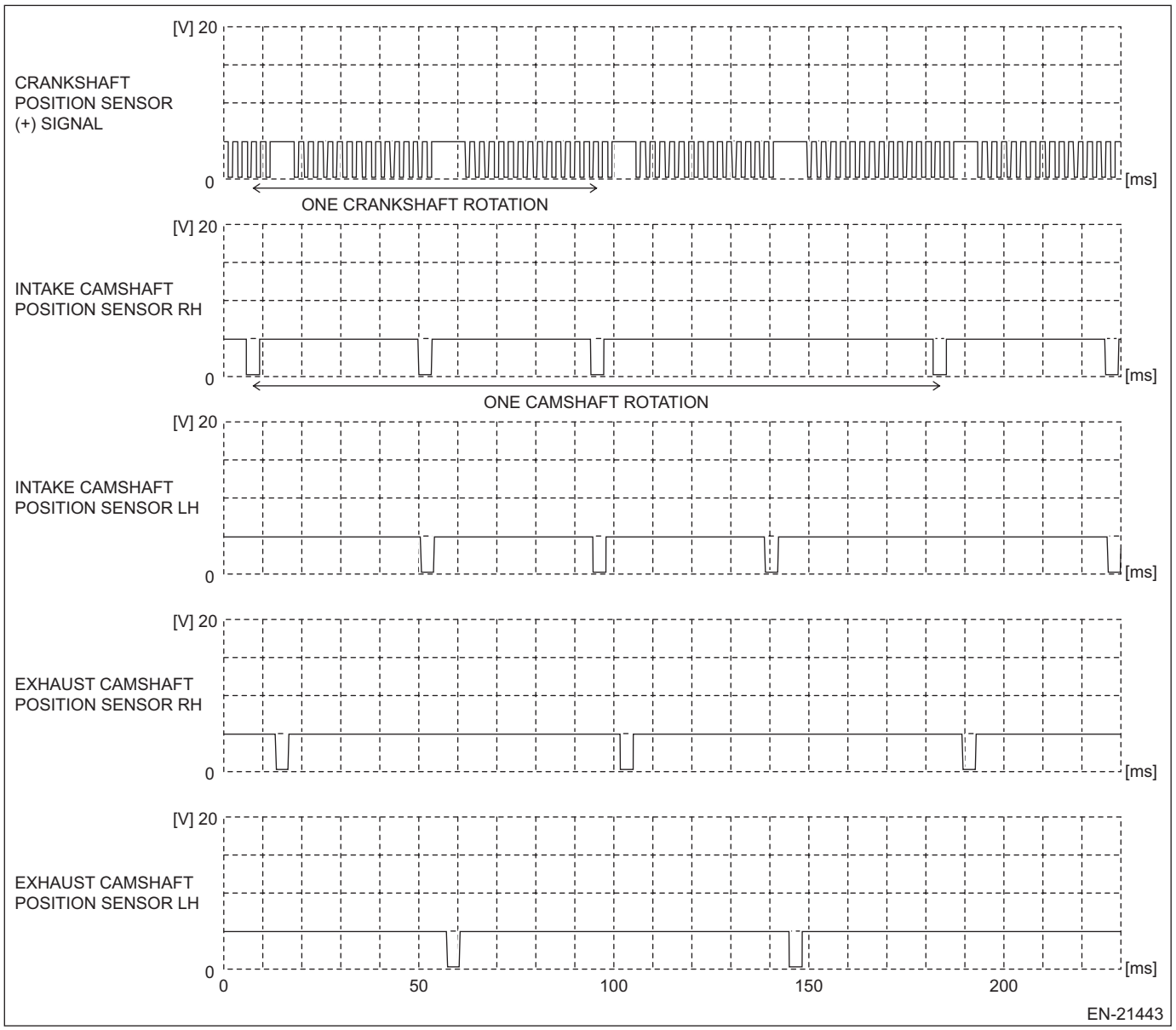

Measured terminal	Crankshaft position sensor (+) signal (E158) No. 19 (+) — Engine ground 3 (E159) No. 10 (–):
	Intake camshaft position sensor RH (E158) No. 20 (+) — Engine ground 3 (E159) No. 10 (–):
	Intake camshaft position sensor LH (E158) No. 21 (+) — Engine ground 3 (E159) No. 10 (–):
	Exhaust camshaft position sensor RH (E158) No. 32 (+) — Engine ground 3 (E159) No. 10 (–):
	Exhaust camshaft position sensor LH (E158) No. 33 (+) — Engine ground 3 (E159) No. 10 (–):
Measuring condition	While engine idling

2. Waveform 2

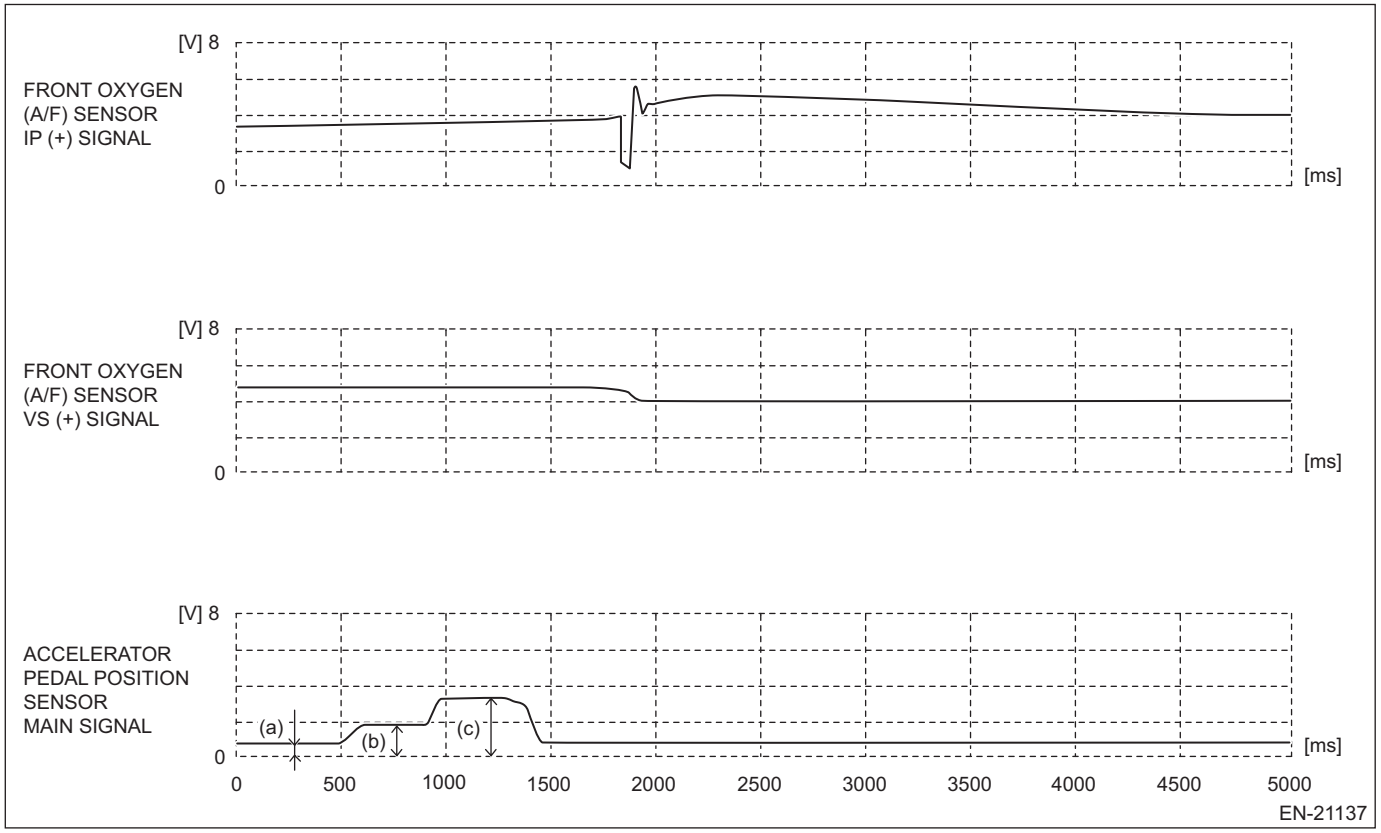

Measured terminal	Front oxygen (A/F) sensor IP+ signal (E158) No. 15 (+) — Engine ground 3 (E159) No. 10 (–):
	Front oxygen (A/F) sensor VS+ signal (E158) No. 27 (+) — Engine ground 3 (E159) No. 10 (–):
	Accelerator pedal position sensor main signal (B134) No. 17 (+) — Engine ground 3 (E159) No. 10 (–):
Measuring condition	(a) Accelerator pedal fully closed (b) Accelerator pedal half open (c) Accelerator pedal fully opened

3. Waveform 3

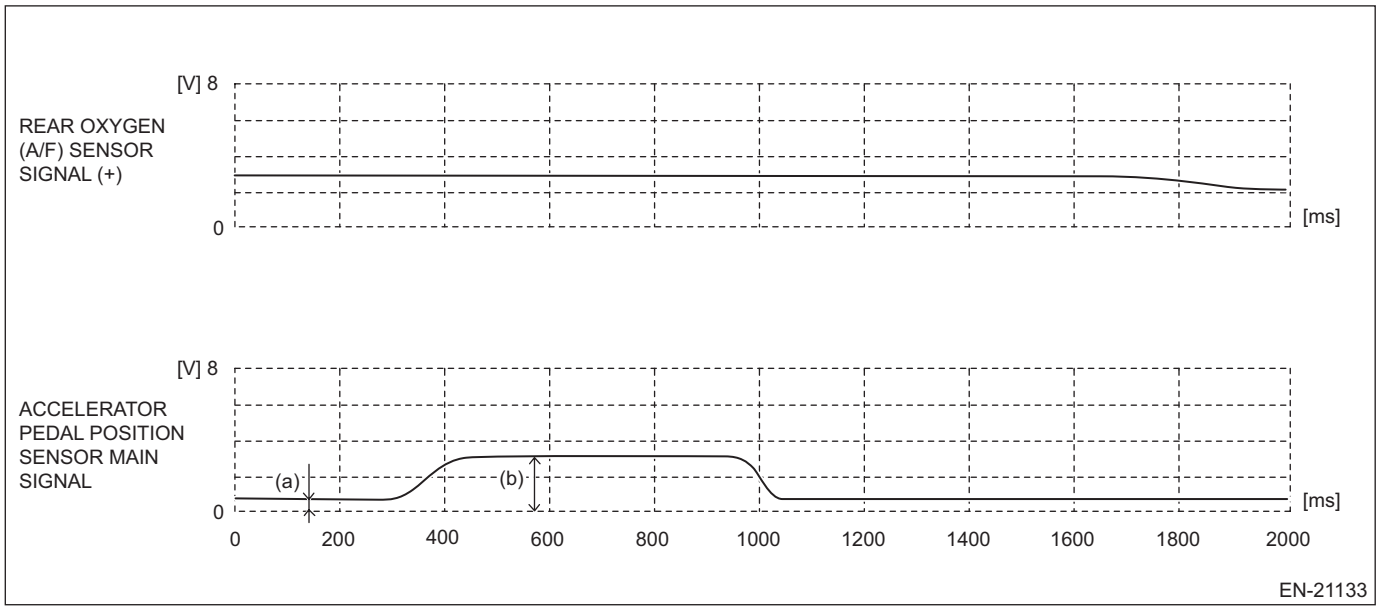

Measured terminal	Rear oxygen sensor (E158) No. 16 (+) — (E158) No. 42 (–):
	Accelerator pedal position sensor main signal (B134) No. 17 (+) — Engine ground 3 (E159) No. 10 (–):
Measuring condition	(a) Accelerator pedal fully closed (b) Accelerator pedal fully opened

4. Waveform 4

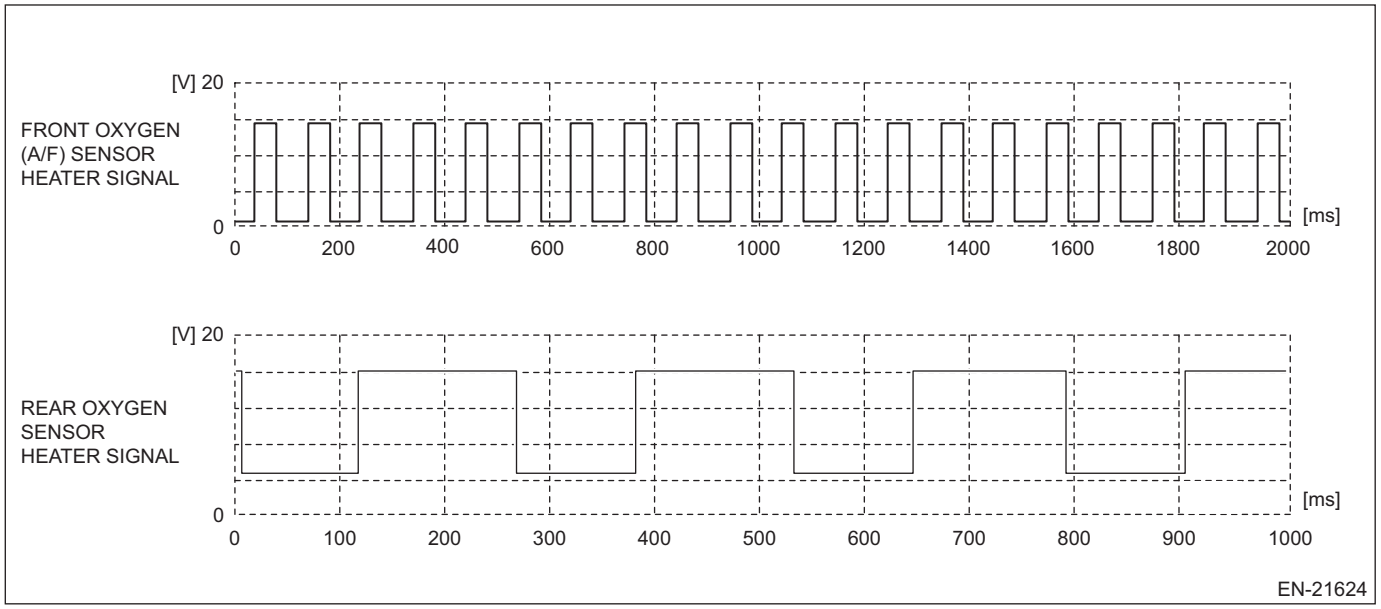

Measured terminal	Front oxygen (A/F) sensor heater (E159) No. 9 (+) — Engine ground 3 (E159) No. 10 (–):
	Rear oxygen sensor heater (E159) No. 3 (+) — Engine ground 3 (E159) No. 10 (–):
Measuring condition	While engine idling

5. Waveform 5

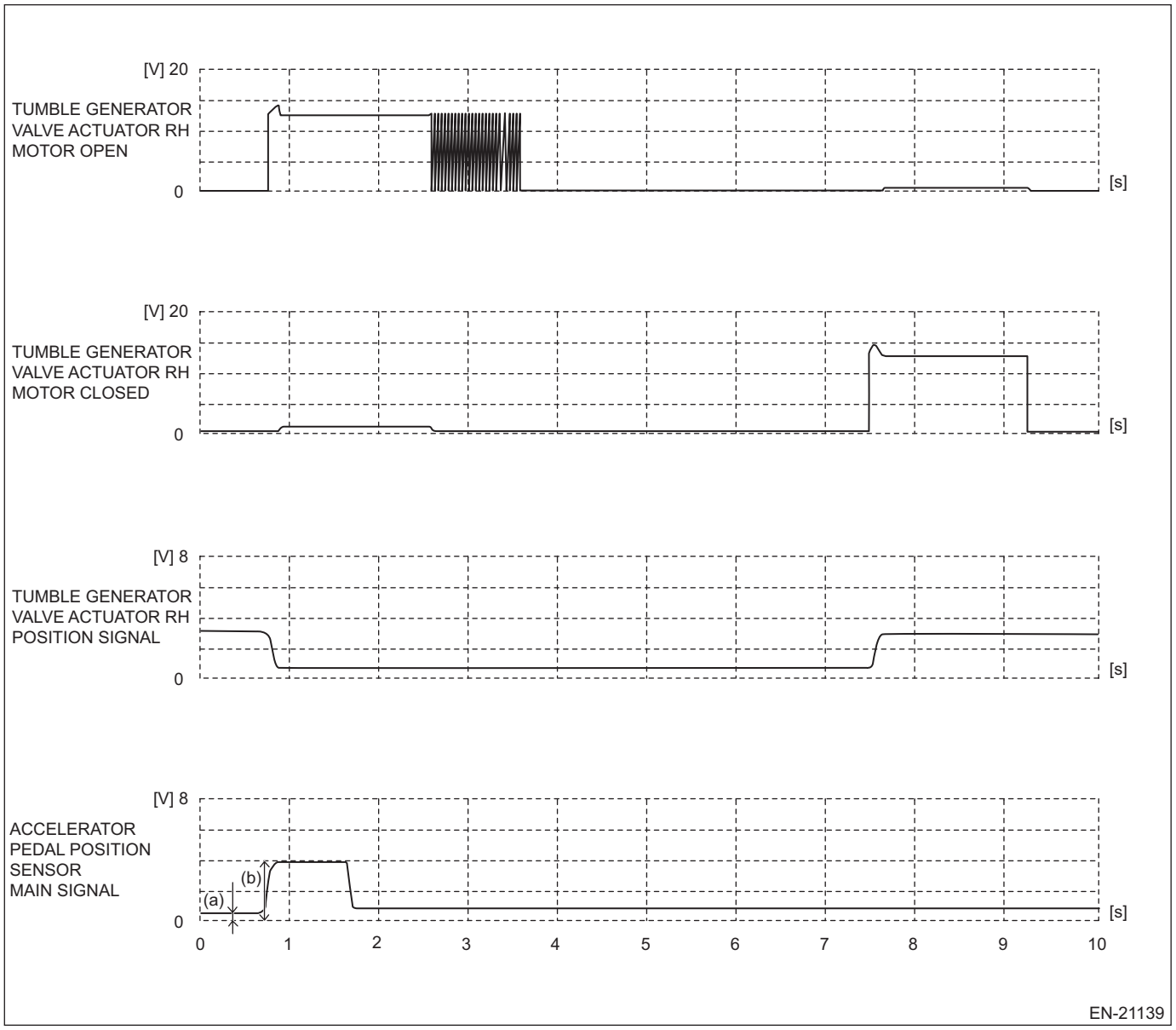

Measured terminal	Tumble generator valve RH motor open (E159) No. 14 (+) — Engine ground 3 (E159) No. 10 (–):
	Tumble generator valve RH motor closed (E159) No. 30 (+) — Engine ground 3 (E159) No. 10 (–):
	Tumble generator valve RH position signal (E158) No. 40 (+) — Engine ground 3 (E159) No. 10 (–):
	Accelerator pedal position sensor main signal (B134) No. 17 (+) — Engine ground 3 (E159) No. 10 (–):
Measuring condition	(a) Accelerator pedal fully closed (b) Accelerator pedal fully opened

6. Waveform 6

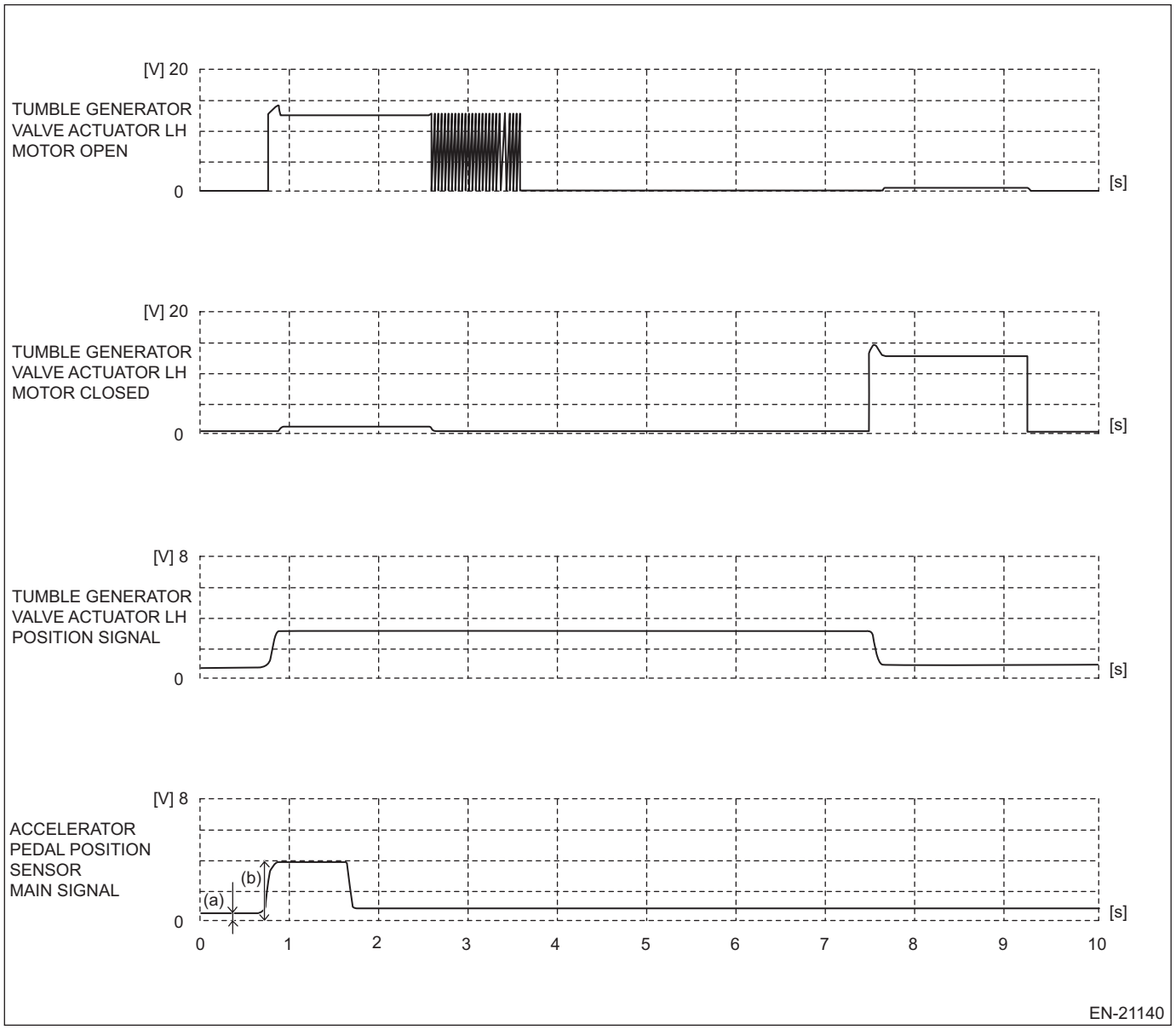

Measured terminal	Tumble generator valve LH motor open (E159) No. 6 (+) — Engine ground 3 (E159) No. 10 (–):
	Tumble generator valve LH motor closed (E159) No. 22 (+) — Engine ground 3 (E159) No. 10 (–):
	Tumble generator valve LH position signal (E158) No. 41 (+) — Engine ground 3 (E159) No. 10 (–):
	Accelerator pedal position sensor main signal (B134) No. 17 (+) — Engine ground 3 (E159) No. 10 (–):
Measuring condition	(a) Accelerator pedal fully closed (b) Accelerator pedal fully opened

7. Waveform 7

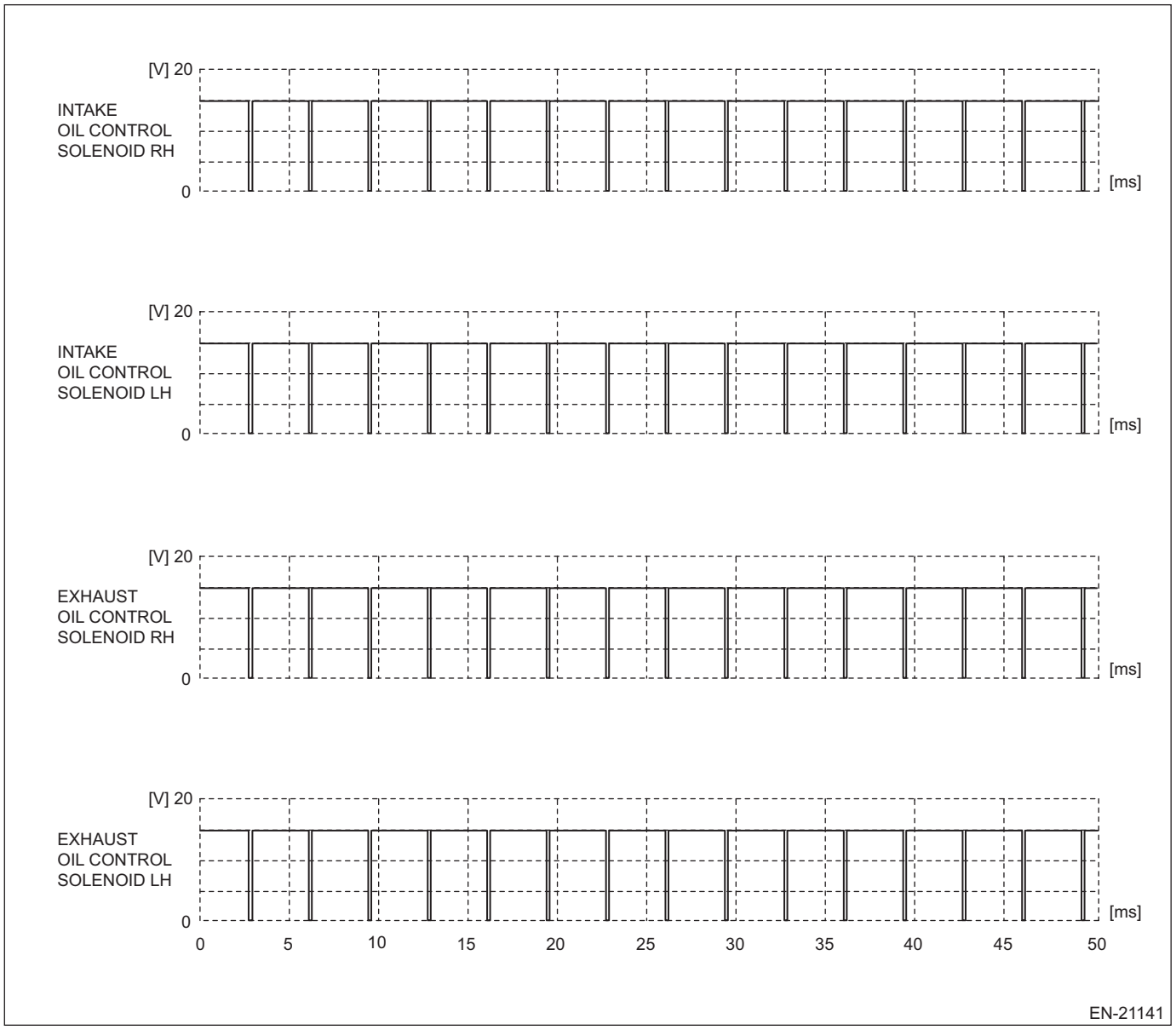

Measured terminal	Intake oil control solenoid RH (E159) No. 7 (+) — Engine ground 3 (E159) No. 10 (–):
	Intake oil control solenoid LH (E159) No. 15 (+) — Engine ground 3 (E159) No. 10 (–):
	Exhaust oil control solenoid RH (E159) No. 23 (+) — Engine ground 3 (E159) No. 10 (–):
	Exhaust oil control solenoid LH (E159) No. 31 (+) — Engine ground 3 (E159) No. 10 (–):
Measuring condition	While engine idling

8. Waveform 8

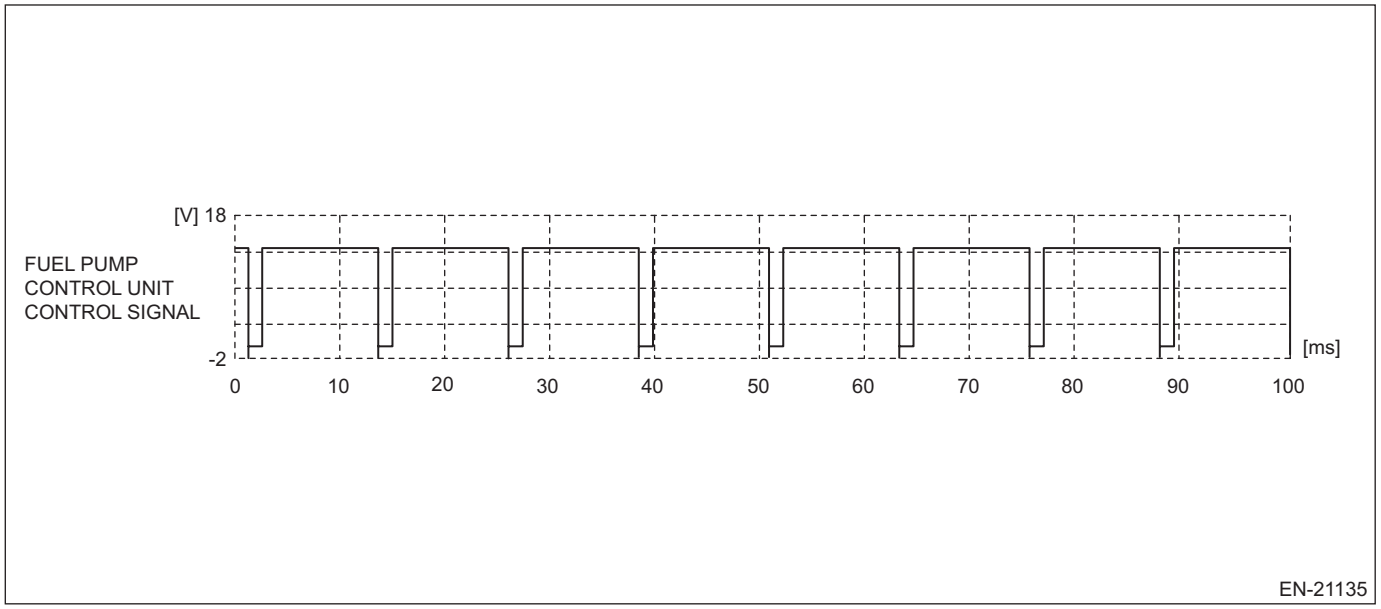

Measured terminal	Fuel pump control unit (control signal) (B134) No. 40 (+) — Engine ground 3 (E159) No. 10 (–):
Measuring condition	While engine idling

9. Waveform 9

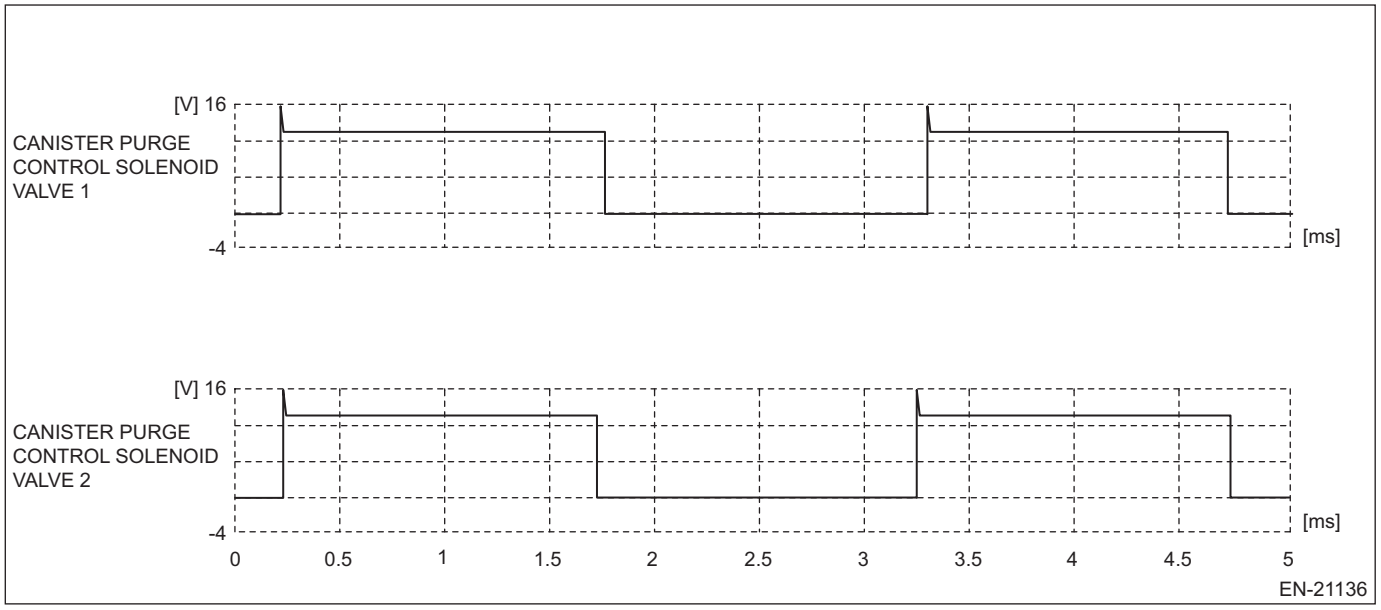

Measured terminal	Canister purge control solenoid valve 1 (E159) No. 4 (+) — Engine ground 3 (E159) No. 10 (–):
	Canister purge control solenoid valve 2 (E159) No. 12 (+) — Engine ground 3 (E159) No. 10 (–):
Measuring condition	Set the following items for active test to ON. • CPC solenoid (canister purge control solenoid valve 1) • CPC solenoid 2 (canister purge control solenoid valve 2)

10.Waveform 10

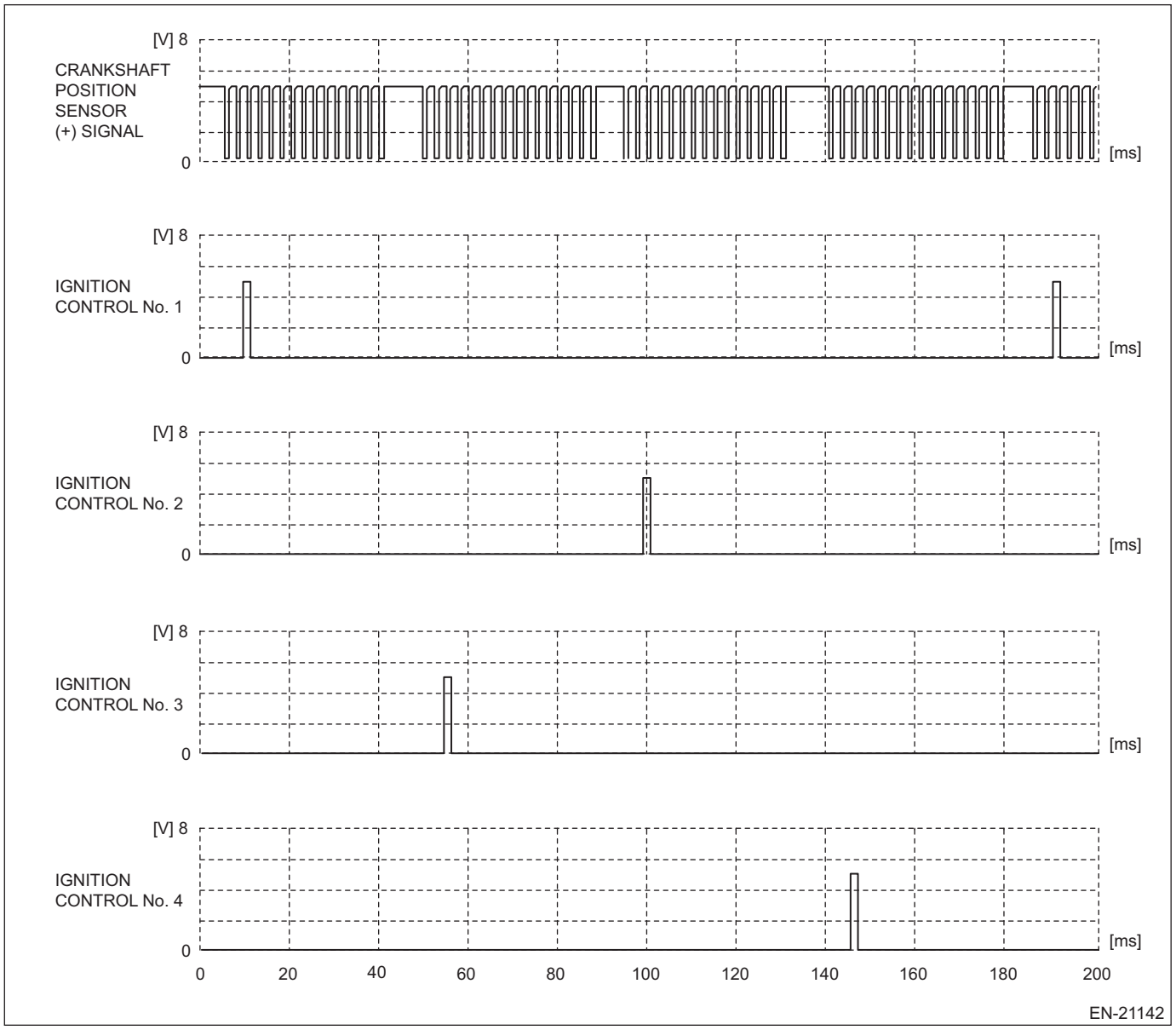

Measured terminal	Crankshaft position sensor (+) signal (E158) No. 19 (+) — Engine ground 3 (E159) No. 10 (–):
	Ignition control #1 (E159) No. 8 (+) — Engine ground 3 (E159) No. 10 (–):
	Ignition control #2 (E159) No. 16 (+) — Engine ground 3 (E159) No. 10 (–):
	Ignition control #3 (E159) No. 24 (+) — Engine ground 3 (E159) No. 10 (–):
	Ignition control #4 (E159) No. 32 (+) — Engine ground 3 (E159) No. 10 (–):
Measuring condition	While engine idling

11.Waveform 11

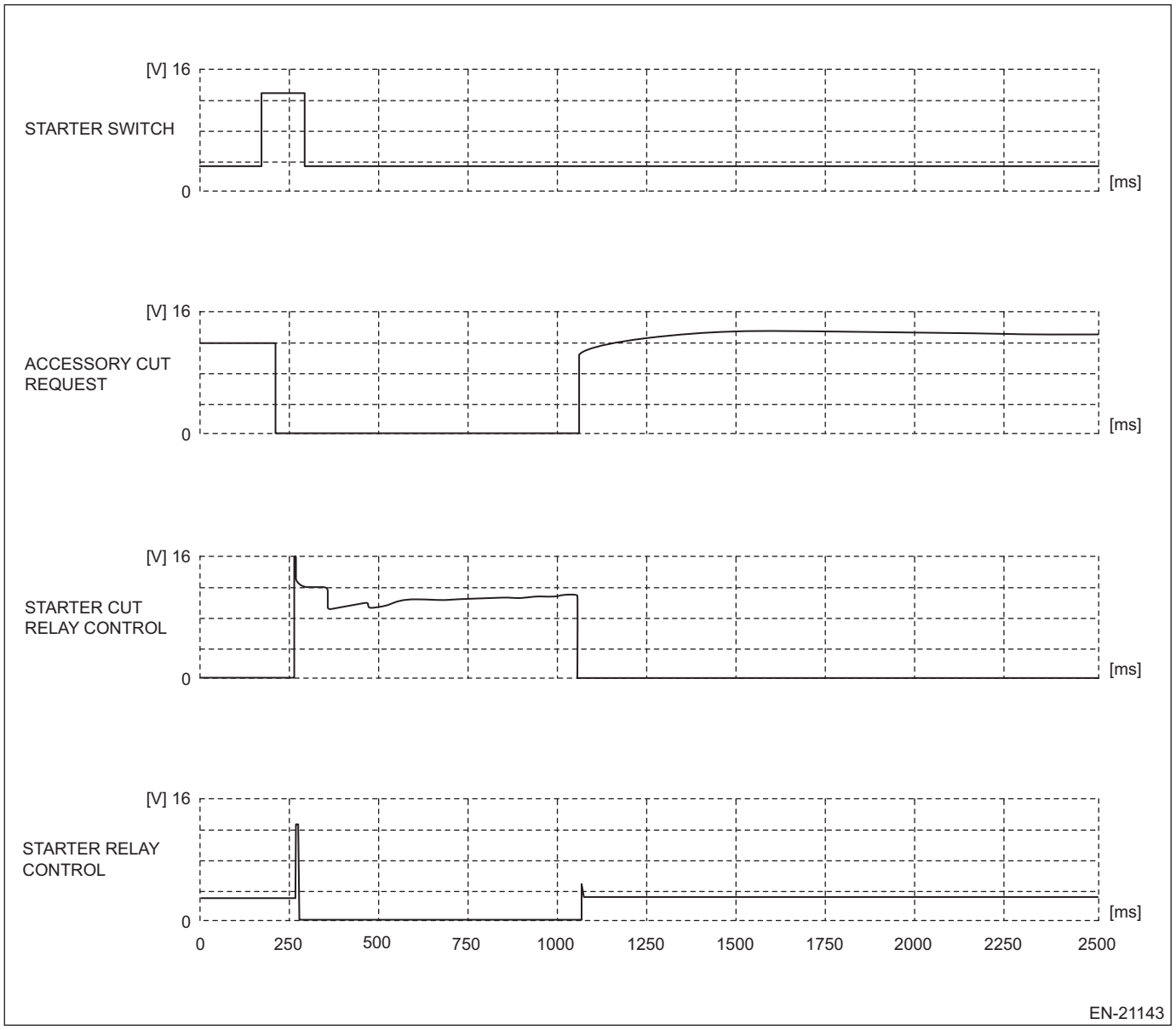

Measured terminal	Starter switch (B134) No. 45 (+) — Engine ground 3 (E159) No. 10 (–):
	Accessory cut request (B134) No. 2 (+) — Engine ground 3 (E159) No. 10 (–):
	Starter cut relay control (B134) No. 13 (+) — Engine ground 3 (E159) No. 10 (–):
	Starter relay control (B134) No. 14 (+) — Engine ground 3 (E159) No. 10 (–):
Measuring condition	When engine is started

12.Waveform 12

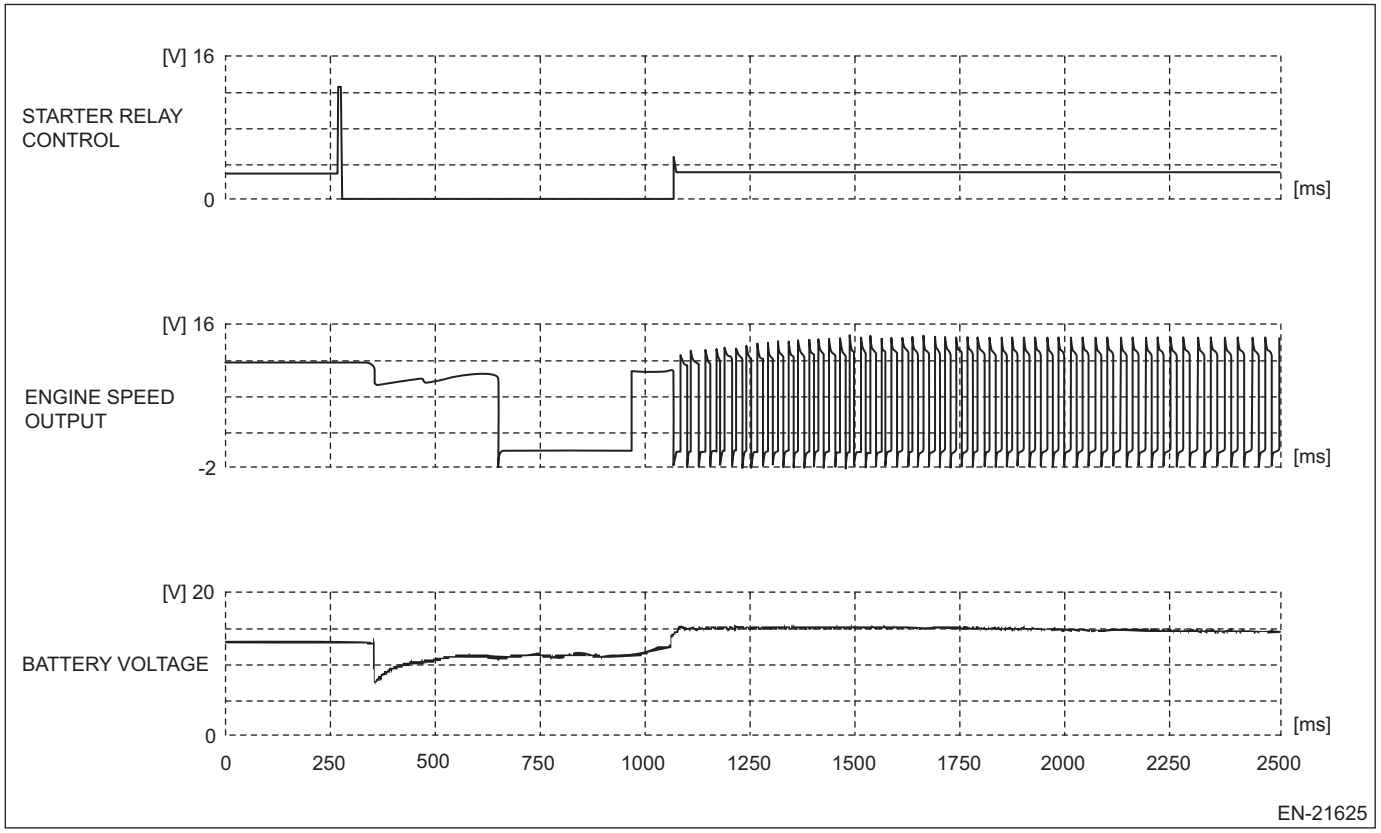

Measured terminal	Starter relay control (B134) No. 14 (+) — Engine ground 3 (E159) No. 10 (–):
	Engine speed output (B134) No. 4 (+) — Engine ground 3 (E159) No. 10 (–):
	Battery voltage (battery terminal) (+) — Engine ground 3 (E159) No. 10 (–):
Measuring condition	When engine is started

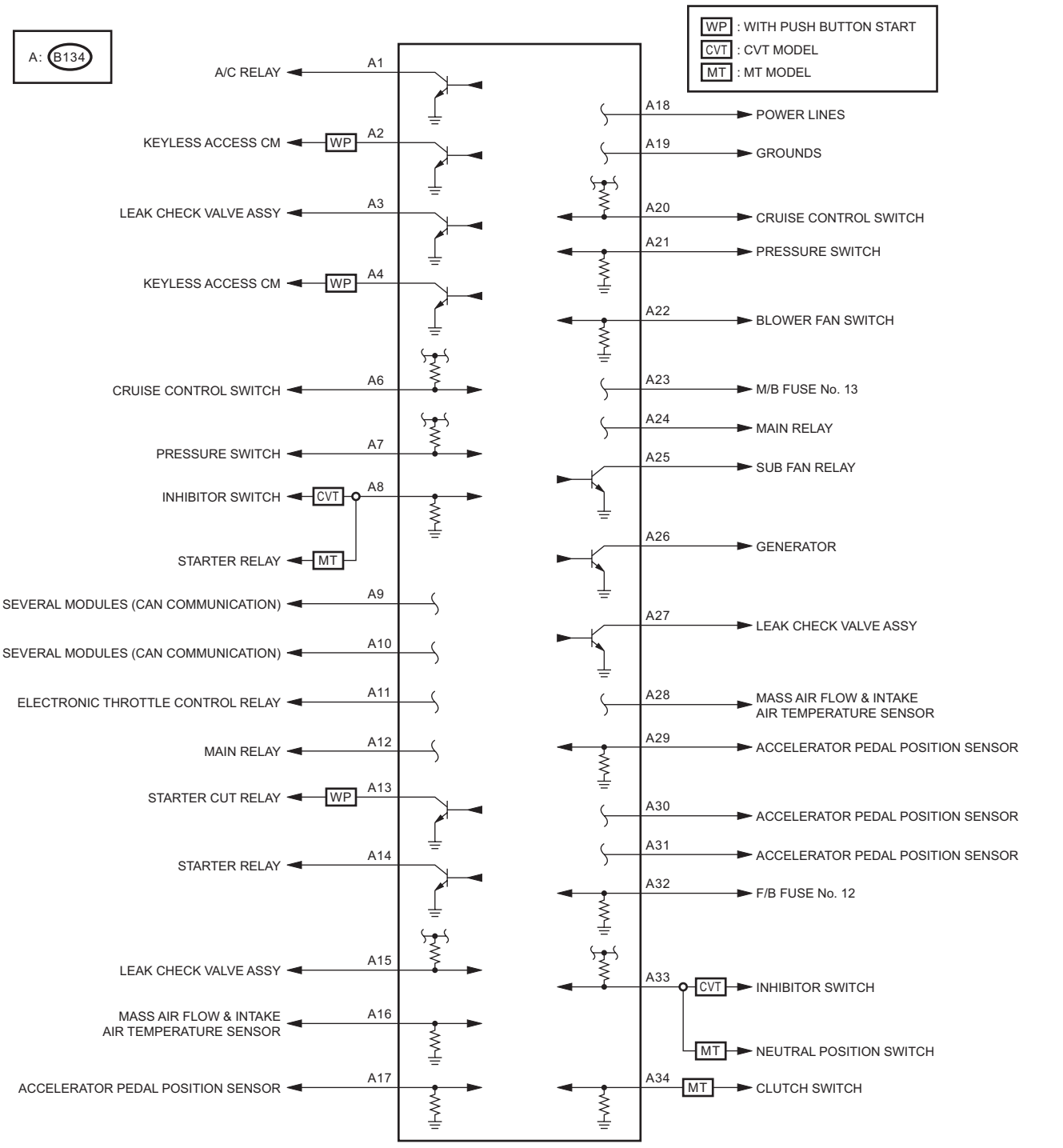
WP : WITH PUSH BUTTON START
CVT : CVT MODEL
MT : MT MODEL
A: B134
A/C RELAY
A1
KEYLESS ACCESS CM
WP
A2
LEAK CHECK VALVE ASSY
A3
KEYLESS ACCESS CM
WP
A4
CRUISE CONTROL SWITCH
A6
PRESSURE SWITCH
A7
INHIBITOR SWITCH
CVT
A8
STARTER RELAY
MT
SEVERAL MODULES (CAN COMMUNICATION)
A9
SEVERAL MODULES (CAN COMMUNICATION)
A10
ELECTRONIC THROTTLE CONTROL RELAY
A11
MAIN RELAY
A12
STARTER CUT RELAY
WP
A13
STARTER RELAY
A14
LEAK CHECK VALVE ASSY
A15
MASS AIR FLOW & INTAKE AIR TEMPERATURE SENSOR
A16
ACCELERATOR PEDAL POSITION SENSOR
A17
A18
POWER LINES
A19
GROUNDS
A20
CRUISE CONTROL SWITCH
A21
PRESSURE SWITCH
A22
BLOWER FAN SWITCH
A23
M/B FUSE No. 13
A24
MAIN RELAY
A25
SUB FAN RELAY
A26
GENERATOR
A27
LEAK CHECK VALVE ASSY
A28
MASS AIR FLOW & INTAKE AIR TEMPERATURE SENSOR
A29
ACCELERATOR PEDAL POSITION SENSOR
A30
ACCELERATOR PEDAL POSITION SENSOR
A31
ACCELERATOR PEDAL POSITION SENSOR
A32
F/B FUSE No. 12
A33
CVT
INHIBITOR SWITCH
MT
NEUTRAL POSITION SWITCH
A34
MT
CLUTCH SWITCH

EN-21517

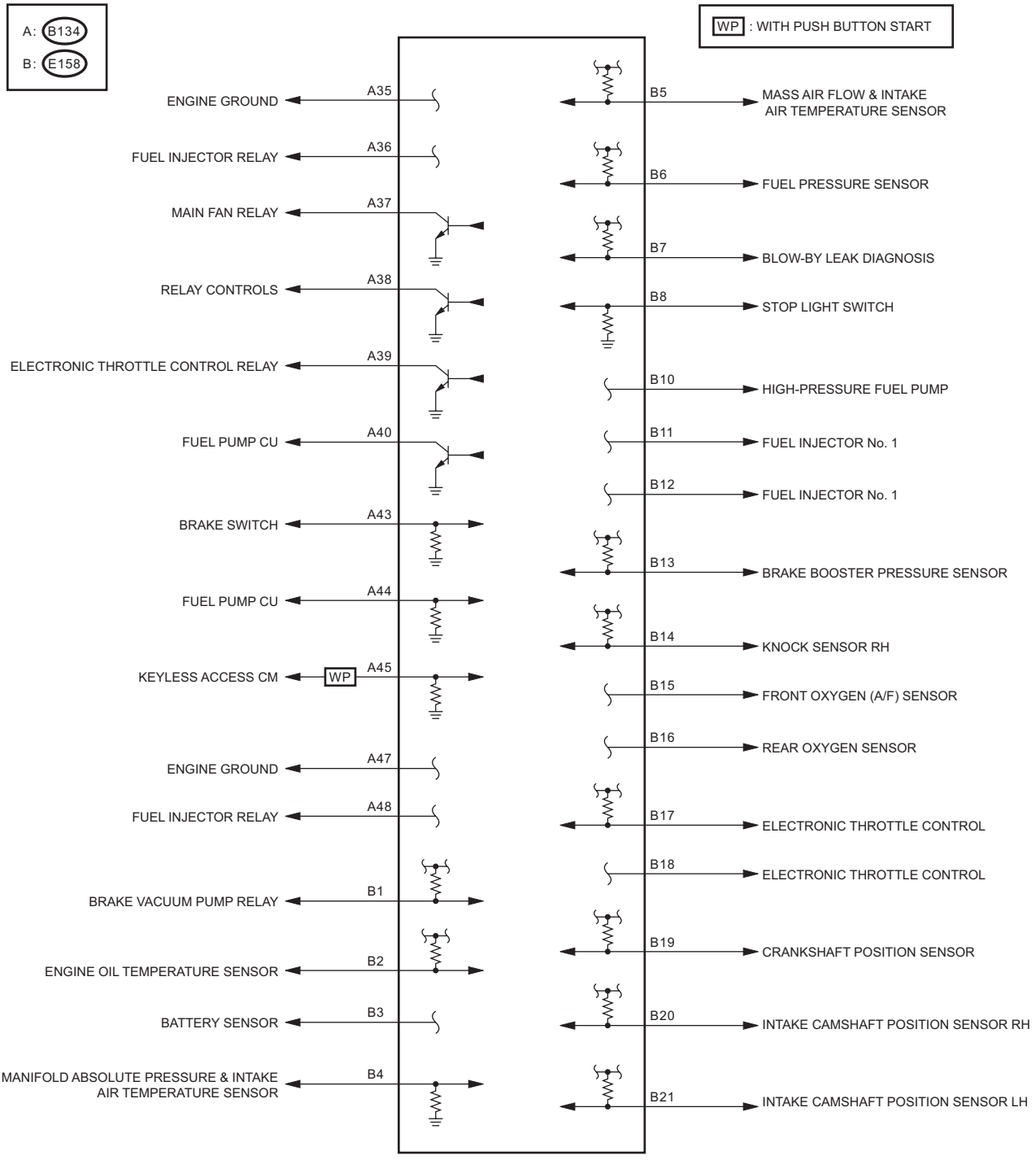
A: B134
B: E158
WP : WITH PUSH BUTTON START
ENGINE GROUND
A35
FUEL INJECTOR RELAY
A36
MAIN FAN RELAY
A37
RELAY CONTROLS
A38
ELECTRONIC THROTTLE CONTROL RELAY
A39
FUEL PUMP CU
A40
BRAKE SWITCH
A43
FUEL PUMP CU
A44
KEYLESS ACCESS CM
WP
A45
ENGINE GROUND
A47
FUEL INJECTOR RELAY
A48
BRAKE VACUUM PUMP RELAY
B1
ENGINE OIL TEMPERATURE SENSOR
B2
BATTERY SENSOR
B3
MANIFOLD ABSOLUTE PRESSURE & INTAKE AIR TEMPERATURE SENSOR
B4
B5
MASS AIR FLOW & INTAKE AIR TEMPERATURE SENSOR
B6
FUEL PRESSURE SENSOR
B7
BLOW-BY LEAK DIAGNOSIS
B8
STOP LIGHT SWITCH
B10
HIGH-PRESSURE FUEL PUMP
B11
FUEL INJECTOR No. 1
B12
FUEL INJECTOR No. 1
B13
BRAKE BOOSTER PRESSURE SENSOR
B14
KNOCK SENSOR RH
B15
FRONT OXYGEN (A/F) SENSOR
B16
REAR OXYGEN SENSOR
B17
ELECTRONIC THROTTLE CONTROL
B18
ELECTRONIC THROTTLE CONTROL
B19
CRANKSHAFT POSITION SENSOR
B20
INTAKE CAMSHAFT POSITION SENSOR RH
B21
INTAKE CAMSHAFT POSITION SENSOR LH

EN-21518

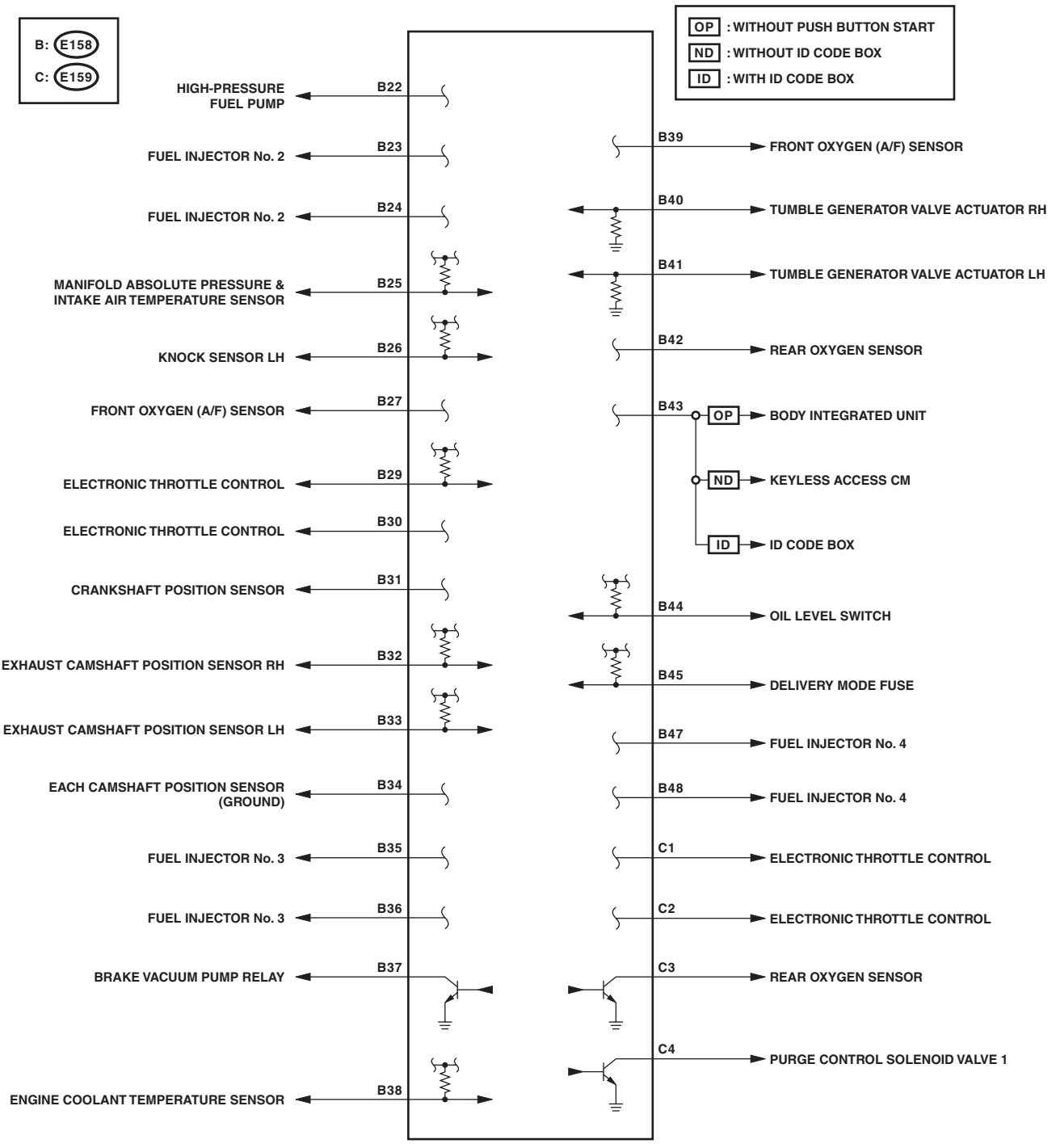
B: E158
C: E159
OP : WITHOUT PUSH BUTTON START
ND : WITHOUT ID CODE BOX
ID : WITH ID CODE BOX
HIGH-PRESSURE FUEL PUMP
B22
FUEL INJECTOR No. 2
B23
FUEL INJECTOR No. 2
B24
MANIFOLD ABSOLUTE PRESSURE & INTAKE AIR TEMPERATURE SENSOR
B25
KNOCK SENSOR LH
B26
FRONT OXYGEN (A/F) SENSOR
B27
ELECTRONIC THROTTLE CONTROL
B29
ELECTRONIC THROTTLE CONTROL
B30
CRANKSHAFT POSITION SENSOR
B31
EXHAUST CAMSHAFT POSITION SENSOR RH
B32
EXHAUST CAMSHAFT POSITION SENSOR LH
B33
EACH CAMSHAFT POSITION SENSOR (GROUND)
B34
FUEL INJECTOR No. 3
B35
FUEL INJECTOR No. 3
B36
BRAKE VACUUM PUMP RELAY
B37
ENGINE COOLANT TEMPERATURE SENSOR
B38
B39
FRONT OXYGEN (A/F) SENSOR
B40
TUMBLE GENERATOR VALVE ACTUATOR RH
B41
TUMBLE GENERATOR VALVE ACTUATOR LH
B42
REAR OXYGEN SENSOR
B43
OP
BODY INTEGRATED UNIT
ND
KEYLESS ACCESS CM
ID
ID CODE BOX
B44
OIL LEVEL SWITCH
B45
DELIVERY MODE FUSE
B47
FUEL INJECTOR No. 4
B48
FUEL INJECTOR No. 4
C1
ELECTRONIC THROTTLE CONTROL
C2
ELECTRONIC THROTTLE CONTROL
C3
REAR OXYGEN SENSOR
C4
PURGE CONTROL SOLENOID VALVE 1

EN-10823

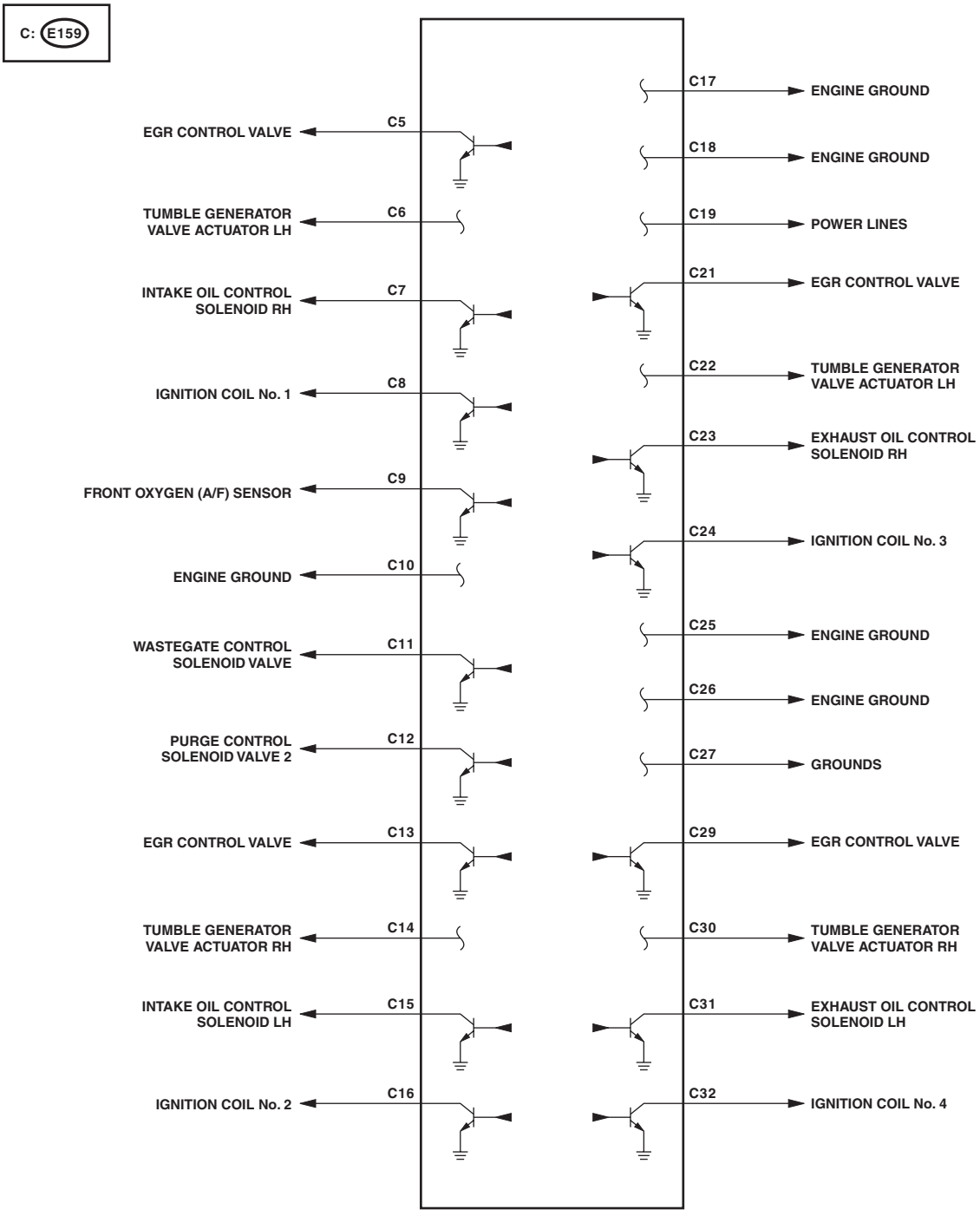
C: E159
EGR CONTROL VALVE
C5
TUMBLE GENERATOR VALVE ACTUATOR LH
C6
INTAKE OIL CONTROL SOLENOID RH
C7
IGNITION COIL No. 1
C8
FRONT OXYGEN (A/F) SENSOR
C9
ENGINE GROUND
C10
WASTEGATE CONTROL SOLENOID VALVE
C11
PURGE CONTROL SOLENOID VALVE 2
C12
EGR CONTROL VALVE
C13
TUMBLE GENERATOR VALVE ACTUATOR RH
C14
INTAKE OIL CONTROL SOLENOID LH
C15
IGNITION COIL No. 2
C16
C17
ENGINE GROUND
C18
ENGINE GROUND
C19
POWER LINES
C21
EGR CONTROL VALVE
C22
TUMBLE GENERATOR VALVE ACTUATOR LH
C23
EXHAUST OIL CONTROL SOLENOID RH
C24
IGNITION COIL No. 3
C25
ENGINE GROUND
C26
ENGINE GROUND
C27
GROUNDS
C29
EGR CONTROL VALVE
C30
TUMBLE GENERATOR VALVE ACTUATOR RH
C31
EXHAUST OIL CONTROL SOLENOID LH
C32
IGNITION COIL No. 4

EN-10230

6. Data Link Connector

A: NOTE

This connector is used for Subaru Select Monitor.

CAUTION:
Do not connect any scan tools other than Subaru Select Monitor or general scan tool because the circuit for Subaru Select Monitor may be damaged.

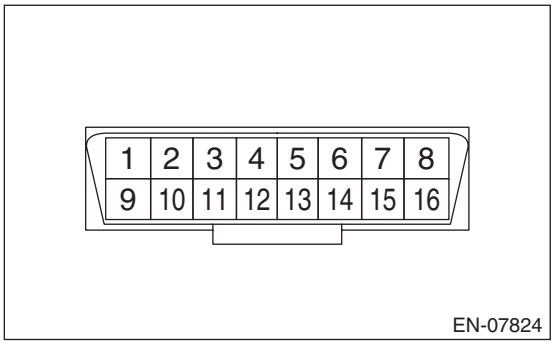

Terminal No.	Contents	Terminal No.	Contents
1	Blank	9	Blank
2	Blank	10	Blank
3	Blank	11	Blank
4	Ground	12	Blank
5	Ground	13	Blank
6	CAN communication (Hi)	14	CAN communication (Lo)
7	Blank	15	Blank
8	Blank	16	Power supply

7. General Scan Tool

A: OPERATION

1. HOW TO USE GENERAL SCAN TOOL

1) Prepare a scan tool (general scan tool) required by SAE J1978.
2) Connect the general scan tool to data link connector located in the lower portion of the instrument panel (on the driver's side).

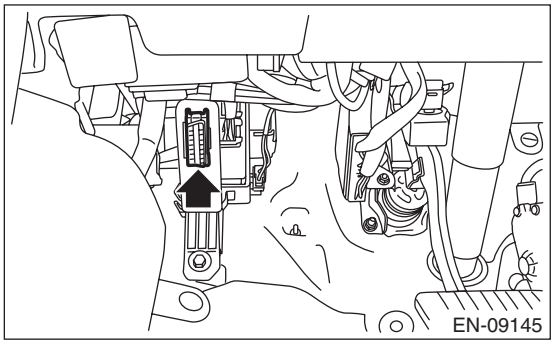

3) Using the general scan tool, call up each data. General scan tool functions consist of:
   (1) MODE $01: Current powertrain diagnostic data
   (2) MODE $02: Powertrain freeze frame data
   (3) MODE $03: Emission-related powertrain DTC
   (4) MODE $04: Clear/Reset emission-related diagnostic information
   (5) MODE $06: Request on-board monitoring test results for continuously monitored systems
   (6) MODE $07: Initial emission-related powertrain DTC
   (7) MODE $08: Request control for on-board system, test, and component
   (8) MODE $09: Request vehicle information
4) Read out the data according to repair procedures. (For detailed operation procedures, refer to the general scan tool operation manual.)

NOTE:
For details concerning DTC, refer to "List of Diagnostic Trouble Code (DTC)". <Ref. to EN(w/o STI)(diag)-106, List of Diagnostic Trouble Code (DTC).>

2. MODE $01 (CURRENT POWERTRAIN DIAGNOSTIC DATA)

Refer to data denoting the current operating condition of analog input/output, digital input/output or the powertrain system.
A list of the support data and PID (Parameter Identification) codes are shown in the following table.

PID	Data	Unit of measure
$01	Number of emission-related powertrain DTC, and malfunction indicator light status and diagnosis support information	—
$03	Fuel system control status	—
$04	Calculated engine load value	%
$05	Engine coolant temperature	°C
$06	Short term fuel trim	%
$07	Long term fuel trim	%
$0B	Intake manifold absolute pressure	kPa
$0C	Engine speed	rpm
$0D	Vehicle speed	MPH
$0E	Ignition timing advance	°
$10	Intake air amount	g/s
$11	Throttle valve absolute opening angle	%
$13	Check whether oxygen sensor is installed.	—
$15	Oxygen sensor output voltage and short term fuel trim associated with oxygen sensor	V and %
$1C	Supporting OBD system	—
$1F	Elapsed time after starting the engine	sec
$21	Running distance after MIL turns on	miles
$24	A/F value and A/F sensor output voltage	– and V
$2C	Target EGR	%
$2D	EGR error	%
$2E	Evaporative purge	%
$2F	Fuel level	%
$30	Number of warm ups after DTC clear	—
$31	Travel distance after DTC clear	miles
$33	Barometric pressure	kPa
$34	A/F value and A/F sensor output current	– and mA
$3C	Catalyst temperature	°C
$41	Diagnostic monitor of each drive cycle	—
$42	ECM power voltage	V
$43	Absolute load	%
$44	A/F target lambda	—
$45	Relative throttle opening angle	%
$46	Ambient temperature	°C
$47	Absolute throttle opening angle 2	%
$49	Absolute accelerator opening angle 1	%
$4A	Absolute accelerator opening angle 2	%
$4C	Target throttle opening angle	%
$4D	Engine operation time during MIL on	min
$4E	Elapsed time after DTC clear	min
$51	Fuel used	—
$53	ELCM pressure	kPa
$5A	Relative accelerator opening angle	%
$5C	Engine oil temperature	°C
$65	Neutral status	—
$68	Intake air temperature	°C
$6D	Fuel pressure and target fuel pressure	kPa

NOTE:
Refer to general scan tool manufacturer's operation manual to access current powertrain diagnostic data (MODE $01).

3. MODE $02 (POWERTRAIN FREEZE FRAME DATA)

Refer to data denoting the operating condition when trouble is detected by on-board diagnosis system. A list of the support data and PID (Parameter Identification) codes are shown in the following table.

PID	Data	Unit of measure
$02	DTC that caused freeze frame data to be stored	—
$03	Fuel system control status	—
$04	Calculated engine load value	%
$05	Engine coolant temperature	°C
$06	Short term fuel trim	%
$07	Long term fuel trim	%
$0B	Intake manifold absolute pressure	kPa
$0C	Engine speed	rpm
$0D	Vehicle speed	MPH
$0E	Ignition timing advance	°
$10	Intake air amount	g/s
$11	Throttle valve absolute opening angle	%
$13	Air fuel ratio sensor	—
$15	Rear oxygen sensor voltage, compensation value	V and %
$1C	Supporting OBD system	—
$1F	Elapsed time after starting the engine	sec
$2C	Target EGR	%
$2D	EGR error	%
$2E	Evaporative purge	%
$2F	Fuel level	%
$30	Number of warm ups after DTC clear	Time
$33	Barometric pressure	kPa
$42	ECM power voltage	V
$43	Absolute load	%
$44	A/F target lambda	—
$45	Relative throttle opening angle	%
$46	Ambient temperature	°C
$47	Absolute throttle opening angle 2	%
$49	Absolute accelerator opening angle 1	%
$4A	Absolute accelerator opening angle 2	%
$4C	Target throttle opening angle	%
$65	Neutral status	—
$68	Intake air temperature	°C
$6D	Fuel pressure and target fuel pressure	kPa

NOTE:
Refer to general scan tool manufacturer's operation manual to access freeze frame data (MODE $02).

4. MODE $03 (EMISSION-RELATED POWERTRAIN DTC)

Refer to "List of Diagnostic Trouble Code (DTC)" for information about data denoting emission-related powertrain DTC. <Ref. to EN(w/o STI)(diag)-106, List of Diagnostic Trouble Code (DTC).>

5. MODE $04 (CLEAR/RESET EMISSION-RELATED DIAGNOSTIC INFORMATION)

Refer to the mode used to clear or reset emission-related diagnostic information.

NOTE:
- Refer to the manufacturer's operation manual for the general scan tool to clear the emission-related diagnostic information (MODE $04).
- Initial diagnosis of electronic throttle control is performed after memory clearance. Wait for 10 seconds or more after turning the ignition switch to ON, and then start the engine.

6. MODE $06 (REQUEST ON-BOARD MONITORING TEST RESULTS FOR CONTINUOUSLY MONITORED SYSTEMS)

Refer to diagnostic value of troubleshooting and data of test limit indicated on the support data bit sequence table. A list of the support data is shown in the following table.

NOTE:
Some items are not displayed according to the specifications.

OBDMID	TID	SID	Diagnostic item
$01	$84	$1E	A/F sensor range failure (Bank 1 Sensor 1)
	$85	$1E	
	$86	$20	A/F sensor response failure (Bank 1 Sensor 1)
	$91	$20	
	$92	$10	
	$A3	$20	
	$A4	$10	
	$AC	$10	
	$AD	$10	
	$AE	$10	
	$AF	$10	
	$CD	$20	
	$CF	$20	
	$DF	$10	
$02	$07	$0B	Oxygen sensor drop failure (Bank 1 Sensor 2)
	$08	$0B	
	$05	$10	Oxygen sensor response failure (Bank 1 Sensor 2)
	$06	$10	
	$BD	$10	
	$A5	$0B	Oxygen sensor characteristic malfunction (drop) diagnosis (P — P voltage)
	$D1	$10	Oxygen sensor delay failure (Bank 1 Sensor 2)
	$D2	$01	
$21	$89	$20	Catalyst deterioration diagnosis (Bank 1)
$31	$8A	$FD	EGR system diagnosis
$35	$8B	$9D	VVT monitor (Bank 1)
	$8C	$9D	
	$8D	$9D	
	$8E	$9D	
	$D3	$9D	
	$D4	$9D	
	$D5	$9D	
	$D6	$9D	
$36	$8B	$9D	VVT monitor (Bank 2)
	$8C	$9D	
	$8D	$9D	
	$8E	$9D	
	$D3	$9D	
	$D4	$9D	
	$D5	$9D	
	$D6	$9D	

OBDMID	TID	SID	Diagnostic item
$3C	$96	$FE	Evaporative emission control system (0.02 inch leak)
	$C1	$FE	
	$C2	$FE	
	$C3	$FE	
	$C4	$FE	
	$C5	$FE	
	$C6	$35	
	$C7	$FE	
	$C8	$FE	
	$C9	$FE	
	$CA	$FE	
	$E4	$FE	
$3D	$E2	$FE	Purge flow
	$E3	$FE	
$41	$9B	$14	A/F sensor heater characteristics failure (Bank 1 Sensor 1)
$42	$A2	$24	Oxygen sensor heater characteristics failure (Bank 1 Sensor 2)
$A1	$0B	$24	Misfire monitoring (all cylinders)
	$0C	$24	
$A2	$0B	$24	Misfire monitoring (#1 cylinder)
	$0C	$24	
$A3	$0B	$24	Misfire monitoring (#2 cylinder)
	$0C	$24	
$A4	$0B	$24	Misfire monitoring (#3 cylinder)
	$0C	$24	
$A5	$0B	$24	Misfire monitoring (#4 cylinder)
	$0C	$24	

7. MODE $07 (INITIAL EMISSION-RELATED POWERTRAIN DTC)

Refer to the data of DTC (temporary code) for troubleshooting result about emission in the first time.

8. MODE $08 (REQUEST CONTROL FOR ON-BOARD SYSTEM, TEST, AND COMPONENT)

Perform “Active Test” of the on-board system.

9. MODE $09 (REQUEST VEHICLE INFORMATION)

Refer to the data of the vehicle specification.

8. Subaru Select Monitor

A: OPERATION

1. HOW TO USE SUBARU SELECT MONITOR

NOTE:
For detailed operation procedures, refer to “Application help”.

2. DISPLAY CURRENT ENGINE DATA

NOTE:
- For detailed operation procedures, refer to “Application help”.
- A list of the support data is shown in the following table.
- *: For models without cruise control, the brake switch signal does not change.

1) On «Start» display, select «Diagnosis».
2) On «Vehicle selection» display, input the vehicle information and select «Confirmed».
3) On «Main Menu» display, select «Each System».
4) On «Select System» display, select «Engine Control System» and then select «Enter».
5) On «Select Function» display, select «Data Monitor».

Display	Contents	Note (at idling)	Remarks
Engine Speed	Value calculated from crankshaft position sensor output value.	729 rpm	rpm
Mass Air Flow	Value calculated from air flow sensor output value.	2.4 g/s	g/s or lb/m
Vehicle Speed	Value calculated from vehicle speed sensor output value.	0 km/h	km/h or MPH
Throttle Opening Angle	Throttle valve opening angle (in percentage) calculated from throttle position sensor output value.	12%	%
Accel opening angle	Accelerator pedal opening angle (in percentage) calculated from accelerator pedal position sensor output value.	0.0%	%
A/F Sensor #1	Actual lambda value calculated from front oxygen (A/F) sensor output value.	1.01	—
Ignition Timing Advance for #1 Cylinder	Ignition timing control value for No. 1 cylinder. Calculated from rotation speed, manifold pressure, intake air temperature, water temperature, and data from knock sensor etc.	6°	°
Engine Coolant Temperature	Value calculated from engine coolant temperature sensor output value.	92°C	°C or °F
Fuel Injection #1 Pulse	Control value of fuel injection time for the RH bank by ECM.	0.51 ms	ms
Short Term Fuel Trim-Bank1	Air fuel ratio correction control value for the front oxygen (A/F) sensor.	0.8%	%
Long Term Fuel Trim-Bank1	Air fuel ratio learning control value for the front oxygen (A/F) sensor.	3.1%	%
Learned Ignition Timing	Ignition timing learning value. Advance angle amount or retard angle amount when knocking occurs.	0.0 deg	deg
Intake Manifold Absolute Pressure	Value calculated from the manifold pressure sensor.	26 kPa	kPa, mmHg, inHg or psig
Oxygen sensor #12	Rear oxygen sensor output voltage value.	0.895 V	V
VVT Adv. Ang. Amount R	AVCS advance angle amount for the RH bank on the intake side.	0 deg	deg
VVT Advance Target Angle Amount R	AVCS target advance angle amount for the RH bank on the intake side. This value is compared with the AVCS advance angle amount R to judge if the intake AVCS is operating properly. Response delays during the transition time.	0 deg	deg
VVT Adv. Ang. Amount L	AVCS advance angle amount for the LH bank on the intake side.	0 deg	deg
VVT Advance Target Angle Amount L	AVCS target advance angle amount for the LH bank on the intake side. This value is compared with the AVCS advance angle amount L to judge if the intake AVCS is operating properly. Response delays during the transition time.	0 deg	deg

Display	Contents	Note (at idling)	Remarks
Exh. VVT Retard Ang. R	AVCS actual retard angle amount for the RH bank on the exhaust side.	0 deg	deg
Ex VVT Retard Target Angle R	AVCS target retard angle amount for the RH bank on the exhaust side. This value is compared with the exhaust AVCS retard angle amount R to judge if the AVCS is operating properly. Response delays during the transition time.	0 deg	deg
Exh. VVT Retard Ang. L	AVCS actual retard angle amount for the LH bank on the exhaust side.	0 deg	deg
Ex VVT Retard Target Angle L	AVCS target retard angle amount for the LH bank on the exhaust side. This value is compared with the exhaust AVCS retard angle amount L to judge if the AVCS is operating properly. Response delays during the transition time.	0 deg	deg
VVT Initial Position Learning Value #1	AVCS initial position learning value for the RH bank on the intake side. Controls the angle against a standard angle. Deviation learning is performed based on this standard value.	78.9°CA	°CA
VVT Initial Position Learning Value #2	AVCS initial position learning value for the LH bank on the intake side. Controls the angle against a standard angle. Deviation learning is performed based on this standard value.	82.4°CA	°CA
VVT Ex Initial Position Learning Value #1	AVCS initial position learning value for the RH bank on the exhaust side. Controls the angle against a standard angle. Deviation learning is performed based on this standard value.	110.3°CA	°CA
VVT Ex Initial Position Learning Value #2	AVCS initial position learning value for the LH bank on the exhaust side. Controls the angle against a standard angle. Deviation learning is performed based on this standard value.	108.9°CA	°CA
ECU ACC	ECM input power supply voltage.	13.924 V	V
Target engine speed	ECM target engine speed.	700 rpm	rpm
Target Equivalence Ratio	Target air fuel ratio. (Lambda) It usually becomes 1.0 aiming at a theoretical air fuel ratio.	0.999	—
Engine Oil Temperature	Value calculated from the engine oil temperature sensor output value.	96°C	°C or °F
IAT Sensor #11	Value calculated from the intake air temperature sensor output value of the air flow sensor.	50°C	°C or °F
IAT Sensor #12	Value calculated from the intake air temperature sensor output value of the manifold pressure sensor.	70°C	°C or °F
Ambient Temperature	Value that ECM estimates by using input values from the engine coolant temperature sensor or the intake air temperature sensor etc.	—	°C or °F
Load Value	Current rate of air amount. Value assuming that the air amount at the current engine speed with the throttle fully open is 100%.	21.2%	%
Absolute Load Value	Percentage of current intake air amount against the maximum air intake amount of the engine. For non-turbo engine, the value can be close to 95%, but will never be 100%. For turbo engine, this value may exceed 100% due to a boost pressure.	17.3%	%
Atmospheric Pressure	Value calculated from atmospheric pressure sensor output value.	99 kPa	kPa, mmHg, inHg or psig
Mani. Relative Pressure	Value calculated from manifold pressure sensor output value. (Absolute value) (Air intake absolute pressure – Atmospheric pressure)	(Intake Manifold Absolute Pressure – Atmospheric Pressure)	kPa, mmHg, inHg or psig

Display	Contents	Note (at idling)	Remarks
Primary Control	Boost pressure control value. Control duty ratio of the boost pressure control solenoid valve. ECM output value.	0.0%	%
Target Throttle Opening Angle	Target throttle opening angle calculated by ECM.	2 deg	deg
Actual Throttle Opening Angle	Actual throttle opening angle. Calculated by ECM based on the throttle sensor input value.	2 deg	deg
Target Throttle Opening Angle	Control value of the target throttle opening angle calculated by ECM. Target value of opening angle in percentage when 0% means fully closed and 100% means fully open.	3.1%	%
Relative Throttle Position	Current throttle opening angle in percentage against the throttle voltage (full range) that has reflected the full close point learning value. The value will be approx. 70% at full open.	2.0%	%
Throttle Motor Voltage	Power supply voltage of the throttle motor. Input value to ECM.	13.8 V	V
Main-Throttle Sensor	Voltage value of the main throttle position sensor. Input value to ECM.	0.62 V	V
Sub-Throttle Sensor	Voltage value of the sub throttle position sensor. Input value to ECM.	0.60 V	V
Throttle Motor Duty	Throttle motor control duty ratio. ECM output value.	–33%	%
Main-Accelerator Sensor	Voltage value of the main accelerator pedal position sensor. Input value to ECM.	0.68 V	V
Sub-Accelerator Sensor	Voltage value of the sub accelerator pedal position sensor. Input value to ECM.	0.68 V	V
Idle Mass Air Flow	Air volume correction value to maintain the target rotation speed in each water temperature. Corrects air volume when the water temperature changes. It includes values of the feedback correction amount and the learning value.	3.00 g/s	g/s
Idle Mass Air Flow Feedback correct	Air volume compensation value of ISC as a feedback correction to stabilize the idling speed.	0.00 g/s	g/s
ISC Learning Value	Learning control value of ISC. After warming up, learning control is executed to reduce the ISC feedback correction to zero, in order to stabilize the engine speed.	0.55 g/s	g/s
Idle A/C load correct	Air volume correction value when the air conditioner is turned on. ECM corrects the air volume against the target rotation speed when the air conditioner is turned ON.	0.86 g/s	g/s
Electric Load Feedback Val	Air volume correction value when an electric load is turned on. ECM corrects the air volume against the set target rotation speed when the electric load is turned ON.	0.10 g/s	g/s
Idle dirty throttle correct	Calculates the ISC learning values on a long-term basis, and judges as an ISC dirty throttle correction when the learning value increases gradually. When carbon or other dirt accumulates on the ISC throttle and make the throttle dirty, air volume decreases when the throttle is fully closed. The ECM increases the amount of compensation air to keep the rotation speed.	0 g/s	g/s
Air Flow Sensor Voltage	Air flow sensor output value. Input value to ECM.	0.8 V	V
Fuel Rail Pressure A	Fuel pressure sensor output value set to the high pressure fuel line. Input value to ECM.	3,000 kPa	kPa
Commanded Fuel Rail Pressure A	Target fuel pressure for high pressure fuel line calculated by ECM.	3,000 kPa	kPa
Fuel Level	Fuel level sensor output value. Input value to ECM. Total value of main and sub.	—	%

Display	Contents	Note (at idling)	Remarks
Fuel level resistance	Fuel level sensor resistance value. Input value to ECM.	—	Ω
Fuel Pump Duty	Fuel pump duty ratio. Supply voltage to the fuel pump is under a duty control by the ECM. This value shows the duty ratio. While the amount of fuel supply is small, such as during idling, the duty value is lowered to decrease the supply voltage.	65%	%
Commanded Evap Purge	Evaporative purge rate displayed by the OBD.	0%	%
CPC Valve Duty Ratio	Control duty ratio of the purge control solenoid valve. ECM output value.	0%	%
Purge Density Learn Value	Leaning value of the evaporation gas density purged from the canister. ECM displays the estimated leaning value.	0.0%	%
Evap Purge Flow	Purge ratio when the evaporation gas is purged from the canister. ECM performs a duty drive to the purge solenoid valve. The amount of gas actually purged will vary depending on the vacuum pressure difference before/after the solenoid valve. Purge ratio displayed here shows current purge amount in percentage against the maximum purge amount when the maximum vacuum pressure is applied.	0.0%	%
ALT Duty	Value calculated by the ECM as an electric power generation voltage. Indicator voltage value from ECM to alternator is under a duty control.	69%	%
Alternator control mode	Control mode of the electric power generation voltage by the alternator. Low: Mode that controls the battery charge Mid: Mode where the battery is not charged and discharged High: Mode that fixes the voltage when the battery is charged or when an electric load is turned on ExHigh: Mode where the battery is charged during deceleration	High/Mid/Low	—
Battery Terminal Voltage	Voltage value between battery terminals input from the battery sensor.	14.0 V	V
Battery Charge/Discharge Current	Battery charge/discharge current value input from the battery sensor. When the value is positive: The current flows to a direction that the battery is charged. When the value is negative: The current flows to a direction that the battery is discharged.	3.6 A	A
Estimated Battery Temperature	Battery temperature input from the battery sensor.	45°C	°C
Remaining Battery Capacity	Remaining amount of battery estimated by ECM.	89.0%	%
Knocking Correction	Retard angle amount when knocking occurs. Partially learning value of ignition timing learning value.	0.0 deg	deg
Fuel system for Bank 1	Feedback status of air fuel ratio. Open: Feedback is stopped Closed: Feedback control is being performed	Cl_normal	—
A/F Sensor #1 Current	Front oxygen (A/F) sensor output current value. Input value to ECM.	0.00 mA	mA
A/F Sensor #1 Resistance	Value calculated from the front oxygen (A/F) sensor output value.	79 Ω	Ω
A/F Correction #3	Sub correction value of A/F feedback control.	–1.41%	%
Front O2 Heater #1	Current value controlling the front oxygen (A/F) sensor heater. ECM output value.	0.00 A	A
Rear O2 Heater Current	Current value controlling the rear oxygen sensor heater. ECM output value.	0.00 A	A

Display	Contents	Note (at idling)	Remarks
No. of EGR steps	Number of EGR valve steps. Number of stepping motor steps. ECM output value.	0 STEP	STEP
Commanded EGR	Target value as EGR setting value calculated by ECM.	0.0%	%
EGR Error	Percentage of the difference in actual EGR steps as compared to the target EGR steps. Both a positive value and a negative value mean that it doesn't fulfill the target. When the value is positive: It opens more than the target value. When the value is negative: It opens smaller than the target value.	0.0%	%
TGV Position Sensor R	Tumble generator valve position sensor RH output value. Input value to ECM.	Close: 2.38 — 3.78 Open: 0.43 — 1.19	V
TGV Position Sensor L	Tumble generator valve position sensor LH output value. Input value to ECM.	Close: 0.43 — 1.19 Open: 2.38 — 3.78	V
TGV Output	Drive signal to tumble generator valve motor. Set to “ON” when the tumble generator valve is activated (when the duty output is other than 0%). ECM output value.	OFF	—
TGV Drive	Tumble generator valve drive status. Set to “Open” when the tumble generator valve is open. ECM control status.	Close	—
OCV Duty R	Control duty ratio of the intake side oil control solenoid on the RH bank. ECM output value.	58.8%	%
OCV Duty L	Control duty ratio of the intake side oil control solenoid on the LH bank. ECM output value.	58.4%	%
OCV Current R	Actual current value of the intake side oil control solenoid on the RH bank. Input value to ECM.	704 mA	mA
OCV Current L	Actual current value of the intake side oil control solenoid on the LH bank. Input value to ECM.	736 mA	mA
Exh. OCV Duty R	Control duty ratio of the exhaust side oil control solenoid on the RH bank. ECM output value.	45.9%	%
Exh. OCV Duty L	Control duty ratio of the exhaust side oil control solenoid on the LH bank. ECM output value.	45.9%	%
Exh. OCV Current R	Actual current value of the exhaust side oil control solenoid on the RH bank. Input value to ECM.	544 mA	mA
Exh. OCV Current L	Actual current value of the exhaust side oil control solenoid on the LH bank. Input value to ECM.	544 mA	mA
Roughness Monitor #1	#1 cylinder roughness monitor count value.	0	—
Roughness Monitor #2	#2 cylinder roughness monitor count value.	0	—
Roughness Monitor #3	#3 cylinder roughness monitor count value.	0	—
Roughness Monitor #4	#4 cylinder roughness monitor count value.	0	—
Cylinder Monitor #1	Calculates the rotation speed between certain angles on the #1 cylinder. If the rotation speed is low compared to monitor values of other cylinders, it means that the combustion is not ideal in that cylinder.	—	rpm

Display	Contents	Note (at idling)	Remarks
Cylinder Monitor #2	Calculates the rotation speed between certain angles on the #2 cylinder. If the rotation speed is low compared to monitor values of other cylinders, it means that the combustion is not ideal in that cylinder.	—	rpm
Cylinder Monitor #3	Calculates the rotation speed between certain angles on the #3 cylinder. If the rotation speed is low compared to monitor values of other cylinders, it means that the combustion is not ideal in that cylinder.	—	rpm
Cylinder Monitor #4	Calculates the rotation speed between certain angles on the #4 cylinder. If the rotation speed is low compared to monitor values of other cylinders, it means that the combustion is not ideal in that cylinder.	—	rpm
Ignition SW ON Count	Time stamp information. Number of times the ignition is ON since the vehicle was manufactured. The number of ignition ON is also recorded when a trouble code is recorded, so the comparison with that number will show you how many times the ignition has turned on since the diagnostic code was recorded.	—	times
Count	Time stamp information. Each unit individually counts the elapsed time since the ignition is turned ON. Master integrated unit and ECM synchronize with the master time. When synchronized: “Common” When not synchronized: “Originally”	Common	—
Time Count	Time stamp information. Elapsed time after ignition ON. When a trouble code is recorded, the elapsed time after ignition ON is also recorded.	—	ms
Time Since Engine Start	Elapsed time after starting the engine.	—	sec
Elapsed Time After Engine Run	Elapsed time after starting the engine. This value is used for control.	—	sec
Accumulation Time After Engine Run	Cumulative time after starting the engine. For models with Auto Start Stop, cumulative time after the first engine start. Time is not accumulated while the engine stops due to the Auto Start Stop system.	—	sec
Initial Engine Oil Temp.	Oil temperature when starting the engine, which is input to ECM from the oil temperature sensor.	—	°C
Initial Engine Coolant Temp.	Water temperature when starting the engine, which is input to ECM from the water temperature sensor.	—	°C
Initial Intake Air Temp.	Intake air temperature when starting the engine, which is input to ECM from the intake air temperature sensor.	—	°C
Engine Starting Time	Time needed since the cranking started till the judgment of engine start is complete.	0 min	ms
Soak Time	The time the vehicle has been left since the engine stopped. This value can be used to check how long the vehicle has been left with the ignition switch ON after the engine stopped.	—	sec
Meter since DTC cleared	Travel distance after DTC clear.	—	km or mile
Time while MIL lighted	Engine operating time from when the malfunction indicator light illuminated till when it went off.	—	min
Time since DTC cleared	Elapsed time after DTC clear.	—	min
Number of Warm-ups since DTC cleared	Number of warm ups after DTC clear. 1 cycle is the time from the cold start till warmed up and stop. (Engine start after a warm-up is not counted.)	—	times
Lighted MI lamp history	Travel distance after the warning light illuminated.	—	km or mile

Display	Contents	Note (at idling)	Remarks
Odometer	Value of the total cumulative travel distance that ECM calculates from the vehicle speed separately from the odometer in the combination meter. Small difference from the odometer will be possible, but if there is a big difference, ECM or the combination meter may need to be replaced.	—	km
Maximum Engine Speed at the time of Misfire detection caused by out of Fuel	Maximum engine speed during fuel cut by a fuel run-out judgment.	0 rpm	rpm
Maximum Intake Air Amount at the time of Misfire detection caused by out of Fuel	Maximum air amount during fuel cut by a fuel run-out judgment.	0 g/s	g/s
Number of Misfire detection caused by out of Fuel	Number of the occurrences of fuel run-out judgment.	0 times	times
Estimated Total Mileage at the time of first Misfire detection caused by out of Fuel	Estimated cumulative travel distance during fuel cut by a fuel run-out judgment.	0 km	km or mile
Engine Speed at the time of Detection to avoid Preignition caused by out of Fuel	Maximum engine speed at the time of pre-ignition avoidance judgment when the fuel runs out.	0 rpm	rpm
Intake Air Mass at the time of Detection to avoid Preignition caused by out of Fuel	Maximum amount of air at the time of pre-ignition avoidance judgment when the fuel runs out.	0 g/s	g/s
Number of Preignition Detection caused by out of Fuel	Number of the occurrences of pre-ignition avoidance judgment when the fuel runs out.	0 times	times
Estimated Total Mileage at the time of first Detection to avoid Preignition caused by out of Fuel	Estimated cumulative travel distance at the time of the first pre-ignition avoidance judgment when the fuel runs out.	0 km	km or mile
Fuel Cut Elps Time	Elapsed time after experienced high rotation speed.	0 sec	sec
Memorized Cruise Speed	Cruise control system target vehicle speed. (Set speed)	0 km/h	km/h or MPH
Catalyst Temperature #11	Estimated temperature of the front catalytic converter.	259.5°C	°C or °F
Type of fuel	Fuel information recorded in the ECM. (It's not the fuel information currently used.)	GAS	—
AT drive status	Neutral condition. Information input from the inhibitor switch. (CVT model)	NEUT	—
MT gear status	Neutral condition. Information input from the neutral switch. (MT model)	NEUT	—
Absolute Evap Sys. Pressure	Evaporative emission control system pressure value. Pressure sensor output value.	99 kPa	kPa, mmHg, inHg or psig
SI Drive mode(Display)	SI-DRIVE mode status. ECM output value. Displayed only on models with SI-DRIVE.	I, S or S#	—
Neutral switch	Neutral switch signal. Signal when in neutral (MT) or in P or N range (AT). Input value to ECM.	Neutral	—
ETC Motor Relay	Drive signal to the electronic throttle motor relay. Set to “ON” when the drive signal is output. ECM output value.	ON	—
Clutch switch	Clutch switch signal. Set to “ON” when the clutch switch is ON. (MT model)	OFF	—

Display	Contents	Note (at idling)	Remarks
Stop Light Switch	Stop light switch signal. Set to “ON” when the stop light illuminates. Input value to ECM.	OFF (when OFF)	—
Brake Switch	Brake switch signal. Set to “ON” when the brake pedal is depressed. Input value to ECM.	OFF (when OFF)	—
Idle Switch Signal	Idle signal. Set to “Idle” while idling.	Idle	—
Ignition switch	Ignition switch signal. Set to “ON” when the ignition switch is ON.	ON	—
A/C Mid Pressure Switch	Air conditioner middle pressure switch signal. Set to “ON” when the switch is ON. Input value to ECM.	OFF (when OFF)	—
A/C Compressor Signal	A/C compressor drive signal. Set to “ON” when the drive signal is output. ECM output value.	OFF (when OFF)	—
Radiator Fan Relay #1	Radiator fan relay drive signal. Set to “ON” when the drive signal is output. ECM output value.	OFF (when OFF)	—
Radiator Fan Relay #2	Radiator fan relay drive signal. Set to “ON” when the drive signal is output. ECM output value.	OFF (when OFF)	—
A/C Switch	Air conditioner switch signal. Set to “ON” when the air conditioner switch of the heater control is ON. Input value to ECM.	OFF (when OFF)	—
Starter Switch	Starter switch signal. Set to “ON” when the starter is ON. Input value to ECM.	OFF	—
Rear Defogger SW	Rear defogger switch input signal. Set to “ON” when the switch is ON. Input value to ECM.	OFF (when OFF)	—
Blower Fan SW	Blower fan switch input signal. Set to “ON” when the switch is ON. Input value to ECM.	OFF (when OFF)	—
Light Switch	Light switch input signal. Set to “ON” when the switch is ON. Input value to ECM.	OFF (when OFF)	—
Wiper Switch	Wiper switch input signal. Set to “ON” when the switch is ON. Input value to ECM.	OFF (when OFF)	—
Delivery Mode Connector	Delivery mode terminal fuse installation status. Shows the status of delivery mode.	OFF	—
Rear O2 Rich Signal	Rear oxygen sensor output value. Displays “Rich” when the air fuel ratio of rear oxygen sensor is rich. Displays “Lean” when the air fuel ratio of rear oxygen sensor is lean.	Rich	—
Knocking Signal	Knock sensor output signal. Judges if a knocking occurs or not. Input value to ECM.	OFF	—
Crankshaft Position Sig.	Crankshaft position sensor output signal. Set to “ON” when the engine is running. Input value to ECM.	ON	—
Camshaft Position Sig.	Camshaft position sensor output signal. Set to “ON” when the engine is running. ECM input value.	ON	—
CPC Solenoid 2	Drive status of the evaporative purge solenoid located upstream of the throttle, equipped with turbo models. ECM output value.	OFF	—

Display	Contents	Note (at idling)	Remarks
Ban of Torque Down VDC	Torque down prohibition notification signal to the vehicle dynamics control (VDC) module. Set to “OFF” when the prohibition signal is output. ECM output value.	ON	—
Request Torque Down VDC	Torque down request signal transmitted from the vehicle dynamics control (VDC) module. Set to “ON” when the request signal is sent. Vehicle dynamics control (VDC) module input value.	OFF	—
Torque Permission Signal	Torque down permission notification signal to the transmission control module. Set to “ON” when the permission signal is output. ECM output value.	OFF	—
SET/COAST Switch	Cruise control system SET/COAST SW signal. Set to “ON” when the switch is operated. Input value to ECM.	OFF (when OFF)	—
RESUME/ACCEL Switch	Cruise control system RESUME/ACCEL SW signal. Set to “ON” when the switch is operated. Input value to ECM.	OFF (when OFF)	—
Main switch	Cruise control system main switch signal. Set to “ON” when the switch is operated. Input value to ECM.	OFF (when OFF)	—
distance change SW	Distance change switch signal. Displayed only on models with EyeSight.	OFF (when OFF)	—
Cruise Control Cancel Switch Signal	Cruise control cancel switch signal of the cruise control system. Set to “ON” when the switch is operated. Input value to ECM.	OFF (when OFF)	—
All Cylinders Fuel cut	Status under the fuel injection amount control where the fuel injection is cut off in all cylinders.	OFF	—
Immobilizer Fuel Cut Status	Status where the fuel injection is cut off by the command from immobilizer.	OFF	—
Shift Pattern Demand for Low Water Temperature	Shift pattern request sent from ECM to the transmission CM. When the water temperature is low, shift pattern change to the low speed side is requested to raise the catalyst temperature faster.	OFF	—
Oil level switch	Oil level switch signal. Set to “LOW level” when the amount of engine oil decreases. Input value to ECM.	HIGH level	—
ELCM switching valve	Leak check valve assembly switching valve drive signal. Set to “Close” when closing the switching valve. ECM output value.	Open	—
ELCM pump	Leak check valve assembly pump drive signal. Set to “ON” when the leak check valve assembly decompression pump is activated. ECM output value.	OFF	—
AT turbine speed	Turbine rotation speed of the transmission. Turbine rotation speed is input from the transmission CM via CAN. (CVT model)	900	—
Lock Up Status	Lock-up status of the transmission. Lock up status is input from the transmission CM via CAN. (CVT model)	OPEN	—
P/N Signal	P/N status of the transmission. P/N range status is input from the transmission CM via CAN. (CVT model)	—	—
Ignition Control Check 1	Detailed status of the engine ignition control information.	90	—
Ignition Control Check 2	Detailed status of the engine ignition control information.	75	—
Alternator control check 1	Detailed status of charge control.	91	—
Alternator control check 2	Detailed status of charge control.	90.1	—
Alternator control check 3	Detailed status of charge control.	10.350	—

Display	Contents	Note (at idling)	Remarks
Alternator control check 4	Detailed status of charge control.	8.970	—
Alternator control check 5	Detailed status of charge control.	100	—
Alternator control check 6	Detailed status of charge control.	0	—
Alternator control check 7	Detailed status of charge control.	14.2	—
Alternator control check 8	Detailed status of charge control.	64	—
Alternator control check 9	Detailed status of charge control.	0	—
Alternator control check 10	Detailed status of charge control.	2	—
MIL Status	Malfunction indicator light illumination status. When judged as abnormal, an illumination command signal is sent from ECM to the combination meter.	OFF	—
Number of Diagnostic Code(s):	The number of trouble codes recorded in the ECM.	0	—
O2 Sensor #11	Installation status of the front oxygen sensor.	Support	—
O2 Sensor #12	Installation status of the rear oxygen sensor.	Support	—
Short term fuel trim #12	Air fuel ratio correction control value for the rear.	0.0%	%
A/F Sensor #11	Air fuel ratio calculated from the front oxygen (A/F) sensor output value. (Lambda)	1.007	—
A/F Sensor #11	Front oxygen (A/F) sensor output voltage.	2.329 V	V
A/F Sensor #11	Air fuel ratio calculated from the front oxygen (A/F) sensor output value. (Lambda)	1.007	—
A/F Sensor #11	Front oxygen (A/F) sensor current value.	0.00 mA	mA
Absolute Throttle Pos.#2	Shows the sub throttle sensor voltage value in % against the full-range 5 V throttle sensor output voltage.	12.2%	%
Accelerator Pedal Pos.#1	Shows the main accelerator sensor voltage value in % against the full-range 5 V throttle sensor output voltage.	14.1%	%
Accelerator Pedal Pos.#2	Shows the sub accelerator sensor voltage value in % against the full-range 5 V throttle sensor output voltage.	13.7%	%
Relative Accelerator Pos.	Accelerator opening angle with a full close point learning value taken into consideration.	0.0%	%
Misfire monitoring(Supp)	Support status of the misfire diagnosis.	YES	—
Misfire monitoring(Rdy)	Status of the misfire diagnosis. YES or N/A: Diagnosis is completed or not supported. NO: Diagnosis is not completed.	YES	—
Fuel system monitoring(Supp)	Support status of the fuel system diagnosis.	YES	—
Fuel system monitoring(Rdy)	Status of the fuel system diagnosis. YES or N/A: Diagnosis is completed or not supported. NO: Diagnosis is not completed.	YES	—
Component monitoring(Supp)	Support status of the component diagnosis.	YES	—
Component monitoring(Rdy)	Status of the component diagnosis. YES or N/A: Diagnosis is completed or not supported. NO: Diagnosis is not completed.	YES	—
Catalyst Diagnosis(Supp)	Support status of the catalyst diagnosis.	YES	—
Catalyst Diagnosis(Rdy)	Status of the catalyst diagnosis. YES or N/A: Diagnosis is completed or not supported. NO: Diagnosis is not completed.	NO	—
Heated catalyst(Supp)	Support status of the heated catalyst diagnosis.	NO	—
Heated catalyst(Rdy)	Status of the heated catalyst diagnosis. YES or N/A: Diagnosis is completed or not supported. NO: Diagnosis is not completed.	N/A	—
Evaporative purge system(Supp)	Support status of the evaporative purge system diagnosis.	NO	—
Evaporative purge system(Rdy)	Status of the evaporative purge system diagnosis. YES or N/A: Diagnosis is completed or not supported. NO: Diagnosis is not completed.	N/A	—

Display	Contents	Note (at idling)	Remarks
Secondary air system(Supp)	Support status of the secondary air system diagnosis.	NO	—
Secondary air system(Rdy)	Status of the secondary air system diagnosis. YES or N/A: Diagnosis is completed or not supported. NO: Diagnosis is not completed.	N/A	—
A/C system refrigerant(Supp)	Support status of the A/C system refrigerant diagnosis.	NO	—
A/C system refrigerant(Rdy)	Status of the A/C system refrigerant diagnosis. YES or N/A: Diagnosis is completed or not supported. NO: Diagnosis is not completed.	N/A	—
Oxygen sensor(Supp)	Support status of the oxygen sensor diagnosis.	YES	—
Oxygen sensor(Rdy)	Status of the oxygen sensor diagnosis. YES or N/A: Diagnosis is completed or not supported. NO: Diagnosis is not completed.	NO	—
O2 Heater Diagnosis(Supp)	Support status of the oxygen sensor heater diagnosis.	YES	—
O2 Heater Diagnosis(Rdy)	Status of the oxygen sensor heater diagnosis. YES or N/A: Diagnosis is completed or not supported. NO: Diagnosis is not completed.	YES	—
EGR system(Supp)	Support status of the EGR diagnosis.	YES	—
EGR system(Rdy)	Status of the EGR diagnosis. YES or N/A: Diagnosis is completed or not supported. NO: Diagnosis is not completed.	NO	—
Misfire monitoring(Enable)	Shows whether or not the execution condition of misfire diagnosis is met. YES: Diagnosis can be executed. NO or N/A: Diagnosis cannot be executed or is not supported.	YES	—
Misfire monitoring(Comp)	Shows whether or not the continuous misfire diagnosis is completed. YES or N/A: Diagnosis is completed or not supported. NO: Diagnosis is not completed.	YES	—
Fuel system monitoring(Enable)	Shows whether or not the execution condition of fuel system diagnosis is met. YES: Diagnosis can be executed. NO or N/A: Diagnosis cannot be executed or is not supported.	YES	—
Fuel system monitoring(Comp)	Shows whether or not the fuel system diagnosis is completed. YES or N/A: Diagnosis is completed or not supported. NO: Diagnosis is not completed.	YES	—
Component monitoring(Enable)	Shows whether or not the execution condition of component diagnosis is met. YES: Diagnosis can be executed. NO or N/A: Diagnosis cannot be executed or is not supported.	YES	—
Component monitoring(Comp)	Shows whether or not the component diagnosis is completed. YES or N/A: Diagnosis is completed or not supported. NO: Diagnosis is not completed.	NO	—
Catalyst Diagnosis(Enable)	Shows whether or not the execution condition of catalyst diagnosis is met. YES: Diagnosis can be executed. NO or N/A: Diagnosis cannot be executed or is not supported.	YES	—
Catalyst Diagnosis(Comp)	Shows whether or not the catalyst diagnosis is completed. YES or N/A: Diagnosis is completed or not supported. NO: Diagnosis is not completed.	NO	—
Heated catalyst(Enable)	Shows whether or not the execution condition of heated catalyst diagnosis is met. YES: Diagnosis can be executed. NO or N/A: Diagnosis cannot be executed or is not supported.	N/A	—

Display	Contents	Note (at idling)	Remarks
Heated catalyst(Comp)	Shows whether or not the heated catalyst diagnosis is completed. YES or N/A: Diagnosis is completed or not supported. NO: Diagnosis is not completed.	N/A	—
Evaporative purge system(Enable)	Shows whether or not the execution condition of evaporative purge system diagnosis is met. YES: Diagnosis can be executed. NO or N/A: Diagnosis cannot be executed or is not supported.	N/A	—
Evaporative purge system(Comp)	Shows whether or not the evaporative purge system diagnosis is completed. YES or N/A: Diagnosis is completed or not supported. NO: Diagnosis is not completed.	N/A	—
Secondary air system(Enable)	Shows whether or not the execution condition of the secondary air system diagnosis is met. YES: Diagnosis can be executed. NO or N/A: Diagnosis cannot be executed or is not supported.	N/A	—
Secondary air system(Comp)	Shows whether or not the secondary air system diagnosis is completed. YES or N/A: Diagnosis is completed or not supported. NO: Diagnosis is not completed.	N/A	—
A/C system refrigerant(Enable)	Shows whether or not the execution condition of A/C system refrigerant diagnosis is met. YES: Diagnosis can be executed. NO or N/A: Diagnosis cannot be executed or is not supported.	N/A	—
A/C system refrigerant(Comp)	Shows whether or not the A/C system refrigerant diagnosis is completed. YES or N/A: Diagnosis is completed or not supported. NO: Diagnosis is not completed.	N/A	—
Oxygen sensor(Enable)	Shows whether or not the execution condition of oxygen sensor diagnosis is met. YES: Diagnosis can be executed. NO or N/A: Diagnosis cannot be executed or is not supported.	YES	—
Oxygen sensor(Comp)	Shows whether or not the oxygen sensor diagnosis is completed. YES or N/A: Diagnosis is completed or not supported. NO: Diagnosis is not completed.	NO	—
O2 Heater Diagnosis(Enable)	Shows whether or not the execution condition of oxygen heater diagnosis is met. YES: Diagnosis can be executed. NO or N/A: Diagnosis cannot be executed or is not supported.	YES	—
O2 Heater Diagnosis(Comp)	Shows whether or not the oxygen heater diagnosis is completed. YES or N/A: Diagnosis is completed or not supported. NO: Diagnosis is not completed.	NO	—
EGR system(Enable)	Shows whether or not the execution condition of EGR diagnosis is met. YES: Diagnosis can be executed. NO or N/A: Diagnosis cannot be executed or is not supported.	YES	—
EGR system(Comp)	Shows whether or not the EGR diagnosis is completed. YES or N/A: Diagnosis is completed or not supported. NO: Diagnosis is not completed.	NO	—
OBD System	Shows the OBD regulation to be followed. This is the information recorded in the ECM, and it does not mean that the unit automatically judges the compliance to the OBD regulations.	OBD/OBD2	—

3. DISPLAY OF ENGINE FREEZE FRAME DATA

NOTE:
• ECM updates the freeze frame data every 0.5 seconds, and always keeps the last three records. Time-series freeze frame data includes the last three freeze frame data and the freeze frame data when the DTC is detected.
• In the time-series freeze frame data, the following freeze frame data are displayed: «Detect», «1 times past», «2 times past», and «3 times past».
• Time lag between the freeze frame data of «Detect» and the freeze frame data of «1 block before» changes within the range of 0 — 0.5 seconds. This is because the freeze frame data of «Detect» is recorded when the DTC is actually detected, while the freeze frame data of «1 block before» is updated every 0.5 seconds.

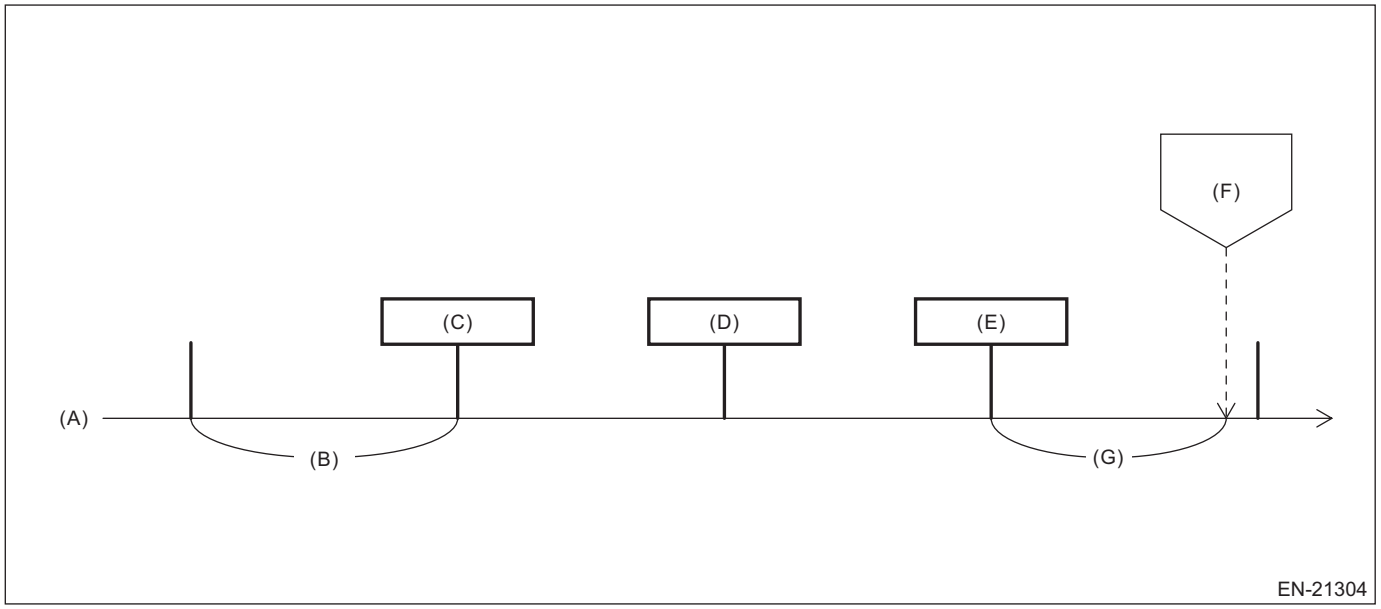

(A) 0.5 seconds timer
(B) 0.5 seconds
(C) «Three times before»
(D) «Two times before»
(E) «Previous time»
(F) «When detected»
(G) Changes within the range of 0 — 0.5 seconds, depending on the timing of DTC detection.

• When more than one DTCs are recorded, the time-series freeze frame data is recorded only for the first-detected DTC, and for the next DTC, just the freeze frame data of «Detect» is recorded. And for the subsequent DTCs, no freeze frame data is recorded.
• When performing diagnosis, you can utilize the time-series freeze frame data to guess the vehicle status when the DTC was detected.
• For detailed operation procedures, refer to “Application help”.
• A list of the support data is shown in the following table.
1) On «Start» display, select «Diagnosis».
2) On «Vehicle selection» display, input the vehicle information and select «Confirmed».
3) On «Main Menu» display, select «Each System».
4) On «Select System» display, select «Engine Control System» and then select «Enter».
5) On «Select Function» display, select «Data Monitor».

6) Select «FFD» of the DTC displayed in «DTC».

Display	Contents	Remarks
Engine Speed	Value calculated from crankshaft position sensor output value.	rpm
Mass Air Flow	Value calculated from air flow sensor output value.	g/s or lb/m
Vehicle Speed	Value calculated from vehicle speed sensor output value.	km/h or MPH
Throttle Opening Angle	Throttle valve opening angle (in percentage) calculated from throttle position sensor output value.	%
Ignition Timing Advance for #1 Cylinder	Ignition timing control value for No. 1 cylinder. Calculated from rotation speed, manifold pressure, intake air temperature, water temperature, and data from knock sensor etc.	°
Engine Coolant Temperature	Value calculated from engine coolant temperature sensor output value.	°C or °F
Short Term Fuel Trim-Bank1	Air fuel ratio correction control value for the front oxygen (A/F) sensor.	%
Long Term Fuel Trim-Bank1	Air fuel ratio learning control value for the front oxygen (A/F) sensor.	%
Intake Manifold Absolute Pressure	Value calculated from the manifold pressure sensor.	kPa, mmHg, inHg or psig
Oxygen sensor #12	Rear oxygen sensor output voltage value.	V
VVT Adv. Ang. Amount R	AVCS advance angle amount for the RH bank on the intake side.	deg
VVT Advance Target Angle Amount R	AVCS target advance angle amount for the RH bank on the intake side. This value is compared with the AVCS advance angle amount R to judge if the intake AVCS is operating properly. Response delays during the transition time.	deg
VVT Adv. Ang. Amount L	AVCS advance angle amount for the LH bank on the intake side.	deg
VVT Advance Target Angle Amount L	AVCS target advance angle amount for the LH bank on the intake side. This value is compared with the AVCS advance angle amount L to judge if the intake AVCS is operating properly. Response delays during the transition time.	deg
Exh. VVT Retard Ang. R	AVCS actual retard angle amount for the RH bank on the exhaust side.	deg
Ex VVT Retard Target Angle R	AVCS target retard angle amount for the RH bank on the exhaust side. This value is compared with the exhaust AVCS retard angle amount R to judge if the AVCS is operating properly. Response delays during the transition time.	deg
Exh. VVT Retard Ang. L	AVCS actual retard angle amount for the LH bank on the exhaust side.	deg
Ex VVT Retard Target Angle L	AVCS target retard angle amount for the LH bank on the exhaust side. This value is compared with the exhaust AVCS retard angle amount L to judge if the AVCS is operating properly. Response delays during the transition time.	deg
ECU ACC	ECM input power supply voltage.	V
Target Equivalence Ratio	Target air fuel ratio. (Lambda) It usually becomes 1.0 aiming at a theoretical air fuel ratio.	—
IAT Sensor #11	Value calculated from the intake air temperature sensor output value of the air flow sensor.	°C or °F
IAT Sensor #12	Value calculated from the intake air temperature sensor output value of the manifold pressure sensor.	°C or °F
Ambient Temperature	Value that ECM estimates by using input values from the engine coolant temperature sensor or the intake air temperature sensor etc.	°C or °F
Load Value	Current rate of air amount. Value assuming that the air amount at the current engine speed with the throttle fully open is 100%.	%
Absolute Load Value	Percentage of current intake air amount against the maximum air intake amount of the engine. For non-turbo engine, the value can be close to 95%, but will never be 100%. For turbo engine, this value may exceed 100% due to a boost pressure.	%
Atmospheric Pressure	Value calculated from atmospheric pressure sensor output value.	kPa, mmHg, inHg or psig
Actual Throttle Opening Angle	Actual throttle opening angle. Calculated by ECM based on the throttle sensor input value.	deg

Display	Contents	Remarks
Target Throttle Opening Angle	Control value of the target throttle opening angle calculated by ECM. Target value of opening angle in percentage when 0% means fully closed and 100% means fully open.	%
Relative Throttle Position	Current throttle opening angle in percentage against the throttle voltage (full range) that has reflected the full close point learning value. The value will be approx. 70% at full open.	%
Idle Mass Air Flow	Air volume correction value to maintain the target rotation speed in each water temperature. Corrects air volume when the water temperature changes. It includes values of the feedback correction amount and the learning value.	g/s
Idle Mass Air Flow Feedback correct	Air volume compensation value of ISC as a feedback correction to stabilize the idling speed.	g/s
ISC Learning Value	Learning control value of ISC. After warming up, learning control is executed to reduce the ISC feedback correction to zero, in order to stabilize the engine speed.	g/s
Idle A/C load correct	Air volume correction value when the air conditioner is turned on. ECM corrects the air volume against the target rotation speed when the air conditioner is turned ON.	g/s
Electric Load Feedback Val	Air volume correction value when an electric load is turned on. ECM corrects the air volume against the set target rotation speed when the electric load is turned ON.	g/s
Idle dirty throttle correct	Calculates the ISC learning values on a long-term basis, and judges as an ISC dirty throttle correction when the learning value increases gradually. When carbon or other dirt accumulates on the ISC throttle and make the throttle dirty, air volume decreases when the throttle is fully closed. The ECM increases the amount of compensation air to keep the rotation speed.	g/s
Fuel Rail Pressure A	Fuel pressure sensor output value set to the high pressure fuel line. Input value to ECM.	kPa, mmHg, inHg or psig
Commanded Fuel Rail Pressure A	Target fuel pressure for high pressure fuel line calculated by ECM.	kPa, mmHg, inHg or psig
Fuel Level	Fuel level sensor output value. Input value to ECM. Total value of main and sub.	%
Fuel level resistance	Fuel level sensor resistance value. Input value to ECM.	Ω
Fuel Pump Duty	Fuel pump duty ratio. Supply voltage to the fuel pump is under a duty control by the ECM. This value shows the duty ratio. While the amount of fuel supply is small, such as during idling, the duty value is lowered to decrease the supply voltage.	%
Commanded Evap Purge	Evaporative purge rate displayed by the OBD.	%
Purge Density Learn Value	Leaning value of the evaporation gas density purged from the canister. ECM displays the estimated leaning value.	%
Evap Purge Flow	Purge ratio when the evaporation gas is purged from the canister. ECM performs a duty drive to the purge solenoid valve. The amount of gas actually purged will vary depending on the vacuum pressure difference before/after the solenoid valve. Purge ratio displayed here shows current purge amount in percentage against the maximum purge amount when the maximum vacuum pressure is applied.	%
Alternator control mode	Control mode of the electric power generation voltage by the alternator. Low: Mode that controls the battery charge Mid: Mode where the battery is not charged and discharged High: Mode that fixes the voltage when the battery is charged or when an electric load is turned on ExHigh: Mode where the battery is charged during deceleration	—
Battery Terminal Voltage	Voltage value between battery terminals input from the battery sensor.	V

Display	Contents	Remarks
Battery Charge/Discharge Current	Battery charge/discharge current value input from the battery sensor. When the value is positive: The current flows to a direction that the battery is charged. When the value is negative: The current flows to a direction that the battery is discharged.	A
Estimated Battery Temperature	Battery temperature input from the battery sensor.	°C or °F
Remaining Battery Capacity	Remaining amount of battery estimated by ECM.	%
Fuel system for Bank 1	Feedback status of air fuel ratio. Open: Feedback is stopped Closed: Feedback control is being performed	—
A/F Sensor #1 Resistance	Value calculated from the front oxygen (A/F) sensor output value.	Ω
Commanded EGR	Target value as EGR setting value calculated by ECM.	%
EGR Error	Percentage of the difference in actual EGR steps as compared to the target EGR steps. Both a positive value and a negative value mean that it doesn't fulfill the target. When the value is positive: It opens more than the target value. When the value is negative: It opens smaller than the target value.	%
Cylinder Monitor #1	Calculates the rotation speed between certain angles on the #1 cylinder. If the rotation speed is low compared to monitor values of other cylinders, it means that the combustion is not ideal in that cylinder.	rpm
Cylinder Monitor #2	Calculates the rotation speed between certain angles on the #2 cylinder. If the rotation speed is low compared to monitor values of other cylinders, it means that the combustion is not ideal in that cylinder.	rpm
Cylinder Monitor #3	Calculates the rotation speed between certain angles on the #3 cylinder. If the rotation speed is low compared to monitor values of other cylinders, it means that the combustion is not ideal in that cylinder.	rpm
Cylinder Monitor #4	Calculates the rotation speed between certain angles on the #4 cylinder. If the rotation speed is low compared to monitor values of other cylinders, it means that the combustion is not ideal in that cylinder.	rpm
Ignition SW ON Count	Time stamp information. Number of times the ignition is ON since the vehicle was manufactured. The number of ignition ON is also recorded when a trouble code is recorded, so the comparison with that number will show you how many times the ignition has turned on since the diagnostic code was recorded.	times
Count	Time stamp information. Each unit individually counts the elapsed time since the ignition is turned ON. Master integrated unit and ECM synchronize with the master time. When synchronized: “Common” When not synchronized: “Originally”	—
Time Count	Time stamp information. Elapsed time after ignition ON. When a trouble code is recorded, the elapsed time after ignition ON is also recorded.	ms
Time Since Engine Start	Elapsed time after starting the engine.	sec
Initial Engine Oil Temp.	Oil temperature when starting the engine, which is input to ECM from the oil temperature sensor.	°C
Initial Engine Coolant Temp.	Water temperature when starting the engine, which is input to ECM from the water temperature sensor.	°C
Initial Intake Air Temp.	Intake air temperature when starting the engine, which is input to ECM from the intake air temperature sensor.	°C
Engine Starting Time	Time needed since the cranking started till the judgment of engine start is complete.	ms
Soak Time	The time the vehicle has been left since the engine stopped. This value can be used to check how long the vehicle has been left with the ignition switch ON after the engine stopped.	sec
Fuel Cut Elps Time	Elapsed time after experienced high rotation speed.	sec

Display	Contents	Remarks
AT drive status	Neutral condition. Information input from the inhibitor switch. (CVT model)	—
MT gear status	Neutral condition. Information input from the neutral switch. (MT model)	—
SI Drive mode(Display)	SI-DRIVE mode status. ECM output value. Displayed only on models with SI-DRIVE.	—
Clutch switch	Clutch switch signal. Set to “ON” when the clutch switch is ON. (MT model)	—
Stop Light Switch	Stop light switch signal. Set to “ON” when the stop light illuminates. Input value to ECM.	—
Ignition switch	Ignition switch signal. Set to “ON” when the ignition switch is ON.	—
A/C Mid Pressure Switch	Air conditioner middle pressure switch signal. Set to “ON” when the switch is ON. Input value to ECM.	—
A/C Compressor Signal	A/C compressor drive signal. Set to “ON” when the drive signal is output. ECM output value.	—
Starter Switch	Starter switch signal. Set to “ON” when the starter is ON. Input value to ECM.	—
AT turbine speed	Turbine rotation speed of the transmission. Turbine rotation speed is input from the transmission CM via CAN. (CVT model)	rpm
Lock Up Status	Lock-up status of the transmission. Lock up status is input from the transmission CM via CAN. (CVT model)	—
P/N Signal	P/N status of the transmission. P/N range status is input from the transmission CM via CAN. (CVT model)	—
O2 Sensor #11	Installation status of the front oxygen (A/F) sensor.	—
O2 Sensor #12	Installation status of the rear oxygen sensor.	—
Short term fuel trim #12	Air fuel ratio correction control value for the rear.	%
Absolute Throttle Pos.#2	Shows the sub throttle sensor voltage value in % against the full-range 5 V throttle sensor output voltage.	%
Accelerator Pedal Pos.#1	Shows the main accelerator sensor voltage value in % against the full-range 5 V throttle sensor output voltage.	%
Accelerator Pedal Pos.#2	Shows the sub accelerator sensor voltage value in % against the full-range 5 V throttle sensor output voltage.	%
OBD System	Shows the OBD regulation to be followed. This is the information recorded in the ECM, and it does not mean that the unit automatically judges the compliance to the OBD regulations.	—

4. V.I.N REGISTRATION

1) On «Start» display, select «Diagnosis».
2) On «Vehicle selection» display, input the vehicle information and select «Confirmed».
3) On «Main Menu» display, select «Each System».
4) On «Select System» display, select «Engine Control System» and then select «Enter».
5) On «Select Function» display, select «Work Support».
6) On «Work Support» display, select «Entry VIN».
7) Perform the procedures shown on the display screen.

9. Read Diagnostic Trouble Code (DTC)

A: OPERATION

1. SUBARU SELECT MONITOR

1) On «Start» display, select «Diagnosis».
2) On «Vehicle selection» display, input the target vehicle information and select «Confirmed».
3) On «Main Menu» display, select «Each System».
4) On «Select System» display, select «Engine Control System» and then select «Enter».
5) On «Select Function» display, select «DTC».

NOTE:
- For detailed operation procedures, refer to “Application help”.
- For details concerning DTC, refer to “List of Diagnostic Trouble Code (DTC)”. <Ref. to EN(w/o STI)(diag)-106, List of Diagnostic Trouble Code (DTC).>

2. GENERAL SCAN TOOL

NOTE:
- Refer to general scan tool manufacturer’s instruction manual to access powertrain DTC (MODE $03).
- Refer to data denoting emission-related powertrain DTC.
- For details concerning DTC, refer to “List of Diagnostic Trouble Code (DTC)”. <Ref. to EN(w/o STI)(diag)-106, List of Diagnostic Trouble Code (DTC).>

10.Inspection Mode

A: PROCEDURE

Perform the diagnosis shown in the following DTC table.
When performing the diagnosis not listed in “List of Diagnostic Trouble Code (DTC)”, refer to the item on the drive cycle. <Ref. to EN(w/o STI)(diag)-67, Drive Cycle.>

DTC	Item	Condition
B1570	ANTENNA	—
B1571	REFERENCE CODE INCOMPATIBILITY	—
B1572	IMM CIRCUIT EXCEPT ANTENNA CIRCUIT	—
B1574	KEY COMMUNICATION	—
B1575	INCORRECT IMMOBILIZER KEY	—
B1576	EGI CONTROL MODULE EEPROM	—
B1577	IMM CONTROL MODULE EEPROM	—
B1578	METER	—
P0010	"A" CAMSHAFT POSITION ACTUATOR CONTROL CIRCUIT/OPEN BANK 1	—
P0013	"B" CAMSHAFT POSITION ACTUATOR CONTROL CIRCUIT/OPEN BANK 1	—
P0020	"A" CAMSHAFT POSITION ACTUATOR CONTROL CIRCUIT/OPEN BANK 2	—
P0023	"B" CAMSHAFT POSITION ACTUATOR CONTROL CIRCUIT/OPEN BANK 2	—
P0031	A/F / O2 HEATER CONTROL CIRCUIT LOW BANK 1 SENSOR 1	—
P0032	A/F / O2 HEATER CONTROL CIRCUIT HIGH BANK 1 SENSOR 1	—
P0037	A/F / O2 HEATER CONTROL CIRCUIT LOW BANK 1 SENSOR 2	—
P0038	A/F / O2 HEATER CONTROL CIRCUIT HIGH BANK 1 SENSOR 2	—
P0072	AMBIENT AIR TEMPERATURE SENSOR CIRCUIT "A" LOW	—
P0073	AMBIENT AIR TEMPERATURE SENSOR CIRCUIT "A" HIGH	—
P0097	INTAKE AIR TEMPERATURE SENSOR 2 CIRCUIT LOW BANK 1	—
P0098	INTAKE AIR TEMPERATURE SENSOR 2 CIRCUIT HIGH BANK 1	—
P0102	MASS OR VOLUME AIR FLOW SENSOR "A" CIRCUIT LOW	—
P0103	MASS OR VOLUME AIR FLOW SENSOR "A" CIRCUIT HIGH	—
P0107	MANIFOLD ABSOLUTE PRESSURE/BAROMETRIC PRESSURE SENSOR CIRCUIT LOW	—
P0108	MANIFOLD ABSOLUTE PRESSURE/BAROMETRIC PRESSURE SENSOR CIRCUIT HIGH	—
P0112	INTAKE AIR TEMPERATURE SENSOR 1 CIRCUIT LOW BANK 1	—
P0113	INTAKE AIR TEMPERATURE SENSOR 1 CIRCUIT HIGH BANK 1	—
P0117	ENGINE COOLANT TEMPERATURE SENSOR 1 CIRCUIT LOW	—
P0118	ENGINE COOLANT TEMPERATURE SENSOR 1 CIRCUIT HIGH	—
P0122	THROTTLE/PEDAL POSITION SENSOR/SWITCH "A" CIRCUIT LOW	—
P0123	THROTTLE/PEDAL POSITION SENSOR/SWITCH "A" CIRCUIT HIGH	—
P0131	A/F / O2 SENSOR CIRCUIT LOW VOLTAGE BANK 1 SENSOR 1	—
P0132	A/F / O2 SENSOR CIRCUIT HIGH VOLTAGE BANK 1 SENSOR 1	—
P0192	FUEL RAIL PRESSURE SENSOR CIRCUIT LOW BANK 1	—
P0193	FUEL RAIL PRESSURE SENSOR CIRCUIT HIGH BANK 1	—
P0197	ENGINE OIL TEMPERATURE SENSOR "A" CIRCUIT LOW	—
P0198	ENGINE OIL TEMPERATURE SENSOR "A" CIRCUIT HIGH	—
P0222	THROTTLE/PEDAL POSITION SENSOR/SWITCH "B" CIRCUIT LOW	—
P0223	THROTTLE/PEDAL POSITION SENSOR/SWITCH "B" CIRCUIT HIGH	—
P0230	FUEL PUMP PRIMARY CIRCUIT	—
P023F	FUEL PUMP SECONDARY CIRCUIT/OPEN	—
P0245	TURBOCHARGER/SUPERCHARGER WASTEGATE SOLENOID "A" LOW	—
P0327	KNOCK/COMBUSTION VIBRATION SENSOR 1 CIRCUIT LOW BANK 1 OR SINGLE SENSOR	—
P0328	KNOCK/COMBUSTION VIBRATION SENSOR 1 CIRCUIT HIGH BANK 1 OR SINGLE SENSOR	—
P0332	KNOCK/COMBUSTION VIBRATION SENSOR 2 CIRCUIT LOW BANK 2	—

DTC	Item	Condition
P0333	KNOCK/COMBUSTION VIBRATION SENSOR 2 CIRCUIT HIGH BANK 2	—
P0335	CRANKSHAFT POSITION SENSOR "A" CIRCUIT	—
P0336	CRANKSHAFT POSITION SENSOR "A" CIRCUIT RANGE/PERFORMANCE	—
P0340	CAMSHAFT POSITION SENSOR "A" CIRCUIT BANK 1 OR SINGLE SENSOR	—
P0341	CAMSHAFT POSITION SENSOR "A" CIRCUIT RANGE/PERFORMANCE BANK 1 OR SINGLE SENSOR	—
P0345	CAMSHAFT POSITION SENSOR "A" CIRCUIT BANK 2	—
P0346	CAMSHAFT POSITION SENSOR "A" CIRCUIT RANGE/PERFORMANCE BANK 2	—
P0351	IGNITION COIL "A" PRIMARY CONTROL CIRCUIT/OPEN	—
P0352	IGNITION COIL "B" PRIMARY CONTROL CIRCUIT/OPEN	—
P0353	IGNITION COIL "C" PRIMARY CONTROL CIRCUIT/OPEN	—
P0354	IGNITION COIL "D" PRIMARY CONTROL CIRCUIT/OPEN	—
P0365	CAMSHAFT POSITION SENSOR "B" CIRCUIT BANK 1	—
P0366	CAMSHAFT POSITION SENSOR "B" CIRCUIT RANGE/PERFORMANCE BANK 1	—
P0390	CAMSHAFT POSITION SENSOR "B" CIRCUIT BANK 2	—
P0391	CAMSHAFT POSITION SENSOR "B" CIRCUIT RANGE/PERFORMANCE BANK 2	—
P0452	EVAP SYSTEM (CPC) PRESSURE SENSOR/SWITCH CIRCUIT LOW	—
P0453	EVAP SYSTEM (CPC) PRESSURE SENSOR/SWITCH CIRCUIT HIGH	—
P0458	EVAP SYSTEM (CPC) PURGE CONTROL VALVE "A" CIRCUIT LOW	—
P0462	FUEL LEVEL SENSOR "A" CIRCUIT LOW	—
P0463	FUEL LEVEL SENSOR "A" CIRCUIT HIGH	—
P04AC	EVAP SYSTEM (CPC) PURGE CONTROL VALVE "B" CIRCUIT LOW	—
P04DB	CRANKCASE VENTILATION SYSTEM (PCV) DISCONNECTED	—
P0512	STARTER (SWITCH) REQUEST CIRCUIT	—
P0560	SYSTEM VOLTAGE	—
P0604	INTERNAL CONTROL MODULE RANDOM ACCESS MEMORY (RAM) ERROR	—
P0605	INTERNAL CONTROL MODULE READ ONLY MEMORY (ROM) ERROR	—
P0606	CONTROL MODULE PROCESSOR	—
P060A	INTERNAL CONTROL MODULE MONITORING PROCESSOR PERFORMANCE	—
P060B	INTERNAL CONTROL MODULE A/D PROCESSING PERFORMANCE	—
P0616	STARTER RELAY "A" CIRCUIT LOW	—
P0617	STARTER RELAY "A" CIRCUIT HIGH	—
P062F	INTERNAL CONTROL MODULE EEPROM ERROR	—
P0685	ECM/PCM POWER RELAY CONTROL CIRCUIT/OPEN	—
P081A	STARTER DISABLE CIRCUIT LOW	—
P1134	A/F / O2 SENSOR BANK1 SENSOR1 SERIAL PERIPHERAL INTERFACE (SPI) COMMUNICATION	—
P1160	THROTTLE RETURN SPRING	—
P1C00	BATTERY MONITOR MODULE "A" PERFORMANCE	—
P2009	TGV CONTROL CIRCUIT LOW BANK 1	—
P2012	TGV CONTROL CIRCUIT LOW BANK 2	—
P2016	TGV POSITION SENSOR/SWITCH CIRCUIT LOW BANK 1	—
P2017	TGV POSITION SENSOR/SWITCH CIRCUIT HIGH BANK 1	—
P2021	TGV POSITION SENSOR/SWITCH CIRCUIT LOW BANK 2	—
P2022	TGV POSITION SENSOR/SWITCH CIRCUIT HIGH BANK 2	—
P2101	THROTTLE ACTUATOR "A" CONTROL MOTOR CIRCUIT RANGE/PERFORMANCE	—
P2102	THROTTLE ACTUATOR "A" CONTROL MOTOR CIRCUIT LOW	—
P2103	THROTTLE ACTUATOR "A" CONTROL MOTOR CIRCUIT HIGH	—
P2109	THROTTLE/PEDAL POSITION SENSOR "A" MINIMUM STOP PERFORMANCE	—
P2119	THROTTLE ACTUATOR "A" CONTROL THROTTLE BODY RANGE/PERFORMANCE	—
P2122	THROTTLE/PEDAL POSITION SENSOR/SWITCH "D" CIRCUIT LOW	—
P2123	THROTTLE/PEDAL POSITION SENSOR/SWITCH "D" CIRCUIT HIGH	—

DTC	Item	Condition
P2127	THROTTLE/PEDAL POSITION SENSOR/SWITCH "E" CIRCUIT LOW	—
P2128	THROTTLE/PEDAL POSITION SENSOR/SWITCH "E" CIRCUIT HIGH	—
P2135	THROTTLE/PEDAL POSITION SENSOR/SWITCH "A"/"B" VOLTAGE CORRELATION	—
P2138	THROTTLE/PEDAL POSITION SENSOR/SWITCH "D"/"E" VOLTAGE CORRELATION	—
P2146	FUEL INJECTOR GROUP "A" SUPPLY VOLTAGE CIRCUIT/OPEN	—
P2228	BAROMETRIC PRESSURE SENSOR "A" CIRCUIT LOW	—
P2229	BAROMETRIC PRESSURE SENSOR "A" CIRCUIT HIGH	—
P2401	EVAP SYSTEM LEAK DETECTION PUMP CONTROL CIRCUIT LOW	—
P2419	EVAP SYSTEM SWITCHING VALVE CONTROL CIRCUIT LOW	—
P2530	IGNITION SWITCH RUN POSITION CIRCUIT	—
U0073	CONTROL MODULE COMMUNICATION BUS OFF	—
U0077	LIN COMMUNICATION BUS "ECM/PCM" OFF	—
U0101	LOST COMMUNICATION WITH TCM	—
U0122	LOST COMMUNICATION WITH VEHICLE DYNAMICS CONTROL MODULE	—
U0155	LOST COMMUNICATION WITH INSTRUMENT PANEL CLUSTER (IPC) CONTROL MODULE	—
U0402	INVALID DATA RECEIVED FROM TCM	—
U0416	INVALID DATA RECEIVED FROM VEHICLE DYNAMICS CONTROL MODULE	—
U0423	INVALID DATA RECEIVED FROM INSTRUMENT PANEL CLUSTER CONTROL MODULE	—
U1712	LOST LIN COMMUNICATION WITH BATTERY "1" MONITOR MODULE	—

1) Check that the battery voltage is 12 V or more and fuel remains approx. half [20 — 40 L (5.3 — 10.6 US gal, 4.4 — 8.8 Imp gal)].
2) Perform the Clear Memory Mode. <Ref. to EN(w/o STI)(diag)-82, Clear Memory Mode.>
3) Read the diagnostic trouble code (DTC) and check that no DTC is displayed. <Ref. to EN(w/o STI)(diag)-63, Read Diagnostic Trouble Code (DTC).>

NOTE:
If the DTC is displayed on the screen, the trouble is still present. Perform the diagnosis using “Diagnostic Procedure with Diagnostic Trouble Code (DTC)”. <Ref. to EN(w/o STI)(diag)-117, Diagnostic Procedure with Diagnostic Trouble Code (DTC).> After solving the DTC, repeat from step 2).
4) Start the engine, and run the engine at idle for 10 seconds or more.
5) Read the readiness code using Subaru Select Monitor and check that the concerned DTC is not displayed. For detailed operation procedures, refer to “Application help”.

NOTE:
• The readiness code shows self-diagnosis status of each DTC. If any DTC is displayed when you select the readiness code, the self-diagnosis of the DTC is not executed or completed. After the self-diagnosis is complete, DTC will no longer be displayed regardless of the diagnostic result.
• Self-diagnosis is executed every time when the ignition switch is turned to ON. Therefore, even after the self-diagnosis is complete and nothing is displayed on the readiness code display, if you turn the ignition switch to ON again after turning it OFF, some DTCs may be displayed on the readiness code display.
• After you repair a DTC and perform the Inspection Mode or the drive cycle, use the readiness code to check if the self-diagnosis of the DTC is completed. If the concerned DTC is displayed, the self-diagnosis of the DTC is not complete. Repeat from step 4).
6) Read the diagnostic trouble code (DTC) and check the DTC. <Ref. to EN(w/o STI)(diag)-63, Read Diagnostic Trouble Code (DTC).>

NOTE:
If the DTC is displayed on the screen, the trouble is still present. Perform the diagnosis using “Diagnostic Procedure with Diagnostic Trouble Code (DTC)”. <Ref. to EN(w/o STI)(diag)-117, Diagnostic Procedure with Diagnostic Trouble Code (DTC).> After solving the DTC, repeat from step 2).

11.Drive Cycle

A: PROCEDURE

It is necessary to perform the drive cycle listed below if DTC is not found in the Inspection Mode. It is possible to complete diagnosis of the DTC by performing the indicated drive cycle. After the repair for the DTC, perform a necessary drive cycle and make sure the function recovers and the DTC is recorded.

1. PREPARATION FOR DRIVE CYCLE

1) Check that the battery voltage is 12 V or more and fuel remains approx. half [20 — 40 L (5.3 — 10.6 US gal, 4.4 — 8.8 Imp gal)].
2) After performing the diagnostics and Clear Memory Mode, check that no DTC remains. <Ref. to EN(w/o STI)(diag)-82, Clear Memory Mode.>

NOTE:
Perform the drive cycle after warming up the engine except when the engine coolant temperature at engine start is specified.

2. DRIVE CYCLE A

DTC	Item	Condition
P0087	Fuel Rail/System Pressure - Too Low Bank 1	Complete diagnosis with drive cycle B or C as well.
P0088	Fuel Rail/System Pressure - Too High Bank 1	Complete diagnosis with drive cycle B or C as well.
P0128	Coolant Thermostat (Engine Coolant Temperature Below Thermostat Regulating Temperature)	—
P0141	O2 Sensor Heater Circuit Bank 1 Sensor 2	—
P014C	A/F / O2 Sensor Slow Response - Rich to Lean Bank 1 Sensor 1	—
P014D	A/F / O2 Sensor Slow Response - Lean to Rich Bank 1 Sensor 1	—
P015A	A/F / O2 Sensor Delayed Response - Rich to Lean Bank 1 Sensor 1	—
P015B	A/F / O2 Sensor Delayed Response - Lean to Rich Bank 1 Sensor 1	—
P0171	System Too Lean Bank 1	Complete diagnosis with drive cycle B or C as well.
P0172	System Too Rich Bank 1	Complete diagnosis with drive cycle B or C as well.
P0300	Random/Multiple Cylinder Misfire Detected	Complete diagnosis with drive cycle B or C as well.
P0301	Cylinder 1 Misfire Detected	Complete diagnosis with drive cycle B or C as well.
P0302	Cylinder 2 Misfire Detected	Complete diagnosis with drive cycle B or C as well.
P0303	Cylinder 3 Misfire Detected	Complete diagnosis with drive cycle B or C as well.
P0304	Cylinder 4 Misfire Detected	Complete diagnosis with drive cycle B or C as well.
P0420	Catalyst System Efficiency Below Threshold Bank 1	—
P0459	Evap System (CPC) Purge Control Valve "A" Circuit High	—
P1191	Fuel Rail Pressure Sensor "A" Circuit No Activity Detected	Complete diagnosis with drive cycle B or C as well.
P2096	Post Catalyst Fuel Trim System Too Lean Bank 1	Complete diagnosis with drive cycle B or C as well.
P2097	Post Catalyst Fuel Trim System Too Rich Bank 1	Complete diagnosis with drive cycle B or C as well.
P2195	A/F /O2 Sensor Signal Biased/Stuck Lean Bank 1 Sensor 1	—
P2196	A/F /O2 Sensor Signal Biased/Stuck Rich Bank 1 Sensor 1	—

Diagnostic procedure:
1) Drive for 20 minutes or more at a constant speed of 80 km/h (50 MPH) or more.
2) Stop the vehicle and idle for one minute.
3) Read the temporary code using the Subaru Select Monitor or general scan tool. <Ref. to EN(w/o STI)(diag)-63, OPERATION, Read Diagnostic Trouble Code (DTC).>

3. DRIVE CYCLE B

DTC	Item	Condition
P0087	Fuel Rail/System Pressure - Too Low Bank 1	Complete diagnosis with drive cycle A or C as well.
P0088	Fuel Rail/System Pressure - Too High Bank 1	Complete diagnosis with drive cycle A or C as well.
P0125	Insufficient Coolant Temperature for Closed Loop Fuel Control	«Coolant Temp.» at engine start: Less than –15°C (5°F)
P0130	A/F / O2 Sensor Circuit Bank 1 Sensor 1	—
P0137	O2 Sensor Circuit Low Voltage Bank 1 Sensor 2	—
P0138	O2 Sensor Circuit High Voltage Bank 1 Sensor 2	—
P0171	System Too Lean Bank 1	Complete diagnosis with drive cycle A or C as well.
P0172	System Too Rich Bank 1	Complete diagnosis with drive cycle A or C as well.
P0300	Random/Multiple Cylinder Misfire Detected	Complete diagnosis with drive cycle A or C as well.
P0301	Cylinder 1 Misfire Detected	Complete diagnosis with drive cycle A or C as well.
P0302	Cylinder 2 Misfire Detected	Complete diagnosis with drive cycle A or C as well.
P0303	Cylinder 3 Misfire Detected	Complete diagnosis with drive cycle A or C as well.
P0304	Cylinder 4 Misfire Detected	Complete diagnosis with drive cycle A or C as well.
P0500	Vehicle Speed Sensor "A" Circuit	—
P0506	Idle Control System RPM - Lower Than Expected	—
P0507	Idle Control System RPM - Higher Than Expected	—
P062D	Fuel Injector Driver Circuit Performance Bank 1	—
P0700	Transmission Control System (MIL Request)	—
P1191	Fuel Rail Pressure Sensor "A" Circuit No Activity Detected	Complete diagnosis with drive cycle A or C as well.
P1261	Cylinder 1 Direct Fuel Injector Circuit/Open	—
P1262	Cylinder 2 Direct Fuel Injector Circuit/Open	—
P1263	Cylinder 3 Direct Fuel Injector Circuit/Open	—
P1264	Cylinder 4 Direct Fuel Injector Circuit/Open	—
P2006	TGV Control Stuck Closed Bank 1	—
P2007	TGV Control Stuck Closed Bank 2	—
P2096	Post Catalyst Fuel Trim System Too Lean Bank 1	Complete diagnosis with drive cycle A or C as well.
P2097	Post Catalyst Fuel Trim System Too Rich Bank 1	Complete diagnosis with drive cycle A or C as well.

Diagnostic procedure:
1) Drive at 10 km/h (6 MPH) or more.
2) Stop the vehicle and idle for ten minutes.
3) Read the temporary code using the Subaru Select Monitor or general scan tool. <Ref. to EN(w/o STI)(diag)-63, OPERATION, Read Diagnostic Trouble Code (DTC).>

4. DRIVE CYCLE C

DTC	Item	Condition
P000A	"A" CAMSHAFT POSITION SLOW RESPONSE BANK 1	—
P000B	"B" CAMSHAFT POSITION SLOW RESPONSE BANK 1	—
P000C	"A" CAMSHAFT POSITION SLOW RESPONSE BANK 2	—
P000D	"B" CAMSHAFT POSITION SLOW RESPONSE BANK 2	—
P0011	"A" CAMSHAFT POSITION - TIMING OVER-ADVANCED OR SYSTEM PERFORMANCE BANK 1	—
P0014	"B" CAMSHAFT POSITION - TIMING OVER-ADVANCED OR SYSTEM PERFORMANCE BANK 1	—
P0021	"A" CAMSHAFT POSITION - TIMING OVER-ADVANCED OR SYSTEM PERFORMANCE BANK 2	—
P0024	"B" CAMSHAFT POSITION - TIMING OVER-ADVANCED OR SYSTEM PERFORMANCE BANK 2	—
P0030	A/F / O2 HEATER CONTROL CIRCUIT BANK 1 SENSOR 1	—
P0068	MAP/MAF - THROTTLE POSITION CORRELATION	—
P0087	FUEL RAIL/SYSTEM PRESSURE - TOO LOW BANK 1	Complete diagnosis with drive cycle A or B as well.
P0088	FUEL RAIL/SYSTEM PRESSURE - TOO HIGH BANK 1	Complete diagnosis with drive cycle A or B as well.
P0101	MASS OR VOLUME AIR FLOW SENSOR "A" CIRCUIT RANGE/PERFORMANCE	—
P0134	A/F / O2 SENSOR CIRCUIT NO ACTIVITY DETECTED BANK 1 SENSOR 1	—
P013A	O2 SENSOR SLOW RESPONSE - RICH TO LEAN BANK 1 SENSOR 2	—
P013B	O2 SENSOR SLOW RESPONSE - LEAN TO RICH BANK 1 SENSOR 2	—
P013E	O2 SENSOR DELAYED RESPONSE - RICH TO LEAN BANK 1 SENSOR 2	—
P013F	O2 SENSOR DELAYED RESPONSE - LEAN TO RICH BANK 1 SENSOR 2	—
P0171	SYSTEM TOO LEAN BANK 1	Complete diagnosis with drive cycle A or B as well.
P0172	SYSTEM TOO RICH BANK 1	Complete diagnosis with drive cycle A or B as well.
P0244	TURBOCHARGER/SUPERCHARGER WASTEGATE SOLENOID "A" RANGE/PERFORMANCE	—
P0246	TURBOCHARGER/SUPERCHARGER WASTEGATE SOLENOID "A" HIGH	—
P0300	RANDOM/MULTIPLE CYLINDER MISFIRE DETECTED	Complete diagnosis with drive cycle A or B as well.
P0301	CYLINDER 1 MISFIRE DETECTED	Complete diagnosis with drive cycle A or B as well.
P0302	CYLINDER 2 MISFIRE DETECTED	Complete diagnosis with drive cycle A or B as well.
P0303	CYLINDER 3 MISFIRE DETECTED	Complete diagnosis with drive cycle A or B as well.
P0304	CYLINDER 4 MISFIRE DETECTED	Complete diagnosis with drive cycle A or B as well.
P0400	EGR "A" FLOW	—
P04AD	EVAP SYSTEM (CPC) PURGE CONTROL VALVE "B" CIRCUIT HIGH	—
P0851	PARK/NEUTRAL SWITCH INPUT CIRCUIT LOW	—
P0852	PARK/NEUTRAL SWITCH INPUT CIRCUIT HIGH	—
P1191	FUEL RAIL PRESSURE SENSOR "A" CIRCUIT NO ACTIVITY DETECTED	Complete diagnosis with drive cycle A or B as well.
P1449	EVAP SYSTEM CLOG DETECTED (AIR FILTER)	—
P1492	COIL 1 EGR "A" CONTROL CIRCUIT LOW	—
P1493	COIL 1 EGR "A" CONTROL CIRCUIT HIGH	—
P1494	COIL 2 EGR "A" CONTROL CIRCUIT LOW	—

DTC	Item	Condition
P1495	COIL 2 EGR "A" CONTROL CIRCUIT HIGH	—
P1496	COIL 3 EGR "A" CONTROL CIRCUIT LOW	—
P1497	COIL 3 EGR "A" CONTROL CIRCUIT HIGH	—
P1498	COIL 4 EGR "A" CONTROL CIRCUIT LOW	—
P1499	COIL 4 EGR "A" CONTROL CIRCUIT HIGH	—
P2004	TGV CONTROL STUCK OPEN BANK 1	—
P2005	TGV CONTROL STUCK OPEN BANK 2	—
P2096	POST CATALYST FUEL TRIM SYSTEM TOO LEAN BANK 1	Complete diagnosis with drive cycle A or B as well.
P2097	POST CATALYST FUEL TRIM SYSTEM TOO RICH BANK 1	Complete diagnosis with drive cycle A or B as well.
P2270	O2 SENSOR SIGNAL BIASED/STUCK LEAN BANK 1 SENSOR 2	—
P2271	O2 SENSOR SIGNAL BIASED/STUCK RICH BANK 1 SENSOR 2	—

Diagnostic procedure:

1) Drive according to the drive pattern described below.

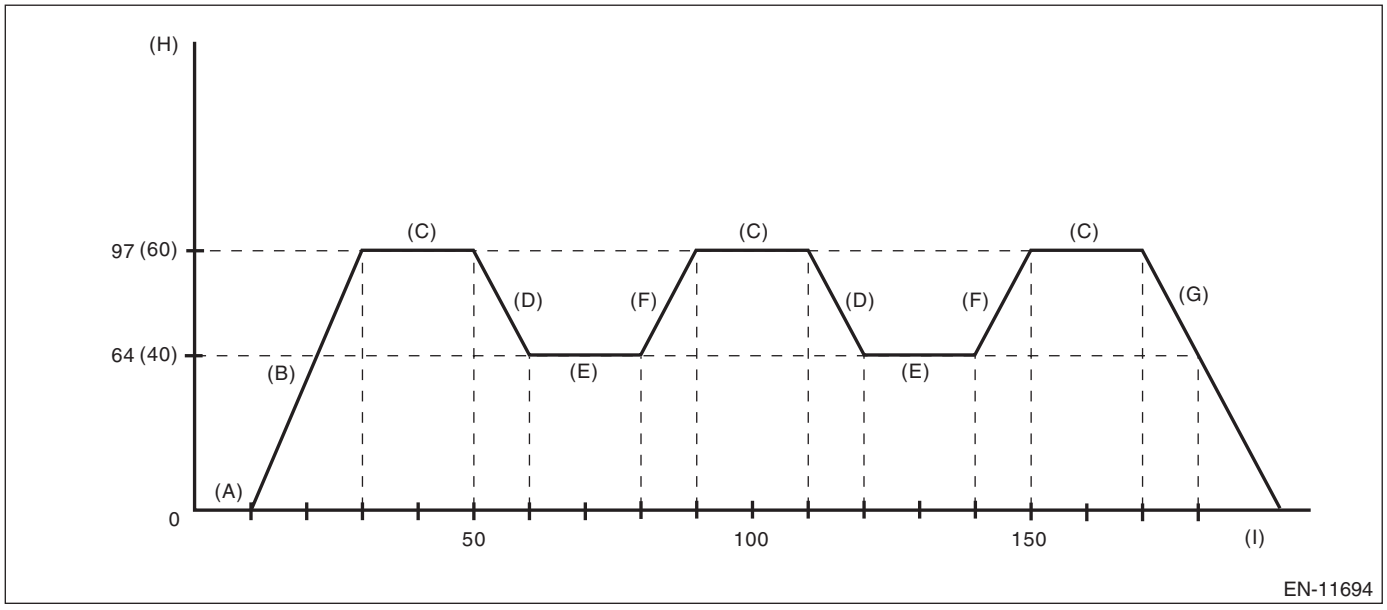

(A) Shift the select lever to “P” range or the shift lever to the neutral position, and let the engine idle for 10 seconds or more.

(B) Accelerate to 97 km/h (60 MPH) or more within 20 seconds.

(C) Drive for 20 seconds or more at 97 km/h (60 MPH) or more.

(D) Decelerate with fully closed throttle to 64 km/h (40 MPH) or less.

(E) Drive for 20 seconds or more at 64 km/h (40 MPH) or less.

(F) Accelerate to 97 km/h (60 MPH) or more within 10 seconds.

(G) Stop vehicle with the throttle fully closed.

(H) Vehicle speed km/h (MPH)

(I) Sec.

2) Read the temporary code using the Subaru Select Monitor or general scan tool. <Ref. to EN(w/o STI)(diag)-63, OPERATION, Read Diagnostic Trouble Code (DTC).>

5. DRIVE CYCLE E

DTC	Item	Condition
P0461	Fuel Level Sensor "A" Circuit Range/Performance	—

Diagnostic procedure:
1) Make sure that the battery voltage is 10.9 V or more.
2) Perform the Clear Memory Mode. <Ref. to EN(w/o STI)(diag)-82, Clear Memory Mode.>
3) Drive for approximately 30 L (7.9 US gal, 6.6 Imp gal) of fuel.

NOTE:
• It is acceptable to drive the vehicle intermittently.
• Do not disconnect the battery terminals while diagnosing. (Data will be cleared by disconnecting the battery terminals.)
4) Read the temporary code using the Subaru Select Monitor or general scan tool. <Ref. to EN(w/o STI)(diag)-63, OPERATION, Read Diagnostic Trouble Code (DTC).>

6. DRIVE CYCLE F

DTC	Item	Condition
P0096	Intake Air Temperature Sensor 2 Circuit Range/ Performance Bank 1	• 6 hours have elapsed since ignition switch is OFF under a completely warmed up condition. • For models with block heater, at least 6 hours must have elapsed without operating the block heater.
P0111	Intake Air Temperature Sensor 1 Circuit Range/ Performance Bank 1	• 6 hours have elapsed since ignition switch is OFF under a completely warmed up condition. • For models with block heater, at least 6 hours must have elapsed without operating the block heater.

Diagnostic procedure:
1) With the ignition switch ON (engine stopped), read the value in «Coolant Temp.» and «IAT Sensor #11». <Ref. to EN(w/o STI)(diag)-46, DISPLAY CURRENT ENGINE DATA, OPERATION, Subaru Select Monitor.>
2) If the values from step 1) satisfy the following conditions, idle the engine for two minutes or more.

Condition:
|Engine coolant temperature — Intake air temperature| ≤ 5°C (9°F)

NOTE:
• If the conditions are not satisfied, turn the ignition switch to OFF and wait until the parameters are satisfied.
• For CVT models, hold the select lever to “P” range or “N” range at idling, and for MT models, the shift lever in the neutral position at idling.

3) Drive according to the drive pattern described below.

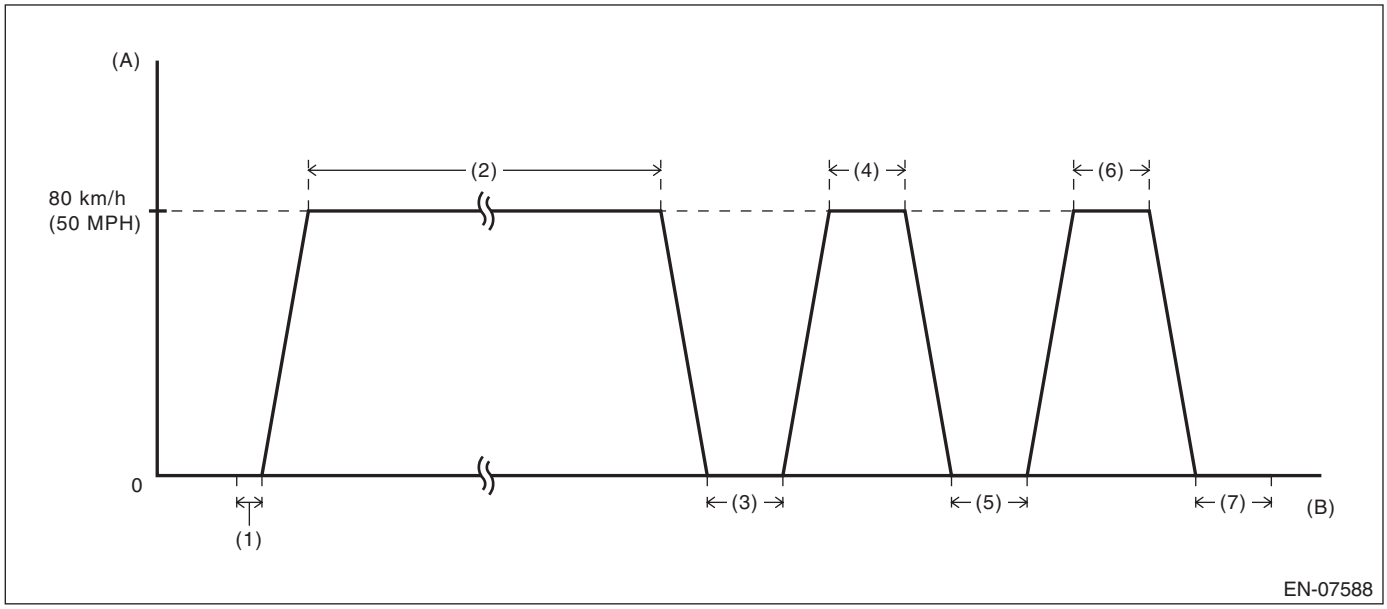

(A)	Vehicle speed	(B)	Elapsed time		
(1)	Idle the engine for 2 minutes or more.	(4)	Drive for 30 seconds or more at a constant speed of 80 km/h (50 MPH) or more.	(6)	Drive for 30 seconds or more at a constant speed of 80 km/h (50 MPH) or more.
(2)	Drive for a total period of 15 minutes or more at a speed of 80 km/h (50 MPH) or more.	(5)	Stop the vehicle and idle for 30 seconds or more.	(7)	Stop the vehicle and idle for 30 seconds.
(3)	Stop the vehicle and idle for 30 seconds or more.				

NOTE:
- In pattern (2), it is acceptable to decelerate to less than 80 km/h (50 MPH) or to stop the vehicle depending on the traffic conditions. Drive the vehicle at 80 km/h (50 MPH) or more until the total driving time reaches or exceeds 15 minutes.
- There is no given transition time between idling and cruising.
- Driving at constant speed only on a downhill causes smaller engine load and may result in failure to obtain a right diagnostic result.
- When the engine stops while performing drive cycle F, perform it again from the state of procedure 1).

4) Read the temporary code using the Subaru Select Monitor or general scan tool. <Ref. to EN(w/o STI)(diag)-63, OPERATION, Read Diagnostic Trouble Code (DTC).>

7. DRIVE CYCLE H

DTC	Item	Condition
P0071	Ambient Air Temperature Sensor Circuit "A" Range/Performance	• 6 hours have elapsed since ignition switch is OFF under a completely warmed up condition. • For models with block heater, at least 6 hours must have elapsed without operating the block heater.
P0116	Engine Coolant Temperature Sensor 1 Circuit Range/Performance	• 6 hours have elapsed since ignition switch is OFF under a completely warmed up condition. • For models with block heater, at least 6 hours must have elapsed without operating the block heater.
P0196	Engine Oil Temperature Sensor "A" Range/Performance	• 6 hours have elapsed since ignition switch is OFF under a completely warmed up condition. • For models with block heater, at least 6 hours must have elapsed without operating the block heater.
P0451	Evap System (CPC) Pressure Sensor/ Switch Circuit Range/Performance	60 seconds have elapsed since ignition switch is OFF.
P050A	Cold Start Idle Control System Performance	—
P050B	Cold Start Ignition Timing Performance	—

Diagnostic procedure:
1) With the ignition switch ON (engine stopped), read the values in «Coolant Temp.» and «Intake Air Temp.». <Ref. to EN(w/o STI)(diag)-46, DISPLAY CURRENT ENGINE DATA, OPERATION, Subaru Select Monitor.>
2) If the values from step 1) satisfy the following conditions, idle the engine for two minutes or more.

Condition:
|Engine coolant temperature — Intake air temperature| ≤ 5°C (9°F)

NOTE:
• If the conditions are not satisfied, turn the ignition switch to OFF and wait until the parameters are satisfied.
• For CVT models, hold the select lever to “P” range or “N” range at idling, and for MT models, the shift lever in the neutral position at idling.
3) Read the temporary code using the Subaru Select Monitor or general scan tool. <Ref. to EN(w/o STI)(diag)-63, OPERATION, Read Diagnostic Trouble Code (DTC).>

8. DRIVE CYCLE I

DTC	Item	Condition
P0455	EVAP SYSTEM (CPC) LEAK DETECTED (LARGE LEAK)	«Coolant Temp.»: 5 — 45°C (41 — 113°F) «IAT Sensor #11»: 5 — 50°C (41 — 122°F)
P0456	EVAP SYSTEM (CPC) LEAK DETECTED (VERY SMALL LEAK)	
P04AF	EVAP SYSTEM PURGE CONTROL VALVE (CPC) "B" STUCK CLOSED	
P1451	EVAP SYSTEM CLOG DETECTED (PIPE)	
P2402	EVAP SYSTEM LEAK DETECTION PUMP CONTROL CIRCUIT HIGH	
P2404	EVAP SYSTEM LEAK DETECTION PUMP SENSE CIRCUIT RANGE/ PERFORMANCE	
P2420	EVAP SYSTEM SWITCHING VALVE CONTROL CIRCUIT HIGH	

CAUTION:
Be careful of the state of the battery when performing the drive cycle I consecutively. Performing the drive cycle I consecutively without the engine running may cause a low battery voltage and battery discharge.

NOTE:
- If it is necessary to perform drive cycle I consecutively, drive the vehicle under the following conditions to release accumulated evaporating gas. Performing the drive cycle I consecutively without starting the engine causes a large amount of evaporating gas to accumulate in the canister, which hinders an accurate diagnosis.
  - After engine is warmed up
  - Drive for 10 minutes or more at a speed of 48 km/h (30 MPH) or more (duration of drive can be an accumulation)
- To obtain an accurate diagnostic result, perform the procedures according to the following points.
  - Do not refuel gas immediately before performing drive cycle I. There will be a large amount of evaporating gas immediately after refuel, which may cause a less accurate diagnostic performance.
  - Do not shake the vehicle while performing drive cycle I. Shaking the vehicle causes evaporating gas to increase inside the fuel tank, which may cause a less accurate diagnostic performance.
  - Do not perform any service operation including installation or removal of parts or connectors while performing drive cycle I. Performing service operation could affect on the functions of related parts, which may cause a less accurate diagnostic performance.
- Perform MODE $08 when using a general scan tool.

Diagnostic procedure:
1) Prepare the Subaru Select Monitor 4. <Ref. to EN(w/o STI)(diag)-9, PREPARATION TOOL, General Description.>
2) Prepare PC with Subaru Select Monitor installed.
3) Connect the USB cable to the DST-i and the USB port on the personal computer (dedicated port for the Subaru Select Monitor).

NOTE:
The dedicated port for the Subaru Select Monitor means the USB port which was used to install the Subaru Select Monitor.
4) Connect the diagnosis cable to DST-i.

5) Connect the DST-i to the data link connector located in the lower portion of the instrument panel (on the driver's side).

CAUTION:
Do not connect the scan tools except for Subaru Select Monitor and general scan tool.

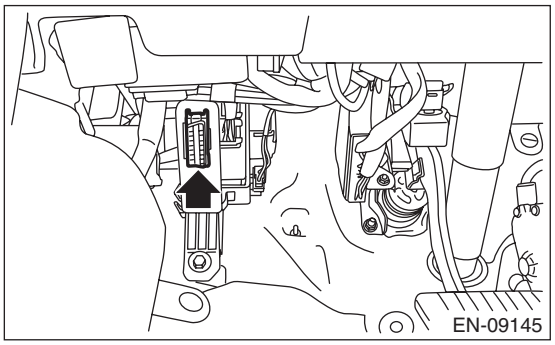

6) Start the PC.
7) Turn the ignition switch to ON (engine OFF) and run the "PC application for Subaru Select Monitor".
8) On «Start» display, select «OBD System».
9) On «Select System» display, select «Evaporative System Leak Test».
10) On «Evaporative System Leak Test» display, select «Evaporative System Leak Test».
11) On «Evaporative System Leak Test is running. Press Cancel to exit this function.» display, click the «OK» button to perform evaporative system leak test.
12) When «Conditions have been enabled to control this function. Turn the ignition switch off to terminate the test.» display appears, wait for 30 minutes without clicking the «OK» button.

CAUTION:
Do not leave the vehicle for an extended period of time after the test is complete. This may cause early deterioration of the battery or discharged battery.

NOTE:
• Clicking the «OK» button bring the «Evaporative System Leak Test» display back, although the test is continuing.
• The Subaru Select Monitor screen does not change after the evaporative system leak test is complete or when the test is aborted by turning off the ignition switch.
• If «Test conditions are not correct» display appears, use Subaru Select Monitor to check that the values in «Coolant Temp.» and «IAT Sensor #11» are within the specified range. If the conditions are satisfied, make the necessary preparation for the drive cycle again. <Ref. to EN(w/o STI)(diag)-67, PREPARATION FOR DRIVE CYCLE, PROCEDURE, Drive Cycle.>
13) After 30 minutes passed from the start of step 14), click the «OK» button to return to the «Evaporative System Leak Test» display.
14) Return to the «OBD System» display, then select «On-board monitor test result».
15) In the «On-board monitor test result», check TID $C1 — $CA of MID $3C.

NOTE:
Perform MODE $06 and check when using a general scan tool.

Result of on-board monitor test

Display	Details	Remarks
$0000 is stored in all Val.	During the evaporative system leak test, the test conditions were not met and the test was canceled.	Once the test conditions are met, perform the test again.
All Val. are stored with values and OK is set to all the results.	Evaporative system leak test is completed correctly.	While the ignition switch is ON, read the pending code using the Subaru Select Monitor.
Some results were no good.	The evaporative system leak test completed successfully but the results were faulty.	While the ignition switch is ON, read the pending code using the Subaru Select Monitor.

16) When the evaporative system leak test is completed correctly, read the pending code with the ignition switch turned to ON position. If the DTC is recorded, check the appropriate DTC. <Ref. to EN(w/o STI)(diag)-63, OPERATION, Read Diagnostic Trouble Code (DTC).>

NOTE:
- Perform MODE $07 when using a general scan tool.
- The pending code will be cleared by turning ignition switch to OFF.

9. DRIVE CYCLE J

DTC	Item	Condition
P2610	ECM/PCM Engine Off Timer Performance	—

Diagnostic procedure:
1) Idle the engine for 15 minutes or more.
2) Turn the ignition switch to OFF.
3) After at least 10 hours passed from the start of step 2), read the temporary code using the Subaru Select Monitor or general scan tool. <Ref. to EN(w/o STI)(diag)-63, OPERATION, Read Diagnostic Trouble Code (DTC).>

10.DRIVE CYCLE N

DTC	Item	Condition
P0016	Crankshaft Position - Camshaft Position Correlation Bank 1 Sensor A	«Coolant Temp.»: 80°C (176°F) or more
P0017	Crankshaft Position - Camshaft Position Correlation Bank 1 Sensor B	
P0018	Crankshaft Position - Camshaft Position Correlation Bank 2 Sensor A	
P0019	Crankshaft Position - Camshaft Position Correlation Bank 2 Sensor B	

WARNING:
When performing drive cycle N on a public road, pay sufficient attention to the traffic condition and give the highest priority to safe driving.
1) Check the data in condition column of table by using the Subaru Select Monitor or general scan tool.

NOTE:
- Subaru Select Monitor

For detailed operation procedures, refer to “Current Data Display For Engine”. <Ref. to EN(w/o STI)(diag)-46, DISPLAY CURRENT ENGINE DATA, OPERATION, Subaru Select Monitor.>
- General scan tool

For detailed operation procedures, refer to the general scan tool operation manual.
2) While the conditions in the list are satisfied, race the engine at the speed of approx. 2,500 rpm for 40 seconds or more.
3) Start the vehicle, then accelerate the vehicle to 50 km/h (31.1 MPH) or more.
4) When the speed reaches 50 km/h (31.1 MPH) or more, release the accelerator pedal, the brake pedal and the clutch pedal (MT model) to decelerate the vehicle without shifting the gear. At this time, select an appropriate gear beforehand so that the engine speed can decrease from 2,500 rpm to 1,900 rpm for 5 seconds or more.

NOTE:
- The vehicle speed does not matter so long as the engine speed can maintain from 2,500 rpm to 1,900 rpm for 5 seconds or more.

Example: On a downhill grade, it can be performed with a low speed gear and at a low vehicle speed.
- When it is performed with the electrical load such as the air conditioner, etc. turned OFF or the vehicle driven on a downhill grade, the engine speed decreases slowly. Therefore, the continuous time can be maintained easily.

5) Bring the vehicle to a stop in a safe place, and idle it for 5 minutes or more.

NOTE:
Driving method while vehicle is driven to a stop at safe place is not restricted.

6) With the vehicle idling, read the temporary diagnostic code of DTC using Subaru Select Monitor or general scan tool.

NOTE:
• For detailed operation procedures, refer to “Read Diagnostic Trouble Code (DTC)”. <Ref. to EN(w/o STI)(diag)-63, Read Diagnostic Trouble Code (DTC).>
• In the step 6), if the DTC is not displayed on the Subaru Select Monitor or general scan tool display screen, the trouble is resolved.

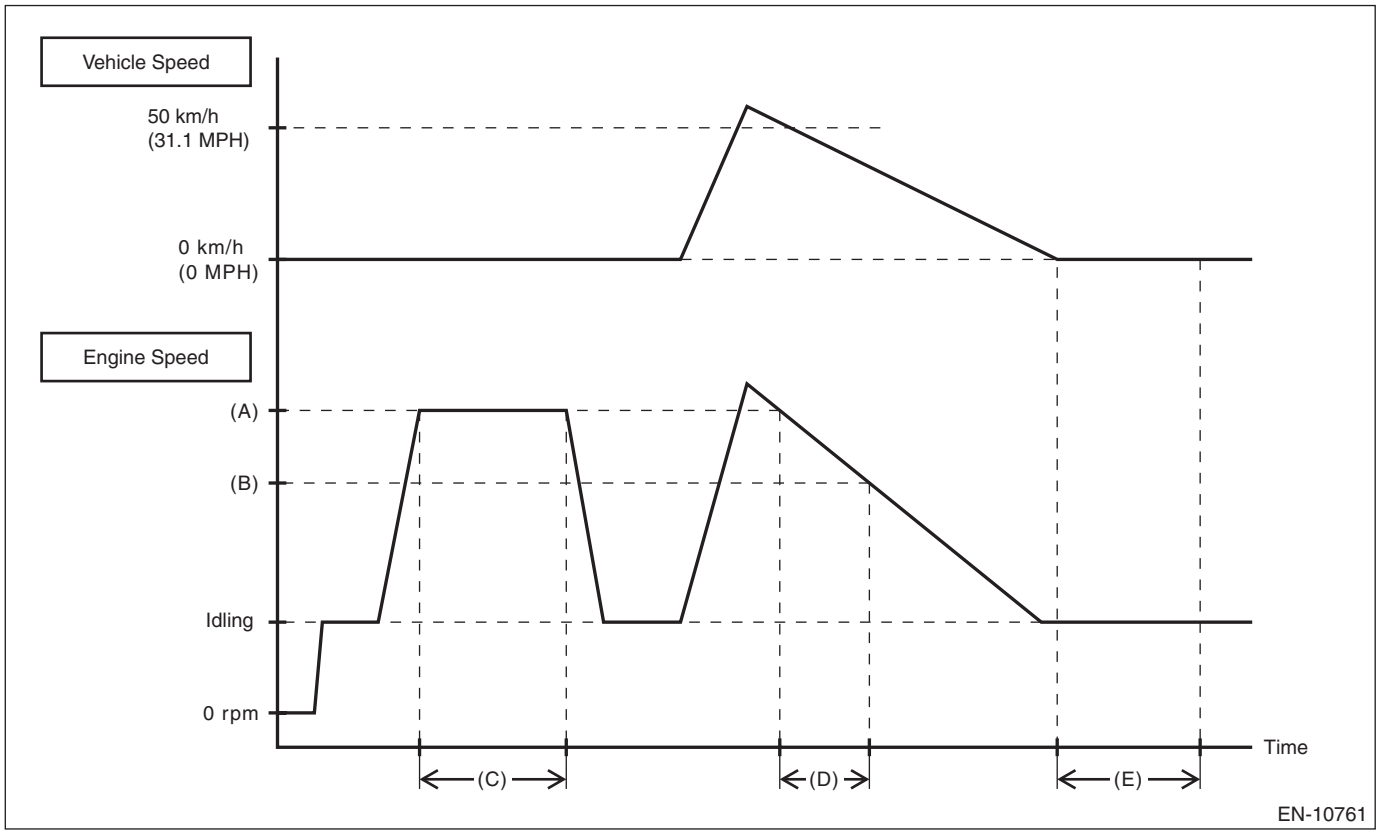

(A) 2500 rpm
(B) 1900 rpm
(C) 40 seconds or more
(D) 5 seconds or more
(E) 5 minutes or more

11.DRIVE CYCLE O

DTC	Item	Condition
P0441	Evap System (CPC) Incorrect Purge Flow	—

Diagnostic procedure:

WARNING:
When performing drive cycle O on a public road, pay sufficient attention to the traffic condition and give the highest priority to safe driving.

1) Drive according to the drive pattern described below.

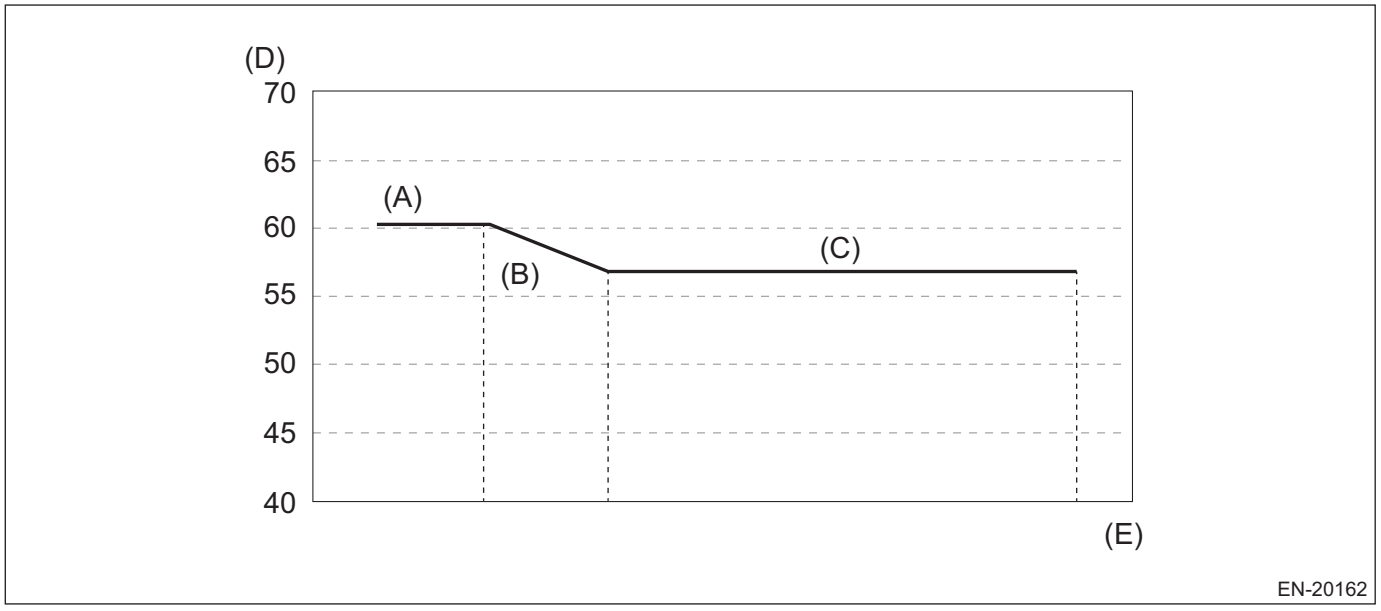

(A) Drive the vehicle at 60 km/h (37 MPH) or faster for at least 5 minutes in fully warm-up condition.
(B) Decelerate with the throttle fully closed for at least 3 seconds.
(C) Drive the vehicle at a constant vehicle speed by depressing the accelerator pedal for at least 30 seconds.
(D) Vehicle speed km/h (MPH)
(E) Sec.

2) Park the vehicle on a safe place.

NOTE:
Driving method while vehicle is driven to a stop at safe place is not restricted.

3) With the vehicle idling, read the temporary diagnostic code of DTC using Subaru Select Monitor or general scan tool.

NOTE:
• For detailed operation procedures, refer to “Read Diagnostic Trouble Code (DTC)”. <Ref. to EN(w/o STI)(diag)-63, Read Diagnostic Trouble Code (DTC).>
• In the step 3), if the DTC is not displayed on the Subaru Select Monitor or general scan tool display screen, the trouble is resolved.

12.DRIVE CYCLE P

DTC	Item	Condition
P04F0	Evap System High Pressure Purge Line (CPC2) Performance	Remaining fuel level 20 L or more

Diagnostic procedure:

WARNING:
When performing drive cycle P on a public road, pay sufficient attention to the traffic condition and give the highest priority to safe driving.

1) Drive according to the drive pattern described below.

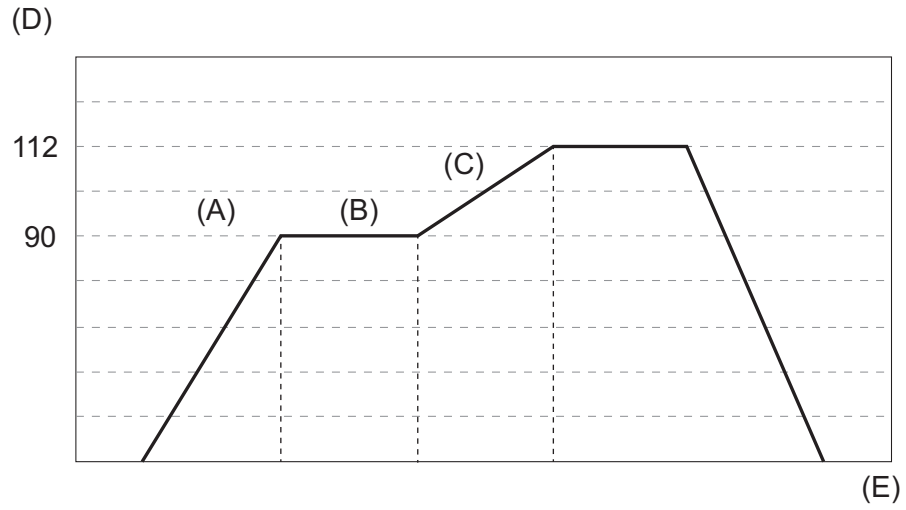

(A) Accelerate the vehicle to 80 km/h (50 MPH) or more in a fully warm-up condition.

(B) Keep a constant vehicle speed of 50 km/h (31.1 MPH) or more for at least five minutes.

(C) While depressing the accelerator pedal without gear shifting, take at least 10 seconds to accelerate to 112 km/h (70 MPH) or more.

(D) Vehicle speed km/h (MPH)

(E) Sec.

2) Park the vehicle on a safe place.

NOTE:
Driving method while vehicle is driven to a stop at safe place is not restricted.

3) With the vehicle idling, read the temporary diagnostic code of DTC using Subaru Select Monitor or general scan tool.

NOTE:
• For detailed operation procedures, refer to “Read Diagnostic Trouble Code (DTC)”. <Ref. to EN(w/o STI)(diag)-63, Read Diagnostic Trouble Code (DTC).>
• In the step 3), if the DTC is not displayed on the Subaru Select Monitor or general scan tool display screen, the trouble is resolved.

13.DRIVE CYCLE Q

DTC	Item	Condition
P0191	Fuel Rail Pressure Sensor Circuit Range/Performance Bank 1	• With the ignition switch ON (engine stopped), read the value in «Coolant Temp.». • If the engine coolant temperature meets the condition of ≥ 30°C, idle the engine for 30 minutes or more. • If the engine coolant temperature does not meet the condition of ≥ 30°C, start the engine, wait until the engine coolant temperature meets the condition of ≥ 30°C, turn OFF the ignition switch once, then idle the engine for 30 minutes or more. • At least 6 hours must have elapsed since ignition switch was OFF. • For models with block heater, at least 6 hours must have elapsed without operating the block heater.

Diagnostic procedure:
1) Idle the engine for at least one minute.

NOTE:
For CVT models, hold the select lever to “P” range or “N” range at idling, and for MT models, the shift lever in the neutral position at idling.
2) Read the temporary code using the Subaru Select Monitor or general scan tool. <Ref. to EN(w/o STI)(diag)-63, OPERATION, Read Diagnostic Trouble Code (DTC).>

14.DRIVE CYCLE R

DTC	Item	Condition
P219A	BANK 1 AIR-FUEL RATIO IMBALANCE	—

WARNING:
When performing the drive cycle R on the public road, be very careful of the traffic condition and the safe driving must be the high priority.
1) Check the data in condition column of table by using the Subaru Select Monitor or general scan tool.

NOTE:
• Subaru Select Monitor
For detailed operation procedures, refer to “Current Data Display For Engine”. <Ref. to EN(w/o STI)(diag)-46, DISPLAY CURRENT ENGINE DATA, OPERATION, Subaru Select Monitor.>
• General scan tool
For detailed operation procedures, refer to the general scan tool operation manual.
2) Keep the engine at idle for at least 30 seconds in a fully warm-up condition.
3) Start the driving.
4) With the gear position in the 4th, take 10 seconds to accelerate from 1500 rpm to 4000 rpm.
5) Decelerate to 1500 rpm in the 4th gear position. (There is no restrictions to the deceleration duration and how to use the brake.)

6) Repeat steps 4) and 5) 10 times (end when the temporary code is acquired).

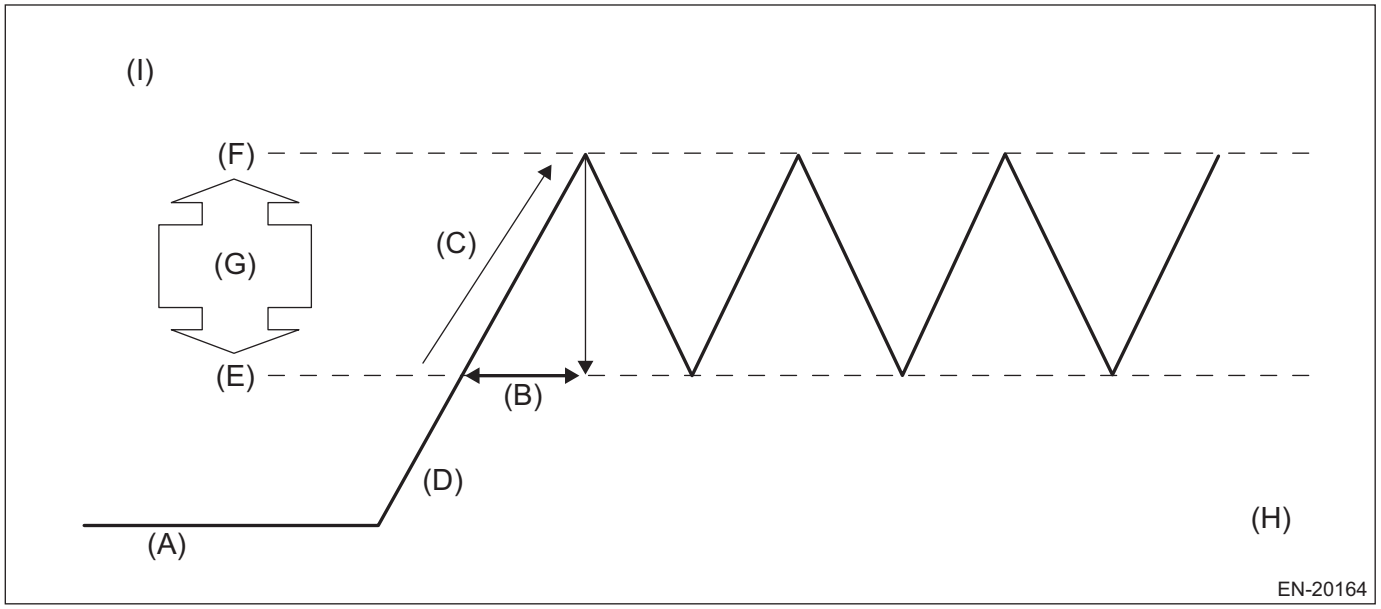

(A)	Idle the engine for at least 30 seconds in a fully warm-up condition.	(D)	Engine speed	(G)	Accelerate and decelerate in the 4th gear position.
(B)	10 seconds	(E)	1500 rpm	(H)	Time
(C)	Accelerating	(F)	4000 rpm	(I)	Accelerating and decelerating

12.Clear Memory Mode

A: OPERATION

1. SUBARU SELECT MONITOR

1) On «Start» display, select «Diagnosis».
2) On «Vehicle selection» display, input the target vehicle information and select «Confirmed».
3) On «Main Menu» display, select «Each System».
4) On «Select System» display, select «Engine Control System» and then select «Enter».
5) On «Select Function» display, select «DTC».
6) On «DTC» display, select «Clear Memory».

NOTE:
- Initial diagnosis of electronic throttle control is performed after memory clearance. Wait for 10 seconds or more after turning the ignition switch to ON, and then start the engine.
- For detailed operation procedures, refer to “Application help”.

2. GENERAL SCAN TOOL

For procedures clearing memory using the general scan tool, refer to the general scan tool operation manual.

NOTE:
Initial diagnosis of electronic throttle control is performed after memory clearance. Wait for 10 seconds or more after turning the ignition switch to ON, and then start the engine.

13.Active Test

A: OPERATION

CAUTION:
After executing the system operation check mode, execute the Clear Memory Mode. <Ref. to EN(w/o STI)(diag)-82, OPERATION, Clear Memory Mode.>

NOTE:
For operation procedures, refer to the “Help for Subaru Select Monitor”.
1) On «Start» display, select «Diagnosis».
2) On «Vehicle selection» display, input the vehicle information and select «Confirmed».
3) On «Main Menu» display, select «Each System».
4) On «Select System» display, select «Engine Control System» and then select «Enter».
5) On «Select Function» display, select «Active Test».

Active test items	Contents	Execution condition
Fuel Pump Control (ON/OFF Dr.)	ON/OFF of the fuel pump can be set.	Ignition switch is ON (engine OFF)
CPC Solenoid Valve	ON/OFF of the purge control solenoid valve can be set.	
Radiator Fan Relay	ON/OFF of the radiator fan relay can be set.	
A/C Compressor Relay	ON/OFF of the A/C relay can be set.	
Turbocharger Wastegate Solenoid	Wastegate control solenoid valve can be set between 0.0% ←→ 99.6%.	
CPC Solenoid 2	ON/OFF of the purge control solenoid valve 2 can be set.	
ELCM switching valve	ON/OFF of the leak check valve assembly switching valve can be set.	
ELCM pump	ON/OFF of the leak check valve assembly vacuum pump can be set.	
Fuel Pump Control (OFF Drive)	Fuel pump can be set to OFF.	At idling
Fixed Idle Ignition Timing	Idle ignition timing can be set and fixed to 10.0°.	
Idle Speed Control	Idle speed can be set to 500 — 2000 rpm.	
Injection Stop Mode (Injector 1) Injection Stop Mode (Injector 2) Injection Stop Mode (Injector 3) Injection Stop Mode (Injector 4)	Injector of each cylinder can be set to stop the fuel injection.	
Injection Quantity Control	The amount of fuel injection can be set to 0 — 20%.	
EGR Valve Control	EGR control valve can be set to 0 — 255 STEP.	
High Pressure Fuel Inspection	High pressure fuel pipe inspection can be executed.	
Alternator control	Alternator control mode can be set to one of the followings: Low mode Middle mode High mode ExHigh mode	
Compression monitor	Compression can be measured.	• Ignition switch is ON (engine OFF) • Accelerator pedal is fully depressed

14.Malfunction Indicator Light

A: PROCEDURE

1. Activation of malfunction indicator light. <Ref. to EN(w/o STI)(diag)-85, ACTIVATION OF MALFUNCTION INDICATOR LIGHT, Malfunction Indicator Light.>
↓
2. Malfunction indicator light does not come on. <Ref. to EN(w/o STI)(diag)-86, MALFUNCTION INDICATOR LIGHT DOES NOT COME ON, Malfunction Indicator Light.>
↓
3. Malfunction indicator light does not go off <Ref. to EN(w/o STI)(diag)-86, MALFUNCTION INDICATOR LIGHT DOES NOT GO OFF, Malfunction Indicator Light.>

B: ACTIVATION OF MALFUNCTION INDICATOR LIGHT

1) When the ignition switch is turned to ON (engine OFF), the malfunction indicator light in the combination meter illuminates.

NOTE:
If the malfunction indicator light does not illuminate, perform diagnostics of the malfunction indicator light circuit or the combination meter circuit. <Ref. to EN(w/o STI)(diag)-86, MALFUNCTION INDICATOR LIGHT DOES NOT COME ON, Malfunction Indicator Light.>

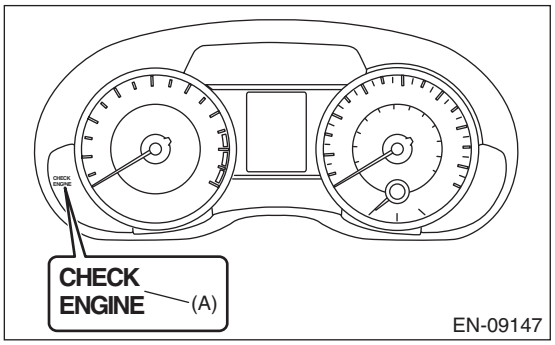

(A) Malfunction indicator light

2) After starting the engine, the malfunction indicator light goes out. If it does not go off, any of the engine and emission control system has malfunction.

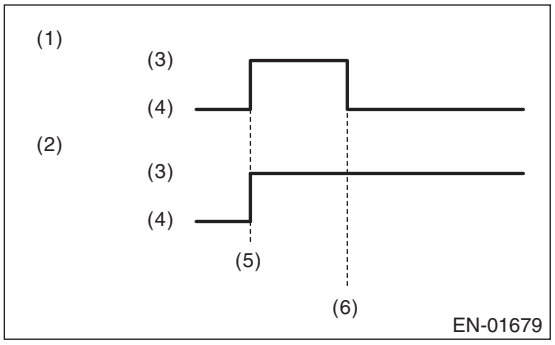

(1) No DTC
(2) Trouble occurs
(3) ON
(4) OFF
(5) Ignition switch ON
(6) Engine start

3) If the diagnostic system detects a misfire which could damage the catalyst, the malfunction indicator light will blink at a cycle of 1 Hz.

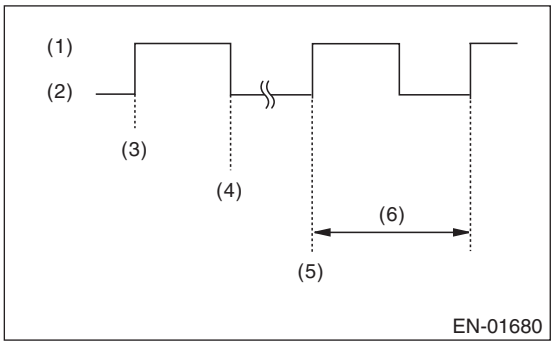

(1) ON
(2) OFF
(3) Ignition switch ON
(4) Engine start
(5) Misfire start
(6) 1 second

C: MALFUNCTION INDICATOR LIGHT DOES NOT COME ON

TROUBLE SYMPTOM:
When the ignition switch is turned to ON (engine OFF), malfunction indicator light does not illuminate.

NOTE:
Refer to IDI section for diagnostic procedure. <Ref. to IDI(diag)-2, Basic Diagnostic Procedure.>

D: MALFUNCTION INDICATOR LIGHT DOES NOT GO OFF

TROUBLE SYMPTOM:
Although malfunction indicator light comes on when the engine runs, DTC is not shown on the Subaru Select Monitor or general scan tool display.

Step	Check	Yes	No
1 **CHECK DTC.**	Is DTC of engine or LAN system displayed? <Ref. to EN(w/o STI)(diag)-63, OPERATION, Read Diagnostic Trouble Code (DTC).>	Check the appropriate DTC using the “List of Diagnostic Trouble Code (DTC)”. <Ref. to EN(w/o STI)(diag)-106, List of Diagnostic Trouble Code (DTC).> <Ref. to LAN(diag)-109, List of Diagnostic Trouble Code (DTC).>	Check the combination meter system. <Ref. to IDI(diag)-2, Basic Diagnostic Procedure.>

15.Diagnostics for Engine Starting Failure

A: PROCEDURE

1. Check of the fuel amount
↓
2. Inspection of starter motor circuit <Ref. to EN(w/o STI)(diag)-87, STARTER MOTOR CIRCUIT, Diagnostics for Engine Starting Failure.>
↓
3. Inspection of ECM power supply and ground line <Ref. to EN(w/o STI)(diag)-99, CHECK POWER SUPPLY AND GROUND LINE OF ENGINE CONTROL MODULE (ECM), Diagnostics for Engine Starting Failure.>
↓
4. Inspection of ignition control system <Ref. to EN(w/o STI)(diag)-101, IGNITION CONTROL SYSTEM, Diagnostics for Engine Starting Failure.>
↓
5. Inspection of fuel pump circuit <Ref. to EN(w/o STI)(diag)-103, FUEL PUMP CIRCUIT, Diagnostics for Engine Starting Failure.>
↓
6. Inspection of fuel injector circuit <Ref. to EN(w/o STI)(diag)-104, FUEL INJECTOR CIRCUIT, Diagnostics for Engine Starting Failure.>

B: STARTER MOTOR CIRCUIT

1. MODEL WITHOUT PUSH BUTTON START

CAUTION:
• After servicing or replacing faulty parts, perform Clear Memory Mode <Ref. to EN(w/o STI)(diag)-82, OPERATION, Clear Memory Mode.>, and Inspection Mode <Ref. to EN(w/o STI)(diag)-64, PROCEDURE, Inspection Mode.>.
• Use the check board when measuring the ECM terminal voltage and resistance.

Diagnostics for Engine Starting Failure

WIRING DIAGRAM:

Engine Electrical System <Ref. to WI-154, WIRING DIAGRAM, Engine Electrical System.>

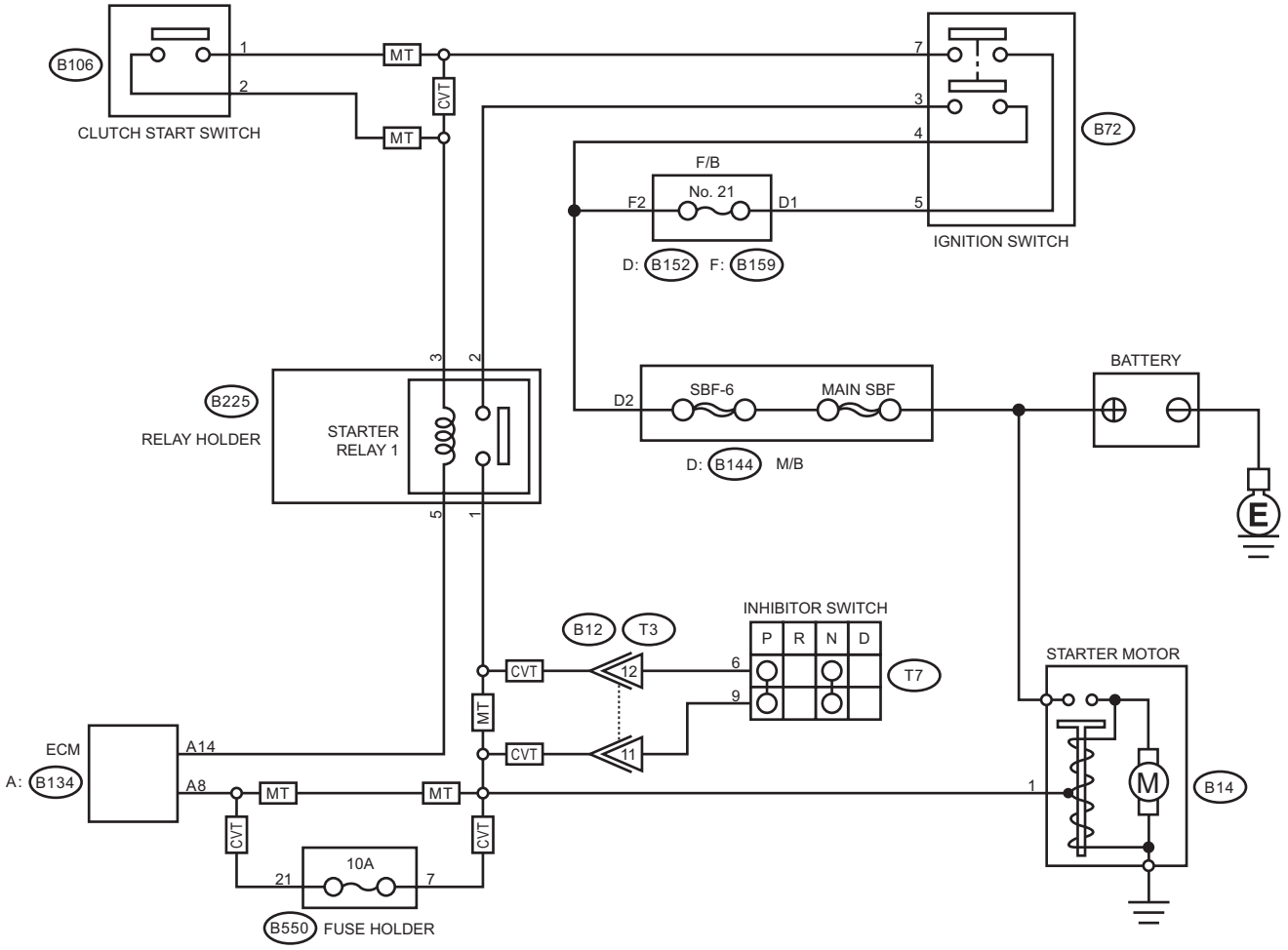

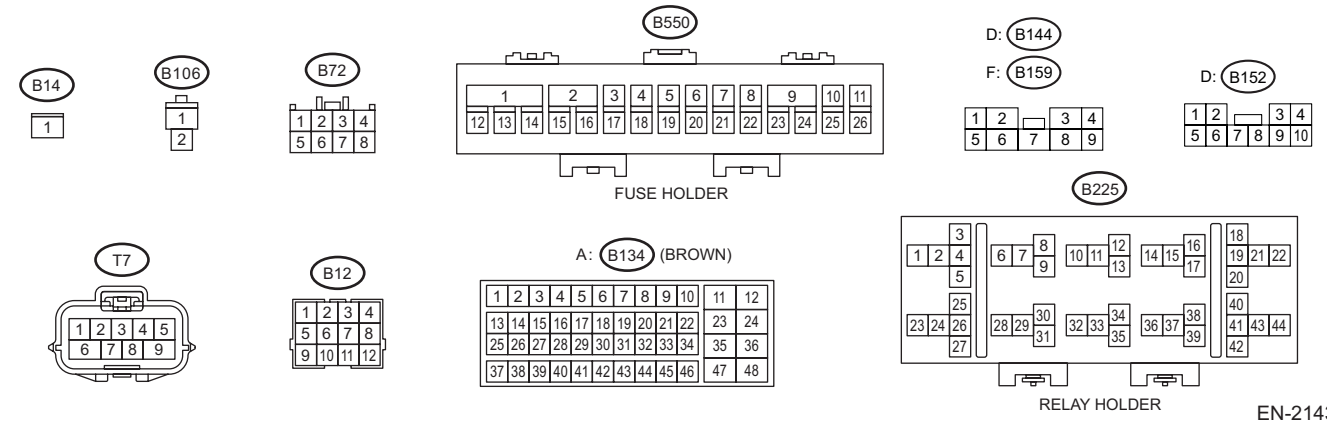

EN-21435

Step		Check	Yes	No
1	**CHECK BATTERY.** Check the battery. <Ref. to SC(w/o STI)-50, Battery.>	Is the check result OK?	Go to step **2**.	Charge or replace the battery. <Ref. to SC(w/o STI)-50, Battery.>
2	**CHECK OPERATION OF STARTER MOTOR.**	Does the starter motor operate?	Go to step **3**.	Go to step **4**.

	Step	Check	Yes	No
3	**CHECK DTC.**	Is DTC displayed? <Ref. to EN(w/o STI)(diag)-63, OPERATION, Read Diagnostic Trouble Code (DTC).>	Check the appropriate DTC using the "List of Diagnostic Trouble Code (DTC)". <Ref. to EN(w/o STI)(diag)-106, List of Diagnostic Trouble Code (DTC).>	Check ignition control system. <Ref. to EN(w/o STI)(diag)-101, IGNITION CONTROL SYSTEM, Diagnostics for Engine Starting Failure.>
4	**CHECK INPUT SIGNAL FOR STARTER MOTOR.** 1) Turn the ignition switch to OFF. 2) Disconnect the connector from starter motor. 3) Turn the ignition switch to START. 4) Measure the voltage between the starter motor connector and the engine ground. ***Connector & terminal*** ***(B14) No. 1 (+) — Engine ground (–):*** NOTE: • For CVT model, place the select lever in "P" range or "N" range. • For MT model, depress the clutch pedal.	Is the voltage 10 V or more?	Check the starter motor. <Ref. to SC(w/o STI)-7, Starter.>	Go to step **5**.
5	**CHECK HARNESS BETWEEN BATTERY AND IGNITION SWITCH CONNECTOR.** 1) Turn the ignition switch to OFF. 2) Disconnect the connector from ignition switch. 3) Measure the power supply voltage between ignition switch connector and chassis ground. ***Connector & terminal*** ***(B72) No. 4 (+) — Chassis ground (–):*** ***(B72) No. 5 (+) — Chassis ground (–):***	Is the voltage 10 V or more?	Go to step **6**.	Repair the power supply circuit.
6	**CHECK IGNITION SWITCH.** Measure the resistance between ignition switch terminals after turning the ignition switch to START position. ***Terminals*** ***No. 3 — No. 4:*** ***No. 5 — No. 7:***	Is the resistance less than 1 Ω?	Go to step **7**.	Replace the ignition switch. <Ref. to SL-64, REPLACEMENT, Ignition Key Lock.>
7	**CHECK INPUT VOLTAGE OF STARTER RELAY 1.** 1) Turn the ignition switch to OFF. 2) Remove the starter relay 1. 3) Connect the connector to ignition switch. 4) Measure the voltage between starter relay 1 connector and chassis ground after turning the ignition switch to START position. ***Connector & terminal*** ***(B225) No. 2 (+) — Chassis ground (–):***	Is the voltage 10 V or more?	Go to step **8**.	Repair the open circuit of harness between starter relay 1 and ignition switch connector.
8	**CHECK HARNESS BETWEEN ECM AND STARTER RELAY 1 CONNECTOR.** 1) Turn the ignition switch to OFF. 2) Disconnect the connector from ECM. 3) Measure the resistance of harness between ECM connector and starter relay 1 connector. ***Connector & terminal*** ***(B134) No. 14 — (B225) No. 5:***	Is the resistance less than 1 Ω?	Go to step **9**.	Repair the open circuit of harness between ECM connector and starter relay 1 connector.

	Step	Check	Yes	No
9	**CHECK STARTER RELAY 1.** 1) Connect the battery to starter relay 1 terminals No. 3 and No. 5. 2) Measure the resistance between starter relay 1 terminals. ***Terminals*** ***No. 1 — No. 2:***	Is the resistance less than 1 Ω?	Go to step **10**.	Replace the starter relay 1. <Ref. to EN(w/o STI)(diag)-10, Electrical Component Location.>
10	**CHECK TRANSMISSION TYPE.**	Is the transmission type CVT?	Go to step **11**.	Go to step **15**.
11	**CHECK INPUT VOLTAGE OF STARTER RELAY 1.** Measure the voltage between starter relay 1 connector and chassis ground after turning the ignition switch to START position. ***Connector & terminal*** ***(B225) No. 3 (+) — Chassis ground (–):***	Is the voltage 10 V or more?	Go to step **12**.	Check the following item and repair if necessary. • Blown out of fuse • Open or short circuit to ground in harness between starter relay 1 and ignition switch connector
12	**CHECK HARNESS BETWEEN STARTER RELAY 1 AND INHIBITOR SWITCH CONNECTOR.** 1) Turn the ignition switch to OFF. 2) Disconnect the connector from inhibitor switch. 3) Measure the resistance of harness between starter relay 1 connector and inhibitor switch connector. ***Connector & terminal*** ***(B225) No. 1 — (T7) No. 6:***	Is the resistance less than 1 Ω?	Go to step **13**.	Repair the harness and connector. NOTE: In this case, repair the following item: • Open circuit in harness between starter relay 1 connector and inhibitor switch connector • Poor contact of coupling connector
13	**CHECK HARNESS BETWEEN INHIBITOR SWITCH AND STARTER MOTOR.** Measure the resistance of harness between the inhibitor switch connector and starter motor. ***Connector & terminal*** ***(T7) No. 9 — (B14) No. 1:***	Is the resistance less than 1 Ω?	Go to step **14**.	Repair the harness and connector. NOTE: In this case, repair the following item: • Open circuit in harness between inhibitor switch connector and starter motor • Poor contact of coupling connector
14	**CHECK INHIBITOR SWITCH.** 1) Place the select lever in “P” range and “N” range. 2) Measure the resistance between inhibitor switch terminals. ***Terminals*** ***No. 6 — No. 9:***	Is the resistance less than 1 Ω?	Check the engine control module (ECM) power supply and ground line. <Ref. to EN(w/o STI)(diag)-99, CHECK POWER SUPPLY AND GROUND LINE OF ENGINE CONTROL MODULE (ECM), Diagnostics for Engine Starting Failure.>	Replace the inhibitor switch. <Ref. to CVT(TR690)-93, Inhibitor Switch.>

	Step	Check	Yes	No
15	**CHECK INPUT VOLTAGE OF CLUTCH START SWITCH.** 1) Disconnect the connector from clutch start switch. 2) Turn the ignition switch to START. 3) Measure the voltage between the clutch start switch connector and chassis ground. ***Connector & terminal*** ***(B106) No. 1 (+) — Chassis ground (–):***	Is the voltage 10 V or more?	Go to step **16**.	Check the following item and repair if necessary. • Blown out of fuse • Open or short circuit to ground in harness between ignition switch connector and clutch start switch connector
16	**CHECK CLUTCH START SWITCH.** 1) Turn the ignition switch to OFF. 2) Measure the resistance between clutch start switch terminals while keeping the clutch pedal depressed. ***Terminals*** ***No. 1 — No. 2:***	Is the resistance less than 1 Ω?	Go to step **17**.	Replace the clutch start switch. <Ref. to CL-35, Clutch Switch.>
17	**CHECK HARNESS BETWEEN STARTER RELAY 1 AND CLUTCH START SWITCH.** Measure the resistance of harness between starter relay 1 and clutch start switch connector. ***Connector & terminal*** ***(B225) No. 3 — (B106) No. 2:***	Is the resistance less than 1 Ω?	Go to step **18**.	Repair the open circuit in harness between starter relay 1 and clutch start switch connector.
18	**CHECK HARNESS BETWEEN STARTER RELAY 1 CONNECTOR AND STARTER MOTOR CONNECTOR.** Measure the resistance of harness between starter relay 1 connector and starter motor connector. ***Connector & terminal*** ***(B225) No. 1 — (B14) No. 1:***	Is the resistance less than 1 Ω?	Check the engine control module (ECM) power supply and ground line. <Ref. to EN(w/o STI)(diag)-99, CHECK POWER SUPPLY AND GROUND LINE OF ENGINE CONTROL MODULE (ECM), Diagnostics for Engine Starting Failure.>	Repair the open circuit of the harness between starter relay 1 connector and starter motor connector.

2. MODEL WITH PUSH BUTTON START

CAUTION:

- **After servicing or replacing faulty parts, perform Clear Memory Mode <Ref. to EN(w/o STI)(diag)-82, OPERATION, Clear Memory Mode.>, and Inspection Mode <Ref. to EN(w/o STI)(diag)-64, PROCEDURE, Inspection Mode.>.**
- **Use the check board when measuring the ECM terminal voltage and resistance.**

WIRING DIAGRAM:

Engine Electrical System <Ref. to WI-154, WIRING DIAGRAM, Engine Electrical System.>

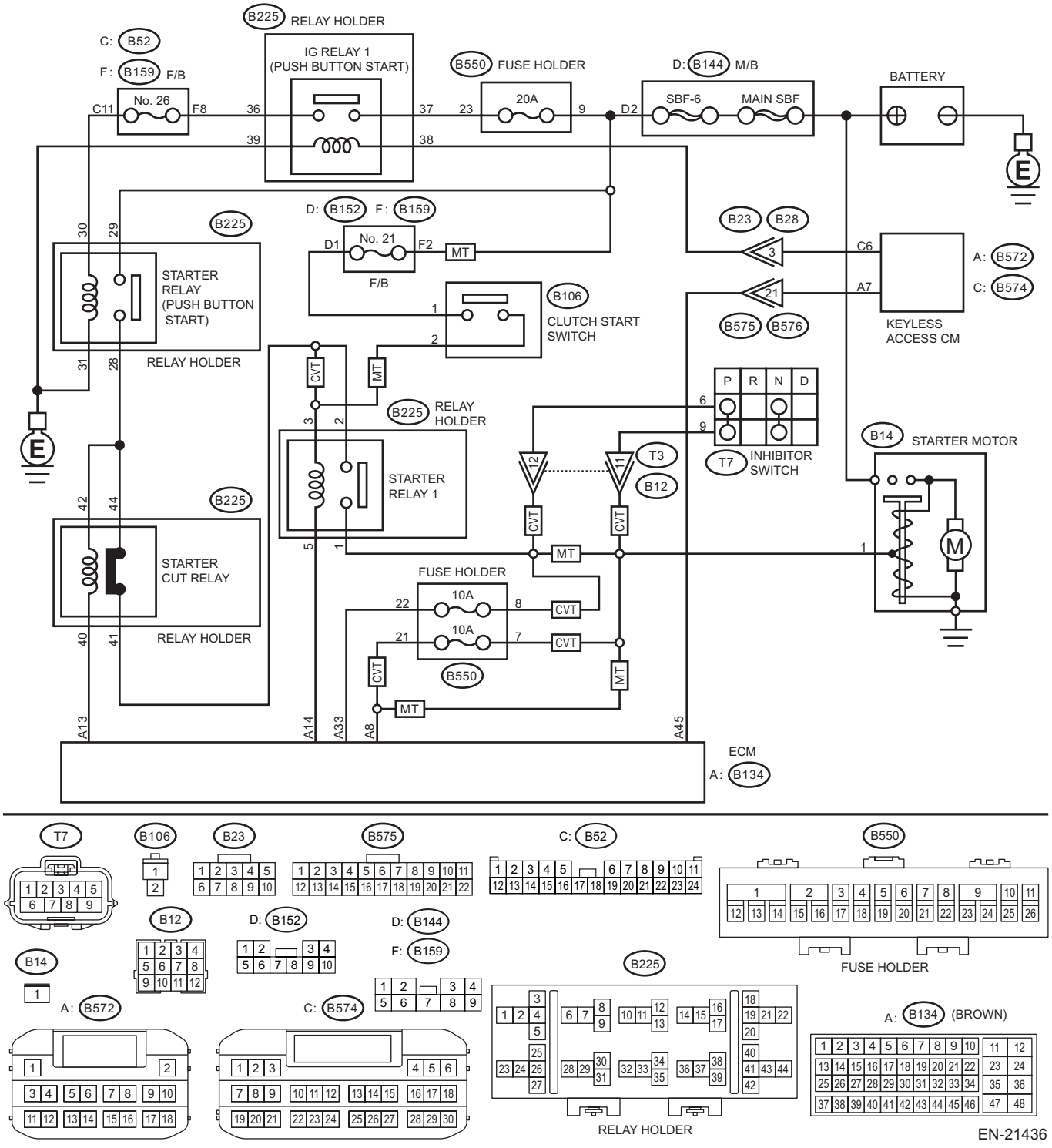

EN-21436

	Step	Check	Yes	No
1	**CHECK BATTERY.** Check the battery. <Ref. to SC(w/o STI)-50, Battery.>	Is the check result OK?	Go to step **2**.	Charge or replace the battery. <Ref. to SC(w/o STI)-50, Battery.>
2	**CHECK OPERATION OF STARTER MOTOR.**	Does the starter motor operate?	Go to step **3**.	Go to step **4**.
3	**CHECK DTC.**	Is DTC displayed? <Ref. to EN(w/o STI)(diag)-63, OPERATION, Read Diagnostic Trouble Code (DTC).>	Check the appropriate DTC using the "List of Diagnostic Trouble Code (DTC)". <Ref. to EN(w/o STI)(diag)-106, List of Diagnostic Trouble Code (DTC).>	Check ignition control system. <Ref. to EN(w/o STI)(diag)-101, IGNITION CONTROL SYSTEM, Diagnostics for Engine Starting Failure.>
4	**CHECK PUSH BUTTON IGNITION SWITCH.** Press the push button ignition switch twice with the ignition OFF (ACC OFF). NOTE: • Release the brake pedal. (CVT model) • Release the clutch pedal. (MT model)	Does the ignition turn to ON?	Go to step **5**.	Check the push button start system. <Ref. to KPS(diag)-113, POWER SUPPLY SWITCHING SYSTEM, INSPECTION, General Diagnostic Table.>
5	**CHECK PUSH BUTTON IGNITION SWITCH.** 1) Depress the brake pedal (CVT model) or clutch pedal (MT model). NOTE: For CVT model, position the select lever in "P" range. 2) Check the push button ignition switch indicator.	Does the indicator turn to green?	Go to step **6**.	Check the push button start system. <Ref. to KPS(diag)-141, ENGINE DOES NOT START, INSPECTION, Diagnostics with Phenomenon.>
6	**CHECK START SWITCH SIGNAL.** 1) Read the waveform of «Starter Switch» using the Subaru Select Monitor. NOTE: For detailed operation procedures, refer to "Read Current Data For Engine". <Ref. to EN(w/o STI)(diag)-46, Subaru Select Monitor.> 2) Press the push button ignition switch once with the brake pedal (CVT model) or clutch pedal (MT model) depressed.	Does waveform of the «Starter Switch» occur?	Go to step **10**.	Go to step **7**.
7	**CHECK HARNESS BETWEEN ECM AND KEYLESS ACCESS CM.** 1) Turn the ignition to OFF. 2) Disconnect the connector from ECM. 3) Disconnect the connector from the keyless access CM. 4) Measure the resistance of harness between ECM connector and keyless access CM. ***Connector & terminal*** ***(B134) No. 45 — (B572) No. 7:***	Is the resistance less than 1 Ω?	Go to step **8**.	Repair the harness and connector. NOTE: In this case, repair the following item: • Open circuit of harness between ECM connector and keyless access CM connector • Poor contact of coupling connector

	Step	Check	Yes	No
8	**CHECK HARNESS BETWEEN ECM AND KEYLESS ACCESS CM.** Measure the resistance between ECM connector and chassis ground. ***Connector & terminal*** ***(B134) No. 45 — Chassis ground:***	Is the resistance 1 MΩ or more?	Go to step **9**.	Repair the short circuit to ground in harness between ECM connector and keyless access CM connector.
9	**CHECK START SWITCH SIGNAL.** 1) Connect the connector to ECM. 2) Connect the connector to the keyless access CM. 3) Read the waveform of start switch signal using an oscilloscope. 4) Press the push button ignition switch once with the brake pedal (CVT model) or clutch pedal (MT model) depressed. ***Connector & terminal*** ***(B134) No. 45 (+) — Chassis ground (–):***	Does waveform of the start switch signal occur?	Repair the poor contact of ECM connector.	Repair the poor contact of keyless access CM connector.
10	**CHECK INPUT SIGNAL FOR STARTER MOTOR.** 1) Turn the ignition to OFF. 2) Disconnect the connector from starter motor. 3) Set the select lever in “P” range or “N” range (CVT model), or the shift lever in neutral. (MT model) 4) Press the push button ignition switch once with the brake pedal (CVT model) or clutch pedal (MT model) depressed. 5) Measure the voltage between the starter motor connector and the engine ground. ***Connector & terminal*** ***(B14) No. 1 (+) — Engine ground (–):***	Is the voltage 10 V or more?	Check the starter motor. <Ref. to SC(w/o STI)-7, Starter.>	Go to step **11**.
11	**CHECK IG RELAY 1 (PUSH BUTTON START) POWER SUPPLY.** 1) Remove the IG relay 1 (push button start). 2) Turn the ignition to ON. 3) Measure the voltage between the IG relay 1 (push button start) connector and chassis ground. ***Connector & terminal*** ***(B225) No. 37 (+) — Chassis ground (–):*** ***(B225) No. 38 (+) — Chassis ground (–):***	Is the voltage 10 V or more?	Go to step **12**.	Check the following item and repair or replace if necessary. • Blown out of fuse • Open circuit or short circuit to ground in harness between IG relay 1 (push button start) connector and keyless access CM connector • Open circuit or short circuit to ground in harness between IG relay 1 (push button start) connector and battery • Poor contact of coupling connector

	Step	Check	Yes	No
12	**CHECK HARNESS BETWEEN IG RELAY 1 (PUSH BUTTON START) CONNECTOR AND CHASSIS GROUND.** 1) Turn the ignition to OFF. 2) Measure the resistance of harness between the IG relay 1 (push button start) connector and chassis ground. ***Connector & terminal*** ***(B225) No. 39 — Chassis ground:***	Is the resistance less than 5 Ω?	Go to step **13**.	Repair the open circuit in harness between the IG relay 1 (push button start) connector and chassis ground.
13	**CHECK IG RELAY 1 (PUSH BUTTON START).** 1) Connect the battery to IG relay 1 (push button start) terminals No. 38 and No. 39. 2) Measure the resistance between IG relay 1 (push button start) terminals. ***Terminals*** ***No. 36 — No. 37:***	Is the resistance less than 1 Ω?	Go to step **14**.	Replace the IG relay 1 (push button start). <Ref. to SL-110, IG Relay1 (Push Button Start).>
14	**CHECK STARTER RELAY (PUSH BUTTON START) POWER SUPPLY.** 1) Install the IG relay 1 (push button start). 2) Remove the starter relay (push button start). 3) Turn the ignition to ON. 4) Measure the voltage between starter relay (push button start) connector and chassis ground. ***Connector & terminal*** ***(B225) No. 29 (+) — Chassis ground (–):*** ***(B225) No. 30 (+) — Chassis ground (–):***	Is the voltage 10 V or more?	Go to step **15**.	Check the following item and repair or replace if necessary. • Blown out of fuse (F/B No. 26) • Open circuit or short circuit to ground in harness between starter relay (push button start) connector and IG relay 1 (push button start) connector • Open circuit or short circuit to ground in harness between starter relay (push button start) connector and battery
15	**CHECK HARNESS BETWEEN STARTER RELAY (PUSH BUTTON START) CONNECTOR AND CHASSIS GROUND.** 1) Turn the ignition to OFF. 2) Measure the resistance of harness between starter relay (push button start) connector and chassis ground. ***Connector & terminal*** ***(B225) No. 31 — Chassis ground:***	Is the resistance less than 5 Ω?	Go to step **16**.	Repair the open circuit in harness between starter relay (push button start) connector and chassis ground.
16	**CHECK STARTER RELAY (PUSH BUTTON START).** 1) Connect the battery to starter relay (push button start) terminals No. 30 and No. 31. 2) Measure the resistance between starter relay (push button start) terminals. ***Terminals*** ***No. 28 — No. 29:***	Is the resistance less than 1 Ω?	Go to step **17**.	Replace the starter relay (push button start). <Ref. to SL-108, Starter Relay (Push Button Start).>

	Step	Check	Yes	No
17	**CHECK HARNESS BETWEEN STARTER RELAY (PUSH BUTTON START) CONNECTOR AND STARTER CUT RELAY CONNECTOR.** 1) Remove the starter cut relay. 2) Measure the resistance of harness between starter relay (push button start) connector and starter cut relay connector. ***Connector & terminal*** ***(B225) No. 28 — (B225) No. 42:*** ***(B225) No. 28 — (B225) No. 44:***	Is the resistance less than 1 Ω?	Go to step **18**.	Repair the open circuit in harness between starter relay (push button start) connector and starter cut relay connector.
18	**CHECK HARNESS BETWEEN ECM AND STARTER CUT RELAY CONNECTOR.** 1) Disconnect the connector from ECM. 2) Measure the resistance between starter cut relay connector and chassis ground. ***Connector & terminal*** ***(B225) No. 40 — Chassis ground:***	Is the resistance 1 MΩ or more?	Go to step **19**.	Repair the short circuit to ground in harness between ECM connector and starter cut relay connector.
19	**CHECK STARTER CUT RELAY.** Measure the resistance between starter cut relay terminals. ***Terminals*** ***No. 41 — No. 44:***	Is the resistance less than 1 Ω?	Go to step **20**.	Replace the starter cut relay. <Ref. to SL-116, Starter Cut Relay.>
20	**CHECK HARNESS BETWEEN STARTER CUT RELAY CONNECTOR AND STARTER RELAY 1 CONNECTOR.** 1) Remove the starter relay 1. 2) Measure the resistance of harness between starter cut relay connector and starter relay 1 connector. ***Connector & terminal*** ***(B225) No. 41 — (B225) No. 2:***	Is the resistance less than 1 Ω?	Go to step **21**.	Repair the open circuit of harness between starter cut relay connector and starter relay 1 connector.
21	**CHECK HARNESS BETWEEN ECM AND STARTER RELAY 1 CONNECTOR.** Measure the resistance of harness between ECM connector and starter relay 1 connector. ***Connector & terminal*** ***(B134) No. 14 — (B225) No. 5:***	Is the resistance less than 1 Ω?	Go to step **22**.	Repair the open circuit of harness between ECM connector and starter relay 1 connector.
22	**CHECK STARTER RELAY 1.** 1) Connect the battery to starter relay 1 terminals No. 3 and No. 5. 2) Measure the resistance between starter relay 1 terminals. ***Terminals*** ***No. 1 — No. 2:***	Is the resistance less than 1 Ω?	Go to step **23**.	Replace the starter relay 1. <Ref. to EN(w/o STI)(diag)-10, LOCATION, Electrical Component Location.>
23	**CHECK TRANSMISSION TYPE.**	Is the transmission type CVT?	Go to step **26**.	Go to step **24**.
24	**CHECK HARNESS BETWEEN STARTER RELAY 1 CONNECTOR AND CLUTCH START SWITCH CONNECTOR.** Measure the resistance of harness between starter relay 1 connector and clutch start switch connector. ***Connector & terminal*** ***(B225) No. 3 — (B106) No. 2:***	Is the resistance less than 1 Ω?	Go to step **25**.	Repair the open circuit in harness between starter relay 1 connector and clutch start switch connector.

	Step	Check	Yes	No
25	**CHECK HARNESS BETWEEN STARTER RELAY 1 CONNECTOR AND STARTER MOTOR CONNECTOR.** Measure the resistance of harness between starter relay 1 connector and starter motor connector. ***Connector & terminal*** ***(B225) No. 1 — (B14) No. 1:***	Is the resistance less than 1 Ω?	Check the engine control module (ECM) power supply and ground line. <Ref. to EN(w/o STI)(diag)-99, CHECK POWER SUPPLY AND GROUND LINE OF ENGINE CONTROL MODULE (ECM), Diagnostics for Engine Starting Failure.>	Repair the open circuit of the harness between starter relay 1 connector and starter motor connector.
26	**CHECK HARNESS BETWEEN STARTER CUT RELAY CONNECTOR AND STARTER RELAY 1 CONNECTOR.** Measure the resistance of harness between starter cut relay connector and starter relay 1 connector. ***Connector & terminal*** ***(B225) No. 41 — (B225) No. 3:***	Is the resistance less than 1 Ω?	Go to step **27**.	Repair the open circuit of harness between starter cut relay connector and starter relay 1 connector.
27	**CHECK HARNESS BETWEEN STARTER RELAY 1 CONNECTOR AND INHIBITOR SWITCH CONNECTOR.** 1) Disconnect the connector from inhibitor switch. 2) Measure the resistance of harness between starter relay 1 connector and inhibitor switch connector. ***Connector & terminal*** ***(B225) No. 1 — (T7) No. 6:***	Is the resistance less than 1 Ω?	Go to step **28**.	Repair the harness and connector. NOTE: In this case, repair the following item: • Open circuit in harness between starter relay 1 connector and inhibitor switch connector • Poor contact of coupling connector
28	**CHECK INHIBITOR SWITCH.** 1) Place the select lever in “P” range or “N” range. 2) Measure the resistance between inhibitor switch terminals. ***Terminals*** ***No. 6 — No. 9:***	Is the resistance less than 1 Ω?	Go to step **29**.	Replace the inhibitor switch. <Ref. to CVT(TR690)-93, Inhibitor Switch.>
29	**CHECK HARNESS BETWEEN ECM AND INHIBITOR SWITCH CONNECTOR.** 1) Disconnect the connector from ECM. 2) Measure the resistance of harness between ECM connector and inhibitor switch connector. ***Connector & terminal*** ***(B134) No. 33 — (T7) No. 6:*** ***(B134) No. 8 — (T7) No. 9:***	Is the resistance less than 1 Ω?	Go to step **30**.	Repair the harness and connector. NOTE: In this case, repair the following item: • Blown out of fuse • Open circuit in harness between ECM connector and inhibitor switch connector • Poor contact of coupling connector

	Step	Check	Yes	No
30	**CHECK NEUTRAL POSITION SWITCH SIGNAL.** 1) Connect all relays to their proper positions. 2) Connect all connectors to their proper positions. 3) Read the value of «Neutral Position Switch» using the Subaru Select Monitor. NOTE: For detailed operation procedures, refer to “READ CURRENT DATA FOR ENGINE”. <Ref. to EN(w/o STI)(diag)-46, Subaru Select Monitor.> 4) Turn the ignition to ON. 5) Place the select lever in “P” range or “N” range.	Is «Neutral» displayed?	Check the engine control module (ECM) power supply and ground line. <Ref. to EN(w/o STI)(diag)-99, CHECK POWER SUPPLY AND GROUND LINE OF ENGINE CONTROL MODULE (ECM), Diagnostics for Engine Starting Failure.>	Repair the harness and connector. NOTE: In this case, repair the following item: • Open circuit in harness between inhibitor switch connector and starter motor connector • Poor contact of coupling connector

C: CHECK POWER SUPPLY AND GROUND LINE OF ENGINE CONTROL MODULE (ECM)

CAUTION:

- **After servicing or replacing faulty parts, perform Clear Memory Mode <Ref. to EN(w/o STI)(diag)-82, OPERATION, Clear Memory Mode.>, and Inspection Mode <Ref. to EN(w/o STI)(diag)-64, PROCEDURE, Inspection Mode.>.**
- **Use the check board when measuring the ECM terminal voltage and resistance.**

WIRING DIAGRAM:

Engine Electrical System <Ref. to WI-154, WIRING DIAGRAM, Engine Electrical System.>

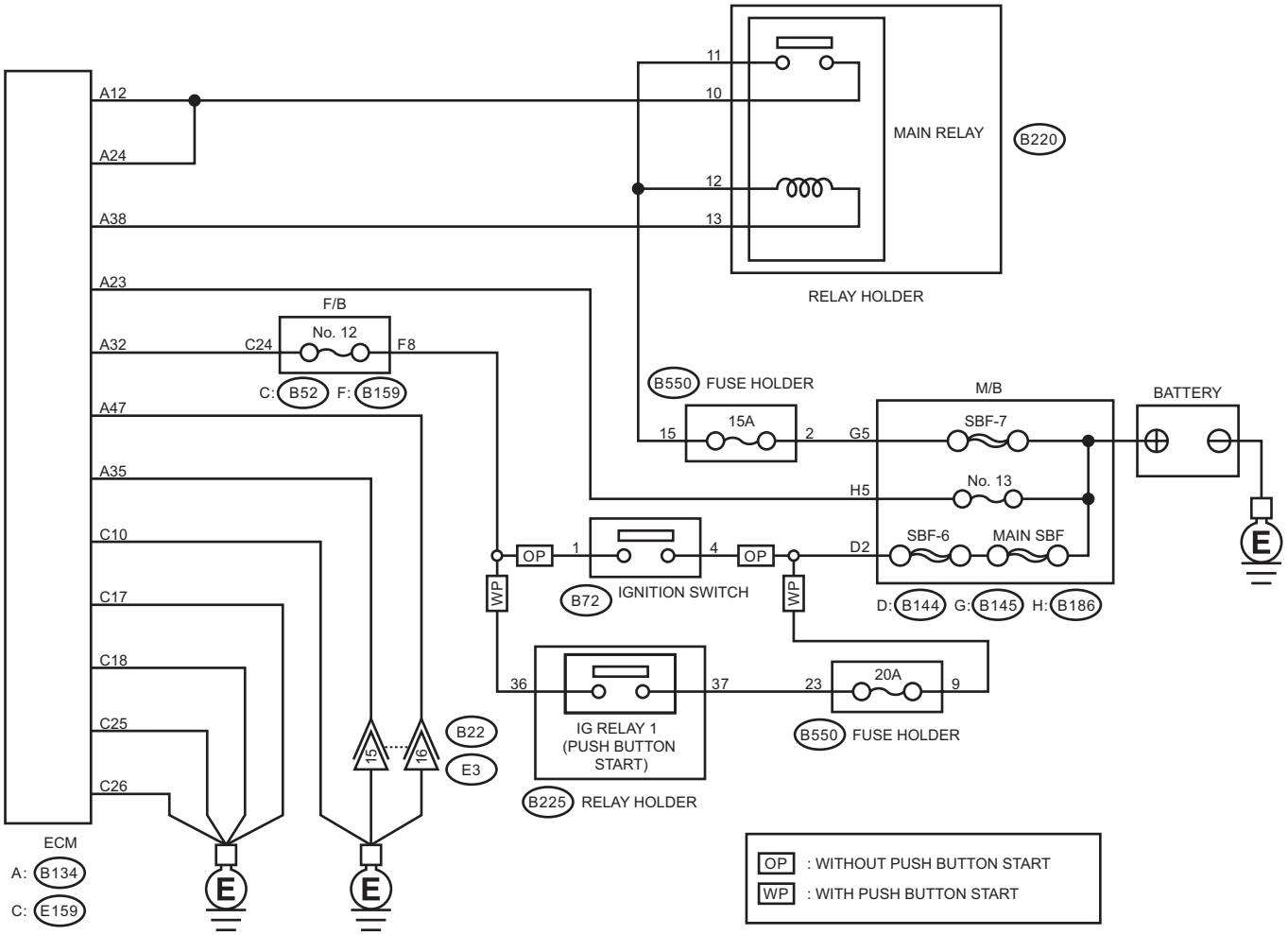

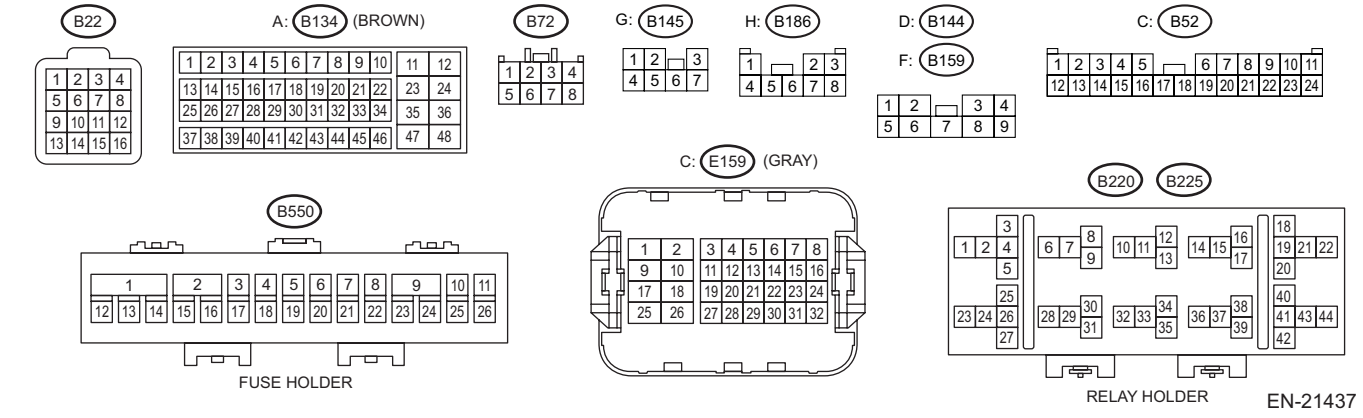

	Step	Check	Yes	No
1	**CHECK MAIN RELAY.** 1) Turn the ignition switch to OFF. 2) Remove the main relay. 3) Connect the battery to main relay terminals No. 12 and No. 13. 4) Measure the resistance between main relay terminals. ***Terminals*** ***No. 10 — No. 11:***	Is the resistance less than 1 Ω?	Go to step **2**.	Replace the main relay. <Ref. to FU(w/o STI)-127, Main Relay.>
2	**CHECK GROUND CIRCUIT FOR ECM.** 1) Disconnect the connector from ECM. 2) Measure the resistance of harness between ECM connector and chassis ground. ***Connector & terminal*** ***(B134) No. 35 — Chassis ground:*** ***(B134) No. 47 — Chassis ground:*** ***(E159) No. 10 — Chassis ground:*** ***(E159) No. 17 — Chassis ground:*** ***(E159) No. 18 — Chassis ground:*** ***(E159) No. 25 — Chassis ground:*** ***(E159) No. 26 — Chassis ground:***	Is the resistance less than 5 Ω?	Go to step **3**.	Repair the harness and connector. NOTE: In this case, repair the following item: • Open circuit of harness between ECM connector and engine ground terminal • Poor contact of coupling connector
3	**CHECK INPUT VOLTAGE OF ECM.** 1) Turn the ignition switch to ON. 2) Measure the voltage between ECM connector and chassis ground. ***Connector & terminal*** ***(B134) No. 23 (+) — Chassis ground (–):*** ***(B134) No. 32 (+) — Chassis ground (–):***	Is the voltage 10 V or more?	Go to step **4**.	Repair the open or ground short in the harness of power supply circuit.
4	**CHECK INPUT VOLTAGE OF MAIN RELAY.** Measure the voltage between main relay connector and chassis ground. ***Connector & terminal*** ***(B220) No. 11 (+) — Chassis ground (–):*** ***(B220) No. 12 (+) — Chassis ground (–):***	Is the voltage 10 V or more?	Go to step **5**.	Repair the open or ground short in the harness of power supply circuit.
5	**CHECK INPUT VOLTAGE OF ECM.** 1) Turn the ignition switch to OFF. 2) Install the main relay. 3) Turn the ignition switch to ON. 4) Measure the voltage between ECM connector and chassis ground. ***Connector & terminal*** ***(B134) No. 38 (+) — Chassis ground (–):***	Is the voltage 10 V or more?	Go to step **6**.	Repair the open circuit of harness between ECM connector and main relay connector.
6	**CHECK INPUT VOLTAGE OF ECM.** 1) Turn the ignition switch to OFF. 2) Connect the connector to ECM. 3) Turn the ignition switch to ON. 4) Measure the voltage between ECM connector and chassis ground. ***Connector & terminal*** ***(B134) No. 12 (+) — Chassis ground (–):*** ***(B134) No. 24 (+) — Chassis ground (–):***	Is the voltage 10 V or more?	Check ignition control system. <Ref. to EN(w/o STI)(diag)-101, IGNITION CONTROL SYSTEM, Diagnostics for Engine Starting Failure.>	Repair the harness and connector. NOTE: In this case, repair the following item: • Open circuit in harness between ECM connector and main relay connector • Poor contact of main relay connector • Poor contact of ECM connector

D: IGNITION CONTROL SYSTEM

CAUTION:
- **After servicing or replacing faulty parts, perform Clear Memory Mode <Ref. to EN(w/o STI)(diag)-82, OPERATION, Clear Memory Mode.>, and Inspection Mode <Ref. to EN(w/o STI)(diag)-64, PROCEDURE, Inspection Mode.>.**
- **Use the check board when measuring the ECM terminal voltage and resistance.**

WIRING DIAGRAM:
Engine Electrical System <Ref. to WI-154, WIRING DIAGRAM, Engine Electrical System.>

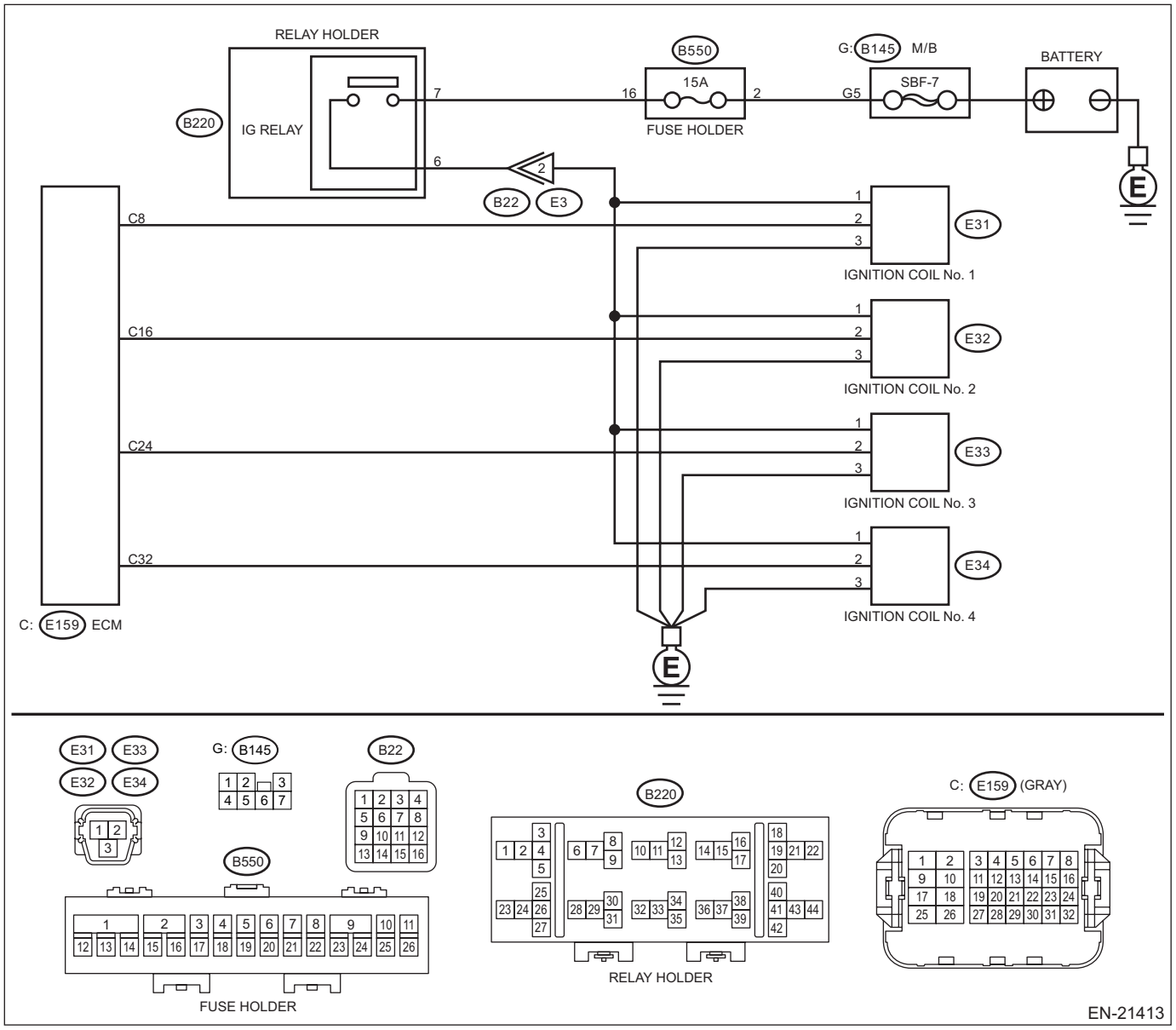

Step		Check	Yes	No
1	**CHECK SPARK PLUG CONDITION.** 1) Remove the spark plug. <Ref. to IG(w/o STI)-4, REMOVAL, Spark Plug.> 2) Check the spark plug condition. <Ref. to IG(w/o STI)-8, INSPECTION, Spark Plug.>	Is the check result OK?	Go to step **2**.	Replace the spark plug. <Ref. to IG(w/o STI)-4, Spark Plug.>

	Step	Check	Yes	No
2	**CHECK IGNITION SYSTEM FOR SPARKS.** 1) Connect the spark plug to ignition coil. 2) Release the fuel pressure. <Ref. to FU(w/o STI)-138, RELEASING OF FUEL PRESSURE, PROCEDURE, Fuel.> 3) Contact the spark plug thread portion to engine. 4) While opening the throttle valve fully, crank the engine to check that spark occurs at each cylinder.	Does spark occur at each cylinder?	Check fuel pump system. <Ref. to EN(w/o STI)(diag)-103, FUEL PUMP CIRCUIT, Diagnostics for Engine Starting Failure.>	Go to step **3**.
3	**CHECK IGNITION COIL POWER SUPPLY CIRCUIT.** 1) Turn the ignition switch to OFF. 2) Disconnect the connector from ignition coil. 3) Turn the ignition switch to ON. 4) Measure the voltage between ignition coil connector and engine ground. ***Connector & terminal*** ***(E31) No. 1 (+) — Engine ground (–):*** ***(E32) No. 1 (+) — Engine ground (–):*** ***(E33) No. 1 (+) — Engine ground (–):*** ***(E34) No. 1 (+) — Engine ground (–):***	Is the voltage 10 V or more?	Go to step **4**.	Repair the harness and connector. NOTE: In this case, repair the following item: • Open or short to ground in power supply circuit • Poor contact of coupling connector • Blown out of fuse
4	**CHECK HARNESS OF IGNITION COIL GROUND CIRCUIT.** 1) Turn the ignition switch to OFF. 2) Measure the resistance of harness between ignition coil connector and engine ground. ***Connector & terminal*** ***(E31) No. 3 — Engine ground:*** ***(E32) No. 3 — Engine ground:*** ***(E33) No. 3 — Engine ground:*** ***(E34) No. 3 — Engine ground:***	Is the resistance less than 5 Ω?	Go to step **5**.	Repair the open circuit in harness between ignition coil connector and engine grounding terminal.
5	**CHECK HARNESS BETWEEN ECM AND IGNITION COIL CONNECTOR.** 1) Disconnect the connector from ECM. 2) Measure the resistance of harness between ECM connector and ignition coil connector. ***Connector & terminal*** ***(E159) No. 8 — (E31) No. 2:*** ***(E159) No. 16 — (E32) No. 2:*** ***(E159) No. 24 — (E33) No. 2:*** ***(E159) No. 32 — (E34) No. 2:***	Is the resistance less than 1 Ω?	Go to step **6**.	Repair the open circuit in harness between ECM connector and ignition coil connector.
6	**CHECK HARNESS BETWEEN ECM AND IGNITION COIL CONNECTOR.** Measure the resistance of harness between ECM connector and engine ground. ***Connector & terminal*** ***(E159) No. 8 — Engine ground:*** ***(E159) No. 16 — Engine ground:*** ***(E159) No. 24 — Engine ground:*** ***(E159) No. 32 — Engine ground:***	Is the resistance 1 MΩ or more?	Go to step **7**.	Repair the ground short circuit of harness between ECM connector and ignition coil connector.
7	**CHECK FOR POOR CONTACT.** Check for poor contact of ECM connector.	Is there poor contact of ECM connector?	Repair the poor contact of ECM connector.	Replace the ignition coil. <Ref. to IG(w/o STI)-11, Ignition Coil.>

E: FUEL PUMP CIRCUIT

CAUTION:
After servicing or replacing faulty parts, perform Clear Memory Mode <Ref. to EN(w/o STI)(diag)-82, OPERATION, Clear Memory Mode.>, and Inspection Mode <Ref. to EN(w/o STI)(diag)-64, PROCEDURE, Inspection Mode.>.

	Step	Check	Yes	No
1	**CHECK OPERATING SOUND OF FUEL PUMP.** Make sure that the fuel pump operates for two seconds when turning the ignition switch to ON. NOTE: Fuel pump operation can be executed using Subaru Select Monitor. Refer to “Active Test” for the procedures. <Ref. to EN(w/o STI)(diag)-83, Active Test.>	Does the fuel pump emit operating sound?	Check the fuel injector circuit. <Ref. to EN(w/o STI)(diag)-104, FUEL INJECTOR CIRCUIT, Diagnostics for Engine Starting Failure.>	Display the DTC. <Ref. to EN(w/o STI)(diag)-63, OPERATION, Read Diagnostic Trouble Code (DTC).>

F: FUEL INJECTOR CIRCUIT

CAUTION:
- **Check or repair only faulty parts.**
- **After servicing or replacing faulty parts, perform Clear Memory Mode <Ref. to EN(w/o STI)(diag)-82, OPERATION, Clear Memory Mode.>, and Inspection Mode <Ref. to EN(w/o STI)(diag)-64, PROCEDURE, Inspection Mode.>.**
- **Use the check board when measuring the ECM terminal voltage and resistance.**

WIRING DIAGRAM:

Engine Electrical System <Ref. to WI-154, WIRING DIAGRAM, Engine Electrical System.>

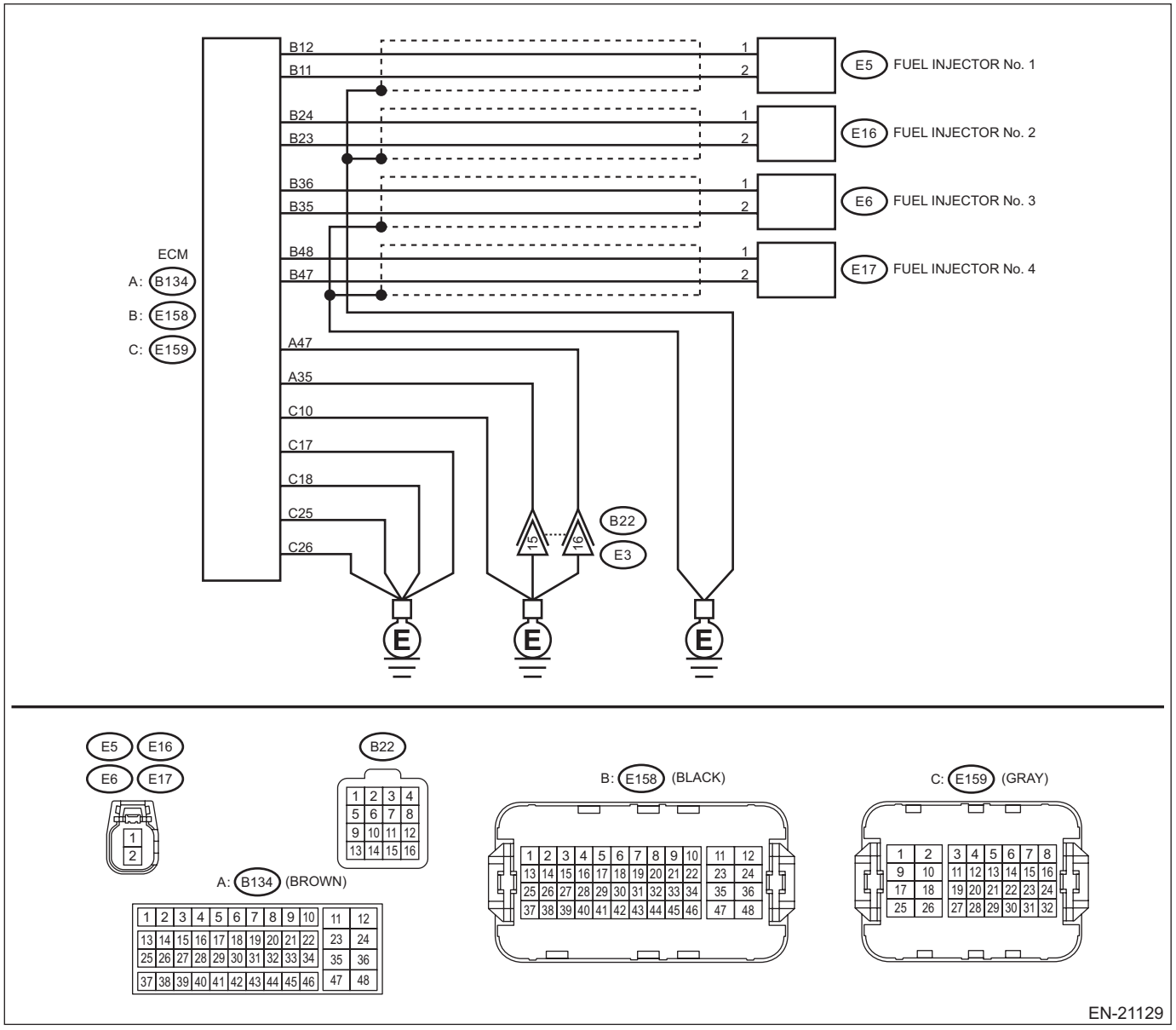

Step		Check	Yes	No
1	**CHECK OPERATION OF EACH FUEL INJECTOR.** While cranking the engine, check each fuel injector emits operating sound. Use a sound scope or listen by attaching a screwdriver to the injector for this check.	Does the fuel injector emit operating sound?	Check the fuel pressure. <Ref. to ME(w/o STI)-31, INSPECTION, Fuel Pressure.>	Go to step **2**.

	Step	Check	Yes	No
2	**CHECK HARNESS BETWEEN ECM AND FUEL INJECTOR CONNECTOR.** 1) Turn the ignition switch to OFF. 2) Disconnect the connector from ECM. 3) Measure the resistance of harness between ECM connector and fuel injector connector. ***Connector & terminal*** ***#1 (E158) No. 12 — (E5) No. 1:*** ***#1 (E158) No. 11 — (E5) No. 2:*** ***#2 (E158) No. 24 — (E16) No. 1:*** ***#2 (E158) No. 23 — (E16) No. 2:*** ***#3 (E158) No. 36 — (E6) No. 1:*** ***#3 (E158) No. 35 — (E6) No. 2:*** ***#4 (E158) No. 48 — (E17) No. 1:*** ***#4 (E158) No. 47 — (E17) No. 2:***	Is the resistance less than 1 Ω?	Go to step **3**.	Repair the open circuit of the harness between the ECM connector and fuel injector connector.
3	**CHECK HARNESS BETWEEN ECM AND FUEL INJECTOR CONNECTOR.** Measure the resistance of harness between ECM connector and chassis ground. ***Connector & terminal*** ***#1 (E158) No. 12 — Chassis ground:*** ***#1 (E158) No. 11 — Chassis ground:*** ***#2 (E158) No. 24 — Chassis ground:*** ***#2 (E158) No. 23 — Chassis ground:*** ***#3 (E158) No. 36 — Chassis ground:*** ***#3 (E158) No. 35 — Chassis ground:*** ***#4 (E158) No. 48 — Chassis ground:*** ***#4 (E158) No. 47 — Chassis ground:***	Is the resistance 1 MΩ or more?	Go to step **4**.	Repair the short circuit to ground in harness between ECM connector and fuel injector connector.
4	**CHECK EACH FUEL INJECTOR.** Check each fuel injector. <Ref. to FU(w/o STI)-65, INSPECTION, Fuel Injector.>	Is the check result OK?	Go to step **5**.	Replace the faulty fuel injector. <Ref. to FU(w/o STI)-50, Fuel Injector.>
5	**CHECK FOR POOR CONTACT.** Check for poor contact of ECM connector.	Is there poor contact of ECM connector?	Repair the poor contact of ECM connector.	Inspection using “General Diagnostic Table”. <Ref. to EN(w/o STI)(diag)-722, INSPECTION, General Diagnostic Table.>

16.List of Diagnostic Trouble Code (DTC)

A: LIST

DTC	Item	Note
B1570	ANTENNA	<Ref. to IM(diag)-16, DTC B1570 ANTENNA, Diagnostic Procedure with Diagnostic Trouble Code (DTC).>
B1571	REFERENCE CODE INCOMPATIBILITY	<Ref. to IM(diag)-18, DTC B1571 REFERENCE CODE INCOMPATIBILITY, Diagnostic Procedure with Diagnostic Trouble Code (DTC).> <Ref. to KPS(diag)-104, DTC B1571 REFERENCE CODE INCOMPATIBILITY, Diagnostic Procedure with Diagnostic Trouble Code (DTC).>
B1572	IMM CIRCUIT EXCEPT ANTENNA CIRCUIT	<Ref. to IM(diag)-19, DTC B1572 IMM CIRCUIT EXCEPT ANTENNA CIRCUIT, Diagnostic Procedure with Diagnostic Trouble Code (DTC).> <Ref. to KPS(diag)-105, DTC B1572 IMM CIRCUIT EXCEPT ANTENNA CIRCUIT, Diagnostic Procedure with Diagnostic Trouble Code (DTC).>
B1574	KEY COMMUNICATION	<Ref. to IM(diag)-23, DTC B1574 KEY COMMUNICATION, Diagnostic Procedure with Diagnostic Trouble Code (DTC).>
B1575	INCORRECT IMMOBILIZER KEY	<Ref. to IM(diag)-24, DTC B1575 INCORRECT IMMOBILIZER KEY, Diagnostic Procedure with Diagnostic Trouble Code (DTC).>
B1576	EGI CONTROL MODULE EEPROM	<Ref. to IM(diag)-25, DTC B1576 EGI CONTROL MODULE EEPROM, Diagnostic Procedure with Diagnostic Trouble Code (DTC).> <Ref. to KPS(diag)-110, DTC B1576 EGI CONTROL MODULE EEPROM, Diagnostic Procedure with Diagnostic Trouble Code (DTC).>
B1577	IMM CONTROL MODULE EEPROM	<Ref. to IM(diag)-26, DTC B1577 IMM CONTROL MODULE EEPROM, Diagnostic Procedure with Diagnostic Trouble Code (DTC).> <Ref. to KPS(diag)-111, DTC B1577 IMM CONTROL MODULE EEPROM, Diagnostic Procedure with Diagnostic Trouble Code (DTC).>
B1578	METER	<Ref. to IM(diag)-26, DTC B1578 METER, Diagnostic Procedure with Diagnostic Trouble Code (DTC).>
P000A	"A" CAMSHAFT POSITION SLOW RESPONSE BANK 1	<Ref. to EN(w/o STI)(diag)-117, DTC P000A "A" CAMSHAFT POSITION SLOW RESPONSE BANK 1, Diagnostic Procedure with Diagnostic Trouble Code (DTC).>
P000B	"B" CAMSHAFT POSITION SLOW RESPONSE BANK 1	<Ref. to EN(w/o STI)(diag)-118, DTC P000B "B" CAMSHAFT POSITION SLOW RESPONSE BANK 1, Diagnostic Procedure with Diagnostic Trouble Code (DTC).>
P000C	"A" CAMSHAFT POSITION SLOW RESPONSE BANK 2	<Ref. to EN(w/o STI)(diag)-118, DTC P000C "A" CAMSHAFT POSITION SLOW RESPONSE BANK 2, Diagnostic Procedure with Diagnostic Trouble Code (DTC).>
P000D	"B" CAMSHAFT POSITION SLOW RESPONSE BANK 2	<Ref. to EN(w/o STI)(diag)-118, DTC P000D "B" CAMSHAFT POSITION SLOW RESPONSE BANK 2, Diagnostic Procedure with Diagnostic Trouble Code (DTC).>
P0010	"A" CAMSHAFT POSITION ACTUATOR CONTROL CIRCUIT/OPEN BANK 1	<Ref. to EN(w/o STI)(diag)-119, DTC P0010 "A" CAMSHAFT POSITION ACTUATOR CONTROL CIRCUIT/OPEN BANK 1, Diagnostic Procedure with Diagnostic Trouble Code (DTC).>
P0011	"A" CAMSHAFT POSITION - TIMING OVER-ADVANCED OR SYSTEM PERFORMANCE BANK 1	<Ref. to EN(w/o STI)(diag)-122, DTC P0011 "A" CAMSHAFT POSITION - TIMING OVER-ADVANCED OR SYSTEM PERFORMANCE BANK 1, Diagnostic Procedure with Diagnostic Trouble Code (DTC).>
P0013	"B" CAMSHAFT POSITION ACTUATOR CONTROL CIRCUIT/OPEN BANK 1	<Ref. to EN(w/o STI)(diag)-124, DTC P0013 "B" CAMSHAFT POSITION ACTUATOR CONTROL CIRCUIT/OPEN BANK 1, Diagnostic Procedure with Diagnostic Trouble Code (DTC).>
P0014	"B" CAMSHAFT POSITION - TIMING OVER-ADVANCED OR SYSTEM PERFORMANCE BANK 1	<Ref. to EN(w/o STI)(diag)-127, DTC P0014 "B" CAMSHAFT POSITION - TIMING OVER-ADVANCED OR SYSTEM PERFORMANCE BANK 1, Diagnostic Procedure with Diagnostic Trouble Code (DTC).>
P0016	CRANKSHAFT POSITION - CAMSHAFT POSITION CORRELATION BANK 1 SENSOR A	<Ref. to EN(w/o STI)(diag)-129, DTC P0016 CRANKSHAFT POSITION - CAMSHAFT POSITION CORRELATION BANK 1 SENSOR A, Diagnostic Procedure with Diagnostic Trouble Code (DTC).>

DTC	Item	Note
P0017	CRANKSHAFT POSITION - CAMSHAFT POSITION CORRELATION BANK 1 SENSOR B	<Ref. to EN(w/o STI)(diag)-132, DTC P0017 CRANKSHAFT POSITION - CAMSHAFT POSITION CORRELATION BANK 1 SENSOR B, Diagnostic Procedure with Diagnostic Trouble Code (DTC).>
P0018	CRANKSHAFT POSITION - CAMSHAFT POSITION CORRELATION BANK 2 SENSOR A	<Ref. to EN(w/o STI)(diag)-135, DTC P0018 CRANKSHAFT POSITION - CAMSHAFT POSITION CORRELATION BANK 2 SENSOR A, Diagnostic Procedure with Diagnostic Trouble Code (DTC).>
P0019	CRANKSHAFT POSITION - CAMSHAFT POSITION CORRELATION BANK 2 SENSOR B	<Ref. to EN(w/o STI)(diag)-137, DTC P0019 CRANKSHAFT POSITION - CAMSHAFT POSITION CORRELATION BANK 2 SENSOR B, Diagnostic Procedure with Diagnostic Trouble Code (DTC).>
P0020	"A" CAMSHAFT POSITION ACTUATOR CONTROL CIRCUIT/OPEN BANK 2	<Ref. to EN(w/o STI)(diag)-139, DTC P0020 "A" CAMSHAFT POSITION ACTUATOR CONTROL CIRCUIT/OPEN BANK 2, Diagnostic Procedure with Diagnostic Trouble Code (DTC).>
P0021	"A" CAMSHAFT POSITION - TIMING OVER-ADVANCED OR SYSTEM PERFORMANCE BANK 2	<Ref. to EN(w/o STI)(diag)-142, DTC P0021 "A" CAMSHAFT POSITION - TIMING OVER-ADVANCED OR SYSTEM PERFORMANCE BANK 2, Diagnostic Procedure with Diagnostic Trouble Code (DTC).>
P0023	"B" CAMSHAFT POSITION ACTUATOR CONTROL CIRCUIT/OPEN BANK 2	<Ref. to EN(w/o STI)(diag)-143, DTC P0023 "B" CAMSHAFT POSITION ACTUATOR CONTROL CIRCUIT/OPEN BANK 2, Diagnostic Procedure with Diagnostic Trouble Code (DTC).>
P0024	"B" CAMSHAFT POSITION - TIMING OVER-ADVANCED OR SYSTEM PERFORMANCE BANK 2	<Ref. to EN(w/o STI)(diag)-146, DTC P0024 "B" CAMSHAFT POSITION - TIMING OVER-ADVANCED OR SYSTEM PERFORMANCE BANK 2, Diagnostic Procedure with Diagnostic Trouble Code (DTC).>
P0030	A/F / O2 HEATER CONTROL CIRCUIT BANK 1 SENSOR 1	<Ref. to EN(w/o STI)(diag)-147, DTC P0030 A/F / O2 HEATER CONTROL CIRCUIT BANK 1 SENSOR 1, Diagnostic Procedure with Diagnostic Trouble Code (DTC).>
P0031	A/F / O2 HEATER CONTROL CIRCUIT LOW BANK 1 SENSOR 1	<Ref. to EN(w/o STI)(diag)-151, DTC P0031 A/F / O2 HEATER CONTROL CIRCUIT LOW BANK 1 SENSOR 1, Diagnostic Procedure with Diagnostic Trouble Code (DTC).>
P0032	A/F / O2 HEATER CONTROL CIRCUIT HIGH BANK 1 SENSOR 1	<Ref. to EN(w/o STI)(diag)-155, DTC P0032 A/F / O2 HEATER CONTROL CIRCUIT HIGH BANK 1 SENSOR 1, Diagnostic Procedure with Diagnostic Trouble Code (DTC).>
P0037	A/F / O2 HEATER CONTROL CIRCUIT LOW BANK 1 SENSOR 2	<Ref. to EN(w/o STI)(diag)-158, DTC P0037 A/F / O2 HEATER CONTROL CIRCUIT LOW BANK 1 SENSOR 2, Diagnostic Procedure with Diagnostic Trouble Code (DTC).>
P0038	A/F / O2 HEATER CONTROL CIRCUIT HIGH BANK 1 SENSOR 2	<Ref. to EN(w/o STI)(diag)-162, DTC P0038 A/F / O2 HEATER CONTROL CIRCUIT HIGH BANK 1 SENSOR 2, Diagnostic Procedure with Diagnostic Trouble Code (DTC).>
P0068	MAP/MAF - THROTTLE POSITION CORRELATION	<Ref. to EN(w/o STI)(diag)-165, DTC P0068 MAP/MAF - THROTTLE POSITION CORRELATION, Diagnostic Procedure with Diagnostic Trouble Code (DTC).>
P0071	AMBIENT AIR TEMPERATURE SENSOR CIRCUIT "A" RANGE/PERFORMANCE	<Ref. to EN(w/o STI)(diag)-168, DTC P0071 AMBIENT AIR TEMPERATURE SENSOR CIRCUIT "A" RANGE/PERFORMANCE, Diagnostic Procedure with Diagnostic Trouble Code (DTC).>
P0072	AMBIENT AIR TEMPERATURE SENSOR CIRCUIT "A" LOW	<Ref. to EN(w/o STI)(diag)-170, DTC P0072 AMBIENT AIR TEMPERATURE SENSOR CIRCUIT "A" LOW, Diagnostic Procedure with Diagnostic Trouble Code (DTC).>
P0073	AMBIENT AIR TEMPERATURE SENSOR CIRCUIT "A" HIGH	<Ref. to EN(w/o STI)(diag)-172, DTC P0073 AMBIENT AIR TEMPERATURE SENSOR CIRCUIT "A" HIGH, Diagnostic Procedure with Diagnostic Trouble Code (DTC).>
P0087	FUEL RAIL/SYSTEM PRESSURE - TOO LOW BANK 1	<Ref. to EN(w/o STI)(diag)-173, DTC P0087 FUEL RAIL/SYSTEM PRESSURE - TOO LOW BANK 1, Diagnostic Procedure with Diagnostic Trouble Code (DTC).>
P0088	FUEL RAIL/SYSTEM PRESSURE - TOO HIGH BANK 1	<Ref. to EN(w/o STI)(diag)-176, DTC P0088 FUEL RAIL/SYSTEM PRESSURE - TOO HIGH BANK 1, Diagnostic Procedure with Diagnostic Trouble Code (DTC).>
P0096	INTAKE AIR TEMPERATURE SENSOR 2 CIRCUIT RANGE/PERFORMANCE BANK 1	<Ref. to EN(w/o STI)(diag)-178, DTC P0096 INTAKE AIR TEMPERATURE SENSOR 2 CIRCUIT RANGE/PERFORMANCE BANK 1, Diagnostic Procedure with Diagnostic Trouble Code (DTC).>
P0097	INTAKE AIR TEMPERATURE SENSOR 2 CIRCUIT LOW BANK 1	<Ref. to EN(w/o STI)(diag)-181, DTC P0097 INTAKE AIR TEMPERATURE SENSOR 2 CIRCUIT LOW BANK 1, Diagnostic Procedure with Diagnostic Trouble Code (DTC).>

DTC	Item	Note
P0098	INTAKE AIR TEMPERATURE SENSOR 2 CIRCUIT HIGH BANK 1	<Ref. to EN(w/o STI)(diag)-184, DTC P0098 INTAKE AIR TEMPERATURE SENSOR 2 CIRCUIT HIGH BANK 1, Diagnostic Procedure with Diagnostic Trouble Code (DTC).>
P0101	MASS OR VOLUME AIR FLOW SENSOR "A" CIRCUIT RANGE/ PERFORMANCE	<Ref. to EN(w/o STI)(diag)-187, DTC P0101 MASS OR VOLUME AIR FLOW SENSOR "A" CIRCUIT RANGE/PERFORMANCE, Diagnostic Procedure with Diagnostic Trouble Code (DTC).>
P0102	MASS OR VOLUME AIR FLOW SENSOR "A" CIRCUIT LOW	<Ref. to EN(w/o STI)(diag)-189, DTC P0102 MASS OR VOLUME AIR FLOW SENSOR "A" CIRCUIT LOW, Diagnostic Procedure with Diagnostic Trouble Code (DTC).>
P0103	MASS OR VOLUME AIR FLOW SENSOR "A" CIRCUIT HIGH	<Ref. to EN(w/o STI)(diag)-192, DTC P0103 MASS OR VOLUME AIR FLOW SENSOR "A" CIRCUIT HIGH, Diagnostic Procedure with Diagnostic Trouble Code (DTC).>
P0107	MANIFOLD ABSOLUTE PRESSURE/BAROMETRIC PRESSURE SENSOR CIRCUIT LOW	<Ref. to EN(w/o STI)(diag)-195, DTC P0107 MANIFOLD ABSOLUTE PRESSURE/BAROMETRIC PRESSURE SENSOR CIRCUIT LOW, Diagnostic Procedure with Diagnostic Trouble Code (DTC).>
P0108	MANIFOLD ABSOLUTE PRESSURE/BAROMETRIC PRESSURE SENSOR CIRCUIT HIGH	<Ref. to EN(w/o STI)(diag)-198, DTC P0108 MANIFOLD ABSOLUTE PRESSURE/BAROMETRIC PRESSURE SENSOR CIRCUIT HIGH, Diagnostic Procedure with Diagnostic Trouble Code (DTC).>
P0111	INTAKE AIR TEMPERATURE SENSOR 1 CIRCUIT RANGE/ PERFORMANCE BANK 1	<Ref. to EN(w/o STI)(diag)-201, DTC P0111 INTAKE AIR TEMPERATURE SENSOR 1 CIRCUIT RANGE/PERFORMANCE BANK 1, Diagnostic Procedure with Diagnostic Trouble Code (DTC).>
P0112	INTAKE AIR TEMPERATURE SENSOR 1 CIRCUIT LOW BANK 1	<Ref. to EN(w/o STI)(diag)-204, DTC P0112 INTAKE AIR TEMPERATURE SENSOR 1 CIRCUIT LOW BANK 1, Diagnostic Procedure with Diagnostic Trouble Code (DTC).>
P0113	INTAKE AIR TEMPERATURE SENSOR 1 CIRCUIT HIGH BANK 1	<Ref. to EN(w/o STI)(diag)-207, DTC P0113 INTAKE AIR TEMPERATURE SENSOR 1 CIRCUIT HIGH BANK 1, Diagnostic Procedure with Diagnostic Trouble Code (DTC).>
P0116	ENGINE COOLANT TEMPERATURE SENSOR 1 CIRCUIT RANGE/PERFORMANCE	<Ref. to EN(w/o STI)(diag)-210, DTC P0116 ENGINE COOLANT TEMPERATURE SENSOR 1 CIRCUIT RANGE/PERFORMANCE, Diagnostic Procedure with Diagnostic Trouble Code (DTC).>
P0117	ENGINE COOLANT TEMPERATURE SENSOR 1 CIRCUIT LOW	<Ref. to EN(w/o STI)(diag)-212, DTC P0117 ENGINE COOLANT TEMPERATURE SENSOR 1 CIRCUIT LOW, Diagnostic Procedure with Diagnostic Trouble Code (DTC).>
P0118	ENGINE COOLANT TEMPERATURE SENSOR 1 CIRCUIT HIGH	<Ref. to EN(w/o STI)(diag)-215, DTC P0118 ENGINE COOLANT TEMPERATURE SENSOR 1 CIRCUIT HIGH, Diagnostic Procedure with Diagnostic Trouble Code (DTC).>
P0122	THROTTLE/PEDAL POSITION SENSOR/SWITCH "A" CIRCUIT LOW	<Ref. to EN(w/o STI)(diag)-218, DTC P0122 THROTTLE/PEDAL POSITION SENSOR/SWITCH "A" CIRCUIT LOW, Diagnostic Procedure with Diagnostic Trouble Code (DTC).>
P0123	THROTTLE/PEDAL POSITION SENSOR/SWITCH "A" CIRCUIT HIGH	<Ref. to EN(w/o STI)(diag)-222, DTC P0123 THROTTLE/PEDAL POSITION SENSOR/SWITCH "A" CIRCUIT HIGH, Diagnostic Procedure with Diagnostic Trouble Code (DTC).>
P0125	INSUFFICIENT COOLANT TEMPERATURE FOR CLOSED LOOP FUEL CONTROL	<Ref. to EN(w/o STI)(diag)-226, DTC P0125 INSUFFICIENT COOLANT TEMPERATURE FOR CLOSED LOOP FUEL CONTROL, Diagnostic Procedure with Diagnostic Trouble Code (DTC).>
P0128	COOLANT THERMOSTAT (ENGINE COOLANT TEMPERATURE BELOW THERMOSTAT REGULATING TEMPERATURE)	<Ref. to EN(w/o STI)(diag)-228, DTC P0128 COOLANT THERMOSTAT (ENGINE COOLANT TEMPERATURE BELOW THERMOSTAT REGULATING TEMPERATURE), Diagnostic Procedure with Diagnostic Trouble Code (DTC).>
P0130	A/F / O2 SENSOR CIRCUIT BANK 1 SENSOR 1	<Ref. to EN(w/o STI)(diag)-232, DTC P0130 A/F / O2 SENSOR CIRCUIT BANK 1 SENSOR 1, Diagnostic Procedure with Diagnostic Trouble Code (DTC).>
P0131	A/F / O2 SENSOR CIRCUIT LOW VOLTAGE BANK 1 SENSOR 1	<Ref. to EN(w/o STI)(diag)-237, DTC P0131 A/F / O2 SENSOR CIRCUIT LOW VOLTAGE BANK 1 SENSOR 1, Diagnostic Procedure with Diagnostic Trouble Code (DTC).>
P0132	A/F / O2 SENSOR CIRCUIT HIGH VOLTAGE BANK 1 SENSOR 1	<Ref. to EN(w/o STI)(diag)-241, DTC P0132 A/F / O2 SENSOR CIRCUIT HIGH VOLTAGE BANK 1 SENSOR 1, Diagnostic Procedure with Diagnostic Trouble Code (DTC).>

DTC	Item	Note
P0134	A/F / O2 SENSOR CIRCUIT NO ACTIVITY DETECTED BANK 1 SENSOR 1	<Ref. to EN(w/o STI)(diag)-245, DTC P0134 A/F / O2 SENSOR CIRCUIT NO ACTIVITY DETECTED BANK 1 SENSOR 1, Diagnostic Procedure with Diagnostic Trouble Code (DTC).>
P0137	O2 SENSOR CIRCUIT LOW VOLTAGE BANK 1 SENSOR 2	<Ref. to EN(w/o STI)(diag)-249, DTC P0137 O2 SENSOR CIRCUIT LOW VOLTAGE BANK 1 SENSOR 2, Diagnostic Procedure with Diagnostic Trouble Code (DTC).>
P0138	O2 SENSOR CIRCUIT HIGH VOLTAGE BANK 1 SENSOR 2	<Ref. to EN(w/o STI)(diag)-254, DTC P0138 O2 SENSOR CIRCUIT HIGH VOLTAGE BANK 1 SENSOR 2, Diagnostic Procedure with Diagnostic Trouble Code (DTC).>
P013A	O2 SENSOR SLOW RESPONSE - RICH TO LEAN BANK 1 SENSOR 2	<Ref. to EN(w/o STI)(diag)-258, DTC P013A O2 SENSOR SLOW RESPONSE - RICH TO LEAN BANK 1 SENSOR 2, Diagnostic Procedure with Diagnostic Trouble Code (DTC).>
P013B	O2 SENSOR SLOW RESPONSE - LEAN TO RICH BANK 1 SENSOR 2	<Ref. to EN(w/o STI)(diag)-263, DTC P013B O2 SENSOR SLOW RESPONSE - LEAN TO RICH BANK 1 SENSOR 2, Diagnostic Procedure with Diagnostic Trouble Code (DTC).>
P013E	O2 SENSOR DELAYED RESPONSE - RICH TO LEAN BANK 1 SENSOR 2	<Ref. to EN(w/o STI)(diag)-265, DTC P013E O2 SENSOR DELAYED RESPONSE - RICH TO LEAN BANK 1 SENSOR 2, Diagnostic Procedure with Diagnostic Trouble Code (DTC).>
P013F	O2 SENSOR DELAYED RESPONSE - LEAN TO RICH BANK 1 SENSOR 2	<Ref. to EN(w/o STI)(diag)-267, DTC P013F O2 SENSOR DELAYED RESPONSE - LEAN TO RICH BANK 1 SENSOR 2, Diagnostic Procedure with Diagnostic Trouble Code (DTC).>
P0141	O2 SENSOR HEATER CIRCUIT BANK 1 SENSOR 2	<Ref. to EN(w/o STI)(diag)-269, DTC P0141 O2 SENSOR HEATER CIRCUIT BANK 1 SENSOR 2, Diagnostic Procedure with Diagnostic Trouble Code (DTC).>
P014C	A/F / O2 SENSOR SLOW RESPONSE - RICH TO LEAN BANK 1 SENSOR 1	<Ref. to EN(w/o STI)(diag)-273, DTC P014C A/F / O2 SENSOR SLOW RESPONSE - RICH TO LEAN BANK 1 SENSOR 1, Diagnostic Procedure with Diagnostic Trouble Code (DTC).>
P014D	A/F / O2 SENSOR SLOW RESPONSE - LEAN TO RICH BANK 1 SENSOR 1	<Ref. to EN(w/o STI)(diag)-275, DTC P014D A/F / O2 SENSOR SLOW RESPONSE - LEAN TO RICH BANK 1 SENSOR 1, Diagnostic Procedure with Diagnostic Trouble Code (DTC).>
P015A	A/F / O2 SENSOR DELAYED RESPONSE - RICH TO LEAN BANK 1 SENSOR 1	<Ref. to EN(w/o STI)(diag)-276, DTC P015A A/F / O2 SENSOR DELAYED RESPONSE - RICH TO LEAN BANK 1 SENSOR 1, Diagnostic Procedure with Diagnostic Trouble Code (DTC).>
P015B	A/F / O2 SENSOR DELAYED RESPONSE - LEAN TO RICH BANK 1 SENSOR 1	<Ref. to EN(w/o STI)(diag)-281, DTC P015B A/F / O2 SENSOR DELAYED RESPONSE - LEAN TO RICH BANK 1 SENSOR 1, Diagnostic Procedure with Diagnostic Trouble Code (DTC).>
P0171	SYSTEM TOO LEAN BANK 1	<Ref. to EN(w/o STI)(diag)-282, DTC P0171 SYSTEM TOO LEAN BANK 1, Diagnostic Procedure with Diagnostic Trouble Code (DTC).>
P0172	SYSTEM TOO RICH BANK 1	<Ref. to EN(w/o STI)(diag)-283, DTC P0172 SYSTEM TOO RICH BANK 1, Diagnostic Procedure with Diagnostic Trouble Code (DTC).>
P0191	FUEL RAIL PRESSURE SENSOR CIRCUIT RANGE/PERFORMANCE BANK 1	<Ref. to EN(w/o STI)(diag)-288, DTC P0191 FUEL RAIL PRESSURE SENSOR CIRCUIT RANGE/PERFORMANCE BANK 1, Diagnostic Procedure with Diagnostic Trouble Code (DTC).>
P0192	FUEL RAIL PRESSURE SENSOR CIRCUIT LOW BANK 1	<Ref. to EN(w/o STI)(diag)-291, DTC P0192 FUEL RAIL PRESSURE SENSOR CIRCUIT LOW BANK 1, Diagnostic Procedure with Diagnostic Trouble Code (DTC).>
P0193	FUEL RAIL PRESSURE SENSOR CIRCUIT HIGH BANK 1	<Ref. to EN(w/o STI)(diag)-293, DTC P0193 FUEL RAIL PRESSURE SENSOR CIRCUIT HIGH BANK 1, Diagnostic Procedure with Diagnostic Trouble Code (DTC).>
P0196	ENGINE OIL TEMPERATURE SENSOR "A" RANGE/PERFORMANCE	<Ref. to EN(w/o STI)(diag)-295, DTC P0196 ENGINE OIL TEMPERATURE SENSOR "A" RANGE/PERFORMANCE, Diagnostic Procedure with Diagnostic Trouble Code (DTC).>
P0197	ENGINE OIL TEMPERATURE SENSOR "A" CIRCUIT LOW	<Ref. to EN(w/o STI)(diag)-298, DTC P0197 ENGINE OIL TEMPERATURE SENSOR "A" CIRCUIT LOW, Diagnostic Procedure with Diagnostic Trouble Code (DTC).>
P0198	ENGINE OIL TEMPERATURE SENSOR "A" CIRCUIT HIGH	<Ref. to EN(w/o STI)(diag)-301, DTC P0198 ENGINE OIL TEMPERATURE SENSOR "A" CIRCUIT HIGH, Diagnostic Procedure with Diagnostic Trouble Code (DTC).>

DTC	Item	Note
P0222	THROTTLE/PEDAL POSITION SENSOR/SWITCH "B" CIRCUIT LOW	<Ref. to EN(w/o STI)(diag)-304, DTC P0222 THROTTLE/PEDAL POSITION SENSOR/SWITCH "B" CIRCUIT LOW, Diagnostic Procedure with Diagnostic Trouble Code (DTC).>
P0223	THROTTLE/PEDAL POSITION SENSOR/SWITCH "B" CIRCUIT HIGH	<Ref. to EN(w/o STI)(diag)-308, DTC P0223 THROTTLE/PEDAL POSITION SENSOR/SWITCH "B" CIRCUIT HIGH, Diagnostic Procedure with Diagnostic Trouble Code (DTC).>
P0230	FUEL PUMP PRIMARY CIRCUIT	<Ref. to EN(w/o STI)(diag)-312, DTC P0230 FUEL PUMP PRIMARY CIRCUIT, Diagnostic Procedure with Diagnostic Trouble Code (DTC).>
P023F	FUEL PUMP SECONDARY CIRCUIT/OPEN	<Ref. to EN(w/o STI)(diag)-315, DTC P023F FUEL PUMP SECONDARY CIRCUIT/OPEN, Diagnostic Procedure with Diagnostic Trouble Code (DTC).>
P0244	TURBOCHARGER/SUPERCHARGER WASTEGATE SOLENOID "A" RANGE/ PERFORMANCE	<Ref. to EN(w/o STI)(diag)-318, DTC P0244 TURBOCHARGER/SUPERCHARGER WASTEGATE SOLENOID "A" RANGE/PERFORMANCE, Diagnostic Procedure with Diagnostic Trouble Code (DTC).>
P0245	TURBOCHARGER/SUPERCHARGER WASTEGATE SOLENOID "A" LOW	<Ref. to EN(w/o STI)(diag)-320, DTC P0245 TURBOCHARGER/SUPERCHARGER WASTEGATE SOLENOID "A" LOW, Diagnostic Procedure with Diagnostic Trouble Code (DTC).>
P0246	TURBOCHARGER/SUPERCHARGER WASTEGATE SOLENOID "A" HIGH	<Ref. to EN(w/o STI)(diag)-323, DTC P0246 TURBOCHARGER/SUPERCHARGER WASTEGATE SOLENOID "A" HIGH, Diagnostic Procedure with Diagnostic Trouble Code (DTC).>
P0300	RANDOM/MULTIPLE CYLINDER MISFIRE DETECTED	<Ref. to EN(w/o STI)(diag)-326, DTC P0300 RANDOM/MULTIPLE CYLINDER MISFIRE DETECTED, Diagnostic Procedure with Diagnostic Trouble Code (DTC).>
P0301	CYLINDER 1 MISFIRE DETECTED	<Ref. to EN(w/o STI)(diag)-330, DTC P0301 CYLINDER 1 MISFIRE DETECTED, Diagnostic Procedure with Diagnostic Trouble Code (DTC).>
P0302	CYLINDER 2 MISFIRE DETECTED	<Ref. to EN(w/o STI)(diag)-334, DTC P0302 CYLINDER 2 MISFIRE DETECTED, Diagnostic Procedure with Diagnostic Trouble Code (DTC).>
P0303	CYLINDER 3 MISFIRE DETECTED	<Ref. to EN(w/o STI)(diag)-334, DTC P0303 CYLINDER 3 MISFIRE DETECTED, Diagnostic Procedure with Diagnostic Trouble Code (DTC).>
P0304	CYLINDER 4 MISFIRE DETECTED	<Ref. to EN(w/o STI)(diag)-335, DTC P0304 CYLINDER 4 MISFIRE DETECTED, Diagnostic Procedure with Diagnostic Trouble Code (DTC).>
P0327	KNOCK/COMBUSTION VIBRATION SENSOR 1 CIRCUIT LOW BANK 1 OR SINGLE SENSOR	<Ref. to EN(w/o STI)(diag)-339, DTC P0327 KNOCK/COMBUSTION VIBRATION SENSOR 1 CIRCUIT LOW BANK 1 OR SINGLE SENSOR, Diagnostic Procedure with Diagnostic Trouble Code (DTC).>
P0328	KNOCK/COMBUSTION VIBRATION SENSOR 1 CIRCUIT HIGH BANK 1 OR SINGLE SENSOR	<Ref. to EN(w/o STI)(diag)-342, DTC P0328 KNOCK/COMBUSTION VIBRATION SENSOR 1 CIRCUIT HIGH BANK 1 OR SINGLE SENSOR, Diagnostic Procedure with Diagnostic Trouble Code (DTC).>
P0332	KNOCK/COMBUSTION VIBRATION SENSOR 2 CIRCUIT LOW BANK 2	<Ref. to EN(w/o STI)(diag)-344, DTC P0332 KNOCK/COMBUSTION VIBRATION SENSOR 2 CIRCUIT LOW BANK 2, Diagnostic Procedure with Diagnostic Trouble Code (DTC).>
P0333	KNOCK/COMBUSTION VIBRATION SENSOR 2 CIRCUIT HIGH BANK 2	<Ref. to EN(w/o STI)(diag)-347, DTC P0333 KNOCK/COMBUSTION VIBRATION SENSOR 2 CIRCUIT HIGH BANK 2, Diagnostic Procedure with Diagnostic Trouble Code (DTC).>
P0335	CRANKSHAFT POSITION SENSOR "A" CIRCUIT	<Ref. to EN(w/o STI)(diag)-349, DTC P0335 CRANKSHAFT POSITION SENSOR "A" CIRCUIT, Diagnostic Procedure with Diagnostic Trouble Code (DTC).>
P0336	CRANKSHAFT POSITION SENSOR "A" CIRCUIT RANGE/PERFORMANCE	<Ref. to EN(w/o STI)(diag)-353, DTC P0336 CRANKSHAFT POSITION SENSOR "A" CIRCUIT RANGE/PERFORMANCE, Diagnostic Procedure with Diagnostic Trouble Code (DTC).>
P0340	CAMSHAFT POSITION SENSOR "A" CIRCUIT BANK 1 OR SINGLE SENSOR	<Ref. to EN(w/o STI)(diag)-356, DTC P0340 CAMSHAFT POSITION SENSOR "A" CIRCUIT BANK 1 OR SINGLE SENSOR, Diagnostic Procedure with Diagnostic Trouble Code (DTC).>
P0341	CAMSHAFT POSITION SENSOR "A" CIRCUIT RANGE/PERFORMANCE BANK 1 OR SINGLE SENSOR	<Ref. to EN(w/o STI)(diag)-360, DTC P0341 CAMSHAFT POSITION SENSOR "A" CIRCUIT RANGE/PERFORMANCE BANK 1 OR SINGLE SENSOR, Diagnostic Procedure with Diagnostic Trouble Code (DTC).>

DTC	Item	Note
P0345	CAMSHAFT POSITION SENSOR "A" CIRCUIT BANK 2	<Ref. to EN(w/o STI)(diag)-361, DTC P0345 CAMSHAFT POSITION SENSOR "A" CIRCUIT BANK 2, Diagnostic Procedure with Diagnostic Trouble Code (DTC).>
P0346	CAMSHAFT POSITION SENSOR "A" CIRCUIT RANGE/PERFORMANCE BANK 2	<Ref. to EN(w/o STI)(diag)-363, DTC P0346 CAMSHAFT POSITION SENSOR "A" CIRCUIT RANGE/PERFORMANCE BANK 2, Diagnostic Procedure with Diagnostic Trouble Code (DTC).>
P0351	IGNITION COIL "A" PRIMARY CONTROL CIRCUIT/OPEN	<Ref. to EN(w/o STI)(diag)-364, DTC P0351 IGNITION COIL "A" PRIMARY CONTROL CIRCUIT/OPEN, Diagnostic Procedure with Diagnostic Trouble Code (DTC).>
P0352	IGNITION COIL "B" PRIMARY CONTROL CIRCUIT/OPEN	<Ref. to EN(w/o STI)(diag)-366, DTC P0352 IGNITION COIL "B" PRIMARY CONTROL CIRCUIT/OPEN, Diagnostic Procedure with Diagnostic Trouble Code (DTC).>
P0353	IGNITION COIL "C" PRIMARY CONTROL CIRCUIT/OPEN	<Ref. to EN(w/o STI)(diag)-366, DTC P0353 IGNITION COIL "C" PRIMARY CONTROL CIRCUIT/OPEN, Diagnostic Procedure with Diagnostic Trouble Code (DTC).>
P0354	IGNITION COIL "D" PRIMARY CONTROL CIRCUIT/OPEN	<Ref. to EN(w/o STI)(diag)-366, DTC P0354 IGNITION COIL "D" PRIMARY CONTROL CIRCUIT/OPEN, Diagnostic Procedure with Diagnostic Trouble Code (DTC).>
P0365	CAMSHAFT POSITION SENSOR "B" CIRCUIT BANK 1	<Ref. to EN(w/o STI)(diag)-367, DTC P0365 CAMSHAFT POSITION SENSOR "B" CIRCUIT BANK 1, Diagnostic Procedure with Diagnostic Trouble Code (DTC).>
P0366	CAMSHAFT POSITION SENSOR "B" CIRCUIT RANGE/PERFORMANCE BANK 1	<Ref. to EN(w/o STI)(diag)-370, DTC P0366 CAMSHAFT POSITION SENSOR "B" CIRCUIT RANGE/PERFORMANCE BANK 1, Diagnostic Procedure with Diagnostic Trouble Code (DTC).>
P0390	CAMSHAFT POSITION SENSOR "B" CIRCUIT BANK 2	<Ref. to EN(w/o STI)(diag)-371, DTC P0390 CAMSHAFT POSITION SENSOR "B" CIRCUIT BANK 2, Diagnostic Procedure with Diagnostic Trouble Code (DTC).>
P0391	CAMSHAFT POSITION SENSOR "B" CIRCUIT RANGE/PERFORMANCE BANK 2	<Ref. to EN(w/o STI)(diag)-373, DTC P0391 CAMSHAFT POSITION SENSOR "B" CIRCUIT RANGE/PERFORMANCE BANK 2, Diagnostic Procedure with Diagnostic Trouble Code (DTC).>
P0400	EGR "A" FLOW	<Ref. to EN(w/o STI)(diag)-374, DTC P0400 EGR "A" FLOW, Diagnostic Procedure with Diagnostic Trouble Code (DTC).>
P0420	CATALYST SYSTEM EFFICIENCY BELOW THRESHOLD BANK 1	<Ref. to EN(w/o STI)(diag)-377, DTC P0420 CATALYST SYSTEM EFFICIENCY BELOW THRESHOLD BANK 1, Diagnostic Procedure with Diagnostic Trouble Code (DTC).>
P0441	EVAP SYSTEM (CPC) INCORRECT PURGE FLOW	<Ref. to EN(w/o STI)(diag)-386, DTC P0441 EVAP SYSTEM (CPC) INCORRECT PURGE FLOW, Diagnostic Procedure with Diagnostic Trouble Code (DTC).>
P0451	EVAP SYSTEM (CPC) PRESSURE SENSOR/SWITCH CIRCUIT RANGE/PERFORMANCE	<Ref. to EN(w/o STI)(diag)-388, DTC P0451 EVAP SYSTEM (CPC) PRESSURE SENSOR/SWITCH CIRCUIT RANGE/PERFORMANCE, Diagnostic Procedure with Diagnostic Trouble Code (DTC).>
P0452	EVAP SYSTEM (CPC) PRESSURE SENSOR/SWITCH CIRCUIT LOW	<Ref. to EN(w/o STI)(diag)-390, DTC P0452 EVAP SYSTEM (CPC) PRESSURE SENSOR/SWITCH CIRCUIT LOW, Diagnostic Procedure with Diagnostic Trouble Code (DTC).>
P0453	EVAP SYSTEM (CPC) PRESSURE SENSOR/SWITCH CIRCUIT HIGH	<Ref. to EN(w/o STI)(diag)-393, DTC P0453 EVAP SYSTEM (CPC) PRESSURE SENSOR/SWITCH CIRCUIT HIGH, Diagnostic Procedure with Diagnostic Trouble Code (DTC).>
P0455	EVAP SYSTEM (CPC) LEAK DETECTED (LARGE LEAK)	<Ref. to EN(w/o STI)(diag)-396, DTC P0455 EVAP SYSTEM (CPC) LEAK DETECTED (LARGE LEAK), Diagnostic Procedure with Diagnostic Trouble Code (DTC).>
P0456	EVAP SYSTEM (CPC) LEAK DETECTED (VERY SMALL LEAK)	<Ref. to EN(w/o STI)(diag)-403, DTC P0456 EVAP SYSTEM (CPC) LEAK DETECTED (VERY SMALL LEAK), Diagnostic Procedure with Diagnostic Trouble Code (DTC).>
P0458	EVAP SYSTEM (CPC) PURGE CONTROL VALVE "A" CIRCUIT LOW	<Ref. to EN(w/o STI)(diag)-404, DTC P0458 EVAP SYSTEM (CPC) PURGE CONTROL VALVE "A" CIRCUIT LOW, Diagnostic Procedure with Diagnostic Trouble Code (DTC).>

DTC	Item	Note
P0459	EVAP SYSTEM (CPC) PURGE CONTROL VALVE "A" CIRCUIT HIGH	<Ref. to EN(w/o STI)(diag)-407, DTC P0459 EVAP SYSTEM (CPC) PURGE CONTROL VALVE "A" CIRCUIT HIGH, Diagnostic Procedure with Diagnostic Trouble Code (DTC).>
P0461	FUEL LEVEL SENSOR "A" CIRCUIT RANGE/PERFORMANCE	<Ref. to EN(w/o STI)(diag)-410, DTC P0461 FUEL LEVEL SENSOR "A" CIRCUIT RANGE/PERFORMANCE, Diagnostic Procedure with Diagnostic Trouble Code (DTC).>
P0462	FUEL LEVEL SENSOR "A" CIRCUIT LOW	<Ref. to EN(w/o STI)(diag)-412, DTC P0462 FUEL LEVEL SENSOR "A" CIRCUIT LOW, Diagnostic Procedure with Diagnostic Trouble Code (DTC).>
P0463	FUEL LEVEL SENSOR "A" CIRCUIT HIGH	<Ref. to EN(w/o STI)(diag)-413, DTC P0463 FUEL LEVEL SENSOR "A" CIRCUIT HIGH, Diagnostic Procedure with Diagnostic Trouble Code (DTC).>
P04AC	EVAP SYSTEM (CPC) PURGE CONTROL VALVE "B" CIRCUIT LOW	<Ref. to EN(w/o STI)(diag)-415, DTC P04AC EVAP SYSTEM (CPC) PURGE CONTROL VALVE "B" CIRCUIT LOW, Diagnostic Procedure with Diagnostic Trouble Code (DTC).>
P04AD	EVAP SYSTEM (CPC) PURGE CONTROL VALVE "B" CIRCUIT HIGH	<Ref. to EN(w/o STI)(diag)-418, DTC P04AD EVAP SYSTEM (CPC) PURGE CONTROL VALVE "B" CIRCUIT HIGH, Diagnostic Procedure with Diagnostic Trouble Code (DTC).>
P04AF	EVAP SYSTEM PURGE CONTROL VALVE (CPC) "B" STUCK CLOSED	<Ref. to EN(w/o STI)(diag)-421, DTC P04AF EVAP SYSTEM PURGE CONTROL VALVE (CPC) "B" STUCK CLOSED, Diagnostic Procedure with Diagnostic Trouble Code (DTC).>
P04DB	CRANKCASE VENTILATION SYSTEM (PCV) DISCONNECTED	<Ref. to EN(w/o STI)(diag)-422, DTC P04DB CRANKCASE VENTILATION SYSTEM (PCV) DISCONNECTED, Diagnostic Procedure with Diagnostic Trouble Code (DTC).>
P04F0	EVAP SYSTEM HIGH PRESSURE PURGE LINE (CPC2) PERFORMANCE	<Ref. to EN(w/o STI)(diag)-425, DTC P04F0 EVAP SYSTEM HIGH PRESSURE PURGE LINE (CPC2) PERFORMANCE, Diagnostic Procedure with Diagnostic Trouble Code (DTC).>
P0500	VEHICLE SPEED SENSOR "A" CIRCUIT	<Ref. to EN(w/o STI)(diag)-429, DTC P0500 VEHICLE SPEED SENSOR "A" CIRCUIT, Diagnostic Procedure with Diagnostic Trouble Code (DTC).>
P0506	IDLE CONTROL SYSTEM RPM - LOWER THAN EXPECTED	<Ref. to EN(w/o STI)(diag)-430, DTC P0506 IDLE CONTROL SYSTEM RPM - LOWER THAN EXPECTED, Diagnostic Procedure with Diagnostic Trouble Code (DTC).>
P0507	IDLE CONTROL SYSTEM RPM - HIGHER THAN EXPECTED	<Ref. to EN(w/o STI)(diag)-432, DTC P0507 IDLE CONTROL SYSTEM RPM - HIGHER THAN EXPECTED, Diagnostic Procedure with Diagnostic Trouble Code (DTC).>
P050A	COLD START IDLE CONTROL SYSTEM PERFORMANCE	<Ref. to EN(w/o STI)(diag)-434, DTC P050A COLD START IDLE CONTROL SYSTEM PERFORMANCE, Diagnostic Procedure with Diagnostic Trouble Code (DTC).>
P050B	COLD START IGNITION TIMING PERFORMANCE	<Ref. to EN(w/o STI)(diag)-444, DTC P050B COLD START IGNITION TIMING PERFORMANCE, Diagnostic Procedure with Diagnostic Trouble Code (DTC).>
P0512	STARTER (SWITCH) REQUEST CIRCUIT	<Ref. to EN(w/o STI)(diag)-445, DTC P0512 STARTER (SWITCH) REQUEST CIRCUIT, Diagnostic Procedure with Diagnostic Trouble Code (DTC).>
P0560	SYSTEM VOLTAGE	<Ref. to EN(w/o STI)(diag)-448, DTC P0560 SYSTEM VOLTAGE, Diagnostic Procedure with Diagnostic Trouble Code (DTC).>
P0604	INTERNAL CONTROL MODULE RANDOM ACCESS MEMORY (RAM) ERROR	<Ref. to EN(w/o STI)(diag)-451, DTC P0604 INTERNAL CONTROL MODULE RANDOM ACCESS MEMORY (RAM) ERROR, Diagnostic Procedure with Diagnostic Trouble Code (DTC).>
P0605	INTERNAL CONTROL MODULE READ ONLY MEMORY (ROM) ERROR	<Ref. to EN(w/o STI)(diag)-452, DTC P0605 INTERNAL CONTROL MODULE READ ONLY MEMORY (ROM) ERROR, Diagnostic Procedure with Diagnostic Trouble Code (DTC).>
P0606	CONTROL MODULE PROCESSOR	<Ref. to EN(w/o STI)(diag)-453, DTC P0606 CONTROL MODULE PROCESSOR, Diagnostic Procedure with Diagnostic Trouble Code (DTC).>
P060A	INTERNAL CONTROL MODULE MONITORING PROCESSOR PERFORMANCE	<Ref. to EN(w/o STI)(diag)-457, DTC P060A INTERNAL CONTROL MODULE MONITORING PROCESSOR PERFORMANCE, Diagnostic Procedure with Diagnostic Trouble Code (DTC).>
P060B	INTERNAL CONTROL MODULE A/D PROCESSING PERFORMANCE	<Ref. to EN(w/o STI)(diag)-457, DTC P060B INTERNAL CONTROL MODULE A/D PROCESSING PERFORMANCE, Diagnostic Procedure with Diagnostic Trouble Code (DTC).>

DTC	Item	Note
P0616	STARTER RELAY "A" CIRCUIT LOW	<Ref. to EN(w/o STI)(diag)-458, DTC P0616 STARTER RELAY "A" CIRCUIT LOW, Diagnostic Procedure with Diagnostic Trouble Code (DTC).>
P0617	STARTER RELAY "A" CIRCUIT HIGH	<Ref. to EN(w/o STI)(diag)-463, DTC P0617 STARTER RELAY "A" CIRCUIT HIGH, Diagnostic Procedure with Diagnostic Trouble Code (DTC).>
P062D	FUEL INJECTOR DRIVER CIRCUIT PERFORMANCE BANK 1	<Ref. to EN(w/o STI)(diag)-469, DTC P062D FUEL INJECTOR DRIVER CIRCUIT PERFORMANCE BANK 1, Diagnostic Procedure with Diagnostic Trouble Code (DTC).>
P062F	INTERNAL CONTROL MODULE EEPROM ERROR	<Ref. to EN(w/o STI)(diag)-472, DTC P062F INTERNAL CONTROL MODULE EEPROM ERROR, Diagnostic Procedure with Diagnostic Trouble Code (DTC).>
P0685	ECM/PCM POWER RELAY CONTROL CIRCUIT/OPEN	<Ref. to EN(w/o STI)(diag)-473, DTC P0685 ECM/PCM POWER RELAY CONTROL CIRCUIT/OPEN, Diagnostic Procedure with Diagnostic Trouble Code (DTC).>
P0700	TRANSMISSION CONTROL SYSTEM (MIL REQUEST)	<Ref. to EN(w/o STI)(diag)-476, DTC P0700 TRANSMISSION CONTROL SYSTEM (MIL REQUEST), Diagnostic Procedure with Diagnostic Trouble Code (DTC).>
P081A	STARTER DISABLE CIRCUIT LOW	<Ref. to EN(w/o STI)(diag)-477, DTC P081A STARTER DISABLE CIRCUIT LOW, Diagnostic Procedure with Diagnostic Trouble Code (DTC).>
P0851	PARK/NEUTRAL SWITCH INPUT CIRCUIT LOW	<Ref. to EN(w/o STI)(diag)-480, DTC P0851 PARK/NEUTRAL SWITCH INPUT CIRCUIT LOW, Diagnostic Procedure with Diagnostic Trouble Code (DTC).>
P0852	PARK/NEUTRAL SWITCH INPUT CIRCUIT HIGH	<Ref. to EN(w/o STI)(diag)-484, DTC P0852 PARK/NEUTRAL SWITCH INPUT CIRCUIT HIGH, Diagnostic Procedure with Diagnostic Trouble Code (DTC).>
P1134	A/F / O2 SENSOR BANK1 SENSOR1 SERIAL PERIPHERAL INTERFACE (SPI) COMMUNICATION	<Ref. to EN(w/o STI)(diag)-489, DTC P1134 A/F / O2 SENSOR BANK1 SENSOR1 SERIAL PERIPHERAL INTERFACE (SPI) COMMUNICATION, Diagnostic Procedure with Diagnostic Trouble Code (DTC).>
P1160	THROTTLE RETURN SPRING	<Ref. to EN(w/o STI)(diag)-490, DTC P1160 THROTTLE RETURN SPRING, Diagnostic Procedure with Diagnostic Trouble Code (DTC).>
P1191	FUEL RAIL PRESSURE SENSOR "A" CIRCUIT NO ACTIVITY DETECTED	<Ref. to EN(w/o STI)(diag)-491, DTC P1191 FUEL RAIL PRESSURE SENSOR "A" CIRCUIT NO ACTIVITY DETECTED, Diagnostic Procedure with Diagnostic Trouble Code (DTC).>
P1261	CYLINDER 1 DIRECT FUEL INJECTOR CIRCUIT/OPEN	<Ref. to EN(w/o STI)(diag)-494, DTC P1261 CYLINDER 1 DIRECT FUEL INJECTOR CIRCUIT/OPEN, Diagnostic Procedure with Diagnostic Trouble Code (DTC).>
P1262	CYLINDER 2 DIRECT FUEL INJECTOR CIRCUIT/OPEN	<Ref. to EN(w/o STI)(diag)-497, DTC P1262 CYLINDER 2 DIRECT FUEL INJECTOR CIRCUIT/OPEN, Diagnostic Procedure with Diagnostic Trouble Code (DTC).>
P1263	CYLINDER 3 DIRECT FUEL INJECTOR CIRCUIT/OPEN	<Ref. to EN(w/o STI)(diag)-497, DTC P1263 CYLINDER 3 DIRECT FUEL INJECTOR CIRCUIT/OPEN, Diagnostic Procedure with Diagnostic Trouble Code (DTC).>
P1264	CYLINDER 4 DIRECT FUEL INJECTOR CIRCUIT/OPEN	<Ref. to EN(w/o STI)(diag)-497, DTC P1264 CYLINDER 4 DIRECT FUEL INJECTOR CIRCUIT/OPEN, Diagnostic Procedure with Diagnostic Trouble Code (DTC).>
P1449	EVAP SYSTEM CLOG DETECTED (AIR FILTER)	<Ref. to EN(w/o STI)(diag)-498, DTC P1449 EVAP SYSTEM CLOG DETECTED (AIR FILTER), Diagnostic Procedure with Diagnostic Trouble Code (DTC).>
P1451	EVAP SYSTEM CLOG DETECTED (PIPE)	<Ref. to EN(w/o STI)(diag)-501, DTC P1451 EVAP SYSTEM CLOG DETECTED (PIPE), Diagnostic Procedure with Diagnostic Trouble Code (DTC).>
P1492	COIL 1 EGR "A" CONTROL CIRCUIT LOW	<Ref. to EN(w/o STI)(diag)-502, DTC P1492 COIL 1 EGR "A" CONTROL CIRCUIT LOW, Diagnostic Procedure with Diagnostic Trouble Code (DTC).>
P1493	COIL 1 EGR "A" CONTROL CIRCUIT HIGH	<Ref. to EN(w/o STI)(diag)-502, DTC P1493 COIL 1 EGR "A" CONTROL CIRCUIT HIGH, Diagnostic Procedure with Diagnostic Trouble Code (DTC).>
P1494	COIL 2 EGR "A" CONTROL CIRCUIT LOW	<Ref. to EN(w/o STI)(diag)-502, DTC P1494 COIL 2 EGR "A" CONTROL CIRCUIT LOW, Diagnostic Procedure with Diagnostic Trouble Code (DTC).>
P1495	COIL 2 EGR "A" CONTROL CIRCUIT HIGH	<Ref. to EN(w/o STI)(diag)-502, DTC P1495 COIL 2 EGR "A" CONTROL CIRCUIT HIGH, Diagnostic Procedure with Diagnostic Trouble Code (DTC).>
P1496	COIL 3 EGR "A" CONTROL CIRCUIT LOW	<Ref. to EN(w/o STI)(diag)-502, DTC P1496 COIL 3 EGR "A" CONTROL CIRCUIT LOW, Diagnostic Procedure with Diagnostic Trouble Code (DTC).>

DTC	Item	Note
P1497	COIL 3 EGR "A" CONTROL CIRCUIT HIGH	<Ref. to EN(w/o STI)(diag)-502, DTC P1497 COIL 3 EGR "A" CONTROL CIRCUIT HIGH, Diagnostic Procedure with Diagnostic Trouble Code (DTC).>
P1498	COIL 4 EGR "A" CONTROL CIRCUIT LOW	<Ref. to EN(w/o STI)(diag)-503, DTC P1498 COIL 4 EGR "A" CONTROL CIRCUIT LOW, Diagnostic Procedure with Diagnostic Trouble Code (DTC).>
P1499	COIL 4 EGR "A" CONTROL CIRCUIT HIGH	<Ref. to EN(w/o STI)(diag)-506, DTC P1499 COIL 4 EGR "A" CONTROL CIRCUIT HIGH, Diagnostic Procedure with Diagnostic Trouble Code (DTC).>
P1603	ENGINE STALL HISTORY	<Ref. to EN(w/o STI)(diag)-509, DTC P1603 ENGINE STALL HISTORY, Diagnostic Procedure with Diagnostic Trouble Code (DTC).>
P1604	STARTABILITY MALFUNCTION	<Ref. to EN(w/o STI)(diag)-537, DTC P1604 STARTABILITY MALFUNCTION, Diagnostic Procedure with Diagnostic Trouble Code (DTC).>
P1C00	BATTERY MONITOR MODULE "A" PERFORMANCE	<Ref. to EN(w/o STI)(diag)-574, DTC P1C00 BATTERY MONITOR MODULE "A" PERFORMANCE, Diagnostic Procedure with Diagnostic Trouble Code (DTC).>
P2004	TGV CONTROL STUCK OPEN BANK 1	<Ref. to EN(w/o STI)(diag)-575, DTC P2004 TGV CONTROL STUCK OPEN BANK 1, Diagnostic Procedure with Diagnostic Trouble Code (DTC).>
P2005	TGV CONTROL STUCK OPEN BANK 2	<Ref. to EN(w/o STI)(diag)-576, DTC P2005 TGV CONTROL STUCK OPEN BANK 2, Diagnostic Procedure with Diagnostic Trouble Code (DTC).>
P2006	TGV CONTROL STUCK CLOSED BANK 1	<Ref. to EN(w/o STI)(diag)-577, DTC P2006 TGV CONTROL STUCK CLOSED BANK 1, Diagnostic Procedure with Diagnostic Trouble Code (DTC).>
P2007	TGV CONTROL STUCK CLOSED BANK 2	<Ref. to EN(w/o STI)(diag)-578, DTC P2007 TGV CONTROL STUCK CLOSED BANK 2, Diagnostic Procedure with Diagnostic Trouble Code (DTC).>
P2009	TGV CONTROL CIRCUIT LOW BANK 1	<Ref. to EN(w/o STI)(diag)-579, DTC P2009 TGV CONTROL CIRCUIT LOW BANK 1, Diagnostic Procedure with Diagnostic Trouble Code (DTC).>
P2012	TGV CONTROL CIRCUIT LOW BANK 2	<Ref. to EN(w/o STI)(diag)-581, DTC P2012 TGV CONTROL CIRCUIT LOW BANK 2, Diagnostic Procedure with Diagnostic Trouble Code (DTC).>
P2016	TGV POSITION SENSOR/ SWITCH CIRCUIT LOW BANK 1	<Ref. to EN(w/o STI)(diag)-583, DTC P2016 TGV POSITION SENSOR/SWITCH CIRCUIT LOW BANK 1, Diagnostic Procedure with Diagnostic Trouble Code (DTC).>
P2017	TGV POSITION SENSOR/ SWITCH CIRCUIT HIGH BANK 1	<Ref. to EN(w/o STI)(diag)-586, DTC P2017 TGV POSITION SENSOR/SWITCH CIRCUIT HIGH BANK 1, Diagnostic Procedure with Diagnostic Trouble Code (DTC).>
P2021	TGV POSITION SENSOR/ SWITCH CIRCUIT LOW BANK 2	<Ref. to EN(w/o STI)(diag)-589, DTC P2021 TGV POSITION SENSOR/SWITCH CIRCUIT LOW BANK 2, Diagnostic Procedure with Diagnostic Trouble Code (DTC).>
P2022	TGV POSITION SENSOR/ SWITCH CIRCUIT HIGH BANK 2	<Ref. to EN(w/o STI)(diag)-592, DTC P2022 TGV POSITION SENSOR/SWITCH CIRCUIT HIGH BANK 2, Diagnostic Procedure with Diagnostic Trouble Code (DTC).>
P2096	POST CATALYST FUEL TRIM SYSTEM TOO LEAN BANK 1	<Ref. to EN(w/o STI)(diag)-595, DTC P2096 POST CATALYST FUEL TRIM SYSTEM TOO LEAN BANK 1, Diagnostic Procedure with Diagnostic Trouble Code (DTC).>
P2097	POST CATALYST FUEL TRIM SYSTEM TOO RICH BANK 1	<Ref. to EN(w/o STI)(diag)-603, DTC P2097 POST CATALYST FUEL TRIM SYSTEM TOO RICH BANK 1, Diagnostic Procedure with Diagnostic Trouble Code (DTC).>
P2101	THROTTLE ACTUATOR "A" CONTROL MOTOR CIRCUIT RANGE/ PERFORMANCE	<Ref. to EN(w/o STI)(diag)-611, DTC P2101 THROTTLE ACTUATOR "A" CONTROL MOTOR CIRCUIT RANGE/PERFORMANCE, Diagnostic Procedure with Diagnostic Trouble Code (DTC).>
P2102	THROTTLE ACTUATOR "A" CONTROL MOTOR CIRCUIT LOW	<Ref. to EN(w/o STI)(diag)-618, DTC P2102 THROTTLE ACTUATOR "A" CONTROL MOTOR CIRCUIT LOW, Diagnostic Procedure with Diagnostic Trouble Code (DTC).>
P2103	THROTTLE ACTUATOR "A" CONTROL MOTOR CIRCUIT HIGH	<Ref. to EN(w/o STI)(diag)-622, DTC P2103 THROTTLE ACTUATOR "A" CONTROL MOTOR CIRCUIT HIGH, Diagnostic Procedure with Diagnostic Trouble Code (DTC).>
P2109	THROTTLE/PEDAL POSITION SENSOR "A" MINIMUM STOP PERFORMANCE	<Ref. to EN(w/o STI)(diag)-626, DTC P2109 THROTTLE/PEDAL POSITION SENSOR "A" MINIMUM STOP PERFORMANCE, Diagnostic Procedure with Diagnostic Trouble Code (DTC).>

DTC	Item	Note
P2119	THROTTLE ACTUATOR "A" CONTROL THROTTLE BODY RANGE/PERFORMANCE	<Ref. to EN(w/o STI)(diag)-627, DTC P2119 THROTTLE ACTUATOR "A" CONTROL THROTTLE BODY RANGE/PERFORMANCE, Diagnostic Procedure with Diagnostic Trouble Code (DTC).>
P2122	THROTTLE/PEDAL POSITION SENSOR/SWITCH "D" CIRCUIT LOW	<Ref. to EN(w/o STI)(diag)-629, DTC P2122 THROTTLE/PEDAL POSITION SENSOR/SWITCH "D" CIRCUIT LOW, Diagnostic Procedure with Diagnostic Trouble Code (DTC).>
P2123	THROTTLE/PEDAL POSITION SENSOR/SWITCH "D" CIRCUIT HIGH	<Ref. to EN(w/o STI)(diag)-632, DTC P2123 THROTTLE/PEDAL POSITION SENSOR/SWITCH "D" CIRCUIT HIGH, Diagnostic Procedure with Diagnostic Trouble Code (DTC).>
P2127	THROTTLE/PEDAL POSITION SENSOR/SWITCH "E" CIRCUIT LOW	<Ref. to EN(w/o STI)(diag)-635, DTC P2127 THROTTLE/PEDAL POSITION SENSOR/SWITCH "E" CIRCUIT LOW, Diagnostic Procedure with Diagnostic Trouble Code (DTC).>
P2128	THROTTLE/PEDAL POSITION SENSOR/SWITCH "E" CIRCUIT HIGH	<Ref. to EN(w/o STI)(diag)-638, DTC P2128 THROTTLE/PEDAL POSITION SENSOR/SWITCH "E" CIRCUIT HIGH, Diagnostic Procedure with Diagnostic Trouble Code (DTC).>
P2135	THROTTLE/PEDAL POSITION SENSOR/SWITCH "A"/"B" VOLTAGE CORRELATION	<Ref. to EN(w/o STI)(diag)-641, DTC P2135 THROTTLE/PEDAL POSITION SENSOR/SWITCH "A"/"B" VOLTAGE CORRELATION, Diagnostic Procedure with Diagnostic Trouble Code (DTC).>
P2138	THROTTLE/PEDAL POSITION SENSOR/SWITCH "D"/"E" VOLTAGE CORRELATION	<Ref. to EN(w/o STI)(diag)-645, DTC P2138 THROTTLE/PEDAL POSITION SENSOR/SWITCH "D"/"E" VOLTAGE CORRELATION, Diagnostic Procedure with Diagnostic Trouble Code (DTC).>
P2146	FUEL INJECTOR GROUP "A" SUPPLY VOLTAGE CIRCUIT/OPEN	<Ref. to EN(w/o STI)(diag)-649, DTC P2146 FUEL INJECTOR GROUP "A" SUPPLY VOLTAGE CIRCUIT/OPEN, Diagnostic Procedure with Diagnostic Trouble Code (DTC).>
P2195	A/F /O2 SENSOR SIGNAL BIASED/STUCK LEAN BANK 1 SENSOR 1	<Ref. to EN(w/o STI)(diag)-651, DTC P2195 A/F /O2 SENSOR SIGNAL BIASED/STUCK LEAN BANK 1 SENSOR 1, Diagnostic Procedure with Diagnostic Trouble Code (DTC).>
P2196	A/F /O2 SENSOR SIGNAL BIASED/STUCK RICH BANK 1 SENSOR 1	<Ref. to EN(w/o STI)(diag)-655, DTC P2196 A/F /O2 SENSOR SIGNAL BIASED/STUCK RICH BANK 1 SENSOR 1, Diagnostic Procedure with Diagnostic Trouble Code (DTC).>
P219A	BANK 1 AIR-FUEL RATIO IMBALANCE	<Ref. to EN(w/o STI)(diag)-659, DTC P219A BANK 1 AIR-FUEL RATIO IMBALANCE, Diagnostic Procedure with Diagnostic Trouble Code (DTC).>
P2227	BAROMETRIC PRESSURE SENSOR "A" CIRCUIT RANGE/PERFORMANCE	<Ref. to EN(w/o STI)(diag)-673, DTC P2227 BAROMETRIC PRESSURE SENSOR "A" CIRCUIT RANGE/PERFORMANCE, Diagnostic Procedure with Diagnostic Trouble Code (DTC).>
P2228	BAROMETRIC PRESSURE SENSOR "A" CIRCUIT LOW	<Ref. to EN(w/o STI)(diag)-674, DTC P2228 BAROMETRIC PRESSURE SENSOR "A" CIRCUIT LOW, Diagnostic Procedure with Diagnostic Trouble Code (DTC).>
P2229	BAROMETRIC PRESSURE SENSOR "A" CIRCUIT HIGH	<Ref. to EN(w/o STI)(diag)-675, DTC P2229 BAROMETRIC PRESSURE SENSOR "A" CIRCUIT HIGH, Diagnostic Procedure with Diagnostic Trouble Code (DTC).>
P2270	O2 SENSOR SIGNAL BIASED/STUCK LEAN BANK 1 SENSOR 2	<Ref. to EN(w/o STI)(diag)-676, DTC P2270 O2 SENSOR SIGNAL BIASED/STUCK LEAN BANK 1 SENSOR 2, Diagnostic Procedure with Diagnostic Trouble Code (DTC).>
P2271	O2 SENSOR SIGNAL BIASED/STUCK RICH BANK 1 SENSOR 2	<Ref. to EN(w/o STI)(diag)-680, DTC P2271 O2 SENSOR SIGNAL BIASED/STUCK RICH BANK 1 SENSOR 2, Diagnostic Procedure with Diagnostic Trouble Code (DTC).>
P2401	EVAP SYSTEM LEAK DETECTION PUMP CONTROL CIRCUIT LOW	<Ref. to EN(w/o STI)(diag)-684, DTC P2401 EVAP SYSTEM LEAK DETECTION PUMP CONTROL CIRCUIT LOW, Diagnostic Procedure with Diagnostic Trouble Code (DTC).>
P2402	EVAP SYSTEM LEAK DETECTION PUMP CONTROL CIRCUIT HIGH	<Ref. to EN(w/o STI)(diag)-687, DTC P2402 EVAP SYSTEM LEAK DETECTION PUMP CONTROL CIRCUIT HIGH, Diagnostic Procedure with Diagnostic Trouble Code (DTC).>
P2404	EVAP SYSTEM LEAK DETECTION PUMP SENSE CIRCUIT RANGE/PERFORMANCE	<Ref. to EN(w/o STI)(diag)-690, DTC P2404 EVAP SYSTEM LEAK DETECTION PUMP SENSE CIRCUIT RANGE/PERFORMANCE, Diagnostic Procedure with Diagnostic Trouble Code (DTC).>

DTC	Item	Note
P2419	EVAP SYSTEM SWITCHING VALVE CONTROL CIRCUIT LOW	<Ref. to EN(w/o STI)(diag)-694, DTC P2419 EVAP SYSTEM SWITCHING VALVE CONTROL CIRCUIT LOW, Diagnostic Procedure with Diagnostic Trouble Code (DTC).>
P2420	EVAP SYSTEM SWITCHING VALVE CONTROL CIRCUIT HIGH	<Ref. to EN(w/o STI)(diag)-697, DTC P2420 EVAP SYSTEM SWITCHING VALVE CONTROL CIRCUIT HIGH, Diagnostic Procedure with Diagnostic Trouble Code (DTC).>
P2530	IGNITION SWITCH RUN POSITION CIRCUIT	<Ref. to EN(w/o STI)(diag)-700, DTC P2530 IGNITION SWITCH RUN POSITION CIRCUIT, Diagnostic Procedure with Diagnostic Trouble Code (DTC).>
P2610	ECM/PCM ENGINE OFF TIMER PERFORMANCE	<Ref. to EN(w/o STI)(diag)-704, DTC P2610 ECM/PCM ENGINE OFF TIMER PERFORMANCE, Diagnostic Procedure with Diagnostic Trouble Code (DTC).>
U0073	CONTROL MODULE COMMUNICATION BUS OFF	<Ref. to EN(w/o STI)(diag)-712, DTC U0073 CONTROL MODULE COMMUNICATION BUS OFF, Diagnostic Procedure with Diagnostic Trouble Code (DTC).>
U0077	LIN COMMUNICATION BUS "ECM/PCM" OFF	<Ref. to EN(w/o STI)(diag)-713, DTC U0077 LIN COMMUNICATION BUS "ECM/PCM" OFF, Diagnostic Procedure with Diagnostic Trouble Code (DTC).>
U0101	LOST COMMUNICATION WITH TCM	<Ref. to EN(w/o STI)(diag)-715, DTC U0101 LOST COMMUNICATION WITH TCM, Diagnostic Procedure with Diagnostic Trouble Code (DTC).>
U0122	LOST COMMUNICATION WITH VEHICLE DYNAMICS CONTROL MODULE	<Ref. to EN(w/o STI)(diag)-715, DTC U0122 LOST COMMUNICATION WITH VEHICLE DYNAMICS CONTROL MODULE, Diagnostic Procedure with Diagnostic Trouble Code (DTC).>
U0155	LOST COMMUNICATION WITH INSTRUMENT PANEL CLUSTER (IPC) CONTROL MODULE	<Ref. to EN(w/o STI)(diag)-715, DTC U0155 LOST COMMUNICATION WITH INSTRUMENT PANEL CLUSTER (IPC) CONTROL MODULE, Diagnostic Procedure with Diagnostic Trouble Code (DTC).>
U0402	INVALID DATA RECEIVED FROM TCM	<Ref. to EN(w/o STI)(diag)-716, DTC U0402 INVALID DATA RECEIVED FROM TCM, Diagnostic Procedure with Diagnostic Trouble Code (DTC).>
U0416	INVALID DATA RECEIVED FROM VEHICLE DYNAMICS CONTROL MODULE	<Ref. to EN(w/o STI)(diag)-716, DTC U0416 INVALID DATA RECEIVED FROM VEHICLE DYNAMICS CONTROL MODULE, Diagnostic Procedure with Diagnostic Trouble Code (DTC).>
U0423	INVALID DATA RECEIVED FROM INSTRUMENT PANEL CLUSTER CONTROL MODULE	<Ref. to EN(w/o STI)(diag)-716, DTC U0423 INVALID DATA RECEIVED FROM INSTRUMENT PANEL CLUSTER CONTROL MODULE, Diagnostic Procedure with Diagnostic Trouble Code (DTC).>
U1712	LOST LIN COMMUNICATION WITH BATTERY "1" MONITOR MODULE	<Ref. to EN(w/o STI)(diag)-717, DTC U1712 LOST LIN COMMUNICATION WITH BATTERY "1" MONITOR MODULE, Diagnostic Procedure with Diagnostic Trouble Code (DTC).>

17.Diagnostic Procedure with Diagnostic Trouble Code (DTC)

A: DTC P000A "A" CAMSHAFT POSITION SLOW RESPONSE BANK 1

NOTE:
For the diagnostic procedure, refer to DTC P0011. <Ref. to EN(w/o STI)(diag)-119, DTC P0010 "A" CAMSHAFT POSITION ACTUATOR CONTROL CIRCUIT/OPEN BANK 1, Diagnostic Procedure with Diagnostic Trouble Code (DTC).>

1. OUTLINE OF DIAGNOSIS

Detect the AVCS system malfunction.
Judge NG when the amount of AVCS actual timing advance does not approach to the amount of AVCS target timing advance.

2. EXECUTION CONDITION

Secondary parameters	Execution condition
Battery voltage	≥ 10.9 V
AVCS control	In operation
|Target timing advance change amount (per 80 ms)|	< 4°CA

3. GENERAL DRIVING CYCLE

Perform the diagnosis continuously while AVCS is operating.

4. DIAGNOSTIC METHOD

When the differences of target timing advance amount and actual timing advance amount is calculated during AVCS control, and the difference per predetermined time is the specified value or larger.
Judge as NG when the following conditions are established within the predetermined time.

Judgment Value

Malfunction Criteria	Threshold Value
Σ(Target position – Actual position)	> 4000°CA or < –4000°CA

Time Needed for Diagnosis: Less than 1 second
Malfunction Indicator Light Illumination: Illuminates when malfunction occurs in 2 continuous driving cycles.

B: DTC P000B "B" CAMSHAFT POSITION SLOW RESPONSE BANK 1

NOTE:
For the diagnostic procedure, refer to DTC P0014. <Ref. to EN(w/o STI)(diag)-127, DTC P0014 "B" CAMSHAFT POSITION - TIMING OVER-ADVANCED OR SYSTEM PERFORMANCE BANK 1, Diagnostic Procedure with Diagnostic Trouble Code (DTC).>

1. OUTLINE OF DIAGNOSIS

Detect the exhaust AVCS system malfunction.
Judge NG when the amount of exhaust AVCS actual timing advance does not approach the amount of exhaust AVCS target timing advance.

2. EXECUTION CONDITION

Secondary parameters	Execution condition
Battery voltage	≥ 10.9 V
Exhaust AVCS control	In operation
|Target timing advance change amount (per 80 ms)|	< 4°CA

3. GENERAL DRIVING CYCLE

Perform the diagnosis continuously while exhaust AVCS is operating.

4. DIAGNOSTIC METHOD

When the differences of target timing advance amount and actual timing advance amount is calculated during exhaust AVCS control, and the difference per predetermined time is the specified value or larger.
Judge as NG when the following conditions are established within the predetermined time.

Judgment Value

Malfunction Criteria	Threshold Value
Σ(Target position – Actual position)	> 4500°CA or < –4500°CA

Time Needed for Diagnosis: Less than 1 second
Malfunction Indicator Light Illumination: Illuminates when malfunction occurs in 2 continuous driving cycles.

C: DTC P000C "A" CAMSHAFT POSITION SLOW RESPONSE BANK 2

NOTE:
For the diagnostic procedure, refer to DTC P0021. <Ref. to EN(w/o STI)(diag)-142, DTC P0021 "A" CAMSHAFT POSITION - TIMING OVER-ADVANCED OR SYSTEM PERFORMANCE BANK 2, Diagnostic Procedure with Diagnostic Trouble Code (DTC).>

1. OUTLINE OF DIAGNOSIS

NOTE:
For the detection standard, refer to DTC P000A. <Ref. to EN(w/o STI)(diag)-117, DTC P000A "A" CAMSHAFT POSITION SLOW RESPONSE BANK 1, Diagnostic Procedure with Diagnostic Trouble Code (DTC).>

D: DTC P000D "B" CAMSHAFT POSITION SLOW RESPONSE BANK 2

NOTE:
For the diagnostic procedure, refer to DTC P0024. <Ref. to EN(w/o STI)(diag)-146, DTC P0024 "B" CAMSHAFT POSITION - TIMING OVER-ADVANCED OR SYSTEM PERFORMANCE BANK 2, Diagnostic Procedure with Diagnostic Trouble Code (DTC).>

1. OUTLINE OF DIAGNOSIS

NOTE:
For the detection standard, refer to DTC P000B. <Ref. to EN(w/o STI)(diag)-118, DTC P000B "B" CAMSHAFT POSITION SLOW RESPONSE BANK 1, Diagnostic Procedure with Diagnostic Trouble Code (DTC).>

E: DTC P0010 "A" CAMSHAFT POSITION ACTUATOR CONTROL CIRCUIT/ OPEN BANK 1

DTC DETECTING CONDITION:
Immediately at fault recognition
TROUBLE SYMPTOM:
Improper idling

CAUTION:
• After servicing or replacing faulty parts, perform Clear Memory Mode <Ref. to EN(w/o STI)(diag)-82, OPERATION, Clear Memory Mode.>, and Inspection Mode <Ref. to EN(w/o STI)(diag)-64, PROCEDURE, Inspection Mode.>.
• Use the check board when measuring the ECM terminal voltage and resistance.
WIRING DIAGRAM:
Engine Electrical System <Ref. to WI-154, WIRING DIAGRAM, Engine Electrical System.>

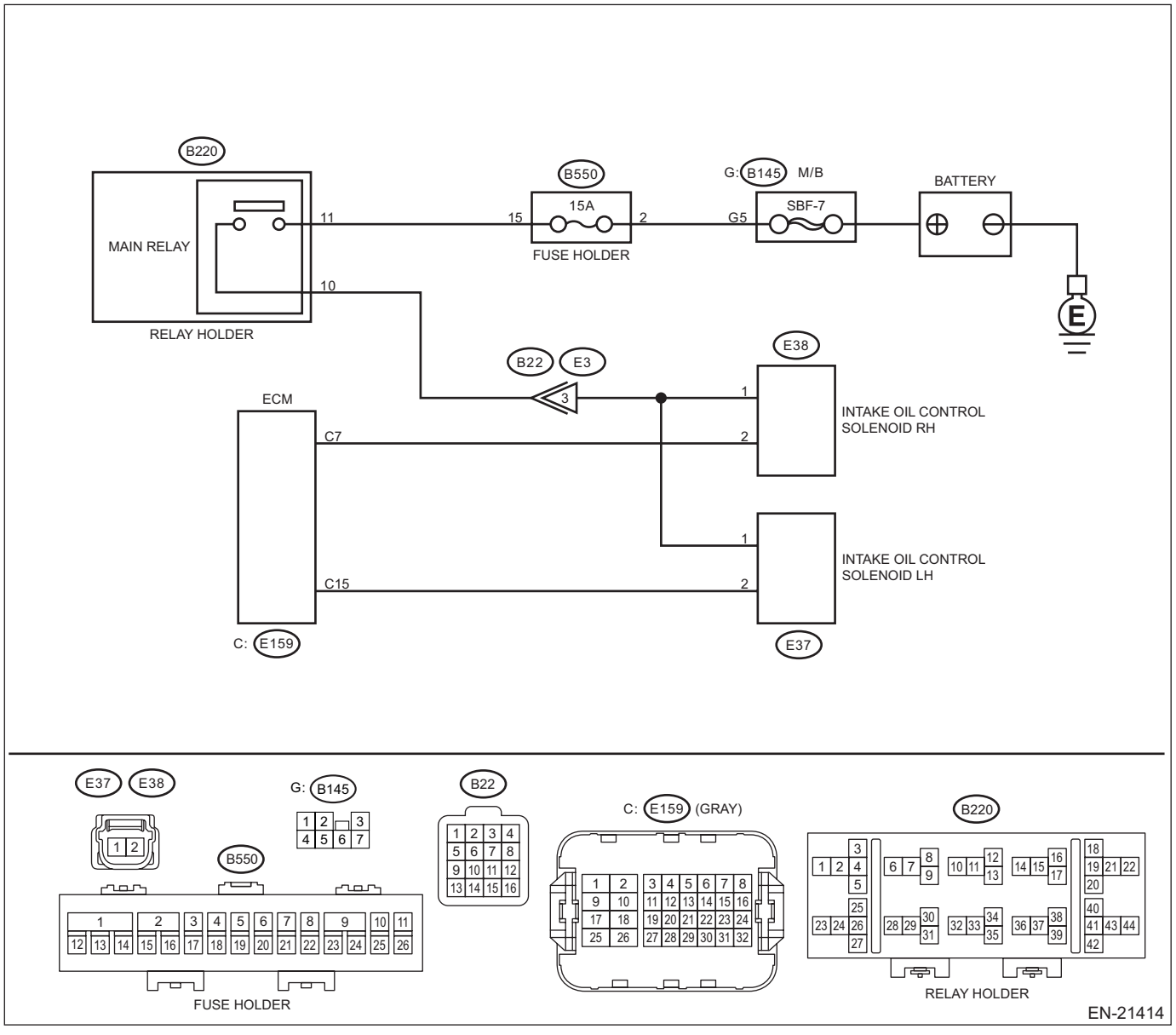

	Step	Check	Yes	No
1	**CHECK OUTPUT SIGNAL OF ECM.** 1) Turn the ignition switch to ON. 2) Measure the voltage between ECM connector and engine ground. ***Connector & terminal*** ***(E159) No. 7 (+) — Engine ground (–):***	Is the voltage 10 V or more?	Go to step **2**.	Go to step **3**.
2	**CHECK FOR POOR CONTACT.** Check for poor contact of ECM connector.	Is there poor contact of ECM connector?	Repair the poor contact of ECM connector.	Even if DTC is detected, the circuit has returned to a normal condition at this time. Reproduce the failure, and then perform the diagnosis again. NOTE: In this case, temporary poor contact of connector, temporary open or short circuit of harness may be the cause.
3	**CHECK POWER SUPPLY TO THE INTAKE OIL CONTROL SOLENOID RH.** Measure the voltage between intake oil control solenoid RH connector and engine ground. ***Connector & terminal*** ***(E38) No. 1 (+) — Engine ground (–):***	Is the voltage 10 V or more?	Go to step **4**.	Repair the power supply circuit.
4	**CHECK HARNESS BETWEEN ECM AND INTAKE OIL CONTROL SOLENOID RH CONNECTOR.** 1) Turn the ignition switch to OFF. 2) Disconnect the connector from ECM. 3) Disconnect the connector from the intake oil control solenoid RH. 4) Measure the resistance between intake oil control solenoid RH connector and engine ground. ***Connector & terminal*** ***(E38) No. 2 — Engine ground:***	Is the resistance 1 MΩ or more?	Go to step **5**.	Repair the short circuit to ground in harness between ECM connector and intake oil control solenoid RH connector.
5	**CHECK HARNESS BETWEEN ECM AND INTAKE OIL CONTROL SOLENOID RH CONNECTOR.** Measure the resistance of harness between ECM connector and intake oil control solenoid RH. ***Connector & terminal*** ***(E159) No. 7 — (E38) No. 2:***	Is the resistance less than 1 Ω?	Go to step **6**.	Repair the harness and connector. NOTE: In this case, repair the following item: • Open circuit in harness between ECM connector and intake oil control solenoid RH connector • Poor contact of coupling connector

	Step	Check	Yes	No
6	**CHECK INTAKE OIL CONTROL SOLENOID RH.** Measure the resistance between intake oil control solenoid RH terminals. ***Terminals*** ***No. 1 — No. 2:***	Is the resistance 6 — 12 Ω?	Repair the poor contact of intake oil control solenoid RH connector.	Replace the intake oil control solenoid RH. <Ref. to FU(w/o STI)-101, Oil Control Solenoid.>

1. OUTLINE OF DIAGNOSIS

Detect the open/short circuit of oil control solenoid valve.
Judge as NG when the current is small even though the duty signal is large, or when the current is large even though the duty signal is small.

2. EXECUTION CONDITION

Diagnosis 1

Secondary parameters	Execution condition
Battery voltage	≥ 10.9 V
Oil control solenoid control duty	≥ 99.6%

Diagnosis 2

Secondary parameters	Execution condition
Battery voltage	≥ 10.9 V
Oil control solenoid control duty	< 8%

3. GENERAL DRIVING CYCLE

Always perform the diagnosis continuously.

4. DIAGNOSTIC METHOD

If the duration of time while the following conditions are met is longer than the time indicated, judge as NG.
Diagnosis 1
Judgment Value

Malfunction Criteria	Threshold Value
Oil control solenoid control present current	< 0.306 A

Diagnosis 2
Judgment Value

Malfunction Criteria	Threshold Value
Present current of the oil control solenoid	≥ 0.306 A

Time Needed for Diagnosis: 2000 ms
Malfunction Indicator Light Illumination: Illuminates as soon as a malfunction occurs.

F: DTC P0011 "A" CAMSHAFT POSITION - TIMING OVER-ADVANCED OR SYSTEM PERFORMANCE BANK 1

DTC DETECTING CONDITION:
Detected when two consecutive driving cycles with fault occur.
TROUBLE SYMPTOM:
- Engine stalls.
- Improper idling

CAUTION:
After servicing or replacing faulty parts, perform Clear Memory Mode <Ref. to EN(w/o STI)(diag)-82, OPERATION, Clear Memory Mode.>, and Inspection Mode <Ref. to EN(w/o STI)(diag)-64, PROCEDURE, Inspection Mode.>.

	Step	Check	Yes	No
1	**IDENTIFYING FAULTY PART.** 1) Perform the Clear Memory Mode. <Ref. to EN(w/o STI)(diag)-82, Clear Memory Mode.> 2) Replace the defective oil control solenoid by the other (RH or LH, intake side or exhaust side) oil control solenoid. 3) Perform appropriate drive cycle. <Ref. to EN(w/o STI)(diag)-67, Drive Cycle.> 4) Make sure that the fault occurrence (DTC and incorrect advancing) has shifted to the other location.	Did the detected DTC shift to the location where the oil control solenoid was replaced?	Replace the faulty oil control solenoid.	Go to step **2**.
2	**CHECK CURRENT DATA.** 1) Start the engine and let it idle. 2) Read the value of «VVT Adv. Ang. Amount R» using the Subaru Select Monitor. NOTE: For detailed operation procedures, refer to “Read Current Data For Engine”. <Ref. to EN(w/o STI)(diag)-46, Subaru Select Monitor.>	Is the value of «VVT Adv. Ang. Amount R» approx. 0 deg?	Go to step **3**.	Check the following item and repair or replace if necessary. • Intake cam sprocket (clog or dirt of oil routing, setting of spring) • Intake camshaft (dirt, damage of camshaft)
3	**CHECK CURRENT DATA.** 1) Drive with acceleration and deceleration at 80 km/h (50 MPH) or less. NOTE: Drive to an extent that the duty output of oil flow control solenoid valve increases. 2) Read the values of «OCV Duty R» and «VVT Adv. Ang. Amount R» using the Subaru Select Monitor. NOTE: For detailed operation procedures, refer to “Read Current Data For Engine”. <Ref. to EN(w/o STI)(diag)-46, Subaru Select Monitor.>	When the value of «OCV Duty R» increases more than 10%, is the value of «VVT Adv. Ang. Amount R» approx. 0 deg?	Check the following item and repair or replace if necessary. • Intake cam sprocket (clog or dirt of oil routing, setting of spring) • Intake camshaft (dirt, damage of camshaft)	Perform the following procedures, and clean the oil routing. Replace the engine oil and idle the engine for 5 minutes, and then replace the oil filter and engine oil. <Ref. to LU(w/o STI)-11, REPLACEMENT, Engine Oil.> <Ref. to LU(w/o STI)-48, Engine Oil Filter.>

1. OUTLINE OF DIAGNOSIS

Detect the AVCS system malfunction.
Judge as NG when the conditions during which the differences of AVCS target timing advance amount and AVCS actual timing advance amount is large continues.

2. EXECUTION CONDITION

- Normal

Secondary parameters	Execution condition
Battery voltage	≥ 10.9 V
AVCS control	In operation

- Intermediate lock under normal condition

Secondary parameters	Execution condition
Battery voltage	≥ 10.9 V
Engine speed	≥ 500 rpm
Elapsed time after starting the engine	> 500 ms and ≤ Value from Map

Map

Engine coolant temperature °C (°F)	–40 (–40)	–30 (–22)	–20 (–4)	–10 (14)	0 (32)	10 (50)	20 (68)	30 (86)
Elapsed time after starting the engine s	10	10	10	8	5	4	3	3

Engine coolant temperature °C (°F)	40 (104)	50 (122)	60 (140)	70 (158)	80 (176)	90 (194)	100 (212)	110 (230)
Elapsed time after starting the engine s	3	3	3	4	4	4	4	4

3. GENERAL DRIVING CYCLE

- Normal

Perform the diagnosis continuously while AVCS is operating.

- Intermediate lock

Perform the diagnosis when the AVCS is carrying out the intermediate lock control at the engine start.

4. DIAGNOSTIC METHOD

When the conditions during which the differences of AVCS target timing advance amount and AVCS actual timing advance amount is large continues for certain amount of time.
Judge as NG when the following conditions are established within the predetermined time.

Judgment Value

Malfunction Criteria	Threshold Value
• Normal |(Target position – Actual position)|	> 10°CA
• Intermediate lock |(Target position – Actual position)|	> 10°CA

Time Needed for Diagnosis:

- Normal: 10 seconds
- Intermediate lock: 2 seconds

Malfunction Indicator Light Illumination: Illuminates when malfunction occurs in 2 continuous driving cycles.

G: DTC P0013 "B" CAMSHAFT POSITION ACTUATOR CONTROL CIRCUIT/ OPEN BANK 1

DTC DETECTING CONDITION:
Immediately at fault recognition
TROUBLE SYMPTOM:
Improper idling

CAUTION:
- **After servicing or replacing faulty parts, perform Clear Memory Mode <Ref. to EN(w/o STI)(diag)-82, OPERATION, Clear Memory Mode.>, and Inspection Mode <Ref. to EN(w/o STI)(diag)-64, PROCEDURE, Inspection Mode.>.**
- **Use the check board when measuring the ECM terminal voltage and resistance.**

WIRING DIAGRAM:
Engine Electrical System <Ref. to WI-154, WIRING DIAGRAM, Engine Electrical System.>

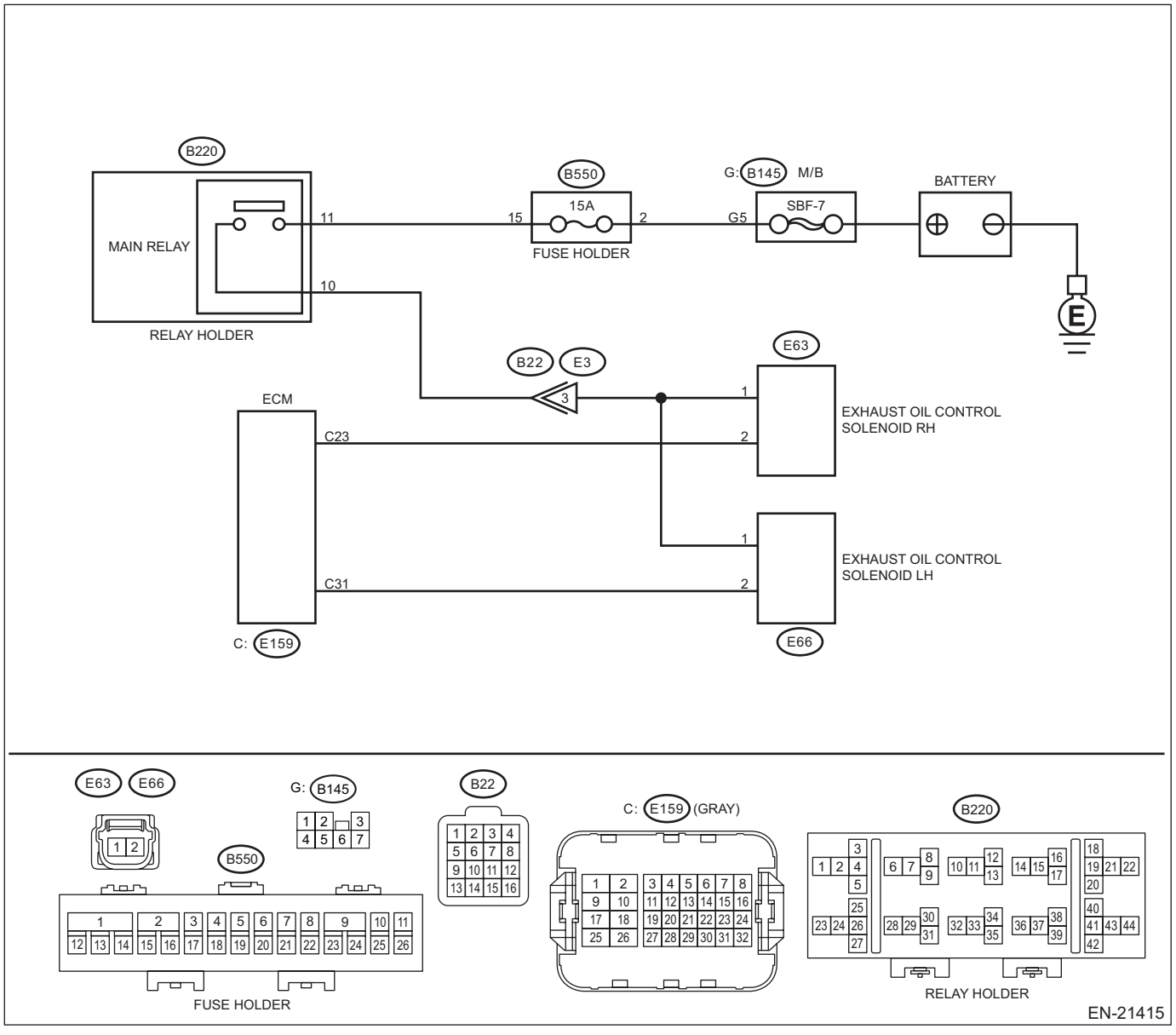

	Step	Check	Yes	No
1	**CHECK OUTPUT SIGNAL OF ECM.** 1) Turn the ignition switch to ON. 2) Measure the voltage between ECM connector and engine ground. ***Connector & terminal*** ***(E159) No. 23 (+) — Engine ground (–):***	Is the voltage 10 V or more?	Go to step **2**.	Go to step **3**.
2	**CHECK FOR POOR CONTACT.** Check for poor contact of ECM connector.	Is there poor contact of ECM connector?	Repair the poor contact of ECM connector.	Even if DTC is detected, the circuit has returned to a normal condition at this time. Reproduce the failure, and then perform the diagnosis again. NOTE: In this case, temporary poor contact of connector, temporary open or short circuit of harness may be the cause.
3	**CHECK POWER SUPPLY TO THE EXHAUST OIL CONTROL SOLENOID RH.** Measure the voltage between exhaust oil control solenoid RH connector and engine ground. ***Connector & terminal*** ***(E63) No. 1 (+) — Engine ground (–):***	Is the voltage 10 V or more?	Go to step **4**.	Repair the power supply circuit.
4	**CHECK HARNESS BETWEEN ECM AND EXHAUST OIL CONTROL SOLENOID RH CONNECTOR.** 1) Turn the ignition switch to OFF. 2) Disconnect the connector from ECM. 3) Disconnect the connector from the exhaust oil control solenoid RH. 4) Measure the resistance between exhaust oil control solenoid RH connector and engine ground. ***Connector & terminal*** ***(E63) No. 2 — Engine ground:***	Is the resistance 1 MΩ or more?	Go to step **5**.	Repair the short circuit to ground in harness between ECM connector and exhaust oil control solenoid RH connector.
5	**CHECK HARNESS BETWEEN ECM AND EXHAUST OIL CONTROL SOLENOID RH CONNECTOR.** Measure the resistance of harness between ECM connector and exhaust oil control solenoid RH. ***Connector & terminal*** ***(E159) No. 23 — (E63) No. 2:***	Is the resistance less than 1 Ω?	Go to step **6**.	Repair the harness and connector. NOTE: In this case, repair the following item: • Open circuit in harness between ECM connector and exhaust oil control solenoid RH connector • Poor contact of coupling connector

Step		Check	Yes	No
6	**CHECK EXHAUST OIL CONTROL SOLENOID RH.** Measure the resistance between exhaust oil control solenoid RH terminals. ***Terminals*** ***No. 1 — No. 2:***	Is the resistance 6 — 12 Ω?	Repair the poor contact of exhaust oil control solenoid RH connector.	Replace the exhaust oil control solenoid RH. <Ref. to FU(w/o STI)-101, Oil Control Solenoid.>

1. OUTLINE OF DIAGNOSIS

Detect the open/short circuit of oil control solenoid valve.
Judge as NG when the current is small even though the duty signal is large, or when the current is large even though the duty signal is small.

2. EXECUTION CONDITION

Diagnosis 1

Secondary parameters	Execution condition
Battery voltage	≥ 10.9 V
Oil control solenoid control duty	≥ 99.6%

Diagnosis 2

Secondary parameters	Execution condition
Battery voltage	≥ 10.9 V
Oil control solenoid control duty	< 8%

3. GENERAL DRIVING CYCLE

Always perform the diagnosis continuously.

4. DIAGNOSTIC METHOD

If the duration of time while the following conditions are met is longer than the time indicated, judge as NG.
Diagnosis 1
Judgment Value

Malfunction Criteria	Threshold Value
Oil control solenoid control present current	< 0.306 A

Diagnosis 2
Judgment Value

Malfunction Criteria	Threshold Value
Present current of the oil control solenoid	≥ 0.306 A

Time Needed for Diagnosis: 2000 ms
Malfunction Indicator Light Illumination: Illuminates as soon as a malfunction occurs.

H: DTC P0014 "B" CAMSHAFT POSITION - TIMING OVER-ADVANCED OR SYSTEM PERFORMANCE BANK 1

DTC DETECTING CONDITION:
Detected when two consecutive driving cycles with fault occur.
TROUBLE SYMPTOM:
- Engine stalls.
- Improper idling

CAUTION:
After servicing or replacing faulty parts, perform Clear Memory Mode <Ref. to EN(w/o STI)(diag)-82, OPERATION, Clear Memory Mode.>, and Inspection Mode <Ref. to EN(w/o STI)(diag)-64, PROCEDURE, Inspection Mode.>.

	Step	Check	Yes	No
1	**IDENTIFYING FAULTY PART.** 1) Perform the Clear Memory Mode. <Ref. to EN(w/o STI)(diag)-82, Clear Memory Mode.> 2) Replace the defective oil control solenoid by the other (RH or LH, intake side or exhaust side) oil control solenoid. 3) Perform appropriate drive cycle. <Ref. to EN(w/o STI)(diag)-67, Drive Cycle.> 4) Make sure that the fault occurrence (DTC and incorrect advancing) has shifted to the other location.	Did the detected DTC shift to the location where the oil control solenoid was replaced?	Replace the faulty oil control solenoid.	Go to step **2**.
2	**CHECK CURRENT DATA.** 1) Start the engine and let it idle. 2) Read the value of «Exh. VVT Retard Ang. R» using the Subaru Select Monitor. NOTE: For detailed operation procedures, refer to “Read Current Data For Engine”. <Ref. to EN(w/o STI)(diag)-46, Subaru Select Monitor.>	Is the value of «Exh. VVT Retard Ang. R» approx. 0 deg?	Go to step **3**.	Check the following item and repair or replace if necessary. • Exhaust cam sprocket (clog or dirt of oil routing, setting of spring) • Exhaust camshaft (dirt, damage of camshaft)
3	**CHECK CURRENT DATA.** 1) Drive with acceleration and deceleration at 80 km/h (50 MPH) or less. NOTE: Drive to an extent that the duty output of oil flow control solenoid valve increases. 2) Read the values of «Exh. OCV Duty R» and «Exh. VVT Retard Ang. R» using the Subaru Select Monitor. NOTE: For detailed operation procedures, refer to “Read Current Data For Engine”. <Ref. to EN(w/o STI)(diag)-46, Subaru Select Monitor.>	When the value of «Exh. OCV Duty R» increases more than 10%, is the value of «Exh. VVT Retard Ang. R» approx. 0 deg?	Check the following item and repair or replace if necessary. • Exhaust cam sprocket (clog or dirt of oil routing, setting of spring) • Exhaust camshaft (dirt, damage of camshaft)	Perform the following procedures, and clean the oil routing. Replace the engine oil and idle the engine for 5 minutes, and then replace the oil filter and engine oil. <Ref. to LU(w/o STI)-11, REPLACEMENT, Engine Oil.> <Ref. to LU(w/o STI)-48, Engine Oil Filter.>

1. OUTLINE OF DIAGNOSIS

Detect the exhaust AVCS system malfunction.
Judge as NG when the conditions during which the differences of exhaust AVCS target timing advance amount and exhaust AVCS actual timing advance amount is large continues.

2. EXECUTION CONDITION

Secondary parameters	Execution condition
Battery voltage	≥ 10.9 V
Exhaust AVCS control	In operation

3. GENERAL DRIVING CYCLE

Perform the diagnosis continuously while exhaust AVCS is operating.

4. DIAGNOSTIC METHOD

When the conditions during which the differences of exhaust AVCS target timing advance amount and exhaust AVCS actual timing advance amount is large continues for certain amount of time.
Judge as NG when the following conditions are established within the predetermined time.

Judgment Value

Malfunction Criteria	Threshold Value
|(Target position – Actual position)|	> 10°CA

Time Needed for Diagnosis: 10 seconds
Malfunction Indicator Light Illumination: Illuminates when malfunction occurs in 2 continuous driving cycles.

I: DTC P0016 CRANKSHAFT POSITION - CAMSHAFT POSITION CORRELATION BANK 1 SENSOR A

DTC DETECTING CONDITION:
Detected when two consecutive driving cycles with fault occur.
TROUBLE SYMPTOM:
- Engine stalls.
- Improper idling

CAUTION:
After servicing or replacing faulty parts, perform Clear Memory Mode <Ref. to EN(w/o STI)(diag)-82, OPERATION, Clear Memory Mode.>, and Inspection Mode <Ref. to EN(w/o STI)(diag)-64, PROCEDURE, Inspection Mode.>.

	Step	Check	Yes	No
1	**CHECK FOR ANY OTHER DTC ON DISPLAY.**	Is DTC other than P0016, P0017, P0018 or P0019 displayed?	Check the appropriate DTC using the "List of Diagnostic Trouble Code (DTC)". <Ref. to EN(w/o STI)(diag)-106, List of Diagnostic Trouble Code (DTC).>	Go to step **2**.
2	**CHECK INTAKE OIL CONTROL SOLENOID RH.** Check the intake oil control solenoid RH. <Ref. to FU(w/o STI)-103, INSPECTION, Oil Control Solenoid.>	Is the check result OK?	Go to step **3**.	Replace the intake oil control solenoid RH. <Ref. to FU(w/o STI)-101, Oil Control Solenoid.>
3	**CHECK INSTALLATION CONDITION OF TIMING CHAIN.** Using ST and by turning the crankshaft, align the alignment marks of crank sprocket, intake cam sprocket and exhaust cam sprocket. <Ref. to ME(w/o STI)-111, Timing Chain Assembly.> ST 18252AA000 CRANKSHAFT SOCKET	Is the timing chain installed in the proper position?	Go to step **4**.	Correct the installation condition of timing chain. <Ref. to ME(w/o STI)-111, Timing Chain Assembly.>
4	**CHECK CAM CARRIER FILTER.** Check the filter installed to the cam carrier. <Ref. to ME(w/o STI)-200, INSPECTION, Cam Carrier.>	Is the check result OK?	Replace the intake cam sprocket RH. <Ref. to ME(w/o STI)-133, Cam Sprocket.> After the operation is complete, go to the next step. Go to step **5**.	Replace the cam carrier filter. <Ref. to ME(w/o STI)-164, Cam Carrier.>

	Step	Check	Yes	No
5	**CHECK CURRENT DATA.** 1) Clear the memory using the Subaru Select Monitor or general scan tool. <Ref. to EN(w/o STI)(diag)-82, OPERATION, Clear Memory Mode.> 2) Start the engine and warm up completely. 3) Using the Subaru Select Monitor, read the values of «VVT Initial Position Learning Value #1» and «VVT Adv. Ang. Amount R» while the vehicle is in stable condition for 30 seconds or more with the engine idling. NOTE: For detailed operation procedures, refer to “Current Data Display For Engine”. <Ref. to EN(w/o STI)(diag)-46, Subaru Select Monitor.> 4) Calculate the values using the following formula. Ignore the unit at this time. |«VVT Initial Position Learning Value #1» – (60 + «VVT Adv. Ang. Amount R»)|	Is the calculation result less than 10?	Go to step **6**.	Replace the ECM. <Ref. to FU(w/o STI)-124, Engine Control Module (ECM).>
6	**CHECK DTC.** 1) Clear the memory using the Subaru Select Monitor or general scan tool. <Ref. to EN(w/o STI)(diag)-82, OPERATION, Clear Memory Mode.> 2) Perform drive cycle N. <Ref. to EN(w/o STI)(diag)-76, DRIVE CYCLE N, PROCEDURE, Drive Cycle.>	Is the same DTC as current diagnosis output?	Replace the ECM. <Ref. to FU(w/o STI)-124, Engine Control Module (ECM).>	End.

1. OUTLINE OF DIAGNOSIS

Detect the AVCS system malfunction.
Judge as NG when standard timing advance amount is far from learning angle.

2. EXECUTION CONDITION

Secondary parameters	Execution condition
Battery voltage	≥ 10.9 V
Elapsed time after external load (power steering, neutral position switch) change	≥ 3 S
AVCS control	In operation
|Actual timing advance change amount (for 10 ms)|	< 1°CA

3. GENERAL DRIVING CYCLE

Perform the diagnosis continuously after starting engine and while AVCS is not operating.

4. DIAGNOSTIC METHOD

Judge as NG when the absolute value of the difference between cam signal input position and learning value is out of specification.
If the duration of time while the following conditions are met is longer than the time indicated, judge as NG.

Diagnosis 1

Judgment Value

Malfunction Criteria	Threshold Value
|Crankshaft position when camshaft position sensor signal is input – Learning value|	> 10°CA

Diagnosis 2

Judgment Value

Malfunction Criteria	Threshold Value
Camshaft position sensor signal input position (RH bank)	< 48.2°CA or > 112.1°CA
Camshaft position sensor signal input position (LH bank)	< 49.9°CA or > 112.1°CA

Time Needed for Diagnosis: 5 seconds
Malfunction Indicator Light Illumination: Illuminates when malfunction occurs in 2 continuous driving cycles.

NOTE:
Initial standard learning value is the value of crank angle initially input at the production plant. And then it will be updated every time normal judgment has been completed. Learning value will not be updated if NG judgment occurs because timing belt or chain derails suddenly in process or because wrong assembly occurs during servicing.

J: DTC P0017 CRANKSHAFT POSITION - CAMSHAFT POSITION CORRELATION BANK 1 SENSOR B

DTC DETECTING CONDITION:
Detected when two consecutive driving cycles with fault occur.
TROUBLE SYMPTOM:
- Engine stalls.
- Improper idling

CAUTION:
After servicing or replacing faulty parts, perform Clear Memory Mode <Ref. to EN(w/o STI)(diag)-82, OPERATION, Clear Memory Mode.>, and Inspection Mode <Ref. to EN(w/o STI)(diag)-64, PROCEDURE, Inspection Mode.>.

	Step	Check	Yes	No
1	**CHECK FOR ANY OTHER DTC ON DISPLAY.**	Is DTC other than P0016, P0017, P0018 or P0019 displayed?	Check the appropriate DTC using the "List of Diagnostic Trouble Code (DTC)". <Ref. to EN(w/o STI)(diag)-106, List of Diagnostic Trouble Code (DTC).>	Go to step **2**.
2	**CHECK EXHAUST OIL CONTROL SOLENOID RH.** Check the exhaust oil control solenoid RH. <Ref. to FU(w/o STI)-103, INSPECTION, Oil Control Solenoid.>	Is the check result OK?	Go to step **3**.	Replace the exhaust oil control solenoid RH. <Ref. to FU(w/o STI)-101, Oil Control Solenoid.>
3	**CHECK INSTALLATION CONDITION OF TIMING CHAIN.** Using ST and by turning the crankshaft, align the alignment marks of crank sprocket, intake cam sprocket and exhaust cam sprocket. <Ref. to ME(w/o STI)-111, Timing Chain Assembly.> ST 18252AA000 CRANKSHAFT SOCKET	Is the timing chain installed in the proper position?	Go to step **4**.	Correct the installation condition of timing chain. <Ref. to ME(w/o STI)-111, Timing Chain Assembly.>
4	**CHECK CAM CARRIER FILTER.** Check the filter installed to the cam carrier. <Ref. to ME(w/o STI)-200, INSPECTION, Cam Carrier.>	Is the check result OK?	Replace the exhaust cam sprocket RH. <Ref. to ME(w/o STI)-133, Cam Sprocket.> After the operation is complete, go to the next step. Go to step **5**.	Replace the cam carrier filter. <Ref. to ME(w/o STI)-164, Cam Carrier.>

	Step	Check	Yes	No
5	**CHECK CURRENT DATA.** 1) Clear the memory using the Subaru Select Monitor or general scan tool. <Ref. to EN(w/o STI)(diag)-82, OPERATION, Clear Memory Mode.> 2) Start the engine and warm up completely. 3) Using the Subaru Select Monitor, read the values of «VVT Ex Initial Position Learning Value #1» and «Exh. VVT Retard Ang. R» while the vehicle is in stable condition for 30 seconds or more with the engine idling. NOTE: For detailed operation procedures, refer to "Current Data Display For Engine". <Ref. to EN(w/o STI)(diag)-46, Subaru Select Monitor.> 4) Calculate the values using the following formula. Ignore the unit at this time. |«VVT Ex Initial Position Learning Value #1» – (90 – «Exh. VVT Retard Ang. R»)|	Is the calculation result less than 10?	Go to step **6**.	Replace the ECM. <Ref. to FU(w/o STI)-124, Engine Control Module (ECM).>
6	**CHECK DTC.** 1) Clear the memory using the Subaru Select Monitor or general scan tool. <Ref. to EN(w/o STI)(diag)-82, OPERATION, Clear Memory Mode.> 2) Perform drive cycle N. <Ref. to EN(w/o STI)(diag)-76, DRIVE CYCLE N, PROCEDURE, Drive Cycle.>	Is the same DTC as current diagnosis output?	Replace the ECM. <Ref. to FU(w/o STI)-124, Engine Control Module (ECM).>	End.

1. OUTLINE OF DIAGNOSIS

Detect the exhaust AVCS system malfunction.
Judge as NG when standard timing advance amount is far from learning angle.

2. EXECUTION CONDITION

Secondary parameters	Execution condition
Battery voltage	≥ 10.9 V
Elapsed time after external load (power steering, neutral position switch) change	≥ 3 S
Exhaust AVCS position learning	In operation
|Actual timing advance change amount (for 10 ms)|	< 1°CA

3. GENERAL DRIVING CYCLE

Perform the diagnosis continuously while the exhaust AVCS is not operating after warming up.

4. DIAGNOSTIC METHOD

Judge as NG when the absolute value of the difference between cam signal input position and learning value is out of specification.
If the duration of time while the following conditions are met is longer than the time indicated, judge as NG.

Diagnosis 1

Judgment Value

Malfunction Criteria	Threshold Value
|Crankshaft position when camshaft position sensor signal is input – Learning value|	> 10°CA

Diagnosis 2

Judgment Value

Malfunction Criteria	Threshold Value
Camshaft position sensor signal input position (RH bank)	< 79.9°CA or > 142.1°CA
Camshaft position sensor signal input position (LH bank)	< 78.2°CA or > 142.1°CA

Time Needed for Diagnosis: 5 seconds
Malfunction Indicator Light Illumination: Illuminates when malfunction occurs in 2 continuous driving cycles.

NOTE:
Initial standard learning value is the value of crank angle initially input at the production plant. And then it will be updated every time normal judgment has been completed. Learning value will not be updated if NG judgment occurs because timing belt or chain derails suddenly in process or because wrong assembly occurs during servicing.

K: DTC P0018 CRANKSHAFT POSITION - CAMSHAFT POSITION CORRELATION BANK 2 SENSOR A

DTC DETECTING CONDITION:
Detected when two consecutive driving cycles with fault occur.
TROUBLE SYMPTOM:
- Engine stalls.
- Improper idling

CAUTION:
After servicing or replacing faulty parts, perform Clear Memory Mode <Ref. to EN(w/o STI)(diag)-82, OPERATION, Clear Memory Mode.>, and Inspection Mode <Ref. to EN(w/o STI)(diag)-64, PROCEDURE, Inspection Mode.>.

	Step	Check	Yes	No
1	**CHECK FOR ANY OTHER DTC ON DISPLAY.**	Is DTC other than P0016, P0017, P0018 or P0019 displayed?	Check the appropriate DTC using the "List of Diagnostic Trouble Code (DTC)". <Ref. to EN(w/o STI)(diag)-106, List of Diagnostic Trouble Code (DTC).>	Go to step **2**.
2	**CHECK INTAKE OIL CONTROL SOLENOID LH.** Check the intake oil control solenoid LH. <Ref. to FU(w/o STI)-103, INSPECTION, Oil Control Solenoid.>	Is the check result OK?	Go to step **3**.	Replace the intake oil control solenoid LH. <Ref. to FU(w/o STI)-101, Oil Control Solenoid.>
3	**CHECK INSTALLATION CONDITION OF TIMING CHAIN.** Using ST and by turning the crankshaft, align the alignment marks of crank sprocket, intake cam sprocket and exhaust cam sprocket. <Ref. to ME(w/o STI)-111, Timing Chain Assembly.> ST 18252AA000 CRANKSHAFT SOCKET	Is the timing chain installed in the proper position?	Go to step **4**.	Correct the installation condition of timing chain. <Ref. to ME(w/o STI)-111, Timing Chain Assembly.>
4	**CHECK CAM CARRIER FILTER.** Check the filter installed to the cam carrier. <Ref. to ME(w/o STI)-200, INSPECTION, Cam Carrier.>	Is the check result OK?	Replace the intake cam sprocket LH. <Ref. to ME(w/o STI)-133, Cam Sprocket.> After the operation is complete, go to the next step. Go to step **5**.	Replace the cam carrier filter. <Ref. to ME(w/o STI)-164, Cam Carrier.>

	Step	Check	Yes	No
5	**CHECK CURRENT DATA.** 1) Clear the memory using the Subaru Select Monitor or general scan tool. <Ref. to EN(w/o STI)(diag)-82, OPERATION, Clear Memory Mode.> 2) Start the engine and warm up completely. 3) Using the Subaru Select Monitor, read the values of «VVT Initial Position Learning Value #2» and «VVT Adv. Ang. Amount L» while the vehicle is in stable condition for 30 seconds or more with the engine idling. NOTE: For detailed operation procedures, refer to "Current Data Display For Engine". <Ref. to EN(w/o STI)(diag)-46, Subaru Select Monitor.> 4) Calculate the values using the following formula. Ignore the unit at this time. |«VVT Initial Position Learning Value #2» – (60 + «VVT Adv. Ang. Amount L»)|	Is the calculation result less than 10?	Go to step **6**.	Replace the ECM. <Ref. to FU(w/o STI)-124, Engine Control Module (ECM).>
6	**CHECK DTC.** 1) Clear the memory using the Subaru Select Monitor or general scan tool. <Ref. to EN(w/o STI)(diag)-82, OPERATION, Clear Memory Mode.> 2) Perform drive cycle N. <Ref. to EN(w/o STI)(diag)-76, DRIVE CYCLE N, PROCEDURE, Drive Cycle.>	Is the same DTC as current diagnosis output?	Replace the ECM. <Ref. to FU(w/o STI)-124, Engine Control Module (ECM).>	End.

1. OUTLINE OF DIAGNOSIS

NOTE:
For the detection standard, refer to DTC P0016. <Ref. to EN(w/o STI)(diag)-129, DTC P0016 CRANKSHAFT POSITION - CAMSHAFT POSITION CORRELATION BANK 1 SENSOR A, Diagnostic Procedure with Diagnostic Trouble Code (DTC).>

L: DTC P0019 CRANKSHAFT POSITION - CAMSHAFT POSITION CORRELATION BANK 2 SENSOR B

DTC DETECTING CONDITION:
Detected when two consecutive driving cycles with fault occur.
TROUBLE SYMPTOM:
- Engine stalls.
- Improper idling

CAUTION:
After servicing or replacing faulty parts, perform Clear Memory Mode <Ref. to EN(w/o STI)(diag)-82, OPERATION, Clear Memory Mode.>, and Inspection Mode <Ref. to EN(w/o STI)(diag)-64, PROCEDURE, Inspection Mode.>.

	Step	Check	Yes	No
1	**CHECK FOR ANY OTHER DTC ON DISPLAY.**	Is DTC other than P0016, P0017, P0018 or P0019 displayed?	Check the appropriate DTC using the "List of Diagnostic Trouble Code (DTC)". <Ref. to EN(w/o STI)(diag)-106, List of Diagnostic Trouble Code (DTC).>	Go to step **2**.
2	**CHECK EXHAUST OIL CONTROL SOLENOID LH.** Check the exhaust oil control solenoid LH. <Ref. to FU(w/o STI)-103, INSPECTION, Oil Control Solenoid.>	Is the check result OK?	Go to step **3**.	Replace the exhaust oil control solenoid LH. <Ref. to FU(w/o STI)-101, Oil Control Solenoid.>
3	**CHECK INSTALLATION CONDITION OF TIMING CHAIN.** Using ST and by turning the crankshaft, align the alignment marks of crank sprocket, intake cam sprocket and exhaust cam sprocket. <Ref. to ME(w/o STI)-111, Timing Chain Assembly.> ST 18252AA000 CRANKSHAFT SOCKET	Is the timing chain installed in the proper position?	Go to step **4**.	Correct the installation condition of timing chain. <Ref. to ME(w/o STI)-111, Timing Chain Assembly.>
4	**CHECK CAM CARRIER FILTER.** Check the filter installed to the cam carrier. <Ref. to ME(w/o STI)-200, INSPECTION, Cam Carrier.>	Is the check result OK?	Replace the exhaust cam sprocket LH. <Ref. to ME(w/o STI)-133, Cam Sprocket.> After the operation is complete, go to the next step. Go to step **5**.	Replace the cam carrier filter. <Ref. to ME(w/o STI)-164, Cam Carrier.>

	Step	Check	Yes	No
5	**CHECK CURRENT DATA.** 1) Clear the memory using the Subaru Select Monitor or general scan tool. <Ref. to EN(w/o STI)(diag)-82, OPERATION, Clear Memory Mode.> 2) Start the engine and warm up completely. 3) Using the Subaru Select Monitor, read the values of «VVT Ex Initial Position Learning Value #2» and «Exh. VVT Retard Ang. L» while the vehicle is in stable condition for 30 seconds or more with the engine idling. NOTE: For detailed operation procedures, refer to "Current Data Display For Engine". <Ref. to EN(w/o STI)(diag)-46, Subaru Select Monitor.> 4) Calculate the values using the following formula. Ignore the unit at this time. |«VVT Ex Initial Position Learning Value #2» – (90 – «Exh. VVT Retard Ang. L»)|	Is the calculation result less than 10?	Go to step **6**.	Replace the ECM. <Ref. to FU(w/o STI)-124, Engine Control Module (ECM).>
6	**CHECK DTC.** 1) Clear the memory using the Subaru Select Monitor or general scan tool. <Ref. to EN(w/o STI)(diag)-82, OPERATION, Clear Memory Mode.> 2) Perform drive cycle N. <Ref. to EN(w/o STI)(diag)-76, DRIVE CYCLE N, PROCEDURE, Drive Cycle.>	Is the same DTC as current diagnosis output?	Replace the ECM. <Ref. to FU(w/o STI)-124, Engine Control Module (ECM).>	End.

1. OUTLINE OF DIAGNOSIS

NOTE:
For the detection standard, refer to DTC P0017. <Ref. to EN(w/o STI)(diag)-132, DTC P0017 CRANKSHAFT POSITION - CAMSHAFT POSITION CORRELATION BANK 1 SENSOR B, Diagnostic Procedure with Diagnostic Trouble Code (DTC).>

M: DTC P0020 "A" CAMSHAFT POSITION ACTUATOR CONTROL CIRCUIT/ OPEN BANK 2

DTC DETECTING CONDITION:
Immediately at fault recognition
TROUBLE SYMPTOM:
Improper idling

CAUTION:
• After servicing or replacing faulty parts, perform Clear Memory Mode <Ref. to EN(w/o STI)(diag)-82, OPERATION, Clear Memory Mode.>, and Inspection Mode <Ref. to EN(w/o STI)(diag)-64, PROCEDURE, Inspection Mode.>.
• Use the check board when measuring the ECM terminal voltage and resistance.
WIRING DIAGRAM:
Engine Electrical System <Ref. to WI-154, WIRING DIAGRAM, Engine Electrical System.>

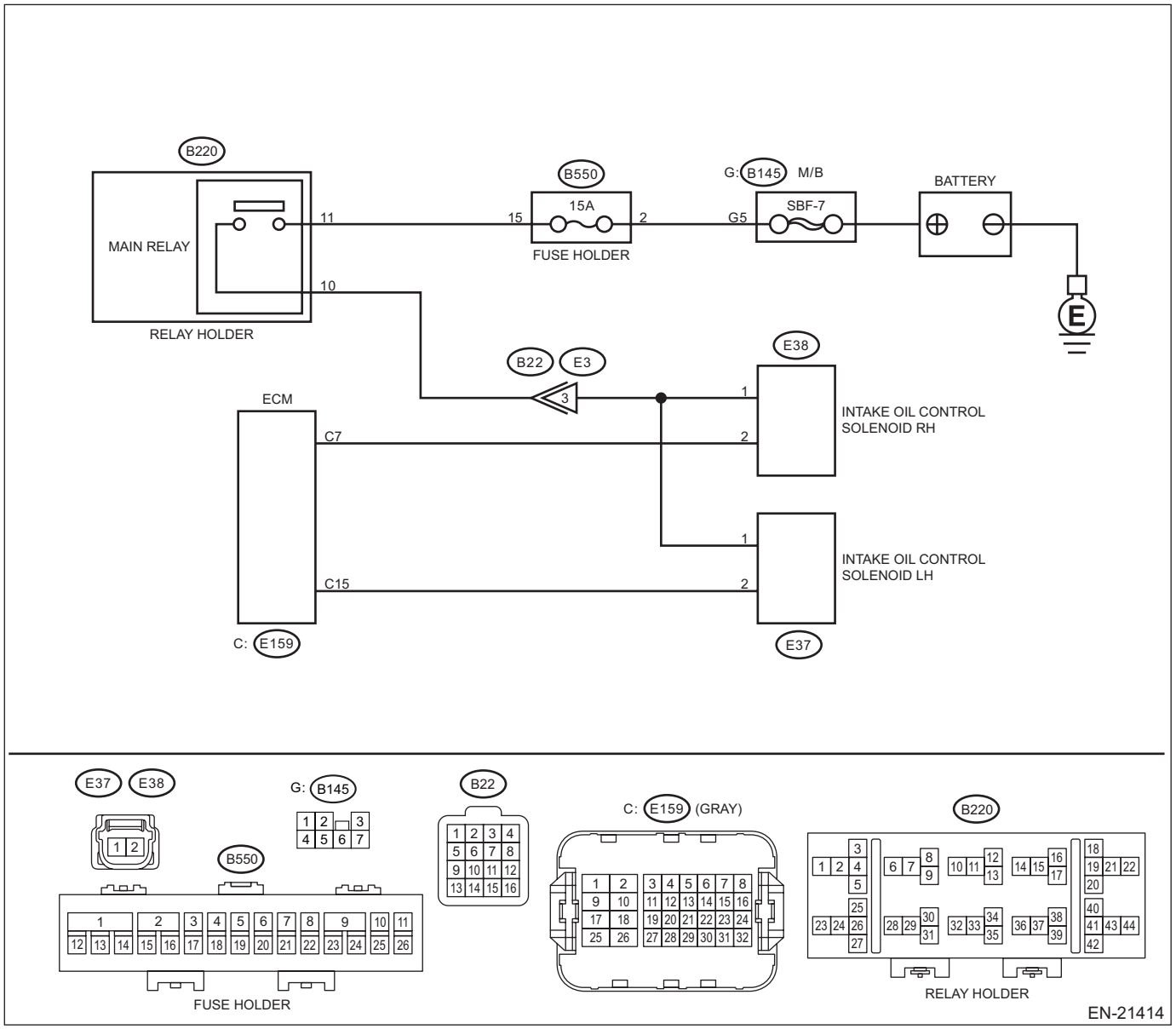

	Step	Check	Yes	No
1	**CHECK OUTPUT SIGNAL OF ECM.** 1) Turn the ignition switch to ON. 2) Measure the voltage between ECM connector and engine ground. ***Connector & terminal*** ***(E159) No. 15 (+) — Engine ground (–):***	Is the voltage 10 V or more?	Go to step **2**.	Go to step **3**.
2	**CHECK FOR POOR CONTACT.** Check for poor contact of ECM connector.	Is there poor contact of ECM connector?	Repair the poor contact of ECM connector.	Even if DTC is detected, the circuit has returned to a normal condition at this time. Reproduce the failure, and then perform the diagnosis again. NOTE: In this case, temporary poor contact of connector, temporary open or short circuit of harness may be the cause.
3	**CHECK POWER SUPPLY TO THE INTAKE OIL CONTROL SOLENOID LH.** Measure the voltage between intake oil control solenoid LH connector and engine ground. ***Connector & terminal*** ***(E37) No. 1 (+) — Engine ground (–):***	Is the voltage 10 V or more?	Go to step **4**.	Repair the power supply circuit.
4	**CHECK HARNESS BETWEEN ECM AND INTAKE OIL CONTROL SOLENOID LH CONNECTOR.** 1) Turn the ignition switch to OFF. 2) Disconnect the connector from ECM. 3) Disconnect the connector from the intake oil control solenoid LH. 4) Measure the resistance between intake oil control solenoid LH connector and engine ground. ***Connector & terminal*** ***(E37) No. 2 — Engine ground:***	Is the resistance 1 MΩ or more?	Go to step **5**.	Repair the short circuit to ground in harness between ECM connector and intake oil control solenoid LH connector.
5	**CHECK HARNESS BETWEEN ECM AND INTAKE OIL CONTROL SOLENOID LH CONNECTOR.** Measure the resistance of harness between ECM connector and intake oil control solenoid LH. ***Connector & terminal*** ***(E159) No. 15 — (E37) No. 2:***	Is the resistance less than 1 Ω?	Go to step **6**.	Repair the harness and connector. NOTE: In this case, repair the following item: • Open circuit in harness between ECM connector and intake oil control solenoid LH connector • Poor contact of coupling connector

	Step	Check	Yes	No
6	**CHECK INTAKE OIL CONTROL SOLENOID LH.** Measure the resistance between intake oil control solenoid LH terminals. ***Terminals*** ***No. 1 — No. 2:***	Is the resistance 6 — 12 Ω?	Repair the poor contact of intake oil control solenoid LH connector.	Replace the intake oil control solenoid LH. <Ref. to FU(w/o STI)-101, Oil Control Solenoid.>

1. OUTLINE OF DIAGNOSIS

NOTE:
For the detection standard, refer to DTC P0010. <Ref. to EN(w/o STI)(diag)-119, DTC P0010 "A" CAMSHAFT POSITION ACTUATOR CONTROL CIRCUIT/OPEN BANK 1, Diagnostic Procedure with Diagnostic Trouble Code (DTC).>

N: DTC P0021 "A" CAMSHAFT POSITION - TIMING OVER-ADVANCED OR SYSTEM PERFORMANCE BANK 2

DTC DETECTING CONDITION:
Detected when two consecutive driving cycles with fault occur.
TROUBLE SYMPTOM:
- Engine stalls.
- Improper idling

CAUTION:
After servicing or replacing faulty parts, perform Clear Memory Mode <Ref. to EN(w/o STI)(diag)-82, OPERATION, Clear Memory Mode.>, and Inspection Mode <Ref. to EN(w/o STI)(diag)-64, PROCEDURE, Inspection Mode.>.

	Step	Check	Yes	No
1	**IDENTIFYING FAULTY PART.** 1) Perform the Clear Memory Mode. <Ref. to EN(w/o STI)(diag)-82, Clear Memory Mode.> 2) Replace the defective oil control solenoid by the other (RH or LH, intake side or exhaust side) oil control solenoid. 3) Perform appropriate drive cycle. <Ref. to EN(w/o STI)(diag)-67, Drive Cycle.> 4) Make sure that the fault occurrence (DTC and incorrect advancing) has shifted to the other location.	Did the detected DTC shift to the location where the oil control solenoid was replaced?	Replace the faulty oil control solenoid.	Go to step **2**.
2	**CHECK CURRENT DATA.** 1) Start the engine and let it idle. 2) Read the value of «VVT Adv. Ang. Amount L» using the Subaru Select Monitor. NOTE: For detailed operation procedures, refer to "Read Current Data For Engine". <Ref. to EN(w/o STI)(diag)-46, Subaru Select Monitor.>	Is the value of «VVT Adv. Ang. Amount L» approx. 0 deg?	Go to step **3**.	Check the following item and repair or replace if necessary. • Intake cam sprocket (clog or dirt of oil routing, setting of spring) • Intake camshaft (dirt, damage of camshaft)
3	**CHECK CURRENT DATA.** 1) Drive with acceleration and deceleration at 80 km/h (50 MPH) or less. NOTE: Drive to an extent that the duty output of oil flow control solenoid valve increases. 2) Read the values of «OCV Duty L» and «VVT Adv. Ang. Amount L» using the Subaru Select Monitor. NOTE: For detailed operation procedures, refer to "Read Current Data For Engine". <Ref. to EN(w/o STI)(diag)-46, Subaru Select Monitor.>	When the value of «OCV Duty L» increases more than 10%, is the value of «VVT Adv. Ang. Amount L» approx. 0 deg?	Check the following item and repair or replace if necessary. • Intake cam sprocket (clog or dirt of oil routing, setting of spring) • Intake camshaft (dirt, damage of camshaft)	Perform the following procedures, and clean the oil routing. Replace the engine oil and idle the engine for 5 minutes, and then replace the oil filter and engine oil. <Ref. to LU(w/o STI)-11, REPLACEMENT, Engine Oil.> <Ref. to LU(w/o STI)-48, Engine Oil Filter.>

1. OUTLINE OF DIAGNOSIS

NOTE:
For the detection standard, refer to DTC P0011. <Ref. to EN(w/o STI)(diag)-122, DTC P0011 "A" CAMSHAFT POSITION - TIMING OVER-ADVANCED OR SYSTEM PERFORMANCE BANK 1, Diagnostic Procedure with Diagnostic Trouble Code (DTC).>

O: DTC P0023 "B" CAMSHAFT POSITION ACTUATOR CONTROL CIRCUIT/ OPEN BANK 2

DTC DETECTING CONDITION:
Immediately at fault recognition
TROUBLE SYMPTOM:
Improper idling

CAUTION:
• After servicing or replacing faulty parts, perform Clear Memory Mode <Ref. to EN(w/o STI)(diag)-82, OPERATION, Clear Memory Mode.>, and Inspection Mode <Ref. to EN(w/o STI)(diag)-64, PROCEDURE, Inspection Mode.>.
• Use the check board when measuring the ECM terminal voltage and resistance.
WIRING DIAGRAM:
Engine Electrical System <Ref. to WI-154, WIRING DIAGRAM, Engine Electrical System.>

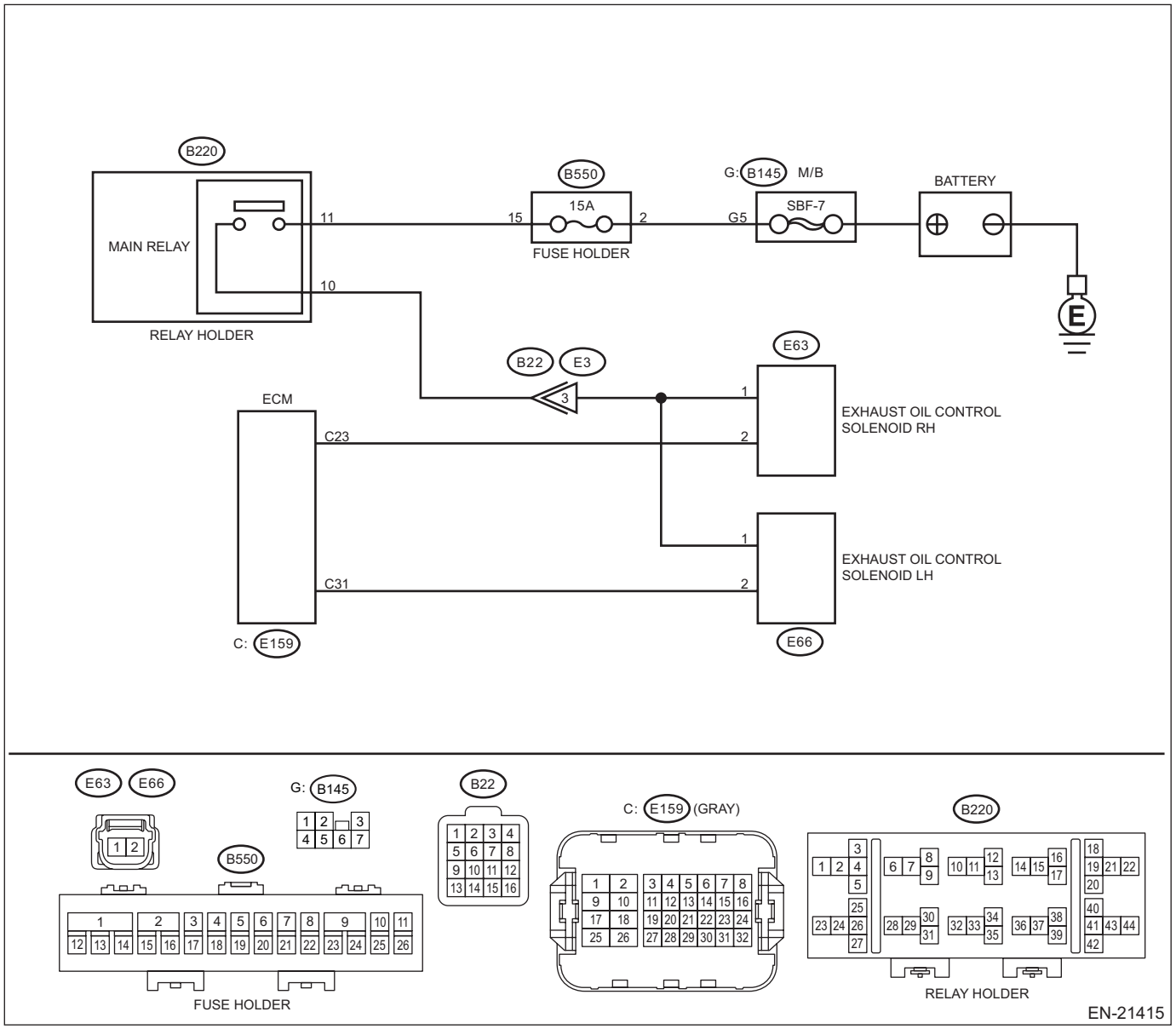

	Step	Check	Yes	No
1	**CHECK OUTPUT SIGNAL OF ECM.** 1) Turn the ignition switch to ON. 2) Measure the voltage between ECM connector and engine ground. ***Connector & terminal*** ***(E159) No. 31 (+) — Engine ground (–):***	Is the voltage 10 V or more?	Go to step **2**.	Go to step **3**.
2	**CHECK FOR POOR CONTACT.** Check for poor contact of ECM connector.	Is there poor contact of ECM connector?	Repair the poor contact of ECM connector.	Even if DTC is detected, the circuit has returned to a normal condition at this time. Reproduce the failure, and then perform the diagnosis again. NOTE: In this case, temporary poor contact of connector, temporary open or short circuit of harness may be the cause.
3	**CHECK POWER SUPPLY TO THE EXHAUST OIL CONTROL SOLENOID LH.** Measure the voltage between exhaust oil control solenoid LH connector and engine ground. ***Connector & terminal*** ***(E66) No. 1 (+) — Engine ground (–):***	Is the voltage 10 V or more?	Go to step **4**.	Repair the power supply circuit.
4	**CHECK HARNESS BETWEEN ECM AND EXHAUST OIL CONTROL SOLENOID LH CONNECTOR.** 1) Turn the ignition switch to OFF. 2) Disconnect the connector from ECM. 3) Disconnect the connector from the exhaust oil control solenoid LH. 4) Measure the resistance between exhaust oil control solenoid LH connector and engine ground. ***Connector & terminal*** ***(E66) No. 2 — Engine ground:***	Is the resistance 1 MΩ or more?	Go to step **5**.	Repair the short circuit to ground in harness between ECM connector and exhaust oil control solenoid LH connector.
5	**CHECK HARNESS BETWEEN ECM AND EXHAUST OIL CONTROL SOLENOID LH CONNECTOR.** Measure the resistance of harness between ECM connector and exhaust oil control solenoid LH. ***Connector & terminal*** ***(E159) No. 31 — (E66) No. 2:***	Is the resistance less than 1 Ω?	Go to step **6**.	Repair the harness and connector. NOTE: In this case, repair the following item: • Open circuit in harness between ECM connector and exhaust oil control solenoid LH connector • Poor contact of coupling connector

	Step	Check	Yes	No
6	**CHECK EXHAUST OIL CONTROL SOLENOID LH.** Measure the resistance between exhaust oil control solenoid LH terminals. ***Terminals*** ***No. 1 — No. 2:***	Is the resistance 6 — 12 Ω?	Repair the poor contact of exhaust oil control solenoid LH connector.	Replace the exhaust oil control solenoid LH. <Ref. to FU(w/o STI)-101, Oil Control Solenoid.>

1. OUTLINE OF DIAGNOSIS

NOTE:
For the detection standard, refer to DTC P0013. <Ref. to EN(w/o STI)(diag)-124, DTC P0013 "B" CAMSHAFT POSITION ACTUATOR CONTROL CIRCUIT/OPEN BANK 1, Diagnostic Procedure with Diagnostic Trouble Code (DTC).>

P: DTC P0024 "B" CAMSHAFT POSITION - TIMING OVER-ADVANCED OR SYSTEM PERFORMANCE BANK 2

DTC DETECTING CONDITION:
Detected when two consecutive driving cycles with fault occur.
TROUBLE SYMPTOM:
- Engine stalls.
- Improper idling

CAUTION:
After servicing or replacing faulty parts, perform Clear Memory Mode <Ref. to EN(w/o STI)(diag)-82, OPERATION, Clear Memory Mode.>, and Inspection Mode <Ref. to EN(w/o STI)(diag)-64, PROCEDURE, Inspection Mode.>.

	Step	Check	Yes	No
1	**IDENTIFYING FAULTY PART.** 1) Perform the Clear Memory Mode. <Ref. to EN(w/o STI)(diag)-82, Clear Memory Mode.> 2) Replace the defective oil control solenoid by the other (RH or LH, intake side or exhaust side) oil control solenoid. 3) Perform appropriate drive cycle. <Ref. to EN(w/o STI)(diag)-67, Drive Cycle.> 4) Make sure that the fault occurrence (DTC and incorrect advancing) has shifted to the other location.	Did the detected DTC shift to the location where the oil control solenoid was replaced?	Replace the faulty oil control solenoid.	Go to step **2**.
2	**CHECK CURRENT DATA.** 1) Start the engine and let it idle. 2) Read the value of «Exh. VVT Retard Ang. L» using the Subaru Select Monitor. NOTE: For detailed operation procedures, refer to "Read Current Data For Engine". <Ref. to EN(w/o STI)(diag)-46, Subaru Select Monitor.>	Is the value of «Exh. VVT Retard Ang. L» approx. 0 deg?	Go to step **3**.	Check the following item and repair or replace if necessary. • Exhaust cam sprocket (clog or dirt of oil routing, setting of spring) • Exhaust camshaft (dirt, damage of camshaft)
3	**CHECK CURRENT DATA.** 1) Drive with acceleration and deceleration at 80 km/h (50 MPH) or less. NOTE: Drive to an extent that the duty output of oil flow control solenoid valve increases. 2) Read the values of «Exh. OCV Duty L» and «Exh. VVT Retard Ang. L» using the Subaru Select Monitor. NOTE: For detailed operation procedures, refer to "Read Current Data For Engine". <Ref. to EN(w/o STI)(diag)-46, Subaru Select Monitor.>	When the value of «Exh. OCV Duty L» increases more than 10%, is the value of «Exh. VVT Retard Ang. L» approx. 0 deg?	Check the following item and repair or replace if necessary. • Exhaust cam sprocket (clog or dirt of oil routing, setting of spring) • Exhaust camshaft (dirt, damage of camshaft)	Perform the following procedures, and clean the oil routing. Replace the engine oil and idle the engine for 5 minutes, and then replace the oil filter and engine oil. <Ref. to LU(w/o STI)-11, REPLACEMENT, Engine Oil.> <Ref. to LU(w/o STI)-48, Engine Oil Filter.>

1. OUTLINE OF DIAGNOSIS

NOTE:
For the detection standard, refer to DTC P0014. <Ref. to EN(w/o STI)(diag)-127, DTC P0014 "B" CAMSHAFT POSITION - TIMING OVER-ADVANCED OR SYSTEM PERFORMANCE BANK 1, Diagnostic Procedure with Diagnostic Trouble Code (DTC).>

Q: DTC P0030 A/F / O2 HEATER CONTROL CIRCUIT BANK 1 SENSOR 1

DTC DETECTING CONDITION:
Detected when two consecutive driving cycles with fault occur.

CAUTION:
- **After servicing or replacing faulty parts, perform Clear Memory Mode <Ref. to EN(w/o STI)(diag)-82, OPERATION, Clear Memory Mode.>, and Inspection Mode <Ref. to EN(w/o STI)(diag)-64, PROCEDURE, Inspection Mode.>.**
- **Use the check board when measuring the ECM terminal voltage and resistance.**

WIRING DIAGRAM:
Engine Electrical System <Ref. to WI-154, WIRING DIAGRAM, Engine Electrical System.>

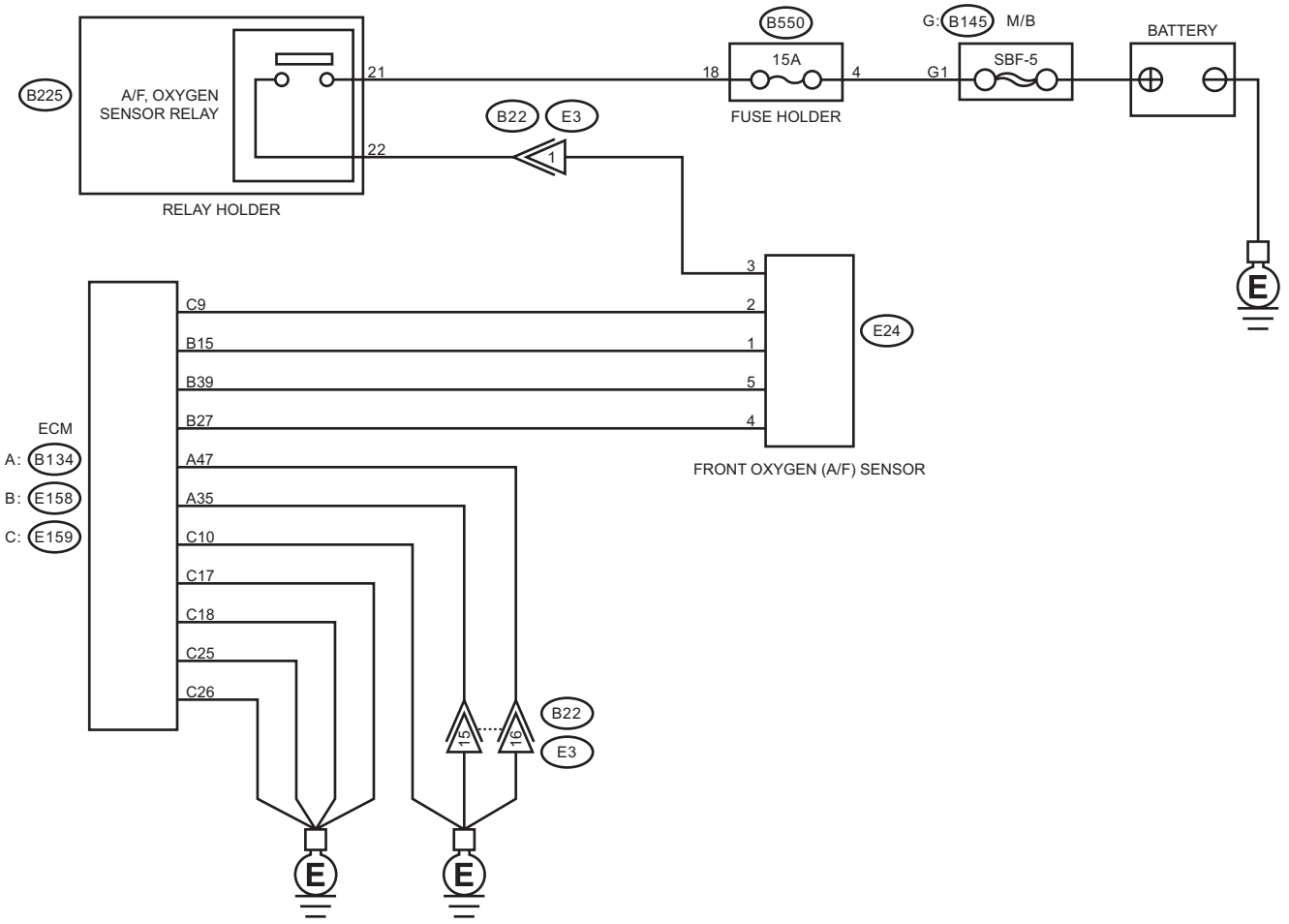

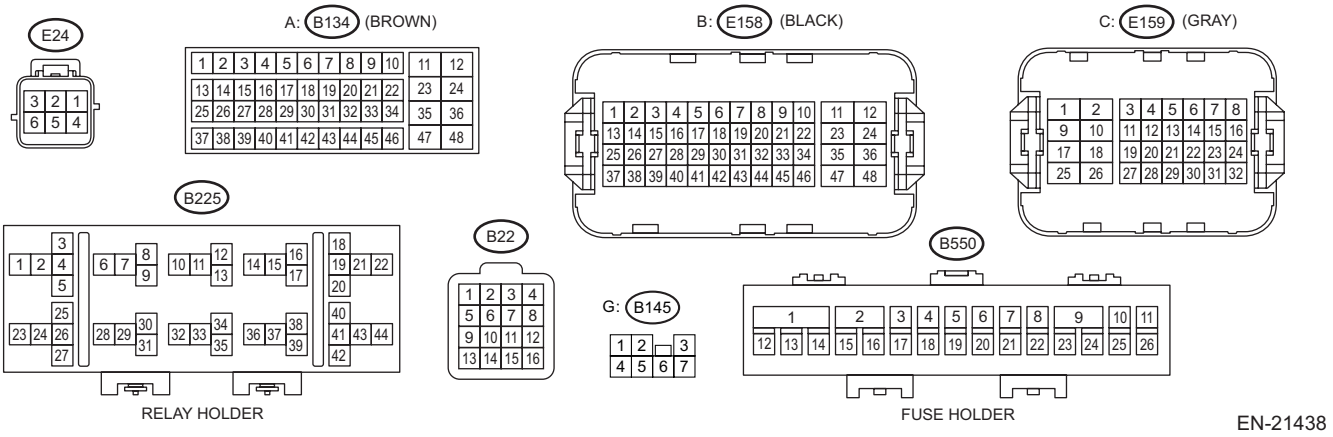

	Step	Check	Yes	No
1	**CHECK HARNESS BETWEEN ECM AND FRONT OXYGEN (A/F) SENSOR CONNECTOR.** 1) Start and warm up the engine. 2) Turn the ignition switch to OFF. 3) Disconnect the connector from ECM. 4) Disconnect the connectors from front oxygen (A/F) sensor. 5) Measure the resistance of harness between ECM connector and front oxygen (A/F) sensor connector. ***Connector & terminal*** ***(E158) No. 15 — (E24) No. 1:*** ***(E159) No. 9 — (E24) No. 2:*** ***(E158) No. 27 — (E24) No. 4:*** ***(E158) No. 39 — (E24) No. 5:***	Is the resistance less than 1 Ω?	Go to step **2**.	Repair the open circuit of harness between ECM connector and front oxygen (A/F) sensor connector.
2	**CHECK FRONT OXYGEN (A/F) SENSOR.** Measure the resistance between front oxygen (A/F) sensor terminals. ***Terminals*** ***No. 2 — No. 3:***	Is the resistance 2 — 3 Ω?	Go to step **3**.	Replace the front oxygen (A/F) sensor. <Ref. to FU(w/o STI)-118, Front Oxygen (A/F) Sensor.>
3	**CHECK FOR POOR CONTACT.** Check for poor contact of ECM and front oxygen (A/F) sensor connector.	Is there poor contact of ECM or front oxygen (A/F) sensor connector?	Repair the poor contact of ECM or front oxygen (A/F) sensor connector.	Replace the front oxygen (A/F) sensor. <Ref. to FU(w/o STI)-118, Front Oxygen (A/F) Sensor.>

1. OUTLINE OF DIAGNOSIS

Detect functional errors of the front oxygen (A/F) sensor heater.
Judge as NG when it is determined that the front oxygen (A/F) sensor impedance is large when looking at engine status such as deceleration fuel cut.

2. COMPONENT DESCRIPTION

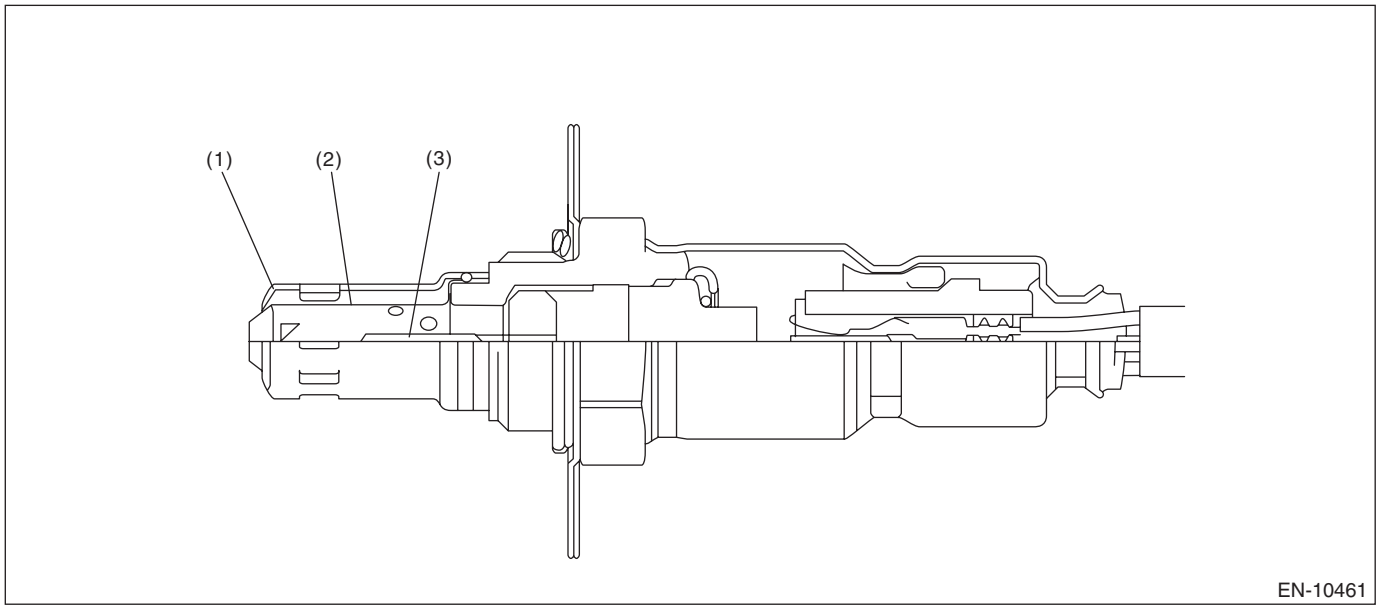

(1) Element cover (outer) (2) Element cover (inner) (3) Sensor element

3. EXECUTION CONDITION

Secondary parameters	Execution condition
Battery voltage	≥ 10.9 V
A/F sensor heater control duty	> 21%

4. GENERAL DRIVING CYCLE

Perform the diagnosis continuously after starting the engine.

5. DIAGNOSTIC METHOD

If the duration of time while the following conditions are met is longer than the time indicated, judge as NG.

Judgment Value

Malfunction Criteria	Threshold Value
Front oxygen (A/F) sensor impedance	> 100 Ω

Time Needed for Diagnosis: 25 seconds
Malfunction Indicator Light Illumination: Illuminates when malfunction occurs in 2 continuous driving cycles.

R: DTC P0031 A/F / O2 HEATER CONTROL CIRCUIT LOW BANK 1 SENSOR 1

DTC DETECTING CONDITION:
Immediately at fault recognition

CAUTION:
- **After servicing or replacing faulty parts, perform Clear Memory Mode <Ref. to EN(w/o STI)(diag)-82, OPERATION, Clear Memory Mode.>, and Inspection Mode <Ref. to EN(w/o STI)(diag)-64, PROCEDURE, Inspection Mode.>.**
- **Use the check board when measuring the ECM terminal voltage and resistance.**

WIRING DIAGRAM:
Engine Electrical System <Ref. to WI-154, WIRING DIAGRAM, Engine Electrical System.>

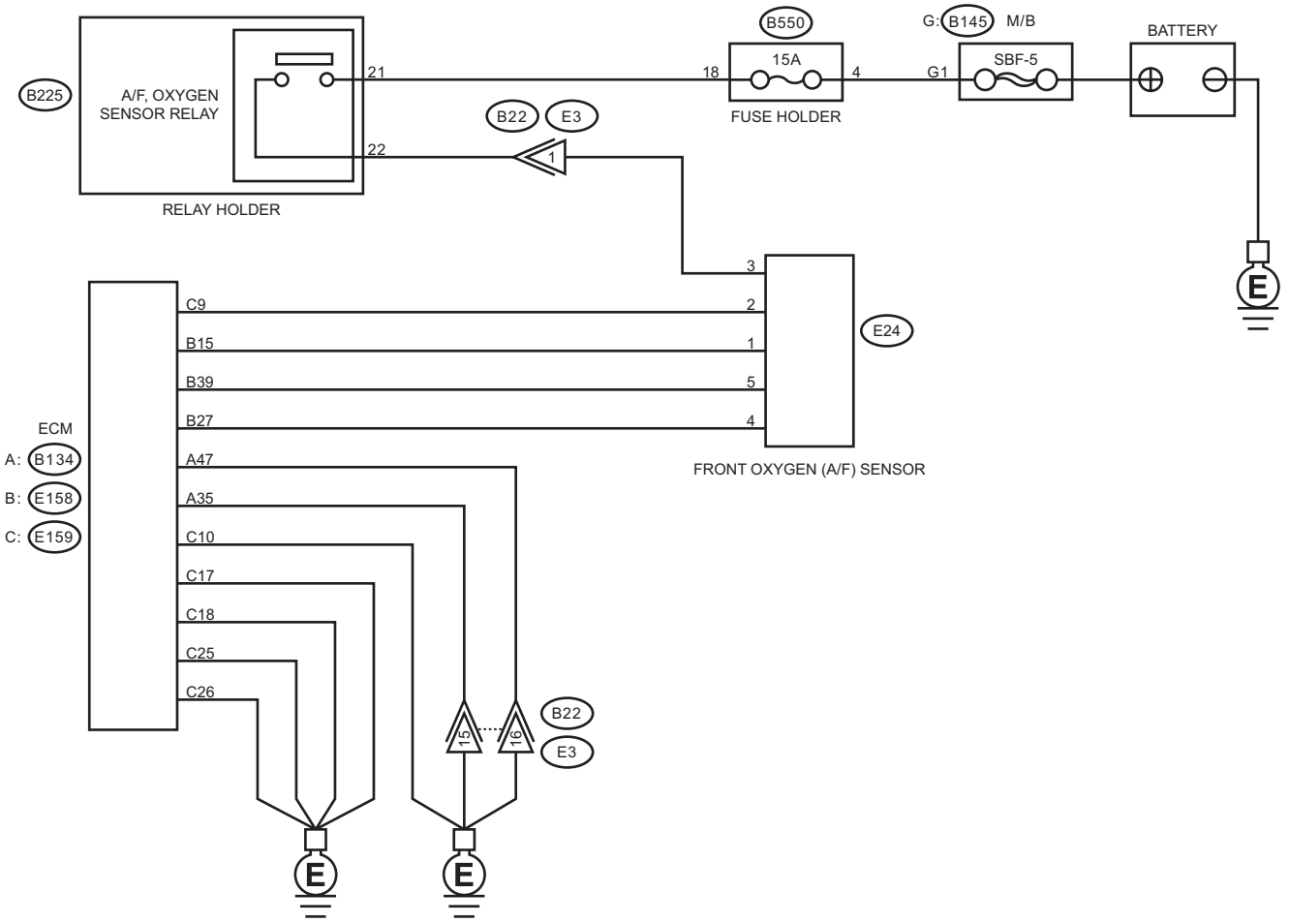

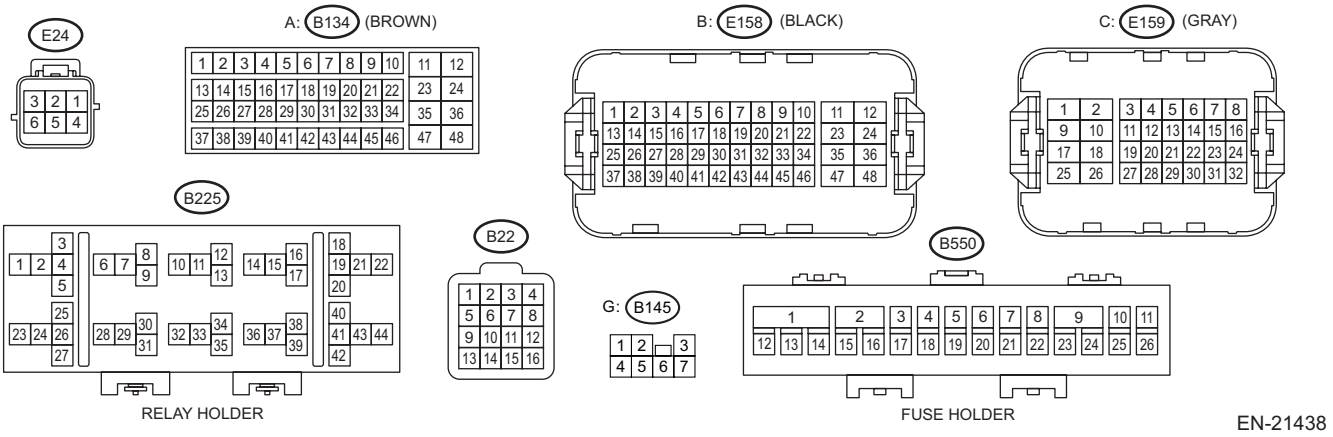

	Step	Check	Yes	No
1	**CHECK POWER SUPPLY TO FRONT OXYGEN (A/F) SENSOR.** 1) Turn the ignition switch to OFF. 2) Disconnect the connectors from front oxygen (A/F) sensor. 3) Turn the ignition switch to ON. 4) Measure the voltage between front oxygen (A/F) sensor connector and engine ground. ***Connector & terminal*** ***(E24) No. 3 (+) — Engine ground (–):***	Is the voltage 10 V or more?	Go to step **2**.	Repair the power supply line. NOTE: In this case, repair the following item: • Open circuit in harness between A/F, oxygen sensor relay and front oxygen (A/F) sensor connector • Poor contact of A/F, oxygen sensor relay connector • Poor contact of coupling connector • Malfunction of A/F, oxygen sensor relay
2	**CHECK HARNESS BETWEEN ECM AND FRONT OXYGEN (A/F) SENSOR CONNECTOR.** 1) Turn the ignition switch to OFF. 2) Disconnect the connector from ECM. 3) Measure the resistance between ECM connector and front oxygen (A/F) sensor connector. ***Connector & terminal*** ***(E24) No. 2 — (E159) No. 9:***	Is the resistance less than 1 Ω?	Go to step **3**.	Repair the open circuit of harness between ECM connector and front oxygen (A/F) sensor connector.
3	**CHECK GROUND CIRCUIT FOR ECM.** Measure the resistance of harness between ECM connector and engine ground. ***Connector & terminal*** ***(B134) No. 35 — Engine ground:*** ***(B134) No. 47 — Engine ground:*** ***(E159) No. 10 — Engine ground:*** ***(E159) No. 17 — Engine ground:*** ***(E159) No. 18 — Engine ground:*** ***(E159) No. 25 — Engine ground:*** ***(E159) No. 26 — Engine ground:***	Is the resistance less than 5 Ω?	Go to step **4**.	Repair the harness and connector. NOTE: In this case, repair the following item: • Open circuit of harness between ECM connector and engine ground • Poor contact of coupling connector
4	**CHECK FRONT OXYGEN (A/F) SENSOR.** Measure the resistance between front oxygen (A/F) sensor terminals. ***Terminals*** ***No. 2 — No. 3:***	Is the resistance 2 — 3 Ω?	Repair the poor contact of ECM connector.	Replace the front oxygen (A/F) sensor. <Ref. to FU(w/o STI)-118, Front Oxygen (A/F) Sensor.>

1. OUTLINE OF DIAGNOSIS

Detect front oxygen (A/F) sensor heater open or short circuit.
The front oxygen (A/F) sensor heater performs duty control, and the output terminal voltage at ON is 0 V, and the output terminal voltage at OFF is the battery voltage.
Judge as NG when the terminal voltage remains Low.

2. EXECUTION CONDITION

Secondary parameters	Execution condition
Battery voltage	≥ 10.9 V
Front oxygen (A/F) sensor heater control duty	≤ 80%

3. GENERAL DRIVING CYCLE

Always perform the diagnosis continuously.

4. DIAGNOSTIC METHOD

If the duration of time while the following conditions are met is longer than the time indicated, judge as NG.

Judgment Value

Malfunction Criteria	Threshold Value
Output voltage	≤ 2.2 V

Time Needed for Diagnosis: 1000 ms
Malfunction Indicator Light Illumination: Illuminates as soon as a malfunction occurs.

S: DTC P0032 A/F / O2 HEATER CONTROL CIRCUIT HIGH BANK 1 SENSOR 1

DTC DETECTING CONDITION:
Immediately at fault recognition

CAUTION:
- **After servicing or replacing faulty parts, perform Clear Memory Mode <Ref. to EN(w/o STI)(diag)-82, OPERATION, Clear Memory Mode.>, and Inspection Mode <Ref. to EN(w/o STI)(diag)-64, PROCEDURE, Inspection Mode.>.**
- **Use the check board when measuring the ECM terminal voltage and resistance.**

WIRING DIAGRAM:
Engine Electrical System <Ref. to WI-154, WIRING DIAGRAM, Engine Electrical System.>

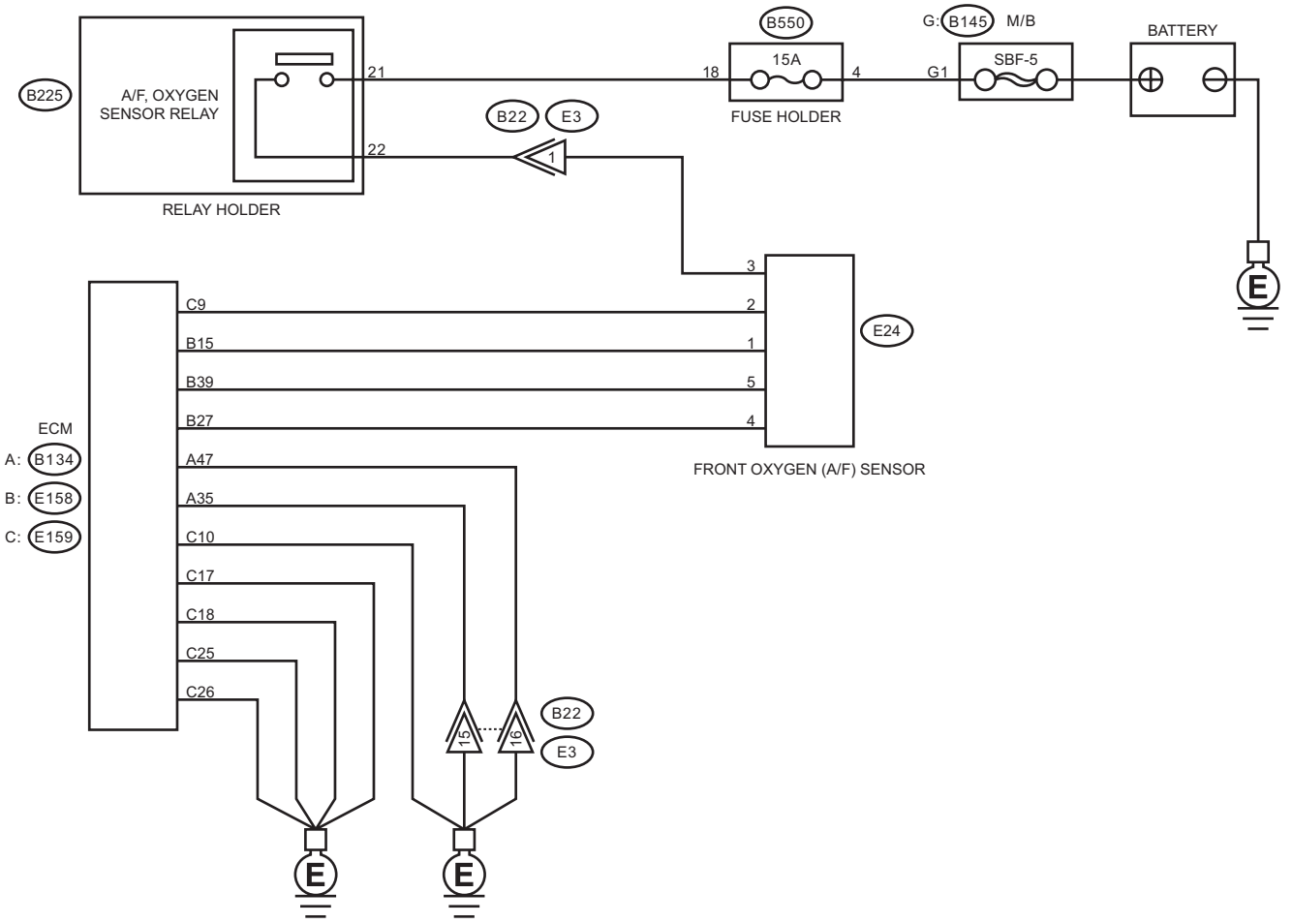

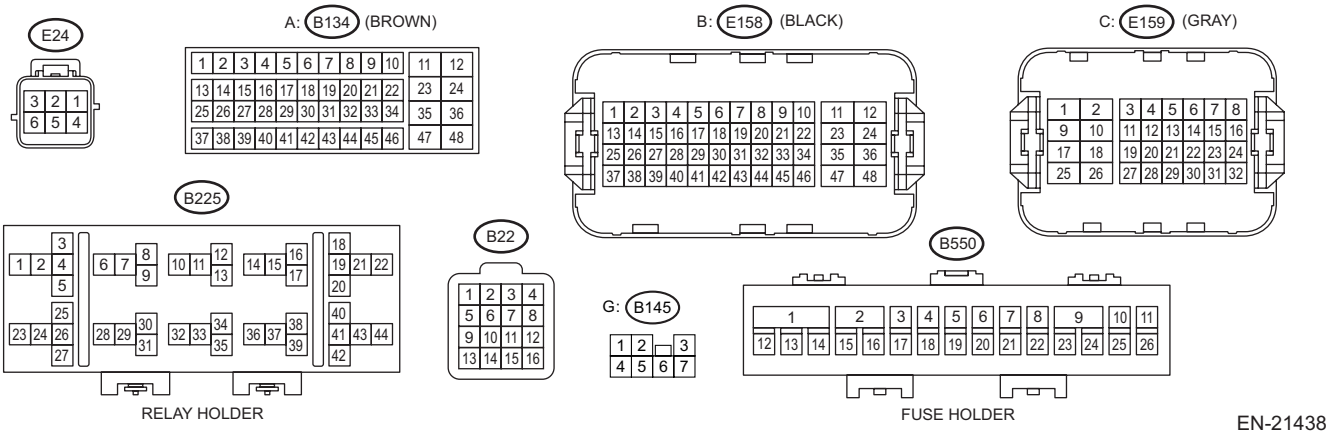

	Step	Check	Yes	No
1	**CHECK HARNESS BETWEEN ECM AND FRONT OXYGEN (A/F) SENSOR CONNECTOR.** 1) Turn the ignition switch to OFF. 2) Measure the voltage between ECM connector and engine ground. ***Connector & terminal*** ***(E159) No. 9 (+) — Engine ground (–):***	Is the voltage 10 V or more?	Repair the short circuit to power in the harness between ECM connector and front oxygen (A/F) sensor connector.	Go to step **2**.
2	**CHECK GROUND CIRCUIT FOR ECM.** 1) Disconnect the connector from ECM. 2) Measure the resistance between the ECM connector and engine ground. ***Connector & terminal*** ***(B134) No. 35 — Engine ground:*** ***(B134) No. 47 — Engine ground:*** ***(E159) No. 10 — Engine ground:*** ***(E159) No. 17 — Engine ground:*** ***(E159) No. 18 — Engine ground:*** ***(E159) No. 25 — Engine ground:*** ***(E159) No. 26 — Engine ground:***	Is the resistance less than 5 Ω?	Repair the poor contact of ECM connector.	Repair the harness and connector. NOTE: In this case, repair the following item: • Open circuit of harness between ECM connector and engine ground • Poor contact of coupling connector

1. OUTLINE OF DIAGNOSIS

Detect front oxygen (A/F) sensor heater open or short circuit.
The front oxygen (A/F) sensor heater performs duty control, and the output terminal voltage at ON is 0 V, and the output terminal voltage at OFF is the battery voltage.
Judge as NG when overcurrent is detected.

2. EXECUTION CONDITION

Secondary parameters	Execution condition
Battery voltage	≥ 10.9 V
Front oxygen (A/F) sensor heater control duty	≥ 20%

3. GENERAL DRIVING CYCLE

Always perform the diagnosis continuously.

4. DIAGNOSTIC METHOD

If the duration of time while the following conditions are met is longer than the time indicated, judge as NG.

Judgment Value

Malfunction Criteria	Threshold Value
Output current	≥ 17 A

Time Needed for Diagnosis: 2250 ms
Malfunction Indicator Light Illumination: Illuminates as soon as a malfunction occurs.

T: DTC P0037 A/F / O2 HEATER CONTROL CIRCUIT LOW BANK 1 SENSOR 2

DTC DETECTING CONDITION:

Detected when two consecutive driving cycles with fault occur.

CAUTION:

- **After servicing or replacing faulty parts, perform Clear Memory Mode <Ref. to EN(w/o STI)(diag)-82, OPERATION, Clear Memory Mode.>, and Inspection Mode <Ref. to EN(w/o STI)(diag)-64, PROCEDURE, Inspection Mode.>.**
- **Use the check board when measuring the ECM terminal voltage and resistance.**

WIRING DIAGRAM:
Engine Electrical System <Ref. to WI-154, WIRING DIAGRAM, Engine Electrical System.>

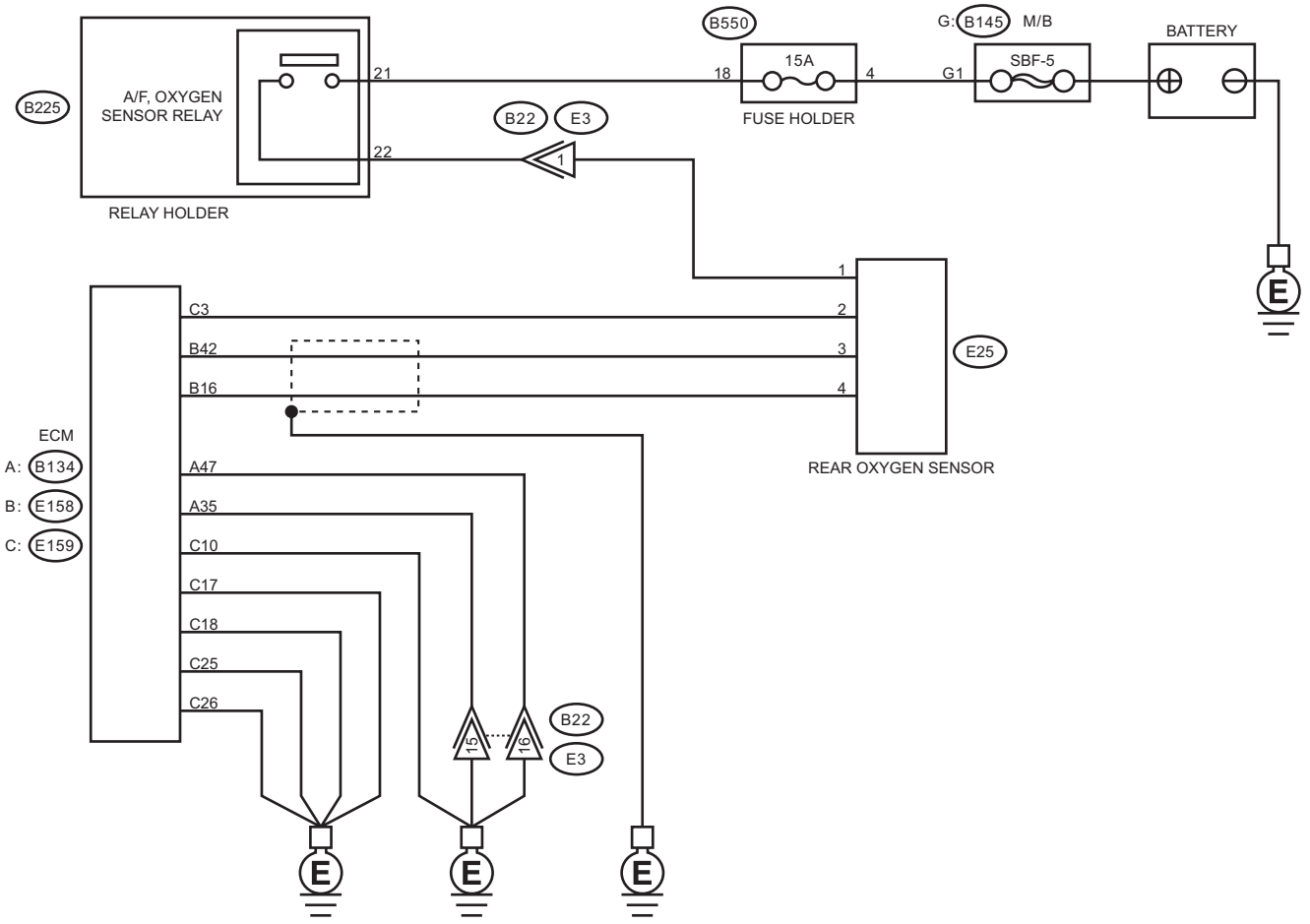

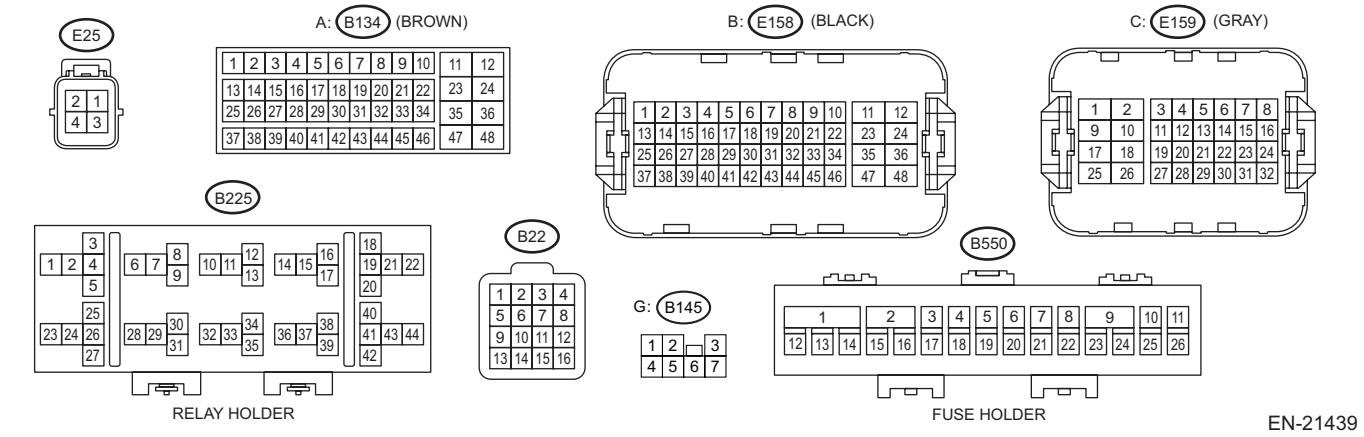

	Step	Check	Yes	No
1	**CHECK POWER SUPPLY TO REAR OXYGEN SENSOR.** 1) Turn the ignition switch to OFF. 2) Disconnect the connector from rear oxygen sensor. 3) Turn the ignition switch to ON. 4) Measure the voltage between rear oxygen sensor connector and engine ground. ***Connector & terminal*** ***(E25) No. 1 (+) — Engine ground (–):***	Is the voltage 10 V or more?	Go to step **2**.	Repair the power supply line. NOTE: In this case, repair the following item: • Open circuit in harness between A/F, oxygen sensor relay and rear oxygen sensor connector • Poor contact of A/F, oxygen sensor relay connector • Poor contact of coupling connector • Malfunction of A/F, oxygen sensor relay
2	**CHECK HARNESS BETWEEN ECM AND REAR OXYGEN SENSOR CONNECTOR.** 1) Turn the ignition switch to OFF. 2) Disconnect the connector from ECM. 3) Measure the resistance between ECM connector and rear oxygen sensor connector. ***Connector & terminal*** ***(E25) No. 2 — (E159) No. 3:***	Is the resistance less than 1 Ω?	Go to step **3**.	Repair the open circuit of harness between ECM connector and rear oxygen sensor connector.
3	**CHECK GROUND CIRCUIT FOR ECM.** Measure the resistance of harness between ECM connector and engine ground. ***Connector & terminal*** ***(B134) No. 35 — Engine ground:*** ***(B134) No. 47 — Engine ground:*** ***(E159) No. 10 — Engine ground:*** ***(E159) No. 17 — Engine ground:*** ***(E159) No. 18 — Engine ground:*** ***(E159) No. 25 — Engine ground:*** ***(E159) No. 26 — Engine ground:***	Is the resistance less than 5 Ω?	Go to step **4**.	Repair the harness and connector. NOTE: In this case, repair the following item: • Open circuit of harness between ECM connector and engine ground • Poor contact of coupling connector
4	**CHECK REAR OXYGEN SENSOR.** Measure the resistance between rear oxygen sensor connector terminals. ***Terminals*** ***No. 1 — No. 2:***	Is the resistance 5 — 7 Ω?	Repair the poor contact of ECM connector.	Replace the rear oxygen sensor. <Ref. to FU(w/o STI)-120, Rear Oxygen Sensor.>

1. OUTLINE OF DIAGNOSIS

Detect the rear oxygen sensor heater open or short circuit.
The rear oxygen sensor heater performs duty control, and the output terminal voltage at ON is 0 V, and the output terminal voltage at OFF is the battery voltage.
Judge as NG when the terminal voltage remains Low.

2. EXECUTION CONDITION

Secondary parameters	Execution condition
Battery voltage	≥ 10.9 V
Rear oxygen sensor heater control duty	≤ 96%

3. GENERAL DRIVING CYCLE

Always perform the diagnosis continuously.

4. DIAGNOSTIC METHOD

If the duration of time while the following conditions are met is longer than the time indicated, judge as NG.

Judgment Value

Malfunction Criteria	Threshold Value
Output voltage	≤ 2.2 V

Time Needed for Diagnosis: 2500 ms
Malfunction Indicator Light Illumination: Illuminates when malfunction occurs in 2 continuous driving cycles.

U: DTC P0038 A/F / O2 HEATER CONTROL CIRCUIT HIGH BANK 1 SENSOR 2

DTC DETECTING CONDITION:

Detected when two consecutive driving cycles with fault occur.

CAUTION:

- **After servicing or replacing faulty parts, perform Clear Memory Mode <Ref. to EN(w/o STI)(diag)-82, OPERATION, Clear Memory Mode.>, and Inspection Mode <Ref. to EN(w/o STI)(diag)-64, PROCEDURE, Inspection Mode.>.**
- **Use the check board when measuring the ECM terminal voltage and resistance.**

WIRING DIAGRAM:

Engine Electrical System <Ref. to WI-154, WIRING DIAGRAM, Engine Electrical System.>

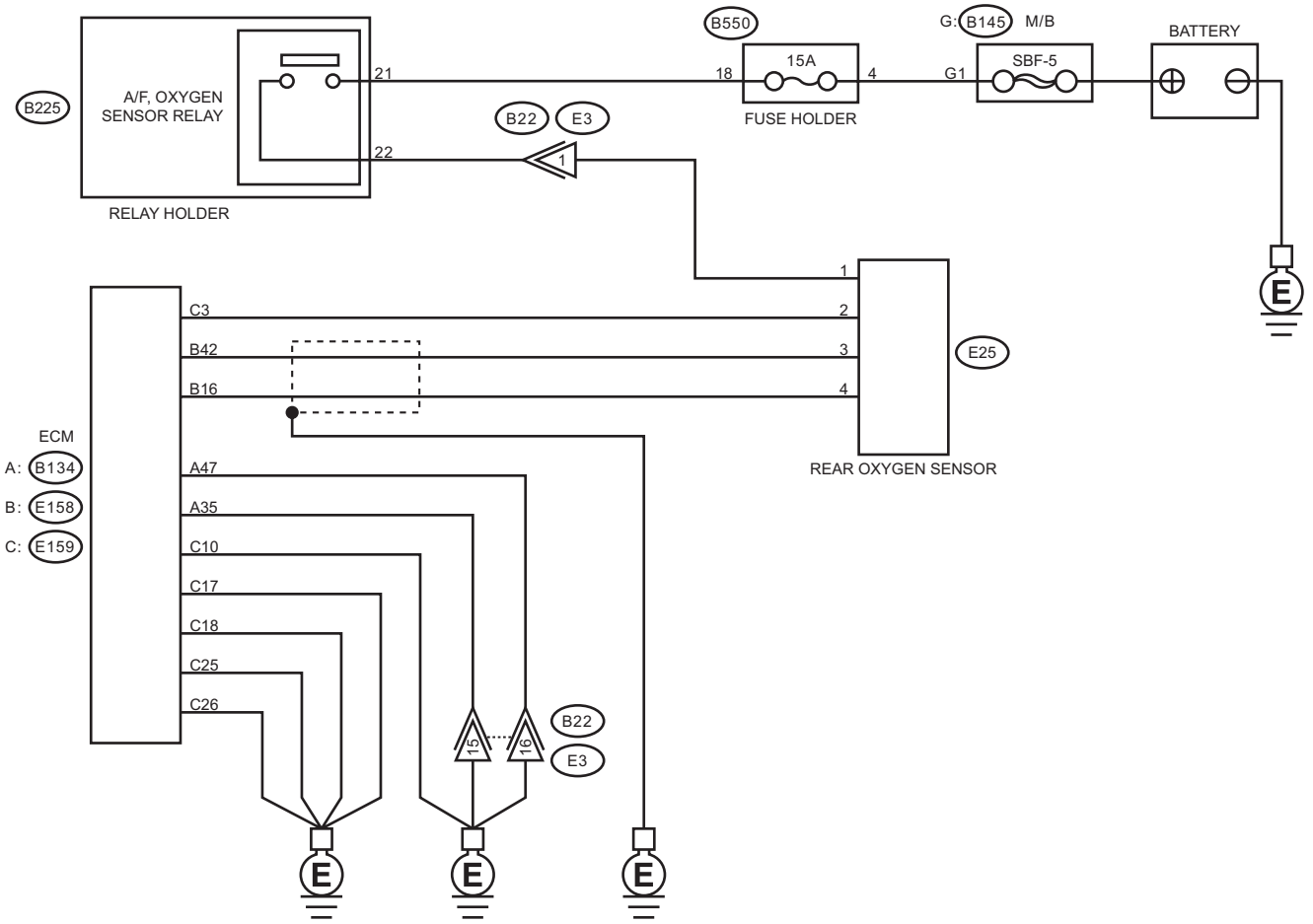

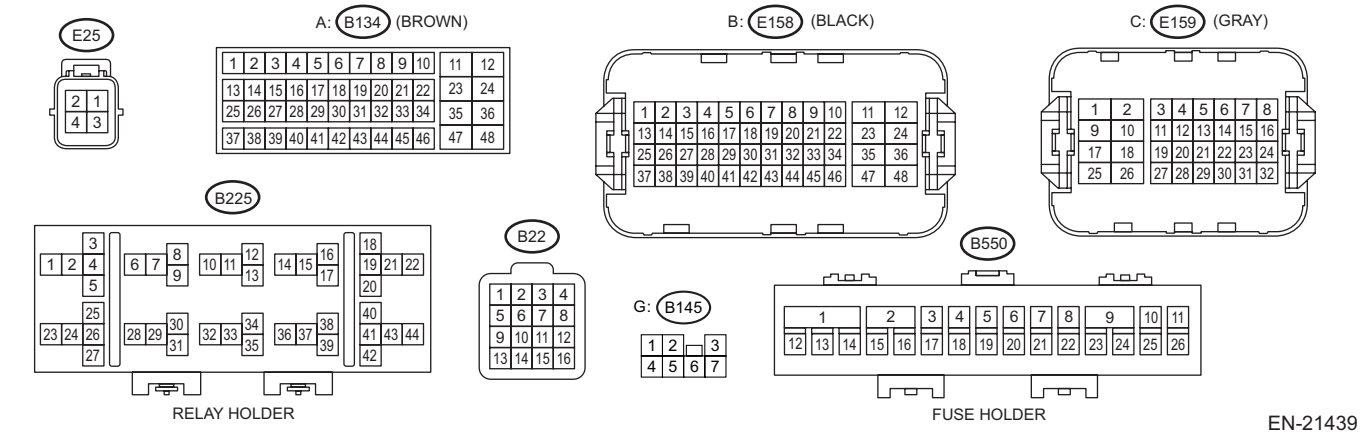

	Step	Check	Yes	No
1	**CHECK HARNESS BETWEEN ECM AND REAR OXYGEN SENSOR CONNECTOR.** 1) Turn the ignition switch to OFF. 2) Measure the voltage between ECM connector and engine ground. ***Connector & terminal*** ***(E159) No. 3 (+) — Engine ground (–):***	Is the voltage 10 V or more?	Repair the short circuit to power in the harness between ECM connector and rear oxygen sensor connector.	Go to step **2**.
2	**CHECK GROUND CIRCUIT FOR ECM.** 1) Disconnect the connector from ECM. 2) Measure the resistance between the ECM connector and engine ground. ***Connector & terminal*** ***(B134) No. 35 — Engine ground:*** ***(B134) No. 47 — Engine ground:*** ***(E159) No. 10 — Engine ground:*** ***(E159) No. 17 — Engine ground:*** ***(E159) No. 18 — Engine ground:*** ***(E159) No. 25 — Engine ground:*** ***(E159) No. 26 — Engine ground:***	Is the resistance less than 5 Ω?	Repair the poor contact of ECM connector.	Repair the harness and connector. NOTE: In this case, repair the following item: • Open circuit of harness between ECM connector and engine ground • Poor contact of coupling connector

1. OUTLINE OF DIAGNOSIS

Detect the rear oxygen sensor heater open or short circuit.
The rear oxygen sensor heater performs duty control, and the output terminal voltage at ON is 0 V, and the output terminal voltage at OFF is the battery voltage.
Judge as NG when overcurrent is detected.

2. EXECUTION CONDITION

Secondary parameters	Execution condition
Battery voltage	≥ 10.9 V
Rear oxygen sensor heater control duty	≥ 4%

3. GENERAL DRIVING CYCLE

Always perform the diagnosis continuously.

4. DIAGNOSTIC METHOD

If the duration of time while the following conditions are met is longer than the time indicated, judge as NG.

Judgment Value

Malfunction Criteria	Threshold Value
Output current	≥ 17 A

Time Needed for Diagnosis: 2500 ms
Malfunction Indicator Light Illumination: Illuminates when malfunction occurs in 2 continuous driving cycles.

V: DTC P0068 MAP/MAF - THROTTLE POSITION CORRELATION

DTC DETECTING CONDITION:
Detected when two consecutive driving cycles with fault occur.

CAUTION:
After servicing or replacing faulty parts, perform Clear Memory Mode <Ref. to EN(w/o STI)(diag)-82, OPERATION, Clear Memory Mode.>, and Inspection Mode <Ref. to EN(w/o STI)(diag)-64, PROCEDURE, Inspection Mode.>.

	Step	Check	Yes	No
1	**CHECK AIR INTAKE SYSTEM.**	Are there holes, loose bolts or disconnection of hose on air intake system?	Repair the air intake system.	Go to step **2**.
2	**CHECK MANIFOLD ABSOLUTE PRESSURE AND INTAKE AIR TEMPERATURE SENSOR.** 1) Start the engine and warm up engine until coolant temperature is higher than 75°C (167°F). 2) For CVT models, set the select lever to "P" range or "N" range, and for MT models, place the shift lever in the neutral position. 3) Turn the A/C switch to OFF. 4) Turn all the accessory switches to OFF. 5) Using the Subaru Select Monitor or a general scan tool, read the value in «Mani. Absolute Pressure». NOTE: • Subaru Select Monitor For detailed operation procedures, refer to "Read Current Data For Engine". <Ref. to EN(w/o STI)(diag)-46, Subaru Select Monitor.> • General scan tool For detailed operation procedures, refer to the general scan tool operation manual.	Is the value in «Mani. Absolute Pressure» 73.3 — 106.6 kPa (550 — 800 mmHg, 21.65 — 31.50 inHg) when the ignition is turned ON, and 20.0 — 46.7 kPa (150 — 350 mmHg, 5.91 — 13.78 inHg) during idling?	Go to step **3**.	Replace the manifold absolute pressure and intake air temperature sensor. <Ref. to FU(w/o STI)-112, Manifold Absolute Pressure and Intake Air Temperature Sensor.>
3	**CHECK THROTTLE OPENING ANGLE.** Using the Subaru Select Monitor or a general scan tool, read the value in «Throttle Opening Angle». NOTE: • Subaru Select Monitor For detailed operation procedures, refer to "Read Current Data For Engine". <Ref. to EN(w/o STI)(diag)-46, Subaru Select Monitor.> • General scan tool For detailed operation procedures, refer to the general scan tool operation manual.	Is the value in «Throttle Opening Angle» with the throttle fully closed less than 5%?	Go to step **4**.	Replace the electronic throttle control. <Ref. to FU(w/o STI)-15, Throttle Body.>
4	**CHECK THROTTLE OPENING ANGLE.**	Is the value in «Throttle Opening Angle» with the throttle fully open 85% or more?	Replace the manifold absolute pressure and intake air temperature sensor. <Ref. to FU(w/o STI)-112, Manifold Absolute Pressure and Intake Air Temperature Sensor.>	Replace the electronic throttle control. <Ref. to FU(w/o STI)-15, Throttle Body.>

1. OUTLINE OF DIAGNOSIS

Detect problems in the manifold absolute pressure sensor output properties.
Judge as NG when the intake air pressure AD value is Low whereas it seemed to be High from the viewpoint of engine condition, or when it is High whereas it seemed to be Low from the engine condition.

2. COMPONENT DESCRIPTION

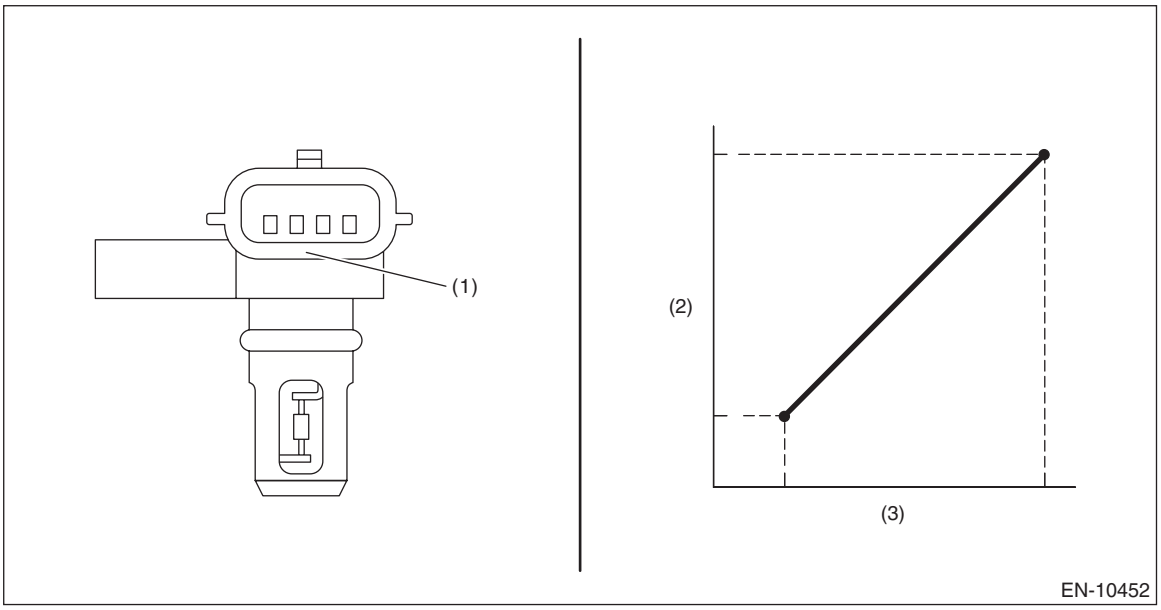

(1) Manifold absolute pressure sensor (2) Voltage (V) (3) Absolute pressure (kPa)

3. EXECUTION CONDITION

Low

Secondary parameters	Execution condition
Engine speed	< 3600 rpm
Charging efficiency (with atmospheric pressure compensation)	≥ 95 air mass %
Throttle position	≥ 80°CA

High

Secondary parameters	Execution condition
Engine speed	≥ 475 rpm and < 900 rpm
Charging efficiency (with atmospheric pressure compensation)	≤ 32 air mass %
Throttle position	≤ 7.0°CA

4. GENERAL DRIVING CYCLE

Perform the diagnosis continuously after idling.

5. DIAGNOSTIC METHOD

Judge as NG when Low side or High side becomes NG.
If the duration of time while the following conditions are met is longer than the time indicated, judge as NG.

Judgment Value

Malfunction Criteria	Threshold Value
Low	
Intake manifold pressure (absolute pressure)	< 75 kPa (562.6 mmHg, 22.2 inHg)
High	
Intake manifold pressure (absolute pressure)	≥ 75 kPa (562.6 mmHg, 22.2 inHg)

Time Needed for Diagnosis:
Low side: 5000 ms
High side: 5000 ms
Malfunction Indicator Light Illumination: Illuminates when malfunction occurs in 2 continuous driving cycles.

W: DTC P0071 AMBIENT AIR TEMPERATURE SENSOR CIRCUIT "A" RANGE/ PERFORMANCE

DTC DETECTING CONDITION:
Detected when two consecutive driving cycles with fault occur.

CAUTION:
After servicing or replacing faulty parts, perform Clear Memory Mode <Ref. to EN(w/o STI)(diag)-82, OPERATION, Clear Memory Mode.>, and Inspection Mode <Ref. to EN(w/o STI)(diag)-64, PROCEDURE, Inspection Mode.>.

	Step	Check	Yes	No
1	**CHECK FOR ANY OTHER DTC ON DISPLAY.**	Is any other DTC displayed?	Check the appropriate DTC using the “List of Diagnostic Trouble Code (DTC)”. <Ref. to EN(w/o STI)(diag)-106, List of Diagnostic Trouble Code (DTC).>	Go to step **2**.
2	**CHECK CURRENT DATA.** 1) Turn the ignition switch to ON. 2) Read the value of «Ambient Air Temperature» using the Subaru Select Monitor or a general scan tool. NOTE: • Subaru Select Monitor For detailed operation procedures, refer to “Current Data Display For HVAC System”. <Ref. to AC(diag)-47, Read Current Data.> • General scan tool For detailed operation procedures, refer to the general scan tool operation manual. 3) Read the change of the value in «Ambient Air Temperature» while heating and cooling the ambient sensor using a hair dryer. **CAUTION:** **Do not heat the part to the temperature where you cannot touch it with your bare hand in order to prevent burning yourself and protect the part.**	Does the value of «Ambient Air Temperature» change between heating and cooling?	Repair the poor contact of ECM connector.	Replace the ambient sensor. <Ref. to AC-71, Ambient Sensor.>

1. OUTLINE OF DIAGNOSIS

Detect the malfunction of ambient temperature sensor characteristics.
After the engine starts after the specified period of soaking time has elapsed, judge by correlation between ambient temperature sensor value, intake air temperature sensor value and engine coolant temperature sensor value. Judge as NG when the differences are both above the specified value by comparing between ambient air temperature and intake air temperature, ambient air temperature and engine coolant temperature.

2. COMPONENT DESCRIPTION

Ambient temperature sensor is connected to combination meter. ECM receives the data of ambient temperature sensor via CAN communication with combination meter.

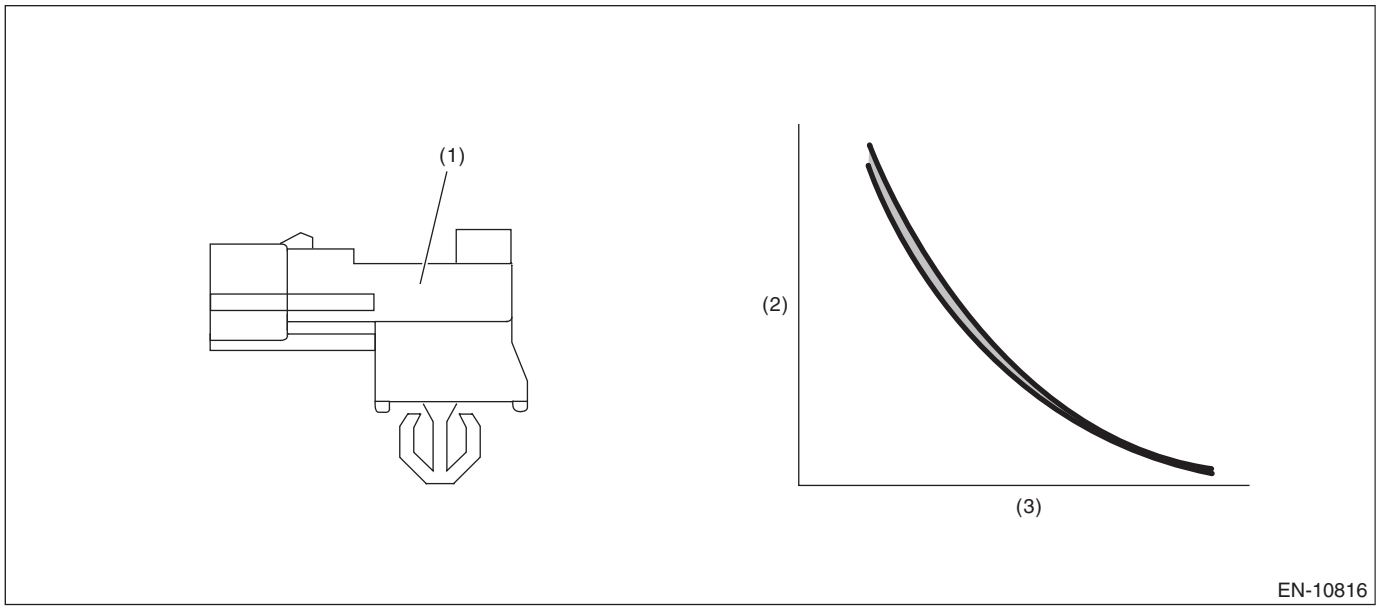

(1) Ambient sensor (2) Resistance value (kΩ) (3) Ambient air temperature (°C (°F))

3. EXECUTION CONDITION

Secondary parameters	Execution condition
Battery voltage	≥ 10.9 V
Soaking time	≥ 21600 s
Block heater judgment	Completed
Block heater operation	Not in operation

4. GENERAL DRIVING CYCLE

Perform the diagnosis only once after the engine starts after a certain period of soaking time.

5. DIAGNOSTIC METHOD

Judge as NG when the following conditions are established.

Judgment Value

Malfunction Criteria	Threshold Value
|Ambient air temperature 30 sec. after engine start – Intake air temperature 30 sec. after engine start|	> Value from Map
|Ambient air temperature at engine start – Engine coolant temperature at engine start|	> 25°C (45°F)

Map

Intake air temperature °C (°F)	–30 (–22)	45 (113)	60 (140)	80 (176)
|Ambient air temperature 30 sec. after engine start – Intake air temperature 30 sec. after engine start| °C (°F)	20 (36)	20 (36)	32 (57.6)	32 (57.6)

Time Needed for Diagnosis: Less than 1 second
Malfunction Indicator Light Illumination: Illuminates when malfunction occurs in 2 continuous driving cycles.

X: DTC P0072 AMBIENT AIR TEMPERATURE SENSOR CIRCUIT "A" LOW

DTC DETECTING CONDITION:

Immediately at fault recognition

	Step	Check	Yes	No
1	**CHECK DTC.** Check for DTC. <Ref. to EN(w/o STI)(diag)-63, Read Diagnostic Trouble Code (DTC).>	Is DTC P0072 or P0073 displayed? (Current malfunction)	Go to step **2**.	Even if DTC is detected, the circuit has returned to a normal condition at this time. Reproduce the failure, and then perform the diagnosis again. NOTE: In this case, temporary poor contact of connector, temporary open or short circuit of harness may be the cause.
2	**CHECK COMBINATION METER.** Check the combination meter system. <Ref. to IDI(diag)-2, Basic Diagnostic Procedure.>	Is the check result OK?	Repair the poor contact of ECM connector.	Repair the combination meter system. <Ref. to IDI(diag)-2, Basic Diagnostic Procedure.>

1. OUTLINE OF DIAGNOSIS

Detect the open or short circuit of ambient temperature sensor.
Judge as NG if out of specification.

2. COMPONENT DESCRIPTION

Ambient temperature sensor is connected to combination meter. ECM receives the data of ambient temperature sensor via CAN communication with combination meter.

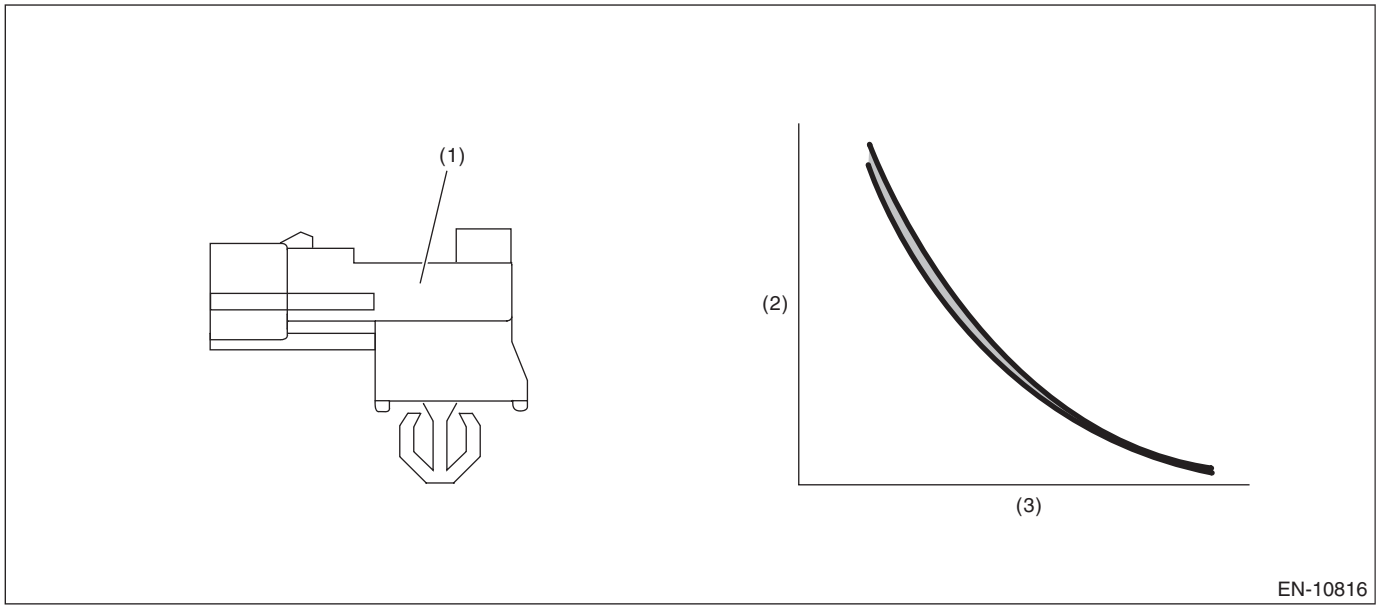

(1) Ambient sensor (2) Resistance value (kΩ) (3) Ambient air temperature (°C (°F))

3. EXECUTION CONDITION

Secondary parameters	Execution condition
Battery voltage	≥ 10.9 V

4. GENERAL DRIVING CYCLE

Always perform the diagnosis continuously after the enable conditions have been established.

5. DIAGNOSTIC METHOD

If the duration of time while the following conditions are met is longer than the time indicated, judge as NG.

Judgment Value

Malfunction Criteria	Threshold Value
Output voltage	< 0.42 V

Time Needed for Diagnosis: 2.56 seconds
Malfunction Indicator Light Illumination: Illuminates as soon as a malfunction occurs.

Y: DTC P0073 AMBIENT AIR TEMPERATURE SENSOR CIRCUIT "A" HIGH

NOTE:
For the diagnostic procedure, refer to DTC P0072. <Ref. to EN(w/o STI)(diag)-170, DTC P0072 AMBIENT AIR TEMPERATURE SENSOR CIRCUIT "A" LOW, Diagnostic Procedure with Diagnostic Trouble Code (DTC).>

1. OUTLINE OF DIAGNOSIS

Detect the open or short circuit of ambient temperature sensor.
Judge as NG if out of specification.

2. COMPONENT DESCRIPTION

Ambient temperature sensor is connected to combination meter. ECM receives the data of ambient temperature sensor via CAN communication with combination meter.

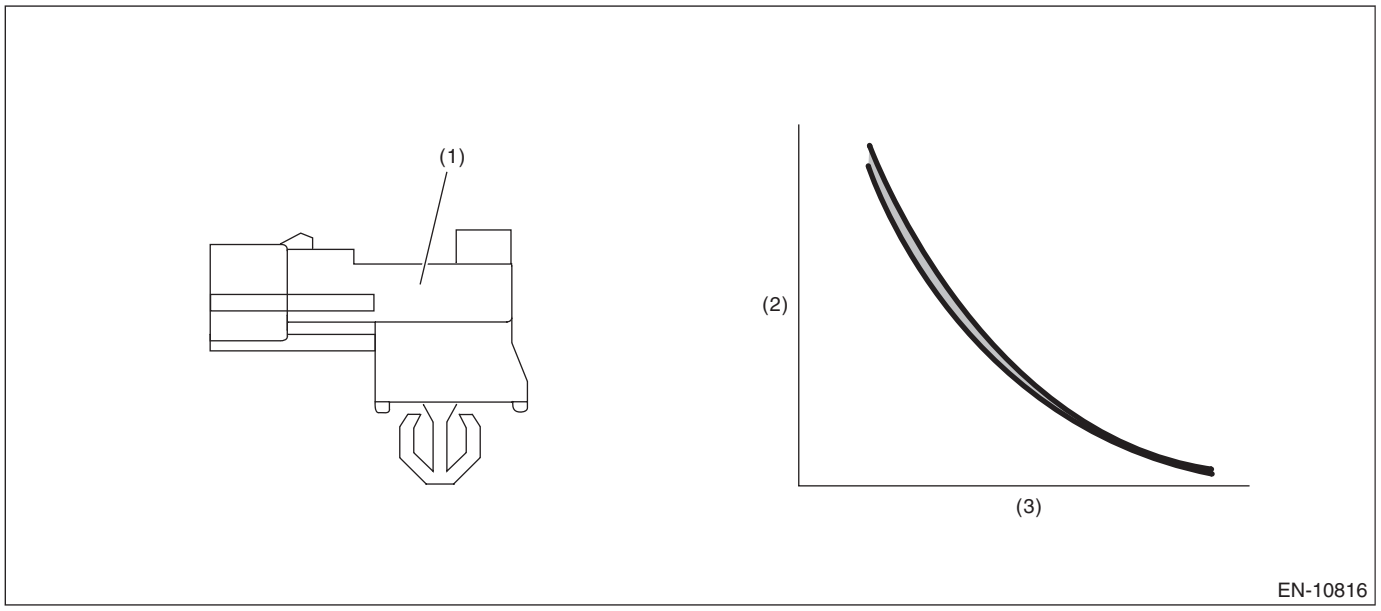

(1) Ambient sensor (2) Resistance value (kΩ) (3) Ambient air temperature (°C (°F))

3. EXECUTION CONDITION

Secondary parameters	Execution condition
Battery voltage	≥ 10.9 V

4. GENERAL DRIVING CYCLE

Always perform the diagnosis continuously after the enable conditions have been established.

5. DIAGNOSTIC METHOD

If the duration of time while the following conditions are met is longer than the time indicated, judge as NG.

Judgment Value

Malfunction Criteria	Threshold Value
Output voltage	> 4.88 V

Time Needed for Diagnosis: 2.56 seconds
Malfunction Indicator Light Illumination: Illuminates as soon as a malfunction occurs.

Z: DTC P0087 FUEL RAIL/SYSTEM PRESSURE - TOO LOW BANK 1

DTC DETECTING CONDITION:
Immediately at fault recognition
TROUBLE SYMPTOM:
- Improper idling
- Poor driving performance
- Poor acceleration

CAUTION:
After servicing or replacing faulty parts, perform Clear Memory Mode <Ref. to EN(w/o STI)(diag)-82, OPERATION, Clear Memory Mode.>, and Inspection Mode <Ref. to EN(w/o STI)(diag)-64, PROCEDURE, Inspection Mode.>.

	Step	Check	Yes	No
1	**CHECK FOR FUEL DELIVERY LINE LEAKAGE.** Visually check the fuel delivery line for leakage. **WARNING:** **• When checking fuel delivery line during engine operation, be very careful so that one's hair, body and clothes do not touch the rotating part in the engine compartment.** **• If there is fuel leakage, the fuel can be combusted spontaneously by the engine heat, resulting in serious accident. Therefore, take extra care of possible fuel leakage.** **• Prepare the necessary fire-extinguishing appliance for immediate fire fighting in case of fire.** NOTE: Concerning the section where visible inspection is difficult, the fuel odor provides a good indication of determining the fuel leakage.	Are there leaks from the fuel delivery line?	Replace the faulty fuel delivery line. <Ref. to FU(w/o STI)-191, Fuel Delivery and Evaporation Lines.> <Ref. to FU(w/o STI)-50, Fuel Injector.>	Go to step **2**.
2	**CHECK FOR ANY OTHER DTC ON DISPLAY.**	Is any other DTC displayed?	Check the appropriate DTC using the "List of Diagnostic Trouble Code (DTC)". <Ref. to EN(w/o STI)(diag)-106, List of Diagnostic Trouble Code (DTC).>	Go to step **3**.
3	**CHECK EXPERIENCE OF RUNNING OUT OF FUEL.** Check if there was an experience of running out of fuel using "Check List for Interview". <Ref. to EN(w/o STI)(diag)-5, CHECK LIST NO. 2, CHECK, Check List for Interview.>	Has the vehicle experienced running out of fuel?	Finish the diagnosis. NOTE: DTC may be stored by running out of fuel.	Go to step **4**.

	Step	Check	Yes	No
4	**CHECK FUEL PRESSURE.** 1) Start the engine. 2) Using the Subaru Select Monitor, read the values in «Fuel Rail Pressure A» and «Commanded Fuel Rail Pressure A» when racing the engine. NOTE: For detailed operation procedures, refer to “Current Data Display For Engine”. <Ref. to EN(w/o STI)(diag)-46, Subaru Select Monitor.>	Is the value in «Fuel Rail Pressure A» synchronized with the one in «Commanded Fuel Rail Pressure A»?	Go to step **5**.	• The value in «Fuel Rail Pressure A» does not increase: Go to step **7**. • The value in «Fuel Rail Pressure A» does not change: Replace the fuel pressure sensor. <Ref. to FU(w/o STI)-66, Fuel Pressure Sensor.>
5	**CHECK OF FUEL PUMP.** 1) Turn the ignition switch to ON. (Engine OFF) 2) On the «Active Test» item, select «Fuel Pump Control (ON/OFF Dr.)» and perform ON/OFF drive operation. NOTE: For detailed operation procedures, refer to “Application help”. 3) Check for operating sound in the fuel pump according to ON/OFF switching operation.	Does the fuel pump emit operating sound?	Go to step **6**.	Check fuel pump circuit. <Ref. to EN(w/o STI)(diag)-103, FUEL PUMP CIRCUIT, Diagnostics for Engine Starting Failure.>
6	**CHECK FUEL PRESSURE (LOW PRESSURE SIDE).** Check the fuel pressure on low-pressure side. <Ref. to ME(w/o STI)-31, INSPECTION, Fuel Pressure.>	Is the check result OK?	Go to step **7**.	Check the fuel pump and fuel delivery line. <Ref. to FU(w/o STI)-167, INSPECTION, Fuel Pump.> <Ref. to FU(w/o STI)-196, INSPECTION, Fuel Delivery and Evaporation Lines.>
7	**CHECK FOR FUEL DELIVERY LINE LEAKAGE (HIGH PRESSURE SIDE).** 1) Start the engine. 2) Using the Subaru Select Monitor, read the change in value of «Fuel Rail Pressure A» when stopping the engine. NOTE: • In order to maintain the communication with Subaru Select Monitor, turn the ignition switch to OFF, and immediately turn it to ON. • For detailed operation procedures, refer to “Current Data Display For Engine”. <Ref. to EN(w/o STI)(diag)-46, Subaru Select Monitor.>	Does the value of «Fuel Rail Pressure A» decrease rapidly?	Go to step **8**.	Go to step **9**.
8	**CHECK HIGH-PRESSURE FUEL PUMP.** Check the high-pressure fuel pump. <Ref. to FU(w/o STI)-75, INSPECTION, High Pressure Fuel Pump.>	Is the check result OK?	Go to step **9**.	Replace the high-pressure fuel pump. <Ref. to FU(w/o STI)-69, High Pressure Fuel Pump.>

	Step	Check	Yes	No
9	**CHECK FOR REPRODUCTION OF FAILURE.** 1) Perform the Clear Memory Mode. <Ref. to EN(w/o STI)(diag)-82, Clear Memory Mode.> 2) Perform appropriate drive cycle test. <Ref. to EN(w/o STI)(diag)-67, Drive Cycle.> 3) Read the DTC. <Ref. to EN(w/o STI)(diag)-63, Read Diagnostic Trouble Code (DTC).>	Is the same DTC as current diagnosis output?	Replace the high-pressure fuel pump. <Ref. to FU(w/o STI)-69, High Pressure Fuel Pump.> After replacement, go to the next step. Go to step **10**. NOTE: When the high-pressure fuel pump has been replaced in step 8, go to the next step without replacing the high-pressure fuel pump. Go to step **11**.	End.
10	**CHECK FOR REPRODUCTION OF FAILURE.** 1) Perform the Clear Memory Mode. <Ref. to EN(w/o STI)(diag)-82, Clear Memory Mode.> 2) Perform appropriate drive cycle test. <Ref. to EN(w/o STI)(diag)-67, Drive Cycle.> 3) Read the DTC. <Ref. to EN(w/o STI)(diag)-63, Read Diagnostic Trouble Code (DTC).>	Is the same DTC as current diagnosis output?	Go to step **11**.	End.
11	**CHECK FOR FUEL DELIVERY LINE LEAKAGE (HIGH PRESSURE SIDE).** 1) Start the engine. 2) Using the Subaru Select Monitor, read the change in value of «Fuel Rail Pressure A» when stopping the engine. NOTE: • In order to maintain the communication with Subaru Select Monitor, turn the ignition switch to OFF, and immediately turn it to ON. • For detailed operation procedures, refer to “Current Data Display For Engine”. <Ref. to EN(w/o STI)(diag)-46, Subaru Select Monitor.>	Does the value of «Fuel Rail Pressure A» decrease rapidly?	Replace the fuel injector. <Ref. to FU(w/o STI)-50, Fuel Injector.>	Repair the poor contact of ECM connector.

1. OUTLINE OF DIAGNOSIS

NOTE:
For the detection standard, refer to DTC P0088. <Ref. to EN(w/o STI)(diag)-176, DTC P0088 FUEL RAIL/SYSTEM PRESSURE - TOO HIGH BANK 1, Diagnostic Procedure with Diagnostic Trouble Code (DTC).>

AA:DTC P0088 FUEL RAIL/SYSTEM PRESSURE - TOO HIGH BANK 1

DTC DETECTING CONDITION:
Immediately at fault recognition
TROUBLE SYMPTOM:
- Poor driving performance
- Poor acceleration

CAUTION:
After servicing or replacing faulty parts, perform Clear Memory Mode <Ref. to EN(w/o STI)(diag)-82, OPERATION, Clear Memory Mode.>, and Inspection Mode <Ref. to EN(w/o STI)(diag)-64, PROCEDURE, Inspection Mode.>.

	Step	Check	Yes	No
1	**CHECK FOR ANY OTHER DTC ON DISPLAY.**	Is any other DTC displayed?	Check the appropriate DTC using the “List of Diagnostic Trouble Code (DTC)”. <Ref. to EN(w/o STI)(diag)-106, List of Diagnostic Trouble Code (DTC).>	Go to step **2**.
2	**CHECK FUEL PRESSURE.** 1) Start the engine. 2) Using Subaru Select Monitor, read the values in «Fuel Rail Pressure A» and «Commanded Fuel Rail Pressure A» until the vehicle is accelerated to 60 km/h (37.3 MPH) from the parked state and stops again. **CAUTION:** **• Follow traffic rules and give the highest priority to safe driving.** **• During driving, do not operate or gaze at the Subaru Select Monitor.** **• Always check the measurement value after bringing the vehicle to a stop in a safe place.** NOTE: • In order to apply the running load to the vehicle, actually drive the vehicle, and read the measurement value. • For detailed operation procedures, refer to “Current Data Display For Engine”. <Ref. to EN(w/o STI)(diag)-46, Subaru Select Monitor.>	Is the value in «Fuel Rail Pressure A» synchronized with the one in «Commanded Fuel Rail Pressure A»?	Replace the high-pressure fuel pump. <Ref. to FU(w/o STI)-69, High Pressure Fuel Pump.> After replacement, go to the next step. Go to step **3**.	Replace the fuel pressure sensor. <Ref. to FU(w/o STI)-66, Fuel Pressure Sensor.>
3	**CHECK FOR REPRODUCTION OF FAILURE.** 1) Perform the Clear Memory Mode. <Ref. to EN(w/o STI)(diag)-82, Clear Memory Mode.> 2) Perform appropriate drive cycle test. <Ref. to EN(w/o STI)(diag)-67, Drive Cycle.> 3) Read the DTC. <Ref. to EN(w/o STI)(diag)-63, Read Diagnostic Trouble Code (DTC).>	Is the same DTC as current diagnosis output?	Repair the poor contact of ECM connector.	End.

1. OUTLINE OF DIAGNOSIS

Detect the malfunction of high pressure fuel system function.
Judge as NG when actual pressure is not close to target pressure.

2. EXECUTION CONDITION

Secondary parameters	Execution condition
Continuous time after fuel cut	> 3 s
Target pressure change every 10 ms	≤ 500 kPa (3750.3 mmHg, 147.7 inHg)

3. GENERAL DRIVING CYCLE

Always perform the diagnosis continuously.

4. DIAGNOSTIC METHOD

If the duration of time while the following conditions are met is longer than the time indicated, judge as NG.

Judgment Value

Malfunction Criteria	Threshold Value	DTC
Actual fuel pressure – Target fuel pressure	< –3300 kPa (24752.1 mmHg, 974.5 inHg)	P0087
Actual fuel pressure – Target fuel pressure	> 6000 kPa (45003.8 mmHg, 1771.8 inHg)	P0088

Time Needed for Diagnosis: 10 seconds
Malfunction Indicator Light Illumination: Illuminates as soon as a malfunction occurs.

AB:DTC P0096 INTAKE AIR TEMPERATURE SENSOR 2 CIRCUIT RANGE/PERFORMANCE BANK 1

DTC DETECTING CONDITION:
Detected when two consecutive driving cycles with fault occur.
TROUBLE SYMPTOM:
- Improper idling
- Poor driving performance

CAUTION:
After servicing or replacing faulty parts, perform Clear Memory Mode <Ref. to EN(w/o STI)(diag)-82, OPERATION, Clear Memory Mode.>, and Inspection Mode <Ref. to EN(w/o STI)(diag)-64, PROCEDURE, Inspection Mode.>.

	Step	Check	Yes	No
1	**CHECK FOR ANY OTHER DTC ON DISPLAY.**	Is any other DTC displayed?	Check the appropriate DTC using the "List of Diagnostic Trouble Code (DTC)". <Ref. to EN(w/o STI)(diag)-106, List of Diagnostic Trouble Code (DTC).>	Go to step **2**.
2	**CHECK CURRENT DATA.** 1) Turn the ignition switch to ON. 2) Read the value of «IAT Sensor #12» using the Subaru Select Monitor or a general scan tool. NOTE: • Subaru Select Monitor For detailed operation procedures, refer to "Current Data Display For Engine". <Ref. to EN(w/o STI)(diag)-46, Subaru Select Monitor.> • General scan tool For detailed operation procedures, refer to the general scan tool operation manual. 3) Read the change of the value in «IAT Sensor #12» while heating and cooling the manifold absolute pressure and intake air temperature sensor using a hair dryer. **CAUTION:** **Do not heat the part to the temperature where you cannot touch it with your bare hand in order to prevent burning yourself and protect the part.**	Does the value of «IAT Sensor #12» change between heating and cooling?	Repair the poor contact of ECM connector.	Replace the manifold absolute pressure and intake air temperature sensor. <Ref. to FU(w/o STI)-112, Manifold Absolute Pressure and Intake Air Temperature Sensor.>

1. OUTLINE OF DIAGNOSIS

Detect the malfunction of the intake air temperature sensor (integrated with manifold absolute pressure sensor) output properties. Using the following two diagnoses, judge as NG when either is NG.
• **Diagnosis 1 (correlation diagnosis):** After the engine starts after the specified period of soaking time has elapsed, diagnose by correlation between intake air temperature sensor value, engine coolant temperature sensor value and ambient temperature sensor value. Judge as NG when the differences are both above the specified value by comparing between intake air temperature and engine coolant temperature, intake air temperature and ambient air temperature.
• **Diagnosis 2 (stuck diagnosis):** Judge as NG when intake air temperature does not change under the driving condition where it should change, considering engine condition.

2. COMPONENT DESCRIPTION

Intake air temperature sensor (integrated with manifold absolute pressure sensor)

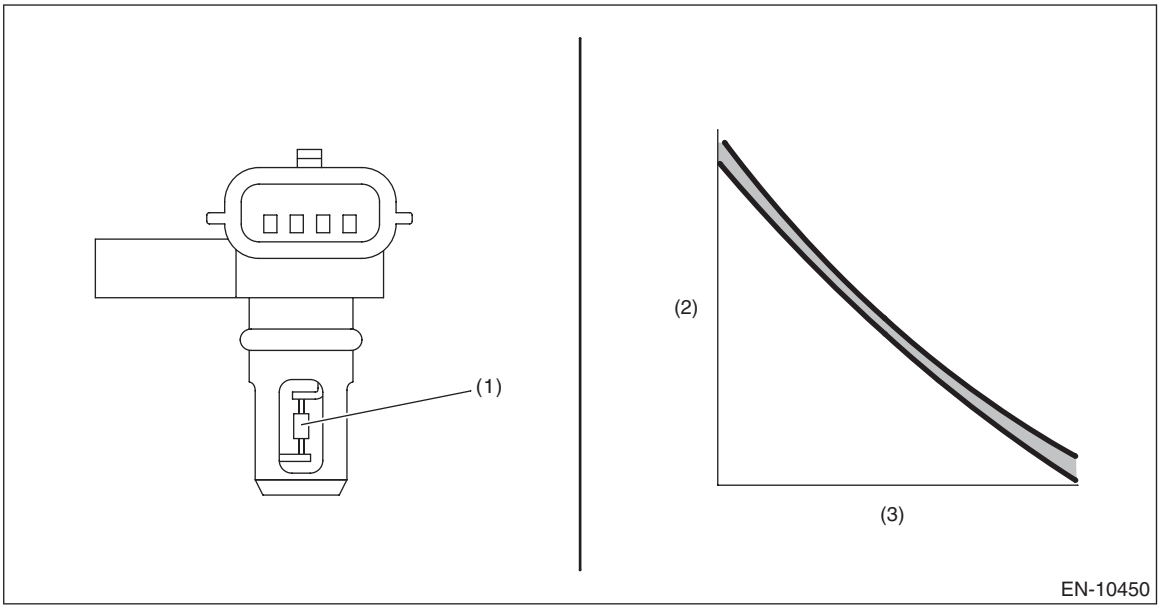

(1) Intake air temperature sensor (2) Resistance value (Ω) (3) Intake air temperature °C (°F)

3. EXECUTION CONDITION

Diagnosis 1

Secondary parameters	Execution condition
Battery voltage	≥ 10.9 V
Soaking time	≥ 21600 s
Block heater judgment	Completed
Block heater operation	Not in operation

Diagnosis 2

Secondary parameters	Execution condition
Battery voltage	≥ 10.9 V
Engine coolant temperature	≥ 60°C (140°F)
Integrated value of intake air amount	≥ 5500 g
Number of experiences under following driving conditions	≥ 3 time (s)
• Duration of driving condition 1	≥ 15 s
Vehicle speed	≥ 40 km/h (24.9 MPH)
and	
Amount of intake air	≥ 10 g/s (0.4 oz/s)
• Duration of driving condition 2	≥ 10 s
Vehicle speed	< 4 km/h (2.5 MPH)

4. GENERAL DRIVING CYCLE

- **Diagnosis 1:** Perform the diagnosis only once after the engine starts after a certain period of soaking time.
- **Diagnosis 2:** Perform the diagnosis when the vehicle speed condition is met after warming up from a cold condition.

5. DIAGNOSTIC METHOD

Judge as NG when Diagnosis 1 or Diagnosis 2 becomes NG.

Diagnosis 1

If the duration of time while the following conditions are met is longer than the time indicated, judge as NG.

Judgment Value

Malfunction Criteria	Threshold Value
|Intake air temperature (manifold absolute pressure sensor) 30 sec. after engine start – Intake air temperature (air flow sensor) 30 sec. after engine start|	> Value of Map 1
|Intake air temperature (manifold absolute pressure sensor) 30 sec. after engine start – Ambient air temperature 30 sec. after engine start|	> Value of Map 2

Map 1

Ambient temperature °C (°F)	–30 (–22)	30 (86)	45 (113)	60 (140)
|Intake air temperature (manifold absolute pressure sensor) 30 sec. after engine start – Intake air temperature (air flow sensor) 30 sec. after engine start| °C (°F)	11 (19.8)	11 (19.8)	11 (19.8)	11 (19.8)

Map 2

Ambient temperature °C (°F)	–30 (–22)	30 (86)	45 (113)	60 (140)
|Intake air temperature (manifold absolute pressure sensor) 30 sec. after engine start – Ambient air temperature 30 sec. after engine start| °C (°F)	20 (36)	20 (36)	32 (57.6)	32 (57.6)

Time Needed for Diagnosis: Less than 1 second

Diagnosis 2

Judge as NG when the following conditions are established.

Judgment Value

Malfunction Criteria	Threshold Value
Output voltage difference between Max. and Min.	< 0.02 V (Equivalent to approximately 0.5°C (0.9°F) near 25°C (77°F))

Time Needed for Diagnosis: Less than 1 second

Malfunction Indicator Light Illumination: Illuminates when malfunction occurs in 2 continuous driving cycles.

AC:DTC P0097 INTAKE AIR TEMPERATURE SENSOR 2 CIRCUIT LOW BANK 1

DTC DETECTING CONDITION:
Immediately at fault recognition
TROUBLE SYMPTOM:
- Improper idling
- Poor driving performance

CAUTION:
- **After servicing or replacing faulty parts, perform Clear Memory Mode <Ref. to EN(w/o STI)(diag)-82, OPERATION, Clear Memory Mode.>, and Inspection Mode <Ref. to EN(w/o STI)(diag)-64, PROCEDURE, Inspection Mode.>.**
- **Use the check board when measuring the ECM terminal voltage and resistance.**

WIRING DIAGRAM:
Engine Electrical System <Ref. to WI-154, WIRING DIAGRAM, Engine Electrical System.>

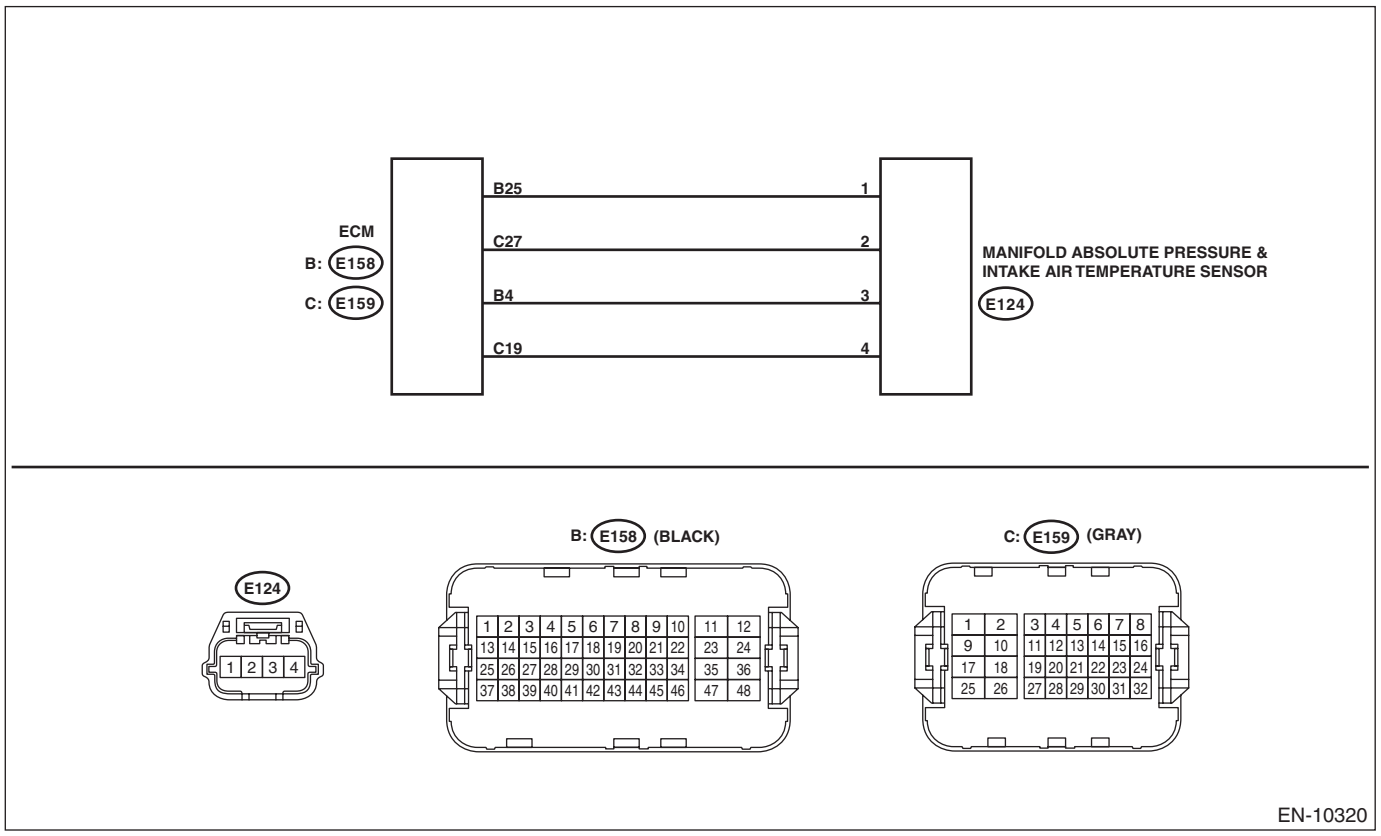

	Step	Check	Yes	No
1	**CHECK CURRENT DATA.** 1) Start the engine. 2) Read the value of «IAT Sensor #12» using the Subaru Select Monitor or a general scan tool. NOTE: • Subaru Select Monitor For detailed operation procedures, refer to “Current Data Display For Engine”. <Ref. to EN(w/o STI)(diag)-46, Subaru Select Monitor.> • General scan tool For detailed operation procedures, refer to the general scan tool operation manual.	Is the value in «IAT Sensor #12» 120°C (248°F) or more?	Go to step **2**.	Even if DTC is detected, the circuit has returned to a normal condition at this time. Reproduce the failure, and then perform the diagnosis again. NOTE: In this case, temporary poor contact of connector, temporary open or short circuit of harness may be the cause.
2	**CHECK HARNESS BETWEEN ECM AND MANIFOLD ABSOLUTE PRESSURE AND INTAKE AIR TEMPERATURE SENSOR CONNECTOR.** 1) Turn the ignition switch to OFF. 2) Disconnect the connector from ECM. 3) Disconnect the connector from the manifold absolute pressure and intake air temperature sensor. 4) Measure the resistance between the ECM connector and engine ground. ***Connector & terminal*** ***(E158) No. 25 — Engine ground:***	Is the resistance 1 MΩ or more?	Replace the manifold absolute pressure and intake air temperature sensor. <Ref. to FU(w/o STI)-112, Manifold Absolute Pressure and Intake Air Temperature Sensor.>	Repair the ground short circuit of harness between ECM connector and the manifold absolute pressure and intake air temperature sensor connector.

1. OUTLINE OF DIAGNOSIS

Detect open or short circuit of the intake air temperature sensor (integrated with manifold absolute pressure sensor).
Judge as NG if out of specification.

2. COMPONENT DESCRIPTION

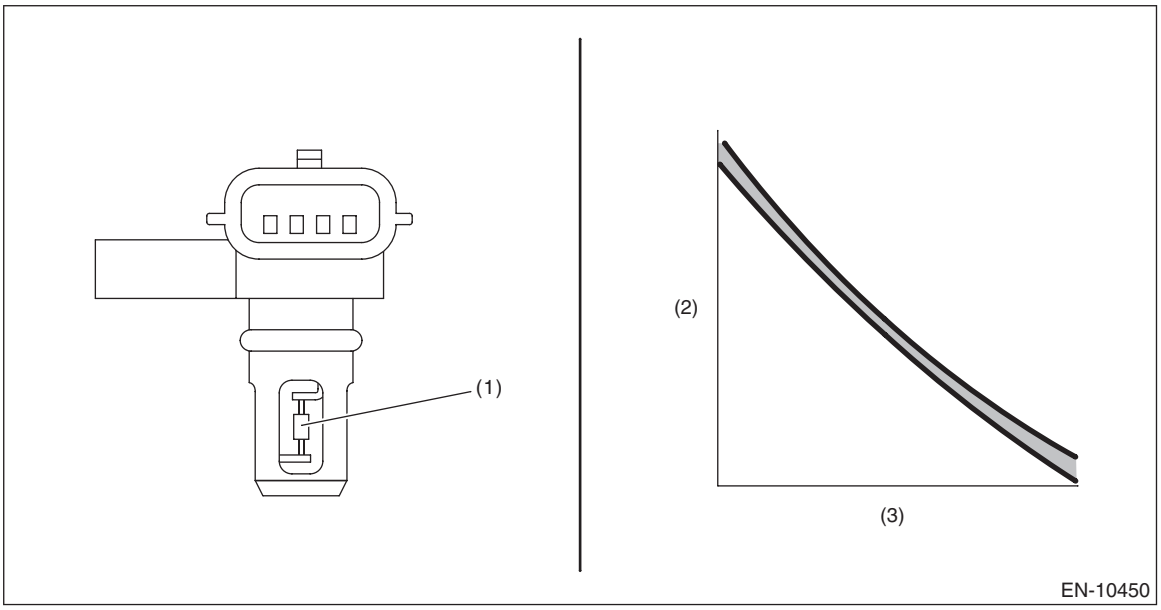

(1) Intake air temperature sensor (2) Resistance value (kΩ) (3) Intake air temperature (°C (°F))

3. EXECUTION CONDITION

Secondary parameters	Execution condition
None	

4. GENERAL DRIVING CYCLE

Always perform the diagnosis continuously.

5. DIAGNOSTIC METHOD

If the duration of time while the following conditions are met is longer than the time indicated, judge as NG.

Judgment Value

Malfunction Criteria	Threshold Value
Output voltage	< 0.22 V

Time Needed for Diagnosis: 520 ms
Malfunction Indicator Light Illumination: Illuminates as soon as a malfunction occurs.

AD:DTC P0098 INTAKE AIR TEMPERATURE SENSOR 2 CIRCUIT HIGH BANK 1

DTC DETECTING CONDITION:
Immediately at fault recognition
TROUBLE SYMPTOM:
- Improper idling
- Poor driving performance

CAUTION:
- **After servicing or replacing faulty parts, perform Clear Memory Mode <Ref. to EN(w/o STI)(diag)-82, OPERATION, Clear Memory Mode.>, and Inspection Mode <Ref. to EN(w/o STI)(diag)-64, PROCEDURE, Inspection Mode.>.**
- **Use the check board when measuring the ECM terminal voltage and resistance.**

WIRING DIAGRAM:
Engine Electrical System <Ref. to WI-154, WIRING DIAGRAM, Engine Electrical System.>

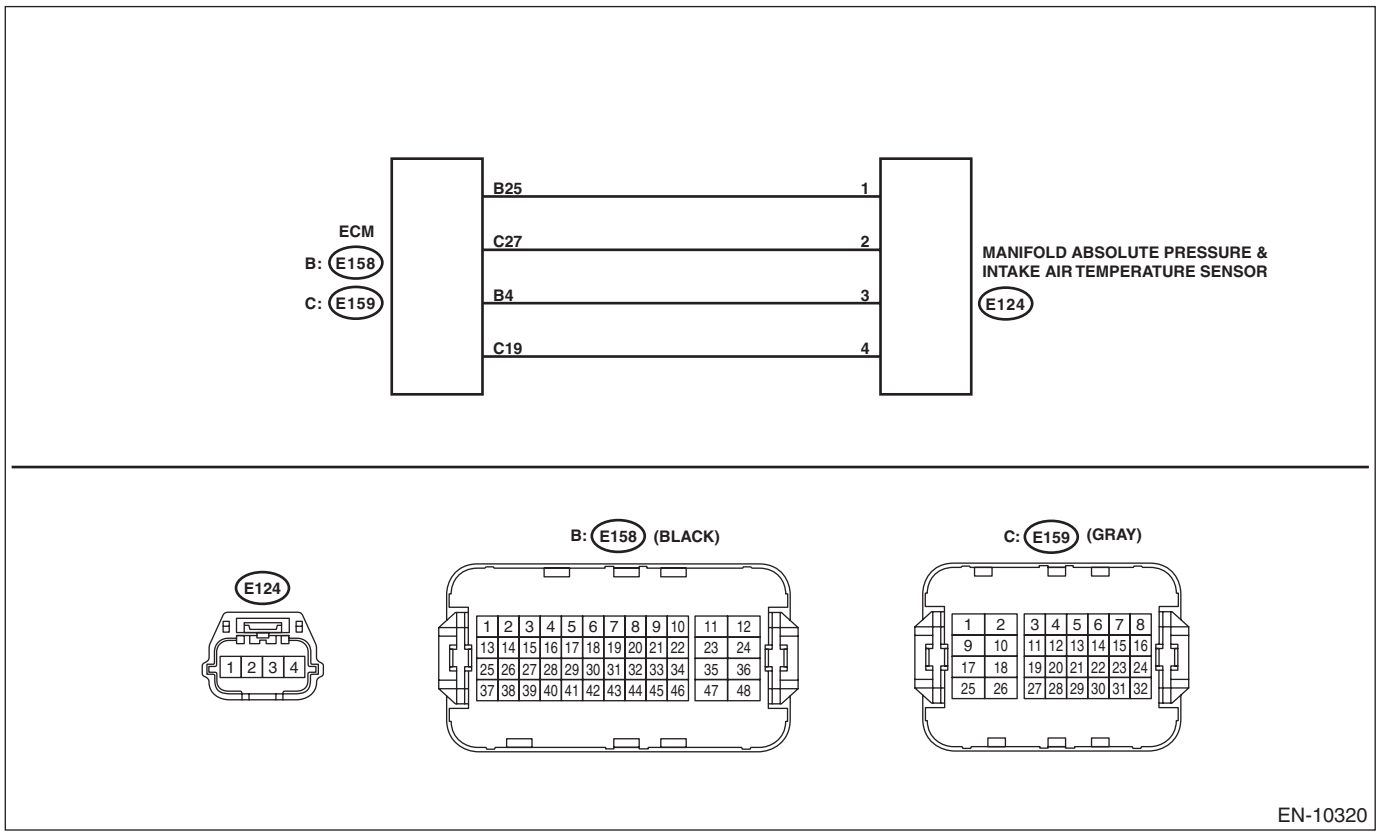

	Step	Check	Yes	No
1	**CHECK CURRENT DATA.** 1) Start the engine. 2) Read the value of «IAT Sensor #12» using the Subaru Select Monitor or a general scan tool. NOTE: • Subaru Select Monitor For detailed operation procedures, refer to "Current Data Display For Engine". <Ref. to EN(w/o STI)(diag)-46, Subaru Select Monitor.> • General scan tool For detailed operation procedures, refer to the general scan tool operation manual.	Is the value in «IAT Sensor #12» less than –40°C (–40°F)?	Go to step **2**.	Even if DTC is detected, the circuit has returned to a normal condition at this time. Reproduce the failure, and then perform the diagnosis again. NOTE: In this case, temporary poor contact of connector, temporary open or short circuit of harness may be the cause.
2	**CHECK FOR POOR CONTACT.** Check for poor contact of ECM and manifold absolute pressure and intake air temperature sensor connector.	Is there poor contact of ECM or manifold absolute pressure and intake air temperature sensor connector?	Repair the poor contact of ECM or manifold absolute pressure and intake air temperature sensor connector.	Go to step **3**.
3	**CHECK HARNESS BETWEEN ECM AND MANIFOLD ABSOLUTE PRESSURE AND INTAKE AIR TEMPERATURE SENSOR CONNECTOR.** 1) Turn the ignition switch to OFF. 2) Disconnect the connector from ECM. 3) Disconnect the connector from the manifold absolute pressure and intake air temperature sensor. 4) Measure the resistance of harness between ECM connector and the manifold absolute pressure and intake air temperature sensor connector. ***Connector & terminal*** ***(E158) No. 25 — (E124) No. 1:*** ***(E159) No. 27 — (E124) No. 2:***	Is the resistance less than 1 Ω?	Go to step **4**.	Repair the open circuit of the harness between the ECM connector and the manifold absolute pressure & intake air temperature sensor connector.
4	**CHECK HARNESS BETWEEN ECM AND MANIFOLD ABSOLUTE PRESSURE AND INTAKE AIR TEMPERATURE SENSOR CONNECTOR.** 1) Connect all connectors. 2) Turn the ignition switch to ON. 3) Measure the voltage between ECM connector and engine ground. ***Connector & terminal*** ***(E158) No. 25 (+) — Engine ground (–):***	Is the voltage 5 V or more?	Repair the short circuit to power in harness between ECM connector and the manifold absolute pressure and intake air temperature sensor connector.	Replace the manifold absolute pressure and intake air temperature sensor. <Ref. to FU(w/o STI)-112, Manifold Absolute Pressure and Intake Air Temperature Sensor.>

1. OUTLINE OF DIAGNOSIS

Detect open or short circuit of the intake air temperature sensor (integrated with manifold absolute pressure sensor).
Judge as NG if out of specification.

2. COMPONENT DESCRIPTION

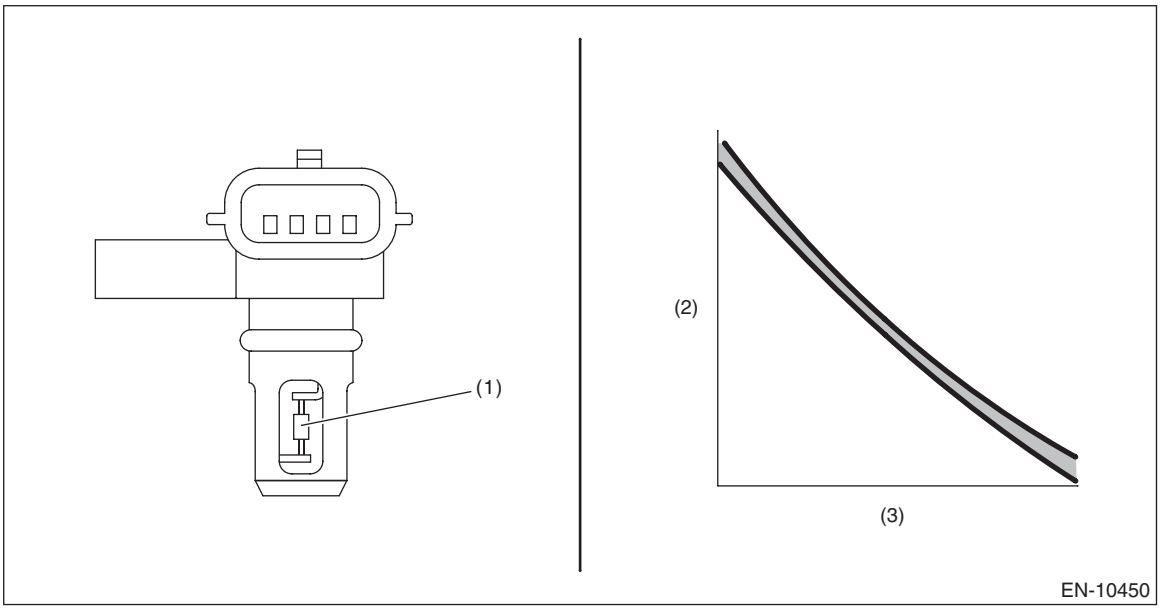

(1) Intake air temperature sensor (2) Resistance value (kΩ) (3) Intake air temperature (°C (°F))

3. EXECUTION CONDITION

Secondary parameters	Execution condition
None	

4. GENERAL DRIVING CYCLE

Always perform the diagnosis continuously.

5. DIAGNOSTIC METHOD

If the duration of time while the following conditions are met is longer than the time indicated, judge as NG.

Judgment Value

Malfunction Criteria	Threshold Value
Output voltage	> 4.72 V

Time Needed for Diagnosis: 520 ms
Malfunction Indicator Light Illumination: Illuminates as soon as a malfunction occurs.

AE:DTC P0101 MASS OR VOLUME AIR FLOW SENSOR "A" CIRCUIT RANGE/ PERFORMANCE

DTC DETECTING CONDITION:
Detected when two consecutive driving cycles with fault occur.
TROUBLE SYMPTOM:
- Improper idling
- Engine stalls.
- Poor driving performance

CAUTION:
After servicing or replacing faulty parts, perform Clear Memory Mode <Ref. to EN(w/o STI)(diag)-82, OPERATION, Clear Memory Mode.>, and Inspection Mode <Ref. to EN(w/o STI)(diag)-64, PROCEDURE, Inspection Mode.>.

Step	Check	Yes	No
1 CHECK FOR ANY OTHER DTC ON DISPLAY.	Is any other DTC displayed?	Check the appropriate DTC using the "List of Diagnostic Trouble Code (DTC)". <Ref. to EN(w/o STI)(diag)-106, List of Diagnostic Trouble Code (DTC).>	Replace the mass air flow and intake air temperature sensor. <Ref. to FU(w/o STI)-110, Mass Air Flow and Intake Air Temperature Sensor.>

1. OUTLINE OF DIAGNOSIS

Detect the malfunction of air flow sensor output properties.
Judge as NG on the Low side when the displayed value of air flow voltage is small even in a driving condition where it should be large. Judge as NG on the High side when the displayed value of air flow voltage is large even in a driving condition where it should be small. Judge as NG in the air flow sensor property when either the Low side or High side becomes NG.

2. COMPONENT DESCRIPTION

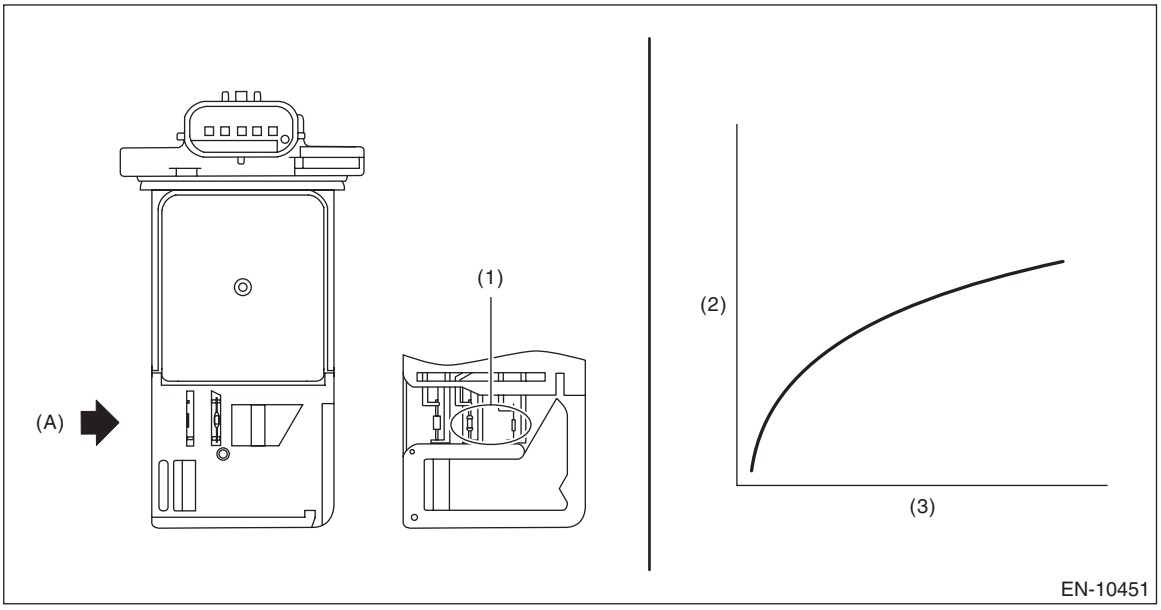

(A) Air

(1) Air flow sensor (2) Voltage (V) (3) Intake air amount (g (oz)/s)

3. EXECUTION CONDITION

Low

Secondary parameters	Execution condition
Engine speed	≥ 1500 rpm
Throttle position	≥ 15°CA
Intake manifold pressure (with atmospheric pressure compensation)	≥ 100 kPa (750.2 mmHg, 29.5 inHg)

High

Secondary parameters	Execution condition
Engine speed	≥ 475 rpm and < 900 rpm
Throttle position	< 60°CA
Intake manifold pressure (with atmospheric pressure compensation)	< 64 kPa (480 mmHg, 18.9 inHg)

4. GENERAL DRIVING CYCLE

Perform the diagnosis continuously after idling.

5. DIAGNOSTIC METHOD

Judge as NG when Low side or High side becomes NG.
If the duration of time while the following conditions are met is longer than the time indicated, judge as NG.

Judgment Value

Malfunction Criteria	Threshold Value
Low	
Output voltage	< 1.48 V
High	
Output voltage	≥ 1.48 V

Time Needed for Diagnosis:
Low: 5 s
High: 5 s
Malfunction Indicator Light Illumination: Illuminates when malfunction occurs in 2 continuous driving cycles.

AF:DTC P0102 MASS OR VOLUME AIR FLOW SENSOR "A" CIRCUIT LOW

DTC DETECTING CONDITION:
Immediately at fault recognition

TROUBLE SYMPTOM:
- Improper idling
- Engine stalls.
- Poor driving performance

CAUTION:
- **After servicing or replacing faulty parts, perform Clear Memory Mode <Ref. to EN(w/o STI)(diag)-82, OPERATION, Clear Memory Mode.>, and Inspection Mode <Ref. to EN(w/o STI)(diag)-64, PROCEDURE, Inspection Mode.>.**
- **Use the check board when measuring the ECM terminal voltage and resistance.**

WIRING DIAGRAM:
Engine Electrical System <Ref. to WI-154, WIRING DIAGRAM, Engine Electrical System.>

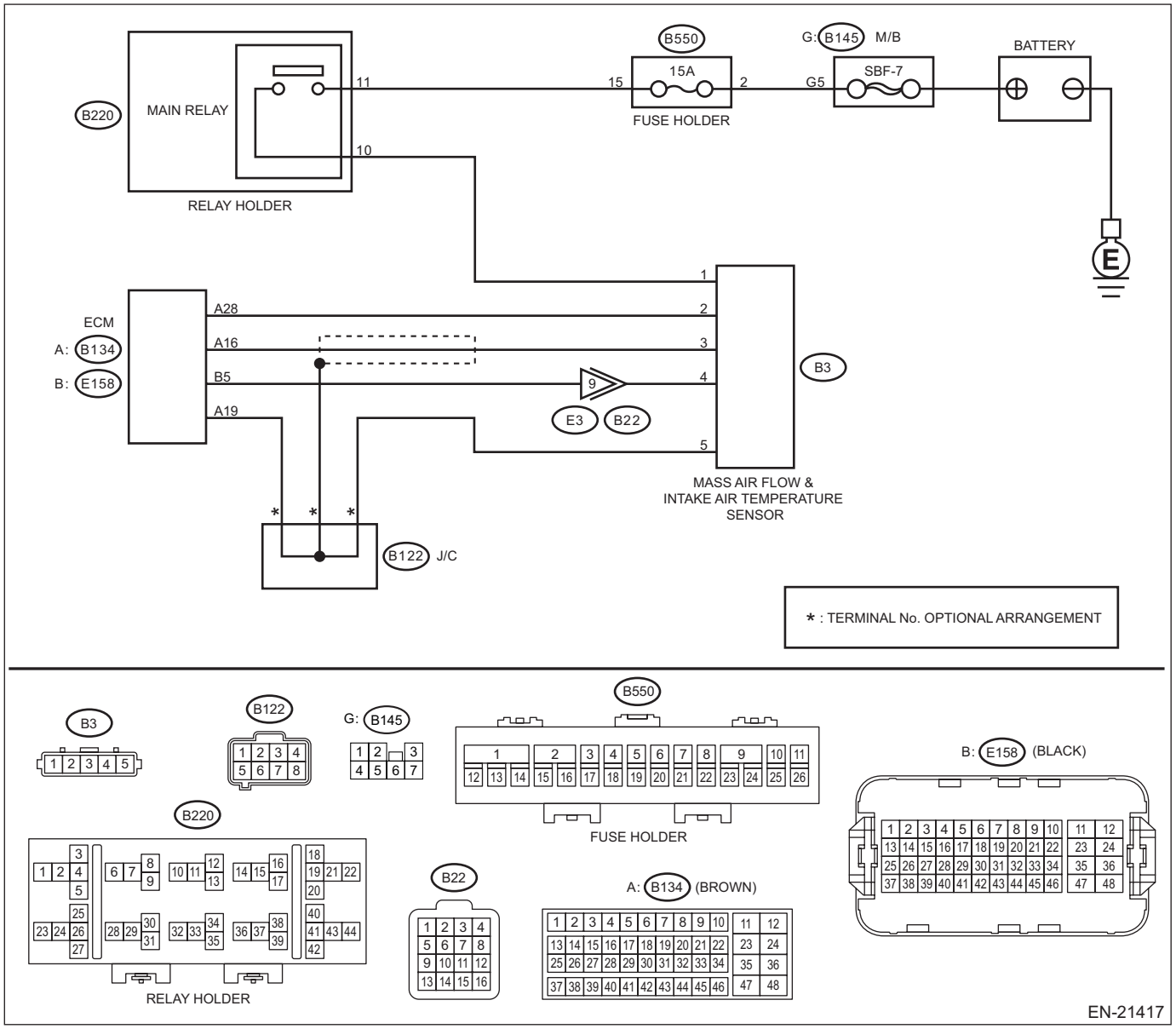

	Step	Check	Yes	No
1	**CHECK CURRENT DATA.** 1) Start the engine. 2) Read the value of «Air Flow Sensor Voltage» using Subaru Select Monitor. NOTE: For detailed operation procedures, refer to "Current Data Display For Engine". <Ref. to EN(w/o STI)(diag)-46, Subaru Select Monitor.>	Is the value of «Air Flow Sensor Voltage» less than 0.2 V?	Go to step **2**.	Even if DTC is detected, the circuit has returned to a normal condition at this time. Reproduce the failure, and then perform the diagnosis again. NOTE: In this case, temporary poor contact of connector, temporary open or short circuit of harness may be the cause.
2	**CHECK POWER SUPPLY OF MASS AIR FLOW AND INTAKE AIR TEMPERATURE SENSOR.** 1) Turn the ignition switch to OFF. 2) Disconnect the connectors from the mass air flow and intake air temperature sensor. 3) Turn the ignition switch to ON. 4) Measure the voltage between mass air flow and intake air temperature sensor connector and engine ground. ***Connector & terminal*** ***(B3) No. 1 (+) — Engine ground (–):***	Is the voltage 10 V or more?	Go to step **3**.	Repair the harness and connector. NOTE: In this case, repair the following item: • Open circuit in harness between main relay and mass air flow and intake air temperature sensor connector • Poor contact of main relay connector
3	**CHECK HARNESS BETWEEN ECM AND MASS AIR FLOW AND INTAKE AIR TEMPERATURE SENSOR CONNECTOR.** 1) Turn the ignition switch to OFF. 2) Disconnect the connector from ECM. 3) Measure the resistance of harness between ECM connector and the mass air flow and intake air temperature sensor connector. ***Connector & terminal*** ***(B134) No. 16 — (B3) No. 3:***	Is the resistance less than 1 Ω?	Go to step **4**.	Repair the open circuit of harness between ECM connector and the mass air flow and intake air temperature sensor connector.
4	**CHECK HARNESS BETWEEN ECM AND MASS AIR FLOW AND INTAKE AIR TEMPERATURE SENSOR CONNECTOR.** Measure the resistance between the ECM connector and engine ground. ***Connector & terminal*** ***(B134) No. 16 — Engine ground:***	Is the resistance 1 MΩ or more?	Go to step **5**.	Repair the ground short circuit of harness between ECM connector and the mass air flow and intake air temperature sensor connector.
5	**CHECK FOR POOR CONTACT.** Check for poor contact of ECM and mass air flow and intake air temperature sensor connector.	Is there poor contact of ECM or mass air flow and intake air temperature sensor connector?	Repair the poor contact of ECM or mass air flow and intake air temperature sensor connector.	Replace the mass air flow and intake air temperature sensor. <Ref. to FU(w/o STI)-110, Mass Air Flow and Intake Air Temperature Sensor.>

1. OUTLINE OF DIAGNOSIS

Detect open or short circuits of the air flow sensor.
Judge as NG if out of specification.

2. COMPONENT DESCRIPTION

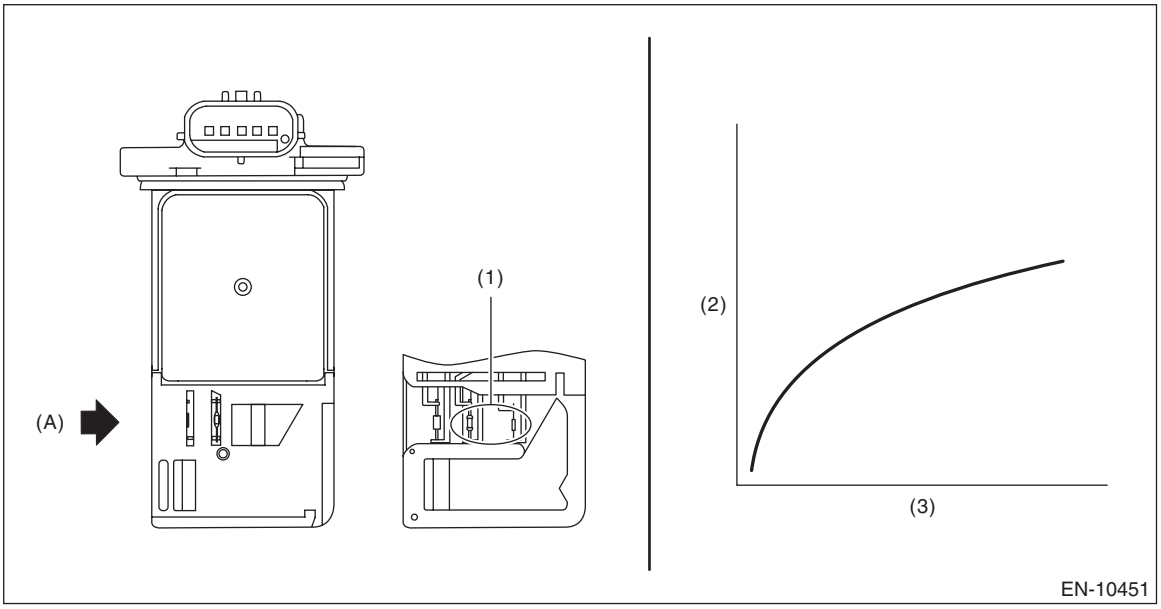

(A) Air

(1) Air flow sensor (2) Voltage (V) (3) Intake air amount (g (oz)/s)

3. EXECUTION CONDITION

Secondary parameters	Execution condition
Elapsed time after ignition switch is turned to ON	< 1040 ms

4. GENERAL DRIVING CYCLE

Always perform the diagnosis continuously.

5. DIAGNOSTIC METHOD

If the duration of time while the following conditions are met is longer than the time indicated, judge as NG.

Judgment Value

Malfunction Criteria	Threshold Value
Output voltage	< 0.12 V

Time Needed for Diagnosis: 520 ms
Malfunction Indicator Light Illumination: Illuminates as soon as a malfunction occurs.

AG:DTC P0103 MASS OR VOLUME AIR FLOW SENSOR "A" CIRCUIT HIGH

DTC DETECTING CONDITION:
Immediately at fault recognition
TROUBLE SYMPTOM:

- Improper idling
- Engine stalls.
- Poor driving performance

CAUTION:

- **After servicing or replacing faulty parts, perform Clear Memory Mode <Ref. to EN(w/o STI)(diag)-82, OPERATION, Clear Memory Mode.>, and Inspection Mode <Ref. to EN(w/o STI)(diag)-64, PROCEDURE, Inspection Mode.>.**
- **Use the check board when measuring the ECM terminal voltage and resistance.**

WIRING DIAGRAM:
Engine Electrical System <Ref. to WI-154, WIRING DIAGRAM, Engine Electrical System.>

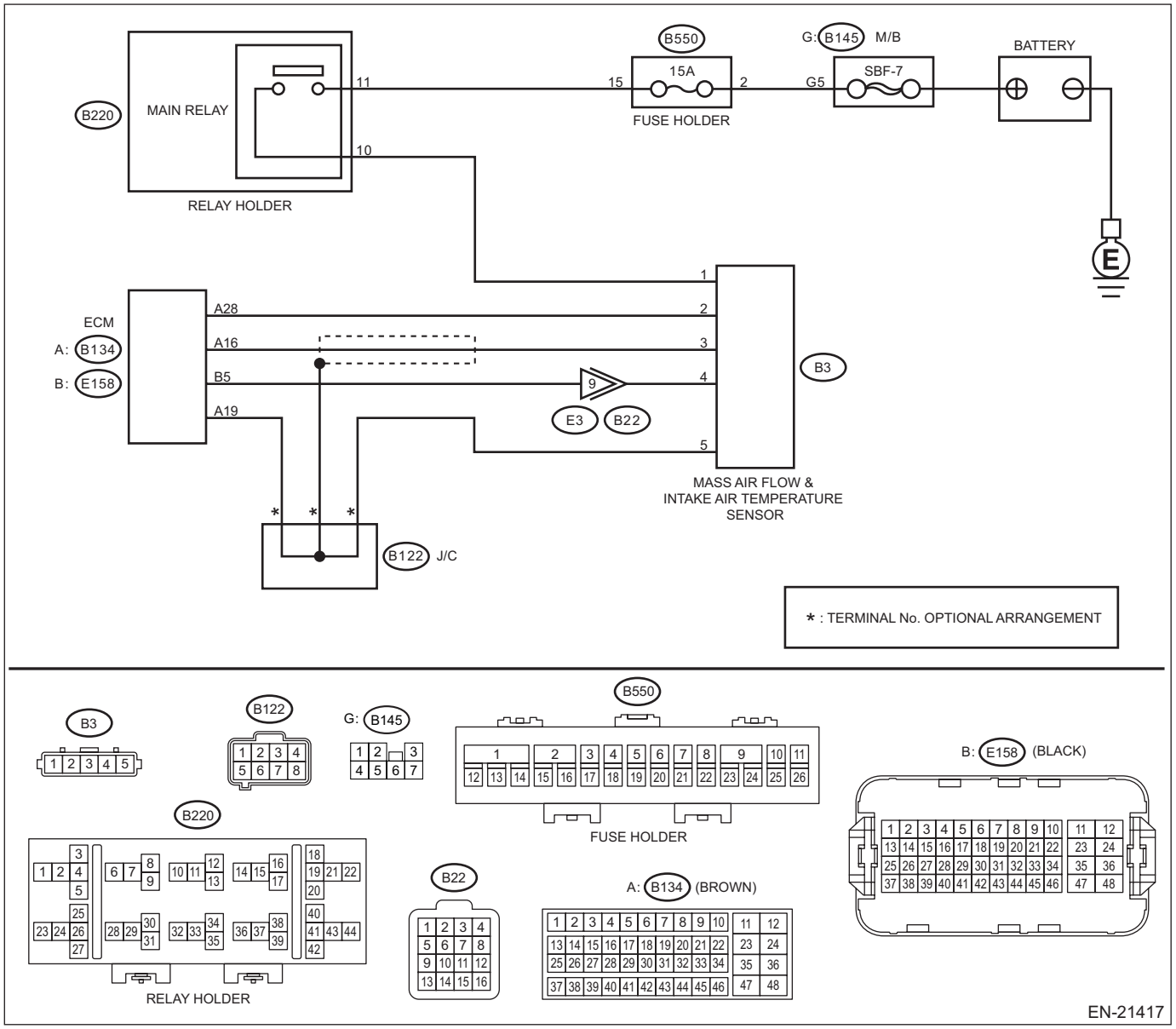

	Step	Check	Yes	No
1	**CHECK CURRENT DATA.** 1) Start the engine. 2) Read the value of «Air Flow Sensor Voltage» using Subaru Select Monitor. NOTE: For detailed operation procedures, refer to "Current Data Display For Engine". <Ref. to EN(w/o STI)(diag)-46, Subaru Select Monitor.>	Is the value of «Air Flow Sensor Voltage» 5 V or more?	Go to step **2**.	Even if DTC is detected, the circuit has returned to a normal condition at this time. Reproduce the failure, and then perform the diagnosis again. NOTE: In this case, temporary poor contact of connector, temporary open or short circuit of harness may be the cause.
2	**CHECK HARNESS BETWEEN ECM AND MASS AIR FLOW AND INTAKE AIR TEMPERATURE SENSOR CONNECTOR.** 1) Turn the ignition switch to OFF. 2) Disconnect the connectors from the mass air flow and intake air temperature sensor. 3) Start the engine. 4) Read the value of «Air Flow Sensor Voltage» using Subaru Select Monitor. NOTE: For detailed operation procedures, refer to "Current Data Display For Engine". <Ref. to EN(w/o STI)(diag)-46, Subaru Select Monitor.>	Is the value of «Air Flow Sensor Voltage» 5 V or more?	Repair the short circuit of harness to power supply between ECM connector and the mass air flow and intake air temperature sensor connector.	Go to step **3**.
3	**CHECK HARNESS BETWEEN ECM AND MASS AIR FLOW AND INTAKE AIR TEMPERATURE SENSOR CONNECTOR.** 1) Turn the ignition switch to OFF. 2) Measure the resistance of harness between mass air flow and intake air temperature sensor connector and engine ground. ***Connector & terminal*** ***(B3) No. 2 — Engine ground:***	Is the resistance less than 5 Ω?	Go to step **4**.	Repair the harness and connector. NOTE: In this case, repair the following item: • Open circuit in harness between ECM connector and the mass air flow and intake air temperature sensor connector • Poor contact of ECM connector
4	**CHECK FOR POOR CONTACT.** Check for poor contact of mass air flow and intake air temperature sensor connector.	Is there poor contact of mass air flow and intake air temperature sensor connector?	Repair the poor contact of mass air flow and intake air temperature sensor connector.	Replace the mass air flow and intake air temperature sensor. <Ref. to FU(w/o STI)-110, Mass Air Flow and Intake Air Temperature Sensor.>

1. OUTLINE OF DIAGNOSIS

Detect open or short circuits of the air flow sensor.
Judge as NG if out of specification.

2. COMPONENT DESCRIPTION

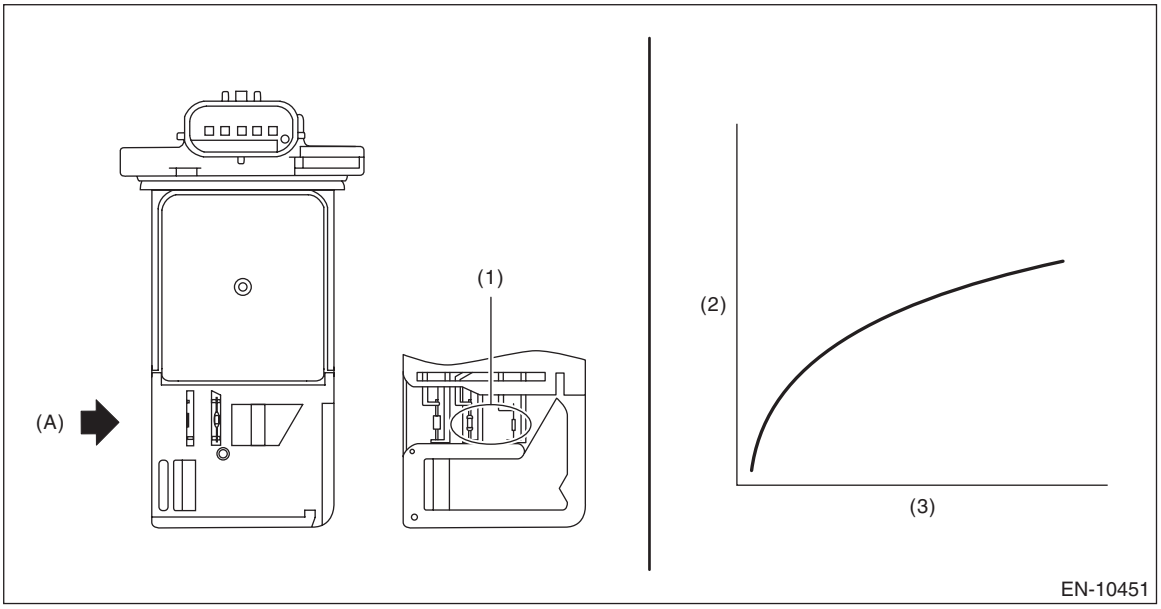

(A) Air

(1) Air flow sensor (2) Voltage (V) (3) Intake air amount (g (oz)/s)

3. EXECUTION CONDITION

Secondary parameters	Execution condition
Elapsed time after ignition switch is turned to ON	≥ 1040 ms

4. GENERAL DRIVING CYCLE

Always perform the diagnosis continuously.

5. DIAGNOSTIC METHOD

If the duration of time while the following conditions are met is longer than the time indicated, judge as NG.

Judgment Value

Malfunction Criteria	Threshold Value
Output voltage	> 4.79 V

Time Needed for Diagnosis: 520 ms
Malfunction Indicator Light Illumination: Illuminates as soon as a malfunction occurs.

AH:DTC P0107 MANIFOLD ABSOLUTE PRESSURE/BAROMETRIC PRESSURE SENSOR CIRCUIT LOW

DTC DETECTING CONDITION:
Immediately at fault recognition

CAUTION:
• After servicing or replacing faulty parts, perform Clear Memory Mode <Ref. to EN(w/o STI)(diag)-82, OPERATION, Clear Memory Mode.>, and Inspection Mode <Ref. to EN(w/o STI)(diag)-64, PROCEDURE, Inspection Mode.>.
• Use the check board when measuring the ECM terminal voltage and resistance.

WIRING DIAGRAM:
Engine Electrical System <Ref. to WI-154, WIRING DIAGRAM, Engine Electrical System.>

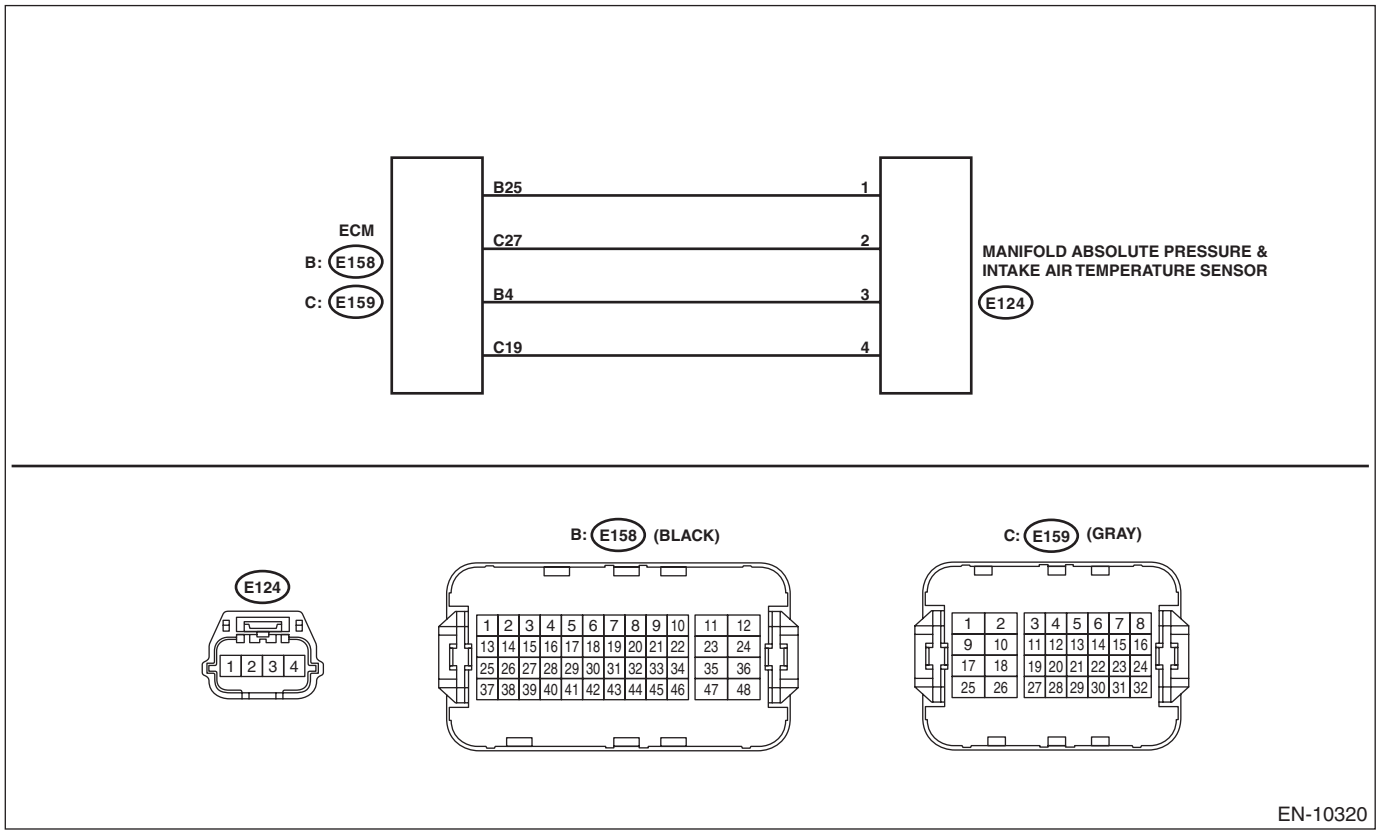

Step		Check	Yes	No
1	**CHECK CURRENT DATA.** 1) Start the engine. 2) Read the value of «Mani. Absolute Pressure» using the Subaru Select Monitor or a general scan tool. NOTE: • Subaru Select Monitor For detailed operation procedures, refer to “Current Data Display For Engine”. <Ref. to EN(w/o STI)(diag)-46, Subaru Select Monitor.> • General scan tool For detailed operation procedures, refer to the general scan tool operation manual.	Is the value of «Mani. Absolute Pressure» less than 13.3 kPa (100 mmHg, 3.94 inHg)?	Go to step **2**.	Even if DTC is detected, the circuit has returned to a normal condition at this time. Reproduce the failure, and then perform the diagnosis again. NOTE: In this case, temporary poor contact of connector, temporary open or short circuit of harness may be the cause.

	Step	Check	Yes	No
2	**CHECK POWER SUPPLY OF MANIFOLD ABSOLUTE PRESSURE AND INTAKE AIR TEMPERATURE SENSOR.** 1) Turn the ignition switch to OFF. 2) Disconnect the connector from the manifold absolute pressure and intake air temperature sensor. 3) Turn the ignition switch to ON. 4) Measure the voltage between the manifold absolute pressure and intake air temperature sensor connector and engine ground. ***Connector & terminal*** ***(E124) No. 4 (+) — Engine ground (–):***	Is the voltage 4.5 V or more?	Go to step **3**.	Repair the harness and connector. NOTE: In this case, repair the following item: • Open circuit of harness between ECM connector and the manifold absolute pressure and intake air temperature sensor connector • Poor contact of ECM connector
3	**CHECK HARNESS BETWEEN ECM AND MANIFOLD ABSOLUTE PRESSURE AND INTAKE AIR TEMPERATURE SENSOR CONNECTOR.** 1) Turn the ignition switch to OFF. 2) Disconnect the connector from ECM. 3) Measure the resistance of harness between ECM connector and the manifold absolute pressure and intake air temperature sensor connector. ***Connector & terminal*** ***(E158) No. 4 — (E124) No. 3:***	Is the resistance less than 1 Ω?	Go to step **4**.	Repair the open circuit in harness between the manifold absolute pressure and intake air temperature sensor connector.
4	**CHECK HARNESS BETWEEN ECM AND MANIFOLD ABSOLUTE PRESSURE AND INTAKE AIR TEMPERATURE SENSOR CONNECTOR.** Measure the resistance between the ECM connector and engine ground. ***Connector & terminal*** ***(E158) No. 4 — Engine ground:***	Is the resistance 1 MΩ or more?	Go to step **5**.	Repair the ground short circuit of harness between ECM connector and the manifold absolute pressure and intake air temperature sensor connector.
5	**CHECK FOR POOR CONTACT.** Check for poor contact of ECM and manifold absolute pressure and intake air temperature sensor connector.	Is there poor contact of ECM or manifold absolute pressure and intake air temperature sensor connector?	Repair the poor contact of ECM or manifold absolute pressure and intake air temperature sensor connector.	Replace the manifold absolute pressure and intake air temperature sensor. <Ref. to FU(w/o STI)-112, Manifold Absolute Pressure and Intake Air Temperature Sensor.>

1. OUTLINE OF DIAGNOSIS

Detect the open or short circuit of manifold absolute pressure sensor.
Judge as NG if out of specification.

2. COMPONENT DESCRIPTION

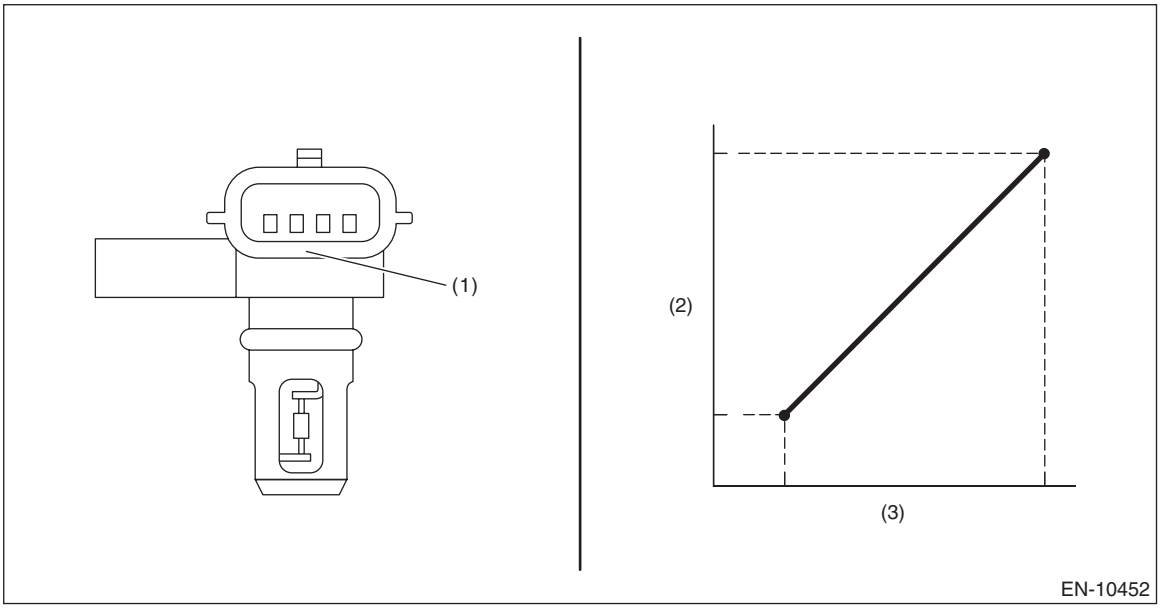

(1) Manifold absolute pressure sensor (2) Voltage (V) (3) Absolute pressure (kPa)

3. EXECUTION CONDITION

Secondary parameters	Execution condition
None	

4. GENERAL DRIVING CYCLE

Always perform the diagnosis continuously.

5. DIAGNOSTIC METHOD

If the duration of time while the following conditions are met is longer than the time indicated, judge as NG.

Judgment Value

Malfunction Criteria	Threshold Value
Output voltage	< 0.36 V

Time Needed for Diagnosis: 2000 ms
Malfunction Indicator Light Illumination: Illuminates as soon as a malfunction occurs.

AI: DTC P0108 MANIFOLD ABSOLUTE PRESSURE/BAROMETRIC PRESSURE SENSOR CIRCUIT HIGH

DTC DETECTING CONDITION:
Immediately at fault recognition

CAUTION:
• After servicing or replacing faulty parts, perform Clear Memory Mode <Ref. to EN(w/o STI)(diag)-82, OPERATION, Clear Memory Mode.>, and Inspection Mode <Ref. to EN(w/o STI)(diag)-64, PROCEDURE, Inspection Mode.>.
• Use the check board when measuring the ECM terminal voltage and resistance.

WIRING DIAGRAM:
Engine Electrical System <Ref. to WI-154, WIRING DIAGRAM, Engine Electrical System.>

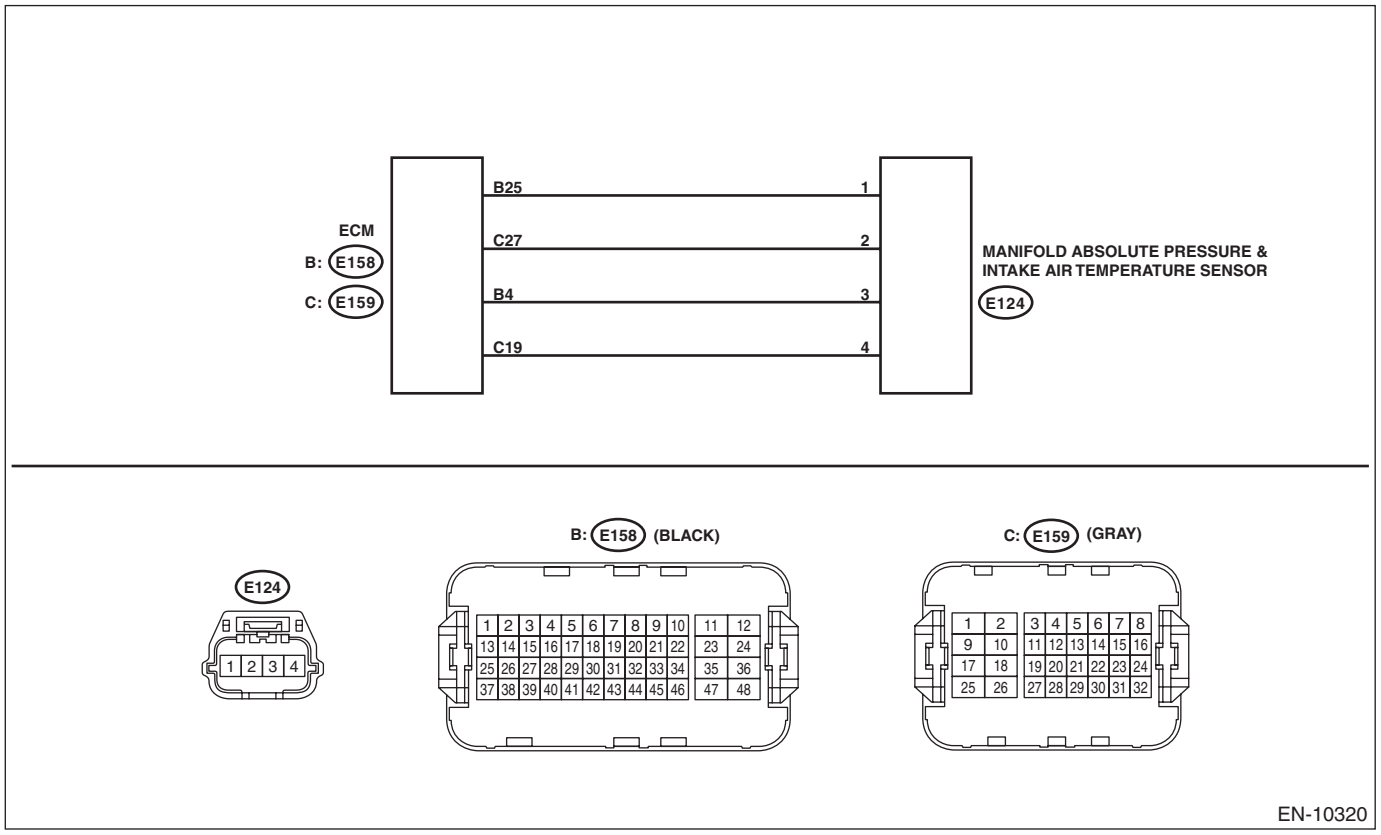

Step		Check	Yes	No
1	**CHECK CURRENT DATA.** 1) Start the engine. 2) Read the value of «Mani. Absolute Pressure» using the Subaru Select Monitor or a general scan tool. NOTE: • Subaru Select Monitor For detailed operation procedures, refer to “Current Data Display For Engine”. <Ref. to EN(w/o STI)(diag)-46, Subaru Select Monitor.> • General scan tool For detailed operation procedures, refer to the general scan tool operation manual.	Is the value of «Mani. Absolute Pressure» 256 kPa (1920.2 mmHg, 75.6 inHg) or more?	Go to step **2**.	Even if DTC is detected, the circuit has returned to a normal condition at this time. Reproduce the failure, and then perform the diagnosis again. NOTE: In this case, temporary poor contact of connector, temporary open or short circuit of harness may be the cause.

	Step	Check	Yes	No
2	**CHECK HARNESS BETWEEN ECM AND MANIFOLD ABSOLUTE PRESSURE AND INTAKE AIR TEMPERATURE SENSOR CONNECTOR.** 1) Turn the ignition switch to OFF. 2) Disconnect the connector from the manifold absolute pressure and intake air temperature sensor. 3) Start the engine. 4) Read the value of «Mani. Absolute Pressure» using the Subaru Select Monitor or a general scan tool. NOTE: • Subaru Select Monitor For detailed operation procedures, refer to "Current Data Display For Engine". <Ref. to EN(w/o STI)(diag)-46, Subaru Select Monitor.> • General scan tool For detailed operation procedures, refer to the general scan tool operation manual.	Is the value of «Mani. Absolute Pressure» 256 kPa (1920.2 mmHg, 75.6 inHg) or more?	Repair the short circuit to power in harness between ECM connector and the manifold absolute pressure and intake air temperature sensor connector.	Go to step **3**.
3	**CHECK HARNESS BETWEEN ECM AND MANIFOLD ABSOLUTE PRESSURE AND INTAKE AIR TEMPERATURE SENSOR CONNECTOR.** 1) Turn the ignition switch to OFF. 2) Measure the resistance of harness between manifold absolute pressure and intake air temperature sensor connector and engine ground. ***Connector & terminal*** ***(E124) No. 2 — Engine ground:***	Is the resistance less than 5 Ω?	Go to step **4**.	Repair the harness and connector. NOTE: In this case, repair the following item: • Open circuit of harness between ECM connector and the manifold absolute pressure and intake air temperature sensor connector • Poor contact of ECM connector
4	**CHECK FOR POOR CONTACT.** Check for poor contact of the manifold absolute pressure and intake air temperature sensor connector.	Is there poor contact of the manifold absolute pressure and intake air temperature sensor connector?	Repair the poor contact of the manifold absolute pressure and intake air temperature sensor connector.	Replace the manifold absolute pressure and intake air temperature sensor. <Ref. to FU(w/o STI)-112, Manifold Absolute Pressure and Intake Air Temperature Sensor.>

1. OUTLINE OF DIAGNOSIS

Detect the open or short circuit of manifold absolute pressure sensor.
Judge as NG if out of specification.

2. COMPONENT DESCRIPTION

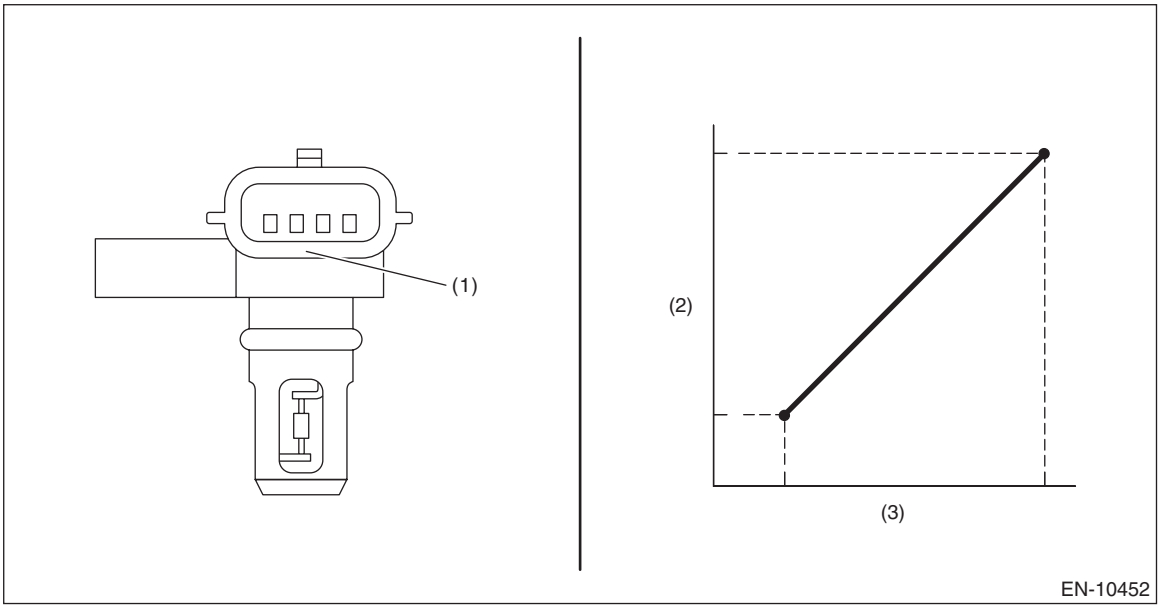

(1) Manifold absolute pressure sensor (2) Voltage (V) (3) Absolute pressure (kPa)

3. EXECUTION CONDITION

Secondary parameters	Execution condition
None	

4. GENERAL DRIVING CYCLE

Always perform the diagnosis continuously.

5. DIAGNOSTIC METHOD

If the duration of time while the following conditions are met is longer than the time indicated, judge as NG.

Judgment Value

Malfunction Criteria	Threshold Value
Output voltage	> 4.85 V

Time Needed for Diagnosis: 2000 ms
Malfunction Indicator Light Illumination: Illuminates as soon as a malfunction occurs.

AJ:DTC P0111 INTAKE AIR TEMPERATURE SENSOR 1 CIRCUIT RANGE/PERFORMANCE BANK 1

DTC DETECTING CONDITION:
Detected when two consecutive driving cycles with fault occur.
TROUBLE SYMPTOM:
- Improper idling
- Poor driving performance

CAUTION:
After servicing or replacing faulty parts, perform Clear Memory Mode <Ref. to EN(w/o STI)(diag)-82, OPERATION, Clear Memory Mode.>, and Inspection Mode <Ref. to EN(w/o STI)(diag)-64, PROCEDURE, Inspection Mode.>.

	Step	Check	Yes	No
1	**CHECK FOR ANY OTHER DTC ON DISPLAY.**	Is any other DTC displayed?	Check the appropriate DTC using the "List of Diagnostic Trouble Code (DTC)". <Ref. to EN(w/o STI)(diag)-106, List of Diagnostic Trouble Code (DTC).>	Go to step **2**.
2	**CHECK CURRENT DATA.** 1) Turn the ignition switch to ON. 2) Read the value of «IAT Sensor #11» using the Subaru Select Monitor or a general scan tool. NOTE: • Subaru Select Monitor For detailed operation procedures, refer to "Current Data Display For Engine". <Ref. to EN(w/o STI)(diag)-46, Subaru Select Monitor.> • General scan tool For detailed operation procedures, refer to the general scan tool operation manual. 3) Read the change of the value in «IAT Sensor #11» while heating and cooling the mass air flow and intake air temperature sensor using a hair dryer. **CAUTION:** **Do not heat the part to the temperature where you cannot touch it with your bare hand in order to prevent burning yourself and protect the part.**	Does the value of «IAT Sensor #11» change between heating and cooling?	Repair the poor contact of ECM connector.	Replace the mass air flow and intake air temperature sensor. <Ref. to FU(w/o STI)-110, Mass Air Flow and Intake Air Temperature Sensor.>

1. OUTLINE OF DIAGNOSIS

Detect the malfunction of the intake air temperature sensor (integrated with air flow sensor) output properties. Using the following two diagnoses, judge as NG when either is NG.
- **Diagnosis 1 (correlation diagnosis):** After the engine starts after the specified period of soaking time has elapsed, diagnose by correlation between intake air temperature sensor value, engine coolant temperature sensor value and ambient temperature sensor value. Judge as NG when the differences are both above the specified value by comparing between intake air temperature and engine coolant temperature, intake air temperature and ambient air temperature.
- **Diagnosis 2 (stuck diagnosis):** Judge as NG when intake air temperature does not change under the driving condition where it should change, considering engine condition.

2. COMPONENT DESCRIPTION

Intake air temperature sensor (integrated with air flow sensor)

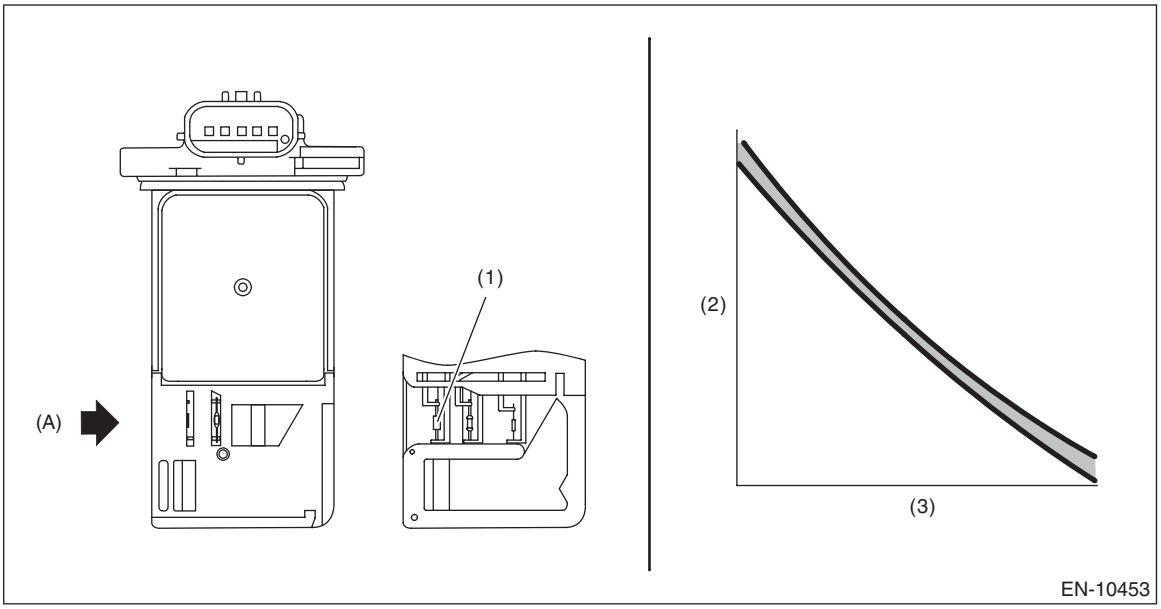

(A) Air

(1) Intake air temperature sensor (2) Resistance value (Ω) (3) Intake air temperature °C (°F)

3. EXECUTION CONDITION

Diagnosis 1

Secondary parameters	Execution condition
Battery voltage	≥ 10.9 V
Soaking time	≥ 21600 s
Block heater judgment	Completed
Block heater operation	Not in operation

Diagnosis 2

Secondary parameters	Execution condition
Battery voltage	≥ 10.9 V
Engine coolant temperature	≥ 60°C (140°F)
Integrated value of intake air amount	≥ 5500 g
Number of experiences under following driving conditions	≥ 3 time (s)
• Duration of driving condition 1	≥ 10 s
Vehicle speed	≥ 40 km/h (24.9 MPH)
and	
Amount of intake air	≥ 10 g/s (0.4 oz/s)
• Duration of driving condition 2	≥ 15 s
Vehicle speed	< 4 km/h (2.5 MPH)

4. GENERAL DRIVING CYCLE

- **Diagnosis 1:** Perform the diagnosis only once after the engine starts after a certain period of soaking time.
- **Diagnosis 2:** Perform the diagnosis when the vehicle speed condition is met after warming up from a cold condition.

5. DIAGNOSTIC METHOD

Judge as NG when Diagnosis 1 or Diagnosis 2 becomes NG.

Diagnosis 1

If the duration of time while the following conditions are met is longer than the time indicated, judge as NG.

Judgment Value

Malfunction Criteria	Threshold Value
|Intake air temperature (air flow sensor) 30 sec. after engine start – Engine coolant temperature at engine start|	> Value of Map 1
|Intake air temperature (air flow sensor) 30 sec. after engine start – Ambient air temperature 30 sec. after engine start|	> Value of Map 2

Map 1

Ambient temperature °C (°F)	–30 (–22)	30 (86)	45 (113)	60 (140)
|Intake air temperature (air flow sensor) 30 sec. after engine start – Engine coolant temperature at engine start| °C (°F)	12 (21.6)	12 (21.6)	22 (39.6)	22 (39.6)

Map 2

Ambient temperature °C (°F)	–30 (–22)	30 (86)	45 (113)	60 (140)
|Intake air temperature (air flow sensor) 30 sec. after engine start – Ambient air temperature 30 sec. after engine start| °C (°F)	20 (36)	20 (36)	32 (57.6)	32 (57.6)

Time Needed for Diagnosis: Less than 1 second

Diagnosis 2

Judge as NG when the following conditions are established.

Judgment Value

Malfunction Criteria	Threshold Value
Output voltage difference between Max. and Min.	< 0.02 V (Equivalent to approximately 0.5°C (0.9°F) near 25°C (77°F))

Time Needed for Diagnosis: Less than 1 second

Malfunction Indicator Light Illumination: Illuminates when malfunction occurs in 2 continuous driving cycles.

AK:DTC P0112 INTAKE AIR TEMPERATURE SENSOR 1 CIRCUIT LOW BANK 1

DTC DETECTING CONDITION:
Immediately at fault recognition
TROUBLE SYMPTOM:
- Improper idling
- Poor driving performance

CAUTION:
- **After servicing or replacing faulty parts, perform Clear Memory Mode <Ref. to EN(w/o STI)(diag)-82, OPERATION, Clear Memory Mode.>, and Inspection Mode <Ref. to EN(w/o STI)(diag)-64, PROCEDURE, Inspection Mode.>.**
- **Use the check board when measuring the ECM terminal voltage and resistance.**

WIRING DIAGRAM:
Engine Electrical System <Ref. to WI-154, WIRING DIAGRAM, Engine Electrical System.>

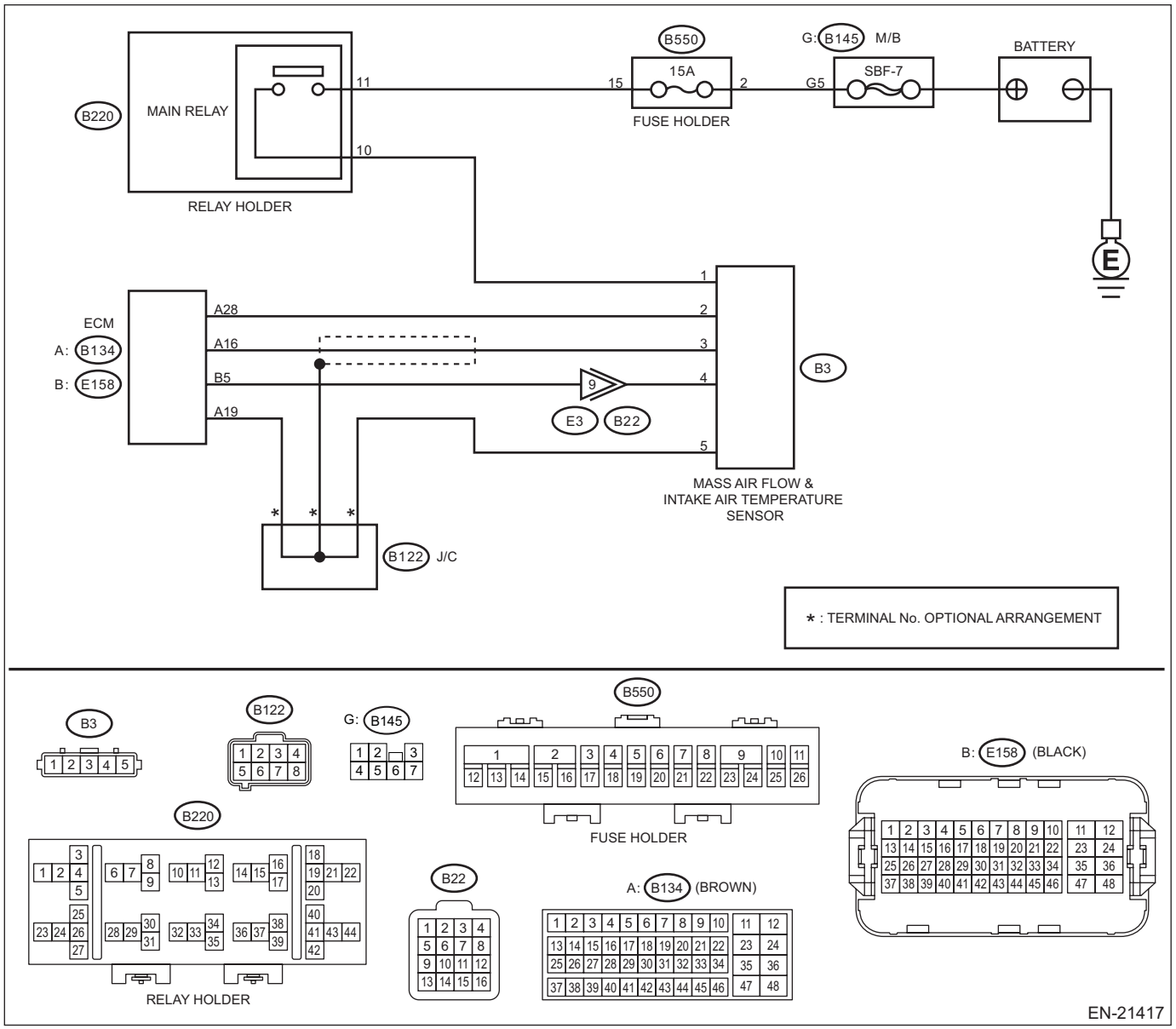

	Step	Check	Yes	No
1	**CHECK CURRENT DATA.** 1) Start the engine. 2) Read the value of «IAT Sensor #11» using the Subaru Select Monitor or a general scan tool. NOTE: • Subaru Select Monitor For detailed operation procedures, refer to “Current Data Display For Engine”. <Ref. to EN(w/o STI)(diag)-46, Subaru Select Monitor.> • General scan tool For detailed operation procedures, refer to the general scan tool operation manual.	Is the value in «IAT Sensor #11» 120°C (248°F) or more?	Go to step **2**.	Even if DTC is detected, the circuit has returned to a normal condition at this time. Reproduce the failure, and then perform the diagnosis again. NOTE: In this case, temporary poor contact of connector, temporary open or short circuit of harness may be the cause.
2	**CHECK HARNESS BETWEEN ECM AND MASS AIR FLOW AND INTAKE AIR TEMPERATURE SENSOR CONNECTOR.** 1) Turn the ignition switch to OFF. 2) Disconnect the connector from ECM. 3) Disconnect the connectors from the mass air flow and intake air temperature sensor. 4) Measure the resistance between the ECM connector and engine ground. ***Connector & terminal*** ***(E158) No. 5 — Engine ground:***	Is the resistance 1 MΩ or more?	Replace the mass air flow and intake air temperature sensor. <Ref. to FU(w/o STI)-110, Mass Air Flow and Intake Air Temperature Sensor.>	Repair the ground short circuit of harness between ECM connector and the mass air flow and intake air temperature sensor connector.

1. OUTLINE OF DIAGNOSIS

Detect open or short circuit of the intake air temperature sensor (integrated with air flow sensor).
Judge as NG if out of specification.

2. COMPONENT DESCRIPTION

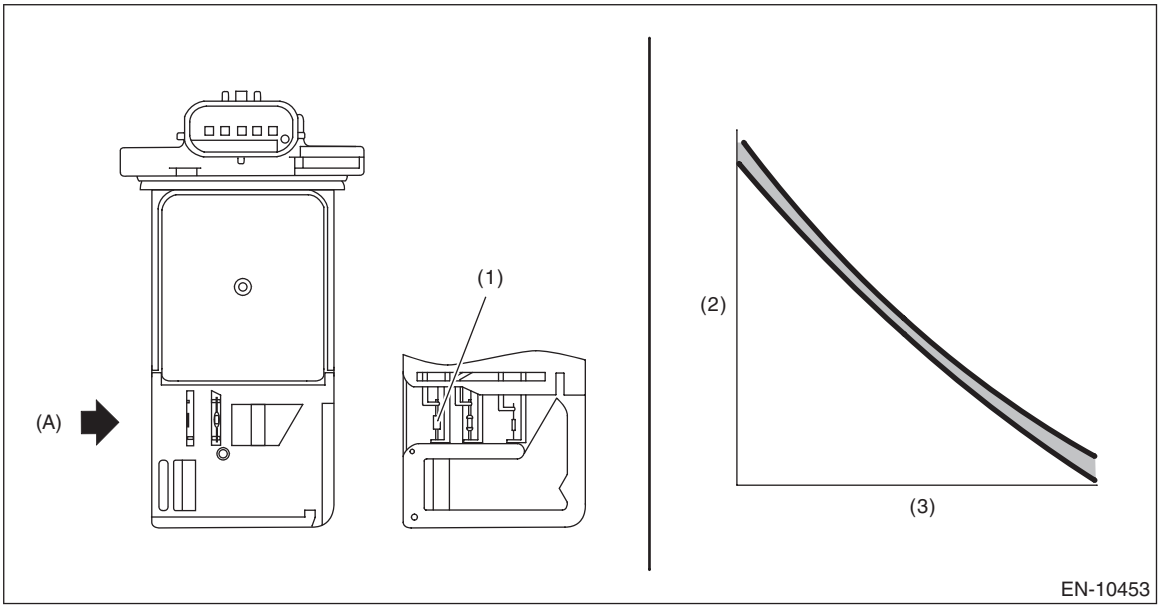

(A) Air

(1) Intake air temperature sensor (2) Resistance value (Ω) (3) Intake air temperature °C (°F)

3. EXECUTION CONDITION

Secondary parameters	Execution condition
None	

4. GENERAL DRIVING CYCLE

Always perform the diagnosis continuously.

5. DIAGNOSTIC METHOD

If the duration of time while the following conditions are met is longer than the time indicated, judge as NG.

Judgment Value

Malfunction Criteria	Threshold Value
Output voltage	< 0.22 V

Time Needed for Diagnosis: 520 ms
Malfunction Indicator Light Illumination: Illuminates as soon as a malfunction occurs.

AL:DTC P0113 INTAKE AIR TEMPERATURE SENSOR 1 CIRCUIT HIGH BANK 1

DTC DETECTING CONDITION:
Immediately at fault recognition

TROUBLE SYMPTOM:
- Improper idling
- Poor driving performance

CAUTION:
- **After servicing or replacing faulty parts, perform Clear Memory Mode <Ref. to EN(w/o STI)(diag)-82, OPERATION, Clear Memory Mode.>, and Inspection Mode <Ref. to EN(w/o STI)(diag)-64, PROCEDURE, Inspection Mode.>.**
- **Use the check board when measuring the ECM terminal voltage and resistance.**

WIRING DIAGRAM:
Engine Electrical System <Ref. to WI-154, WIRING DIAGRAM, Engine Electrical System.>

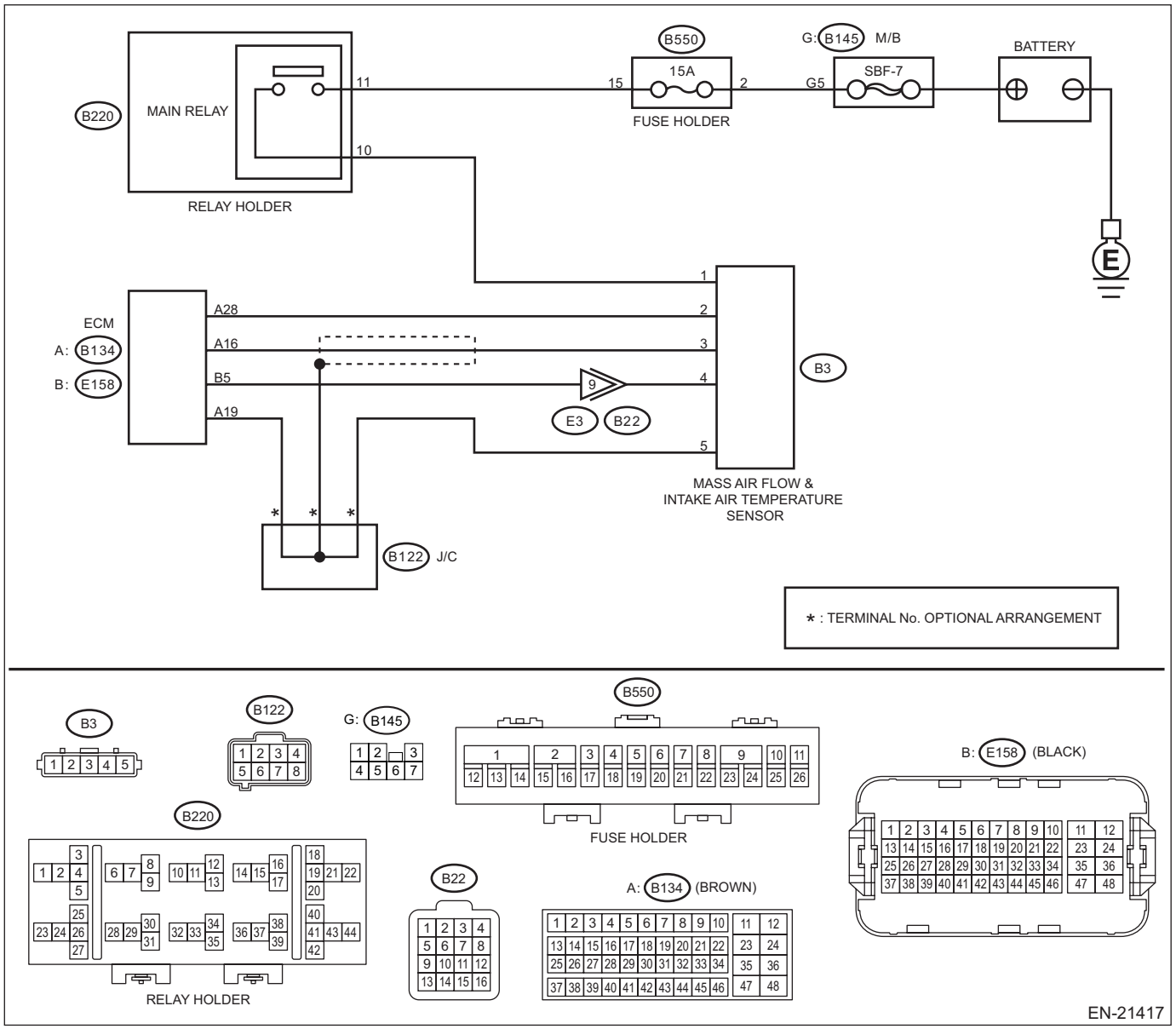

	Step	Check	Yes	No
1	**CHECK CURRENT DATA.** 1) Start the engine. 2) Read the value of «IAT Sensor #11» using the Subaru Select Monitor or a general scan tool. NOTE: • Subaru Select Monitor For detailed operation procedures, refer to "Current Data Display For Engine". <Ref. to EN(w/o STI)(diag)-46, Subaru Select Monitor.> • General scan tool For detailed operation procedures, refer to the general scan tool operation manual.	Is the value in «IAT Sensor #11» less than –40°C (–40°F)?	Go to step **2**.	Even if DTC is detected, the circuit has returned to a normal condition at this time. Reproduce the failure, and then perform the diagnosis again. NOTE: In this case, temporary poor contact of connector, temporary open or short circuit of harness may be the cause.
2	**CHECK FOR POOR CONTACT.** Check for poor contact of ECM and mass air flow and intake air temperature sensor connector.	Is there poor contact of ECM or mass air flow and intake air temperature sensor connector?	Repair the poor contact of ECM or mass air flow and intake air temperature sensor connector.	Go to step **3**.
3	**CHECK HARNESS BETWEEN ECM AND MASS AIR FLOW AND INTAKE AIR TEMPERATURE SENSOR CONNECTOR.** 1) Turn the ignition switch to OFF. 2) Disconnect the connector from ECM. 3) Disconnect the connectors from the mass air flow and intake air temperature sensor. 4) Measure the resistance of harness between ECM connector and the mass air flow and intake air temperature sensor connector. ***Connector & terminal*** ***(E158) No. 5 — (B3) No. 4:*** ***(B134) No. 19 — (B3) No. 5:***	Is the resistance less than 1 Ω?	Go to step **4**.	Repair the harness and connector. NOTE: In this case, repair the following item: • Open circuit in harness between ECM connector and the mass air flow and intake air temperature sensor connector • Poor contact of coupling connector
4	**CHECK HARNESS BETWEEN ECM AND MASS AIR FLOW AND INTAKE AIR TEMPERATURE SENSOR CONNECTOR.** 1) Connect all connectors. 2) Turn the ignition switch to ON. 3) Measure the voltage between ECM connector and engine ground. ***Connector & terminal*** ***(E158) No. 5 (+) — Engine ground (–):***	Is the voltage 5 V or more?	Repair the short circuit of harness to power supply between ECM connector and the mass air flow and intake air temperature sensor connector.	Replace the mass air flow and intake air temperature sensor. <Ref. to FU(w/o STI)-110, Mass Air Flow and Intake Air Temperature Sensor.>

1. OUTLINE OF DIAGNOSIS

Detect open or short circuit of the intake air temperature sensor (integrated with air flow sensor).
Judge as NG if out of specification.

2. COMPONENT DESCRIPTION

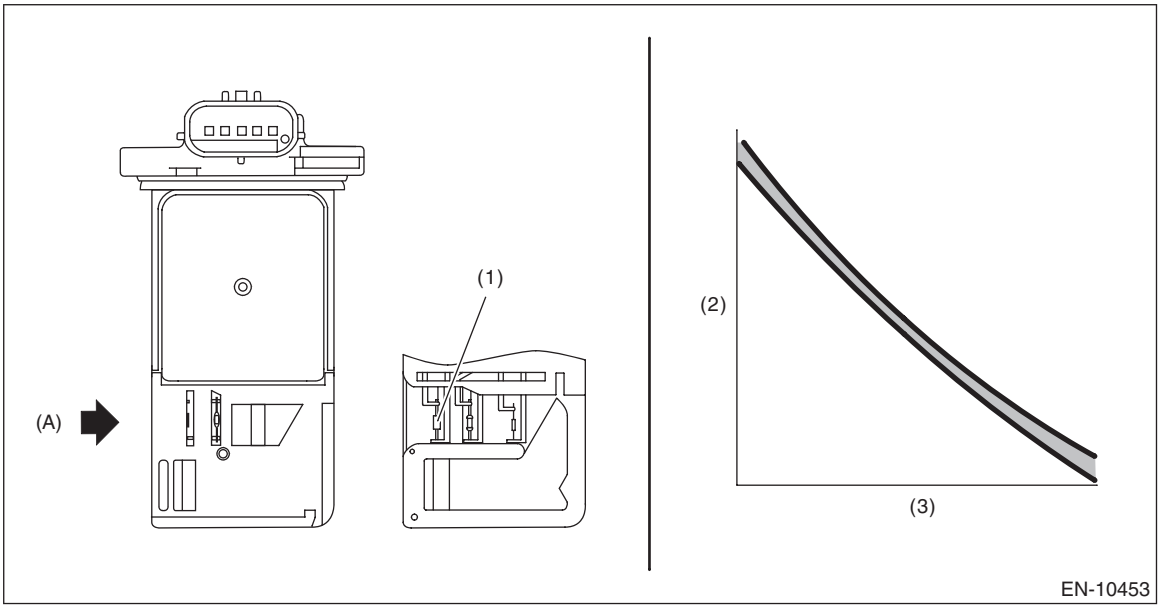

(A) Air

(1) Intake air temperature sensor (2) Resistance value (Ω) (3) Intake air temperature °C (°F)

3. EXECUTION CONDITION

Secondary parameters	Execution condition
None	

4. GENERAL DRIVING CYCLE

Always perform the diagnosis continuously.

5. DIAGNOSTIC METHOD

If the duration of time while the following conditions are met is longer than the time indicated, judge as NG.

Judgment Value

Malfunction Criteria	Threshold Value
Output voltage	> 4.72 V

Time Needed for Diagnosis: 520 ms
Malfunction Indicator Light Illumination: Illuminates as soon as a malfunction occurs.

AM:DTC P0116 ENGINE COOLANT TEMPERATURE SENSOR 1 CIRCUIT RANGE/PERFORMANCE

DTC DETECTING CONDITION:
Detected when two consecutive driving cycles with fault occur.
TROUBLE SYMPTOM:
- Hard to start
- Improper idling
- Poor driving performance

CAUTION:
After servicing or replacing faulty parts, perform Clear Memory Mode <Ref. to EN(w/o STI)(diag)-82, OPERATION, Clear Memory Mode.>, and Inspection Mode <Ref. to EN(w/o STI)(diag)-64, PROCEDURE, Inspection Mode.>.

	Step	Check	Yes	No
1	**CHECK FOR ANY OTHER DTC ON DISPLAY.**	Is any other DTC displayed?	Check the appropriate DTC using the "List of Diagnostic Trouble Code (DTC)". <Ref. to EN(w/o STI)(diag)-106, List of Diagnostic Trouble Code (DTC).>	Go to step **2**.
2	**CHECK ENGINE COOLANT TEMPERATURE SENSOR.** 1) Disconnect the connectors from the engine coolant temperature sensor. 2) Measure the resistance between engine coolant temperature sensor terminals when the engine coolant is cold and after warmed up. ***Terminals*** ***No. 1 — No. 2:***	Is the resistance of engine coolant temperature sensor different between when engine coolant is cold and after warmed up?	Repair the poor contact of ECM connector.	Replace the engine coolant temperature sensor. <Ref. to FU(w/o STI)-89, Engine Coolant Temperature Sensor.>

1. OUTLINE OF DIAGNOSIS

Detect the malfunction of the engine coolant temperature sensor characteristics.
After the engine starts after the specified period of soaking time has elapsed, diagnose by correlation between engine coolant temperature sensor value, intake air temperature sensor value and ambient temperature sensor value. Judge as NG when the differences are both above the specified value by comparing between engine coolant temperature and ambient air temperature, engine coolant temperature and intake air temperature.

2. COMPONENT DESCRIPTION

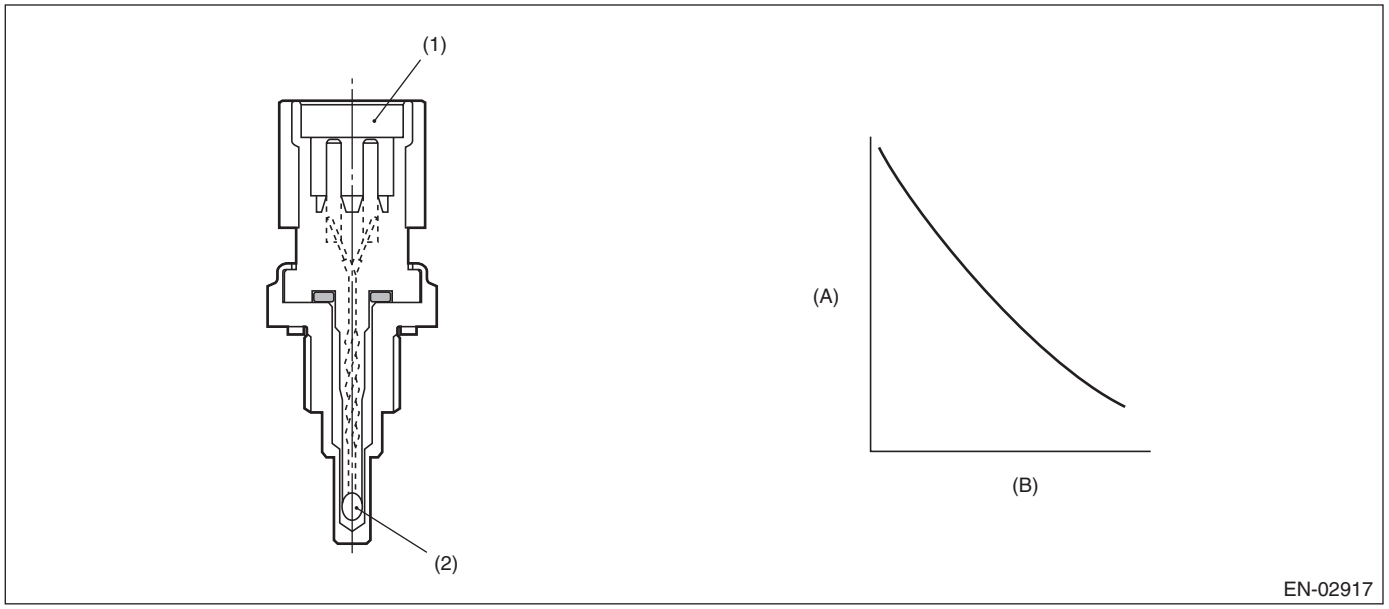

(A) Resistance value (kΩ)
(B) Temperature °C (°F)
(1) Connector
(2) Thermistor element

3. EXECUTION CONDITION

Secondary parameters	Execution condition
Battery voltage	≥ 10.9 V
Soaking time	≥ 21600 s
Block heater judgment	Completed
Block heater operation	Not in operation

4. GENERAL DRIVING CYCLE

Perform the diagnosis only once after the engine starts after a certain period of soaking time.

5. DIAGNOSTIC METHOD

Judge as NG when the following conditions are established.

Judgment Value

Malfunction Criteria	Threshold Value
|Engine coolant temperature at engine start – Intake air temperature 30 sec. after engine start|	> Value from Map
|Engine coolant temperature at engine start – Ambient air temperature at engine start|	> 25°C (45°F)

Map

Ambient temperature °C (°F)	–30 (–22)	30 (86)	45 (113)	60 (140)
|Engine coolant temperature at engine start – Intake air temperature 30 sec. after engine start| °C (°F)	12 (21.6)	12 (21.6)	22 (39.6)	22 (39.6)

Time Needed for Diagnosis: Less than 1 second
Malfunction Indicator Light Illumination: Illuminates when malfunction occurs in 2 continuous driving cycles.

AN:DTC P0117 ENGINE COOLANT TEMPERATURE SENSOR 1 CIRCUIT LOW

DTC DETECTING CONDITION:
Immediately at fault recognition
TROUBLE SYMPTOM:
- Hard to start
- Improper idling
- Poor driving performance

CAUTION:
- **After servicing or replacing faulty parts, perform Clear Memory Mode <Ref. to EN(w/o STI)(diag)-82, OPERATION, Clear Memory Mode.>, and Inspection Mode <Ref. to EN(w/o STI)(diag)-64, PROCEDURE, Inspection Mode.>.**
- **Use the check board when measuring the ECM terminal voltage and resistance.**

WIRING DIAGRAM:
Engine Electrical System <Ref. to WI-154, WIRING DIAGRAM, Engine Electrical System.>

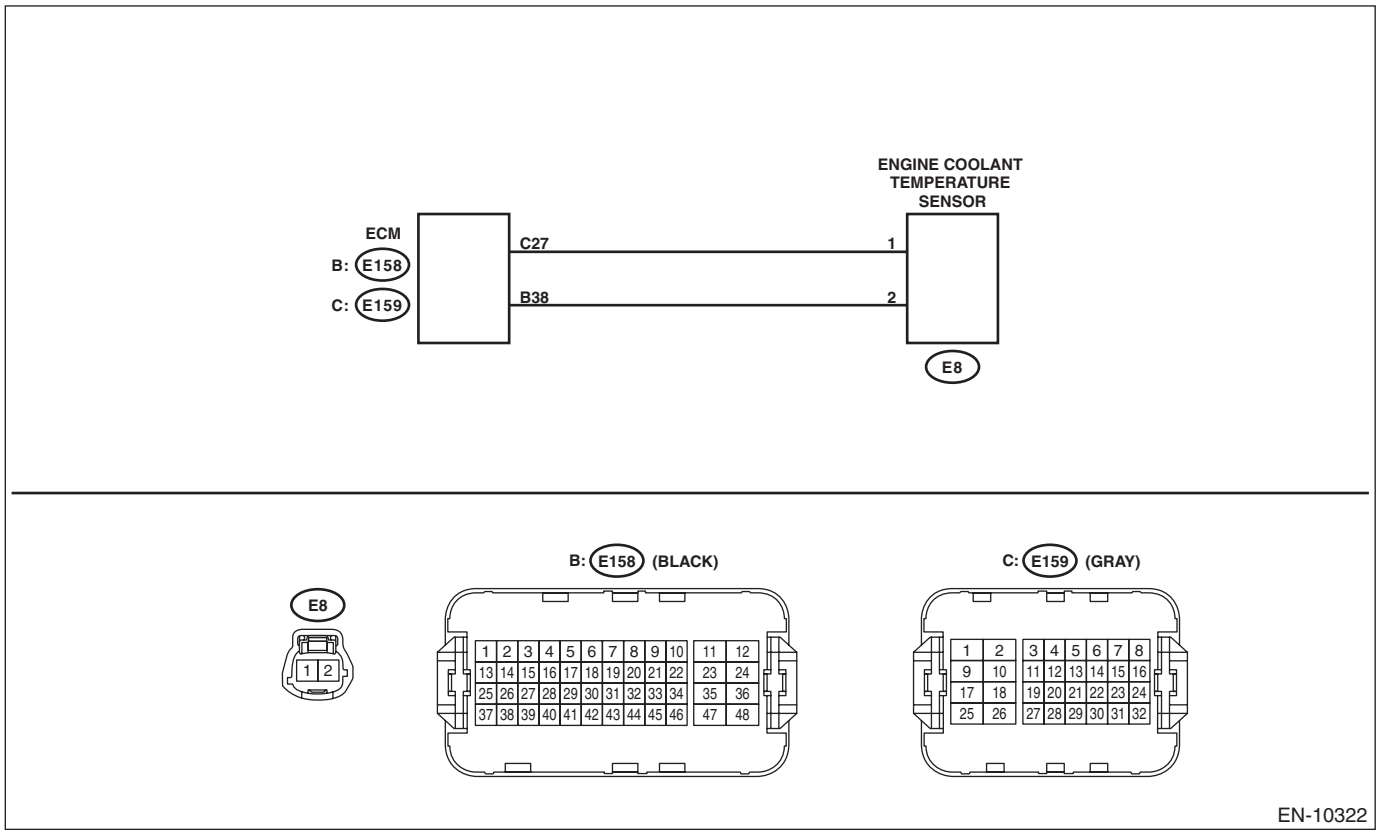

	Step	Check	Yes	No
1	**CHECK CURRENT DATA.** 1) Start the engine. 2) Read the value of «Coolant Temp.» using the Subaru Select Monitor or a general scan tool. NOTE: • Subaru Select Monitor For detailed operation procedures, refer to “Current Data Display For Engine”. <Ref. to EN(w/o STI)(diag)-46, Subaru Select Monitor.> • General scan tool For detailed operation procedures, refer to the general scan tool operation manual.	Is the value of «Coolant Temp.» 150°C (302°F) or more?	Go to step **2**.	Even if DTC is detected, the circuit has returned to a normal condition at this time. Reproduce the failure, and then perform the diagnosis again. NOTE: In this case, temporary poor contact of connector, temporary open or short circuit of harness may be the cause.
2	**CHECK HARNESS BETWEEN ECM AND ENGINE COOLANT TEMPERATURE SENSOR CONNECTOR.** 1) Turn the ignition switch to OFF. 2) Disconnect the connector from ECM. 3) Disconnect the connectors from the engine coolant temperature sensor. 4) Measure the resistance between the ECM connector and engine ground. ***Connector & terminal*** ***(E158) No. 38 — Engine ground:***	Is the resistance 1 MΩ or more?	Replace the engine coolant temperature sensor. <Ref. to FU(w/o STI)-89, Engine Coolant Temperature Sensor.>	Repair the short circuit to ground in harness between ECM connector and engine coolant temperature sensor connector.

1. OUTLINE OF DIAGNOSIS

Detect the open or short circuit of the engine coolant temperature sensor.
Judge as NG if out of specification.

2. COMPONENT DESCRIPTION

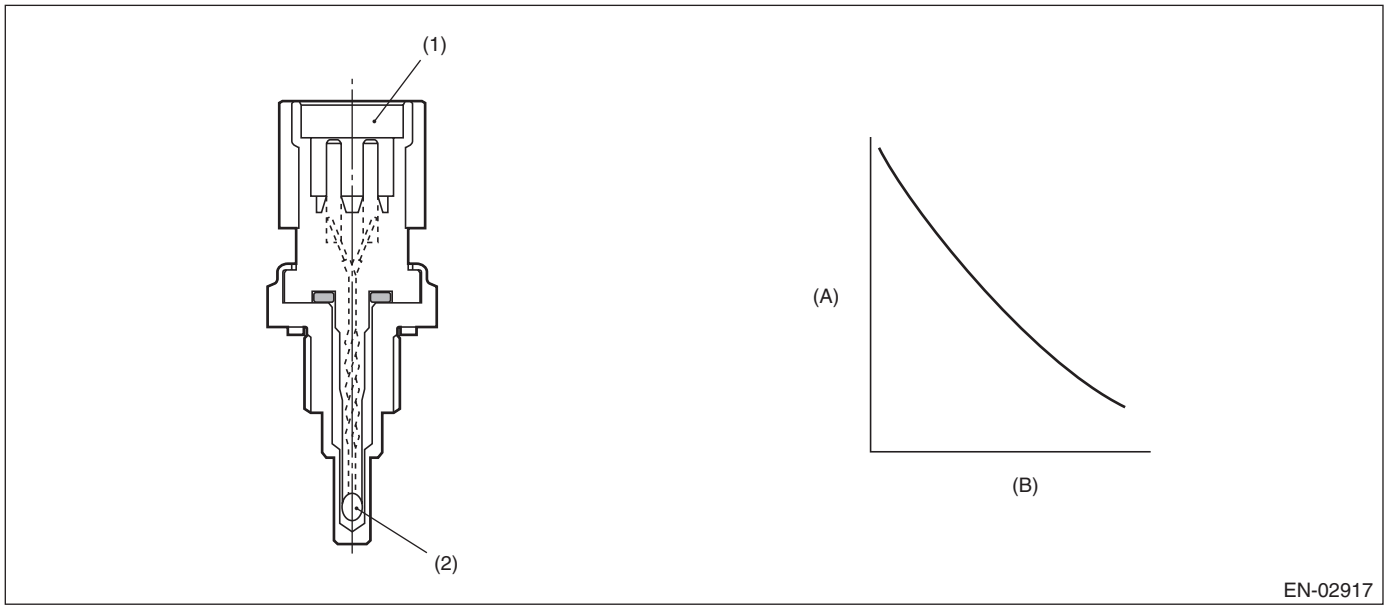

(A) Resistance value (kΩ)
(B) Temperature °C (°F)
(1) Connector
(2) Thermistor element

3. EXECUTION CONDITION

Secondary parameters	Execution condition
None	

4. GENERAL DRIVING CYCLE

Always perform the diagnosis continuously.

5. DIAGNOSTIC METHOD

If the duration of time while the following conditions are met is longer than the time indicated, judge as NG.

Judgment Value

Malfunction Criteria	Threshold Value
Output voltage	< 0.33 V

Time Needed for Diagnosis: 500 ms
Malfunction Indicator Light Illumination: Illuminates as soon as a malfunction occurs.

AO:DTC P0118 ENGINE COOLANT TEMPERATURE SENSOR 1 CIRCUIT HIGH

DTC DETECTING CONDITION:
Immediately at fault recognition
TROUBLE SYMPTOM:
- Hard to start
- Improper idling
- Poor driving performance

CAUTION:
• After servicing or replacing faulty parts, perform Clear Memory Mode <Ref. to EN(w/o STI)(diag)-82, OPERATION, Clear Memory Mode.>, and Inspection Mode <Ref. to EN(w/o STI)(diag)-64, PROCEDURE, Inspection Mode.>.
• Use the check board when measuring the ECM terminal voltage and resistance.
WIRING DIAGRAM:
Engine Electrical System <Ref. to WI-154, WIRING DIAGRAM, Engine Electrical System.>

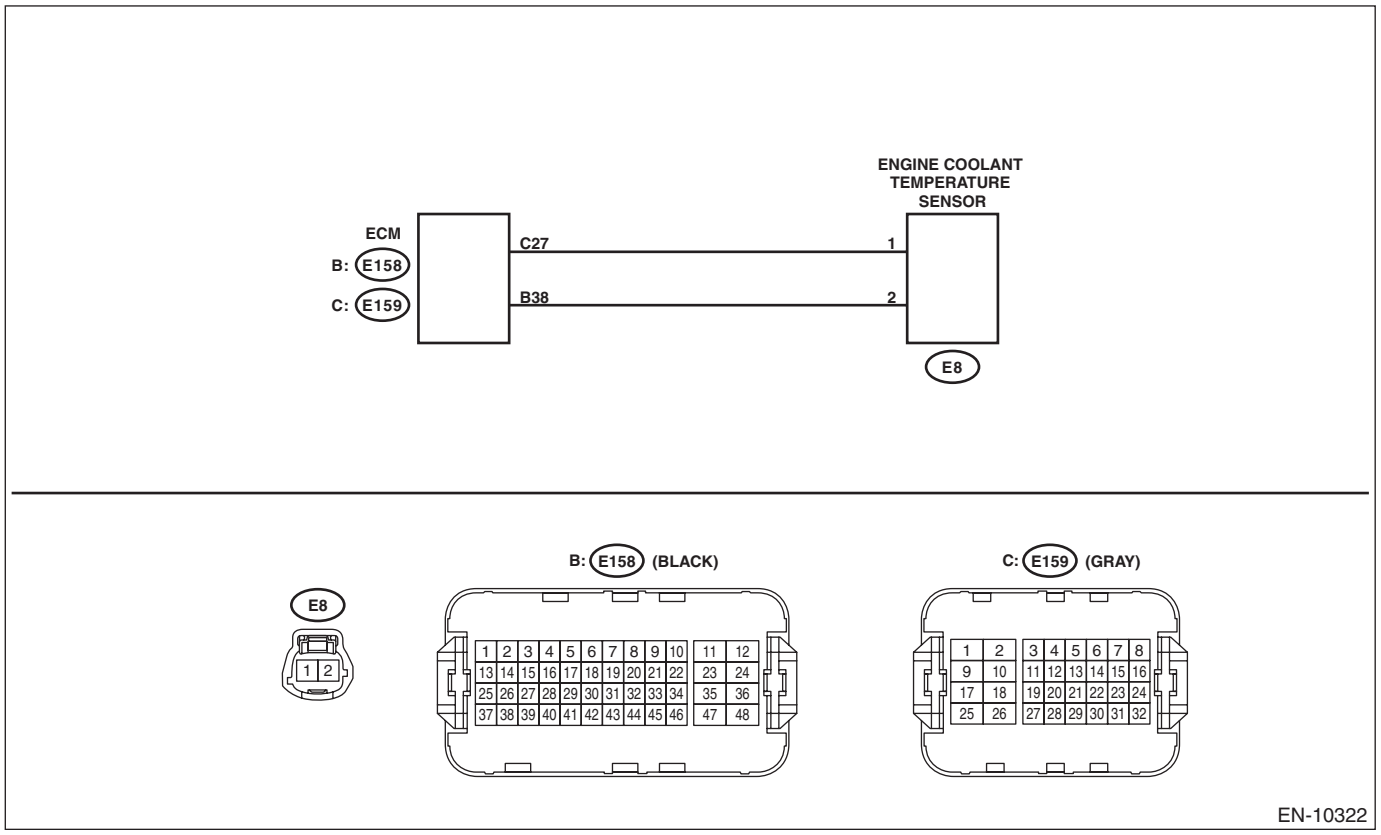

	Step	Check	Yes	No
1	**CHECK CURRENT DATA.** 1) Start the engine. 2) Read the value of «Coolant Temp.» using the Subaru Select Monitor or a general scan tool. NOTE: • Subaru Select Monitor For detailed operation procedures, refer to "Current Data Display For Engine". <Ref. to EN(w/o STI)(diag)-46, Subaru Select Monitor.> • General scan tool For detailed operation procedures, refer to the general scan tool operation manual.	Is the value of «Coolant Temp.» less than –40°C (–40°F)?	Go to step **2**.	Even if DTC is detected, the circuit has returned to a normal condition at this time. Reproduce the failure, and then perform the diagnosis again. NOTE: In this case, temporary poor contact of connector, temporary open or short circuit of harness may be the cause.
2	**CHECK FOR POOR CONTACT.** Check for poor contact of ECM and engine coolant temperature sensor connector.	Is there poor contact of ECM or engine coolant temperature sensor connector?	Repair the poor contact of ECM or engine coolant temperature sensor connector.	Go to step **3**.
3	**CHECK HARNESS BETWEEN ECM AND ENGINE COOLANT TEMPERATURE SENSOR CONNECTOR.** 1) Turn the ignition switch to OFF. 2) Disconnect the connector from ECM. 3) Disconnect the connectors from the engine coolant temperature sensor. 4) Measure the resistance of harness between ECM connector and engine coolant temperature sensor connector. ***Connector & terminal*** ***(E159) No. 27 — (E8) No. 1:*** ***(E158) No. 38 — (E8) No. 2:***	Is the resistance less than 1 Ω?	Go to step **4**.	Repair the open circuit of the harness between the ECM connector and engine coolant temperature sensor connector.
4	**CHECK HARNESS BETWEEN ECM AND ENGINE COOLANT TEMPERATURE SENSOR CONNECTOR.** 1) Connect all connectors. 2) Turn the ignition switch to ON. 3) Measure the voltage between ECM connector and engine ground. ***Connector & terminal*** ***(E158) No. 38 (+) — Engine ground (–):***	Is the voltage 5 V or more?	Repair the short circuit of harness to power supply between ECM connector and engine coolant temperature sensor connector.	Replace the engine coolant temperature sensor. <Ref. to FU(w/o STI)-89, Engine Coolant Temperature Sensor.>

1. OUTLINE OF DIAGNOSIS

Detect the open or short circuit of the engine coolant temperature sensor.
Judge as NG if out of specification.

2. COMPONENT DESCRIPTION

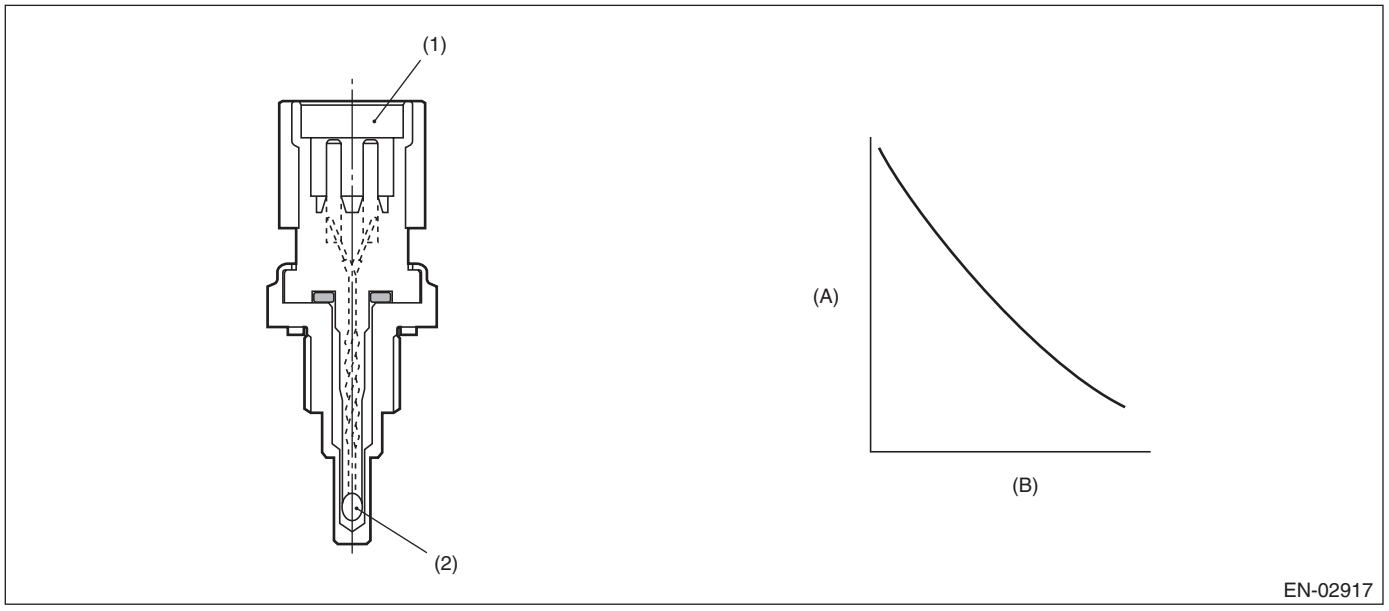

(A) Resistance value (kΩ)
(B) Temperature °C (°F)
(1) Connector
(2) Thermistor element

3. EXECUTION CONDITION

Secondary parameters	Execution condition
None	

4. GENERAL DRIVING CYCLE

Always perform the diagnosis continuously.

5. DIAGNOSTIC METHOD

If the duration of time while the following conditions are met is longer than the time indicated, judge as NG.

Judgment Value

Malfunction Criteria	Threshold Value
Output voltage	> 4.71 V

Time Needed for Diagnosis: 500 ms
Malfunction Indicator Light Illumination: Illuminates as soon as a malfunction occurs.

AP:DTC P0122 THROTTLE/PEDAL POSITION SENSOR/SWITCH "A" CIRCUIT LOW

DTC DETECTING CONDITION:
Immediately at fault recognition
TROUBLE SYMPTOM:
- Improper idling
- Engine stalls.
- Poor driving performance

CAUTION:
• After servicing or replacing faulty parts, perform Clear Memory Mode <Ref. to EN(w/o STI)(diag)-82, OPERATION, Clear Memory Mode.>, and Inspection Mode <Ref. to EN(w/o STI)(diag)-64, PROCEDURE, Inspection Mode.>.
• Use the check board when measuring the ECM terminal voltage and resistance.

WIRING DIAGRAM:

Engine Electrical System <Ref. to WI-154, WIRING DIAGRAM, Engine Electrical System.>

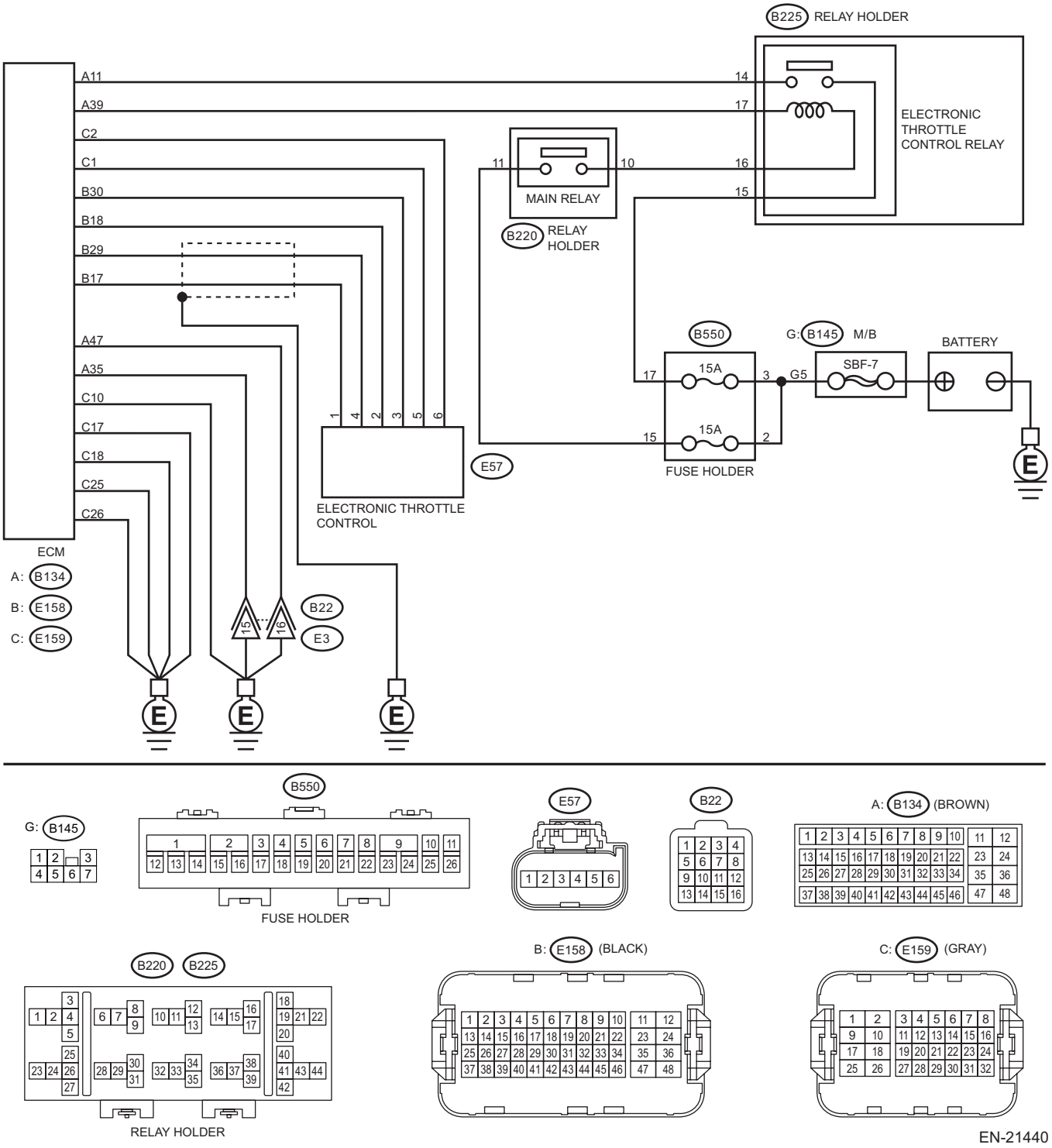

EN-21440

	Step	Check	Yes	No
1	**CHECK HARNESS BETWEEN ECM AND ELECTRONIC THROTTLE CONTROL CONNECTOR.** 1) Turn the ignition switch to OFF. 2) Disconnect the connector from ECM. 3) Disconnect the connectors from electronic throttle control. 4) Measure the resistance between the ECM connector and engine ground. ***Connector & terminal*** ***(E158) No. 18 — Engine ground:*** ***(E158) No. 17 — Engine ground:***	Is the resistance 1 MΩ or more?	Go to step **2**.	Repair the ground short circuit of harness between ECM connector and electronic throttle control connector.
2	**CHECK SHORT CIRCUIT INSIDE THE ECM.** 1) Connect the connector to ECM. 2) Measure the resistance between electronic throttle control connector and engine ground. ***Connector & terminal*** ***(E57) No. 1 — Engine ground:***	Is the resistance 1 MΩ or more?	Replace the electronic throttle control. <Ref. to FU(w/o STI)-15, Throttle Body.>	Repair the ground short circuit of harness between ECM connector and electronic throttle control connector. Replace the ECM if defective. <Ref. to FU(w/o STI)-124, Engine Control Module (ECM).>

1. OUTLINE OF DIAGNOSIS

Detect the open or short circuit of throttle position sensor 1.
Judge as NG if out of specification.

2. COMPONENT DESCRIPTION

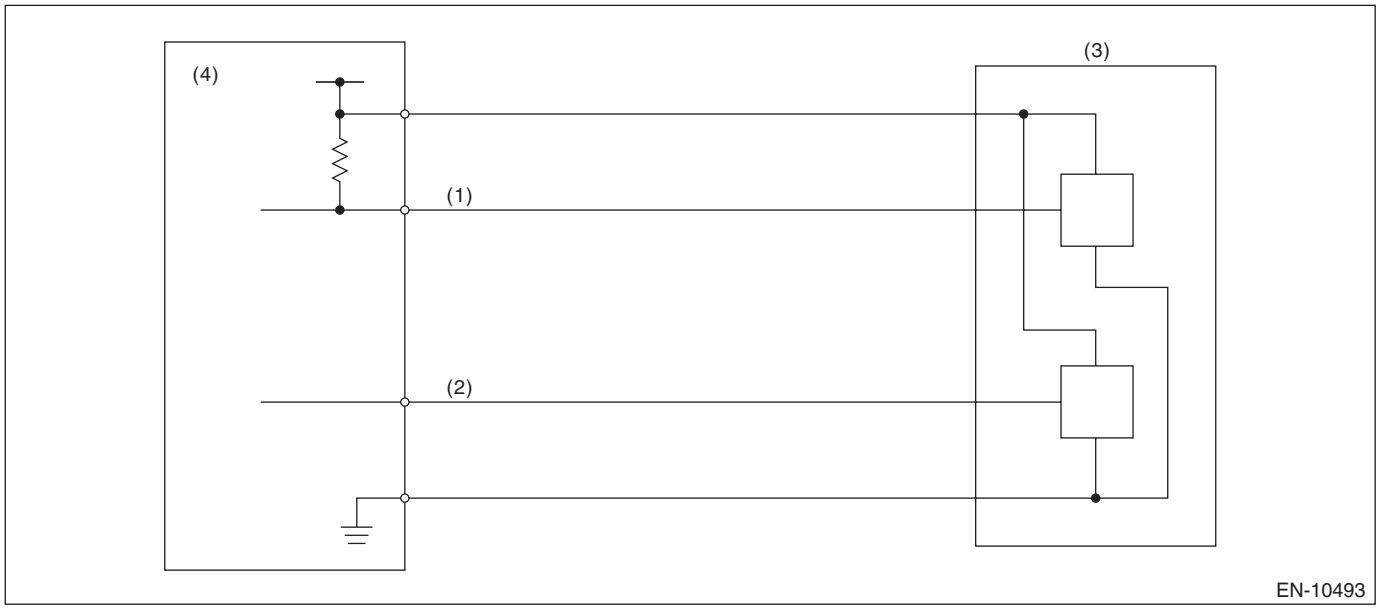

(1) Throttle position sensor 1 signal
(2) Throttle position sensor 2 signal
(3) Throttle position sensor
(4) Engine control module (ECM)

3. EXECUTION CONDITION

Secondary parameters	Execution condition
Battery voltage	≥ 6 V

4. GENERAL DRIVING CYCLE

Always perform the diagnosis continuously.

5. DIAGNOSTIC METHOD

If the duration of time while the following conditions are met is longer than the time indicated, judge as NG.

Judgment Value

Malfunction Criteria	Threshold Value
Sensor 1 input voltage	< 0.29 V

Time Needed for Diagnosis: 100 ms
Malfunction Indicator Light Illumination: Illuminates as soon as a malfunction occurs.

AQ:DTC P0123 THROTTLE/PEDAL POSITION SENSOR/SWITCH "A" CIRCUIT HIGH

DTC DETECTING CONDITION:
Immediately at fault recognition
TROUBLE SYMPTOM:
- Improper idling
- Engine stalls.
- Poor driving performance

CAUTION:
- **After servicing or replacing faulty parts, perform Clear Memory Mode <Ref. to EN(w/o STI)(diag)-82, OPERATION, Clear Memory Mode.>, and Inspection Mode <Ref. to EN(w/o STI)(diag)-64, PROCEDURE, Inspection Mode.>.**
- **Use the check board when measuring the ECM terminal voltage and resistance.**

WIRING DIAGRAM:

Engine Electrical System <Ref. to WI-154, WIRING DIAGRAM, Engine Electrical System.>

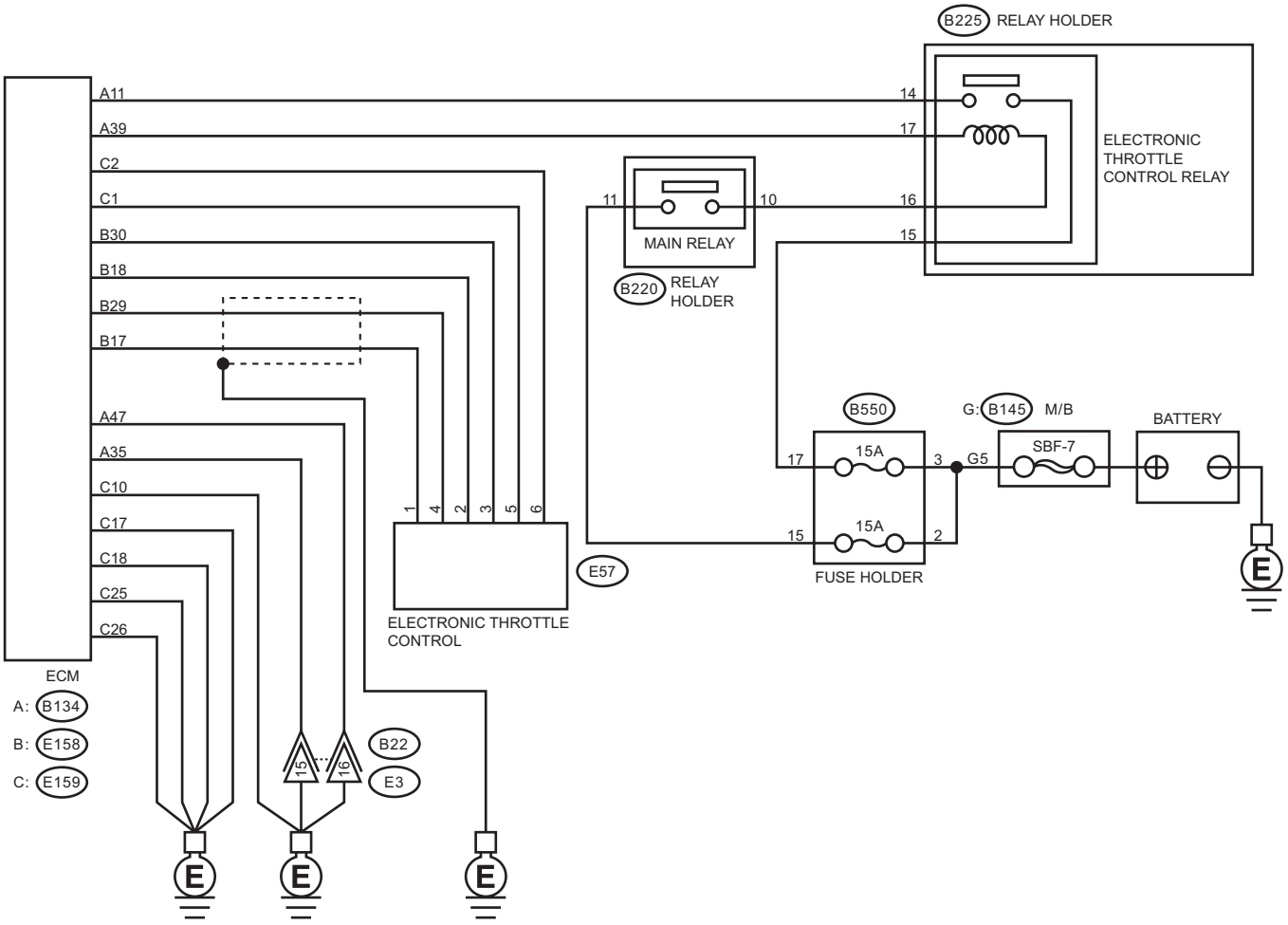

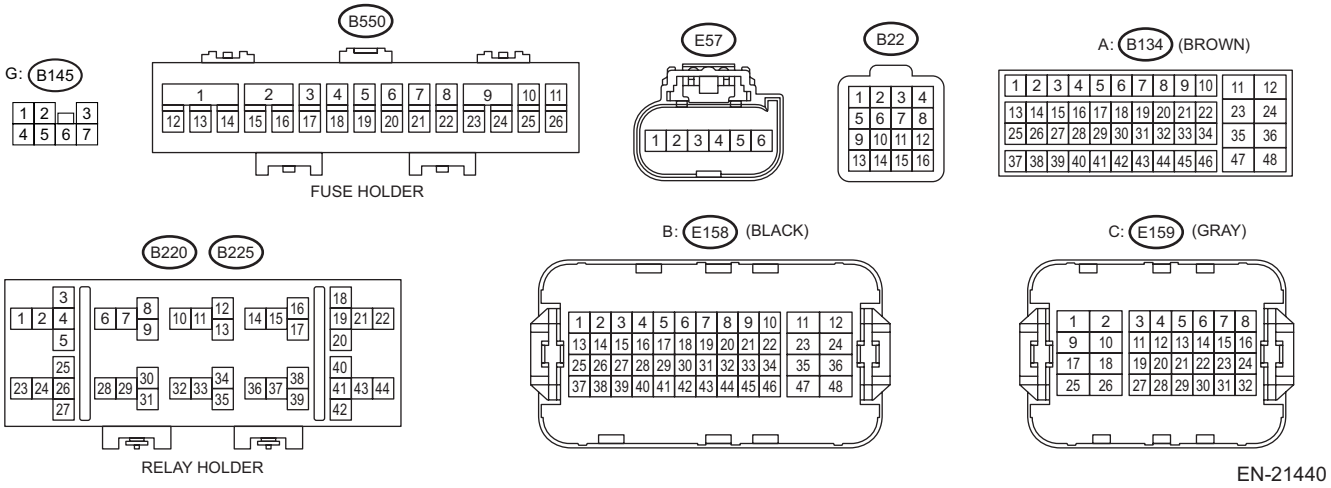

EN-21440

	Step	Check	Yes	No
1	**CHECK HARNESS BETWEEN ECM AND ELECTRONIC THROTTLE CONTROL CONNECTOR.** 1) Turn the ignition switch to OFF. 2) Disconnect the connector from ECM. 3) Disconnect the connectors from electronic throttle control. 4) Measure the resistance of harness between ECM connector and electronic throttle control connector. ***Connector & terminal*** ***(E158) No. 17 — (E57) No. 1:*** ***(E158) No. 30 — (E57) No. 3:***	Is the resistance less than 1 Ω?	Go to step **2**.	Repair the open circuit of harness between ECM connector and electronic throttle control connector.
2	**CHECK HARNESS BETWEEN ECM AND ELECTRONIC THROTTLE CONTROL CONNECTOR.** 1) Connect the connector to ECM. 2) Measure the resistance between electronic throttle control connector and engine ground. ***Connector & terminal*** ***(E57) No. 3 — Engine ground:***	Is the resistance less than 5 Ω?	Go to step **3**.	Repair the harness and connector. NOTE: In this case, repair the following item: • Open circuit of harness between ECM connector and engine ground • Poor contact of ECM connector • Poor contact of coupling connector
3	**CHECK HARNESS BETWEEN ECM AND ELECTRONIC THROTTLE CONTROL CONNECTOR.** 1) Turn the ignition switch to ON. 2) Measure the voltage between electronic throttle control connector and engine ground. ***Connector & terminal*** ***(E57) No. 1 (+) — Engine ground (–):***	Is the voltage 5 V or more?	Repair the short circuit to power in the harness between ECM connector and electronic throttle control connector.	Go to step **4**.
4	**CHECK HARNESS BETWEEN ECM AND ELECTRONIC THROTTLE CONTROL CONNECTOR.** 1) Turn the ignition switch to OFF. 2) Disconnect the connector from ECM. 3) Measure the resistance between ECM connectors. ***Connector & terminal*** ***(E158) No. 17 — (E158) No. 18:***	Is the resistance 1 MΩ or more?	Repair the poor contact of electronic throttle control connector. Replace the electronic throttle control if defective. <Ref. to FU(w/o STI)-15, Throttle Body.>	Repair the short circuit to power in the harness between ECM connector and electronic throttle control connector.

1. OUTLINE OF DIAGNOSIS

Detect the open or short circuit of throttle position sensor 1.
Judge as NG if out of specification.

2. COMPONENT DESCRIPTION

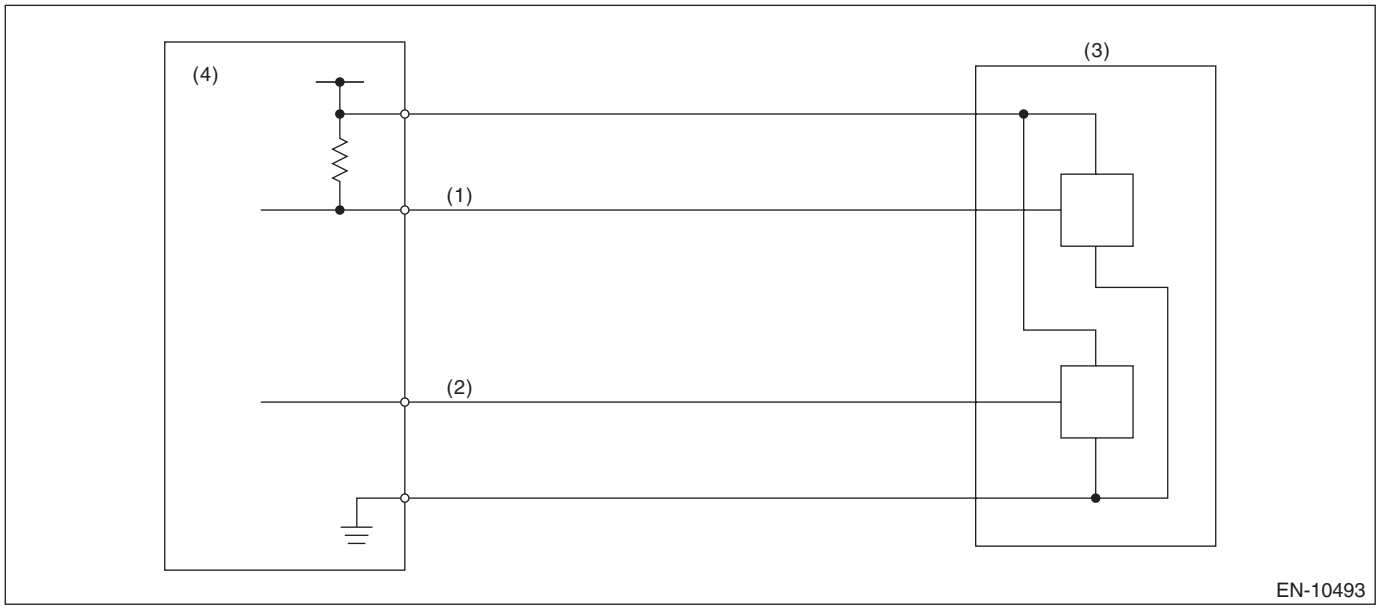

(1) Throttle position sensor 1 signal
(2) Throttle position sensor 2 signal
(3) Throttle position sensor
(4) Engine control module (ECM)

3. EXECUTION CONDITION

Secondary parameters	Execution condition
Battery voltage	≥ 6 V

4. GENERAL DRIVING CYCLE

Always perform the diagnosis continuously.

5. DIAGNOSTIC METHOD

If the duration of time while the following conditions are met is longer than the time indicated, judge as NG.

Judgment Value

Malfunction Criteria	Threshold Value
Sensor 1 input voltage	> 4.69 V

Time Needed for Diagnosis: 100 ms
Malfunction Indicator Light Illumination: Illuminates as soon as a malfunction occurs.

AR:DTC P0125 INSUFFICIENT COOLANT TEMPERATURE FOR CLOSED LOOP FUEL CONTROL

DTC DETECTING CONDITION:
Detected when two consecutive driving cycles with fault occur.
TROUBLE SYMPTOM:
Engine does not return to idle.

CAUTION:
After servicing or replacing faulty parts, perform Clear Memory Mode <Ref. to EN(w/o STI)(diag)-82, OPERATION, Clear Memory Mode.>, and Inspection Mode <Ref. to EN(w/o STI)(diag)-64, PROCEDURE, Inspection Mode.>.

	Step	Check	Yes	No
1	**CHECK ENGINE COOLANT.** Check the following items: • Amount of engine coolant • Engine coolant freeze • Contamination of engine coolant	Is the check result OK?	Go to step **2**.	Fill or replace the engine coolant. <Ref. to CO(w/o STI)-13, REPLACEMENT, Engine Coolant.>
2	**CHECK THERMOSTAT.**	Does the thermostat remain opened?	Replace the thermostat. <Ref. to CO(w/o STI)-32, Thermostat.>	Replace the engine coolant temperature sensor. <Ref. to FU(w/o STI)-89, Engine Coolant Temperature Sensor.>

1. OUTLINE OF DIAGNOSIS

Detect the malfunction of engine coolant temperature output property.
Judge as NG when engine coolant temperature does not rise to the specified value after predetermined time has elapsed since engine start.

2. COMPONENT DESCRIPTION

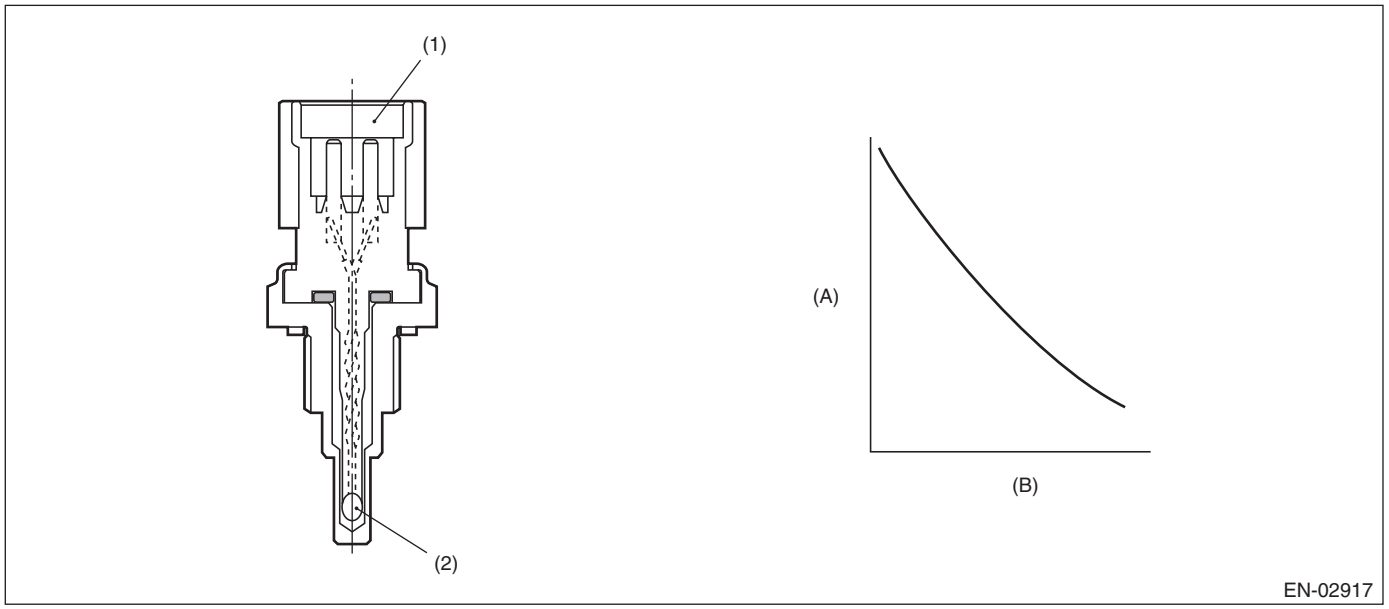

(A) Resistance value (kΩ)
(B) Temperature °C (°F)
(1) Connector
(2) Thermistor element

3. EXECUTION CONDITION

Secondary parameters	Execution condition
Battery voltage,	≥ 10.9 V
Engine coolant temperature at engine start	< –15°C (5°F)
Engine speed	≥ 475 rpm

4. GENERAL DRIVING CYCLE

Perform the diagnosis only once after starting the engine from cold condition.

5. DIAGNOSTIC METHOD

If the duration of time while the following conditions are met is longer than the time indicated, judge as NG.

Judgment Value

Malfunction Criteria	Threshold Value
Engine coolant temperature	< –15°C (5°F)
Elapsed time after starting the engine ((Smaller value either one of engine coolant temperature and intake air temperature at engine start) ≥ –23.3°C (–9.9°F))	≥ 120 s
or	
Elapsed time after starting the engine ((Smaller value either one of engine coolant temperature and intake air temperature at engine start) < –23.3°C (–9.9°F))	≥ 300 s

Time Needed for Diagnosis: 120 or 300 seconds
Malfunction Indicator Light Illumination: Illuminates when malfunction occurs in 2 continuous driving cycles.

AS:DTC P0128 COOLANT THERMOSTAT (ENGINE COOLANT TEMPERATURE BELOW THERMOSTAT REGULATING TEMPERATURE)

DTC DETECTING CONDITION:

Detected when two consecutive driving cycles with fault occur.

TROUBLE SYMPTOM:

- Thermostat remains open.
- Coolant temperature rises slowly.

CAUTION:

After servicing or replacing faulty parts, perform Clear Memory Mode <Ref. to EN(w/o STI)(diag)-82, OPERATION, Clear Memory Mode.>, and Inspection Mode <Ref. to EN(w/o STI)(diag)-64, PROCEDURE, Inspection Mode.>.

	Step	Check	Yes	No
1	**CHECK FOR ANY OTHER DTC ON DISPLAY.**	Is any other DTC displayed?	Check the appropriate DTC using the "List of Diagnostic Trouble Code (DTC)". <Ref. to EN(w/o STI)(diag)-106, List of Diagnostic Trouble Code (DTC).>	Go to step **2**.
2	**CHECK ENGINE COOLANT.**	Is the check result OK?	Go to step **3**.	Refill the engine coolant. <Ref. to CO(w/o STI)-13, Engine Coolant.>
3	**CHECK RADIATOR FAN.** 1) Start the engine. 2) Keep idling for approx. 3 minutes (with acceleration OFF) 3) Check the radiator fan operation.	Does the radiator fan continuously rotate for 3 minutes or more during idling?	Repair radiator fan circuit. <Ref. to CO(w/o STI)-44, Radiator Main Fan and Fan Motor.> <Ref. to CO(w/o STI)-47, Radiator Sub Fan and Fan Motor.>	Go to step **4**.
4	**CHECK ENGINE COOLANT TEMPERATURE SENSOR.** Check the engine coolant temperature sensor. <Ref. to FU(w/o STI)-90, INSPECTION, Engine Coolant Temperature Sensor.>	Is the check result OK?	Replace the thermostat. <Ref. to CO(w/o STI)-32, Thermostat.>	Replace the engine coolant temperature sensor. <Ref. to FU(w/o STI)-89, Engine Coolant Temperature Sensor.>

1. OUTLINE OF DIAGNOSIS

Detect malfunctions of the thermostat function.
Judge as NG when any one of the following conditions is established.

- When the actual engine coolant temperature does not reach the maximum temperature necessary to perform other OBDII diagnosis and Σ (Estimated engine coolant temperature – actual engine coolant temperature) exceeded the predetermined value. (Judgment 1)
- When the actual engine coolant temperature does not reach the range within –11°C (–19.8°F) from the regulated temperature and Σ (Estimated engine coolant temperature – actual engine coolant temperature) exceeded the predetermined value. (Judgment 2)
- When the difference between the estimated coolant temperature and the actual engine coolant temperature exceeds the predetermined value, and Σ (Estimated engine coolant temperature – actual engine coolant temperature) exceeded the predetermined value. (Judgment 3)

2. COMPONENT DESCRIPTION

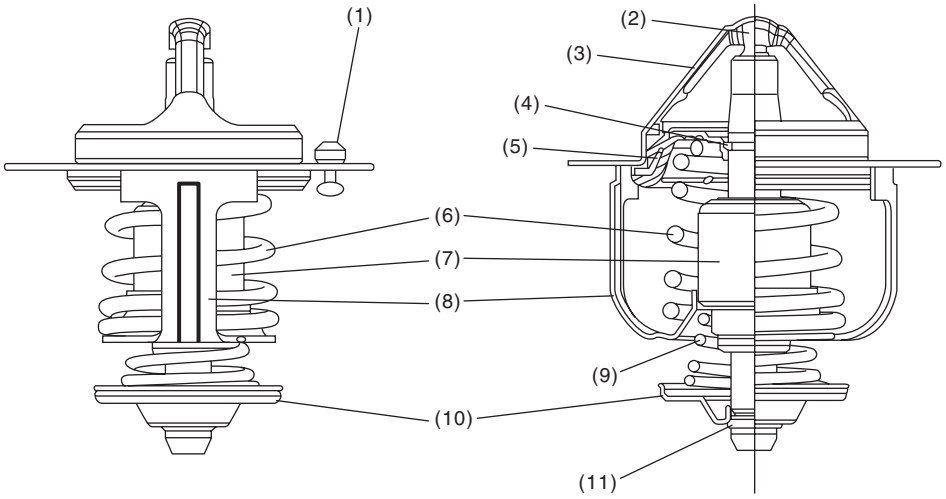

(1) Jiggle valve
(2) Piston
(3) Flange
(4) Stop ring
(5) Dust seal
(6) Main spring
(7) Wax element
(8) Frame
(9) Bypass spring
(10) Bypass valve
(11) Stop ring

3. EXECUTION CONDITION

Secondary parameters	Execution condition
<Judgment 1>	
Battery voltage	≥ 10.9 V
Estimate ambient temperature	≥ –7°C (19.4°F)
Vehicle speed	≥ 30 km/h (18.6 MPH)
Estimated coolant temperature	> 60°C (140°F)
Engine coolant temperature at engine start	< 60°C (140°F)
<Judgment 2>	
Battery voltage	≥ 10.9 V
Estimate ambient temperature	≥ –7°C (19.4°F)
Vehicle speed	≥ 30 km/h (18.6 MPH)
Estimated coolant temperature	> Value of Map 1
Engine coolant temperature at engine start	< 60°C (140°F)
<Judgment 3>	
Battery voltage	≥ 10.9 V
Estimate ambient temperature	≥ –7°C (19.4°F)
Vehicle speed	≥ 30 km/h (18.6 MPH)
Estimated coolant temperature	≥ Value from Map 2
Engine coolant temperature at engine start	< 60°C (140°F)

Map 1

Engine coolant temperature at engine starting °C (°F)	–7 (19.4)	8 (46.4)	10 (50)	25 (77)
Estimated coolant temperature °C (°F)	70.6 (49.1)	78.1 (63.3)	78.1 (172.6)	78.1 (172.6)

Map 2

Engine coolant temperature at engine starting °C (°F)	–7 (19.4)	10 (50)	25 (77)	31.8 (89.2)
Estimated coolant temperature °C (°F)	49.1 (120)	63.3 (146)	74 (165.2)	78.1 (172.6)

4. GENERAL DRIVING CYCLE

Perform the diagnosis only once after starting the engine.

5. DIAGNOSTIC METHOD

If the duration of time while the following conditions are met is longer than the time indicated, judge as NG.

Judgment Value

Malfunction Criteria	Threshold Value
When any one of the followings is established:	
<Judgment 1>	
Actual engine coolant temperature and Σ (Estimated engine coolant temperature – actual engine coolant temperature)	< 60°C (140°F) > Value of Map 3
<Judgment 2>	
Actual engine coolant temperature and Σ (Estimated engine coolant temperature – actual engine coolant temperature)	< Regulated temperature – Value of Map 4 > Value of Map 5
Regulated temperature	> 89.2°C (192.6°F)
<Judgment 3>	
Estimated engine coolant temperature – actual engine coolant temperature and Σ (Estimated engine coolant temperature – actual engine coolant temperature)	> 11.1°C (20°F) > Value of Map 6

Map 3

Engine coolant temperature at engine starting °C (°F)	–7 (19.4)	0 (32)	10 (50)	25 (77)	30 (86)	40 (104)
Threshold Value °C (°F)	1387.5 (2497.5)	1387.5 (2497.5)	1387.5 (2497.5)	1387.5 (2497.5)	1387.5 (2497.5)	961.5 (1730.7)

Map 4

Estimate ambient temperature °C (°F)	–7 (19.4)	8 (46.4)	10 (50)	25 (77)
Threshold Value °C (°F)	18.6 (33.5)	11.1 (20)	11.1 (20)	11.1 (20)

Map 5

Engine coolant temperature at engine starting °C (°F)	–7 (19.4)	0 (32)	8 (46.4)	10 (50)	30 (86)	35 (95)
Threshold Value °C (°F)	1387.5 (2497.5)	1387.5 (2497.5)	1387.5 (2497.5)	1387.5 (2497.5)	1387.5 (2497.5)	1201.9 (2163.4)

Map 6

Engine coolant temperature at engine starting °C (°F)	–7 (19.4)	8 (46.4)	10 (50)	25 (77)
Threshold Value °C (°F)	1387.5 (2497.5)	1387.5 (2497.5)	1387.5 (2497.5)	1387.5 (2497.5)

Time Needed for Diagnosis: Less than 1 second
Malfunction Indicator Light Illumination: Illuminates when malfunction occurs in 2 continuous driving cycles.

AT:DTC P0130 A/F / O2 SENSOR CIRCUIT BANK 1 SENSOR 1

DTC DETECTING CONDITION:
Immediately at fault recognition

CAUTION:
- **After servicing or replacing faulty parts, perform Clear Memory Mode <Ref. to EN(w/o STI)(diag)-82, OPERATION, Clear Memory Mode.>, and Inspection Mode <Ref. to EN(w/o STI)(diag)-64, PROCEDURE, Inspection Mode.>.**
- **Use the check board when measuring the ECM terminal voltage and resistance.**

WIRING DIAGRAM:
Engine Electrical System <Ref. to WI-154, WIRING DIAGRAM, Engine Electrical System.>

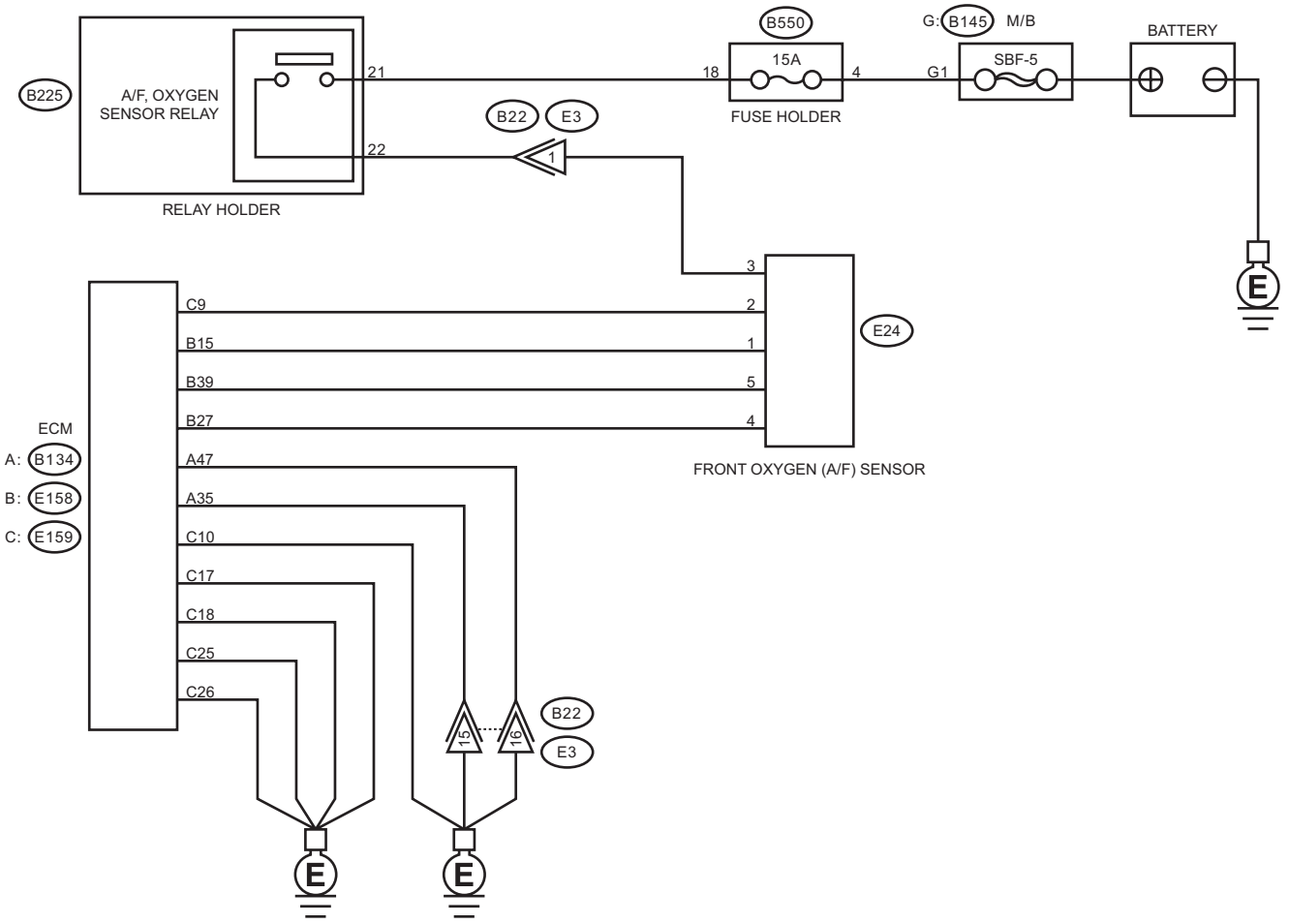

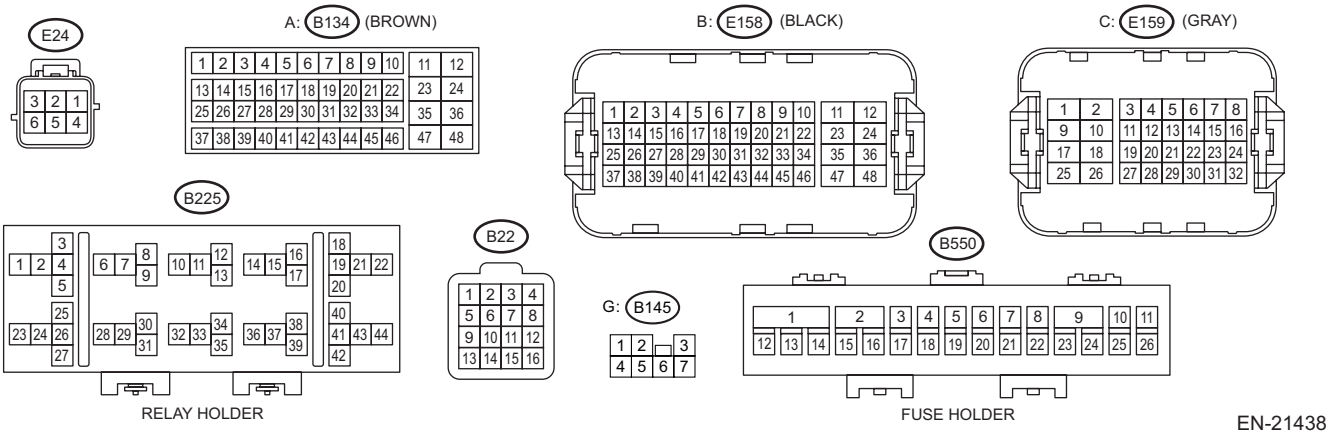

	Step	Check	Yes	No
1	**CHECK FRONT OXYGEN (A/F) SENSOR DATA.** 1) Start the engine and warm up engine until coolant temperature is higher than 75°C (167°F). 2) Idle the engine for one minute or more. 3) Read the value of «A/F Sensor #11» using the Subaru Select Monitor or a general scan tool. NOTE: • Subaru Select Monitor For detailed operation procedures, refer to "Current Data Display For Engine". <Ref. to EN(w/o STI)(diag)-46, Subaru Select Monitor.> • General scan tool For detailed operation procedures, refer to the general scan tool operation manual.	Is the value of «A/F Sensor #11» 1.20 — 3.00 V?	Go to step **2**.	Go to step **3**.
2	**CHECK FRONT OXYGEN (A/F) SENSOR DATA.** 1) Race the engine so that the engine speed reaches 3,000 rpm. (Five times in total) 2) Read the value of «A/F Sensor #11» at racing using the Subaru Select Monitor or a general scan tool. NOTE: • To increase engine speed to 3,000 rpm, slowly depress accelerator pedal for approximately 5 seconds, and quickly release accelerator pedal to decrease engine speed. • Normally, the air fuel ratio is rich during racing.	Is the value of «A/F Sensor #11» 2.5 V or more?	Go to step **5**.	Go to step **3**.
3	**CHECK HARNESS BETWEEN ECM AND FRONT OXYGEN (A/F) SENSOR CONNECTOR.** 1) Turn the ignition switch to OFF. 2) Disconnect the connector from ECM. 3) Disconnect the connectors from front oxygen (A/F) sensor. 4) Measure the resistance of harness between ECM connector and front oxygen (A/F) sensor connector. ***Connector & terminal*** ***(E158) No. 15 — (E24) No. 1:*** ***(E158) No. 27 — (E24) No. 4:*** ***(E158) No. 39 — (E24) No. 5:***	Is the resistance less than 1 Ω?	Go to step **4**.	Repair the open circuit of harness between ECM connector and front oxygen (A/F) sensor connector.
4	**CHECK HARNESS BETWEEN ECM AND FRONT OXYGEN (A/F) SENSOR CONNECTOR.** Measure the resistance between the ECM connector and engine ground. ***Connector & terminal*** ***(E158) No. 15 — Engine ground:*** ***(E158) No. 27 — Engine ground:*** ***(E158) No. 39 — Engine ground:***	Is the resistance 1 MΩ or more?	Go to step **5**.	Repair the short circuit to ground in harness between ECM connector and front oxygen (A/F) sensor connector.

	Step	Check	Yes	No
5	**CHECK EXHAUST SYSTEM.** Check exhaust system parts. NOTE: Check the following items. • Looseness and improper fitting of exhaust system parts • Damage (crack, hole etc.) of parts • Looseness of front oxygen (A/F) sensor • Loose part and improper installation between front oxygen (A/F) sensor and rear oxygen sensor	Is there any fault in exhaust system?	Repair or replace faulty parts.	Replace the front oxygen (A/F) sensor. <Ref. to FU(w/o STI)-118, Front Oxygen (A/F) Sensor.>

1. OUTLINE OF DIAGNOSIS

Judge as NG, while the element impedance is low with the element current out of the range.

2. COMPONENT DESCRIPTION

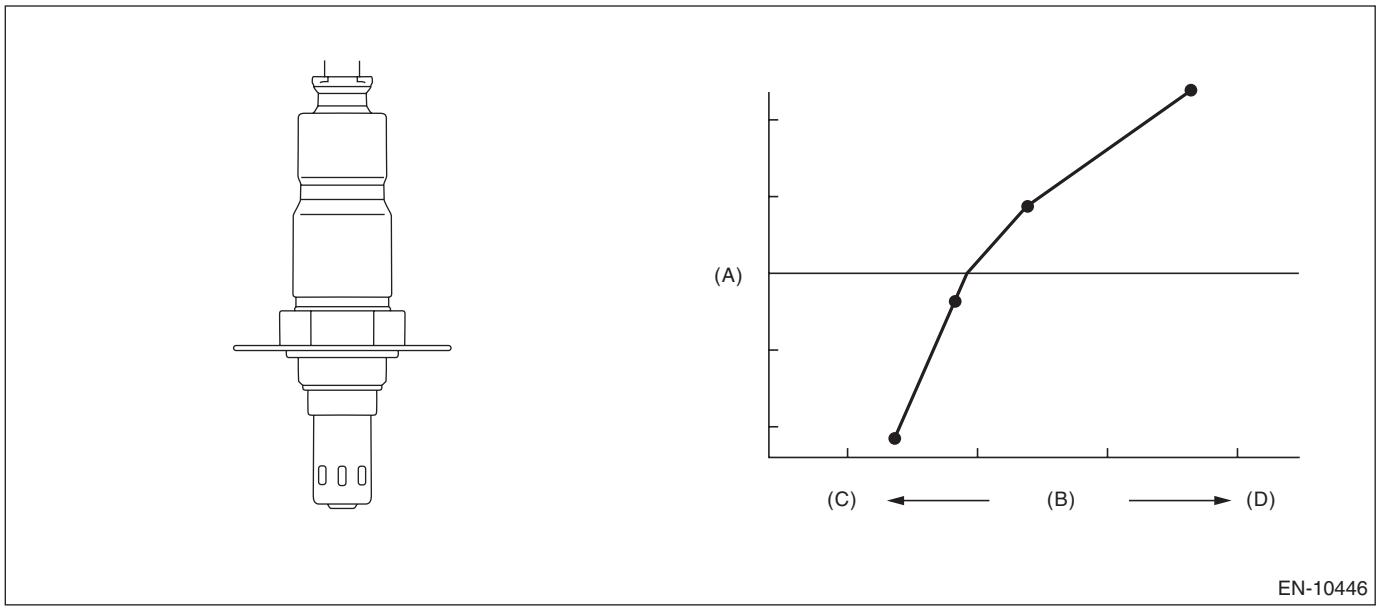

(A) Electromotive force (B) Air fuel ratio (C) Rich
(D) Lean

3. EXECUTION CONDITION

Secondary parameters	Execution condition
Battery voltage	≥ 10.9 V
Front oxygen (A/F) sensor impedance	≤ 403 Ω

4. GENERAL DRIVING CYCLE

Always perform the diagnosis continuously.

5. DIAGNOSTIC METHOD

If the duration of time while the following conditions are met is longer than the time indicated, judge as NG.

Judgment Value

Malfunction Criteria	Threshold Value
Input current	< –45 μA or > 45 μA

Time Needed for Diagnosis: 3040 ms
Malfunction Indicator Light Illumination: Illuminates as soon as a malfunction occurs.

AU:DTC P0131 A/F / O2 SENSOR CIRCUIT LOW VOLTAGE BANK 1 SENSOR 1

DTC DETECTING CONDITION:
Immediately at fault recognition

CAUTION:
- **After servicing or replacing faulty parts, perform Clear Memory Mode <Ref. to EN(w/o STI)(diag)-82, OPERATION, Clear Memory Mode.>, and Inspection Mode <Ref. to EN(w/o STI)(diag)-64, PROCEDURE, Inspection Mode.>.**
- **Use the check board when measuring the ECM terminal voltage and resistance.**

WIRING DIAGRAM:

Engine Electrical System <Ref. to WI-154, WIRING DIAGRAM, Engine Electrical System.>

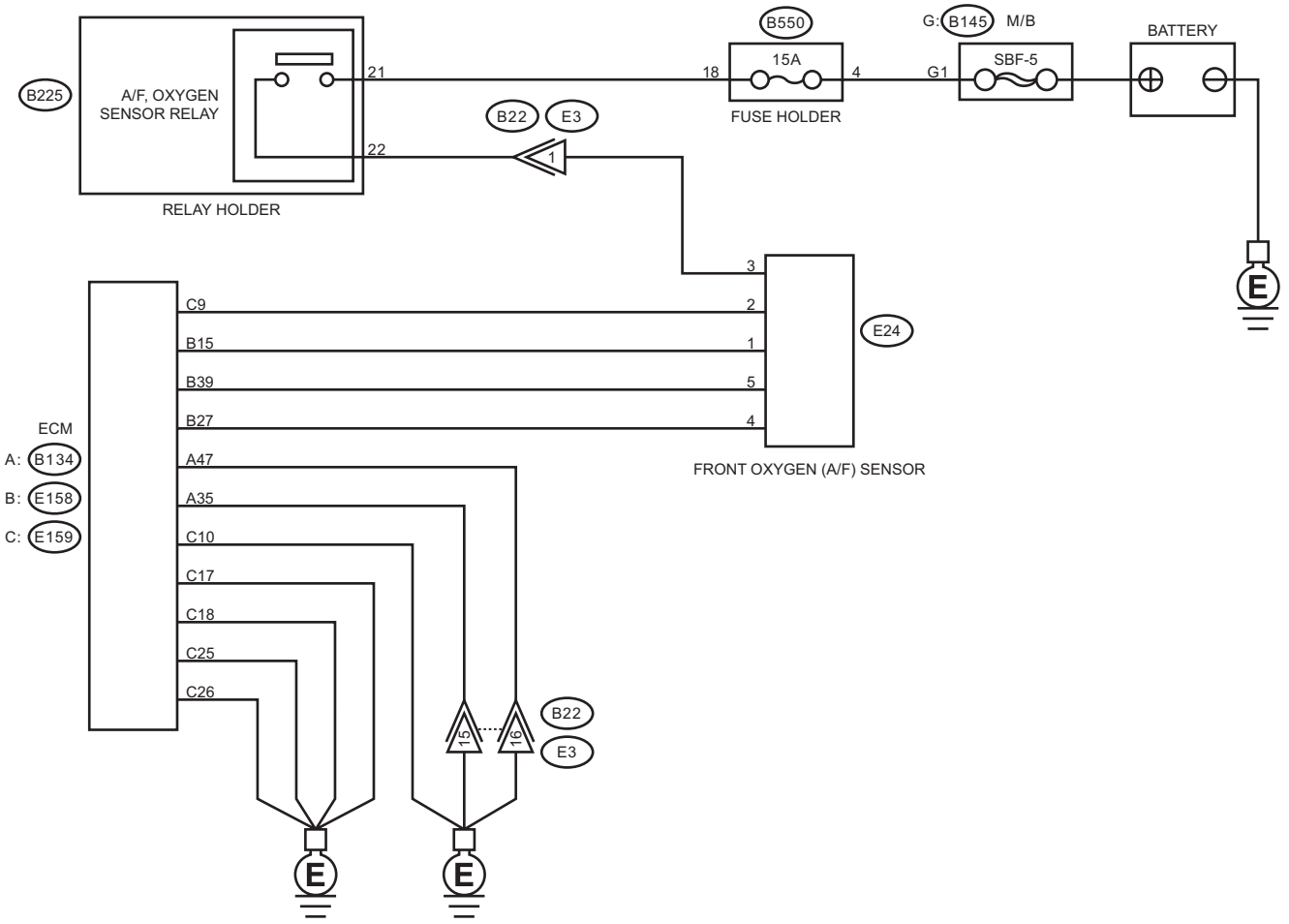

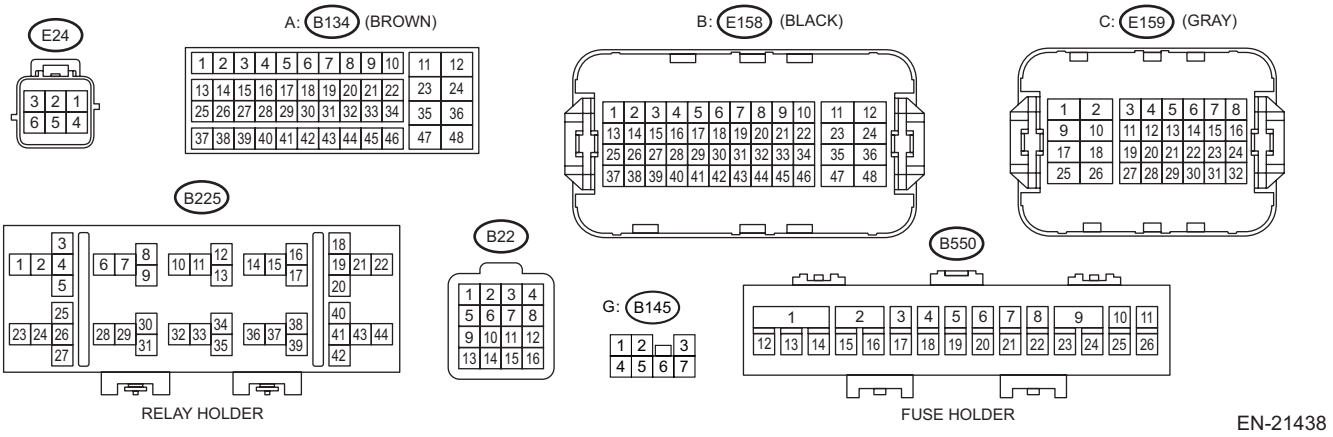

Step		Check	Yes	No
1	**CHECK FRONT OXYGEN (A/F) SENSOR CONNECTOR.**	Has water entered the connector?	Completely remove any water inside.	Go to step **2**.

	Step	Check	Yes	No
2	**CHECK HARNESS BETWEEN ECM AND FRONT OXYGEN (A/F) SENSOR CONNECTOR.** 1) Turn the ignition switch to OFF. 2) Disconnect the connector from ECM. 3) Disconnect the connectors from front oxygen (A/F) sensor. 4) Measure the resistance between the ECM connector and engine ground. ***Connector & terminal*** ***(E158) No. 15 — Engine ground:*** ***(E158) No. 27 — Engine ground:*** ***(E158) No. 39 — Engine ground:***	Is the resistance 1 MΩ or more?	Go to step **3**.	Repair the short circuit to ground in harness between ECM connector and front oxygen (A/F) sensor connector.
3	**CHECK FOR POOR CONTACT.** Check for poor contact of the front oxygen (A/F) sensor connector.	Is there poor contact of front oxygen (A/F) sensor connector?	Repair the poor contact of front oxygen (A/F) sensor connector.	Replace the front oxygen (A/F) sensor. <Ref. to FU(w/o STI)-118, Front Oxygen (A/F) Sensor.>

1. OUTLINE OF DIAGNOSIS

Detect the open or short circuit of sensor.
Judge as NG, when the element voltage is out of the specified range.

2. COMPONENT DESCRIPTION

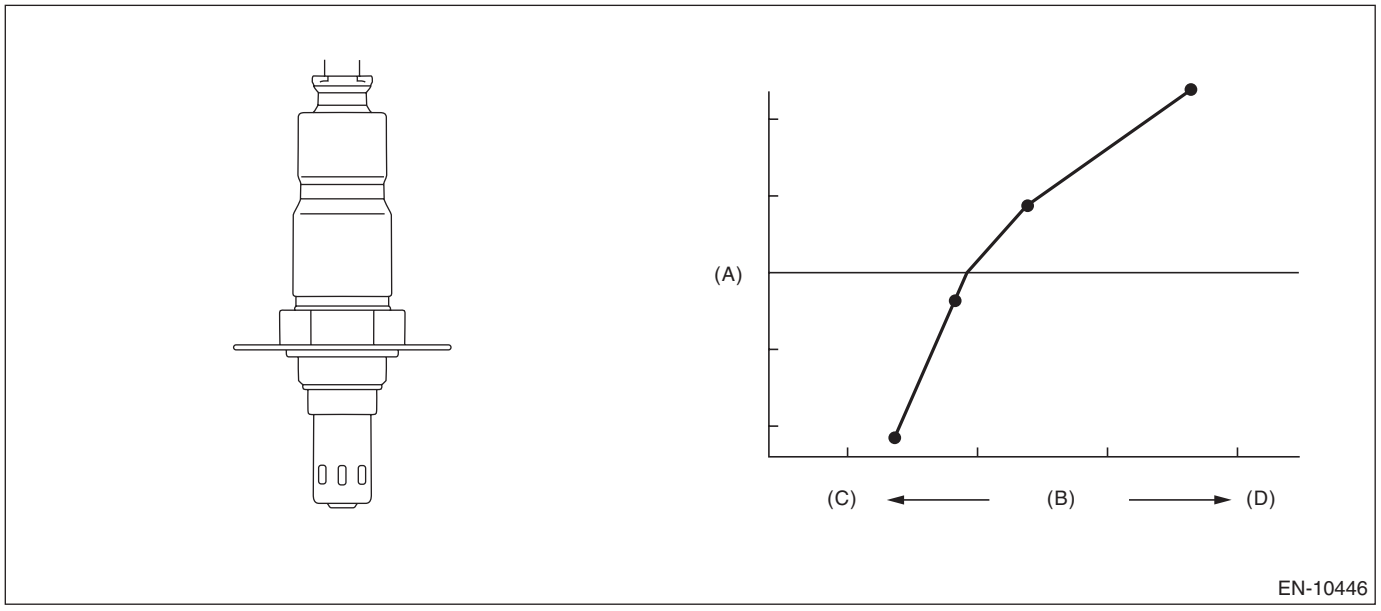

(A) Electromotive force (B) Air fuel ratio (C) Rich
(D) Lean

3. EXECUTION CONDITION

Secondary parameters	Execution condition
Battery voltage	≥ 10.9 V

4. GENERAL DRIVING CYCLE

Always perform the diagnosis continuously.

5. DIAGNOSTIC METHOD

If the duration of time while the following conditions are met is longer than the time indicated, judge as NG.

Judgment Value

Malfunction Criteria	Threshold Value
Input voltage (+)	≤ 1 V
or	
Input voltage (–)	≤ 1 V
or	
Sensor reference voltage	≤ 1 V

Time Needed for Diagnosis: 560 ms
Malfunction Indicator Light Illumination: Illuminates as soon as a malfunction occurs.

AV:DTC P0132 A/F / O2 SENSOR CIRCUIT HIGH VOLTAGE BANK 1 SENSOR 1

DTC DETECTING CONDITION:
Immediately at fault recognition

CAUTION:
- **After servicing or replacing faulty parts, perform Clear Memory Mode <Ref. to EN(w/o STI)(diag)-82, OPERATION, Clear Memory Mode.>, and Inspection Mode <Ref. to EN(w/o STI)(diag)-64, PROCEDURE, Inspection Mode.>.**
- **Use the check board when measuring the ECM terminal voltage and resistance.**

WIRING DIAGRAM:

Engine Electrical System <Ref. to WI-154, WIRING DIAGRAM, Engine Electrical System.>

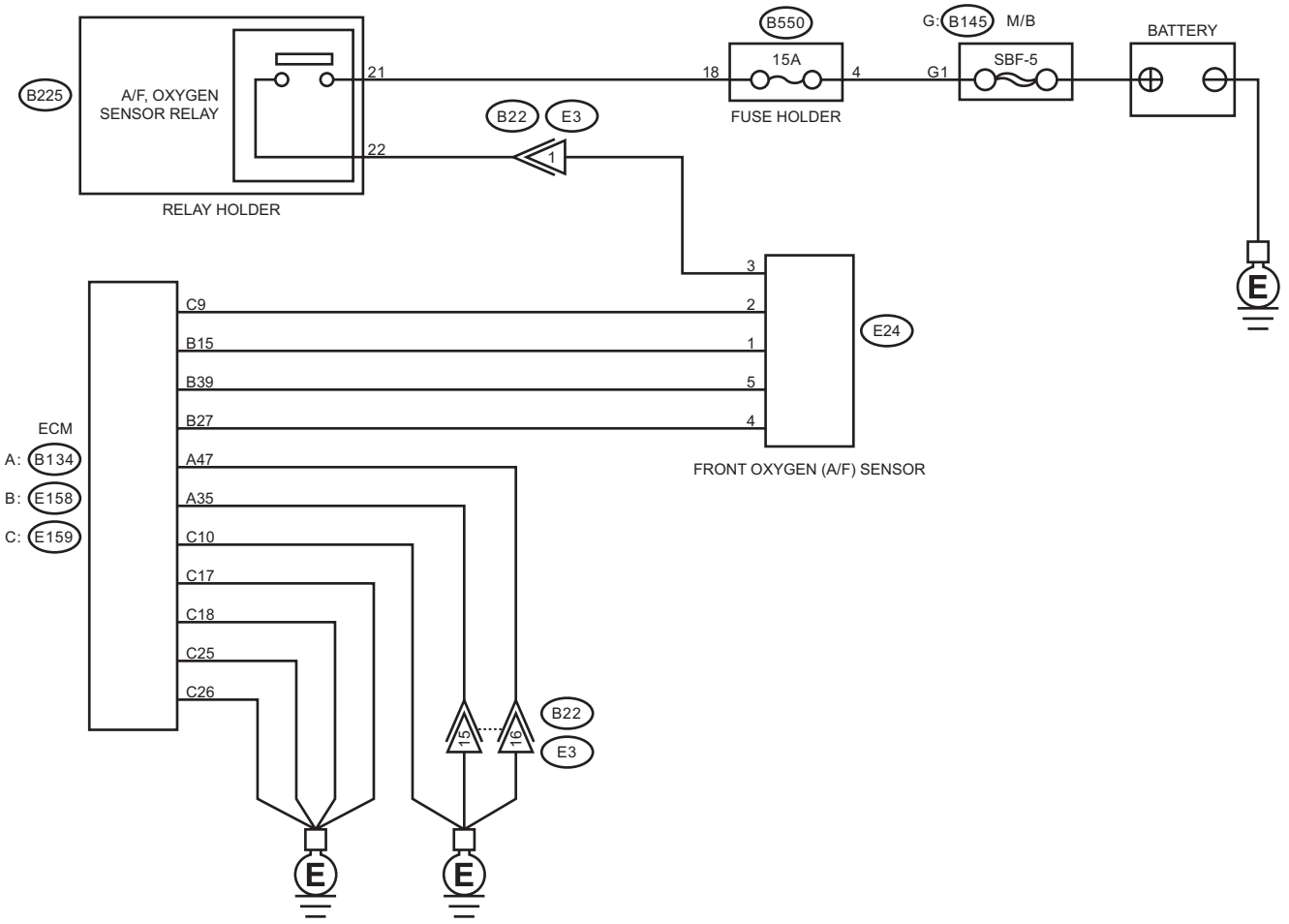

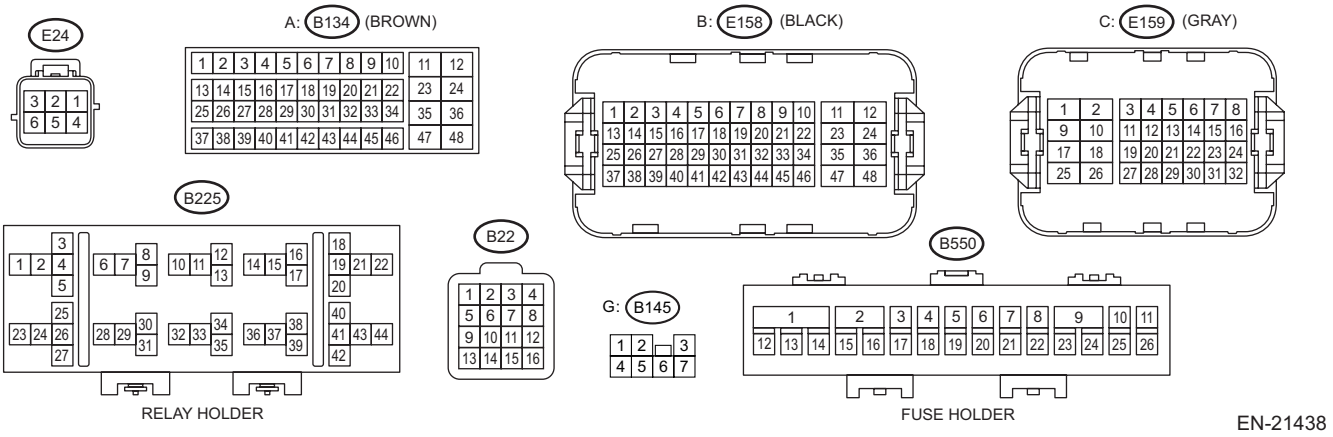

Step		Check	Yes	No
1	**CHECK FRONT OXYGEN (A/F) SENSOR CONNECTOR.**	Has water entered the connector?	Completely remove any water inside.	Go to step **2**.

	Step	Check	Yes	No
2	**CHECK HARNESS BETWEEN ECM AND FRONT OXYGEN (A/F) SENSOR CONNECTOR.** 1) Turn the ignition switch to OFF. 2) Disconnect the connectors from front oxygen (A/F) sensor. 3) Turn the ignition switch to ON. 4) Measure the voltage between ECM connector and engine ground. ***Connector & terminal*** ***(E158) No. 15 (+) — Engine ground (–):*** ***(E158) No. 27 (+) — Engine ground (–):*** ***(E158) No. 39 (+) — Engine ground (–):***	Is the voltage 8 V or more?	Repair the short circuit to power in the harness between ECM connector and front oxygen (A/F) sensor connector.	Replace the front oxygen (A/F) sensor. <Ref. to FU(w/o STI)-118, Front Oxygen (A/F) Sensor.>

1. OUTLINE OF DIAGNOSIS

Detect the open or short circuit of sensor.
Judge as NG, when the element voltage is out of the specified range.

2. COMPONENT DESCRIPTION

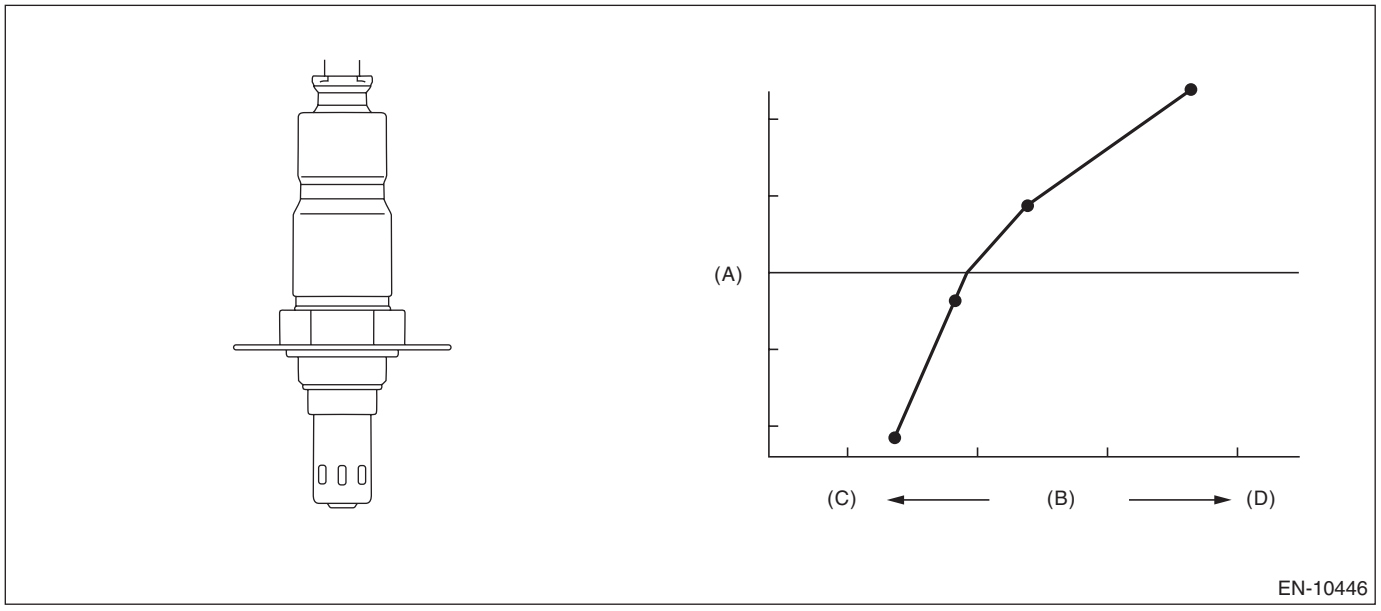

(A) Electromotive force (B) Air fuel ratio (C) Rich
(D) Lean

3. EXECUTION CONDITION

Secondary parameters	Execution condition
Battery voltage	≥ 10.9 V

4. GENERAL DRIVING CYCLE

Always perform the diagnosis continuously.

5. DIAGNOSTIC METHOD

If the duration of time while the following conditions are met is longer than the time indicated, judge as NG.

Judgment Value

Malfunction Criteria	Threshold Value
Input voltage (+)	≥ Battery voltage – 1 V
or	
Input voltage (–)	≥ Battery voltage – 1 V
or	
Sensor reference voltage	≥ 6.5 V

Time Needed for Diagnosis: 560 ms
Malfunction Indicator Light Illumination: Illuminates as soon as a malfunction occurs.

AW:DTC P0134 A/F / O2 SENSOR CIRCUIT NO ACTIVITY DETECTED BANK 1 SENSOR 1

DTC DETECTING CONDITION:
Immediately at fault recognition

CAUTION:

- **After servicing or replacing faulty parts, perform Clear Memory Mode <Ref. to EN(w/o STI)(diag)-82, OPERATION, Clear Memory Mode.>, and Inspection Mode <Ref. to EN(w/o STI)(diag)-64, PROCEDURE, Inspection Mode.>.**
- **Use the check board when measuring the ECM terminal voltage and resistance.**

WIRING DIAGRAM:
Engine Electrical System <Ref. to WI-154, WIRING DIAGRAM, Engine Electrical System.>

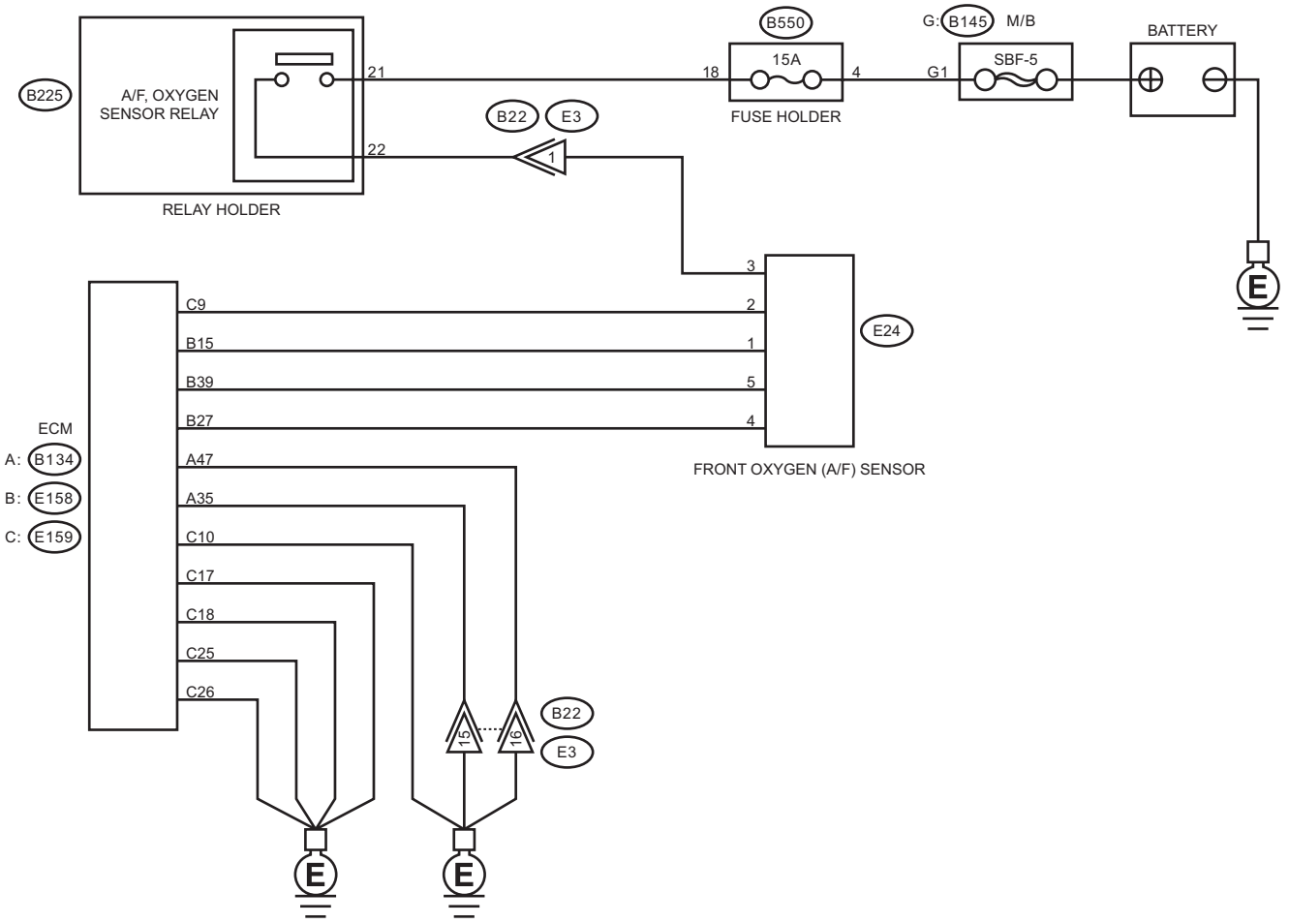

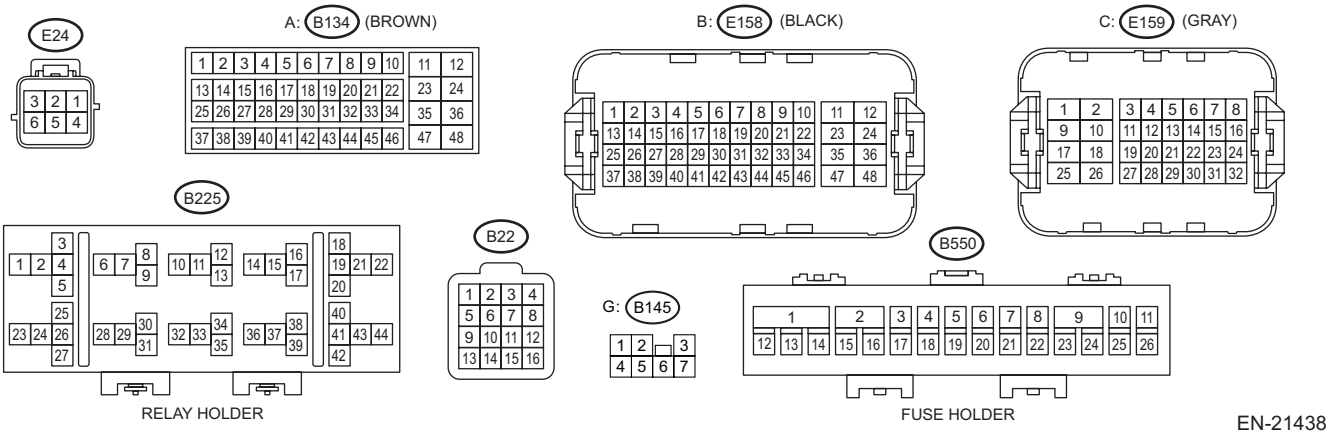

	Step	Check	Yes	No
1	**CHECK HARNESS BETWEEN ECM AND FRONT OXYGEN (A/F) SENSOR CONNECTOR.** 1) Turn the ignition switch to OFF. 2) Disconnect the connector from ECM. 3) Disconnect the connectors from front oxygen (A/F) sensor. 4) Measure the resistance of harness between ECM connector and front oxygen (A/F) sensor connector. ***Connector & terminal*** ***(E158) No. 15 — (E24) No. 1:*** ***(E158) No. 27 — (E24) No. 4:*** ***(E158) No. 39 — (E24) No. 5:***	Is the resistance less than 1 Ω?	Go to step **2**.	Repair the open circuit of harness between ECM connector and front oxygen (A/F) sensor connector.
2	**CHECK FOR POOR CONTACT.** Check for poor contact of ECM and front oxygen (A/F) sensor connector.	Is there poor contact of ECM or front oxygen (A/F) sensor connector?	Repair the poor contact of ECM or front oxygen (A/F) sensor connector.	Replace the front oxygen (A/F) sensor. <Ref. to FU(w/o STI)-118, Front Oxygen (A/F) Sensor.>

1. OUTLINE OF DIAGNOSIS

Detect open circuits of the sensor.
Judge as NG when the element voltage is out of range, or the element current is stuck.

2. COMPONENT DESCRIPTION

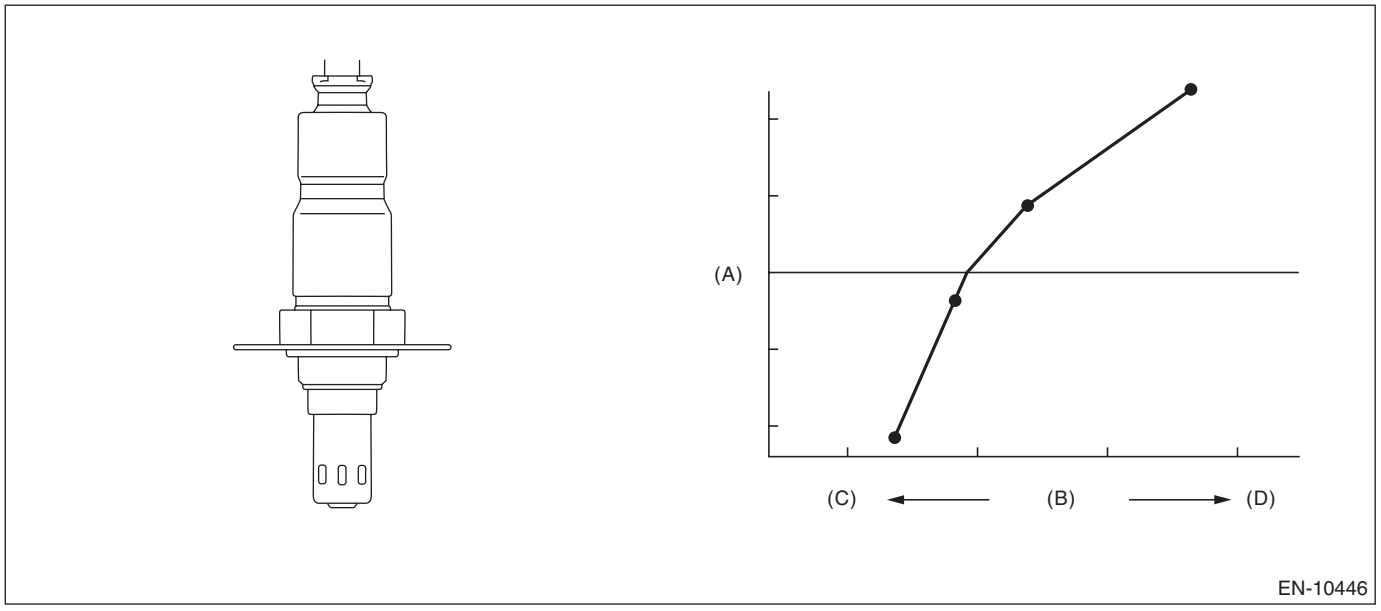

(A) Electromotive force (B) Air fuel ratio (C) Rich
(D) Lean

3. EXECUTION CONDITION

Secondary parameters	Execution condition
Input voltage (+)	
Battery voltage	≥ 10.9 V
Front oxygen (A/F) sensor impedance	> 403 Ω
Sensor reference voltage	
Battery voltage	≥ 10.9 V
Front oxygen (A/F) sensor impedance	> 403 Ω
Input current	
Battery voltage	≥ 10.9 V
Front oxygen (A/F) sensor impedance	≤ 403 Ω

4. GENERAL DRIVING CYCLE

Always perform the diagnosis continuously.

5. DIAGNOSTIC METHOD

If the duration of time while the following conditions are met is longer than the time indicated, judge as NG.

Judgment Value

Malfunction Criteria	Threshold Value
Input voltage (+)	> 2.65 V
or	
Sensor reference voltage	≤ 3.6 V
or	
Input current	–45 μA — 45 μA

Time Needed for Diagnosis:
Input voltage (+): 30000 ms
Sensor reference voltage: 2000 ms
Input current: 2000 ms
Malfunction Indicator Light Illumination: Illuminates as soon as a malfunction occurs.

AX:DTC P0137 O2 SENSOR CIRCUIT LOW VOLTAGE BANK 1 SENSOR 2

DTC DETECTING CONDITION:

Detected when two consecutive driving cycles with fault occur.

CAUTION:

- **After servicing or replacing faulty parts, perform Clear Memory Mode <Ref. to EN(w/o STI)(diag)-82, OPERATION, Clear Memory Mode.>, and Inspection Mode <Ref. to EN(w/o STI)(diag)-64, PROCEDURE, Inspection Mode.>.**
- **Use the check board when measuring the ECM terminal voltage and resistance.**

WIRING DIAGRAM:

Engine Electrical System <Ref. to WI-154, WIRING DIAGRAM, Engine Electrical System.>

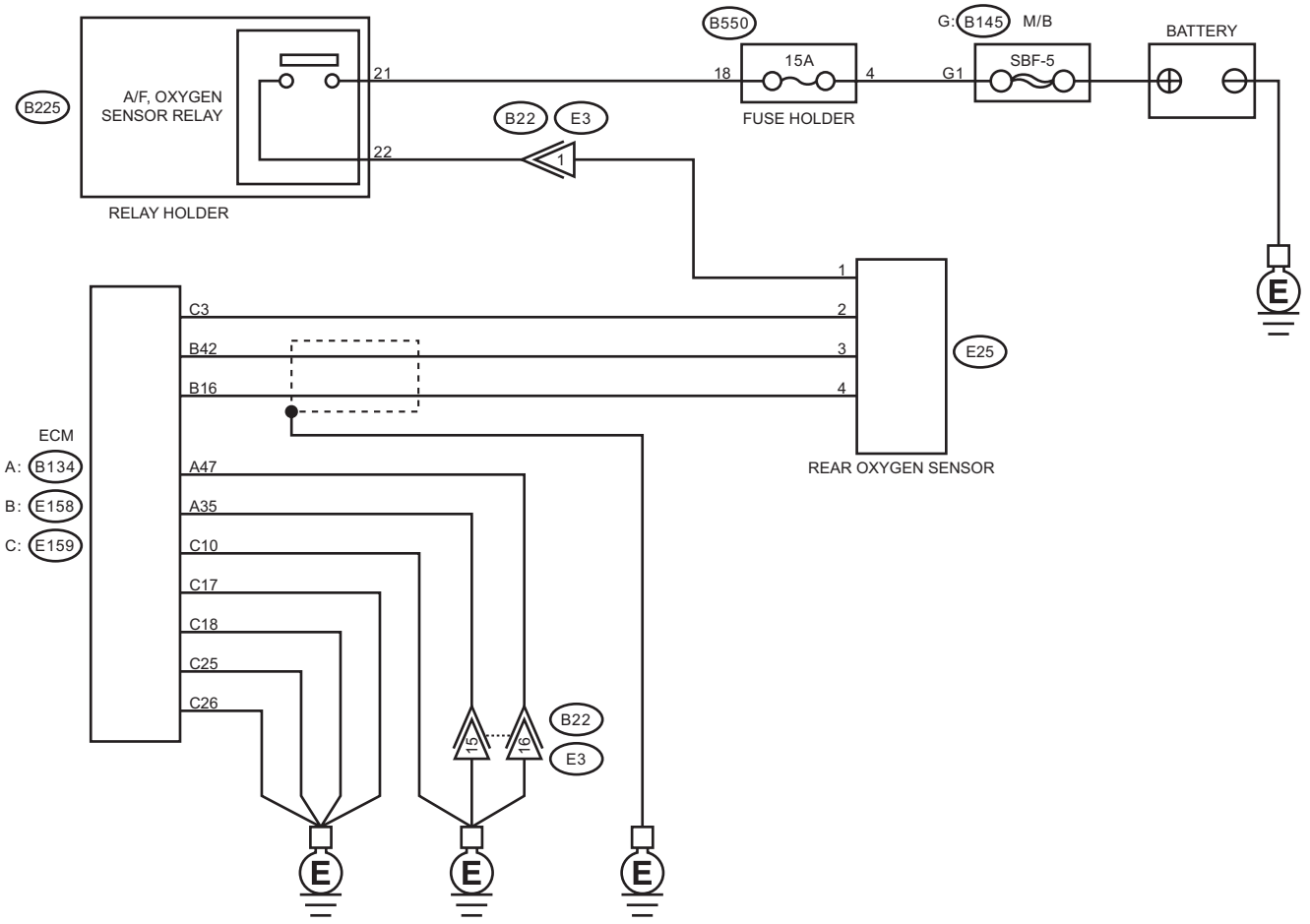

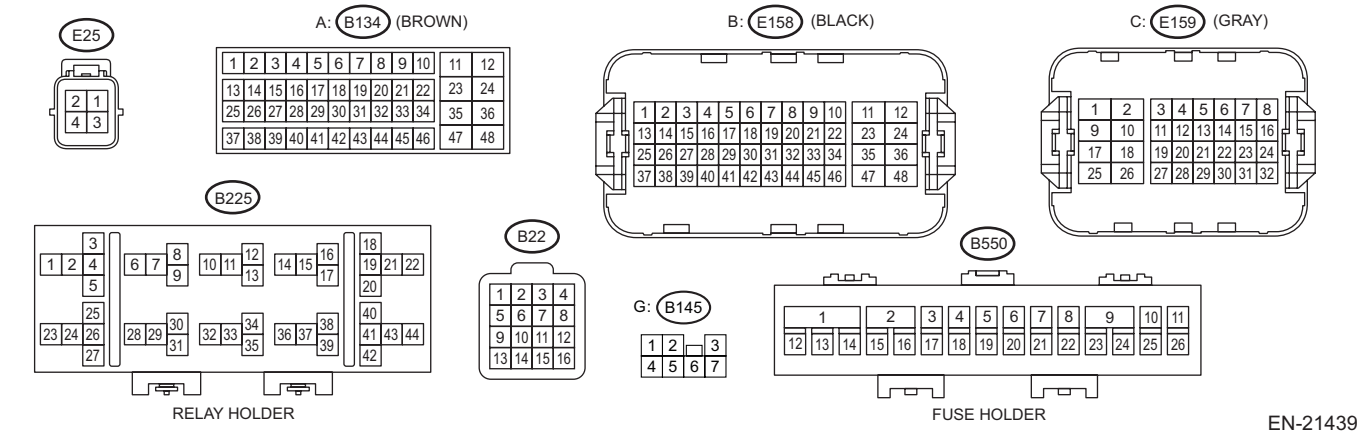

	Step	Check	Yes	No
1	**CHECK REAR OXYGEN SENSOR DATA.** 1) Warm up the engine until engine coolant temperature is higher than 75°C (167°F), and keep the engine speed at 3,000 rpm. (2 minutes maximum) 2) Read the value of «O2 Sensor #12» using the Subaru Select Monitor or a general scan tool. NOTE: • Subaru Select Monitor For detailed operation procedures, refer to "Read Current Data For Engine". <Ref. to EN(w/o STI)(diag)-46, Subaru Select Monitor.> • General scan tool For detailed operation procedures, refer to the general scan tool operation manual.	Is the value of «Oxygen sensor #12» 0.490 V or more?	Go to step **6**.	Go to step **2**.
2	**CHECK REAR OXYGEN SENSOR CONNECTOR.**	Has water entered the connector?	Completely remove any water inside.	Go to step **3**.
3	**CHECK HARNESS BETWEEN ECM AND REAR OXYGEN SENSOR CONNECTOR.** 1) Turn the ignition switch to OFF. 2) Disconnect the connector from ECM. 3) Disconnect the connector from rear oxygen sensor. 4) Measure the resistance of harness between ECM connector and rear oxygen sensor connector. ***Connector & terminal*** ***(E158) No. 42 — (E25) No. 3:*** ***(E158) No. 16 — (E25) No. 4:***	Is the resistance less than 1 Ω?	Go to step **4**.	Repair the open circuit of harness between ECM connector and rear oxygen sensor connector.
4	**CHECK HARNESS BETWEEN ECM AND REAR OXYGEN SENSOR CONNECTOR.** Measure the resistance of harness between ECM connector and rear oxygen sensor connector. ***Connector & terminal*** ***(E158) No. 16 — Engine ground*** ***(E158) No. 42 — Engine ground***	Is the resistance 1 MΩ or more?	Go to step **5**.	Repair the short circuit to ground in harness between ECM connector and rear oxygen sensor connector.
5	**CHECK HARNESS BETWEEN ECM AND REAR OXYGEN SENSOR CONNECTOR.** 1) Connect the connector to ECM. 2) Turn the ignition switch to ON. 3) Measure the voltage between rear oxygen sensor connector and engine ground. ***Connector & terminal*** ***(E25) No. 3 (+) — Engine ground (–):***	Is the voltage 1.8 V or more?	Replace the rear oxygen sensor. <Ref. to FU(w/o STI)-120, Rear Oxygen Sensor.>	Replace the ECM. <Ref. to FU(w/o STI)-124, Engine Control Module (ECM).>
6	**CHECK EXHAUST SYSTEM.** Check exhaust system parts. NOTE: Check the following items. • Looseness and improper fitting of exhaust system parts • Damage (crack, hole etc.) of parts • Loose part and improper installation between front oxygen (A/F) sensor and rear oxygen sensor	Is there any fault in exhaust system?	Repair or replace faulty parts.	Replace the rear oxygen sensor. <Ref. to FU(w/o STI)-120, Rear Oxygen Sensor.>

1. OUTLINE OF DIAGNOSIS

Detect continuity NG of the oxygen sensor. Judge as NG when the oxygen sensor voltage reading is not within the probable range.

2. COMPONENT DESCRIPTION

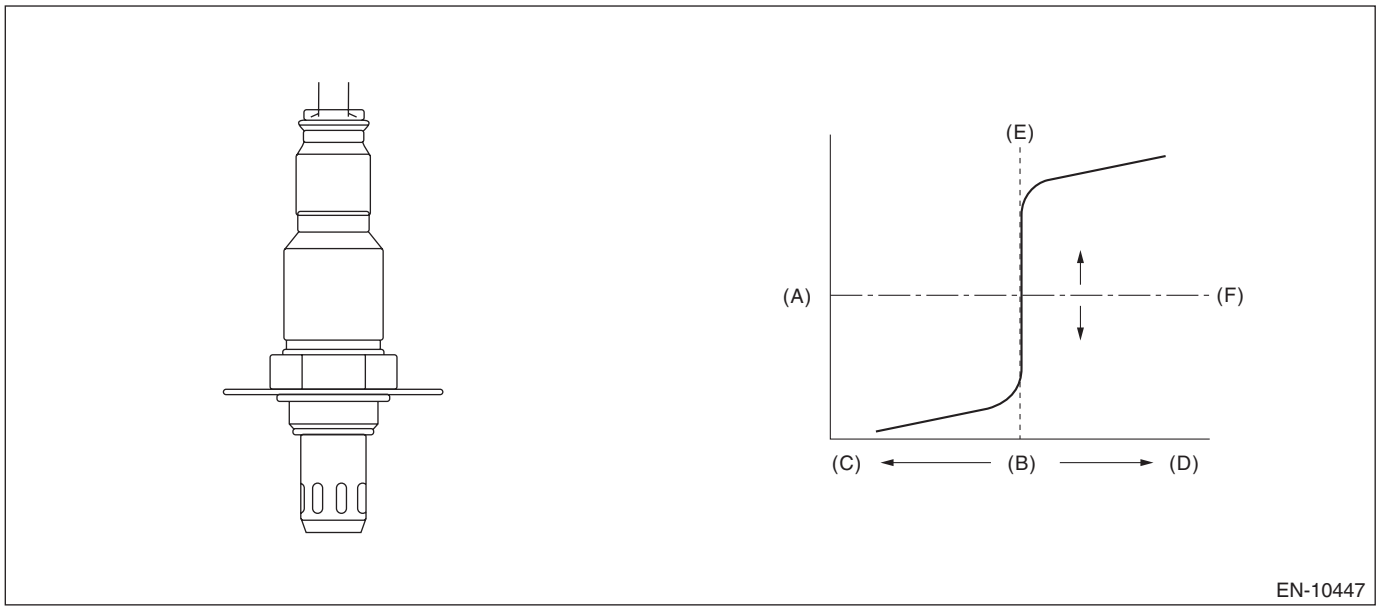

(A) Electromotive force
(B) Air fuel ratio
(C) Lean
(D) Rich
(E) Theoretical air fuel ratio
(F) Comparative voltage

3. EXECUTION CONDITION

Diagnosis 1

Secondary parameters	Execution condition
Battery voltage	≥ 10.9 V

Diagnosis 2 and 3

Secondary parameters	Execution condition
12 V battery system voltage	≥ 10.9 V
Estimated secondary oxygen sensor element temperature	≥ 450°C
Integrated duty ratio of the secondary oxygen sensor heater operation from engine start	≥ 54400%
Secondary oxygen sensor offset signal	≥ 1.8 V and ≤ 2.2 V

4. GENERAL DRIVING CYCLE

Always perform the diagnosis continuously after the enable conditions have been established.

5. DIAGNOSTIC METHOD

If the duration of time while the following conditions are met is longer than the time indicated, judge as NG.

Judgment value 1

Judgment Value

Malfunction Criteria	Threshold Value
Secondary oxygen sensor offset signal (A)	< 1.8 V

Judgment value 2

Malfunction Criteria	Threshold Value
Secondary oxygen sensor signal (B)	< 1.7 V

Judgment value 3

Malfunction Criteria	Threshold Value
Secondary oxygen sensor output voltage {(B) - (A)}	< –0.22 V

Time Needed for Diagnosis: 1 second
Malfunction Indicator Light Illumination: Illuminates when malfunction occurs in 2 continuous driving cycles.

AY:DTC P0138 O2 SENSOR CIRCUIT HIGH VOLTAGE BANK 1 SENSOR 2

DTC DETECTING CONDITION:

Detected when two consecutive driving cycles with fault occur.

CAUTION:

- **After servicing or replacing faulty parts, perform Clear Memory Mode <Ref. to EN(w/o STI)(diag)-82, OPERATION, Clear Memory Mode.>, and Inspection Mode <Ref. to EN(w/o STI)(diag)-64, PROCEDURE, Inspection Mode.>.**
- **Use the check board when measuring the ECM terminal voltage and resistance.**

WIRING DIAGRAM:
Engine Electrical System <Ref. to WI-154, WIRING DIAGRAM, Engine Electrical System.>

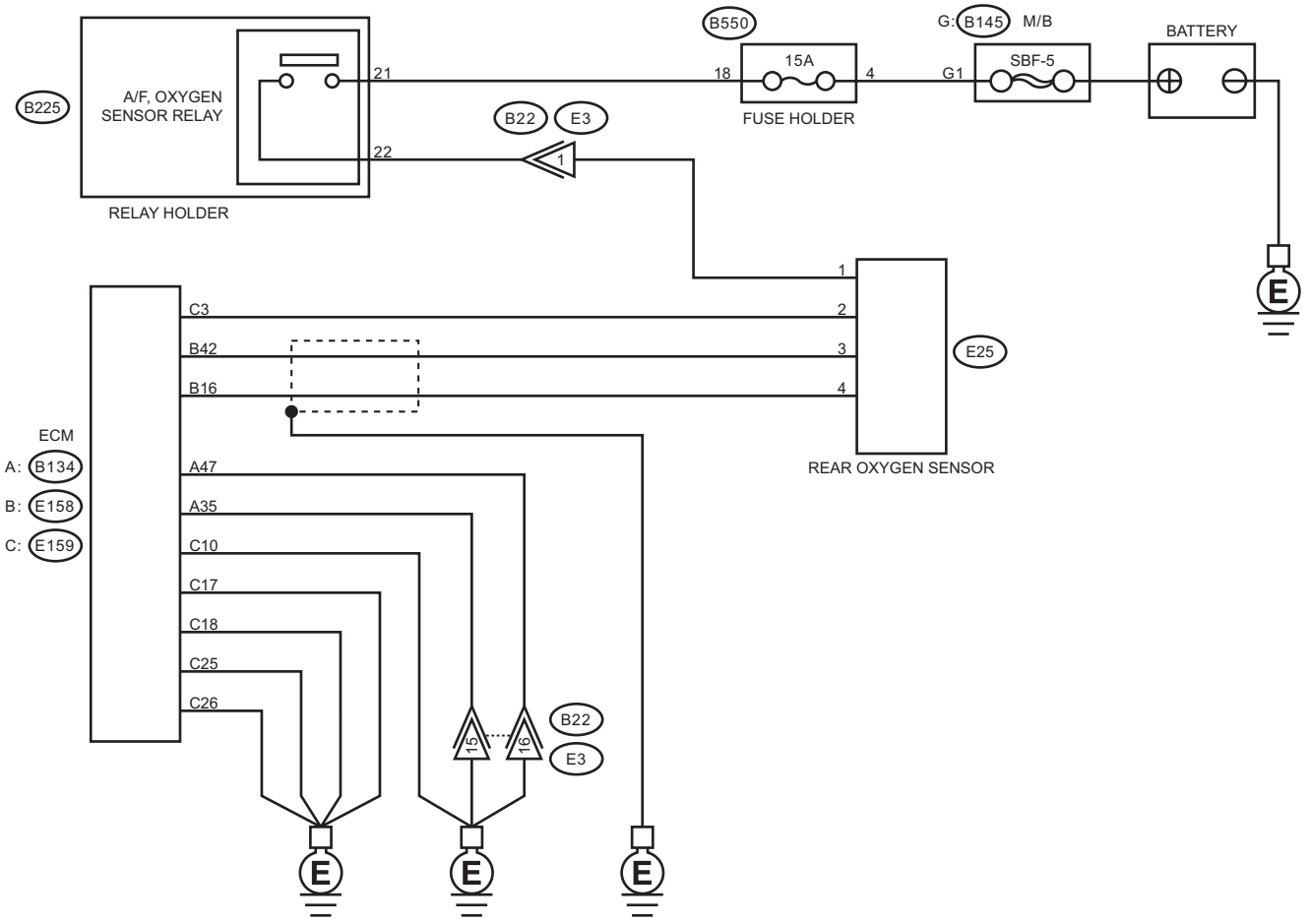

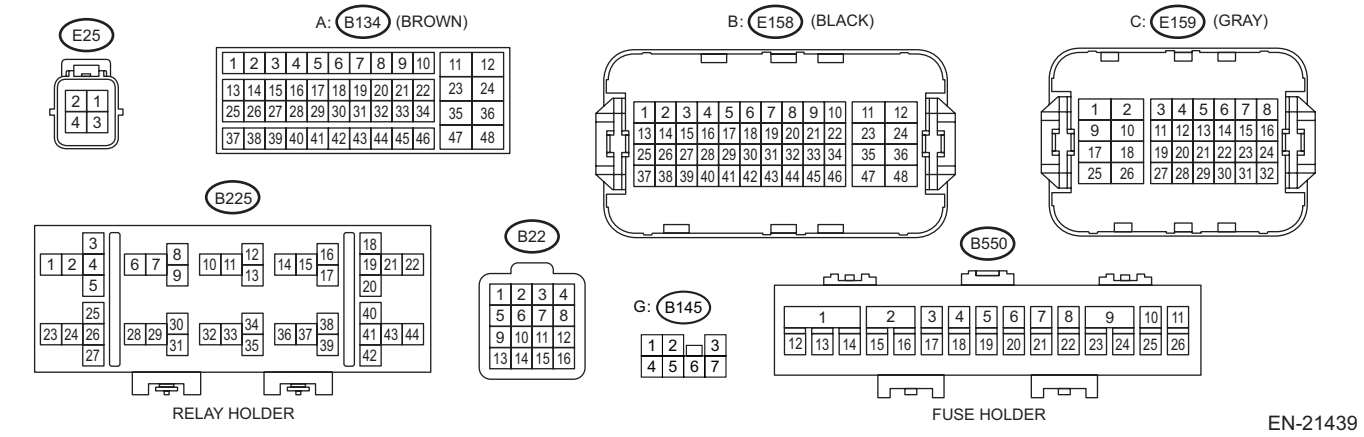

	Step	Check	Yes	No
1	**CHECK REAR OXYGEN SENSOR DATA.** 1) Warm up the engine until engine coolant temperature is higher than 75°C (167°F), and rapidly reduce the engine speed from 3,000 rpm. 2) Read the value of «O2 Sensor #12» using the Subaru Select Monitor or a general scan tool. NOTE: • Subaru Select Monitor For detailed operation procedures, refer to "Read Current Data For Engine". <Ref. to EN(w/o STI)(diag)-46, Subaru Select Monitor.> • General scan tool For detailed operation procedures, refer to the general scan tool operation manual.	Is the value of «Oxygen sensor #12» 0.250 V or less?	Go to step **5**.	Go to step **2**.
2	**CHECK REAR OXYGEN SENSOR CONNECTOR.**	Has water entered the connector?	Completely remove any water inside.	Go to step **3**.
3	**CHECK HARNESS BETWEEN ECM AND REAR OXYGEN SENSOR CONNECTOR.** 1) Turn the ignition switch to OFF. 2) Disconnect the connector from ECM. 3) Disconnect the connector from rear oxygen sensor. 4) Measure the resistance of harness between ECM connector and rear oxygen sensor connector. ***Connector & terminal*** ***(E158) No. 42 — (E25) No. 3:*** ***(E158) No. 16 — (E25) No. 4:***	Is the resistance less than 1 Ω?	Go to step **4**.	Repair the open circuit of harness between ECM connector and rear oxygen sensor connector.
4	**CHECK HARNESS BETWEEN ECM AND REAR OXYGEN SENSOR CONNECTOR.** 1) Connect the connector to ECM. 2) Turn the ignition switch to ON. 3) Measure the voltage between rear oxygen sensor connector and engine ground. ***Connector & terminal*** ***(E25) No. 3 (+) — Engine ground (−):***	Is the voltage 2.2 V or less?	Replace the rear oxygen sensor. <Ref. to FU(w/o STI)-120, Rear Oxygen Sensor.>	Replace the ECM. <Ref. to FU(w/o STI)-124, Engine Control Module (ECM).>
5	**CHECK EXHAUST SYSTEM.** Check exhaust system parts. NOTE: Check the following items. • Looseness and improper fitting of exhaust system parts • Damage (crack, hole etc.) of parts • Loose part and improper installation between front oxygen (A/F) sensor and rear oxygen sensor	Is there any fault in exhaust system?	Repair or replace faulty parts.	Replace the rear oxygen sensor. <Ref. to FU(w/o STI)-120, Rear Oxygen Sensor.>

1. OUTLINE OF DIAGNOSIS

Detect continuity NG of the oxygen sensor. Judge as NG when the oxygen sensor voltage reading is not within the probable range.

2. COMPONENT DESCRIPTION

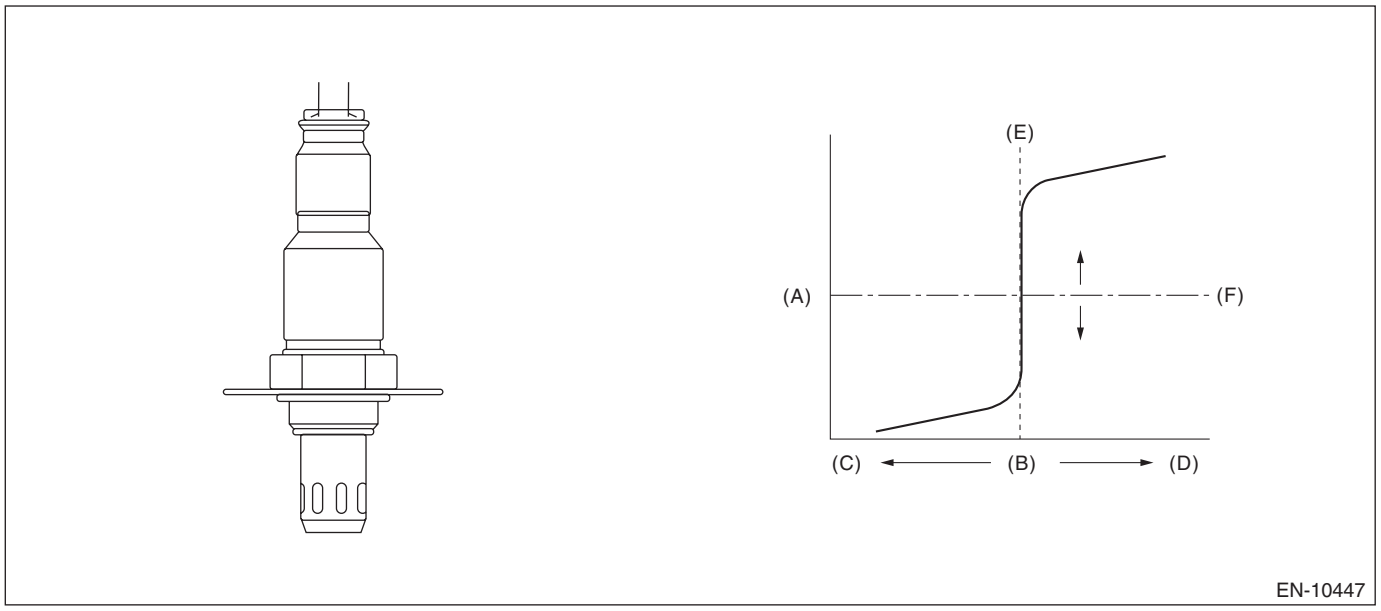

(A) Electromotive force
(B) Air fuel ratio
(C) Lean
(D) Rich
(E) Theoretical air fuel ratio
(F) Comparative voltage

3. EXECUTION CONDITION

Secondary parameters	Execution condition
Battery voltage	≥ 10.9 V

4. GENERAL DRIVING CYCLE

Always perform the diagnosis continuously after the enable conditions have been established.

5. DIAGNOSTIC METHOD

If the duration of time while the following conditions are met is longer than the time indicated, judge as NG.

Judgment value 1

Judgment Value

Malfunction Criteria	Threshold Value
Oxygen sensor offset voltage	> 2.2 V

Judgment value 2

Malfunction Criteria	Threshold Value
Oxygen sensor voltage	> 3.25 V

Judgment value 3

Malfunction Criteria	Threshold Value
Secondary oxygen sensor output voltage {(B) - (A)}	> 1.2 V

Time Needed for Diagnosis: 1 second
Malfunction Indicator Light Illumination: Illuminates when malfunction occurs in 2 continuous driving cycles.

AZ:DTC P013A O2 SENSOR SLOW RESPONSE - RICH TO LEAN BANK 1 SENSOR 2

DTC DETECTING CONDITION:

Detected when two consecutive driving cycles with fault occur.

CAUTION:

- **After servicing or replacing faulty parts, perform Clear Memory Mode <Ref. to EN(w/o STI)(diag)-82, OPERATION, Clear Memory Mode.>, and Inspection Mode <Ref. to EN(w/o STI)(diag)-64, PROCEDURE, Inspection Mode.>.**
- **Use the check board when measuring the ECM terminal voltage and resistance.**

WIRING DIAGRAM:
Engine Electrical System <Ref. to WI-154, WIRING DIAGRAM, Engine Electrical System.>

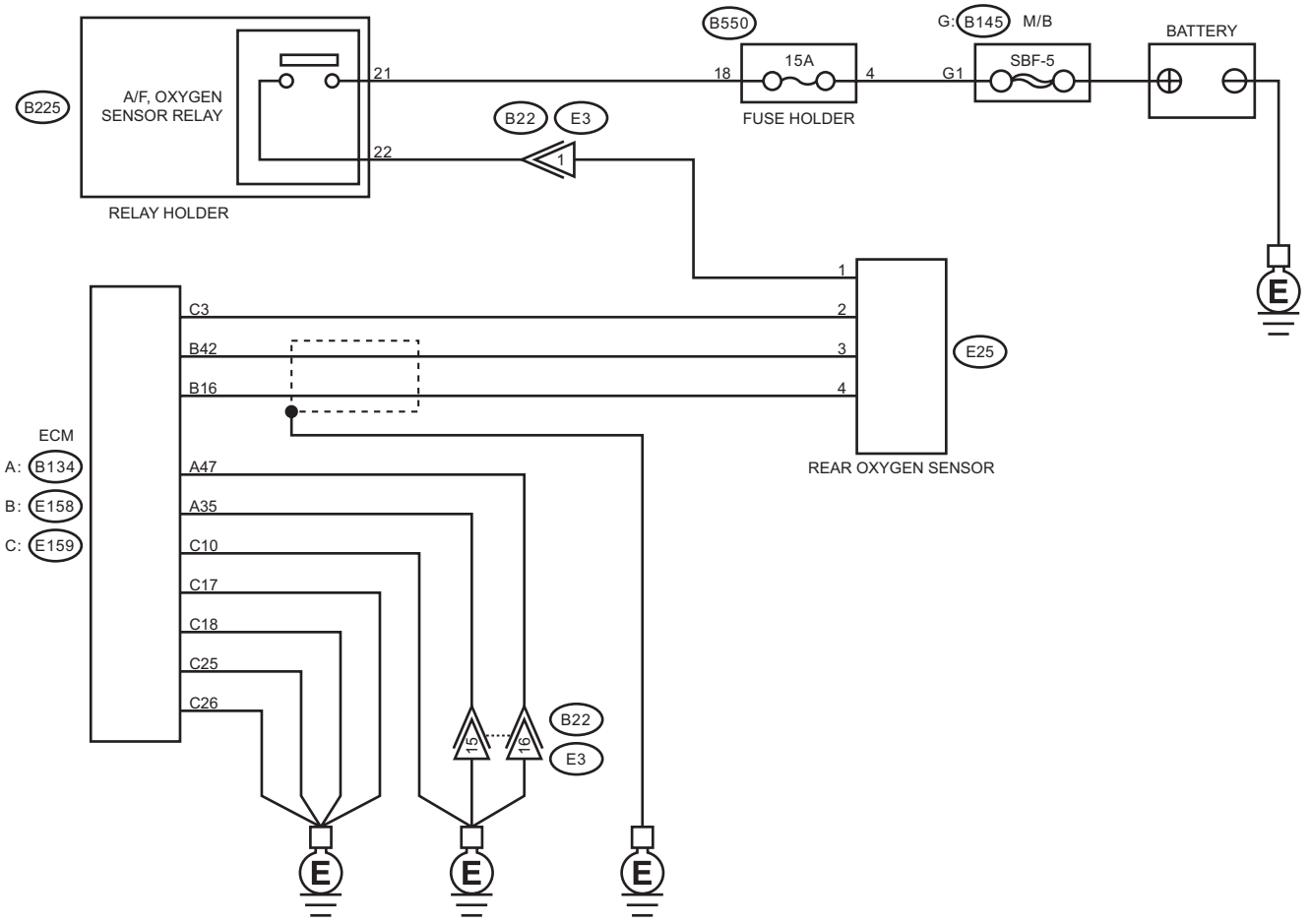

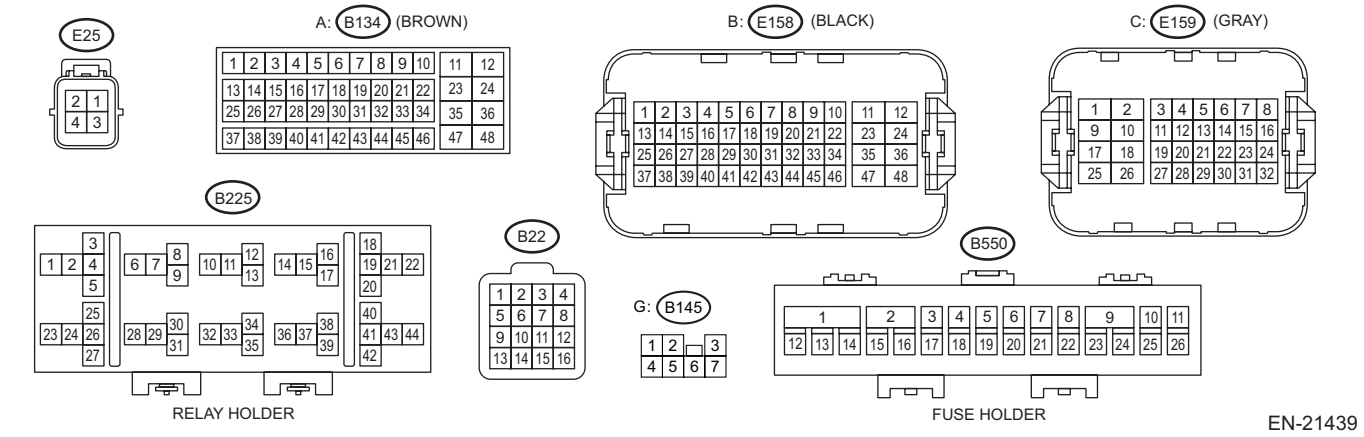

	Step	Check	Yes	No
1	**CHECK HARNESS BETWEEN ECM AND REAR OXYGEN SENSOR CONNECTOR.** 1) Turn the ignition switch to OFF. 2) Disconnect the connector from ECM. 3) Disconnect the connector from rear oxygen sensor. 4) Measure the resistance of harness between ECM connector and rear oxygen sensor connector. ***Connector & terminal*** ***(E158) No. 16 — (E25) No. 4:***	Is the resistance less than 1 Ω?	Go to step **2**.	Repair the open circuit of harness between ECM connector and rear oxygen sensor connector.
2	**CHECK HARNESS BETWEEN ECM AND REAR OXYGEN SENSOR CONNECTOR.** Measure the resistance between rear oxygen sensor connector and engine ground. ***Connector & terminal*** ***(E25) No. 4 — Engine ground:***	Is the resistance 1 MΩ or more?	Go to step **3**.	Repair the short circuit to ground in harness between ECM connector and rear oxygen sensor connector.
3	**CHECK REAR OXYGEN SENSOR.** Measure the resistance between rear oxygen sensor terminals. ***Terminals*** ***No. 3 — No. 4***	Is the resistance less than 1 Ω?	Replace the rear oxygen sensor. <Ref. to FU(w/o STI)-120, Rear Oxygen Sensor.>	Even if DTC is detected, the circuit has returned to a normal condition at this time. Reproduce the failure, and then perform the diagnosis again. NOTE: In this case, temporary poor contact of connector, temporary open or short circuit of harness may be the cause.

1. OUTLINE OF DIAGNOSIS

Detect the slow response of rich → lean for rear oxygen sensor output.
When the deceleration fuel cut has occurred, detect the trouble by calculating the time when the rear oxygen sensor output passes through the predetermined range of voltages.
Judge as NG when the response time is larger than the threshold value.

2. COMPONENT DESCRIPTION

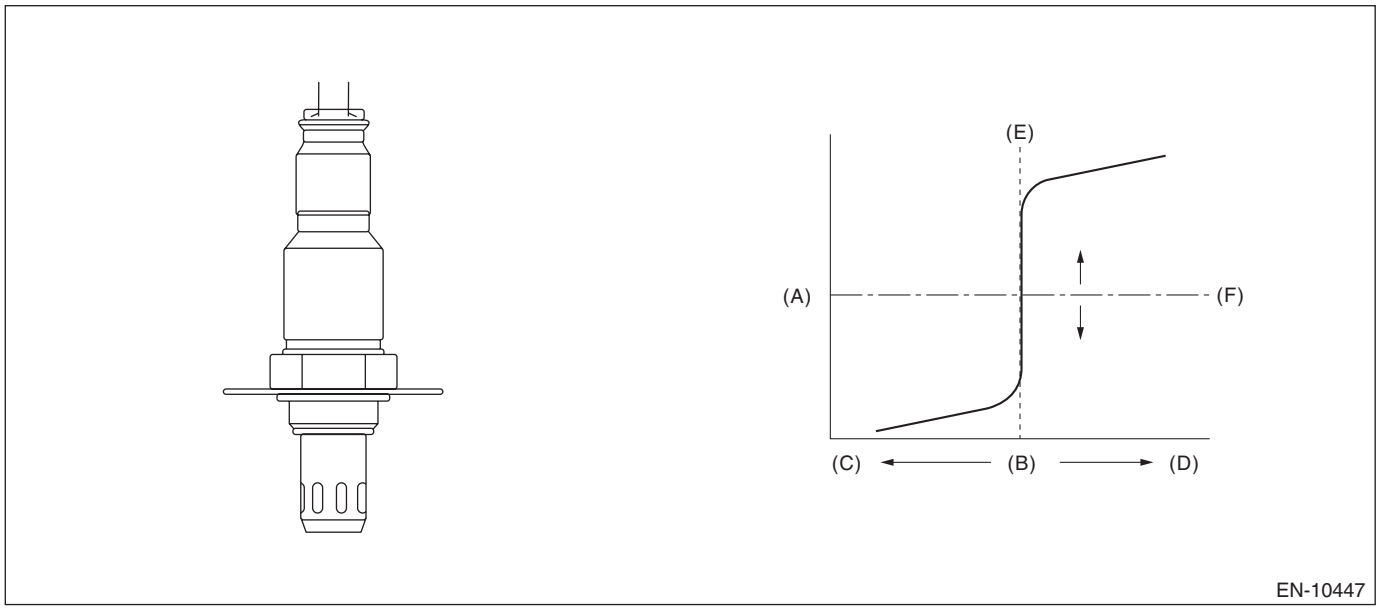

(A) Electromotive force
(B) Air fuel ratio
(C) Lean
(D) Rich
(E) Theoretical air fuel ratio
(F) Comparative voltage

3. EXECUTION CONDITION

Secondary parameters	Execution condition
Battery voltage	≥ 10.9 V
Current calculation time of the rear oxygen sensor heater after starting	≥ 180000 ms
Rear oxygen sensor voltage when fuel cut starts	≥ 0.55 V
Fuel cut	In operation
Estimated temperature of rear oxygen sensor element when fuel cut starts	≥ 450°C (842°F)

4. GENERAL DRIVING CYCLE

Perform diagnosis once during deceleration fuel cut from a constant and high speed driving, when rear oxygen sensor is warmed up sufficiently.

5. DIAGNOSTIC METHOD

Detect the trouble by calculating the response time of the rear oxygen sensor during fuel cut.

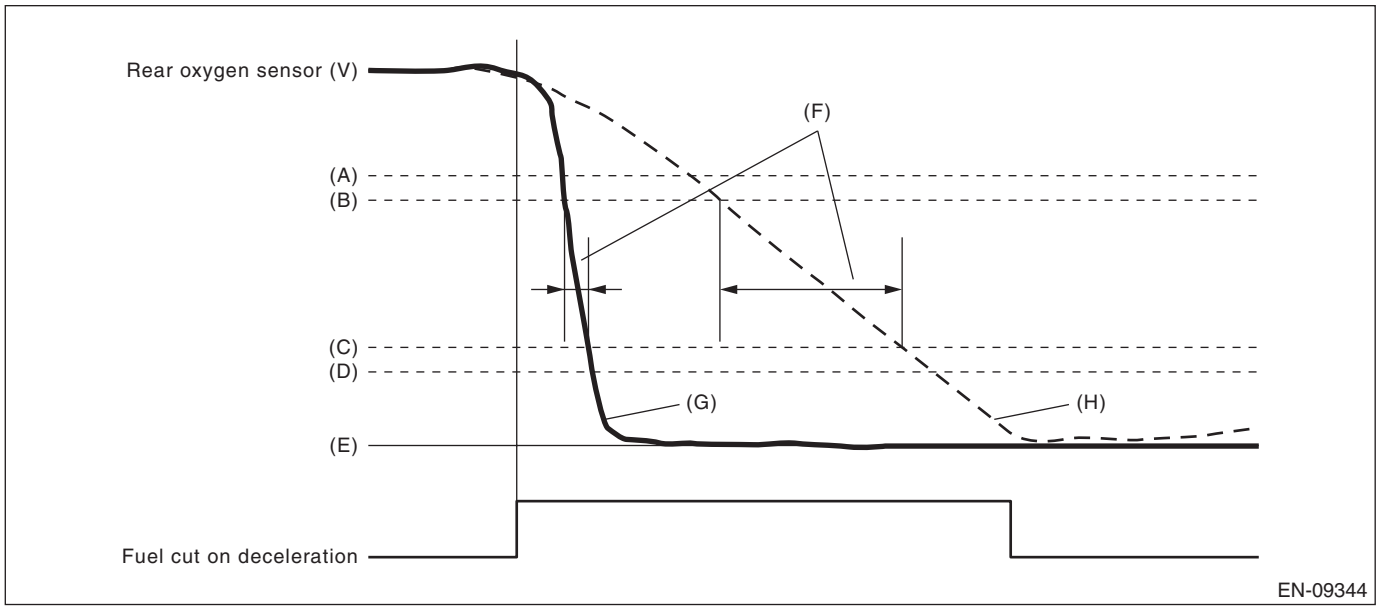

(A) 0.55 V
(B) 0.50 V
(C) 0.20 V
(D) 0.15 V
(E) 0 V
(F) Diagnostic parameter
(G) Normal
(H) Malfunction

Judge as NG when the following conditions are established.

Judgment Value

Malfunction Criteria	Threshold Value
Time needed for rear oxygen sensor voltage to change from 0.5 V to 0.2 V	> 837 ms

Time Needed for Diagnosis: 5 seconds
Malfunction Indicator Light Illumination: Illuminates when malfunction occurs in 2 continuous driving cycles.

BA:DTC P013B O2 SENSOR SLOW RESPONSE - LEAN TO RICH BANK 1 SENSOR 2

NOTE:
For the diagnostic procedure, refer to DTC P013A. <Ref. to EN(w/o STI)(diag)-258, DTC P013A O2 SENSOR SLOW RESPONSE - RICH TO LEAN BANK 1 SENSOR 2, Diagnostic Procedure with Diagnostic Trouble Code (DTC).>

1. OUTLINE OF DIAGNOSIS

Detect the slow response of lean → rich for rear oxygen sensor output.
After the deceleration fuel cut has occurred, detect the trouble by calculating the time when the rear oxygen sensor output passes through the predetermined range of voltages.
Judge as NG when the response time is larger than the threshold value.

2. COMPONENT DESCRIPTION

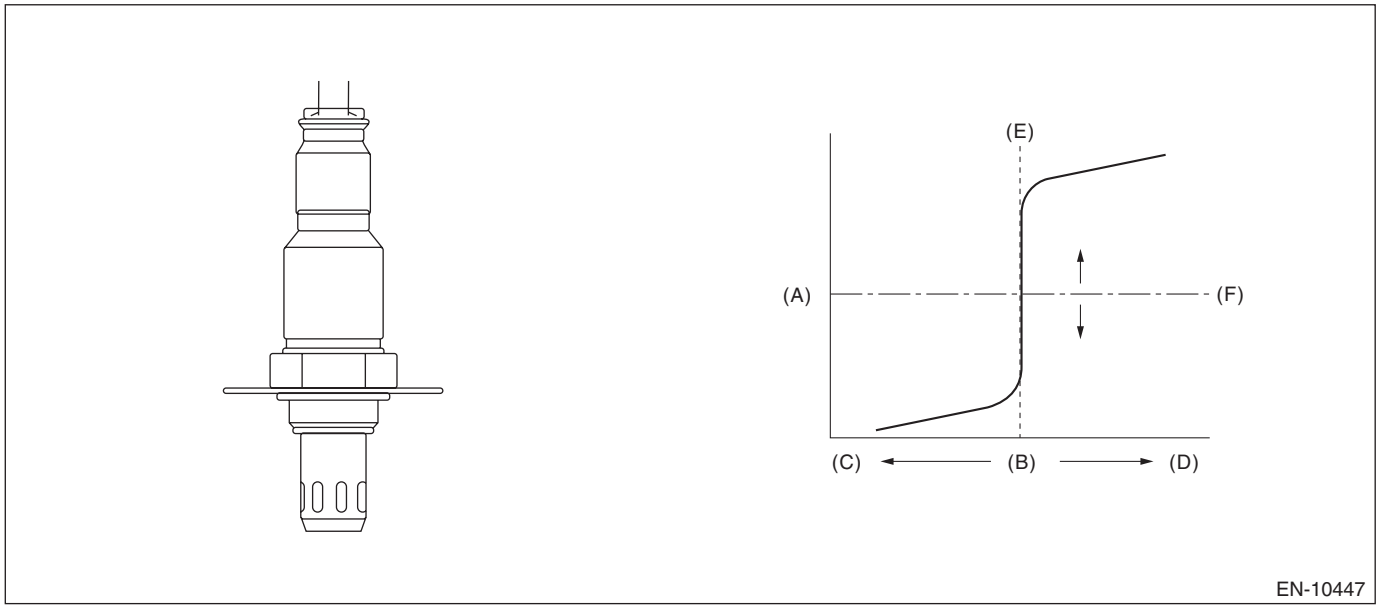

(A) Electromotive force
(B) Air fuel ratio
(C) Lean
(D) Rich
(E) Theoretical air fuel ratio
(F) Comparative voltage

3. EXECUTION CONDITION

Secondary parameters	Execution condition
Battery voltage	≥ 10.9 V
Main feedback	In operation
Deceleration fuel cut of 5000 ms or more	Experienced

4. GENERAL DRIVING CYCLE

Perform diagnosis only once after recovering from a deceleration fuel cut continued for more than predetermined time.

5. DIAGNOSTIC METHOD

Detect the trouble by calculating the response time of the rear oxygen sensor after fuel cut.

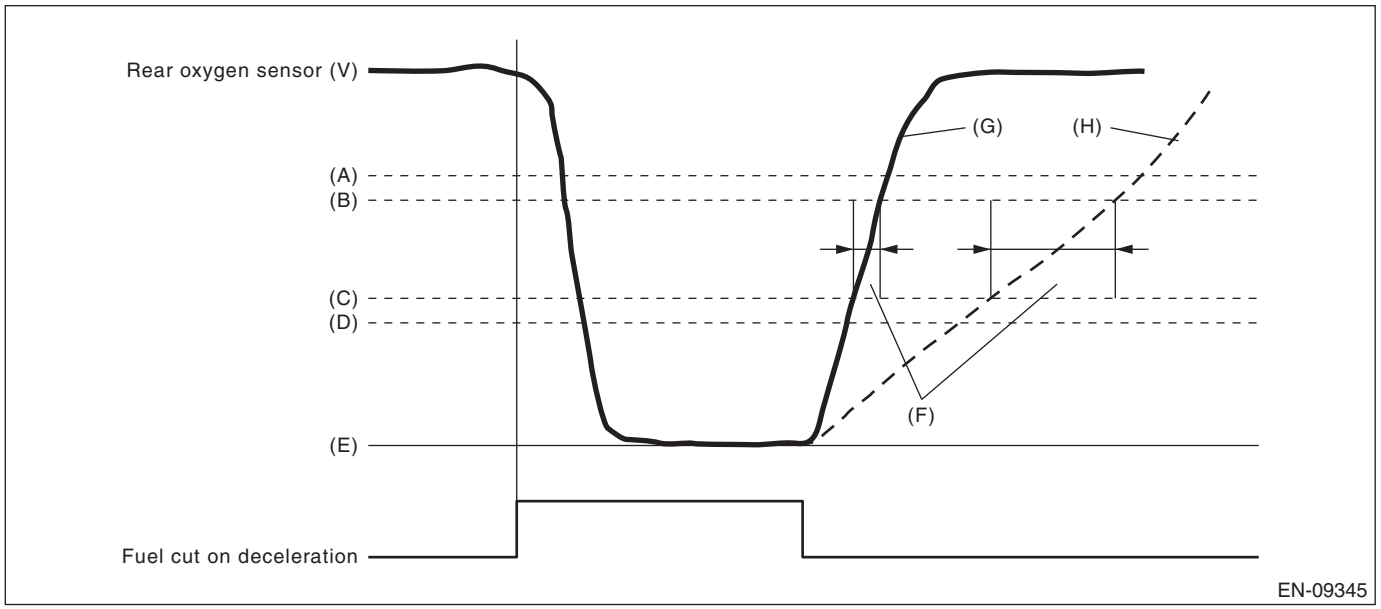

(A) 0.55 V
(B) 0.50 V
(C) 0.30 V
(D) 0.25 V
(E) 0 V
(F) Diagnostic parameter
(G) Normal
(H) Malfunction

Judge as NG when the following conditions are established.

Judgment Value

Malfunction Criteria	Threshold Value
Time needed for rear oxygen sensor voltage to change from 0.3 V to 0.5 V	> 4000 ms

Time Needed for Diagnosis: Less than 1 second
Malfunction Indicator Light Illumination: Illuminates when malfunction occurs in 2 continuous driving cycles.

BB:DTC P013E O2 SENSOR DELAYED RESPONSE - RICH TO LEAN BANK 1 SENSOR 2

NOTE:
For the diagnostic procedure, refer to DTC P013A. <Ref. to EN(w/o STI)(diag)-258, DTC P013A O2 SENSOR SLOW RESPONSE - RICH TO LEAN BANK 1 SENSOR 2, Diagnostic Procedure with Diagnostic Trouble Code (DTC).>

1. OUTLINE OF DIAGNOSIS

Detect the delayed response of rear oxygen sensor output for rich → lean.
After the deceleration fuel cut has started, detect the trouble by calculating the time when the rear oxygen sensor output decreases to the predetermined voltages.
Judge as NG when the response time is larger than the threshold value.

2. COMPONENT DESCRIPTION

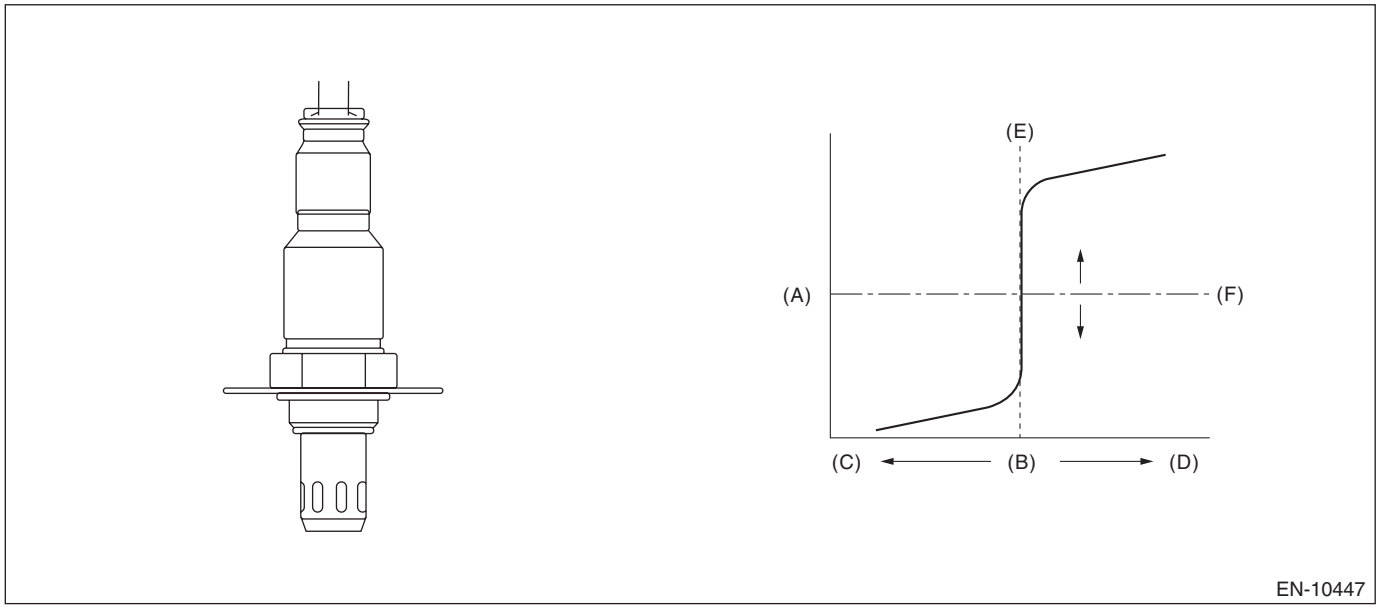

(A) Electromotive force
(B) Air fuel ratio
(C) Lean
(D) Rich
(E) Theoretical air fuel ratio
(F) Comparative voltage

3. EXECUTION CONDITION

Secondary parameters	Execution condition
Battery voltage	≥ 10.9 V
Rear oxygen sensor voltage when fuel cut starts	≥ 0.55 V
Fuel cut	In operation
Estimated temperature of rear oxygen sensor element when fuel cut starts	≥ 450°C (842°F)

4. GENERAL DRIVING CYCLE

Perform diagnosis once during deceleration fuel cut from a constant and high speed driving, when rear oxygen sensor is warmed up sufficiently.

5. DIAGNOSTIC METHOD

Detect the trouble by calculating the time from the beginning of the fuel cut to the beginning of the rear oxygen sensor voltage starting to drop.

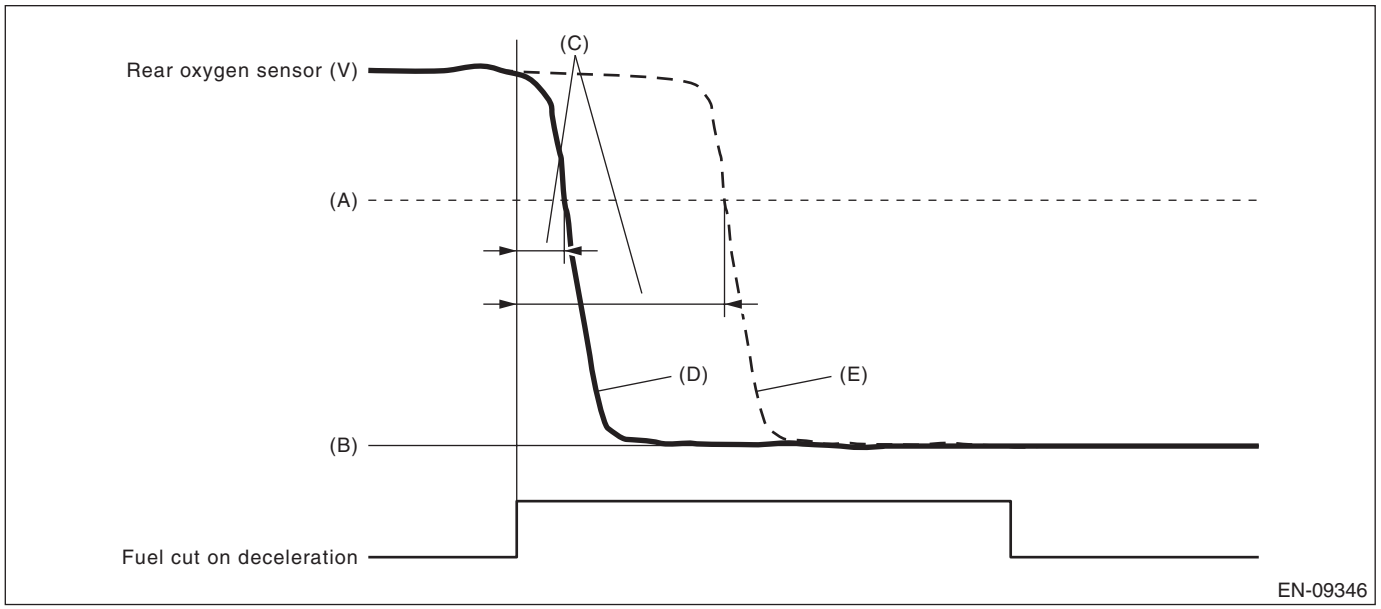

(A) 0.5 V
(B) 0 V
(C) Diagnostic parameter
(D) Normal
(E) Malfunction

Judge as NG when the following conditions are established.

Judgment Value

Malfunction Criteria	Threshold Value
Time when rear oxygen sensor voltage changed to 0.5 V after the fuel cut started	> 4000 ms

Time Needed for Diagnosis: 5 seconds
Malfunction Indicator Light Illumination: Illuminates when malfunction occurs in 2 continuous driving cycles.

BC:DTC P013F O2 SENSOR DELAYED RESPONSE - LEAN TO RICH BANK 1 SENSOR 2

NOTE:
For the diagnostic procedure, refer to DTC P013A. <Ref. to EN(w/o STI)(diag)-258, DTC P013A O2 SENSOR SLOW RESPONSE - RICH TO LEAN BANK 1 SENSOR 2, Diagnostic Procedure with Diagnostic Trouble Code (DTC).>

1. OUTLINE OF DIAGNOSIS

Detect the delayed response of rear oxygen sensor output for lean → rich.
After the deceleration fuel cut has completed, detect the trouble by calculating the time when the rear oxygen sensor output increases to the predetermined voltages.
Judge as NG when the response time is larger than the threshold value.

2. COMPONENT DESCRIPTION

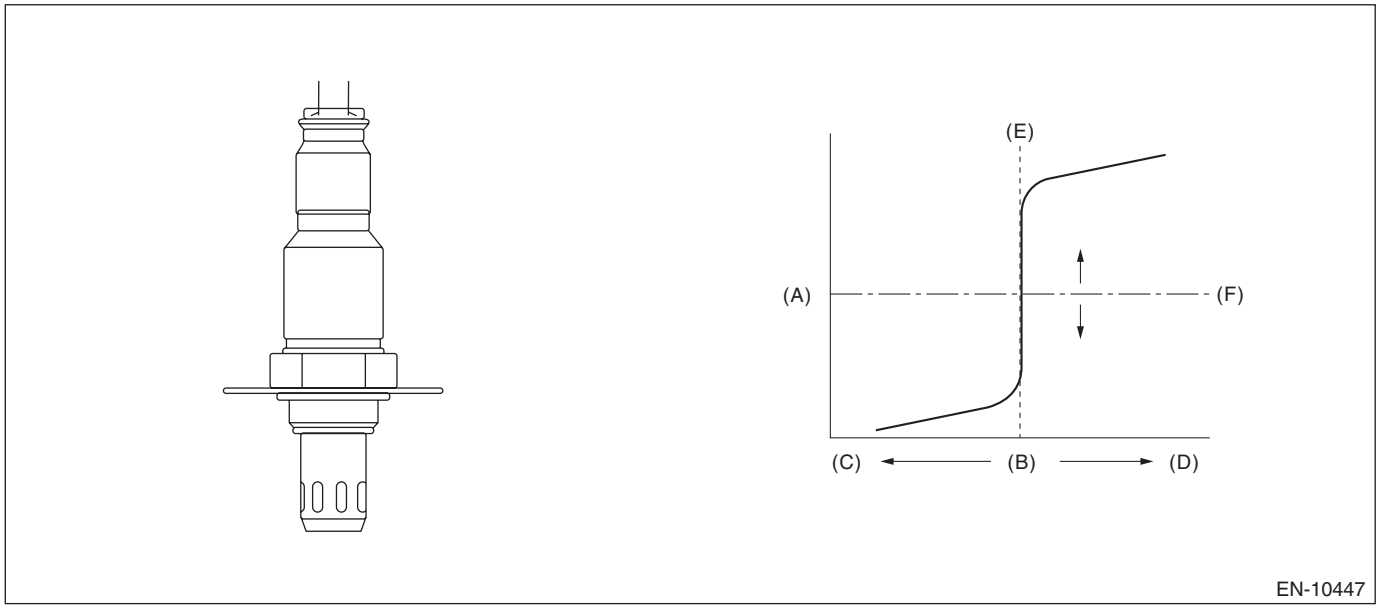

(A) Electromotive force
(B) Air fuel ratio
(C) Lean
(D) Rich
(E) Theoretical air fuel ratio
(F) Comparative voltage

3. EXECUTION CONDITION

Secondary parameters	Execution condition
Battery voltage	≥ 10.9 V
Main feedback	In operation
Rear oxygen sensor voltage when fuel cut has completed	≤ 0.15 V
Deceleration fuel cut of 5000 ms or more	Experienced
Estimated element temperature of rear oxygen sensor when fuel cut has completed	≥ 450°C (842°F)
Amount of intake air	≥ 15 g/s (0.5 oz/s)

4. GENERAL DRIVING CYCLE

Perform diagnosis only once when recovering from the deceleration fuel cut continued for more than predetermined time with the rear oxygen sensor warmed up sufficiently.

5. DIAGNOSTIC METHOD

Detect the trouble by calculating the time from the completion of the fuel cut to the beginning of the rear oxygen sensor voltage starting to rise.

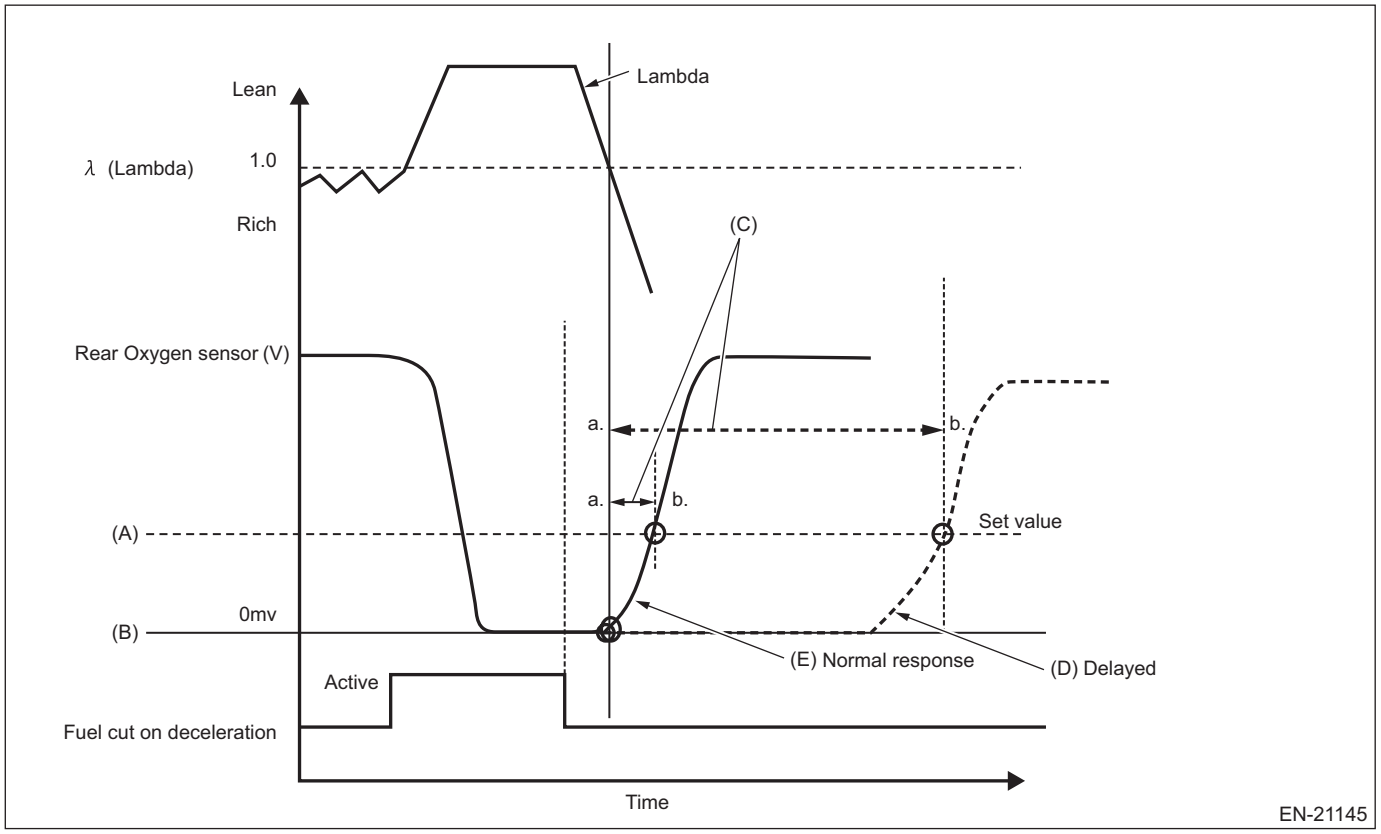

(A) 0.3 V
(B) 0 V
(C) Diagnostic parameter
(D) Normal
(E) Malfunction

Judge as NG when the following conditions are established.

Judgment Value

Malfunction Criteria	Threshold Value
Output voltage value of rear oxygen sensor	< 0.2 V
Elapsed time*	> Map

*Elapsed time: The time since the λ became less than 1 after the end of fuel cut

Map

Amount of intake air (g/s)	15	16	18	40
Elapsed time (s)	4	4	4	4

Time Needed for Diagnosis: Less than 1 second
Malfunction Indicator Light Illumination: Illuminates when malfunction occurs in 2 continuous driving cycles.

BD:DTC P0141 O2 SENSOR HEATER CIRCUIT BANK 1 SENSOR 2

DTC DETECTING CONDITION:

Detected when two consecutive driving cycles with fault occur.

CAUTION:

- **After servicing or replacing faulty parts, perform Clear Memory Mode <Ref. to EN(w/o STI)(diag)-82, OPERATION, Clear Memory Mode.>, and Inspection Mode <Ref. to EN(w/o STI)(diag)-64, PROCEDURE, Inspection Mode.>.**
- **Use the check board when measuring the ECM terminal voltage and resistance.**

WIRING DIAGRAM:
Engine Electrical System <Ref. to WI-154, WIRING DIAGRAM, Engine Electrical System.>

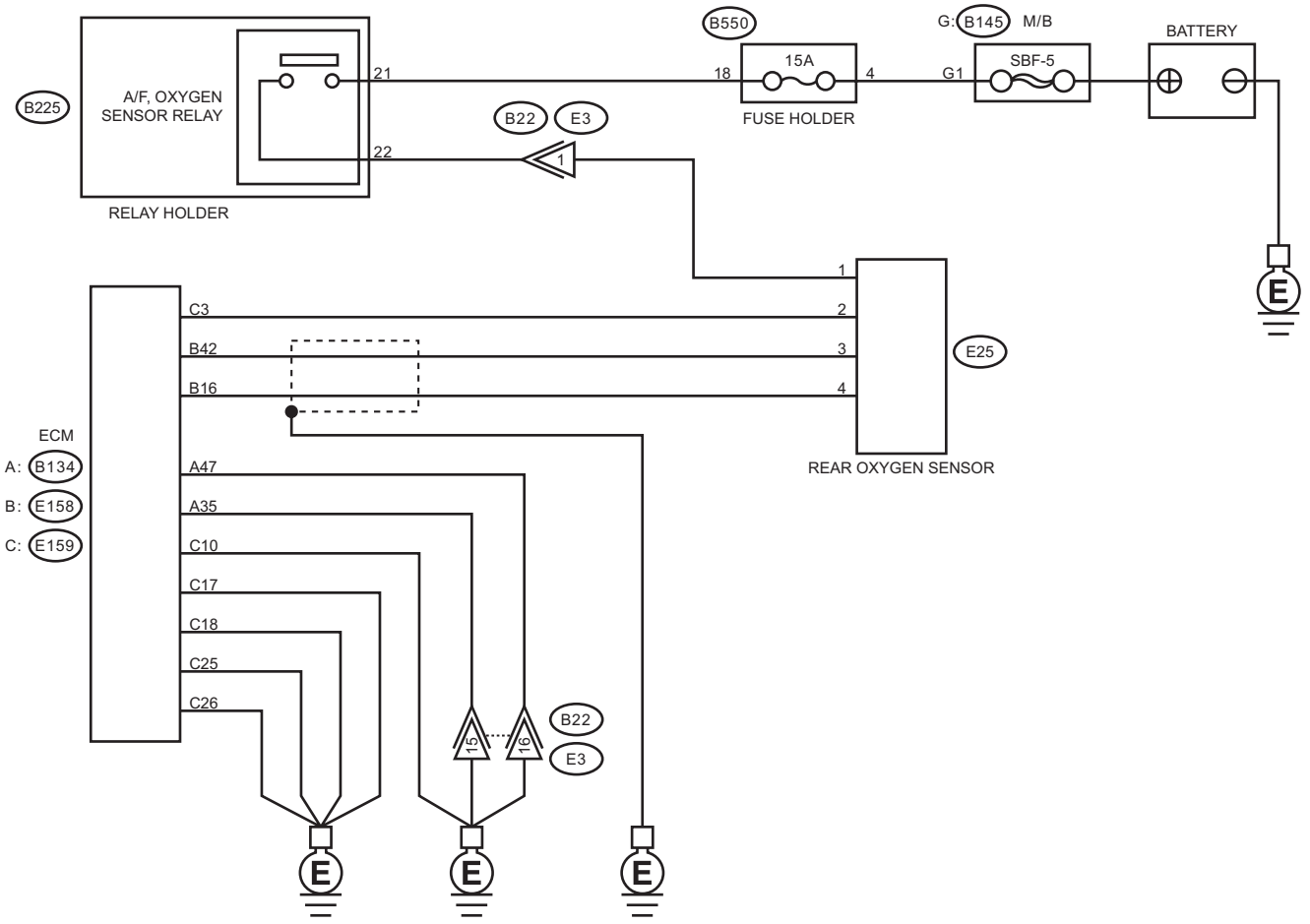

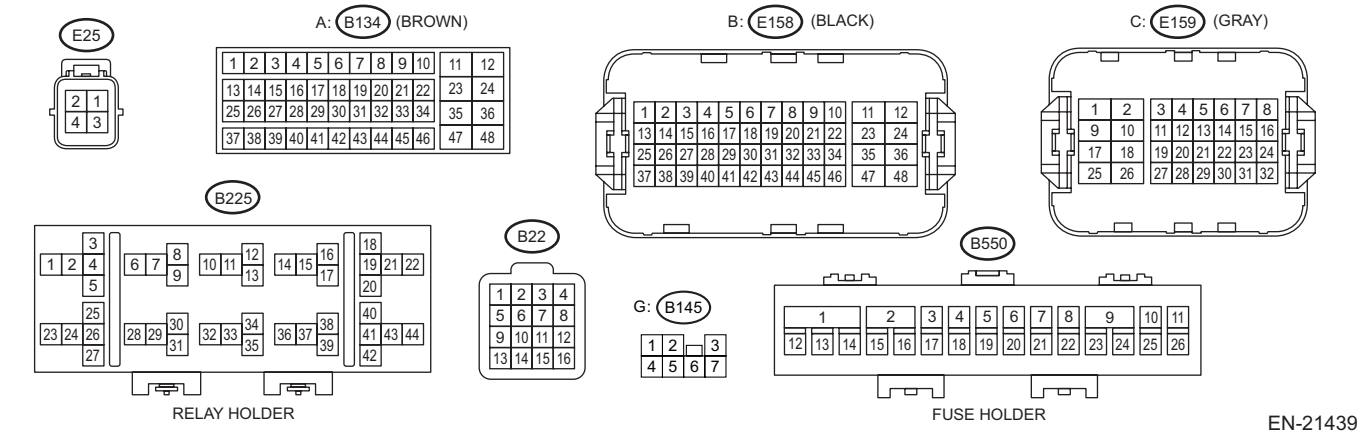

	Step	Check	Yes	No
1	**CHECK POWER SUPPLY TO REAR OXYGEN SENSOR.** 1) Turn the ignition switch to OFF. 2) Disconnect the connector from rear oxygen sensor. 3) Turn the ignition switch to ON. 4) Measure the voltage between rear oxygen sensor connector and engine ground. ***Connector & terminal*** ***(E25) No. 1 (+) — Engine ground (–):***	Is the voltage 10 V or more?	Go to step **2**.	Repair the power supply line. NOTE: In this case, repair the following item: • Open circuit in harness between A/F, oxygen sensor relay and rear oxygen sensor connector • Poor contact of A/F, oxygen sensor relay connector • Poor contact of coupling connector • Malfunction of A/F, oxygen sensor relay
2	**CHECK HARNESS BETWEEN ECM AND REAR OXYGEN SENSOR CONNECTOR.** 1) Turn the ignition switch to OFF. 2) Disconnect the connector from ECM. 3) Measure the resistance between ECM connector and rear oxygen sensor connector. ***Connector & terminal*** ***(E25) No. 2 — (E159) No. 3:***	Is the resistance less than 1 Ω?	Go to step **3**.	Repair the open circuit of harness between ECM connector and rear oxygen sensor connector.
3	**CHECK GROUND CIRCUIT FOR ECM.** Measure the resistance of harness between ECM connector and engine ground. ***Connector & terminal*** ***(B134) No. 35 — Engine ground:*** ***(B134) No. 47 — Engine ground:*** ***(E159) No. 10 — Engine ground:*** ***(E159) No. 17 — Engine ground:*** ***(E159) No. 18 — Engine ground:*** ***(E159) No. 25 — Engine ground:*** ***(E159) No. 26 — Engine ground:***	Is the resistance less than 5 Ω?	Go to step **4**.	Repair the harness and connector. NOTE: In this case, repair the following item: • Open circuit of harness between ECM connector and engine ground • Poor contact of coupling connector
4	**CHECK REAR OXYGEN SENSOR.** Measure the resistance between rear oxygen sensor connector terminals. ***Terminals*** ***No. 1 — No. 2:***	Is the resistance 5.4 — 7.3 Ω?	Repair the poor contact of ECM connector.	Replace the rear oxygen sensor. <Ref. to FU(w/o STI)-120, Rear Oxygen Sensor.>

1. OUTLINE OF DIAGNOSIS

Detect malfunction of the rear oxygen sensor heater.
Judge as NG if it is determined that the rear oxygen sensor impedance is large by observing the engine conditions.

2. COMPONENT DESCRIPTION

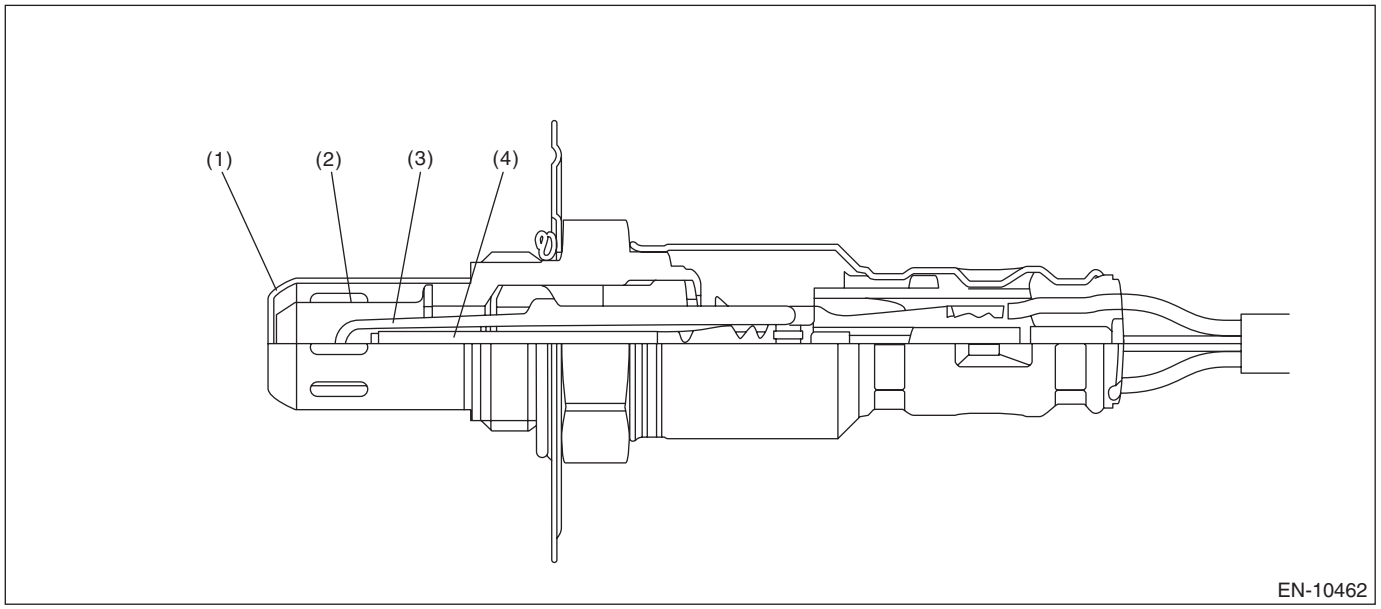

(1) Element cover (outer)
(2) Element cover (inner)
(3) Sensor element
(4) Ceramic heater

3. EXECUTION CONDITION

Secondary parameters	Execution condition
Battery voltage	≥ 10.9 V
Rear oxygen sensor heater control duty	≥ 4%

4. GENERAL DRIVING CYCLE

Always perform the diagnosis continuously.

5. DIAGNOSTIC METHOD

If the duration of time while the following conditions are met is longer than the time indicated, judge as NG.

Judgment Value

Malfunction Criteria	Threshold Value
Rear oxygen sensor heater current	< Value from Map

Map

Battery voltage (V)	10.9	12	13	14	15	16
Threshold Value (mA)	330	357.5	385	412.5	440	467.5

Time Needed for Diagnosis: 10 seconds
Malfunction Indicator Light Illumination: Illuminates when malfunction occurs in 2 continuous driving cycles.

BE:DTC P014C A/F / O2 SENSOR SLOW RESPONSE - RICH TO LEAN BANK 1 SENSOR 1

DTC DETECTING CONDITION:
Detected when two consecutive driving cycles with fault occur.

CAUTION:
After servicing or replacing faulty parts, perform Clear Memory Mode <Ref. to EN(w/o STI)(diag)-82, OPERATION, Clear Memory Mode.>, and Inspection Mode <Ref. to EN(w/o STI)(diag)-64, PROCEDURE, Inspection Mode.>.

	Step	Check	Yes	No
1	**CHECK EXHAUST SYSTEM.** NOTE: Check the following items. • Loose installation of front portion of exhaust pipe onto cylinder heads • Loose connection between front exhaust pipe and front catalytic converter • Damage of exhaust pipe resulting in a hole	Is there any fault in exhaust system?	Repair the exhaust system.	Replace the front oxygen (A/F) sensor. <Ref. to FU(w/o STI)-118, Front Oxygen (A/F) Sensor.>

1. OUTLINE OF DIAGNOSIS

Detect the slow response of front oxygen (A/F) sensor.
For diagnosis, detect the trouble by processing the λ waveform in normal driving without forcibly changing the target air fuel ratio.

2. COMPONENT DESCRIPTION

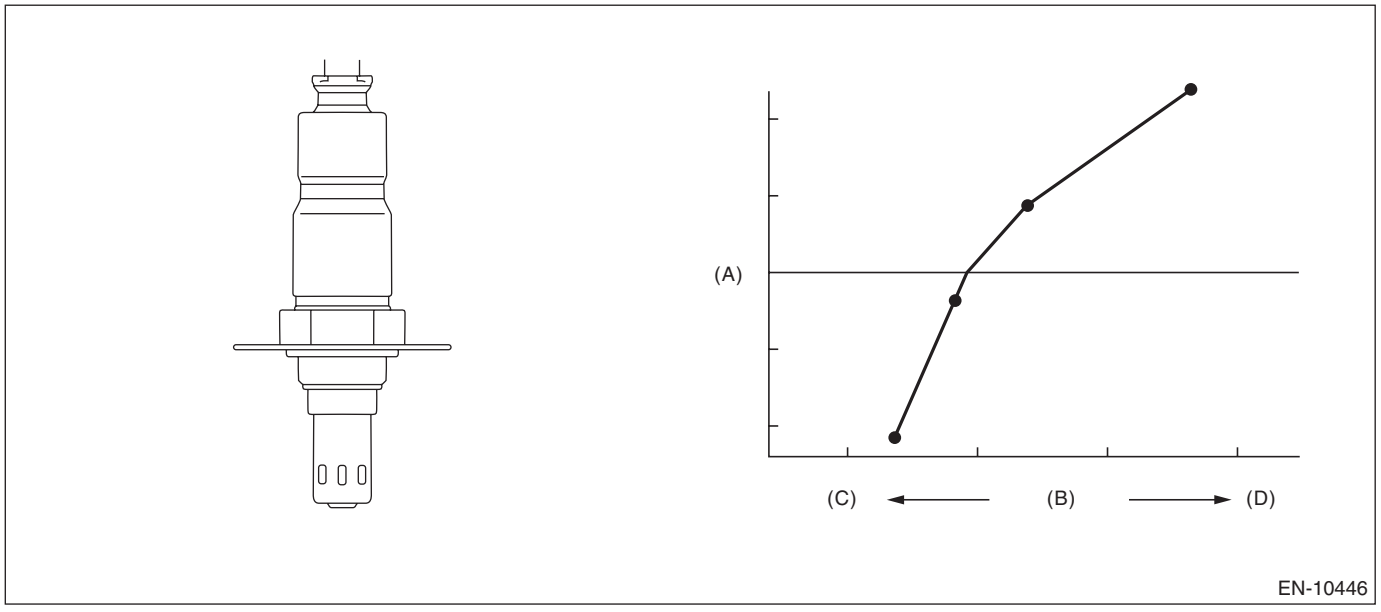

(A) Electromotive force (B) Air fuel ratio (C) Rich
(D) Lean

3. EXECUTION CONDITION

Secondary parameters	Execution condition
Battery voltage	≥ 10.9 V
Barometric pressure	> 75 kPa (562.6 mmHg, 22.2 inHg)
Operation time of main feedback	≥ 5 s
Engine speed	≥ 1000 rpm
Amount of intake air	≥ 10 g/s (0.35 oz/s)
Accelerator pedal position	> 0%

4. GENERAL DRIVING CYCLE

Perform diagnosis only once in a city driving including normal acceleration and deceleration.

5. DIAGNOSTIC METHOD 1

Detect the malfunction by checking “Cumulative value of time when λ changes from lean → rich” in comparison to “Time during which diagnosis is in progress”.

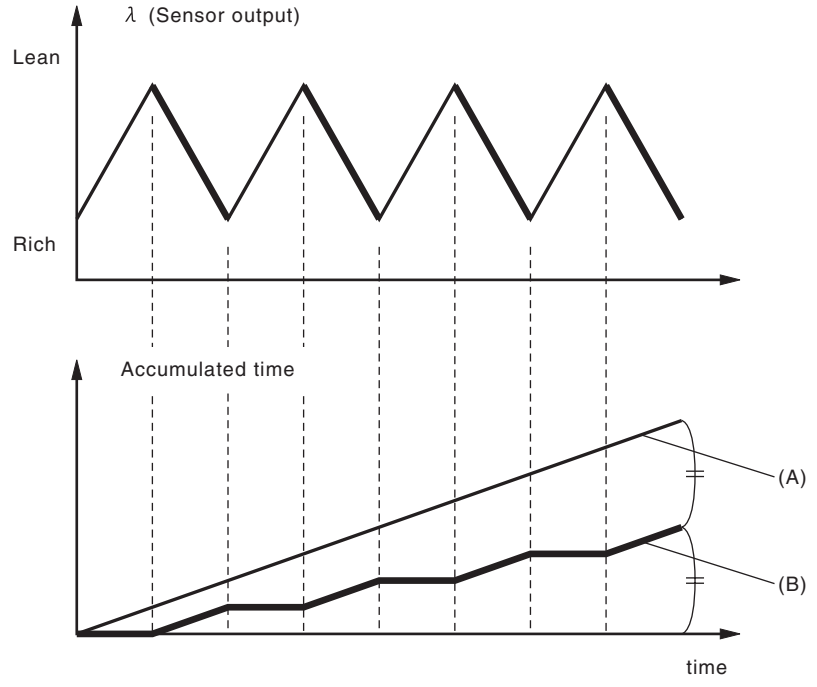

EN-09340

(A) Time during which diagnosis is in progress

(B) Cumulative value of time when λ changes from lean → rich

Judge as NG when the following conditions are established.

Judgment Value

Malfunction Criteria	Threshold Value	DTC
(Cumulative value of time when λ changes from lean → rich) / (Time during which diagnosis is in progress)	< 0.38	P014C
	> 0.61	P014D

Time Needed for Diagnosis: 120 seconds

Malfunction Indicator Light Illumination: Illuminates when malfunction occurs in 2 continuous driving cycles.

6. DIAGNOSTIC METHOD 2

Detect the malfunction by the cumulative value obtained from the amount of variation in λ change.

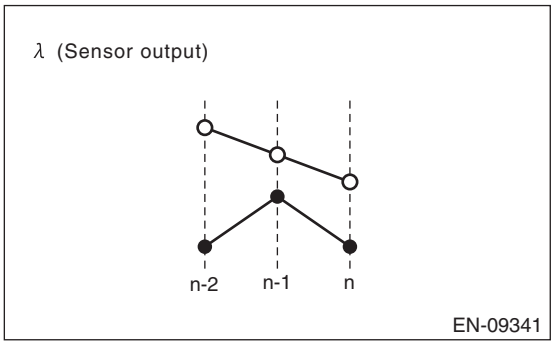

Judge as NG when the following conditions are established.

Judgment Value

Malfunction Criteria	Threshold Value	DTC
Cumulative value obtained from the amount of variation in λ change	< Value from Map	P014C and P014D

Map

Cumulative value obtained from the amount of variation in λ	0.00	3.00
Cumulative value obtained from the amount of variation in λ change	0.00	2.50

Time Needed for Diagnosis: 120 seconds
Malfunction Indicator Light Illumination: Illuminates when malfunction occurs in 2 continuous driving cycles.

BF:DTC P014D A/F / O2 SENSOR SLOW RESPONSE - LEAN TO RICH BANK 1 SENSOR 1

NOTE:
For the diagnostic procedure, refer to DTC P014C. <Ref. to EN(w/o STI)(diag)-273, DTC P014C A/F / O2 SENSOR SLOW RESPONSE - RICH TO LEAN BANK 1 SENSOR 1, Diagnostic Procedure with Diagnostic Trouble Code (DTC).>

1. OUTLINE OF DIAGNOSIS

NOTE:
For the detection standard, refer to DTC P014C. <Ref. to EN(w/o STI)(diag)-273, DTC P014C A/F / O2 SENSOR SLOW RESPONSE - RICH TO LEAN BANK 1 SENSOR 1, Diagnostic Procedure with Diagnostic Trouble Code (DTC).>

BG:DTC P015A A/F / O2 SENSOR DELAYED RESPONSE - RICH TO LEAN BANK 1 SENSOR 1

NOTE:
For the diagnostic procedure, refer to DTC P014C. <Ref. to EN(w/o STI)(diag)-273, DTC P014C A/F / O2 SENSOR SLOW RESPONSE - RICH TO LEAN BANK 1 SENSOR 1, Diagnostic Procedure with Diagnostic Trouble Code (DTC).>

1. OUTLINE OF DIAGNOSIS

Detect the slow response of front oxygen (A/F) sensor.
For diagnosis, detect the trouble by processing the λ waveform in normal driving without forcibly changing the target air fuel ratio.

2. COMPONENT DESCRIPTION

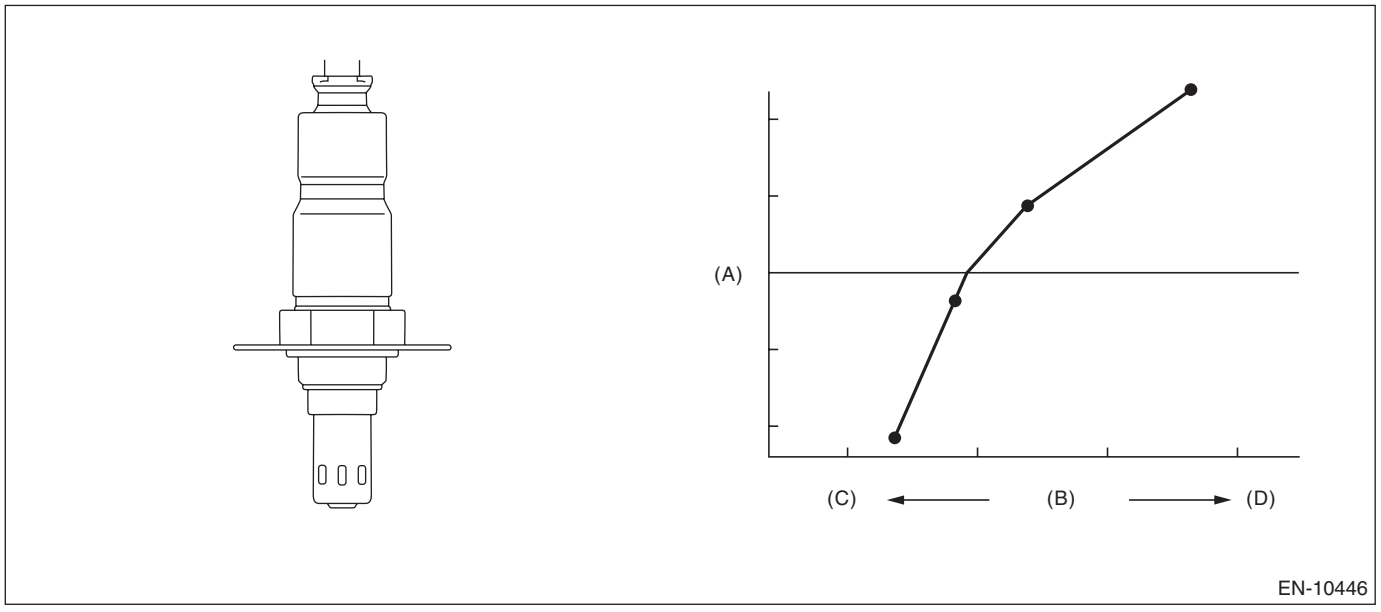

(A) Electromotive force (B) Air fuel ratio (C) Rich
(D) Lean

3. EXECUTION CONDITION

Diagnostic method 1 and 2

Secondary parameters	Execution condition
Battery voltage	≥ 10.9 V
Barometric pressure	> 75 kPa (562.6 mmHg, 22.2 inHg)
Operation time of main feedback	≥ 5 s
Engine speed	≥ 1000 rpm
Amount of intake air	≥ 7.5 g/s (1 oz/s) and < 40 g/s (1.4 oz/s)

DIAGNOSIS METHOD 3 (MT MODEL ONLY)

Secondary parameters	Execution condition
Battery voltage	≥ 10.9 V
Barometric pressure	> 75 kPa (562.6 mmHg, 22.2 inHg)
Main feedback	In operation
Vehicle speed	> 40 km/h (24.9 MPH)
Barometric pressure	> 75 kPa (56301 mmHg, 221.7 inHg)
Engine speed	≥ 1000 rpm and < 4000 rpm
Amount of intake air	≥ 7.5 g/s (0.3 oz/s) and < 40 g/s (1.4 oz/s)
Catalyst depletion diagnosis	Not under diagnosis

4. GENERAL DRIVING CYCLE

Perform diagnosis only once in a city driving including normal acceleration and deceleration.

5. DIAGNOSTIC METHOD 1

Detect the malfunction depending on the average value of time necessary for λ to inverse the air fuel ratio from “Lean → Rich → Lean” to “Rich → Lean → Rich”.

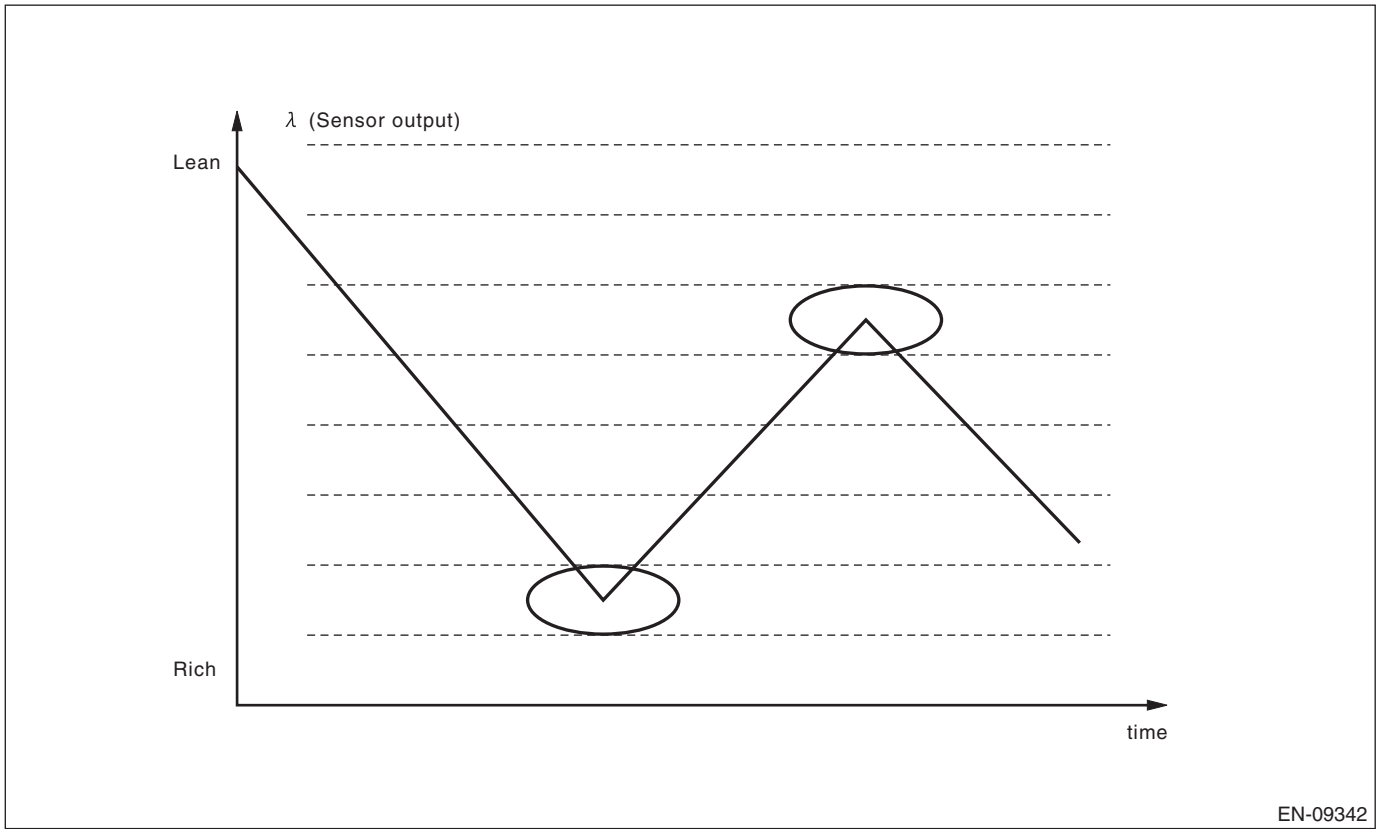

Judge as NG when the following conditions are established.

Judgment Value

Malfunction Criteria	Threshold Value	DTC
Average value of time necessary for λ to inverse the air fuel ratio to Lean → Rich → Lean	> 80 ms	P015A
Average value of time necessary for λ to inverse the air fuel ratio to Rich → Lean → Rich	> 110 ms	P015B

Time Needed for Diagnosis: 100 times of inversion
Malfunction Indicator Light Illumination: Illuminates when malfunction occurs in 2 continuous driving cycles.

6. DIAGNOSTIC METHOD 2

Detect the malfunction by calculating the average amplitude of λ.

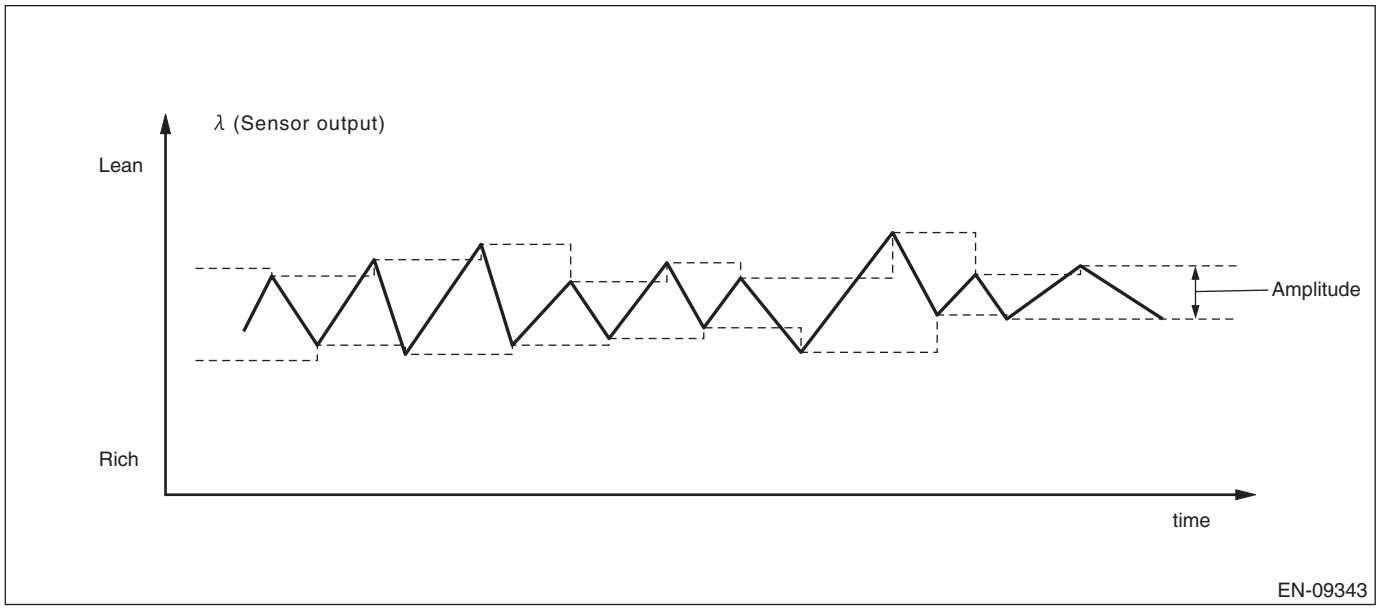

Judge as NG when the following conditions are established.

Judgment Value

Malfunction Criteria	Threshold Value	DTC
Average value for λ amplitude	> 0.1	P015A and P015B

Time Needed for Diagnosis: 90 seconds
Malfunction Indicator Light Illumination: Illuminates when malfunction occurs in 2 continuous driving cycles.

7. DIAGNOSIS METHOD 3 (MT MODEL ONLY)

Change STFT (A/F compensation value) by interruption, and measure the reaction time of λ value. When A/F sensor malfunctions, the reaction time takes longer than at normal condition. In this case, judge as abnormal.

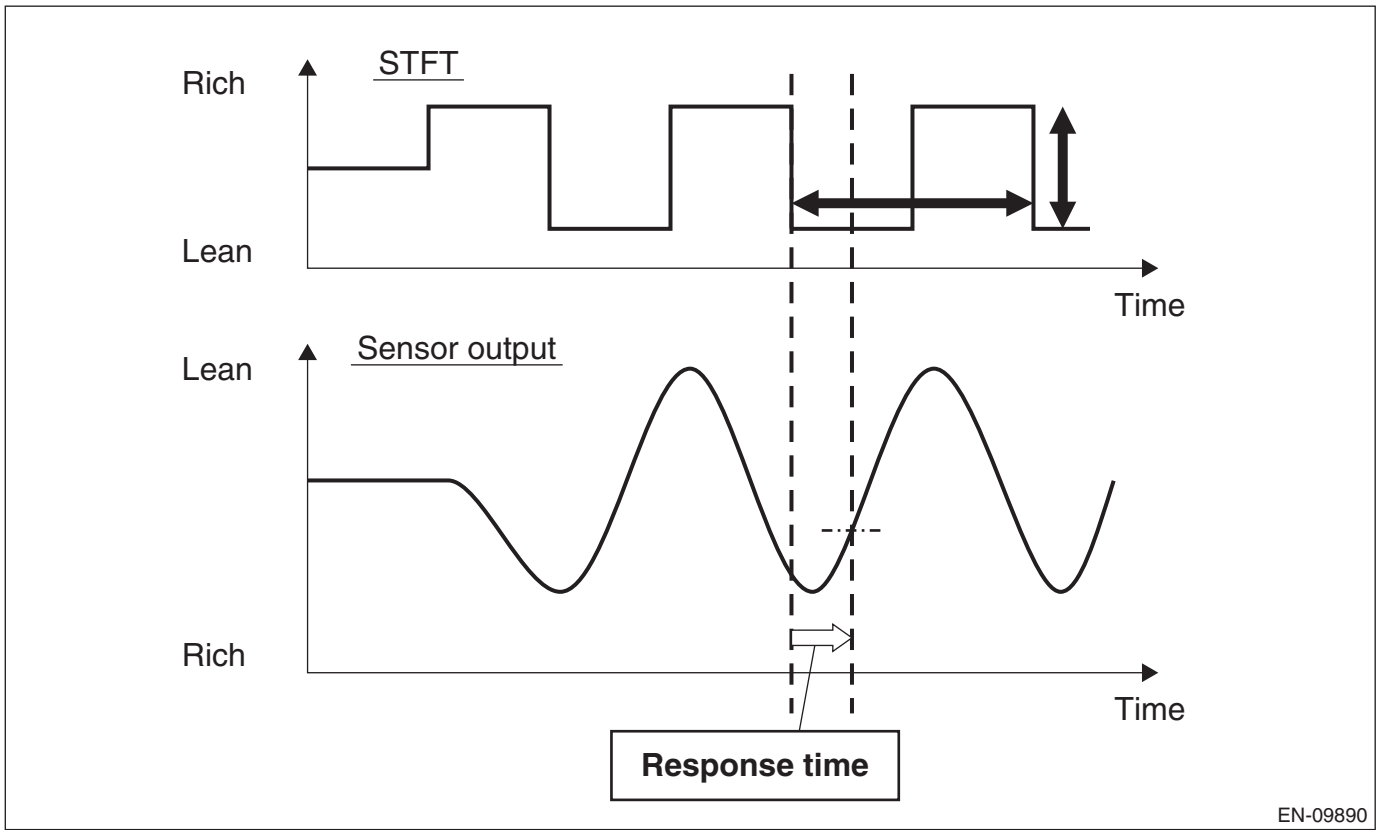

Measure reaction time (t1, t2, t3) and reaction time (t4, t5, t6). Use the average value of the reaction time to obtain the diagnostic value.

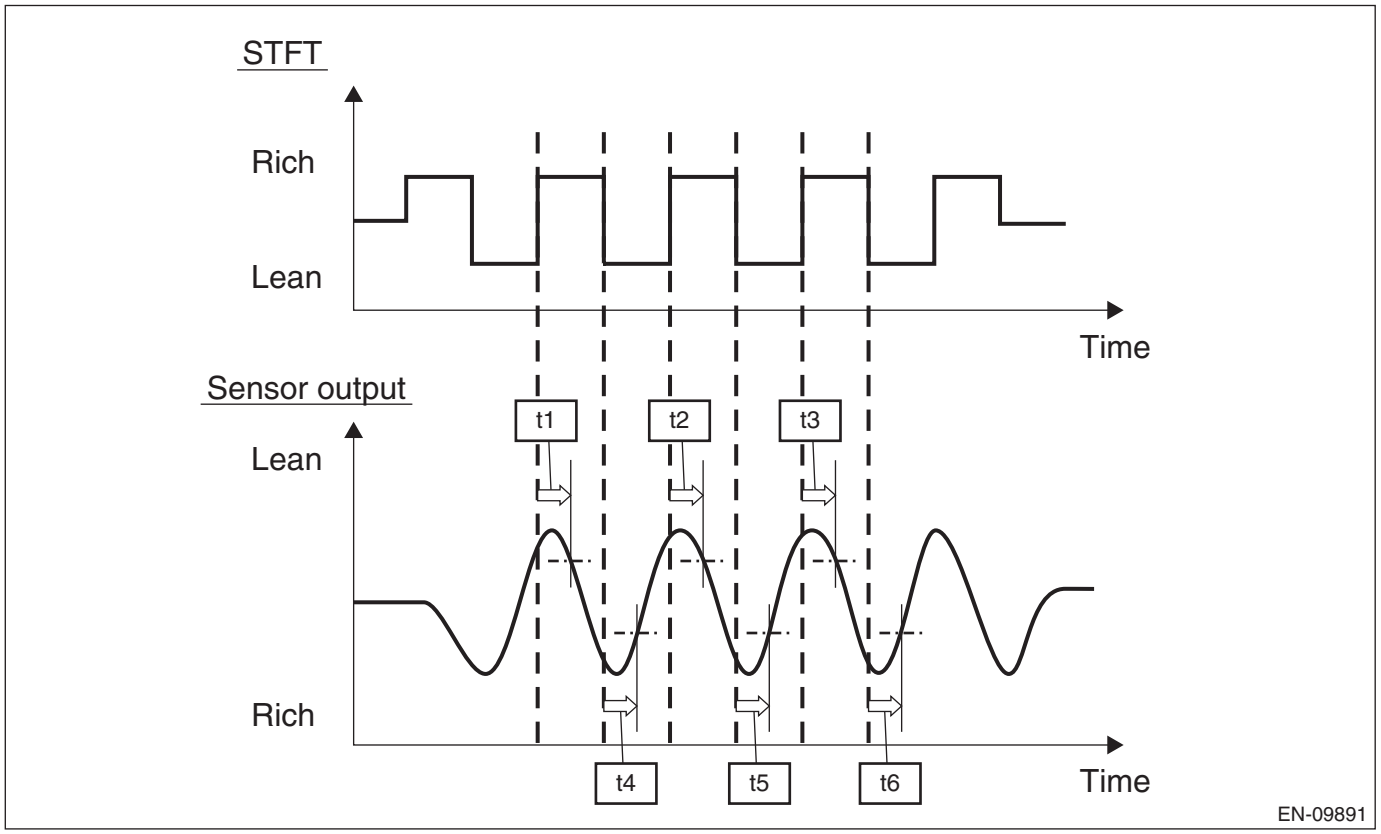

Judge as NG when the following conditions are established.

Judgment Value

Malfunction Criteria	Threshold Value	DTC
(t1 + t2 + t3)/3 and (t4 + t5 + t6)/3	> 0.8 s > 0.8 s	P015A and P015B

Time Needed for Diagnosis: 4.5 seconds
Malfunction Indicator Light Illumination: Illuminates when malfunction occurs in 2 continuous driving cycles.

BH:DTC P015B A/F / O2 SENSOR DELAYED RESPONSE - LEAN TO RICH BANK 1 SENSOR 1

NOTE:
For the diagnostic procedure, refer to DTC P014C. <Ref. to EN(w/o STI)(diag)-273, DTC P014C A/F / O2 SENSOR SLOW RESPONSE - RICH TO LEAN BANK 1 SENSOR 1, Diagnostic Procedure with Diagnostic Trouble Code (DTC).>

1. OUTLINE OF DIAGNOSIS

NOTE:
For the detection standard, refer to DTC P015A. <Ref. to EN(w/o STI)(diag)-276, DTC P015A A/F / O2 SENSOR DELAYED RESPONSE - RICH TO LEAN BANK 1 SENSOR 1, Diagnostic Procedure with Diagnostic Trouble Code (DTC).>

BI: DTC P0171 SYSTEM TOO LEAN BANK 1

NOTE:
For the diagnostic procedure, refer to DTC P0172. <Ref. to EN(w/o STI)(diag)-283, DTC P0172 SYSTEM TOO RICH BANK 1, Diagnostic Procedure with Diagnostic Trouble Code (DTC).>

1. OUTLINE OF DIAGNOSIS

Detect fuel system malfunction by the amount of main feedback control.
Fuel system is diagnosed by comparing the target air fuel ratio calculated by ECM with the actual air fuel ratio measured by sensor.

2. EXECUTION CONDITION

Secondary parameters	Execution condition
Main feedback	In operation

3. GENERAL DRIVING CYCLE

Perform the diagnosis continuously during main feedback.

4. DIAGNOSTIC METHOD

Compare the diagnostic value with the threshold value, and if a condition meeting the criteria continues for 10 s × 3 times or more, judge that there is a fault in the fuel system.

Judgment Value

Malfunction Criteria	Threshold Value
Offset amount of main feedback compensation	≥ 1.35

Time Needed for Diagnosis: 10 s × 3 times
Malfunction Indicator Light Illumination: Illuminates when malfunction occurs in 2 continuous driving cycles.

BJ:DTC P0172 SYSTEM TOO RICH BANK 1

DTC DETECTING CONDITION:

Detected when two consecutive driving cycles with fault occur.

TROUBLE SYMPTOM:

- Improper idling
- Engine stalls.
- Poor driving performance

CAUTION:

- **After servicing or replacing faulty parts, perform Clear Memory Mode <Ref. to EN(w/o STI)(diag)-82, OPERATION, Clear Memory Mode.>, and Inspection Mode <Ref. to EN(w/o STI)(diag)-64, PROCEDURE, Inspection Mode.>.**
- **Use the check board when measuring the ECM terminal voltage and resistance.**

WIRING DIAGRAM:

Engine Electrical System <Ref. to WI-154, WIRING DIAGRAM, Engine Electrical System.>

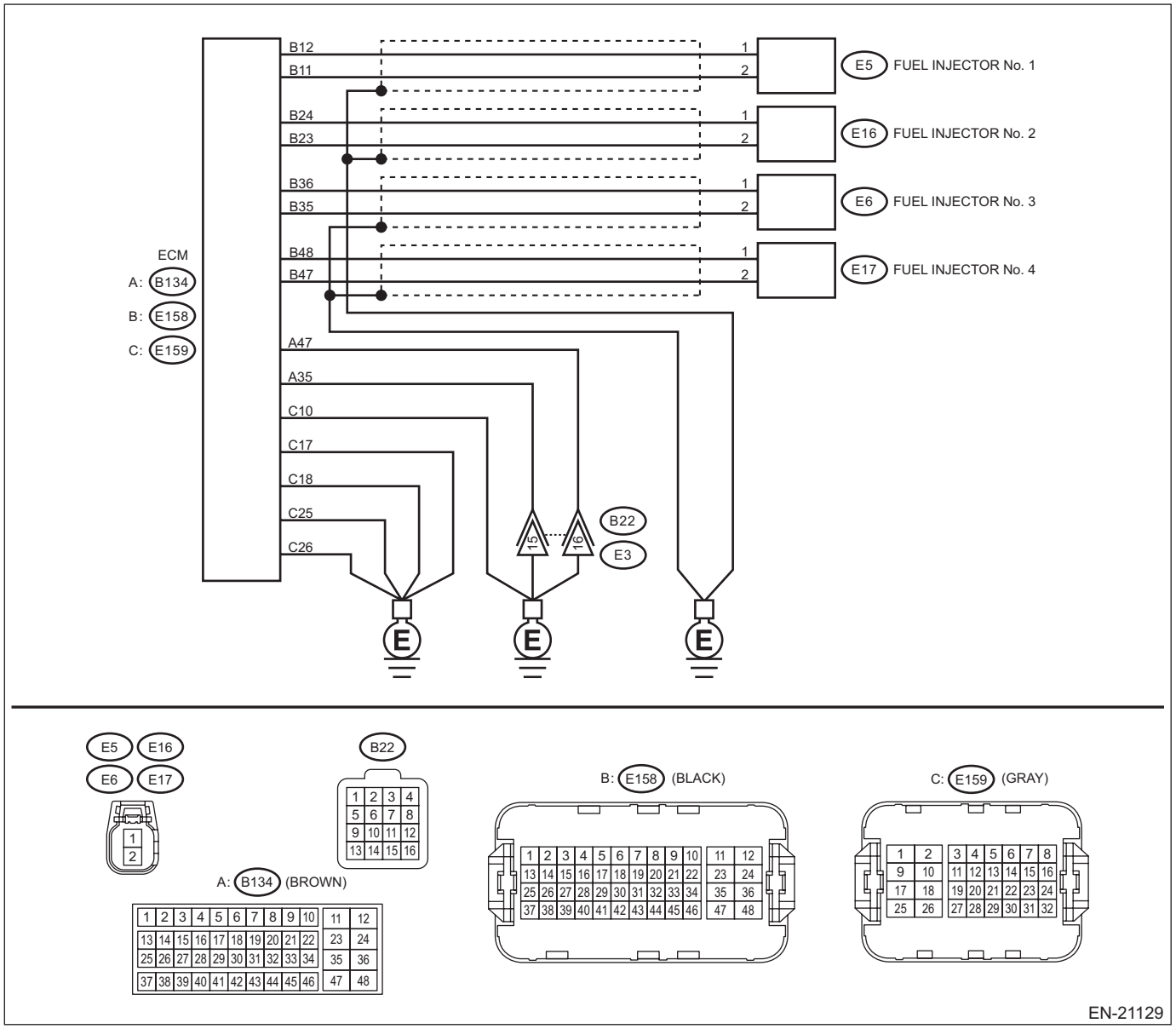

	Step	Check	Yes	No
1	**CHECK HARNESS BETWEEN ECM AND FUEL INJECTOR CONNECTOR.** 1) Turn the ignition switch to OFF. 2) Disconnect the connector from ECM. 3) Measure the resistance between ECM connectors. ***Connector & terminal*** ***#1 (E158) No. 11 — (E158) No. 12:*** ***#2 (E158) No. 23 — (E158) No. 24:*** ***#3 (E158) No. 35 — (E158) No. 36:*** ***#4 (E158) No. 47 — (E158) No. 48:***	Is resistance 1.89 — 2.31 Ω at 20°C (68°F)?	Go to step **3**.	Go to step **2**.
2	**CHECK HARNESS BETWEEN ECM AND FUEL INJECTOR CONNECTOR.** 1) Disconnect the connector from fuel injector. 2) Measure the resistance of harness between ECM connector and defective fuel injector connector. ***Connector & terminal*** ***#1 (E158) No. 12 — (E5) No. 1:*** ***#1 (E158) No. 11 — (E5) No. 2:*** ***#2 (E158) No. 24 — (E16) No. 1:*** ***#2 (E158) No. 23 — (E16) No. 2:*** ***#3 (E158) No. 36 — (E6) No. 1:*** ***#3 (E158) No. 35 — (E6) No. 2:*** ***#4 (E158) No. 48 — (E17) No. 1:*** ***#4 (E158) No. 47 — (E17) No. 2:***	Is the resistance less than 1 Ω?	Repair or replace the following items. • Poor contact of fuel injector connector • Defective fuel injector <Ref. to FU(w/o STI)-50, Fuel Injector.>	Repair the open circuit of the harness between the ECM connector and fuel injector connector.
3	**CHECK HARNESS BETWEEN ECM AND FUEL INJECTOR CONNECTOR.** Measure the resistance between the ECM connector and engine ground. ***Connector & terminal*** ***#1 (E158) No. 12 — Engine ground:*** ***#1 (E158) No. 11 — Engine ground:*** ***#2 (E158) No. 24 — Engine ground:*** ***#2 (E158) No. 23 — Engine ground:*** ***#3 (E158) No. 36 — Engine ground:*** ***#3 (E158) No. 35 — Engine ground:*** ***#4 (E158) No. 48 — Engine ground:*** ***#4 (E158) No. 47 — Engine ground:***	Is the resistance 1 MΩ or more?	Go to step **5**.	Go to step **4**.
4	**CHECK HARNESS BETWEEN ECM AND FUEL INJECTOR CONNECTOR.** 1) Disconnect the connector from fuel injector. 2) Measure the resistance between ECM connector and engine ground on defective fuel injectors. ***Connector & terminal*** ***#1 (E158) No. 12 — Engine ground:*** ***#1 (E158) No. 11 — Engine ground:*** ***#2 (E158) No. 24 — Engine ground:*** ***#2 (E158) No. 23 — Engine ground:*** ***#3 (E158) No. 36 — Engine ground:*** ***#3 (E158) No. 35 — Engine ground:*** ***#4 (E158) No. 48 — Engine ground:*** ***#4 (E158) No. 47 — Engine ground:***	Is the resistance 1 MΩ or more?	Replace the faulty fuel injector. <Ref. to FU(w/o STI)-50, Fuel Injector.>	Repair the short circuit to ground in harness between ECM connector and fuel injector connector.
5	**CHECK EXHAUST SYSTEM.**	Are there holes or loose bolts on exhaust system?	Repair the exhaust system.	Go to step **6**.
6	**CHECK AIR INTAKE SYSTEM.**	Are there holes, loose bolts or disconnection of hose on air intake system?	Repair the air intake system.	Go to step **7**.

	Step	Check	Yes	No
7	**CHECK FUEL PRESSURE.** **WARNING:** **Place "NO OPEN FLAMES" signs near the working area.** **CAUTION:** **Be careful not to spill fuel.** Measure the fuel pressure. <Ref. to ME(w/o STI)-31, INSPECTION, Fuel Pressure.> **CAUTION:** **Release fuel pressure before removing the fuel pressure gauge.**	Is the measured value 328 — 358 kPa (3.3 — 3.7 kgf/cm^2, 48 — 52 psi)?	Go to step **8**.	Check the fuel pump and fuel delivery line. <Ref. to FU(w/o STI)-167, INSPECTION, Fuel Pump.> <Ref. to FU(w/o STI)-196, INSPECTION, Fuel Delivery and Evaporation Lines.>
8	**CHECK ENGINE COOLANT TEMPERATURE SENSOR.** 1) Start the engine and warm up completely. 2) Read the value of «Coolant Temp.» using the Subaru Select Monitor or a general scan tool. NOTE: • Subaru Select Monitor For detailed operation procedures, refer to "Current Data Display For Engine". <Ref. to EN(w/o STI)(diag)-46, Subaru Select Monitor.> • General scan tool For detailed operation procedures, refer to the general scan tool operation manual.	Is the value of «Coolant Temp.» 75°C (167°F) or more?	Go to step **9**.	Replace the engine coolant temperature sensor. <Ref. to FU(w/o STI)-89, Engine Coolant Temperature Sensor.>
9	**CHECK MASS AIR FLOW AND INTAKE AIR TEMPERATURE SENSOR.** 1) Start the engine and warm up engine until coolant temperature is higher than 75°C (167°F). 2) For CVT models, set the select lever to "P" range or "N" range, and for MT models, place the shift lever in the neutral position. 3) Turn the A/C switch to OFF. 4) Turn all the accessory switches to OFF. 5) Read the value of «Mass Air Flow» using the Subaru Select Monitor or a general scan tool. NOTE: • Subaru Select Monitor For detailed operation procedures, refer to "Current Data Display For Engine". <Ref. to EN(w/o STI)(diag)-46, Subaru Select Monitor.> • General scan tool For detailed operation procedures, refer to the general scan tool operation manual.	Is the value of «Mass Air Flow» 2.0 — 5.0 g/s (0.26 — 0.66 lb/m)?	Go to step **10**.	Replace the mass air flow and intake air temperature sensor. <Ref. to FU(w/o STI)-110, Mass Air Flow and Intake Air Temperature Sensor.>

	Step	Check	Yes	No
10	**CHECK MASS AIR FLOW AND INTAKE AIR TEMPERATURE SENSOR.** 1) Start the engine and warm up engine until coolant temperature is higher than 75°C (167°F). 2) For CVT models, set the select lever to "P" range or "N" range, and for MT models, place the shift lever in the neutral position. 3) Turn the A/C switch to OFF. 4) Turn all the accessory switches to OFF. 5) Open the front hood. 6) Measure the ambient temperature. 7) Read the value of «IAT Sensor #11» using the Subaru Select Monitor or a general scan tool. NOTE: • Subaru Select Monitor For detailed operation procedures, refer to "Current Data Display For Engine". <Ref. to EN(w/o STI)(diag)-46, Subaru Select Monitor.> • General scan tool For detailed operation procedures, refer to the general scan tool operation manual.	Subtract ambient temperature value from the value of «IAT Sensor #11». Is the obtained value –10 — 50°C (–18 — 90°F)?	Go to step **11**.	Check the mass air flow and intake air temperature sensor. <Ref. to FU(w/o STI)-110, Mass Air Flow and Intake Air Temperature Sensor.>
11	**CHECK FUEL INJECTOR.** Check fuel injector. <Ref. to FU(w/o STI)-65, INSPECTION, Fuel Injector.>	Is the check result OK?	Go to step **12**.	Replace the faulty fuel injector. <Ref. to FU(w/o STI)-50, Fuel Injector.>
12	**CHECK PCV VALVE.** Check the PCV valve.	Is the PCV valve free from deformation, crack or other damage?	Repair or replace the PCV valve. <Ref. to EC(w/o STI)-83, PCV Valve.>	Go to step **13**.
13	**CHECK PCV HOSE.** Check the PCV hose.	Is the PCV hose free from deformation, crack or other damage?	Check the PCV hose assembly for cracks, damage or looseness. <Ref. to EC(w/o STI)-77, PCV Hose Assembly.>	Go to step **14**.
14	**CHECK PCV HOSE.** Check the PCV hose.	Check the clamp of PCV hose assembly for damage or looseness.	Repair or replace the PCV valve. <Ref. to EC(w/o STI)-77, PCV Hose Assembly.>	Repair the poor contact of ECM connector.

1. OUTLINE OF DIAGNOSIS

Detect fuel system malfunction by the amount of main feedback control.
Fuel system is diagnosed by comparing the target air fuel ratio calculated by ECM with the actual air fuel ratio measured by sensor.

2. EXECUTION CONDITION

Secondary parameters	Execution condition
Main feedback	In operation

3. GENERAL DRIVING CYCLE

Perform the diagnosis continuously after idling.

4. DIAGNOSTIC METHOD

Compare the diagnostic value with the threshold value, and if a condition meeting the criteria continues for 10 s × 3 times or more, judge that there is a fault in the fuel system.

Judgment Value

Malfunction Criteria	Threshold Value
Offset amount of main feedback compensation	< Value from Map

Map

Warm-up increase compensation coefficient	0.00	0.10	0.20	0.30	0.39	0.50	0.60
Threshold Value	0.000	–0.111	–0.198	–0.267	–0.343	–0.396	–0.439

Time Needed for Diagnosis: 10 s × 3 times
Malfunction Indicator Light Illumination: Illuminates when malfunction occurs in 2 continuous driving cycles.

BK:DTC P0191 FUEL RAIL PRESSURE SENSOR CIRCUIT RANGE/PERFORMANCE BANK 1

DTC DETECTING CONDITION:
Detected when two consecutive driving cycles with fault occur.
TROUBLE SYMPTOM:
- Improper idling
- Poor driving performance

CAUTION:
- **After servicing or replacing faulty parts, perform Clear Memory Mode <Ref. to EN(w/o STI)(diag)-82, OPERATION, Clear Memory Mode.>, and Inspection Mode <Ref. to EN(w/o STI)(diag)-64, PROCEDURE, Inspection Mode.>.**
- **Use the check board when measuring the ECM terminal voltage and resistance.**

WIRING DIAGRAM:
Engine Electrical System <Ref. to WI-154, WIRING DIAGRAM, Engine Electrical System.>

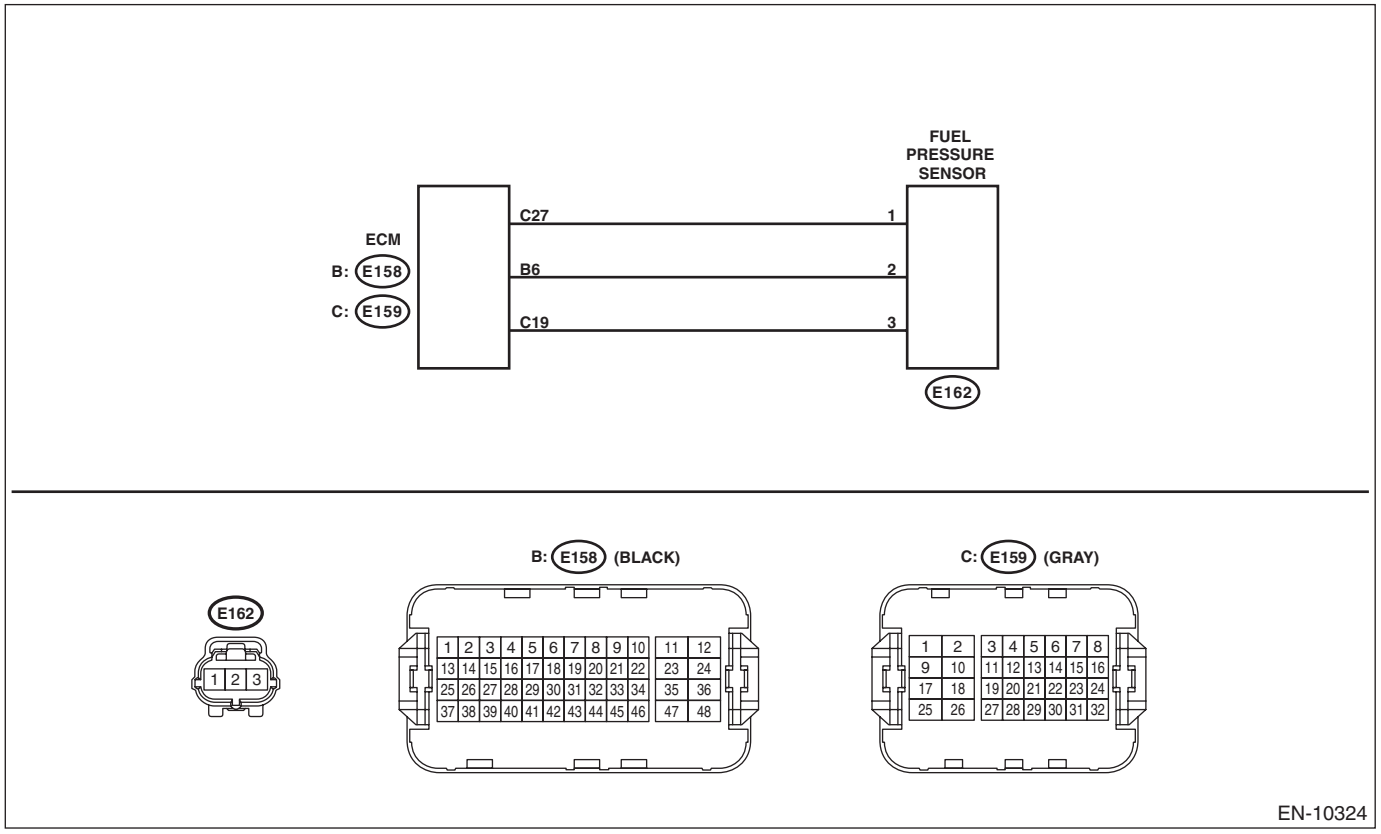

Step		Check	Yes	No
1	**CHECK FUEL PRESSURE SENSOR POWER SUPPLY.** 1) Turn the ignition switch to OFF. 2) Disconnect the connector from the fuel pressure sensor. 3) Turn the ignition switch to ON. 4) Measure the voltage between fuel pressure sensor and engine ground. ***Connector & terminal*** ***(E162) No. 3 (+) — Engine ground (–):***	Is the voltage 4.5 V or more?	Go to step **2**.	Go to step **4**.

	Step	Check	Yes	No
2	**CHECK HARNESS BETWEEN ECM AND FUEL PRESSURE SENSOR CONNECTOR.** 1) Turn the ignition switch to OFF. 2) Disconnect the connector from ECM. 3) Disconnect the connector from the fuel pressure sensor. 4) Measure the resistance of harness between ECM connector and fuel pressure sensor connector. ***Connector & terminal*** ***(E159) No. 27 — (E162) No. 1:*** ***(E158) No. 6 — (E162) No. 2:***	Is the resistance less than 1 Ω?	Go to step **3**.	Repair the open circuit in harness between ECM connector and fuel pressure sensor connector.
3	**CHECK HARNESS BETWEEN ECM AND FUEL PRESSURE SENSOR CONNECTOR.** Measure the resistance between the ECM connector and engine ground. ***Connector & terminal*** ***(E158) No. 6 (+) — Engine ground:*** ***(E159) No. 27 (+) — Engine ground:***	Is the resistance 1 MΩ or more?	Replace the fuel pressure sensor. <Ref. to FU(w/o STI)-66, Fuel Pressure Sensor.>	Repair the ground short circuit of harness between ECM connector and fuel pressure sensor connector.
4	**CHECK HARNESS BETWEEN ECM AND FUEL PRESSURE SENSOR CONNECTOR.** 1) Turn the ignition switch to OFF. 2) Disconnect the connector from ECM. 3) Measure the resistance of harness between ECM connector and fuel pressure sensor connector. ***Connector & terminal*** ***(E159) No. 19 — (E162) No. 3:***	Is the resistance less than 1 Ω?	Go to step **5**.	Repair the open circuit in harness between ECM connector and fuel pressure sensor connector.
5	**CHECK HARNESS BETWEEN ECM AND FUEL PRESSURE SENSOR CONNECTOR.** Measure the resistance between the ECM connector and engine ground. ***Connector & terminal*** ***(E158) No. 19 — Engine ground:***	Is the resistance 1 MΩ or more?	Repair the poor contact of ECM connector.	Repair the ground short circuit of harness between ECM connector and fuel pressure sensor connector.

1. OUTLINE OF DIAGNOSIS

Detect the offset malfunction of the fuel pressure sensor.
Judge as NG when the difference of the relative pressure between the fuel pressure and the barometric pressure is equal to or more than the judgment value when the predetermined conditions are met.

2. EXECUTION CONDITION

Secondary parameters	Execution condition
Integrated intake air mass during previous driving cycle	> 10000 g
Soak time	> 21600 s
Block heater detection	Complete
Block heater use (Refer to Definition List #4)	Not detected
Engine Coolant Temperature (ECT) continues dropping at each wake up *As defined by ECT at this wake up < ECT at last wake up	True*

3. GENERAL DRIVING CYCLE

Perform the diagnosis only once when the engine starts after a certain period of soaking time.

4. DIAGNOSTIC METHOD

Judge as NG when the following conditions are established.

Judgment Value

Malfunction Criteria	Threshold Value
Minimum HPFR pressure sensor output voltage (Fuel pressure)< 3.863 MPa	> 1.015 V
Minimum HPFR pressure sensor output voltage (Fuel pressure)< –2.011 MPa	> 0.232 V

Time Needed for Diagnosis: Less than 1 second
Malfunction Indicator Light Illumination: Illuminates when malfunction occurs in 2 continuous driving cycles.

BL:DTC P0192 FUEL RAIL PRESSURE SENSOR CIRCUIT LOW BANK 1

DTC DETECTING CONDITION:
Immediately at fault recognition
TROUBLE SYMPTOM:
- Improper idling
- Poor driving performance

CAUTION:
• After servicing or replacing faulty parts, perform Clear Memory Mode <Ref. to EN(w/o STI)(diag)-82, OPERATION, Clear Memory Mode.>, and Inspection Mode <Ref. to EN(w/o STI)(diag)-64, PROCEDURE, Inspection Mode.>.
• Use the check board when measuring the ECM terminal voltage and resistance.
WIRING DIAGRAM:
Engine Electrical System <Ref. to WI-154, WIRING DIAGRAM, Engine Electrical System.>

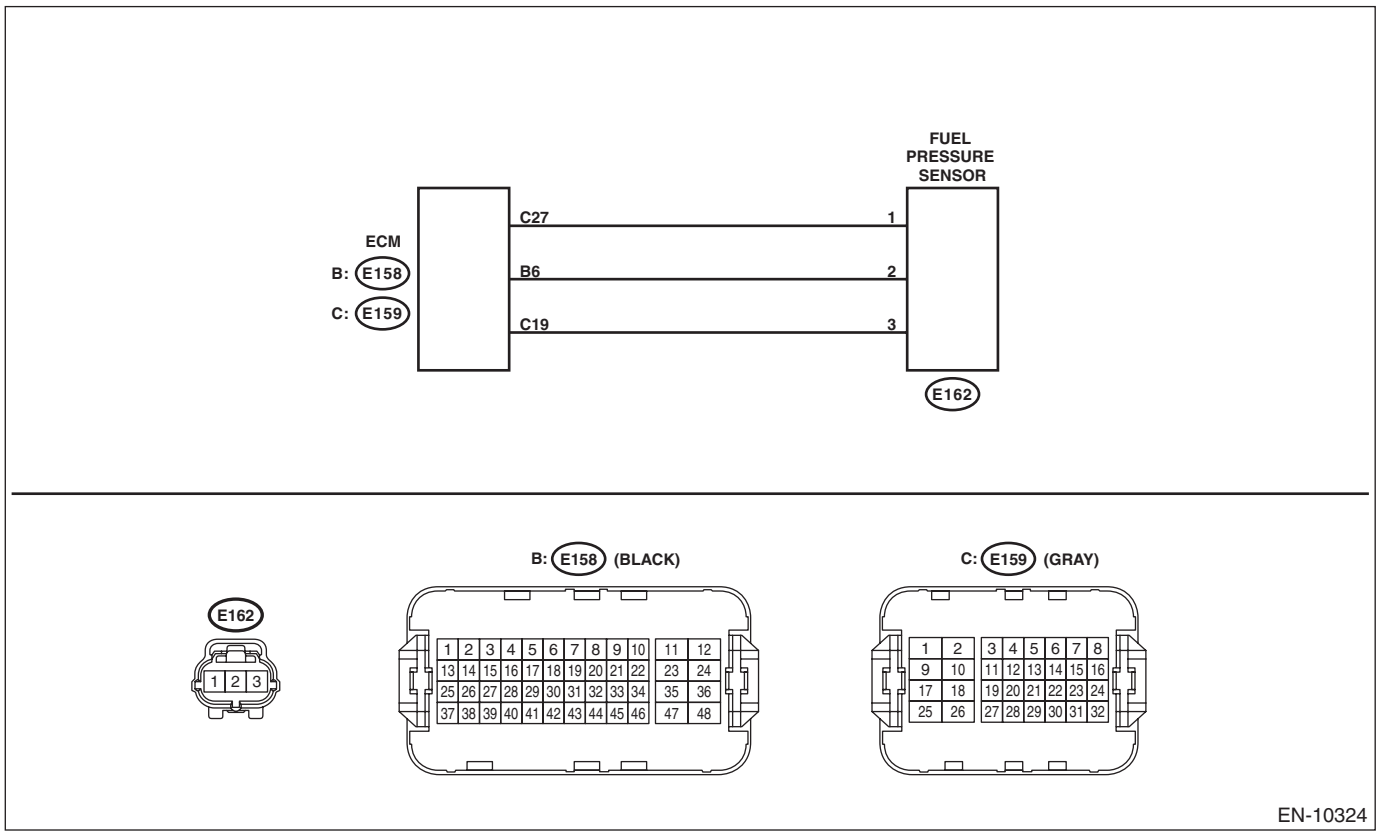

Step		Check	Yes	No
1	**CHECK HARNESS BETWEEN ECM AND FUEL PRESSURE SENSOR CONNECTOR.** 1) Turn the ignition switch to OFF. 2) Disconnect the connector from ECM. 3) Disconnect the connector from the fuel pressure sensor. 4) Measure the resistance between the ECM connector and engine ground. ***Connector & terminal*** ***(E158) No. 6 — Engine ground:***	Is the resistance 1 MΩ or more?	Replace the fuel pressure sensor. <Ref. to FU(w/o STI)-66, Fuel Pressure Sensor.>	Repair the ground short circuit of harness between ECM connector and fuel pressure sensor connector.

1. OUTLINE OF DIAGNOSIS

Detect the open or short circuit of the fuel pressure sensor.
Judge as NG if out of specification.

2. COMPONENT DESCRIPTION

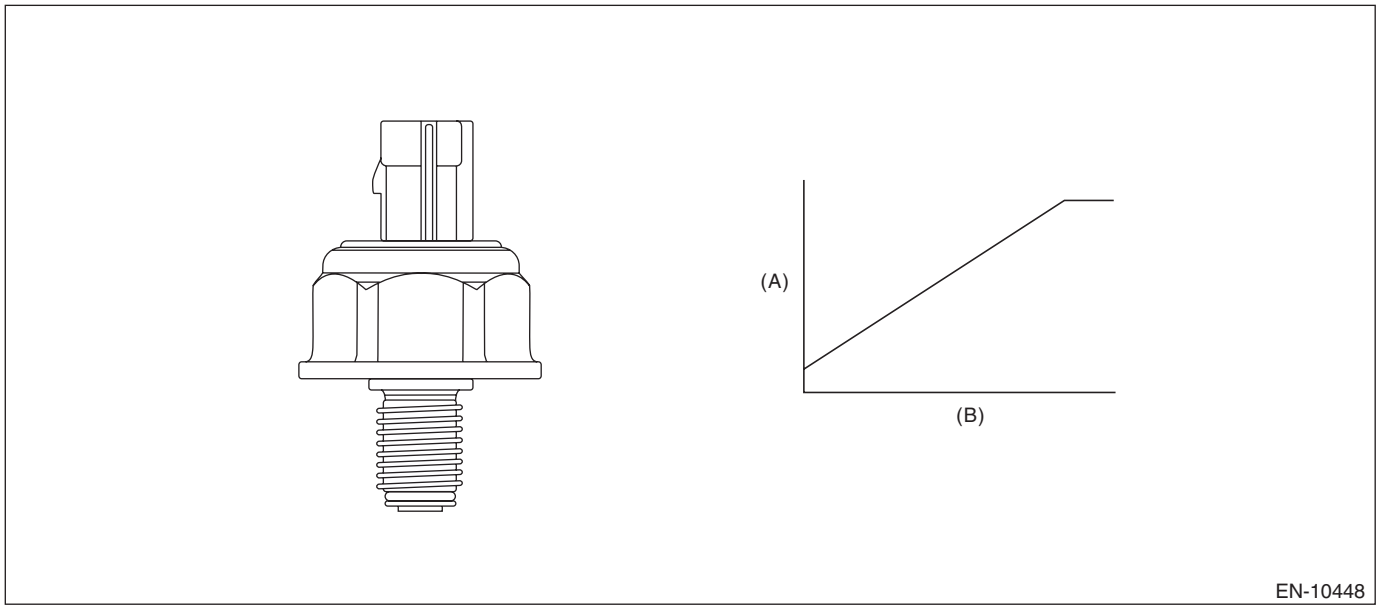

(A) Output voltage (B) Absolute pressure

3. EXECUTION CONDITION

Secondary parameters	Execution condition
None	

4. GENERAL DRIVING CYCLE

Always perform the diagnosis continuously.

5. DIAGNOSTIC METHOD

If the duration of time while the following conditions are met is longer than the time indicated, judge as NG.

Judgment Value

Malfunction Criteria	Threshold Value
Output voltage	< 0.23 V

Time Needed for Diagnosis: 2500 ms
Malfunction Indicator Light Illumination: Illuminates as soon as a malfunction occurs.

BM:DTC P0193 FUEL RAIL PRESSURE SENSOR CIRCUIT HIGH BANK 1

DTC DETECTING CONDITION:
Immediately at fault recognition
TROUBLE SYMPTOM:
- Improper idling
- Poor driving performance

CAUTION:
• After servicing or replacing faulty parts, perform Clear Memory Mode <Ref. to EN(w/o STI)(diag)-82, OPERATION, Clear Memory Mode.>, and Inspection Mode <Ref. to EN(w/o STI)(diag)-64, PROCEDURE, Inspection Mode.>.
• Use the check board when measuring the ECM terminal voltage and resistance.
WIRING DIAGRAM:
Engine Electrical System <Ref. to WI-154, WIRING DIAGRAM, Engine Electrical System.>

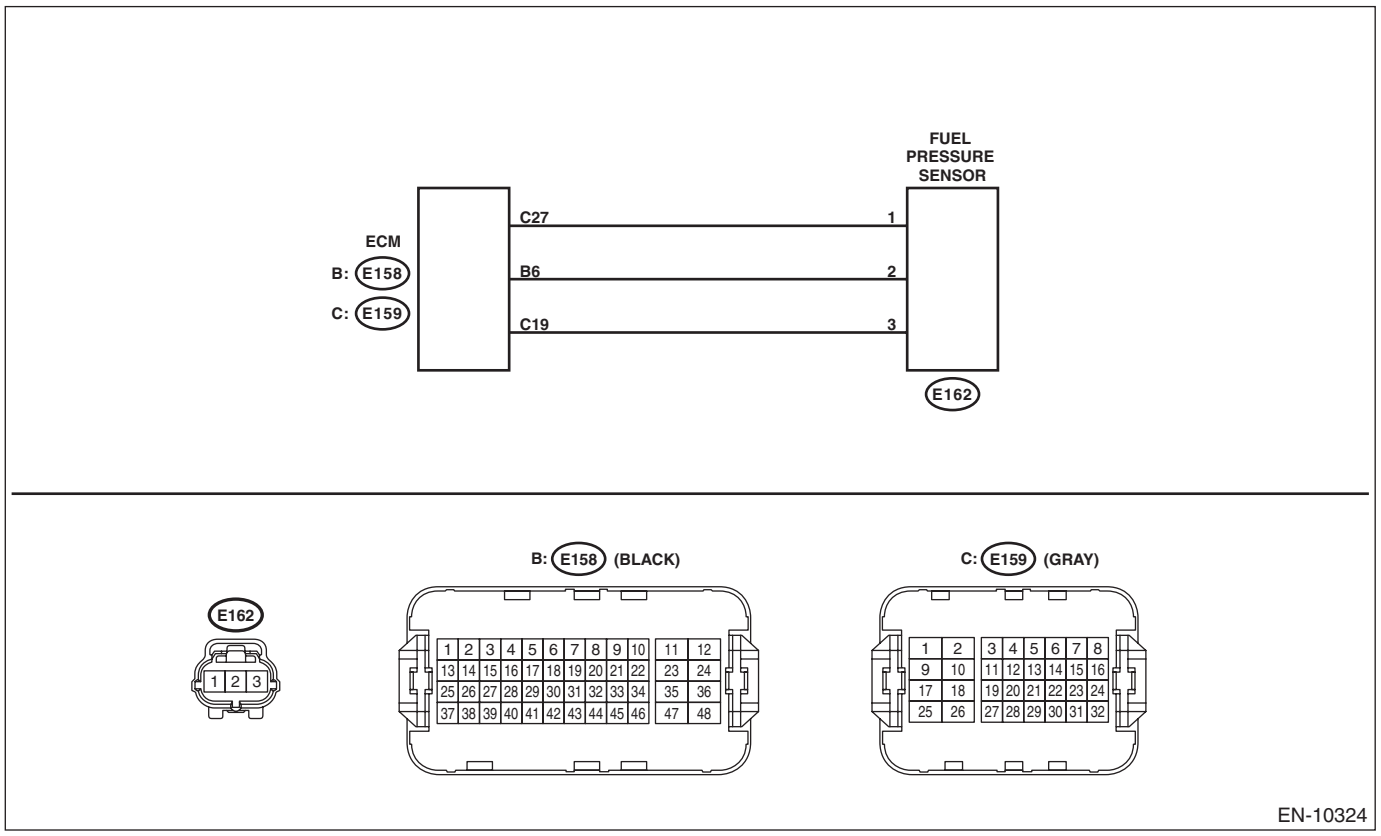

Step		Check	Yes	No
1	**CHECK FOR POOR CONTACT.** Check for poor contact of ECM and fuel pressure sensor connector.	Is there poor contact of the ECM or fuel pressure sensor connector?	Repair the poor contact of the ECM or fuel pressure sensor connector.	Go to step **2**.
2	**CHECK HARNESS BETWEEN ECM AND FUEL PRESSURE SENSOR CONNECTOR.** 1) Turn the ignition switch to OFF. 2) Disconnect the connector from ECM. 3) Disconnect the connector from the fuel pressure sensor. 4) Measure the resistance of harness between ECM connector and fuel pressure sensor connector. ***Connector & terminal*** ***(E159) No. 27 — (E162) No. 1:*** ***(E158) No. 6 — (E162) No. 2:***	Is the resistance less than 1 Ω?	Go to step **3**.	Repair the open circuit in harness between ECM connector and fuel pressure sensor connector.

Step		Check	Yes	No
3	**CHECK HARNESS BETWEEN ECM AND FUEL PRESSURE SENSOR CONNECTOR.** 1) Connect all connectors. 2) Turn the ignition switch to ON. 3) Measure the voltage between ECM connector and engine ground. ***Connector & terminal*** ***(E158) No. 6 (+) — Engine ground (–):***	Is the voltage 5 V or more?	Repair the short circuit to power in the harness between ECM connector and fuel pressure sensor connector.	Replace the fuel pressure sensor. <Ref. to FU(w/o STI)-66, Fuel Pressure Sensor.>

1. OUTLINE OF DIAGNOSIS

Detect the open or short circuit of the fuel pressure sensor.
Judge as NG if out of specification.

2. COMPONENT DESCRIPTION

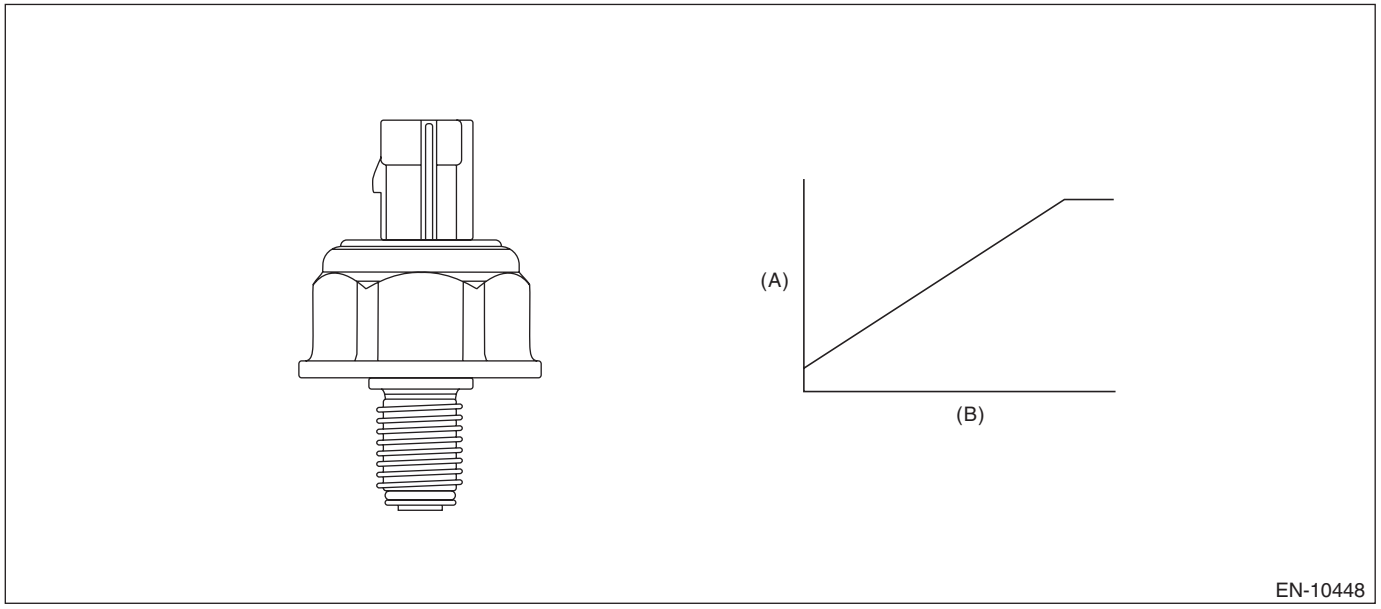

(A) Output voltage (B) Absolute pressure

3. EXECUTION CONDITION

Secondary parameters	Execution condition
None	

4. GENERAL DRIVING CYCLE

Always perform the diagnosis continuously.

5. DIAGNOSTIC METHOD

If the duration of time while the following conditions are met is longer than the time indicated, judge as NG.

Judgment Value

Malfunction Criteria	Threshold Value
Output voltage	> 3.25 V

Time Needed for Diagnosis: 2500 ms
Malfunction Indicator Light Illumination: Illuminates as soon as a malfunction occurs.

BN:DTC P0196 ENGINE OIL TEMPERATURE SENSOR "A" RANGE/PERFORMANCE

DTC DETECTING CONDITION:

Detected when two consecutive driving cycles with fault occur.

TROUBLE SYMPTOM:

- Hard to start
- Improper idling
- Poor driving performance

CAUTION:

• After servicing or replacing faulty parts, perform Clear Memory Mode <Ref. to EN(w/o STI)(diag)-82, OPERATION, Clear Memory Mode.>, and Inspection Mode <Ref. to EN(w/o STI)(diag)-64, PROCEDURE, Inspection Mode.>.

• Use the check board when measuring the ECM terminal voltage and resistance.

WIRING DIAGRAM:

Engine Electrical System <Ref. to WI-154, WIRING DIAGRAM, Engine Electrical System.>

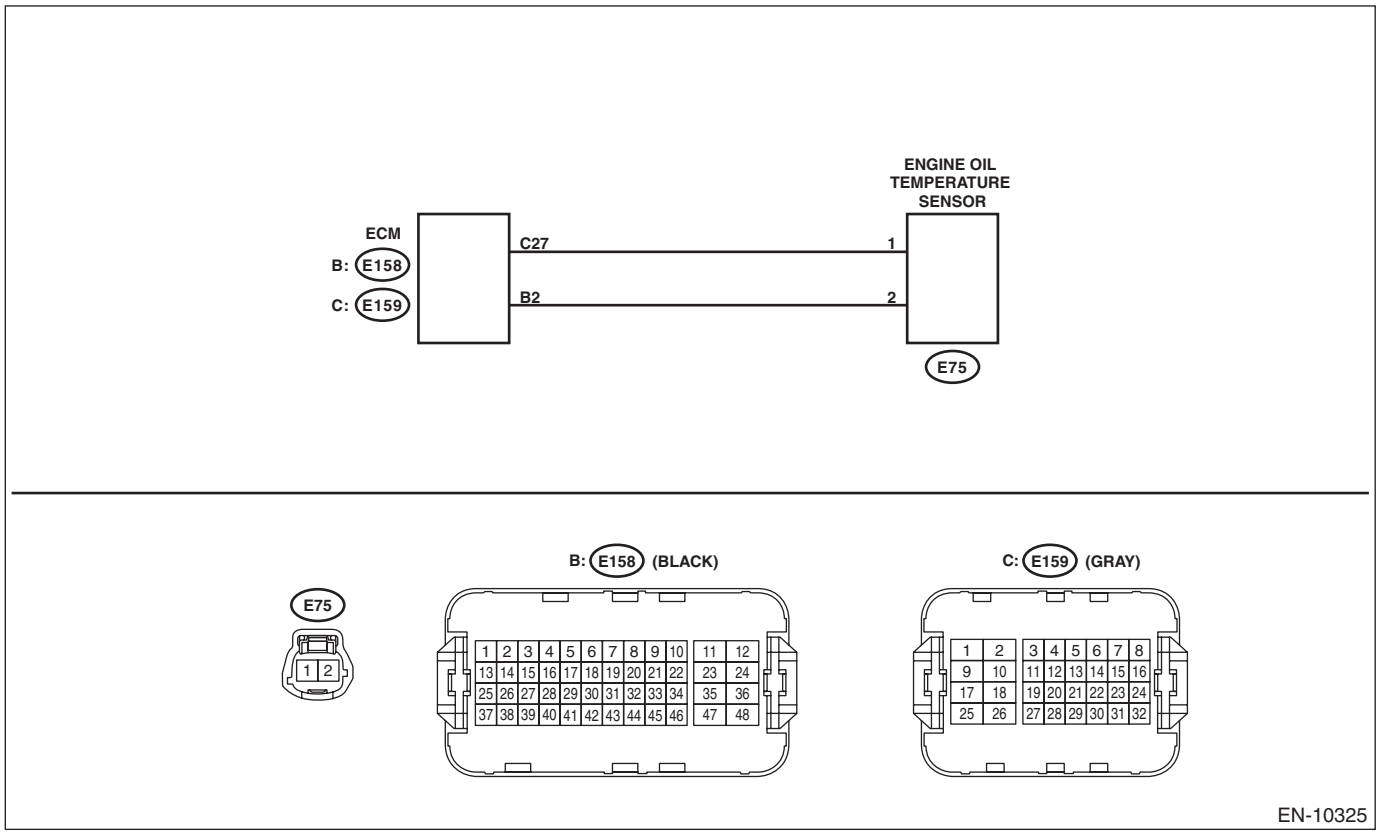

Step	Check	Yes	No
1 **CHECK FOR ANY OTHER DTC ON DISPLAY.**	Is any other DTC displayed?	Check the appropriate DTC using the “List of Diagnostic Trouble Code (DTC)”. <Ref. to EN(w/o STI)(diag)-106, List of Diagnostic Trouble Code (DTC).>	Go to step **2**.

Step		Check	Yes	No
2	**CHECK ENGINE OIL TEMPERATURE SENSOR.** 1) Disconnect the connectors from the engine oil temperature sensor. 2) Measure the resistance between engine oil temperature sensor terminals when the engine is cold and after warmed up. ***Terminals*** ***No. 1 — No. 2:***	Is the resistance of engine oil temperature sensor different between when engine is cold and after warmed up?	Repair the poor contact of ECM connector.	Replace the engine oil temperature sensor. <Ref. to FU(w/o STI)-91, Engine Oil Temperature Sensor.>

1. OUTLINE OF DIAGNOSIS

Detect the malfunction of the engine oil temperature sensor output properties. Using the following two diagnoses, judge as NG when either is NG.

- **Diagnosis 1 (correlation diagnosis):** After the engine starts after the specified period of soaking time has elapsed, diagnose by correlation between engine oil temperature sensor value, engine coolant temperature sensor value and intake air temperature sensor value. Judge as NG when the differences are both above the specified value by comparing between engine oil temperature and engine coolant temperature, engine oil temperature and intake air temperature.
- **Diagnosis 2 (function diagnosis):** Judge as NG when engine oil temperature does not rise to the specified value regardless of an engine running condition that clears certain conditions.

2. COMPONENT DESCRIPTION

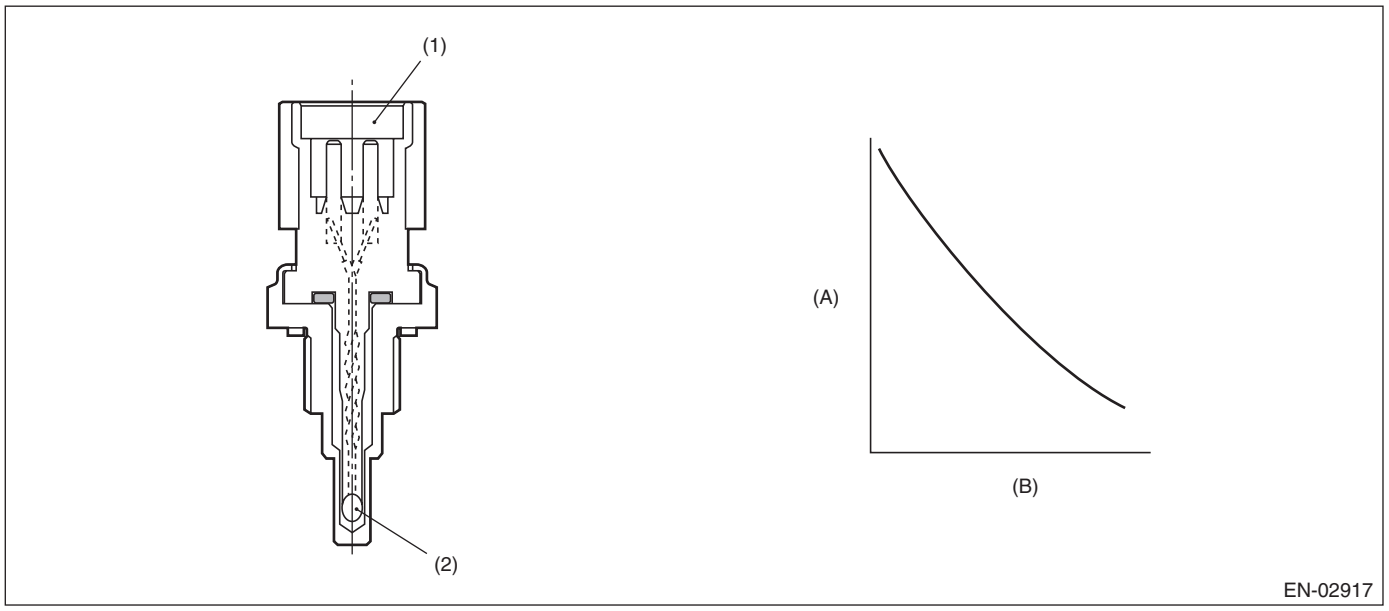

(A) Resistance value (kΩ)
(B) Temperature °C (°F)
(1) Connector
(2) Thermistor element

3. EXECUTION CONDITION

Diagnosis 1

Secondary parameters	Execution condition
Battery voltage	≥ 10.9 V
Soaking time	≥ 21600 s
Block heater judgment	Completed
Block heater operation	Not in operation

Diagnosis 2

Secondary parameters	Execution condition
Battery voltage	≥ 10.9 V
Engine speed	≥ 475 rpm
Engine oil temperature at engine starting	< 50°C (122°F)
Idling ratio	≤ 50%

4. GENERAL DRIVING CYCLE

- **Diagnosis 1:** Perform the diagnosis only once after the engine starts after a certain period of soaking time.
- **Diagnosis 2:** Perform the diagnosis only once after starting the engine from cold condition.

5. DIAGNOSTIC METHOD

Judge as NG when Diagnosis 1 or Diagnosis 2 becomes NG.
If the duration of time while the following conditions are met is longer than the time indicated, judge as NG.

Diagnosis 1

Judgment Value

Malfunction Criteria	Threshold Value
|Engine oil temperature at engine start – Engine coolant temperature at engine start|	> 10°C (18°F)
|Engine oil temperature at engine start – Intake air temperature 30 sec. after engine start|	> Value of Map 1

Map 1

Ambient temperature °C (°F)	–30 (–22)	30 (86)	45 (113)	60 (140)
|Engine oil temperature at engine start – Intake air temperature 30 sec. after engine start| °C (°F)	10 (18)	10 (18)	22 (39.6)	22 (39.6)

Time Needed for Diagnosis: Less than 1 second

Diagnosis 2

Judgment Value

Malfunction Criteria	Threshold Value
Engine oil temperature	< 50°C (122°F)
Elapsed time after starting the engine	≥ Value from Map 2

Map 2

Intake air temperature at engine start °C (°F)	–30 (–22)	–20 (–4)	–10 (14)	0 (32)	10 (50)	20 (68)	30 (86)	40 (104)
Elapsed time after starting the engine s	2,800	2,100	1,400	900	650	500	400	400

Time Needed for Diagnosis: Less than 1 second
Malfunction Indicator Light Illumination: Illuminates when malfunction occurs in 2 continuous driving cycles.

BO:DTC P0197 ENGINE OIL TEMPERATURE SENSOR "A" CIRCUIT LOW

DTC DETECTING CONDITION:
Immediately at fault recognition
TROUBLE SYMPTOM:
- Hard to start
- Improper idling
- Poor driving performance

CAUTION:
- **After servicing or replacing faulty parts, perform Clear Memory Mode <Ref. to EN(w/o STI)(diag)-82, OPERATION, Clear Memory Mode.>, and Inspection Mode <Ref. to EN(w/o STI)(diag)-64, PROCEDURE, Inspection Mode.>.**
- **Use the check board when measuring the ECM terminal voltage and resistance.**

WIRING DIAGRAM:
Engine Electrical System <Ref. to WI-154, WIRING DIAGRAM, Engine Electrical System.>

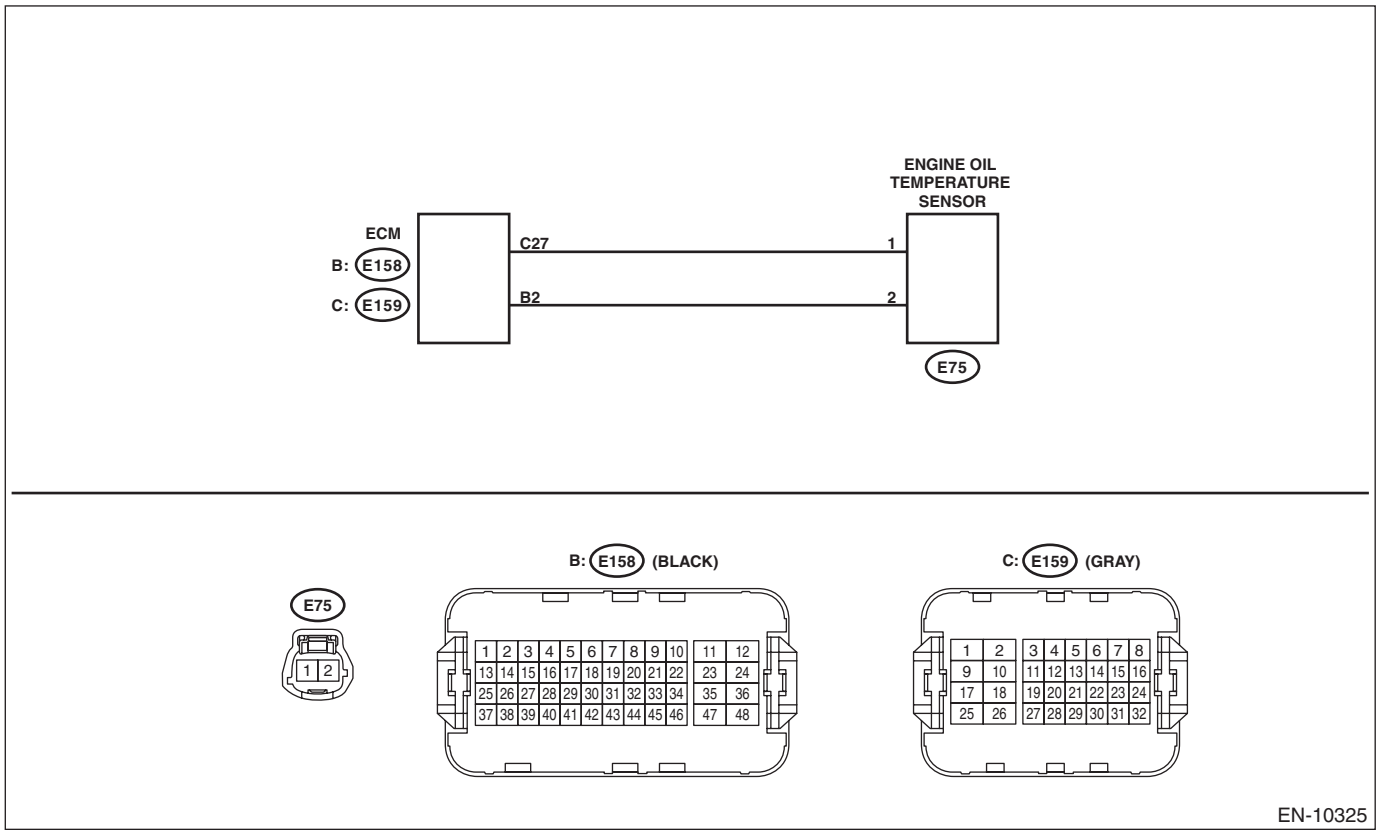

	Step	Check	Yes	No
1	**CHECK CURRENT DATA.** 1) Start the engine. 2) Read the value of «Oil Temperature» using the Subaru Select Monitor or a general scan tool. NOTE: • Subaru Select Monitor For detailed operation procedures, refer to “Current Data Display For Engine”. <Ref. to EN(w/o STI)(diag)-46, Subaru Select Monitor.> • General scan tool For detailed operation procedures, refer to the general scan tool operation manual.	Is the value of «Oil Temperature» 150°C (302°F) or more?	Go to step **2**.	Even if DTC is detected, the circuit has returned to a normal condition at this time. Reproduce the failure, and then perform the diagnosis again. NOTE: In this case, temporary poor contact of connector, temporary open or short circuit of harness may be the cause.
2	**CHECK HARNESS BETWEEN ECM AND ENGINE OIL TEMPERATURE SENSOR CONNECTOR.** 1) Turn the ignition switch to OFF. 2) Disconnect the connector from ECM. 3) Disconnect the connectors from the engine oil temperature sensor. 4) Measure the resistance between the ECM connector and engine ground. ***Connector & terminal*** ***(E158) No. 2 — Engine ground:***	Is the resistance 1 MΩ or more?	Replace the engine oil temperature sensor. <Ref. to FU(w/o STI)-91, Engine Oil Temperature Sensor.>	Repair the short circuit to ground in the harness between the ECM connector and engine oil temperature sensor connector.

1. OUTLINE OF DIAGNOSIS

Detect the open or short circuit of the oil temperature sensor.
Judge as NG when outside of the judgment value.

2. COMPONENT DESCRIPTION

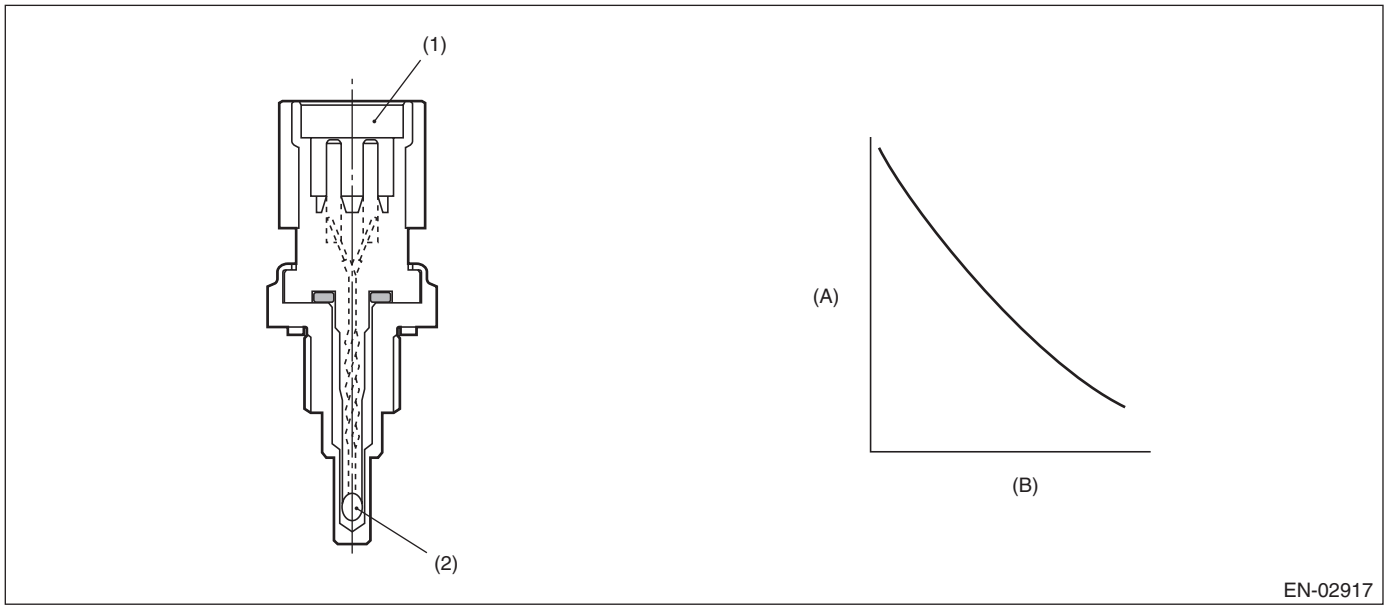

(A) Resistance value (kΩ)
(B) Temperature °C (°F)
(1) Connector
(2) Thermistor element

3. EXECUTION CONDITION

Secondary parameters	Execution condition
None	

4. GENERAL DRIVING CYCLE

Always perform the diagnosis continuously.

5. DIAGNOSTIC METHOD

If the duration of time while the following conditions are met is longer than the time indicated, judge as NG.

Judgment Value

Malfunction Criteria	Threshold Value
Output voltage	< 0.18 V

Time Needed for Diagnosis: 500 ms
Malfunction Indicator Light Illumination: Illuminates as soon as a malfunction occurs.

BP:DTC P0198 ENGINE OIL TEMPERATURE SENSOR "A" CIRCUIT HIGH

DTC DETECTING CONDITION:
Immediately at fault recognition
TROUBLE SYMPTOM:
- Hard to start
- Improper idling
- Poor driving performance

CAUTION:
- **After servicing or replacing faulty parts, perform Clear Memory Mode <Ref. to EN(w/o STI)(diag)-82, OPERATION, Clear Memory Mode.>, and Inspection Mode <Ref. to EN(w/o STI)(diag)-64, PROCEDURE, Inspection Mode.>.**
- **Use the check board when measuring the ECM terminal voltage and resistance.**

WIRING DIAGRAM:
Engine Electrical System <Ref. to WI-154, WIRING DIAGRAM, Engine Electrical System.>

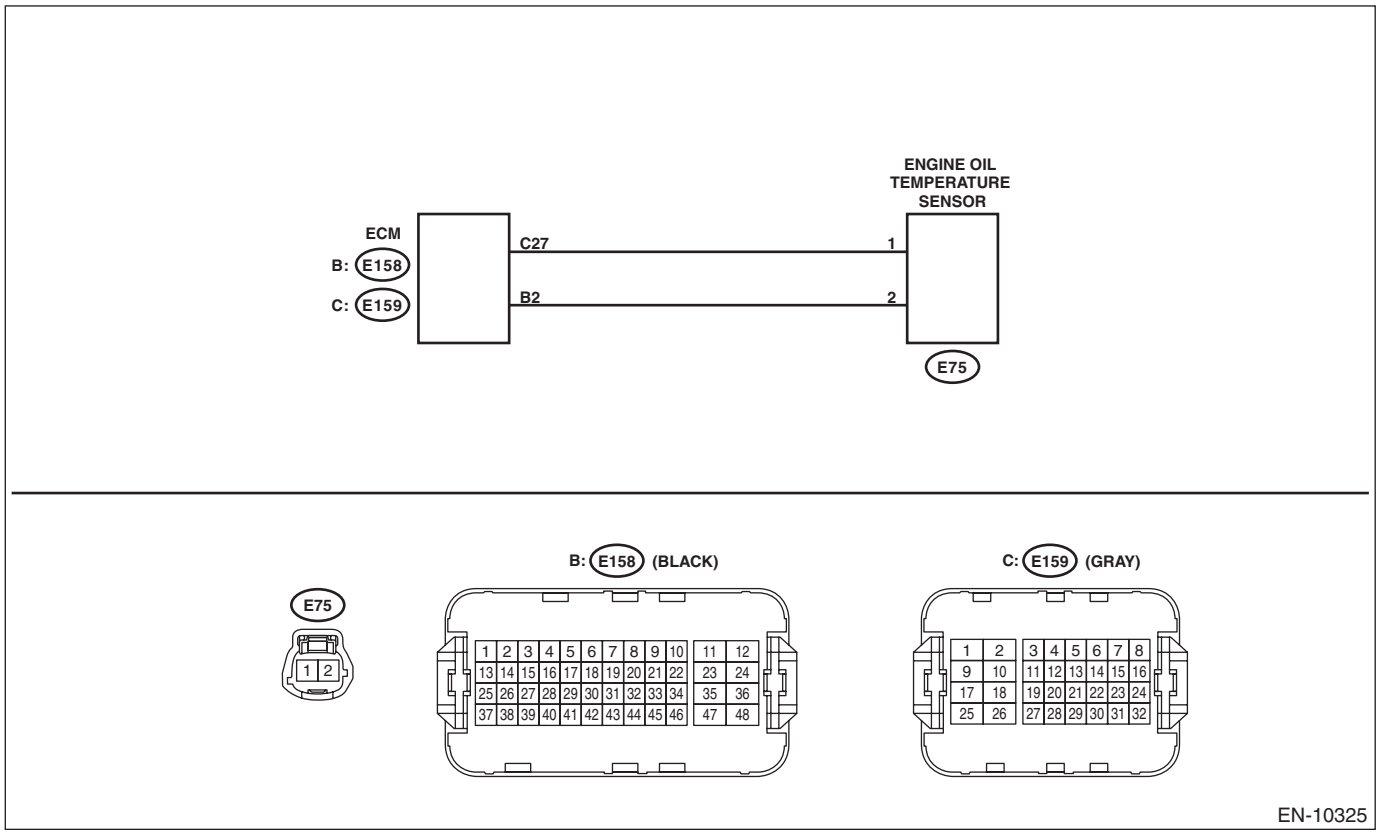

	Step	Check	Yes	No
1	**CHECK CURRENT DATA.** 1) Start the engine. 2) Read the value of «Oil Temperature» using the Subaru Select Monitor or a general scan tool. NOTE: • Subaru Select Monitor For detailed operation procedures, refer to "Current Data Display For Engine". <Ref. to EN(w/o STI)(diag)-46, Subaru Select Monitor.> • General scan tool For detailed operation procedures, refer to the general scan tool operation manual.	Is the value of «Oil Temperature» –40°C (–40°F) or less?	Go to step **2**.	Even if DTC is detected, the circuit has returned to a normal condition at this time. Reproduce the failure, and then perform the diagnosis again. NOTE: In this case, temporary poor contact of connector, temporary open or short circuit of harness may be the cause.
2	**CHECK FOR POOR CONTACT.** Check for poor contact between the ECM and engine oil temperature sensor connectors.	Is there poor contact of the ECM or engine oil temperature sensor connectors?	Repair the poor contact of ECM or engine oil temperature sensor connector.	Go to step **3**.
3	**CHECK HARNESS BETWEEN ECM AND ENGINE OIL TEMPERATURE SENSOR CONNECTOR.** 1) Turn the ignition switch to OFF. 2) Disconnect the connector from ECM. 3) Disconnect the connectors from the engine oil temperature sensor. 4) Measure the resistance of the harness between the ECM connector and engine oil temperature sensor connector. ***Connector & terminal*** ***(E159) No. 27 — (E75) No. 1:*** ***(E158) No. 2 — (E75) No. 2:***	Is the resistance less than 1 Ω?	Go to step **4**.	Repair the open circuit in the harness between ECM connector and engine oil temperature sensor connector.
4	**CHECK HARNESS BETWEEN ECM AND ENGINE OIL TEMPERATURE SENSOR CONNECTOR.** 1) Connect all connectors. 2) Turn the ignition switch to ON. 3) Measure the voltage between ECM connector and engine ground. ***Connector & terminal*** ***(E158) No. 2 (+) — Engine ground (–):***	Is the voltage 5 V or more?	Repair the short circuit to power in harness between ECM connector and engine oil temperature sensor connector.	Replace the engine oil temperature sensor. <Ref. to FU(w/o STI)-91, Engine Oil Temperature Sensor.>

1. OUTLINE OF DIAGNOSIS

Detect the open or short circuit of the oil temperature sensor.
Judge as NG when outside of the judgment value.

2. COMPONENT DESCRIPTION

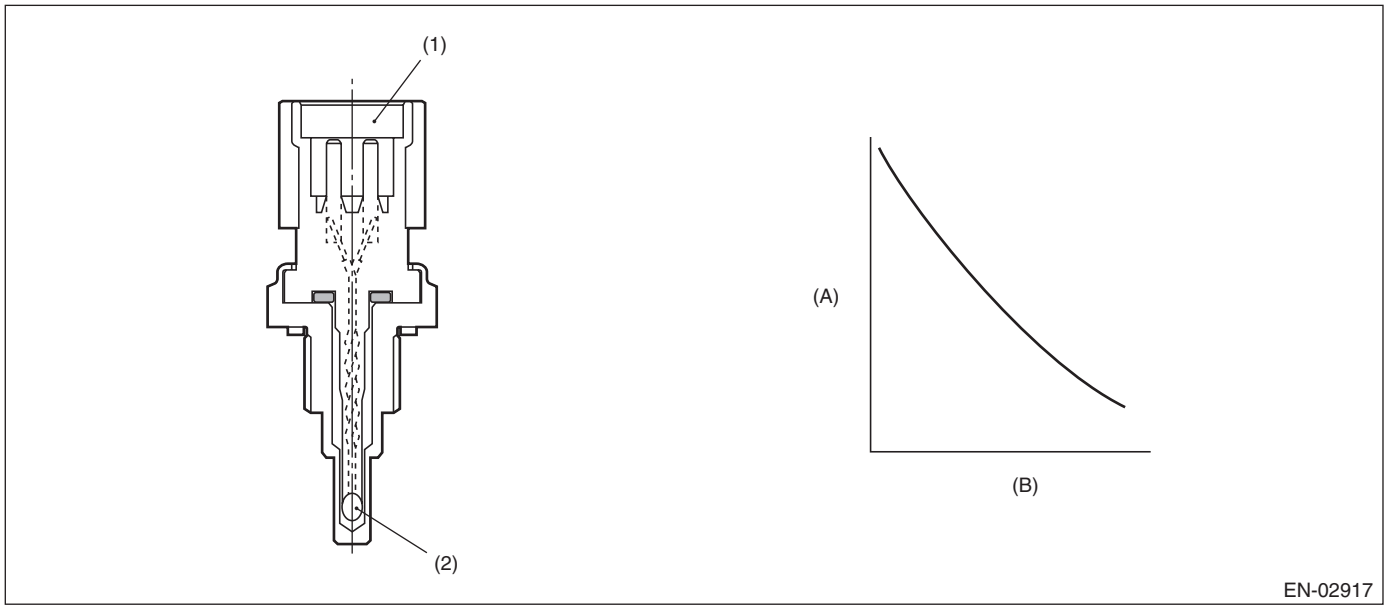

(A) Resistance value (kΩ)
(B) Temperature °C (°F)
(1) Connector
(2) Thermistor element

3. EXECUTION CONDITION

Secondary parameters	Execution condition
None	

4. GENERAL DRIVING CYCLE

Always perform the diagnosis continuously.

5. DIAGNOSTIC METHOD

If the duration of time while the following conditions are met is longer than the time indicated, judge as NG.

Judgment Value

Malfunction Criteria	Threshold Value
Output voltage	> 4.71 V

Time Needed for Diagnosis: 500 ms
Malfunction Indicator Light Illumination: Illuminates as soon as a malfunction occurs.

BQ:DTC P0222 THROTTLE/PEDAL POSITION SENSOR/SWITCH "B" CIRCUIT LOW

DTC DETECTING CONDITION:
Immediately at fault recognition
TROUBLE SYMPTOM:
- Improper idling
- Poor driving performance
- Engine stalls.

CAUTION:
• After servicing or replacing faulty parts, perform Clear Memory Mode <Ref. to EN(w/o STI)(diag)-82, OPERATION, Clear Memory Mode.>, and Inspection Mode <Ref. to EN(w/o STI)(diag)-64, PROCEDURE, Inspection Mode.>.
• Use the check board when measuring the ECM terminal voltage and resistance.

WIRING DIAGRAM:
Engine Electrical System <Ref. to WI-154, WIRING DIAGRAM, Engine Electrical System.>

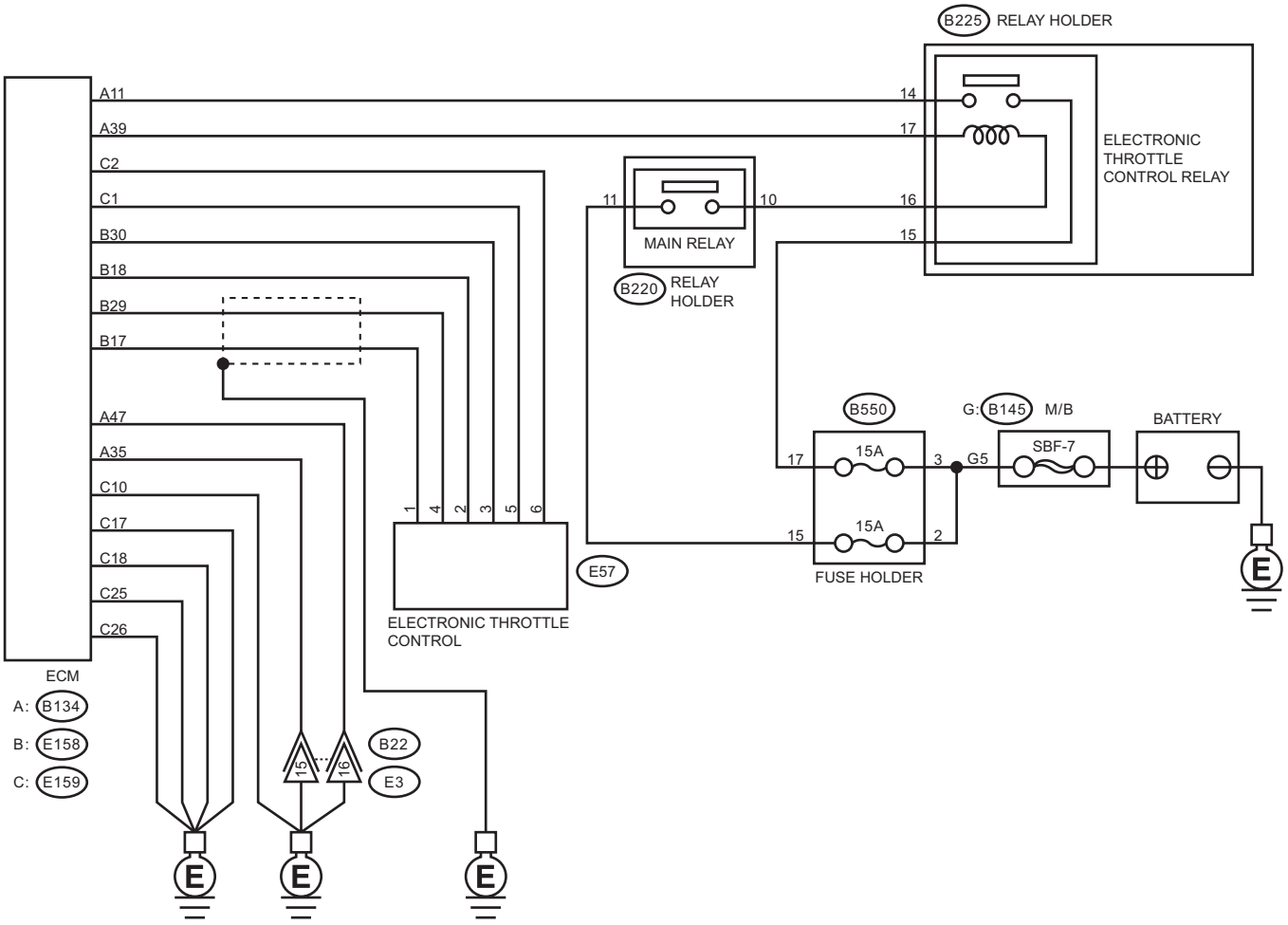

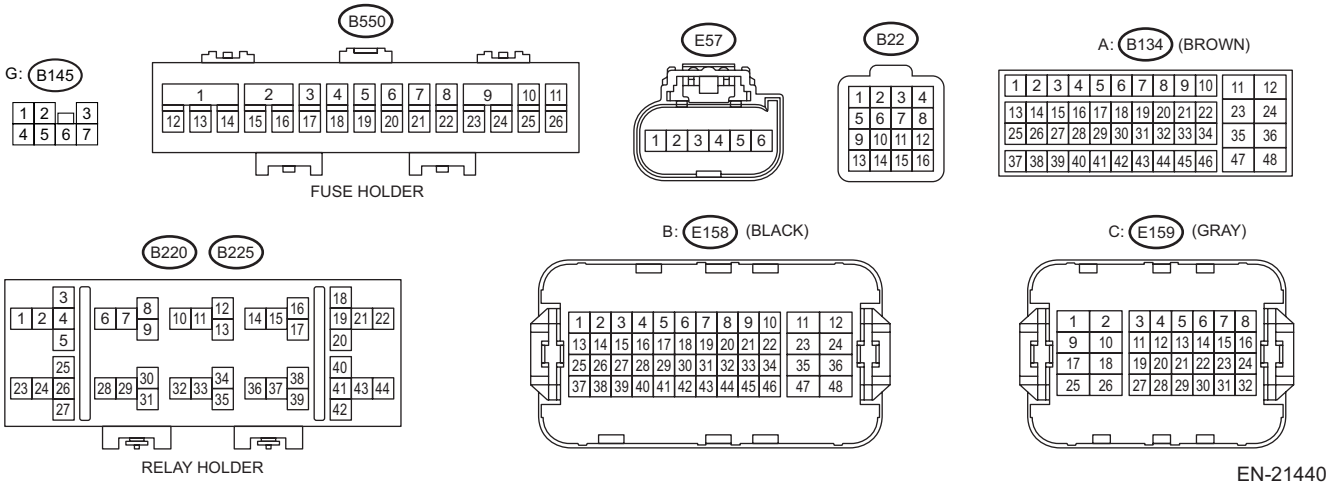

EN-21440

	Step	Check	Yes	No
1	**CHECK HARNESS BETWEEN ECM AND ELECTRONIC THROTTLE CONTROL CONNECTOR.** 1) Turn the ignition switch to OFF. 2) Disconnect the connector from ECM. 3) Disconnect the connectors from electronic throttle control. 4) Measure the resistance between the ECM connector and engine ground. ***Connector & terminal*** ***(E158) No. 18 — Engine ground:*** ***(E158) No. 29 — Engine ground:***	Is the resistance 1 MΩ or more?	Go to step **2**.	Repair the ground short circuit of harness between ECM connector and electronic throttle control connector.
2	**CHECK SHORT CIRCUIT INSIDE THE ECM.** 1) Connect the connector to ECM. 2) Measure the resistance between electronic throttle control connector and engine ground. ***Connector & terminal*** ***(E57) No. 4 — Engine ground:***	Is the resistance 1 MΩ or more?	Replace the electronic throttle control. <Ref. to FU(w/o STI)-15, Throttle Body.>	Repair the ground short circuit of harness between ECM connector and electronic throttle control connector. Replace the ECM if defective. <Ref. to FU(w/o STI)-124, Engine Control Module (ECM).>

1. OUTLINE OF DIAGNOSIS

Detect the open or short circuit of throttle position sensor 2.
Judge as NG if out of specification.

2. COMPONENT DESCRIPTION

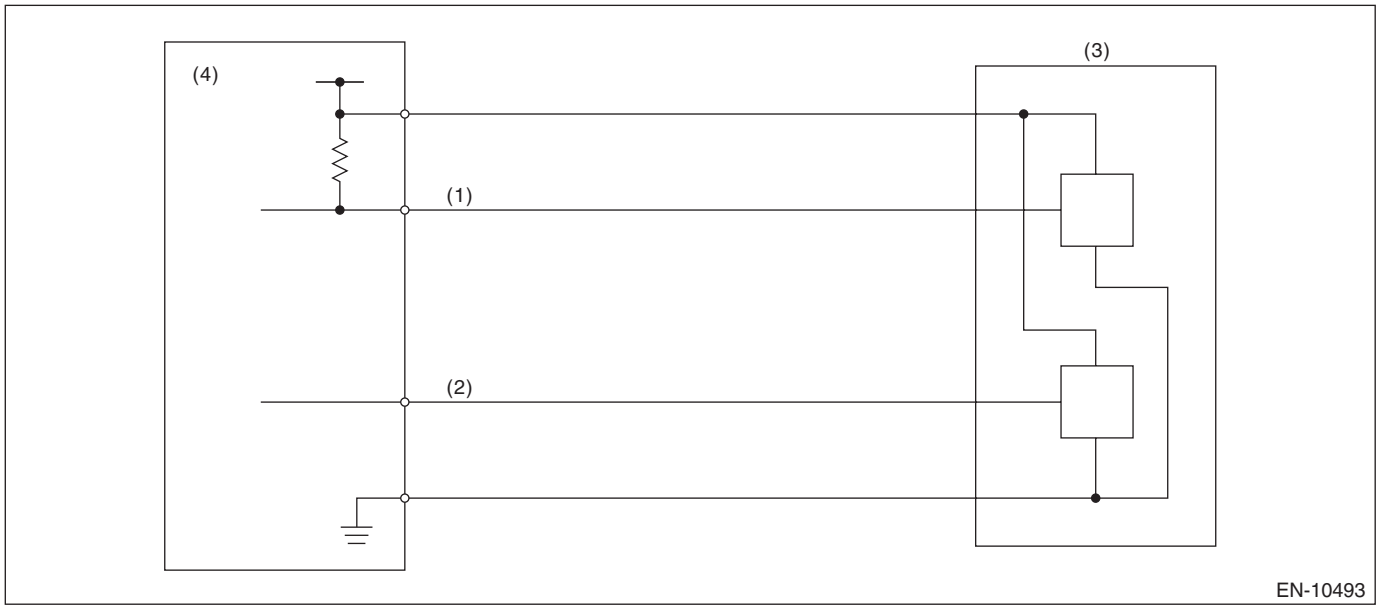

(1) Throttle position sensor 1 signal
(2) Throttle position sensor 2 signal
(3) Throttle position sensor
(4) Engine control module (ECM)

3. EXECUTION CONDITION

Secondary parameters	Execution condition
Battery voltage	≥ 6 V

4. GENERAL DRIVING CYCLE

Always perform the diagnosis continuously.

5. DIAGNOSTIC METHOD

If the duration of time while the following conditions are met is longer than the time indicated, judge as NG.

Judgment Value

Malfunction Criteria	Threshold Value
Sensor 2 input voltage	< 0.44 V

Time Needed for Diagnosis: 100 ms
Malfunction Indicator Light Illumination: Illuminates as soon as a malfunction occurs.

BR:DTC P0223 THROTTLE/PEDAL POSITION SENSOR/SWITCH "B" CIRCUIT HIGH

DTC DETECTING CONDITION:
Immediately at fault recognition
TROUBLE SYMPTOM:
- Improper idling
- Poor driving performance
- Engine stalls.

CAUTION:
- **After servicing or replacing faulty parts, perform Clear Memory Mode <Ref. to EN(w/o STI)(diag)-82, OPERATION, Clear Memory Mode.>, and Inspection Mode <Ref. to EN(w/o STI)(diag)-64, PROCEDURE, Inspection Mode.>.**
- **Use the check board when measuring the ECM terminal voltage and resistance.**

WIRING DIAGRAM:
Engine Electrical System <Ref. to WI-154, WIRING DIAGRAM, Engine Electrical System.>

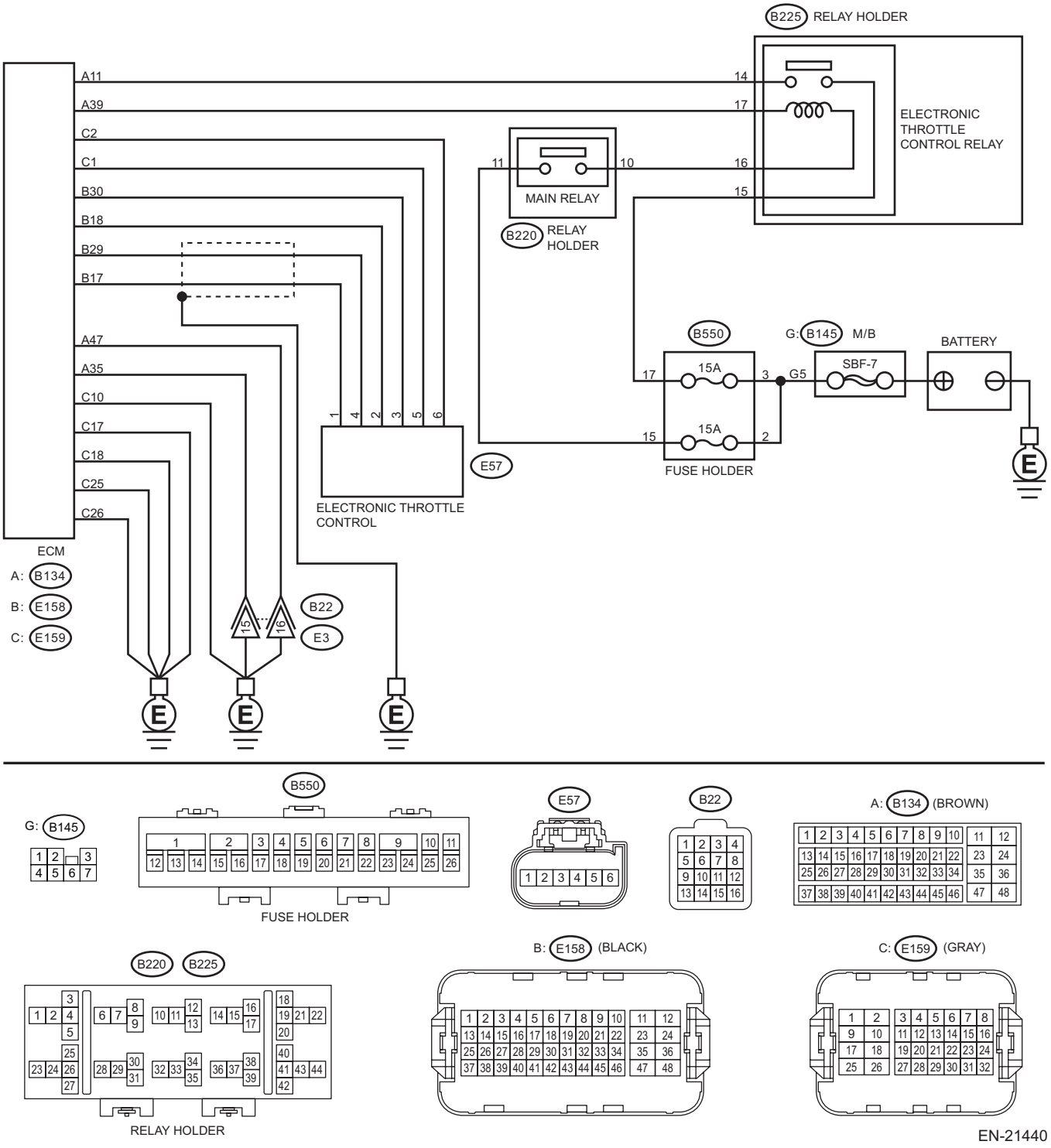

EN-21440

	Step	Check	Yes	No
1	**CHECK HARNESS BETWEEN ECM AND ELECTRONIC THROTTLE CONTROL CONNECTOR.** 1) Turn the ignition switch to OFF. 2) Disconnect the connector from ECM. 3) Disconnect the connectors from electronic throttle control. 4) Measure the resistance of harness between ECM connector and electronic throttle control connector. ***Connector & terminal*** ***(E158) No. 29 — (E57) No. 4:*** ***(E158) No. 30 — (E57) No. 3:***	Is the resistance less than 1 Ω?	Go to step **2**.	Repair the open circuit of harness between ECM connector and electronic throttle control connector.
2	**CHECK HARNESS BETWEEN ECM AND ELECTRONIC THROTTLE CONTROL CONNECTOR.** 1) Connect the connector to ECM. 2) Measure the resistance between electronic throttle control connector and engine ground. ***Connector & terminal*** ***(E57) No. 3 — Engine ground:***	Is the resistance less than 5 Ω?	Go to step **3**.	Repair the harness and connector. NOTE: In this case, repair the following item: • Open circuit of harness between ECM connector and engine ground • Poor contact of ECM connector • Poor contact of coupling connector
3	**CHECK HARNESS BETWEEN ECM AND ELECTRONIC THROTTLE CONTROL CONNECTOR.** 1) Turn the ignition switch to ON. 2) Measure the voltage between electronic throttle control connector and engine ground. ***Connector & terminal*** ***(E57) No. 4 (+) — Engine ground (–):***	Is the voltage 5 V or more?	Repair the short circuit to power in the harness between ECM connector and electronic throttle control connector.	Go to step **4**.
4	**CHECK HARNESS BETWEEN ECM AND ELECTRONIC THROTTLE CONTROL CONNECTOR.** 1) Turn the ignition switch to OFF. 2) Disconnect the connector from ECM. 3) Measure the resistance between ECM connectors. ***Connector & terminal*** ***(E158) No. 18 — (E158) No. 29:***	Is the resistance 1 MΩ or more?	Repair the poor contact of electronic throttle control connector. Replace the electronic throttle control if defective. <Ref. to FU(w/o STI)-15, Throttle Body.>	Repair the short circuit to power in the harness between ECM connector and electronic throttle control connector.

1. OUTLINE OF DIAGNOSIS

Detect the open or short circuit of throttle position sensor 2.
Judge as NG if out of specification.

2. COMPONENT DESCRIPTION

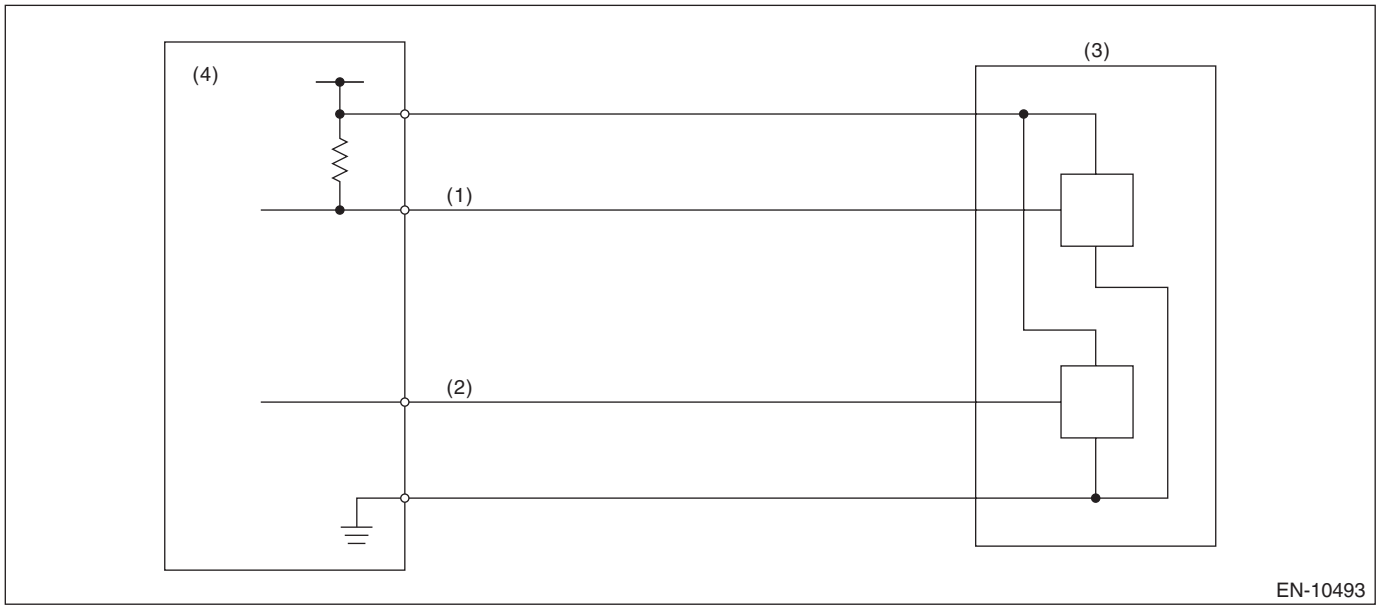

(1) Throttle position sensor 1 signal
(2) Throttle position sensor 2 signal
(3) Throttle position sensor
(4) Engine control module (ECM)

3. EXECUTION CONDITION

Secondary parameters	Execution condition
Battery voltage	≥ 6 V

4. GENERAL DRIVING CYCLE

Always perform the diagnosis continuously.

5. DIAGNOSTIC METHOD

If the duration of time while the following conditions are met is longer than the time indicated, judge as NG.

Judgment Value

Malfunction Criteria	Threshold Value
Sensor 2 input voltage	> 4.82 V

Time Needed for Diagnosis: 100 ms
Malfunction Indicator Light Illumination: Illuminates as soon as a malfunction occurs.

BS:DTC P0230 FUEL PUMP PRIMARY CIRCUIT

DTC DETECTING CONDITION:

Detected when two consecutive driving cycles with fault occur.

CAUTION:

- **After servicing or replacing faulty parts, perform Clear Memory Mode <Ref. to EN(w/o STI)(diag)-82, OPERATION, Clear Memory Mode.>, and Inspection Mode <Ref. to EN(w/o STI)(diag)-64, PROCEDURE, Inspection Mode.>.**
- **Use the check board when measuring the ECM terminal voltage and resistance.**

WIRING DIAGRAM:

Engine Electrical System <Ref. to WI-154, WIRING DIAGRAM, Engine Electrical System.>

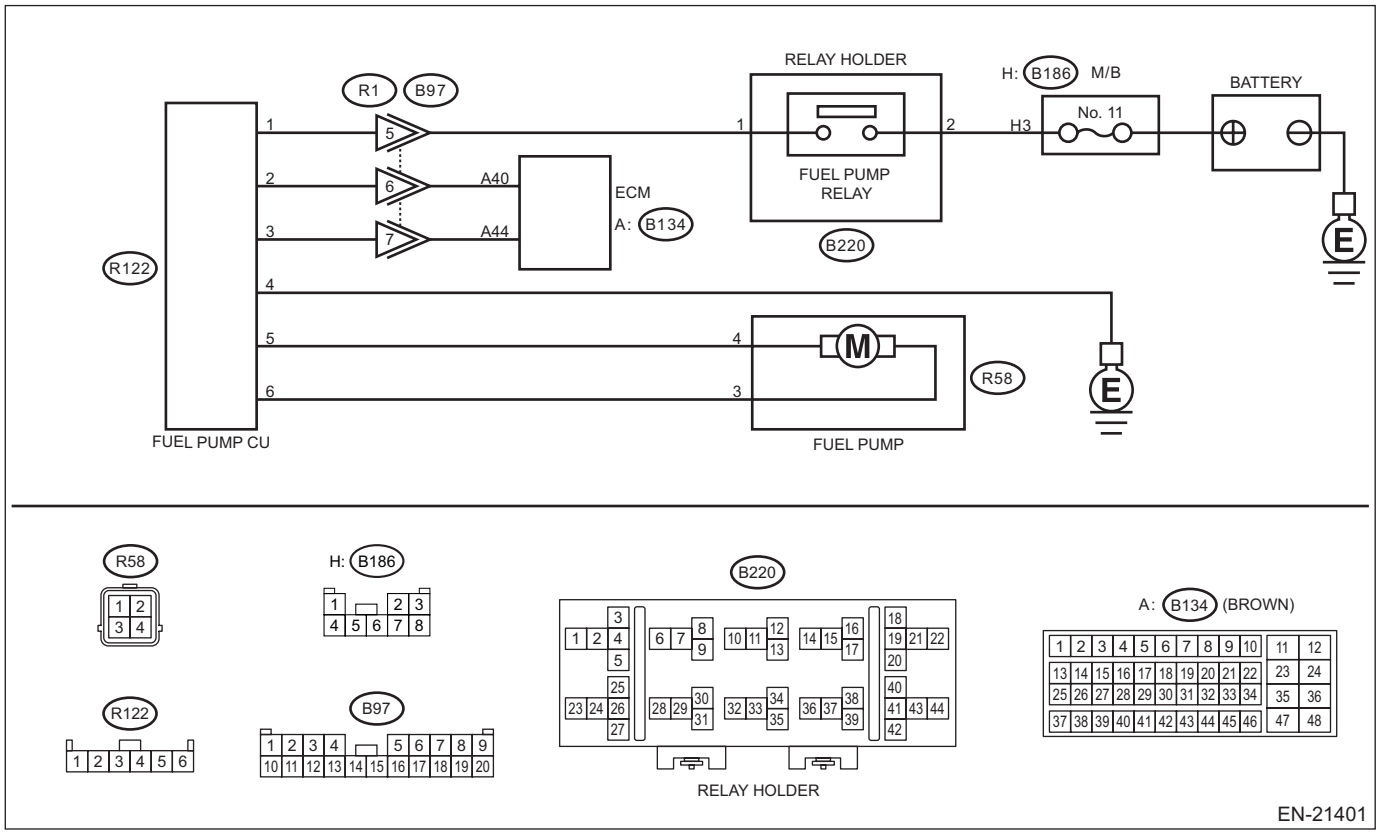

Step		Check	Yes	No
1	**CHECK POWER SUPPLY CIRCUIT TO FUEL PUMP CONTROL UNIT.** 1) Turn the ignition switch to OFF. 2) Disconnect the connector from fuel pump control unit. 3) Turn the ignition switch to ON. 4) Measure the voltage between fuel pump control unit connector and engine ground. ***Connector & terminal*** ***(R122) No. 1 (+) — Engine ground (–):***	Is the voltage 10 V or more?	Go to step **2**.	Repair the power supply circuit. NOTE: In this case, repair the following item: • Open circuit or short circuit to ground in harness between fuel pump relay connector and fuel pump control unit connector • Poor contact of fuel pump control unit connector • Poor contact of fuel pump relay connector • Poor contact of coupling connector

	Step	Check	Yes	No
2	**CHECK GROUND CIRCUIT OF FUEL PUMP CONTROL UNIT.** 1) Turn the ignition switch to OFF. 2) Measure the resistance of harness between fuel pump control unit connector and engine ground. ***Connector & terminal*** ***(R122) No. 4 — Engine ground:***	Is the resistance less than 5 Ω?	Go to step **3**.	Repair the open circuit between fuel pump control unit connector and engine ground.
3	**CHECK HARNESS BETWEEN FUEL PUMP CONTROL UNIT AND FUEL PUMP CONNECTOR.** 1) Disconnect the connector from fuel pump. 2) Measure the resistance of harness between fuel pump control unit and fuel pump connector. ***Connector & terminal*** ***(R122) No. 5 — (R58) No. 4:*** ***(R122) No. 6 — (R58) No. 3:***	Is the resistance less than 1 Ω?	Go to step **4**.	Repair the open circuit in harness between fuel pump control unit connector and fuel pump connector.
4	**CHECK HARNESS BETWEEN FUEL PUMP CONTROL UNIT AND FUEL PUMP CONNECTOR.** Measure the resistance between fuel pump control unit connector and engine ground. ***Connector & terminal*** ***(R122) No. 5 — Engine ground:*** ***(R122) No. 6 — Engine ground:***	Is the resistance 1 MΩ or more?	Go to step **5**.	Repair the short circuit to ground in harness between fuel pump control unit connector and fuel pump connector.
5	**CHECK HARNESS BETWEEN ECM AND FUEL PUMP CONTROL UNIT CONNECTOR.** 1) Disconnect the connector from ECM. 2) Measure the resistance of harness between ECM connector and fuel pump control unit connector. ***Connector & terminal*** ***(B134) No. 40 — (R122) No. 2:*** ***(B134) No. 44 — (R122) No. 3:***	Is the resistance less than 1 Ω?	Go to step **6**.	Repair the harness and connector. NOTE: In this case, repair the following item: • Open circuit in harness between ECM connector and fuel pump control unit connector • Poor contact of coupling connector
6	**CHECK HARNESS BETWEEN ECM AND FUEL PUMP CONTROL UNIT CONNECTOR.** Measure the resistance between fuel pump control unit connector and engine ground. ***Connector & terminal*** ***(R122) No. 2 — Engine ground:*** ***(R122) No. 3 — Engine ground:***	Is the resistance 1 MΩ or more?	Go to step **7**.	Repair the short circuit to ground in harness between ECM connector and fuel pump control unit connector.
7	**CHECK FOR POOR CONTACT.** Check for poor contact of ECM and fuel pump control unit connector.	Is there poor contact of ECM or fuel pump control unit connector?	Repair the poor contact of ECM or fuel pump control unit connector.	Go to step **8**.
8	**CHECK EXPERIENCE OF RUNNING OUT OF FUEL.**	Has the vehicle experienced running out of fuel?	Finish the diagnosis. NOTE: DTC may be recorded as a result of fuel pump idling while running out of fuel.	Replace the fuel pump control unit. <Ref. to FU(w/o STI)-137, Fuel Pump Control Unit.>

1. OUTLINE OF DIAGNOSIS

Detect the malfunction of fuel pump control unit.
Judge as NG when the NG signal is sent through a diagnostic line coming from the fuel pump control unit.
Fuel pump control unit detects the open or short circuit malfunction for each line, and then sends NG signals if one of them is found NG.

2. COMPONENT DESCRIPTION

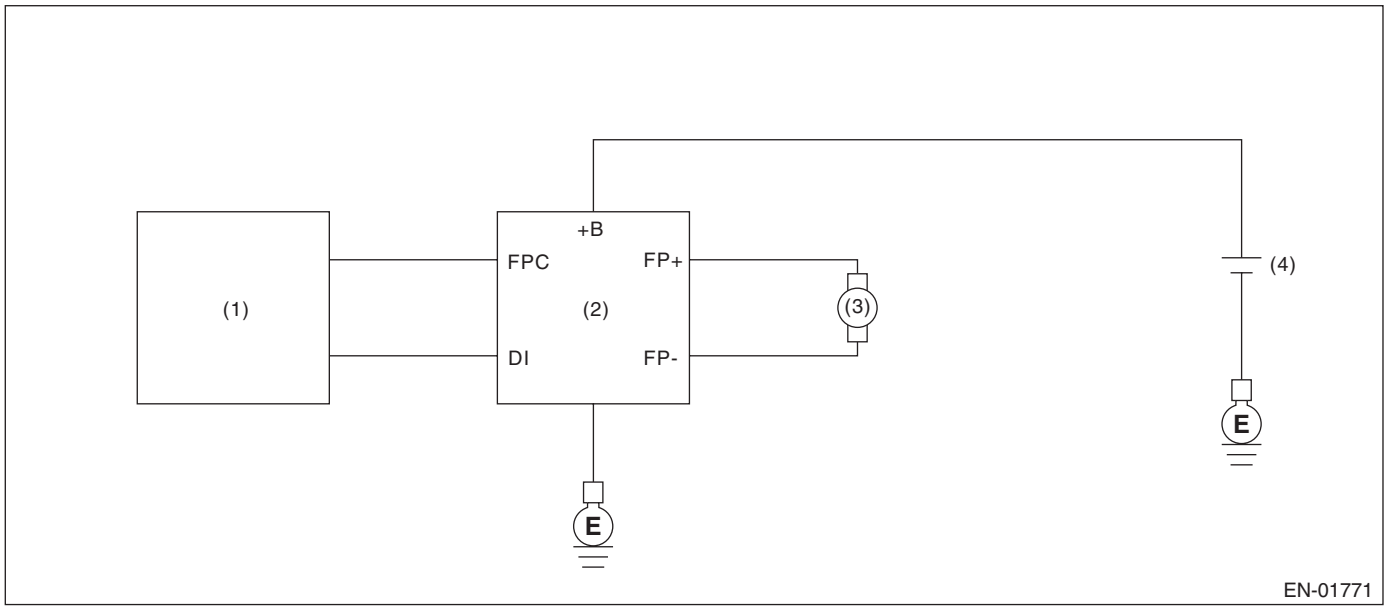

(1) Engine control module (ECM)
(2) Fuel pump control unit
(3) Fuel pump
(4) Battery

3. EXECUTION CONDITION

Secondary parameters	Execution condition
Battery voltage	≥ 8 V
Fuel level	≥ 15%
Elapsed time after starting the engine	≥ 180 s
Fuel pump controller control mode	ON

4. GENERAL DRIVING CYCLE

Always perform the diagnosis continuously.

5. DIAGNOSTIC METHOD

If the duration of time while the following conditions are met is longer than the time indicated, judge as NG.

Judgment Value

Malfunction Criteria	Threshold Value
Fuel pump control unit output diagnosis signal	< 1.5 V

Time Needed for Diagnosis: 2520 ms
Malfunction Indicator Light Illumination: Illuminates when malfunction occurs in 2 continuous driving cycles.

BT:DTC P023F FUEL PUMP SECONDARY CIRCUIT/OPEN

DTC DETECTING CONDITION:
Immediately at fault recognition

CAUTION:
• After servicing or replacing faulty parts, perform Clear Memory Mode <Ref. to EN(w/o STI)(diag)-82, OPERATION, Clear Memory Mode.>, and Inspection Mode <Ref. to EN(w/o STI)(diag)-64, PROCEDURE, Inspection Mode.>.
• Use the check board when measuring the ECM terminal voltage and resistance.

WIRING DIAGRAM:
Engine Electrical System <Ref. to WI-154, WIRING DIAGRAM, Engine Electrical System.>

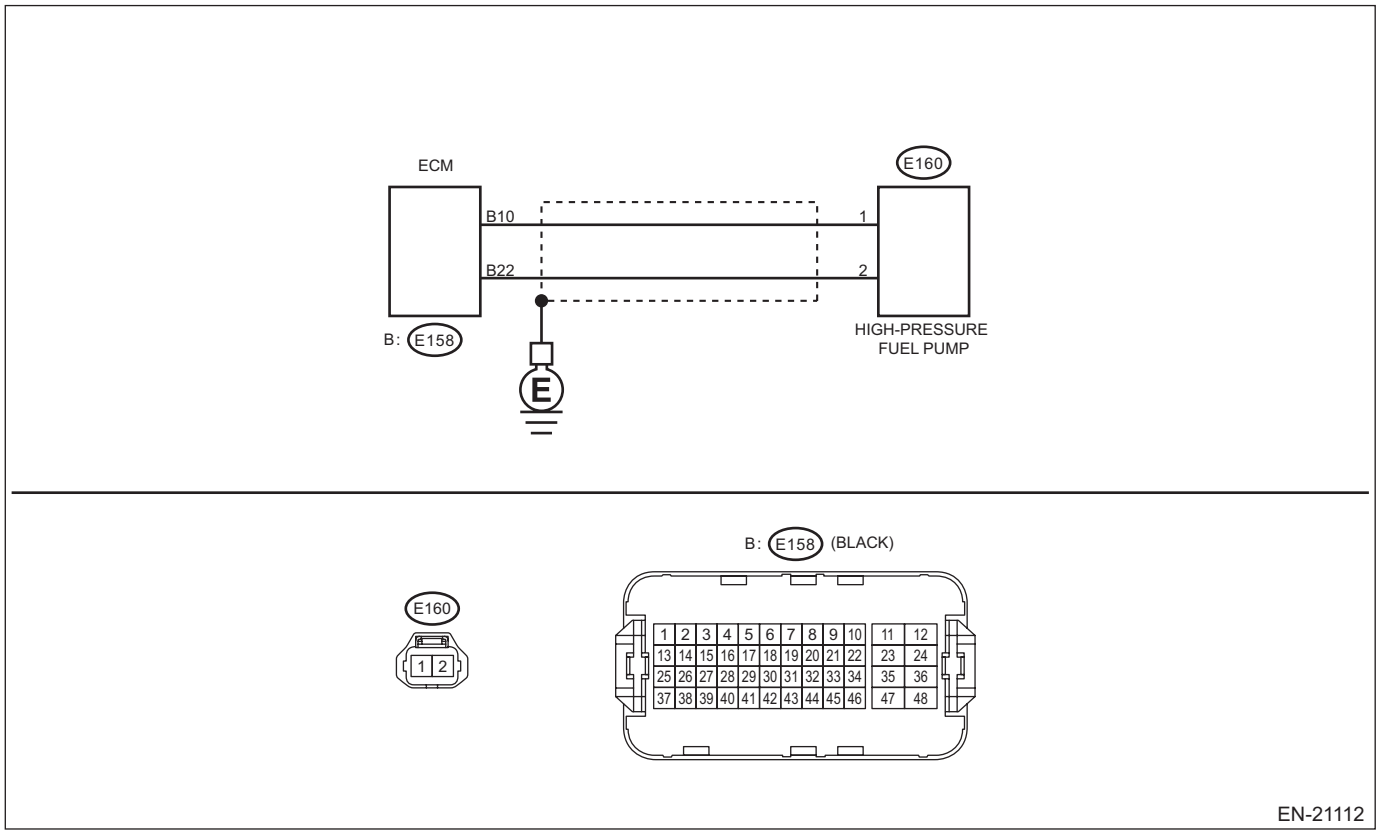

	Step	Check	Yes	No
1	**CHECK HIGH-PRESSURE FUEL PUMP.** Check the high-pressure fuel pump. <Ref. to FU(w/o STI)-75, INSPECTION, High Pressure Fuel Pump.>	Is the check result OK?	Go to step **2**.	Replace the high-pressure fuel pump. <Ref. to FU(w/o STI)-69, High Pressure Fuel Pump.>
2	**CHECK HARNESS BETWEEN ECM AND HIGH-PRESSURE FUEL PUMP CONNECTOR.** 1) Disconnect the connector from ECM. 2) Disconnect the connector from high-pressure fuel pump. 3) Measure the resistance of harness between ECM connector and high-pressure fuel pump connector. ***Connector & terminal*** ***(E158) No. 10 — (E160) No. 1:*** ***(E158) No. 22 — (E160) No. 2:***	Is the resistance less than 1 Ω?	Go to step **3**.	Repair the open circuit in harness between ECM connector and high-pressure fuel pump connector.

Step		Check	Yes	No
3	**CHECK HARNESS BETWEEN ECM AND HIGH-PRESSURE FUEL PUMP CONNECTOR.** Measure the resistance between high-pressure fuel pump connector and engine ground. ***Connector & terminal*** ***(E160) No. 1 — Engine ground:*** ***(E160) No. 2 — Engine ground:***	Is the resistance 1 MΩ or more?	Repair the poor contact of ECM connector.	Repair the short circuit to ground in harness between ECM connector and high-pressure fuel pump connector.

1. OUTLINE OF DIAGNOSIS

Detect the malfunction of high pressure fuel pump circuit function.
Judge as NG when ECM detects any malfunction in the diagnostic items listed below.

Diagnostic item	Malfunction Criteria
Power supply short	ECM low side terminal voltage of the high pressure fuel pump circuit is high.
Ground short	ECM low side terminal voltage of the high pressure fuel pump circuit is low.
Open circuit	High pressure fuel pump current is low.
Overcurrent	High pressure fuel pump current is high.
Short circuit	The time when the high pressure fuel pump current reaches the target current is short.

2. EXECUTION CONDITION

Secondary parameters	Execution condition
Battery voltage	≥ 9.4 V
Engine speed	> 0 rpm
Elapsed time after fuel pump current shutdown (Only power supply short diagnosis and ground short diagnosis)	≥ 3.15 ms

3. GENERAL DRIVING CYCLE

Always perform the diagnosis continuously.

4. DIAGNOSTIC METHOD

If the duration of time while the following conditions are met is longer than the time indicated, judge as NG.

Diagnosis for Power Supply Short

Judgment Value

Malfunction Criteria	Threshold Value
Terminal voltage	≥ 4.1 V

Diagnosis for Ground Short

Judgment Value

Malfunction Criteria	Threshold Value
Terminal voltage	≤ 0.8 V

Diagnosis for Open Circuit

Judgment Value

Malfunction Criteria	Threshold Value
Fuel pump current	≤ 0.5 A

Diagnosis for Overcurrent

Judgment Value

Malfunction Criteria	Threshold Value
Fuel pump current	≥ 22 A

Diagnosis for Short Circuit

Judgment Value

Malfunction Criteria	Threshold Value
Time for reaching target current	≤ 0.075 ms

Time Needed for Diagnosis: TDC × 75 times
Malfunction Indicator Light Illumination: Illuminates as soon as a malfunction occurs.

BU:DTC P0244 TURBOCHARGER/SUPERCHARGER WASTEGATE SOLENOID "A" RANGE/PERFORMANCE

DTC DETECTING CONDITION:
Immediately at fault recognition
TROUBLE SYMPTOM:
Poor driving performance

CAUTION:
After servicing or replacing faulty parts, perform Clear Memory Mode <Ref. to EN(w/o STI)(diag)-82, OPERATION, Clear Memory Mode.>, and Inspection Mode <Ref. to EN(w/o STI)(diag)-64, PROCEDURE, Inspection Mode.>.

	Step	Check	Yes	No
1	**CHECK FOR ANY OTHER DTC ON DISPLAY.**	Is any other DTC displayed?	Check the appropriate DTC using the “List of Diagnostic Trouble Code (DTC)”. <Ref. to EN(w/o STI)(diag)-106, List of Diagnostic Trouble Code (DTC).>	Go to step **2**.
2	**CHECK WASTEGATE ACTUATOR PIPING AND WASTEGATE CONTROL SOLENOID VALVE PIPING.**	Are there any damage or disconnection of hose in wastegate actuator piping or wastegate control solenoid valve piping?	Connect the wastegate actuator pipe or wastegate control solenoid valve pipe properly. If defective, replace the hose.	Replace the wastegate control solenoid valve. <Ref. to FU(w/o STI)-116, Wastegate Control Solenoid Valve.>

1. OUTLINE OF DIAGNOSIS

Detect the malfunction of wastegate control solenoid valve function.
Judge as NG when becoming high wastegate pressure.

2. COMPONENT DESCRIPTION

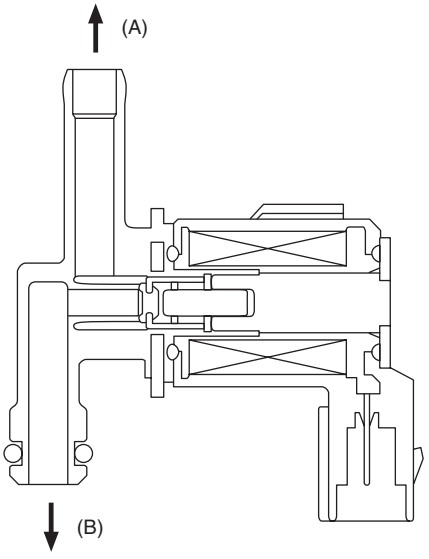

EN-10454

(A) Turbocharger (B) Intake duct

3. EXECUTION CONDITION

Secondary parameters	Execution condition
None	

4. GENERAL DRIVING CYCLE

Always perform the diagnosis continuously.

5. DIAGNOSTIC METHOD

If the duration of time while the following conditions are met is longer than the time indicated, judge as NG.

Judgment Value

Malfunction Criteria	Threshold Value
Intake manifold pressure	> Value from Map

Map

		Barometric pressure (kPa (mmHg, inHg))							
		64 (480, 18.9)	70.6 (529.5, 20.8)	77.3 (579.8, 22.8)	84 (630.1, 24.8)	90.6 (679.6, 26.8)	93.3 (699.8, 27.6)	96 (720.1, 28.3)	97.3 (729.8, 28.7)
Engine speed (rpm)	1600	159.7 (1197.9, 47.2)	159.7 (1197.9, 47.2)	159.7 (1197.9, 47.2)	159.7 (1197.9, 47.2)	159.7 (1197.9, 47.2)	159.7 (1197.9, 47.2)	159.7 (1197.9, 47.2)	159.7 (1197.9, 47.2)
	2400	223.7 (1677.9, 66.1)	223.7 (1677.9, 66.1)	223.7 (1677.9, 66.1)	223.7 (1677.9, 66.1)	223.7 (1677.9, 66.1)	223.7 (1677.9, 66.1)	223.7 (1677.9, 66.1)	223.7 (1677.9, 66.1)
	3200	219.2 (1644.1, 64.7)	223.3 (1674.9, 65.9)	229.6 (1722.1, 67.8)	233.7 (1752.9, 69)	233.7 (1752.9, 69)	233.7 (1752.9, 69)	233.7 (1752.9, 69)	233.7 (1752.9, 69)
	4000	204.3 (1532.4, 60.3)	210.7 (1580.4, 62.2)	220.4 (1653.1, 65.1)	236.4 (1773.2, 69.8)	240.7 (1805.4, 71.1)	240.7 (1805.4, 71.1)	240.7 (1805.4, 71.1)	240.7 (1805.4, 71.1)
	4800	190.9 (1431.9, 56.4)	201.9 (1514.4, 59.6)	213.5 (1601.4, 63)	234.7 (1760.4, 69.3)	245.7 (1842.9, 72.6)	245.7 (1842.9, 72.6)	245.7 (1842.9, 72.6)	245.7 (1842.9, 72.6)
	5600	155.1 (1163.3, 45.8)	176.5 (1323.9, 52.1)	187.2 (1404.1, 55.3)	208.6 (1564.6, 61.6)	219.3 (1644.9, 64.8)	234.3 (1757.4, 69.2)	240.7 (1805.4, 71.1)	240.7 (1805.4, 71.1)
kPa (mmHg, inHg)									

Time Needed for Diagnosis: 2000 ms
Malfunction Indicator Light Illumination: Illuminates as soon as a malfunction occurs.

BV:DTC P0245 TURBOCHARGER/SUPERCHARGER WASTEGATE SOLENOID "A" LOW

DTC DETECTING CONDITION:
Immediately at fault recognition
TROUBLE SYMPTOM:
Poor driving performance

CAUTION:
- **After servicing or replacing faulty parts, perform Clear Memory Mode <Ref. to EN(w/o STI)(diag)-82, OPERATION, Clear Memory Mode.>, and Inspection Mode <Ref. to EN(w/o STI)(diag)-64, PROCEDURE, Inspection Mode.>.**
- **Use the check board when measuring the ECM terminal voltage and resistance.**

WIRING DIAGRAM:
Engine Electrical System <Ref. to WI-154, WIRING DIAGRAM, Engine Electrical System.>

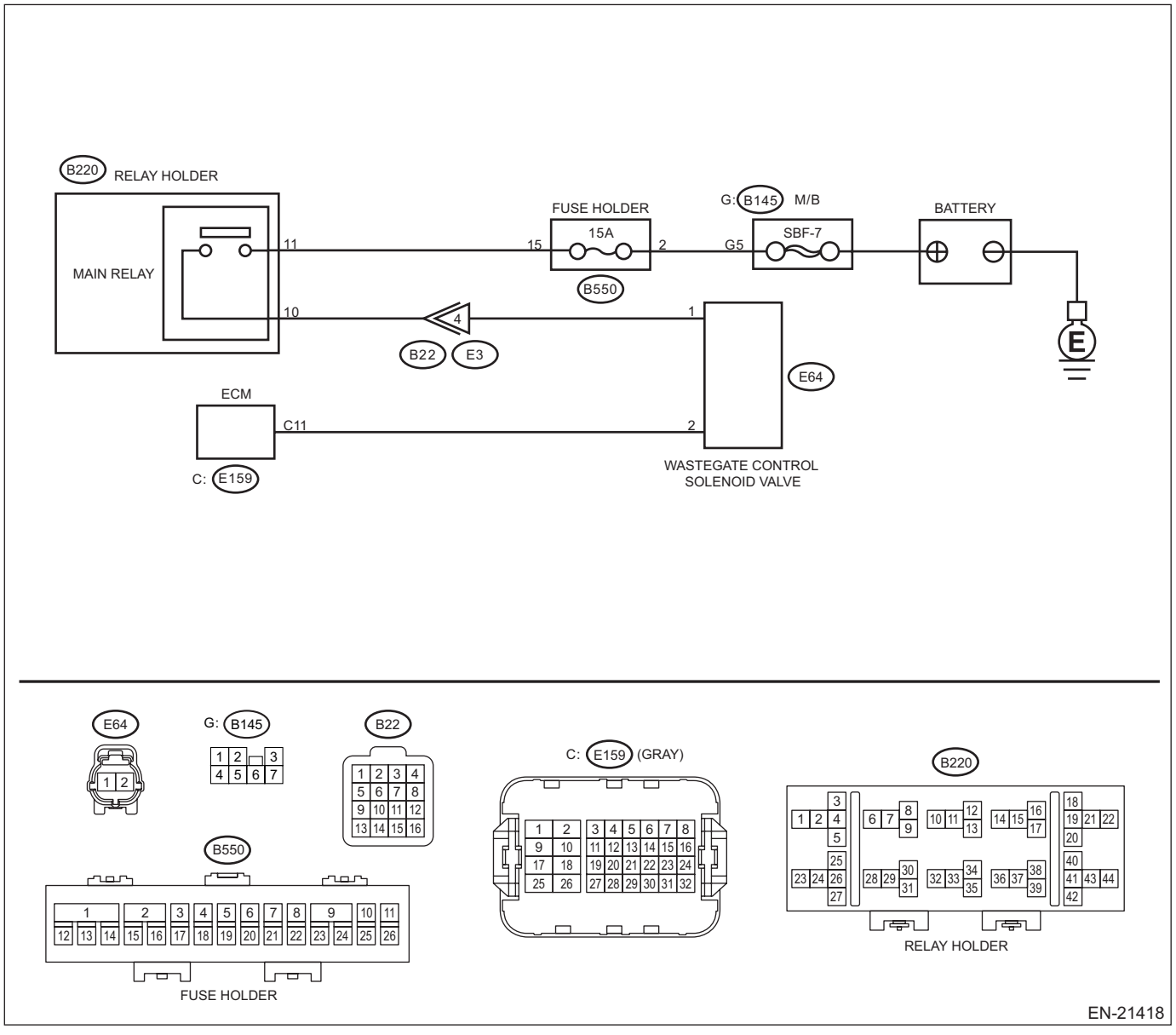

	Step	Check	Yes	No
1	**CHECK OUTPUT SIGNAL OF ECM.** 1) Turn the ignition switch to ON. 2) Measure the voltage between ECM connector and engine ground. ***Connector & terminal*** ***(E159) No. 11 (+) — Engine ground (–):***	Is the voltage 10 V or more?	Go to step **2**.	Go to step **3**.
2	**CHECK FOR POOR CONTACT.** Check for poor contact of ECM connector.	Is there poor contact of ECM connector?	Repair the poor contact of ECM connector.	Even if DTC is detected, the circuit has returned to a normal condition at this time. Reproduce the failure, and then perform the diagnosis again. NOTE: In this case, temporary poor contact of connector, temporary open or short circuit of harness may be the cause.
3	**CHECK POWER SUPPLY TO WASTEGATE CONTROL SOLENOID VALVE.** Measure the voltage between wastegate control solenoid valve connector and engine ground. ***Connector & terminal*** ***(E64) No. 1 (+) — Engine ground (–):***	Is the voltage 10 V or more?	Go to step **4**.	Repair the power supply circuit.
4	**CHECK HARNESS BETWEEN ECM AND WASTEGATE CONTROL SOLENOID VALVE CONNECTOR.** 1) Turn the ignition switch to OFF. 2) Disconnect the connector from ECM. 3) Disconnect the connector from the wastegate control solenoid valve. 4) Measure the resistance between wastegate control solenoid valve connector and engine ground. ***Connector & terminal*** ***(E64) No. 2 — Engine ground:***	Is the resistance 1 MΩ or more?	Go to step **5**.	Repair ground short circuit of harness between ECM connector and wastegate control solenoid valve connector.
5	**CHECK HARNESS BETWEEN ECM AND WASTEGATE CONTROL SOLENOID VALVE CONNECTOR.** Measure the resistance of harness between ECM connector and wastegate control solenoid valve connector. ***Connector & terminal*** ***(E159) No. 11 — (E64) No. 2:***	Is the resistance less than 1 Ω?	Go to step **6**.	Repair open circuit in harness between ECM connector and wastegate control solenoid valve connector.
6	**CHECK WASTEGATE CONTROL SOLENOID VALVE.** 1) Remove the wastegate control solenoid valve. 2) Measure the resistance between wastegate control solenoid valve terminals. ***Terminals*** ***No. 1 — No. 2:***	Is the resistance 10 — 100 Ω?	Repair poor contact of wastegate control solenoid valve connector.	Replace the wastegate control solenoid valve. <Ref. to FU(w/o STI)-116, Wastegate Control Solenoid Valve.>

1. OUTLINE OF DIAGNOSIS

Detect open or short circuit of the wastegate control solenoid valve.
Judge as NG when the terminal output voltage remains Low during outputting the duty signal.

2. COMPONENT DESCRIPTION

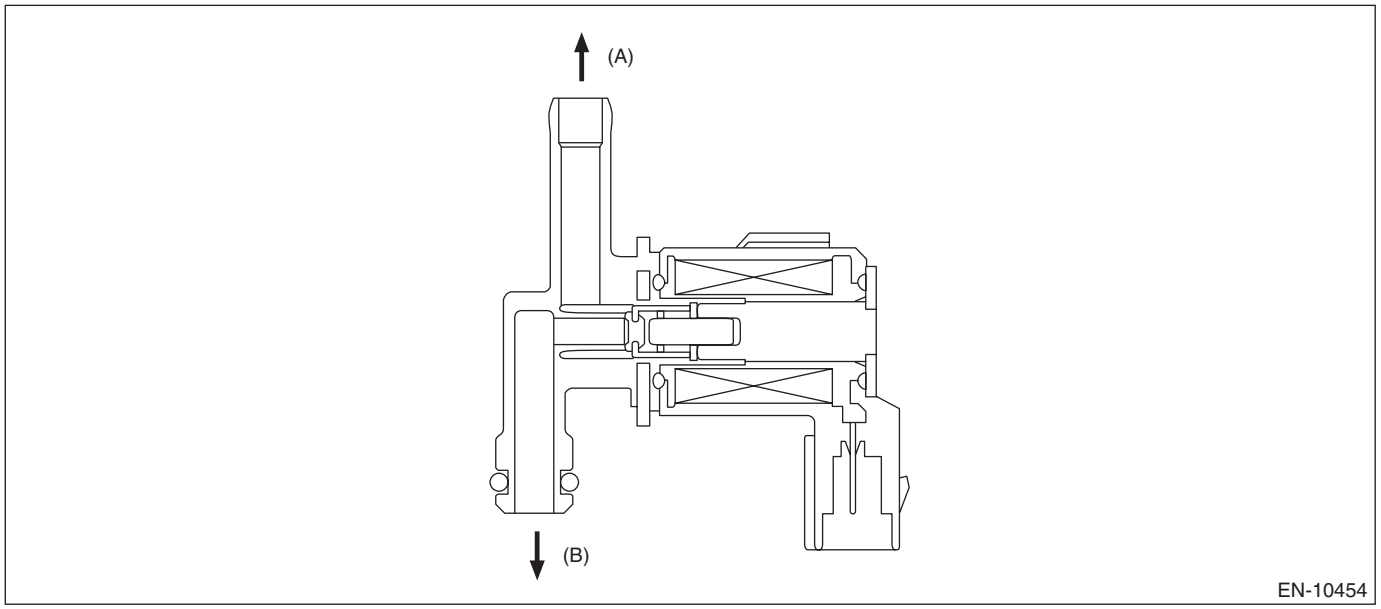

(A) Turbocharger (B) Intake duct

3. EXECUTION CONDITION

Secondary parameters	Execution condition
Battery voltage	≥ 10.9 V
Duty ratio of wastegate control	≤ 80%

4. GENERAL DRIVING CYCLE

Always perform the diagnosis after starting the engine.

5. DIAGNOSTIC METHOD

If the duration of time while the following conditions are met is longer than the time indicated, judge as NG.

Judgment Value

Malfunction Criteria	Threshold Value
Output voltage	≤ 2.2 V

Time Needed for Diagnosis: 640 ms
Malfunction Indicator Light Illumination: Illuminates as soon as a malfunction occurs.

BW:DTC P0246 TURBOCHARGER/SUPERCHARGER WASTEGATE SOLENOID "A" HIGH

DTC DETECTING CONDITION:
Immediately at fault recognition
TROUBLE SYMPTOM:
Poor driving performance

CAUTION:
- **After servicing or replacing faulty parts, perform Clear Memory Mode <Ref. to EN(w/o STI)(diag)-82, OPERATION, Clear Memory Mode.>, and Inspection Mode <Ref. to EN(w/o STI)(diag)-64, PROCEDURE, Inspection Mode.>.**
- **Use the check board when measuring the ECM terminal voltage and resistance.**

WIRING DIAGRAM:
Engine Electrical System <Ref. to WI-154, WIRING DIAGRAM, Engine Electrical System.>

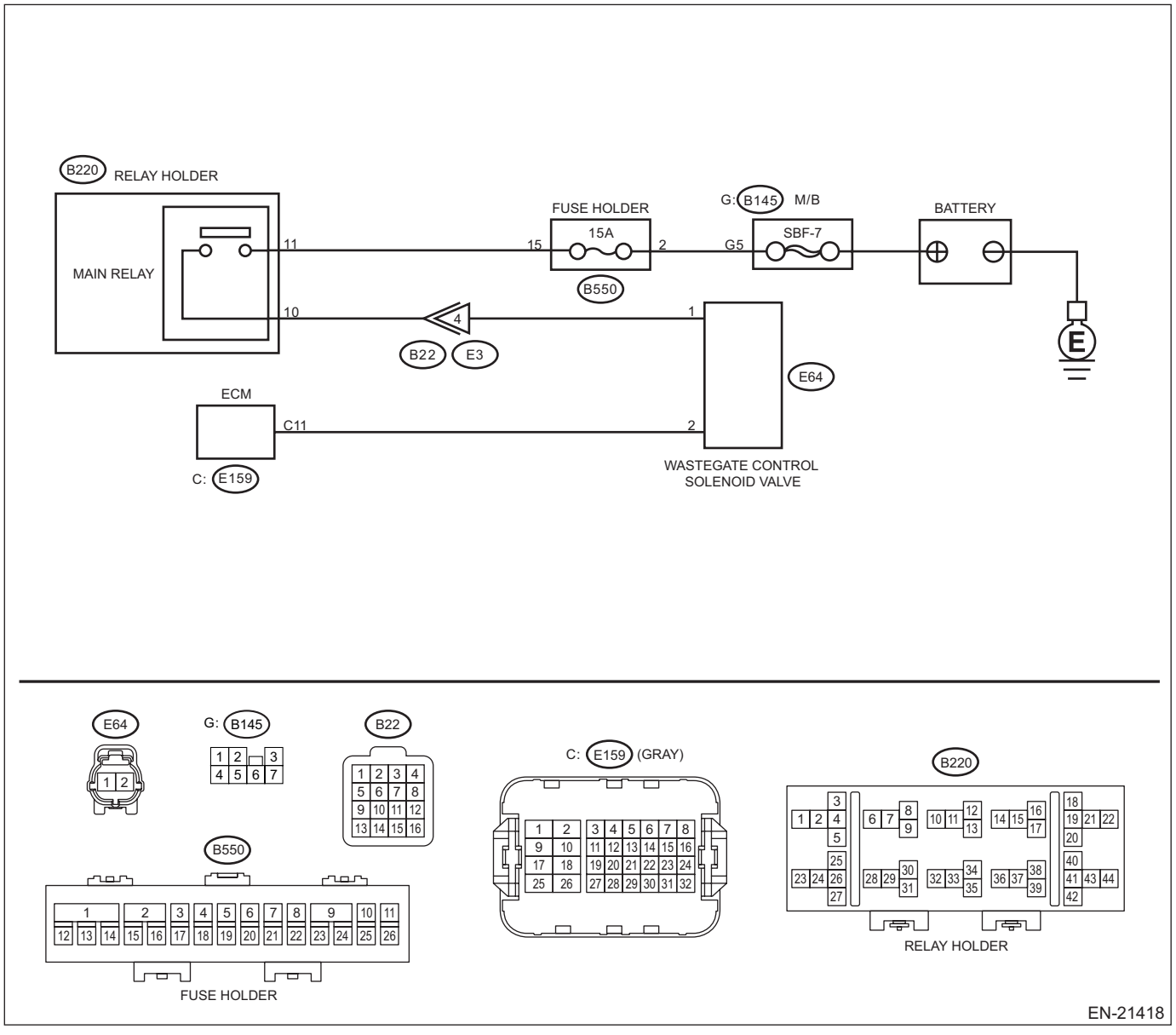

	Step	Check	Yes	No
1	**CHECK HARNESS BETWEEN ECM AND WASTEGATE CONTROL SOLENOID VALVE CONNECTOR.** 1) Turn the ignition switch to OFF. 2) Disconnect the connector from ECM. 3) Disconnect the connector from the wastegate control solenoid valve. 4) Turn the ignition switch to ON. 5) Measure the voltage between ECM connector and engine ground. ***Connector & terminal*** ***(E159) No. 11 (+) — Engine ground (–):***	Is the voltage 10 V or more?	Repair short circuit to power in harness between ECM connector and wastegate control solenoid valve connector.	Go to step **2**.
2	**CHECK WASTEGATE CONTROL SOLENOID VALVE.** 1) Turn the ignition switch to OFF. 2) Measure the resistance between wastegate control solenoid valve terminals. ***Terminals*** ***No. 1 — No. 2:***	Is the resistance less than 1 Ω?	Replace the wastegate control solenoid valve. <Ref. to FU(w/o STI)-116, Wastegate Control Solenoid Valve.>	Repair the poor contact of ECM connector.

1. OUTLINE OF DIAGNOSIS

Detect open or short circuit of the wastegate control solenoid valve.
Judge as NG when overcurrent is detected.

2. COMPONENT DESCRIPTION

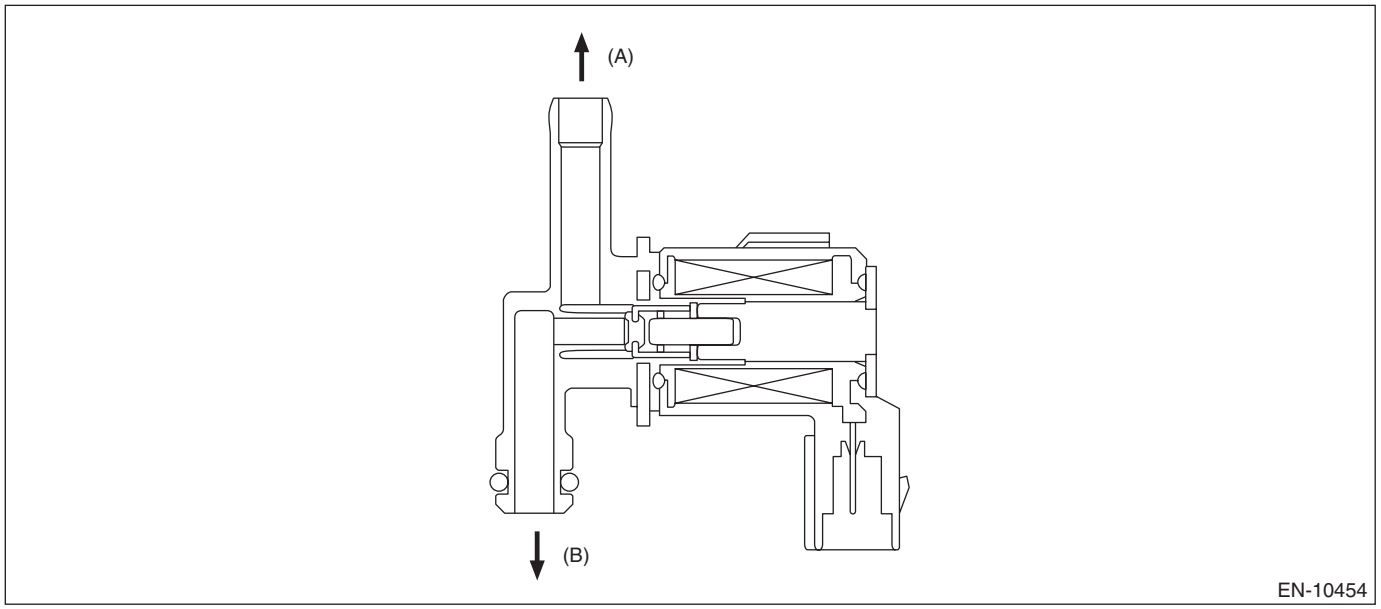

(A) Turbocharger (B) Intake duct

3. EXECUTION CONDITION

Secondary parameters	Execution condition
Battery voltage	≥ 10.9 V
Duty ratio of wastegate control	≥ 20%

4. GENERAL DRIVING CYCLE

Always perform the diagnosis after starting the engine.

5. DIAGNOSTIC METHOD

If the duration of time while the following conditions are met is longer than the time indicated, judge as NG.

Judgment Value

Malfunction Criteria	Threshold Value
Output current	≥ 17 A

Time Needed for Diagnosis: 2250 ms
Malfunction Indicator Light Illumination: Illuminates as soon as a malfunction occurs.

BX:DTC P0300 RANDOM/MULTIPLE CYLINDER MISFIRE DETECTED

DTC DETECTING CONDITION:

- Detected when two consecutive driving cycles with fault occur.
- Immediately at fault recognition (A misfire which could damage catalyst occurs.)

TROUBLE SYMPTOM:

- Engine stalls.
- Improper idling
- Rough driving

CAUTION:

- **After servicing or replacing faulty parts, perform Clear Memory Mode <Ref. to EN(w/o STI)(diag)-82, OPERATION, Clear Memory Mode.>, and Inspection Mode <Ref. to EN(w/o STI)(diag)-64, PROCEDURE, Inspection Mode.>.**
- **Use the check board when measuring the ECM terminal voltage and resistance.**

WIRING DIAGRAM:

Engine Electrical System <Ref. to WI-154, WIRING DIAGRAM, Engine Electrical System.>

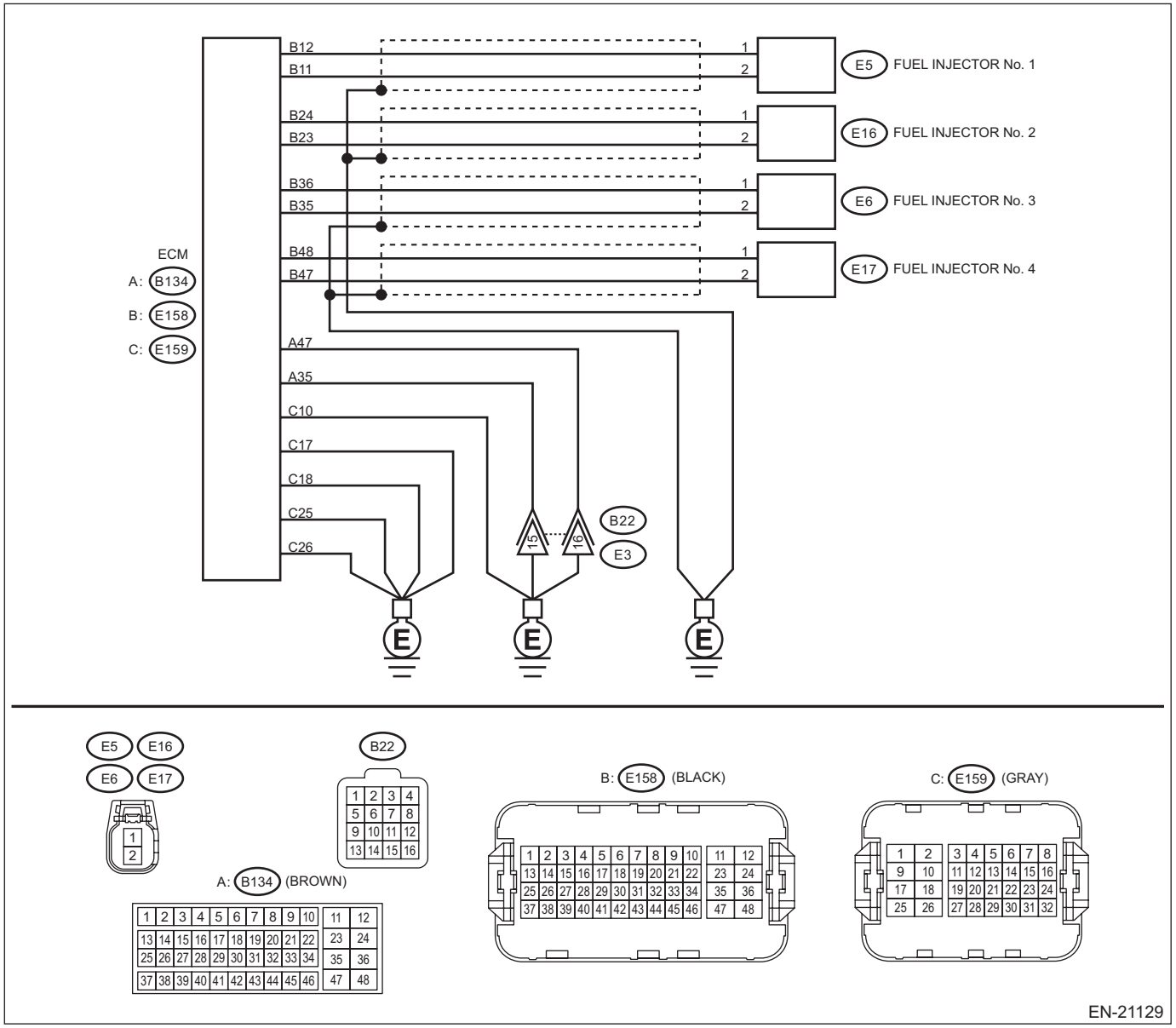

	Step	Check	Yes	No
1	**CHECK HARNESS BETWEEN ECM AND FUEL INJECTOR CONNECTOR.** 1) Turn the ignition switch to OFF. 2) Disconnect the connector from all fuel injectors. 3) Measure the resistance between all fuel injector connectors and engine ground. ***Connector & terminal*** ***#1 (E5) No. 1 — Engine ground:*** ***#1 (E5) No. 2 — Engine ground:*** ***#2 (E16) No. 1 — Engine ground:*** ***#2 (E16) No. 2 — Engine ground:*** ***#3 (E6) No. 1 — Engine ground:*** ***#3 (E6) No. 2 — Engine ground:*** ***#4 (E17) No. 1 — Engine ground:*** ***#4 (E17) No. 2 — Engine ground:***	Is the resistance 1 MΩ or more?	Go to step **2**.	Repair the short circuit to ground in harness between ECM connector and fuel injector connector.
2	**CHECK HARNESS BETWEEN ECM AND FUEL INJECTOR CONNECTOR.** Measure the resistance of harness between ECM connector and fuel injector connector on all cylinders. ***Connector & terminal*** ***#1 (E158) No. 12 — (E5) No. 1:*** ***#1 (E158) No. 11 — (E5) No. 2:*** ***#2 (E158) No. 24 — (E16) No. 1:*** ***#2 (E158) No. 23 — (E16) No. 2:*** ***#3 (E158) No. 36 — (E6) No. 1:*** ***#3 (E158) No. 35 — (E6) No. 2:*** ***#4 (E158) No. 48 — (E17) No. 1:*** ***#4 (E158) No. 47 — (E17) No. 2:***	Is the resistance less than 1 Ω?	Go to step **3**.	Repair the open circuit of the harness between the ECM connector and fuel injector connector.
3	**CHECK FUEL INJECTOR.** Check all fuel injectors. <Ref. to FU(w/o STI)-65, INSPECTION, Fuel Injector.>	Is the check result OK?	Go to step **4**.	Replace the faulty fuel injector. <Ref. to FU(w/o STI)-50, Fuel Injector.>
4	**CHECK INSTALLATION CONDITION OF CAMSHAFT POSITION SENSOR/CRANKSHAFT POSITION SENSOR.**	Is the camshaft position sensor or crankshaft position sensor loosely installed?	Tighten the camshaft position sensor or crankshaft position sensor. <Ref. to FU(w/o STI)-98, INSTALLATION, Camshaft Position Sensor.> <Ref. to FU(w/o STI)-94, INSTALLATION, Crankshaft Position Sensor.>	Go to step **5**.
5	**CHECK CRANKSHAFT POSITION SENSOR PLATE.**	Is the crankshaft position sensor plate rusted or does it have broken teeth?	Replace the crankshaft position sensor plate. <Ref. to ME(w/o STI)-247, Cylinder Block.>	Go to step **6**.
6	**CHECK INSTALLATION CONDITION OF TIMING CHAIN.** Turn the crankshaft using ST, and align the alignment mark on crank sprocket with alignment mark on cylinder block. ST 18252AA000 CRANKSHAFT SOCKET	Is the timing chain dislocated from its proper position?	Correct the installation condition of timing chain. <Ref. to ME(w/o STI)-111, Timing Chain Assembly.>	Go to step **7**.

	Step	Check	Yes	No
7	**CHECK FUEL LEVEL.**	Is the fuel meter indication higher than the “Lower” level?	Go to step **8**.	Refill the fuel so that the fuel meter indication is higher than the “Lower” level, and proceed to the next step. Go to step **11**.
8	**CHECK PCV VALVE.** Check the PCV valve.	Is the PCV valve free from deformation, crack or other damage?	Repair or replace the PCV valve. <Ref. to EC(w/o STI)-83, PCV Valve.>	Go to step **9**.
9	**CHECK PCV HOSE.** Check the PCV hose.	Is the PCV hose free from deformation, crack or other damage?	Check the PCV hose assembly for cracks, damage or looseness. <Ref. to EC(w/o STI)-77, PCV Hose Assembly.>	Go to step **10**.
10	**CHECK PCV HOSE.** Check the PCV hose.	Check the clamp of PCV hose assembly for damage or looseness.	Repair or replace the PCV hose. <Ref. to EC(w/o STI)-77, PCV Hose Assembly.>	Go to step **11**.
11	**CHECK STATUS OF MALFUNCTION INDICATOR LIGHT.** 1) Clear the memory using the Subaru Select Monitor or general scan tool. <Ref. to EN(w/o STI)(diag)-82, Clear Memory Mode.> 2) Start the engine, and drive the vehicle 10 minutes or more.	Does the malfunction indicator light illuminate or blink?	Go to step **13**.	Go to step **12**.
12	**CHECK CAUSE OF MISFIRE.**	Was the cause of misfire identified when the engine is running?	Finish diagnostics operation, if the engine has no abnormality.	Repair the poor contact of connector. NOTE: In this case, repair the following item: • Poor contact of ignition coil connector • Poor contact of fuel injector connector on faulty cylinders • Poor contact of ECM connector • Poor contact of coupling connector

Step		Check	Yes	No
13	CHECK AIR INTAKE SYSTEM.	Is there any fault in air intake system?	Repair the air intake system. NOTE: Check the following items. • Are there air leaks or air suction caused by loose or dislocated nuts and bolts? • Are there cracks or any disconnection of hoses?	Go to step **14**.
14	CHECK ALL CYLINDERS.	Is there a fault in any cylinder?	Repair or replace the faulty part of the faulty cylinder. NOTE: Check the following items. • Spark plug • Ignition coil • Fuel injector • Compression • Skipping timing chain teeth	Go to DTC P0171. <Ref. to EN(w/o STI)(diag)-282, DTC P0171 SYSTEM TOO LEAN BANK 1, Diagnostic Procedure with Diagnostic Trouble Code (DTC).>

1. OUTLINE OF DIAGNOSIS

NOTE:
For the detection standard, refer to DTC P0301. <Ref. to EN(w/o STI)(diag)-330, DTC P0301 CYLINDER 1 MISFIRE DETECTED, Diagnostic Procedure with Diagnostic Trouble Code (DTC).>

BY:DTC P0301 CYLINDER 1 MISFIRE DETECTED

NOTE:
For the diagnostic procedure, refer to DTC P0304. <Ref. to EN(w/o STI)(diag)-335, DTC P0304 CYLINDER 4 MISFIRE DETECTED, Diagnostic Procedure with Diagnostic Trouble Code (DTC).>

1. OUTLINE OF DIAGNOSIS

Detect the presence of misfire occurrence. (Revolution fluctuation method)
Monitoring Misfire which influences exhaust deterioration (1.5 times of FTP) and catalyst damage is made obligatory by the law. Misfire affecting these two has two patterns below:
• Intermittent misfire (The same cylinder misfires in random, or different cylinders misfire in random.): FTP 1.5 times misfire
• Every time misfire (The same cylinder misfires every time.): FTP 1.5 times misfire, Catalyst damage misfire
The following detecting methods are adopted for these detection.
1) Intermittent misfire: FTP 1.5 times misfire
• 180° Interval Difference Method
• 360° Interval Difference Method (whole range)
• 720° Interval Difference Method (3,000 rpm or more)
2) Misfire every time: FTP 1.5 times misfire, Catalyst damage misfire
• 360° Interval Difference Method

2. EXECUTION CONDITION

Secondary parameters	Execution condition
Battery voltage	≥ 8 V
Fuel shut-off function	≠ Fuel cut
Engine speed	≥ 400 rpm to < 6500 rpm
Intake manifold pressure	
• Normal ignition (Changes based on the engine speed and atmospheric pressure.)	≥ 20.1 kPa (150.8 mmHg, 5.9 inHg) to < 48.3 kPa (362.3 mmHg, 14.3 inHg)
• Idle ignition (Changes based on the engine speed and atmospheric pressure.)	≥ 20.1 kPa (150.8 mmHg, 5.9 inHg) to < 48.7 kPa (365.3 mmHg, 14.4 inHg)
Time elapsed after engine start	≥ 2 crankshaft revolutions
Following condition A or B is met	
A: Engine coolant temperature at engine starting	> –6.7°C (19.4°F)
B: Following conditions (b1) and (b2) are met	
(b1) Engine coolant temperature at engine starting	≤ –6.7°C (19.4°F)
(b2) Engine coolant temperature	≥ 21.1°C (69.8°F)

3. GENERAL DRIVING CYCLE

• If conditions are met, it is possible to detect the misfires from idling to high engine speed. However, in case any engine load or breakage occurs, perform with the engine at idle.
• Perform the diagnosis continuously.

4. DIAGNOSTIC METHOD

When a misfire occurs, the engine speed will decrease and the crankshaft position speed will change. Calculate the interval difference value (diagnostic value) from crankshaft position speed by the following formula, and judge whether a misfire is occurring or not comparing the calculated result with judgment value. Count the number of misfires, if the misfire ratio is higher during 1000 revs. or 200 revs., judge corresponding cylinders as NG.

Diagnostic value calculation (Calculate from angle speed) →	Misfire detection in every single ignition (Compare diagnostic value with judgment value) →	NG judgment (Misfire occurrence judgment required by the law) (Compare number of misfire with judgment value)
	• 180 Degree Interval Difference Method • 360 Degree Interval Difference Method • 720 Degree Interval Difference Method	• FTP 1.5 times misfire NG judgment • NG judgment for catalyst-damaging misfire

As shown in the following figure, pick a cylinder as the standard and name it A. And the former crankshaft position speed is named B, the second former crankshaft position speed is named C, the third is named D, etc.

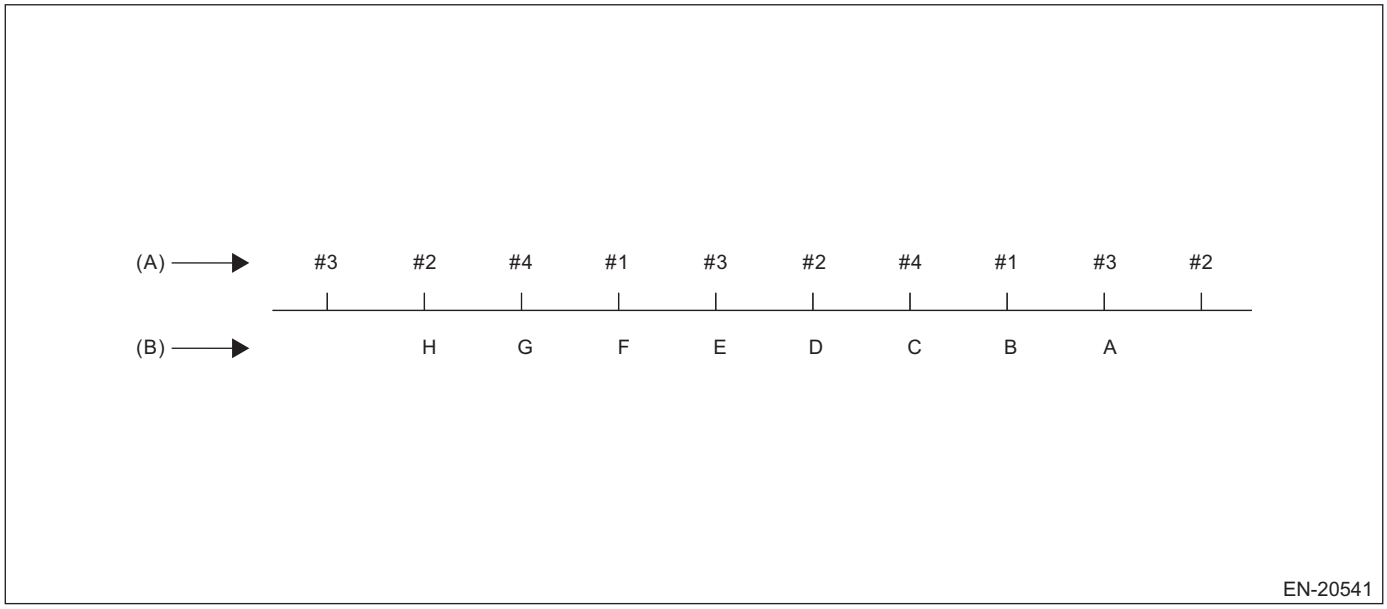

(A) Ignition order (B) Crankshaft position speed

180° Interval Difference Method

Diagnostic value	180 degree interval difference = (A – B) – (B – C)
Judge as a misfire in the following cases. • 180 degree interval difference ≥ Judgment value of positive side • 180 degree interval difference ≤ Judgment value of negative side (Diagnostic value before 180° CA)	

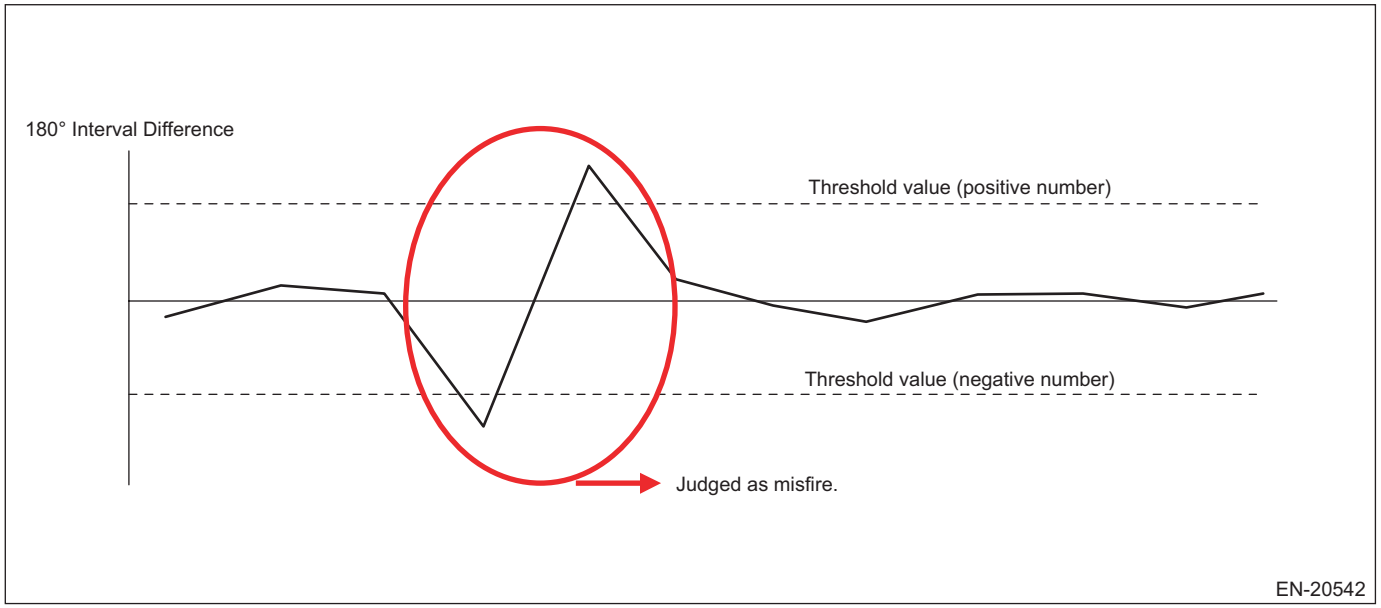

360° Interval Difference Method

Diagnostic value	360 degree interval difference = (B – A) – (D – C)
Misfire judgment	360 degree interval difference > Judgment value: → Judged as misfire

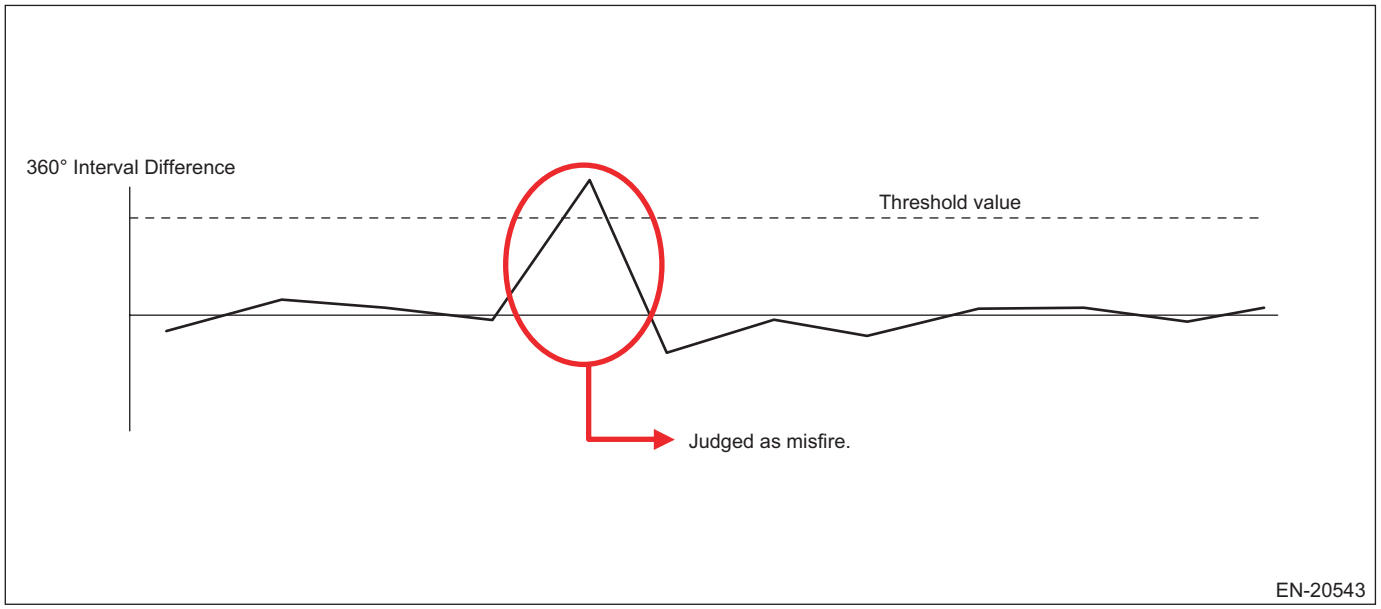

720° Interval Difference Method

Diagnostic value	720 degree interval difference = (A – B) – (E – F)
Judge as a misfire in the following cases. • 720 degree interval difference ≥ Judgment value of positive side • 720 degree interval difference ≤ Judgment value of negative side (Diagnostic value before 720° CA)	



(A) 720 degree interval difference
(B) Threshold value (positive side)
(C) Threshold value (negative side)

- **FTP 1.5 times misfire (misfire occurrence level which influences exhaust gas)**

Judgment Value (Judge that malfunction occurs when the misfire ratio is high in 1000 engine revs.)

Malfunction Criteria	Threshold Value
FTP emission diagnostic value	≥ 24 × 100/2000% in 1000 revs.

Time Needed for Diagnosis: 1000 engine revs.
Malfunction Indicator Light Illumination: Illuminates when malfunction occurs in 2 continuous driving cycles.

- **Catalyst-damaging misfire (misfire occurrence level that will damage catalyst)**

Judgment Value

Malfunction Criteria	Threshold Value
Catalyst-damaging misfire diagnostic value	≥ Value from Map

Map

Percentage (%)		Charging efficiency (%)											
		15	30	45	60	75	90	105	120	135	150	165	180
Engine speed (rpm)	700	25	25	—	—	—	—	—	—	—	—	—	—
	1000	25	25	25	25	25	25	—	—	—	—	—	—
	1500	25	25	25	25	16.75	16.75	16.75	—	—	—	—	—
	2000	25	25	25	25	16.75	14.25	12.5	—	—	—	—	—
	2500	25	25	19.75	17	14.25	12.5	11	11	—	—	—	—
	3000	25	25	19.75	17	14.25	12	10.5	10	7.75	6	—	—
	3500	25	25	19.75	17	14.25	11	9	7.75	6	5	5	5
	4000	—	25	19.75	17	14.25	11	8.25	6.25	5	5	5	5
	4500	—	25	17.5	14.25	12.5	9	6.75	5	5	5	5	5
	5000	—	25	16.75	12.5	11	8.25	6	5	5	5	5	5
	5500	—	25	16	12	11	7.25	5	5	5	5	5	5
	6000	—	25	15	11	11	6	5	5	5	5	5	5
	6500	25	25	12.5	8.8	8.8	5	5	5	5	5	5	5

Time Needed for Diagnosis: 200 engine revs.
Malfunction Indicator Light Illumination: Illuminates as soon as a malfunction occurs.

BZ:DTC P0302 CYLINDER 2 MISFIRE DETECTED

NOTE:
For the diagnostic procedure, refer to DTC P0304. <Ref. to EN(w/o STI)(diag)-335, DTC P0304 CYLINDER 4 MISFIRE DETECTED, Diagnostic Procedure with Diagnostic Trouble Code (DTC).>

1. OUTLINE OF DIAGNOSIS

NOTE:
For the detection standard, refer to DTC P0301. <Ref. to EN(w/o STI)(diag)-330, DTC P0301 CYLINDER 1 MISFIRE DETECTED, Diagnostic Procedure with Diagnostic Trouble Code (DTC).>

CA:DTC P0303 CYLINDER 3 MISFIRE DETECTED

NOTE:
For the diagnostic procedure, refer to DTC P0304. <Ref. to EN(w/o STI)(diag)-335, DTC P0304 CYLINDER 4 MISFIRE DETECTED, Diagnostic Procedure with Diagnostic Trouble Code (DTC).>

1. OUTLINE OF DIAGNOSIS

NOTE:
For the detection standard, refer to DTC P0301. <Ref. to EN(w/o STI)(diag)-330, DTC P0301 CYLINDER 1 MISFIRE DETECTED, Diagnostic Procedure with Diagnostic Trouble Code (DTC).>

CB:DTC P0304 CYLINDER 4 MISFIRE DETECTED

DTC DETECTING CONDITION:

- Detected when two consecutive driving cycles with fault occur.
- Immediately at fault recognition (A misfire which could damage catalyst occurs.)

TROUBLE SYMPTOM:

- Engine stalls.
- Improper idling
- Rough driving

CAUTION:

- **After servicing or replacing faulty parts, perform Clear Memory Mode <Ref. to EN(w/o STI)(diag)-82, OPERATION, Clear Memory Mode.>, and Inspection Mode <Ref. to EN(w/o STI)(diag)-64, PROCEDURE, Inspection Mode.>.**
- **Use the check board when measuring the ECM terminal voltage and resistance.**

WIRING DIAGRAM:

Engine Electrical System <Ref. to WI-154, WIRING DIAGRAM, Engine Electrical System.>

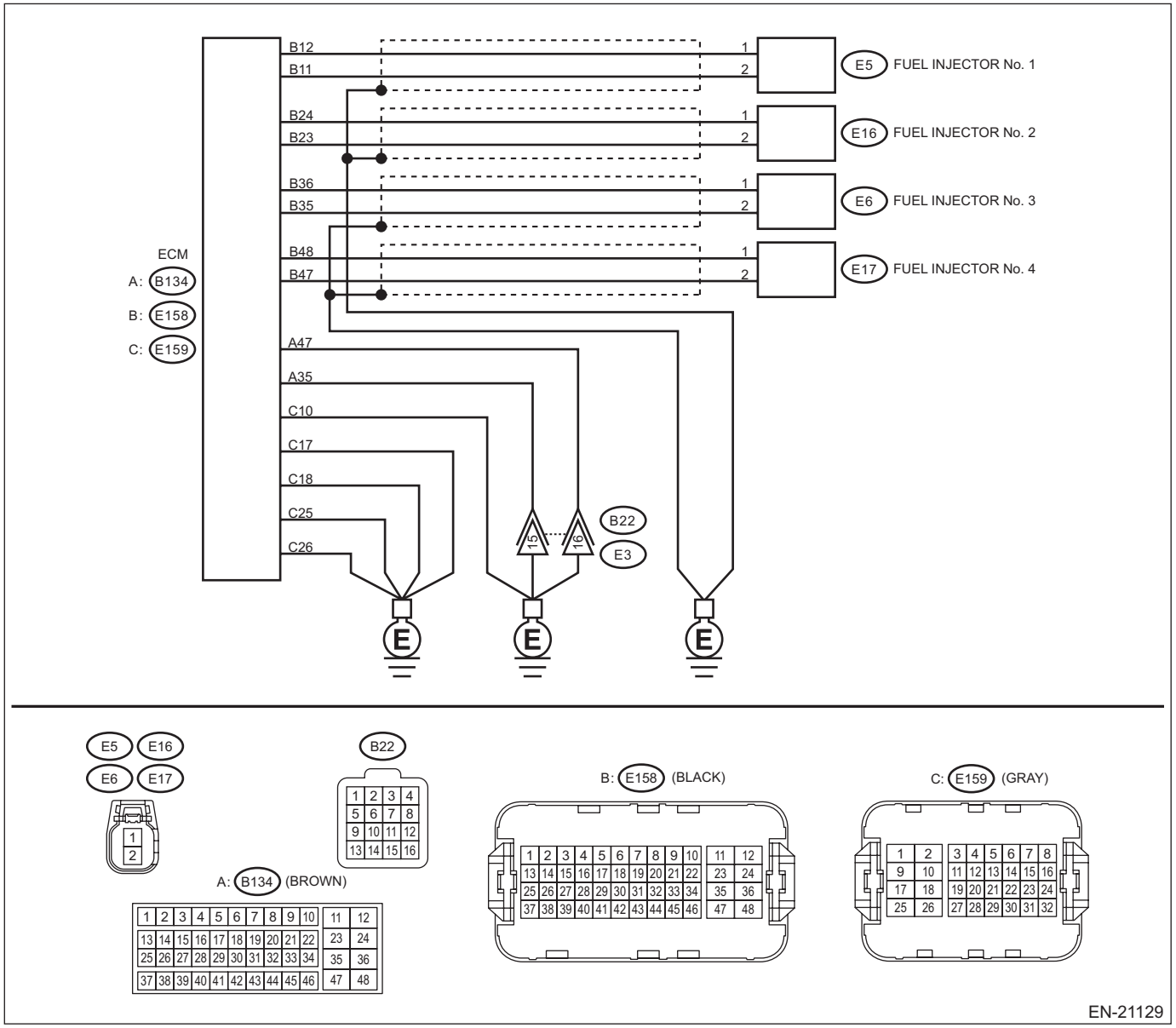

	Step	Check	Yes	No
1	**CHECK HARNESS BETWEEN ECM AND FUEL INJECTOR CONNECTOR.** 1) Turn the ignition switch to OFF. 2) Disconnect the connector from fuel injector on faulty cylinders. 3) Measure the resistance between fuel injector connector and engine ground on faulty cylinders. ***Connector & terminal*** ***#1 (E5) No. 1 — Engine ground:*** ***#1 (E5) No. 2 — Engine ground:*** ***#2 (E16) No. 1 — Engine ground:*** ***#2 (E16) No. 2 — Engine ground:*** ***#3 (E6) No. 1 — Engine ground:*** ***#3 (E6) No. 2 — Engine ground:*** ***#4 (E17) No. 1 — Engine ground:*** ***#4 (E17) No. 2 — Engine ground:***	Is the resistance 1 MΩ or more?	Go to step **2**.	Repair the short circuit to ground in harness between ECM connector and fuel injector connector.
2	**CHECK HARNESS BETWEEN ECM AND FUEL INJECTOR CONNECTOR.** Measure the resistance of harness between ECM connector and fuel injector connector on faulty cylinders. ***Connector & terminal*** ***#1 (E158) No. 12 — (E5) No. 1:*** ***#1 (E158) No. 11 — (E5) No. 2:*** ***#2 (E158) No. 24 — (E16) No. 1:*** ***#2 (E158) No. 23 — (E16) No. 2:*** ***#3 (E158) No. 36 — (E6) No. 1:*** ***#3 (E158) No. 35 — (E6) No. 2:*** ***#4 (E158) No. 48 — (E17) No. 1:*** ***#4 (E158) No. 47 — (E17) No. 2:***	Is the resistance less than 1 Ω?	Go to step **3**.	Repair the open circuit of the harness between the ECM connector and fuel injector connector.
3	**CHECK FUEL INJECTOR.** Check the fuel injector on faulty cylinder. <Ref. to FU(w/o STI)-65, INSPECTION, Fuel Injector.>	Is the check result OK?	Go to step **4**.	Replace the faulty fuel injector. <Ref. to FU(w/o STI)-50, Fuel Injector.>
4	**CHECK INSTALLATION CONDITION OF CAMSHAFT POSITION SENSOR/CRANKSHAFT POSITION SENSOR.**	Is the camshaft position sensor or crankshaft position sensor loosely installed?	Tighten the camshaft position sensor or crankshaft position sensor. <Ref. to FU(w/o STI)-98, INSTALLATION, Camshaft Position Sensor.> <Ref. to FU(w/o STI)-94, INSTALLATION, Crankshaft Position Sensor.>	Go to step **5**.
5	**CHECK CRANKSHAFT POSITION SENSOR PLATE.**	Is the crankshaft position sensor plate rusted or does it have broken teeth?	Replace the crankshaft position sensor plate. <Ref. to ME(w/o STI)-247, Cylinder Block.>	Go to step **6**.
6	**CHECK INSTALLATION CONDITION OF TIMING CHAIN.** Turn the crankshaft using ST, and align the alignment mark on crank sprocket with alignment mark on cylinder block. ST 18252AA000 CRANKSHAFT SOCKET	Is the timing chain dislocated from its proper position?	Correct the installation condition of timing chain. <Ref. to ME(w/o STI)-111, Timing Chain Assembly.>	Go to step **7**.

	Step	Check	Yes	No
7	**CHECK FUEL LEVEL.**	Is the fuel meter indication higher than the “Lower” level?	Go to step **8**.	Refill the fuel so that the fuel meter indication is higher than the “Lower” level, and proceed to the next step. Go to step **11**.
8	**CHECK PCV VALVE.** Check the PCV valve.	Is the PCV valve free from deformation, crack or other damage?	Repair or replace the PCV valve. <Ref. to EC(w/o STI)-83, PCV Valve.>	Go to step **9**.
9	**CHECK PCV HOSE.** Check the PCV hose.	Is the PCV hose free from deformation, crack or other damage?	Check the PCV hose assembly for cracks, damage or looseness. <Ref. to EC(w/o STI)-77, PCV Hose Assembly.>	Go to step **10**.
10	**CHECK PCV HOSE.** Check the PCV hose.	Check the clamp of PCV hose assembly for damage or looseness.	Repair or replace the PCV valve. <Ref. to EC(w/o STI)-77, PCV Hose Assembly.>	Go to step **11**.
11	**CHECK STATUS OF MALFUNCTION INDICATOR LIGHT.** 1) Clear the memory using the Subaru Select Monitor or general scan tool. <Ref. to EN(w/o STI)(diag)-82, Clear Memory Mode.> 2) Start the engine, and drive the vehicle 10 minutes or more.	Does the malfunction indicator light illuminate or blink?	Go to step **13**.	Go to step **12**.
12	**CHECK CAUSE OF MISFIRE.**	Was the cause of misfire identified when the engine is running?	Finish diagnostics operation, if the engine has no abnormality.	Repair the poor contact of connector. NOTE: In this case, repair the following item: • Poor contact of ignition coil connector • Poor contact of fuel injector connector on faulty cylinders • Poor contact of ECM connector • Poor contact of coupling connector

Step		Check	Yes	No
13	**CHECK AIR INTAKE SYSTEM.**	Is there any fault in air intake system?	Repair the air intake system. NOTE: Check the following items. • Are there air leaks or air suction caused by loose or dislocated nuts and bolts? • Are there cracks or any disconnection of hoses?	Go to step **14**.
14	**CHECK CYLINDER.**	Is there any fault in the cylinder?	Repair or replace faulty parts. NOTE: Check the following items. • Spark plug • Ignition coil • Fuel injector • Compression • Skipping timing chain teeth	Go to DTC P0171. <Ref. to EN(w/o STI)(diag)-282, DTC P0171 SYSTEM TOO LEAN BANK 1, Diagnostic Procedure with Diagnostic Trouble Code (DTC).>

1. OUTLINE OF DIAGNOSIS

NOTE:
For the detection standard, refer to DTC P0301. <Ref. to EN(w/o STI)(diag)-330, DTC P0301 CYLINDER 1 MISFIRE DETECTED, Diagnostic Procedure with Diagnostic Trouble Code (DTC).>

CC:DTC P0327 KNOCK/COMBUSTION VIBRATION SENSOR 1 CIRCUIT LOW BANK 1 OR SINGLE SENSOR

DTC DETECTING CONDITION:
Immediately at fault recognition
TROUBLE SYMPTOM:
- Poor driving performance
- Knocking occurs

CAUTION:
- **After servicing or replacing faulty parts, perform Clear Memory Mode <Ref. to EN(w/o STI)(diag)-82, OPERATION, Clear Memory Mode.>, and Inspection Mode <Ref. to EN(w/o STI)(diag)-64, PROCEDURE, Inspection Mode.>.**
- **Use the check board when measuring the ECM terminal voltage and resistance.**

WIRING DIAGRAM:
Engine Electrical System <Ref. to WI-154, WIRING DIAGRAM, Engine Electrical System.>

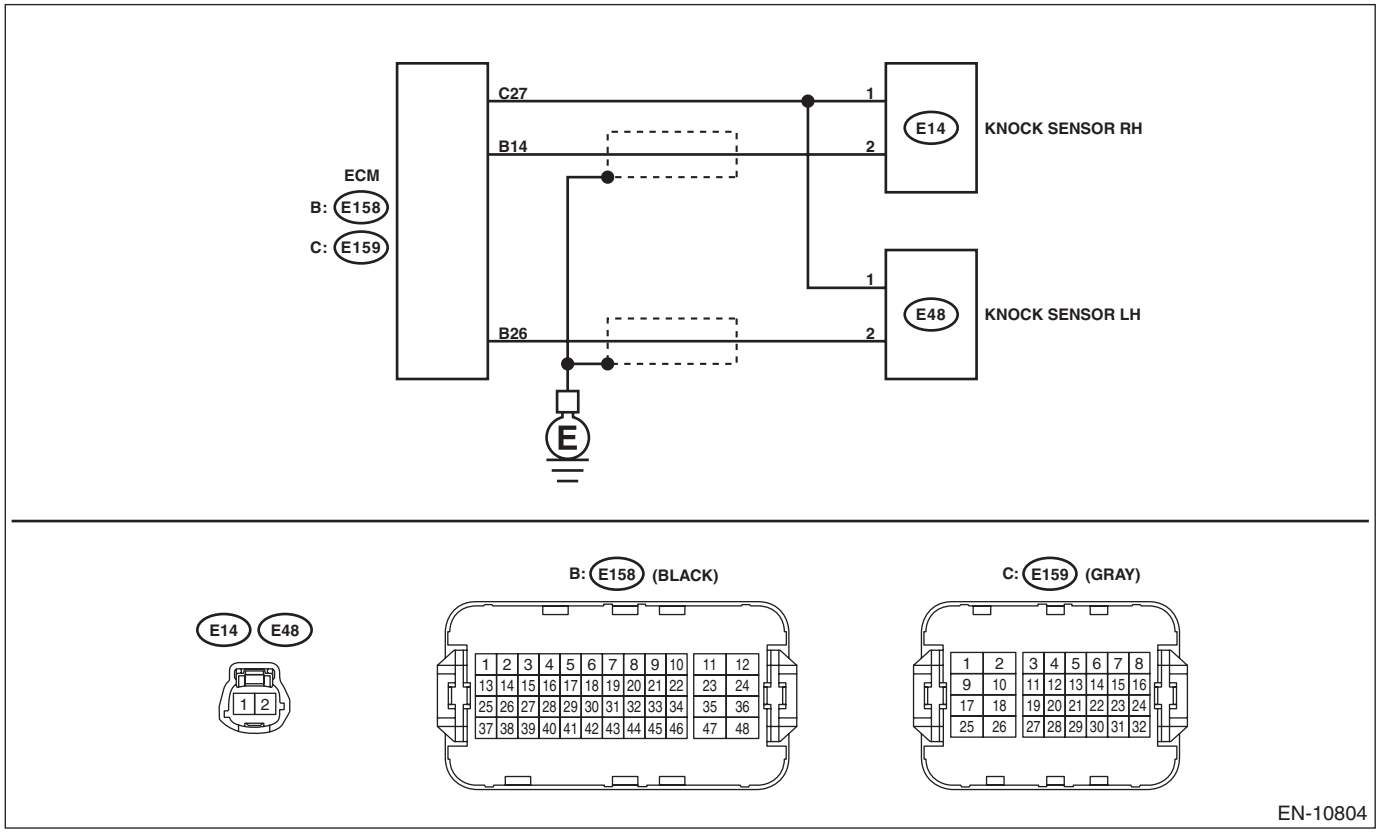

Step		Check	Yes	No
1	**CHECK HARNESS BETWEEN ECM AND KNOCK SENSOR CONNECTOR.** 1) Turn the ignition switch to OFF. 2) Disconnect the connector from ECM. 3) Measure the resistance between ECM connectors. ***Connector & terminal*** ***(E158) No. 14 — (E159) No. 27:***	Is the resistance less than 500 kΩ?	Go to step **2**.	Go to step **3**.

	Step	Check	Yes	No
2	**CHECK KNOCK SENSOR.** 1) Disconnect the connector from the knock sensor. 2) Measure the resistance between knock sensor connectors. ***Terminals*** ***No. 1 — No. 2:***	Is the resistance less than 500 kΩ?	Replace the knock sensor. <Ref. to FU(w/o STI)-104, Knock Sensor.>	Repair the short circuit to ground in harness between ECM connector and knock sensor connector. NOTE: The harness between both connectors are shielded. Remove the shield and repair the short circuit of harness.
3	**CHECK INPUT SIGNAL OF ECM.** 1) Connect the ECM. 2) Turn the ignition switch to ON. 3) Measure the voltage between ECM connector and engine ground. ***Connector & terminal*** ***(E158) No. 14 (+) — Engine ground (–):***	Is the voltage 2 V or more?	Even if DTC is detected, the circuit has returned to a normal condition at this time. Reproduce the failure, and then perform the diagnosis again. NOTE: In this case, temporary poor contact of connector, temporary open or short circuit of harness may be the cause.	Repair the short circuit to ground in harness between ECM connector and knock sensor connector. NOTE: The harness between both connectors are shielded. Remove the shield and repair the short circuit of harness.

1. OUTLINE OF DIAGNOSIS

Detect the open or short circuit of knock sensor.
Judge as NG if out of specification.

2. COMPONENT DESCRIPTION

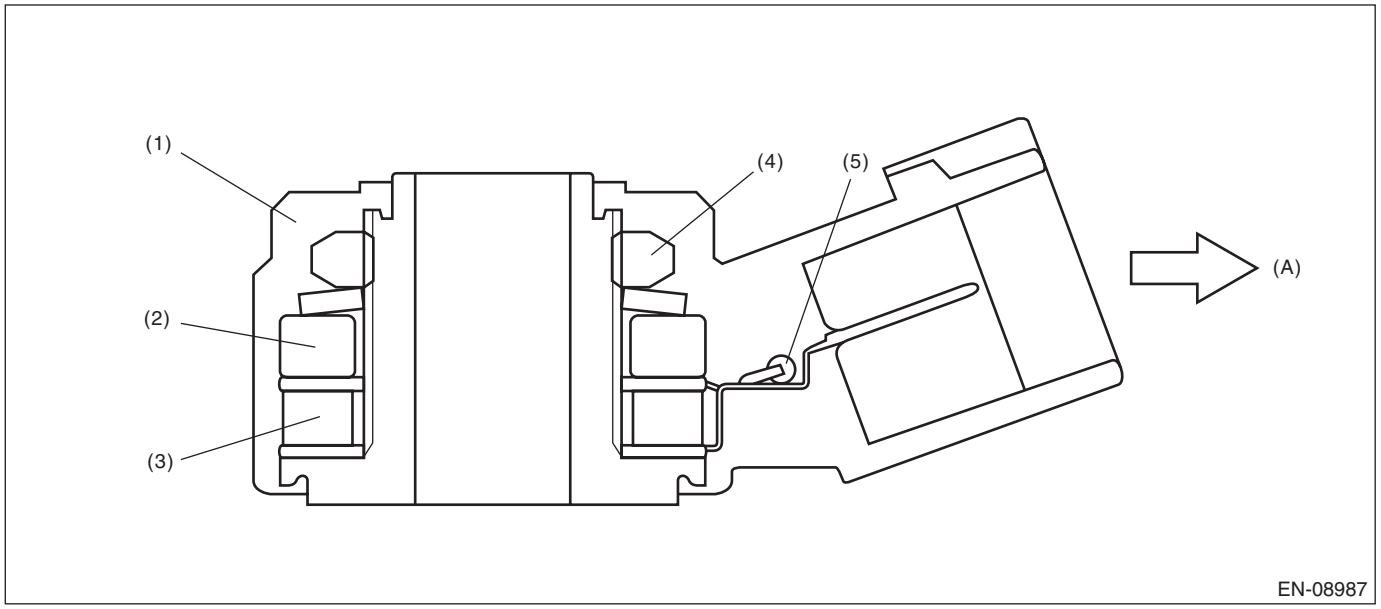

(A) To knock sensor harness

(1) Case
(2) Weight
(3) Piezoelectric element
(4) Nut
(5) Resistance

3. EXECUTION CONDITION

Secondary parameters	Execution condition
None	

4. GENERAL DRIVING CYCLE

Always perform the diagnosis continuously.

5. DIAGNOSTIC METHOD

If the duration of time while the following conditions are met is longer than the time indicated, judge as NG.

Judgment Value

Malfunction Criteria	Threshold Value
Output voltage	< 0.22 V

Time Needed for Diagnosis: 1000 ms
Malfunction Indicator Light Illumination: Illuminates as soon as a malfunction occurs.

CD:DTC P0328 KNOCK/COMBUSTION VIBRATION SENSOR 1 CIRCUIT HIGH BANK 1 OR SINGLE SENSOR

DTC DETECTING CONDITION:
Immediately at fault recognition
TROUBLE SYMPTOM:
- Poor driving performance
- Knocking occurs

CAUTION:
• After servicing or replacing faulty parts, perform Clear Memory Mode <Ref. to EN(w/o STI)(diag)-82, OPERATION, Clear Memory Mode.>, and Inspection Mode <Ref. to EN(w/o STI)(diag)-64, PROCEDURE, Inspection Mode.>.
• Use the check board when measuring the ECM terminal voltage and resistance.
WIRING DIAGRAM:
Engine Electrical System <Ref. to WI-154, WIRING DIAGRAM, Engine Electrical System.>

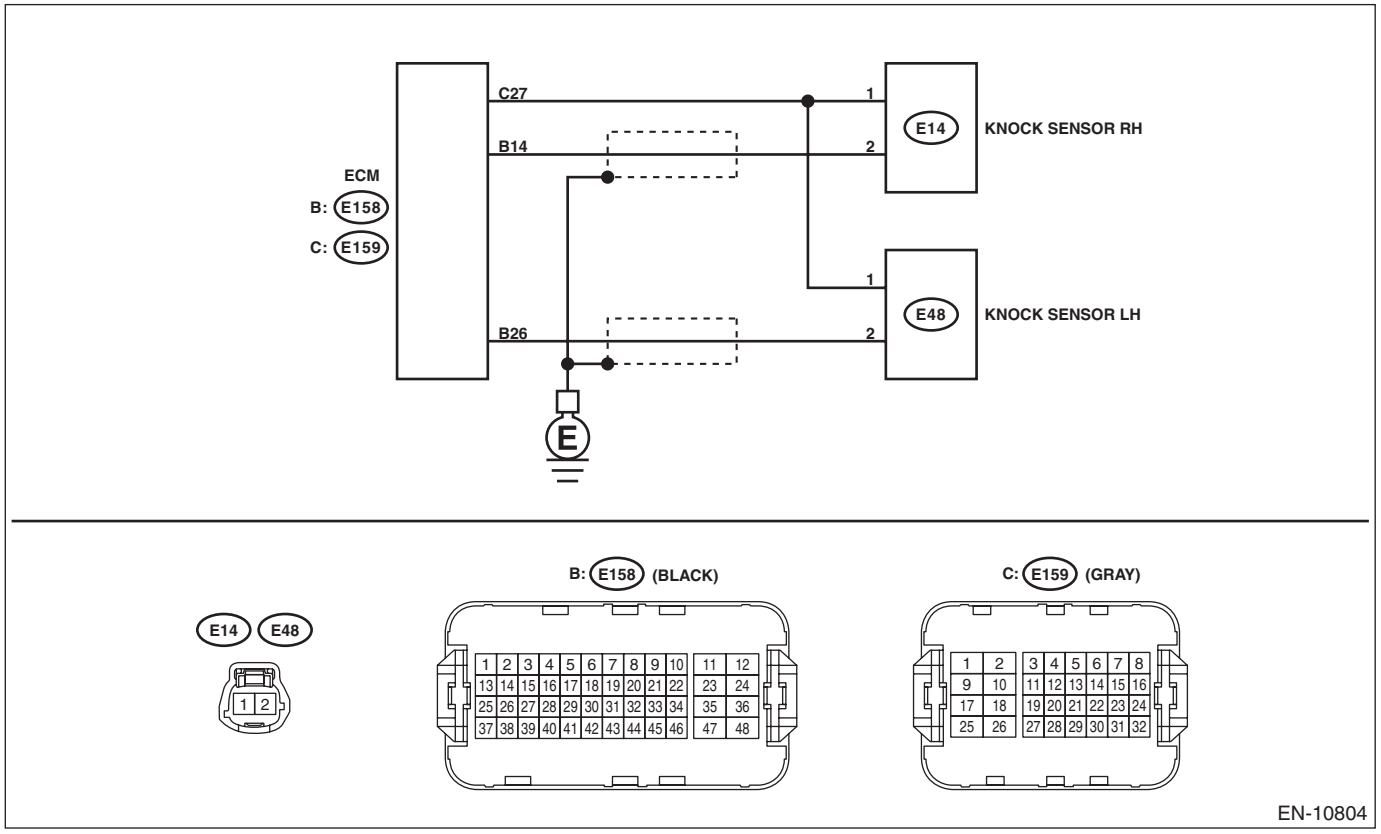

Step		Check	Yes	No
1	**CHECK HARNESS BETWEEN ECM AND KNOCK SENSOR CONNECTOR.** 1) Turn the ignition switch to OFF. 2) Disconnect the connector from ECM. 3) Measure the resistance between ECM connectors. ***Connector & terminal*** ***(E158) No. 14 — (E159) No. 27:***	Is the resistance 600 kΩ or more?	Go to step **2**.	Repair the poor contact of ECM connector.
2	**CHECK KNOCK SENSOR.** 1) Disconnect the connector from the knock sensor. 2) Measure the resistance between knock sensor terminals. ***Terminals*** ***No. 1 — No. 2:***	Is the resistance 600 kΩ or more?	Replace the knock sensor. <Ref. to FU(w/o STI)-104, Knock Sensor.>	Repair the open circuit in harness between ECM connector and knock sensor connector.

1. OUTLINE OF DIAGNOSIS

Detect the open or short circuit of knock sensor.
Judge as NG if out of specification.

2. COMPONENT DESCRIPTION

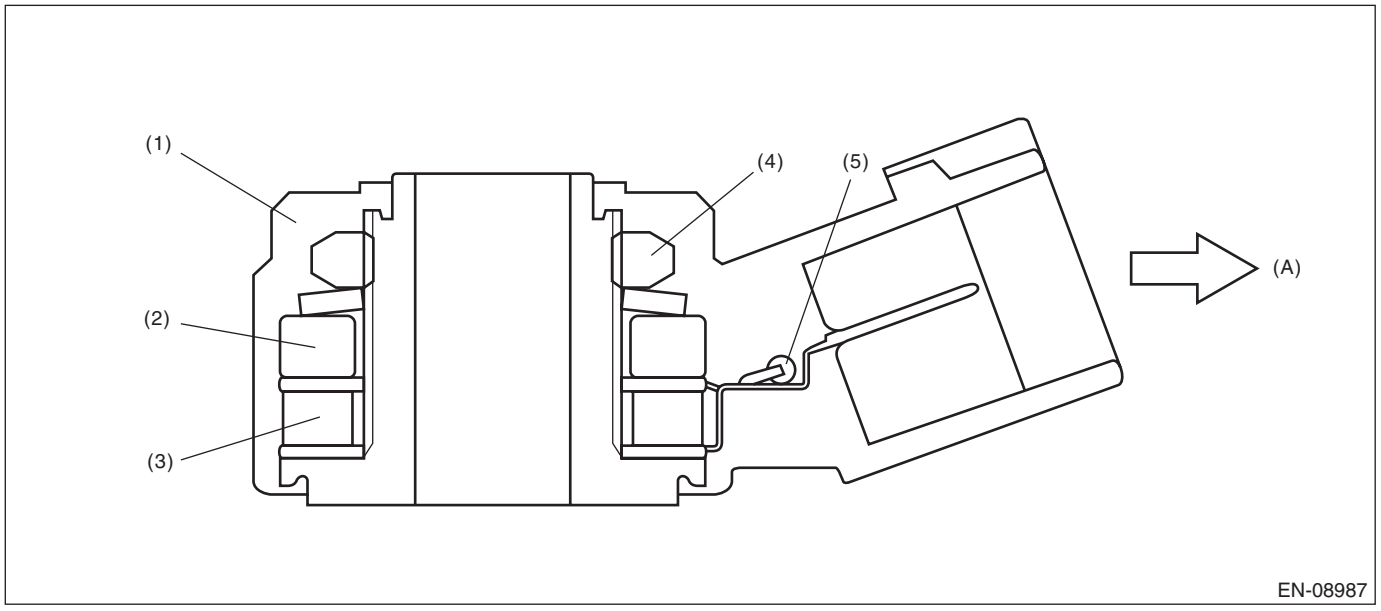

(A) To knock sensor harness

(1) Case
(2) Weight
(3) Piezoelectric element
(4) Nut
(5) Resistance

3. EXECUTION CONDITION

Secondary parameters	Execution condition
None	

4. GENERAL DRIVING CYCLE

Always perform the diagnosis continuously.

5. DIAGNOSTIC METHOD

If the duration of time while the following conditions are met is longer than the time indicated, judge as NG.

Judgment Value

Malfunction Criteria	Threshold Value
Output voltage	> 4.73 V

Time Needed for Diagnosis: 1000 ms
Malfunction Indicator Light Illumination: Illuminates as soon as a malfunction occurs.

CE:DTC P0332 KNOCK/COMBUSTION VIBRATION SENSOR 2 CIRCUIT LOW BANK 2

DTC DETECTING CONDITION:
Immediately at fault recognition
TROUBLE SYMPTOM:
- Driving performance problem
- Knocking occurs

CAUTION:
• After servicing or replacing faulty parts, perform Clear Memory Mode <Ref. to EN(w/o STI)(diag)-82, OPERATION, Clear Memory Mode.>, and Inspection Mode <Ref. to EN(w/o STI)(diag)-64, PROCEDURE, Inspection Mode.>.
• Use the check board when measuring the ECM terminal voltage and resistance.
WIRING DIAGRAM:
Engine Electrical System <Ref. to WI-154, WIRING DIAGRAM, Engine Electrical System.>

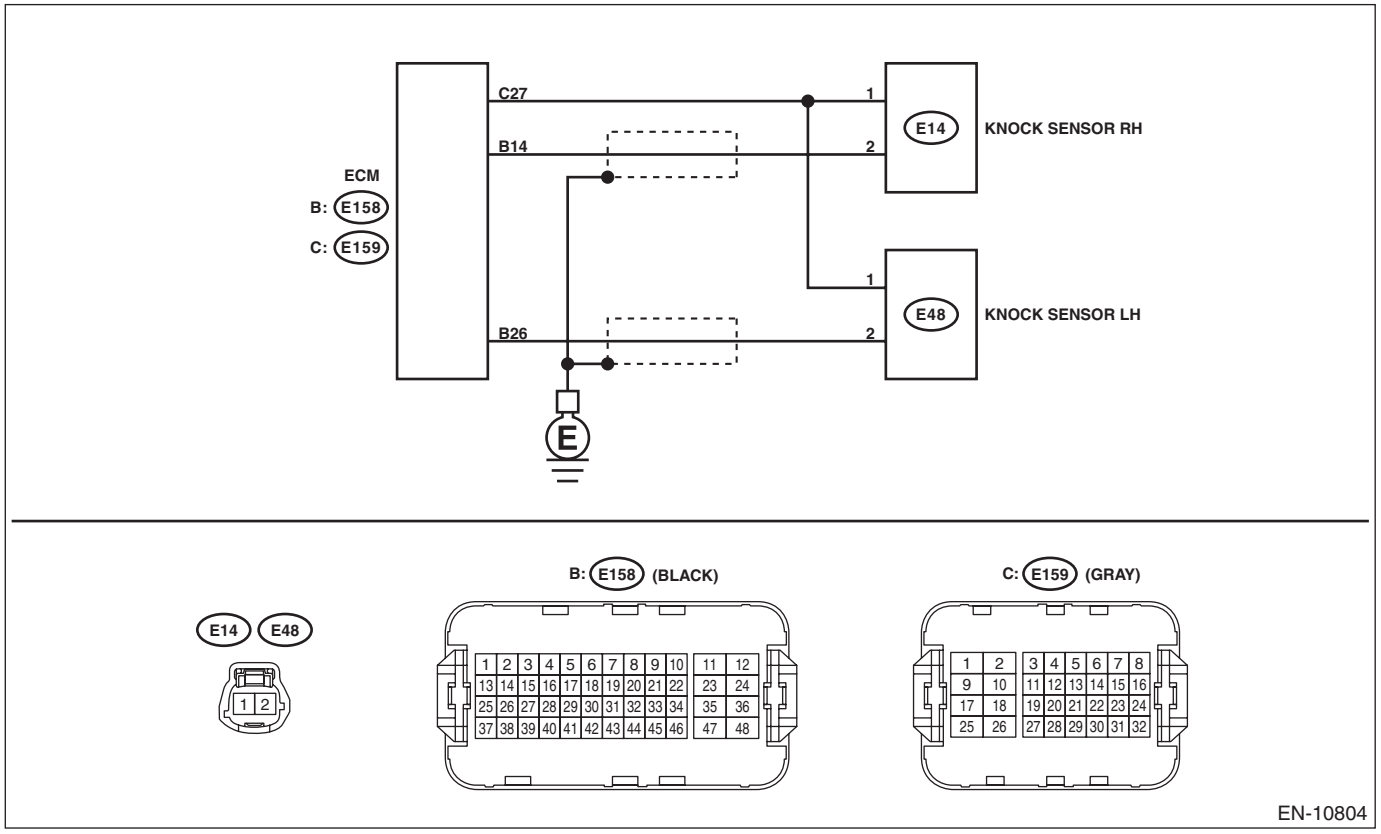

Step		Check	Yes	No
1	**CHECK HARNESS BETWEEN ECM AND KNOCK SENSOR CONNECTOR.** 1) Turn the ignition switch to OFF. 2) Disconnect the connector from ECM. 3) Measure the resistance between ECM connectors. ***Connector & terminal*** ***(E158) No. 26 — (E159) No. 27:***	Is the resistance less than 500 kΩ?	Go to step **2**.	Go to step **3**.

	Step	Check	Yes	No
2	**CHECK KNOCK SENSOR.** 1) Disconnect the connector from the knock sensor. 2) Measure the resistance between knock sensor connectors. ***Terminals*** ***No. 1 — No. 2:***	Is the resistance less than 500 kΩ?	Replace the knock sensor. <Ref. to FU(w/o STI)-104, Knock Sensor.>	Repair the short circuit to ground in harness between ECM connector and knock sensor connector. NOTE: The harness between both connectors are shielded. Remove the shield and repair the short circuit of harness.
3	**CHECK INPUT SIGNAL OF ECM.** 1) Connect the ECM. 2) Turn the ignition switch to ON. 3) Measure the voltage between ECM connector and engine ground. ***Connector & terminal*** ***(E158) No. 26 (+) — Engine ground (–):***	Is the voltage 2 V or more?	Even if DTC is detected, the circuit has returned to a normal condition at this time. Reproduce the failure, and then perform the diagnosis again. NOTE: In this case, temporary poor contact of connector, temporary open or short circuit of harness may be the cause.	Repair the short circuit to ground in harness between ECM connector and knock sensor connector. NOTE: The harness between both connectors are shielded. Remove the shield and repair the short circuit of harness.

1. OUTLINE OF DIAGNOSIS

Detect the open or short circuit of knock sensor.
Judge as NG if out of specification.

2. COMPONENT DESCRIPTION

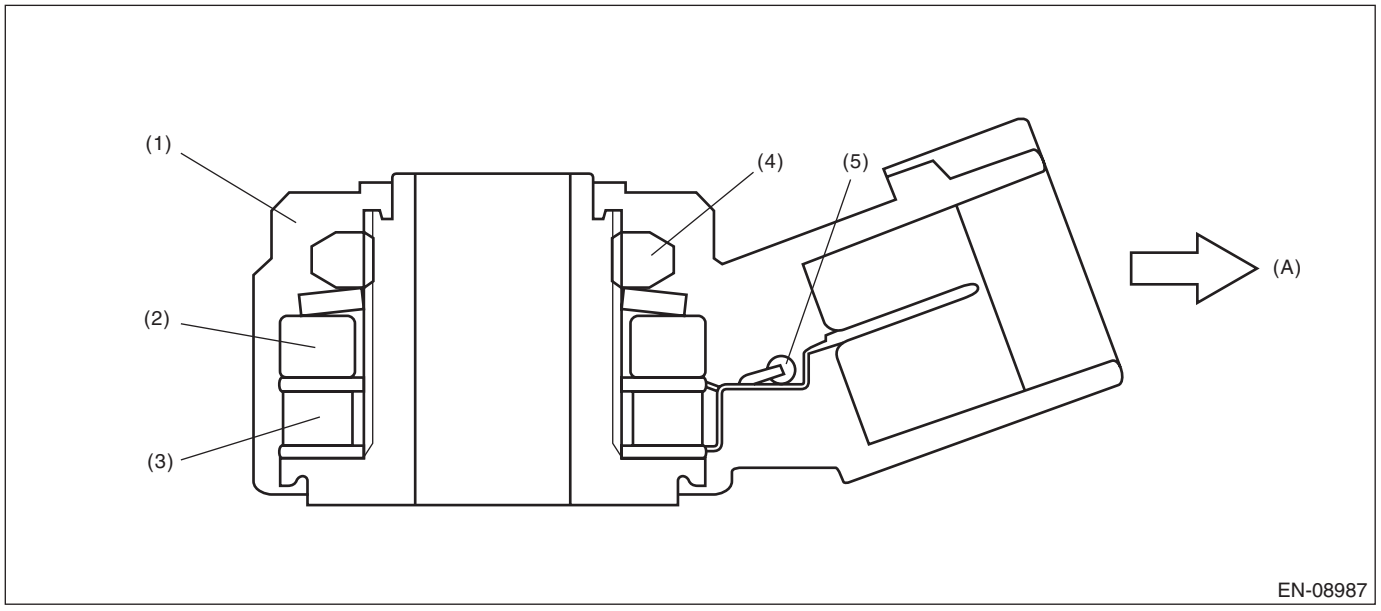

(A) To knock sensor harness

(1) Case
(2) Weight
(3) Piezoelectric element
(4) Nut
(5) Resistance

3. EXECUTION CONDITION

Secondary parameters	Execution condition
None	

4. GENERAL DRIVING CYCLE

Always perform the diagnosis continuously.

5. DIAGNOSTIC METHOD

If the duration of time while the following conditions are met is longer than the time indicated, judge as NG.

Judgment Value

Malfunction Criteria	Threshold Value
Output voltage	< 0.22 V

Time Needed for Diagnosis: 1000 ms
Malfunction Indicator Light Illumination: Illuminates as soon as a malfunction occurs.

CF:DTC P0333 KNOCK/COMBUSTION VIBRATION SENSOR 2 CIRCUIT HIGH BANK 2

DTC DETECTING CONDITION:
Immediately at fault recognition
TROUBLE SYMPTOM:
- Driving performance problem
- Knocking occurs

CAUTION:
• After servicing or replacing faulty parts, perform Clear Memory Mode <Ref. to EN(w/o STI)(diag)-82, OPERATION, Clear Memory Mode.>, and Inspection Mode <Ref. to EN(w/o STI)(diag)-64, PROCEDURE, Inspection Mode.>.
• Use the check board when measuring the ECM terminal voltage and resistance.
WIRING DIAGRAM:
Engine Electrical System <Ref. to WI-154, WIRING DIAGRAM, Engine Electrical System.>

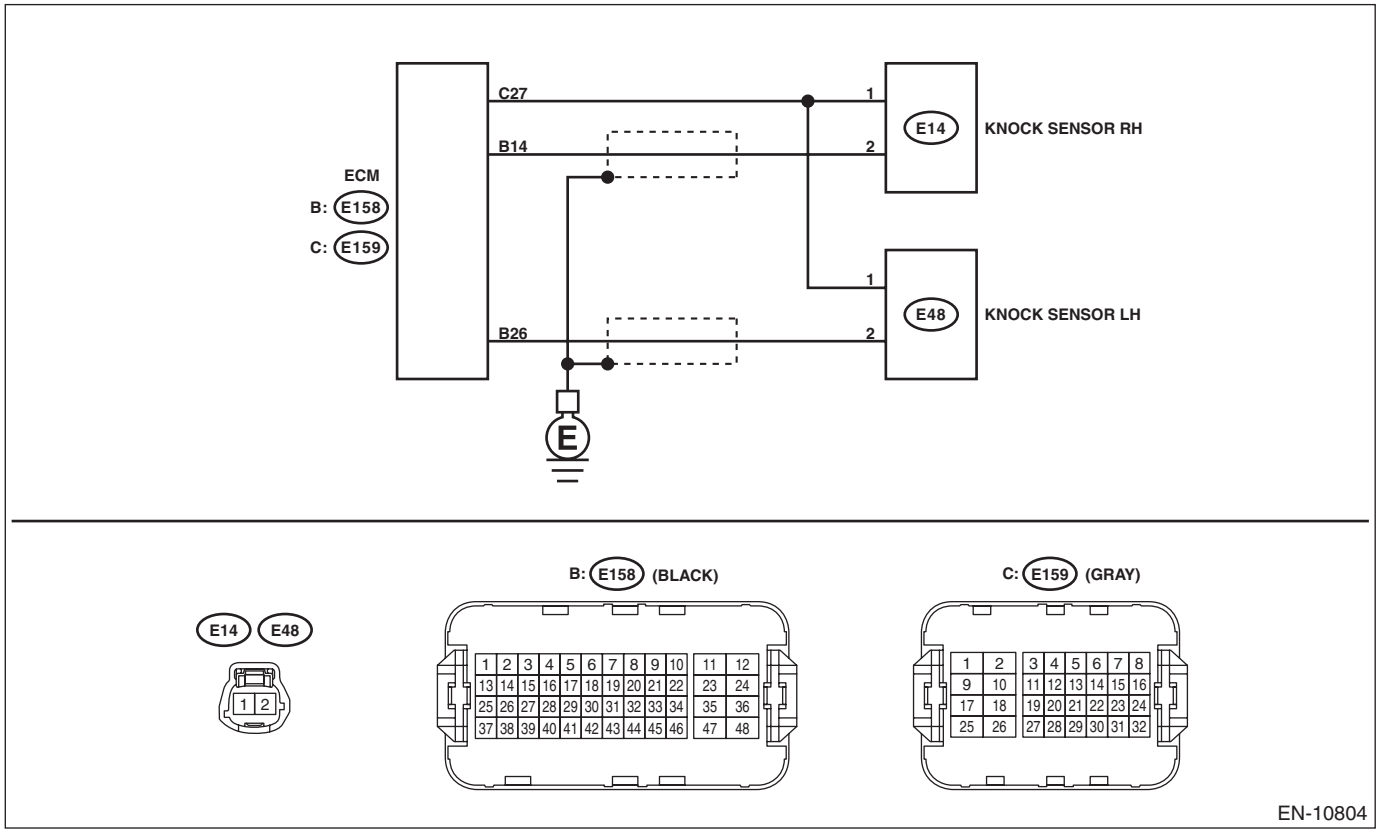

Step		Check	Yes	No
1	**CHECK HARNESS BETWEEN ECM AND KNOCK SENSOR CONNECTOR.** 1) Turn the ignition switch to OFF. 2) Disconnect the connector from ECM. 3) Measure the resistance between ECM connectors. ***Connector & terminal*** ***(E158) No. 26 — (E159) No. 27:***	Is the resistance 600 kΩ or more?	Go to step **2**.	Repair the poor contact of ECM connector.
2	**CHECK KNOCK SENSOR.** 1) Disconnect the connector from the knock sensor. 2) Measure the resistance between knock sensor terminals. ***Terminals*** ***No. 1 — No. 2:***	Is the resistance 600 kΩ or more?	Replace the knock sensor. <Ref. to FU(w/o STI)-104, Knock Sensor.>	Repair the open circuit in harness between ECM connector and knock sensor connector.

1. OUTLINE OF DIAGNOSIS

Detect the open or short circuit of knock sensor.
Judge as NG if out of specification.

2. COMPONENT DESCRIPTION

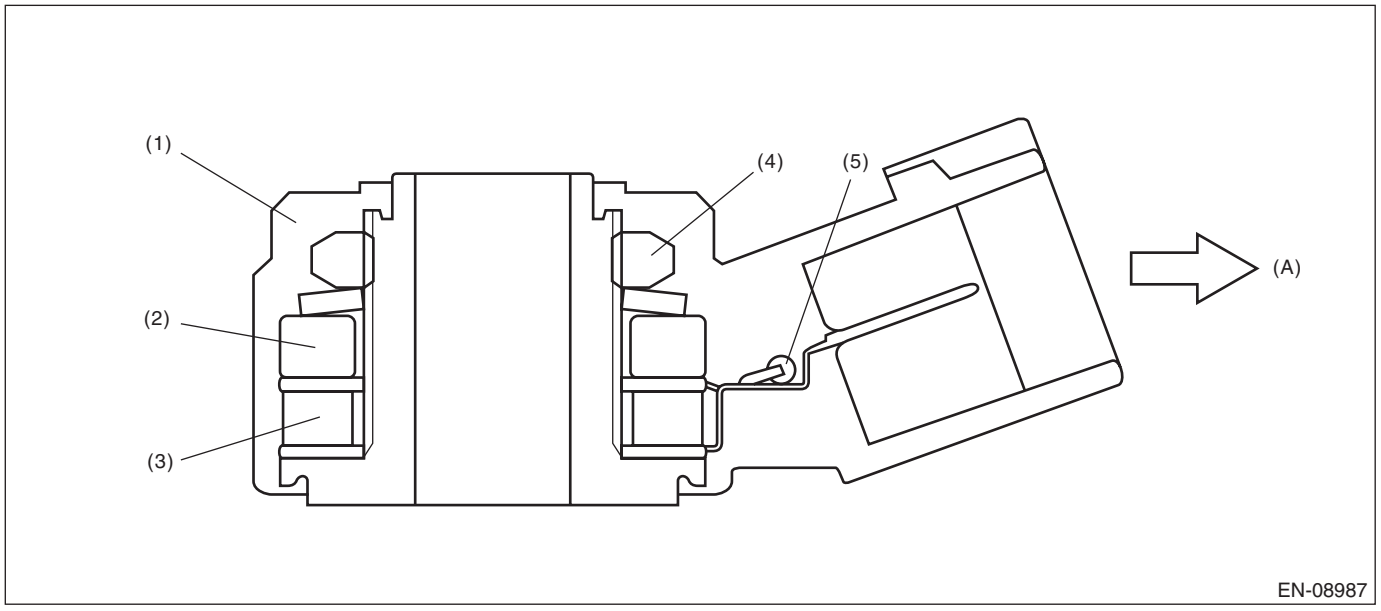

(A) To knock sensor harness

(1) Case
(2) Weight
(3) Piezoelectric element
(4) Nut
(5) Resistance

3. EXECUTION CONDITION

Secondary parameters	Execution condition
None	

4. GENERAL DRIVING CYCLE

Always perform the diagnosis continuously.

5. DIAGNOSTIC METHOD

If the duration of time while the following conditions are met is longer than the time indicated, judge as NG.

Judgment Value

Malfunction Criteria	Threshold Value
Output voltage	> 4.73 V

Time Needed for Diagnosis: 1000 ms
Malfunction Indicator Light Illumination: Illuminates as soon as a malfunction occurs.

CG:DTC P0335 CRANKSHAFT POSITION SENSOR "A" CIRCUIT

DTC DETECTING CONDITION:
Immediately at fault recognition
TROUBLE SYMPTOM:
- Engine stalls.
- Failure of engine to start

CAUTION:
- **After servicing or replacing faulty parts, perform Clear Memory Mode <Ref. to EN(w/o STI)(diag)-82, OPERATION, Clear Memory Mode.>, and Inspection Mode <Ref. to EN(w/o STI)(diag)-64, PROCEDURE, Inspection Mode.>.**
- **Use the check board when measuring the ECM terminal voltage and resistance.**

WIRING DIAGRAM:
Engine Electrical System <Ref. to WI-154, WIRING DIAGRAM, Engine Electrical System.>

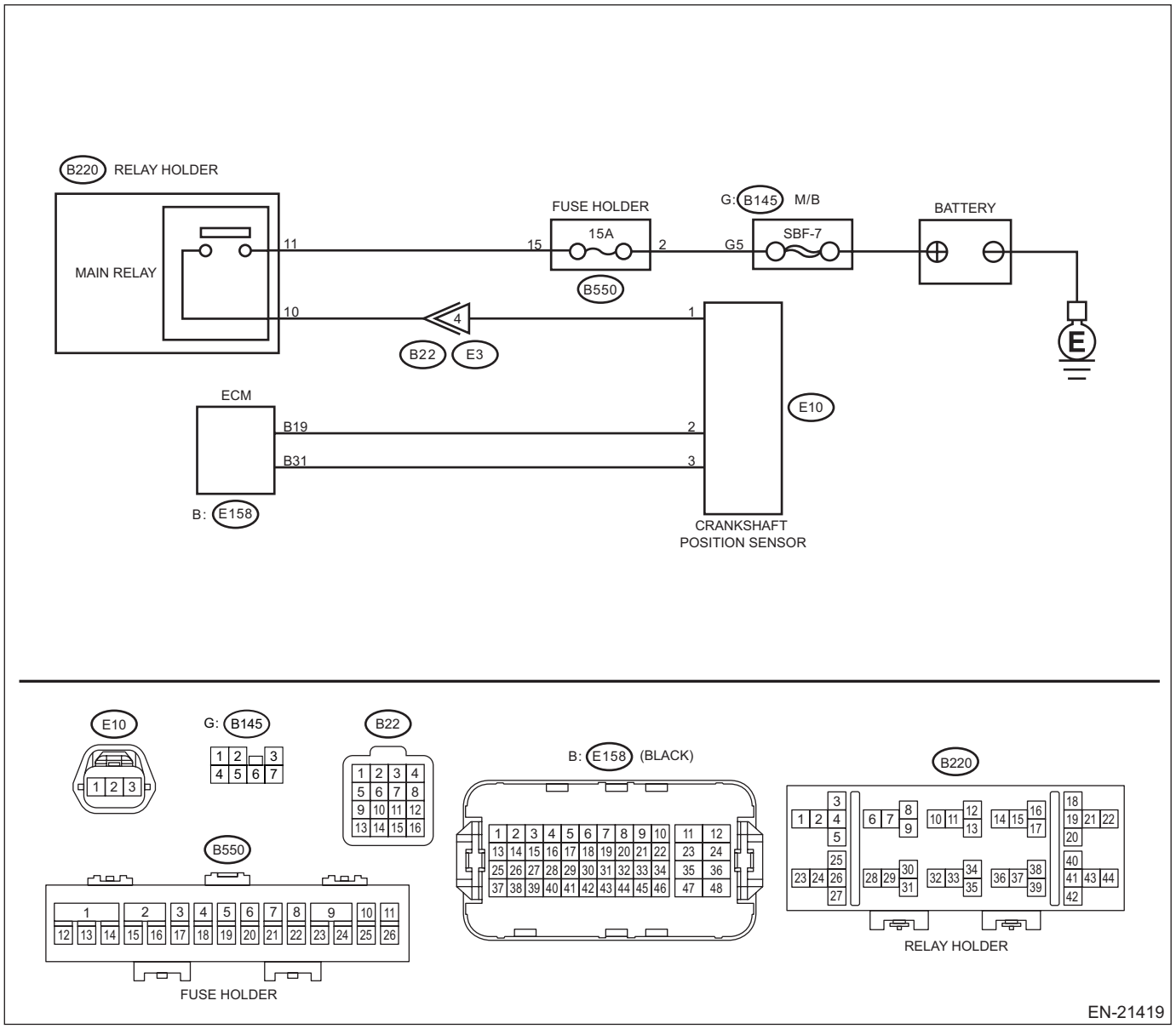

	Step	Check	Yes	No
1	**CHECK POWER SUPPLY OF CRANKSHAFT POSITION SENSOR.** 1) Turn the ignition switch to OFF. 2) Disconnect the connector from the crankshaft position sensor. 3) Turn the ignition switch to ON. 4) Measure the voltage between crankshaft position sensor connector and engine ground. ***Connector & terminal*** ***(E10) No. 1 (+) — Engine ground (–):***	Is the voltage 10 V or more?	Go to step **2**.	Repair the harness and connector. NOTE: In this case, repair the following item: • Open circuit or short circuit to ground in harness between main relay connector and crankshaft position sensor connector • Poor contact of coupling connector
2	**CHECK HARNESS BETWEEN ECM AND CRANKSHAFT POSITION SENSOR CONNECTOR.** 1) Turn the ignition switch to OFF. 2) Disconnect the connector from ECM. 3) Measure the resistance between ECM connector and crankshaft position sensor connector. ***Connector & terminal*** ***(E158) No. 19 — (E10) No. 2:*** ***(E158) No. 31 — (E10) No. 3:***	Is the resistance less than 1 Ω?	Go to step **3**.	Repair the open circuit in the harness between the ECM connector and crankshaft position sensor connector.
3	**CHECK HARNESS BETWEEN ECM AND CRANKSHAFT POSITION SENSOR CONNECTOR.** Measure the resistance between crankshaft position sensor connector and engine ground. ***Connector & terminal*** ***(E10) No. 2 — Engine ground:*** ***(E10) No. 3 — Engine ground:***	Is the resistance 1 MΩ or more?	Go to step **4**.	Repair short circuit to ground in harness between ECM connector and crankshaft position sensor connector.
4	**CHECK HARNESS BETWEEN ECM AND CRANKSHAFT POSITION SENSOR CONNECTOR.** Measure the voltage between crankshaft position sensor connector and engine ground. ***Connector & terminal*** ***(E10) No. 2 (+) — Engine ground (–):*** ***(E10) No. 3 (+) — Engine ground (–):***	Is the voltage 5 V or more?	Repair the short circuit to power in the harness between ECM connector and crankshaft position sensor connector.	Go to step **5**.
5	**CHECK CONDITION OF CRANKSHAFT POSITION SENSOR.**	Is the crankshaft position sensor installation bolt tightened securely?	Go to step **6**.	Tighten the crankshaft position sensor installation bolt securely. <Ref. to FU(w/o STI)-94, INSTALLATION, Crankshaft Position Sensor.>
6	**CHECK CRANKSHAFT POSITION SENSOR.** Check waveform of crankshaft position sensor. <Ref. to EN(w/o STI)(diag)-21, Engine Control Module (ECM) I/O Signal.>	Is there any abnormality in waveform?	Replace the crankshaft position sensor. <Ref. to FU(w/o STI)-93, Crankshaft Position Sensor.>	Repair the following item. • Poor contact of ECM connector • Poor contact of crankshaft position sensor connector • Poor contact of coupling connector

1. OUTLINE OF DIAGNOSIS

Detect the open or short circuit of the crankshaft position sensor.
Judge as NG when the crank signal is not input even though the starter was rotated.

2. COMPONENT DESCRIPTION

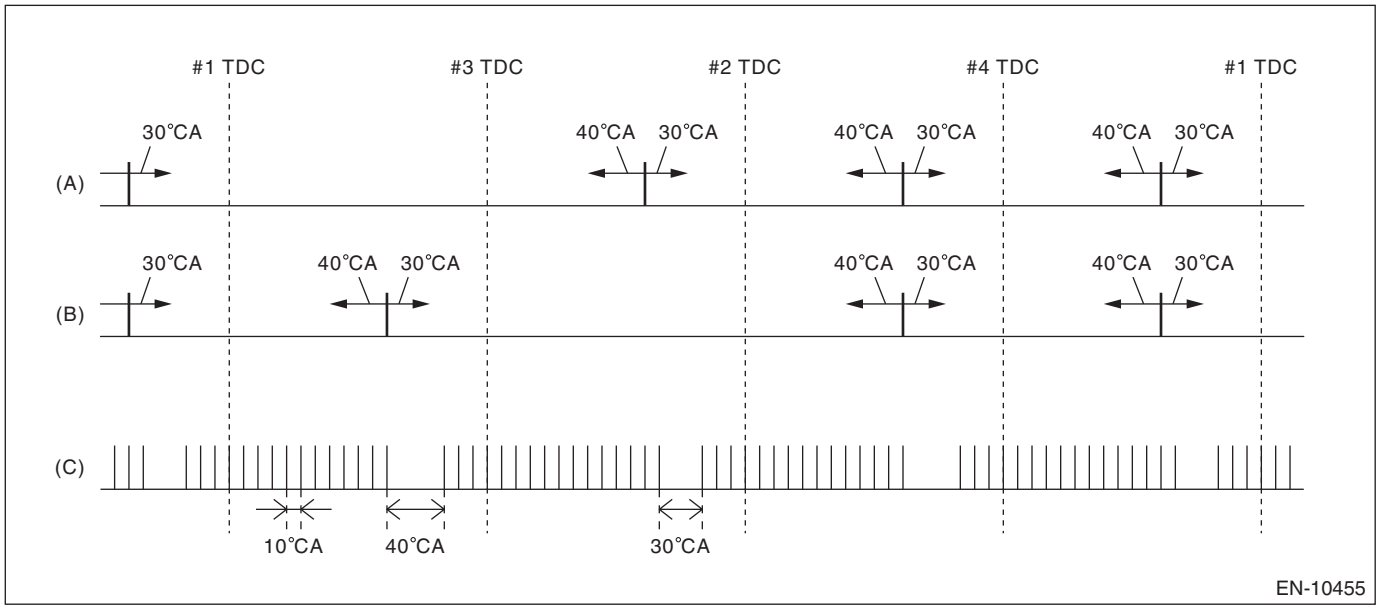

(A) Intake cam signal RH (B) Intake cam signal LH (C) Crankshaft signal

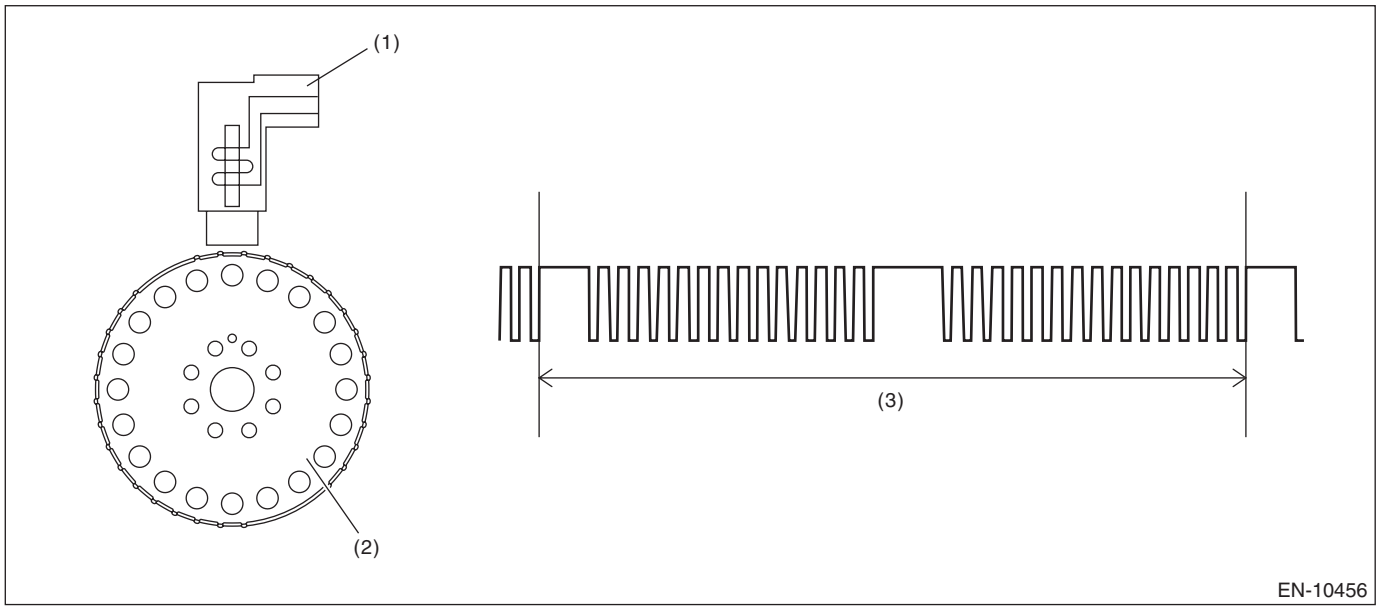

(1) Crankshaft position sensor (2) Crankshaft position sensor plate (3) One crankshaft rotation

3. EXECUTION CONDITION

Secondary parameters	Execution condition
Battery voltage	≥ 8 V

4. GENERAL DRIVING CYCLE

Always perform the diagnosis continuously.

5. DIAGNOSTIC METHOD

If the duration of time while the following conditions are met is longer than the time indicated, judge as NG.

Judgment Value

Malfunction Criteria	Threshold Value
Number of crankshaft position sensor signals during cranking	=0

Time Needed for Diagnosis: 3000 ms
Malfunction Indicator Light Illumination: Illuminates as soon as a malfunction occurs.

CH:DTC P0336 CRANKSHAFT POSITION SENSOR "A" CIRCUIT RANGE/PERFORMANCE

DTC DETECTING CONDITION:
Detected when two consecutive driving cycles with fault occur.
TROUBLE SYMPTOM:
- Engine stalls.
- Failure of engine to start

CAUTION:
After servicing or replacing faulty parts, perform Clear Memory Mode <Ref. to EN(w/o STI)(diag)-82, OPERATION, Clear Memory Mode.>, and Inspection Mode <Ref. to EN(w/o STI)(diag)-64, PROCEDURE, Inspection Mode.>.

	Step	Check	Yes	No
1	**CHECK CONDITION OF CRANKSHAFT POSITION SENSOR.** Turn the ignition switch to OFF.	Is the crankshaft position sensor installation bolt tightened securely?	Go to step **2**.	Tighten the crankshaft position sensor installation bolt securely. <Ref. to FU(w/o STI)-93, Crankshaft Position Sensor.>
2	**CHECK CRANKSHAFT POSITION SENSOR PLATE.**	Is there crack or damage in the crankshaft position sensor plate teeth?	Replace the crankshaft position sensor plate. <Ref. to ME(w/o STI)-247, Cylinder Block.>	Go to step **3**.
3	**CHECK INSTALLATION CONDITION OF TIMING CHAIN.** Turn the crankshaft, and align alignment mark on crank sprocket with alignment mark on cylinder block. ST 18252AA000 CRANKSHAFT SOCKET	Is the timing chain dislocated from its proper position?	Correct the installation condition of timing chain. <Ref. to ME(w/o STI)-111, Timing Chain Assembly.>	Replace the crankshaft position sensor. <Ref. to FU(w/o STI)-93, Crankshaft Position Sensor.>

1. OUTLINE OF DIAGNOSIS

Detect for faults in crankshaft position sensor output properties.
Judge as NG when there is a problem in the number of crankshaft signals for every revolution of crankshaft.

2. COMPONENT DESCRIPTION

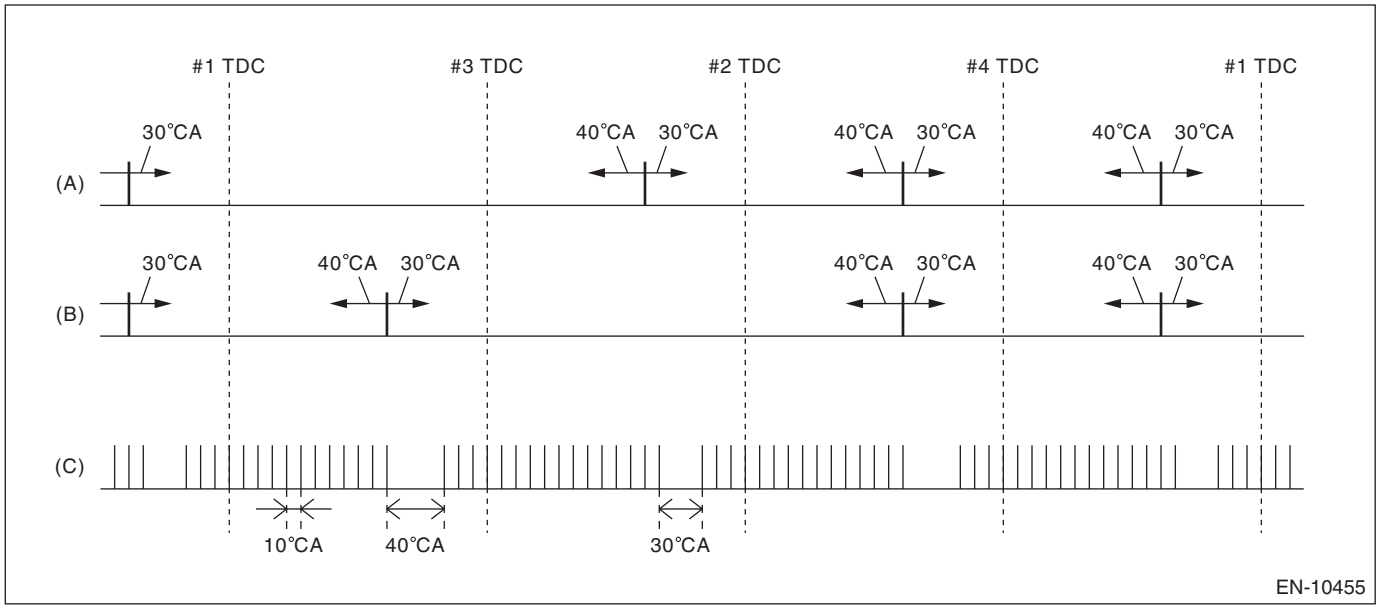

(A) Intake cam signal RH (B) Intake cam signal LH (C) Crankshaft signal

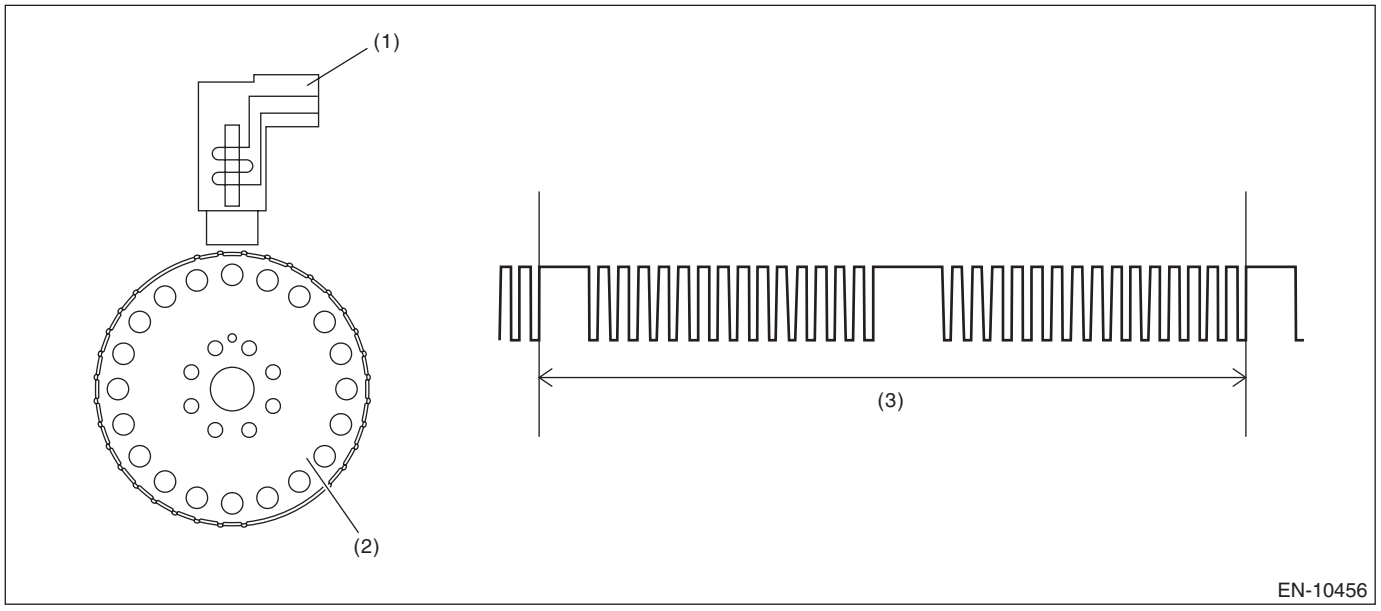

(1) Crankshaft position sensor (2) Crankshaft position sensor plate (3) One crankshaft rotation

3. EXECUTION CONDITION

Secondary parameters	Execution condition
Battery voltage	≥ 10.9 V

4. GENERAL DRIVING CYCLE

Always perform the diagnosis continuously.

5. DIAGNOSTIC METHOD

Judge as NG when the following conditions are established.

Diagnosis 1

Judgment Value

Malfunction Criteria	Threshold Value
Amount of crank sensor signal during 0.5 rev of crankshaft	< 14 or ≥ 20

Diagnosis 2

Judgment Value

Malfunction Criteria	Threshold Value
|(Present value of diagnosis 1) – (Previous value of diagnosis 1)|	≠ 1

Time Needed for Diagnosis: 10 engine revs.
Malfunction Indicator Light Illumination: Illuminates when malfunction occurs in 2 continuous driving cycles.

CI: DTC P0340 CAMSHAFT POSITION SENSOR "A" CIRCUIT BANK 1 OR SINGLE SENSOR

DTC DETECTING CONDITION:
Immediately at fault recognition
TROUBLE SYMPTOM:
- Engine stalls.
- Failure of engine to start

CAUTION:
- **After servicing or replacing faulty parts, perform Clear Memory Mode <Ref. to EN(w/o STI)(diag)-82, OPERATION, Clear Memory Mode.>, and Inspection Mode <Ref. to EN(w/o STI)(diag)-64, PROCEDURE, Inspection Mode.>.**
- **Use the check board when measuring the ECM terminal voltage and resistance.**

WIRING DIAGRAM:
Engine Electrical System <Ref. to WI-154, WIRING DIAGRAM, Engine Electrical System.>

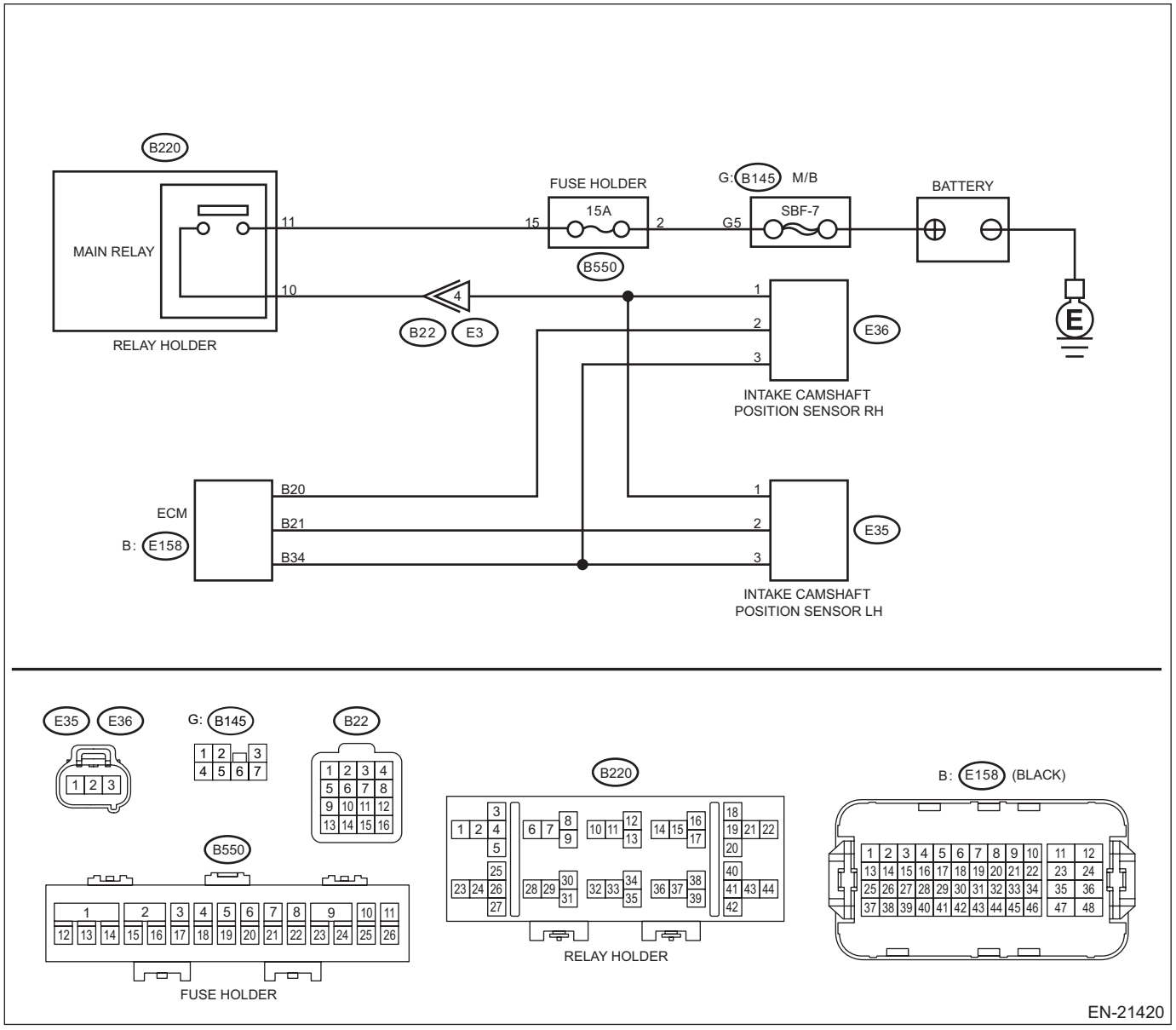

	Step	Check	Yes	No
1	**CHECK POWER SUPPLY OF CAMSHAFT POSITION SENSOR.** 1) Turn the ignition switch to OFF. 2) Disconnect the connector from camshaft position sensor. 3) Turn the ignition switch to ON. 4) Measure the voltage between camshaft position sensor connector and engine ground. ***Connector & terminal*** ***(E36) No. 1 (+) — Engine ground (–):***	Is the voltage 10 V or more?	Go to step **2**.	Repair the harness and connector. NOTE: In this case, repair the following item: • Open circuit or short circuit to ground in harness between main relay connector and camshaft position sensor connector • Poor contact of coupling connector
2	**CHECK HARNESS BETWEEN ECM AND CAMSHAFT POSITION SENSOR CONNECTOR.** 1) Turn the ignition switch to OFF. 2) Disconnect the connector from ECM. 3) Measure the resistance between ECM connector and camshaft position sensor connector. ***Connector & terminal*** ***(E158) No. 20 — (E36) No. 2:*** ***(E158) No. 34 — (E36) No. 3:***	Is the resistance less than 1 Ω?	Go to step **3**.	Repair the harness and connector. NOTE: In this case, repair the following item: • Open circuit in harness between ECM connector and camshaft position sensor connector • Poor contact of coupling connector
3	**CHECK HARNESS BETWEEN ECM AND CAMSHAFT POSITION SENSOR CONNECTOR.** Measure the resistance between camshaft position sensor connector and engine ground. ***Connector & terminal*** ***(E36) No. 2 — Engine ground:***	Is the resistance 1 MΩ or more?	Go to step **4**.	Repair short circuit to ground in harness between ECM connector and camshaft position sensor connector.
4	**CHECK HARNESS BETWEEN ECM AND CAMSHAFT POSITION SENSOR CONNECTOR.** Measure the voltage between camshaft position sensor connector and engine ground. ***Connector & terminal*** ***(E36) No. 2 (+) — Engine ground (–):***	Is the voltage 5 V or more?	Repair the short circuit to power in the harness between ECM connector and camshaft position sensor connector.	Go to step **5**.
5	**CHECK CONDITION OF CAMSHAFT POSITION SENSOR.**	Is the camshaft position sensor installation bolt tightened securely?	Go to step **6**.	Tighten the camshaft position sensor installation bolt securely. <Ref. to FU(w/o STI)-98, INSTALLATION, Camshaft Position Sensor.>
6	**CHECK CAMSHAFT POSITION SENSOR.** Check the waveform of the camshaft position sensor. <Ref. to EN(w/o STI)(diag)-21, Engine Control Module (ECM) I/O Signal.>	Is there any abnormality in waveform?	Replace the camshaft position sensor. <Ref. to FU(w/o STI)-97, Camshaft Position Sensor.>	Repair the following item. • Poor contact of ECM connector • Poor contact of camshaft position sensor connector • Poor contact of coupling connector

1. OUTLINE OF DIAGNOSIS

Detect the open or short circuit of the camshaft position sensor.
When there is no camshaft position signal input continuously, judge as NG.

2. COMPONENT DESCRIPTION

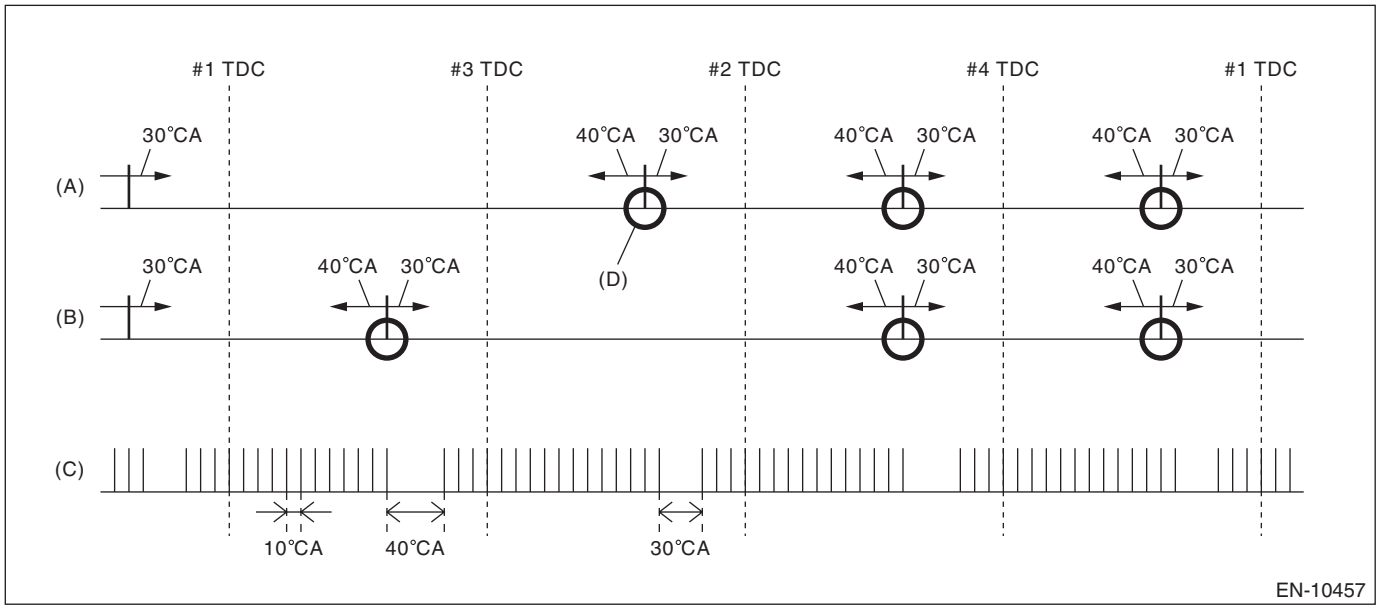

(A) Intake cam signal RH
(B) Intake cam signal LH
(C) Crankshaft signal
(D) Camshaft position signal: When normal, there will be 3 camshaft position signals for every 2 crankshaft revolutions.

3. EXECUTION CONDITION

Diagnosis 1

Secondary parameters	Execution condition
Battery voltage	≥ 8 V

Diagnosis 2

Secondary parameters	Execution condition
Battery voltage	≥ 8 V
Elapsed time after starting the engine	≥ 200 ms

4. GENERAL DRIVING CYCLE

Diagnosis 1: Perform the diagnosis only once.
Diagnosis 2: Always perform the diagnosis continuously.

5. DIAGNOSTIC METHOD

Diagnosis 1

Judge as NG when no input status of camshaft position sensor signal continues for 3 sec. during cranking.

Judgment Value

Malfunction Criteria	Threshold Value
Number of camshaft position sensor signals during cranking	=0

Time Needed for Diagnosis: 3 seconds

Diagnosis 2

If the duration of time while the following conditions are met is longer than the time indicated, judge as NG.

Judgment Value

Malfunction Criteria	Threshold Value
Amount of camshaft sensor signal during 1.5 revs of crankshaft	=0

Time Needed for Diagnosis: 6 engine revs.

Malfunction Indicator Light Illumination: Illuminates as soon as a malfunction occurs.

CJ:DTC P0341 CAMSHAFT POSITION SENSOR "A" CIRCUIT RANGE/PERFORMANCE BANK 1 OR SINGLE SENSOR

NOTE:
For the diagnostic procedure, refer to DTC P0340. <Ref. to EN(w/o STI)(diag)-356, DTC P0340 CAMSHAFT POSITION SENSOR "A" CIRCUIT BANK 1 OR SINGLE SENSOR, Diagnostic Procedure with Diagnostic Trouble Code (DTC).>

1. OUTLINE OF DIAGNOSIS

Detect the malfunction of camshaft position sensor property.
Judge as NG when the number of camshaft signals remains abnormal.

2. COMPONENT DESCRIPTION

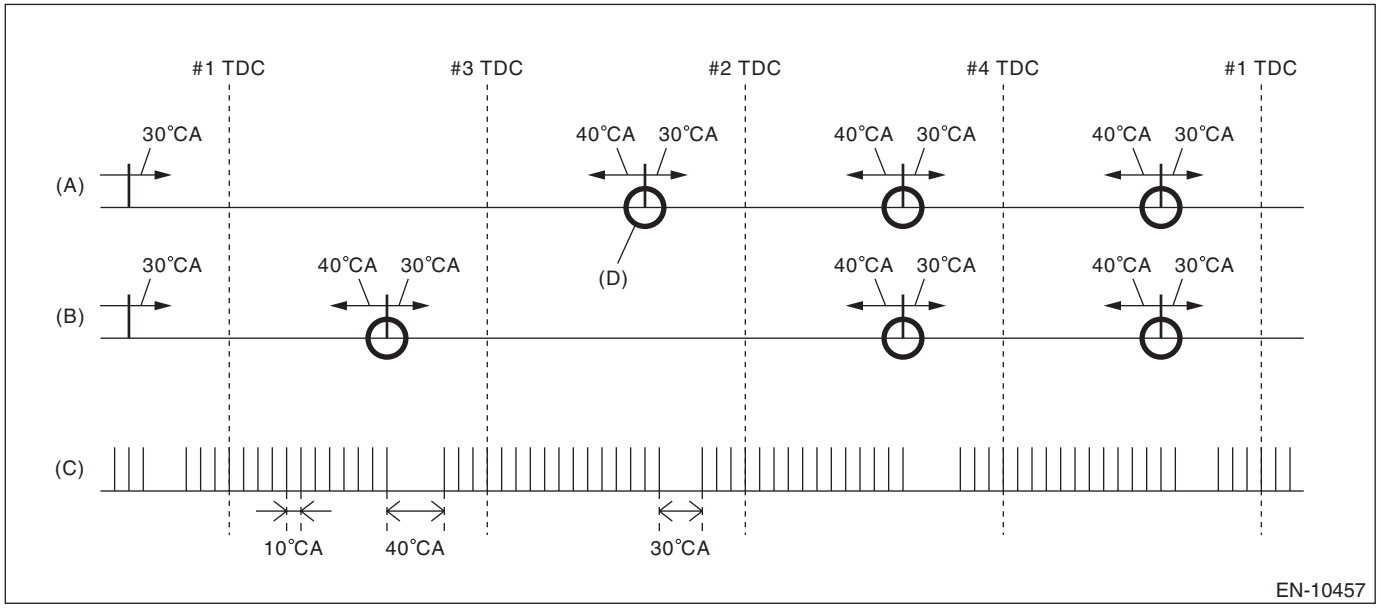

(A) Intake cam signal RH
(B) Intake cam signal LH
(C) Crankshaft signal
(D) Camshaft position signal: When normal, there will be 3 camshaft position signals for every 2 crankshaft revolutions.

3. EXECUTION CONDITION

Secondary parameters	Execution condition
Battery voltage	≥ 8 V

4. GENERAL DRIVING CYCLE

Always perform the diagnosis continuously.

5. DIAGNOSTIC METHOD

Judge as NG when the condition continues where the number of camshaft position sensor signals are not 3 times during 2 revs of crankshaft.

Judgment Value

Malfunction Criteria	Threshold Value
Amount of camshaft sensor signal during 2 revs of crankshaft	≠ 3 times

Time Needed for Diagnosis: Engine 2 revolutions × 4 times
Malfunction Indicator Light Illumination: Illuminates as soon as a malfunction occurs.

CK:DTC P0345 CAMSHAFT POSITION SENSOR "A" CIRCUIT BANK 2

DTC DETECTING CONDITION:
Immediately at fault recognition
TROUBLE SYMPTOM:
- Engine stalls.
- Failure of engine to start

CAUTION:
- **After servicing or replacing faulty parts, perform Clear Memory Mode <Ref. to EN(w/o STI)(diag)-82, OPERATION, Clear Memory Mode.>, and Inspection Mode <Ref. to EN(w/o STI)(diag)-64, PROCEDURE, Inspection Mode.>.**
- **Use the check board when measuring the ECM terminal voltage and resistance.**

WIRING DIAGRAM:
Engine Electrical System <Ref. to WI-154, WIRING DIAGRAM, Engine Electrical System.>

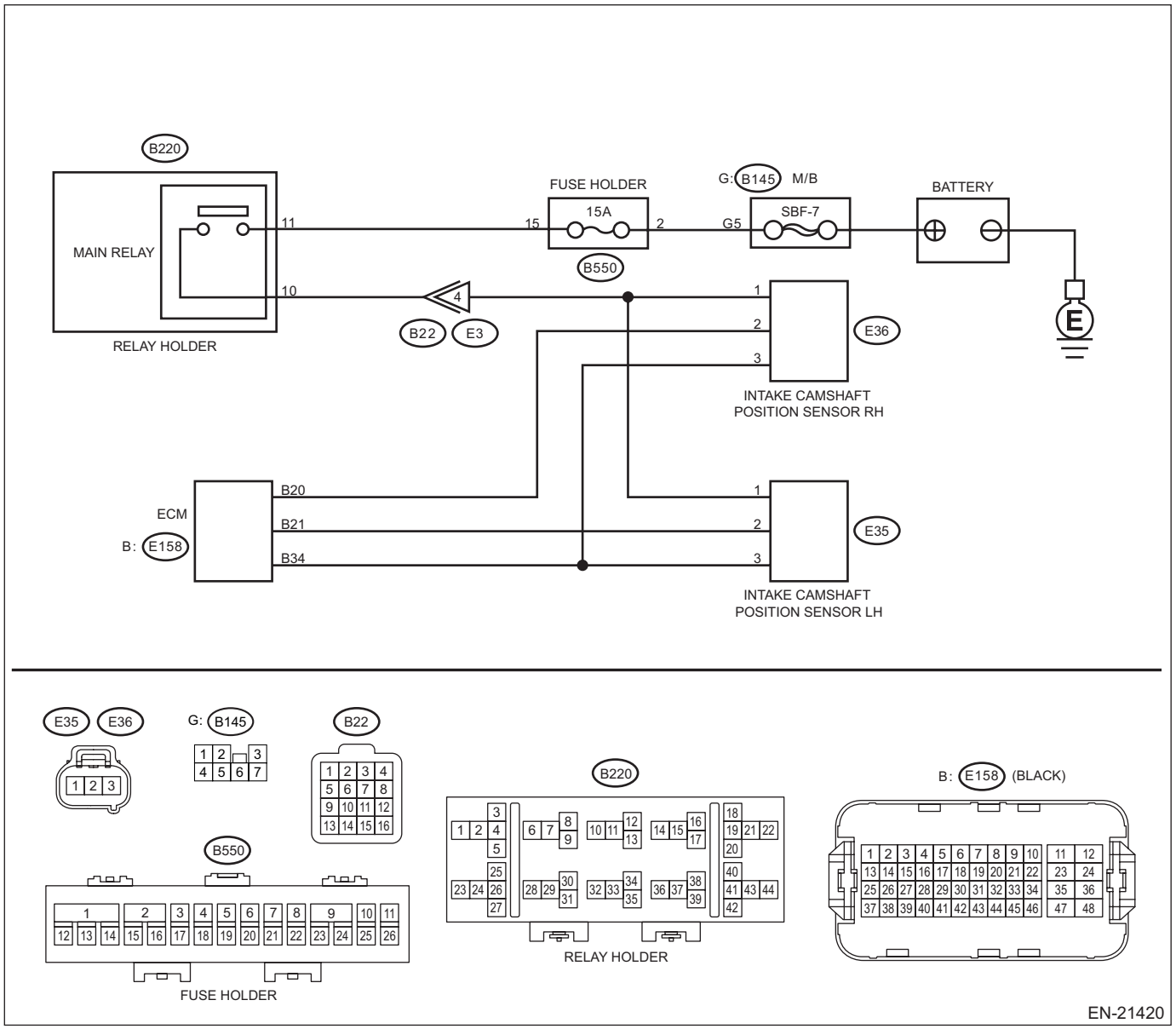

	Step	Check	Yes	No
1	**CHECK POWER SUPPLY OF CAMSHAFT POSITION SENSOR.** 1) Turn the ignition switch to OFF. 2) Disconnect the connector from camshaft position sensor. 3) Turn the ignition switch to ON. 4) Measure the voltage between camshaft position sensor connector and engine ground. ***Connector & terminal*** ***(E35) No. 1 (+) — Engine ground (–):***	Is the voltage 10 V or more?	Go to step **2**.	Repair the harness and connector. NOTE: In this case, repair the following item: • Open circuit or short circuit to ground in harness between main relay connector and camshaft position sensor connector • Poor contact of coupling connector
2	**CHECK HARNESS BETWEEN ECM AND CAMSHAFT POSITION SENSOR CONNECTOR.** 1) Turn the ignition switch to OFF. 2) Disconnect the connector from ECM. 3) Measure the resistance between ECM connector and camshaft position sensor connector. ***Connector & terminal*** ***(E158) No. 21 — (E35) No. 2:*** ***(E158) No. 34 — (E35) No. 3:***	Is the resistance less than 1 Ω?	Go to step **3**.	Repair the open circuit in the harness between the ECM connector and camshaft position sensor connector.
3	**CHECK HARNESS BETWEEN ECM AND CAMSHAFT POSITION SENSOR CONNECTOR.** Measure the resistance between camshaft position sensor connector and engine ground. ***Connector & terminal*** ***(E35) No. 2 — Engine ground:***	Is the resistance 1 MΩ or more?	Go to step **4**.	Repair short circuit to ground in harness between ECM connector and camshaft position sensor connector.
4	**CHECK HARNESS BETWEEN ECM AND CAMSHAFT POSITION SENSOR CONNECTOR.** Measure the voltage between camshaft position sensor connector and engine ground. ***Connector & terminal*** ***(E35) No. 2 (+) — Engine ground (–):***	Is the voltage 5 V or more?	Repair the short circuit to power in the harness between ECM connector and camshaft position sensor connector.	Go to step **5**.
5	**CHECK CONDITION OF CAMSHAFT POSITION SENSOR.**	Is the camshaft position sensor installation bolt tightened securely?	Go to step **6**.	Tighten the camshaft position sensor installation bolt securely. <Ref. to FU(w/o STI)-98, INSTALLATION, Camshaft Position Sensor.>
6	**CHECK CAMSHAFT POSITION SENSOR.** Check the waveform of the camshaft position sensor. <Ref. to EN(w/o STI)(diag)-21, Engine Control Module (ECM) I/O Signal.>	Is there any abnormality in waveform?	Replace the camshaft position sensor. <Ref. to FU(w/o STI)-97, Camshaft Position Sensor.>	Repair the following item. • Poor contact of ECM connector • Poor contact of camshaft position sensor connector • Poor contact of coupling connector

1. OUTLINE OF DIAGNOSIS

NOTE:
For the detection standard, refer to DTC P0340. <Ref. to EN(w/o STI)(diag)-356, DTC P0340 CAMSHAFT POSITION SENSOR "A" CIRCUIT BANK 1 OR SINGLE SENSOR, Diagnostic Procedure with Diagnostic Trouble Code (DTC).>

CL:DTC P0346 CAMSHAFT POSITION SENSOR "A" CIRCUIT RANGE/PERFORMANCE BANK 2

NOTE:
For the diagnostic procedure, refer to DTC P0345. <Ref. to EN(w/o STI)(diag)-361, DTC P0345 CAMSHAFT POSITION SENSOR "A" CIRCUIT BANK 2, Diagnostic Procedure with Diagnostic Trouble Code (DTC).>

1. OUTLINE OF DIAGNOSIS

NOTE:
For the detection standard, refer to DTC P0341. <Ref. to EN(w/o STI)(diag)-360, DTC P0341 CAMSHAFT POSITION SENSOR "A" CIRCUIT RANGE/PERFORMANCE BANK 1 OR SINGLE SENSOR, Diagnostic Procedure with Diagnostic Trouble Code (DTC).>

CM:DTC P0351 IGNITION COIL "A" PRIMARY CONTROL CIRCUIT/OPEN

DTC DETECTING CONDITION:
Immediately at fault recognition

TROUBLE SYMPTOM:
- Improper idling
- Poor driving performance

CAUTION:
- **After servicing or replacing faulty parts, perform Clear Memory Mode <Ref. to EN(w/o STI)(diag)-82, OPERATION, Clear Memory Mode.>, and Inspection Mode <Ref. to EN(w/o STI)(diag)-64, PROCEDURE, Inspection Mode.>.**
- **Use the check board when measuring the ECM terminal voltage and resistance.**

WIRING DIAGRAM:
Engine Electrical System <Ref. to WI-154, WIRING DIAGRAM, Engine Electrical System.>

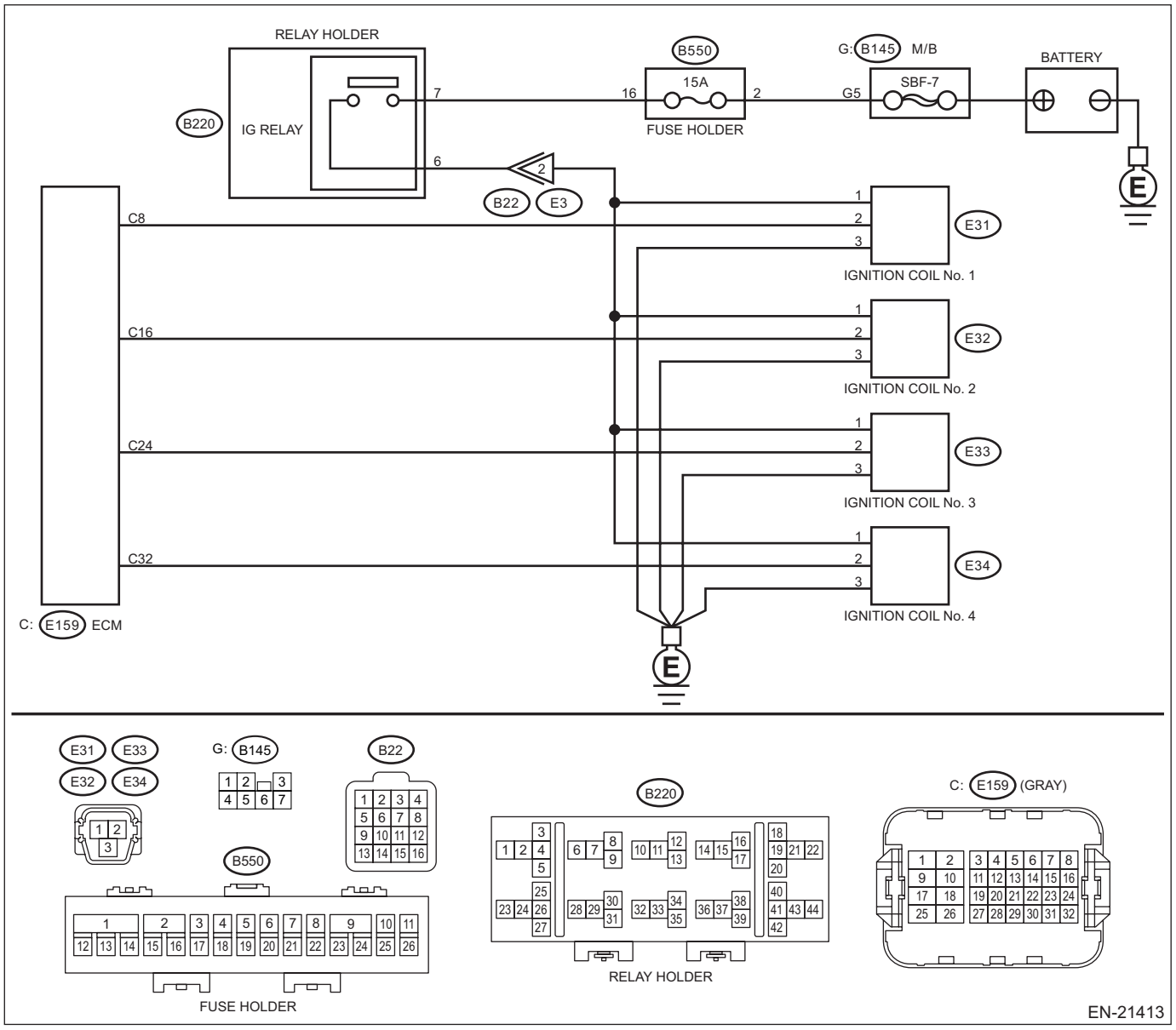

	Step	Check	Yes	No
1	**CHECK IGNITION COIL POWER SUPPLY CIRCUIT.** 1) Turn the ignition switch to OFF. 2) Disconnect the connector from ignition coil. 3) Turn the ignition switch to ON. 4) Measure the voltage between ignition coil connector and engine ground. ***Connector & terminal*** ***DTC P0351; (E31) No. 1 (+) — Engine ground (–):*** ***DTC P0352; (E32) No. 1 (+) — Engine ground (–):*** ***DTC P0353; (E33) No. 1 (+) — Engine ground (–):*** ***DTC P0354; (E34) No. 1 (+) — Engine ground (–):***	Is the voltage 10 V or more?	Go to step **2**.	Repair the harness and connector. NOTE: In this case, repair the following item: • Open or short to ground in harness of power supply circuit • Blown out of fuse • Poor contact of IG relay connector • Poor contact of coupling connector • Faulty IG relay
2	**CHECK HARNESS OF IGNITION COIL GROUND CIRCUIT.** 1) Turn the ignition switch to OFF. 2) Measure the resistance of harness between ignition coil connector and engine ground. ***Connector & terminal*** ***DTC P0351; (E31) No. 3 — Engine ground:*** ***DTC P0352; (E32) No. 3 — Engine ground:*** ***DTC P0353; (E33) No. 3 — Engine ground:*** ***DTC P0354; (E34) No. 3 — Engine ground:***	Is the resistance less than 5 Ω?	Go to step **3**.	Repair the open circuit in harness between ignition coil connector and engine grounding terminal.
3	**CHECK HARNESS BETWEEN ECM AND IGNITION COIL CONNECTOR.** 1) Disconnect the connector from ECM. 2) Measure the resistance between ignition coil connector and engine ground. ***Connector & terminal*** ***DTC P0351; (E31) No. 2 — Engine ground:*** ***DTC P0352; (E32) No. 2 — Engine ground:*** ***DTC P0353; (E33) No. 2 — Engine ground:*** ***DTC P0354; (E34) No. 2 — Engine ground:***	Is the resistance 1 MΩ or more?	Go to step **4**.	Repair the ground short circuit of harness between ECM connector and ignition coil connector.
4	**CHECK HARNESS BETWEEN ECM AND IGNITION COIL CONNECTOR.** Measure the resistance of harness between ECM connector and ignition coil connector. ***Connector & terminal*** ***DTC P0351; (E159) No. 8 — (E31) No. 2:*** ***DTC P0352; (E159) No. 16 — (E32) No. 2:*** ***DTC P0353; (E159) No. 24 — (E33) No. 2:*** ***DTC P0354; (E159) No. 32 — (E34) No. 2:***	Is the resistance less than 1 Ω?	Go to step **5**.	Repair the open circuit in harness between ECM connector and ignition coil connector.
5	**CHECK FOR POOR CONTACT.** Check for poor contact of ECM connector.	Is there poor contact of ECM connector?	Repair the poor contact of ECM connector.	Go to step **6**.
6	**CHECK SPARK PLUG CONDITION.** 1) Remove the spark plug of the corresponding cylinder. <Ref. to IG(w/o STI)-4, REMOVAL, Spark Plug.> 2) Check the spark plug condition. <Ref. to IG(w/o STI)-8, INSPECTION, Spark Plug.>	Is the check result OK?	Replace the ignition coil. <Ref. to IG(w/o STI)-11, Ignition Coil.>	Replace the spark plug. <Ref. to IG(w/o STI)-4, Spark Plug.>

1. OUTLINE OF DIAGNOSIS

Based on the self-diagnostic result of the ignition coil driving IC, judge the ignition coil driving circuit as normal or abnormal.
The ignition coil driving IC detects “no ignition” status as a malfunction.

2. EXECUTION CONDITION

Secondary parameters	Execution condition
Battery voltage	≥ 10.9 V
Engine speed	> 0 rpm

3. GENERAL DRIVING CYCLE

Always perform the diagnosis continuously.

4. DIAGNOSTIC METHOD

Judge as NG when the following conditions are established.

Judgment Value

Malfunction Criteria	Threshold Value
Fault signal from ignition drive IC	ON

Time Needed for Diagnosis: 2500 ms
Malfunction Indicator Light Illumination: Illuminates as soon as a malfunction occurs.

CN:DTC P0352 IGNITION COIL "B" PRIMARY CONTROL CIRCUIT/OPEN

NOTE:
For the diagnostic procedure, refer to DTC P0351. <Ref. to EN(w/o STI)(diag)-364, DTC P0351 IGNITION COIL "A" PRIMARY CONTROL CIRCUIT/OPEN, Diagnostic Procedure with Diagnostic Trouble Code (DTC).>

1. OUTLINE OF DIAGNOSIS

NOTE:
For the detection standard, refer to DTC P0351. <Ref. to EN(w/o STI)(diag)-364, DTC P0351 IGNITION COIL "A" PRIMARY CONTROL CIRCUIT/OPEN, Diagnostic Procedure with Diagnostic Trouble Code (DTC).>

CO:DTC P0353 IGNITION COIL "C" PRIMARY CONTROL CIRCUIT/OPEN

NOTE:
For the diagnostic procedure, refer to DTC P0351. <Ref. to EN(w/o STI)(diag)-364, DTC P0351 IGNITION COIL "A" PRIMARY CONTROL CIRCUIT/OPEN, Diagnostic Procedure with Diagnostic Trouble Code (DTC).>

1. OUTLINE OF DIAGNOSIS

NOTE:
For the detection standard, refer to DTC P0351. <Ref. to EN(w/o STI)(diag)-364, DTC P0351 IGNITION COIL "A" PRIMARY CONTROL CIRCUIT/OPEN, Diagnostic Procedure with Diagnostic Trouble Code (DTC).>

CP:DTC P0354 IGNITION COIL "D" PRIMARY CONTROL CIRCUIT/OPEN

NOTE:
For the diagnostic procedure, refer to DTC P0351. <Ref. to EN(w/o STI)(diag)-364, DTC P0351 IGNITION COIL "A" PRIMARY CONTROL CIRCUIT/OPEN, Diagnostic Procedure with Diagnostic Trouble Code (DTC).>

1. OUTLINE OF DIAGNOSIS

NOTE:
For the detection standard, refer to DTC P0351. <Ref. to EN(w/o STI)(diag)-364, DTC P0351 IGNITION COIL "A" PRIMARY CONTROL CIRCUIT/OPEN, Diagnostic Procedure with Diagnostic Trouble Code (DTC).>

CQ:DTC P0365 CAMSHAFT POSITION SENSOR "B" CIRCUIT BANK 1

DTC DETECTING CONDITION:
Immediately at fault recognition
TROUBLE SYMPTOM:
- Engine stalls.
- Failure of engine to start

CAUTION:
- **After servicing or replacing faulty parts, perform Clear Memory Mode <Ref. to EN(w/o STI)(diag)-82, OPERATION, Clear Memory Mode.>, and Inspection Mode <Ref. to EN(w/o STI)(diag)-64, PROCEDURE, Inspection Mode.>.**
- **Use the check board when measuring the ECM terminal voltage and resistance.**

WIRING DIAGRAM:
Engine Electrical System <Ref. to WI-154, WIRING DIAGRAM, Engine Electrical System.>

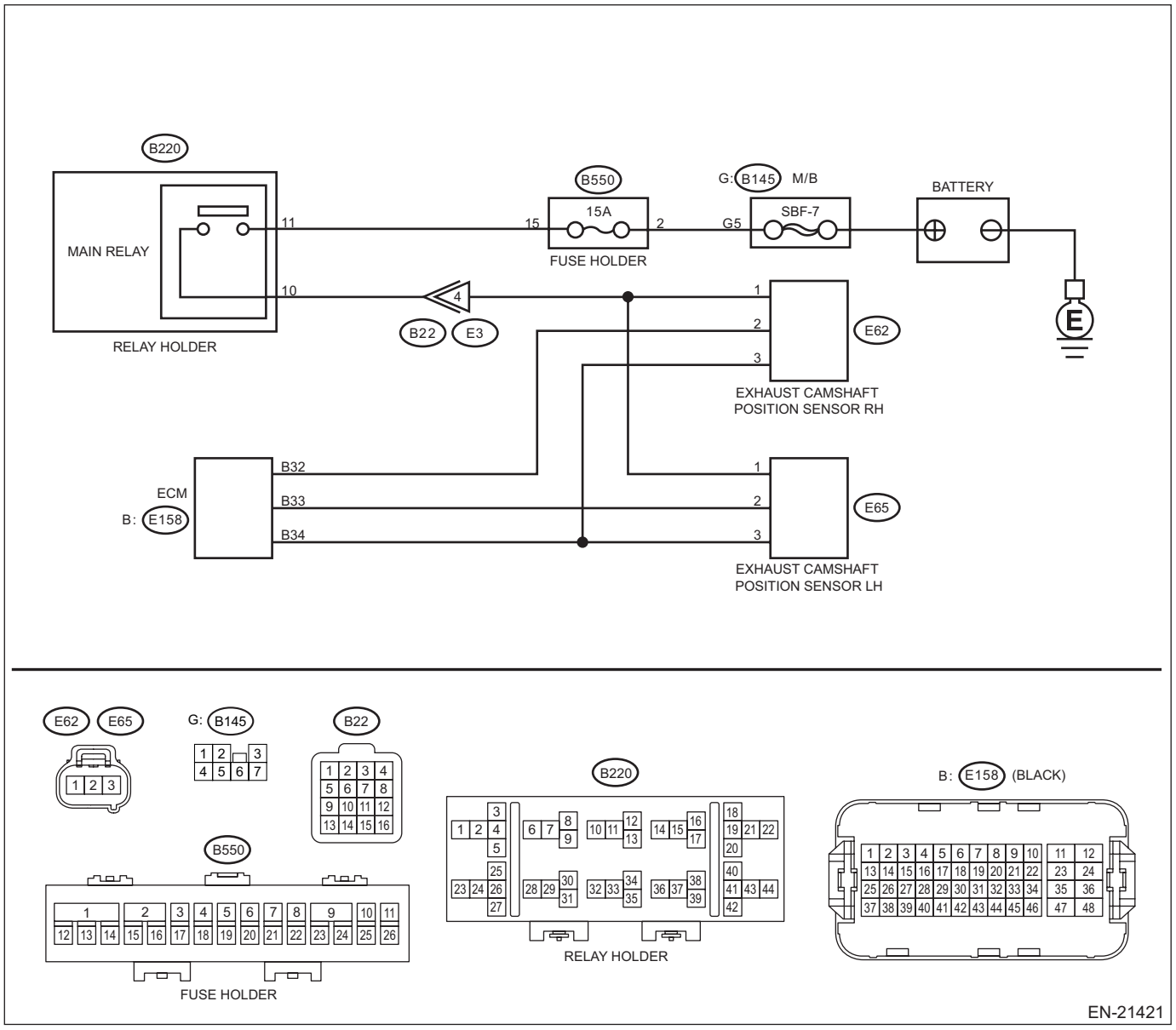

	Step	Check	Yes	No
1	**CHECK POWER SUPPLY OF CAMSHAFT POSITION SENSOR.** 1) Turn the ignition switch to OFF. 2) Disconnect the connector from camshaft position sensor. 3) Turn the ignition switch to ON. 4) Measure the voltage between camshaft position sensor connector and engine ground. ***Connector & terminal*** ***(E62) No. 1 (+) — Engine ground (–):***	Is the voltage 10 V or more?	Go to step **2**.	Repair the harness and connector. NOTE: In this case, repair the following item: • Open circuit in harness between main relay and camshaft position sensor connector • Poor contact of coupling connector
2	**CHECK HARNESS BETWEEN ECM AND CAMSHAFT POSITION SENSOR CONNECTOR.** 1) Turn the ignition switch to OFF. 2) Disconnect the connector from ECM. 3) Measure the resistance between ECM connector and camshaft position sensor connector. ***Connector & terminal*** ***(E158) No. 32 — (E62) No. 2:*** ***(E158) No. 34 — (E62) No. 3:***	Is the resistance less than 1 Ω?	Go to step **3**.	Repair the open circuit in the harness between the ECM connector and camshaft position sensor connector.
3	**CHECK HARNESS BETWEEN ECM AND CAMSHAFT POSITION SENSOR CONNECTOR.** Measure the resistance between camshaft position sensor connector and engine ground. ***Connector & terminal*** ***(E62) No. 2 — Engine ground:***	Is the resistance 1 MΩ or more?	Go to step **4**.	Repair short circuit to ground in harness between ECM connector and camshaft position sensor connector.
4	**CHECK HARNESS BETWEEN ECM AND CAMSHAFT POSITION SENSOR CONNECTOR.** Measure the voltage between camshaft position sensor connector and engine ground. ***Connector & terminal*** ***(E62) No. 2 (+) — Engine ground (–):***	Is the voltage 5 V or more?	Repair the short circuit to power in the harness between ECM connector and camshaft position sensor connector.	Go to step **5**.
5	**CHECK CONDITION OF CAMSHAFT POSITION SENSOR.**	Is the camshaft position sensor installation bolt tightened securely?	Go to step **6**.	Tighten the camshaft position sensor installation bolt securely. <Ref. to FU(w/o STI)-98, INSTALLATION, Camshaft Position Sensor.>
6	**CHECK CAMSHAFT POSITION SENSOR.** Check the waveform of the camshaft position sensor. <Ref. to EN(w/o STI)(diag)-21, Engine Control Module (ECM) I/O Signal.>	Is there any abnormality in waveform?	Replace the camshaft position sensor. <Ref. to FU(w/o STI)-97, Camshaft Position Sensor.>	Repair the following item. • Poor contact of ECM connector • Poor contact of camshaft position sensor connector • Poor contact of coupling connector

1. OUTLINE OF DIAGNOSIS

Detect the open or short circuit of the camshaft position sensor.
When there is no camshaft position signal input continuously, judge as NG.

2. COMPONENT DESCRIPTION

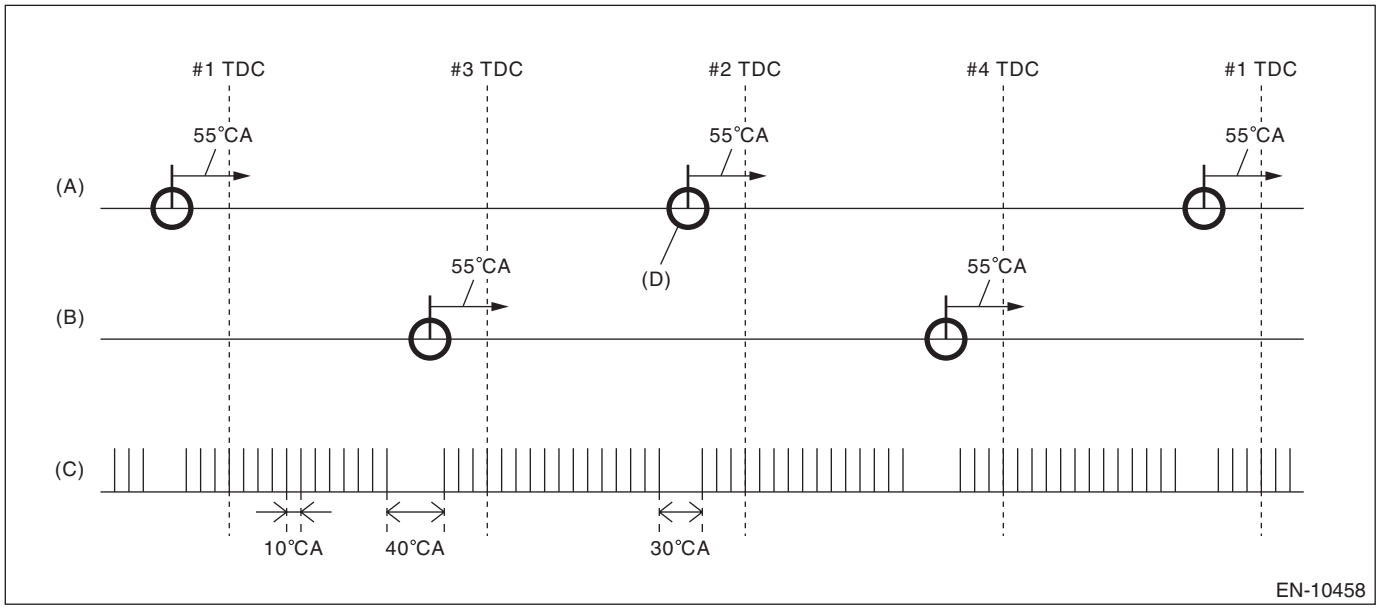

(A) Exhaust cam signal RH
(B) Exhaust cam signal LH
(C) Crankshaft signal
(D) Camshaft position signal: When normal, there will be 2 camshaft position signals for every 2 crankshaft revolutions.

3. EXECUTION CONDITION

Secondary parameters	Execution condition
Battery voltage	≥ 10.9 V
Elapsed time after starting the engine	≥ 0.2 s

4. GENERAL DRIVING CYCLE

Always perform the diagnosis continuously.

5. DIAGNOSTIC METHOD

If the duration of time while the following conditions are met is longer than the time indicated, judge as NG.

Judgment Value

Malfunction Criteria	Threshold Value
Amount of camshaft sensor signal during 1.5 revs of crankshaft	=0

Time Needed for Diagnosis: 6 engine revs.
Malfunction Indicator Light Illumination: Illuminates as soon as a malfunction occurs.

CR:DTC P0366 CAMSHAFT POSITION SENSOR "B" CIRCUIT RANGE/PERFORMANCE BANK 1

NOTE:
For the diagnostic procedure, refer to DTC P0365. <Ref. to EN(w/o STI)(diag)-367, DTC P0365 CAMSHAFT POSITION SENSOR "B" CIRCUIT BANK 1, Diagnostic Procedure with Diagnostic Trouble Code (DTC).>

1. OUTLINE OF DIAGNOSIS

Detect the malfunction of camshaft position sensor property.
Judge as NG when the number of camshaft signals remains abnormal.

2. COMPONENT DESCRIPTION

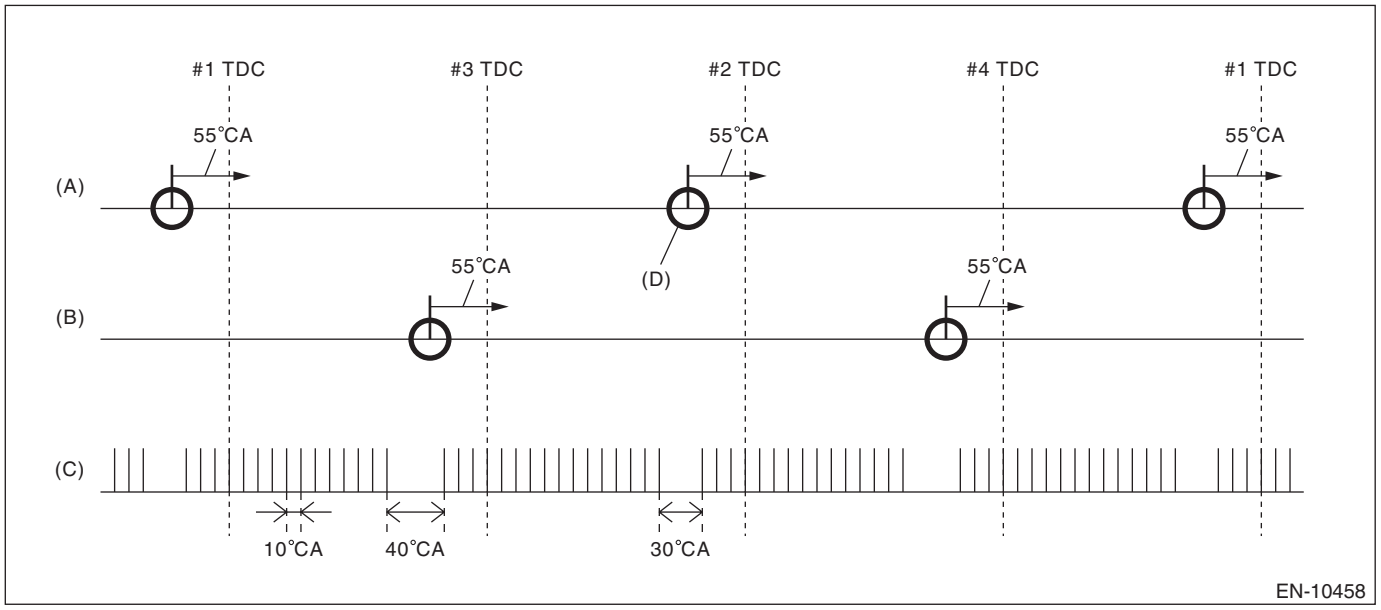

(A) Exhaust cam signal RH
(B) Exhaust cam signal LH
(C) Crankshaft signal
(D) Camshaft position signal: When normal, there will be 2 camshaft position signals for every 2 crankshaft revolutions.

3. EXECUTION CONDITION

Secondary parameters	Execution condition
Battery voltage	≥ 10.9 V

4. GENERAL DRIVING CYCLE

Always perform the diagnosis continuously.

5. DIAGNOSTIC METHOD

Judge as NG when the condition continues where the number of camshaft position sensor signals are not 2 times during 2 revs of crankshaft.

Judgment Value

Malfunction Criteria	Threshold Value
Amount of camshaft sensor signal during 2 revs of crankshaft	≠ 2 times

Time Needed for Diagnosis: Engine 2 revolutions × 4 times
Malfunction Indicator Light Illumination: Illuminates as soon as a malfunction occurs.

CS:DTC P0390 CAMSHAFT POSITION SENSOR "B" CIRCUIT BANK 2

DTC DETECTING CONDITION:
Immediately at fault recognition

TROUBLE SYMPTOM:
- Engine stalls.
- Failure of engine to start

CAUTION:
- **After servicing or replacing faulty parts, perform Clear Memory Mode <Ref. to EN(w/o STI)(diag)-82, OPERATION, Clear Memory Mode.>, and Inspection Mode <Ref. to EN(w/o STI)(diag)-64, PROCEDURE, Inspection Mode.>.**
- **Use the check board when measuring the ECM terminal voltage and resistance.**

WIRING DIAGRAM:
Engine Electrical System <Ref. to WI-154, WIRING DIAGRAM, Engine Electrical System.>

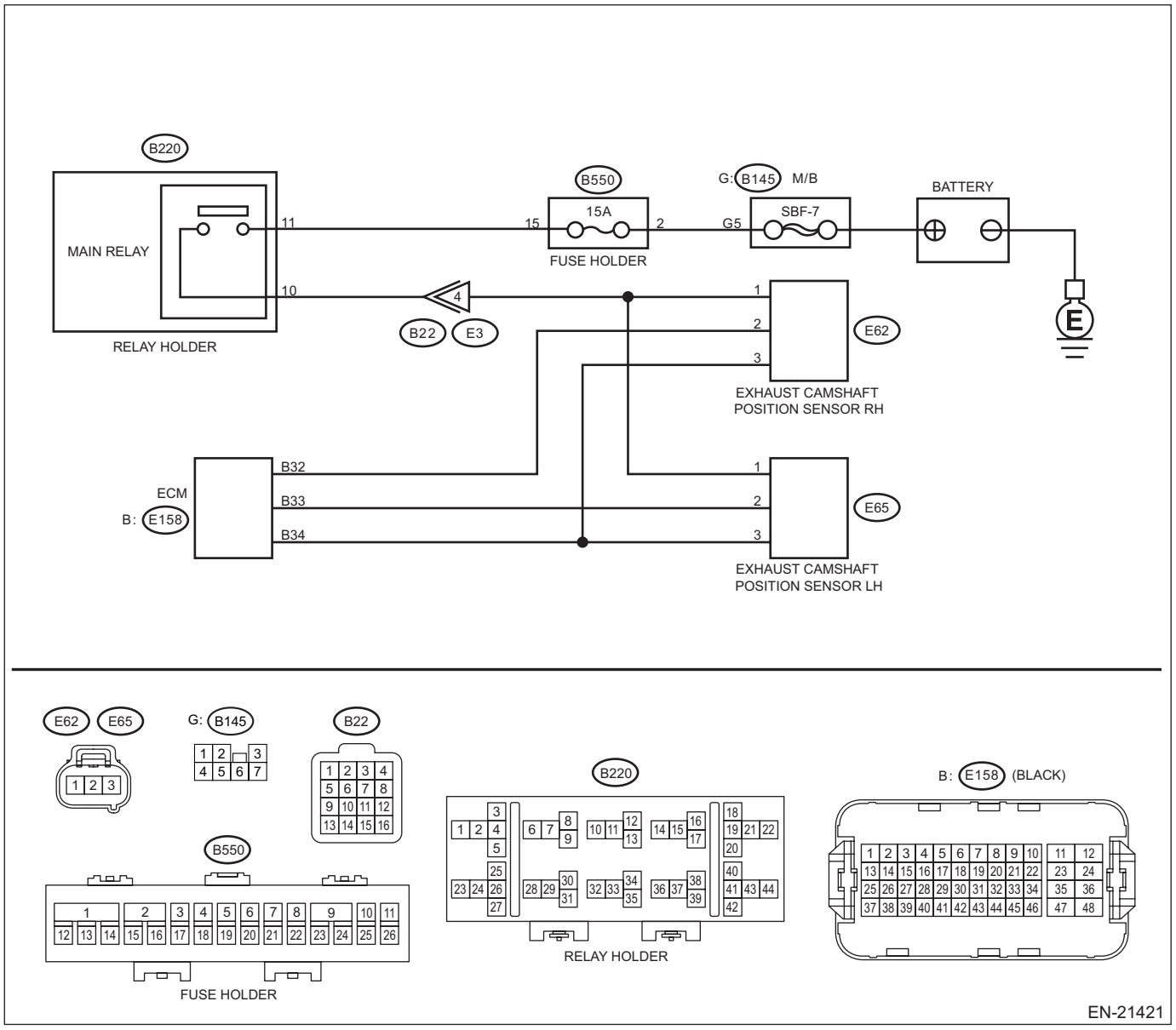

	Step	Check	Yes	No
1	**CHECK POWER SUPPLY OF CAMSHAFT POSITION SENSOR.** 1) Turn the ignition switch to OFF. 2) Disconnect the connector from camshaft position sensor. 3) Turn the ignition switch to ON. 4) Measure the voltage between camshaft position sensor connector and engine ground. ***Connector & terminal*** ***(E65) No. 1 (+) — Engine ground (–):***	Is the voltage 10 V or more?	Go to step **2**.	Repair the harness and connector. NOTE: In this case, repair the following item: • Open circuit or short circuit to ground in harness between main relay connector and camshaft position sensor connector • Poor contact of coupling connector
2	**CHECK HARNESS BETWEEN ECM AND CAMSHAFT POSITION SENSOR CONNECTOR.** 1) Turn the ignition switch to OFF. 2) Disconnect the connector from ECM. 3) Measure the resistance between ECM connector and camshaft position sensor connector. ***Connector & terminal*** ***(E158) No. 33 — (E65) No. 2:*** ***(E158) No. 34 — (E65) No. 3:***	Is the resistance less than 1 Ω?	Go to step **3**.	Repair the harness and connector. NOTE: In this case, repair the following item: • Open circuit in harness between ECM connector and camshaft position sensor connector • Poor contact of coupling connector
3	**CHECK HARNESS BETWEEN ECM AND CAMSHAFT POSITION SENSOR CONNECTOR.** Measure the resistance between camshaft position sensor connector and engine ground. ***Connector & terminal*** ***(E65) No. 2 — Engine ground:***	Is the resistance 1 MΩ or more?	Go to step **4**.	Repair short circuit to ground in harness between ECM connector and camshaft position sensor connector.
4	**CHECK HARNESS BETWEEN ECM AND CAMSHAFT POSITION SENSOR CONNECTOR.** Measure the voltage between camshaft position sensor connector and engine ground. ***Connector & terminal*** ***(E65) No. 2 (+) — Engine ground (–):***	Is the voltage 5 V or more?	Repair the short circuit to power in the harness between ECM connector and camshaft position sensor connector.	Go to step **5**.
5	**CHECK CONDITION OF CAMSHAFT POSITION SENSOR.**	Is the camshaft position sensor installation bolt tightened securely?	Go to step **6**.	Tighten the camshaft position sensor installation bolt securely. <Ref. to FU(w/o STI)-98, INSTALLATION, Camshaft Position Sensor.>
6	**CHECK CAMSHAFT POSITION SENSOR.** Check the waveform of the camshaft position sensor. <Ref. to EN(w/o STI)(diag)-21, Engine Control Module (ECM) I/O Signal.>	Is there any abnormality in waveform?	Replace the camshaft position sensor. <Ref. to FU(w/o STI)-97, Camshaft Position Sensor.>	Repair the following item. • Poor contact of ECM connector • Poor contact of camshaft position sensor connector • Poor contact of coupling connector

1. OUTLINE OF DIAGNOSIS

NOTE:
For the detection standard, refer to DTC P0365. <Ref. to EN(w/o STI)(diag)-367, DTC P0365 CAMSHAFT POSITION SENSOR "B" CIRCUIT BANK 1, Diagnostic Procedure with Diagnostic Trouble Code (DTC).>

CT:DTC P0391 CAMSHAFT POSITION SENSOR "B" CIRCUIT RANGE/PERFORMANCE BANK 2

NOTE:
For the diagnostic procedure, refer to DTC P0390. <Ref. to EN(w/o STI)(diag)-371, DTC P0390 CAMSHAFT POSITION SENSOR "B" CIRCUIT BANK 2, Diagnostic Procedure with Diagnostic Trouble Code (DTC).>

1. OUTLINE OF DIAGNOSIS

NOTE:
For the detection standard, refer to DTC P0366. <Ref. to EN(w/o STI)(diag)-363, DTC P0346 CAMSHAFT POSITION SENSOR "A" CIRCUIT RANGE/PERFORMANCE BANK 2, Diagnostic Procedure with Diagnostic Trouble Code (DTC).>

CU:DTC P0400 EGR "A" FLOW

DTC DETECTING CONDITION:
Detected when two consecutive driving cycles with fault occur.
TROUBLE SYMPTOM:
- Movement performance problem when engine is low speed
- Improper idling
- Movement performance problem

CAUTION:
After servicing or replacing faulty parts, perform Clear Memory Mode <Ref. to EN(w/o STI)(diag)-82, OPERATION, Clear Memory Mode.>, and Inspection Mode <Ref. to EN(w/o STI)(diag)-64, PROCEDURE, Inspection Mode.>.

	Step	Check	Yes	No
1	**CHECK CURRENT DATA.** 1) Start the engine. 2) Read the value of «Mani. Absolute Pressure» using the Subaru Select Monitor or a general scan tool. NOTE: • Subaru Select Monitor For detailed operation procedures, refer to "Current Data Display For Engine". <Ref. to EN(w/o STI)(diag)-46, Subaru Select Monitor.> • General scan tool For detailed operation procedures, refer to the general scan tool operation manual.	Is the value of «Mani. Absolute Pressure» 53.3 kPa (400 mmHg, 15.75 inHg) or more?	Make sure that the EGR control valve, manifold absolute pressure sensor and throttle body are installed securely.	Go to step **2**.
2	**CHECK EGR CONTROL VALVE.** Remove the EGR control valve.	Are there any holes, clogged lines or foreign matters in the EGR system?	Repair the EGR system.	Replace EGR control valve. <Ref. to EC(w/o STI)-34, EGR Control Valve.>

1. OUTLINE OF DIAGNOSIS

Detect EGR system malfunction.
Intake manifold pressure (negative pressure) is constant because the throttle valve is fully closed during deceleration fuel cut. At this time, when the EGR control valve is opened/closed, the intake manifold pressure will change. EGR System OK/NG is judged by the range of this change.

2. COMPONENT DESCRIPTION

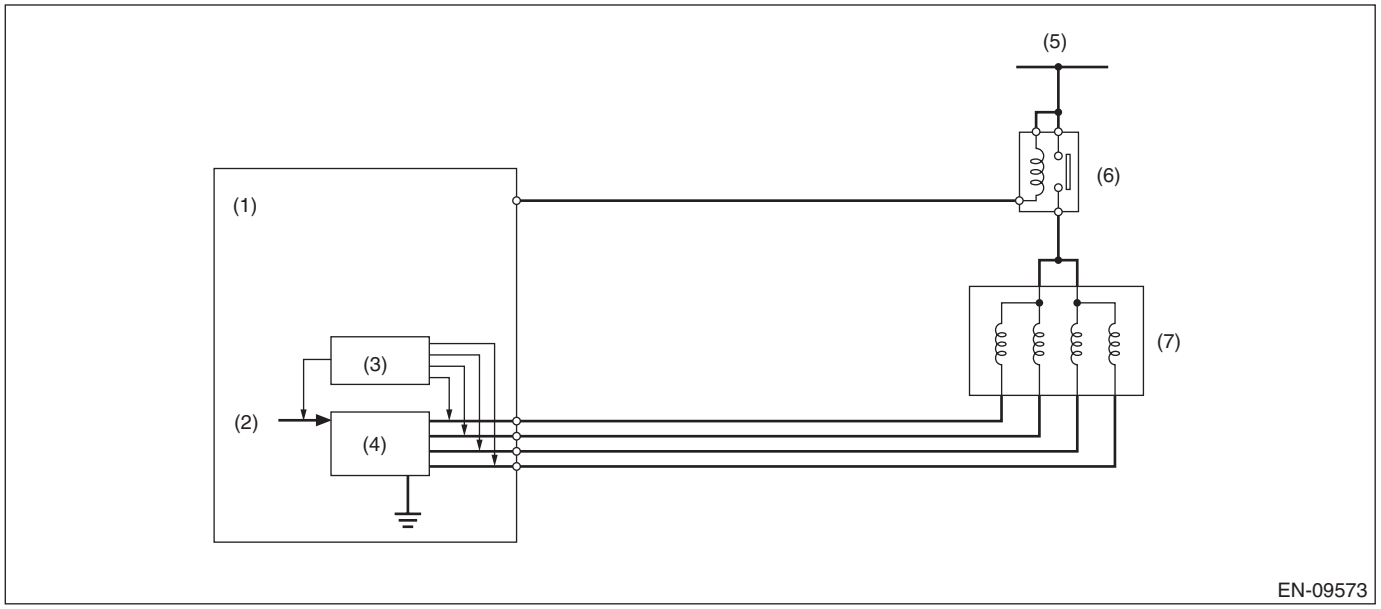

(1) Engine control module (ECM)
(2) Computer unit (CPU)
(3) Detecting circuit
(4) Switching circuit
(5) Battery voltage
(6) Main relay
(7) EGR control valve

3. EXECUTION CONDITION

Secondary parameters	Execution condition
Battery voltage	≥ 10.9 V
Barometric pressure	≥ 75.1 kPa (563 mmHg, 22.2 inHg)
Amount of intake air	≥ 0°C
Engine speed	≥ 1300 rpm to < 5000 rpm
Vehicle speed	≥ 40 km/h (24.9 MPH)
Deceleration fuel cut for 3000 ms or more	Experienced
Neutral switch	OFF

4. GENERAL DRIVING CYCLE

During deceleration fuel cut from 40 km/h (24.9 MPH) or more, perform diagnosis only once.
Be careful of vehicle speed and engine speed. (Diagnosis will not be completed if the vehicle speed and engine speed conditions become out of specification due to deceleration.)

5. DIAGNOSTIC METHOD

Measure the pressure values when the enable conditions are established, and perform diagnosis by calculating those results.
1. Label the intake manifold pressure value as PMOF1, which is observed when enable conditions are established, and set the EGR target step to 55 steps (nearly full open).
2. Label the intake manifold pressure value as PMON, which is observed after one second has passed since EGR target step was set to 55 steps (when the enable conditions were established), and set the EGR target step to 0.

3. Label the intake manifold pressure as PMOF2, which is observed after one second has passed since EGR target step was set to 0 (after two seconds have passed since the enable conditions were established). Judge as NG when the following conditions are established.

Judgment Value

Malfunction Criteria	Threshold Value
PMON – (PMOF1 + PMOF2)/2	< 2.48 kPa (18.6 mmHg, 0.7 inHg)

Time Needed for Diagnosis: 2 seconds
Malfunction Indicator Light Illumination: Illuminates when malfunction occurs in 2 continuous driving cycles.

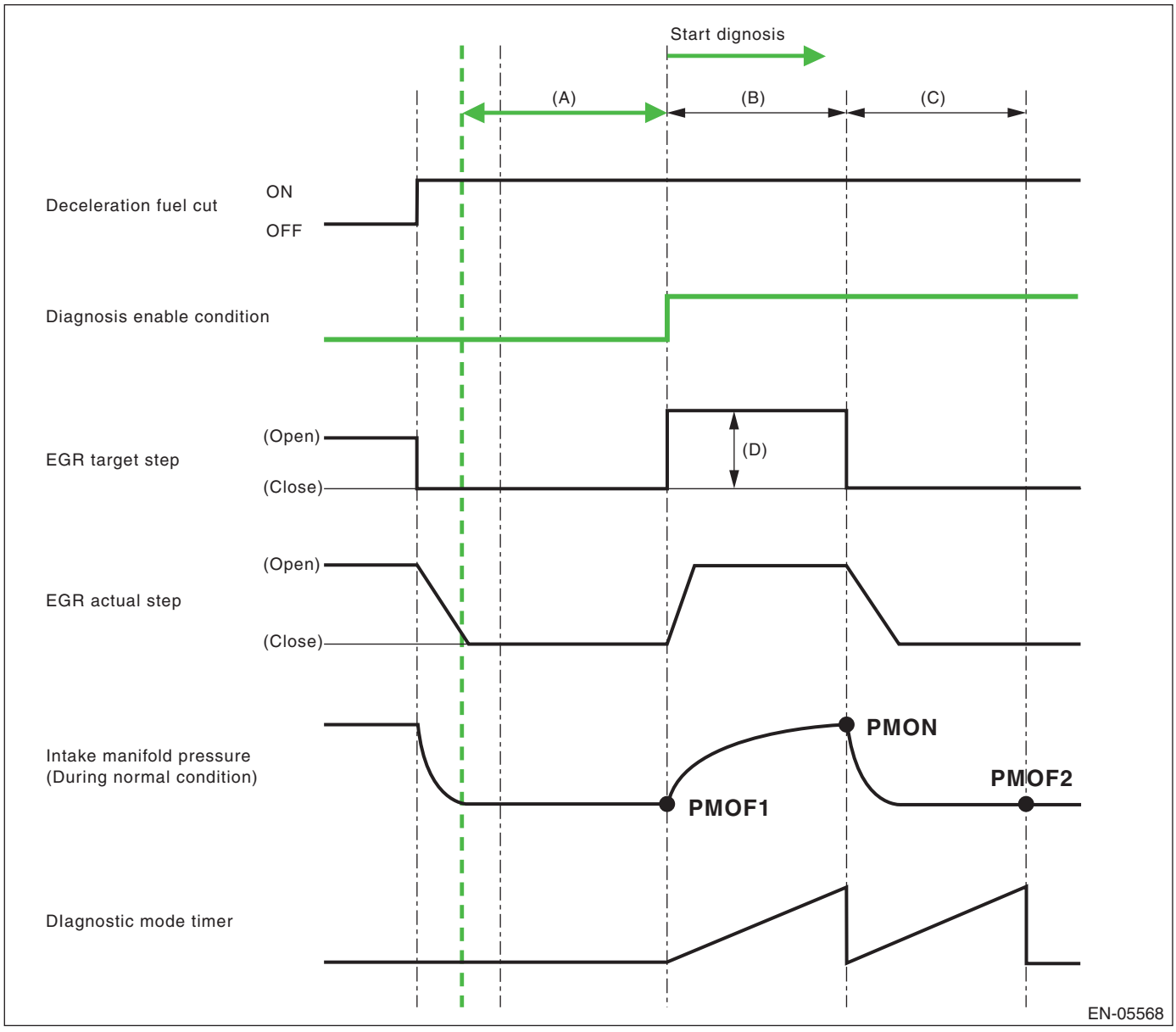

(A) 3000 ms (B) 1000 ms (C) 1000 ms
(D) 55 steps

CV:DTC P0420 CATALYST SYSTEM EFFICIENCY BELOW THRESHOLD BANK 1

DTC DETECTING CONDITION:

Detected when two consecutive driving cycles with fault occur.

TROUBLE SYMPTOM:

- Engine stalls.
- Idle mixture is out of specifications.

CAUTION:

- **After servicing or replacing faulty parts, perform Clear Memory Mode <Ref. to EN(w/o STI)(diag)-82, OPERATION, Clear Memory Mode.>, and Inspection Mode <Ref. to EN(w/o STI)(diag)-64, PROCEDURE, Inspection Mode.>.**
- **Use the check board when measuring the ECM terminal voltage and resistance.**

WIRING DIAGRAM:

Engine Electrical System <Ref. to WI-154, WIRING DIAGRAM, Engine Electrical System.>

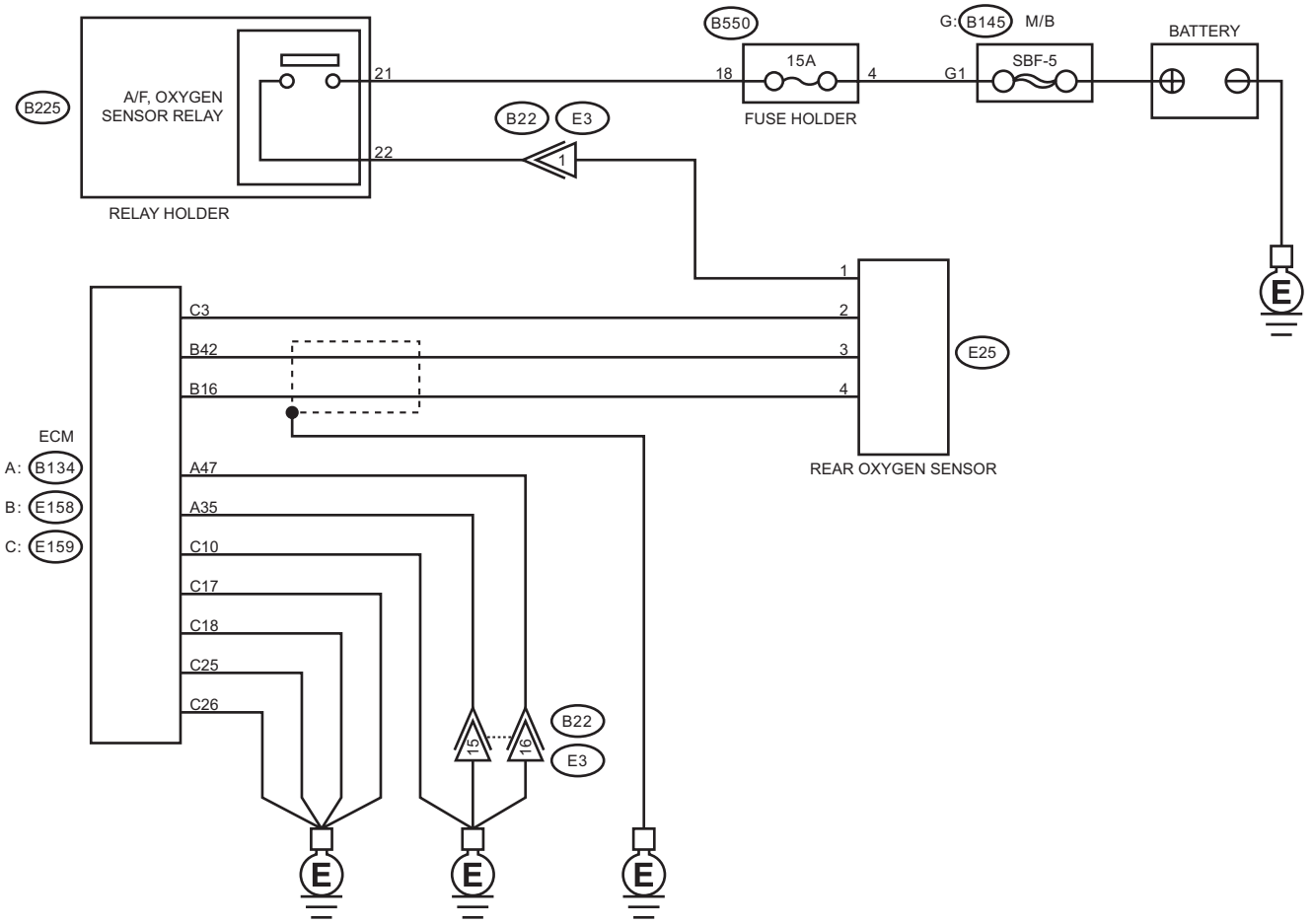

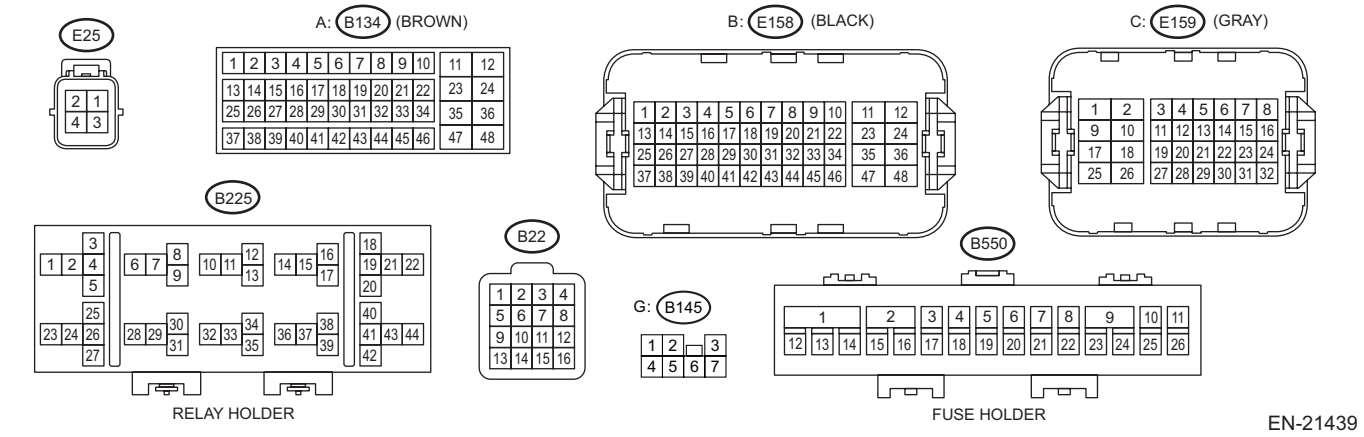

	Step	Check	Yes	No
1	**CHECK EXHAUST SYSTEM.** Check for gas leaks or air suction caused by loose or dislocated nuts and bolts, and open hole at exhaust pipes. NOTE: Check the following positions. • Between cylinder head and front exhaust pipe • Between front exhaust pipe and front catalytic converter • Between front catalytic converter and rear catalytic converter • Loose or improperly attached front oxygen (A/F) sensor or rear oxygen sensor	Is there any fault in exhaust system?	Repair or replace the exhaust system. <Ref. to EX(w/o STI)-2, General Description.>	Go to step **2**.
2	**CHECK WAVEFORM DATA ON THE SUBARU SELECT MONITOR (WHILE DRIVING).** 1) Drive at a constant speed between 80 — 112 km/h (50 — 70 MPH). 2) After 5 minutes have elapsed in the condition of step 1), use the Subaru Select Monitor while still driving to read the waveform data. • At normal condition 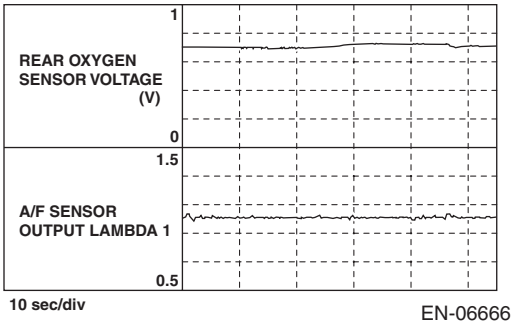 • At abnormal condition (numerous inversion) 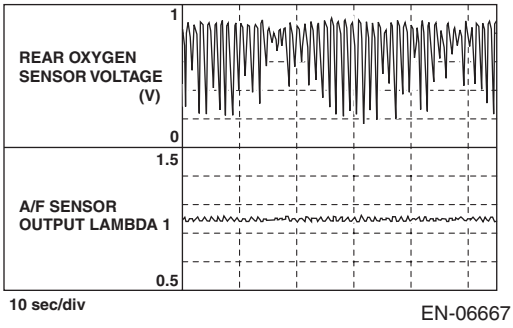 	Is a normal waveform displayed?	Even if DTC is detected, the circuit has returned to a normal condition at this time. Reproduce the failure, and then perform the diagnosis again. NOTE: In this case, temporary poor contact of connector, temporary open or short circuit of harness may be the cause.	Go to step **3**.

	Step	Check	Yes	No
3	**CHECK WAVEFORM DATA ON THE SUBARU SELECT MONITOR (WHILE IDLING).** 1) Run the engine at idle. 2) In the condition of step 1), use the Subaru Select Monitor to read the waveform data. • At normal condition 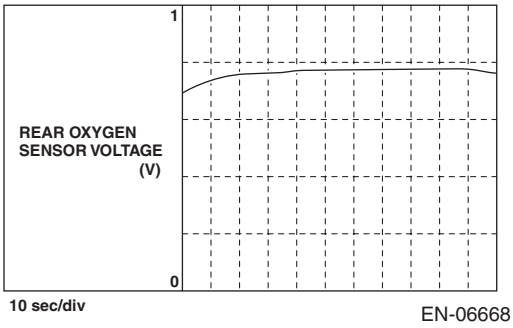 EN-06668 • At abnormal condition 1 (numerous inversion) 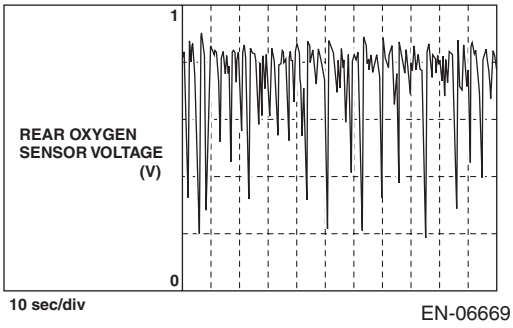 EN-06669 • At abnormal condition 2 (noise input) 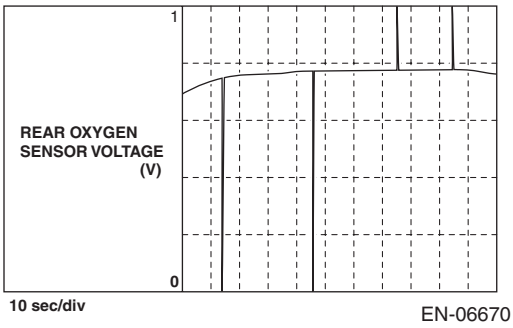 EN-06670	Is a normal waveform displayed?	Go to step **4**.	• The waveform is displayed at abnormal condition 1: Go to step **4**. • The waveform is displayed at abnormal condition 2: Go to step **5**.
4	**CHECK CATALYTIC CONVERTER.**	Is the catalytic converter damaged?	Replace the catalytic converter. <Ref. to EC(w/o STI)-6, Front Catalytic Converter.> <Ref. to EC(w/o STI)-7, Rear Catalytic Converter.>	Go to step **5**.
5	**CHECK REAR OXYGEN SENSOR CONNECTOR.**	Has water entered the connector?	Completely remove any water inside.	Go to step **6**.

	Step	Check	Yes	No
6	**CHECK HARNESS BETWEEN ECM AND REAR OXYGEN SENSOR CONNECTOR.** 1) Turn the ignition switch to OFF. 2) Disconnect the connector from ECM. 3) Disconnect the connector from rear oxygen sensor. 4) Measure the resistance of harness between ECM connector and rear oxygen sensor connector. ***Connector & terminal*** ***(E158) No. 42 — (E25) No. 3:*** ***(E158) No. 16 — (E25) No. 4:***	Is the resistance less than 1 Ω?	Go to step **7**.	Repair the open circuit of harness between ECM connector and rear oxygen sensor connector.
7	**CHECK REAR OXYGEN SENSOR SHIELD.** 1) Turn the ignition switch to OFF. 2) Expose the rear oxygen sensor connector body side harness sensor shield. 3) Measure the resistance between sensor shield and engine ground.	Is the resistance less than 1 Ω?	Go to step **8**.	Repair the open circuit of rear oxygen sensor harness.
8	**CHECK ENGINE OIL AMOUNT AND EXHAUST GAS.** 1) Check the engine oil amount. <Ref. to LU(w/o STI)-10, INSPECTION, Engine Oil.> 2) Check exhaust gas during idling.	Does the engine oil amount drop or white smoke emit from the muffler?	Check the engine, and repair the defective part. <Ref. to ME(w/o STI)-329, INSPECTION, Engine Trouble in General.> After repairing the engine, replace the catalytic converter. <Ref. to EC(w/o STI)-6, Front Catalytic Converter.> <Ref. to EC(w/o STI)-7, Rear Catalytic Converter.> After the catalytic converter is replaced, perform step 2 to check the normal waveform is displayed, and then exit the procedure.	Go to step **9**.

	Step	Check	Yes	No
9	**CHECK IGNITION SYSTEM.** 1) Check the spark plug. <Ref. to IG(w/o STI)-8, INSPECTION, Spark Plug.> 2) Check the status of the ignition coil connector and the spark plug terminal.	Is there any fault in the ignition system?	After repairing the ignition system, replace the catalytic converter. <Ref. to EC(w/o STI)-6, Front Catalytic Converter.> <Ref. to EC(w/o STI)-7, Rear Catalytic Converter.> After the catalytic converter is replaced, perform step 2 to check the normal waveform is displayed, and then exit the procedure.	Go to step **10**.
10	**CHECK FUEL SYSTEM.** 1) Refer to and check the items in “Insufficient fuel supply to fuel injector” (except for “a. Fuel pump does not operate.”) and “Leakage or blow out of fuel”. <Ref. to FU(w/o STI)-197, INSPECTION, Fuel System Trouble in General.> 2) Check throttle body. <Ref. to FU(w/o STI)-16, INSPECTION, Throttle Body.> 3) Check intake manifold. <Ref. to FU(w/o STI)-41, INSPECTION, Intake Manifold.>	Is there any fault in the fuel system?	After repairing the fuel system, replace the catalytic converter. <Ref. to EC(w/o STI)-6, Front Catalytic Converter.> <Ref. to EC(w/o STI)-7, Rear Catalytic Converter.> After the catalytic converter is replaced, perform step 2 to check the normal waveform is displayed, and then exit the procedure.	Go to step **11**.

Step		Check	Yes	No
11	CHECK DTC.	Is any other DTC displayed?	Check the appropriate DTC using the “List of Diagnostic Trouble Code (DTC)”. <Ref. to EN(w/o STI)(diag)-106, List of Diagnostic Trouble Code (DTC).> After checking the DTC, replace the catalytic converter. <Ref. to EC(w/o STI)-6, Front Catalytic Converter.> <Ref. to EC(w/o STI)-7, Rear Catalytic Converter.> After the catalytic converter is replaced, perform step 2 to check the normal waveform is displayed, and then exit the procedure.	Replace the rear oxygen sensor. <Ref. to FU(w/o STI)-120, Rear Oxygen Sensor.>

1. OUTLINE OF DIAGNOSIS

Detect the deterioration of the catalyst function.
Though the rear oxygen sensor output changes slowly with a new catalyst, the sensor output with a deteriorated catalyst becomes high and the inversion time is shortened.
For this reason, the catalyst diagnosis is carried out by monitoring the rear oxygen sensor output and comparing it with the front oxygen (A/F) sensor output.

2. COMPONENT DESCRIPTION

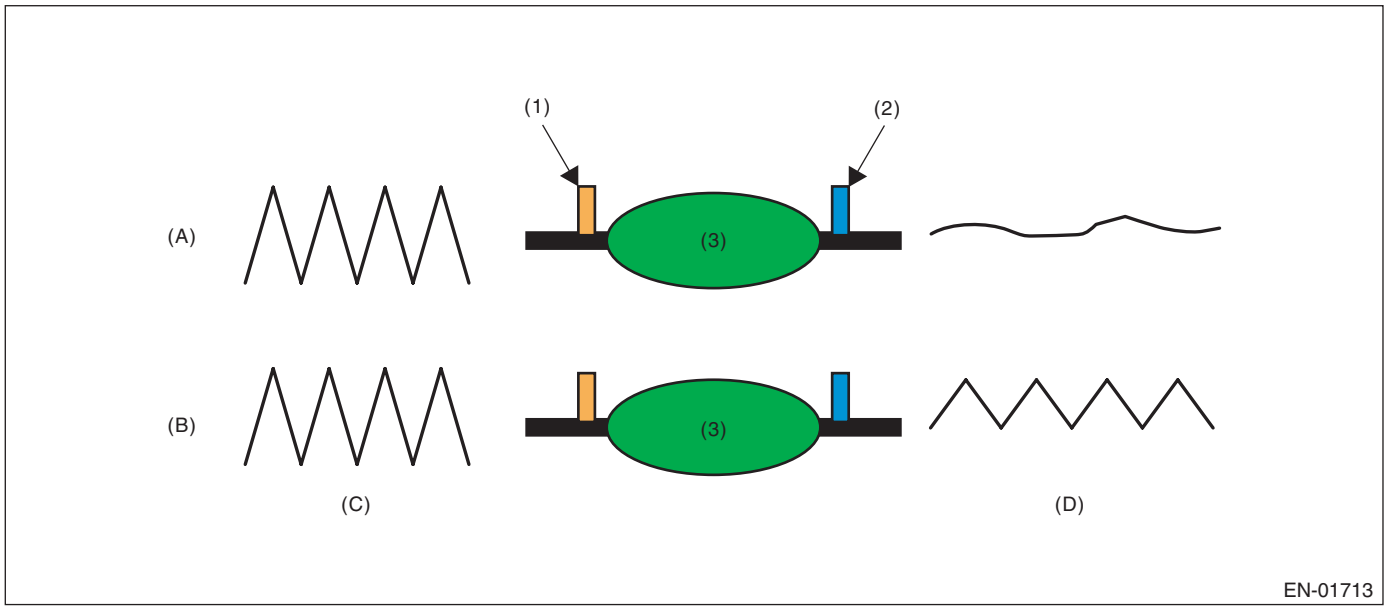

(A) Normal
(B) Deterioration
(C) Output waveform from the front oxygen (A/F) sensor
(D) Output waveform from the rear oxygen sensor
(1) Front oxygen (A/F) sensor
(2) Rear oxygen sensor
(3) Catalytic converter

3. EXECUTION CONDITION

Secondary parameters	Execution condition
Battery voltage	≥ 10.9 V
Barometric pressure	≥ 75.1 kPa (563 mmHg, 22.2 inHg)
Sub feedback	In operation
Amount of intake air	≥ 5 g/s (0.18 oz/s) and < 45 g/s (1.59 oz/s)
Estimated catalyst temperature	≥ 460°C (860°F)
Vehicle speed	≥ 40 km/h (24.9 MPH)
Rear oxygen output change from 0.55 V or less to 0.55 V or more	Experienced after fuel cut
Estimated temperature of the rear oxygen sensor element	≥ 450°C (842°F)

4. GENERAL DRIVING CYCLE

Perform the diagnosis only once at a constant 40 km/h (24.9 MPH) or higher.

5. DIAGNOSTIC METHOD

After the enable conditions have been established, calculate the front oxygen (A/F) sensor lambda deviation sum value and the rear oxygen sensor output voltage deviation sum value in every 32 ms × 4 times. If the front oxygen (A/F) sensor lambda deviation sum value is the predetermined value or more, calculate the diagnostic value.
If the duration of time while the following conditions are met is within the time indicated, judge as NG.

Judgment Value

Malfunction Criteria	Threshold Value
Rear oxygen sensor output voltage deviation sum value / front oxygen (A/F) sensor lambda deviation sum value	> 12

Time Needed for Diagnosis: 30 — 55 seconds
Malfunction Indicator Light Illumination: Illuminates as soon as a malfunction occurs.

CW:DTC P0441 EVAP SYSTEM (CPC) INCORRECT PURGE FLOW

DTC DETECTING CONDITION:
Immediately at fault recognition
TROUBLE SYMPTOM:
Improper idling

CAUTION:
After servicing or replacing faulty parts, perform Clear Memory Mode <Ref. to EN(w/o STI)(diag)-82, OPERATION, Clear Memory Mode.>, and Inspection Mode <Ref. to EN(w/o STI)(diag)-64, PROCEDURE, Inspection Mode.>.

	Step	Check	Yes	No
1	**CHECK FOR ANY OTHER DTC ON DISPLAY.**	Is any other DTC displayed?	Check the appropriate DTC using the "List of Diagnostic Trouble Code (DTC)". <Ref. to EN(w/o STI)(diag)-106, List of Diagnostic Trouble Code (DTC).>	Go to step **2**.
2	**CHECK PURGE CONTROL SOLENOID VALVE.** Operate the purge control solenoid valve using the Subaru Select Monitor. NOTE: For detailed operation procedures, refer to the "Active Test". <Ref. to EN(w/o STI)(diag)-83, Active Test.>	Does the purge control solenoid valve operate?	Go to step **3**.	Replace the purge control solenoid valve. <Ref. to EC(w/o STI)-22, Purge Control Solenoid Valve.>
3	**CHECK EVAPORATIVE EMISSION CONTROL SYSTEM LINE.** Turn the ignition switch to OFF.	Are there holes, cracks, clogging, or disconnection, misconnection of hoses or pipes in evaporative emission control system?	Repair or replace the hoses or pipes.	Repair the poor contact of ECM connector.

1. OUTLINE OF DIAGNOSIS

Detect the malfunction of purge flow by the change of Evaporative Leak Check Module pressure sensor output value before/after purge introduction.

2. EXECUTION CONDITION

Secondary parameters	Execution condition
(Evaporative Leak Check Module switching valve for time) = Close	< 120 s
Purge control duty ratio	> 0%
Precondition (Conditions to close the switching valve of ELCM intrusively):	
Battery voltage	≥ 10.9 V
Barometric pressure	≥ 75.06 kPa (563.1 mmHg, 22.2 inHg)
Integrated value of calculated purge airflow since engine start	≥ 72 g *
Barometric pressure — Manifold absolute pressure	≥ 10 kPa (75 mmHg, 2.9 inHg)
((Fuel system status	= Fuel Cut
for time)	> 1 s
followed by Fuel system status)	≠ Fuel Cut
Ambient air temperature	≥ –25°C (–13°F)

* It takes approximately 2 min at 40 mph.

3. GENERAL DRIVING CYCLE

Perform the diagnosis only once after engine start.

4. DIAGNOSTIC METHOD

Close the Evaporative Leak Check Module switching valve, and close the fuel tank completely, and perform the forced purging. If pressure change amount is 667 Pa (5 mmHg, 0.2 inHg) or less, judge as malfunction of purge flow.

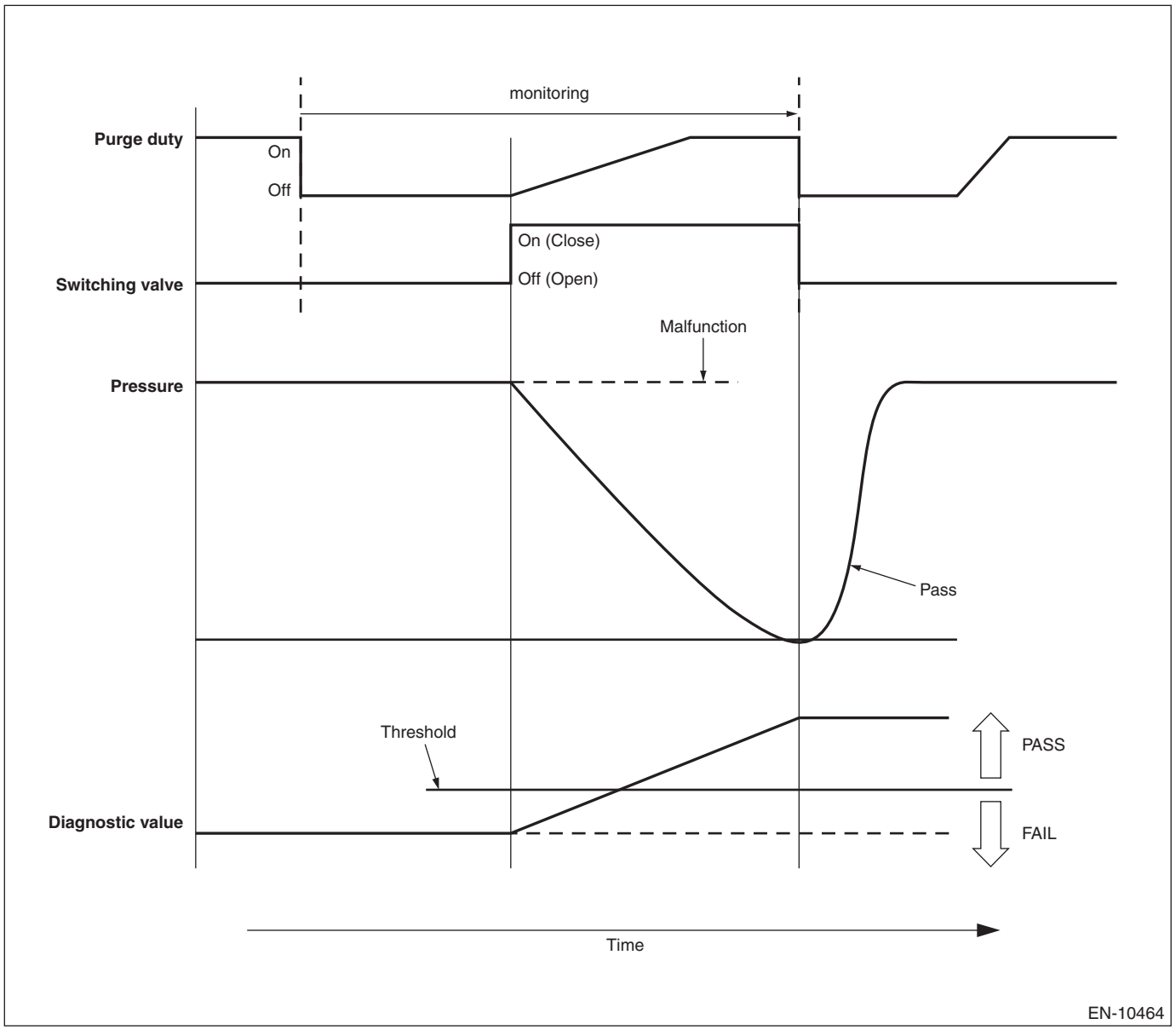

Judge as NG when the following conditions are established.

Judgment Value

Malfunction Criteria	Threshold Value
Evaporative Leak Check Module pressure (gauge)	> –667 Pa (–5 mmHg, –0.2 inHg)

Time Needed for Diagnosis: 20 seconds
Malfunction Indicator Light Illumination: Illuminates as soon as a malfunction occurs.

CX:DTC P0451 EVAP SYSTEM (CPC) PRESSURE SENSOR/SWITCH CIRCUIT RANGE/PERFORMANCE

DTC DETECTING CONDITION:
Detected when two consecutive driving cycles with fault occur.

CAUTION:
After servicing or replacing faulty parts, perform Clear Memory Mode <Ref. to EN(w/o STI)(diag)-82, OPERATION, Clear Memory Mode.>, and Inspection Mode <Ref. to EN(w/o STI)(diag)-64, PROCEDURE, Inspection Mode.>.

	Step	Check	Yes	No
1	**CHECK FOR ANY OTHER DTC ON DISPLAY.**	Is any other DTC displayed?	Check the appropriate DTC using the "List of Diagnostic Trouble Code (DTC)". <Ref. to EN(w/o STI)(diag)-106, List of Diagnostic Trouble Code (DTC).>	Go to step **2**.
2	**CHECK CURRENT DATA.** 1) Turn the ignition switch to ON (engine OFF). 2) Using the Subaru Select Monitor or general scan tool, read the value in «Absolute Evap Sys. Pressure» and «Mani. Absolute Pressure», and compare them with the actual atmospheric pressure. NOTE: • Subaru Select Monitor For detailed operation procedures, refer to "Read Current Data For Engine". <Ref. to EN(w/o STI)(diag)-46, Subaru Select Monitor.> • General scan tool For detailed operation procedures, refer to the general scan tool operation manual. • To read the actual atmospheric pressure, connect the Subaru Select Monitor or general scan tool to the other known good vehicle.	Is the difference with the actual atmospheric pressure 6.2 kPa (46.5 mmHg, 1.8 inHg) or more?	Replace the part that showed larger deviation from the actual atmospheric pressure than the other. • If deviations in value for «Absolute Evap Sys. Pressure» is larger: Replace the leak check valve assembly. <Ref. to EC(w/o STI)-52, Leak Check Valve Assembly.> • If deviations in value for «Mani. Absolute Pressure» is larger: Replace the manifold absolute pressure and intake air temperature sensor. <Ref. to FU(w/o STI)-112, Manifold Absolute Pressure and Intake Air Temperature Sensor.>	Even if DTC is detected, the circuit has returned to a normal condition at this time. Reproduce the failure, and then perform the diagnosis again. NOTE: In this case, temporary poor contact of connector, temporary open or short circuit of harness may be the cause.

1. OUTLINE OF DIAGNOSIS

Detect the output characteristics malfunction of Evaporative Leak Check Module pressure sensor.
Judge as NG when the Evaporative Leak Check Module pressure sensor output value is largely different from the intake manifold pressure when the ignition switch is ON.

2. COMPONENT DESCRIPTION

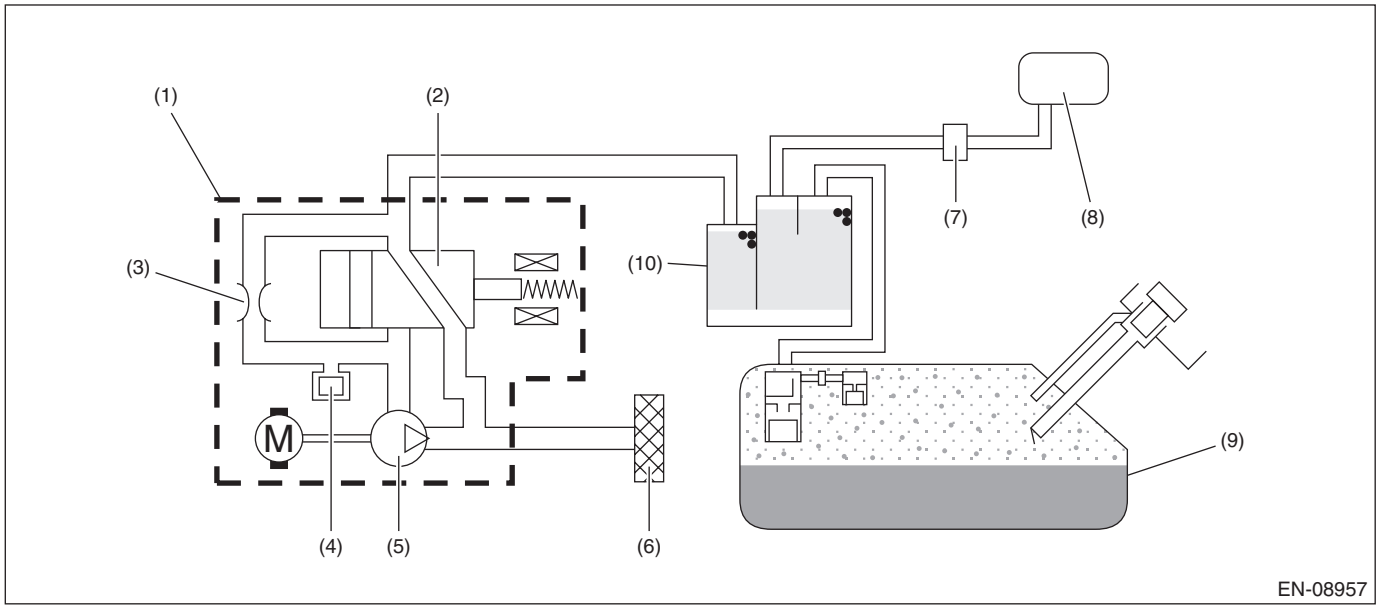

(1) Leak check valve ASSY
(2) Switching valve
(3) Reference orifice (0.02 inch orifice)
(4) Pressure sensor
(5) Vacuum pump
(6) Drain filter
(7) Purge control solenoid valve
(8) Intake manifold
(9) Fuel tank
(10) Canister

3. EXECUTION CONDITION

Secondary parameters	Execution condition
Elapsed time after ignition switch is turned to ON	≥ 0.5 s and < 60 s
Soaking time	≥ 60 s
Evaporative Leak Check Module vacuum pump	Not in operation
Evaporative Leak Check Module switching valve	Open
Purge control	Not in operation

4. GENERAL DRIVING CYCLE

Perform the diagnosis once at ignition ON.

5. DIAGNOSTIC METHOD

If the duration of time while the following conditions are met is longer than the time indicated, judge as NG.

Judgment Value

Malfunction Criteria	Threshold Value
|Evaporative Leak Check Module pressure sensor output value when ignition switch is ON – intake manifold pressure (absolute pressure) when ignition switch is ON|	> 12.4 kPa (93 mmHg, 3.7 inHg)

Time Needed for Diagnosis: 0.32 seconds
Malfunction Indicator Light Illumination: Illuminates when malfunction occurs in 2 continuous driving cycles.

CY:DTC P0452 EVAP SYSTEM (CPC) PRESSURE SENSOR/SWITCH CIRCUIT LOW

DTC DETECTING CONDITION:
Immediately at fault recognition

CAUTION:

- **After servicing or replacing faulty parts, perform Clear Memory Mode <Ref. to EN(w/o STI)(diag)-82, OPERATION, Clear Memory Mode.>, and Inspection Mode <Ref. to EN(w/o STI)(diag)-64, PROCEDURE, Inspection Mode.>.**
- **Use the check board when measuring the ECM terminal voltage and resistance.**

WIRING DIAGRAM:
Engine Electrical System <Ref. to WI-154, WIRING DIAGRAM, Engine Electrical System.>

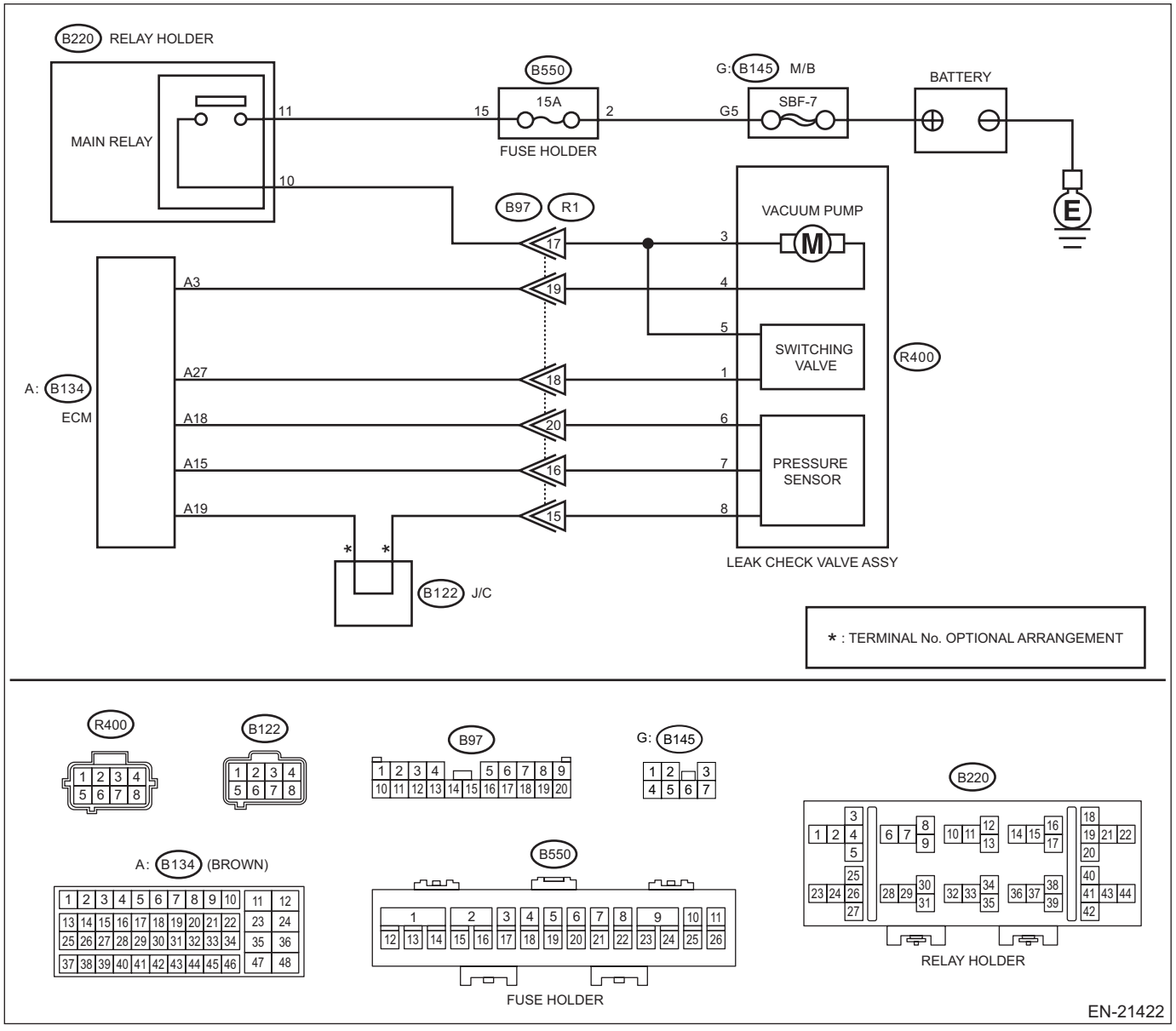

	Step	Check	Yes	No
1	**CHECK CURRENT DATA.** 1) Turn the ignition switch to ON. 2) Read the value of «Absolute Evap Sys. Pressure» using the Subaru Select Monitor or a general scan tool. NOTE: • Subaru Select Monitor For detailed operation procedures, refer to "Read Current Data For Engine". <Ref. to EN(w/o STI)(diag)-46, Subaru Select Monitor.> • General scan tool For detailed operation procedures, refer to the general scan tool operation manual.	Is the value in «Absolute Evap Sys. Pressure» 34 kPa (255 mmHg, 10 inHg) or less?	Go to step **2**.	Even if DTC is detected, the circuit has returned to a normal condition at this time. Reproduce the failure, and then perform the diagnosis again. NOTE: In this case, temporary poor contact of connector, temporary open or short circuit of harness may be the cause.
2	**CHECK POWER SUPPLY OF LEAK CHECK VALVE ASSEMBLY.** 1) Turn the ignition switch to OFF. 2) Disconnect the connector from the leak check valve assembly. 3) Turn the ignition switch to ON. 4) Measure the voltage between the leak check valve assembly connector and chassis ground. ***Connector & terminal*** ***(R400) No. 6 (+) — Chassis ground (–):***	Is the voltage 4.5 V or more?	Go to step **3**.	Repair the harness and connector. NOTE: In this case, repair the following item: • Open circuit in harness between ECM connector and the leak check valve assembly connector • Poor contact of ECM connector • Poor contact of coupling connector
3	**CHECK HARNESS BETWEEN ECM AND LEAK CHECK VALVE ASSEMBLY CONNECTOR.** 1) Turn the ignition switch to OFF. 2) Disconnect the connector from ECM. 3) Measure the resistance between ECM connector and chassis ground. ***Connector & terminal*** ***(B134) No. 15 — Chassis ground:***	Is the resistance 1 MΩ or more?	Go to step **4**.	Repair the short circuit to ground in harness between ECM connector and leak check valve assembly connector.
4	**CHECK FOR POOR CONTACT.** Check for poor contact of leak check valve assembly connector.	Is there poor contact in the leak check valve assembly connector?	Repair the poor contact in the leak check valve assembly connector.	Replace the leak check valve assembly. <Ref. to EC(w/o STI)-52, Leak Check Valve Assembly.>

1. OUTLINE OF DIAGNOSIS

Detect the open or short circuit in Evaporative Leak Check Module pressure sensor.
Judge as NG if out of specification.

2. COMPONENT DESCRIPTION

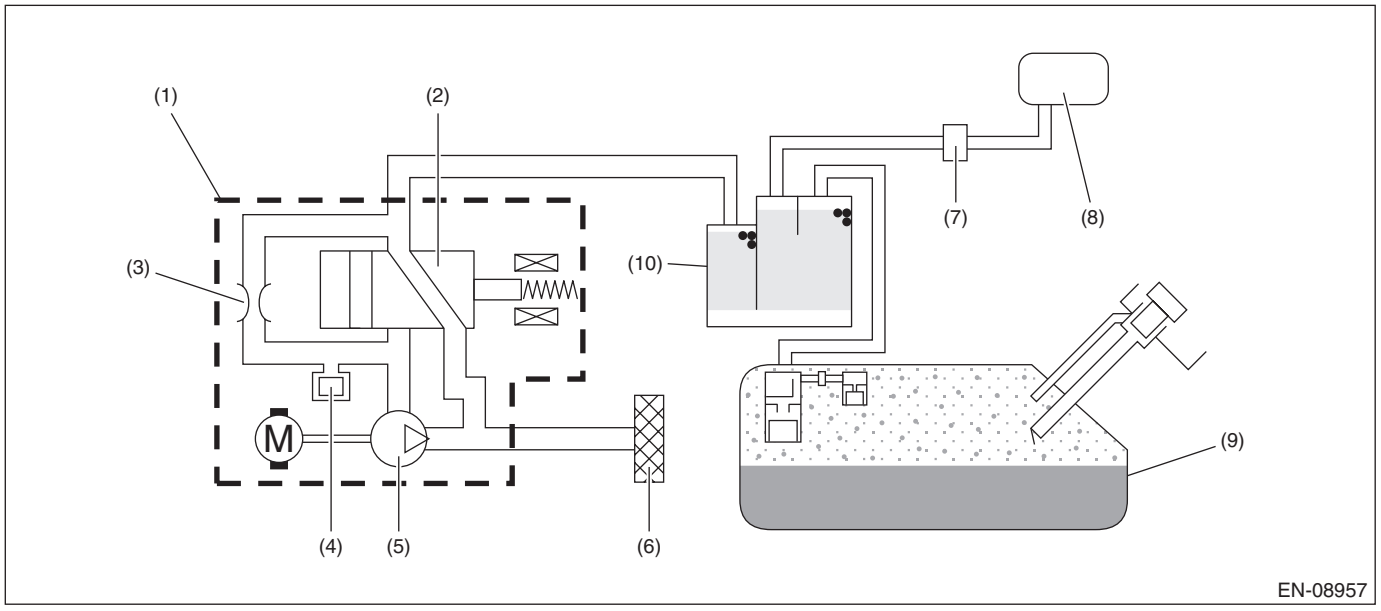

(1) Leak check valve ASSY
(2) Switching valve
(3) Reference orifice (0.02 inch orifice)
(4) Pressure sensor
(5) Vacuum pump
(6) Drain filter
(7) Purge control solenoid valve
(8) Intake manifold
(9) Fuel tank
(10) Canister

3. EXECUTION CONDITION

Secondary parameters	Execution condition
Battery voltage	≥ 10.9 V

4. GENERAL DRIVING CYCLE

Always perform the diagnosis continuously.

5. DIAGNOSTIC METHOD

If the duration of time while the following conditions are met is longer than the time indicated, judge as NG.

Judgment Value

Malfunction Criteria	Threshold Value
Output voltage	< 0.92 V

Time Needed for Diagnosis: 1000 ms
Malfunction Indicator Light Illumination: Illuminates as soon as a malfunction occurs.

CZ:DTC P0453 EVAP SYSTEM (CPC) PRESSURE SENSOR/SWITCH CIRCUIT HIGH

DTC DETECTING CONDITION:
Immediately at fault recognition

CAUTION:

- **After servicing or replacing faulty parts, perform Clear Memory Mode <Ref. to EN(w/o STI)(diag)-82, OPERATION, Clear Memory Mode.>, and Inspection Mode <Ref. to EN(w/o STI)(diag)-64, PROCEDURE, Inspection Mode.>.**
- **Use the check board when measuring the ECM terminal voltage and resistance.**

WIRING DIAGRAM:
Engine Electrical System <Ref. to WI-154, WIRING DIAGRAM, Engine Electrical System.>

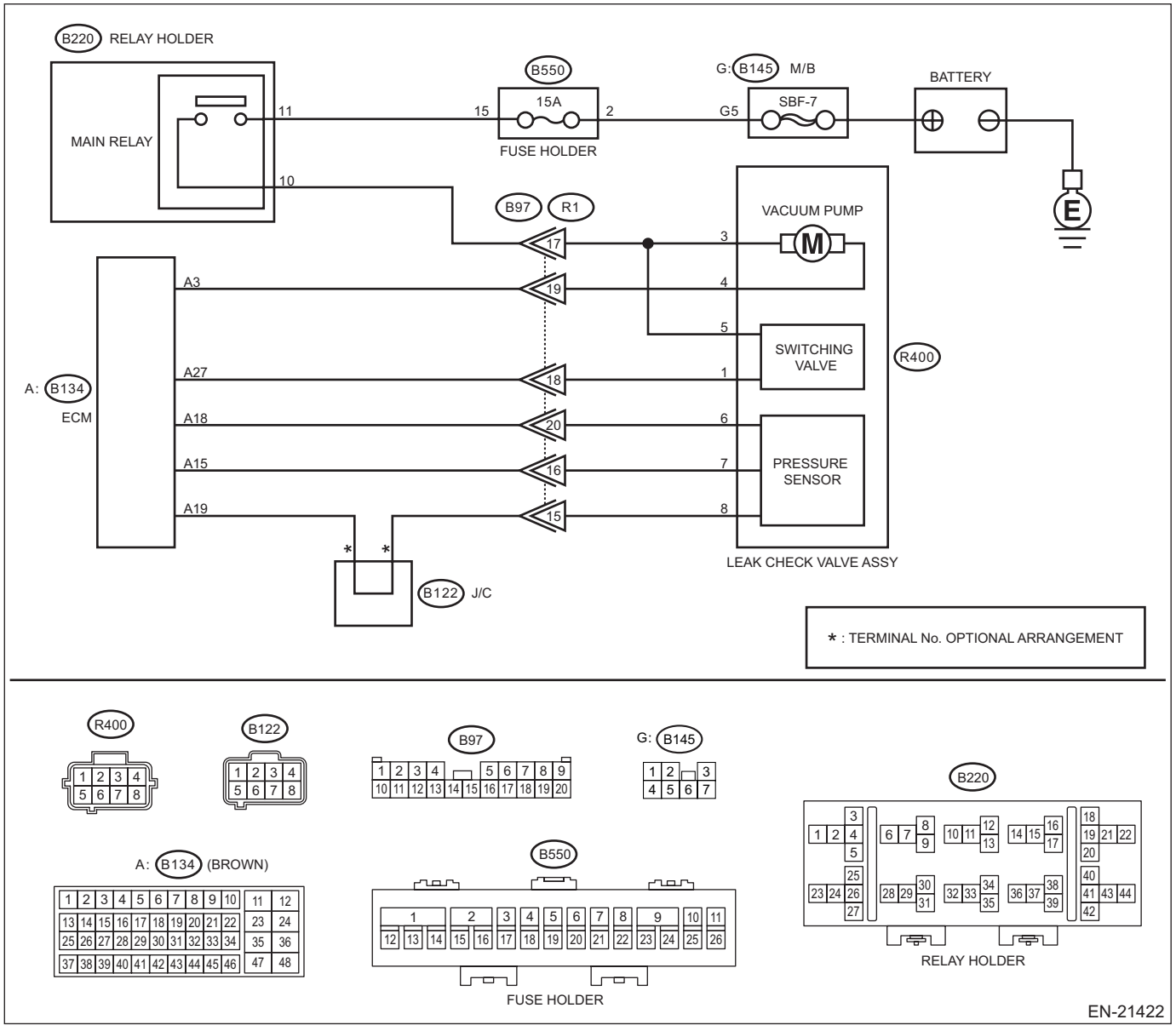

	Step	Check	Yes	No
1	**CHECK CURRENT DATA.** 1) Turn the ignition switch to ON. 2) Read the value of «Absolute Evap Sys. Pressure» using the Subaru Select Monitor or a general scan tool. NOTE: • Subaru Select Monitor For detailed operation procedures, refer to "Read Current Data For Engine". <Ref. to EN(w/o STI)(diag)-46, Subaru Select Monitor.> • General scan tool For detailed operation procedures, refer to the general scan tool operation manual.	Is the value in «Absolute Evap Sys. Pressure» 125 kPa (938 mmHg, 36.9 inHg) or more?	Go to step **2**.	Even if DTC is detected, the circuit has returned to a normal condition at this time. Reproduce the failure, and then perform the diagnosis again. NOTE: In this case, temporary poor contact of connector, temporary open or short circuit of harness may be the cause.
2	**CHECK HARNESS BETWEEN ECM AND LEAK CHECK VALVE ASSEMBLY CONNECTOR.** 1) Turn the ignition switch to OFF. 2) Disconnect the connector from ECM. 3) Disconnect the connector from the leak check valve assembly. 4) Measure the resistance of harness between ECM connector and the leak check valve assembly connector. ***Connector & terminal*** ***(B134) No. 15 — (R400) No. 7:*** ***(B134) No. 19 — (R400) No. 8:***	Is the resistance less than 1 Ω?	Go to step **3**.	Repair the harness and connector. NOTE: In this case, repair the following item: • Open circuit in harness between ECM connector and the leak check valve assembly connector • Poor contact of coupling connector • Poor contact of joint connector
3	**CHECK FOR POOR CONTACT.** Check for poor contact of ECM and the leak check valve assembly connector.	Is there poor contact in ECM and the leak check valve assembly connector?	Repair the poor contact of ECM and the leak check valve assembly connector.	Go to step **4**.
4	**CHECK LEAK CHECK VALVE ASSEMBLY.** Check the pressure sensor of the leak check valve assembly. <Ref. to EC(w/o STI)-68, CHECK PRESSURE SENSOR, INSPECTION, Leak Check Valve Assembly.>	Is the check result OK?	Repair the short circuit to power in harness between ECM connector and leak check valve assembly connector.	Replace the leak check valve assembly. <Ref. to EC(w/o STI)-52, Leak Check Valve Assembly.>

1. OUTLINE OF DIAGNOSIS

Detect the open or short circuit in Evaporative Leak Check Module pressure sensor.
Judge as NG if out of specification.

2. COMPONENT DESCRIPTION

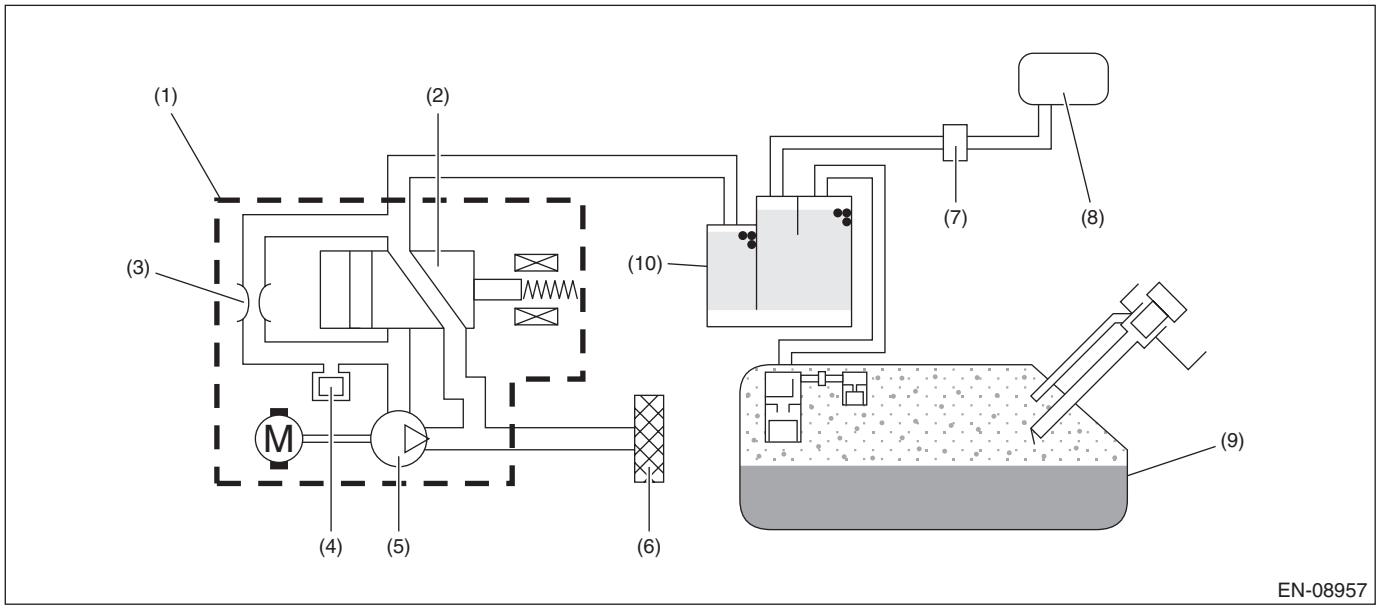

(1) Leak check valve ASSY
(2) Switching valve
(3) Reference orifice (0.02 inch orifice)
(4) Pressure sensor
(5) Vacuum pump
(6) Drain filter
(7) Purge control solenoid valve
(8) Intake manifold
(9) Fuel tank
(10) Canister

3. EXECUTION CONDITION

Secondary parameters	Execution condition
Battery voltage	≥ 10.9 V

4. GENERAL DRIVING CYCLE

Always perform the diagnosis continuously.

5. DIAGNOSTIC METHOD

If the duration of time while the following conditions are met is longer than the time indicated, judge as NG.

Judgment Value

Malfunction Criteria	Threshold Value
Output voltage	> 4.25 V

Time Needed for Diagnosis: 1000 ms
Malfunction Indicator Light Illumination: Illuminates as soon as a malfunction occurs.

DA:DTC P0455 EVAP SYSTEM (CPC) LEAK DETECTED (LARGE LEAK)

DTC DETECTING CONDITION:
Detected when two consecutive driving cycles with fault occur.
TROUBLE SYMPTOM:
- Fuel odor
- There is a hole of more than 1.0 mm (0.04 in) dia. in evaporation system or fuel tank.
- Fuel filler cap loose or lost

CAUTION:
After servicing or replacing faulty parts, perform Clear Memory Mode <Ref. to EN(w/o STI)(diag)-82, OPERATION, Clear Memory Mode.>, and Inspection Mode <Ref. to EN(w/o STI)(diag)-64, PROCEDURE, Inspection Mode.>.

	Step	Check	Yes	No
1	**CHECK FUEL FILLER CAP.** 1) Turn the ignition switch to OFF. 2) Check the fuel filler cap. NOTE: The DTC is stored in memory if fuel filler cap is or was loose or if the cap chain has caught while tightening.	Is the fuel filler cap tightened securely?	Go to step **2**.	Tighten fuel filler cap securely.
2	**CHECK FUEL FILLER CAP.**	Is the fuel filler cap genuine?	Go to step **3**.	Replace with a genuine fuel filler cap.
3	**CHECK FUEL FILLER PIPE GASKET.**	Is there any damage to the seal between fuel filler cap and fuel filler pipe?	Repair or replace the fuel filler cap and fuel filler pipe. <Ref. to FU(w/o STI)-156, Fuel Filler Pipe.>	Go to step **4**.
4	**CHECK PURGE CONTROL SOLENOID VALVE.** Check air-tightness of the purge control solenoid valve. <Ref. to EC(w/o STI)-28, INSPECTION, Purge Control Solenoid Valve.>	Is the check result OK?	Go to step **5**.	Replace the purge control solenoid valve. <Ref. to EC(w/o STI)-22, Purge Control Solenoid Valve.>
5	**CHECK EVAPORATIVE EMISSION CONTROL SYSTEM LINE.**	Are there holes on the evaporation line?	Repair or replace the evaporation line. <Ref. to FU(w/o STI)-191, Fuel Delivery and Evaporation Lines.>	Go to step **6**.
6	**CHECK CANISTER.**	Are there holes on the canister?	Replace the canister. <Ref. to EC(w/o STI)-8, Canister.>	Go to step **7**.
7	**CHECK LEAK CHECK VALVE ASSEMBLY.**	Are there damage or holes on the leak check valve assembly?	Replace the leak check valve assembly. <Ref. to EC(w/o STI)-52, Leak Check Valve Assembly.>	Go to step **8**.
8	**CHECK FUEL TANK.** Remove the fuel tank. <Ref. to FU(w/o STI)-145, Fuel Tank.>	Are there damage or holes on the fuel tank?	Repair or replace the fuel tank. <Ref. to FU(w/o STI)-145, Fuel Tank.>	Go to step **9**.

Step		Check	Yes	No
9	**CHECK ANY OTHER MECHANICAL TROUBLE IN EVAPORATIVE EMISSION CONTROL SYSTEM.**	Are there holes, cracks, clogging, or disconnection, misconnection of hoses or pipes in evaporative emission control system?	Repair or replace the hoses or pipes.	Repair the poor contact of ECM connector.

1. OUTLINE OF DIAGNOSIS

This diagnosis judges whether the Evaporative Leak Check Module operation is normal or not, and whether the evaporative emission system has leak and clogging or not.
To purge the canister, after driving, perform the five hours soaking after ignition switch OFF in order to stabilize the evaporative gas status. * After 5 or 7 or 9.5 hours passed, ECM is activated by soaking timer, and the leak check is started.
Judges whether the Evaporative Leak Check Module operation is normal or not, by measuring the reference pressure status via reference orifice (0.02 inch orifice). Judge as malfunction if the reference pressure is out of specified range. Then, judge whether there is a leak or not, by comparing the pressure (leak pressure) when the reference pressure and the evaporative emission system are in negative pressure condition. Judge as system leak in the evaporative emission system if the leak pressure is higher than reference pressure. Judge as clogging of pipe if the leak pressure becomes lower than the reference pressure within the specified amount of time.
0.02 inch leak and 0.04 inch leak can be distinguished by measuring the leak pressure.
The diagnosis results are stored inside ECM until the engine is started again.
*: When the test conditions are not met in 5 hours, perform diagnosis at elapsed time of 7 hours. When the test conditions are not met in 7 hours, perform diagnosis at elapsed time of 9.5 hours.

Diagnostic item	
Evaporative Leak Check Module system (leak check valve assembly main body)	Vacuum pump stuck Switching valve stuck to open Switching valve stuck to close Reference orifice flow large Reference orifice flow small
Leak check	Large leak • 0.04 inch leak • Fuel cap loose • Fuel cap off • System malfunction
	Very small leak • 0.02 inch leak
Clogging of pipe	—

OUTLINE OF DIAGNOSIS

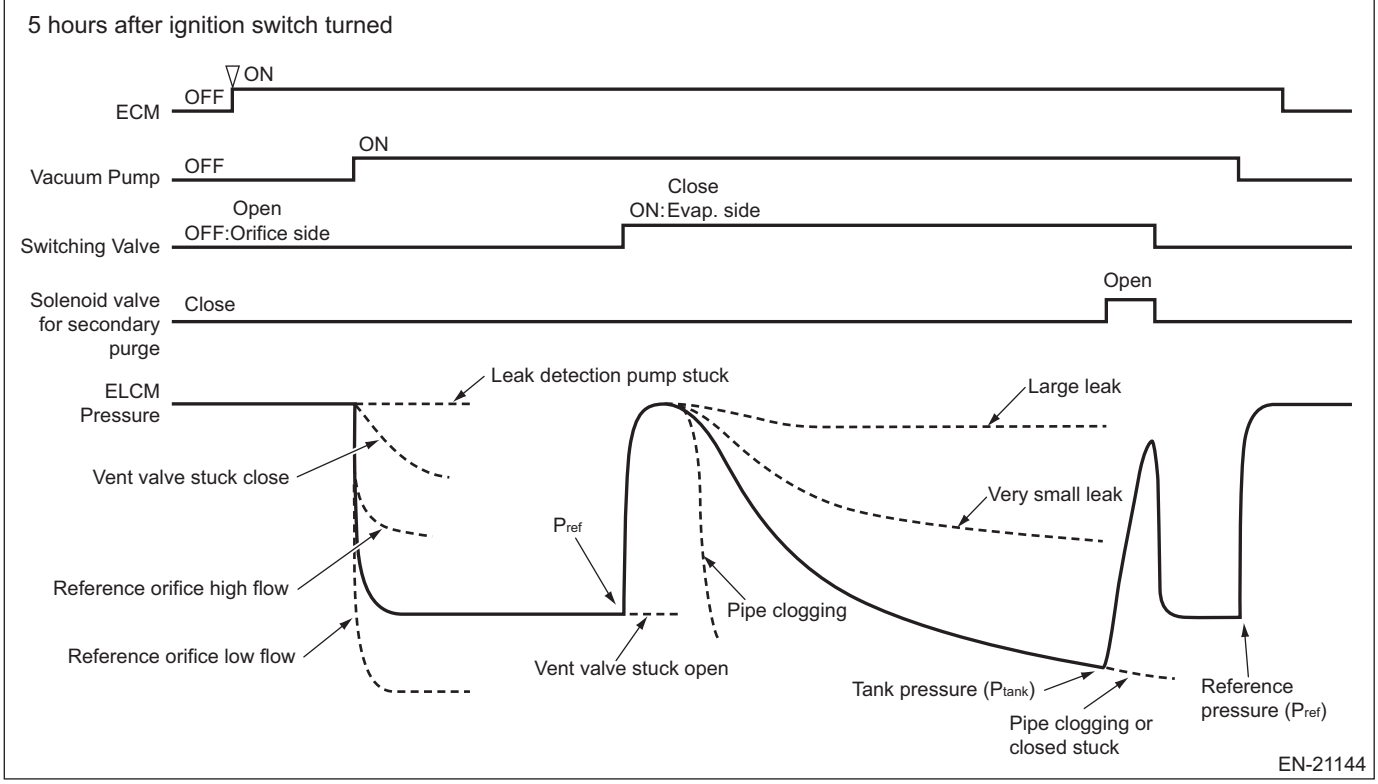

2. COMPONENT DESCRIPTION

Evaporative Leak Check Module consists of the pressure sensor, the reference orifice (diameter of 0.02 inch), the vacuum pump which introduces the negative pressure into evaporative emission system, and the switching valve which switches the passage to introduce the negative pressure.

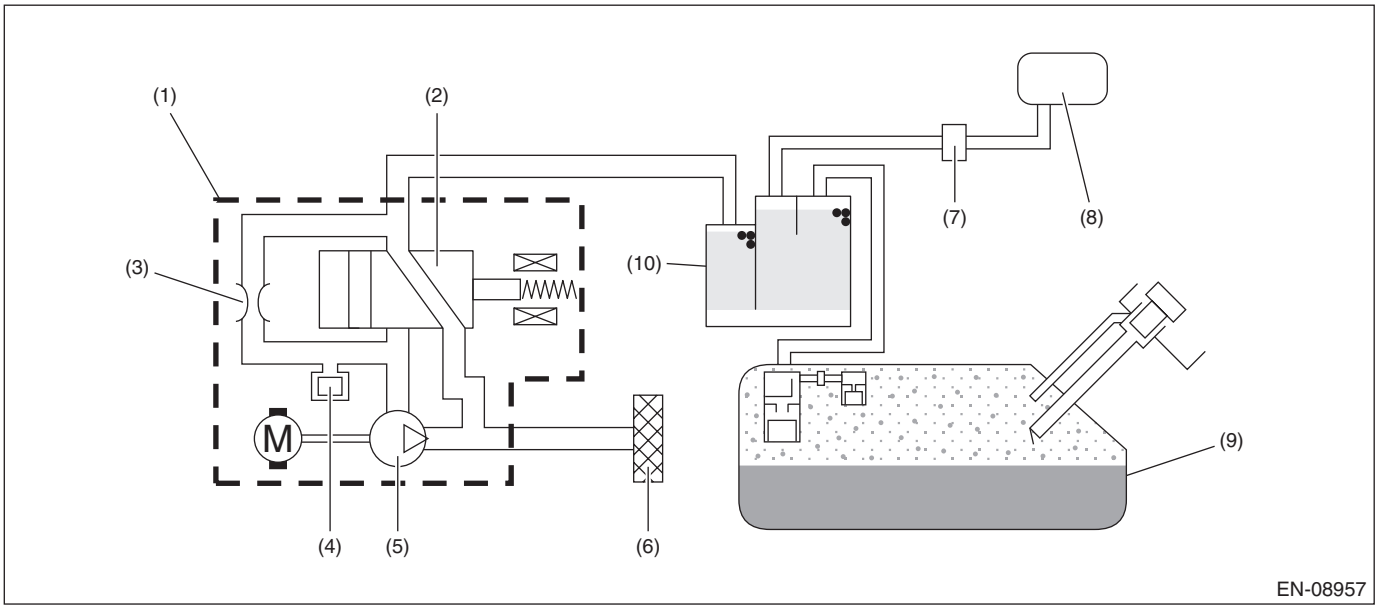

(1) Leak check valve ASSY
(2) Switching valve
(3) Reference orifice (0.02 inch orifice)
(4) Pressure sensor
(5) Vacuum pump
(6) Drain filter
(7) Purge control solenoid valve
(8) Intake manifold
(9) Fuel tank
(10) Canister

3. EXECUTION CONDITION

Secondary parameters	Execution condition
Battery voltage	≥ 10.9 V
Barometric pressure	≥ 75.06 kPa (563.1 mmHg, 22.2 inHg)
Engine coolant temperature	≥ 4.4°C (39.9°F) and < 45°C (113°F)
Accumulated purge amount during previous driving cycle	≥ Value of Map 1

Map 1

Engine coolant temperature when ECM is activated after soak time °C (°F)	0 (32)	30 (86)	35 (95)	40 (104)	45 (113)
Accumulated purge amount during previous driving cycle g (oz)	129 (4.51)	129 (4.51)	427 (13.54)	711 (22.57)	996 (31.6)

4. GENERAL DRIVING CYCLE

Perform the diagnosis only once when 5 or 7 or 9.5 hours has passed after ignition switch is OFF. For more detail, refer to “OUTLINE OF DIAGNOSIS”. <Ref. to EN(w/o STI)(diag)-397, OUTLINE OF DIAGNOSIS, DTC P0455 EVAP SYSTEM (CPC) LEAK DETECTED (LARGE LEAK), Diagnostic Procedure with Diagnostic Trouble Code (DTC).>

5. DIAGNOSTIC METHOD

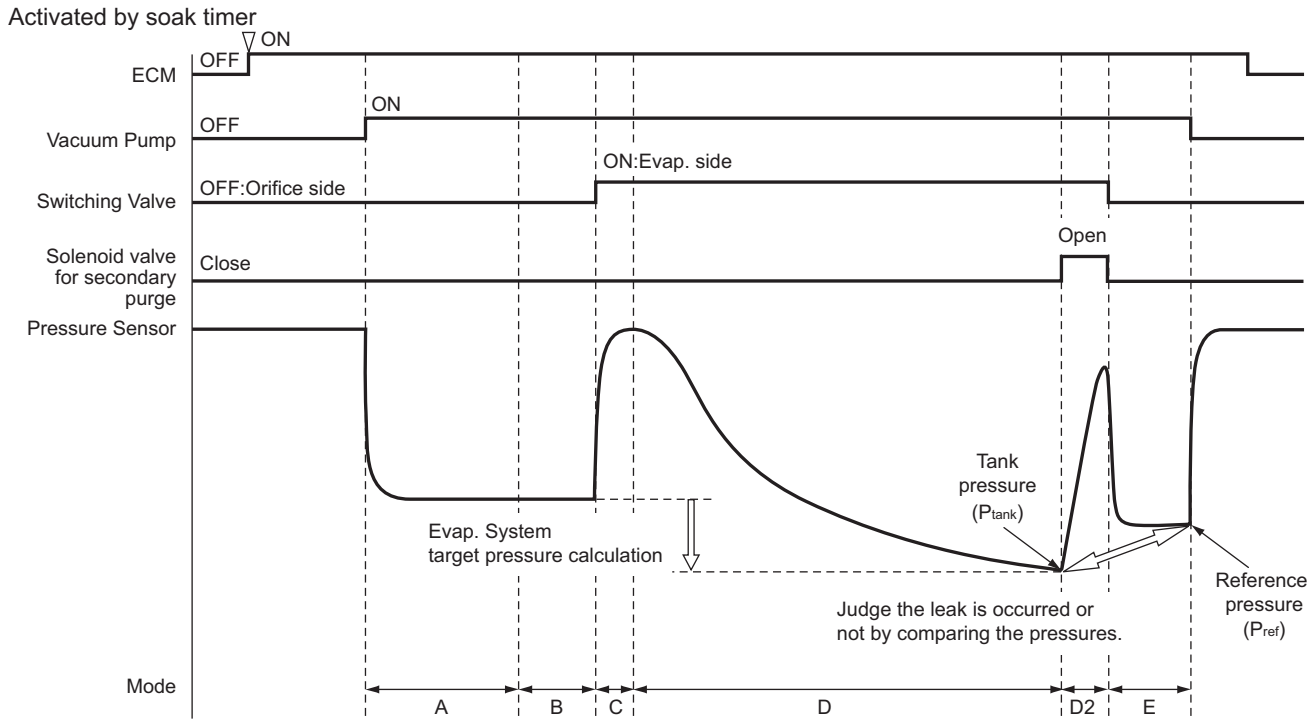

EN-20165

Mode	Explanation of Mode	Diagnosis Period
A	Vacuum pump operation confirmation and characteristics stability	7 s or less & 300 s
B	Measurement of reference pressure for setting the target negative pressure	40 s or less
C	Switching valve operation confirmation	12 s or less
D	Clogging of pipe diagnosis and leak pressure measurement	900 s or less
D2	Pipe clogging of the high pressure line Solenoid valve for secondary purge stuck closed	60 s
E	Reference pressure measurement for judgment	40 s or less

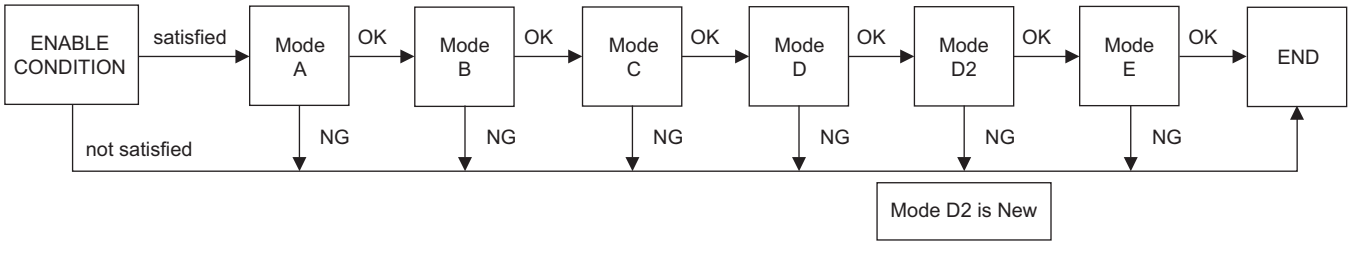

EN-20167

Mode A (Vacuum pump operation confirmation and characteristics stability)

Purpose: Detect the vacuum pump operation trouble.
Judge as NG when the following conditions are established.
Judge as OK if the following conditions are not established, and warm up for five minutes to stabilize the vacuum pump characteristics.

Judgment Value

Malfunction Criteria	Threshold Value	DTC
Pressure sensor output value	> –224 Pa (–1.7 mmHg, –0.1 inHg)	P2404

Mode B (Measurement of reference pressure for setting the target negative pressure)

Judgment 1
Purpose: Judge the reference pressure stability.
Judge as NG when the following conditions are established.
Judgment 2
Purpose: Judge whether the reference pressure is within the normal range, and detect the vacuum pump and orifice malfunctions.
Judge as NG when the following conditions are established.

Judgment Value

Malfunction Criteria	Threshold Value	DTC
Judgment 1 |Pressure sensor maximum output value – Pressure sensor minimum output value| or Judgment 2	> 493 Pa (3.7 mmHg, 0.1 inHg)	P2404
Reference pressure for setting the target negative pressure	< Value of Map 2 or > Value of Map 3	P2404

Map 2

Barometric pressure kPa (mmHg, inHg)	70 (525, 20.7)	80 (600, 23.6)	90 (675, 26.6)	100 (750, 29.5)
Reference pressure for setting the target negative pressure Pa (mmHg, inHg)	–3972 (–29.8, –1.2)	–4079 (–30.6, –1.2)	–4186 (–31.4, –1.2)	–4292 (–32.2, –1.3)

Map 3

Barometric pressure kPa (mmHg, inHg)	70 (525, 20.7)	80 (600, 23.6)	90 (675, 26.6)	100 (750, 29.5)
Reference pressure for setting the target negative pressure Pa (mmHg, inHg)	–942 (–7.1, –0.3)	–1048 (–7.9, –0.3)	–1155 (–8.7, –0.3)	–1262 (–9.5, –0.4)

Mode C (Switching valve operation confirmation)

Purpose: Measure the pressure increase when switching valve is changed from open to close, and detect the stuck to open/close malfunctions of the switching valve.
Judge as NG when the following conditions are established.

Judgment Value

Malfunction Criteria	Threshold Value	DTC
Pressure sensor output value – Reference pressure for setting the target negative pressure	< 224 Pa (1.7 mmHg, 0.1 inHg)	P2404

Mode D (Clogging of pipe diagnosis and leak pressure measurement)

1. **Clogging of pipe**
   Purpose: Measure the time required for the evaporative emission system to reach the target negative pressure by the vacuum pump, and detect the clogging of pipe trouble.
   Judge as clogging of pipe malfunction if the evaporative emission system reaches to the target negative pressure within the specified time.
2. **Leak pressure measurement**
   Purpose: Measure the pressure (leak pressure) when the evaporative emission system becomes the negative pressure by the vacuum pump.
   Store the pressure as a leak pressure while the following conditions are met.

Phase D

Judgment Value

Malfunction Criteria	Threshold Value	DTC
Phase D Time of Phase D	≤ 27000 ms	P1451
Phase D2 Reference pressure for judgment of the target negative pressure	< –667 kPa (–5011.25 mmHg, –197.29 inHg)	P04AF
<Large leak (0.04 inch)> Leak pressure	≥ Value of Map 6	P0455
<Very small leak (0.02 inch)> Leak pressure	> Reference pressure of 0.018 inch (Pa) and < Map6 (Pa)	P0456

Map 6

Reference pressure (Pa)	–4856	–4000	–2750	–1500	–824
Threshold Value (Pa)	–1785	–1463	–991	–520	–265

Formula for threshold value = Reference pressure × 0.377 – 0.341
Time Needed for Diagnosis: 24 min

Mode E (Measurement of reference pressure for judgment)

Judgment 1
Purpose: Judge the reference pressure stability.
Judge as NG when the following conditions are established.
Judgment 2
Purpose: Judge whether the reference pressure is within the normal range, and detect the vacuum pump and orifice malfunctions. Judge the vacuum pump performance stability.
Judge as NG when the following conditions are established.
Judgment 3
Purpose: Judge the presence of evaporative emission system leak.

Judge as NG when the following conditions are established.

Judgment Value

Malfunction Criteria	Threshold Value	DTC
Judgment 1 |Pressure sensor maximum output value – Pressure sensor minimum output value| or Judgment 2 Reference pressure for judgment or Judgment 3 |Reference pressure for setting the target negative pressure – Reference pressure for judgment|	 > 493 Pa (3.7 mmHg, 0.1 inHg) < Value of Map 4 or > Value of Map 5 > 943 Pa (7.1 mmHg, 0.3 inHg)	 P2404 P2404 P2404

Map 4

Barometric pressure kPa (mmHg, inHg)	70 (525, 20.7)	80 (600, 23.6)	90 (675, 26.6)	100 (750, 29.5)
Reference pressure for judgment kPa (mmHg, inHg)	–4.5 (–34.02, –1.3)	–4.6 (–34.815, –1.4)	–4.7 (–35.618, –1.4)	–4.9 (–36.42, –1.4)

Map 5

Barometric pressure kPa (mmHg, inHg)	70 (525, 20.7)	80 (600, 23.6)	90 (675, 26.6)	100 (750, 29.5)
Reference pressure for judgment kPa (mmHg, inHg)	–0.9 (–6.18, –0.2)	–0.9 (–6.983, –0.3)	–1 (–7.785, –0.3)	–1.1 (–8.58, –0.3)

Time Needed for Diagnosis: 24 min

At next engine start, confirm whether the enable conditions are satisfied even though refueling has been done during soaking, and determine the malfunction.

Malfunction Indicator Light Illumination: Illuminates when malfunction occurs in 2 continuous driving cycles.

DB:DTC P0456 EVAP SYSTEM (CPC) LEAK DETECTED (VERY SMALL LEAK)

NOTE:

For the diagnostic procedure, refer to DTC P0455. <Ref. to EN(w/o STI)(diag)-396, DTC P0455 EVAP SYSTEM (CPC) LEAK DETECTED (LARGE LEAK), Diagnostic Procedure with Diagnostic Trouble Code (DTC).>

1. OUTLINE OF DIAGNOSIS

NOTE:

For the detection standard, refer to DTC P0455. <Ref. to EN(w/o STI)(diag)-396, DTC P0455 EVAP SYSTEM (CPC) LEAK DETECTED (LARGE LEAK), Diagnostic Procedure with Diagnostic Trouble Code (DTC).>

DC:DTC P0458 EVAP SYSTEM (CPC) PURGE CONTROL VALVE "A" CIRCUIT LOW

DTC DETECTING CONDITION:

Detected when two consecutive driving cycles with fault occur.

TROUBLE SYMPTOM:

Improper idling

CAUTION:

- **After servicing or replacing faulty parts, perform Clear Memory Mode <Ref. to EN(w/o STI)(diag)-82, OPERATION, Clear Memory Mode.>, and Inspection Mode <Ref. to EN(w/o STI)(diag)-64, PROCEDURE, Inspection Mode.>.**
- **Use the check board when measuring the ECM terminal voltage and resistance.**

WIRING DIAGRAM:

Engine Electrical System <Ref. to WI-154, WIRING DIAGRAM, Engine Electrical System.>

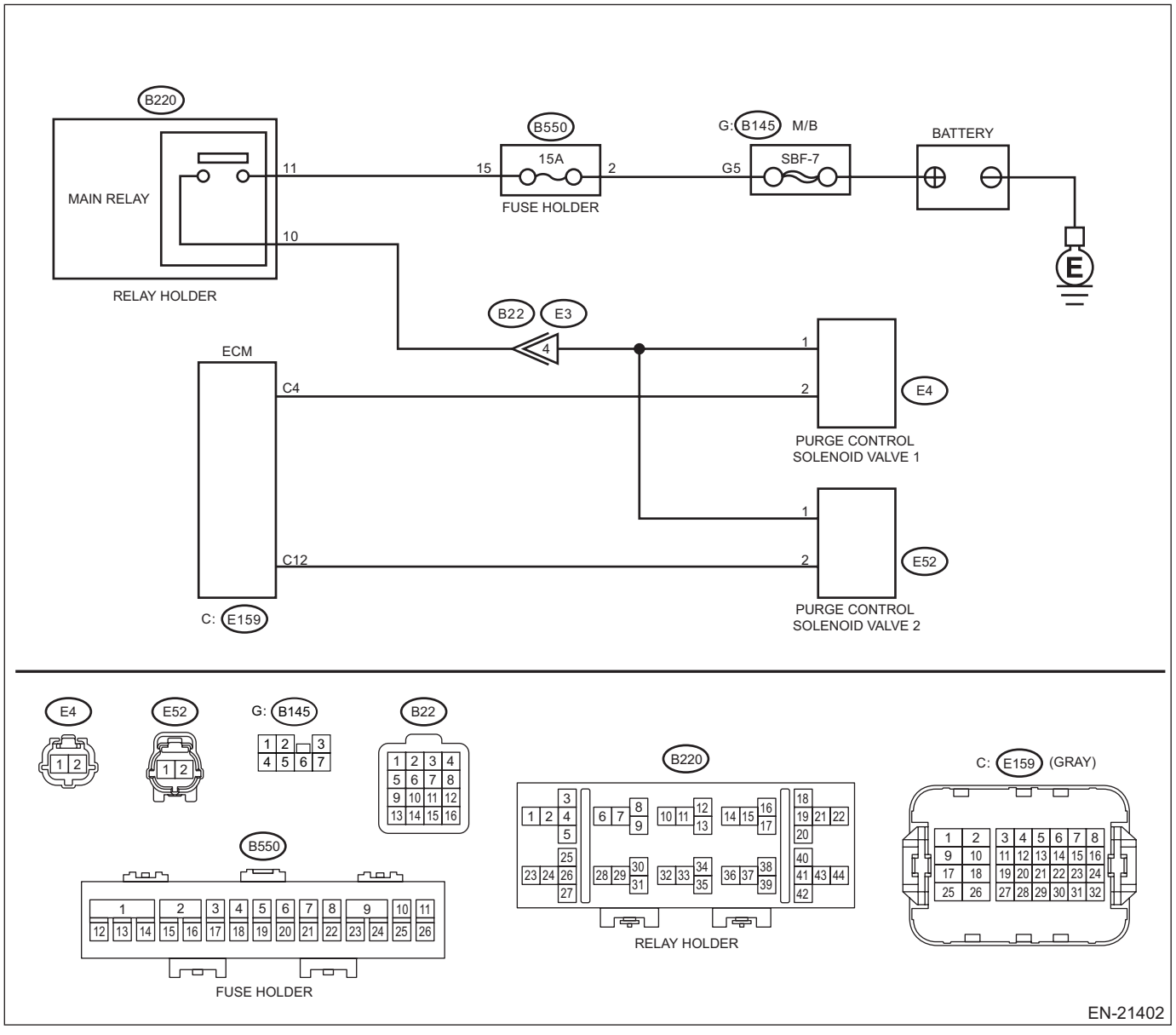

	Step	Check	Yes	No
1	**CHECK OUTPUT SIGNAL OF ECM.** 1) Turn the ignition switch to ON. 2) Measure the voltage between ECM connector and engine ground. ***Connector & terminal*** ***(E159) No. 4 (+) — Engine ground (–):***	Is the voltage 10 V or more?	Go to step **2**.	Go to step **3**.
2	**CHECK FOR POOR CONTACT.** Check for poor contact of ECM connector.	Is there poor contact of ECM connector?	Repair the poor contact of ECM connector.	Even if DTC is detected, the circuit has returned to a normal condition at this time. Reproduce the failure, and then perform the diagnosis again. NOTE: In this case, temporary poor contact of connector, temporary open or short circuit of harness may be the cause.
3	**CHECK POWER SUPPLY TO PURGE CONTROL SOLENOID VALVE 1 CONNECTOR.** Measure the voltage between purge control solenoid valve 1 connector and engine ground. ***Connector & terminal*** ***(E4) No. 1 (+) — Engine ground (–):***	Is the voltage 10 V or more?	Go to step **4**.	Repair the power supply circuit.
4	**CHECK HARNESS BETWEEN ECM AND PURGE CONTROL SOLENOID VALVE 1 CONNECTOR.** 1) Turn the ignition switch to OFF. 2) Disconnect the connector from ECM. 3) Disconnect the connector from purge control solenoid valve 1. 4) Measure the resistance between the purge control solenoid valve 1 connector and engine ground. ***Connector & terminal*** ***(E4) No. 2 — Engine ground:***	Is the resistance 1 MΩ or more?	Go to step **5**.	Repair the ground short circuit of harness between ECM connector and purge control solenoid valve 1 connector.
5	**CHECK HARNESS BETWEEN ECM AND PURGE CONTROL SOLENOID VALVE 1 CONNECTOR.** Measure the resistance of harness between ECM connector and purge control solenoid valve 1 connector. ***Connector & terminal*** ***(E159) No. 4 — (E4) No. 2:***	Is the resistance less than 1 Ω?	Go to step **6**.	Repair the open circuit in harness between ECM connector and purge control solenoid valve 1 connector.
6	**CHECK PURGE CONTROL SOLENOID VALVE 1.** 1) Remove the purge control solenoid valve 1. 2) Measure the resistance between purge control solenoid valve 1 terminals. ***Terminals*** ***No. 1 — No. 2:***	Is the resistance 10 — 100 Ω?	Repair the poor contact of the purge control solenoid valve 1 connector.	Replace the purge control solenoid valve 1. <Ref. to EC(w/o STI)-22, Purge Control Solenoid Valve.>

1. OUTLINE OF DIAGNOSIS

Detect open or short circuit of the purge control solenoid valve.
Judge as NG when the ECM output level differs from the actual terminal level.

2. COMPONENT DESCRIPTION

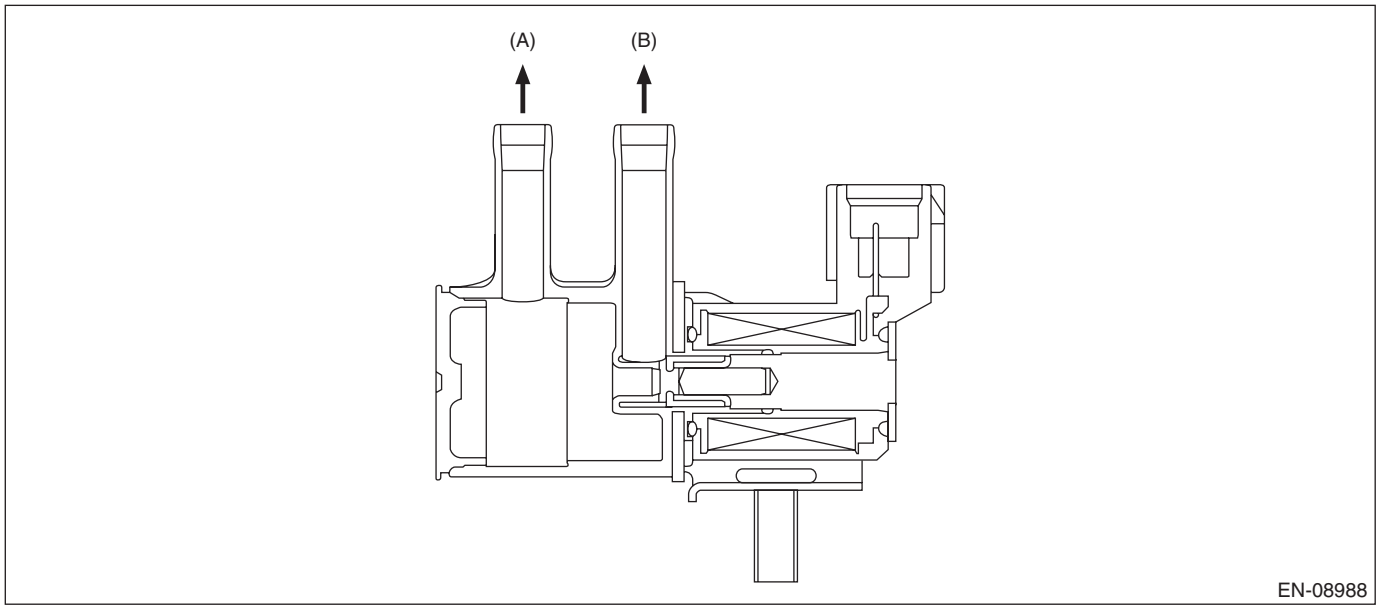

(A) To canister (B) To intake manifold

3. EXECUTION CONDITION

Secondary parameters	Execution condition
Battery voltage	≥ 10.9 V
Purge control solenoid valve control duty	≤ 80%

4. GENERAL DRIVING CYCLE

Always perform the diagnosis after starting the engine.

5. DIAGNOSTIC METHOD

If the duration of time while the following conditions are met is longer than the time indicated, judge as NG.

Judgment Value

Malfunction Criteria	Threshold Value
Output voltage	≤ 2.2 V

Time Needed for Diagnosis: 2500 ms
Malfunction Indicator Light Illumination: Illuminates when malfunction occurs in 2 continuous driving cycles.

DD:DTC P0459 EVAP SYSTEM (CPC) PURGE CONTROL VALVE "A" CIRCUIT HIGH

DTC DETECTING CONDITION:

Detected when two consecutive driving cycles with fault occur.

TROUBLE SYMPTOM:

Improper idling

CAUTION:

- **After servicing or replacing faulty parts, perform Clear Memory Mode <Ref. to EN(w/o STI)(diag)-82, OPERATION, Clear Memory Mode.>, and Inspection Mode <Ref. to EN(w/o STI)(diag)-64, PROCEDURE, Inspection Mode.>.**
- **Use the check board when measuring the ECM terminal voltage and resistance.**

WIRING DIAGRAM:

Engine Electrical System <Ref. to WI-154, WIRING DIAGRAM, Engine Electrical System.>

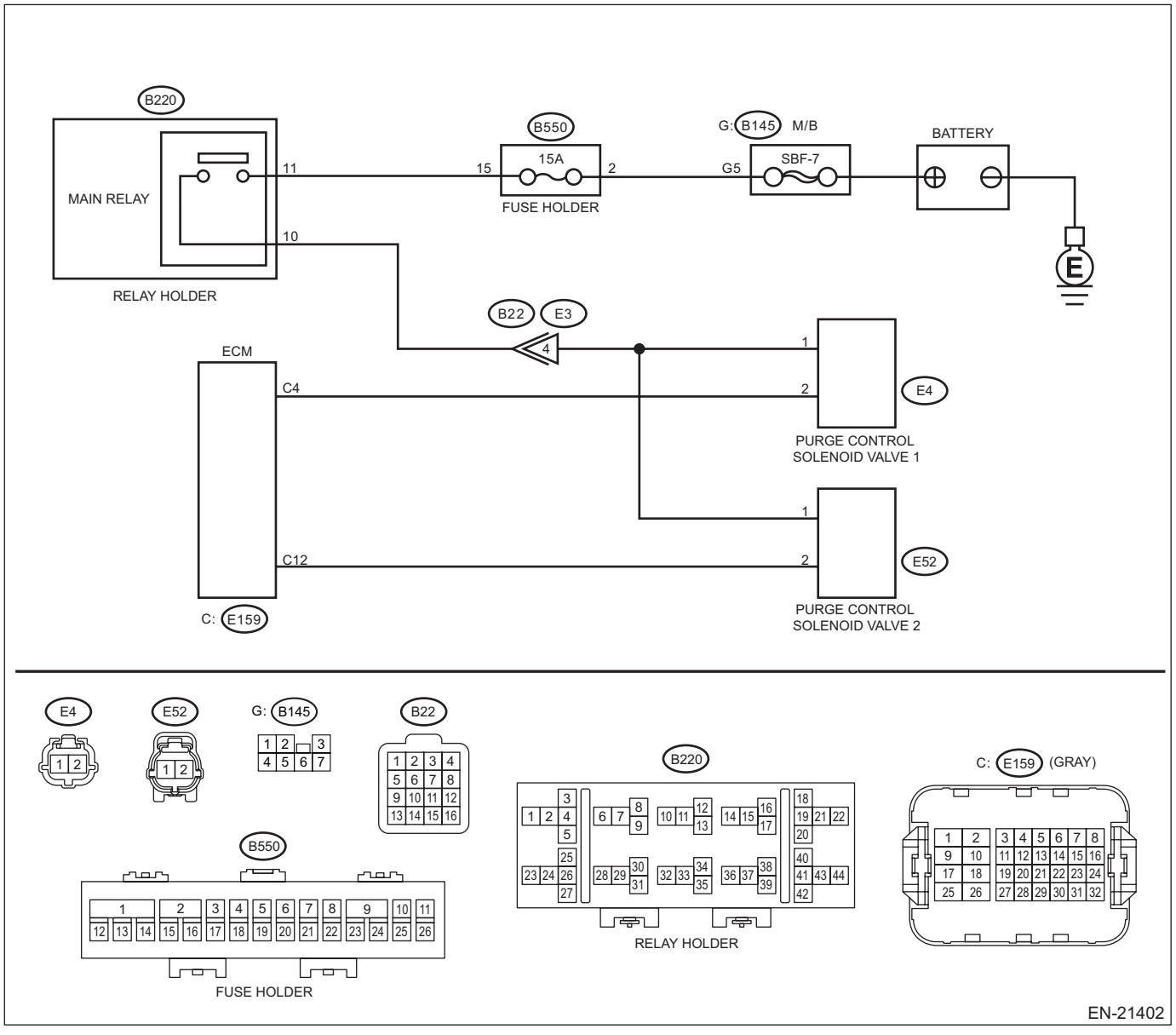

	Step	Check	Yes	No
1	**CHECK HARNESS BETWEEN ECM AND PURGE CONTROL SOLENOID VALVE 1 CONNECTOR.** 1) Turn the ignition switch to OFF. 2) Disconnect the connector from ECM. 3) Disconnect the connector from purge control solenoid valve 1. 4) Turn the ignition switch to ON. 5) Measure the voltage between ECM connector and engine ground. ***Connector & terminal*** ***(E159) No. 4 (+) — Engine ground (–):***	Is the voltage 10 V or more?	Repair the short circuit to power in harness between ECM connector and purge control solenoid valve 1 connector.	Go to step **2**.
2	**CHECK PURGE CONTROL SOLENOID VALVE 1.** 1) Turn the ignition switch to OFF. 2) Measure the resistance between purge control solenoid valve 1 terminals. ***Terminals*** ***No. 1 — No. 2:***	Is the resistance less than 1 Ω?	Replace the purge control solenoid valve 1. <Ref. to EC(w/o STI)-22, Purge Control Solenoid Valve.>	Repair the poor contact of ECM connector.

1. OUTLINE OF DIAGNOSIS

Detect open or short circuit of the purge control solenoid valve.
Judge as NG when the ECM output level differs from the actual terminal level.

2. COMPONENT DESCRIPTION

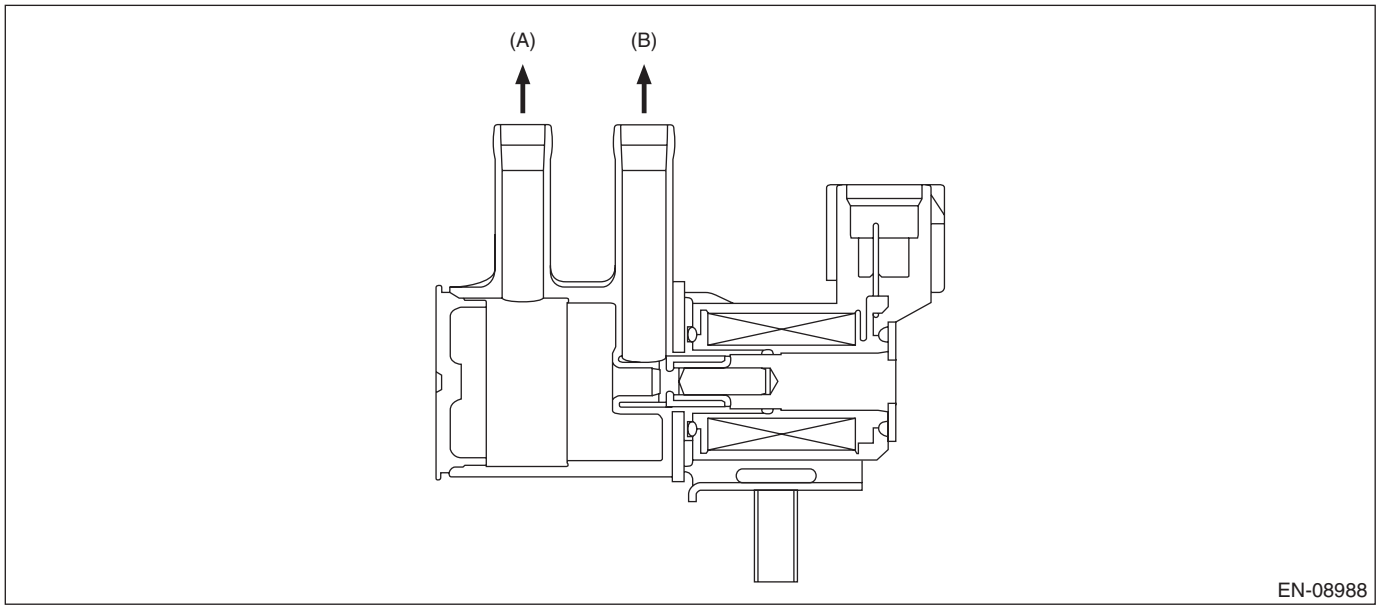

(A) To canister (B) To intake manifold

3. EXECUTION CONDITION

Secondary parameters	Execution condition
Battery voltage	≥ 10.9 V
Purge control solenoid valve control duty	≥ 20%

4. GENERAL DRIVING CYCLE

Always perform the diagnosis after starting the engine.

5. DIAGNOSTIC METHOD

If the duration of time while the following conditions are met is longer than the time indicated, judge as NG.

Judgment Value

Malfunction Criteria	Threshold Value
Output current	≥ 5 A

Time Needed for Diagnosis: 2250 ms
Malfunction Indicator Light Illumination: Illuminates when malfunction occurs in 2 continuous driving cycles.

DE:DTC P0461 FUEL LEVEL SENSOR "A" CIRCUIT RANGE/PERFORMANCE

DTC DETECTING CONDITION:
Detected when two consecutive driving cycles with fault occur.

CAUTION:
After servicing or replacing faulty parts, perform Clear Memory Mode <Ref. to EN(w/o STI)(diag)-82, OPERATION, Clear Memory Mode.>, and Inspection Mode <Ref. to EN(w/o STI)(diag)-64, PROCEDURE, Inspection Mode.>.

	Step	Check	Yes	No
1	**CHECK FOR ANY OTHER DTC ON DISPLAY.**	Is any other DTC displayed?	Check the appropriate DTC using the "List of Diagnostic Trouble Code (DTC)". <Ref. to EN(w/o STI)(diag)-106, List of Diagnostic Trouble Code (DTC).>	Replace the fuel level sensor and fuel sub level sensor. <Ref. to FU(w/o STI)-168, Fuel Level Sensor.> <Ref. to FU(w/o STI)-171, Fuel Sub Level Sensor.>

1. OUTLINE OF DIAGNOSIS

Detect malfunctions of the fuel level sensor output property.
If the fuel level does not vary in a particular driving condition / engine condition where it should, judge as NG.

2. COMPONENT DESCRIPTION

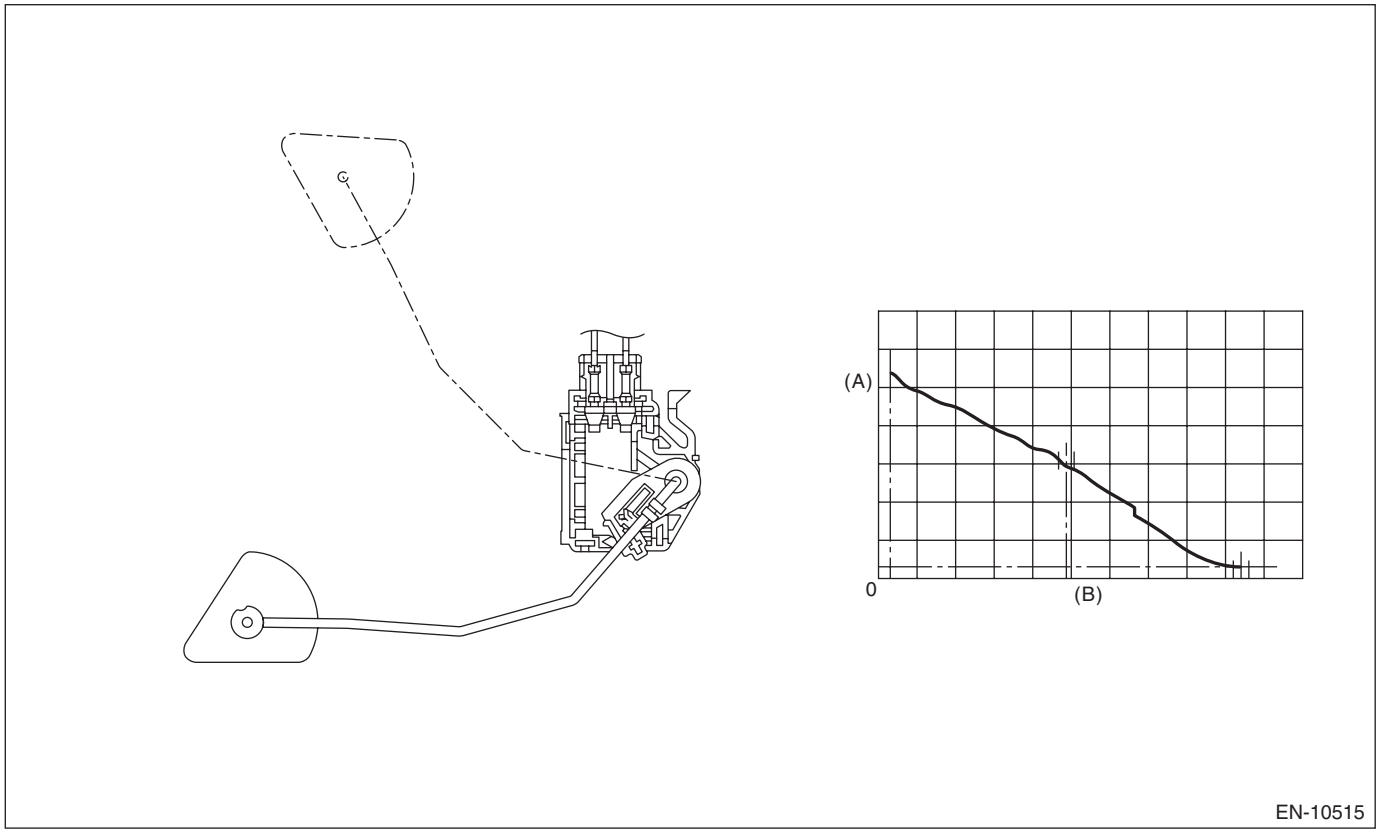

(A) Fuel level (B) Resistance

3. EXECUTION CONDITION

Secondary parameters	Execution condition
Elapsed time after engine starting	≥ 5 s
Battery voltage	≥ 10.9 V
Fuel injection time sum value	≥ 1148.2 s

4. GENERAL DRIVING CYCLE

Always perform the diagnosis continuously.

5. DIAGNOSTIC METHOD

Judge as NG when the following conditions are established.

Judgment Value

Malfunction Criteria	Threshold Value
Max. value – min. value of fuel level	< 3.646%

Time Needed for Diagnosis: Less than 1 second
Malfunction Indicator Light Illumination: Illuminates when malfunction occurs in 2 continuous driving cycles.

DF:DTC P0462 FUEL LEVEL SENSOR "A" CIRCUIT LOW

NOTE:
For the diagnostic procedure, refer to DTC P0463. <Ref. to EN(w/o STI)(diag)-413, DTC P0463 FUEL LEVEL SENSOR "A" CIRCUIT HIGH, Diagnostic Procedure with Diagnostic Trouble Code (DTC).>

1. OUTLINE OF DIAGNOSIS

Detect the open or short circuit of fuel level sensor. Judge as NG if out of specification.

2. COMPONENT DESCRIPTION

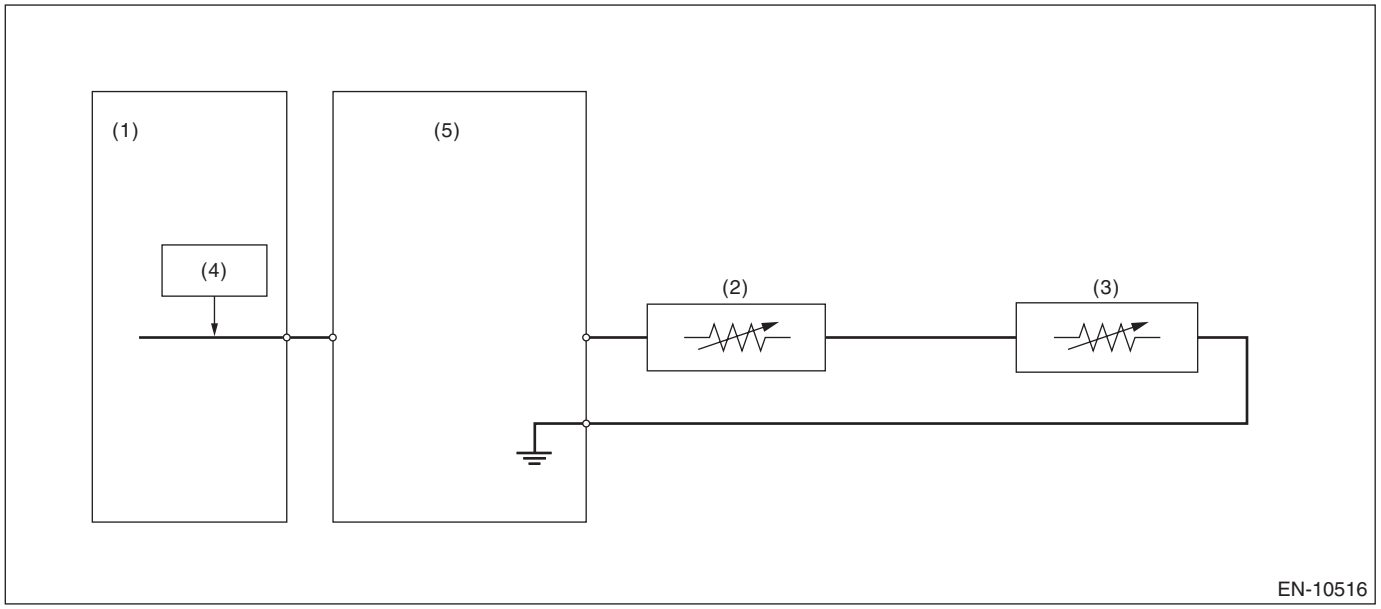

(1) Engine control module (ECM)
(2) Fuel sub level sensor
(3) Fuel level sensor
(4) Detecting circuit
(5) Combination meter

3. EXECUTION CONDITION

Secondary parameters	Execution condition
Battery voltage	≥ 10.9 V
Elapsed time after starting the engine	≥ 3000 ms

4. GENERAL DRIVING CYCLE

Always perform the diagnosis continuously.

5. DIAGNOSTIC METHOD

If the duration of time while the following conditions are met is longer than the time indicated, judge as NG.

Judgment Value

Malfunction Criteria	Threshold Value
Output voltage	< 2.21 V

Time Needed for Diagnosis: 2560 ms
Malfunction Indicator Light Illumination: Illuminates when malfunction occurs in 2 continuous driving cycles.

DG:DTC P0463 FUEL LEVEL SENSOR "A" CIRCUIT HIGH

DTC DETECTING CONDITION:
Detected when two consecutive driving cycles with fault occur.

CAUTION:
After servicing or replacing faulty parts, perform Clear Memory Mode <Ref. to EN(w/o STI)(diag)-82, OPERATION, Clear Memory Mode.>, and Inspection Mode <Ref. to EN(w/o STI)(diag)-64, PROCEDURE, Inspection Mode.>.

Step		Check	Yes	No
1	**CHECK FOR ANY OTHER DTC ON DISPLAY.**	Is DTC P0462 or P0463 displayed on the Subaru Select Monitor?	Check the combination meter. <Ref. to IDI(diag)-2, Basic Diagnostic Procedure.>	Even if DTC is detected, the circuit has returned to a normal condition at this time. Reproduce the failure, and then perform the diagnosis again. NOTE: In this case, temporary poor contact of connector, temporary open or short circuit of harness may be the cause.

1. OUTLINE OF DIAGNOSIS

Detect the open or short circuit of fuel level sensor. Judge as NG if out of specification.

2. COMPONENT DESCRIPTION

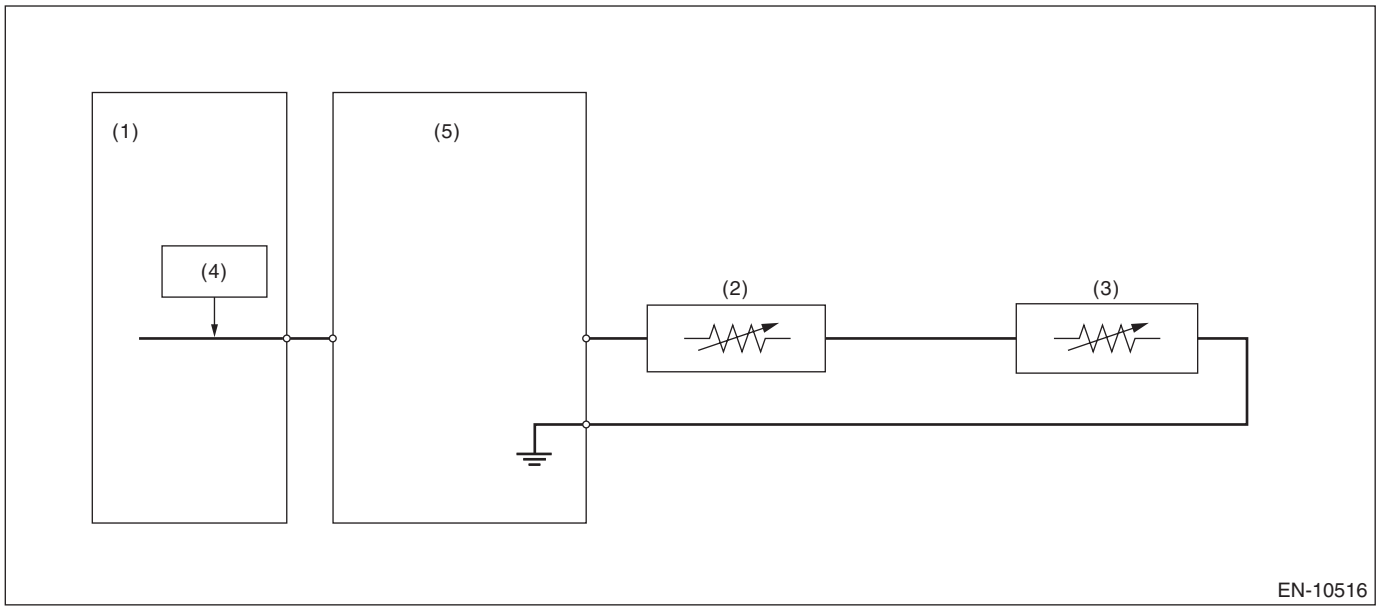

(1) Engine control module (ECM)
(2) Fuel sub level sensor
(3) Fuel level sensor
(4) Detecting circuit
(5) Combination meter

3. EXECUTION CONDITION

Secondary parameters	Execution condition
Battery voltage	≥ 10.9 V
Elapsed time after starting the engine	≥ 3000 ms

4. GENERAL DRIVING CYCLE

Always perform the diagnosis continuously.

5. DIAGNOSTIC METHOD

If the duration of time while the following conditions are met is longer than the time indicated, judge as NG.

Judgment Value

Malfunction Criteria	Threshold Value
Output voltage	> 12 V

Time Needed for Diagnosis: 1040 ms
Malfunction Indicator Light Illumination: Illuminates when malfunction occurs in 2 continuous driving cycles.

DH:DTC P04AC EVAP SYSTEM (CPC) PURGE CONTROL VALVE "B" CIRCUIT LOW

DTC DETECTING CONDITION:

Detected when two consecutive driving cycles with fault occur.

TROUBLE SYMPTOM:

Improper idling

CAUTION:

- **After servicing or replacing faulty parts, perform Clear Memory Mode <Ref. to EN(w/o STI)(diag)-82, OPERATION, Clear Memory Mode.>, and Inspection Mode <Ref. to EN(w/o STI)(diag)-64, PROCEDURE, Inspection Mode.>.**
- **Use the check board when measuring the ECM terminal voltage and resistance.**

WIRING DIAGRAM:

Engine Electrical System <Ref. to WI-154, WIRING DIAGRAM, Engine Electrical System.>

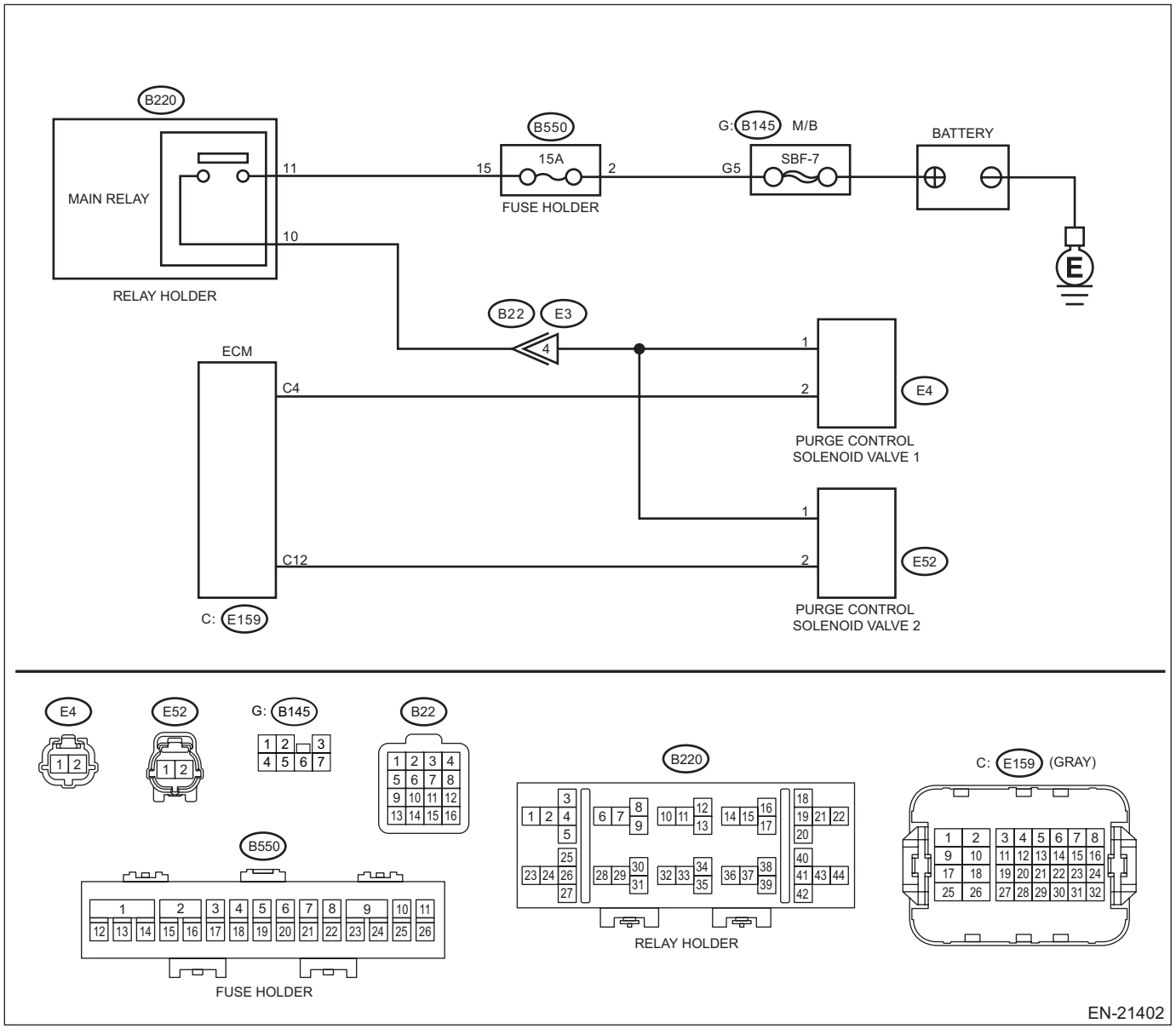

	Step	Check	Yes	No
1	**CHECK OUTPUT SIGNAL OF ECM.** 1) Turn the ignition switch to ON. 2) Measure the voltage between ECM connector and chassis ground. ***Connector & terminal*** ***(B137) No. 15 (+) — Chassis ground (–):***	Is the voltage 10 V or more?	Go to step **2**.	Go to step **3**.
2	**CHECK FOR POOR CONTACT.** Check for poor contact of ECM connector.	Is there poor contact of ECM connector?	Repair the poor contact of ECM connector.	Even if DTC is detected, the circuit has returned to a normal condition at this time. Reproduce the failure, and then perform the diagnosis again. NOTE: In this case, temporary open or short circuit of harness or temporary poor contact of connector may be the cause.
3	**CHECK POWER SUPPLY TO PURGE CONTROL SOLENOID VALVE 2 CONNECTOR.** Measure the voltage between purge control solenoid valve 2 connector and engine ground. ***Connector & terminal*** ***(E52) No. 1 (+) — Engine ground (–):***	Is the voltage 10 V or more?	Go to step **4**.	Repair the power supply circuit.
4	**CHECK HARNESS BETWEEN ECM AND PURGE CONTROL SOLENOID VALVE 2 CONNECTOR.** 1) Turn the ignition switch to OFF. 2) Disconnect the connector from ECM. 3) Disconnect the connector from purge control solenoid valve 2. 4) Measure the resistance between the purge control solenoid valve 2 connector and engine ground. ***Connector & terminal*** ***(E52) No. 2 — Engine ground:***	Is the resistance 1 MΩ or more?	Go to step **5**.	Repair the ground short circuit of harness between ECM connector and purge control solenoid valve 2 connector.
5	**CHECK HARNESS BETWEEN ECM AND PURGE CONTROL SOLENOID VALVE 2 CONNECTOR.** Measure the resistance of harness between ECM connector and purge control solenoid valve 2 connector. ***Connector & terminal*** ***(B137) No. 15 — (E52) No. 2:***	Is the resistance less than 1 Ω?	Go to step **6**.	Repair the harness and connector. NOTE: In this case, repair the following item: • Open circuit of harness between ECM connector and purge control solenoid valve 2 connector • Poor contact of coupling connector

	Step	Check	Yes	No
6	**CHECK PURGE CONTROL SOLENOID VALVE 2.** 1) Remove the purge control solenoid valve 2. 2) Measure the resistance between purge control solenoid valve 2 terminals. ***Terminals*** ***No. 1 — No. 2:***	Is the resistance 10 — 100 Ω?	Repair the poor contact of the purge control solenoid valve 2 connector.	Replace the purge control solenoid valve 2. <Ref. to EC(STI)-24, Purge Control Solenoid Valve.>

1. OUTLINE OF DIAGNOSIS

Detect open or short circuit of the purge control solenoid valve 2.
Judge as NG when the ECM output level differs from the actual terminal level.

2. COMPONENT DESCRIPTION

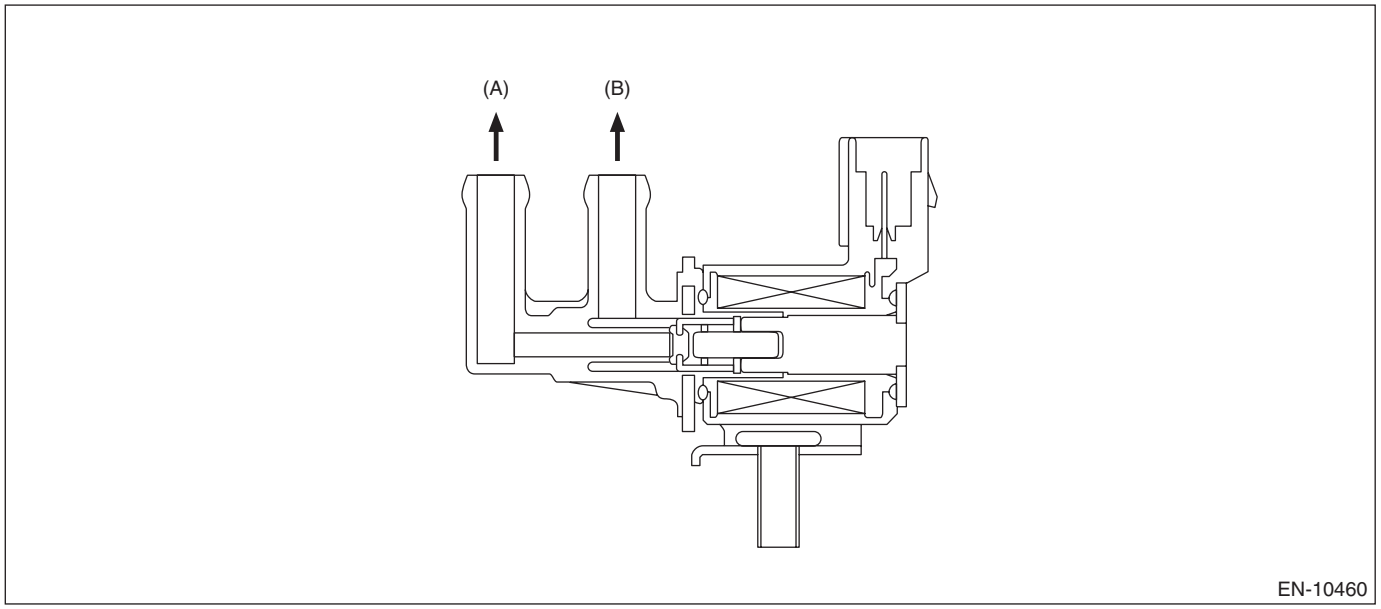

(A) To canister (B) To intake manifold

3. EXECUTION CONDITION

Secondary parameters	Execution condition
Battery voltage	≥ 10.9 V
Purge control solenoid valve 2 control signal	OFF

4. GENERAL DRIVING CYCLE

Always perform the diagnosis after starting the engine.

5. DIAGNOSTIC METHOD

If the duration of time while the following conditions are met is longer than the time indicated, judge as NG.

Judgment Value

Malfunction Criteria	Threshold Value
Output voltage	≤ 2.2 V

Time Needed for Diagnosis: 2500 ms
Malfunction Indicator Light Illumination: Illuminates when malfunction occurs in 2 continuous driving cycles.

DI: DTC P04AD EVAP SYSTEM (CPC) PURGE CONTROL VALVE "B" CIRCUIT HIGH

DTC DETECTING CONDITION:
Detected when two consecutive driving cycles with fault occur.
TROUBLE SYMPTOM:
Improper idling

CAUTION:
- **After servicing or replacing faulty parts, perform Clear Memory Mode <Ref. to EN(w/o STI)(diag)-82, OPERATION, Clear Memory Mode.>, and Inspection Mode <Ref. to EN(w/o STI)(diag)-64, PROCEDURE, Inspection Mode.>.**
- **Use the check board when measuring the ECM terminal voltage and resistance.**

WIRING DIAGRAM:
Engine Electrical System <Ref. to WI-154, WIRING DIAGRAM, Engine Electrical System.>

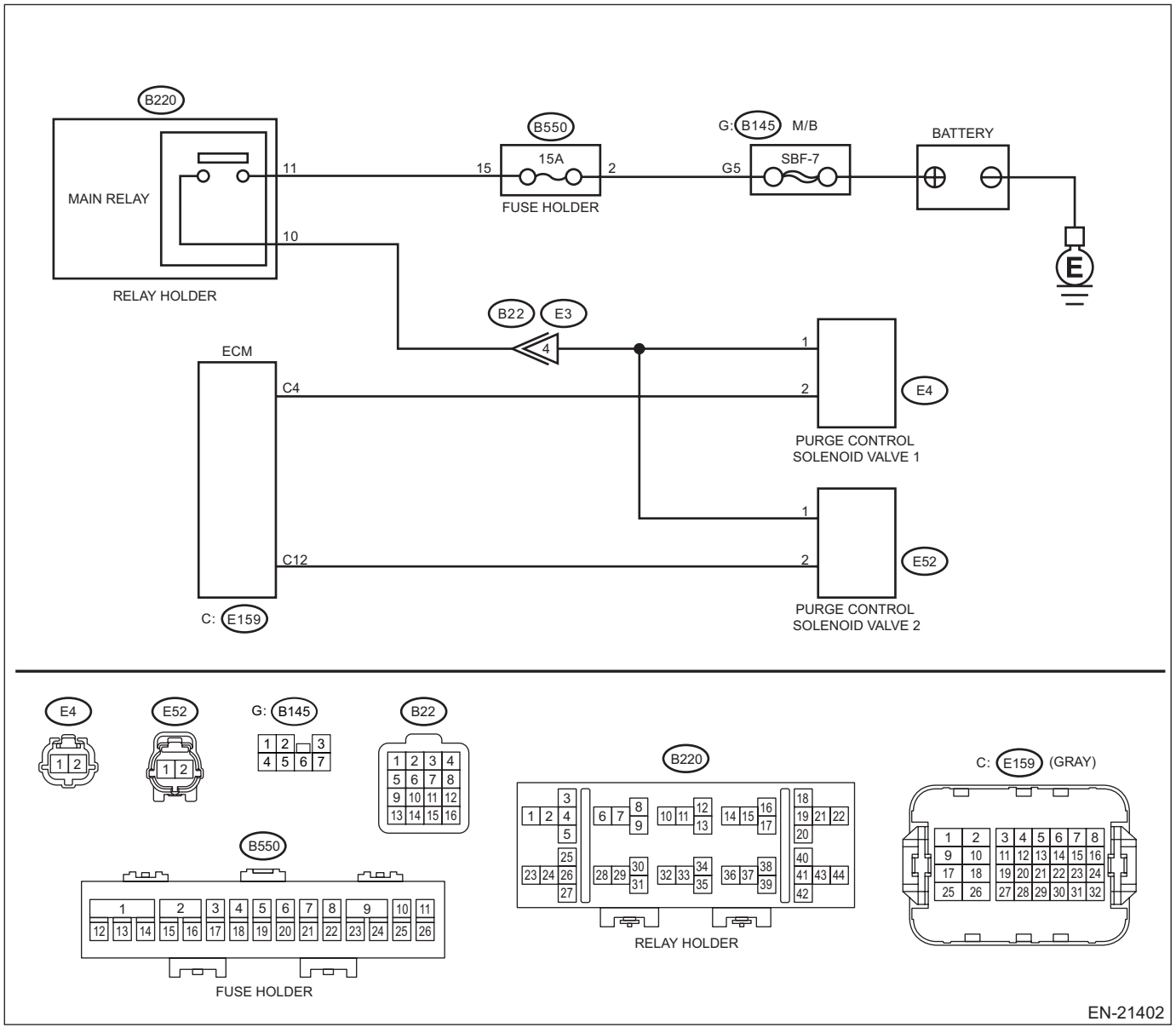

	Step	Check	Yes	No
1	**CHECK HARNESS BETWEEN ECM AND PURGE CONTROL SOLENOID VALVE 2 CONNECTOR.** 1) Turn the ignition switch to OFF. 2) Disconnect the connector from ECM. 3) Disconnect the connector from purge control solenoid valve 2. 4) Turn the ignition switch to ON. 5) Measure the voltage between ECM connector and chassis ground. ***Connector & terminal*** ***(E159) No. 12 (+) — Chassis ground (–):***	Is the voltage 10 V or more?	Repair the short circuit to power in harness between ECM connector and purge control solenoid valve 2 connector.	Go to step **2**.
2	**CHECK PURGE CONTROL SOLENOID VALVE 2.** 1) Turn the ignition switch to OFF. 2) Measure the resistance between purge control solenoid valve 2 terminals. ***Terminals*** ***No. 1 — No. 2:***	Is the resistance less than 1 Ω?	Replace the purge control solenoid valve 2. <Ref. to EC(STI)-24, Purge Control Solenoid Valve.>	Repair the poor contact of ECM connector.

1. OUTLINE OF DIAGNOSIS

Detect open or short circuit of the purge control solenoid valve 2.
Judge as NG when the ECM output level differs from the actual terminal level.

2. COMPONENT DESCRIPTION

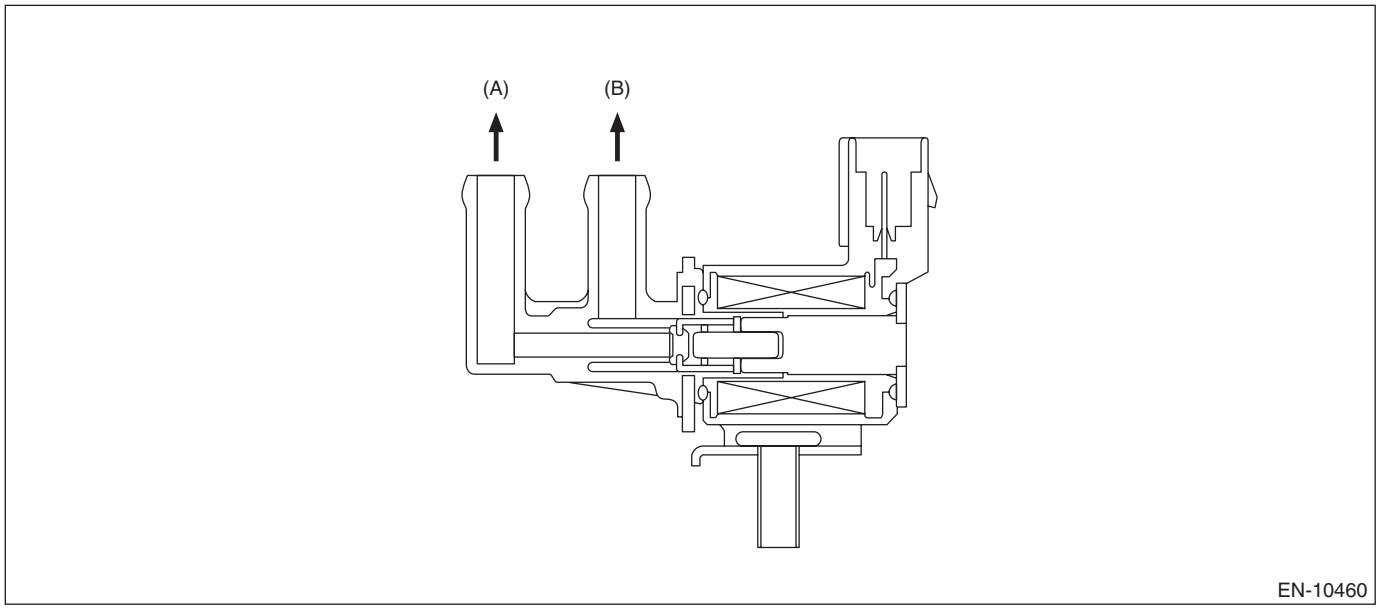

(A) To canister
(B) To intake manifold

3. EXECUTION CONDITION

Secondary parameters	Execution condition
Battery voltage	≥ 10.9 V
Purge control solenoid 2 control signal	ON

4. GENERAL DRIVING CYCLE

Always perform the diagnosis after starting the engine.

5. DIAGNOSTIC METHOD

If the duration of time while the following conditions are met is longer than the time indicated, judge as NG.

Judgment Value

Malfunction Criteria	Threshold Value
Output current	≥ 5 A

Time Needed for Diagnosis: 2250 ms
Malfunction Indicator Light Illumination: Illuminates when malfunction occurs in 2 continuous driving cycles.

DJ:DTC P04AF EVAP SYSTEM PURGE CONTROL VALVE (CPC) "B" STUCK CLOSED

DTC DETECTING CONDITION:
Detected when two consecutive driving cycles with fault occur.

CAUTION:
After servicing or replacing faulty parts, perform Clear Memory Mode <Ref. to EN(w/o STI)(diag)-82, OPERATION, Clear Memory Mode.>, and Inspection Mode <Ref. to EN(w/o STI)(diag)-64, PROCEDURE, Inspection Mode.>.

	Step	Check	Yes	No
1	**CHECK BETWEEN CANISTER AND PURGE CONTROL VALVE 2.** Check the piping between the canister and the purge control valve 2.	Is there clogging in the piping between the canister and the purge control valve 2?	Repair or replace the piping between the canister and the purge control valve 2. <Ref. to FU(w/o STI)-191, Fuel Delivery and Evaporation Lines.>	Go to step **2**.
2	**CHECK BETWEEN CANISTER AND PURGE CONTROL VALVE 2.** Check the piping between the canister and the purge control valve 2.	Is there closed stuck state in the piping between the canister and the purge control valve 2?	Repair or replace the purge control valve 2. <Ref. to EC(w/o STI)-22, Purge Control Solenoid Valve.>	Go to step **3**.
3	**CHECK PIPING BETWEEN PURGE CONTROL VALVE 2 AND TURBOCHARGER.** Check the piping between the purge control valve 2 and the turbocharger.	Is there clogging in the piping between the purge control valve 2 and the turbocharger?	Repair or replace the piping between the purge control valve 2 and the turbocharger. <Ref. to IN(w/o STI)-49, Turbocharger.>	Go to step **4**.
4	**CHECK EVAPORATIVE EMISSION CONTROL SYSTEM.** Perform drive cycle I. <Ref. to EN(w/o STI)(diag)-76, DRIVE CYCLE J, PROCEDURE, Drive Cycle.>	Is DTC P04AF displayed on the display?	Replace the leak check valve assembly. <Ref. to EC(w/o STI)-52, Leak Check Valve Assembly.>	End.

1. OUTLINE OF DIAGNOSIS

NOTE:
For the detection standard, refer to DTC P0455. <Ref. to EN(w/o STI)(diag)-396, DTC P0455 EVAP SYSTEM (CPC) LEAK DETECTED (LARGE LEAK), Diagnostic Procedure with Diagnostic Trouble Code (DTC).>

DK:DTC P04DB CRANKCASE VENTILATION SYSTEM (PCV) DISCONNECTED

DTC DETECTING CONDITION:
Immediately at fault recognition
TROUBLE SYMPTOM:
Improper idling

CAUTION:
• After servicing or replacing faulty parts, perform Clear Memory Mode <Ref. to EN(w/o STI)(diag)-82, OPERATION, Clear Memory Mode.>, and Inspection Mode <Ref. to EN(w/o STI)(diag)-64, PROCEDURE, Inspection Mode.>.
• Use the check board when measuring the ECM terminal voltage and resistance.
WIRING DIAGRAM:
Engine Electrical System <Ref. to WI-154, WIRING DIAGRAM, Engine Electrical System.>

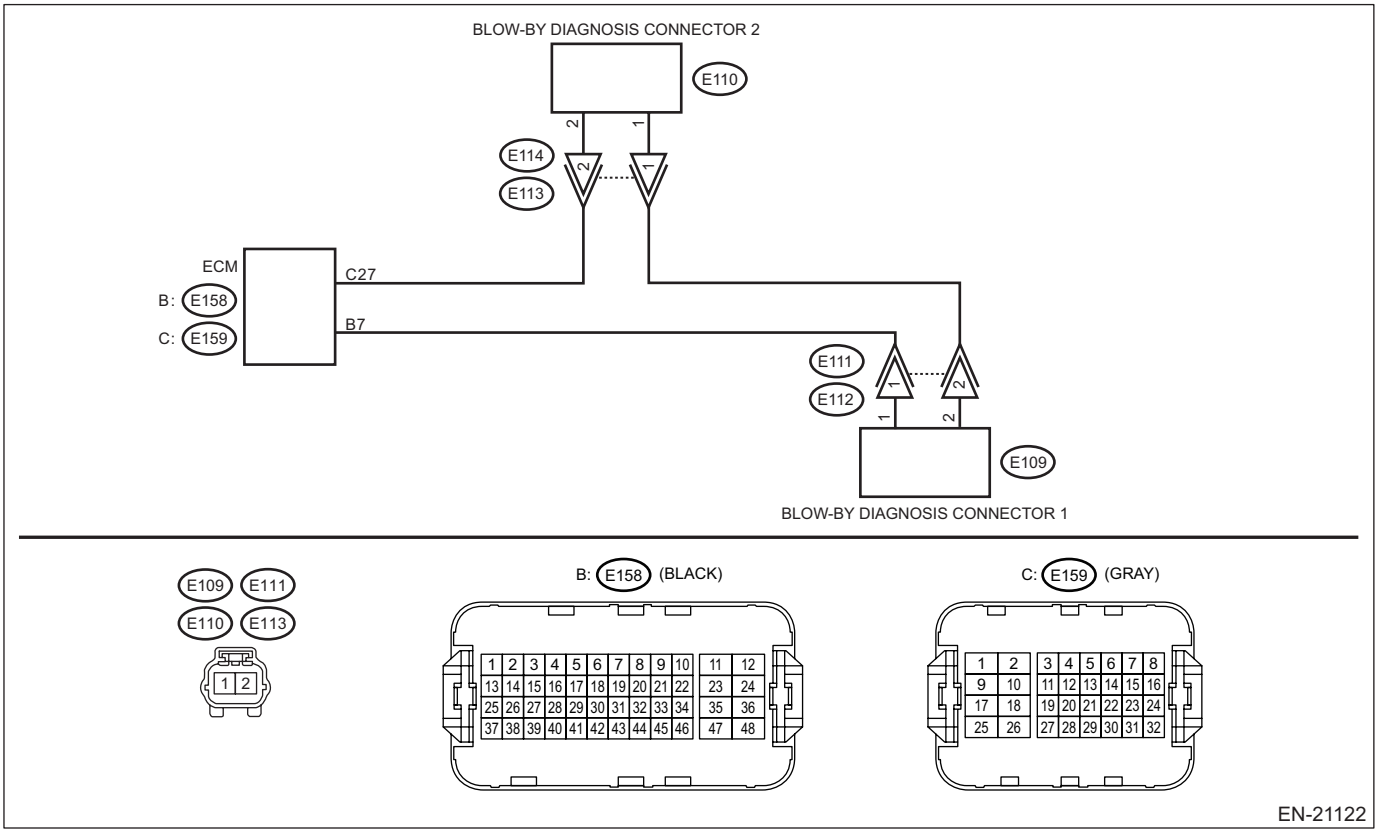

	Step	Check	Yes	No
1	**CHECK BLOW-BY HOSE.** Check the blow-by hose condition.	Is there any disconnection or crack in blow-by hose?	Install or replace the blow-by hose.	Go to step **2**.
2	**CHECK HARNESS BETWEEN ECM AND PCV HOSE ASSEMBLY CONNECTOR.** 1) Turn the ignition switch to OFF. 2) Disconnect the connector from ECM. 3) Disconnect the connector from the PCV hose assembly. 4) Measure the resistance of harness between ECM connector and PCV hose assembly connector. ***Connector & terminal*** ***(E158) No. 7 — (E109) No. 1:***	Is the resistance less than 1 Ω?	Go to step **3**.	Repair the harness and connector. NOTE: In this case, repair the following item: • Open circuit in harness between ECM connector and PCV hose assembly connector • Poor contact of coupling connector

	Step	Check	Yes	No
3	**CHECK HARNESS BETWEEN ECM AND PCV HOSE ASSEMBLY CONNECTOR.** Measure the resistance between PCV hose assembly connector and chassis ground. ***Connector & terminal*** ***(E158) No. 7 — Chassis ground:***	Is the resistance 1 MΩ or more?	Go to step **4**.	Repair the short circuit to ground in harness between ECM connector and PCV hose assembly connector.
4	**CHECK HARNESS BETWEEN LEAK DIAGNOSIS CONNECTORS.** Measure the resistance of harness between leak diagnosis connectors. ***Connector & terminal*** ***(E109) No. 2 — (E110) No. 1:***	Is the resistance less than 1 Ω?	Go to step **5**.	Repair the open circuit in the wiring harness between leak diagnosis connectors.
5	**CHECK GROUND CIRCUIT OF PCV HOSE ASSEMBLY.** Measure the resistance of harness between PCV hose assembly connector and engine ground. ***Connector & terminal*** ***(E110) No. 2 — Engine ground:***	Is the resistance less than 5 Ω?	Go to step **6**.	Repair the open circuit in harness between PCV hose assembly connector and engine ground.
6	**CHECK PCV HOSE ASSEMBLY.** Measure the resistance between terminals of each leak diagnosis connector. ***Terminals*** ***No. 1 — No. 2:***	Is the resistance less than 1 Ω at all measurement?	Repair the poor contact of ECM and PCV hose assembly connector.	Replace the PCV hose assembly. <Ref. to EC(w/o STI)-77, PCV Hose Assembly.>

1. OUTLINE OF DIAGNOSIS

Detect the blow-by hose disconnection abnormality.
Judge as NG when the diagnosis terminal voltage is high.

2. COMPONENT DESCRIPTION

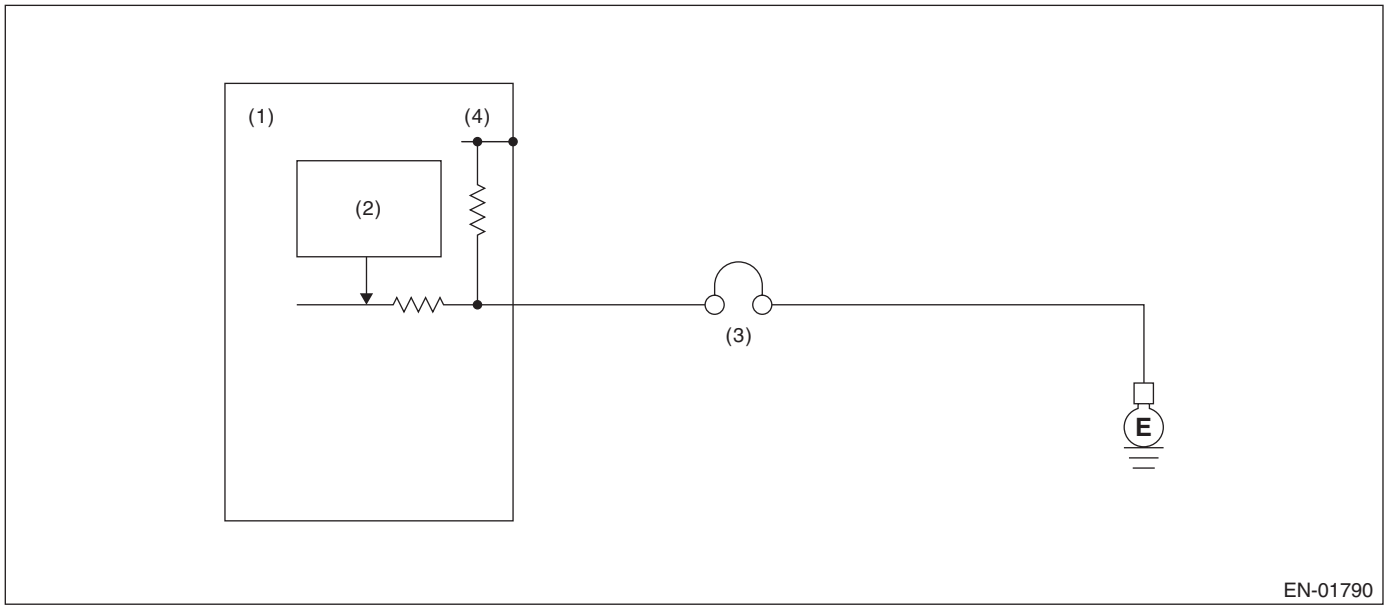

(1) Engine control module (ECM)
(2) Detecting circuit
(3) PCV diagnosis connector
(4) 5 V

3. EXECUTION CONDITION

Secondary parameters	Execution condition
Battery voltage	≥ 10.9 V

4. GENERAL DRIVING CYCLE

Always perform the diagnosis continuously.

5. DIAGNOSTIC METHOD

If the duration of time while the following conditions are met is longer than the time indicated, judge as NG.

Judgment Value

Malfunction Criteria	Threshold Value
Positive crankcase ventilation diagnosis voltage	> 2.8 V

Time Needed for Diagnosis: 2500 ms
Malfunction Indicator Light Illumination: Illuminates as soon as a malfunction occurs.

DL:DTC P04F0 EVAP SYSTEM HIGH PRESSURE PURGE LINE (CPC2) PERFORMANCE

DTC DETECTING CONDITION:
Detected when two consecutive driving cycles with fault occur.
TROUBLE SYMPTOM:
Improper idling

CAUTION:
After servicing or replacing faulty parts, perform Clear Memory Mode <Ref. to EN(w/o STI)(diag)-82, OPERATION, Clear Memory Mode.>, and Inspection Mode <Ref. to EN(w/o STI)(diag)-64, PROCEDURE, Inspection Mode.>.

	Step	Check	Yes	No
1	**CHECK FOR ANY OTHER DTC ON DISPLAY.**	Is any other DTC displayed?	Check the appropriate DTC using the "List of Diagnostic Trouble Code (DTC)". <Ref. to EN(w/o STI)(diag)-106, List of Diagnostic Trouble Code (DTC).>	Go to step **2**.
2	**CHECK PIPING BETWEEN PURGE CONTROL VALVE 2 AND TURBOCHARGER.** Check the piping between the purge control valve 2 and the turbocharger.	Is there dislocation of the piping between the purge control valve 2 and the turbocharger?	Repair or replace the piping between the purge control valve 2 and the turbocharger. <Ref. to IN(w/o STI)-49, Turbocharger.>	Go to step **3**.
3	**CHECK PIPING BETWEEN PURGE CONTROL VALVE 2 AND TURBOCHARGER.** Check the piping between the purge control valve 2 and the turbocharger.	Is there clogging in the piping between the purge control valve 2 and the turbocharger?	Repair or replace the piping between the purge control valve and the turbocharger. <Ref. to IN(w/o STI)-49, Turbocharger.>	Go to step **4**.
4	**CHECK PURGE CONTROL VALVE 2.** Check the purge control valve 2.	Is there closed or open stuck state in the purge control valve 2?	Repair or replace the purge control valve 2 or leak check valve. <Ref. to EC(w/o STI)-83, PCV Valve.> <Ref. to EC(w/o STI)-52, Leak Check Valve Assembly.>	Go to step **5**.
5	**CHECK PURGE CONTROL VALVE 1.** Check the main body of the purge control valve 1.	Is there any leakage in the main body of the purge control valve 1?	Repair or replace the purge control valve 1. <Ref. to EC(w/o STI)-22, Purge Control Solenoid Valve.>	Go to step **6**.
6	**CHECK EVAPORATIVE EMISSION CONTROL SYSTEM LINE.** 1) Turn the ignition switch to OFF. 2) Make sure that the delivery mode fuse is removed.	Are there holes, cracks, clogging, or disconnection, misconnection of hoses or pipes in evaporative emission control system?	Repair or replace the hoses or pipes.	Go to step **7**.

Step		Check	Yes	No
7	**CHECK VACUUM PUMP OPERATION OF LEAK CHECK VALVE ASSEMBLY.** Check the vacuum pump operation of the leak check valve assembly. <Ref. to EC(w/o STI)-66, INSPECTION, Leak Check Valve Assembly.>	Does the vacuum pump operate?	Go to step **8**.	Replace the leak check valve assembly. <Ref. to EC(w/o STI)-52, Leak Check Valve Assembly.>
8	**CHECK SWITCHING VALVE OPERATION OF LEAK CHECK VALVE ASSEMBLY.** Check the switching valve operation of the leak check valve assembly. <Ref. to EC(w/o STI)-66, INSPECTION, Leak Check Valve Assembly.>	Does the switching valve operate?	End.	Replace the leak check valve assembly. <Ref. to EC(w/o STI)-52, Leak Check Valve Assembly.>

1. OUTLINE OF DIAGNOSIS

Monitor Method

This monitor intrusively performs a functional check to detect incorrect purge flow when the engine is running in very high boost conditions.

Theory of operation: At very high boost conditions, the pressure drop caused by the air filter creates a slight vacuum in the high pressure purge line. Refer to following Figure 1.

Phase 1: The monitor removes the air in EVAP system by closing the Evaporative Leak Check Module switching valve and Evaporative Leak Check Module pump is intrusively activated when the solenoid valve for high pressure purge is open and all enable conditions are satisfied. In the case of normal condition, Evaporative Leak Check Module pressure (gauge) will decrease to reach the threshold value. However, if the hose is disconnected, the Evaporative Leak Check Module pressure will remain above the threshold value.

Phase 2: Since there is a possibility that a large amount of EVAP vapor is generated during Phase 1, the monitor may determine a false fail. To prevent this condition, the EVAP system is sealed and the pressure is measured again after a predetermined time (following Phase 1). If the measured pressure exceeds a second threshold value, the monitor is cancelled. If the pressure does not reach the second threshold value, the monitor determines a malfunction (disconnection).

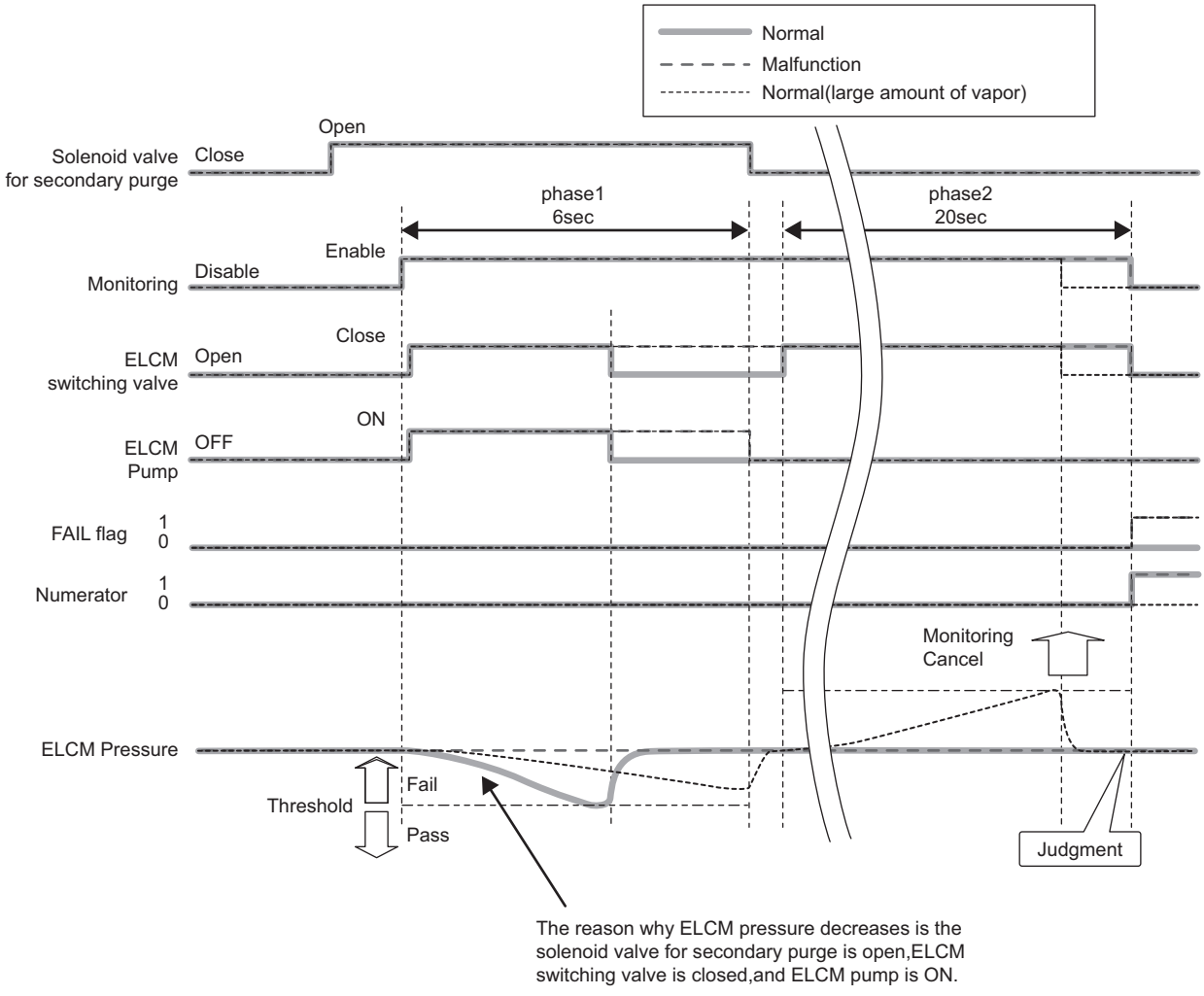

Figure2:Timing Chart

EN-20166

2. EXECUTION CONDITION

Secondary parameters	Execution condition
Common condition: (Phase 1, Phase 2)	
Battery voltage	≥ 10.9 V
Barometric pressure	≥ 75.1 kPa (563 mmHg, 22.2 inHg)
Fuel level	≥ 9L
Phase1	
Integrated purge air amount since engine starting	≥ 72 g
(Purge control duty ratio	= 0%
for time)	≥ 1 s
Ambient air temperature	> 4.4°C and < 35°C
Intake air amount per 1 second	> Map
Commanded solenoid valve for secondary purge (High Pressure Purge Line)	Open

Map

Fuel level L (US gal)	9 (2.64)	10 (5.26)	20 (5.28)	30 (7.93)	40 (10.57)	50 (13.21)	60 (15.85)
Intake air amount per 1 second (g/s)	80	80	60	60	60	60	60

3. GENERAL DRIVING CYCLE

Perform the diagnosis only once after starting the engine.

4. DIAGNOSTIC METHOD

Judge as NG when the following conditions are established.

Judgment Value

Malfunction Criteria	Threshold Value
<Phase1>	
Evaporative Leak Check Module pressure (gauge)	> –267 Pa
<Phase2>	
Evaporative Leak Check Module pressure (gauge)	< 267 Pa

Phase1
Time Needed for Diagnosis: 6 seconds
Phase2
Time Needed for Diagnosis: 20 seconds
Malfunction Indicator Light Illumination: Illuminates when malfunction occurs in 2 continuous driving cycles.

DM:DTC P0500 VEHICLE SPEED SENSOR "A" CIRCUIT

DTC DETECTING CONDITION:
Immediately at fault recognition

CAUTION:
After servicing or replacing faulty parts, perform Clear Memory Mode <Ref. to EN(w/o STI)(diag)-82, OPERATION, Clear Memory Mode.>, and Inspection Mode <Ref. to EN(w/o STI)(diag)-64, PROCEDURE, Inspection Mode.>.

Step		Check	Yes	No
1	**CHECK DTC OF VDC.** Check DTC of VDC.	Is DTC for VDC displayed?	Perform the diagnosis according to DTC. <Ref. to VDC(diag)-55, List of Diagnostic Trouble Code (DTC).>	Repair the poor contact of ECM connector.

1. OUTLINE OF DIAGNOSIS

Judge as NG when outside of the judgment value.
Judge NG when the received data from VDCCM&H/U is abnormal vehicle speed, and the vehicle speed data is impossible.

2. COMPONENT DESCRIPTION

Vehicle speed signals are taken in to the VDC control module and hydraulic control unit, and normal/erroneous data of the ABS wheel speed sensor is received by CAN communication from the VDC control module and hydraulic control unit.

3. EXECUTION CONDITION

Secondary parameters	Execution condition
Battery voltage	≥ 10.9 V

4. GENERAL DRIVING CYCLE

Always perform the diagnosis continuously after the enable conditions have been established.

5. DIAGNOSTIC METHOD

If the duration of time while the following conditions are met is longer than the time indicated, judge as NG.

Judgment Value

Malfunction Criteria	Threshold Value
Speed of front wheels received from VDC control module & hydraulic control unit	≥ 300 km/h (186.4 MPH)

Time Needed for Diagnosis: 2560 ms
Malfunction Indicator Light Illumination: Illuminates as soon as a malfunction occurs.

DN:DTC P0506 IDLE CONTROL SYSTEM RPM - LOWER THAN EXPECTED

DTC DETECTING CONDITION:
Detected when two consecutive driving cycles with fault occur.
TROUBLE SYMPTOM:
- Hard to start the engine.
- Engine does not start.
- Improper idling
- Engine stalls.

CAUTION:
After servicing or replacing faulty parts, perform Clear Memory Mode <Ref. to EN(w/o STI)(diag)-82, OPERATION, Clear Memory Mode.>, and Inspection Mode <Ref. to EN(w/o STI)(diag)-64, PROCEDURE, Inspection Mode.>.

	Step	Check	Yes	No
1	**CHECK FOR ANY OTHER DTC ON DISPLAY.**	Is any other DTC displayed?	Check the appropriate DTC using the "List of Diagnostic Trouble Code (DTC)". <Ref. to EN(w/o STI)(diag)-106, List of Diagnostic Trouble Code (DTC).>	Go to step **2**.
2	**CHECK AIR CLEANER ELEMENT.** 1) Turn the ignition switch to OFF. 2) Check the air cleaner element.	Is there excessive clogging on air cleaner element?	Replace the air cleaner element. <Ref. to IN(w/o STI)-11, Air Cleaner Element.>	Go to step **3**.
3	**CHECK ELECTRONIC THROTTLE CONTROL.** 1) Remove the electronic throttle control. <Ref. to FU(w/o STI)-15, REMOVAL, Throttle Body.> 2) Check the electronic throttle control.	Are foreign matter found inside electronic throttle control?	Remove foreign matter from electronic throttle control.	Perform the DTC diagnosis. <Ref. to EN(w/o STI)(diag)-611, DTC P2101 THROTTLE ACTUATOR "A" CONTROL MOTOR CIRCUIT RANGE/PERFORMANCE, Diagnostic Procedure with Diagnostic Trouble Code (DTC).>

1. OUTLINE OF DIAGNOSIS

Detect the malfunction that actual engine speed is not close to target engine speed during idling. Judge as NG when actual engine speed is not close to target engine speed during idling.

2. EXECUTION CONDITION

Secondary parameters	Execution condition
Battery voltage	≥ 10.9 V
Barometric pressure	≥ 75.06 kPa (563 mmHg, 22.2 inHg)
Lambda value (left and right)	≥ 0.851 and < 1.151
Vehicle speed	= 0 km/h (0 MPH)
Engine coolant temperature	≥ 60°C (140°F)
Accelerator pedal position	= 0%
Elapsed time after gear position change (P ←→ D or N ←→ D)	> 5 S
Cold start diagnosis	Not in operation
Main feedback	In operation
Idle speed control feedback	In operation

3. GENERAL DRIVING CYCLE

Perform the diagnosis continuously at idling after warming up engine.

4. DIAGNOSTIC METHOD

If the duration of time while the following conditions are met is longer than the time indicated, judge as NG.

Judgment Value

Malfunction Criteria	Threshold Value
Actual engine speed – Target engine speed	< – 100 rpm

Time Needed for Diagnosis: 15 seconds
Malfunction Indicator Light Illumination: Illuminates when malfunction occurs in 2 continuous driving cycles.

DO:DTC P0507 IDLE CONTROL SYSTEM RPM - HIGHER THAN EXPECTED

DTC DETECTING CONDITION:
Detected when two consecutive driving cycles with fault occur.
TROUBLE SYMPTOM:
Engine keeps running at higher speed than specified idle speed.

CAUTION:
After servicing or replacing faulty parts, perform Clear Memory Mode <Ref. to EN(w/o STI)(diag)-82, OPERATION, Clear Memory Mode.>, and Inspection Mode <Ref. to EN(w/o STI)(diag)-64, PROCEDURE, Inspection Mode.>.

	Step	Check	Yes	No
1	**CHECK FOR ANY OTHER DTC ON DISPLAY.**	Is any other DTC displayed?	Check the appropriate DTC using the "List of Diagnostic Trouble Code (DTC)". <Ref. to EN(w/o STI)(diag)-106, List of Diagnostic Trouble Code (DTC).>	Go to step **2**.
2	**CHECK AIR INTAKE SYSTEM.** 1) Start and idle the engine. 2) Check the following items. • Loose installation of intake manifold and throttle body • Cracks of intake manifold gasket and throttle body gasket • Disconnection of vacuum hoses	Is there any fault in air intake system?	Repair air suction and leaks.	Go to step **3**.
3	**CHECK ELECTRONIC THROTTLE CONTROL.** 1) Turn the ignition switch to OFF. 2) Remove the electronic throttle control. <Ref. to FU(w/o STI)-15, REMOVAL, Throttle Body.> 3) Check the electronic throttle control.	Are foreign matter found inside electronic throttle control?	Remove foreign matter from electronic throttle control.	Perform the DTC diagnosis. <Ref. to EN(w/o STI)(diag)-611, DTC P2101 THROTTLE ACTUATOR "A" CONTROL MOTOR CIRCUIT RANGE/PERFORMANCE, Diagnostic Procedure with Diagnostic Trouble Code (DTC).>

1. OUTLINE OF DIAGNOSIS

Detect the malfunction that actual engine speed is not close to target engine speed during idling. Judge as NG when actual engine speed is not close to target engine speed during idling.

2. EXECUTION CONDITION

Secondary parameters	Execution condition
Battery voltage	≥ 10.9 V
Barometric pressure	≥ 75.06 kPa (563 mmHg, 22.2 inHg)
Lambda value (left and right)	≥ 0.851 and < 1.151
Vehicle speed	= 0 km/h (0 MPH)
Engine coolant temperature	≥ 60°C (140°F)
Accelerator pedal position	= 0%
Elapsed time after gear position change (P ←→ D or N ←→ D)	> 5 S
Cold start diagnosis	Not in operation
Main feedback	In operation
Idle speed control feedback	In operation

3. GENERAL DRIVING CYCLE

Perform the diagnosis continuously at idling after warming up engine.

4. DIAGNOSTIC METHOD

If the duration of time while the following conditions are met is longer than the time indicated, judge as NG.

Judgment Value

Malfunction Criteria	Threshold Value
Actual engine speed – Target engine speed	> 200 rpm

Time Needed for Diagnosis: 15 seconds
Malfunction Indicator Light Illumination: Illuminates when malfunction occurs in 2 continuous driving cycles.

DP:DTC P050A COLD START IDLE CONTROL SYSTEM PERFORMANCE

DTC DETECTING CONDITION:

Detected when two consecutive driving cycles with fault occur.

TROUBLE SYMPTOM:

- Engine keeps running at higher speed than specified idle speed.
- Engine keeps running at a lower speed than the specified idle speed.
- Engine stalls.

CAUTION:

- **After servicing or replacing faulty parts, perform Clear Memory Mode <Ref. to EN(w/o STI)(diag)-82, OPERATION, Clear Memory Mode.>, and Inspection Mode <Ref. to EN(w/o STI)(diag)-64, PROCEDURE, Inspection Mode.>.**
- **Use the check board when measuring the ECM terminal voltage and resistance.**

WIRING DIAGRAM:

Engine Electrical System <Ref. to WI-154, WIRING DIAGRAM, Engine Electrical System.>

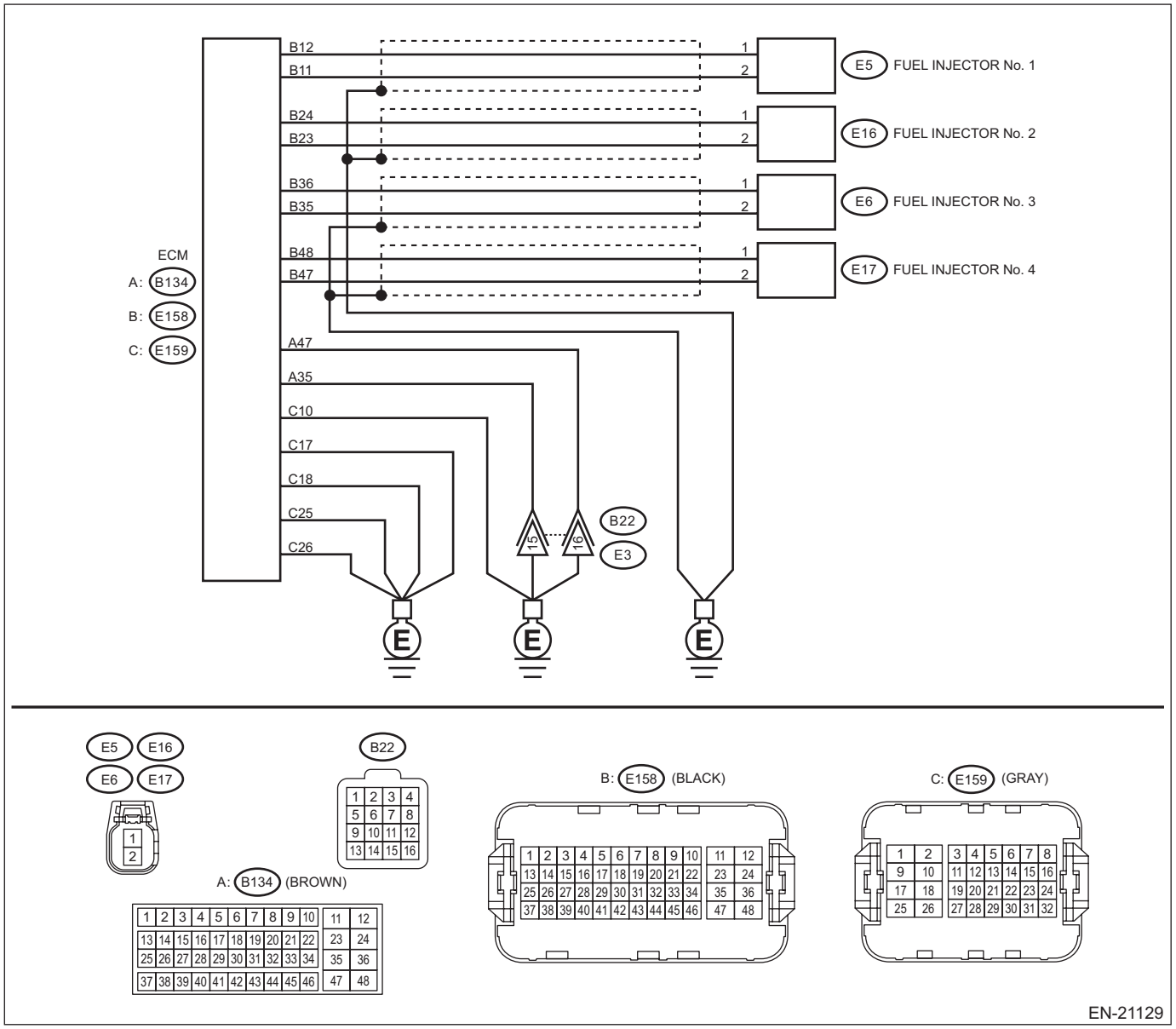

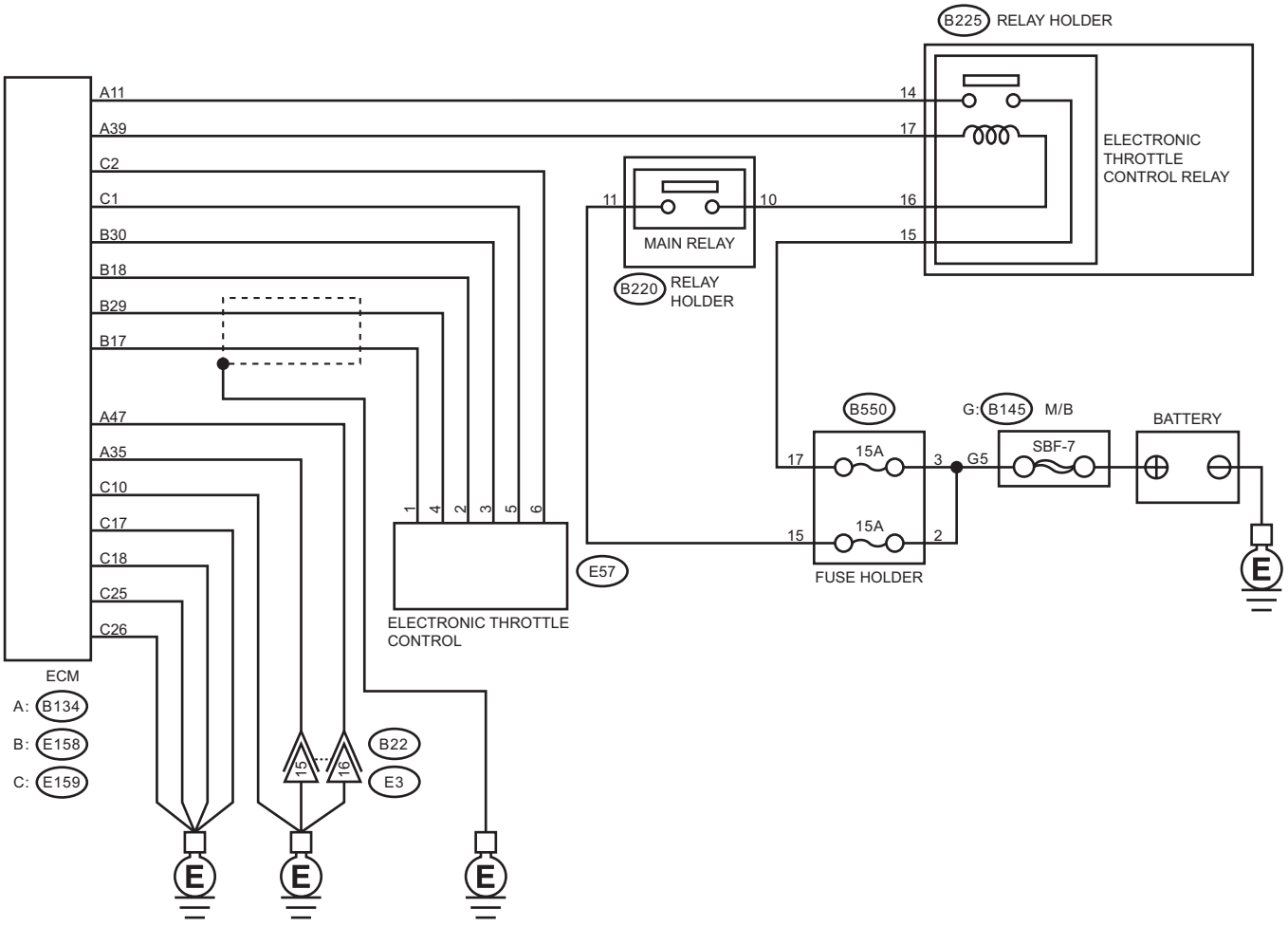
B225 RELAY HOLDER
ELECTRONIC THROTTLE CONTROL RELAY
MAIN RELAY
B220 RELAY HOLDER
B550
G: B145 M/B
BATTERY
SBF-7
15A
15A
FUSE HOLDER
E57
ELECTRONIC THROTTLE CONTROL
ECM
A: B134
B: E158
C: E159
B22
E3
A11
A39
C2
C1
B30
B18
B29
B17
A47
A35
C10
C17
C18
C25
C26

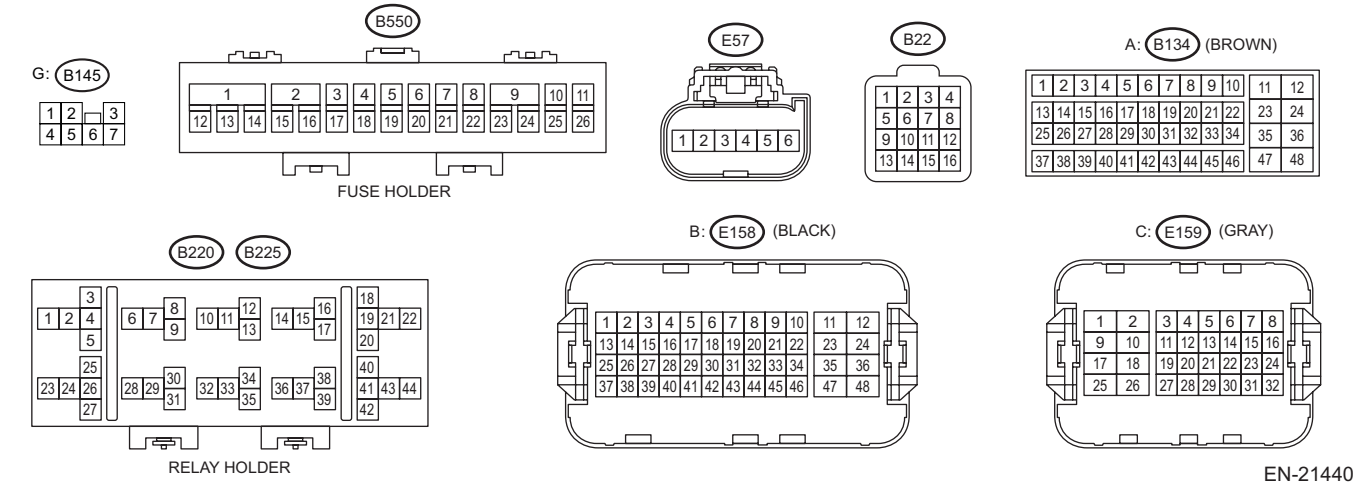
G: B145
B550
FUSE HOLDER
E57
B22
A: B134 (BROWN)
B220
B225
RELAY HOLDER
B: E158 (BLACK)
C: E159 (GRAY)

EN-21440

	Step	Check	Yes	No
1	**CHECK FOR ANY OTHER DTC ON DISPLAY.**	Is any other DTC displayed?	Check the appropriate DTC using the "List of Diagnostic Trouble Code (DTC)". <Ref. to EN(w/o STI)(diag)-106, List of Diagnostic Trouble Code (DTC).>	Go to step **2**.
2	**CHECK ENGINE OIL.**	Is there a proper amount of engine oil?	Go to step **3**.	Replace engine oil. <Ref. to LU(w/o STI)-11, REPLACEMENT, Engine Oil.>
3	**CHECK EXHAUST SYSTEM.**	Are there holes or loose bolts on exhaust system?	Repair the exhaust system.	Go to step **4**.
4	**CHECK AIR INTAKE SYSTEM.**	Are there holes, loose bolts or disconnection of hose on air intake system?	Repair the air intake system.	Go to step **5**.
5	**CHECK FUEL PRESSURE.** **WARNING:** **Place "NO OPEN FLAMES" signs near the working area.** **CAUTION:** **Be careful not to spill fuel.** Measure the fuel pressure. <Ref. to ME(w/o STI)-31, INSPECTION, Fuel Pressure.> **CAUTION:** **Release fuel pressure before removing the fuel pressure gauge.**	Is the measured value 328 — 358 kPa (3.3 — 3.7 kgf/cm^2, 48 — 52 psi)?	Go to step **6**.	Check the fuel pump and fuel delivery line. <Ref. to FU(w/o STI)-167, INSPECTION, Fuel Pump.> <Ref. to FU(w/o STI)-196, INSPECTION, Fuel Delivery and Evaporation Lines.>
6	**CHECK ENGINE COOLANT TEMPERATURE SENSOR.** 1) Start the engine and warm up completely. 2) Read the value of «Coolant Temp.» using the Subaru Select Monitor or a general scan tool. NOTE: • Subaru Select Monitor For detailed operation procedures, refer to "Read Current Data For Engine". <Ref. to EN(w/o STI)(diag)-46, Subaru Select Monitor.> • General scan tool For detailed operation procedures, refer to the general scan tool operation manual.	Is the value of «Coolant Temp.» 75°C (167°F) or more?	Go to step **7**.	Replace the engine coolant temperature sensor. <Ref. to FU(w/o STI)-89, Engine Coolant Temperature Sensor.>

	Step	Check	Yes	No
7	**CHECK MASS AIR FLOW AND INTAKE AIR TEMPERATURE SENSOR.** 1) Start the engine and warm up engine until coolant temperature is higher than 75°C (167°F). 2) For CVT models, set the select lever to "P" range or "N" range, and for MT models, place the shift lever in the neutral position. 3) Turn the A/C switch to OFF. 4) Turn all the accessory switches to OFF. 5) Read the value of «Mass Air Flow» using the Subaru Select Monitor or a general scan tool. NOTE: • Subaru Select Monitor For detailed operation procedures, refer to "Read Current Data For Engine". <Ref. to EN(w/o STI)(diag)-46, Subaru Select Monitor.> • General scan tool For detailed operation procedures, refer to the general scan tool operation manual.	Is the value of «Mass Air Flow» 2.0 — 5.0 g/s (0.26 — 0.66 lb/m)?	Go to step **8**.	Replace the mass air flow and intake air temperature sensor. <Ref. to FU(w/o STI)-110, Mass Air Flow and Intake Air Temperature Sensor.>
8	**CHECK MASS AIR FLOW AND INTAKE AIR TEMPERATURE SENSOR.** 1) Start the engine and warm up engine until coolant temperature is higher than 75°C (167°F). 2) For CVT models, set the select lever to "P" range or "N" range, and for MT models, place the shift lever in the neutral position. 3) Turn the A/C switch to OFF. 4) Turn all the accessory switches to OFF. 5) Open the front hood. 6) Measure the ambient temperature. 7) Read the value of «IAT Sensor #11» using the Subaru Select Monitor or a general scan tool. NOTE: • Subaru Select Monitor For detailed operation procedures, refer to "Read Current Data For Engine". <Ref. to EN(w/o STI)(diag)-46, Subaru Select Monitor.> • General scan tool For detailed operation procedures, refer to the general scan tool operation manual.	Subtract ambient temperature value from the value of «IAT Sensor #11». Is the obtained value –10 — 50°C (–18 — 90°F)?	Go to step **9**.	Check the mass air flow and intake air temperature sensor. <Ref. to FU(w/o STI)-110, Mass Air Flow and Intake Air Temperature Sensor.>

	Step	Check	Yes	No
9	**CHECK HARNESS BETWEEN ECM AND FUEL INJECTOR CONNECTOR.** 1) Turn the ignition switch to OFF. 2) Disconnect the connector from fuel injector on faulty cylinders. 3) Measure the resistance between fuel injector connector and engine ground on faulty cylinders. ***Connector & terminal*** ***#1 (E5) No. 1 — Engine ground:*** ***#1 (E5) No. 2 — Engine ground:*** ***#2 (E16) No. 1 — Engine ground:*** ***#2 (E16) No. 2 — Engine ground:*** ***#3 (E6) No. 1 — Engine ground:*** ***#3 (E6) No. 2 — Engine ground:*** ***#4 (E17) No. 1 — Engine ground:*** ***#4 (E17) No. 2 — Engine ground:***	Is the resistance 1 MΩ or more?	Go to step **10**.	Repair the short circuit to ground in harness between ECM connector and fuel injector connector.
10	**CHECK HARNESS BETWEEN ECM AND FUEL INJECTOR CONNECTOR.** Measure the resistance of harness between ECM and fuel injector connector on faulty cylinders. ***Connector & terminal*** ***#1 (E158) No. 12 — (E5) No. 1:*** ***#1 (E158) No. 11 — (E5) No. 2:*** ***#2 (E158) No. 24 — (E16) No. 1:*** ***#2 (E158) No. 23 — (E16) No. 2:*** ***#3 (E158) No. 36 — (E6) No. 1:*** ***#3 (E158) No. 35 — (E6) No. 2:*** ***#4 (E158) No. 48 — (E17) No. 1:*** ***#4 (E158) No. 47 — (E17) No. 2:***	Is the resistance less than 1 Ω?	Go to step **11**.	Repair the open circuit of the harness between the ECM connector and fuel injector connector.
11	**CHECK FUEL INJECTOR.** Check the fuel injector on faulty cylinder. <Ref. to FU(w/o STI)-65, INSPECTION, Fuel Injector.>	Is the check result OK?	Go to step **12**.	Replace the faulty fuel injector. <Ref. to FU(w/o STI)-50, Fuel Injector.>
12	**CHECK INSTALLATION CONDITION OF CAMSHAFT POSITION SENSOR/CRANKSHAFT POSITION SENSOR.**	Is the camshaft position sensor or crankshaft position sensor loosely installed?	Tighten the camshaft position sensor or crankshaft position sensor. <Ref. to FU(w/o STI)-98, INSTALLATION, Camshaft Position Sensor.> <Ref. to FU(w/o STI)-94, INSTALLATION, Crankshaft Position Sensor.>	Go to step **13**.
13	**CHECK CRANKSHAFT POSITION SENSOR PLATE.**	Is the crankshaft position sensor plate rusted or does it have broken teeth?	Replace the crankshaft position sensor plate. <Ref. to ME(w/o STI)-247, Cylinder Block.>	Go to step **14**.
14	**CHECK INSTALLATION CONDITION OF TIMING CHAIN.** Turn the crankshaft using ST, and align the alignment mark on crank sprocket with alignment mark on cylinder block. ST 18252AA000 CRANKSHAFT SOCKET	Is the timing chain dislocated from its proper position?	Correct the installation condition of timing chain. <Ref. to ME(w/o STI)-111, Timing Chain Assembly.>	Go to step **15**.

	Step	Check	Yes	No
15	**CHECK ELECTRONIC THROTTLE CONTROL RELAY.** 1) Turn the ignition switch to OFF. 2) Remove the electronic throttle control relay. 3) Connect the battery to terminals No. 16 and No. 17 of electronic throttle control relay. 4) Measure the resistance between electronic throttle control relay terminals. ***Terminals*** ***No. 14 — No. 15:***	Is the resistance less than 1 Ω?	Go to step **16**.	Replace the electronic throttle control relay. <Ref. to FU(w/o STI)-131, Electronic Throttle Control Relay.>
16	**CHECK POWER SUPPLY OF ELECTRONIC THROTTLE CONTROL RELAY.** Measure the voltage between electronic throttle control relay connector and chassis ground. ***Connector & terminal*** ***(B225) No. 15 (+) — Chassis ground (–):***	Is the voltage 10 V or more?	Go to step **17**.	Repair the open or short to ground in the power supply circuit.
17	**CHECK HARNESS BETWEEN ECM AND ELECTRONIC THROTTLE CONTROL RELAY CONNECTOR.** 1) Disconnect the connector from ECM. 2) Turn the ignition switch to ON. 3) Measure the voltage between electronic throttle control relay connector and chassis ground. ***Connector & terminal*** ***(B225) No. 17 (+) — Chassis ground (–):***	Is the voltage 10 V or more?	Repair the short circuit to power in the harness between ECM connector and electronic throttle control relay connector.	Go to step **18**.
18	**CHECK HARNESS BETWEEN ECM AND ELECTRONIC THROTTLE CONTROL RELAY CONNECTOR.** 1) Turn the ignition switch to OFF. 2) Measure the resistance between electronic throttle control relay connector and chassis ground. ***Connector & terminal*** ***(B225) No. 14 — Chassis ground:*** ***(B225) No. 17 — Chassis ground:***	Is the resistance 1 MΩ or more?	Go to step **19**.	Repair the short circuit to ground in harness between ECM connector and electronic throttle control relay connector.
19	**CHECK HARNESS BETWEEN ECM AND ELECTRONIC THROTTLE CONTROL RELAY CONNECTOR.** Measure the resistance between ECM connector and electronic throttle control relay connector. ***Connector & terminal*** ***(B134) No. 39 — (B225) No. 17:*** ***(B134) No. 11 — (B225) No. 14:***	Is the resistance less than 1 Ω?	Go to step **20**.	Repair the open circuit in harness between ECM connector and electronic throttle control relay connector.
20	**CHECK HARNESS BETWEEN ECM AND ELECTRONIC THROTTLE CONTROL CONNECTOR.** 1) Turn the ignition switch to OFF. 2) Disconnect the connectors from electronic throttle control. 3) Measure the resistance between the ECM connector and engine ground. ***Connector & terminal*** ***(E158) No. 18 — Engine ground:*** ***(E158) No. 17 — Engine ground:*** ***(E158) No. 29 — Engine ground:***	Is the resistance 1 MΩ or more?	Go to step **21**.	Repair the ground short circuit of harness between ECM connector and electronic throttle control connector.

	Step	Check	Yes	No
21	**CHECK SHORT CIRCUIT INSIDE THE ECM.** 1) Connect the connector to ECM. 2) Measure the resistance between electronic throttle control connector and engine ground. ***Connector & terminal*** ***(E57) No. 1 — Engine ground:*** ***(E57) No. 4 — Engine ground:***	Is the resistance 1 MΩ or more?	Go to step **22**.	Repair the ground short circuit of harness between ECM connector and electronic throttle control connector. Replace the ECM if defective. <Ref. to FU(w/o STI)-124, Engine Control Module (ECM).>
22	**CHECK HARNESS BETWEEN ECM AND ELECTRONIC THROTTLE CONTROL CONNECTOR.** 1) Disconnect the connector from ECM. 2) Measure the resistance of harness between ECM connector and electronic throttle control connector. ***Connector & terminal*** ***(E158) No. 17 — (E57) No. 1:*** ***(E158) No. 30 — (E57) No. 3:*** ***(E158) No. 29 — (E57) No. 4:***	Is the resistance less than 1 Ω?	Go to step **23**.	Repair the open circuit of harness between ECM connector and electronic throttle control connector.
23	**CHECK HARNESS BETWEEN ECM AND ELECTRONIC THROTTLE CONTROL CONNECTOR.** 1) Connect the connector to ECM. 2) Measure the resistance between electronic throttle control connector and engine ground. ***Connector & terminal*** ***(E57) No. 3 — Engine ground:***	Is the resistance less than 5 Ω?	Go to step **24**.	Repair the harness and connector. NOTE: In this case, repair the following item: • Open circuit of harness between ECM connector and engine ground • Poor contact of ECM connector • Poor contact of coupling connector
24	**CHECK HARNESS BETWEEN ECM AND ELECTRONIC THROTTLE CONTROL CONNECTOR.** 1) Turn the ignition switch to ON. 2) Measure the voltage between electronic throttle control connector and engine ground. ***Connector & terminal*** ***(E57) No. 1 (+) — Engine ground (–):*** ***(E57) No. 4 (+) — Engine ground (–):***	Is the voltage 5 V or more?	Repair the short circuit to power in the harness between ECM connector and electronic throttle control connector.	Go to step **25**.
25	**CHECK HARNESS BETWEEN ECM AND ELECTRONIC THROTTLE CONTROL CONNECTOR.** 1) Turn the ignition switch to OFF. 2) Disconnect the connector from ECM. 3) Measure the resistance between ECM connectors. ***Connector & terminal*** ***(E158) No. 18 — (E158) No. 17:*** ***(E158) No. 18 — (E158) No. 29:***	Is the resistance 1 MΩ or more?	Go to step **26**.	Repair the short circuit to power in the harness between ECM connector and electronic throttle control connector.

	Step	Check	Yes	No
26	**CHECK SENSOR OUTPUT.** 1) Connect all connectors. 2) Turn the ignition switch to ON. 3) Read the value of «Main-Throttle Sensor» using Subaru Select Monitor. NOTE: For detailed operation procedures, refer to "Current Data Display For Engine". <Ref. to EN(w/o STI)(diag)-46, Subaru Select Monitor.>	Is the value of «Main-Throttle Sensor» 0.60 — 0.65 V?	Go to step **27**.	Repair the poor contact of electronic throttle control connector. Replace the electronic throttle control if defective. <Ref. to FU(w/o STI)-15, Throttle Body.>
27	**CHECK SENSOR OUTPUT.** Read the value of «Sub-Throttle Sensor» using Subaru Select Monitor. NOTE: For detailed operation procedures, refer to "Current Data Display For Engine". <Ref. to EN(w/o STI)(diag)-46, Subaru Select Monitor.>	Is the value of «Sub-Throttle Sensor» 0.60 — 0.65 V?	Go to step **28**.	Repair the poor contact of electronic throttle control connector. Replace the electronic throttle control if defective. <Ref. to FU(w/o STI)-15, Throttle Body.>
28	**CHECK HARNESS BETWEEN ECM AND ELECTRONIC THROTTLE CONTROL MOTOR.** 1) Turn the ignition switch to OFF. 2) Disconnect the connector from ECM. 3) Disconnect the connectors from electronic throttle control. 4) Measure the resistance between ECM connector and electronic throttle control connector. ***Connector & terminal*** ***(E159) No. 1 — (E57) No. 5:*** ***(E159) No. 2 — (E57) No. 6:***	Is the resistance less than 1 Ω?	Go to step **29**.	Repair the open circuit of harness between ECM connector and electronic throttle control.
29	**CHECK HARNESS BETWEEN ECM AND ELECTRONIC THROTTLE CONTROL MOTOR.** 1) Connect the connector to ECM. 2) Turn the ignition switch to ON. 3) Measure the voltage between electronic throttle control connector and engine ground. ***Connector & terminal*** ***(E57) No. 5 (+) — Engine ground (–):*** ***(E57) No. 6 (+) — Engine ground (–):***	Is the voltage 5 V or more?	Repair the short circuit to power in the harness between ECM connector and electronic throttle control connector.	Go to step **30**.
30	**CHECK HARNESS BETWEEN ECM AND ELECTRONIC THROTTLE CONTROL MOTOR.** 1) Turn the ignition switch to OFF. 2) Disconnect the connector from ECM. 3) Measure the resistance between electronic throttle control connector and engine ground. ***Connector & terminal*** ***(E57) No. 5 — Engine ground:*** ***(E57) No. 6 — Engine ground:***	Is the resistance 1 MΩ or more?	Go to step **31**.	Repair the ground short circuit of harness between ECM connector and electronic throttle control connector.
31	**CHECK ELECTRONIC THROTTLE CONTROL MOTOR HARNESS.** Measure the resistance between electronic throttle control connectors. ***Connector & terminal*** ***(E57) No. 5 — (E57) No. 6:***	Is the resistance 1 MΩ or more?	Go to step **32**.	Repair the short circuit in harness between ECM connector and electronic throttle control connector.

Step		Check	Yes	No
32	**CHECK ELECTRONIC THROTTLE CONTROL GROUND CIRCUIT.** Measure the resistance between the ECM connector and engine ground. ***Connector & terminal*** ***(B134) No. 35 — Engine ground:*** ***(B134) No. 47 — Engine ground:*** ***(E159) No. 10 — Engine ground:*** ***(E159) No. 17 — Engine ground:*** ***(E159) No. 18 — Engine ground:*** ***(E159) No. 25 — Engine ground:*** ***(E159) No. 26 — Engine ground:***	Is the resistance less than 5 Ω?	Go to step **33**.	Repair the harness and connector. NOTE: In this case, repair the following item: • Open circuit of harness between ECM connector and engine ground • Poor contact of coupling connector
33	**CHECK ELECTRONIC THROTTLE CONTROL.** Measure the resistance between electronic throttle control terminals. ***Terminals*** ***No. 5 — No. 6:***	Is the resistance 50 Ω or less?	Go to step **34**.	Replace the electronic throttle control. <Ref. to FU(w/o STI)-15, Throttle Body.>
34	**CHECK ELECTRONIC THROTTLE CONTROL.** Move the throttle valve to the fully opened and fully closed positions with fingers. Check that the valve returns to the specified position when releasing fingers.	Does the valve return to the specified position? Specified value: 3 mm (0.12 in) from fully closed position	Repair the poor contact of ECM connector.	Replace the electronic throttle control. <Ref. to FU(w/o STI)-15, Throttle Body.>

1. OUTLINE OF DIAGNOSIS

• When cold, the abnormality in the control of target engine speed increase is detected. (P050A)

Judge as NG if the idle speed diagnosis is NG.
• Idle speed diagnosis
Judge as NG when actual engine speed is not close to target engine speed at cold start.

• Detect malfunctions of the catalyst advanced idling retard angle control. (P050B)

Judge as NG when ECM is not controlling the angle properly during catalyst advanced idling retard angle control.
• Final ignition timing diagnosis
Judge as NG when actual retard amount is under the specified value at cold start.

2. EXECUTION CONDITION

Secondary parameters	Execution condition
<Idle speed diagnosis>	
Battery voltage	≥ 10.9 V
Barometric pressure	≥ 75 kPa (563 mmHg, 22.2 inHg)
Vehicle speed	≤ 1.9 km/h (1.2 MPH)
Engine coolant temperature	≤ 75°C (167°F)
Throttle position	< 0.37°CA
Integrated value of intake air amount	< Value from Map
Elapsed time after gear position change (P ←→ D or N ←→ D)	≥ 3000 ms
Elapsed time after starting the engine	≥ 2000 ms
<Final ignition timing diagnosis>	
Battery voltage	≥ 10.9 V
Barometric pressure	≥ 75 kPa (563 mmHg, 22.2 inHg)
Vehicle speed	≤ 1.9 km/h (1.2 MPH)
Engine coolant temperature	≤ 75°C (167°F)
Throttle position	< 0.37°CA
Integrated value of intake air amount	< Value from Map
Elapsed time after gear position change (P ←→ D or N ←→ D)	≥ 3000 ms
Target retard amount	≥ 10°CA

Map

Engine coolant temperature at engine starting °C (°F)	–40 (–40)	–30 (–22)	–20 (–4)	–10 (–14)	0 (32)	10 (50)	20 (68)	30 (86)
Integrated value of intake air amount g (oz)	833 (25.5)	833 (25.5)	750 (21.27)	683 (24.09)	683 (25.04)	683 (24.23)	633 (20.1)	633 (21.41)

Engine coolant temperature at engine starting °C (°F)	40 (104)	50 (122)	60 (140)	70 (158)	75 (167)
Integrated value of intake air amount g (oz)	607 (21.41)	607 (21.41)	553 (19.5)	467 (16.47)	467 (16.47)

3. GENERAL DRIVING CYCLE

Perform the diagnosis at cold start.

4. DIAGNOSTIC METHOD

• Idle speed diagnosis

Judge as NG when the following conditions are established.

Judgment Value

Malfunction Criteria	Threshold Value
Actual engine speed – Target engine speed	< – 300 rpm

Time Needed for Diagnosis: 7 seconds
Malfunction Indicator Light Illumination: Illuminates when malfunction occurs in 2 continuous driving cycles.

- **Final ignition timing diagnosis**

Judge as NG when the following conditions are established.

Judgment Value

Malfunction Criteria	Threshold Value
Final ignition timing – ignition timing during CSERS* *: Ignition timing during CSERS (Cold Start Emission Reduction Strategy) = Base ignition timing – retard amount	> 8.5°CA

Time Needed for Diagnosis: 7 seconds
Malfunction Indicator Light Illumination: Illuminates when malfunction occurs in 2 continuous driving cycles.

DQ:DTC P050B COLD START IGNITION TIMING PERFORMANCE

NOTE:
For the diagnostic procedure, refer to DTC P050A. <Ref. to EN(w/o STI)(diag)-434, DTC P050A COLD START IDLE CONTROL SYSTEM PERFORMANCE, Diagnostic Procedure with Diagnostic Trouble Code (DTC).>

1. OUTLINE OF DIAGNOSIS

NOTE:
For the detection standard, refer to DTC P050A. <Ref. to EN(w/o STI)(diag)-434, DTC P050A COLD START IDLE CONTROL SYSTEM PERFORMANCE, Diagnostic Procedure with Diagnostic Trouble Code (DTC).>

DR:DTC P0512 STARTER (SWITCH) REQUEST CIRCUIT

DTC DETECTING CONDITION:
Immediately at fault recognition
TROUBLE SYMPTOM:
Failure of engine to start

CAUTION:
- **After servicing or replacing faulty parts, perform Clear Memory Mode <Ref. to EN(w/o STI)(diag)-82, OPERATION, Clear Memory Mode.>, and Inspection Mode <Ref. to EN(w/o STI)(diag)-64, PROCEDURE, Inspection Mode.>.**
- **Use the check board when measuring the ECM terminal voltage and resistance.**

WIRING DIAGRAM:

Engine Electrical System <Ref. to WI-154, WIRING DIAGRAM, Engine Electrical System.>

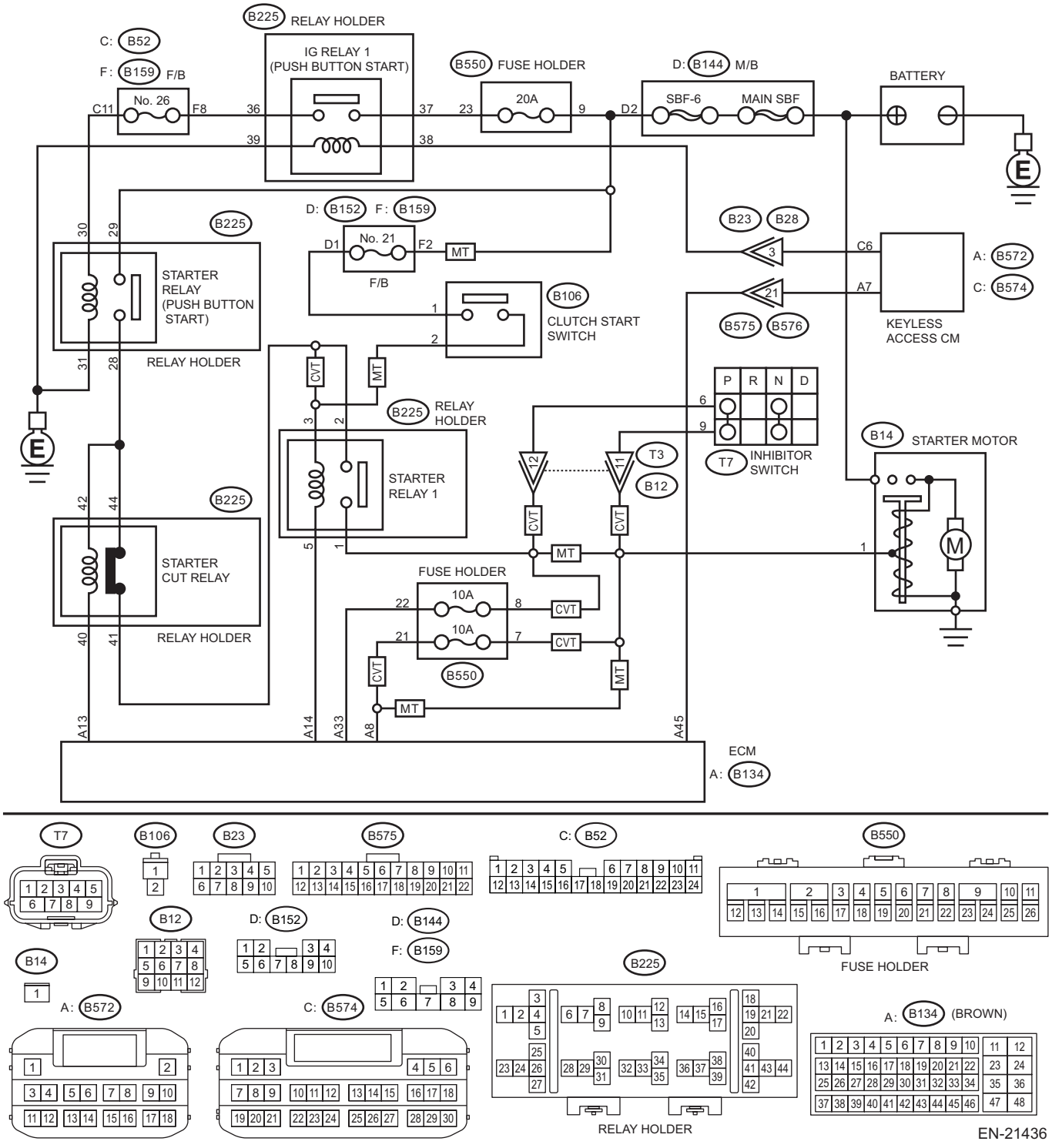

EN-21436

Step		Check	Yes	No
1	**CHECK PUSH BUTTON IGNITION SWITCH.** Operate the push button ignition switch.	Does it operate smoothly without catch?	Go to step **2**.	Replace the push button ignition switch. <Ref. to SL-106, Push Button Ignition Switch.>

	Step	Check	Yes	No
2	**CHECK DTC.** 1) Clear the memory using the Subaru Select Monitor or general scan tool. <Ref. to EN(w/o STI)(diag)-82, Clear Memory Mode.> 2) Start and idle the engine for three minutes or more.	Is the same DTC as current diagnosis output?	Go to step **3**.	Even if DTC is detected, the circuit has returned to a normal condition at this time. Reproduce the failure, and then perform the diagnosis again. NOTE: In this case, temporary poor contact of connector, temporary open or short circuit of harness may be the cause.
3	**CHECK HARNESS BETWEEN ECM AND KEYLESS ACCESS CM.** 1) Turn the ignition to OFF. 2) Disconnect the connector from ECM. 3) Turn the ignition to ON. 4) Measure the voltage between ECM connector and engine ground. ***Connector & terminal*** ***(B134) No. 45 (+) — Engine ground (–):***	Is the voltage 10 V or more?	Repair the short circuit to power supply in harness between ECM connector and keyless access CM connector.	Repair the poor contact of ECM connector.

1. OUTLINE OF DIAGNOSIS

Detect abnormal continuity in the starter SW.
Judge as ON NG when the starter SW signal remains ON.

2. EXECUTION CONDITION

Secondary parameters	Execution condition
Battery voltage	≥ 8 V
Engine speed	≥ 475 rpm

3. GENERAL DRIVING CYCLE

Always perform the diagnosis continuously.

4. DIAGNOSTIC METHOD

If the duration of time while the following conditions are met is longer than the time indicated, judge as ON NG.

Judgment Value

Malfunction Criteria	Threshold Value
Starter SW1 voltage	≥ 6 V

Time Needed for Diagnosis: 30 seconds
Malfunction Indicator Light Illumination: Illuminates as soon as a malfunction occurs.

DS:DTC P0560 SYSTEM VOLTAGE

DTC DETECTING CONDITION:
Immediately at fault recognition

CAUTION:
- **After servicing or replacing faulty parts, perform Clear Memory Mode <Ref. to EN(w/o STI)(diag)-82, OPERATION, Clear Memory Mode.>, and Inspection Mode <Ref. to EN(w/o STI)(diag)-64, PROCEDURE, Inspection Mode.>.**
- **Use the check board when measuring the ECM terminal voltage and resistance.**

WIRING DIAGRAM:

Engine Electrical System <Ref. to WI-154, WIRING DIAGRAM, Engine Electrical System.>

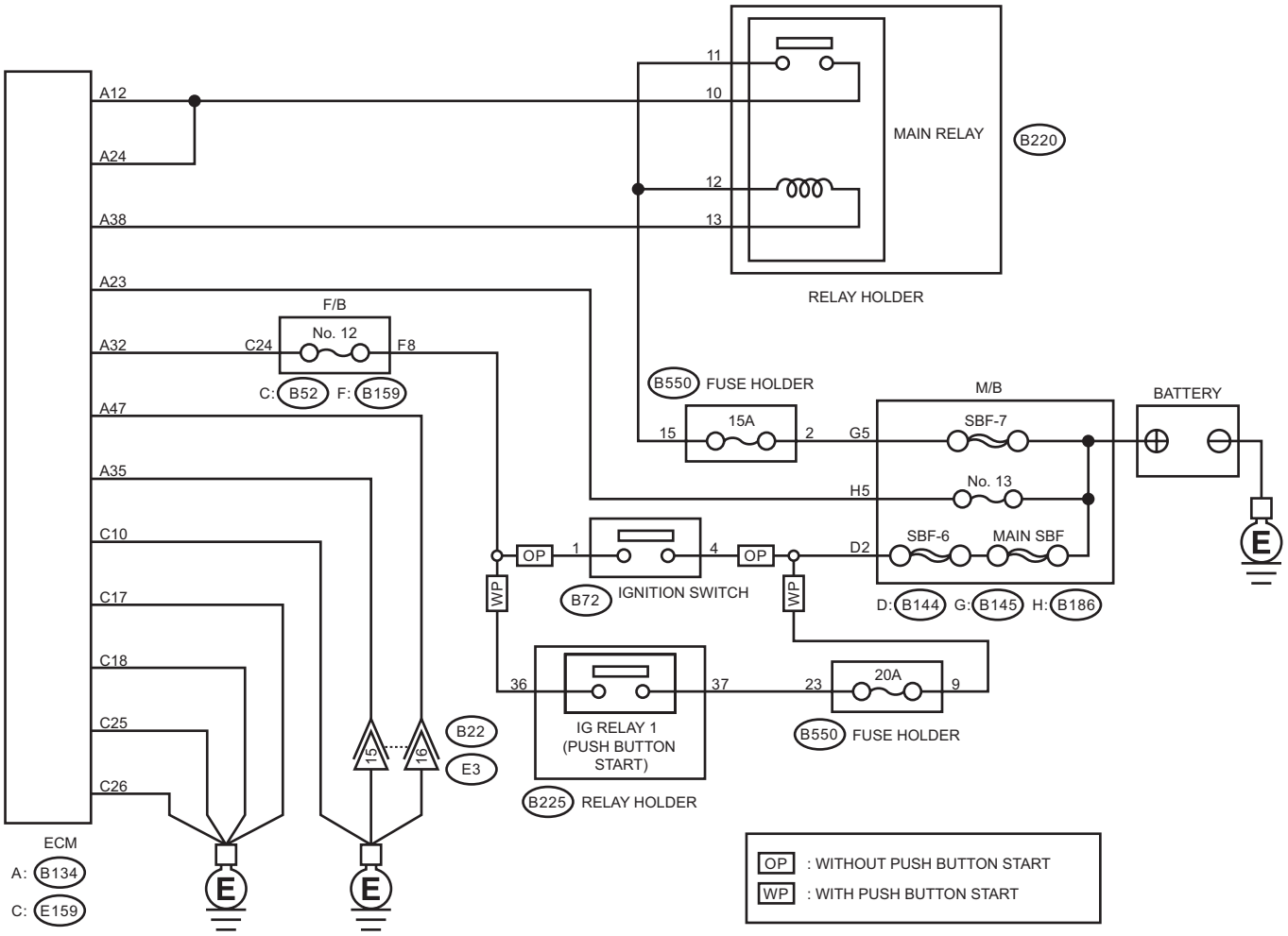

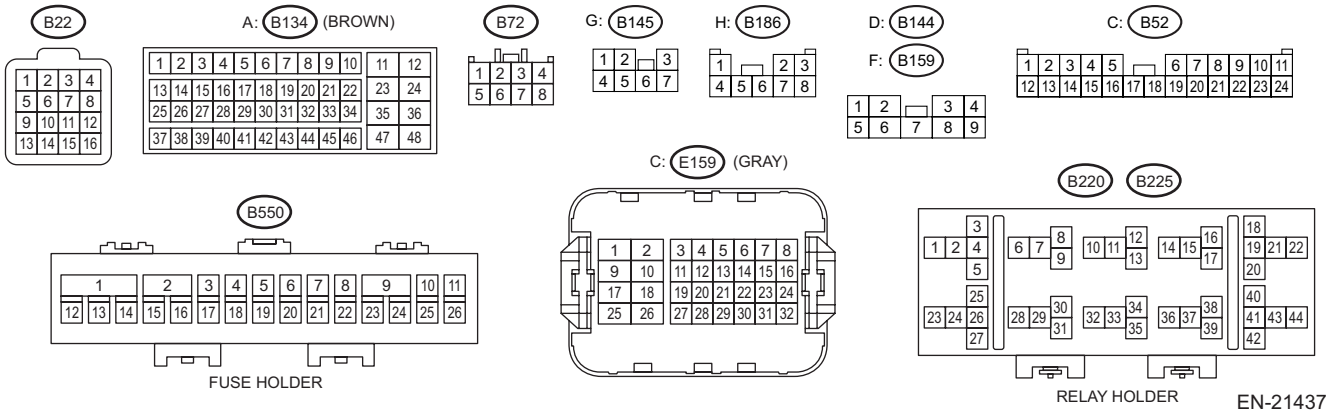

Step		Check	Yes	No
1	**CHECK INPUT SIGNAL OF ECM.** 1) Turn the ignition switch to OFF. 2) Measure the voltage between ECM connector and chassis ground. ***Connector & terminal*** ***(B134) No. 23 (+) — Chassis ground (–):***	Is the voltage 10 V or more?	Repair the poor contact of ECM connector.	Go to step **2**.

	Step	Check	Yes	No
2	**CHECK HARNESS BETWEEN ECM AND MAIN FUSE BOX CONNECTOR.** 1) Disconnect the connector from ECM. 2) Measure the resistance between ECM connector and chassis ground. ***Connector & terminal*** ***(B134) No. 23 — Chassis ground:***	Is the resistance 1 MΩ or more?	Go to step **3**.	Repair the short circuit to ground in harness between ECM connector and battery terminal.
3	**CHECK FUSE NO. 13 (MAIN FUSE BOX).**	Is the fuse blown out?	Replace the fuse.	Repair the harness and connector. NOTE: In this case, repair the following item: • Open circuit in harness between ECM connector and battery • Poor contact of ECM connector • Poor contact of battery terminal

1. OUTLINE OF DIAGNOSIS

Detect the open/short circuit of back-up power supply circuit.
Judge as NG when the backup power voltage is low.

2. EXECUTION CONDITION

Secondary parameters	Execution condition
Battery voltage	≥ 10.9 V

3. GENERAL DRIVING CYCLE

Perform the diagnosis continuously after starting the engine.

4. DIAGNOSTIC METHOD

If the duration of time while the following conditions are met is longer than the time indicated, judge as NG.

Judgment Value

Malfunction Criteria	Threshold Value
Voltage of back-up power supply	< 6 V

Time Needed for Diagnosis: 2560 ms
Malfunction Indicator Light Illumination: Illuminates as soon as a malfunction occurs.

DT:DTC P0604 INTERNAL CONTROL MODULE RANDOM ACCESS MEMORY (RAM) ERROR

DTC DETECTING CONDITION:
Immediately at fault recognition
TROUBLE SYMPTOM:
- Engine does not start.
- Engine stalls.

CAUTION:
After servicing or replacing faulty parts, perform Clear Memory Mode <Ref. to EN(w/o STI)(diag)-82, OPERATION, Clear Memory Mode.>, and Inspection Mode <Ref. to EN(w/o STI)(diag)-64, PROCEDURE, Inspection Mode.>.

Step	Check	Yes	No
1 **CHECK FOR ANY OTHER DTC ON DISPLAY.**	Is any other DTC displayed?	Check the appropriate DTC using the "List of Diagnostic Trouble Code (DTC)". <Ref. to EN(w/o STI)(diag)-106, List of Diagnostic Trouble Code (DTC).>	Even if DTC is detected, the circuit has returned to a normal condition at this time. Reproduce the failure, and then perform the diagnosis again. NOTE: In this case, temporary poor contact of connector, temporary open or short circuit of harness may be the cause.

1. OUTLINE OF DIAGNOSIS

Detect the functional malfunction of the microcomputer RAM.
When there is a problem in the CPU normal RAM, judge as NG.
If it is possible to write data to the whole area of RAM in the initial routine, and is possible to read the same data, it is judged as OK, and if not, NG.

2. EXECUTION CONDITION

Secondary parameters	Execution condition
ECM initialization	Execution

Diagnosis with the initial routine.

3. GENERAL DRIVING CYCLE

Perform the diagnosis as soon as the ignition switch is turned to ON.

4. DIAGNOSTIC METHOD

Judge as NG when the following conditions are established.

Judgment Value

Malfunction Criteria	Threshold Value
Write the specified value into the RAM.	Different from written value

Time Needed for Diagnosis: Less than 1 second
Malfunction Indicator Light Illumination: Illuminates as soon as a malfunction occurs.

DU:DTC P0605 INTERNAL CONTROL MODULE READ ONLY MEMORY (ROM) ERROR

NOTE:
For the diagnostic procedure, refer to DTC P0606. <Ref. to EN(w/o STI)(diag)-453, DTC P0606 CONTROL MODULE PROCESSOR, Diagnostic Procedure with Diagnostic Trouble Code (DTC).>

1. OUTLINE OF DIAGNOSIS

Judge as NG when the SUM value of the microcomputer ROM is outside the standard value.

2. EXECUTION CONDITION

Secondary parameters	Execution condition
ECM initialization	Execution

3. GENERAL DRIVING CYCLE

Perform the diagnosis when the ignition switch is turned from OFF to ON.

4. DIAGNOSTIC METHOD

Judge as NG if the criteria below are met.

Judgment Value

Malfunction Criteria	Threshold Value
SUM value of ROM	Malfunction

Time Needed for Diagnosis: Less than 1 second
Malfunction Indicator Light Illumination: Illuminates as soon as a malfunction occurs.

DV:DTC P0606 CONTROL MODULE PROCESSOR

DTC DETECTING CONDITION:
Immediately at fault recognition
TROUBLE SYMPTOM:
- Improper idling
- Poor driving performance

CAUTION:
- **After servicing or replacing faulty parts, perform Clear Memory Mode <Ref. to EN(w/o STI)(diag)-82, OPERATION, Clear Memory Mode.>, and Inspection Mode <Ref. to EN(w/o STI)(diag)-64, PROCEDURE, Inspection Mode.>.**
- **Use the check board when measuring the ECM terminal voltage and resistance.**

WIRING DIAGRAM:
Engine Electrical System <Ref. to WI-154, WIRING DIAGRAM, Engine Electrical System.>

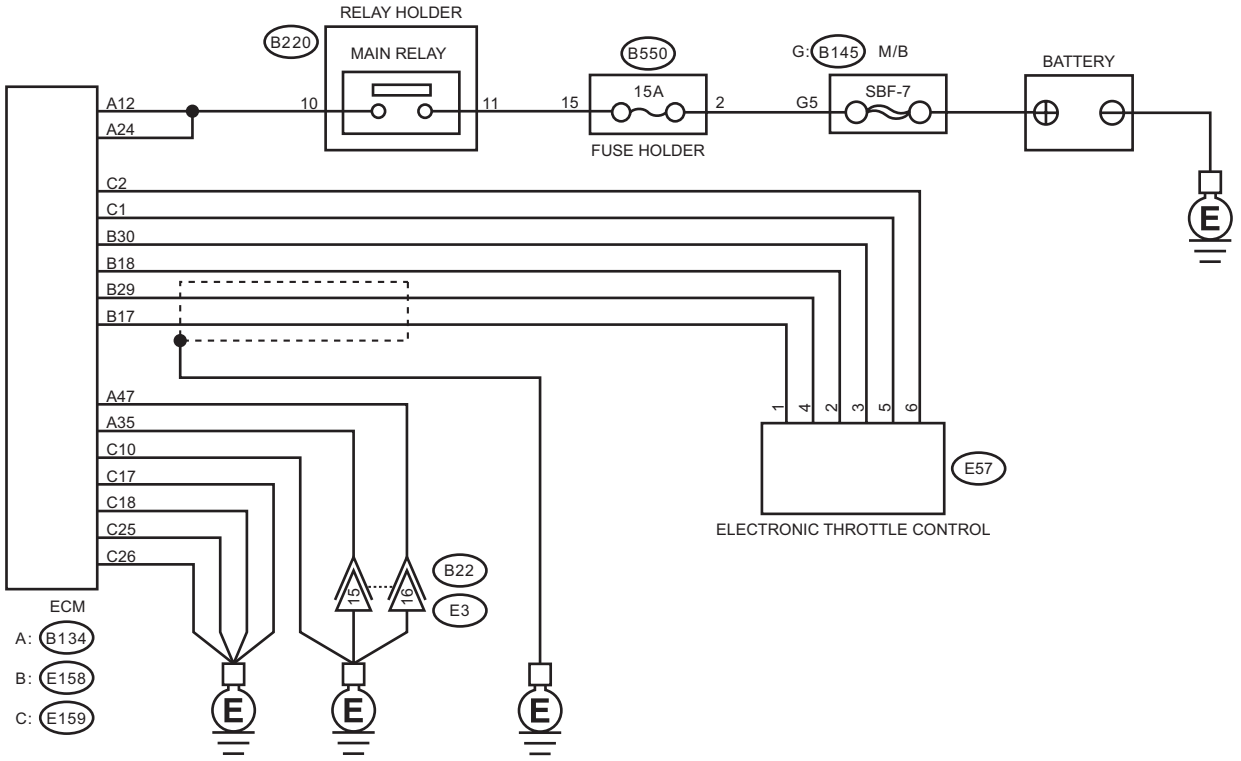

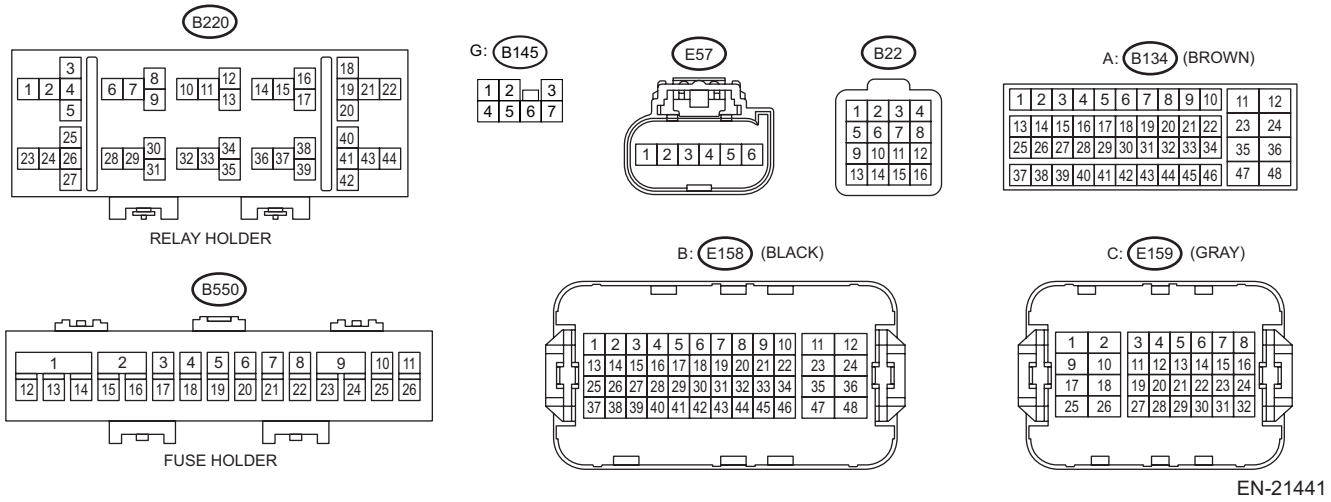

EN-21441

	Step	Check	Yes	No
1	**CHECK INPUT VOLTAGE OF ECM.** 1) Turn the ignition switch to ON. 2) Measure the voltage between ECM connector and engine ground. ***Connector & terminal*** ***(B134) No. 12 (+) — Engine ground (–):*** ***(B134) No. 24 (+) — Engine ground (–):***	Is the voltage 10 — 13 V?	Go to step **2**.	Repair the open or short to ground in the power supply circuit.
2	**CHECK INPUT VOLTAGE OF ECM.** 1) Start the engine. 2) Measure the voltage between ECM connector and engine ground. ***Connector & terminal*** ***(B134) No. 12 (+) — Engine ground (–):*** ***(B134) No. 24 (+) — Engine ground (–):***	Is the voltage 13 — 15 V?	Go to step **3**.	Repair the open or short to ground in the power supply circuit.
3	**CHECK HARNESS BETWEEN ECM AND ELECTRONIC THROTTLE CONTROL CONNECTOR.** 1) Turn the ignition switch to OFF. 2) Disconnect the connector from ECM. 3) Disconnect the connectors from electronic throttle control. 4) Measure the resistance of harness between ECM connector and electronic throttle control connector. ***Connector & terminal*** ***(E158) No. 18 — (E57) No. 2:*** ***(E158) No. 30 — (E57) No. 3:***	Is the resistance less than 1 Ω?	Go to step **4**.	Repair the open circuit of harness between ECM connector and electronic throttle control connector.
4	**CHECK ECM GROUND HARNESS.** 1) Connect all connectors. 2) Turn the ignition to ON. 3) Measure the voltage between ECM connector and engine ground. ***Connector & terminal*** ***(B134) No. 35 (+) — Engine ground (–):*** ***(B134) No. 47 (+) — Engine ground (–):*** ***(E159) No. 10 (+) — Engine ground (–):*** ***(E159) No. 17 (+) — Engine ground (–):*** ***(E159) No. 18 (+) — Engine ground (–):*** ***(E159) No. 25 (+) — Engine ground (–):*** ***(E159) No. 26 (+) — Engine ground (–):***	Is the voltage less than 1 V?	Check the connector for poor contact and check the harness. Replace the ECM if no fault is found. <Ref. to FU(w/o STI)-124, Engine Control Module (ECM).>	Repair the harness and connector. NOTE: In this case, repair the following item: • Open circuit in ground circuit • Loose engine ground terminal • Poor contact of coupling connector

1. OUTLINE OF DIAGNOSIS

Judge as NG when any one of the followings is established.
(1) When the input amplifier circuit operation of throttle position sensor 1 is abnormal.
(2) When the learning value of backup RAM is incorrect.
(3) When SUM value of backup RAM is outside the standard value.
(4) When the communication between main CPU and sub CPU is abnormal.
(5) If the CPU operation is abnormal
(6) If the CPU operation is abnormal (FPU check).

2. EXECUTION CONDITION

Secondary parameters	Execution condition
(1) ECM initialization	Execution
(2) Ignition switch	OFF → ON
(3) ECM initialization	Execution
(4) Battery voltage	≥ 6 V
(5) Battery voltage	≥ 6 V
(6) Battery voltage	≥ 6 V

3. GENERAL DRIVING CYCLE

(1) Perform the diagnosis only once.
(2) Always perform the diagnosis continuously.
(3) Perform the diagnosis only once.
(4) Always perform the diagnosis continuously.
(5) Always perform the diagnosis continuously.
(6) Always perform the diagnosis continuously.

4. DIAGNOSTIC METHOD

Judge as NG if the criteria below are met.

Judgment Value

Malfunction Criteria	Threshold Value
(1) Throttle minimum stop position	≥ 2.2 V
(2) The learned value of accelerator pedal position in back-up RAM area 1	≠ The learned value of accelerator pedal position in back-up RAM area 2
(3) The sum of back-up RAM at the ECM shut down	≠ The sum of back-up RAM at the ECM powered-on
(4) Communication between main CPU and sub CPU	Lost
(5) The calculated data of throttle control by main CPU	≠ The calculated data of throttle control by sub CPU
(6) The calculated data by main CPU	≠ The calculated data by FPU

Time Needed for Diagnosis:
(1): Less than 1 second
(2): Less than 1 second
(3): Less than 1 second
(4): Less than 1 second
(5): Less than 1 second
(6): 200 ms
Malfunction Indicator Light Illumination: Illuminates as soon as a malfunction occurs.

DW:DTC P060A INTERNAL CONTROL MODULE MONITORING PROCESSOR PERFORMANCE

NOTE:
For the diagnostic procedure, refer to DTC P0606. <Ref. to EN(w/o STI)(diag)-453, DTC P0606 CONTROL MODULE PROCESSOR, Diagnostic Procedure with Diagnostic Trouble Code (DTC).>

1. OUTLINE OF DIAGNOSIS

Judge as NG when the monitoring IC operation is abnormal.

2. EXECUTION CONDITION

Secondary parameters	Execution condition
None	

3. GENERAL DRIVING CYCLE

Always perform the diagnosis continuously.

4. DIAGNOSTIC METHOD

Judge as NG when one of the following conditions is established.

Judgment Value

Malfunction Criteria	Threshold Value
Communication status between main CPU and sub CPU	Malfunction

Time Needed for Diagnosis: Less than 1 second
Malfunction Indicator Light Illumination: Illuminates as soon as a malfunction occurs.

DX:DTC P060B INTERNAL CONTROL MODULE A/D PROCESSING PERFORMANCE

NOTE:
For the diagnostic procedure, refer to DTC P0606. <Ref. to EN(w/o STI)(diag)-453, DTC P0606 CONTROL MODULE PROCESSOR, Diagnostic Procedure with Diagnostic Trouble Code (DTC).>

1. OUTLINE OF DIAGNOSIS

Judge as NG when the AD converter operation is abnormal.

2. EXECUTION CONDITION

Secondary parameters	Execution condition
Battery voltage	≥ 6 V
|A/D for control – Last value of A/D for control|	≥ 0.5 V

3. GENERAL DRIVING CYCLE

Always perform the diagnosis continuously.

4. DIAGNOSTIC METHOD

Judge as NG when one of the following conditions is established.

Judgment Value

Malfunction Criteria	Threshold Value
Change amount of A/D for control	≤ 0.2 V
Change amount of A/D for monitoring	≤ 0.2 V

Time Needed for Diagnosis: 200 ms
Malfunction Indicator Light Illumination: Illuminates as soon as a malfunction occurs.

DY:DTC P0616 STARTER RELAY "A" CIRCUIT LOW

1. MODEL WITHOUT PUSH BUTTON START

DTC DETECTING CONDITION:
Immediately at fault recognition

CAUTION:

- **After servicing or replacing faulty parts, perform Clear Memory Mode <Ref. to EN(w/o STI)(diag)-82, OPERATION, Clear Memory Mode.>, and Inspection Mode <Ref. to EN(w/o STI)(diag)-64, PROCEDURE, Inspection Mode.>.**
- **Use the check board when measuring the ECM terminal voltage and resistance.**

WIRING DIAGRAM:

Engine Electrical System <Ref. to WI-154, WIRING DIAGRAM, Engine Electrical System.>

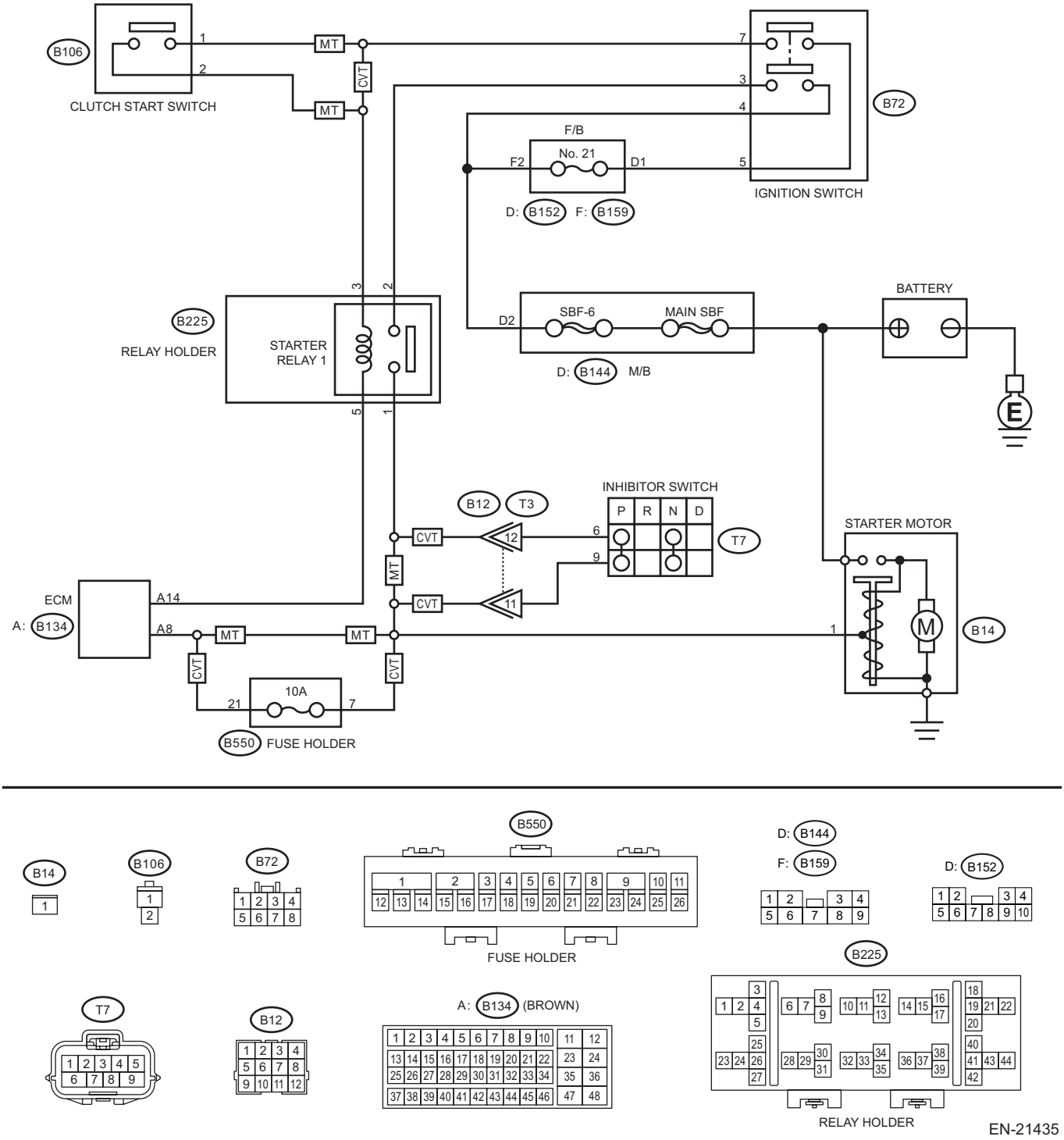

EN-21435

	Step	Check	Yes	No
1	**CHECK FOR ANY OTHER DTC ON DISPLAY.**	Is any other DTC displayed?	Check DTC using "List of Diagnostic Trouble Code (DTC)". <Ref. to EN(w/o STI)(diag)-106, List of Diagnostic Trouble Code (DTC).>	Go to step **2**.
2	**CHECK HARNESS BETWEEN ECM AND STARTER RELAY 1 CONNECTOR.** 1) Turn the ignition switch to OFF. 2) Remove the starter relay 1. 3) Disconnect the connector from ECM. 4) Disconnect the connector from starter motor. 5) Measure the resistance of harness between ECM connector and starter relay 1 connector. ***Connector & terminal*** ***(B134) No. 8 — (B225) No. 1:*** NOTE: For CVT model, place the select lever in "P" range or "N" range.	Is the resistance less than 1 Ω?	Go to step **3**.	NOTE: Check the following item and repair or replace if necessary. • Open circuit of harness between ECM connector and starter relay 1 connector • Poor contact of coupling connector
3	**CHECK HARNESS BETWEEN ECM AND STARTER RELAY 1 CONNECTOR.** Measure the resistance between ECM connector and chassis ground. ***Connector & terminal*** ***(B134) No. 8 — Chassis ground:***	Is the resistance 1 MΩ or more?	Repair the poor contact of ECM connector.	Repair the short circuit to ground in harness between ECM connector and starter relay 1 connector.

2. MODEL WITH PUSH BUTTON START

Immediately at fault recognition

TROUBLE SYMPTOM:

Failure of engine to start

CAUTION:

• After servicing or replacing faulty parts, perform Clear Memory Mode <Ref. to EN(w/o STI)(diag)-82, OPERATION, Clear Memory Mode.>, and Inspection Mode <Ref. to EN(w/o STI)(diag)-64, PROCEDURE, Inspection Mode.>.

• Use the check board when measuring the ECM terminal voltage and resistance.

WIRING DIAGRAM:

Engine Electrical System <Ref. to WI-154, WIRING DIAGRAM, Engine Electrical System.>

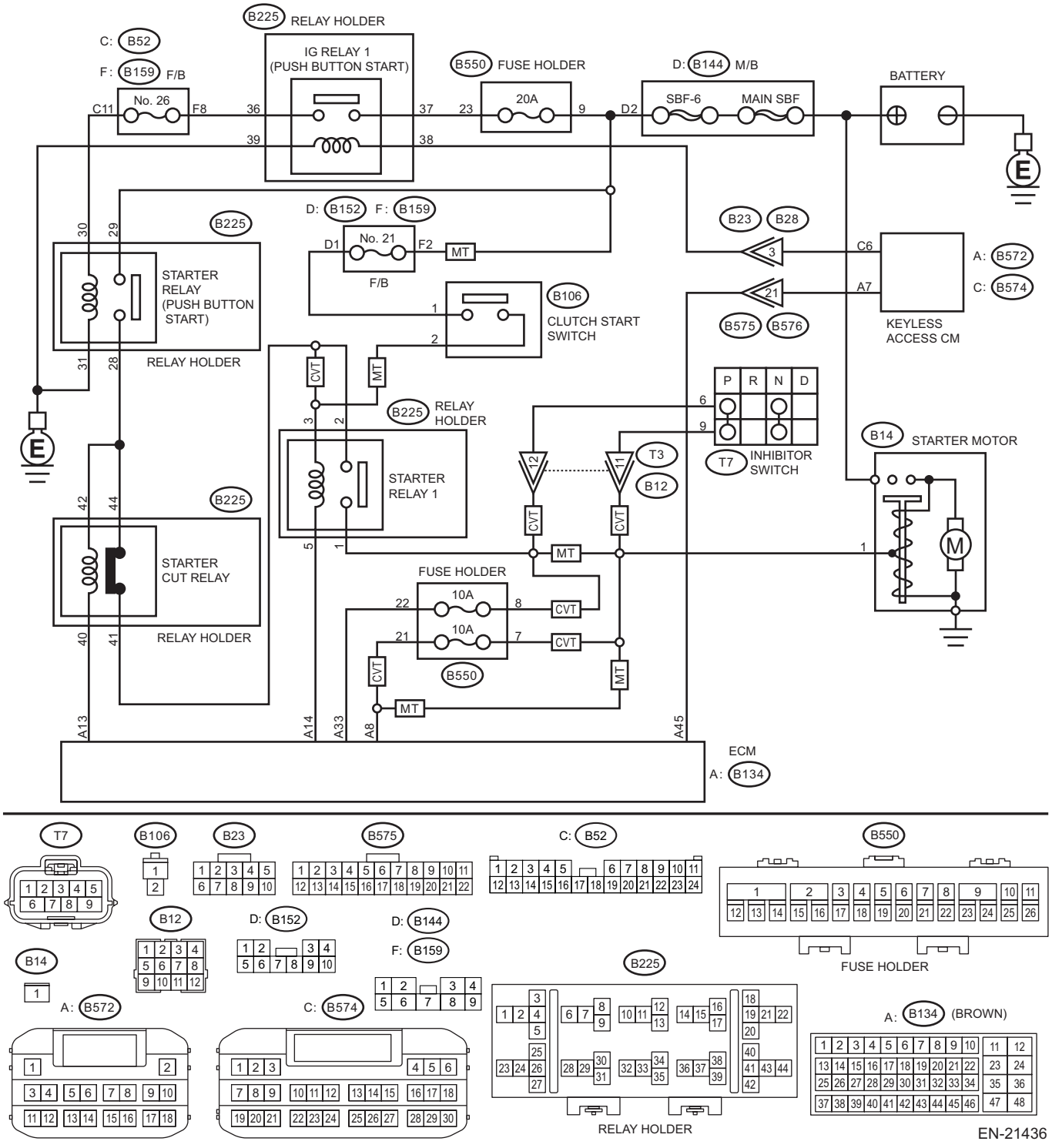

EN-21436

	Step	Check	Yes	No
1	**CHECK HARNESS BETWEEN ECM AND STARTER RELAY 1 CONNECTOR.** 1) Turn the ignition to OFF. 2) Disconnect the connector from ECM. 3) Remove the starter relay 1. 4) Measure the resistance of harness between ECM connector and starter relay 1 connector. NOTE: For CVT model, place the select lever in "P" range or "N" range. ***Connector & terminal*** ***(B134) No. 8 — (B225) No. 1:***	Is the resistance less than 1 Ω?	Go to step **2**.	Repair the harness and connector. NOTE: In this case, repair the following item: • Open circuit of harness between ECM connector and starter relay 1 connector • Poor contact of coupling connector
2	**CHECK HARNESS BETWEEN ECM AND STARTER RELAY 1 CONNECTOR.** 1) Disconnect the connector from starter motor. 2) Measure the resistance between the ECM connector and engine ground. ***Connector & terminal*** ***(B134) No. 8 — Engine ground:***	Is the resistance 1 MΩ or more?	Repair the poor contact of ECM connector.	Repair the short circuit to ground in harness between ECM connector and starter relay 1 connector.

3. OUTLINE OF DIAGNOSIS

Detect abnormal continuity in the starter SW 2.
Judge as OFF NG when the starter SW 2 signal remains OFF.

4. EXECUTION CONDITION

Secondary parameters	Execution condition
Battery voltage	≥ 8 V
Vehicle speed	< 1 km/h (0.6 MPH)
Engine speed	Increases from 0 rpm to 500 rpm or more
Starter relay	ON

5. GENERAL DRIVING CYCLE

Perform the diagnosis only once after starting the engine.

6. DIAGNOSTIC METHOD

Judge as OFF NG when the following conditions are established.

Judgment Value

Malfunction Criteria	Threshold Value
Starter SW2 signal of 6 V or more	Not detected

Time Needed for Diagnosis: Less than 1 second
Malfunction Indicator Light Illumination: Illuminates as soon as a malfunction occurs.

DZ:DTC P0617 STARTER RELAY "A" CIRCUIT HIGH

1. MODEL WITHOUT PUSH BUTTON START

DTC DETECTING CONDITION:

- Immediately at fault recognition
- GENERAL DESCRIPTION <Ref. to EN(w/o STI)(diag)-463, DTC P0617 STARTER RELAY "A" CIRCUIT HIGH, Diagnostic Procedure with Diagnostic Trouble Code (DTC).>

TROUBLE SYMPTOM:

Failure of engine to start

CAUTION:

- **After servicing or replacing faulty parts, perform Clear Memory Mode <Ref. to EN(w/o STI)(diag)-82, OPERATION, Clear Memory Mode.>, and Inspection Mode <Ref. to EN(w/o STI)(diag)-64, PROCEDURE, Inspection Mode.>.**
- **Use the check board when measuring the ECM terminal voltage and resistance.**

WIRING DIAGRAM:

Engine Electrical System <Ref. to WI-154, WIRING DIAGRAM, Engine Electrical System.>

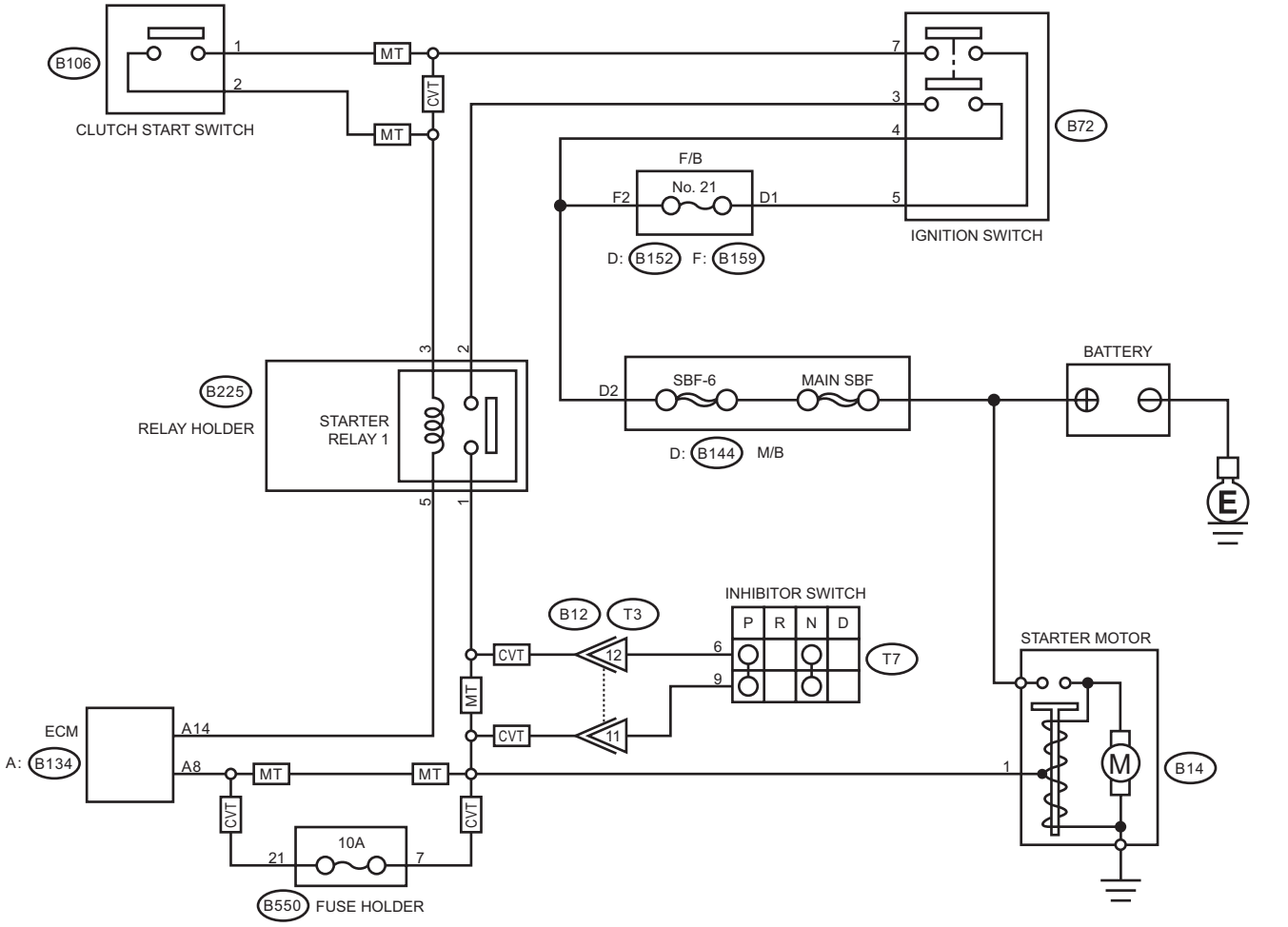

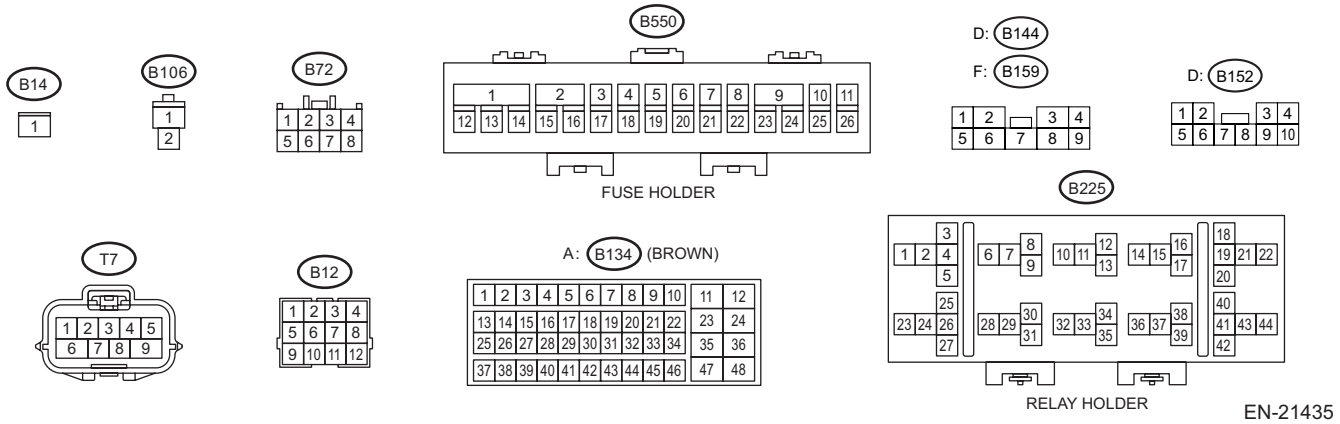

EN-21435

	Step	Check	Yes	No
1	**CHECK FOR ANY OTHER DTC ON DISPLAY.**	Is any other DTC displayed?	Check the appropriate DTC using the "List of Diagnostic Trouble Code (DTC)". <Ref. to EN(w/o STI)(diag)-106, List of Diagnostic Trouble Code (DTC).>	Go to step **2**.
2	**CHECK HARNESS BETWEEN ECM AND STARTER RELAY 1 CONNECTOR.** 1) Turn the ignition switch to OFF. 2) Disconnect the connector from ECM. 3) Turn the ignition switch to ON. 4) Measure the voltage between ECM connector and chassis ground. ***Connector & terminal*** ***(B134) No. 8 (+) — Chassis ground (–):*** NOTE: For CVT model, place the select lever in "P" range or "N" range.	Is the voltage 10 V or more?	Repair the short circuit to power in harness between ECM connector and starter relay 1 connector.	Repair the poor contact of ECM connector.

2. MODEL WITH PUSH BUTTON START

DTC DETECTING CONDITION:
Immediately at fault recognition
TROUBLE SYMPTOM:
Failure of engine to start

CAUTION:
• After servicing or replacing faulty parts, perform Clear Memory Mode <Ref. to EN(w/o STI)(diag)-82, OPERATION, Clear Memory Mode.>, and Inspection Mode <Ref. to EN(w/o STI)(diag)-64, PROCEDURE, Inspection Mode.>.
• Use the check board when measuring the ECM terminal voltage and resistance.

WIRING DIAGRAM:

Engine Electrical System <Ref. to WI-154, WIRING DIAGRAM, Engine Electrical System.>

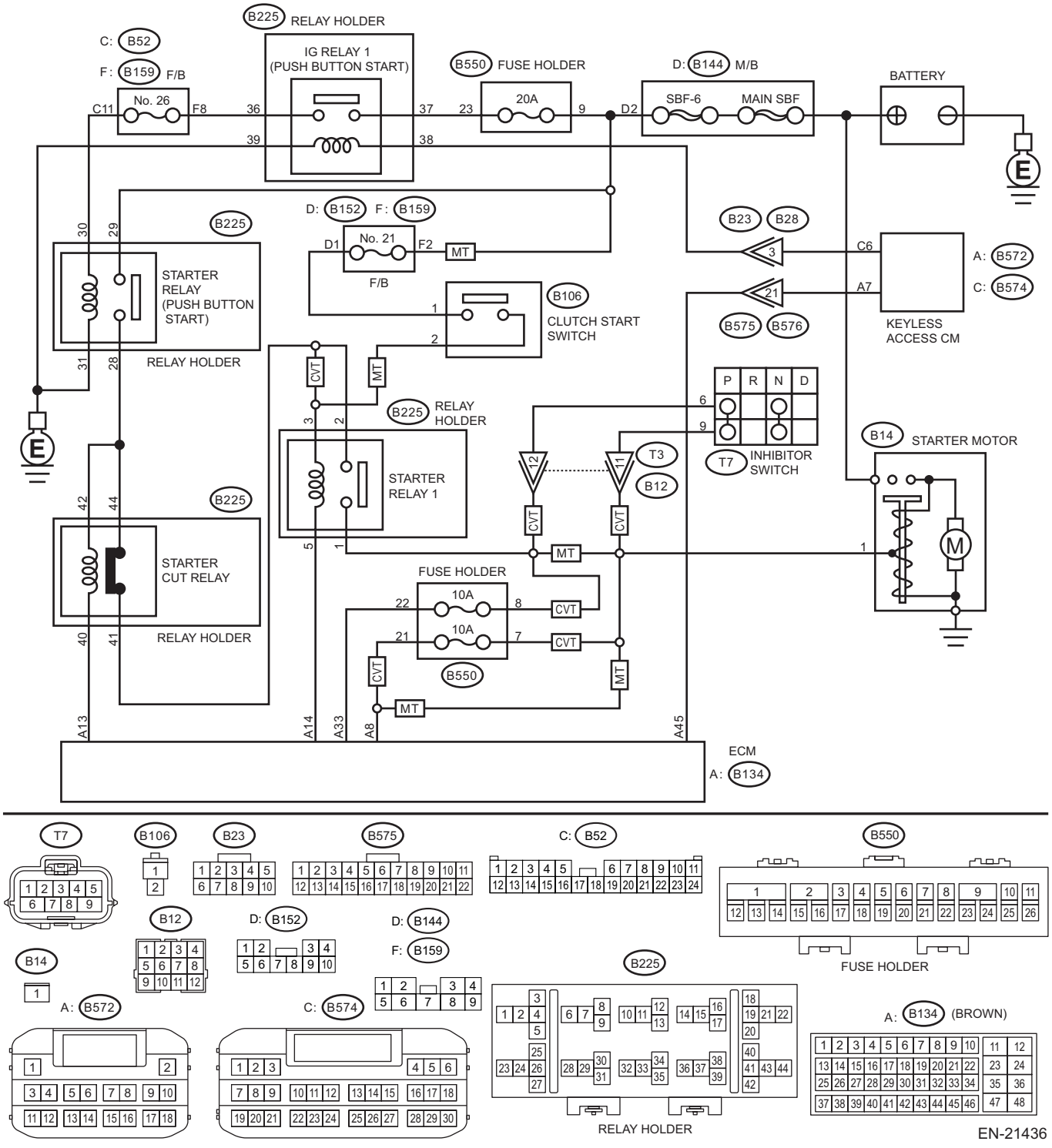

EN-21436

	Step	Check	Yes	No
1	**CHECK STARTER MOTOR.** 1) Turn the ignition to ON. 2) Check the starter motor condition.	Is the starter motor rotating?	Go to step **2**.	Repair the short circuit to power supply. NOTE: In this case, repair the following harnesses: • Short circuit to power supply in harness between ECM connector and starter relay connector • Short circuit to power supply in harness between ECM connector and starter motor • Short circuit to power supply in harness between starter relay 1 connector and starter motor
2	**CHECK HARNESS BETWEEN STARTER CUT RELAY CONNECTOR AND STARTER RELAY 1 CONNECTOR.** 1) Turn the ignition to OFF. 2) Disconnect the connector from starter motor. 3) Remove the starter cut relay and starter relay 1. 4) Turn the ignition to ON. 5) Measure the voltage between starter relay 1 connector and chassis ground. ***Connector & terminal*** ***(B225) No. 2 (+) — Chassis ground (–):***	Is the voltage 10 V or more?	Repair the short circuit to power in harness between starter cut relay connector and starter relay 1 connector.	Go to step **3**.
3	**CHECK STARTER CUT RELAY.** 1) Connect the battery to starter cut relay terminals No. 40 and No. 42. 2) Measure the resistance between starter cut relay terminals. ***Terminals*** ***No. 41 — No. 44:***	Is the resistance 1 MΩ or more?	Go to step **6**.	Replace the starter cut relay. <Ref. to SL-116, Starter Cut Relay.> Go to step **4**.
4	**CHECK HARNESS BETWEEN ECM AND STARTER RELAY 1 CONNECTOR.** 1) Disconnect the connector from ECM. 2) Measure the resistance between the ECM connector and engine ground. ***Connector & terminal*** ***(B134) No. 14 — Engine ground:***	Is the resistance 1 MΩ or more?	Go to step **5**.	Repair the short circuit to ground in harness between ECM connector and starter relay 1 connector.
5	**CHECK STARTER RELAY 1.** Measure the resistance between starter relay 1 terminals. ***Terminals*** ***No. 1 — No. 2:***	Is the resistance 1 MΩ or more?	Go to step **6**.	Replace the starter relay 1. <Ref. to EN(w/o STI)(diag)-10, LOCATION, Electrical Component Location.>

Step		Check	Yes	No
6	**CHECK HARNESS BETWEEN ECM, STARTER RELAY 1 CONNECTOR AND STARTER MOTOR.** 1) Disconnect the connector from ECM. 2) Turn the ignition to ON. 3) Measure the voltage between ECM connector and engine ground. ***Connector & terminal*** ***(B134) No. 8 (+) — Engine ground (–):***	Is the voltage 10 V or more?	Repair the short circuit to power supply. NOTE: In this case, repair the following harnesses: • Short circuit to power supply in harness between ECM connector and starter relay 1 connector • Short circuit to power supply in harness between ECM connector and starter motor • Short circuit to power supply in harness between starter relay 1 connector and starter motor	Repair the poor contact of ECM connector.

3. OUTLINE OF DIAGNOSIS

Detect abnormal continuity in the starter SW 2.
Judge as ON NG when the starter SW 2 signal remains ON.

4. EXECUTION CONDITION

Secondary parameters	Execution condition
Battery voltage	≥ 8 V
Engine speed	≥ 475 rpm
Starter relay	OFF

5. GENERAL DRIVING CYCLE

Perform the diagnosis continuously after starting the engine.

6. DIAGNOSTIC METHOD

If the duration of time while the following conditions are met is longer than the time indicated, judge as NG.

Judgment Value

Malfunction Criteria	Threshold Value
Starter SW2 signal	≥ 6 V

Time Needed for Diagnosis: 30 seconds
Malfunction Indicator Light Illumination: Illuminates as soon as a malfunction occurs.

EA:DTC P062D FUEL INJECTOR DRIVER CIRCUIT PERFORMANCE BANK 1

DTC DETECTING CONDITION:
Immediately at fault recognition
TROUBLE SYMPTOM:
- Engine does not start.
- Engine stalls.

CAUTION:
- **After servicing or replacing faulty parts, perform Clear Memory Mode <Ref. to EN(w/o STI)(diag)-82, OPERATION, Clear Memory Mode.>, and Inspection Mode <Ref. to EN(w/o STI)(diag)-64, PROCEDURE, Inspection Mode.>.**
- **Use the check board when measuring the ECM terminal voltage and resistance.**

WIRING DIAGRAM:
Engine Electrical System <Ref. to WI-154, WIRING DIAGRAM, Engine Electrical System.>

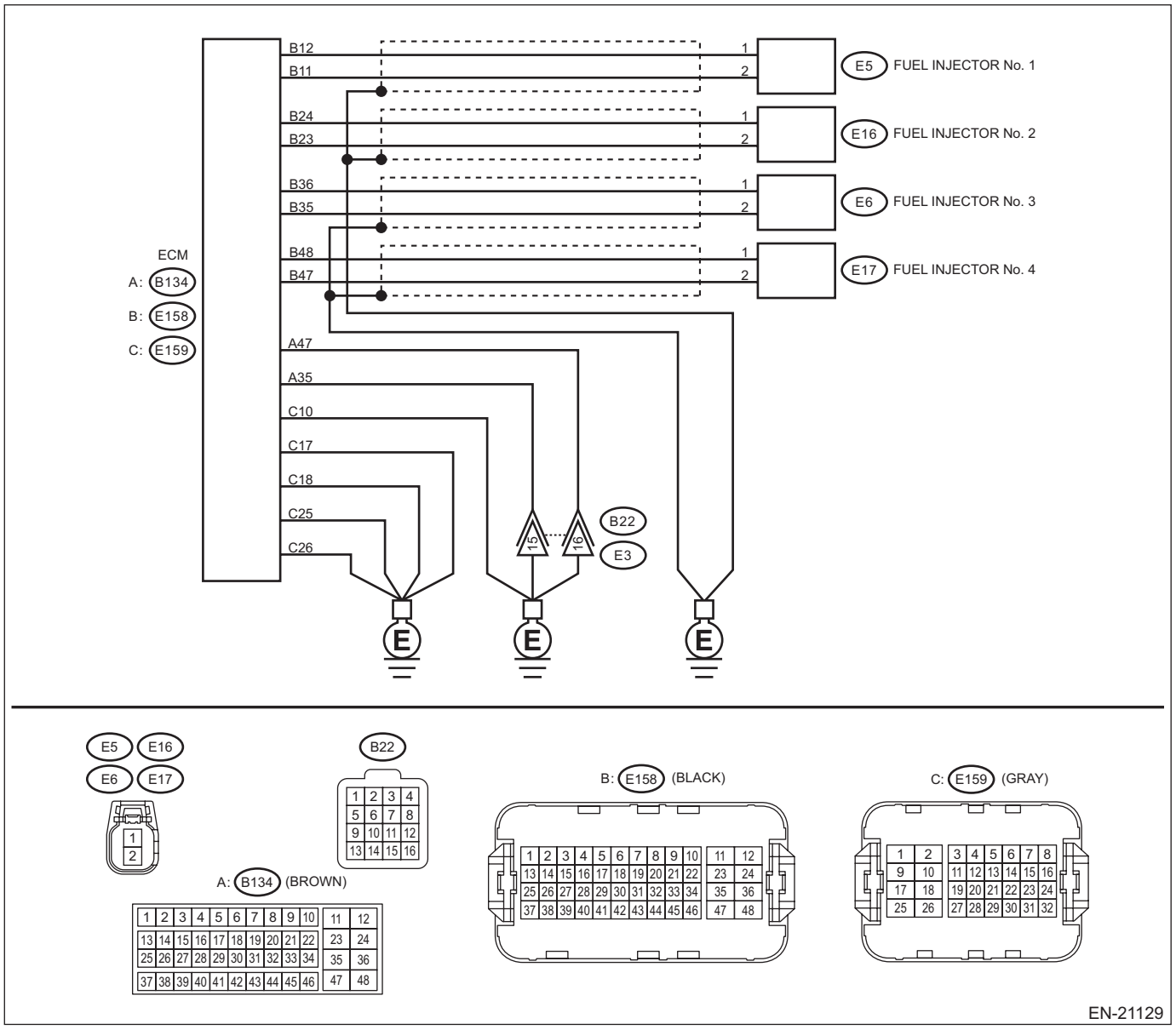

	Step	Check	Yes	No
1	**CHECK FOR ANY OTHER DTC ON DISPLAY.**	Is any other DTC displayed?	Check the appropriate DTC using the "List of Diagnostic Trouble Code (DTC)". <Ref. to EN(w/o STI)(diag)-106, List of Diagnostic Trouble Code (DTC).>	Go to step **2**.
2	**CHECK HARNESS BETWEEN ECM AND FUEL INJECTOR CONNECTOR.** 1) Turn the ignition switch to OFF. 2) Disconnect the connector from ECM. 3) Measure the resistance between ECM connectors. ***Connector & terminal*** ***#1 (E158) No. 11 — (E158) No. 12:*** ***#2 (E158) No. 23 — (E158) No. 24:*** ***#3 (E158) No. 35 — (E158) No. 36:*** ***#4 (E158) No. 47 — (E158) No. 48:***	Is resistance 1.89 — 2.31 Ω at 20°C (68°F)?	Go to step **4**.	Go to step **3**.
3	**CHECK HARNESS BETWEEN ECM AND FUEL INJECTOR CONNECTOR.** 1) Disconnect the connector from fuel injector. 2) Measure the resistance of harness between ECM connector and defective fuel injector connector. ***Connector & terminal*** ***#1 (E158) No. 12 — (E5) No. 1:*** ***#1 (E158) No. 11 — (E5) No. 2:*** ***#2 (E158) No. 24 — (E16) No. 1:*** ***#2 (E158) No. 23 — (E16) No. 2:*** ***#3 (E158) No. 36 — (E6) No. 1:*** ***#3 (E158) No. 35 — (E6) No. 2:*** ***#4 (E158) No. 48 — (E17) No. 1:*** ***#4 (E158) No. 47 — (E17) No. 2:***	Is the resistance less than 1 Ω?	Repair or replace the following items. • Poor contact of fuel injector connector • Defective fuel injector <Ref. to FU(w/o STI)-50, Fuel Injector.>	Repair the open circuit of the harness between the ECM connector and fuel injector connector.
4	**CHECK HARNESS BETWEEN ECM AND FUEL INJECTOR CONNECTOR.** Measure the resistance between the ECM connector and engine ground. ***Connector & terminal*** ***#1 (E158) No. 12 — Engine ground:*** ***#1 (E158) No. 11 — Engine ground:*** ***#2 (E158) No. 24 — Engine ground:*** ***#2 (E158) No. 23 — Engine ground:*** ***#3 (E158) No. 36 — Engine ground:*** ***#3 (E158) No. 35 — Engine ground:*** ***#4 (E158) No. 48 — Engine ground:*** ***#4 (E158) No. 47 — Engine ground:***	Is the resistance 1 MΩ or more?	Repair the poor contact of ECM connector.	Go to step **5**.

Step		Check	Yes	No
5	**CHECK HARNESS BETWEEN ECM AND FUEL INJECTOR CONNECTOR.** 1) Disconnect the connector from fuel injector. 2) Measure the resistance between ECM connector and engine ground on defective fuel injectors. ***Connector & terminal*** ***#1 (E158) No. 12 — Engine ground:*** ***#1 (E158) No. 11 — Engine ground:*** ***#2 (E158) No. 24 — Engine ground:*** ***#2 (E158) No. 23 — Engine ground:*** ***#3 (E158) No. 36 — Engine ground:*** ***#3 (E158) No. 35 — Engine ground:*** ***#4 (E158) No. 48 — Engine ground:*** ***#4 (E158) No. 47 — Engine ground:***	Is the resistance 1 MΩ or more?	Replace the faulty fuel injector. <Ref. to FU(w/o STI)-50, Fuel Injector.>	Repair the short circuit to ground in harness between ECM connector and fuel injector connector.

1. OUTLINE OF DIAGNOSIS

Detect the malfunction of fuel injector circuit function.
Judge as NG when ECM with two fuel injectors or more detects any malfunction in the diagnostic items listed below.

Diagnostic item	Malfunction Criteria
Overcurrent	Fuel injector current is high.
Low current	Fuel injector current is low.

2. EXECUTION CONDITION

Secondary parameters	Execution condition
Battery voltage	≥ 9.4 V
Engine speed	> 0 rpm
Fuel cut	Not performed

3. GENERAL DRIVING CYCLE

Always perform the diagnosis continuously.

4. DIAGNOSTIC METHOD

If the duration of time while the following conditions are met is longer than the time indicated, judge as NG.

Diagnosis for Overcurrent

Judgment Value

Malfunction Criteria	Threshold Value
Fuel injector current	≥ 18 A

Low Current Diagnosis

Judgment Value

Malfunction Criteria	Threshold Value
Fuel injector current	≤ 8.8 A

Time Needed for Diagnosis: TDC × 50 times
Malfunction Indicator Light Illumination: Illuminates as soon as a malfunction occurs.

EB:DTC P062F INTERNAL CONTROL MODULE EEPROM ERROR

NOTE:
For the diagnostic procedure, refer to DTC P0606. <Ref. to EN(w/o STI)(diag)-453, DTC P0606 CONTROL MODULE PROCESSOR, Diagnostic Procedure with Diagnostic Trouble Code (DTC).>

1. OUTLINE OF DIAGNOSIS

Judge as NG when the EEPROM operation is abnormal.

2. EXECUTION CONDITION

Secondary parameters	Execution condition
None	

3. GENERAL DRIVING CYCLE

Perform the diagnosis during self shut.

4. DIAGNOSTIC METHOD

Judge as NG when the following conditions are established.

Judgment Value

Malfunction Criteria	Threshold Value
Writing result to EEPROM	Malfunction

Time Needed for Diagnosis: Less than 1 second
Malfunction Indicator Light Illumination: Illuminates as soon as a malfunction occurs.

EC:DTC P0685 ECM/PCM POWER RELAY CONTROL CIRCUIT/OPEN

DTC DETECTING CONDITION:

Detected when two consecutive driving cycles with fault occur.

CAUTION:

- **After servicing or replacing faulty parts, perform Clear Memory Mode <Ref. to EN(w/o STI)(diag)-82, OPERATION, Clear Memory Mode.>, and Inspection Mode <Ref. to EN(w/o STI)(diag)-64, PROCEDURE, Inspection Mode.>.**
- **Use the check board when measuring the ECM terminal voltage and resistance.**

WIRING DIAGRAM:

Engine Electrical System <Ref. to WI-154, WIRING DIAGRAM, Engine Electrical System.>

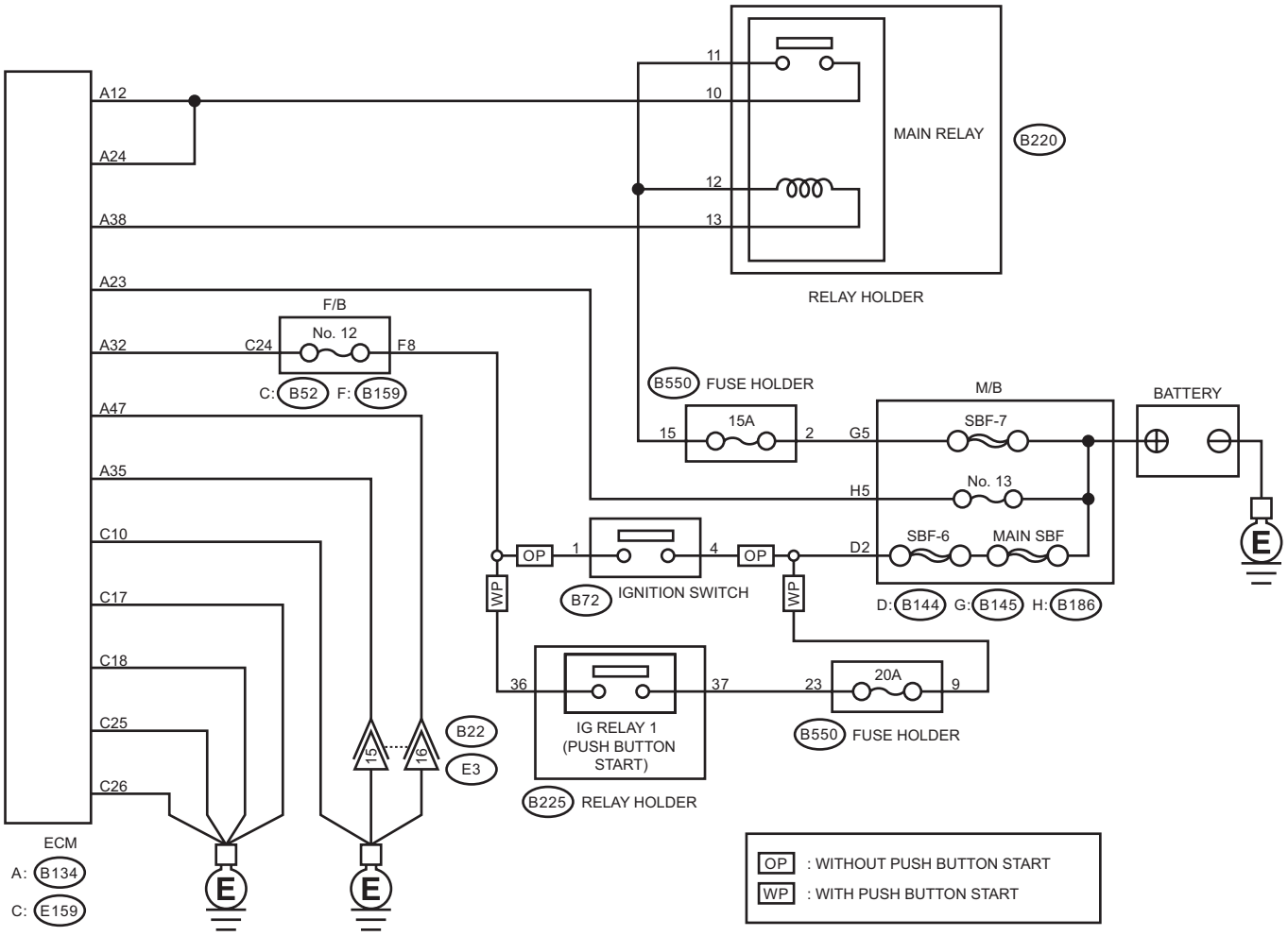

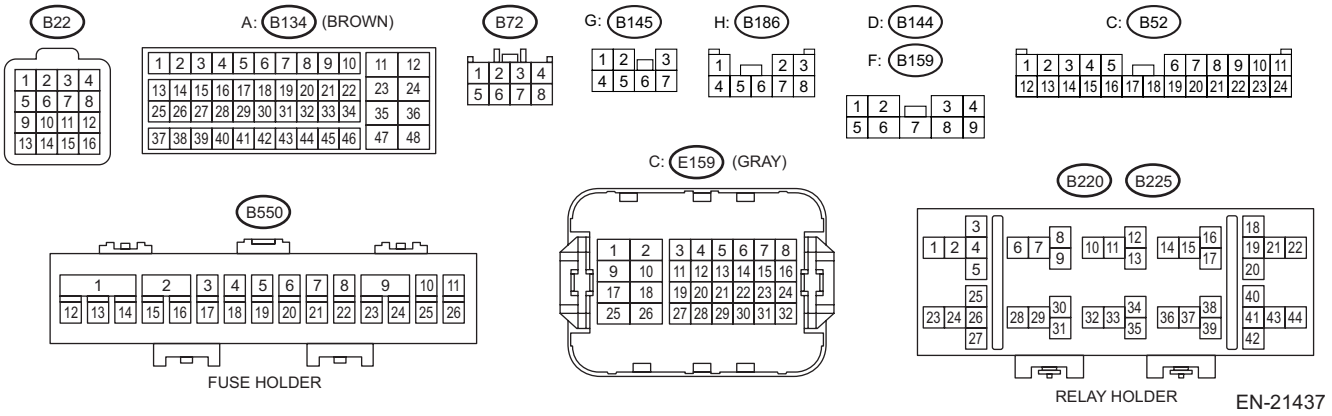

Step		Check	Yes	No
1	**CHECK ECM CONNECTOR.** Check the connecting condition of ECM connector.	Is the ECM connector correctly connected?	Go to step **2**.	Connect the ECM connector correctly.

	Step	Check	Yes	No
2	**CHECK HARNESS BETWEEN ECM AND MAIN RELAY CONNECTOR.** 1) Turn the ignition switch to OFF. 2) Remove the main relay. 3) Disconnect the connector from ECM. 4) Measure the resistance between the ECM connector and engine ground. ***Connector & terminal*** ***(B134) No. 38 — Engine ground:***	Is the resistance 1 MΩ or more?	Go to step **3**.	Repair the short circuit to ground in harness between ECM connector and main relay connector.
3	**CHECK HARNESS BETWEEN ECM AND MAIN RELAY CONNECTOR.** 1) Install the main relay. 2) Turn the ignition switch to ON. 3) Measure the voltage between ECM connector and engine ground. ***Connector & terminal*** ***(B134) No. 12 (+) — Engine ground (–):*** ***(B134) No. 24 (+) — Engine ground (–):***	Is the voltage 10 V or more?	Repair the harness and connector. NOTE: In this case, repair the following item: • Short circuit to power supply in harness between ECM connector and main relay connector • Defective main relay	Repair the poor contact of ECM connector.

1. OUTLINE OF DIAGNOSIS

Detect the main relay stuck to ON.
Judge as NG when ECM keeps operating for more than predetermined time although the main relay does not turn to OFF after ignition switch is turned to OFF.

2. COMPONENT DESCRIPTION

The main relay controls the current in the coil section to switch ON/OFF the ECM by receiving instructions from the ignition switch and Evaporative Leak Check Module.

3. EXECUTION CONDITION

Secondary parameters	Execution condition
Main relay	OFF instruction

4. GENERAL DRIVING CYCLE

Perform the diagnosis only once when the following driving cycle starts after the ignition switch is OFF.

5. DIAGNOSTIC METHOD

If the duration of time while the following conditions are met is longer than the time indicated, judge as NG.

Judgment Value

Malfunction Criteria	Threshold Value
ECM status	In operation

Time Needed for Diagnosis: 2.5 seconds
Malfunction Indicator Light Illumination: Illuminates when malfunction occurs in 2 continuous driving cycles.

ED:DTC P0700 TRANSMISSION CONTROL SYSTEM (MIL REQUEST)

NOTE:
For the diagnostic procedure, refer to CVT section. <Ref. to CVT(diag)-2, Basic Diagnostic Procedure.>

1. OUTLINE OF DIAGNOSIS

Judge as NG when there is CAN communication with the TCM and there is a MIL lighting request.

2. EXECUTION CONDITION

Secondary parameters	Execution condition
Battery voltage	≥ 10.9 V

3. GENERAL DRIVING CYCLE

Always perform the diagnosis continuously.

4. DIAGNOSTIC METHOD

If the duration of time while the following conditions are met is longer than the time indicated, judge as NG.

Judgment Value

Malfunction Criteria	Threshold Value
MIL lighting request from TCM	Yes

Time Needed for Diagnosis: 2560 ms
Malfunction Indicator Light Illumination: Illuminates as soon as a malfunction occurs.

EE:DTC P081A STARTER DISABLE CIRCUIT LOW

DTC DETECTING CONDITION:
Immediately at fault recognition
TROUBLE SYMPTOM:
Failure of engine to start

CAUTION:
- **After servicing or replacing faulty parts, perform Clear Memory Mode <Ref. to EN(w/o STI)(diag)-82, OPERATION, Clear Memory Mode.>, and Inspection Mode <Ref. to EN(w/o STI)(diag)-64, PROCEDURE, Inspection Mode.>.**
- **Use the check board when measuring the ECM terminal voltage and resistance.**

WIRING DIAGRAM:

Engine Electrical System <Ref. to WI-154, WIRING DIAGRAM, Engine Electrical System.>

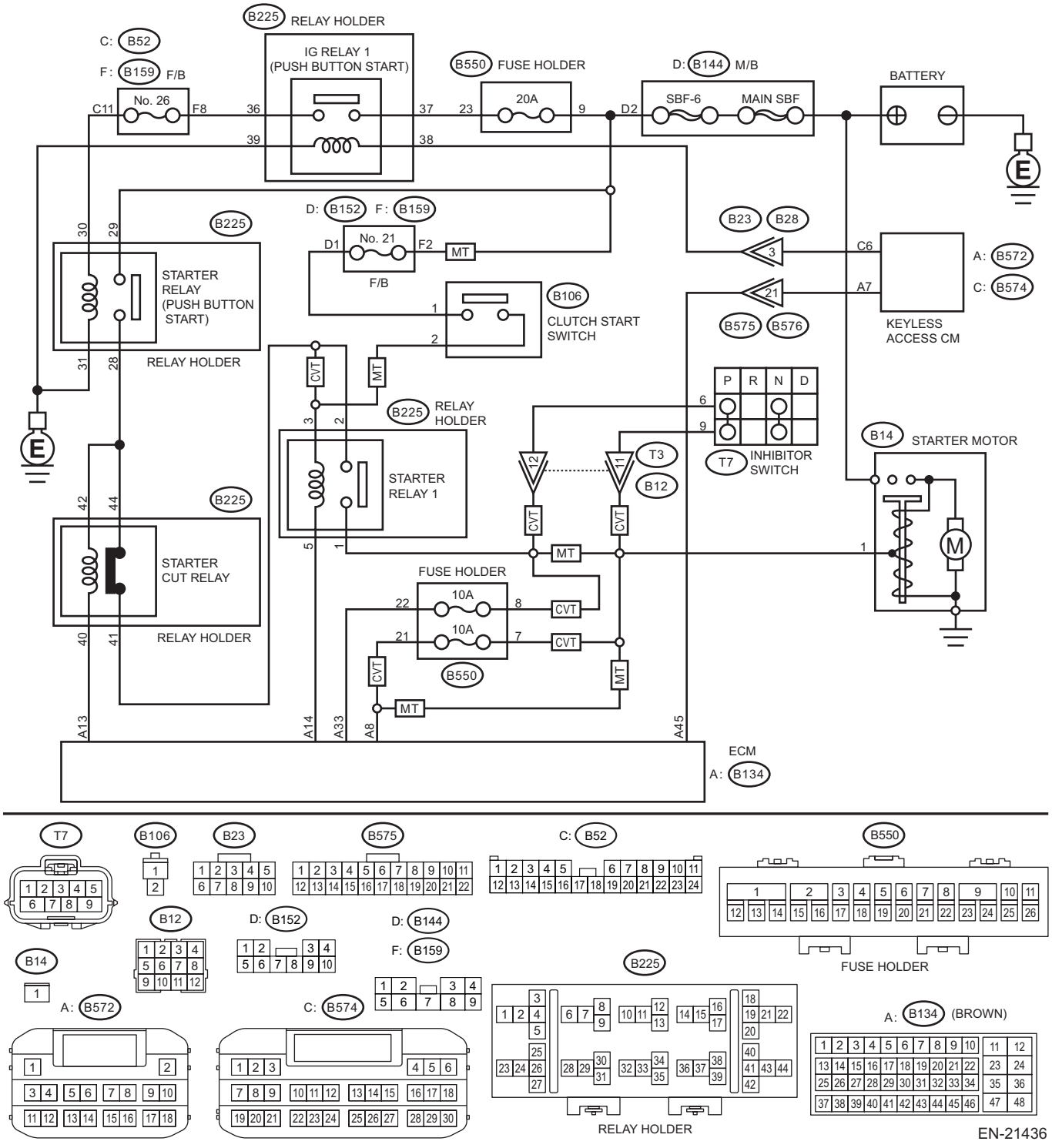

	Step	Check	Yes	No
1	**CHECK HARNESS BETWEEN STARTER RELAY (PUSH BUTTON START) CONNECTOR AND STARTER CUT RELAY CONNECTOR.** 1) Turn the ignition to OFF. 2) Remove the starter relay (push button start). 3) Remove the starter cut relay. 4) Measure the resistance of harness between starter relay (push button start) connector and starter cut relay connector. ***Connector & terminal*** ***(B225) No. 28 — (B225) No. 42:***	Is the resistance less than 1 Ω?	Go to step **2**.	Repair the open circuit in harness between starter relay (push button start) connector and starter cut relay connector.
2	**CHECK HARNESS BETWEEN ECM AND STARTER CUT RELAY CONNECTOR.** 1) Disconnect the connector from ECM. 2) Measure the resistance of harness between ECM connector and starter cut relay connector. ***Connector & terminal*** ***(B134) No. 13 — (B225) No. 40:***	Is the resistance less than 1 Ω?	Go to step **3**.	Repair the open circuit of harness between ECM connector and starter cut relay connector.
3	**CHECK STARTER CUT RELAY.** 1) Connect the battery to starter cut relay terminals No. 40 and No. 42. 2) Measure the resistance between starter cut relay terminals. ***Terminals*** ***No. 41 — No. 44:***	Is the resistance 1 MΩ or more?	Repair the poor contact of ECM connector.	Replace the starter cut relay. <Ref. to SL-116, Starter Cut Relay.>

1. OUTLINE OF DIAGNOSIS

Detect abnormal continuity in the starter cut relay.
Judge as NG when the starter cut relay output line is open.

2. EXECUTION CONDITION

Secondary parameters	Execution condition
Battery voltage	≥ 8 V
Vehicle speed	< 1 km/h (0.6 MPH)
Starter cut relay	OFF
Engine speed	Increases from 0 rpm to 500 rpm or more

3. GENERAL DRIVING CYCLE

Perform the diagnosis only once when the engine condition is turned from before starting to after starting.

4. DIAGNOSTIC METHOD

Judge as NG when the following conditions are established.

Judgment Value

Malfunction Criteria	Threshold Value
Starter cut relay control signal that exceeds 3.2 V	Not detected

Time Needed for Diagnosis: 640 ms
Malfunction Indicator Light Illumination: Illuminates as soon as a malfunction occurs.

EF:DTC P0851 PARK/NEUTRAL SWITCH INPUT CIRCUIT LOW

1. AT MODEL

DTC DETECTING CONDITION:
Detected when two consecutive driving cycles with fault occur.
TROUBLE SYMPTOM:
Improper idling

CAUTION:
• After servicing or replacing faulty parts, perform Clear Memory Mode <Ref. to EN(w/o STI)(diag)-82, OPERATION, Clear Memory Mode.>, and Inspection Mode <Ref. to EN(w/o STI)(diag)-64, PROCEDURE, Inspection Mode.>.
• Use the check board when measuring the ECM terminal voltage and resistance.
WIRING DIAGRAM:
Engine Electrical System <Ref. to WI-154, WIRING DIAGRAM, Engine Electrical System.>

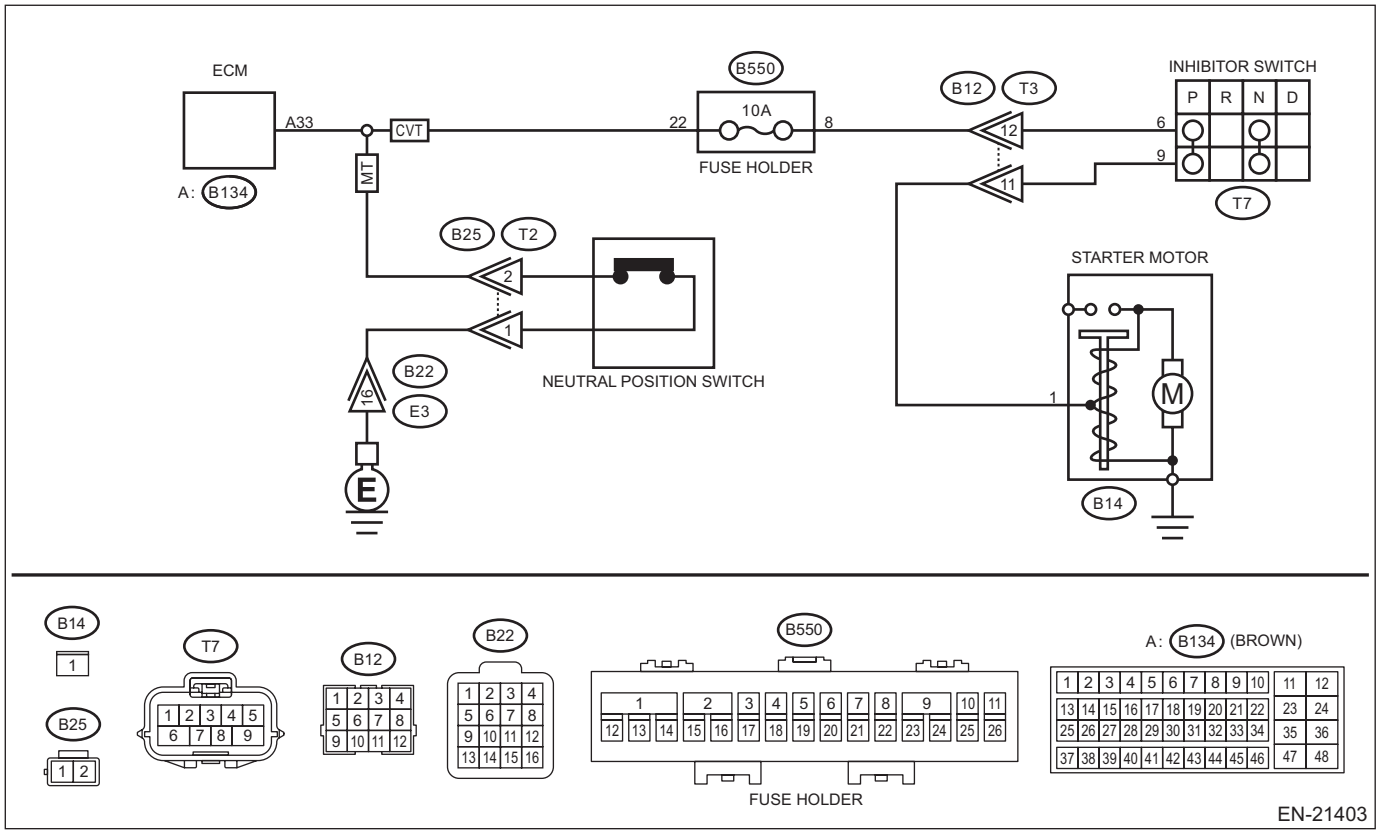

Step		Check	Yes	No
1	**CHECK SELECT CABLE.**	Is there any fault in select cable?	Repair or adjust the select cable. <Ref. to CS-43, Select Cable.>	Go to step **2**.
2	**CHECK INPUT SIGNAL OF ECM.** 1) Turn the ignition switch to ON. 2) Place the select lever in other than "P" range and "N" range. 3) Measure the voltage between ECM connector and chassis ground. ***Connector & terminal*** ***(B134) No. 33 (+) — Chassis ground (–):***	Is the voltage 10 V or more?	Repair the poor contact of ECM connector.	Go to step **3**.

	Step	Check	Yes	No
3	**CHECK HARNESS BETWEEN ECM AND TRANSMISSION HARNESS CONNECTOR.** 1) Turn the ignition switch to OFF. 2) Disconnect the connector from ECM. 3) Disconnect the connector from the transmission harness connector (T3). 4) Measure the resistance between ECM connector and chassis ground. ***Connector & terminal*** ***(B134) No. 33 — Chassis ground:***	Is the resistance 1 MΩ or more?	Go to step **4**.	Repair the short circuit to ground in harness between ECM connector and transmission harness connector.
4	**CHECK TRANSMISSION HARNESS CONNECTOR.** 1) Disconnect the connector from inhibitor switch. 2) Measure the resistance between transmission harness connector and engine ground. ***Connector & terminal*** ***(T3) No. 12 — Engine ground:***	Is the resistance 1 MΩ or more?	Replace the inhibitor switch. <Ref. to CVT(TR690)-93, Inhibitor Switch.>	Repair short circuit to ground in harness between transmission harness connector and inhibitor switch connector.

2. OUTLINE OF DIAGNOSIS (AT MODEL)

Detect the open or short circuit of neutral SW.
Judge as NG when the ECM neutral terminal input differs from the reception data from TCM.

3. EXECUTION CONDITION (AT MODEL)

Secondary parameters	Execution condition
Battery voltage	≥ 10.9 V
Starter relay feedback voltage	< 1.5 V
Data received from TCM	≠ “P” range/“N” range

4. GENERAL DRIVING CYCLE (AT MODEL)

Perform the diagnosis continuously in 2 seconds after starting the engine.

5. METHOD OF DIAGNOSIS (AT MODEL)

If the duration of time while the following conditions are met is longer than the time indicated, judge as NG.

Judgment Value

Malfunction Criteria	Threshold Value
Neutral position switch voltage	≤ 1 V

Time Needed for Diagnosis: 80 ms × 80 times
Malfunction Indicator Light Illumination: Illuminates when malfunction occurs in 2 continuous driving cycles.

6. MT MODEL

DTC DETECTING CONDITION:
Detected when two consecutive driving cycles with fault occur.
TROUBLE SYMPTOM:
Improper idling

CAUTION:
• After servicing or replacing faulty parts, perform Clear Memory Mode <Ref. to EN(w/o STI)(diag)-82, OPERATION, Clear Memory Mode.>, and Inspection Mode <Ref. to EN(w/o STI)(diag)-64, PROCEDURE, Inspection Mode.>.
• Use the check board when measuring the ECM terminal voltage and resistance.
WIRING DIAGRAM:
Engine Electrical System <Ref. to WI-154, WIRING DIAGRAM, Engine Electrical System.>

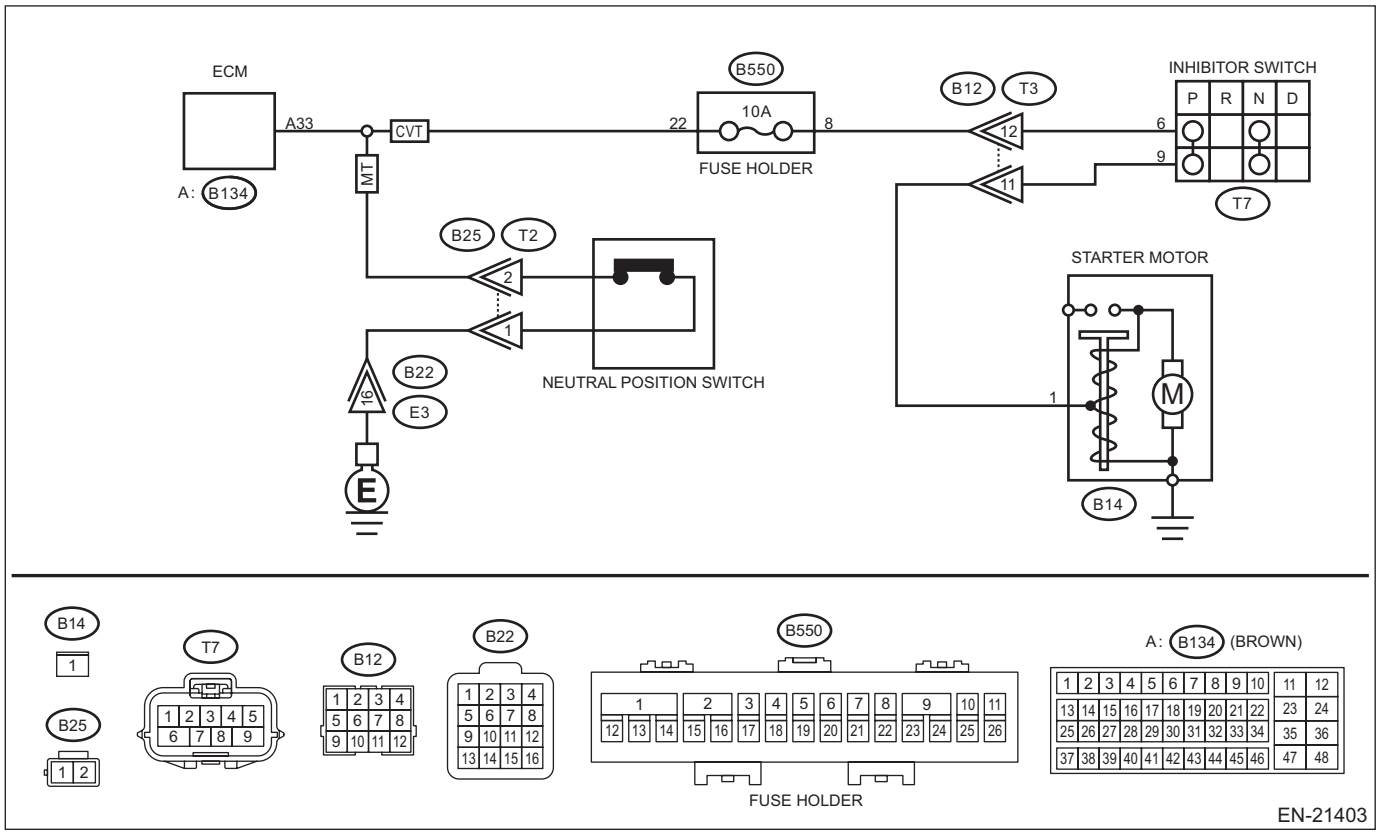

	Step	Check	Yes	No
1	**CHECK INPUT SIGNAL OF ECM.** 1) Turn the ignition switch to ON. 2) Place the shift lever in a position other than neutral. 3) Measure the voltage between ECM connector and engine ground. ***Connector & terminal*** ***(B134) No. 33 (+) — Engine ground (–):***	Is the voltage 10 V or more?	Repair the poor contact of ECM connector.	Go to step **2**.

Step		Check	Yes	No
2	**CHECK HARNESS BETWEEN ECM AND NEUTRAL POSITION SWITCH CONNECTOR.** 1) Turn the ignition switch to OFF. 2) Disconnect the connector from ECM. 3) Disconnect the connector from the neutral position switch. 4) Measure the resistance between the ECM connector and engine ground. ***Connector & terminal*** ***(B134) No. 33 — Engine ground:***	Is the resistance 1 MΩ or more?	Replace the neutral position switch. <Ref. to 6MT(TY75)-46, Switches and Harness.>	Repair the short circuit to ground harness between ECM connector and neutral position switch connector.

7. OUTLINE OF DIAGNOSIS (MT MODEL)

Detect the open or short circuit of neutral SW.
Judge as NG when there is no change in the neutral SW even if the driving shift was applied. (There is neutral SW ON/OFF inversion from the vehicle speed and engine speed.)

8. EXECUTION CONDITION (MT MODEL)

Secondary parameters	Execution condition
Battery voltage	≥ 10.9 V
The number of driving condition change from a) to b)	= 3 times
a) Vehicle speed	≤ 0 km/h (0 MPH)
Engine speed	≥ 600 rpm and ≤ 900 rpm
b) Vehicle speed	≤ 64 km/h (39.8 MPH)
Engine speed	≥ 1450 rpm and ≤ 2250 rpm

9. GENERAL DRIVING CYCLE (MT MODEL)

Perform the diagnosis only once after the enable conditions have been established.

10.METHOD OF DIAGNOSIS (MT MODEL)

Judge NG when the malfunction criteria below are completed determined times or more after the neutral SW change.

Judgment Value

Malfunction Criteria	Threshold Value
Neutral switch output voltage	≤ 1 V

Time Needed for Diagnosis: 3 times
Malfunction Indicator Light Illumination: Illuminates when malfunction occurs in 2 continuous driving cycles.

EG:DTC P0852 PARK/NEUTRAL SWITCH INPUT CIRCUIT HIGH

1. AT MODEL

DTC DETECTING CONDITION:
Detected when two consecutive driving cycles with fault occur.
TROUBLE SYMPTOM:
Improper idling

CAUTION:
• After servicing or replacing faulty parts, perform Clear Memory Mode <Ref. to EN(w/o STI)(diag)-82, OPERATION, Clear Memory Mode.>, and Inspection Mode <Ref. to EN(w/o STI)(diag)-64, PROCEDURE, Inspection Mode.>.
• Use the check board when measuring the ECM terminal voltage and resistance.
WIRING DIAGRAM:
Engine Electrical System <Ref. to WI-154, WIRING DIAGRAM, Engine Electrical System.>

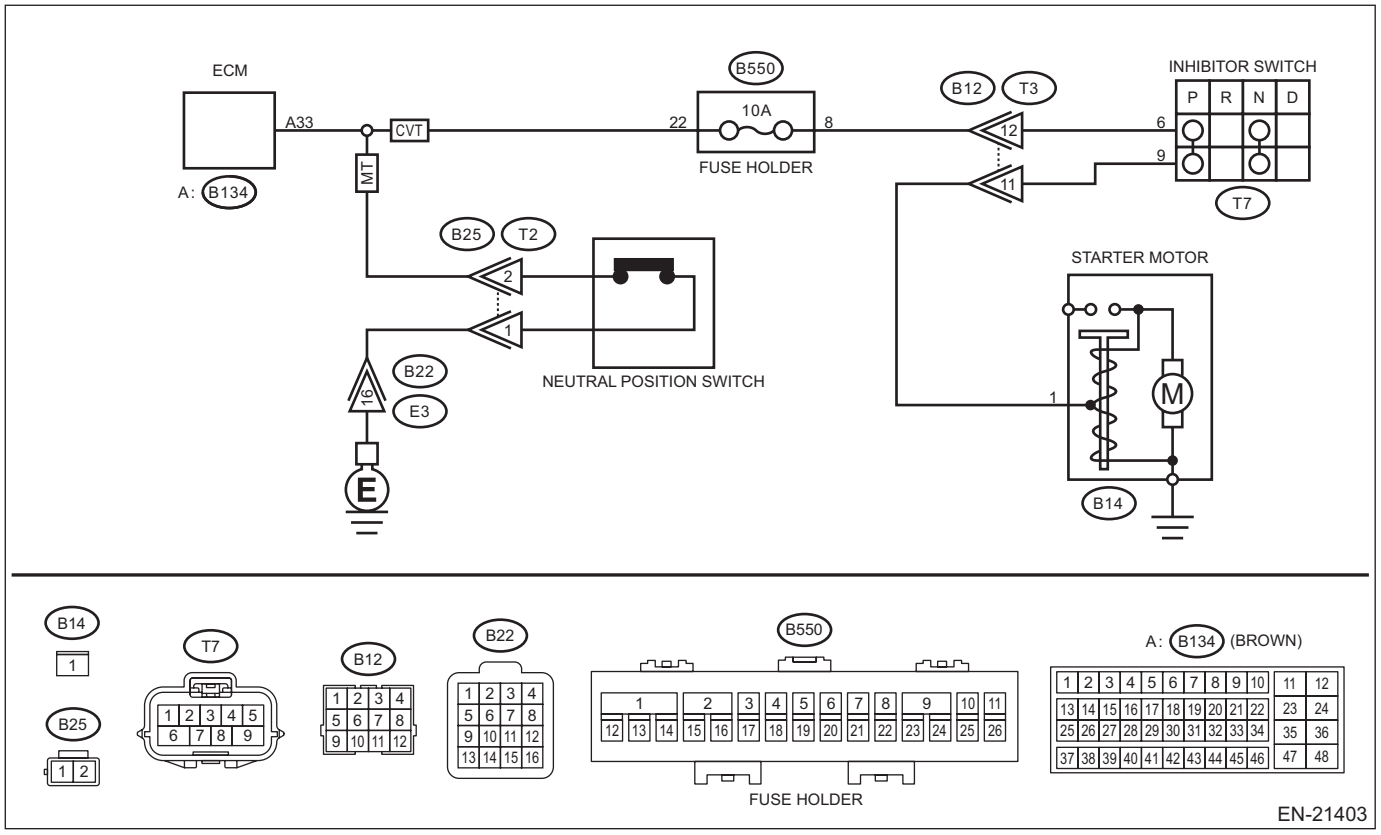

	Step	Check	Yes	No
1	**CHECK SELECT CABLE.**	Is there any fault in select cable?	Repair or adjust the select cable. <Ref. to CS-43, Select Cable.>	Go to step **2**.
2	**CHECK INPUT SIGNAL OF ECM.** 1) Turn the ignition switch to ON. 2) Measure the voltage between ECM and chassis ground with select lever at “P” range and “N” range. ***Connector & terminal*** ***(B134) No. 33 (+) — Chassis ground (–):***	Is the voltage less than 1 V?	Repair the poor contact of ECM connector.	Go to step **3**.

	Step	Check	Yes	No
3	**CHECK HARNESS BETWEEN ECM AND INHIBITOR SWITCH CONNECTOR.** 1) Turn the ignition switch to OFF. 2) Disconnect the connector from ECM. 3) Disconnect the connector from inhibitor switch. 4) Measure the resistance of harness between ECM connector and inhibitor switch connector. ***Connector & terminal*** ***(B134) No. 33 — (T7) No. 6:***	Is the resistance less than 1 Ω?	Go to step **4**.	Repair the harness and connector. NOTE: In this case, repair the following item: • Blown out of fuse • Open circuit in harness between ECM connector and inhibitor switch connector • Poor contact of coupling connector
4	**CHECK INHIBITOR SWITCH GROUND LINE.** Measure the resistance of harness between inhibitor switch connector and engine ground. ***Connector & terminal*** ***(T7) No. 9 — Engine ground:***	Is the resistance less than 5 Ω?	Replace the inhibitor switch. <Ref. to CVT(TR690)-93, Inhibitor Switch.>	Repair the harness and connector. NOTE: In this case, repair the following item: • Open circuit of harness between inhibitor switch connector and starter motor ground line • Poor contact of coupling connector • Poor contact of starter motor connector • Poor contact of starter motor ground • Starter motor

2. OUTLINE OF DIAGNOSIS (AT MODEL)

Detect the open or short circuit of neutral SW.
Judge as NG when the ECM neutral terminal input differs from the reception data from TCM.

3. EXECUTION CONDITION (AT MODEL)

Secondary parameters	Execution condition
Battery voltage	≥ 10.9 V
Starter relay feedback voltage	< 1.5 V
Data received from TCM	= “P” range/“N” range

4. GENERAL DRIVING CYCLE (AT MODEL)

Perform the diagnosis continuously in 2 seconds after starting the engine.

5. METHOD OF DIAGNOSIS (AT MODEL)

If the duration of time while the following conditions are met is longer than the time indicated, judge as NG.

Judgment Value

Malfunction Criteria	Threshold Value
Neutral position switch voltage	≥ 6.6 V

Time Needed for Diagnosis: 80 ms × 80 times
Malfunction Indicator Light Illumination: Illuminates when malfunction occurs in 2 continuous driving cycles.

6. MT MODEL

DTC DETECTING CONDITION:
Detected when two consecutive driving cycles with fault occur.
TROUBLE SYMPTOM:
Improper idling

CAUTION:
• After servicing or replacing faulty parts, perform Clear Memory Mode <Ref. to EN(w/o STI)(diag)-82, OPERATION, Clear Memory Mode.>, and Inspection Mode <Ref. to EN(w/o STI)(diag)-64, PROCEDURE, Inspection Mode.>.
• Use the check board when measuring the ECM terminal voltage and resistance.
WIRING DIAGRAM:
Engine Electrical System <Ref. to WI-154, WIRING DIAGRAM, Engine Electrical System.>

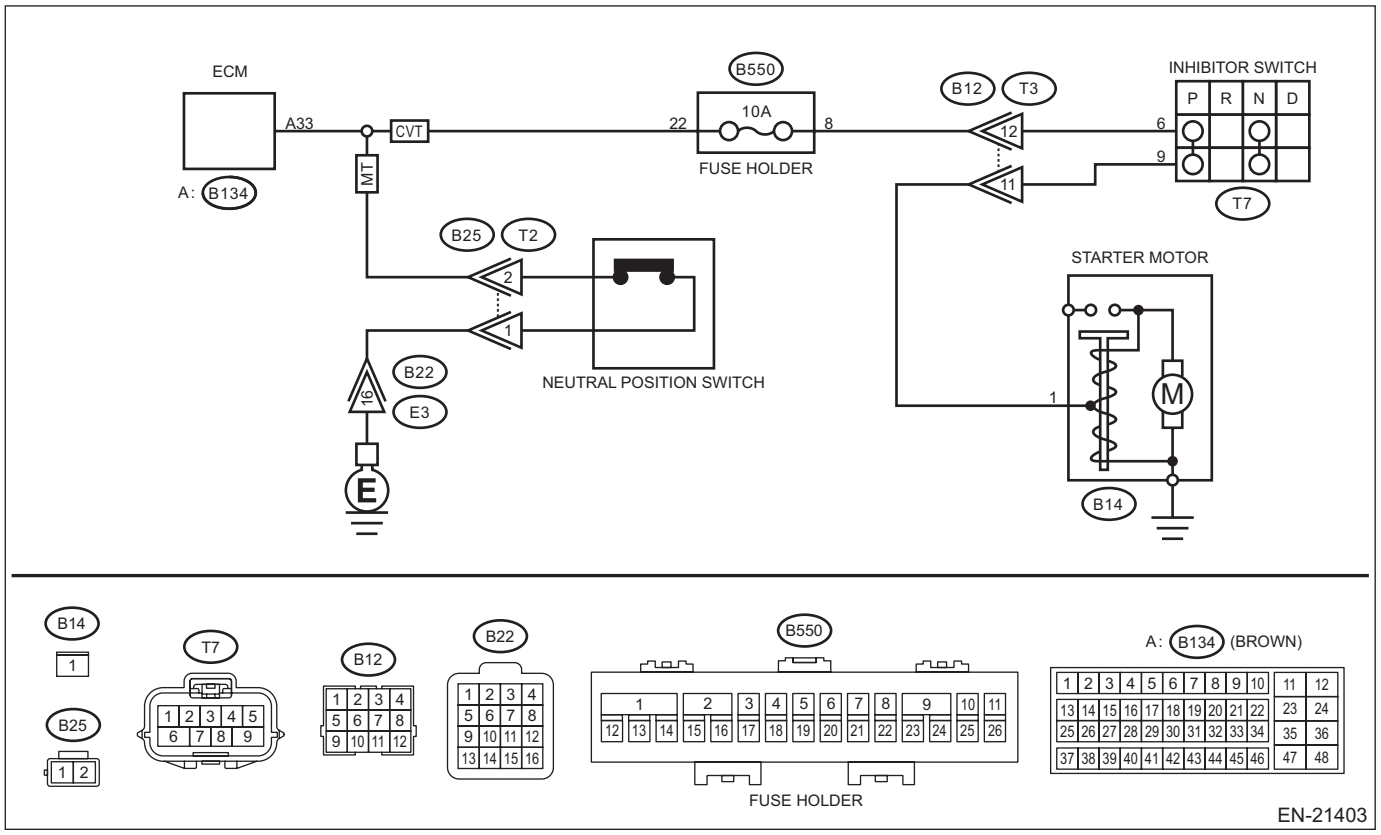

Step		Check	Yes	No
1	**CHECK INPUT SIGNAL OF ECM.** 1) Turn the ignition switch to ON. 2) Place the shift lever in neutral. 3) Measure the voltage between ECM connector and engine ground. ***Connector & terminal*** ***(B134) No. 33 (+) — Engine ground (–):***	Is the voltage less than 1 V?	Repair the poor contact of ECM connector.	Go to step **2**.

Step		Check	Yes	No
2	**CHECK HARNESS BETWEEN ECM AND NEUTRAL POSITION SWITCH CONNECTOR.** 1) Turn the ignition switch to OFF. 2) Disconnect the connector from ECM. 3) Disconnect the connector from the neutral position switch. 4) Measure the resistance of harness between ECM connector and neutral position switch connector. ***Connector & terminal*** ***(B134) No. 33 — (B25) No. 2:***	Is the resistance less than 1 Ω?	Go to step **3**.	Repair the open circuit in harness between ECM connector and transmission harness connector.
3	**CHECK HARNESS BETWEEN NEUTRAL POSITION SWITCH CONNECTOR AND CHASSIS GROUND.** Measure the resistance of harness between neutral position switch connector and chassis ground. ***Connector & terminal*** ***(B25) No. 1 — Chassis ground:***	Is the resistance less than 5 Ω?	Go to step **4**.	Repair the harness and connector. NOTE: In this case, repair the following item: • Open circuit in harness between neutral position switch connector and chassis ground • Poor contact of coupling connector
4	**CHECK NEUTRAL POSITION SWITCH.** 1) Place the shift lever in neutral. 2) Measure the resistance between neutral position switch connector terminals. ***Connector & terminal*** ***(T2) No. 1 — (T2) No. 2:***	Is the resistance less than 1 Ω?	Repair the poor contact of neutral position switch connector.	Replace the neutral position switch. <Ref. to 6MT(TY75)-46, Switches and Harness.>

7. OUTLINE OF DIAGNOSIS (MT MODEL)

Detect the open or short circuit of neutral SW.
Judge as NG when there is no change in the neutral SW even if the driving shift was applied. (There is neutral SW ON/OFF inversion from the vehicle speed and engine speed.)

8. EXECUTION CONDITION (MT MODEL)

Secondary parameters	Execution condition
Battery voltage	≥ 10.9 V
The number of driving condition change from a) to b)	= 3 times
a) Vehicle speed	≤ 0 km/h (0 MPH)
Engine speed	≥ 600 rpm and ≤ 900 rpm
b) Vehicle speed	≤ 64 km/h (39.8 MPH)
Engine speed	≥ 1400 rpm and ≤ 2250 rpm

9. GENERAL DRIVING CYCLE (MT MODEL)

Perform the diagnosis only once after the enable conditions have been established.

10.METHOD OF DIAGNOSIS (MT MODEL)

Judge NG when the malfunction criteria below are completed determined times or more after the neutral SW change.

Judgment Value

Malfunction Criteria	Threshold Value
Neutral switch output voltage	≥ 6.6 V

Time Needed for Diagnosis: 3 times
Malfunction Indicator Light Illumination: Illuminates when malfunction occurs in 2 continuous driving cycles.

EH:DTC P1134 A/F / O2 SENSOR BANK1 SENSOR1 SERIAL PERIPHERAL INTERFACE (SPI) COMMUNICATION

DTC DETECTING CONDITION:
Immediately at fault recognition

CAUTION:
After servicing or replacing faulty parts, perform Clear Memory Mode <Ref. to EN(w/o STI)(diag)-82, OPERATION, Clear Memory Mode.>, and Inspection Mode <Ref. to EN(w/o STI)(diag)-64, PROCEDURE, Inspection Mode.>.

Step		Check	Yes	No
1	**CHECK FOR ANY OTHER DTC ON DISPLAY.**	Is any other DTC displayed?	Check the appropriate DTC using the “List of Diagnostic Trouble Code (DTC)”. <Ref. to EN(w/o STI)(diag)-106, List of Diagnostic Trouble Code (DTC).>	Replace the ECM. <Ref. to FU(w/o STI)-124, Engine Control Module (ECM).>

1. OUTLINE OF DIAGNOSIS

Judge as NG when the A/F sensor microcomputer operation is abnormal.

2. EXECUTION CONDITION

Secondary parameters	Execution condition
None	

3. GENERAL DRIVING CYCLE

Always perform the diagnosis continuously.

4. DIAGNOSTIC METHOD

Judge as NG when the following conditions are established.

Judgment Value

Malfunction Criteria	Threshold Value
Communication status between CPU and A/F sensor microcomputer	Malfunction

Time Needed for Diagnosis: 80 ms
Malfunction Indicator Light Illumination: Illuminates as soon as a malfunction occurs.

EI: DTC P1160 THROTTLE RETURN SPRING

NOTE:
For the diagnostic procedure, refer to DTC. <Ref. to EN(w/o STI)(diag)-611, DTC P2101 THROTTLE ACTUATOR "A" CONTROL MOTOR CIRCUIT RANGE/PERFORMANCE, Diagnostic Procedure with Diagnostic Trouble Code (DTC).>

1. OUTLINE OF DIAGNOSIS

Judge as NG when the throttle position is out of specified value with ignition switch OFF.

2. EXECUTION CONDITION

Secondary parameters	Execution condition
Ignition switch	OFF
Continuous time when throttle motor control duty is 0%	= 7.82 s

3. GENERAL DRIVING CYCLE

Perform the diagnosis when the ignition switch is turned from ON to OFF.

4. DIAGNOSTIC METHOD

Judge as NG when the following conditions are established.

Judgment Value

Malfunction Criteria	Threshold Value
Throttle position	< 13.9% or > 20.6%

Time Needed for Diagnosis: Less than 1 second
Malfunction Indicator Light Illumination: Illuminates as soon as a malfunction occurs.

EJ: DTC P1191 FUEL RAIL PRESSURE SENSOR "A" CIRCUIT NO ACTIVITY DETECTED

DTC DETECTING CONDITION:

Detected when two consecutive driving cycles with fault occur.

TROUBLE SYMPTOM:

- Improper idling
- Poor driving performance

CAUTION:

- **After servicing or replacing faulty parts, perform Clear Memory Mode <Ref. to EN(w/o STI)(diag)-82, OPERATION, Clear Memory Mode.>, and Inspection Mode <Ref. to EN(w/o STI)(diag)-64, PROCEDURE, Inspection Mode.>.**
- **Use the check board when measuring the ECM terminal voltage and resistance.**

WIRING DIAGRAM:

Engine Electrical System <Ref. to WI-154, WIRING DIAGRAM, Engine Electrical System.>

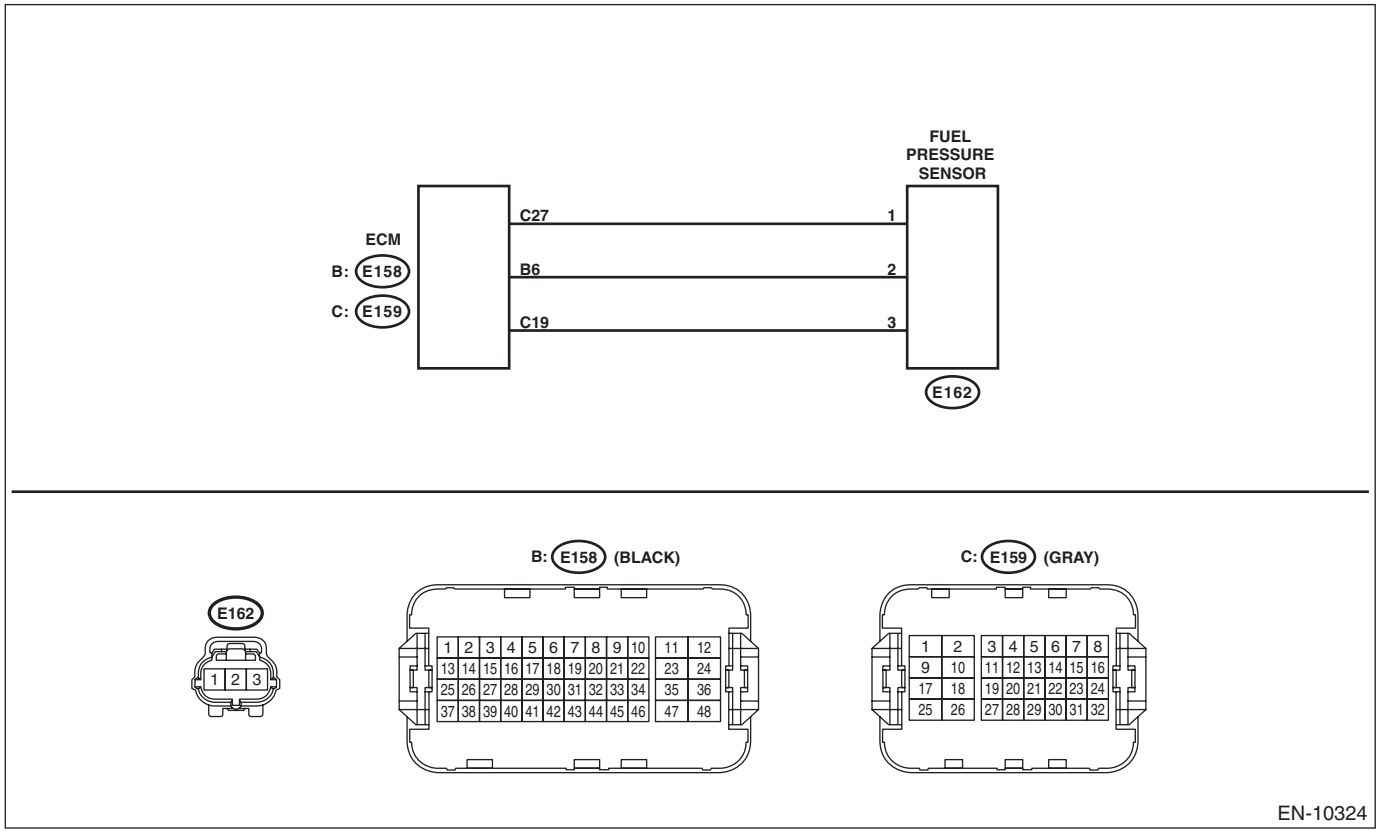

	Step	Check	Yes	No
1	**CHECK CURRENT DATA.** 1) Start the engine. 2) Read the value of «Fuel Rail Pressure A» using the Subaru Select Monitor or a general scan tool. NOTE: • Subaru Select Monitor For detailed operation procedures, refer to "Current Data Display For Engine". <Ref. to EN(w/o STI)(diag)-46, Subaru Select Monitor.> • General scan tool For detailed operation procedures, refer to the general scan tool operation manual.	Is the value of «Fuel Rail Pressure A» 2500 kPa (25.49 kgf/cm^2, 362.6 psi) or more?	Go to step **2**.	Even if DTC is detected, the circuit has returned to a normal condition at this time. Reproduce the failure, and then perform the diagnosis again. NOTE: In this case, temporary poor contact of connector, temporary open or short circuit of harness may be the cause.
2	**CHECK FUEL PRESSURE SENSOR POWER SUPPLY.** 1) Turn the ignition switch to OFF. 2) Disconnect the connector from the fuel pressure sensor. 3) Turn the ignition switch to ON. 4) Measure the voltage between fuel pressure sensor connector and engine ground. ***Connector & terminal*** ***(E162) No. 3 (+) — Engine ground (–):***	Is the voltage 4.5 V or more?	Go to step **3**.	Go to step **6**.
3	**CHECK FUEL PRESSURE SENSOR SIGNAL.** 1) Connect all connectors. 2) Start the engine. 3) Read the value of «Fuel Rail Pressure A» when idling using the Subaru Select Monitor or a general scan tool. NOTE: • Subaru Select Monitor For detailed operation procedures, refer to "Current Data Display For Engine". <Ref. to EN(w/o STI)(diag)-46, Subaru Select Monitor.> • General scan tool For detailed operation procedures, refer to the general scan tool operation manual. 4) Measure the voltage between ECM connectors. ***Connector & terminal*** ***(E158) No. 6 (+) — (E159) No. 27 (–):***	When the value of «Fuel Rail Pressure A» during idling is approx. 4,000 kPa (40.79 kgf/cm^2, 580.2 psi), is the voltage 0.75 — 1.5 V?	Repair the poor contact of ECM connector.	Go to step **4**.
4	**CHECK HARNESS BETWEEN ECM AND FUEL PRESSURE SENSOR CONNECTOR.** 1) Turn the ignition switch to OFF. 2) Disconnect the connector from ECM. 3) Disconnect the connector from the fuel pressure sensor. 4) Measure the resistance of harness between ECM connector and fuel pressure sensor connector. ***Connector & terminal*** ***(E159) No. 27 — (E162) No. 1:*** ***(E158) No. 6 — (E162) No. 2:***	Is the resistance less than 1 Ω?	Go to step **5**.	Repair the open circuit in harness between ECM connector and fuel pressure sensor connector.

	Step	Check	Yes	No
5	**CHECK HARNESS BETWEEN ECM AND FUEL PRESSURE SENSOR CONNECTOR.** Measure the resistance between the ECM connector and engine ground. ***Connector & terminal*** ***(E158) No. 6 — Engine ground:*** ***(E159) No. 27 — Engine ground:***	Is the resistance 1 MΩ or more?	Replace the fuel pressure sensor. <Ref. to FU(w/o STI)-66, Fuel Pressure Sensor.>	Go to step **6**.
6	**CHECK HARNESS BETWEEN ECM AND FUEL PRESSURE SENSOR CONNECTOR.** 1) Turn the ignition switch to OFF. 2) Disconnect the connector from ECM. 3) Measure the resistance of harness between ECM connector and fuel pressure sensor connector. ***Connector & terminal*** ***(E159) No. 19 — (E162) No. 3:***	Is the resistance less than 1 Ω?	Go to step **7**.	Repair the open circuit in harness between ECM connector and fuel pressure sensor connector.
7	**CHECK HARNESS BETWEEN ECM AND FUEL PRESSURE SENSOR CONNECTOR.** Measure the resistance between the ECM connector and engine ground. ***Connector & terminal*** ***(E159) No. 19 — Engine ground:***	Is the resistance 1 MΩ or more?	Repair the poor contact of ECM connector.	Repair the ground short circuit of harness between ECM connector and fuel pressure sensor connector.

1. OUTLINE OF DIAGNOSIS

Detect the signal stuck of the fuel pressure sensor.
Judge as NG when the voltage change amount per unit time of the fuel pressure sensor does not exceed the threshold value.

2. EXECUTION CONDITION

Secondary parameters	Execution condition
Battery voltage	≥ 10.9 V
Engine speed	≥ 475 rpm
Fuel cut	Not performed

3. GENERAL DRIVING CYCLE

Perform the diagnosis continuously after starting the engine.

4. DIAGNOSTIC METHOD

If the duration of time while the following conditions are met is longer than the time indicated, judge as NG.

Judgment Value

Malfunction Criteria	Threshold Value
Change amount per unit time of fuel pressure sensor voltage	≤ 3.8 V/s

Time Needed for Diagnosis: 10 seconds
Malfunction Indicator Light Illumination: Illuminates when malfunction occurs in 2 continuous driving cycles.

EK:DTC P1261 CYLINDER 1 DIRECT FUEL INJECTOR CIRCUIT/OPEN

DTC DETECTING CONDITION:
Immediately at fault recognition

CAUTION:
- **After servicing or replacing faulty parts, perform Clear Memory Mode <Ref. to EN(w/o STI)(diag)-82, OPERATION, Clear Memory Mode.>, and Inspection Mode <Ref. to EN(w/o STI)(diag)-64, PROCEDURE, Inspection Mode.>.**
- **Use the check board when measuring the ECM terminal voltage and resistance.**

WIRING DIAGRAM:
Engine Electrical System <Ref. to WI-154, WIRING DIAGRAM, Engine Electrical System.>

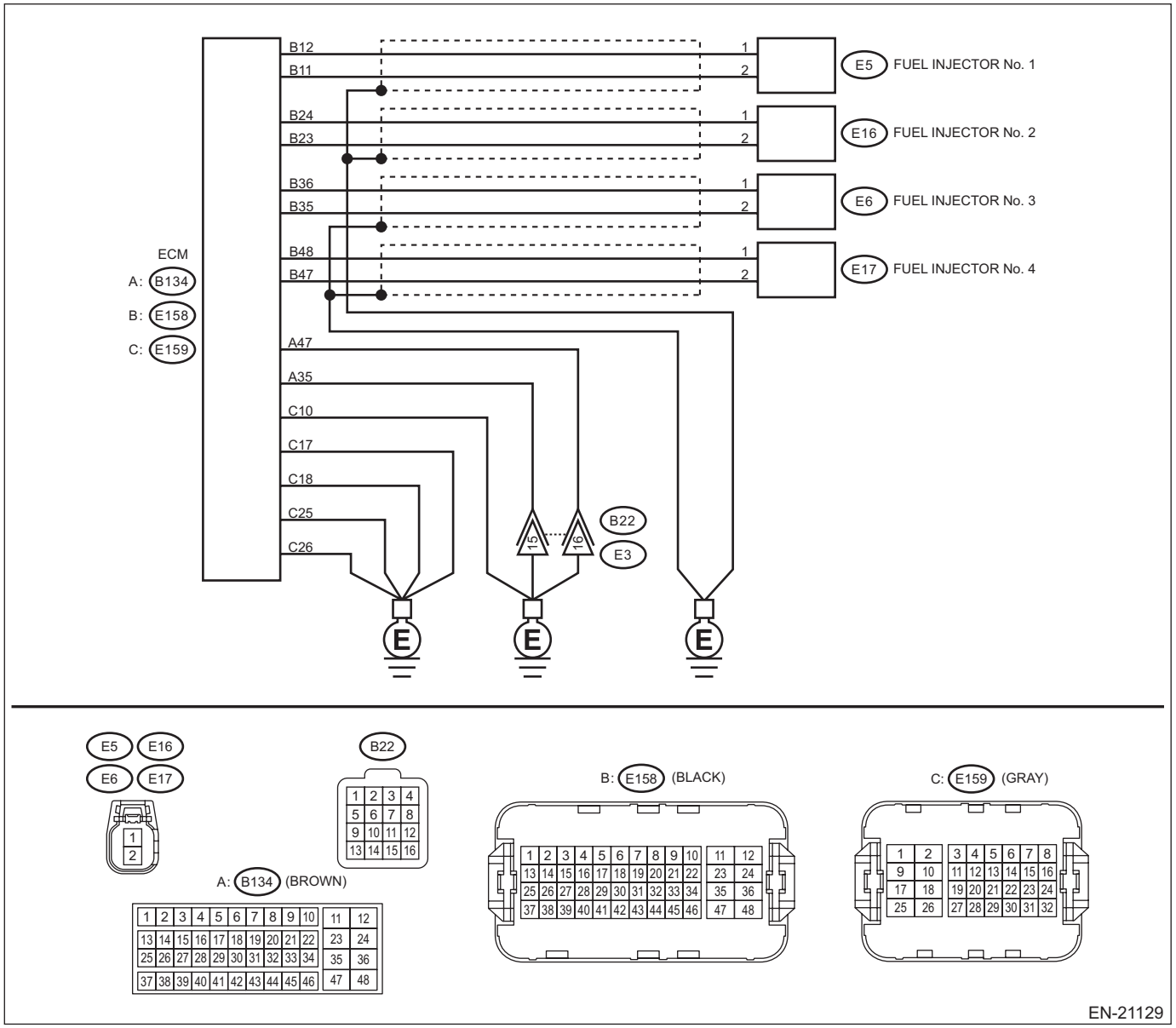

	Step	Check	Yes	No
1	**CHECK HARNESS BETWEEN ECM AND FUEL INJECTOR CONNECTOR.** 1) Turn the ignition switch to OFF. 2) Disconnect the connector from ECM. 3) Measure the resistance between ECM terminals on faulty fuel injectors. ***Connector & terminal*** ***#1 (E158) No. 11 — (E158) No. 12:*** ***#2 (E158) No. 23 — (E158) No. 24:*** ***#3 (E158) No. 35 — (E158) No. 36:*** ***#4 (E158) No. 47 — (E158) No. 48:***	Is resistance 1.89 — 2.31 Ω at 20°C (68°F)?	Go to step **2**.	Go to step **3**.
2	**CHECK HARNESS BETWEEN ECM AND FUEL INJECTOR CONNECTOR.** Measure the resistance between ECM and engine ground on faulty injectors. ***Connector & terminal*** ***#1 (E158) No. 12 — Engine ground:*** ***#1 (E158) No. 11 — Engine ground:*** ***#2 (E158) No. 24 — Engine ground:*** ***#2 (E158) No. 23 — Engine ground:*** ***#3 (E158) No. 36 — Engine ground:*** ***#3 (E158) No. 35 — Engine ground:*** ***#4 (E158) No. 48 — Engine ground:*** ***#4 (E158) No. 47 — Engine ground:***	Is the resistance 1 MΩ or more?	Repair the poor contact of ECM connector.	Go to step **3**.
3	**CHECK FUEL INJECTOR.** Check the fuel injector on faulty cylinder. <Ref. to FU(w/o STI)-65, INSPECTION, Fuel Injector.>	Is the check result OK?	Repair the open or ground short circuit in harness between ECM connector and fuel injector connector.	Replace the faulty fuel injector. <Ref. to FU(w/o STI)-50, Fuel Injector.>

1. OUTLINE OF DIAGNOSIS

Detect the malfunction of fuel injector circuit function.
Judge as NG when ECM detects any malfunction in the diagnostic items listed below.

Diagnostic item	Malfunction Criteria
Power supply short	ECM low side terminal voltage of the fuel injector circuit is high.
Ground short	ECM low side terminal voltage of the fuel injector circuit is low.
Open circuit	Fuel injector current is low.
Overcurrent	Fuel injector current is high.
Short circuit	The time when the fuel injector current reaches the target current is short.

2. EXECUTION CONDITION

Secondary parameters	Execution condition
Battery voltage	≥ 9.4 V
Engine speed	> 0 rpm
Fuel cut	Not performed

3. GENERAL DRIVING CYCLE

Always perform the diagnosis continuously.

4. DIAGNOSTIC METHOD

If the duration of time while the following conditions are met is longer than the time indicated, judge as NG.

Diagnosis for Power Supply Short

Judgment Value

Malfunction Criteria	Threshold Value
Terminal voltage	≥ 4.1 V

Diagnosis for Ground Short

Judgment Value

Malfunction Criteria	Threshold Value
Terminal voltage	≤ 0.8 V

Diagnosis for Open Circuit

Judgment Value

Malfunction Criteria	Threshold Value
Fuel injector current	≤ 0.5 A

Diagnosis for Overcurrent

Judgment Value

Malfunction Criteria	Threshold Value
Fuel injector current	≥ 22 A

Diagnosis for Short Circuit

Judgment Value

Malfunction Criteria	Threshold Value
Time for reaching target current	≤ 0.075 ms

Time Needed for Diagnosis: TDC × 50 times
Malfunction Indicator Light Illumination: Illuminates as soon as a malfunction occurs.

EL:DTC P1262 CYLINDER 2 DIRECT FUEL INJECTOR CIRCUIT/OPEN

NOTE:
For the diagnostic procedure, refer to DTC P1261. <Ref. to EN(w/o STI)(diag)-494, DTC P1261 CYLINDER 1 DIRECT FUEL INJECTOR CIRCUIT/OPEN, Diagnostic Procedure with Diagnostic Trouble Code (DTC).>

1. OUTLINE OF DIAGNOSIS

NOTE:
For the detection standard, refer to DTC P1261. <Ref. to EN(w/o STI)(diag)-494, DTC P1261 CYLINDER 1 DIRECT FUEL INJECTOR CIRCUIT/OPEN, Diagnostic Procedure with Diagnostic Trouble Code (DTC).>

EM:DTC P1263 CYLINDER 3 DIRECT FUEL INJECTOR CIRCUIT/OPEN

NOTE:
For the diagnostic procedure, refer to DTC P1261. <Ref. to EN(w/o STI)(diag)-494, DTC P1261 CYLINDER 1 DIRECT FUEL INJECTOR CIRCUIT/OPEN, Diagnostic Procedure with Diagnostic Trouble Code (DTC).>

1. OUTLINE OF DIAGNOSIS

NOTE:
For the detection standard, refer to DTC P1261. <Ref. to EN(w/o STI)(diag)-494, DTC P1261 CYLINDER 1 DIRECT FUEL INJECTOR CIRCUIT/OPEN, Diagnostic Procedure with Diagnostic Trouble Code (DTC).>

EN:DTC P1264 CYLINDER 4 DIRECT FUEL INJECTOR CIRCUIT/OPEN

NOTE:
For the diagnostic procedure, refer to DTC P1261. <Ref. to EN(w/o STI)(diag)-494, DTC P1261 CYLINDER 1 DIRECT FUEL INJECTOR CIRCUIT/OPEN, Diagnostic Procedure with Diagnostic Trouble Code (DTC).>

1. OUTLINE OF DIAGNOSIS

NOTE:
For the detection standard, refer to DTC P1261. <Ref. to EN(w/o STI)(diag)-494, DTC P1261 CYLINDER 1 DIRECT FUEL INJECTOR CIRCUIT/OPEN, Diagnostic Procedure with Diagnostic Trouble Code (DTC).>

EO:DTC P1449 EVAP SYSTEM CLOG DETECTED (AIR FILTER)

DTC DETECTING CONDITION:
Detected when two consecutive driving cycles with fault occur.

CAUTION:
After servicing or replacing faulty parts, perform Clear Memory Mode <Ref. to EN(w/o STI)(diag)-82, OPERATION, Clear Memory Mode.>, and Inspection Mode <Ref. to EN(w/o STI)(diag)-64, PROCEDURE, Inspection Mode.>.

	Step	Check	Yes	No
1	**CHECK FOR ANY OTHER DTC ON DISPLAY.**	Is any other DTC displayed?	Check the appropriate DTC using the "List of Diagnostic Trouble Code (DTC)". <Ref. to EN(w/o STI)(diag)-106, List of Diagnostic Trouble Code (DTC).>	Go to step **2**.
2	**CHECK DRAIN TUBE A AND DRAIN PIPE BETWEEN LEAK CHECK VALVE ASSEMBLY AND DRAIN FILTER.**	Is the drain tube A or the drain pipe between leak check valve assembly and drain filter clogged?	Replace the drain tube A or the drain pipe between leak check valve assembly and drain filter. <Ref. to EC(w/o STI)-52, Leak Check Valve Assembly.> <Ref. to EC(w/o STI)-48, Drain Filter.>	Go to step **3**.
3	**CHECK DRAIN FILTER.**	Is the drain filter clogged?	Replace the drain filter. <Ref. to EC(w/o STI)-48, Drain Filter.>	Replace the leak check valve assembly. <Ref. to EC(w/o STI)-52, Leak Check Valve Assembly.>

1. OUTLINE OF DIAGNOSIS

Detect the drain filter clogging by the pressure change during purge introduction.
Judge as drain filter clogging malfunction if the pressure in the evaporative emission system piping suddenly decreases by the purging.

2. COMPONENT DESCRIPTION

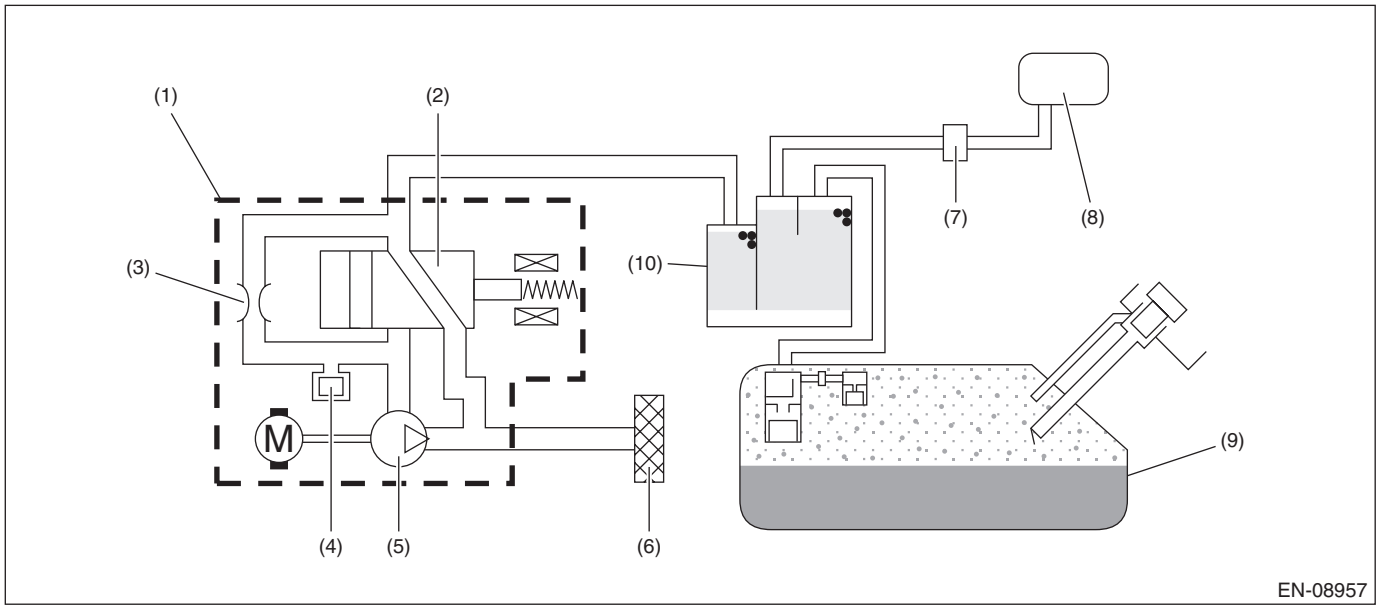

(1) Leak check valve ASSY
(2) Switching valve
(3) Reference orifice (0.02 inch orifice)
(4) Pressure sensor
(5) Vacuum pump
(6) Drain filter
(7) Purge control solenoid valve
(8) Intake manifold
(9) Fuel tank
(10) Canister

3. EXECUTION CONDITION

Secondary parameters	Execution condition
Battery voltage	≥ 10.9 V
Elapsed time after starting the engine	≥ 20000 ms
Evaporative Leak Check Module vacuum pump	Not in operation
Evaporative Leak Check Module switching valve	Open

4. GENERAL DRIVING CYCLE

Always perform the diagnosis continuously when purging is performed after 20000 ms have passed since the engine started.

5. DIAGNOSTIC METHOD

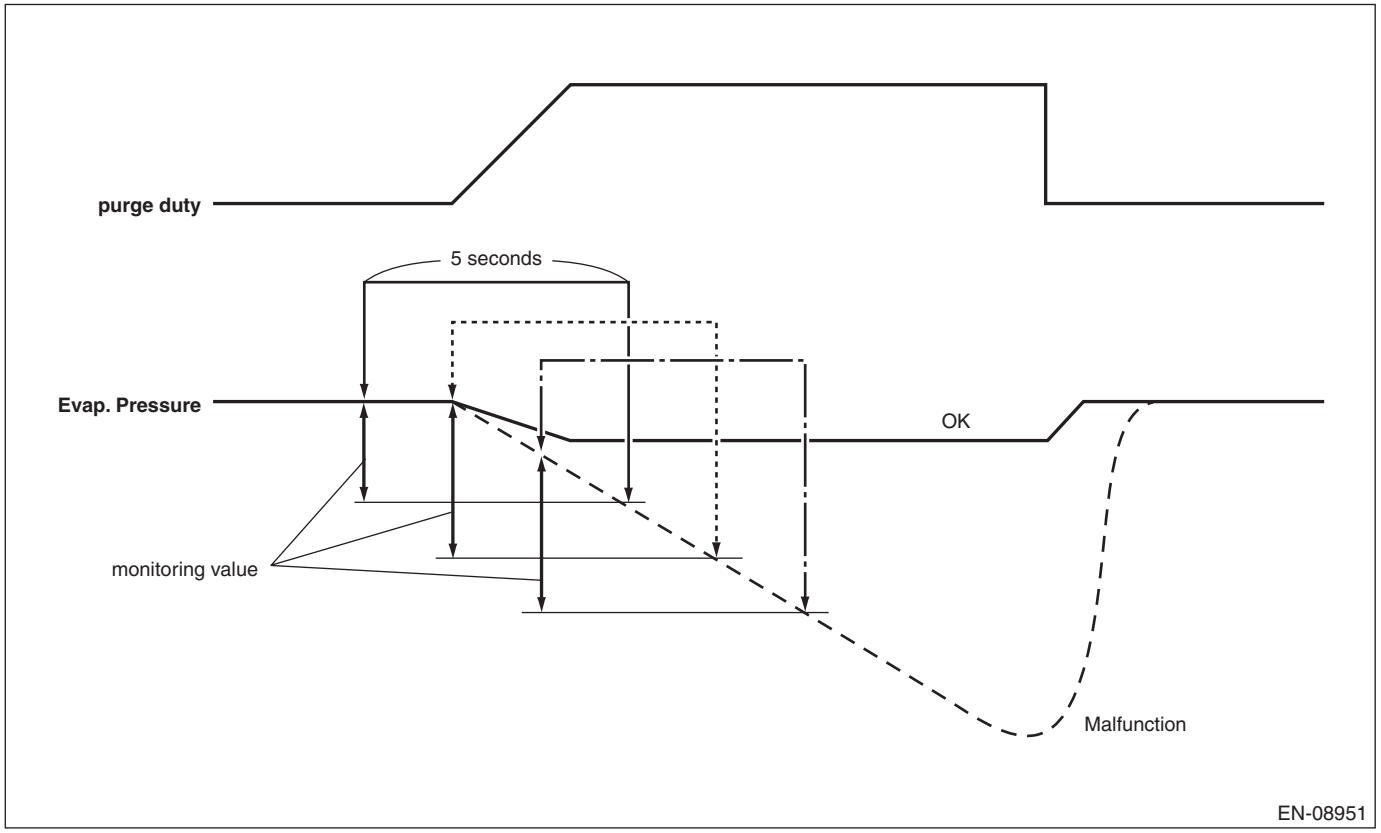

Calculate the difference between the Evaporative Leak Check Module pressure sensor output value of 5 seconds ago and the value at the present moment, and if the value is greater than the judgment value, detect as filter clogging trouble and judge as malfunction.
Judge as NG when the following conditions are established.

Judgment Value

Malfunction Criteria	Threshold Value
|Pressure sensor output value as of 5 seconds ago – Current pressure sensor output value|	> 1370 Pa (10.3 mmHg, 0.4 inHg)

Time Needed for Diagnosis: 6 seconds
Malfunction Indicator Light Illumination: Illuminates when malfunction occurs in 2 continuous driving cycles.

EP:DTC P1451 EVAP SYSTEM CLOG DETECTED (PIPE)

DTC DETECTING CONDITION:
Detected when two consecutive driving cycles with fault occur.

CAUTION:
After servicing or replacing faulty parts, perform Clear Memory Mode <Ref. to EN(w/o STI)(diag)-82, OPERATION, Clear Memory Mode.>, and Inspection Mode <Ref. to EN(w/o STI)(diag)-64, PROCEDURE, Inspection Mode.>.

	Step	Check	Yes	No
1	**CHECK DRAIN TUBE BETWEEN CANISTER AND LEAK CHECK VALVE ASSEMBLY.**	Is the drain tube between canister and leak check valve assembly clogged?	Replace the drain tube between the canister and leak check valve assembly. <Ref. to EC(w/o STI)-52, Leak Check Valve Assembly.>	Go to step **2**.
2	**CHECK HOSE AND TUBE BETWEEN CANISTER AND FUEL TANK.**	Are the hose and tube between the canister and fuel tank clogged?	Replace the hose or tube between the canister and fuel tank. <Ref. to EC(w/o STI)-8, Canister.> <Ref. to FU(w/o STI)-145, Fuel Tank.>	Replace the canister. <Ref. to EC(w/o STI)-8, Canister.> After the operation is complete, go to the next step. Go to step **3**.
3	**CHECK EVAPORATIVE EMISSION CONTROL SYSTEM.** Perform drive cycle I. <Ref. to EN(w/o STI)(diag)-74, DRIVE CYCLE I, PROCEDURE, Drive Cycle.>	Is DTC P1451 displayed on the display?	Replace the leak check valve assembly. <Ref. to EC(w/o STI)-52, Leak Check Valve Assembly.>	End.

1. OUTLINE OF DIAGNOSIS

NOTE:
For the detection standard, refer to DTC P0455. <Ref. to EN(w/o STI)(diag)-396, DTC P0455 EVAP SYSTEM (CPC) LEAK DETECTED (LARGE LEAK), Diagnostic Procedure with Diagnostic Trouble Code (DTC).>

EQ:DTC P1492 COIL 1 EGR "A" CONTROL CIRCUIT LOW

NOTE:
For the diagnostic procedure, refer to DTC P1498. <Ref. to EN(w/o STI)(diag)-503, DTC P1498 COIL 4 EGR "A" CONTROL CIRCUIT LOW, Diagnostic Procedure with Diagnostic Trouble Code (DTC).>

1. OUTLINE OF DIAGNOSIS

NOTE:
For the detection standard, refer to DTC P1498. <Ref. to EN(w/o STI)(diag)-503, DTC P1498 COIL 4 EGR "A" CONTROL CIRCUIT LOW, Diagnostic Procedure with Diagnostic Trouble Code (DTC).>

ER:DTC P1493 COIL 1 EGR "A" CONTROL CIRCUIT HIGH

NOTE:
For the diagnostic procedure, refer to DTC P1499. <Ref. to EN(w/o STI)(diag)-506, DTC P1499 COIL 4 EGR "A" CONTROL CIRCUIT HIGH, Diagnostic Procedure with Diagnostic Trouble Code (DTC).>

1. OUTLINE OF DIAGNOSIS

NOTE:
For the detection standard, refer to DTC P1499. <Ref. to EN(w/o STI)(diag)-506, DTC P1499 COIL 4 EGR "A" CONTROL CIRCUIT HIGH, Diagnostic Procedure with Diagnostic Trouble Code (DTC).>

ES:DTC P1494 COIL 2 EGR "A" CONTROL CIRCUIT LOW

NOTE:
For the diagnostic procedure, refer to DTC P1498. <Ref. to EN(w/o STI)(diag)-503, DTC P1498 COIL 4 EGR "A" CONTROL CIRCUIT LOW, Diagnostic Procedure with Diagnostic Trouble Code (DTC).>

1. OUTLINE OF DIAGNOSIS

NOTE:
For the detection standard, refer to DTC P1498. <Ref. to EN(w/o STI)(diag)-503, DTC P1498 COIL 4 EGR "A" CONTROL CIRCUIT LOW, Diagnostic Procedure with Diagnostic Trouble Code (DTC).>

ET:DTC P1495 COIL 2 EGR "A" CONTROL CIRCUIT HIGH

NOTE:
For the diagnostic procedure, refer to DTC P1499. <Ref. to EN(w/o STI)(diag)-506, DTC P1499 COIL 4 EGR "A" CONTROL CIRCUIT HIGH, Diagnostic Procedure with Diagnostic Trouble Code (DTC).>

1. OUTLINE OF DIAGNOSIS

NOTE:
For the detection standard, refer to DTC P1499. <Ref. to EN(w/o STI)(diag)-506, DTC P1499 COIL 4 EGR "A" CONTROL CIRCUIT HIGH, Diagnostic Procedure with Diagnostic Trouble Code (DTC).>

EU:DTC P1496 COIL 3 EGR "A" CONTROL CIRCUIT LOW

NOTE:
For the diagnostic procedure, refer to DTC P1498. <Ref. to EN(w/o STI)(diag)-503, DTC P1498 COIL 4 EGR "A" CONTROL CIRCUIT LOW, Diagnostic Procedure with Diagnostic Trouble Code (DTC).>

1. OUTLINE OF DIAGNOSIS

NOTE:
For the detection standard, refer to DTC P1498. <Ref. to EN(w/o STI)(diag)-503, DTC P1498 COIL 4 EGR "A" CONTROL CIRCUIT LOW, Diagnostic Procedure with Diagnostic Trouble Code (DTC).>

EV:DTC P1497 COIL 3 EGR "A" CONTROL CIRCUIT HIGH

NOTE:
For the diagnostic procedure, refer to DTC P1499. <Ref. to EN(w/o STI)(diag)-506, DTC P1499 COIL 4 EGR "A" CONTROL CIRCUIT HIGH, Diagnostic Procedure with Diagnostic Trouble Code (DTC).>

1. OUTLINE OF DIAGNOSIS

NOTE:
For the detection standard, refer to DTC P1499. <Ref. to EN(w/o STI)(diag)-506, DTC P1499 COIL 4 EGR "A" CONTROL CIRCUIT HIGH, Diagnostic Procedure with Diagnostic Trouble Code (DTC).>

EW:DTC P1498 COIL 4 EGR "A" CONTROL CIRCUIT LOW

DTC DETECTING CONDITION:
Immediately at fault recognition

TROUBLE SYMPTOM:
- Improper idling
- Poor driving performance
- Engine breathing

CAUTION:
- **After servicing or replacing faulty parts, perform Clear Memory Mode <Ref. to EN(w/o STI)(diag)-82, OPERATION, Clear Memory Mode.>, and Inspection Mode <Ref. to EN(w/o STI)(diag)-64, PROCEDURE, Inspection Mode.>.**
- **Use the check board when measuring the ECM terminal voltage and resistance.**

WIRING DIAGRAM:
Engine Electrical System <Ref. to WI-154, WIRING DIAGRAM, Engine Electrical System.>

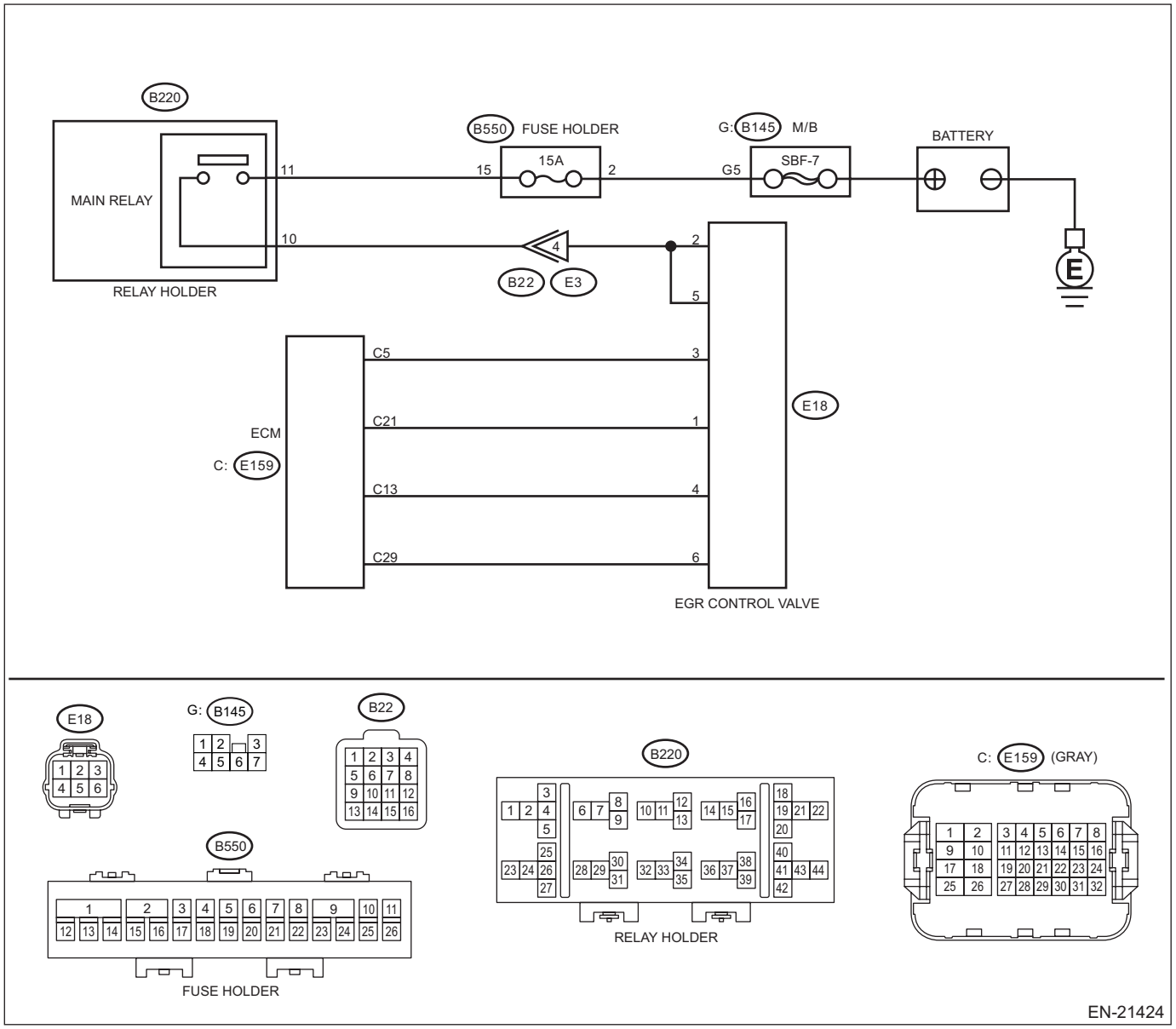

	Step	Check	Yes	No
1	**CHECK POWER SUPPLY TO EGR CONTROL VALVE.** 1) Turn the ignition switch to OFF. 2) Disconnect the connector from the EGR control valve. 3) Turn the ignition switch to ON. 4) Measure the voltage between EGR control valve connector and engine ground. ***Connector & terminal*** ***(E18) No. 2 (+) — Engine ground (–):*** ***(E18) No. 5 (+) — Engine ground (–):***	Is the voltage 10 V or more?	Go to step **2**.	Repair the harness and connector. NOTE: In this case, repair the following item: • Open circuit in harness between EGR control valve and main relay connector • Poor contact of coupling connector
2	**CHECK HARNESS BETWEEN ECM AND EGR CONTROL VALVE CONNECTOR.** 1) Turn the ignition switch to OFF. 2) Disconnect the connector from ECM. 3) Measure the resistance between ECM connector and EGR control valve connector. ***Connector & terminal*** ***DTC P1492; (E159) No. 5 — (E18) No. 3:*** ***DTC P1494; (E159) No. 21 — (E18) No. 1:*** ***DTC P1496; (E159) No. 13 — (E18) No. 4:*** ***DTC P1498; (E159) No. 29 — (E18) No. 6:***	Is the resistance less than 1 Ω?	Go to step **3**.	Repair the open circuit of the harness between the ECM connector and EGR control valve connector.
3	**CHECK HARNESS BETWEEN ECM AND EGR CONTROL VALVE CONNECTOR.** 1) Disconnect the connector from ECM. 2) Measure the resistance between the ECM connector and engine ground. ***Connector & terminal*** ***DTC P1492; (E159) No. 5 — Engine ground:*** ***DTC P1494; (E159) No. 21 — Engine ground:*** ***DTC P1496; (E159) No. 13 — Engine ground:*** ***DTC P1498; (E159) No. 29 — Engine ground:***	Is the resistance 1 MΩ or more?	Go to step **4**.	Repair ground short circuit of harness between ECM connector and EGR control valve connector.
4	**CHECK FOR POOR CONTACT.** Check for poor contact between ECM connector and EGR control valve connector.	Is there poor contact in ECM or EGR control valve connector?	Repair the poor contact of ECM or EGR control valve connector.	Replace EGR control valve. <Ref. to EC(w/o STI)-34, EGR Control Valve.>

1. OUTLINE OF DIAGNOSIS

- Detects open or short circuit of EGR.
- Judge as NG when the ECM output level differs from the actual terminal level.

2. COMPONENT DESCRIPTION

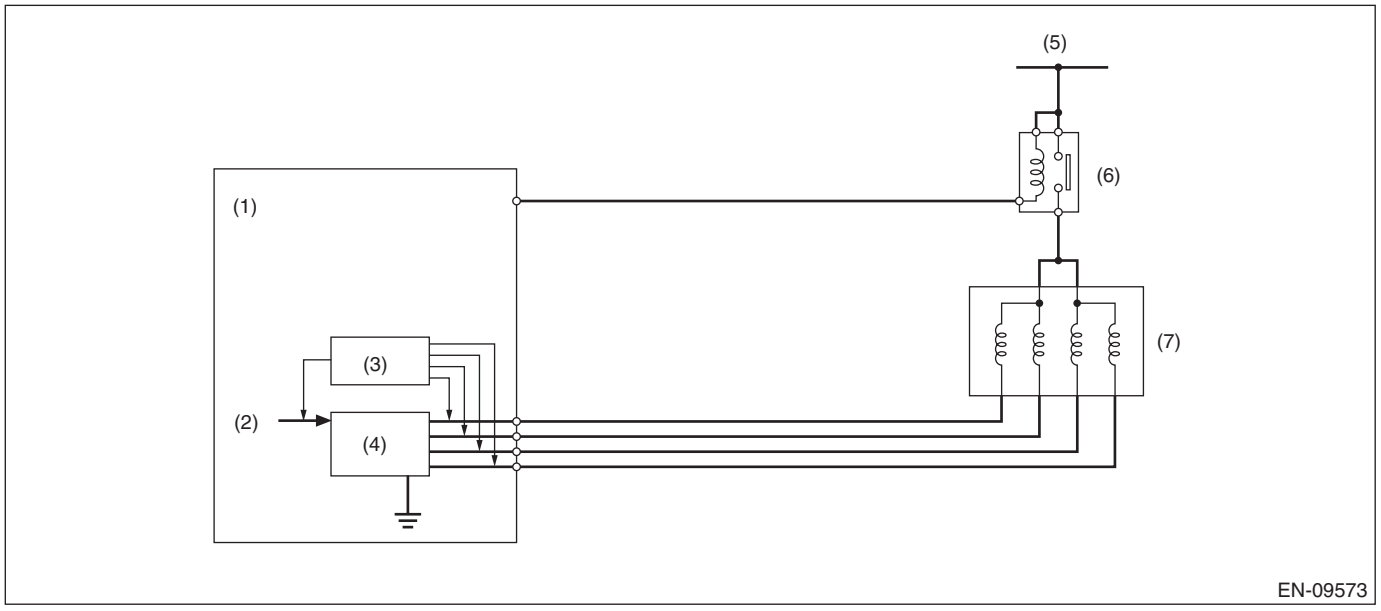

(1) Engine control module (ECM)
(2) Computer unit (CPU)
(3) Detecting circuit
(4) Switch circuit
(5) Battery voltage
(6) Main relay
(7) EGR control valve

3. EXECUTION CONDITION

Secondary parameters	Execution condition
EGR control signal	OFF
Battery voltage	≥ 10.9 V

4. GENERAL DRIVING CYCLE

Always perform the diagnosis continuously.

5. DIAGNOSTIC METHOD

If the duration of time while the following conditions are met is longer than the time indicated, judge as NG.

Judgment Value

Malfunction Criteria	Threshold Value
Terminal voltage	≤ 2.2 V

Time Needed for Diagnosis: 2500 ms
Malfunction Indicator Light Illumination: Illuminates as soon as a malfunction occurs.

EX:DTC P1499 COIL 4 EGR "A" CONTROL CIRCUIT HIGH

DTC DETECTING CONDITION:
Immediately at fault recognition

TROUBLE SYMPTOM:
- Improper idling
- Poor driving performance
- Engine breathing

CAUTION:
- **After servicing or replacing faulty parts, perform Clear Memory Mode <Ref. to EN(w/o STI)(diag)-82, OPERATION, Clear Memory Mode.>, and Inspection Mode <Ref. to EN(w/o STI)(diag)-64, PROCEDURE, Inspection Mode.>.**
- **Use the check board when measuring the ECM terminal voltage and resistance.**

WIRING DIAGRAM:
Engine Electrical System <Ref. to WI-154, WIRING DIAGRAM, Engine Electrical System.>

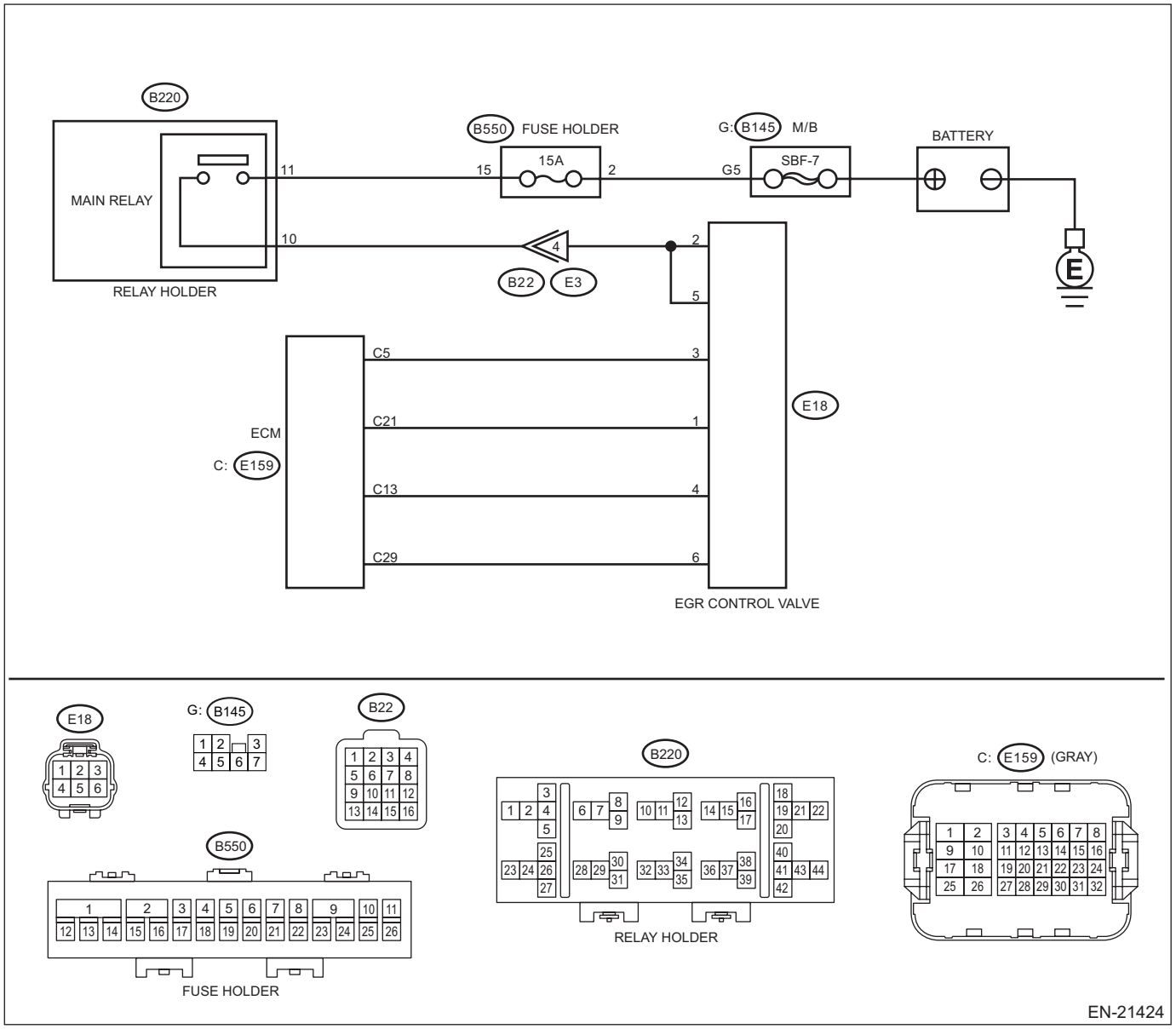

	Step	Check	Yes	No
1	**CHECK HARNESS BETWEEN ECM AND EGR CONTROL VALVE CONNECTOR.** 1) Turn the ignition switch to OFF. 2) Disconnect the connector from ECM. 3) Disconnect the connector from the EGR control valve. 4) Turn the ignition switch to ON. 5) Measure the voltage between ECM connector and engine ground. ***Connector & terminal*** ***DTC P1493; (E159) No. 5 (+) — Engine ground (–):*** ***DTC P1495; (E159) No. 21 (+) — Engine ground (–):*** ***DTC P1497; (E159) No. 13 (+) — Engine ground (–):*** ***DTC P1499; (E159) No. 29 (+) — Engine ground (–):***	Is the voltage 10 V or more?	Repair the short circuit to power supply in the harness between the ECM connector and EGR control valve connector.	Go to step **2**.
2	**CHECK EGR CONTROL VALVE.** Measure the resistance between EGR control valve terminals. ***Terminals*** ***DTC P1493; No. 2 — No. 3:*** ***DTC P1495; No. 2 — No. 1:*** ***DTC P1497; No. 5 — No. 4:*** ***DTC P1499; No. 5 — No. 6:***	Is the resistance 20 Ω or more?	Repair the poor contact of ECM connector.	Replace EGR control valve. <Ref. to EC(w/o STI)-34, EGR Control Valve.>

1. OUTLINE OF DIAGNOSIS

- Detects open or short circuit of EGR.
- Judge as NG when the ECM output level differs from the actual terminal level.

2. COMPONENT DESCRIPTION

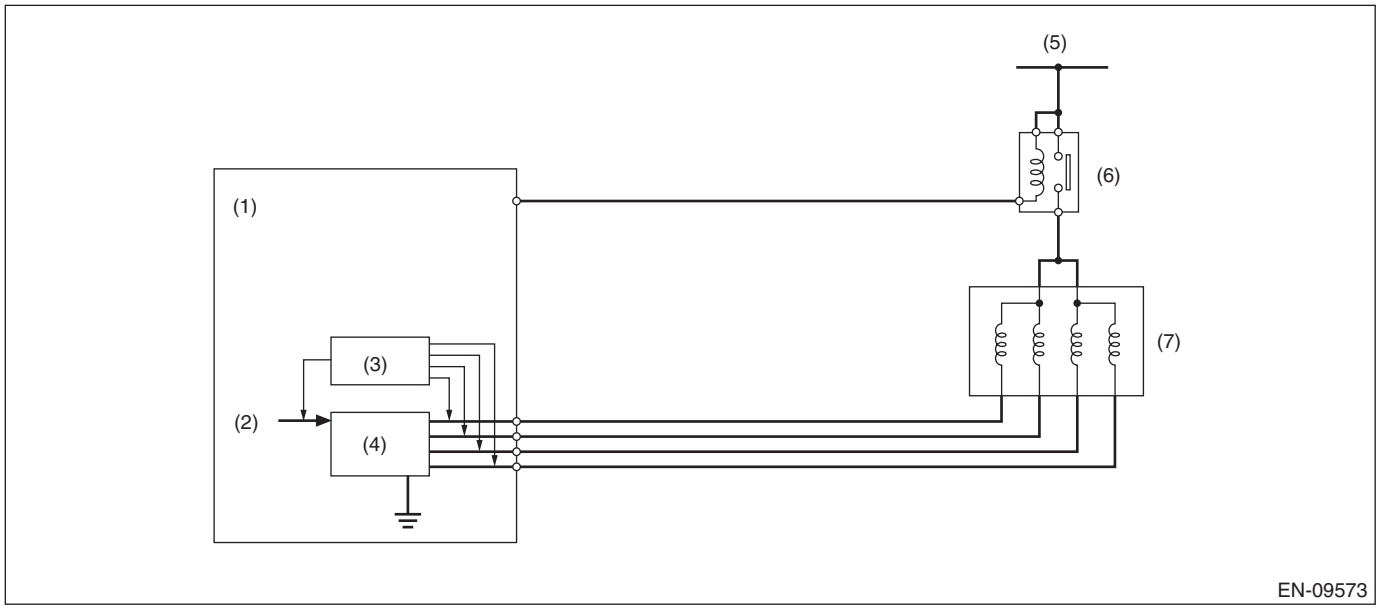

(1) Engine control module (ECM)
(2) Computer unit (CPU)
(3) Detecting circuit
(4) Switch circuit
(5) Battery voltage
(6) Main relay
(7) EGR control valve

3. EXECUTION CONDITION

Secondary parameters	Execution condition
EGR control signal	ON
Battery voltage	≥ 10.9 V

4. GENERAL DRIVING CYCLE

Always perform the diagnosis continuously.

5. DIAGNOSTIC METHOD

If the duration of time while the following conditions are met is longer than the time indicated, judge as NG.

Judgment Value

Malfunction Criteria	Threshold Value
Terminal current	≥ 5 A

Time Needed for Diagnosis: 2250 ms
Malfunction Indicator Light Illumination: Illuminates as soon as a malfunction occurs.

EY:DTC P1603 ENGINE STALL HISTORY

DTC DETECTING CONDITION:
Immediately at fault recognition

CAUTION:
- **After servicing or replacing faulty parts, perform Clear Memory Mode <Ref. to EN(w/o STI)(diag)-82, OPERATION, Clear Memory Mode.>.**
- **Use the check board when measuring the ECM terminal voltage and resistance.**

NOTE:
This DTC may be detected even if fault does not occur in the vehicle. If the customer does not ask for inspection, perform the clear memory mode without inspection and return the vehicle to the user.

WIRING DIAGRAM:
Engine Electrical System <Ref. to WI-154, WIRING DIAGRAM, Engine Electrical System.>

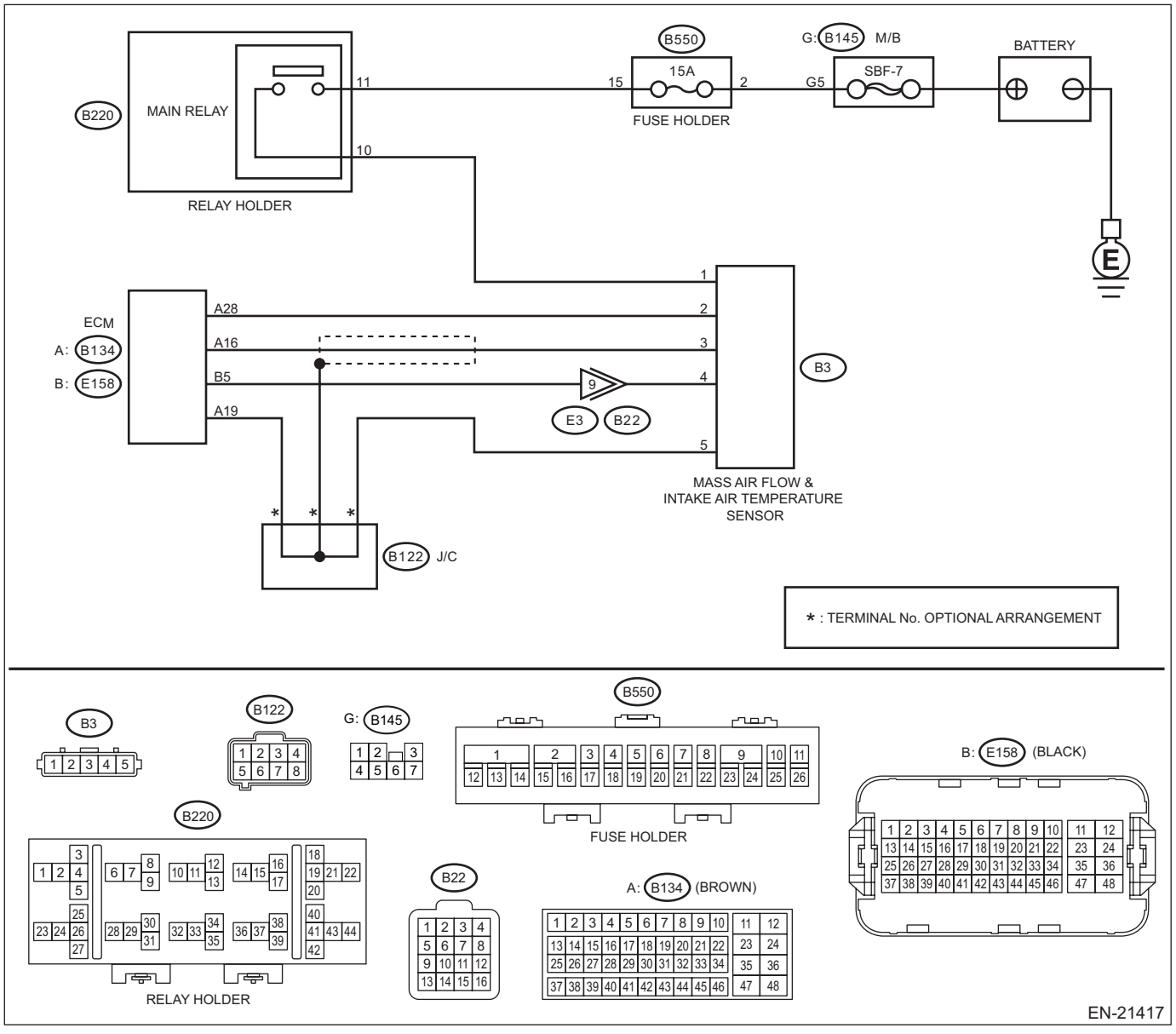

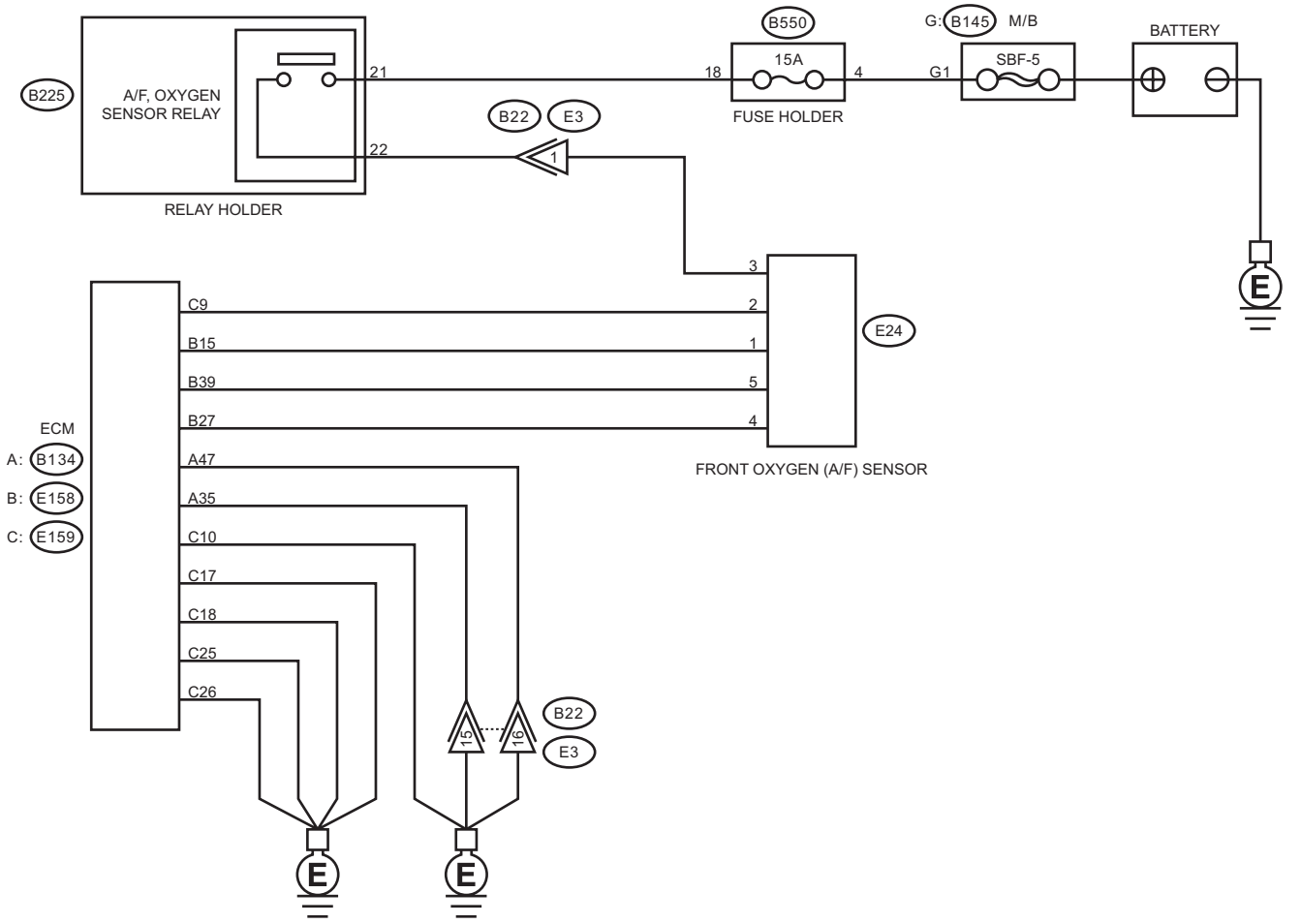
B225
A/F, OXYGEN SENSOR RELAY
21
22
RELAY HOLDER
B22
E3
1
B550
15A
18
4
FUSE HOLDER
G: B145
M/B
G1
SBF-5
BATTERY
E
3
2
1
5
4
E24
FRONT OXYGEN (A/F) SENSOR
ECM
A: B134
B: E158
C: E159
C9
B15
B39
B27
A47
A35
C10
C17
C18
C25
C26
16
16
B22
E3
E
E

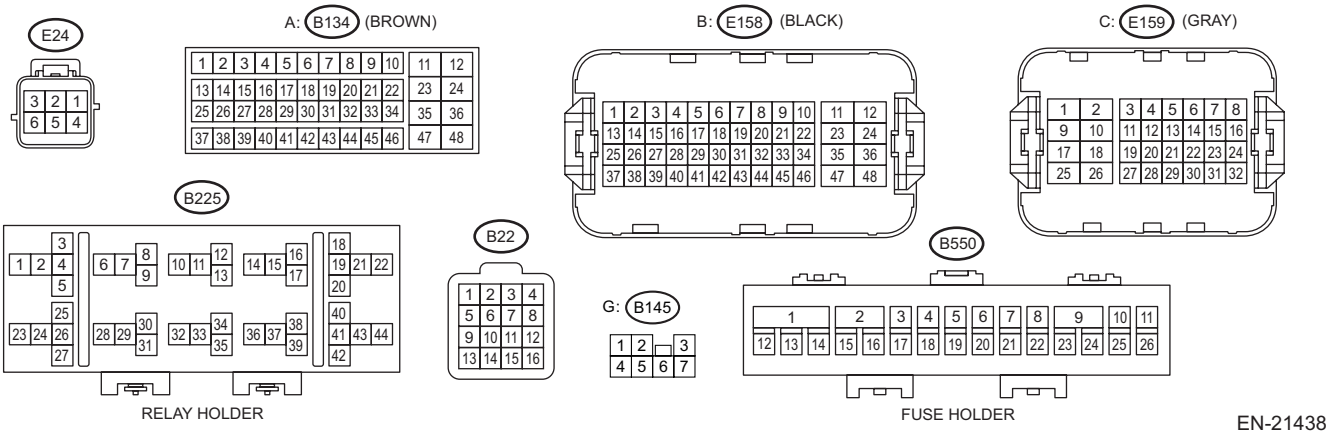
E24
A: B134 (BROWN)
B: E158 (BLACK)
C: E159 (GRAY)
B225
B22
G: B145
B550
RELAY HOLDER
FUSE HOLDER
EN-21438

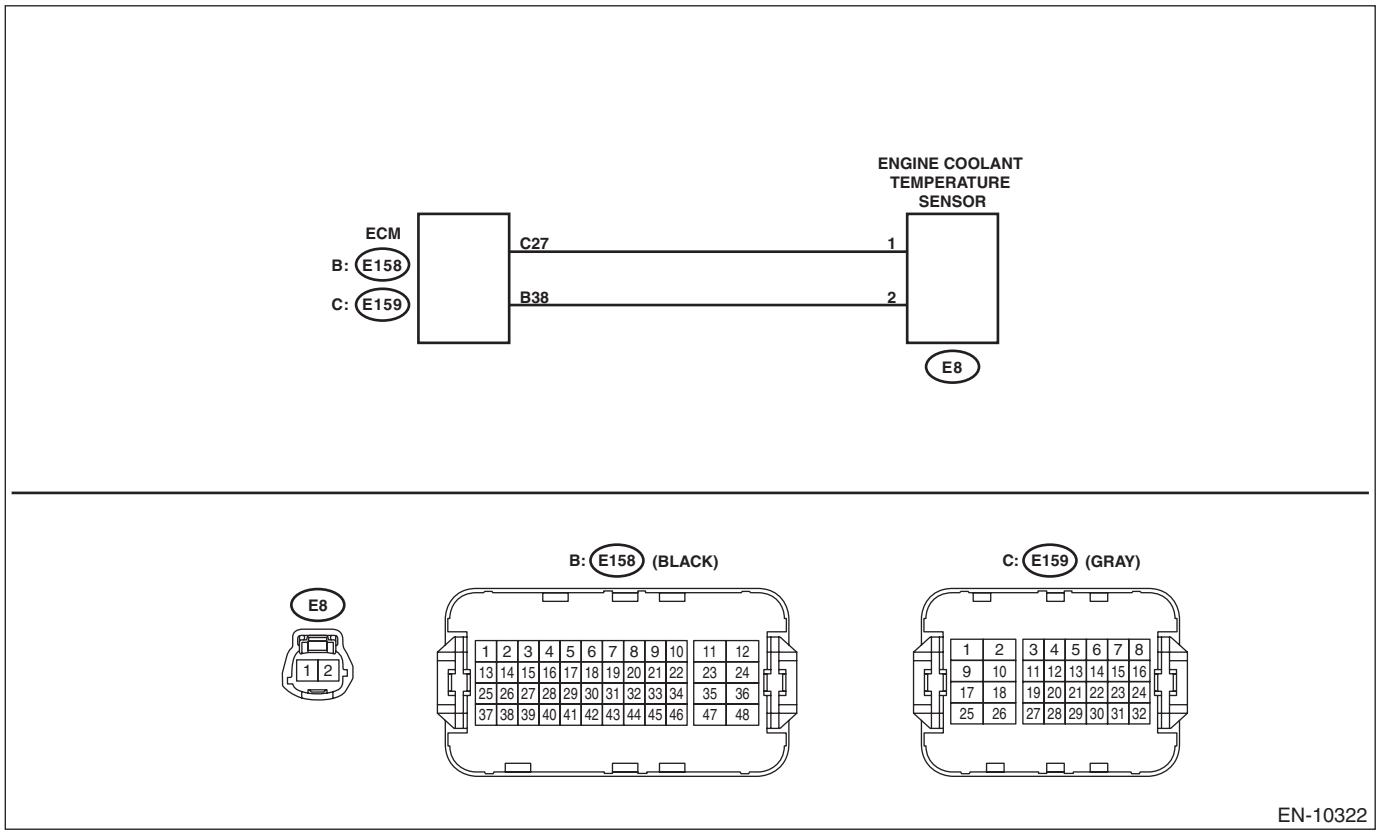
ENGINE COOLANT TEMPERATURE SENSOR
ECM
B: E158
C: E159
C27
B38
1
2
E8
B: E158 (BLACK)
C: E159 (GRAY)
1 2 3 4 5 6 7 8 9 10 11 12
13 14 15 16 17 18 19 20 21 22 23 24
25 26 27 28 29 30 31 32 33 34 35 36
37 38 39 40 41 42 43 44 45 46 47 48
1 2 3 4 5 6 7 8
9 10 11 12 13 14 15 16
17 18 19 20 21 22 23 24
25 26 27 28 29 30 31 32
EN-10322

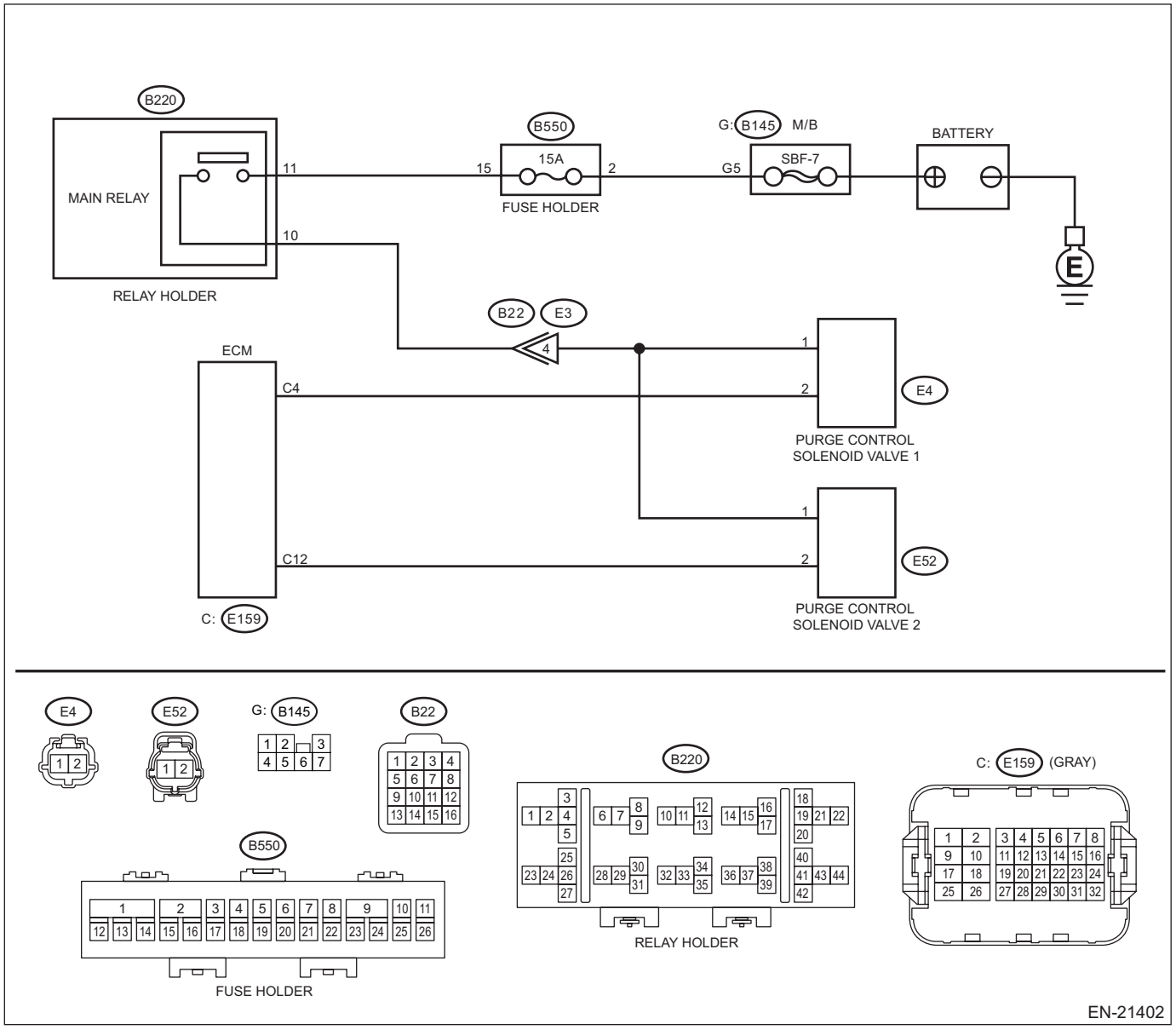
B220
MAIN RELAY
11
10
RELAY HOLDER
B550
15
15A
2
FUSE HOLDER
G: B145 M/B
G5
SBF-7
BATTERY
E
B22
E3
4
ECM
C4
C12
C: E159
1
2
E4
PURGE CONTROL SOLENOID VALVE 1
1
2
E52
PURGE CONTROL SOLENOID VALVE 2
E4
E52
G: B145
B22
B550
FUSE HOLDER
B220
RELAY HOLDER
C: E159 (GRAY)
EN-21402

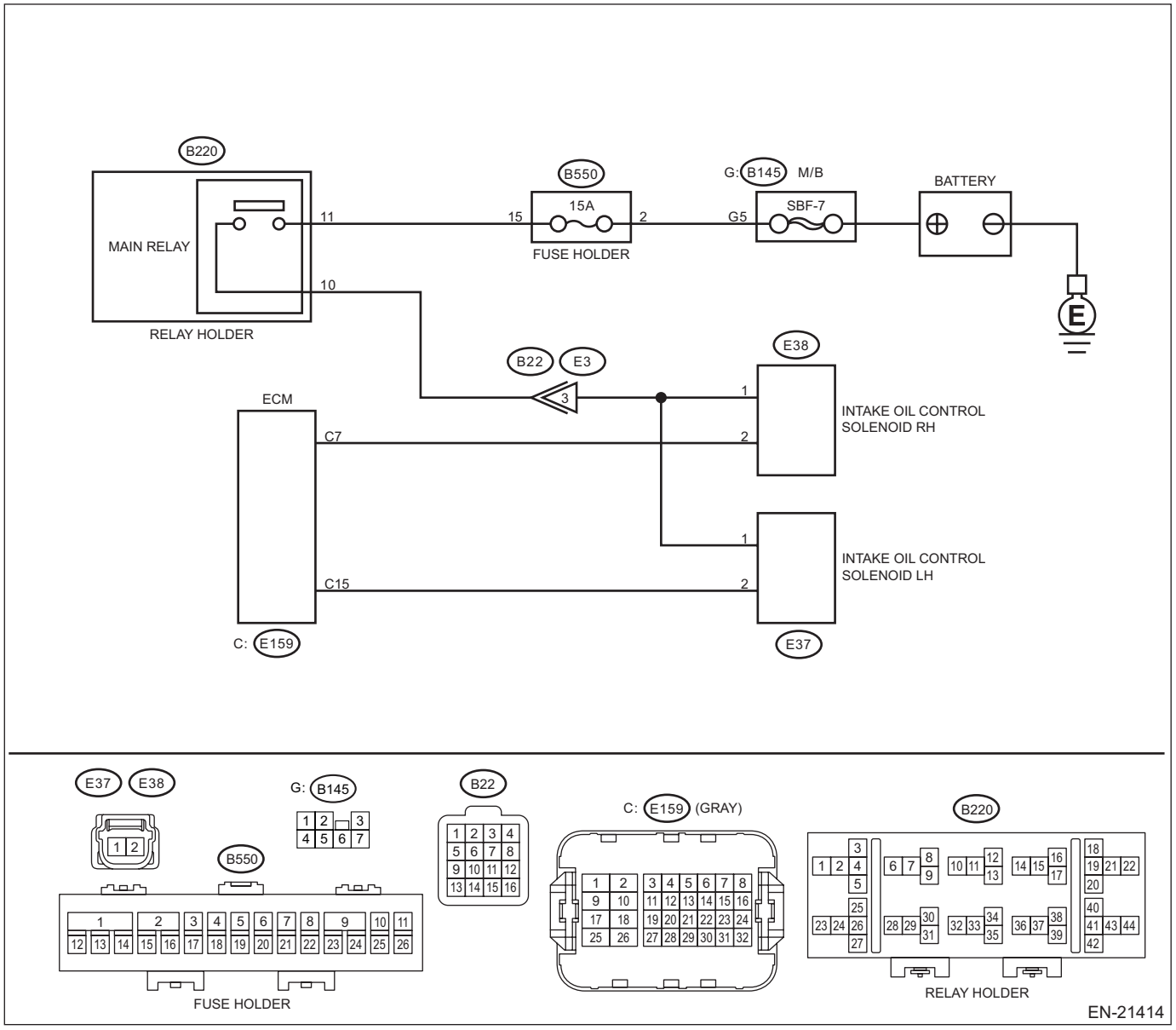
B220
MAIN RELAY
11
10
RELAY HOLDER
B550
15
15A
2
FUSE HOLDER
G: B145 M/B
G5
SBF-7
BATTERY
E
B22
E3
3
ECM
C7
C15
C: E159
E38
1
2
INTAKE OIL CONTROL SOLENOID RH
1
2
INTAKE OIL CONTROL SOLENOID LH
E37

E37
E38
G: B145
B550
FUSE HOLDER
B22
C: E159 (GRAY)
B220
RELAY HOLDER
EN-21414

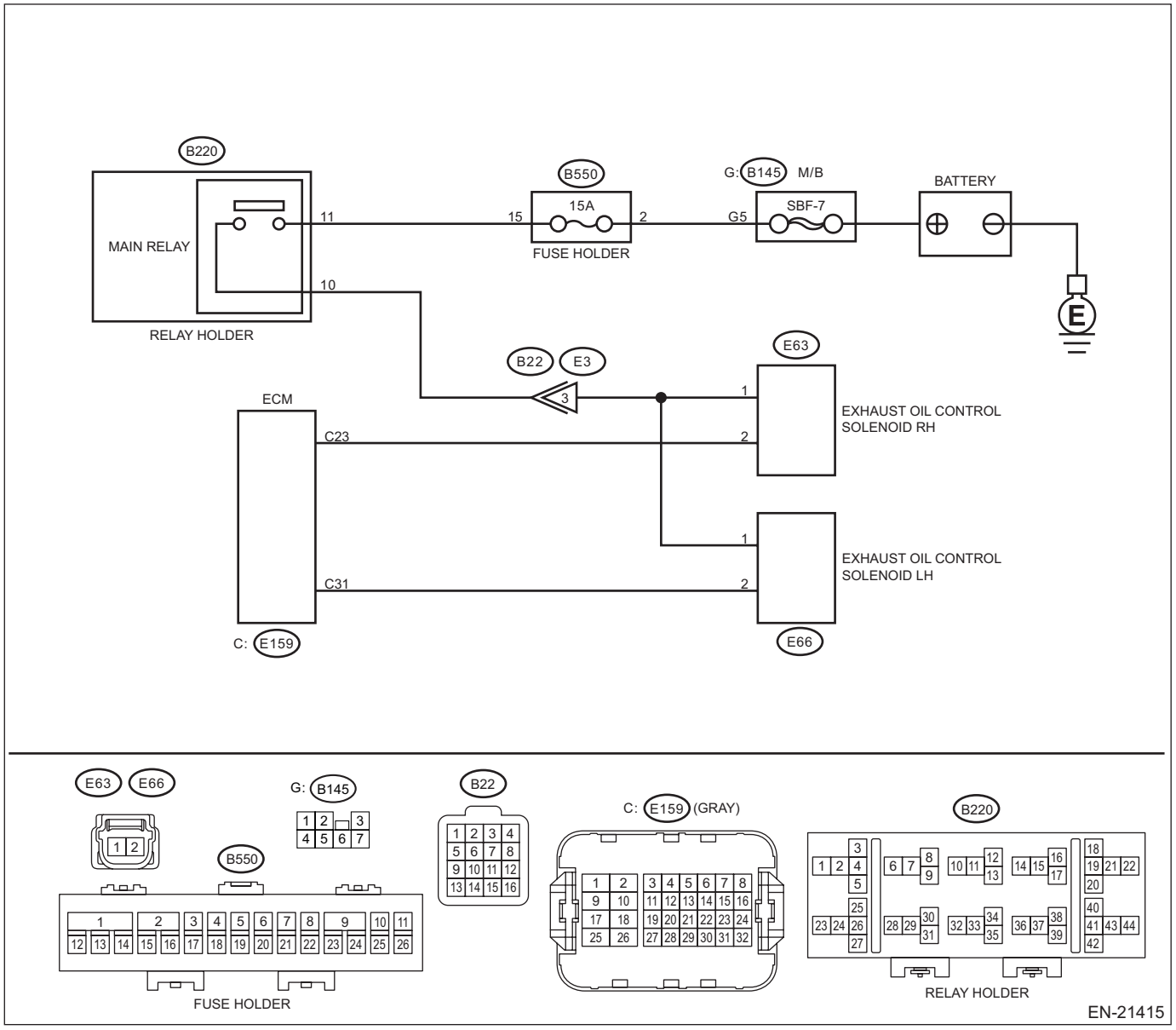
B220
MAIN RELAY
11
10
RELAY HOLDER
B550
15
15A
2
FUSE HOLDER
G: B145 M/B
G5
SBF-7
BATTERY
E
B22
E3
3
ECM
C23
C31
C: E159
E63
1
2
EXHAUST OIL CONTROL SOLENOID RH
1
2
EXHAUST OIL CONTROL SOLENOID LH
E66
E63
E66
1 2
G: B145
1 2 3
4 5 6 7
B550
1 2 3 4 5 6 7 8 9 10 11
12 13 14 15 16 17 18 19 20 21 22 23 24 25 26
FUSE HOLDER
B22
1 2 3 4
5 6 7 8
9 10 11 12
13 14 15 16
C: E159 (GRAY)
1 2 3 4 5 6 7 8
9 10 11 12 13 14 15 16
17 18 19 20 21 22 23 24
25 26 27 28 29 30 31 32
B220
1 2 3 4 5 6 7 8 9 10 11 12 13 14 15 16 17 18 19 20 21 22 23 24 25 26 27 28 29 30 31 32 33 34 35 36 37 38 39 40 41 42 43 44
RELAY HOLDER
EN-21415

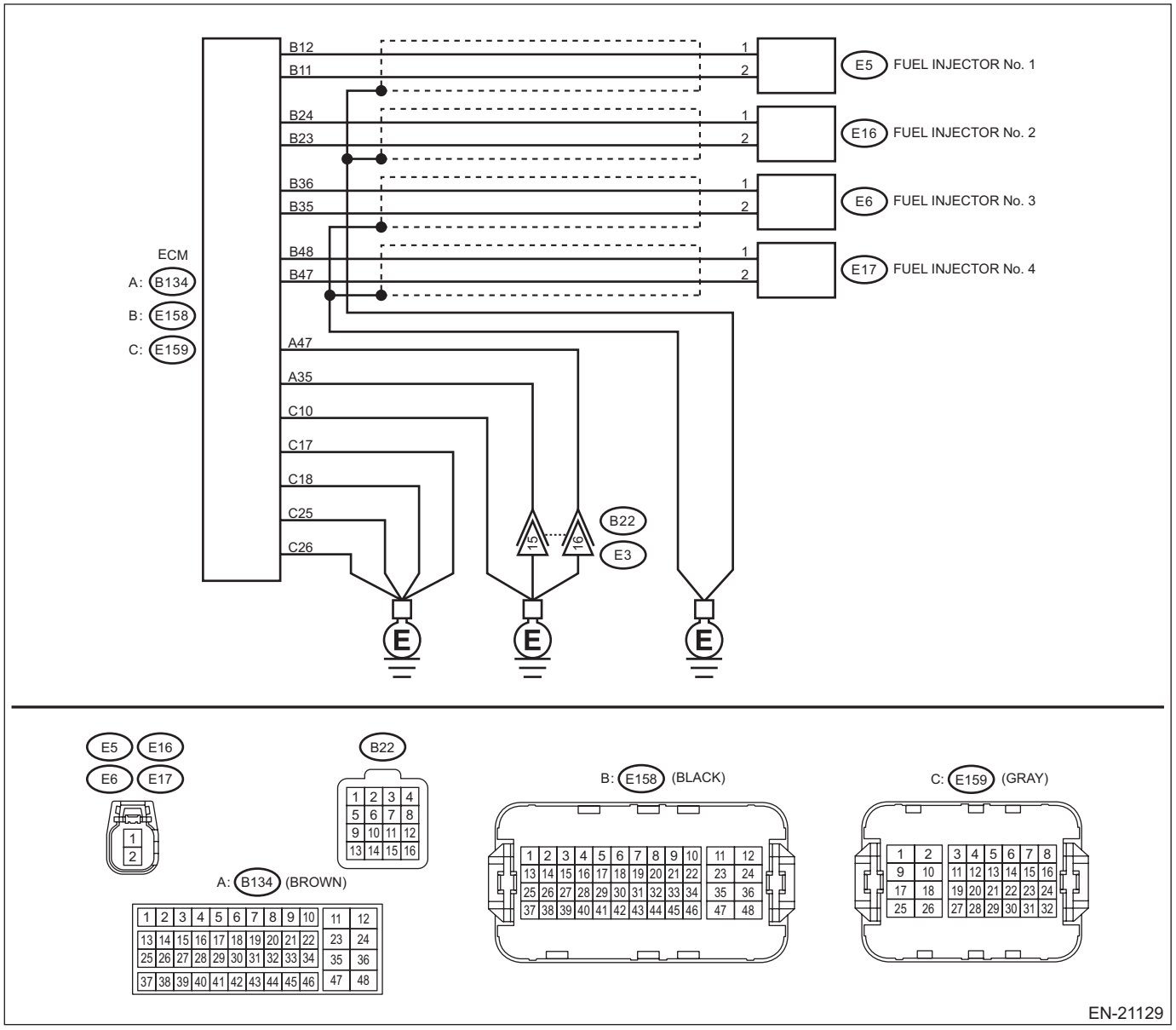

Step		Check	Yes	No
1	**CHECK DTC.**	Is any other DTC displayed?	Check DTC using “List of Diagnostic Trouble Code (DTC)”. <Ref. to EN(w/o STI)(diag)-106, List of Diagnostic Trouble Code (DTC).>	Go to step **2**.
2	**CHECK FREEZE FRAME DATA.** Using the Subaru Select Monitor, read the value in «Fuel Level». NOTE: For detailed operation procedures, refer to “Freeze Frame Data Display For Engine”. <Ref. to EN(w/o STI)(diag)-58, DISPLAY OF ENGINE FREEZE FRAME DATA, OPERATION, Subaru Select Monitor.>	Is the value of «Fuel Level» 16.4% or more?	Go to step **3**.	Fuel may be run out. If the fault occurs after refueling, continue the diagnosis. Go to step **3**.

	Step	Check	Yes	No
3	**CHECK FREEZE FRAME DATA.** Read the value of «Control module voltage» using Subaru Select Monitor. NOTE: For detailed operation procedures, refer to "Freeze Frame Data Display For Engine". <Ref. to EN(w/o STI)(diag)-58, DISPLAY OF ENGINE FREEZE FRAME DATA, OPERATION, Subaru Select Monitor.>	Is the value of «Control module voltage» 11 V or more?	Go to step **4**.	Check the battery and generator. <Ref. to SC(w/o STI)-51, INSPECTION, Battery.> <Ref. to SC(w/o STI)-44, INSPECTION, Generator.>
4	**CHECK FOR MALFUNCTION OCCURRENCE.**	Did you ask the customer about the driving condition and engine speed status when the fault occurred?	• The engine speed dropped slowly and then the engine stalled during idling or deceleration: Go to step **5**. • The engine speed dropped rapidly and then the engine stalled during idling or deceleration: Go to step **82**. • The engine stalled during standing start, acceleration, or constant speed driving: Go to step **89**.	Ask the customer about the driving condition and engine speed status when fault occurred.
5	**CHECK FREEZE FRAME DATA.** 1) Read the values of «Short term fuel trim B1» and «Long term fuel trim B1», using the Subaru Select Monitor. NOTE: For detailed operation procedures, refer to "Freeze Frame Data Display For Engine". <Ref. to EN(w/o STI)(diag)-58, DISPLAY OF ENGINE FREEZE FRAME DATA, OPERATION, Subaru Select Monitor.> 2) Obtain the sum values of «Short term fuel trim B1» and «Long term fuel trim B1» in each freeze frame data.	Is the sum value of «Short term fuel trim B1» and «Long term fuel trim B1» within ±15% in each freeze frame data?	Go to step **56**.	• More than 15% in each freeze frame data: Go to step **6**. • Less than –15% in any one of freeze frame data: Go to step **40**.
6	**CHECK AIR INTAKE SYSTEM.** Check the installing condition of the air intake system.	Are there holes, loose bolts or disconnection of hose on air intake system?	Repair the air intake system. <Ref. to IN(w/o STI)-2, General Description.>	Go to step **7**.
7	**CHECK PURGE CONTROL SOLENOID VALVE.** Check purge control solenoid valve 1 and purge control solenoid valve 2. <Ref. to EC(w/o STI)-28, INSPECTION, Purge Control Solenoid Valve.>	Is the check result OK?	Go to step **8**.	Replace the faulty purge control solenoid valve. <Ref. to EC(w/o STI)-22, Purge Control Solenoid Valve.>

	Step	Check	Yes	No
8	**CHECK FREEZE FRAME DATA.** Read the value of «Stop Light Switch» using Subaru Select Monitor. NOTE: For detailed operation procedures, refer to "Freeze Frame Data Display For Engine". <Ref. to EN(w/o STI)(diag)-58, DISPLAY OF ENGINE FREEZE FRAME DATA, OPERATION, Subaru Select Monitor.>	Does the value of «Stop Light Switch» indicate OFF in all freeze frame data?	Go to step **11**.	Go to step **9**.
9	**CHECK CURRENT DATA.** 1) Start the engine and warm up completely. 2) Read the value of «Short term fuel trim B1» both when the brake pedal is released and depressed using Subaru Select Monitor. NOTE: For detailed operation procedures, refer to "Current Data Display For Engine". <Ref. to EN(w/o STI)(diag)-46, DISPLAY CURRENT ENGINE DATA, OPERATION, Subaru Select Monitor.>	Does the value of «Short term fuel trim B1» with the brake pedal depressed increase by 10% or more compared to when the pedal is released?	Replace the brake booster. <Ref. to BR-75, Brake Booster.>	Go to step **10**.
10	**CHECK CURRENT DATA.** 1) Start the engine and warm up completely. 2) While reproducing the faulty condition of the vehicle, read the values of «Short term fuel trim B1» and «Long term fuel trim B1» using the Subaru Select Monitor. NOTE: For detailed operation procedures, refer to "Current Data Display For Engine". <Ref. to EN(w/o STI)(diag)-46, DISPLAY CURRENT ENGINE DATA, OPERATION, Subaru Select Monitor.> 3) Obtain the sum values of «Short term fuel trim B1» and «Long term fuel trim B1».	Is the sum value of «Short term fuel trim B1» and «Long term fuel trim B1» within ±15%?	Go to step **11**.	Replace the brake booster. <Ref. to BR-75, Brake Booster.>
11	**CHECK IGNITION SYSTEM.** Check the ignition system. <Ref. to EN(w/o STI)(diag)-101, IGNITION CONTROL SYSTEM, Diagnostics for Engine Starting Failure.>	Is the check result OK?	Go to step **12**.	Repair the ignition system. <Ref. to IG(w/o STI)-2, General Description.>
12	**CHECK FREEZE FRAME DATA.** Read the value of «A/F Sensor #1» using the Subaru Select Monitor. NOTE: For detailed operation procedures, refer to "Freeze Frame Data Display For Engine". <Ref. to EN(w/o STI)(diag)-58, DISPLAY OF ENGINE FREEZE FRAME DATA, OPERATION, Subaru Select Monitor.>	Is the value of «A/F Sensor #1» 1.00 or more?	Go to step **17**.	Go to step **13**.
13	**CHECK MASS AIR FLOW AND INTAKE AIR TEMPERATURE SENSOR.** Check the mass air flow and intake air temperature sensor. <Ref. to FU(w/o STI)-110, INSPECTION, Mass Air Flow and Intake Air Temperature Sensor.>	Is the check result OK?	Go to step **14**.	Replace the mass air flow and intake air temperature sensor. <Ref. to FU(w/o STI)-110, Mass Air Flow and Intake Air Temperature Sensor.>

	Step	Check	Yes	No
14	**CHECK HARNESS BETWEEN ECM AND MASS AIR FLOW AND INTAKE AIR TEMPERATURE SENSOR CONNECTOR.** 1) Turn the ignition switch to OFF. 2) Disconnect the connector from ECM. 3) Disconnect the connectors from the mass air flow and intake air temperature sensor. 4) Measure the resistance of harness between ECM connector and the mass air flow and intake air temperature sensor connector. ***Connector & terminal*** ***(B134) No. 16 — (B3) No. 3:*** ***(B134) No. 28 — (B3) No. 2:***	Is the resistance less than 1 Ω?	Go to step **15**.	Repair the open circuit of harness between ECM connector and the mass air flow and intake air temperature sensor connector.
15	**CHECK HARNESS BETWEEN ECM AND MASS AIR FLOW AND INTAKE AIR TEMPERATURE SENSOR CONNECTOR.** Measure the resistance between the ECM connector and engine ground. ***Connector & terminal*** ***(B134) No. 16 — Engine ground:*** ***(B134) No. 28 — Engine ground:***	Is the resistance 1 MΩ or more?	Go to step **16**.	Repair the ground short circuit of harness between ECM connector and the mass air flow and intake air temperature sensor connector.
16	**CHECK CURRENT DATA.** 1) Start the engine and warm up completely. 2) Compare with the reference value of «Load Value» described in “Engine Current Data Display” under “Subaru Select Monitor”. <Ref. to EN(w/o STI)(diag)-46, DISPLAY CURRENT ENGINE DATA, OPERATION, Subaru Select Monitor.> NOTE: • The value of «Calculated load value» change depending on how the engine internal parts settle in. If the value is out of standard, judge it again by comparing the vehicle with another one with the same specifications and similar conditions such as travel distance. • For detailed operation procedures, refer to “Current Data Display For Engine”. <Ref. to EN(w/o STI)(diag)-46, DISPLAY CURRENT ENGINE DATA, OPERATION, Subaru Select Monitor.>	Does the value of «Calculated load value» falls between 90 — 110% of the value described in the list?	Go to step **21**.	Replace the mass air flow and intake air temperature sensor. <Ref. to FU(w/o STI)-110, Mass Air Flow and Intake Air Temperature Sensor.>
17	**CHECK FRONT OXYGEN (A/F) SENSOR DATA.** 1) Start the engine and warm up completely. 2) Raise the engine speed up to 2,500 rpm and maintain it for approx. three minutes. 3) Release the accelerator pedal and idle the engine. 4) Using «Injection Quantity Control» in the «Active Test» item, read the value of «A/F Sensor #1» at the increase rate of both 12% and –12%. NOTE: • Perform the operation immediately after the engine comes into idling condition, otherwise the front oxygen (A/F) sensor will be cooled. • For detailed operation procedures, refer to the “Active Test”. <Ref. to EN(w/o STI)(diag)-83, Active Test.>	Does the value of «A/F Sensor #1» change to less than 0.88 at the increase rate of 12%, and to 1.12 or more at the rate of –12%?	Go to step **21**.	Go to step **18**.

	Step	Check	Yes	No
18	**CHECK POWER SUPPLY TO FRONT OXYGEN (A/F) SENSOR.** 1) Turn the ignition switch to OFF. 2) Disconnect the connectors from front oxygen (A/F) sensor. 3) Turn the ignition switch to ON. 4) Measure the voltage between front oxygen (A/F) sensor connector and engine ground. ***Connector & terminal*** ***(E24) No. 3 (+) — Engine ground (–):***	Is the voltage 10 V or more?	Go to step **19**.	Repair the power supply line. NOTE: In this case, repair the following item: • Open circuit in harness between A/F, oxygen sensor relay and front oxygen (A/F) sensor connector • Poor contact of A/F, oxygen sensor relay connector • Poor contact of coupling connector • Malfunction of A/F, oxygen sensor relay
19	**CHECK HARNESS BETWEEN ECM AND FRONT OXYGEN (A/F) SENSOR CONNECTOR.** 1) Turn the ignition switch to OFF. 2) Disconnect the connector from ECM. 3) Measure the resistance of harness between ECM connector and front oxygen (A/F) sensor connector. ***Connector & terminal*** ***(E158) No. 15 — (E24) No. 1:*** ***(E158) No. 27 — (E24) No. 4:*** ***(E158) No. 39 — (E24) No. 5:*** ***(E159) No. 9 — (E24) No. 2:***	Is the resistance less than 1 Ω?	Go to step **20**.	Repair the open circuit of harness between ECM connector and front oxygen (A/F) sensor connector.
20	**CHECK HARNESS BETWEEN ECM AND FRONT OXYGEN (A/F) SENSOR CONNECTOR.** Measure the resistance between the ECM connector and engine ground. ***Connector & terminal*** ***(E158) No. 15 — Engine ground:*** ***(E158) No. 27 — Engine ground:*** ***(E158) No. 39 — Engine ground:*** ***(E159) No. 9 — Engine ground:***	Is the resistance 1 MΩ or more?	Go to step **21**.	Repair the short circuit to ground in harness between ECM connector and front oxygen (A/F) sensor connector.
21	**CHECK FREEZE FRAME DATA.** Using the Subaru Select Monitor, read the values in «Coolant Temp.» and «Ambient Temperature». NOTE: For detailed operation procedures, refer to “Freeze Frame Data Display For Engine”. <Ref. to EN(w/o STI)(diag)-58, DISPLAY OF ENGINE FREEZE FRAME DATA, OPERATION, Subaru Select Monitor.>	Is the value of «Coolant Temp.» 120°C (248°F) or more? Or, is the value of «Coolant Temp.» lower than «Ambient Temperature» by 15°C (27°F) or more?	Go to step **22**.	Go to step **25**.
22	**CHECK ENGINE COOLANT TEMPERATURE SENSOR.** Check the engine coolant temperature sensor. <Ref. to FU(w/o STI)-90, INSPECTION, Engine Coolant Temperature Sensor.>	Is the check result OK?	Go to step **23**.	Replace the engine coolant temperature sensor. <Ref. to FU(w/o STI)-89, Engine Coolant Temperature Sensor.>

	Step	Check	Yes	No
23	**CHECK HARNESS BETWEEN ECM AND ENGINE COOLANT TEMPERATURE SENSOR CONNECTOR.** 1) Turn the ignition switch to OFF. 2) Disconnect the connector from ECM. 3) Disconnect the connectors from the engine coolant temperature sensor. 4) Measure the resistance of harness between ECM connector and engine coolant temperature sensor connector. ***Connector & terminal*** ***(E159) No. 27 — (E8) No. 1:*** ***(E158) No. 38 — (E8) No. 2:***	Is the resistance less than 1 Ω?	Go to step **24**.	Repair the open circuit of the harness between the ECM connector and engine coolant temperature sensor connector.
24	**CHECK HARNESS BETWEEN ECM AND ENGINE COOLANT TEMPERATURE SENSOR CONNECTOR.** Measure the resistance between the ECM connector and engine ground. ***Connector & terminal*** ***(E158) No. 38 — Engine ground:*** ***(E159) No. 27 — Engine ground:***	Is the resistance 1 MΩ or more?	Go to step **25**.	Repair the short circuit to ground in harness between ECM connector and engine coolant temperature sensor connector.
25	**CHECK FREEZE FRAME DATA.** Using the Subaru Select Monitor, read the value in «Evap Purge Flow». NOTE: For detailed operation procedures, refer to "Freeze Frame Data Display For Engine". <Ref. to EN(w/o STI)(diag)-58, DISPLAY OF ENGINE FREEZE FRAME DATA, OPERATION, Subaru Select Monitor.>	Is the value of «Evap Purge Flow» 0% in all freeze frame data?	Go to step **35**.	Go to step **26**.
26	**CHECK PURGE CONTROL SOLENOID VALVE 1.** 1) On the «Active Test» item, select «CPC Solenoid Valve», and perform ON/OFF. NOTE: For detailed operation procedures, refer to the "Active Test". <Ref. to EN(w/o STI)(diag)-83, Active Test.> 2) Check if the ventilation changes according to ON/OFF switching operation.	Does the ventilation of purge control solenoid valve 1 change correctly?	Go to step **30**.	Go to step **27**.
27	**CHECK POWER SUPPLY TO PURGE CONTROL SOLENOID VALVE 1 CONNECTOR.** 1) Turn the ignition switch to OFF. 2) Disconnect the connector from purge control solenoid valve 1. 3) Turn the ignition switch to ON. 4) Measure the voltage between purge control solenoid valve 1 connector and engine ground. ***Connector & terminal*** ***(E4) No. 1 (+) — Engine ground (–):***	Is the voltage 10 V or more?	Go to step **28**.	Repair the power supply circuit.
28	**CHECK HARNESS BETWEEN ECM AND PURGE CONTROL SOLENOID VALVE 1 CONNECTOR.** 1) Turn the ignition switch to OFF. 2) Disconnect the connector from ECM. 3) Measure the resistance of harness between ECM connector and purge control solenoid valve 1 connector. ***Connector & terminal*** ***(E159) No. 4 — (E4) No. 2:***	Is the resistance less than 1 Ω?	Go to step **29**.	Repair the open circuit in harness between ECM connector and purge control solenoid valve 1 connector.

	Step	Check	Yes	No
29	**CHECK HARNESS BETWEEN ECM AND PURGE CONTROL SOLENOID VALVE 1 CONNECTOR.** Measure the resistance between the purge control solenoid valve 1 connector and engine ground. ***Connector & terminal*** ***(E4) No. 2 — Engine ground:***	Is the resistance 1 MΩ or more?	Go to step **30**.	Repair the ground short circuit of harness between ECM connector and purge control solenoid valve 1 connector.
30	**CHECK PURGE CONTROL SOLENOID VALVE 2.** 1) Connect all connectors. 2) On the «Active Test» item, select «CPC Solenoid 2», and perform ON/OFF. NOTE: For detailed operation procedures, refer to the "Active Test". <Ref. to EN(w/o STI)(diag)-83, Active Test.> 3) Check if the ventilation changes according to ON/OFF switching operation.	Does the ventilation of purge control solenoid valve 2 change correctly?	Go to step **35**.	Go to step **31**.
31	**CHECK POWER SUPPLY TO PURGE CONTROL SOLENOID VALVE 2 CONNECTOR.** 1) Turn the ignition switch to OFF. 2) Disconnect the connector from purge control solenoid valve 2. 3) Turn the ignition switch to ON. 4) Measure the voltage between purge control solenoid valve 2 connector and engine ground. ***Connector & terminal*** ***(E52) No. 1 (+) — Engine ground (–):***	Is the voltage 10 V or more?	Go to step **32**.	Repair the power supply circuit.
32	**CHECK HARNESS BETWEEN ECM AND PURGE CONTROL SOLENOID VALVE 2 CONNECTOR.** 1) Turn the ignition switch to OFF. 2) Disconnect the connector from ECM. 3) Measure the resistance of harness between ECM connector and purge control solenoid valve 2 connector. ***Connector & terminal*** ***(E159) No. 12 — (E52) No. 2:***	Is the resistance less than 1 Ω?	Go to step **33**.	Repair the open circuit in harness between ECM connector and purge control solenoid valve 2 connector.
33	**CHECK HARNESS BETWEEN ECM AND PURGE CONTROL SOLENOID VALVE 2 CONNECTOR.** Measure the resistance between the purge control solenoid valve 2 connector and engine ground. ***Connector & terminal*** ***(E52) No. 2 — Engine ground:***	Is the resistance 1 MΩ or more?	Go to step **34**.	Repair the ground short circuit of harness between ECM connector and purge control solenoid valve 2 connector.
34	**CHECK FOR POOR CONTACT.** Check for poor contact of ECM connector.	Is there poor contact of ECM connector?	Repair the poor contact of ECM connector.	Replace the ECM. <Ref. to FU(w/o STI)-124, Engine Control Module (ECM).>

	Step	Check	Yes	No
35	**CHECK OF FUEL PUMP.** 1) On the «Active Test» item, select «Fuel Pump Control (ON/OFF Dr.)» and perform ON/OFF drive operation. NOTE: For detailed operation procedures, refer to the "Active Test". <Ref. to EN(w/o STI)(diag)-83, Active Test.> 2) Check if operating sound occurs in the fuel pump according to ON/OFF switching operation.	Does the fuel pump emit operating sound?	Go to step **37**.	Go to step **36**.
36	**CHECK OF FUEL PUMP.** Check fuel pump. <Ref. to FU(w/o STI)-167, INSPECTION, Fuel Pump.>	Is the check result OK?	Check fuel pump system. <Ref. to EN(w/o STI)(diag)-312, DTC P0230 FUEL PUMP PRIMARY CIRCUIT, Diagnostic Procedure with Diagnostic Trouble Code (DTC).>	Replace the fuel pump. <Ref. to FU(w/o STI)-161, Fuel Pump.>
37	**CHECK FUEL TANK.** Check if any foreign matters such as iron powder exist in the fuel tank.	Is there any foreign matter in the fuel tank?	Remove foreign matter from the fuel tank.	Go to step **38**.
38	**CHECK FUEL PRESSURE.** **WARNING:** **Place "NO OPEN FLAMES" signs near the working area.** **CAUTION:** **Be careful not to spill fuel.** Measure the fuel pressure. <Ref. to ME(w/o STI)-31, INSPECTION, Fuel Pressure.> **CAUTION:** **Release fuel pressure before removing the fuel pressure gauge.**	Is the measured value 340 — 400 kPa (3.5 — 4.1 kgf/cm^2, 49 — 58 psi)?	Go to step **39**.	Check the fuel pump and fuel delivery line. <Ref. to FU(w/o STI)-167, INSPECTION, Fuel Pump.> <Ref. to FU(w/o STI)-196, INSPECTION, Fuel Delivery and Evaporation Lines.>
39	**CHECK FREEZE FRAME DATA.** Using the Subaru Select Monitor, read the values in «Fuel Rail Pressure A» and «Commanded Fuel Rail Pressure A». NOTE: For detailed operation procedures, refer to "Freeze Frame Data Display For Engine". <Ref. to EN(w/o STI)(diag)-58, DISPLAY OF ENGINE FREEZE FRAME DATA, OPERATION, Subaru Select Monitor.>	Is the value in «Fuel Rail Pressure A» synchronized with the one in «Commanded Fuel Rail Pressure A» in all freeze frame data?	Perform the Clear Memory Mode to complete. <Ref. to EN(w/o STI)(diag)-82, Clear Memory Mode.>	Check the high-pressure fuel pump. <Ref. to FU(w/o STI)-75, INSPECTION, High Pressure Fuel Pump.>
40	**CHECK IGNITION SYSTEM.** Check the ignition system. <Ref. to EN(w/o STI)(diag)-101, IGNITION CONTROL SYSTEM, Diagnostics for Engine Starting Failure.>	Is the check result OK?	Go to step **41**.	Repair the ignition system. <Ref. to IG(w/o STI)-2, General Description.>

	Step	Check	Yes	No
41	**CHECK FREEZE FRAME DATA.** Compare with the reference value of «Load Value» described in “Engine Current Data Display” under “Subaru Select Monitor”. <Ref. to EN(w/o STI)(diag)-46, DISPLAY CURRENT ENGINE DATA, OPERATION, Subaru Select Monitor.> NOTE: • The value of «Calculated load value» change depending on how the engine internal parts settle in. If the value is out of standard, judge it again by comparing the vehicle with another one with the same specifications and similar conditions such as travel distance. • For detailed operation procedures, refer to “Freeze Frame Data Display For Engine”. <Ref. to EN(w/o STI)(diag)-58, DISPLAY OF ENGINE FREEZE FRAME DATA, OPERATION, Subaru Select Monitor.>	Is the value of «Calculated load value» 110% or more of the value described in the list?	Go to step **43**.	Go to step **42**.
42	**CHECK FREEZE FRAME DATA.** Read the value of «A/F Sensor #1» using the Subaru Select Monitor. NOTE: For detailed operation procedures, refer to “Freeze Frame Data Display For Engine”. <Ref. to EN(w/o STI)(diag)-58, DISPLAY OF ENGINE FREEZE FRAME DATA, OPERATION, Subaru Select Monitor.>	Is the value of «A/F Sensor #1» less than 1.00?	Go to step **47**.	Go to step **52**.
43	**CHECK MASS AIR FLOW AND INTAKE AIR TEMPERATURE SENSOR.** Check the mass air flow and intake air temperature sensor. <Ref. to FU(w/o STI)-110, INSPECTION, Mass Air Flow and Intake Air Temperature Sensor.>	Is the check result OK?	Go to step **44**.	Replace the mass air flow and intake air temperature sensor. <Ref. to FU(w/o STI)-110, Mass Air Flow and Intake Air Temperature Sensor.>
44	**CHECK HARNESS BETWEEN ECM AND MASS AIR FLOW AND INTAKE AIR TEMPERATURE SENSOR CONNECTOR.** 1) Turn the ignition switch to OFF. 2) Disconnect the connector from ECM. 3) Disconnect the connectors from the mass air flow and intake air temperature sensor. 4) Measure the resistance of harness between ECM connector and the mass air flow and intake air temperature sensor connector. ***Connector & terminal*** ***(B134) No. 16 — (B3) No. 3:*** ***(B134) No. 28 — (B3) No. 2:***	Is the resistance less than 1 Ω?	Go to step **45**.	Repair the open circuit of harness between ECM connector and the mass air flow and intake air temperature sensor connector.
45	**CHECK HARNESS BETWEEN ECM AND MASS AIR FLOW AND INTAKE AIR TEMPERATURE SENSOR CONNECTOR.** Measure the resistance between the ECM connector and engine ground. ***Connector & terminal*** ***(B134) No. 16 — Engine ground:*** ***(B134) No. 28 — Engine ground:***	Is the resistance 1 MΩ or more?	Go to step **46**.	Repair the ground short circuit of harness between ECM connector and the mass air flow and intake air temperature sensor connector.

	Step	Check	Yes	No
46	**CHECK CURRENT DATA.** 1) Start the engine and warm up completely. 2) Compare with the reference value of «Load Value» described in “Engine Current Data Display” under “Subaru Select Monitor”. <Ref. to EN(w/o STI)(diag)-46, DISPLAY CURRENT ENGINE DATA, OPERATION, Subaru Select Monitor.> NOTE: • The value of «Calculated load value» change depending on how the engine internal parts settle in. If the value is out of standard, judge it again by comparing the vehicle with another one with the same specifications and similar conditions such as travel distance. • For detailed operation procedures, refer to “Current Data Display For Engine”. <Ref. to EN(w/o STI)(diag)-46, DISPLAY CURRENT ENGINE DATA, OPERATION, Subaru Select Monitor.>	Does the value of «Calculated load value» falls between 90 — 110% of the value described in the list?	Go to step **47**.	Replace the mass air flow and intake air temperature sensor. <Ref. to FU(w/o STI)-110, Mass Air Flow and Intake Air Temperature Sensor.>
47	**CHECK CURRENT DATA.** 1) Start the engine and warm up completely. 2) Raise the engine speed up to 2,500 rpm and maintain it for approx. three minutes. 3) Release the accelerator pedal and idle the engine. 4) Using «Injection Quantity Control» in the «Active Test» item, read the value of «A/F Sensor #1» at the increase rate of both 12% and –12%. NOTE: • Perform the operation immediately after the engine comes into idling condition, otherwise the front oxygen (A/F) sensor will be cooled. • For detailed operation procedures, refer to the “Active Test”. <Ref. to EN(w/o STI)(diag)-83, Active Test.>	Does the value of «A/F Sensor #1» change to less than 0.88 at the increase rate of 12%, and to 1.12 or more at the rate of –12%?	Go to step **52**.	Go to step **48**.
48	**CHECK FREEZE FRAME DATA.** Read the value of «A/F Sensor #1 Resistance» using the Subaru Select Monitor. NOTE: For detailed operation procedures, refer to “Freeze Frame Data Display For Engine”. <Ref. to EN(w/o STI)(diag)-58, DISPLAY OF ENGINE FREEZE FRAME DATA, OPERATION, Subaru Select Monitor.>	Is the value of «A/F Sensor #1 Resistance» 500 Ω or more?	Replace the front oxygen (A/F) sensor. <Ref. to FU(w/o STI)-118, Front Oxygen (A/F) Sensor.>	Go to step **49**.

	Step	Check	Yes	No
49	**CHECK POWER SUPPLY TO FRONT OXYGEN (A/F) SENSOR.** 1) Turn the ignition switch to OFF. 2) Disconnect the connectors from front oxygen (A/F) sensor. 3) Turn the ignition switch to ON. 4) Measure the voltage between front oxygen (A/F) sensor connector and engine ground. ***Connector & terminal*** ***(E24) No. 3 (+) — Engine ground (–):***	Is the voltage 10 V or more?	Go to step **50**.	Repair the power supply line. NOTE: In this case, repair the following item: • Open circuit in harness between A/F, oxygen sensor relay and front oxygen (A/F) sensor connector • Poor contact of A/F, oxygen sensor relay connector • Poor contact of coupling connector • Malfunction of A/F, oxygen sensor relay
50	**CHECK HARNESS BETWEEN ECM AND FRONT OXYGEN (A/F) SENSOR CONNECTOR.** 1) Turn the ignition switch to OFF. 2) Disconnect the connector from ECM. 3) Measure the resistance of harness between ECM connector and front oxygen (A/F) sensor connector. ***Connector & terminal*** ***(E158) No. 15 — (E24) No. 1:*** ***(E158) No. 27 — (E24) No. 4:*** ***(E158) No. 39 — (E24) No. 5:*** ***(E159) No. 9 — (E24) No. 2:***	Is the resistance less than 1 Ω?	Go to step **51**.	Repair the open circuit of harness between ECM connector and front oxygen (A/F) sensor connector.
51	**CHECK HARNESS BETWEEN ECM AND FRONT OXYGEN (A/F) SENSOR CONNECTOR.** Measure the resistance between the ECM connector and engine ground. ***Connector & terminal*** ***(E158) No. 15 — Engine ground:*** ***(E158) No. 27 — Engine ground:*** ***(E158) No. 39 — Engine ground:*** ***(E159) No. 9 — Engine ground:***	Is the resistance 1 MΩ or more?	Go to step **52**.	Repair the short circuit to ground in harness between ECM connector and front oxygen (A/F) sensor connector.
52	**CHECK FREEZE FRAME DATA.** Using the Subaru Select Monitor, read the values in «Coolant Temp.» and «Ambient Temperature». NOTE: For detailed operation procedures, refer to “Freeze Frame Data Display For Engine”. <Ref. to EN(w/o STI)(diag)-58, DISPLAY OF ENGINE FREEZE FRAME DATA, OPERATION, Subaru Select Monitor.>	Is the value of «Coolant Temp.» 120°C (248°F) or more? Or, is the value of «Coolant Temp.» lower than «Ambient Temperature» by 15°C (27°F) or more?	Go to step **53**.	Perform the Clear Memory Mode to complete. <Ref. to EN(w/o STI)(diag)-82, Clear Memory Mode.>
53	**CHECK ENGINE COOLANT TEMPERATURE SENSOR.** Check the engine coolant temperature sensor. <Ref. to FU(w/o STI)-90, INSPECTION, Engine Coolant Temperature Sensor.>	Is the check result OK?	Go to step **54**.	Replace the engine coolant temperature sensor. <Ref. to FU(w/o STI)-89, Engine Coolant Temperature Sensor.>

	Step	Check	Yes	No
54	**CHECK HARNESS BETWEEN ECM AND ENGINE COOLANT TEMPERATURE SENSOR CONNECTOR.** 1) Turn the ignition switch to OFF. 2) Disconnect the connector from ECM. 3) Disconnect the connectors from the engine coolant temperature sensor. 4) Measure the resistance of harness between ECM connector and engine coolant temperature sensor connector. ***Connector & terminal*** ***(E159) No. 27 — (E8) No. 1:*** ***(E158) No. 38 — (E8) No. 2:***	Is the resistance less than 1 Ω?	Go to step **55**.	Repair the open circuit of the harness between the ECM connector and engine coolant temperature sensor connector.
55	**CHECK HARNESS BETWEEN ECM AND ENGINE COOLANT TEMPERATURE SENSOR CONNECTOR.** Measure the resistance between the ECM connector and engine ground. ***Connector & terminal*** ***(E158) No. 38 — Engine ground:*** ***(E159) No. 27 — Engine ground:***	Is the resistance 1 MΩ or more?	Even if DTC is detected, it has returned to a normal condition at this time. Reproduce the failure, and then perform the diagnosis again. NOTE: In this case, temporary poor contact of connector, temporary open or short circuit of harness may be the cause.	Repair the short circuit to ground in harness between ECM connector and engine coolant temperature sensor connector.
56	**CHECK IGNITION SYSTEM.** Check the ignition system. <Ref. to EN(w/o STI)(diag)-101, IGNITION CONTROL SYSTEM, Diagnostics for Engine Starting Failure.>	Is the check result OK?	Go to step **57**.	Repair the ignition system. <Ref. to IG(w/o STI)-2, General Description.>

	Step	Check	Yes	No
57	**CHECK FREEZE FRAME DATA.** 1) Using Subaru Select Monitor, read the values of «Idle Mass Air Flow Feedback correct», «ISC Learning Value» and «Idle dirty throttle correct» in freeze frame data. NOTE: For detailed operation procedures, refer to "Freeze Frame Data Display For Engine". <Ref. to EN(w/o STI)(diag)-58, DISPLAY OF ENGINE FREEZE FRAME DATA, OPERATION, Subaru Select Monitor.> 2) Obtain the sum value of «Idle Mass Air Flow Feedback correct», «ISC Learning Value» and «Idle dirty throttle correct». 3) Start the engine and warm up completely. 4) Using Subaru Select Monitor, read the values of «Idle Mass Air Flow Feedback correct», «ISC Learning Value» and «Idle dirty throttle correct» in current data at normal idling. NOTE: For detailed operation procedures, refer to "Current Data Display For Engine". <Ref. to EN(w/o STI)(diag)-46, DISPLAY CURRENT ENGINE DATA, OPERATION, Subaru Select Monitor.> 5) Obtain the sum value of «Idle Mass Air Flow Feedback correct», «ISC Learning Value» and «Idle dirty throttle correct».	Is the sum value of freeze frame data less than 80% of the sum value of current data?	Go to step **58**.	Go to step **60**.
58	**CHECK AIR INTAKE SYSTEM.** Check the installing condition of the air intake system.	Are there holes, loose bolts or disconnection of hose on air intake system?	Repair the air intake system. <Ref. to IN(w/o STI)-2, General Description.>	Go to step **59**.
59	**CHECK AIR INTAKE SYSTEM.** Check the air intake system related parts. • Brake booster: <Ref. to BR-80, INSPECTION, Brake Booster.> • Mass air flow and intake air temperature sensor: <Ref. to FU(w/o STI)-110, INSPECTION, Mass Air Flow and Intake Air Temperature Sensor.> • PCV pipe: <Ref. to EC(w/o STI)-74, INSPECTION, PCV Pipe.> • PCV connector: <Ref. to EC(w/o STI)-75, INSPECTION, PCV Connector.> • PCV hose: <Ref. to EC(w/o STI)-76, INSPECTION, PCV Hose.> • PCV hose assembly: <Ref. to EC(w/o STI)-82, INSPECTION, PCV Hose Assembly.> • PCV valve: <Ref. to EC(w/o STI)-85, INSPECTION, PCV Valve.> • Purge control solenoid valve 1 and purge control solenoid valve 2: <Ref. to EC(w/o STI)-28, INSPECTION, Purge Control Solenoid Valve.>	Are all of the air intake system related parts normal?	Go to step **77**.	Replace the parts if defective.

	Step	Check	Yes	No
60	**CHECK FREEZE FRAME DATA.** 1) Using the Subaru Select Monitor, read the values of the followings: «VVT Adv. Ang. Amount R», «VVT Advance Target Angle Amount R», «VVT Adv. Ang. Amount L», «VVT Advance Target Angle Amount L», «Exh. VVT Retard Ang. R», «Ex VVT Retard Target Angle R», «Exh. VVT Retard Ang. L» and «Ex VVT Retard Target Angle L». NOTE: For detailed operation procedures, refer to "Freeze Frame Data Display For Engine". <Ref. to EN(w/o STI)(diag)-58, DISPLAY OF ENGINE FREEZE FRAME DATA, OPERATION, Subaru Select Monitor.> 2) Using the Subaru Select Monitor, compare the respective values between the followings: «VVT Adv. Ang. Amount R» and «VVT Advance Target Angle Amount R», «VVT Adv. Ang. Amount L» and «VVT Advance Target Angle Amount L», «Exh. VVT Retard Ang. R» and «Ex VVT Retard Target Angle R», «Exh. VVT Retard Ang. L» and «Ex VVT Retard Target Angle L».	Does all of the advance angle amount and retard angle amount synchronize with their target values?	Go to step **77**.	Diagnose the part that does not synchronize. • Intake RH: Go to step **61**. • Intake LH: Go to step **65**. • Exhaust RH: Go to step **69**. • Exhaust LH: Go to step **73**.
61	**CHECK POWER SUPPLY TO THE INTAKE OIL CONTROL SOLENOID RH.** 1) Turn the ignition switch to OFF. 2) Disconnect the connector from the intake oil control solenoid RH. 3) Turn the ignition switch to ON. 4) Measure the voltage between intake oil control solenoid RH connector and engine ground. ***Connector & terminal*** ***(E38) No. 1 (+) — Engine ground (–):***	Is the voltage 10 V or more?	Go to step **62**.	Repair the power supply circuit.
62	**CHECK HARNESS BETWEEN ECM AND INTAKE OIL CONTROL SOLENOID RH CONNECTOR.** 1) Turn the ignition switch to OFF. 2) Disconnect the connector from ECM. 3) Measure the resistance of harness between ECM connector and intake oil control solenoid RH. ***Connector & terminal*** ***(E159) No. 7 — (E38) No. 2:***	Is the resistance less than 1 Ω?	Go to step **63**.	Repair the open circuit in harness between ECM connector and intake oil control solenoid RH connector.
63	**CHECK HARNESS BETWEEN ECM AND INTAKE OIL CONTROL SOLENOID RH CONNECTOR.** Measure the resistance between intake oil control solenoid RH connector and engine ground. ***Connector & terminal*** ***(E38) No. 2 — Engine ground:***	Is the resistance 1 MΩ or more?	Go to step **64**.	Repair the short circuit to ground in harness between ECM connector and intake oil control solenoid RH connector.
64	**CHECK INTAKE OIL CONTROL SOLENOID RH.** Check the intake oil control solenoid RH. <Ref. to FU(w/o STI)-103, INSPECTION, Oil Control Solenoid.>	Is the check result OK?	Replace the intake cam sprocket RH. <Ref. to ME(w/o STI)-133, Cam Sprocket.>	Replace the intake oil control solenoid RH. <Ref. to FU(w/o STI)-101, Oil Control Solenoid.>

	Step	Check	Yes	No
65	**CHECK POWER SUPPLY TO THE INTAKE OIL CONTROL SOLENOID LH.** 1) Turn the ignition switch to OFF. 2) Disconnect the connector from the intake oil control solenoid LH. 3) Turn the ignition switch to ON. 4) Measure the voltage between intake oil control solenoid LH connector and engine ground. ***Connector & terminal*** ***(E37) No. 1 (+) — Engine ground (–):***	Is the voltage 10 V or more?	Go to step **66**.	Repair the power supply circuit.
66	**CHECK HARNESS BETWEEN ECM AND INTAKE OIL CONTROL SOLENOID LH CONNECTOR.** 1) Turn the ignition switch to OFF. 2) Disconnect the connector from ECM. 3) Measure the resistance of harness between ECM connector and intake oil control solenoid LH. ***Connector & terminal*** ***(E159) No. 15 — (E37) No. 2:***	Is the resistance less than 1 Ω?	Go to step **67**.	Repair the open circuit in harness between ECM connector and intake oil control solenoid LH connector.
67	**CHECK HARNESS BETWEEN ECM AND INTAKE OIL CONTROL SOLENOID LH CONNECTOR.** Measure the resistance between intake oil control solenoid LH connector and engine ground. ***Connector & terminal*** ***(E37) No. 2 — Engine ground:***	Is the resistance 1 MΩ or more?	Go to step **68**.	Repair the short circuit to ground in harness between ECM connector and intake oil control solenoid LH connector.
68	**CHECK INTAKE OIL CONTROL SOLENOID LH.** Check the intake oil control solenoid LH. <Ref. to FU(w/o STI)-103, INSPECTION, Oil Control Solenoid.>	Is the check result OK?	Replace the intake cam sprocket LH. <Ref. to ME(w/o STI)-133, Cam Sprocket.>	Replace the intake oil control solenoid LH. <Ref. to FU(w/o STI)-101, Oil Control Solenoid.>
69	**CHECK POWER SUPPLY TO THE EXHAUST OIL CONTROL SOLENOID RH.** 1) Turn the ignition switch to OFF. 2) Disconnect the connector from the exhaust oil control solenoid RH. 3) Turn the ignition switch to ON. 4) Measure the voltage between exhaust oil control solenoid RH connector and engine ground. ***Connector & terminal*** ***(E63) No. 1 (+) — Engine ground (–):***	Is the voltage 10 V or more?	Go to step **70**.	Repair the power supply circuit.
70	**CHECK HARNESS BETWEEN ECM AND EXHAUST OIL CONTROL SOLENOID RH CONNECTOR.** 1) Turn the ignition switch to OFF. 2) Disconnect the connector from ECM. 3) Measure the resistance of harness between ECM connector and exhaust oil control solenoid RH. ***Connector & terminal*** ***(E159) No. 23 — (E63) No. 2:***	Is the resistance less than 1 Ω?	Go to step **71**.	Repair the open circuit in harness between ECM connector and exhaust oil control solenoid RH connector.

	Step	Check	Yes	No
71	**CHECK HARNESS BETWEEN ECM AND EXHAUST OIL CONTROL SOLENOID RH CONNECTOR.** Measure the resistance between exhaust oil control solenoid RH connector and engine ground. ***Connector & terminal*** ***(E63) No. 2 — Engine ground:***	Is the resistance 1 MΩ or more?	Go to step **72**.	Repair the short circuit to ground in harness between ECM connector and exhaust oil control solenoid RH connector.
72	**CHECK EXHAUST OIL CONTROL SOLENOID RH.** Check the exhaust oil control solenoid RH. <Ref. to FU(w/o STI)-103, INSPECTION, Oil Control Solenoid.>	Is the check result OK?	Replace the exhaust cam sprocket RH. <Ref. to ME(w/o STI)-133, Cam Sprocket.>	Replace the exhaust oil control solenoid RH. <Ref. to FU(w/o STI)-101, Oil Control Solenoid.>
73	**CHECK POWER SUPPLY TO THE EXHAUST OIL CONTROL SOLENOID LH.** 1) Turn the ignition switch to OFF. 2) Disconnect the connector from the exhaust oil control solenoid LH. 3) Turn the ignition switch to ON. 4) Measure the voltage between exhaust oil control solenoid LH connector and engine ground. ***Connector & terminal*** ***(E66) No. 1 (+) — Engine ground (–):***	Is the voltage 10 V or more?	Go to step **74**.	Repair the power supply circuit.
74	**CHECK HARNESS BETWEEN ECM AND EXHAUST OIL CONTROL SOLENOID LH CONNECTOR.** 1) Turn the ignition switch to OFF. 2) Disconnect the connector from ECM. 3) Measure the resistance of harness between ECM connector and exhaust oil control solenoid LH. ***Connector & terminal*** ***(E159) No. 31 — (E66) No. 2:***	Is the resistance less than 1 Ω?	Go to step **75**.	Repair the open circuit in harness between ECM connector and exhaust oil control solenoid LH connector.
75	**CHECK HARNESS BETWEEN ECM AND EXHAUST OIL CONTROL SOLENOID LH CONNECTOR.** Measure the resistance between exhaust oil control solenoid LH connector and engine ground. ***Connector & terminal*** ***(E66) No. 2 — Engine ground:***	Is the resistance 1 MΩ or more?	Go to step **76**.	Repair the short circuit to ground in harness between ECM connector and exhaust oil control solenoid LH connector.
76	**CHECK EXHAUST OIL CONTROL SOLENOID LH.** Check the exhaust oil control solenoid LH. <Ref. to FU(w/o STI)-103, INSPECTION, Oil Control Solenoid.>	Is the check result OK?	Replace the exhaust cam sprocket LH. <Ref. to ME(w/o STI)-133, Cam Sprocket.>	Replace the exhaust oil control solenoid LH. <Ref. to FU(w/o STI)-101, Oil Control Solenoid.>
77	**CHECK ENGINE COOLANT TEMPERATURE SENSOR.** Check the engine coolant temperature sensor. <Ref. to FU(w/o STI)-90, INSPECTION, Engine Coolant Temperature Sensor.>	Is the check result OK?	Go to step **78**.	Replace the engine coolant temperature sensor. <Ref. to FU(w/o STI)-89, Engine Coolant Temperature Sensor.>

	Step	Check	Yes	No
78	**CHECK HARNESS BETWEEN ECM AND ENGINE COOLANT TEMPERATURE SENSOR CONNECTOR.** 1) Turn the ignition switch to OFF. 2) Disconnect the connector from ECM. 3) Disconnect the connectors from the engine coolant temperature sensor. 4) Measure the resistance of harness between ECM connector and engine coolant temperature sensor connector. ***Connector & terminal*** ***(E159) No. 27 — (E8) No. 1:*** ***(E158) No. 38 — (E8) No. 2:***	Is the resistance less than 1 Ω?	Go to step **79**.	Repair the open circuit of the harness between the ECM connector and engine coolant temperature sensor connector.
79	**CHECK HARNESS BETWEEN ECM AND ENGINE COOLANT TEMPERATURE SENSOR CONNECTOR.** Measure the resistance between the ECM connector and engine ground. ***Connector & terminal*** ***(E158) No. 38 — Engine ground:*** ***(E159) No. 27 — Engine ground:***	Is the resistance 1 MΩ or more?	Go to step **80**.	Repair the short circuit to ground in harness between ECM connector and engine coolant temperature sensor connector.
80	**CHECK MASS AIR FLOW AND INTAKE AIR TEMPERATURE SENSOR.** Check the mass air flow and intake air temperature sensor. <Ref. to FU(w/o STI)-110, INSPECTION, Mass Air Flow and Intake Air Temperature Sensor.>	Is the check result OK?	Go to step **81**.	Replace the mass air flow and intake air temperature sensor. <Ref. to FU(w/o STI)-110, Mass Air Flow and Intake Air Temperature Sensor.>
81	**CHECK MANIFOLD ABSOLUTE PRESSURE AND INTAKE AIR TEMPERATURE SENSOR.** Check the manifold absolute pressure and intake air temperature sensor. <Ref. to FU(w/o STI)-113, INSPECTION, Manifold Absolute Pressure and Intake Air Temperature Sensor.>	Is the check result OK?	Perform the Clear Memory Mode to complete. <Ref. to EN(w/o STI)(diag)-82, Clear Memory Mode.>	Check the manifold absolute pressure and intake air temperature sensor. <Ref. to FU(w/o STI)-112, Manifold Absolute Pressure and Intake Air Temperature Sensor.>
82	**CHECK HARNESS BETWEEN ECM AND FUEL INJECTOR CONNECTOR.** 1) Turn the ignition switch to OFF. 2) Disconnect the connector from ECM. 3) Disconnect the connector from fuel injector. 4) Measure the resistance of harness between ECM connector and fuel injector connector. ***Connector & terminal*** ***#1 (E158) No. 12 — (E5) No. 1:*** ***#1 (E158) No. 11 — (E5) No. 2:*** ***#2 (E158) No. 24 — (E16) No. 1:*** ***#2 (E158) No. 23 — (E16) No. 2:*** ***#3 (E158) No. 36 — (E6) No. 1:*** ***#3 (E158) No. 35 — (E6) No. 2:*** ***#4 (E158) No. 48 — (E17) No. 1:*** ***#4 (E158) No. 47 — (E17) No. 2:***	Is the resistance less than 1 Ω?	Go to step **83**.	Repair the open circuit of the harness between the ECM connector and fuel injector connector.

	Step	Check	Yes	No
83	**CHECK HARNESS BETWEEN ECM AND FUEL INJECTOR CONNECTOR.** Measure the resistance between the ECM connector and engine ground. ***Connector & terminal*** ***#1 (E158) No. 12 — Engine ground:*** ***#1 (E158) No. 11 — Engine ground:*** ***#2 (E158) No. 24 — Engine ground:*** ***#2 (E158) No. 23 — Engine ground:*** ***#3 (E158) No. 36 — Engine ground:*** ***#3 (E158) No. 35 — Engine ground:*** ***#4 (E158) No. 48 — Engine ground:*** ***#4 (E158) No. 47 — Engine ground:***	Is the resistance 1 MΩ or more?	Go to step **84**.	Repair the short circuit to ground in harness between ECM connector and fuel injector connector.
84	**CHECK IGNITION SYSTEM.** Check the ignition system. <Ref. to EN(w/o STI)(diag)-101, IGNITION CONTROL SYSTEM, Diagnostics for Engine Starting Failure.>	Is the check result OK?	Go to step **85**.	Repair the ignition system. <Ref. to IG(w/o STI)-2, General Description.>
85	**CHECK FREEZE FRAME DATA.** Using the Subaru Select Monitor, read the values in «A/C Compressor Signal» and «Idle A/C load correct». NOTE: For detailed operation procedures, refer to “Freeze Frame Data Display For Engine”. <Ref. to EN(w/o STI)(diag)-58, DISPLAY OF ENGINE FREEZE FRAME DATA, OPERATION, Subaru Select Monitor.>	Does the value of «A/C Compressor Signal» indicate ON output, and does the value of «Idle A/C load correct» increase?	Check the air conditioner. <Ref. to AC(diag)-8, INSPECTION, Diagnostics with Phenomenon.> <Ref. to AC(diag)-2, PROCEDURE, Basic Diagnostic Procedure.>	Go to step **86**.
86	**CHECK FREEZE FRAME DATA.** 1) Using the Subaru Select Monitor, read the value of «Electric Load Feedback Val». NOTE: For detailed operation procedures, refer to “Freeze Frame Data Display For Engine”. <Ref. to EN(w/o STI)(diag)-58, DISPLAY OF ENGINE FREEZE FRAME DATA, OPERATION, Subaru Select Monitor.> 2) Compare the value of «Electric Load Feedback Val» with that of «ISC Learning Value», which is described in “Engine Current Data Display”. <Ref. to EN(w/o STI)(diag)-46, DISPLAY CURRENT ENGINE DATA, OPERATION, Subaru Select Monitor.> NOTE: For detailed operation procedures, refer to “Current Data Display For Engine”. <Ref. to EN(w/o STI)(diag)-46, DISPLAY CURRENT ENGINE DATA, OPERATION, Subaru Select Monitor.>	Is the value of «Electric Load Feedback Val» 20% or more of «ISC Learning Value»?	Check the generator and power assisted system. <Ref. to SC(w/o STI)-44, INSPECTION, Generator.> <Ref. to PS(diag)-2, Basic Diagnostic Procedure.>	Go to step **87**.
87	**CHECK FREEZE FRAME DATA.** 1) Using the Subaru Select Monitor, read the values of «Vehicle Speed», «Engine Speed» and «AT turbine speed». NOTE: For detailed operation procedures, refer to “Freeze Frame Data Display For Engine”. <Ref. to EN(w/o STI)(diag)-58, DISPLAY OF ENGINE FREEZE FRAME DATA, OPERATION, Subaru Select Monitor.>	Is there any freeze frame data indicating that the value of «Vehicle Speed» is less than 30 km/h (18.6 MPH), and that the difference in values between «Engine Speed» and «AT turbine speed» is less than 100 rpm?	Repair the CVT. <Ref. to CVT(TR690)-3, General Description.>	Go to step **88**.

	Step	Check	Yes	No
88	**CHECK DTC.**	Is DTC of CVT displayed? <Ref. to CVT(diag)-18, OPERATION, Read Diagnostic Trouble Code (DTC).>	Check the appropriate DTC using the "List of Diagnostic Trouble Code (DTC)". <Ref. to CVT(diag)-36, List of Diagnostic Trouble Code (DTC).>	Even if DTC is detected, it has returned to a normal condition at this time. Reproduce the failure, and then perform the diagnosis again. NOTE: In this case, temporary poor contact of connector, temporary open or short circuit of harness may be the cause.
89	**CHECK FREEZE FRAME DATA.** Using the Subaru Select Monitor, read the values in «Calculated load value» and «Relative Throttle Pos.». NOTE: For detailed operation procedures, refer to "Freeze Frame Data Display For Engine". <Ref. to EN(w/o STI)(diag)-58, DISPLAY OF ENGINE FREEZE FRAME DATA, OPERATION, Subaru Select Monitor.>	Is the value of «Calculated load value» decreasing while that of «Relative Throttle Pos.» is increasing?	Go to step **90**.	Go to step **94**.
90	**CHECK MASS AIR FLOW AND INTAKE AIR TEMPERATURE SENSOR.** Check the mass air flow and intake air temperature sensor. <Ref. to FU(w/o STI)-110, INSPECTION, Mass Air Flow and Intake Air Temperature Sensor.>	Is the check result OK?	Go to step **91**.	Replace the mass air flow and intake air temperature sensor. <Ref. to FU(w/o STI)-110, Mass Air Flow and Intake Air Temperature Sensor.>
91	**CHECK HARNESS BETWEEN ECM AND MASS AIR FLOW AND INTAKE AIR TEMPERATURE SENSOR CONNECTOR.** 1) Turn the ignition switch to OFF. 2) Disconnect the connector from ECM. 3) Disconnect the connectors from the mass air flow and intake air temperature sensor. 4) Measure the resistance of harness between ECM connector and the mass air flow and intake air temperature sensor connector. ***Connector & terminal*** ***(B134) No. 16 — (B3) No. 3:*** ***(B134) No. 28 — (B3) No. 2:***	Is the resistance less than 1 Ω?	Go to step **92**.	Repair the open circuit of harness between ECM connector and the mass air flow and intake air temperature sensor connector.
92	**CHECK HARNESS BETWEEN ECM AND MASS AIR FLOW AND INTAKE AIR TEMPERATURE SENSOR CONNECTOR.** Measure the resistance between the ECM connector and engine ground. ***Connector & terminal*** ***(B134) No. 16 — Engine ground:*** ***(B134) No. 28 — Engine ground:***	Is the resistance 1 MΩ or more?	Go to step **93**.	Repair the ground short circuit of harness between ECM connector and the mass air flow and intake air temperature sensor connector.

	Step	Check	Yes	No
93	**CHECK CURRENT DATA.** 1) Start the engine and warm up completely. 2) Compare with the reference value of «Load Value» described in "Engine Current Data Display" under "Subaru Select Monitor". <Ref. to EN(w/o STI)(diag)-46, DISPLAY CURRENT ENGINE DATA, OPERATION, Subaru Select Monitor.> NOTE: • The value of «Calculated load value» change depending on how the engine internal parts settle in. If the value is out of standard, judge it again by comparing the vehicle with another one with the same specifications and similar conditions such as travel distance. • For detailed operation procedures, refer to "Current Data Display For Engine". <Ref. to EN(w/o STI)(diag)-46, DISPLAY CURRENT ENGINE DATA, OPERATION, Subaru Select Monitor.>	Does the value of «Calculated load value» falls between 90 — 110% of the value described in the list?	Go to step **94**.	Replace the mass air flow and intake air temperature sensor. <Ref. to FU(w/o STI)-110, Mass Air Flow and Intake Air Temperature Sensor.>
94	**CHECK HARNESS BETWEEN ECM AND FUEL INJECTOR CONNECTOR.** 1) Turn the ignition switch to OFF. 2) Disconnect the connector from ECM. 3) Disconnect the connector from fuel injector. 4) Measure the resistance of harness between ECM connector and fuel injector connector. ***Connector & terminal*** ***#1 (E158) No. 12 — (E5) No. 1:*** ***#1 (E158) No. 11 — (E5) No. 2:*** ***#2 (E158) No. 24 — (E16) No. 1:*** ***#2 (E158) No. 23 — (E16) No. 2:*** ***#3 (E158) No. 36 — (E6) No. 1:*** ***#3 (E158) No. 35 — (E6) No. 2:*** ***#4 (E158) No. 48 — (E17) No. 1:*** ***#4 (E158) No. 47 — (E17) No. 2:***	Is the resistance less than 1 Ω?	Go to step **95**.	Repair the open circuit of the harness between the ECM connector and fuel injector connector.
95	**CHECK HARNESS BETWEEN ECM AND FUEL INJECTOR CONNECTOR.** Measure the resistance between the ECM connector and engine ground. ***Connector & terminal*** ***#1 (E158) No. 12 — Engine ground:*** ***#1 (E158) No. 11 — Engine ground:*** ***#2 (E158) No. 24 — Engine ground:*** ***#2 (E158) No. 23 — Engine ground:*** ***#3 (E158) No. 36 — Engine ground:*** ***#3 (E158) No. 35 — Engine ground:*** ***#4 (E158) No. 48 — Engine ground:*** ***#4 (E158) No. 47 — Engine ground:***	Is the resistance 1 MΩ or more?	Go to step **96**.	Repair the short circuit to ground in harness between ECM connector and fuel injector connector.
96	**CHECK IGNITION SYSTEM.** Check the ignition system. <Ref. to EN(w/o STI)(diag)-101, IGNITION CONTROL SYSTEM, Diagnostics for Engine Starting Failure.>	Is the check result OK?	Go to step **97**.	Repair the ignition system. <Ref. to IG(w/o STI)-2, General Description.>

	Step	Check	Yes	No
97	**CHECK OF FUEL PUMP.** 1) On the «Active Test» item, select «Fuel Pump Control (ON/OFF Dr.)» and perform ON/OFF drive operation. NOTE: For detailed operation procedures, refer to the "Active Test". <Ref. to EN(w/o STI)(diag)-83, Active Test.> 2) Check if operating sound occurs in the fuel pump according to ON/OFF switching operation.	Does the fuel pump emit operating sound?	Go to step **99**.	Go to step **98**.
98	**CHECK OF FUEL PUMP.** Check fuel pump. <Ref. to FU(w/o STI)-167, INSPECTION, Fuel Pump.>	Is the check result OK?	Check fuel pump system. <Ref. to EN(w/o STI)(diag)-312, DTC P0230 FUEL PUMP PRIMARY CIRCUIT, Diagnostic Procedure with Diagnostic Trouble Code (DTC).>	Replace the fuel pump. <Ref. to FU(w/o STI)-161, Fuel Pump.>
99	**CHECK FUEL TANK.** Check if any foreign matters such as iron powder exist in the fuel tank.	Is there any foreign matter in the fuel tank?	Remove foreign matter from the fuel tank.	Go to step **100**.
100	**CHECK FUEL PRESSURE.** **WARNING:** **Place "NO OPEN FLAMES" signs near the working area.** **CAUTION:** **Be careful not to spill fuel.** Measure the fuel pressure. <Ref. to ME(w/o STI)-31, INSPECTION, Fuel Pressure.> **CAUTION:** **Release fuel pressure before removing the fuel pressure gauge.**	Is the measured value 340 — 400 kPa (3.5 — 4.1 kgf/cm^2, 49 — 58 psi)?	Go to step **101**.	Check the fuel pump and fuel delivery line. <Ref. to FU(w/o STI)-167, INSPECTION, Fuel Pump.> <Ref. to FU(w/o STI)-196, INSPECTION, Fuel Delivery and Evaporation Lines.>
101	**CHECK FREEZE FRAME DATA.** Using the Subaru Select Monitor, read the values in «Fuel Rail Pressure A» and «Commanded Fuel Rail Pressure A». NOTE: For detailed operation procedures, refer to "Freeze Frame Data Display For Engine". <Ref. to EN(w/o STI)(diag)-58, DISPLAY OF ENGINE FREEZE FRAME DATA, OPERATION, Subaru Select Monitor.>	Is the value in «Fuel Rail Pressure A» synchronized with the one in «Commanded Fuel Rail Pressure A» in all freeze frame data?	Go to step **102**.	Check the high-pressure fuel pump. <Ref. to FU(w/o STI)-75, INSPECTION, High Pressure Fuel Pump.>
102	**CHECK ENGINE RUNNING CONDITION.** Check the engine running condition using "Roughness monitor" in the Subaru Select Monitor. NOTE: For detailed operation procedures, refer to "Application help".	Is there a large difference in the speed between each cylinder?	It is possible that the compression pressure of the engine is not sufficient. Check the engine. <Ref. to ME(w/o STI)-329, INSPECTION, Engine Trouble in General.>	Perform the Clear Memory Mode to complete. <Ref. to EN(w/o STI)(diag)-82, Clear Memory Mode.>

1. OUTLINE OF DIAGNOSIS

Judge as NG when the engine stops except by operating the ignition switch after starting the engine.

2. EXECUTION CONDITION

Secondary parameters	Execution condition
Engine condition	After engine starting

3. GENERAL DRIVING CYCLE

Always perform the diagnosis continuously after the enable conditions have been established.

4. DIAGNOSTIC METHOD

If the duration of time while the following conditions are met is longer than the time indicated, judge as NG.

Judgment Value

Malfunction Criteria	Threshold Value
Engine speed	≤ 300 rpm

Time Needed for Diagnosis: 60 ms
Malfunction Indicator Light Illumination: Does not illuminate.

EZ:DTC P1604 STARTABILITY MALFUNCTION

DTC DETECTING CONDITION:
Immediately at fault recognition

CAUTION:
- **After servicing or replacing faulty parts, perform Clear Memory Mode <Ref. to EN(w/o STI)(diag)-82, OPERATION, Clear Memory Mode.>.**
- **Use the check board when measuring the ECM terminal voltage and resistance.**

NOTE:
This DTC may be detected even if fault does not occur in the vehicle. If the customer does not ask for inspection, perform the clear memory mode without inspection and return the vehicle to the user.

WIRING DIAGRAM:
Engine Electrical System <Ref. to WI-154, WIRING DIAGRAM, Engine Electrical System.>

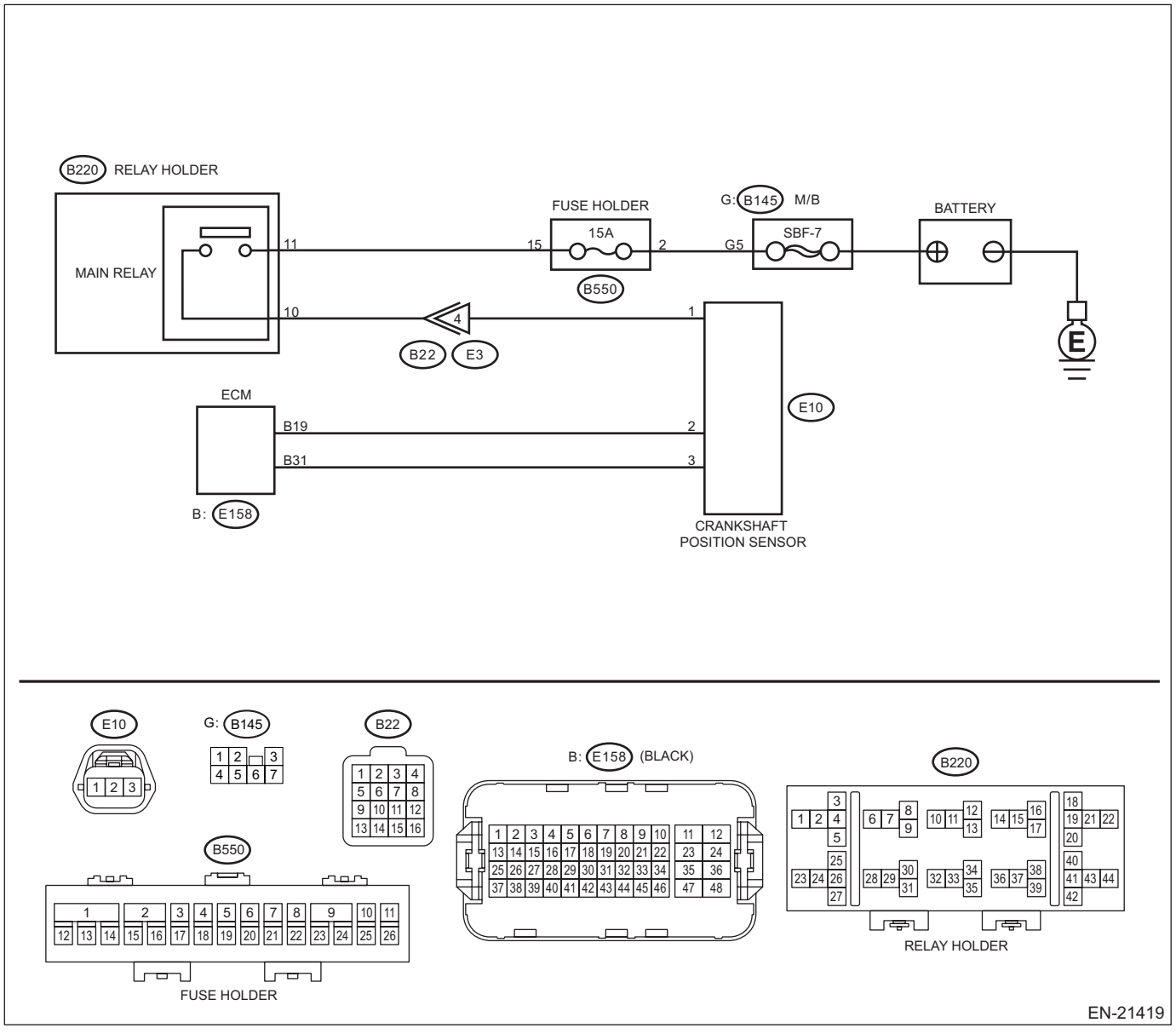

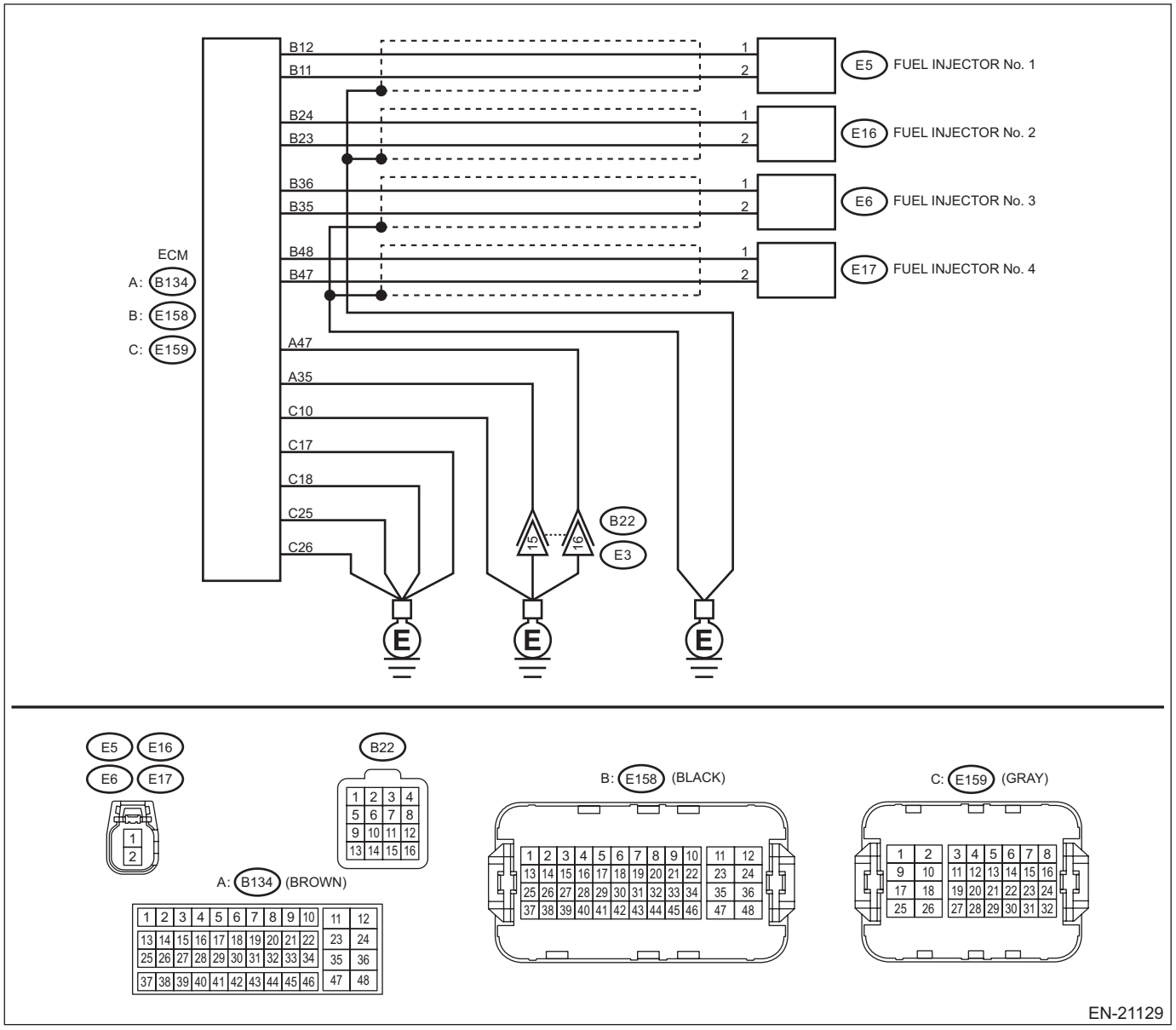
ECM
A: B134
B: E158
C: E159
B12
B11
B24
B23
B36
B35
B48
B47
A47
A35
C10
C17
C18
C25
C26
E5 FUEL INJECTOR No. 1
E16 FUEL INJECTOR No. 2
E6 FUEL INJECTOR No. 3
E17 FUEL INJECTOR No. 4
B22
E3
A: B134 (BROWN)
B: E158 (BLACK)
C: E159 (GRAY)
EN-21129

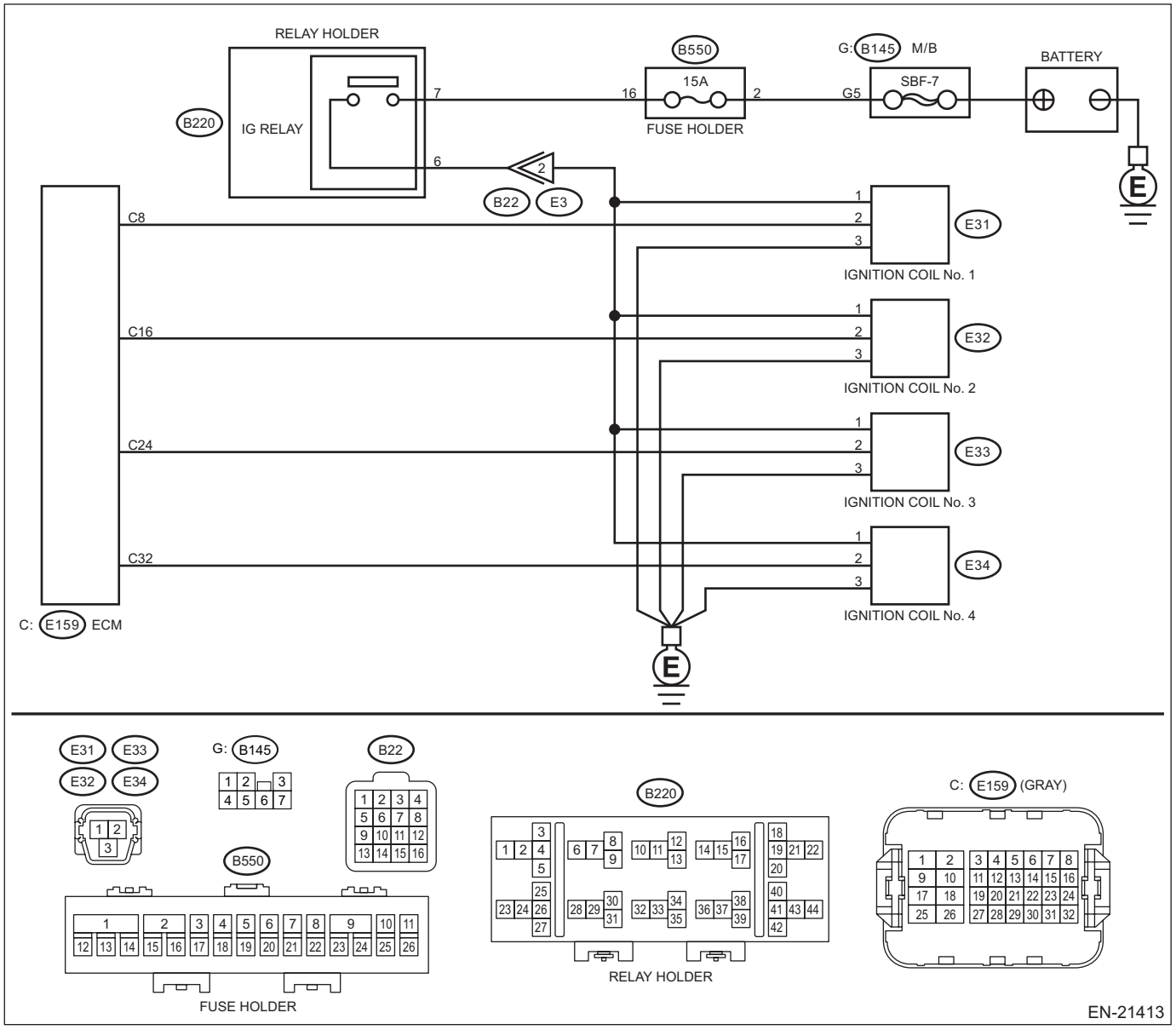
RELAY HOLDER
B220
IG RELAY
7
6
B550
15A
16
2
FUSE HOLDER
G: B145 M/B
G5
SBF-7
BATTERY
2
B22
E3
C8
C16
C24
C32
C: E159 ECM
E31
E32
E33
E34
IGNITION COIL No. 1
IGNITION COIL No. 2
IGNITION COIL No. 3
IGNITION COIL No. 4
E
G: B145
B22
B550
FUSE HOLDER
B220
RELAY HOLDER
C: E159 (GRAY)
EN-21413

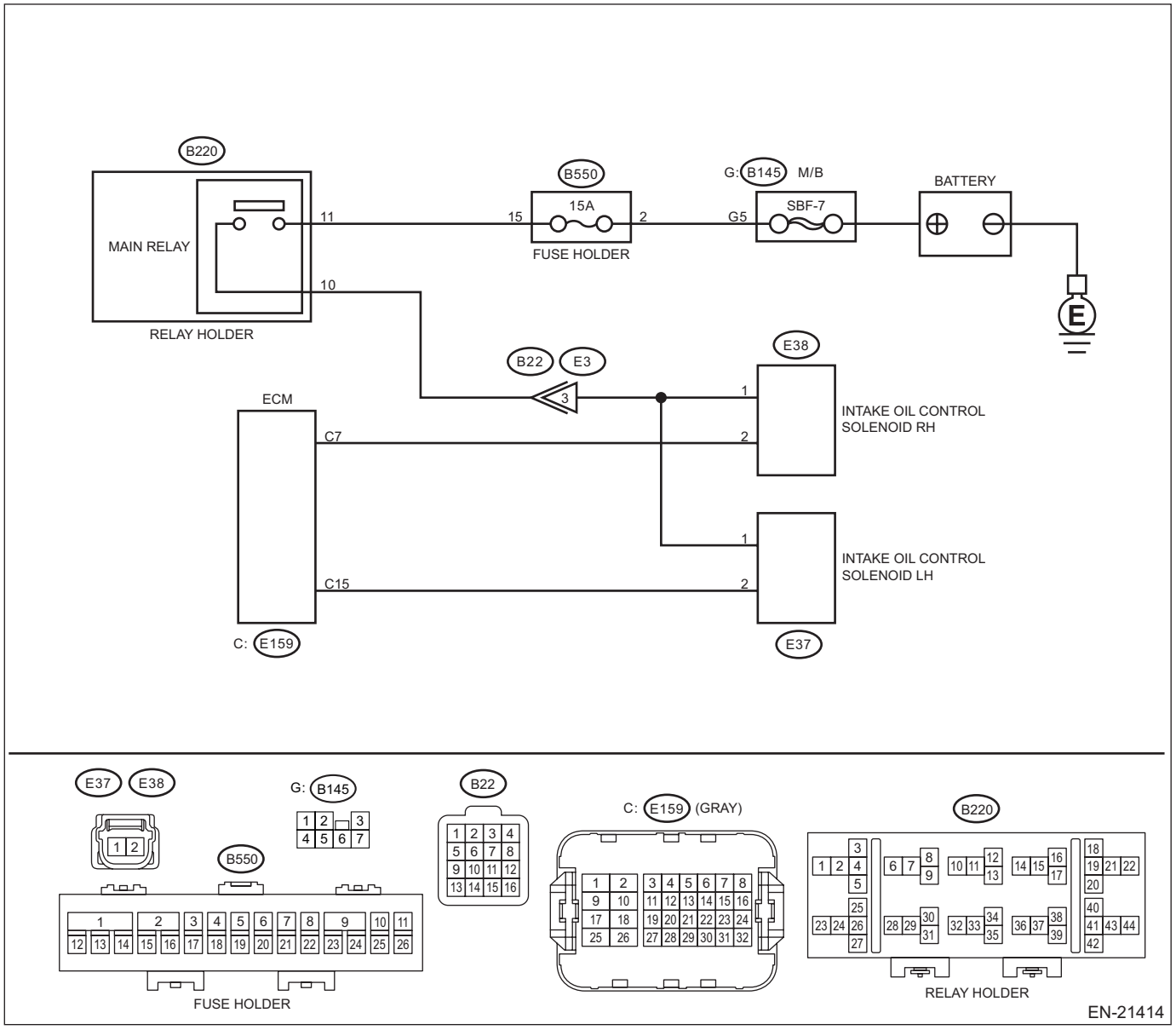
B220
MAIN RELAY
11
10
RELAY HOLDER
B550
15
15A
2
FUSE HOLDER
G: B145 M/B
G5
SBF-7
BATTERY
E
B22
E3
3
ECM
C7
C15
C: E159
E38
1
2
INTAKE OIL CONTROL SOLENOID RH
1
2
INTAKE OIL CONTROL SOLENOID LH
E37
E37
E38
G: B145
B550
FUSE HOLDER
B22
C: E159 (GRAY)
B220
RELAY HOLDER
EN-21414

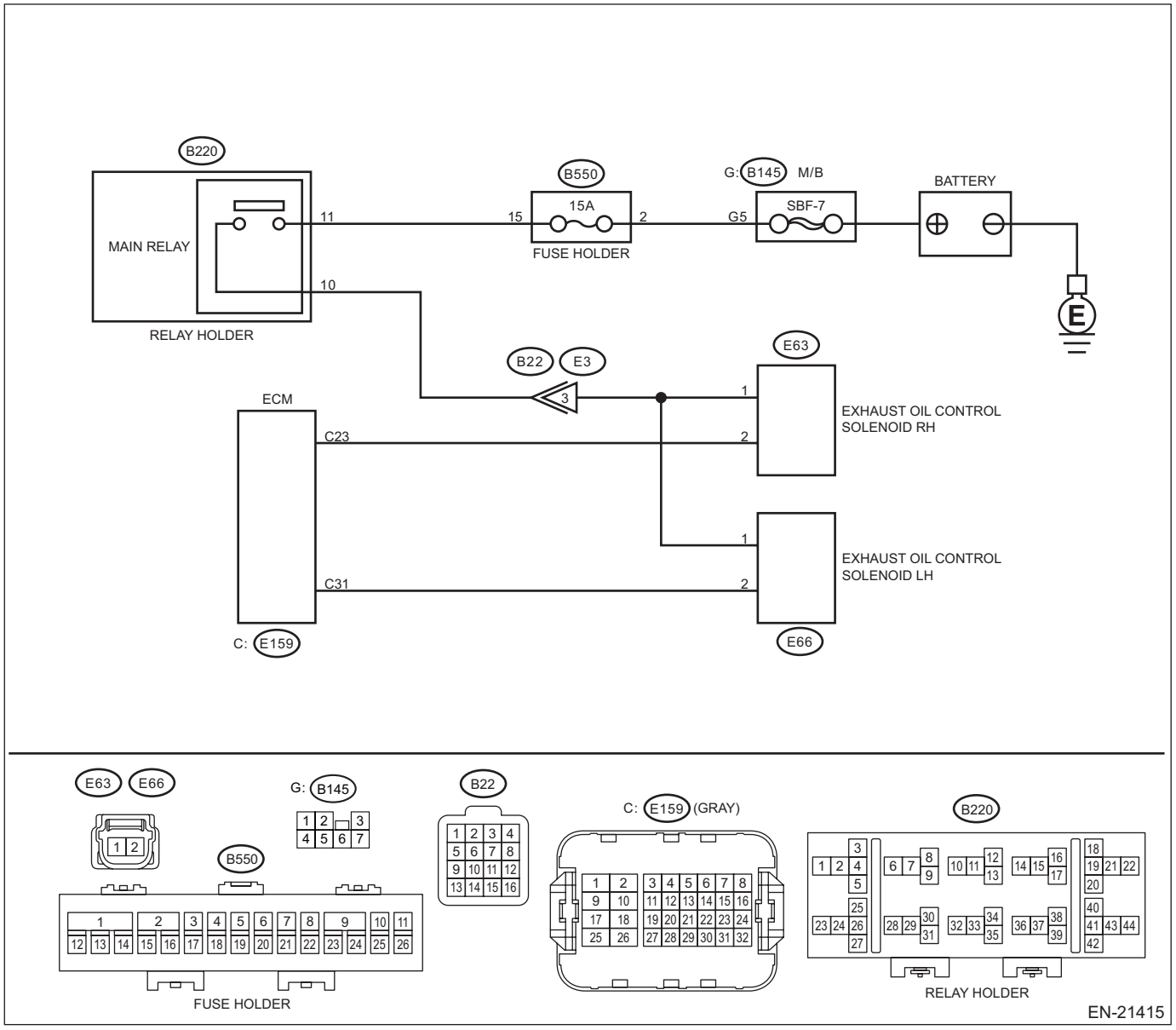
B220
MAIN RELAY
11
10
RELAY HOLDER
B550
15
15A
2
FUSE HOLDER
G: B145 M/B
G5
SBF-7
BATTERY
E
B22
E3
3
ECM
C23
C31
C: E159
E63
1
2
EXHAUST OIL CONTROL SOLENOID RH
1
2
EXHAUST OIL CONTROL SOLENOID LH
E66
E63
E66
1 2
G: B145
1 2 3
4 5 6 7
B550
1 2 3 4 5 6 7 8 9 10 11
12 13 14 15 16 17 18 19 20 21 22 23 24 25 26
FUSE HOLDER
B22
1 2 3 4
5 6 7 8
9 10 11 12
13 14 15 16
C: E159 (GRAY)
1 2 3 4 5 6 7 8
9 10 11 12 13 14 15 16
17 18 19 20 21 22 23 24
25 26 27 28 29 30 31 32
B220
1 2 3 4 5 6 7 8 9 10 11 12 13 14 15 16 17 18 19 20 21 22 23 24 25 26 27 28 29 30 31 32 33 34 35 36 37 38 39 40 41 42 43 44
RELAY HOLDER
EN-21415

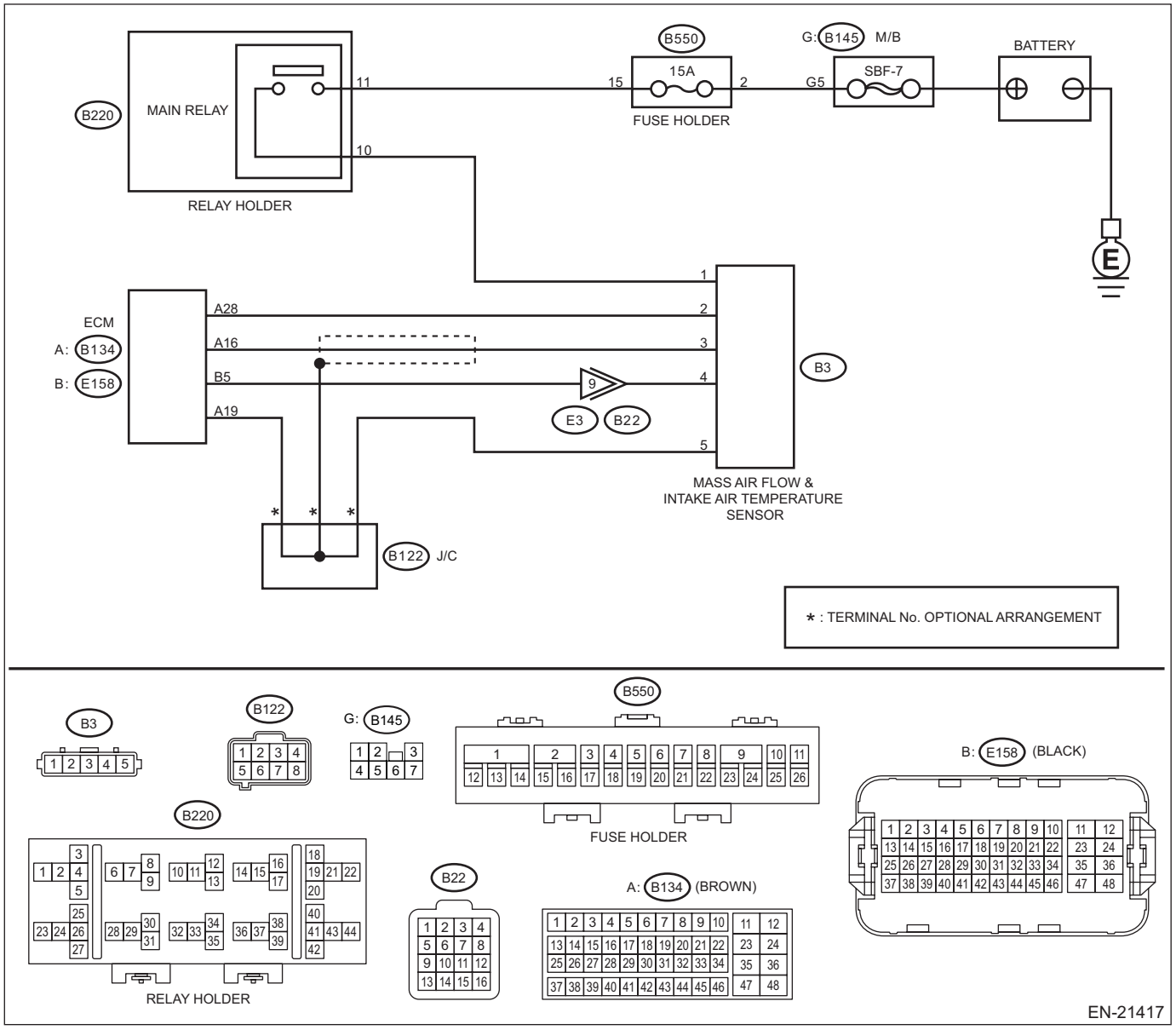
B220
MAIN RELAY
11
10
RELAY HOLDER
B550
15A
15
2
FUSE HOLDER
G: B145 M/B
G5
SBF-7
BATTERY
E
ECM
A: B134
B: E158
A28
A16
B5
A19
1
2
3
4
5
B3
9
E3
B22
MASS AIR FLOW &
INTAKE AIR TEMPERATURE
SENSOR
B122 J/C
* : TERMINAL No. OPTIONAL ARRANGEMENT
B3
B122
G: B145
B550
FUSE HOLDER
B: E158 (BLACK)
B220
RELAY HOLDER
B22
A: B134 (BROWN)
EN-21417

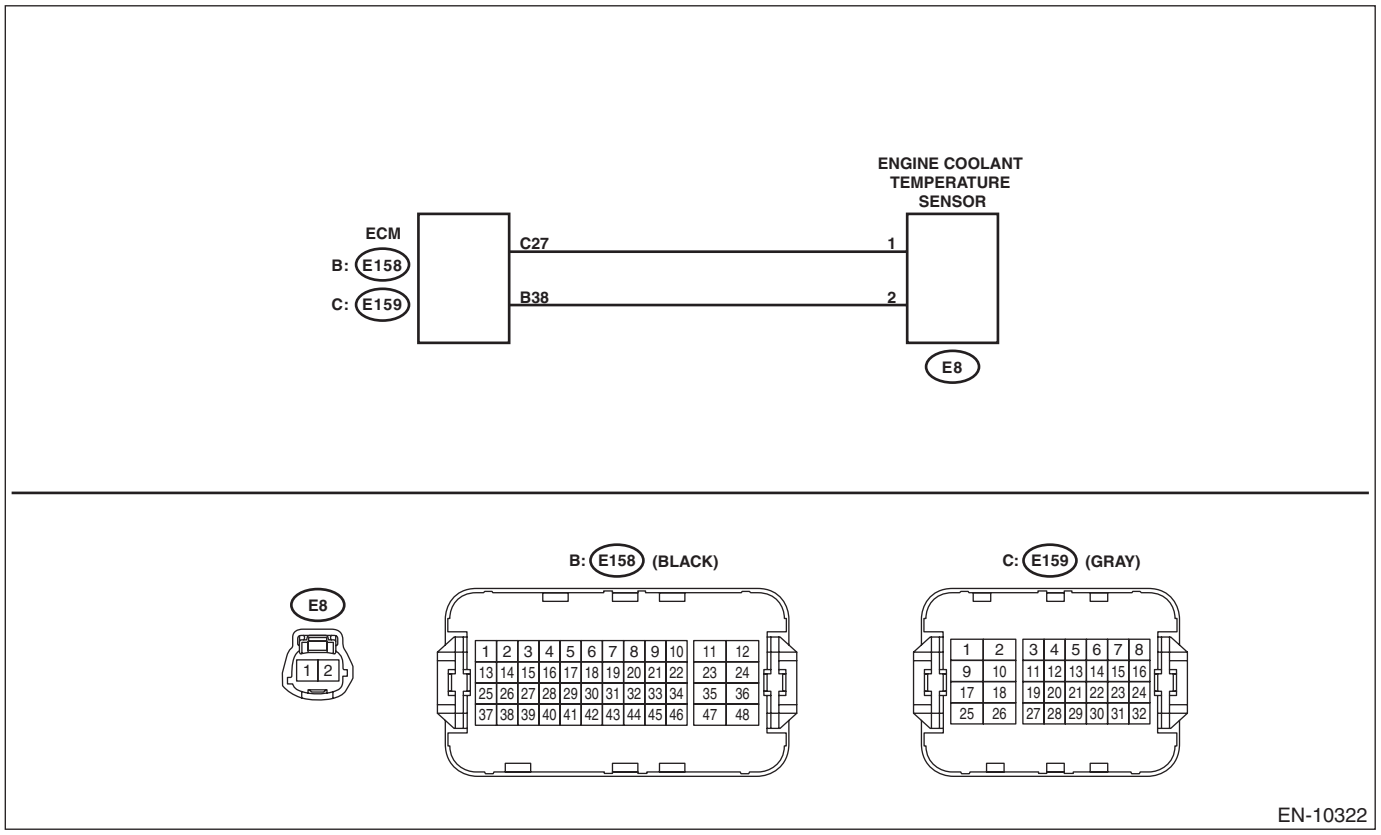
ENGINE COOLANT TEMPERATURE SENSOR
ECM
B: E158
C: E159
C27
B38
1
2
E8
B: E158 (BLACK)
C: E159 (GRAY)
1 2 3 4 5 6 7 8 9 10 11 12
13 14 15 16 17 18 19 20 21 22 23 24
25 26 27 28 29 30 31 32 33 34 35 36
37 38 39 40 41 42 43 44 45 46 47 48
1 2 3 4 5 6 7 8
9 10 11 12 13 14 15 16
17 18 19 20 21 22 23 24
25 26 27 28 29 30 31 32
EN-10322

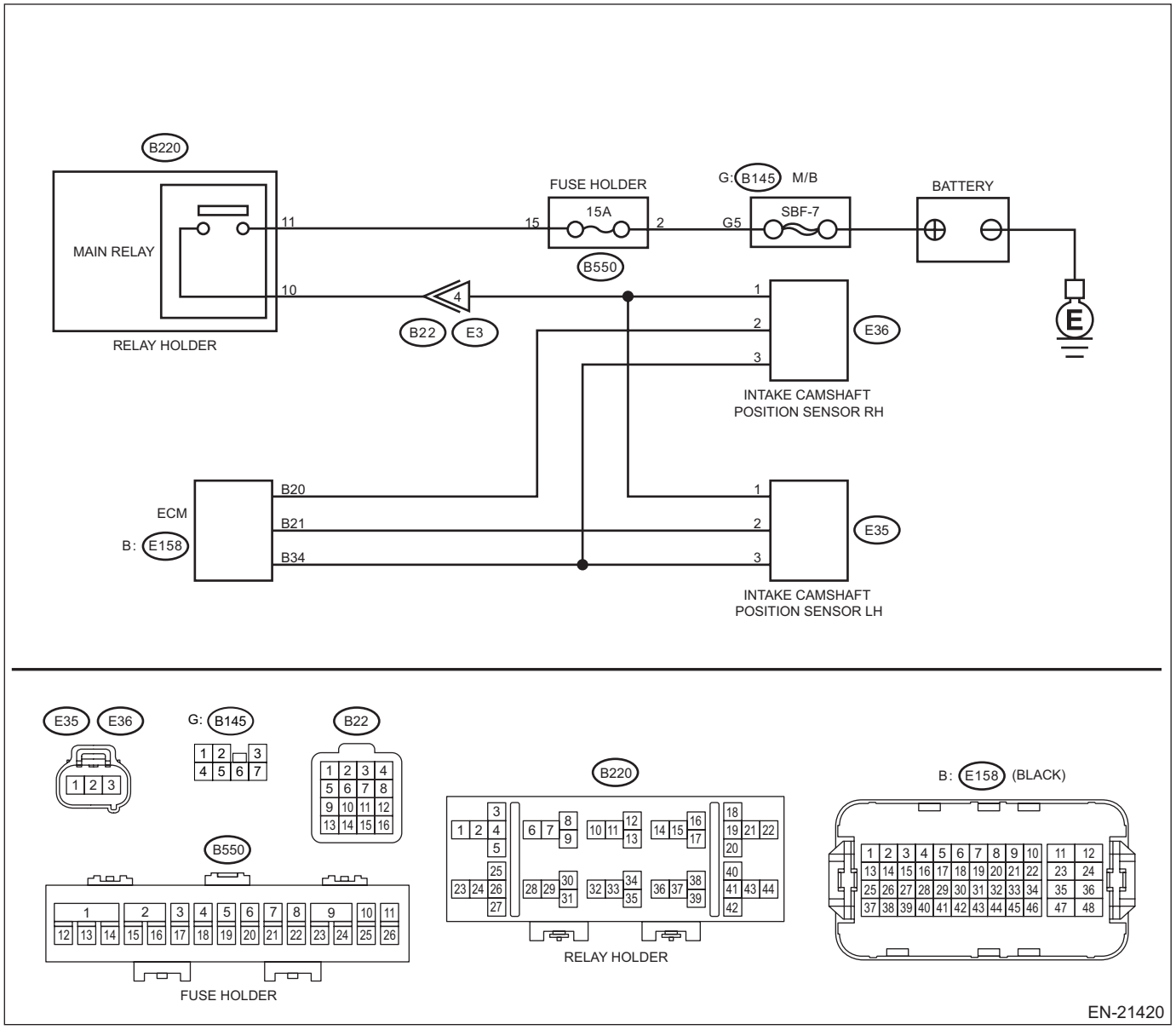
B220
MAIN RELAY
11
10
RELAY HOLDER
FUSE HOLDER
15
15A
2
B550
G: B145 M/B
G5
SBF-7
BATTERY
4
B22
E3
1
2
3
E36
INTAKE CAMSHAFT
POSITION SENSOR RH
ECM
B: E158
B20
B21
B34
E35
INTAKE CAMSHAFT
POSITION SENSOR LH
E35
E36
G: B145
B22
B550
FUSE HOLDER
B220
RELAY HOLDER
B: E158 (BLACK)
EN-21420

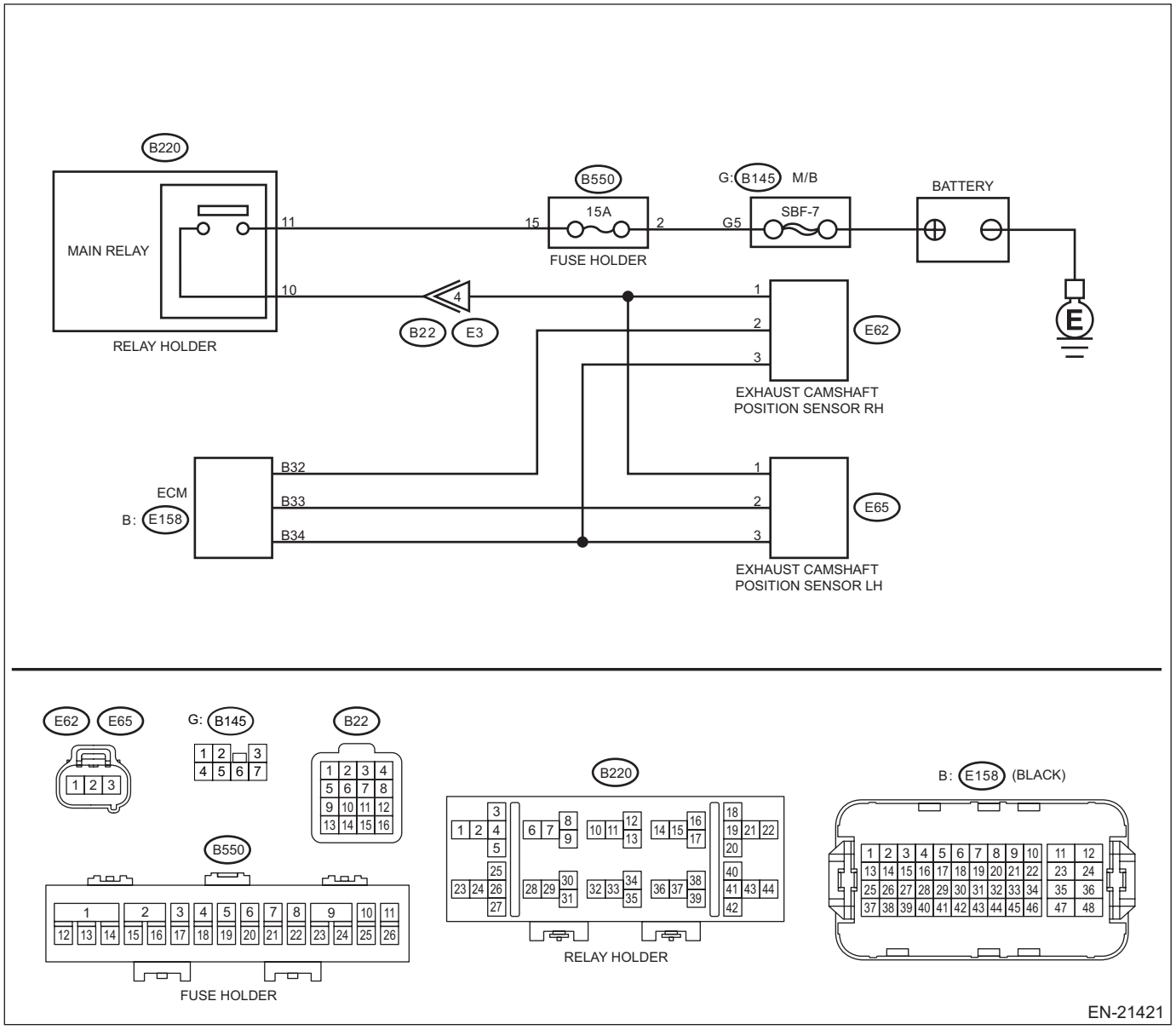

Step		Check	Yes	No
1	**CHECK DTC.**	Is any other DTC displayed?	Check DTC using "List of Diagnostic Trouble Code (DTC)". <Ref. to EN(w/o STI)(diag)-106, List of Diagnostic Trouble Code (DTC).>	Go to step **2**.
2	**CHECK IMMOBILIZER.** Check the immobilizer. <Ref. to IM(diag)-2, Basic Diagnostic Procedure.>	Is the check result OK?	Go to step **3**.	Repair the immobilizer. <Ref. to IM(diag)-2, Basic Diagnostic Procedure.>
3	**CHECK FOR MALFUNCTION OCCURRENCE.**	Is it possible to reproduce the faulty phenomenon or to identify the faulty condition?	Go to step **30**.	Go to step **4**.

	Step	Check	Yes	No
4	**CHECK FREEZE FRAME DATA.** Using the Subaru Select Monitor, read the values in «Engine Speed» and «Control module voltage». NOTE: For detailed operation procedures, refer to "Freeze Frame Data Display For Engine". <Ref. to EN(w/o STI)(diag)-58, DISPLAY OF ENGINE FREEZE FRAME DATA, OPERATION, Subaru Select Monitor.>	Is the value of «Engine Speed» 0 rpm?	• When the value of «Control module voltage» is less than 5 V: Check the battery. <Ref. to SC(w/o STI)-51, INSPECTION, Battery.> • When the value of «Control module voltage» is 5 V or more: Go to step **5**.	• When the value of «Engine Speed» is less than 250 rpm: Go to step **12**. • When the value of «Engine Speed» is 250 rpm or more: Go to step **20**.
5	**CHECK FREEZE FRAME DATA.** Read the value of «Control module voltage» using Subaru Select Monitor. NOTE: For detailed operation procedures, refer to "Freeze Frame Data Display For Engine". <Ref. to EN(w/o STI)(diag)-58, DISPLAY OF ENGINE FREEZE FRAME DATA, OPERATION, Subaru Select Monitor.>	Is the value of «Control module voltage» less than 9 V?	It is possible that the engine friction is too large. Check the engine. <Ref. to ME(w/o STI)-329, INSPECTION, Engine Trouble in General.>	• When the value of «Control module voltage» changes in any one of freeze frame data: Go to step **6**. • When the value of «Control module voltage» does not change in all freeze frame data: Check the starter motor circuit. <Ref. to EN(w/o STI)(diag)-87, STARTER MOTOR CIRCUIT, Diagnostics for Engine Starting Failure.>
6	**CHECK INSTALLATION CONDITION OF CRANKSHAFT POSITION SENSOR.**	Is the crankshaft position sensor installed correctly?	Go to step **7**.	Install the crankshaft position sensor correctly. <Ref. to FU(w/o STI)-94, INSTALLATION, Crankshaft Position Sensor.>
7	**CHECK CRANKSHAFT POSITION SENSOR.** Check the crankshaft position sensor. <Ref. to FU(w/o STI)-95, INSPECTION, Crankshaft Position Sensor.>	Is the check result OK?	Go to step **8**.	Replace the crankshaft position sensor. <Ref. to FU(w/o STI)-93, Crankshaft Position Sensor.>
8	**CHECK POWER SUPPLY TO CRANKSHAFT POSITION SENSOR.** 1) Turn the ignition switch to OFF. 2) Disconnect the connector from the crankshaft position sensor. 3) Turn the ignition switch to ON. 4) Measure the voltage between crankshaft position sensor connector and engine ground. ***Connector & terminal*** ***(E10) No. 1 (+) — Engine ground (–):***	Is the voltage 10 V or more?	Go to step **9**.	Repair the power supply circuit.

	Step	Check	Yes	No
9	**CHECK HARNESS BETWEEN ECM AND CRANKSHAFT POSITION SENSOR CONNECTOR.** 1) Turn the ignition switch to OFF. 2) Disconnect the connector from ECM. 3) Measure the resistance of harness between ECM connector and crankshaft position sensor connector. ***Connector & terminal*** ***(E158) No. 19 — (E10) No. 2:*** ***(E158) No. 31 — (E10) No. 3:***	Is the resistance less than 1 Ω?	Go to step **10**.	Repair the open circuit in the harness between the ECM connector and crankshaft position sensor connector.
10	**CHECK HARNESS BETWEEN ECM AND CRANKSHAFT POSITION SENSOR CONNECTOR.** Measure the resistance between crankshaft position sensor connector and engine ground. ***Connector & terminal*** ***(E10) No. 2 — Engine ground:*** ***(E10) No. 3 — Engine ground:***	Is the resistance 1 MΩ or more?	Go to step **11**.	Repair short circuit to ground in harness between ECM connector and crankshaft position sensor connector.
11	**CHECK FOR MALFUNCTION OCCURRENCE.** 1) Replace the crankshaft position sensor. <Ref. to FU(w/o STI)-93, Crankshaft Position Sensor.> 2) Check that the fault is removed.	Is the fault removed?	Perform the Clear Memory Mode to complete. <Ref. to EN(w/o STI)(diag)-82, Clear Memory Mode.>	Replace the ECM. <Ref. to FU(w/o STI)-124, Engine Control Module (ECM).>
12	**CHECK FREEZE FRAME DATA.** Using the Subaru Select Monitor, read the values in «Coolant Temp.», «Ambient Temperature» and «Fuel Pump Duty». NOTE: For detailed operation procedures, refer to "Freeze Frame Data Display For Engine". <Ref. to EN(w/o STI)(diag)-58, DISPLAY OF ENGINE FREEZE FRAME DATA, OPERATION, Subaru Select Monitor.>	Is the value of «Coolant Temp.» 120°C (248°F) or more? Or, is the value of «Coolant Temp.» lower than «Ambient Temperature» by 15°C (27°F) or more?	Replace the engine coolant temperature sensor. <Ref. to FU(w/o STI)-89, Engine Coolant Temperature Sensor.>	• When the value of «Fuel Pump Duty» is 60% or more: Go to step **13**. • When the value of «Fuel Pump Duty» is less than 60%: Check the fuel pump system. <Ref. to EN(w/o STI)(diag)-312, DTC P0230 FUEL PUMP PRIMARY CIRCUIT, Diagnostic Procedure with Diagnostic Trouble Code (DTC).>
13	**CHECK OF FUEL PUMP.** 1) On the «Active Test» item, select «Fuel Pump Control (ON/OFF Dr.)» and perform ON/OFF drive operation. NOTE: For detailed operation procedures, refer to the "Active Test". <Ref. to EN(w/o STI)(diag)-83, Active Test.> 2) Check if operating sound occurs in the fuel pump according to ON/OFF switching operation.	Does the fuel pump emit operating sound?	Go to step **15**.	Go to step **14**.

	Step	Check	Yes	No
14	**CHECK OF FUEL PUMP.** Check fuel pump. <Ref. to FU(w/o STI)-167, INSPECTION, Fuel Pump.>	Is the check result OK?	Check fuel pump system. <Ref. to EN(w/o STI)(diag)-312, DTC P0230 FUEL PUMP PRIMARY CIRCUIT, Diagnostic Procedure with Diagnostic Trouble Code (DTC).>	Replace the fuel pump. <Ref. to FU(w/o STI)-161, Fuel Pump.>
15	**CHECK FUEL TANK.** Check if any foreign matters such as iron powder exist in the fuel tank.	Is there any foreign matter in the fuel tank?	Remove foreign matter from the fuel tank.	Go to step **16**.
16	**CHECK FUEL PRESSURE.** **WARNING:** **Place "NO OPEN FLAMES" signs near the working area.** **CAUTION:** **Be careful not to spill fuel.** Measure the fuel pressure. <Ref. to ME(w/o STI)-31, INSPECTION, Fuel Pressure.> **CAUTION:** **Release fuel pressure before removing the fuel pressure gauge.**	Is the measured value 340 — 400 kPa (3.5 — 4.1 kgf/cm^2, 49 — 58 psi)?	Go to step **17**.	Check the fuel pump and fuel delivery line. <Ref. to FU(w/o STI)-167, INSPECTION, Fuel Pump.> <Ref. to FU(w/o STI)-196, INSPECTION, Fuel Delivery and Evaporation Lines.>
17	**CHECK FREEZE FRAME DATA.** Using the Subaru Select Monitor, read the values in «Fuel Rail Pressure A» and «Commanded Fuel Rail Pressure A». NOTE: For detailed operation procedures, refer to "Freeze Frame Data Display For Engine". <Ref. to EN(w/o STI)(diag)-58, DISPLAY OF ENGINE FREEZE FRAME DATA, OPERATION, Subaru Select Monitor.>	Is the value in «Fuel Rail Pressure A» synchronized with the one in «Commanded Fuel Rail Pressure A» in all freeze frame data?	Go to step **18**.	Check the high-pressure fuel pump. <Ref. to FU(w/o STI)-75, INSPECTION, High Pressure Fuel Pump.>
18	**CHECK HARNESS BETWEEN ECM AND FUEL INJECTOR CONNECTOR.** 1) Turn the ignition switch to OFF. 2) Disconnect the connector from ECM. 3) Disconnect the connector from fuel injector. 4) Measure the resistance of harness between ECM connector and fuel injector connector. ***Connector & terminal*** ***#1 (E158) No. 12 — (E5) No. 1:*** ***#1 (E158) No. 11 — (E5) No. 2:*** ***#2 (E158) No. 24 — (E16) No. 1:*** ***#2 (E158) No. 23 — (E16) No. 2:*** ***#3 (E158) No. 36 — (E6) No. 1:*** ***#3 (E158) No. 35 — (E6) No. 2:*** ***#4 (E158) No. 48 — (E17) No. 1:*** ***#4 (E158) No. 47 — (E17) No. 2:***	Is the resistance less than 1 Ω?	Go to step **19**.	Repair the open circuit of the harness between the ECM connector and fuel injector connector.

	Step	Check	Yes	No
19	**CHECK HARNESS BETWEEN ECM AND FUEL INJECTOR CONNECTOR.** Measure the resistance between the ECM connector and engine ground. ***Connector & terminal*** ***#1 (E158) No. 12 — Engine ground:*** ***#1 (E158) No. 11 — Engine ground:*** ***#2 (E158) No. 24 — Engine ground:*** ***#2 (E158) No. 23 — Engine ground:*** ***#3 (E158) No. 36 — Engine ground:*** ***#3 (E158) No. 35 — Engine ground:*** ***#4 (E158) No. 48 — Engine ground:*** ***#4 (E158) No. 47 — Engine ground:***	Is the resistance 1 MΩ or more?	Go to step **29**.	Repair the short circuit to ground in harness between ECM connector and fuel injector connector.
20	**CHECK FREEZE FRAME DATA.** Using the Subaru Select Monitor, read the values in «Coolant Temp.», «Ambient Temperature» and «Engine Speed». NOTE: For detailed operation procedures, refer to "Freeze Frame Data Display For Engine". <Ref. to EN(w/o STI)(diag)-58, DISPLAY OF ENGINE FREEZE FRAME DATA, OPERATION, Subaru Select Monitor.>	Is the value of «Coolant Temp.» 120°C (248°F) or more? Or, is the value of «Coolant Temp.» lower than «Ambient Temperature» by 15°C (27°F) or more?	Replace the engine coolant temperature sensor. <Ref. to FU(w/o STI)-89, Engine Coolant Temperature Sensor.>	• When the minimum value of «Engine Speed» is less than 300 rpm: Go to step **21**. • When the minimum value of «Engine Speed» is 300 rpm or more: It is possible that the engine compression pressure is not sufficient. Check the engine. <Ref. to ME(w/o STI)-329, INSPECTION, Engine Trouble in General.>
21	**CHECK FUEL INJECTOR.** Check fuel injector. <Ref. to FU(w/o STI)-65, INSPECTION, Fuel Injector.>	Is there any deposit in the fuel injectors?	Replace the fuel injector. <Ref. to FU(w/o STI)-50, Fuel Injector.>	Go to step **22**.
22	**CHECK FUEL TANK.** Check if any foreign matters such as iron powder exist in the fuel tank.	Is there any foreign matter in the fuel tank?	Remove foreign matter from the fuel tank.	Go to step **23**.
23	**CHECK FREEZE FRAME DATA.** Using the Subaru Select Monitor, read the value in «Coolant Temp.». NOTE: For detailed operation procedures, refer to "Freeze Frame Data Display For Engine". <Ref. to EN(w/o STI)(diag)-58, DISPLAY OF ENGINE FREEZE FRAME DATA, OPERATION, Subaru Select Monitor.>	Is the value of «Coolant Temp.» 40 — 90°C (104 — 194°F)?	Go to step **25**.	Go to step **24**.

	Step	Check	Yes	No
24	**CHECK FUEL PRESSURE.** **WARNING:** **Place "NO OPEN FLAMES" signs near the working area.** **CAUTION:** **Be careful not to spill fuel.** Measure the fuel pressure five minutes after the engine is stopped. <Ref. to ME(w/o STI)-31, INSPECTION, Fuel Pressure.> **CAUTION:** **Release fuel pressure before removing the fuel pressure gauge.** NOTE: If the engine does not start, measure the fuel pressure five minutes after cranking is completed.	Is the measured value 147 kPa (1.5 kgf/cm^2, 21 psi) or more?	Go to step **29**.	Replace the pressure regulator. <Ref. to FU(w/o STI)-180, Fuel Filter.>
25	**CHECK FUEL INJECTOR.** 1) After the engine is stopped, scavenge inside of the intake manifold by applying compressed air. 2) Measure the HC concentration inside the intake manifold 15 minutes after scavenging is completed.	Is the HC concentration less than 4,000 ppm?	Go to step **27**.	Go to step **26**.
26	**CHECK FUEL INJECTOR.** Check fuel injector. <Ref. to FU(w/o STI)-65, INSPECTION, Fuel Injector.>	Is the check result OK?	Go to step **27**.	Replace the fuel injector. <Ref. to FU(w/o STI)-50, Fuel Injector.>
27	**CHECK THROTTLE BODY.** Check throttle body. <Ref. to FU(w/o STI)-16, INSPECTION, Throttle Body.>	Is there any deposit in the throttle body?	Replace the throttle body. <Ref. to FU(w/o STI)-15, Throttle Body.>	Go to step **28**.
28	**CHECK AIR INTAKE SYSTEM.** Check the installing condition of the air intake system.	Are there holes, loose bolts or disconnection of hose on air intake system?	Repair the air intake system. <Ref. to IN(w/o STI)-2, General Description.>	Go to step **29**.
29	**CHECK FOR MALFUNCTION OCCURRENCE.**	Is the fault removed?	Perform the Clear Memory Mode to complete. <Ref. to EN(w/o STI)(diag)-82, Clear Memory Mode.>	Go to step **30**.
30	**CHECK FOR MALFUNCTION OCCURRENCE.**	Does cranking occur?	• When the engine speed is abnormal during cranking: Go to step **37**. • When an initial combustion does not occur: Go to step **40**. • When the engine stalls immediately after engine start: Go to step **57**. • When the engine takes time to start: Go to step **80**.	Go to step **31**.

	Step	Check	Yes	No
31	**CHECK FOR MALFUNCTION OCCURRENCE.**	Does the sound occur by a protruding starter pinion gear during cranking?	• When the starter motor does not rotate: Go to step **32**. • When the starter motor rotates but does not engage: Go to step **34**.	Go to step **35**.
32	**CHECK BATTERY.** Check the battery. <Ref. to SC(w/o STI)-51, INSPECTION, Battery.>	Is the check result OK?	Go to step **33**.	Charge or replace the battery. <Ref. to SC(w/o STI)-50, Battery.>
33	**CHECK ENGINE MAIN BODY.** Using the ST, rotate the crankshaft. ST 18252AA000 CRANKSHAFT SOCKET	Does the crankshaft rotate smoothly?	Check the starter motor. <Ref. to SC(w/o STI)-23, INSPECTION, Starter.> NOTE: It is possible that the engine friction increased temporarily. Check if any foreign matter is mixed in engine oil. If a foreign matter is found, check the engine. <Ref. to ME(w/o STI)-329, INSPECTION, Engine Trouble in General.>	It is possible that the engine friction is too large. Check the engine. <Ref. to ME(w/o STI)-329, INSPECTION, Engine Trouble in General.>
34	**CHECK STARTER MOTOR.** Check the starter motor. <Ref. to SC(w/o STI)-23, INSPECTION, Starter.>	Is there any wear or damage in the starter pinion gear?	Repair the starter motor. <Ref. to SC(w/o STI)-7, Starter.>	• CVT model: Replace the torque converter assembly. <Ref. to CVT(TR690)-141, Torque Converter Assembly.> • MT model: Replace the flywheel. <Ref. to CL-15, Flywheel.>
35	**CHECK BATTERY.** Check the battery. <Ref. to SC(w/o STI)-51, INSPECTION, Battery.>	Is the check result OK?	Go to step **36**.	Charge or replace the battery. <Ref. to SC(w/o STI)-50, Battery.>
36	**CHECK STARTER MOTOR.** Check the starter motor. <Ref. to SC(w/o STI)-23, INSPECTION, Starter.>	Is the check result OK?	Check the starter motor circuit. <Ref. to EN(w/o STI)(diag)-87, STARTER MOTOR CIRCUIT, Diagnostics for Engine Starting Failure.>	Repair the starter motor. <Ref. to SC(w/o STI)-7, Starter.>

	Step	Check	Yes	No
37	**CHECK CURRENT DATA.** Read the value of «Engine Speed» during cranking using Subaru Select Monitor. NOTE: For detailed operation procedures, refer to "Current Data Display For Engine". <Ref. to EN(w/o STI)(diag)-46, DISPLAY CURRENT ENGINE DATA, OPERATION, Subaru Select Monitor.>	Is the value of «Engine Speed» 300 rpm or more?	It is possible that the compression pressure of the engine is not sufficient. Check the engine. <Ref. to ME(w/o STI)-329, INSPECTION, Engine Trouble in General.>	Go to step **38**.
38	**CHECK BATTERY.** Check the battery. <Ref. to SC(w/o STI)-51, INSPECTION, Battery.>	Is the check result OK?	Go to step **39**.	Charge or replace the battery. <Ref. to SC(w/o STI)-50, Battery.>
39	**CHECK ENGINE MAIN BODY.** Using the ST, rotate the crankshaft. ST 18252AA000 CRANKSHAFT SOCKET	Does the crankshaft rotate smoothly?	Check the starter motor. <Ref. to SC(w/o STI)-23, INSPECTION, Starter.> NOTE: It is possible that the engine friction increased temporarily. Check if any foreign matter is mixed in engine oil. If a foreign matter is found, check the engine. <Ref. to ME(w/o STI)-329, INSPECTION, Engine Trouble in General.>	It is possible that the engine friction is too large. Check the engine. <Ref. to ME(w/o STI)-329, INSPECTION, Engine Trouble in General.>
40	**CHECK OPERATION OF EACH FUEL INJECTOR.** Using a sound scope, check each fuel injector for operation sound during cranking.	Does the fuel injector emit operating sound?	Go to step **41**.	Go to step **54**.
41	**CHECK FUEL PRESSURE.** **WARNING:** **Place "NO OPEN FLAMES" signs near the working area.** **CAUTION:** **Be careful not to spill fuel.** Measure the fuel pressure. <Ref. to ME(w/o STI)-31, INSPECTION, Fuel Pressure.> **CAUTION:** **Release fuel pressure before removing the fuel pressure gauge.**	Is the measured value 340 — 400 kPa (3.5 — 4.1 kgf/cm^2, 49 — 58 psi)?	Go to step **42**.	Go to step **52**.
42	**CHECK IGNITION CONDITION.** Check the ignition condition. <Ref. to EN(w/o STI)(diag)-101, IGNITION CONTROL SYSTEM, Diagnostics for Engine Starting Failure.>	Is the check result OK?	Go to step **43**.	Go to step **46**.

	Step	Check	Yes	No
43	**CHECK FOR MALFUNCTION OCCURRENCE.** Check for the condition of fault occurrence.	Does the fault occur only within approx. 15 to 120 minutes after the engine is stopped?	Go to step **45**.	• When the fault occurs in two or three minutes or a long time after the engine is stopped: Go to step **44**. • When the fault occurrence pattern is inconsistent: Go to step **94**.
44	**CHECK FUEL PRESSURE.** **WARNING:** **Place "NO OPEN FLAMES" signs near the working area.** **CAUTION:** **Be careful not to spill fuel.** Measure the fuel pressure five minutes after the engine is stopped. <Ref. to ME(w/o STI)-31, INSPECTION, Fuel Pressure.> **CAUTION:** **Release fuel pressure before removing the fuel pressure gauge.** NOTE: If the engine does not start, measure the fuel pressure five minutes after cranking is completed.	Is the measured value 147 kPa (1.5 kgf/cm^2, 21 psi) or more?	Go to step **94**.	Replace the pressure regulator. <Ref. to FU(w/o STI)-180, Fuel Filter.>
45	**CHECK FUEL INJECTOR.** 1) After the engine is stopped, scavenge inside of the intake manifold by applying compressed air. 2) Measure the HC concentration inside the intake manifold 15 minutes after scavenging is completed.	Is the HC concentration less than 4,000 ppm?	Go to step **94**.	Replace the fuel injector. <Ref. to FU(w/o STI)-50, Fuel Injector.>
46	**CHECK SPARK PLUG.** Check the spark plug. <Ref. to IG(w/o STI)-8, INSPECTION, Spark Plug.>	Is the check result OK?	Go to step **47**.	Replace all spark plugs on all cylinders. <Ref. to IG(w/o STI)-4, Spark Plug.>
47	**CHECK CURRENT DATA.** Record the value of «Engine Speed» during cranking using Subaru Select Monitor. NOTE: For detailed operation procedures, refer to "Current Data Display For Engine". <Ref. to EN(w/o STI)(diag)-46, DISPLAY CURRENT ENGINE DATA, OPERATION, Subaru Select Monitor.>	Does the recorded value of «Engine Speed» contain data of 0 rpm?	It is possible that temporary fault occurs in the crankshaft position sensor circuit. Check the crankshaft position sensor circuit. <Ref. to EN(w/o STI)(diag)-349, DTC P0335 CRANKSHAFT POSITION SENSOR "A" CIRCUIT, Diagnostic Procedure with Diagnostic Trouble Code (DTC).>	Go to step **48**.

	Step	Check	Yes	No
48	**CHECK IGNITION COIL POWER SUPPLY CIRCUIT.** 1) Turn the ignition switch to OFF. 2) Disconnect the connector from ignition coil. 3) Turn the ignition switch to ON. 4) Measure the voltage between ignition coil connector and engine ground. ***Connector & terminal*** ***(E31) No. 1 (+) — Engine ground (–):*** ***(E32) No. 1 (+) — Engine ground (–):*** ***(E33) No. 1 (+) — Engine ground (–):*** ***(E34) No. 1 (+) — Engine ground (–):***	Is the voltage 10 V or more?	Go to step **49**.	Repair the harness and connector. NOTE: In this case, repair the following item: • Open or short to ground in power supply circuit • Poor contact of coupling connector • Blown out of fuse
49	**CHECK HARNESS BETWEEN ECM AND IGNITION COIL CONNECTOR.** 1) Disconnect the connector from ECM. 2) Measure the resistance of harness between ECM connector and ignition coil connector. ***Connector & terminal*** ***(E159) No. 8 — (E31) No. 2:*** ***(E159) No. 16 — (E32) No. 2:*** ***(E159) No. 24 — (E33) No. 2:*** ***(E159) No. 32 — (E34) No. 2:***	Is the resistance less than 1 Ω?	Go to step **50**.	Repair the open circuit in harness between ECM connector and ignition coil connector.
50	**CHECK HARNESS BETWEEN ECM AND IGNITION COIL CONNECTOR.** Measure the resistance of harness between ECM connector and engine ground. ***Connector & terminal*** ***(E159) No. 8 — Engine ground:*** ***(E159) No. 16 — Engine ground:*** ***(E159) No. 24 — Engine ground:*** ***(E159) No. 32 — Engine ground:***	Is the resistance 1 MΩ or more?	Go to step **51**.	Repair the ground short circuit of harness between ECM connector and ignition coil connector.
51	**CHECK HARNESS OF IGNITION COIL GROUND CIRCUIT.** 1) Turn the ignition switch to OFF. 2) Measure the resistance of harness between ignition coil connector and engine ground. ***Connector & terminal*** ***(E31) No. 3 — Engine ground:*** ***(E32) No. 3 — Engine ground:*** ***(E33) No. 3 — Engine ground:*** ***(E34) No. 3 — Engine ground:***	Is the resistance less than 5 Ω?	Replace the ignition coil. <Ref. to IG(w/o STI)-11, Ignition Coil.> If the fault occurs after servicing, continue the diagnosis. Go to step **99**.	Repair the open circuit in harness between ignition coil connector and engine grounding terminal.
52	**CHECK OF FUEL PUMP.** 1) On the «Active Test» item, select «Fuel Pump Control (ON/OFF Dr.)» and perform ON/OFF drive operation. NOTE: For detailed operation procedures, refer to the “Active Test”. <Ref. to EN(w/o STI)(diag)-83, Active Test.> 2) Check if operating sound occurs in the fuel pump according to ON/OFF switching operation.	Does the fuel pump emit operating sound?	Check the fuel pump and fuel delivery line. <Ref. to FU(w/o STI)-167, INSPECTION, Fuel Pump.> <Ref. to FU(w/o STI)-196, INSPECTION, Fuel Delivery and Evaporation Lines.>	Go to step **53**.

	Step	Check	Yes	No
53	**CHECK OF FUEL PUMP.** Check fuel pump. <Ref. to FU(w/o STI)-167, INSPECTION, Fuel Pump.>	Is the check result OK?	Check fuel pump system. <Ref. to EN(w/o STI)(diag)-312, DTC P0230 FUEL PUMP PRIMARY CIRCUIT, Diagnostic Procedure with Diagnostic Trouble Code (DTC).> If the fault occurs after servicing, continue the diagnosis. Go to step **94**.	Replace the fuel pump. <Ref. to FU(w/o STI)-161, Fuel Pump.>
54	**CHECK CURRENT DATA.** Record the value of «Engine Speed» during cranking using Subaru Select Monitor. NOTE: For detailed operation procedures, refer to "Current Data Display For Engine". <Ref. to EN(w/o STI)(diag)-46, DISPLAY CURRENT ENGINE DATA, OPERATION, Subaru Select Monitor.>	Does the recorded value of «Engine Speed» contain data of 0 rpm?	It is possible that temporary fault occurs in the crankshaft position sensor circuit. Check the crankshaft position sensor circuit. <Ref. to EN(w/o STI)(diag)-349, DTC P0335 CRANKSHAFT POSITION SENSOR "A" CIRCUIT, Diagnostic Procedure with Diagnostic Trouble Code (DTC).>	Go to step **55**.
55	**CHECK HARNESS BETWEEN ECM AND FUEL INJECTOR CONNECTOR.** 1) Turn the ignition switch to OFF. 2) Disconnect the connector from ECM. 3) Disconnect the connector from fuel injector. 4) Measure the resistance of harness between ECM connector and fuel injector connector. ***Connector & terminal*** ***#1 (E158) No. 12 — (E5) No. 1:*** ***#1 (E158) No. 11 — (E5) No. 2:*** ***#2 (E158) No. 24 — (E16) No. 1:*** ***#2 (E158) No. 23 — (E16) No. 2:*** ***#3 (E158) No. 36 — (E6) No. 1:*** ***#3 (E158) No. 35 — (E6) No. 2:*** ***#4 (E158) No. 48 — (E17) No. 1:*** ***#4 (E158) No. 47 — (E17) No. 2:***	Is the resistance less than 1 Ω?	Go to step **56**.	Repair the open circuit of the harness between the ECM connector and fuel injector connector.
56	**CHECK HARNESS BETWEEN ECM AND FUEL INJECTOR CONNECTOR.** Measure the resistance between the ECM connector and engine ground. ***Connector & terminal*** ***#1 (E158) No. 12 — Engine ground:*** ***#1 (E158) No. 11 — Engine ground:*** ***#2 (E158) No. 24 — Engine ground:*** ***#2 (E158) No. 23 — Engine ground:*** ***#3 (E158) No. 36 — Engine ground:*** ***#3 (E158) No. 35 — Engine ground:*** ***#4 (E158) No. 48 — Engine ground:*** ***#4 (E158) No. 47 — Engine ground:***	Is the resistance 1 MΩ or more?	Replace the ECM. <Ref. to FU(w/o STI)-124, Engine Control Module (ECM).>	Repair the short circuit to ground in harness between ECM connector and fuel injector connector.

Step		Check	Yes	No
57	**CHECK MASS AIR FLOW AND INTAKE AIR TEMPERATURE SENSOR.** Check the mass air flow and intake air temperature sensor. <Ref. to FU(w/o STI)-110, INSPECTION, Mass Air Flow and Intake Air Temperature Sensor.>	Is the check result OK?	Go to step **58**.	Go to step **78**.
58	**CHECK AIR INTAKE SYSTEM.** Check the installing condition of the air intake system.	Are there holes, loose bolts or disconnection of hose on air intake system?	Repair the air intake system. <Ref. to IN(w/o STI)-2, General Description.>	Go to step **59**.
59	**CHECK ELECTRONIC THROTTLE CONTROL.** 1) Disconnect the connectors from electronic throttle control. 2) Start the engine with the electronic throttle control connector disconnected.	Does the engine start?	Go to step **60**.	Go to step **61**.
60	**CHECK THROTTLE BODY.** Check throttle body. <Ref. to FU(w/o STI)-16, INSPECTION, Throttle Body.>	Is there any deposit in the throttle body?	Replace the throttle body. <Ref. to FU(w/o STI)-15, Throttle Body.>	Go to step **61**.
61	**CHECK FREEZE FRAME DATA.** 1) Using the Subaru Select Monitor, read the values of the followings: «VVT Adv. Ang. Amount R», «VVT Advance Target Angle Amount R», «VVT Adv. Ang. Amount L», «VVT Advance Target Angle Amount L», «Exh. VVT Retard Ang. R», «Ex VVT Retard Target Angle R», «Exh. VVT Retard Ang. L» and «Ex VVT Retard Target Angle L». NOTE: For detailed operation procedures, refer to "Freeze Frame Data Display For Engine". <Ref. to EN(w/o STI)(diag)-58, DISPLAY OF ENGINE FREEZE FRAME DATA, OPERATION, Subaru Select Monitor.> 2) Using the Subaru Select Monitor, compare the respective values between the followings: «VVT Adv. Ang. Amount R» and «VVT Advance Target Angle Amount R», «VVT Adv. Ang. Amount L» and «VVT Advance Target Angle Amount L», «Exh. VVT Retard Ang. R» and «Ex VVT Retard Target Angle R», «Exh. VVT Retard Ang. L» and «Ex VVT Retard Target Angle L».	Does all of the advance angle amount and retard angle amount synchronize with their target values?	Go to step **112**.	Diagnose the part where there is difference of 10 deg or more. • Intake RH: Go to step **62**. • Intake LH: Go to step **66**. • Exhaust RH: Go to step **70**. • Exhaust LH: Go to step **74**.
62	**CHECK POWER SUPPLY TO THE INTAKE OIL CONTROL SOLENOID RH.** 1) Turn the ignition switch to OFF. 2) Disconnect the connector from the intake oil control solenoid RH. 3) Turn the ignition switch to ON. 4) Measure the voltage between intake oil control solenoid RH connector and engine ground. ***Connector & terminal*** ***(E38) No. 1 (+) — Engine ground (–):***	Is the voltage 10 V or more?	Go to step **63**.	Repair the power supply circuit.

	Step	Check	Yes	No
63	**CHECK HARNESS BETWEEN ECM AND INTAKE OIL CONTROL SOLENOID RH CONNECTOR.** 1) Turn the ignition switch to OFF. 2) Disconnect the connector from ECM. 3) Measure the resistance of harness between ECM connector and intake oil control solenoid RH. ***Connector & terminal*** ***(E159) No. 7 — (E38) No. 2:***	Is the resistance less than 1 Ω?	Go to step **64**.	Repair the open circuit in harness between ECM connector and intake oil control solenoid RH connector.
64	**CHECK HARNESS BETWEEN ECM AND INTAKE OIL CONTROL SOLENOID RH CONNECTOR.** Measure the resistance between intake oil control solenoid RH connector and engine ground. ***Connector & terminal*** ***(E38) No. 2 — Engine ground:***	Is the resistance 1 MΩ or more?	Go to step **65**.	Repair the short circuit to ground in harness between ECM connector and intake oil control solenoid RH connector.
65	**CHECK INTAKE OIL CONTROL SOLENOID RH.** Check the intake oil control solenoid RH. <Ref. to FU(w/o STI)-103, INSPECTION, Oil Control Solenoid.>	Is the check result OK?	Replace the intake cam sprocket RH. <Ref. to ME(w/o STI)-133, Cam Sprocket.>	Replace the intake oil control solenoid RH. <Ref. to FU(w/o STI)-101, Oil Control Solenoid.>
66	**CHECK POWER SUPPLY TO THE INTAKE OIL CONTROL SOLENOID LH.** 1) Turn the ignition switch to OFF. 2) Disconnect the connector from the intake oil control solenoid LH. 3) Turn the ignition switch to ON. 4) Measure the voltage between intake oil control solenoid LH connector and engine ground. ***Connector & terminal*** ***(E37) No. 1 (+) — Engine ground (–):***	Is the voltage 10 V or more?	Go to step **67**.	Repair the power supply circuit.
67	**CHECK HARNESS BETWEEN ECM AND INTAKE OIL CONTROL SOLENOID LH CONNECTOR.** 1) Turn the ignition switch to OFF. 2) Disconnect the connector from ECM. 3) Measure the resistance of harness between ECM connector and intake oil control solenoid LH. ***Connector & terminal*** ***(E159) No. 15 — (E37) No. 2:***	Is the resistance less than 1 Ω?	Go to step **68**.	Repair the open circuit in harness between ECM connector and intake oil control solenoid LH connector.
68	**CHECK HARNESS BETWEEN ECM AND INTAKE OIL CONTROL SOLENOID LH CONNECTOR.** Measure the resistance between intake oil control solenoid LH connector and engine ground. ***Connector & terminal*** ***(E37) No. 2 — Engine ground:***	Is the resistance 1 MΩ or more?	Go to step **69**.	Repair the short circuit to ground in harness between ECM connector and intake oil control solenoid LH connector.
69	**CHECK INTAKE OIL CONTROL SOLENOID LH.** Check the intake oil control solenoid LH. <Ref. to FU(w/o STI)-103, INSPECTION, Oil Control Solenoid.>	Is the check result OK?	Replace the intake cam sprocket LH. <Ref. to ME(w/o STI)-133, Cam Sprocket.>	Replace the intake oil control solenoid LH. <Ref. to FU(w/o STI)-101, Oil Control Solenoid.>

	Step	Check	Yes	No
70	**CHECK POWER SUPPLY TO THE EXHAUST OIL CONTROL SOLENOID RH.** 1) Turn the ignition switch to OFF. 2) Disconnect the connector from the exhaust oil control solenoid RH. 3) Turn the ignition switch to ON. 4) Measure the voltage between exhaust oil control solenoid RH connector and engine ground. ***Connector & terminal*** ***(E63) No. 1 (+) — Engine ground (–):***	Is the voltage 10 V or more?	Go to step **71**.	Repair the power supply circuit.
71	**CHECK HARNESS BETWEEN ECM AND EXHAUST OIL CONTROL SOLENOID RH CONNECTOR.** 1) Turn the ignition switch to OFF. 2) Disconnect the connector from ECM. 3) Measure the resistance of harness between ECM connector and exhaust oil control solenoid RH. ***Connector & terminal*** ***(E159) No. 23 — (E63) No. 2:***	Is the resistance less than 1 Ω?	Go to step **72**.	Repair the open circuit in harness between ECM connector and exhaust oil control solenoid RH connector.
72	**CHECK HARNESS BETWEEN ECM AND EXHAUST OIL CONTROL SOLENOID RH CONNECTOR.** Measure the resistance between exhaust oil control solenoid RH connector and engine ground. ***Connector & terminal*** ***(E63) No. 2 — Engine ground:***	Is the resistance 1 MΩ or more?	Go to step **73**.	Repair the short circuit to ground in harness between ECM connector and exhaust oil control solenoid RH connector.
73	**CHECK EXHAUST OIL CONTROL SOLENOID RH.** Check the exhaust oil control solenoid RH. <Ref. to FU(w/o STI)-103, INSPECTION, Oil Control Solenoid.>	Is the check result OK?	Replace the exhaust cam sprocket RH. <Ref. to ME(w/o STI)-133, Cam Sprocket.>	Replace the exhaust oil control solenoid RH. <Ref. to FU(w/o STI)-101, Oil Control Solenoid.>
74	**CHECK POWER SUPPLY TO THE EXHAUST OIL CONTROL SOLENOID LH.** 1) Turn the ignition switch to OFF. 2) Disconnect the connector from the exhaust oil control solenoid LH. 3) Turn the ignition switch to ON. 4) Measure the voltage between exhaust oil control solenoid LH connector and engine ground. ***Connector & terminal*** ***(E66) No. 1 (+) — Engine ground (–):***	Is the voltage 10 V or more?	Go to step **75**.	Repair the power supply circuit.
75	**CHECK HARNESS BETWEEN ECM AND EXHAUST OIL CONTROL SOLENOID LH CONNECTOR.** 1) Turn the ignition switch to OFF. 2) Disconnect the connector from ECM. 3) Measure the resistance of harness between ECM connector and exhaust oil control solenoid LH. ***Connector & terminal*** ***(E159) No. 31 — (E66) No. 2:***	Is the resistance less than 1 Ω?	Go to step **76**.	Repair the open circuit in harness between ECM connector and exhaust oil control solenoid LH connector.

	Step	Check	Yes	No
76	**CHECK HARNESS BETWEEN ECM AND EXHAUST OIL CONTROL SOLENOID LH CONNECTOR.** Measure the resistance between exhaust oil control solenoid LH connector and engine ground. ***Connector & terminal*** ***(E66) No. 2 — Engine ground:***	Is the resistance 1 MΩ or more?	Go to step **77**.	Repair the short circuit to ground in harness between ECM connector and exhaust oil control solenoid LH connector.
77	**CHECK EXHAUST OIL CONTROL SOLENOID LH.** Check the exhaust oil control solenoid LH. <Ref. to FU(w/o STI)-103, INSPECTION, Oil Control Solenoid.>	Is the check result OK?	Replace the exhaust cam sprocket LH. <Ref. to ME(w/o STI)-133, Cam Sprocket.>	Replace the exhaust oil control solenoid LH. <Ref. to FU(w/o STI)-101, Oil Control Solenoid.>
78	**CHECK HARNESS BETWEEN ECM AND MASS AIR FLOW AND INTAKE AIR TEMPERATURE SENSOR CONNECTOR.** 1) Turn the ignition switch to OFF. 2) Disconnect the connector from ECM. 3) Disconnect the connectors from the mass air flow and intake air temperature sensor. 4) Measure the resistance of harness between ECM connector and the mass air flow and intake air temperature sensor connector. ***Connector & terminal*** ***(B134) No. 16 — (B3) No. 3:*** ***(B134) No. 28 — (B3) No. 2:***	Is the resistance less than 1 Ω?	Go to step **79**.	Repair the open circuit of harness between ECM connector and the mass air flow and intake air temperature sensor connector.
79	**CHECK HARNESS BETWEEN ECM AND MASS AIR FLOW AND INTAKE AIR TEMPERATURE SENSOR CONNECTOR.** Measure the resistance between the ECM connector and engine ground. ***Connector & terminal*** ***(B134) No. 16 — Engine ground:*** ***(B134) No. 28 — Engine ground:***	Is the resistance 1 MΩ or more?	Replace the mass air flow and intake air temperature sensor. <Ref. to FU(w/o STI)-110, Mass Air Flow and Intake Air Temperature Sensor.> If the fault occurs after servicing, continue the diagnosis. Go to step **112**.	Repair the ground short circuit of harness between ECM connector and the mass air flow and intake air temperature sensor connector.
80	**CHECK ENGINE COOLANT TEMPERATURE SENSOR.** Check the engine coolant temperature sensor. <Ref. to FU(w/o STI)-90, INSPECTION, Engine Coolant Temperature Sensor.>	Is the check result OK?	Go to step **81**.	Replace the engine coolant temperature sensor. <Ref. to FU(w/o STI)-89, Engine Coolant Temperature Sensor.> If the fault occurs after servicing, replace the ECM. <Ref. to FU(w/o STI)-124, Engine Control Module (ECM).> If the fault still occurs after replacing the ECM, continue the diagnosis. Go to step **123**.

	Step	Check	Yes	No
81	**CHECK HARNESS BETWEEN ECM AND ENGINE COOLANT TEMPERATURE SENSOR CONNECTOR.** 1) Turn the ignition switch to OFF. 2) Disconnect the connector from ECM. 3) Disconnect the connectors from the engine coolant temperature sensor. 4) Measure the resistance of harness between ECM connector and engine coolant temperature sensor connector. ***Connector & terminal*** ***(E159) No. 27 — (E8) No. 1:*** ***(E158) No. 38 — (E8) No. 2:***	Is the resistance less than 1 Ω?	Go to step **82**.	Repair the open circuit of the harness between the ECM connector and engine coolant temperature sensor connector. If the fault occurs after servicing, replace the ECM. <Ref. to FU(w/o STI)-124, Engine Control Module (ECM).> If the fault still occurs after replacing the ECM, continue the diagnosis. Go to step **123**.
82	**CHECK HARNESS BETWEEN ECM AND ENGINE COOLANT TEMPERATURE SENSOR CONNECTOR.** Measure the resistance between the ECM connector and engine ground. ***Connector & terminal*** ***(E158) No. 38 — Engine ground:*** ***(E159) No. 27 — Engine ground:***	Is the resistance 1 MΩ or more?	Go to step **83**.	Repair the short circuit to ground in harness between ECM connector and engine coolant temperature sensor connector. If the fault occurs after servicing, replace the ECM. <Ref. to FU(w/o STI)-124, Engine Control Module (ECM).> If the fault still occurs after replacing the ECM, continue the diagnosis. Go to step **123**.
83	**CHECK CURRENT DATA.** 1) Turn the ignition switch to ON. (Engine OFF) 2) Read the values of «Long term fuel trim B1» and «Atmosphere Pressure», using the Subaru Select Monitor. NOTE: For detailed operation procedures, refer to “Current Data Display For Engine”. <Ref. to EN(w/o STI)(diag)-46, DISPLAY CURRENT ENGINE DATA, OPERATION, Subaru Select Monitor.>	Is the value of «Long term fuel trim B1» –25 — 25%, and «Atmosphere Pressure» 80 kPa (600 mmHg, 23.6 inHg) or more?	Go to step **86**.	Go to step **84**.
84	**CHECK FOR MALFUNCTION OCCURRENCE.** 1) Perform the Clear Memory Mode. <Ref. to EN(w/o STI)(diag)-82, Clear Memory Mode.> 2) Start the engine.	Does the engine start?	Go to step **85**.	Go to step **86**.

	Step	Check	Yes	No
85	**CHECK IDLE SPEED.** Check the idle speed.	Is the idle speed stable?	Replace the mass air flow and intake air temperature sensor. <Ref. to FU(w/o STI)-110, Mass Air Flow and Intake Air Temperature Sensor.> If the fault occurs after servicing, replace the ECM. <Ref. to FU(w/o STI)-124, Engine Control Module (ECM).> If the fault still occurs after replacing the ECM, continue the diagnosis. Go to step **123**.	Replace the fuel injector. <Ref. to FU(w/o STI)-50, Fuel Injector.> If the fault occurs after servicing, replace the ECM. <Ref. to FU(w/o STI)-124, Engine Control Module (ECM).> If the fault still occurs after replacing the ECM, continue the diagnosis. Go to step **123**.
86	**CHECK FUEL PRESSURE.** **WARNING:** **Place "NO OPEN FLAMES" signs near the working area.** **CAUTION:** **Be careful not to spill fuel.** Measure the fuel pressure. <Ref. to ME(w/o STI)-31, INSPECTION, Fuel Pressure.> **CAUTION:** **Release fuel pressure before removing the fuel pressure gauge.**	Is the measured value 340 — 400 kPa (3.5 — 4.1 kgf/cm^2, 49 — 58 psi)?	Go to step **87**.	Go to step **93**.
87	**CHECK FREEZE FRAME DATA.** Using the Subaru Select Monitor, read the values in «Fuel Rail Pressure A» and «Commanded Fuel Rail Pressure A». NOTE: For detailed operation procedures, refer to "Freeze Frame Data Display For Engine". <Ref. to EN(w/o STI)(diag)-58, DISPLAY OF ENGINE FREEZE FRAME DATA, OPERATION, Subaru Select Monitor.>	Is the value in «Fuel Rail Pressure A» synchronized with the one in «Commanded Fuel Rail Pressure A» in all freeze frame data?	Go to step **88**.	Check the high-pressure fuel pump. <Ref. to FU(w/o STI)-75, INSPECTION, High Pressure Fuel Pump.>

	Step	Check	Yes	No
88	**CHECK SPARK PLUG.** Check the spark plug. <Ref. to IG(w/o STI)-8, INSPECTION, Spark Plug.>	Is the check result OK?	Go to step **89**.	• When spark plugs in some cylinders are faulty: Replace the faulty spark plugs of the cylinders, then check the ignition system and fuel system in the faulty cylinders. <Ref. to IG(w/o STI)-4, Spark Plug.> If the fault occurs after servicing, continue the diagnosis. Go to step **123**. • When all spark plugs in all cylinders are faulty: Replace faulty spark plugs in all cylinders. <Ref. to IG(w/o STI)-4, Spark Plug.> If the fault occurs after servicing, continue the diagnosis. Go to step **123**.
89	**CHECK FOR MALFUNCTION OCCURRENCE.** Check for the condition of fault occurrence.	Does the fault occur only within approx. 15 to 120 minutes after the engine is stopped?	Go to step **91**.	• When the fault occurs in two or three minutes or a long time after the engine is stopped: Go to step **90**. • When the fault occurrence pattern is inconsistent: Go to step **123**.
90	**CHECK FUEL PRESSURE.** **WARNING:** **Place "NO OPEN FLAMES" signs near the working area.** **CAUTION:** **Be careful not to spill fuel.** Measure the fuel pressure five minutes after the engine is stopped. <Ref. to ME(w/o STI)-31, INSPECTION, Fuel Pressure.> **CAUTION:** **Release fuel pressure before removing the fuel pressure gauge.** NOTE: If the engine does not start, measure the fuel pressure five minutes after cranking is completed.	Is the measured value 147 kPa (1.5 kgf/cm^2, 21 psi) or more?	Go to step **123**.	Replace the pressure regulator. <Ref. to FU(w/o STI)-180, Fuel Filter.>

	Step	Check	Yes	No
91	**CHECK PURGE CONTROL SOLENOID VALVE.** Check purge control solenoid valve 1 and purge control solenoid valve 2. <Ref. to EC(w/o STI)-28, INSPECTION, Purge Control Solenoid Valve.>	Is the check result OK?	Go to step **92**.	Replace the faulty purge control solenoid valve. <Ref. to EC(w/o STI)-22, Purge Control Solenoid Valve.>
92	**CHECK FUEL INJECTOR.** 1) After the engine is stopped, scavenge inside of the intake manifold by applying compressed air. 2) Measure the HC concentration inside the intake manifold 15 minutes after scavenging is completed.	Is the HC concentration less than 4,000 ppm?	Go to step **123**.	Replace the fuel injector. <Ref. to FU(w/o STI)-50, Fuel Injector.>
93	**CHECK OF FUEL PUMP.** Check fuel pump. <Ref. to FU(w/o STI)-167, INSPECTION, Fuel Pump.>	Is the check result OK?	Check fuel pump system. <Ref. to EN(w/o STI)(diag)-312, DTC P0230 FUEL PUMP PRIMARY CIRCUIT, Diagnostic Procedure with Diagnostic Trouble Code (DTC).> If the fault occurs after servicing, continue the diagnosis. Go to step **123**.	Replace the fuel pump. <Ref. to FU(w/o STI)-161, Fuel Pump.>
94	**CHECK FUEL INJECTOR.** Check fuel injector. <Ref. to FU(w/o STI)-65, INSPECTION, Fuel Injector.>	Is the check result OK?	Go to step **95**.	Replace the fuel injector. <Ref. to FU(w/o STI)-50, Fuel Injector.>
95	**CHECK HARNESS BETWEEN ECM AND FUEL INJECTOR CONNECTOR.** 1) Turn the ignition switch to OFF. 2) Disconnect the connector from ECM. 3) Disconnect the connector from fuel injector. 4) Measure the resistance of harness between ECM connector and fuel injector connector. ***Connector & terminal*** ***#1 (E158) No. 12 — (E5) No. 1:*** ***#1 (E158) No. 11 — (E5) No. 2:*** ***#2 (E158) No. 24 — (E16) No. 1:*** ***#2 (E158) No. 23 — (E16) No. 2:*** ***#3 (E158) No. 36 — (E6) No. 1:*** ***#3 (E158) No. 35 — (E6) No. 2:*** ***#4 (E158) No. 48 — (E17) No. 1:*** ***#4 (E158) No. 47 — (E17) No. 2:***	Is the resistance less than 1 Ω?	Go to step **96**.	Repair the open circuit of the harness between the ECM connector and fuel injector connector.
96	**CHECK HARNESS BETWEEN ECM AND FUEL INJECTOR CONNECTOR.** Measure the resistance between the ECM connector and engine ground. ***Connector & terminal*** ***#1 (E158) No. 12 — Engine ground:*** ***#1 (E158) No. 11 — Engine ground:*** ***#2 (E158) No. 24 — Engine ground:*** ***#2 (E158) No. 23 — Engine ground:*** ***#3 (E158) No. 36 — Engine ground:*** ***#3 (E158) No. 35 — Engine ground:*** ***#4 (E158) No. 48 — Engine ground:*** ***#4 (E158) No. 47 — Engine ground:***	Is the resistance 1 MΩ or more?	Go to step **97**.	Repair the short circuit to ground in harness between ECM connector and fuel injector connector.

	Step	Check	Yes	No
97	**CHECK FOR MALFUNCTION OCCURRENCE.** 1) Replace the crankshaft position sensor. <Ref. to FU(w/o STI)-93, Crankshaft Position Sensor.> 2) Check that the fault is removed.	Is the fault removed?	Perform the Clear Memory Mode to complete. <Ref. to EN(w/o STI)(diag)-82, Clear Memory Mode.>	Go to step **98**.
98	**CHECK FOR MALFUNCTION OCCURRENCE.** 1) Replace the camshaft position sensor. <Ref. to FU(w/o STI)-97, Camshaft Position Sensor.> 2) Check that the fault is removed.	Is the fault removed?	Perform the Clear Memory Mode to complete. <Ref. to EN(w/o STI)(diag)-82, Clear Memory Mode.>	Replace the ECM. <Ref. to FU(w/o STI)-124, Engine Control Module (ECM).>
99	**CHECK INSTALLATION CONDITION OF CRANKSHAFT POSITION SENSOR.**	Is the crankshaft position sensor installed correctly?	Go to step **100**.	Install the crankshaft position sensor correctly. <Ref. to FU(w/o STI)-94, INSTALLATION, Crankshaft Position Sensor.>
100	**CHECK INSTALLATION CONDITION OF CAMSHAFT POSITION SENSOR.**	Is the camshaft position sensor installed correctly?	Go to step **101**.	Install the camshaft position sensor correctly. <Ref. to FU(w/o STI)-98, INSTALLATION, Camshaft Position Sensor.>
101	**CHECK POWER SUPPLY TO CRANKSHAFT POSITION SENSOR.** 1) Turn the ignition switch to OFF. 2) Disconnect the connector from the crankshaft position sensor. 3) Turn the ignition switch to ON. 4) Measure the voltage between crankshaft position sensor connector and engine ground. ***Connector & terminal*** ***(E10) No. 1 (+) — Engine ground (–):***	Is the voltage 10 V or more?	Go to step **102**.	Repair the power supply circuit.
102	**CHECK HARNESS BETWEEN ECM AND CRANKSHAFT POSITION SENSOR CONNECTOR.** 1) Turn the ignition switch to OFF. 2) Disconnect the connector from ECM. 3) Measure the resistance of harness between ECM connector and crankshaft position sensor connector. ***Connector & terminal*** ***(E158) No. 19 — (E10) No. 2:*** ***(E158) No. 31 — (E10) No. 3:***	Is the resistance less than 1 Ω?	Go to step **103**.	Repair the open circuit in the harness between the ECM connector and crankshaft position sensor connector.
103	**CHECK HARNESS BETWEEN ECM AND CRANKSHAFT POSITION SENSOR CONNECTOR.** Measure the resistance between crankshaft position sensor connector and engine ground. ***Connector & terminal*** ***(E10) No. 2 — Engine ground:*** ***(E10) No. 3 — Engine ground:***	Is the resistance 1 MΩ or more?	Go to step **104**.	Repair short circuit to ground in harness between ECM connector and crankshaft position sensor connector.

	Step	Check	Yes	No
104	**CHECK POWER SUPPLY OF INTAKE CAMSHAFT POSITION SENSOR.** 1) Turn the ignition switch to OFF. 2) Disconnect the connector from the intake camshaft position sensor. 3) Turn the ignition switch to ON. 4) Measure the voltage between intake camshaft position sensor connector and engine ground. ***Connector & terminal*** ***(E35) No. 1 (+) — Engine ground (–):*** ***(E36) No. 1 (+) — Engine ground (–):***	Is the voltage 10 V or more?	Go to step **105**.	Repair the harness and connector. NOTE: In this case, repair the following item: • Open circuit or short circuit to ground in harness between main relay connector and intake camshaft position sensor connector • Poor contact of coupling connector
105	**CHECK HARNESS BETWEEN ECM AND INTAKE CAMSHAFT POSITION SENSOR CONNECTOR.** 1) Turn the ignition switch to OFF. 2) Disconnect the connector from ECM. 3) Measure the resistance between ECM connector and intake camshaft position sensor connector. ***Connector & terminal*** ***(E158) No. 21 — (E35) No. 2:*** ***(E158) No. 34 — (E35) No. 3:*** ***(E158) No. 20 — (E36) No. 2:*** ***(E158) No. 34 — (E36) No. 3:***	Is the resistance less than 1 Ω?	Go to step **106**.	Repair the open circuit in the harness between ECM connector and intake camshaft position sensor connector.
106	**CHECK HARNESS BETWEEN ECM AND INTAKE CAMSHAFT POSITION SENSOR CONNECTOR.** Measure the resistance between intake camshaft position sensor connector and engine ground. ***Connector & terminal*** ***(E35) No. 2 — Engine ground:*** ***(E36) No. 2 — Engine ground:***	Is the resistance 1 MΩ or more?	Go to step **107**.	Repair short circuit to ground in the harness between ECM connector and intake camshaft position sensor connector.
107	**CHECK POWER SUPPLY OF EXHAUST CAMSHAFT POSITION SENSOR.** 1) Turn the ignition switch to OFF. 2) Disconnect the connector from the exhaust camshaft position sensor. 3) Turn the ignition switch to ON. 4) Measure the voltage between exhaust camshaft position sensor connector and engine ground. ***Connector & terminal*** ***(E62) No. 1 (+) — Engine ground (–):*** ***(E65) No. 1 (+) — Engine ground (–):***	Is the voltage 10 V or more?	Go to step **108**.	Repair the harness and connector. NOTE: In this case, repair the following item: • Open circuit in harness between main relay and exhaust camshaft position sensor connector • Poor contact of coupling connector

	Step	Check	Yes	No
108	**CHECK HARNESS BETWEEN ECM AND EXHAUST CAMSHAFT POSITION SENSOR.** 1) Turn the ignition switch to OFF. 2) Disconnect the connector from ECM. 3) Measure the resistance between ECM connector and exhaust crankshaft position sensor connector. ***Connector & terminal*** ***(E158) No. 32 — (E62) No. 2:*** ***(E158) No. 34 — (E62) No. 3:*** ***(E158) No. 33 — (E65) No. 2:*** ***(E158) No. 34 — (E65) No. 3:***	Is the resistance less than 1 Ω?	Go to step **109**.	Repair the open circuit in the harness between ECM connector and exhaust camshaft position sensor connector.
109	**CHECK HARNESS BETWEEN ECM AND EXHAUST CAMSHAFT POSITION SENSOR.** Measure the resistance between exhaust camshaft position sensor connector and engine ground. ***Connector & terminal*** ***(E62) No. 2 — Engine ground:*** ***(E65) No. 2 — Engine ground:***	Is the resistance 1 MΩ or more?	Go to step **110**.	Repair short circuit to ground in the harness between ECM connector and exhaust camshaft position sensor connector.
110	**CHECK FOR MALFUNCTION OCCURRENCE.** 1) Replace the crankshaft position sensor. <Ref. to FU(w/o STI)-93, Crankshaft Position Sensor.> 2) Check that the fault is removed.	Is the fault removed?	Perform the Clear Memory Mode to complete. <Ref. to EN(w/o STI)(diag)-82, Clear Memory Mode.>	Go to step **111**.
111	**CHECK FOR MALFUNCTION OCCURRENCE.** 1) Replace the camshaft position sensor. <Ref. to FU(w/o STI)-97, Camshaft Position Sensor.> 2) Check that the fault is removed.	Is the fault removed?	Perform the Clear Memory Mode to complete. <Ref. to EN(w/o STI)(diag)-82, Clear Memory Mode.>	Replace the ECM. <Ref. to FU(w/o STI)-124, Engine Control Module (ECM).>
112	**CHECK ENGINE COOLANT TEMPERATURE SENSOR.** Check the engine coolant temperature sensor. <Ref. to FU(w/o STI)-90, INSPECTION, Engine Coolant Temperature Sensor.>	Is the check result OK?	Go to step **113**.	Replace the engine coolant temperature sensor. <Ref. to FU(w/o STI)-89, Engine Coolant Temperature Sensor.>
113	**CHECK FUEL PRESSURE.** 1) Read the value of «Fuel Rail Pressure A» during cranking using Subaru Select Monitor. NOTE: For detailed operation procedures, refer to "Current Data Display For Engine". <Ref. to EN(w/o STI)(diag)-46, DISPLAY CURRENT ENGINE DATA, OPERATION, Subaru Select Monitor.> **WARNING:** **Place "NO OPEN FLAMES" signs near the working area.** **CAUTION:** **Be careful not to spill fuel.** 2) Measure the fuel pressure five minutes after the engine is stopped. <Ref. to ME(w/o STI)-31, INSPECTION, Fuel Pressure.> **CAUTION:** **Release fuel pressure before removing the fuel pressure gauge.**	Is the value of «Fuel Rail Pressure A» during cranking 304 — 353 kPa (3.1 — 3.6 kgf/cm^2, 44 — 51 psi), and is the fuel pressure five minutes after engine stop 147 kPa (1.5 kgf/cm^2, 21 psi) or more?	Go to step **114**.	Go to step **122**.

	Step	Check	Yes	No
114	**CHECK CURRENT DATA.** 1) Turn the ignition switch to ON. (Engine OFF) 2) Read the value of «Long term fuel trim B1» using the Subaru Select Monitor. NOTE: For detailed operation procedures, refer to "Current Data Display For Engine". <Ref. to EN(w/o STI)(diag)-46, DISPLAY CURRENT ENGINE DATA, OPERATION, Subaru Select Monitor.>	Does the value of «Long term fuel trim B1» fall within a range of –15 — 15%?	Go to step **115**.	Replace the fuel injector. <Ref. to FU(w/o STI)-50, Fuel Injector.>
115	**CHECK FOR MALFUNCTION OCCURRENCE.** Start the engine and check the idling speed.	Is the idling speed stable all time?	It is possible that the fault comes from fuel. Replace fuel.	Go to step **116**.
116	**CHECK INSTALLATION CONDITION OF CRANKSHAFT POSITION SENSOR.**	Is the crankshaft position sensor installed correctly?	Go to step **117**.	Install the crankshaft position sensor correctly. <Ref. to FU(w/o STI)-94, INSTALLATION, Crankshaft Position Sensor.>
117	**CHECK POWER SUPPLY TO CRANKSHAFT POSITION SENSOR.** 1) Turn the ignition switch to OFF. 2) Disconnect the connector from the crankshaft position sensor. 3) Turn the ignition switch to ON. 4) Measure the voltage between crankshaft position sensor connector and engine ground. ***Connector & terminal*** ***(E10) No. 1 (+) — Engine ground (–):***	Is the voltage 10 V or more?	Go to step **118**.	Repair the power supply circuit.
118	**CHECK HARNESS BETWEEN ECM AND CRANKSHAFT POSITION SENSOR CONNECTOR.** 1) Turn the ignition switch to OFF. 2) Disconnect the connector from ECM. 3) Measure the resistance of harness between ECM connector and crankshaft position sensor connector. ***Connector & terminal*** ***(E158) No. 19 — (E10) No. 2:*** ***(E158) No. 31 — (E10) No. 3:***	Is the resistance less than 1 Ω?	Go to step **119**.	Repair the open circuit in the harness between the ECM connector and crankshaft position sensor connector.
119	**CHECK HARNESS BETWEEN ECM AND CRANKSHAFT POSITION SENSOR CONNECTOR.** Measure the resistance between crankshaft position sensor connector and engine ground. ***Connector & terminal*** ***(E10) No. 2 — Engine ground:*** ***(E10) No. 3 — Engine ground:***	Is the resistance 1 MΩ or more?	Go to step **120**.	Repair short circuit to ground in harness between ECM connector and crankshaft position sensor connector.
120	**CHECK COMPRESSION PRESSURE.** Check the compression pressure. <Ref. to ME(w/o STI)-23, INSPECTION, Compression.>	Is the check result OK?	Go to step **121**.	Check the engine. <Ref. to ME(w/o STI)-329, INSPECTION, Engine Trouble in General.>

	Step	Check	Yes	No
121	**CHECK FOR MALFUNCTION OCCURRENCE.** 1) Replace the crankshaft position sensor. <Ref. to FU(w/o STI)-93, Crankshaft Position Sensor.> 2) Check that the fault is removed.	Is the fault removed?	Perform the Clear Memory Mode to complete. <Ref. to EN(w/o STI)(diag)-82, Clear Memory Mode.>	Check the valve timing. <Ref. to ME(w/o STI)-111, Timing Chain Assembly.> When the valve timing is normal, replace the ECM. <Ref. to FU(w/o STI)-124, Engine Control Module (ECM).>
122	**CHECK OF FUEL PUMP.** Check fuel pump. <Ref. to FU(w/o STI)-167, INSPECTION, Fuel Pump.>	Is the check result OK?	Check fuel pump system. <Ref. to EN(w/o STI)(diag)-312, DTC P0230 FUEL PUMP PRIMARY CIRCUIT, Diagnostic Procedure with Diagnostic Trouble Code (DTC).>	Replace the fuel pump. <Ref. to FU(w/o STI)-161, Fuel Pump.>
123	**CHECK FUEL PRESSURE.** 1) Read the value of «Fuel Rail Pressure A» during cranking using Subaru Select Monitor. NOTE: For detailed operation procedures, refer to "Current Data Display For Engine". <Ref. to EN(w/o STI)(diag)-46, DISPLAY CURRENT ENGINE DATA, OPERATION, Subaru Select Monitor.> **WARNING:** **Place "NO OPEN FLAMES" signs near the working area.** **CAUTION:** **Be careful not to spill fuel.** 2) Measure the fuel pressure five minutes after the engine is stopped. <Ref. to ME(w/o STI)-31, INSPECTION, Fuel Pressure.> **CAUTION:** **Release fuel pressure before removing the fuel pressure gauge.**	Is the value of «Fuel Rail Pressure A» during cranking 304 — 353 kPa (3.1 — 3.6 kgf/cm^2, 44 — 51 psi), and is the fuel pressure five minutes after engine stop 147 kPa (1.5 kgf/cm^2, 21 psi) or more?	Go to step **124**.	Go to step **131**.
124	**CHECK CURRENT DATA.** 1) Turn the ignition switch to ON. (Engine OFF) 2) Read the value of «Long term fuel trim B1» using the Subaru Select Monitor. NOTE: For detailed operation procedures, refer to "Current Data Display For Engine". <Ref. to EN(w/o STI)(diag)-46, DISPLAY CURRENT ENGINE DATA, OPERATION, Subaru Select Monitor.>	Does the value of «Long term fuel trim B1» fall within a range of –15 — 15%?	Go to step **125**.	Replace the fuel injector. <Ref. to FU(w/o STI)-50, Fuel Injector.>
125	**CHECK FOR MALFUNCTION OCCURRENCE.** Start the engine and check the idling speed.	Is the idling speed stable all time?	It is possible that the fault comes from fuel. Replace fuel.	Go to step **126**.

	Step	Check	Yes	No
126	**CHECK INSTALLATION CONDITION OF CRANKSHAFT POSITION SENSOR.**	Is the crankshaft position sensor installed correctly?	Go to step **127**.	Install the crankshaft position sensor correctly. <Ref. to FU(w/o STI)-94, INSTALLATION, Crankshaft Position Sensor.>
127	**CHECK POWER SUPPLY TO CRANKSHAFT POSITION SENSOR.** 1) Turn the ignition switch to OFF. 2) Disconnect the connector from the crankshaft position sensor. 3) Turn the ignition switch to ON. 4) Measure the voltage between crankshaft position sensor connector and engine ground. ***Connector & terminal*** ***(E10) No. 1 (+) — Engine ground (–):***	Is the voltage 10 V or more?	Go to step **128**.	Repair the power supply circuit.
128	**CHECK HARNESS BETWEEN ECM AND CRANKSHAFT POSITION SENSOR CONNECTOR.** 1) Turn the ignition switch to OFF. 2) Disconnect the connector from ECM. 3) Measure the resistance of harness between ECM connector and crankshaft position sensor connector. ***Connector & terminal*** ***(E158) No. 19 — (E10) No. 2:*** ***(E158) No. 31 — (E10) No. 3:***	Is the resistance less than 1 Ω?	Go to step **129**.	Repair the open circuit in the harness between the ECM connector and crankshaft position sensor connector.
129	**CHECK HARNESS BETWEEN ECM AND CRANKSHAFT POSITION SENSOR CONNECTOR.** Measure the resistance between crankshaft position sensor connector and engine ground. ***Connector & terminal*** ***(E10) No. 2 — Engine ground:*** ***(E10) No. 3 — Engine ground:***	Is the resistance 1 MΩ or more?	Go to step **130**.	Repair short circuit to ground in harness between ECM connector and crankshaft position sensor connector.
130	**CHECK FOR MALFUNCTION OCCURRENCE.** 1) Replace the crankshaft position sensor. <Ref. to FU(w/o STI)-93, Crankshaft Position Sensor.> 2) Check that the fault is removed.	Is the fault removed?	Perform the Clear Memory Mode to complete. <Ref. to EN(w/o STI)(diag)-82, Clear Memory Mode.>	Replace the ECM. <Ref. to FU(w/o STI)-124, Engine Control Module (ECM).>
131	**CHECK OF FUEL PUMP.** Check fuel pump. <Ref. to FU(w/o STI)-167, INSPECTION, Fuel Pump.>	Is the check result OK?	Go to step **132**.	Replace the fuel pump. <Ref. to FU(w/o STI)-161, Fuel Pump.>
132	**CHECK FUEL PUMP SYSTEM.** Check fuel pump system. <Ref. to EN(w/o STI)(diag)-312, DTC P0230 FUEL PUMP PRIMARY CIRCUIT, Diagnostic Procedure with Diagnostic Trouble Code (DTC).>	Is the check result OK?	Go to step **133**.	Repair the fuel pump system. <Ref. to EN(w/o STI)(diag)-312, DTC P0230 FUEL PUMP PRIMARY CIRCUIT, Diagnostic Procedure with Diagnostic Trouble Code (DTC).>

	Step	Check	Yes	No
133	**CHECK PURGE CONTROL SOLENOID VALVE.** Check purge control solenoid valve 1 and purge control solenoid valve 2. <Ref. to EC(w/o STI)-28, INSPECTION, Purge Control Solenoid Valve.>	Is the check result OK?	Go to step **134**.	Replace the faulty purge control solenoid valve. <Ref. to EC(w/o STI)-22, Purge Control Solenoid Valve.>
134	**CHECK FUEL INJECTOR.** 1) After the engine is stopped, scavenge inside of the intake manifold by applying compressed air. 2) Measure the HC concentration inside the intake manifold 15 minutes after scavenging is completed.	Is the HC concentration less than 4,000 ppm?	Go to step **135**.	Replace the fuel injector. <Ref. to FU(w/o STI)-50, Fuel Injector.>
135	**CHECK INTAKE VALVE.** Check the intake valve. <Ref. to ME(w/o STI)-224, INSPECTION, Cylinder Head.>	Is there any deposit in the intake valve?	Clean the intake valve. <Ref. to ME(w/o STI)-206, Cylinder Head.>	Go to step **136**.
136	**CHECK ENGINE COOLANT TEMPERATURE SENSOR.** Check the engine coolant temperature sensor. <Ref. to FU(w/o STI)-90, INSPECTION, Engine Coolant Temperature Sensor.>	Is the check result OK?	Go to step **137**.	Replace the engine coolant temperature sensor. <Ref. to FU(w/o STI)-89, Engine Coolant Temperature Sensor.>
137	**CHECK INSTALLATION CONDITION OF CRANKSHAFT POSITION SENSOR.**	Is the crankshaft position sensor installed correctly?	Go to step **138**.	Install the crankshaft position sensor correctly. <Ref. to FU(w/o STI)-94, INSTALLATION, Crankshaft Position Sensor.>
138	**CHECK INSTALLATION CONDITION OF CAMSHAFT POSITION SENSOR.**	Is the camshaft position sensor installed correctly?	Go to step **139**.	Install the camshaft position sensor correctly. <Ref. to FU(w/o STI)-98, INSTALLATION, Camshaft Position Sensor.>
139	**CHECK POWER SUPPLY TO CRANKSHAFT POSITION SENSOR.** 1) Turn the ignition switch to OFF. 2) Disconnect the connector from the crankshaft position sensor. 3) Turn the ignition switch to ON. 4) Measure the voltage between crankshaft position sensor connector and engine ground. ***Connector & terminal*** ***(E10) No. 1 (+) — Engine ground (–):***	Is the voltage 10 V or more?	Go to step **140**.	Repair the power supply circuit.
140	**CHECK HARNESS BETWEEN ECM AND CRANKSHAFT POSITION SENSOR CONNECTOR.** 1) Turn the ignition switch to OFF. 2) Disconnect the connector from ECM. 3) Measure the resistance of harness between ECM connector and crankshaft position sensor connector. ***Connector & terminal*** ***(E158) No. 19 — (E10) No. 2:*** ***(E158) No. 31 — (E10) No. 3:***	Is the resistance less than 1 Ω?	Go to step **141**.	Repair the open circuit in the harness between the ECM connector and crankshaft position sensor connector.

	Step	Check	Yes	No
141	**CHECK HARNESS BETWEEN ECM AND CRANKSHAFT POSITION SENSOR CONNECTOR.** Measure the resistance between crankshaft position sensor connector and engine ground. ***Connector & terminal*** ***(E10) No. 2 — Engine ground:*** ***(E10) No. 3 — Engine ground:***	Is the resistance 1 MΩ or more?	Go to step **142**.	Repair short circuit to ground in harness between ECM connector and crankshaft position sensor connector.
142	**CHECK POWER SUPPLY OF INTAKE CAMSHAFT POSITION SENSOR.** 1) Turn the ignition switch to OFF. 2) Disconnect the connector from the intake camshaft position sensor. 3) Turn the ignition switch to ON. 4) Measure the voltage between intake camshaft position sensor connector and engine ground. ***Connector & terminal*** ***(E35) No. 1 (+) — Engine ground (–):*** ***(E36) No. 1 (+) — Engine ground (–):***	Is the voltage 10 V or more?	Go to step **143**.	Repair the harness and connector. NOTE: In this case, repair the following item: • Open circuit or short circuit to ground in harness between main relay connector and intake camshaft position sensor connector • Poor contact of coupling connector
143	**CHECK HARNESS BETWEEN ECM AND INTAKE CAMSHAFT POSITION SENSOR CONNECTOR.** 1) Turn the ignition switch to OFF. 2) Disconnect the connector from ECM. 3) Measure the resistance between ECM connector and intake camshaft position sensor connector. ***Connector & terminal*** ***(E158) No. 21 — (E35) No. 2:*** ***(E158) No. 34 — (E35) No. 3:*** ***(E158) No. 20 — (E36) No. 2:*** ***(E158) No. 34 — (E36) No. 3:***	Is the resistance less than 1 Ω?	Go to step **144**.	Repair the open circuit in the harness between ECM connector and intake camshaft position sensor connector.
144	**CHECK HARNESS BETWEEN ECM AND INTAKE CAMSHAFT POSITION SENSOR CONNECTOR.** Measure the resistance between intake camshaft position sensor connector and engine ground. ***Connector & terminal*** ***(E35) No. 2 — Engine ground:*** ***(E36) No. 2 — Engine ground:***	Is the resistance 1 MΩ or more?	Go to step **145**.	Repair short circuit to ground in the harness between ECM connector and intake camshaft position sensor connector.
145	**CHECK POWER SUPPLY OF EXHAUST CAMSHAFT POSITION SENSOR.** 1) Turn the ignition switch to OFF. 2) Disconnect the connector from the exhaust camshaft position sensor. 3) Turn the ignition switch to ON. 4) Measure the voltage between exhaust camshaft position sensor connector and engine ground. ***Connector & terminal*** ***(E62) No. 1 (+) — Engine ground (–):*** ***(E65) No. 1 (+) — Engine ground (–):***	Is the voltage 10 V or more?	Go to step **146**.	Repair the harness and connector. NOTE: In this case, repair the following item: • Open circuit in harness between main relay and exhaust camshaft position sensor connector • Poor contact of coupling connector

	Step	Check	Yes	No
146	**CHECK HARNESS BETWEEN ECM AND EXHAUST CAMSHAFT POSITION SENSOR.** 1) Turn the ignition switch to OFF. 2) Disconnect the connector from ECM. 3) Measure the resistance between ECM connector and exhaust crankshaft position sensor connector. ***Connector & terminal*** ***(E158) No. 32 — (E62) No. 2:*** ***(E158) No. 34 — (E62) No. 3:*** ***(E158) No. 33 — (E65) No. 2:*** ***(E158) No. 34 — (E65) No. 3:***	Is the resistance less than 1 Ω?	Go to step **147**.	Repair the open circuit in the harness between ECM connector and exhaust camshaft position sensor connector.
147	**CHECK HARNESS BETWEEN ECM AND EXHAUST CAMSHAFT POSITION SENSOR.** Measure the resistance between exhaust camshaft position sensor connector and engine ground. ***Connector & terminal*** ***(E62) No. 2 — Engine ground:*** ***(E65) No. 2 — Engine ground:***	Is the resistance 1 MΩ or more?	Go to step **148**.	Repair short circuit to ground in the harness between ECM connector and exhaust camshaft position sensor connector.
148	**CHECK COMPRESSION PRESSURE.** Check the compression pressure. <Ref. to ME(w/o STI)-23, INSPECTION, Compression.>	Is the check result OK?	Go to step **149**.	Check the engine. <Ref. to ME(w/o STI)-329, INSPECTION, Engine Trouble in General.>
149	**CHECK FOR MALFUNCTION OCCURRENCE.** 1) Replace the crankshaft position sensor. <Ref. to FU(w/o STI)-93, Crankshaft Position Sensor.> 2) Check that the fault is removed.	Is the fault removed?	Perform the Clear Memory Mode to complete. <Ref. to EN(w/o STI)(diag)-82, Clear Memory Mode.>	Go to step **150**.
150	**CHECK FOR MALFUNCTION OCCURRENCE.** 1) Replace the camshaft position sensor. <Ref. to FU(w/o STI)-97, Camshaft Position Sensor.> 2) Check that the fault is removed.	Is the fault removed?	Perform the Clear Memory Mode to complete. <Ref. to EN(w/o STI)(diag)-82, Clear Memory Mode.>	Check the valve timing. <Ref. to ME(w/o STI)-111, Timing Chain Assembly.> When the valve timing is normal, replace the ECM. <Ref. to FU(w/o STI)-124, Engine Control Module (ECM).>

1. OUTLINE OF DIAGNOSIS

Judge as NG when the status enters into any one of the followings.
- Although starter signal input is present in ECM, the engine does not start (diagnosis 1)
- Although starter signal input is present in ECM, starting takes more time than it should (diagnosis 1)
- The engine stops immediately after starting except by operating the ignition switch (diagnosis 2)

2. EXECUTION CONDITION

Diagnosis 1

Secondary parameters	Execution condition
Starter signal	ON

Diagnosis 2

Secondary parameters	Execution condition
Elapsed time after starting the engine	≤ 2 s

3. GENERAL DRIVING CYCLE

Always perform the diagnosis continuously after the enable conditions have been established.

4. DIAGNOSTIC METHOD

Diagnosis 1

If the duration of time while the following conditions are met is longer than the time indicated, judge as NG.

Judgment Value

Malfunction Criteria	Threshold Value
Engine speed	< 500 rpm

Time Needed for Diagnosis: 2 — 26 seconds

Diagnosis 2

Judge as NG when the following conditions are established.

Judgment Value

Malfunction Criteria	Threshold Value
Engine speed	< 300 rpm

Time Needed for Diagnosis: Less than 1 second

Malfunction Indicator Light Illumination: Does not illuminate.

FA:DTC P1C00 BATTERY MONITOR MODULE "A" PERFORMANCE

DTC DETECTING CONDITION:
Immediately at fault recognition

CAUTION:
After servicing or replacing faulty parts, perform Clear Memory Mode <Ref. to EN(w/o STI)(diag)-82, OPERATION, Clear Memory Mode.>, and Inspection Mode <Ref. to EN(w/o STI)(diag)-64, PROCEDURE, Inspection Mode.>.

	Step	Check	Yes	No
1	**CHECK DTC.** Check for DTC. <Ref. to EN(w/o STI)(diag)-63, Read Diagnostic Trouble Code (DTC).>	Is DTC P1C00 displayed? (Current malfunction)	Replace the battery sensor. <Ref. to SC(w/o STI)-58, Battery Sensor.>	Even if DTC is detected, it has returned to a normal condition at this time. Reproduce the failure, and then perform the diagnosis again.

1. OUTLINE OF DIAGNOSIS

Judge as NG when faulty signal of each part is sent from the battery sensor.

2. COMPONENT DESCRIPTION

The battery sensor monitors the data of battery voltage, current, temperature, etc. ECM receives these data via LIN communication with the battery sensor.

3. EXECUTION CONDITION

Secondary parameters	Execution condition
Ignition switch	ON

4. GENERAL DRIVING CYCLE

Always perform the diagnosis continuously after the enable conditions have been established.

5. DIAGNOSTIC METHOD

Judge as NG when the following conditions are established.

Judgment Value

Malfunction Criteria	Threshold Value
Receives internal abnormality	ON
or	
Receives temperature sensor error	ON
or	
Receives voltage sensor error	ON
or	
Receives current sensor error	ON

Time Needed for Diagnosis: Less than 1 second
Malfunction Indicator Light Illumination: Does not illuminate.

FB:DTC P2004 TGV CONTROL STUCK OPEN BANK 1

DTC DETECTING CONDITION:
Immediately at fault recognition

CAUTION:
After servicing or replacing faulty parts, perform Clear Memory Mode <Ref. to EN(w/o STI)(diag)-82, OPERATION, Clear Memory Mode.>, and Inspection Mode <Ref. to EN(w/o STI)(diag)-64, PROCEDURE, Inspection Mode.>.

	Step	Check	Yes	No
1	**CHECK FOR ANY OTHER DTC ON DISPLAY.**	Is any other DTC displayed?	Check the appropriate DTC using the "List of Diagnostic Trouble Code (DTC)". <Ref. to EN(w/o STI)(diag)-106, List of Diagnostic Trouble Code (DTC).>	Go to step **2**.
2	**CHECK TUMBLE GENERATOR VALVE RH.** 1) Remove the tumble generator valve assembly RH. 2) Check the tumble generator valve.	Is there any dirt or clogging with foreign objects in the tumble generator valve?	Clean the tumble generator valve.	Replace the tumble generator valve RH. <Ref. to FU(w/o STI)-42, Tumble Generator Valve Assembly.>

1. OUTLINE OF DIAGNOSIS

Detect the malfunction of tumble generator valve motor function.
Judge open fixing malfunction when the opening degree is large even after finishing the tumble generator valve closing driving.

2. EXECUTION CONDITION

Secondary parameters	Execution condition
Battery voltage	≥ 10.9 V
Tumble generator valve "close" signal output time	≥ 3.2 s

3. GENERAL DRIVING CYCLE

Always perform the diagnosis continuously.

4. DIAGNOSTIC METHOD

If the duration of time while the following conditions are met is longer than the time indicated, judge as NG.

Judgment Value

Malfunction Criteria	Threshold Value
Tumble generator valve opening angle	≥ 57 deg

Time Needed for Diagnosis: 3000 ms
Malfunction Indicator Light Illumination: Illuminates as soon as a malfunction occurs.

FC:DTC P2005 TGV CONTROL STUCK OPEN BANK 2

DTC DETECTING CONDITION:
Immediately at fault recognition

CAUTION:
After servicing or replacing faulty parts, perform Clear Memory Mode <Ref. to EN(w/o STI)(diag)-82, OPERATION, Clear Memory Mode.>, and Inspection Mode <Ref. to EN(w/o STI)(diag)-64, PROCEDURE, Inspection Mode.>.

	Step	Check	Yes	No
1	**CHECK FOR ANY OTHER DTC ON DISPLAY.**	Is any other DTC displayed?	Check the appropriate DTC using the "List of Diagnostic Trouble Code (DTC)". <Ref. to EN(w/o STI)(diag)-106, List of Diagnostic Trouble Code (DTC).>	Go to step **2**.
2	**CHECK TUMBLE GENERATOR VALVE LH.** 1) Remove the tumble generator valve assembly LH. 2) Check the tumble generator valve.	Is there any dirt or clogging with foreign objects in the tumble generator valve?	Clean the tumble generator valve.	Replace the tumble generator valve LH. <Ref. to FU(w/o STI)-42, Tumble Generator Valve Assembly.>

1. OUTLINE OF DIAGNOSIS

Detect the malfunction of tumble generator valve motor function.
Judge open fixing malfunction when the opening degree is large even after finishing the tumble generator valve closing driving.

2. EXECUTION CONDITION

Secondary parameters	Execution condition
Battery voltage	≥ 10.9 V
Tumble generator valve "close" signal output time	≥ 3.2 s

3. GENERAL DRIVING CYCLE

Always perform the diagnosis continuously.

4. DIAGNOSTIC METHOD

If the duration of time while the following conditions are met is longer than the time indicated, judge as NG.

Judgment Value

Malfunction Criteria	Threshold Value
Tumble generator valve opening angle	≥ 57 deg

Time Needed for Diagnosis: 3000 ms
Malfunction Indicator Light Illumination: Illuminates as soon as a malfunction occurs.

FD:DTC P2006 TGV CONTROL STUCK CLOSED BANK 1

DTC DETECTING CONDITION:
Immediately at fault recognition

CAUTION:
After servicing or replacing faulty parts, perform Clear Memory Mode <Ref. to EN(w/o STI)(diag)-82, OPERATION, Clear Memory Mode.>, and Inspection Mode <Ref. to EN(w/o STI)(diag)-64, PROCEDURE, Inspection Mode.>.

	Step	Check	Yes	No
1	**CHECK FOR ANY OTHER DTC ON DISPLAY.**	Is any other DTC displayed?	Check the appropriate DTC using the "List of Diagnostic Trouble Code (DTC)". <Ref. to EN(w/o STI)(diag)-106, List of Diagnostic Trouble Code (DTC).>	Go to step **2**.
2	**CHECK TUMBLE GENERATOR VALVE RH.** 1) Remove the tumble generator valve assembly RH. 2) Check the tumble generator valve.	Is there any dirt or clogging with foreign objects in the tumble generator valve?	Clean the tumble generator valve.	Replace the tumble generator valve RH. <Ref. to FU(w/o STI)-42, Tumble Generator Valve Assembly.>

1. OUTLINE OF DIAGNOSIS

Detect the malfunction of tumble generator valve motor function.
Judge close fixing malfunction when the opening degree is small even after finishing the tumble generator valve open driving.

2. EXECUTION CONDITION

Secondary parameters	Execution condition
Battery voltage	≥ 10.9 V
Tumble generator valve "open" signal output time	≥ 4.6 s

3. GENERAL DRIVING CYCLE

Always perform the diagnosis continuously.

4. DIAGNOSTIC METHOD

If the duration of time while the following conditions are met is longer than the time indicated, judge as NG.

Judgment Value

Malfunction Criteria	Threshold Value
Tumble generator valve opening angle	< 57 deg

Time Needed for Diagnosis: 3000 ms
Malfunction Indicator Light Illumination: Illuminates as soon as a malfunction occurs.

FE:DTC P2007 TGV CONTROL STUCK CLOSED BANK 2

DTC DETECTING CONDITION:
Immediately at fault recognition

CAUTION:
After servicing or replacing faulty parts, perform Clear Memory Mode <Ref. to EN(w/o STI)(diag)-82, OPERATION, Clear Memory Mode.>, and Inspection Mode <Ref. to EN(w/o STI)(diag)-64, PROCEDURE, Inspection Mode.>.

	Step	Check	Yes	No
1	**CHECK FOR ANY OTHER DTC ON DISPLAY.**	Is any other DTC displayed?	Check the appropriate DTC using the "List of Diagnostic Trouble Code (DTC)". <Ref. to EN(w/o STI)(diag)-106, List of Diagnostic Trouble Code (DTC).>	Go to step **2**.
2	**CHECK TUMBLE GENERATOR VALVE LH.** 1) Remove the tumble generator valve assembly LH. 2) Check the tumble generator valve.	Is there any dirt or clogging with foreign objects in the tumble generator valve?	Clean the tumble generator valve.	Replace the tumble generator valve LH. <Ref. to FU(w/o STI)-42, Tumble Generator Valve Assembly.>

1. OUTLINE OF DIAGNOSIS

Detect the malfunction of tumble generator valve motor function.
Judge close fixing malfunction when the opening degree is small even after finishing the tumble generator valve open driving.

2. EXECUTION CONDITION

Secondary parameters	Execution condition
Battery voltage	≥ 10.9 V
Tumble generator valve "open" signal output time	≥ 4.6 s

3. GENERAL DRIVING CYCLE

Always perform the diagnosis continuously.

4. DIAGNOSTIC METHOD

If the duration of time while the following conditions are met is longer than the time indicated, judge as NG.

Judgment Value

Malfunction Criteria	Threshold Value
Tumble generator valve opening angle	< 57 deg

Time Needed for Diagnosis: 3000 ms
Malfunction Indicator Light Illumination: Illuminates as soon as a malfunction occurs.

FF: DTC P2009 TGV CONTROL CIRCUIT LOW BANK 1

DTC DETECTING CONDITION:
Immediately at fault recognition

CAUTION:
• After servicing or replacing faulty parts, perform Clear Memory Mode <Ref. to EN(w/o STI)(diag)-82, OPERATION, Clear Memory Mode.>, and Inspection Mode <Ref. to EN(w/o STI)(diag)-64, PROCEDURE, Inspection Mode.>.
• Use the check board when measuring the ECM terminal voltage and resistance.

WIRING DIAGRAM:
Engine Electrical System <Ref. to WI-154, WIRING DIAGRAM, Engine Electrical System.>

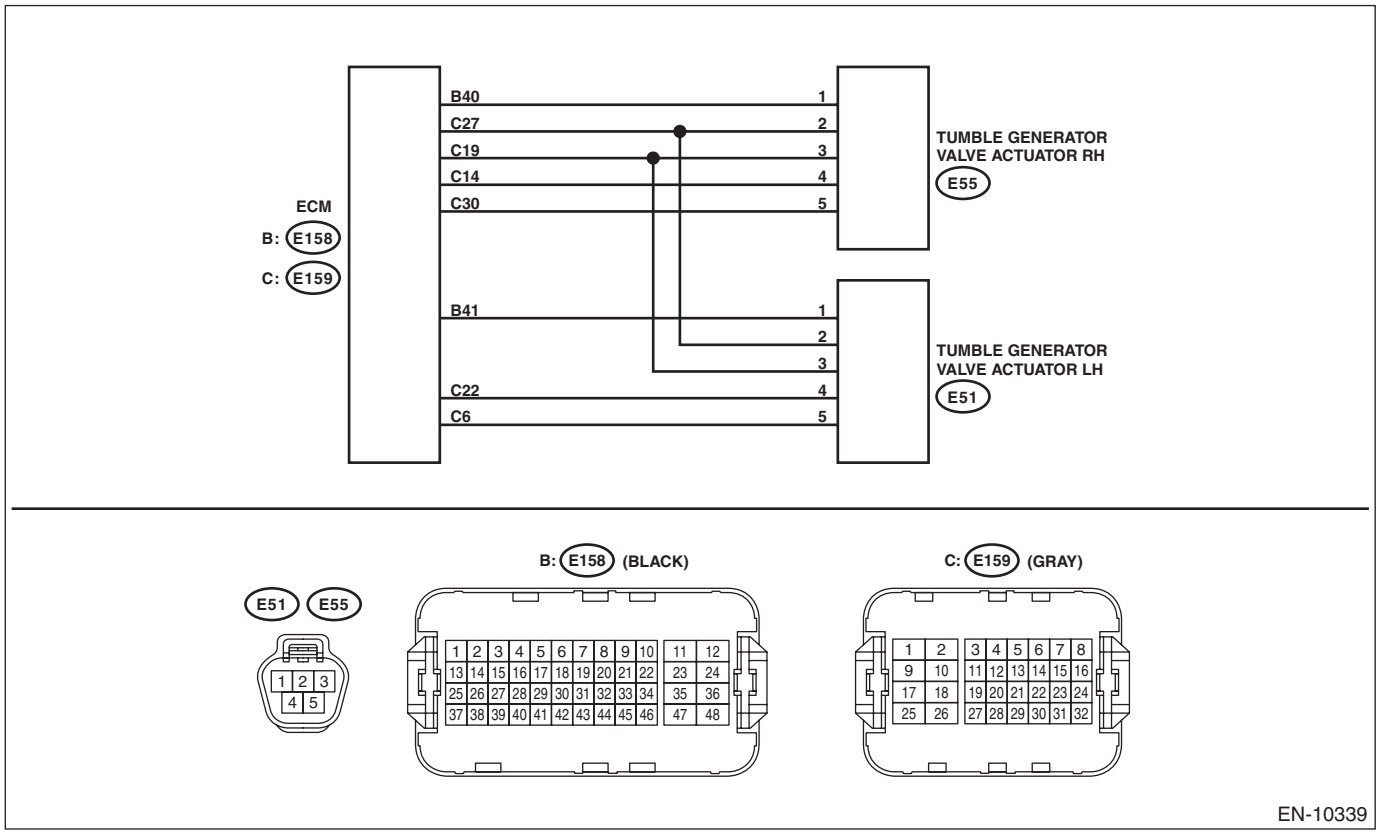

Step		Check	Yes	No
1	**CHECK HARNESS BETWEEN ECM AND TUMBLE GENERATOR VALVE ACTUATOR RH CONNECTOR.** 1) Turn the ignition switch to OFF. 2) Disconnect the connector from ECM. 3) Measure the voltage between ECM connector and engine ground. ***Connector & terminal*** ***(E159) No. 14 (+) — Engine ground (–):*** ***(E159) No. 30 (+) — Engine ground (–):***	Is the voltage 5 V or more?	Repair the short circuit to power in harness between ECM connector and tumble generator valve actuator RH connector.	Replace the tumble generator valve actuator RH. <Ref. to FU(w/o STI)-44, Tumble Generator Valve Actuator.>

1. OUTLINE OF DIAGNOSIS

Detect the open or short circuit of tumble generator valve motor.
Judge as NG when the overcurrent signal is sent from IC after tumble generator valve driving IC diagnosis.

2. COMPONENT DESCRIPTION

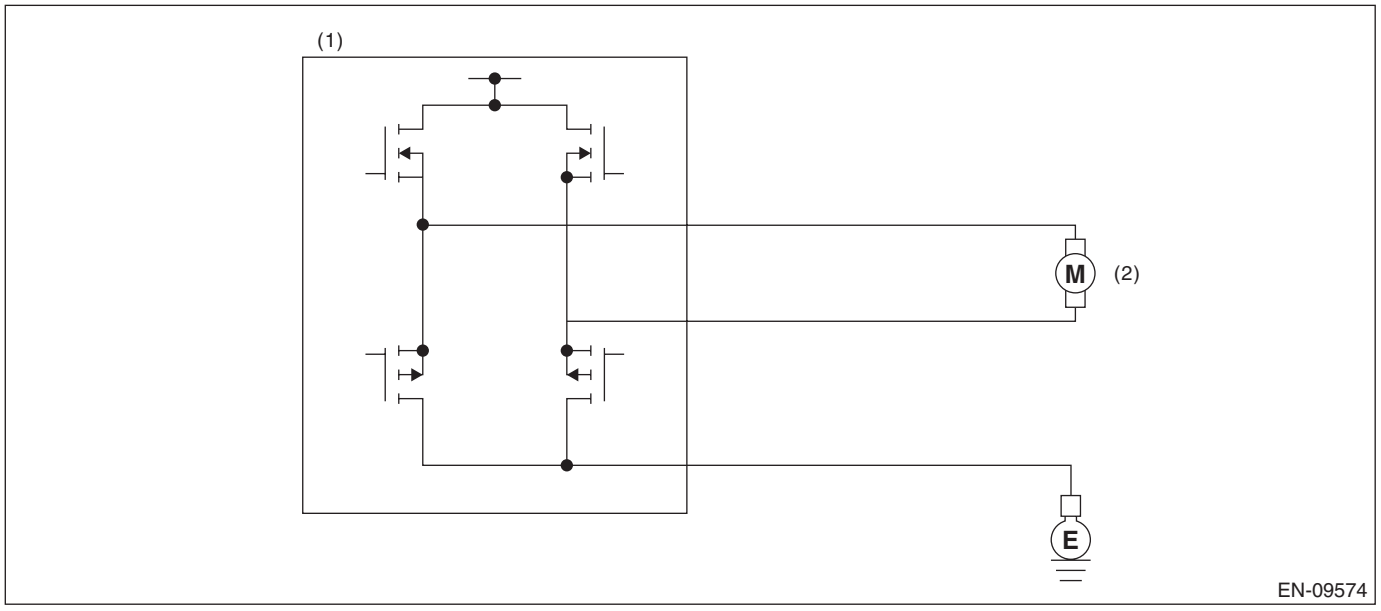

(1) Engine control module (ECM) (2) Tumble generator valve

3. EXECUTION CONDITION

Secondary parameters	Execution condition
Battery voltage	≥ 10.9 V
Tumble generator valve drive signal	Open or Closed

4. GENERAL DRIVING CYCLE

Always perform the diagnosis continuously.

5. DIAGNOSTIC METHOD

If the duration of time while the following conditions are met is longer than the time indicated, judge as NG.

Judgment Value

Malfunction Criteria	Threshold Value
Overcurrent signal from tumble generator valve drive IC	ON

Time Needed for Diagnosis: 320 ms
Malfunction Indicator Light Illumination: Illuminates as soon as a malfunction occurs.

FG:DTC P2012 TGV CONTROL CIRCUIT LOW BANK 2

DTC DETECTING CONDITION:
Immediately at fault recognition

CAUTION:
• After servicing or replacing faulty parts, perform Clear Memory Mode <Ref. to EN(w/o STI)(diag)-82, OPERATION, Clear Memory Mode.>, and Inspection Mode <Ref. to EN(w/o STI)(diag)-64, PROCEDURE, Inspection Mode.>.
• Use the check board when measuring the ECM terminal voltage and resistance.

WIRING DIAGRAM:
Engine Electrical System <Ref. to WI-154, WIRING DIAGRAM, Engine Electrical System.>

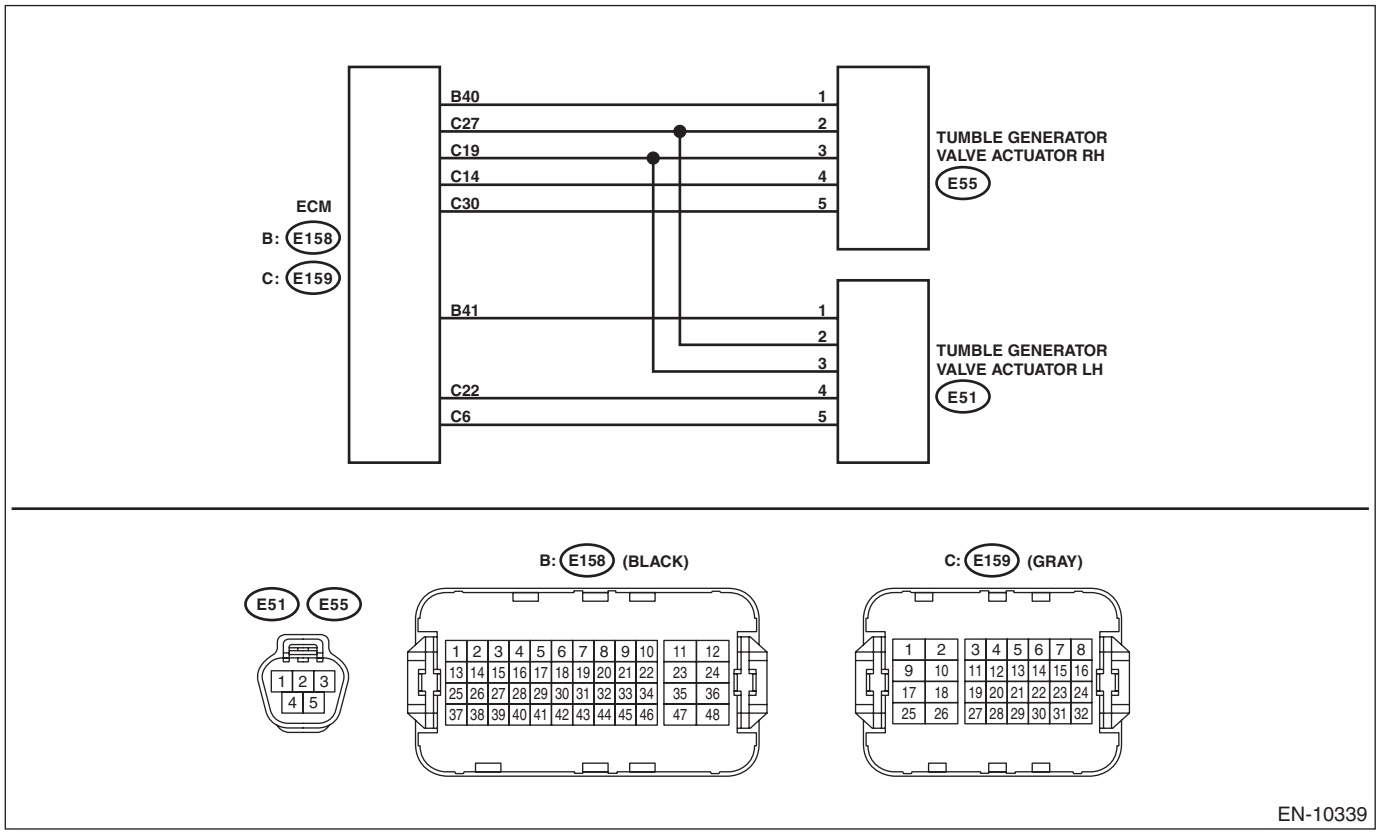

Step		Check	Yes	No
1	**CHECK HARNESS BETWEEN ECM AND TUMBLE GENERATOR VALVE ACTUATOR LH CONNECTOR.** 1) Turn the ignition switch to OFF. 2) Disconnect the connector from ECM. 3) Measure the voltage between ECM connector and engine ground. ***Connector & terminal*** ***(E159) No. 6 (+) — Engine ground (–):*** ***(E159) No. 22 (+) — Engine ground (–):***	Is the voltage 5 V or more?	Repair the short circuit to power in harness between ECM connector and tumble generator valve actuator LH connector.	Replace the tumble generator valve actuator LH. <Ref. to FU(w/o STI)-44, Tumble Generator Valve Actuator.>

1. OUTLINE OF DIAGNOSIS

Detect the open or short circuit of tumble generator valve motor.
Judge as NG when the overcurrent signal is sent from IC after tumble generator valve driving IC diagnosis.

2. COMPONENT DESCRIPTION

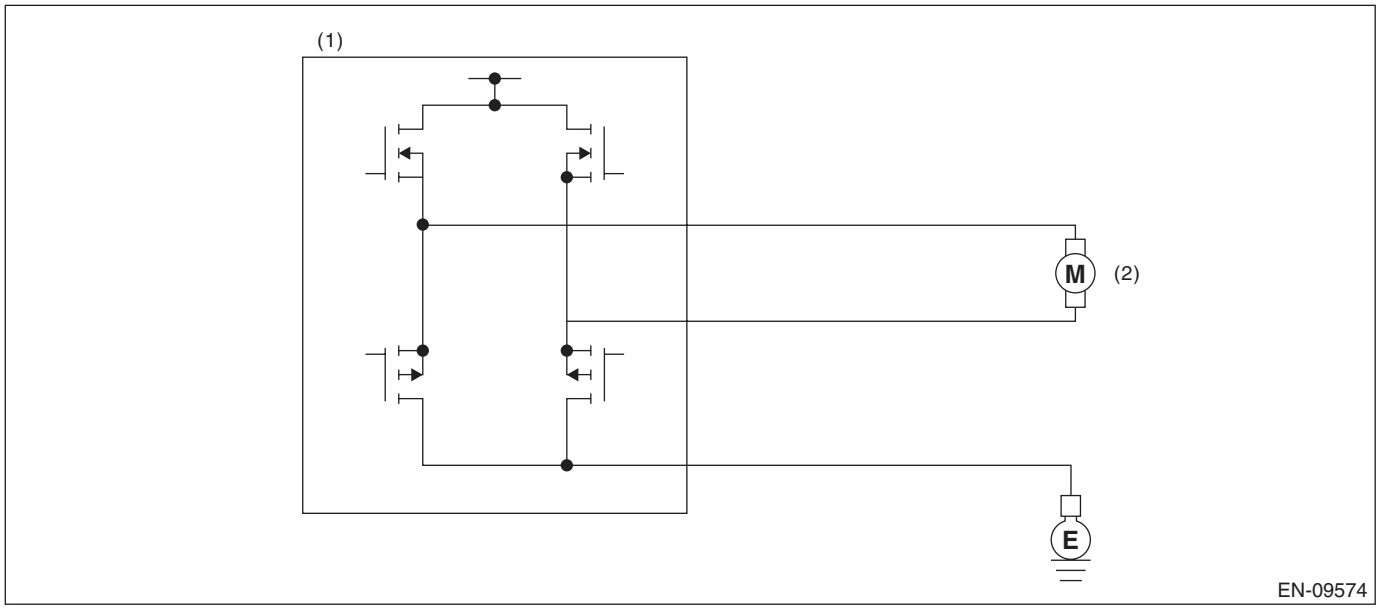

(1) Engine control module (ECM) (2) Tumble generator valve

3. EXECUTION CONDITION

Secondary parameters	Execution condition
Battery voltage	≥ 10.9 V
Tumble generator valve drive signal	Open or Closed

4. GENERAL DRIVING CYCLE

Always perform the diagnosis continuously.

5. DIAGNOSTIC METHOD

If the duration of time while the following conditions are met is longer than the time indicated, judge as NG.

Judgment Value

Malfunction Criteria	Threshold Value
Overcurrent signal from tumble generator valve drive IC	ON

Time Needed for Diagnosis: 320 ms
Malfunction Indicator Light Illumination: Illuminates as soon as a malfunction occurs.

FH:DTC P2016 TGV POSITION SENSOR/SWITCH CIRCUIT LOW BANK 1

DTC DETECTING CONDITION:
Immediately at fault recognition
TROUBLE SYMPTOM:
- Improper idling
- Engine stalls.
- Poor driving performance

CAUTION:
• After servicing or replacing faulty parts, perform Clear Memory Mode <Ref. to EN(w/o STI)(diag)-82, OPERATION, Clear Memory Mode.>, and Inspection Mode <Ref. to EN(w/o STI)(diag)-64, PROCEDURE, Inspection Mode.>.
• Use the check board when measuring the ECM terminal voltage and resistance.
WIRING DIAGRAM:
Engine Electrical System <Ref. to WI-154, WIRING DIAGRAM, Engine Electrical System.>

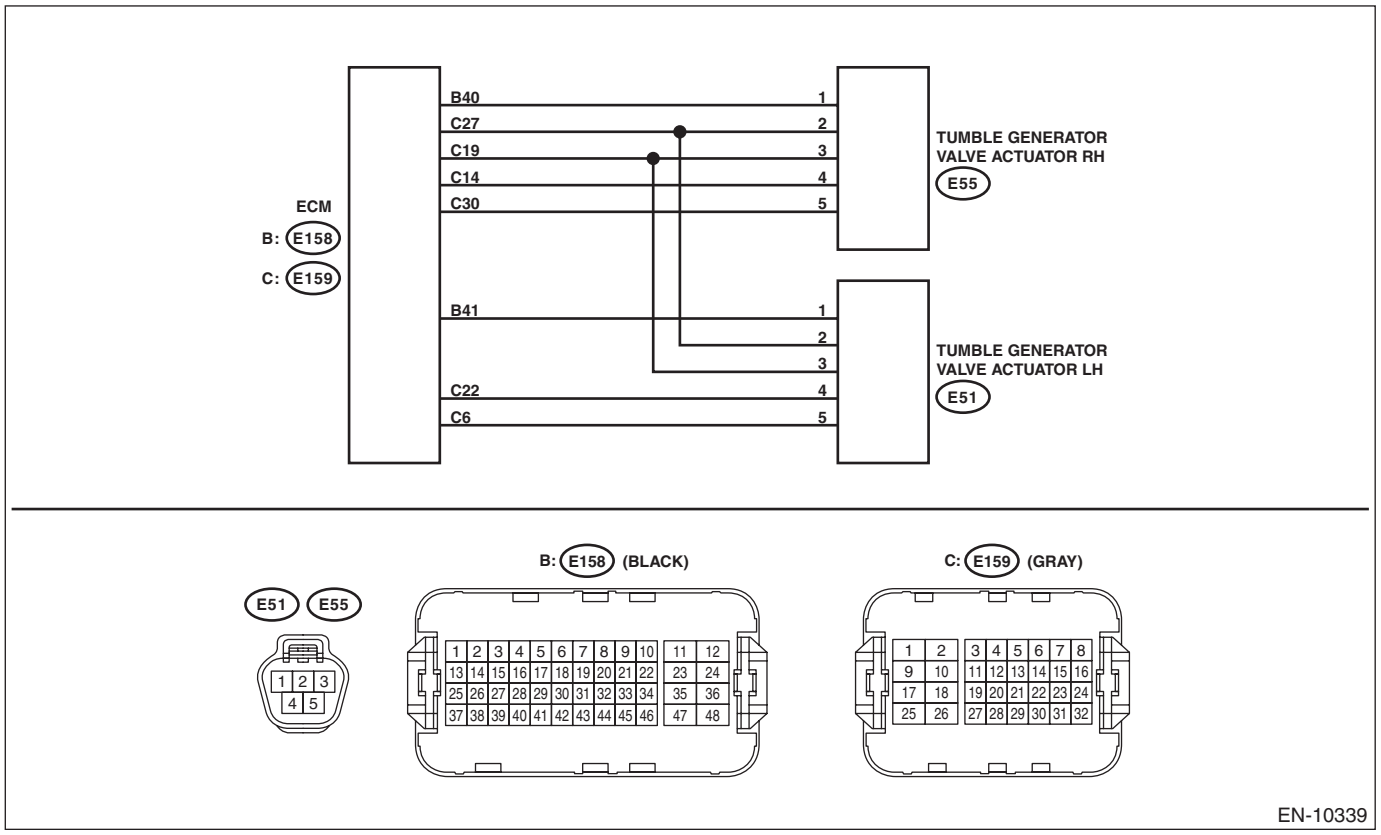

	Step	Check	Yes	No
1	**CHECK CURRENT DATA.** 1) Start the engine. 2) Read the value of «TGV Position Sensor R» using the Subaru Select Monitor. NOTE: For detailed operation procedures, refer to "Current Data Display For Engine". <Ref. to EN(w/o STI)(diag)-46, Subaru Select Monitor.>	Is the value of «TGV Position Sensor R» less than 0.2 V?	Go to step **2**.	Even if DTC is detected, the circuit has returned to a normal condition at this time. Reproduce the failure, and then perform the diagnosis again. NOTE: In this case, temporary poor contact of connector, temporary open or short circuit of harness may be the cause.
2	**CHECK POWER SUPPLY OF TUMBLE GENERATOR VALVE ACTUATOR RH.** 1) Turn the ignition switch to OFF. 2) Disconnect the connector from tumble generator valve actuator RH. 3) Turn the ignition switch to ON. 4) Measure the voltage between tumble generator valve actuator RH connector and engine ground. ***Connector & terminal*** ***(E55) No. 3 (+) — Engine ground (–):***	Is the voltage 4.5 V or more?	Go to step **3**.	Repair the harness and connector. NOTE: In this case, repair the following item: • Open circuit in harness between ECM connector and tumble generator valve actuator RH connector • Poor contact of ECM connector
3	**CHECK HARNESS BETWEEN ECM AND TUMBLE GENERATOR VALVE ACTUATOR RH CONNECTOR.** 1) Turn the ignition switch to OFF. 2) Disconnect the connector from ECM. 3) Measure the resistance of harness between ECM connector and tumble generator valve actuator RH connector. ***Connector & terminal*** ***(E158) No. 40 — (E55) No. 1:***	Is the resistance less than 1 Ω?	Go to step **4**.	Repair the open circuit in harness between ECM connector and tumble generator valve actuator RH connector.
4	**CHECK HARNESS BETWEEN ECM AND TUMBLE GENERATOR VALVE ACTUATOR RH CONNECTOR.** Measure the resistance between the ECM connector and engine ground. ***Connector & terminal*** ***(E158) No. 40 — Engine ground:***	Is the resistance 1 MΩ or more?	Go to step **5**.	Repair the short circuit to ground in harness between ECM connector and tumble generator valve actuator RH connector.
5	**CHECK FOR POOR CONTACT.** Check for poor contact of ECM and tumble generator valve actuator RH connector.	Is there poor contact of ECM or the tumble generator valve actuator RH connector?	Repair the poor contact of ECM or tumble generator valve actuator RH connector.	Replace the tumble generator valve actuator RH. <Ref. to FU(w/o STI)-42, Tumble Generator Valve Assembly.>

1. OUTLINE OF DIAGNOSIS

Detect open or short circuit of tumble generator valve position sensor.
Judge as NG if out of specification.

2. COMPONENT DESCRIPTION

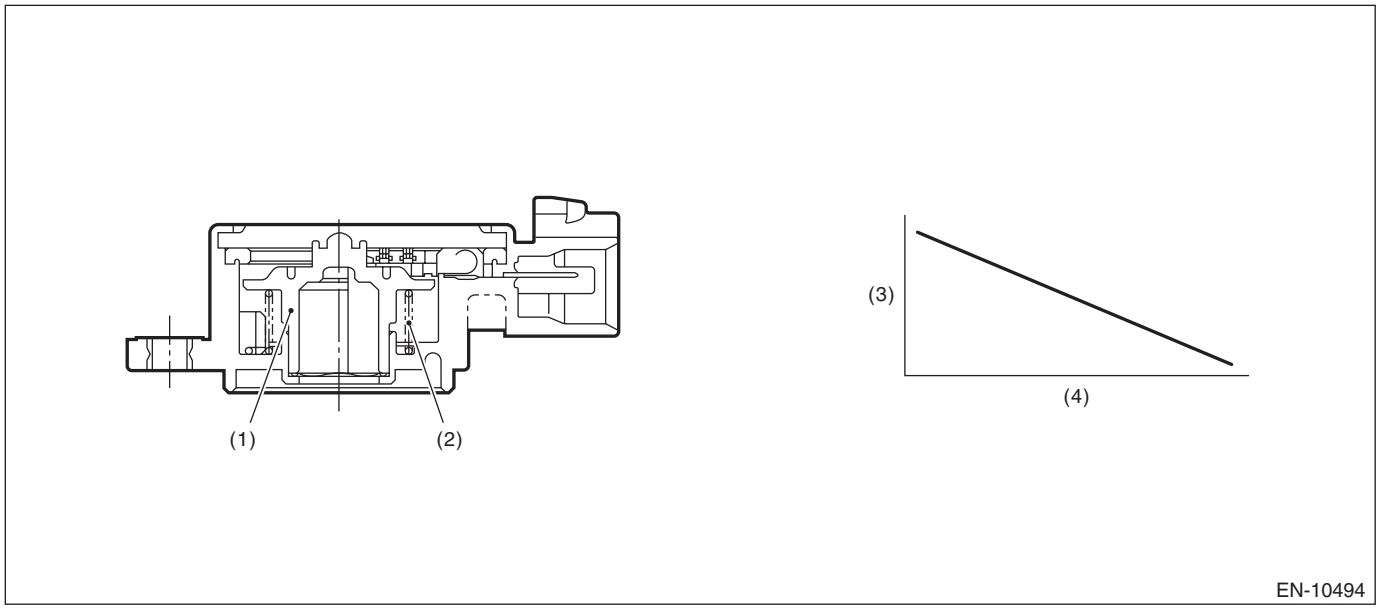

(1) Rotor
(2) Return spring
(3) Voltage (V)
(4) Tumble generator valve opening angle (°)

3. EXECUTION CONDITION

Secondary parameters	Execution condition
None	

4. GENERAL DRIVING CYCLE

Always perform the diagnosis continuously.

5. DIAGNOSTIC METHOD

If the duration of time while the following conditions are met is longer than the time indicated, judge as NG.

Judgment Value

Malfunction Criteria	Threshold Value
Output voltage	< 0.21 V

Time Needed for Diagnosis: 520 ms
Malfunction Indicator Light Illumination: Illuminates as soon as a malfunction occurs.

FI: DTC P2017 TGV POSITION SENSOR/SWITCH CIRCUIT HIGH BANK 1

DTC DETECTING CONDITION:
Immediately at fault recognition
TROUBLE SYMPTOM:
- Improper idling
- Engine stalls.
- Poor driving performance

CAUTION:
• After servicing or replacing faulty parts, perform Clear Memory Mode <Ref. to EN(w/o STI)(diag)-82, OPERATION, Clear Memory Mode.>, and Inspection Mode <Ref. to EN(w/o STI)(diag)-64, PROCEDURE, Inspection Mode.>.
• Use the check board when measuring the ECM terminal voltage and resistance.
WIRING DIAGRAM:
Engine Electrical System <Ref. to WI-154, WIRING DIAGRAM, Engine Electrical System.>

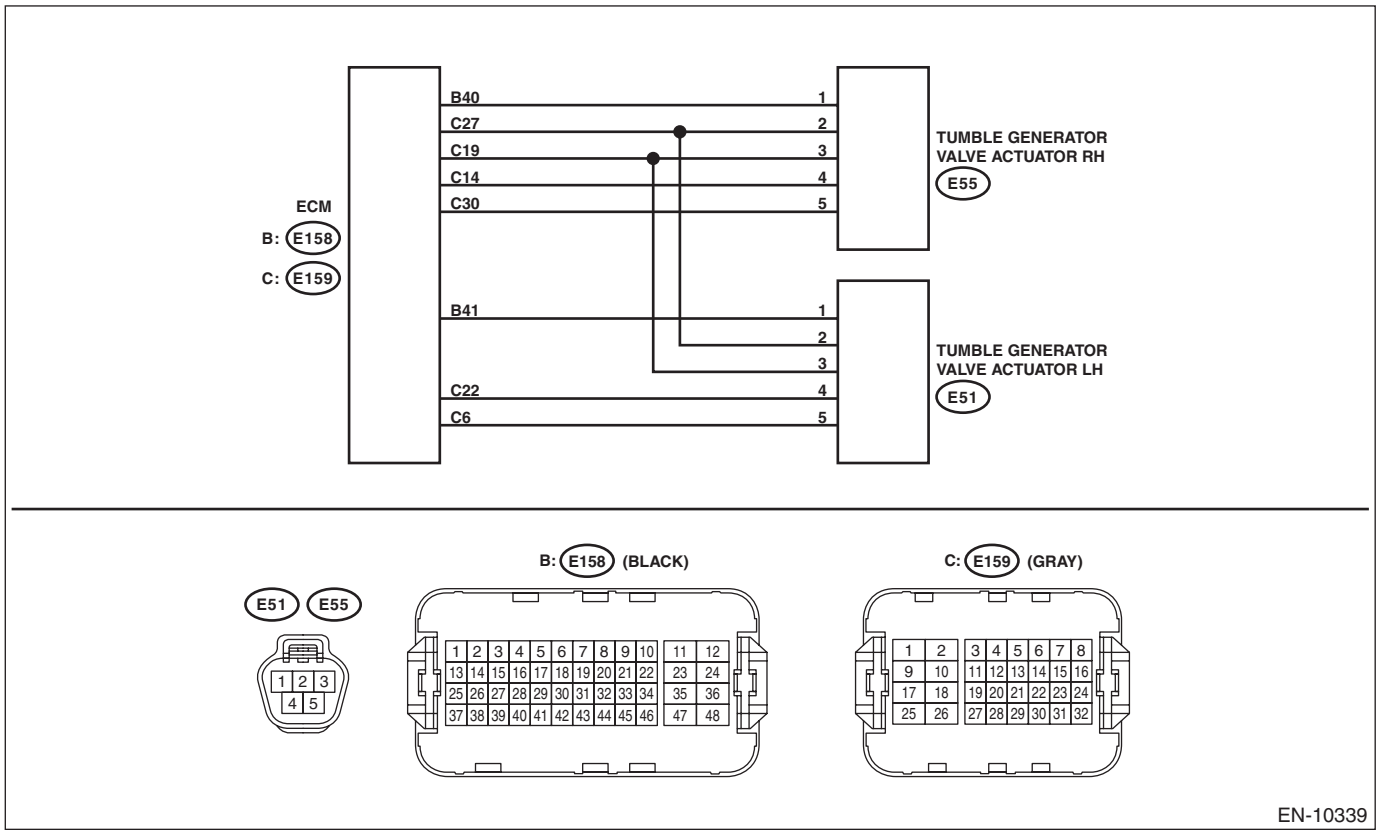

	Step	Check	Yes	No
1	**CHECK CURRENT DATA.** 1) Start the engine. 2) Read the value of «TGV Position Sensor R» using the Subaru Select Monitor. NOTE: For detailed operation procedures, refer to "Current Data Display For Engine". <Ref. to EN(w/o STI)(diag)-46, Subaru Select Monitor.>	Is the value of «TGV Position Sensor R» 5 V or more?	Go to step **2**.	Even if DTC is detected, the circuit has returned to a normal condition at this time. Reproduce the failure, and then perform the diagnosis again. NOTE: In this case, temporary poor contact of connector, temporary open or short circuit of harness may be the cause.
2	**CHECK HARNESS BETWEEN ECM AND TUMBLE GENERATOR VALVE ACTUATOR RH CONNECTOR.** 1) Turn the ignition switch to OFF. 2) Disconnect the connector from tumble generator valve actuator RH. 3) Start the engine. 4) Read the value of «TGV Position Sensor R» using the Subaru Select Monitor. NOTE: For detailed operation procedures, refer to "Current Data Display For Engine". <Ref. to EN(w/o STI)(diag)-46, Subaru Select Monitor.>	Is the value of «TGV Position Sensor R» 5 V or more?	Repair the short circuit to power in harness between ECM connector and tumble generator valve actuator RH connector.	Go to step **3**.
3	**CHECK HARNESS BETWEEN ECM AND TUMBLE GENERATOR VALVE ACTUATOR RH CONNECTOR.** 1) Turn the ignition switch to OFF. 2) Measure the resistance of harness between tumble generator valve actuator RH connector and engine ground. ***Connector & terminal*** ***(E55) No. 2 — Engine ground:***	Is the resistance less than 5 Ω?	Go to step **4**.	Repair the harness and connector. NOTE: In this case, repair the following item: • Open circuit in harness between ECM connector and tumble generator valve actuator RH connector • Poor contact of ECM connector
4	**CHECK FOR POOR CONTACT.** Check for poor contact of tumble generator valve actuator RH connector.	Is there poor contact of the tumble generator valve actuator RH connector?	Repair the poor contact of tumble generator valve actuator RH connector.	Replace the tumble generator valve actuator RH. <Ref. to FU(w/o STI)-42, Tumble Generator Valve Assembly.>

1. OUTLINE OF DIAGNOSIS

Detect open or short circuit of tumble generator valve position sensor.
Judge as NG if out of specification.

2. COMPONENT DESCRIPTION

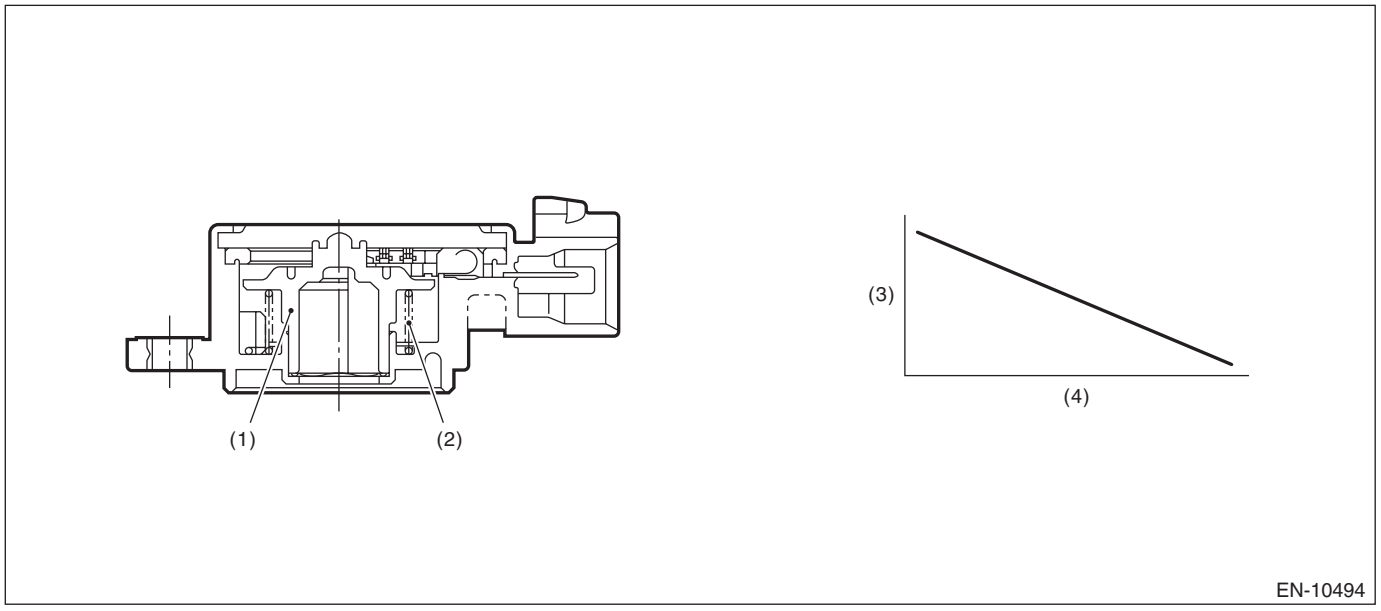

(1) Rotor
(2) Return spring
(3) Voltage (V)
(4) Tumble generator valve opening angle (°)

3. EXECUTION CONDITION

Secondary parameters	Execution condition
None	

4. GENERAL DRIVING CYCLE

Always perform the diagnosis continuously.

5. DIAGNOSTIC METHOD

If the duration of time while the following conditions are met is longer than the time indicated, judge as NG.

Judgment Value

Malfunction Criteria	Threshold Value
Output voltage	> 4.47 V

Time Needed for Diagnosis: 520 ms
Malfunction Indicator Light Illumination: Illuminates as soon as a malfunction occurs.

FJ: DTC P2021 TGV POSITION SENSOR/SWITCH CIRCUIT LOW BANK 2

DTC DETECTING CONDITION:
Immediately at fault recognition
TROUBLE SYMPTOM:

- Improper idling
- Engine stalls.
- Poor driving performance

CAUTION:

- **After servicing or replacing faulty parts, perform Clear Memory Mode <Ref. to EN(w/o STI)(diag)-82, OPERATION, Clear Memory Mode.>, and Inspection Mode <Ref. to EN(w/o STI)(diag)-64, PROCEDURE, Inspection Mode.>.**
- **Use the check board when measuring the ECM terminal voltage and resistance.**

WIRING DIAGRAM:
Engine Electrical System <Ref. to WI-154, WIRING DIAGRAM, Engine Electrical System.>

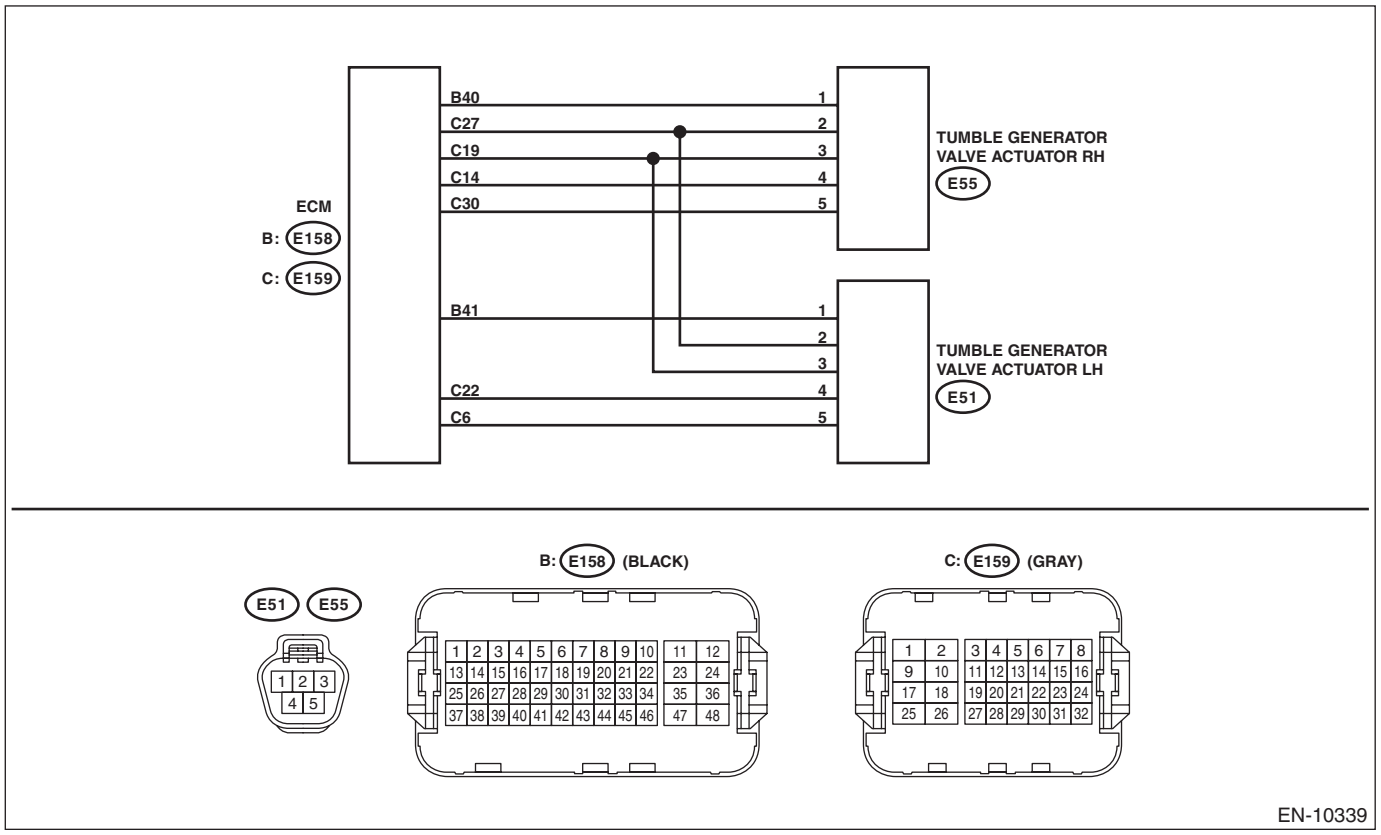

	Step	Check	Yes	No
1	**CHECK CURRENT DATA.** 1) Start the engine. 2) Read the value of «TGV Position Sensor L» using the Subaru Select Monitor. NOTE: For detailed operation procedures, refer to "Current Data Display For Engine". <Ref. to EN(w/o STI)(diag)-46, Subaru Select Monitor.>	Is the value of «TGV Position Sensor L» less than 0.2 V?	Go to step **2**.	Even if DTC is detected, the circuit has returned to a normal condition at this time. Reproduce the failure, and then perform the diagnosis again. NOTE: In this case, temporary poor contact of connector, temporary open or short circuit of harness may be the cause.
2	**CHECK POWER SUPPLY OF TUMBLE GENERATOR VALVE ACTUATOR LH.** 1) Turn the ignition switch to OFF. 2) Disconnect the connector from tumble generator valve actuator LH. 3) Turn the ignition switch to ON. 4) Measure the voltage between tumble generator valve actuator LH connector and engine ground. ***Connector & terminal*** ***(E51) No. 3 (+) — Engine ground (–):***	Is the voltage 4.5 V or more?	Go to step **3**.	Repair the harness and connector. NOTE: In this case, repair the following item: • Open circuit in harness between ECM connector and tumble generator valve actuator LH connector • Poor contact of ECM connector
3	**CHECK HARNESS BETWEEN ECM AND TUMBLE GENERATOR VALVE ACTUATOR LH CONNECTOR.** 1) Turn the ignition switch to OFF. 2) Disconnect the connector from ECM. 3) Measure the resistance of harness between ECM connector and tumble generator valve actuator LH connector. ***Connector & terminal*** ***(E158) No. 41 — (E51) No. 1:***	Is the resistance less than 1 Ω?	Go to step **4**.	Repair the open circuit in harness between ECM connector and tumble generator valve actuator LH connector.
4	**CHECK HARNESS BETWEEN ECM AND TUMBLE GENERATOR VALVE ACTUATOR LH CONNECTOR.** Measure the resistance between the ECM connector and engine ground. ***Connector & terminal*** ***(E158) No. 41 — Engine ground:***	Is the resistance 1 MΩ or more?	Go to step **5**.	Repair the short circuit to ground in harness between ECM connector and tumble generator valve actuator LH connector.
5	**CHECK FOR POOR CONTACT.** Check for poor contact of ECM and tumble generator valve actuator LH connector.	Is there poor contact of ECM or the tumble generator valve actuator LH connector?	Repair the poor contact of ECM or tumble generator valve actuator LH connector.	Replace the tumble generator valve actuator LH. <Ref. to FU(w/o STI)-42, Tumble Generator Valve Assembly.>

1. OUTLINE OF DIAGNOSIS

Detect open or short circuit of tumble generator valve position sensor.
Judge as NG if out of specification.

2. COMPONENT DESCRIPTION

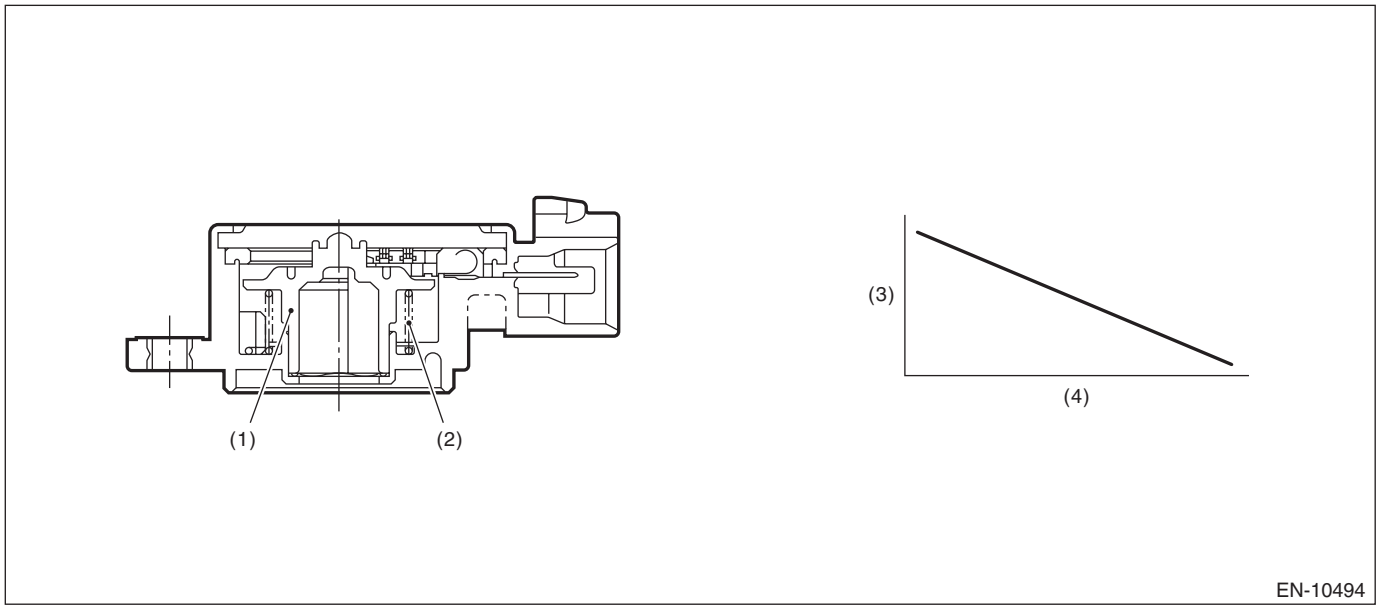

(1) Rotor
(2) Return spring
(3) Voltage (V)
(4) Tumble generator valve opening angle (°)

3. EXECUTION CONDITION

Secondary parameters	Execution condition
None	

4. GENERAL DRIVING CYCLE

Always perform the diagnosis continuously.

5. DIAGNOSTIC METHOD

If the duration of time while the following conditions are met is longer than the time indicated, judge as NG.

Judgment Value

Malfunction Criteria	Threshold Value
Output voltage	< 0.21 V

Time Needed for Diagnosis: 520 ms
Malfunction Indicator Light Illumination: Illuminates as soon as a malfunction occurs.

FK:DTC P2022 TGV POSITION SENSOR/SWITCH CIRCUIT HIGH BANK 2

DTC DETECTING CONDITION:
Immediately at fault recognition
TROUBLE SYMPTOM:
- Improper idling
- Engine stalls.
- Poor driving performance

CAUTION:
• After servicing or replacing faulty parts, perform Clear Memory Mode <Ref. to EN(w/o STI)(diag)-82, OPERATION, Clear Memory Mode.>, and Inspection Mode <Ref. to EN(w/o STI)(diag)-64, PROCEDURE, Inspection Mode.>.
• Use the check board when measuring the ECM terminal voltage and resistance.
WIRING DIAGRAM:
Engine Electrical System <Ref. to WI-154, WIRING DIAGRAM, Engine Electrical System.>

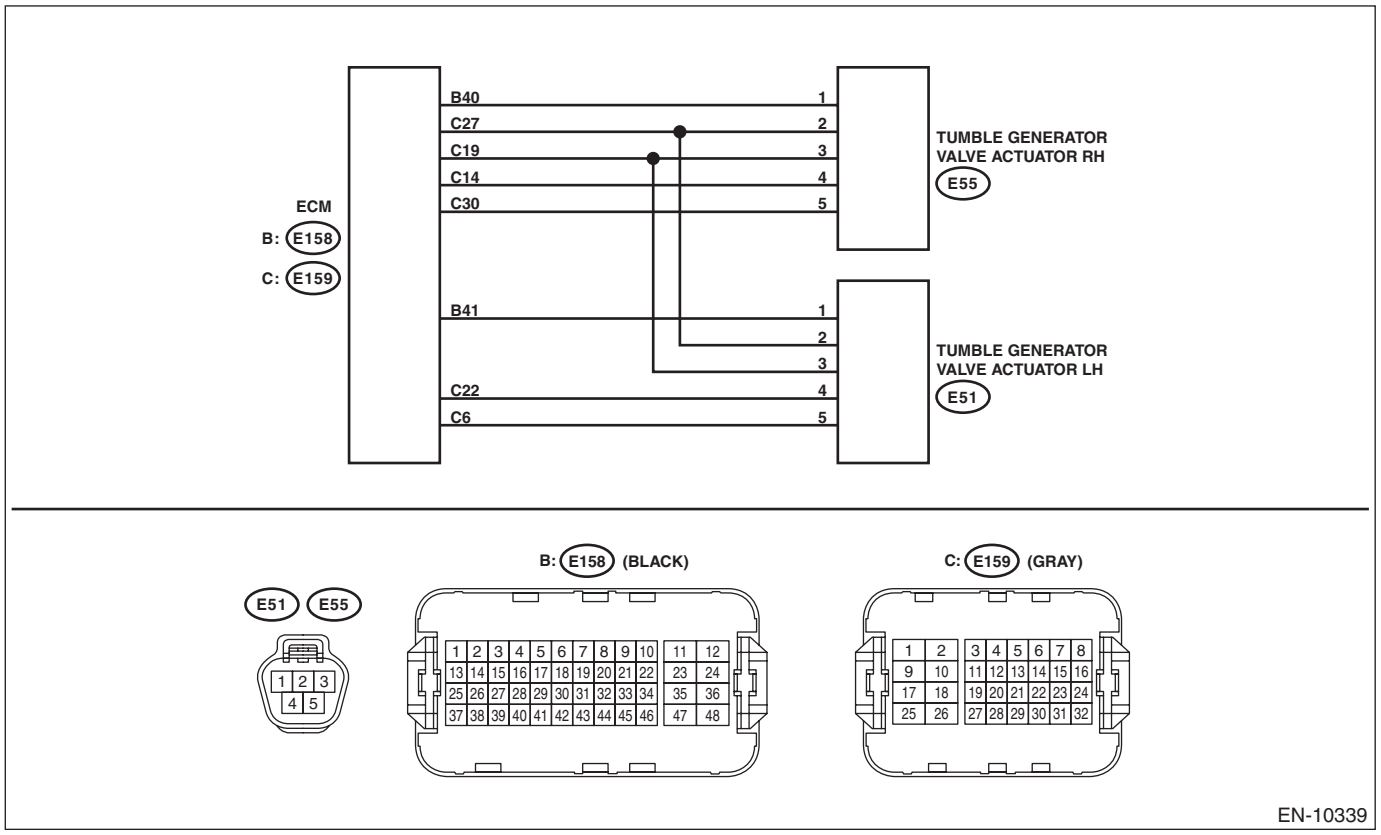

	Step	Check	Yes	No
1	**CHECK CURRENT DATA.** 1) Start the engine. 2) Read the value of «TGV Position Sensor L» using the Subaru Select Monitor. NOTE: For detailed operation procedures, refer to "Current Data Display For Engine". <Ref. to EN(w/o STI)(diag)-46, Subaru Select Monitor.>	Is the value of «TGV Position Sensor L» 5 V or more?	Go to step **2**.	Even if DTC is detected, the circuit has returned to a normal condition at this time. Reproduce the failure, and then perform the diagnosis again. NOTE: In this case, temporary poor contact of connector, temporary open or short circuit of harness may be the cause.
2	**CHECK HARNESS BETWEEN ECM AND TUMBLE GENERATOR VALVE ACTUATOR LH CONNECTOR.** 1) Turn the ignition switch to OFF. 2) Disconnect the connector from tumble generator valve actuator LH. 3) Start the engine. 4) Read the value of «TGV Position Sensor L» using the Subaru Select Monitor. NOTE: For detailed operation procedures, refer to "Current Data Display For Engine". <Ref. to EN(w/o STI)(diag)-46, Subaru Select Monitor.>	Is the value of «TGV Position Sensor L» 5 V or more?	Repair the short circuit to power in harness between ECM connector and tumble generator valve actuator LH connector.	Go to step **3**.
3	**CHECK HARNESS BETWEEN ECM AND TUMBLE GENERATOR VALVE ACTUATOR LH CONNECTOR.** 1) Turn the ignition switch to OFF. 2) Measure the resistance of harness between tumble generator valve actuator LH connector and engine ground. ***Connector & terminal*** ***(E51) No. 2 — Engine ground:***	Is the resistance less than 5 Ω?	Go to step **4**.	Repair the harness and connector. NOTE: In this case, repair the following item: • Open circuit in harness between ECM connector and tumble generator valve actuator LH connector • Poor contact of ECM connector
4	**CHECK FOR POOR CONTACT.** Check for poor contact of tumble generator valve actuator LH connector.	Is there poor contact of the tumble generator valve actuator LH connector?	Repair the poor contact of tumble generator valve actuator LH connector.	Replace the tumble generator valve actuator LH. <Ref. to FU(w/o STI)-42, Tumble Generator Valve Assembly.>

1. OUTLINE OF DIAGNOSIS

Detect open or short circuit of tumble generator valve position sensor.
Judge as NG if out of specification.

2. COMPONENT DESCRIPTION

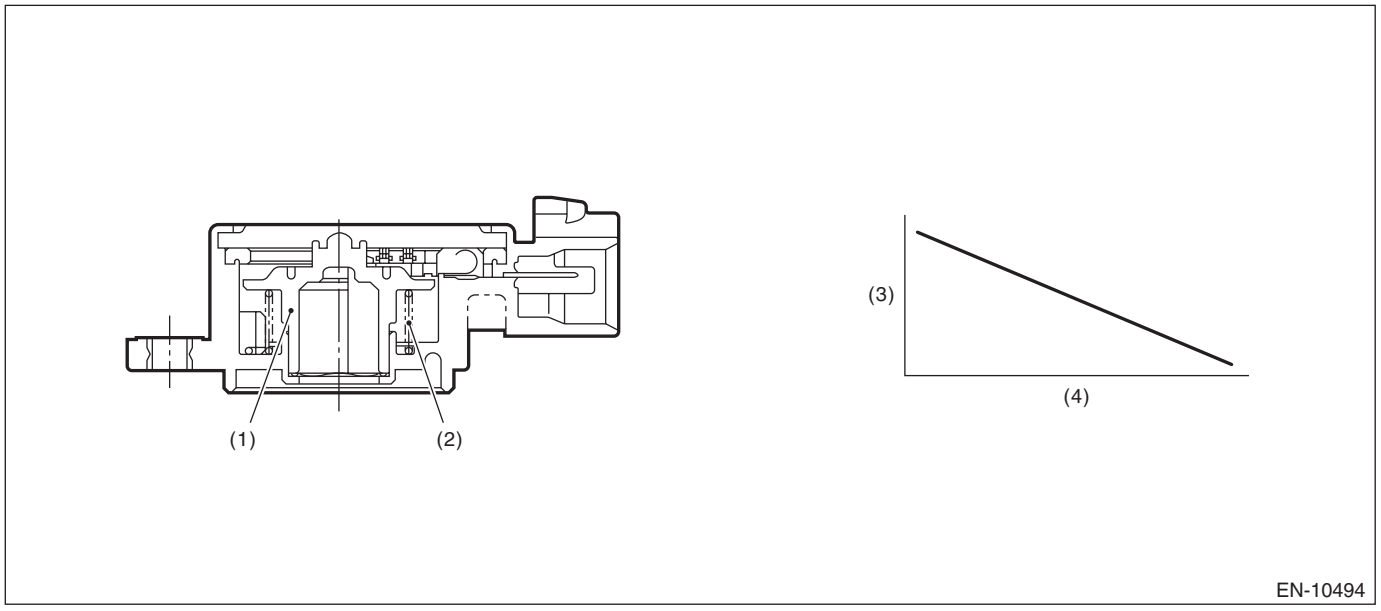

(1) Rotor
(2) Return spring
(3) Voltage (V)
(4) Tumble generator valve opening angle (°)

3. EXECUTION CONDITION

Secondary parameters	Execution condition
None	

4. GENERAL DRIVING CYCLE

Always perform the diagnosis continuously.

5. DIAGNOSTIC METHOD

If the duration of time while the following conditions are met is longer than the time indicated, judge as NG.

Judgment Value

Malfunction Criteria	Threshold Value
Output voltage	> 4.47 V

Time Needed for Diagnosis: 520 ms
Malfunction Indicator Light Illumination: Illuminates as soon as a malfunction occurs.

FL: DTC P2096 POST CATALYST FUEL TRIM SYSTEM TOO LEAN BANK 1

DTC DETECTING CONDITION:

Detected when two consecutive driving cycles with fault occur.

CAUTION:

- **After servicing or replacing faulty parts, perform Clear Memory Mode <Ref. to EN(w/o STI)(diag)-82, OPERATION, Clear Memory Mode.>, and Inspection Mode <Ref. to EN(w/o STI)(diag)-64, PROCEDURE, Inspection Mode.>.**
- **Use the check board when measuring the ECM terminal voltage and resistance.**

WIRING DIAGRAM:
Engine Electrical System <Ref. to WI-154, WIRING DIAGRAM, Engine Electrical System.>

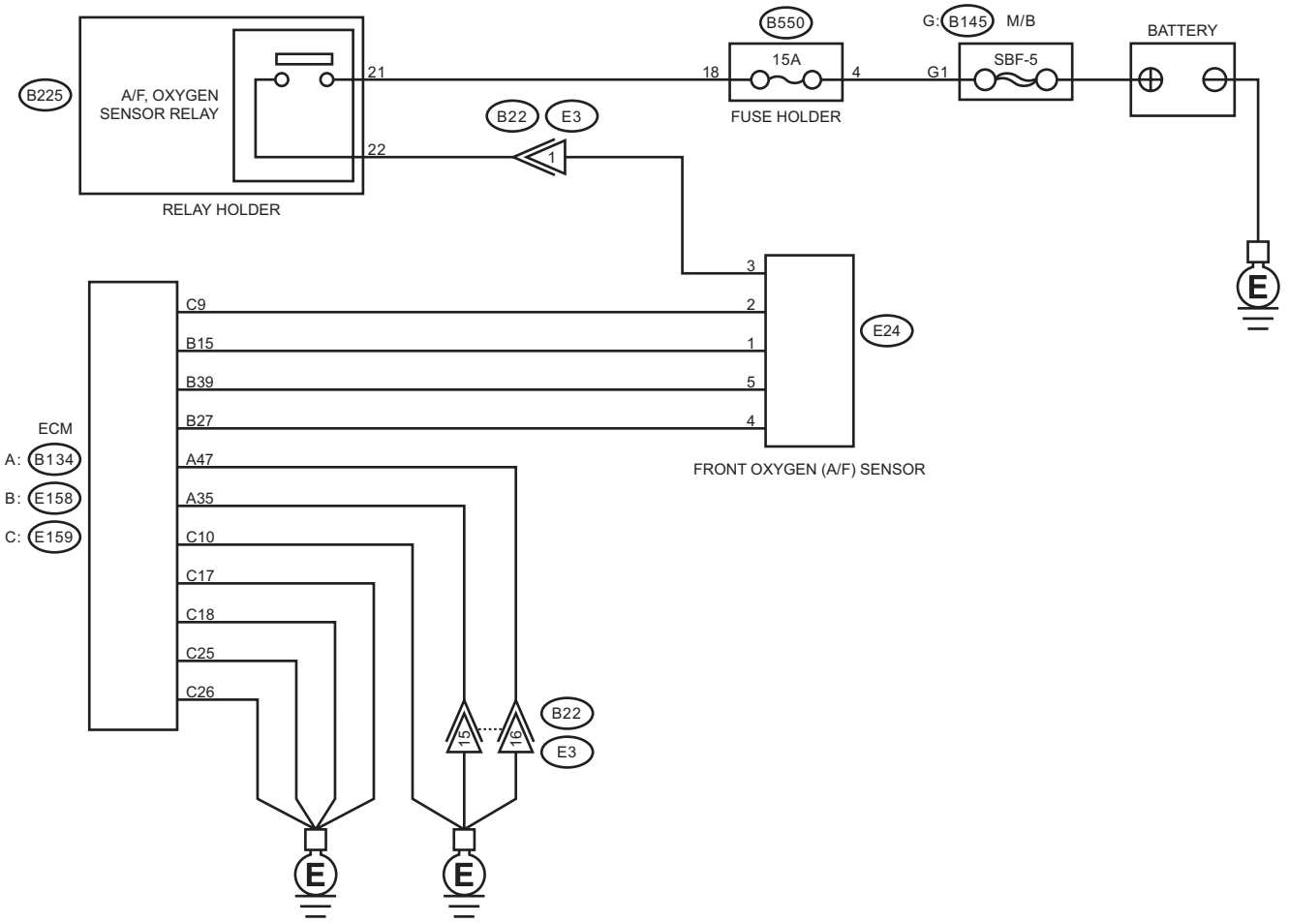

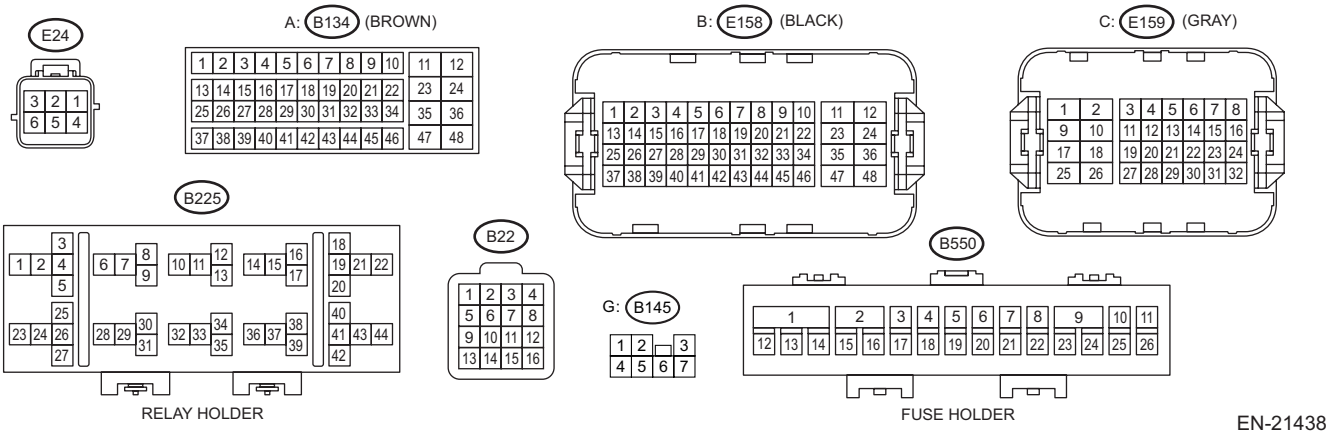

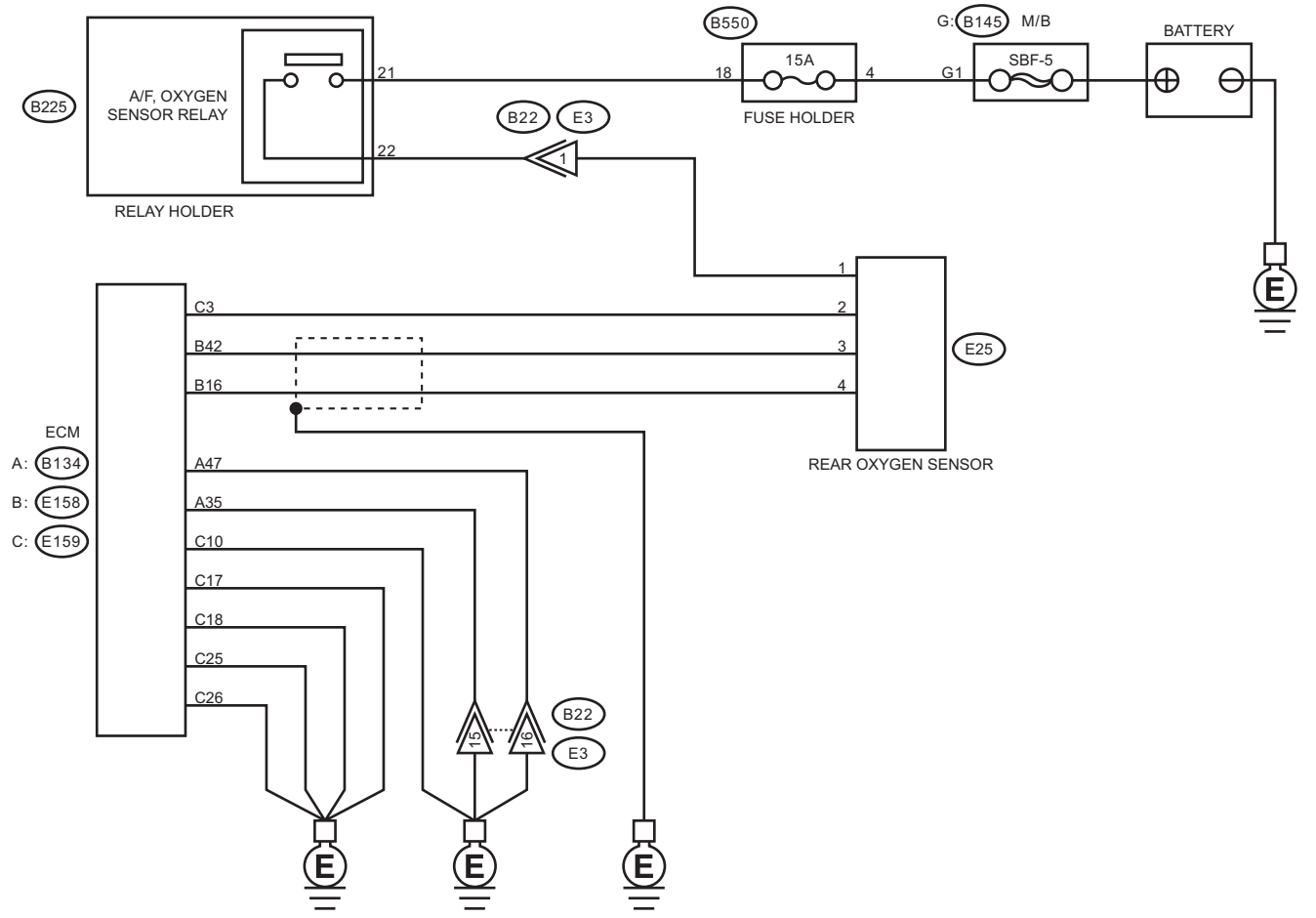

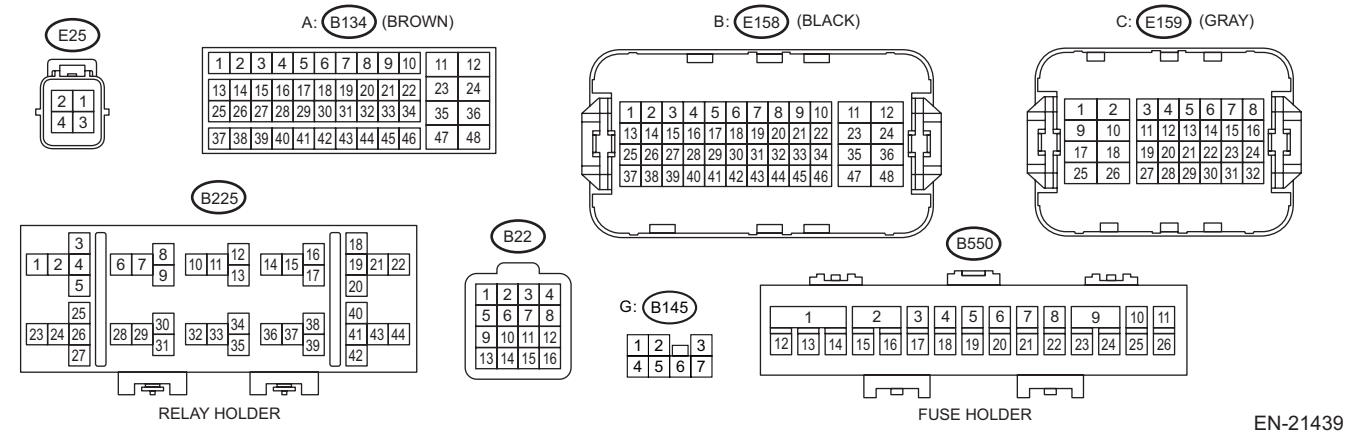

Step	Check	Yes	No
1 **CHECK FOR ANY OTHER DTC ON DISPLAY.**	Is any other DTC displayed?	Check DTC using "List of Diagnostic Trouble Code (DTC)". <Ref. to EN(w/o STI)(diag)-106, List of Diagnostic Trouble Code (DTC).>	Go to step **2**.

	Step	Check	Yes	No
2	**CHECK FRONT OXYGEN (A/F) SENSOR CONNECTOR AND COUPLING CONNECTOR.**	Has water entered the connector?	Completely remove any water inside.	Go to step **3**.
3	**CHECK HARNESS BETWEEN ECM AND FRONT OXYGEN (A/F) SENSOR CONNECTOR.** 1) Turn the ignition switch to OFF. 2) Disconnect the connector from ECM. 3) Disconnect the connectors from front oxygen (A/F) sensor. 4) Measure the resistance of harness between ECM connector and front oxygen (A/F) sensor connector. ***Connector & terminal*** ***(E158) No. 15 — (E24) No. 1:*** ***(E158) No. 27 — (E24) No. 4:*** ***(E158) No. 39 — (E24) No. 5:***	Is the resistance less than 1 Ω?	Go to step **4**.	Repair the harness and connector. NOTE: In this case, repair the following item: • Open circuit in harness between ECM connector and front oxygen (A/F) sensor connector • Poor contact of coupling connector
4	**CHECK HARNESS BETWEEN ECM AND FRONT OXYGEN (A/F) SENSOR CONNECTOR.** Measure the resistance between ECM connector and chassis ground. ***Connector & terminal*** ***(B158) No. 15 — Chassis ground:*** ***(B158) No. 27 — Chassis ground:*** ***(B158) No. 39 — Chassis ground:***	Is the resistance 1 MΩ or more?	Go to step **5**.	Repair the short circuit to ground in harness between ECM connector and front oxygen (A/F) sensor connector.
5	**CHECK HARNESS BETWEEN ECM AND FRONT OXYGEN (A/F) SENSOR CONNECTOR.** 1) Connect the connector to ECM. 2) Turn the ignition switch to ON. 3) Measure the voltage between front oxygen (A/F) sensor connector and chassis ground. ***Connector & terminal*** ***(E24) No. 1 (+) — Chassis ground (–):*** ***(E24) No. 4 (+) — Chassis ground (–):*** ***(E24) No. 5 (+) — Chassis ground (–):***	Is the voltage 8 V or more?	Repair the short circuit to power in the harness between ECM connector and front oxygen (A/F) sensor connector.	Go to step **6**.
6	**CHECK EXHAUST SYSTEM.**	Are there holes or loose bolts on exhaust system?	Repair the exhaust system.	Go to step **7**.
7	**CHECK AIR INTAKE SYSTEM.**	Are there holes, loose bolts or disconnection of hose on air intake system?	Repair the air intake system.	Go to step **8**.
8	**CHECK FUEL PRESSURE.** **WARNING:** **Place "NO OPEN FLAMES" signs near the working area.** **CAUTION:** **Be careful not to spill fuel.** 1) Connect the front oxygen (A/F) sensor connector. 2) Measure the fuel pressure. <Ref. to ME(w/o STI)-31, INSPECTION, Fuel Pressure.> **CAUTION:** **Release fuel pressure before removing the fuel pressure gauge.**	Is the measured value 328 — 358 kPa (3.3 — 3.7 kgf/cm^2, 48 — 52 psi)?	Go to step **9**.	Check the fuel pump and fuel delivery line. <Ref. to FU(w/o STI)-167, INSPECTION, Fuel Pump.> <Ref. to FU(w/o STI)-196, INSPECTION, Fuel Delivery and Evaporation Lines.>

	Step	Check	Yes	No
9	**CHECK ENGINE COOLANT TEMPERATURE SENSOR.** 1) Start the engine and warm up completely. 2) Read the value of «Coolant Temp.» using the Subaru Select Monitor or a general scan tool. NOTE: • Subaru Select Monitor For detailed operation procedures, refer to "Read Current Data For Engine". <Ref. to EN(w/o STI)(diag)-46, Subaru Select Monitor.> • General scan tool For detailed operation procedures, refer to the general scan tool operation manual.	Is the value of «Coolant Temp.» 75°C (167°F) or more?	Go to step **10**.	Replace the engine coolant temperature sensor. <Ref. to FU(w/o STI)-89, Engine Coolant Temperature Sensor.>
10	**CHECK MASS AIR FLOW AND INTAKE AIR TEMPERATURE SENSOR.** 1) Start the engine and warm up engine until coolant temperature is higher than 75°C (167°F). 2) For CVT models, set the select lever to "P" range or "N" range, and for MT models, place the shift lever in the neutral position. 3) Turn the A/C switch to OFF. 4) Turn all the accessory switches to OFF. 5) Read the value of «Mass Air Flow» using the Subaru Select Monitor or a general scan tool. NOTE: • Subaru Select Monitor For detailed operation procedures, refer to "Read Current Data For Engine". <Ref. to EN(w/o STI)(diag)-46, Subaru Select Monitor.> • General scan tool For detailed operation procedures, refer to the general scan tool operation manual.	Is the value in «Mass Air Flow» 2.0 — 5.0 g/s (0.26 — 0.66 lb/s)?	Go to step **11**.	Replace the mass air flow and intake air temperature sensor. <Ref. to FU(w/o STI)-110, Mass Air Flow and Intake Air Temperature Sensor.>
11	**CHECK MASS AIR FLOW AND INTAKE AIR TEMPERATURE SENSOR.** 1) Start the engine and warm up engine until coolant temperature is higher than 75°C (167°F). 2) For CVT models, set the select lever to "P" range or "N" range, and for MT models, place the shift lever in the neutral position. 3) Turn the A/C switch to OFF. 4) Turn all the accessory switches to OFF. 5) Open the front hood. 6) Measure the ambient temperature. 7) Read the value of «IAT Sensor #11» using the Subaru Select Monitor or a general scan tool. NOTE: • Subaru Select Monitor For detailed operation procedures, refer to "Read Current Data For Engine". <Ref. to EN(w/o STI)(diag)-46, Subaru Select Monitor.> • General scan tool For detailed operation procedures, refer to the general scan tool operation manual.	Subtract ambient temperature value from the value of «IAT Sensor #11». Is the obtained value –10 — 50°C (–18 — 90°F)?	Go to step **12**.	Check the mass air flow and intake air temperature sensor. <Ref. to FU(w/o STI)-110, Mass Air Flow and Intake Air Temperature Sensor.>

	Step	Check	Yes	No
12	**CHECK REAR OXYGEN SENSOR DATA.** 1) Warm up the engine until engine coolant temperature is higher than 75°C (167°F), and keep the engine speed at 3,000 rpm. (2 minutes maximum) 2) Read the value of «O2 Sensor #12» using the Subaru Select Monitor or a general scan tool. NOTE: • Subaru Select Monitor For detailed operation procedures, refer to "Read Current Data For Engine". <Ref. to EN(w/o STI)(diag)-46, Subaru Select Monitor.> • General scan tool For detailed operation procedures, refer to the general scan tool operation manual.	Is the value of «Oxygen sensor #12» 0.490 V or more?	Go to step **13**.	Go to step **14**.
13	**CHECK REAR OXYGEN SENSOR DATA.** 1) Warm up the engine until engine coolant temperature is higher than 75°C (167°F), and rapidly reduce the engine speed from 3,000 rpm. 2) Read the value of «O2 Sensor #12» using the Subaru Select Monitor or a general scan tool. NOTE: • Subaru Select Monitor For detailed operation procedures, refer to "Read Current Data For Engine". <Ref. to EN(w/o STI)(diag)-46, Subaru Select Monitor.> • General scan tool For detailed operation procedures, refer to the general scan tool operation manual.	Is the value of «Oxygen sensor #12» 0.250 V or more?	Go to step **15**.	Go to step **14**.
14	**CHECK REAR OXYGEN SENSOR CONNECTOR AND COUPLING CONNECTOR.**	Has water entered the connector?	Completely remove any water inside.	Go to step **16**.
15	**CHECK FRONT OXYGEN (A/F) SENSOR USING REAR OXYGEN SENSOR SIGNAL.** 1) Warm up the engine until engine coolant temperature is higher than 75°C (167°F), then keep the engine idling for 5 minutes or more. 2) Read the value of «O2 Sensor #12» using the Subaru Select Monitor or a general scan tool. NOTE: • Subaru Select Monitor For detailed operation procedures, refer to "Read Current Data For Engine". <Ref. to EN(w/o STI)(diag)-46, Subaru Select Monitor.> • General scan tool For detailed operation procedures, refer to the general scan tool operation manual.	Is the value of «Oxygen sensor #12» kept at 0.250 V or less for 5 minutes or more?	Replace the front oxygen (A/F) sensor. <Ref. to FU(w/o STI)-118, Front Oxygen (A/F) Sensor.>	Go to step **16**.

	Step	Check	Yes	No
16	**CHECK HARNESS BETWEEN ECM AND REAR OXYGEN SENSOR CONNECTOR.** 1) Turn the ignition switch to OFF. 2) Disconnect the connector from ECM. 3) Disconnect the connector from rear oxygen sensor. 4) Measure the resistance of harness between ECM connector and rear oxygen sensor connector. ***Connector & terminal*** ***(E158) No. 42 — (E25) No. 3:*** ***(E158) No. 16 — (E25) No. 4:***	Is the resistance less than 1 Ω?	Go to step **17**.	Repair the harness and connector. NOTE: In this case, repair the following item: • Open circuit in harness between ECM connector and rear oxygen sensor connector • Poor contact of coupling connector
17	**CHECK HARNESS BETWEEN ECM AND REAR OXYGEN SENSOR CONNECTOR.** 1) Connect the connector to ECM. 2) Turn the ignition switch to ON. 3) Measure the voltage between rear oxygen sensor connector and chassis ground. ***Connector & terminal*** ***(E25) No. 4 (+) — Chassis ground (–):***	Is the voltage 0.2 — 0.5 V?	Replace the rear oxygen sensor. <Ref. to FU(w/o STI)-120, Rear Oxygen Sensor.>	Repair the harness and connector. NOTE: In this case, repair the following item: • Open circuit in harness between ECM connector and rear oxygen sensor connector • Poor contact of ECM connector • Poor contact of coupling connector

1. OUTLINE OF DIAGNOSIS

Detect the malfunction of fuel system from the size of the sub feedback learning value.
Control the sub feedback learning and judge as NG when the learning value is in the lean zone.

2. COMPONENT DESCRIPTION

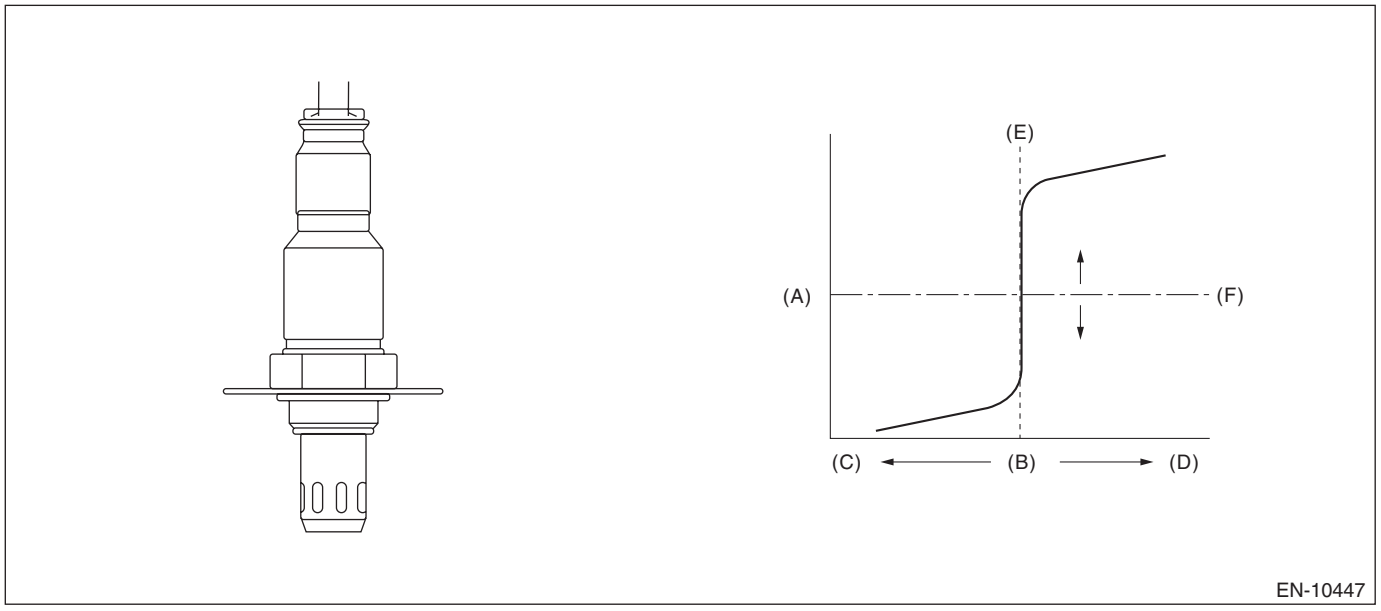

(A) Electromotive force
(B) Air fuel ratio
(C) Lean
(D) Rich
(E) Theoretical air fuel ratio
(F) Comparative voltage

3. EXECUTION CONDITION

Secondary parameters	Execution condition
Sub feedback	In operation

4. GENERAL DRIVING CYCLE

Perform the diagnosis continuously during sub feedback operation.

5. DIAGNOSTIC METHOD

If the duration of time while the following conditions are met is longer than the time indicated, judge as NG.

Judgment Value

Malfunction Criteria	Threshold Value
Sub feedback learning value	≤ –0.024

Time Needed for Diagnosis: 1 second
Malfunction Indicator Light Illumination: Illuminates when malfunction occurs in 2 continuous driving cycles.

FM:DTC P2097 POST CATALYST FUEL TRIM SYSTEM TOO RICH BANK 1

DTC DETECTING CONDITION:

Detected when two consecutive driving cycles with fault occur.

CAUTION:

- **After servicing or replacing faulty parts, perform Clear Memory Mode <Ref. to EN(w/o STI)(diag)-82, OPERATION, Clear Memory Mode.>, and Inspection Mode <Ref. to EN(w/o STI)(diag)-64, PROCEDURE, Inspection Mode.>.**
- **Use the check board when measuring the ECM terminal voltage and resistance.**

WIRING DIAGRAM:
Engine Electrical System <Ref. to WI-154, WIRING DIAGRAM, Engine Electrical System.>

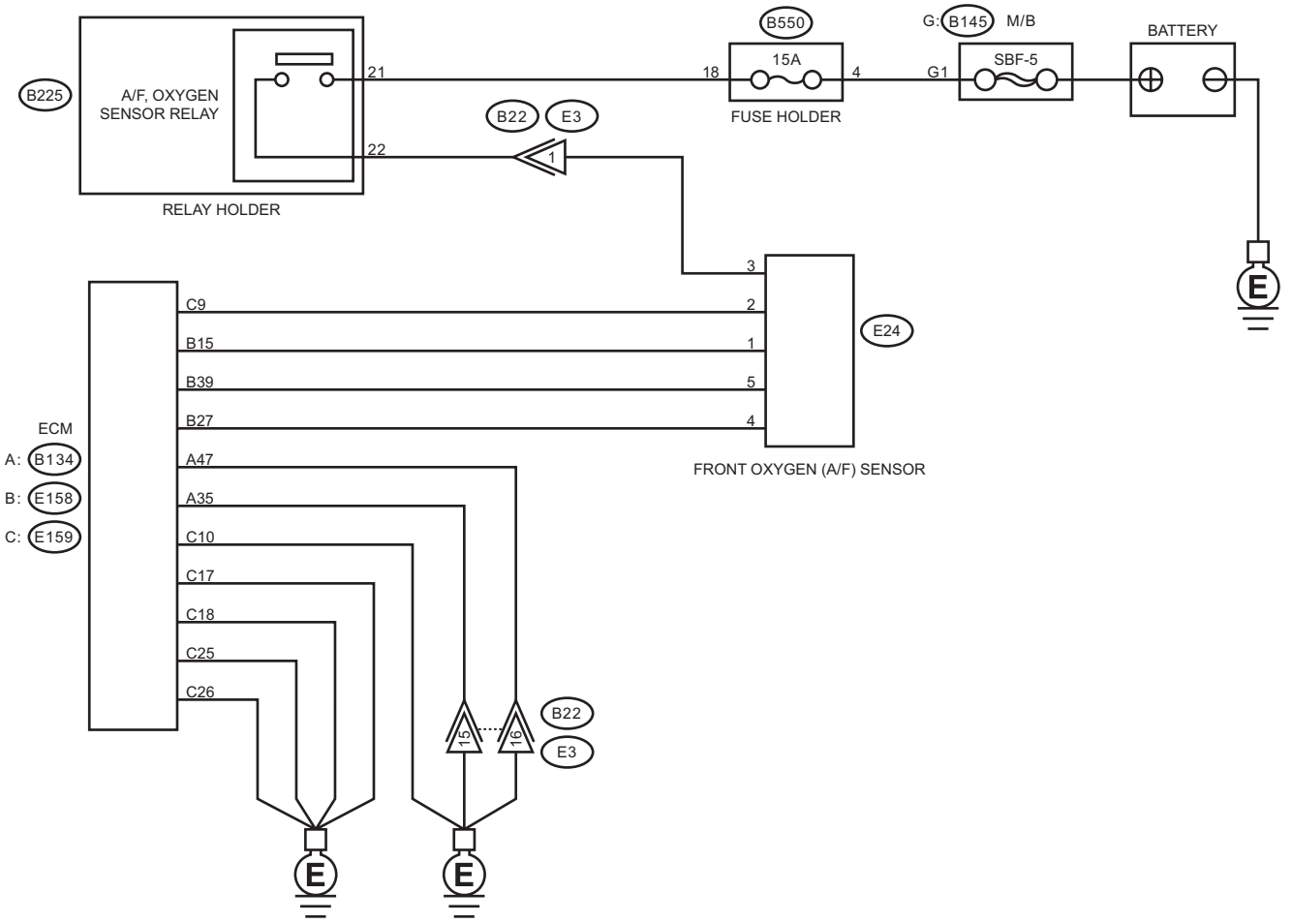

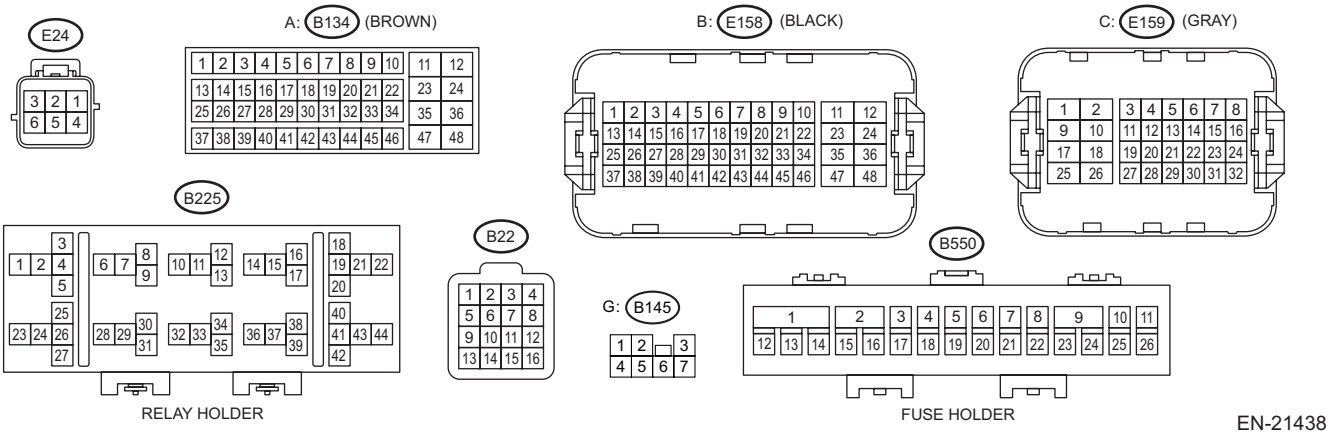

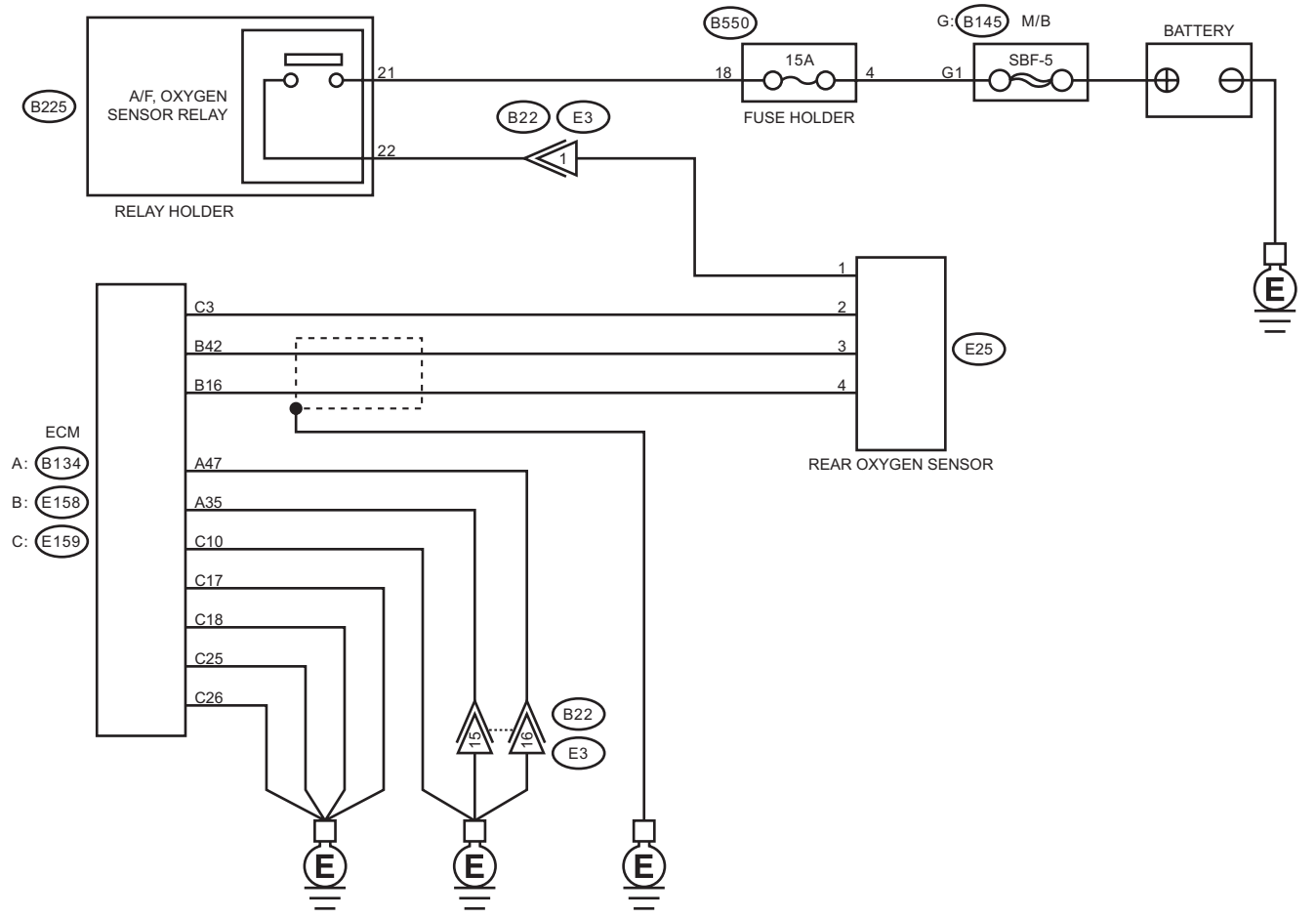

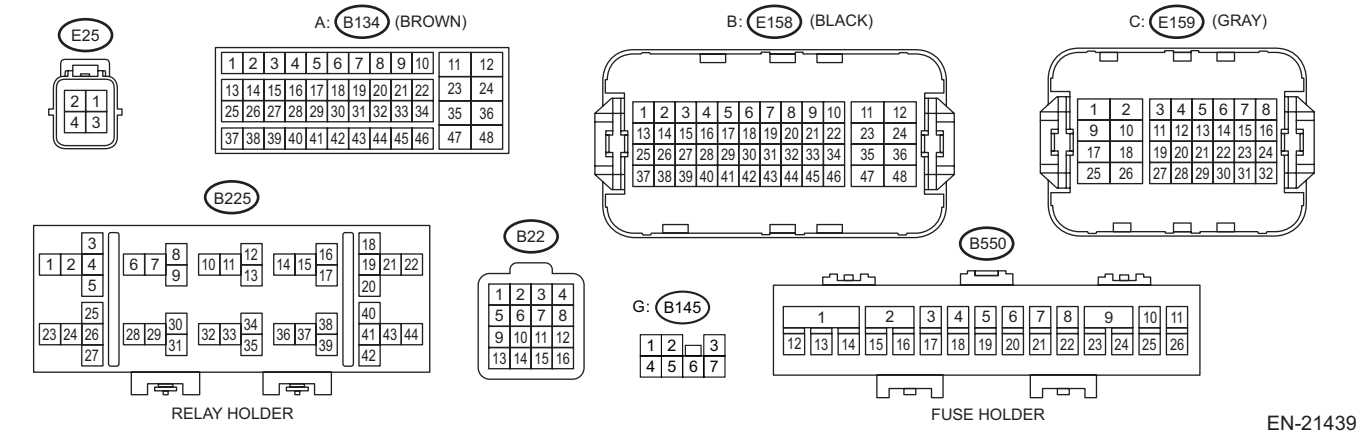

Step	Check	Yes	No
1 **CHECK FOR ANY OTHER DTC ON DISPLAY.**	Is any other DTC displayed?	Check DTC using “List of Diagnostic Trouble Code (DTC)”. <Ref. to EN(w/o STI)(diag)-106, List of Diagnostic Trouble Code (DTC).>	Go to step **2**.

	Step	Check	Yes	No
2	**CHECK FRONT OXYGEN (A/F) SENSOR CONNECTOR AND COUPLING CONNECTOR.**	Has water entered the connector?	Completely remove any water inside.	Go to step **3**.
3	**CHECK HARNESS BETWEEN ECM AND FRONT OXYGEN (A/F) SENSOR CONNECTOR.** 1) Turn the ignition switch to OFF. 2) Disconnect the connector from ECM. 3) Disconnect the connectors from front oxygen (A/F) sensor. 4) Measure the resistance of harness between ECM connector and front oxygen (A/F) sensor connector. ***Connector & terminal*** ***(E158) No. 15 — (E24) No. 1:*** ***(E158) No. 27 — (E24) No. 4:*** ***(E158) No. 39 — (E24) No. 5:***	Is the resistance less than 1 Ω?	Go to step **4**.	Repair the harness and connector. NOTE: In this case, repair the following item: • Open circuit in harness between ECM connector and front oxygen (A/F) sensor connector • Poor contact of coupling connector
4	**CHECK HARNESS BETWEEN ECM AND FRONT OXYGEN (A/F) SENSOR CONNECTOR.** Measure the resistance between ECM connector and chassis ground. ***Connector & terminal*** ***(E158) No. 15 — Chassis ground:*** ***(E158) No. 27 — Chassis ground:*** ***(E158) No. 39 — Chassis ground:***	Is the resistance 1 MΩ or more?	Go to step **5**.	Repair the short circuit to ground in harness between ECM connector and front oxygen (A/F) sensor connector.
5	**CHECK HARNESS BETWEEN ECM AND FRONT OXYGEN (A/F) SENSOR CONNECTOR.** 1) Connect the connector to ECM. 2) Turn the ignition switch to ON. 3) Measure the voltage between front oxygen (A/F) sensor connector and chassis ground. ***Connector & terminal*** ***(E24) No. 1 (+) — Chassis ground (–):*** ***(E24) No. 4 (+) — Chassis ground (–):*** ***(E24) No. 5 (+) — Chassis ground (–):***	Is the voltage 8 V or more?	Repair the short circuit to power in the harness between ECM connector and front oxygen (A/F) sensor connector.	Go to step **6**.
6	**CHECK EXHAUST SYSTEM.**	Are there holes or loose bolts on exhaust system?	Repair the exhaust system.	Go to step **7**.
7	**CHECK AIR INTAKE SYSTEM.**	Are there holes, loose bolts or disconnection of hose on air intake system?	Repair the air intake system.	Go to step **8**.
8	**CHECK FUEL PRESSURE.** **WARNING:** **Place "NO OPEN FLAMES" signs near the working area.** **CAUTION:** **Be careful not to spill fuel.** 1) Connect the front oxygen (A/F) sensor connector. 2) Measure the fuel pressure. <Ref. to ME(w/o STI)-31, INSPECTION, Fuel Pressure.> **CAUTION:** **Release fuel pressure before removing the fuel pressure gauge.**	Is the measured value 328 — 358 kPa (3.3 — 3.7 kgf/cm^2, 48 — 52 psi)?	Go to step **9**.	Check the fuel pump and fuel delivery line. <Ref. to FU(w/o STI)-167, INSPECTION, Fuel Pump.> <Ref. to FU(w/o STI)-196, INSPECTION, Fuel Delivery and Evaporation Lines.>

	Step	Check	Yes	No
9	**CHECK ENGINE COOLANT TEMPERATURE SENSOR.** 1) Start the engine and warm up completely. 2) Read the value of «Coolant Temp.» using the Subaru Select Monitor or a general scan tool. NOTE: • Subaru Select Monitor For detailed operation procedures, refer to "Read Current Data For Engine". <Ref. to EN(w/o STI)(diag)-46, Subaru Select Monitor.> • General scan tool For detailed operation procedures, refer to the general scan tool operation manual.	Is the value of «Coolant Temp.» 75°C (167°F) or more?	Go to step **10**.	Replace the engine coolant temperature sensor. <Ref. to FU(w/o STI)-89, Engine Coolant Temperature Sensor.>
10	**CHECK MASS AIR FLOW AND INTAKE AIR TEMPERATURE SENSOR.** 1) Start the engine and warm up engine until coolant temperature is higher than 75°C (167°F). 2) For CVT models, set the select lever to "P" range or "N" range, and for MT models, place the shift lever in the neutral position. 3) Turn the A/C switch to OFF. 4) Turn all the accessory switches to OFF. 5) Read the value of «Mass Air Flow» using the Subaru Select Monitor or a general scan tool. NOTE: • Subaru Select Monitor For detailed operation procedures, refer to "Read Current Data For Engine". <Ref. to EN(w/o STI)(diag)-46, Subaru Select Monitor.> • General scan tool For detailed operation procedures, refer to the general scan tool operation manual.	Is the value in «Mass Air Flow» 2.0 — 5.0 g/s (0.26 — 0.66 lb/s)?	Go to step **11**.	Replace the mass air flow and intake air temperature sensor. <Ref. to FU(w/o STI)-110, Mass Air Flow and Intake Air Temperature Sensor.>
11	**CHECK MASS AIR FLOW AND INTAKE AIR TEMPERATURE SENSOR.** 1) Start the engine and warm up engine until coolant temperature is higher than 75°C (167°F). 2) For CVT models, set the select lever to "P" range or "N" range, and for MT models, place the shift lever in the neutral position. 3) Turn the A/C switch to OFF. 4) Turn all the accessory switches to OFF. 5) Open the front hood. 6) Measure the ambient temperature. 7) Read the value of «IAT Sensor #11» using the Subaru Select Monitor or a general scan tool. NOTE: • Subaru Select Monitor For detailed operation procedures, refer to "Read Current Data For Engine". <Ref. to EN(w/o STI)(diag)-46, Subaru Select Monitor.> • General scan tool For detailed operation procedures, refer to the general scan tool operation manual.	Subtract ambient temperature value from the value of «IAT Sensor #11». Is the obtained value –10 — 50°C (–18 — 90°F)?	Go to step **12**.	Check the mass air flow and intake air temperature sensor. <Ref. to FU(w/o STI)-110, Mass Air Flow and Intake Air Temperature Sensor.>

	Step	Check	Yes	No
12	**CHECK REAR OXYGEN SENSOR DATA.** 1) Warm up the engine until engine coolant temperature is higher than 75°C (167°F), and keep the engine speed at 3,000 rpm. (2 minutes maximum) 2) Read the value of «O2 Sensor #12» using the Subaru Select Monitor or a general scan tool. NOTE: • Subaru Select Monitor For detailed operation procedures, refer to "Read Current Data For Engine". <Ref. to EN(w/o STI)(diag)-46, Subaru Select Monitor.> • General scan tool For detailed operation procedures, refer to the general scan tool operation manual.	Is the value of «Oxygen sensor #12» 0.490 V or more?	Go to step **13**.	Go to step **14**.
13	**CHECK REAR OXYGEN SENSOR DATA.** 1) Warm up the engine until engine coolant temperature is higher than 75°C (167°F), and rapidly reduce the engine speed from 3,000 rpm. 2) Read the value of «O2 Sensor #12» using the Subaru Select Monitor or a general scan tool. NOTE: • Subaru Select Monitor For detailed operation procedures, refer to "Read Current Data For Engine". <Ref. to EN(w/o STI)(diag)-46, Subaru Select Monitor.> • General scan tool For detailed operation procedures, refer to the general scan tool operation manual.	Is the value of «Oxygen sensor #12» 0.250 V or less?	Go to step **15**.	Go to step **14**.
14	**CHECK REAR OXYGEN SENSOR CONNECTOR AND COUPLING CONNECTOR.**	Has water entered the connector?	Completely remove any water inside.	Go to step **16**.
15	**CHECK FRONT OXYGEN (A/F) SENSOR USING REAR OXYGEN SENSOR SIGNAL.** 1) Warm up the engine until engine coolant temperature is higher than 75°C (167°F), then keep the engine idling for 5 minutes or more. 2) Read the value of «O2 Sensor #12» using the Subaru Select Monitor or a general scan tool. NOTE: • Subaru Select Monitor For detailed operation procedures, refer to "Read Current Data For Engine". <Ref. to EN(w/o STI)(diag)-46, Subaru Select Monitor.> • General scan tool For detailed operation procedures, refer to the general scan tool operation manual.	Is the value of «Oxygen sensor #12» kept at 0.8 V or more for 5 minutes or more?	Replace the front oxygen (A/F) sensor. <Ref. to FU(w/o STI)-118, Front Oxygen (A/F) Sensor.>	Go to step **16**.

	Step	Check	Yes	No
16	**CHECK HARNESS BETWEEN ECM AND REAR OXYGEN SENSOR CONNECTOR.** 1) Turn the ignition switch to OFF. 2) Disconnect the connector from ECM. 3) Disconnect the connector from rear oxygen sensor. 4) Measure the resistance of harness between ECM connector and rear oxygen sensor connector. ***Connector & terminal*** ***(E158) No. 42 — (E25) No. 3:*** ***(E158) No. 16 — (E25) No. 4:***	Is the resistance less than 1 Ω?	Go to step **17**.	Repair the harness and connector. NOTE: In this case, repair the following item: • Open circuit in harness between ECM connector and rear oxygen sensor connector • Poor contact of coupling connector
17	**CHECK HARNESS BETWEEN ECM AND REAR OXYGEN SENSOR CONNECTOR.** 1) Connect the connector to ECM. 2) Turn the ignition switch to ON. 3) Measure the voltage between rear oxygen sensor connector and chassis ground. ***Connector & terminal*** ***(E25) No. 4 (+) — Chassis ground (–):***	Is the voltage 0.2 — 0.5 V?	Replace the rear oxygen sensor. <Ref. to FU(w/o STI)-120, Rear Oxygen Sensor.>	Repair the harness and connector. NOTE: In this case, repair the following item: • Open circuit in harness between ECM connector and rear oxygen sensor connector • Poor contact of ECM connector • Poor contact of coupling connector

1. OUTLINE OF DIAGNOSIS

Detect the malfunction of fuel system from the size of the sub feedback learning value.
Sub feedback learning is being performed. When the learning value goes to the rich side, judge as NG.

2. COMPONENT DESCRIPTION

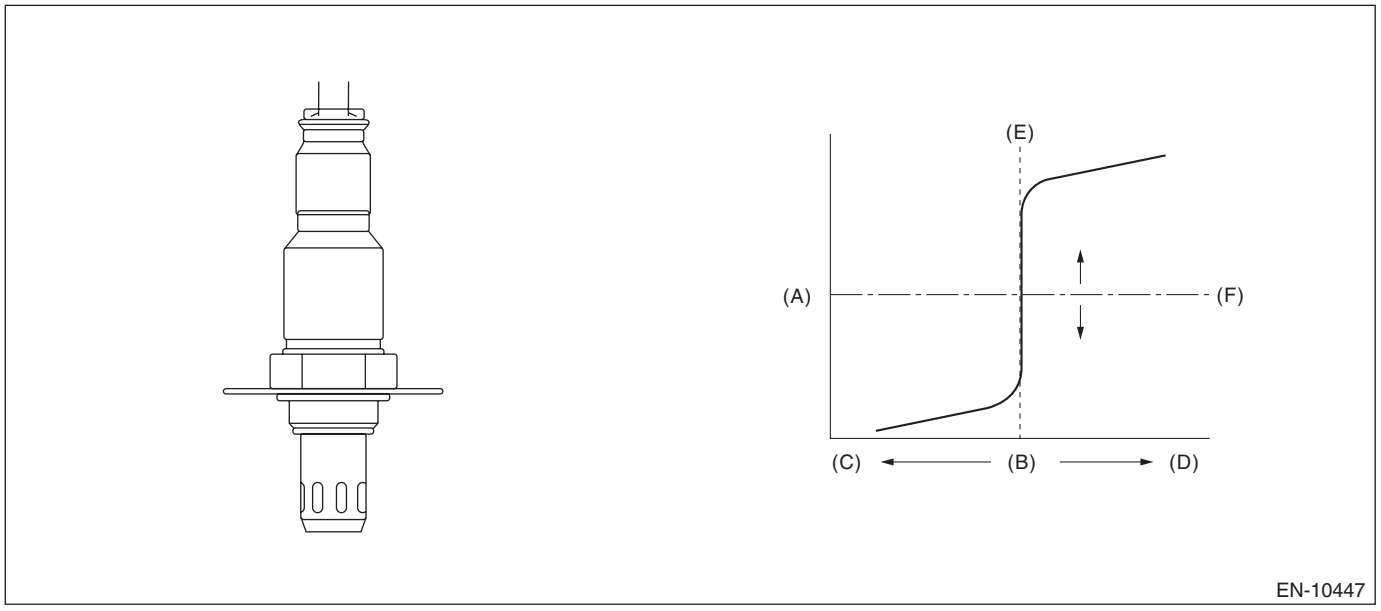

(A) Electromotive force
(B) Air fuel ratio
(C) Lean
(D) Rich
(E) Theoretical air fuel ratio
(F) Comparative voltage

3. EXECUTION CONDITION

Secondary parameters	Execution condition
Sub feedback	In operation

4. GENERAL DRIVING CYCLE

Perform the diagnosis continuously during sub feedback operation.

5. DIAGNOSTIC METHOD

If the duration of time while the following conditions are met is longer than the time indicated, judge as NG.

Judgment Value

Malfunction Criteria	Threshold Value
Sub feedback learning value	≥ 0.026

Time Needed for Diagnosis: 1 second
Malfunction Indicator Light Illumination: Illuminates when malfunction occurs in 2 continuous driving cycles.

FN:DTC P2101 THROTTLE ACTUATOR "A" CONTROL MOTOR CIRCUIT RANGE/PERFORMANCE

DTC DETECTING CONDITION:
Immediately at fault recognition
TROUBLE SYMPTOM:
- Improper idling
- Poor driving performance
- Engine stalls.

CAUTION:
- **After servicing or replacing faulty parts, perform Clear Memory Mode <Ref. to EN(w/o STI)(diag)-82, OPERATION, Clear Memory Mode.>, and Inspection Mode <Ref. to EN(w/o STI)(diag)-64, PROCEDURE, Inspection Mode.>.**
- **Use the check board when measuring the ECM terminal voltage and resistance.**

WIRING DIAGRAM:

Engine Electrical System <Ref. to WI-154, WIRING DIAGRAM, Engine Electrical System.>

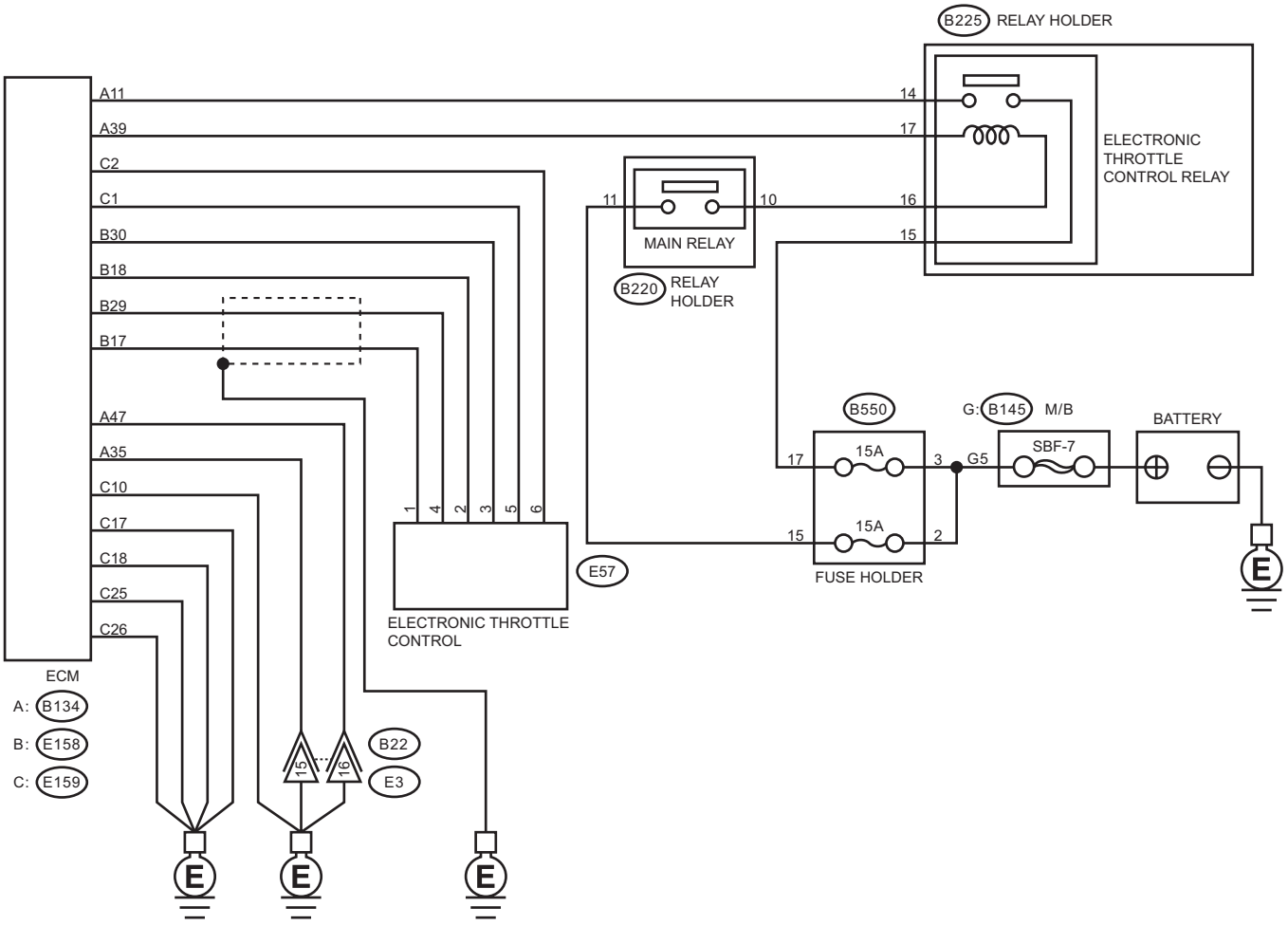

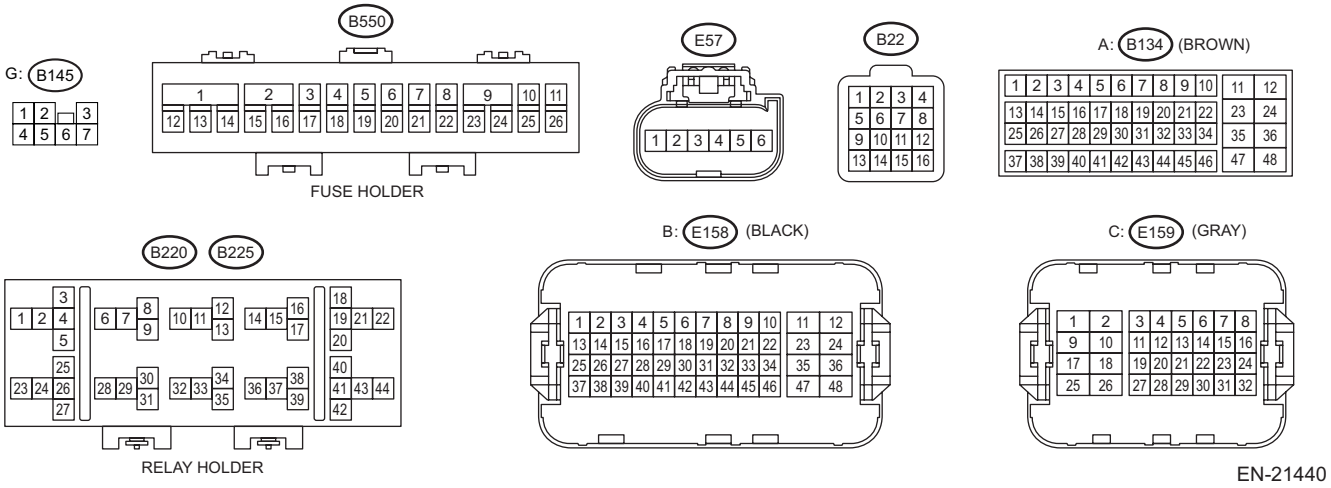

EN-21440

	Step	Check	Yes	No
1	**CHECK ELECTRONIC THROTTLE CONTROL RELAY.** 1) Turn the ignition switch to OFF. 2) Remove the electronic throttle control relay. 3) Connect the battery to terminals No. 16 and No. 17 of electronic throttle control relay. 4) Measure the resistance between electronic throttle control relay terminals. ***Terminals*** ***No. 14 — No. 15:***	Is the resistance less than 1 Ω?	Go to step **2**.	Replace the electronic throttle control relay. <Ref. to FU(w/o STI)-131, Electronic Throttle Control Relay.>
2	**CHECK POWER SUPPLY OF ELECTRONIC THROTTLE CONTROL RELAY.** Measure the voltage between electronic throttle control relay connector and chassis ground. ***Connector & terminal*** ***(B225) No. 15 (+) — Chassis ground (–):***	Is the voltage 10 V or more?	Go to step **3**.	Repair the open or short to ground in the power supply circuit.
3	**CHECK HARNESS BETWEEN ECM AND ELECTRONIC THROTTLE CONTROL RELAY CONNECTOR.** 1) Disconnect the connector from ECM. 2) Turn the ignition switch to ON. 3) Measure the voltage between electronic throttle control relay connector and chassis ground. ***Connector & terminal*** ***(B225) No. 17 (+) — Chassis ground (–):***	Is the voltage 10 V or more?	Repair the short circuit to power in the harness between ECM connector and electronic throttle control relay connector.	Go to step **4**.
4	**CHECK HARNESS BETWEEN ECM AND ELECTRONIC THROTTLE CONTROL RELAY CONNECTOR.** 1) Turn the ignition switch to OFF. 2) Measure the resistance between electronic throttle control relay connector and chassis ground. ***Connector & terminal*** ***(B225) No. 14 — Chassis ground:*** ***(B225) No. 17 — Chassis ground:***	Is the resistance 1 MΩ or more?	Go to step **5**.	Repair the short circuit to ground in harness between ECM connector and electronic throttle control relay connector.
5	**CHECK HARNESS BETWEEN ECM AND ELECTRONIC THROTTLE CONTROL RELAY CONNECTOR.** Measure the resistance between ECM connector and electronic throttle control relay connector. ***Connector & terminal*** ***(B134) No. 39 — (B225) No. 17:*** ***(B134) No. 11 — (B225) No. 14:***	Is the resistance less than 1 Ω?	Go to step **6**.	Repair the open circuit in harness between ECM connector and electronic throttle control relay connector.
6	**CHECK HARNESS BETWEEN ECM AND ELECTRONIC THROTTLE CONTROL CONNECTOR.** 1) Turn the ignition switch to OFF. 2) Disconnect the connectors from electronic throttle control. 3) Measure the resistance between the ECM connector and engine ground. ***Connector & terminal*** ***(E158) No. 18 — Engine ground:*** ***(E158) No. 17 — Engine ground:*** ***(E158) No. 29 — Engine ground:***	Is the resistance 1 MΩ or more?	Go to step **7**.	Repair the ground short circuit of harness between ECM connector and electronic throttle control connector.

	Step	Check	Yes	No
7	**CHECK SHORT CIRCUIT INSIDE THE ECM.** 1) Connect the connector to ECM. 2) Measure the resistance between electronic throttle control connector and engine ground. ***Connector & terminal*** ***(E57) No. 1 — Engine ground:*** ***(E57) No. 4 — Engine ground:***	Is the resistance 220 kΩ or more?	Go to step **8**.	Repair the ground short circuit of harness between ECM connector and electronic throttle control connector. Replace the ECM if defective. <Ref. to FU(w/o STI)-124, Engine Control Module (ECM).>
8	**CHECK HARNESS BETWEEN ECM AND ELECTRONIC THROTTLE CONTROL CONNECTOR.** 1) Disconnect the connector from ECM. 2) Measure the resistance of harness between ECM connector and electronic throttle control connector. ***Connector & terminal*** ***(E158) No. 17 — (E57) No. 1:*** ***(E158) No. 30 — (E57) No. 3:*** ***(E158) No. 29 — (E57) No. 4:***	Is the resistance less than 1 Ω?	Go to step **9**.	Repair the open circuit of harness between ECM connector and electronic throttle control connector.
9	**CHECK HARNESS BETWEEN ECM AND ELECTRONIC THROTTLE CONTROL CONNECTOR.** 1) Connect the connector to ECM. 2) Measure the resistance between electronic throttle control connector and engine ground. ***Connector & terminal*** ***(E57) No. 3 — Engine ground:***	Is the resistance less than 5 Ω?	Go to step **10**.	Repair the harness and connector. NOTE: In this case, repair the following item: • Open circuit of harness between ECM connector and engine ground • Poor contact of ECM connector • Poor contact of coupling connector
10	**CHECK HARNESS BETWEEN ECM AND ELECTRONIC THROTTLE CONTROL CONNECTOR.** 1) Turn the ignition switch to ON. 2) Measure the voltage between electronic throttle control connector and engine ground. ***Connector & terminal*** ***(E57) No. 1 (+) — Engine ground (–):*** ***(E57) No. 4 (+) — Engine ground (–):***	Is the voltage 5 V or more?	Repair the short circuit to power in the harness between ECM connector and electronic throttle control connector.	Go to step **11**.
11	**CHECK HARNESS BETWEEN ECM AND ELECTRONIC THROTTLE CONTROL CONNECTOR.** 1) Turn the ignition switch to OFF. 2) Disconnect the connector from ECM. 3) Measure the resistance between ECM connectors. ***Connector & terminal*** ***(E158) No. 18 — (E158) No. 17:*** ***(E158) No. 18 — (E158) No. 29:***	Is the resistance 1 MΩ or more?	Go to step **12**.	Repair the short circuit to power in the harness between ECM connector and electronic throttle control connector.

	Step	Check	Yes	No
12	**CHECK SENSOR OUTPUT.** 1) Connect all connectors. 2) Start the engine and warm up completely. 3) Stop the engine, and then turn the ignition switch to ON (engine OFF). 4) Read the value of «Main-Throttle Sensor» using Subaru Select Monitor. NOTE: For detailed operation procedures, refer to "Current Data Display For Engine". <Ref. to EN(w/o STI)(diag)-46, Subaru Select Monitor.>	Is the value of «Main-Throttle Sensor» 0.60 — 0.65 V?	Go to step **13**.	Repair the poor contact of electronic throttle control connector. Replace the electronic throttle control if defective. <Ref. to FU(w/o STI)-15, Throttle Body.>
13	**CHECK SENSOR OUTPUT.** Read the value of «Sub-Throttle Sensor» using Subaru Select Monitor. NOTE: For detailed operation procedures, refer to "Current Data Display For Engine". <Ref. to EN(w/o STI)(diag)-46, Subaru Select Monitor.>	Is the value of «Sub-Throttle Sensor» 0.60 — 0.65 V?	Go to step **14**.	Repair the poor contact of electronic throttle control connector. Replace the electronic throttle control if defective. <Ref. to FU(w/o STI)-15, Throttle Body.>
14	**CHECK HARNESS BETWEEN ECM AND ELECTRONIC THROTTLE CONTROL MOTOR.** 1) Turn the ignition switch to OFF. 2) Disconnect the connector from ECM. 3) Disconnect the connectors from electronic throttle control. 4) Measure the resistance between ECM connector and electronic throttle control connector. ***Connector & terminal*** ***(E159) No. 1 — (E57) No. 5:*** ***(E159) No. 2 — (E57) No. 6:***	Is the resistance less than 1 Ω?	Go to step **15**.	Repair the open circuit of harness between ECM connector and electronic throttle control.
15	**CHECK HARNESS BETWEEN ECM AND ELECTRONIC THROTTLE CONTROL MOTOR.** 1) Connect the connector to ECM. 2) Turn the ignition switch to ON. 3) Measure the voltage between electronic throttle control connector and engine ground. ***Connector & terminal*** ***(E57) No. 5 (+) — Engine ground (–):*** ***(E57) No. 6 (+) — Engine ground (–):***	Is the voltage 5 V or more?	Repair the short circuit to power in the harness between ECM connector and electronic throttle control connector.	Go to step **16**.
16	**CHECK HARNESS BETWEEN ECM AND ELECTRONIC THROTTLE CONTROL MOTOR.** 1) Turn the ignition switch to OFF. 2) Disconnect the connector from ECM. 3) Measure the resistance between electronic throttle control connector and engine ground. ***Connector & terminal*** ***(E57) No. 5 — Engine ground:*** ***(E57) No. 6 — Engine ground:***	Is the resistance 1 MΩ or more?	Go to step **17**.	Repair the ground short circuit of harness between ECM connector and electronic throttle control connector.
17	**CHECK ELECTRONIC THROTTLE CONTROL MOTOR HARNESS.** Measure the resistance between electronic throttle control connectors. ***Connector & terminal*** ***(E57) No. 5 — (E57) No. 6:***	Is the resistance 1 MΩ or more?	Go to step **18**.	Repair the short circuit in harness between ECM connector and electronic throttle control connector.

	Step	Check	Yes	No
18	**CHECK ELECTRONIC THROTTLE CONTROL GROUND CIRCUIT.** Measure the resistance between the ECM connector and engine ground. ***Connector & terminal*** ***(B134) No. 35 — Engine ground:*** ***(B134) No. 47 — Engine ground:*** ***(E159) No. 10 — Engine ground:*** ***(E159) No. 17 — Engine ground:*** ***(E159) No. 18 — Engine ground:*** ***(E159) No. 25 — Engine ground:*** ***(E159) No. 26 — Engine ground:***	Is the resistance less than 5 Ω?	Go to step **19**.	Repair the harness and connector. NOTE: In this case, repair the following item: • Open circuit of harness between ECM connector and engine ground • Poor contact of coupling connector
19	**CHECK ELECTRONIC THROTTLE CONTROL.** Measure the resistance between electronic throttle control terminals. ***Terminals*** ***No. 5 — No. 6:***	Is the resistance 50 Ω or less?	Go to step **20**.	Replace the electronic throttle control. <Ref. to FU(w/o STI)-15, Throttle Body.>
20	**CHECK ELECTRONIC THROTTLE CONTROL.** Move the throttle valve to the fully opened and fully closed positions with fingers. Check that the valve returns to the specified position when releasing fingers.	Does the valve return to the specified position? Standard value: 3 mm (0.12 in) from fully closed position	Repair the poor contact of ECM connector.	Replace the electronic throttle control. <Ref. to FU(w/o STI)-15, Throttle Body.>

1. OUTLINE OF DIAGNOSIS

In the diagnosis with ignition switch ON, judge as NG when the opening angle with the throttle driven to close direction is out of the specified range.

2. COMPONENT DESCRIPTION

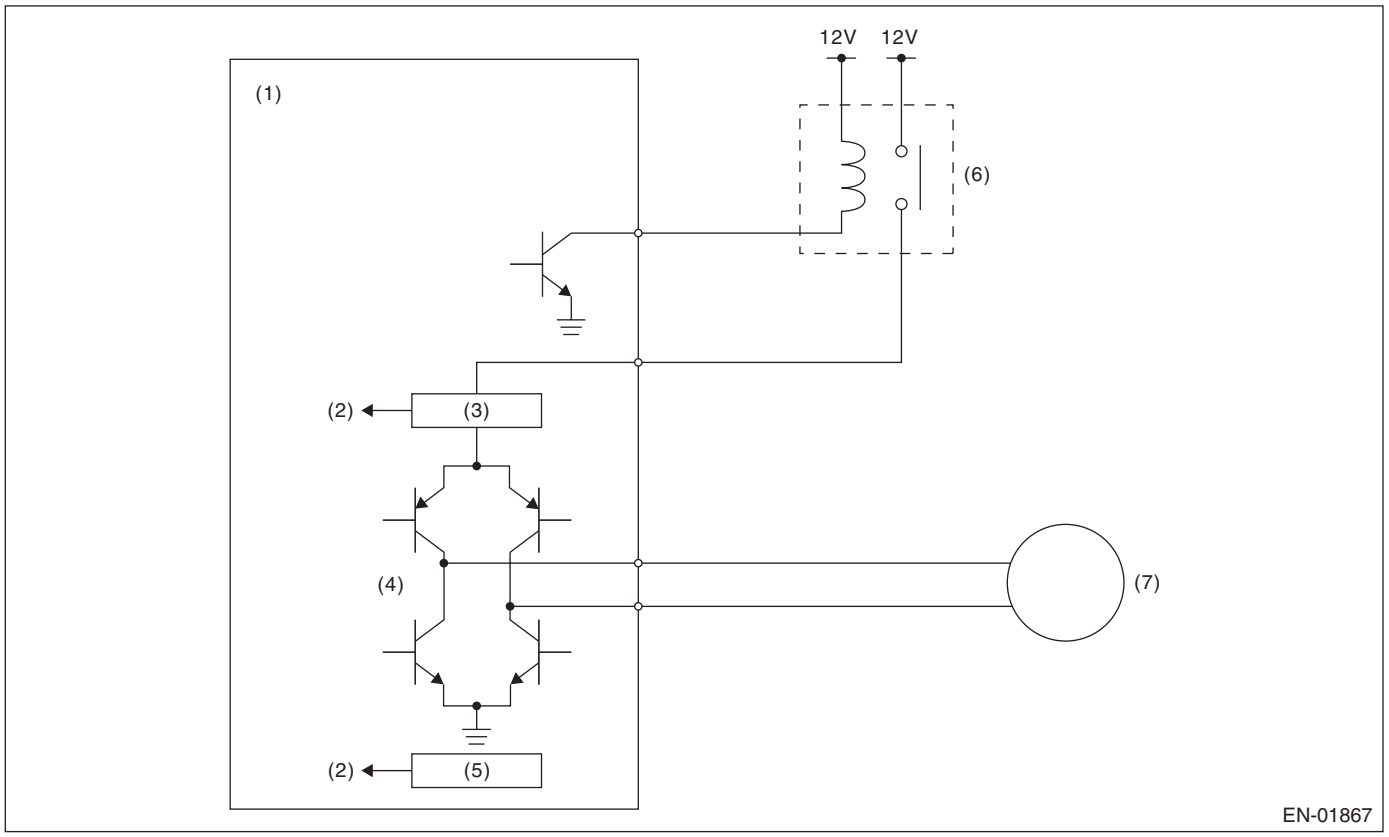

(1) Engine control module (ECM)
(2) Detecting circuit
(3) Overcurrent detection circuit
(4) Drive circuit
(5) Temperature detection circuit
(6) Electronic throttle control relay
(7) Motor

3. EXECUTION CONDITION

Secondary parameters	Execution condition
Battery voltage	≥ 6 V

4. GENERAL DRIVING CYCLE

Perform the diagnosis when the ignition switch is turned from OFF to ON.

5. DIAGNOSTIC METHOD

If the duration of time while the following conditions are met is longer than the time indicated, judge as NG.

Judgment Value

Malfunction Criteria	Threshold Value
Throttle position during throttle minimum stop position learning	≥ 36%

Time Needed for Diagnosis: 190 ms
Malfunction Indicator Light Illumination: Illuminates as soon as a malfunction occurs.

FO:DTC P2102 THROTTLE ACTUATOR "A" CONTROL MOTOR CIRCUIT LOW

DTC DETECTING CONDITION:
Immediately at fault recognition
TROUBLE SYMPTOM:
- Improper idling
- Poor driving performance
- Engine stalls.

CAUTION:
- **After servicing or replacing faulty parts, perform Clear Memory Mode <Ref. to EN(w/o STI)(diag)-82, OPERATION, Clear Memory Mode.>, and Inspection Mode <Ref. to EN(w/o STI)(diag)-64, PROCEDURE, Inspection Mode.>.**
- **Use the check board when measuring the ECM terminal voltage and resistance.**

WIRING DIAGRAM:

Engine Electrical System <Ref. to WI-154, WIRING DIAGRAM, Engine Electrical System.>

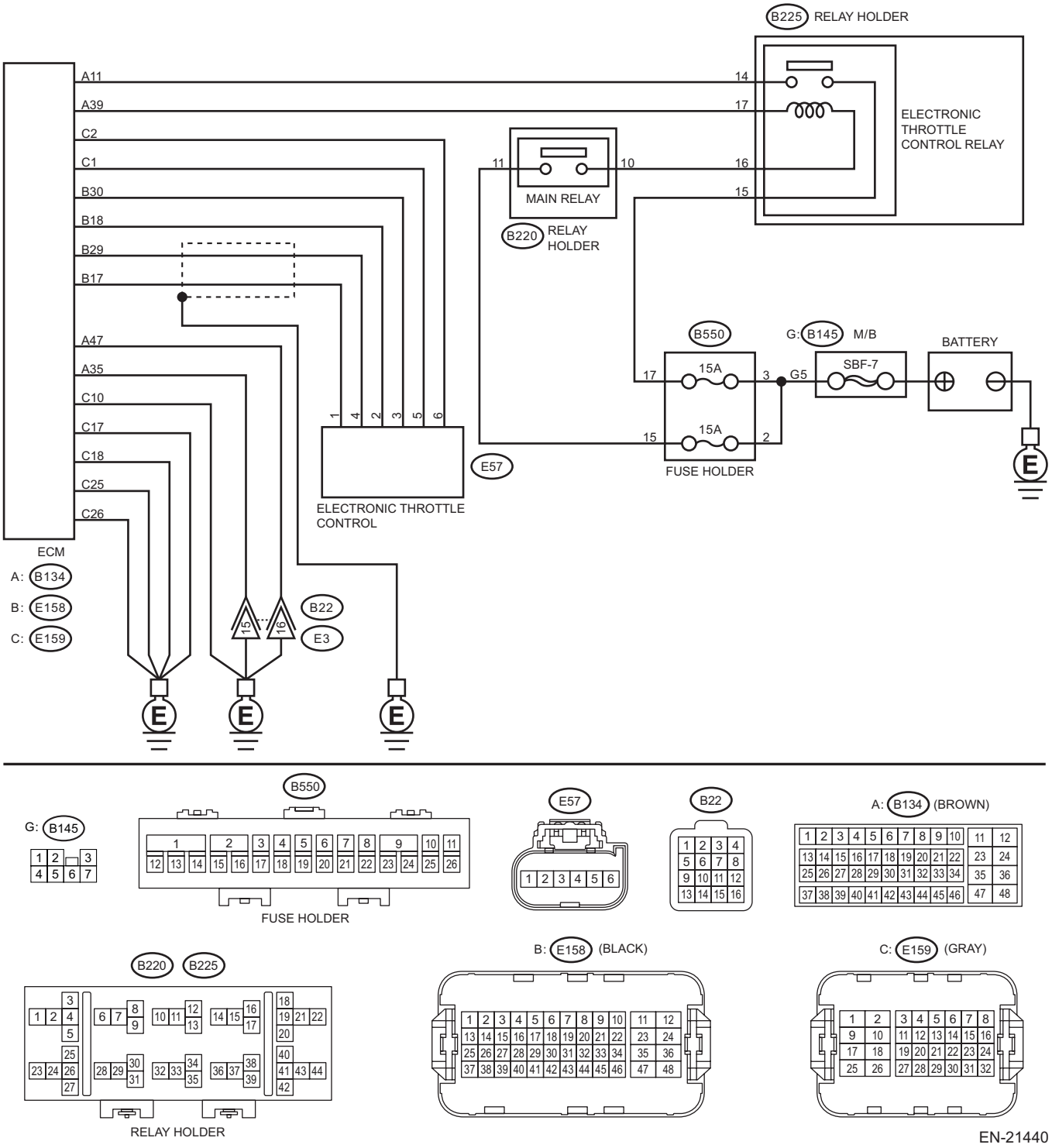

EN-21440

	Step	Check	Yes	No
1	**CHECK ELECTRONIC THROTTLE CONTROL RELAY.** 1) Turn the ignition switch to OFF. 2) Remove the electronic throttle control relay. 3) Connect the battery to terminals No. 16 and No. 17 of electronic throttle control relay. 4) Measure the resistance between electronic throttle control relay terminals. ***Terminals*** ***No. 14 — No. 15:***	Is the resistance less than 1 Ω?	Go to step **2**.	Replace the electronic throttle control relay. <Ref. to FU(w/o STI)-131, Electronic Throttle Control Relay.>
2	**CHECK POWER SUPPLY OF ELECTRONIC THROTTLE CONTROL RELAY.** Measure the voltage between electronic throttle control relay connector and chassis ground. ***Connector & terminal*** ***(B225) No. 15 (+) — Chassis ground (–):***	Is the voltage 10 V or more?	Go to step **3**.	Repair the open or short to ground in the power supply circuit.
3	**CHECK HARNESS BETWEEN ECM AND ELECTRONIC THROTTLE CONTROL RELAY CONNECTOR.** 1) Disconnect the connector from ECM. 2) Turn the ignition switch to ON. 3) Measure the voltage between electronic throttle control relay connector and chassis ground. ***Connector & terminal*** ***(B225) No. 17 (+) — Chassis ground (–):***	Is the voltage 10 V or more?	Repair the short circuit to power in the harness between ECM connector and electronic throttle control relay connector.	Go to step **4**.
4	**CHECK HARNESS BETWEEN ECM AND ELECTRONIC THROTTLE CONTROL RELAY CONNECTOR.** 1) Turn the ignition switch to OFF. 2) Measure the resistance between electronic throttle control relay connector and chassis ground. ***Connector & terminal*** ***(B225) No. 14 — Chassis ground:*** ***(B225) No. 17 — Chassis ground:***	Is the resistance 1 MΩ or more?	Go to step **5**.	Repair the short circuit to ground in harness between ECM connector and electronic throttle control relay connector.
5	**CHECK HARNESS BETWEEN ECM AND ELECTRONIC THROTTLE CONTROL RELAY CONNECTOR.** Measure the resistance between ECM connector and electronic throttle control relay connector. ***Connector & terminal*** ***(B135) No. 39 — (B225) No. 17:*** ***(B135) No. 11 — (B225) No. 14:***	Is the resistance less than 1 Ω?	Repair the poor contact of ECM connector.	Repair the open circuit in harness between ECM connector and electronic throttle control relay connector.

1. OUTLINE OF DIAGNOSIS

Judge as NG when the electronic throttle control power is not supplied even when ECM sets the electric control throttle relay to ON, or when the monitored electronic throttle control relay does not switch to OFF even when ECM sets the electronic throttle control relay to OFF.

2. COMPONENT DESCRIPTION

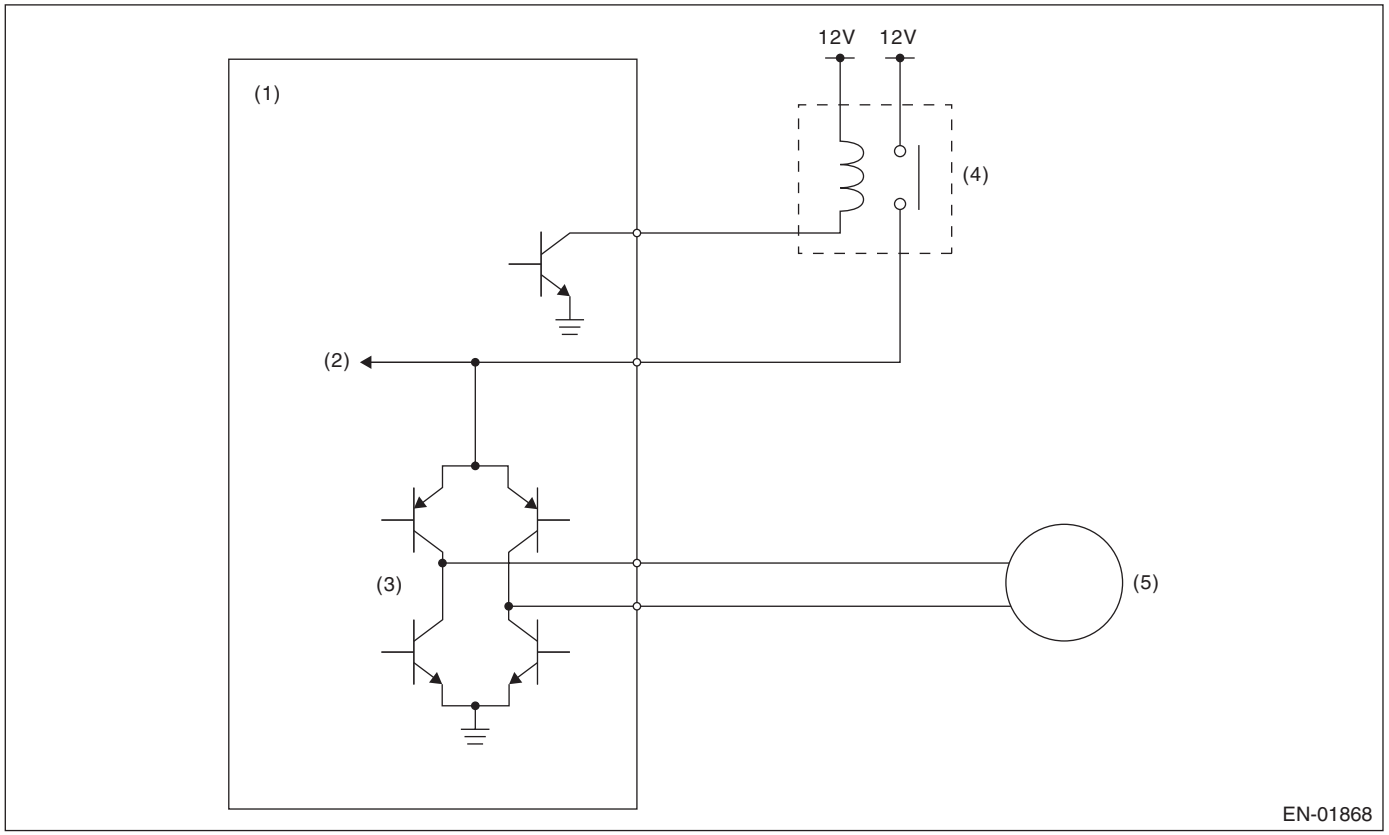

(1) Engine control module (ECM)
(2) Voltage detection circuit
(3) Drive circuit
(4) Electronic throttle control relay
(5) Motor

3. EXECUTION CONDITION

Secondary parameters	Execution condition
<For electronic throttle control power supply>	
Battery voltage	≥ 6 V
Electronic throttle control relay output	ON
<For electronic throttle control relay monitor>	
Battery voltage	≥ 10.9 V
Electronic throttle control relay output	OFF

4. GENERAL DRIVING CYCLE

Always perform the diagnosis continuously.

5. DIAGNOSTIC METHOD

If the duration of time while the following conditions are met is longer than the time indicated, judge as NG.

Judgment Value

Malfunction Criteria	Threshold Value
<For electronic throttle control power supply>	
Electronic throttle control power voltage	< 6 V
<For electronic throttle control relay monitor>	
Electronic throttle control relay monitor voltage	≤ 1.5 V

Time Needed for Diagnosis: 510 ms
Malfunction Indicator Light Illumination: Illuminates as soon as a malfunction occurs.

FP:DTC P2103 THROTTLE ACTUATOR "A" CONTROL MOTOR CIRCUIT HIGH

DTC DETECTING CONDITION:
Immediately at fault recognition

CAUTION:
- **After servicing or replacing faulty parts, perform Clear Memory Mode <Ref. to EN(w/o STI)(diag)-82, OPERATION, Clear Memory Mode.>, and Inspection Mode <Ref. to EN(w/o STI)(diag)-64, PROCEDURE, Inspection Mode.>.**
- **Use the check board when measuring the ECM terminal voltage and resistance.**

WIRING DIAGRAM:
Engine Electrical System <Ref. to WI-154, WIRING DIAGRAM, Engine Electrical System.>

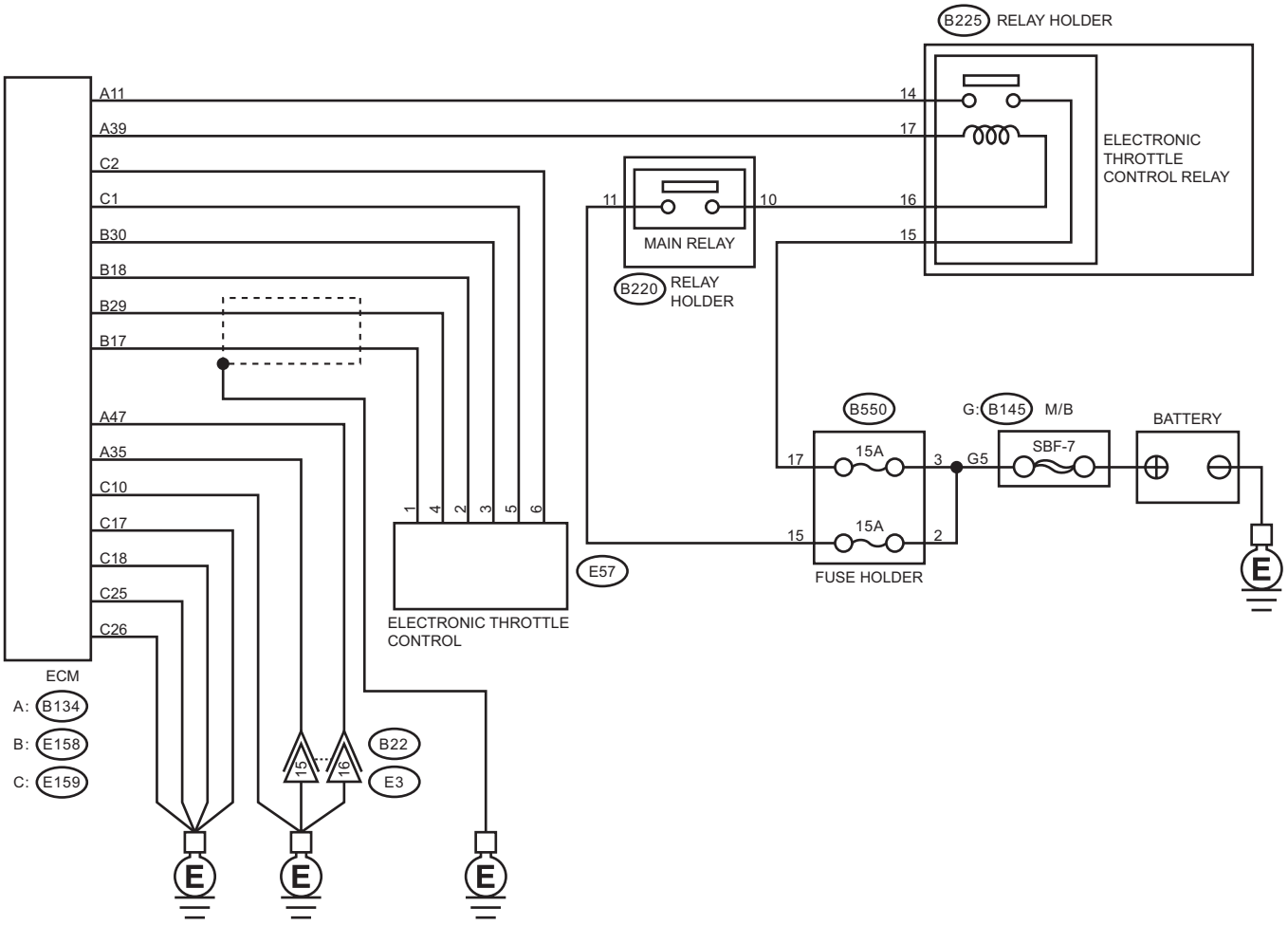

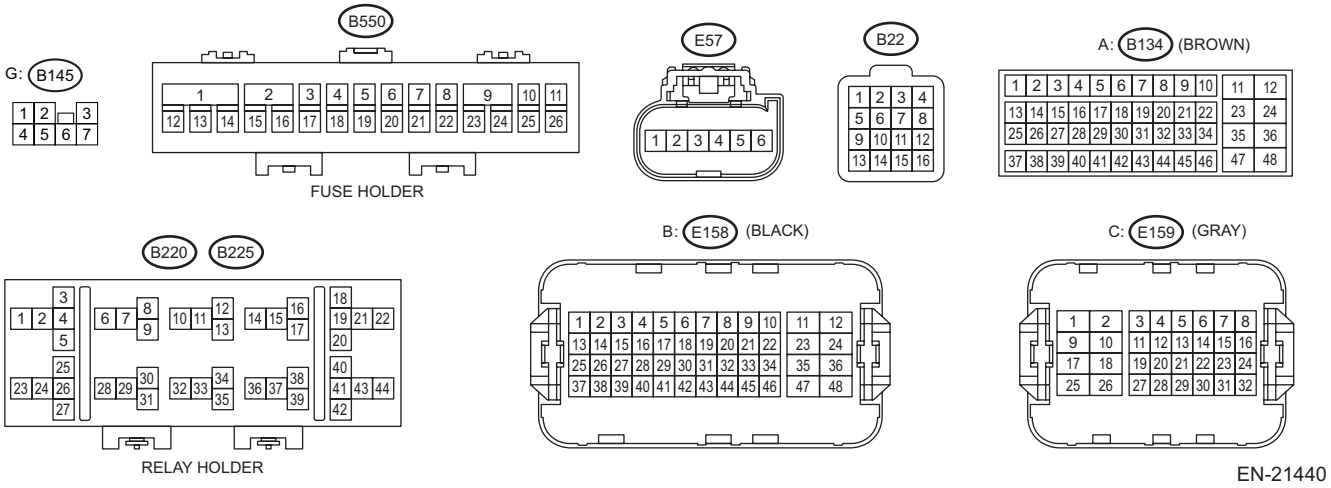

EN-21440

	Step	Check	Yes	No
1	**CHECK ELECTRONIC THROTTLE CONTROL RELAY.** 1) Turn the ignition switch to OFF. 2) Remove the electronic throttle control relay. 3) Measure the resistance between electronic throttle control relay terminals. ***Terminals*** ***No. 14 — No. 15:***	Is the resistance 1 MΩ or more?	Go to step **2**.	Replace the electronic throttle control relay. <Ref. to FU(w/o STI)-131, Electronic Throttle Control Relay.>
2	**CHECK SHORT CIRCUIT OF ELECTRONIC THROTTLE CONTROL RELAY POWER SUPPLY.** 1) Turn the ignition switch to ON. 2) Measure the voltage between electronic throttle control relay connector and chassis ground. ***Connector & terminal*** ***(B225) No. 14 (+) — Chassis ground (–):***	Is the voltage 10 V or more?	Repair the short circuit to power in the harness between ECM connector and electronic throttle control relay connector.	Go to step **3**.
3	**CHECK HARNESS BETWEEN ECM AND ELECTRONIC THROTTLE CONTROL RELAY CONNECTOR.** 1) Turn the ignition switch to OFF. 2) Disconnect the connector from ECM. 3) Measure the resistance between the ECM connector and engine ground. ***Connector & terminal*** ***(B134) No. 39 — Engine ground:***	Is the resistance 1 MΩ or more?	Repair the poor contact of ECM connector.	Repair the short circuit to ground in harness between ECM connector and electronic throttle control relay connector.

1. OUTLINE OF DIAGNOSIS

Judge as NG when the monitored electronic throttle control relay does not switch to ON even when ECM sets the electric control throttle relay to ON.

2. COMPONENT DESCRIPTION

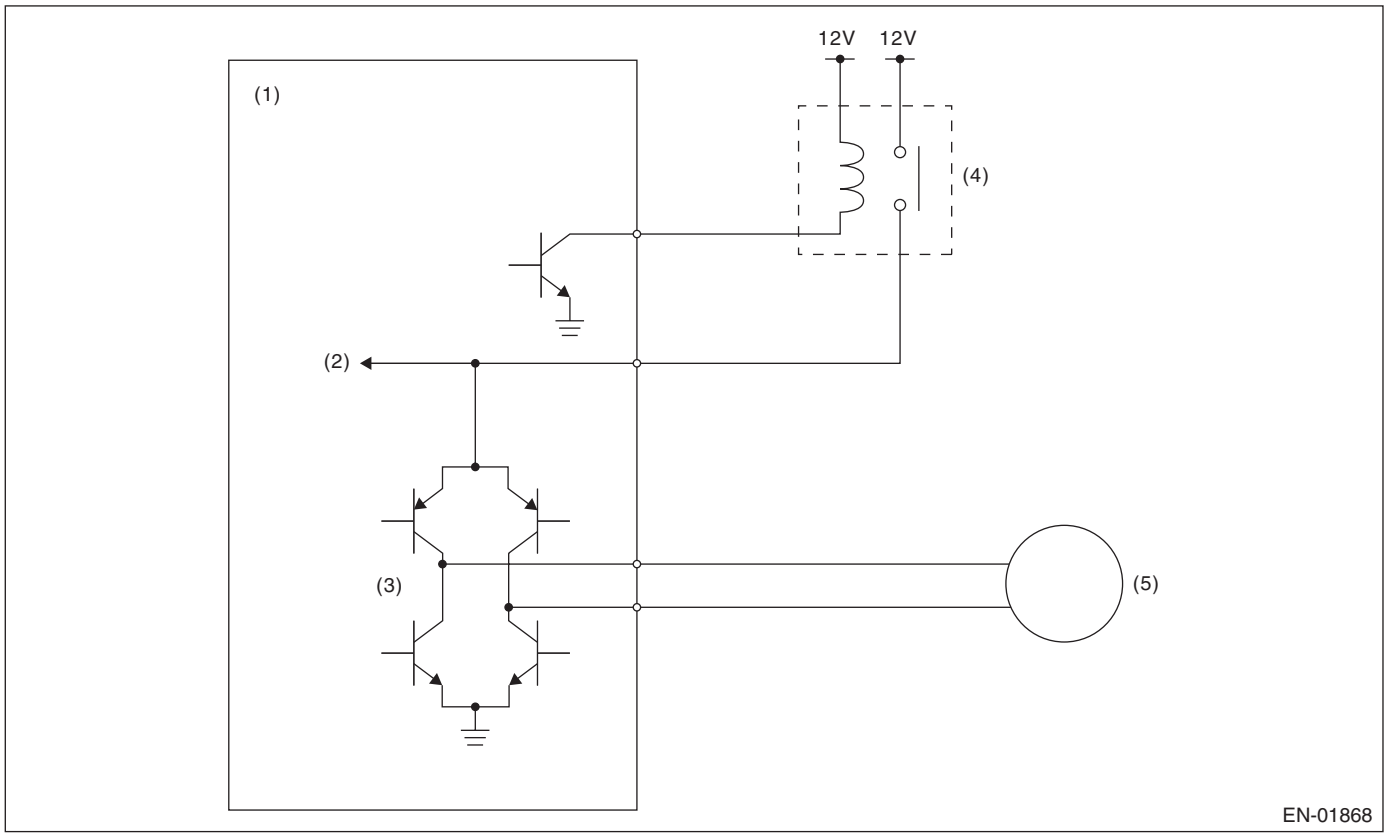

(1) Engine control module (ECM)
(2) Voltage detection circuit
(3) Drive circuit
(4) Electronic throttle control relay
(5) Motor

3. EXECUTION CONDITION

Secondary parameters	Execution condition
Battery voltage	≥ 10.9 V
Electronic throttle control relay output	ON

4. GENERAL DRIVING CYCLE

Always perform the diagnosis continuously.

5. DIAGNOSTIC METHOD

If the duration of time while the following conditions are met is longer than the time indicated, judge as NG.

Judgment Value

Malfunction Criteria	Threshold Value
Electronic throttle control relay monitor voltage	≥ 6 V

Time Needed for Diagnosis: 510 ms
Malfunction Indicator Light Illumination: Illuminates as soon as a malfunction occurs.

FQ:DTC P2109 THROTTLE/PEDAL POSITION SENSOR "A" MINIMUM STOP PERFORMANCE

NOTE:
For the diagnostic procedure, refer to DTC. <Ref. to EN(w/o STI)(diag)-611, DTC P2101 THROTTLE ACTUATOR "A" CONTROL MOTOR CIRCUIT RANGE/PERFORMANCE, Diagnostic Procedure with Diagnostic Trouble Code (DTC).>

1. OUTLINE OF DIAGNOSIS

Judge as NG when full close point learning cannot conducted or abnormal value is detected.

2. COMPONENT DESCRIPTION

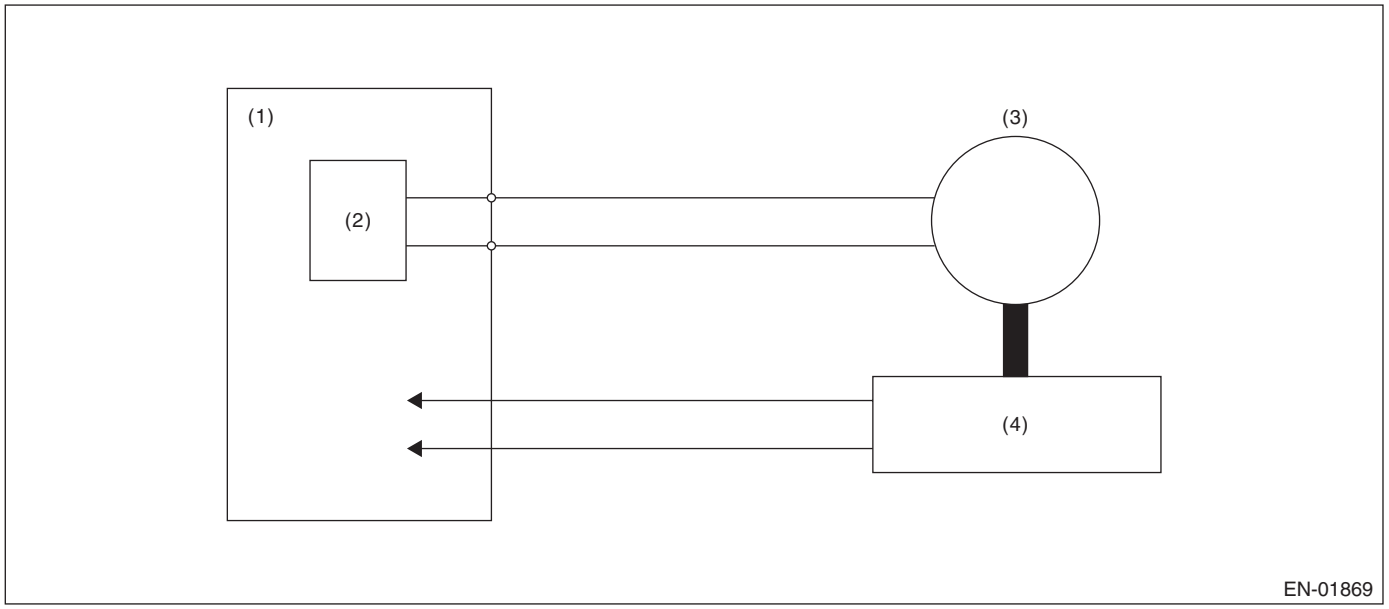

(1) Engine control module (ECM)
(2) Drive circuit
(3) Motor
(4) Throttle position sensor

3. EXECUTION CONDITION

Secondary parameters	Execution condition
None	

4. GENERAL DRIVING CYCLE

Perform the diagnosis at full closed point learning.

5. DIAGNOSTIC METHOD

If the duration of time while the following conditions are met is longer than the time indicated, judge as NG.

Judgment Value

Malfunction Criteria	Threshold Value
Throttle position when the ignition switch is ON – Throttle minimum stop position	< 2.6% (sensor 1) < 2.6% (sensor 2)

Time Needed for Diagnosis: 200 ms
Malfunction Indicator Light Illumination: Illuminates as soon as a malfunction occurs.

FR:DTC P2119 THROTTLE ACTUATOR "A" CONTROL THROTTLE BODY RANGE/PERFORMANCE

NOTE:
For the diagnostic procedure, refer to DTC. <Ref. to EN(w/o STI)(diag)-611, DTC P2101 THROTTLE ACTUATOR "A" CONTROL MOTOR CIRCUIT RANGE/PERFORMANCE, Diagnostic Procedure with Diagnostic Trouble Code (DTC).>

1. OUTLINE OF DIAGNOSIS

Judge as NG when the throttle is open stuck, or when the difference between actual throttle opening angle and estimated opening angle is out of range. Judge as NG when any one of the six items for diagnosis is applied.

Throttle open stuck:
- Throttle position is out of range
- Intake air amount is out of range

When the difference between actual throttle opening angle and estimated opening angle is out of range:
- All time monitoring
- Actual opening angle change amount is small
- Actual opening angle change amount is large
- Actual opening angle does not change

2. EXECUTION CONDITION

Item	Secondary parameters	Execution condition
Throttle position is out of range	Battery voltage DTC P0606 CONTROL MODULE PROCESSOR	≥ 6 V Under detection
Intake air amount is out of range		
All time monitoring	Battery voltage	≥ 6 V
Actual opening angle change amount is small	Battery voltage Actual opening angle change amount	≥ 6 V > 0.84%/ms
Actual opening angle change amount is large	Battery voltage Actual opening angle change amount	≥ 6 V > 2.1%/ms
Actual opening angle does not change	Battery voltage Continuous time when actual opening angle changing amount is 0%/ms	> 6 V ≥ 5 s

3. GENERAL DRIVING CYCLE

Always perform the diagnosis continuously.

4. DIAGNOSTIC METHOD

Judge as NG if the criteria below are met.

Judgment Value

Item	Malfunction Criteria	Threshold Value
Throttle position is out of range	Throttle position	≥ 17.3%
Intake air amount is out of range	Amount of intake air	> 19.2 g/s (0.68 oz/s)
All time monitoring	Difference between actual throttle opening angle and estimated opening angle	≥ 4.2%
Actual opening angle change amount is small	Difference between actual throttle opening angle and estimated opening angle	≥ 2.1%
Actual opening angle change amount is large	Difference between actual throttle opening angle and estimated opening angle	≥ 4.2%
Actual opening angle does not change	Difference between actual throttle opening angle and target throttle opening angle	≥ 1.68%

Time Needed for Diagnosis:

Item	Time
Throttle position is out of range	200 ms
Intake air amount is out of range	200 ms
All time monitoring	2000 ms
Actual opening angle change amount is small	1000 ms
Actual opening angle change amount is large	500 ms
Actual opening angle does not change	1000 ms

Malfunction Indicator Light Illumination: Illuminates as soon as a malfunction occurs.

FS:DTC P2122 THROTTLE/PEDAL POSITION SENSOR/SWITCH "D" CIRCUIT LOW

DTC DETECTING CONDITION:
Immediately at fault recognition
TROUBLE SYMPTOM:
- Improper idling
- Poor driving performance

CAUTION:
- **After servicing or replacing faulty parts, perform Clear Memory Mode <Ref. to EN(w/o STI)(diag)-82, OPERATION, Clear Memory Mode.>, and Inspection Mode <Ref. to EN(w/o STI)(diag)-64, PROCEDURE, Inspection Mode.>.**
- **Use the check board when measuring the ECM terminal voltage and resistance.**

WIRING DIAGRAM:
Engine Electrical System <Ref. to WI-154, WIRING DIAGRAM, Engine Electrical System.>

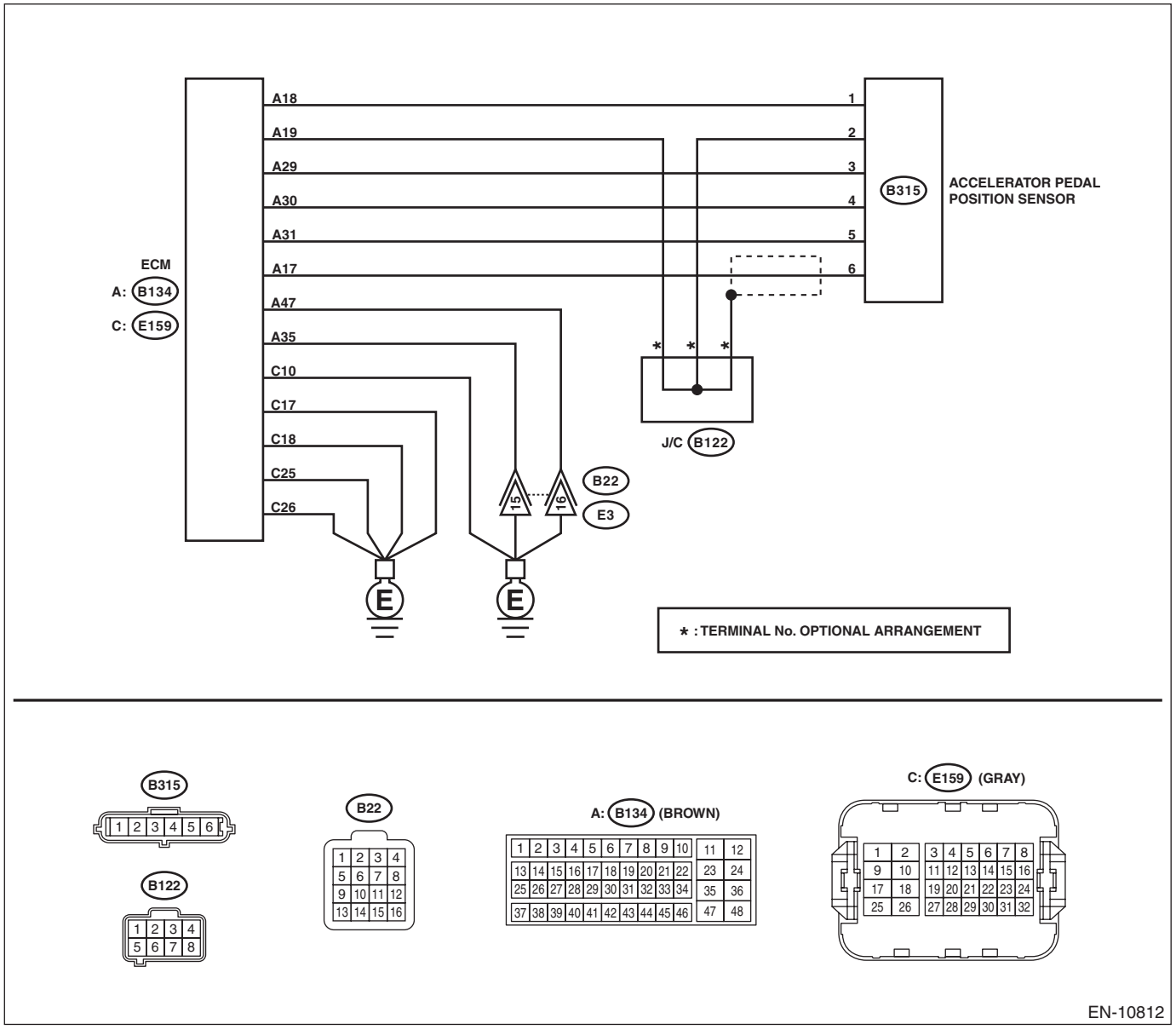

	Step	Check	Yes	No
1	**CHECK HARNESS BETWEEN ECM AND ACCELERATOR PEDAL POSITION SENSOR CONNECTOR.** 1) Turn the ignition switch to OFF. 2) Disconnect the connector from ECM. 3) Disconnect the connector from the accelerator pedal position sensor. 4) Measure the resistance between the ECM connector and engine ground. ***Connector & terminal*** ***(B134) No. 30 — Engine ground:*** ***(B134) No. 17 — Engine ground:*** ***(B134) No. 17 — (B134) No. 19:***	Is the resistance 1 MΩ or more?	Go to step **2**.	Repair the short circuit to ground in harness between ECM connector and accelerator pedal position sensor connector.
2	**CHECK SHORT CIRCUIT INSIDE THE ECM.** 1) Connect the connector to ECM. 2) Measure the resistance between accelerator pedal position sensor connector and chassis ground. ***Connector & terminal*** ***(B315) No. 6 — Chassis ground:***	Is the resistance 1 MΩ or more?	Replace the accelerator pedal. <Ref. to SP(w/o STI)-4, Accelerator Pedal.>	Repair the short circuit to ground in harness between ECM connector and accelerator pedal position sensor connector. Replace the ECM if defective. <Ref. to FU(w/o STI)-124, Engine Control Module (ECM).>

1. OUTLINE OF DIAGNOSIS

Detect the open or short circuit of accelerator pedal position sensor 1.
Judge as NG if out of specification.

2. COMPONENT DESCRIPTION

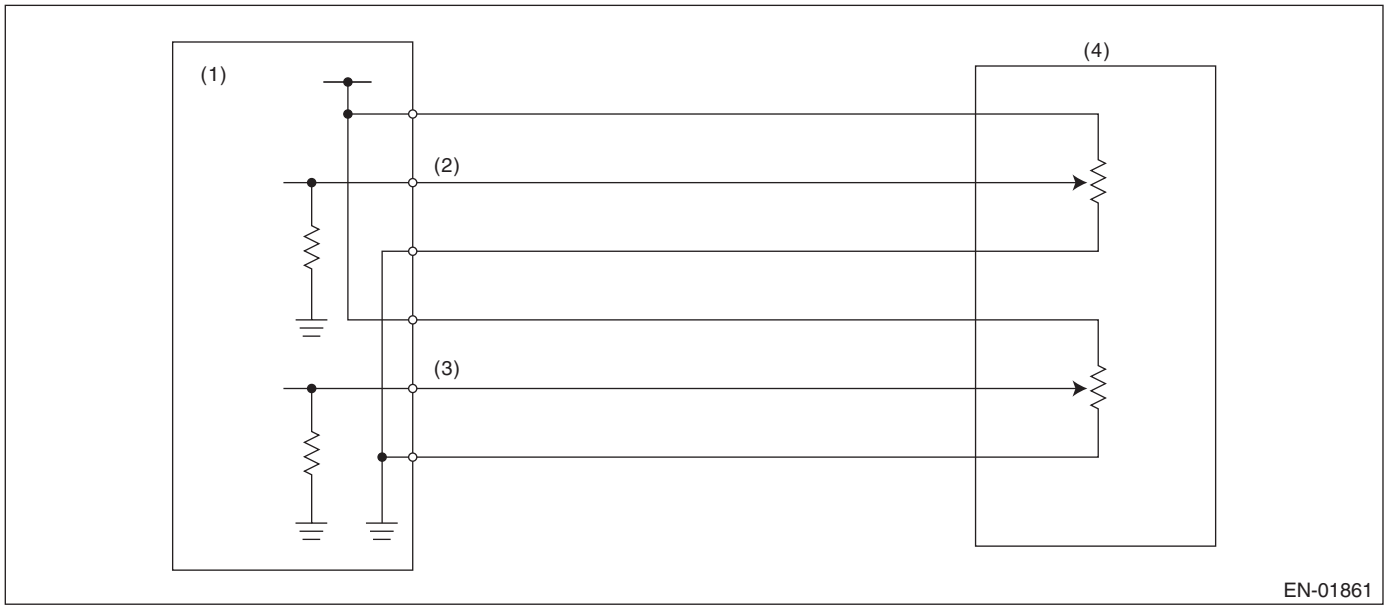

(1) Engine control module (ECM)
(2) Accelerator pedal position sensor 1 signal
(3) Accelerator pedal position sensor 2 signal
(4) Accelerator pedal position sensor

3. EXECUTION CONDITION

Secondary parameters	Execution condition
Battery voltage	≥ 6 V

4. GENERAL DRIVING CYCLE

Always perform the diagnosis continuously.

5. DIAGNOSTIC METHOD

If the duration of time while the following conditions are met is longer than the time indicated, judge as NG.

Judgment Value

Malfunction Criteria	Threshold Value
Sensor 1 output voltage	< 0.54 V

Time Needed for Diagnosis: 100 ms
Malfunction Indicator Light Illumination: Illuminates as soon as a malfunction occurs.

FT: DTC P2123 THROTTLE/PEDAL POSITION SENSOR/SWITCH "D" CIRCUIT HIGH

DTC DETECTING CONDITION:
Immediately at fault recognition
TROUBLE SYMPTOM:
- Improper idling
- Poor driving performance

CAUTION:
• After servicing or replacing faulty parts, perform Clear Memory Mode <Ref. to EN(w/o STI)(diag)-82, OPERATION, Clear Memory Mode.>, and Inspection Mode <Ref. to EN(w/o STI)(diag)-64, PROCEDURE, Inspection Mode.>.
• Use the check board when measuring the ECM terminal voltage and resistance.
WIRING DIAGRAM:
Engine Electrical System <Ref. to WI-154, WIRING DIAGRAM, Engine Electrical System.>

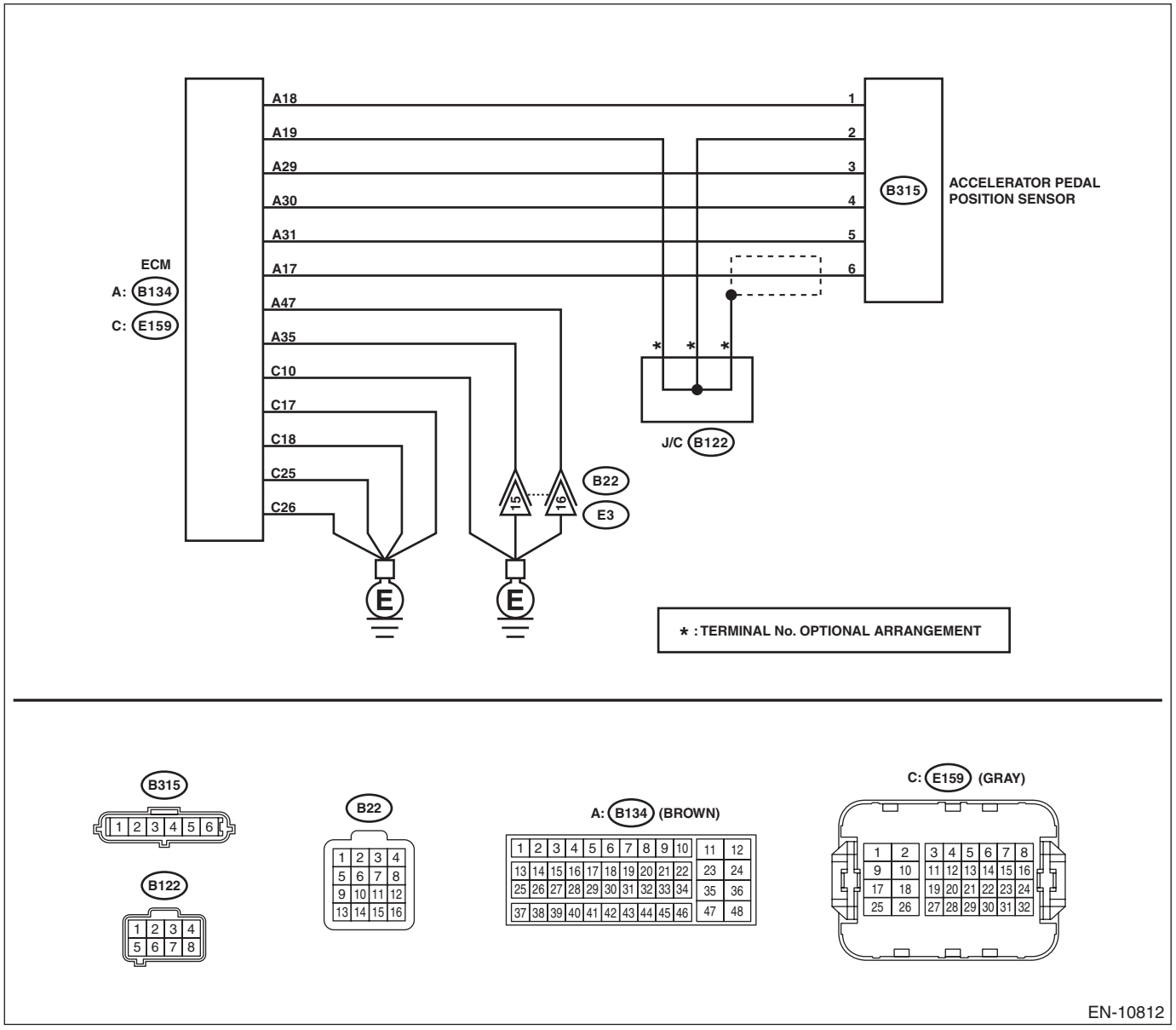

	Step	Check	Yes	No
1	**CHECK HARNESS BETWEEN ECM AND ACCELERATOR PEDAL POSITION SENSOR CONNECTOR.** 1) Turn the ignition switch to OFF. 2) Disconnect the connector from ECM. 3) Disconnect the connector from the accelerator pedal position sensor. 4) Measure the resistance of harness between ECM connector and accelerator pedal position sensor connector. ***Connector & terminal*** ***(B134) No. 17 — (B315) No. 6:*** ***(B134) No. 31 — (B315) No. 5:***	Is the resistance less than 1 Ω?	Go to step **2**.	Repair the open circuit of harness between ECM connector and accelerator pedal position sensor connector.
2	**CHECK HARNESS BETWEEN ECM AND ACCELERATOR PEDAL POSITION SENSOR CONNECTOR.** 1) Connect the connector to ECM. 2) Measure the resistance between accelerator pedal position sensor connector and chassis ground. ***Connector & terminal*** ***(B315) No. 5 — Chassis ground:***	Is the resistance less than 5 Ω?	Go to step **3**.	Repair the harness and connector. NOTE: In this case, repair the following item: • Open circuit of harness between ECM connector and engine ground • Poor contact of ECM connector • Poor contact of coupling connector
3	**CHECK HARNESS BETWEEN ECM AND ACCELERATOR PEDAL POSITION SENSOR CONNECTOR.** 1) Turn the ignition switch to ON. 2) Measure the voltage between accelerator pedal position sensor connector and chassis ground. ***Connector & terminal*** ***(B315) No. 6 (+) — Chassis ground (–):***	Is the voltage 5 V or more?	Repair the short circuit to power supply in harness between ECM connector and accelerator pedal position sensor connector.	Go to step **4**.
4	**CHECK HARNESS BETWEEN ECM AND ACCELERATOR PEDAL POSITION SENSOR CONNECTOR.** 1) Turn the ignition switch to OFF. 2) Disconnect the connector from ECM. 3) Measure the resistance between ECM connectors. ***Connector & terminal*** ***(B134) No. 17 — (B134) No. 30:***	Is the resistance 1 MΩ or more?	Repair the poor contact of accelerator pedal position sensor connector. Replace the accelerator pedal if defective. <Ref. to SP(w/o STI)-4, Accelerator Pedal.>	Repair the short circuit to power supply in harness between ECM connector and accelerator pedal position sensor connector.

1. OUTLINE OF DIAGNOSIS

Detect the open or short circuit of accelerator pedal position sensor 1.
Judge as NG if out of specification.

2. COMPONENT DESCRIPTION

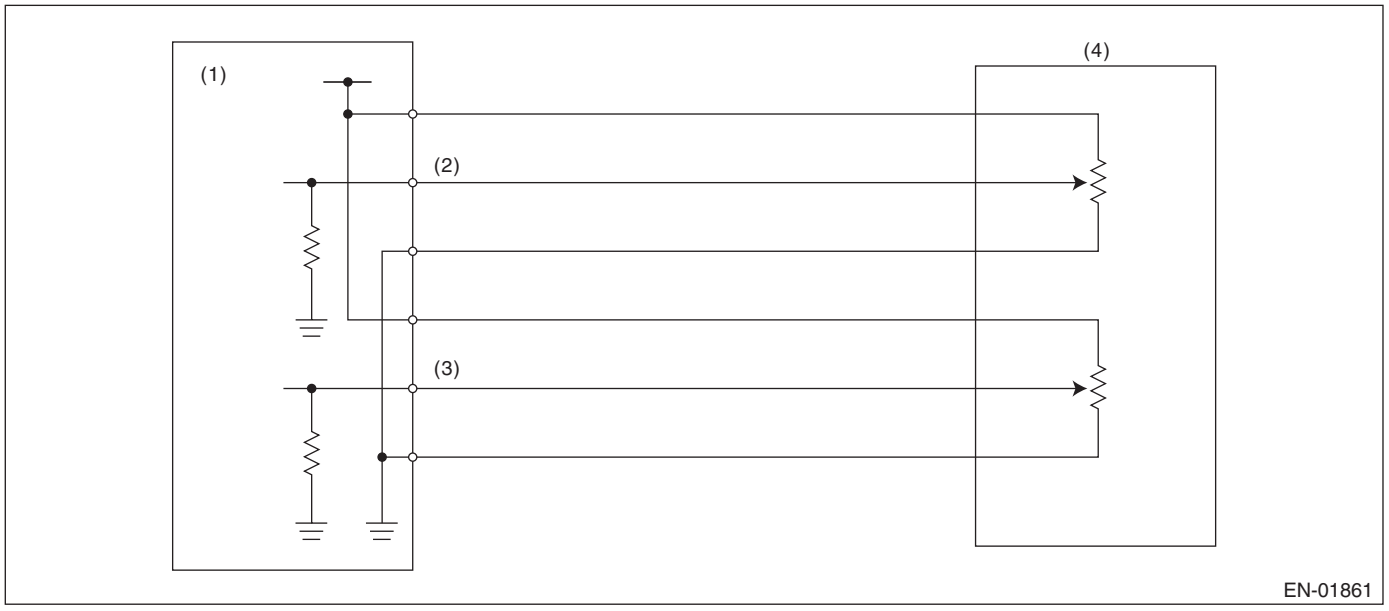

(1) Engine control module (ECM)
(2) Accelerator pedal position sensor 1 signal
(3) Accelerator pedal position sensor 2 signal
(4) Accelerator pedal position sensor

3. EXECUTION CONDITION

Secondary parameters	Execution condition
Battery voltage	≥ 6 V

4. GENERAL DRIVING CYCLE

Always perform the diagnosis continuously.

5. DIAGNOSTIC METHOD

If the duration of time while the following conditions are met is longer than the time indicated, judge as NG.

Judgment Value

Malfunction Criteria	Threshold Value
Sensor 1 output voltage	> 4.77 V

Time Needed for Diagnosis: 100 ms
Malfunction Indicator Light Illumination: Illuminates as soon as a malfunction occurs.

FU:DTC P2127 THROTTLE/PEDAL POSITION SENSOR/SWITCH "E" CIRCUIT LOW

DTC DETECTING CONDITION:
Immediately at fault recognition
TROUBLE SYMPTOM:
- Improper idling
- Poor driving performance

CAUTION:
- **After servicing or replacing faulty parts, perform Clear Memory Mode <Ref. to EN(w/o STI)(diag)-82, OPERATION, Clear Memory Mode.>, and Inspection Mode <Ref. to EN(w/o STI)(diag)-64, PROCEDURE, Inspection Mode.>.**
- **Use the check board when measuring the ECM terminal voltage and resistance.**

WIRING DIAGRAM:
Engine Electrical System <Ref. to WI-154, WIRING DIAGRAM, Engine Electrical System.>

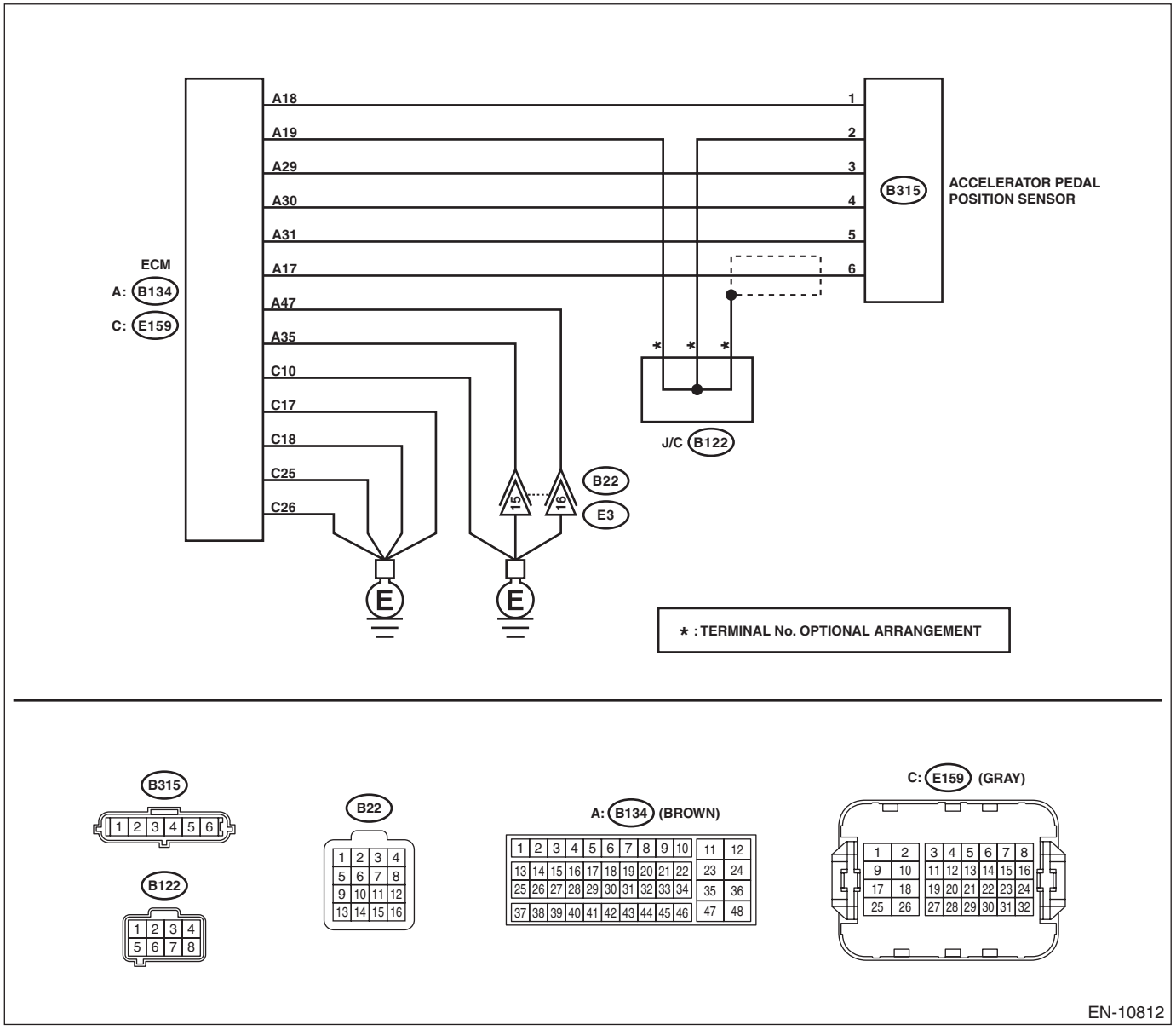

	Step	Check	Yes	No
1	**CHECK HARNESS BETWEEN ECM AND ACCELERATOR PEDAL POSITION SENSOR CONNECTOR.** 1) Turn the ignition switch to OFF. 2) Disconnect the connector from ECM. 3) Disconnect the connector from the accelerator pedal position sensor. 4) Measure the resistance between the ECM connector and engine ground. ***Connector & terminal*** ***(B134) No. 18 — Engine ground:*** ***(B134) No. 29 — Engine ground:***	Is the resistance 1 MΩ or more?	Go to step **2**.	Repair the short circuit to ground in harness between ECM connector and accelerator pedal position sensor connector.
2	**CHECK SHORT CIRCUIT INSIDE THE ECM.** 1) Connect the connector to ECM. 2) Measure the resistance between accelerator pedal position sensor connector and chassis ground. ***Connector & terminal*** ***(B315) No. 3 — Chassis ground:***	Is the resistance 1 MΩ or more?	Replace the accelerator pedal. <Ref. to SP(w/o STI)-4, Accelerator Pedal.>	Repair the short circuit to ground in harness between ECM connector and accelerator pedal position sensor connector. Replace the ECM if defective. <Ref. to FU(w/o STI)-124, Engine Control Module (ECM).>

1. OUTLINE OF DIAGNOSIS

Detect the open or short circuit of accelerator pedal position sensor 2.
Judge as NG if out of specification.

2. COMPONENT DESCRIPTION

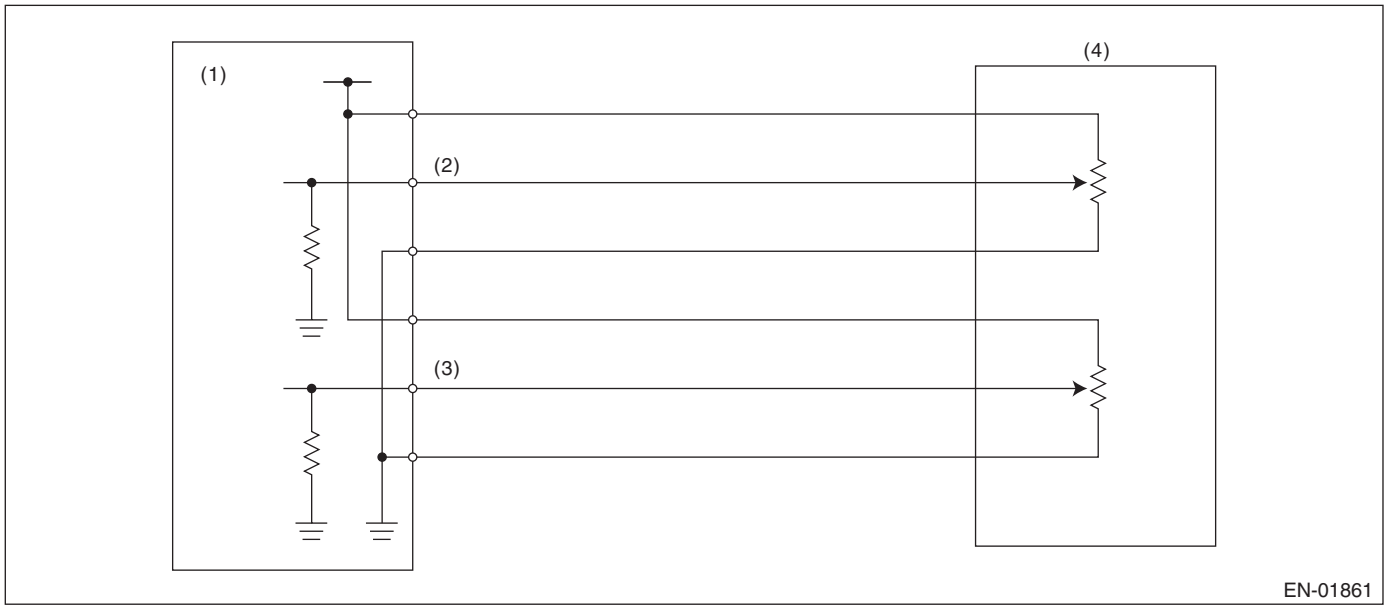

(1) Engine control module (ECM)
(2) Accelerator pedal position sensor 1 signal
(3) Accelerator pedal position sensor 2 signal
(4) Accelerator pedal position sensor

3. EXECUTION CONDITION

Secondary parameters	Execution condition
Battery voltage	≥ 6 V

4. GENERAL DRIVING CYCLE

Always perform the diagnosis continuously.

5. DIAGNOSTIC METHOD

If the duration of time while the following conditions are met is longer than the time indicated, judge as NG.

Judgment Value

Malfunction Criteria	Threshold Value
Sensor 2 output voltage	< 0.54 V

Time Needed for Diagnosis: 100 ms
Malfunction Indicator Light Illumination: Illuminates as soon as a malfunction occurs.

FV:DTC P2128 THROTTLE/PEDAL POSITION SENSOR/SWITCH "E" CIRCUIT HIGH

DTC DETECTING CONDITION:
Immediately at fault recognition
TROUBLE SYMPTOM:
- Improper idling
- Poor driving performance

CAUTION:
- **After servicing or replacing faulty parts, perform Clear Memory Mode <Ref. to EN(w/o STI)(diag)-82, OPERATION, Clear Memory Mode.>, and Inspection Mode <Ref. to EN(w/o STI)(diag)-64, PROCEDURE, Inspection Mode.>.**
- **Use the check board when measuring the ECM terminal voltage and resistance.**

WIRING DIAGRAM:
Engine Electrical System <Ref. to WI-154, WIRING DIAGRAM, Engine Electrical System.>

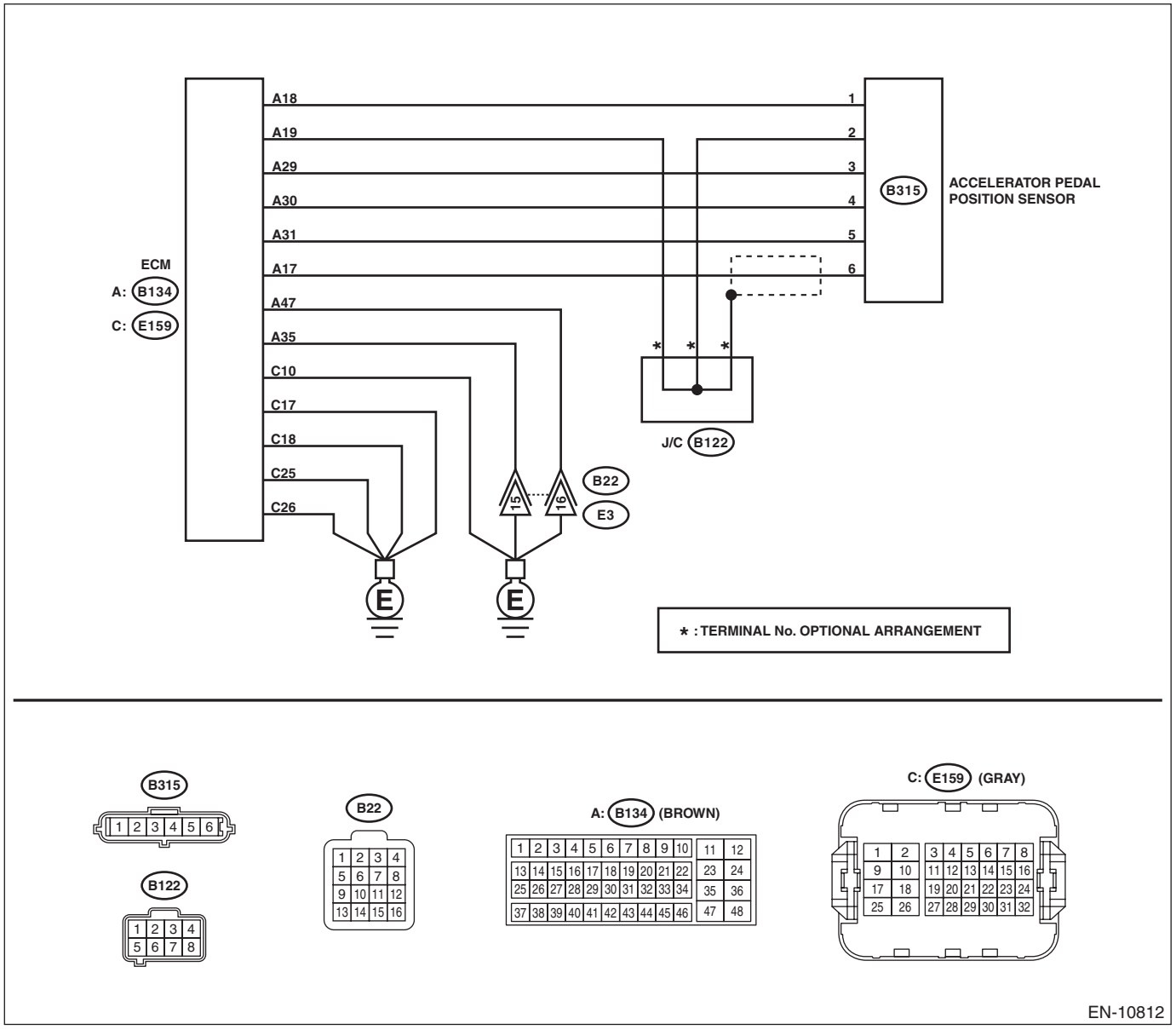

	Step	Check	Yes	No
1	**CHECK HARNESS BETWEEN ECM AND ACCELERATOR PEDAL POSITION SENSOR CONNECTOR.** 1) Turn the ignition switch to OFF. 2) Disconnect the connector from ECM. 3) Disconnect the connector from the accelerator pedal position sensor. 4) Measure the resistance of harness between ECM connector and accelerator pedal position sensor connector. ***Connector & terminal*** ***(B134) No. 29 — (B315) No. 3:*** ***(B134) No. 19 — (B315) No. 2:***	Is the resistance less than 1 Ω?	Go to step **2**.	Repair the harness and connector. NOTE: In this case, repair the following item: • Open circuit of harness between ECM connector and accelerator pedal position sensor connector • Poor contact of joint connector
2	**CHECK HARNESS BETWEEN ECM AND ACCELERATOR PEDAL POSITION SENSOR CONNECTOR.** 1) Connect the connector to ECM. 2) Measure the resistance between accelerator pedal position sensor connector and chassis ground. ***Connector & terminal*** ***(B315) No. 2 — Chassis ground:***	Is the resistance less than 1 Ω?	Go to step **3**.	Repair the harness and connector. NOTE: In this case, repair the following item: • Open circuit of harness between ECM connector and engine ground • Poor contact of ECM connector • Poor contact of coupling connector
3	**CHECK HARNESS BETWEEN ECM AND ACCELERATOR PEDAL POSITION SENSOR CONNECTOR.** 1) Turn the ignition switch to ON. 2) Measure the voltage between accelerator pedal position sensor connector and chassis ground. ***Connector & terminal*** ***(B315) No. 3 (+) — Chassis ground (–):***	Is the voltage 5 V or more?	Repair the short circuit to power supply in harness between ECM connector and accelerator pedal position sensor connector.	Go to step **4**.
4	**CHECK HARNESS BETWEEN ECM AND ACCELERATOR PEDAL POSITION SENSOR CONNECTOR.** 1) Turn the ignition switch to OFF. 2) Disconnect the connector from ECM. 3) Measure the resistance between ECM connectors. ***Connector & terminal*** ***(B134) No. 18 — (B134) No. 29:***	Is the resistance 1 MΩ or more?	Repair the poor contact of accelerator pedal position sensor connector. Replace the accelerator pedal if defective. <Ref. to SP(w/o STI)-4, Accelerator Pedal.>	Repair the short circuit to power supply in harness between ECM connector and accelerator pedal position sensor connector.

1. OUTLINE OF DIAGNOSIS

Detect the open or short circuit of accelerator pedal position sensor 2.
Judge as NG if out of specification.

2. COMPONENT DESCRIPTION

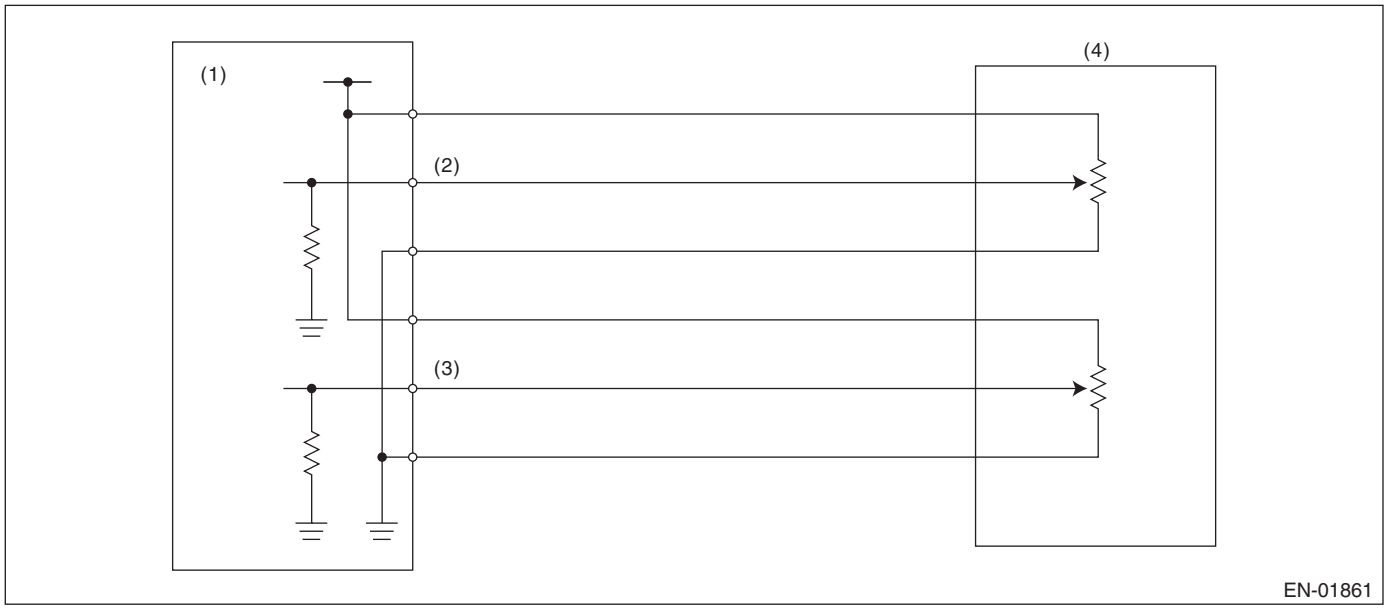

(1) Engine control module (ECM)
(2) Accelerator pedal position sensor 1 signal
(3) Accelerator pedal position sensor 2 signal
(4) Accelerator pedal position sensor

3. EXECUTION CONDITION

Secondary parameters	Execution condition
Battery voltage	≥ 6 V

4. GENERAL DRIVING CYCLE

Always perform the diagnosis continuously.

5. DIAGNOSTIC METHOD

If the duration of time while the following conditions are met is longer than the time indicated, judge as NG.

Judgment Value

Malfunction Criteria	Threshold Value
Sensor 2 output voltage	> 4.77 V

Time Needed for Diagnosis: 100 ms
Malfunction Indicator Light Illumination: Illuminates as soon as a malfunction occurs.

FW:DTC P2135 THROTTLE/PEDAL POSITION SENSOR/SWITCH "A"/"B" VOLTAGE CORRELATION

DTC DETECTING CONDITION:
Immediately at fault recognition
TROUBLE SYMPTOM:
- Improper idling
- Poor driving performance

CAUTION:
- **After servicing or replacing faulty parts, perform Clear Memory Mode <Ref. to EN(w/o STI)(diag)-82, OPERATION, Clear Memory Mode.>, and Inspection Mode <Ref. to EN(w/o STI)(diag)-64, PROCEDURE, Inspection Mode.>.**
- **Use the check board when measuring the ECM terminal voltage and resistance.**

WIRING DIAGRAM:

Engine Electrical System <Ref. to WI-154, WIRING DIAGRAM, Engine Electrical System.>

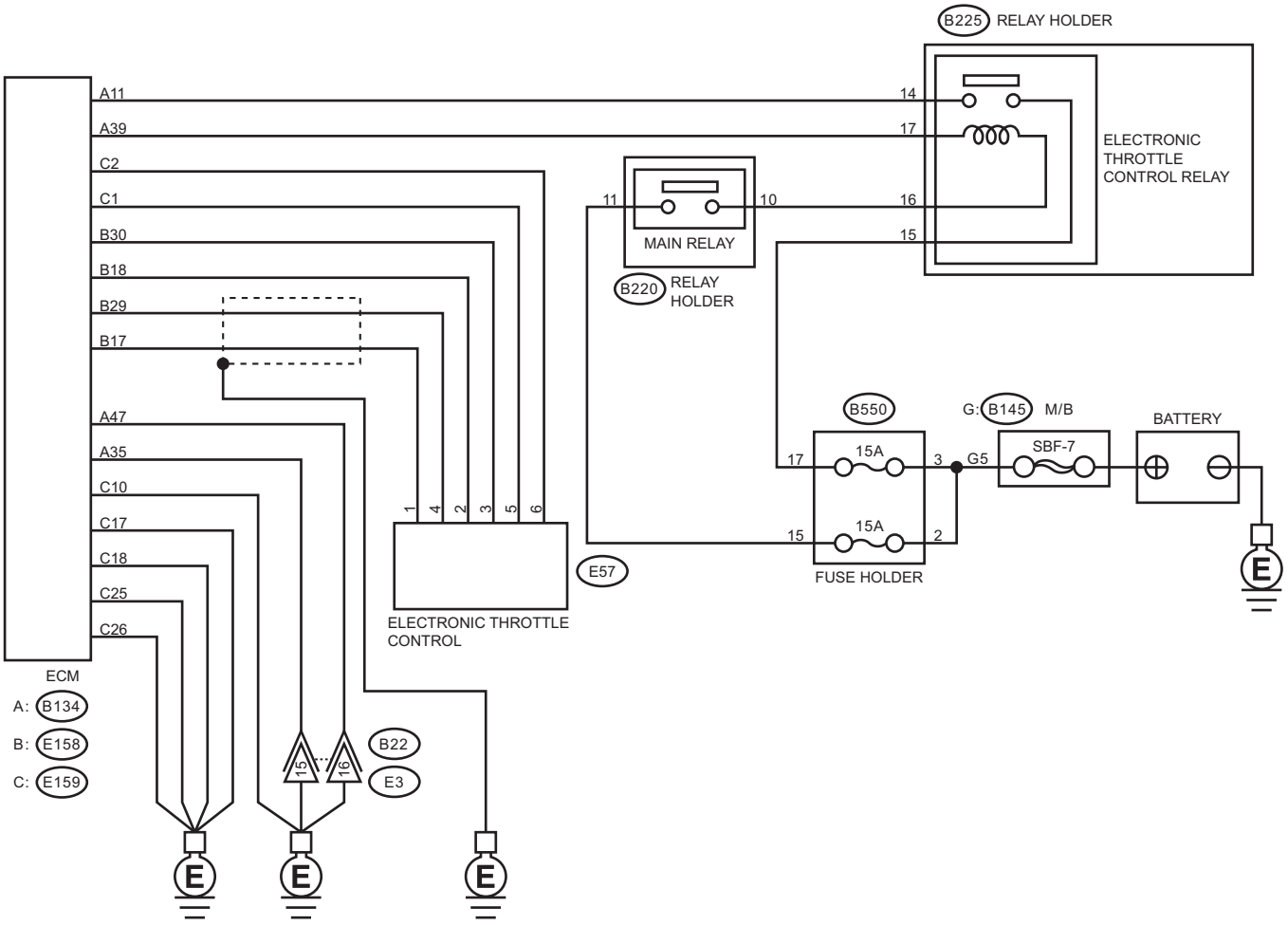

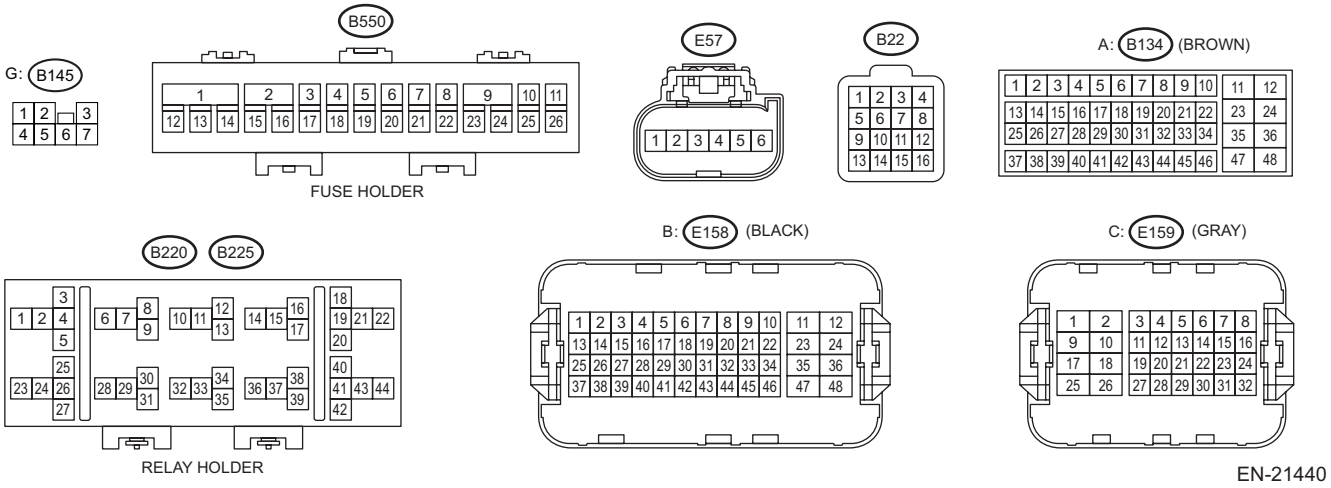

EN-21440

	Step	Check	Yes	No
1	**CHECK HARNESS BETWEEN ECM AND ELECTRONIC THROTTLE CONTROL CONNECTOR.** 1) Turn the ignition switch to OFF. 2) Disconnect the connector from ECM. 3) Disconnect the connectors from electronic throttle control. 4) Measure the resistance between the ECM connector and engine ground. ***Connector & terminal*** ***(E158) No. 18 — Engine ground:*** ***(E158) No. 17 — Engine ground:*** ***(E158) No. 29 — Engine ground:***	Is the resistance 1 MΩ or more?	Go to step **2**.	Repair the ground short circuit of harness between ECM connector and electronic throttle control connector.
2	**CHECK SHORT CIRCUIT INSIDE THE ECM.** 1) Connect the connector to ECM. 2) Measure the resistance between electronic throttle control connector and engine ground. ***Connector & terminal*** ***(E57) No. 1 — Engine ground:*** ***(E57) No. 4 — Engine ground:***	Is the resistance 1 MΩ or more?	Go to step **3**.	Repair the ground short circuit of harness between ECM connector and electronic throttle control connector. Replace the ECM if defective. <Ref. to FU(w/o STI)-124, Engine Control Module (ECM).>
3	**CHECK HARNESS BETWEEN ECM AND ELECTRONIC THROTTLE CONTROL CONNECTOR.** 1) Disconnect the connector from ECM. 2) Measure the resistance of harness between ECM connector and electronic throttle control connector. ***Connector & terminal*** ***(E158) No. 17 — (E57) No. 1:*** ***(E158) No. 30 — (E57) No. 3:*** ***(E158) No. 29 — (E57) No. 4:***	Is the resistance less than 1 Ω?	Go to step **4**.	Repair the open circuit of harness between ECM connector and electronic throttle control connector.
4	**CHECK HARNESS BETWEEN ECM AND ELECTRONIC THROTTLE CONTROL CONNECTOR.** 1) Connect the connector to ECM. 2) Measure the resistance between electronic throttle control connector and engine ground. ***Connector & terminal*** ***(E57) No. 3 — Engine ground:***	Is the resistance less than 5 Ω?	Go to step **5**.	Repair the harness and connector. NOTE: In this case, repair the following item: • Open circuit of harness between ECM connector and engine ground • Poor contact of ECM connector • Poor contact of coupling connector
5	**CHECK HARNESS BETWEEN ECM AND ELECTRONIC THROTTLE CONTROL CONNECTOR.** 1) Turn the ignition switch to ON. 2) Measure the voltage between electronic throttle control connector and engine ground. ***Connector & terminal*** ***(E57) No. 1 (+) — Engine ground (–):*** ***(E57) No. 4 (+) — Engine ground (–):***	Is the voltage 5 V or more?	Repair the short circuit to power in the harness between ECM connector and electronic throttle control connector.	Go to step **6**.

Step		Check	Yes	No
6	**CHECK HARNESS BETWEEN ECM AND ELECTRONIC THROTTLE CONTROL CONNECTOR.** 1) Turn the ignition switch to OFF. 2) Disconnect the connector from ECM. 3) Measure the resistance between ECM connectors. ***Connector & terminal*** ***(E158) No. 18 — (E158) No. 17:*** ***(E158) No. 18 — (E158) No. 29:***	Is the resistance 1 MΩ or more?	Repair the poor contact of electronic throttle control connector. Replace the electronic throttle control if defective. <Ref. to FU(w/o STI)-15, Throttle Body.>	Repair the short circuit to power in the harness between ECM connector and electronic throttle control connector.

1. OUTLINE OF DIAGNOSIS

Judge as NG when the signal level of throttle position sensor 1 is different from the throttle position sensor 2.

2. COMPONENT DESCRIPTION

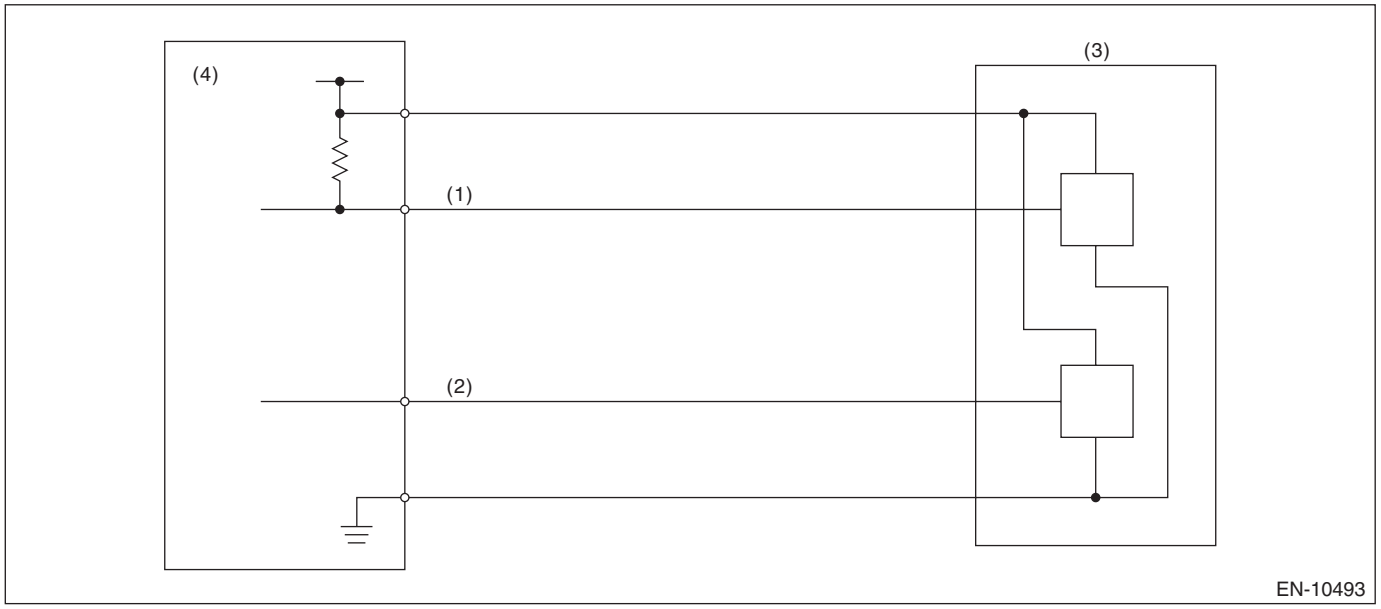

(1) Throttle position sensor 1 signal
(2) Throttle position sensor 2 signal
(3) Throttle position sensor
(4) Engine control module (ECM)

3. EXECUTION CONDITION

Secondary parameters	Execution condition
Battery voltage	≥ 6 V

4. GENERAL DRIVING CYCLE

Always perform the diagnosis continuously.

5. DIAGNOSTIC METHOD

If the duration of time while the following conditions are met is longer than the time indicated, judge as NG.

Judgment Value

Malfunction Criteria	Threshold Value
|Throttle position sensor 1 voltage – (5 V – throttle position sensor 2 voltage)|	> 0.79 V

Time Needed for Diagnosis: 120 ms
Malfunction Indicator Light Illumination: Illuminates as soon as a malfunction occurs.

FX:DTC P2138 THROTTLE/PEDAL POSITION SENSOR/SWITCH "D"/"E" VOLTAGE CORRELATION

DTC DETECTING CONDITION:
Immediately at fault recognition
TROUBLE SYMPTOM:
- Improper idling
- Poor driving performance

CAUTION:
- **After servicing or replacing faulty parts, perform Clear Memory Mode <Ref. to EN(w/o STI)(diag)-82, OPERATION, Clear Memory Mode.>, and Inspection Mode <Ref. to EN(w/o STI)(diag)-64, PROCEDURE, Inspection Mode.>.**
- **Use the check board when measuring the ECM terminal voltage and resistance.**

WIRING DIAGRAM:
Engine Electrical System <Ref. to WI-154, WIRING DIAGRAM, Engine Electrical System.>

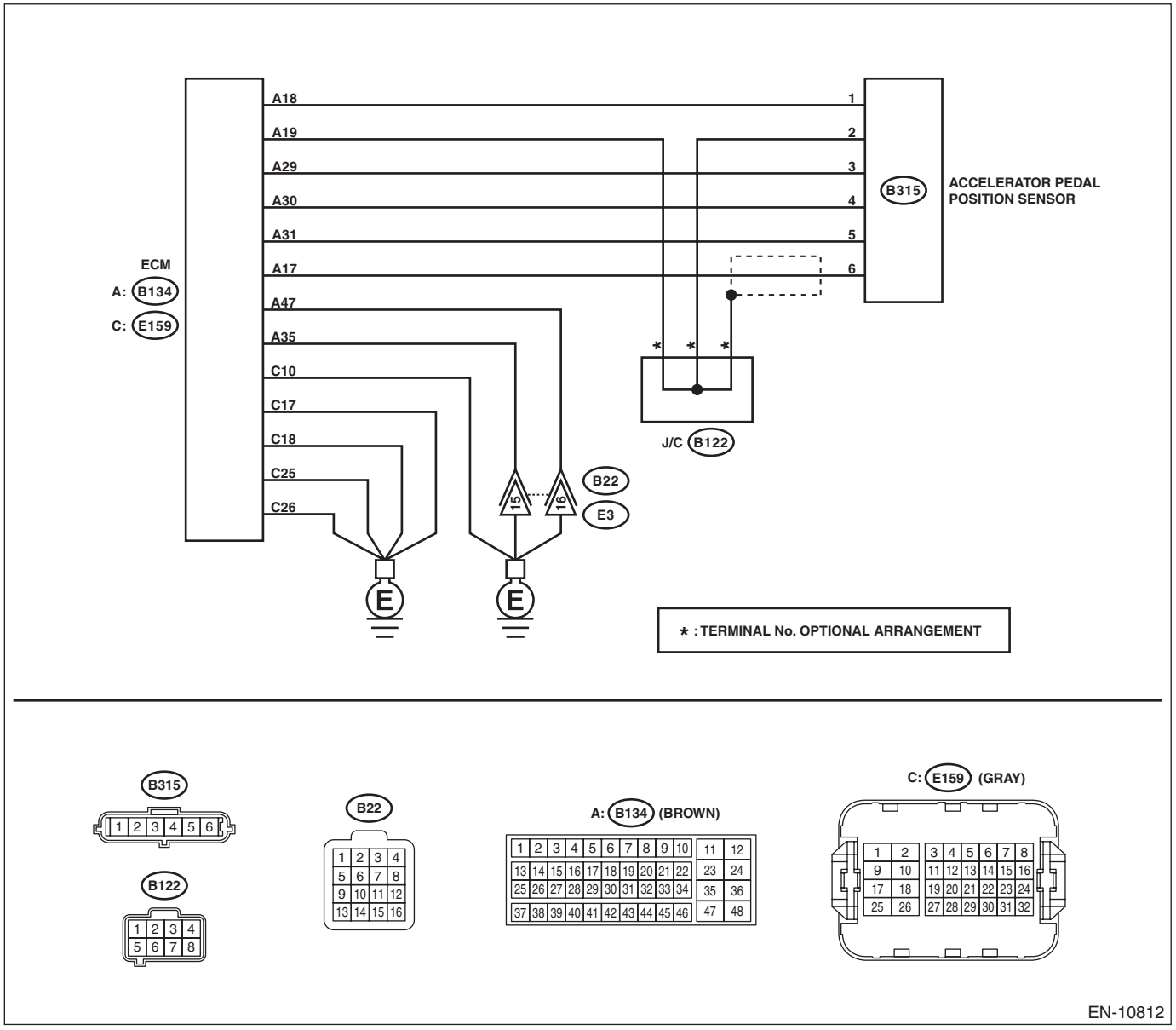

	Step	Check	Yes	No
1	**CHECK ACCELERATOR PEDAL POSITION SENSOR OUTPUT.** 1) Turn the ignition switch to ON. 2) Measure the voltage between ECM connector and engine ground. ***Connector & terminal*** ***Main accelerator pedal position sensor signal*** ***(B134) No. 17 (+) — Engine ground (–):*** ***Sub accelerator pedal position sensor signal*** ***(B134) No. 29 (+) — Engine ground (–):***	Is the difference in measured values for the main accelerator pedal position sensor signal and the sub accelerator pedal position sensor signal 0 V?	Go to step **3**.	Go to step **2**.
2	**CHECK ACCELERATOR PEDAL POSITION SENSOR OUTPUT.** 1) Measure the voltage between accelerator pedal position sensor connector and chassis ground. ***Connector & terminal*** ***(B315) No. 6 (+) — Chassis ground (–):*** ***(B315) No. 3 (+) — Chassis ground (–):***	Is the difference in measured values for the main accelerator pedal position sensor signal and the sub accelerator pedal position sensor signal 0 V?	Replace the accelerator pedal. <Ref. to SP(w/o STI)-4, Accelerator Pedal.>	Repair the harness and connector. NOTE: In this case, repair the following item: • Open circuit of harness between ECM connector and accelerator pedal position sensor connector • Short circuit to ground in harness between ECM connector and accelerator pedal position sensor connector
3	**CHECK HARNESS BETWEEN ECM AND ACCELERATOR PEDAL POSITION SENSOR CONNECTOR.** Measure the resistance of harness between the accelerator pedal position sensor connector and chassis ground. ***Connector & terminal*** ***(B315) No. 5 — Chassis ground:*** ***(B315) No. 2 — Chassis ground:***	Is the resistance less than 5 Ω?	Repair the poor contact of ECM connector.	Repair the harness and connector. NOTE: In this case, repair the following item: • Open circuit of harness between ECM connector and accelerator pedal position sensor connector • Open circuit of harness between ECM connector and engine ground • Poor contact of coupling connector

1. OUTLINE OF DIAGNOSIS

Judge as NG when the signal level of accelerator pedal position sensor 1 is different from the accelerator pedal position sensor 2.

2. COMPONENT DESCRIPTION

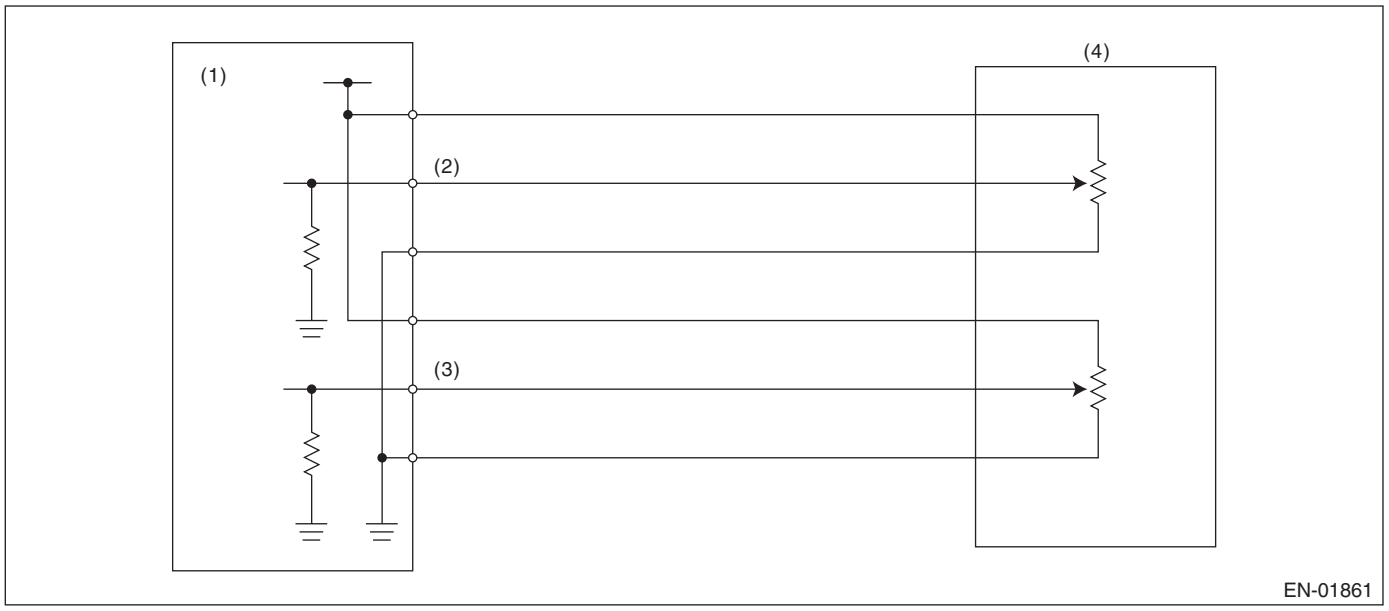

(1) Engine control module (ECM)
(2) Accelerator pedal position sensor 1 signal
(3) Accelerator pedal position sensor 2 signal
(4) Accelerator pedal position sensor

3. EXECUTION CONDITION

Secondary parameters	Execution condition
Battery voltage	≥ 6 V

4. GENERAL DRIVING CYCLE

Always perform the diagnosis continuously.

5. DIAGNOSTIC METHOD

If the duration of time while the following conditions are met is longer than the time indicated, judge as NG.

Judgment Value

Malfunction Criteria	Threshold Value
Signal difference between two sensors	Within NG range of **Details of Judgment value**

Details of Judgment Value

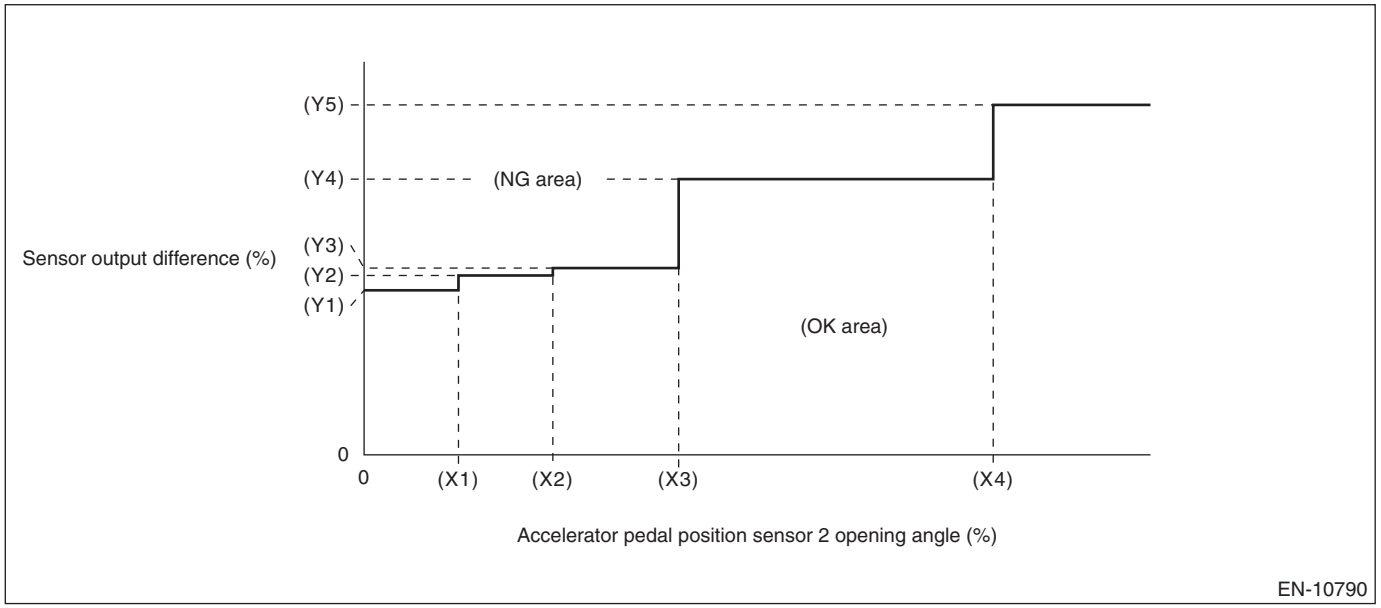

(X1) 1.82% (X2) 3.64% (X3) 6.06%
(X4) 12.12%

(Y1) 4.44% (Y2) 4.84% (Y3) 5.04%
(Y4) 7.44% (Y5) 9.44%

Time Needed for Diagnosis: 140 ms
Malfunction Indicator Light Illumination: Illuminates as soon as a malfunction occurs.

FY:DTC P2146 FUEL INJECTOR GROUP "A" SUPPLY VOLTAGE CIRCUIT/ OPEN

DTC DETECTING CONDITION:
Immediately at fault recognition

CAUTION:
- **After servicing or replacing faulty parts, perform Clear Memory Mode <Ref. to EN(w/o STI)(diag)-82, OPERATION, Clear Memory Mode.>, and Inspection Mode <Ref. to EN(w/o STI)(diag)-64, PROCEDURE, Inspection Mode.>.**
- **Use the check board when measuring the ECM terminal voltage and resistance.**

WIRING DIAGRAM:
Engine Electrical System <Ref. to WI-154, WIRING DIAGRAM, Engine Electrical System.>

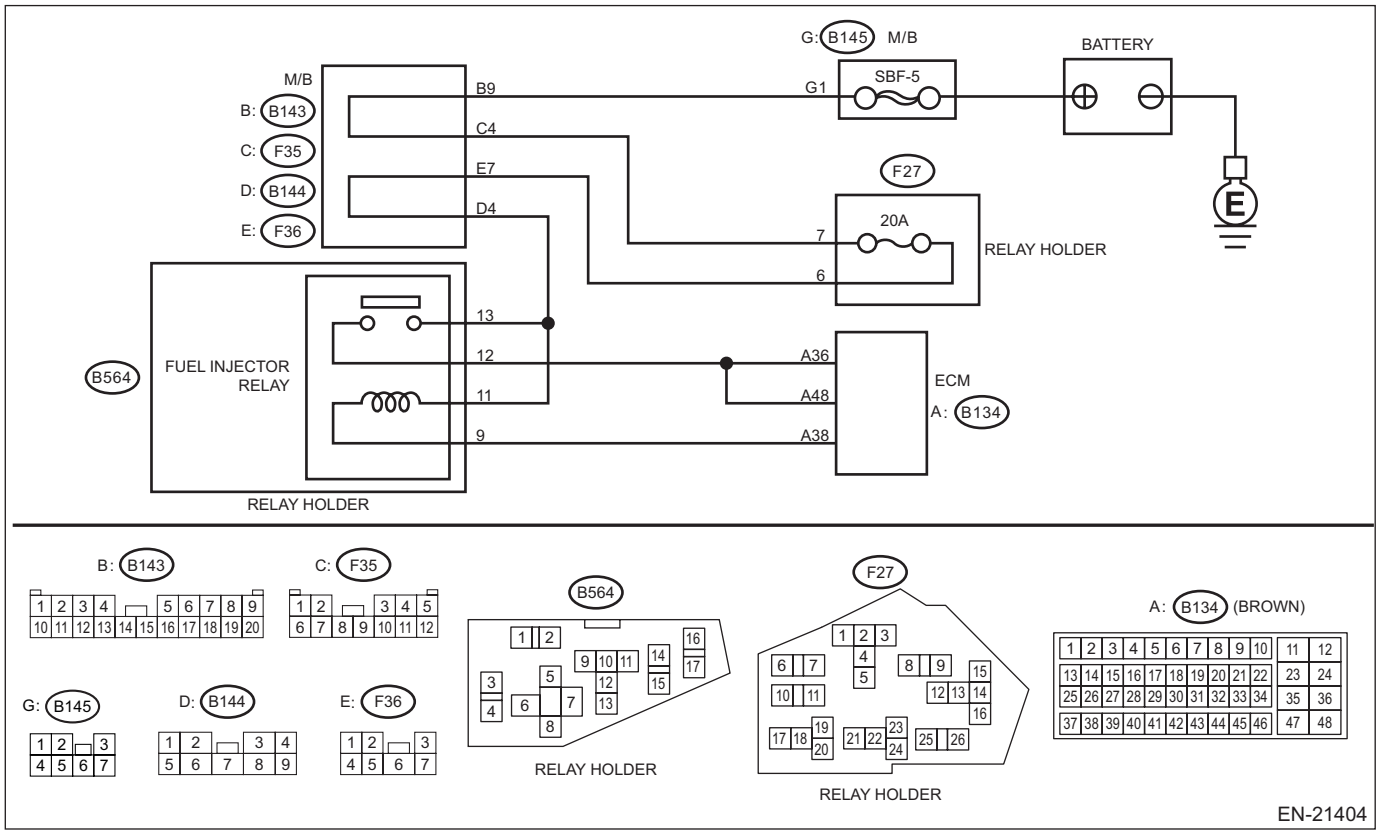

Step		Check	Yes	No
1	**CHECK INPUT VOLTAGE OF ECM.** 1) Turn the ignition switch to ON. 2) Measure the voltage between ECM connector and engine ground. ***Connector & terminal*** ***(B134) No. 36 (+) — Engine ground (–):*** ***(B134) No. 48 (+) — Engine ground (–):***	Is the voltage 10 V or more?	Repair the poor contact of ECM connector.	Go to step **2**.
2	**CHECK HARNESS BETWEEN ECM AND FUEL INJECTOR RELAY CONNECTOR.** 1) Turn the ignition switch to OFF. 2) Disconnect the connector from ECM. 3) Remove the fuel injector relay. 4) Measure the resistance between fuel injector relay connector and engine ground. ***Connector & terminal*** ***(B564) No. 12 — Engine ground:***	Is the resistance 1 MΩ or more?	Go to step **3**.	Repair the short circuit to ground in harness between ECM connector and fuel injector relay connector.

	Step	Check	Yes	No
3	**CHECK HARNESS BETWEEN ECM AND FUEL INJECTOR RELAY CONNECTOR.** Measure the resistance of harness between ECM connector and fuel injector relay connector. ***Connector & terminal*** ***(B134) No. 36 — (B564) No. 12:*** ***(B134) No. 48 — (B564) No. 12:*** ***(B134) No. 38 — (B564) No. 9:***	Is the resistance less than 1 Ω?	Go to step **4**.	Repair the open circuit in harness between ECM connector and fuel injector relay connector.
4	**CHECK INPUT VOLTAGE OF FUEL INJECTOR RELAY.** Measure the voltage between fuel injector relay connector and the engine ground. ***Connector & terminal*** ***(B564) No. 13 (+) — Engine ground (–):*** ***(B564) No. 11 (+) — Engine ground (–):***	Is the voltage 10 V or more?	Replace the fuel injector relay. <Ref. to FU(w/o STI)-135, Fuel Injector Relay.>	Repair the open or ground short in the harness of power supply circuit.

1. OUTLINE OF DIAGNOSIS

Detect the open/short circuit of injector power supply circuit and injector booster circuit.

2. EXECUTION CONDITION

Secondary parameters	Execution condition
Battery voltage	≥ 10.9 V
Injector power supply voltage (diagnosis 2 only)	6 — 17.2 V

3. GENERAL DRIVING CYCLE

Always perform the diagnosis continuously.

4. DIAGNOSTIC METHOD

If the duration of time while the following conditions are met is longer than the time indicated, judge as NG.

Diagnosis 1

Judgment Value

Malfunction Criteria	Threshold Value
Injector power supply voltage	< 6 V or > 17.2 V

Diagnosis 2

Judgment Value

Malfunction Criteria	Threshold Value
Injector booster power supply voltage	< 5.98 V or > 70.72 V

Time Needed for Diagnosis:

- Diagnosis 1: 1000 ms
- Diagnosis 2: 280 ms

Malfunction Indicator Light Illumination: Illuminates as soon as a malfunction occurs.

FZ: DTC P2195 A/F /O2 SENSOR SIGNAL BIASED/STUCK LEAN BANK 1 SENSOR 1

DTC DETECTING CONDITION:

Detected when two consecutive driving cycles with fault occur.

CAUTION:

- **After servicing or replacing faulty parts, perform Clear Memory Mode <Ref. to EN(w/o STI)(diag)-82, OPERATION, Clear Memory Mode.>, and Inspection Mode <Ref. to EN(w/o STI)(diag)-64, PROCEDURE, Inspection Mode.>.**
- **Use the check board when measuring the ECM terminal voltage and resistance.**

WIRING DIAGRAM:

Engine Electrical System <Ref. to WI-154, WIRING DIAGRAM, Engine Electrical System.>

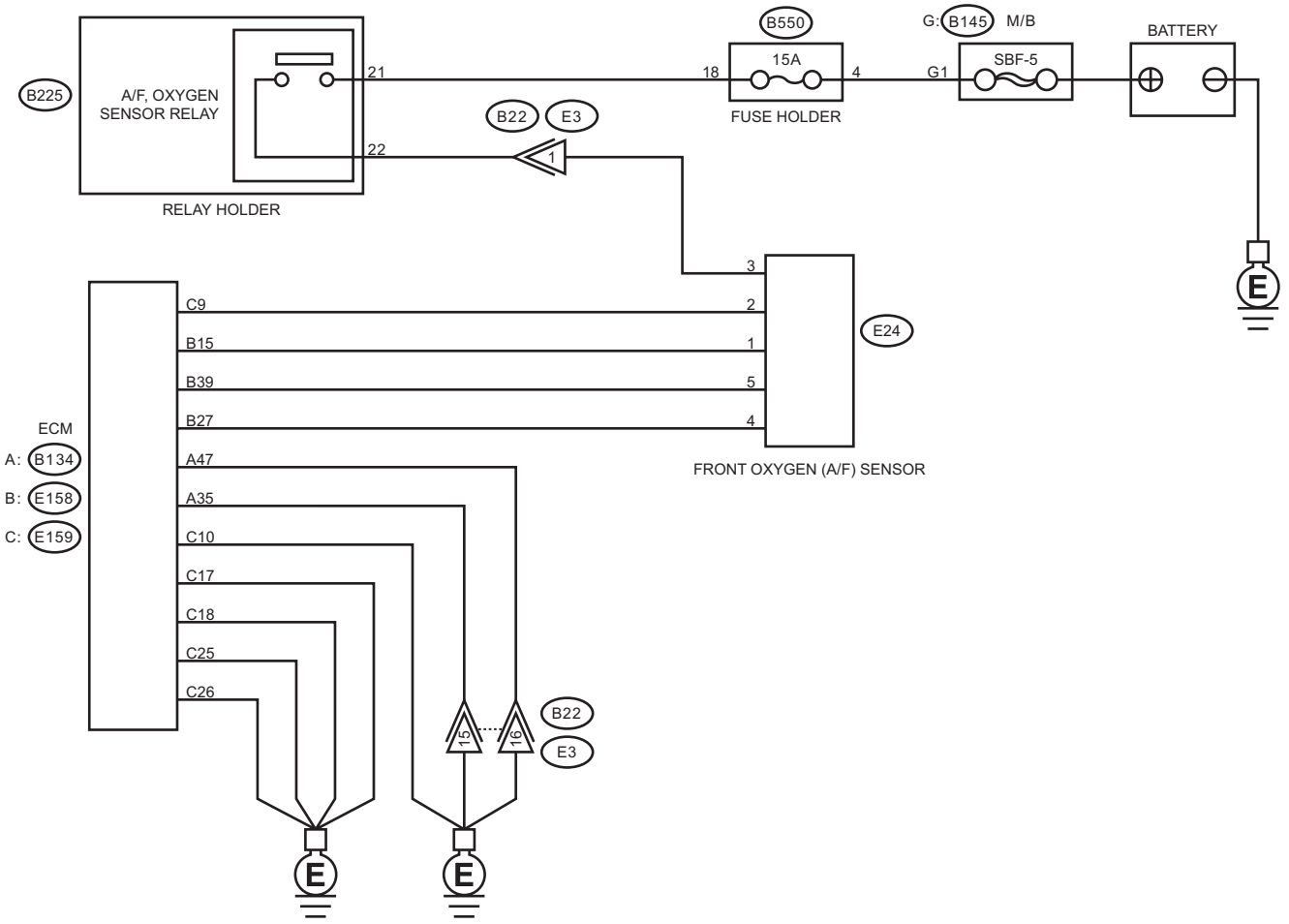

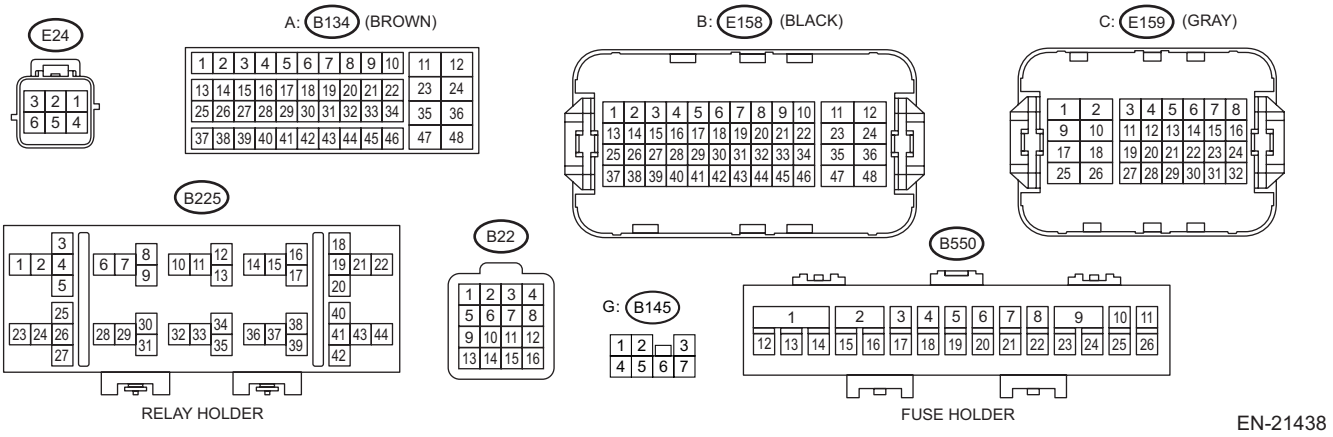

Step		Check	Yes	No
1	**CHECK FRONT OXYGEN (A/F) SENSOR CONNECTOR AND COUPLING CONNECTOR.**	Has water entered the connector?	Completely remove any water inside.	Go to step **2**.

	Step	Check	Yes	No
2	**CHECK HARNESS BETWEEN ECM AND FRONT OXYGEN (A/F) SENSOR CONNECTOR.** 1) Turn the ignition switch to OFF. 2) Disconnect the connector from ECM. 3) Disconnect the connectors from front oxygen (A/F) sensor. 4) Measure the resistance of harness between ECM connector and front oxygen (A/F) sensor connector. ***Connector & terminal*** ***(E158) No. 15 — (E24) No. 1:*** ***(E158) No. 27 — (E24) No. 4:*** ***(E158) No. 39 — (E24) No. 5:***	Is the resistance less than 1 Ω?	Go to step **3**.	Repair the harness and connector. NOTE: In this case, repair the following item: • Open circuit in harness between ECM connector and front oxygen (A/F) sensor connector • Poor contact of coupling connector
3	**CHECK FOR POOR CONTACT.** Check for poor contact of the front oxygen (A/F) sensor connector.	Is there poor contact of front oxygen (A/F) sensor connector?	Repair the poor contact of front oxygen (A/F) sensor connector.	Replace the front oxygen (A/F) sensor. <Ref. to FU(w/o STI)-118, Front Oxygen (A/F) Sensor.>

1. OUTLINE OF DIAGNOSIS

Detect that λ value remains low.
Judge as NG when lambda value is determined as abnormal in accordance with driving conditions such as intake air amount, sub feedback control, and front oxygen (A/F) sensor λ value and rear oxygen sensor voltage value.

λ value = Actual air fuel ratio/Theoretical air fuel ratio
λ > 1: Lean
λ < 1: Rich

2. COMPONENT DESCRIPTION

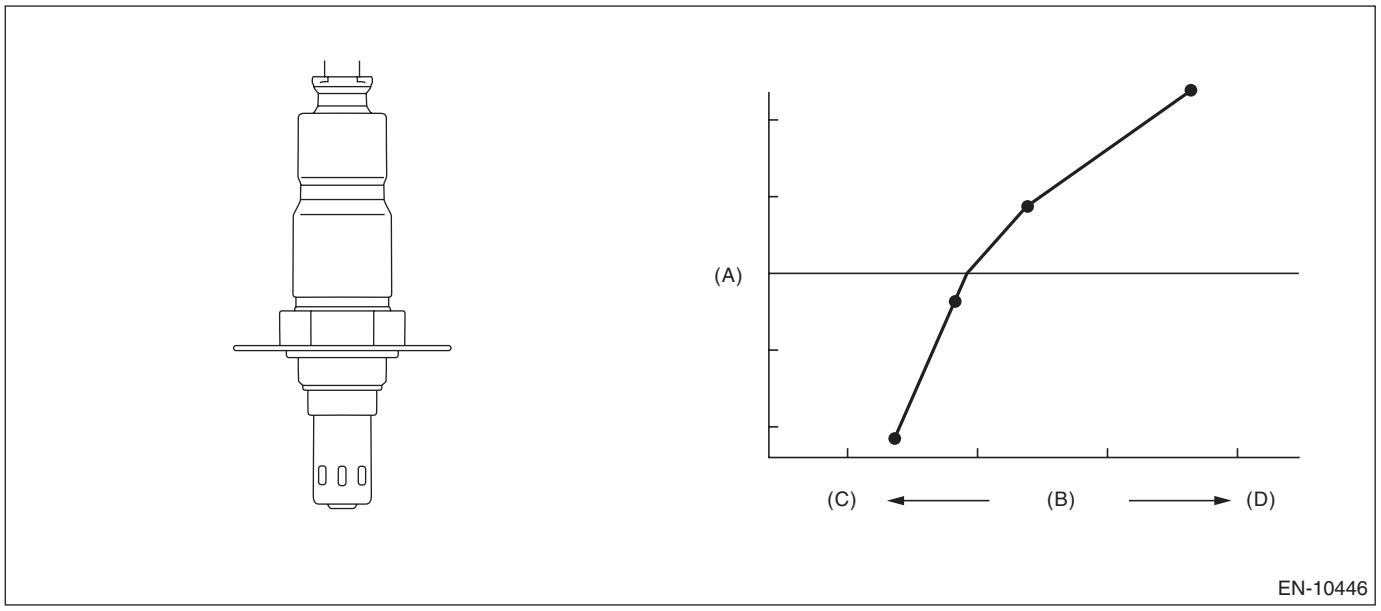

(A) Electromotive force (B) Air fuel ratio (C) Rich
(D) Lean

3. EXECUTION CONDITION

Secondary parameters	Execution condition
Battery voltage	≥ 10.9 V
Main feedback	In operation
Amount of intake air	≥ 6 g/s (0.8 lb/m)
Estimated temperature of the rear oxygen sensor element	≥ 450°C (842°F)

4. GENERAL DRIVING CYCLE

Perform the diagnosis continuously when the conditions are established.

5. DIAGNOSTIC METHOD

If the duration of time while the following conditions are met is longer than the time indicated, judge as NG.

Judgment Value

Malfunction Criteria	Threshold Value
λ value	> 1.15
Rear oxygen sensor voltage value	≥ 0.55 V

Time Needed for Diagnosis: 10000 ms
Malfunction Indicator Light Illumination: Illuminates when malfunction occurs in 2 continuous driving cycles.

GA:DTC P2196 A/F /O2 SENSOR SIGNAL BIASED/STUCK RICH BANK 1 SENSOR 1

DTC DETECTING CONDITION:

Detected when two consecutive driving cycles with fault occur.

CAUTION:

- **After servicing or replacing faulty parts, perform Clear Memory Mode <Ref. to EN(w/o STI)(diag)-82, OPERATION, Clear Memory Mode.>, and Inspection Mode <Ref. to EN(w/o STI)(diag)-64, PROCEDURE, Inspection Mode.>.**
- **Use the check board when measuring the ECM terminal voltage and resistance.**

WIRING DIAGRAM:

Engine Electrical System <Ref. to WI-154, WIRING DIAGRAM, Engine Electrical System.>

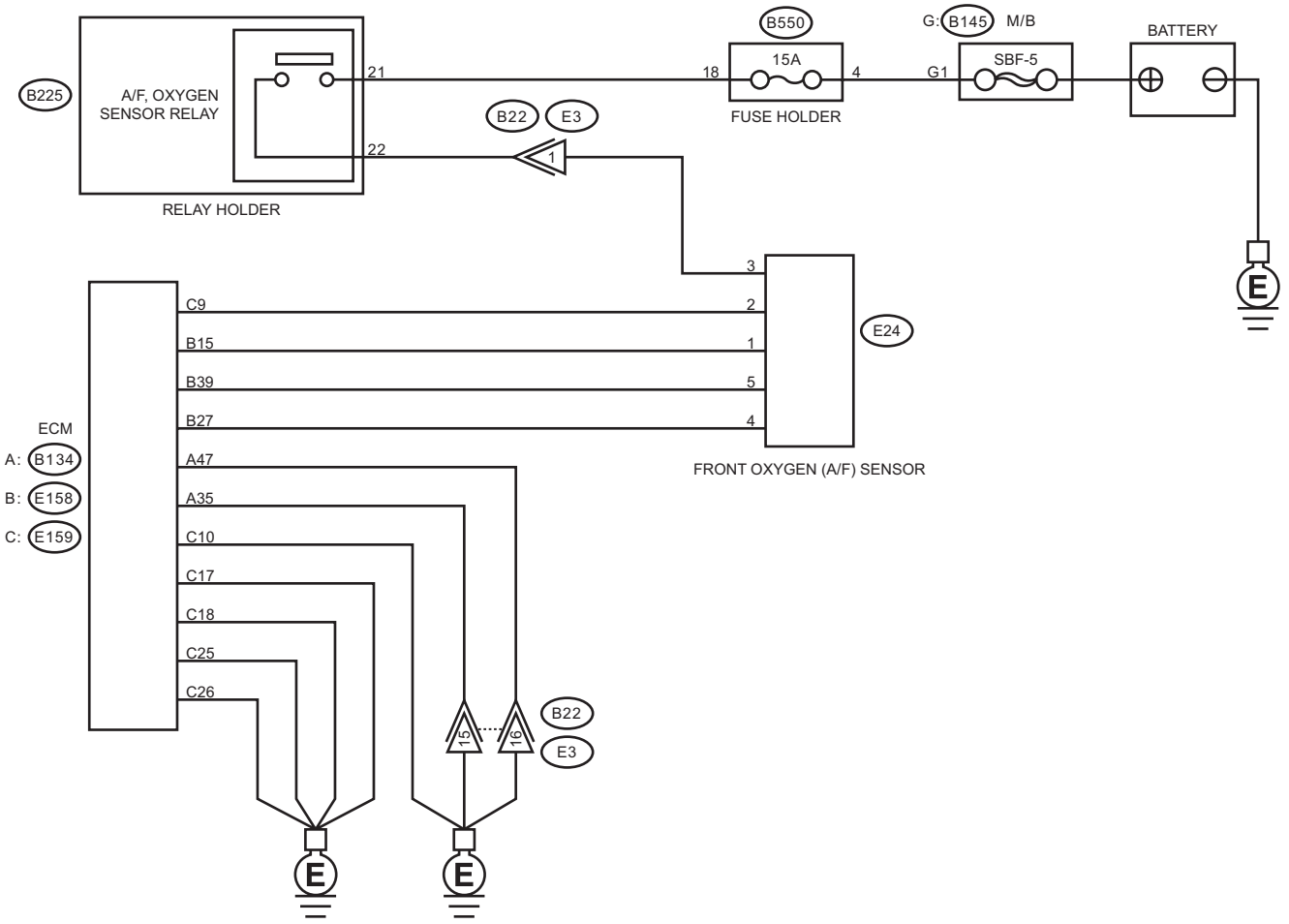

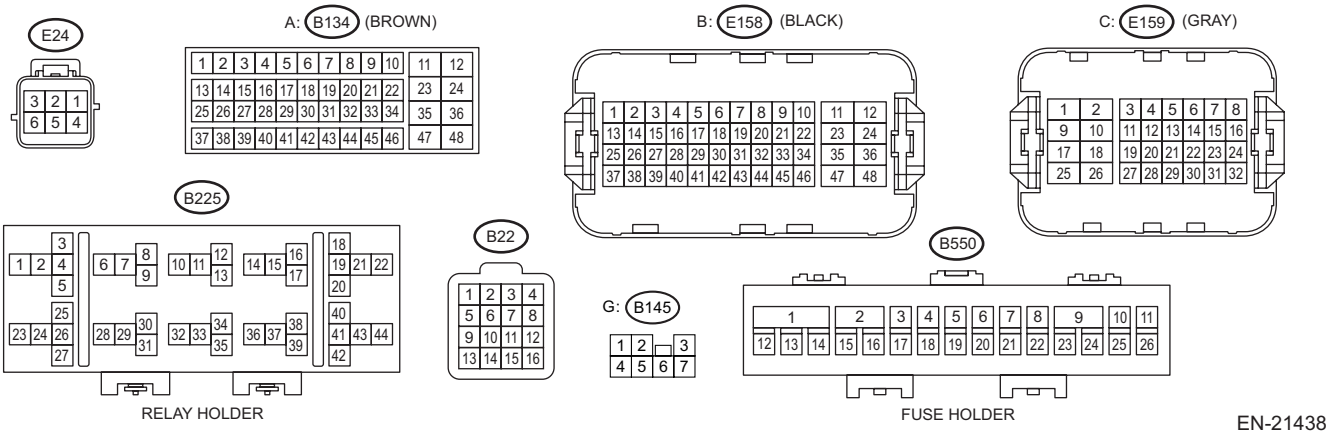

Step		Check	Yes	No
1	**CHECK FRONT OXYGEN (A/F) SENSOR CONNECTOR AND COUPLING CONNECTOR.**	Has water entered the connector?	Completely remove any water inside.	Go to step **2**.

	Step	Check	Yes	No
2	**CHECK HARNESS BETWEEN ECM AND FRONT OXYGEN (A/F) SENSOR CONNECTOR.** 1) Turn the ignition switch to OFF. 2) Disconnect the connector from ECM. 3) Measure the resistance between ECM connector and chassis ground. ***Connector & terminal*** ***(E158) No. 15 — Chassis ground:*** ***(E158) No. 27 — Chassis ground:*** ***(E158) No. 39 — Chassis ground:***	Is the resistance 1 MΩ or more?	Go to step **3**.	Repair the short circuit to ground in harness between ECM connector and front oxygen (A/F) sensor connector.
3	**CHECK HARNESS BETWEEN ECM AND FRONT OXYGEN (A/F) SENSOR CONNECTOR.** 1) Connect the connector to ECM. 2) Disconnect the connectors from front oxygen (A/F) sensor. 3) Turn the ignition switch to ON. 4) Measure the voltage between ECM connector and chassis ground. ***Connector & terminal*** ***(E158) No. 15 (+) — Chassis ground (–):*** ***(E158) No. 27 (+) — Chassis ground (–):*** ***(E158) No. 39 (+) — Chassis ground (–):***	Is the voltage 8 V or more?	Repair the short circuit to power in the harness between ECM connector and front oxygen (A/F) sensor connector.	Repair the poor contact of ECM connector.

1. OUTLINE OF DIAGNOSIS

Detect that λ value remains high.
Judge as NG when lambda value is determined as abnormal in accordance with driving conditions such as intake air amount, sub feedback control, and front oxygen (A/F) sensor λ value and rear oxygen sensor voltage value.

λ value = Actual air fuel ratio/Theoretical air fuel ratio
λ > 1: Lean
λ < 1: Rich

2. COMPONENT DESCRIPTION

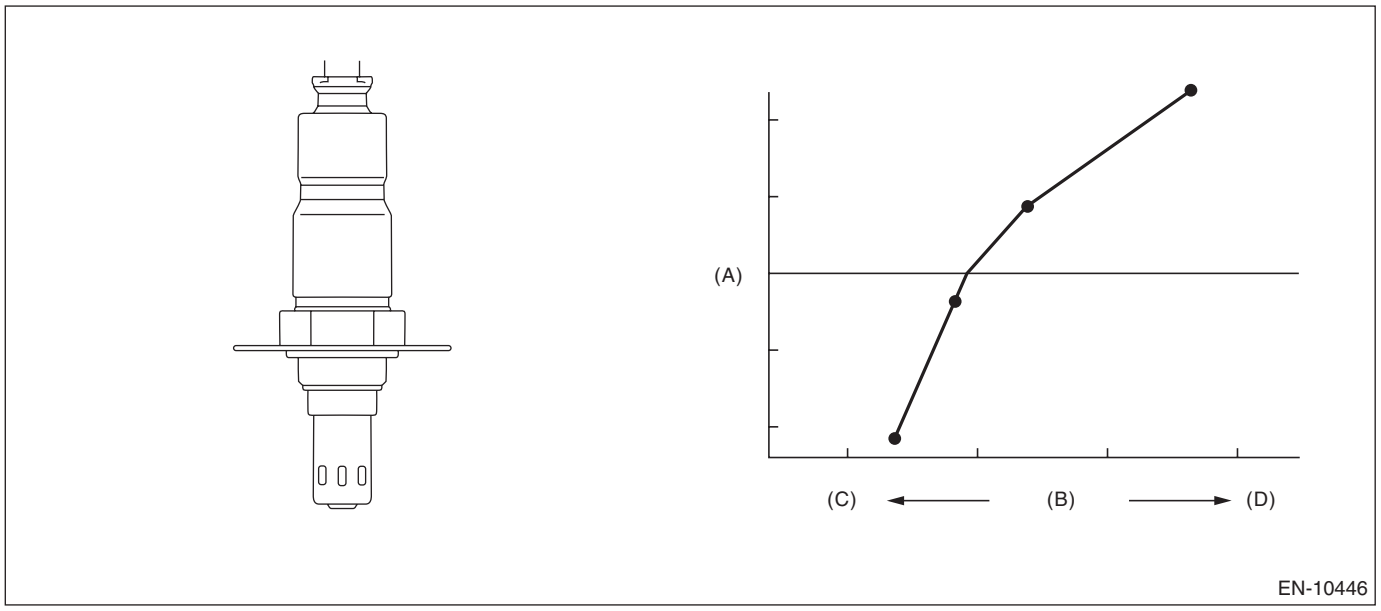

(A) Electromotive force (B) Air fuel ratio (C) Rich
(D) Lean

3. EXECUTION CONDITION

Secondary parameters	Execution condition
Battery voltage	≥ 10.9 V
Main feedback	In operation
Amount of intake air	≥ 6 g/s (0.8 lb/m)
Estimated temperature of the rear oxygen sensor element	≥ 450°C (842°F)

4. GENERAL DRIVING CYCLE

Perform the diagnosis continuously when the conditions are established.

5. DIAGNOSTIC METHOD

If the duration of time while the following conditions are met is longer than the time indicated, judge as NG.

Judgment Value

Malfunction Criteria	Threshold Value
λ value	< 0.85
Rear oxygen sensor voltage value	≤ 0.15 V

Time Needed for Diagnosis: 10000 ms
Malfunction Indicator Light Illumination: Illuminates when malfunction occurs in 2 continuous driving cycles.

GB:DTC P219A BANK 1 AIR-FUEL RATIO IMBALANCE

DTC DETECTING CONDITION:

Detected when two consecutive driving cycles with fault occur.

TROUBLE SYMPTOM:

- Engine stalls.
- Improper idling

CAUTION:

- **After servicing or replacing faulty parts, perform Clear Memory Mode <Ref. to EN(w/o STI)(diag)-82, OPERATION, Clear Memory Mode.>, and Inspection Mode <Ref. to EN(w/o STI)(diag)-64, PROCEDURE, Inspection Mode.>.**
- **Use the check board when measuring the ECM terminal voltage and resistance.**

WIRING DIAGRAM:
Engine Electrical System <Ref. to WI-154, WIRING DIAGRAM, Engine Electrical System.>

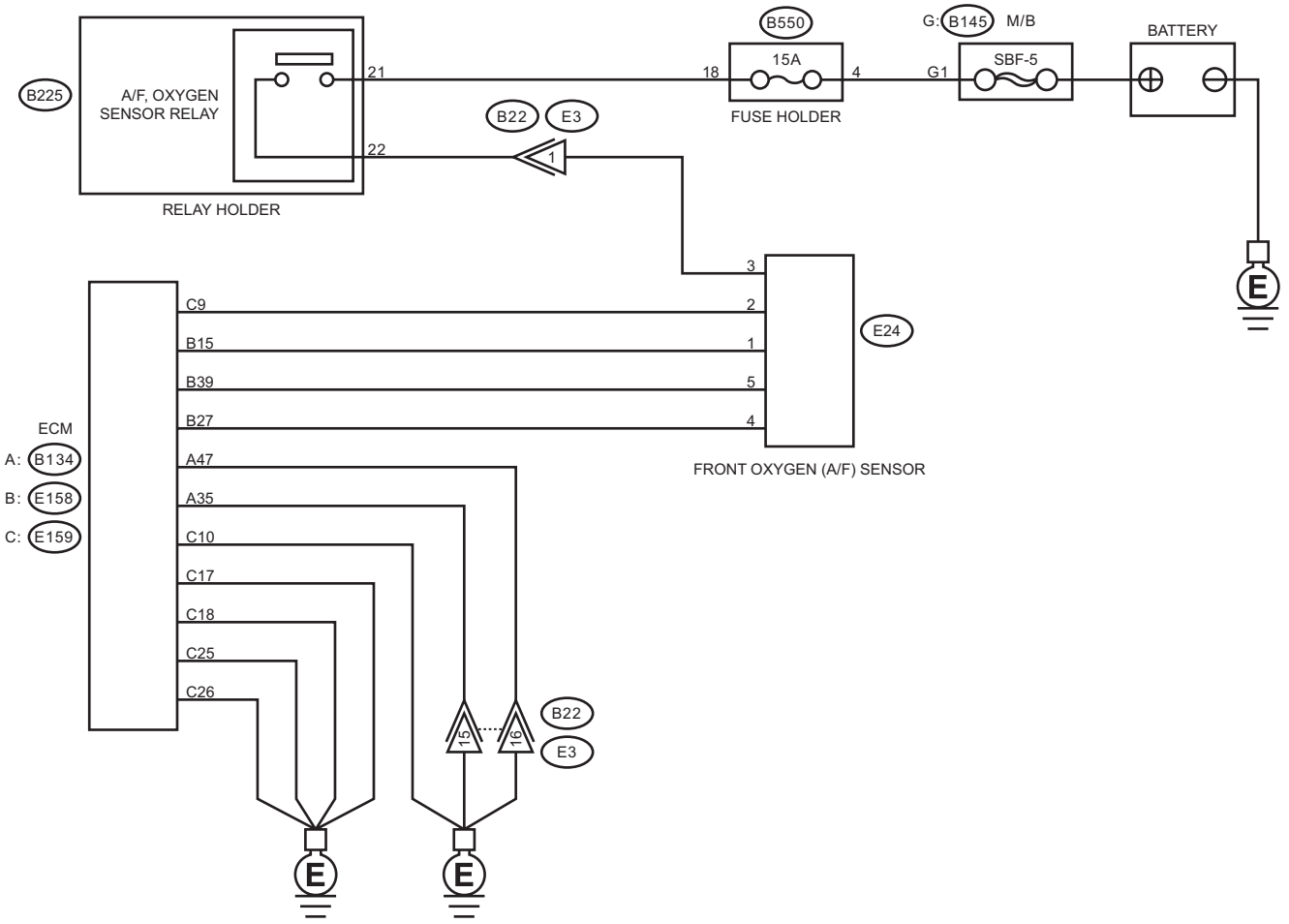

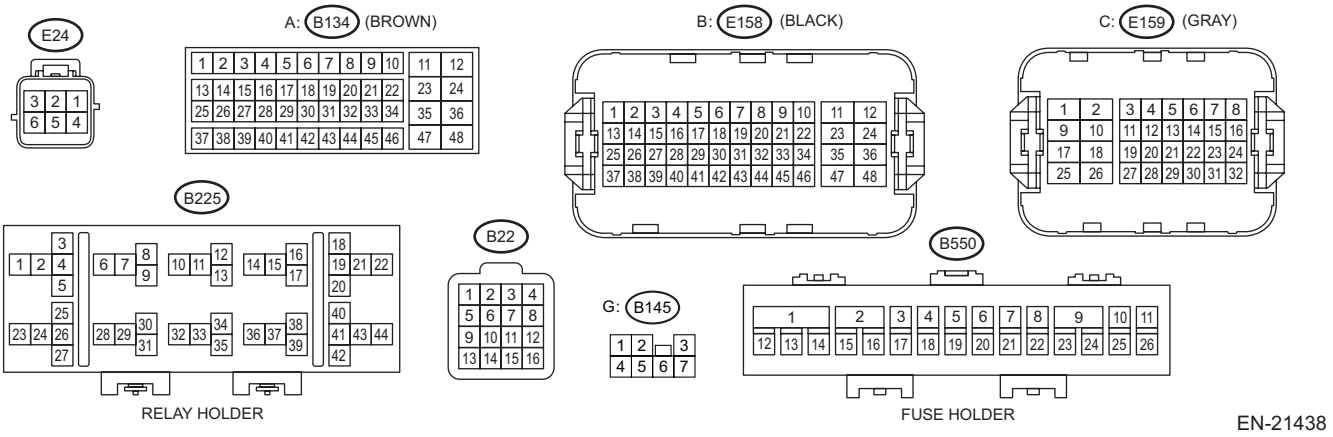

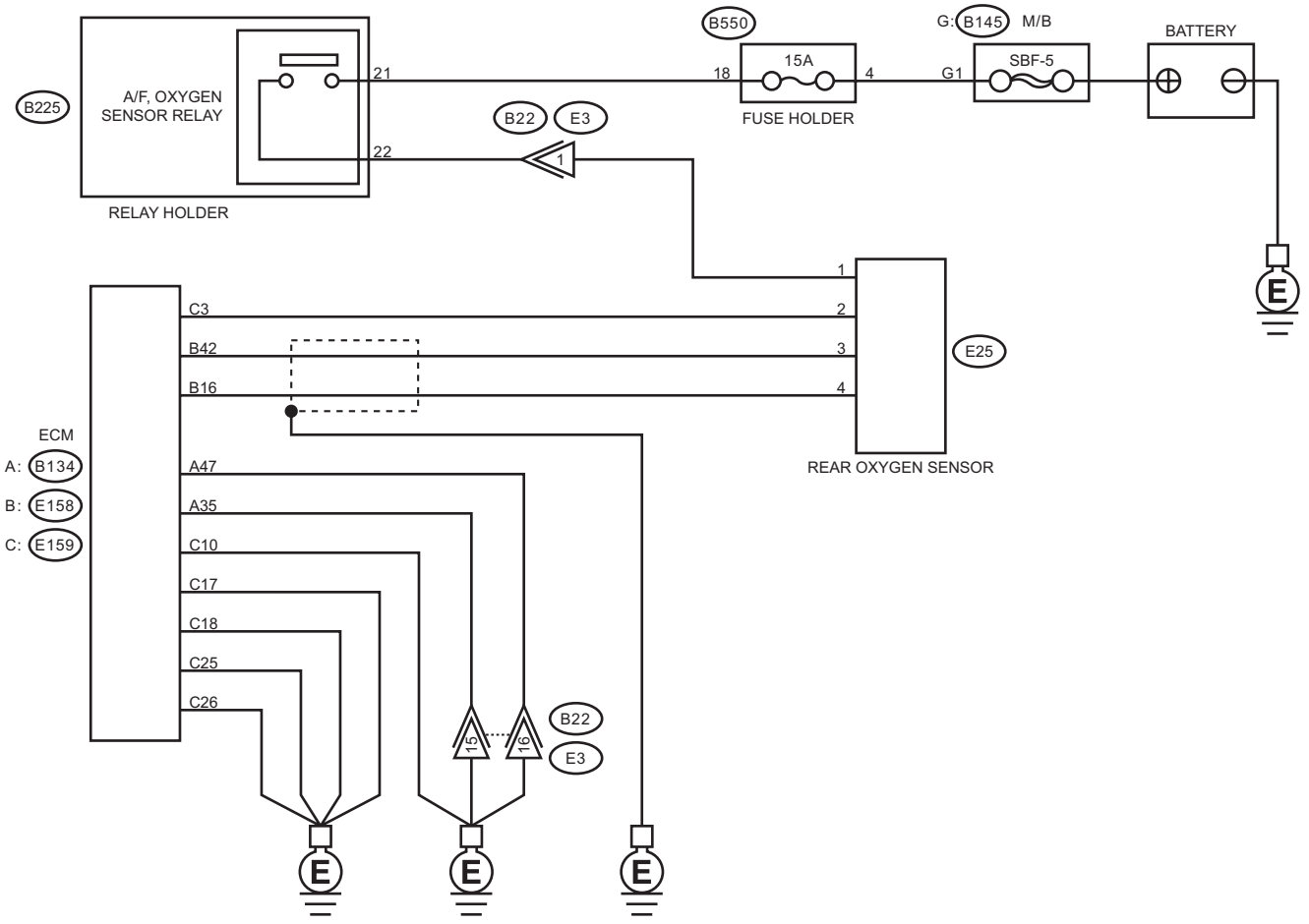
B225
A/F, OXYGEN SENSOR RELAY
RELAY HOLDER
21
22
B550
15A
18
4
FUSE HOLDER
G: B145
M/B
G1
SBF-5
BATTERY
B22
E3
1
E
C3
B42
B16
1
2
3
4
E25
REAR OXYGEN SENSOR
ECM
A: B134
B: E158
C: E159
A47
A35
C10
C17
C18
C25
C26
15
16
B22
E3
E
E
E

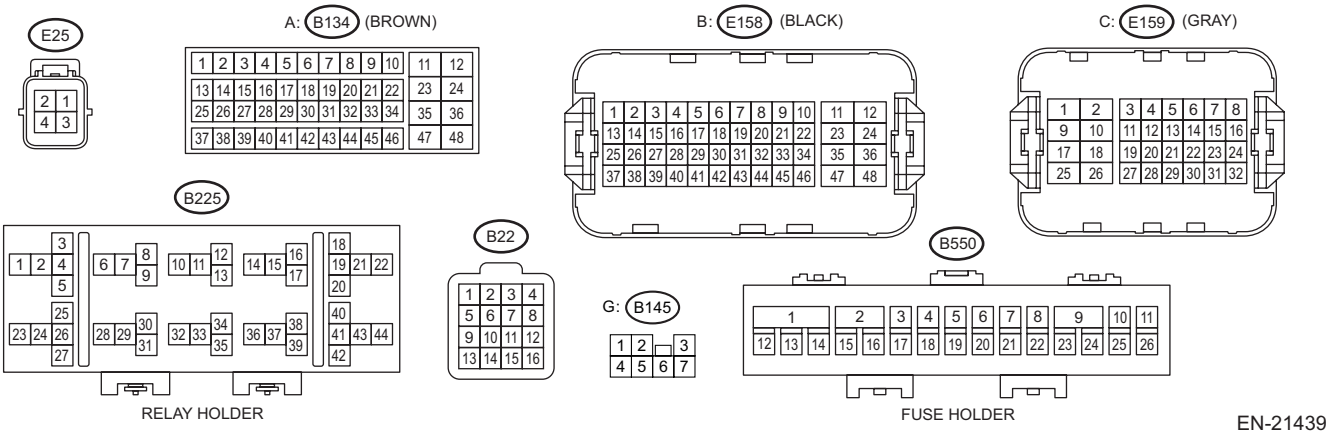
E25
A: B134 (BROWN)
B: E158 (BLACK)
C: E159 (GRAY)
B225
RELAY HOLDER
B22
G: B145
B550
FUSE HOLDER
EN-21439

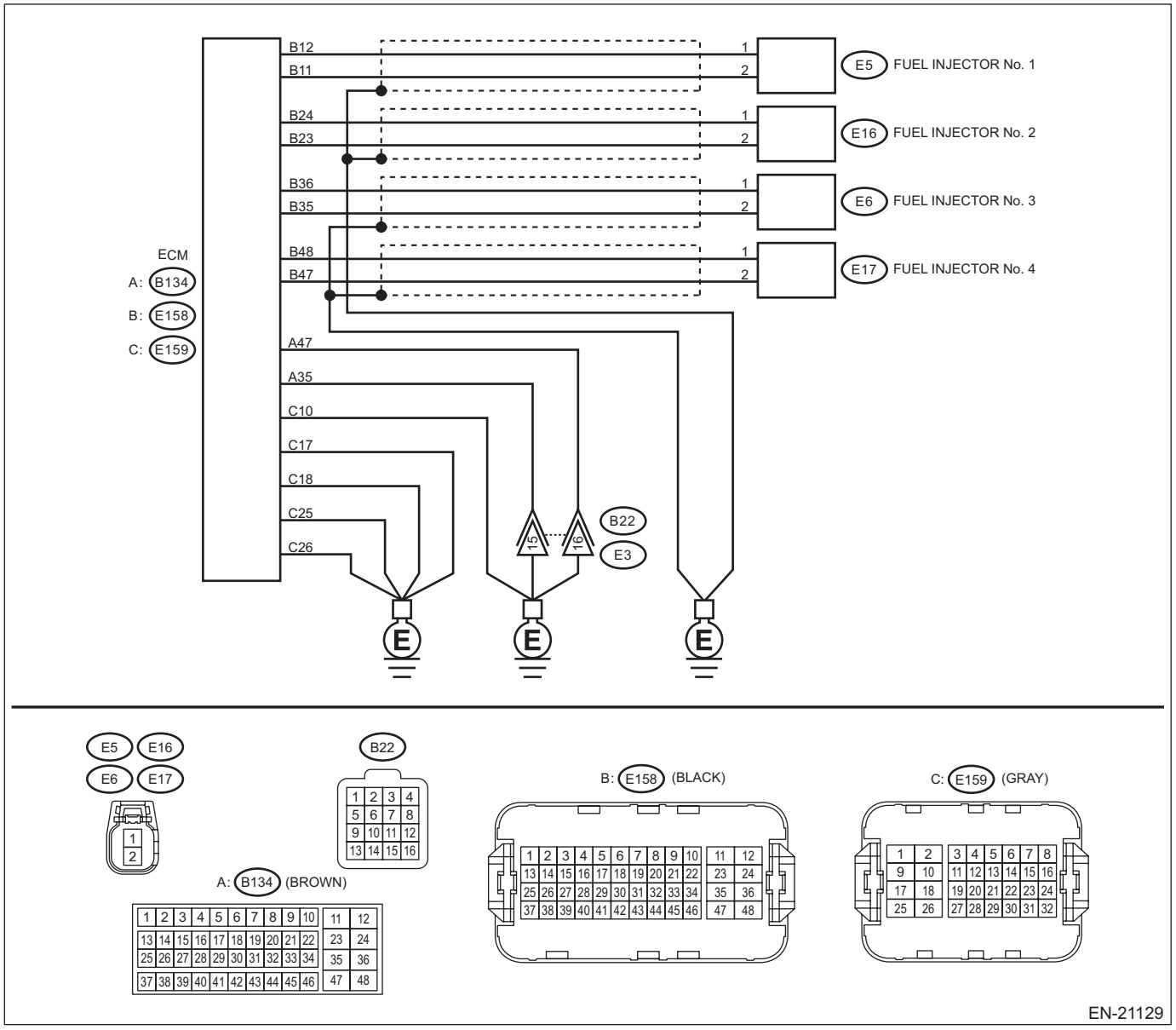

Step		Check	Yes	No
1	**CHECK FRONT OXYGEN (A/F) SENSOR CONNECTOR AND COUPLING CONNECTOR.**	Has water entered the connector?	Completely remove any water inside.	Go to step **2**.
2	**CHECK HARNESS BETWEEN ECM AND FRONT OXYGEN (A/F) SENSOR CONNECTOR.** 1) Turn the ignition switch to OFF. 2) Disconnect the connector from ECM. 3) Disconnect the connectors from front oxygen (A/F) sensor. 4) Measure the resistance of harness between ECM connector and front oxygen (A/F) sensor connector. ***Connector & terminal*** ***(E158) No. 15 — (E24) No. 1:*** ***(E158) No. 27 — (E24) No. 4:*** ***(E158) No. 39 — (E24) No. 5:***	Is the resistance less than 1 Ω?	Go to step **3**.	Repair the harness and connector. NOTE: In this case, repair the following item: • Open circuit in harness between ECM connector and front oxygen (A/F) sensor connector • Poor contact of coupling connector

	Step	Check	Yes	No
3	**CHECK HARNESS BETWEEN ECM AND FRONT OXYGEN (A/F) SENSOR CONNECTOR.** Measure the resistance between ECM connector and chassis ground. ***Connector & terminal*** ***(E158) No. 15 — Chassis ground:*** ***(E158) No. 27 — Chassis ground:*** ***(E158) No. 39 — Chassis ground:***	Is the resistance 1 MΩ or more?	Go to step **4**.	Repair the short circuit to ground in harness between ECM connector and front oxygen (A/F) sensor connector.
4	**CHECK HARNESS BETWEEN ECM AND FRONT OXYGEN (A/F) SENSOR CONNECTOR.** 1) Connect the connector to ECM. 2) Turn the ignition switch to ON. 3) Measure the voltage between front oxygen (A/F) sensor connector and chassis ground. ***Connector & terminal*** ***(E24) No. 1 (+) — Chassis ground (–):*** ***(E24) No. 4 (+) — Chassis ground (–):*** ***(E24) No. 5 (+) — Chassis ground (–):***	Is the voltage 8 V or more?	Repair the short circuit to power in the harness between ECM connector and front oxygen (A/F) sensor connector.	Go to step **5**.
5	**CHECK EXHAUST SYSTEM.**	Are there holes or loose bolts on exhaust system?	Repair the exhaust system.	Go to step **6**.
6	**CHECK AIR INTAKE SYSTEM.**	Are there holes, loose bolts or disconnection of hose on air intake system?	Repair the air intake system.	Go to step **7**.
7	**CHECK FUEL PRESSURE.** **WARNING:** **Place "NO OPEN FLAMES" signs near the working area.** **CAUTION:** **Be careful not to spill fuel.** 1) Connect the front oxygen (A/F) sensor connector. 2) Measure the fuel pressure. <Ref. to ME(w/o STI)-31, INSPECTION, Fuel Pressure.> **CAUTION:** **Release fuel pressure before removing the fuel pressure gauge.**	Is the measured value 328 — 358 kPa (3.3 — 3.7 kgf/cm^2, 48 — 52 psi)?	Go to step **8**.	Check the fuel pump and fuel delivery line. <Ref. to FU(w/o STI)-167, INSPECTION, Fuel Pump.> <Ref. to FU(w/o STI)-196, INSPECTION, Fuel Delivery and Evaporation Lines.>
8	**CHECK ENGINE COOLANT TEMPERATURE SENSOR.** 1) Start the engine and warm up completely. 2) Read the value of «Coolant Temp.» using the Subaru Select Monitor or a general scan tool. NOTE: • Subaru Select Monitor For detailed operation procedures, refer to "Read Current Data For Engine". <Ref. to EN(w/o STI)(diag)-46, Subaru Select Monitor.> • General scan tool For detailed operation procedures, refer to the general scan tool operation manual.	Is the value of «Coolant Temp.» 75°C (167°F) or more?	Go to step **9**.	Replace the engine coolant temperature sensor. <Ref. to FU(w/o STI)-89, Engine Coolant Temperature Sensor.>

	Step	Check	Yes	No
9	**CHECK MASS AIR FLOW AND INTAKE AIR TEMPERATURE SENSOR.** 1) Start the engine and warm up engine until coolant temperature is higher than 75°C (167°F). 2) For CVT models, set the select lever to "P" range or "N" range, and for MT models, place the shift lever in the neutral position. 3) Turn the A/C switch to OFF. 4) Turn all the accessory switches to OFF. 5) Read the value of «Mass Air Flow» using the Subaru Select Monitor or a general scan tool. NOTE: • Subaru Select Monitor For detailed operation procedures, refer to "Read Current Data For Engine". <Ref. to EN(w/o STI)(diag)-46, Subaru Select Monitor.> • General scan tool For detailed operation procedures, refer to the general scan tool operation manual.	Is the value of «Mass Air Flow» 2.0 — 5.0 g/s (0.26 — 0.66 lb/m)?	Go to step **10**.	Replace the mass air flow and intake air temperature sensor. <Ref. to FU(w/o STI)-110, Mass Air Flow and Intake Air Temperature Sensor.>
10	**CHECK MASS AIR FLOW AND INTAKE AIR TEMPERATURE SENSOR.** 1) Start the engine and warm up engine until coolant temperature is higher than 75°C (167°F). 2) For CVT models, set the select lever to "P" range or "N" range, and for MT models, place the shift lever in the neutral position. 3) Turn the A/C switch to OFF. 4) Turn all the accessory switches to OFF. 5) Open the front hood. 6) Measure the ambient temperature. 7) Read the value of «IAT Sensor #11» using the Subaru Select Monitor or a general scan tool. NOTE: • Subaru Select Monitor For detailed operation procedures, refer to "Read Current Data For Engine". <Ref. to EN(w/o STI)(diag)-46, Subaru Select Monitor.> • General scan tool For detailed operation procedures, refer to the general scan tool operation manual.	Subtract ambient temperature value from the value of «IAT Sensor #11». Is the obtained value –10 — 50°C (–18 — 90°F)?	Go to step **11**.	Check the mass air flow and intake air temperature sensor. <Ref. to FU(w/o STI)-110, Mass Air Flow and Intake Air Temperature Sensor.>
11	**CHECK REAR OXYGEN SENSOR DATA.** 1) Warm up the engine until engine coolant temperature is higher than 75°C (167°F), and keep the engine speed at 3,000 rpm. (2 minutes maximum) 2) Read the value of «O2 Sensor #12» using the Subaru Select Monitor or a general scan tool. NOTE: • Subaru Select Monitor For detailed operation procedures, refer to "Read Current Data For Engine". <Ref. to EN(w/o STI)(diag)-46, Subaru Select Monitor.> • General scan tool For detailed operation procedures, refer to the general scan tool operation manual.	Is the value of «Oxygen sensor #12» 0.490 V or more?	Go to step **12**.	Go to step **13**.

	Step	Check	Yes	No
12	**CHECK REAR OXYGEN SENSOR DATA.** 1) Warm up the engine until engine coolant temperature is higher than 75°C (167°F), and rapidly reduce the engine speed from 3,000 rpm. 2) Read the value of «O2 Sensor #12» using the Subaru Select Monitor or a general scan tool. NOTE: • Subaru Select Monitor For detailed operation procedures, refer to "Read Current Data For Engine". <Ref. to EN(w/o STI)(diag)-46, Subaru Select Monitor.> • General scan tool For detailed operation procedures, refer to the general scan tool operation manual.	Is the value of «Oxygen sensor #12» 0.250 V or less?	Go to step **14**.	Go to step **13**.
13	**CHECK REAR OXYGEN SENSOR CONNECTOR AND COUPLING CONNECTOR.**	Has water entered the connector?	Completely remove any water inside.	Go to step **15**.
14	**CHECK FRONT OXYGEN (A/F) SENSOR USING REAR OXYGEN SENSOR SIGNAL.** 1) Warm up the engine until engine coolant temperature is higher than 75°C (167°F), then keep the engine idling for 5 minutes or more. 2) Read the value of «O2 Sensor #12» using the Subaru Select Monitor or a general scan tool. NOTE: • Subaru Select Monitor For detailed operation procedures, refer to "Read Current Data For Engine". <Ref. to EN(w/o STI)(diag)-46, Subaru Select Monitor.> • General scan tool For detailed operation procedures, refer to the general scan tool operation manual.	Is the value of «Oxygen sensor #12» kept at 0.250 V or less for 5 minutes or more?	Replace the front oxygen (A/F) sensor. <Ref. to FU(w/o STI)-118, Front Oxygen (A/F) Sensor.>	Go to step **15**.
15	**CHECK HARNESS BETWEEN ECM AND REAR OXYGEN SENSOR CONNECTOR.** 1) Turn the ignition switch to OFF. 2) Disconnect the connector from ECM. 3) Disconnect the connector from rear oxygen sensor. 4) Measure the resistance of harness between ECM connector and rear oxygen sensor connector. ***Connector & terminal*** ***(E158) No. 42 — (E25) No. 3:*** ***(E158) No. 16 — (E25) No. 4:***	Is the resistance less than 1 Ω?	Go to step **16**.	Repair the harness and connector. NOTE: In this case, repair the following item: • Open circuit in harness between ECM connector and rear oxygen sensor connector • Poor contact of coupling connector
16	**CHECK HARNESS BETWEEN ECM AND REAR OXYGEN SENSOR CONNECTOR.** 1) Connect the connector to ECM. 2) Turn the ignition switch to ON. 3) Measure the voltage between rear oxygen sensor connector and chassis ground. ***Connector & terminal*** ***(E25) No. 4 (+) — Chassis ground (–):***	Is the voltage 0.2 — 0.5 V?	Replace the rear oxygen sensor. <Ref. to FU(w/o STI)-120, Rear Oxygen Sensor.>	Go to step **17**.

	Step	Check	Yes	No
17	**CHECK HARNESS BETWEEN ECM AND FUEL INJECTOR CONNECTOR.** 1) Turn the ignition switch to OFF. 2) Disconnect the connector from fuel injector on faulty cylinders. 3) Measure the resistance between fuel injector connector and engine ground on faulty cylinders. ***Connector & terminal*** ***#1 (E5) No. 1 — Engine ground:*** ***#1 (E5) No. 2 — Engine ground:*** ***#2 (E16) No. 1 — Engine ground:*** ***#2 (E16) No. 2 — Engine ground:*** ***#3 (E6) No. 1 — Engine ground:*** ***#3 (E6) No. 2 — Engine ground:*** ***#4 (E17) No. 1 — Engine ground:*** ***#4 (E17) No. 2 — Engine ground:***	Is the resistance 1 MΩ or more?	Go to step **18**.	Repair the short circuit to ground in harness between ECM connector and fuel injector connector.
18	**CHECK HARNESS BETWEEN ECM AND FUEL INJECTOR CONNECTOR.** Measure the resistance of harness between ECM and fuel injector connector on faulty cylinders. ***Connector & terminal*** ***#1 (E158) No. 12 — (E5) No. 1:*** ***#1 (E158) No. 11 — (E5) No. 2:*** ***#2 (E158) No. 24 — (E16) No. 1:*** ***#2 (E158) No. 23 — (E16) No. 2:*** ***#3 (E158) No. 36 — (E6) No. 1:*** ***#3 (E158) No. 35 — (E6) No. 2:*** ***#4 (E158) No. 48 — (E17) No. 1:*** ***#4 (E158) No. 47 — (E17) No. 2:***	Is the resistance less than 1 Ω?	Go to step **19**.	Repair the open circuit of the harness between the ECM connector and fuel injector connector.
19	**CHECK FUEL INJECTOR.** Check the fuel injector on faulty cylinder. <Ref. to FU(w/o STI)-65, INSPECTION, Fuel Injector.>	Is the check result OK?	Go to step **20**.	Replace the faulty fuel injector. <Ref. to FU(w/o STI)-50, Fuel Injector.>
20	**CHECK INSTALLATION CONDITION OF CAMSHAFT POSITION SENSOR/CRANKSHAFT POSITION SENSOR.**	Is the camshaft position sensor or crankshaft position sensor loosely installed?	Tighten the camshaft position sensor or crankshaft position sensor. <Ref. to FU(w/o STI)-98, INSTALLATION, Camshaft Position Sensor.> <Ref. to FU(w/o STI)-94, INSTALLATION, Crankshaft Position Sensor.>	Go to step **21**.
21	**CHECK CRANKSHAFT POSITION SENSOR PLATE.**	Is the crankshaft position sensor plate rusted or does it have broken teeth?	Replace the crankshaft position sensor plate. <Ref. to ME(w/o STI)-247, Cylinder Block.>	Go to step **22**.
22	**CHECK INSTALLATION CONDITION OF TIMING CHAIN.** Turn the crankshaft using ST, and align the alignment mark on crank sprocket with alignment mark on cylinder block. ST 18252AA000 CRANKSHAFT SOCKET	Is the timing chain dislocated from its proper position?	Correct the installation condition of timing chain. <Ref. to ME(w/o STI)-111, Timing Chain Assembly.>	Go to step **23**.

	Step	Check	Yes	No
23	**CHECK FUEL LEVEL.**	Is the fuel meter indication higher than the “Lower” level?	Go to step **24**.	Refill the fuel so that the fuel meter indication is higher than the “Lower” level, and proceed to the next step. Go to step **24**.
24	**CHECK STATUS OF MALFUNCTION INDICATOR LIGHT.** 1) Clear the memory using the Subaru Select Monitor or general scan tool. <Ref. to EN(w/o STI)(diag)-82, Clear Memory Mode.> 2) Start the engine, and drive the vehicle 10 minutes or more.	Does the malfunction indicator light illuminate or blink?	Go to step **26**.	Go to step **25**.
25	**CHECK CAUSE OF MISFIRE.**	Was the cause of misfire identified when the engine is running?	Finish diagnostics operation, if the engine has no abnormality.	Repair the poor contact of connector. NOTE: In this case, repair the following item: • Poor contact of ignition coil connector • Poor contact of fuel injector connector on faulty cylinders • Poor contact of ECM connector • Poor contact of coupling connector
26	**CHECK AIR INTAKE SYSTEM.**	Is there any fault in air intake system?	Repair the air intake system. NOTE: Check the following items. • Are there air leaks or air suction caused by loose or dislocated nuts and bolts? • Are there cracks or any disconnection of hoses?	Go to step **27**.
27	**CHECK MISFIRE SYMPTOM.** 1) Turn the ignition switch to ON. 2) Check for DTC. <Ref. to EN(w/o STI)(diag)-63, Read Diagnostic Trouble Code (DTC).>	Does the Subaru Select Monitor or general scan tool indicate only one DTC?	Go to step **30**.	Go to step **28**.
28	**CHECK DTC.**	Is DTC P0301 and P0303 displayed on the Subaru Select Monitor or general scan tool?	Go to step **31**.	Go to step **29**.
29	**CHECK DTC.**	Is DTC P0302 and P0304 displayed on the Subaru Select Monitor or general scan tool?	Go to step **32**.	Go to step **33**.

Step		Check	Yes	No
30	ONLY ONE CYLINDER.	Is there any fault in the cylinder?	Repair or replace faulty parts. NOTE: Check the following items. • Spark plug • Ignition coil • Fuel injector • Compression	Go to DTC P0171. <Ref. to EN(w/o STI)(diag)-282, DTC P0171 SYSTEM TOO LEAN BANK 1, Diagnostic Procedure with Diagnostic Trouble Code (DTC).>
31	GROUP OF #1 AND #3 CYLINDERS.	Are there any faults in #1 and #3 cylinders?	Repair or replace faulty parts. NOTE: Check the following items. • Spark plug • Ignition coil • Fuel injector • Compression • Skipping timing chain teeth	Go to DTC P0171. <Ref. to EN(w/o STI)(diag)-282, DTC P0171 SYSTEM TOO LEAN BANK 1, Diagnostic Procedure with Diagnostic Trouble Code (DTC).>
32	GROUP OF #2 AND #4 CYLINDERS.	Are there any faults in #2 and #4 cylinders?	Repair or replace faulty parts. NOTE: Check the following items. • Spark plug • Ignition coil • Fuel injector • Compression • Skipping timing chain teeth	Go to DTC P0171. <Ref. to EN(w/o STI)(diag)-282, DTC P0171 SYSTEM TOO LEAN BANK 1, Diagnostic Procedure with Diagnostic Trouble Code (DTC).>
33	CYLINDER AT RANDOM.	Is the engine idle rough?	Go to DTC P0171. <Ref. to EN(w/o STI)(diag)-282, DTC P0171 SYSTEM TOO LEAN BANK 1, Diagnostic Procedure with Diagnostic Trouble Code (DTC).>	Repair or replace faulty parts. NOTE: Check the following items. • Spark plug • Ignition coil • Fuel injector • Compression

1. OUTLINE OF DIAGNOSIS

This diagnostic monitor performs a functional check of the fuel system to determine an air-fuel ratio cylinder imbalance.
This diagnosis is composed of two monitors.
The outline of “monitor A1” is as follows. When an air-fuel ratio cylinder imbalance occurs, the primary oxygen sensor output signal will oscillate with increased amplitude. This monitor utilizes this behavior to make a diagnosis. The monitor integrates the difference between the amplification value and the mean value of the first oxygen sensor output signal and compares it to a threshold to make a judgment.
The outline of “monitor B1” is as follows. Similarly, when an imbalance occurs, the engine speed also fluctuates with increased amplitude. This monitor utilizes this behavior to make a diagnosis. For reference, it should be noted that this imbalance monitor method is actually similar to the current misfire diagnostic monitor, and the parameter “domg360” (units: degrees CA) is shared between the imbalance and misfire monitors. The imbalance monitor is performed during idle condition when the engine is warm. The monitor integrates the count of “domg360” which exceeds a threshold in 1000 revolution.
When both the “monitor A1” value and the “monitor B1” value exceed a predetermined threshold, this monitor determines a malfunction and stores a fault code.

Monitor A1

When there is an air-fuel ratio cylinder imbalance malfunction, the primary oxygen sensor output fluctuates widely compared with a normal sensor, as shown by the chain line in Figure 1 below. This monitor makes a diagnosis based on this phenomenon. Each primary oxygen sensor signal (PS) and mean value of the primary oxygen sensor signal (MS) is calculated from the primary oxygen sensor signal. The absolute values of (PS – MS) are sampled every 4 ms as shown in the figure. Diagnostic value 1 (DV1) is obtained by integrating the absolute value of (PS – MS) for 2500 times. A malfunction is determined when DV1 exceeds the threshold. The judgment values are determined experimentally.

Figure 1. Compare malfunctioned primary oxygen sensor output with a normal sensor

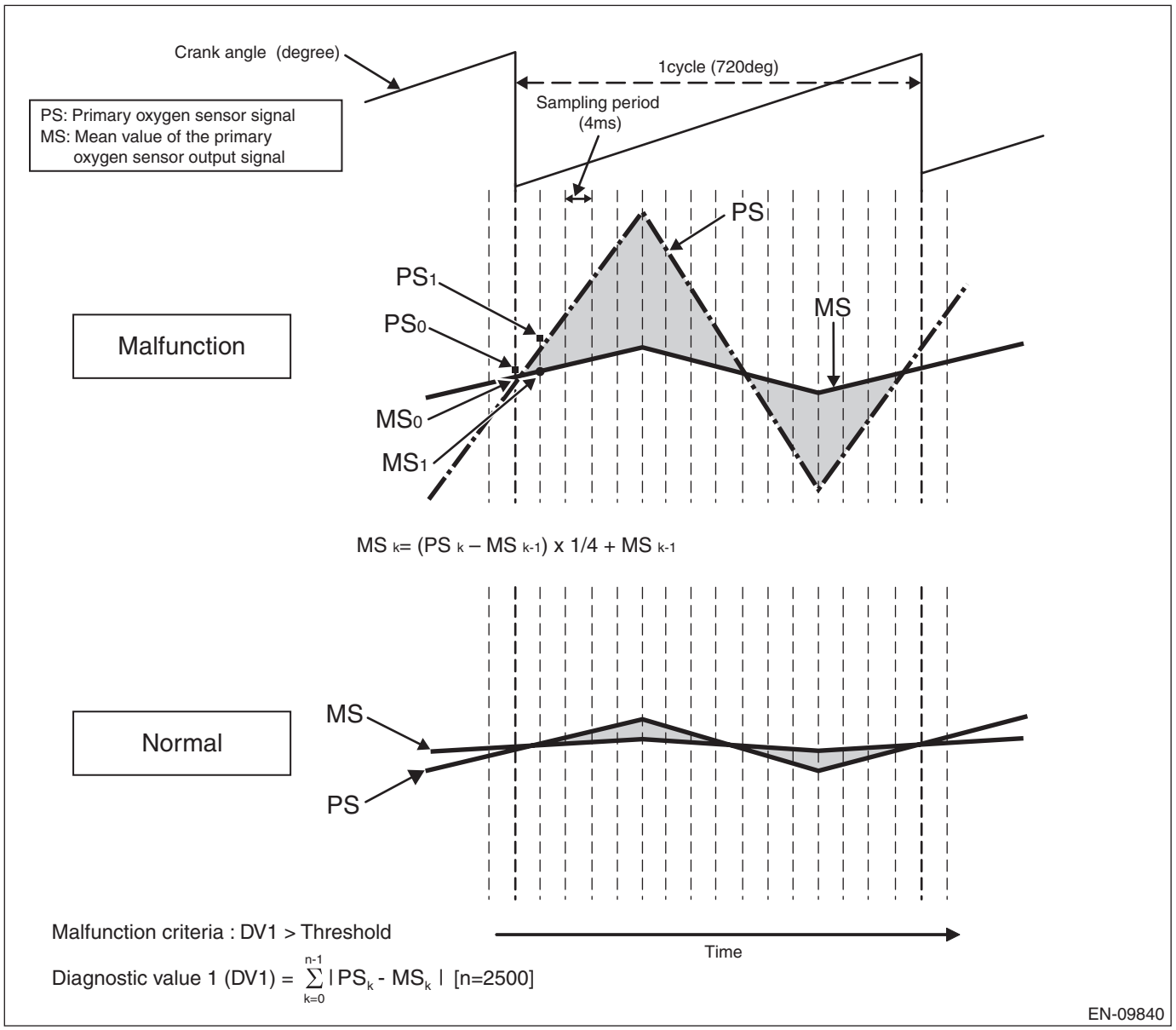

Monitor B1

Method used: Difference method of 360 degrees CA
Monitor value: domg360 = (omg 1 – omg 0) – (omg 3 – omg 2) = angular speed
Each crankshaft angular speed is defined as Figure 2 below.
Figure 2. Description of domg360 output

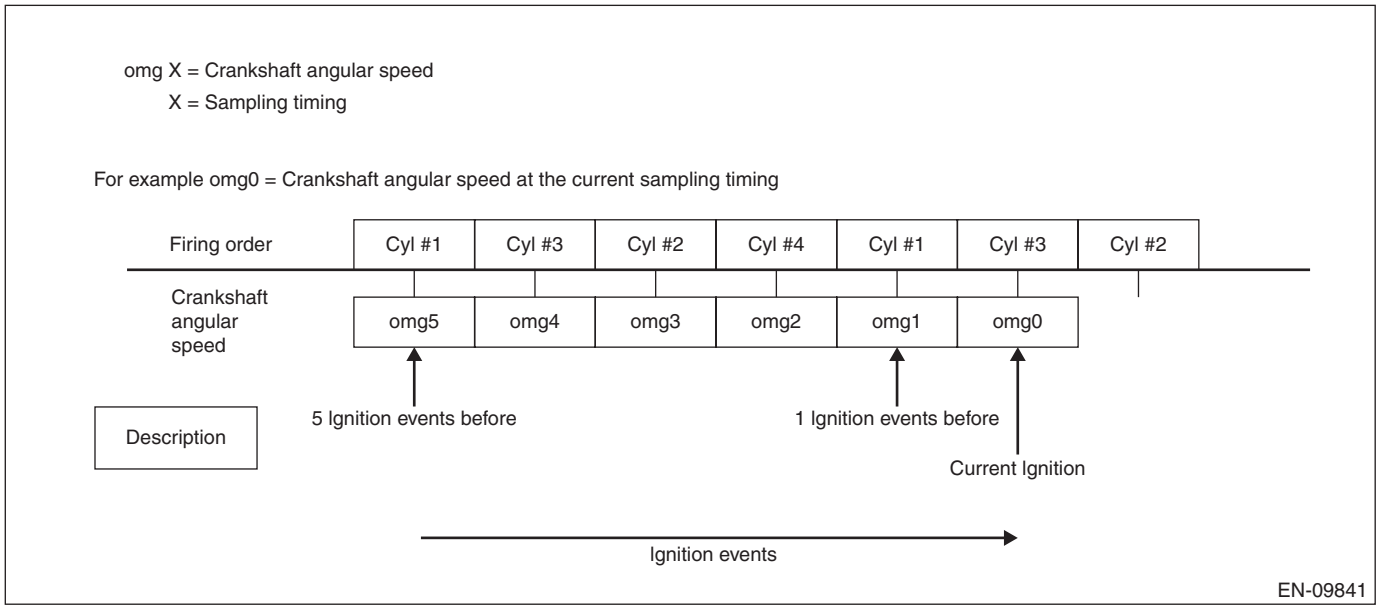

This method uses the fact that the domg360 of lean conditioned cylinder caused by imbalance malfunction indicates big value, as shown by the chain line in Figure 3 below.
The number of times for domg360 to exceed the judgment value in 1000 revolutions (500 cycles) is calculated as diagnostic value 2 (DV2). A malfunction is determined when DV2 exceeds the threshold.
Figure 3. Compare malfunctioned domg360 output with a normal output

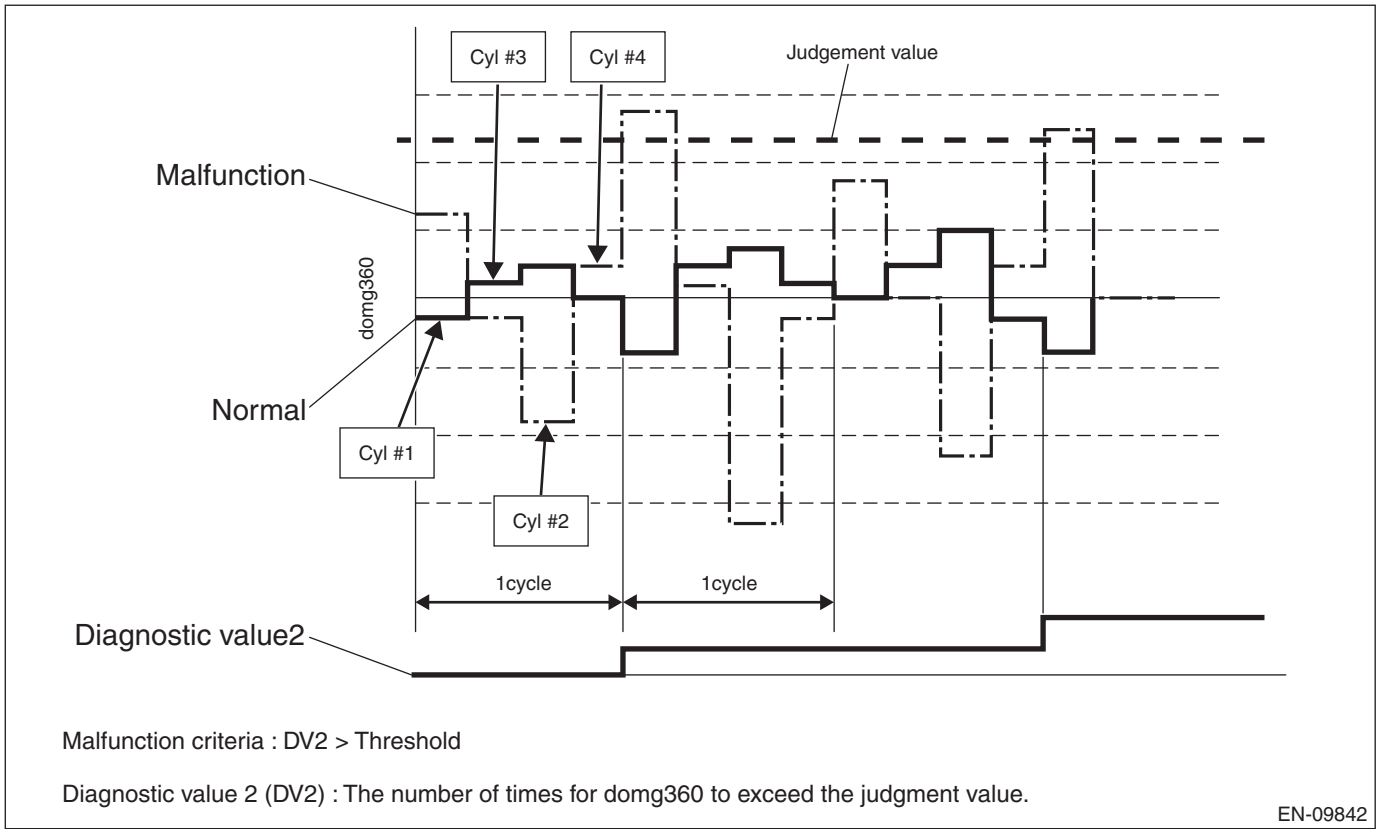

2. EXECUTION CONDITION

Monitor A1: Primary oxygen sensor fluctuation

Secondary parameters	Execution condition
Battery voltage	≥ 10.9 V
Barometric pressure	≥ 75.06 kPa (563 mmHg, 22.2 inHg)
Main feedback	In operation
Engine speed	> 1500 rpm and < 4000 rpm
Charging efficiency	> 70 air mass %
(Target A/F in order to stabilize the Oxygen Storage Capacity	
in the catalyst after fuel cut recovery	≠ Rich
for time)	≥ 0.5 s
Fuel control for short-term fuel trim by A/F sensor response monitoring (only for MT model)	≠ Intrusively changed

Monitor B1: Crankshaft speed fluctuation

Secondary parameters	Execution condition
Misfiring diagnosis monitoring	In operation
Accelerator pedal position	≠ 0%
Engine speed	> 1500 rpm and < 4000 rpm
Vehicle speed	≤ 482.78 km/h (300 MPH)
Charging efficiency	> 70 air mass % and < 255 air mass %

3. GENERAL DRIVING CYCLE

Always perform the diagnosis continuously.

4. DIAGNOSTIC METHOD

Judge as NG when Monitor A1 and Monitor B1 are both NG, and when either is OK, judge as OK.

Monitor A1

Judge as NG when the following conditions are established.

Judgment Value

Malfunction Criteria	Threshold Value
Diagnostic value 1 (DV1)	> Map

Threshold value 1 (TV1):

$$\sum_{k=0}^{n-1} Map_k \quad [n=2500]$$

EN-09888

Map

		Charging efficiency (air mass %)					
		70	80	90	100	110	120
Engine speed (rpm)	1500	0.002	0.002	0.003	0.004	0.005	0.006
	2000	0.002	0.002	0.003	0.004	0.009	0.013
	2500	0.002	0.002	0.006	0.012	0.018	0.022
	3000	0.004	0.009	0.016	0.022	0.027	0.031
	3500	0.005	0.009	0.018	0.023	0.028	0.032
	4000	0.015	0.018	0.029	0.033	0.036	0.041

Time Needed for Diagnosis: 10 seconds

Monitor B1

Judge as NG when the following conditions are established.

Judgment Value

Malfunction Criteria	Threshold Value
Diagnostic Value2 (DV2)	> 17 count

Time Needed for Diagnosis: 1000 engine revs.

Malfunction Indicator Light Illumination: Illuminates when malfunction occurs in 2 continuous driving cycles.

GC:DTC P2227 BAROMETRIC PRESSURE SENSOR "A" CIRCUIT RANGE/PERFORMANCE

DTC DETECTING CONDITION:
Detected when two consecutive driving cycles with fault occur.

CAUTION:
After servicing or replacing faulty parts, perform Clear Memory Mode <Ref. to EN(w/o STI)(diag)-82, OPERATION, Clear Memory Mode.>, and Inspection Mode <Ref. to EN(w/o STI)(diag)-64, PROCEDURE, Inspection Mode.>.

Step	Check	Yes	No
1 **CHECK FOR ANY OTHER DTC ON DISPLAY.**	Is any other DTC displayed?	Check DTC using "List of Diagnostic Trouble Code (DTC)". <Ref. to EN(w/o STI)(diag)-106, List of Diagnostic Trouble Code (DTC).>	Replace the ECM. <Ref. to FU(w/o STI)-124, Engine Control Module (ECM).> NOTE: The barometric pressure sensor is built into the ECM.

1. OUTLINE OF DIAGNOSIS

Detect the malfunction of barometric pressure sensor output property.
Judge as NG when the barometric pressure sensor output is largely different from the intake manifold pressure at engine start.

2. COMPONENT DESCRIPTION

The barometric pressure sensor is built into the ECM.

3. EXECUTION CONDITION

Secondary parameters	Execution condition
Soaking time	≥ 60 s
Elapsed time after ignition switch is turned to ON	< 60 s

4. GENERAL DRIVING CYCLE

Perform the diagnosis once at ignition switch ON.

5. DIAGNOSTIC METHOD

If the duration of time while the following conditions are met is longer than the time indicated, judge as NG.

Judgment Value

Malfunction Criteria	Threshold Value
|Barometric pressure – Intake manifold pressure at engine start|	≥ 12.73 kPa (95.5 mmHg, 3.8 inHg)

Time Needed for Diagnosis: Less than 1 second
Malfunction Indicator Light Illumination: Illuminates when malfunction occurs in 2 continuous driving cycles.

GD:DTC P2228 BAROMETRIC PRESSURE SENSOR "A" CIRCUIT LOW

DTC DETECTING CONDITION:
Immediately at fault recognition

CAUTION:
After servicing or replacing faulty parts, perform Clear Memory Mode <Ref. to EN(w/o STI)(diag)-82, OPERATION, Clear Memory Mode.>, and Inspection Mode <Ref. to EN(w/o STI)(diag)-64, PROCEDURE, Inspection Mode.>.

Step		Check	Yes	No
1	**CHECK FOR ANY OTHER DTC ON DISPLAY.**	Is any other DTC displayed?	Check DTC using "List of Diagnostic Trouble Code (DTC)". <Ref. to EN(w/o STI)(diag)-106, List of Diagnostic Trouble Code (DTC).>	Replace the ECM. <Ref. to FU(w/o STI)-124, Engine Control Module (ECM).> NOTE: The barometric pressure sensor is built into the ECM.

1. OUTLINE OF DIAGNOSIS

Detect the open/short circuit of the barometric pressure sensor.
Judge as NG if out of specification.

2. COMPONENT DESCRIPTION

The barometric pressure sensor is built into the ECM.

3. EXECUTION CONDITION

Secondary parameters	Execution condition
None	

4. GENERAL DRIVING CYCLE

Always perform the diagnosis continuously.

5. DIAGNOSTIC METHOD

If the duration of time while the following conditions are met is longer than the time indicated, judge as NG.

Judgment Value

Malfunction Criteria	Threshold Value
Output voltage	< 1.76 V

Time Needed for Diagnosis: 520 ms
Malfunction Indicator Light Illumination: Illuminates as soon as a malfunction occurs.

GE:DTC P2229 BAROMETRIC PRESSURE SENSOR "A" CIRCUIT HIGH

DTC DETECTING CONDITION:
Immediately at fault recognition

CAUTION:
After servicing or replacing faulty parts, perform Clear Memory Mode <Ref. to EN(w/o STI)(diag)-82, OPERATION, Clear Memory Mode.>, and Inspection Mode <Ref. to EN(w/o STI)(diag)-64, PROCEDURE, Inspection Mode.>.

Step	Check	Yes	No
1 **CHECK FOR ANY OTHER DTC ON DISPLAY.**	Is any other DTC displayed?	Check DTC using "List of Diagnostic Trouble Code (DTC)". <Ref. to EN(w/o STI)(diag)-106, List of Diagnostic Trouble Code (DTC).>	Replace the ECM. <Ref. to FU(w/o STI)-124, Engine Control Module (ECM).> NOTE: The barometric pressure sensor is built into the ECM.

1. OUTLINE OF DIAGNOSIS

Detect the open/short circuit of the barometric pressure sensor.
Judge as NG if out of specification.

2. COMPONENT DESCRIPTION

The barometric pressure sensor is built into the ECM.

3. EXECUTION CONDITION

Secondary parameters	Execution condition
None	

4. GENERAL DRIVING CYCLE

Always perform the diagnosis continuously.

5. DIAGNOSTIC METHOD

If the duration of time while the following conditions are met is longer than the time indicated, judge as NG.

Judgment Value

Malfunction Criteria	Threshold Value
Output voltage	> 4.6 V

Time Needed for Diagnosis: 520 ms
Malfunction Indicator Light Illumination: Illuminates as soon as a malfunction occurs.

GF:DTC P2270 O2 SENSOR SIGNAL BIASED/STUCK LEAN BANK 1 SENSOR 2

DTC DETECTING CONDITION:

Detected when two consecutive driving cycles with fault occur.

CAUTION:

- **After servicing or replacing faulty parts, perform Clear Memory Mode <Ref. to EN(w/o STI)(diag)-82, OPERATION, Clear Memory Mode.>, and Inspection Mode <Ref. to EN(w/o STI)(diag)-64, PROCEDURE, Inspection Mode.>.**
- **Use the check board when measuring the ECM terminal voltage and resistance.**

WIRING DIAGRAM:
Engine Electrical System <Ref. to WI-154, WIRING DIAGRAM, Engine Electrical System.>

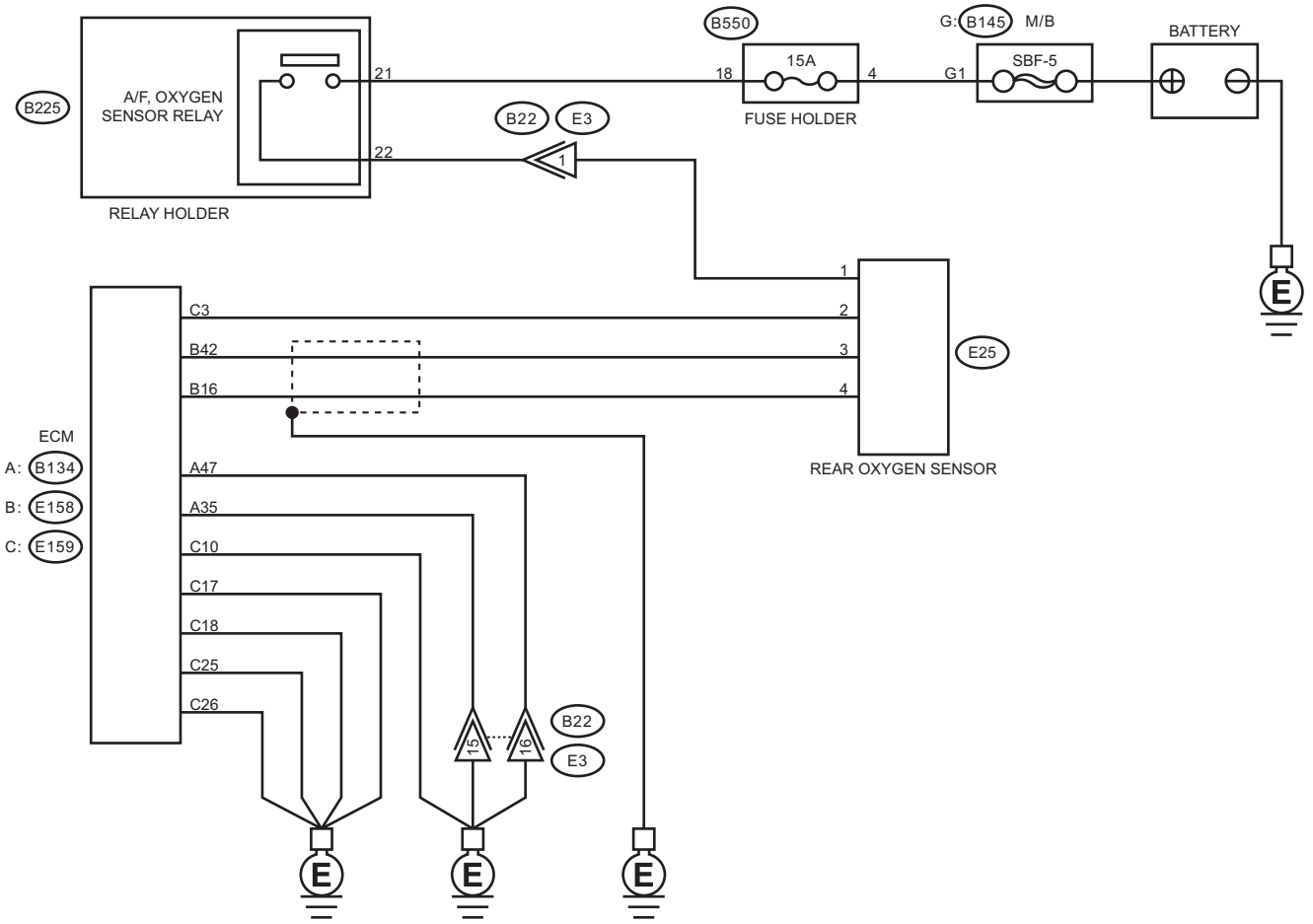

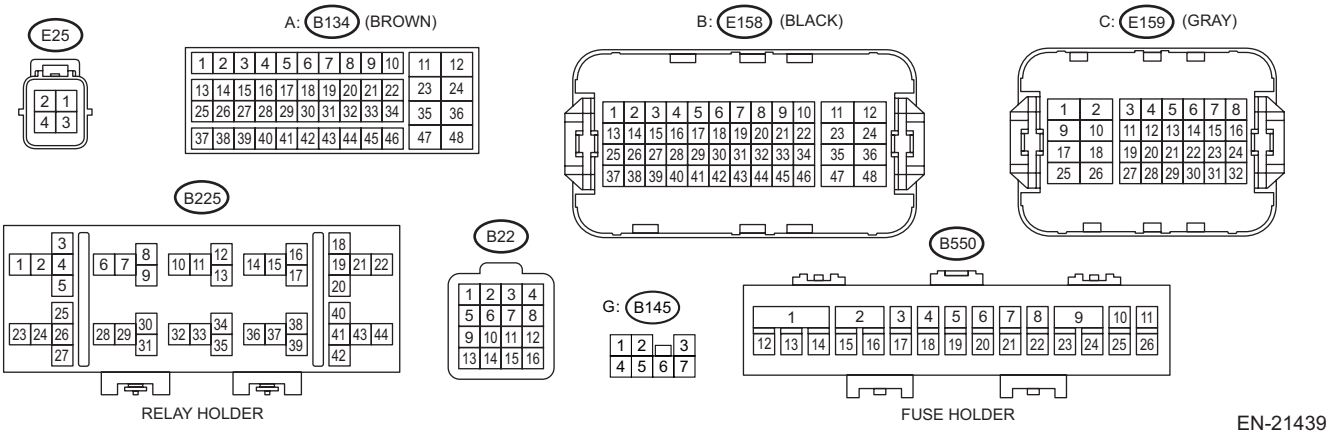

Step		Check	Yes	No
1	**CHECK REAR OXYGEN SENSOR CONNECTOR.**	Has water entered the connector?	Completely remove any water inside.	Go to step **2**.

	Step	Check	Yes	No
2	**CHECK HARNESS BETWEEN ECM AND REAR OXYGEN SENSOR CONNECTOR.** 1) Turn the ignition switch to OFF. 2) Disconnect the connector from ECM. 3) Disconnect the connector from rear oxygen sensor. 4) Measure the resistance of harness between ECM connector and rear oxygen sensor connector. ***Connector & terminal*** ***(E158) No. 42 — (E25) No. 3:*** ***(E158) No. 16 — (E25) No. 4:***	Is the resistance less than 1 Ω?	Go to step **3**.	Repair the open circuit of harness between ECM connector and rear oxygen sensor connector.
3	**CHECK HARNESS BETWEEN ECM AND REAR OXYGEN SENSOR CONNECTOR.** 1) Connect the connector to ECM. 2) Turn the ignition switch to ON. 3) Measure the voltage between rear oxygen sensor connector and engine ground. ***Connector & terminal*** ***(E25) No. 3 (+) — Engine ground (–):***	Is the voltage 0.15 V or more?	Repair the short circuit to power in the harness between ECM connector and rear oxygen sensor connector.	Go to step **4**.
4	**CHECK EXHAUST SYSTEM.** Check exhaust system parts. NOTE: Check the following items. • Looseness and improper fitting of exhaust system parts • Damage (crack, hole etc.) of parts • Damage (crack, hole etc.) between front oxygen (A/F) sensor and rear oxygen sensor	Is there any fault in exhaust system?	Repair or replace faulty parts.	Replace the rear oxygen sensor. <Ref. to FU(w/o STI)-120, Rear Oxygen Sensor.>

1. OUTLINE OF DIAGNOSIS

Detect the stuck of rear oxygen sensor voltage in lean state.
When rear oxygen sensor voltage remains below the threshold value for predetermined time, diagnosis interrupts target air fuel ratio for control and raises output voltage.
Judge as NG detecting the stuck in lean state when rear oxygen sensor voltage remains below the threshold value even after the interrupt control.

2. COMPONENT DESCRIPTION

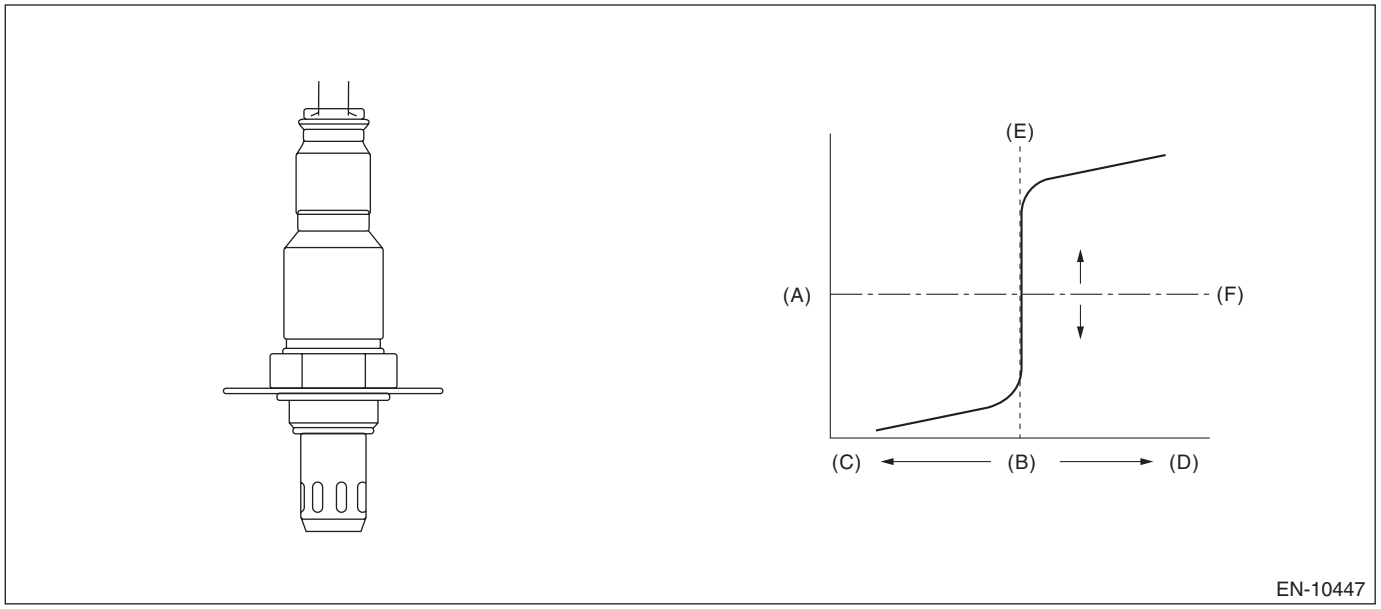

(A) Electromotive force
(B) Air fuel ratio
(C) Lean
(D) Rich
(E) Theoretical air fuel ratio
(F) Comparative voltage

3. EXECUTION CONDITION

Secondary parameters	Execution condition
Battery voltage	≥ 10.9 V
Sub feedback	In operation
Amount of intake air	≥ 10 g/s (1.3 lb/m)
Estimated temperature of the rear oxygen sensor element	≥ 450°C (932°F)
Enable conditions at interrupt control are as follows	
Air fuel ratio reduced from target air fuel ratio	= Value of Map
Continuous time when rear oxygen sensor output voltage is less than 0.55 V	≥ 5000 ms

Map

Output voltage of rear oxygen sensor V	0.00	0.15	0.20	0.40	0.60
Air fuel ratio reduced from target air fuel ratio %	15	15	4	4	4

4. GENERAL DRIVING CYCLE

Perform the diagnosis only once after the enable conditions have been established.

5. DIAGNOSTIC METHOD

If the duration of time while the following conditions are met is longer than the time indicated, judge as NG.

Judgment Value

Malfunction Criteria	Threshold Value
Output voltage of rear oxygen sensor	< 0.55 V

Time Needed for Diagnosis: 15 seconds
Malfunction Indicator Light Illumination: Illuminates when malfunction occurs in 2 continuous driving cycles.

GG:DTC P2271 O2 SENSOR SIGNAL BIASED/STUCK RICH BANK 1 SENSOR 2

DTC DETECTING CONDITION:

Detected when two consecutive driving cycles with fault occur.

CAUTION:

- **After servicing or replacing faulty parts, perform Clear Memory Mode <Ref. to EN(w/o STI)(diag)-82, OPERATION, Clear Memory Mode.>, and Inspection Mode <Ref. to EN(w/o STI)(diag)-64, PROCEDURE, Inspection Mode.>.**
- **Use the check board when measuring the ECM terminal voltage and resistance.**

WIRING DIAGRAM:
Engine Electrical System <Ref. to WI-154, WIRING DIAGRAM, Engine Electrical System.>

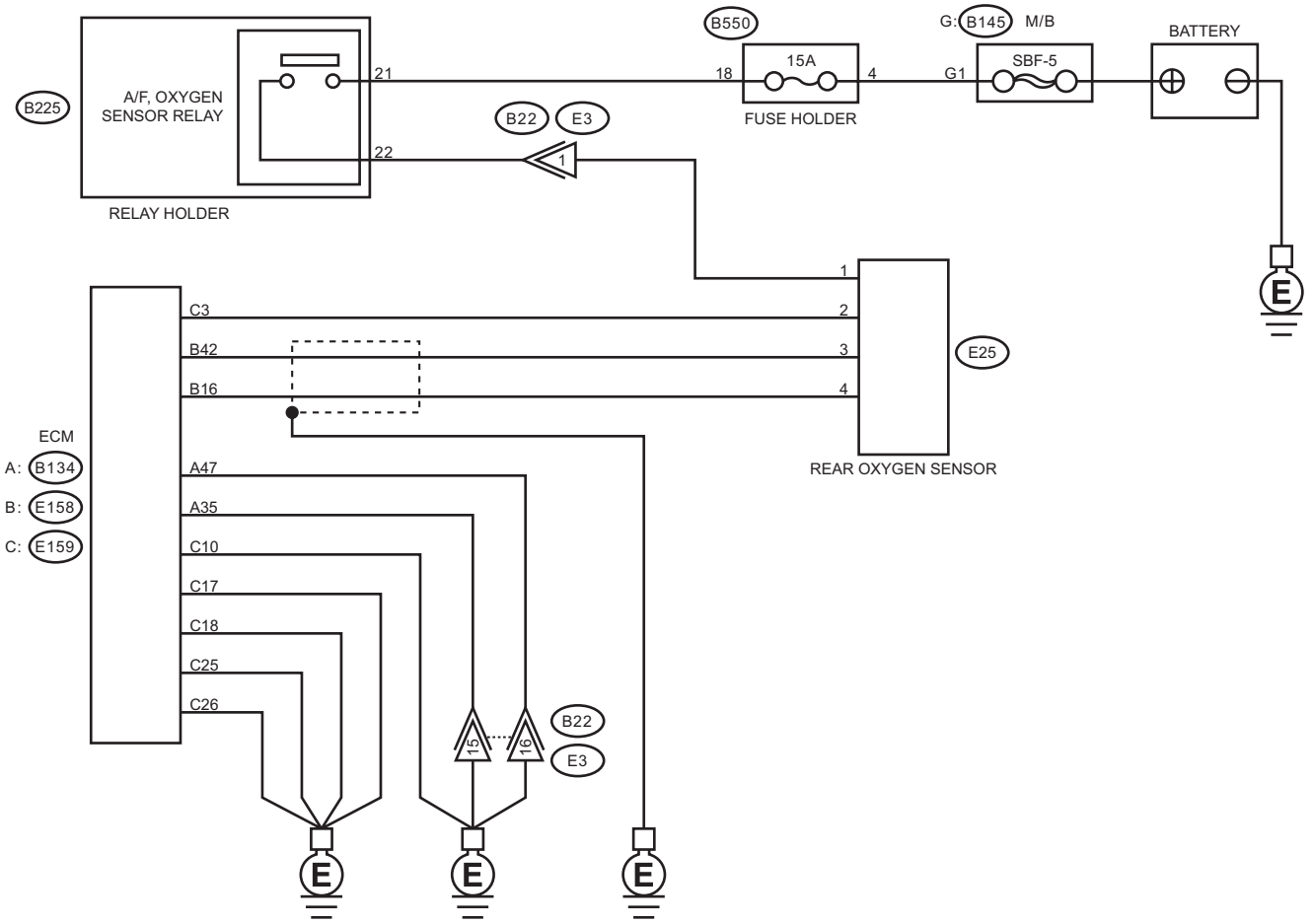

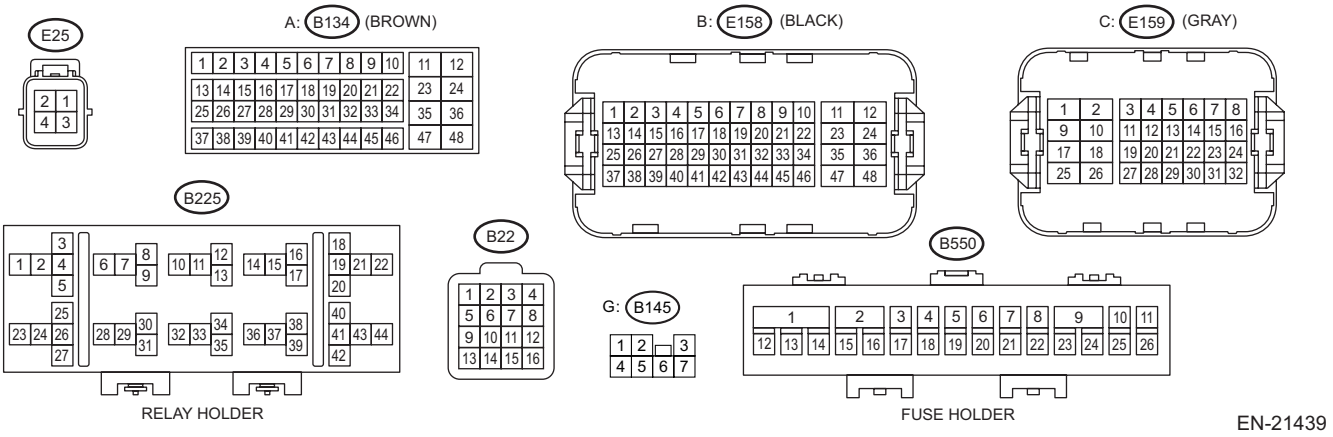

Step		Check	Yes	No
1	**CHECK REAR OXYGEN SENSOR CONNECTOR.**	Has water entered the connector?	Completely remove any water inside.	Go to step **2**.

	Step	Check	Yes	No
2	**CHECK HARNESS BETWEEN ECM AND REAR OXYGEN SENSOR CONNECTOR.** 1) Turn the ignition switch to OFF. 2) Disconnect the connector from ECM. 3) Disconnect the connector from rear oxygen sensor. 4) Measure the resistance of harness between ECM connector and rear oxygen sensor connector. ***Connector & terminal*** ***(E158) No. 42 — (E25) No. 3:*** ***(E158) No. 16 — (E25) No. 4:***	Is the resistance less than 1 Ω?	Go to step **3**.	Repair the open circuit of harness between ECM connector and rear oxygen sensor connector.
3	**CHECK HARNESS BETWEEN ECM AND REAR OXYGEN SENSOR CONNECTOR.** Measure the resistance between the ECM connector and engine ground. ***Connector & terminal*** ***(E158) No. 42 — Engine ground:***	Is the resistance 1 MΩ or more?	Go to step **4**.	Repair the short circuit to ground in harness between ECM connector and rear oxygen sensor connector.
4	**CHECK EXHAUST SYSTEM.** Check exhaust system parts. NOTE: Check the following items. • Looseness and improper fitting of exhaust system parts • Damage (crack, hole etc.) of parts • Damage (crack, hole etc.) between front oxygen (A/F) sensor and rear oxygen sensor	Is there any fault in exhaust system?	Repair or replace faulty parts.	Replace the rear oxygen sensor. <Ref. to FU(w/o STI)-120, Rear Oxygen Sensor.>

1. OUTLINE OF DIAGNOSIS

Detect the stuck of rear oxygen sensor voltage in rich state.
Detect the stuck in rich state and judge as NG if rear oxygen sensor voltage remains above the threshold value for predetermined time.

2. COMPONENT DESCRIPTION

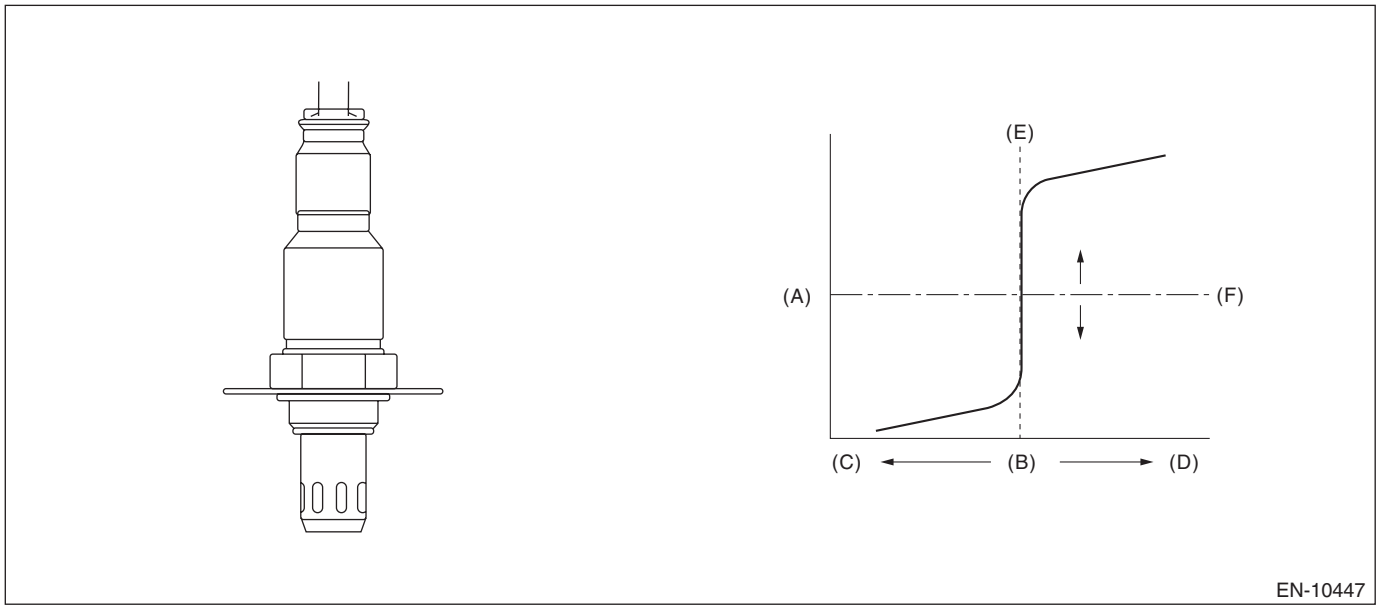

(A) Electromotive force
(B) Air fuel ratio
(C) Lean
(D) Rich
(E) Theoretical air fuel ratio
(F) Comparative voltage

3. EXECUTION CONDITION

Secondary parameters	Execution condition
Battery voltage	≥ 10.9 V
Deceleration fuel cut for 5000 ms or more	Experienced
Estimated temperature of the rear oxygen sensor element	≥ 450°C (842°F)

4. GENERAL DRIVING CYCLE

Perform the diagnosis only once after the enable conditions have been established.

5. DIAGNOSTIC METHOD

If the duration of time while the following conditions are met is longer than the time indicated, judge as NG.

Judgment Value

Malfunction Criteria	Threshold Value
Output voltage of rear oxygen sensor	> 0.15 V

Time Needed for Diagnosis: 0.5 seconds
Malfunction Indicator Light Illumination: Illuminates when malfunction occurs in 2 continuous driving cycles.

GH:DTC P2401 EVAP SYSTEM LEAK DETECTION PUMP CONTROL CIRCUIT LOW

DTC DETECTING CONDITION:
Immediately at fault recognition

CAUTION:

- **After servicing or replacing faulty parts, perform Clear Memory Mode <Ref. to EN(w/o STI)(diag)-82, OPERATION, Clear Memory Mode.>, and Inspection Mode <Ref. to EN(w/o STI)(diag)-64, PROCEDURE, Inspection Mode.>.**
- **Use the check board when measuring the ECM terminal voltage and resistance.**

WIRING DIAGRAM:
Engine Electrical System <Ref. to WI-154, WIRING DIAGRAM, Engine Electrical System.>

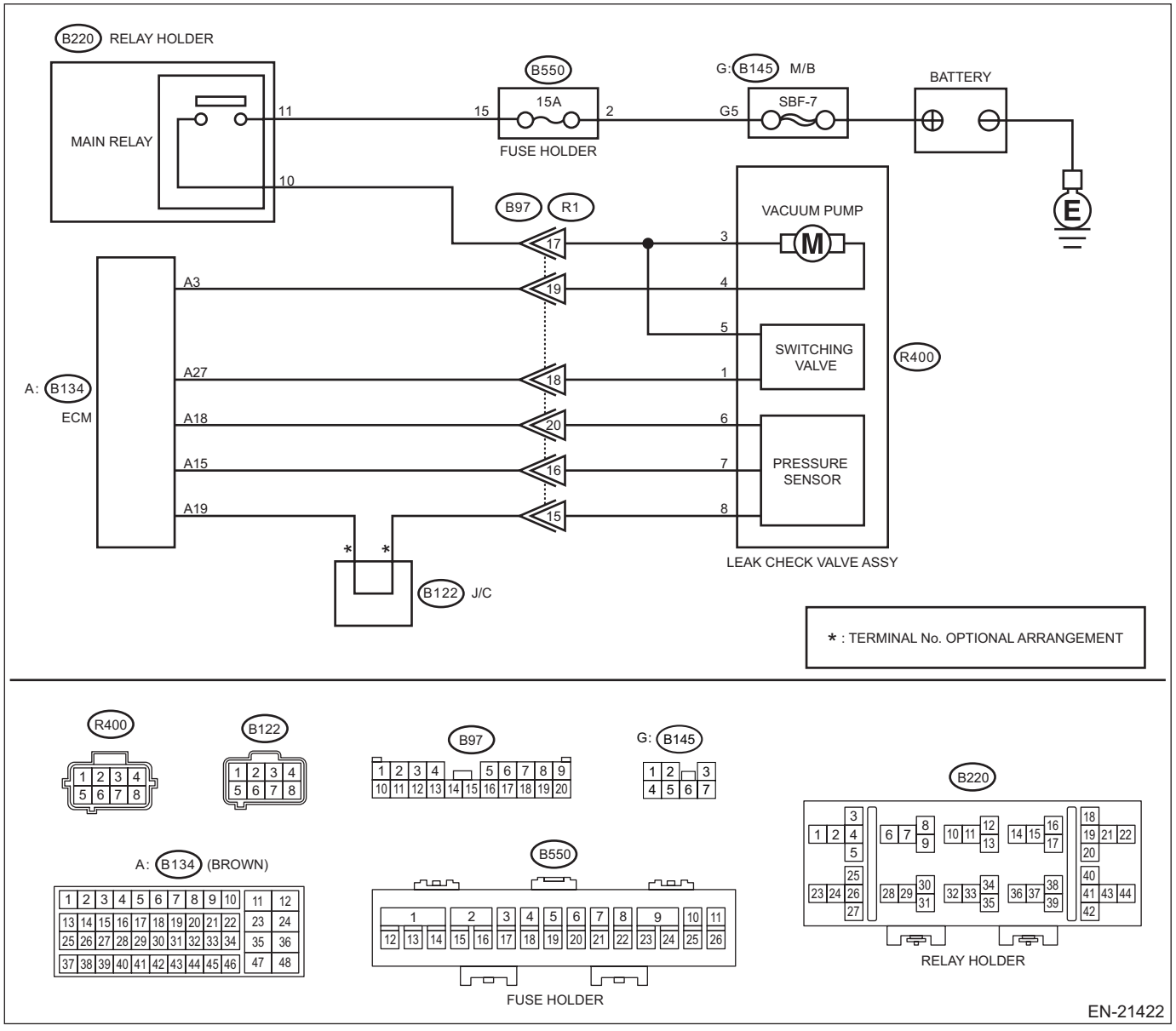

	Step	Check	Yes	No
1	**CHECK HARNESS BETWEEN ECM AND LEAK CHECK VALVE ASSEMBLY CONNECTOR.** 1) Turn the ignition switch to ON. 2) Measure the voltage between ECM connector and chassis ground. ***Connector & terminal*** ***(B134) No. 3 (+) — Chassis ground (–):***	Is the voltage 10 V or more?	Go to step **2**.	Go to step **3**.
2	**CHECK FOR POOR CONTACT.** Check for poor contact of ECM connector.	Is there poor contact of ECM connector?	Repair the poor contact of ECM connector.	Even if DTC is detected, the circuit has returned to a normal condition at this time. Reproduce the failure, and then perform the diagnosis again. NOTE: In this case, temporary open or short circuit of harness or temporary poor contact of connector may be the cause.
3	**CHECK POWER SUPPLY TO LEAK CHECK VALVE ASSEMBLY.** Measure the voltage between the leak check valve assembly connector and engine ground. ***Connector & terminal*** ***(R400) No. 3 (+) — Engine ground (–):***	Is the voltage 10 V or more?	Go to step **4**.	Repair the power supply circuit.
4	**CHECK HARNESS BETWEEN ECM AND LEAK CHECK VALVE ASSEMBLY CONNECTOR.** 1) Turn the ignition switch to OFF. 2) Disconnect the connector from ECM. 3) Disconnect the connector from the leak check valve assembly. 4) Measure the resistance between leak check valve assembly and chassis ground. ***Connector & terminal*** ***(R400) No. 4 — Chassis ground:***	Is the resistance 1 MΩ or more?	Go to step **5**.	Repair the short circuit to ground in harness between ECM connector and leak check valve assembly connector.
5	**CHECK HARNESS BETWEEN ECM AND LEAK CHECK VALVE ASSEMBLY CONNECTOR.** Measure the resistance of harness between ECM connector and the leak check valve assembly connector. ***Connector & terminal*** ***(B134) No. 3 — (R400) No. 4:***	Is the resistance less than 1 Ω?	Go to step **6**.	Repair the harness and connector. NOTE: In this case, repair the following item: • Open circuit in harness between ECM connector and the leak check valve assembly connector • Poor contact of coupling connector

Step		Check	Yes	No
6	**CHECK LEAK CHECK VALVE ASSEMBLY.** Check the vacuum pump of the leak check valve assembly. <Ref. to EC(w/o STI)-68, CHECK VACUUM PUMP, INSPECTION, Leak Check Valve Assembly.>	Is the vacuum pump of the leak check valve assembly OK?	Repair the poor contact in the leak check valve assembly connector.	Replace the leak check valve assembly. <Ref. to EC(w/o STI)-52, Leak Check Valve Assembly.>

1. OUTLINE OF DIAGNOSIS

Detect the open or short circuit in Evaporative Leak Check Module vacuum pump.
Judge as NG if out of specification.

2. COMPONENT DESCRIPTION

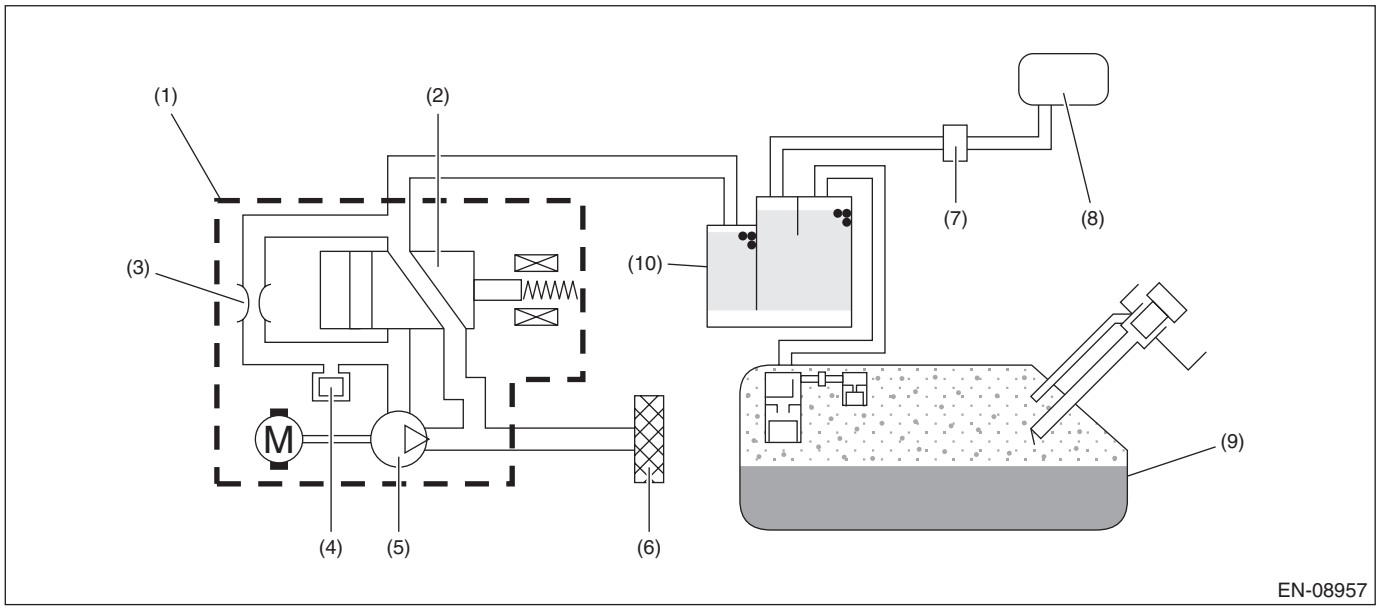

(1) Leak check valve ASSY
(2) Switching valve
(3) Reference orifice (0.02 inch orifice)
(4) Pressure sensor
(5) Vacuum pump
(6) Drain filter
(7) Purge control solenoid valve
(8) Intake manifold
(9) Fuel tank
(10) Canister

3. EXECUTION CONDITION

Secondary parameters	Execution condition
Battery voltage	≥ 10.9
Evaporative Leak Check Module vacuum pump drive signal	OFF

4. GENERAL DRIVING CYCLE

Always perform the diagnosis continuously after the enable conditions have been established.

5. DIAGNOSTIC METHOD

If the duration of time while the following conditions are met is longer than the time indicated, judge as NG.

Judgment Value

Malfunction Criteria	Threshold Value
Output voltage	≤ 2.2 V

Time Needed for Diagnosis: 2500 ms
Malfunction Indicator Light Illumination: Illuminates as soon as a malfunction occurs.

GI: DTC P2402 EVAP SYSTEM LEAK DETECTION PUMP CONTROL CIRCUIT HIGH

DTC DETECTING CONDITION:
Immediately at fault recognition

CAUTION:

- **After servicing or replacing faulty parts, perform Clear Memory Mode <Ref. to EN(w/o STI)(diag)-82, OPERATION, Clear Memory Mode.>, and Inspection Mode <Ref. to EN(w/o STI)(diag)-64, PROCEDURE, Inspection Mode.>.**
- **Use the check board when measuring the ECM terminal voltage and resistance.**

WIRING DIAGRAM:
Engine Electrical System <Ref. to WI-154, WIRING DIAGRAM, Engine Electrical System.>

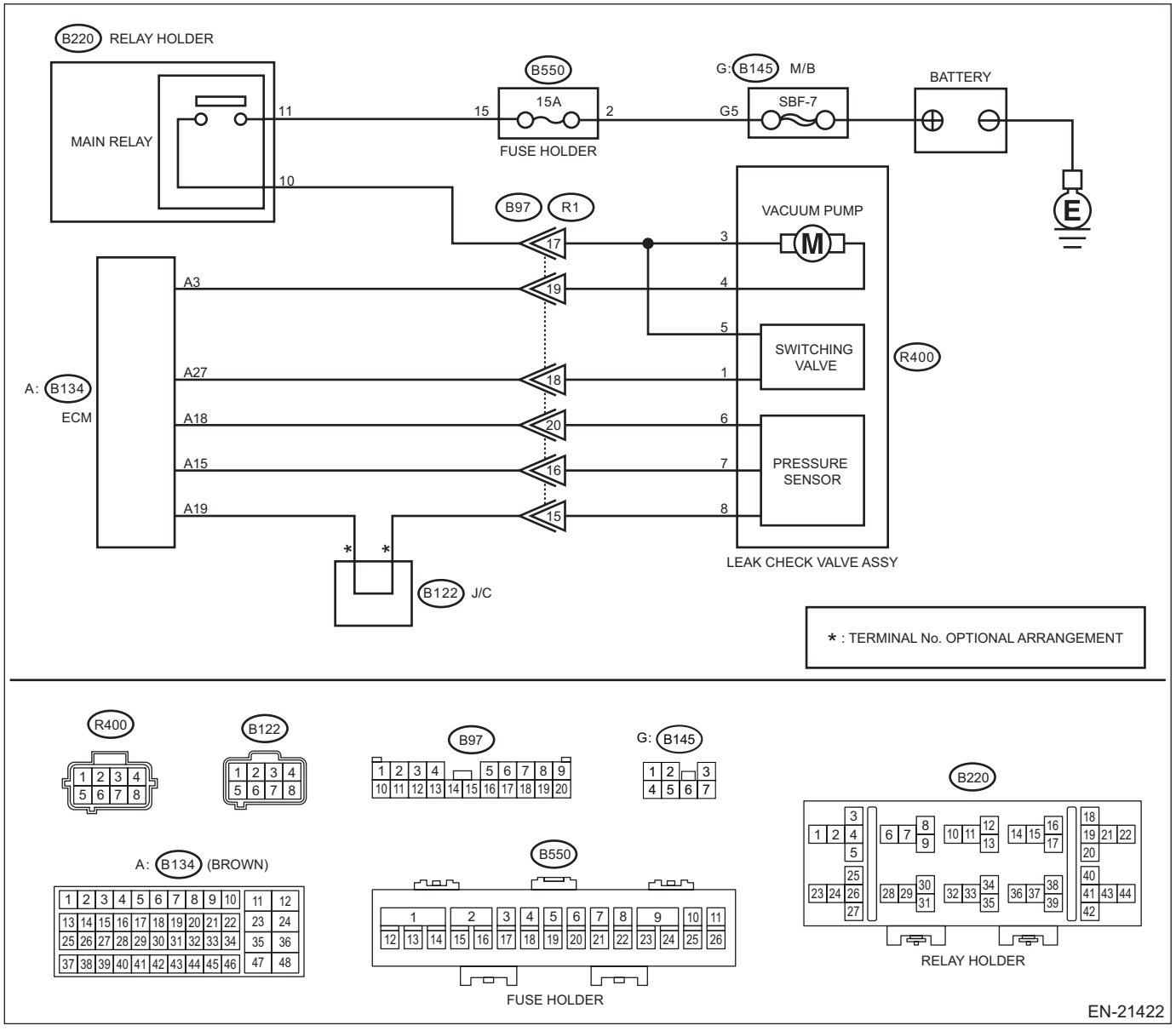

	Step	Check	Yes	No
1	**CHECK HARNESS BETWEEN ECM AND LEAK CHECK VALVE ASSEMBLY CONNECTOR.** 1) Turn the ignition switch to OFF. 2) Disconnect the connector from the leak check valve assembly. 3) Turn the ignition switch to ON. 4) Measure the voltage between leak check valve assembly and chassis ground. ***Connector & terminal*** ***(R400) No. 4 (+) — Chassis ground (–):***	Is the voltage 10 V or more?	Repair the short circuit to power in harness between ECM connector and leak check valve assembly connector.	Go to step **2**.
2	**CHECK LEAK CHECK VALVE ASSEMBLY.** 1) Turn the ignition switch to OFF. 2) Check the vacuum pump of the leak check valve assembly. <Ref. to EC(w/o STI)-68, CHECK VACUUM PUMP, INSPECTION, Leak Check Valve Assembly.>	Is the check result OK?	Repair the poor contact in the leak check valve assembly connector.	Replace the leak check valve assembly. <Ref. to EC(w/o STI)-52, Leak Check Valve Assembly.>

1. OUTLINE OF DIAGNOSIS

Detect the open or short circuit in Evaporative Leak Check Module vacuum pump.
Judge as NG if out of specification.

2. COMPONENT DESCRIPTION

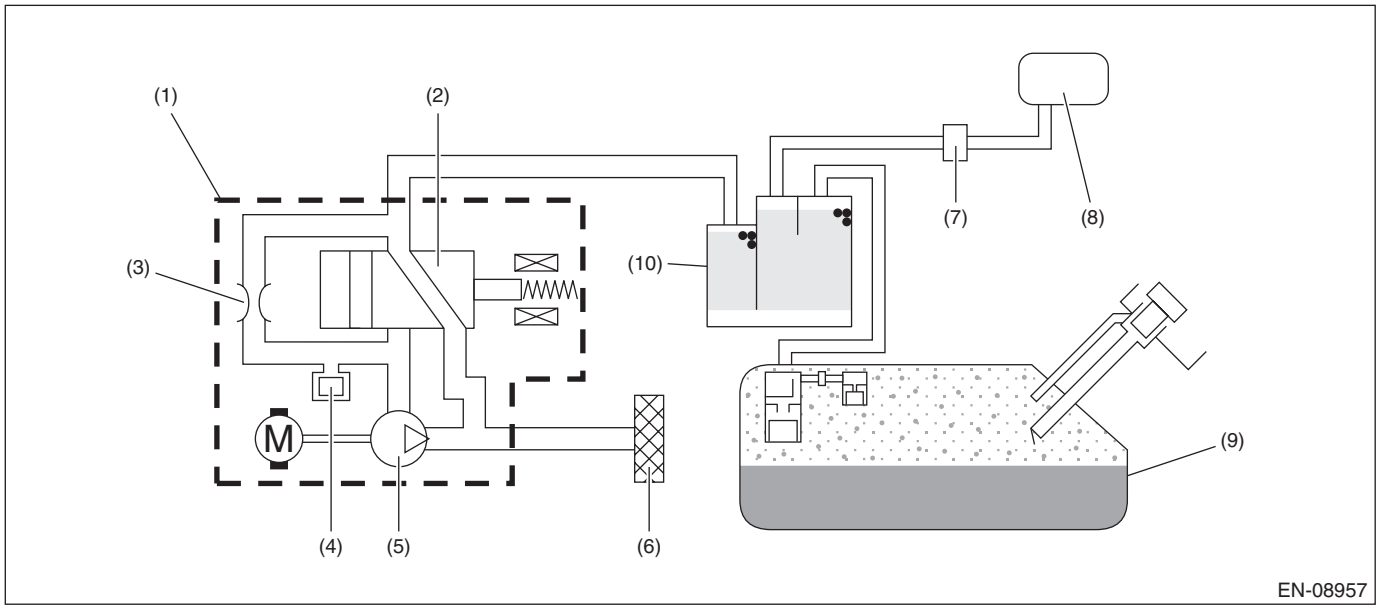

(1)	Leak check valve ASSY	(5)	Vacuum pump	(9)	Fuel tank
(2)	Switching valve	(6)	Drain filter	(10)	Canister
(3)	Reference orifice (0.02 inch orifice)	(7)	Purge control solenoid valve		
(4)	Pressure sensor	(8)	Intake manifold		

3. EXECUTION CONDITION

Secondary parameters	Execution condition
Battery voltage	≥ 10.9
Evaporative Leak Check Module vacuum pump drive signal	ON

4. GENERAL DRIVING CYCLE

Perform the diagnosis only once after the enable conditions have been established.

5. DIAGNOSTIC METHOD

If the duration of time while the following conditions are met is longer than the time indicated, judge as NG.

Judgment Value

Malfunction Criteria	Threshold Value
Output current	≥ 5 A

Time Needed for Diagnosis: 2250 ms
Malfunction Indicator Light Illumination: Illuminates as soon as a malfunction occurs.

GJ:DTC P2404 EVAP SYSTEM LEAK DETECTION PUMP SENSE CIRCUIT RANGE/PERFORMANCE

DTC DETECTING CONDITION:

Detected when two consecutive driving cycles with fault occur.

CAUTION:

- **After servicing or replacing faulty parts, perform Clear Memory Mode <Ref. to EN(w/o STI)(diag)-82, OPERATION, Clear Memory Mode.>, and Inspection Mode <Ref. to EN(w/o STI)(diag)-64, PROCEDURE, Inspection Mode.>.**
- **Use the check board when measuring the ECM terminal voltage and resistance.**

WIRING DIAGRAM:

Engine Electrical System <Ref. to WI-154, WIRING DIAGRAM, Engine Electrical System.>

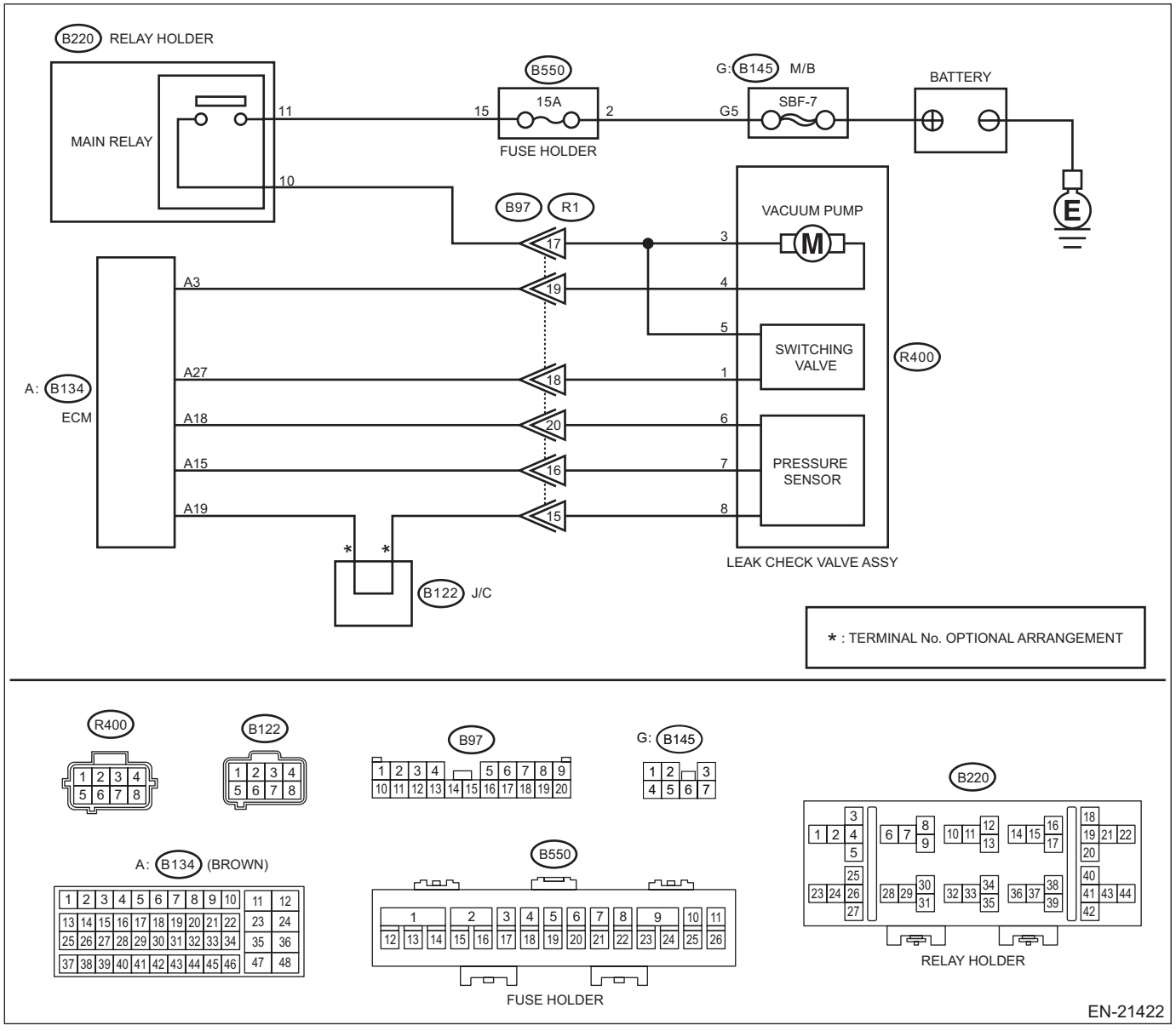

	Step	Check	Yes	No
1	**CHECK FOR ANY OTHER DTC ON DISPLAY.**	Is any other DTC displayed?	Check the appropriate DTC using the "List of Diagnostic Trouble Code (DTC)". <Ref. to EN(w/o STI)(diag)-106, List of Diagnostic Trouble Code (DTC).>	Go to step **2**.
2	**CHECK LEAK CHECK VALVE ASSEMBLY PUMP.** Operate the ELCM pump using the Subaru Select Monitor. NOTE: For detailed operation procedures, refer to the "Active Test". <Ref. to EN(w/o STI)(diag)-83, Active Test.>	Does the leak check valve assembly pump operate?	Go to step **6**.	Go to step **3**.
3	**CHECK POWER SUPPLY OF LEAK CHECK VALVE ASSEMBLY.** 1) Turn the ignition switch to OFF. 2) Disconnect the connector from the leak check valve assembly. 3) Turn the ignition switch to ON. 4) Measure the voltage between the leak check valve assembly connector and chassis ground. ***Connector & terminal*** ***(R400) No. 3 (+) — Chassis ground (–):***	Is the voltage 10 V or more?	Go to step **4**.	Repair the harness and connector. NOTE: In this case, repair the following item: • Open circuit in harness between the main relay and the leak check valve assembly connector • Poor contact of main relay connector • Poor contact of coupling connector
4	**CHECK HARNESS BETWEEN ECM AND LEAK CHECK VALVE ASSEMBLY CONNECTOR.** 1) Turn the ignition switch to OFF. 2) Disconnect the connector from ECM. 3) Measure the resistance of harness between ECM connector and the leak check valve assembly connector. ***Connector & terminal*** ***(B134) No. 3 — (R400) No. 4:***	Is the resistance less than 1 Ω?	Go to step **5**.	Repair the harness and connector. NOTE: In this case, repair the following item: • Open circuit in harness between ECM connector and the leak check valve assembly connector • Poor contact of coupling connector
5	**CHECK HARNESS BETWEEN ECM AND LEAK CHECK VALVE ASSEMBLY CONNECTOR.** 1) Measure the resistance of harness between ECM connector and chassis ground. ***Connector & terminal*** ***(B134) No. 3 — Chassis ground:***	Is the resistance 1 MΩ or more?	Replace the leak check valve assembly. <Ref. to EC(w/o STI)-52, Leak Check Valve Assembly.>	Repair the short circuit to ground in harness between ECM connector and leak check valve assembly connector.

	Step	Check	Yes	No
6	**CHECK LEAK CHECK VALVE ASSEMBLY SWITCHING VALVE.** Using the Subaru Select Monitor, operate the leak check valve assembly switching valve. NOTE: For detailed operation procedures, refer to the "Active Test". <Ref. to EN(w/o STI)(diag)-83, Active Test.>	Does the leak check valve assembly switching valve operate?	Go to step **10**.	Go to step **7**.
7	**CHECK POWER SUPPLY OF LEAK CHECK VALVE ASSEMBLY.** 1) Turn the ignition switch to OFF. 2) Disconnect the connector from the leak check valve assembly. 3) Turn the ignition switch to ON. 4) Measure the voltage between the leak check valve assembly connector and chassis ground. ***Connector & terminal*** ***(R400) No. 5 (+) — Chassis ground (–):***	Is the voltage 10 V or more?	Go to step **8**.	Repair the harness and connector. NOTE: In this case, repair the following item: • Open circuit in harness between the main relay and the leak check valve assembly connector • Poor contact of main relay connector • Poor contact of coupling connector
8	**CHECK HARNESS BETWEEN ECM AND LEAK CHECK VALVE ASSEMBLY CONNECTOR.** 1) Turn the ignition switch to OFF. 2) Disconnect the connector from ECM. 3) Measure the resistance of harness between ECM connector and the leak check valve assembly connector. ***Connector & terminal*** ***(B134) No. 27 — (R400) No. 1:***	Is the resistance less than 1 Ω?	Go to step **9**.	Repair the harness and connector. NOTE: In this case, repair the following item: • Open circuit in harness between ECM connector and the leak check valve assembly connector • Poor contact of coupling connector
9	**CHECK HARNESS BETWEEN ECM AND LEAK CHECK VALVE ASSEMBLY CONNECTOR.** 1) Measure the resistance of harness between ECM connector and chassis ground. ***Connector & terminal*** ***(B134) No. 27 — Chassis ground:***	Is the resistance 1 MΩ or more?	Replace the leak check valve assembly. <Ref. to EC(w/o STI)-52, Leak Check Valve Assembly.>	Repair the short circuit to ground in harness between ECM connector and leak check valve assembly connector.

Step		Check	Yes	No
10	**CHECK EVAPORATIVE EMISSION CONTROL SYSTEM.** Perform drive cycle I. <Ref. to EN(w/o STI)(diag)-74, DRIVE CYCLE I, PROCEDURE, Drive Cycle.>	Is DTC P2404 displayed on the display?	Replace the leak check valve assembly. <Ref. to EC(w/o STI)-52, Leak Check Valve Assembly.>	Even if DTC is detected, the circuit has returned to a normal condition at this time. Reproduce the failure, and then perform the diagnosis again. NOTE: In this case, temporary poor contact of connector, temporary open or short circuit of harness may be the cause.

1. OUTLINE OF DIAGNOSIS

NOTE:
For the detection standard, refer to DTC P0455. <Ref. to EN(w/o STI)(diag)-396, DTC P0455 EVAP SYSTEM (CPC) LEAK DETECTED (LARGE LEAK), Diagnostic Procedure with Diagnostic Trouble Code (DTC).>

GK:DTC P2419 EVAP SYSTEM SWITCHING VALVE CONTROL CIRCUIT LOW

DTC DETECTING CONDITION:
Immediately at fault recognition

CAUTION:
- **After servicing or replacing faulty parts, perform Clear Memory Mode <Ref. to EN(w/o STI)(diag)-82, OPERATION, Clear Memory Mode.>, and Inspection Mode <Ref. to EN(w/o STI)(diag)-64, PROCEDURE, Inspection Mode.>.**
- **Use the check board when measuring the ECM terminal voltage and resistance.**

WIRING DIAGRAM:
Engine Electrical System <Ref. to WI-154, WIRING DIAGRAM, Engine Electrical System.>

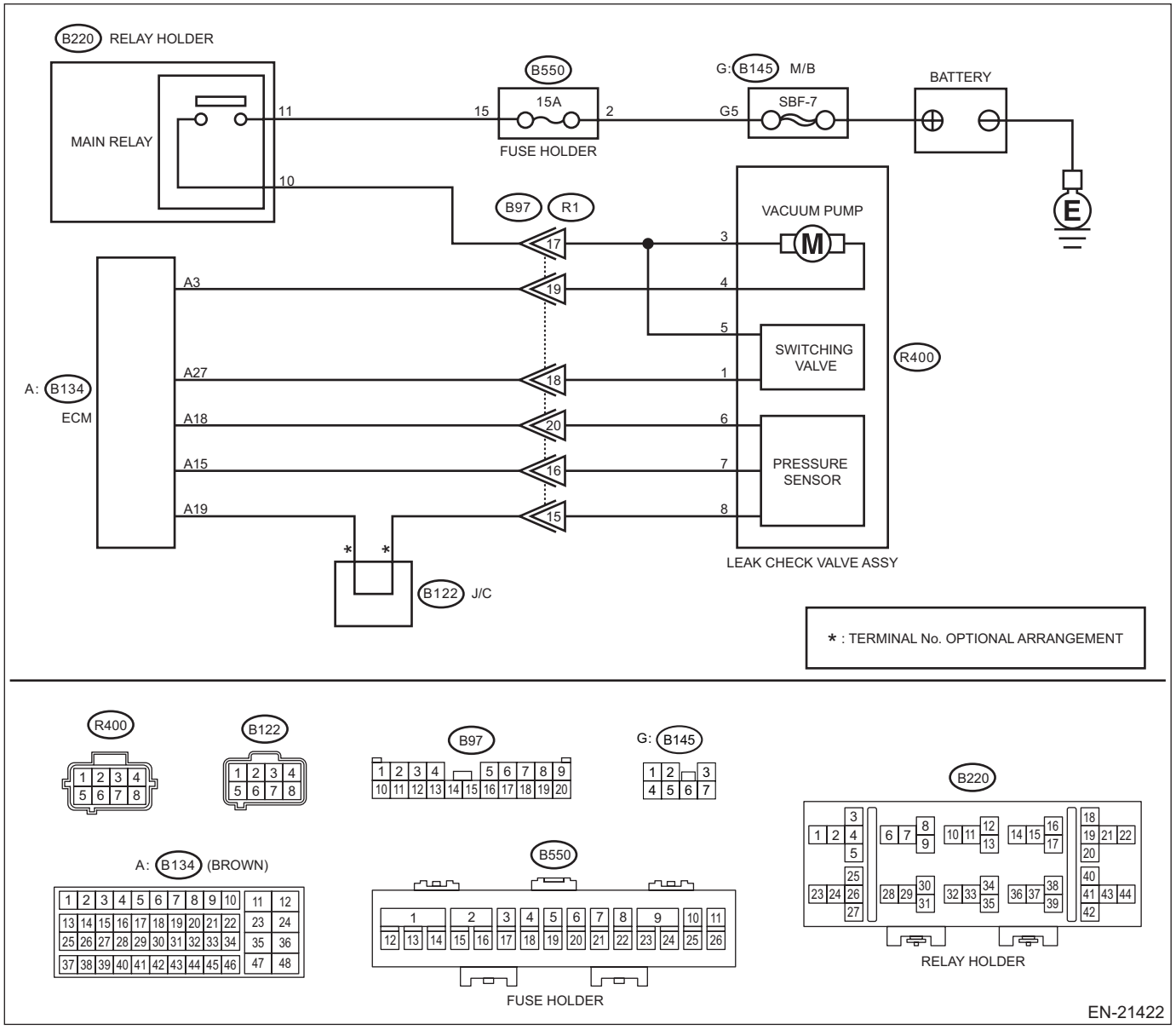

	Step	Check	Yes	No
1	**CHECK HARNESS BETWEEN ECM AND LEAK CHECK VALVE ASSEMBLY CONNECTOR.** 1) Turn the ignition switch to ON. 2) Measure the voltage between ECM connector and chassis ground. ***Connector & terminal*** ***(B134) No. 27 (+) — Chassis ground (–):***	Is the voltage 10 V or more?	Go to step **2**.	Go to step **3**.
2	**CHECK FOR POOR CONTACT.** Check for poor contact of ECM connector.	Is there poor contact of ECM connector?	Repair the poor contact of ECM connector.	Even if DTC is detected, the circuit has returned to a normal condition at this time. Reproduce the failure, and then perform the diagnosis again. NOTE: In this case, temporary open or short circuit of harness or temporary poor contact of connector may be the cause.
3	**CHECK POWER SUPPLY TO LEAK CHECK VALVE ASSEMBLY.** Measure the voltage between the leak check valve assembly connector and engine ground. ***Connector & terminal*** ***(R400) No. 5 (+) — Engine ground (–):***	Is the voltage 10 V or more?	Go to step **4**.	Repair the power supply circuit.
4	**CHECK HARNESS BETWEEN ECM AND LEAK CHECK VALVE ASSEMBLY CONNECTOR.** 1) Turn the ignition switch to OFF. 2) Disconnect the connector from ECM. 3) Disconnect the connector from the leak check valve assembly. 4) Measure the resistance between leak check valve assembly and chassis ground. ***Connector & terminal*** ***(R400) No. 1 — Chassis ground:***	Is the resistance 1 MΩ or more?	Go to step **5**.	Repair the short circuit to ground in harness between ECM connector and leak check valve assembly connector.
5	**CHECK HARNESS BETWEEN ECM AND LEAK CHECK VALVE ASSEMBLY CONNECTOR.** Measure the resistance of harness between ECM connector and the leak check valve assembly connector. ***Connector & terminal*** ***(B134) No. 27 — (R400) No. 1:***	Is the resistance less than 1 Ω?	Go to step **6**.	Repair the harness and connector. NOTE: In this case, repair the following item: • Open circuit in harness between ECM connector and the leak check valve assembly connector • Poor contact of coupling connector

Step		Check	Yes	No
6	**CHECK LEAK CHECK VALVE ASSEMBLY.** Check the switching valve of the leak check valve assembly. <Ref. to EC(w/o STI)-66, CHECK SWITCHING VALVE, INSPECTION, Leak Check Valve Assembly.>	Is the check result OK?	Repair the poor contact in the leak check valve assembly connector.	Replace the leak check valve assembly. <Ref. to EC(w/o STI)-52, Leak Check Valve Assembly.>

1. OUTLINE OF DIAGNOSIS

Detect the open or short circuit in Evaporative Leak Check Module switching valve.
Judge as NG if out of specification.

2. COMPONENT DESCRIPTION

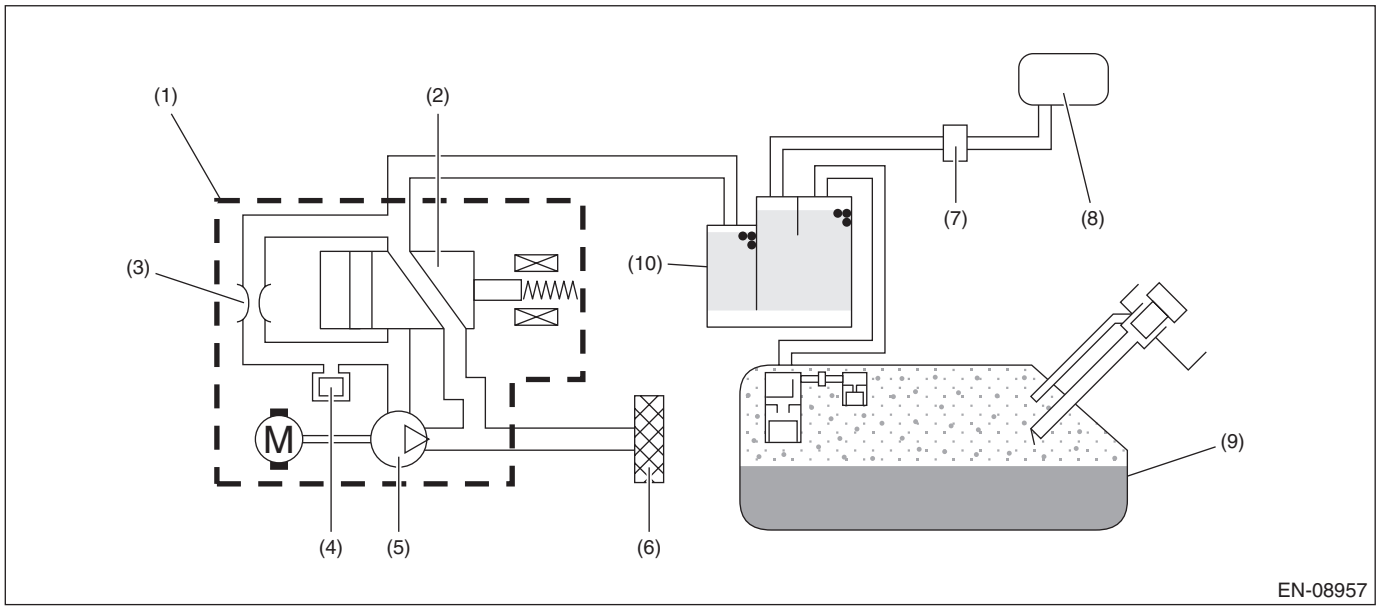

(1) Leak check valve ASSY
(2) Switching valve
(3) Reference orifice (0.02 inch orifice)
(4) Pressure sensor
(5) Vacuum pump
(6) Drain filter
(7) Purge control solenoid valve
(8) Intake manifold
(9) Fuel tank
(10) Canister

3. EXECUTION CONDITION

Secondary parameters	Execution condition
Battery voltage	≥ 10.9
Evaporative Leak Check Module switching valve drive signal	OFF

4. GENERAL DRIVING CYCLE

Perform the diagnosis continuously after the enable conditions have been established.

5. DIAGNOSTIC METHOD

If the duration of time while the following conditions are met is longer than the time indicated, judge as NG.

Judgment Value

Malfunction Criteria	Threshold Value
Output voltage	≤ 2.2 V

Time Needed for Diagnosis: 2500 ms
Malfunction Indicator Light Illumination: Illuminates as soon as a malfunction occurs.

GL:DTC P2420 EVAP SYSTEM SWITCHING VALVE CONTROL CIRCUIT HIGH

DTC DETECTING CONDITION:
Immediately at fault recognition

CAUTION:
- **After servicing or replacing faulty parts, perform Clear Memory Mode <Ref. to EN(w/o STI)(diag)-82, OPERATION, Clear Memory Mode.>, and Inspection Mode <Ref. to EN(w/o STI)(diag)-64, PROCEDURE, Inspection Mode.>.**
- **Use the check board when measuring the ECM terminal voltage and resistance.**

WIRING DIAGRAM:
Engine Electrical System <Ref. to WI-154, WIRING DIAGRAM, Engine Electrical System.>

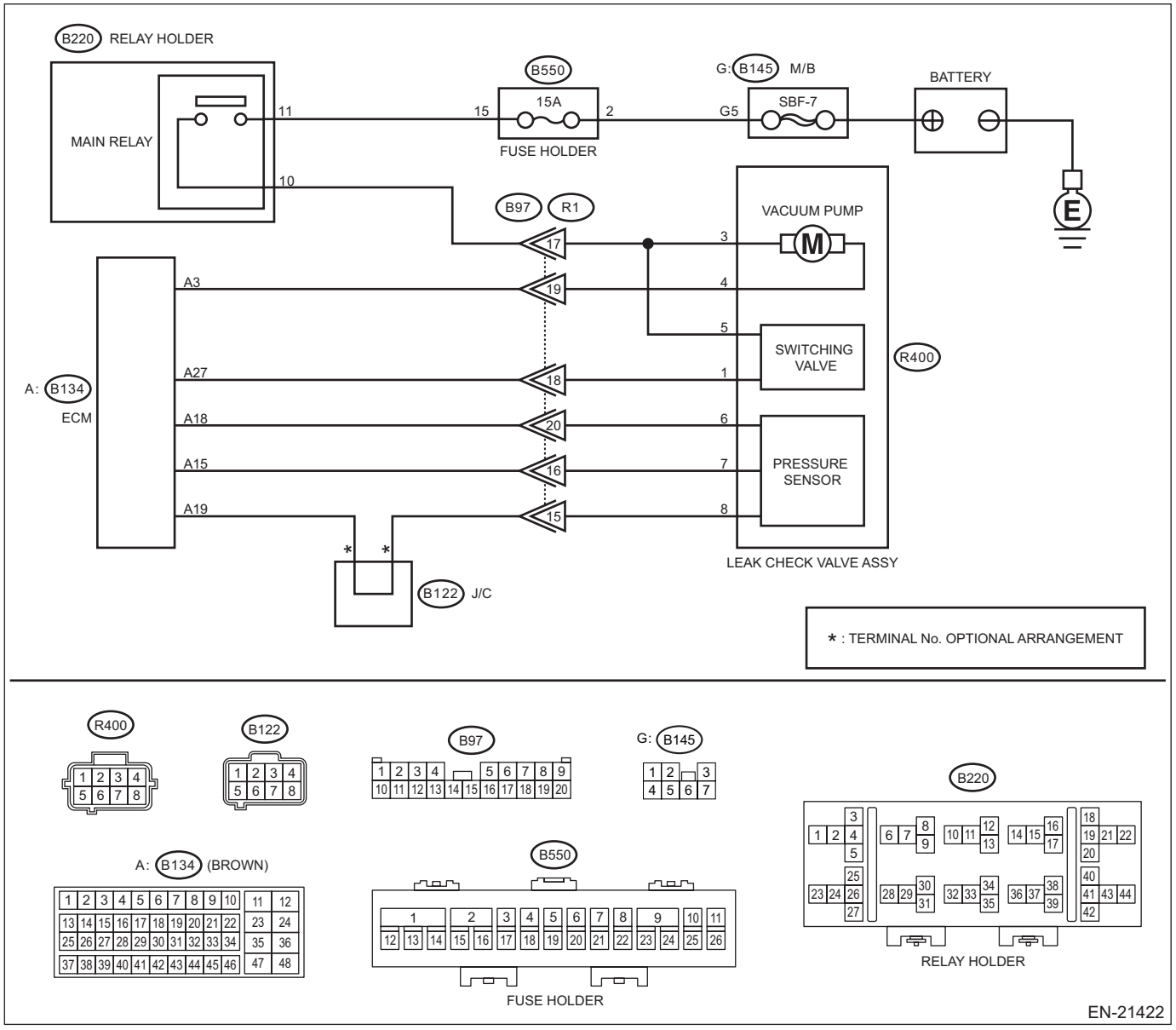

	Step	Check	Yes	No
1	**CHECK HARNESS BETWEEN ECM AND LEAK CHECK VALVE ASSEMBLY CONNECTOR.** 1) Turn the ignition switch to OFF. 2) Disconnect the connector from the leak check valve assembly. 3) Turn the ignition switch to ON. 4) Measure the voltage between leak check valve assembly and chassis ground. ***Connector & terminal*** ***(R400) No. 1 (+) — Chassis ground (–):***	Is the voltage 10 V or more?	Repair the short circuit to power in harness between ECM connector and leak check valve assembly connector.	Go to step **2**.
2	**CHECK LEAK CHECK VALVE ASSEMBLY.** 1) Turn the ignition switch to OFF. 2) Check the switching valve of the leak check valve assembly. <Ref. to EC(w/o STI)-66, CHECK SWITCHING VALVE, INSPECTION, Leak Check Valve Assembly.>	Is the check result OK?	Repair the poor contact in the leak check valve assembly connector.	Replace the leak check valve assembly. <Ref. to EC(w/o STI)-52, Leak Check Valve Assembly.>

1. OUTLINE OF DIAGNOSIS

Detect the open or short circuit in Evaporative Leak Check Module switching valve.
Judge as NG if out of specification.

2. COMPONENT DESCRIPTION

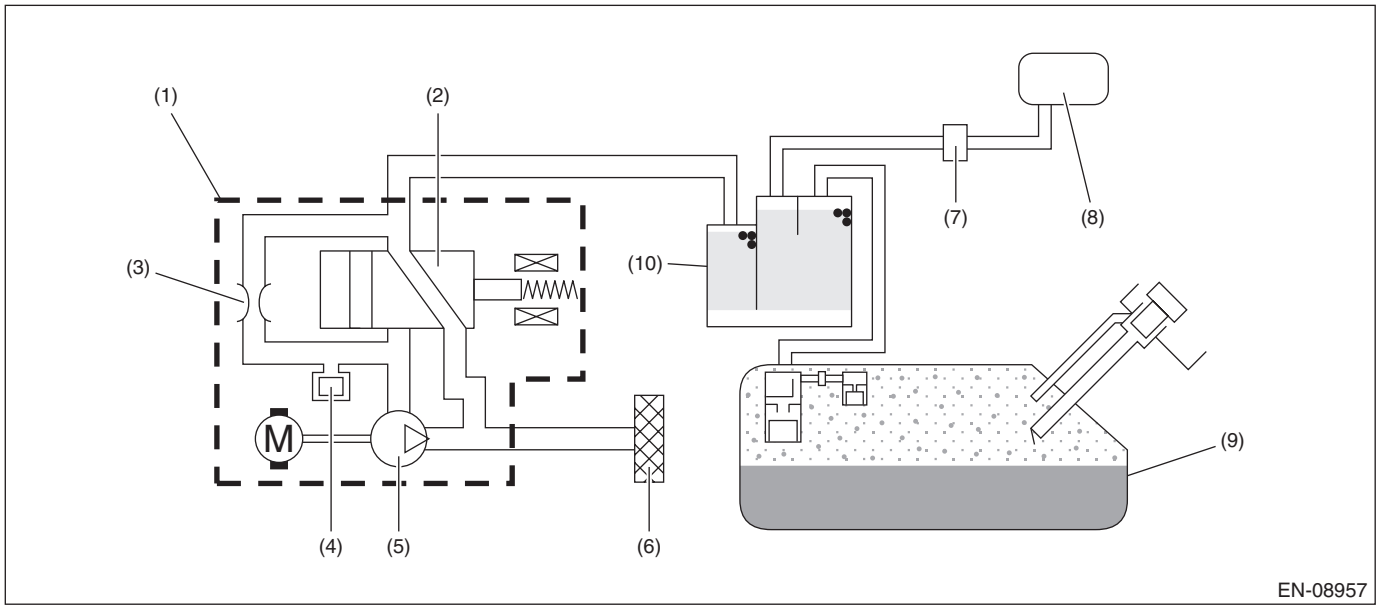

(1) Leak check valve ASSY
(2) Switching valve
(3) Reference orifice (0.02 inch orifice)
(4) Pressure sensor
(5) Vacuum pump
(6) Drain filter
(7) Purge control solenoid valve
(8) Intake manifold
(9) Fuel tank
(10) Canister

3. EXECUTION CONDITION

Secondary parameters	Execution condition
Battery voltage	≥ 10.9
Evaporative Leak Check Module switching valve drive signal	ON

4. GENERAL DRIVING CYCLE

Perform the diagnosis continuously after the enable conditions have been established.

5. DIAGNOSTIC METHOD

If the duration of time while the following conditions are met is longer than the time indicated, judge as NG.

Judgment Value

Malfunction Criteria	Threshold Value
Output current	≥ 5 A

Time Needed for Diagnosis: 2250 ms
Malfunction Indicator Light Illumination: Illuminates as soon as a malfunction occurs.

GM:DTC P2530 IGNITION SWITCH RUN POSITION CIRCUIT

DTC DETECTING CONDITION:
Immediately at fault recognition
TROUBLE SYMPTOM:
Improper idling

CAUTION:
- **After servicing or replacing faulty parts, perform Clear Memory Mode <Ref. to EN(w/o STI)(diag)-82, OPERATION, Clear Memory Mode.>, and Inspection Mode <Ref. to EN(w/o STI)(diag)-64, PROCEDURE, Inspection Mode.>.**
- **Use the check board when measuring the ECM terminal voltage and resistance.**

WIRING DIAGRAM:
Engine Electrical System <Ref. to WI-154, WIRING DIAGRAM, Engine Electrical System.>

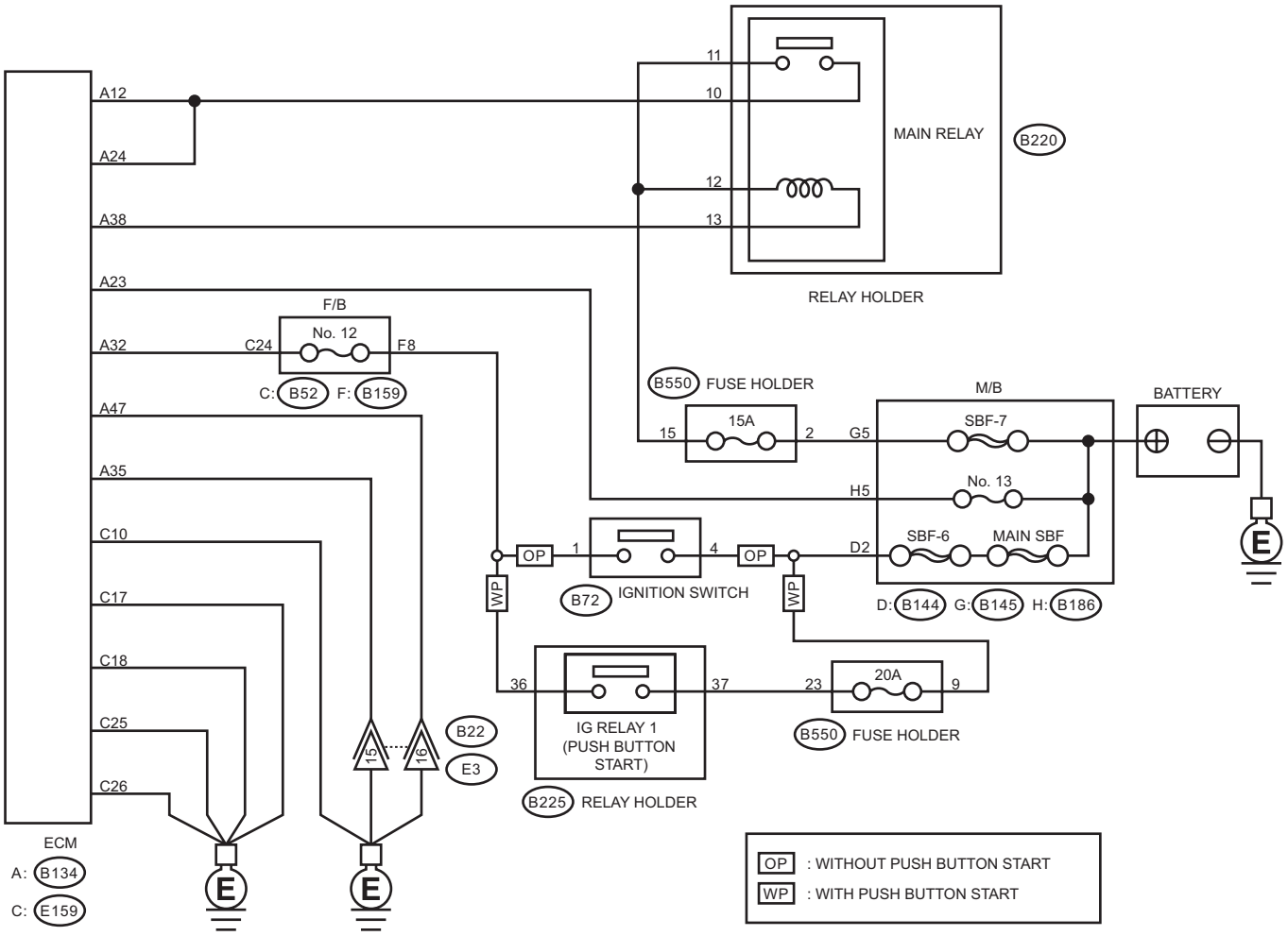

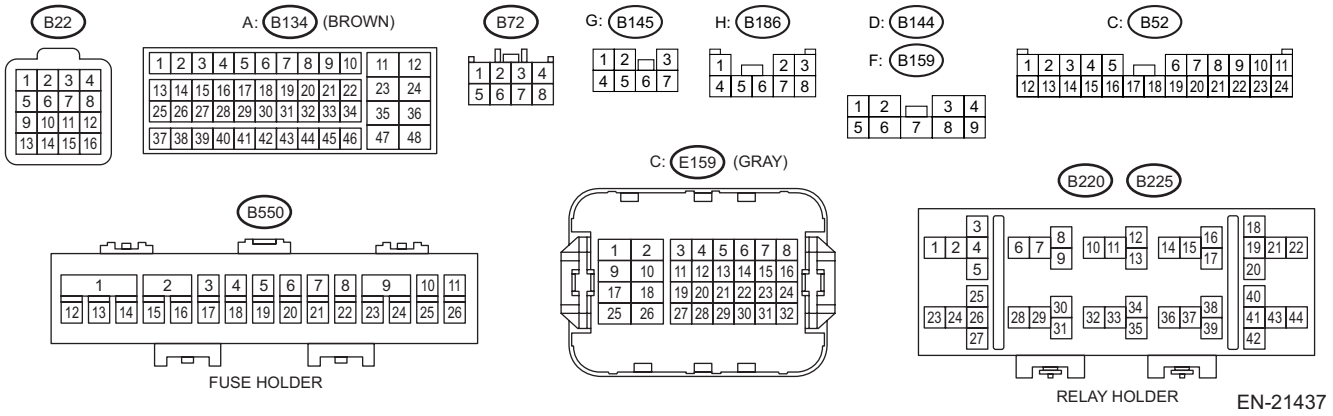

Step		Check	Yes	No
1	**CHECK ECM CONNECTOR.** Check the connecting condition of ECM connector.	Is the ECM connector correctly connected?	Go to step **2**.	Connect the ECM connector correctly.

Step	Check	Yes	No
2 **CHECK INPUT VOLTAGE OF ECM.** 1) Turn the ignition switch to ON. 2) Connect the check board. ST 18460AA030 CHECK BOARD 3) Measure the voltage between ECM connector and engine ground while wiggling the harness between ECM connector and ignition switch connector (for models without push button start), or between ECM connector and IG relay 1 (push button start) connector (for models with push button start). ***Connector & terminal*** ***(B134) No. 32 (+) — Engine ground (–):***	Is the voltage 8 V or more all the time?	Even if DTC is detected, the circuit has returned to a normal condition at this time. Reproduce the failure, and then perform the diagnosis again. NOTE: In this case, the following items may be the cause of fault. Model without push button start • Open circuit or short circuit to ground in harness between ECM connector and ignition switch connector • Poor contact of ignition switch connector • Poor contact of ignition switch Model with push button start • Open circuit or short circuit to ground in harness between ECM connector and IG relay 1 (push button start) connector • Poor contact in IG relay 1 (push button start) connector • Poor contact in IG relay 1 (push button start)	Repair the harness and connector. NOTE: In this case, repair the following item: Model without push button start • Open circuit or short circuit to ground in harness between ECM connector and ignition switch connector • Poor contact of ignition switch connector • Poor contact of ignition switch • Faulty fuse (F/B No. 12) Model with push button start • Open circuit or short circuit to ground in harness between ECM connector and IG relay 1 (push button start) connector • Poor contact in IG relay 1 (push button start) connector • Poor contact in IG relay 1 (push button start) • Faulty fuse (F/B No. 12)

1. OUTLINE OF DIAGNOSIS

Detect instantaneous open in ignition switch input circuit to ECM.
Judge as NG if out of specification.

2. COMPONENT DESCRIPTION

ECM monitors the voltage of the ignition switch input circuit. Judge as ignition switch ON when the voltage is the specified value or more.

3. EXECUTION CONDITION

Secondary parameters	Execution condition
Battery voltage	≥ 10.9 V
Engine speed	≥ 475 rpm

4. GENERAL DRIVING CYCLE

Always perform the diagnosis continuously after the enable conditions have been established.

5. DIAGNOSTIC METHOD

Judge as NG when the following conditions are established within the predetermined time.

Judgment Value

Malfunction Criteria	Threshold Value
Number of instantaneous opens in ignition switch input circuit	≥ 5 times

Time Needed for Diagnosis: 5 seconds
Malfunction Indicator Light Illumination: Illuminates as soon as a malfunction occurs.

GN:DTC P2610 ECM/PCM ENGINE OFF TIMER PERFORMANCE

DTC DETECTING CONDITION:
Detected when two consecutive driving cycles with fault occur.

CAUTION:
After servicing or replacing faulty parts, perform Clear Memory Mode <Ref. to EN(w/o STI)(diag)-82, OPERATION, Clear Memory Mode.>, and Inspection Mode <Ref. to EN(w/o STI)(diag)-64, PROCEDURE, Inspection Mode.>.

Step	Check	Yes	No
1 **CHECK FOR ANY OTHER DTC ON DISPLAY.**	Is any other DTC displayed?	Check DTC using "List of Diagnostic Trouble Code (DTC)". <Ref. to EN(w/o STI)(diag)-106, List of Diagnostic Trouble Code (DTC).>	Replace the ECM. <Ref. to FU(w/o STI)-124, Engine Control Module (ECM).> NOTE: The soaking timer IC is built into the ECM.

1. OUTLINE OF DIAGNOSIS

Confirm the engine off timer accuracy by comparing engine off timer and power supply IC timer after ignition switch is turned to OFF.
This diagnosis consists of the following six cases. Judge as NG when in any one of the following cases, abnormality is detected.

Case number	Diagnosis function	Time Needed for Diagnosis:
Case #1	Diagnose the difference between wake-up request time and power supply IC timer.	Less than 1 second
Case #2	Diagnose the time in power supply IC timer before wake up.	Less than 1 second
Case #3	Diagnose the communication error between main CPU and sub CPU.	2 s
Case #4	Diagnose the communication error between main CPU and power supply IC.	2 s
Case #5	Diagnose the operation status abnormality in main CPU and sub CPU.	2 s
Case #6	Diagnose the ignition switch status abnormality in main CPU and sub CPU.	2 s

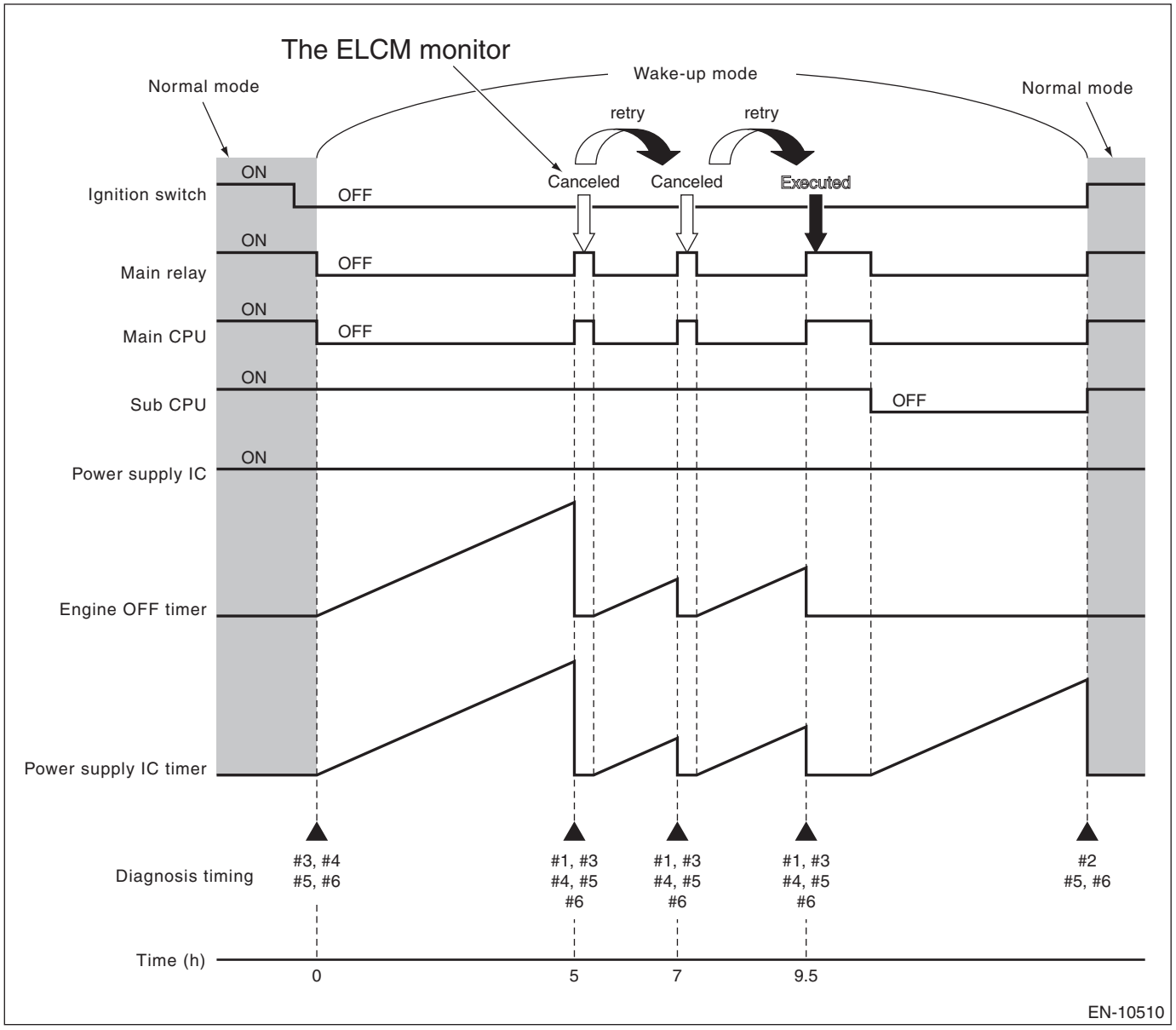

NOTE:
- Normal mode: main relay and ignition switch is ON.
- Wake-up mode: In soaking

2. COMPONENT DESCRIPTION

The engine off timer is built into the ECM.

3. EXECUTION CONDITION

Secondary parameters	Execution condition
<Case #1>	
Battery voltage	≥ 10.9 V
Main CPU	Wake-up mode
<Case #2>	
Battery voltage	≥ 10.9 V
Main CPU	Normal mode
Wake-up experience flag	OFF
<Case #3, #4, #5 and #6>	
Battery voltage	≥ 10.9 V

4. GENERAL DRIVING CYCLE

- **Case #1:** Perform the diagnosis only once when wake-up operates after the ignition switch is OFF.
- **Case #2:** Perform the diagnosis only once when the following driving cycle starts after the ignition switch is OFF.
- **Case #3:** Perform the diagnosis only once after the enable conditions have been established.
- **Case #4:** Perform the diagnosis only once after the enable conditions have been established.
- **Case #5:** Perform the diagnosis only once after the enable conditions have been established.
- **Case #6:** Perform the diagnosis only once after the enable conditions have been established.

5. DIAGNOSTIC METHOD

<Case #1>

Judge as abnormal in engine off timer or power supply IC timer when the difference between wake-up request time and power supply IC timer exceeds the threshold value.
When the sub CPU is faulty, wake-up timing is either advancing or retarding compared with normal timing.

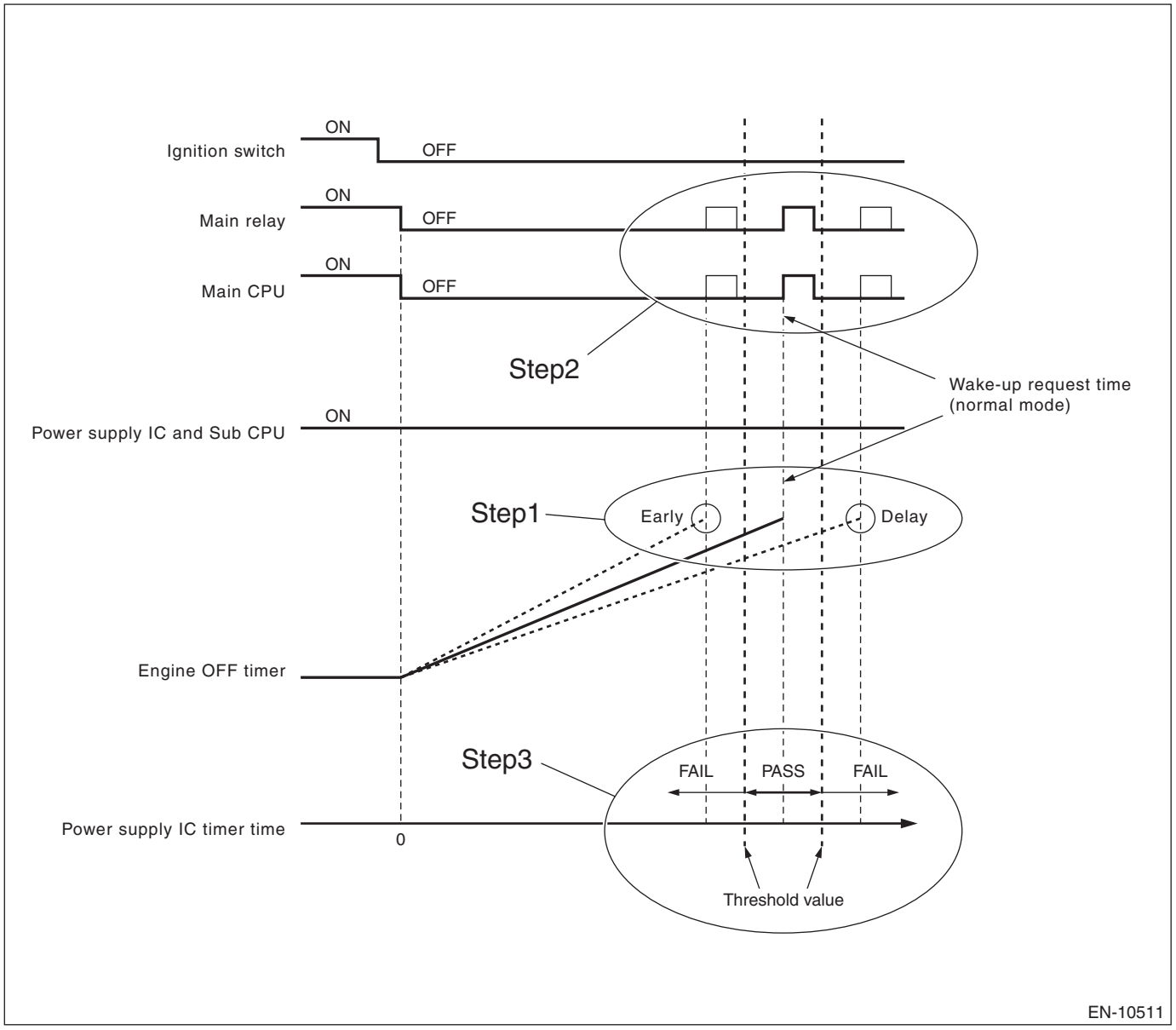

Processed in order Step 1 through Step 3.

Judge as NG when the following conditions are established.

Judgment Value

Malfunction Criteria	Threshold Value
|(Power supply IC timer) – (Wake-up request time)| / Wake-up request time	> 0.24

Time Needed for Diagnosis: Less than 1 second
Malfunction Indicator Light Illumination: Illuminates when malfunction occurs in 2 continuous driving cycles.

<Case #2>

Judge as abnormal in engine off timer when the power supply IC timer exceeds the wake-up request time before wake up.
When case #1 is not performed, perform case #2.

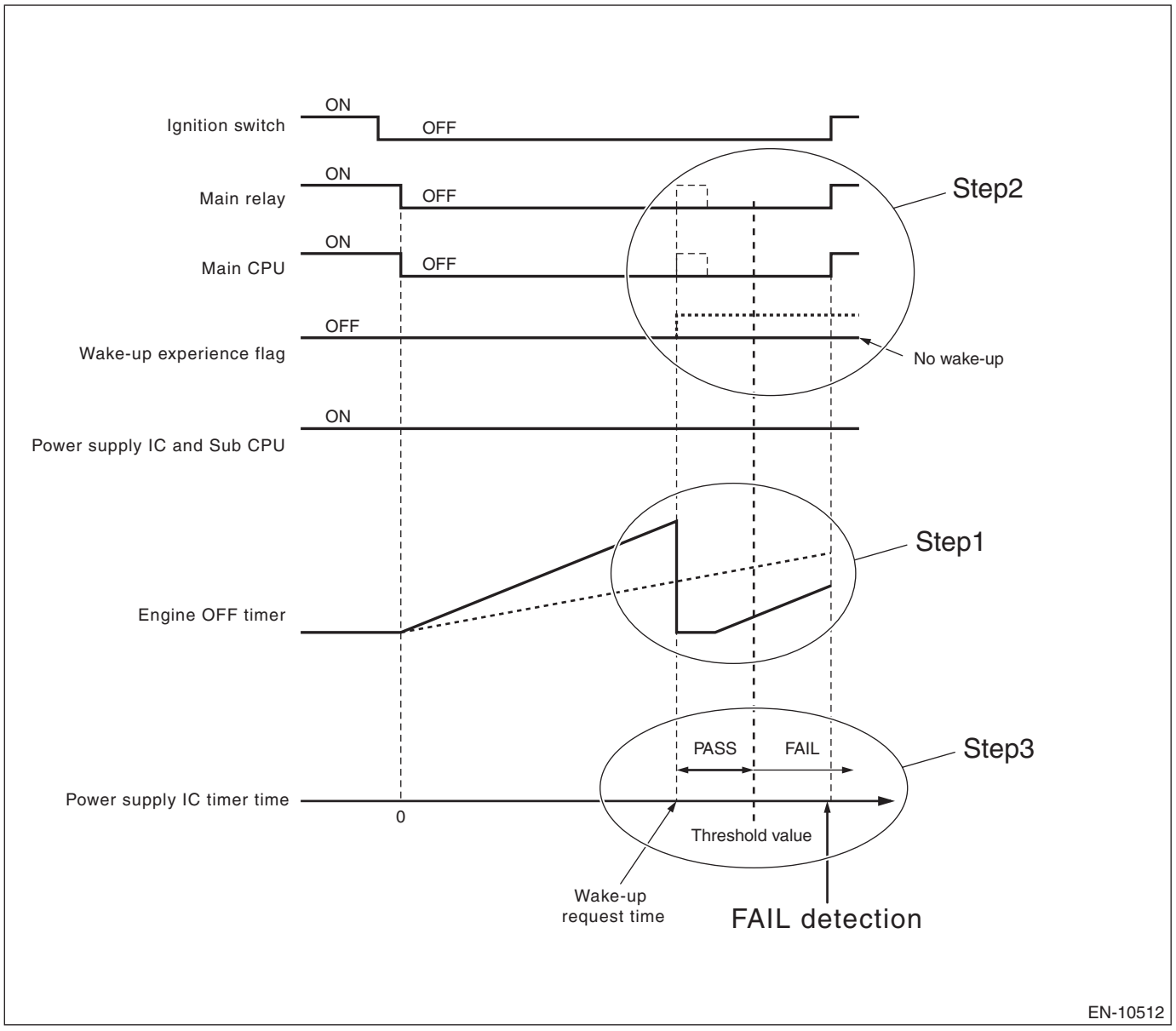

Processed in order Step 1 through Step 3.

Judge as NG when the following conditions are established.

Judgment Value

Malfunction Criteria	Threshold Value
{(Power supply IC timer) – (Wake-up request time)} / Wake-up request time	> 0.24

Time Needed for Diagnosis: Less than 1 second
Malfunction Indicator Light Illumination: Illuminates when malfunction occurs in 2 continuous driving cycles.

<Case #3>

Diagnose the communication error between main CPU and sub CPU.
Judge as NG when the wake-up time required from main CPU and the wake-up time received from sub CPU are different.

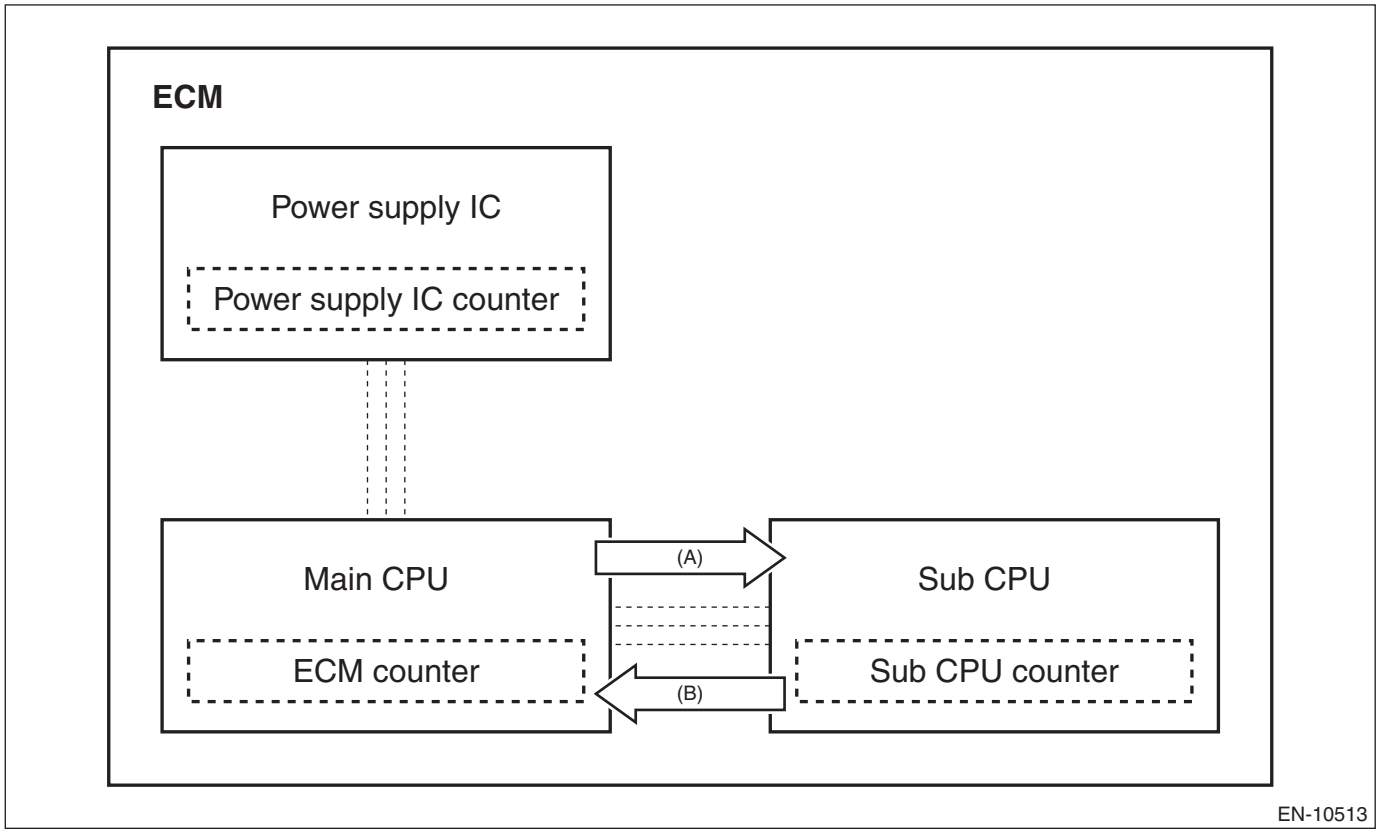

(A) Main CPU demands wake-up time to sub CPU.
(B) Sub CPU sends back wake-up time required by main CPU.

Judge as NG when the following conditions are established.

Judgment Value

Malfunction Criteria	Threshold Value
Wake-up time required by main CPU	≠ Wake-up time sent back by sub CPU

Time Needed for Diagnosis: 2 seconds
Malfunction Indicator Light Illumination: Illuminates when malfunction occurs in 2 continuous driving cycles.

<Case #4>

Diagnose the communication error between main CPU and power supply IC.
Judge as NG when the signal required by main CPU and the signal received from power supply IC are different.

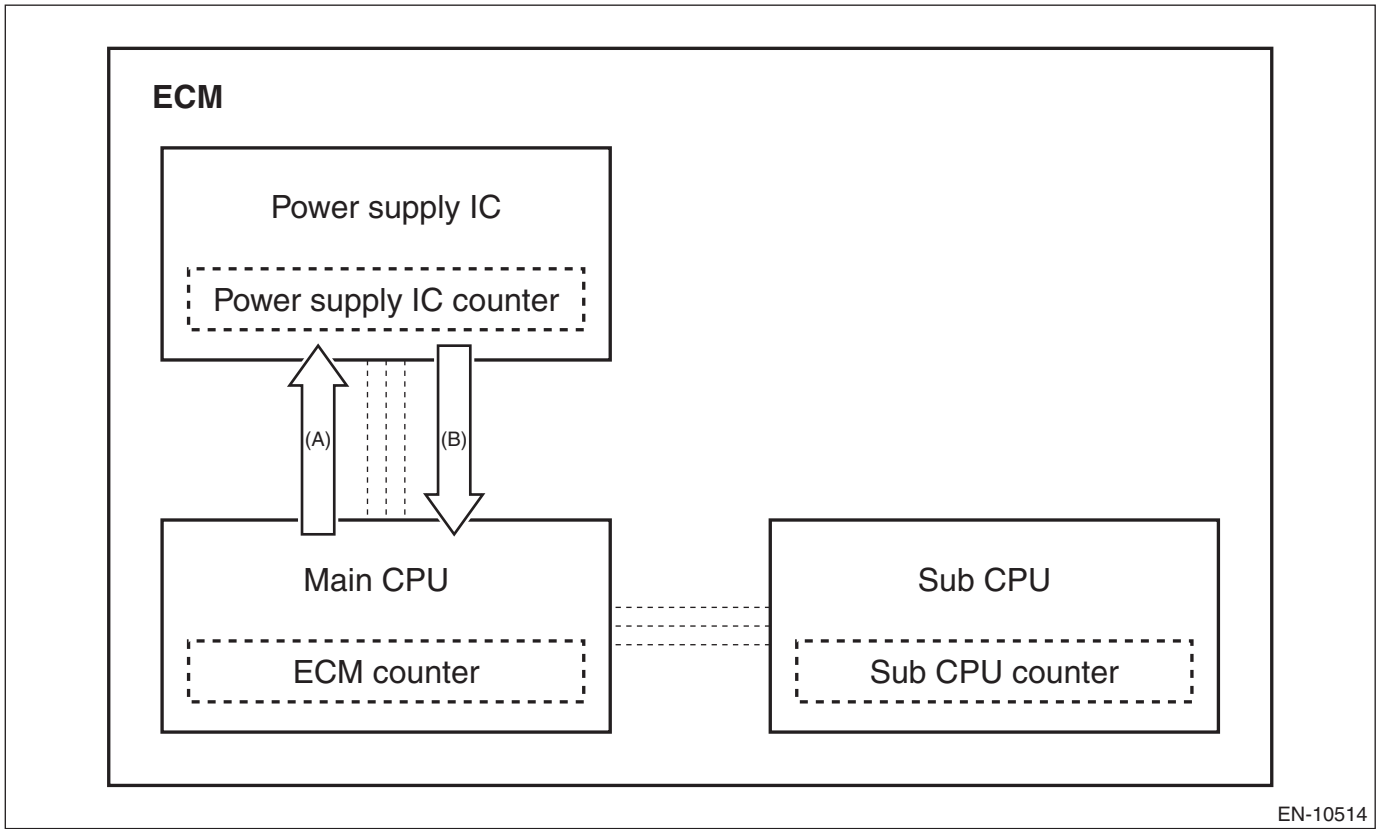

(A) Main CPU demands signals for measuring the wake-up time to power supply IC.
(B) Main CPU receives signals for measuring the wake-up time from power supply IC.

Judge as NG when the following conditions are established.

Judgment Value

Malfunction Criteria	Threshold Value
Signal required by main CPU	≠ Signal received from power supply IC

Time Needed for Diagnosis: 2 seconds
Malfunction Indicator Light Illumination: Illuminates when malfunction occurs in 2 continuous driving cycles.

<Case #5>

On main CPU and sub CPU, there are two operation status: “normal mode” and “wake-up mode”.
Perform diagnosis for CPU operation status abnormality by detecting the difference in operating status of main CPU and sub CPU.
Judge as NG when main CPU and sub CPU is different in operating status.

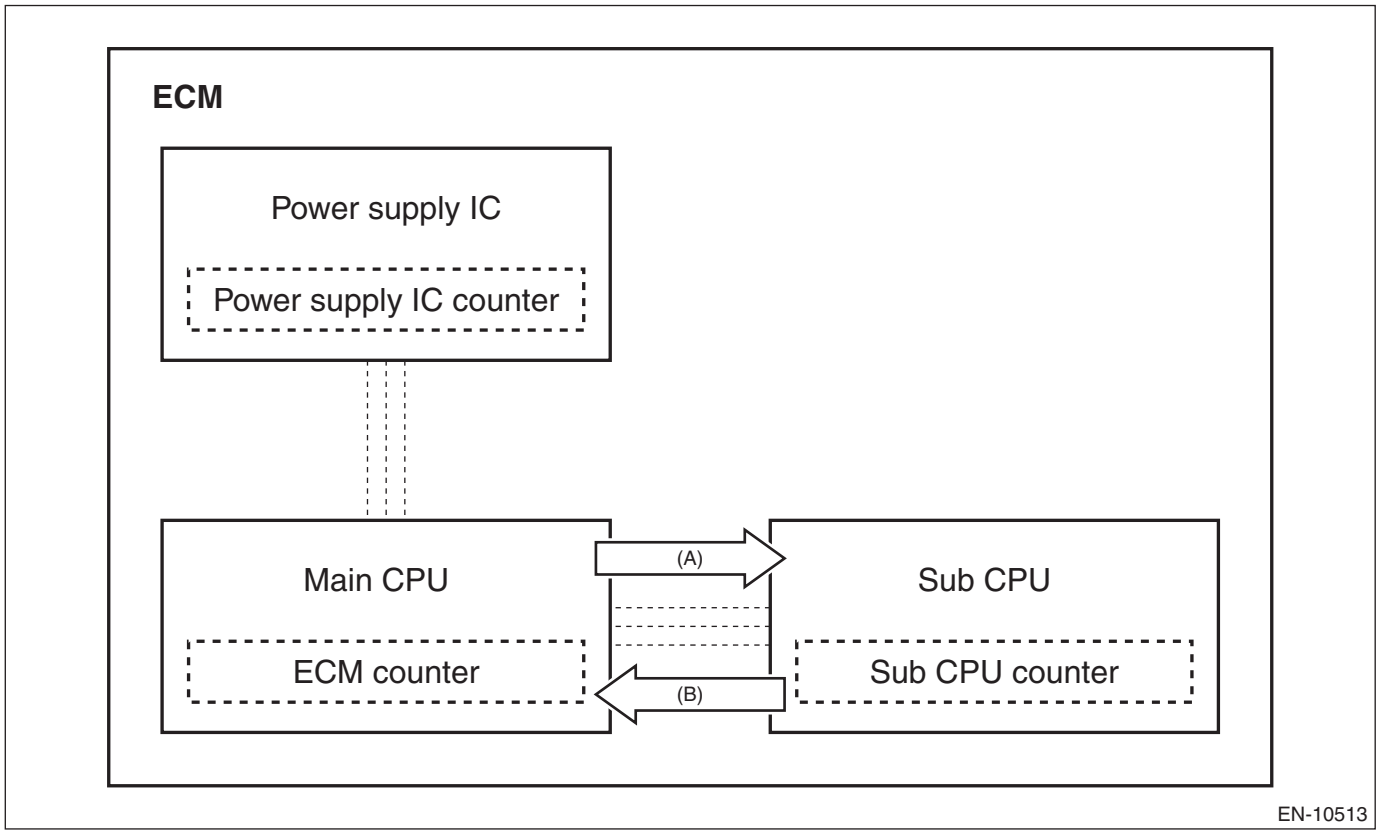

(A) Main CPU demands diagnosis for operating status to sub CPU.
(B) Sub CPU sends back the operating status to main CPU.

Judge as NG when the following conditions are established.

Judgment Value

Malfunction Criteria	Threshold Value
Operating status of main CPU	≠ Operating status of sub CPU

Time Needed for Diagnosis: 2 seconds
Malfunction Indicator Light Illumination: Illuminates when malfunction occurs in 2 continuous driving cycles.

<Case #6>

Perform diagnosis for ignition switch status abnormality by detecting the difference in ignition switch status (ON or OFF) of main CPU and sub CPU.
Judge as NG when main CPU and sub CPU are different in ignition switch status.

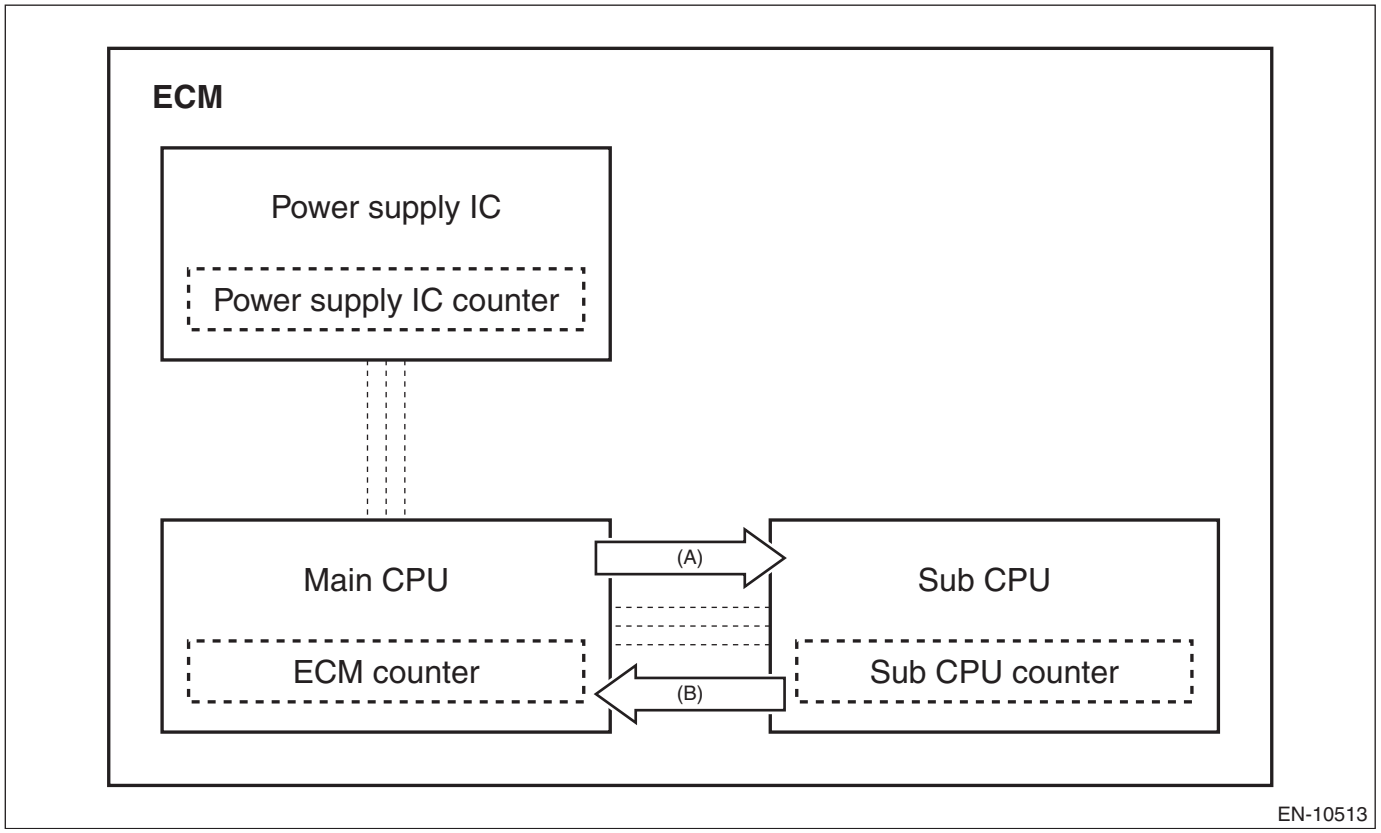

(A) Main CPU demands ignition switch status to sub CPU.
(B) Sub CPU sends back ignition switch status to main CPU.

Judge as NG when the following conditions are established.

Judgment Value

Malfunction Criteria	Threshold Value
Ignition switch status of main CPU	≠ Ignition switch status of sub CPU

Time Needed for Diagnosis: 2 seconds
Malfunction Indicator Light Illumination: Illuminates when malfunction occurs in 2 continuous driving cycles.

GO:DTC U0073 CONTROL MODULE COMMUNICATION BUS OFF

NOTE:
For the diagnostic procedure, refer to LAN section. <Ref. to LAN(diag)-2, Basic Diagnostic Procedure.>

1. OUTLINE OF DIAGNOSIS

Detect malfunction of CAN communication.
Judge as NG when CAN communication failure has occurred.

2. COMPONENT DESCRIPTION

(Common Specifications)
CAN Protocol 2.0 B (Active)
Frame Format: 11 Bit ID Frame (Standard Frame)
Conforms to ISO11898
Communication Speed: 500 kbps

3. EXECUTION CONDITION

Secondary parameters	Execution condition
Battery voltage	≥ 10.9 V

4. GENERAL DRIVING CYCLE

Always perform the diagnosis continuously.

5. DIAGNOSTIC METHOD

Judge as NG when the following conditions are established.

Judgment Value

Malfunction Criteria	Threshold Value
CAN bus condition	Bus off

Time Needed for Diagnosis: 436 ms
Malfunction Indicator Light Illumination: Illuminates as soon as a malfunction occurs.

GP:DTC U0077 LIN COMMUNICATION BUS "ECM/PCM" OFF

DTC DETECTING CONDITION:
Immediately at fault recognition

CAUTION:
• After servicing or replacing faulty parts, perform Clear Memory Mode <Ref. to EN(w/o STI)(diag)-82, OPERATION, Clear Memory Mode.>, and Inspection Mode <Ref. to EN(w/o STI)(diag)-64, PROCEDURE, Inspection Mode.>.
• Use the check board when measuring the ECM terminal voltage and resistance.

WIRING DIAGRAM:
Engine Electrical System <Ref. to WI-154, WIRING DIAGRAM, Engine Electrical System.>

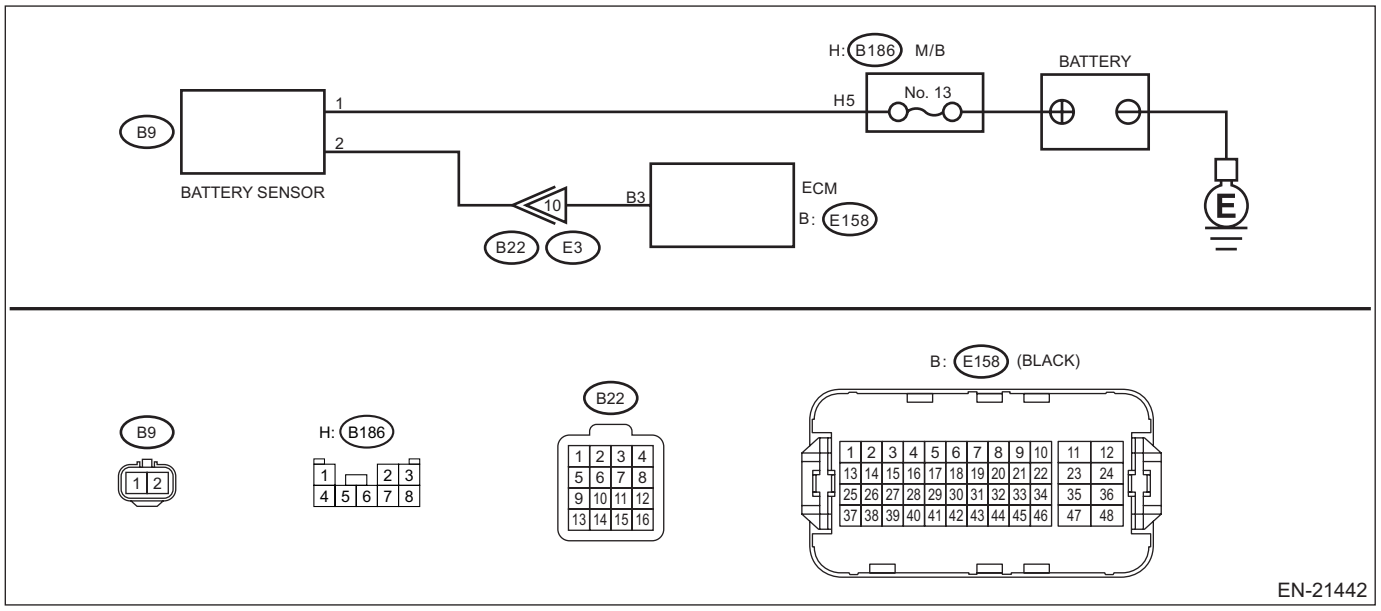

Step		Check	Yes	No
1	**CHECK DTC.** Check for DTC. <Ref. to EN(w/o STI)(diag)-63, Read Diagnostic Trouble Code (DTC).>	Is U0077 displayed? (Current malfunction)	Go to step **2**.	Even if DTC is detected, the circuit has returned to a normal condition at this time. Reproduce the failure, and then perform the diagnosis again.
2	**CHECK ECM CONNECTOR.** Check the connecting condition of ECM connector.	Is the ECM connector correctly connected?	Go to step **3**.	Connect the ECM connector correctly.
3	**CHECK HARNESS BETWEEN BATTERY AND BATTERY SENSOR CONNECTOR.** 1) Turn the ignition switch to OFF. 2) Disconnect the ground terminal from battery sensor. <Ref. to NT-6, BATTERY, NOTE, Note.> 3) Disconnect the connector from battery sensor. 4) Disconnect the positive terminal of battery. 5) Measure the resistance of the harness between battery positive cable terminal and battery sensor connector. ***Connector & terminal*** ***Positive cable terminal — (B9) No. 1:***	Is the resistance less than 1 Ω?	Go to step **4**.	Repair the open circuit in harness between battery positive cable terminal and battery sensor connector.

Step		Check	Yes	No
4	**CHECK HARNESS BETWEEN ECM AND BATTERY SENSOR CONNECTOR.** 1) Disconnect the connector from ECM. 2) Measure the resistance of harness between ECM connector and battery sensor connector. ***Connector & terminal*** ***(E158) No. 3 — (B9) No. 2:***	Is the resistance less than 1 Ω?	Repair the poor contact of ECM connector or battery sensor connector.	Repair the harness and connector. NOTE: In this case, repair the following item: • Open circuit in harness between ECM connector and battery sensor connector • Poor contact of coupling connector

1. OUTLINE OF DIAGNOSIS

Detect malfunction of LIN communication.
Judge as NG when the data sent/received via LIN communication is abnormal.

2. COMPONENT DESCRIPTION

LIN communication is used to send/receive data between ECM and battery sensor.

3. EXECUTION CONDITION

Secondary parameters	Execution condition
Battery voltage	≥ 10.9 V

4. GENERAL DRIVING CYCLE

Always perform the diagnosis continuously after the enable conditions have been established.

5. DIAGNOSTIC METHOD

If the duration of time while the following conditions are met is longer than the time indicated, judge as NG.

Judgment Value

Malfunction Criteria	Threshold Value
Data sent/received with control modules connected to LIN	No change or Checksum error

Time Needed for Diagnosis: 1.5 seconds
Malfunction Indicator Light Illumination: Does not illuminate.

GQ:DTC U0101 LOST COMMUNICATION WITH TCM

NOTE:
For the diagnostic procedure, refer to LAN section. <Ref. to LAN(diag)-2, Basic Diagnostic Procedure.>

1. OUTLINE OF DIAGNOSIS

Detect malfunction of CAN communication.
Judge as NG when CAN communication failure between TCM, VDC CM and combination meter has occurred.

2. COMPONENT DESCRIPTION

(Common Specifications)
CAN Protocol 2.0 B (Active)
Frame Format: 11 Bit ID Frame (Standard Frame)
Conforms to ISO11898
Communication Speed: 500 kbps

3. EXECUTION CONDITION

Secondary parameters	Execution condition
Battery voltage	≥ 10.9 V

4. GENERAL DRIVING CYCLE

Always perform the diagnosis continuously.

5. DIAGNOSTIC METHOD

Judge as NG when the following conditions are established.

Judgment Value

Malfunction Criteria	Threshold Value
ID received from control module connected to CAN	None

Time Needed for Diagnosis: 500 ms
Malfunction Indicator Light Illumination: Illuminates as soon as a malfunction occurs.

GR:DTC U0122 LOST COMMUNICATION WITH VEHICLE DYNAMICS CONTROL MODULE

NOTE:
For the diagnostic procedure, refer to LAN section. <Ref. to LAN(diag)-2, Basic Diagnostic Procedure.>

1. OUTLINE OF DIAGNOSIS

NOTE:
For the detection standard, refer to DTC U0101. <Ref. to EN(w/o STI)(diag)-715, DTC U0101 LOST COMMUNICATION WITH TCM, Diagnostic Procedure with Diagnostic Trouble Code (DTC).>

GS:DTC U0155 LOST COMMUNICATION WITH INSTRUMENT PANEL CLUSTER (IPC) CONTROL MODULE

NOTE:
For the diagnostic procedure, refer to LAN section. <Ref. to LAN(diag)-2, Basic Diagnostic Procedure.>

1. OUTLINE OF DIAGNOSIS

NOTE:
For the detection standard, refer to DTC U0101. <Ref. to EN(w/o STI)(diag)-715, DTC U0101 LOST COMMUNICATION WITH TCM, Diagnostic Procedure with Diagnostic Trouble Code (DTC).>

GT:DTC U0402 INVALID DATA RECEIVED FROM TCM

NOTE:
For the diagnostic procedure, refer to LAN section. <Ref. to LAN(diag)-2, Basic Diagnostic Procedure.>

1. OUTLINE OF DIAGNOSIS

Detect malfunction of CAN communication.
Judge as NG when data received from TCM, VDC CM and combination meter is not normal.

2. COMPONENT DESCRIPTION

(Common Specifications)
CAN Protocol 2.0 B (Active)
Frame Format: 11 Bit ID Frame (Standard Frame)
Conforms to ISO11898
Communication Speed: 500 kbps

3. EXECUTION CONDITION

Secondary parameters	Execution condition
Battery voltage	≥ 10.9 V

4. GENERAL DRIVING CYCLE

Always perform the diagnosis continuously.

5. DIAGNOSTIC METHOD

Judge as NG when the following conditions are established.

Judgment Value

Malfunction Criteria	Threshold Value
Data updated from control module connected to CAN	None

Time Needed for Diagnosis: 2 seconds
Malfunction Indicator Light Illumination: Illuminates as soon as a malfunction occurs.

GU:DTC U0416 INVALID DATA RECEIVED FROM VEHICLE DYNAMICS CONTROL MODULE

NOTE:
For the diagnostic procedure, refer to LAN section. <Ref. to LAN(diag)-2, Basic Diagnostic Procedure.>

1. OUTLINE OF DIAGNOSIS

NOTE:
For the detection standard, refer to DTC U0402. <Ref. to EN(w/o STI)(diag)-716, DTC U0402 INVALID DATA RECEIVED FROM TCM, Diagnostic Procedure with Diagnostic Trouble Code (DTC).>

GV:DTC U0423 INVALID DATA RECEIVED FROM INSTRUMENT PANEL CLUSTER CONTROL MODULE

NOTE:
For the diagnostic procedure, refer to LAN section. <Ref. to LAN(diag)-2, Basic Diagnostic Procedure.>

1. OUTLINE OF DIAGNOSIS

NOTE:
For the detection standard, refer to DTC U0402. <Ref. to EN(w/o STI)(diag)-716, DTC U0402 INVALID DATA RECEIVED FROM TCM, Diagnostic Procedure with Diagnostic Trouble Code (DTC).>

GW:DTC U1712 LOST LIN COMMUNICATION WITH BATTERY "1" MONITOR MODULE

NOTE:
For the diagnostic procedure, refer to DTC U0077. <Ref. to EN(w/o STI)(diag)-713, DTC U0077 LIN COMMUNICATION BUS "ECM/PCM" OFF, Diagnostic Procedure with Diagnostic Trouble Code (DTC).>

1. OUTLINE OF DIAGNOSIS

Detect malfunction of LIN communication.
Judge as NG when LIN communication failure has occurred with the battery sensor.

2. COMPONENT DESCRIPTION

The battery sensor monitors the data of battery voltage, current, temperature, etc. ECM receives these data via LIN communication with the battery sensor.

3. EXECUTION CONDITION

Secondary parameters	Execution condition
Battery voltage	≥ 10.9 V

4. GENERAL DRIVING CYCLE

Always perform the diagnosis continuously after the enable conditions have been established.

5. DIAGNOSTIC METHOD

If the duration of time while the following conditions are met is longer than the time indicated, judge as NG.

Judgment Value

Malfunction Criteria	Threshold Value
Data received from control modules connected to LIN	No change or Checksum error

Time Needed for Diagnosis: 2 seconds
Malfunction Indicator Light Illumination: Does not illuminate.

18.Diagnostic Procedure without Diagnostic Trouble Code (DTC)

A: CHECK SI-DRIVE (SUBARU INTELLIGENT DRIVE) SYSTEM

DIAGNOSIS:
SI-DRIVE mode does not switch.

CAUTION:
Note that SI-DRIVE system operates the following controls when it switches the modes.
1. Cannot switch to S# (Sport Sharp) mode when the engine is cold, and S# (Sport Sharp) switch prohibition buzzer sounds.
2. Switches to S (Sport) when turning the engine ON after turning the engine OFF in S# (Sport sharp) mode.
3. Returns to the mode last selected when turning the engine ON after turning the engine OFF in S (Sport) or I (Intelligent) mode.
4. Switches to S (Sport) when the malfunction indicator light illuminates while the engine is running. In this case, Cannot switch to S# (Sport Sharp) or I (Intelligent) mode.
5. If there is a possible engine coolant or engine oil temperature overheat condition, it will not be possible to switch to the S# (Sport Sharp) mode. Switches to S (Sport) while driving in S# (Sport sharp) mode.

1. SI-DRIVE MODE INDICATION DOES NOT CHANGE AND MODES DO NOT SWITCH AFTER SWITCHING SI-DRIVE MODES

CAUTION:
Use the check board when measuring the ECM terminal voltage and resistance.
WIRING DIAGRAM:
Engine Electrical System <Ref. to WI-154, WIRING DIAGRAM, Engine Electrical System.>

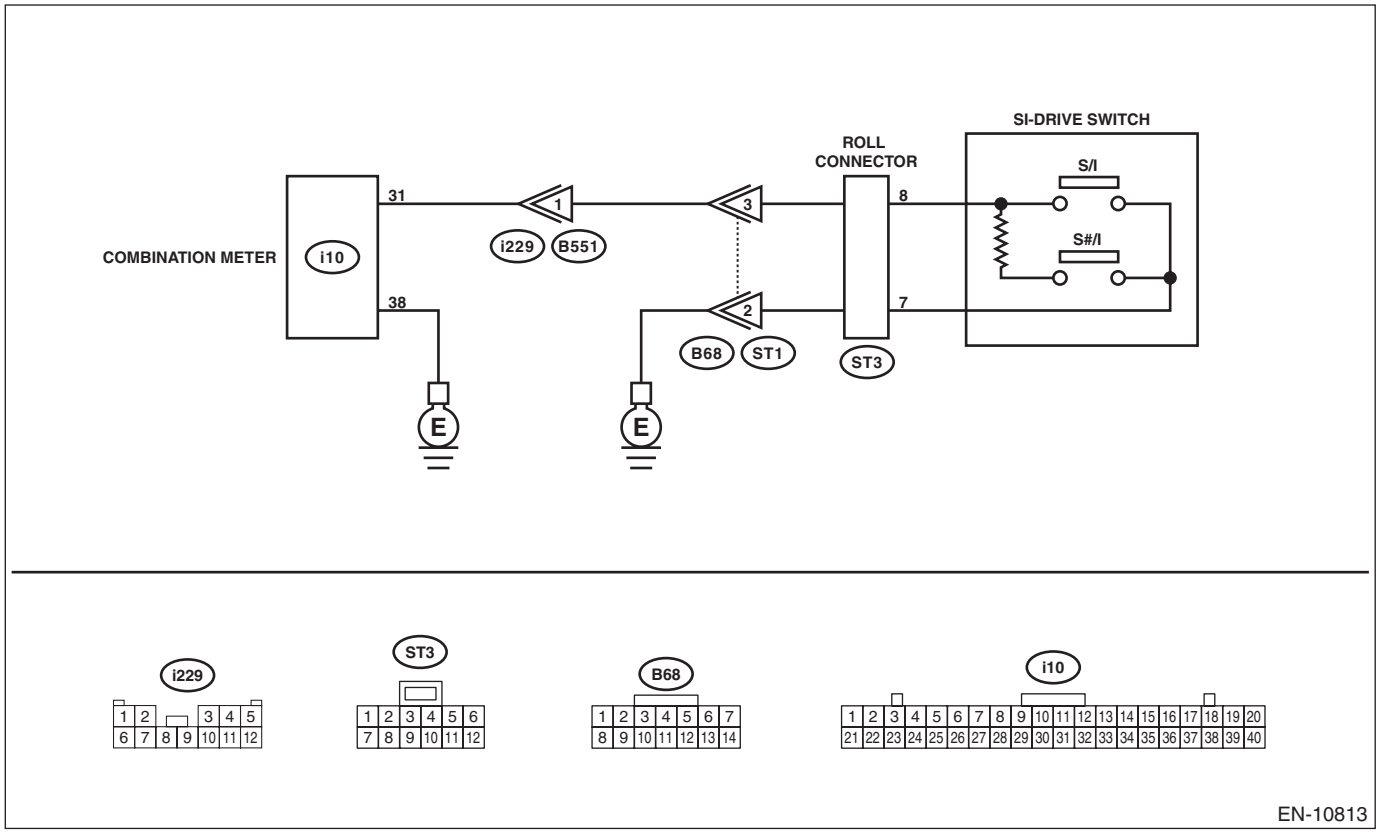

	Step	Check	Yes	No
1	**CHECK SI-DRIVE SWITCH.** 1) Turn the ignition switch to OFF. 2) Disconnect the connector from the combination meter. 3) Measure the resistance when the SI-DRIVE switch is operated. ***Connector & terminal*** ***(i10) No. 31 — Chassis ground:***	Does the resistance change as below? S#/I: 1.71 — 1.89 kΩ S/I: less than 1 Ω	Go to step **5**.	Go to step **2**.
2	**CHECK HARNESS BETWEEN COMBINATION METER AND SI-DRIVE SWITCH CONNECTOR.** Measure the resistance of harness between combination meter connector and SI-DRIVE switch connector. ***Connector & terminal*** ***(i10) No. 31 — (ST3) No. 8:***	Is the resistance less than 1 Ω?	Go to step **3**.	Repair the harness and connector. NOTE: In this case, repair the following item: • Open circuit in harness between combination meter connector and SI-DRIVE switch connector • Poor contact of coupling connector • Poor contact of roll connector • Roll connector is faulty
3	**CHECK HARNESS BETWEEN SI-DRIVE SWITCH CONNECTOR AND CHASSIS GROUND.** Measure the resistance of harness between SI-DRIVE switch connector and chassis ground. ***Connector & terminal*** ***(ST3) No. 7 — Chassis ground:***	Is the resistance less than 1 Ω?	Go to step **4**.	Repair the harness and connector. NOTE: In this case, repair the following item: • Open circuit in harness between SI-DRIVE switch connector and chassis ground • Poor contact of joint connector • Poor contact of roll connector • Roll connector is faulty
4	**CHECK HARNESS BETWEEN COMBINATION METER AND SI-DRIVE SWITCH CONNECTOR.** Measure the resistance between combination meter connector and chassis ground. ***Connector & terminal*** ***(i10) No. 31 — Chassis ground:***	Is the resistance 1 MΩ or more?	Repair the poor contact of SI-DRIVE switch connector. Replace the SI-DRIVE switch if defective. <Ref. to FU(w/o STI)-123, SI-DRIVE (SUBARU Intelligent Drive) Selector.>	Repair the short circuit to ground in harness between combination meter and SI-DRIVE switch connector.
5	**CHECK HARNESS BETWEEN COMBINATION METER AND CHASSIS GROUND.** Measure the resistance of harness between combination meter and chassis ground. ***Connector & terminal*** ***(i10) No. 38 — Chassis ground:***	Is the resistance less than 5 Ω?	Go to step **6**.	Repair the open circuit of harness between combination meter and chassis ground.

	Step	Check	Yes	No
6	**RECHECK FAULT.** 1) Connect all connectors. 2) Switch SI-DRIVE modes.	Is there any fault?	Repair the poor contact of combination meter connector. Replace the meter case assembly if defective. <Ref. to IDI-13, Combination Meter.>	The circuit has returned to a normal condition at this time. Reproduce the failure, and then perform the diagnosis again. NOTE: In this case, temporary poor contact of connector, temporary open or short circuit of harness may be the cause.

2. WHEN THE SI-DRIVE MODE IS CHANGED, “S”, “I” OR “S#” FLASHES IN COMBINATION METER SI-DRIVE MODE DISPLAY IN APPROX. 5 SECONDS

	Step	Check	Yes	No
1	**CHECK DTC.**	Is DTC displayed?	Check the appropriate DTC using the “List of Diagnostic Trouble Code (DTC)” concerning the respective units.	Go to step **2**.
2	**CHECK COMBINATION METER AND CLOCK DISPLAY.** Check for abnormal display other than “S”, “I” or “S#” flashing. Examples: Malfunction indicator light illuminates.	Is there an abnormal display other than “S”, “I” or “S#” flashing?	For the diagnostic procedure, refer to LAN section. <Ref. to LAN(diag)-2, Basic Diagnostic Procedure.>	Go to step **3**.
3	**CHECK ECM AND COMBINATION METER.**	Is the part number of ECM and combination meter correct?	Replace the meter case assembly. <Ref. to IDI-13, Combination Meter.>	Replace ECM or meter case assembly with the one with the correct part number. <Ref. to FU(w/o STI)-124, Engine Control Module (ECM).> <Ref. to IDI-13, Combination Meter.>

3. WHEN THE SI-DRIVE MODE IS CHANGED, “S”, “I” OR “S#” FLASHES IN COMBINATION METER SI-DRIVE MODE DISPLAY

NOTE:
In this case, there is a fault other than in SI-DRIVE system.

	Step	Check	Yes	No
1	**CHECK MALFUNCTION INDICATOR LIGHT.** 1) Start the engine. 2) Check if malfunction indicator light illuminates.	Does the malfunction indicator light illuminate?	Read the DTC using Subaru Select Monitor and check the indicated DTC. <Ref. to EN(w/o STI)(diag)-63, Read Diagnostic Trouble Code (DTC).>	Go to step **2**.
2	**CHECK ENGINE COOLANT TEMPERATURE GAUGE.** 1) Turn the ignition switch to ON. 2) Check the engine coolant temperature gauge.	Does it indicate overheating?	Inspect for the cause of overheating and repair.	Go to step **3**.
3	**CHECK ENGINE OIL TEMPERATURE.** 1) Turn the ignition switch to ON. 2) Check the value of «Oil Temperature» using Subaru Select Monitor. NOTE: For detailed operation procedures, refer to “Current Data Display For Engine”. <Ref. to EN(w/o STI)(diag)-46, Subaru Select Monitor.>	Is the value of «Oil Temperature» 117°C (243°F) or more?	Inspect and repair the cause of engine oil temperature rise. NOTE: Ask the customer whether the vehicle has experienced a long drive in low gear or towing of heavy load. If not, drive the vehicle again after the engine oil temperature lowers, and check if the engine oil temperature rises.	Go to step **4**.
4	**CHECK COMBINATION METER INDICATION.** 1) Turn the ignition switch to ON. 2) Switch SI-DRIVE modes. 3) Check the SI-DRIVE mode display in the combination meter.	Does the SI-DRIVE mode “S”, “I” or “S#” in combination meter flash?	Replace the meter case assembly. <Ref. to IDI-13, Combination Meter.>	Perform test operation and check the malfunction indicator light, engine coolant temperature warning light, and engine oil temperature. If they are normal, finish the diagnosis.

19.General Diagnostic Table

A: INSPECTION

1. ENGINE

NOTE:
Malfunction of parts other than those listed is also possible. <Ref. to ME(w/o STI)-329, Engine Trouble in General.>

Symptoms	Faulty parts
1. Engine stalls during idling.	1) Electronic throttle control 2) Manifold absolute pressure sensor 3) Mass air flow and intake air temperature sensor 4) Ignition parts (*1) 5) Engine coolant temperature sensor (*2) 6) Crankshaft position sensor (*3) 7) Camshaft position sensor (*3) 8) Fuel injection parts (*4)
2. Rough idling	1) Electronic throttle control 2) Manifold absolute pressure sensor 3) Mass air flow and intake air temperature sensor 4) Engine coolant temperature sensor (*2) 5) Ignition parts (*1) 6) Air intake system (*5) 7) Fuel injection parts (*4) 8) Crankshaft position sensor (*3) 9) Camshaft position sensor (*3) 10) Oxygen sensor 11) Fuel pump and fuel pump relay 12) EGR control valve
3. Engine does not return to idle.	1) Electronic throttle control 2) Engine coolant temperature sensor 3) Manifold absolute pressure sensor 4) Mass air flow and intake air temperature sensor 5) Accelerator pedal position sensor 6) EGR control valve 7) Engine oil temperature sensor
4. Poor acceleration	1) Manifold absolute pressure sensor 2) Mass air flow and intake air temperature sensor 3) Electronic throttle control 4) Fuel injection parts (*4) 5) Fuel pump and fuel pump relay 6) Engine coolant temperature sensor (*2) 7) Crankshaft position sensor (*3) 8) Camshaft position sensor (*3) 9) Accelerator pedal position sensor 10) Engine torque control signal circuit 11) Ignition parts (*1) 12) EGR control valve 13) Engine oil temperature sensor
5. Engine stalls, hesitates, or sputters at acceleration.	1) Manifold absolute pressure sensor 2) Mass air flow and intake air temperature sensor 3) Engine coolant temperature sensor (*2) 4) Crankshaft position sensor (*3) 5) Camshaft position sensor (*3) 6) Purge control solenoid valve 7) Fuel injection parts (*4) 8) Fuel pump and fuel pump relay 9) Electronic throttle control 10) EGR control valve

Symptoms	Faulty parts
6. Surging	1) Manifold absolute pressure sensor 2) Mass air flow and intake air temperature sensor 3) Engine coolant temperature sensor (*2) 4) Crankshaft position sensor (*3) 5) Camshaft position sensor (*3) 6) Fuel injection parts (*4) 7) Electronic throttle control 8) Fuel pump and fuel pump relay 9) EGR control valve
7. Spark knock	1) Manifold absolute pressure sensor 2) Mass air flow and intake air temperature sensor 3) Engine coolant temperature sensor 4) Knock sensor 5) Fuel injection parts (*4) 6) Fuel pump and fuel pump relay 7) EGR control valve
8. After burning in exhaust system	1) Manifold absolute pressure sensor 2) Mass air flow and intake air temperature sensor 3) Engine coolant temperature sensor (*2) 4) Fuel injection parts (*4) 5) Fuel pump and fuel pump relay

*1: Check ignition coil and spark plug.
*2: Indicate the symptom occurring only in cold temperatures.
*3: Ensure secure installation.
*4: Check fuel injector, fuel pressure regulator and fuel filter.
*5: Inspect for air leak in air intake system.

TRANSMISSION SECTION

CONTROL SYSTEMS	CS
CONTINUOUSLY VARIABLE TRANSMISSION	CVT(TR690)
CONTINUOUSLY VARIABLE TRANSMISSION (DIAGNOSTICS)	CVT(diag)
MANUAL TRANSMISSION AND DIFFERENTIAL	6MT(TY75)
MANUAL TRANSMISSION AND DIFFERENTIAL	6MT(TY85)
MANUAL TRANSMISSION AND DIFFERENTIAL (DIAGNOSTICS)	6MT(diag)
CLUTCH SYSTEM	CL

This service manual has been prepared to provide SUBARU service personnel with the necessary information and data for the correct maintenance and repair of SUBARU vehicles.
This manual includes the procedures for maintenance, disassembling, reassembling, inspection and adjustment of components and diagnostics for guidance of experienced mechanics.
Please peruse and utilize this manual fully to ensure complete repair work for satisfying our customers by keeping their vehicle in optimum condition. When replacement of parts during repair work is needed, be sure to use SUBARU genuine parts.

All information, illustration and specifications contained in this manual are based on the latest product information available at the time of publication approval.

FUJI HEAVY INDUSTRIES LTD. G1270BE4

CONTROL SYSTEMS

CS

		Page
1.	General Description	2
2.	AT Shift Lock Control System	7
3.	Select Lever	25
4.	Select Cable	43
5.	AT Shift Lock Solenoid and “P” Range Switch	51
6.	Body Integrated Unit	54
7.	MT Gear Shift Lever	55
8.	MT Gear Shift Cable	84
9.	MT Gear Select Cable	93
10.	Reverse Check Cable	109
11.	General Diagnostic Table	126

1. General Description

A: SPECIFICATION

Item	Specifications
Swing torque of rod against lever N (kgf, lbf)	3.7 (0.38, 0.83) or less

B: COMPONENT

1. AT SELECT LEVER

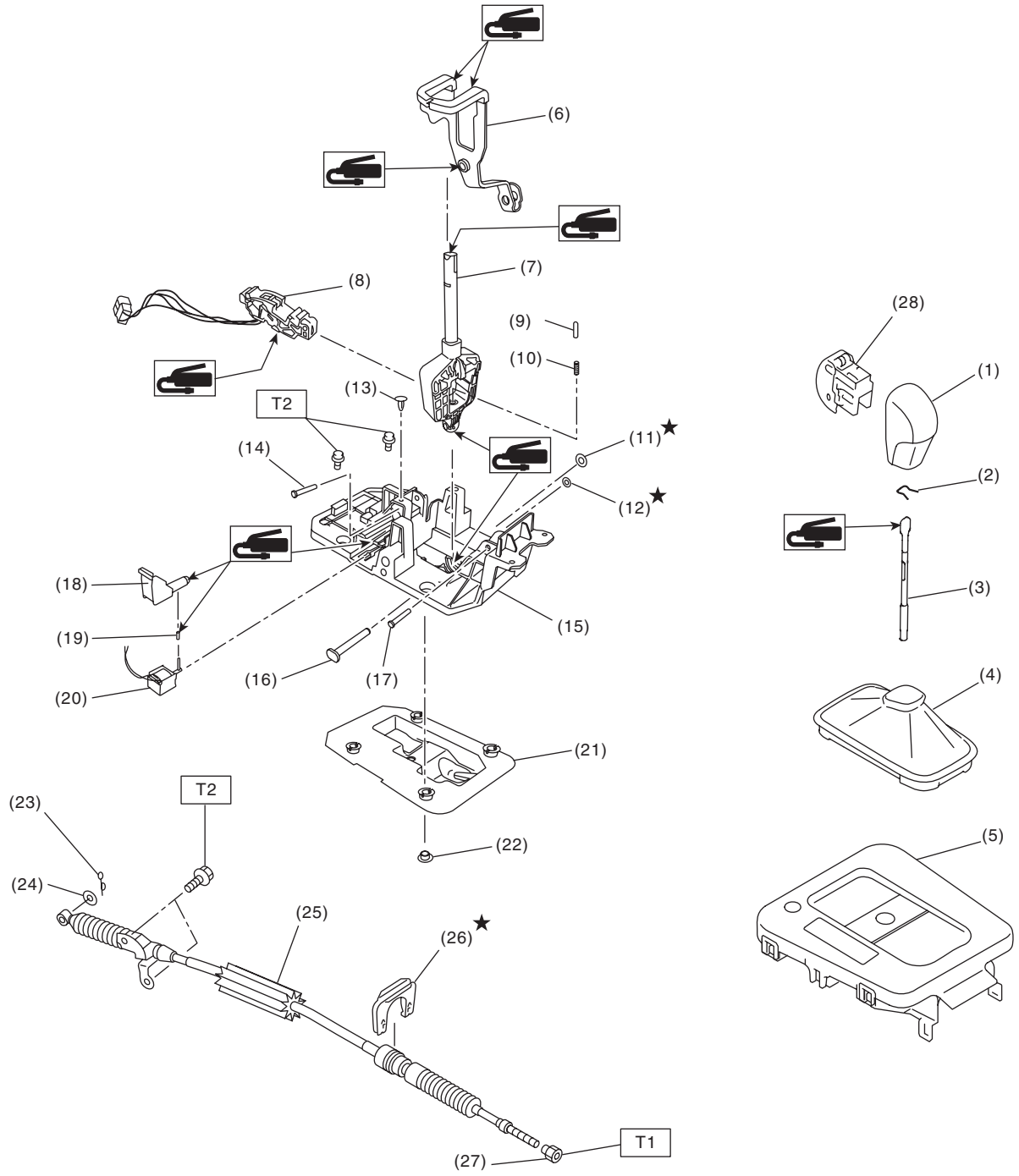

CS-01826

(1) Grip sub ASSY
(2) Clamp grip pin
(3) Rod COMPL
(4) Boot ASSY
(5) Indicator ASSY
(6) Arm COMPL
(7) Selector lever COMPL
(8) Plate guide
(9) Rod detent
(10) Detent spring
(11) Clamp push nut
(12) Clamp push nut
(13) Clamp pin
(14) Spacer pin guide
(15) Plate COMPL
(16) Shaft control
(17) Spacer pin guide
(18) Rod shift lock
(19) Cushion solenoid
(20) Solenoid unit
(21) Gasket
(22) Spacer plate
(23) Snap pin
(24) Washer
(25) Select cable
(26) Clamp
(27) Nut
(28) Button ASSY-AT

Tightening torque: N·m (kgf-m, ft-lb)
T1: 7.5 (0.8, 5.5)
T2: 18 (1.8, 13.3)

2. 6MT GEAR SHIFT LEVER (STI MODEL)

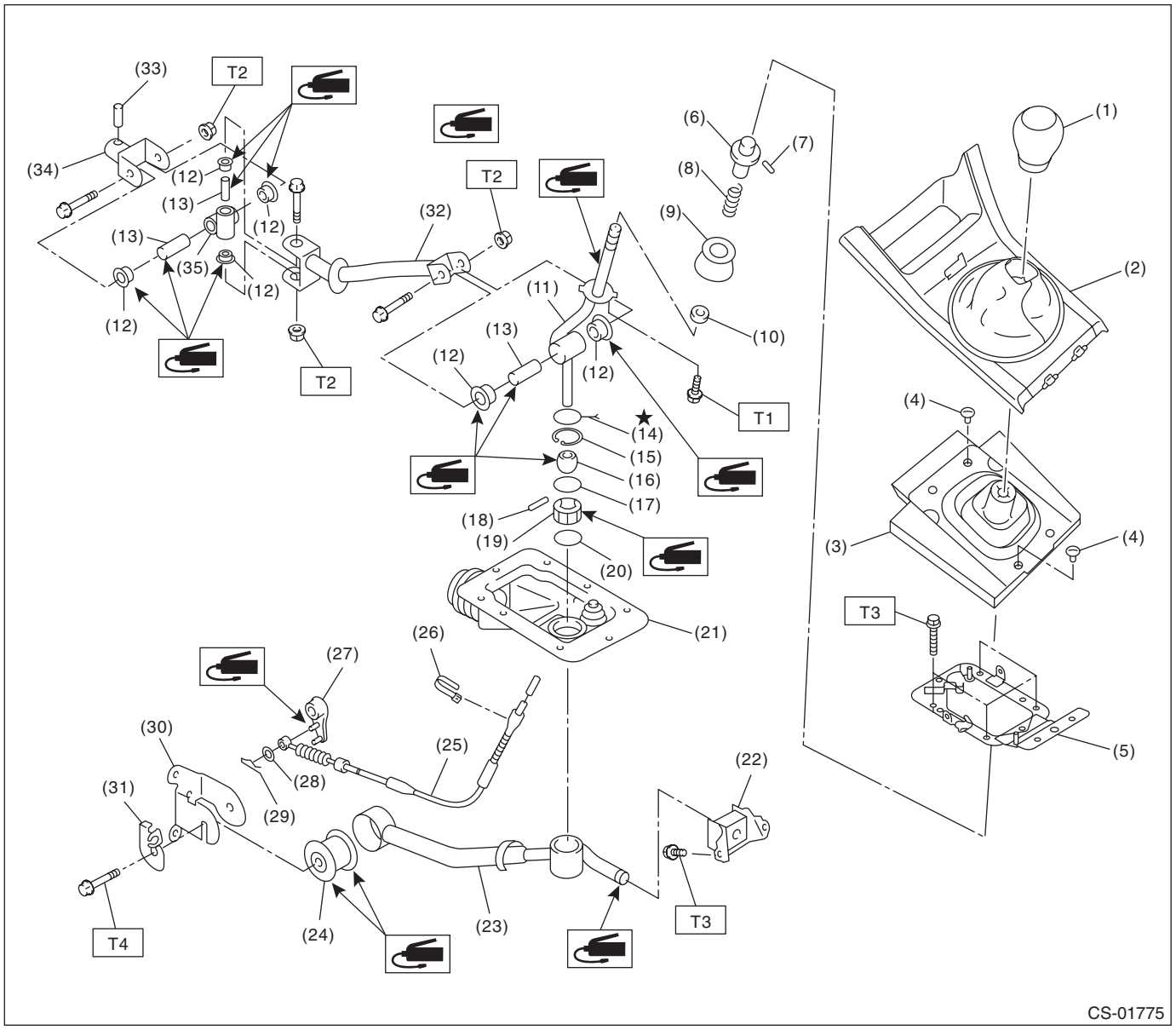

(1) Gear shift knob
(2) Cover - shift lever
(3) Boot and insulator ASSY
(4) Clamp
(5) Plate COMPL
(6) Slider
(7) Spring pin
(8) Spring
(9) Holder
(10) Seat cushion
(11) Lever
(12) Bushing
(13) Spacer
(14) Lock wire
(15) Snap ring
(16) Bushing
(17) O-ring
(18) Spring pin
(19) Bushing
(20) O-ring
(21) Boot
(22) Cushion rubber
(23) Stay
(24) Bushing
(25) Reverse check cable
(26) Band clip
(27) Reverse check lever
(28) Washer
(29) Snap pin
(30) Bracket
(31) Cable plate
(32) Rod
(33) Spring pin
(34) Joint
(35) Boss

Tightening torque: N·m (kgf-m, ft-lb)
T1: 1.3 (0.1, 1.0)
T2: 12 (1.2, 8.9)
T3: 18 (1.8, 13.3)
T4: 32 (3.3, 23.6)

3. 6MT GEAR SHIFT LEVER (EXCEPT FOR STI MODEL)

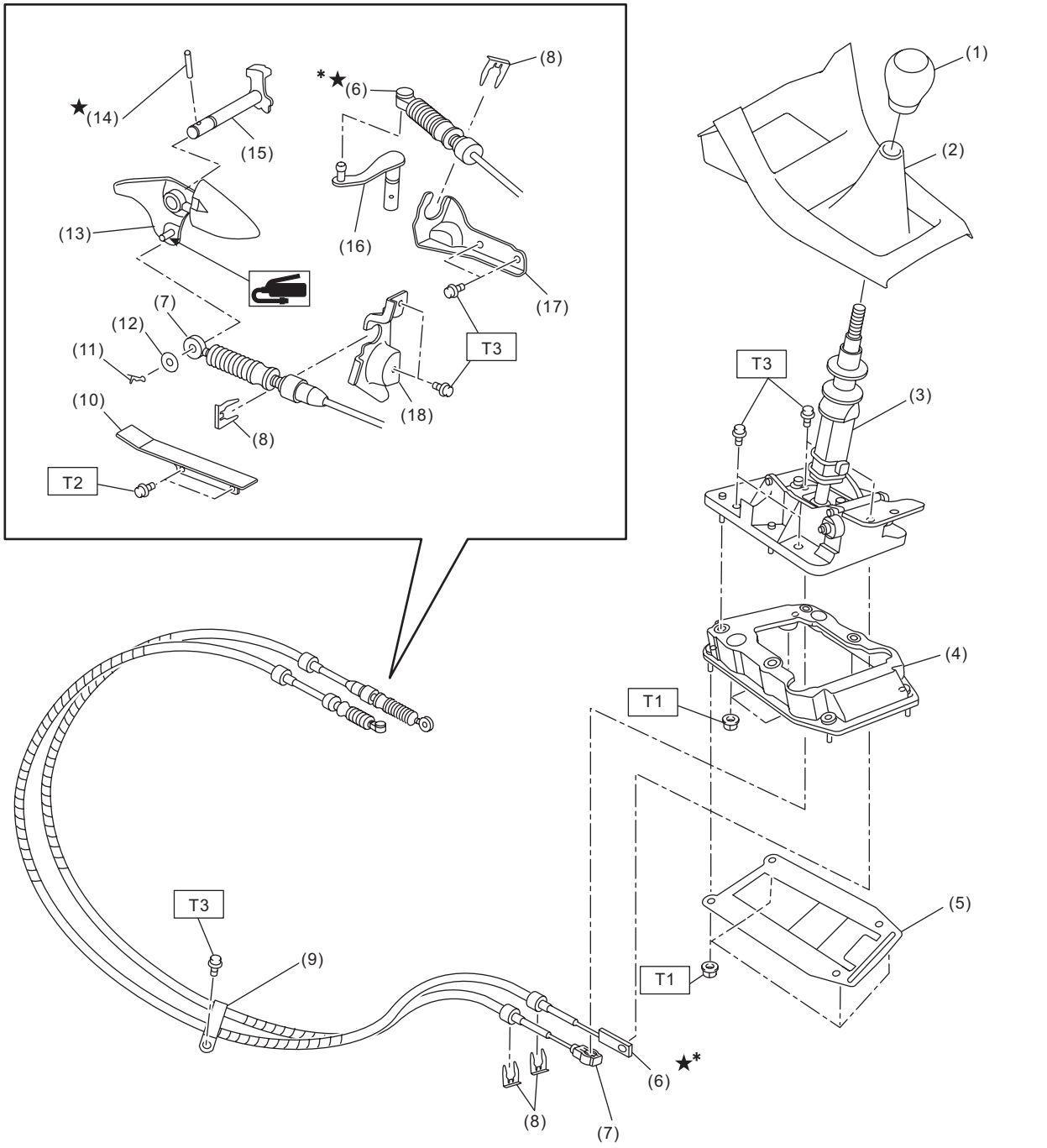

CS-10039

(1) Shift knob
(2) Cover - shift lever
(3) Gear shift lever ASSY
(4) Cable cover ASSY
(5) Cable cover plate
(6) MT gear select cable
(7) MT gear shift cable
(8) Clamp
(9) Cable clamp
(10) Dust cover
(11) Snap pin
(12) Washer
(13) Shift lever COMPL
(14) Spring pin
(15) Shifter arm No. 2
(16) Selector lever COMPL
(17) Select bracket
(18) Shift bracket

Tightening torque: N·m (kgf-m, ft-lb)
T1: 7.5 (0.8, 5.5)
T2: 15 (1.5, 11.1)
T3: 18 (1.8, 13.3)

*: Always use new MT gear select cable if the cable is removed from select lever COMPL of transmission side.

C: PREPARATION TOOL

1. SPECIAL TOOL

ILLUSTRATION	TOOL NUMBER	DESCRIPTION	REMARKS
 STSSM4	—	SUBARU SELECT MONITOR 4	Used for setting of each function and trouble-shooting for electrical system. NOTE: For detailed operation procedures of Subaru Select Monitor 4, refer to “Application help”.

2. GENERAL TOOL

TOOL NAME	REMARKS
Circuit tester	Used for measuring resistance, voltage and current.
DST-i	Used together with Subaru Select Monitor 4.

D: CAUTION

- Remove contamination including dirt and corrosion before removal, installation or disassembly.
- Keep the disassembled parts in order and protect them from dust and dirt.
- Before removal, installation or disassembly, be sure to clarify the failure. Avoid unnecessary removal, installation, disassembly and replacement.
- Use SUBARU genuine fluid, grease etc. or equivalent. Do not mix fluid, grease, etc. of different grades or manufacturers.
- Be sure to tighten fasteners including bolts and nuts to the specified torque.
- Apply grease onto sliding or revolving surfaces before installation.
- Before installing O-rings or snap rings, apply a proper amount of grease to avoid damage and deformation.
- Before securing a part in a vise, place cushioning material such as wood blocks, aluminum plate or cloth between the part and the vise.
- Before disconnecting electrical connectors, be sure to disconnect the negative terminal from battery.

2. AT Shift Lock Control System

A: LOCATION

1. MODEL WITHOUT PUSH BUTTON IGNITION SWITCH

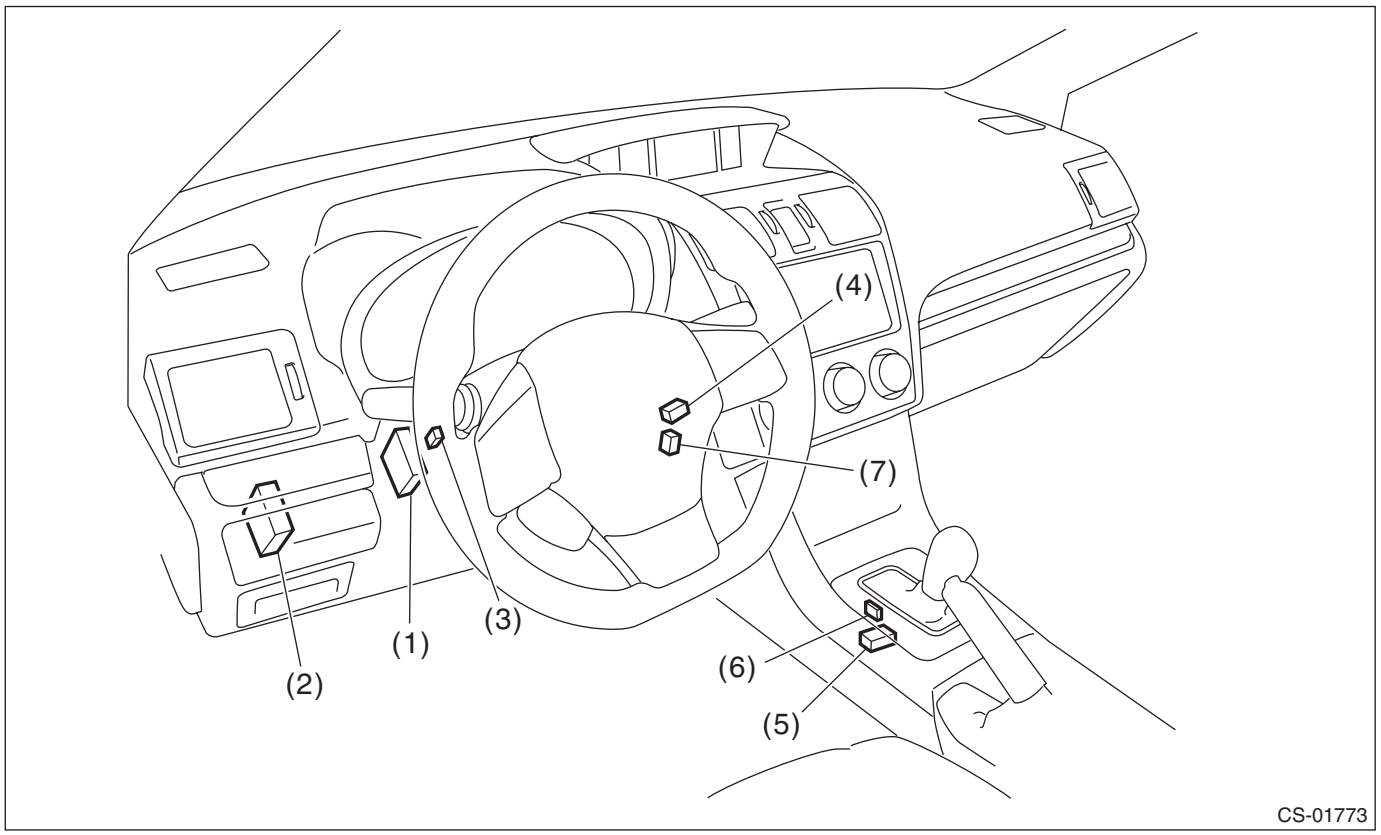

(1) TCM (“P” range)
(2) Body integrated unit
(3) Stop light and brake switch
(4) Key cylinder (with built-in key warning switch)
(5) Solenoid unit
(6) “P” range switch
(7) Key lock solenoid

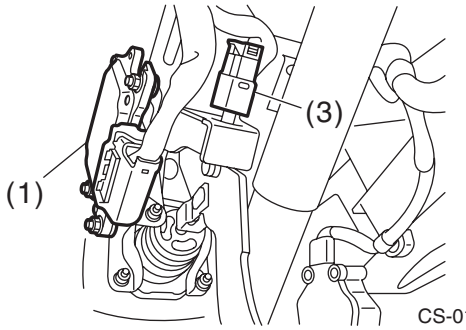

CS-01776

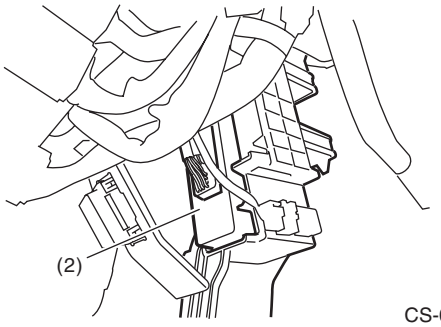

CS-01399

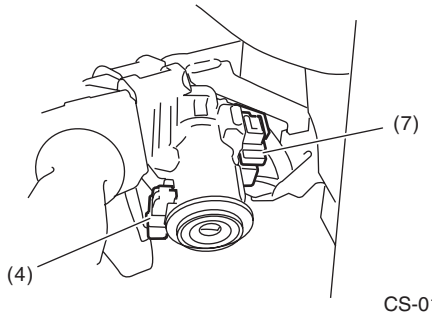

CS-01400

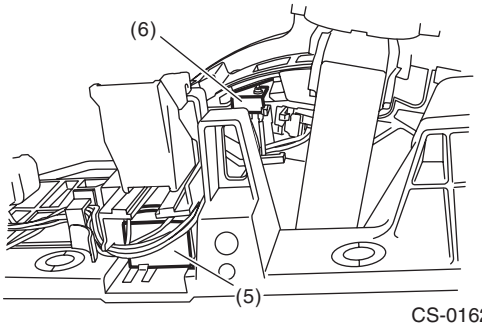

CS-01624

2. MODEL WITH PUSH BUTTON IGNITION SWITCH

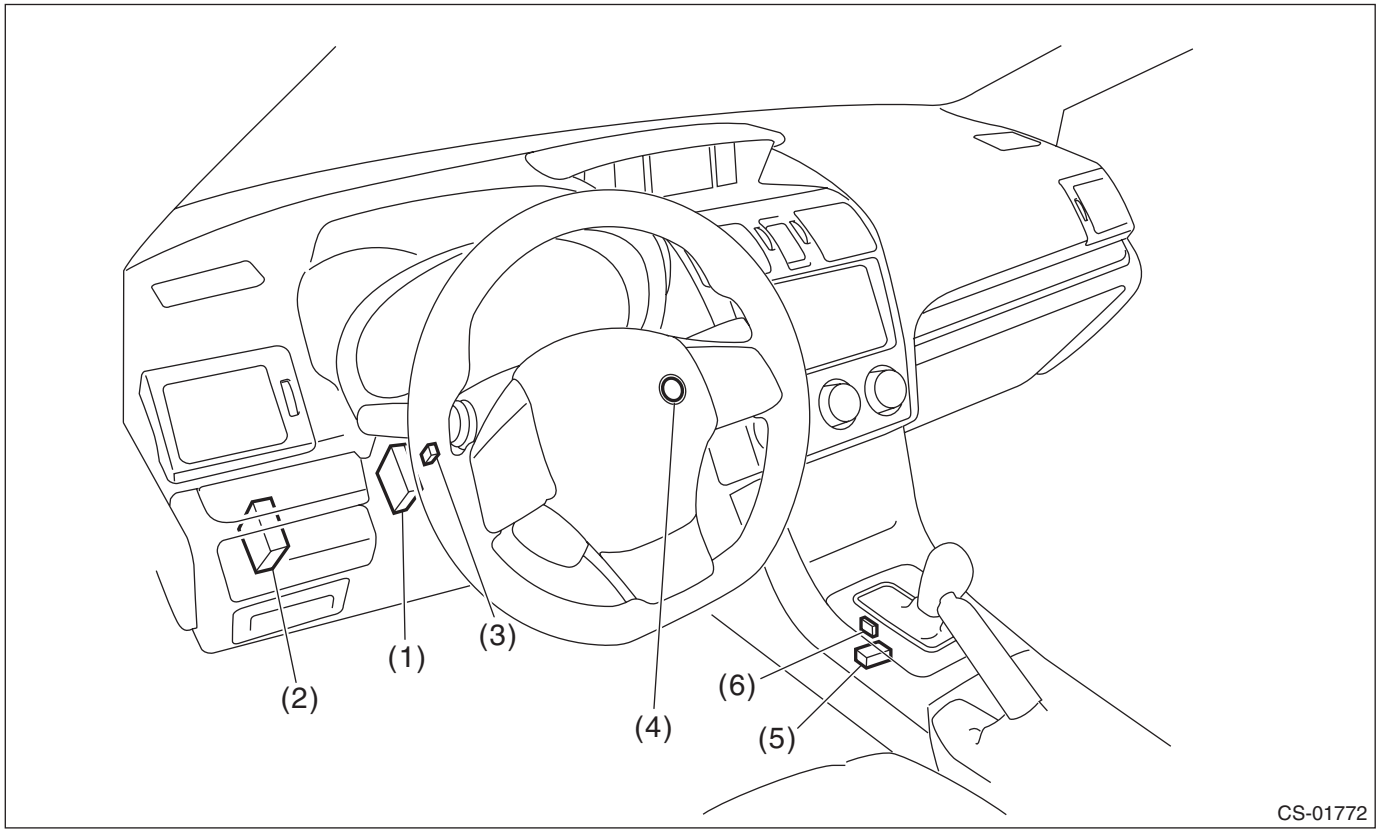

(1) TCM (“P” range)
(2) Body integrated unit
(3) Stop light and brake switch
(4) Push button ignition switch
(5) Solenoid unit
(6) “P” range switch

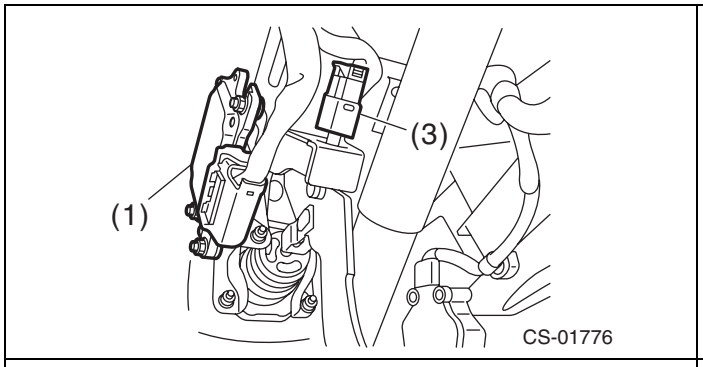

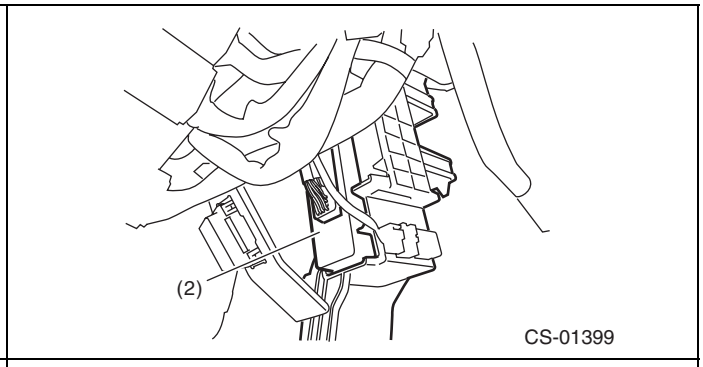

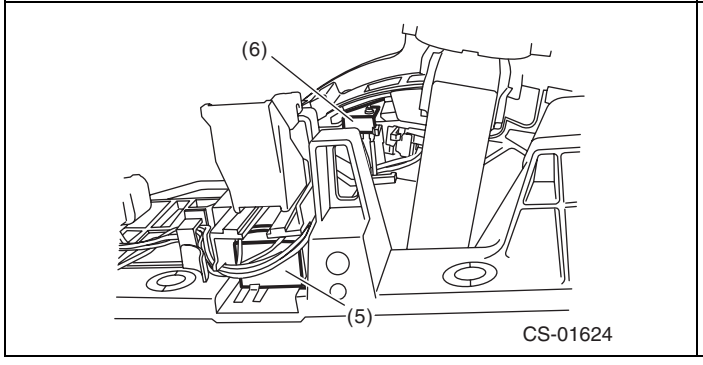

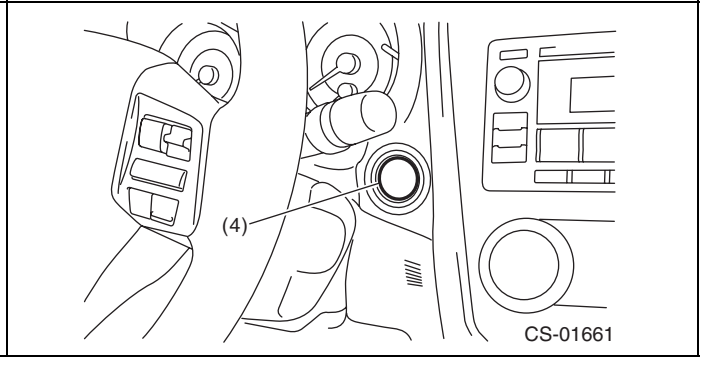

B: ELECTRICAL SPECIFICATION

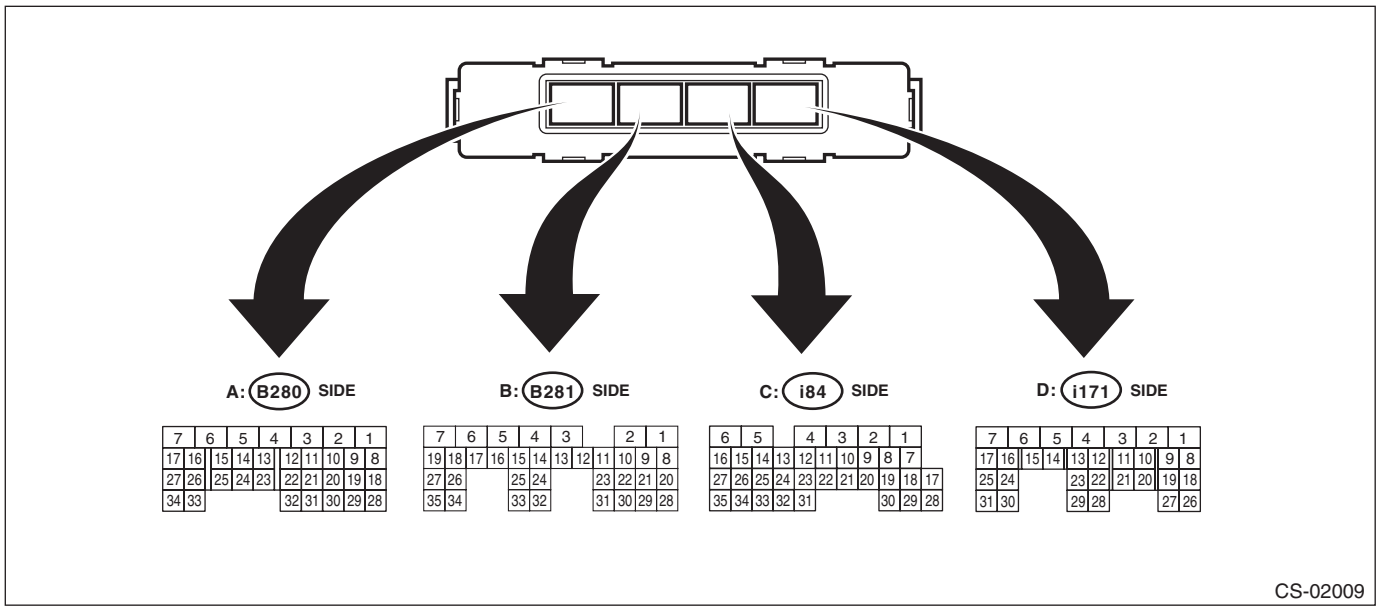

Item	Connector No.	Terminal No.	Input/Output signal Measured value and measuring conditions
Battery power supply	B281	6	9 — 16 V
		7	
	i84	6	
Ignition power supply	B280	32	10 — 15 V when ignition switch is at ACC.
	B281	3	10 — 15 V when ignition switch is at ON or START.
TCM (“P” range)	i84	27	Can not be measured because of digital communication
		35	
Stop light and brake switch	B280	10	9 — 16 V when the stop light & brake switch is ON. 0 V when the stop light & brake switch is OFF.
“P” range switch	B281	18	0 V when select lever is in “P” range. 9 — 16 V when select lever is in other positions than “P” range
Solenoid unit signal	B281	5	8.5 — 16 V when shift lock is released 0 V when shift lock is operating.
Key warning switch signal (Model without push button ignition switch)	B280	4	9 — 16 V when key is inserted. 0 V when key is removed.
Key lock solenoid signal (Model without push button ignition switch)	B281	4	7.5 — 16 V when the key is inserted with the select lever shifted in positions other than “P” range. 0 V at other conditions than above.
Ground	B280	1	—

C: WIRING DIAGRAM

1. MODEL WITHOUT PUSH BUTTON IGNITION SWITCH

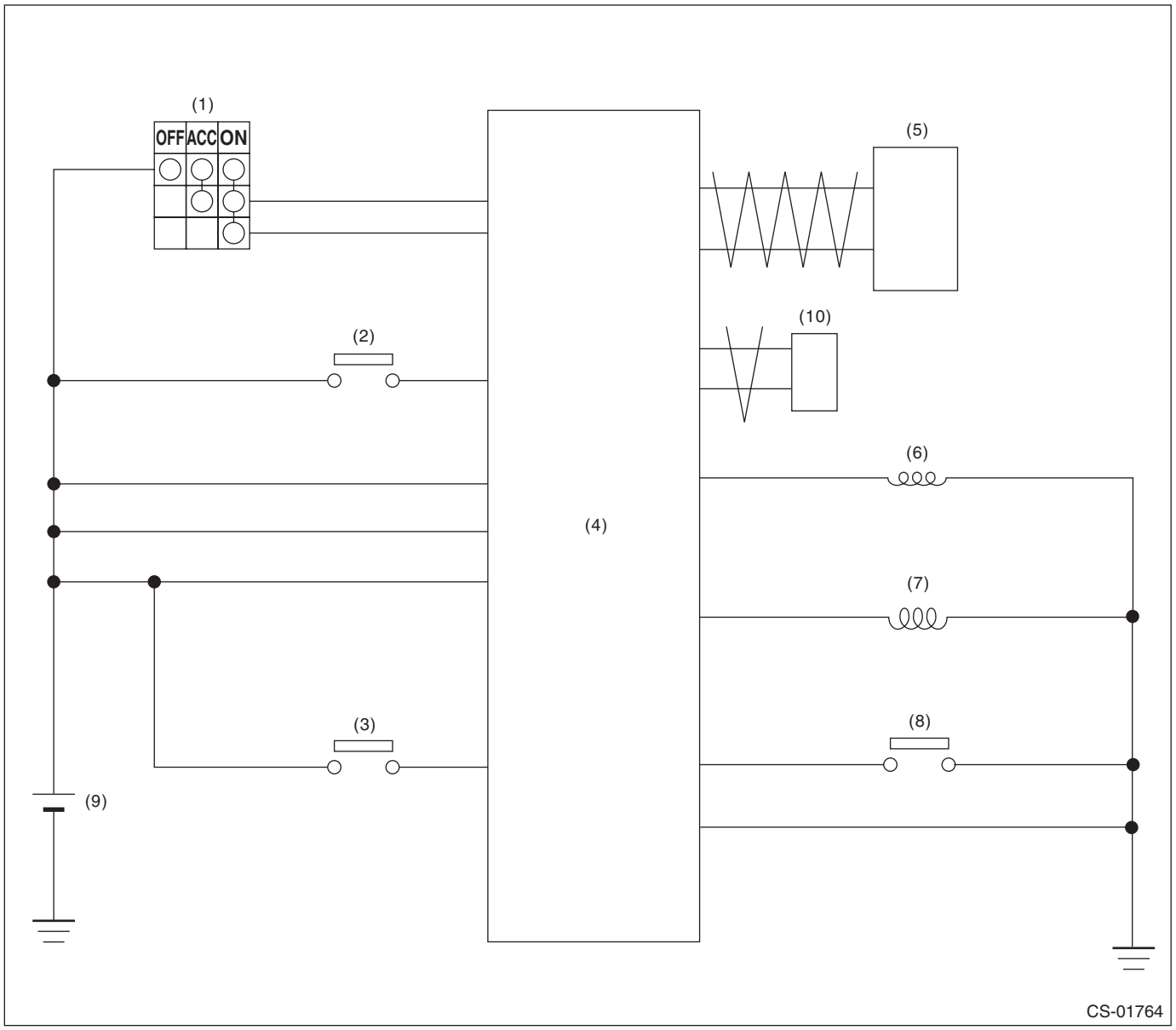

(1) Ignition switch
(2) Stop light and brake switch
(3) Key warning switch
(4) Body integrated unit
(5) TCM (shift range information)
(6) Key lock solenoid
(7) Shift lock solenoid
(8) “P” range switch
(9) Battery
(10) VDC CM (vehicle speed information)

2. MODEL WITH PUSH BUTTON IGNITION SWITCH

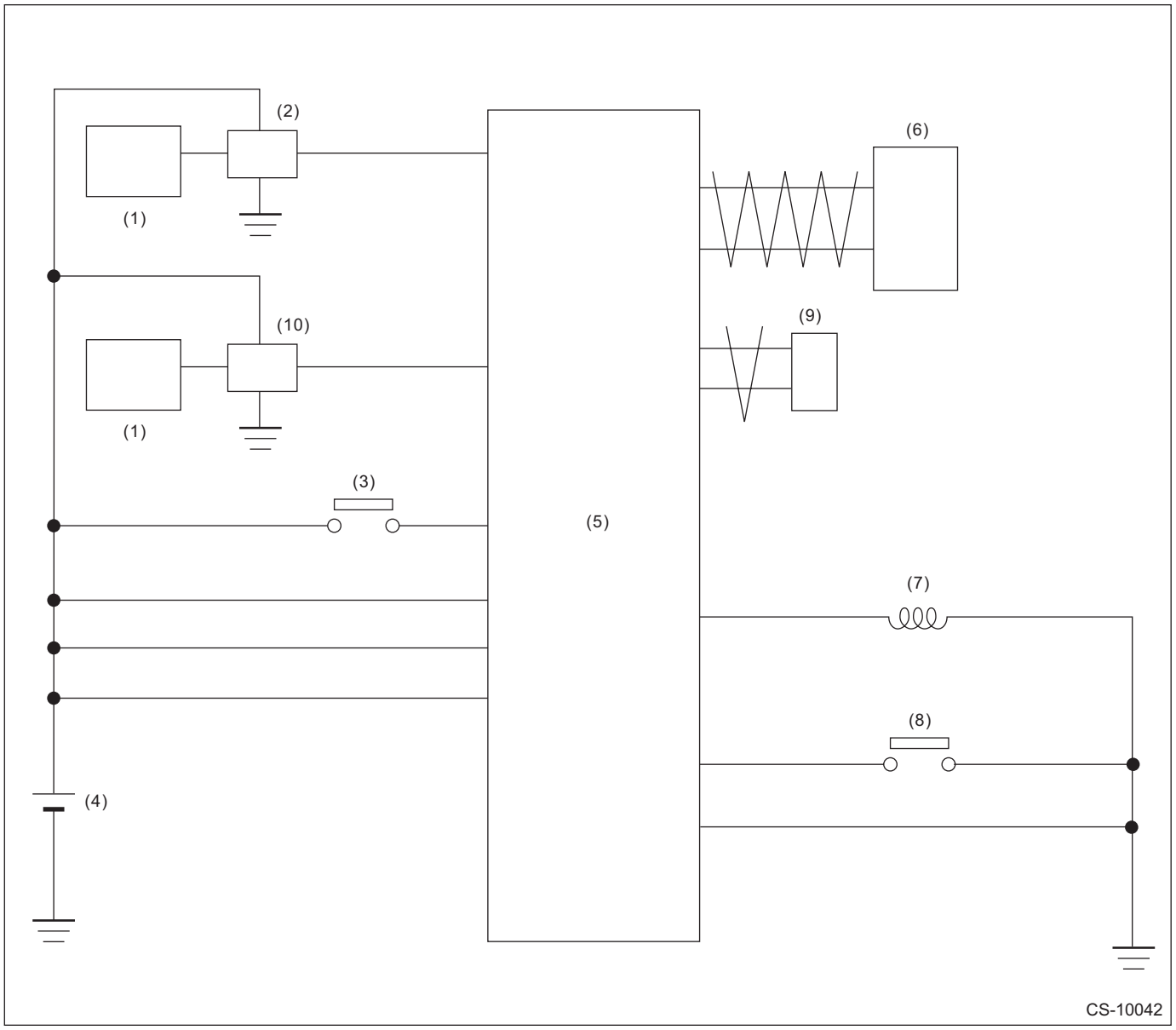

(1) Keyless access CM
(2) IG relay 1 (push button start)
(3) Stop light and brake switch
(4) Battery
(5) Body integrated unit
(6) TCM (shift range information)
(7) Shift lock solenoid
(8) “P” range switch
(9) VDC CM (vehicle speed information)
(10) Accessory relay (push button start)

D: INSPECTION

1. SHIFT LOCK OPERATION

- Model without push button ignition switch

	Step	Check	Yes	No
1	**CHECK COMMUNICATION OF SUBARU SELECT MONITOR.** 1) Turn the ignition switch to ON. 2) Using the Subaru Select Monitor, check whether communication to all systems can be executed normally.	Is the system name displayed?	Go to step **2**.	Perform the inspection following the diagnostic procedure in BODY CONTROL SYSTEM (DIAGNOSTICS) section. <Ref. to BC(diag)-2, Basic Diagnostic Procedure.>
2	**CHECK SHIFT LOCK.** 1) Turn the ignition switch to ON. 2) Shift the select lever to “P” range.	While brake pedal is not depressed, is it possible to move the select lever from the “P” range to other ranges?	Perform the inspection of “SELECT LEVER CANNOT BE LOCKED OR RELEASED”. <Ref. to CS-19, SELECT LEVER CANNOT BE LOCKED OR RELEASED, INSPECTION, AT Shift Lock Control System.>	Go to step **3**.
3	**CHECK SHIFT LOCK.**	While brake pedal is depressed, is it possible to move the select lever from the “P” range to other ranges?	Go to step **4**.	Perform the inspection of “SELECT LEVER CANNOT BE LOCKED OR RELEASED”. <Ref. to CS-19, SELECT LEVER CANNOT BE LOCKED OR RELEASED, INSPECTION, AT Shift Lock Control System.>
4	**CHECK SHIFT LOCK.** Shift the select lever to “N” range.	Is it possible to move the select lever from the “N” range to the “P” range?	Go to step **5**.	Perform the inspection of “SELECT LEVER CANNOT BE LOCKED OR RELEASED”. <Ref. to CS-19, SELECT LEVER CANNOT BE LOCKED OR RELEASED, INSPECTION, AT Shift Lock Control System.>

Step		Check	Yes	No
5	**CHECK SHIFT LOCK.** 1) Shift the select lever to “N” range. 2) Turn the ignition switch to ACC.	While brake pedal is depressed, is it possible to move the select lever from the “N” range to the “P” range?	Go to step **6**.	Perform the inspection of “SELECT LEVER CANNOT BE LOCKED OR RELEASED”. <Ref. to CS-19, SELECT LEVER CANNOT BE LOCKED OR RELEASED, INSPECTION, AT Shift Lock Control System.>
6	**CHECK KEY INTERLOCK.** 1) Turn the ignition switch to OFF. 2) Shift the select lever to other than “P” range.	Can the ignition key be removed?	Perform the inspection of “KEY INTERLOCK CANNOT BE LOCKED OR RELEASED”. <Ref. to CS-22, KEY INTERLOCK CANNOT BE LOCKED OR RELEASED, INSPECTION, AT Shift Lock Control System.>	Go to step **7**.
7	**CHECK KEY INTERLOCK.** Shift the select lever to “P” range.	Can the ignition key be removed?	AT shift lock system is normal.	Perform the inspection of “KEY INTERLOCK CANNOT BE LOCKED OR RELEASED”. <Ref. to CS-22, KEY INTERLOCK CANNOT BE LOCKED OR RELEASED, INSPECTION, AT Shift Lock Control System.>

• Model with push button ignition switch

	Step	Check	Yes	No
1	**CHECK COMMUNICATION OF SUBARU SELECT MONITOR.** 1) Turn the ignition switch to ON. 2) Using the Subaru Select Monitor, check whether communication to all systems can be executed normally.	Is the system name displayed?	Go to step **2**.	Perform the inspection following the diagnostic procedure in BODY CONTROL SYSTEM (DIAGNOSTICS) section. <Ref. to BC(diag)-2, Basic Diagnostic Procedure.>
2	**CHECK SHIFT LOCK.** 1) Turn the ignition switch to ON. 2) Shift the select lever to “P” range.	While brake pedal is not depressed, is it possible to move the select lever from the “P” range to other ranges?	Perform the inspection of “SELECT LEVER CANNOT BE LOCKED OR RELEASED”. <Ref. to CS-19, SELECT LEVER CANNOT BE LOCKED OR RELEASED, INSPECTION, AT Shift Lock Control System.>	Go to step **3**.
3	**CHECK SHIFT LOCK.**	While brake pedal is depressed, is it possible to move the select lever from the “P” range to other ranges?	Go to step **4**.	Perform the inspection of “SELECT LEVER CANNOT BE LOCKED OR RELEASED”. <Ref. to CS-19, SELECT LEVER CANNOT BE LOCKED OR RELEASED, INSPECTION, AT Shift Lock Control System.>
4	**CHECK SHIFT LOCK.** Shift the select lever to “N” range.	Is it possible to move the select lever from the “N” range to the “P” range?	Go to step **5**.	Perform the inspection of “SELECT LEVER CANNOT BE LOCKED OR RELEASED”. <Ref. to CS-19, SELECT LEVER CANNOT BE LOCKED OR RELEASED, INSPECTION, AT Shift Lock Control System.>

Step	Check	Yes	No
5 **CHECK SHIFT LOCK.** 1) Shift the select lever to “N” range. 2) Turn the ignition switch to ACC.	While brake pedal is depressed, is it possible to move the select lever from the “N” range to the “P” range?	AT shift lock system is normal.	Perform the inspection of “SELECT LEVER CANNOT BE LOCKED OR RELEASED”. <Ref. to CS-19, SELECT LEVER CANNOT BE LOCKED OR RELEASED, INSPECTION, AT Shift Lock Control System.>

2. BODY INTEGRATED UNIT POWER SUPPLY AND GROUND CIRCUIT

NOTE:
For the DC power supply circuit, refer to “WIRING DIAGRAMS”. <Ref. to WI-31, Power Supply Circuit.>

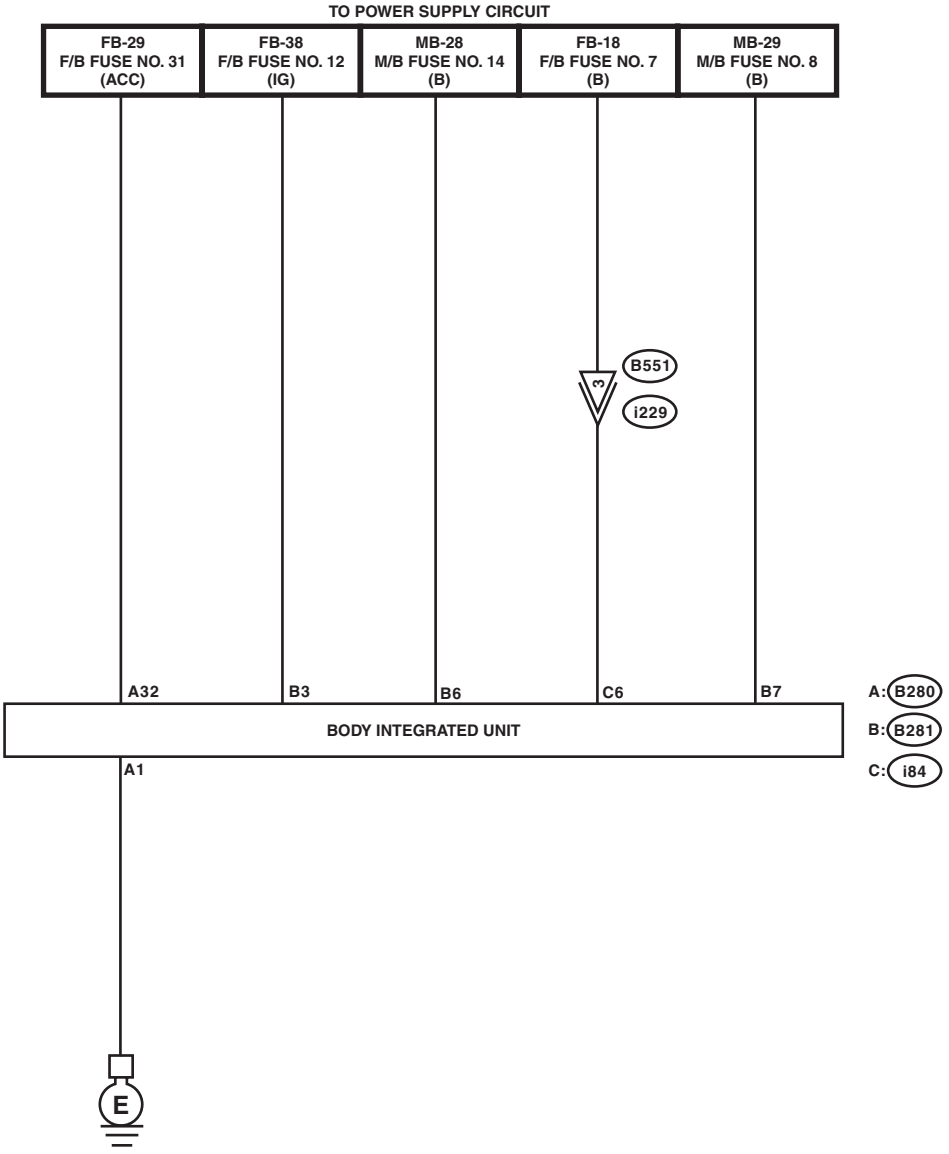

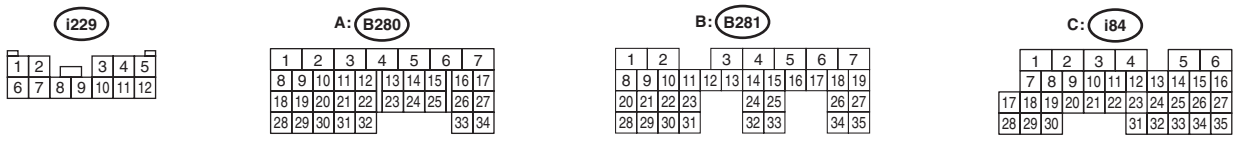

CS-01823

Step		Check	Yes	No
1	**CHECK DTC OF BODY INTEGRATED UNIT.** Check DTC of body integrated unit. <Ref. to BC(diag)-11, Read Diagnostic Trouble Code (DTC).>	Is the DTC of power line displayed on body integrated unit?	Repair or replace it according to the DTC.	Go to step **2**.

Step		Check	Yes	No
2	**CHECK HARNESS BETWEEN BODY INTEGRATED UNIT AND BATTERY.** 1) Turn the ignition switch to ON. 2) Measure the voltage between body integrated unit and chassis ground. ***Connector & terminal*** ***(B281) No. 3 (+) — Chassis ground (–):*** ***(B280) No. 32 (+) — Chassis ground (–):*** ***(B281) No. 6 (+) — Chassis ground (–):*** ***(B281) No. 7 (+) — Chassis ground (–):*** ***(i84) No. 6 (+) — Chassis ground (–):***	Is the voltage 9 — 16 V?	Go to step **3**.	Check harness for open circuit between the body integrated unit and the battery or a blown fuse.
3	**CHECK HARNESS BETWEEN BODY INTEGRATED UNIT AND CHASSIS GROUND.** 1) Turn the ignition switch to OFF. 2) Measure the harness resistance between the body integrated unit and chassis ground. ***Connector & terminal*** ***(B280) No. 1 — Chassis ground:***	Is the resistance less than 1 Ω?	Go to step **4**.	Repair the open circuit of harness between the body integrated unit and chassis ground.
4	**CHECK FOR POOR CONTACT.**	Is there poor contact of connector?	Repair the poor contact.	Check body integrated unit.

3. SELECT LEVER CANNOT BE LOCKED OR RELEASED

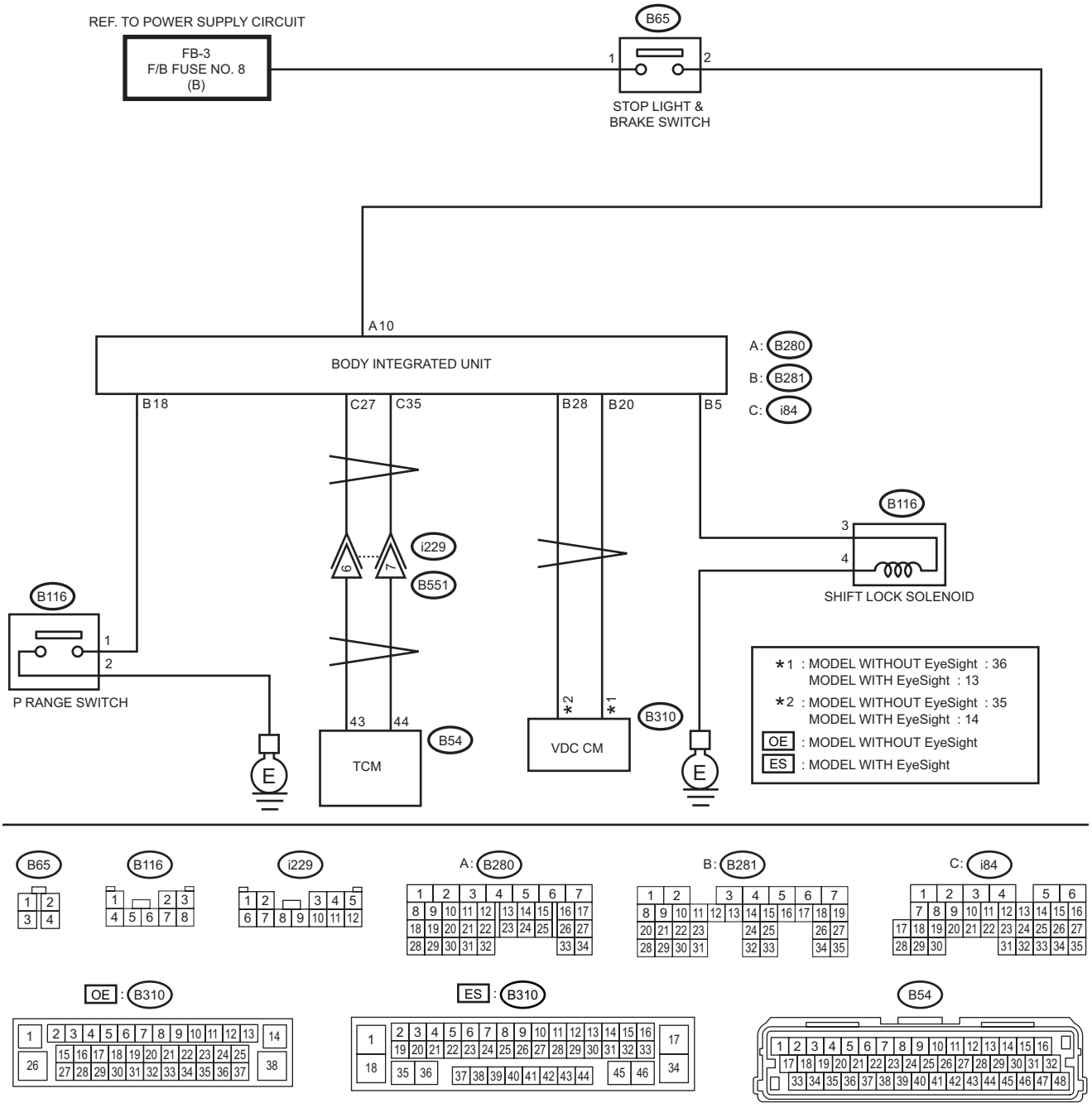

CS-10043

Step		Check	Yes	No
1	**CHECK BODY INTEGRATED UNIT POWER SUPPLY AND GROUND CIRCUIT.** <Ref. to CS-17, BODY INTEGRATED UNIT POWER SUPPLY AND GROUND CIRCUIT, INSPECTION, AT Shift Lock Control System.>	Is there any fault?	Follow the procedures to perform inspection and repair.	Go to step **2**.

	Step	Check	Yes	No
2	**CHECK CURRENT DATA.** 1) Connect the Subaru Select Monitor. 2) Shift the select lever to "P" range. 3) Turn the ignition switch to ON. 4) Select the current data display and display «P SW». <Ref. to BC(diag)-17, Read Current Data.>	Is the display "ON" in the P range and "OFF" in ranges other than P?	Go to step **3**.	Go to step **8**.
3	**CHECK CURRENT DATA.** Select the current data display and display «Stop Light Switch». <Ref. to BC(diag)-17, Read Current Data.>	Is "ON" displayed when the brake pedal is depressed and "OFF" displayed when the brake pedal is released?	Go to step **4**.	Go to step **11**.
4	**CHECK BODY INTEGRATED UNIT DTC.** Check the DTC of the body integrated unit when the brake pedal is pressed and when it is released. (Hold each condition for 5 seconds or more.)	Is there a DTC of a current malfunction?	Follow the DTC to perform inspection and repair.	Go to step **5**.
5	**CHECK CURRENT DATA.** Select the current data display and display «Shift lock solenoid output». <Ref. to BC(diag)-17, Read Current Data.>	Is "ON" displayed when the brake pedal is depressed and "OFF" displayed when the brake pedal is released?	Go to step **6**.	Replace the body integrated unit.
6	**CHECK CURRENT DATA.** Select the current data display and display «Shift Position». <Ref. to BC(diag)-17, Read Current Data.>	Is the display "P" in the P range and other than "P" in ranges other than P?	Go to step **7**.	Check the following items. • Inhibitor switch • Harness between inhibitor switch and TCM • TCM input signal • TCM CAN communication • Body integrated unit CAN receive
7	**CHECK CURRENT DATA.** 1) Select the current data display and display «Front Wheel Speed». <Ref. to BC(diag)-17, Read Current Data.> 2) Start the engine. 3) Raise vehicle speed gradually up to approximately 20 km/h (12 MPH).	Is a figure equivalent to the speedometer being indicated?	Go to step **12**.	Check the following items. • Wheel speed sensor • CAN communication by VDC unit • Body integrated unit CAN receive Replace the wheel speed sensor, VDC unit or body integrated unit, or both.
8	**CHECK HARNESS BETWEEN BODY INTEGRATED UNIT AND "P" RANGE SWITCH.** 1) Disconnect the connector from body integrated unit. 2) Disconnect the connector of "P" range switch. 3) Check for open circuit of harness, short circuit to battery or short circuit to ground between the body integrated unit and "P" range switch. ***Connector & terminal*** ***(B281) No. 18 — (B116) No. 1:***	Is there any fault in the harness?	Repair or replace the harness between the body integrated unit and the "P" range switch.	Go to step **9**.

	Step	Check	Yes	No
9	**CHECK HARNESS BETWEEN "P" RANGE SWITCH AND CHASSIS GROUND.** Measure the resistance of harness between "P" range switch and chassis ground. ***Connector & terminal*** ***(B116) No. 2 — Chassis ground:***	Is it less than 10 Ω?	Go to step **10**.	Repair the harness between the "P" range switch and chassis ground.
10	**CHECK "P" RANGE SWITCH.** Measure the resistance between "P" range switch connector terminals. ***Terminals*** ***No. 2 — No. 1:***	Is it less than 10 Ω in the "P" range, and 1 MΩ or more in ranges other than "P"?	Replace the body integrated unit.	Replace the "P" range switch.
11	**CHECK STOP LIGHT SWITCH INPUT SIGNAL.** 1) Disconnect the connector from body integrated unit. 2) Measure the voltage between the body integrated unit connector terminal and chassis ground. ***Connector & terminal*** ***(B280) No. 10 (+) — Chassis ground (–):***	Is the voltage 9 V to 16 V when the brake pedal is depressed, and approx. 0 V when not depressed?	Replace the body integrated unit.	Check the stop light system.
12	**CHECK SOLENOID UNIT OPERATION.** Connect the battery to the solenoid unit connector terminal, and operate the solenoid unit. ***Terminals*** ***No. 3 (+) — No. 4 (–):***	Does the solenoid unit operate normally?	Check the lock mechanism of the select lever body.	Replace the solenoid unit.

4. KEY INTERLOCK CANNOT BE LOCKED OR RELEASED

NOTE:
Check of this item only applies to models without a push button ignition switch.

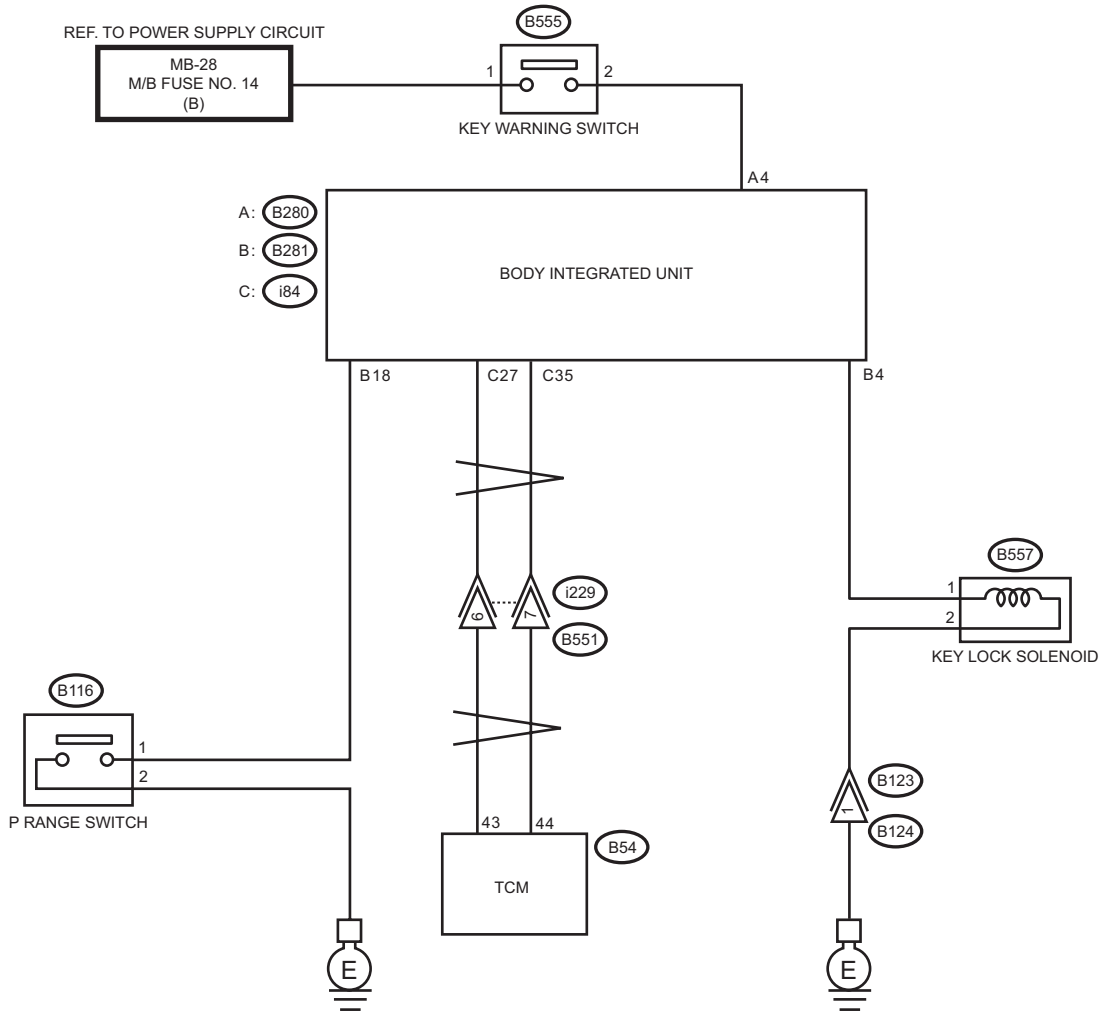

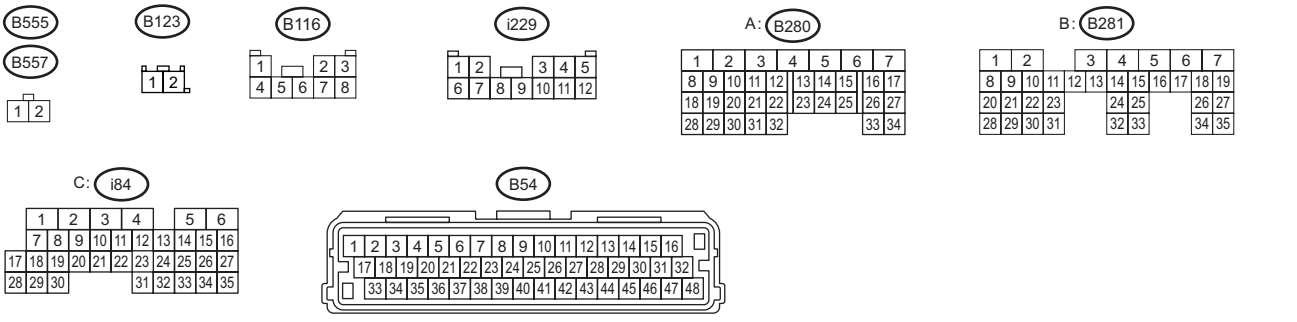

CS-10044

Step		Check	Yes	No
1	**CHECK BODY INTEGRATED UNIT POWER SUPPLY AND GROUND CIRCUIT.** <Ref. to CS-17, BODY INTEGRATED UNIT POWER SUPPLY AND GROUND CIRCUIT, INSPECTION, AT Shift Lock Control System.>	Is there any fault?	Follow the procedures to inspect and repair.	Go to step **2**.

	Step	Check	Yes	No
2	**CHECK CURRENT DATA.** 1) Connect the Subaru Select Monitor. 2) Shift the select lever to "P" range. 3) Turn the ignition switch to ON. 4) Select the current data display and display «P SW». <Ref. to BC(diag)-17, Read Current Data.>	Is the display "ON" in the P range and "OFF" in ranges other than P?	Go to step **3**.	Go to step **6**.
3	**CHECK CURRENT DATA.** 1) Select the current data display and display the «key-lock warning SW». <Ref. to BC(diag)-17, Read Current Data.> 2) Turn the ignition switch to OFF.	Does the display change from "ON" ←→ "OFF" when the key is inserted and removed?	Go to step **4**.	Go to step **9**.
4	**CHECK CURRENT DATA.** 1) Turn the ignition switch to ON. 2) Select the current data display and display «Key lock solenoid output». <Ref. to BC(diag)-17, Read Current Data.>	Is the display "OFF" in the P range and "ON" in ranges other than P?	Go to step **10**.	Go to step **5**.
5	**CHECK DTC OF BODY INTEGRATED UNIT.** 1) Set the select lever to other than "P" range. 2) Check DTC of body integrated unit.	Is B1015 (key interlock circuit abnormal) a current malfunction?	Follow the DTC to perform inspection and repair.	Go to step **10**.
6	**CHECK HARNESS BETWEEN BODY INTEGRATED UNIT AND "P" RANGE SWITCH.** 1) Disconnect the connector from body integrated unit. 2) Disconnect the connector of "P" range switch. 3) Check for open circuit of harness, short circuit to battery or short circuit to ground between the body integrated unit and "P" range switch. ***Connector & terminal*** ***(B281) No. 18 — (B116) No. 1:***	Is there any fault in the harness?	Repair or replace the harness between the body integrated unit and the "P" range switch.	Go to step **7**.
7	**CHECK HARNESS BETWEEN "P" RANGE SWITCH AND CHASSIS GROUND.** Measure the resistance of harness between "P" range switch and chassis ground. ***Connector & terminal*** ***(B116) No. 2 — Chassis ground:***	Is it less than 10 Ω?	Go to step **8**.	Repair the harness between the "P" range switch and chassis ground.
8	**CHECK "P" RANGE SWITCH.** Measure the resistance between "P" range switch connector terminals. ***Terminals*** ***No. 2 — No. 1:***	Is it less than 10 Ω in the "P" range, and 1 MΩ or more in ranges other than "P"?	Replace the body integrated unit.	Replace the "P" range switch.
9	**CHECK HARNESS BETWEEN BATTERY AND KEY WARNING SWITCH AND BODY INTEGRATED UNIT.** 1) Disconnect the connector from body integrated unit. 2) Measure the voltage between body integrated unit and chassis ground. ***Connector & terminal*** ***(B280) No. 4 (+) — Chassis ground (–):***	Is the display 9 V or more when the key is inserted, and less than 1.5 V with the key removed?	Replace the body integrated unit.	Check the following items. • Key warning switch • Harness/fuse • Ignition circuit

Step		Check	Yes	No
10	**CHECK HARNESS BETWEEN BODY INTEGRATED UNIT AND KEY LOCK SOLENOID.** 1) Disconnect the connector from body integrated unit. 2) Disconnect the connector of key lock solenoid. 3) Check for open circuit of harness, short circuit to battery or short circuit to ground between the body integrated unit and key lock solenoid. ***Connector & terminal*** ***(B281) No. 4 — (B557) No. 1:***	Is there any fault in the harness?	Repair or replace the harness between the body integrated unit and the key lock solenoid.	Go to step **11**.
11	**CHECK HARNESS BETWEEN KEY LOCK SOLENOID AND CHASSIS GROUND.** Measure the resistance of harness between key lock solenoid and chassis ground. ***Connector & terminal*** ***(B557) No. 2 — Chassis ground:***	Is it less than 10 Ω?	Go to step **12**.	Repair or replace the harness between the key lock solenoid and chassis ground.
12	**CHECK KEY LOCK SOLENOID OPERATION.** Connect the battery to the key lock solenoid connector terminal, and operate the solenoid. ***Terminals*** ***No. 2 (+) — No. 1 (–):***	Does the key lock solenoid operate normally?	Go to step **13**.	Replace the key lock solenoid.
13	**CHECK OUTPUT OF BODY INTEGRATED UNIT.** 1) Connect all connectors. 2) Insert the key. 3) Measure the voltage between body integrated unit and chassis ground. ***Connector & terminal*** ***(B281) No. 4 — Chassis ground:***	Is it 7.5 V to 16 V in ranges other than “P”, and 0 V in the “P” range?	Check the lock mechanism of the steering lock body.	Replace the body integrated unit.

3. Select Lever

A: REMOVAL

1) Shift the select lever to “N” range.
2) Disconnect the ground cable from battery. <Ref. to NT-6, BATTERY, NOTE, Note.>

NOTE:
For model with battery sensor, disconnect the ground terminal from battery sensor.
3) Lift up the vehicle.
4) Remove the center exhaust pipe (rear). <Ref. to EX(w/o STI)-32, REMOVAL, Center Exhaust Pipe.>
5) Remove the center exhaust cover.

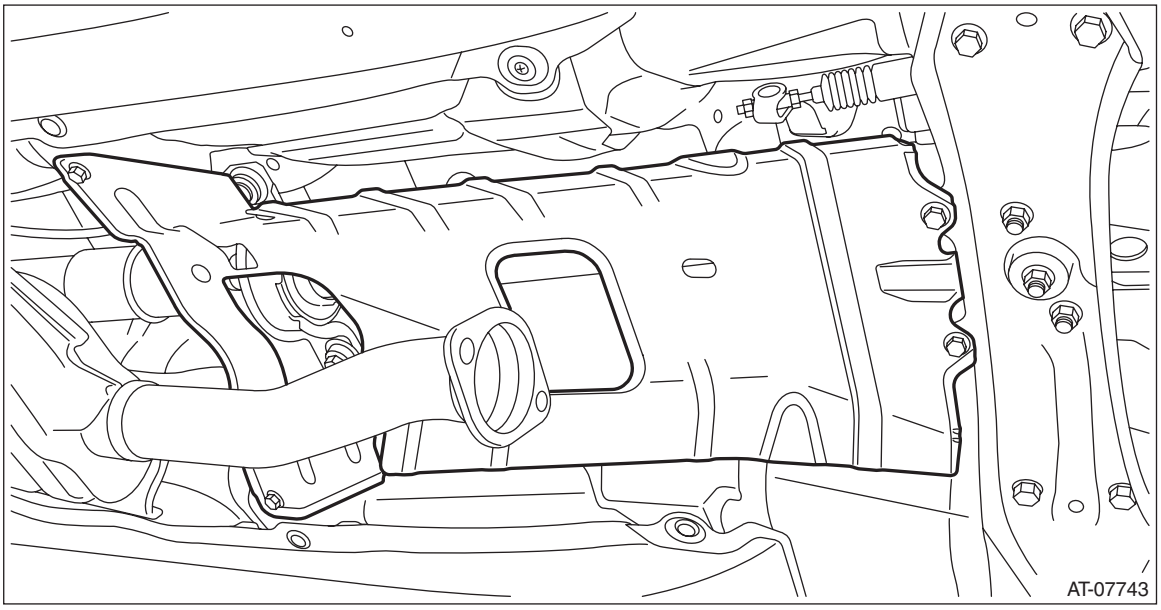

6) Disconnect the cable from the arm COMPL.

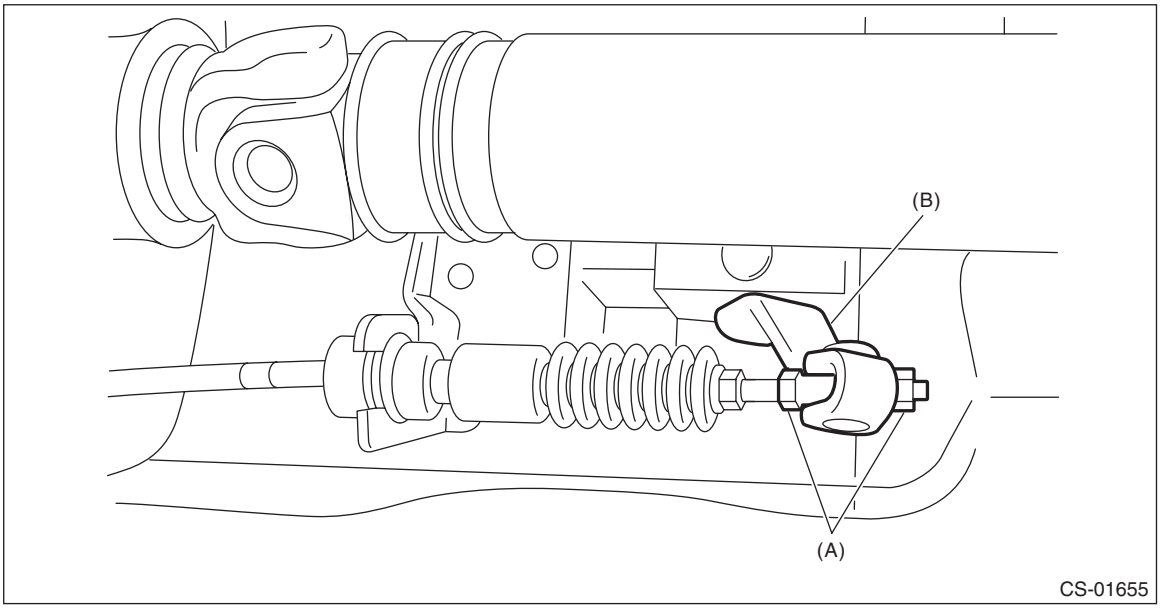

(A) Adjusting nut
(B) Arm COMPL

7) Raise the claw of clamp and remove the cable.

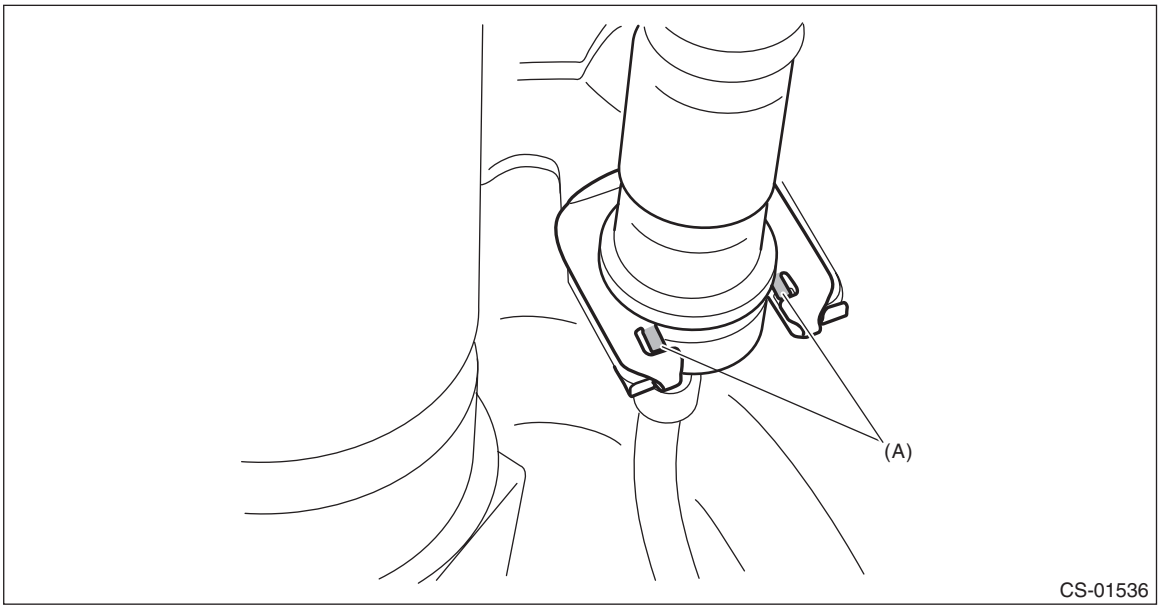

(A) Claw

8) Lower the vehicle.
9) Shift the select lever to “N” range.
10) Lower the boot assembly vertically toward the lever.

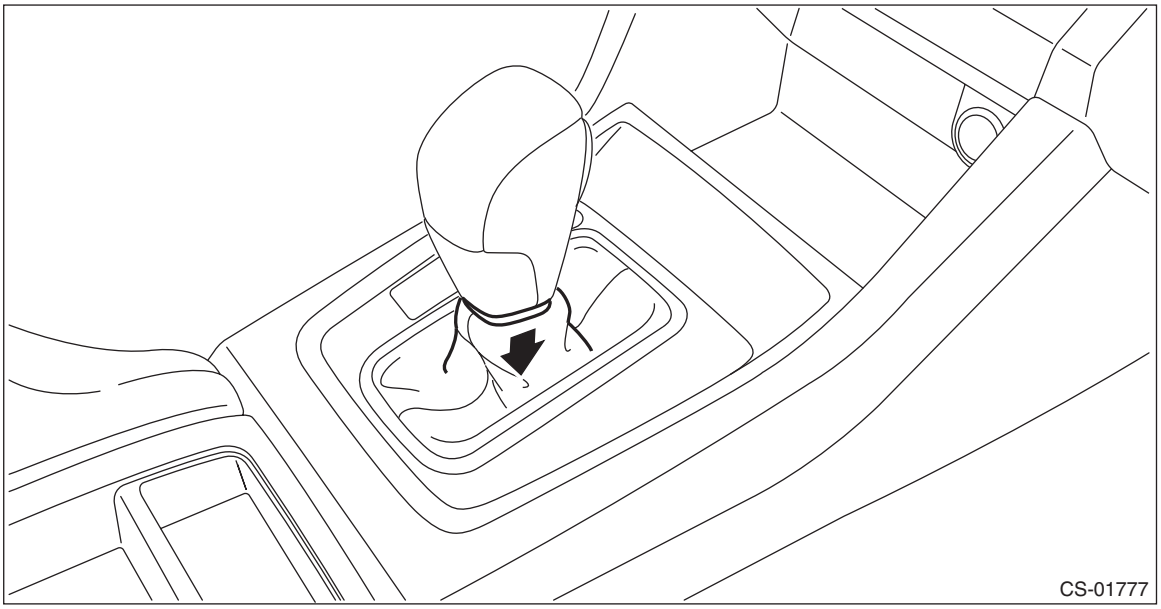

11) Remove the clamp grip pin.

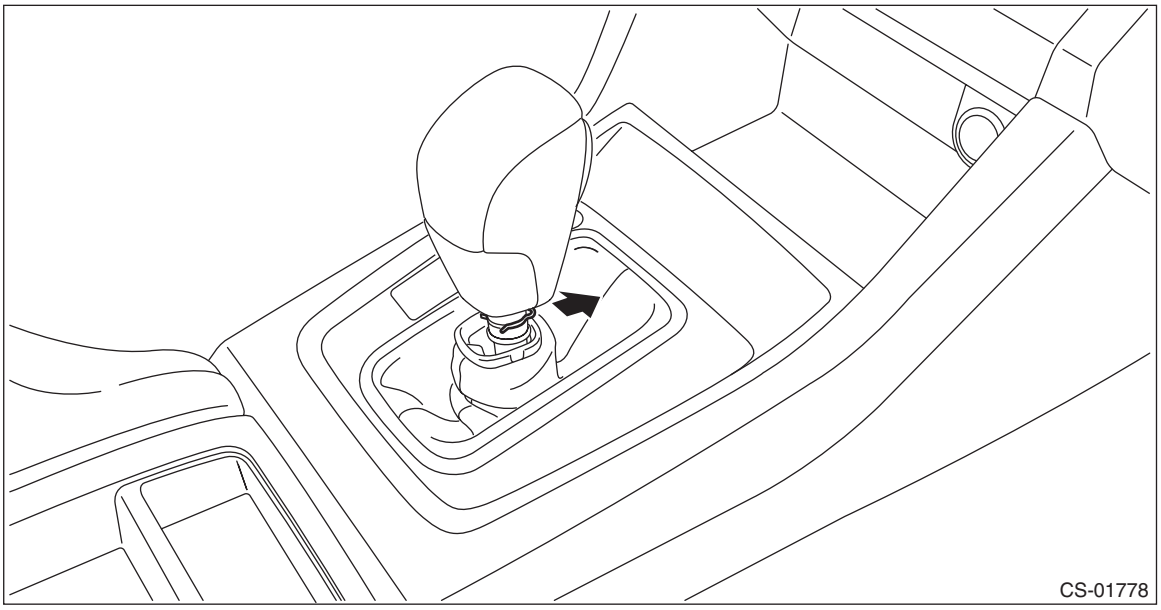

12) Remove the grip assembly.

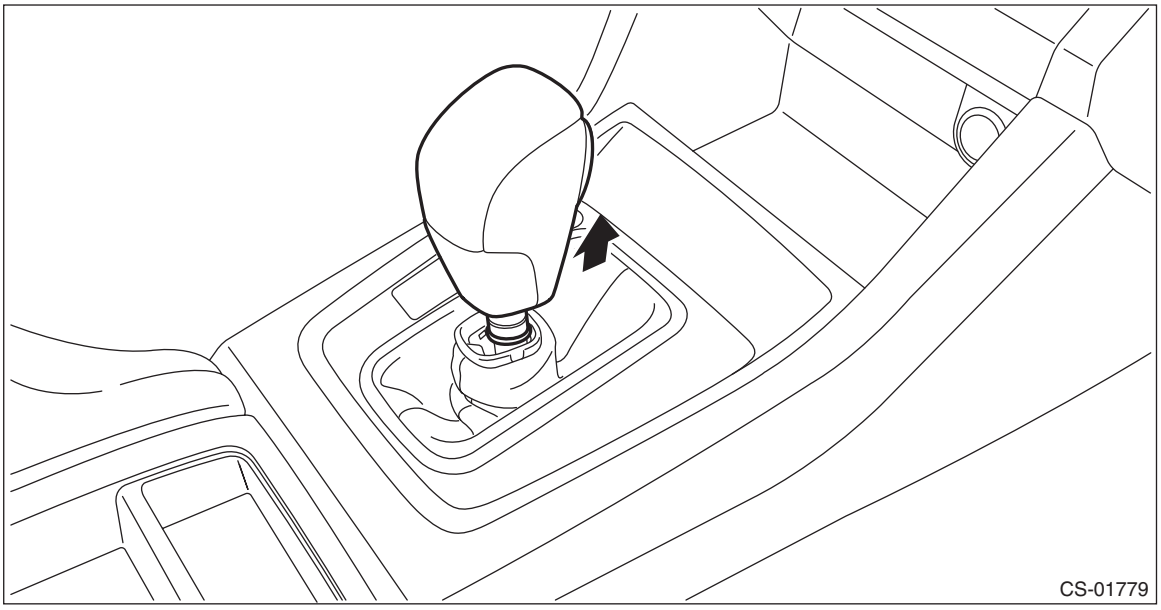

13) Remove the console box assembly. <Ref. to EI-67, REMOVAL, Console Box.>
14) Remove the cover - shift lever. <Ref. to EI-67, REMOVAL, Console Box.>
15) Remove the panel center LWR LH and RH. <Ref. to EI-67, REMOVAL, Console Box.>

16) Disconnect the connector, and remove the indicator assembly.

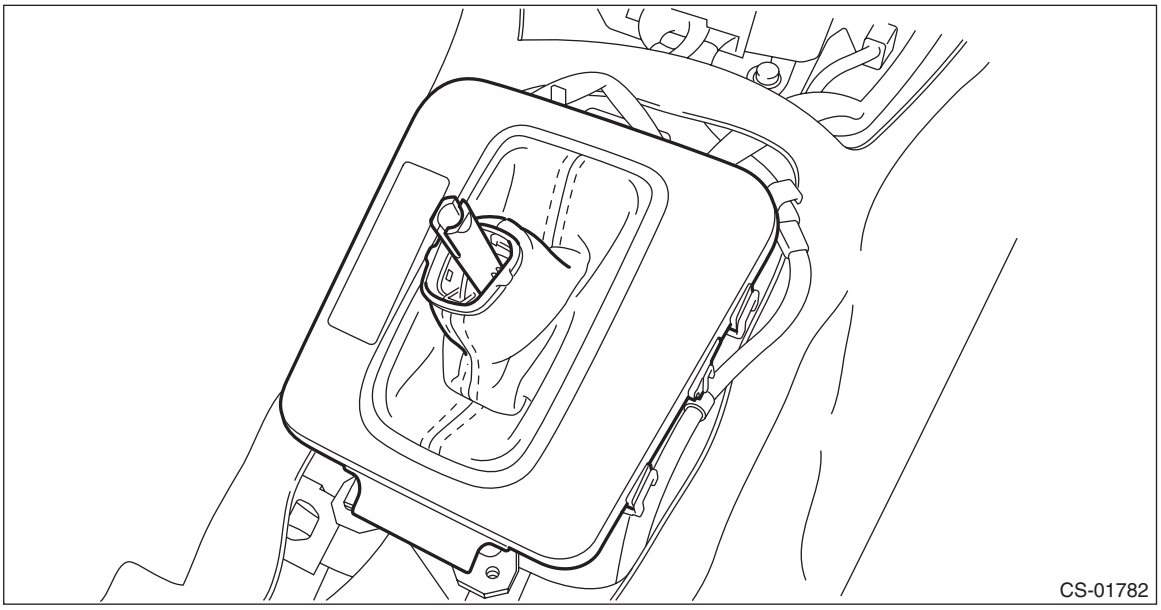

17) Remove the harness clips.

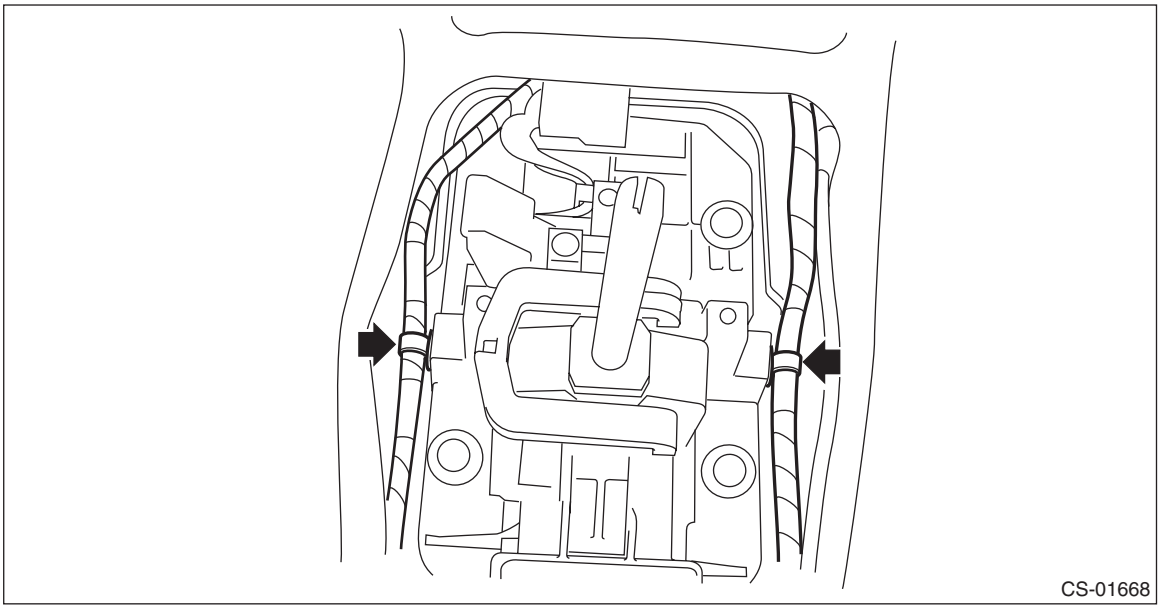

18) Disconnect the harness connector.

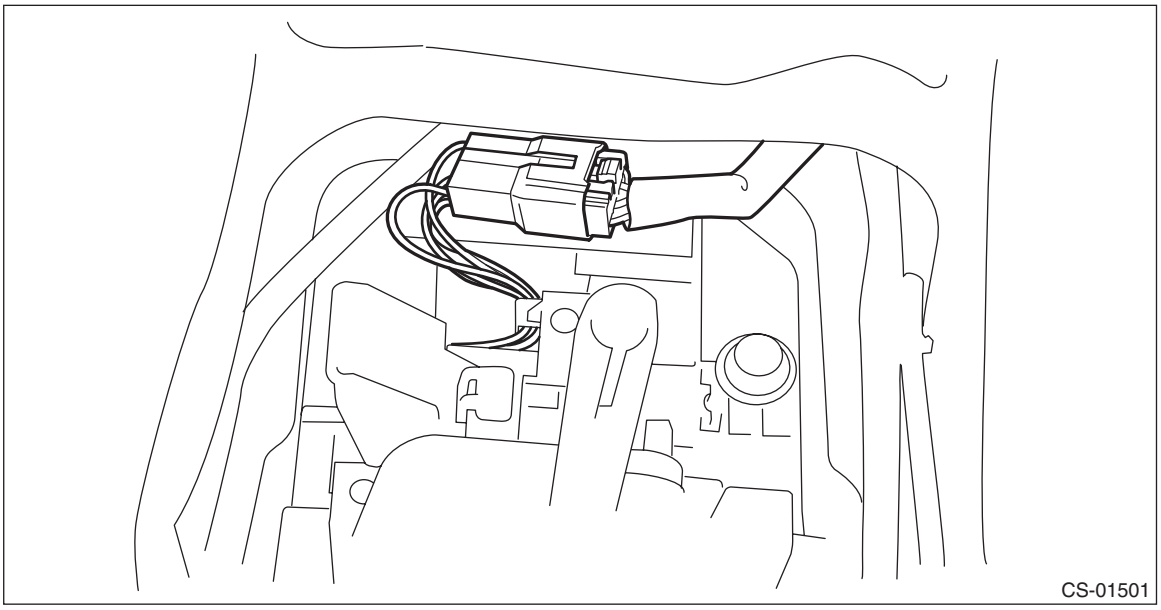

19) Remove the select lever assembly.

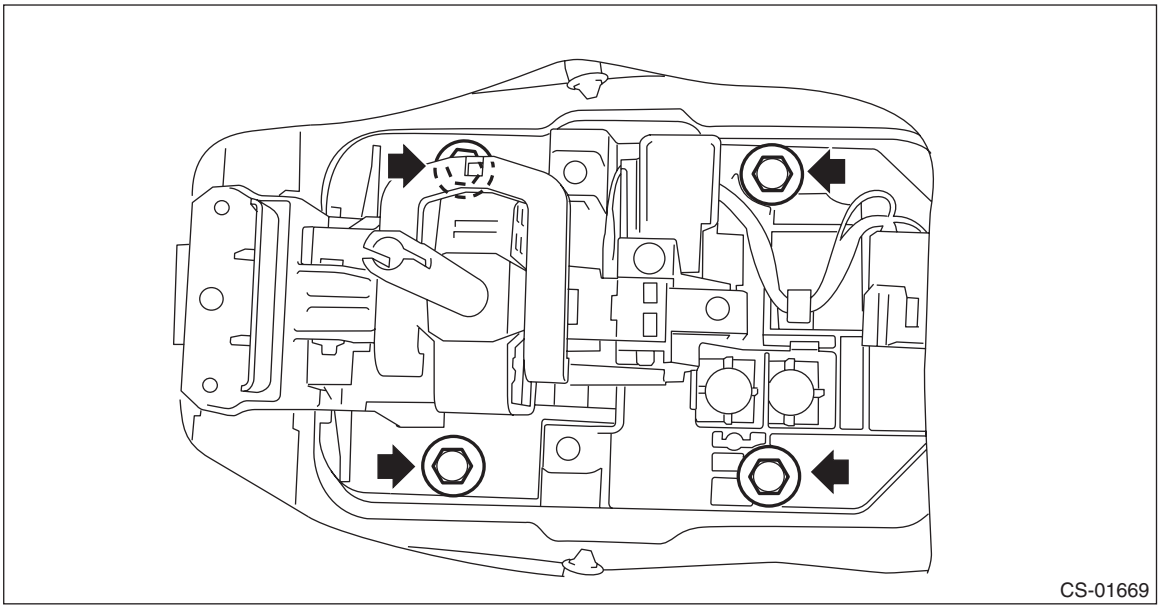

B: INSTALLATION

1) Install the select lever assembly after setting it to the vehicle body.

Tightening torque:
18 N·m (1.8 kgf-m, 13.3 ft-lb)

2) Connect the harness connector.
3) Install the harness clip to the select lever assembly.
4) Shift the select lever to “N” range.
5) Install the indicator assembly, then connect the connector.

NOTE:
Insert the select lever through the blind hole sufficiently.

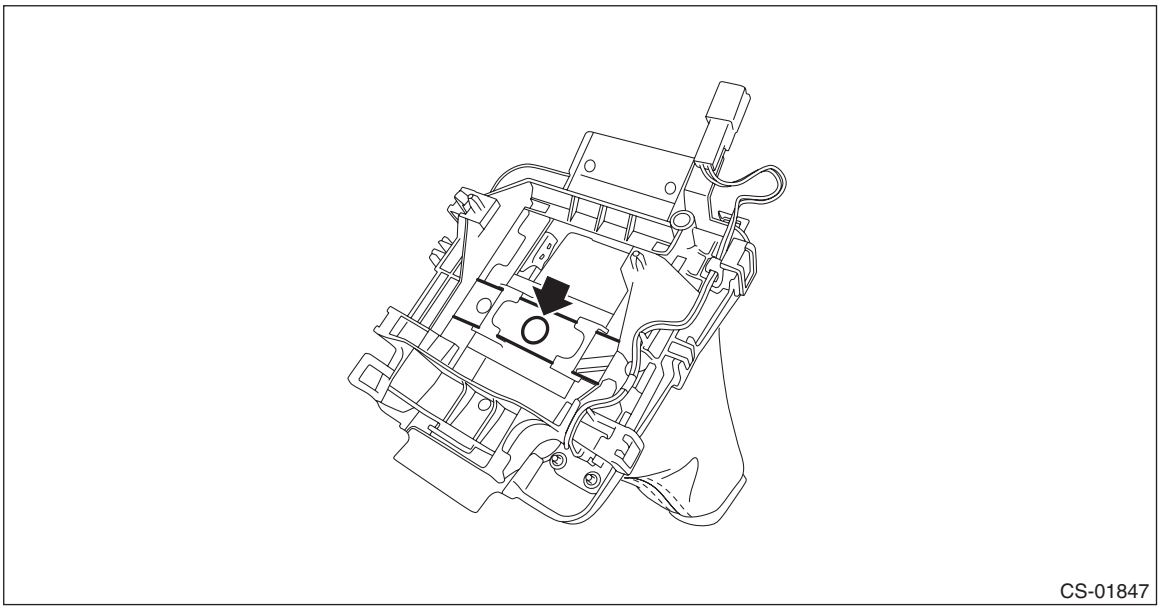
CS-01847

6) Install the panel center LWR LH and RH. <Ref. to EI-71, INSTALLATION, Console Box.>
7) Install the cover - shift lever. <Ref. to EI-71, INSTALLATION, Console Box.>
8) Install the console box assembly. <Ref. to EI-71, INSTALLATION, Console Box.>
9) Accessing from the button side of the grip, attach the clamp grip pin.

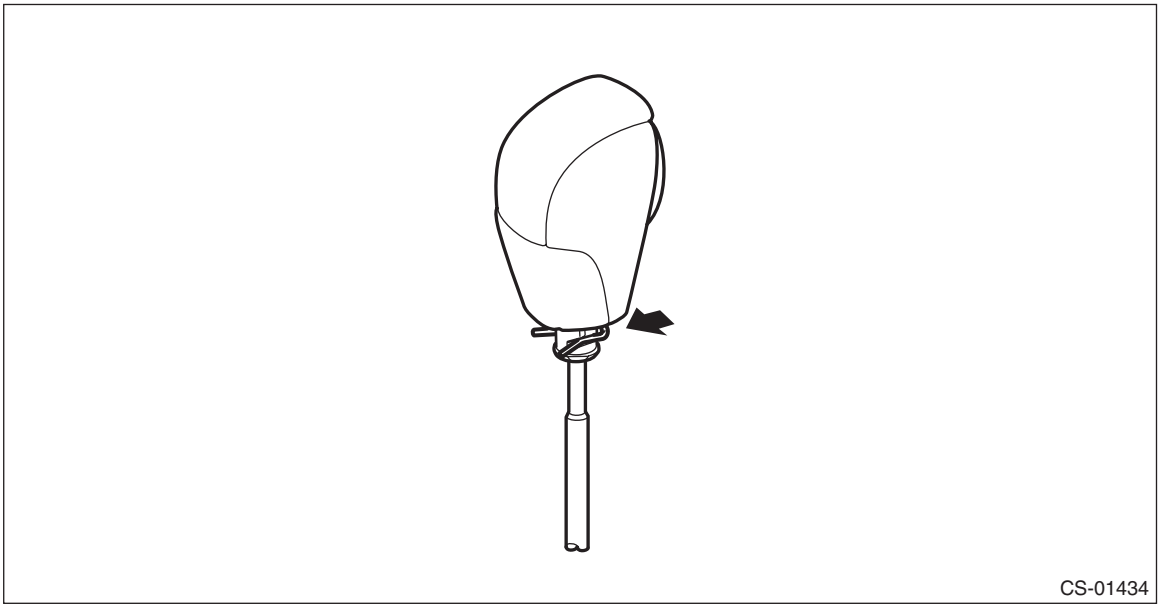
CS-01434

10) Insert the grip assembly to the select lever and press it down until a click is heard.

NOTE:
While pressing the clamp grip with a finger in order to prevent it from popping out, insert the grip assembly.

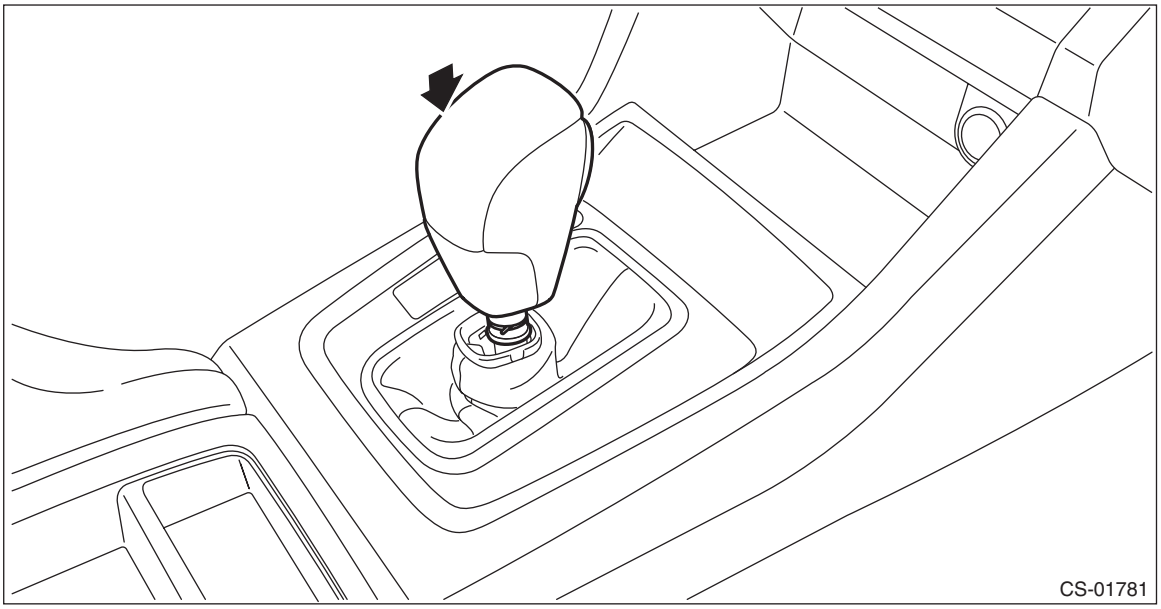

11) Securely install the boot assembly.

NOTE:
After installation, check that the boot assembly does not come off.

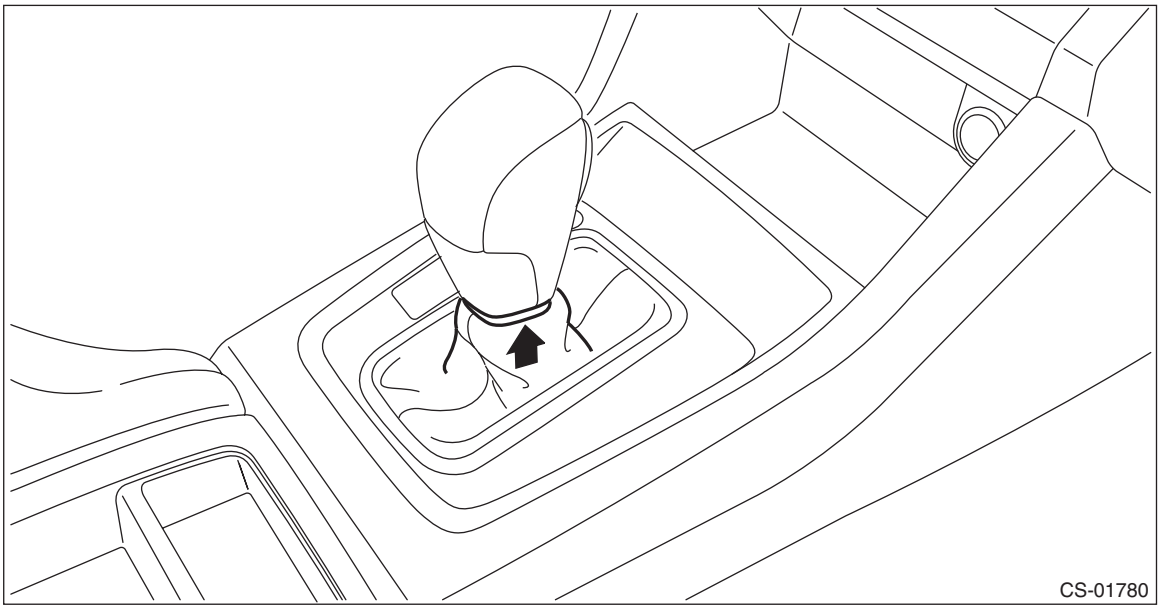

12) After installation of grip, check the following points.
- The grip will not come off.
- The button on the grip operates normally.

13) Shift the select lever to “N” range.
14) Lift up the vehicle.
15) Secure the cable to the bracket. <Ref. to CS-45, INSTALLATION, Select Cable.>
16) Adjust the select cable position. <Ref. to CS-48, ADJUSTMENT, Select Cable.>

17) After adjustment, confirm that the select lever operates properly at all range positions using the shift lock release button.

NOTE:
According to the select lever operation, confirm that the indicator positions are shown correctly.
18) Install the center exhaust cover.

Tightening torque:
18 N·m (1.8 kgf-m, 13.3 ft-lb)
19) Install the center exhaust pipe (rear). <Ref. to EX(w/o STI)-37, INSTALLATION, Center Exhaust Pipe.>
20) Lower the vehicle.
21) Connect the battery ground terminal. <Ref. to NT-6, BATTERY, NOTE, Note.>
22) Inspect the following items. If a malfunction is found in the inspection, adjust the select cable or inhibitor switch.
(1) The shift lock operates normally. <Ref. to CS-13, SHIFT LOCK OPERATION, INSPECTION, AT Shift Lock Control System.>
(2) Engine starts when the select lever is in “P” or “N” range, but not in other ranges.
(3) Back-up light illuminates when the select lever is in the “R” range, but not in other ranges.
(4) Select lever and indicator positions are matched.

C: DISASSEMBLY

1. GRIP ASSY

1) Remove the button assembly_AT.

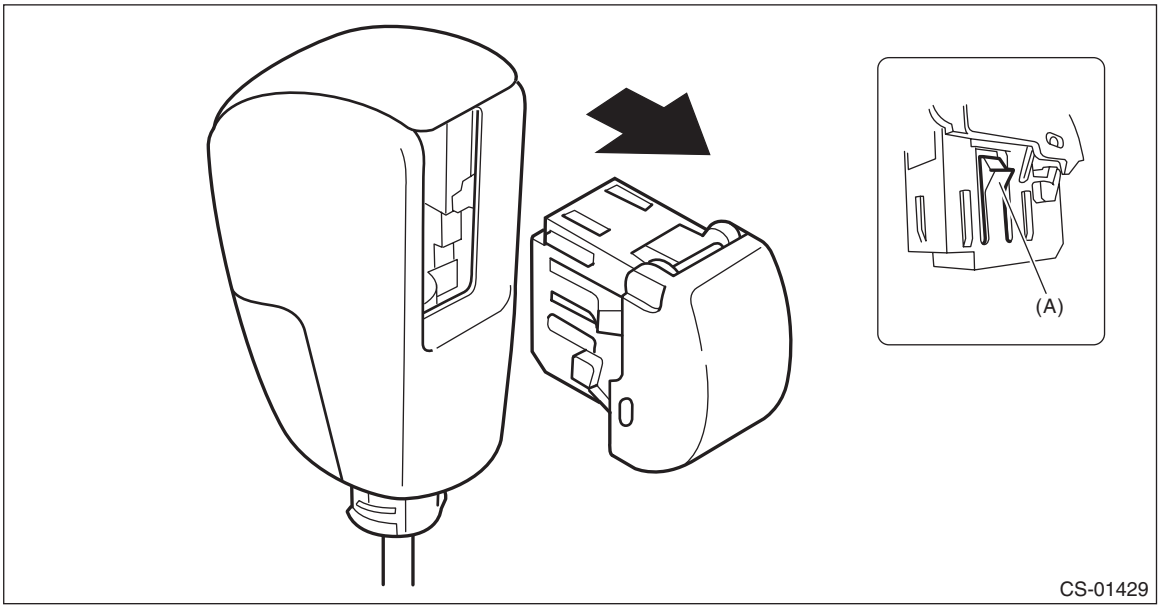

(A) Claw

2) Remove the rod COMPL.

2. AT SELECT LEVER ASSEMBLY

1) Remove the spacer plate.

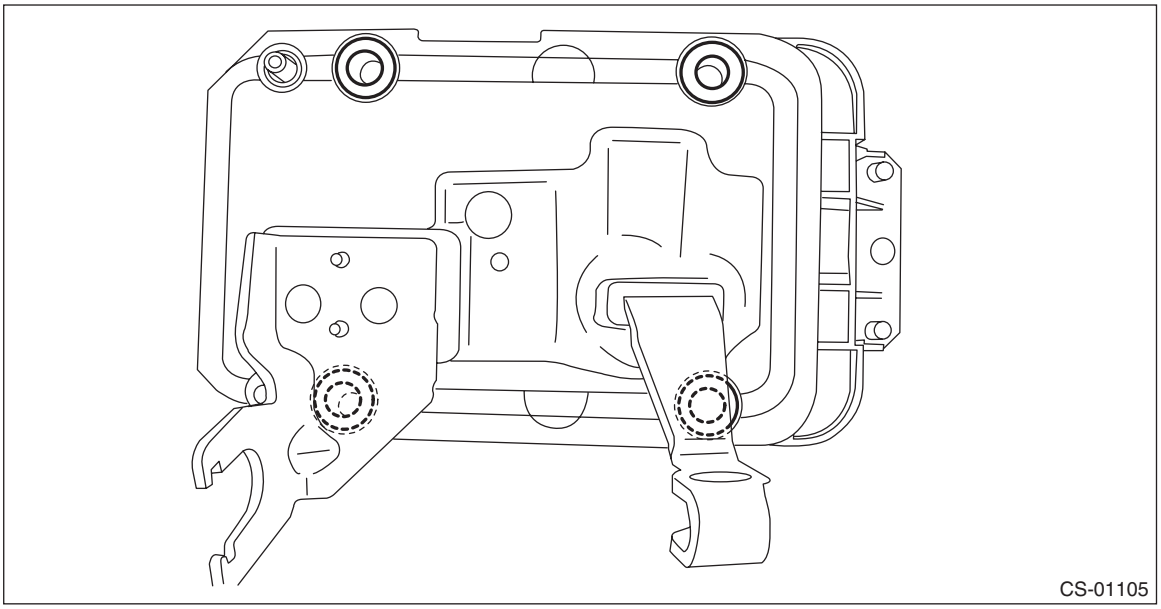
CS-01105

2) Remove the gasket.

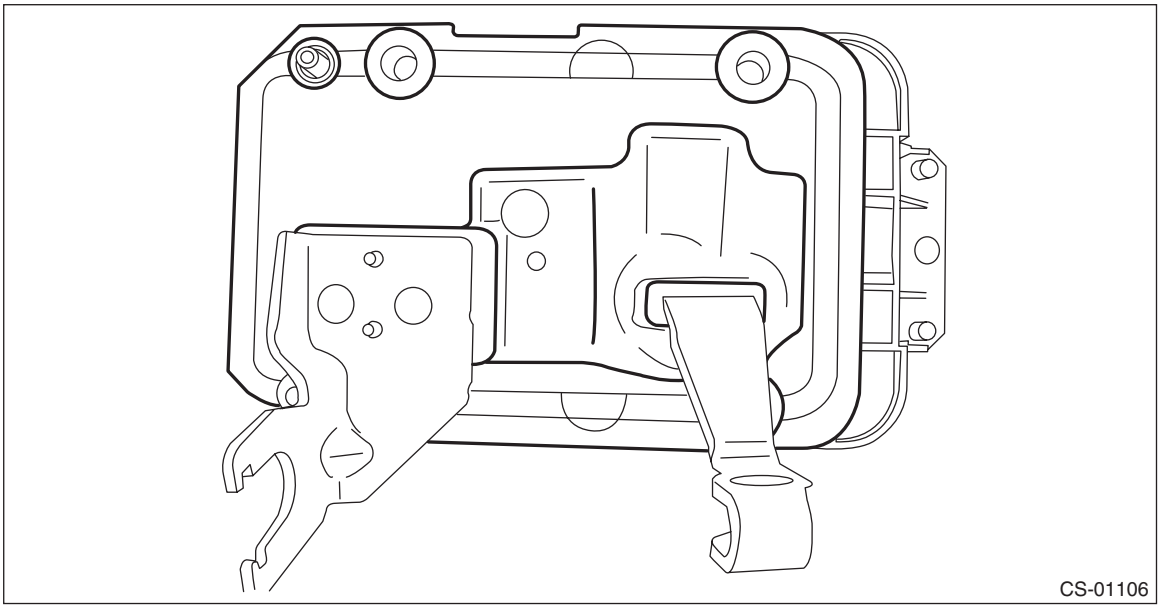
CS-01106

3) Insert a flat tip screwdriver with a thin tip under the connector and disconnect the harness connector.

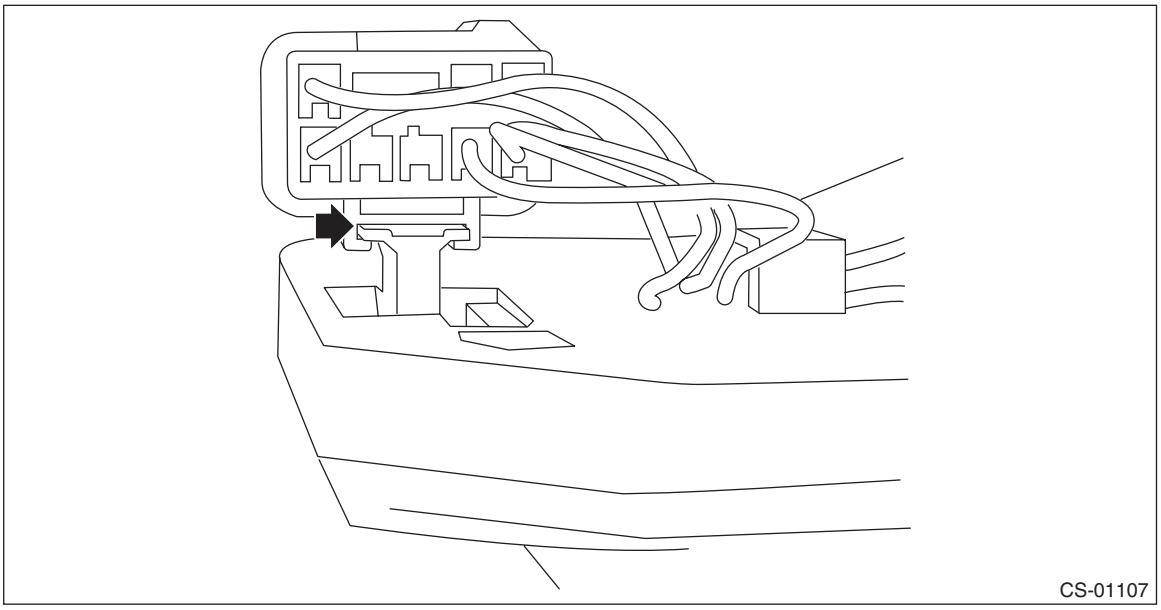

4) Remove the harness.

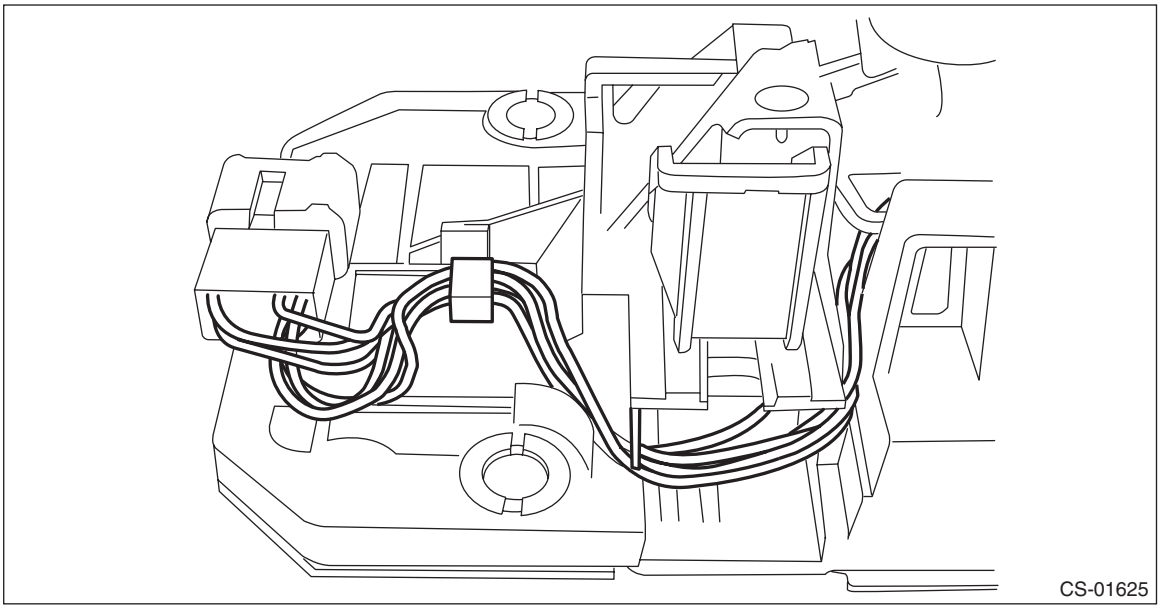

5) Raise the claw with a flat tip screwdriver with a thin tip and remove the solenoid unit.

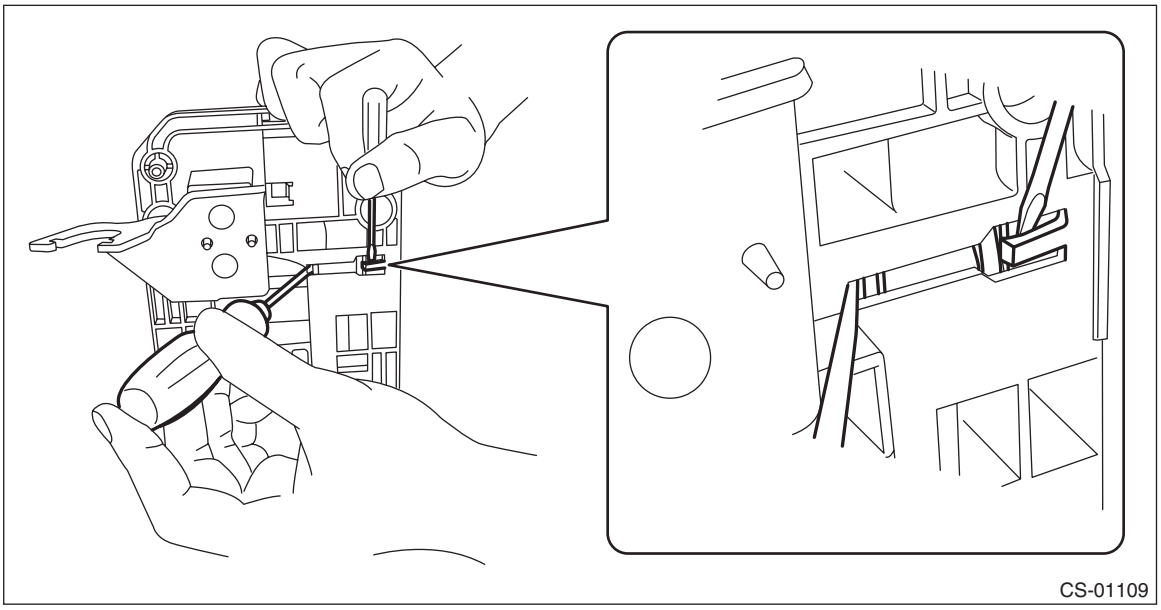

6) Remove the terminal of the solenoid unit using a flat tip precision screwdriver with a tip width of 1.3 mm (0.05 in) or less, KTC connector terminal tool ECC-1T or equivalent.

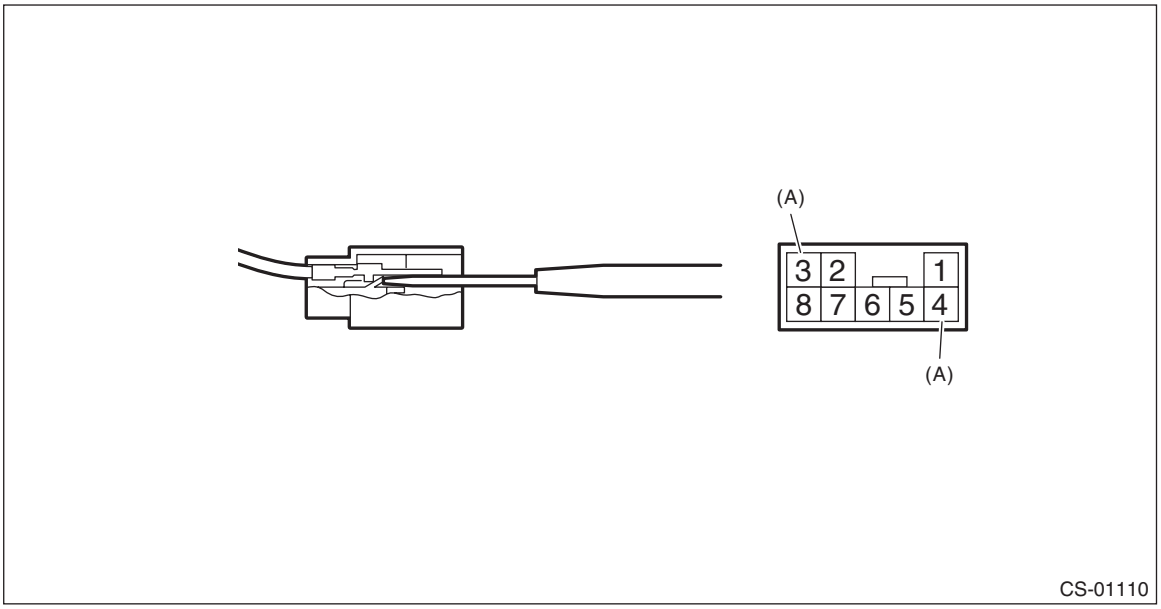

(A) Solenoid unit terminals

7) Remove the clamp push nut.

NOTE:
Replace the clamp push nut with a new part.

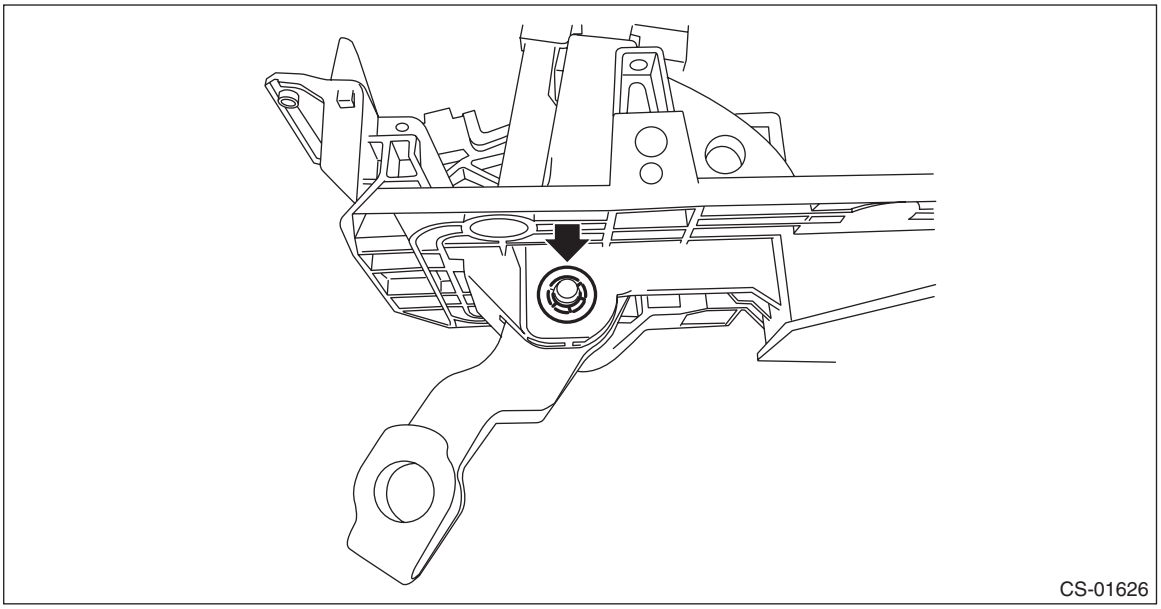

8) Pull out shaft control.

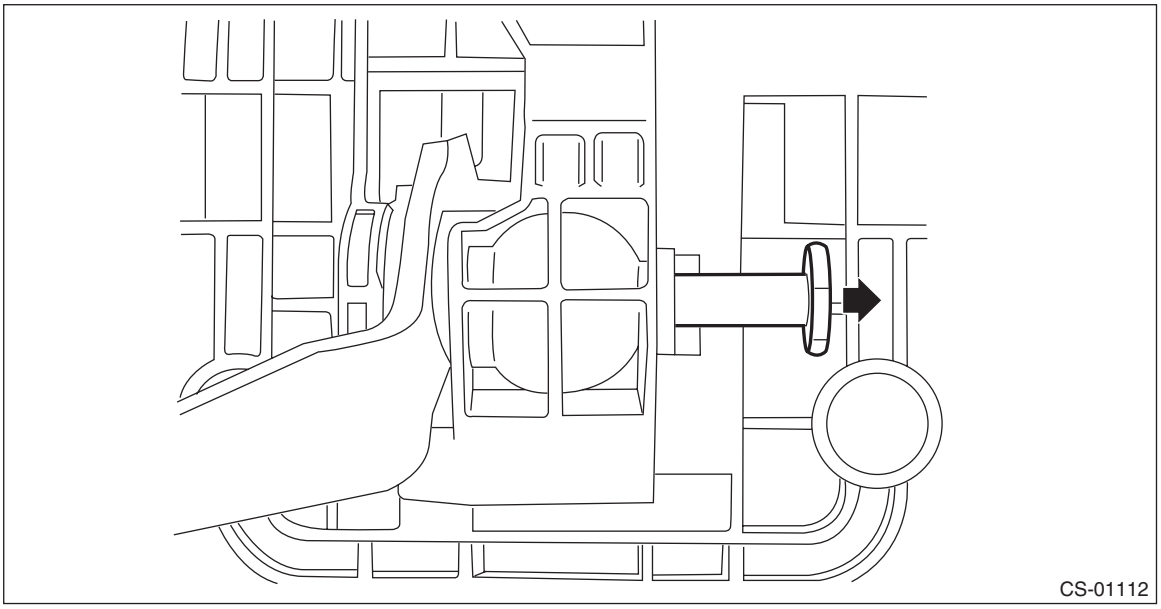

9) Remove the clamp push nut.

NOTE:
Replace the clamp push nut with a new part.

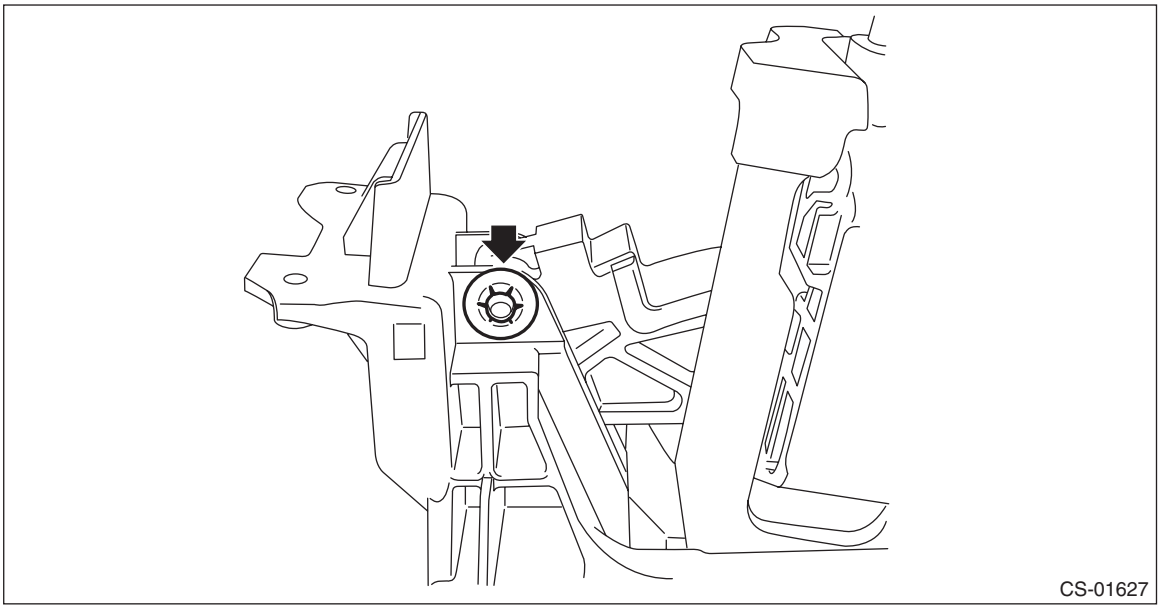

10) Pull out spacer pin guide.

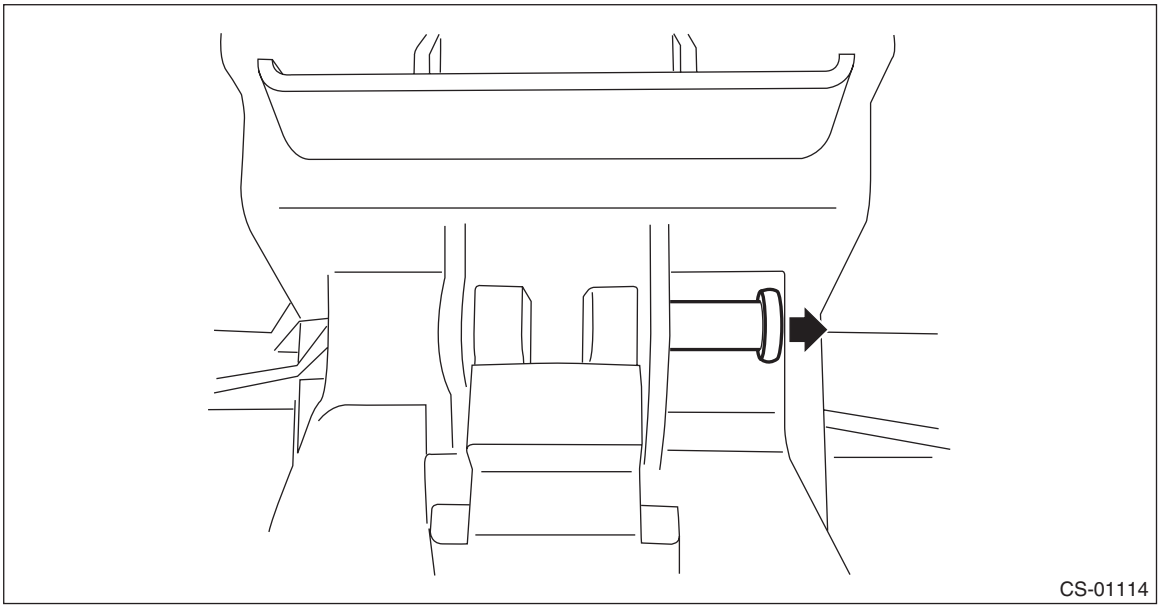

11) Remove the clamp pin.

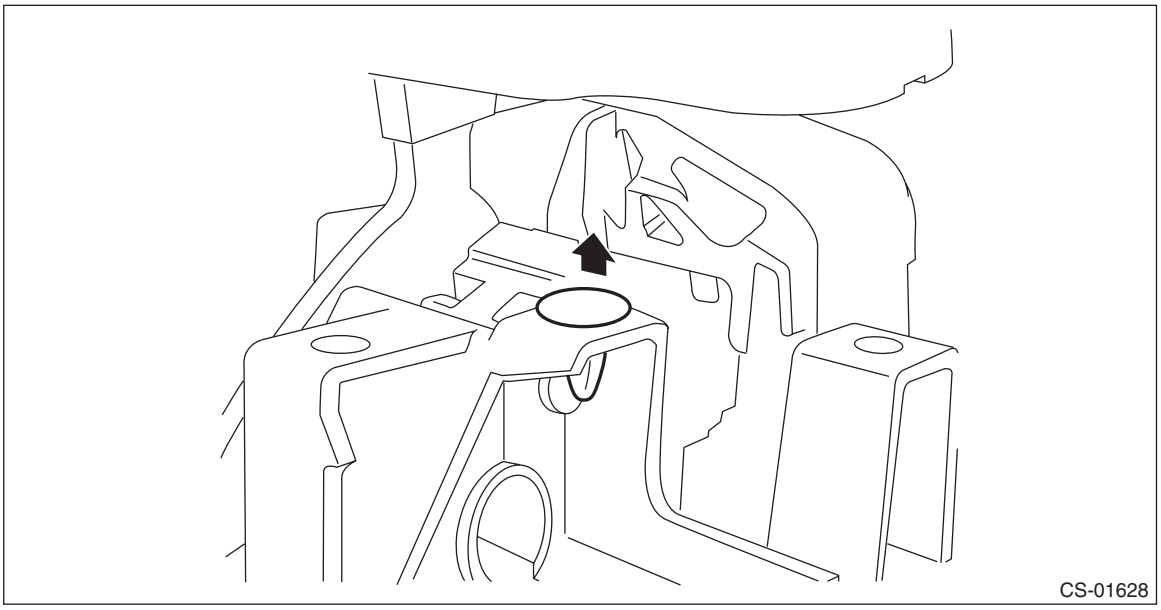

12) Remove the spacer pin guide.

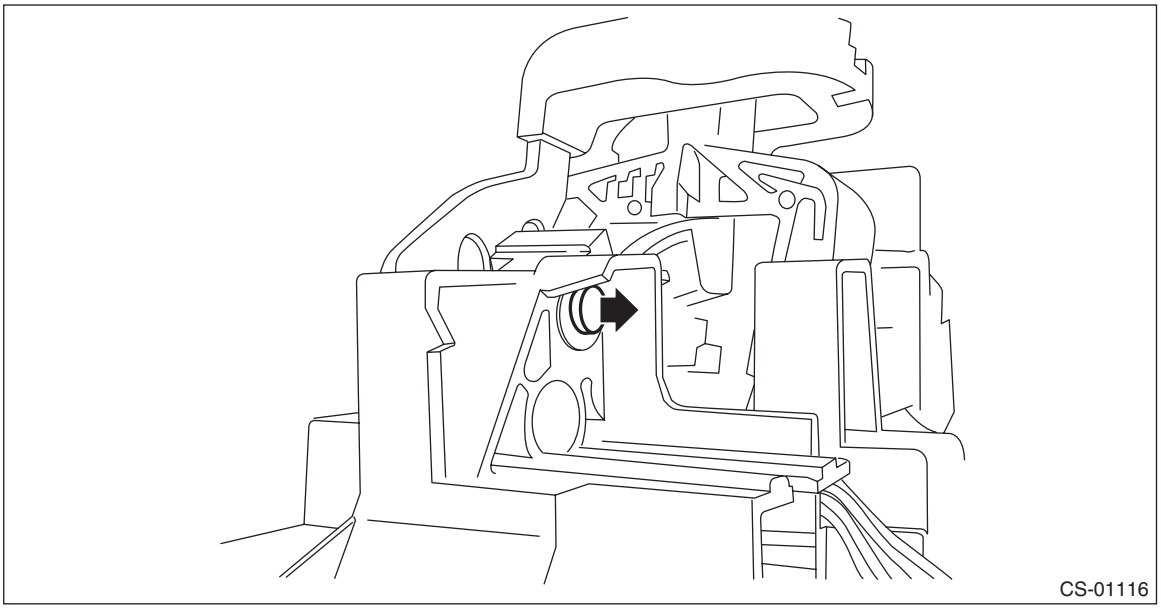

13) Remove the select lever COMPL.

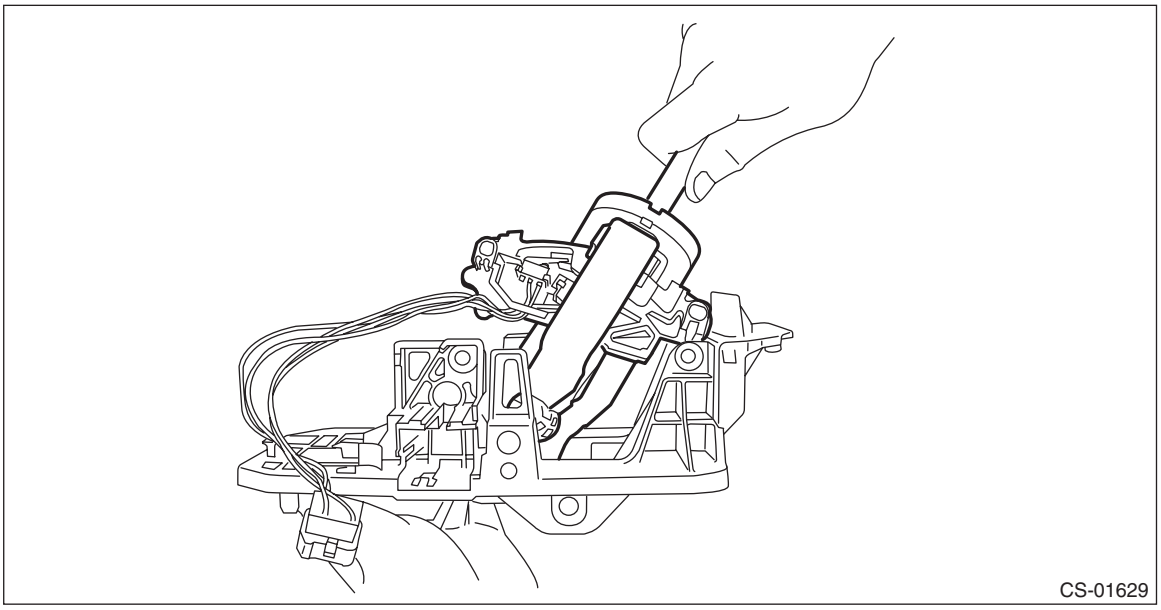

14) Remove the arm COMPL.

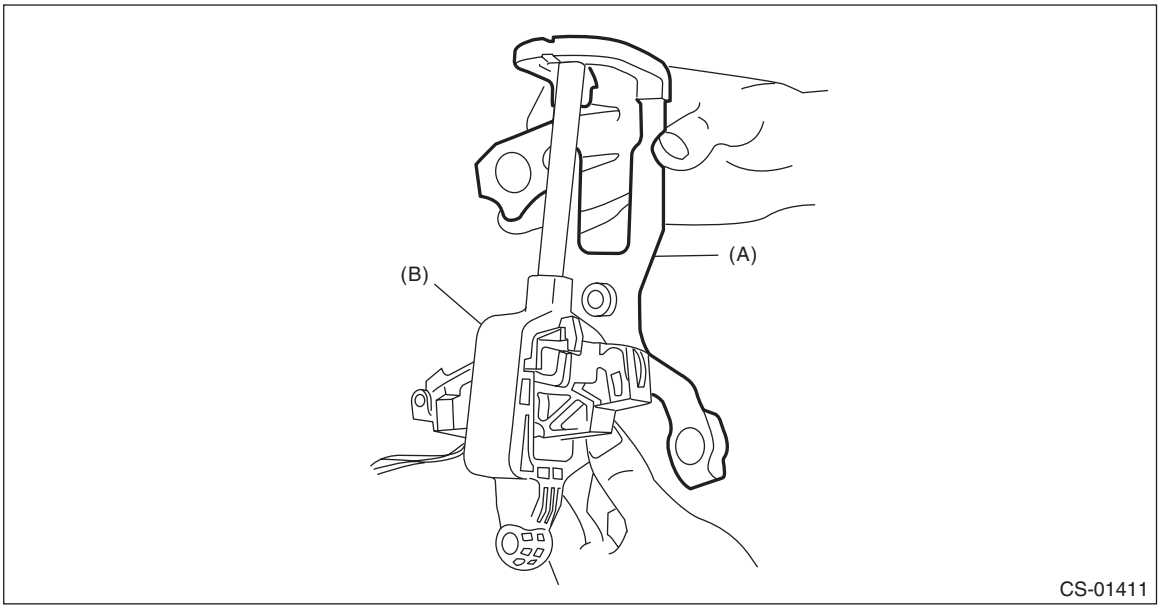

(A) Arm COMPL
(B) Selector lever COMPL

15) Remove the plate guide.

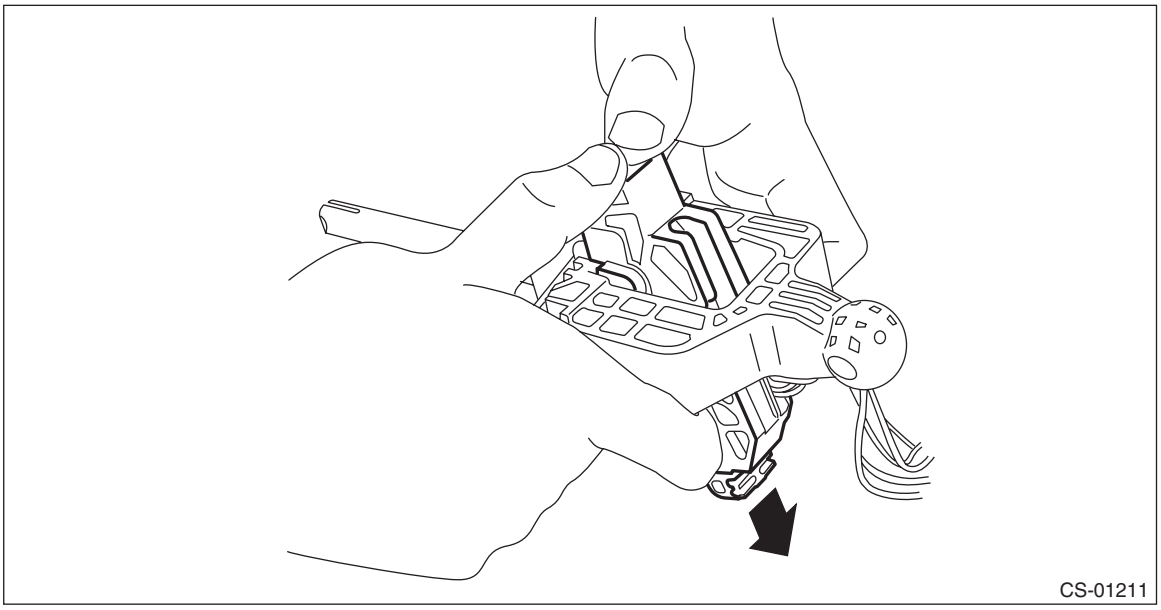

16) Remove the rod detent and the detent spring.

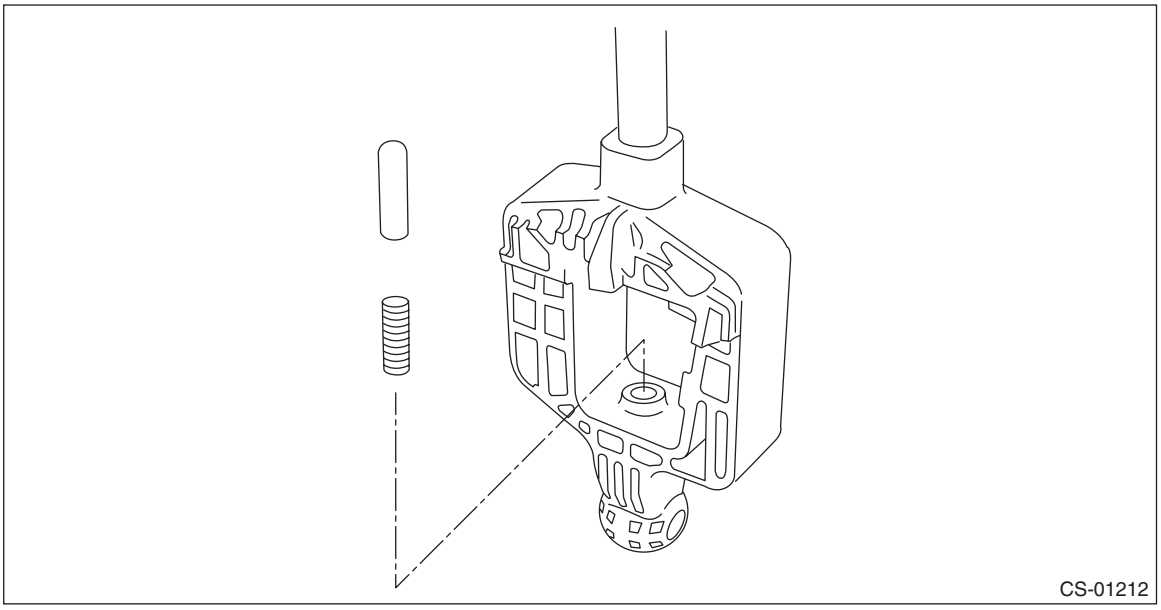

3. INDICATOR ASSY

1) Remove the boot assembly from the indicator assembly.

CAUTION:
When removing the boot assembly, be careful not to damage the boot assembly claws and adjacent parts.

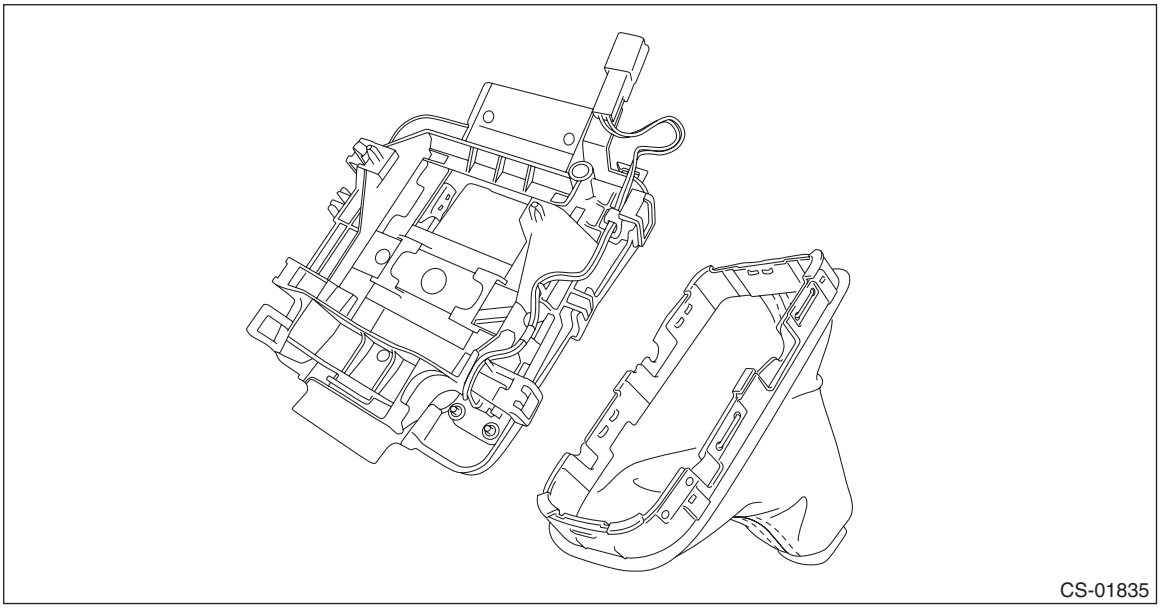

D: ASSEMBLY

1) Clean all the parts before assembly.
2) Apply Multemp D or equivalent to the sliding portion of each part.
3) Assemble in the reverse order of disassembly.

NOTE:
Insert the solenoid unit terminals to the harness connector.

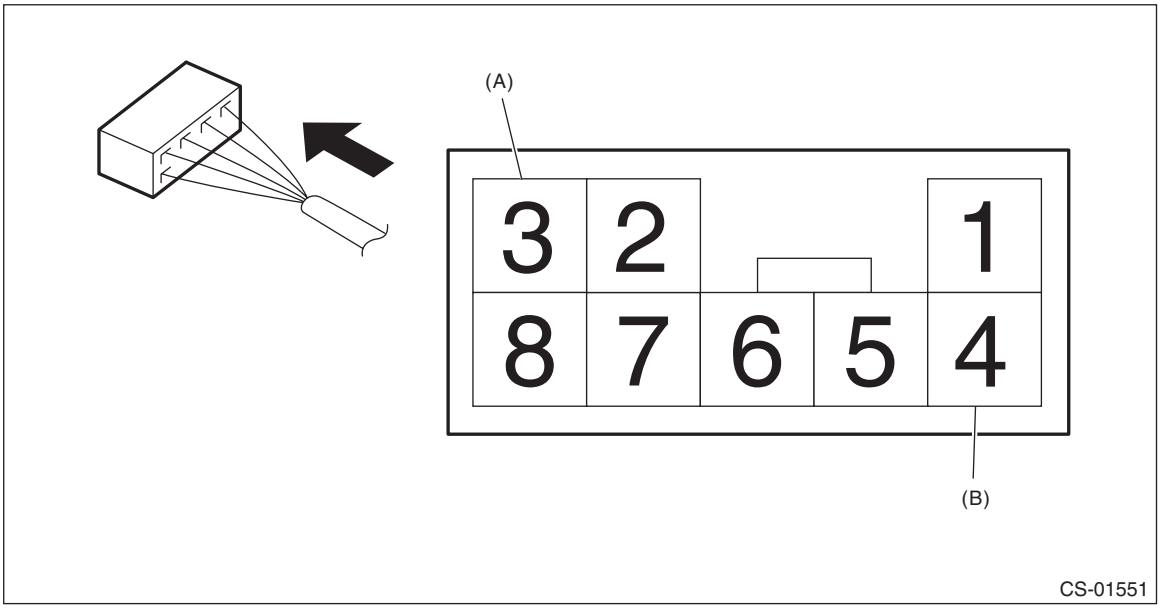

(A) Solenoid unit (color code: blue) (B) Solenoid unit (color code: black)

4) After installation, check the following points.
• The select indicator matches the select lever position when the select lever is changed from “P” range to “D” range.
• The select lever position and the position mark match each other.
• Operating force to move the select lever from “P” to “D” range.

E: INSPECTION

1) Inspect the removed parts by comparing with new parts for deformation, damage and wear. Repair or replace if defective.
2) Inspect the select lever assembly operating condition before assembly. Normal if it operates smoothly.

4. Select Cable

A: REMOVAL

1) Shift the select lever to “N” range.
2) Disconnect the ground cable from battery. <Ref. to NT-6, BATTERY, NOTE, Note.>

NOTE:
For model with battery sensor, disconnect the ground terminal from battery sensor.
3) Lift up the vehicle.
4) Remove the center exhaust pipe (rear). <Ref. to EX(w/o STI)-32, REMOVAL, Center Exhaust Pipe.>
5) Remove the center exhaust cover.

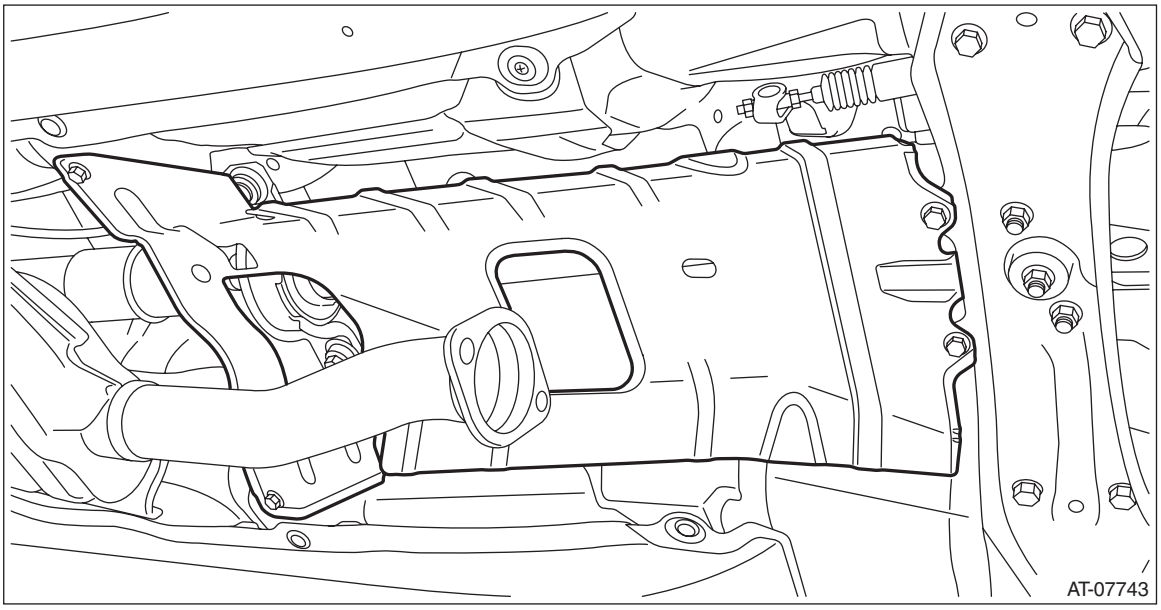

6) Remove the snap pin and washer from the shifter arm.

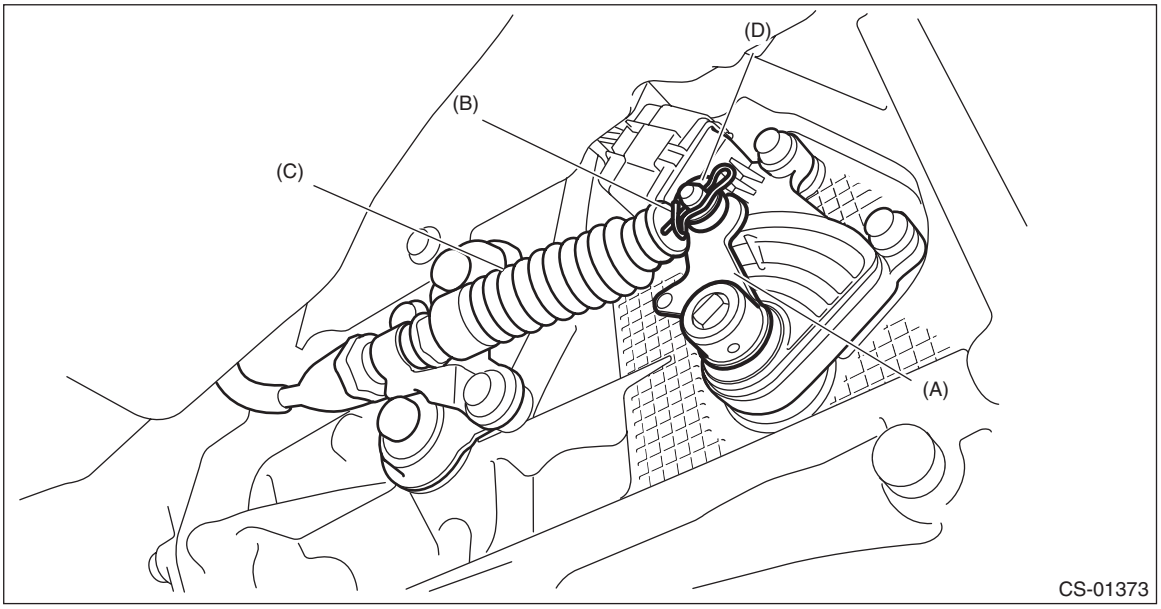

(A) Shifter arm
(B) Snap pin
(C) Select cable
(D) Washer

7) Remove the plate assembly.

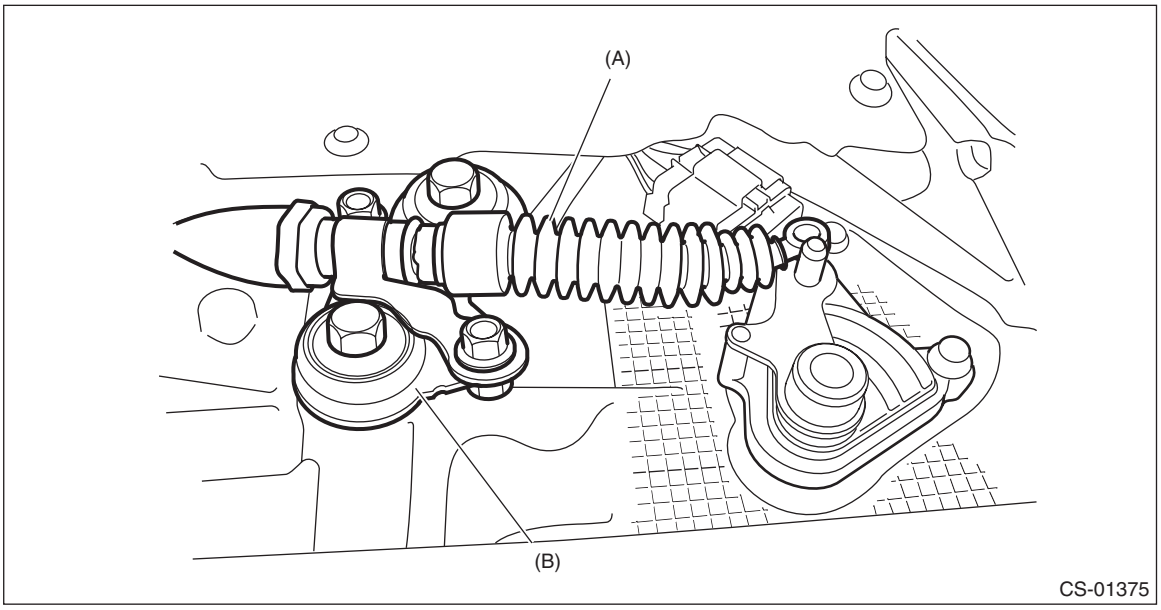

(A) Select cable (B) Plate ASSY

8) Disconnect the cable from arm COMPL.

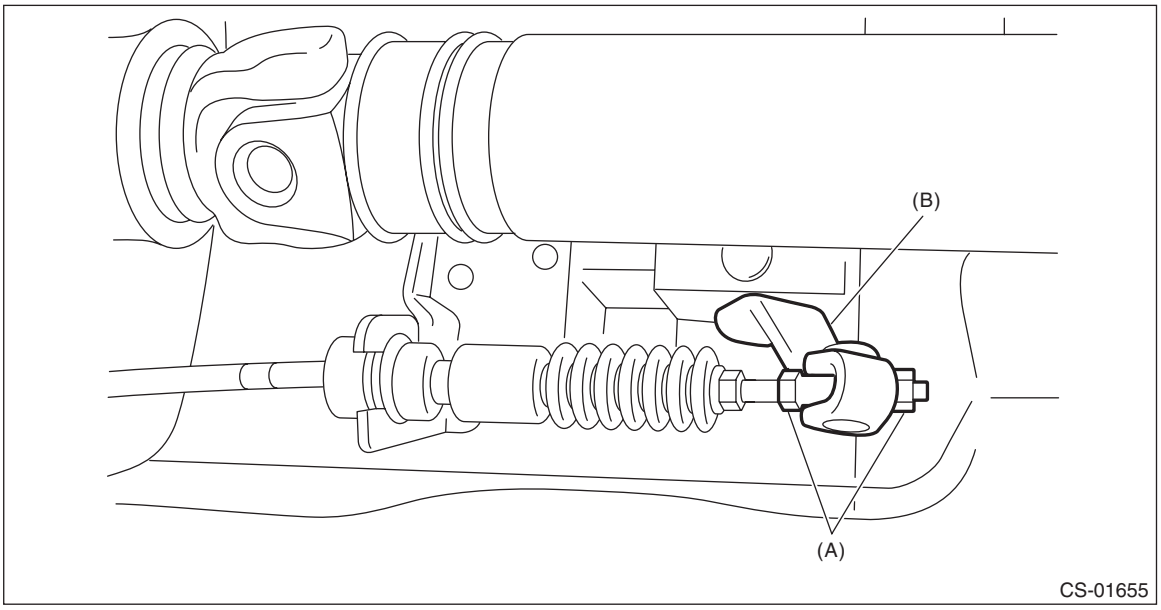

(A) Adjusting nut (B) Arm COMPL

9) Raise the claw of clamp and remove the cable.

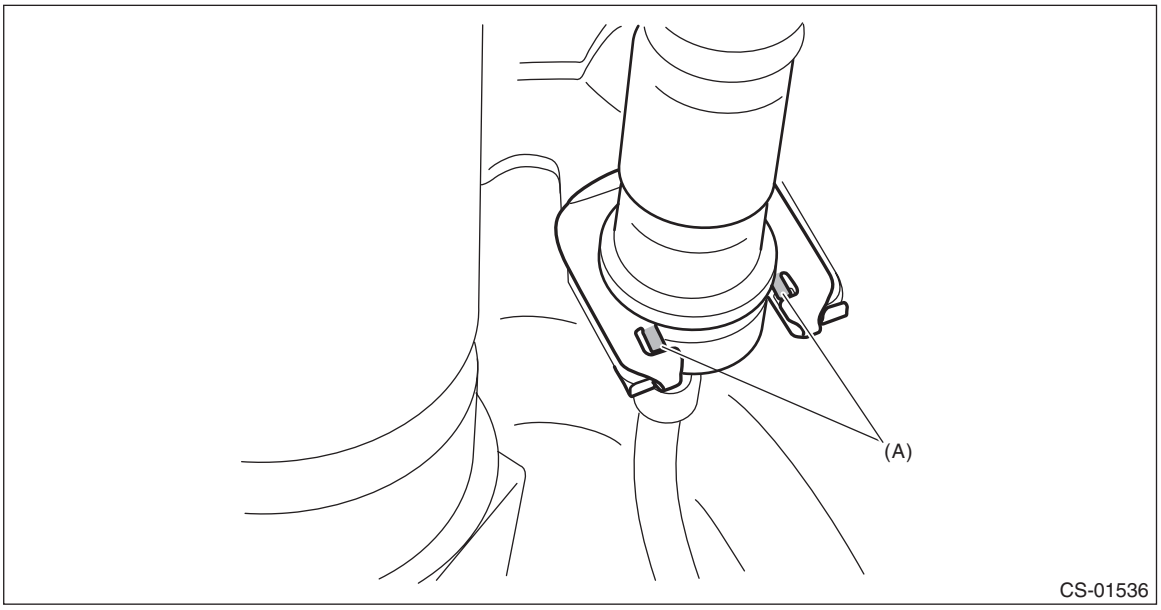

(A) Claw

10) Remove the select cable from plate assembly.

B: INSTALLATION

1) Position the select cable as shown in the figure, and install it to the plate assembly.

CAUTION:
- **If the cable is installed in the wrong direction, loosen the bracket bolts, and then reinstall the cable in the correct direction.**
- **Do not forcibly turn the cable (wire side) to align the direction correctly.**

Tightening torque:
T: 18 N·m (1.8 kgf-m, 13.3 ft-lb)

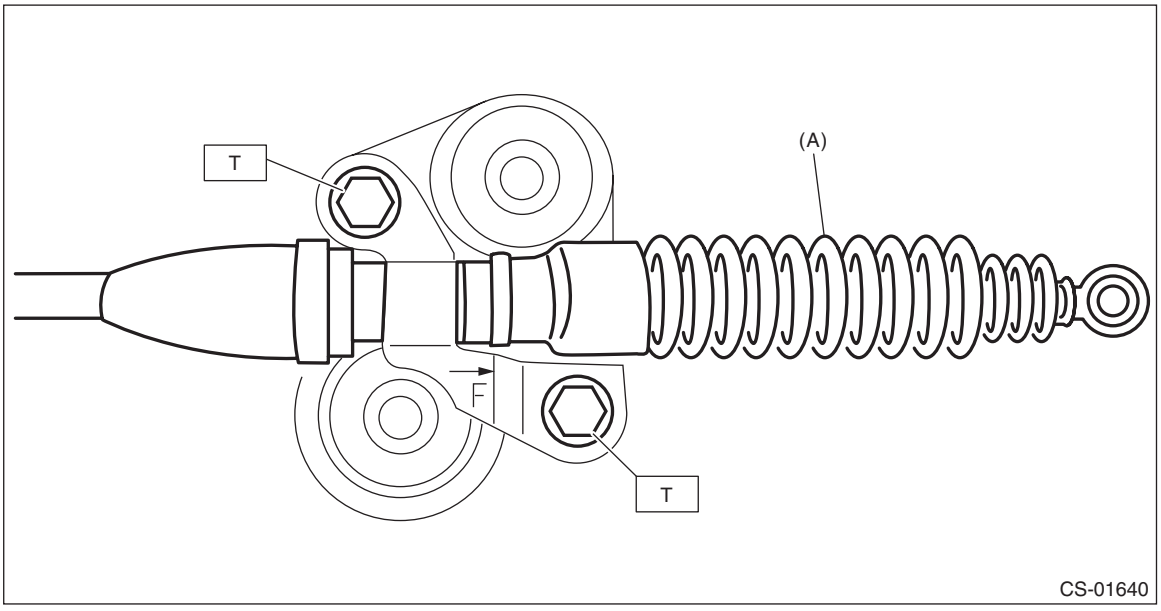

(A) Select cable

2) Install the select cable to the shifter arm.
3) Install the plate assembly.

Tightening torque:
T: 25 N·m (2.5 kgf-m, 18.4 ft-lb)

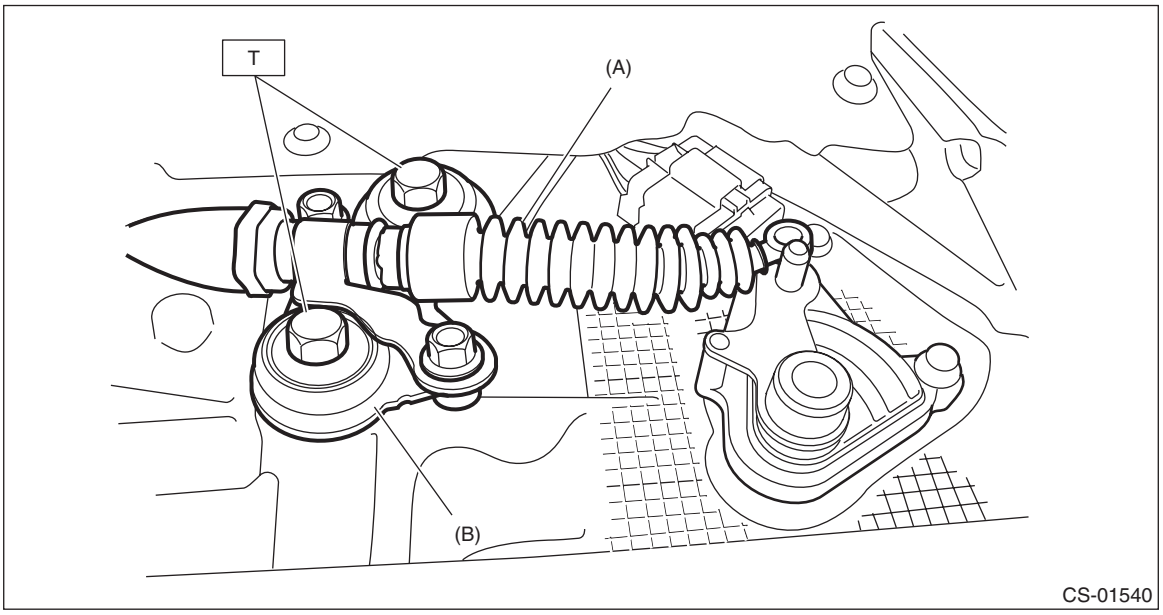

(A) Select cable
(B) Plate ASSY

4) Install the washer and snap pin to the shifter arm.

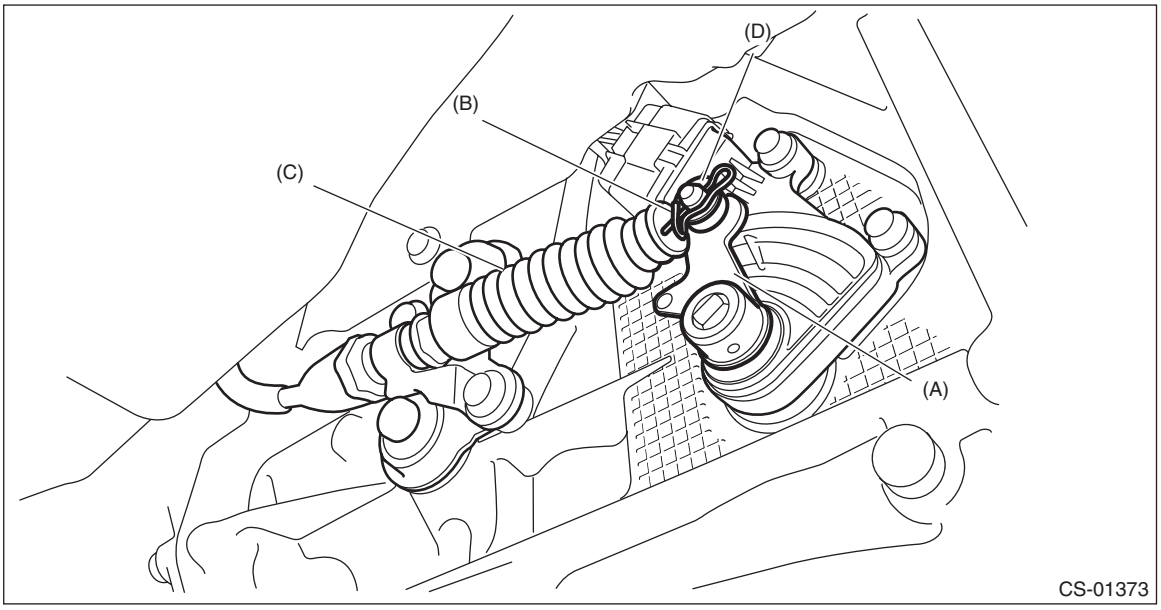

(A) Shifter arm
(B) Snap pin
(C) Select cable
(D) Washer

5) Install new clamp paying attention to the installing direction.

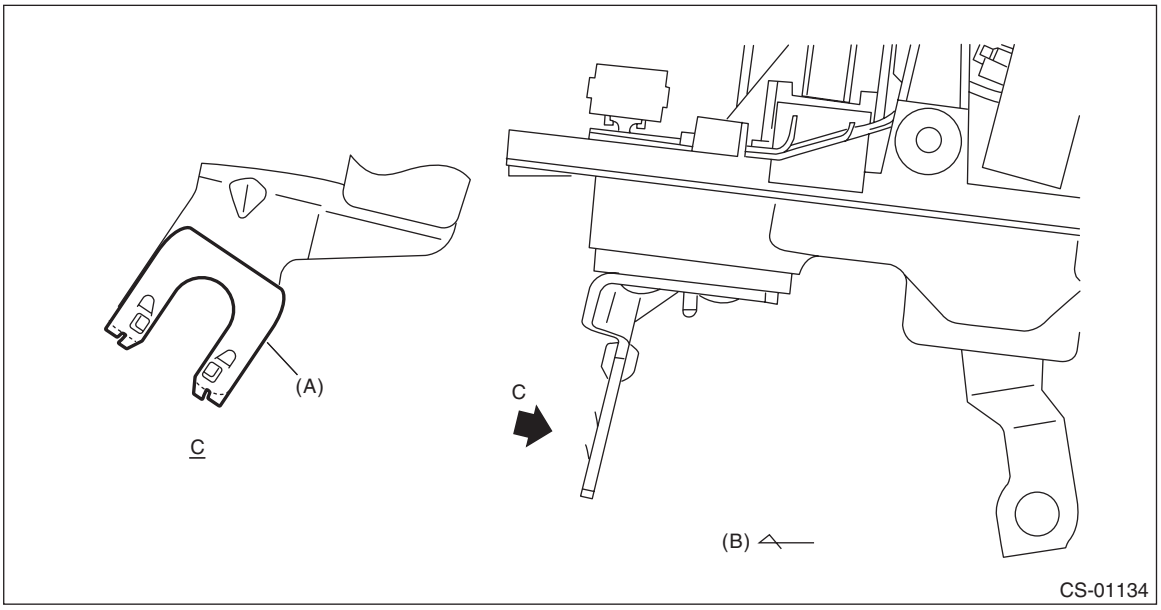

(A) Clamp (B) Forward

6) Insert the tip of inner cable into connector hole of select lever, and fix the cable to bracket.

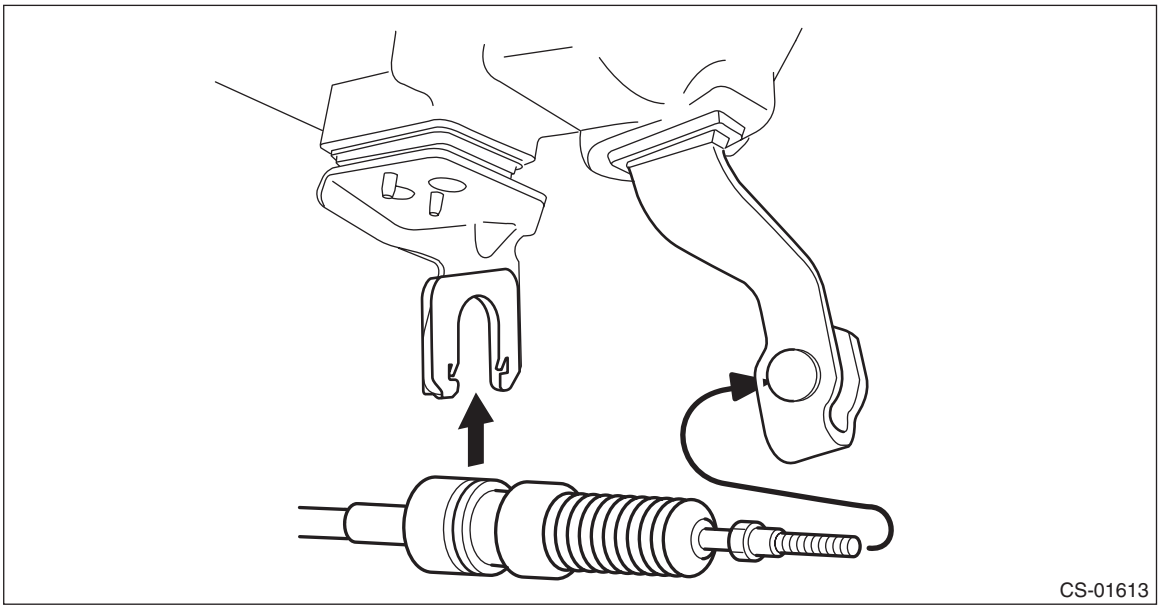

7) Shift the select lever to the “N” range, and then adjust the select cable position. <Ref. to CS-48, ADJUSTMENT, Select Cable.>
8) Install the center exhaust cover.

Tightening torque:
18 N·m (1.8 kgf-m, 13.3 ft-lb)

9) Install the center exhaust pipe (rear). <Ref. to EX(w/o STI)-37, INSTALLATION, Center Exhaust Pipe.>
10) Lower the vehicle.
11) Connect the battery ground terminal. <Ref. to NT-6, BATTERY, NOTE, Note.>

C: INSPECTION

Check the removed cable and replace or adjust if damaged, rusty or malfunctioning.
1) Check the cable for smooth operation.
2) Check the inner cable for damage and rust.
3) Check the outer cable for damage, bends and cracks.
4) Check the boot for damage, cracks and deterioration.
5) Move the select lever from “P” to “D” range. Check the existence of feel to contact the detents in each range. If the detents cannot be felt or the position pointer is improperly aligned, adjust the cable.
6) Check if the starter motor rotates when the select lever is set to “P” range.
7) Check the back-up light illumination when the select lever is in “R” range.
8) Check the parking lock operation when the select lever is in “P” range.

D: ADJUSTMENT

1) Shift the select lever to “N” range.
2) Lift up the vehicle.
3) Remove the center exhaust pipe (rear). <Ref. to EX(w/o STI)-32, REMOVAL, Center Exhaust Pipe.>
4) Remove the center exhaust cover.

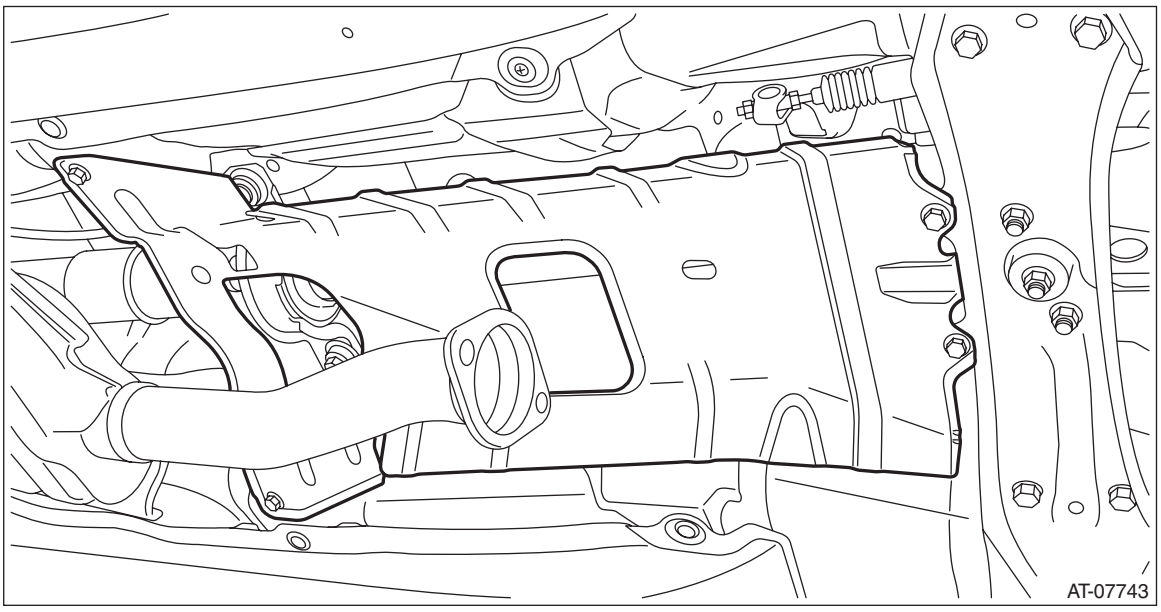

5) Loosen the adjusting nuts on both sides.

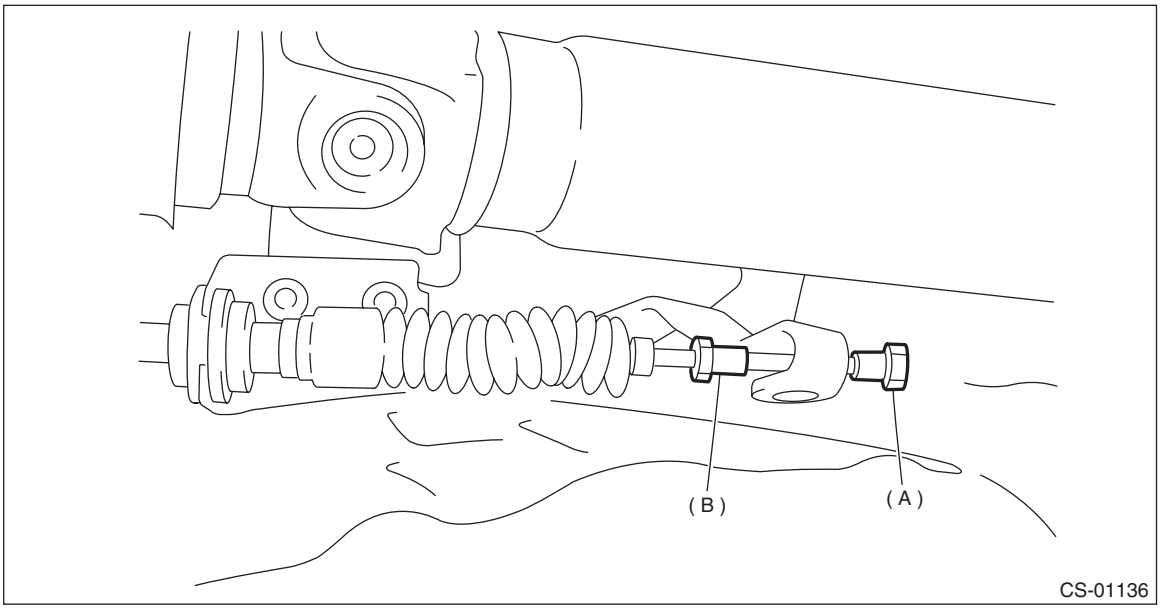

(A) Adjusting nut A
(B) Adjusting nut B

6) Turn adjusting nut B until it lightly touches the connector.

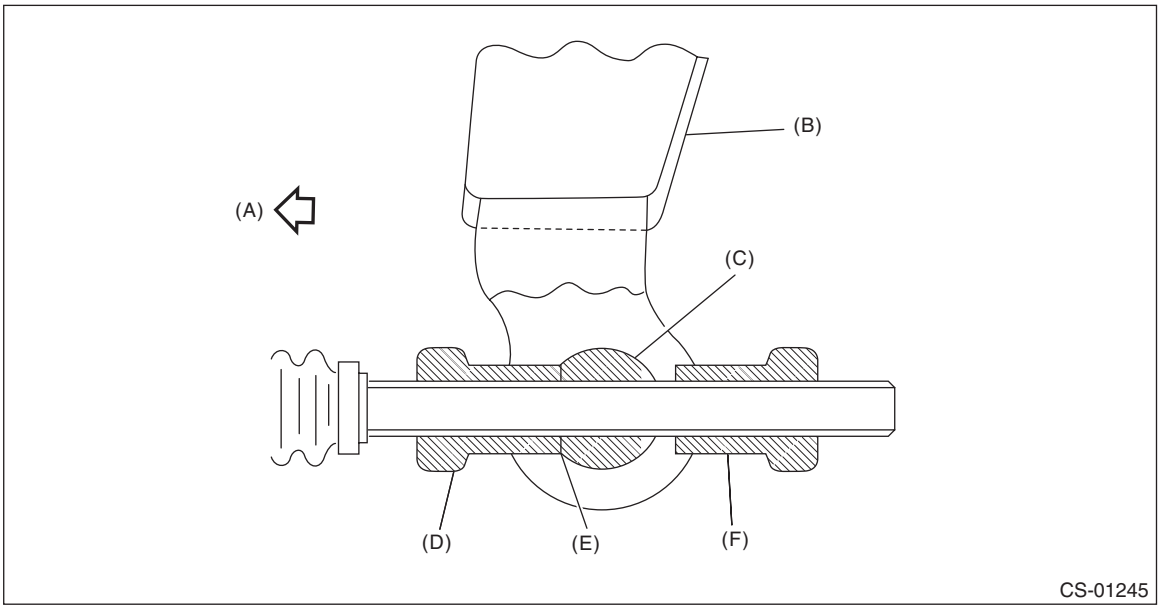

(A) Forward side
(B) Select lever
(C) Connector
(D) Adjusting nut B
(E) Contact point
(F) Adjusting nut A

7) Set a spanner wrench to adjusting nut B so that it does not rotate, and then tighten the adjusting nut A.

Tightening torque:
7.5 N·m (0.76 kgf-m, 5.5 ft-lb)

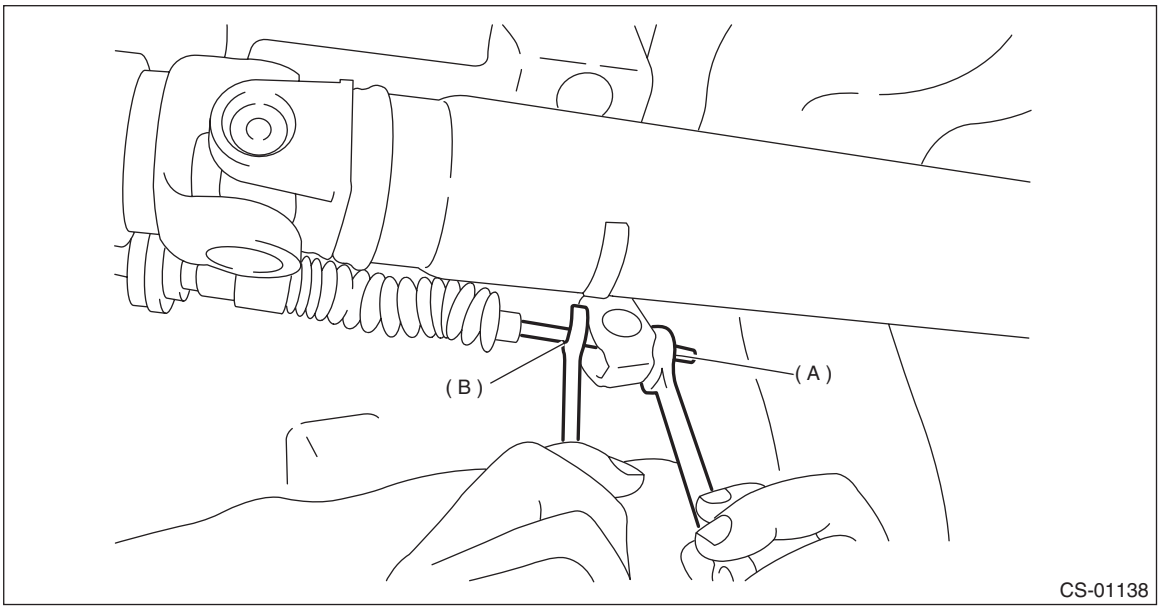

(A) Adjusting nut A (B) Adjusting nut B

8) After the completion of adjustment, confirm that the select lever operates normally at all ranges.
9) Installing procedure hereafter is in the reverse order of removal.

5. AT Shift Lock Solenoid and “P” Range Switch

A: REMOVAL

1. SOLENOID UNIT

1) Remove the AT select lever. <Ref. to CS-25, REMOVAL, Select Lever.>
2) Remove the spacer and gasket. <Ref. to CS-32, DISASSEMBLY, Select Lever.>
3) Using a flat tip screwdriver with a thin tip, remove the harness connector.

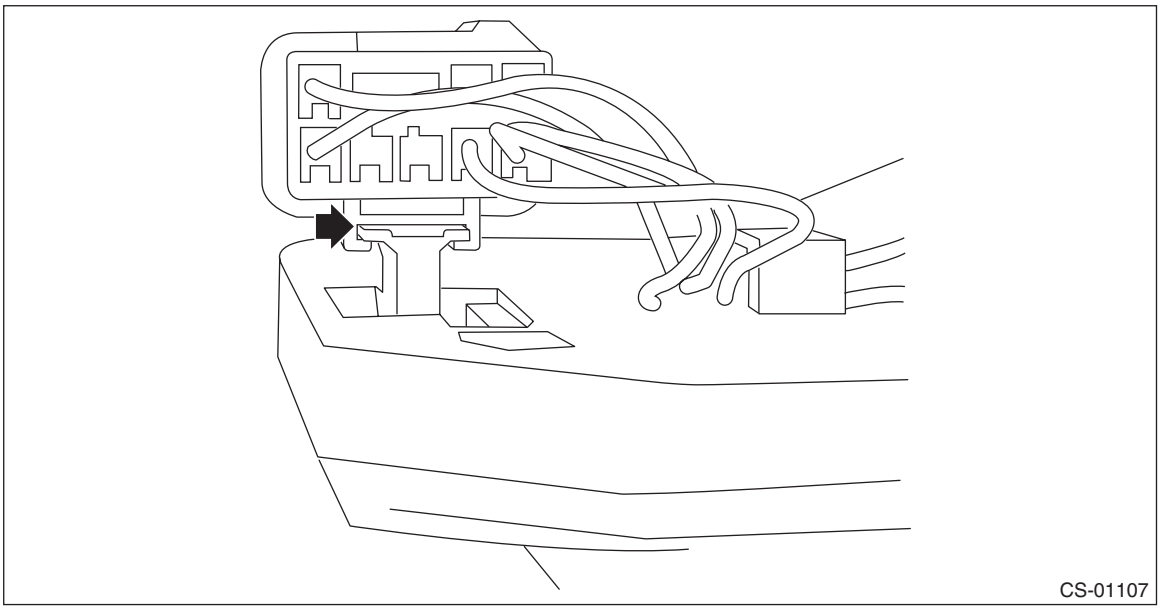

4) Raise the claw with a flat tip screwdriver with a thin tip and remove the solenoid unit.

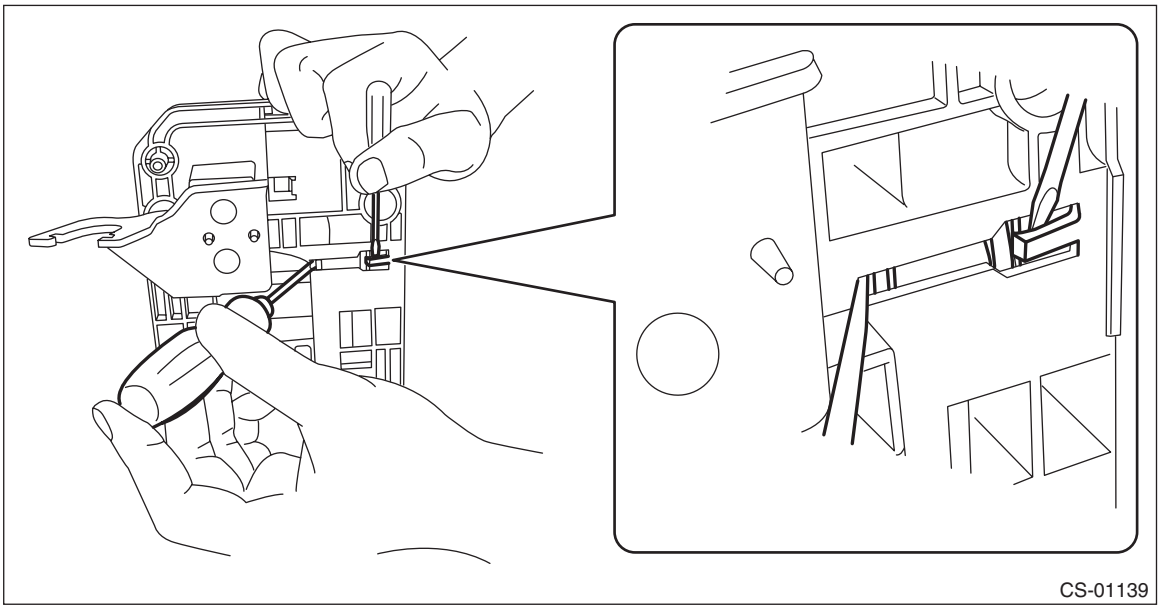

5) Remove the terminal of the solenoid unit using a flat tip precision screwdriver with a tip width of 1.3 mm (0.05 in) or less, KTC connector terminal tool ECC-1T or equivalent.

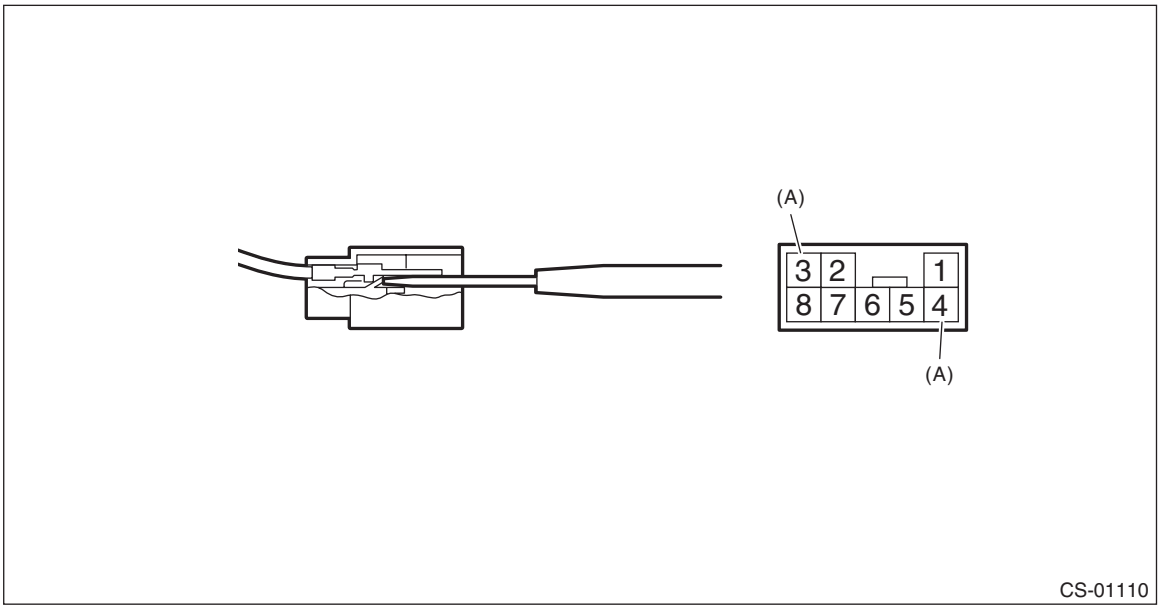

(A) Solenoid unit terminals

2. “P” RANGE SWITCH

For the removal of “P” range switch, refer to the procedure for AT select lever. <Ref. to CS-32, DISASSEMBLY, Select Lever.>

B: INSTALLATION

Install in the reverse order of removal.

NOTE:
Connect the solenoid unit terminals.

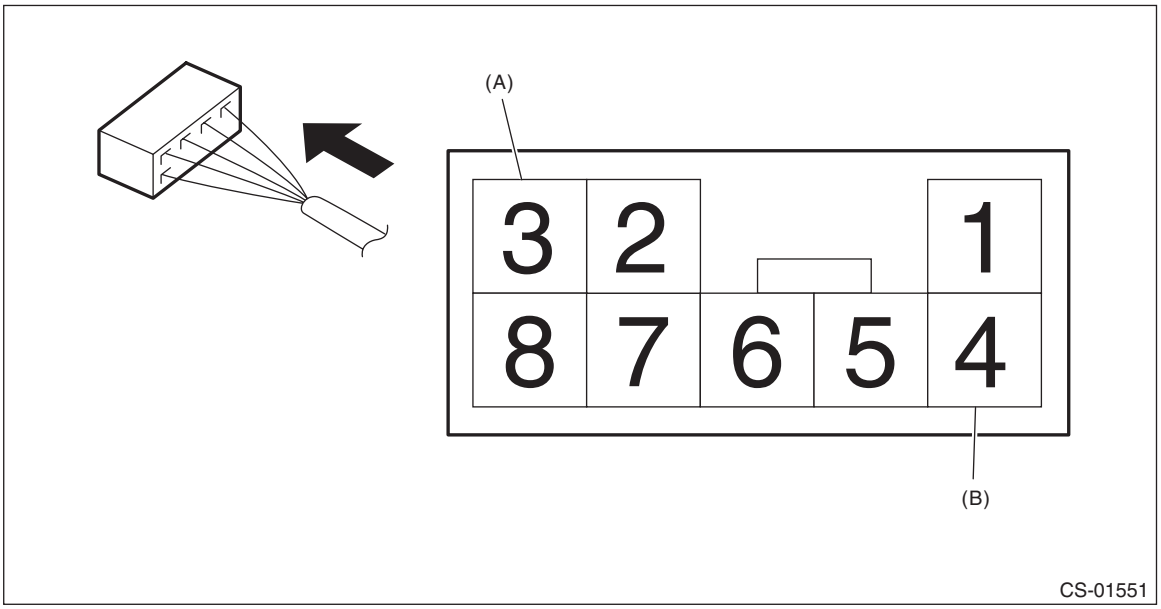

(A) Solenoid unit (color code: blue) (B) Solenoid unit (color code: black)

C: INSPECTION

	Step	Check	Yes	No
1	**CHECK SOLENOID UNIT.** Measure the resistance of solenoid unit connector terminals. ***Terminals*** ***No. 4 — No. 3:***	Is the resistance 27.6 — 30.5 Ω?	Go to step **2**.	Replace the solenoid unit. <Ref. to CS-51, AT Shift Lock Solenoid and “P” Range Switch.>
2	**CHECK SOLENOID UNIT.** Connect the battery to the solenoid unit connector terminals, and then operate the solenoid. ***Terminals*** ***No. 3 (+) — No. 4 (–):***	Does the solenoid unit operate normally?	Go to step **3**.	Replace the solenoid unit. <Ref. to CS-51, AT Shift Lock Solenoid and “P” Range Switch.>
3	**CHECK “P” RANGE SWITCH.** 1) Shift the select lever to “P” range. 2) Measure the resistance between “P” range switch connector terminals. ***Terminals*** ***No. 1 — No. 2:***	Is the resistance less than 1 Ω?	Go to step **4**.	Replace the “P” range switch. <Ref. to CS-51, AT Shift Lock Solenoid and “P” Range Switch.>
4	**CHECK “P” RANGE SWITCH.** 1) Set the select lever to other than “P” range. 2) Measure the resistance between “P” range switch connector terminals. ***Terminals*** ***No. 1 — No. 2:***	Is the resistance 1 MΩ or more?	Normal	Replace the “P” range switch. <Ref. to CS-51, AT Shift Lock Solenoid and “P” Range Switch.>

6. Body Integrated Unit

A: NOTE

Refer to “Body Integrated Unit” for removal and installation procedure. <Ref. to SL-81, Body Integrated Unit.>

7. MT Gear Shift Lever

A: REMOVAL

1. STI MODEL

1) Disconnect the ground cable from battery. <Ref. to NT-6, BATTERY, NOTE, Note.>

NOTE:
For model with battery sensor, disconnect the ground terminal from battery sensor.

2) Remove the gear shift knob by turning it counterclockwise.
3) Remove the console box assembly. <Ref. to EI-67, REMOVAL, Console Box.>
4) Remove the cover - shift lever. <Ref. to EI-67, REMOVAL, Console Box.>
5) Remove the panel center LWR LH and RH. <Ref. to EI-67, REMOVAL, Console Box.>
6) Remove the clamp.

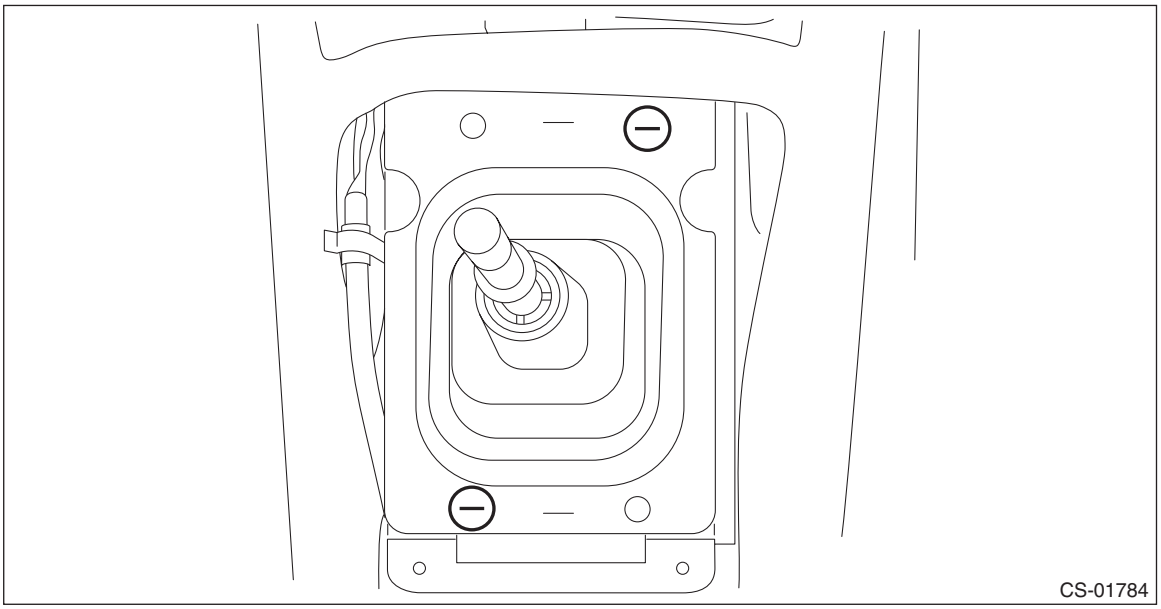
CS-01784

7) Remove the boot and insulator assembly.

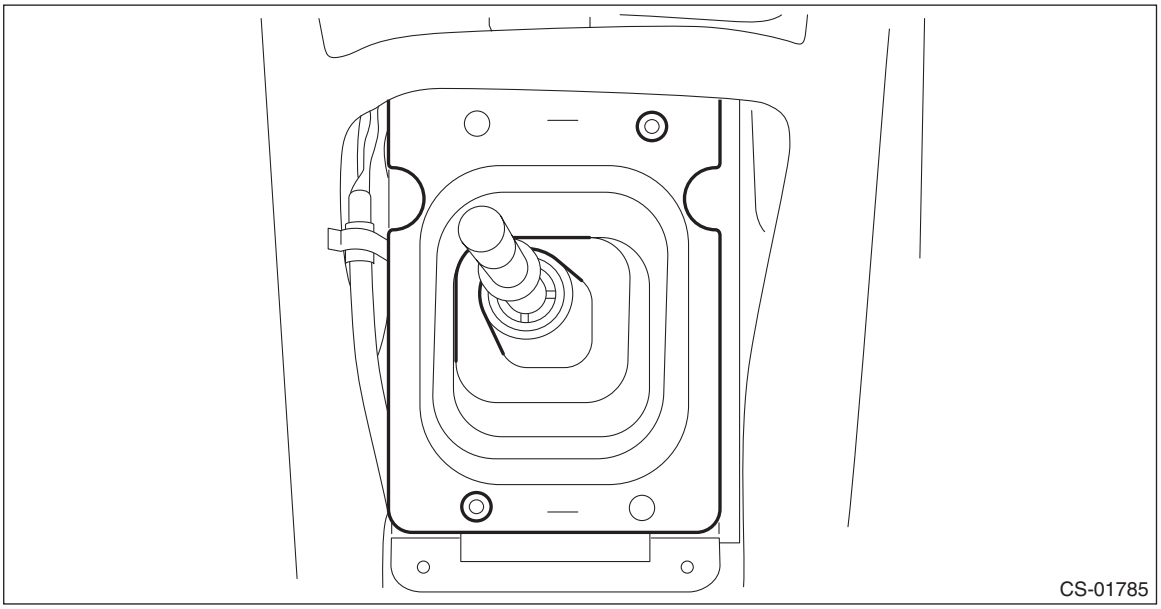
CS-01785

8) Remove the harness clamp.

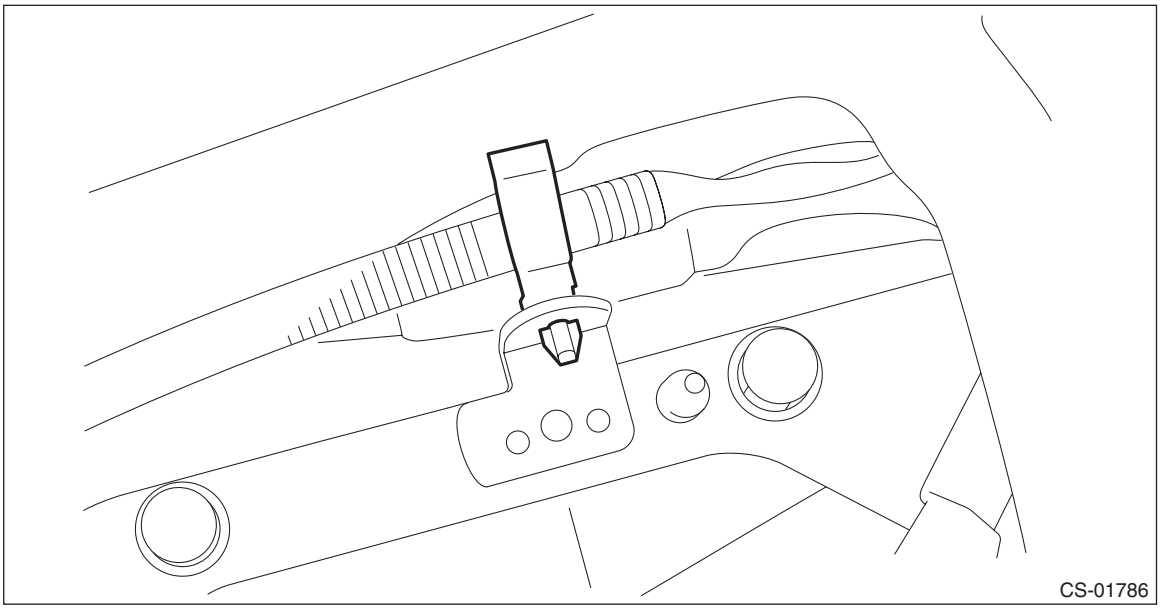

9) Remove the plate COMPL.

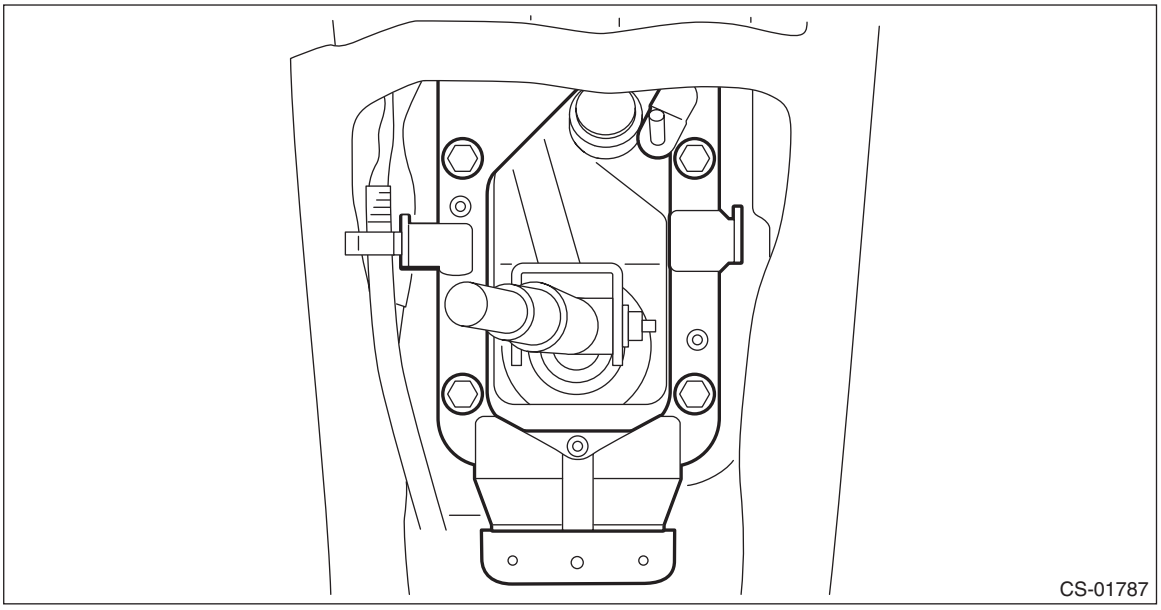

10) Lift up the vehicle.
11) Remove the center exhaust pipe (rear). <Ref. to EX(STI)-7, REMOVAL, Center Exhaust Pipe.>

12) Remove the center exhaust cover.



13) Remove the crossmember. <Ref. to 6MT(TY85)-30, REMOVAL, Transmission Mounting System.>
14) Remove the snap pin and washer, and remove the reverse check cable.

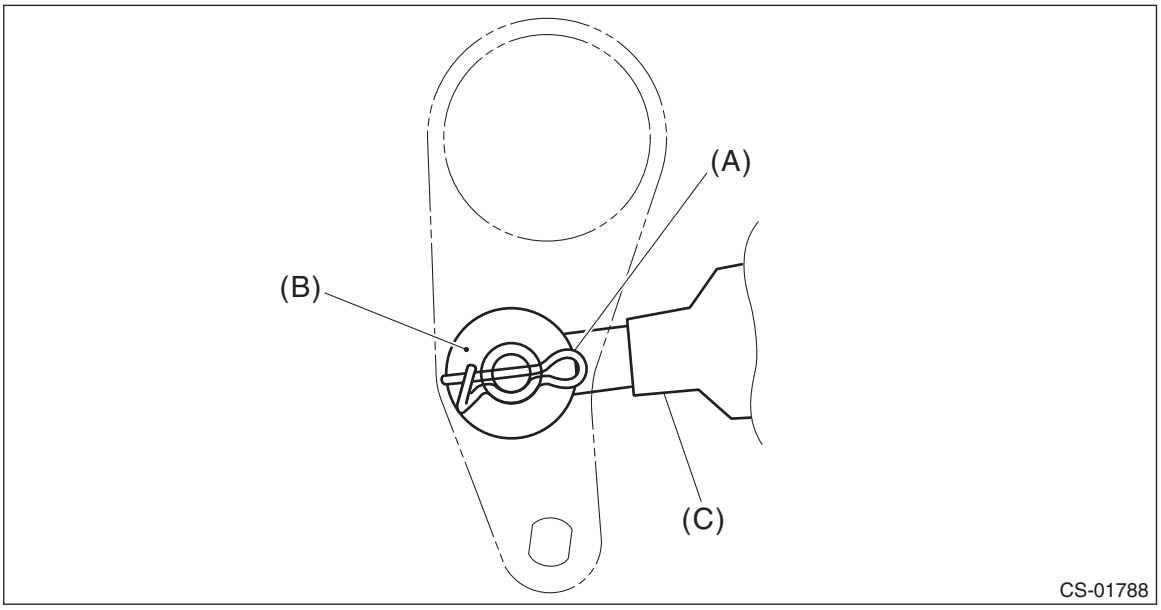

(A) Snap pin (B) Washer (C) Reverse check cable

15) Move the transmission to the right side, and remove the joint COMPL, stay bolts and reverse check cable.

NOTE:
If the transmission is not moved aside, the joint COMPL and stay bolts may contact the body and cause damage.

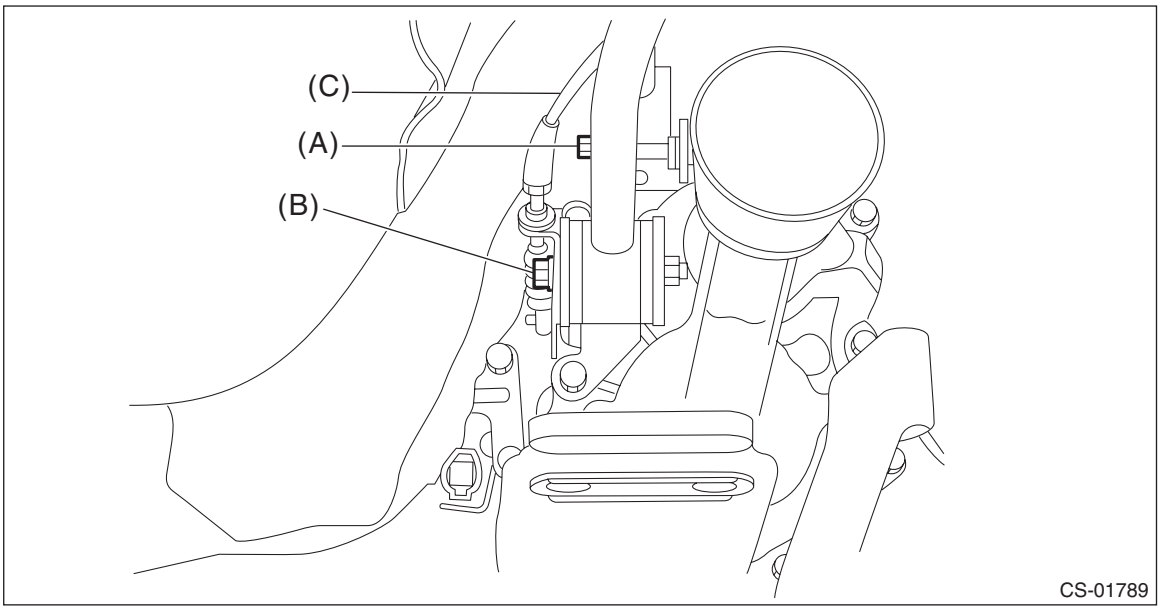

(A) Joint COMPL bolt (B) Stay bolt (C) Reverse check cable

16) Remove the cushion rubber.

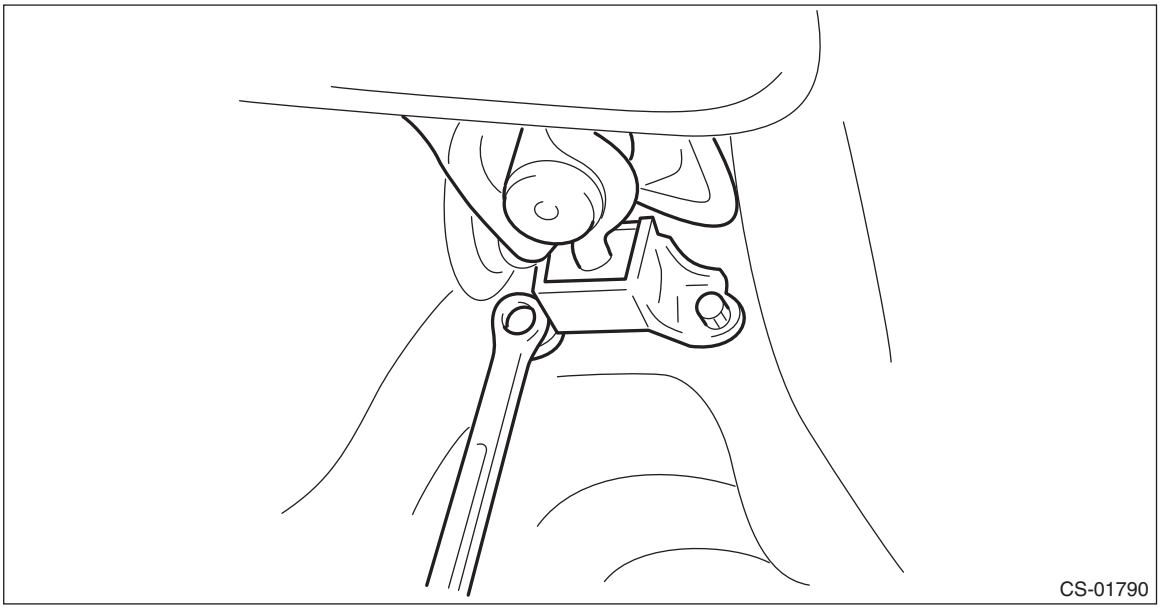

17) Remove the gear shift lever.

2. EXCEPT FOR STI MODEL

1) Disconnect the ground cable from battery. <Ref. to NT-6, BATTERY, NOTE, Note.>

NOTE:
For model with battery sensor, disconnect the ground terminal from battery sensor.

2) Lift up the vehicle.
3) Remove the center exhaust pipe (rear). <Ref. to EX(w/o STI)-32, REMOVAL, Center Exhaust Pipe.>
4) Remove the center exhaust cover.

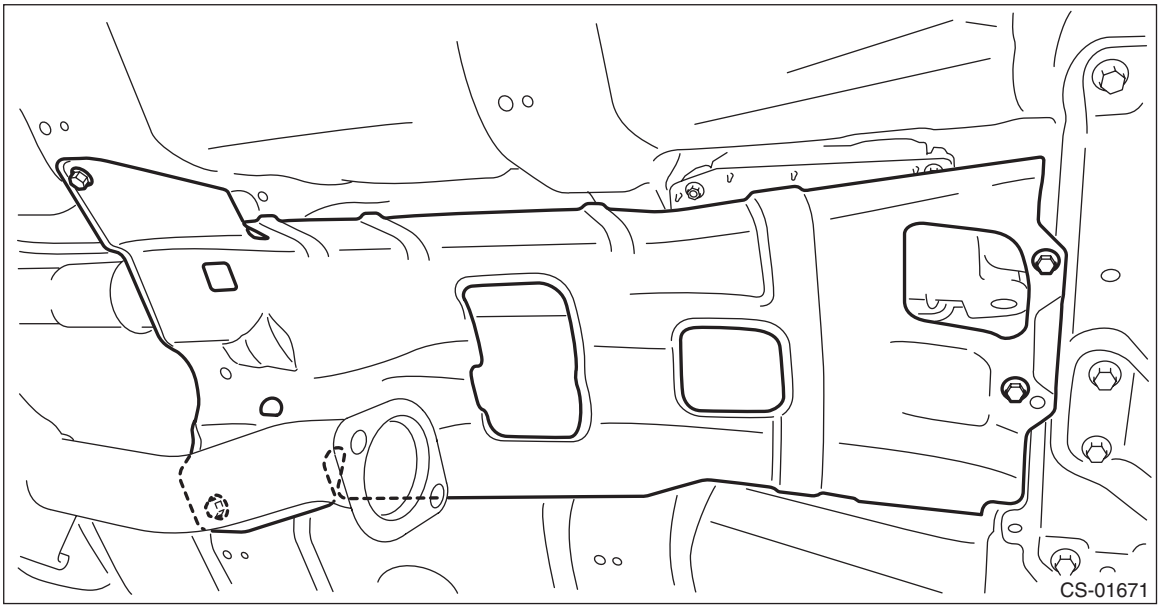

5) Remove the cable cover plate.

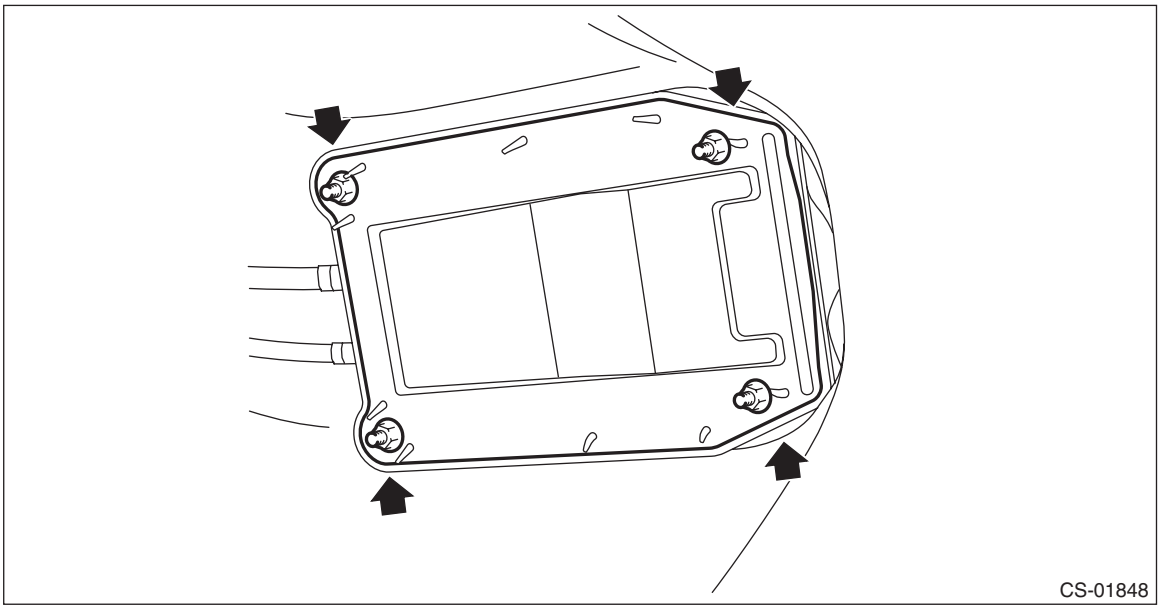

6) Disconnect the MT gear shift cable and MT gear select cable.

CAUTION:
Be careful not to deform the cable inner.

(1) Pull out down the MT gear shift cable to spread the spring.
(2) Push the MT gear select cable in the direction of arrow, and remove it.

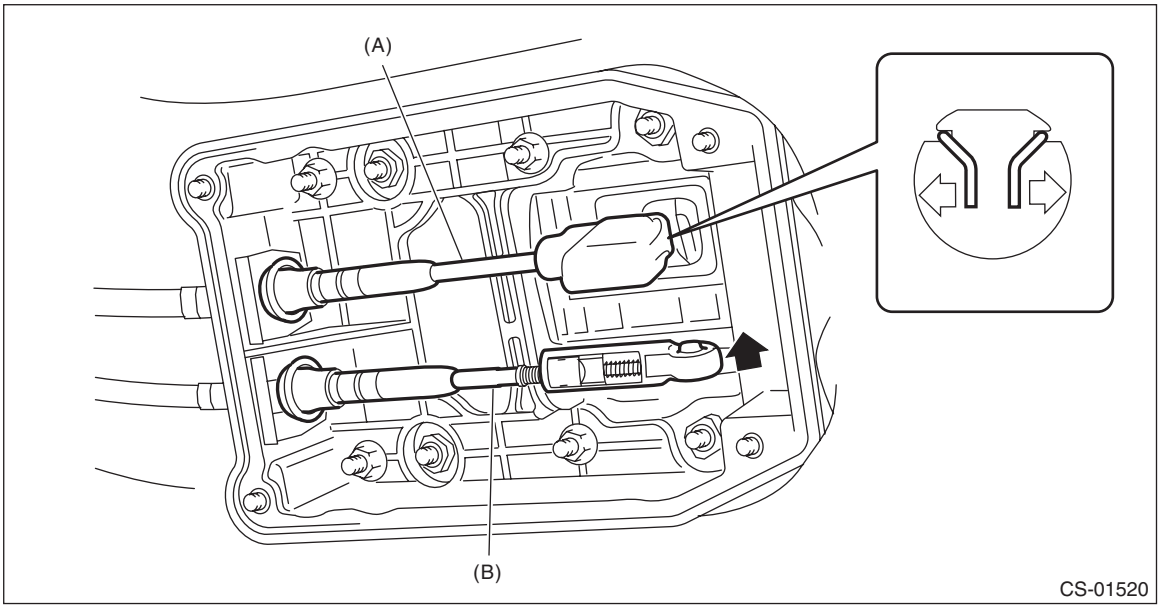

(A) MT gear shift cable (B) MT gear select cable

7) Remove the cable cover assembly.

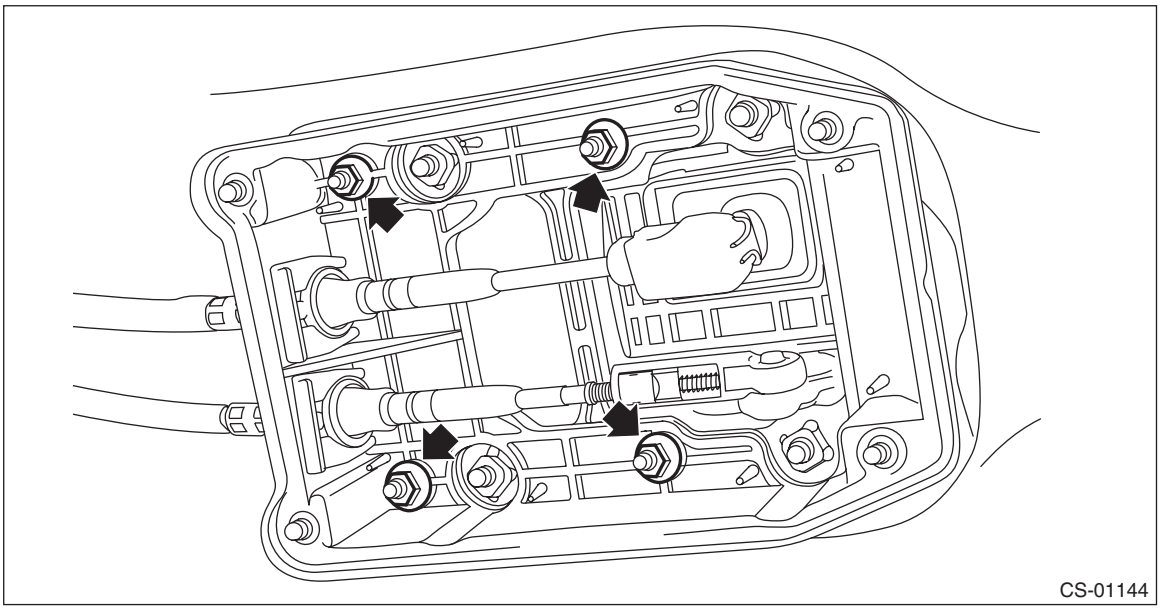

8) Lower the vehicle.
9) Remove the console box assembly. <Ref. to EI-67, REMOVAL, Console Box.>
10) Remove the gear shift knob and remove the cover - shift lever. <Ref. to EI-67, REMOVAL, Console Box.>
11) Remove the panel center LWR LH and RH. <Ref. to EI-67, REMOVAL, Console Box.>
12) Remove the harness clamp.

13) Remove the gear shift lever assembly.

NOTE:
The MT gear shift lever cannot be disassembled.

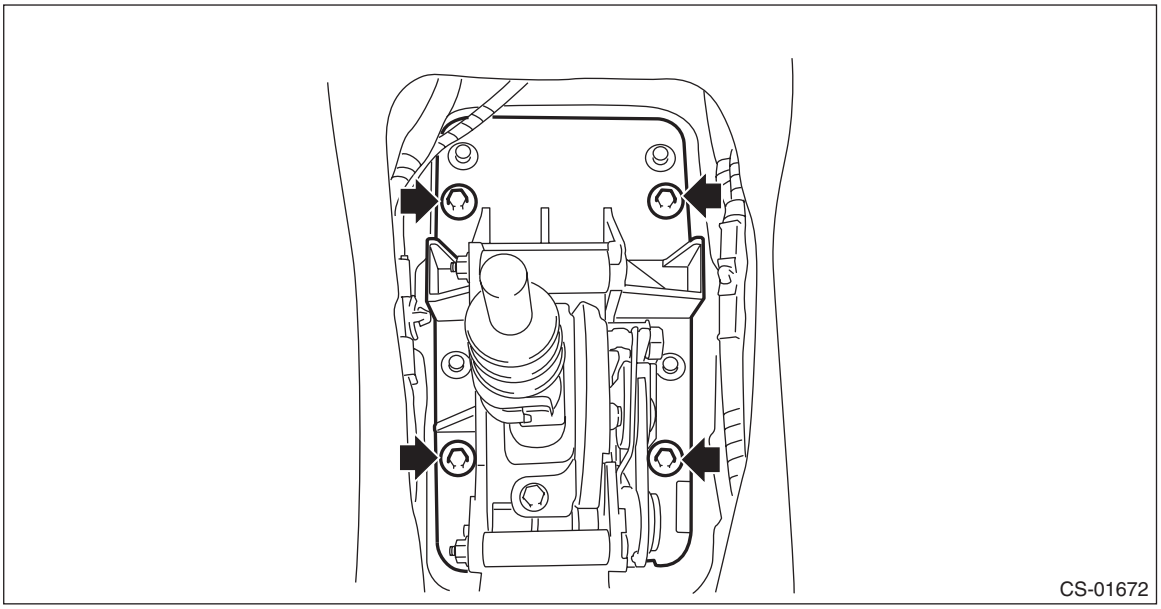

B: INSTALLATION

1. STI MODEL

1) Insert the gear shift lever from the bottom of the vehicle.

NOTE:
After inserting the rod and stay, temporarily put them onto transmission mount.
2) Install the cushion rubber.

Tightening torque:
18 N·m (1.8 kgf-m, 13.3 ft-lb)

3) Move the transmission to the right side of the vehicle, and install the joint COMPL and stay.

Tightening torque:
T1: 12 N·m (1.2 kgf-m, 8.9 ft-lb)
T2: 32 N·m (3.3 kgf-m, 23.6 ft-lb)

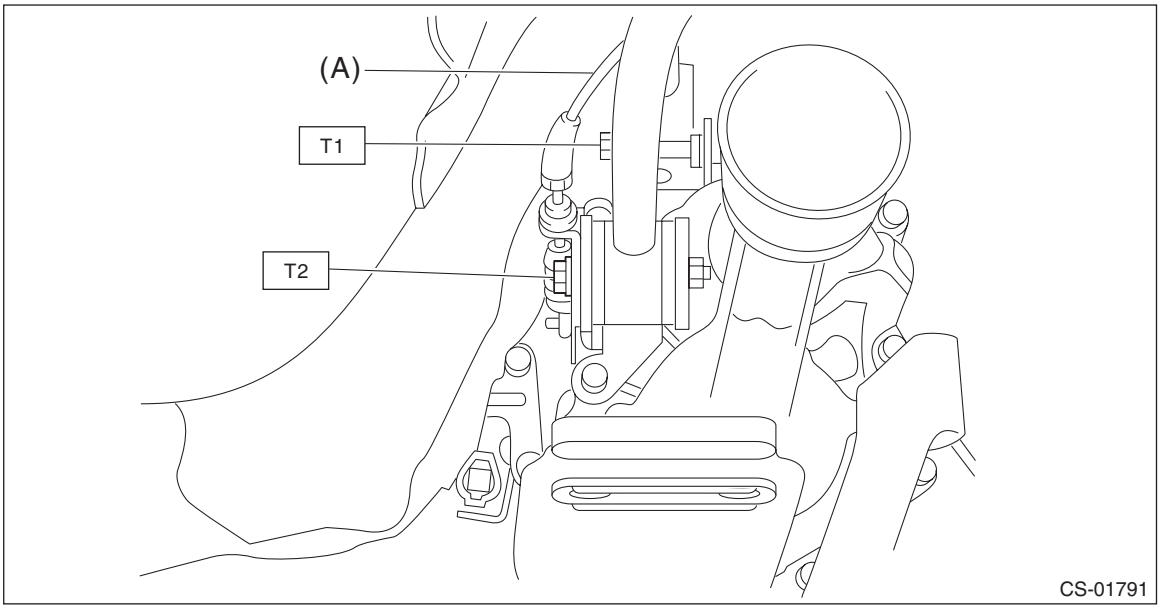

(A) Reverse check cable

4) Install the reverse check cable, washer and snap pin.

NOTE:
Pay attention to the installing direction of the snap ring.

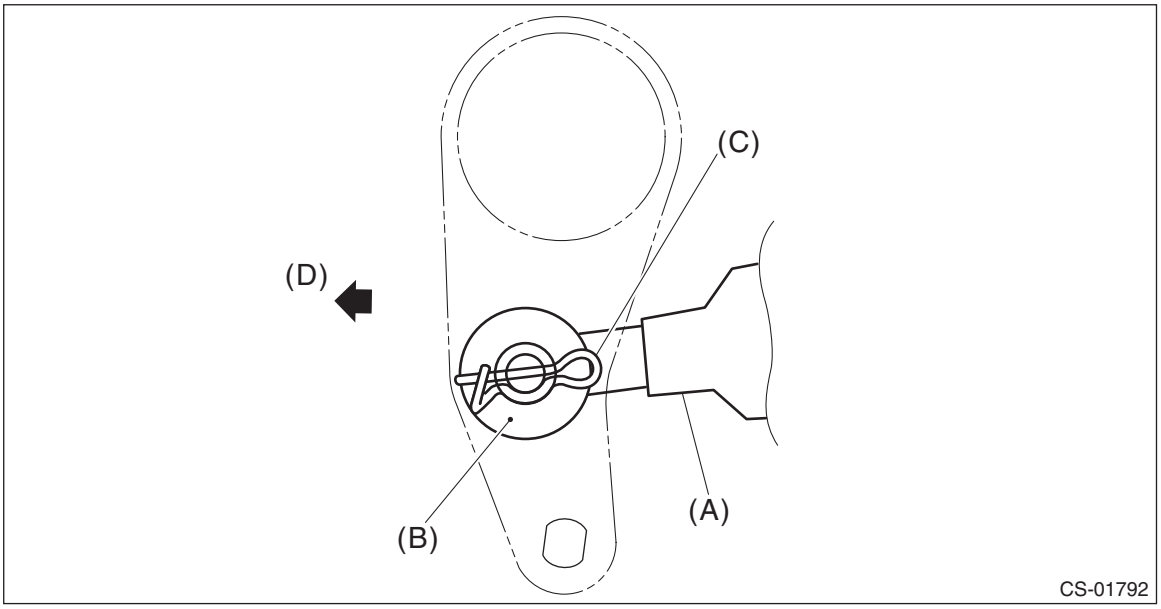

(A) Reverse check cable
(B) Washer
(C) Snap pin
(D) Front side

5) Make sure the hole of extension case is aligned with that of reverse check lever. If the hole positions are not aligned, adjust the reverse check cable. <Ref. to CS-119, ADJUSTMENT, Reverse Check Cable.>

NOTE:
• Check that the M3 bolt goes through the hole of reverse check lever and can be inserted into the hole of extension case.
• When checking visually, confirm that the gap of hole positions is 0.5 mm (0.02 in) or less.

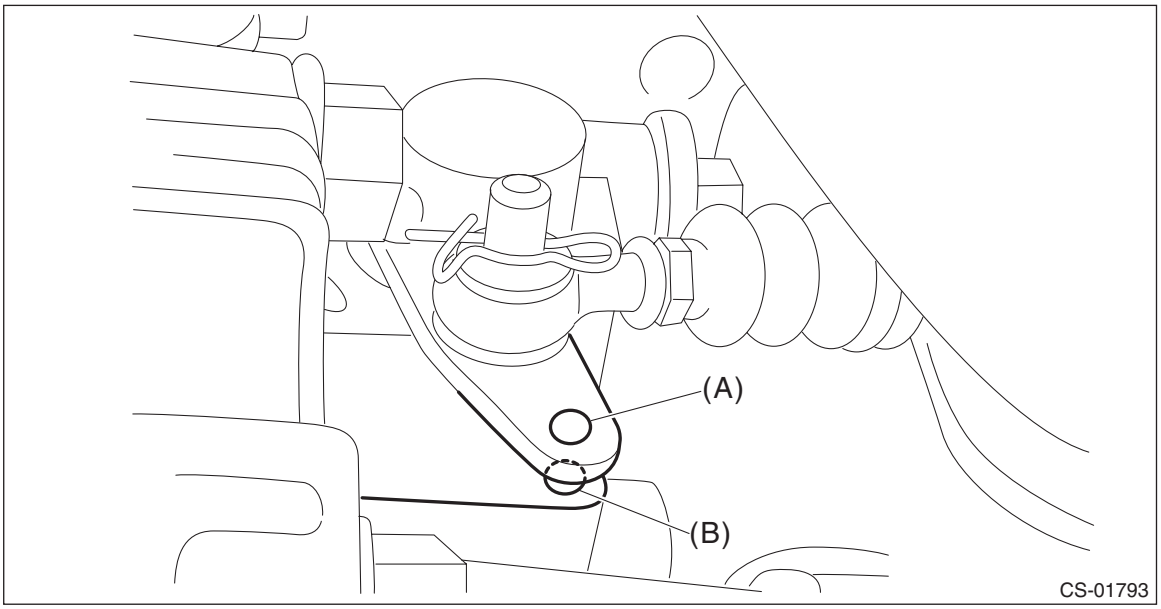

(A) Hole of reverse check lever (B) Hole of extension case

6) Install the crossmember. <Ref. to 6MT(TY85)-30, INSTALLATION, Transmission Mounting System.>
7) Install the center exhaust cover.
8) Install the center exhaust pipe (rear). <Ref. to EX(STI)-8, INSTALLATION, Center Exhaust Pipe.>
9) Install the plate COMPL.

NOTE:
Be careful not to twist the inner boot when installing.

Tightening torque:
18 N·m (1.8 kgf-m, 13.3 ft-lb)
(1) Set the plate COMPL to the vehicle.
(2) Temporarily tighten the bolt (A).
(3) Tighten the bolt (B).
(4) Tighten the bolt (A).

(5) Tighten the bolts (C) and (D).

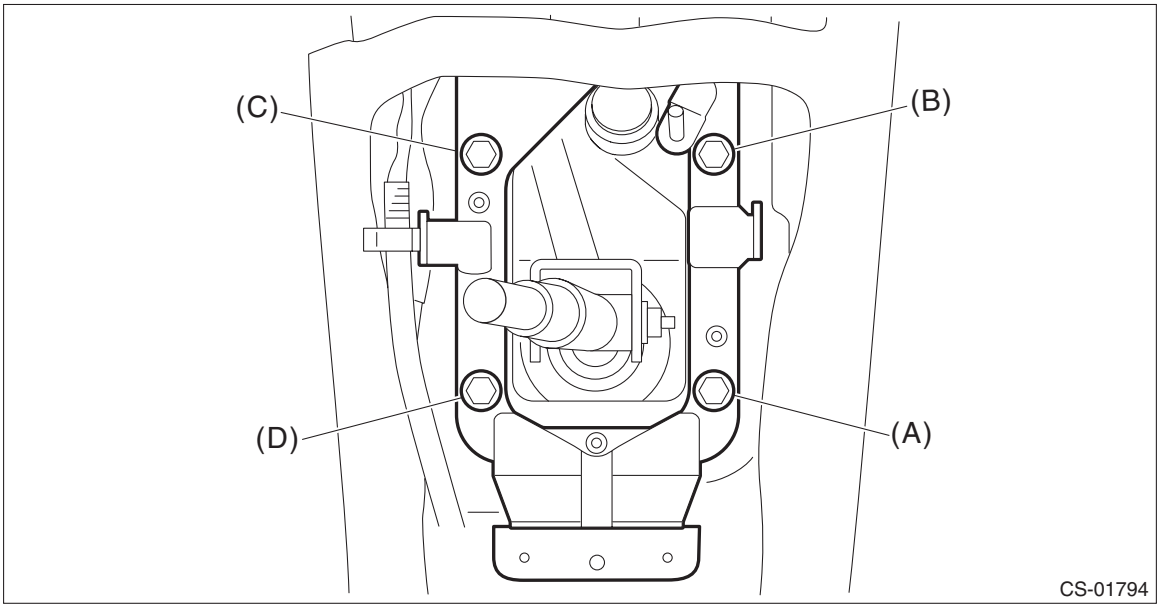

10) Install the harness clamp to the plate COMPL.
11) Install the boot and insulator assembly, and secure with a clamp.
12) Install the panel center LWR LH and RH. <Ref. to EI-71, INSTALLATION, Console Box.>
13) Install the cover - shift lever. <Ref. to EI-71, INSTALLATION, Console Box.>
14) Install the console box assembly. <Ref. to EI-71, INSTALLATION, Console Box.>
15) Install the gear shift knob by turning it clockwise.

CAUTION:
Do not turn the gear shift knob excessively to prevent it from being damaged.
16) Make sure the gears can be shifted accurately into each gear.
17) Connect the battery ground terminal. <Ref. to NT-6, BATTERY, NOTE, Note.>

2. EXCEPT FOR STI MODEL

1) Install the gear shift lever assembly.

Tightening torque:
18 N·m (1.8 kgf-m, 13.3 ft-lb)

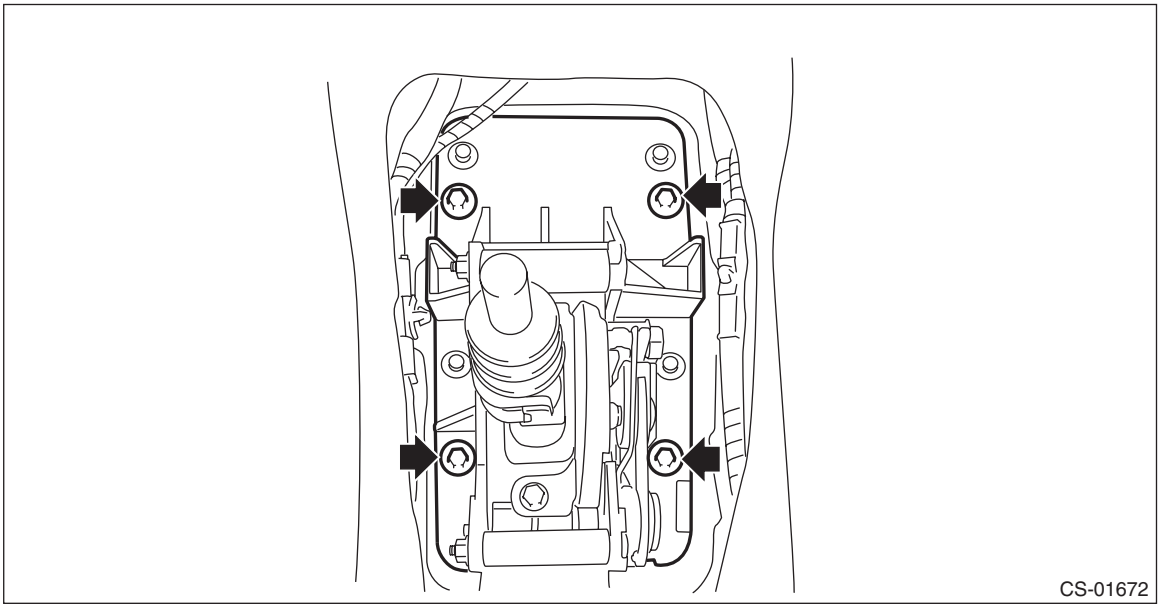

2) Install the harness clamp.
3) Lift up the vehicle.
4) Install the cable cover assembly.

Tightening torque:
7.5 N·m (0.8 kgf-m, 5.5 ft-lb)
5) Connect the MT gear shift cable and MT gear select cable.

CAUTION:
Be careful not to deform the cable inner.

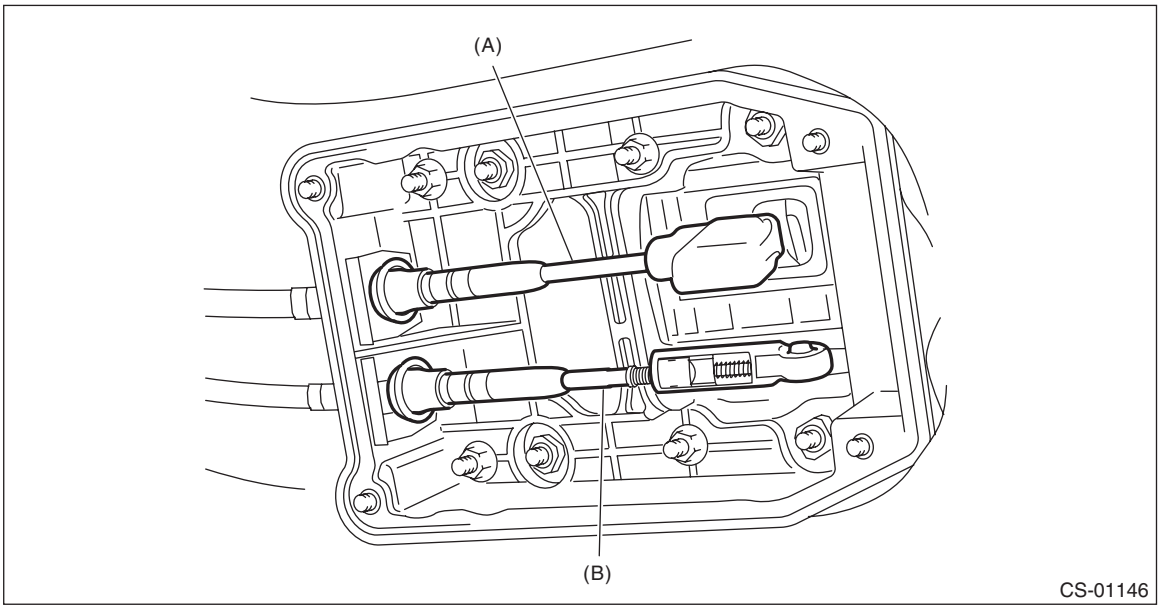

(A) MT gear shift cable (B) MT gear select cable

6) Attach the cable cover plate.

Tightening torque:
7.5 N·m (0.8 kgf-m, 5.5 ft-lb)
7) Install the center exhaust cover.

Tightening torque:
18 N·m (1.8 kgf-m, 13.3 ft-lb)
8) Install the center exhaust pipe (rear). <Ref. to EX(w/o STI)-37, INSTALLATION, Center Exhaust Pipe.>
9) Lower the vehicle.
10) Install the panel center LWR LH and RH. <Ref. to EI-71, INSTALLATION, Console Box.>
11) Install the cover - shift lever, and install the gear shift knob. <Ref. to EI-71, INSTALLATION, Console Box.>
12) Install the console box assembly. <Ref. to EI-71, INSTALLATION, Console Box.>
13) Make sure the gears can be shifted accurately into each gear. Adjust the MT gear select lever, if the gears cannot be shifted correctly. <Ref. to CS-104, ADJUSTMENT, MT Gear Select Cable.>
14) Connect the battery ground terminal. <Ref. to NT-6, BATTERY, NOTE, Note.>

C: DISASSEMBLY

NOTE:
Disassemble procedures are only for STI model.
1) Remove the spring pin from the slider.

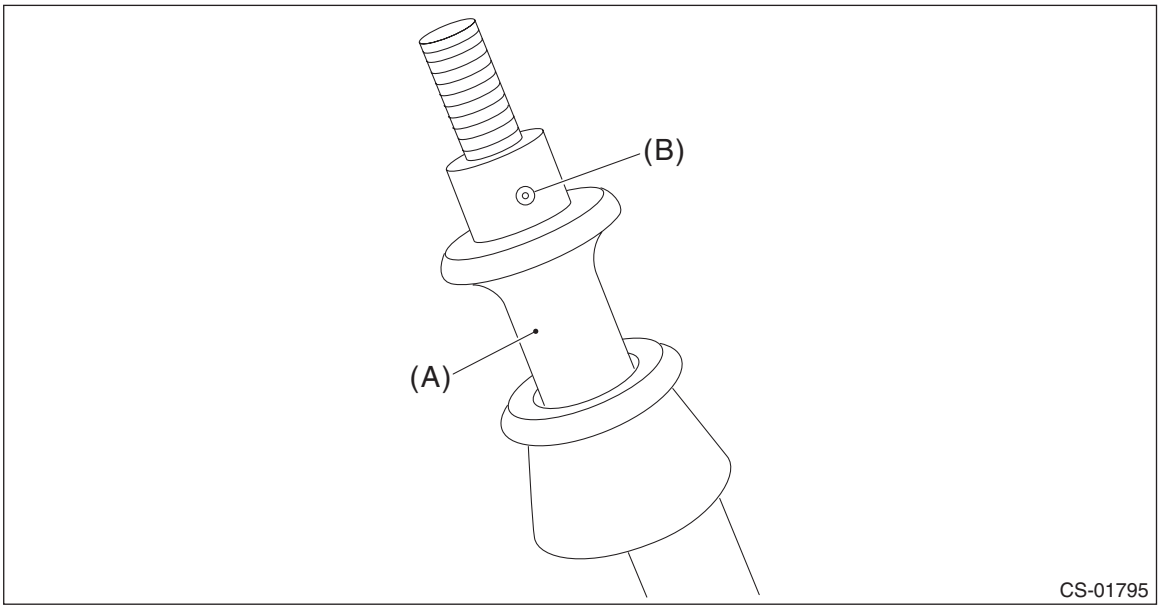

(A) Slider (B) Spring pin

2) Remove the slider and spring.

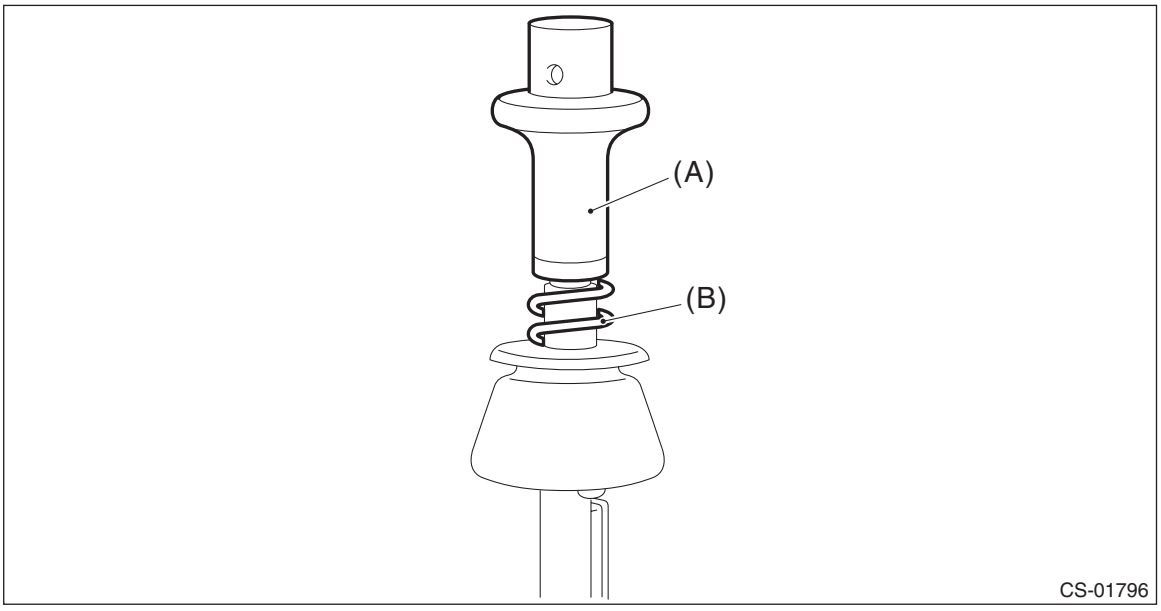

(A) Slider (B) Spring

3) Cut off the band clip.

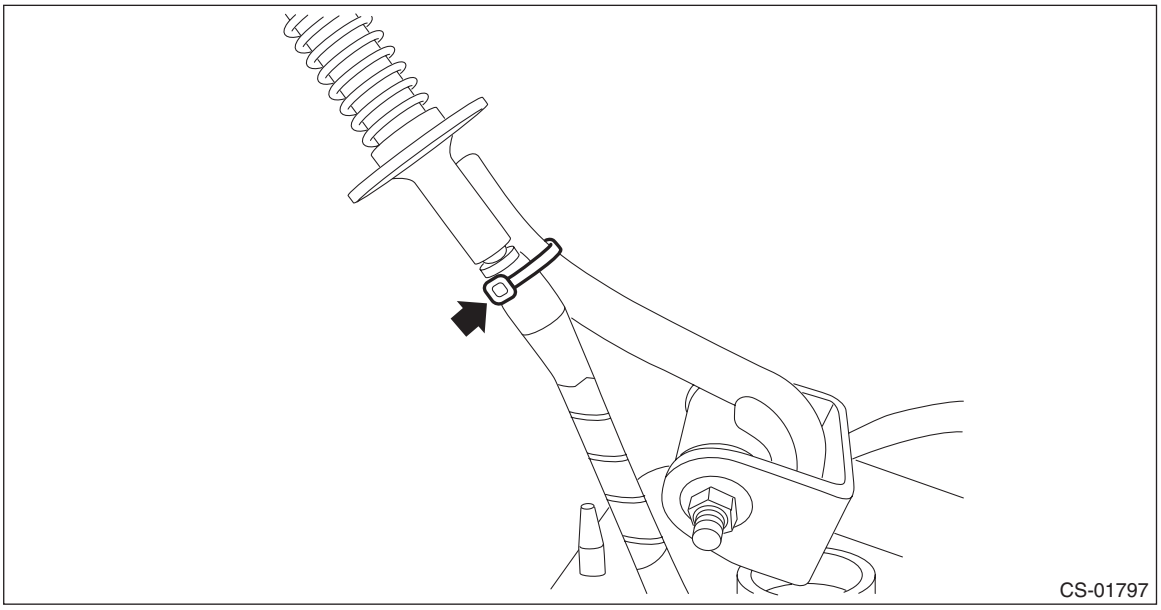

4) Remove the reverse check cable from the cable plate.

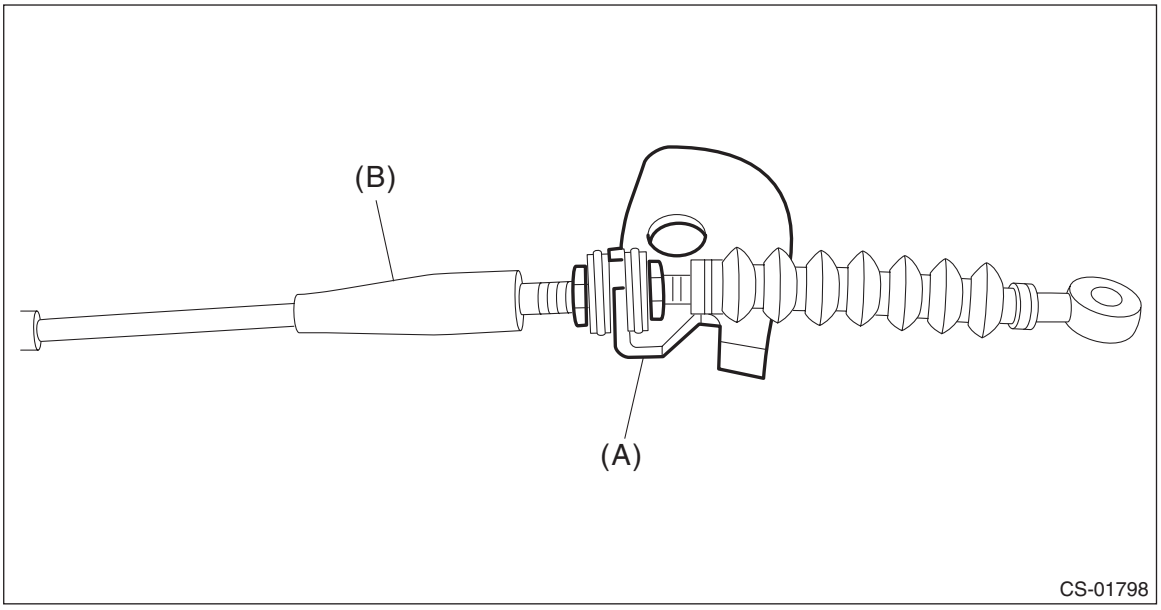

(A) Cable plate (B) Reverse check cable

5) Remove the reverse check cable.

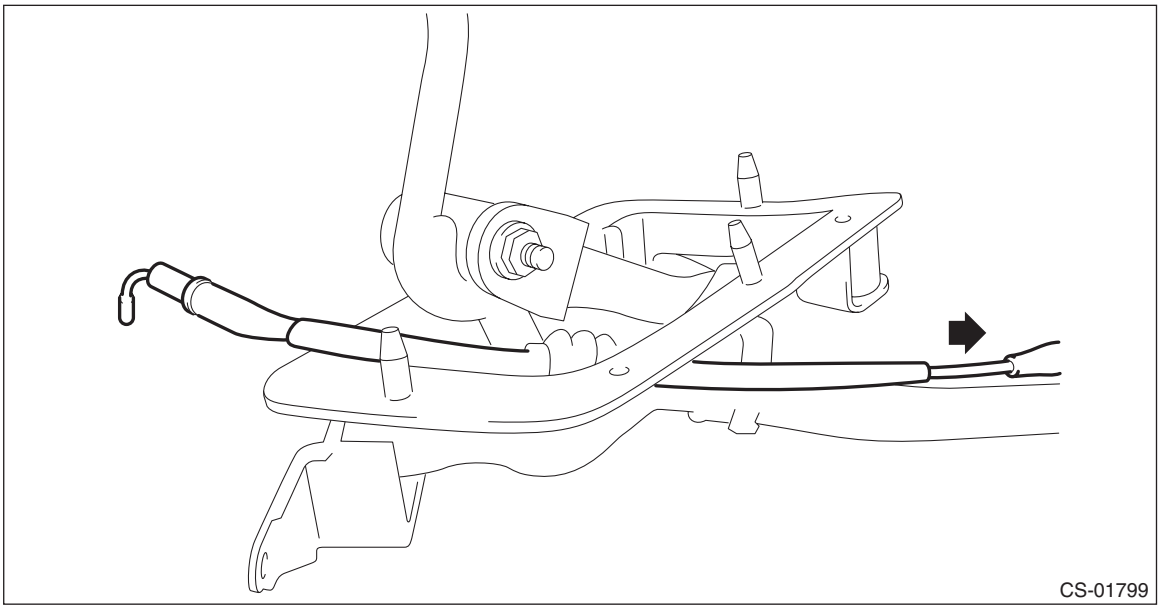

6) Remove the holder and spring.

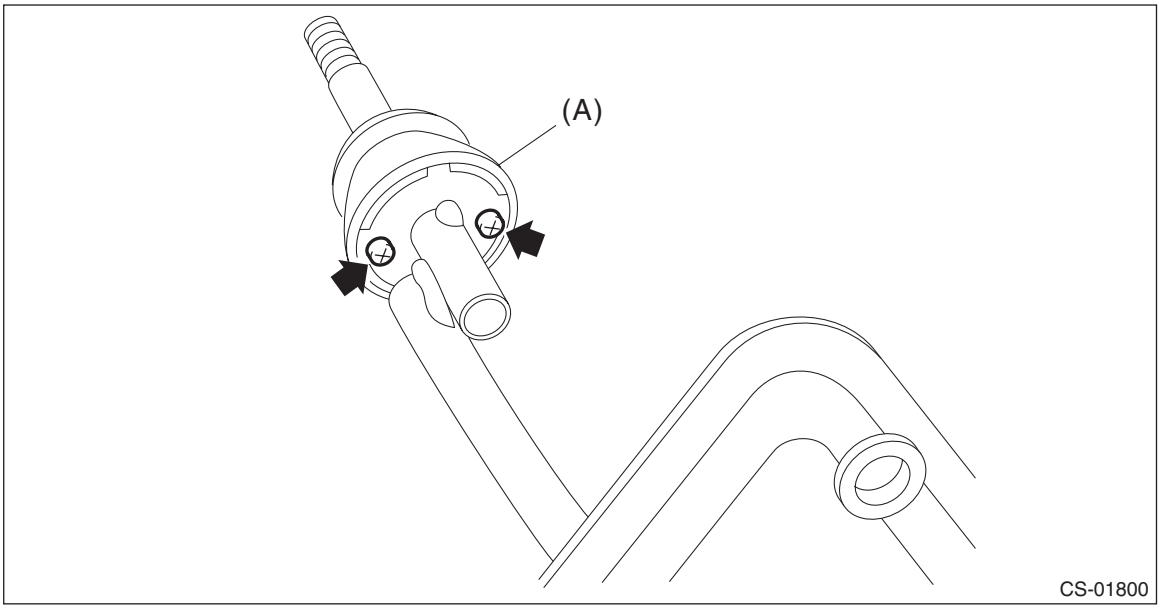

(A) Holder

7) Disassemble the lock wire.

NOTE:
Do not reuse the lock wire.

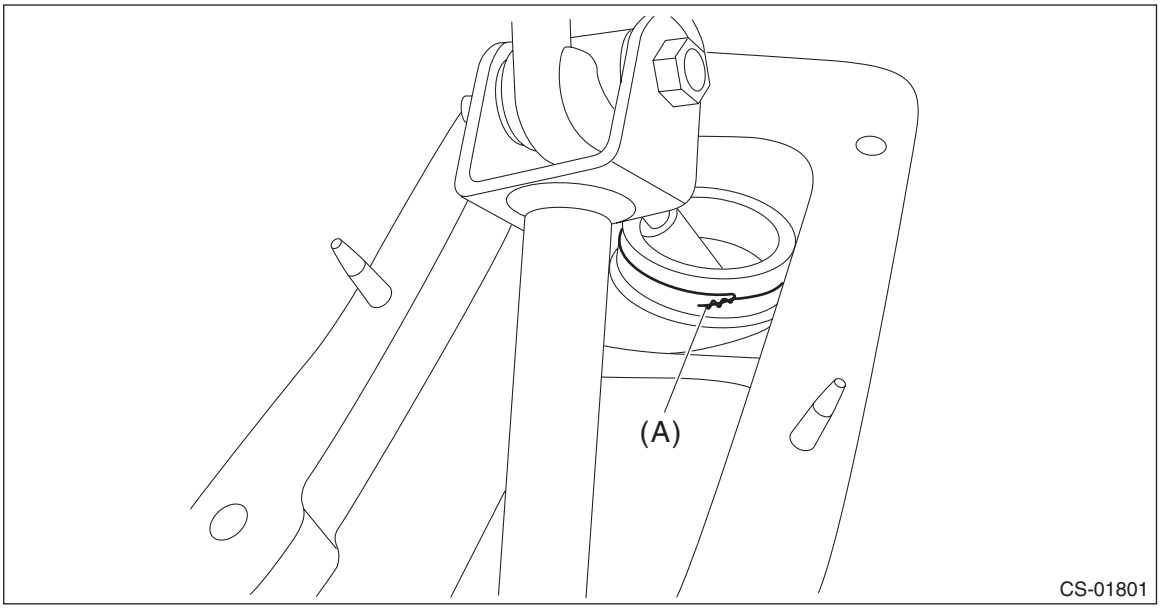

(A) Lock wire

8) Remove the boss from the rod.

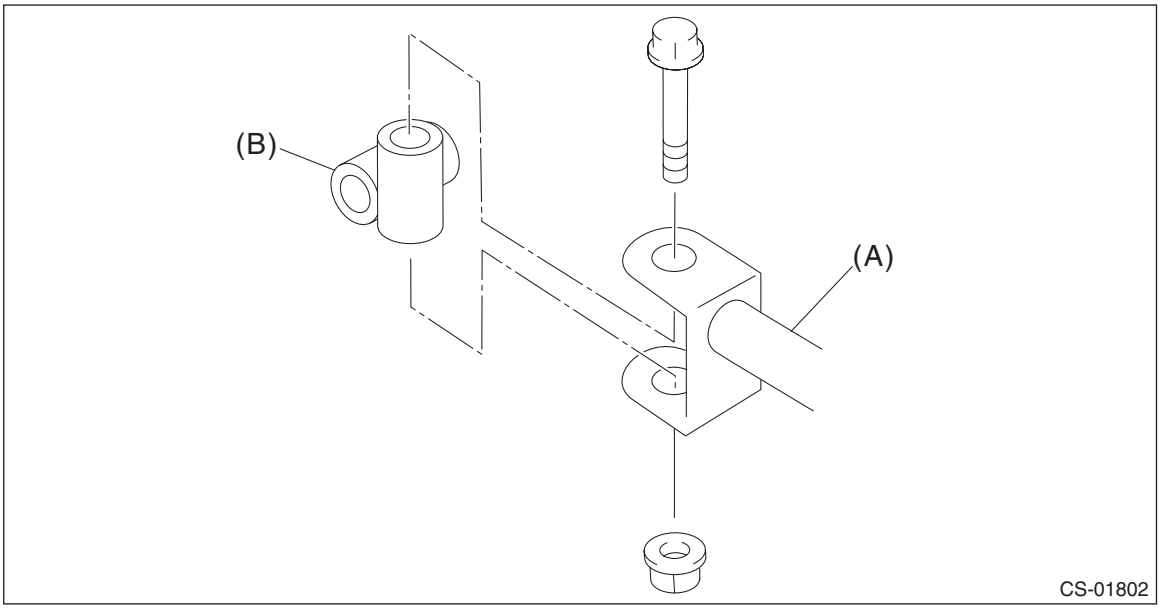

(A) Rod (B) Boss

9) Remove the rod from lever.

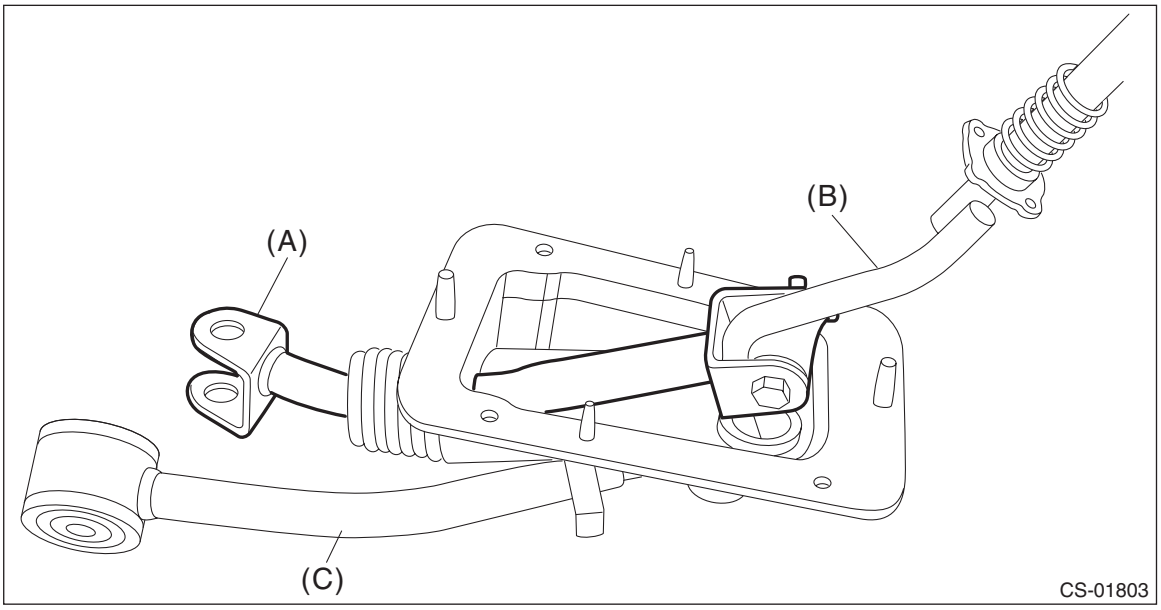

(A) Rod (B) Lever (C) Stay

10) Separate the rod and inner boot.
11) Remove the snap ring.

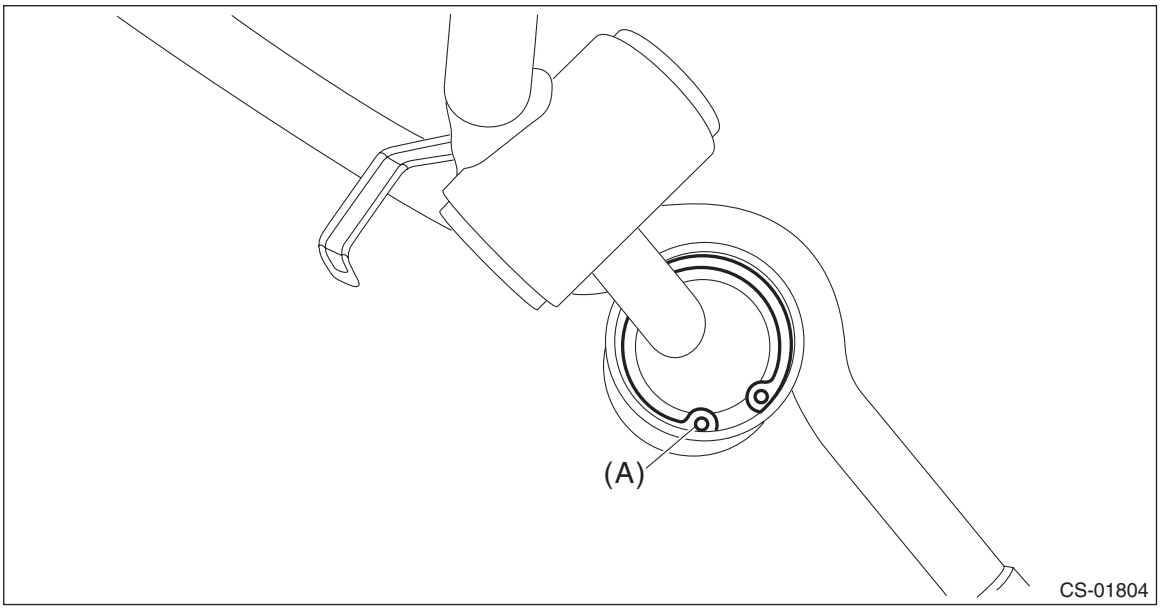

(A) Snap ring

12) Separate the gear shift lever and the stay.

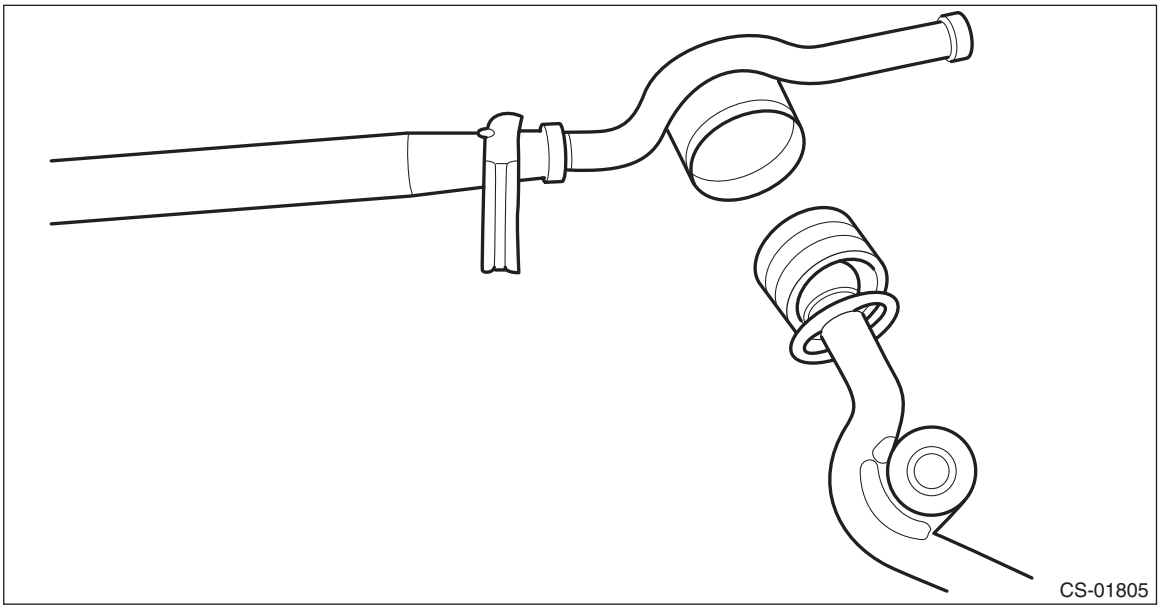

13) Remove the O-ring and bushing.

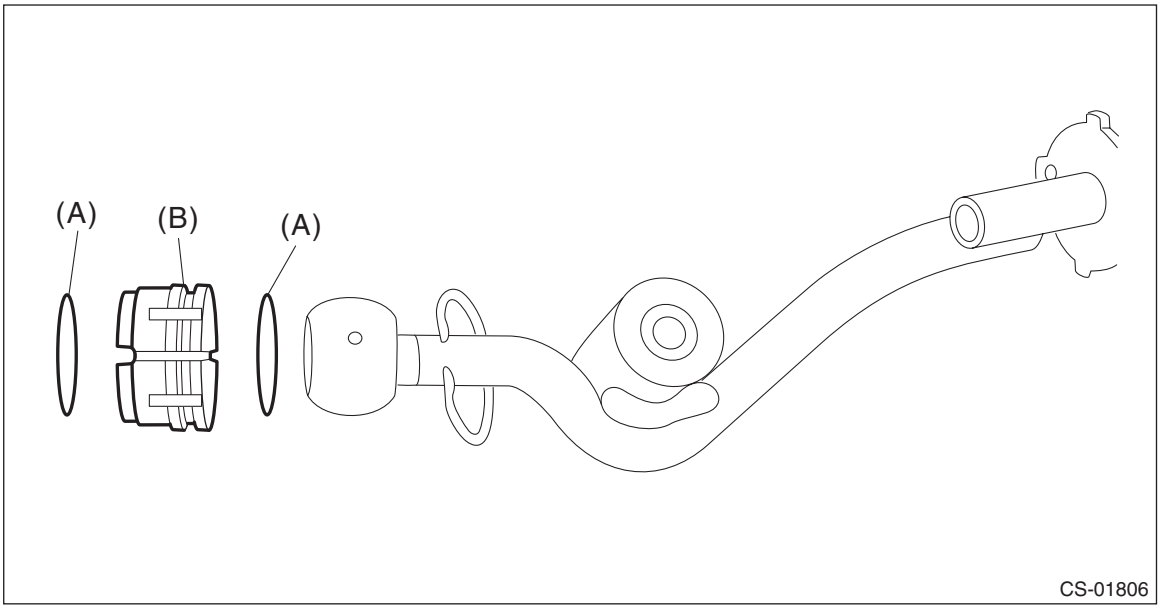

(A) O-ring (B) Bushing

14) Remove the spring pin, and then remove the bushing and snap ring.

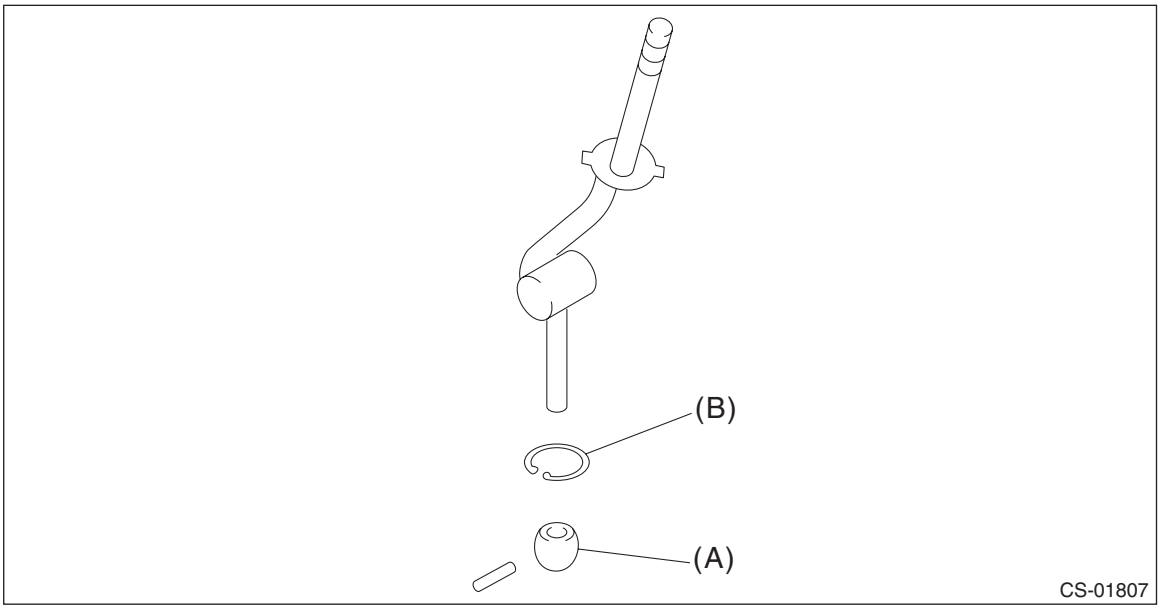

(A) Bushing (B) Snap ring

15) Remove the bushing and spacer from the boss.

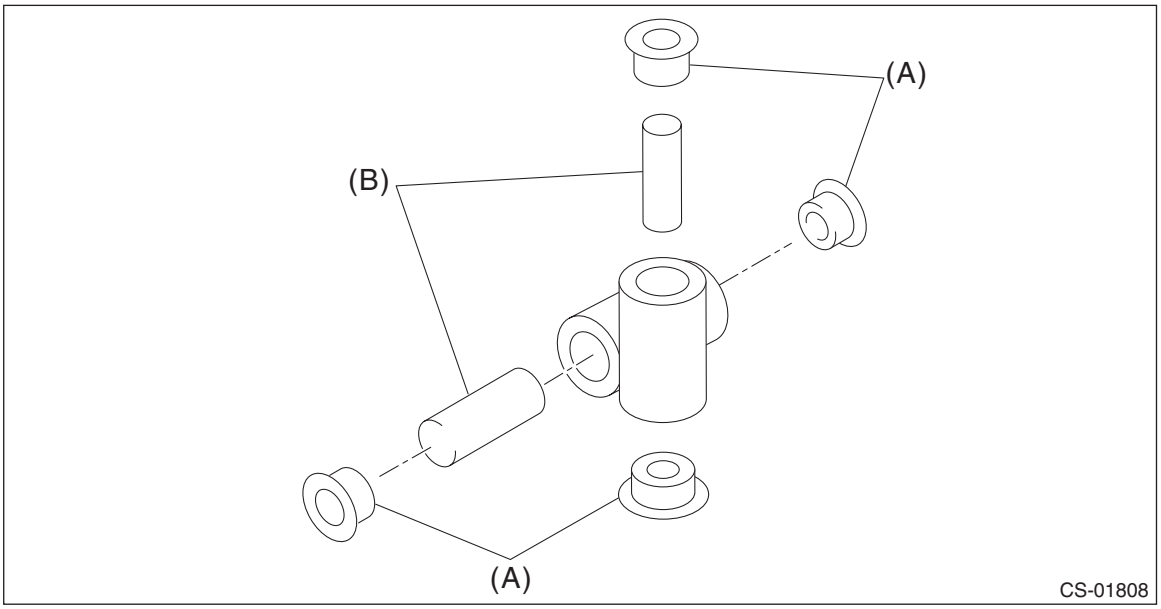

(A) Bushing (B) Spacer

16) Remove the bushing and cushion rubber from the stay.

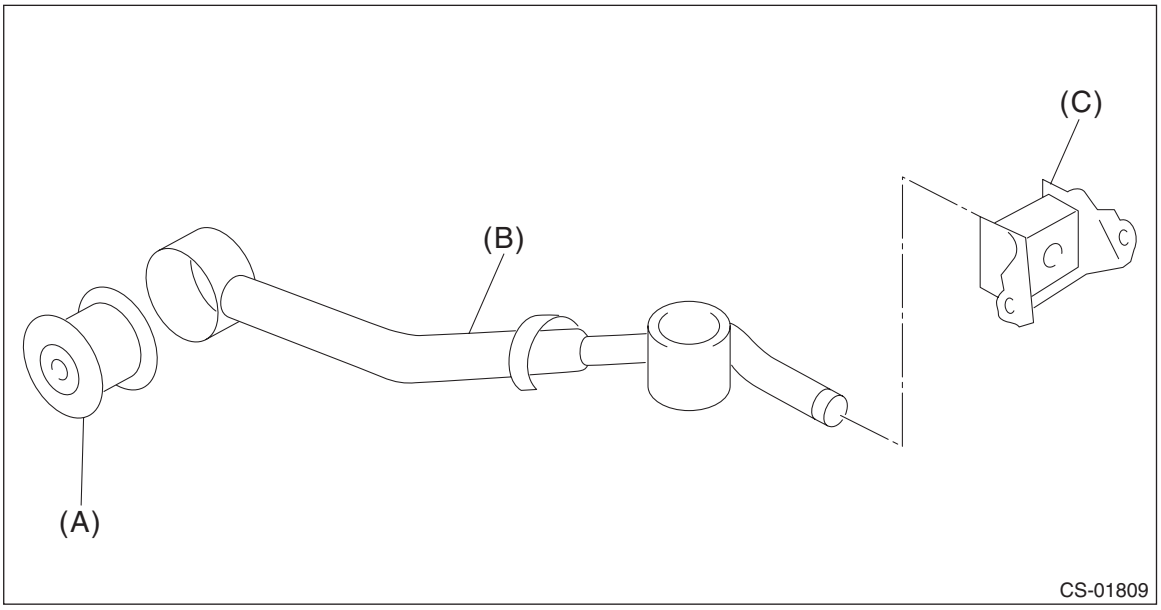

(A) Bushing (B) Stay (C) Cushion rubber

D: ASSEMBLY

NOTE:
- Clean all the parts before assembly.
- Apply NIGTIGHT LYW No. 2 grease or equivalent to each part. <Ref. to CS-4, 6MT GEAR SHIFT LEVER (STI MODEL), COMPONENT, General Description.>

1) Mount the bushing and cushion rubber to the stay.

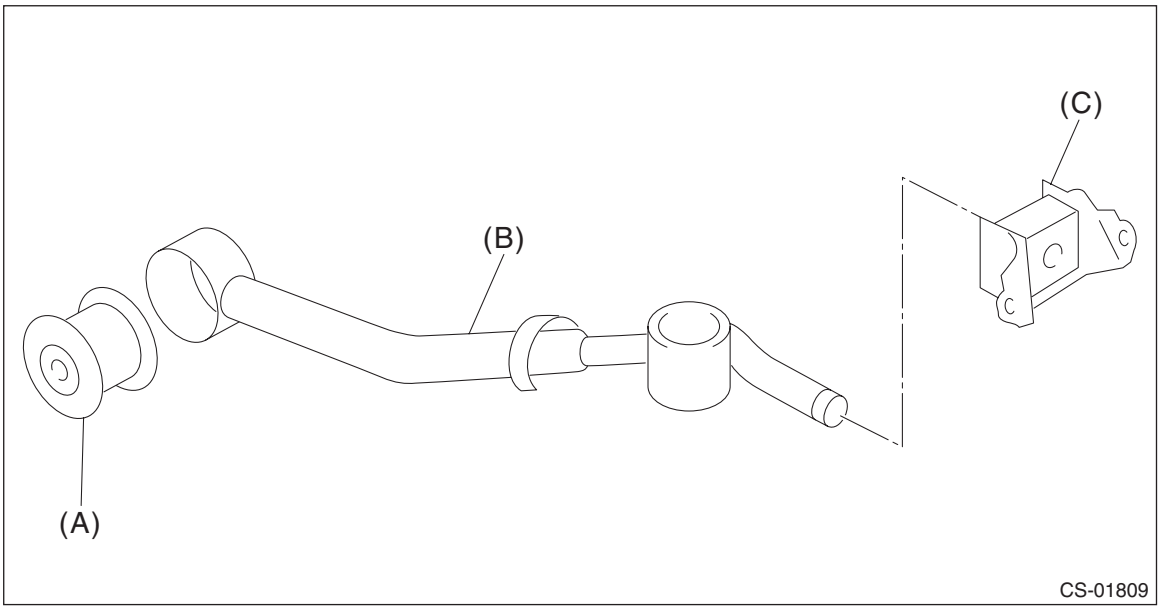

(A) Bushing (B) Stay (C) Cushion rubber

2) Install the bushing and spacer to boss.

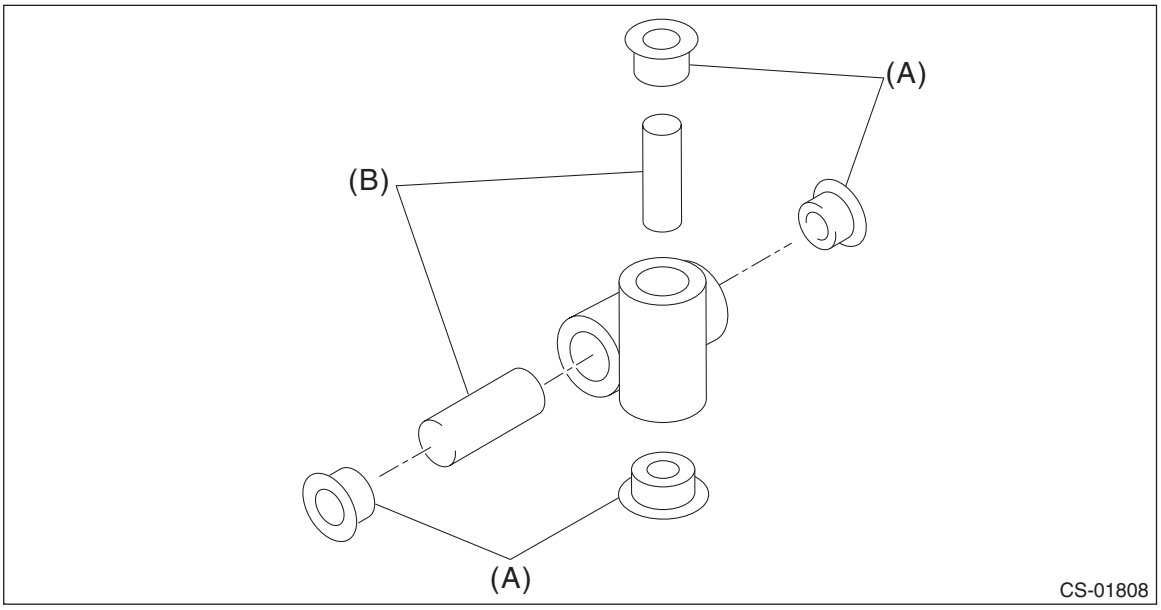

(A) Bushing (B) Spacer

3) Install the snap ring and install the bushing.

NOTE:
Apply grease to the bushing.

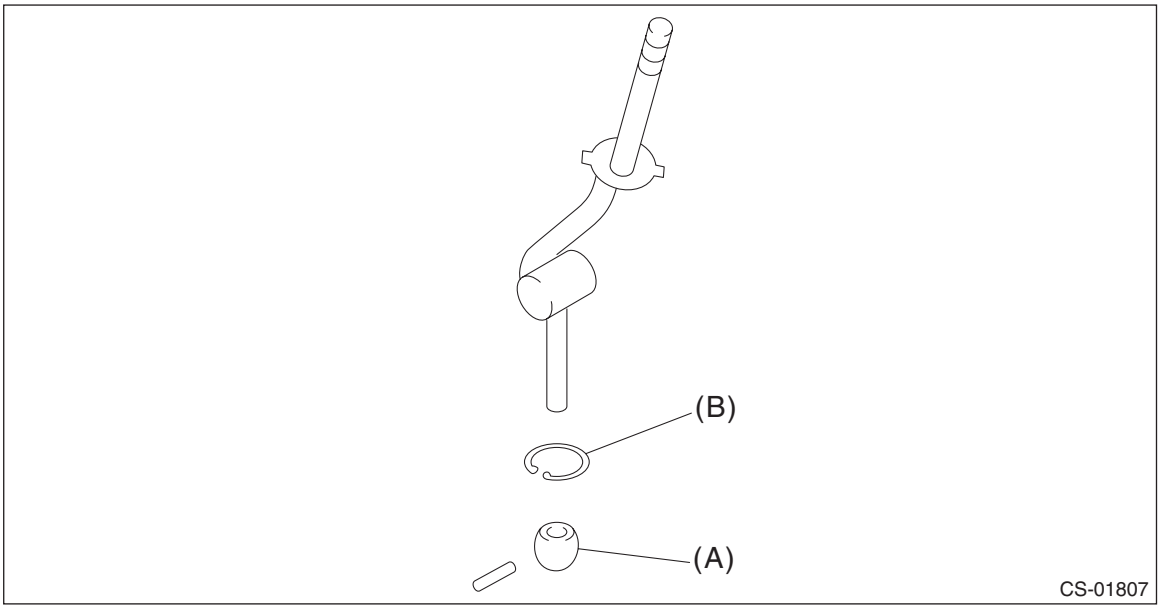

(A) Bushing (B) Snap ring

4) Apply grease to the bushing and O-ring, and then install to gear shift lever.

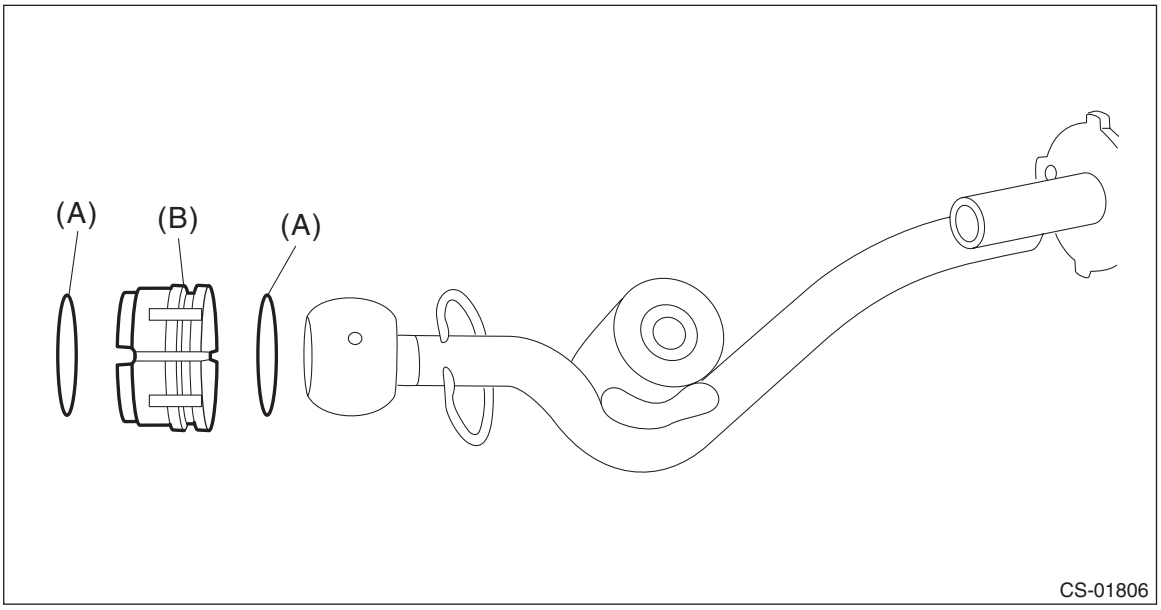

(A) O-ring (B) Bushing

5) Apply sufficient grease into boss, and then install the gear shift lever to the stay.

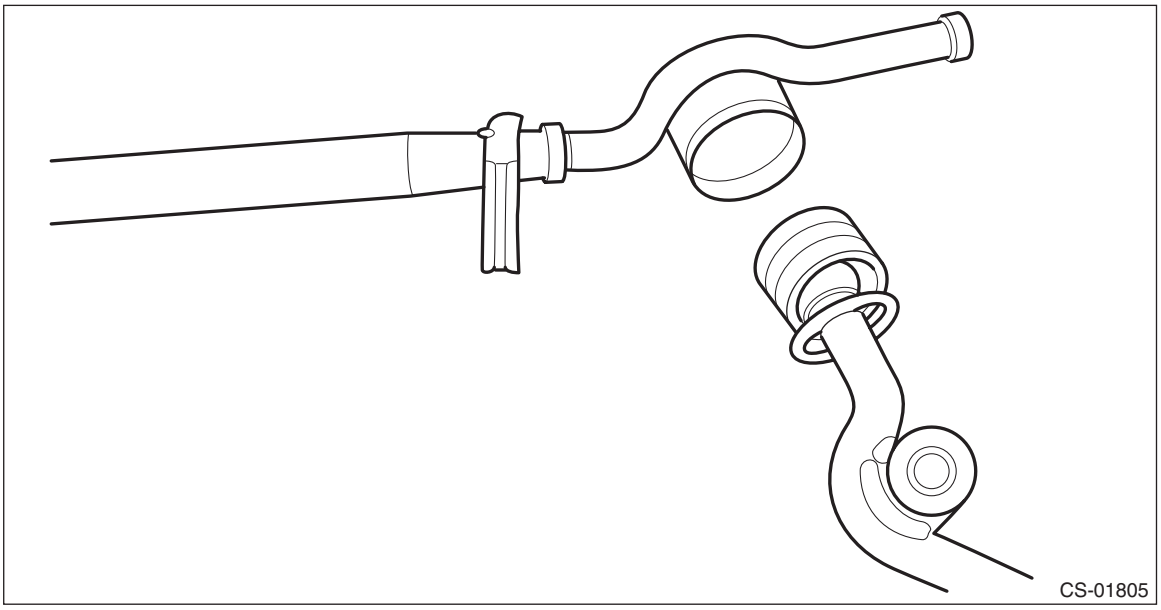

6) Install the snap ring.

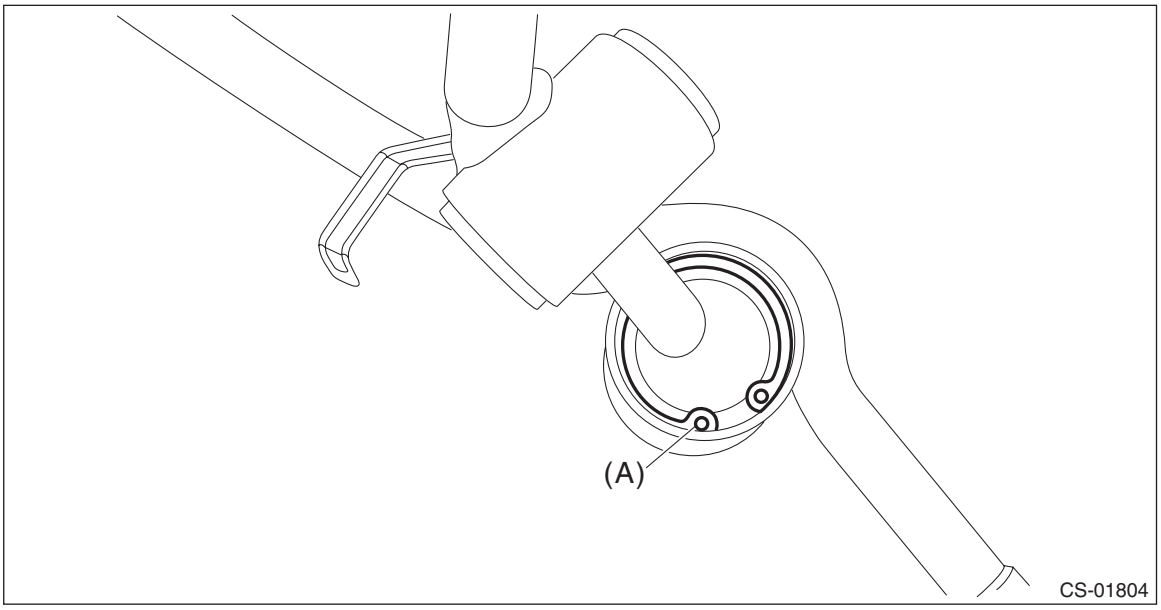

(A) Snap ring

7) Insert the gear shift lever and rod into boot hole.
8) Install the rod.

Tightening torque:
12 N·m (1.2 kgf-m, 8.9 ft-lb)

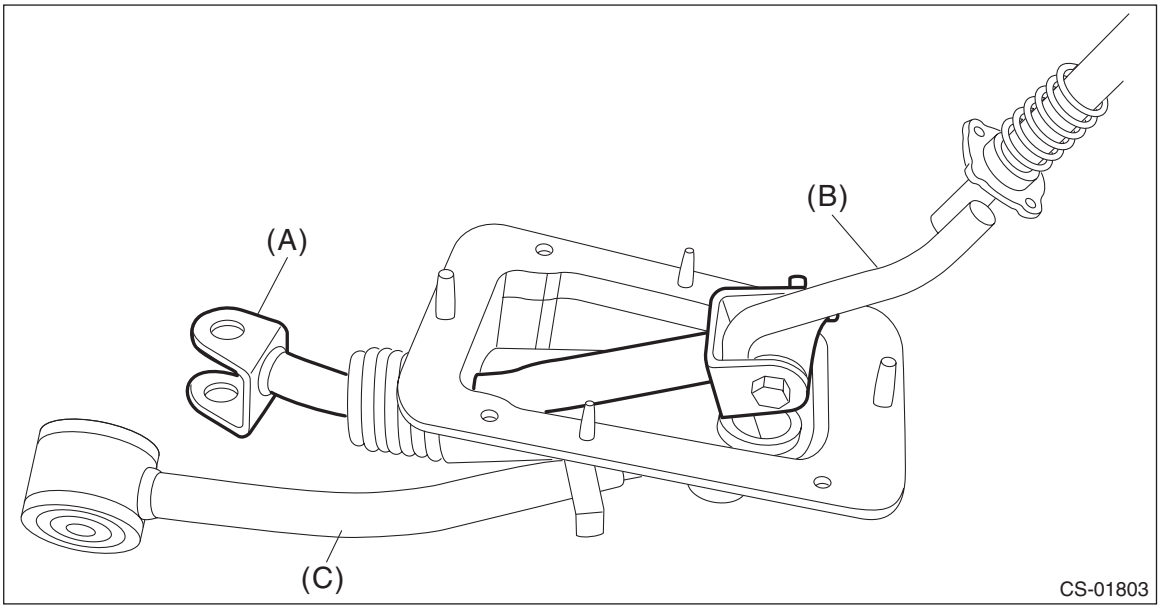

(A) Rod (B) Lever (C) Stay

9) Install the boss to the rod.

Tightening torque:
12 N·m (1.2 kgf-m, 8.9 ft-lb)

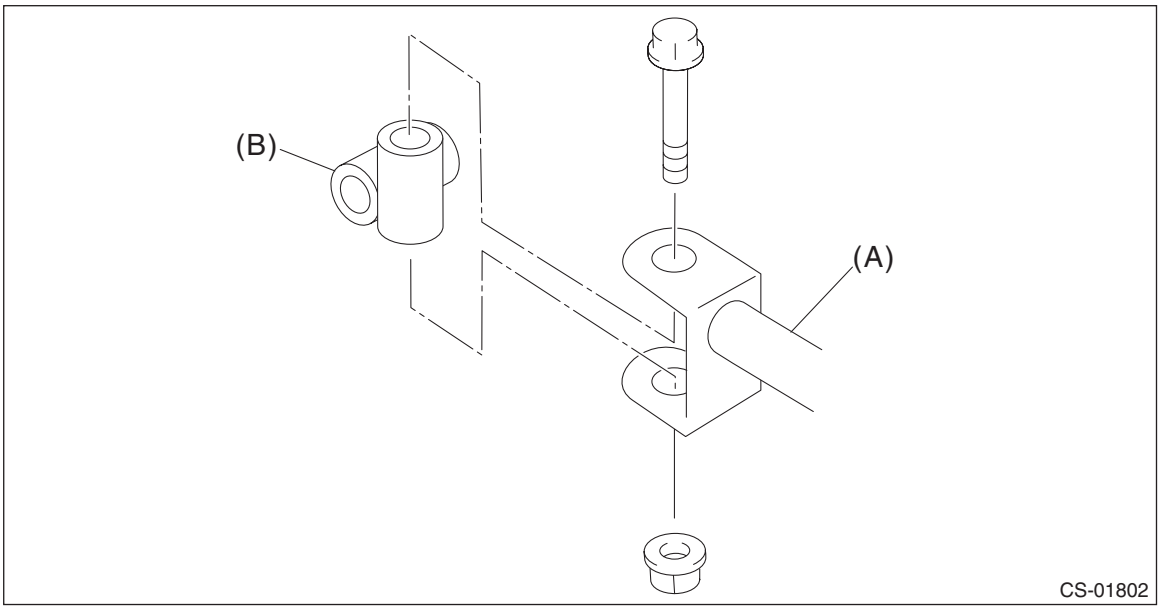

(A) Rod (B) Boss

10) Install a new lock wire.

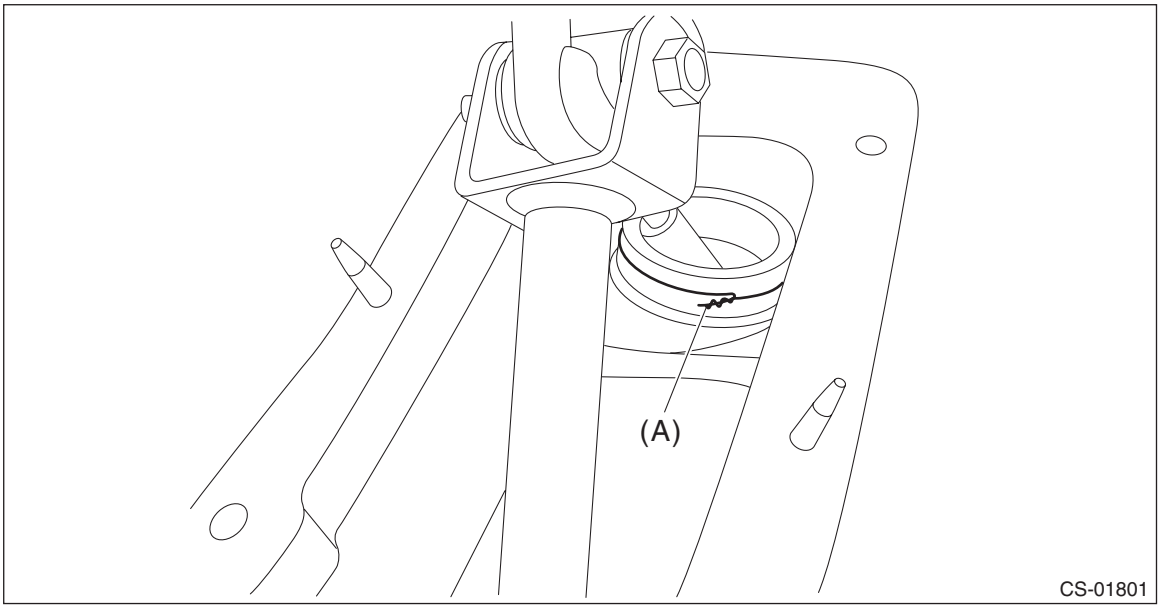

(A) Lock wire

NOTE:
- Install the lock wire to the stay groove.
- Bend the extra wire to the same direction of lock wire winding.

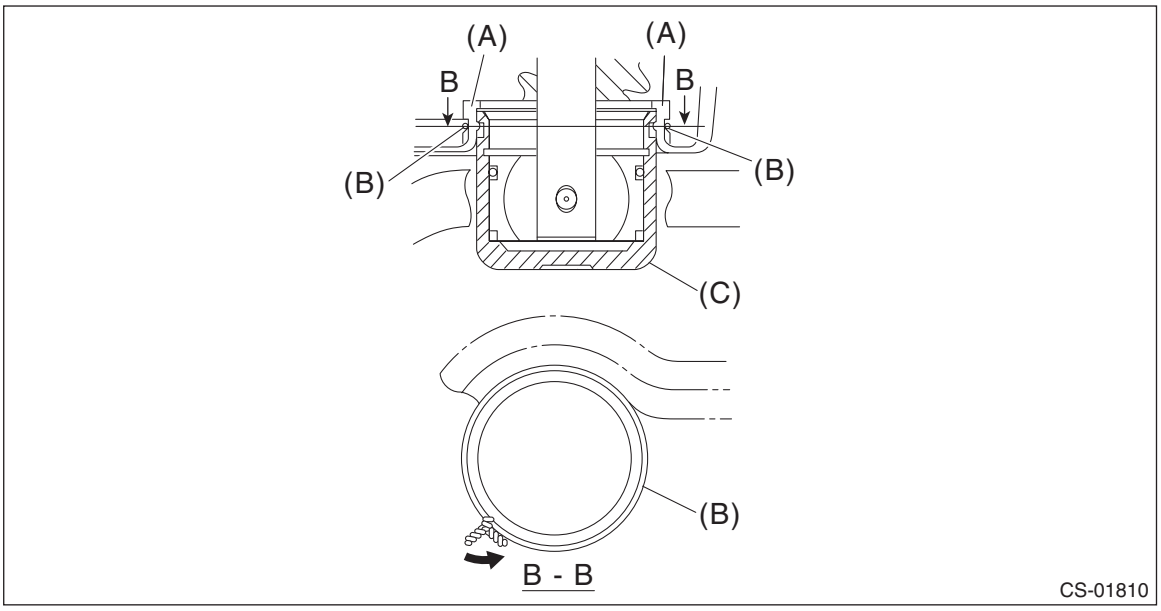

(A) Inner boot (B) Lock wire (C) Stay

11) Install the holder.

Tightening torque:
1.3 N·m (0.1 kgf-m, 1.0 ft-lb)

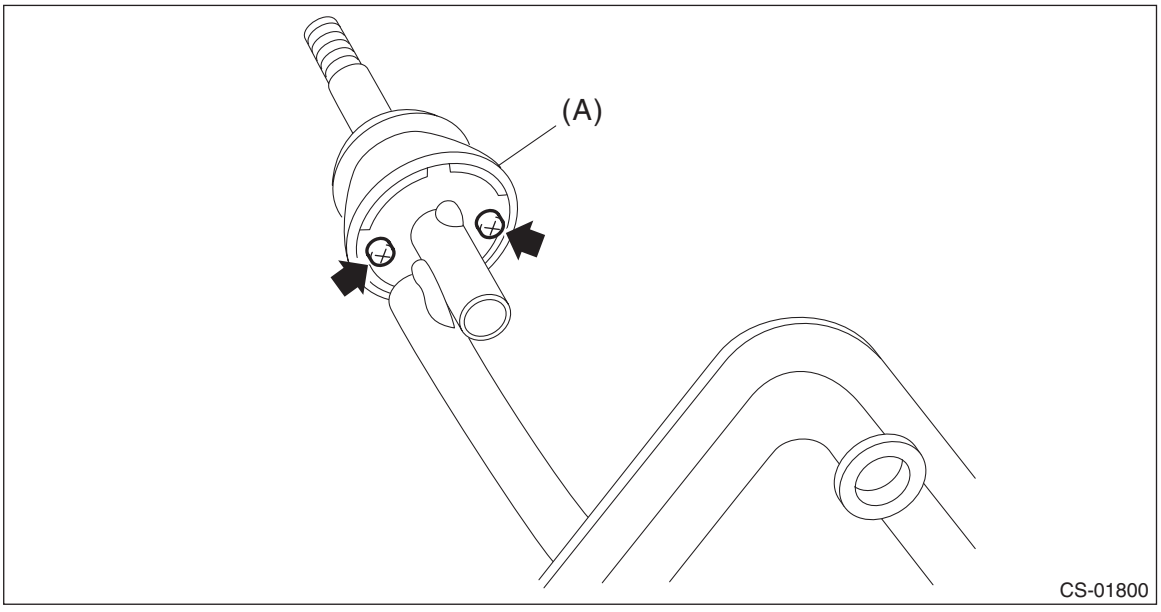

(A) Holder

12) Insert the reverse check cable into the boot hole.
13) Insert the reverse check cable into the gear shift assembly, and fix in place with a band clip.

NOTE:
- Cut the excess band clip.
- Make sure that the reverse check cable is inserted into the gearshift lever with no gaps.

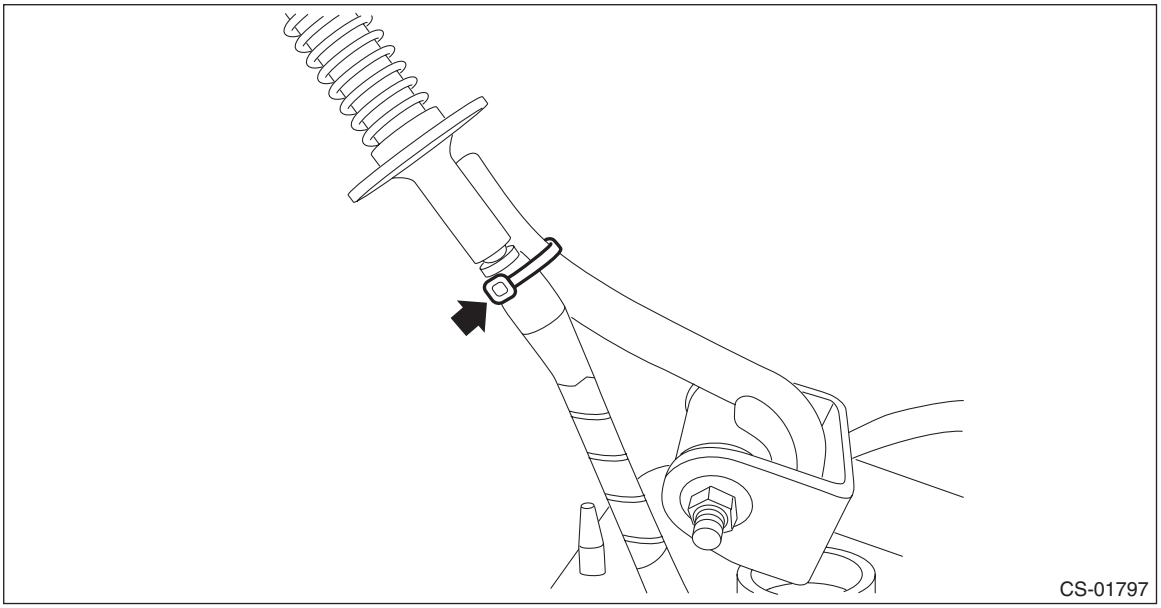

14) Install the seat cushion and spring.

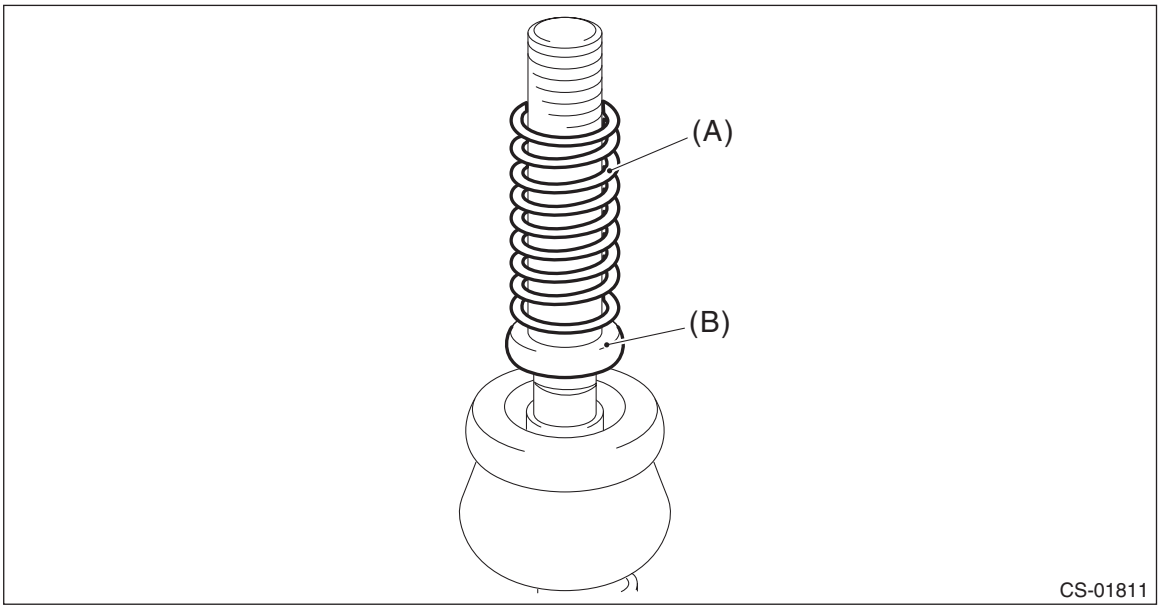

(A) Spring
(B) Seat cushion

15) Use the spring pin to secure the end of the slider and reverse check cable.

NOTE:
Apply grease to the moving part of slider.

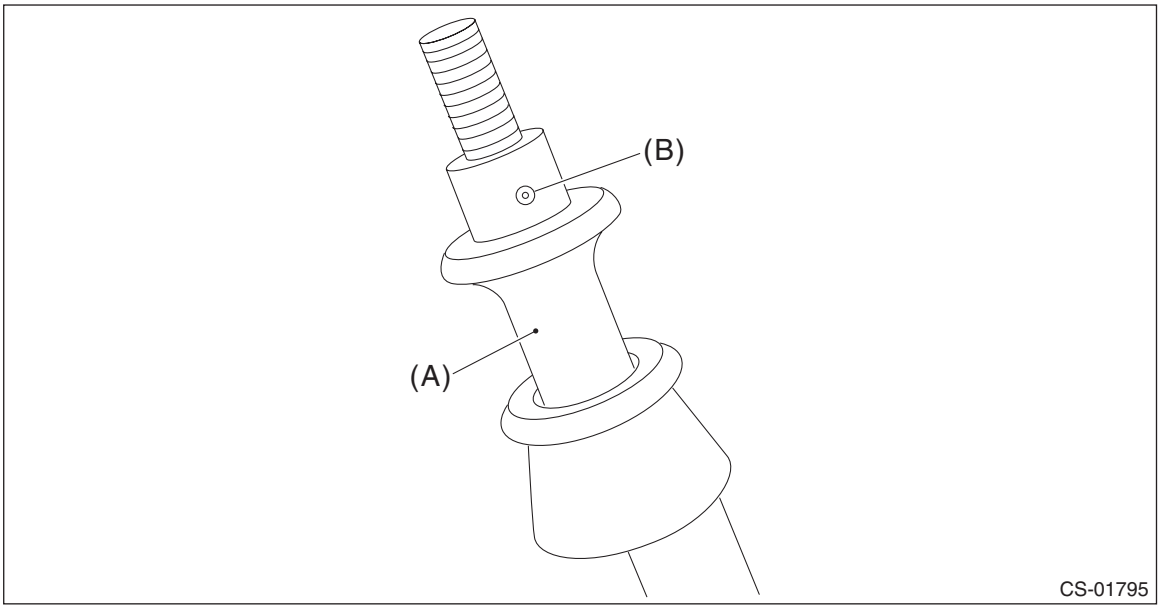

(A) Slider (B) Spring pin

16) Install the reverse check cable to the cable plate, and tighten the lock nut.

Tightening torque:
6 N·m (0.6 kgf-m, 4.4 ft-lb)

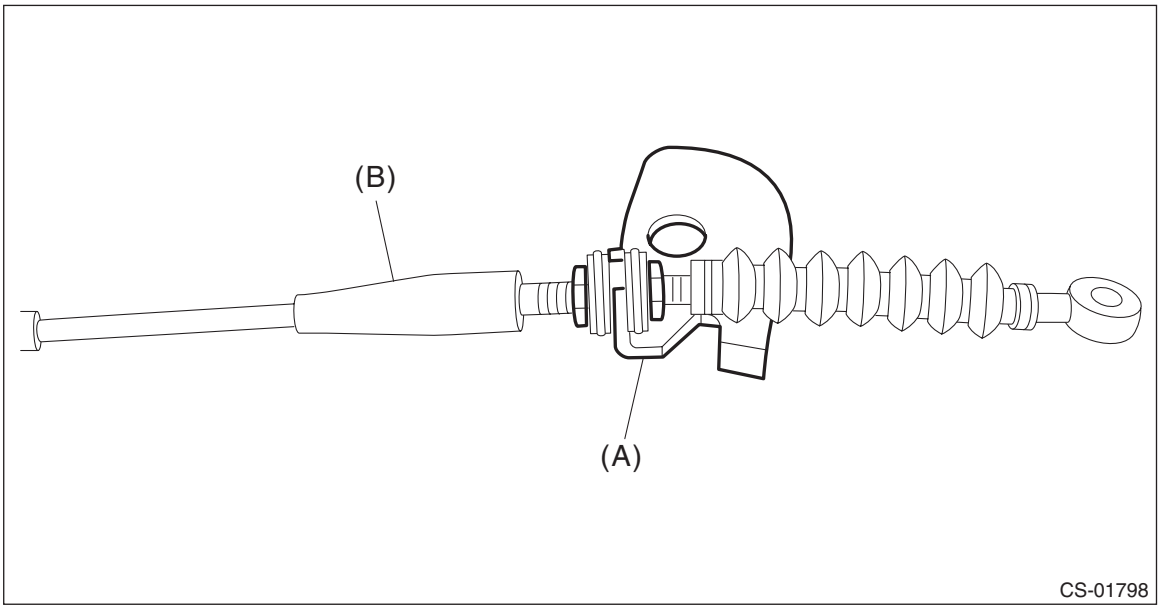

(A) Cable plate (B) Reverse check cable

17) Secure the reverse check cable to the stay clip.

NOTE:
Install the reverse check cable on top of the stay.

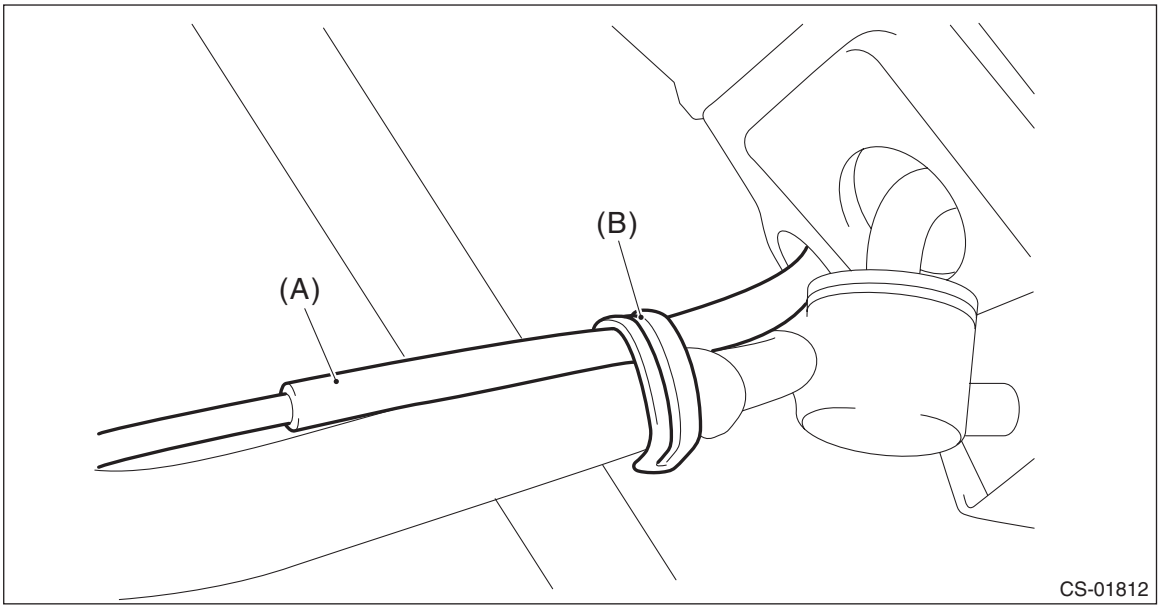

(A) Reverse check cable (B) Clip

E: INSPECTION

1. STI MODEL

1) Check the parts (bushing, cushion rubber, spacer, boot, stay and rod, etc.) for deformation, damage and wear. If necessary, correct or replace faulty parts. Compare the removed parts with new parts to judge if there are damages or not.

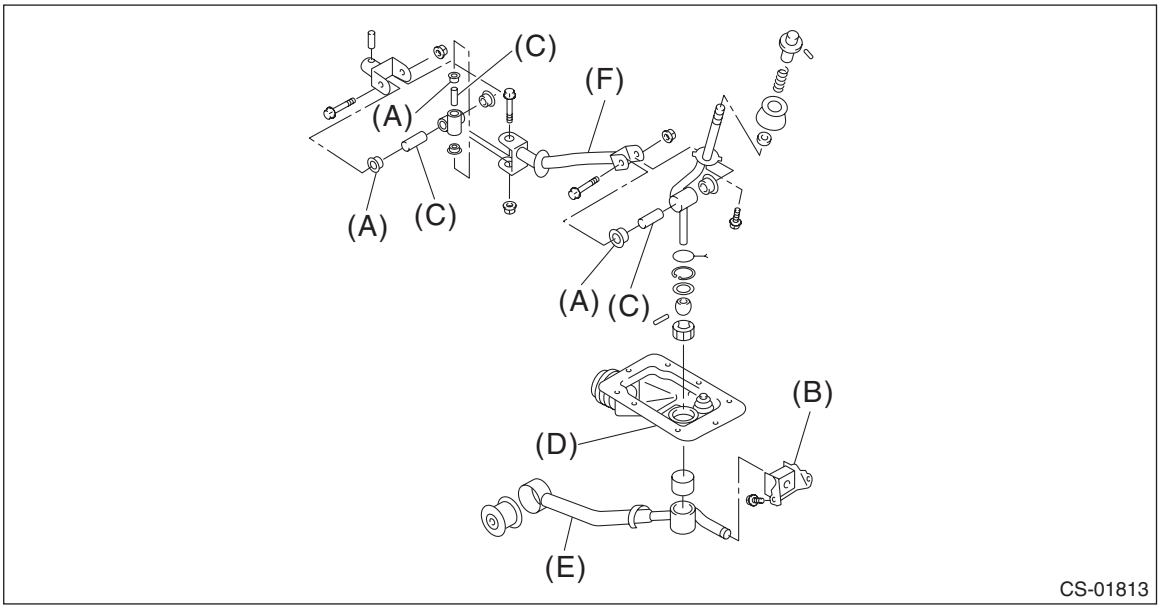

(A) Bushing (C) Spacer (E) Stay
(B) Cushion rubber (D) Boot (F) Rod

2) Check the swing torque of rod linked with the gear shift lever.
If the torque exceeds the specifications, replace the bushing or retighten nuts.

Swing torque:
3.7 N (0.38 kgf, 0.83 lbf) or less

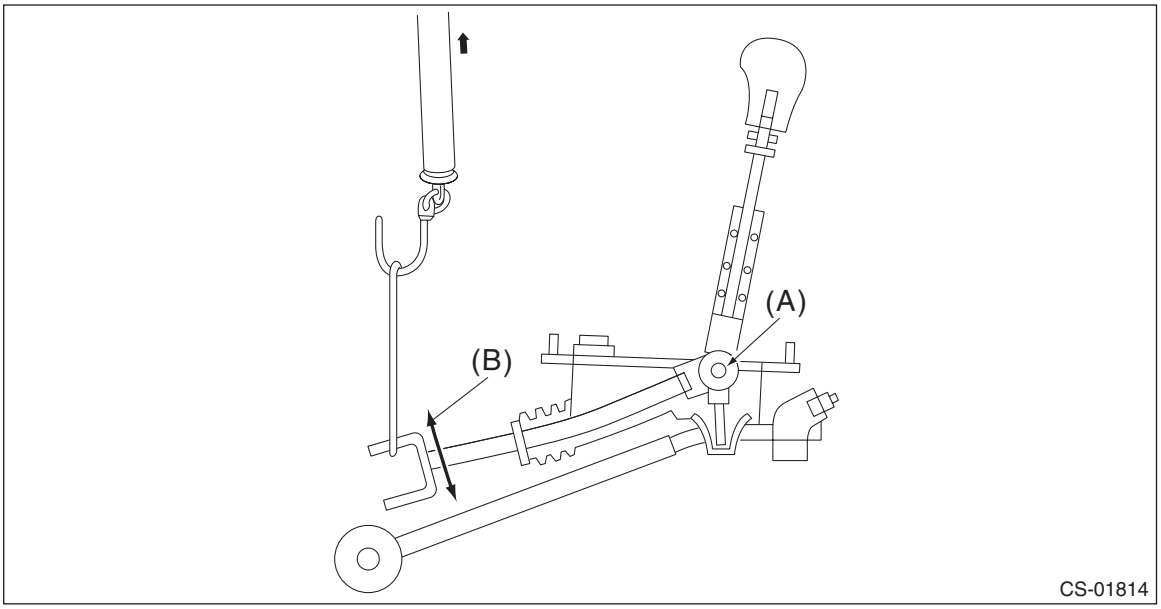

(A) Pivot (B) Swing torque

2. EXCEPT FOR STI MODEL

1) Check the parts for deformation, damage and wear. Repair or replace if necessary. Compare the removed parts with new parts to confirm if there are damages or not.
2) Check that selecting to the reverse direction is disable unless the slider is pulled up.
3) Check that selecting to the reverse direction is possible when the slider is pulled up to the full.
4) Check that the shift lever moves to initial position, when the slider backs to “N” position from step 3).

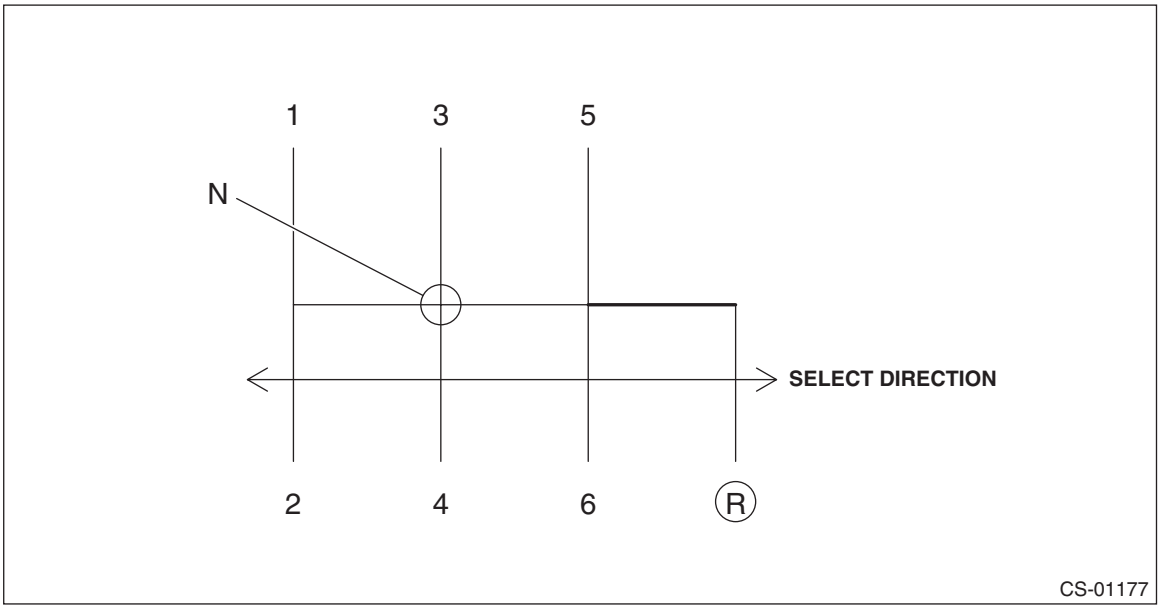

5) Move the shift lever to the neutral position, and check that the play in the select direction above the shift knob is within the reference standard. If not within the reference standard values, replace the MT gear shift lever. <Ref. to CS-59, EXCEPT FOR STI MODEL, REMOVAL, MT Gear Shift Lever.>

Play in neutral position:
Reference standard
1.5 mm (0.059 in) or less

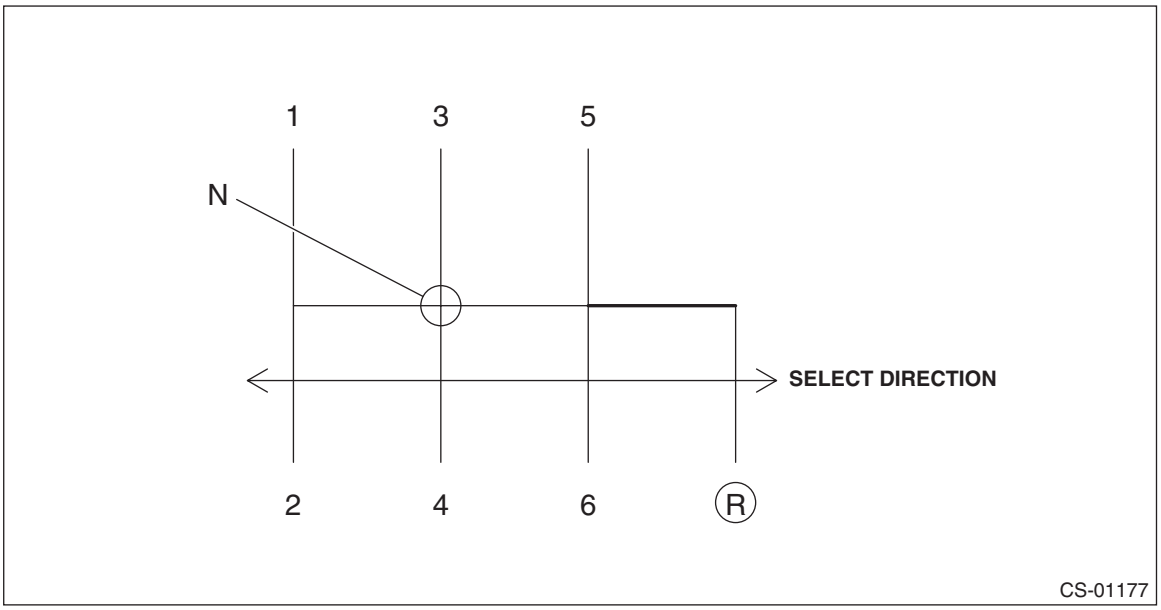

8. MT Gear Shift Cable

A: REMOVAL

1) Disconnect the ground cable from battery. <Ref. to NT-6, BATTERY, NOTE, Note.>

NOTE:
For model with battery sensor, disconnect the ground terminal from battery sensor.
2) Lift up the vehicle.
3) Remove the center exhaust pipe (rear). <Ref. to EX(w/o STI)-32, REMOVAL, Center Exhaust Pipe.>
4) Remove the center exhaust cover.

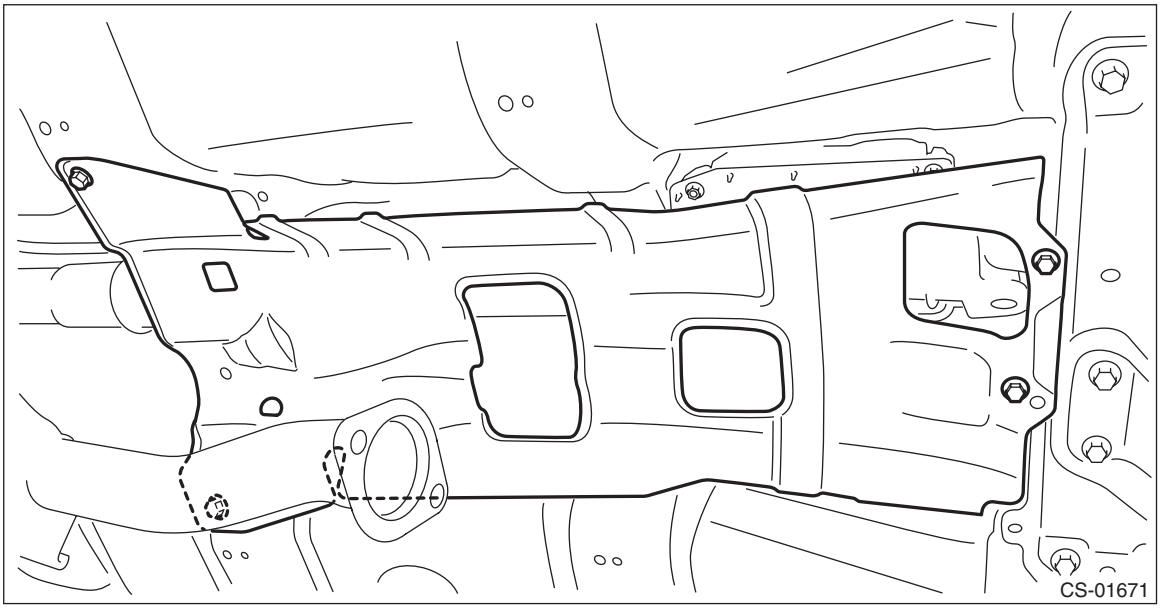

5) Remove the cable clamp.

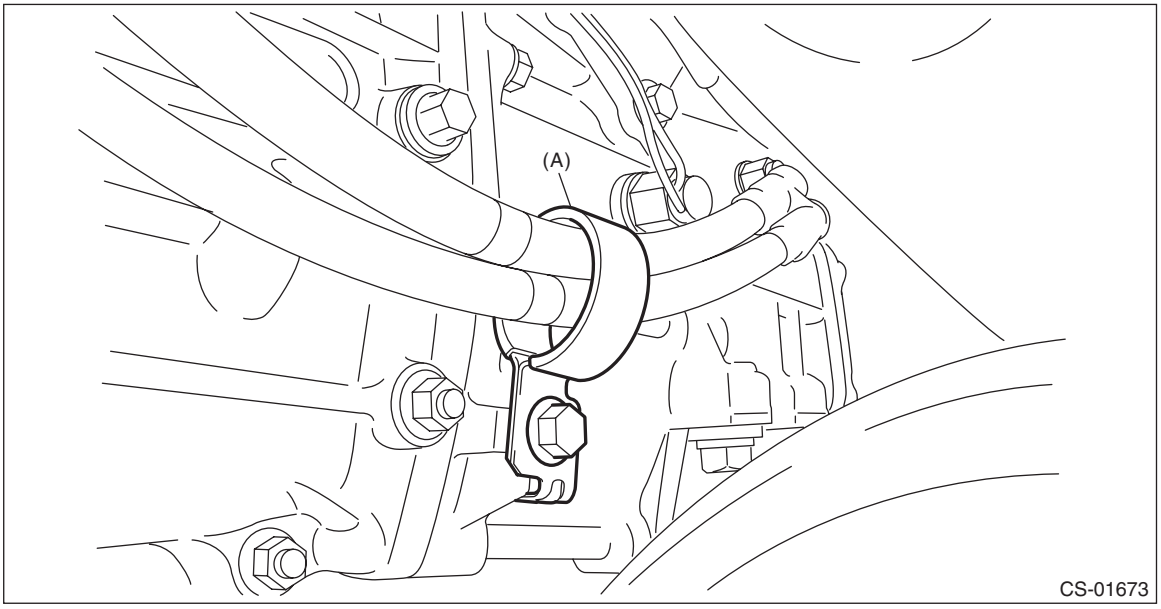

(A) Cable clamp

6) Remove the dust cover.

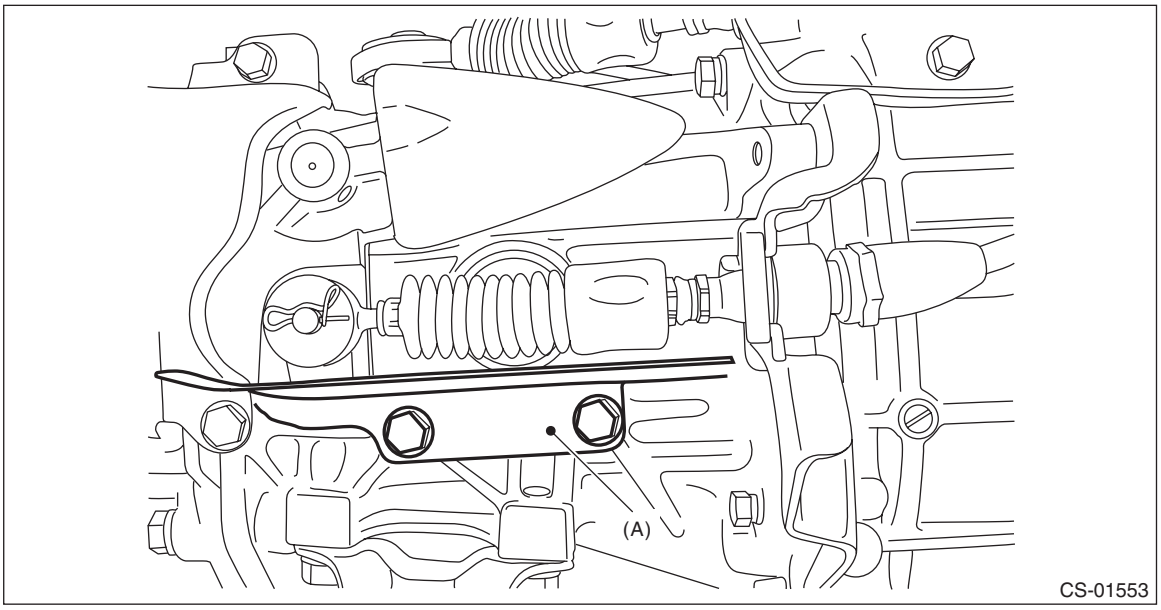

(A) Dust cover

7) Remove the snap pin and washer.

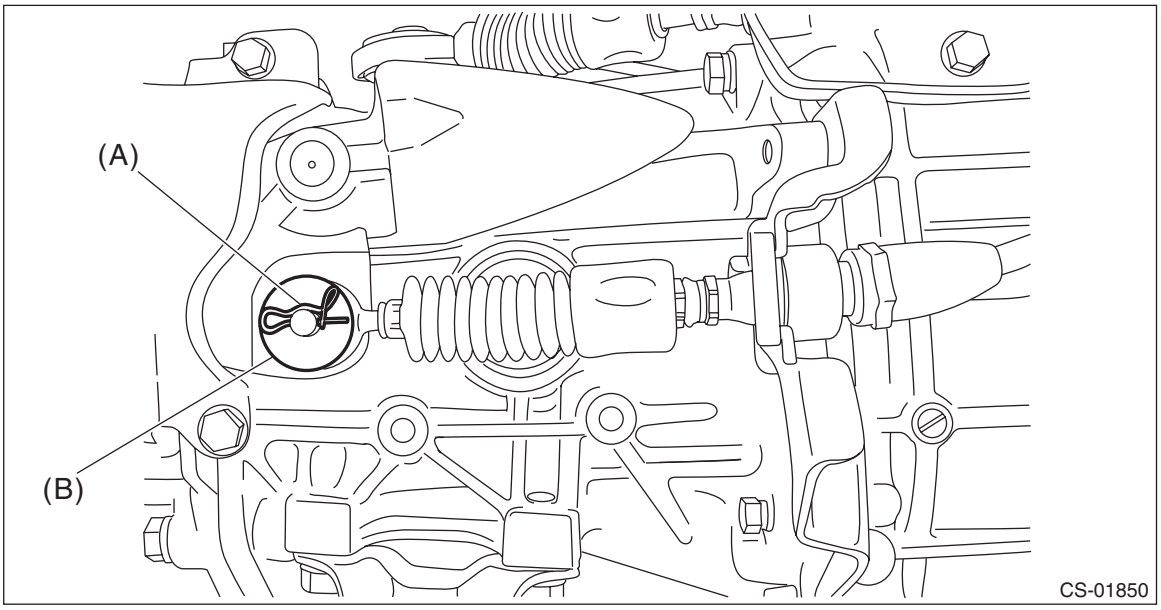

(A) Snap pin (B) Washer

8) Remove the bolts holding the shift bracket.

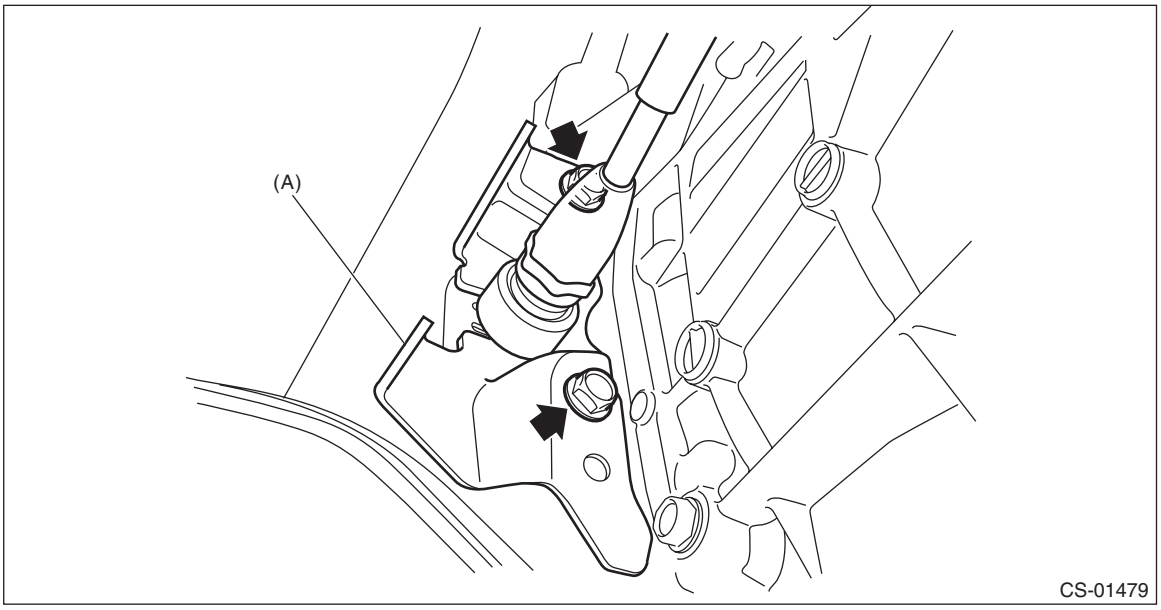

(A) Shift bracket

9) Remove the shift bracket together with the MT gear shift cable.

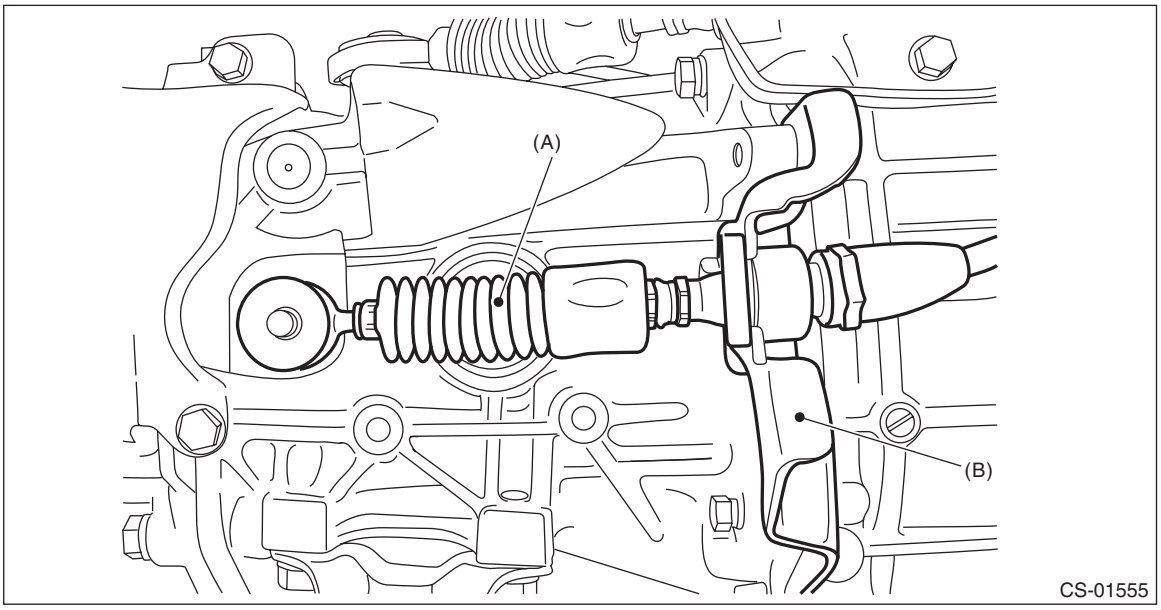

(A) MT gear shift cable (B) Shift bracket

10) Remove the cable cover plate.

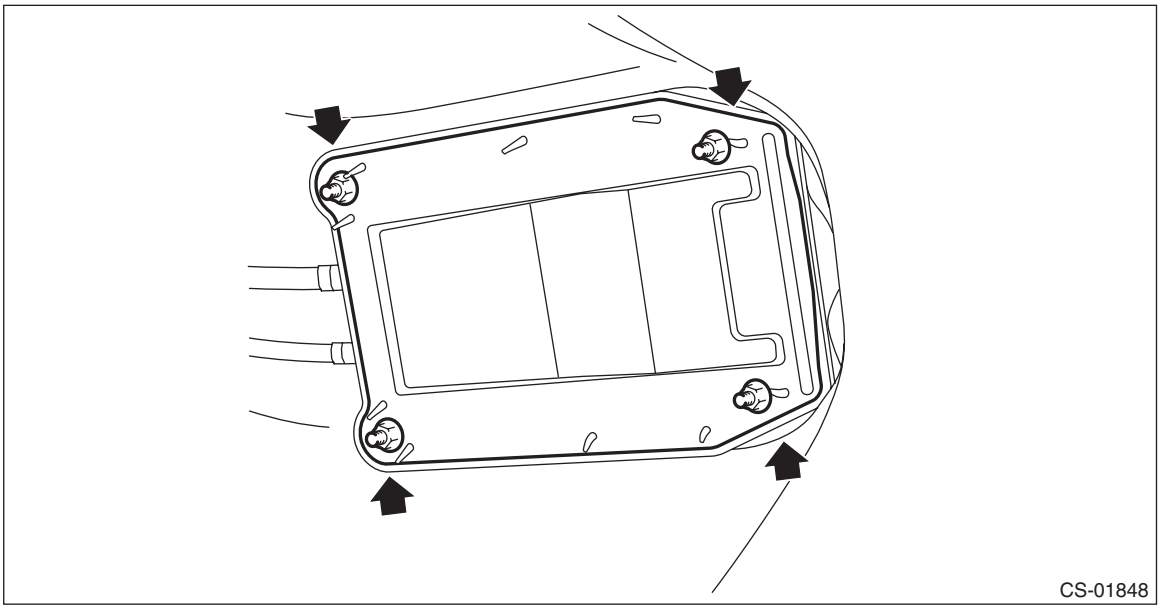

11) Disconnect the MT gear shift cable.

CAUTION:
Be careful not to deform the cable inner.

NOTE:
Pull out down the MT gear shift cable to spread the spring.

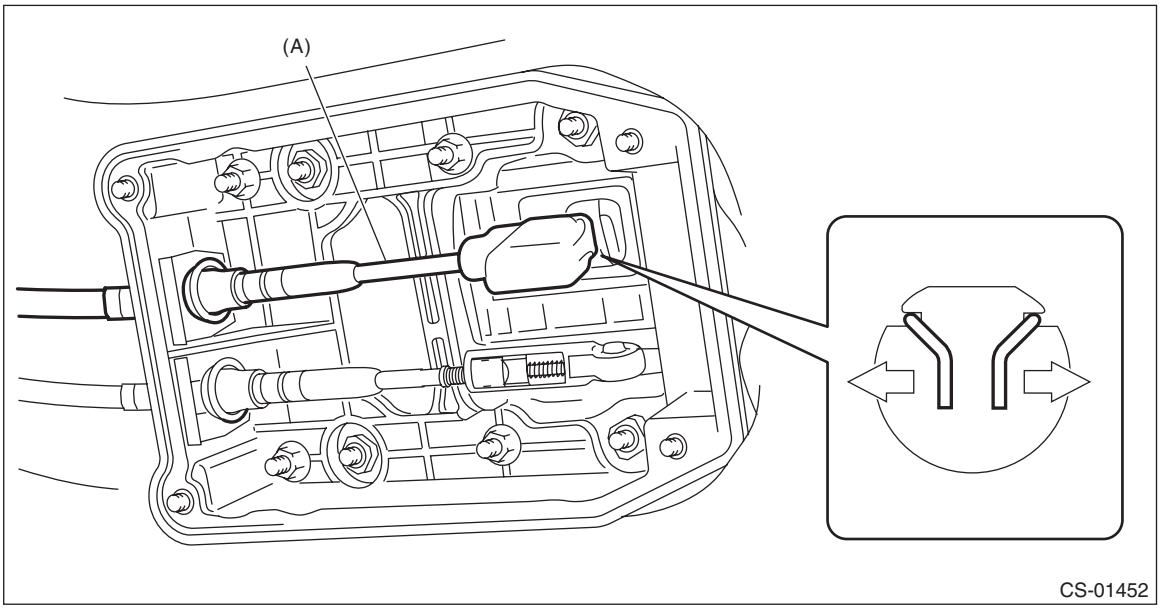

(A) MT gear shift cable

12) Remove the clamp.

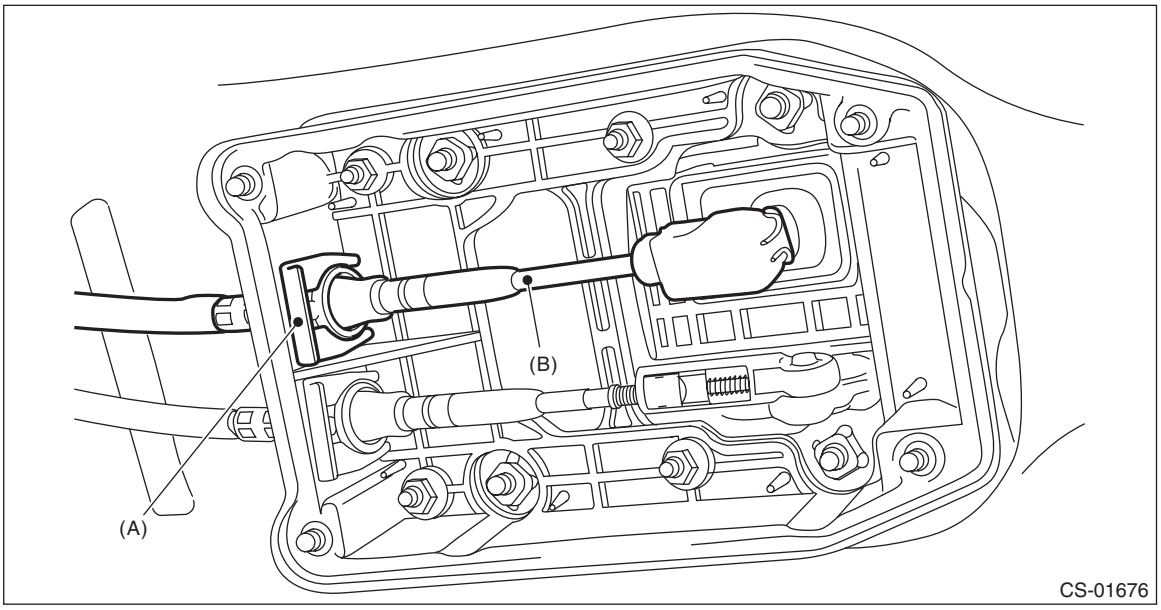

(A) Clamp (B) MT gear shift cable

13) Pull out the MT gear shift cable.

CAUTION:
- **Do not bend MT gear shift cable at a sharp angle.**
- **Do not twist the cable inner excessively.**

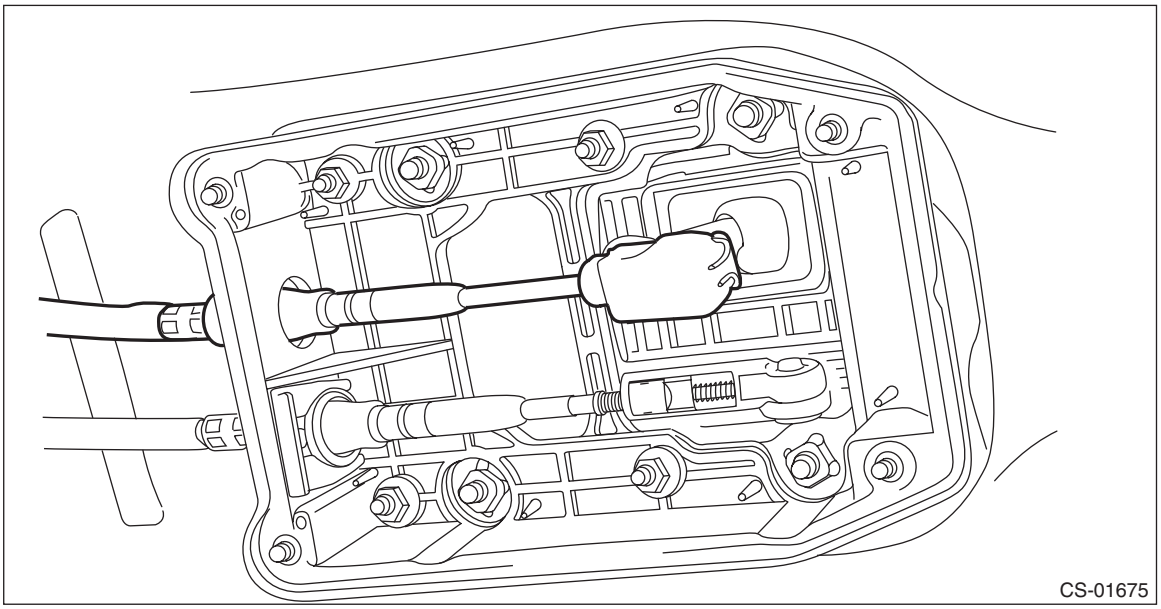

B: INSTALLATION

CAUTION:
- **Do not bend MT gear shift cable at a sharp angle.**
- **When replacing the new MT gear shift cable, secure it to shift bracket with the clamps, be careful not to mistake the installing direction.**

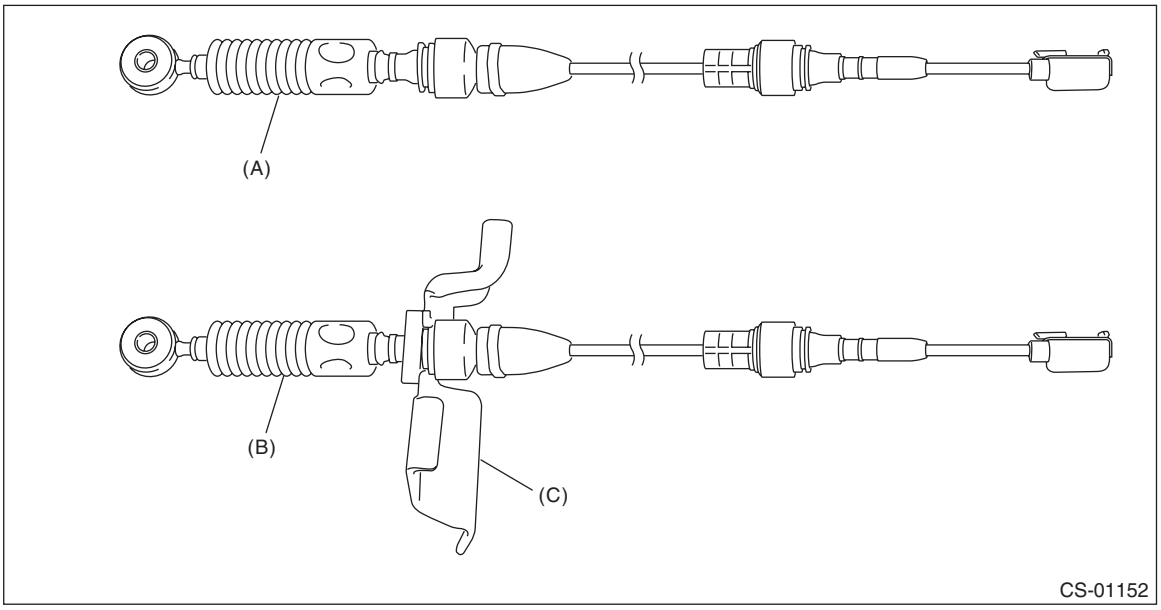

(A) Old MT gear shift cable (B) New MT gear shift cable (C) Shift bracket

1) Install the shift bracket together with the MT gear shift cable.

Tightening torque:
18 N·m (1.8 kgf-m, 13.3 ft-lb)

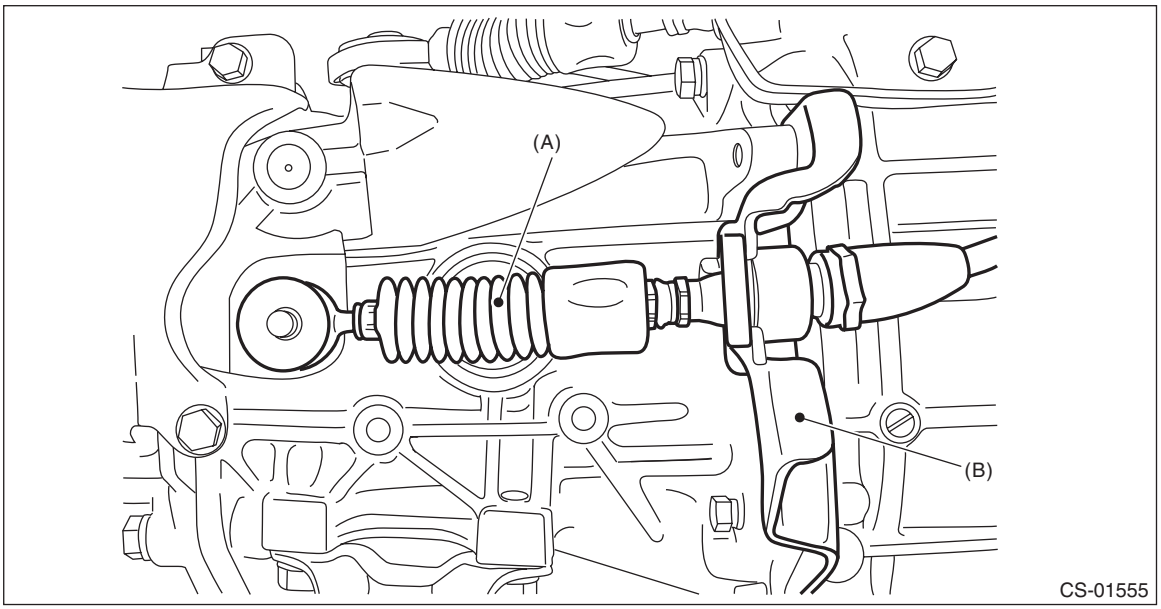

(A) MT gear shift cable (B) Shift bracket

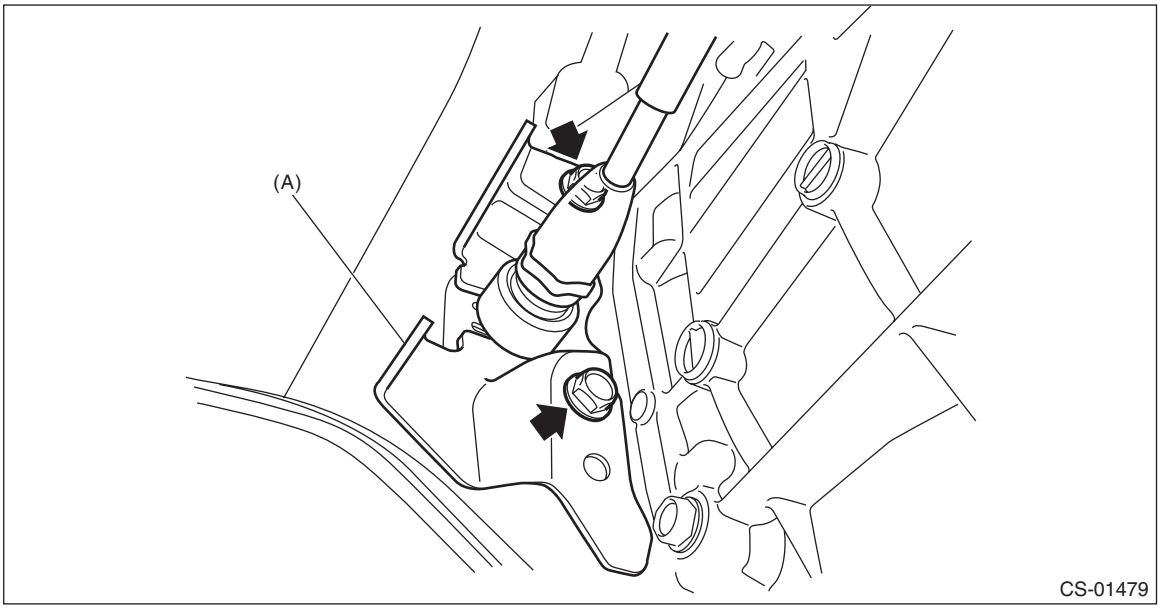

(A) Shift bracket

2) Install the snap pin and washer.

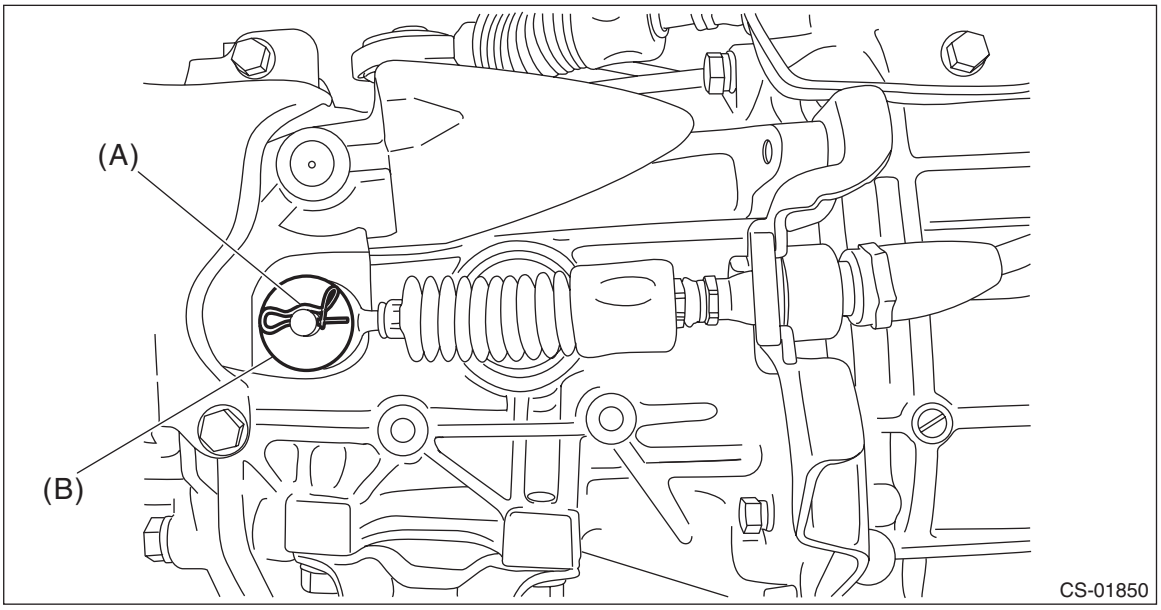

(A) Snap pin (B) Washer

3) Install the dust cover.

Tightening torque:
15 N·m (1.5 kgf-m, 11.1 ft-lb)

4) Insert the MT gear shift cable into cable cover assembly, and install the clamp.

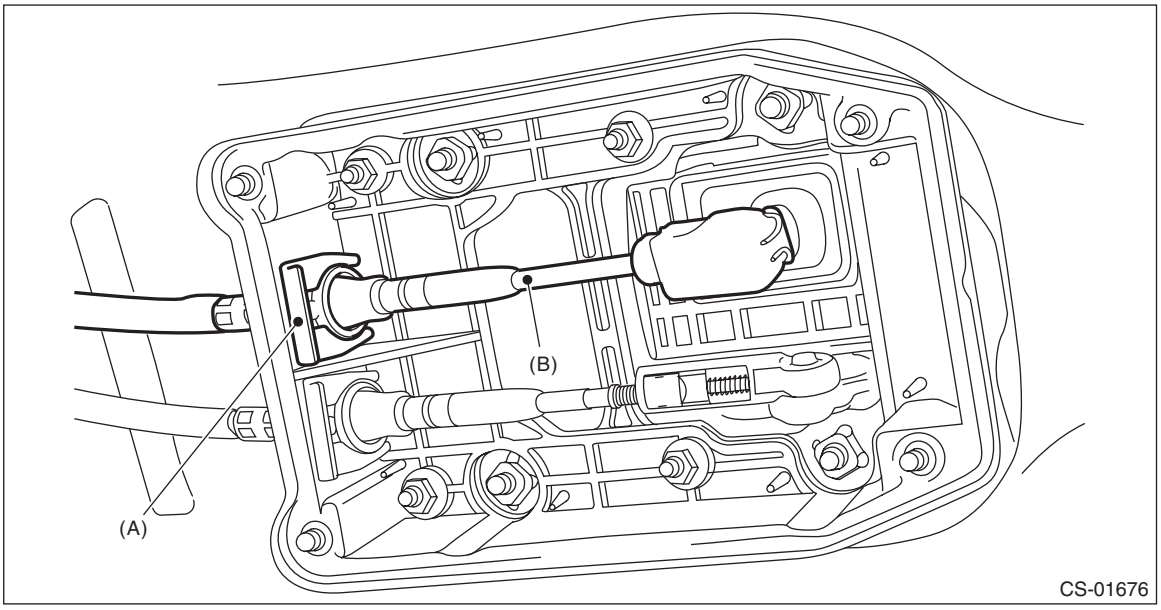

(A) Clamp (B) MT gear shift cable

5) Connect the MT gear shift cable.
6) Attach the cable cover plate.

Tightening torque:
7.5 N·m (0.8 kgf-m, 5.5 ft-lb)

7) Insert the MT gear shift cable into cable clamp, and install to the transmission.

Tightening torque:
18 N·m (1.8 kgf-m, 13.3 ft-lb)

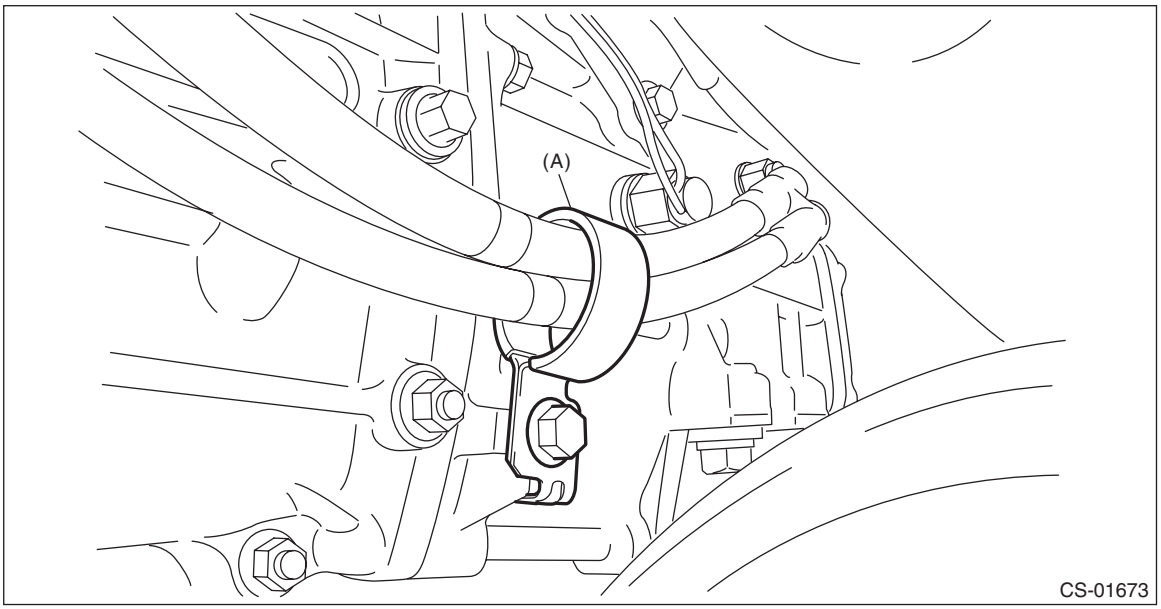

(A) Cable clamp

8) Install the center exhaust cover.

Tightening torque:
18 N·m (1.8 kgf-m, 13.3 ft-lb)

9) Install the center exhaust pipe (rear). <Ref. to EX(w/o STI)-37, INSTALLATION, Center Exhaust Pipe.>
10) Lower the vehicle.
11) Connect the battery ground terminal. <Ref. to NT-6, BATTERY, NOTE, Note.>
12) Make sure the gears can be shifted accurately into each gear.

9. MT Gear Select Cable

A: REMOVAL

CAUTION:
Always use new MT gear select cable if the cable is removed from selector lever COMPL of transmission side.

1) Disconnect the ground cable from battery. <Ref. to NT-6, BATTERY, NOTE, Note.>

NOTE:
For model with battery sensor, disconnect the ground terminal from battery sensor.

2) Remove the air intake duct. <Ref. to IN(w/o STI)-26, REMOVAL, Air Intake Duct.>
3) Remove the intercooler and the intercooler stay. <Ref. to IN(w/o STI)-43, REMOVAL, Intercooler.>
4) Disconnect the engine harness connector.

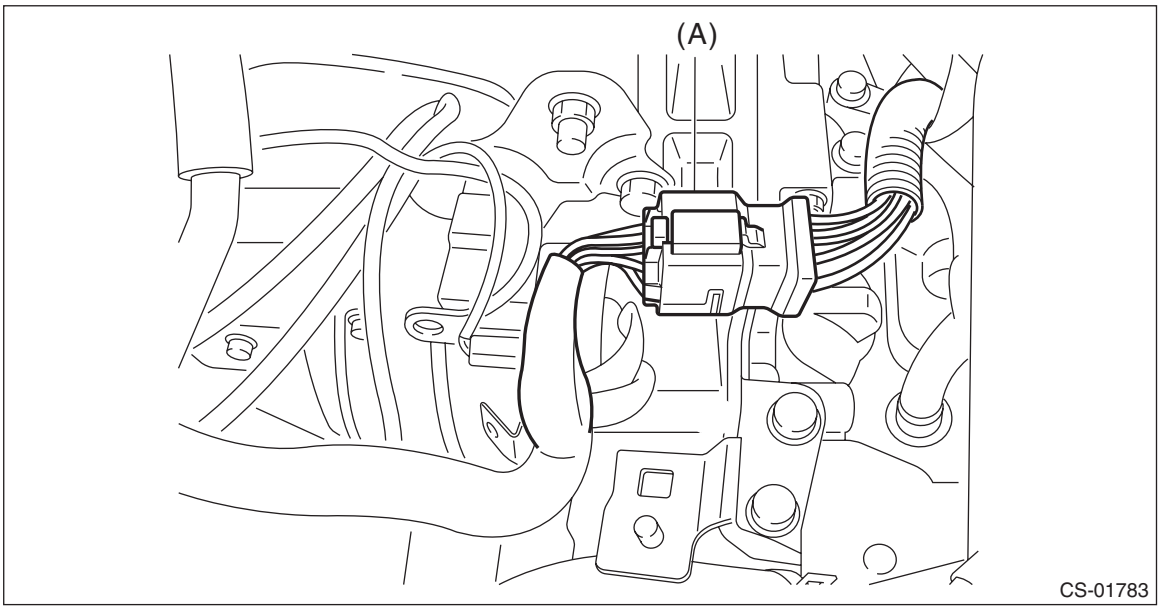

(A) Engine harness connectors

5) Disconnect the transmission radio ground cord terminal.

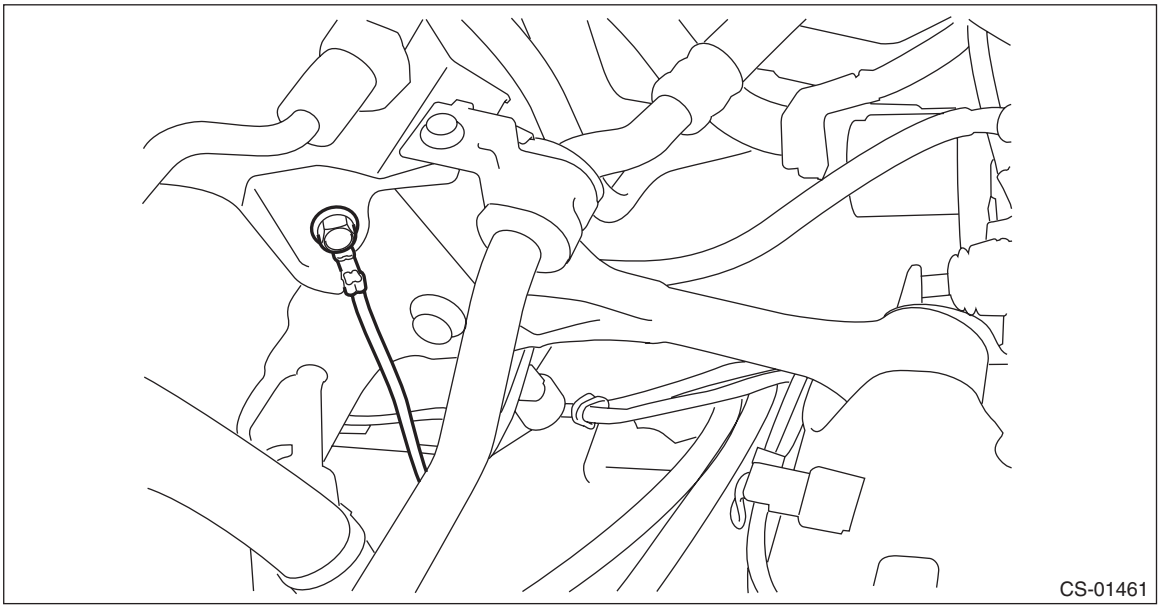

6) Remove the pitching stopper. <Ref. to 6MT(TY85)-30, PITCHING STOPPER, REMOVAL, Transmission Mounting System.>

7) Lift up the vehicle.
8) Remove the center exhaust pipe (rear). <Ref. to EX(w/o STI)-32, REMOVAL, Center Exhaust Pipe.>
9) Remove the center exhaust cover.

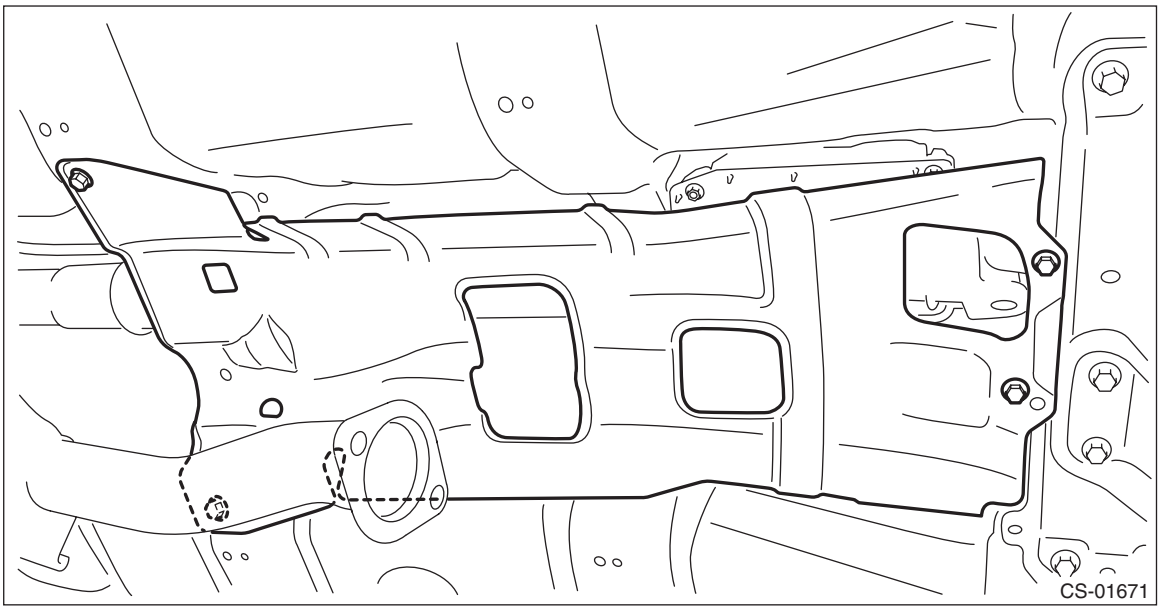

10) Remove the propeller shaft. <Ref. to DS-12, REMOVAL, Propeller Shaft.>
11) Remove the cable clamp.

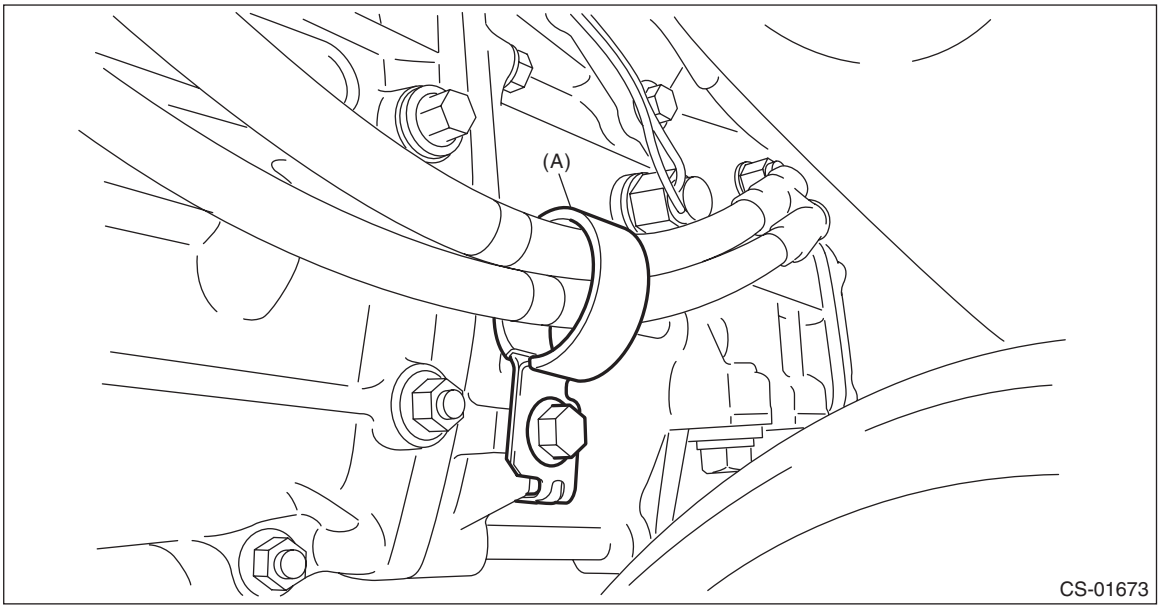

(A) Cable clamp

12) Place the transmission jack under the transmission.

13) Remove the mounting bolt of front crossmember and rear crossmember, and lower the transmission approx. 100 mm (4 in).

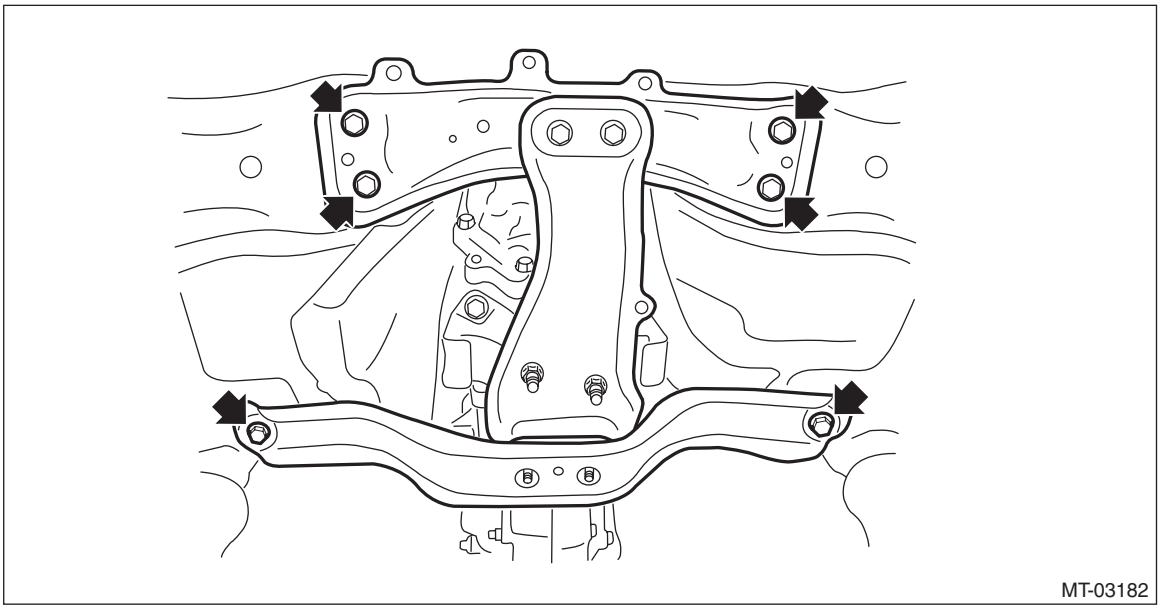

14) Insert a spanner between the selector lever COMPL and the MT gear select cable, and remove the MT gear select cable by raising the handle.

NOTE:
- Use a spanner with 11 to 13 in size.
- The thickness of the spanner must not exceed 6 mm (0.2 in).

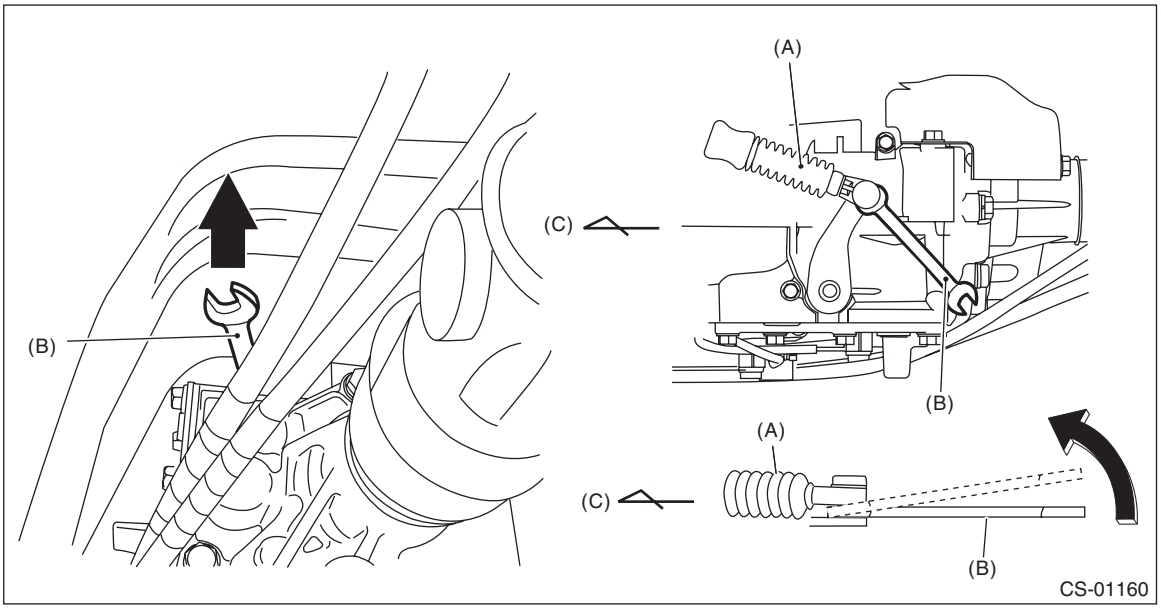

(A) MT gear select cable (B) Spanner (C) Forward

15) Remove the MT gear select cable and select bracket as a single unit.

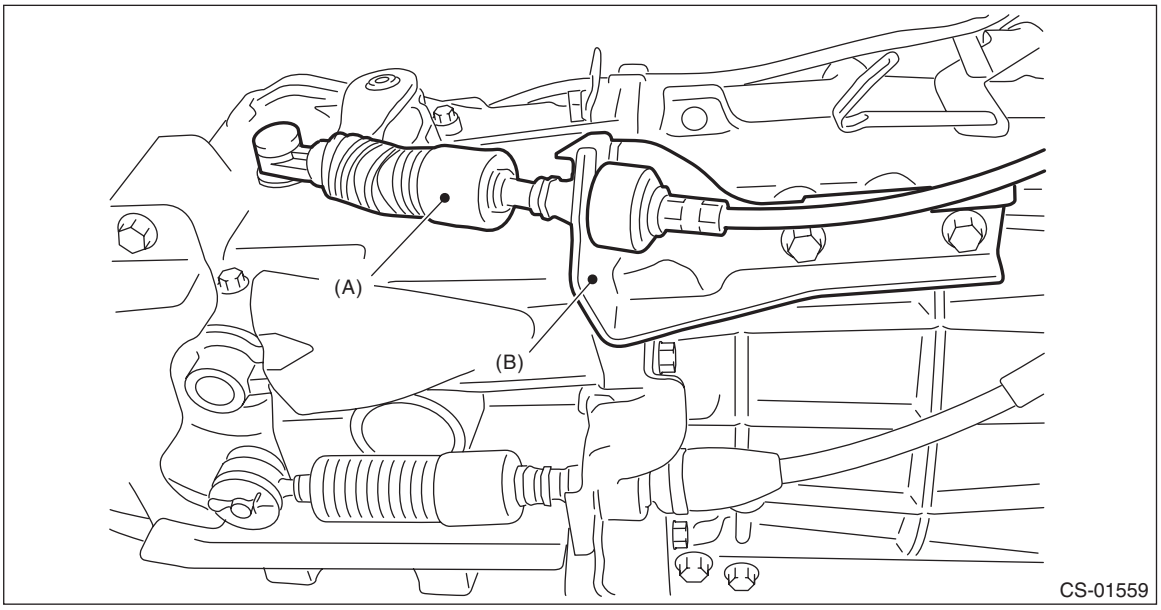

(A) MT gear select cable (B) Select bracket

16) Remove the cable cover plate.

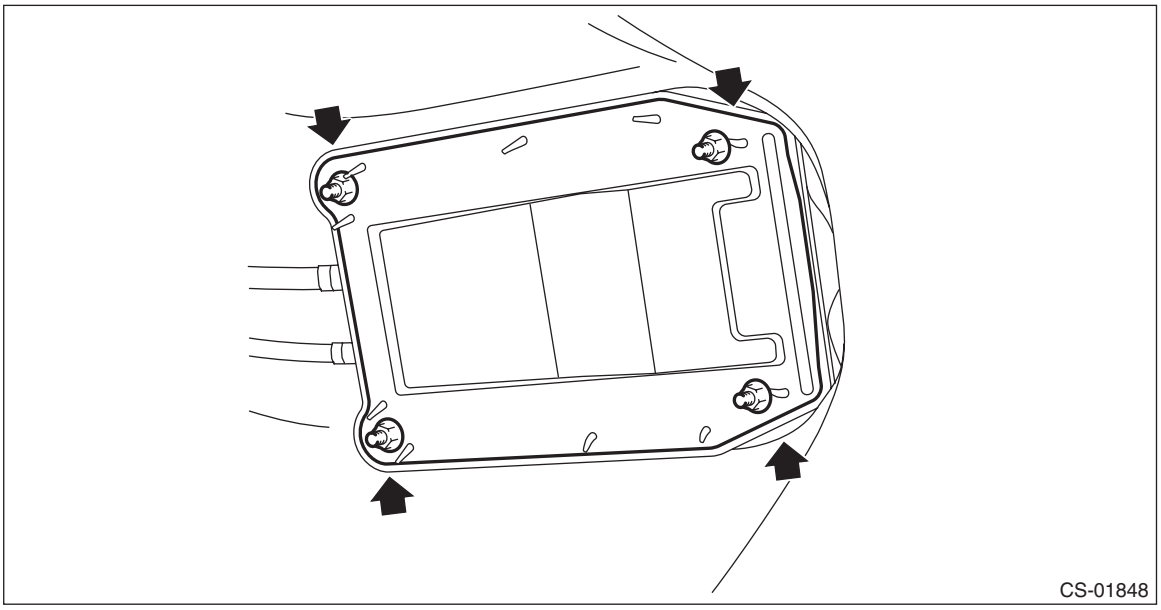

17) Disconnect the MT gear select cable.

CAUTION:
Be careful not to deform the cable inner.

NOTE:
Push the MT gear select cable in the direction of arrow, and remove it.

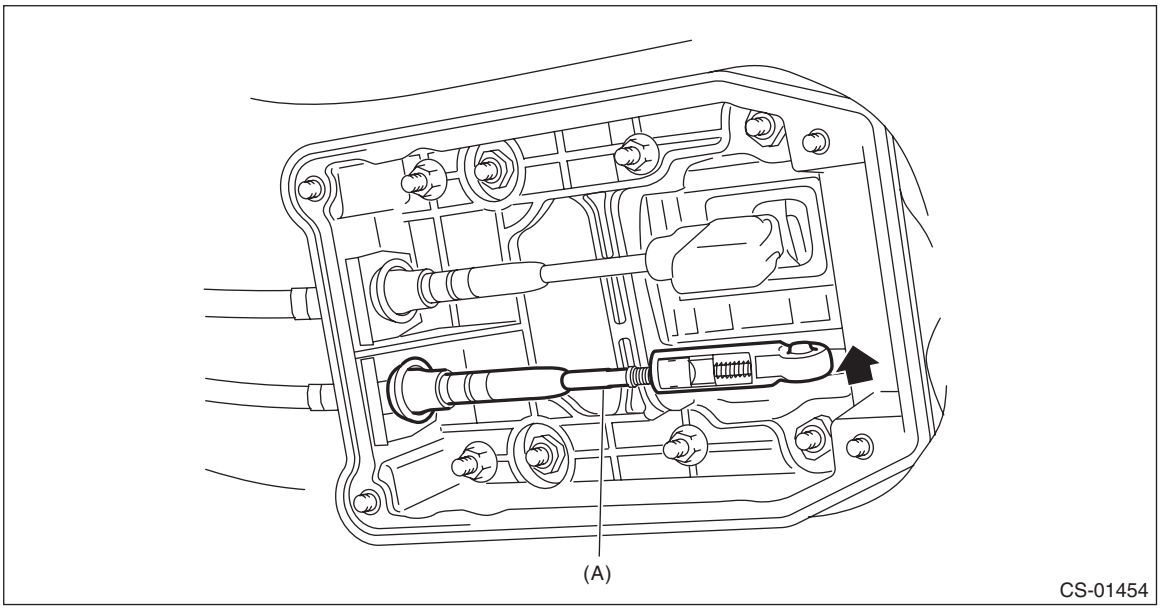

(A) MT gear select cable

18) Remove the clamp.

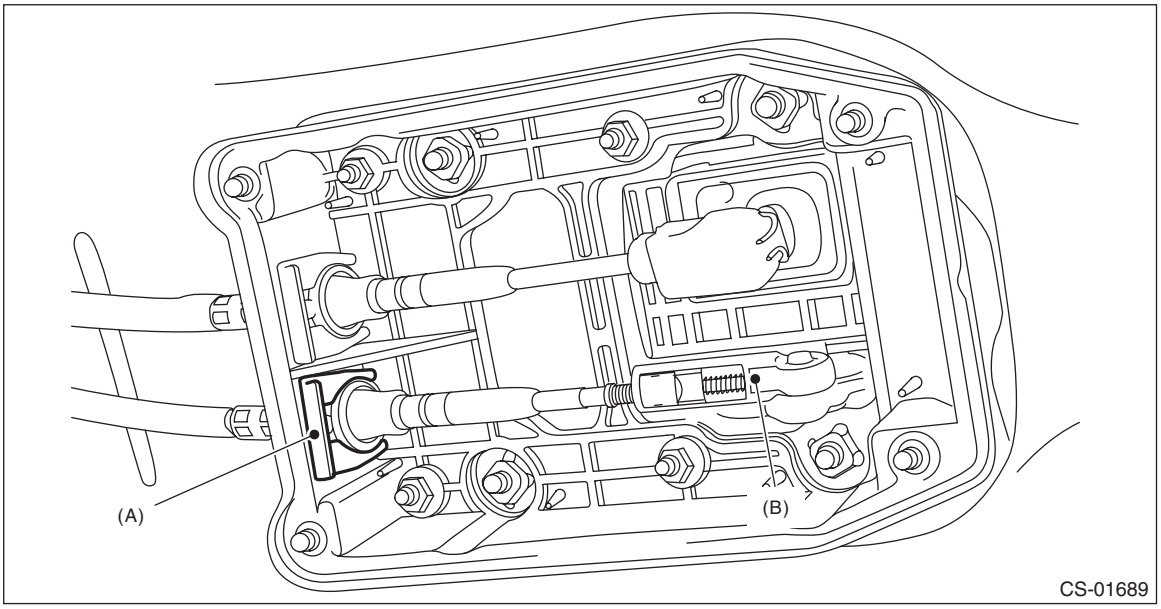

(A) Clamp (B) MT gear select cable

19) Pull out the MT gear select cable.

CAUTION:
Do not bend the MT gear select cable sharply.

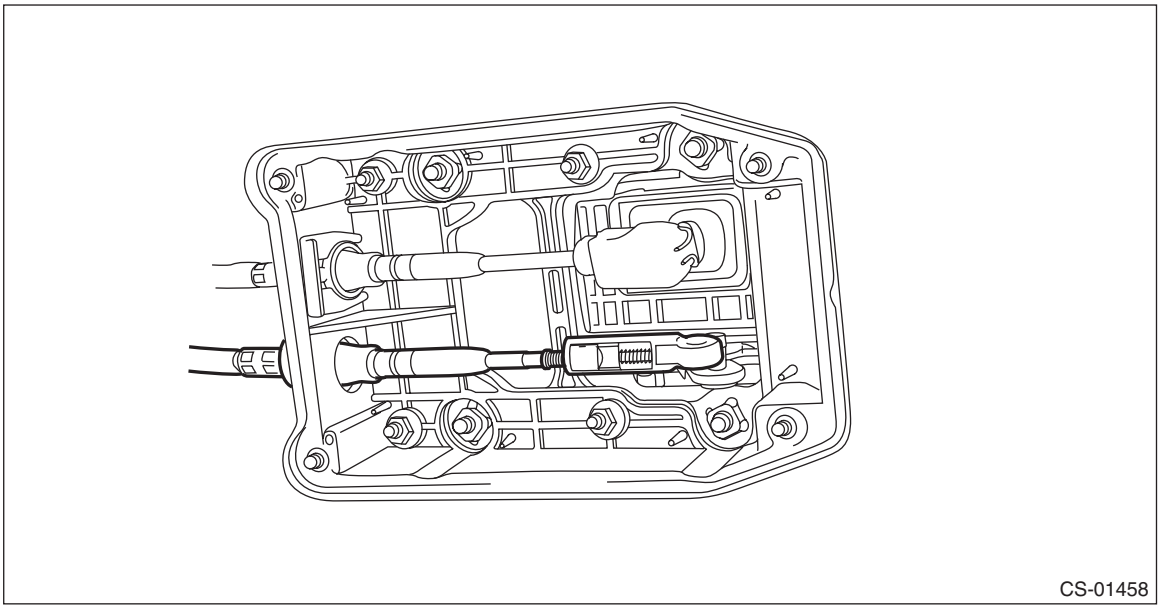

B: INSTALLATION

CAUTION:
• Always use new MT gear select cable if the cable is removed from selector lever COMPL of transmission side.
• Do not bend the MT gear select cable sharply.
• Do not twist the inner cable excessively.

1) Remove the MT gear select cable from the select bracket.

CAUTION:
Check for assembling position before removing the MT gear select cable from the select bracket.

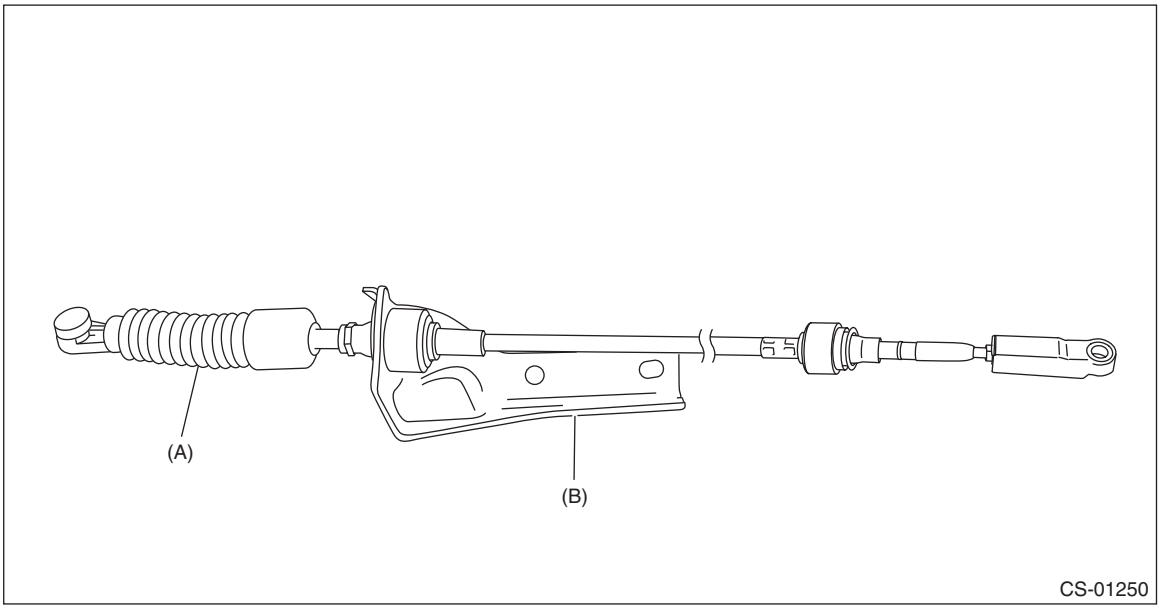

(A) MT gear select cable (B) Select bracket

2) Set to the new MT gear select cable to the select bracket and secure it with the clamp.

CAUTION:
Be careful not to mistake the MT gear select cable installing direction.

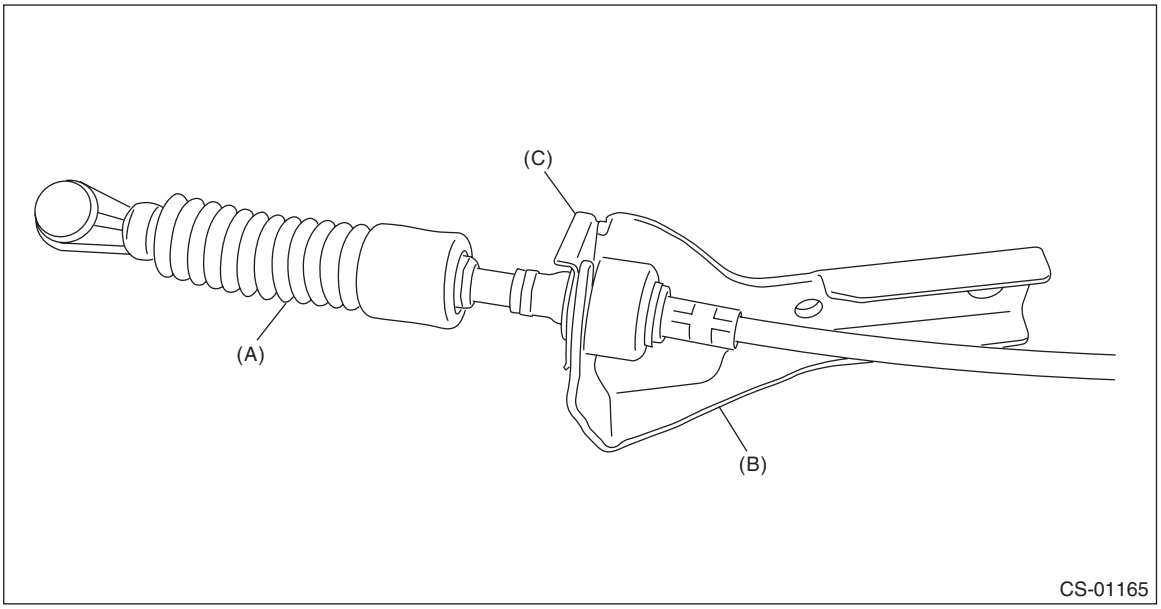

(A) MT gear select cable (B) Select bracket (C) Clamp

3) Install the MT gear select cable and select bracket as a single unit.

Tightening torque:
18 N·m (1.8 kgf-m, 13.3 ft-lb)

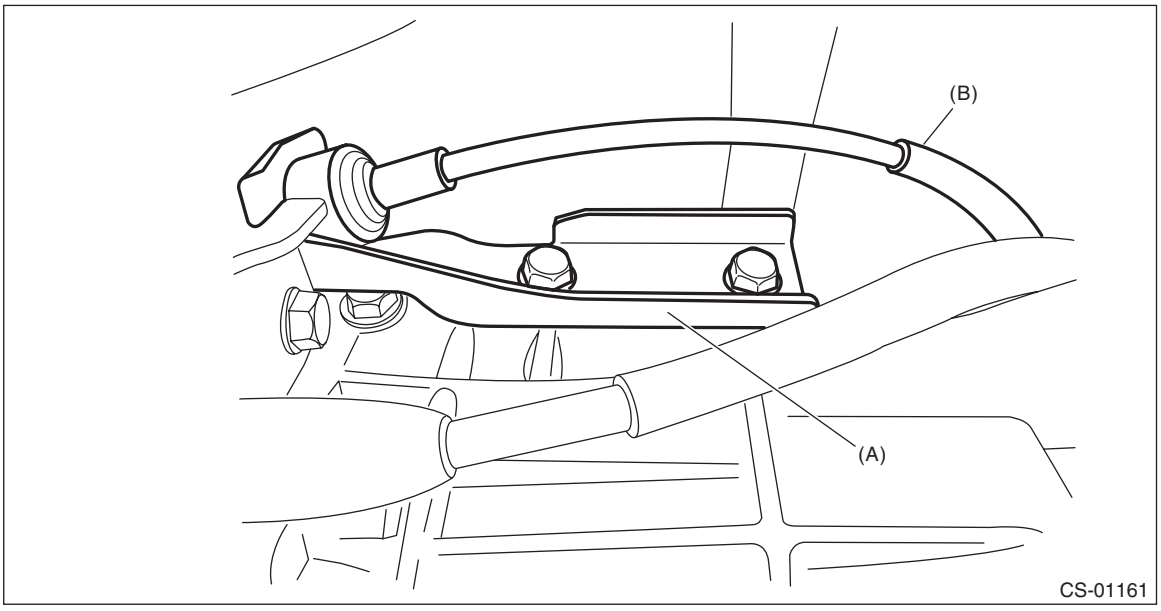

(A) Select bracket (B) MT gear select cable

4) Install the MT gear select cable to the select lever COMPL.

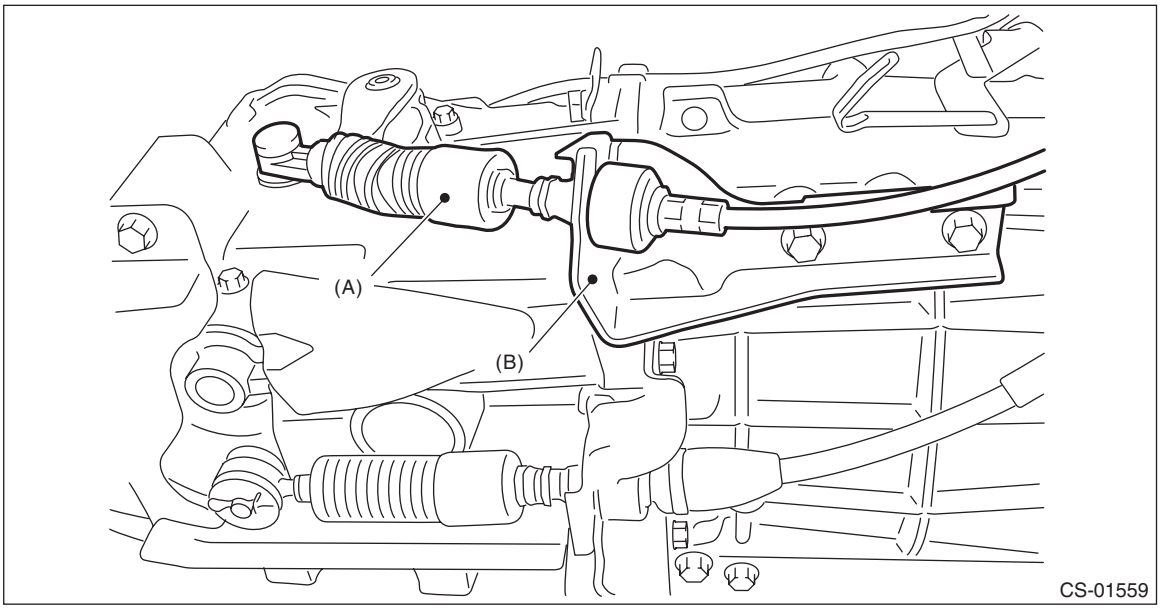

(A) MT gear select cable (B) Select bracket

5) Insert the MT gear select cable into cable cover assembly, and install the clamp.

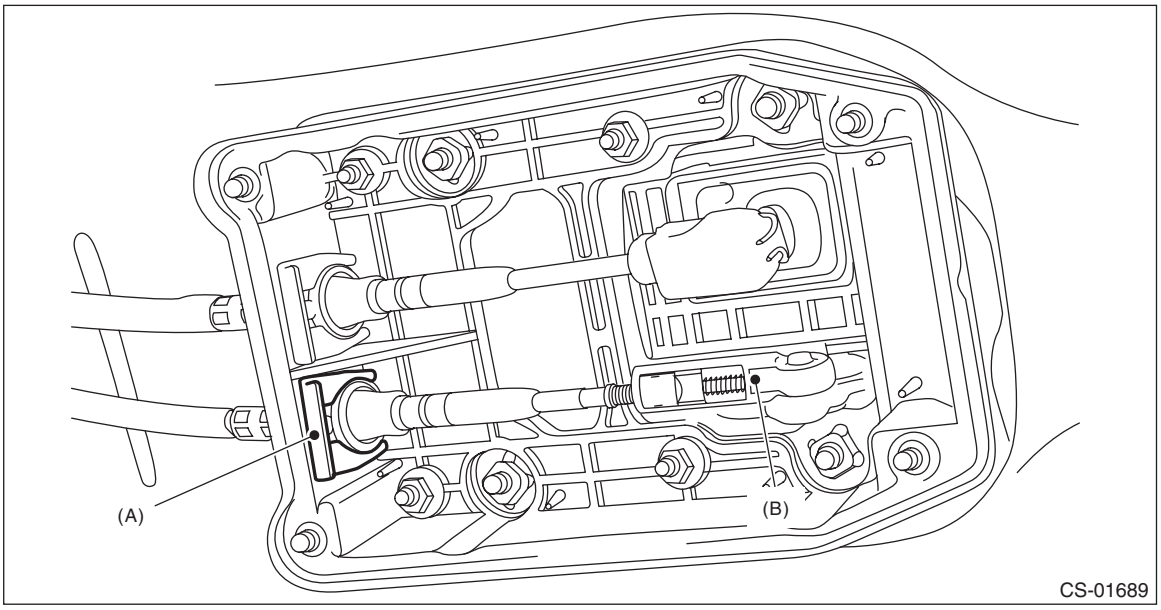

(A) Clamp (B) MT gear select cable

6) Measure the exposed length (a) of MT gear select cable. If the value is out of specification, adjust the MT gear select cable. <Ref. to CS-104, ADJUSTMENT, MT Gear Select Cable.>

Exposed length (a) of MT gear select cable:
Specification: 11 mm (0.4 in)

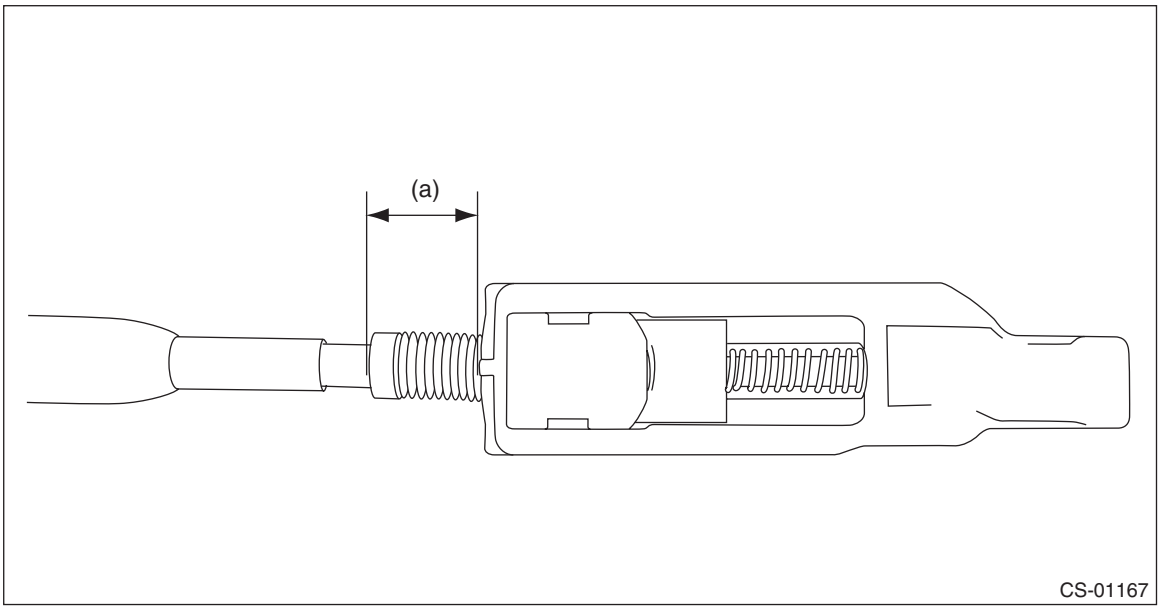

7) Connect the MT gear select cable.
8) Attach the cable cover plate.

Tightening torque:
7.5 N·m (0.8 kgf-m, 5.5 ft-lb)

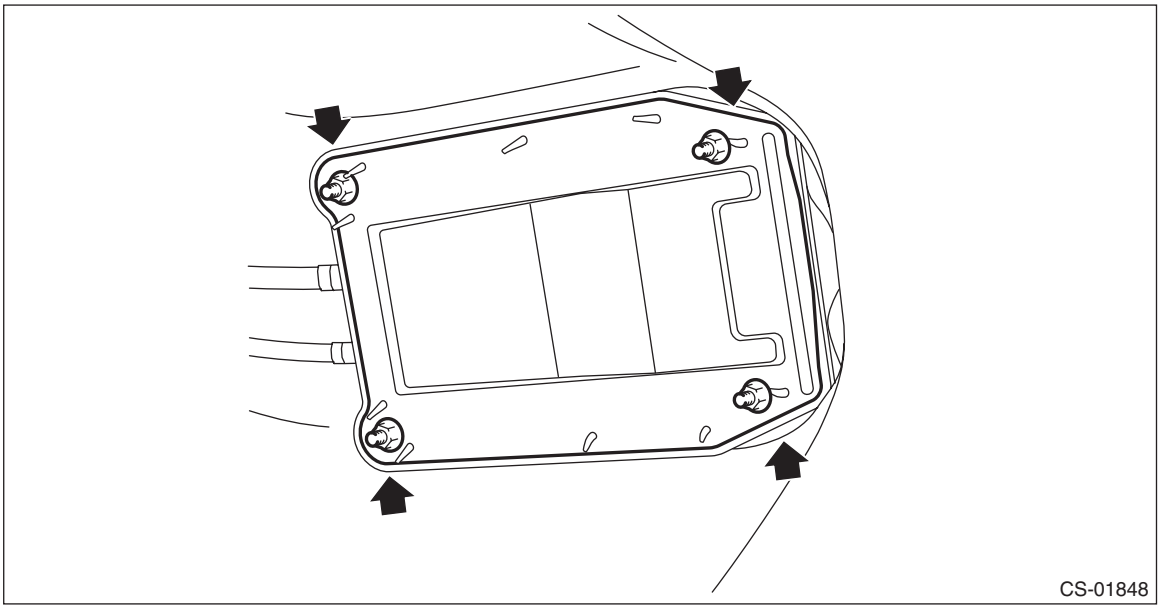

9) Insert the MT gear select cable into cable clamp, and install to the transmission.

Tightening torque:
18 N·m (1.8 kgf-m, 13.3 ft-lb)

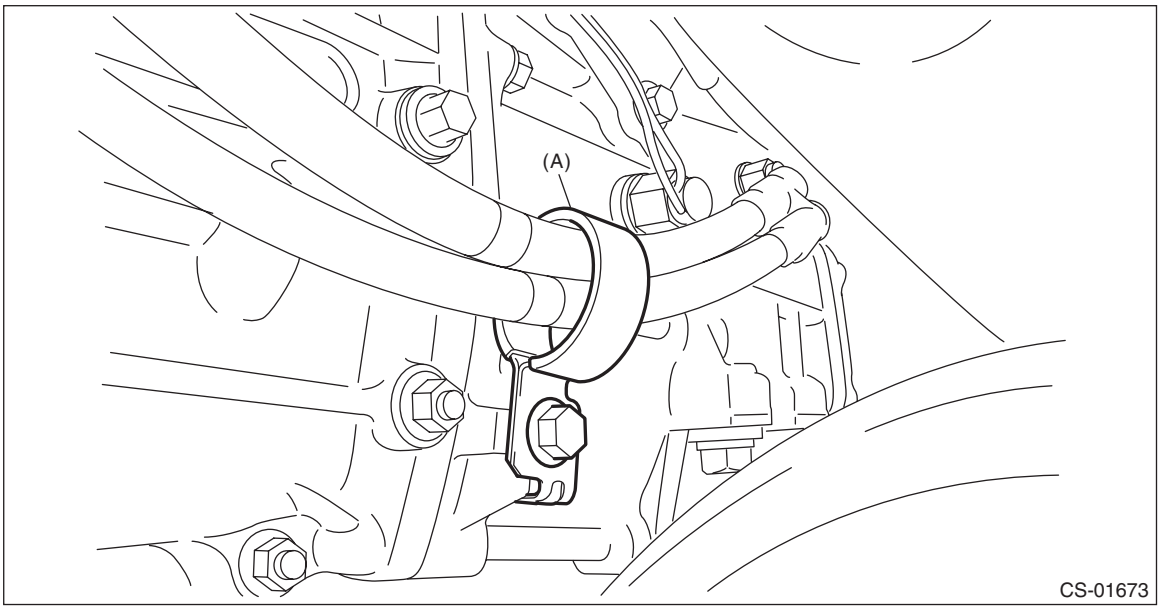

(A) Cable clamp

10) Raise the transmission jack, install the front crossmember and rear crossmember.

Tightening torque:
T1: 70 N·m (7.1 kgf-m, 51.6 ft-lb)
T2: 140 N·m (14.3 kgf-m, 103.3 ft-lb)

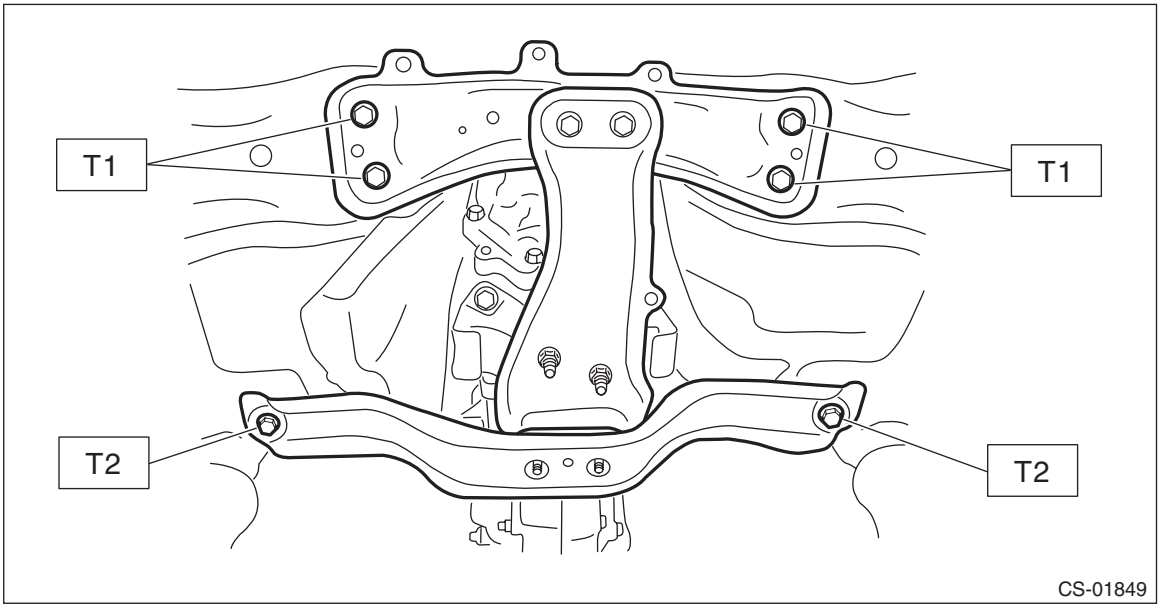

11) Take out the transmission jack.
12) Install the propeller shaft. <Ref. to DS-14, INSTALLATION, Propeller Shaft.>
13) Install the center exhaust cover.

Tightening torque:
18 N·m (1.8 kgf-m, 13.3 ft-lb)

14) Install the center exhaust pipe (rear). <Ref. to EX(w/o STI)-37, INSTALLATION, Center Exhaust Pipe.>
15) Lower the vehicle.
16) Install the pitching stopper. <Ref. to 6MT(TY85)-30, PITCHING STOPPER, INSTALLATION, Transmission Mounting System.>
17) Install the transmission radio ground cord terminal.

Tightening torque:
13 N·m (1.3 kgf-m, 9.6 ft-lb)

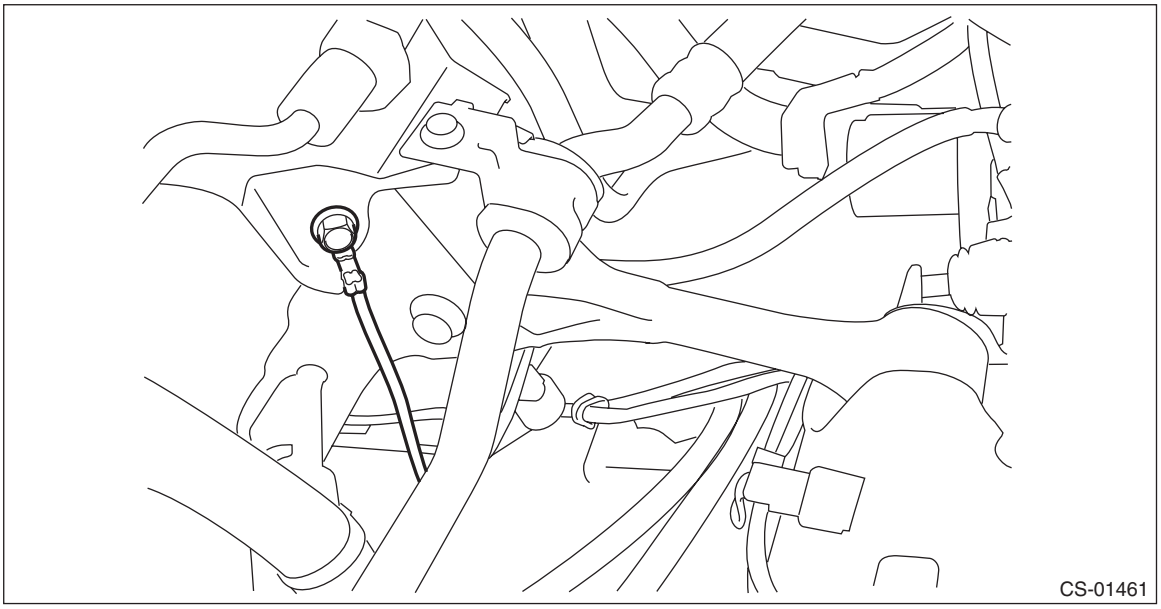
CS-01461

18) Connect the engine harness connector.

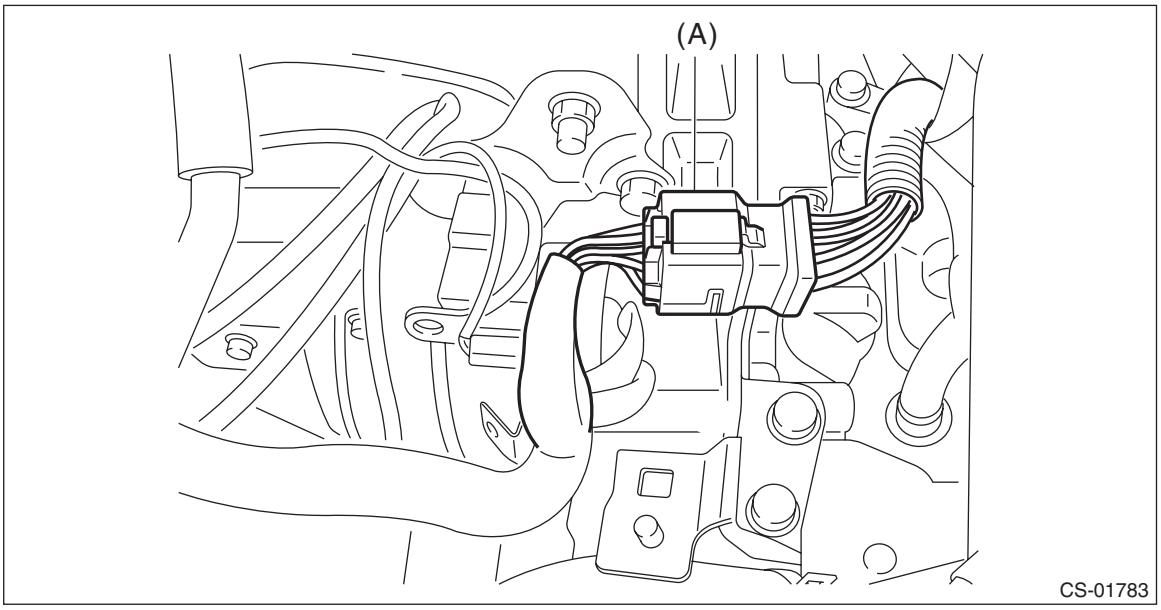

CS-01783

(A) Engine harness connectors

19) Install the intercooler stay and the intercooler. <Ref. to IN(w/o STI)-45, INSTALLATION, Intercooler.>
20) Install the air intake duct. <Ref. to IN(w/o STI)-26, INSTALLATION, Air Intake Duct.>
21) Connect the battery ground terminal. <Ref. to NT-6, BATTERY, NOTE, Note.>
22) Make sure the gears can be shifted accurately into each gear.

C: INSPECTION

1) Check that exposed length (a) of MT gear select cable is within specification.

Exposed length (a) of MT gear select cable:
Specification: 11 mm (0.4 in)

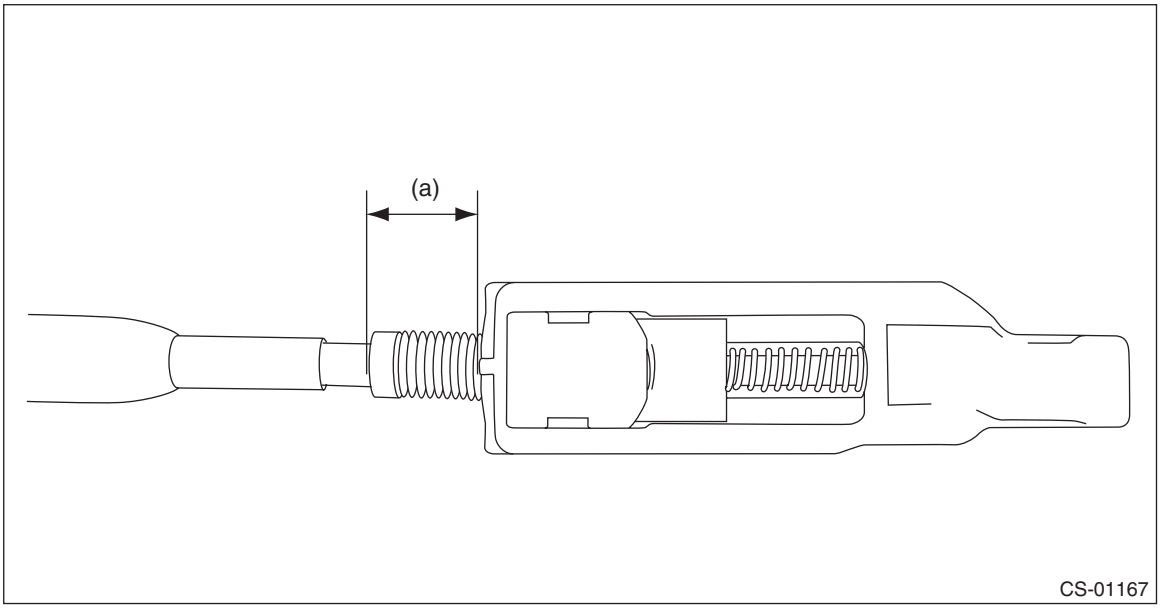

2) If it is not within the specification, perform the adjustment. <Ref. to CS-104, ADJUSTMENT, MT Gear Select Cable.>

D: ADJUSTMENT

NOTE:
Two persons are required to perform the MT gear select cable adjustment. (Only the step 7) requires two workers.)
1) Move the shift lever to the 6th.
2) Remove the cable cover plate.

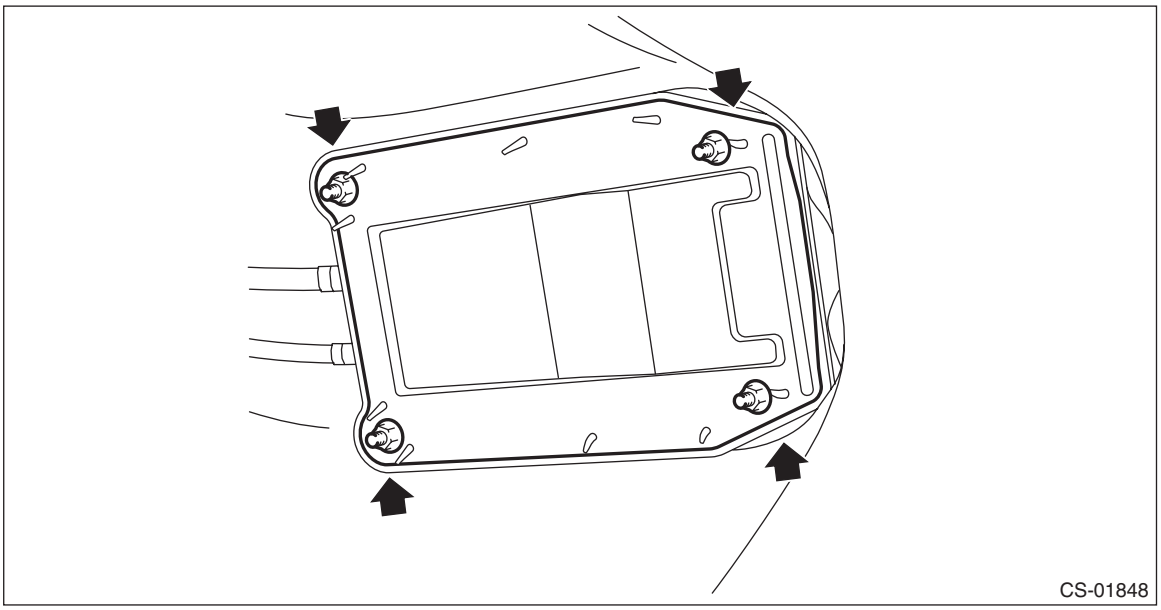

3) Disconnect the MT gear select cable.

NOTE:
Push the MT gear select cable in the direction of arrow, and remove it.

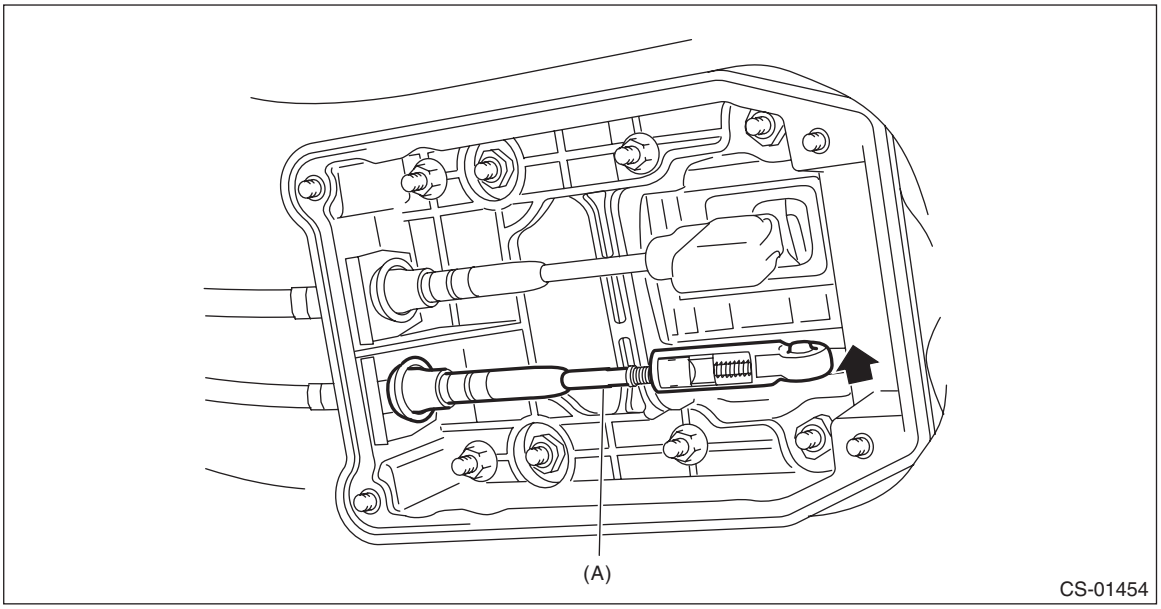

(A) MT gear select cable

4) Measure the exposed length (a) of MT gear select cable.

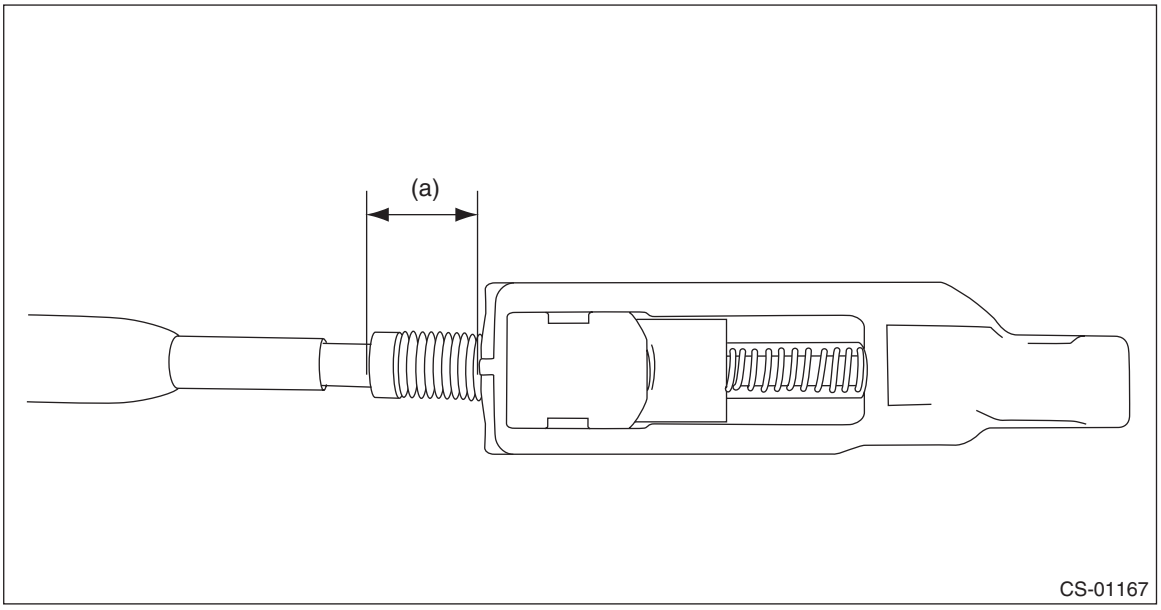

(a) Measurement value

5) Slide the slider (green) in the direction of the arrow and release the lock piece (pink) by using flat tip screwdriver etc.

CAUTION:
Lock piece is easily damaged for the resin. When the lock piece is broken, replace the new MT gear select cable.

NOTE:
Rotate the MT gear select cable to 180 degrees, slide the slider in the direction of the arrow and push the claw of lock piece.

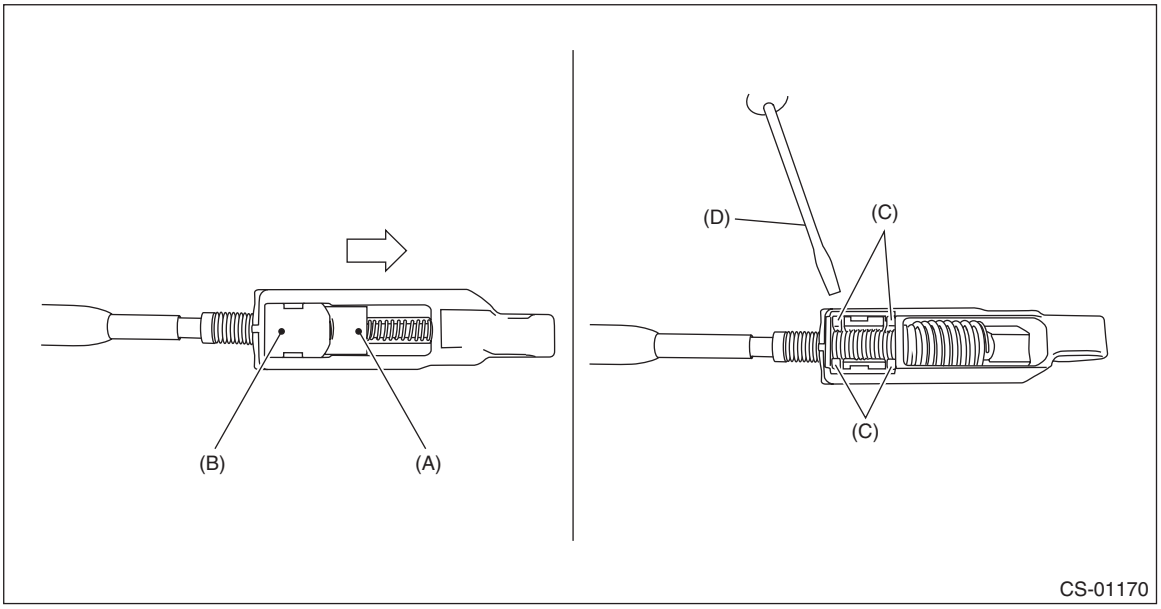

(A) Slider
(B) Lock piece
(C) Claw
(D) Flat tip screwdriver

6) Connect the MT gear select cable to the select lever, with the lock piece released.

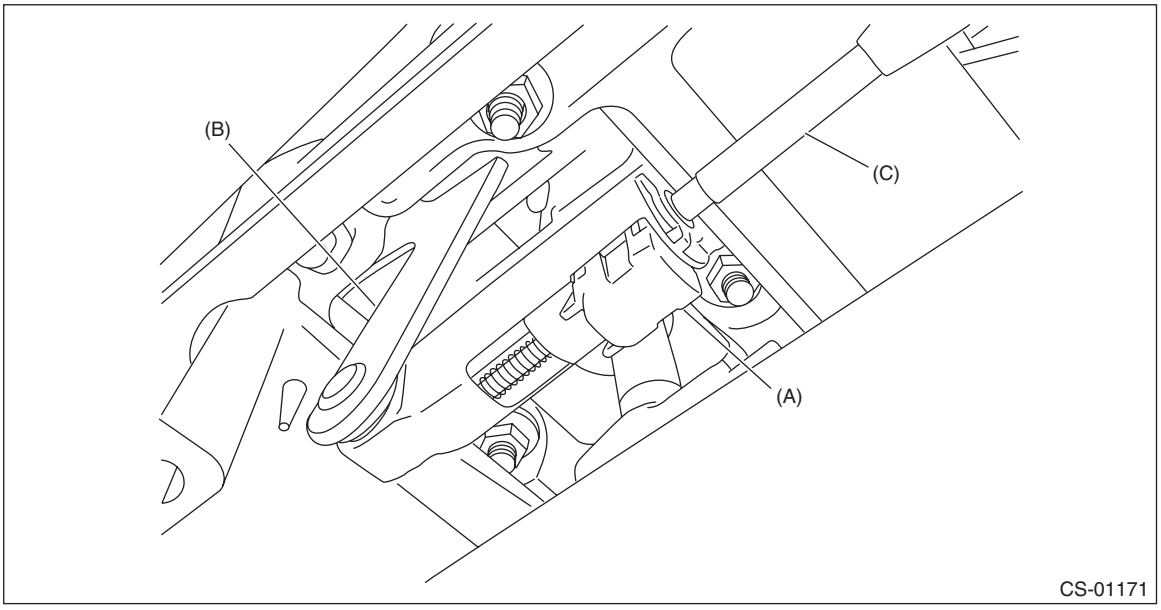

(A) Lock piece
(B) Select lever
(C) MT gear select cable

7) Move the shift lever to the reverse side, keep the exposed length (a) of MT gear select cable to 11 mm (0.4 in), and push the lock piece.

NOTE:
Pull up the slider of the gear shift lever assembly, move to the Rev side.

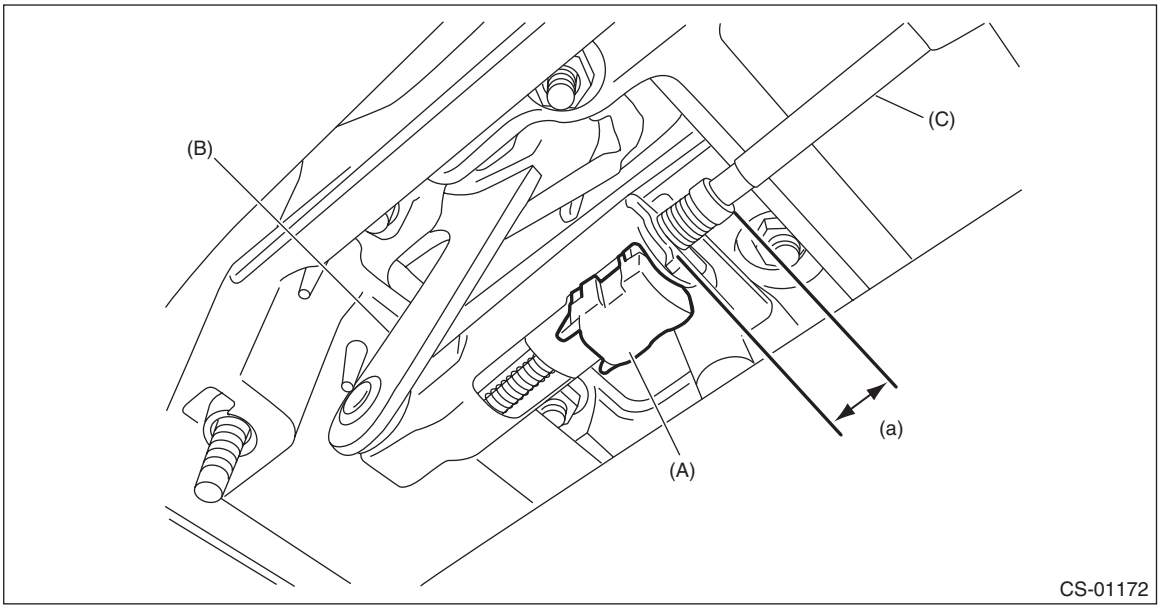

(a) Exposed length 11 mm (0.4 in)

(A) Lock piece (B) Select lever (C) MT gear select cable

8) Shift to 5th ←→ 6th and Rev, and check for stuck.
9) Check that the shift lever can move along the cranking line when operating the lever from 4th to 5th gear with a load applied toward the 6th gear.

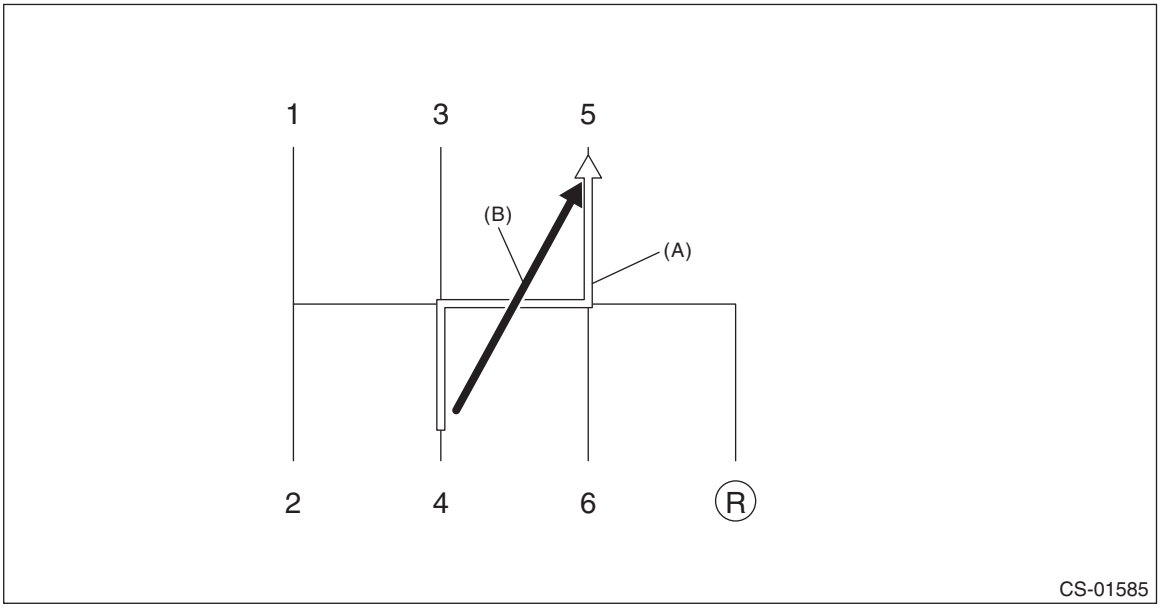

(A) Cranking operation (B) Load direction

10) If the shifting operation is not smooth, readjust the exposed length (a) of MT gear select cable by referring to the following figure.

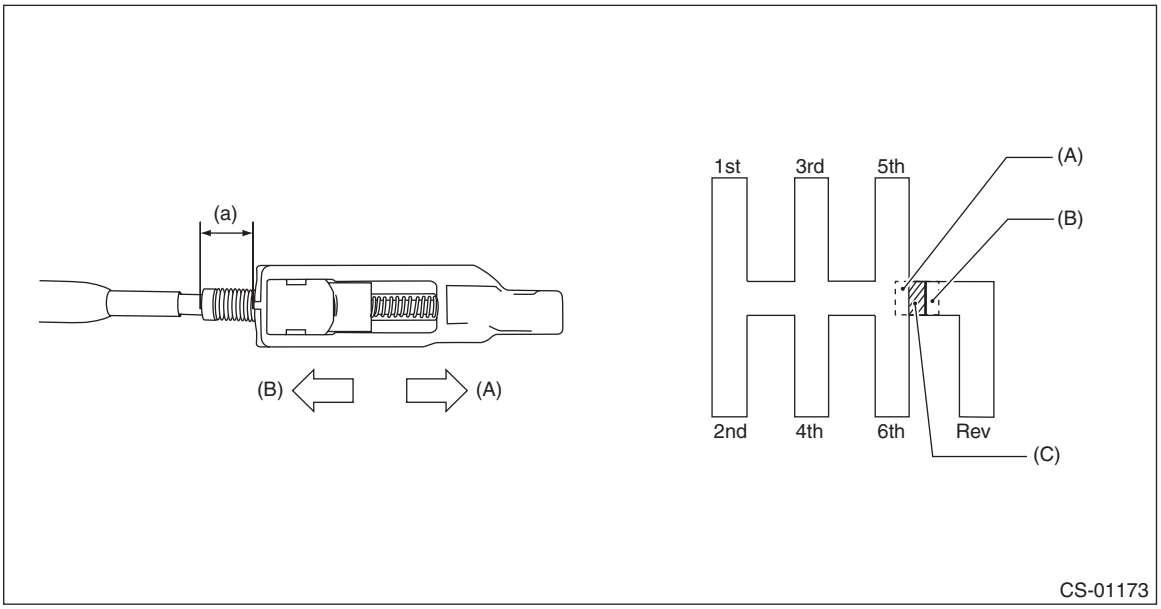

(a) Exposed length of MT gear select cable

(A) Extend direction of exposed length of MT gear select cable

(B) Shorten direction of exposed length of MT gear select cable

(C) Specification of exposed length (a)

- If the shift cannot be inserted to push the reverse lock bracket 5th and 6th.

⇨ Extend the exposed length (a) of MT gear select cable.

- When operate the select lever to 4th → 5th, it cannot be operated at select lever crank line.

⇨ Shorten the exposed length (a) of MT gear select cable.

NOTE:
If it cannot adjust, replace the MT gear select cable.

11) If no fault is found in the shift and select operation, restore the vehicle.

10.Reverse Check Cable

A: REMOVAL

1) Disconnect the ground cable from battery. <Ref. to NT-6, BATTERY, NOTE, Note.>

NOTE:
For model with battery sensor, disconnect the ground terminal from battery sensor.

2) Remove the gear shift knob by turning it counterclockwise.
3) Remove the console box assembly. <Ref. to EI-67, REMOVAL, Console Box.>
4) Remove the cover - shift lever. <Ref. to EI-67, REMOVAL, Console Box.>
5) Remove the panel center LWR LH and RH. <Ref. to EI-67, REMOVAL, Console Box.>
6) Remove the clamp.

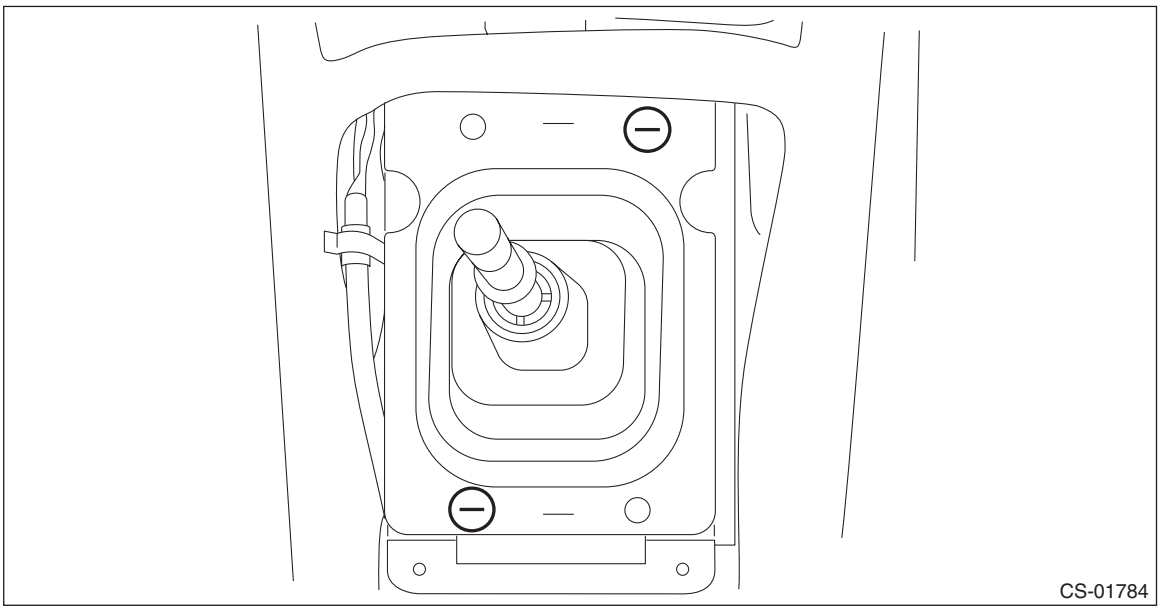
CS-01784

7) Remove the boot and insulator assembly.

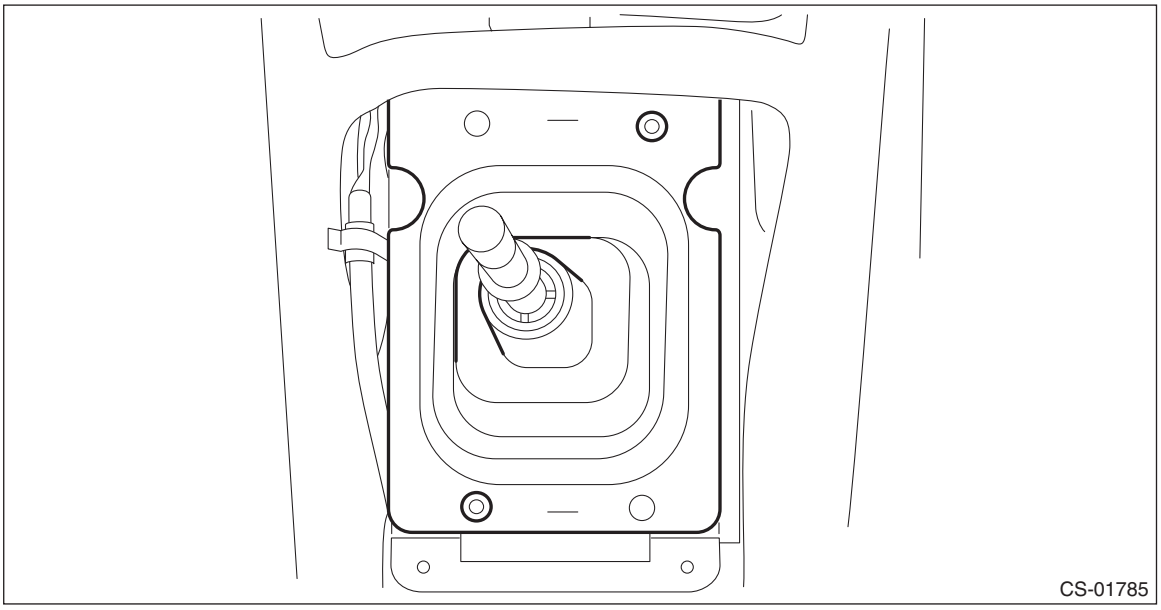
CS-01785

8) Remove the spring pin from the slider.

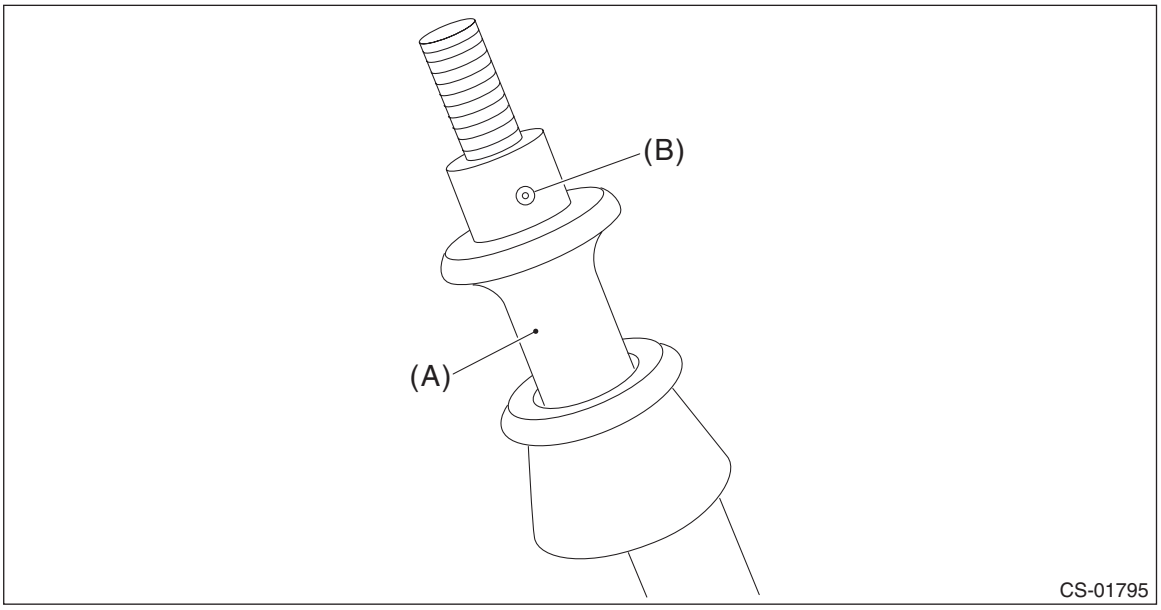

(A) Slider (B) Spring pin

9) Remove the slider and spring.

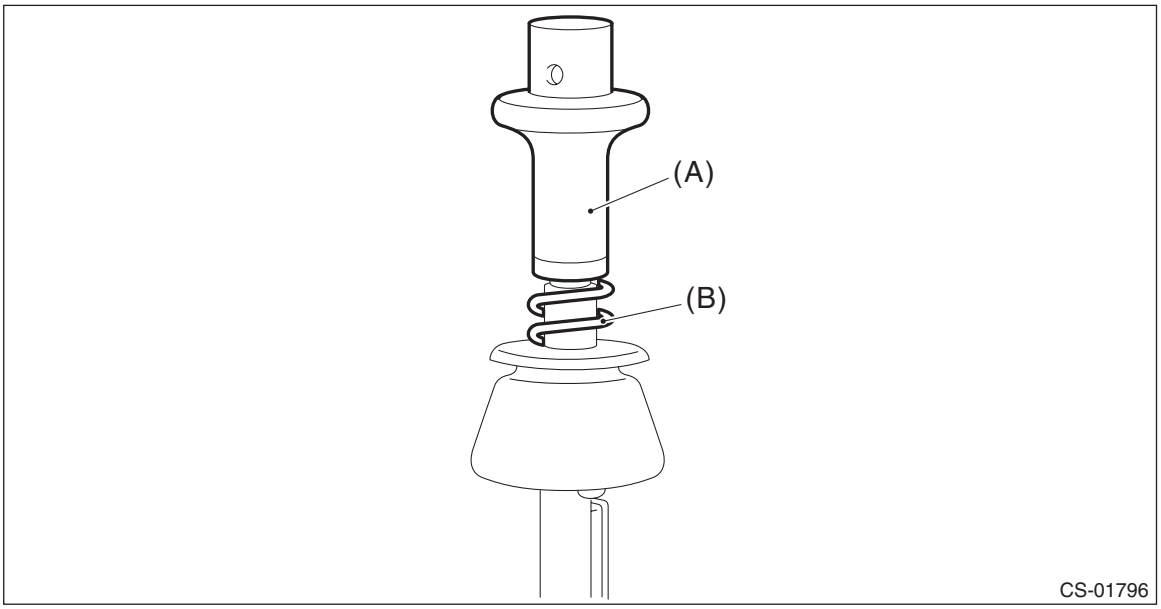

(A) Slider (B) Spring

10) Cut the band clip, and separate the reverse check cable from the gear shift lever.

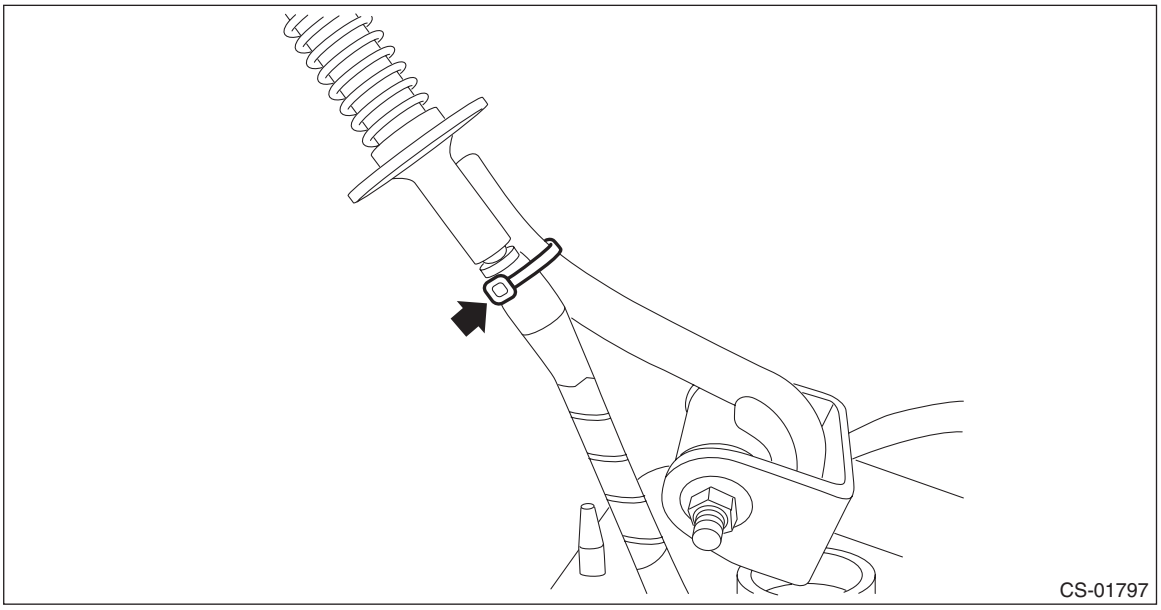

11) Lift up the vehicle.
12) Remove the center exhaust pipe (rear). <Ref. to EX(STI)-7, REMOVAL, Center Exhaust Pipe.>
13) Remove the center exhaust cover.



14) Remove the crossmember. <Ref. to 6MT(TY85)-30, REMOVAL, Transmission Mounting System.>

15) Remove the snap pin and washer, and separate the reverse check cable.

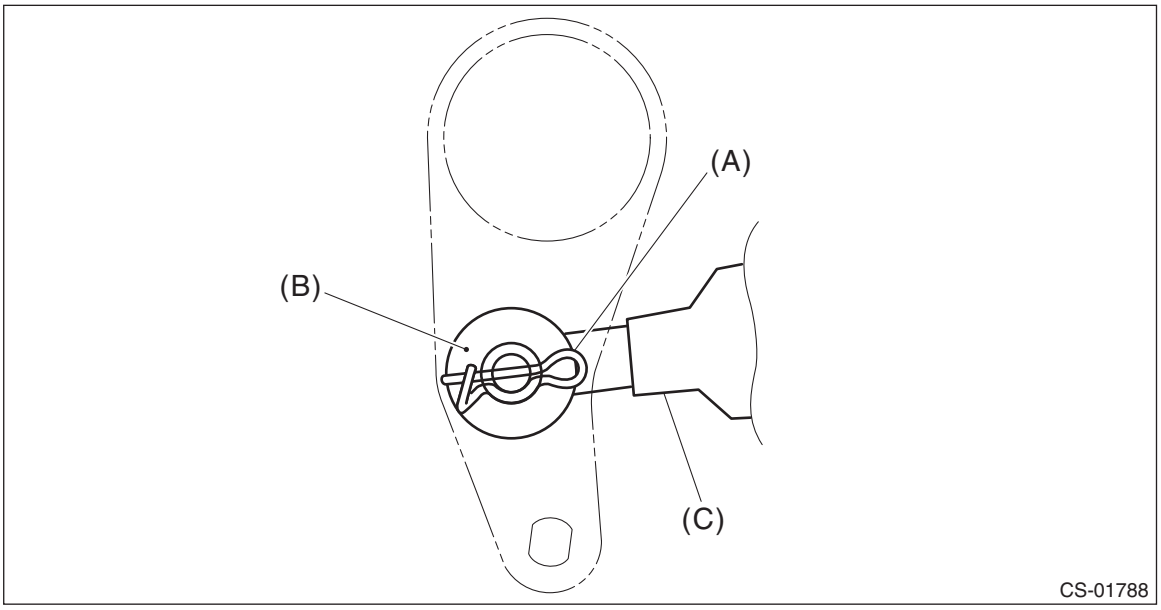

(A) Snap pin (B) Washer (C) Reverse check cable

16) Move the transmission to the right side, and remove the stay bolts and the reverse check cable.

NOTE:
If the transmission is not moved aside, the stay bolts may contact the body and cause damage.

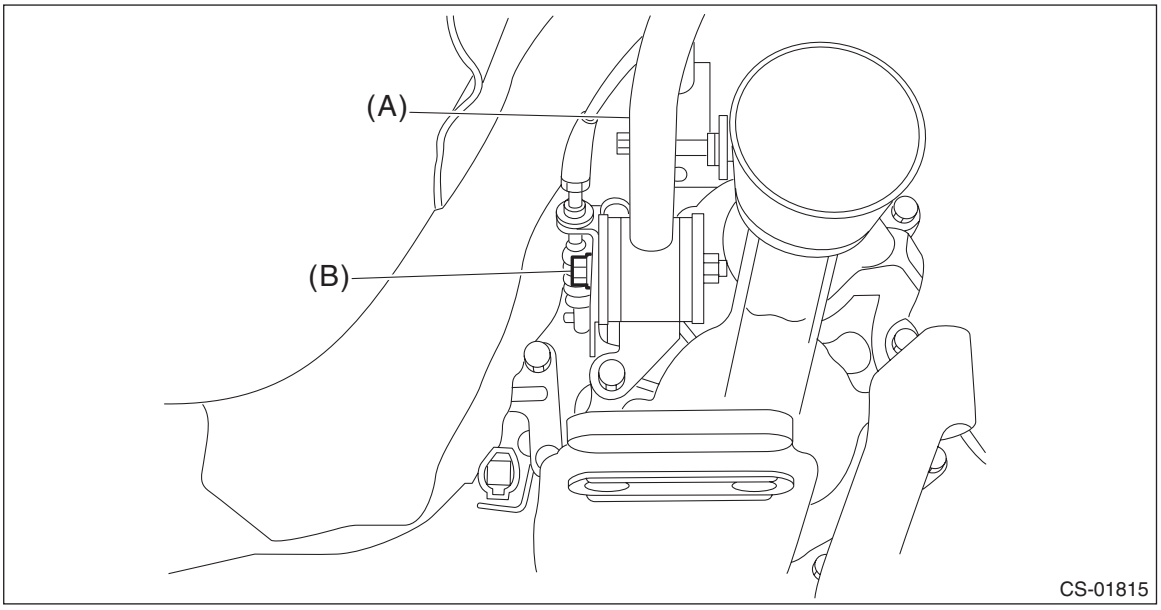

(A) Stay (B) Stay bolt

17) Lift up the stay clip, and separate the stay from the reverse check cable.

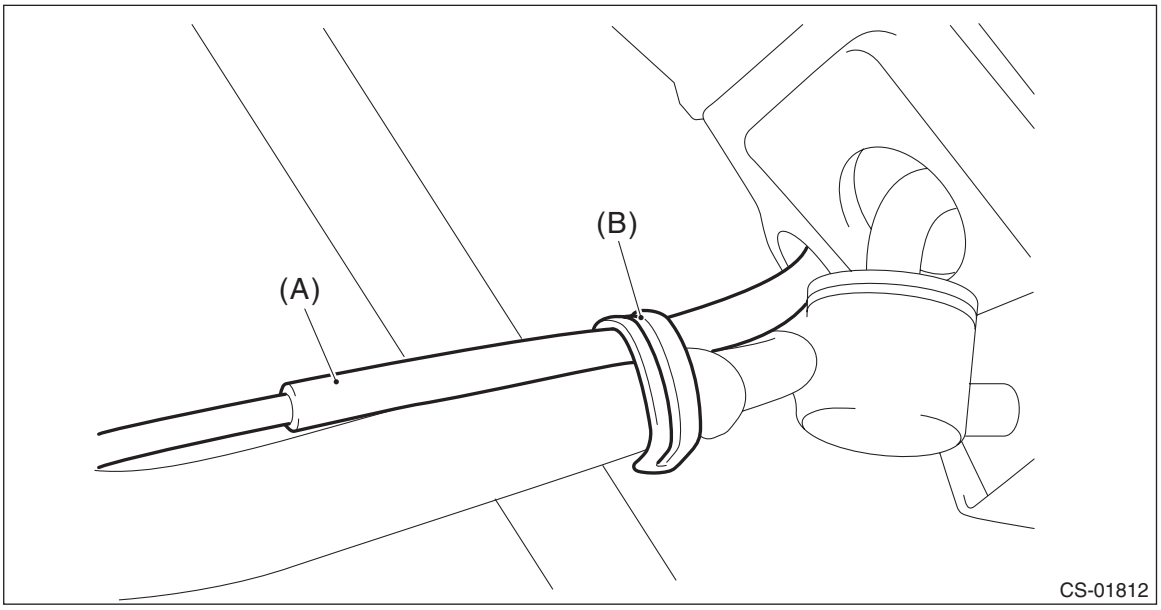

(A) Reverse check cable (B) Clip

18) Pull out the reverse check cable from underside of the vehicle to remove it.

NOTE:
Be careful not to damage the inner boot.

19) Loosen the lock nut, and remove the reverse check cable from the cable plate.

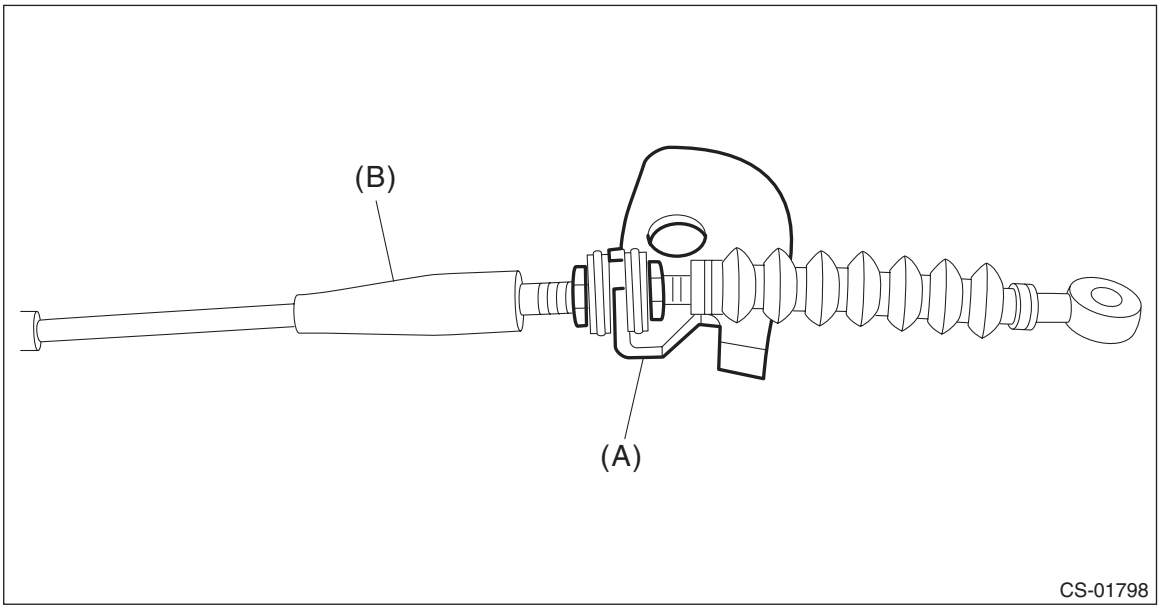

(A) Cable plate (B) Reverse check cable

B: INSTALLATION

1) Insert the reverse check cable into the inner boot hole from underside of the vehicle.
2) Insert the reverse check cable into the gear shift lever assembly, and secure it with the band clip.

NOTE:
- Cut the excess band clip.
- Make sure that the reverse check cable is inserted into the gearshift lever with no gaps.

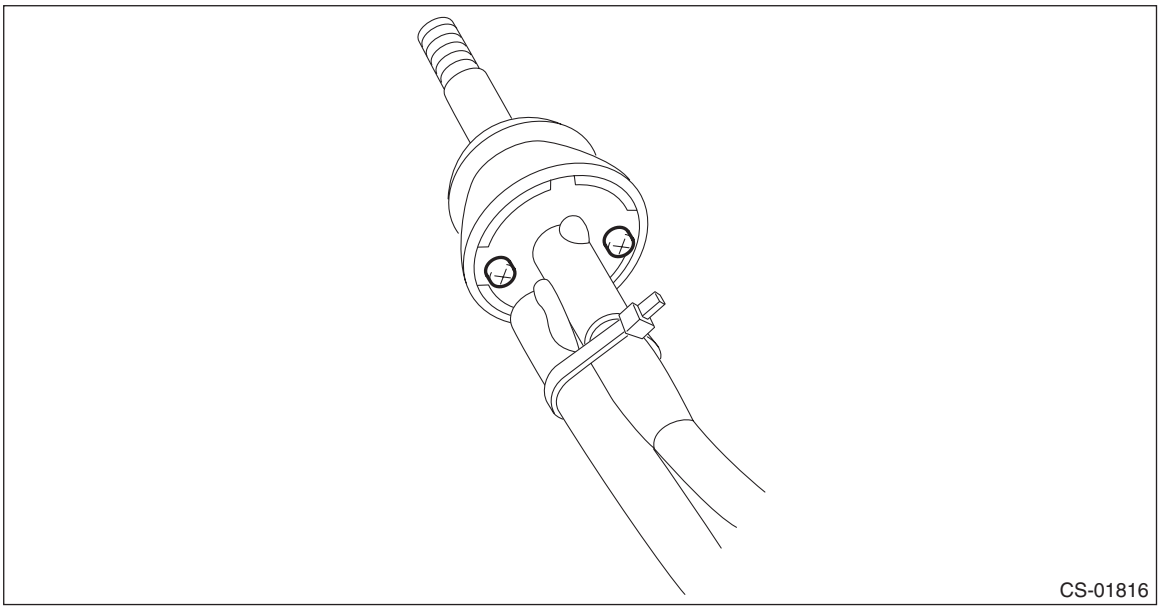

3) Use the spring pin to secure the end of the slider and reverse check cable.

NOTE:
Apply grease to the moving part of slider.

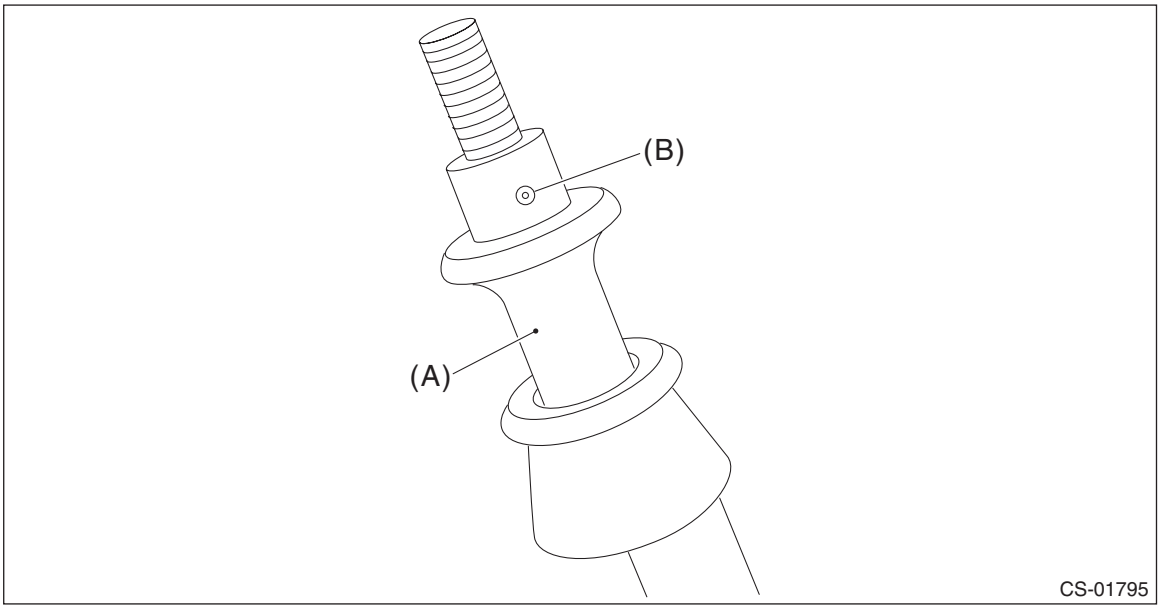

(A) Slider
(B) Spring pin

4) Move the transmission to the right side, and install the stay.

Tightening torque:
T: 32 N·m (3.3 kgf-m, 23.6 ft-lb)

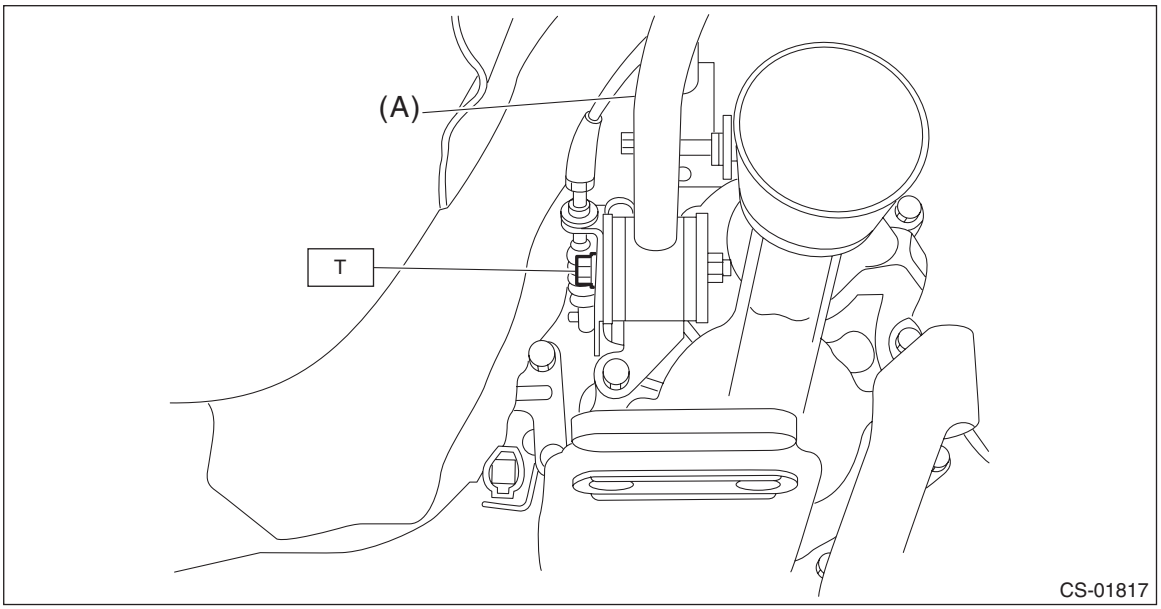

(A) Stay

5) Install the reverse check cable, washer and snap pin.

NOTE:
Make sure to point the snap pin in an appropriate direction.

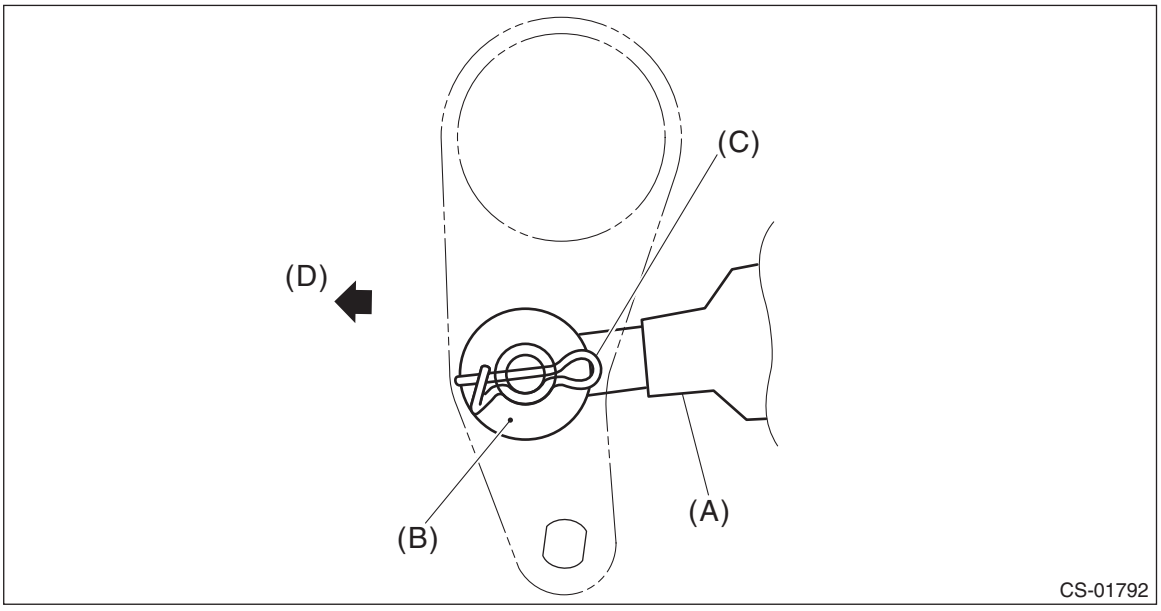

(A) Reverse check cable
(B) Washer
(C) Snap pin
(D) Front side

6) Make sure the hole of extension case is aligned with that of reverse check lever. If the hole positions are not aligned, adjust the reverse check cable. <Ref. to CS-119, ADJUSTMENT, Reverse Check Cable.>

NOTE:
• Check that the M3 bolt goes through the hole of reverse check lever and can be inserted into the hole of extension case.
• When checking visually, confirm that the gap of hole positions is 0.5 mm (0.02 in) or less.

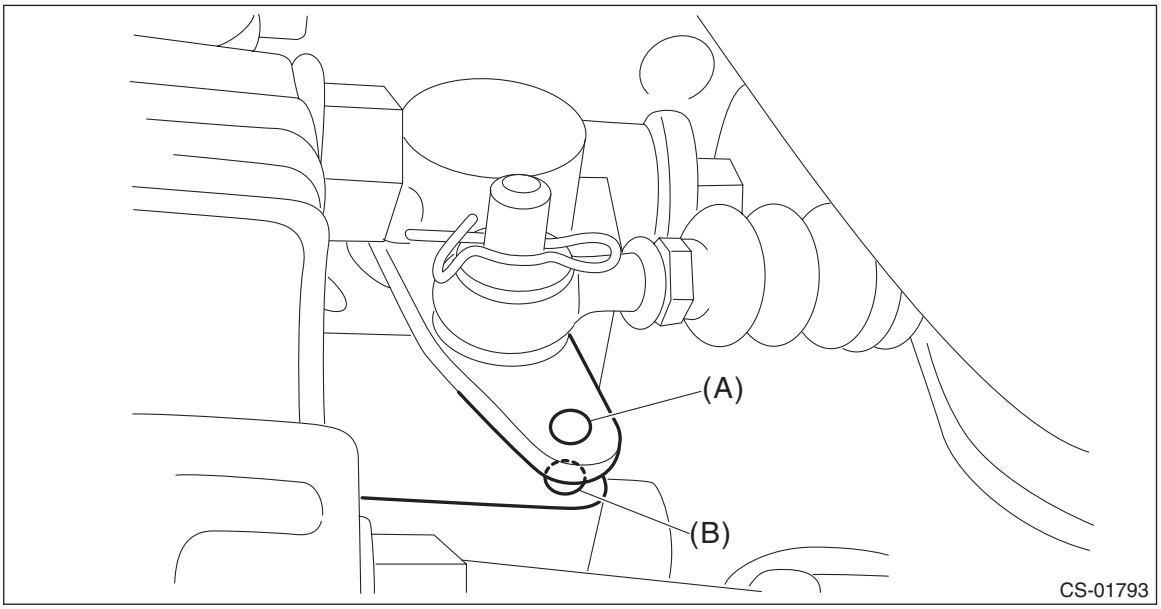

(A) Hole of reverse check lever (B) Hole of extension case

7) Secure the reverse check cable to the stay clip.

NOTE:
Install the reverse check cable on top of the stay.

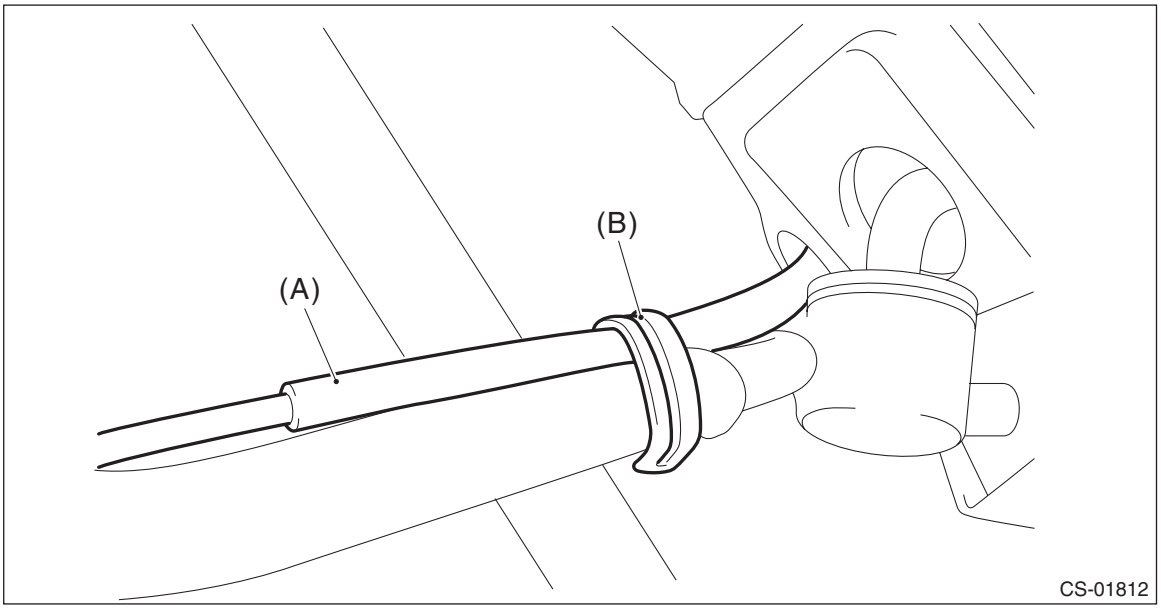

(A) Reverse check cable (B) Clip

8) Install the crossmember. <Ref. to 6MT(TY85)-30, INSTALLATION, Transmission Mounting System.>
9) Install the center exhaust cover.

Tightening torque:
18 N·m (1.8 kgf-m, 13.3 ft-lb)

10) Install the center exhaust pipe (rear). <Ref. to EX(STI)-8, INSTALLATION, Center Exhaust Pipe.>
11) Install the boot and insulator assembly, and secure with a clamp.

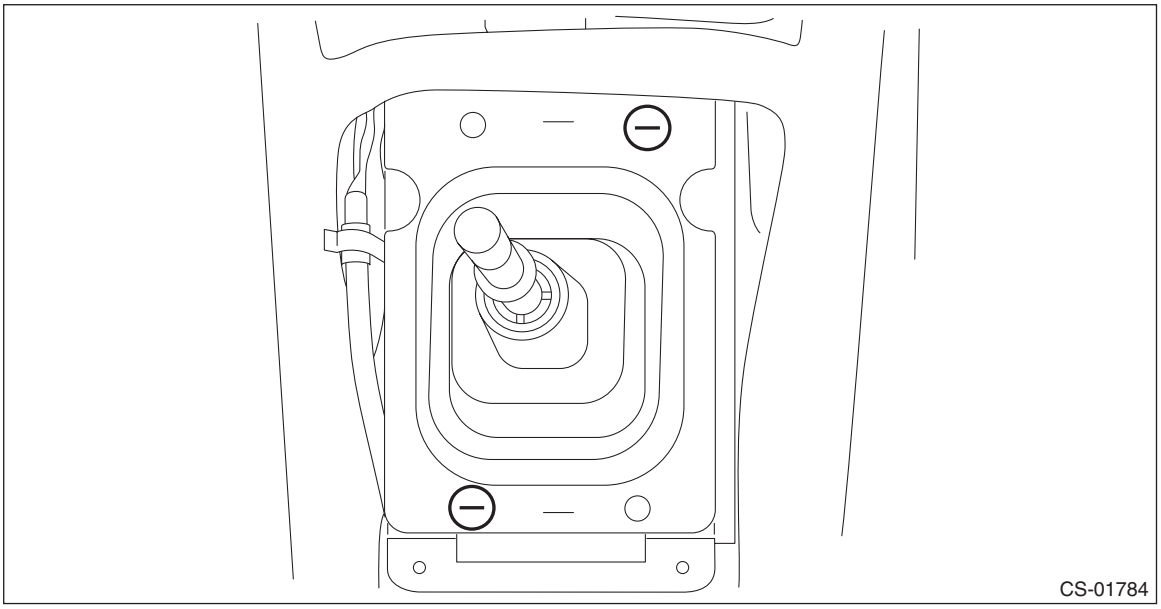

12) Install the panel center LWR LH and RH. <Ref. to EI-71, INSTALLATION, Console Box.>
13) Install the cover - shift lever. <Ref. to EI-71, INSTALLATION, Console Box.>
14) Install the console box assembly. <Ref. to EI-71, INSTALLATION, Console Box.>
15) Install the gear shift knob by turning it clockwise.

CAUTION:
Do not turn the gear shift knob excessively to prevent it from being damaged.

16) Connect the battery ground terminal. <Ref. to NT-6, BATTERY, NOTE, Note.>

C: INSPECTION

1) Make sure the slider moves smoothly. If it does not move, adjust the reverse check cable, or check the slider for damage. <Ref. to CS-119, ADJUSTMENT, Reverse Check Cable.>
2) Check if the gear shifts into reverse when pulling up the slider. If the gear cannot shift into reverse, adjust the reverse check cable. <Ref. to CS-119, ADJUSTMENT, Reverse Check Cable.>
3) Check that the gear does not shift into reverse when the slider is not pulled up. If the gear shifts into reverse, adjust or replace the reverse check cable. <Ref. to CS-119, ADJUSTMENT, Reverse Check Cable.>
4) Make sure the hole of extension case is aligned with that of reverse check lever. If the hole positions are not aligned, adjust the reverse check cable. <Ref. to CS-119, ADJUSTMENT, Reverse Check Cable.>

NOTE:
- Check that the M3 bolt goes through the hole of reverse check lever and can be inserted into the hole of extension case.
- When checking visually, confirm that the gap of hole positions is 0.5 mm (0.02 in) or less.

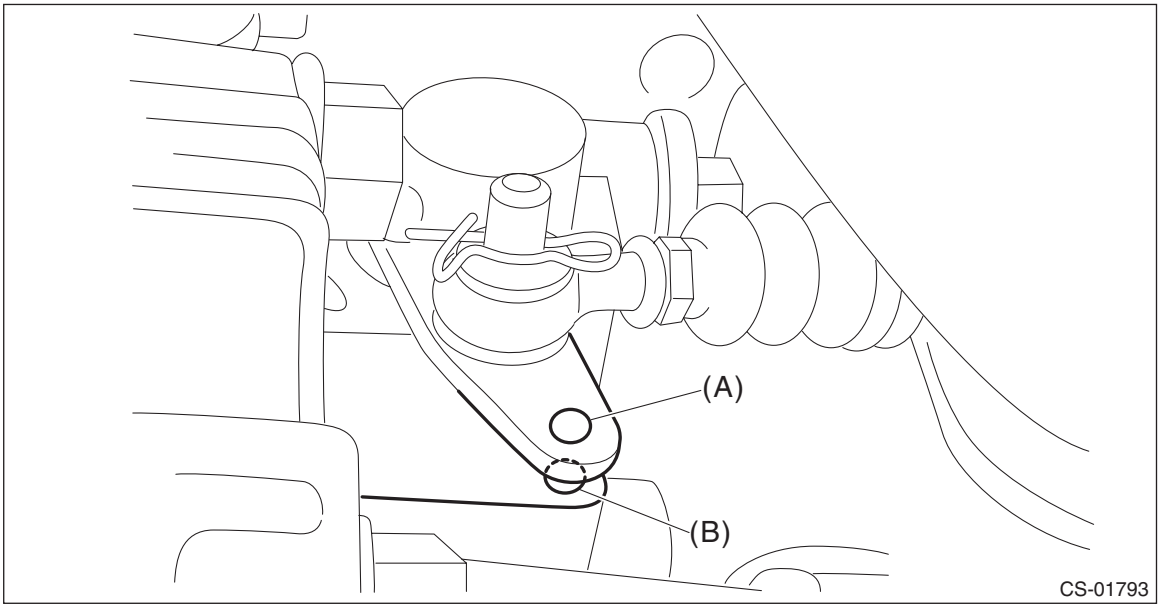

(A) Hole of reverse check lever (B) Hole of extension case

D: ADJUSTMENT

1) Disconnect the ground cable from battery. <Ref. to NT-6, BATTERY, NOTE, Note.>

NOTE:
For model with battery sensor, disconnect the ground terminal from battery sensor.
2) Lift up the vehicle.
3) Remove the center exhaust pipe (rear). <Ref. to EX(STI)-7, REMOVAL, Center Exhaust Pipe.>
4) Remove the center exhaust cover.



5) Remove the crossmember. <Ref. to 6MT(TY85)-30, REMOVAL, Transmission Mounting System.>
6) Measure the distance “A” from the shift bracket seating face on transmission side to the hole edge of the reverse check lever.

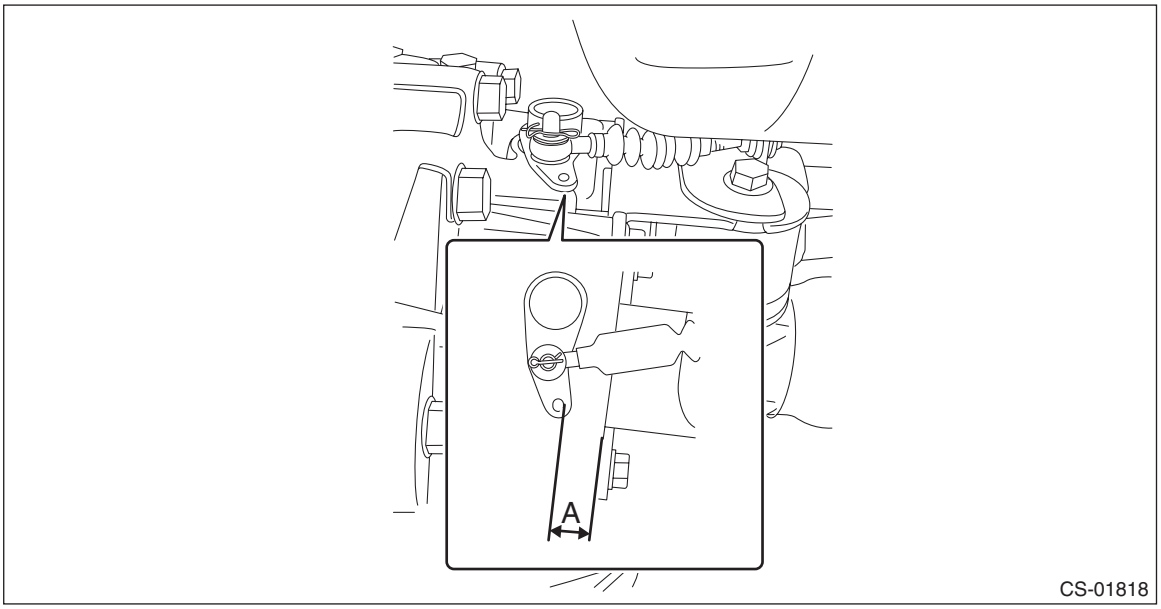

7) Measure the distance “B” from the shift bracket seating face on transmission side to the hole edge of the extension case.

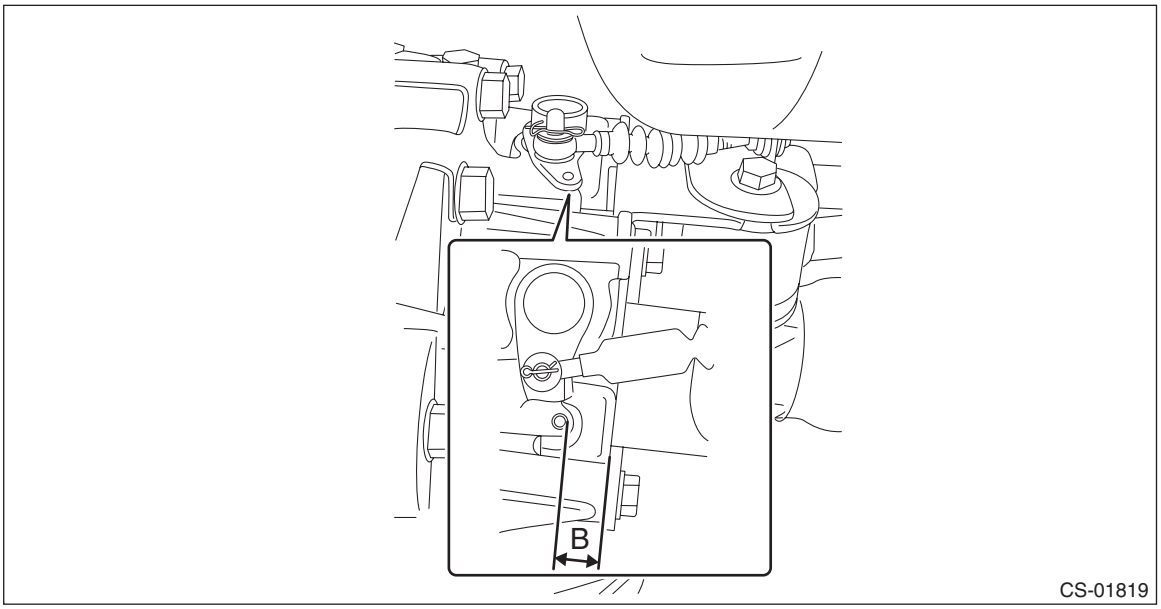

8) Calculate the following formula and determine the amount of cable adjustment.
T mm = (A – B) × 0.56
[T in = (A – B) × 0.56]
T: Amount of cable adjustment
A: Distance from the shift bracket seating face on transmission side to the hole edge of the reverse check lever
B: Distance from the shift bracket seating face on transmission side to the hole edge of the extension case

NOTE:
• If the value “T” (amount of cable adjustment) is positive (+), shorten the length “C” (from cable plate edge to reverse check cable) by using adjustment procedures.
• If the value “T” (amount of cable adjustment) is negative (–), lengthen the length “C” (from cable plate edge to reverse check cable) by using adjustment procedures.

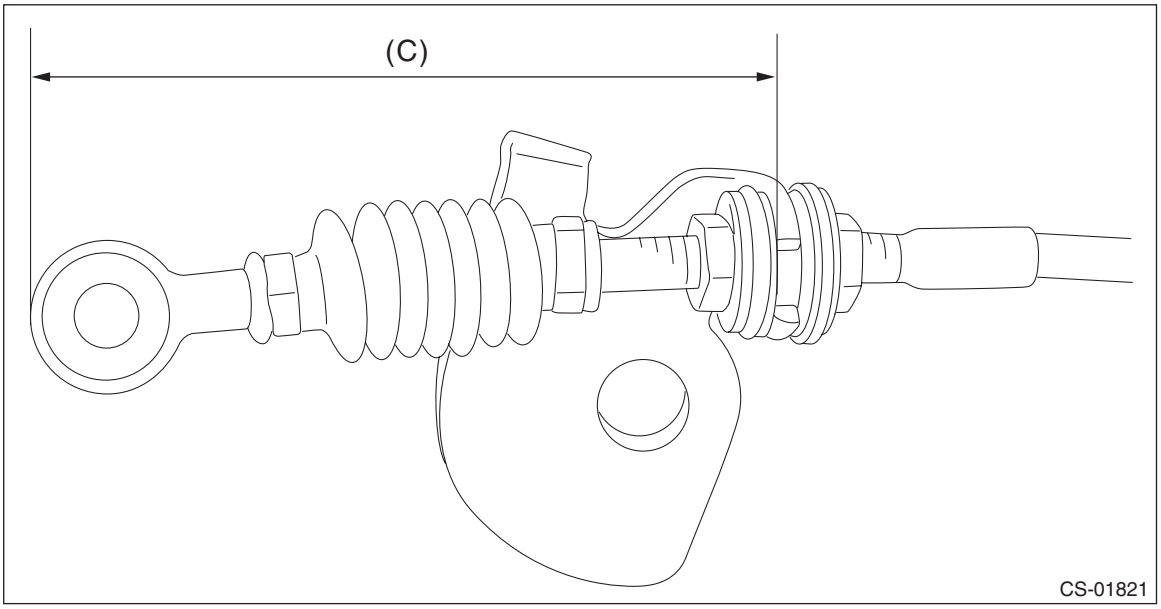

9) Remove the snap pin and washer, and separate the reverse check cable.

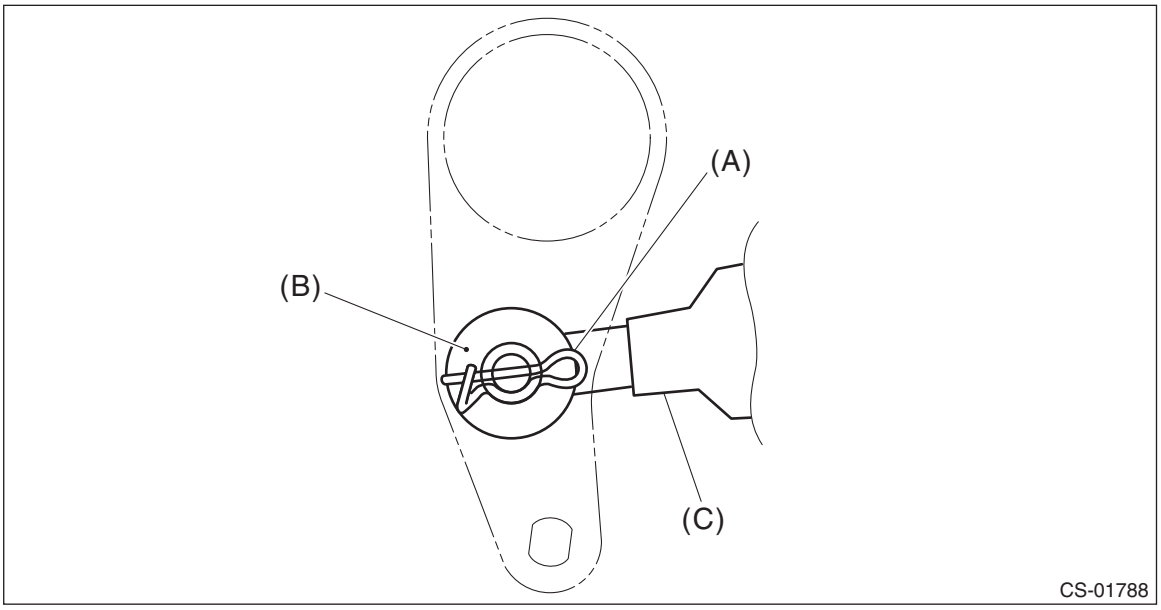

(A) Snap pin (B) Washer (C) Reverse check cable

10) Move the transmission to the right side, and remove the stay bolts and the reverse check cable.

NOTE:
If the transmission is not moved aside, the stay bolts may contact the body and cause damage.

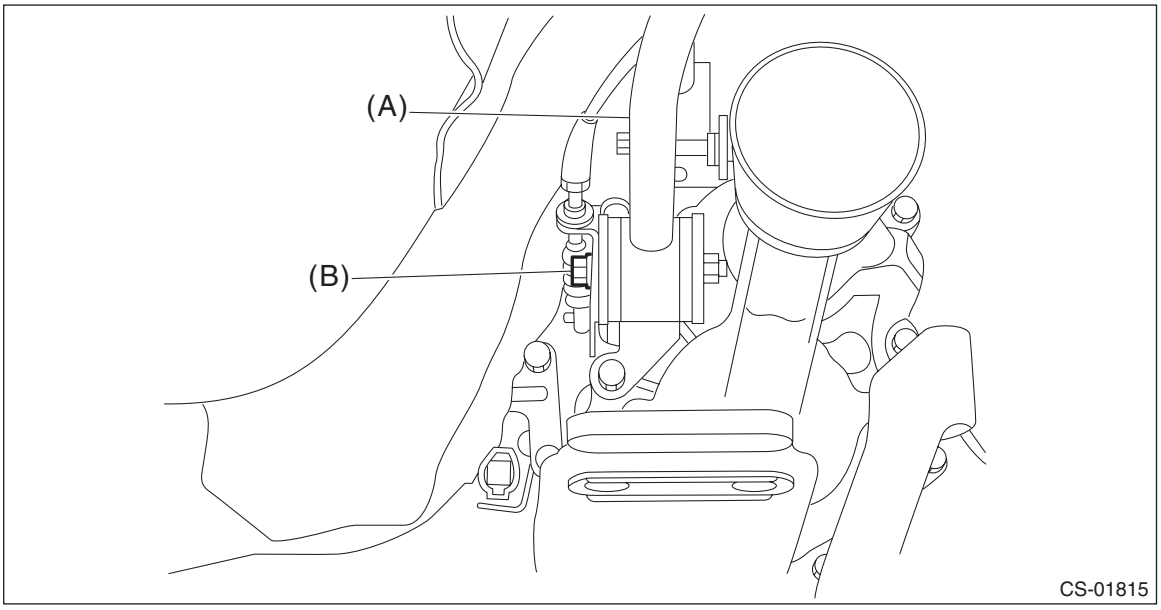

(A) Stay (B) Stay bolt

11) Check the adjustment of the reverse check cable.
(1) Add a marking on the reverse check cable.

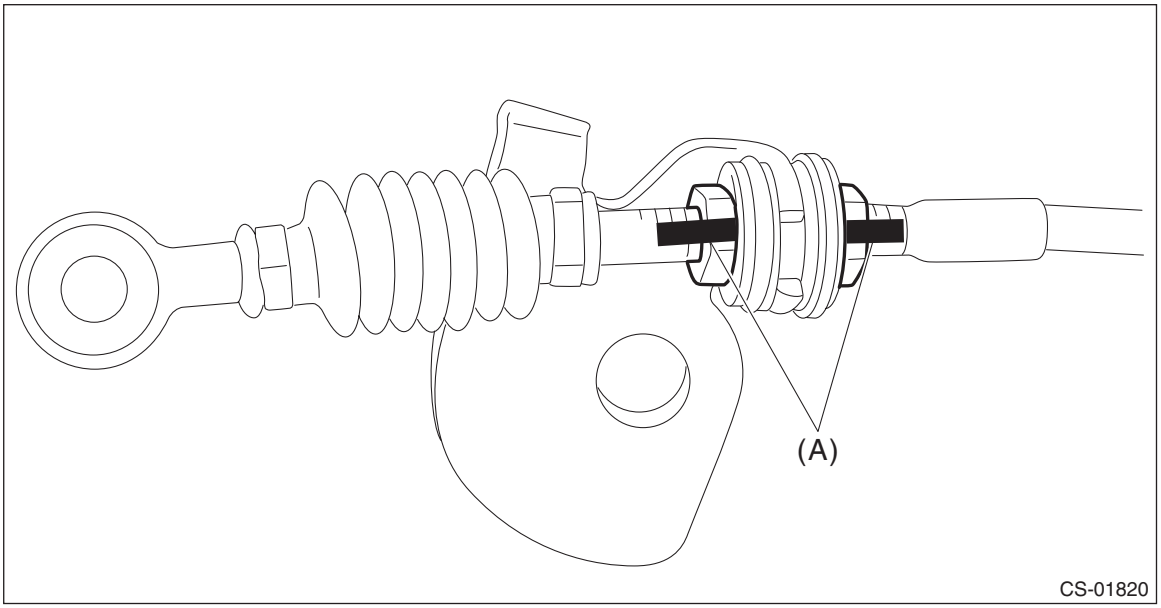

(A) Marking

(2) According to the value “T” (amount of cable adjustment) calculated in the step 8), turn the lock nut of reverse check cable back and forth, then adjust the length “C” (from cable plate edge to reverse check cable).

NOTE:
• Turning the lock nut toward front of the vehicle makes the cable length shorter and toward the rear of the vehicle the cable length longer.
• The amount of the cable adjustment by one lock nut rotation is 1 mm (0.04 in).
• Turn the lock nuts on both sides by the same adjustment amount.

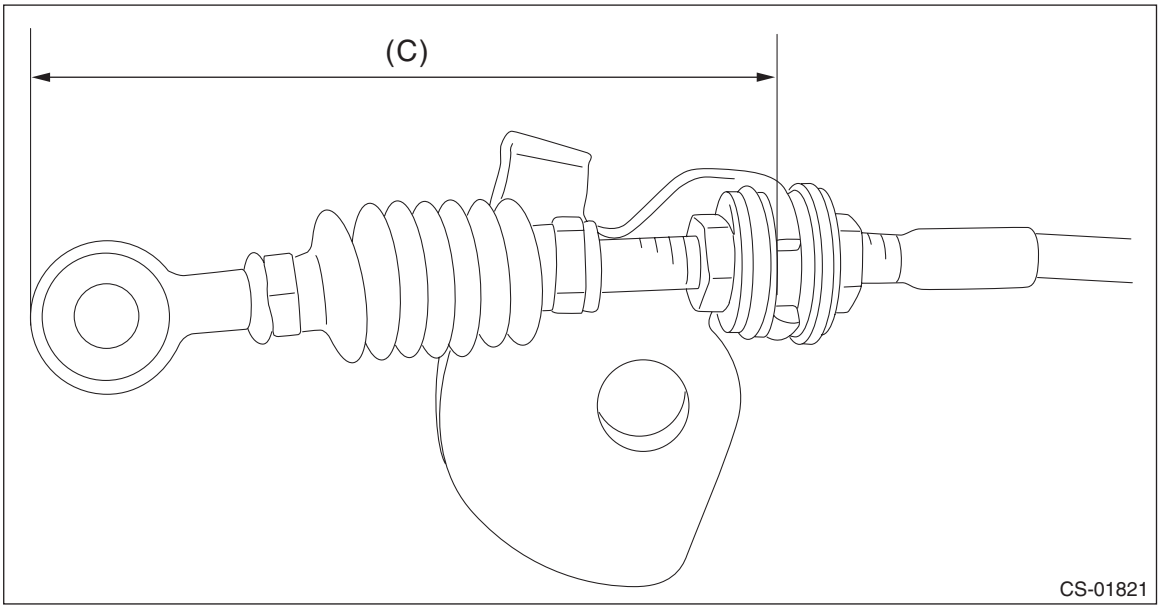

(3) Tighten the lock nut.

Tightening torque:
6 N·m (0.6 kgf-m, 4.4 ft-lb)

12) Move the transmission to the right side, and install the stay.

Tightening torque:
T: 32 N·m (3.3 kgf-m, 23.6 ft-lb)

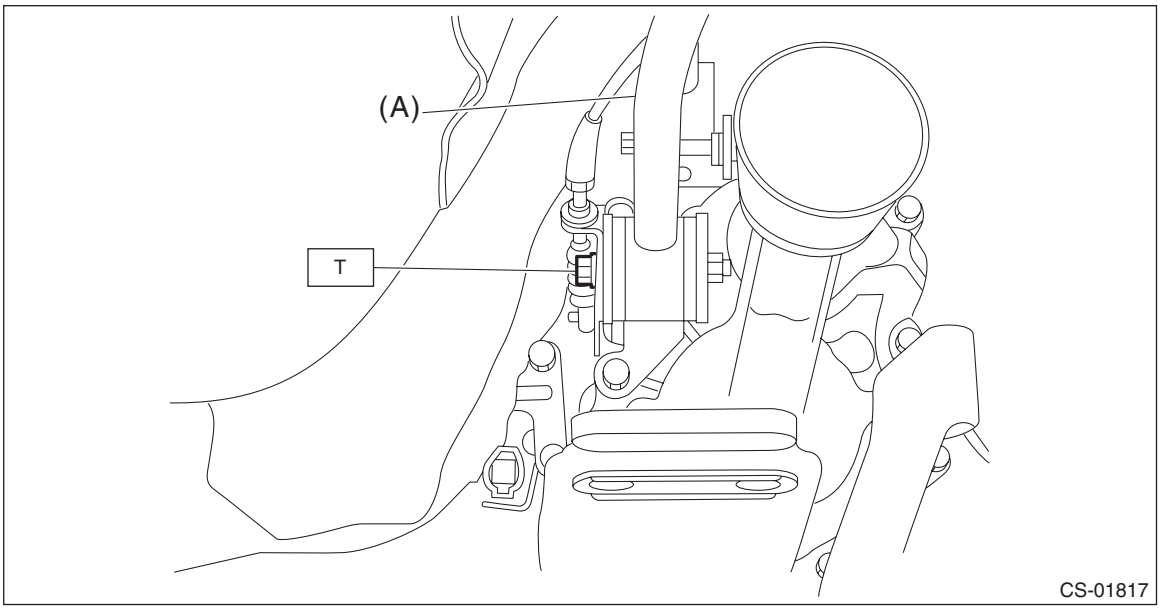

(A) Stay

13) Install the reverse check cable, washer and snap pin.

NOTE:
Make sure to point the snap pin in an appropriate direction.

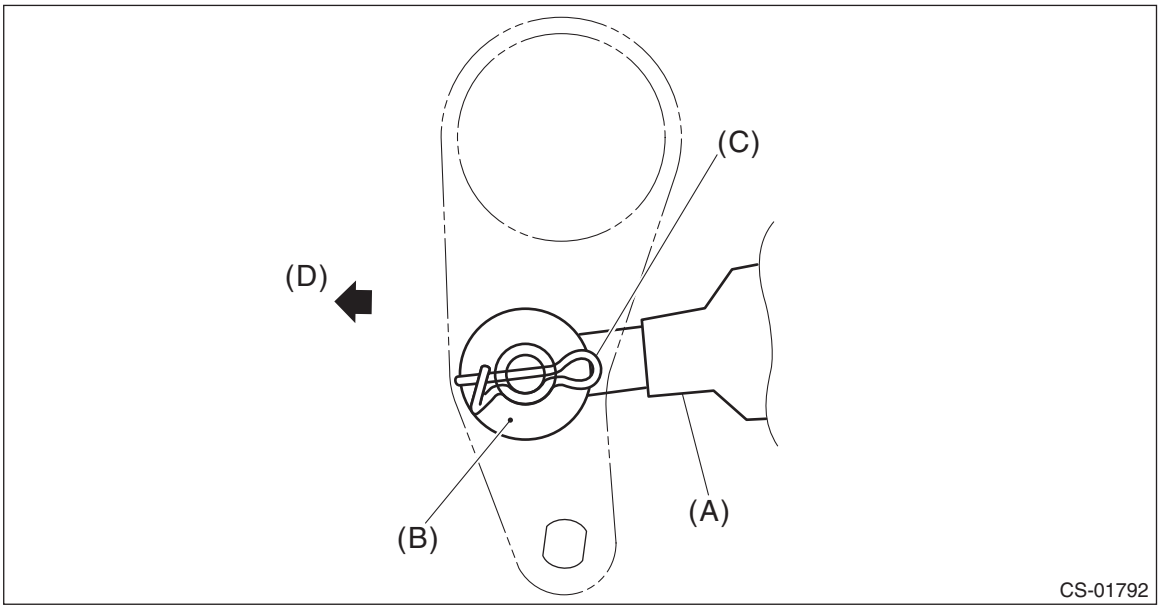

(A) Reverse check cable
(B) Washer
(C) Snap pin
(D) Front side

14) Make sure the hole of extension case is aligned with that of reverse check lever. If the hole positions are not aligned, return to the step 6) and repeat the adjustment procedures of the reverse check cable.

NOTE:
• Check that the M3 bolt goes through the hole of reverse check lever and can be inserted into the hole of extension case.
• When checking visually, confirm that the gap of hole positions is 0.5 mm (0.02 in) or less.

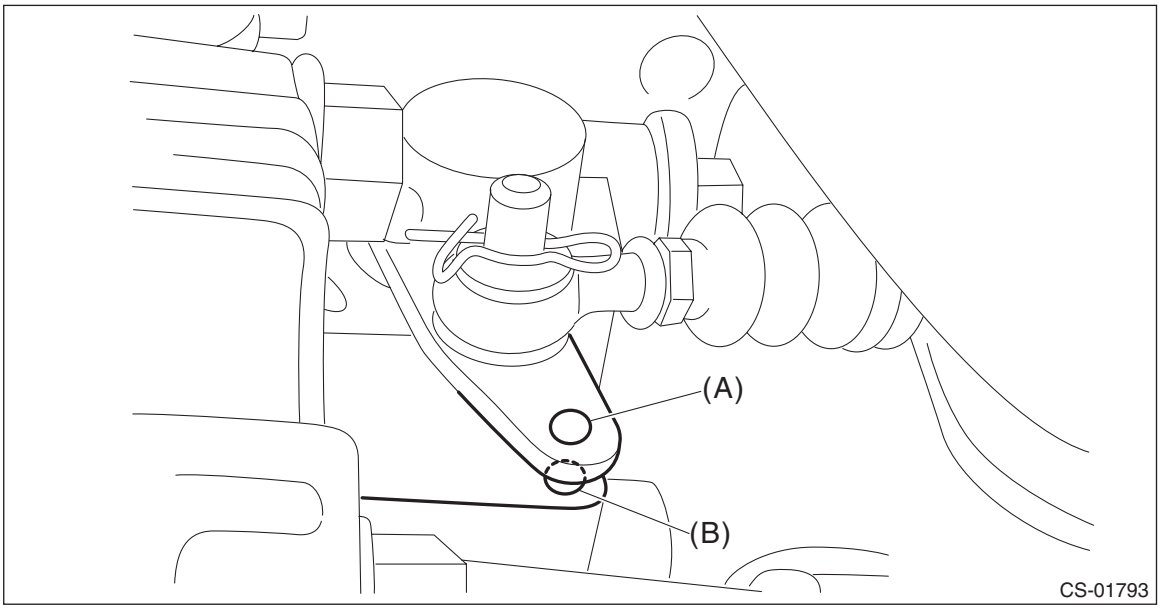

(A) Hole of reverse check lever (B) Hole of extension case

NOTE:
If the hole positions are not aligned after repeating the reverse check cable adjustment, adjust the cable hole position to the reference standard.

Distance from the shift bracket seating face on transmission side to the hole edge of the reverse check lever "A":
Reference standard
16 mm (0.63 in)

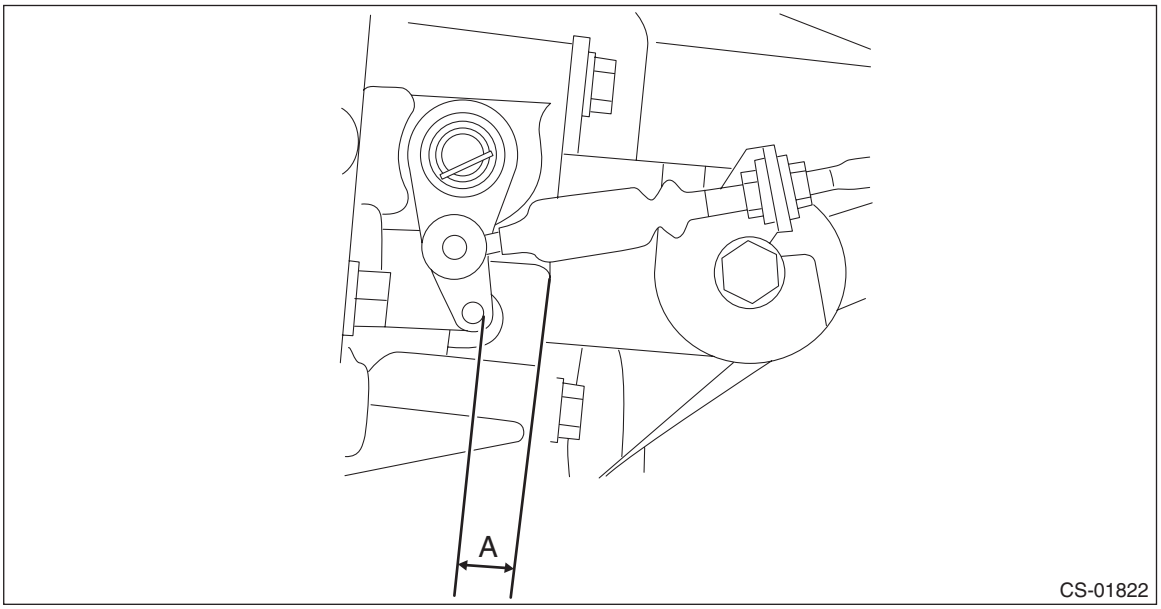

15) Install the crossmember. <Ref. to 6MT(TY85)-30, INSTALLATION, Transmission Mounting System.>

16) Install the center exhaust cover.

Tightening torque:
18 N·m (1.8 kgf-m, 13.3 ft-lb)

17) Install the center exhaust pipe (rear). <Ref. to EX(STI)-8, INSTALLATION, Center Exhaust Pipe.>
18) Connect the battery ground terminal. <Ref. to NT-6, BATTERY, NOTE, Note.>

11.General Diagnostic Table

A: INSPECTION

Symptoms	Possible cause	Corrective action
AT select lever	Starter does not run.	Adjust the select cable and inhibitor switch, or inspect the circuit.
	Back-up light does not illuminate.	Adjust the select cable and inhibitor switch, or inspect the circuit.
	AT shift lock system does not operate normally.	Adjust the select cable and inhibitor switch, or inspect the circuit.
	Manual mode can not be set.	Inspect the mode switch and select lever, or inspect the circuit.
MT gear shift lever (STI model)	Cannot shift into reverse.	Adjust the reverse check cable.
	Can shift into reverse when the slider is not pulled up.	Adjust or replace the reverse check cable.
	Slider cannot be pulled up or sticks in the pulled-up position.	• Check the reverse check system of the transmission. • Adjust or replace the reverse check cable.
MT gear shift lever (Except for STI model)	Cannot shift into reverse.	Adjust the MT gear select cable.
	Shifted to 6th though it shifted to reverse.	Adjust or replace the MT gear select cable.
	Can shift into reverse when the slider is not pulled up.	Adjust or replace the MT gear select cable.
	Slider cannot be pulled up or sticks in the pulled-up position.	• Check the shift link system of the transmission. • Adjust or replace the MT gear select cable.

CONTINUOUSLY VARIABLE TRANSMISSION

CVT(TR690)

		Page
1.	General Description	3
2.	CVTF	36
3.	Differential Gear Oil	41
4.	Variator Chain Break-in	44
5.	Road Test	45
6.	Stall Test	47
7.	Time Lag Test	49
8.	Secondary Pressure (Line Pressure) Test	50
9.	Transfer Clutch Pressure Test	53
10.	Automatic Transmission Assembly	57
11.	Transmission Mounting System	84
12.	Extension Case Oil Seal	88
13.	Differential Side Retainer Oil Seal	90
14.	Inhibitor Switch	93
15.	Secondary Speed Sensor	100
16.	Primary Speed Sensor	103
17.	Front Wheel Speed Sensor	106
18.	Rear Wheel Speed Sensor	108
19.	Secondary Pressure Sensor	111
20.	Control Valve Body	113
21.	Transmission Harness	123
22.	Transmission Control Module (TCM)	126
23.	CVTF Cooler (With Warmer Function)	129
24.	Air Breather Hose	136
25.	Drive Plate	138
26.	Preparation for Overhaul	140
27.	Torque Converter Assembly	141
28.	Extension Case	143
29.	Rear Drive Shaft	147
30.	Transfer Clutch	152
31.	Center Differential Carrier	155
32.	Transfer Reduction Driven Gear	159
33.	Parking Pawl	164
34.	Intermediate Case	166
35.	CVTF Filter	172
36.	Reverse Brake Assembly	173
37.	Forward Clutch Assembly	182
38.	Reduction Driven Gear	203
39.	Transmission Control Device	210
40.	Transmission Case	214
41.	Primary Pulley and Secondary Pulley	230
42.	Variator Chain	245
43.	Drive Pinion Shaft Assembly	246

44. Front Differential Assembly 266
45. Oil Pump 284
46. Oil Pump Chain 285
47. Converter Case Cover 293
48. Front Reduction Drive Gear 303
49. Front Reduction Driven Gear 311
50. Converter Case 319
51. Diagnostics with Phenomenon 323

1. General Description

A: SPECIFICATION

1. TORQUE CONVERTER

Model		2.0 L DOHC turbo
Type		Symmetric, 3-element, single stage, 2-phase torque converter
Stall torque ratio		2.09
Nominal	mm (in)	246 (9.69)
Stall speed (at sea level)	r/min	2,050 — 2,590 (D range) 2,130 — 2,680 (R range)
One-way clutch		Sprag type one-way clutch

2. OIL PUMP

Type		Internal gear pump
Driving method		Driven by chain
Number of teeth	Inner rotor	8
	Outer rotor	9

3. TRANSMISSION CONTROL ELEMENT

Type	Forward continuously variable speed change, 1 reverse, planetary gear
Multi-plate clutch	1 set
Multi-plate brake	1 set

4. TRANSMISSION GEAR RATIO

Forward	3.505 — 0.544
Rev	2.345

5. PLATE

Number of input clutch drive plates	5
Number of forward clutch drive plates	6
Number of reverse brake drive plates	5

6. SELECTOR POSITION

P (Park)	Transmission neutral, output shaft locked, engine start enabled
R (Reverse)	Rev
N (Neutral)	Transmission neutral, engine start enabled
D (Drive)	Forward continuously variable speed change and 8 speed step change*1
M (Manual mode) (paddle shift +side)	Manual gear change 1st → 2nd → 3rd → 4th → 5th → 6th → 7th*1 → 8th*1
M (Manual mode) (paddle shift –side)	Manual gear change 1st ← 2nd ← 3rd ← 4th ← 5th ← 6th ← 7th*1 ← 8th*1

*1: Only when in S# mode

7. HYDRAULIC CONTROL AND LUBRICATION

Type	Electronic hydraulic control (speed changed by signals of vehicle speed and accelerator opening angle)
Fluid	Specified fluid: Subaru High Torque CVT Fluid **CAUTION:** **Always use specified CVTF. Using other fluid will cause malfunction.**
Fluid capacity L (US qt, Imp qt)	12.11 — 12.61 (12.8 — 13.3, 10.7 — 11.1)
Lubrication system	Forced feed lubrication with oil pump

8. COOLING AND HARNESS

Cooling system	CVTF cooler (with warmer feature)
Inhibitor switch harness	12 poles
Transmission harness	20 poles

9. TRANSFER

Transfer type	Variable torque distribution (VTD)
Number of transfer clutch drives & driven plates	3
Control method	Electronic hydraulic type
Reduction gear ratio	1.000 (37/37)

10.REDUCTION GEAR RATIO

Front final reduction gear ratio	3.900

11.FRONT DIFFERENTIAL GEAR OIL

Fluid	Recommended fluid: SUBARU GEAR OIL EXTRA MT **CAUTION:** **If an alternative transmission oil is used, you may not have expected functionality and performance.** Alternative fluid: GL-5 (75W-90)
Fluid capacity L (US qt, Imp qt)	1.3 — 1.5 (1.4 — 1.6, 1.1 — 1.3)

B: COMPONENT

1. TORQUE CONVERTER ASSEMBLY AND CONVERTER CASE

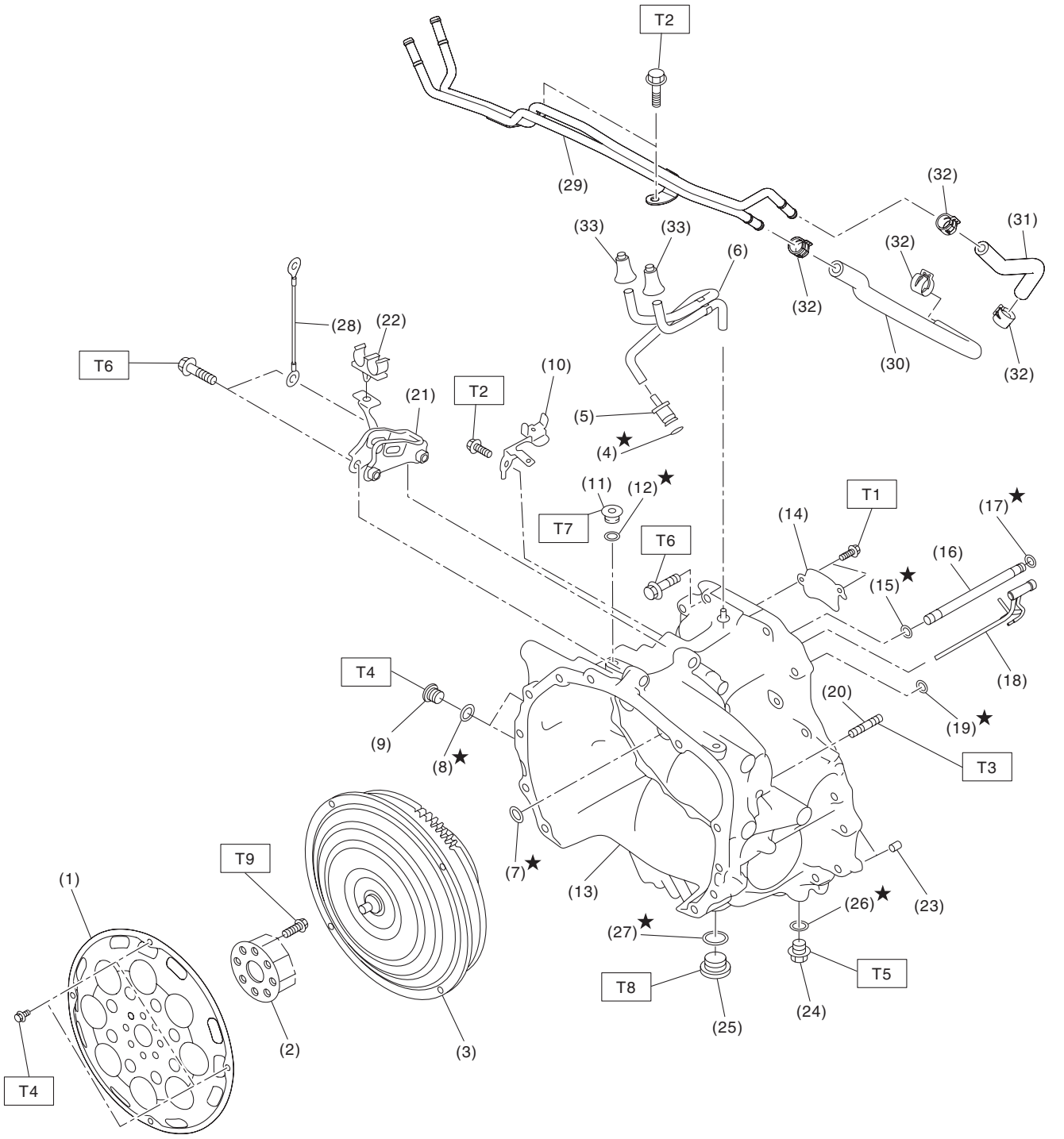

(1) Drive plate
(2) Reinforcement drive plate
(3) Torque converter ASSY
(4) O-ring
(5) Oil charge pipe cap
(6) Air breather hose
(7) O-ring
(8) O-ring
(9) Plug
(10) Transmission harness stay
(11) Plug
(12) O-ring
(13) Converter case
(14) Oil stopper plate
(15) O-ring
(16) Lubrication pipe
(17) O-ring
(18) Lubrication pipe
(19) O-ring
(20) Stud bolt
(21) Pitching stopper bracket
(22) Clip
(23) Straight pin
(24) Overflow drain plug
(25) Front differential gear oil drain plug
(26) Gasket
(27) Gasket
(28) Transmission radio ground cord
(29) CVT cooler pipe COMPL
(30) CVTF hose
(31) CVTF hose
(32) Clamp
(33) Air breather cap

Tightening torque: N·m (kgf-m, ft-lb)
T1: 9 (0.9, 6.6)
T2: 16 (1.6, 11.8)
T3: 18 (1.8, 13.3)
T4: 25 (2.5, 18.4)
T5: 35 (3.6, 25.8)
T6: 41 (4.2, 30.2)
T7: 50 (5.1, 36.9)
T8: 70 (7.1, 51.6)
T9: <Ref. to CVT(TR690)-138, INSTALLATION, Drive Plate.>

2. OIL PUMP ASSY

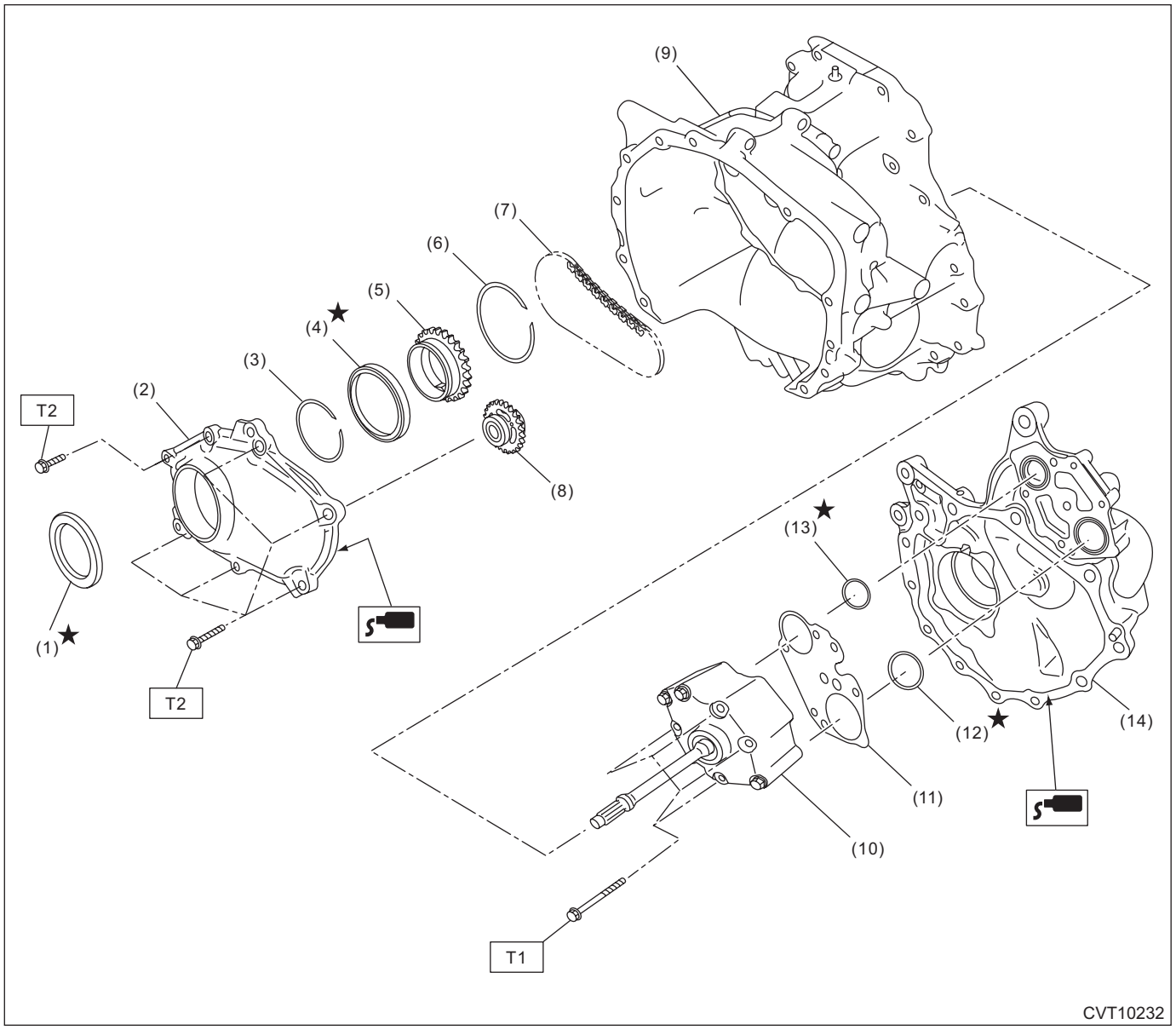

(1) Oil seal
(2) Oil pump chain cover
(3) Snap ring
(4) Ball bearing
(5) Drive sprocket
(6) Snap ring
(7) Oil pump chain
(8) Driven sprocket
(9) Converter case
(10) Oil pump ASSY
(11) Plate
(12) O-ring (large)
(13) O-ring (small)
(14) Drive pinion retainer

Tightening torque: N·m (kgf-m, ft-lb)
T1: 8.5 (0.9, 6.3)
T2: 24 (2.4, 17.7)

3. TRANSMISSION CASE

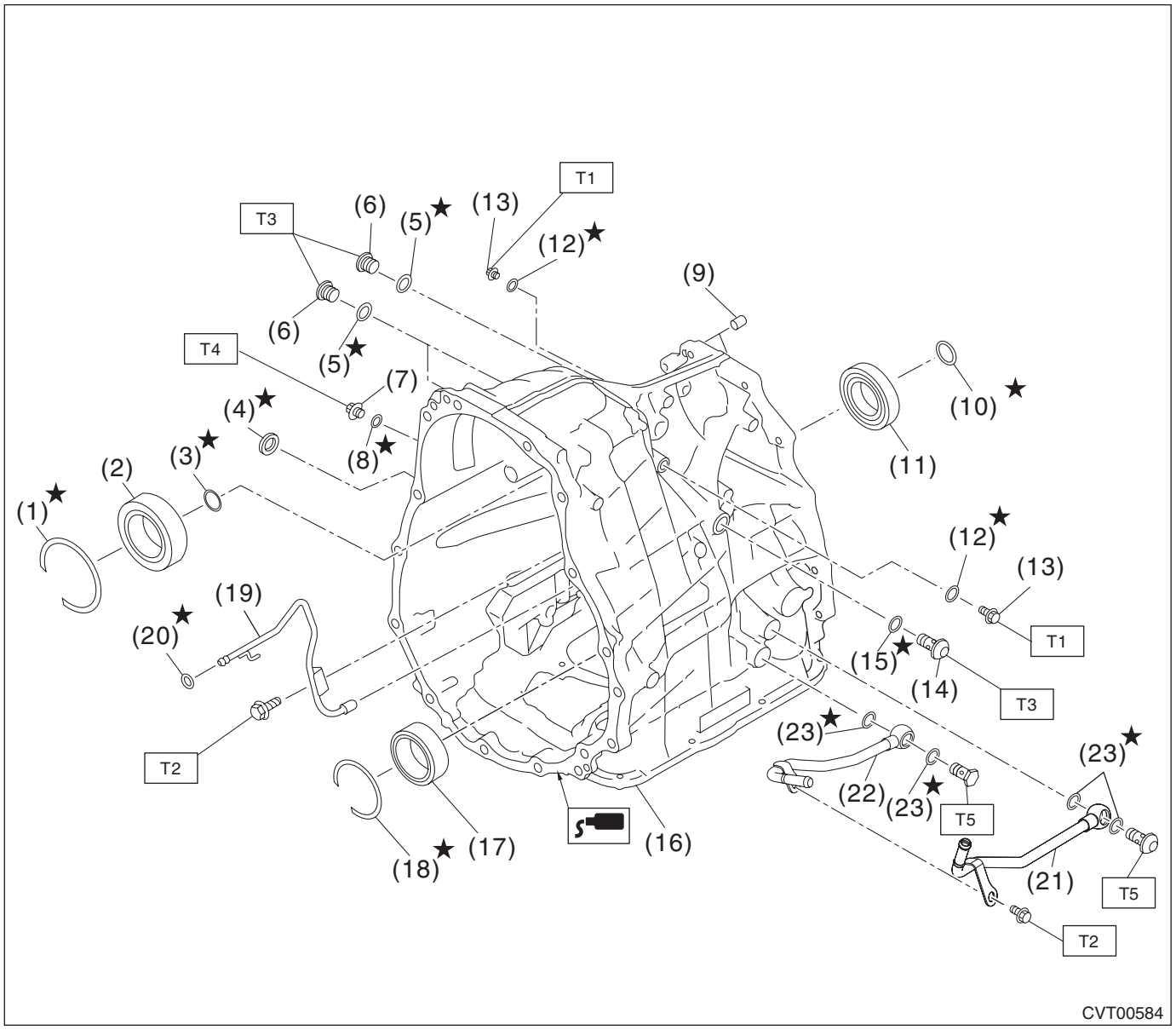

(1) Snap ring
(2) Roller bearing
(3) Seal ring
(4) Oil seal
(5) O-ring
(6) Plug
(7) Plug
(8) Gasket
(9) Straight pin
(10) Seal ring
(11) Ball bearing
(12) O-ring
(13) Plug
(14) Plug
(15) O-ring
(16) Transmission case
(17) Roller bearing
(18) Snap ring
(19) Lubrication pipe
(20) O-ring
(21) CVTF outlet pipe
(22) CVTF inlet pipe
(23) Gasket

Tightening torque: N·m (kgf-m, ft-lb)
T1: 13 (1.3, 9.6)
T2: 16 (1.6, 11.8)
T3: 25 (2.5, 18.4)
T4: 35 (3.6, 25.8)
T5: 40 (4.1, 29.5)

4. CONTROL VALVE BODY

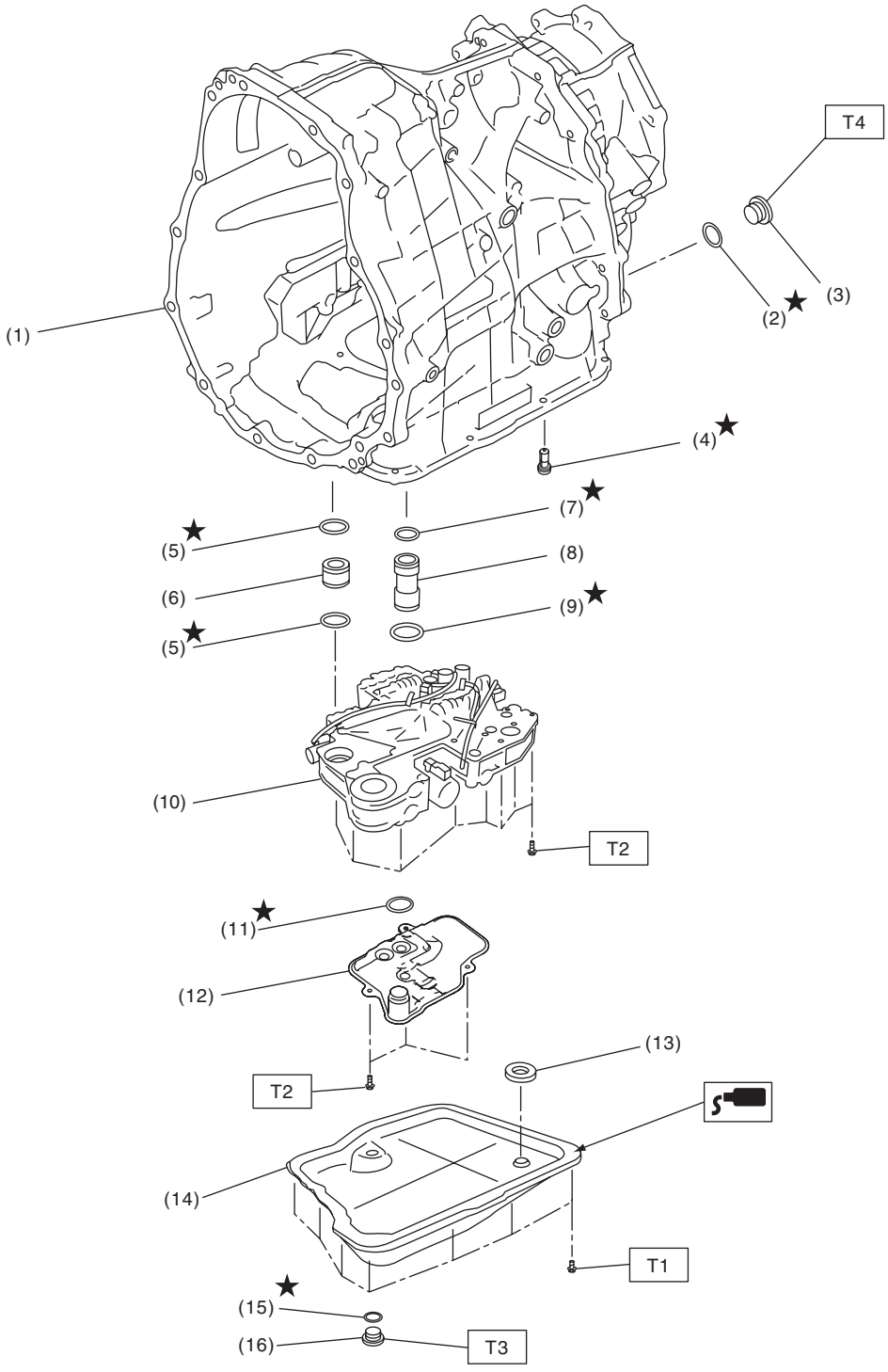

(1) Transmission case
(2) Gasket
(3) Filler plug
(4) CVTF filter
(5) O-ring
(6) Pressure pipe
(7) O-ring (small)
(8) CVTF pipe
(9) O-ring (large)
(10) Control valve body
(11) O-ring
(12) Oil strainer
(13) Magnet
(14) Oil pan
(15) Gasket
(16) CVTF drain plug

Tightening torque: N·m (kgf-m, ft-lb)
T1: 5 (0.5, 3.7)
T2: 9 (0.9, 6.6)
T3: 39.2 (4.0, 28.9)
T4: 50 (5.1, 36.9)

5. REVERSE BRAKE ASSEMBLY AND INTERMEDIATE CASE

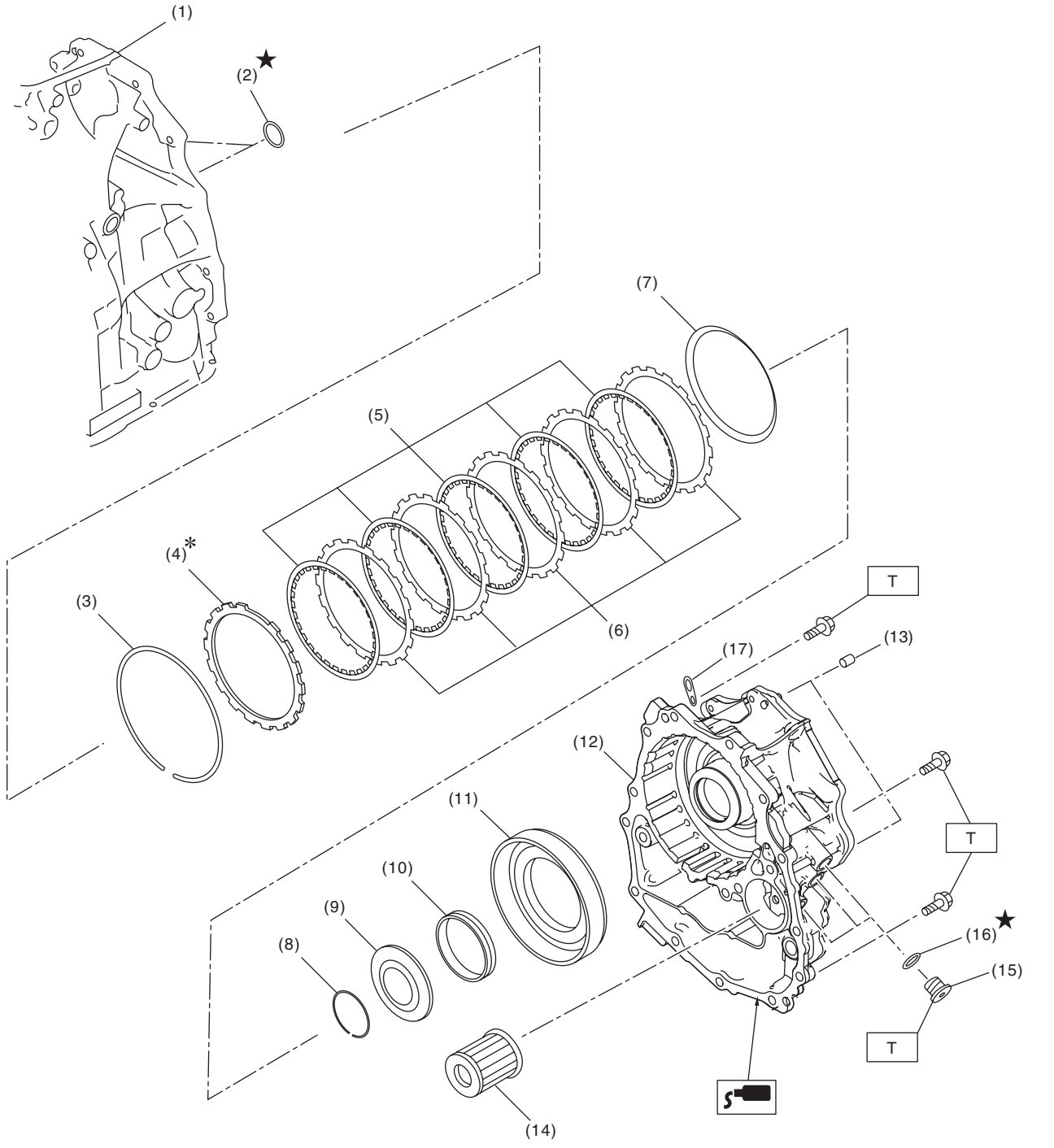

AT-07299

(1) Transmission case
(2) O-ring
(3) Snap ring
(4) Retaining plate
(5) Drive plate
(6) Driven plate
(7) Dish plate
(8) Snap ring
(9) Spring retainer
(10) Return spring
(11) Reverse brake piston
(12) Intermediate case
(13) Straight pin
(14) CVTF filter
(15) Plug
(16) O-ring
(17) Transmission hanger

Tightening torque: N·m (kgf-m, ft-lb)
T: 25 (2.5, 18.4)

6. FORWARD CLUTCH ASSEMBLY AND REDUCTION DRIVEN GEAR

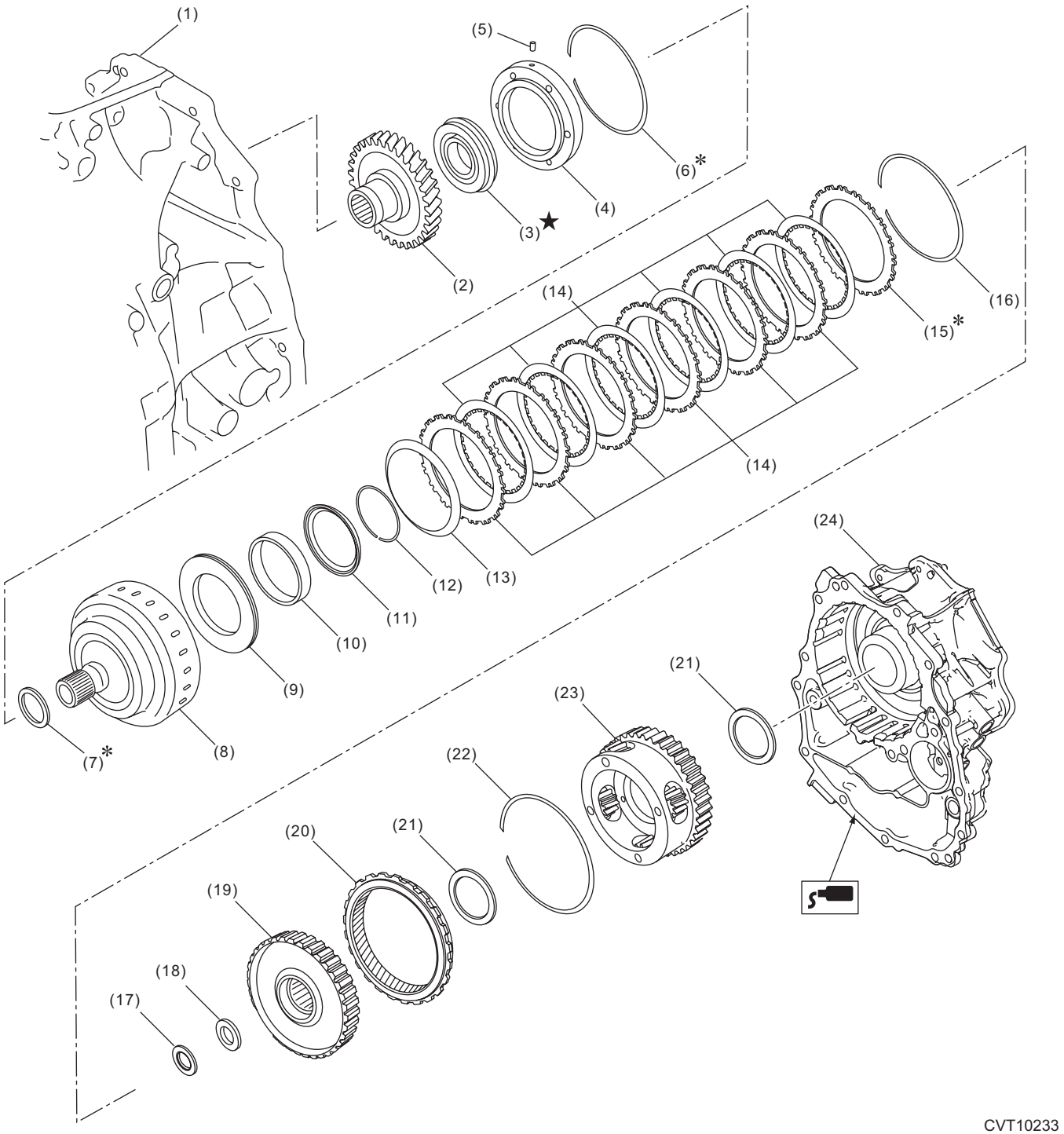

CVT10233

(1) Transmission case
(2) Reduction driven gear
(3) Ball bearing
(4) Reduction driven gear retainer
(5) Straight pin
(6) Snap ring
(7) Washer
(8) Forward clutch drum
(9) Forward clutch piston
(10) Return spring
(11) Forward clutch piston retainer
(12) Snap ring
(13) Dish plate
(14) Forward clutch plate
(15) Retaining plate
(16) Snap ring
(17) Thrust needle bearing
(18) Washer
(19) Sun gear ASSY
(20) Internal gear
(21) Thrust needle bearing
(22) Snap ring
(23) Planetary carrier ASSY
(24) Intermediate case

7. FRONT REDUCTION DRIVE GEAR AND FRONT REDUCTION DRIVEN GEAR

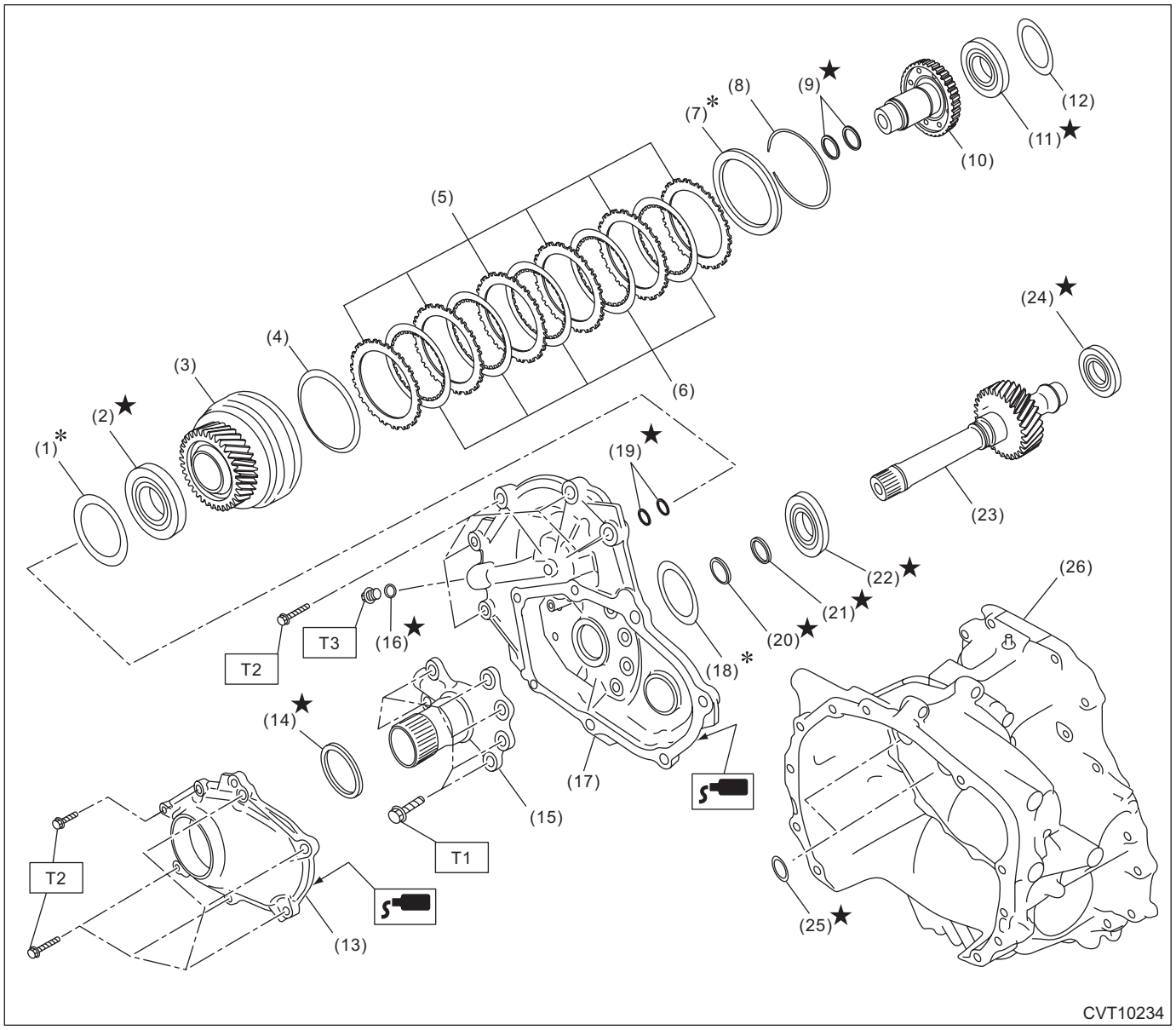

(1) Shim
(2) Ball bearing
(3) Front reduction driven gear
(4) Dish plate
(5) Driven plate
(6) Drive plate
(7) Retaining plate
(8) Snap ring
(9) Seal ring
(10) Front reduction driven shaft
(11) Ball bearing
(12) Shim
(13) Oil pump chain cover
(14) Seal ring
(15) Center support COMPL
(16) O-ring
(17) Converter case cover
(18) Shim
(19) Seal ring
(20) O-ring
(21) Seal ring
(22) Ball bearing
(23) Front reduction drive gear
(24) Ball bearing
(25) O-ring
(26) Converter case

Tightening torque: N·m (kgf-m, ft-lb)
T1: 21.5 (2.2, 15.9)
T2: 24 (2.4, 17.7)
T3: 25 (2.5, 18.4)

8. TRANSMISSION CONTROL DEVICE

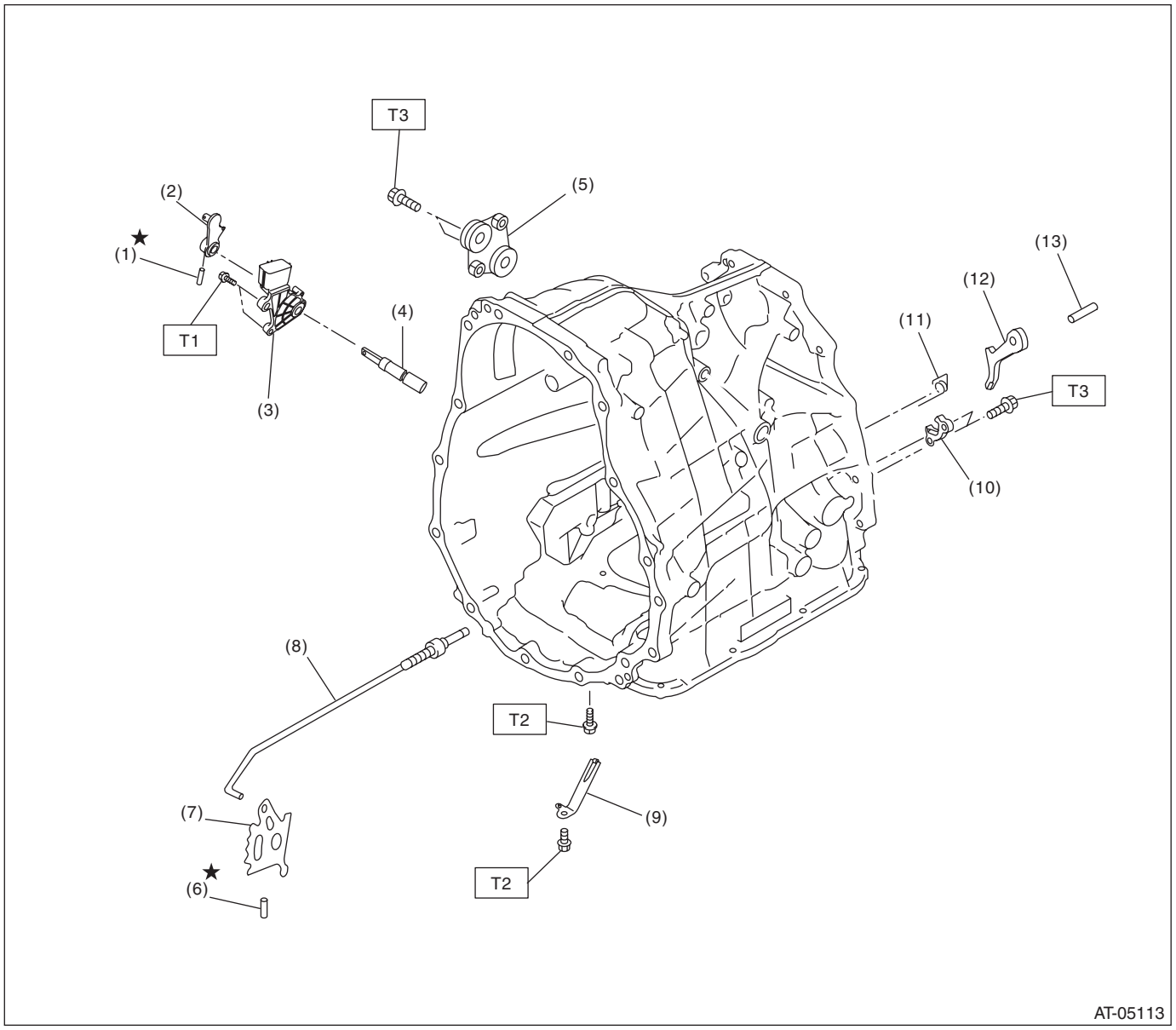

(1) Spring pin
(2) Shifter arm
(3) Inhibitor switch
(4) Shifter arm shaft
(5) Cable plate ASSY
(6) Spring pin
(7) Manual plate
(8) Parking rod
(9) Detent spring
(10) Parking support
(11) Return spring
(12) Parking pawl
(13) Shaft

Tightening torque: N·m (kgf-m, ft-lb)
T1: 5 (0.5, 3.7)
T2: 7 (0.7, 5.2)
T3: 25 (2.5, 18.4)

9. PRIMARY PULLEY, SECONDARY PULLEY AND VARIATOR CHAIN

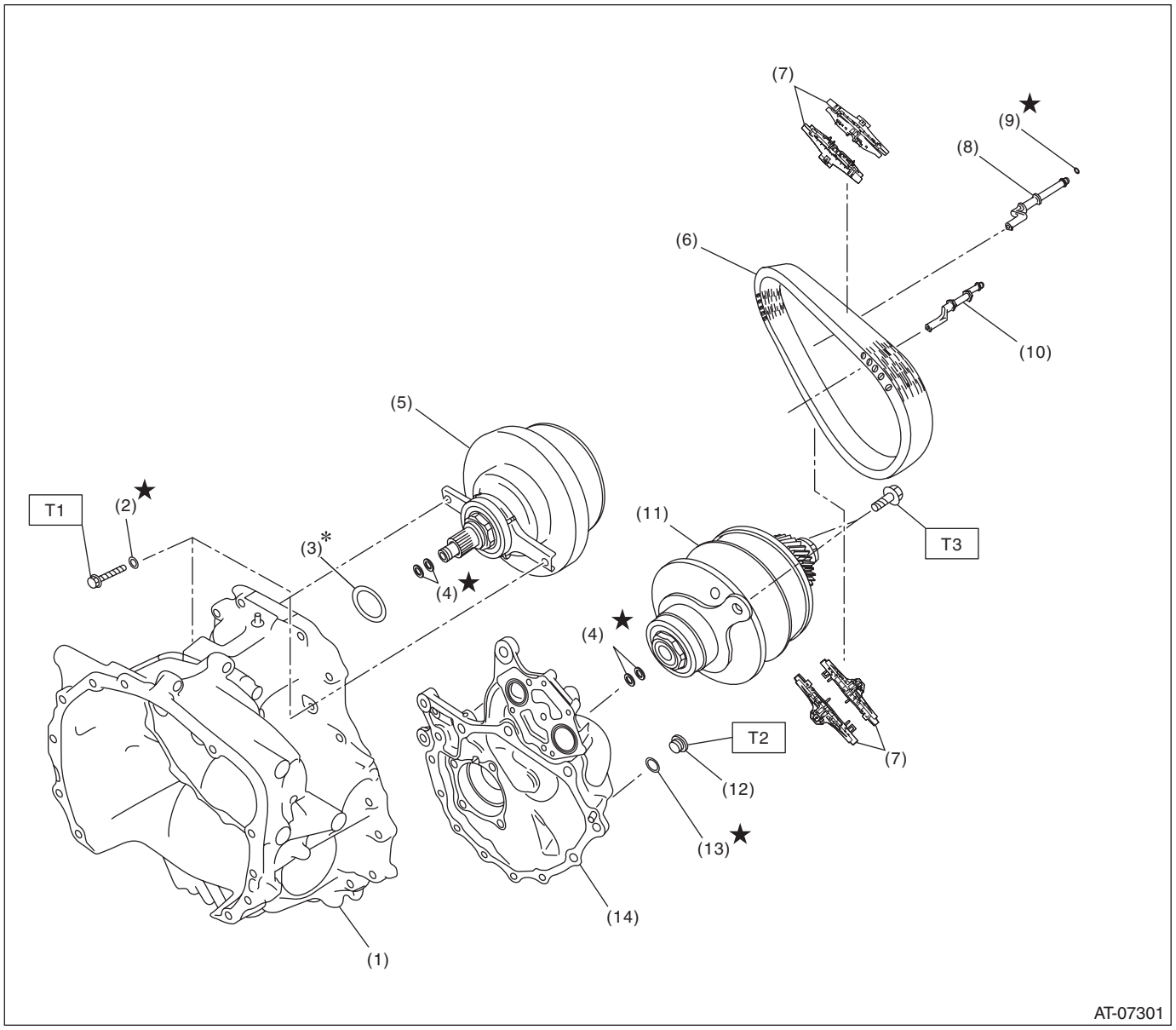

(1)	Converter case	(8)	Lubrication pipe
(2)	Seal washer	(9)	O-ring
(3)	Shim	(10)	Support rod
(4)	Seal ring	(11)	Secondary pulley ASSY
(5)	Primary pulley ASSY	(12)	Plug
(6)	Variator chain	(13)	O-ring
(7)	Chain guide	(14)	Drive pinion retainer

Tightening torque: N·m (kgf-m, ft-lb)
T1: 21 (2.1, 15.5)
T2: 25 (2.5, 18.4)
T3: 33 (3.4, 24.3)

10.FRONT DIFFERENTIAL GEAR

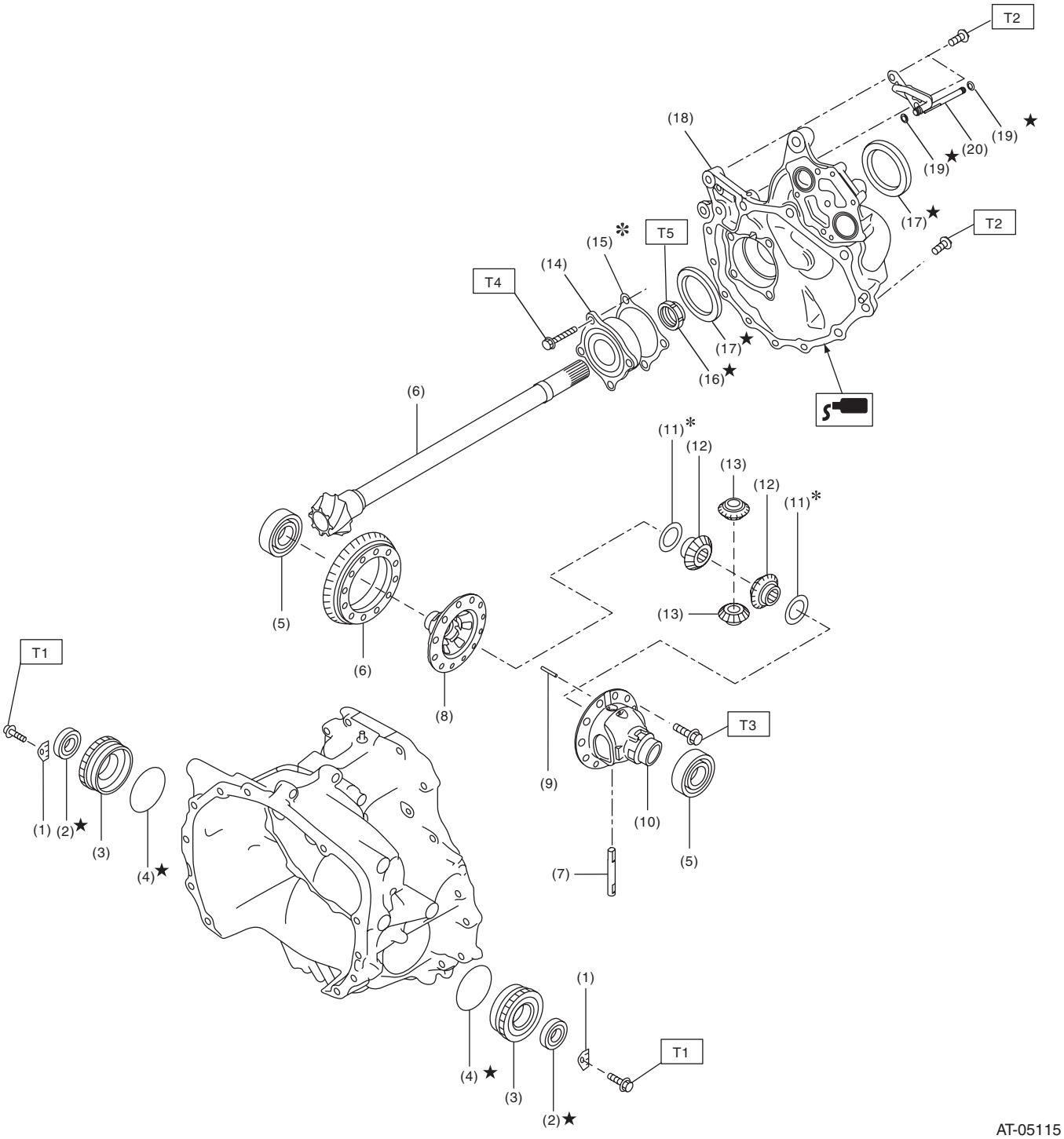

(1) Lock plate
(2) Oil seal
(3) Differential side retainer
(4) O-ring
(5) Taper roller bearing
(6) Drive pinion gear set
(7) Pinion shaft
(8) Differential case RH
(9) Straight pin
(10) Differential case LH
(11) Washer
(12) Differential bevel gear
(13) Differential bevel pinion
(14) Taper roller bearing
(15) Shim
(16) Lock nut
(17) Oil seal
(18) Drive pinion retainer
(19) O-ring
(20) Lubrication pipe

Tightening torque: N·m (kgf-m, ft-lb)	
T1:	***25 (2.5, 18.4)***
T2:	***43 (4.4, 31.7)***
T3:	***<Ref. to CVT(TR690)-274, DIFFERENTIAL CASE ASSEMBLY, ASSEMBLY, Front Differential Assembly.>***
T4:	***70 (7.1, 51.6)***
T5:	***130 (13.3, 95.9)***

11.TRANSFER AND EXTENSION CASE

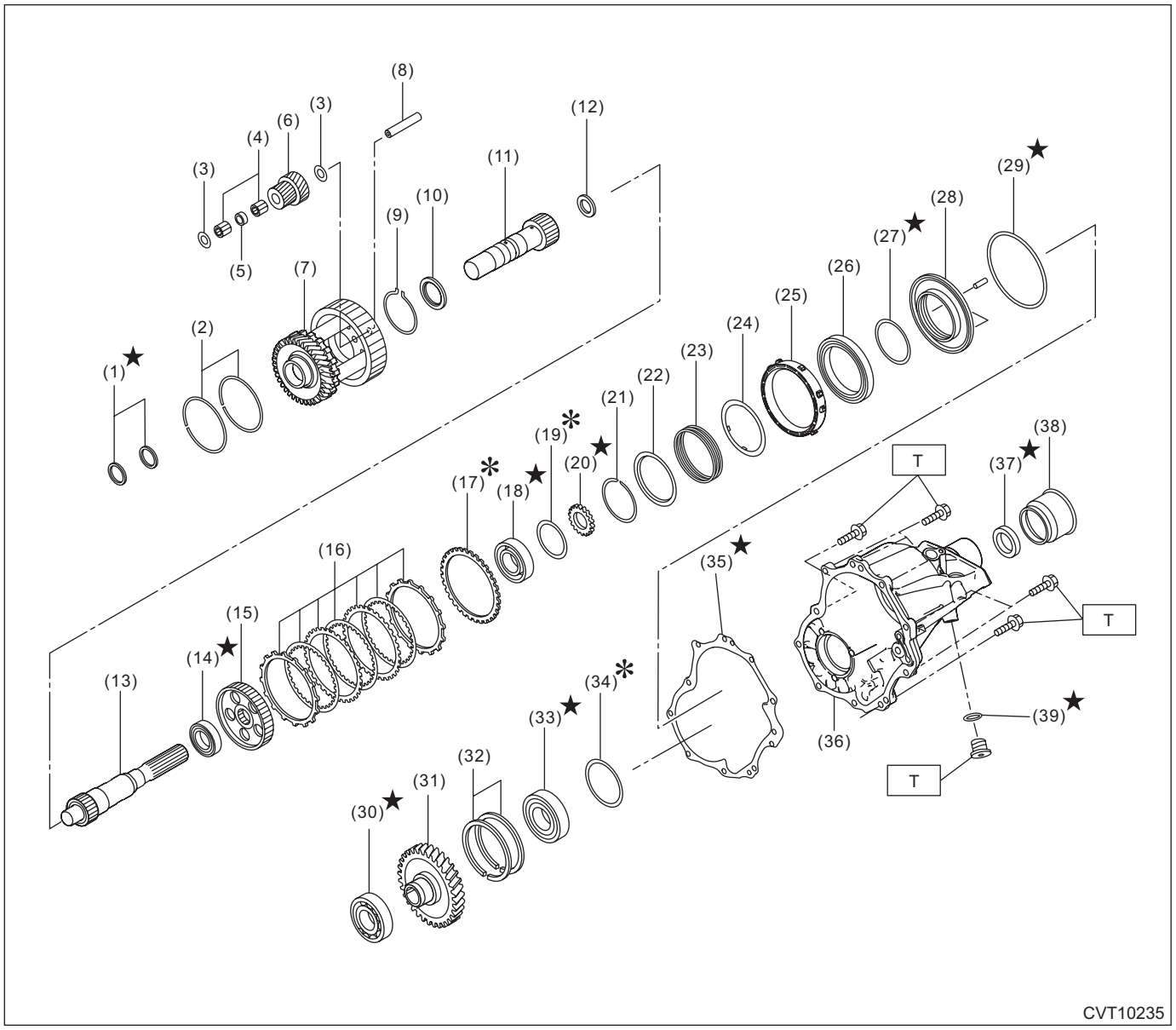

(1) Seal ring
(2) Snap ring
(3) Planetary pinion washer
(4) Needle bearing
(5) Spacer
(6) Pinion gear
(7) Planetary carrier ASSY
(8) Planetary pinion shaft ASSY
(9) Snap ring
(10) Thrust bearing
(11) Intermediate shaft
(12) Thrust washer
(13) Rear drive shaft
(14) Ball bearing
(15) Transfer clutch hub
(16) Transfer clutch plate
(17) Driven plate No. 3
(18) Ball bearing
(19) Rear drive shaft shim
(20) Revolution gear
(21) Snap ring
(22) Clutch spring retainer
(23) Return spring
(24) Spring retainer
(25) Pressure plate
(26) Ball bearing
(27) O-ring
(28) Transfer clutch piston
(29) D-ring
(30) Ball bearing
(31) Transfer reduction driven gear
(32) Snap ring
(33) Ball bearing
(34) Shim
(35) Gasket
(36) Extension case
(37) Oil seal
(38) Dust cover
(39) O-ring

Tightening torque: N·m (kgf-m, ft-lb)
T: 25 (2.5, 18.4)

12.TRANSMISSION HARNESS AND SENSOR

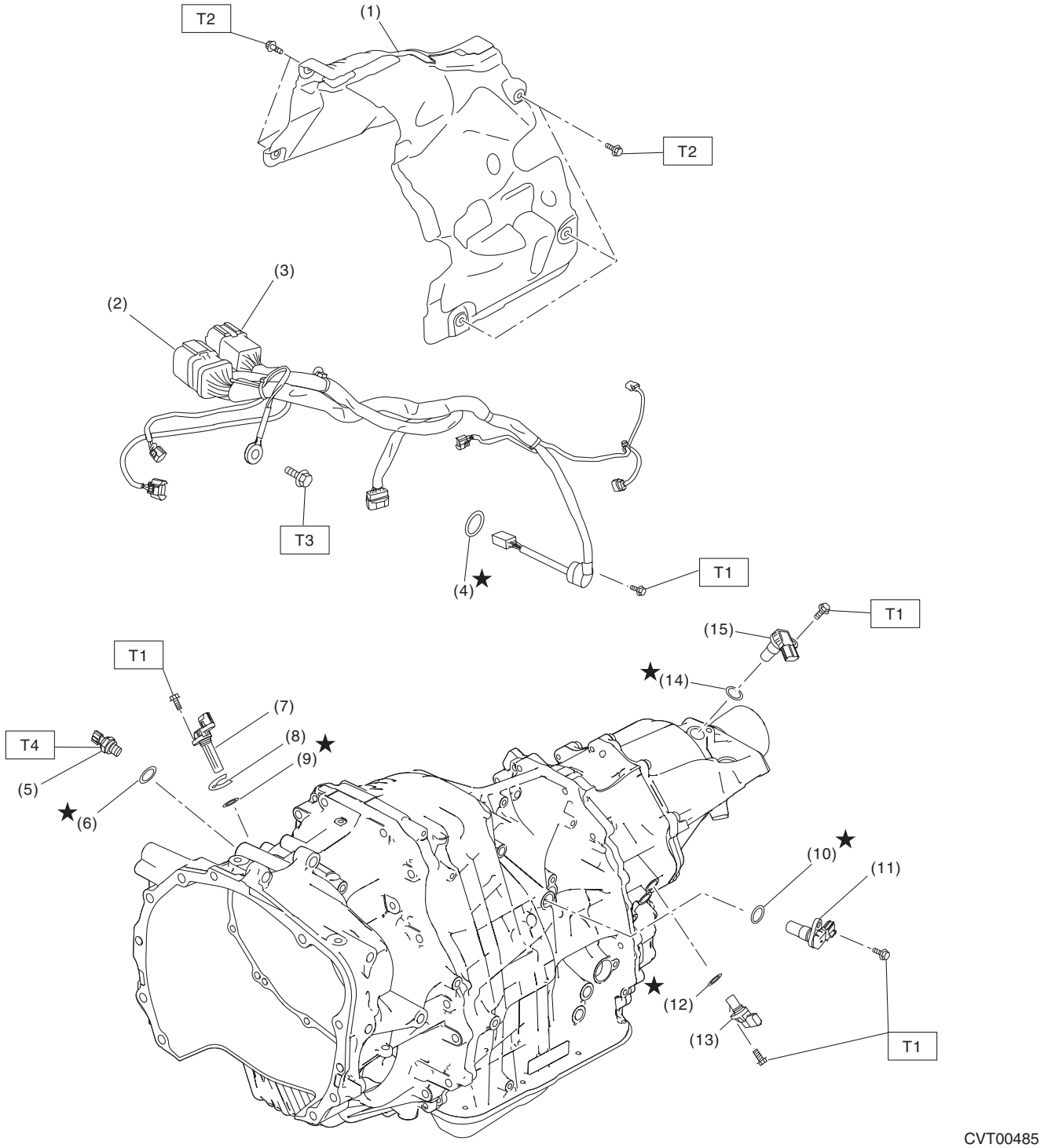

(1)	Transmission cover	(8)	Spacer	(15)	Rear wheel speed sensor
(2)	Transmission harness	(9)	O-ring		
(3)	Inhibitor harness	(10)	O-ring	***Tightening torque: N·m (kgf-m, ft-lb)***	
(4)	O-ring	(11)	Secondary speed sensor	***T1:***	***5 (0.5, 3.7)***
(5)	Secondary pressure sensor	(12)	O-ring	***T2:***	***8 (0.8, 5.9)***
(6)	O-ring	(13)	Front wheel speed sensor	***T3:***	***16 (1.6, 11.8)***
(7)	Primary speed sensor	(14)	O-ring	***T4:***	***39 (4.0, 28.8)***

13.CVTF COOLER (WITH WARMER FEATURE)

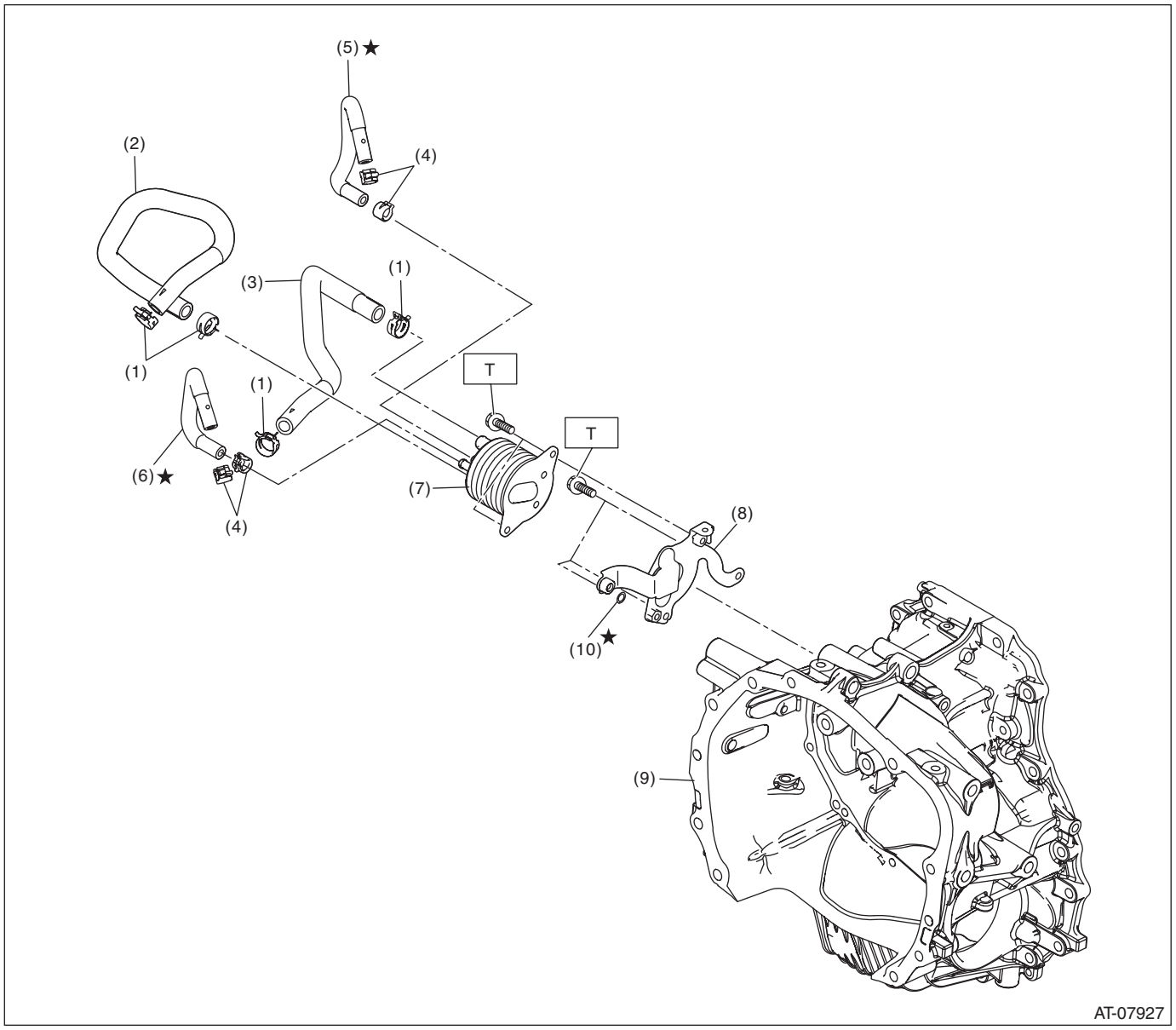

(1) Hose clamp
(2) Engine coolant outlet hose
(3) Engine coolant inlet hose
(4) Hose clamp
(5) CVTF cooler inlet hose
(6) CVTF cooler outlet hose
(7) CVTF cooler (with warmer feature)
(8) CVTF cooler bracket
(9) Converter case
(10) O-ring

Tightening torque: N·m (kgf-m, ft-lb)
T: 23 (2.3, 17.0)

14.TRANSMISSION CONTROL MODULE

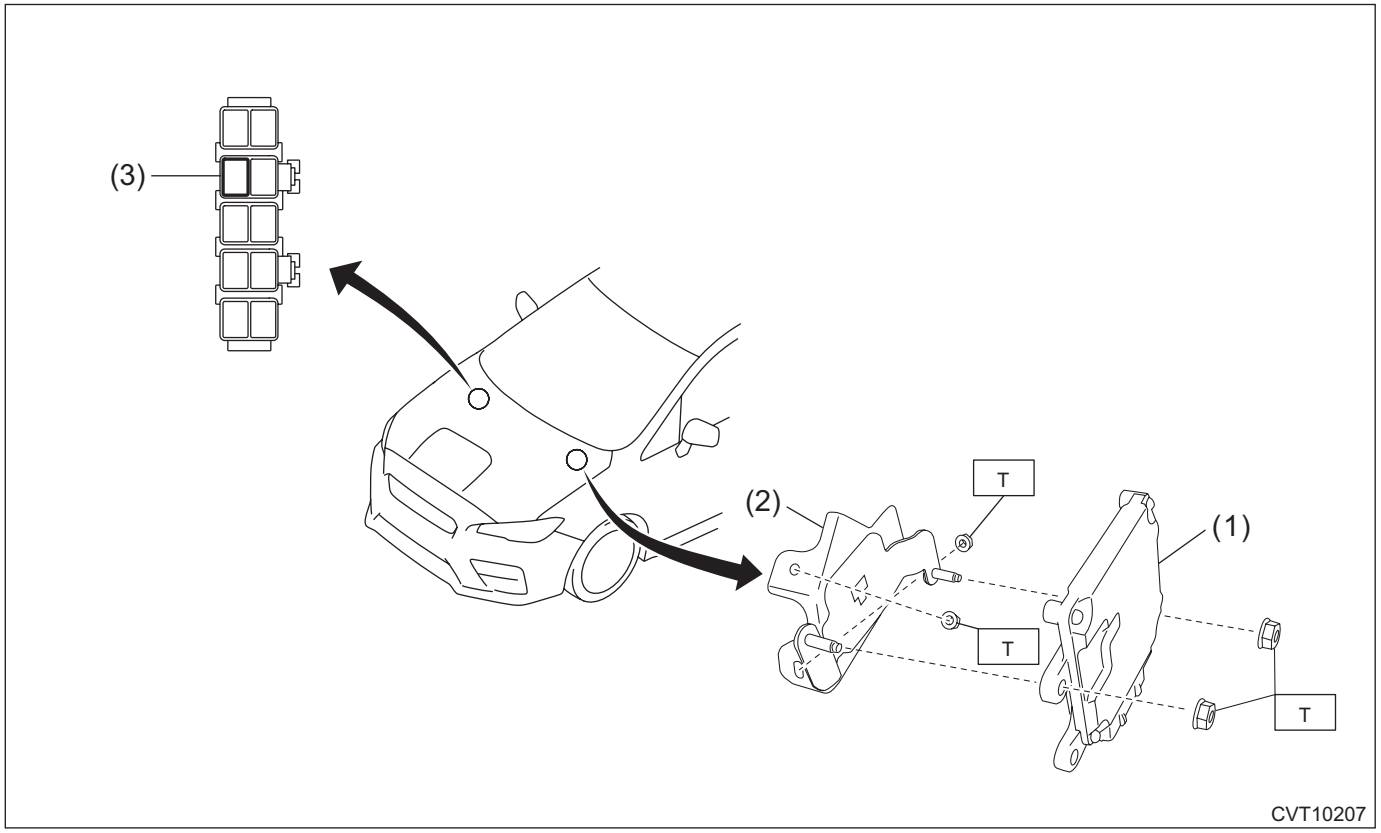

(1) Transmission control module (TCM)
(2) TCM bracket
(3) Relay

Tightening torque: N·m (kgf-m, ft-lb)

T: 7.5 (0.8, 5.5)

15.TRANSMISSION MOUNTING

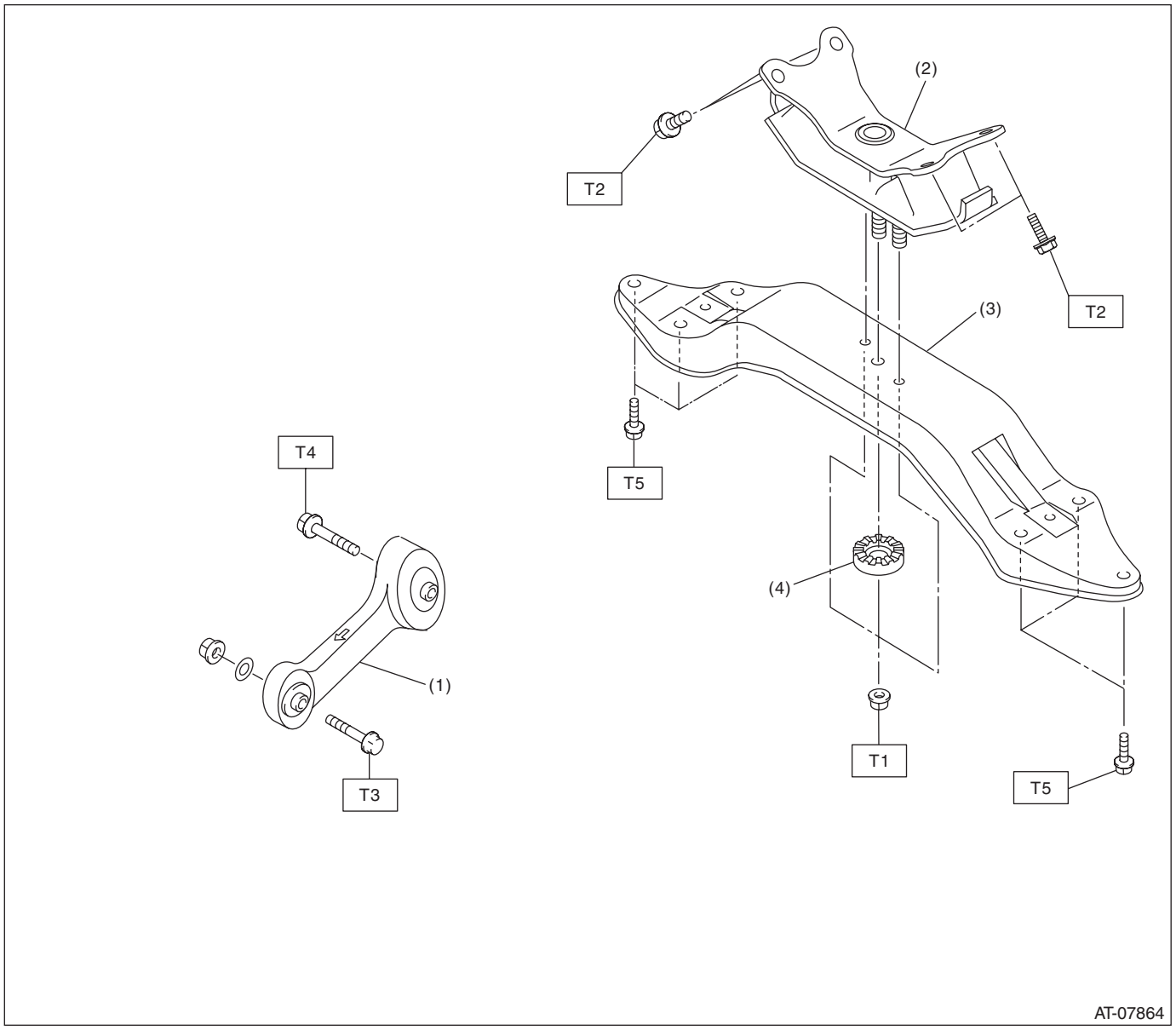

(1) Pitching stopper
(2) Rear cushion rubber
(3) Transmission rear crossmember
(4) Stopper

Tightening torque: N·m (kgf-m, ft-lb)
T1: 35 (3.6, 25.8)
T2: 40 (4.1, 29.5)
T3: 50 (5.1, 36.9)
T4: 58 (5.9, 42.8)
T5: 70 (7.1, 51.6)

C: CAUTION

- Wear appropriate work clothing, including a cap, protective goggles and protective shoes when performing any work.
- Remove contamination including dirt and corrosion before removal, installation or disassembly.
- Keep the disassembled parts in order and protect them from dust and dirt.
- Do not place the oil pan with its inner side facing up until it is installed, to prevent intrusion of foreign matter into the control valve body.
- Before removal, installation or disassembly, be sure to clarify the failure. Avoid unnecessary removal, installation, disassembly and replacement.
- When disassembling the case and other light alloy parts, use a plastic hammer to force it apart. Do not pry apart with screwdrivers or other tools.
- Vehicle components are extremely hot after driving. Be wary of receiving burns from heated parts.
- Use SUBARU genuine CVTF and recommended grease. Do not mix CVTF, grease etc. of different grades or manufacturers.
- Be sure to tighten bolts and nuts to the specified torque.
- Place lifts, shop jacks or rigid racks at specified locations.
- Apply CVTF onto sliding or revolving surfaces before installation.
- Apply CVTF onto the press-fitting surface of the part before press-fitting the part using a press.
- Replace deformed or damaged snap rings with new parts.
- Before installing O-rings or oil seals, apply sufficient amount of CVTF to avoid damage and deformation.
- Be careful not to incorrectly install or fail to install O-rings, snap rings and other such parts.
- Before securing a part on a vise, place cushioning material such as wood blocks, aluminum plate, or cloth between the part and the vise.
- Avoid damaging the mating surface of the case.
- Before applying liquid gasket, completely remove the old liquid gasket.
- After removing the sensors, breather hose and plugs, plug the holes to avoid foreign materials intruding as necessary.
- During disassembly or assembly, be sure to use nylon gloves or paper towels. Do not use cloth gloves or waste cloth.

D: PREPARATION TOOL

1. SPECIAL TOOL

ILLUSTRATION	TOOL NUMBER	DESCRIPTION	REMARKS
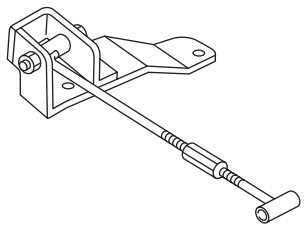 ST41099AC000	41099AC000	ENGINE SUPPORT ASSY	Used for supporting engine.
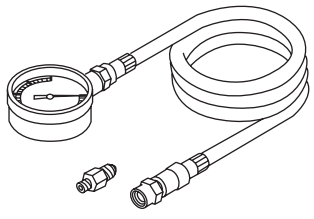 ST18801AA000	18801AA000	OIL PRESSURE GAUGE ASSY	Used for measuring the secondary pressure (line pressure).

ILLUSTRATION	TOOL NUMBER	DESCRIPTION	REMARKS
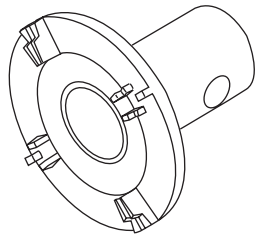 ST18658AA020	18658AA020	WRENCH COMPL RETAINER	Used for removing and installing the differential side retainer.
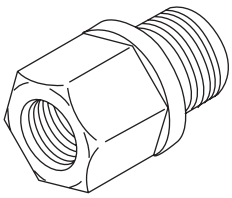 ST18681AA000	18681AA000	PRESSURE GAUGE ADAPTER	Used for measuring the secondary pressure (line pressure) and transfer clutch hydraulic pressure. NOTE: Used together with the genuine O-ring (part No. 806911080).
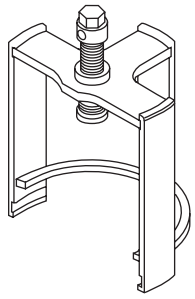 ST18769AA000	18769AA000	EXPANDER PULLEY	Used for removing and installing the secondary pulley assembly.
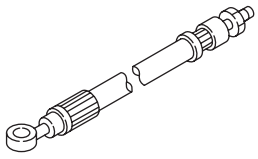 ST-498897700	498897700	OIL PRESSURE ADAPTER SET	Used for measuring the secondary pressure (line pressure) hydraulic pressure.
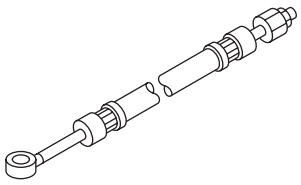 ST34099AC020	34099AC020	ADAPTER HOSE B	Used for measuring the transfer clutch hydraulic pressure. NOTE: Used with genuine union screw (Part No. 801914010) and gasket (Part No. 803914060).

ILLUSTRATION	TOOL NUMBER	DESCRIPTION	REMARKS
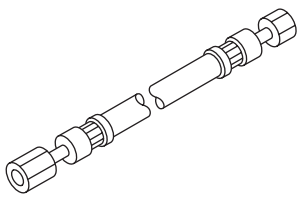 ST34099AC010	34099AC010	ADAPTER HOSE A	Used for measuring the transfer clutch hydraulic pressure.
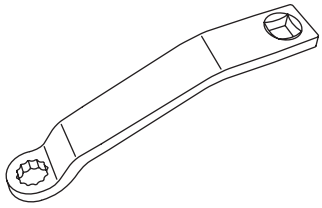 ST73099SG000	73099SG000	SPECIAL TOOL CONDENSER	Used for installing the transfer clutch pressure test plug.
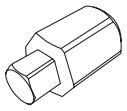 ST18270AA040	18270AA040	SOCKET	Used for installing the transfer clutch pressure test plug.
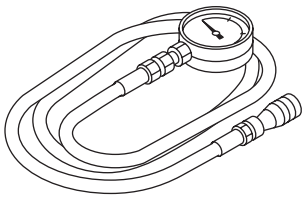 ST-498575400	498575400	OIL PRESSURE GAUGE ASSY	Used for measuring the transfer clutch hydraulic pressure.
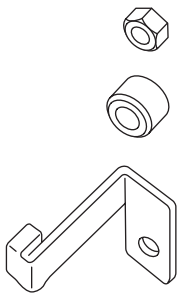 ST-498277200	498277200	STOPPER SET	• Used for removing and installing automatic transmission assembly to engine. • Used for preventing the torque converter from dropping off.

ILLUSTRATION	TOOL NUMBER	DESCRIPTION	REMARKS
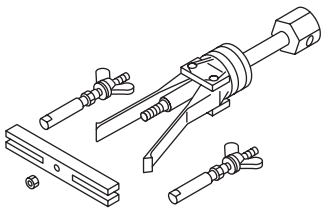 ST-398527700	398527700	PULLER ASSY	• Used for removing the extension case oil seal. • Used for removing the roller bearing of the primary pulley and secondary pulley. • Used for removing the bearing of reduction driven gear. • Used for removing the differential side retainer bearing outer race.
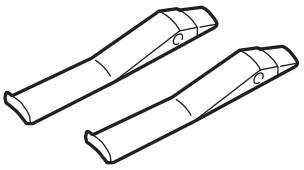 ST18760AA000	18760AA000	CLAW	• Used for removing ball bearing of front reduction driven gear. • Used together with PULLER ASSY (398527700).
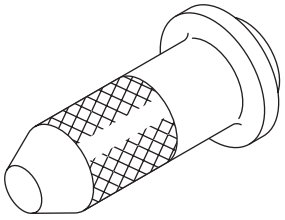 ST-498057300	498057300	INSTALLER	Used for installing the extension case oil seal.
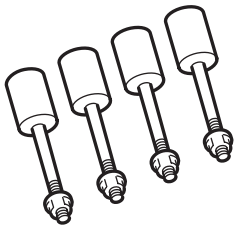 ST18632AA000	18632AA000	TRANSMISSION STAND	Used for disassembling and assembling the transmission.
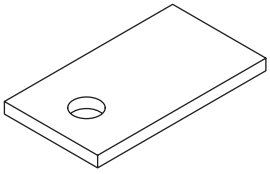 ST-498255400	498255400	PLATE	Used for measuring the backlash of hypoid gear.

ILLUSTRATION	TOOL NUMBER	DESCRIPTION	REMARKS
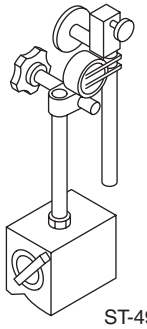 ST-498247001	498247001	MAGNET BASE	• Used for measuring the backlash of differential bevel pinion. • Used for measuring the backlash of hypoid gear. • Used together with DIAL GAUGE (498247100).
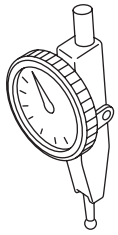 ST-498247100	498247100	DIAL GAUGE	• Used for measuring the backlash of differential bevel pinion. • Used for measuring the backlash of hypoid gear. • Used together with MAGNET BASE (498247001).
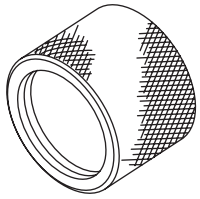 ST18675AA000	18675AA000	DIFFERENTIAL SIDE OIL SEAL INSTALLER	Used for installing the differential side retainer oil seal.
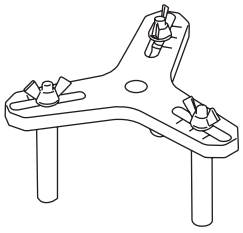 ST18762AA001	18762AA001	COMPRESSOR SPECIAL TOOL	• Used for disassembling and installing the multi-plate clutch piston for shifting. • COMPRESSOR SPECIAL TOOL (18762AA000) can also be used. (Except for transfer clutch piston)
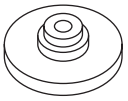 ST18765AA000	18765AA000	COMPRESSOR SUPPORT	Used for disassembling and installing the multi-plate clutch for shifting.

ILLUSTRATION	TOOL NUMBER	DESCRIPTION	REMARKS
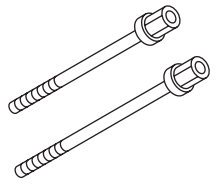 ST18763AA000	18763AA000	COMPRESSOR SHAFT	Used for disassembling and installing the multi-plate clutch for shifting.
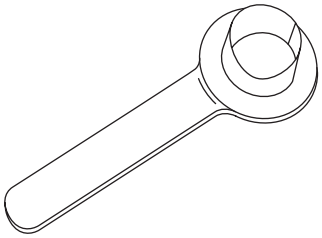 ST28399SA010	28399SA010	OIL SEAL PROTECTOR	Used for protecting oil seal when installing front drive shaft.
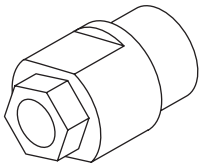 ST18667AA010	18667AA010	HOLDER	• Used for removing and installing the drive pinion lock nut. • Used as a holder to rotate gear when checking tooth contact.
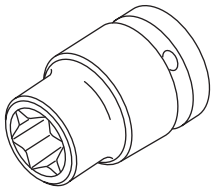 ST18270KA010	18270KA010	SOCKET (E16)	Used for removing and installing the center support COMPL.
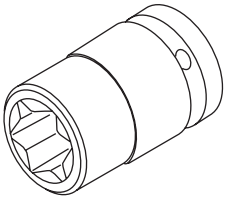 ST18270KA020	18270KA020	SOCKET (E20)	• Used for removing and installing the hypoid driven gear. • Used for removing and installing the drive pinion shaft retainer.

ILLUSTRATION	TOOL NUMBER	DESCRIPTION	REMARKS
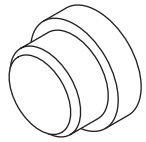 ST-398497701	398497701	SEAT	Used for removing and installing the ball bearing.
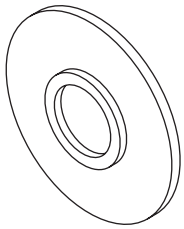 ST-398177700	398177700	INSTALLER	• Used for removing and installing the ball bearing and tapered roller bearing. • Used for installing the parking gear.
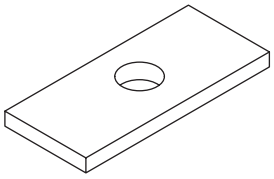 ST-398643600	398643600	GAUGE	Used for measuring the total end play, extension end play and drive pinion height.
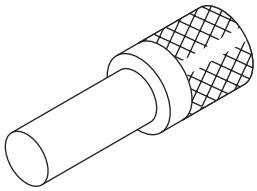 ST-899864100	899864100	REMOVER	Used for removing and installing the ball bearing.
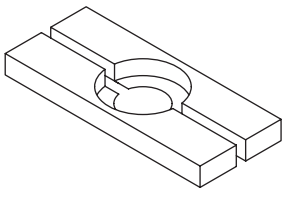 ST-498077000	498077000	REMOVER	• Used for removing ball bearing of front reduction drive gear. • Used for removing the inner bearing inner race of the drive pinion shaft. • Used for removing the differential taper roller bearing.

ILLUSTRATION	TOOL NUMBER	DESCRIPTION	REMARKS
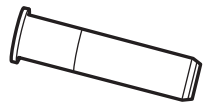 ST18657AA010	18657AA010	INSTALLER	Used for installing the oil seal of inhibitor switch.
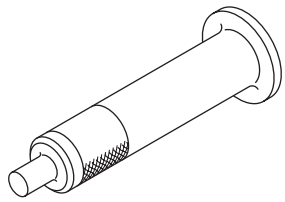 ST18657AA020	18657AA020	OIL SEAL INSTALLER	Used for installing the oil seal.
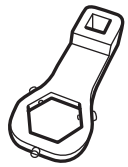 ST18621AA000	18621AA000	ADAPTER WRENCH	Used for removing and installing the drive pinion shaft lock nut.
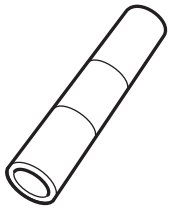 ST18651AA000	18651AA000	INSTALLER	Used for installing the bearing of front reduction drive gear.
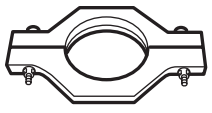 ST18720AA000	18720AA000	REMOVER	Used for removing ball bearing of reduction driven gear.

ILLUSTRATION	TOOL NUMBER	DESCRIPTION	REMARKS
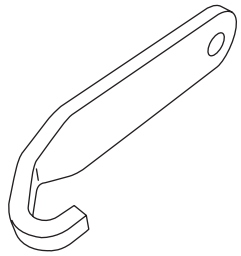 ST-498497300	498497300	CRANKSHAFT STOPPER	Used for stopping the drive plate rotation when removing and installing the drive plate.
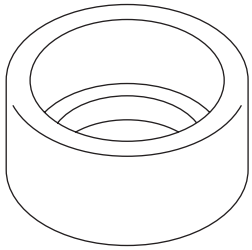 ST20299AG010	20299AG010	BASE	Used for installing the bearing on primary pulley side.
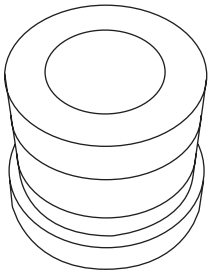 ST-399513600	399513600	INSTALLER	• Used to install the rear drive shaft ball bearing. • Used for removing the bearing of the oil pump chain sprocket.
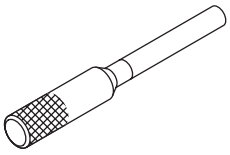 ST-499267300	499267300	STOPPER PIN	Used for adjusting the inhibitor switch.
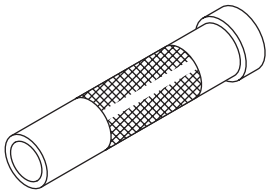 ST-499277100	499277100	BUSHING 1-2 INSTALLER	• Used for installing the front differential taper roller bearing. • Used for removing and installing the transfer reduction drive gear. • Used for installing the ball bearing of the transfer reduction drive gear. • Used for installing the oil seal. • Used for installing the ball bearing of the transfer reduction driven gear.

ILLUSTRATION	TOOL NUMBER	DESCRIPTION	REMARKS
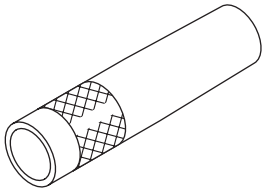 ST-499277200	499277200	INSTALLER	• Used for installing the inner bearing inner race of drive pinion shaft. • Used for installing the reduction driven gear.
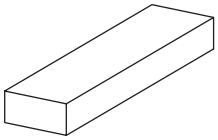 ST-499575400	499575400	GAUGE	Used for measuring height of end play.
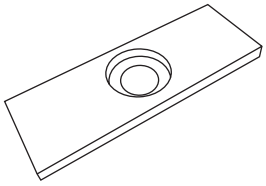 ST-499575600	499575600	GAUGE	Used for measuring height of end play.
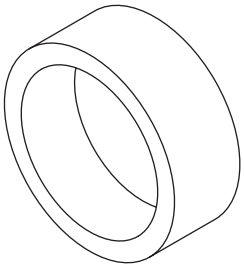 ST-398744300	398744300	PISTON GUIDE	Used for measuring height of end play.
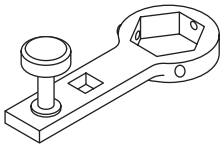 ST-499787700	499787700	WRENCH	Used for measuring the differential pinion shaft backlash.

ILLUSTRATION	TOOL NUMBER	DESCRIPTION	REMARKS
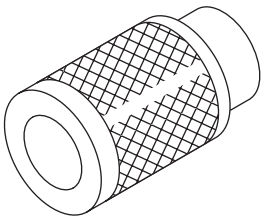 ST-499757002	499757002	INSTALLER	Used for installing the bearing of front reduction driven gear.
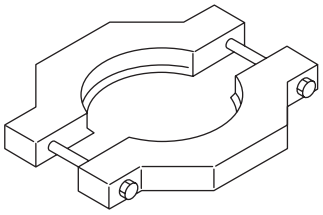 ST18767AA000	18767AA000	BEARING REMOVER	Used for removing the reduction driven gear bearing retainer.
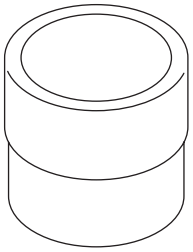 ST-499755602	499755602	PRESS SNAP RING	• Used for installing the oil seal. • Used for installing the ball bearing and roller bearing.
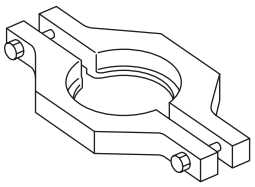 ST-498077600	498077600	REMOVER	• Used for removing the ball bearing of the rear drive shaft. • Used for removing the ball bearing of transfer reduction driven gear. • Used for removing ball bearing of reduction driven gear. • Used for removing the ball bearing of drive sprocket.
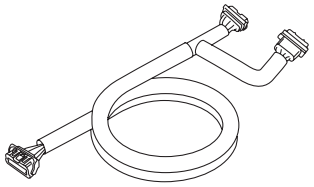 ST18460AA040	18460AA040	CHECK BOARD	Used for measuring TCM terminal voltage and resistance.

ILLUSTRATION	TOOL NUMBER	DESCRIPTION	REMARKS
 STSSM4	—	SUBARU SELECT MONITOR 4	Used for setting of each function and trouble-shooting for electrical system. NOTE: For detailed operation procedures of Subaru Select Monitor 4, refer to “Application help”.

2. GENERAL TOOL

TOOL NAME	REMARKS
Circuit tester	Used for measuring resistance, voltage and current.
Thickness gauge	Used for the clearance in reverse brake, forward clutch, transfer clutch and input clutch.
Caliper	Used for measuring the clearance at the parts.
Spring scale	Used for measuring the starting torque of the drive pinion.
TORX® bit T70	Used for removing and installing differential gear oil drain plug.
Straight pin remover	Used for removing and installing the spring pin.
Deep socket	Used for removing and installing the secondary pressure sensor. NOTE: Use Ko-ken 3/8 12-point 27 mm (manufacturer product No. 3305M-27).
Push/pull gauge	Used for measuring clutch clearance.
Angle gauge	• Used for installing the hypoid driven gear. • Used for installing the drive plate.
DST-i	Used together with Subaru Select Monitor 4.

2. CVTF

A: INSPECTION

Check for leakage of CVTF from transmission.

B: ADJUSTMENT

CAUTION:
• CVTF level changes along with CVTF temperature. When inspecting CVTF level, observe the specified CVTF temperature.
• Always use specified CVTF. Using other fluid will cause malfunction.

1) Idle the engine to raise CVTF temperature to 35 — 45°C (95 — 113°F) on Subaru Select Monitor.
2) Operate the select lever in P → R → N → D and D → N → R → P to circulate CVTF with the engine idling.
3) With the engine running, lift up the vehicle and remove the filler plug.

CAUTION:
Pay special attention to the following operations as the engine is at idle.

NOTE:
CVTF is at the specified level when it is up to the filler plug hole lower section.

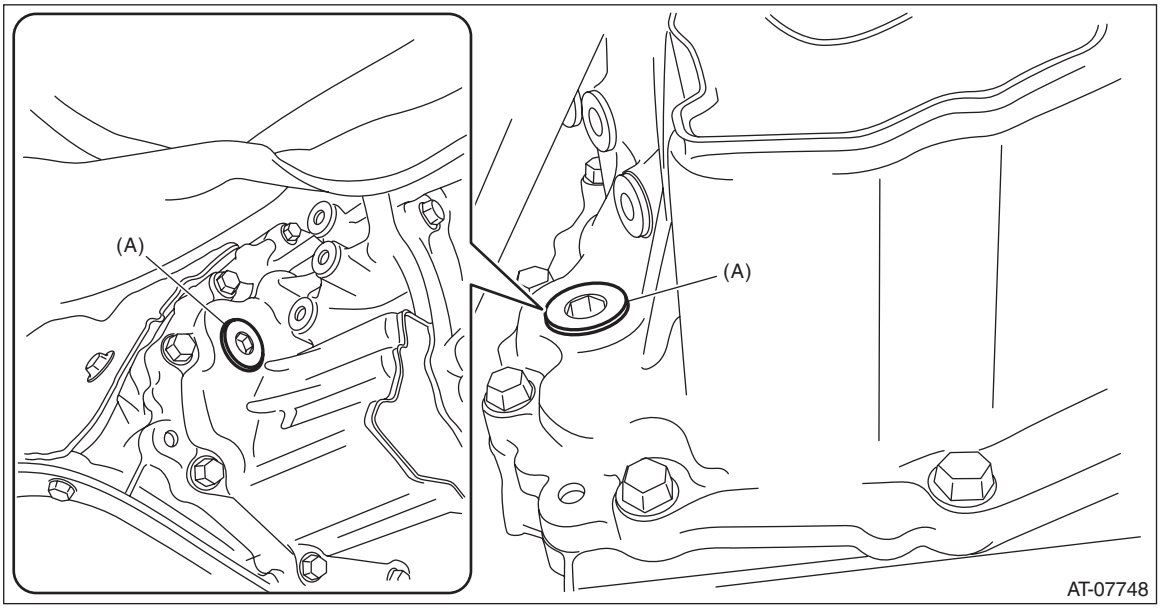

(A) Filler plug

4) When there is no CVTF leakage from the transmission, add the specified fluid up to the filler plug hole lower section.

Specified fluid:
<Ref. to CVT(TR690)-4, HYDRAULIC CONTROL AND LUBRICATION, SPECIFICATION, General Description.>

CAUTION:
Note that when CVTF is added up to the lower section of filler plug while the transmission is in cold condition, overfilling of CVTF occurs, causing the oil to spill out.

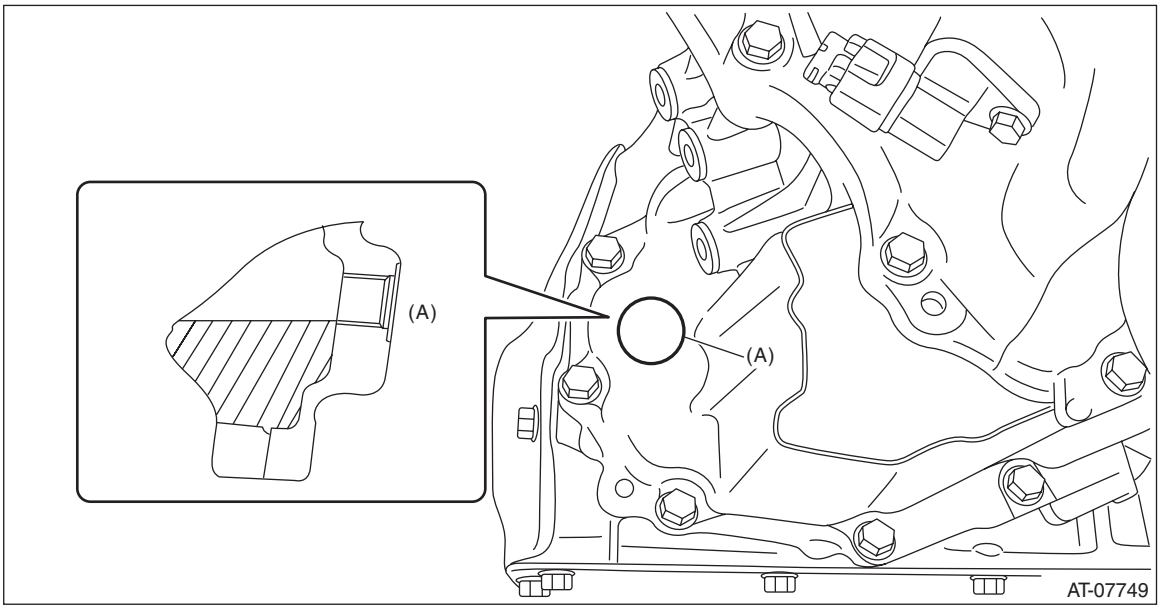

(A) Filler plug hole

5) Install the filler plug.

NOTE:
Use a new gasket.

Tightening torque:
50 N·m (5.1 kgf-m, 36.9 ft-lb)

C: REPLACEMENT

CAUTION:
• Directly after the vehicle has been running or the engine has been idling for a long time, the CVTF is hot. Be careful not to burn yourself.
• Be careful not to spill the CVTF on exhaust pipe to prevent it from emitting smoke or causing fires. If CVTF adheres, wipe it off completely.
• Always use specified CVTF. Using other fluid will cause malfunction.

1) Lift up the vehicle, and remove the CVTF drain plug.

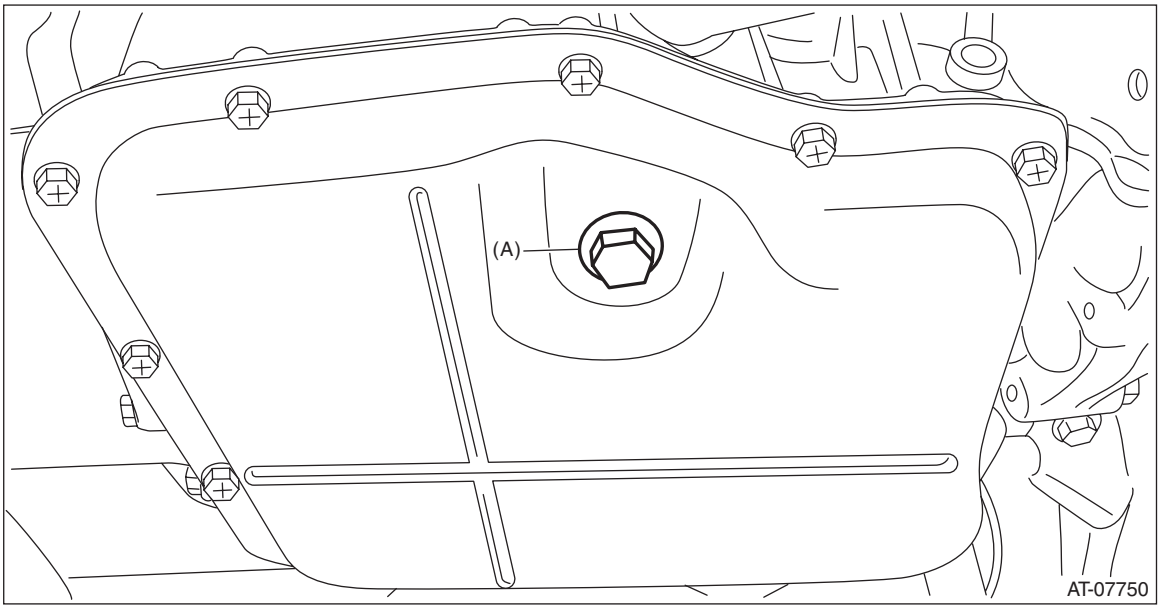

(A) CVTF drain plug

2) Check the CVTF condition. <Ref. to CVT(TR690)-40, CONDITION CHECK, CVTF.>
3) Install the CVTF drain plug and gasket.

NOTE:
Use a new gasket.

Tightening torque:
39.2 N·m (4.0 kgf-m, 28.9 ft-lb)

4) Remove the filler plug.

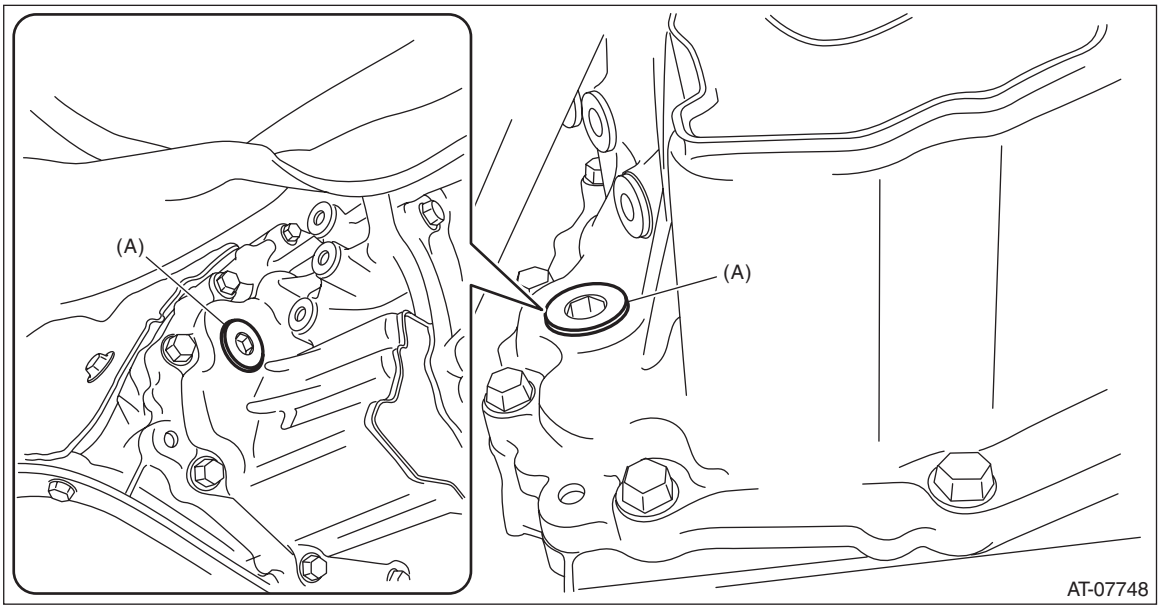

(A) Filler plug

5) Add the specified fluid up to the filler plug hole lower section.

Specified fluid:
<Ref. to CVT(TR690)-4, HYDRAULIC CONTROL AND LUBRICATION, SPECIFICATION, General Description.>

6) Temporarily tighten the filler plug.
7) Idle the engine to raise CVTF temperature to 35 — 45°C (95 — 113°F) on Subaru Select Monitor.
8) Operate the select lever in P → R → N → D and D → N → R → P to circulate CVTF with the engine idling.

CAUTION:
Pay special attention to the following operations as the engine is at idle.
9) Place the select lever in “P” range. Then lift up the vehicle with the engine at idle to adjust the CVTF level and check for leakage. <Ref. to CVT(TR690)-36, ADJUSTMENT, CVTF.>

10) Replace with a new gasket, and attach the filler plug.

Tightening torque:
50 N·m (5.1 kgf-m, 36.9 ft-lb)

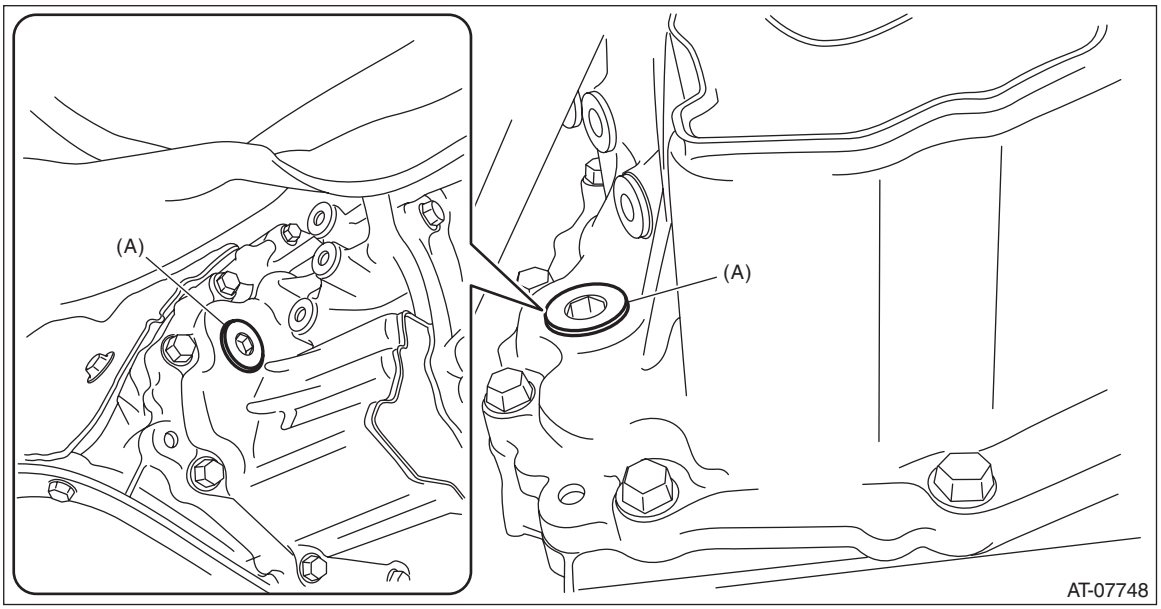

(A) Filler plug

D: CONDITION CHECK

NOTE:
When replacing CVTF, determine the condition inside the transmission body by inspecting the drained CVTF.

Fluid condition	Trouble and possible cause	Corrective action
Metal particles.	Excessive wear of the internal of the transmission body.	Replace CVTF and check if CVT operates correctly.
Thick and varnish-form fluid.	Burnt clutches	Replace CVTF and check the CVT body or vehicle for faulty.
Clouded CVTF or bubbles.	Water mixed in fluid.	Replace CVTF and check the water entering point.

3. Differential Gear Oil

A: INSPECTION

Check that there is no leakage of differential gear oil from the converter case.

B: ADJUSTMENT

NOTE:
Immediately after removing the overflow drain plug, remaining gear oil (approx. 8 cc) may come out of the overflow pipe. This is not included in the specified amount. When removing the overflow drain plug, make sure the gear oil flows out of the overflow drain plug hole by filling with gear oil.

1) Lift up the vehicle.
2) Remove the oil charge pipe cap.

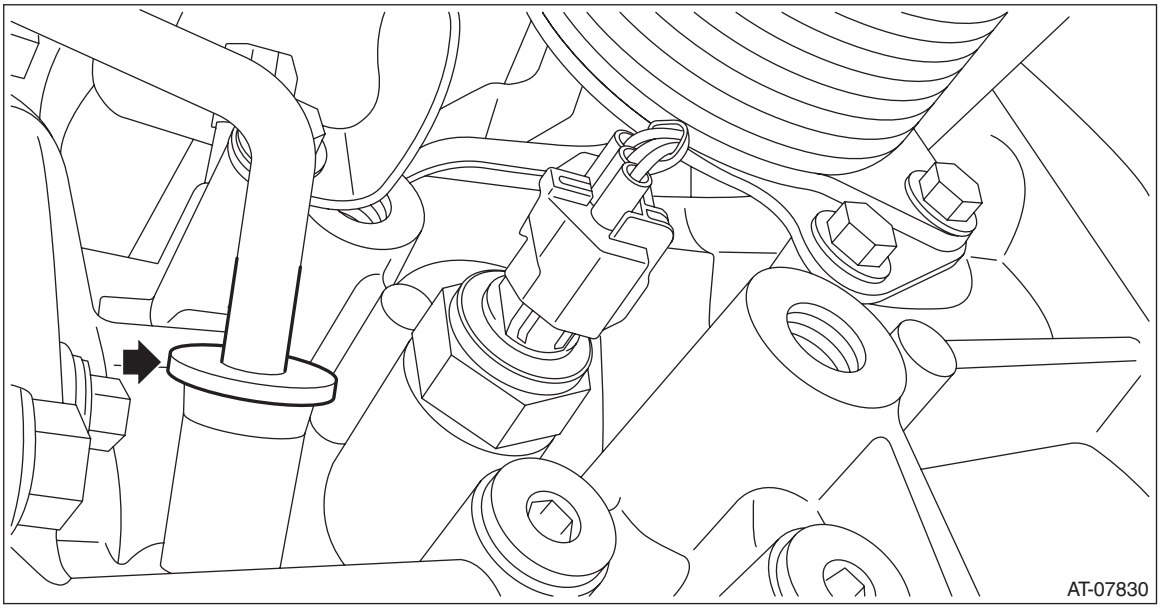

3) Remove the overflow drain plug.

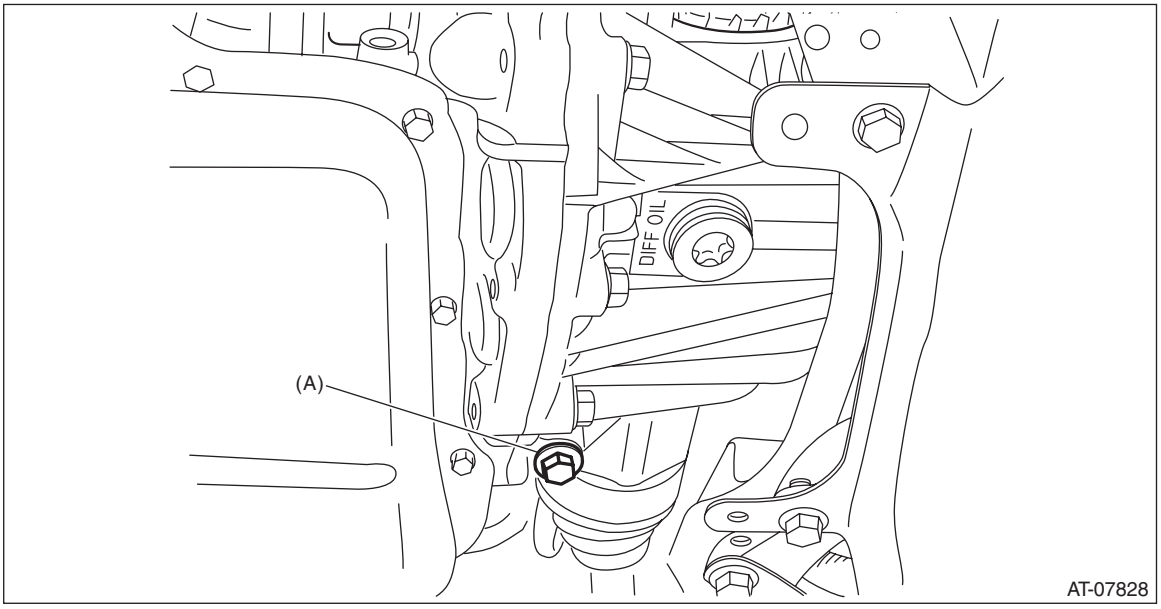

(A) Overflow drain plug

4) Fill in the differential gear oil through the charge pipe up to where the oil flows out of the overflow drain plug.

Recommended gear oil:
<Ref. to CVT(TR690)-4, FRONT DIFFERENTIAL GEAR OIL, SPECIFICATION, General Description.>
5) When the flow of the differential gear oil turns into a narrow stream, install the overflow drain plug.

NOTE:
Use a new gasket.

Tightening torque:
35 N·m (3.6 kgf-m, 25.8 ft-lb)

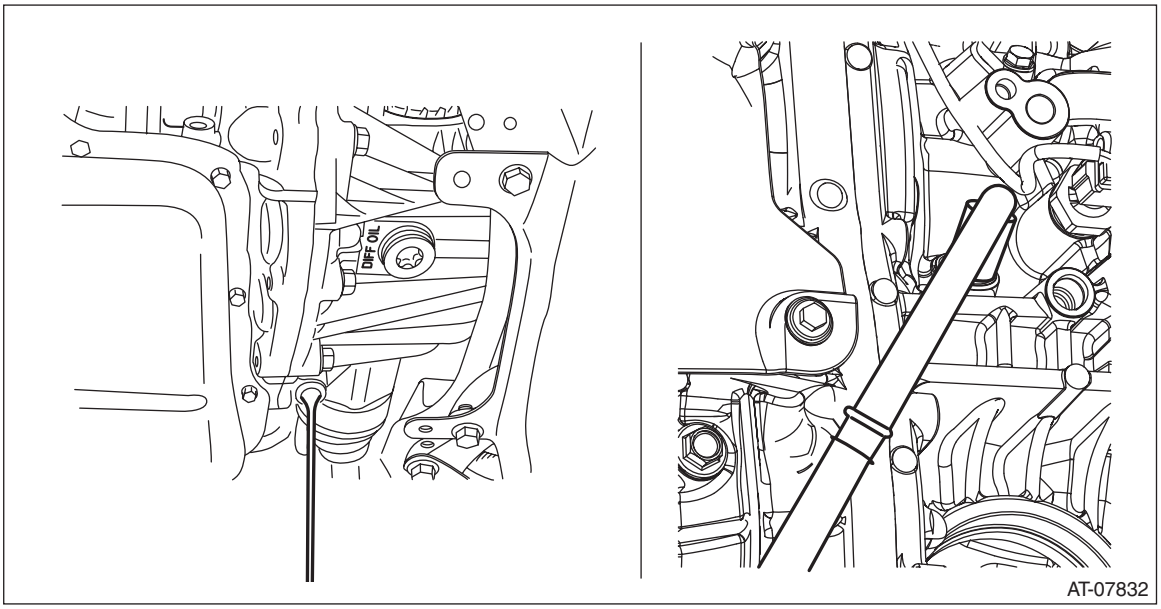

6) Install the oil charge pipe cap.

C: REPLACEMENT

CAUTION:
• Immediately after the vehicle has been running or after idling for a long time, the differential gear oil will be hot. Be careful not to burn yourself.
• Be careful not to spill differential gear oil on the exhaust pipe to prevent it from emitting smoke or causing a fire. If gear oil adheres, wipe it off completely.
1) Lift up the vehicle.
2) Remove the differential gear oil drain plug using TORX® bit T70. Drain differential gear oil.

3) Install the differential gear oil drain plug using TORX® bit T70.

NOTE:
Use a new gasket.

Tightening torque:
70 N·m (7.1 kgf-m, 51.6 ft-lb)

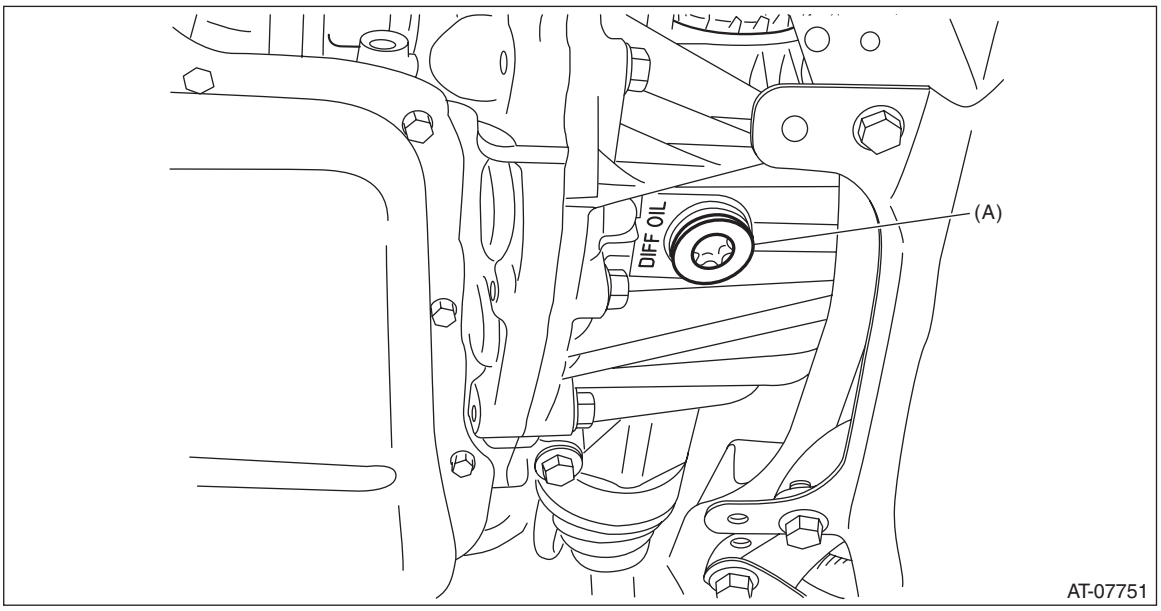

(A) Differential gear oil drain plug

4) Pour gear oil from the charge pipe.

Recommended gear oil:
<Ref. to CVT(TR690)-4, FRONT DIFFERENTIAL GEAR OIL, SPECIFICATION, General Description.>

Gear oil capacity:
<Ref. to CVT(TR690)-4, FRONT DIFFERENTIAL GEAR OIL, SPECIFICATION, General Description.>

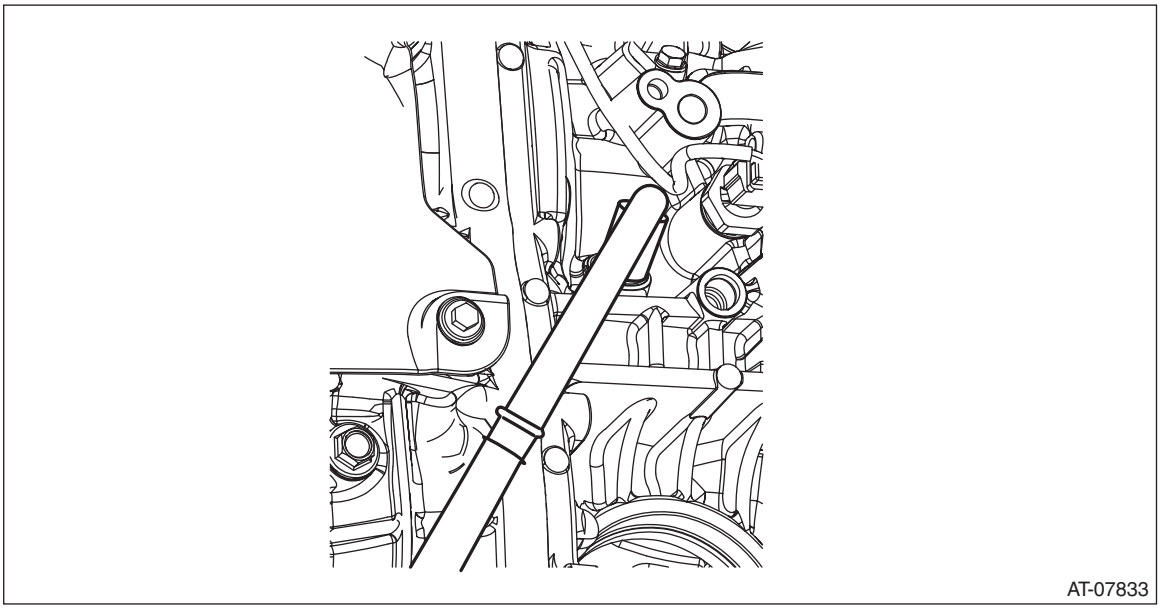

5) Adjust the level of differential gear oil. <Ref. to CVT(TR690)-41, ADJUSTMENT, Differential Gear Oil.>

4. Variator Chain Break-in

A: GENERAL DESCRIPTION

Perform Variator Chain Break-in when the following work has been performed.
- Variator chain replacement
- Primary pulley and secondary pulley replacement

B: PROCEDURE

NOTE:
- During variator chain break-in, VDC warning light illuminate because of the difference between the vehicle speed value and G sensor value. This is not a malfunction. If the warning light illuminates, clear the VDC memory after the variator chain break-in is finished. <Ref. to VDC(diag)-30, Clear Memory Mode.>
- If the above malfunction code is detected during variator chain break-in, the system enters into fail mode, and the vehicle shows symptom such as engine speed rapid increases even if the accelerator pedal is gradually depressed.

1) Lift up the vehicle.

CAUTION:
Lift up the vehicle until the tire bottom is 0.3 m (0.98 ft) or more above the ground.

2) Shift the select lever to “P” or “N” range.
3) Apply the parking brake.
4) Connect the Subaru Select Monitor to data link connector.
5) Idle the engine to raise the CVTF temperature to 40 — 50°C (104 — 122°F) displayed on the Subaru Select Monitor.

NOTE:
When CVTF temperature does not rise easily or if you want to rise CVTF temperature faster, maintain the engine speed within 2,000 — 2,500 r/min at “P” or “N” range to raise the CVTF temperature.

6) With the select lever in “P” or “N” range, increase the engine speed to 3,000 — 3,500 r/min from the idling condition, and maintain the speed for approximately five seconds, then release the accelerator pedal.
7) Depress the accelerator pedal gradually again from idling condition to increase the engine speed to 3,000 — 3,500 r/min, maintain the speed for approximately five seconds, then release the accelerator pedal.
8) Release the parking brake.
9) Shift the select lever into manual mode and set to 1st.
10) Depress the accelerator pedal gradually, and increase the engine speed to 5,300 r/min from engine idling condition.

NOTE:
Increase the engine speed while taking care that the engine speed does not become too high.

11) Release the accelerator pedal to fully closed position to lower the engine speed to 4,000 r/min.
12) Depress the accelerator pedal gradually again, and increase the engine speed to 5,300 r/min.
13) Repeat the steps 11) and 12) for 40 times.
14) Release the accelerator pedal to return the engine speed to idling.
15) Shift the select lever to “P” range, and then turn the engine to OFF.

5. Road Test

A: INSPECTION

1. GENERAL PRECAUTION

Road tests should be conducted to properly diagnose the condition of CVT.

CAUTION:
Always observe the local traffic laws when performing the test.

2. D RANGE SHIFT FUNCTION

In intelligent mode, make sure the engine speed is 1,100 — 1,300 r/min while driving on the level road at 50 km/h (31 MPH) after accelerating from halting to 1/4 of accelerator opening angle. Then stop the vehicle. Check normal gear change has occurred while the vehicle speed changes from a constant speed to zero.

3. KICK-DOWN FUNCTION

Check if engine speed will rise by operating the accelerator opening angle to the full from a constant speed of 50 km/h (31 MPH) or more.

4. ENGINE BRAKE OPERATION

In each mode of SI-DRIVE, check down shifting operation, engine braking, and indicators inside the meters.
When in S# mode

- Drive in “8th speed of manual mode” [90 — 100 km/h (56 — 62 MPH)], and shift down from 8th to 7th. Check if the indicator of combination meter switches “8” → “7”. At the same time, check engine braking in 7th gear.
- Drive in “7th speed of manual mode” [80 — 90 km/h (50 — 56 MPH)], and shift down from 7th to 6th. Check if the indicator of combination meter switches “7” → “6”. At the same time, check engine braking in 6th gear.
- Drive in “6th speed of manual mode” [70 — 80 km/h (43 — 50 MPH)], and shift down from 6th to 5th. Check if the indicator of combination meter switches “6” → “5”. At the same time, check the engine brake in 5th gear.
- Drive in “5th speed of manual mode” [60 — 70 km/h (37 — 43 MPH)], and shift down from 5th to 4th. Check if the indicator of combination meter switches “5” → “4”. At the same time, check the engine brake in 4th gear.
- Drive in “4th speed of manual mode” [50 — 60 km/h (31 — 37 MPH)], and shift down from 4th to 3rd. Check if the indicator of combination meter switches “4” → “3”. At the same time, check the engine brake in 3rd gear.
- Drive in “3rd speed of manual mode” [30 — 40 km/h (19 — 25 MPH)], and shift down from 3rd to 2nd. Check if the indicator of combination meter switches “3” → “2”. At the same time, check the engine brake in 2nd gear.
- Drive in “2nd speed of manual mode” [20 — 30 km/h (12 — 19 MPH)], and shift down from 2nd to 1st. Check if the indicator of combination meter switches “2” → “1”. At the same time, check the engine brake in 1st gear.

Other than in S# mode

- Drive in “6th speed of manual mode” [70 — 80 km/h (43 — 50 MPH)], and shift down from 6th to 5th. Check if the indicator of combination meter switches “6” → “5”. At the same time, check the engine brake in 5th gear.
- Drive in “5th speed of manual mode” [60 — 70 km/h (37 — 43 MPH)], and shift down from 5th to 4th. Check if the indicator of combination meter switches “5” → “4”. At the same time, check the engine brake in 4th gear.
- Drive in “4th speed of manual mode” [50 — 60 km/h (31 — 37 MPH)], and shift down from 4th to 3rd. Check if the indicator of combination meter switches “4” → “3”. At the same time, check the engine brake in 3rd gear.
- Drive in “3rd speed of manual mode” [40 — 50 km/h (25 — 31 MPH)], and shift down from 3rd to 2nd. Check if the indicator of combination meter switches “3” → “2”. At the same time, check the engine brake in 2nd gear.
- Drive in “2nd speed of manual mode” [20 — 30 km/h (12 — 19 MPH)], and shift down from 2nd to 1st. Check if the indicator of combination meter switches “2” → “1”. At the same time, check the engine brake in 1st gear.

5. LOCK-UP FUNCTION

When the accelerator is lightly depressed while driving on a flat road in “D” range, check that rpm does not change abruptly.

6. P RANGE OPERATION

Stop the vehicle on an uphill grade of 5% or more and shift to the “P” range and apply the parking brake. Check that the vehicle does not move when the parking brake is released.

7. NOISE AND VIBRATION

Check for noise and vibration during driving at a constant speed, accelerating, decelerating and manual shift operation.

8. OIL LEAKAGE

After the driving test, inspect for leakage of CVTF and differential gear oil from the transmission body.

6. Stall Test

A: INSPECTION

CAUTION:
Make sure no other person is around the vehicle during stall test measurement.

NOTE:
Stall test is extremely important in diagnosing the condition of CVT and engine. The test is necessary to measure the engine stall speeds in “R” and “D” range.
Purposes of the stall test:

- Operational check of forward clutch and reverse brake
- Operational check of the torque converter assembly
- Engine performance check

1) Place wheel chocks at the front and rear of all wheels and engage the parking brake.
2) Turn the A/C OFF.
3) Using the Subaru Select Monitor, check if the throttle valve operates when you depress the accelerator pedal. <Ref. to EN(w/o STI)(diag)-46, DISPLAY CURRENT ENGINE DATA, OPERATION, Subaru Select Monitor.>
4) Check the engine oil level. <Ref. to LU(w/o STI)-2, General Description.>
5) Check the coolant level. <Ref. to CO(w/o STI)-13, Engine Coolant.>
6) Adjust the CVTF level. <Ref. to CVT(TR690)-36, ADJUSTMENT, CVTF.>
7) Increase the CVTF temperature to 60 — 80°C (140 — 176°F) by idling the engine with the select lever shifted to “N” or “P” range.
8) Hold down the pre-collision brake OFF switch to turn OFF the pre-collision brake. (With EyeSight)
9) Shift the select lever to “D” range.
10) Depress the accelerator pedal to the full while fully depressing the foot brake pedal with your left foot.
11) When the engine speed stabilizes, quickly record the engine speed and release accelerator pedal. Shift the select lever to “N” range. Let the engine idle for one minute or more to cool it down.

12) Shift to “R” range and perform the same stall test.

NOTE:
• Do not perform a stall test for over 5 seconds at a time. (From closed throttle, fully open throttle to stall speed reading.) Failure to follow this instruction will cause the engine oil and CVTF to deteriorate and the clutch and brake to be adversely affected.
• Be sure to cool down the engine for at least one minute after each stall test with the select lever set in the “P” or “N” range and with the idle speed of 1,200 r/min or less.
• If the stall speed is higher than the specified range, attempt to finish the stall test in as short a time as possible, in order to prevent the CVT from sustaining damage.

Stall speed standard:
2,050 — 2,590 r/min (D range)
2,130 — 2,680 r/min (R range)

Stall test judgment

Range	Range	Probable cause
Lower than standard value	D, R	• Throttle valve is not fully open. • Insufficient engine output • Torque converter malfunction
Higher than standard value	D	• Forward clutch slippage • Secondary pressure (line pressure) is low. • Variator chain malfunction • Input clutch slippage
	R	• Reverse brake slippage • Secondary pressure (line pressure) is low. • Variator chain malfunction • Input clutch slippage
	D, R	• Torque converter malfunction • Control valve body malfunction • TCM malfunction • Damaged harness and harness connector

7. Time Lag Test

A: INSPECTION

NOTE:
When the select lever is shifted while the engine is idling, there will be a certain time elapse or lag before shock is felt. This symptom helps to check the condition of forward clutch and reverse brake.
- Perform the test at normal operation CVTF temperature of 60 — 80°C (140 — 176°F).
- Be sure to allow one minute or more interval between tests.
- Make three measurements and take the average value.

1) Apply the parking brake.
2) Start the engine. Check the idle speed. (A/C OFF)
3) Shift the select lever from “N” to “D” range. Using a stop watch, measure the time elapsed from shifting the lever until the shock is felt.

Time lag standard:
1.2 seconds or less

If “N” → “D” time lag is longer than specified:
- Secondary pressure (line pressure) is too low.
- Forward clutch worn
- Piston malfunction
- Control valve body malfunction
- Learning incomplete

4) In the same manner, measure the time lag when shifting from “N” range to “R” range.

Time lag standard:
1.5 seconds or less

If “N” → “R” time lag is longer than specified:
- Secondary pressure (line pressure) is too low.
- Reverse brake worn
- Piston malfunction
- Control valve body malfunction
- Learning incomplete

8. Secondary Pressure (Line Pressure) Test

A: INSPECTION

CAUTION:
• Directly after the vehicle has been running or the engine has been idling for a long time, the CVTF is hot. Be careful not to burn yourself.
• Make sure no other person is around the vehicle during secondary pressure (line pressure) test measurement.
• After performing the secondary pressure (line pressure) test measurement, adjust the CVTF level.

NOTE:
• If the pulley and variator chain, clutch or brake show signs of slipping or shift feel is not correct, check the secondary pressure (line pressure).
• Connect Subaru Select Monitor to vehicle so as to measure the engine speed and actual secondary pressure (secondary pressure (line pressure)).
• In many cases, slippage or inability to operate the vehicle may be due to insufficient oil pressure for the operation of clutch, brake or control valve.
1) Remove the front wheel RH. <Ref. to WT-5, REMOVAL, Tire and Wheel.>
2) Lift up the vehicle.
3) Remove the test plug for secondary pressure (line pressure).

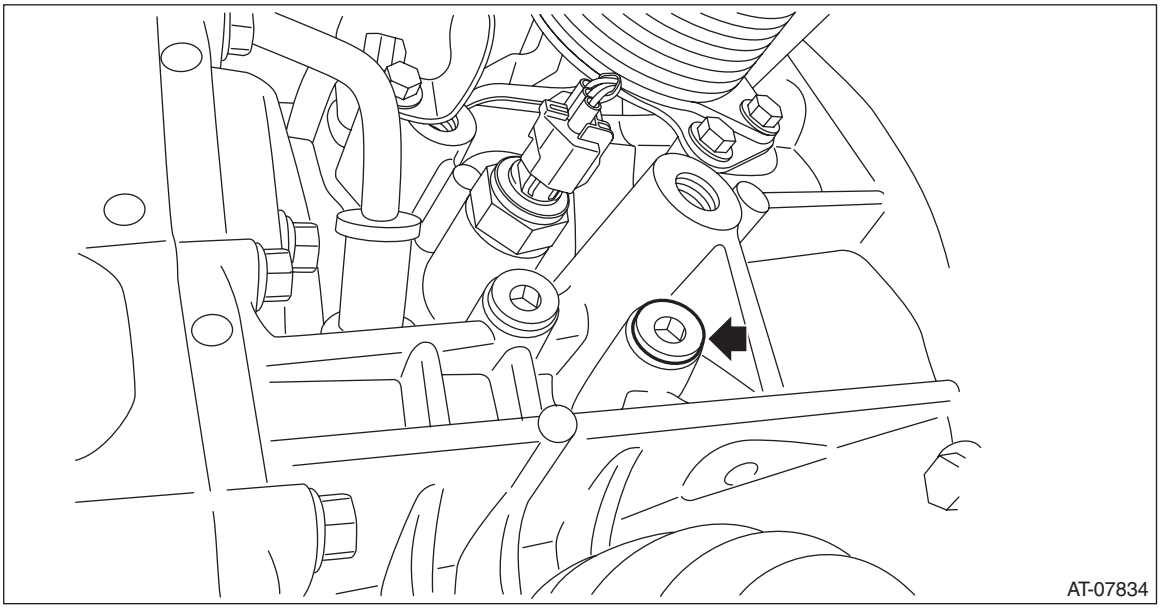

4) Attach ST1, ST2 and ST3 to transmission.
ST1 18801AA000 OIL PRESSURE GAUGE ASSY
ST2 18681AA000 PRESSURE GAUGE ADAPTER
ST3 498897700 OIL PRESSURE ADAPTER SET

NOTE:
Use ST2 PRESSURE GAUGE ADAPTER with genuine O-ring (Part No. 806911080) attached.

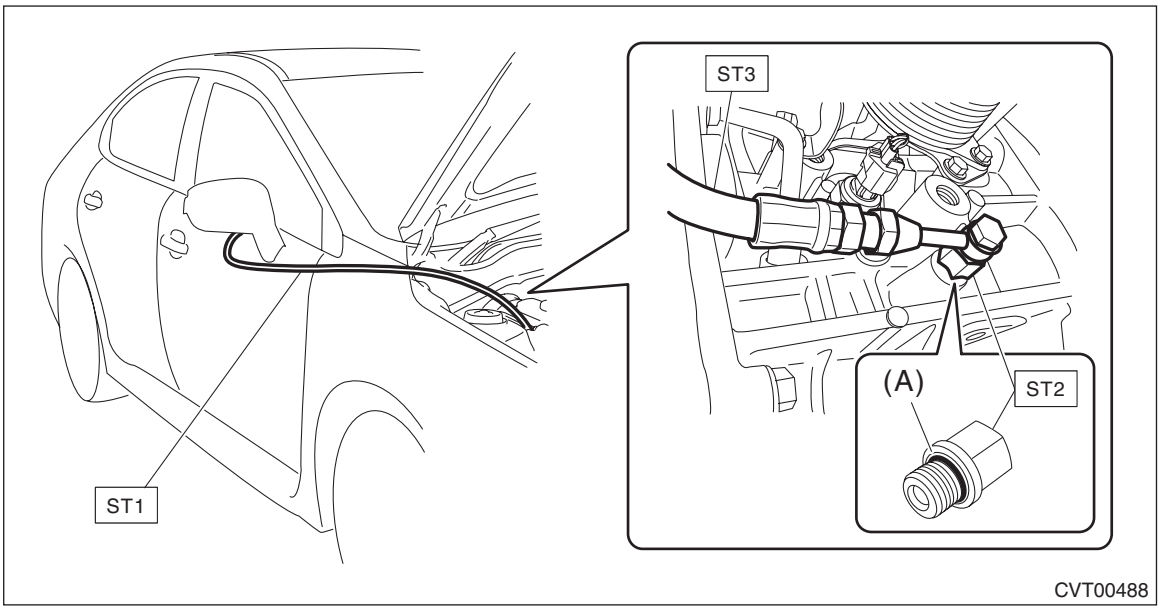

(A) O-ring (genuine part)

5) Lower the vehicle.
6) Set the gauge so that it can be seen from the driver's seat.
7) Install the front wheel RH. <Ref. to WT-5, INSTALLATION, Tire and Wheel.>
8) Using the Subaru Select Monitor, check if the throttle valve operates when you depress the accelerator pedal. <Ref. to EN(w/o STI)(diag)-46, DISPLAY CURRENT ENGINE DATA, OPERATION, Subaru Select Monitor.>
9) Check the engine oil level. <Ref. to LU(w/o STI)-2, General Description.>
10) Check the coolant level. <Ref. to CO(w/o STI)-13, Engine Coolant.>
11) Adjust the CVTF level. <Ref. to CVT(TR690)-36, ADJUSTMENT, CVTF.>
12) Increase the CVTF temperature to 60 — 80°C (140 — 176°F) by idling the engine with the select lever shifted to "N" or "P" range.
13) Hold down the pre-collision brake OFF switch to turn OFF the pre-collision brake. (With EyeSight)
14) Shift the select lever to "D" range.
15) Depress the accelerator pedal to the full while fully depressing the foot brake pedal with your left foot.

16) Immediately after the engine speed becomes steady, record the reading of the secondary pressure (line pressure), engine speed and actual secondary pressure on Subaru Select Monitor. And then release the accelerator pedal. Shift the select lever to “N” range. Let the engine idle for one minute or more to cool it down.

NOTE:
• Do not continue the stall test for 5 seconds or more at a time (from fully closed throttle, fully open throttle to secondary pressure (line pressure) reading). Failure to follow this instruction will cause the engine oil and CVTF to deteriorate and the clutch and brake to be adversely affected.
• After performing the secondary pressure (line pressure) test, be sure to cool down the engine for at least one minute with the select lever set in “P” or “N” range and with the idle speed at 1,200 r/min or less.
• Under each condition, check that the measured pressure matches almost totally with actual secondary pressure.
• When both measured pressure and actual secondary pressure are out of specification, judge as control valve malfunction.
• The value at stall is for reference because the pressure changes under different conditions or circumstances.
• The value at idling is steady because it is not affected by any condition or circumstance.

Secondary pressure (line pressure) standard				
	Range	Throttle	Brake	Secondary pressure (line pressure) (MPa (kgf/cm^2, psi))
Stall	D, R	Full open	ON	4.5 — 6 (45.9 — 61.2, 652 — 870)
Idling	P, N	Full closed	OFF	0.5 — 1.5 (5.1 — 15.3, 72 — 218)

17) Remove the ST and install the plug after measurement.

NOTE:
• Use new O-rings.
• Apply CVTF to the O-rings.

Tightening torque:
25 N·m (2.5 kgf-m, 18.4 ft-lb)

9. Transfer Clutch Pressure Test

A: INSPECTION

1) Lift up the vehicle.
2) Remove the test plug.

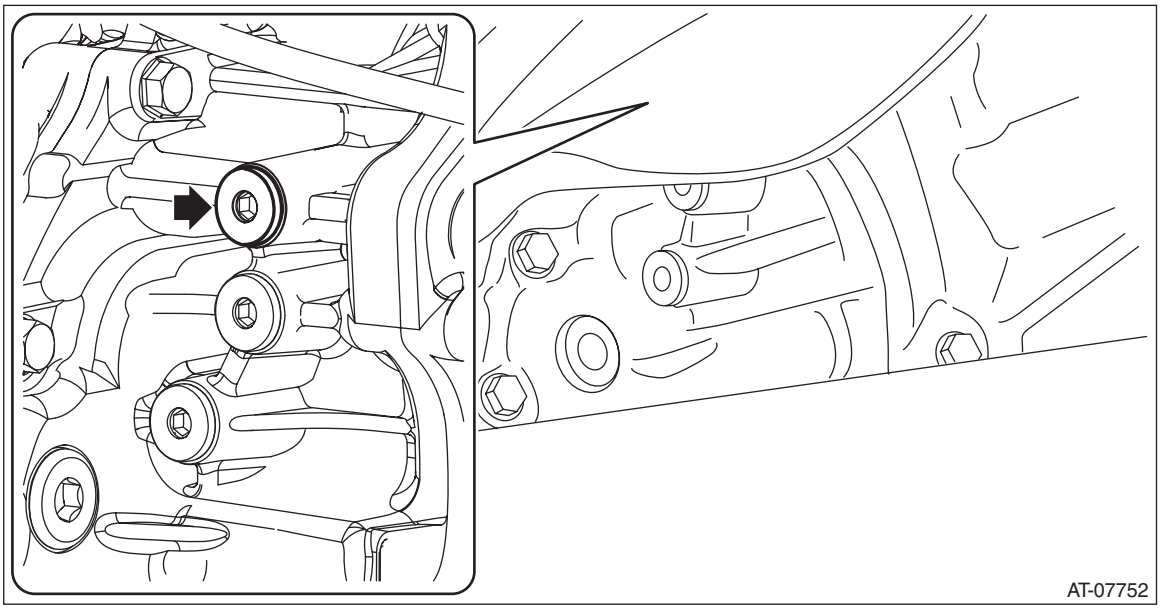

3) Set the ST1, ST2, ST3 and ST4 to the transmission.

CAUTION:
Be careful when setting tools so that the hoses do not touch the exhaust pipes.

NOTE:
• Use ST1 ADAPTER HOSE B with genuine union screw (Part No. 801914010) and gasket (Part No. 803914060) attached.
• Use ST3 PRESSURE GAUGE ADAPTER with genuine O-ring (Part No. 806911080) attached.

ST1 34099AC020 ADAPTER HOSE B
ST2 34099AC010 ADAPTER HOSE A
ST3 18681AA000 PRESSURE GAUGE ADAPTER
ST4 498575400 OIL PRESSURE GAUGE ASSY

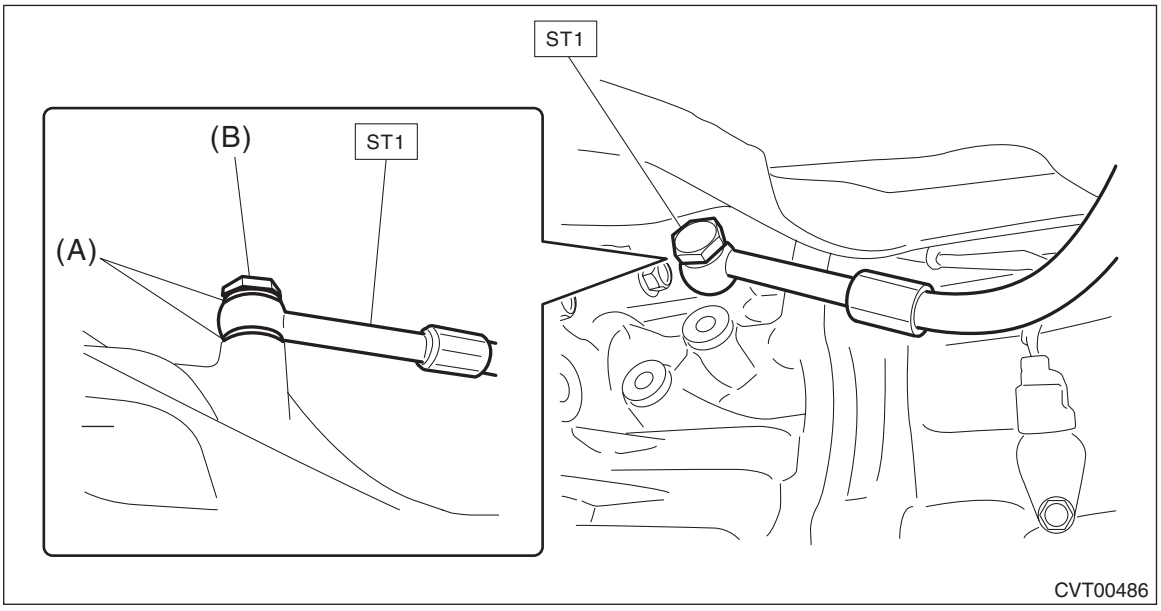

(A) Gasket (genuine part)
(B) Union screw (genuine part)

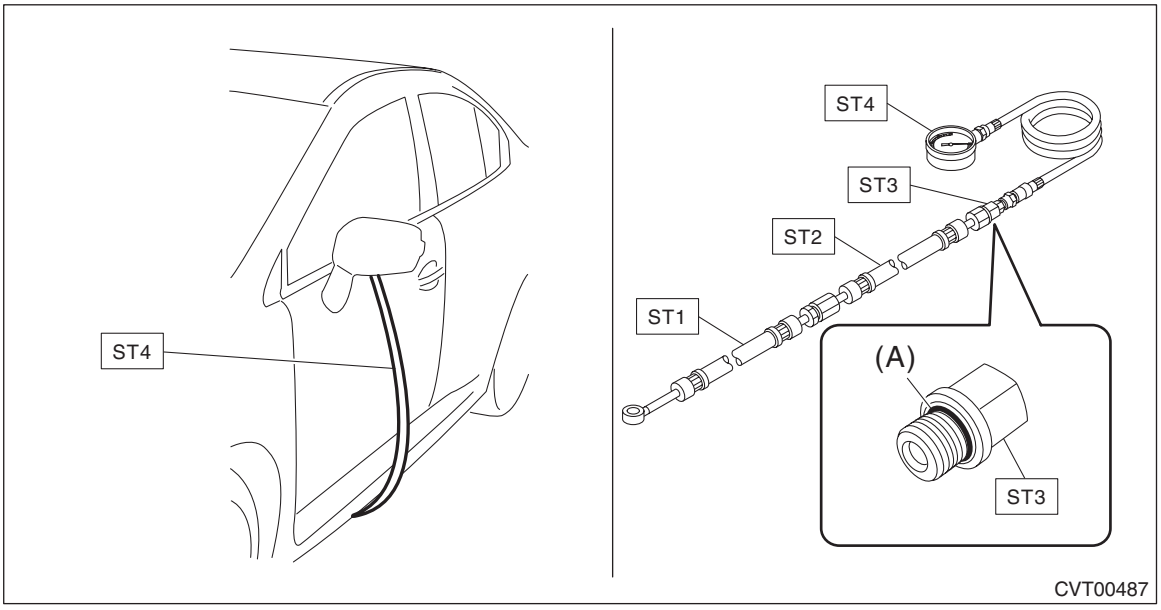

(A) O-ring (genuine part)

4) Lower the vehicle.

5) Connect the Subaru Select Monitor to the data link connector and read the current data.
6) Check the transfer clutch pressure as in secondary pressure (line pressure) test. <Ref. to CVT(TR690)-50, Secondary Pressure (Line Pressure) Test.>

NOTE:
If oil pressure is not produced or it does not change, the control valve body may be malfunctioning.

Range position	ON Duty ratio (%)	Accelerator pedal opening angle (%)	Standard transfer clutch pressure kPa (kgf/cm^2, psi)
D	95 — 100	Fully opened (100)	1,000 — 1,200 (10.2 — 12.2, 145 — 174)
	60	Adjust ON Duty ratio to 60%.	400 — 700 (4.1 — 7.1, 58 — 102)
	0	Fully closed (0)	—
N or P	0	Fully closed (0)	0

7) Lift up the vehicle.
8) Remove the ST.
9) Install the test plug using ST1 and ST2.

NOTE:
- Use new O-rings.
- Apply CVTF to the O-rings.
- Tighten the test plug while directly aligning ST2 and torque wrench.

ST1 18270AA040 SOCKET
ST2 73099SG000 SPECIAL TOOL CONDENSER
Using the following formula, calculate the tightening torque for a torque wrench.
T2 = L2/(L1 + L2) × T1
T1: 25 N·m (2.5 kgf-m, 18.4 ft-lb)
L1: ST2 length 0.1 m (3.94 in) (a)
L2: Torque wrench length (b) m (in)

[Required torque setting]
T2: Tightening torque: N·m (kgf-m, ft-lb)

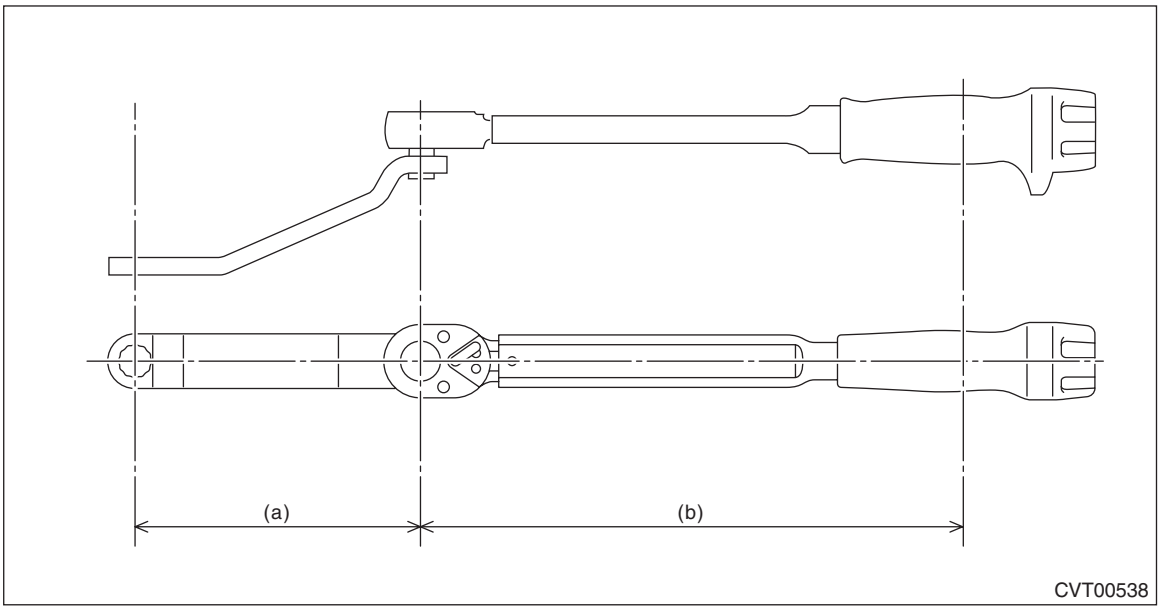

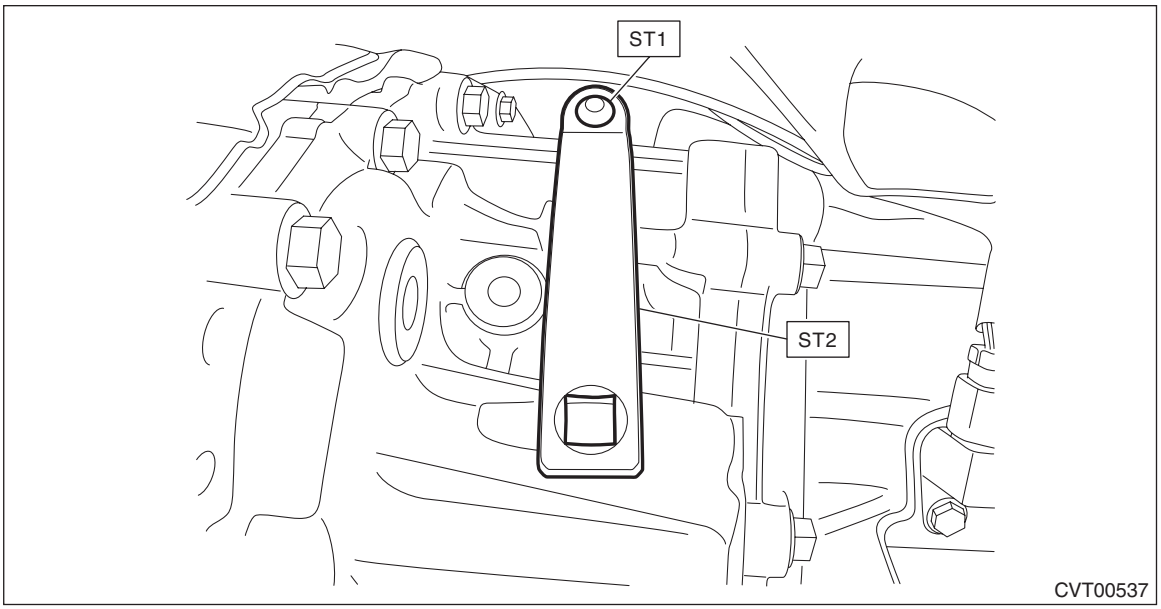

10) Lower the vehicle.

10.Automatic Transmission Assembly

A: REMOVAL

1) Remove the front tires.
2) Disconnect the ground terminal from battery sensor. <Ref. to NT-6, BATTERY, NOTE, Note.>
3) Remove the collector cover. <Ref. to IN(w/o STI)-7, REMOVAL, Collector Cover.>
4) Remove the air intake duct. <Ref. to IN(w/o STI)-26, REMOVAL, Air Intake Duct.>
5) Remove the intercooler and the intercooler stay. <Ref. to IN(w/o STI)-43, REMOVAL, Intercooler.>
6) Remove the air breather hose. <Ref. to CVT(TR690)-136, REMOVAL, Air Breather Hose.>
7) Disconnect the following connectors.

- Transmission harness connectors
- Transmission radio ground terminal
- Inhibitor harness connector
- Engine harness connectors

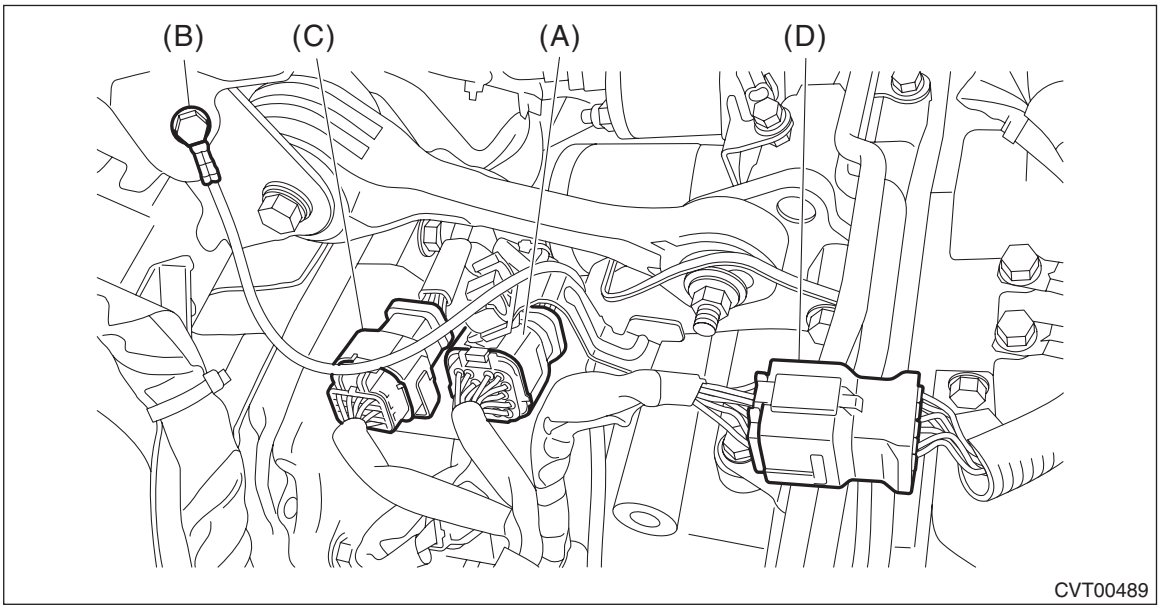

(A) Transmission harness connectors
(B) Transmission radio ground terminal
(C) Inhibitor harness connector
(D) Engine harness connectors

8) Remove the engine hanger rear.

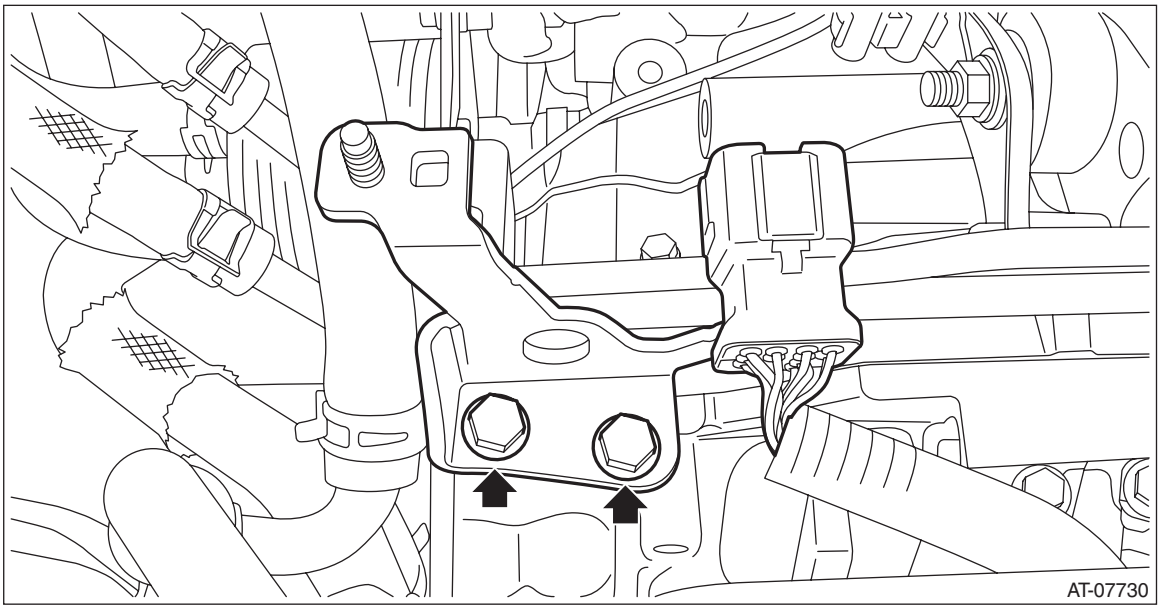

9) Remove the harness clip.

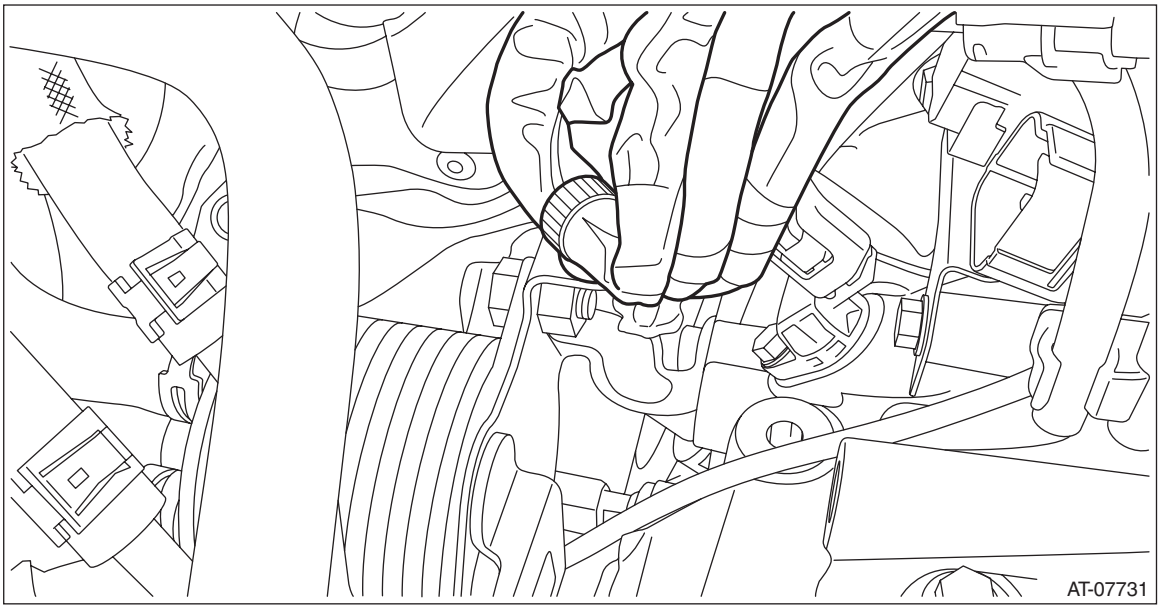

10) Remove the starter. <Ref. to SC(w/o STI)-2, General Description.>

11) Remove the pitching stopper.

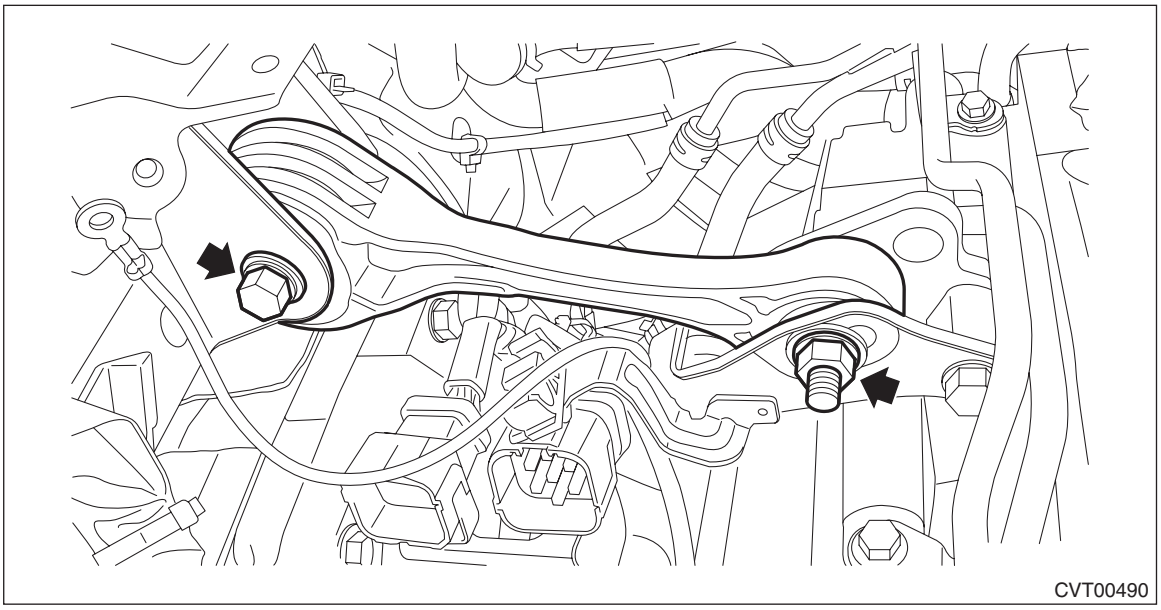

12) Remove the service hole plug.

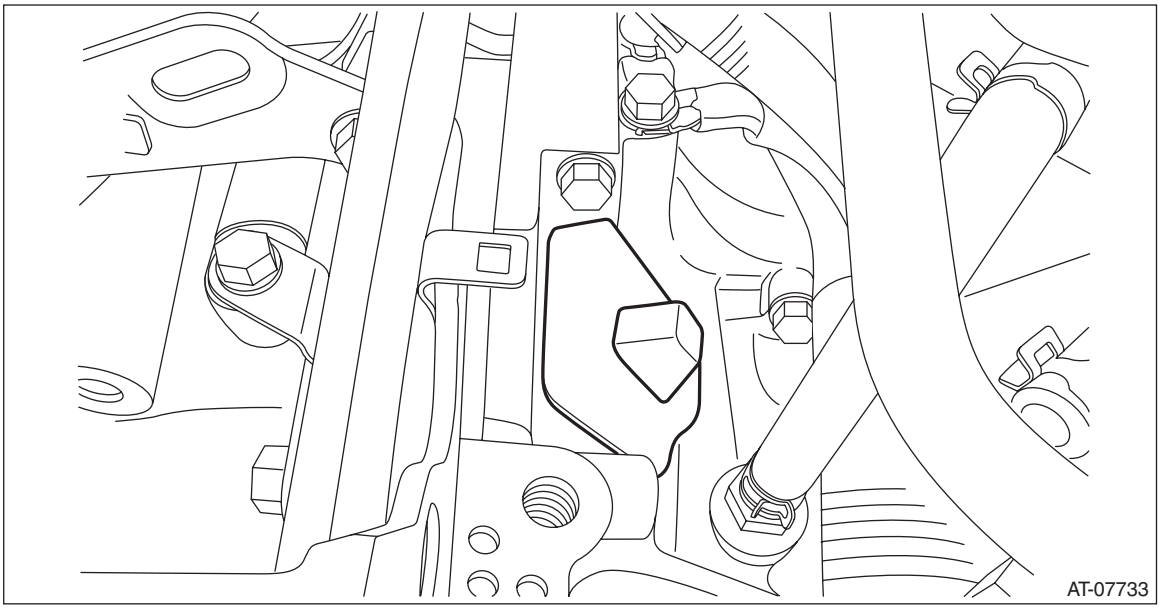

13) Remove the four bolts combining the torque converter and drive plate while rotating the crank pulley a little at a time in the same direction as engine revolution.

CAUTION:
- **Be careful not to drop bolts into the converter housing.**
- **Be careful not to damage the mounting bolts.**

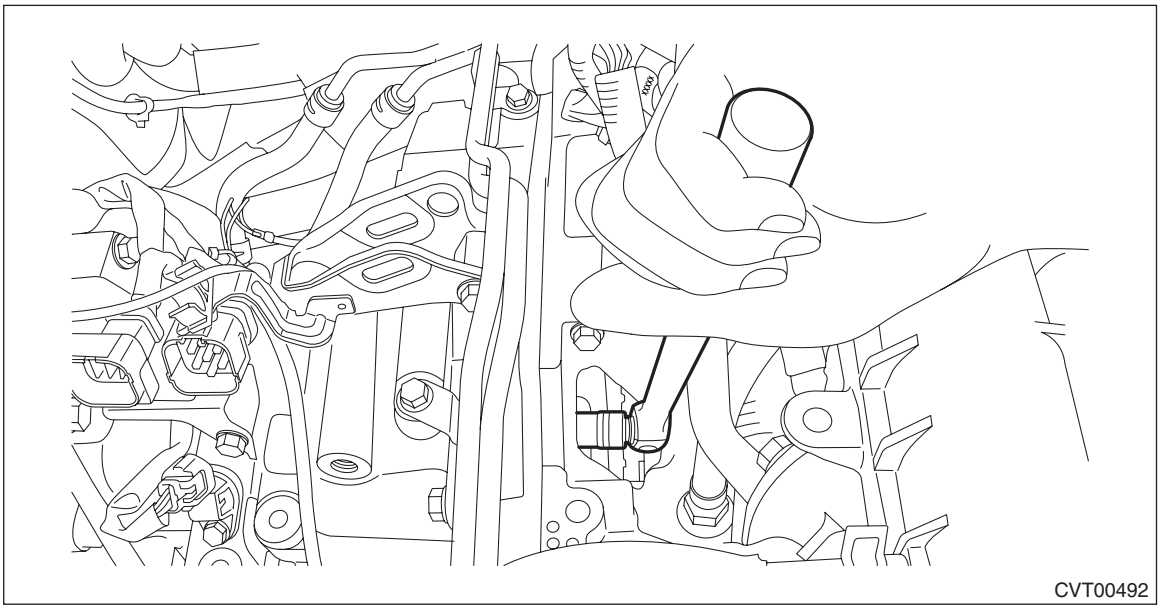

14) Make sure the torque converter moves freely by rotating with finger through the starter installation hole.
15) Attach the ST to the converter case.
ST 498277200 STOPPER SET

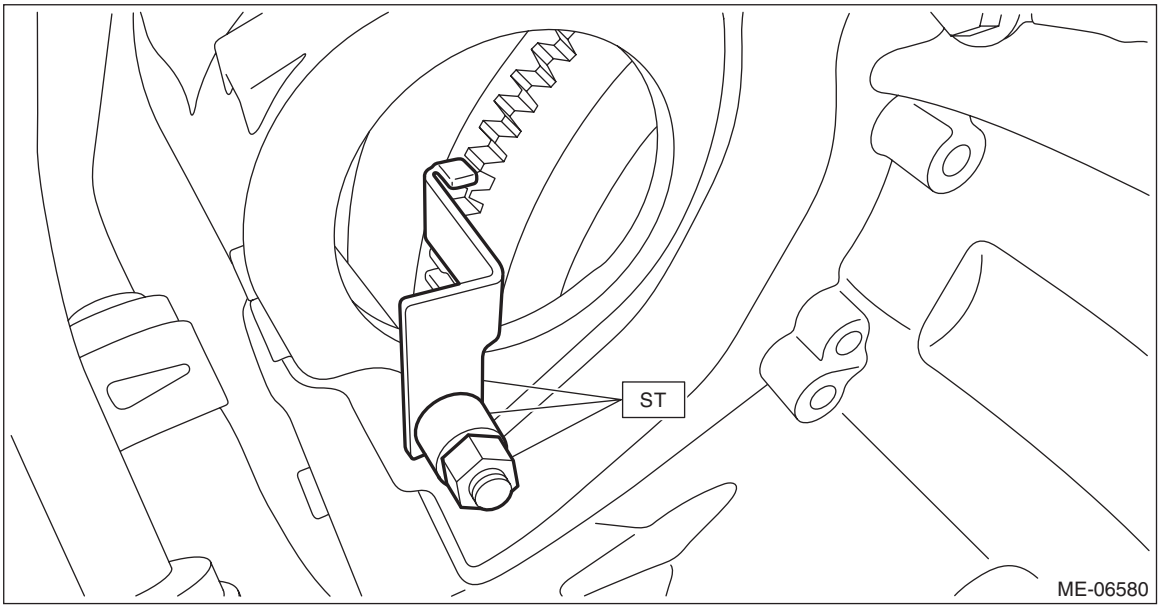

16) Remove the primary speed sensor harness connector.

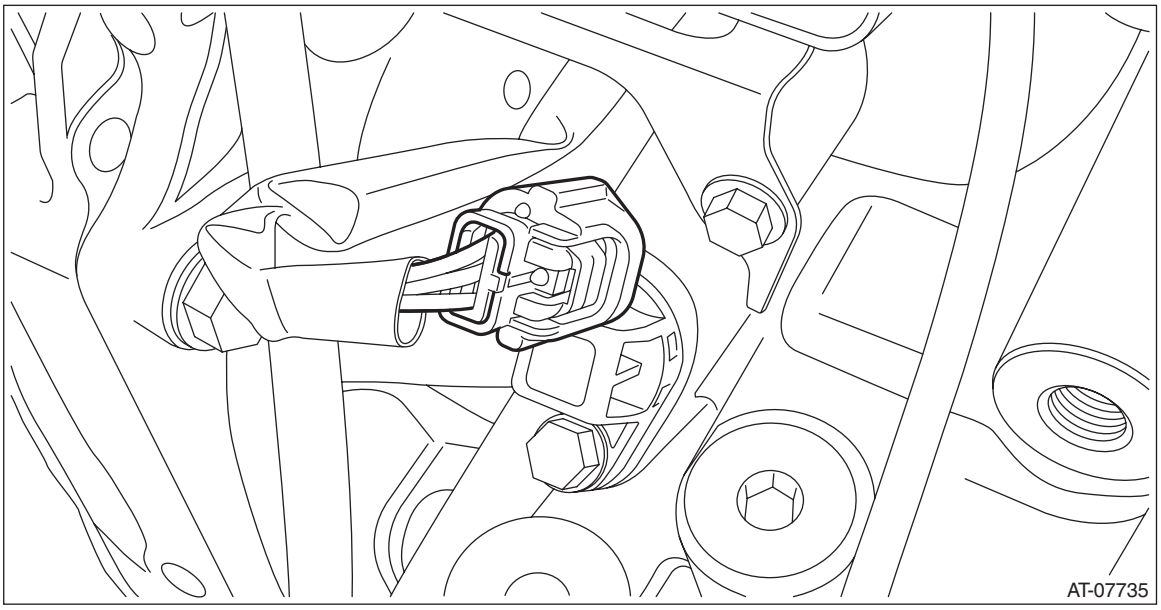

17) Remove the transmission harness stay.

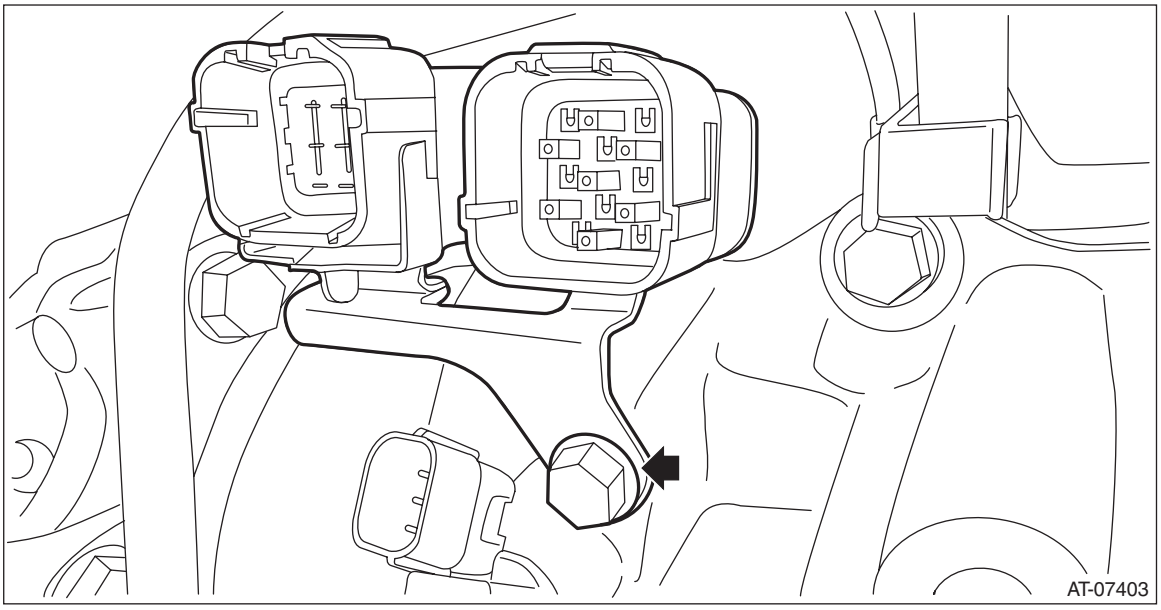

18) Remove the CVTF cooler pipe COMPL mounting bolt.

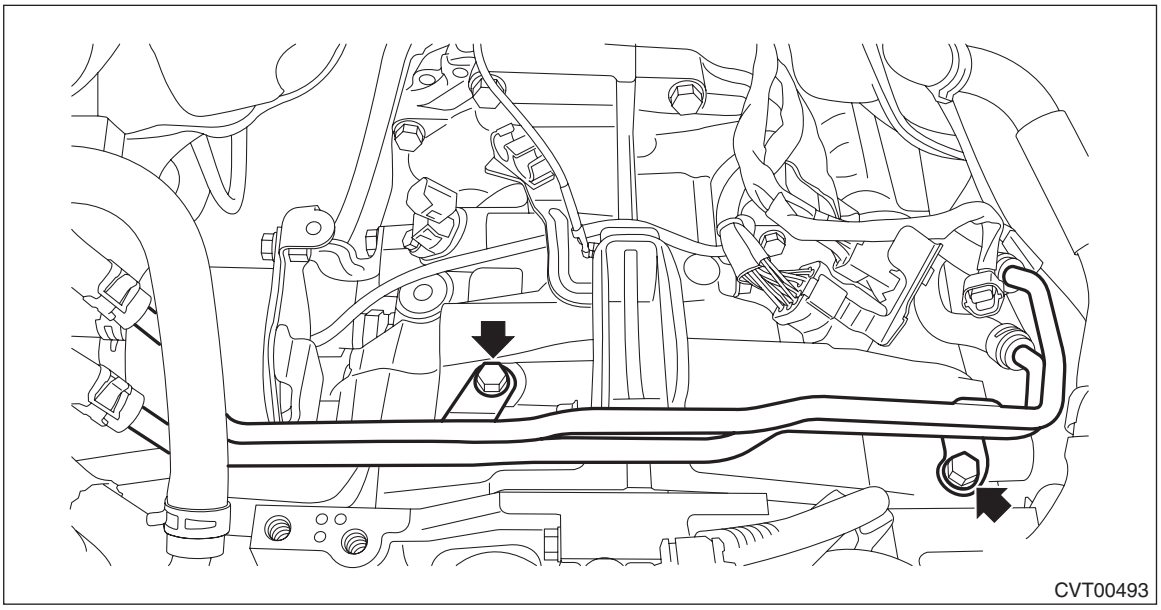

19) Remove the pitching stopper bracket and transmission radio ground cord.

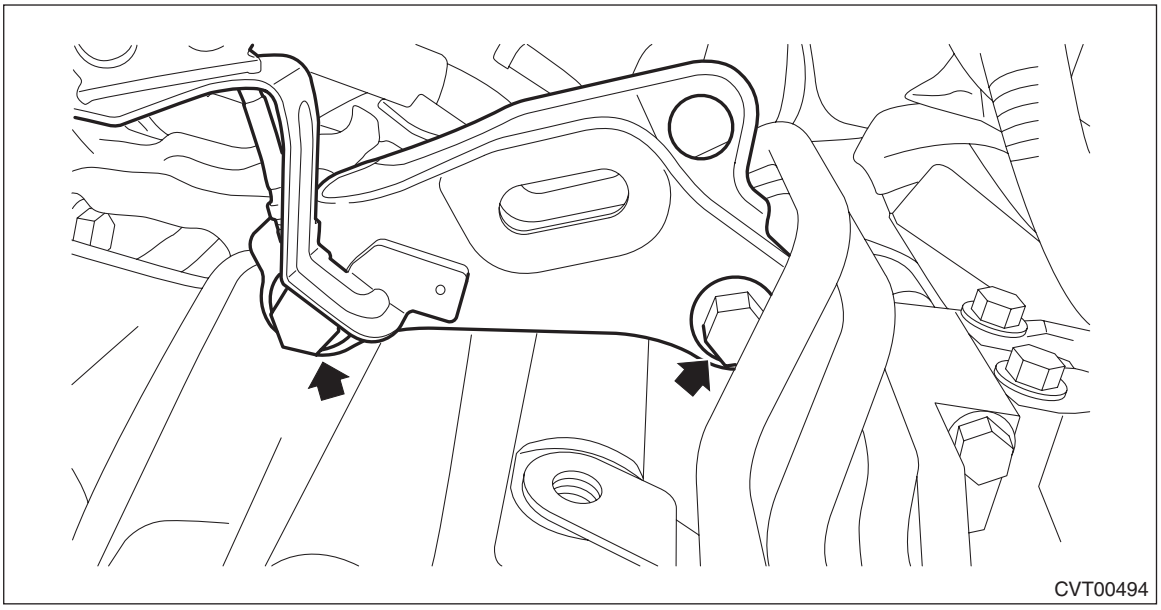

20) Remove the engine ground terminal.

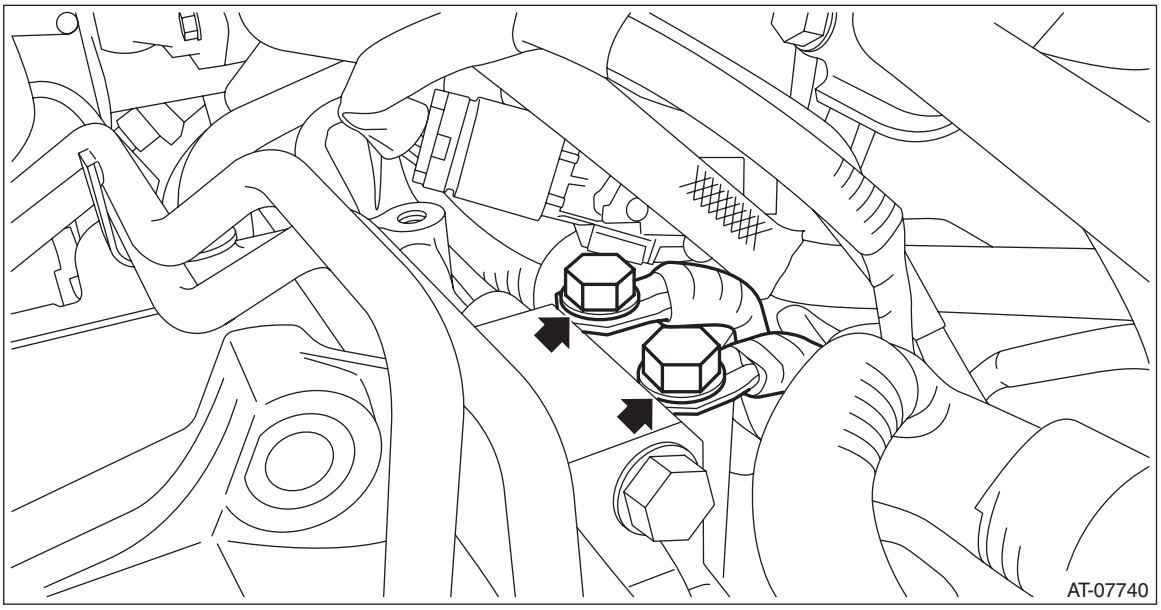

21) Lift up the vehicle.
22) Remove the center exhaust pipe (rear). <Ref. to EX(w/o STI)-32, REMOVAL, Center Exhaust Pipe.>
23) Remove the exhaust hanger bracket.

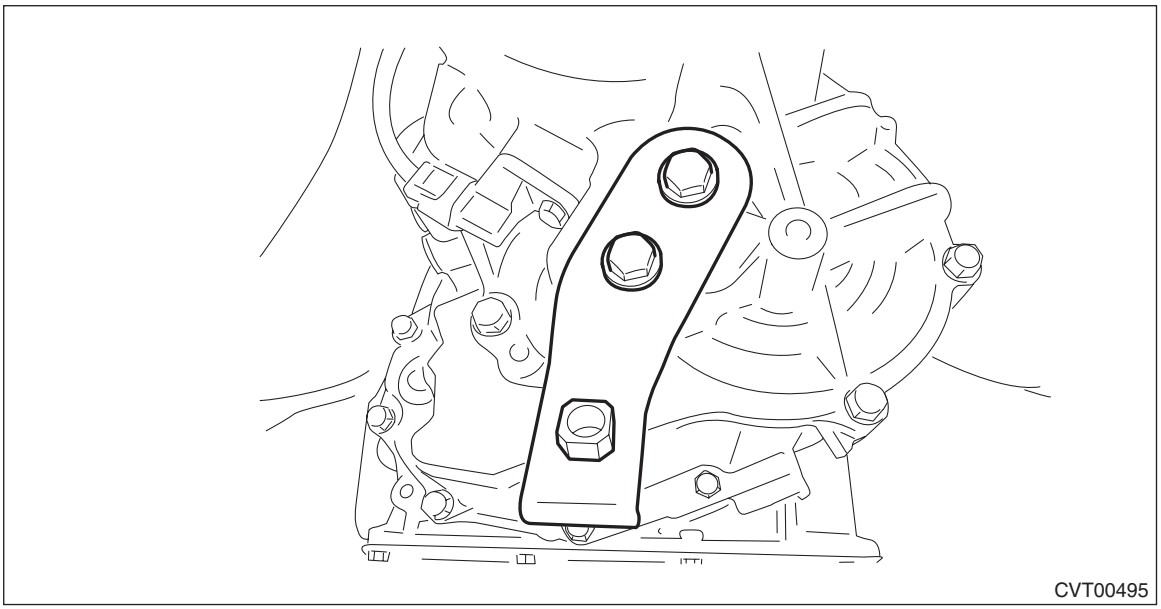

24) Remove the CVTF drain plug to drain CVTF. <Ref. to CVT(TR690)-38, REPLACEMENT, CVTF.>

25) Remove the center exhaust cover.

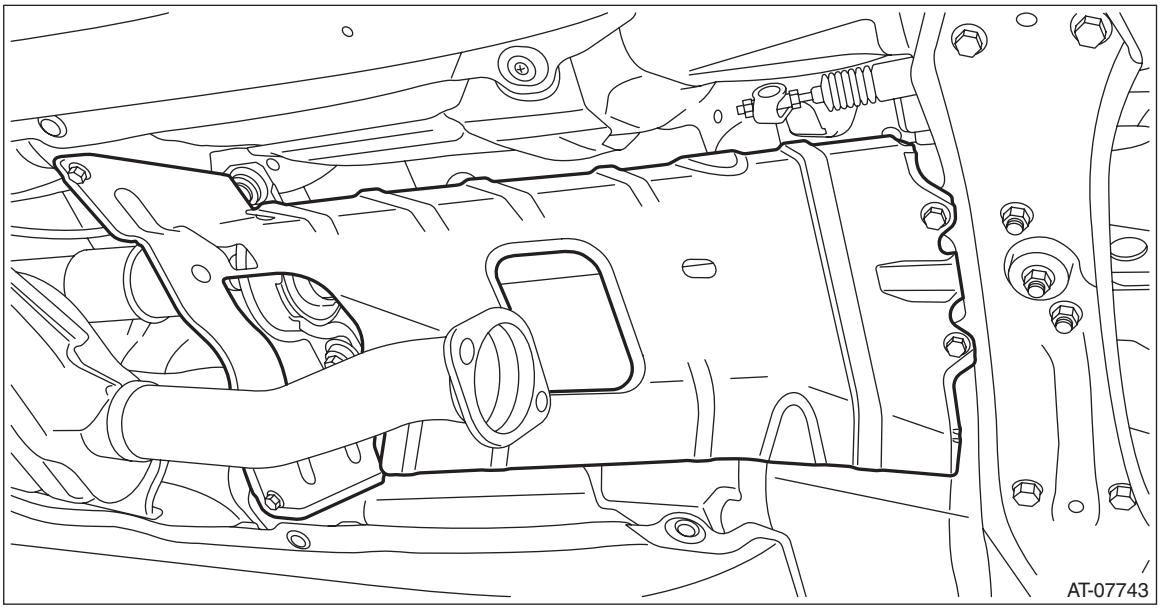

26) Remove the secondary pressure sensor harness connector.

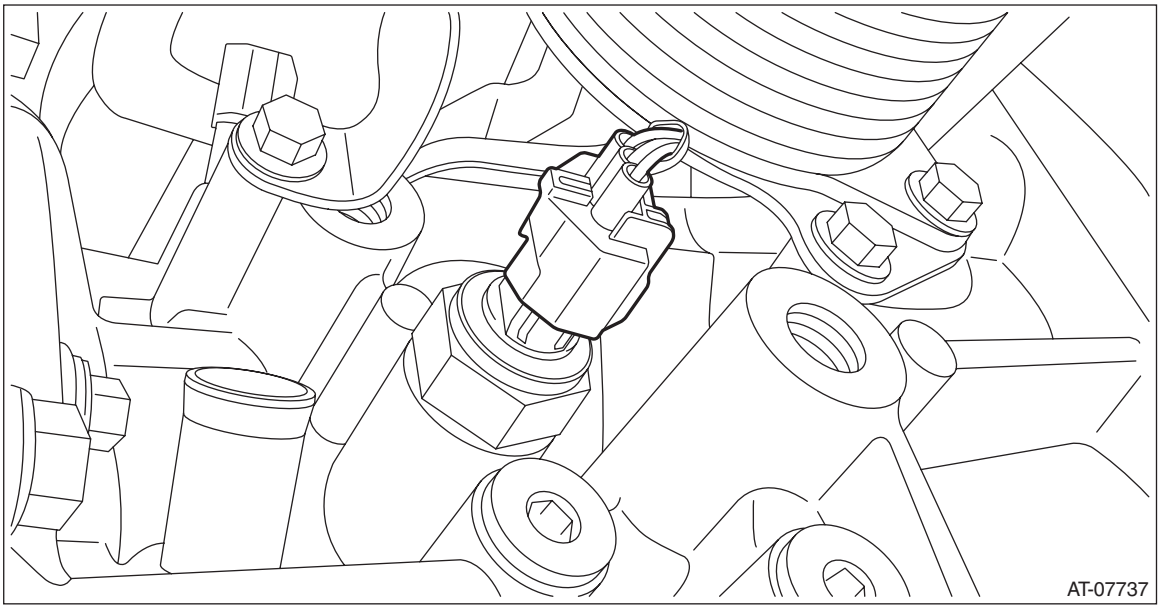

27) Remove the snap pin and washer, and remove the select cable.

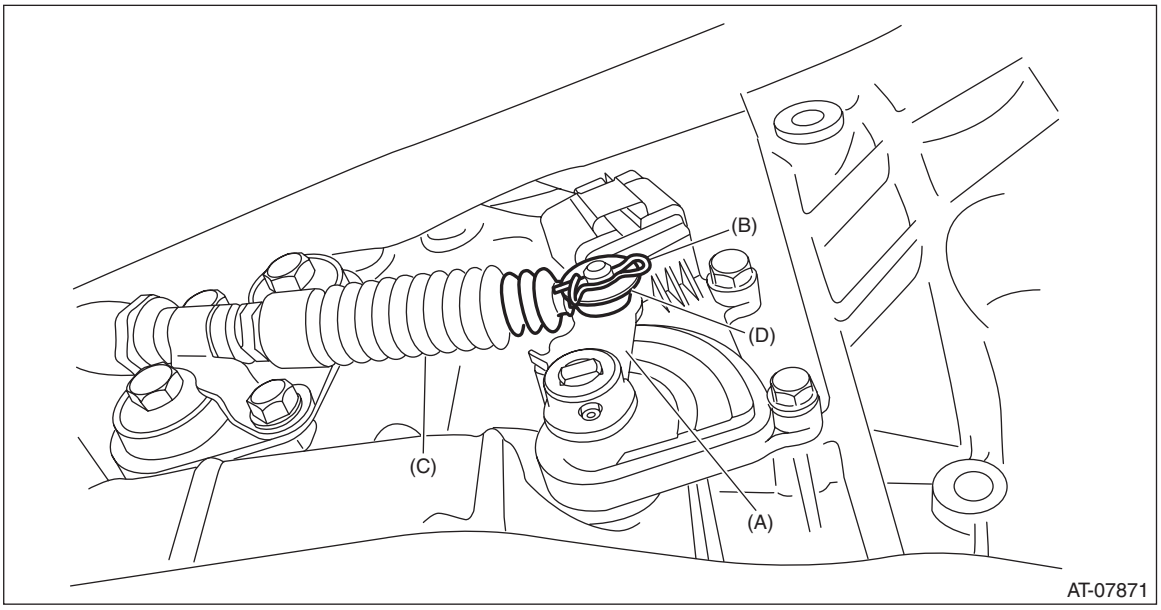

(A) Shifter arm
(B) Snap pin
(C) Select cable
(D) Washer

28) Remove the cable plate assembly.

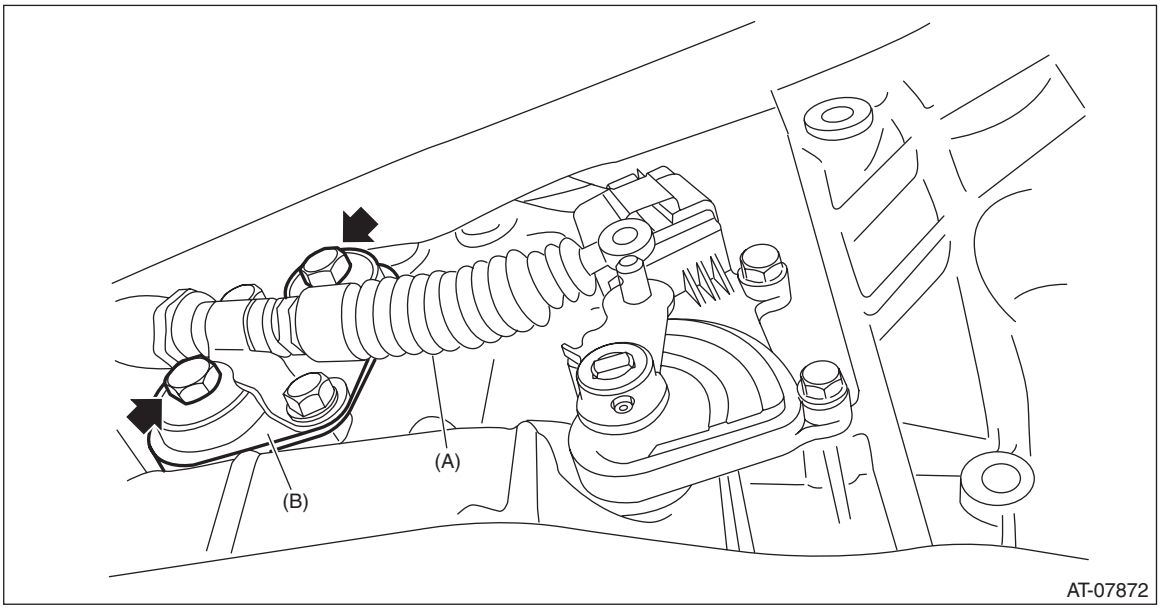

(A) Select cable
(B) Cable plate ASSY

29) Drain differential gear oil. <Ref. to CVT(TR690)-42, REPLACEMENT, Differential Gear Oil.>

30) Remove the CVTF inlet hose and outlet hose.

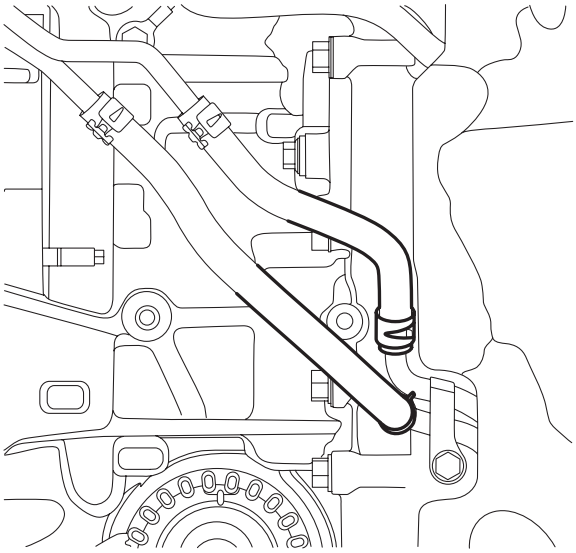

31) Remove the CVTF cooler (with warmer feature), and using a piece of wire, affix to a location of the body where it will not interfere with the removal/installation of the transmission.

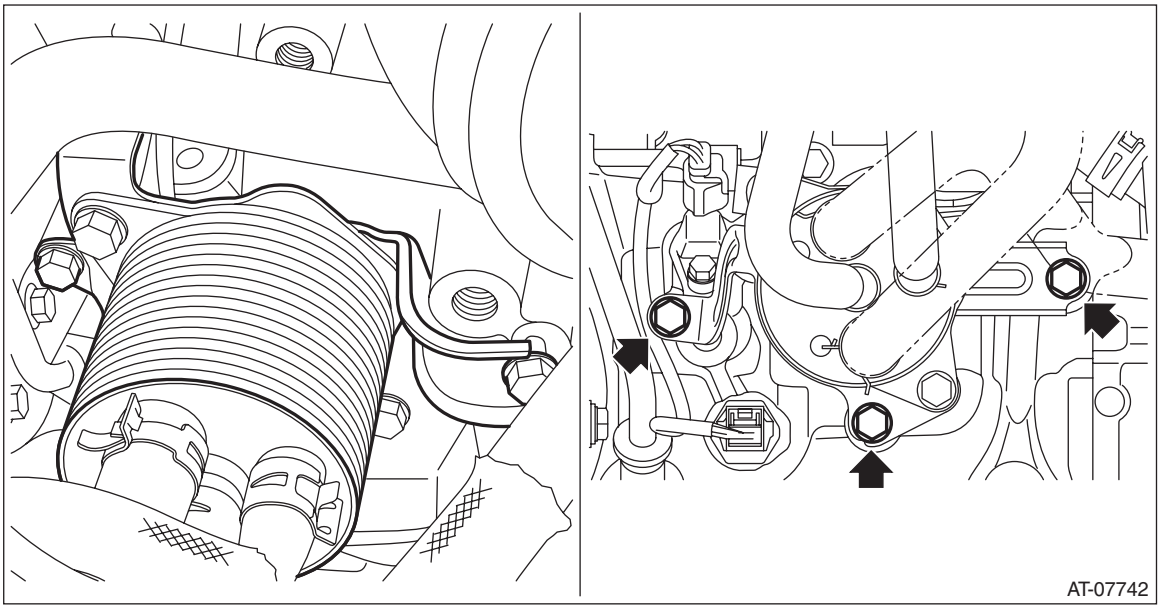

32) Set the ST.
ST 41099AC000 ENGINE SUPPORT ASSY

NOTE:
Place a washer with 4 mm (0.16 in) thickness into the gap between the engine block and ST.

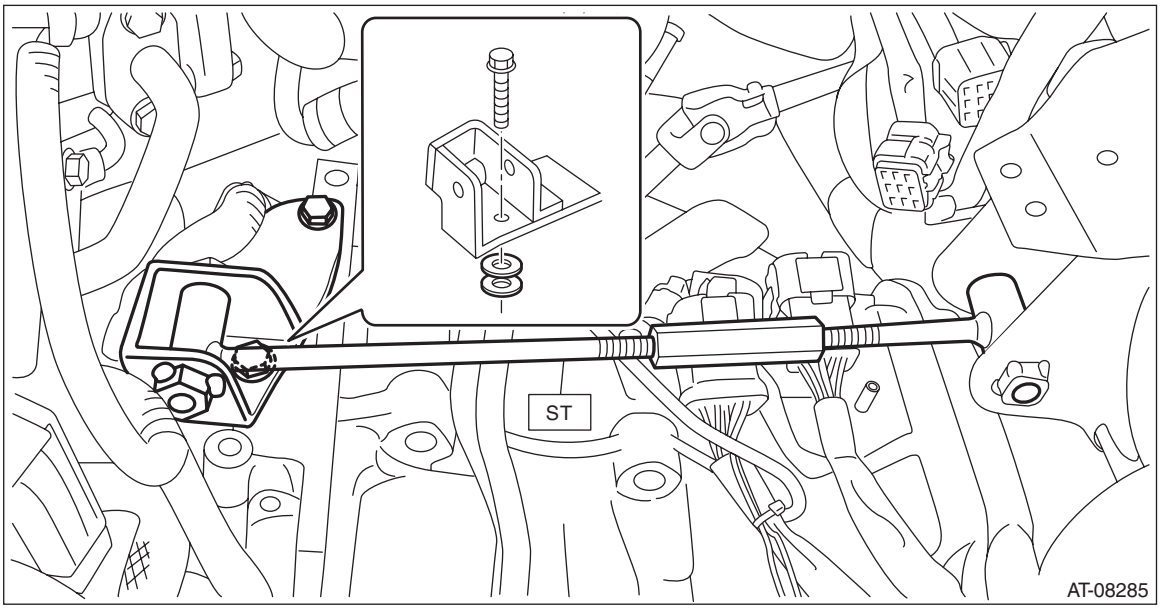

33) Remove the three transmission connecting bolts.

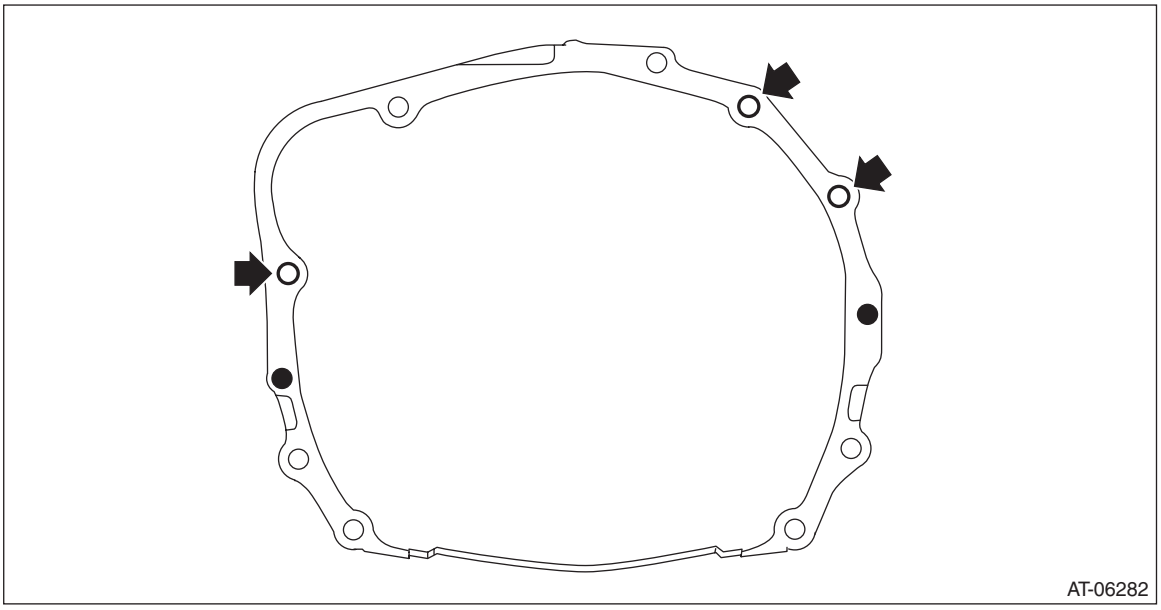

34) Lift up the vehicle.
35) Remove the propeller shaft. <Ref. to DS-12, REMOVAL, Propeller Shaft.>
36) Remove the stabilizer link. <Ref. to FS-29, REMOVAL, Front Stabilizer.>
37) Disconnect the lower arm ball joint and housing.
38) Pull out the front drive shaft from transmission using a crowbar.

NOTE:
Place cloth between the tire lever or bar and the transmission in order to avoid damaging the transmission side retainer.

39) Holding the joint of front drive shaft from transmission side, pull out the drive shaft from transmission with care not to stretch the boot.

NOTE:
- Before pulling the front drive shaft RH, turn the steering wheel to the right hand at full lock.
- Before pulling the front drive shaft LH, turn the steering wheel to the left hand at full lock.

40) Remove the two transmission connecting bolts and two nuts (lower side).

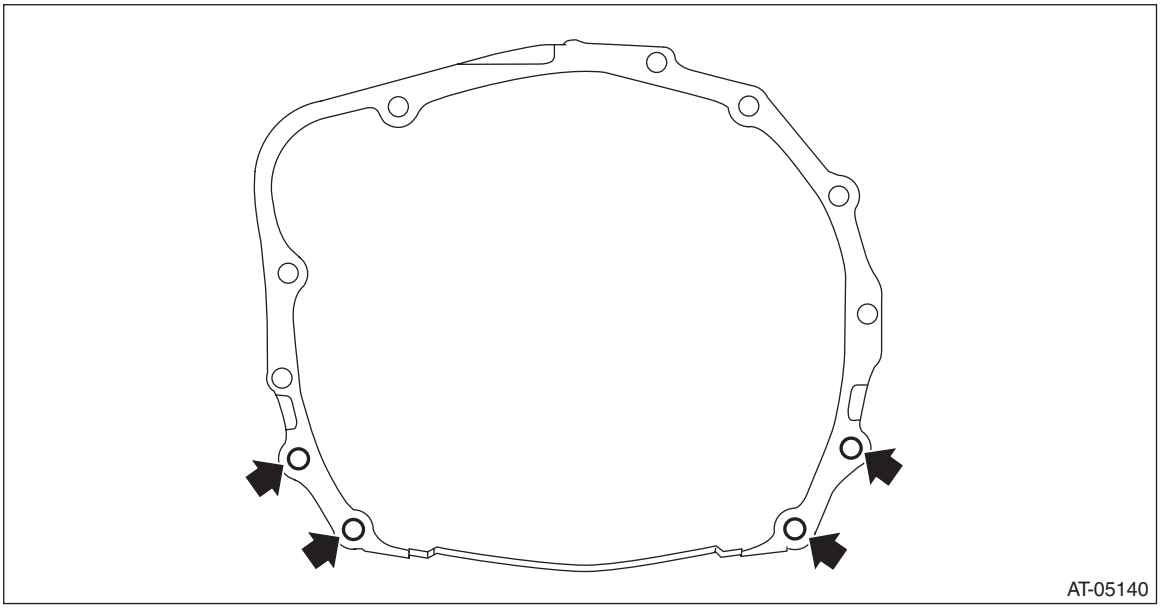

41) Set the transmission jack under the transmission.

NOTE:
Make sure that the support plates of transmission jack do not touch the oil pan.

42) Remove the transmission rear crossmember.

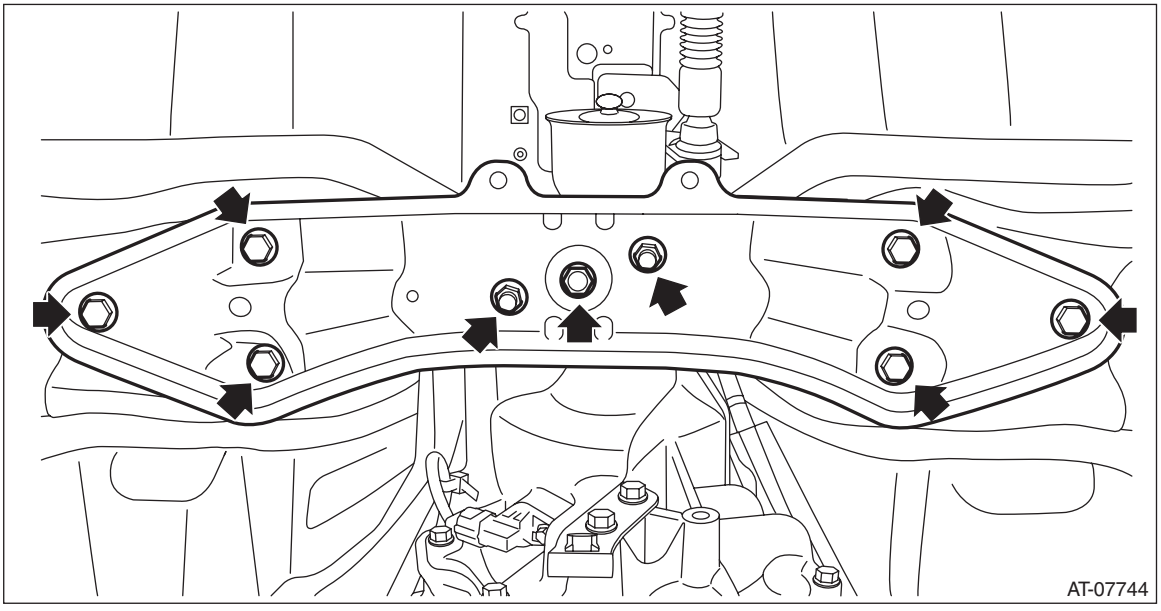

43) While lowering the transmission jack gradually, fully retract the engine support, and then tilt the engine rearward.
44) Remove the transmission assembly.

NOTE:
Remove it while moving the transmission jack up and down so that the engine and transmission remain directly aligned.

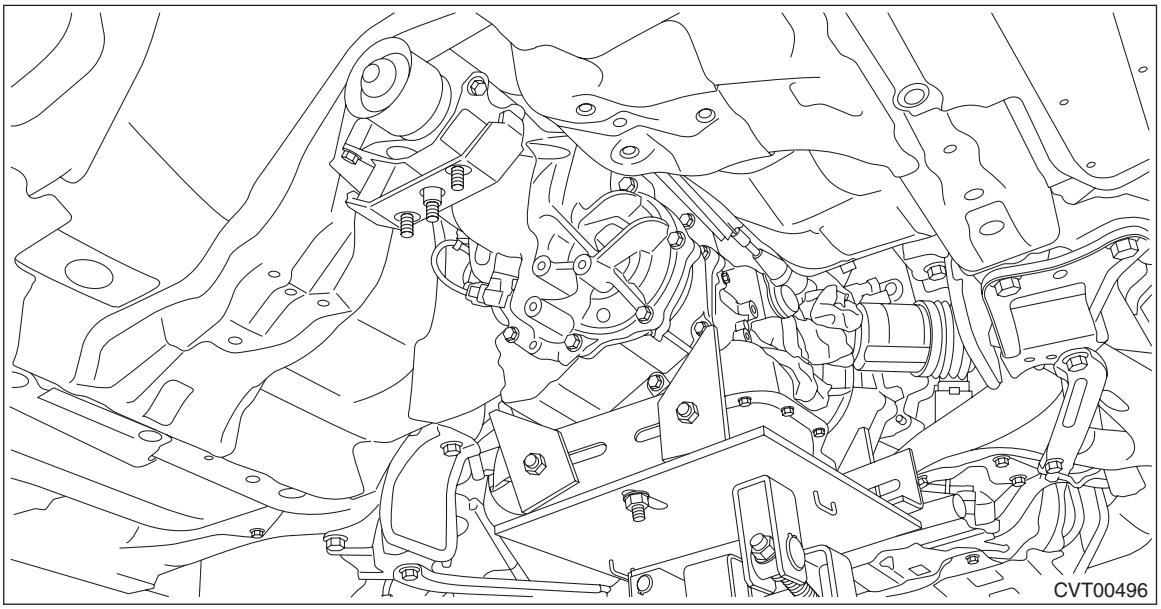

45) Remove the rear cushion rubber.

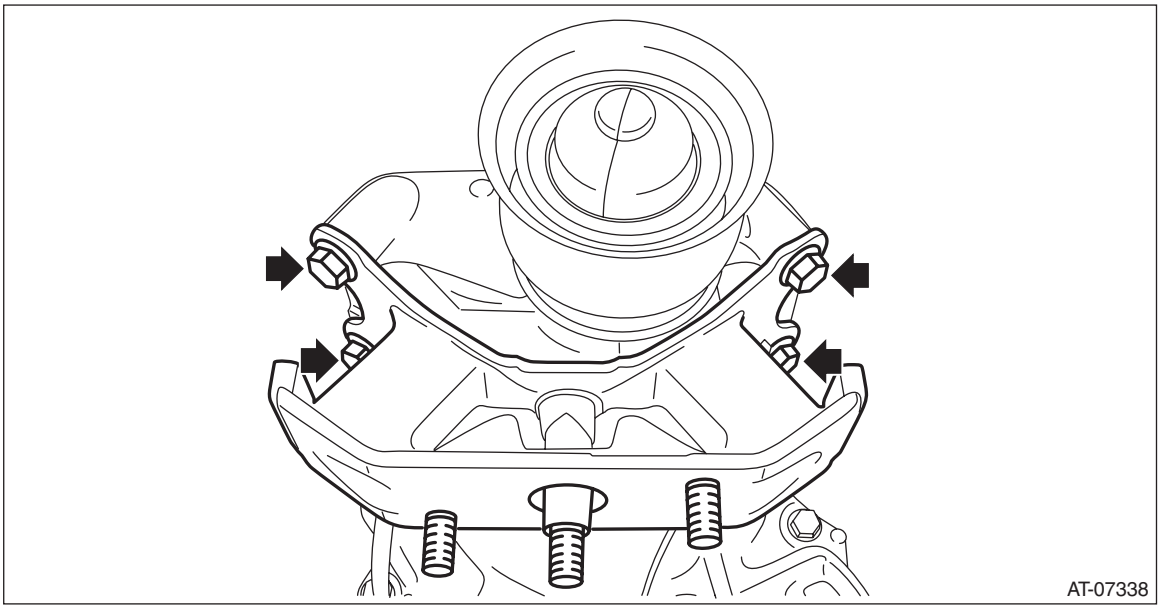

B: INSTALLATION

1) Attach the ST to converter case.
ST 498277200 STOPPER SET

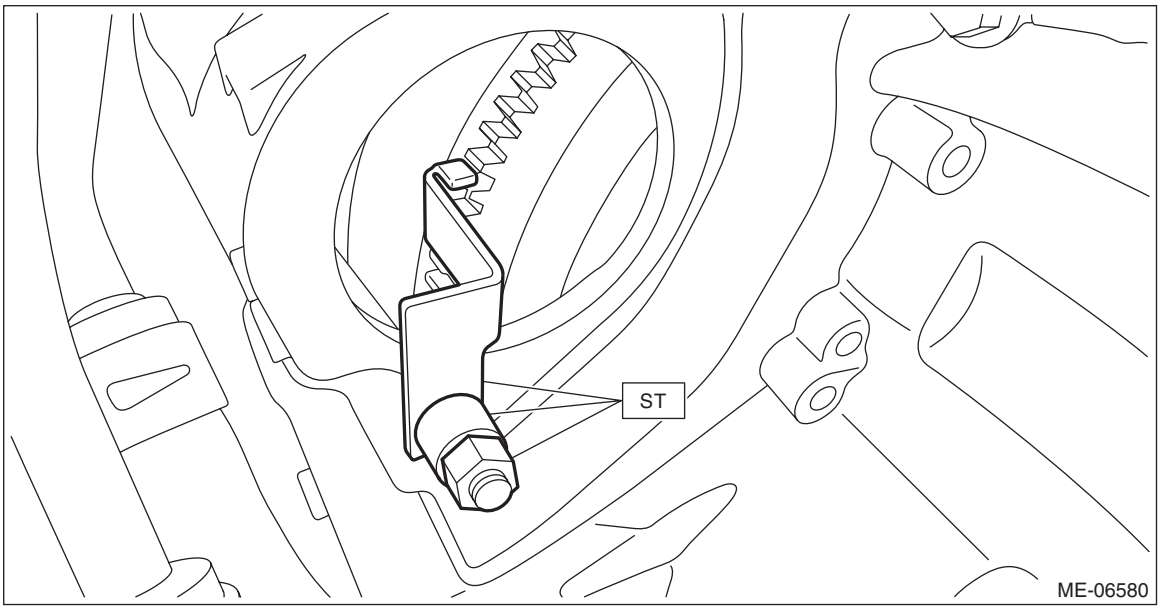

2) When completely overhauling the transmission, refill approx. 10 L (2.6 US qt, 8.8 Imp qt) of CVTF through the transmission right side plug, and install the plug.

CAUTION:
Always use specified CVTF. Using other fluid will cause malfunction. <Ref. to CVT(TR690)-4, HYDRAULIC CONTROL AND LUBRICATION, SPECIFICATION, General Description.>

NOTE:
Use a new gasket.

Tightening torque:
35 N·m (3.6 kgf-m, 25.8 ft-lb)

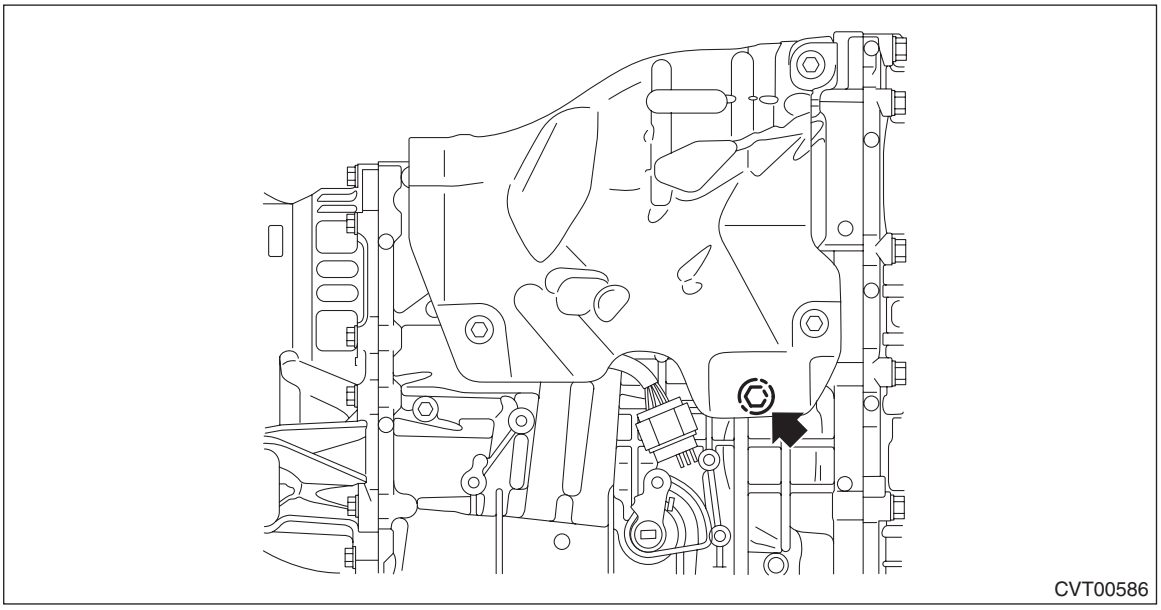

3) Replace the front differential side retainer oil seal. <Ref. to CVT(TR690)-90, REPLACEMENT, Differential Side Retainer Oil Seal.>

NOTE:
- Be sure to replace the differential side retainer oil seal with a new part whenever the front drive shaft is removed from the transmission.
- When a new differential side retainer oil seal has been installed, replacement is not required.

4) Install the rear cushion rubber.

Tightening torque:
40 N·m (4.1 kgf-m, 29.5 ft-lb)

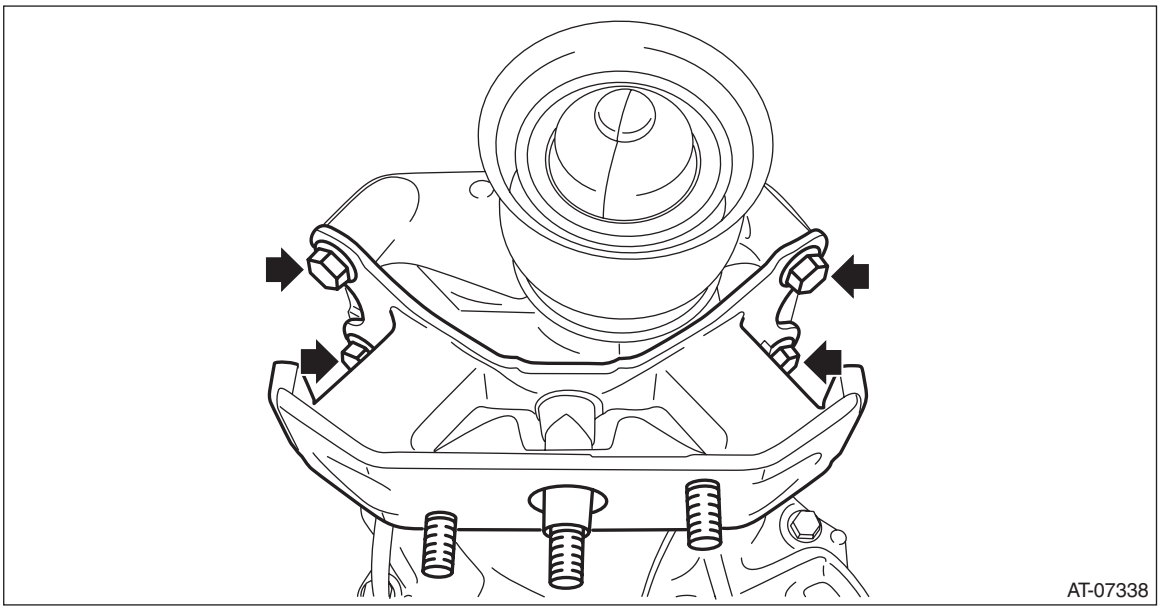

5) Mount the transmission onto the transmission jack.
6) Strike and bend the transmission hanger of transmission rear with a rubber hammer etc. so that it gets in contact with the transmission case.

CAUTION:
Do not apply extra overload or impact to the transmission case.

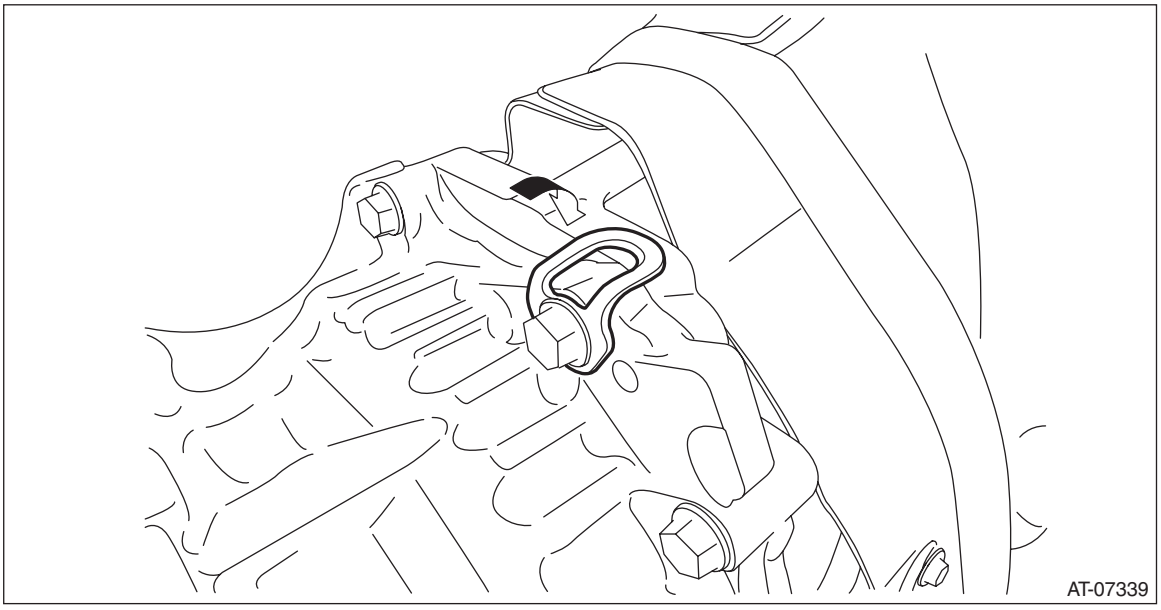

7) Remove the pitching stopper bracket, if mounted.

8) Install the transmission onto the engine.

NOTE:
- While raising the transmission jack gradually, turn the screw of engine support, then tilt the engine forward.
- Temporarily attach the two engine connecting bolts and two nuts (lower side).

9) Install the transmission rear crossmember.

Tightening torque:
T1: 35 N·m (3.6 kgf-m, 25.8 ft-lb)
T2: 70 N·m (7.1 kgf-m, 51.6 ft-lb)

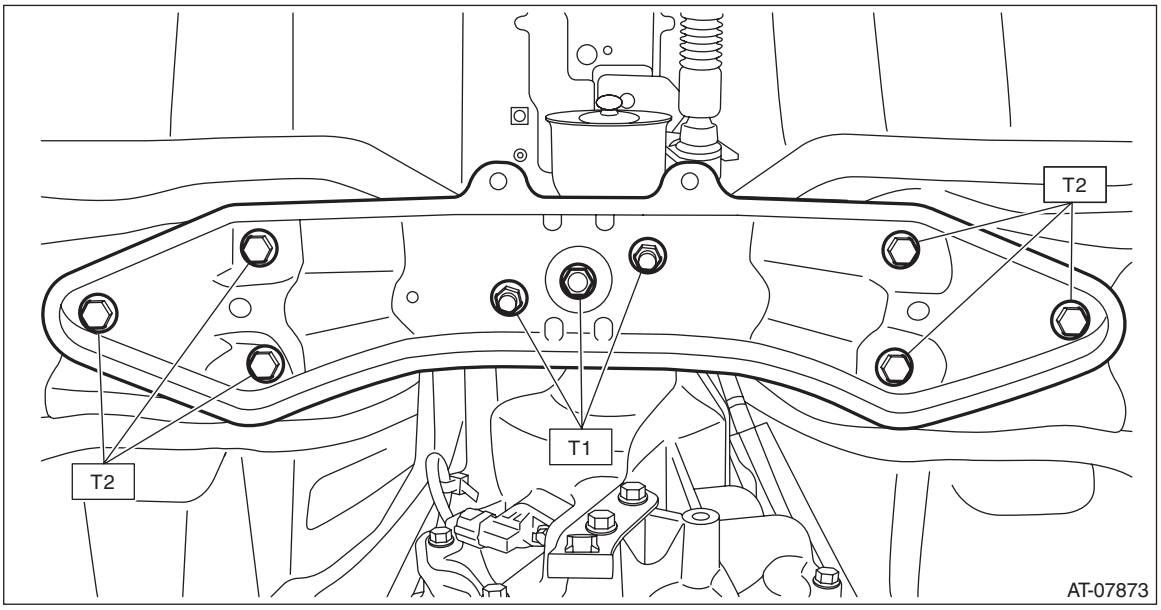

10) Tighten the two engine connecting bolts and two nuts (lower side).

Tightening torque:
50 N·m (5.1 kgf-m, 36.9 ft-lb)

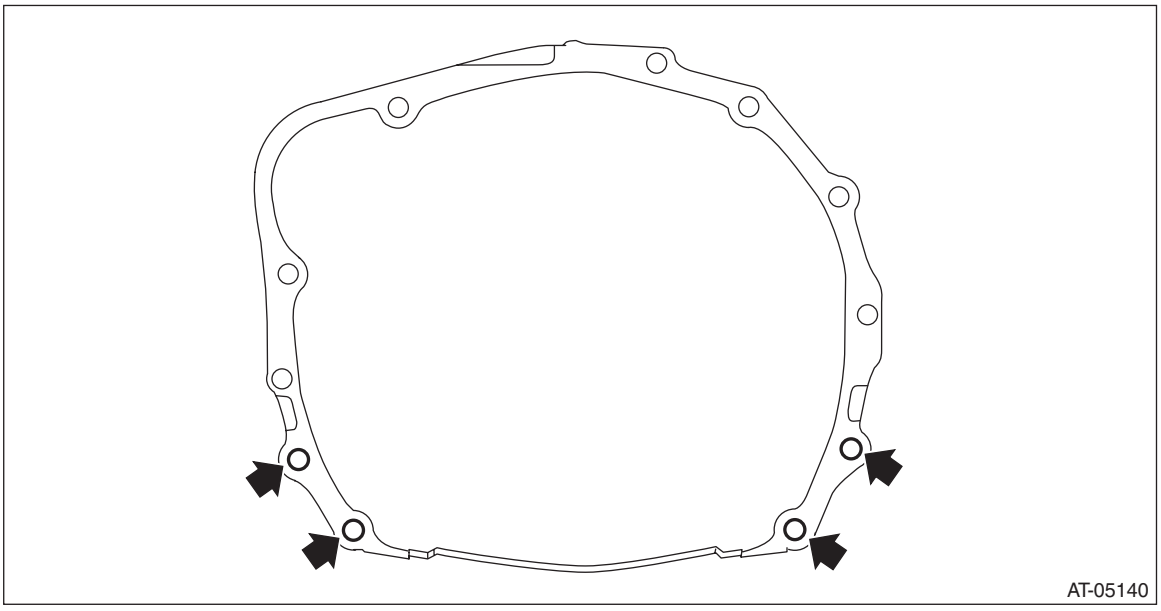

11) Remove the transmission jack.
12) Lower the vehicle.

13) Install the three engine mounting bolts (upper side).

Tightening torque:
50 N·m (5.1 kgf-m, 36.9 ft-lb)

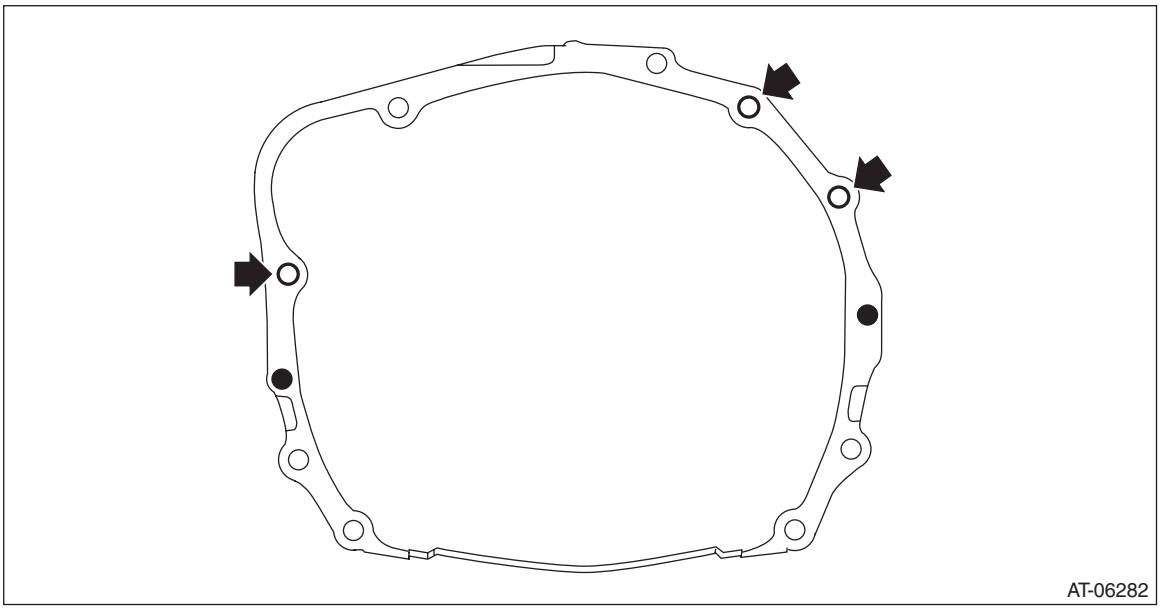

14) Remove the ST (STOPPER SET) from converter case.
15) Remove the ST (ENGINE SUPPORT ASSY).
ST 41099AC000 ENGINE SUPPORT ASSY

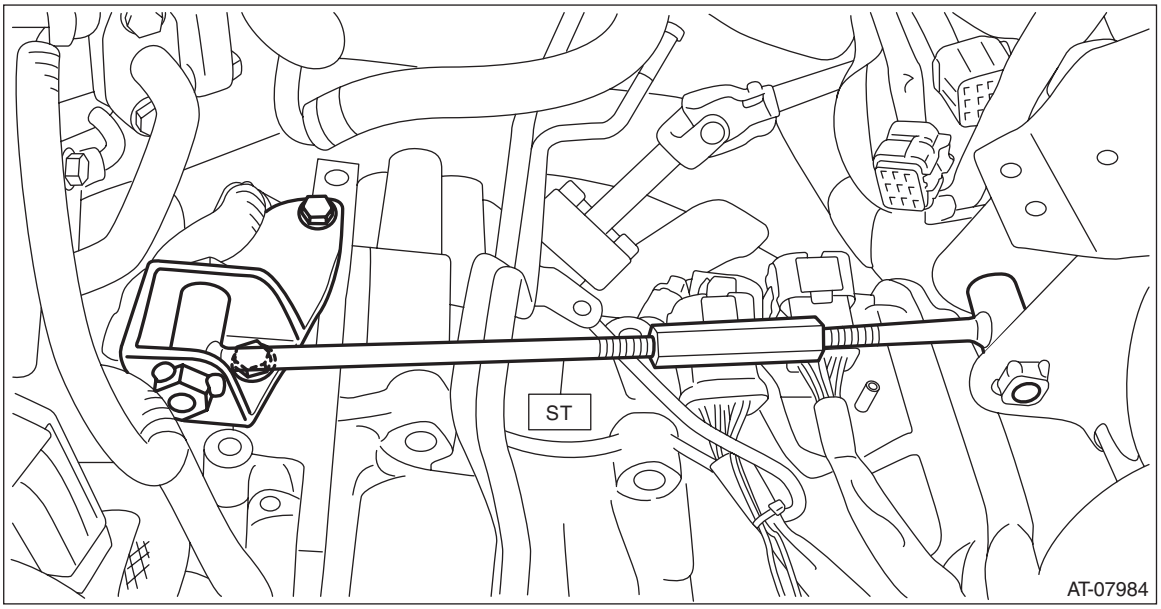

16) Match the torque converter screw hole with drive plate hole to install the bolt.

CAUTION:
- **Do not drop the mounting bolt in the converter housing.**
- **Do not damage the mounting bolt.**

Tightening torque:
25 N·m (2.5 kgf-m, 18.4 ft-lb)
17) Install the remaining three bolts by rotating the crank pulley a little at a time in the same direction as engine revolution.

Tightening torque:
25 N·m (2.5 kgf-m, 18.4 ft-lb)

18) Install the service hole plug.

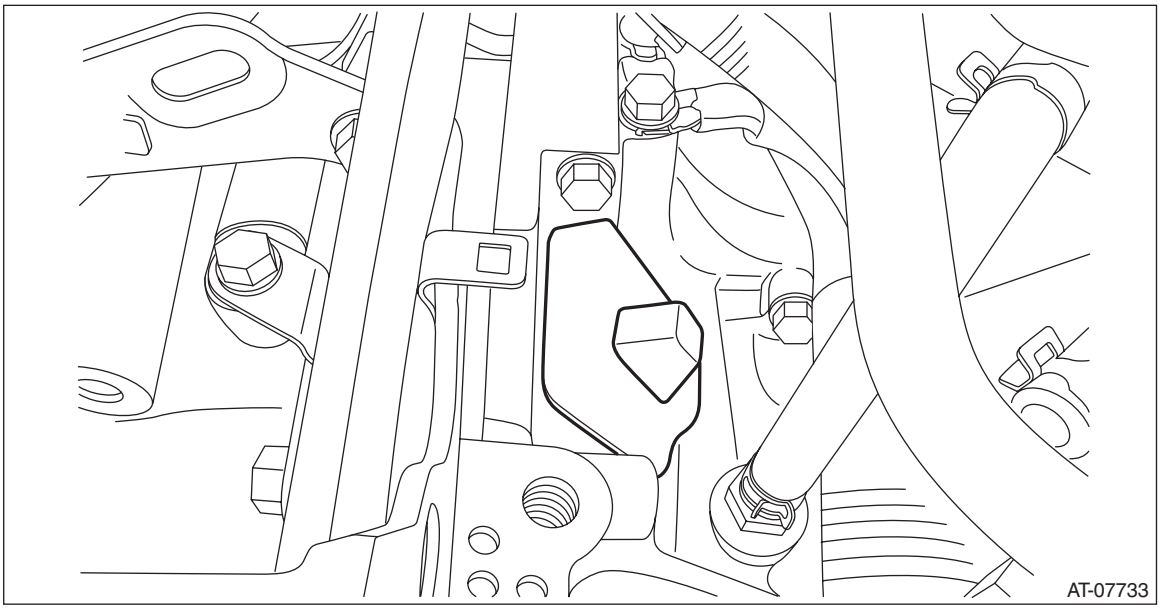

19) Install the engine ground terminals.

Tightening torque:
19 N·m (1.9 kgf-m, 14.0 ft-lb)

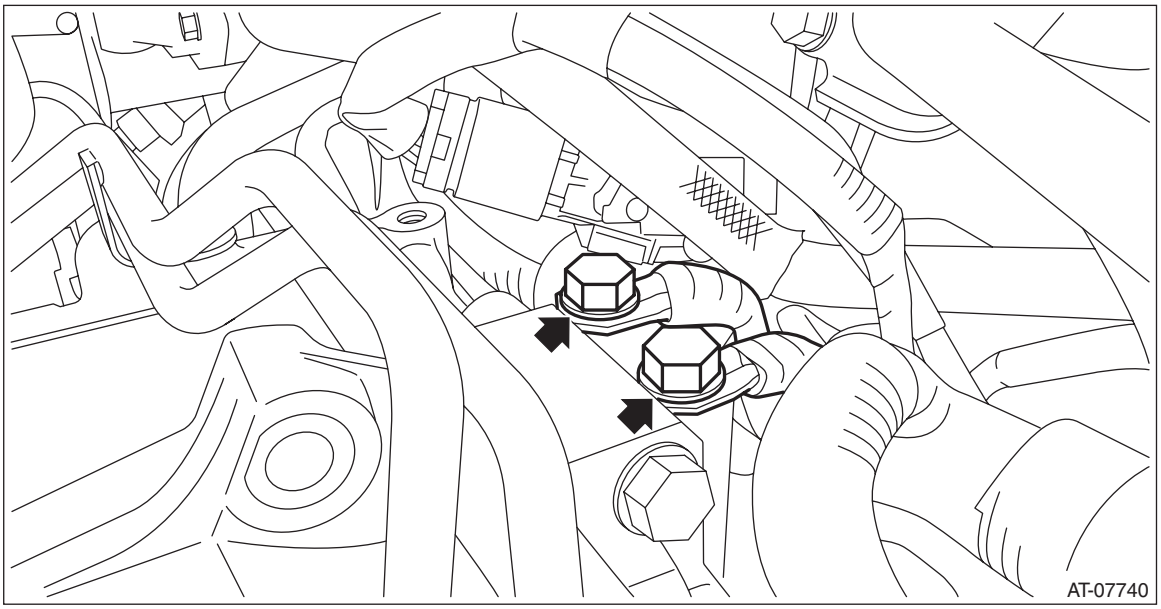

20) Install the pitching stopper bracket and transmission radio ground cord.

CAUTION:
Be careful not to deform or damage the terminal of transmission radio ground cord.

Tightening torque:
41 N·m (4.2 kgf-m, 30.2 ft-lb)

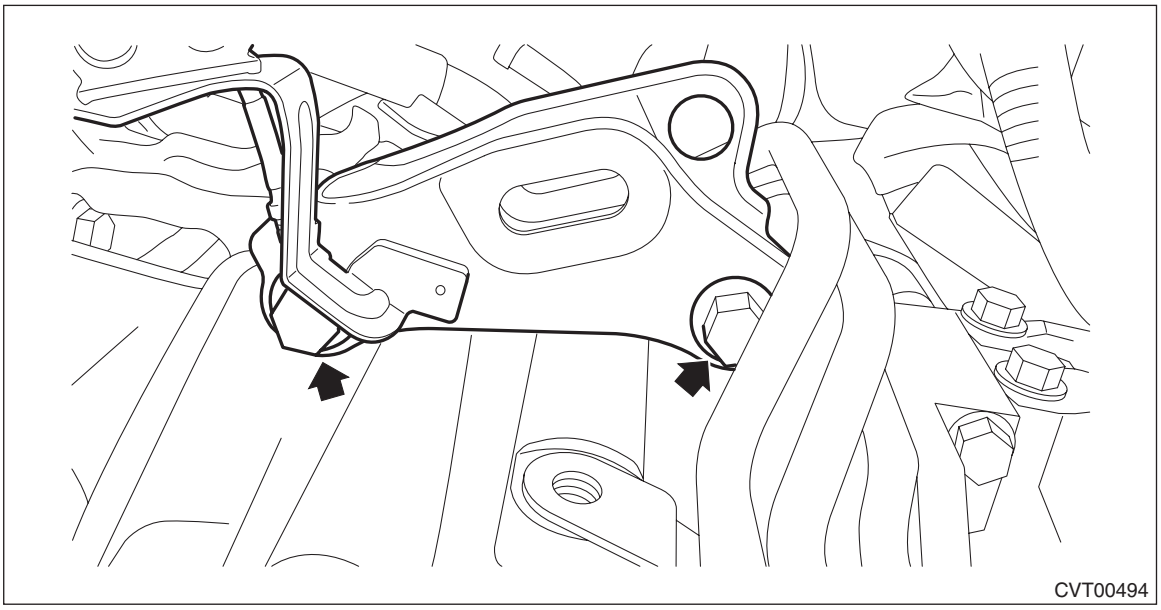

21) Install the CVTF cooler (with warmer feature).

Tightening torque:
23 N·m (2.3 kgf-m, 17.0 ft-lb)

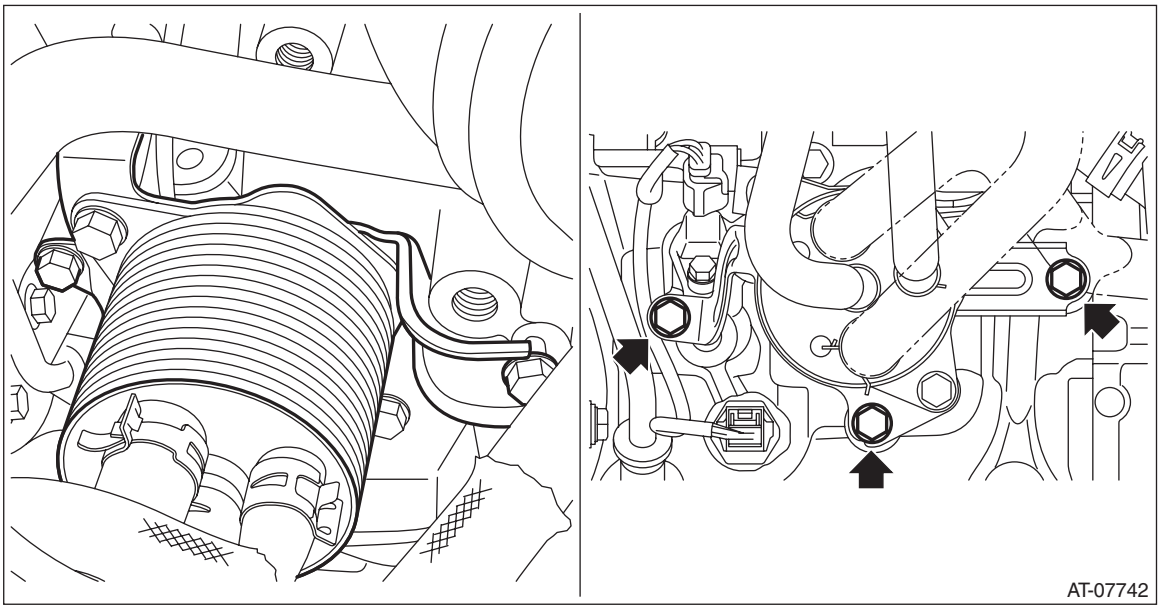

22) Install the CVTF cooler pipe COMPL.

Tightening torque:
16 N·m (1.6 kgf-m, 11.8 ft-lb)

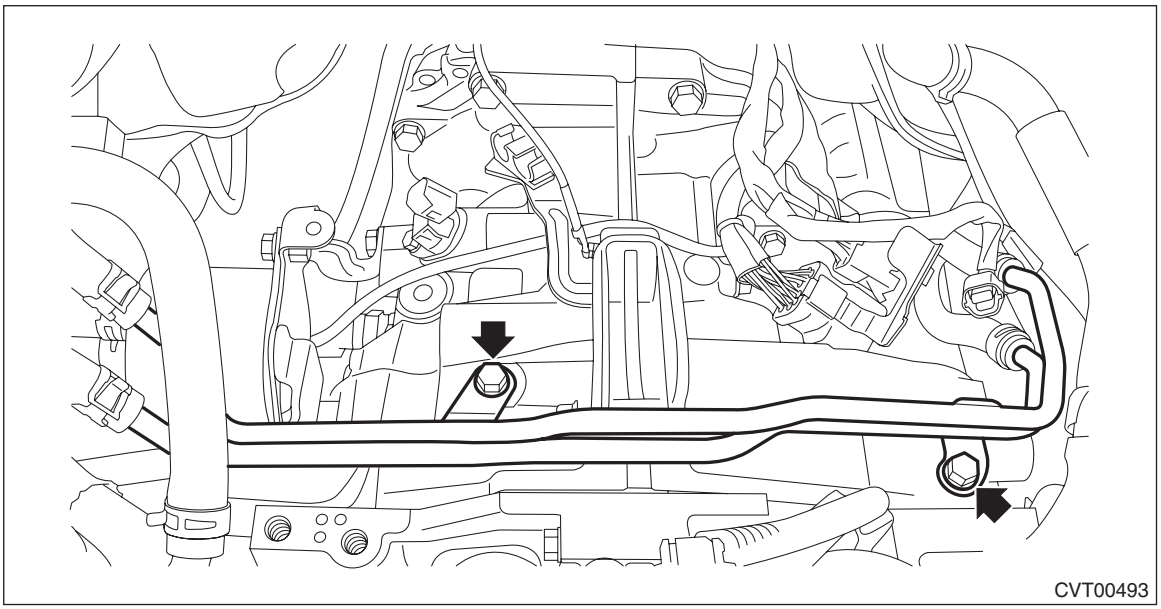

23) Install the CVTF inlet hose and outlet hose.

NOTE:
- Use new CVTF hoses.
- Install the CVTF hose with the painted position facing the rear side of transmission.

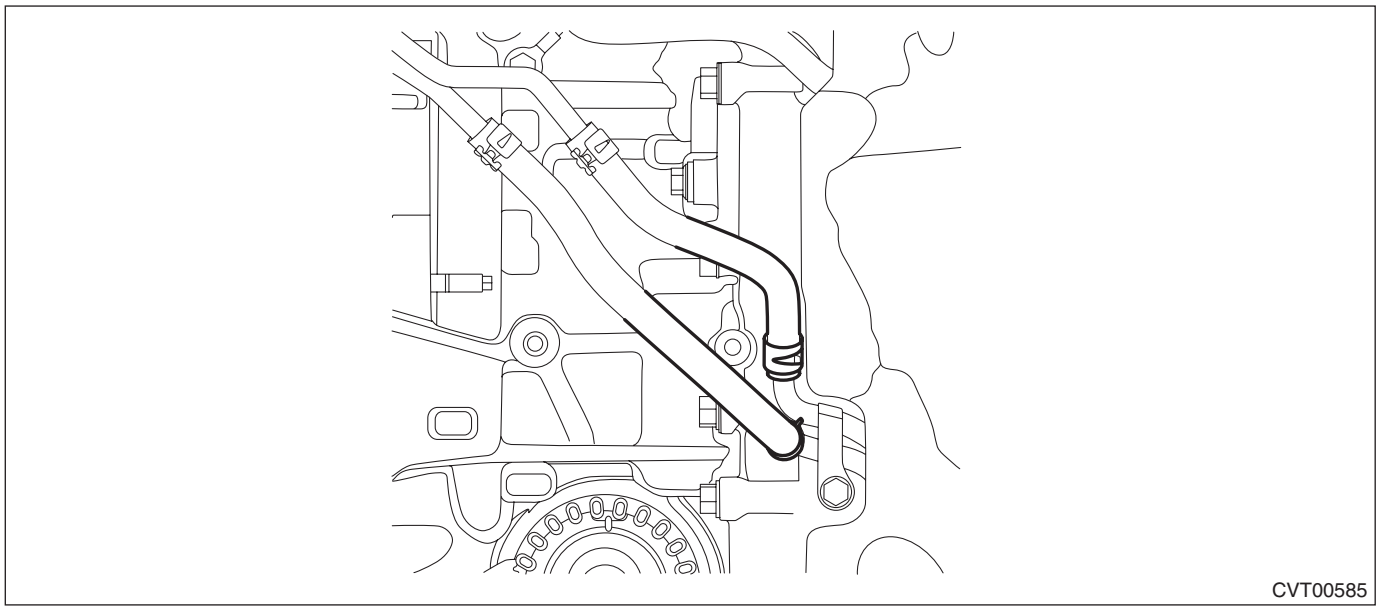

24) Install the starter. <Ref. to SC(w/o STI)-2, General Description.>

25) Install the transmission harness stay.

Tightening torque:
16 N·m (1.6 kgf-m, 11.8 ft-lb)

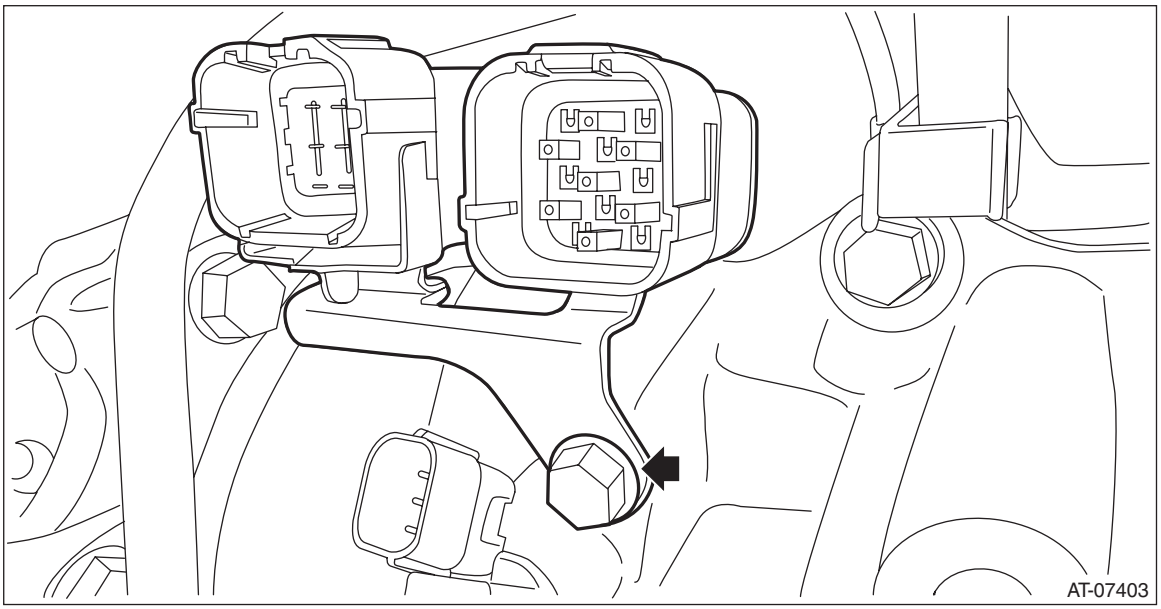

26) Install the pitching stopper.

Tightening torque:
T1: 50 N·m (5.1 kgf-m, 36.9 ft-lb)
T2: 58 N·m (5.9 kgf-m, 42.8 ft-lb)

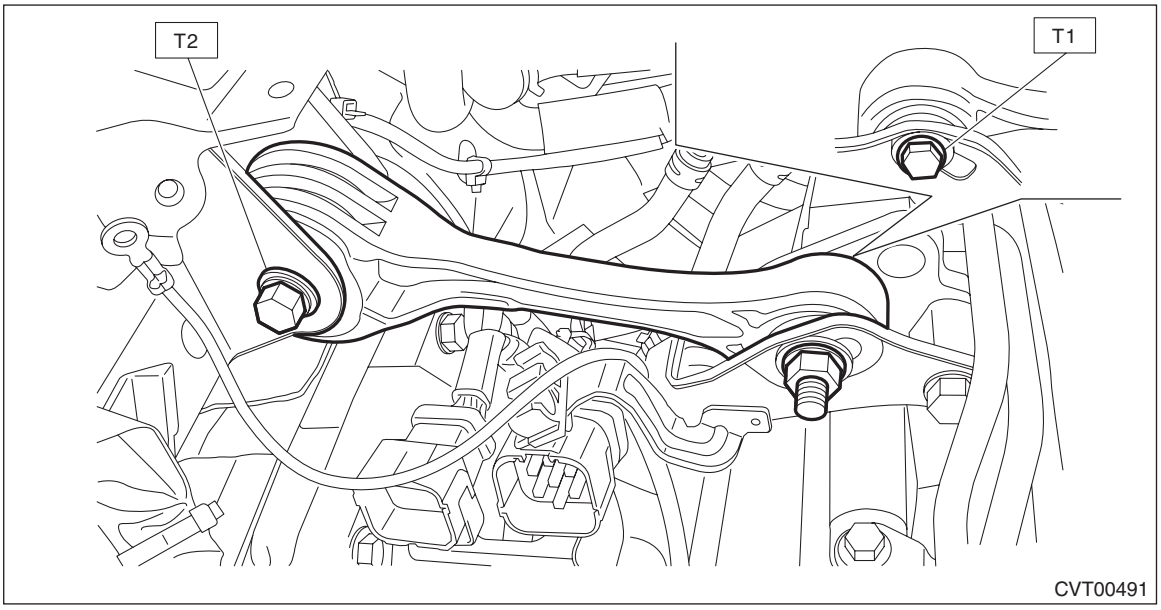

27) Lift up the vehicle.

28) Set the ST to differential side retainer.
ST 28399SA010 OIL SEAL PROTECTOR

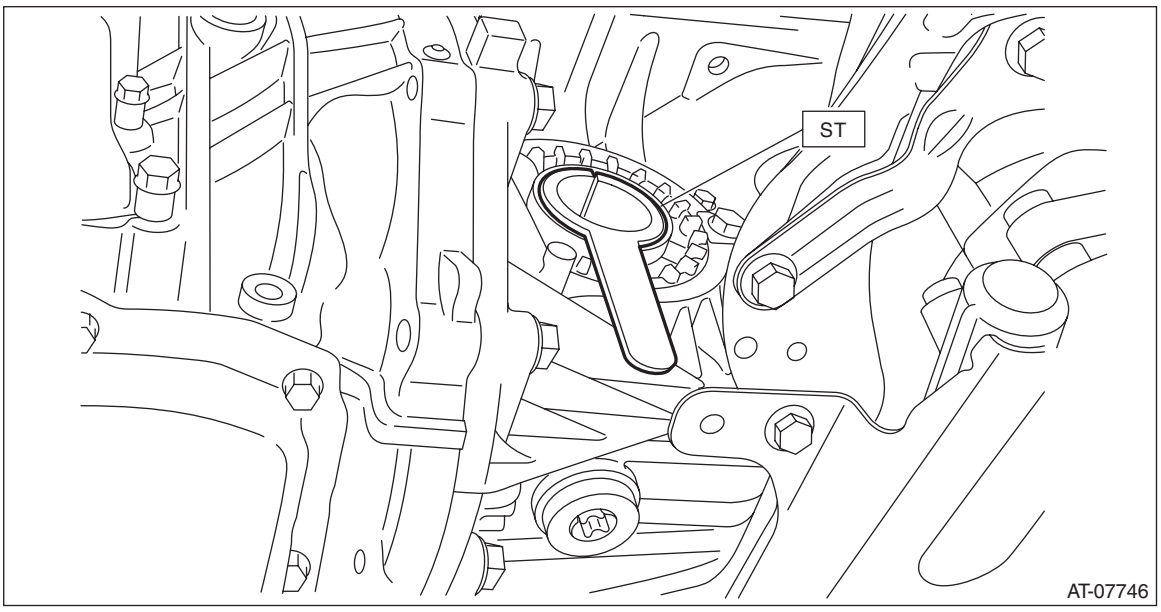

29) Replace the circlip of the drive shaft with a new part.
30) Insert the front drive shaft spline section into transmission and remove the ST (OIL SEAL PROTECTOR).

NOTE:
- Before inserting the front drive shaft RH, turn the steering wheel to the right hand at full lock.
- Before inserting the front drive shaft LH, turn the steering wheel to the left hand at full lock.

31) Insert the drive shaft into the transmission securely by pressing the housing from outside of the vehicle.
32) Insert the ball joint into housing and secure with bolt.

Tightening torque:
50 N·m (5.1 kgf-m, 36.9 ft-lb)

CAUTION:
- **Do not apply grease to the tapered portion of ball stud.**
- **Before tightening, make sure the lower side of housing and stepped section of ball joint are in contact.**

33) Install the stabilizer link.

Tightening torque:
60 N·m (6.1 kgf-m, 44.3 ft-lb)
34) Install the propeller shaft. <Ref. to DS-14, INSTALLATION, Propeller Shaft.>

35) Install the cable plate assembly.

Tightening torque:
T: 25 N·m (2.5 kgf-m, 18.4 ft-lb)

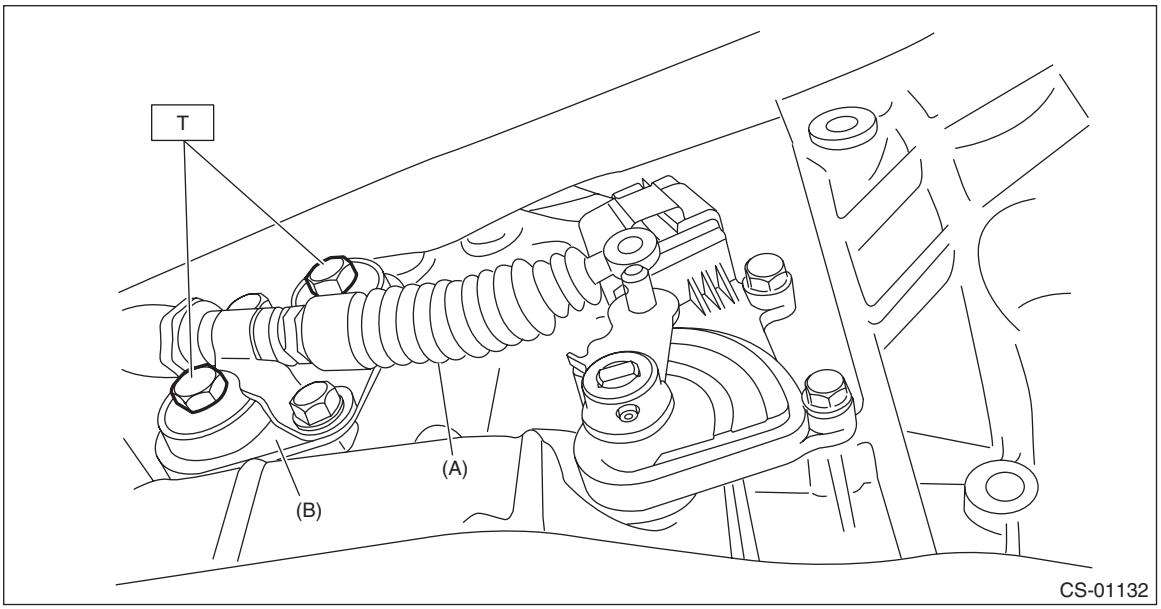

(A) Select cable
(B) Cable plate ASSY

36) Install the washer and snap pin.

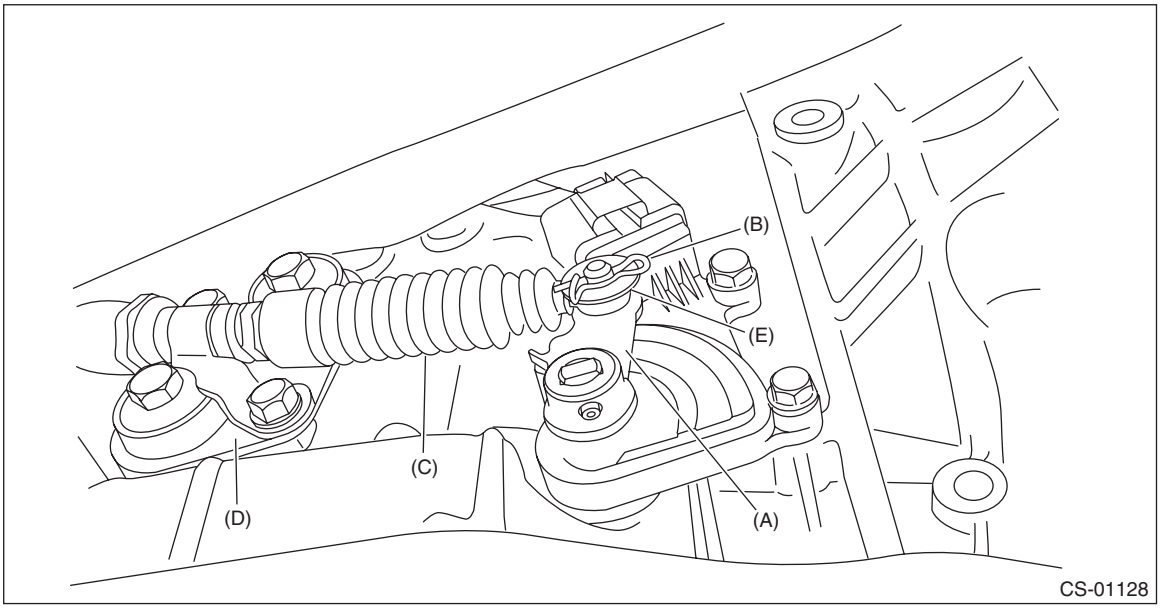

(A) Shifter arm
(B) Snap pin
(C) Select cable
(D) Cable plate ASSY
(E) Washer

37) Connect the secondary pressure sensor harness connector.

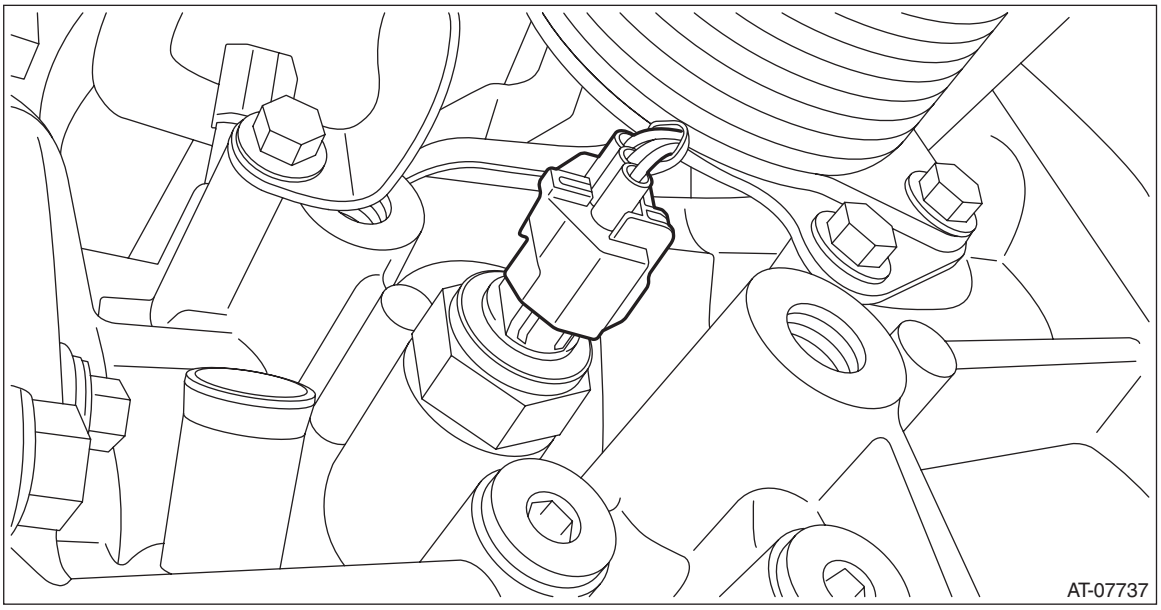

38) Install the center exhaust cover.

Tightening torque:
18 N·m (1.8 kgf-m, 13.3 ft-lb)

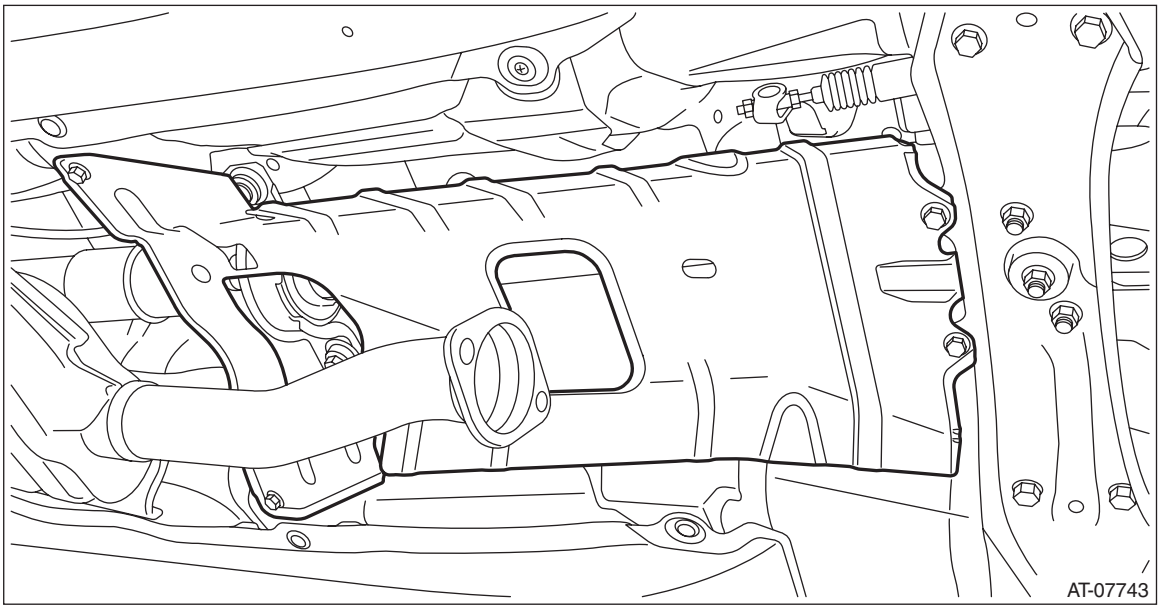

39) Install the exhaust hanger bracket.

Tightening torque:
23 N·m (2.3 kgf-m, 17.0 ft-lb)

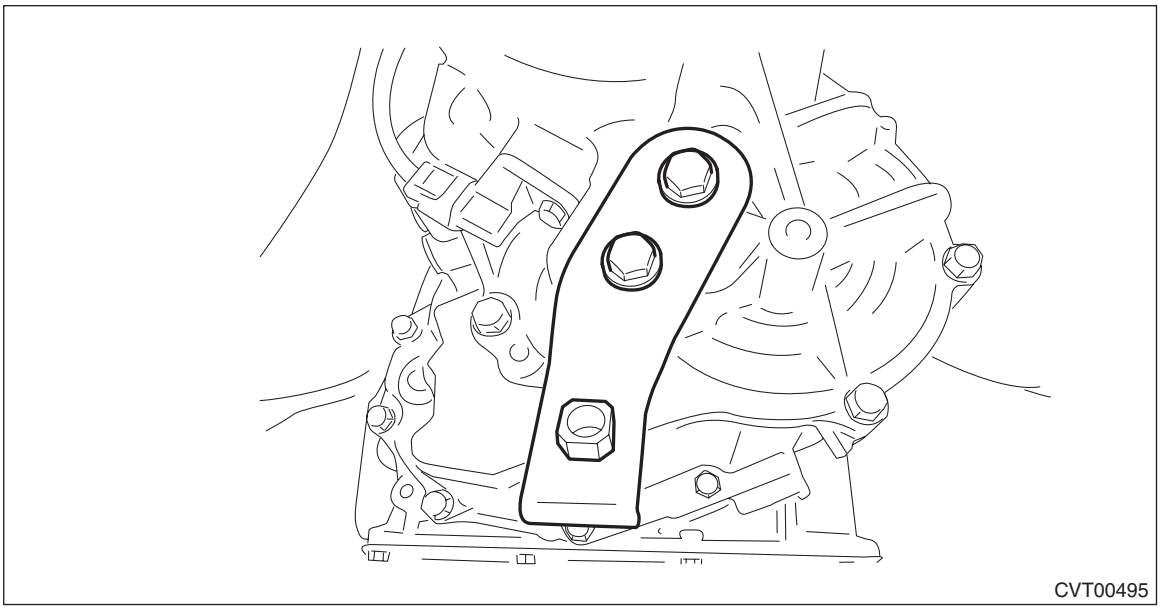

40) Install the center exhaust pipe (rear). <Ref. to EX(w/o STI)-37, INSTALLATION, Center Exhaust Pipe.>
41) Connect the primary pressure sensor harness connector.

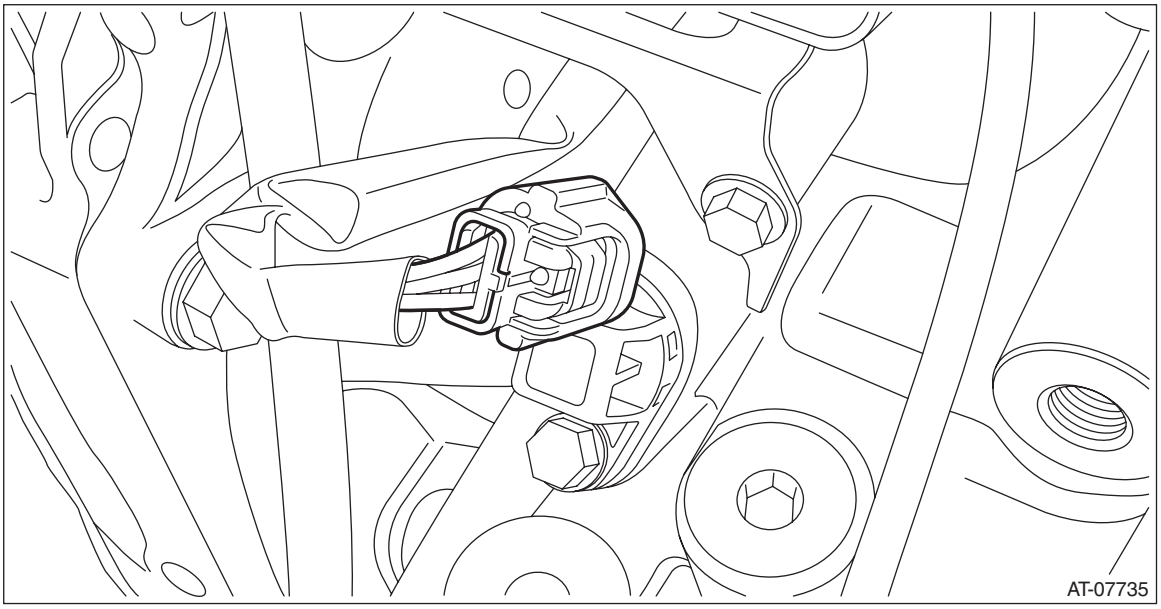

42) Install the engine hanger rear.

Tightening torque:
21 N·m (2.1 kgf-m, 15.5 ft-lb)

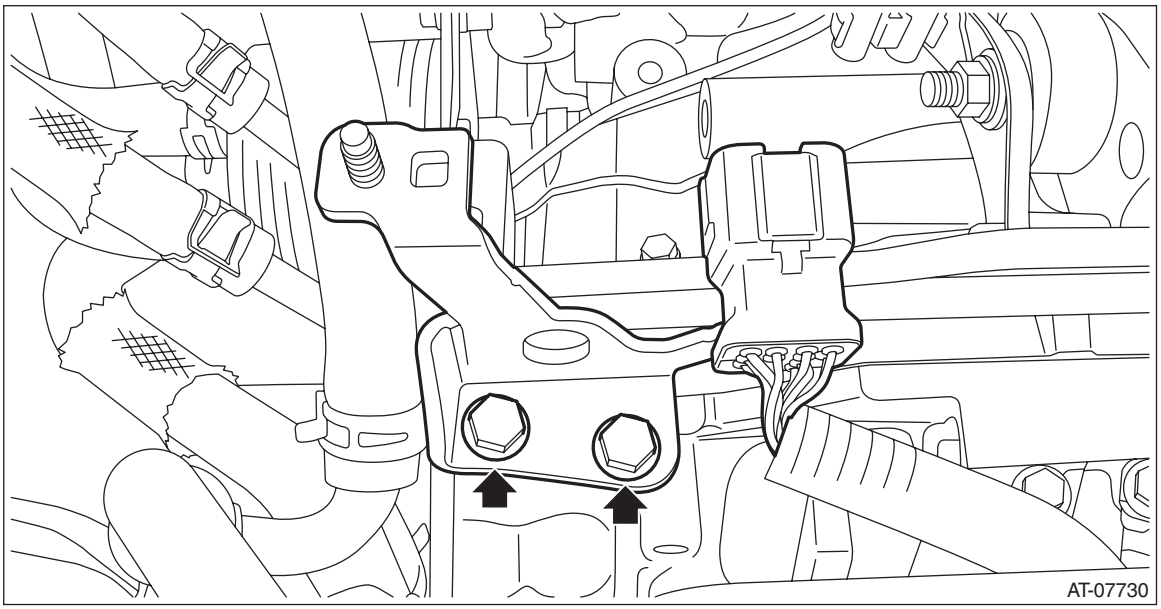

43) Install the harness clip.

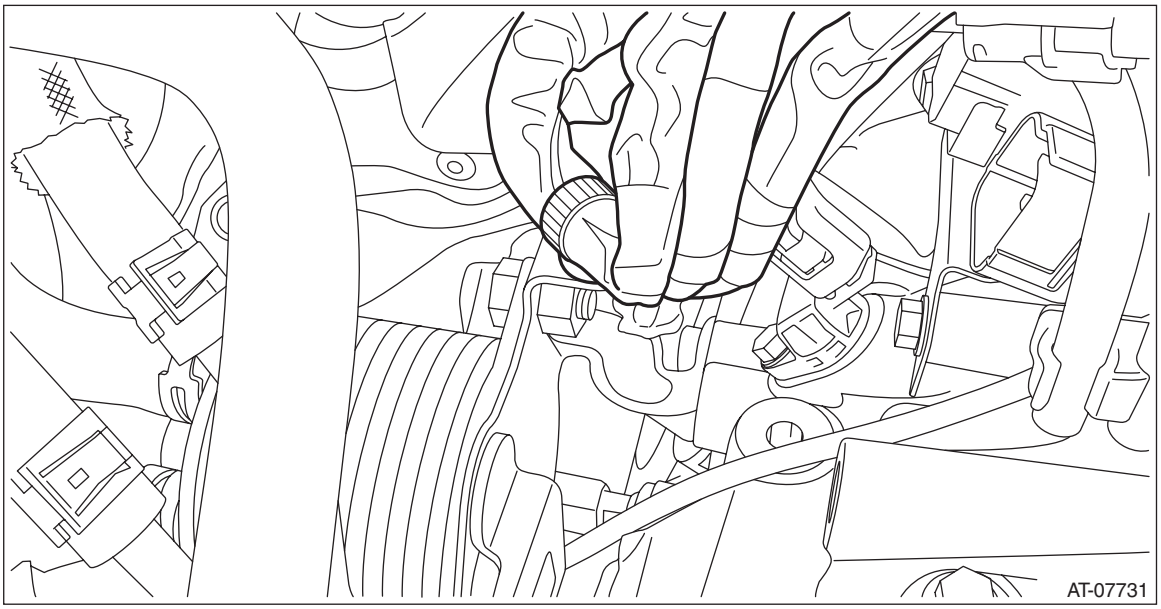

44) Connect the following harness connectors.
- Transmission harness connectors
- Transmission radio ground terminal
- Inhibitor harness connector
- Engine harness connectors

Tightening torque:
13 N·m (1.3 kgf-m, 9.6 ft-lb)

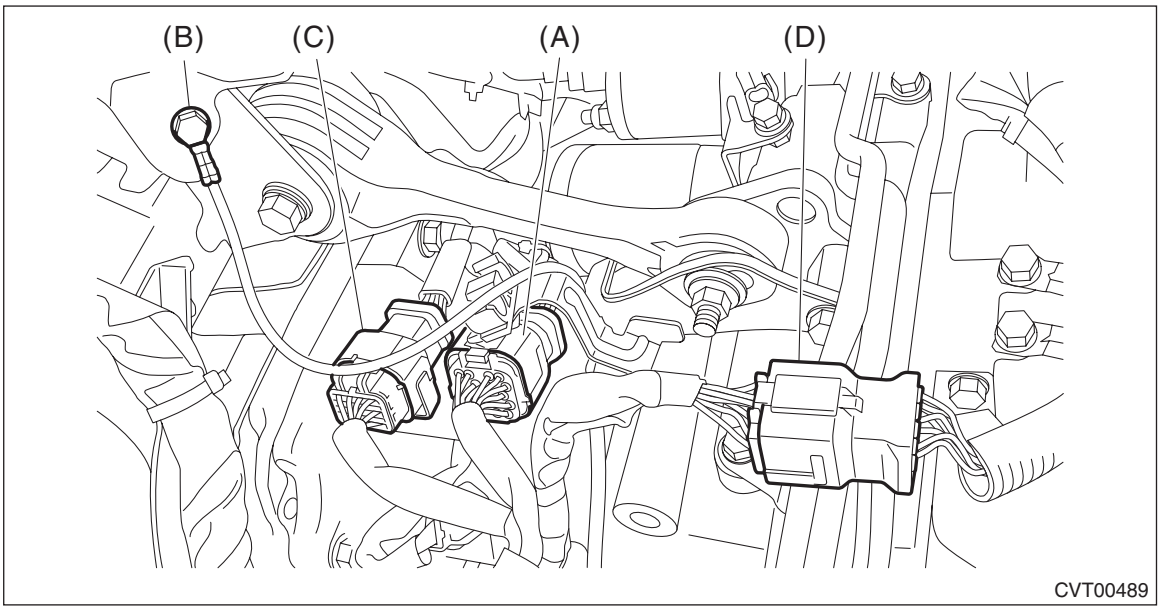

(A) Transmission harness connectors
(B) Transmission radio ground terminal
(C) Inhibitor harness connector
(D) Engine harness connectors

45) Install the air breather hose. <Ref. to CVT(TR690)-136, INSTALLATION, Air Breather Hose.>
46) Install the intercooler and the intercooler stay. <Ref. to IN(w/o STI)-45, INSTALLATION, Intercooler.>
47) Install the air intake duct. <Ref. to IN(w/o STI)-26, INSTALLATION, Air Intake Duct.>
48) Install the front tires.
49) Install the collector cover. <Ref. to IN(w/o STI)-10, INSTALLATION, Collector Cover.>
50) Connect the ground terminal to battery sensor. <Ref. to NT-6, BATTERY, NOTE, Note.>
51) Refill differential gear oil to adjust the differential gear oil amount. <Ref. to CVT(TR690)-41, ADJUSTMENT, Differential Gear Oil.>
52) Refill CVTF to adjust the CVTF amount. <Ref. to CVT(TR690)-36, ADJUSTMENT, CVTF.>
53) Perform the variator chain break-in. <Ref. to CVT(TR690)-44, Variator Chain Break-in.>

CAUTION:
Always execute the variator chain break-in after the replacement of the following.
- **Variator chain replacement**
- **Primary pulley and secondary pulley replacement**

54) Perform the operation for clearing AT learning value. <Ref. to CVT(diag)-19, OPERATION, Clear Memory Mode.>
55) Perform the operation of AT learning mode. <Ref. to CVT(diag)-26, Learning Control.>
56) Perform the road test to make sure there is no fault. <Ref. to CVT(TR690)-45, INSPECTION, Road Test.>

11.Transmission Mounting System

A: REMOVAL

1. PITCHING STOPPER

1) Disconnect the ground terminal from battery sensor. <Ref. to NT-6, BATTERY, NOTE, Note.>
2) Remove the collector cover. <Ref. to IN(w/o STI)-7, REMOVAL, Collector Cover.>
3) Remove the intercooler. <Ref. to IN(w/o STI)-43, REMOVAL, Intercooler.>
4) Remove the pitching stopper.

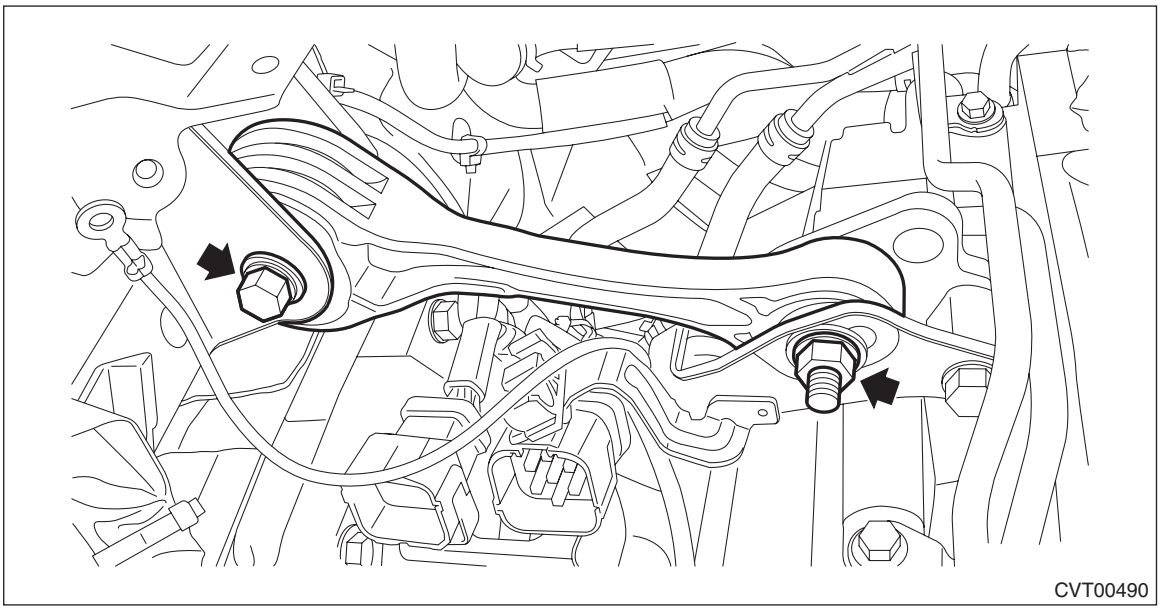

2. TRANSMISSION REAR CROSSMEMBER AND REAR CUSHION RUBBER

1) Disconnect the ground terminal from battery sensor. <Ref. to NT-6, BATTERY, NOTE, Note.>
2) Lift up the vehicle.
3) Remove the center exhaust pipe (rear). <Ref. to EX(w/o STI)-32, REMOVAL, Center Exhaust Pipe.>
4) Remove the center exhaust cover.

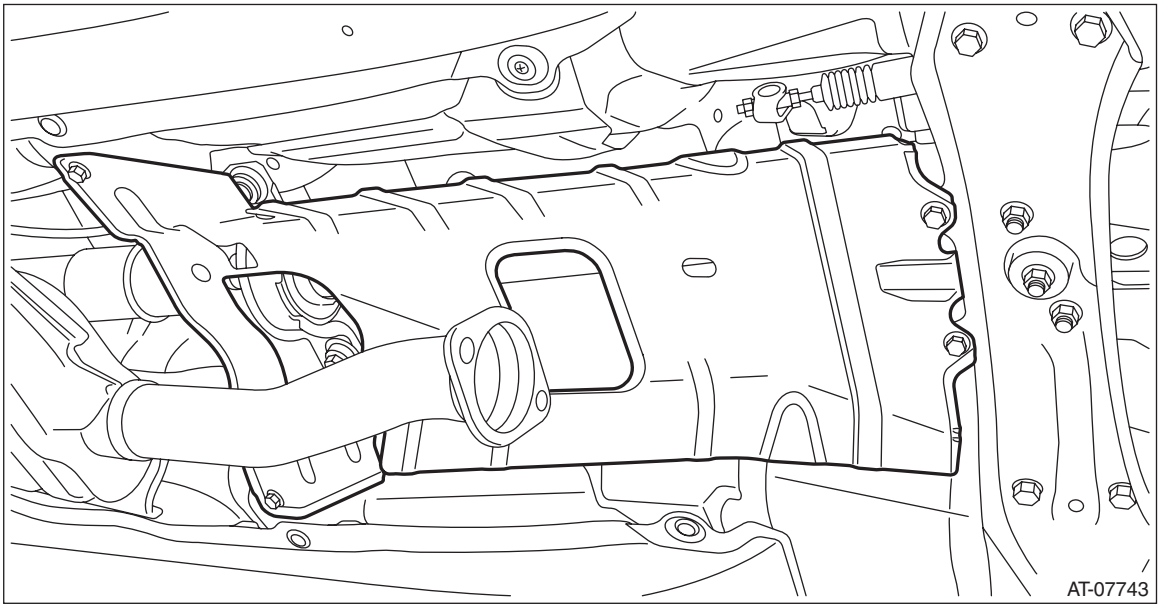

5) Set the transmission jack under the transmission. Make sure that the support plate of transmission jack does not touch the oil pan.

6) Remove the transmission rear crossmember.

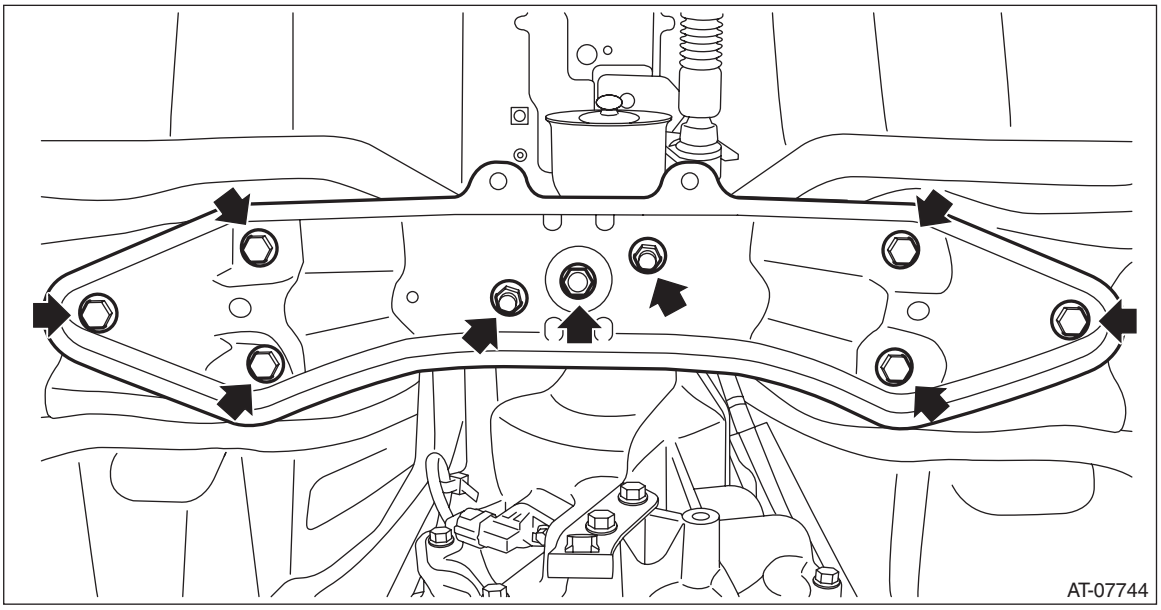

7) Remove the rear cushion rubber.

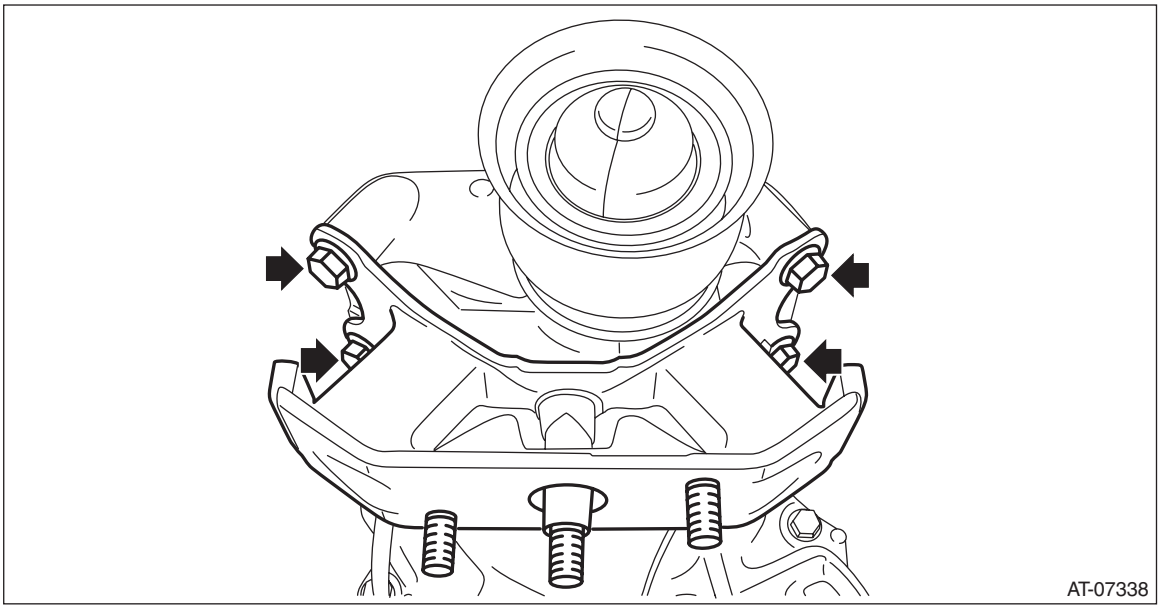

B: INSTALLATION

1. PITCHING STOPPER

1) Install the pitching stopper.

Tightening torque:
T1: 50 N·m (5.1 kgf-m, 36.9 ft-lb)
T2: 58 N·m (5.9 kgf-m, 42.8 ft-lb)

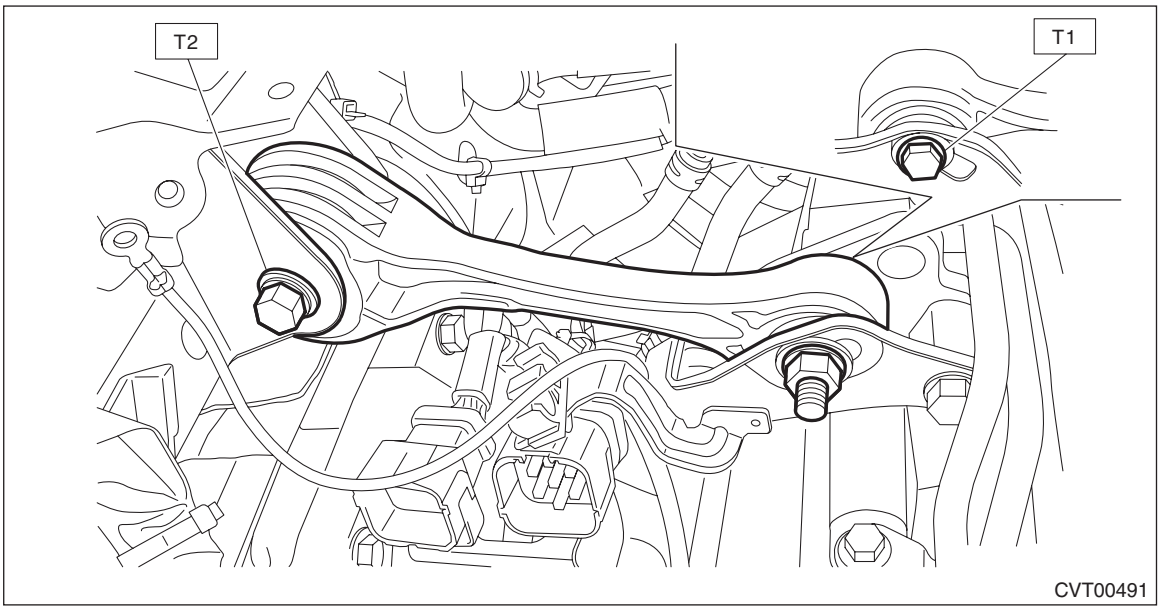

2) Install the intercooler. <Ref. to IN(w/o STI)-45, INSTALLATION, Intercooler.>
3) Install the collector cover. <Ref. to IN(w/o STI)-10, INSTALLATION, Collector Cover.>
4) Connect the ground terminal to battery sensor. <Ref. to NT-6, BATTERY, NOTE, Note.>

2. TRANSMISSION REAR CROSSMEMBER AND REAR CUSHION RUBBER

1) Install the rear cushion rubber.

Tightening torque:
40 N·m (4.1 kgf-m, 29.5 ft-lb)

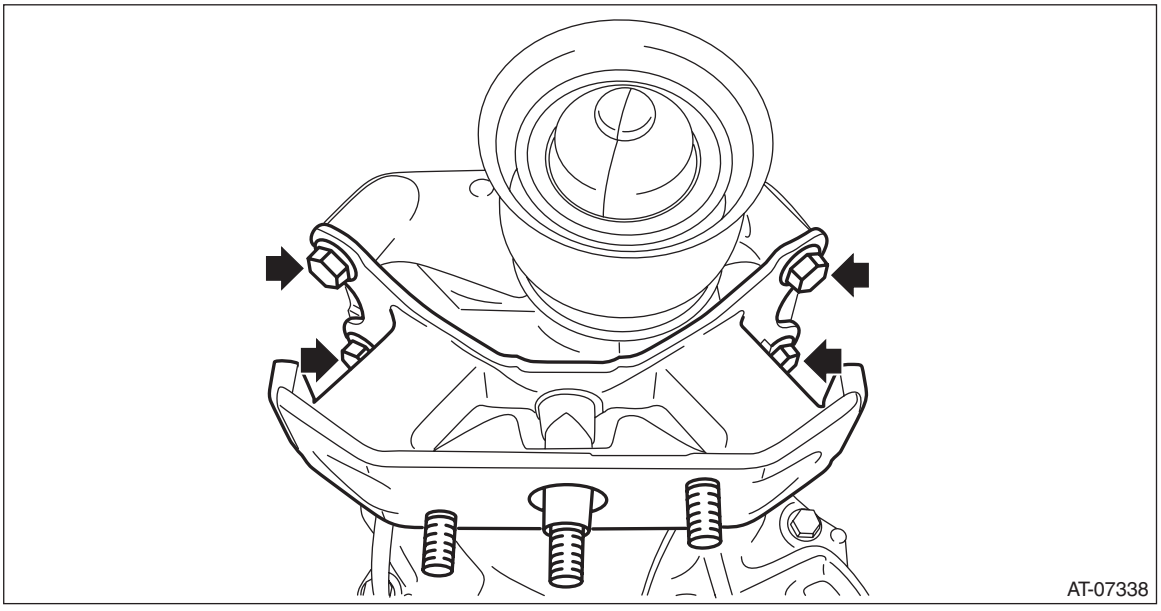

2) Install the transmission rear crossmember.

Tightening torque:
T1: 35 N·m (3.6 kgf-m, 25.8 ft-lb)
T2: 70 N·m (7.1 kgf-m, 51.6 ft-lb)

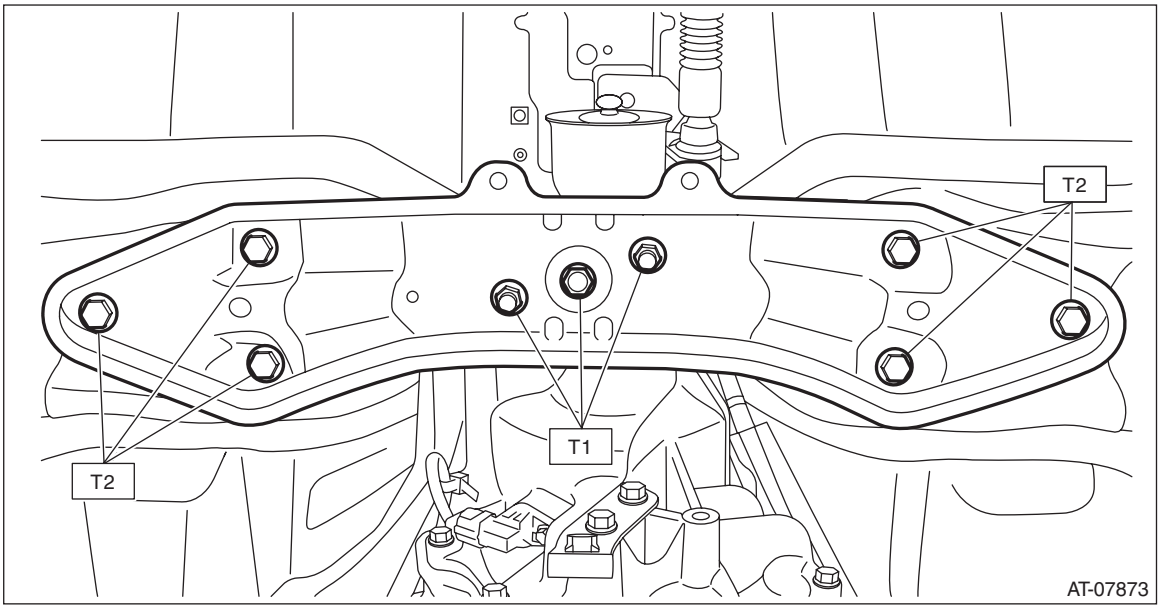

3) Remove the transmission jack.
4) Install the center exhaust cover.

Tightening torque:
18 N·m (1.8 kgf-m, 13.3 ft-lb)

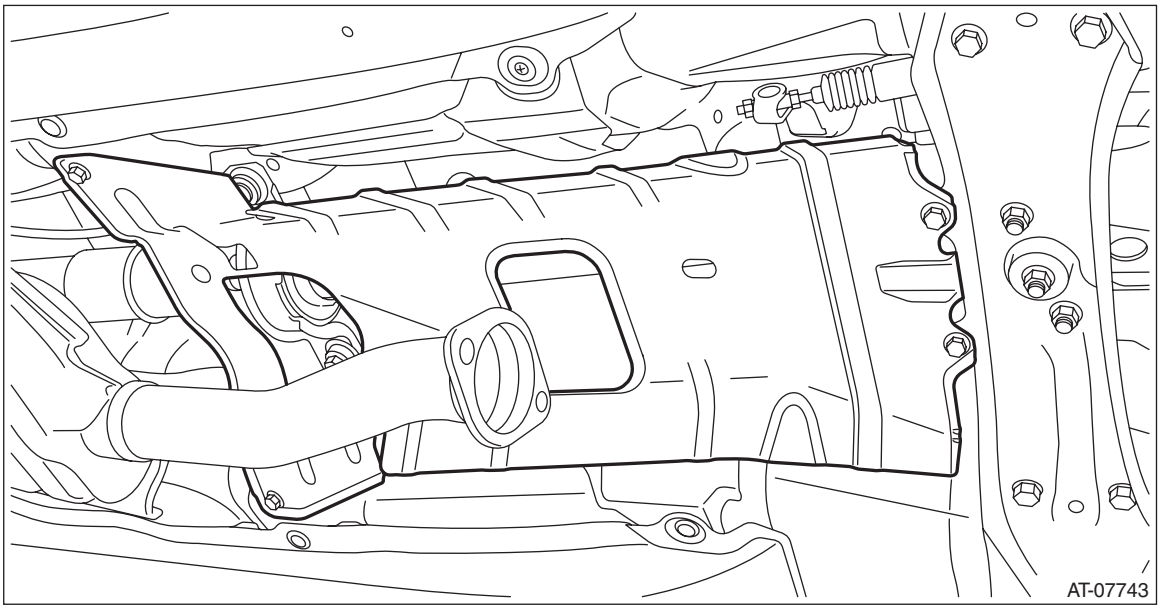

5) Install the center exhaust pipe (rear). <Ref. to EX(w/o STI)-37, INSTALLATION, Center Exhaust Pipe.>
6) Connect the ground terminal to battery sensor. <Ref. to NT-6, BATTERY, NOTE, Note.>

C: INSPECTION

- Check the crossmember for bends or damage.
- Check that the cushion rubber is not stiff, cracked or otherwise damaged.
- Check the pitching stopper for bends or damage.

12.Extension Case Oil Seal

A: INSPECTION

Check for leakage of CVTF from the joint section of transmission and propeller shaft. If a leak is found, inspect the propeller shaft and replace the oil seal.

B: REPLACEMENT

CAUTION:
Immediately after the vehicle has been running or after idling for a long time, the CVTF will be hot. Be careful not to burn yourself.

1) Lift up the vehicle.
2) Remove the center exhaust pipe (rear). <Ref. to EX(w/o STI)-32, REMOVAL, Center Exhaust Pipe.>
3) Remove the center exhaust cover.

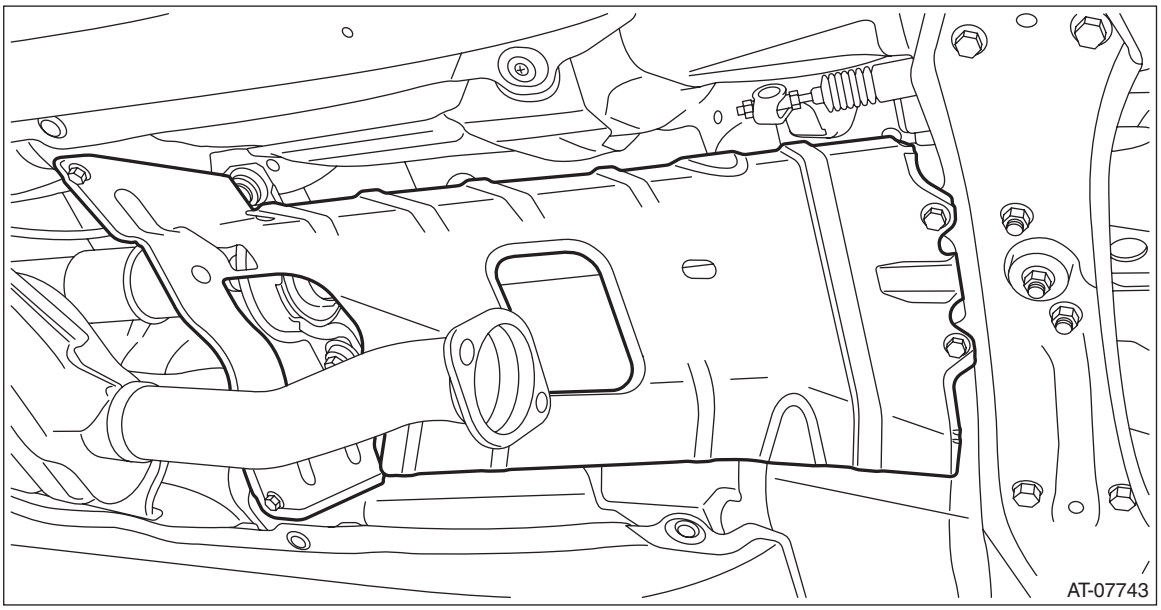

4) Clean the transmission exterior.
5) Remove the propeller shaft. <Ref. to DS-12, REMOVAL, Propeller Shaft.>
6) Using a screwdriver or ST, remove the oil seal trying not to damage the extension case.
ST 398527700 PULLER ASSY
7) Using the ST, install the oil seal.

NOTE:
- Use a new oil seal.
- Apply CVTF to the oil seal lip and press-fitting surface.

ST 498057300 INSTALLER
8) Install the propeller shaft. <Ref. to DS-14, INSTALLATION, Propeller Shaft.>

9) Install the center exhaust cover.

Tightening torque:
18 N·m (1.8 kgf-m, 13.3 ft-lb)

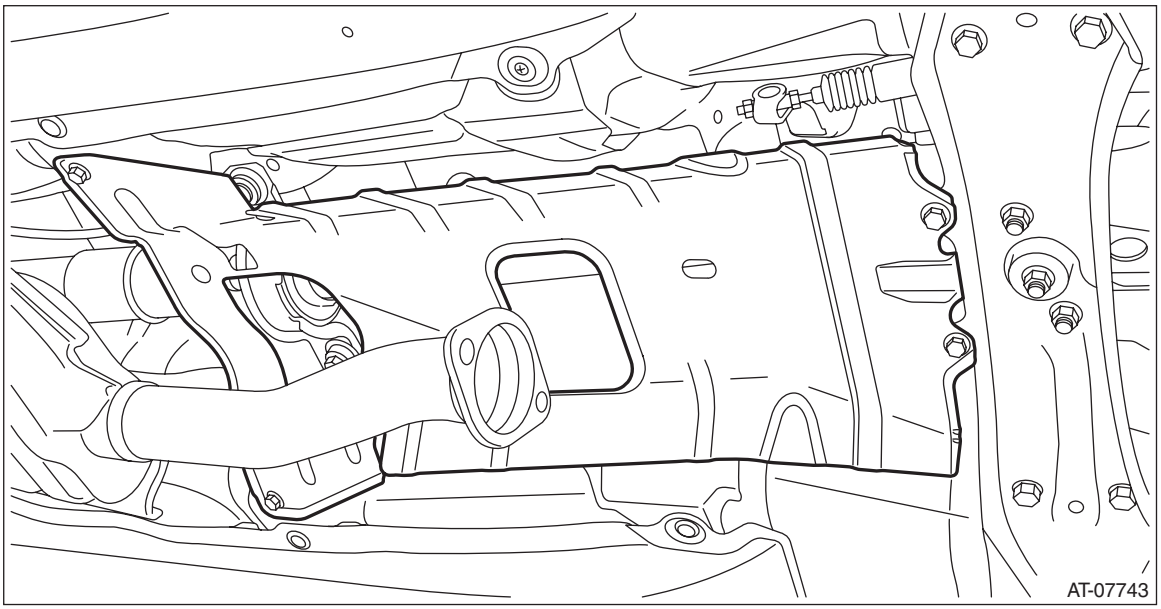

10) Install the center exhaust pipe (rear). <Ref. to EX(w/o STI)-37, INSTALLATION, Center Exhaust Pipe.>
11) Adjust the CVTF level and check there is no leakage. <Ref. to CVT(TR690)-36, ADJUSTMENT, CVTF.>

13.Differential Side Retainer Oil Seal

A: INSPECTION

Check for leakage of gear oil from the oil seal. If there is an oil leak, inspect the front drive shaft and replace the oil seal.

B: REPLACEMENT

CAUTION:
• Immediately after the vehicle has been running or after idling for a long time, the differential gear oil will be hot. Be careful not to burn yourself.
• Be careful not to spill the differential gear oil on exhaust pipe to prevent it from emitting smoke or fire. If differential gear oil is spilled on the exhaust pipe, wipe it off completely.
1) Remove the front tires.
2) Remove the center exhaust pipe (rear). <Ref. to EX(w/o STI)-32, REMOVAL, Center Exhaust Pipe.>
3) Remove the differential gear oil drain plug using TORX® bit T70, and then drain differential gear oil.

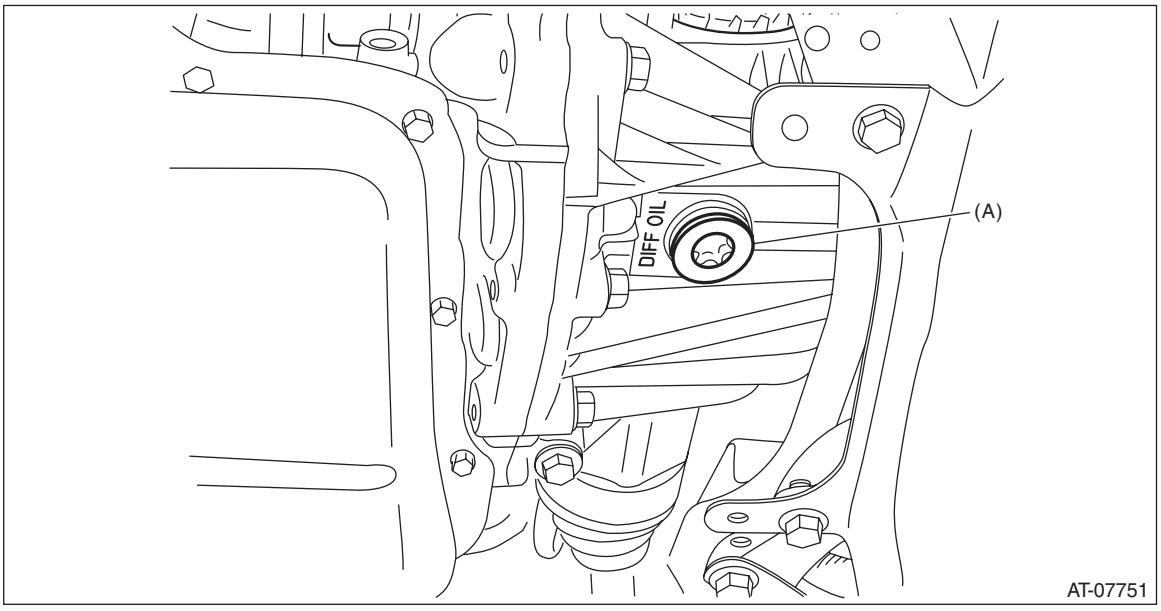

(A) Differential gear oil drain plug

4) Tighten the differential gear oil drain plug.

NOTE:
Use a new gasket.

Tightening torque:
70 N·m (7.1 kgf-m, 51.6 ft-lb)
5) Remove the stabilizer link. <Ref. to FS-29, REMOVAL, Front Stabilizer.>
6) Disconnect the lower arm ball joint and housing.
7) Pull out the front drive shaft from transmission using a crowbar.

NOTE:
Place a cloth between the tire lever or bar and the transmission in order to avoid damaging the differential side retainer.
8) Holding the joint of front drive shaft from transmission side, pull out the drive shaft from transmission with care not to stretch the boot.

NOTE:
• Before pulling the front drive shaft RH, turn the steering wheel to the right hand at full lock.
• Before pulling the front drive shaft LH, turn the steering wheel to the left hand at full lock.
9) Remove the differential side retainer oil seal using driver wrapped with vinyl tape etc.

10) Using the ST, install the differential side retainer oil seal by lightly tapping with a hammer.
ST 18675AA000 DIFFERENTIAL SIDE OIL SEAL INSTALLER

NOTE:
- Apply differential gear oil to the lip surface, so that the oil seal lip is not deformed.
- Apply differential gear oil to the press-fitting surface of oil seal and the differential side retainer.
- Oil seal has an identification mark (R, L). When installing oil seals, do not confuse the left and right.

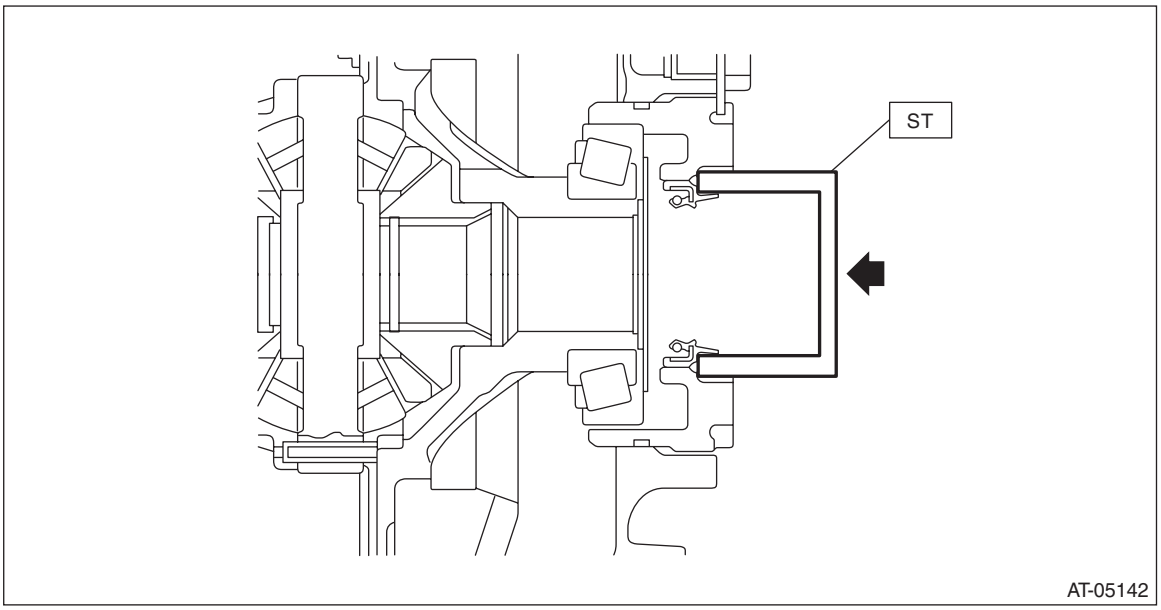

11) Set the ST to differential side retainer.
ST 28399SA010 OIL SEAL PROTECTOR

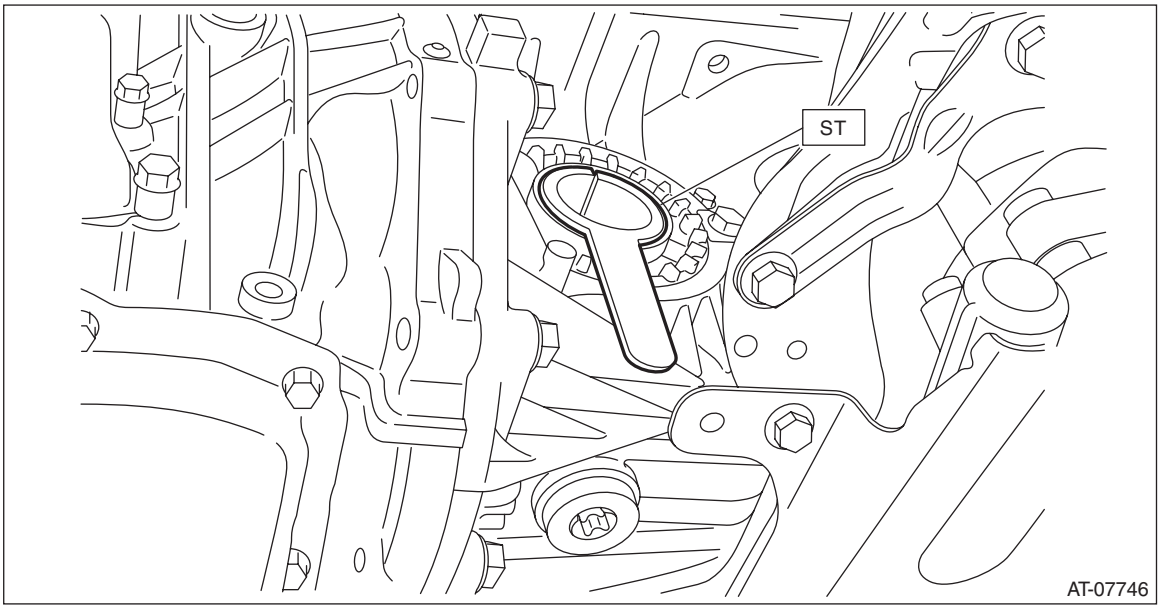

12) Replace the circlip of the drive shaft with a new part.
13) Insert the front drive shaft spline section into transmission and remove the ST (OIL SEAL PROTECTOR).
14) Insert the drive shaft into the transmission securely by pressing the housing from outside of the vehicle.

15) Insert the ball joint into housing and secure with bolt.

CAUTION:
- **Do not apply grease to the tapered portion of ball stud.**
- **Before tightening, make sure the lower side of housing and stepped section of ball joint are in contact.**

Tightening torque:
50 N·m (5.1 kgf-m, 36.9 ft-lb)

16) Install the stabilizer link.

Tightening torque:
60 N·m (6.1 kgf-m, 44.3 ft-lb)

17) Install the center exhaust pipe (rear). <Ref. to EX(w/o STI)-37, INSTALLATION, Center Exhaust Pipe.>
18) Lower the vehicle.
19) Refill differential gear oil from the charge pipe. <Ref. to CVT(TR690)-41, Differential Gear Oil.>
20) Adjust the differential gear oil level, and check for leakage. <Ref. to CVT(TR690)-41, ADJUSTMENT, Differential Gear Oil.>
21) Install the front tires.

14.Inhibitor Switch

A: INSPECTION

When the driving condition or starter motor operation is improper, first check the shift linkage for improper operation. If the shift linkage is functioning properly, check the inhibitor switch.

1) Remove the collector cover. <Ref. to IN(w/o STI)-7, REMOVAL, Collector Cover.>
2) Remove the intercooler. <Ref. to IN(w/o STI)-43, REMOVAL, Intercooler.>
3) Disconnect the inhibitor harness connector.

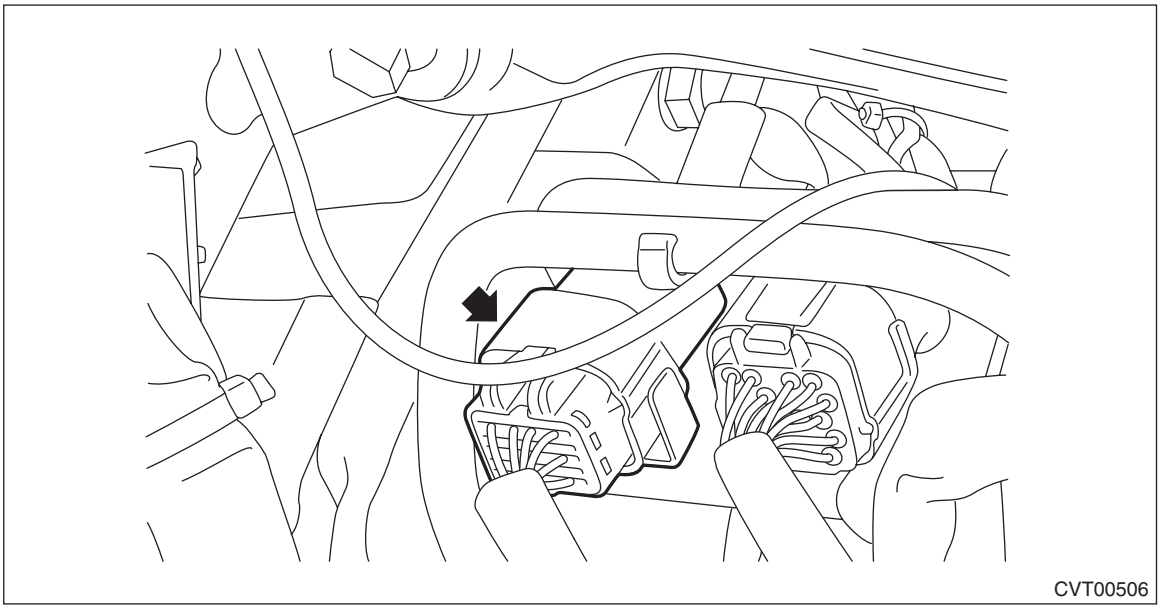

4) Check for continuity in inhibitor switch circuit by shifting the select lever in “P”, “R”, “N” and “D” respectively.

NOTE:
- Check that there is no continuity in the starter circuit when the select lever is in the “R” and “D” ranges.
- When inhibitor switch is normal, check there is no poor contact in vehicle side connector and no open circuit in harness.

	Range	Terminal No.
Signal sent to TCM	P	4 — 3
	R	4 — 2
	N	4 — 1
	D	4 — 8
Starter circuit	P/N	12 — 11
Back-up light circuit	R	10 — 9

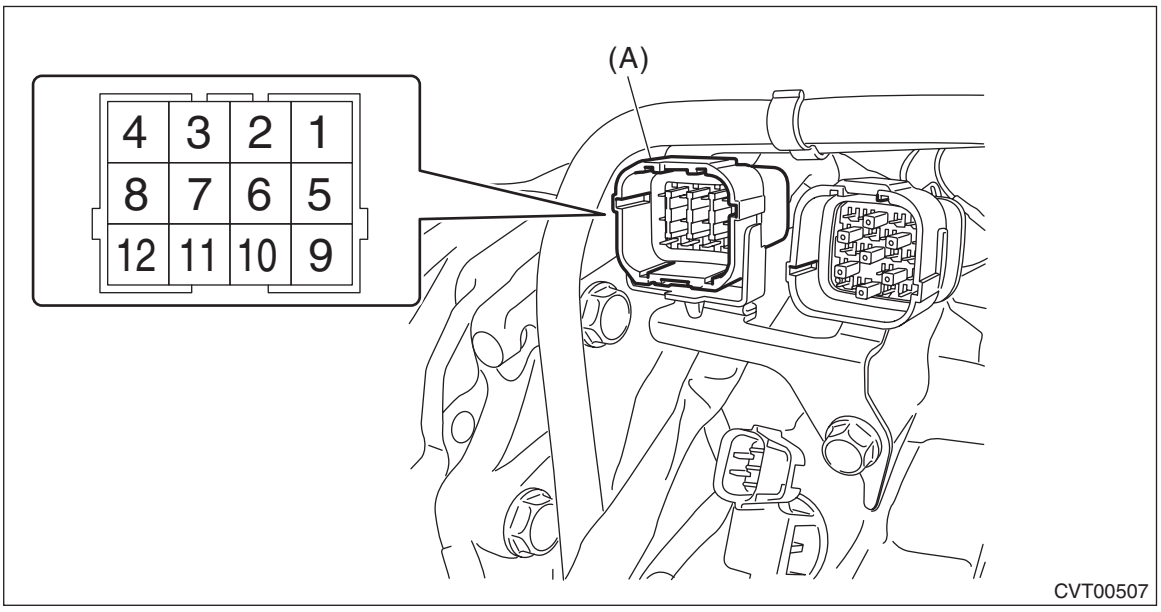

(A) Inhibitor harness connector

5) Check that there is continuity at equal points when the select lever is moved 1.5° in both directions from the “N” range.
If there is continuity in only one direction or in other points, adjust the inhibitor switch. <Ref. to CVT(TR690)-95, ADJUSTMENT, Inhibitor Switch.>

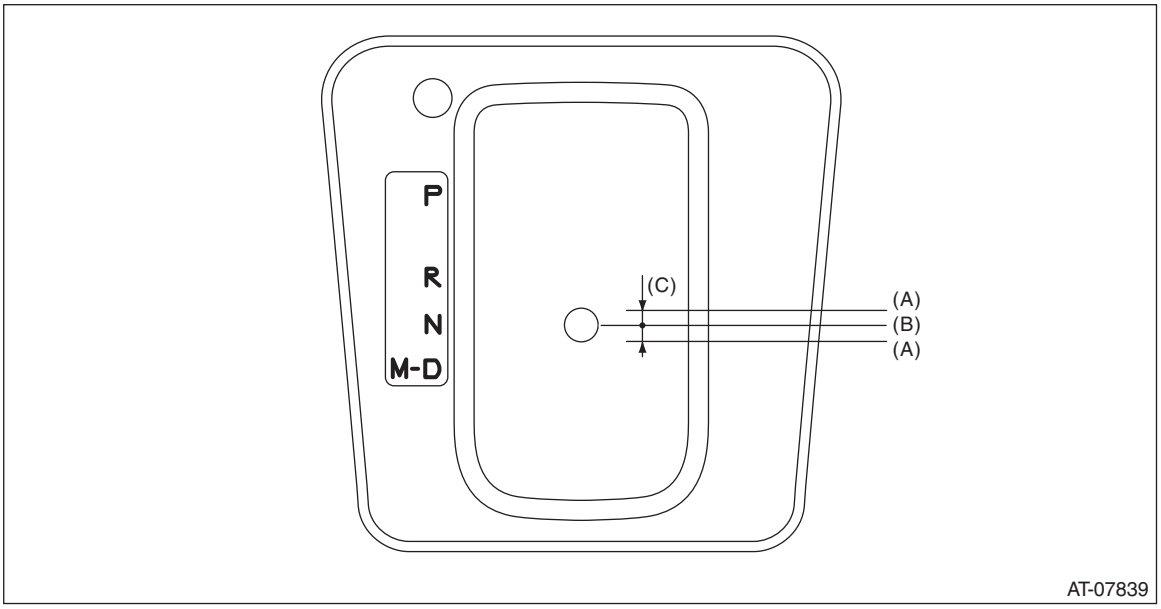

(A) Continuity does not exist.
(B) Continuity exists.
(C) 1.5°

6) Repeat the above inspection in other gear ranges. If there is fault, adjust the inhibitor switch and select cable. <Ref. to CVT(TR690)-95, ADJUSTMENT, Inhibitor Switch.> <Ref. to CS-48, ADJUSTMENT, Select Cable.>

B: ADJUSTMENT

1) Shift the select lever to “N” range.
2) Loosen the two bolts holding the inhibitor switch.
3) Insert the ST vertically into the holes of the shifter arm and switch body.
ST 499267300 STOPPER PIN

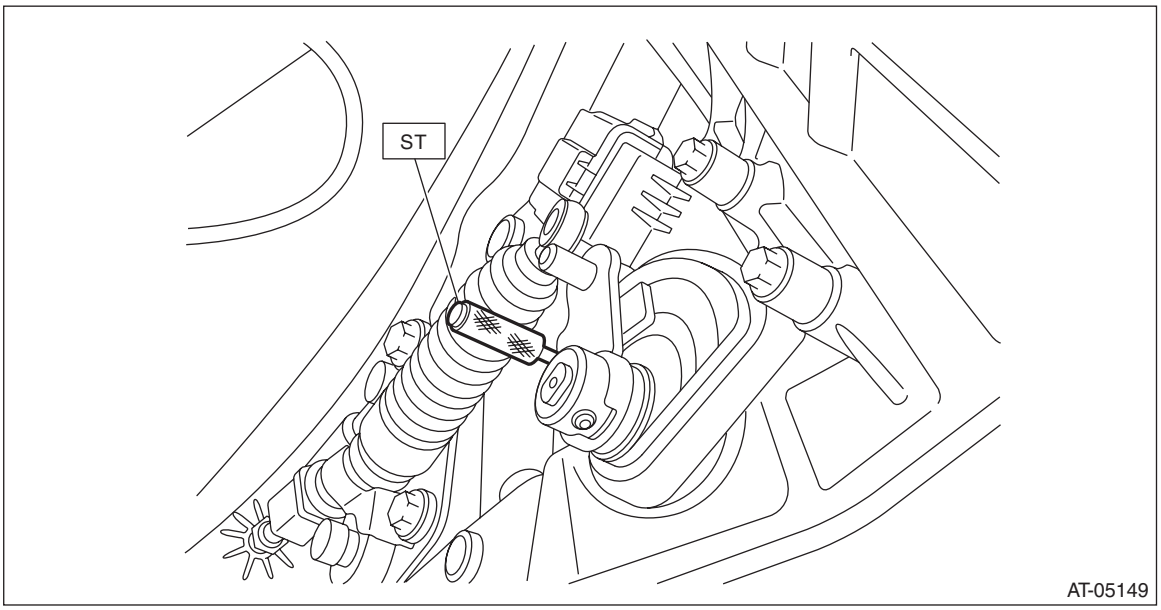

4) Tighten the two bolts holding the inhibitor switch.

Tightening torque:
5 N·m (0.5 kgf-m, 3.7 ft-lb)

5) Repeat the inspection of the inhibitor switch. If the inhibitor switch is determined to be “faulty”, replace it.

C: REMOVAL

1) Shift the select lever to “N” range.
2) Disconnect the ground terminal from battery sensor. <Ref. to NT-6, BATTERY, NOTE, Note.>
3) Lift up the vehicle.
4) Remove the snap pin and washer.

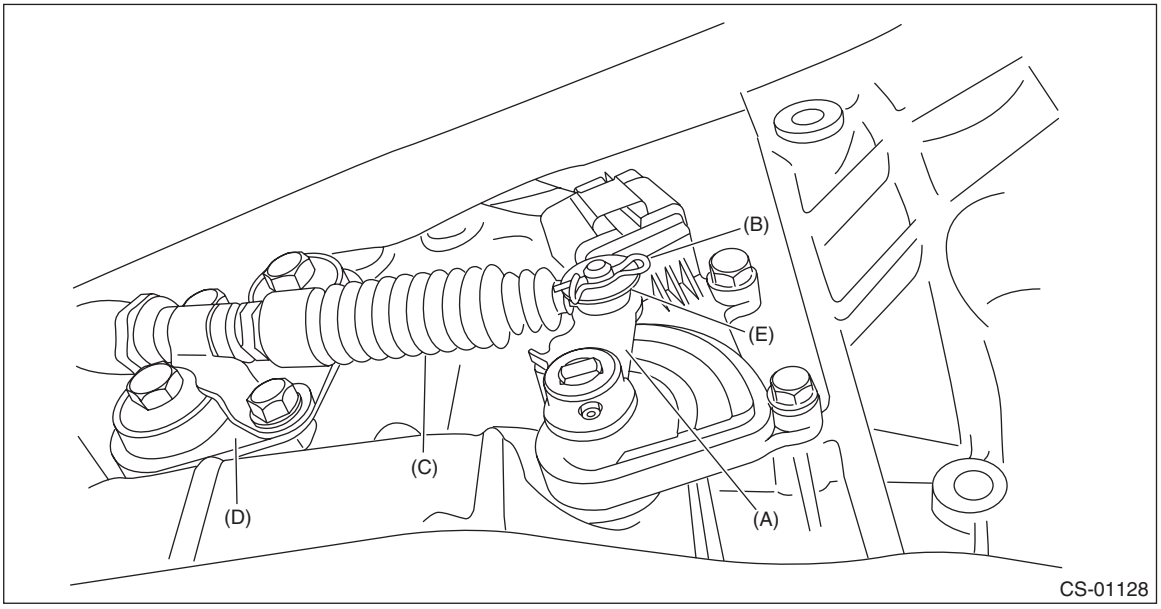

(A) Shifter arm
(B) Snap pin
(C) Select cable
(D) Cable plate ASSY
(E) Washer

5) Remove the spring pin and shifter arm.

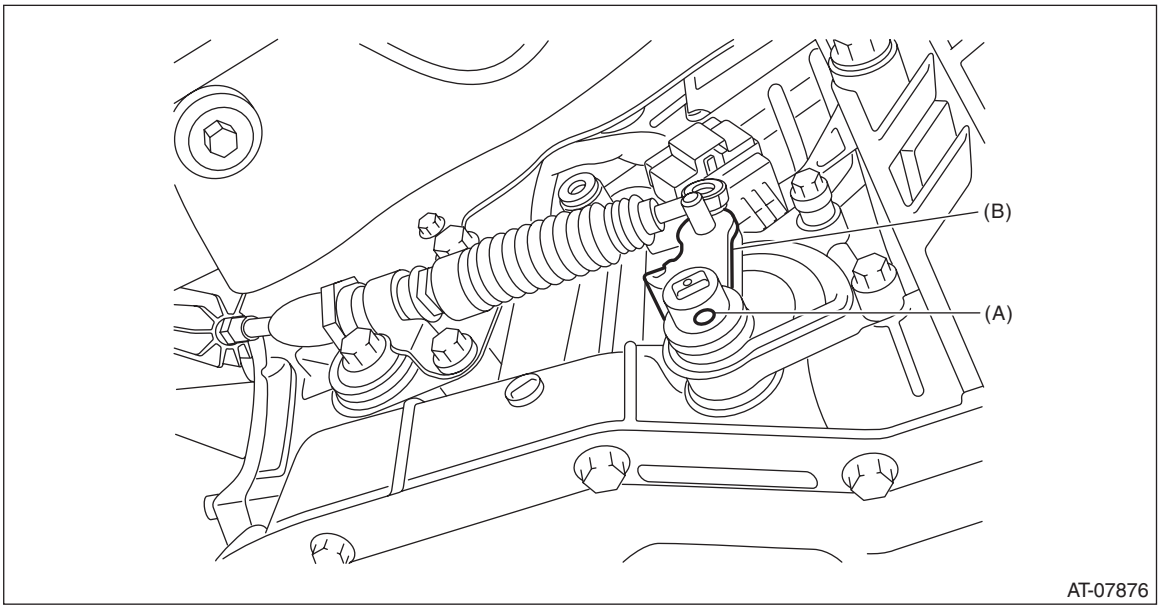

(A) Spring pin
(B) Shifter arm

6) Remove the inhibitor harness connector from inhibitor switch.
7) Remove the two inhibitor switch securing bolts.

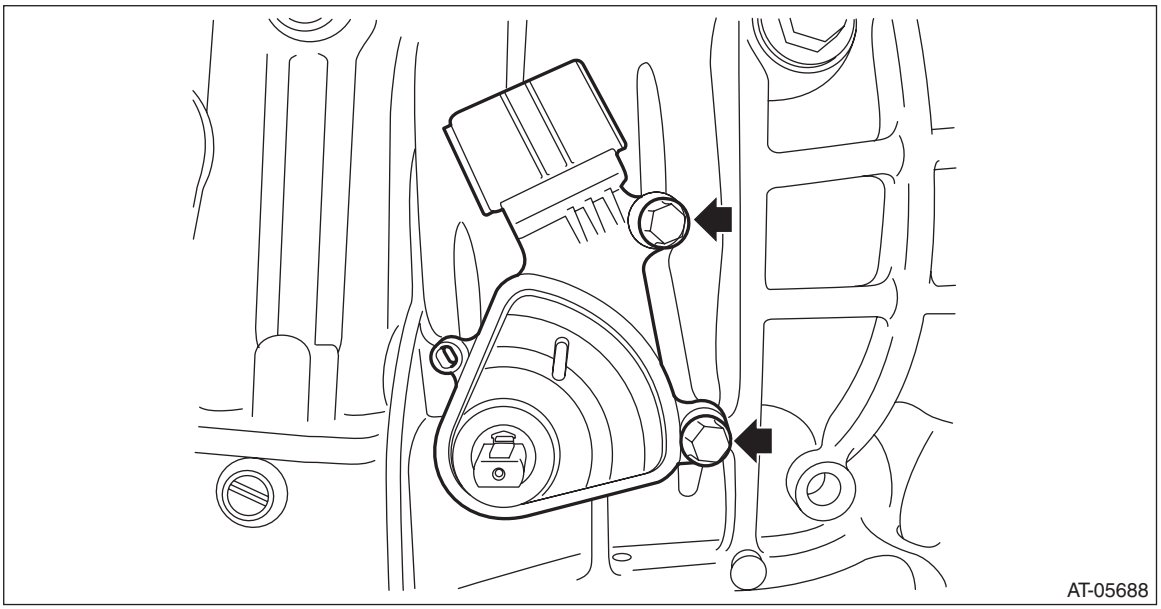

8) Remove the inhibitor switch.

D: INSTALLATION

1) Temporarily install the inhibitor switch.

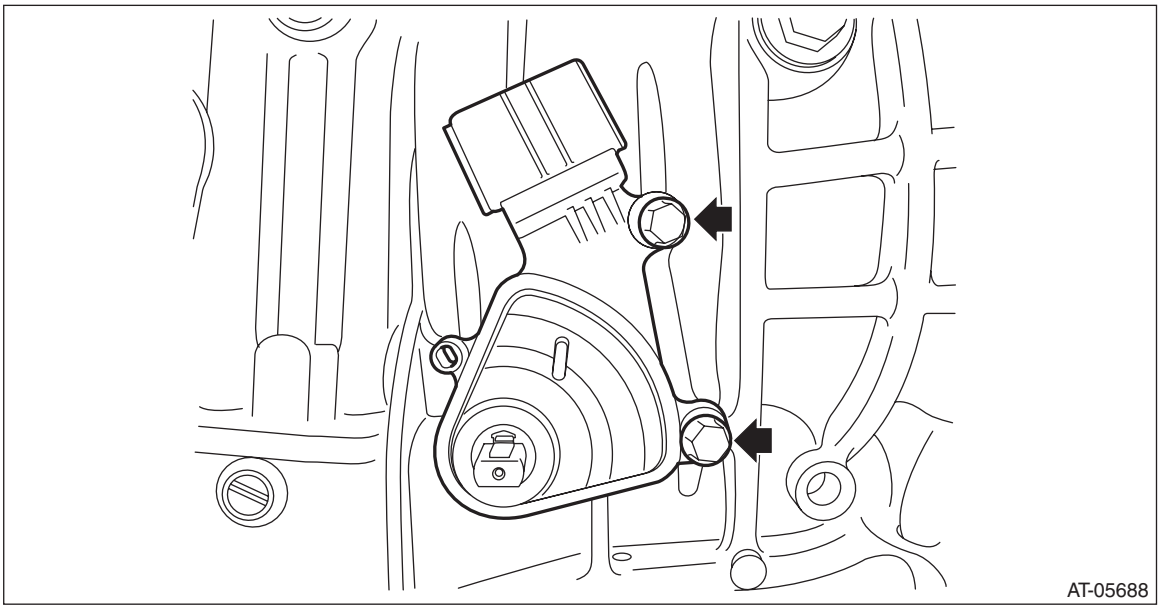

2) Connect the inhibitor harness connector to the inhibitor switch.
3) Install the shifter arm and fix with the spring pin.

NOTE:
Use new spring pin.

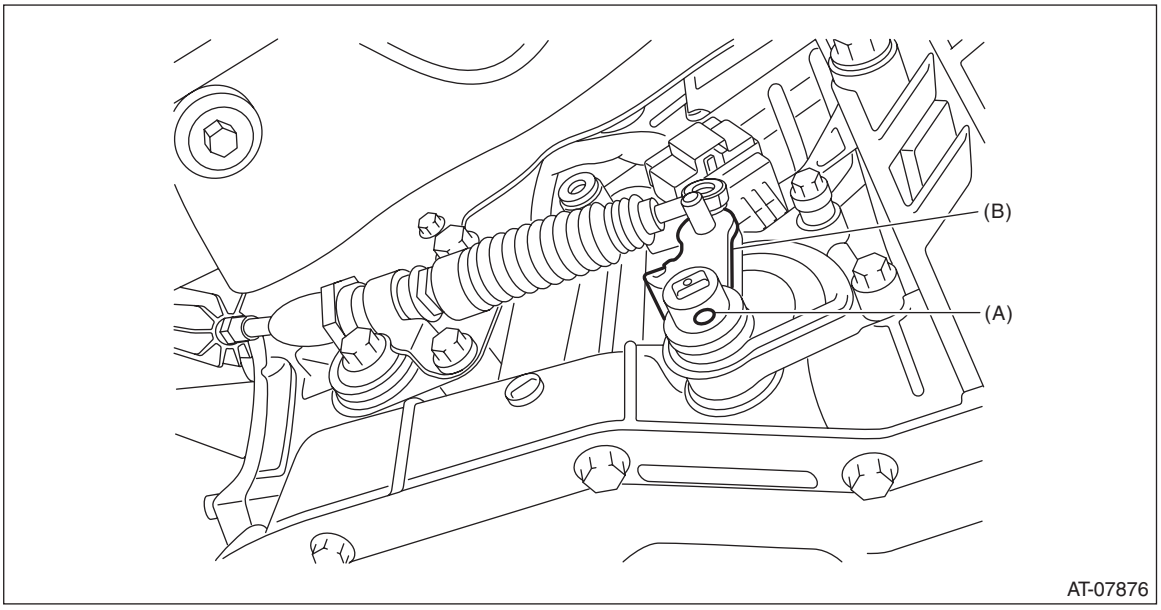

(A) Spring pin
(B) Shifter arm

4) Shift the shifter arm to “N” range.

5) Install the ST vertically in the cutout of shifter arm and the hole of switch body.
ST 499267300 STOPPER PIN

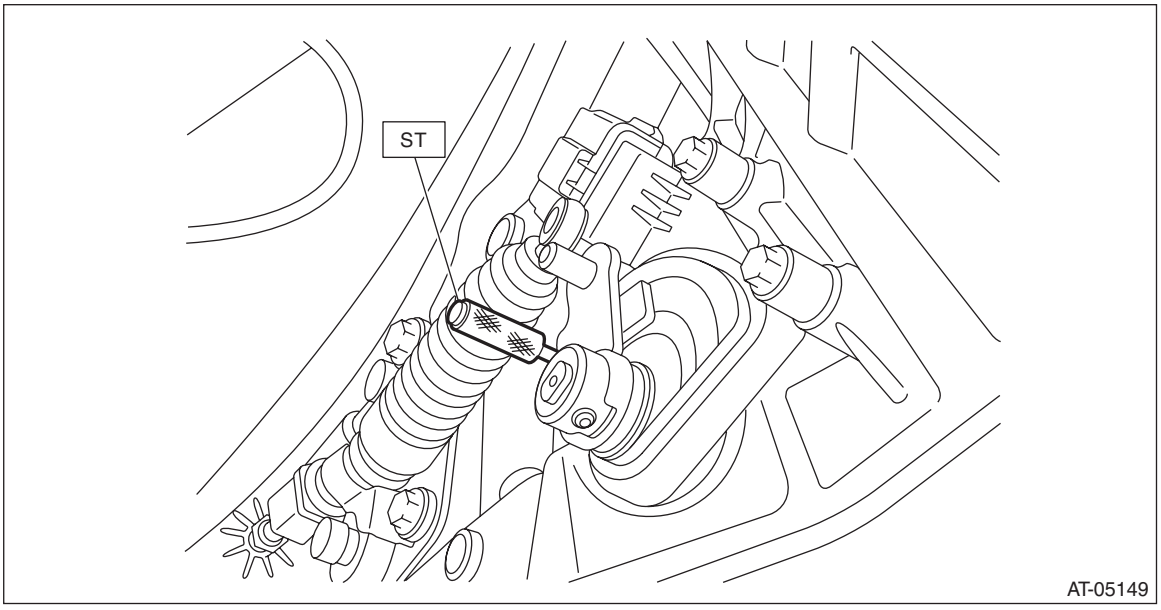

6) Tighten the two bolts holding the inhibitor switch.

Tightening torque:
5 N·m (0.5 kgf-m, 3.7 ft-lb)

7) Install the select cable to the shifter arm.
8) Install the washer and snap pin.

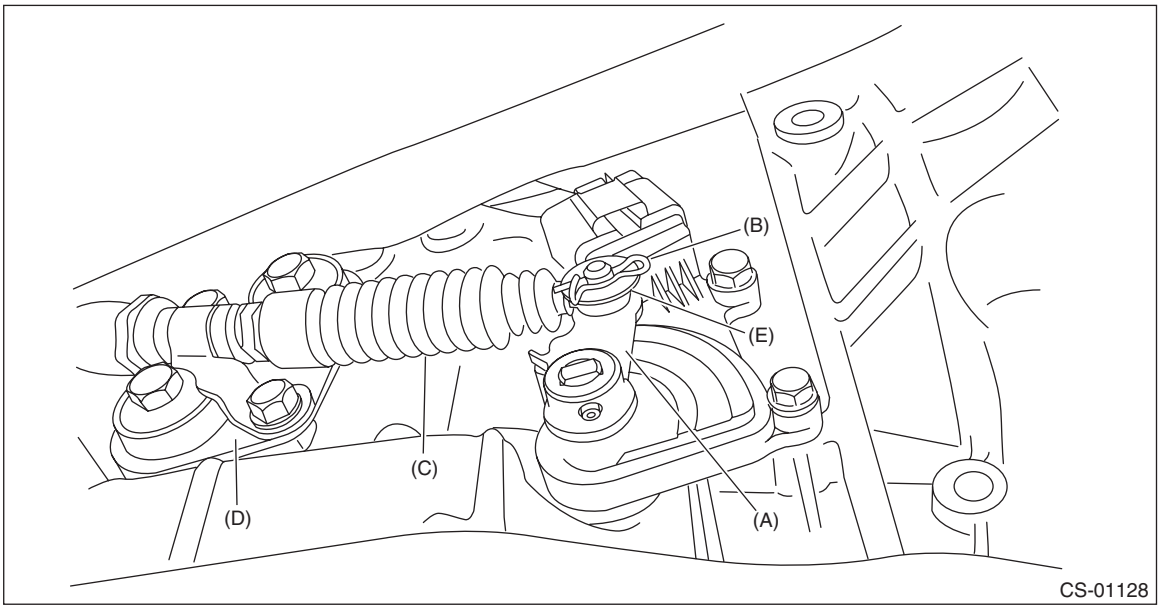

(A) Shifter arm
(B) Snap pin
(C) Select cable
(D) Cable plate ASSY
(E) Washer

9) Lower the vehicle.
10) Connect the ground terminal to battery sensor. <Ref. to NT-6, BATTERY, NOTE, Note.>
11) Check the inhibitor switch. <Ref. to CVT(TR690)-93, INSPECTION, Inhibitor Switch.>

15.Secondary Speed Sensor

A: REMOVAL

CAUTION:
Be sure to prevent water or oil from contacting the connector terminal of secondary speed sensor. If adhesion occurs, replace with a new part.

1) Remove the transmission from the vehicle. <Ref. to CVT(TR690)-57, REMOVAL, Automatic Transmission Assembly.>
2) Remove the transmission cover on the transmission upper side.

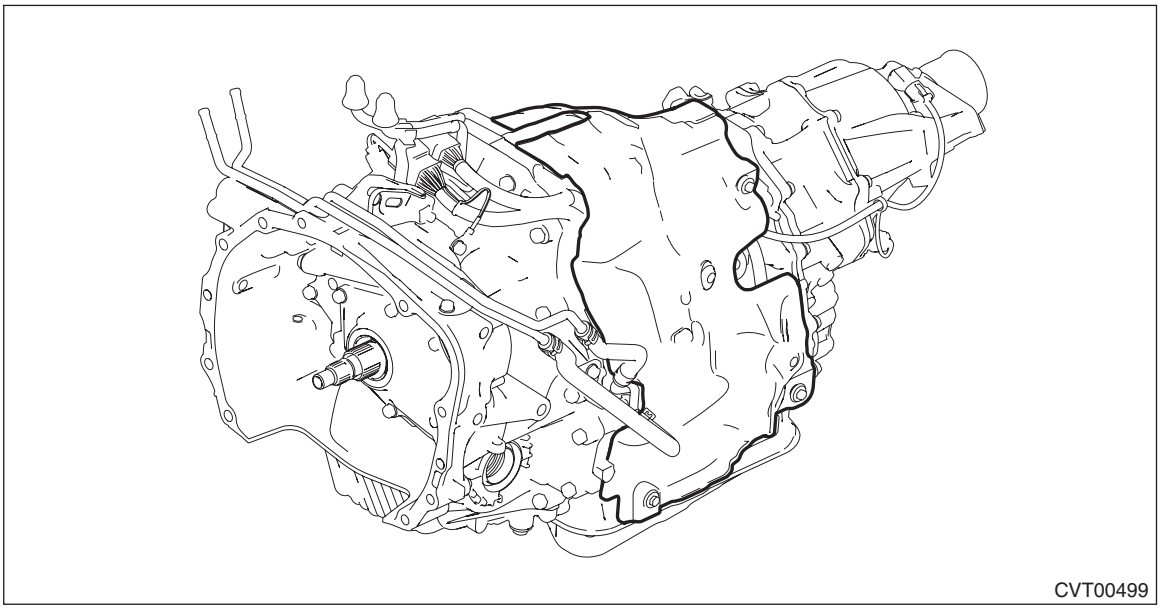
CVT00499

3) Remove the secondary speed sensor harness connector.
4) Remove the secondary speed sensor.

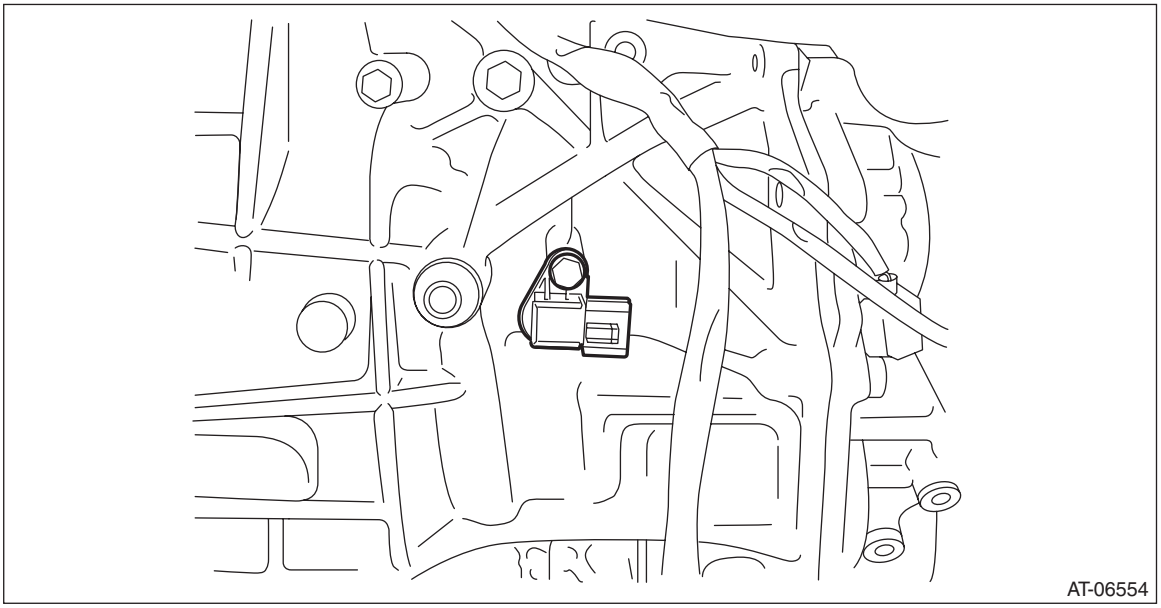
AT-06554

B: INSTALLATION

CAUTION:
Be sure to prevent water or oil from contacting the connector terminal of secondary speed sensor. If adhesion occurs, replace with a new part.
Install in the reverse order of removal.

NOTE:
- Use new O-rings.
- Apply CVTF to the O-ring.

Tightening torque:
Secondary speed sensor
5 N·m (0.5 kgf-m, 3.7 ft-lb)
Transmission cover
8 N·m (0.8 kgf-m, 5.9 ft-lb)

C: INSPECTION

1) Remove the bulkhead harness connector from TCM. <Ref. to CVT(TR690)-126, REMOVAL, Transmission Control Module (TCM).>
2) Set the ST between the TCM and bulkhead harness.
ST 18460AA040 CHECK BOARD
3) Set the probe of oscilloscope to the check board connector.

Terminals:
No. 13 (+) — No. 26 (–)

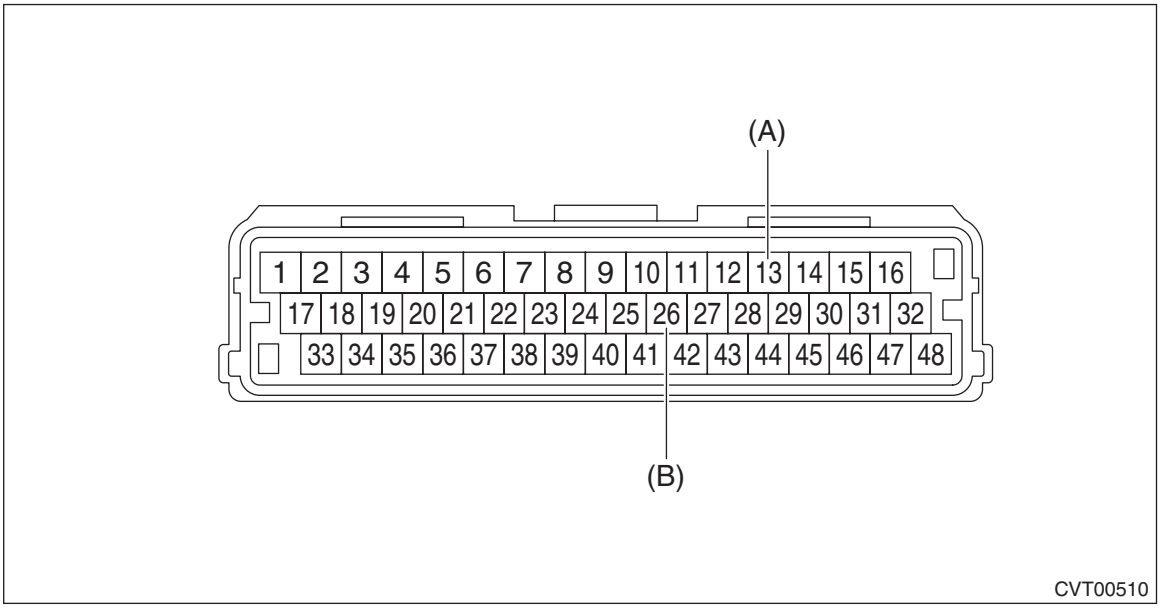

(A) + probe
(B) – probe

4) Start and warm up the engine.

5) Check the waveform of secondary speed sensor with engine idling.

NOTE:
The waveform cycle changes as the speed changes.

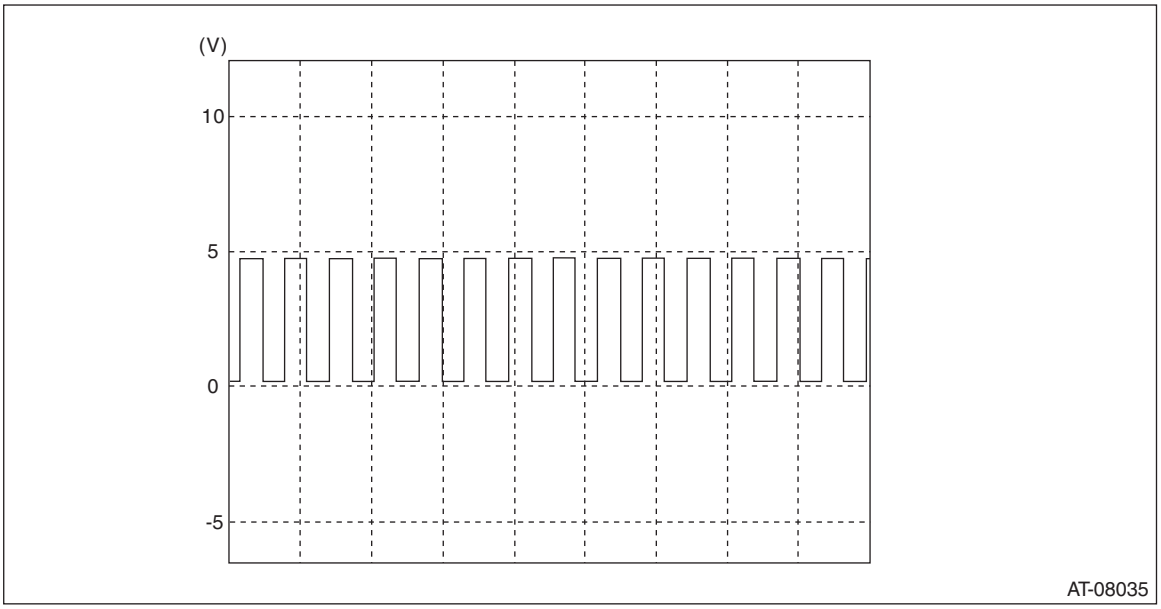

16.Primary Speed Sensor

A: REMOVAL

CAUTION:
Be sure to prevent water or oil from contacting the connector terminal of primary speed sensor. If adhesion occurs, replace with a new part.

1) Disconnect the ground terminal from battery sensor. <Ref. to NT-6, BATTERY, NOTE, Note.>
2) Remove the collector cover. <Ref. to IN(w/o STI)-7, REMOVAL, Collector Cover.>
3) Remove the intercooler. <Ref. to IN(w/o STI)-43, REMOVAL, Intercooler.>
4) Clean the transmission exterior.
5) Remove the primary speed sensor harness connector.

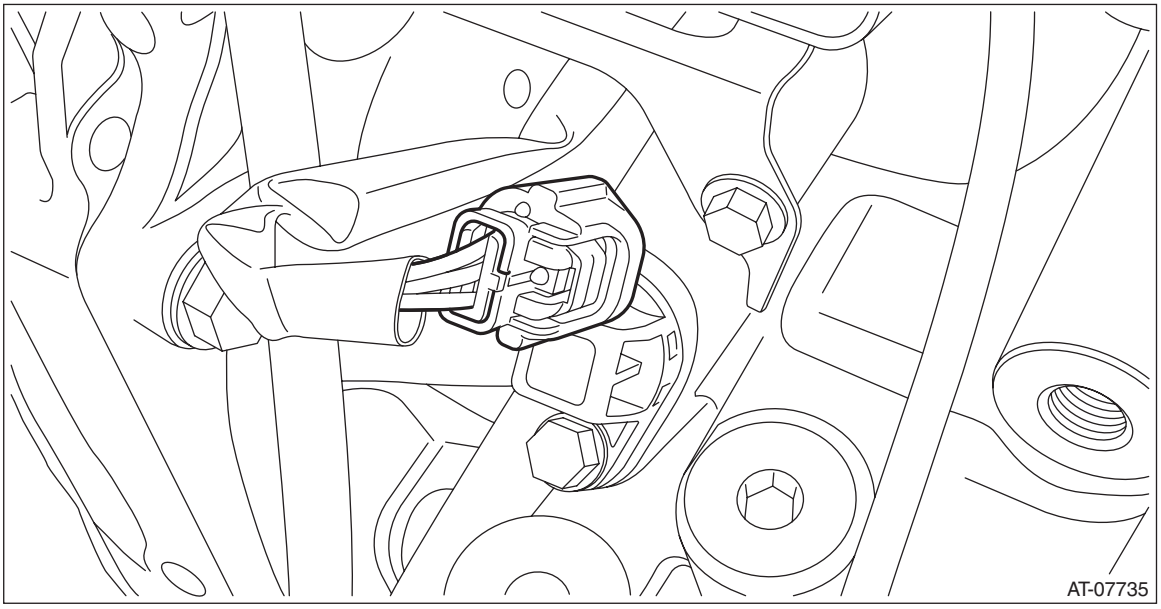

6) Remove the primary speed sensor and the spacer.

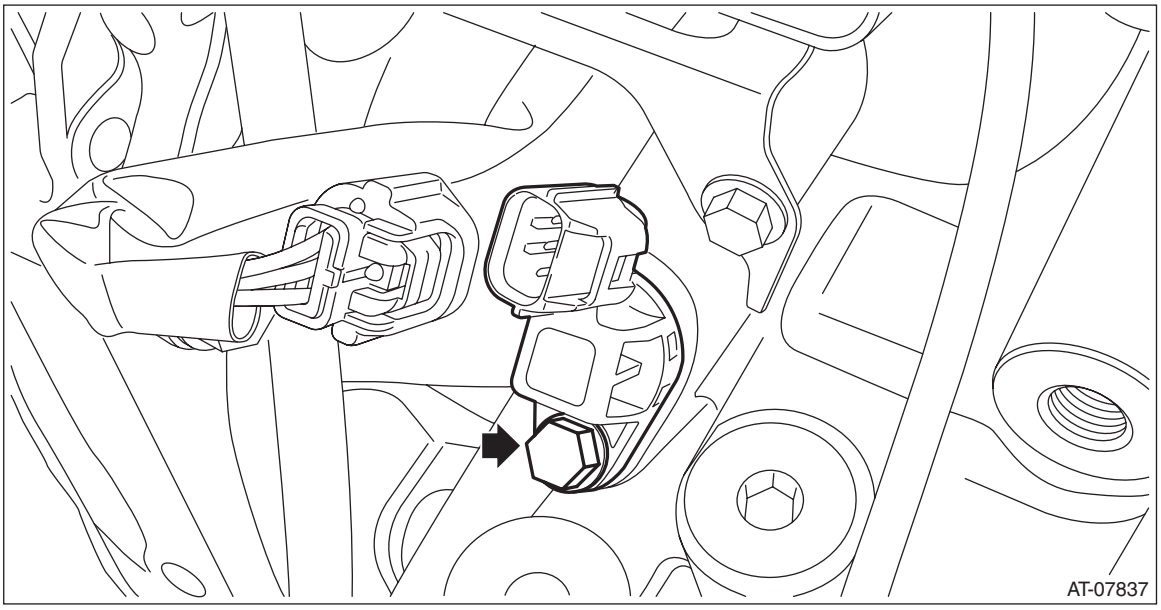

B: INSTALLATION

CAUTION:
Be sure to prevent water or oil from contacting the connector terminal of primary speed sensor. If adhesion occurs, replace with a new part.
Install in the reverse order of removal.

CAUTION:
Do not forget to install the spacer.

NOTE:
- Use new O-rings.
- Apply CVTF to the O-rings.

Tightening torque:
Primary speed sensor
5 N·m (0.5 kgf-m, 3.7 ft-lb)

C: INSPECTION

1) Remove the bulkhead harness connector from TCM. <Ref. to CVT(TR690)-126, REMOVAL, Transmission Control Module (TCM).>
2) Set the ST between the TCM and bulkhead harness.
ST 18460AA040 CHECK BOARD
3) Set the probe of oscilloscope to the check board connector.

Terminals:
No. 14 (+) — No. 42 (–)

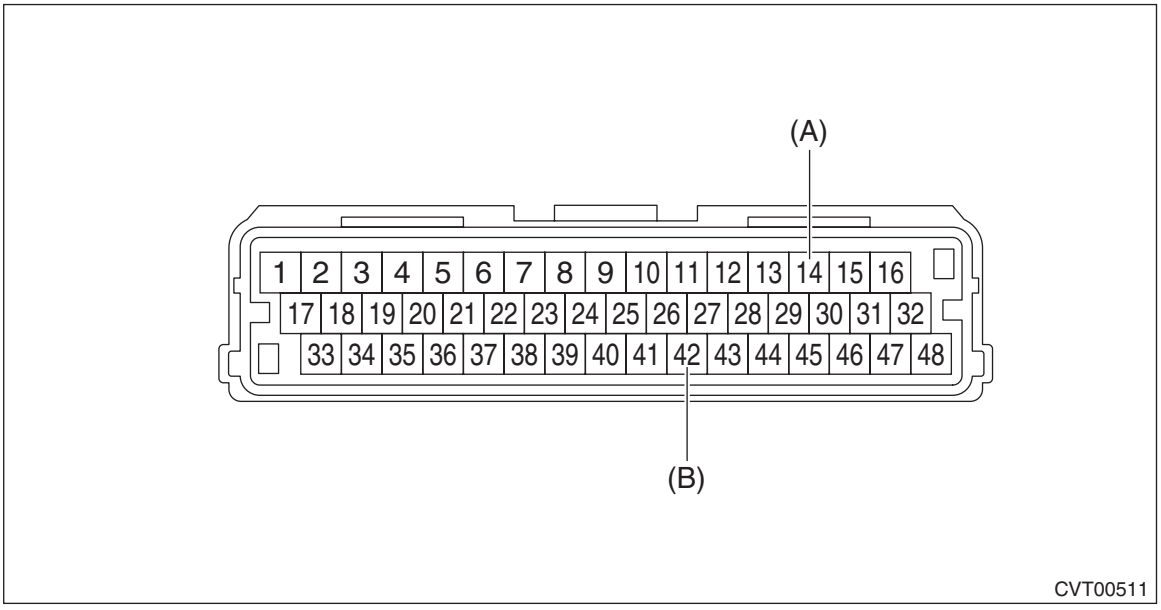

(A) + probe
(B) – probe

4) Start and warm up the engine.

5) Check the waveform of primary speed sensor with engine idling.

NOTE:
The waveform cycle changes as the speed changes.

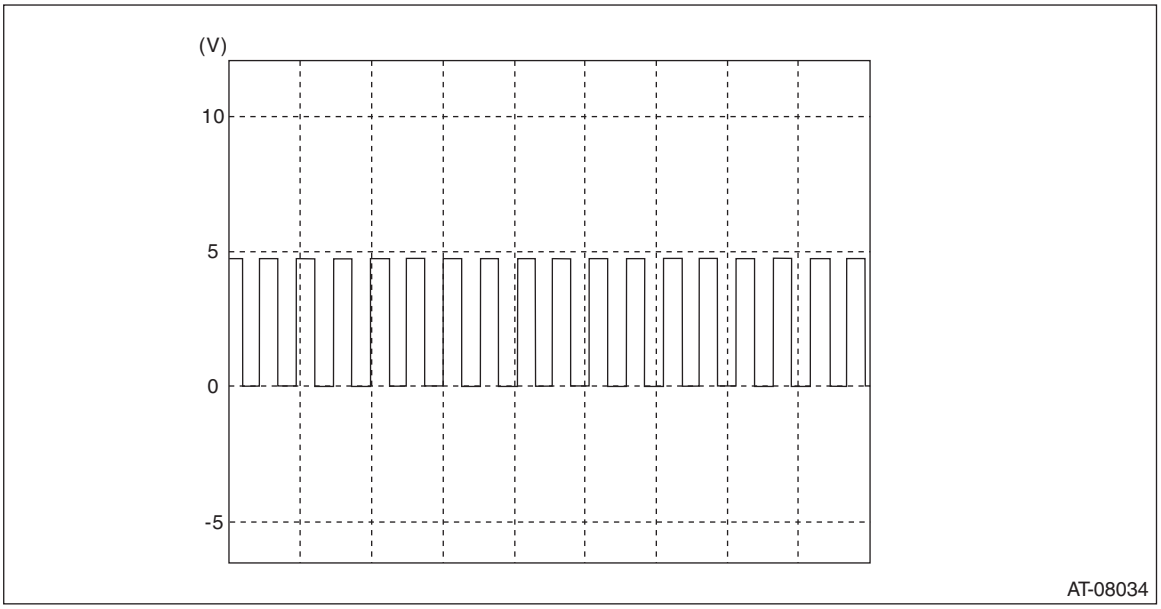

17.Front Wheel Speed Sensor

A: REMOVAL

CAUTION:
• Be sure to prevent water or oil from contacting the connector terminal of front wheel speed sensor. If adhesion occurs, replace with a new part.
• When removing front wheel speed sensor, CVTF may let out. If CVTF has leaked, adjust the CVTF level after installing the front wheel speed sensor.
1) Disconnect the ground terminal from battery sensor. <Ref. to NT-6, BATTERY, NOTE, Note.>
2) Lift up the vehicle.
3) Clean the transmission exterior.
4) Remove the front wheel speed sensor harness connector.
5) Remove the front wheel speed sensor.

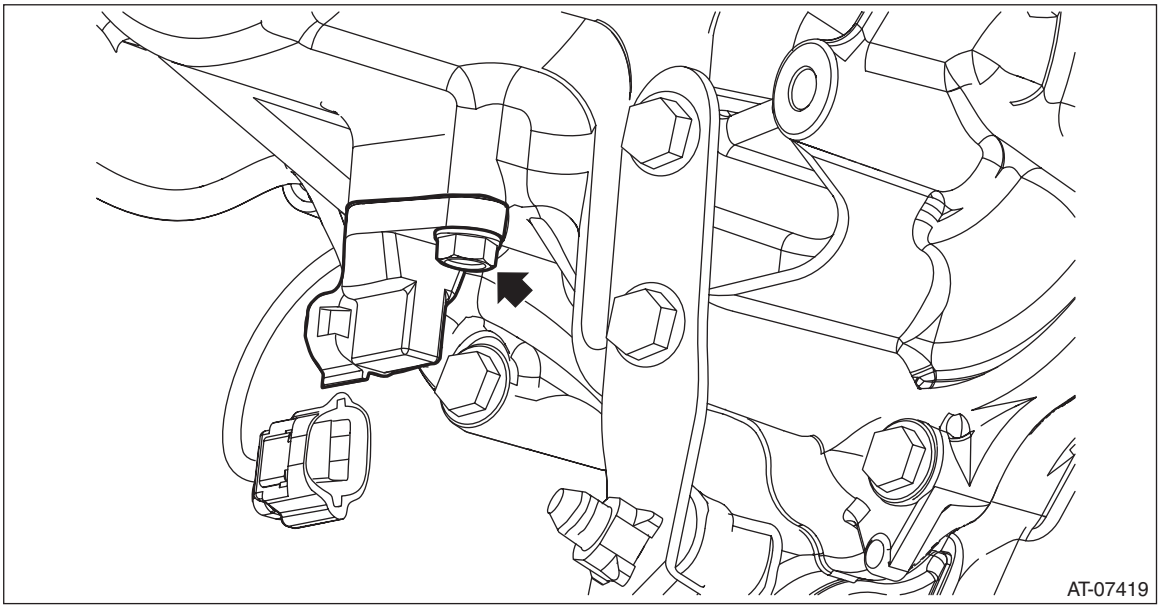

B: INSTALLATION

CAUTION:
• Be sure to prevent water or oil from contacting the connector terminal of front wheel speed sensor. If adhesion occurs, replace with a new part.
• After installing the front wheel speed sensor, adjust the CVTF level.
Install in the reverse order of removal.

NOTE:
• Use new O-rings.
• Apply CVTF to the O-ring.

Tightening torque:
5 N·m (0.5 kgf-m, 3.7 ft-lb)

C: INSPECTION

1) Remove the bulkhead harness connector from TCM. <Ref. to CVT(TR690)-126, REMOVAL, Transmission Control Module (TCM).>
2) Set the ST between the TCM and bulkhead harness.
ST 18460AA040 CHECK BOARD
3) Set the probe of oscilloscope to the check board connector.

Terminals:
No. 12 (+) — No. 26 (–)

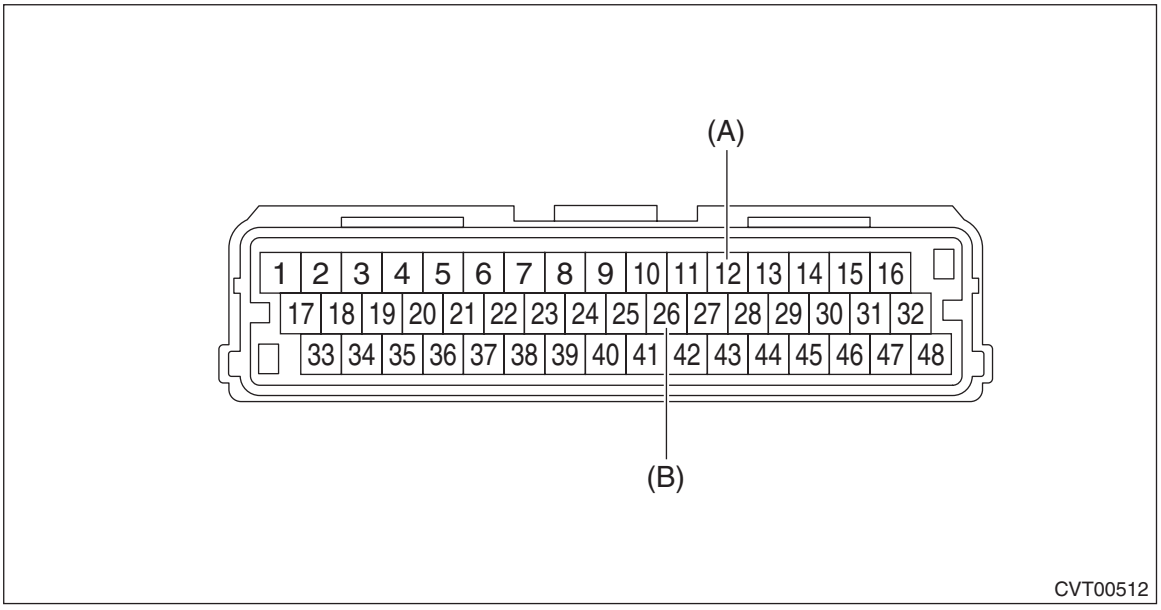

(A) + probe
(B) – probe

4) Lift up the vehicle and raise the vehicle speed up to 20 km/h (12 MPH).
5) Check the waveform of front wheel speed sensor when vehicle speed is at 20 km/h (12 MPH).

NOTE:
The waveform cycle changes as the speed changes.

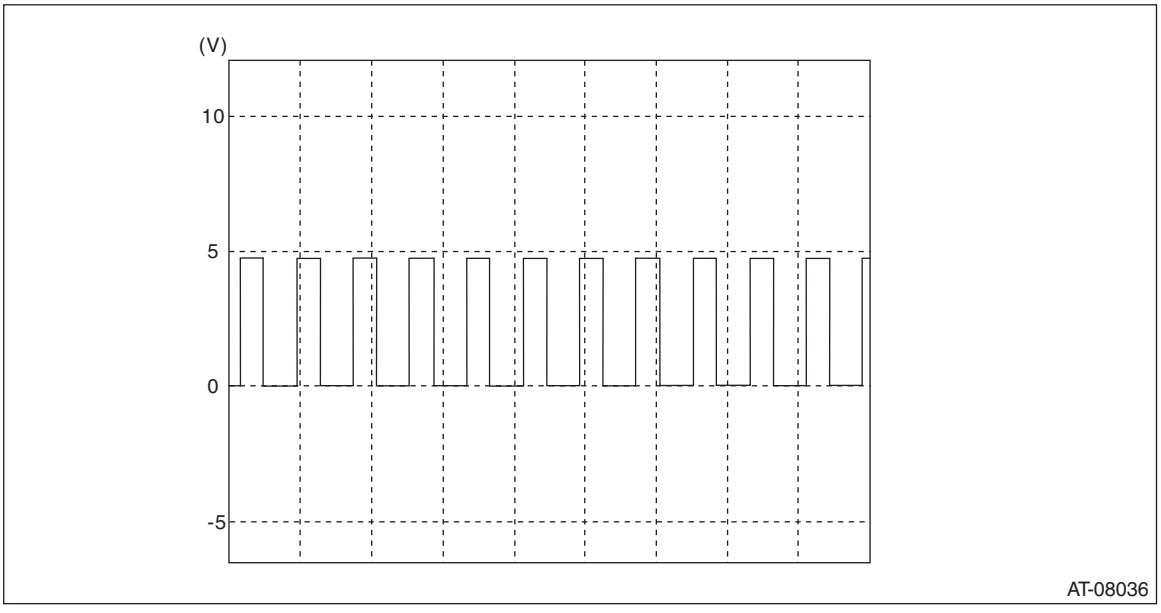

18.Rear Wheel Speed Sensor

A: REMOVAL

1) Disconnect the ground terminal from battery sensor. <Ref. to NT-6, BATTERY, NOTE, Note.>
2) Lift up the vehicle.
3) Clean the transmission exterior.
4) Remove the bolts which connect the center exhaust pipe (rear) and rear exhaust pipe.
5) Remove the bolts holding the center exhaust cover, and move the center exhaust cover to the rear.
6) Disconnect the rear wheel speed sensor connector.
7) Remove the rear wheel speed sensor.

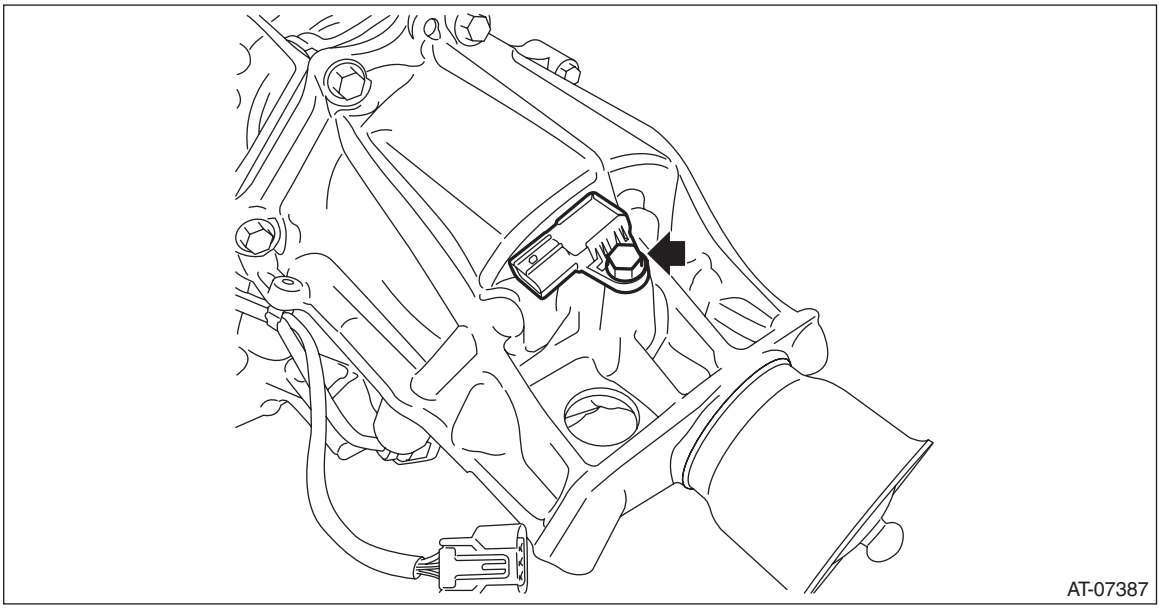

B: INSTALLATION

1) Install the rear wheel speed sensor.

NOTE:
Use new O-rings.

Tightening torque:
5 N·m (0.5 kgf-m, 3.7 ft-lb)

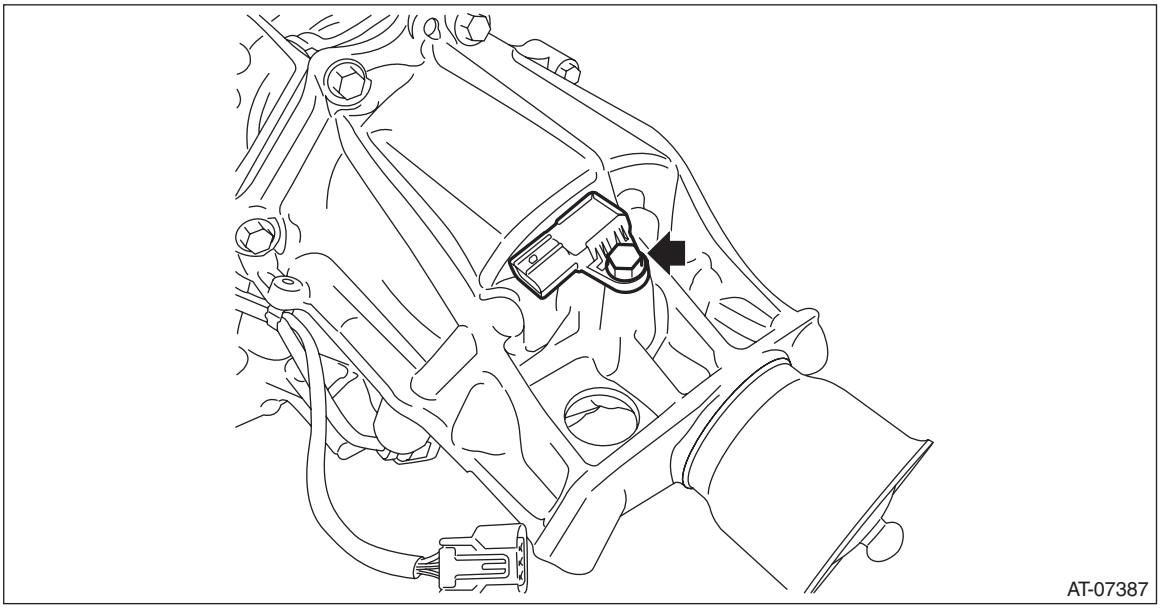

2) Connect the rear wheel speed sensor connector.
3) Install the center exhaust cover.

Tightening torque:
18 N·m (1.8 kgf-m, 13.3 ft-lb)
4) Tighten the bolts which connect the center exhaust pipe (rear) and rear exhaust pipe.

NOTE:
Use a new gasket.

Tightening torque:
18 N·m (1.8 kgf-m, 13.3 ft-lb)
5) Lower the vehicle.
6) Connect the ground terminal to battery sensor. <Ref. to NT-6, BATTERY, NOTE, Note.>

C: INSPECTION

1) Remove the bulkhead harness connector from TCM. <Ref. to CVT(TR690)-126, REMOVAL, Transmission Control Module (TCM).>
2) Set the ST between the TCM and bulkhead harness.
ST 18460AA040 CHECK BOARD
3) Set the probe of oscilloscope to the check board connector.

Terminals:
No. 11 (+) — No. 26 (–)

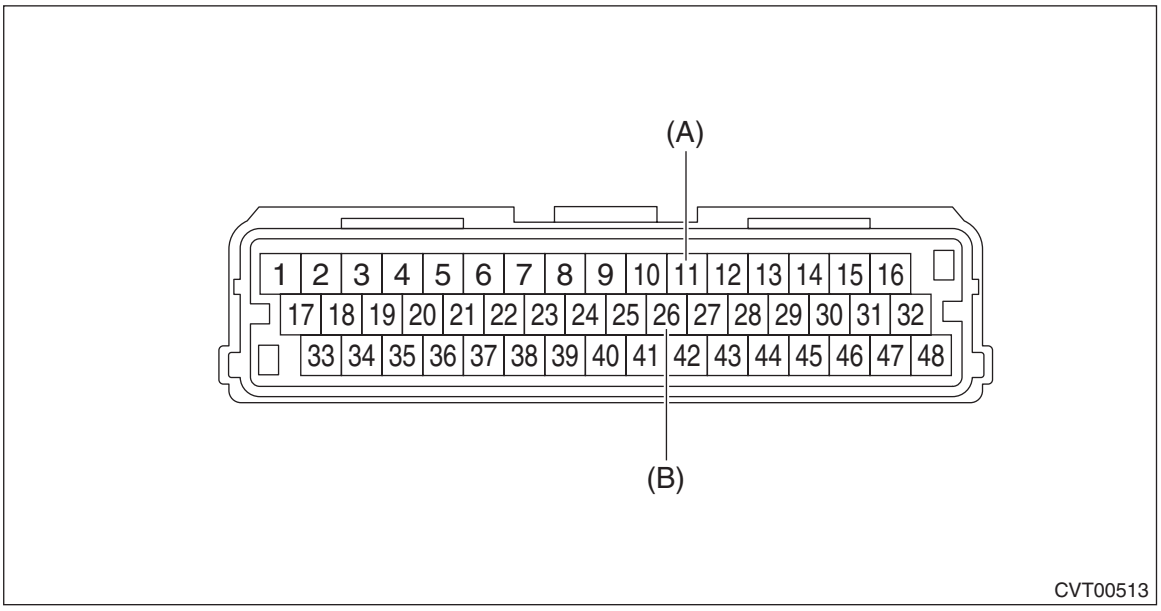

(A) + probe
(B) – probe

4) Lift up the vehicle and raise the vehicle speed up to 20 km/h (12 MPH).

5) Check the waveform of rear wheel speed sensor when vehicle speed is at 20 km/h (12 MPH).

NOTE:
The waveform cycle changes as the speed changes.

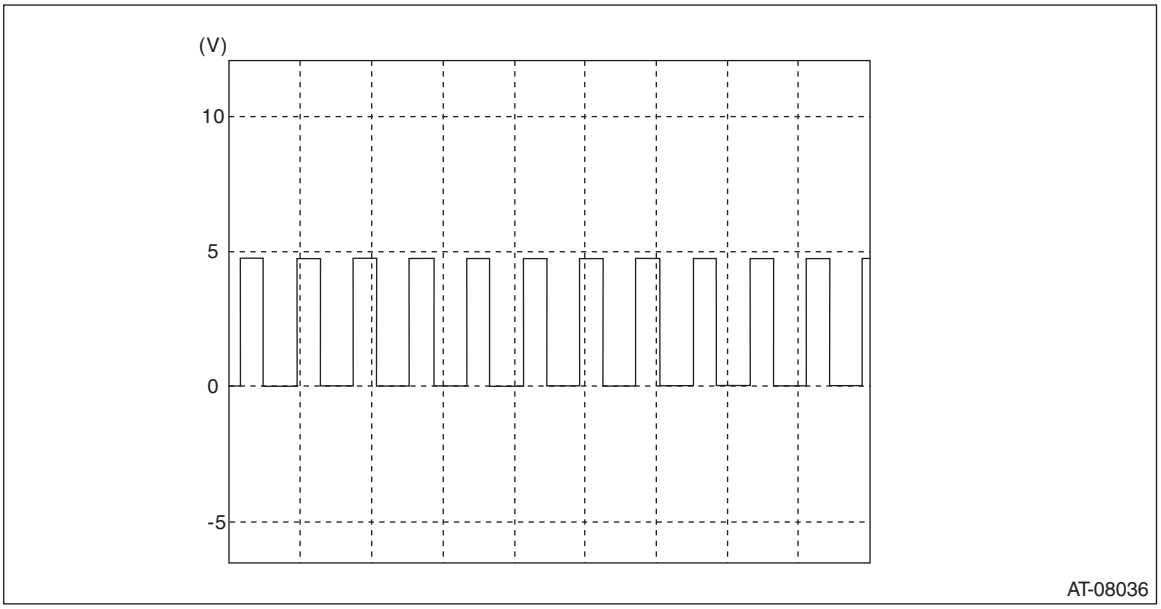

19.Secondary Pressure Sensor

A: REMOVAL

CAUTION:
• Be sure to prevent water or oil from contacting the connector terminal of secondary pressure sensor. If adhesion occurs, replace with a new part.
• When removing secondary pressure sensor, CVTF may let out. If CVTF has leaked, adjust the CVTF level after installing the secondary pressure sensor.
1) Disconnect the ground terminal from battery sensor. <Ref. to NT-6, BATTERY, NOTE, Note.>
2) Lift up the vehicle.
3) Clean the transmission exterior.
4) Remove the secondary pressure sensor harness connector.
5) Remove the secondary pressure sensor.

NOTE:
Use Ko-ken 3/8 12-point 27 mm (manufacturer product No. 3305M-27) deep socket.

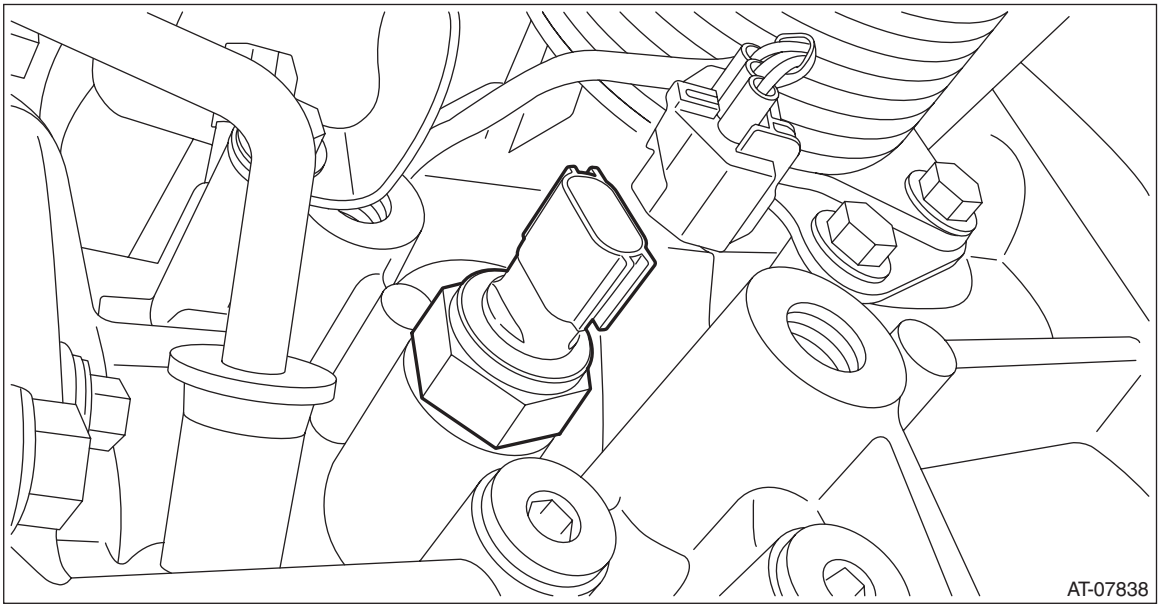

B: INSTALLATION

CAUTION:
• Be sure to prevent water or oil from contacting the connector terminal of secondary pressure sensor. If adhesion occurs, replace with a new part.
• After installing the secondary pressure sensor, adjust the CVTF level.
Install in the reverse order of removal.

NOTE:
• Use new O-rings.
• Apply CVTF to the O-rings.

Tightening torque:
39 N·m (4.0 kgf-m, 28.8 ft-lb)

C: INSPECTION

1) Start and warm up the engine.
2) Shift the select lever to “P” or “N” range.
3) Depress the brake pedal and hold it.
4) Check “secondary pressure sensor voltage” by using Subaru Select Monitor while the engine is idling. <Ref. to CVT(diag)-14, OPERATION, Subaru Select Monitor.>

Specification:
Approx. 0.8 V

5) Check “secondary pressure sensor voltage” by using Subaru Select Monitor while the engine is stopped and the ignition switch is turned on. <Ref. to CVT(diag)-14, OPERATION, Subaru Select Monitor.>

Specification:
Approx. 0.5 V

20.Control Valve Body

A: REMOVAL

CAUTION:
• Directly after the vehicle has been running or the engine has been idling for a long time, the CVTF is hot. Be careful not to burn yourself.
• Be careful not to spill CVTF on the exhaust pipe to prevent it from emitting smoke or causing a fire. If the CVTF adheres, wipe it off completely.

NOTE:
The control valve body is replaced as an assembly only, because it is a non-disassembly part.
1) Disconnect the ground terminal from battery sensor. <Ref. to NT-6, BATTERY, NOTE, Note.>
2) Lift up the vehicle.
3) Clean the transmission exterior.
4) Remove the CVTF drain plug to drain CVTF.

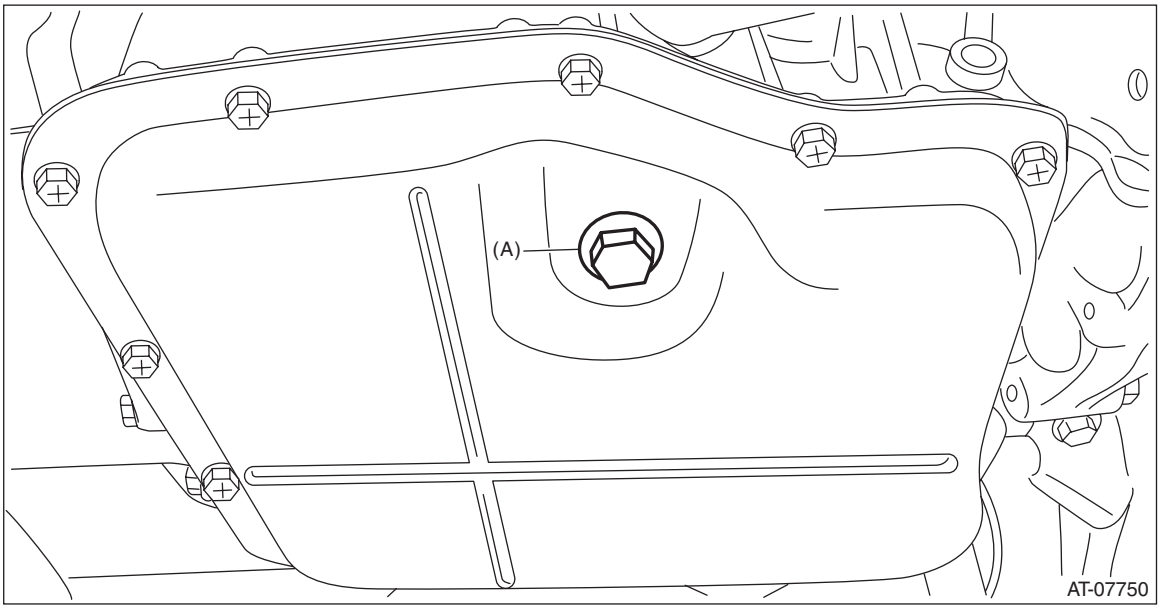

(A) CVTF drain plug

5) Install the CVTF drain plug.

NOTE:
Use a new gasket.

Tightening torque:
39.2 N·m (4.0 kgf-m, 28.9 ft-lb)

6) Remove the oil pan.

CAUTION:
Be careful not to allow foreign matter such as dust or dirt to enter the oil pan.

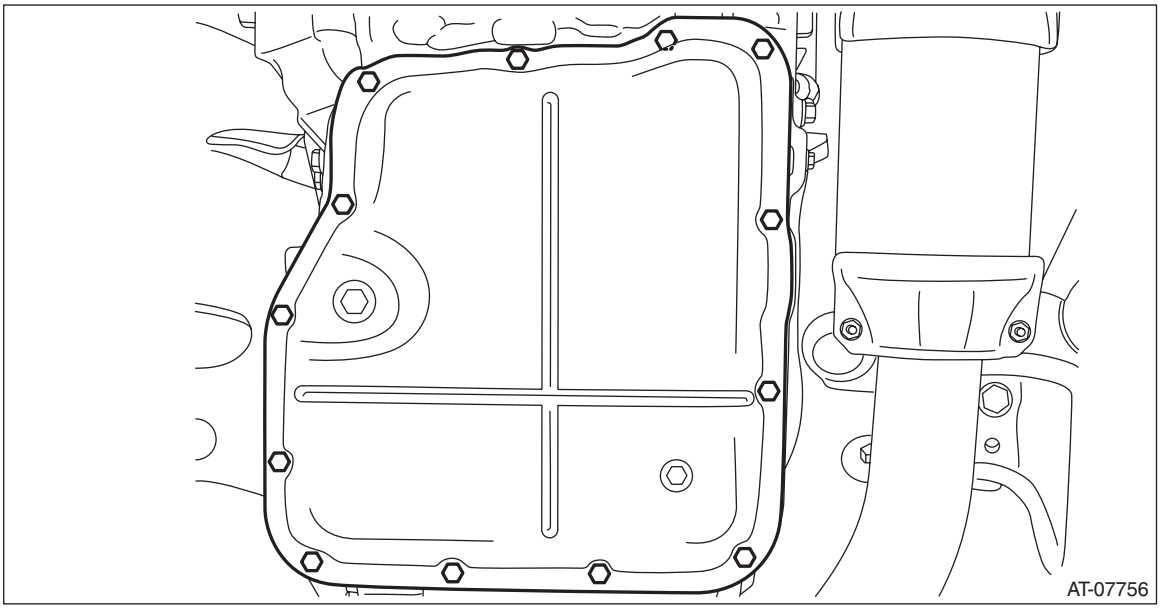

7) Remove the magnet.
8) Disconnect the control valve harness connector.

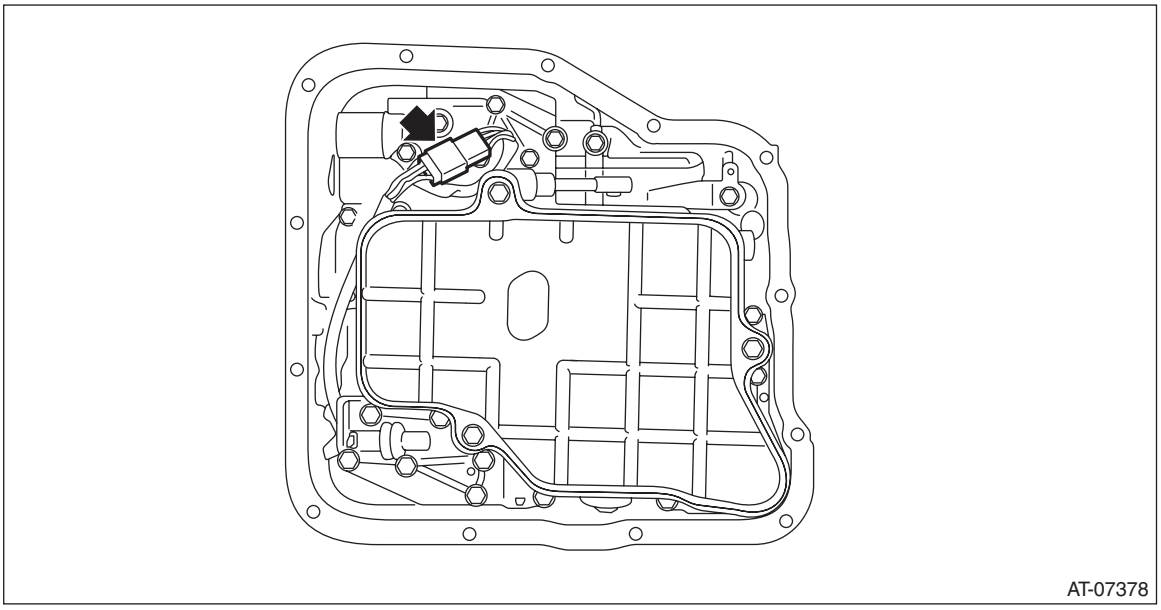

9) Remove the oil strainer.

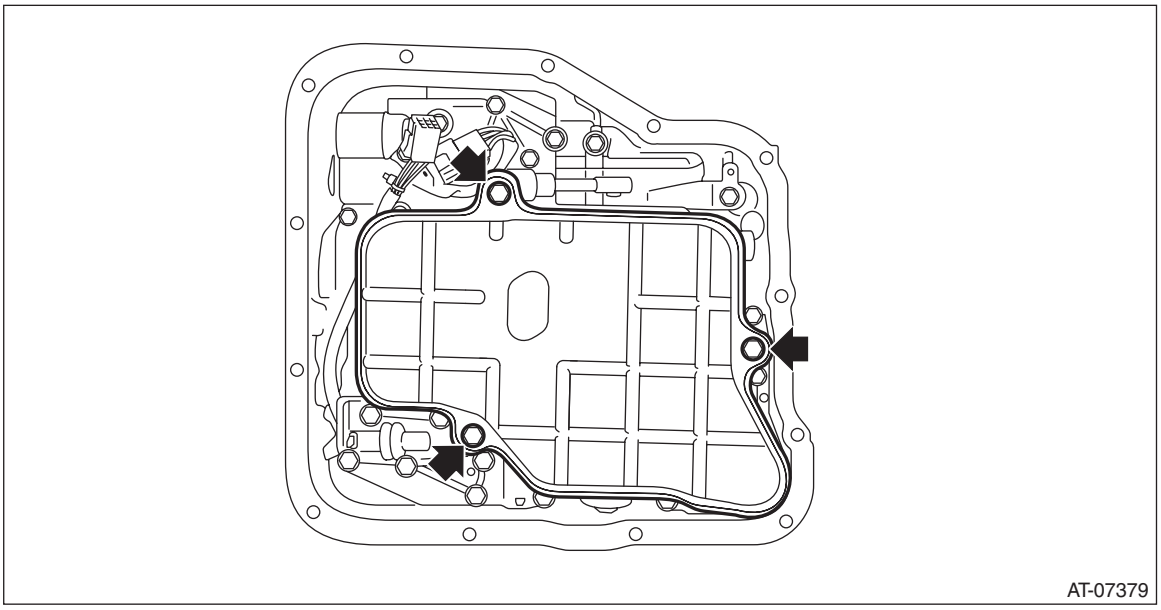

10) Remove the control valve body.

CAUTION:
Do not let the manual valve drop off.

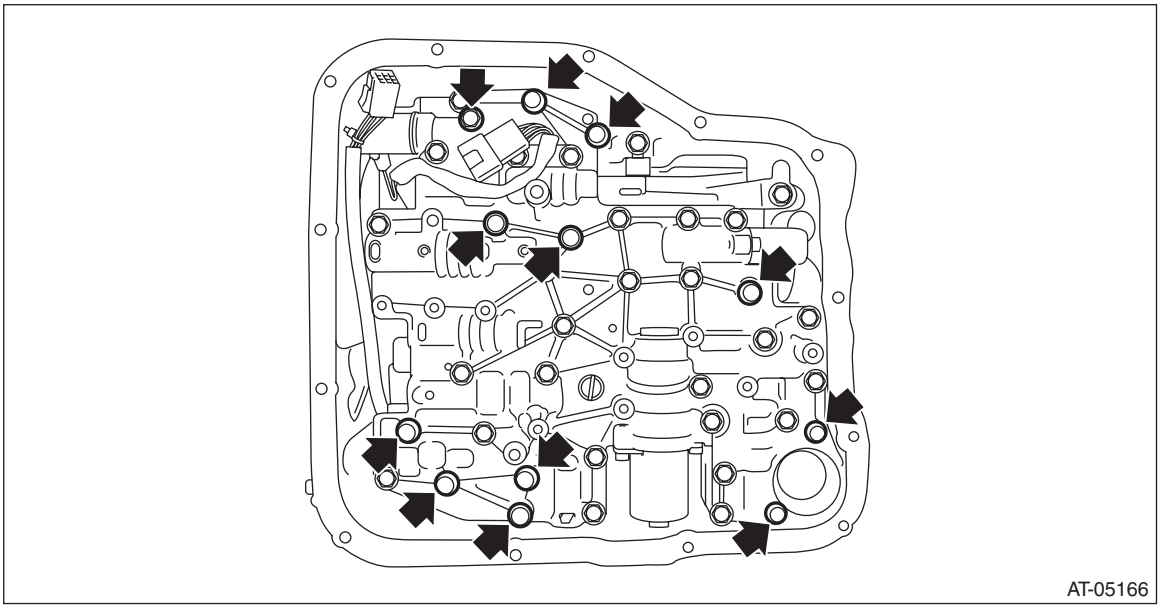

11) Remove the pressure pipe.

NOTE:
It may be located in transmission case side.

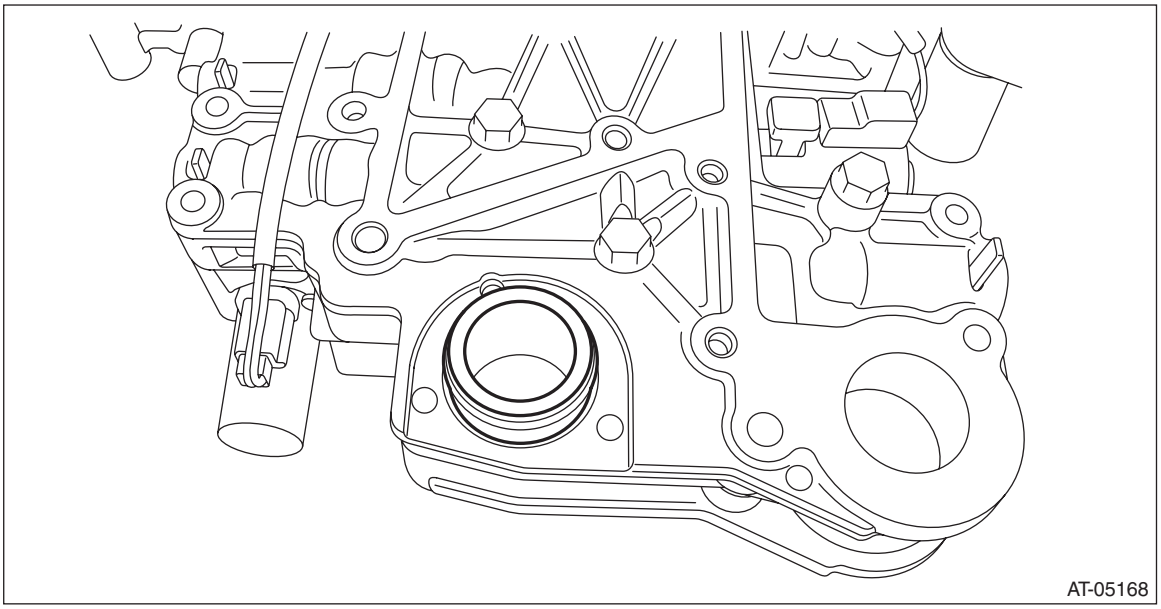

12) Remove the O-ring from oil strainer.

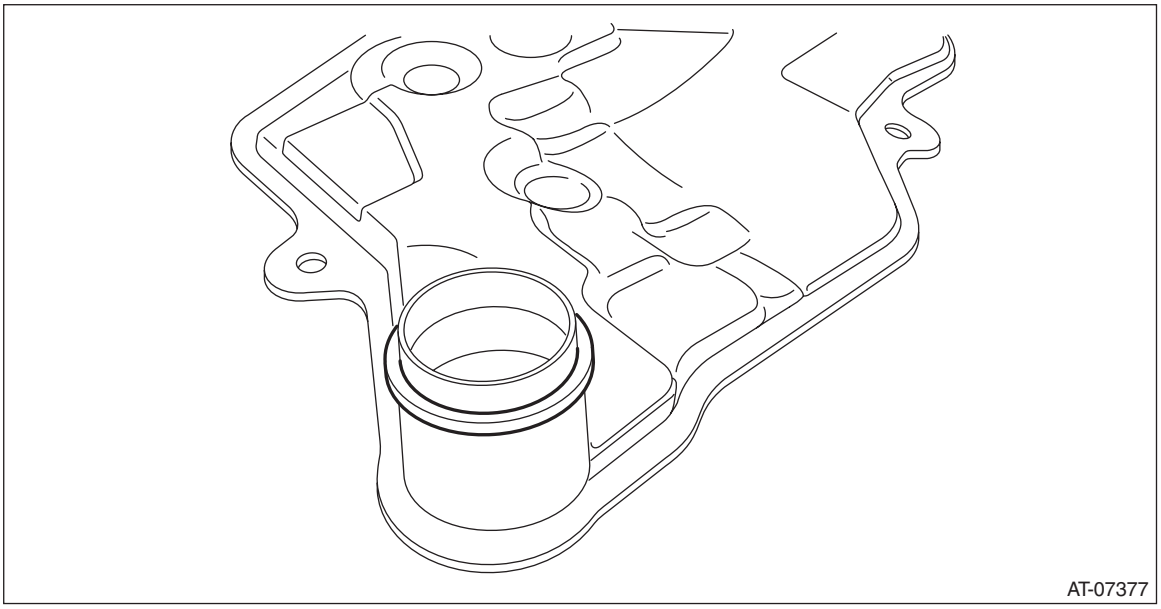

13) Remove the O-ring from pressure pipe.

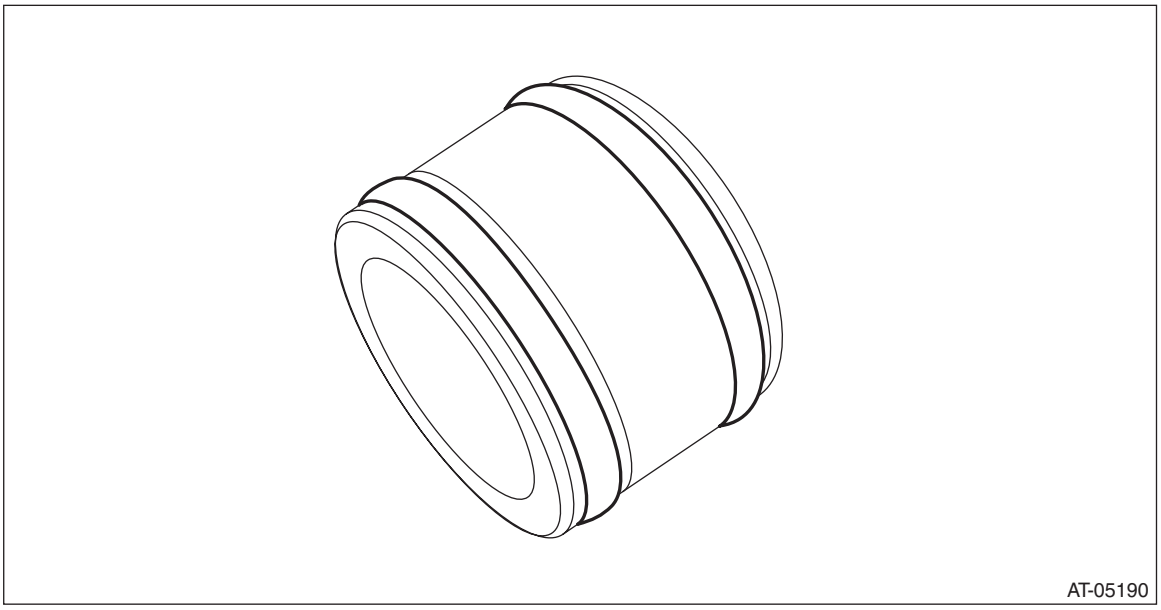

B: INSTALLATION

1) Clean the mating surface of oil pan and transmission case.
2) Make sure that the CVTF filter is installed to the transmission case.

NOTE:
Make sure that the CVTF filter does not protrude from the transmission case.

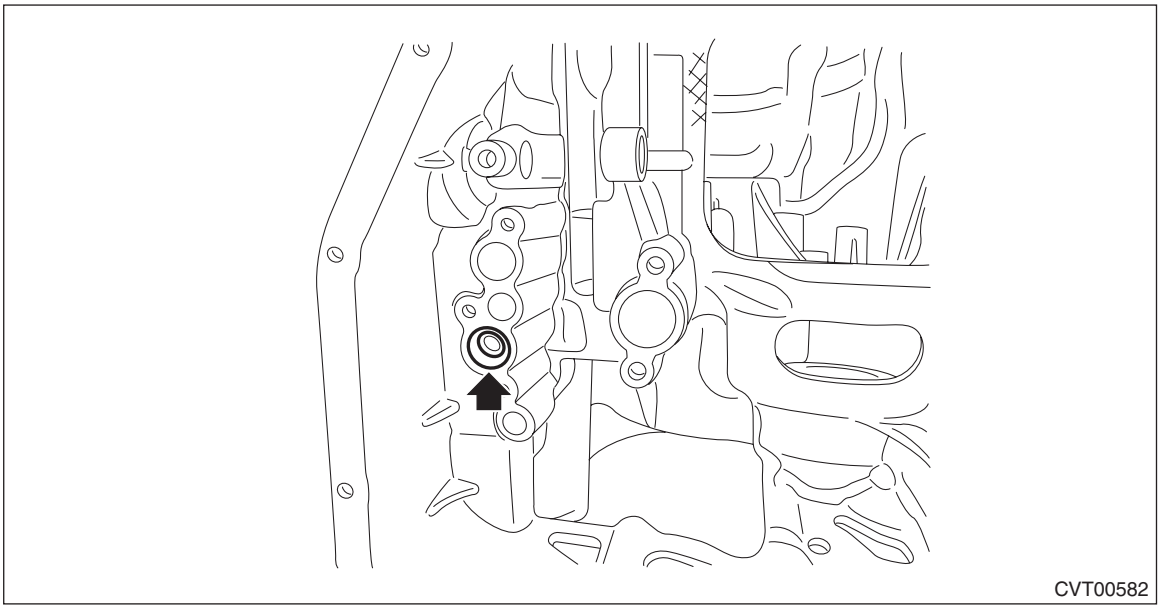

3) Check the control valve body for dust and other foreign matter.

4) Install the O-ring to the pressure pipe.

NOTE:
- Use new O-rings.
- Apply CVTF to the O-rings.

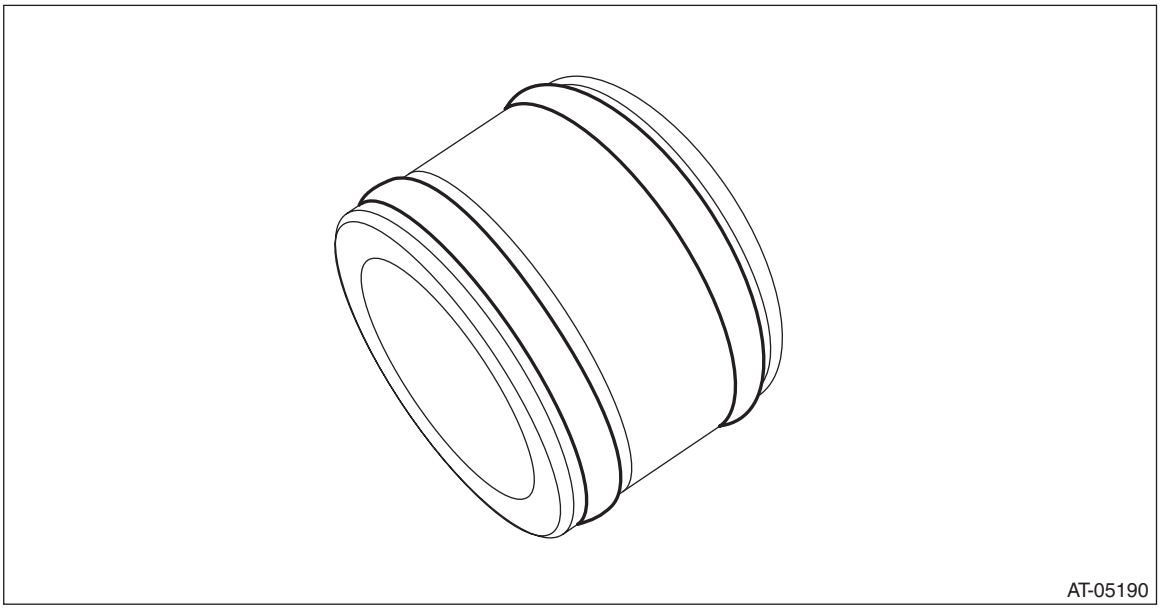

5) Install the pressure pipe.

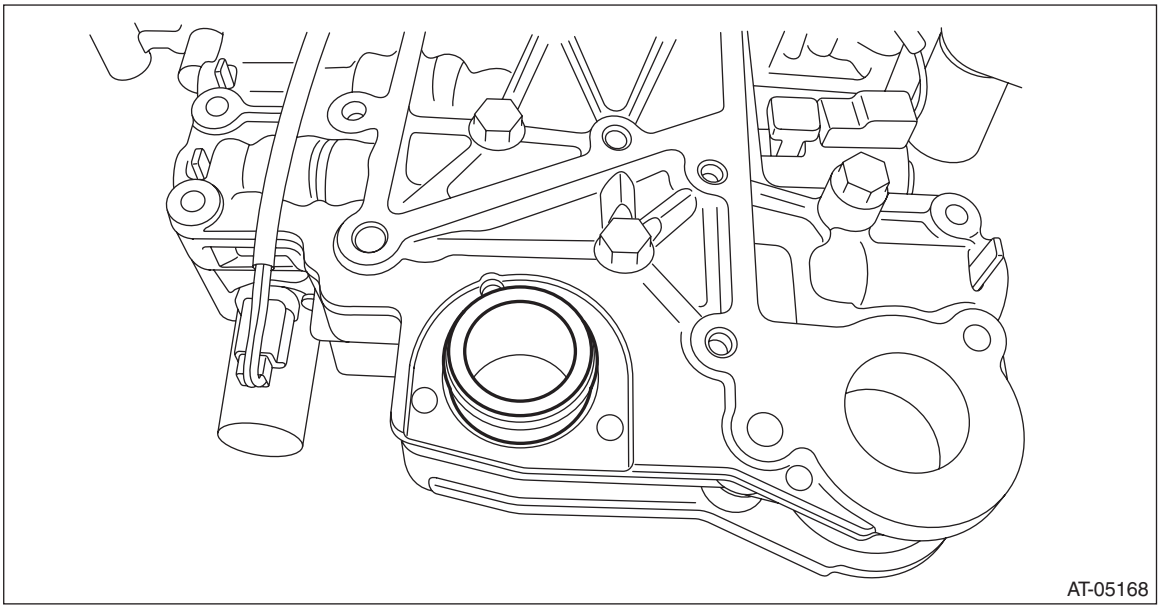

6) Install the control valve body.

CAUTION:
- **Beware of the transmission harness getting caught in between.**
- **Do not impact or bend the transmission harness because it has the oil temperature sensor inside.**

NOTE:
- Engage the manual valve to the manual plate.
- Lead the transmission harness through from the point indicated by dashed line in the figure.

Tightening torque:
9 N·m (0.9 kgf-m, 6.6 ft-lb)

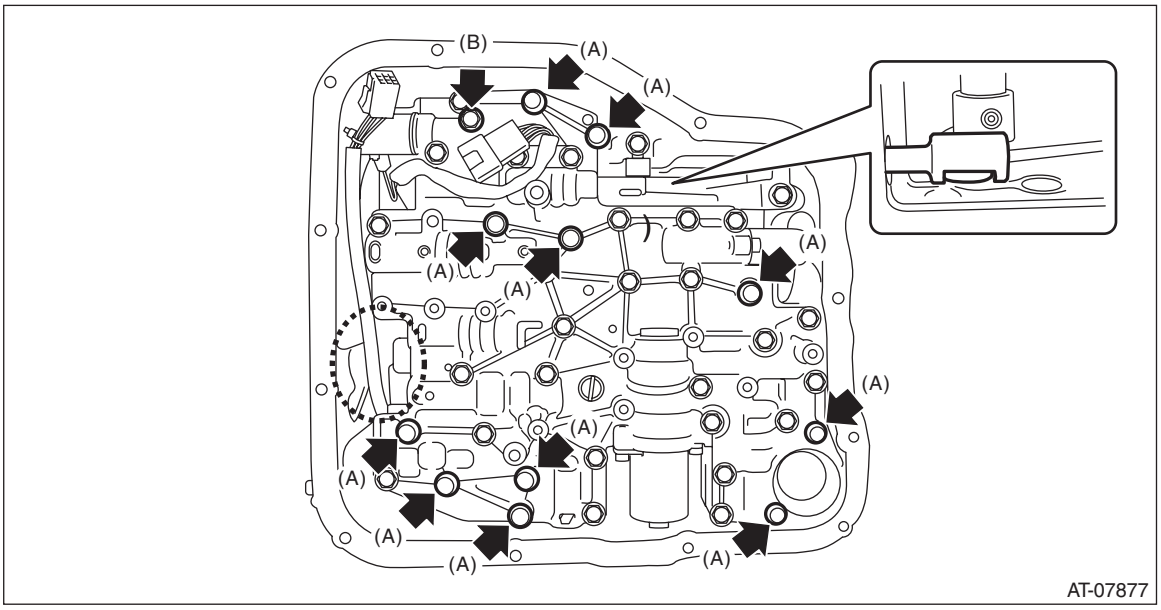

(A) Short bolt (11 pcs)
(B) Long bolt (1 pcs)

7) Install the O-ring to oil strainer and install the oil strainer.

NOTE:
- Use new O-rings.
- Apply CVTF to the O-rings.
- Let the transmission harness run between control valve body and oil strainer.

Tightening torque:
9 N·m (0.9 kgf-m, 6.6 ft-lb)

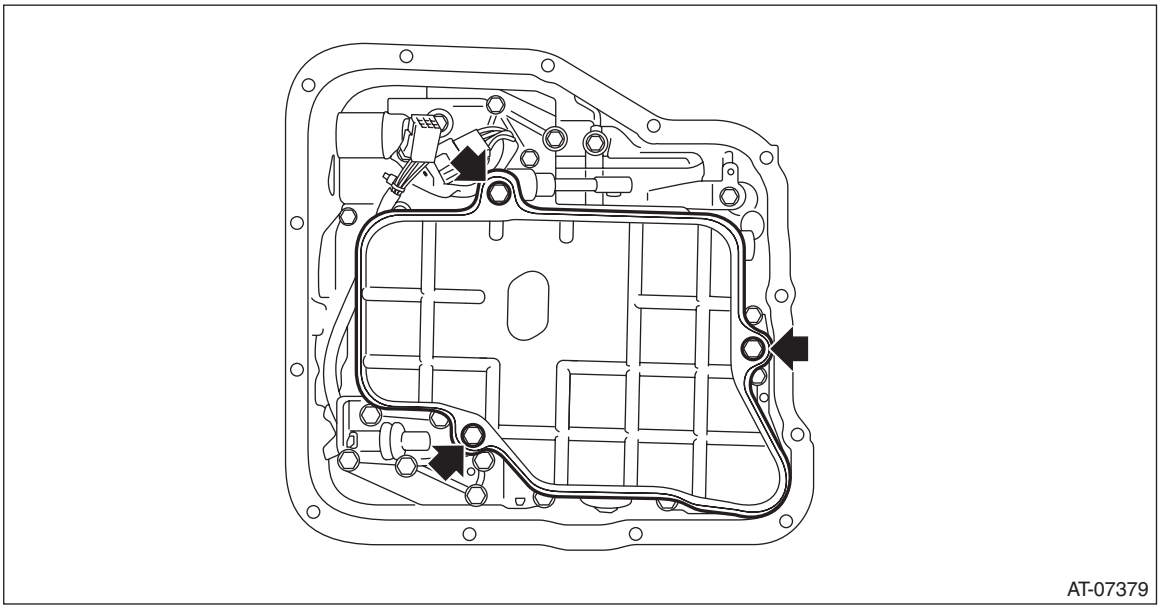

8) Connect the control valve harness connector.

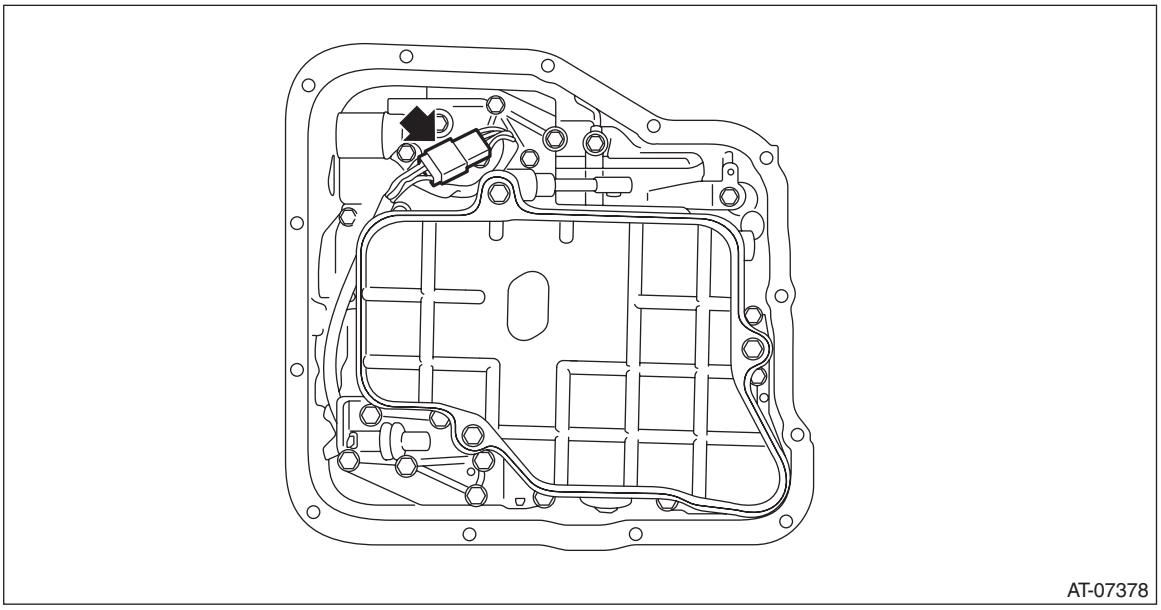

9) Clean the magnet.
10) Attach the magnet at the specified position of the oil pan.

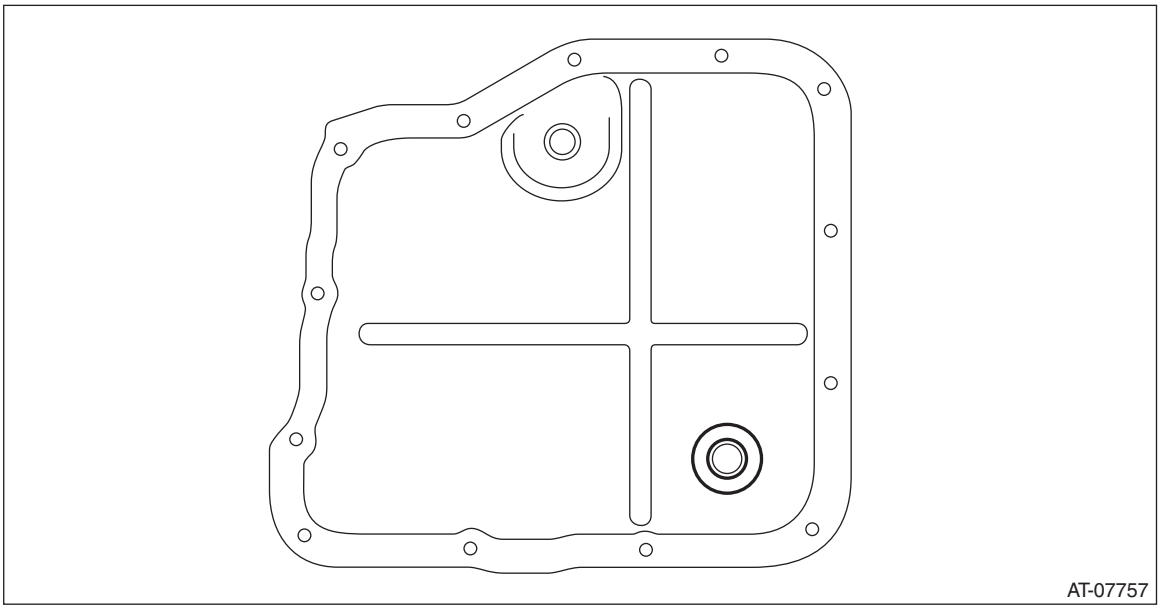

11) Apply liquid gasket all around the oil pan mating surface seamlessly.

Liquid gasket:
THREE BOND 1217B (Part No. K0877YA020) or equivalent

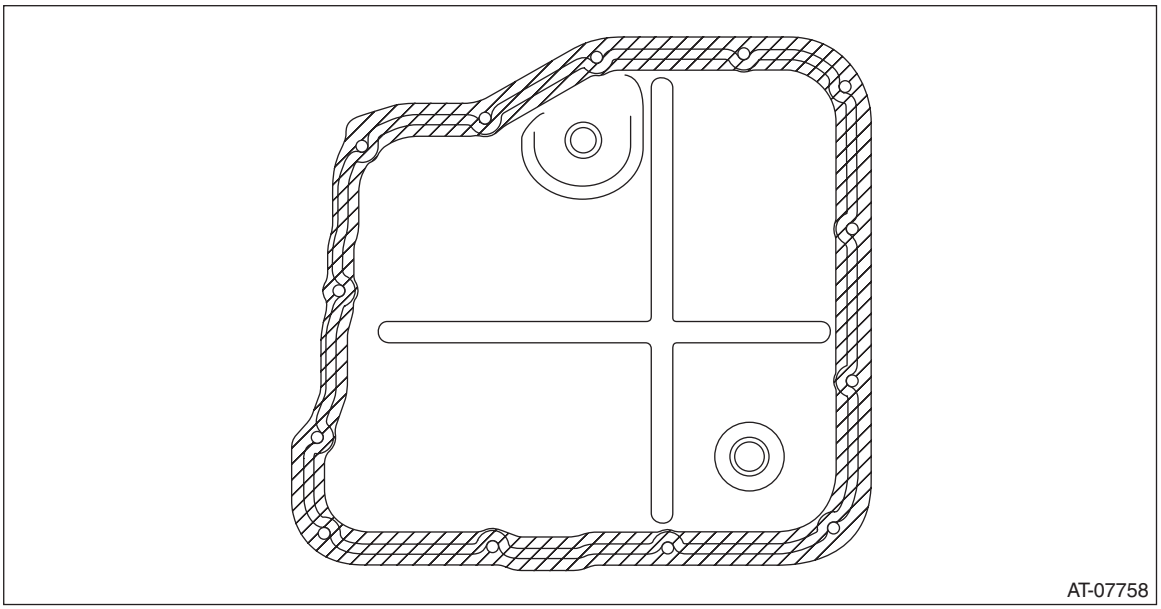

12) Install the oil pan by equally tightening the bolts.

CAUTION:
Beware of the transmission harness getting caught in between.

Tightening torque:
5 N·m (0.5 kgf-m, 3.7 ft-lb)

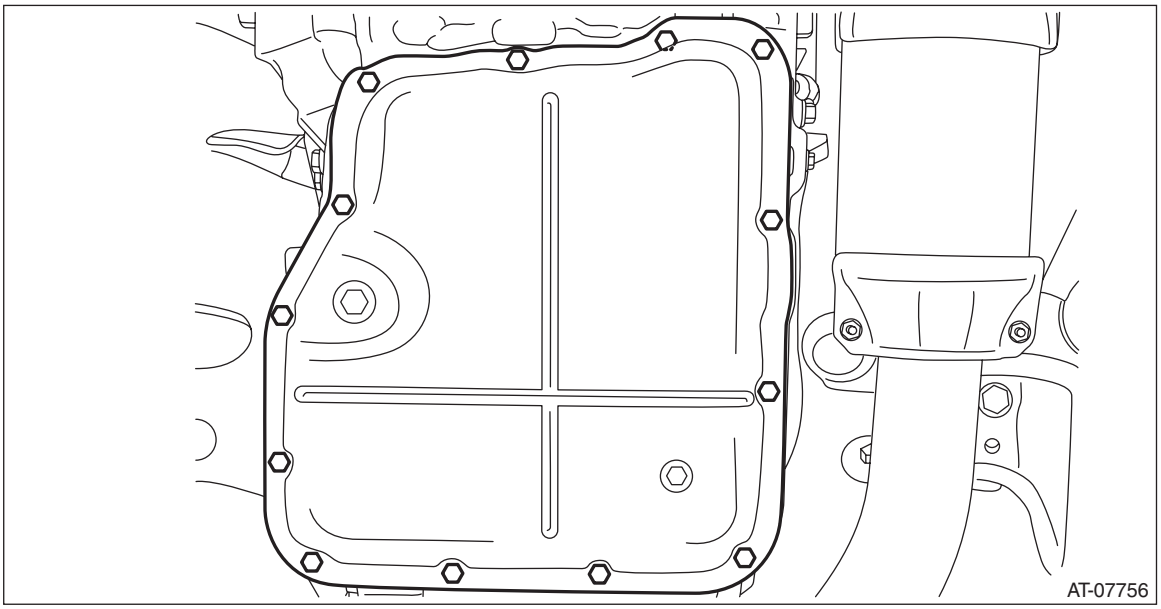

13) Connect the ground terminal to battery sensor. <Ref. to NT-6, BATTERY, NOTE, Note.>
14) Fill with CVTF. <Ref. to CVT(TR690)-38, REPLACEMENT, CVTF.>
15) Adjust the CVTF level. <Ref. to CVT(TR690)-36, ADJUSTMENT, CVTF.>
16) Perform the operation of AT learning mode. <Ref. to CVT(diag)-26, Learning Control.>

C: INSPECTION

- Check each part for damage or dust.
- Check oil strainer for clogging.
- Measure the resistance of each solenoid.

NOTE:
Measurement should be performed at a temperature of 20°C (68°F).

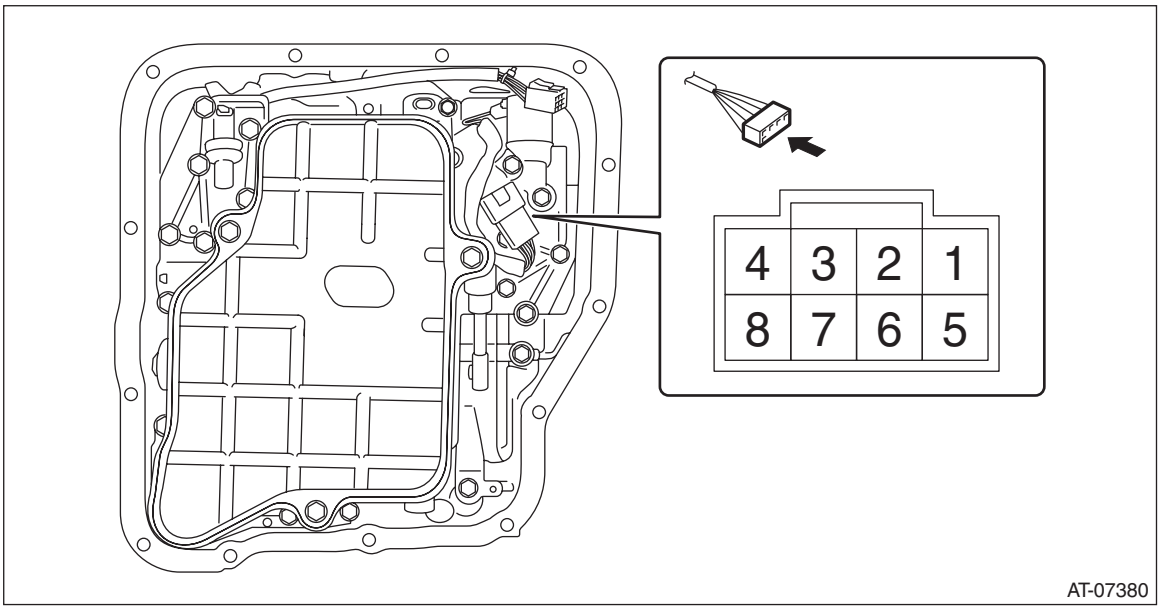

Solenoid	Terminal No.	Standard (Ω)
Secondary solenoid	No. 1 — control valve body	Approx. 6.6 Ω
Lock-up duty solenoid	No. 2 — control valve body	Approx. 12 Ω
F&R solenoid	No. 3 — control valve body	Approx. 5.3 Ω
Lock-up ON/OFF solenoid	No. 5 — control valve body	Approx. 16 Ω
Primary DOWN solenoid	No. 6 — control valve body	Approx. 12 Ω
Primary UP solenoid	No. 7 — control valve body	Approx. 12 Ω
AWD solenoid	No. 8 — control valve body	Approx. 3.2 Ω

21.Transmission Harness

A: REMOVAL

1) Remove the transmission from the vehicle. <Ref. to CVT(TR690)-57, REMOVAL, Automatic Transmission Assembly.>
2) Prepare for overhaul. <Ref. to CVT(TR690)-140, Preparation for Overhaul.>
3) Remove the transmission harness ground terminal and remove the harness connectors from front wheel speed sensor, rear wheel speed sensor and secondary speed sensor.

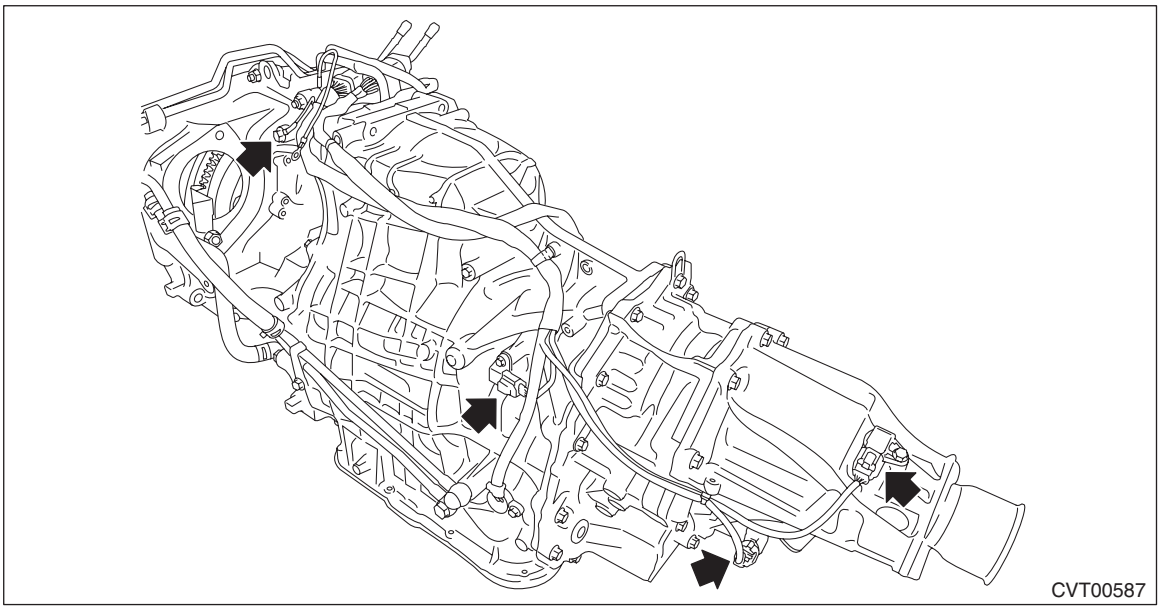

4) Remove the harness connectors from inhibitor switch, primary speed sensor and secondary pressure sensor.

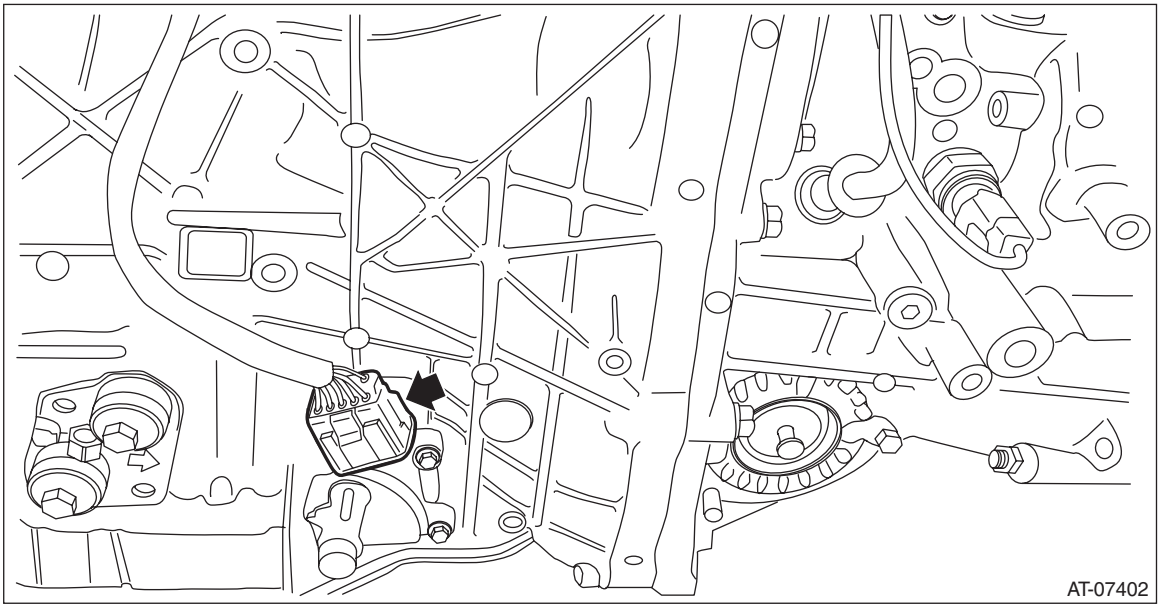

5) Remove the transmission harness stay.

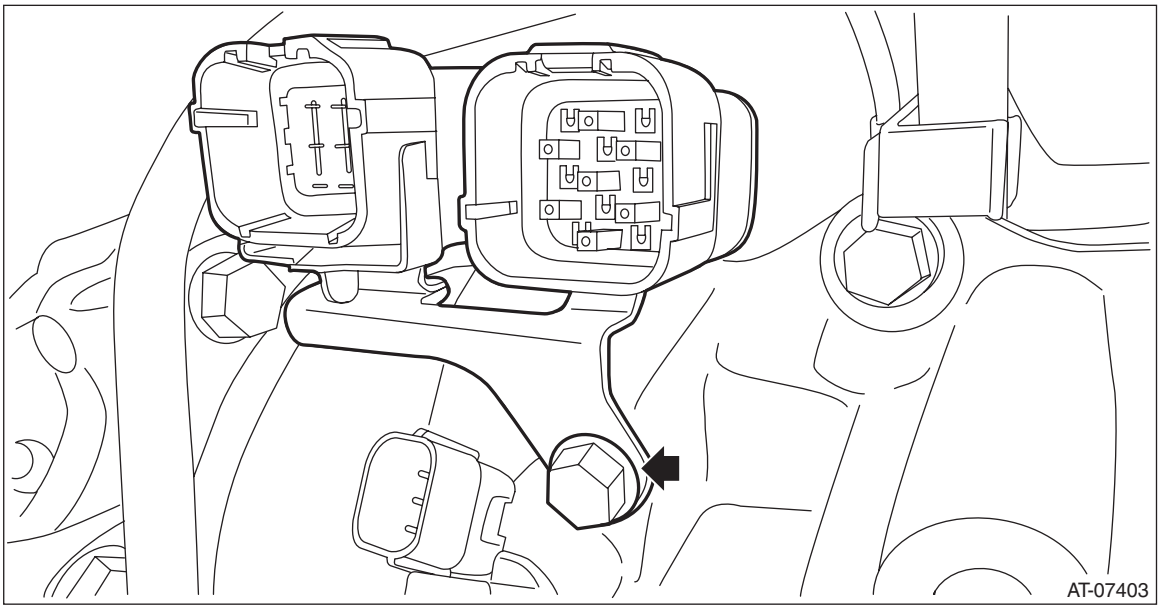

6) Remove transmission harness connector and inhibitor harness connector from harness stay.
7) Remove the control valve body. <Ref. to CVT(TR690)-113, REMOVAL, Control Valve Body.>
8) Remove the mounting bolt to pull out the bushing of transmission harness from transmission case round hole.

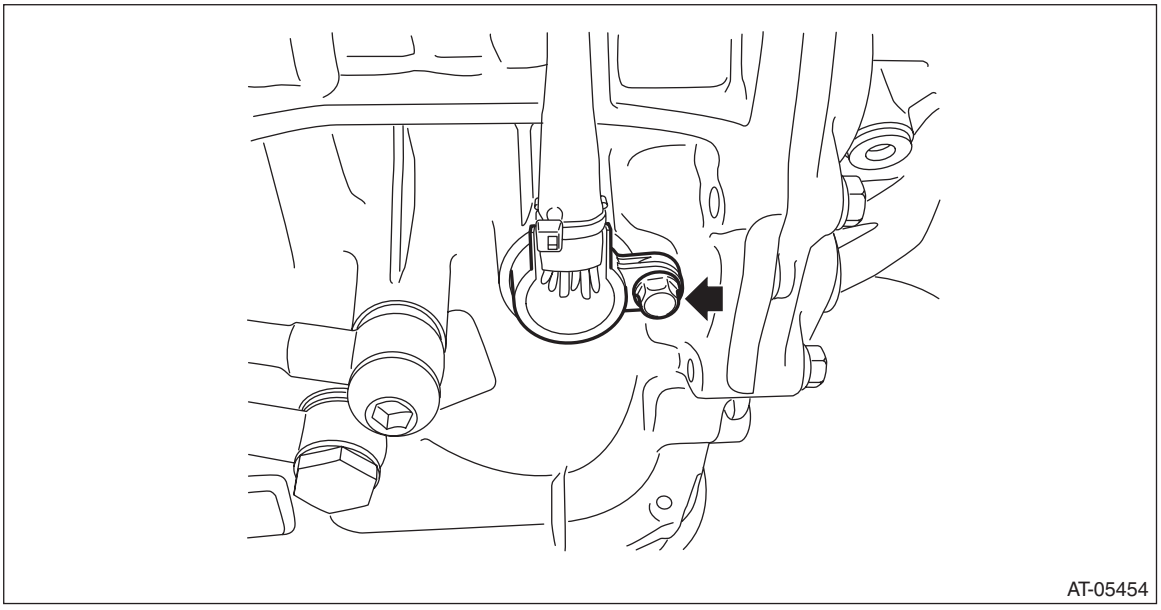

9) Remove the harness clip from transmission assembly.

B: INSTALLATION

Install in the reverse order of removal.

NOTE:
- Use new O-rings.
- Do not impact or bend the transmission harness because it has the oil temperature sensor inside.
- Install the transmission ground terminal at an approximately 45° angle (A).

Tightening torque:
T1: 5 N·m (0.5 kgf-m, 3.7 ft-lb)
T2: 16 N·m (1.6 kgf-m, 11.8 ft-lb)

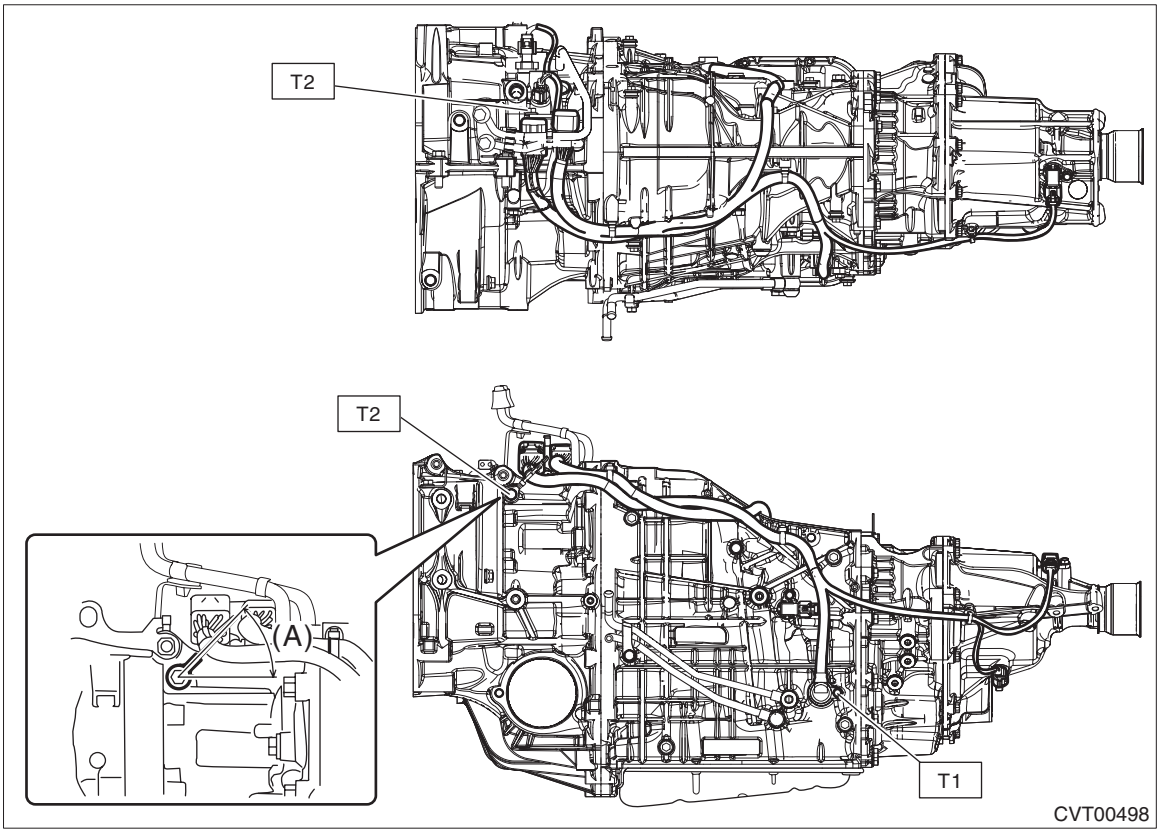

C: INSPECTION

1) Visually check the harness and connector for damage or crack.
2) Check the harness terminal for rust, disconnection or poor contact.
3) Check the continuity between harness terminals and oil temperature sensor.

NOTE:
Refer to WIRING SECTION for transmission harness terminal and oil temperature sensor terminal. <Ref. to WI-144, WIRING DIAGRAM, CVT Control System.>

Harness continuity standard
Less than 1 Ω

Oil temperature sensor standard
Approx. 2.6 kΩ (at 20°C)

22.Transmission Control Module (TCM)

A: REMOVAL

1) Disconnect the ground terminal from battery sensor. <Ref. to NT-6, BATTERY, NOTE, Note.>
2) Move the lock lever in the arrow direction while pressing the lock button, and disconnect the connector.

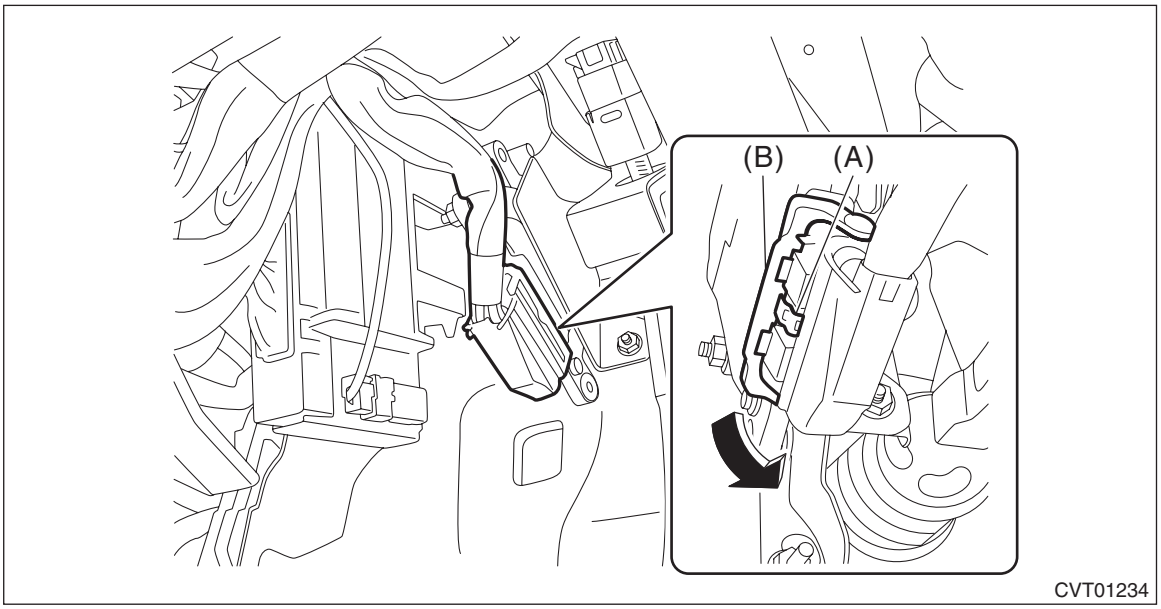

(A) Lock button
(B) Lock lever

3) Remove the TCM.

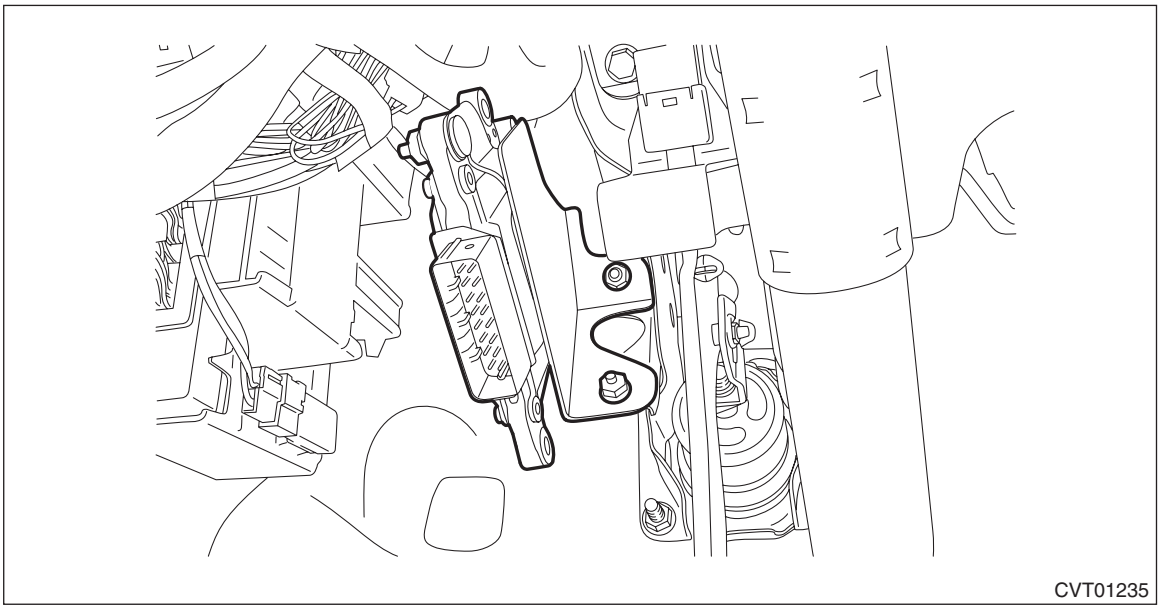

4) Remove the TCM from the bracket.

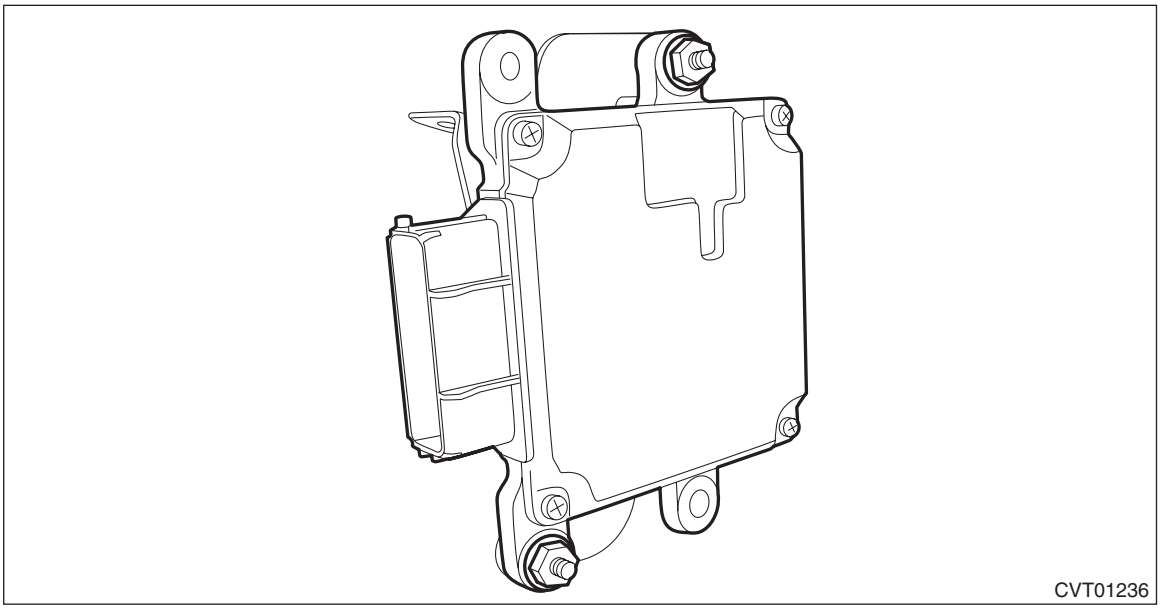

B: INSTALLATION

1) Install the TCM to the bracket.

Tightening torque:
7.5 N·m (0.8 kgf-m, 5.5 ft-lb)

2) Install the TCM.

Tightening torque:
7.5 N·m (0.8 kgf-m, 5.5 ft-lb)

3) Install the harness connector to TCM.

NOTE:
- Install the connector in the reverse order of removal.
- Move the lock lever in the arrow direction, and confirm that a clicking sound is heard.

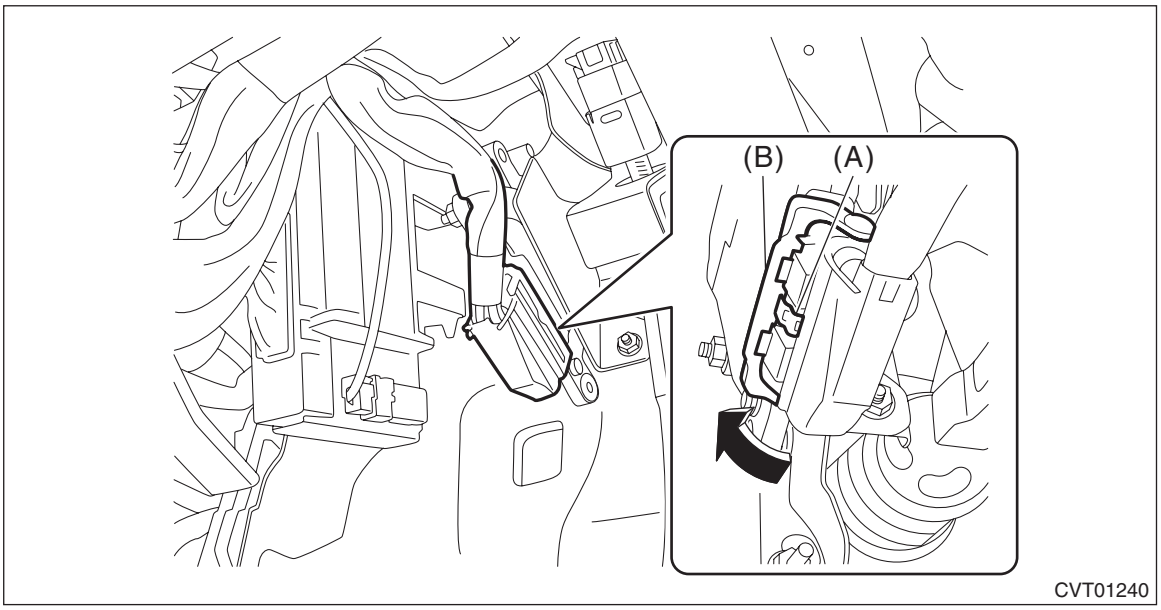

(A) Lock button
(B) Lock lever

4) Connect the ground terminal to battery sensor. <Ref. to NT-6, BATTERY, NOTE, Note.>
5) Perform the operation of AT learning mode. <Ref. to CVT(diag)-26, Learning Control.>

23.CVTF Cooler (With Warmer Function)

A: REMOVAL

CAUTION:
If the CVTF and engine coolant is spilt over exhaust pipe, wipe it off with cloth to avoid emitting smoke or causing a fire.

1) Disconnect the ground terminal from battery sensor. <Ref. to NT-6, BATTERY, NOTE, Note.>
2) Remove the collector cover. <Ref. to IN(w/o STI)-7, REMOVAL, Collector Cover.>
3) Drain engine coolant. <Ref. to CO(w/o STI)-13, REPLACEMENT, Engine Coolant.>
4) Remove the intercooler. <Ref. to IN(w/o STI)-43, REMOVAL, Intercooler.>
5) Remove the harness clip.

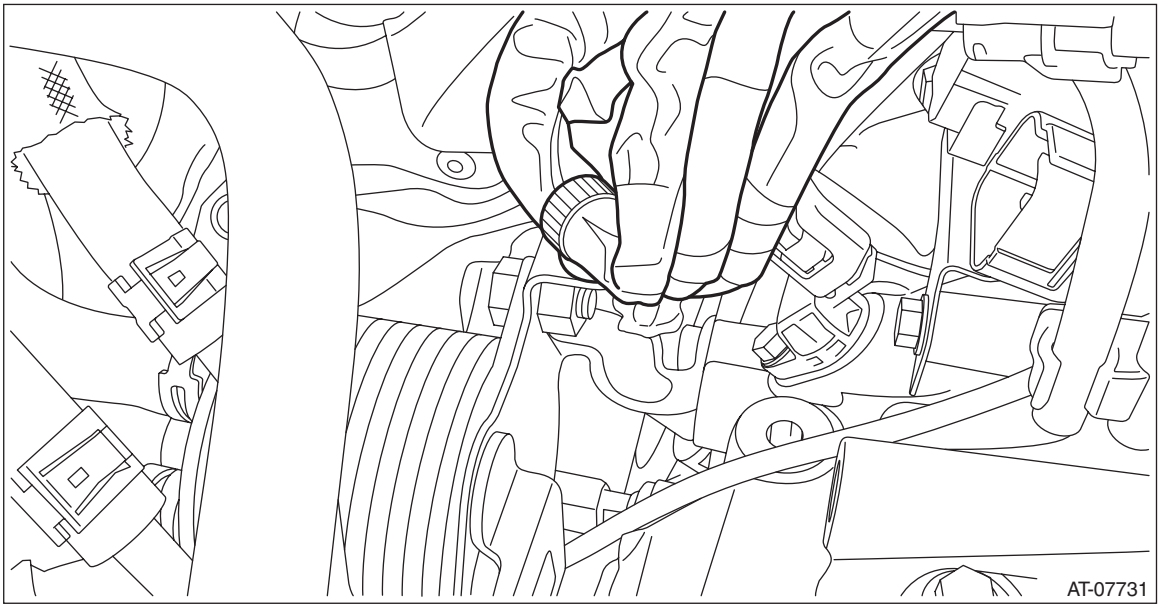

6) Disconnect the engine coolant outlet hose, engine coolant inlet hose, CVTF inlet hose and CVTF outlet hose.

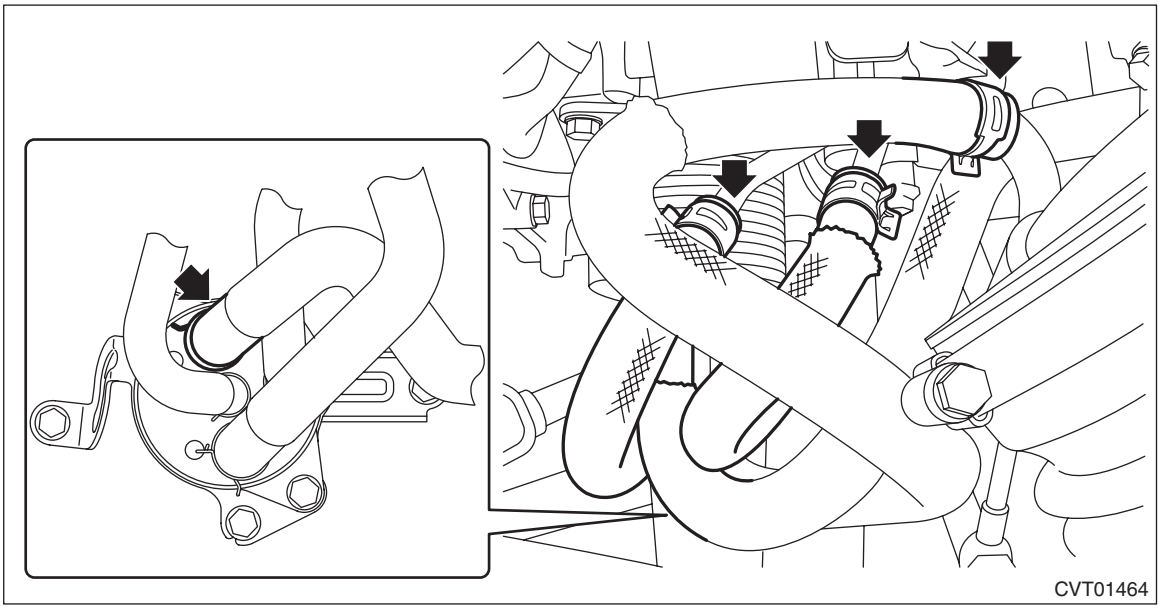

7) Remove the CVTF inlet hose and CVTF outlet hose.

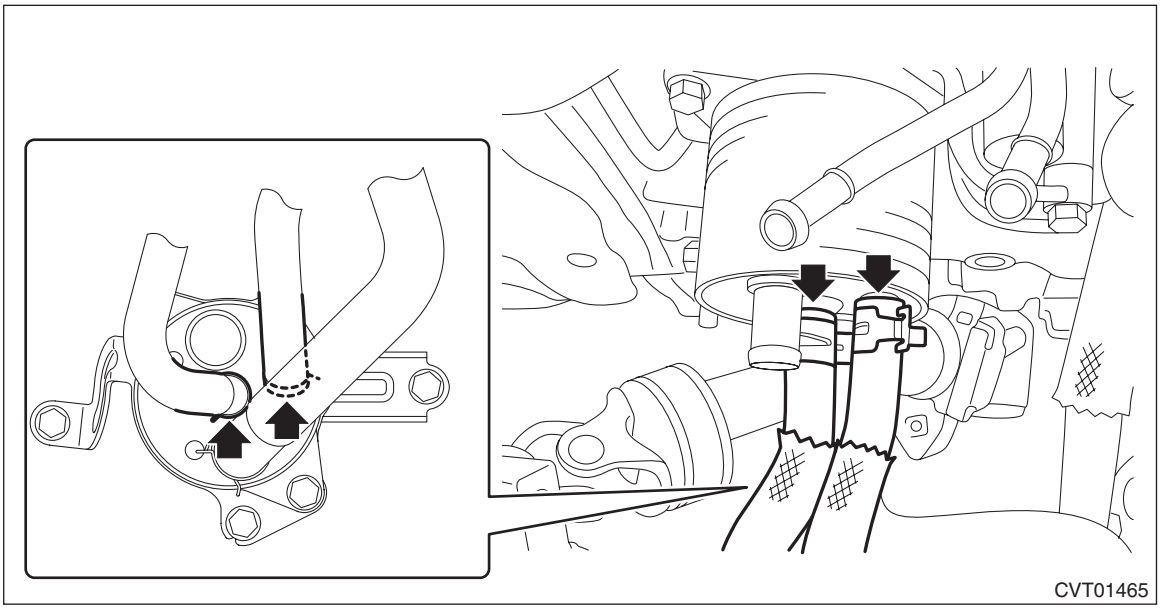

8) Remove the engine coolant outlet hose.

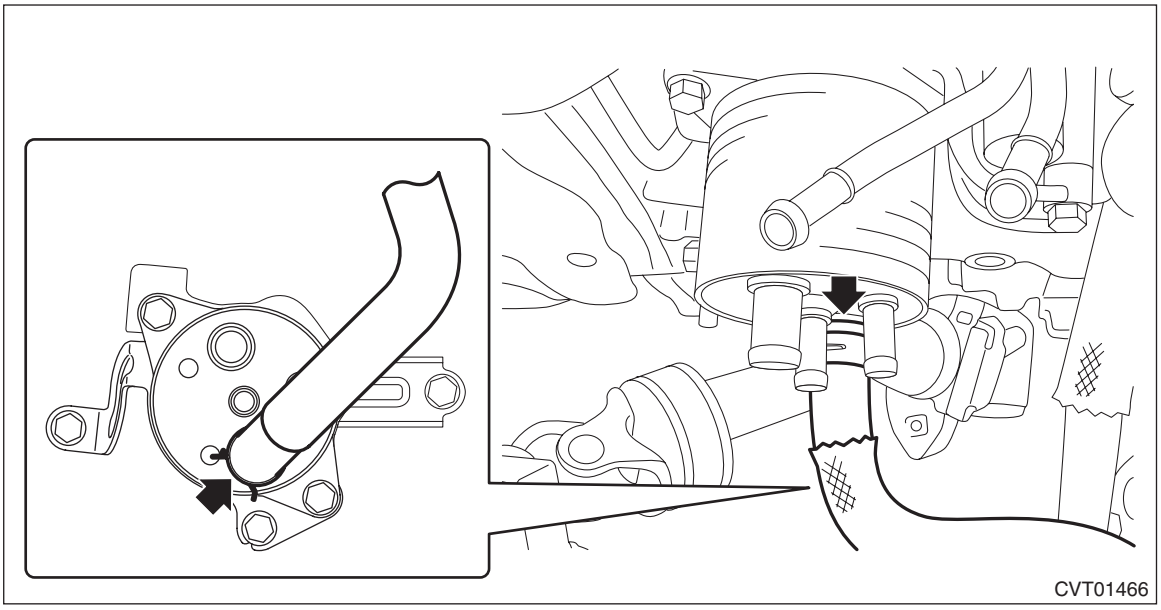

9) Remove the CVTF cooler (with warmer feature).

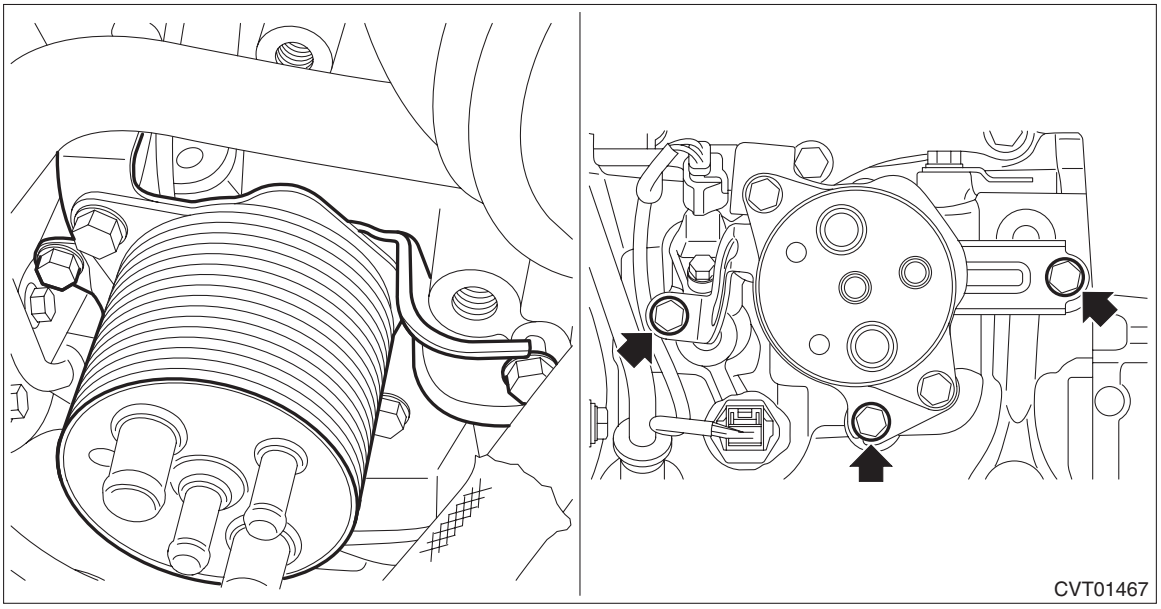

10) Remove the intake manifold, EGR valve, and the insulator. <Ref. to FU(w/o STI)-18, REMOVAL, Intake Manifold.> <Ref. to EC(w/o STI)-34, REMOVAL, EGR Control Valve.>

11) Remove the engine coolant inlet hose.

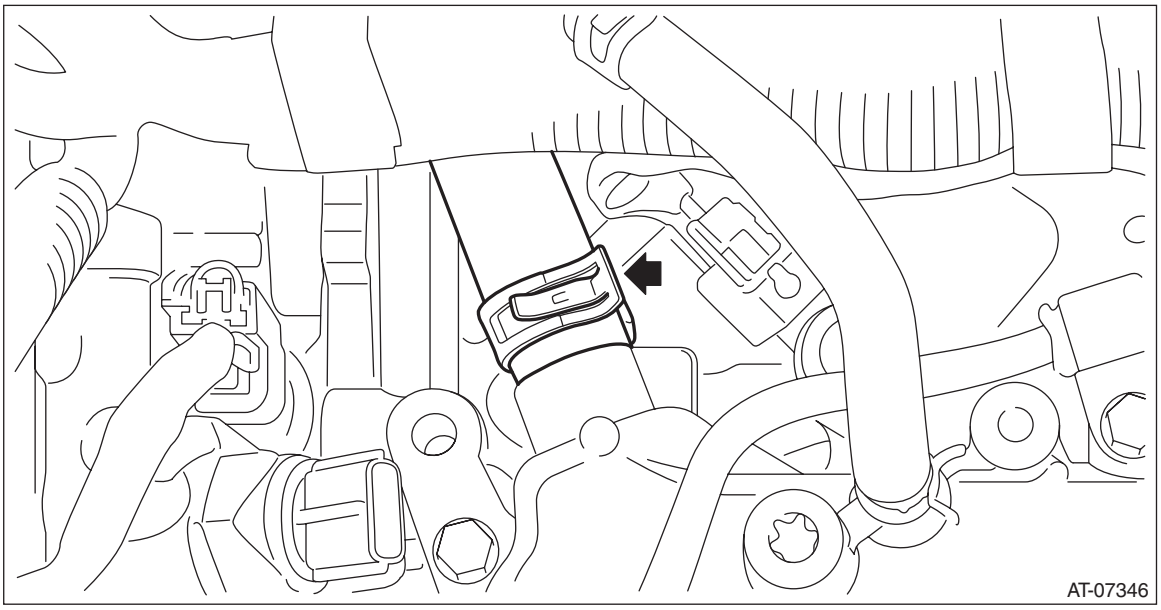

B: INSTALLATION

1) Connect the engine coolant inlet hose.

NOTE:
When installing the engine coolant inlet hose, the triangle marking should face upward.

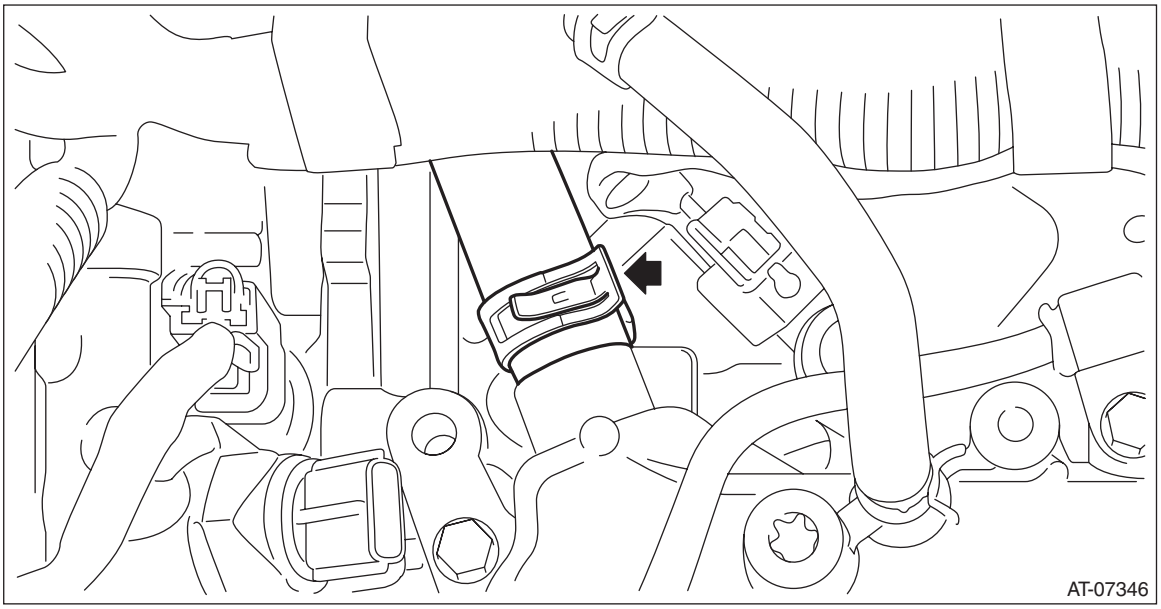

2) Install the insulator, EGR valve, and the intake manifold. <Ref. to FU(w/o STI)-28, INSTALLATION, Intake Manifold.> <Ref. to EC(w/o STI)-35, INSTALLATION, EGR Control Valve.>
3) Replace the CVTF inlet hose and the outlet hose.
4) Install the CVTF cooler (with warmer feature).

Tightening torque:
23 N·m (2.3 kgf-m, 17.0 ft-lb)

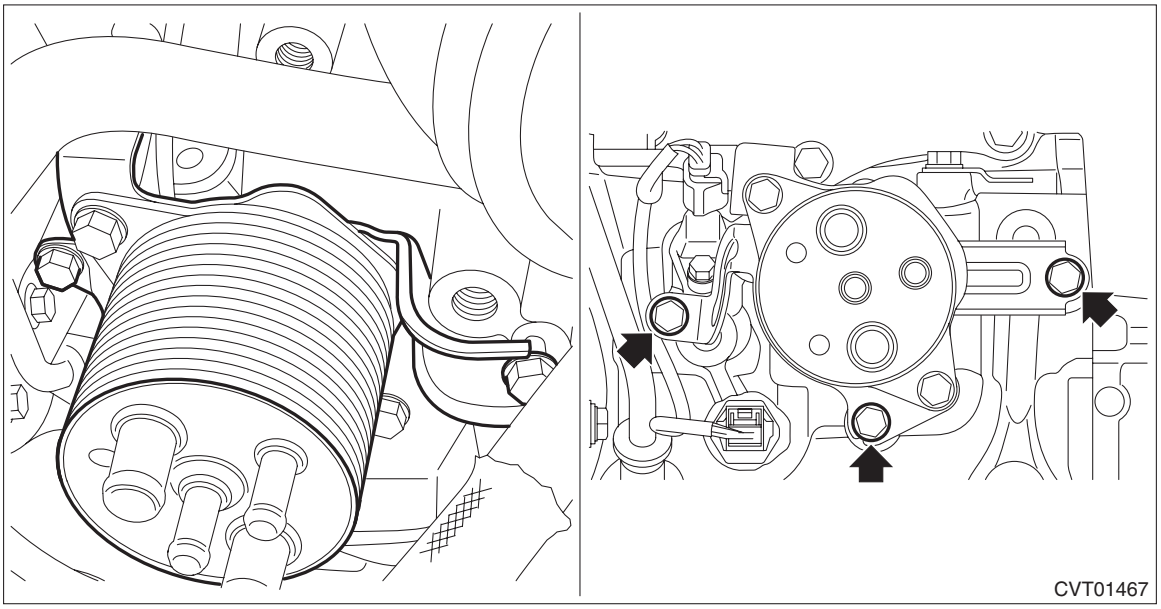

5) Connect the engine coolant outlet hose.

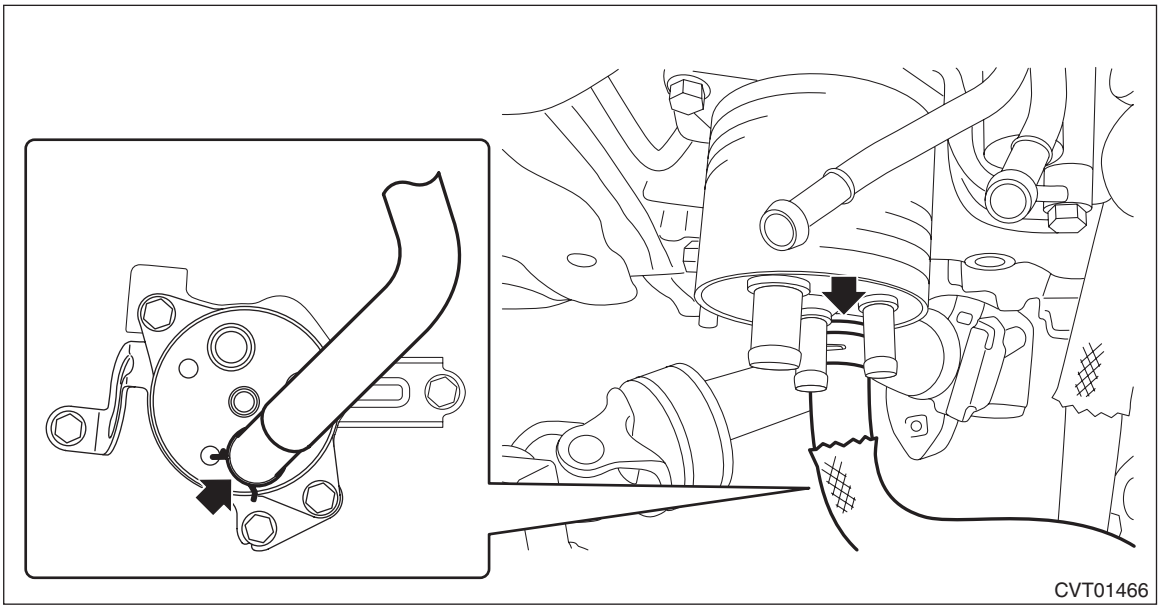

6) Connect the CVTF inlet hose and CVTF outlet hose.

NOTE:
Use new CVTF hoses.

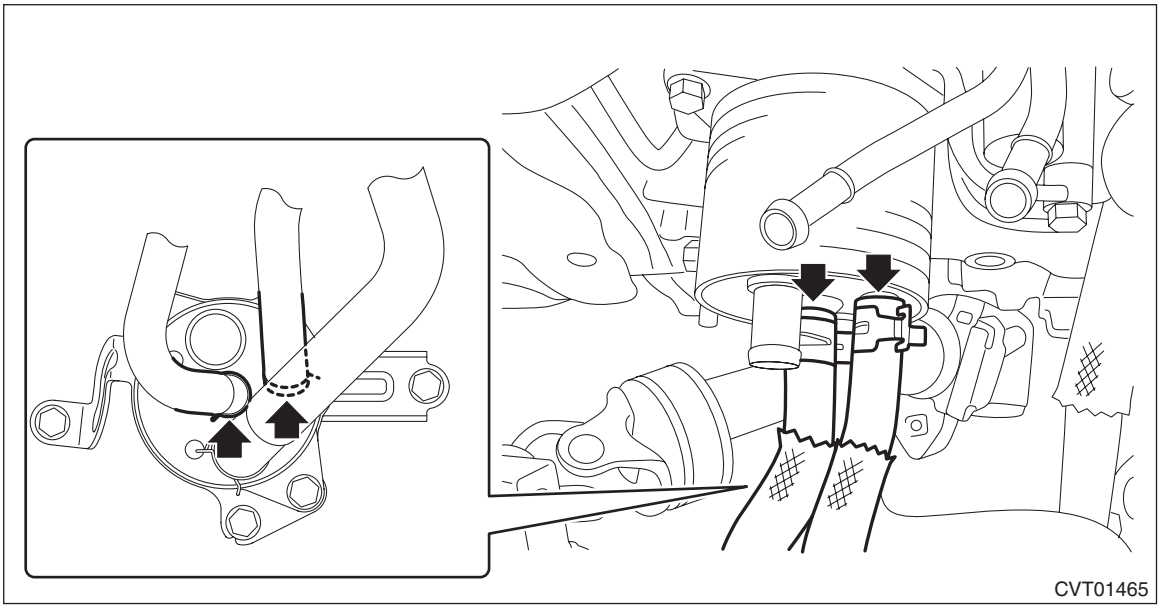

7) Install the engine coolant outlet hose, engine coolant inlet hose, CVTF inlet hose and CVTF outlet hose.

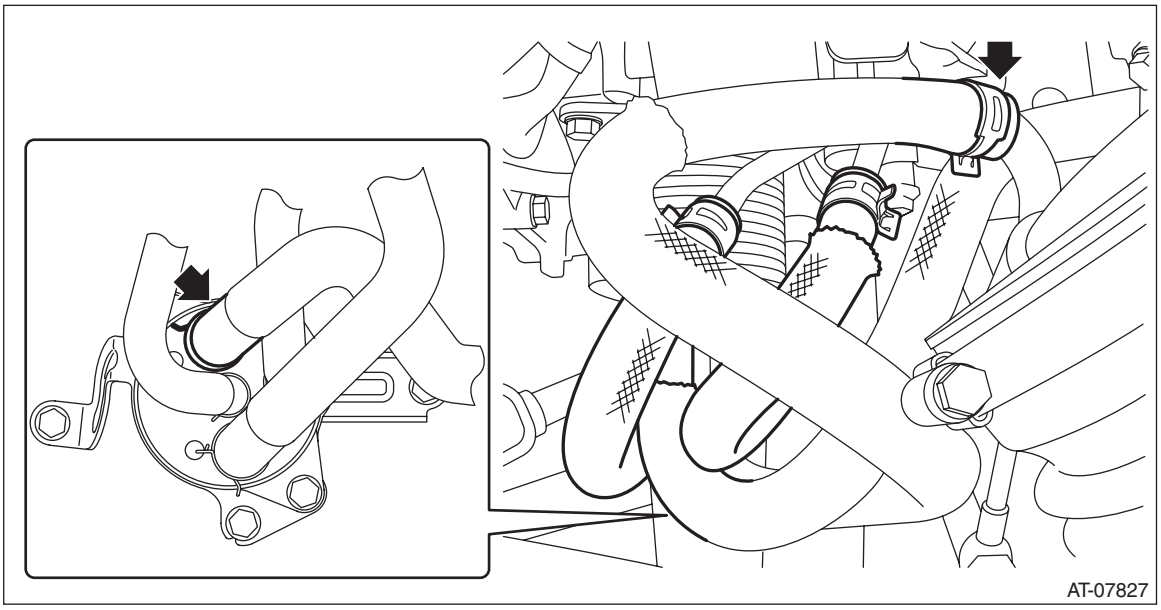

8) Check installation condition of hoses.
- Make sure the hoses do not interfere with each other or with other components.
- Check each hose for bent, excess curve, and twisting conditions.

9) Install the harness clip.

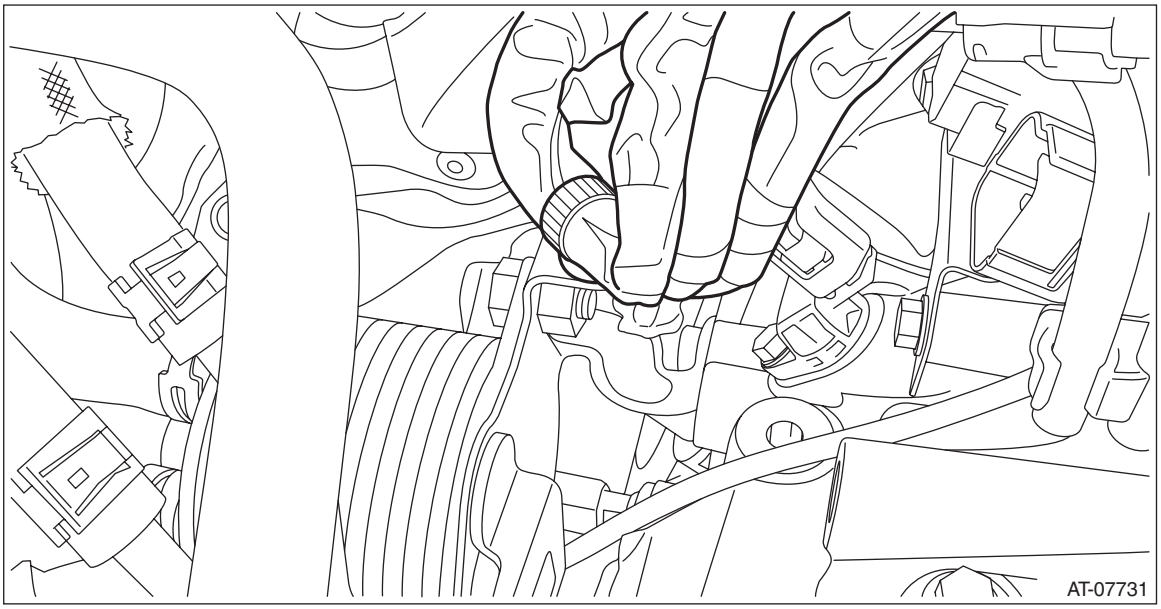

10) Install the intercooler. <Ref. to IN(w/o STI)-45, INSTALLATION, Intercooler.>
11) Install the collector cover. <Ref. to IN(w/o STI)-10, INSTALLATION, Collector Cover.>
12) Connect the ground terminal to battery sensor. <Ref. to NT-6, BATTERY, NOTE, Note.>
13) Fill engine coolant. <Ref. to CO(w/o STI)-13, REPLACEMENT, Engine Coolant.>
14) Adjust the CVTF level. <Ref. to CVT(TR690)-36, ADJUSTMENT, CVTF.>

C: DISASSEMBLY

1) Remove the bracket.

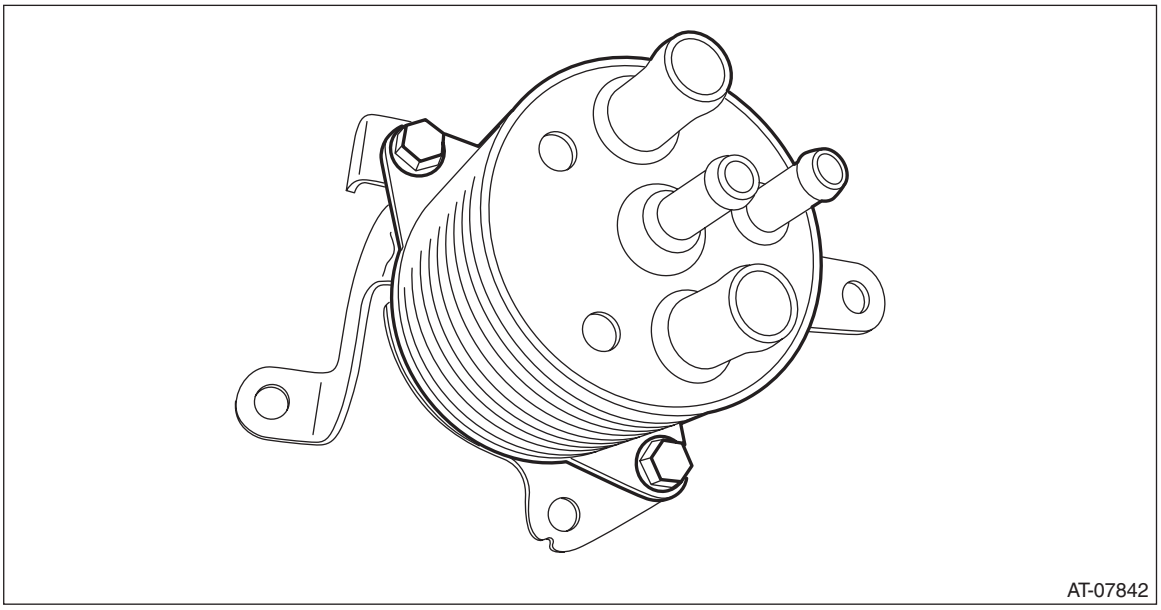

D: ASSEMBLY

1) Attach the bracket.

Tightening torque:
23 N·m (2.3 kgf-m, 17.0 ft-lb)

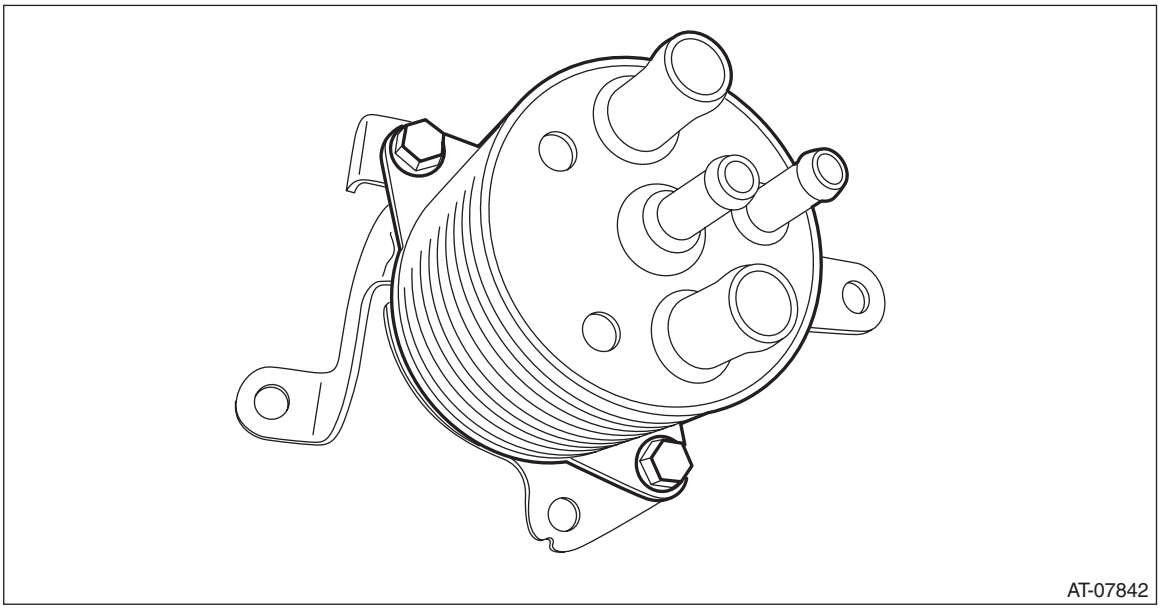

E: INSPECTION

Replace any faulty CVTF cooler hoses, CVTF cooler pipes and clamps found in the inspection below.
1) Check that there are no CVTF or engine coolant leaks from the connections.
2) Check the clamp for deformation.
3) Lightly bend the CVTF cooler hose and check for cracks in the surface or other damages.
4) Pinch the CVTF cooler hose with your fingers and check for poor elasticity. Also check for poor elasticity in the parts where the clamp was installed by pressing with your fingernail.
5) Check for peeling, cracks, and deformation at the tip of the hose.
6) Check the CVTF cooler (with warmer feature) for any damage.

24.Air Breather Hose

A: REMOVAL

1) Disconnect the ground terminal from battery sensor. <Ref. to NT-6, BATTERY, NOTE, Note.>
2) Remove the collector cover. <Ref. to IN(w/o STI)-7, REMOVAL, Collector Cover.>
3) Remove the intercooler. <Ref. to IN(w/o STI)-43, REMOVAL, Intercooler.>
4) Remove the two air breather hoses.

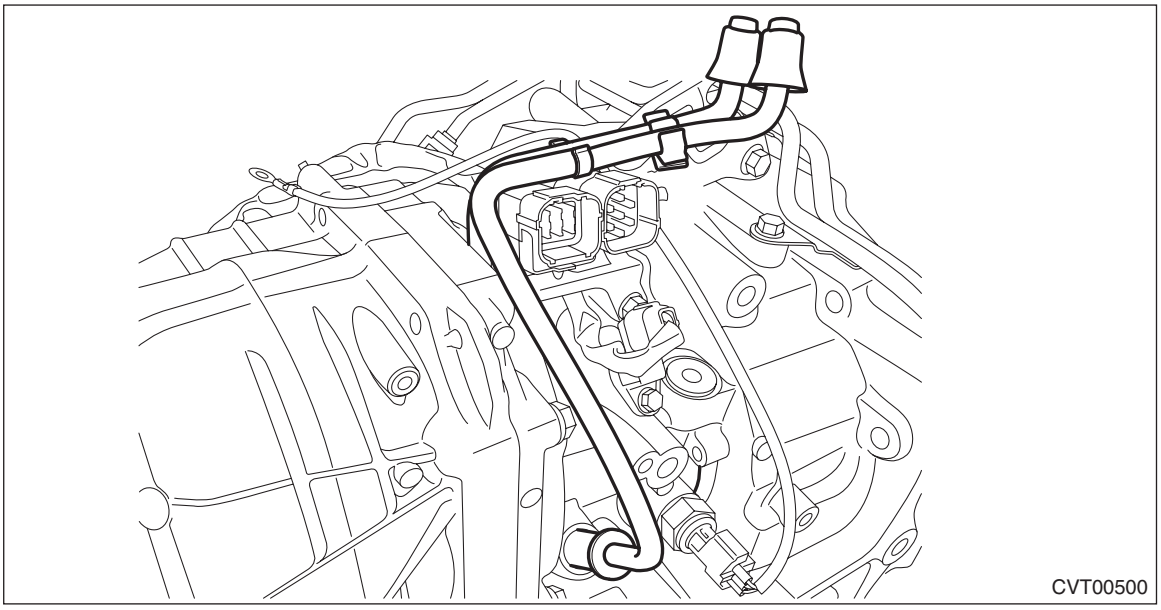
CVT00500

5) Remove the air breather cap.
6) Remove the oil cap.

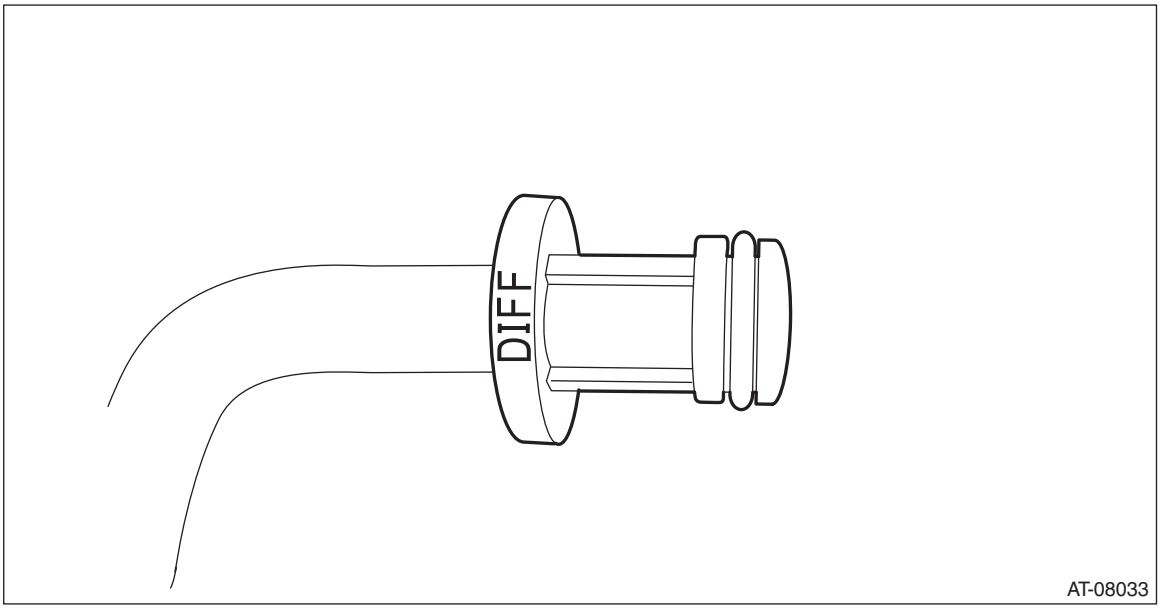

AT-08033

B: INSTALLATION

Install in the reverse order of removal.

NOTE:
Use new O-rings.

C: INSPECTION

- Check the hose for peeling, crack or clogging.
- Check the oil cap is not cracked or clogged.
- Check O-ring of oil cap is not damaged.

25.Drive Plate

A: REMOVAL

1) Remove the transmission assembly from the vehicle. <Ref. to CVT(TR690)-57, REMOVAL, Automatic Transmission Assembly.>
2) Set the ST.

NOTE:
Set the ST to the drive plate referring to the illustration.
ST 498497300 CRANKSHAFT STOPPER

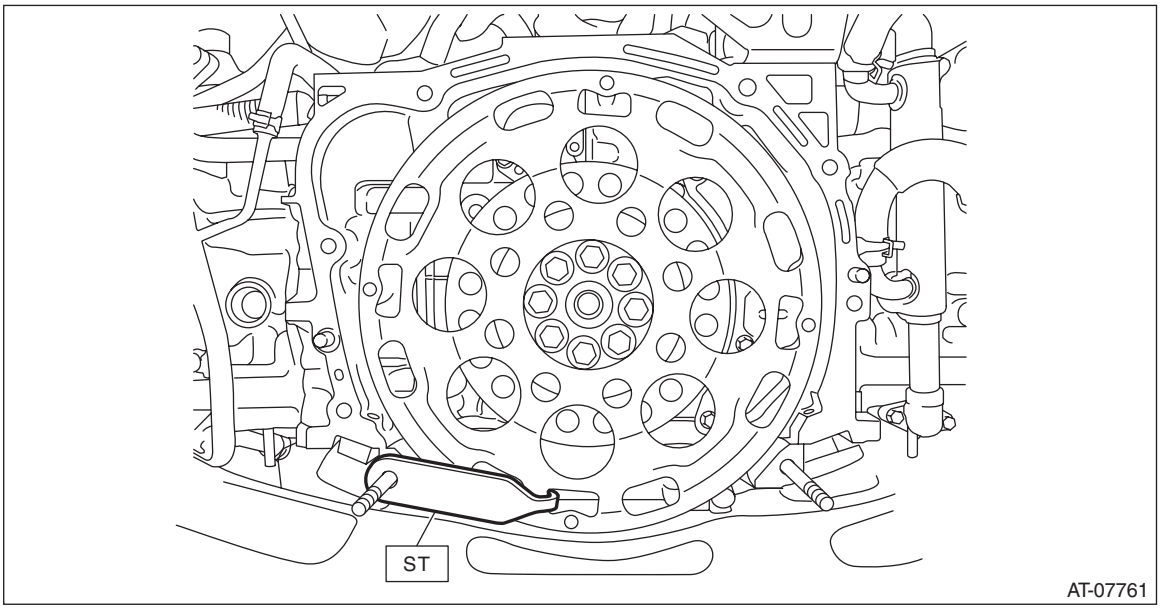

3) Remove the drive plate and reinforcement drive plate.

B: INSTALLATION

1) Temporarily install the drive plate and reinforcement drive plate.
2) Set the ST.

NOTE:
Set the ST to the drive plate referring to the illustration.
ST 498497300 CRANKSHAFT STOPPER

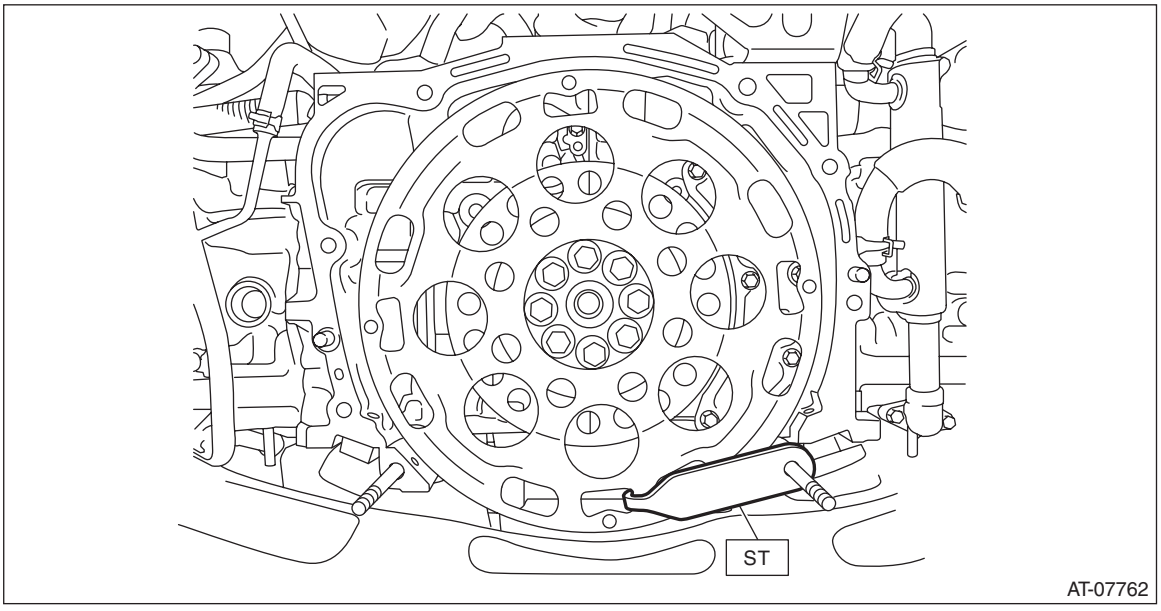

3) Tighten the drive plate mounting bolt in two stages.

NOTE:
Fix the engine unit.

(1) Tighten the drive plate mounting bolt.

Tightening torque:
30 N·m (3.1 kgf-m, 22.1 ft-lb)

(2) While checking the tightening angle with the angle gauge, tighten the drive plate mounting bolts to the specified angle.

Tightening angle:
30° — 35°

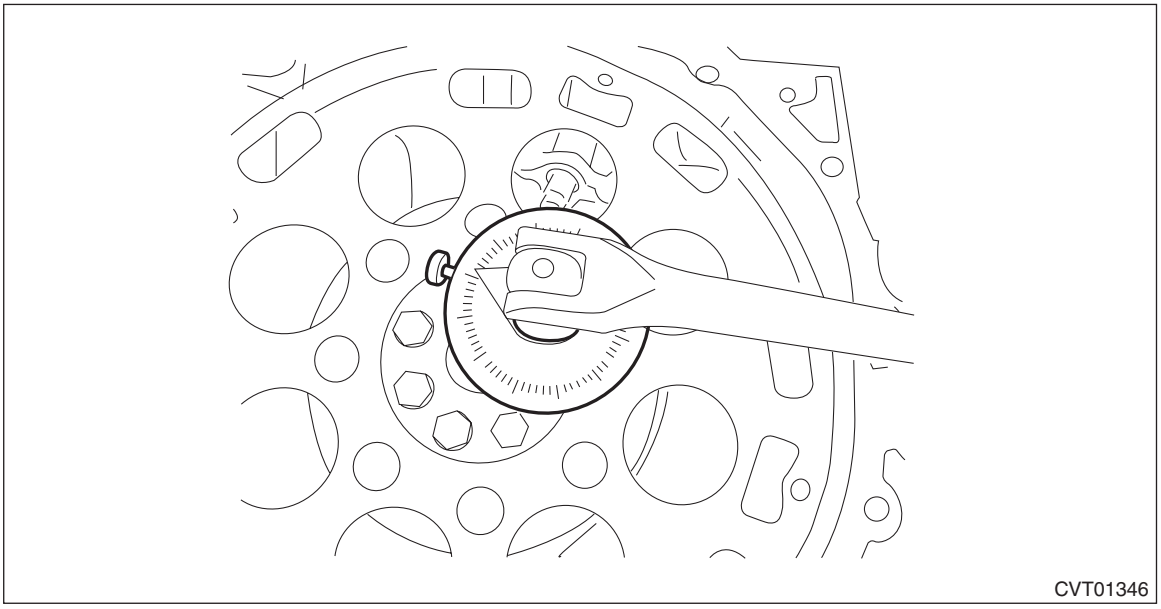

4) Install the transmission assembly to the vehicle. <Ref. to CVT(TR690)-70, INSTALLATION, Automatic Transmission Assembly.>

C: INSPECTION

Check the drive cable for damage.

26.Preparation for Overhaul

A: GENERAL DESCRIPTION

Before disassembling and assembling the transmission, follow the following procedures to prepare.

B: PROCEDURE

1) Clean the transmission exterior.
2) Remove the torque converter assembly. <Ref. to CVT(TR690)-141, REMOVAL, Torque Converter Assembly.>
3) Attach the ST on the transmission.
ST 18632AA000 STAND ASSY

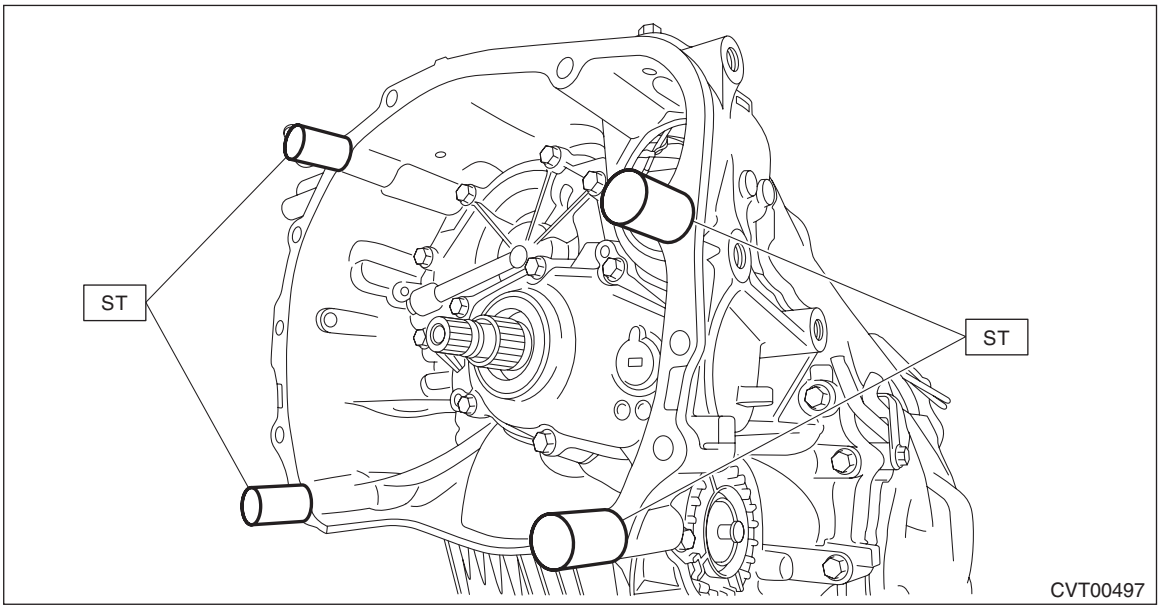

4) Remove the transmission cover on the transmission upper side.

NOTE:
Install using the following tightening torque.

Tightening torque:
8 N·m (0.8 kgf-m, 5.9 ft-lb)

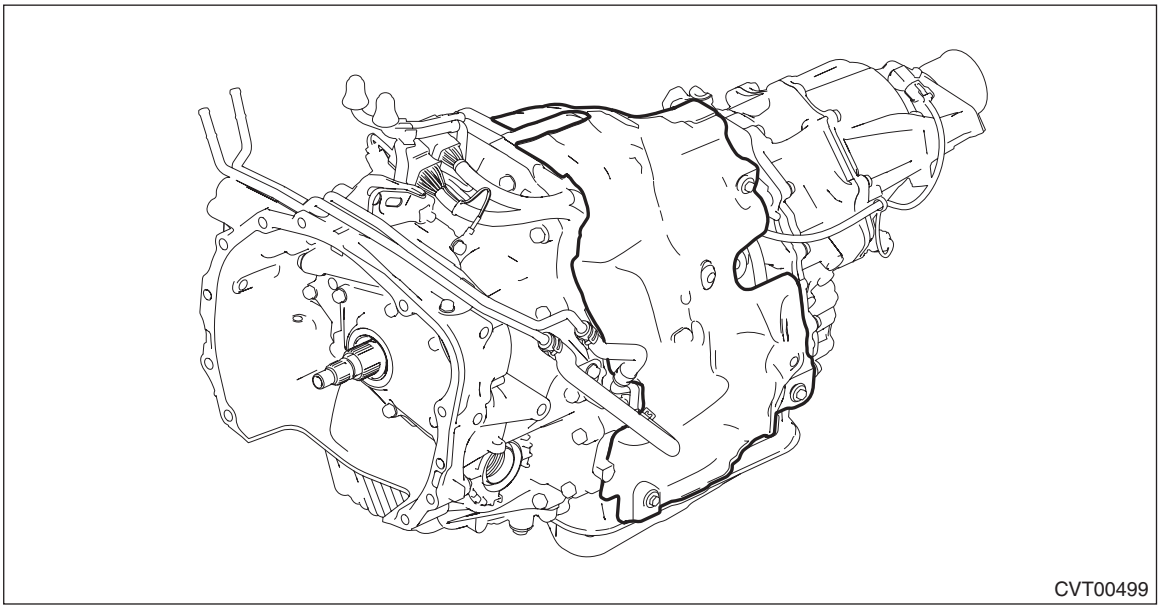

5) Place the transmission assembly on end.

27.Torque Converter Assembly

A: REMOVAL

1) Remove the transmission assembly from the vehicle. <Ref. to CVT(TR690)-57, REMOVAL, Automatic Transmission Assembly.>
2) Pull out the torque converter assembly horizontally.

CAUTION:
Do not scratch the inside of engaging parts.

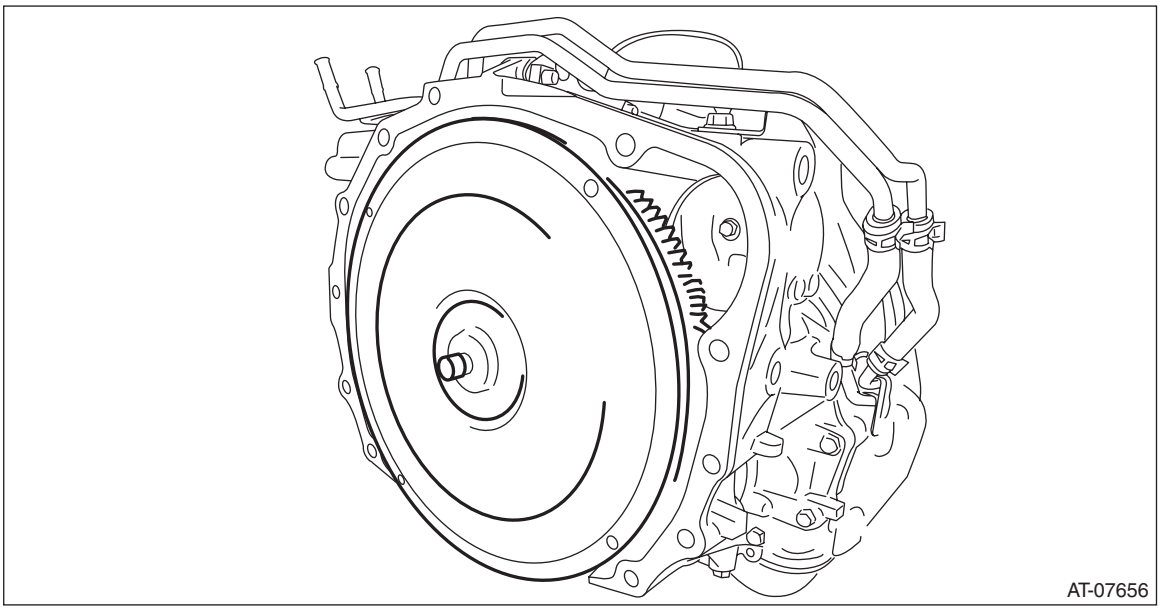

3) Remove the O-ring from the front reduction drive gear.

B: INSTALLATION

1) Install the O-ring to front reduction drive gear.

NOTE:
- Use new O-rings.
- Apply CVTF to the O-ring.

2) While holding the torque converter assembly by hand, carefully install it into the torque converter case.

NOTE:
- Apply CVTF to the oil seal lip.
- Do not damage the oil seal and O-ring.

3) Engage the splines while gently rotating the torque converter assembly by hand, and securely insert the assembly.

4) Measure depth “A”, from converter case end surface to drive plate contacting surface.

Standard (reference):
6.8 mm (0.268 in) or less

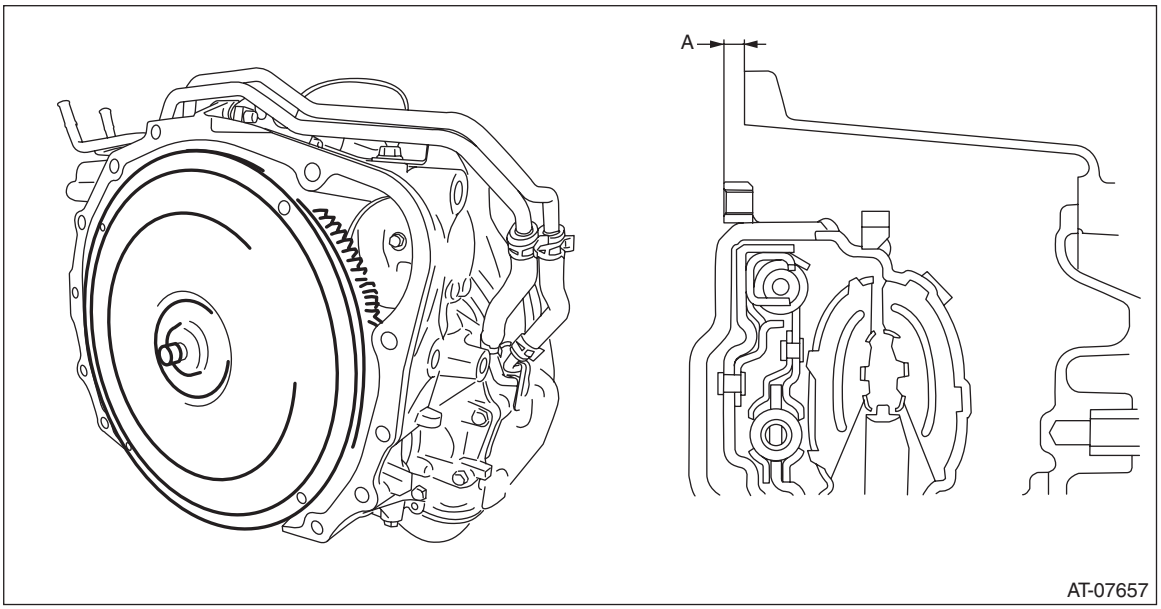

5) Install the transmission assembly to the vehicle. <Ref. to CVT(TR690)-70, INSTALLATION, Automatic Transmission Assembly.>

C: INSPECTION

- Check the protrusion of torque converter center (front boss) is not deformed or damaged.
- Check the ring gear and exterior for break or damage.

28.Extension Case

A: REMOVAL

1) Remove the transmission assembly from the vehicle. <Ref. to CVT(TR690)-57, REMOVAL, Automatic Transmission Assembly.>
2) Remove the front wheel speed sensor. <Ref. to CVT(TR690)-106, REMOVAL, Front Wheel Speed Sensor.>
3) Remove the rear wheel speed sensor. <Ref. to CVT(TR690)-108, REMOVAL, Rear Wheel Speed Sensor.>
4) Remove the harness clip, and remove the extension case.

NOTE:
The total number of extension case mounting bolts is 10.

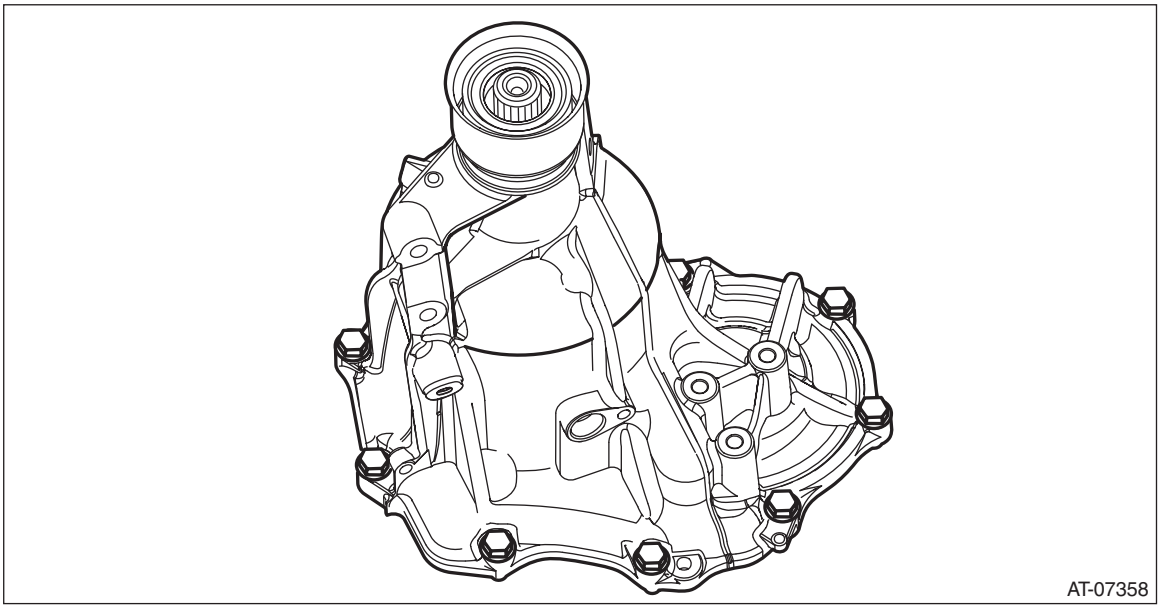

B: INSTALLATION

1) Clean the mating surface of the extension case and intermediate case.
2) Select the rear drive shaft shim. <Ref. to CVT(TR690)-150, ADJUSTMENT, Rear Drive Shaft.>
3) Select the shim for transfer reduction driven gear. <Ref. to CVT(TR690)-162, ADJUSTMENT, Transfer Reduction Driven Gear.>
4) Install the selected rear drive shaft shims to the rear drive shaft.
5) Attach the selected shim to transfer reduction driven gear assembly.
6) Install the gasket and the extension case.

NOTE:
Use a new gasket.

Tightening torque:
25 N·m (2.5 kgf-m, 18.4 ft-lb)

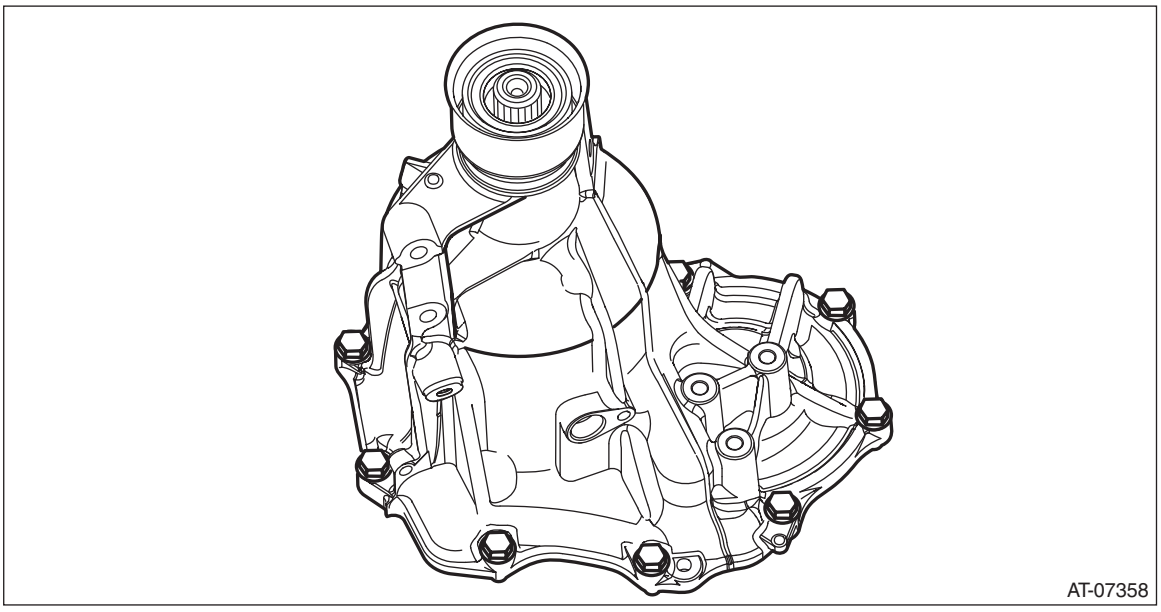

7) Install the rear wheel speed sensor. <Ref. to CVT(TR690)-108, INSTALLATION, Rear Wheel Speed Sensor.>
8) Install the front wheel speed sensor. <Ref. to CVT(TR690)-106, INSTALLATION, Front Wheel Speed Sensor.>
9) Install the transmission assembly. <Ref. to CVT(TR690)-70, INSTALLATION, Automatic Transmission Assembly.>

C: DISASSEMBLY

1) Remove the dust cover from extension case.
2) Remove the snap ring using the ST and press.

CAUTION:
If the operation is performed with the dust cover installed, place a table between the extension case and the press table.
ST 18762AA001 COMPRESSOR SPECIAL TOOL

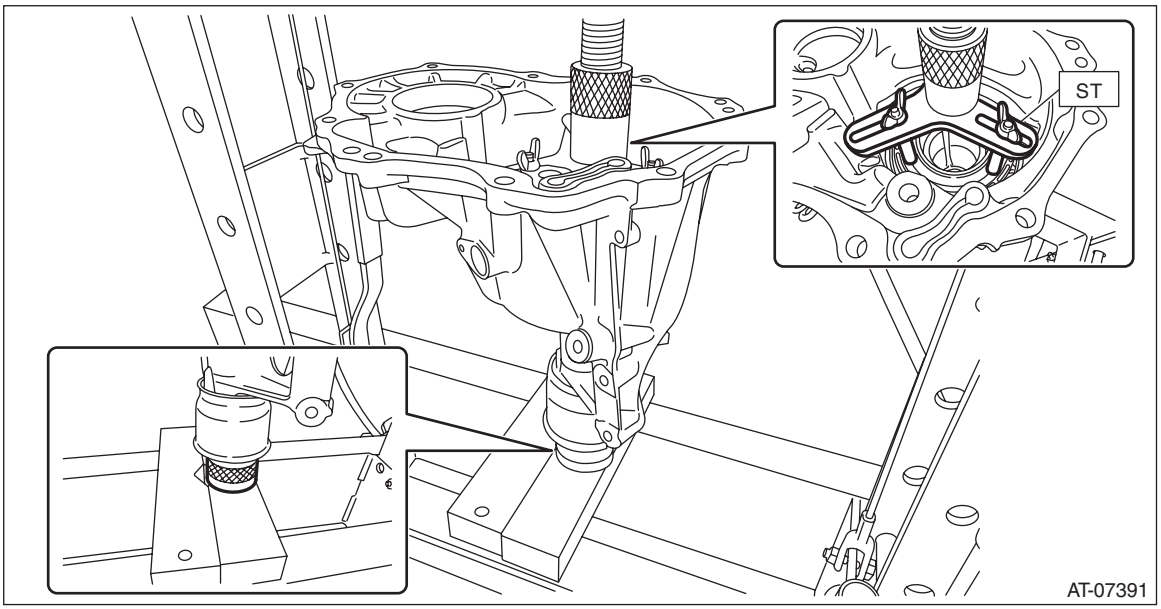

3) Supply compressed air to remove the transfer clutch piston.

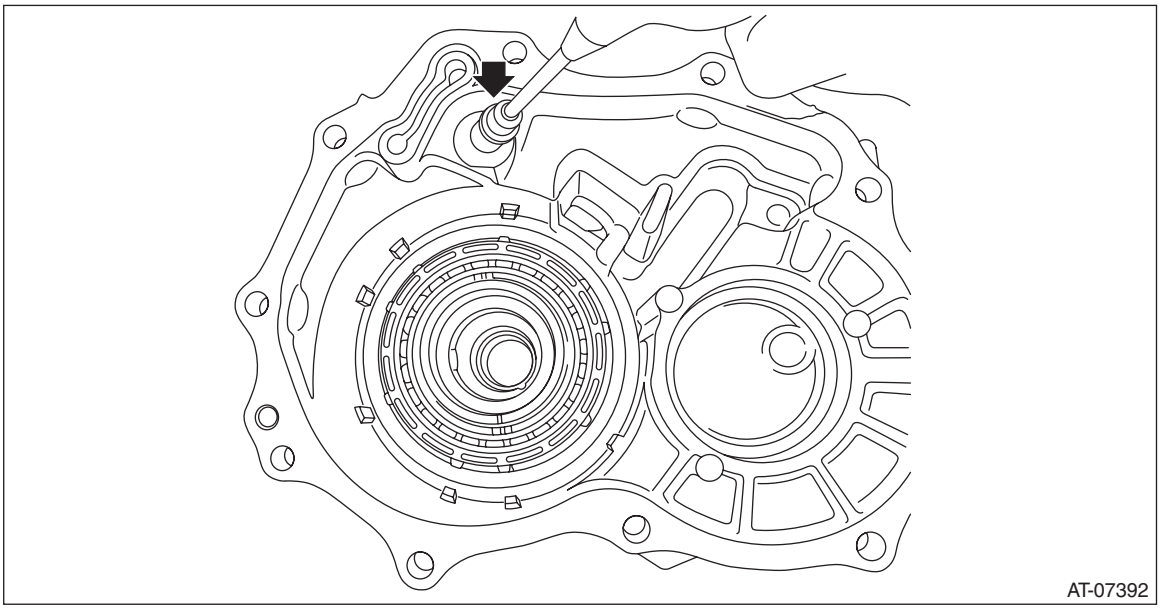

4) Remove the D-ring and O-ring from the transfer clutch piston.
5) Remove the extension case oil seal from the extension case.
6) Remove the plug from the extension case.

D: ASSEMBLY

1) Install the O-ring and plug.

NOTE:
Use new O-rings.

Tightening torque:
25 N·m (2.5 kgf-m, 18.4 ft-lb)

2) Install the D-ring and O-ring to the transfer clutch piston.

NOTE:
- Use new D-rings and O-rings.
- Apply CVTF to the D-rings and O-rings of the transfer clutch piston assembly.

3) Insert the transfer clutch piston, spring retainer, return spring and clutch spring retainer.
4) Using the ST and a press, install the snap ring.

CAUTION:
If the operation is performed with the dust cover installed, place a table between the extension case and the press table.
ST 18762AA001 COMPRESSOR SPECIAL TOOL

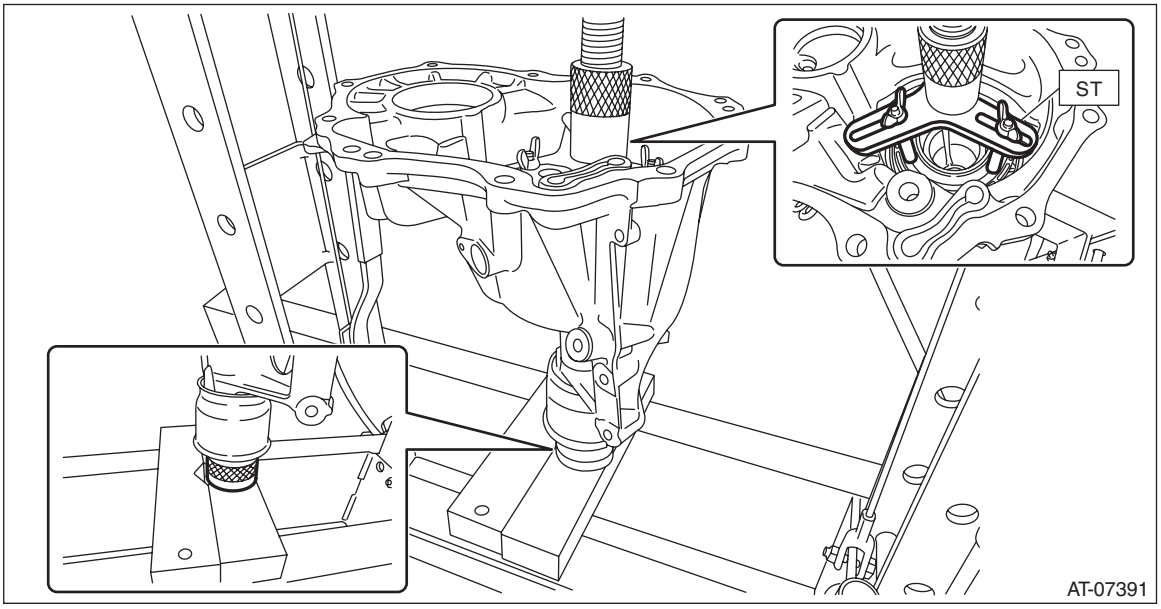

5) Press-fit the dust cover into extension case.
6) Install the extension case oil seal to extension case.
ST 498057300 INSTALLER

E: INSPECTION

- Use compressed air to make sure the extension case routes are not clogged or leaking.
- Check the D-rings and O-rings for damage.
- Make sure the snap ring is not worn and the return spring has no permanent distortion, damage, or deformation.
- Check the ball bearing for smooth rotation.
- Check the ball bearing for excessive looseness.
- Check there is no leak of CVTF from the joint between extension case and intermediate case.
- Check there is no damage or cracks on the extension case.

F: ADJUSTMENT

NOTE:
When replacing the extension case, select the rear drive shaft shim and transfer reduction driven gear shim. <Ref. to CVT(TR690)-150, ADJUSTMENT, Rear Drive Shaft.> <Ref. to CVT(TR690)-162, ADJUSTMENT, Transfer Reduction Driven Gear.>

29.Rear Drive Shaft

A: REMOVAL

1) Remove the transmission assembly from the vehicle. <Ref. to CVT(TR690)-57, REMOVAL, Automatic Transmission Assembly.>
2) Remove the extension case. <Ref. to CVT(TR690)-143, REMOVAL, Extension Case.>
3) Remove the rear drive shaft.

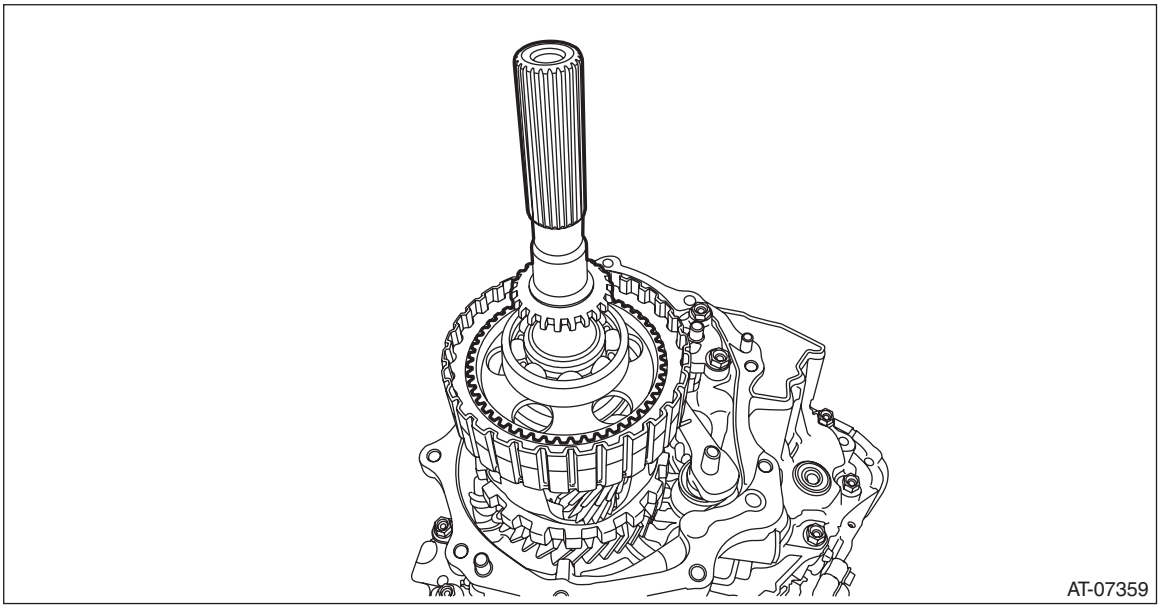

B: INSTALLATION

1) Install the rear drive shaft.

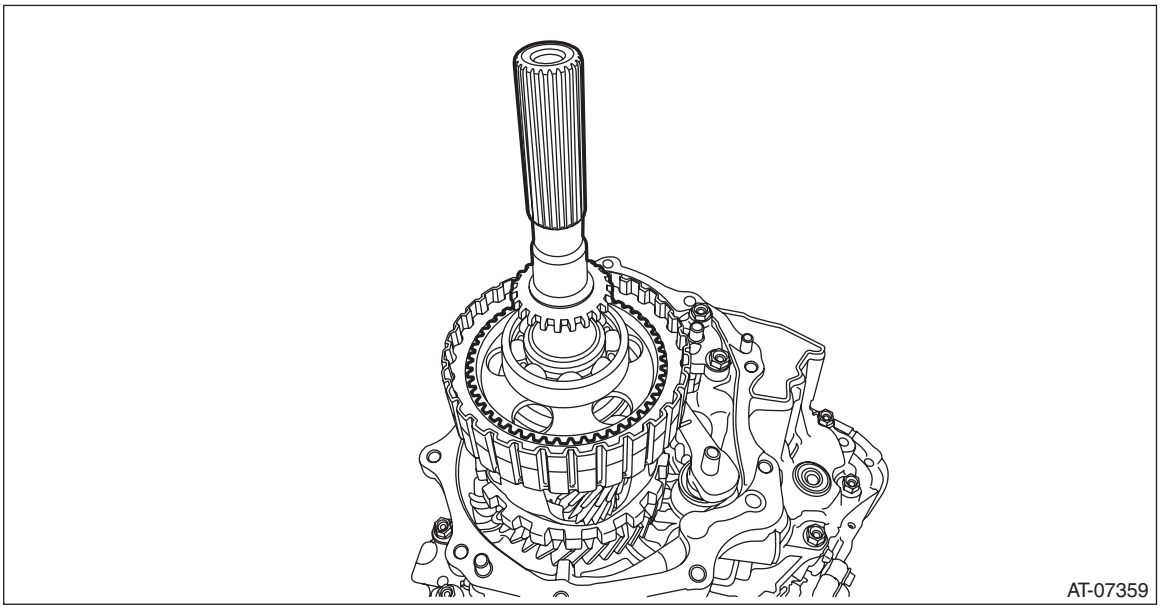

2) Select the rear drive shaft shim. <Ref. to CVT(TR690)-150, ADJUSTMENT, Rear Drive Shaft.>
3) Install the selected rear drive shaft shims to the rear drive shaft.
4) Install the extension case. <Ref. to CVT(TR690)-144, INSTALLATION, Extension Case.>
5) Install the transmission assembly to the vehicle. <Ref. to CVT(TR690)-70, INSTALLATION, Automatic Transmission Assembly.>

C: DISASSEMBLY

1) Using a press, remove the revolution gear.

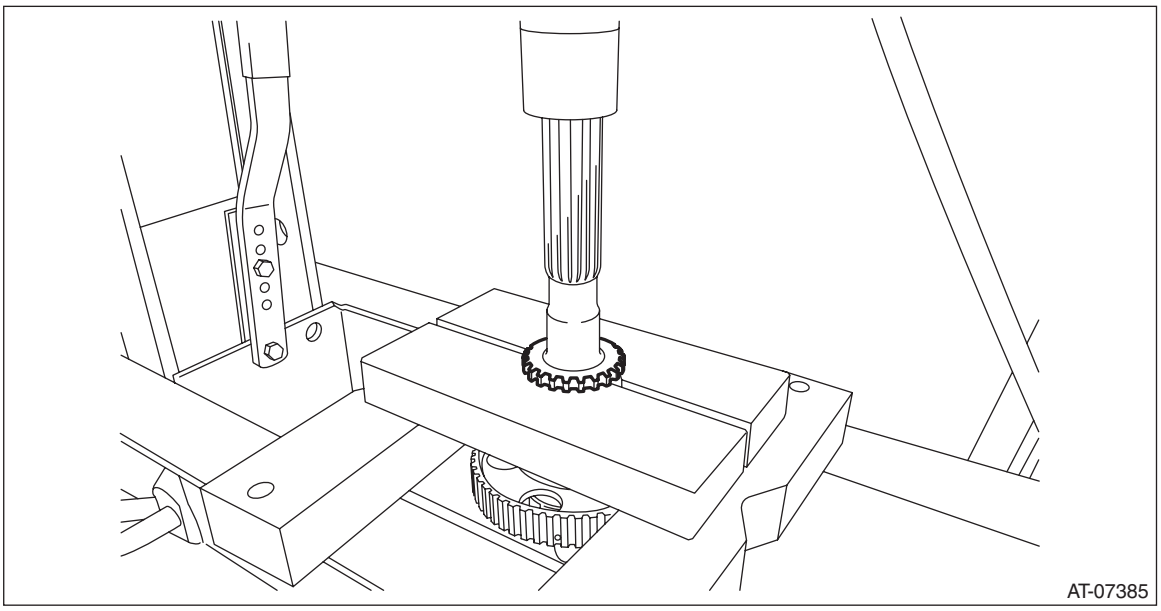

2) Using a press, remove the front and rear ball bearings and clutch hub.

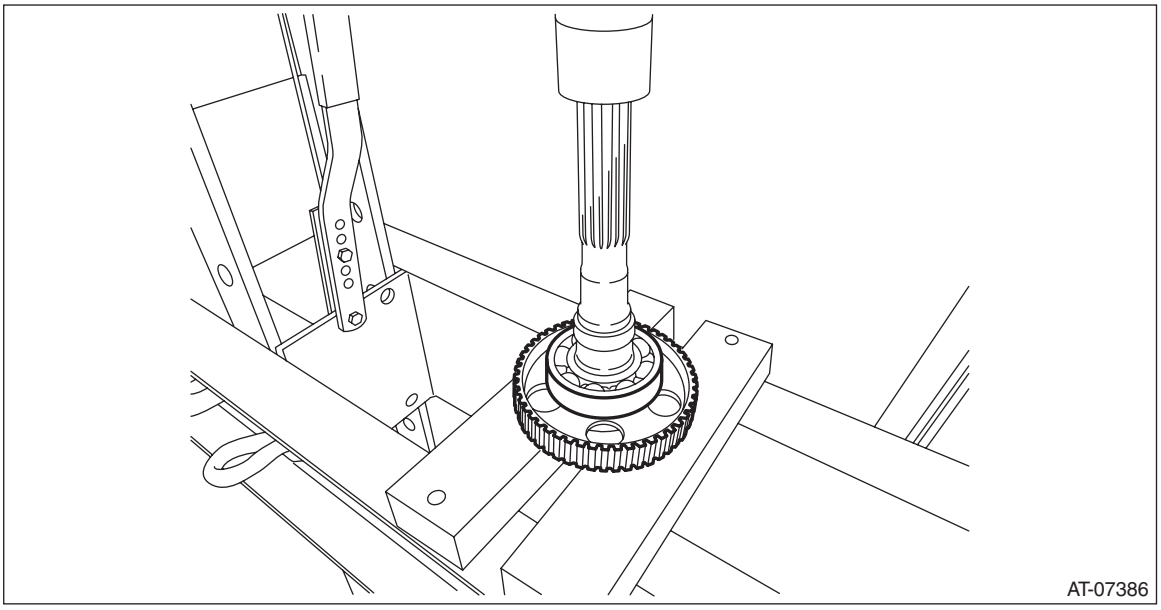

D: ASSEMBLY

Assemble in the reverse order of disassembly.

NOTE:
- Use new ball bearings and revolution gear.
- Apply CVTF to press-fitting surface of ball bearing.
- Make sure of the direction of clutch hub.

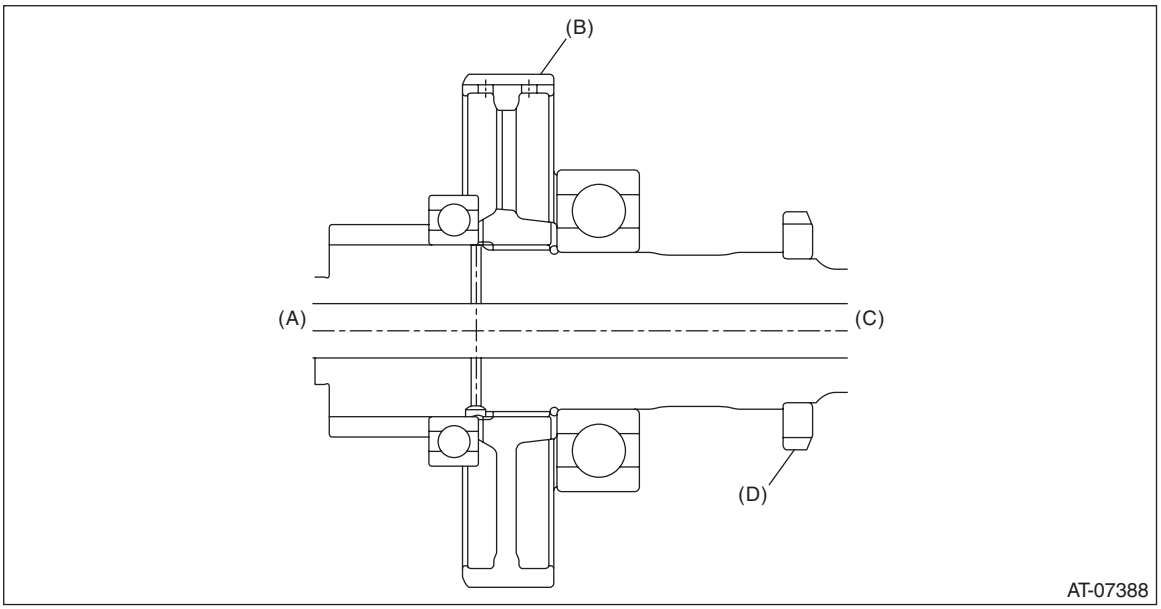

(A) Front side
(B) Clutch hub
(C) Rear side
(D) Revolution gear

E: INSPECTION

- Check each part for crack, damage or dust.
- Check the ball bearing for smooth rotation.
- Check the ball bearing for excessive looseness.
- Inspect axial play of the rear drive shaft.

F: ADJUSTMENT

NOTE:
When replacing the rear drive shaft or bearing, select the rear drive shaft shim.
1) Install the rear drive shaft.

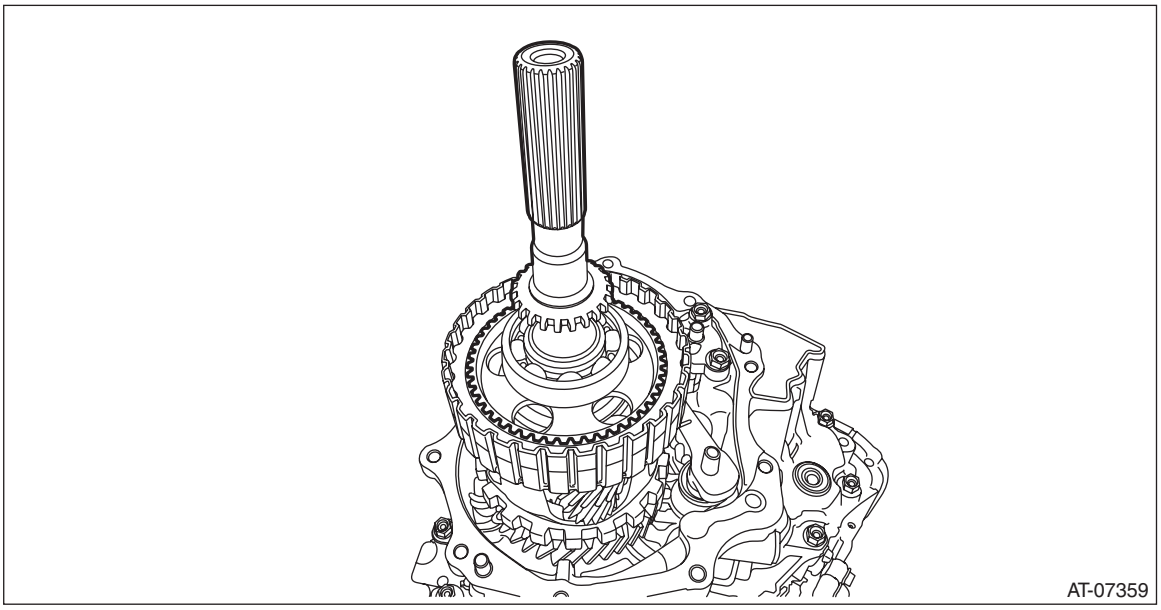

2) Using the ST, measure the depth “A” from the end surface of ST to the contact surface of ball bearing.
ST 499575400 GAUGE

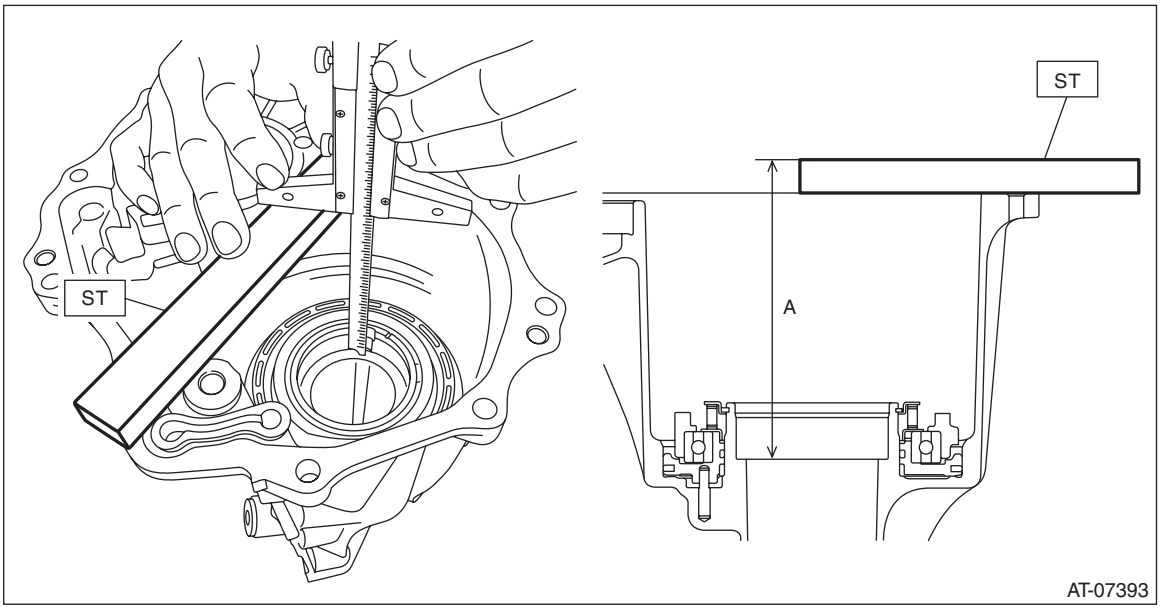

3) Using the ST, measure the height “B” from the mating surface of intermediate case to the end surface of ST.

NOTE:
Set the ST so that it does not ride on the bearing inner race.
ST 499575400 GAUGE

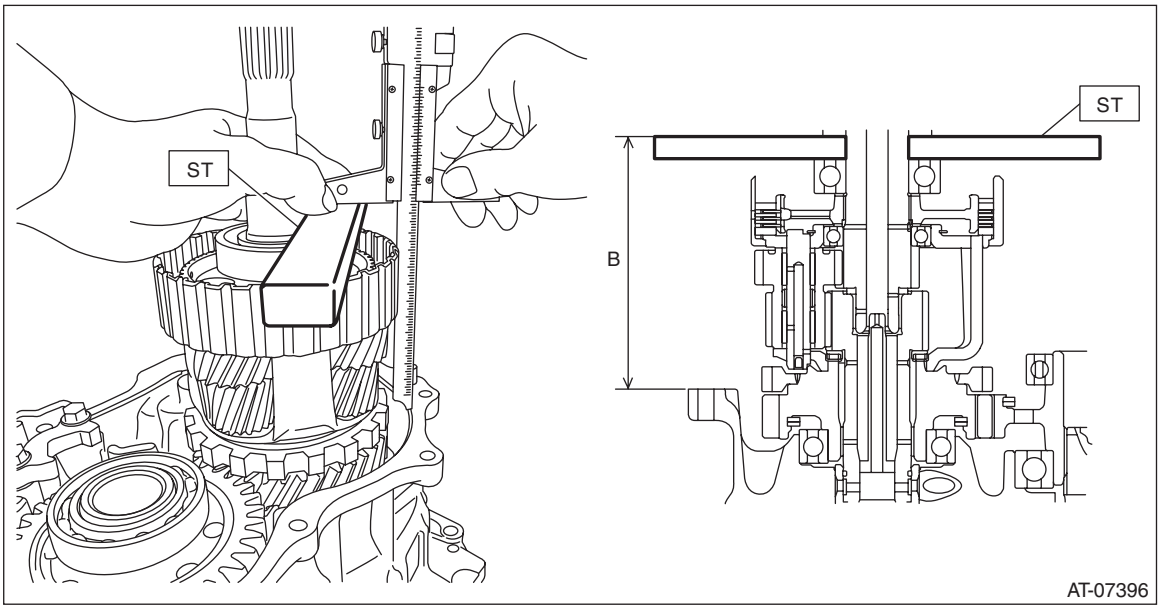

4) Obtain the thickness of rear drive shaft shim using the following formula to select none to four rear drive shaft shims.
T (mm) = A – B + 0.38 – (0.05 — 0.25)
[T (in) = A – B + 0.0149 – (0.002 — 0.01)]
T: Rear drive shaft shim thickness
A: Depth from the ST end surface to the ball bearing contact surface
B: Height from the mating surface of the intermediate case to the ST end face
0.38 mm (0.0149 in): Thickness of gasket
0.05 — 0.25 mm (0.002 — 0.01 in): Clearance

Rear drive shaft shim	
Part No.	Thickness mm (in)
33281AA040	0.2 (0.008)
33281AA050	0.5 (0.020)
33281AA060	0.3 (0.012)

30.Transfer Clutch

A: REMOVAL

1) Remove the transmission assembly from the vehicle. <Ref. to CVT(TR690)-57, REMOVAL, Automatic Transmission Assembly.>
2) Remove the extension case. <Ref. to CVT(TR690)-143, REMOVAL, Extension Case.>
3) Remove the rear drive shaft. <Ref. to CVT(TR690)-147, REMOVAL, Rear Drive Shaft.>
4) Remove the transfer clutch assembly.

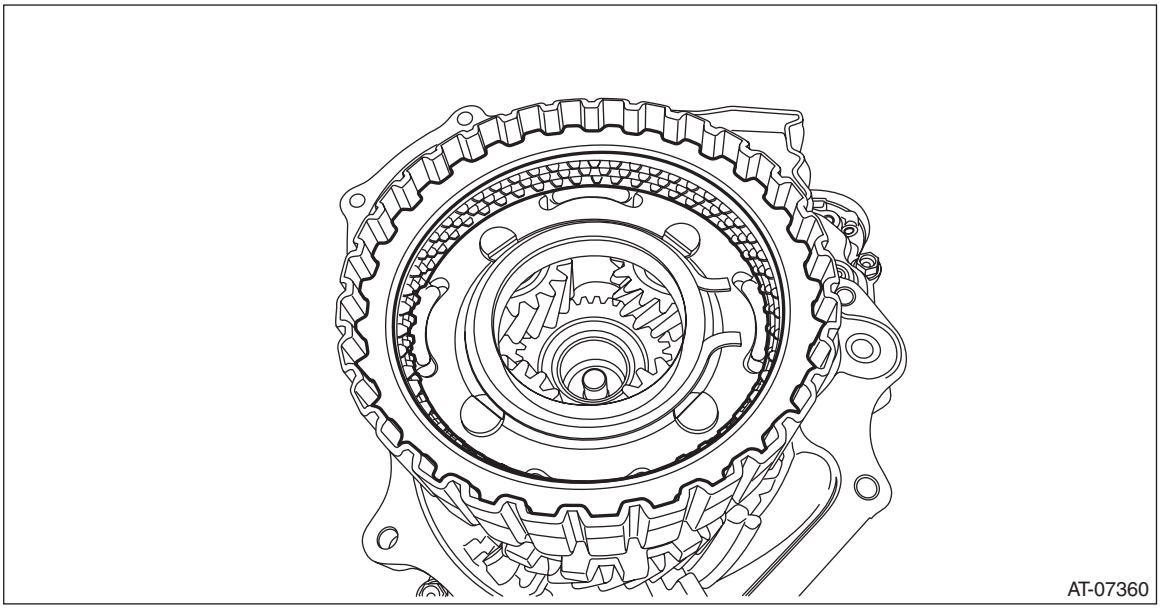

B: INSTALLATION

1) Install the transfer clutch assembly.

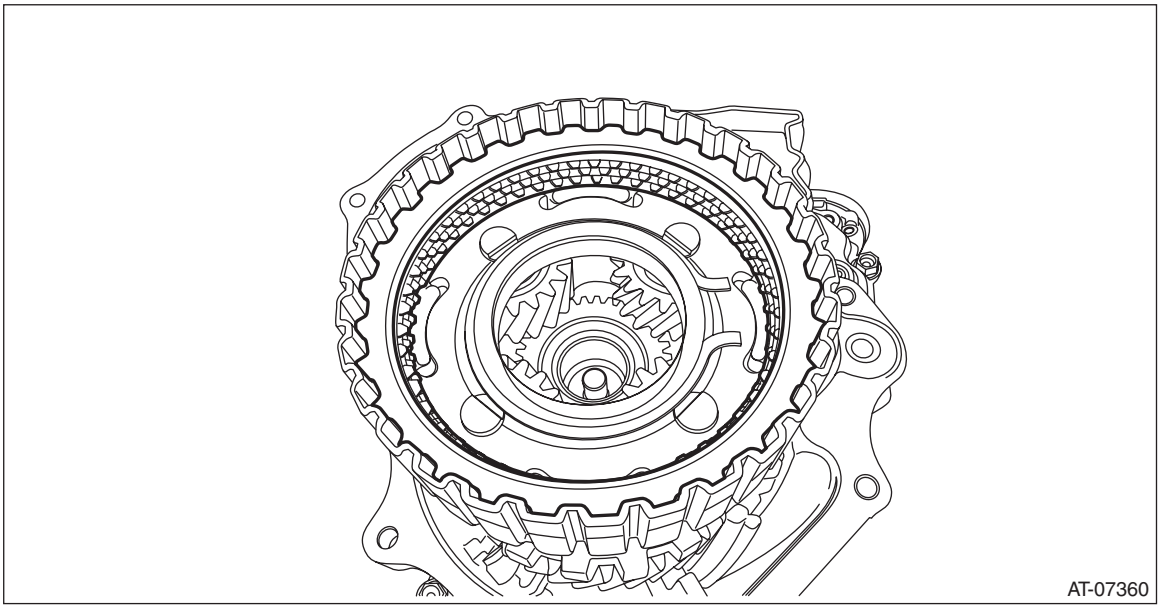

2) Select driven plate No. 3. <Ref. to CVT(TR690)-153, ADJUSTMENT, Transfer Clutch.>
3) Attach the selected driven plate No. 3 to the center differential assembly.
4) Install the rear drive shaft. <Ref. to CVT(TR690)-147, INSTALLATION, Rear Drive Shaft.>
5) Install the extension case. <Ref. to CVT(TR690)-144, INSTALLATION, Extension Case.>
6) Install the transmission assembly to the vehicle. <Ref. to CVT(TR690)-70, INSTALLATION, Automatic Transmission Assembly.>

C: INSPECTION

- Inspect the drive plate facing for wear and damage.
- Driven plate for discoloration (burned color)
- Make sure the snap ring is not worn and the return spring has no permanent distortion, damage, or deformation.
- Check the lip seal for damage.
- Inspect the extension end play, and adjust it to within the standard value. <Ref. to CVT(TR690)-153, ADJUSTMENT, Transfer Clutch.>

D: ADJUSTMENT

1) Install the drive plate and driven plate to the center differential carrier.
2) Using the ST, measure depth “A” from the end surface of ST to the transfer clutch piston.
ST 499575400 GAUGE

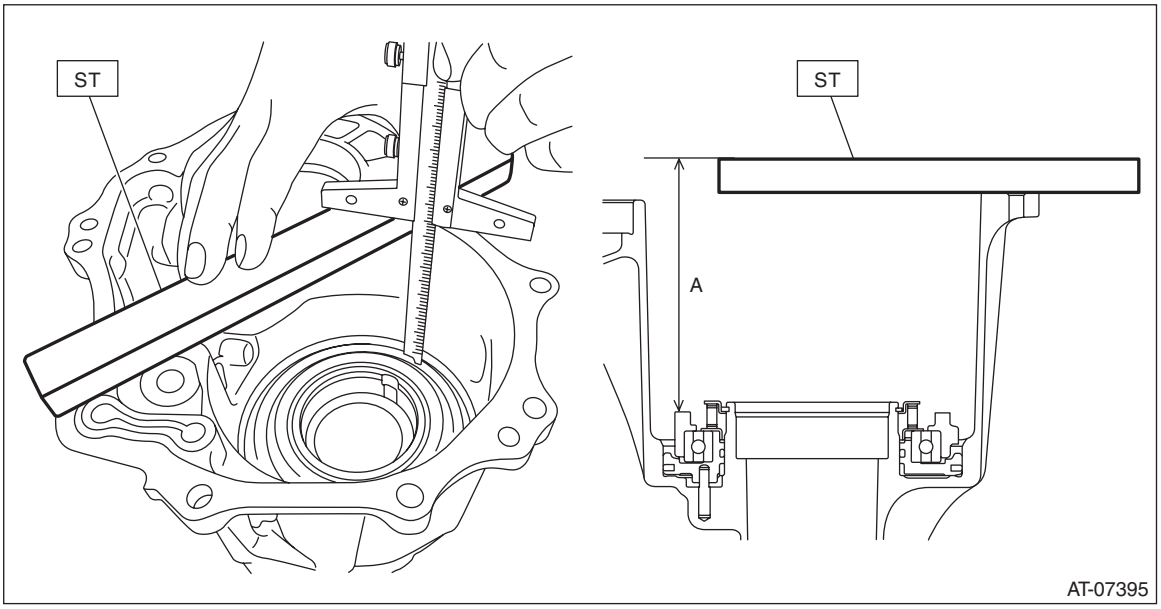

3) Using the ST, measure the height “B” from the mating surface of intermediate case to the end surface of ST.
ST 398744300 PISTON GUIDE

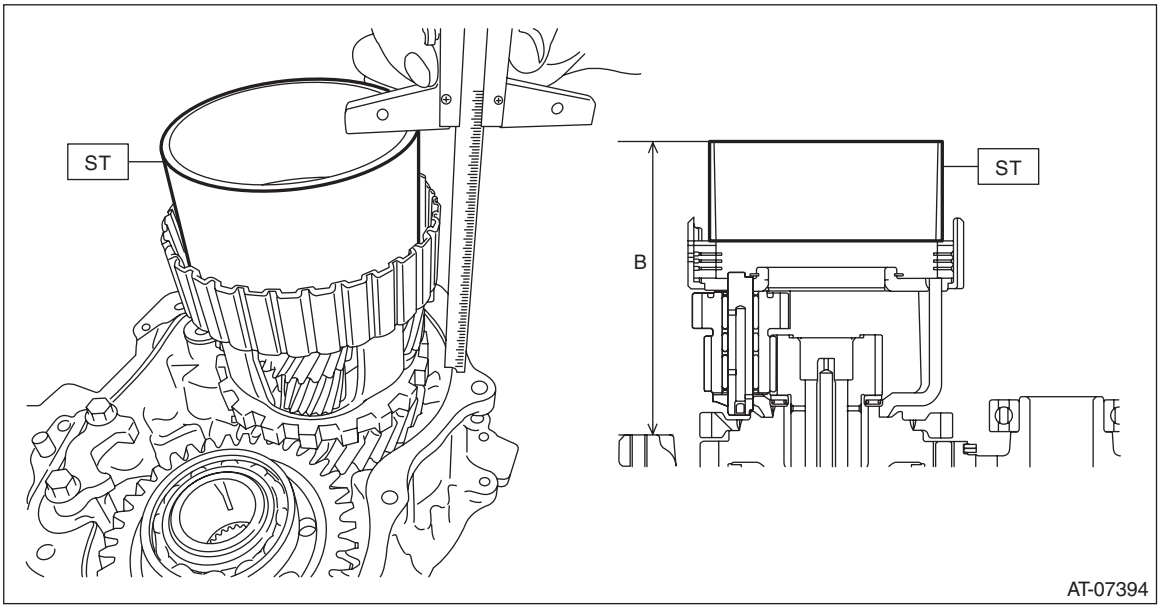

4) Obtain the thickness of driven plate No. 3 using the following formula to select one driven plate No. 3.
T mm = (A – 15) – (B – 50) + 0.38 – (0.2 — 0.6)
[T in = (A – 0.591) – (B – 1.97) + 0.0149 – (0.008 — 0.024)]
T: Rear drive shaft shim thickness
A: Depth from the ST end surface to the transfer clutch piston
B: Height from the mating surface of the intermediate case to the ST end face
0.38 mm (0.0149 in): Thickness of gasket
15 mm (0.591 in): Thickness of ST
50 mm (1.97 in): Thickness of ST
0.2 — 0.6 mm (0.008 — 0.024 in): Clearance

Driven plate No. 3	
Part No.	Thickness mm (in)
31589AA150	1.6 (0.063)
31589AA160	2.0 (0.079)
31589AA170	2.4 (0.094)
31589AA180	2.8 (0.110)

31.Center Differential Carrier

A: REMOVAL

1) Remove the transmission assembly from the vehicle. <Ref. to CVT(TR690)-57, REMOVAL, Automatic Transmission Assembly.>
2) Remove the extension case. <Ref. to CVT(TR690)-143, REMOVAL, Extension Case.>
3) Remove the rear drive shaft. <Ref. to CVT(TR690)-147, REMOVAL, Rear Drive Shaft.>
4) Remove the transfer clutch. <Ref. to CVT(TR690)-152, REMOVAL, Transfer Clutch.>
5) Remove the center differential carrier assembly.

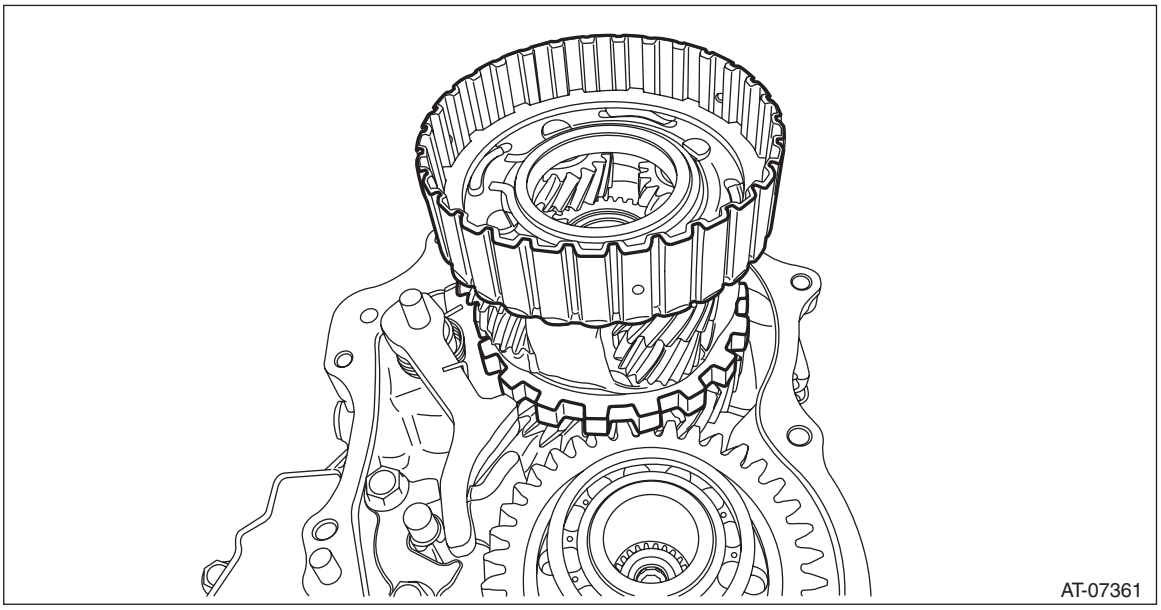

6) Remove the seal rings.

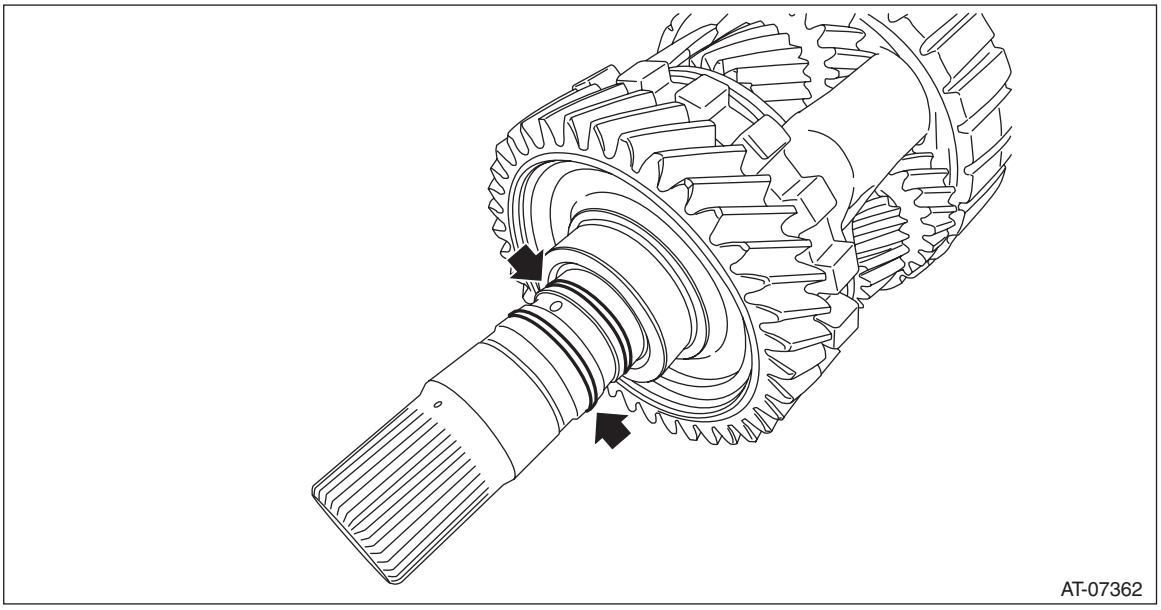

B: INSTALLATION

1) Install the seal rings.

NOTE:
- Use new seal rings.
- Do not stretch the seal ring excessively.
- Apply CVTF after installation.

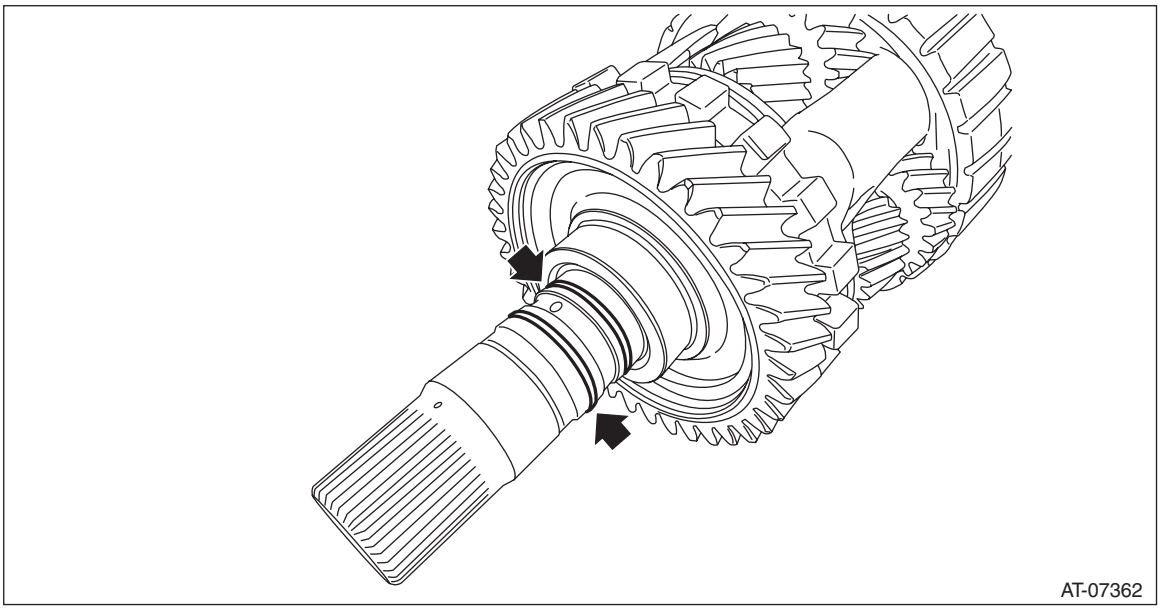

2) Install the center differential assembly.

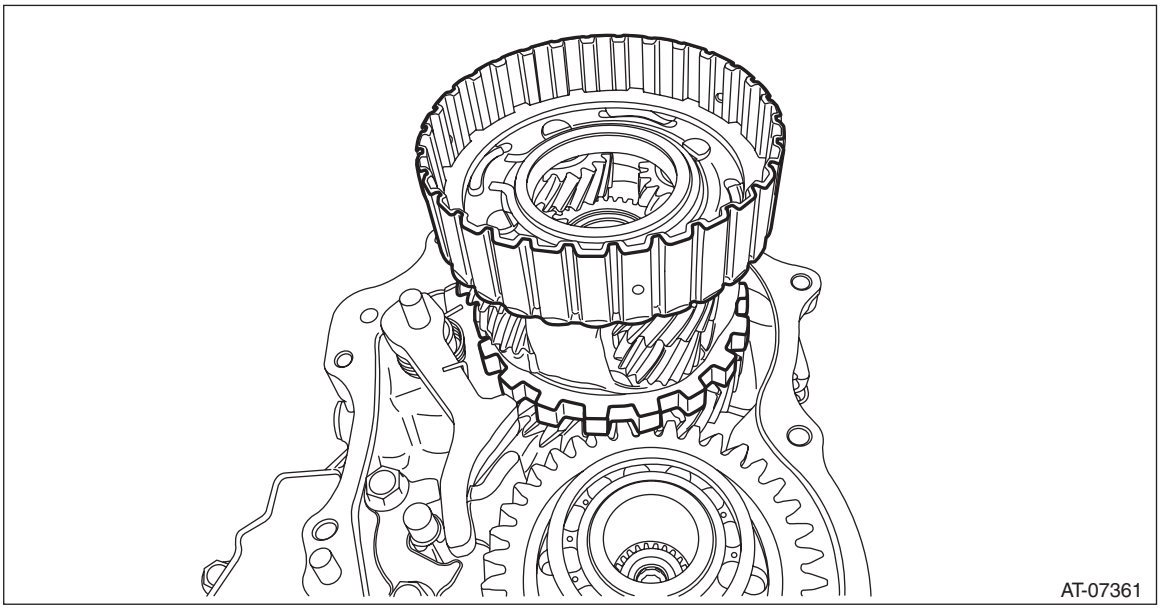

3) Install the transfer clutch. <Ref. to CVT(TR690)-152, INSTALLATION, Transfer Clutch.>
4) Select driven plate No. 3 to replace. <Ref. to CVT(TR690)-153, ADJUSTMENT, Transfer Clutch.>
5) Install the rear drive shaft. <Ref. to CVT(TR690)-147, INSTALLATION, Rear Drive Shaft.>
6) Select the rear drive shaft shim. <Ref. to CVT(TR690)-150, ADJUSTMENT, Rear Drive Shaft.>
7) Install the extension case. <Ref. to CVT(TR690)-144, INSTALLATION, Extension Case.>
8) Install the transmission assembly to the vehicle. <Ref. to CVT(TR690)-70, INSTALLATION, Automatic Transmission Assembly.>

C: DISASSEMBLY

1) Remove the snap ring, and pull out the pinion shaft from center differential assembly.

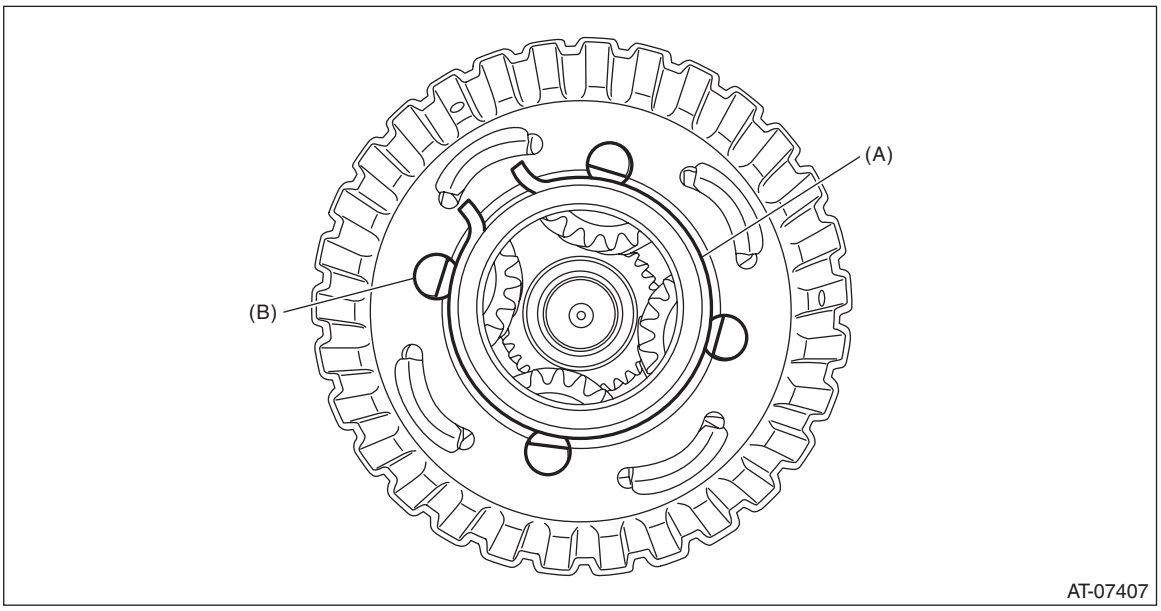

(A) Snap ring
(B) Pinion shaft

2) Remove the pinion gear and washers from center differential assembly.

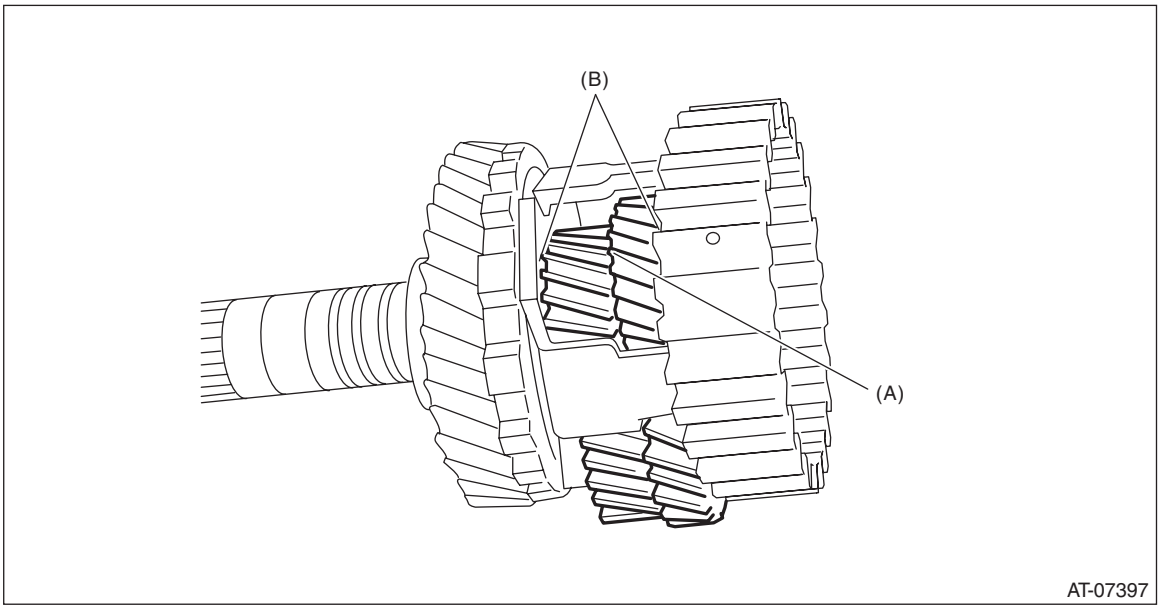

(A) Pinion gear
(B) Washer

3) Remove the intermediate shaft and thrust bearing.

D: ASSEMBLY

1) Install the thrust bearing onto intermediate shaft.
2) Insert the intermediate shaft into the center differential assembly.
3) Install the pinion gears and washers.
4) Insert the pinion shaft into the center differential assembly.

NOTE:
- Insert the pinion shaft with the side with the plug side facing the front side (gear side).
- After inserting the pinion shaft, adjust its position so that the cutout portion on the front side is on the inner side.

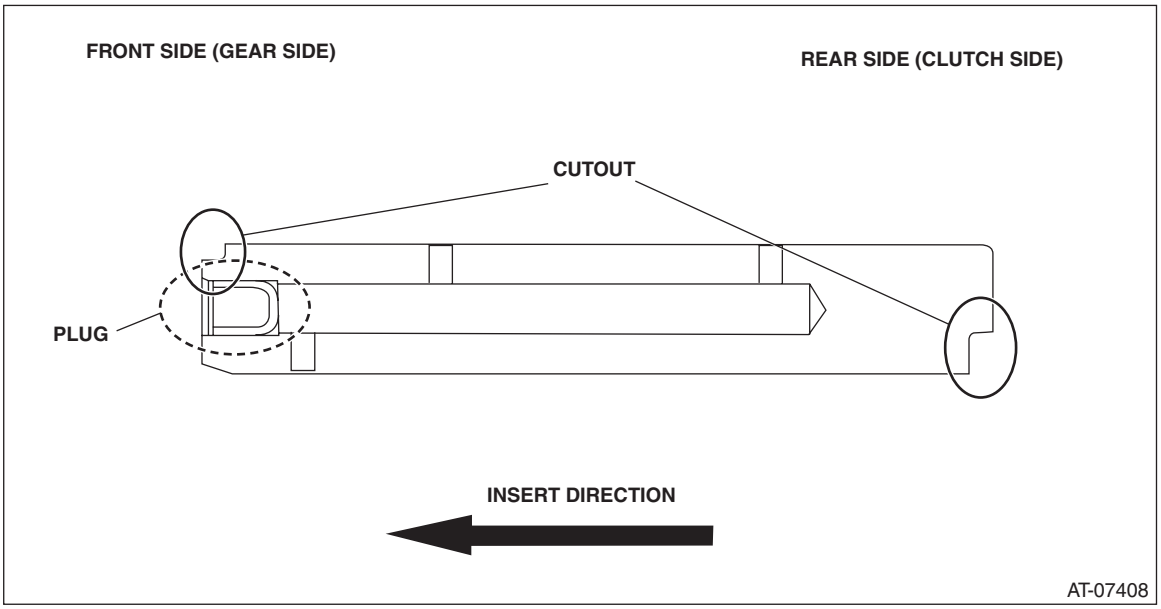

5) Install the snap ring.

E: INSPECTION

- Check each part for crack, damage, wear or dust.
- Inspect the extension end play, and adjust it to within the standard value. <Ref. to CVT(TR690)-153, ADJUSTMENT, Transfer Clutch.>

32.Transfer Reduction Driven Gear

A: REMOVAL

1) Remove the transmission assembly from the vehicle. <Ref. to CVT(TR690)-57, REMOVAL, Automatic Transmission Assembly.>
2) Remove the extension case. <Ref. to CVT(TR690)-143, REMOVAL, Extension Case.>
3) Remove the rear drive shaft. <Ref. to CVT(TR690)-147, REMOVAL, Rear Drive Shaft.>
4) Remove the transfer clutch assembly. <Ref. to CVT(TR690)-152, REMOVAL, Transfer Clutch.>
5) Remove the center differential carrier. <Ref. to CVT(TR690)-155, REMOVAL, Center Differential Carrier.>
6) Remove the transfer reduction driven gear assembly.

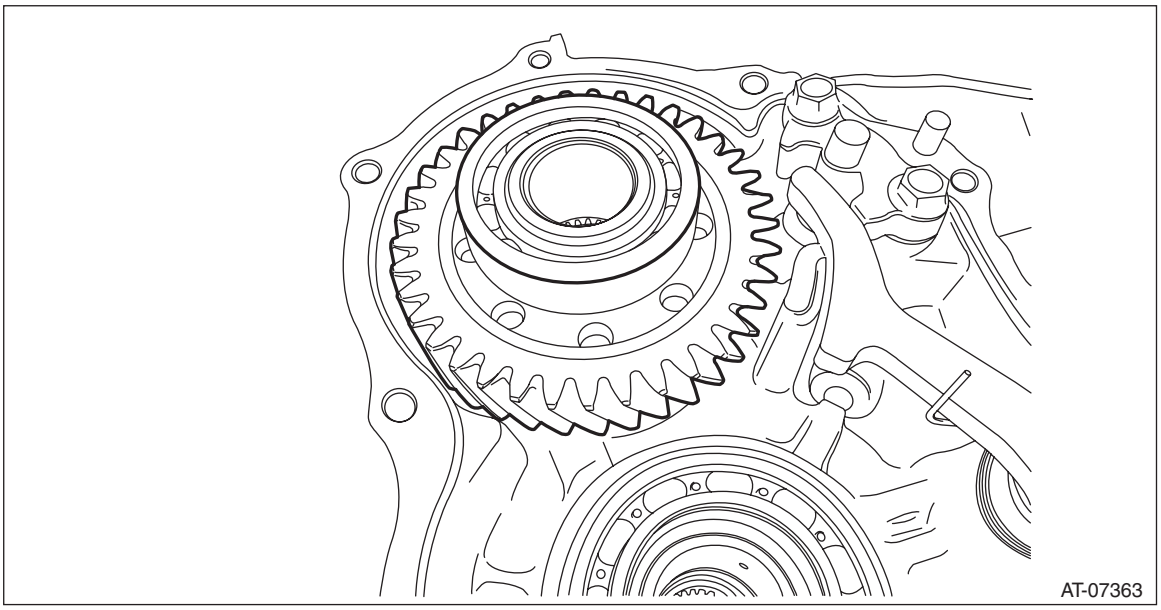

B: INSTALLATION

1) Install the reduction driven gear assembly.

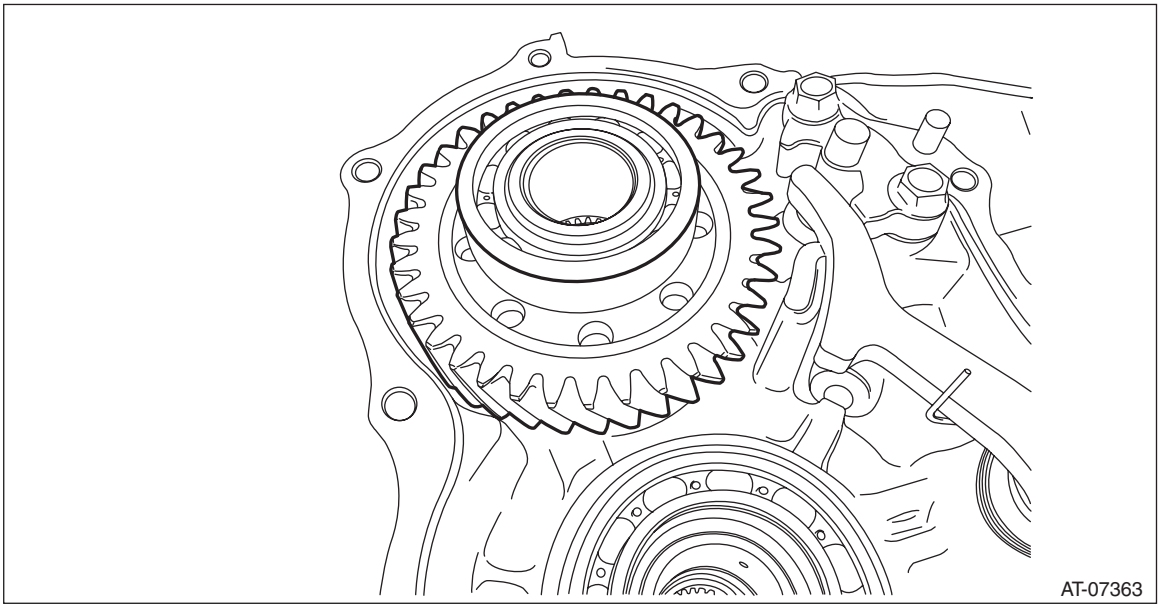

2) Select shims. <Ref. to CVT(TR690)-162, ADJUSTMENT, Transfer Reduction Driven Gear.>
3) Install the center differential carrier. <Ref. to CVT(TR690)-156, INSTALLATION, Center Differential Carrier.>
4) Install the transfer clutch assembly. <Ref. to CVT(TR690)-152, INSTALLATION, Transfer Clutch.>
5) Install the rear drive shaft. <Ref. to CVT(TR690)-147, INSTALLATION, Rear Drive Shaft.>

6) Mount the selected shim onto ball bearing.
7) Install the extension case. <Ref. to CVT(TR690)-144, INSTALLATION, Extension Case.>
8) Install the transmission assembly to the vehicle. <Ref. to CVT(TR690)-70, INSTALLATION, Automatic Transmission Assembly.>

C: DISASSEMBLY

1) Remove the snap ring from transfer reduction driven gear.
2) Using the ST, remove the ball bearing (large) from transfer reduction driven gear.
ST1 899864100 REMOVER
ST2 398497701 SEAT
ST3 498077600 REMOVER

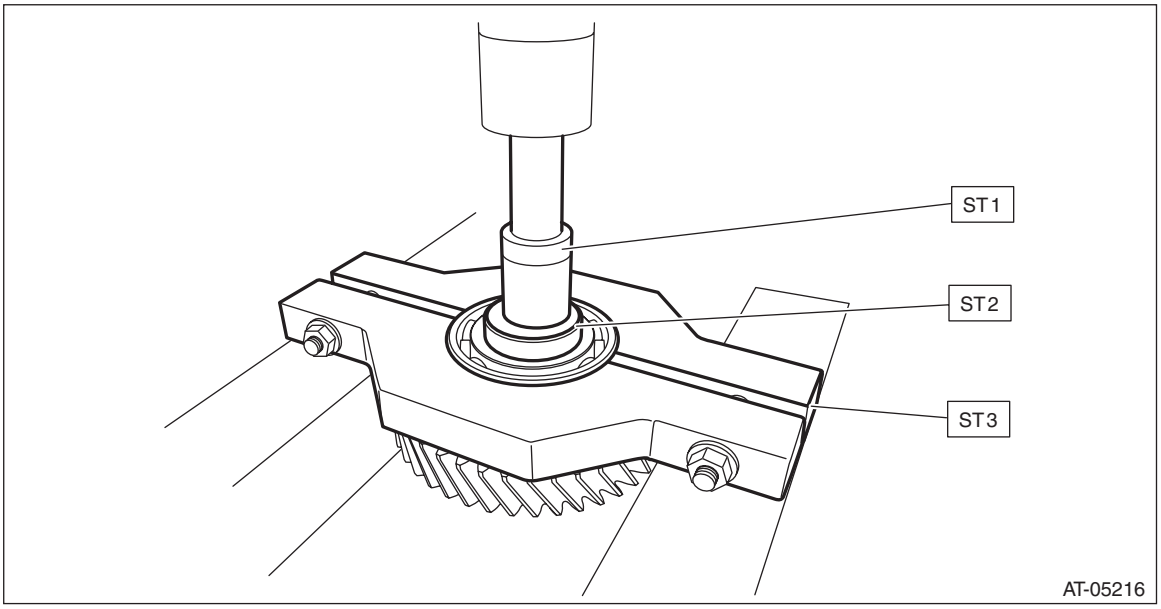

3) Using the ST, remove the ball bearing (small) from transfer reduction driven gear.
ST1 899864100 REMOVER
ST2 398497701 SEAT
ST3 18720AA000 REMOVER

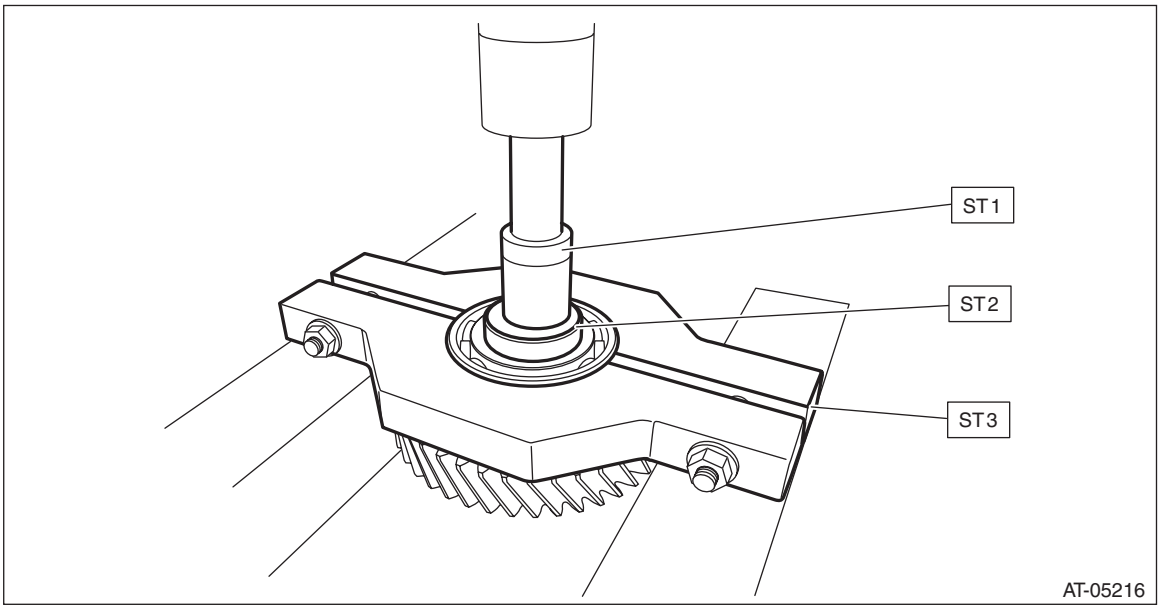

D: ASSEMBLY

1) Install the new ball bearing (large) to reduction driven gear using the ST.
ST 499277100 BUSHING 1-2 INSTALLER

NOTE:
- Use a new ball bearing.
- Install to the splines inside transfer reduction driven gear shaft.

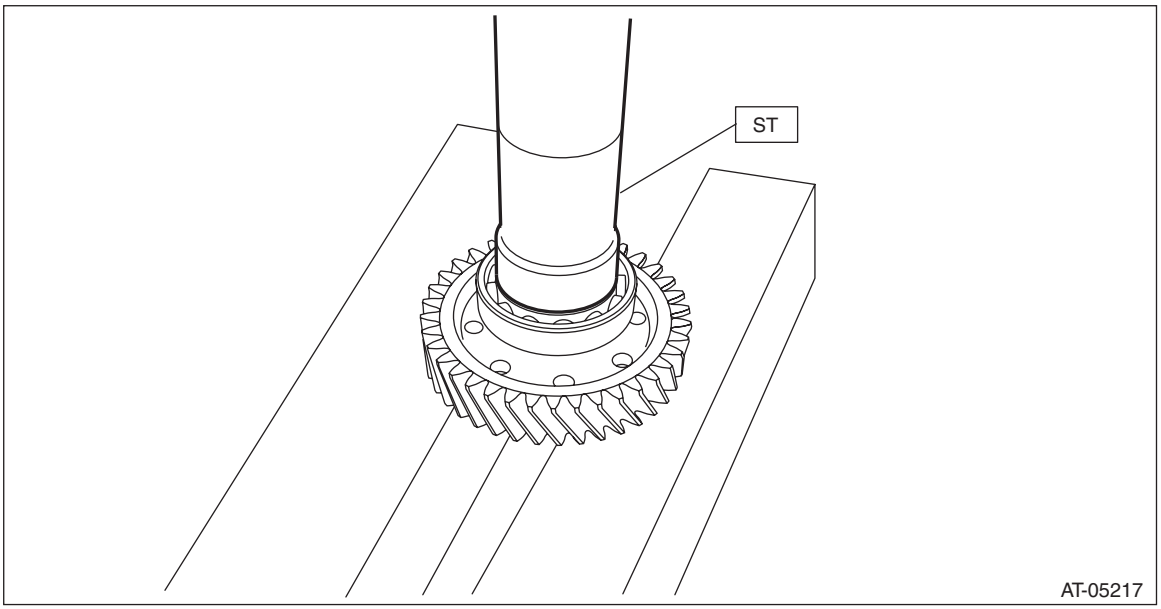

2) Install the new ball bearing (small) to reduction driven gear.

NOTE:
Use a new ball bearing.
ST 499277100 BUSHING 1-2 INSTALLER

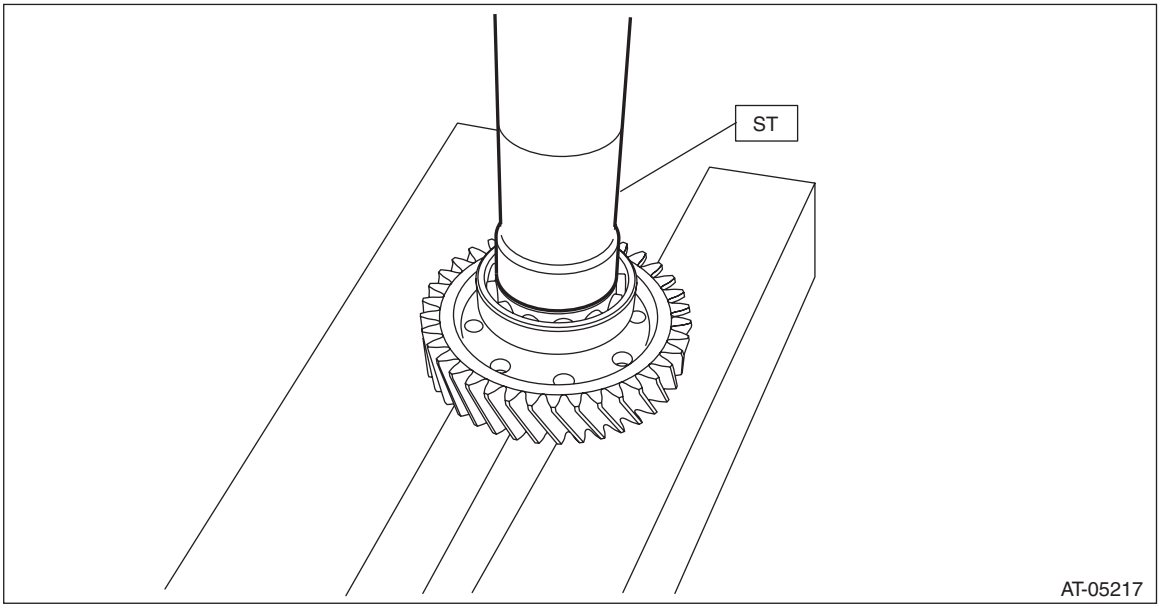

3) Install the snap ring to the transfer reduction driven gear.

E: INSPECTION

- Check the ball bearing for smooth rotation.
- Check the ball bearing for excessive looseness.
- Make sure the gear is not broken or damaged.

F: ADJUSTMENT

1) Measure depth “A” from the ST upper face to the ball bearing catch surface.
ST 398643600 GAUGE

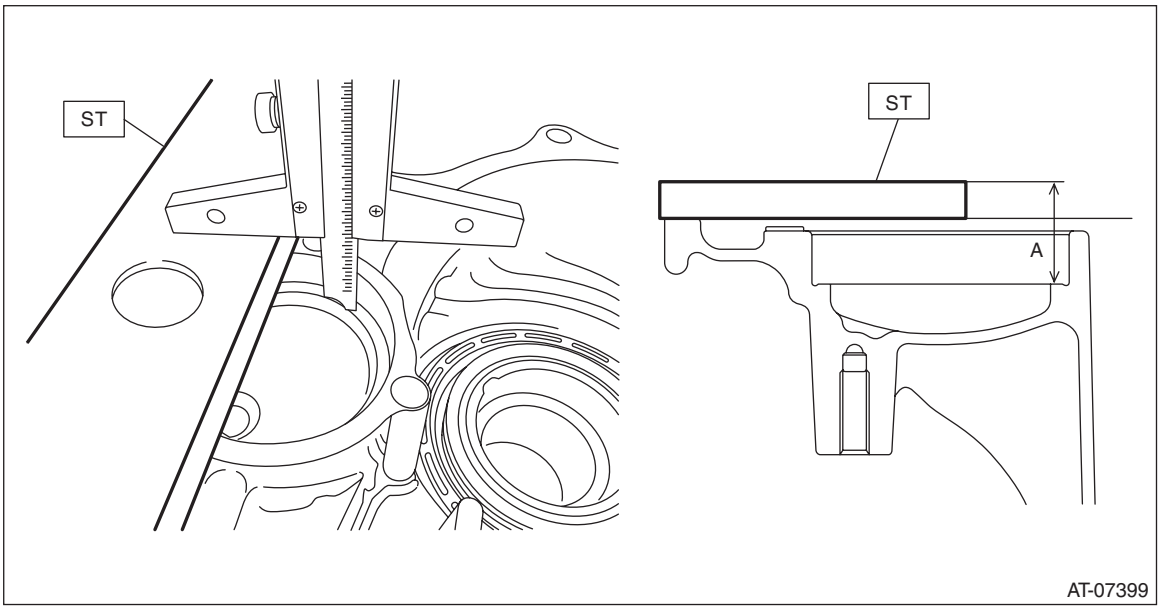

2) Measure height “B” from the ST to the end of the ball bearing outer ring.
ST 398643600 GAUGE

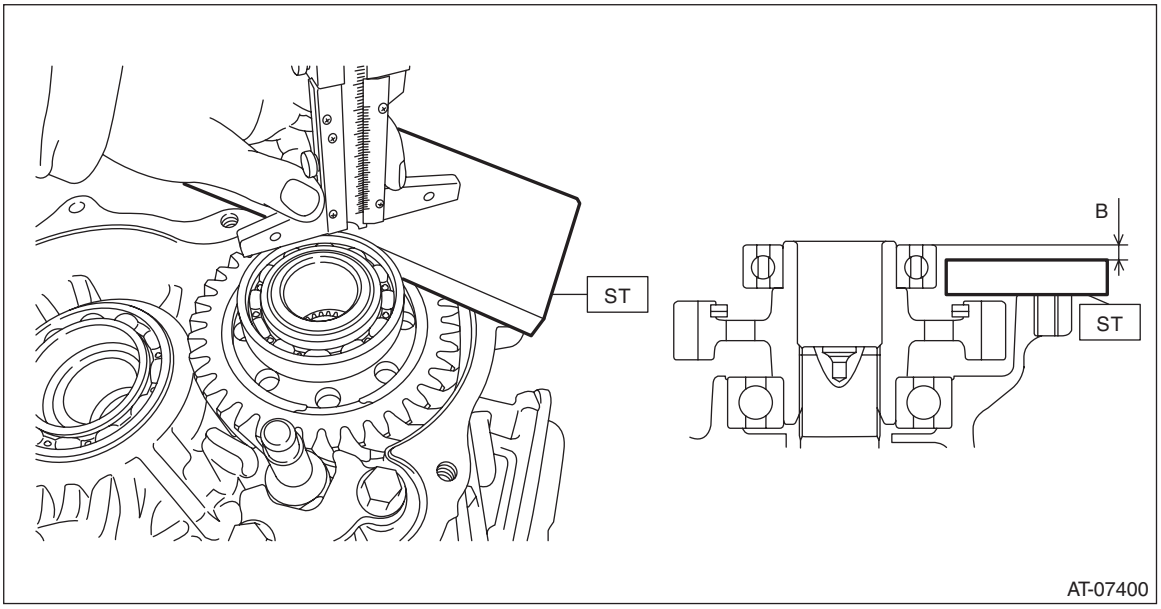

3) Obtain the thickness of shim using the following formula to select one to three shims.
T mm = (A – 15) – (B + 15) + 0.38 – (0.05 — 0.25)
[T in = (A – 0.591) – (B + 0.591) + 0.0149 – (0.002 — 0.01)]
T: Shim thickness
A: Depth from the ST upper face to the ball bearing catch surface
B: Height from the ST to the end of the ball bearing outer ring
0.38 mm (0.0149 in): Thickness of gasket
15 mm (0.591 in): Thickness of ST
0.05 — 0.25 mm (0.002 — 0.01 in): Clearance

Shim	
Part No.	Thickness mm (in)
31288AA190	0.2 (0.008)
31288AA200	0.3 (0.012)
31288AA210	0.5 (0.02)

33.Parking Pawl

A: REMOVAL

1) Remove the transmission assembly from the vehicle. <Ref. to CVT(TR690)-57, REMOVAL, Automatic Transmission Assembly.>
2) Shift the range select lever to “N” range.
3) Remove the extension case. <Ref. to CVT(TR690)-143, REMOVAL, Extension Case.>
4) Remove the parking pawl shaft, return spring and parking pawl.

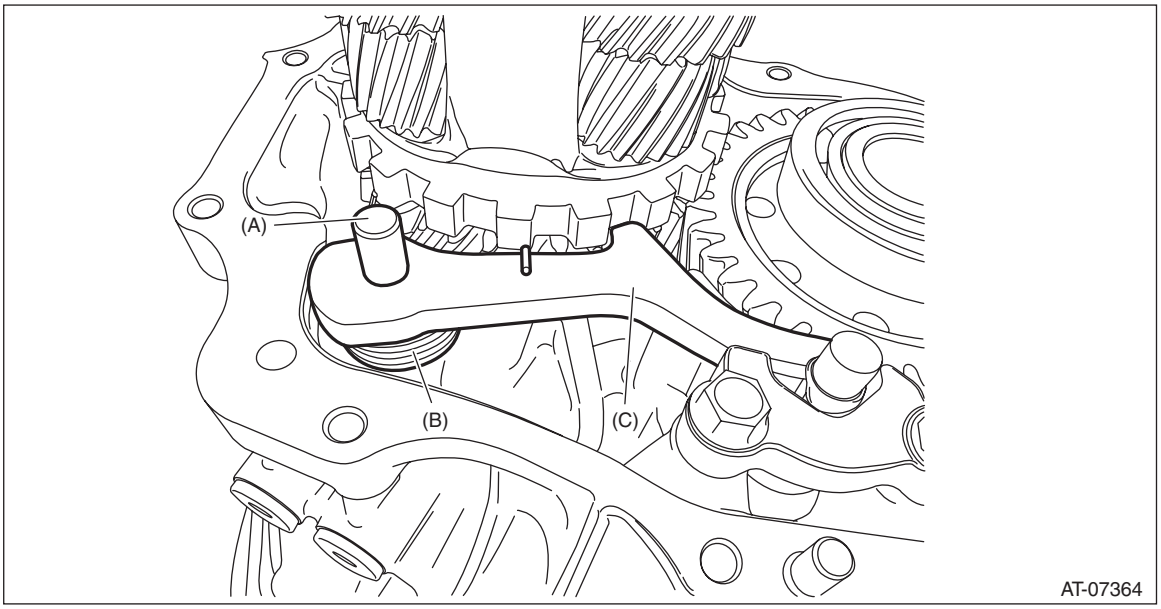

(A) Parking pawl shaft
(B) Return spring
(C) Parking pawl

B: INSTALLATION

1) Set the range select lever to the “N” range.
2) Install the parking pawl shaft, return spring and parking pawl.

NOTE:
Make sure that the end of return spring sticks out of parking pawl as shown in (a). Make sure that the other end contacts the rib of intermediate case as shown in (b).

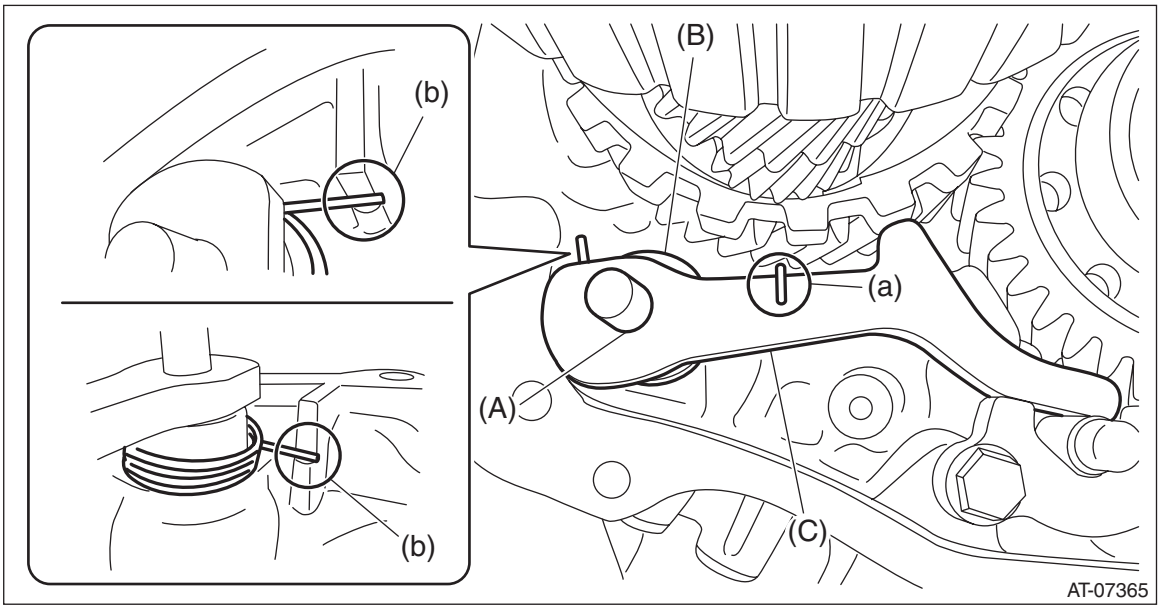

(A) Parking pawl shaft
(B) Return spring
(C) Parking pawl

3) Install the extension case. <Ref. to CVT(TR690)-144, INSTALLATION, Extension Case.>
4) Install the transmission assembly to the vehicle. <Ref. to CVT(TR690)-70, INSTALLATION, Automatic Transmission Assembly.>

C: INSPECTION

- Check the parking pawl for breakage or damage.
- Check the return spring for fatigue.

34.Intermediate Case

A: REMOVAL

1) Remove the transmission assembly from vehicle body. <Ref. to CVT(TR690)-57, REMOVAL, Automatic Transmission Assembly.>
2) Remove the extension case. <Ref. to CVT(TR690)-143, REMOVAL, Extension Case.>
3) Remove the parking pawl. <Ref. to CVT(TR690)-164, REMOVAL, Parking Pawl.>
4) Remove the rear drive shaft. <Ref. to CVT(TR690)-147, REMOVAL, Rear Drive Shaft.>
5) Remove the transfer clutch assembly. <Ref. to CVT(TR690)-152, REMOVAL, Transfer Clutch.>
6) Remove the center differential carrier. <Ref. to CVT(TR690)-155, REMOVAL, Center Differential Carrier.>
7) Remove the transfer reduction driven gear assembly. <Ref. to CVT(TR690)-159, REMOVAL, Transfer Reduction Driven Gear.>
8) Remove the intermediate case.

NOTE:
- The total number of intermediate case mounting bolts is 14.
- Inside the transmission is a single bolt (arrowed).

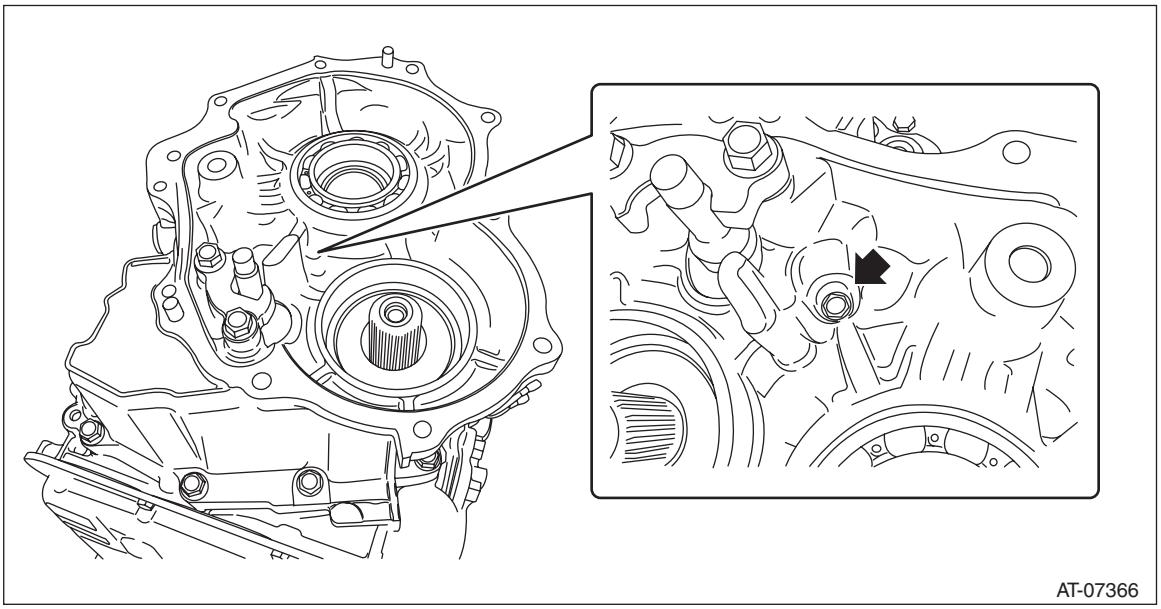

9) Remove the CVTF filter.

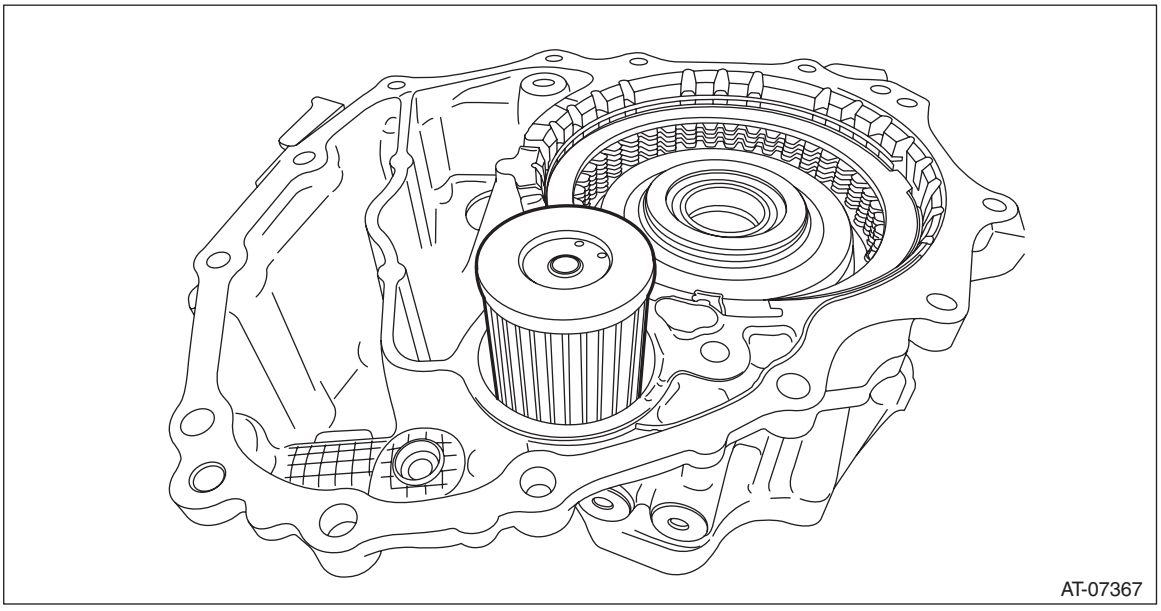

10) Remove the O-ring from the transmission case.

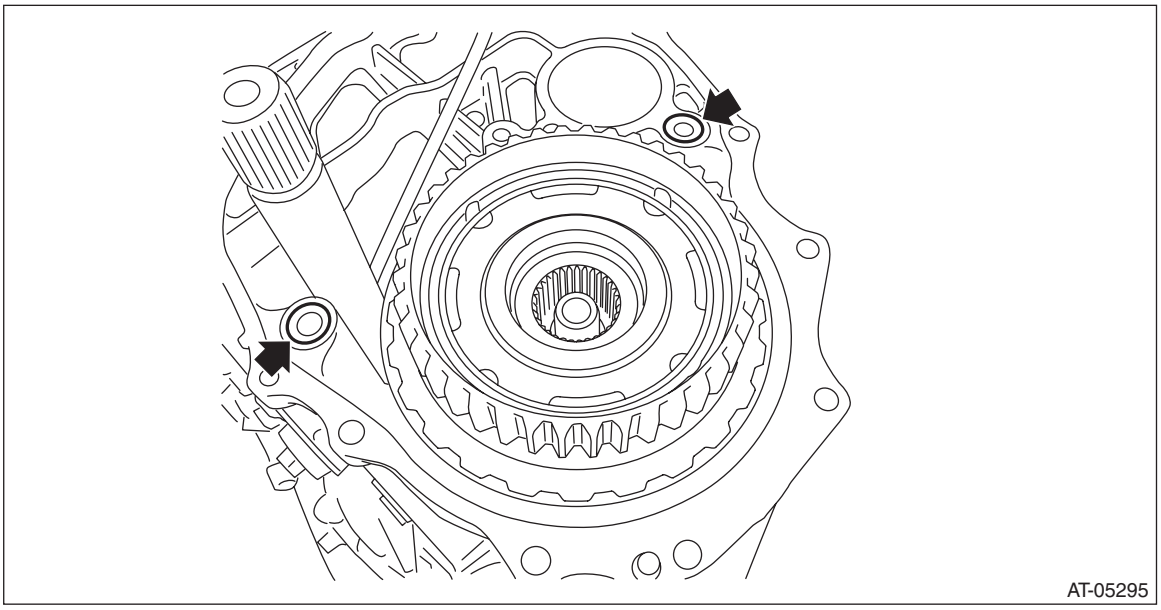

B: INSTALLATION

1) Clean the mating surface of intermediate case and transmission case.
2) Face the O-ring side of the CVTF filter to the intermediate case side, and install the CVTF filter.

NOTE:
Apply CVTF to the O-rings.

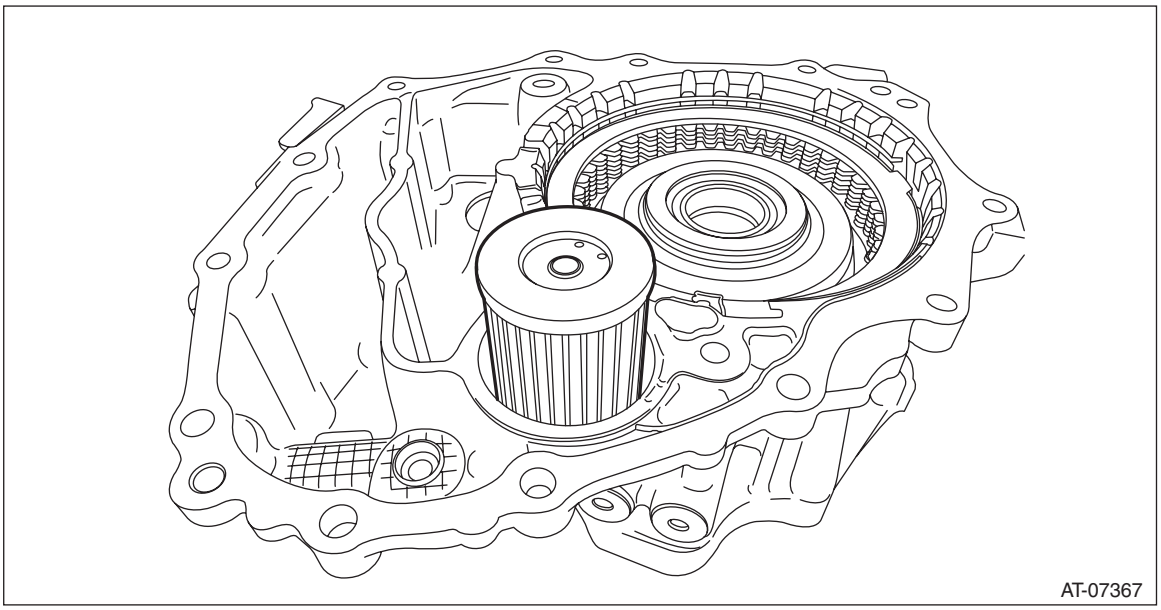

3) Install the O-ring to the transmission case.

NOTE:
- Use new O-rings.
- Apply CVTF to the O-rings.

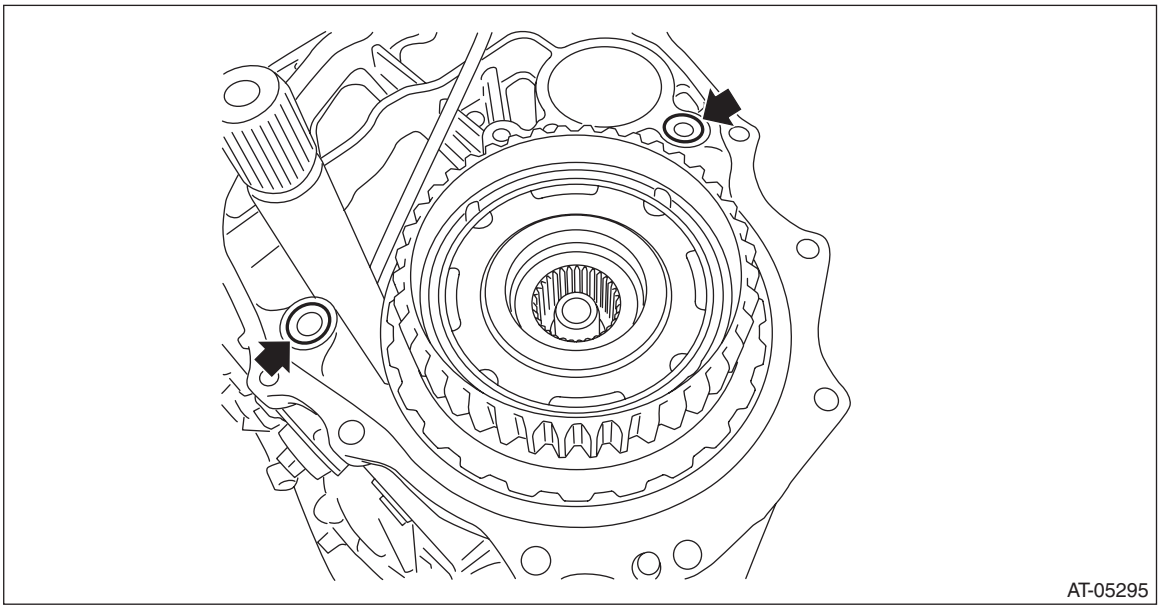

4) Apply liquid gasket to intermediate case seamlessly.

Liquid gasket:
THREE BOND 1215B or equivalent

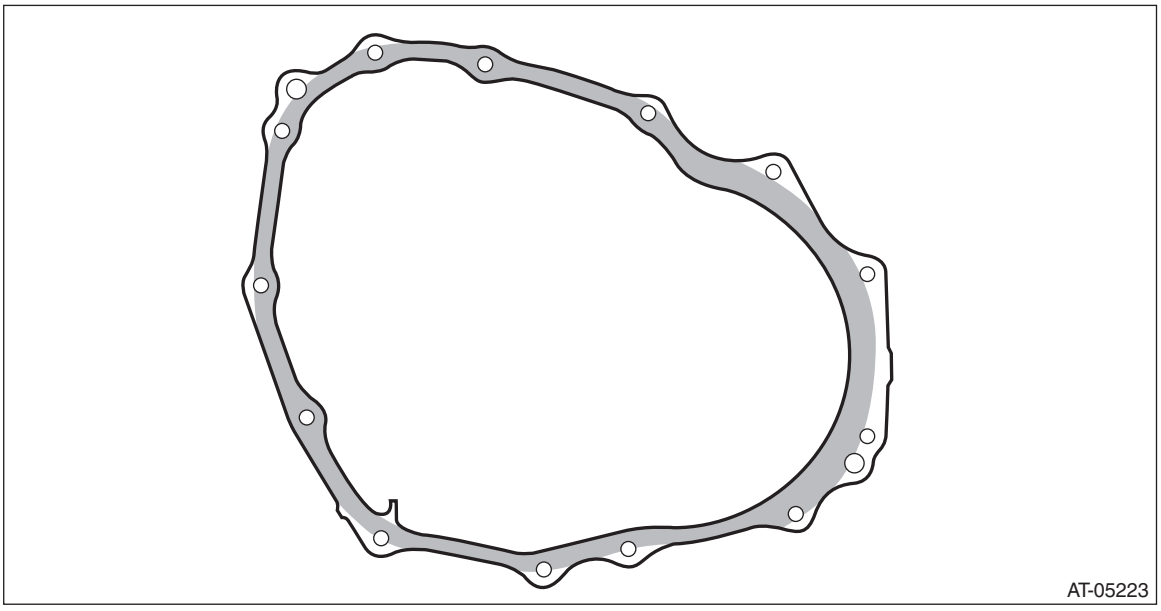

5) Install the intermediate case and the transmission hanger to the transmission case.

NOTE:
Make sure to install the arrowed bolt.

Tightening torque:
25 N·m (2.5 kgf-m, 18.4 ft-lb)

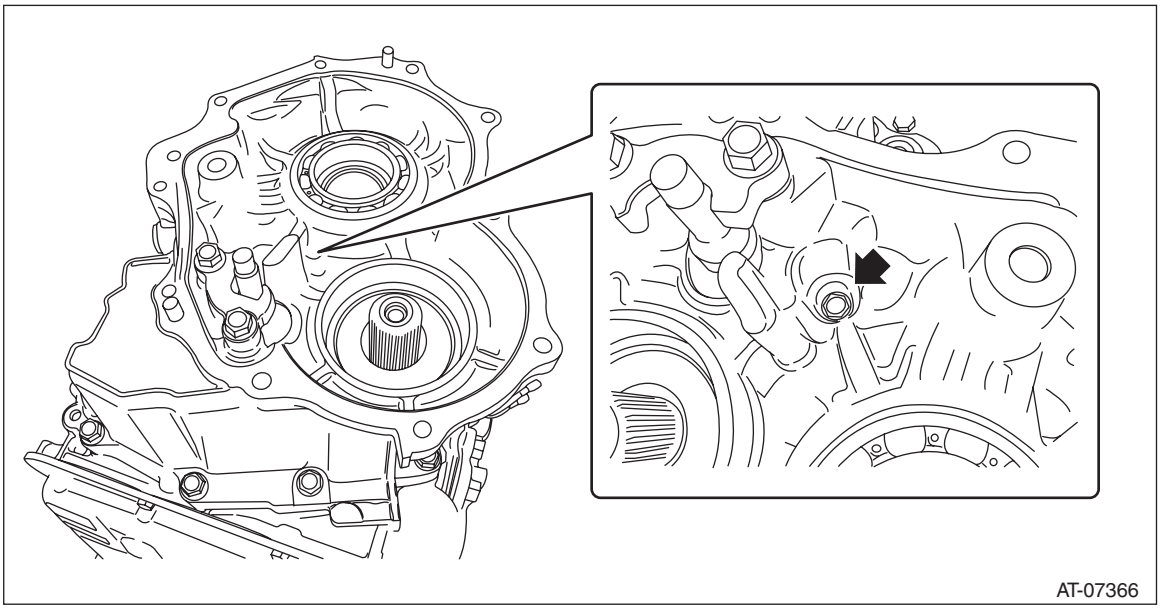

6) Install the transfer reduction driven gear assembly. <Ref. to CVT(TR690)-159, INSTALLATION, Transfer Reduction Driven Gear.>
7) Install the center differential carrier. <Ref. to CVT(TR690)-156, INSTALLATION, Center Differential Carrier.>
8) Install the transfer clutch assembly. <Ref. to CVT(TR690)-152, INSTALLATION, Transfer Clutch.>
9) Install the rear drive shaft. <Ref. to CVT(TR690)-147, INSTALLATION, Rear Drive Shaft.>
10) Install the parking pawl. <Ref. to CVT(TR690)-165, INSTALLATION, Parking Pawl.>
11) Install the extension case. <Ref. to CVT(TR690)-144, INSTALLATION, Extension Case.>
12) Install the transmission to vehicle. <Ref. to CVT(TR690)-70, INSTALLATION, Automatic Transmission Assembly.>

C: DISASSEMBLY

1) Remove the parking support.
2) Remove the CVTF filler plug.
3) Remove all plugs from intermediate case.

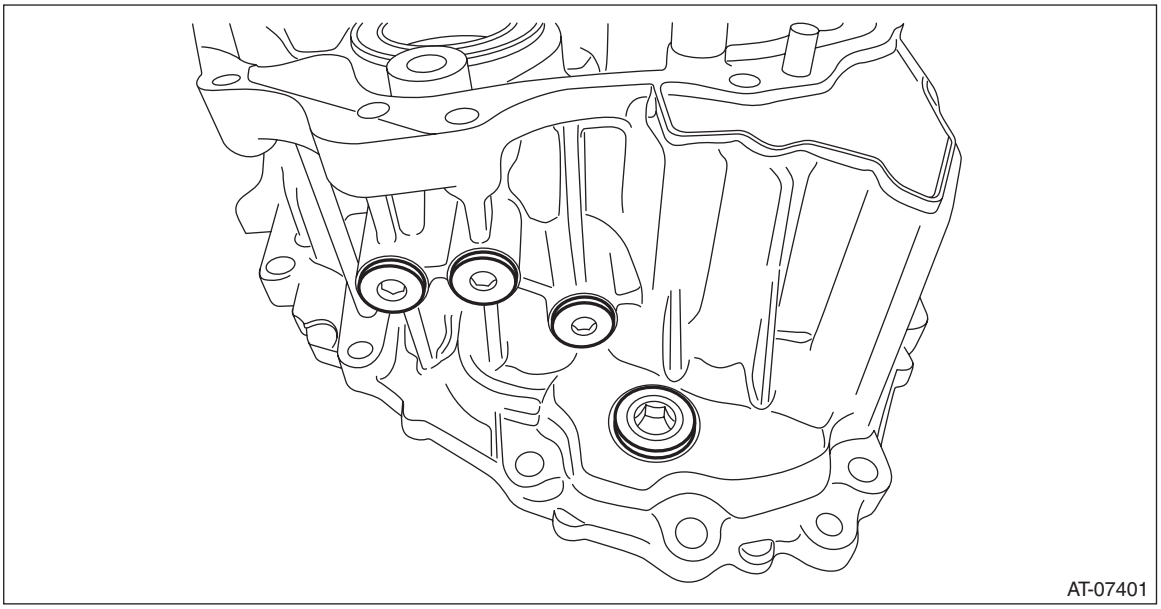

4) Remove the reverse brake assembly. <Ref. to CVT(TR690)-173, DISASSEMBLY, Reverse Brake Assembly.>

D: ASSEMBLY

1) Install the reverse brake. <Ref. to CVT(TR690)-176, ASSEMBLY, Reverse Brake Assembly.>
2) install all plugs to intermediate case.

Tightening torque:
25 N·m (2.5 kgf-m, 18.4 ft-lb)

NOTE:
Use new O-rings.

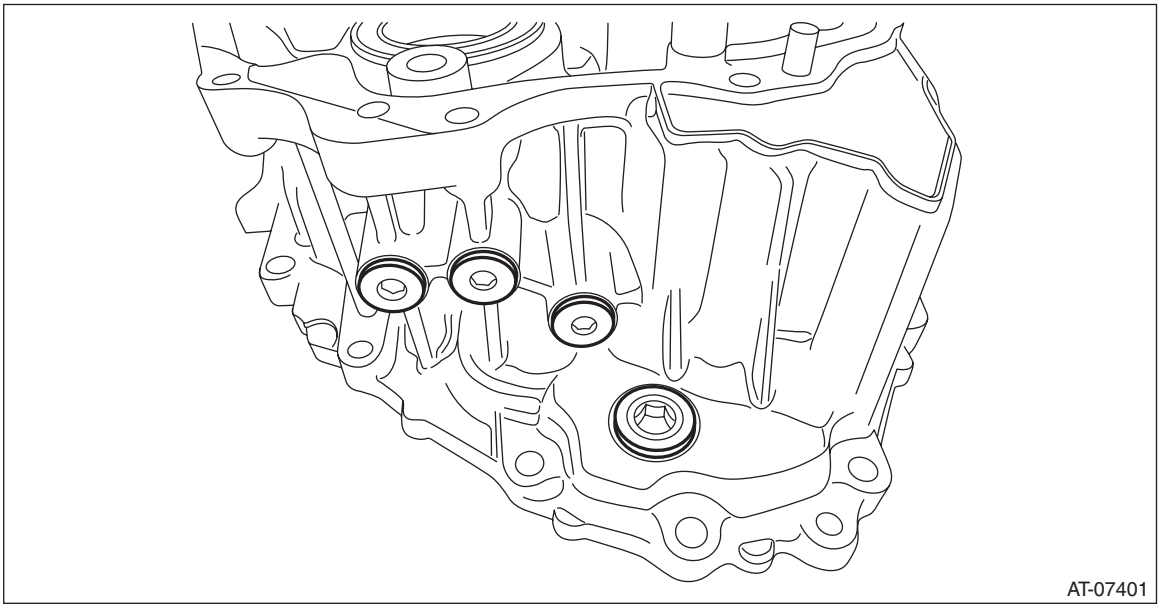

3) Install the parking support.

Tightening torque:
25 N·m (2.5 kgf-m, 18.4 ft-lb)

4) Temporarily install the CVTF filler plug.

NOTE:
Replace the gasket of CVTF filler plug with a new part after installing the transmission assembly to vehicle and adjusting CVTF fluid.

E: INSPECTION

- Check the intermediate case for fissures, cracks or damage.
- Check for leakage of CVTF from the connections between intermediate case and transmission case, and between intermediate case and extension case.

35.CVTF Filter

A: REMOVAL

NOTE:
• Although CVTF filter is a maintenance-free part, replace it if a large quantity of wear debris and metal particles are found in CVTF and CVTF filter.
• For removal of CVTF filter, refer to “Intermediate Case”. <Ref. to CVT(TR690)-166, REMOVAL, Intermediate Case.>

B: INSTALLATION

NOTE:
For installation of CVTF filter, refer to “Intermediate Case”. <Ref. to CVT(TR690)-167, INSTALLATION, Intermediate Case.>

C: INSPECTION

- Check if a large quantity of wear debris or metal particles are in CVTF and CVTF filter.
- Check for broken part or damaged O-ring.

36.Reverse Brake Assembly

A: REMOVAL

NOTE:
For removal of reverse brake assembly, refer to “Intermediate Case”. <Ref. to CVT(TR690)-166, REMOVAL, Intermediate Case.>

B: INSTALLATION

NOTE:
For installation of reverse brake assembly, refer to “Intermediate Case”. <Ref. to CVT(TR690)-167, INSTALLATION, Intermediate Case.>

C: DISASSEMBLY

1) Remove the snap ring.
2) Remove the retaining plate, drive plate, driven plate and dish plate.

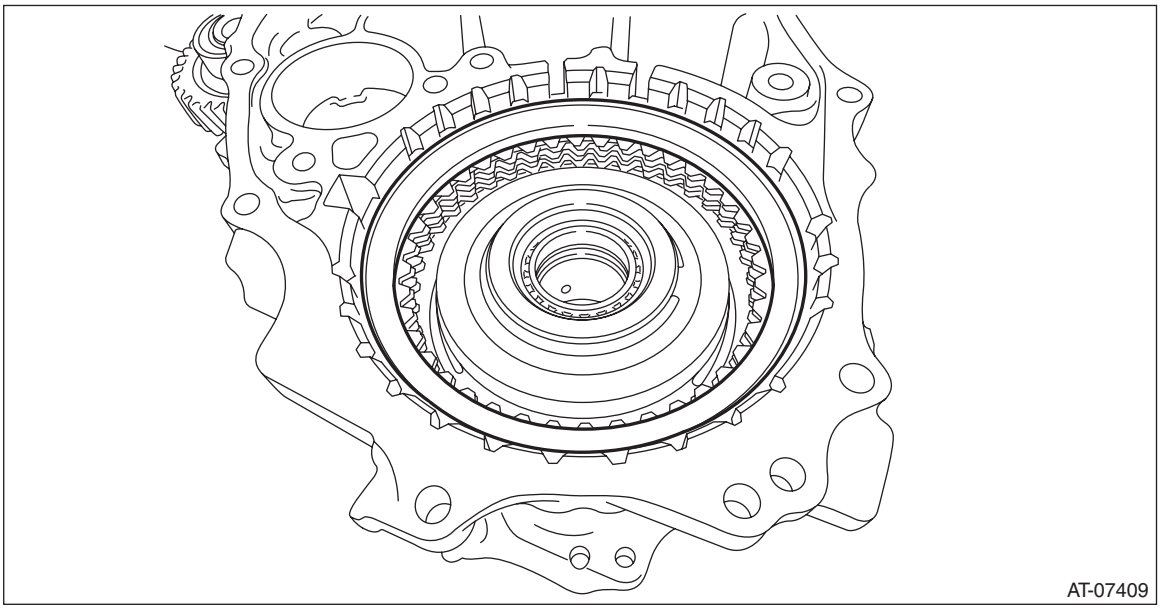

3) Set the ST1, ST2 and ST3 to intermediate case.
ST1 18762AA001 COMPRESSOR SPECIAL TOOL
ST2 18763AA000 COMPRESSOR SHAFT
ST3 18765AA000 COMPRESSOR SUPPORT

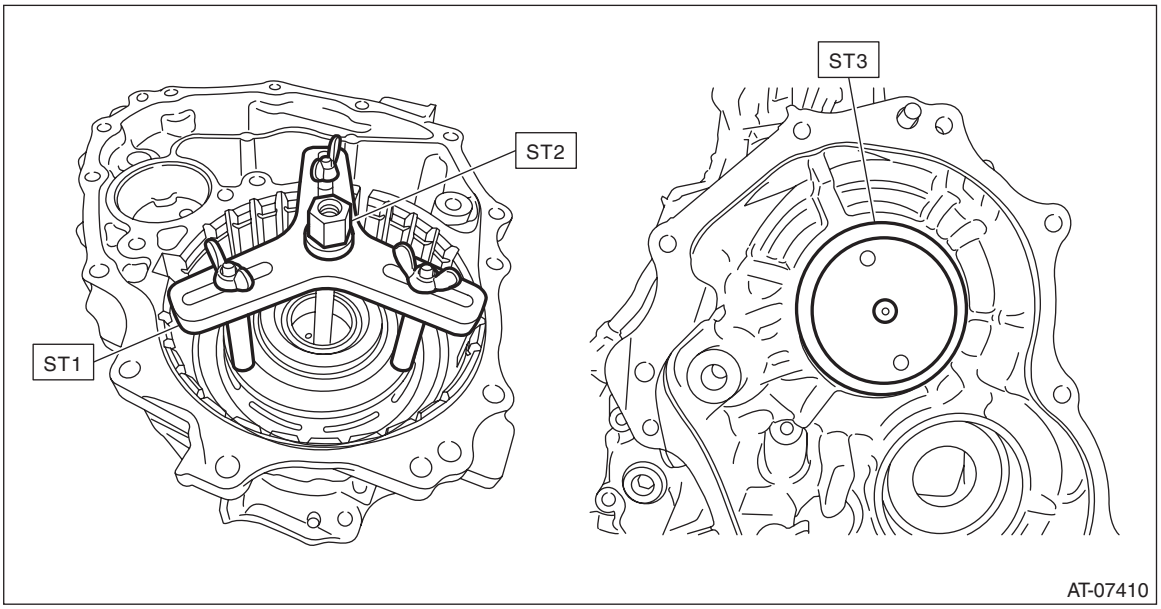

4) Compress the return spring using the set ST to remove the snap ring.

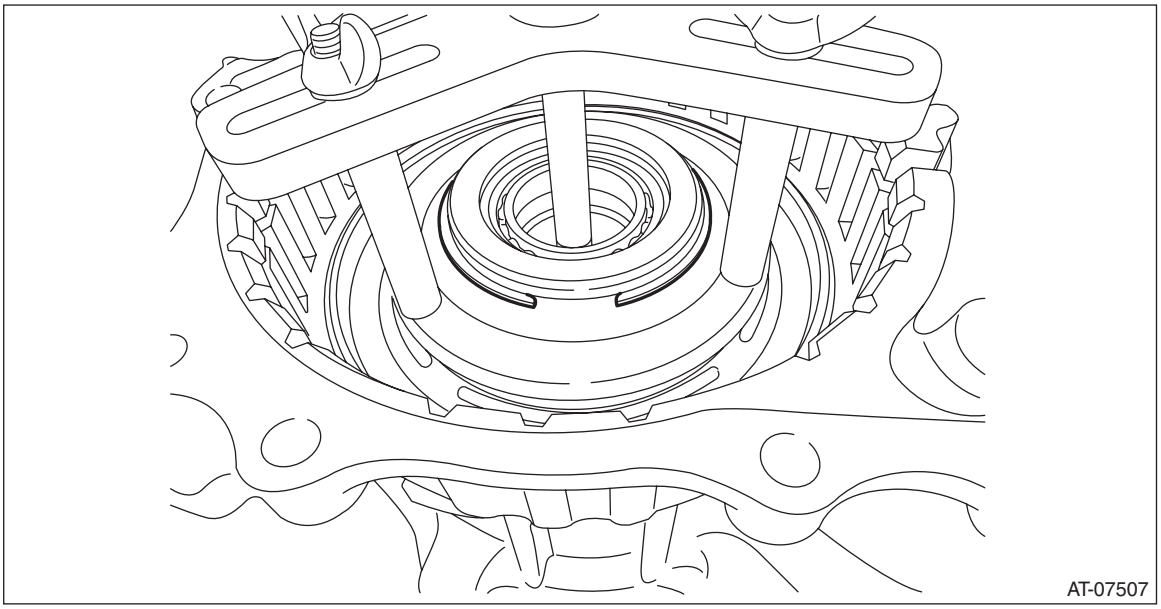

5) Using the ST, remove the snap ring and spring retainer.

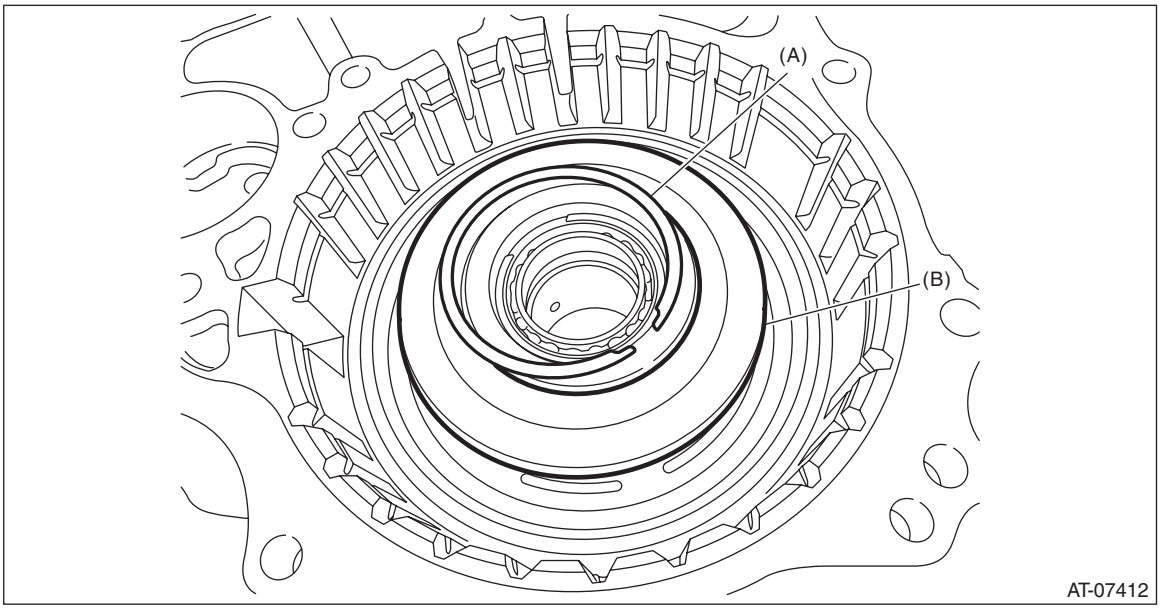

(A) Snap ring
(B) Spring retainer

6) Remove the return spring.

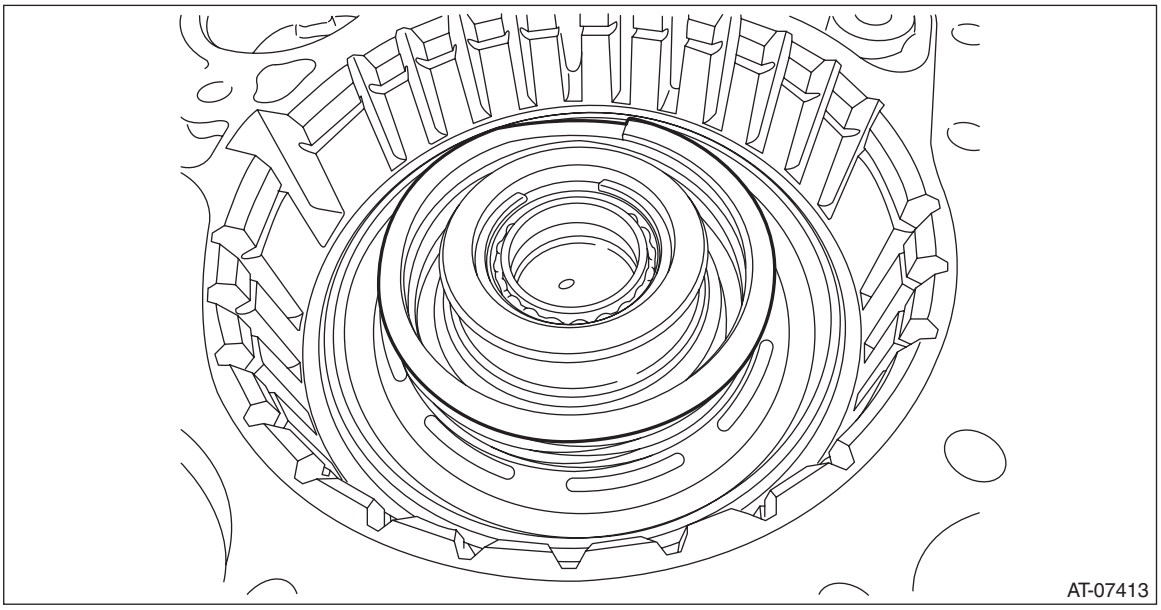

7) Remove the reverse brake piston by blowing compressed air intermittently from intermediate case hole.

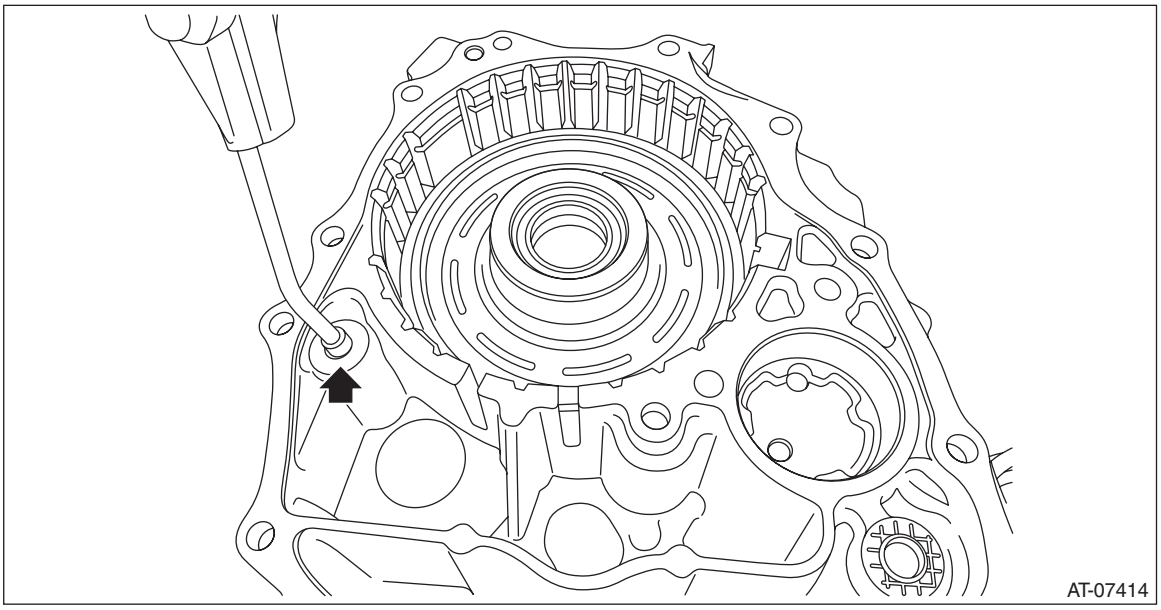

D: ASSEMBLY

1) Apply CVTF to the seal of reverse brake piston and install it to intermediate case.

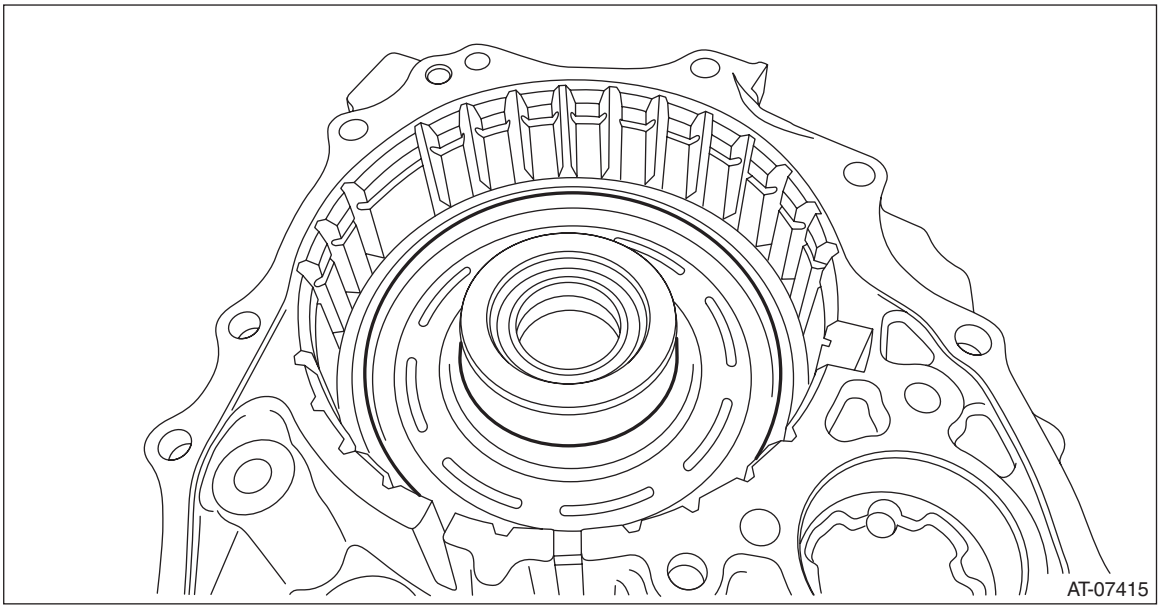

2) Install the return spring.

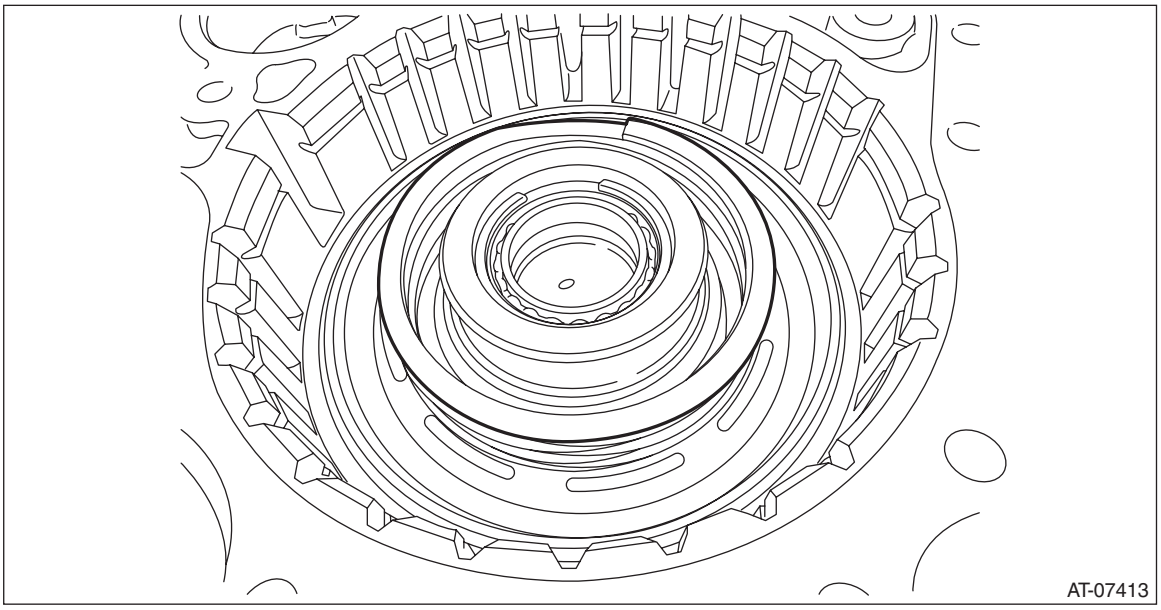

3) Set the spring retainer and snap ring.

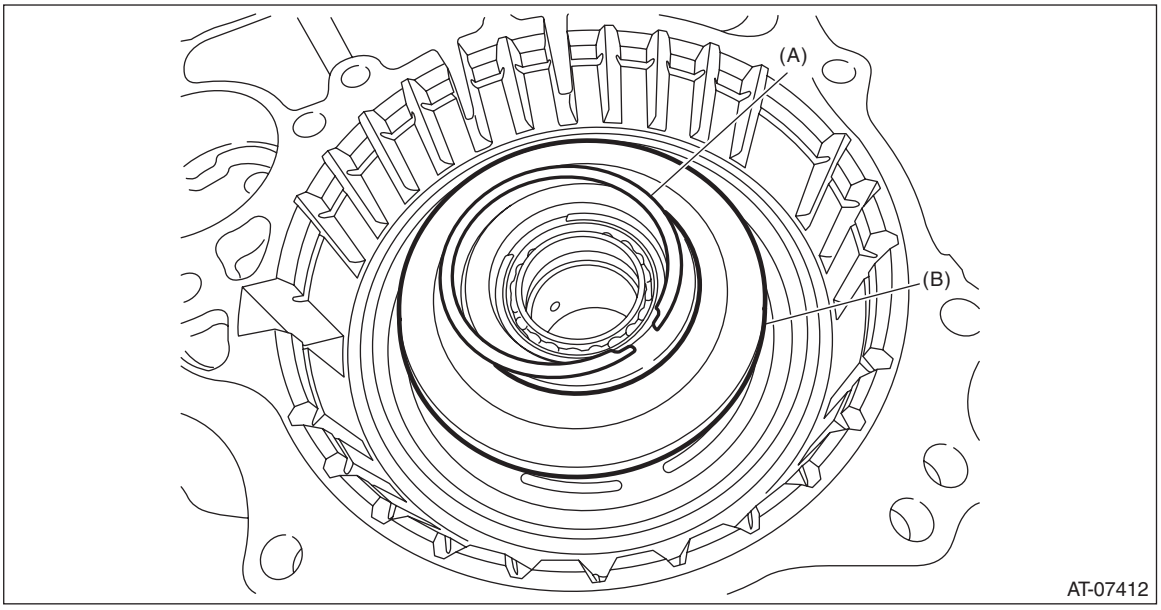

(A) Snap ring
(B) Spring retainer

4) Set the ST1, ST2 and ST3 to intermediate case.
ST1 18762AA001 COMPRESSOR SPECIAL TOOL
ST2 18763AA000 COMPRESSOR SHAFT
ST3 18765AA000 COMPRESSOR SUPPORT

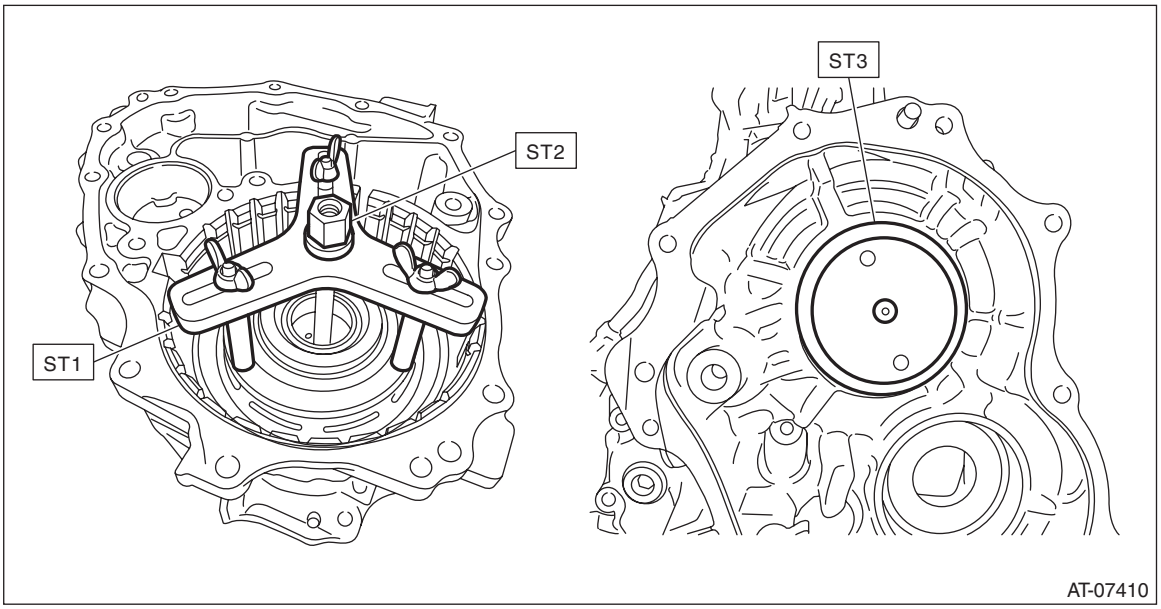

5) Compress the return spring using the ST attached, and install the snap ring.

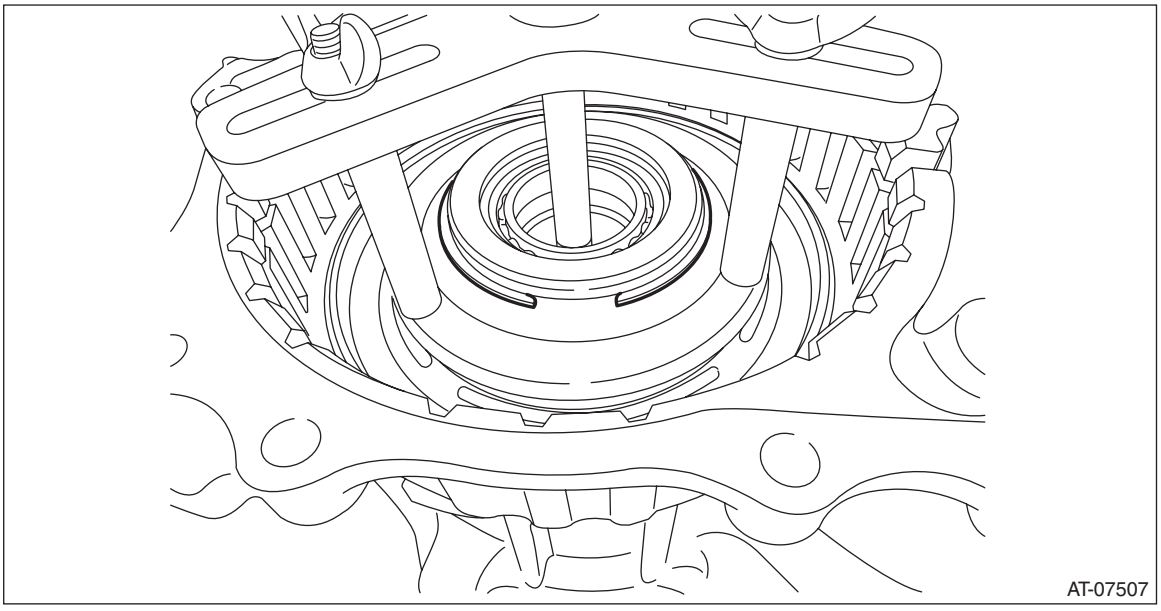

6) Check the operation of reverse brake piston by blowing compressed air intermittently from intermediate case hole.

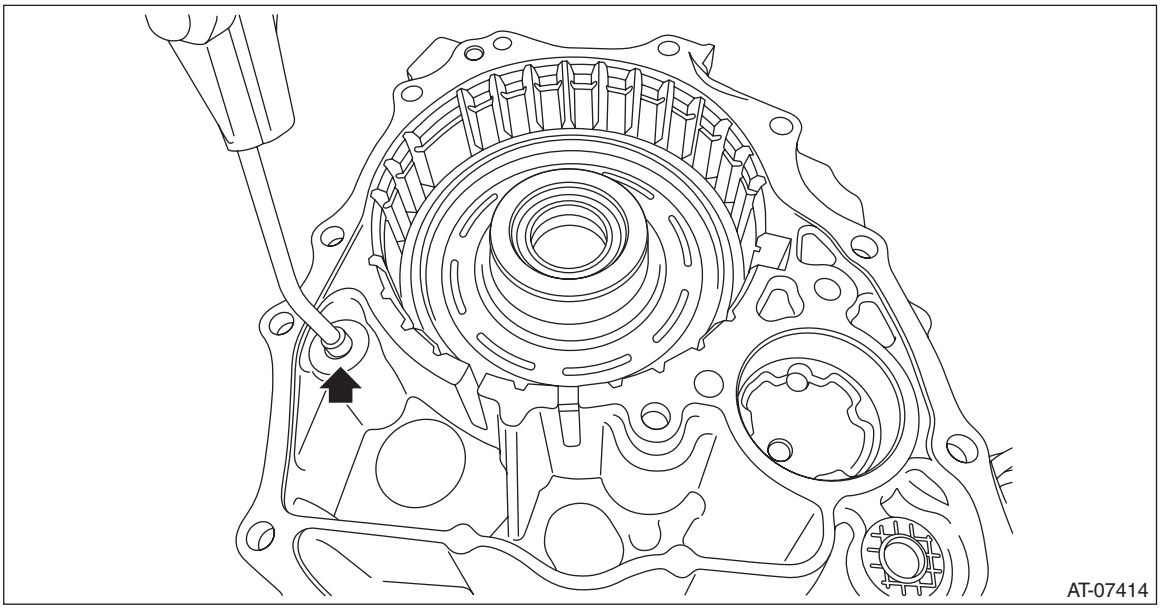

7) Place the dish plate, driven plate, drive plate and retaining plate neatly in this order on surface table.
8) Set the dial gauge to retaining plate, and read its scale.

NOTE:
The value, which is read in the gauge at this time, is zero point.
9) Scale and record the weight "Z" of a flat board which will be put on retaining plate.

NOTE:
- Use a stiff board which does not bend against load as a flat board to be put on retaining plate.
- Use a flat board weighing less than 84 N (8.6 kgf, 18.9 lb).

10) Put the flat board on retaining plate.

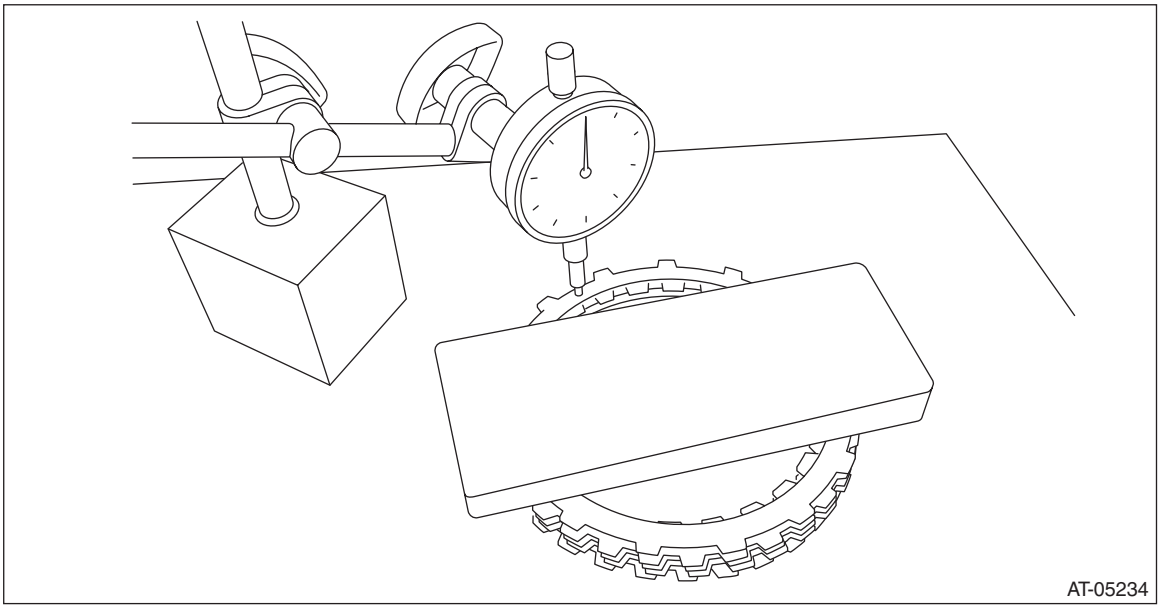

11) Using the following formula, read the push/pull gauge and calculate "N".
N = 84 N (8.6 kgf, 18.9 lb) – Z
84 N (8.6 kgf, 18.9 lb) : Load applied to clutch plate
Z: Flat board weight

12) Press the center of retaining plate by applying a force of “N” or more using push/pull gauge, and then measure and record the compression amount “A”.

NOTE:
Measure at four points with a 90° interval and calculate the average.

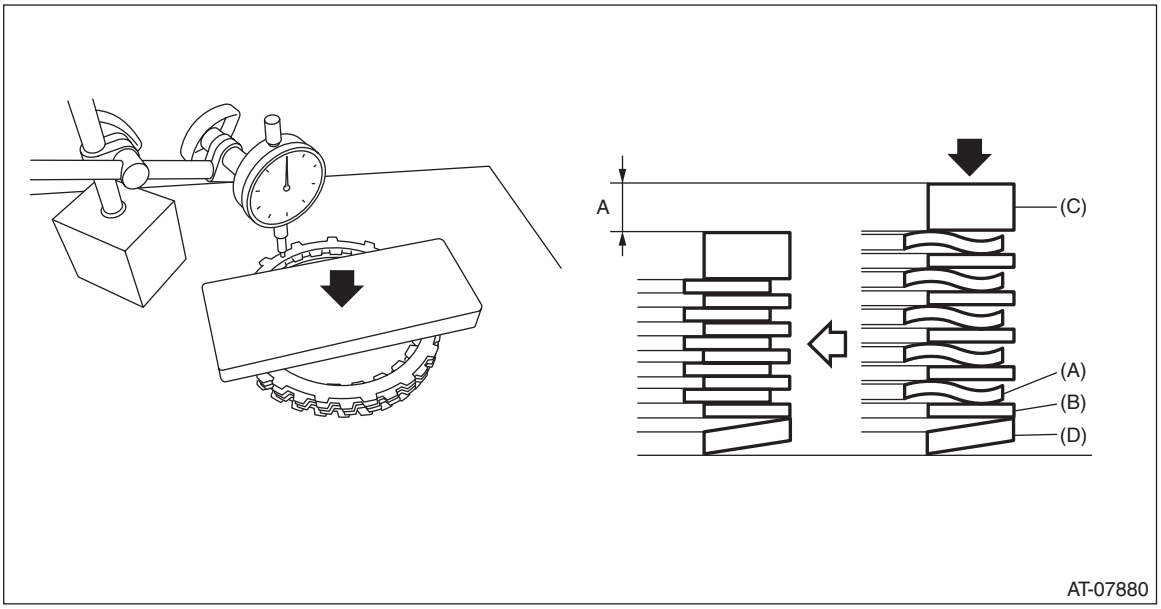

(A) Drive plate
(B) Driven plate
(C) Retaining plate
(D) Dish plate

13) Install the dish plate, drive plate, driven plate, retaining plate and snap ring to intermediate case.

NOTE:
Install the dish plate in the correct direction.

14) Measure and record the clearance “B” between the retaining plate and snap ring.

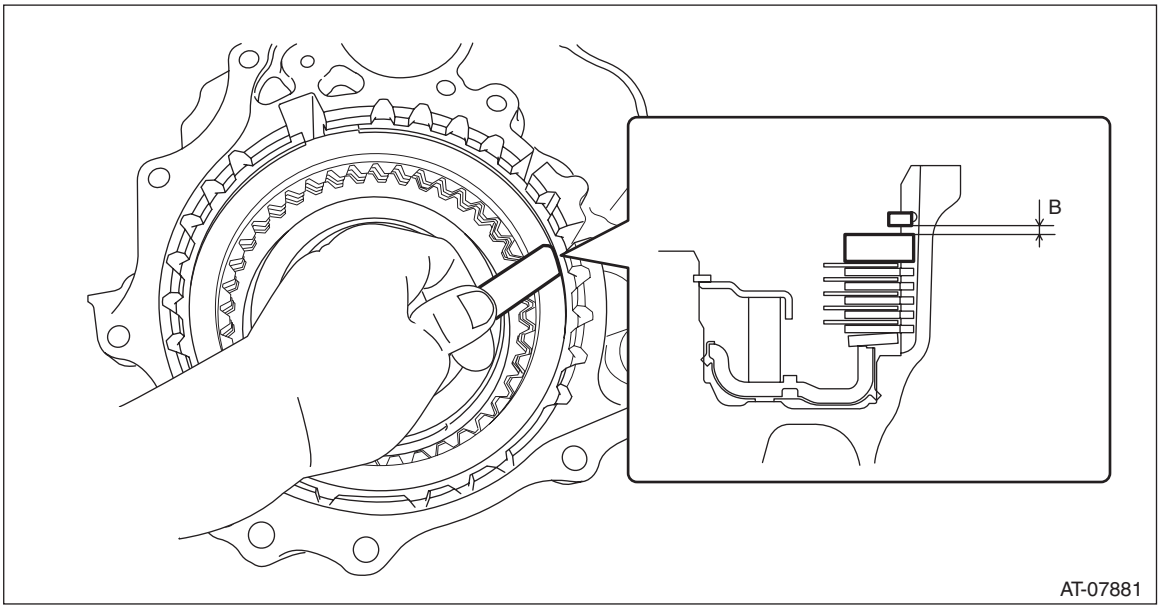

15) Piston stroke calculation
Calculate with A and B dimensions recorded before. If it exceeds the limit, replace with a new drive plate and adjust within the initial standard value.
S mm (in) = A + B
S: Piston stroke
A: Compression amount of drive plate and dish plate
B: Clearance between retaining plate and snap ring

Initial standard:
2.88 — 3.18 mm (0.113 — 0.125 in)

Limit thickness:
3.38 mm (0.133 in)

Retaining plate	
Part No.	Thickness mm (in)
31567AB680	5.6 (0.220)
31567AB690	5.8 (0.228)
31567AB700	6.0 (0.236)
31579AB710	6.2 (0.244)

E: INSPECTION

- Inspect the drive plate facing for wear and damage.
- Check the driven plate for discoloration (burnt color).
- Check for worn snap ring, fatigue or damaged return spring or deformed spring retainer.
- Make sure the clearance between retaining plate and snap ring of reverse brake is within the limit. If it exceeds the limit, replace with a new drive plate and select and adjust the retaining plate within the initial standard value. <Ref. to CVT(TR690)-176, ASSEMBLY, Reverse Brake Assembly.>

37.Forward Clutch Assembly

A: REMOVAL

1) Remove the transmission from the vehicle. <Ref. to CVT(TR690)-57, REMOVAL, Automatic Transmission Assembly.>
2) Remove the extension case. <Ref. to CVT(TR690)-143, REMOVAL, Extension Case.>
3) Remove the rear drive shaft. <Ref. to CVT(TR690)-147, REMOVAL, Rear Drive Shaft.>
4) Remove the transfer clutch assembly. <Ref. to CVT(TR690)-152, REMOVAL, Transfer Clutch.>
5) Remove the center differential carrier. <Ref. to CVT(TR690)-155, REMOVAL, Center Differential Carrier.>
6) Remove the transfer reduction driven gear. <Ref. to CVT(TR690)-159, REMOVAL, Transfer Reduction Driven Gear.>
7) Remove the intermediate case. <Ref. to CVT(TR690)-166, REMOVAL, Intermediate Case.>
8) Remove the thrust needle bearing.

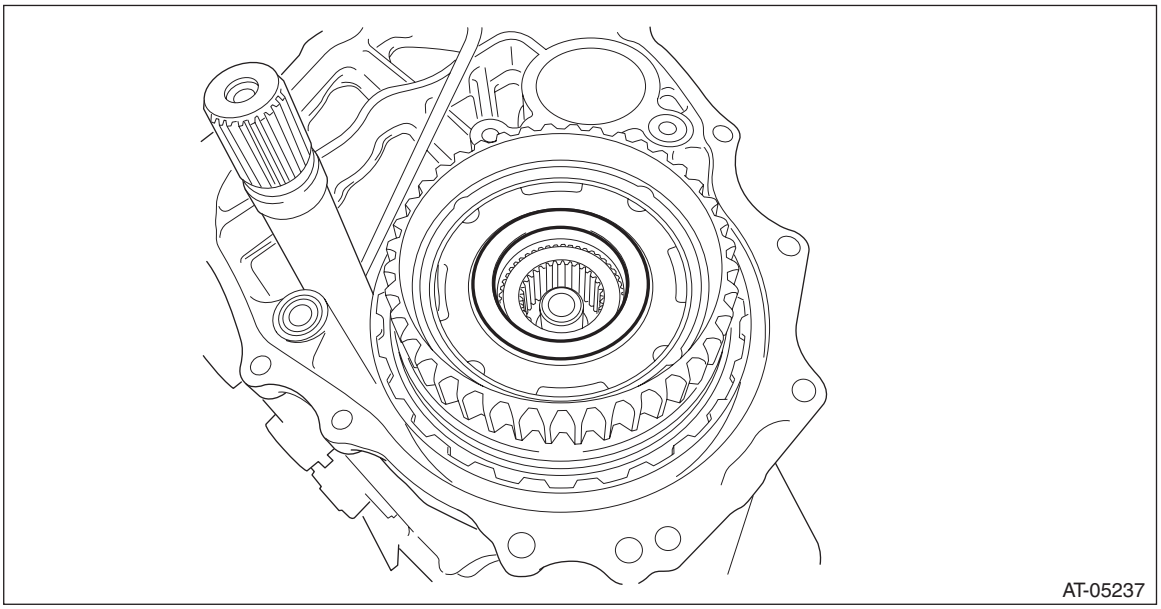
AT-05237

9) Remove the forward clutch assembly.

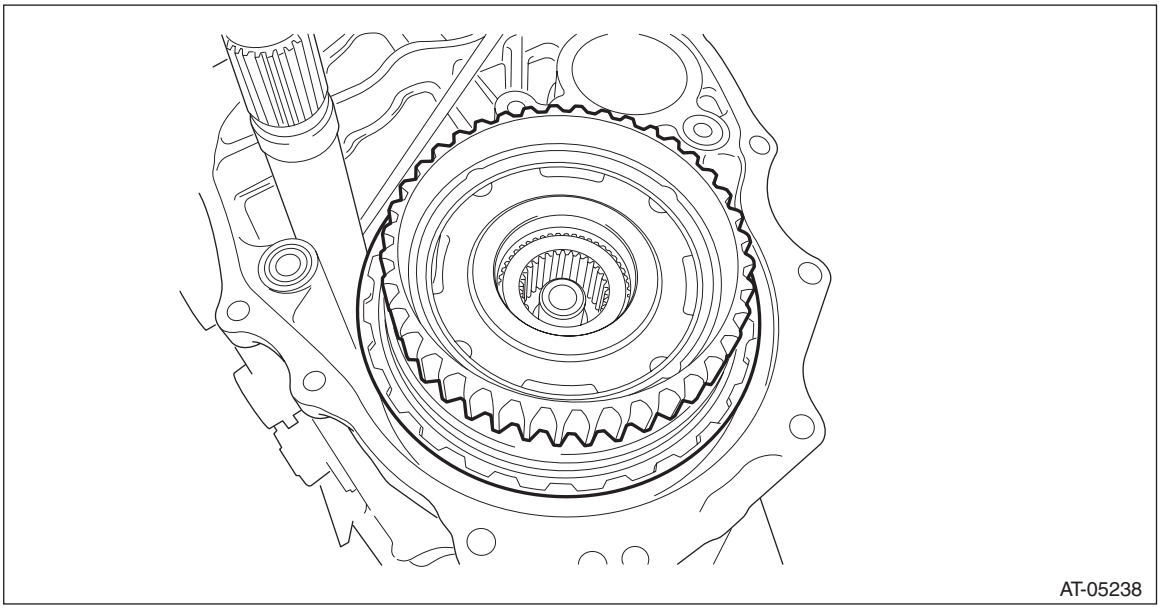
AT-05238

10) Remove the washer.

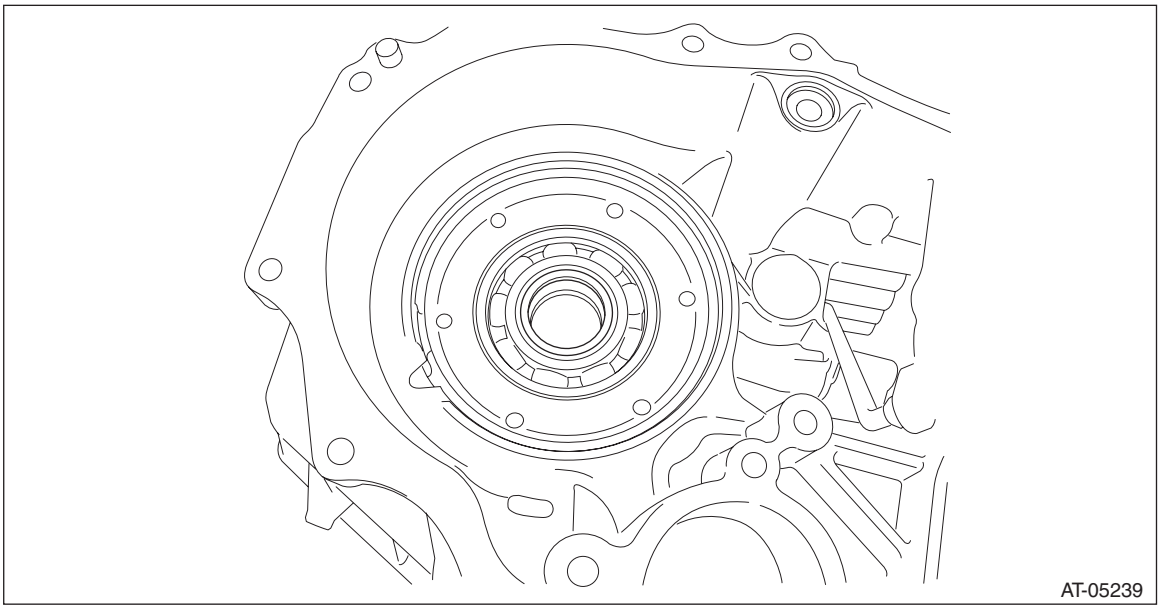

B: INSTALLATION

1) Select a washer. <Ref. to CVT(TR690)-201, ADJUSTMENT, Forward Clutch Assembly.>
2) Install the selected washer.

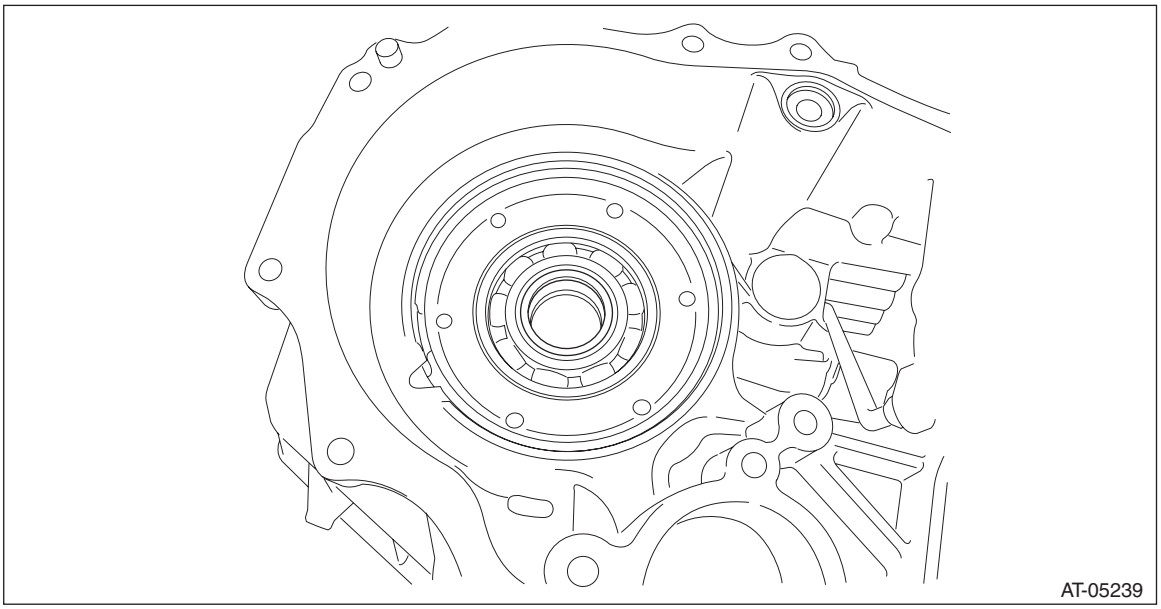

3) Install the forward clutch assembly.

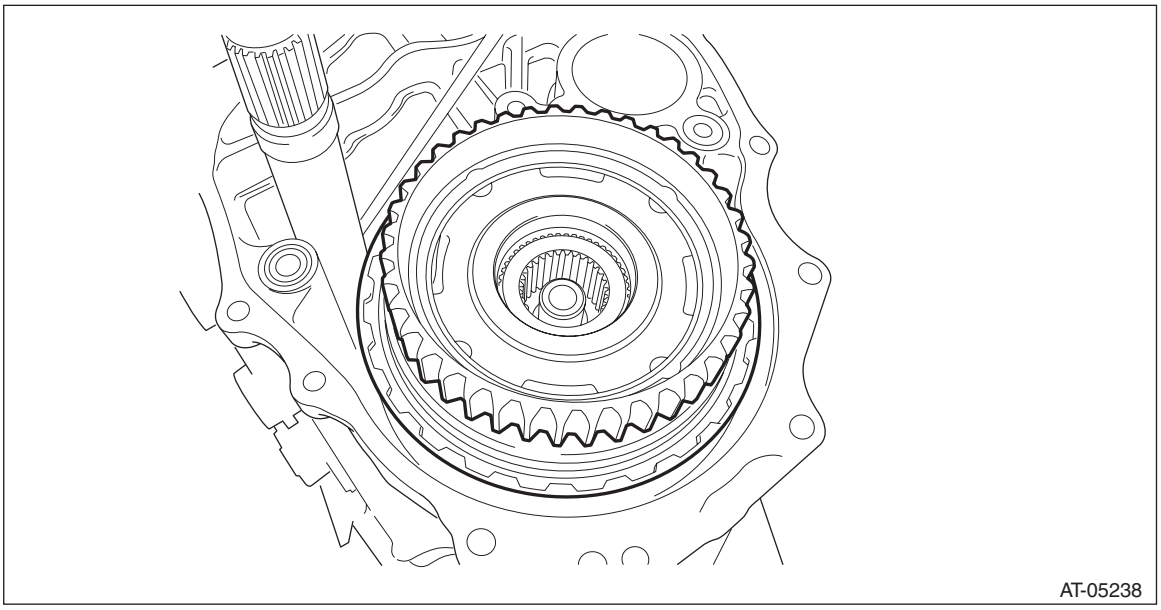

4) Install the thrust needle bearing.

NOTE:
Install the thrust needle bearing in the correct direction.

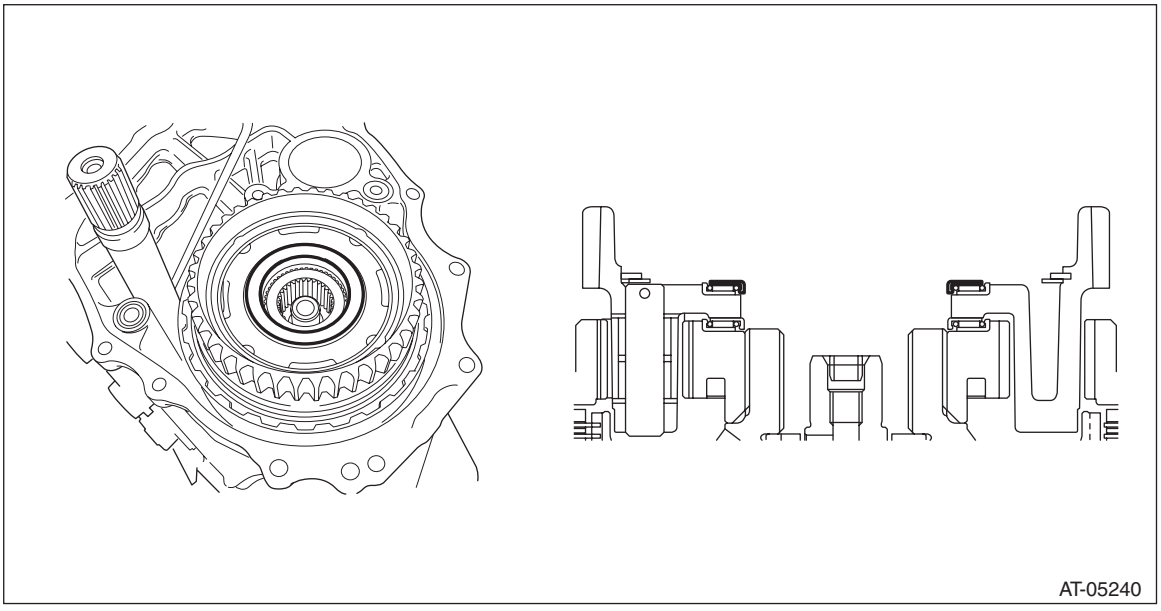

5) Install the intermediate case. <Ref. to CVT(TR690)-167, INSTALLATION, Intermediate Case.>
6) Install the transfer reduction driven gear assembly. <Ref. to CVT(TR690)-159, INSTALLATION, Transfer Reduction Driven Gear.>
7) Install the center differential carrier. <Ref. to CVT(TR690)-156, INSTALLATION, Center Differential Carrier.>
8) Install the transfer clutch assembly. <Ref. to CVT(TR690)-152, INSTALLATION, Transfer Clutch.>
9) Install the rear drive shaft. <Ref. to CVT(TR690)-147, INSTALLATION, Rear Drive Shaft.>
10) Install the extension case. <Ref. to CVT(TR690)-144, INSTALLATION, Extension Case.>
11) Install the transmission to vehicle. <Ref. to CVT(TR690)-70, INSTALLATION, Automatic Transmission Assembly.>

C: DISASSEMBLY

1) Remove the planetary carrier assembly.

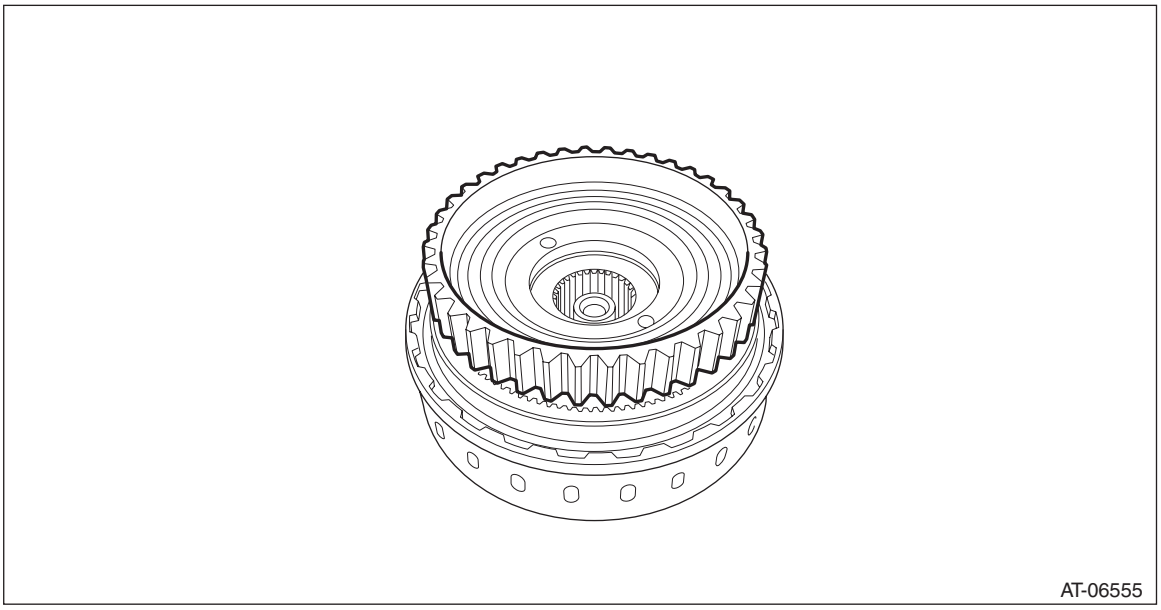

2) Remove the thrust needle bearing.

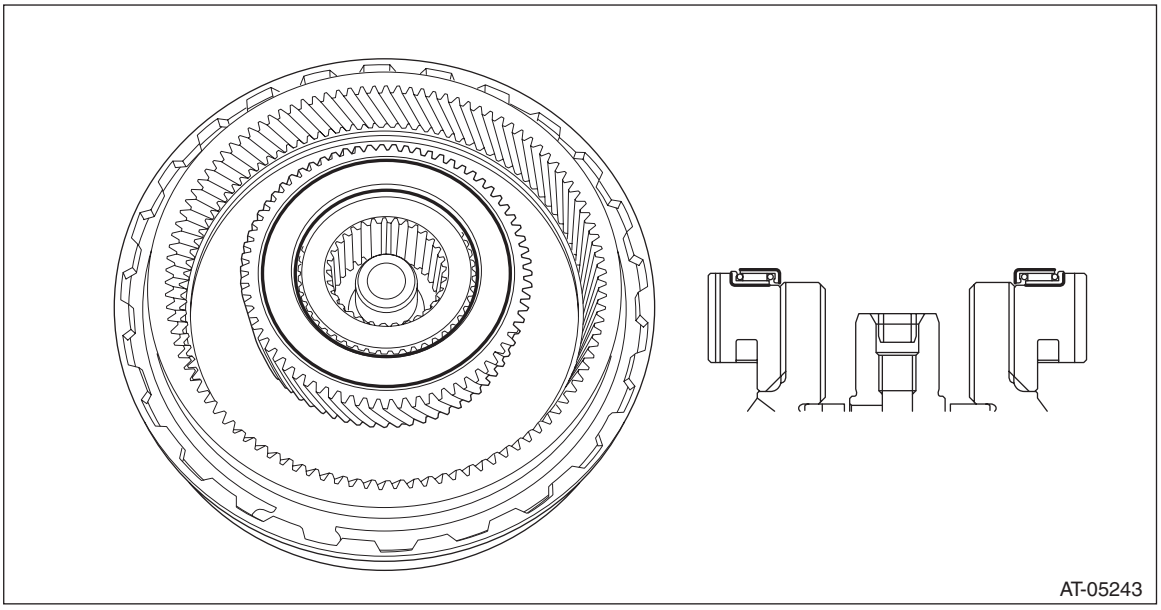

3) Remove the snap ring.

NOTE:
Use marking or labeling to the upper snap ring for measurement of the snap ring thickness when selecting the retaining plate.

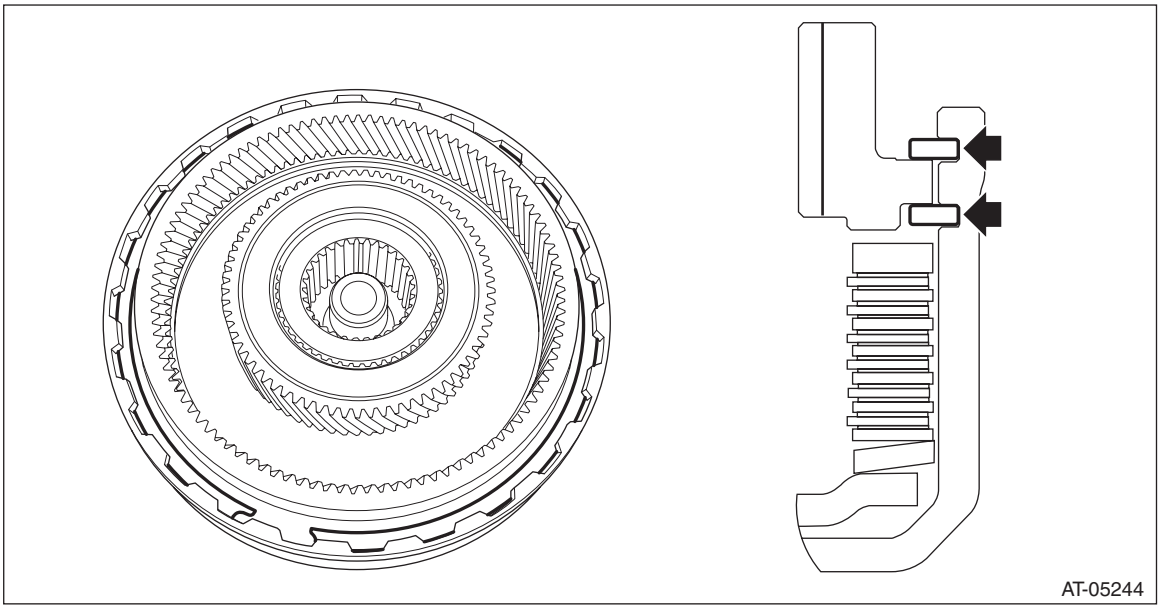

4) Remove the internal gear.

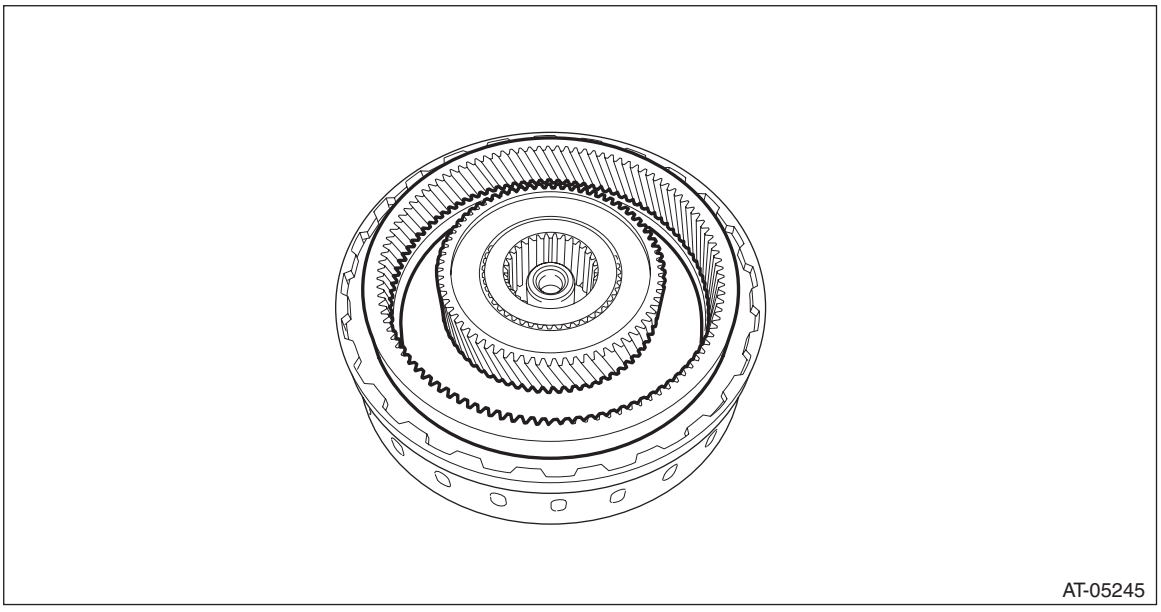

5) Remove the sun gear.

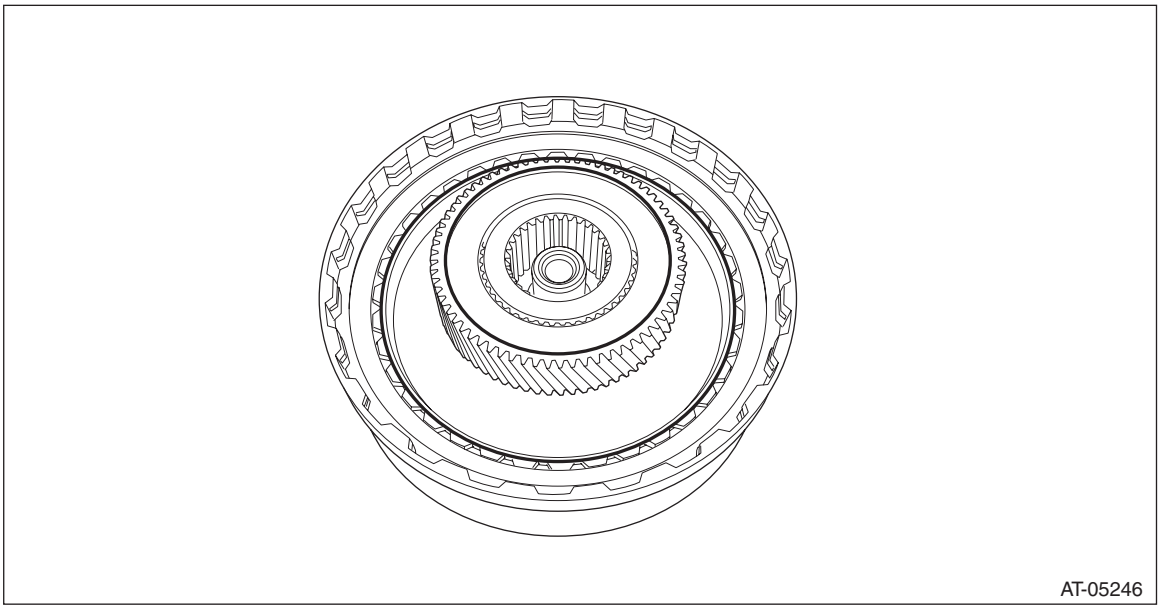

6) Remove the washer.

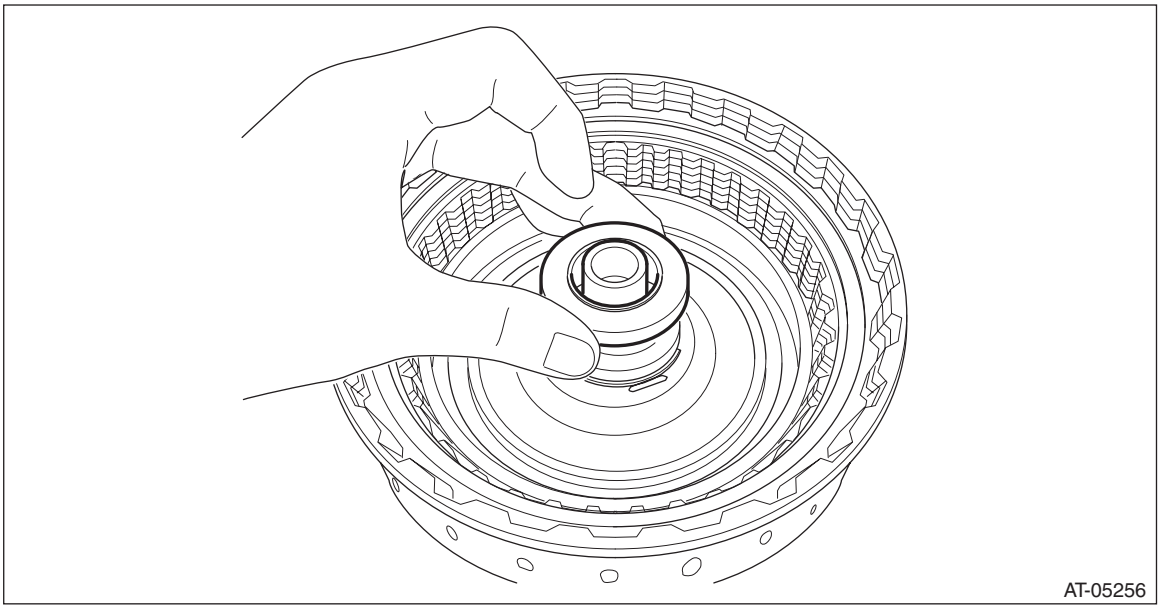

7) Remove the thrust needle bearing.

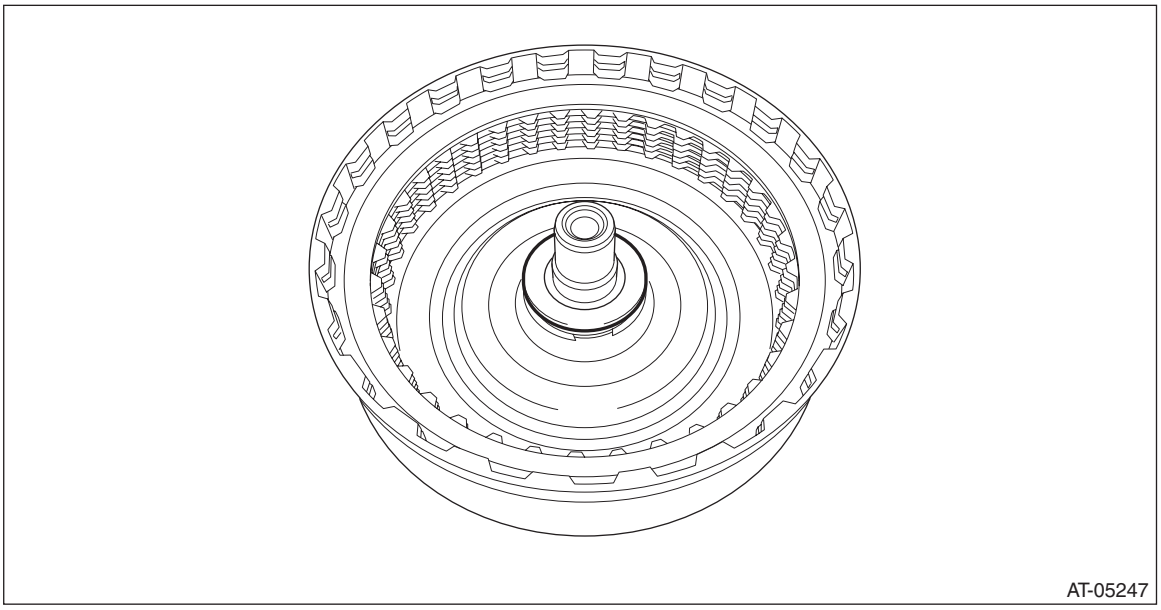

8) Remove the snap ring.

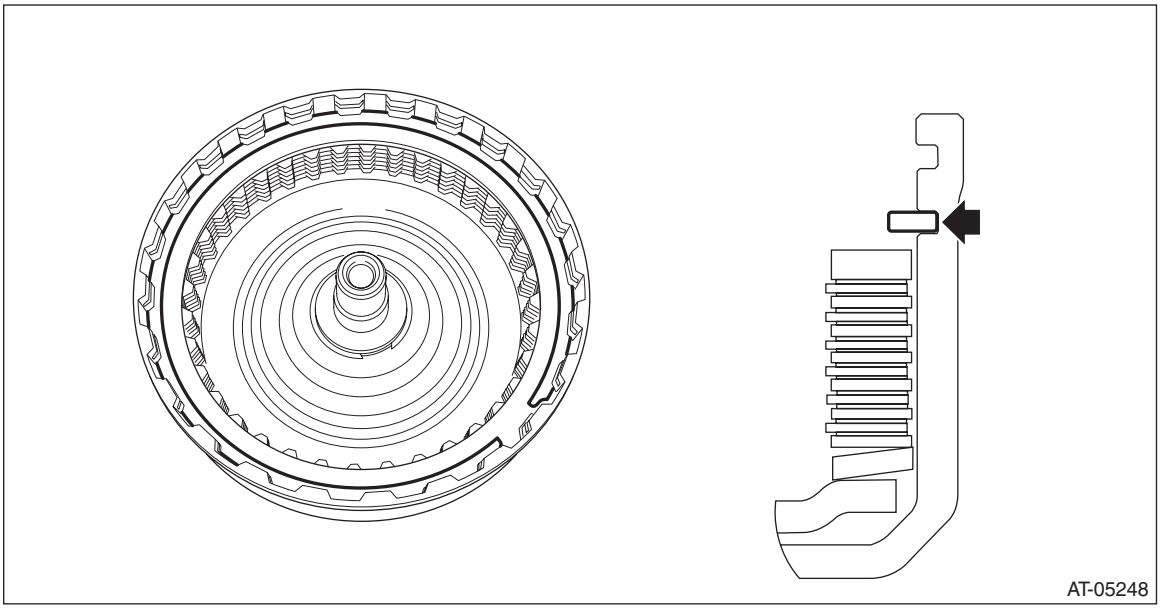

9) Remove the retaining plate, drive plate, driven plate and dish plate.

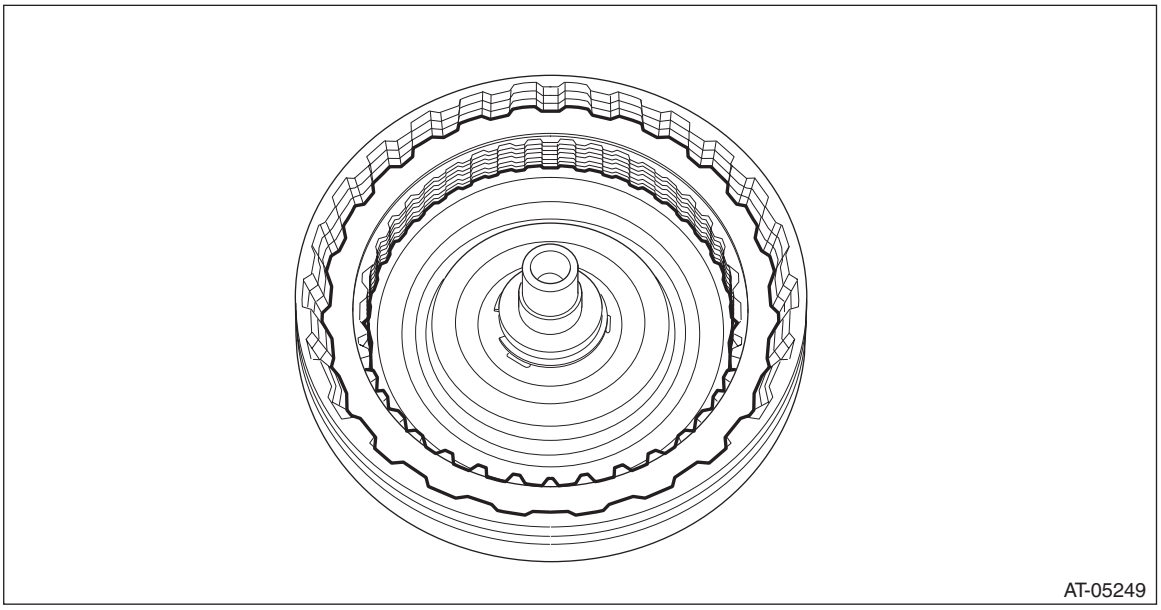

10) Using the ST, remove the snap ring.
ST 18762AA001 COMPRESSOR SPECIAL TOOL

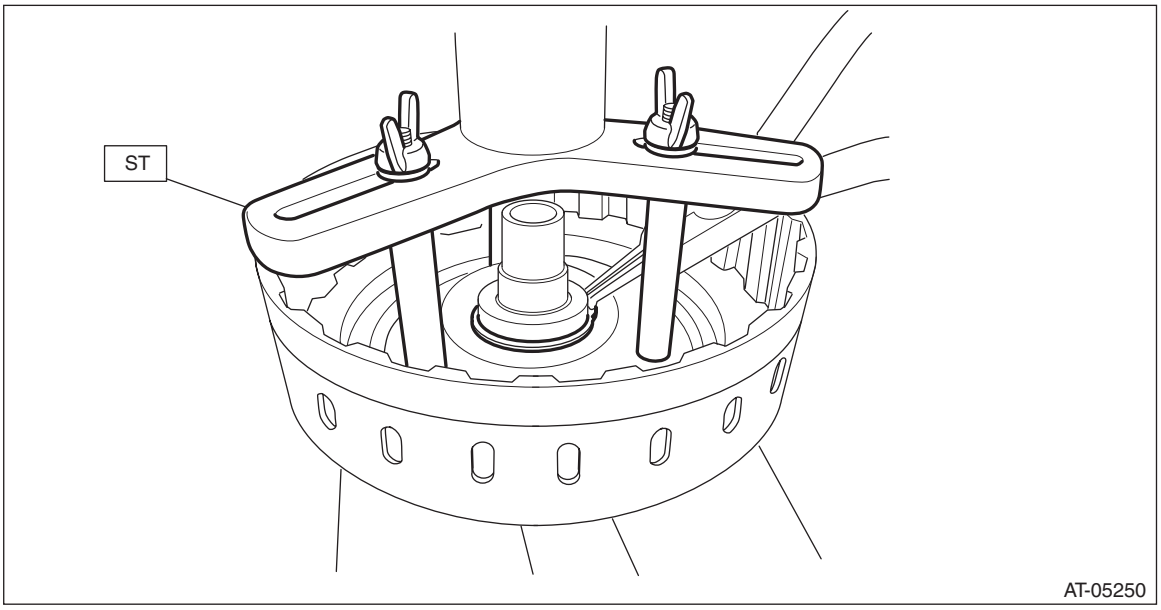

11) Remove the forward clutch piston retainer.

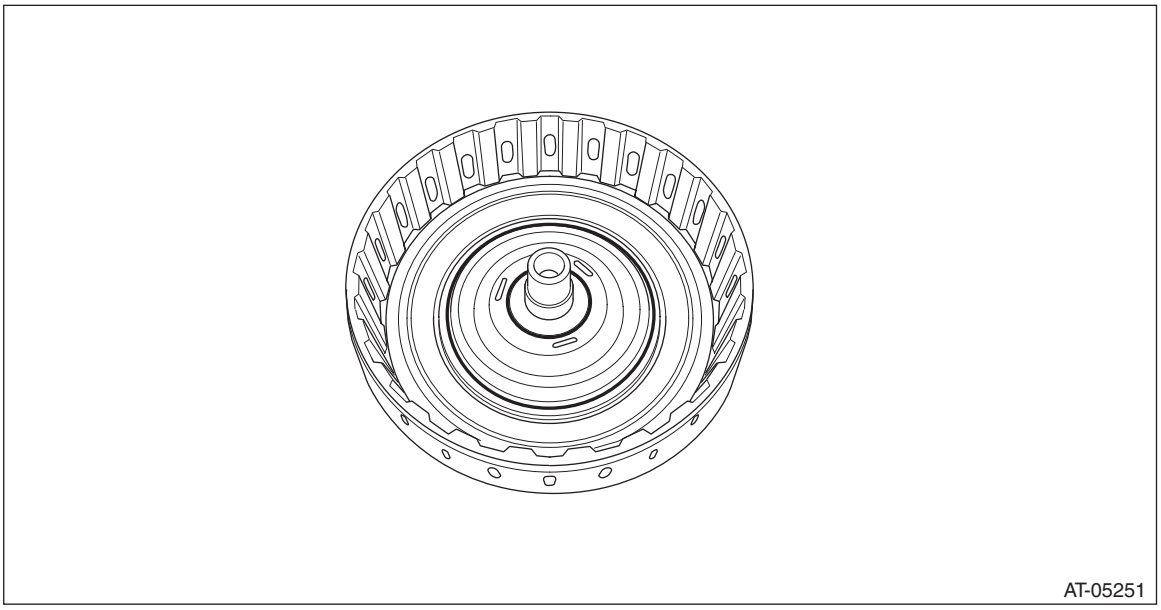

12) Remove the return spring.

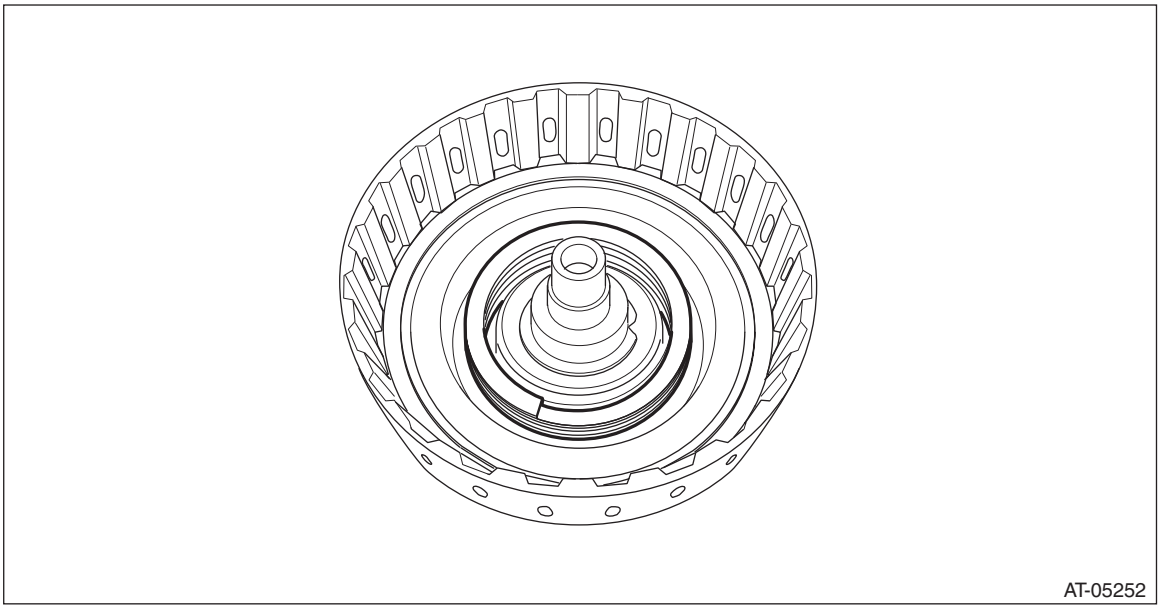

13) Remove the forward clutch piston by blowing compressed air intermittently from end of forward clutch drum.

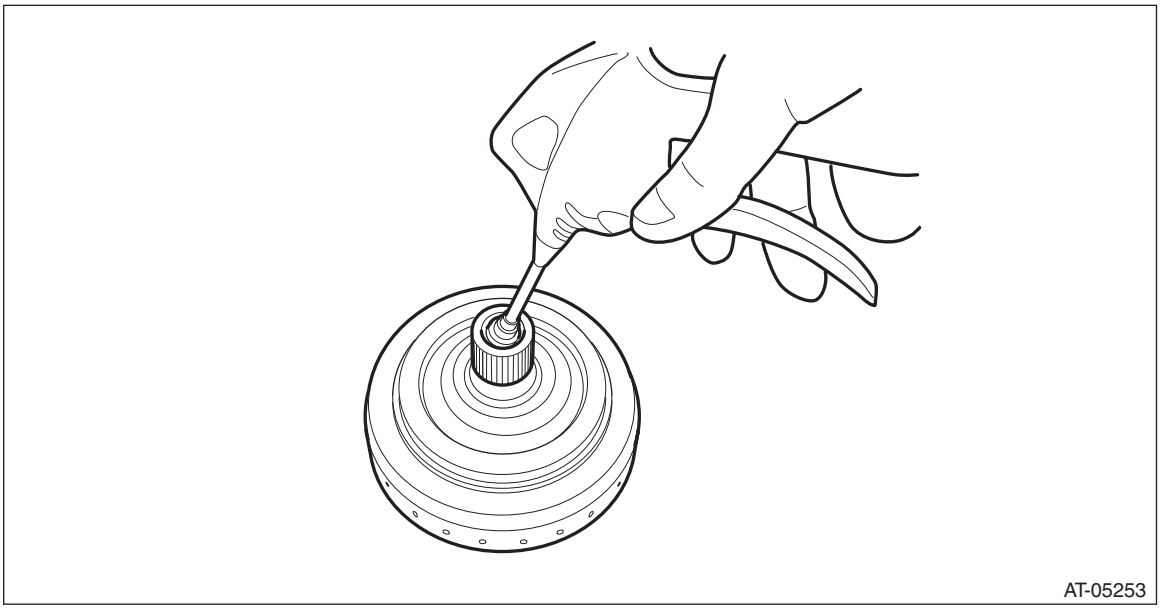

D: ASSEMBLY

1) Install the forward clutch piston to forward clutch drum.

NOTE:
- Apply CVTF to the seal of forward clutch piston.
- Insert it all the way to the end.

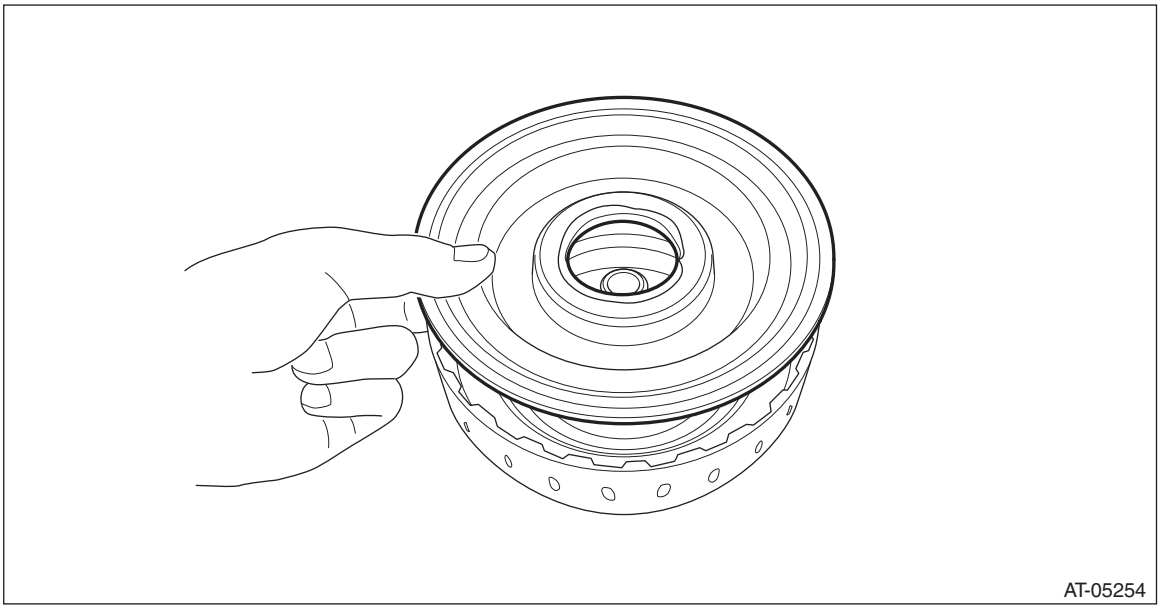

2) Install the return spring.

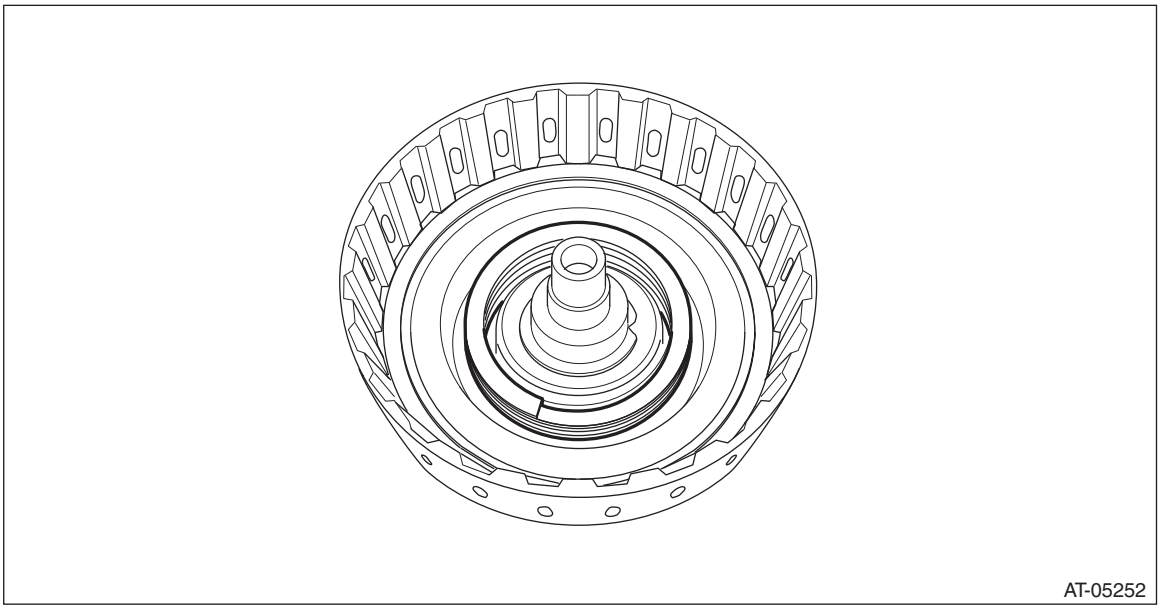

3) Install the forward clutch piston retainer.

NOTE:
Apply CVTF to the sealing portion of the forward clutch piston retainer.

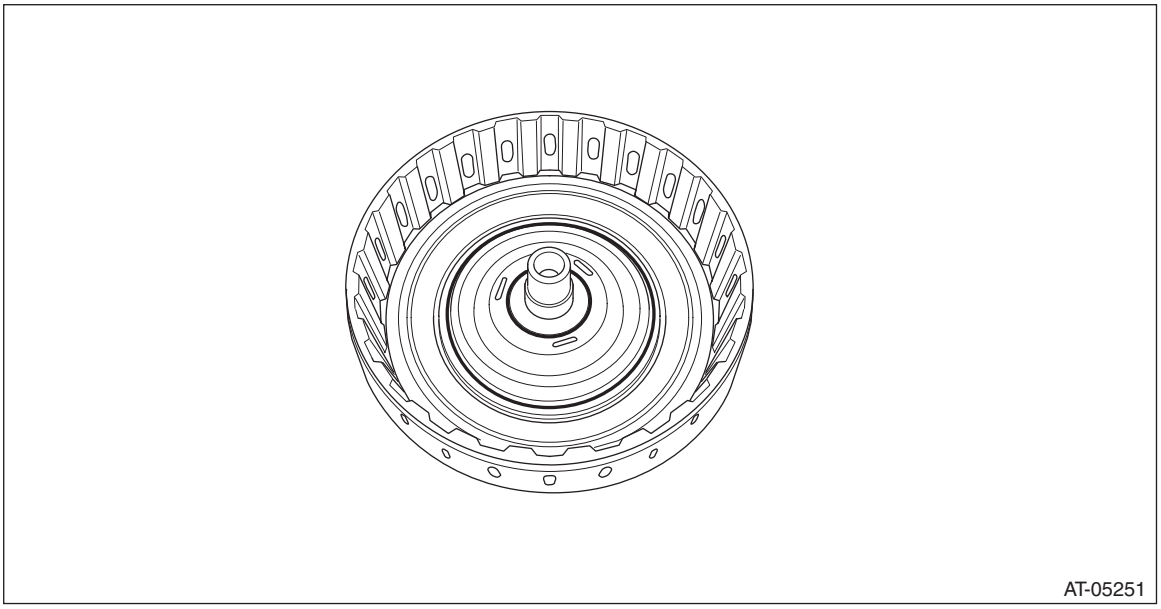

4) Compress the return spring using the ST to install the snap ring.
ST 18762AA001 COMPRESSOR SPECIAL TOOL

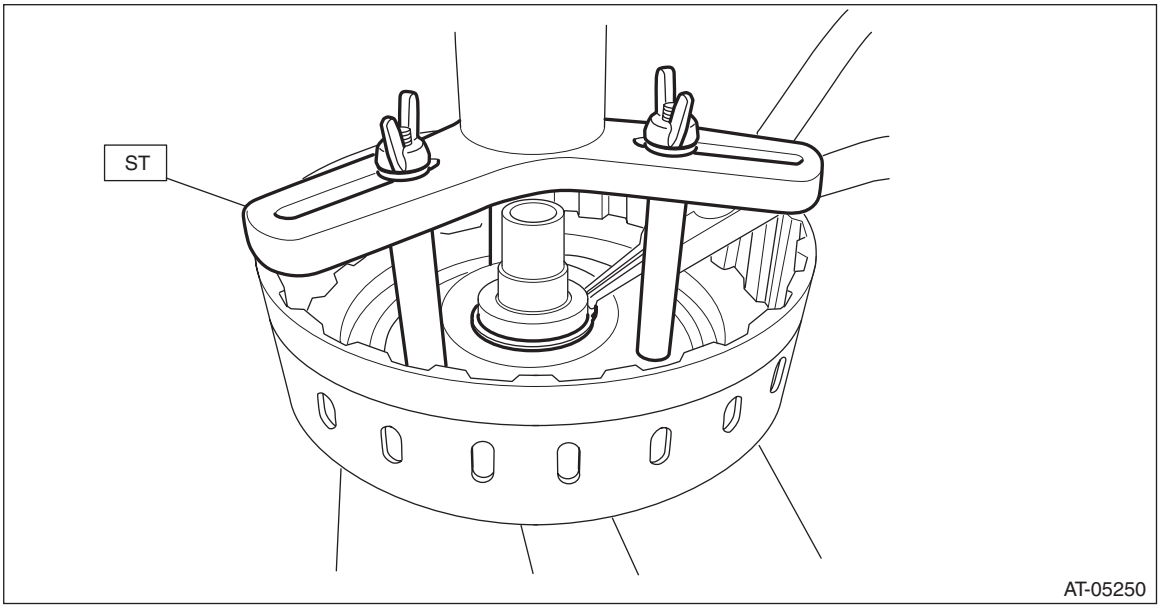

5) Measure thickness “A” of the retaining plate installed.

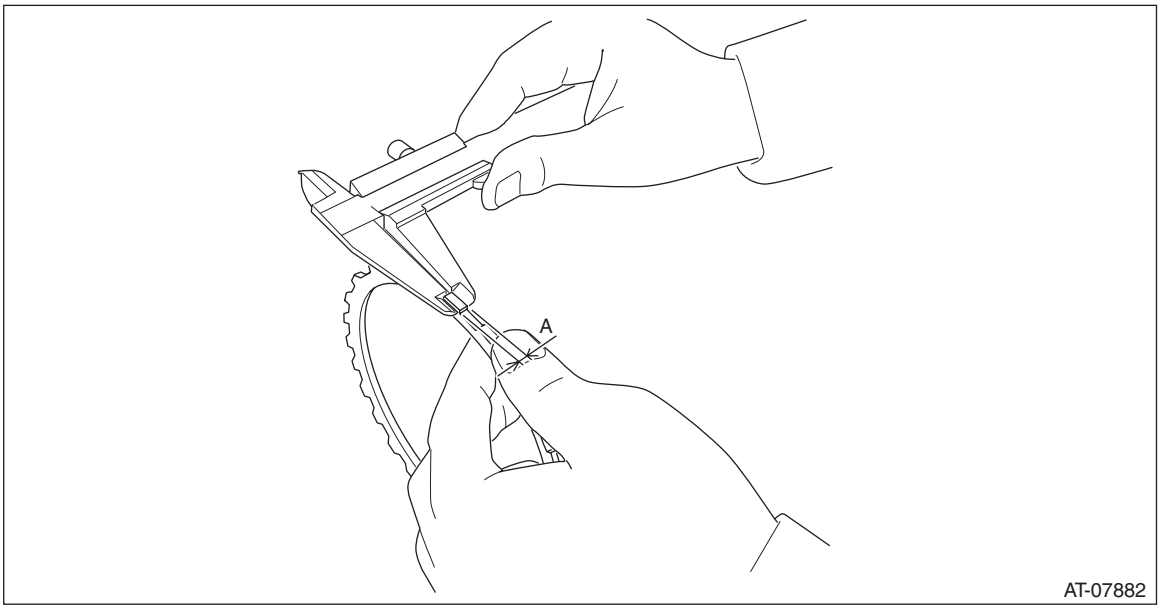

6) Measure thickness “B” of the internal gear on a surface plate.

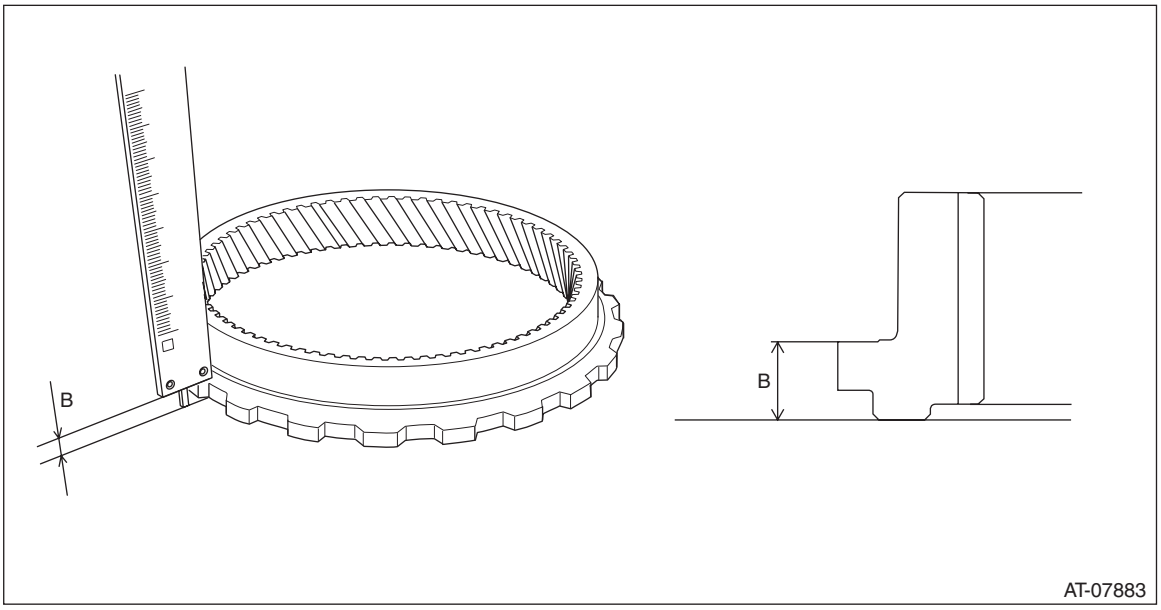

7) Measure thickness “C” of labelled or marked snap ring.

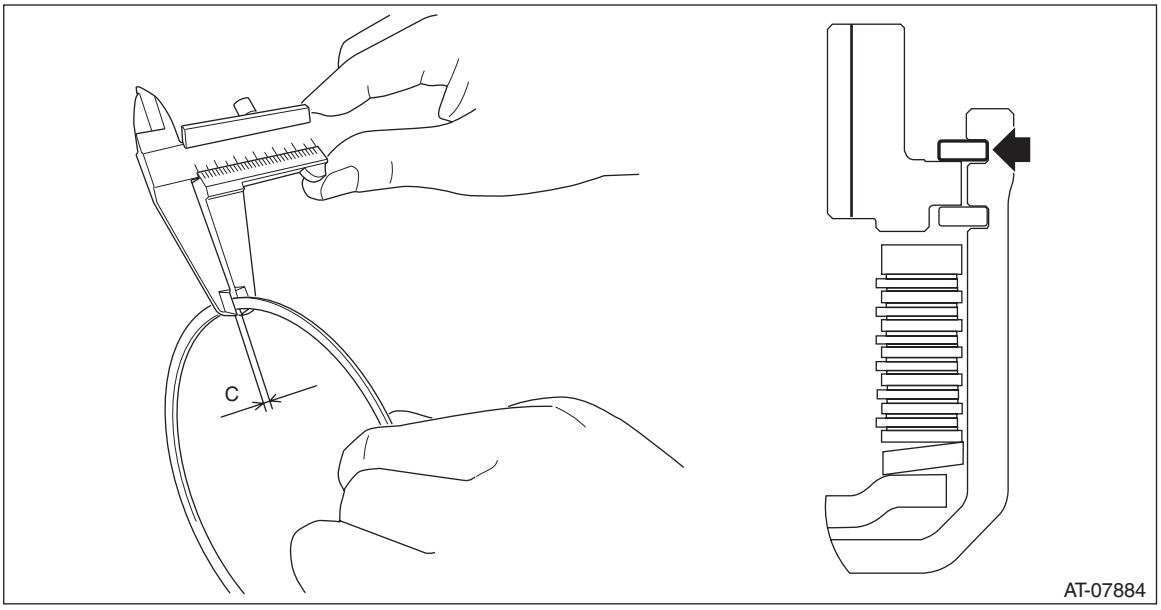

8) Install the dish plate, drive plate and driven plate.

9) Install the snap ring at the location (upper groove) indicated in the figure.

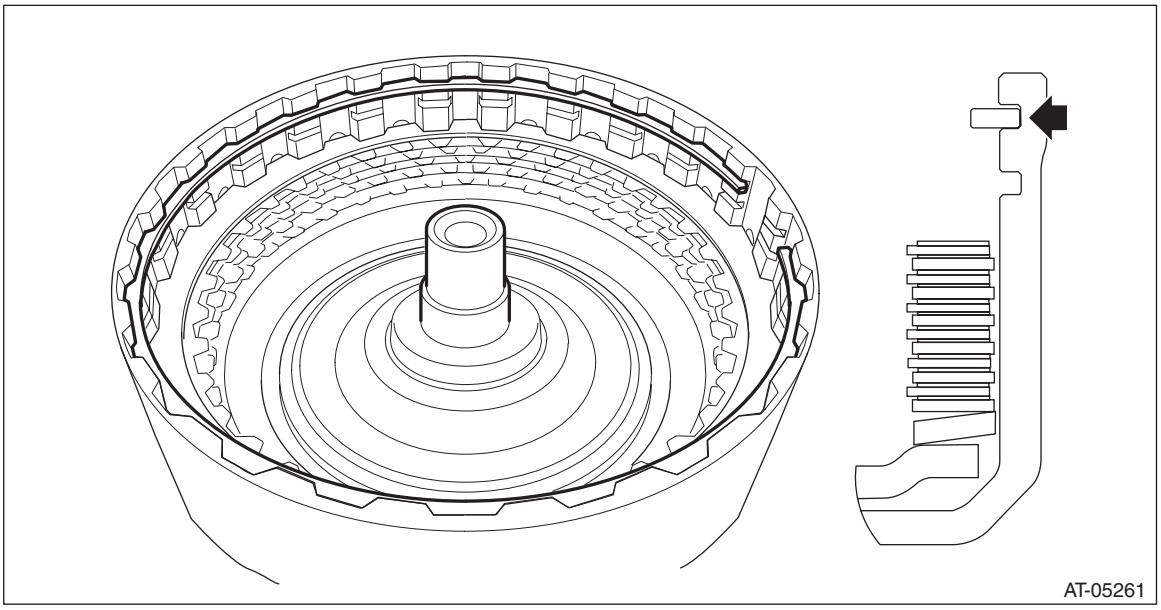

10) Measure depth “D” of snap ring and driven plate while lifting the snap ring.

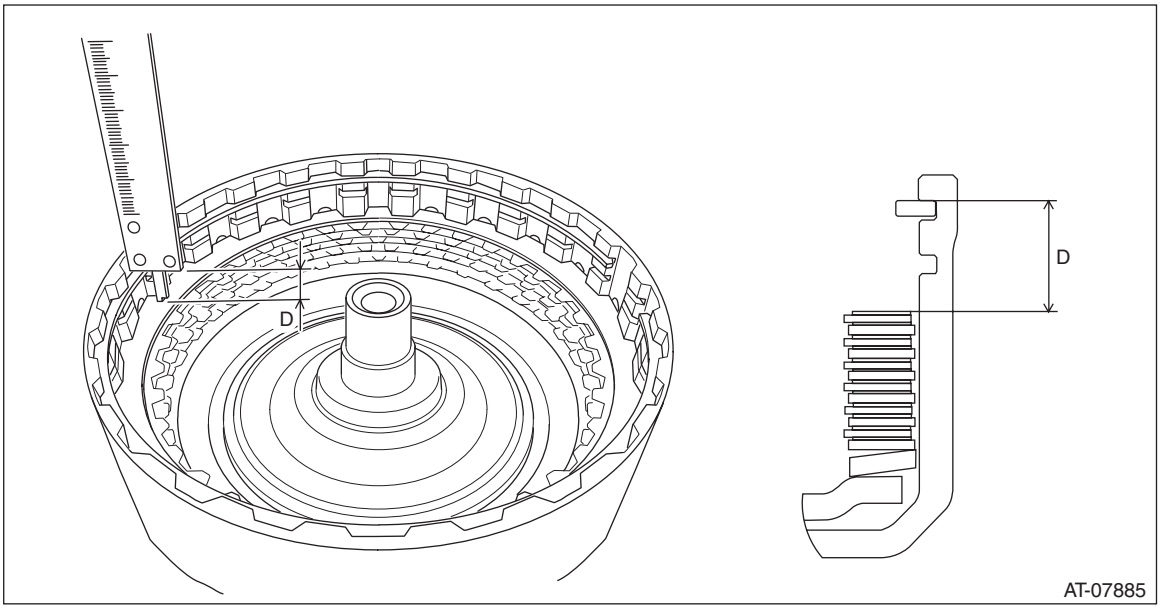

11) Calculate clearance “T” from internal gear to retaining plate with the obtained value from step 5) through step 10).
Formula: T mm (in) = D – A – B – C
T: Clearance from internal gear to retaining plate
A: Thickness of retaining plate
B: Thickness of internal gear
C: Thickness of snap ring
D: Depth of snap ring and driven plate, with snap ring raised upward

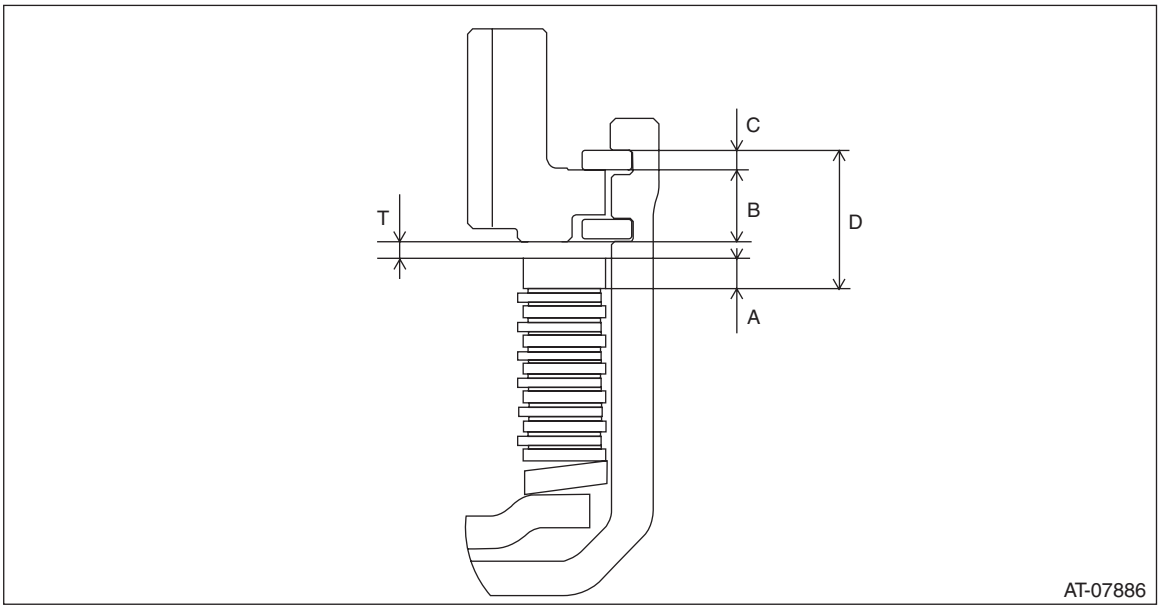

12) If the value “T” obtained from step 11) exceeds the limit for use, replace the drive plate and driven plate with new parts and select the retaining plate within the initial standard value.

Initial standard:
1.2 — 1.6 mm (0.047 — 0.063 in)

Limit thickness:
2.4 mm (0.09 in)

Retaining plate	
Item number	Thickness mm (in)
31567AB670	3.2 (0.126)
31567AB660	3.0 (0.118)
31567AB650	2.8 (0.110)
31567AB640	2.6 (0.102)

13) Remove the snap ring.

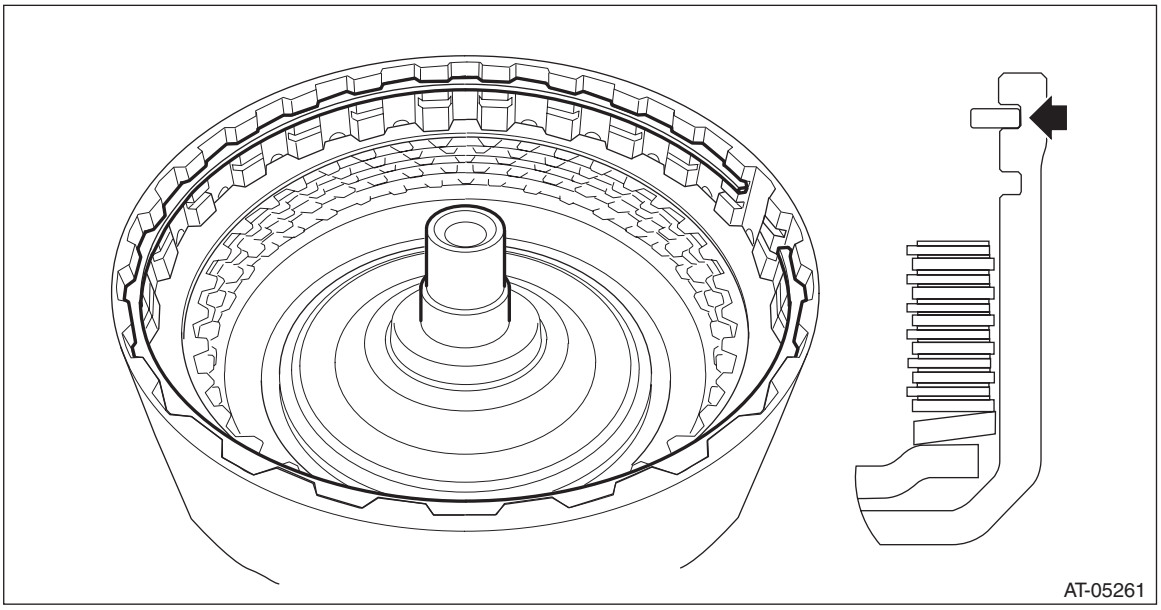

14) Replace with the selected retaining plate to install.
15) Install the snap ring to the lower groove.

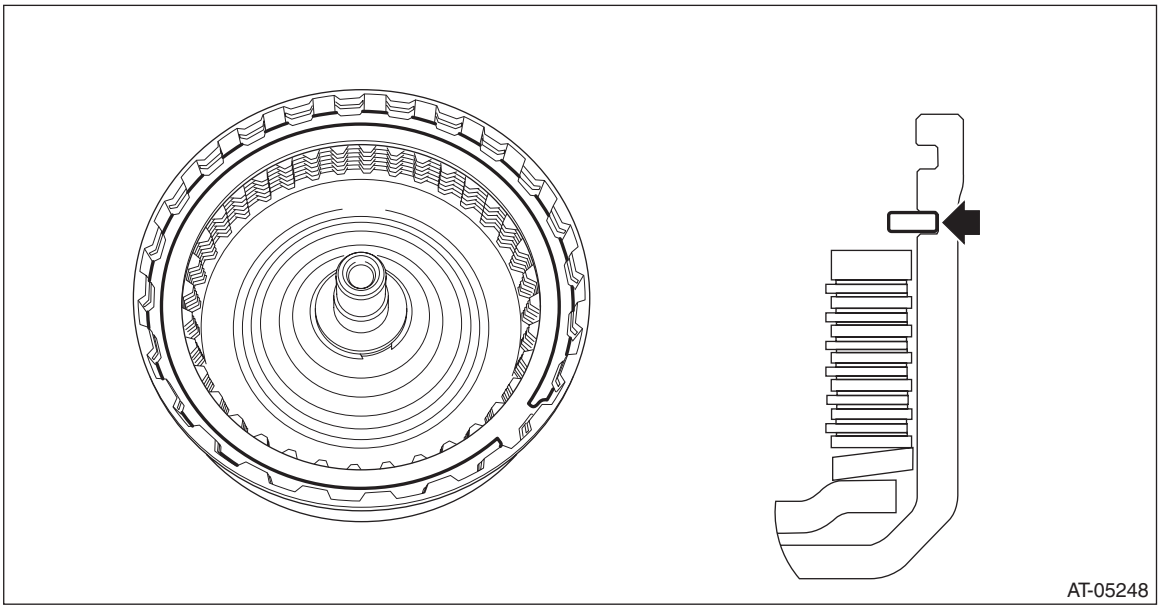

16) Install the thrust needle bearing.

NOTE:
Install the thrust needle bearing in the correct direction.

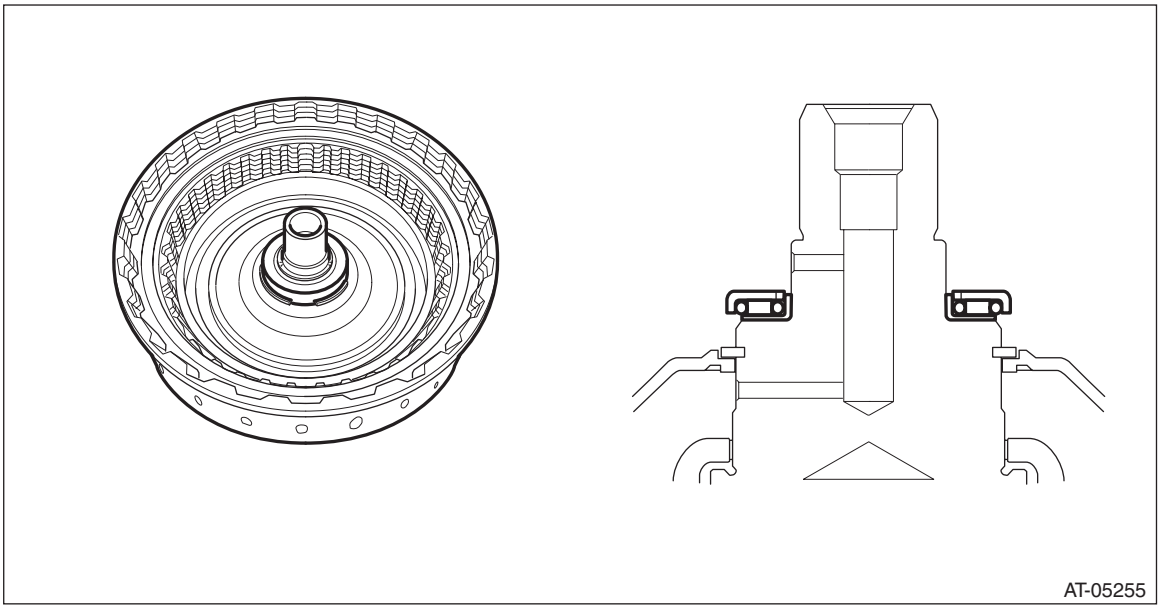

17) Install the washer.

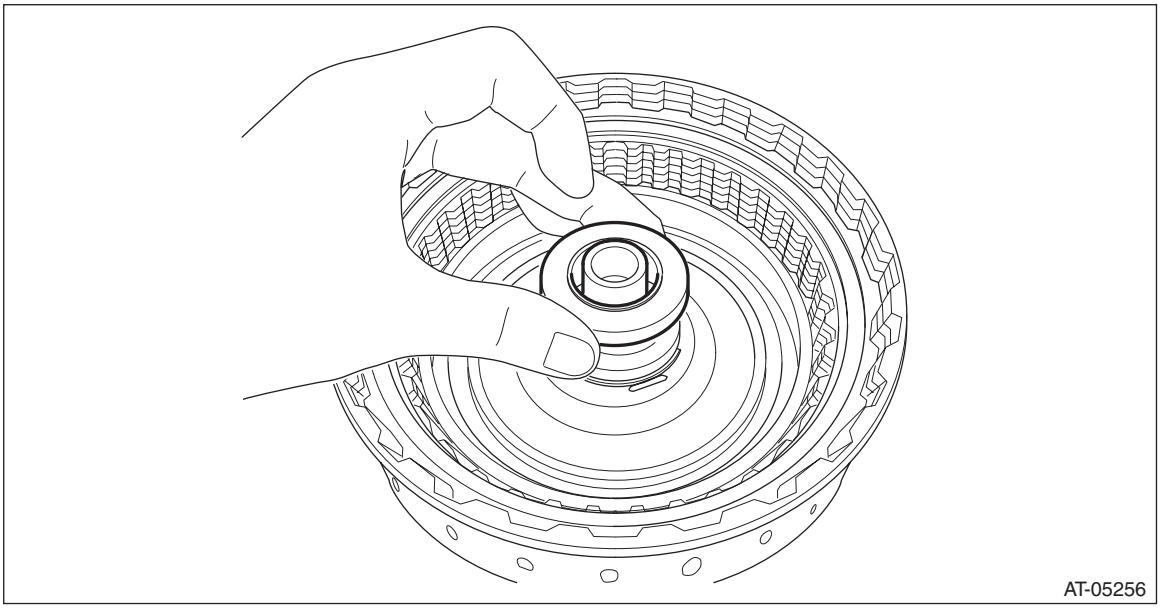

18) Install the sun gear.

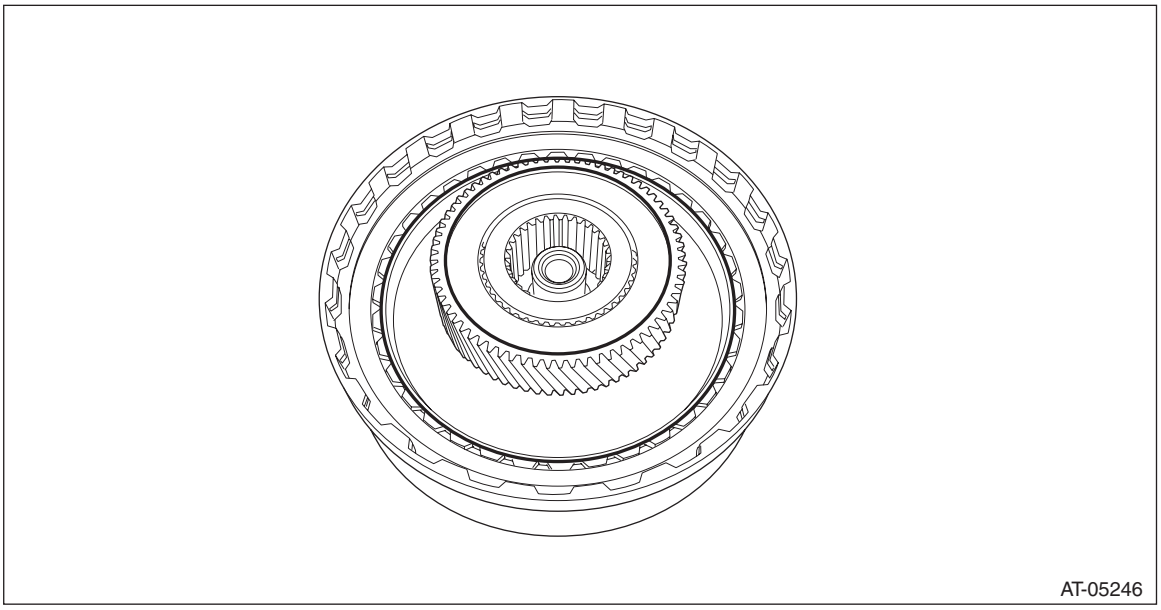

19) Install the internal gear.

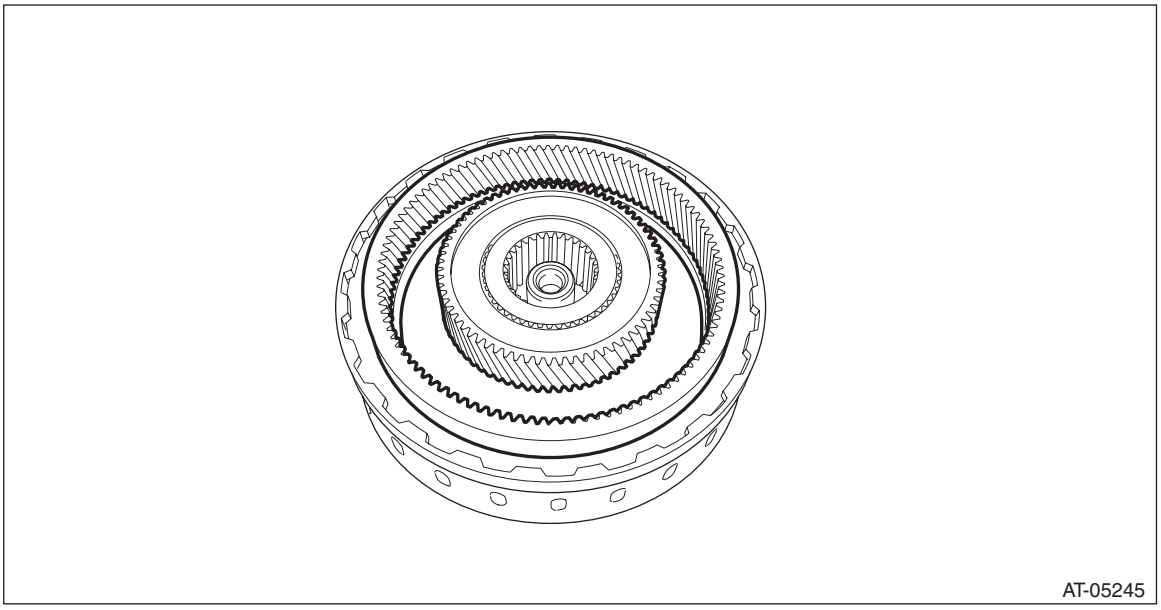

20) Install the snap ring.

21) Install the thrust needle bearing.

NOTE:
Make sure to install in the right direction.

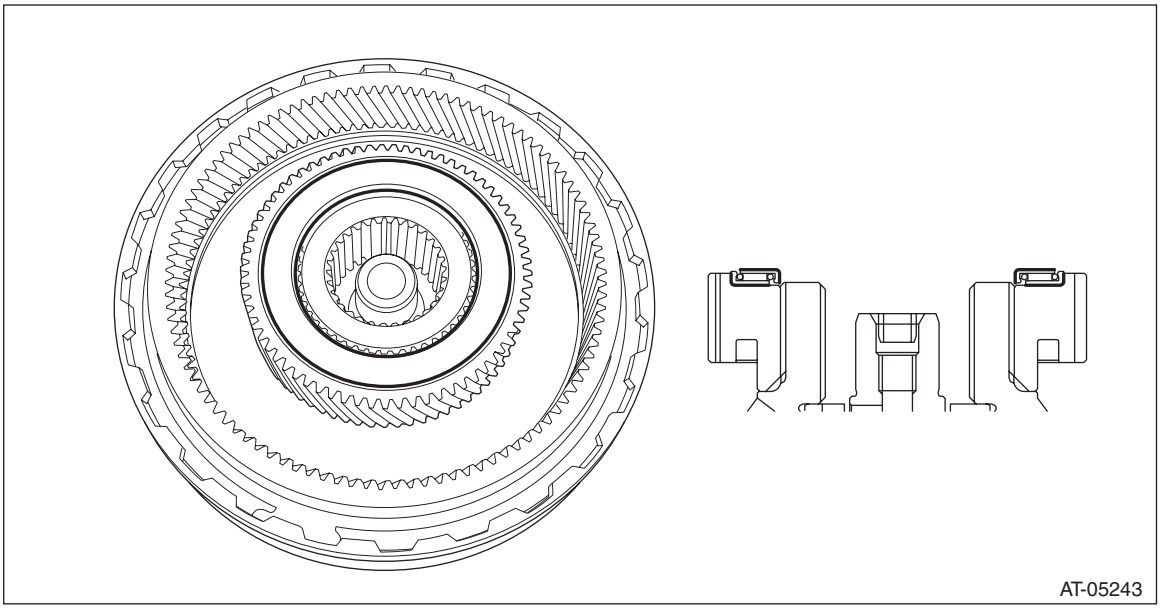

22) Install the planetary carrier assembly.

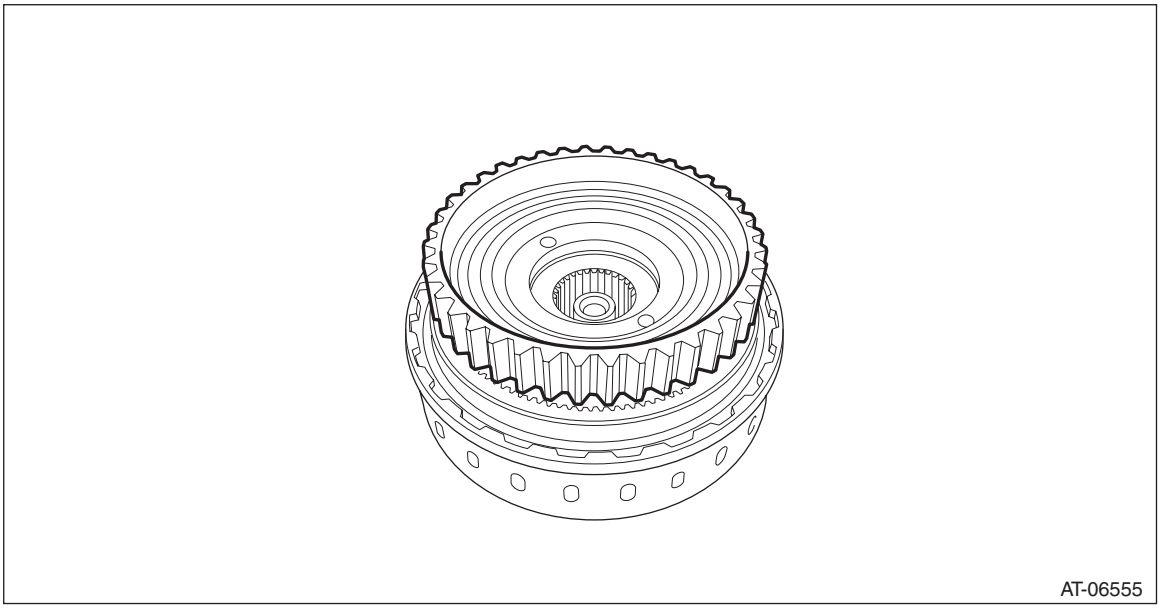

E: INSPECTION

- Check the forward clutch drum, internal gear, sun gear and forward clutch piston lip for wear or damage.
- Inspect the drive plate facing for wear and damage.
- Check the driven plate for discoloration (burnt color).
- Check for worn snap ring, fatigue or damaged return spring or deformed spring retainer.
- Make sure the clearance between retaining plate and internal gear of forward clutch is within the limit. If it exceeds the standard, replace the forward clutch assembly. <Ref. to CVT(TR690)-191, ASSEMBLY, Forward Clutch Assembly.>

F: ADJUSTMENT

1) Measure depth “A” from the ST upper face to the washer catch surface.
ST 398643600 GAUGE

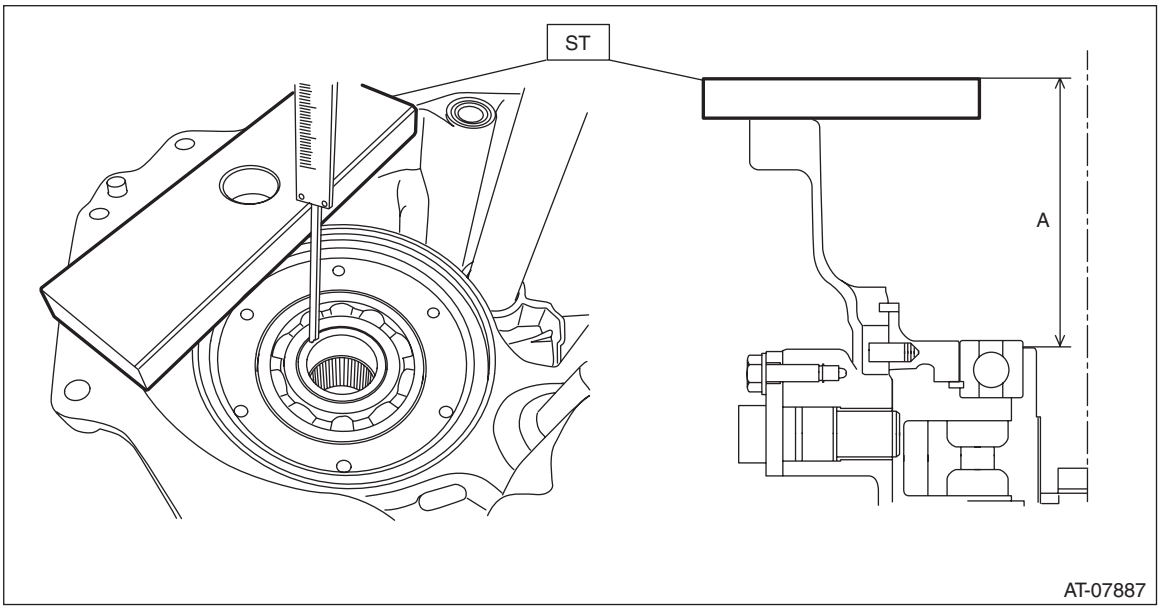

2) Install the forward clutch assembly to intermediate case.
3) Setting the ST, measure height “B” from the ST upper side to the intermediate case mating surface.
ST 499575600 GAUGE

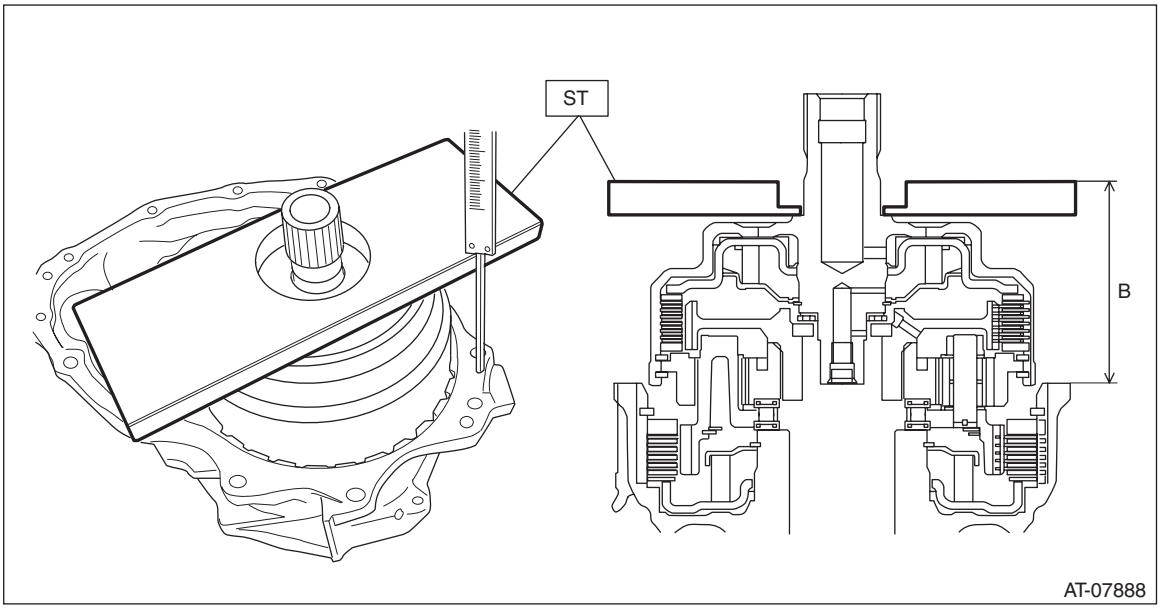

4) Obtain the thickness of washer using the following formula.
Calculation formula:
T (mm) = (A – 15) – (B – 15) – (0.35 — 0.70)
[T (in) = (A – 0.591) – (B – 0.591) – (0.014 — 0.028)]
T: Washer thickness
A: Depth from the ST upper face to the washer catch surface
B: Height from the upper surface of the ST to the mating surface of the intermediate case
15 mm (0.591 in): Thickness of ST
0.35 — 0.70 mm (0.014 — 0.028 in): Clearance

5) Select the washer to meet the value “T” obtained from step 4).

Washer	
Part No.	Washer thickness mm (in)
803034040	1.0 (0.039)
803034041	1.2 (0.047)
803034042	1.4 (0.055)
803034043	1.6 (0.063)

38.Reduction Driven Gear

A: REMOVAL

1) Remove the transmission from the vehicle. <Ref. to CVT(TR690)-57, REMOVAL, Automatic Transmission Assembly.>
2) Remove the extension case. <Ref. to CVT(TR690)-143, REMOVAL, Extension Case.>
3) Remove the rear drive shaft. <Ref. to CVT(TR690)-147, REMOVAL, Rear Drive Shaft.>
4) Remove the transfer clutch assembly. <Ref. to CVT(TR690)-152, REMOVAL, Transfer Clutch.>
5) Remove the center differential carrier. <Ref. to CVT(TR690)-155, REMOVAL, Center Differential Carrier.>
6) Remove the transfer reduction driven gear assembly. <Ref. to CVT(TR690)-159, REMOVAL, Transfer Reduction Driven Gear.>
7) Remove the intermediate case. <Ref. to CVT(TR690)-166, REMOVAL, Intermediate Case.>
8) Remove the forward clutch assembly. <Ref. to CVT(TR690)-182, REMOVAL, Forward Clutch Assembly.>
9) Remove the snap ring.

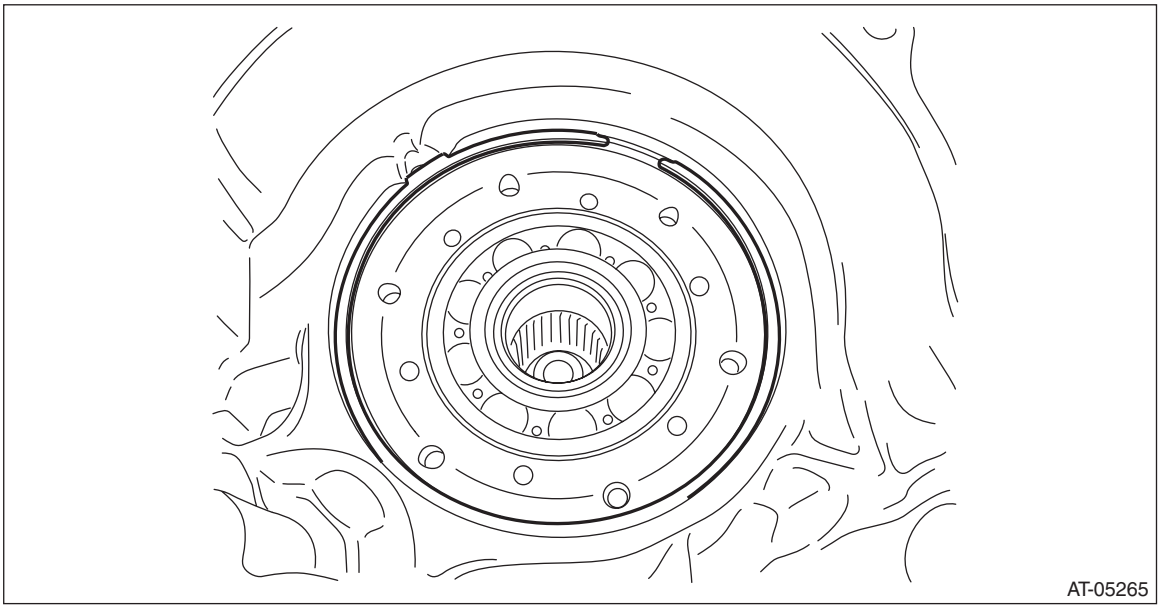
AT-05265

10) Remove the reduction driven gear assembly.

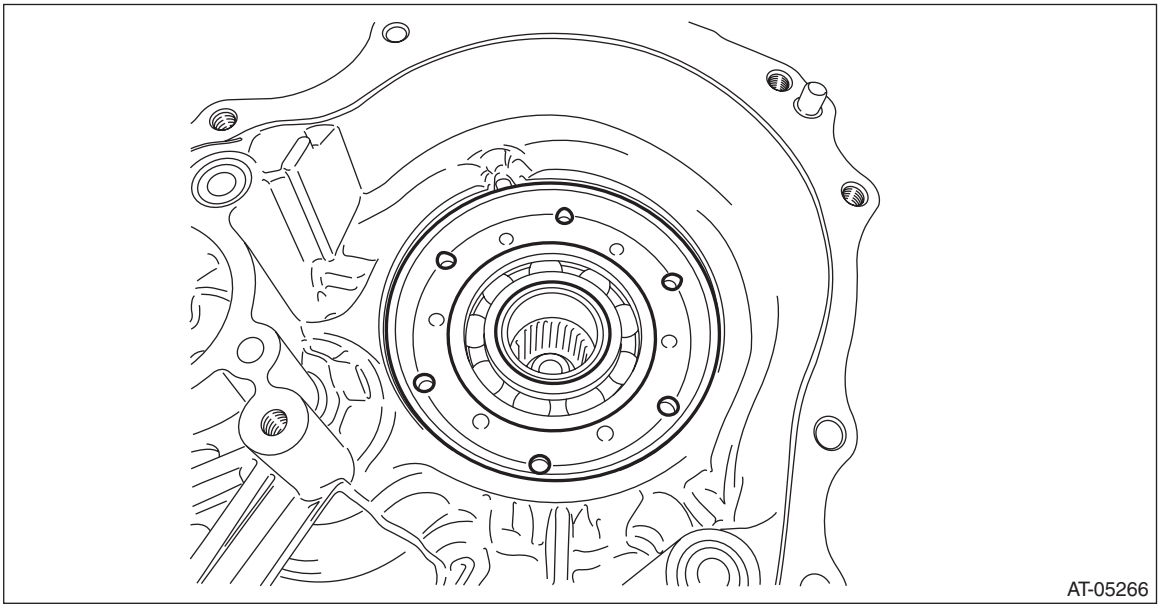
AT-05266

11) Remove the straight pin.

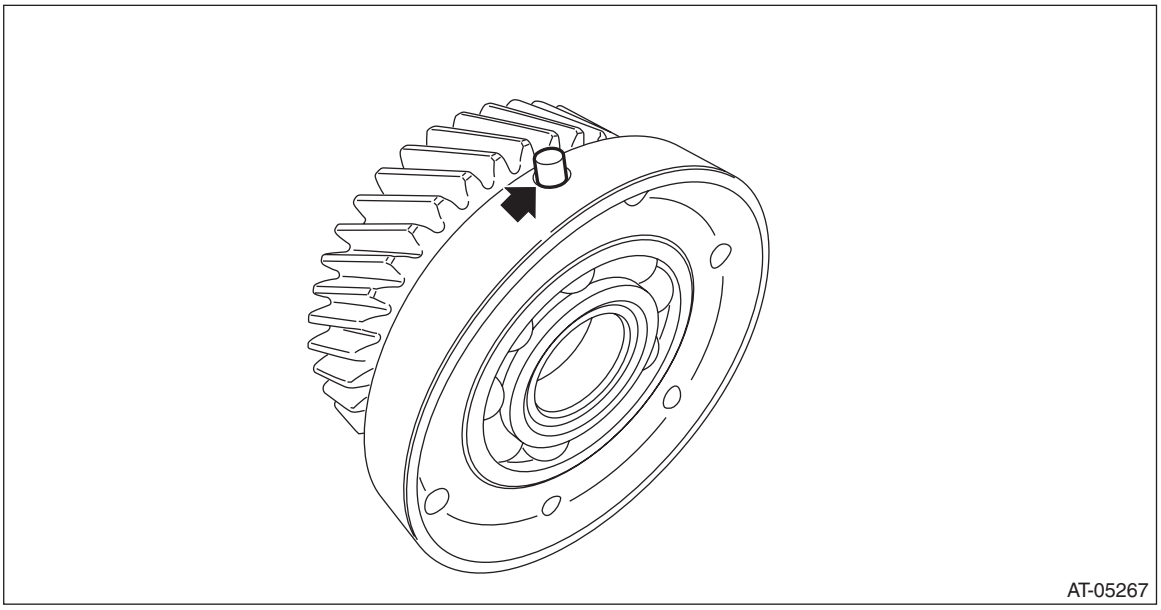

B: INSTALLATION

1) Install the straight pin to reduction driven gear assembly.

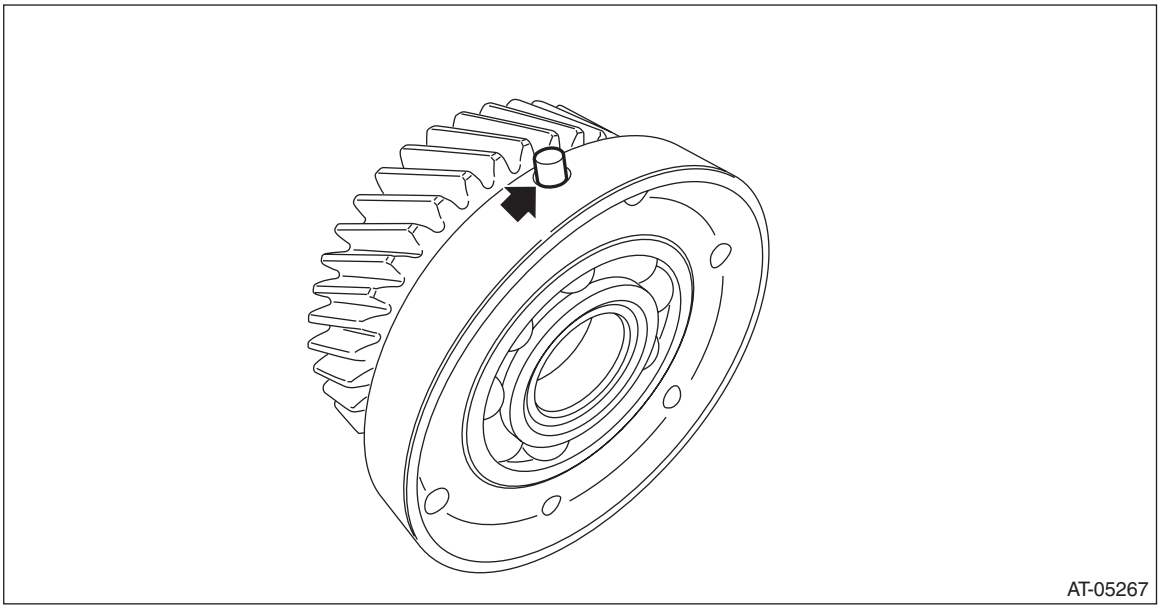

2) Fit the straight pin portion to the recess portion of transmission case and install the reduction driven gear and install the snap ring.

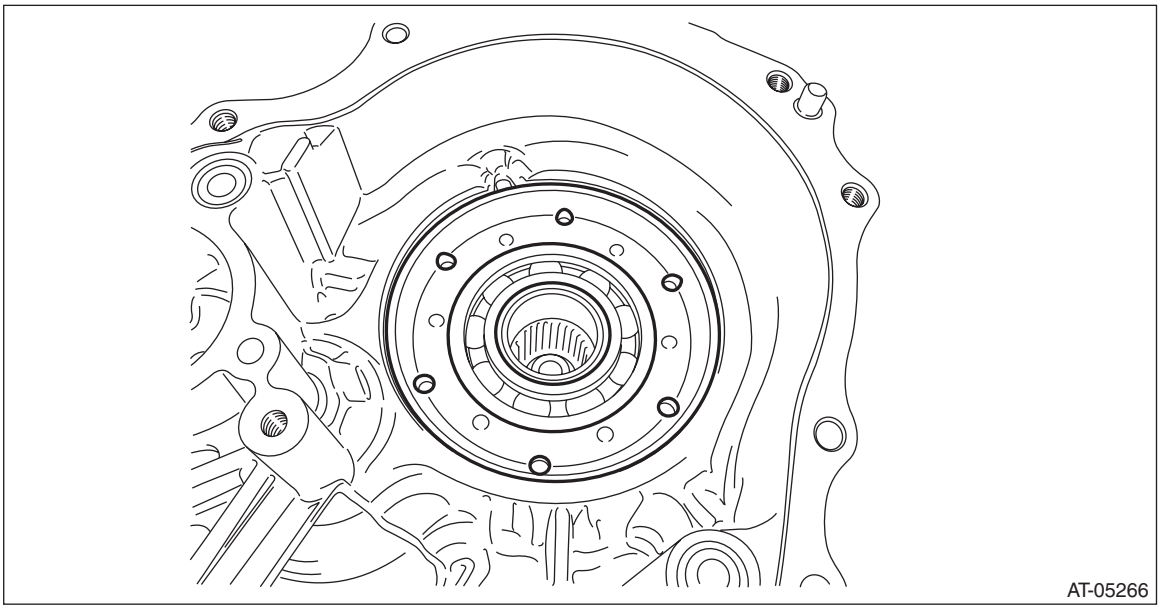

3) Select the snap ring. <Ref. to CVT(TR690)-209, ADJUSTMENT, Reduction Driven Gear.>
4) Replace with the selected snap ring.

NOTE:
If the clearance measured in step 3) is within standard, the snap ring replacement is not necessary.
5) Install the forward clutch assembly. <Ref. to CVT(TR690)-183, INSTALLATION, Forward Clutch Assembly.>
6) Install the intermediate case. <Ref. to CVT(TR690)-167, INSTALLATION, Intermediate Case.>
7) Install the transfer reduction driven gear assembly. <Ref. to CVT(TR690)-159, INSTALLATION, Transfer Reduction Driven Gear.>
8) Install the center differential carrier. <Ref. to CVT(TR690)-156, INSTALLATION, Center Differential Carrier.>
9) Install the transfer clutch assembly. <Ref. to CVT(TR690)-152, INSTALLATION, Transfer Clutch.>
10) Install the rear drive shaft. <Ref. to CVT(TR690)-147, INSTALLATION, Rear Drive Shaft.>
11) Install the extension case. <Ref. to CVT(TR690)-144, INSTALLATION, Extension Case.>
12) Install the transmission to vehicle. <Ref. to CVT(TR690)-70, INSTALLATION, Automatic Transmission Assembly.>

C: DISASSEMBLY

1) Remove the bearing retainer using ST1, ST2 and ST3.
ST1 899864100 REMOVER
ST2 398497701 SEAT
ST3 18767AA000 BEARING REMOVER

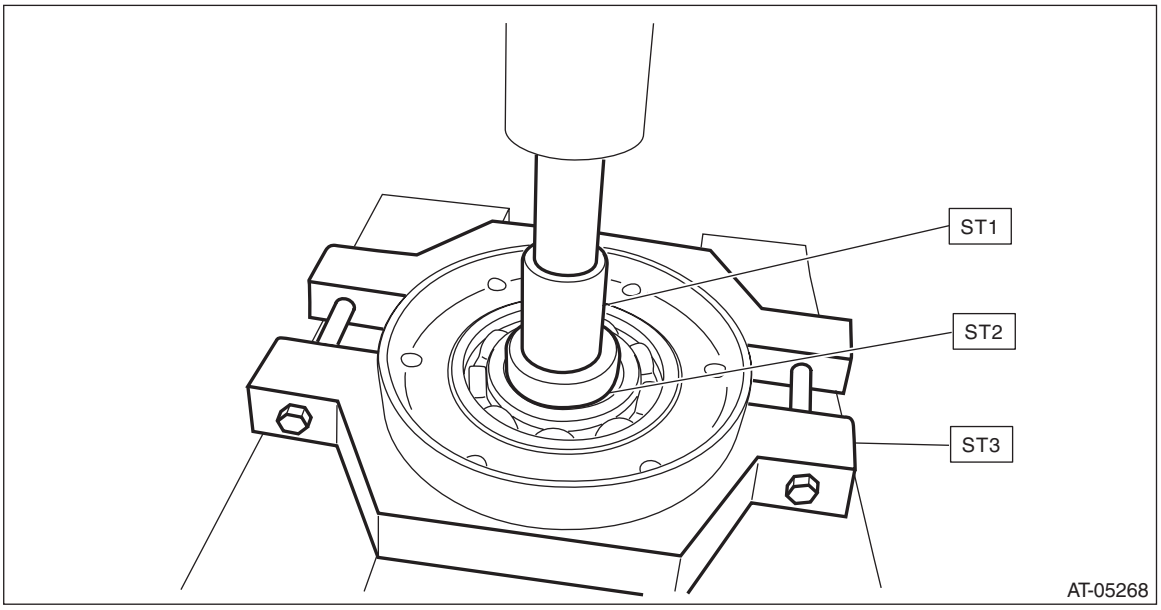

2) Remove the snap ring.

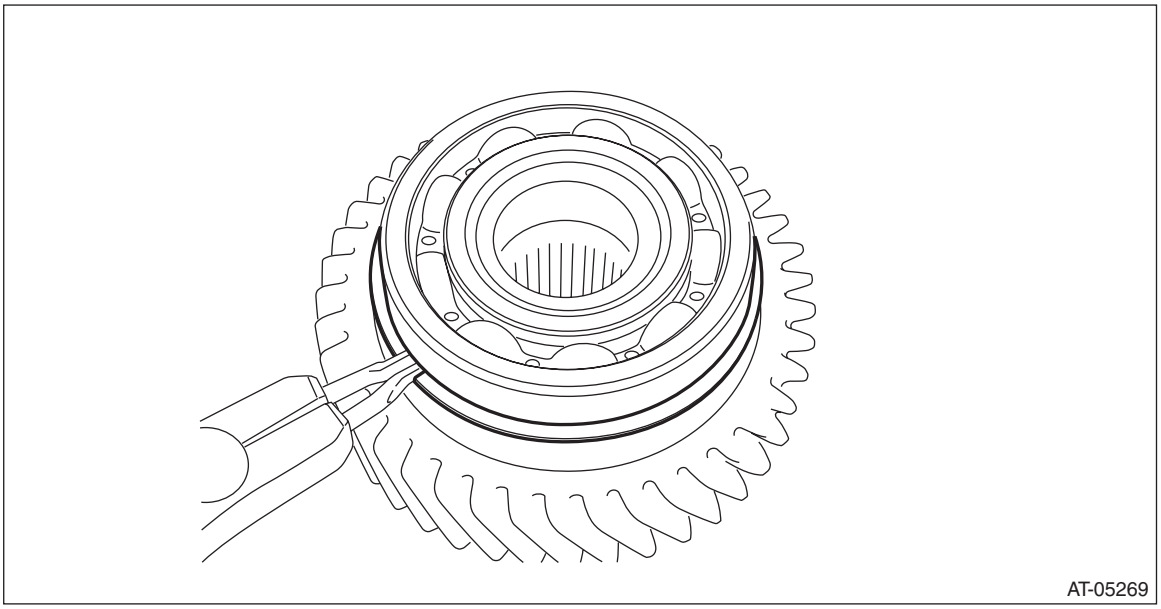

3) Remove the ball bearing using ST1, ST2 and ST3.
ST1 899864100 REMOVER
ST2 398497701 SEAT
ST3 498077600 REMOVER

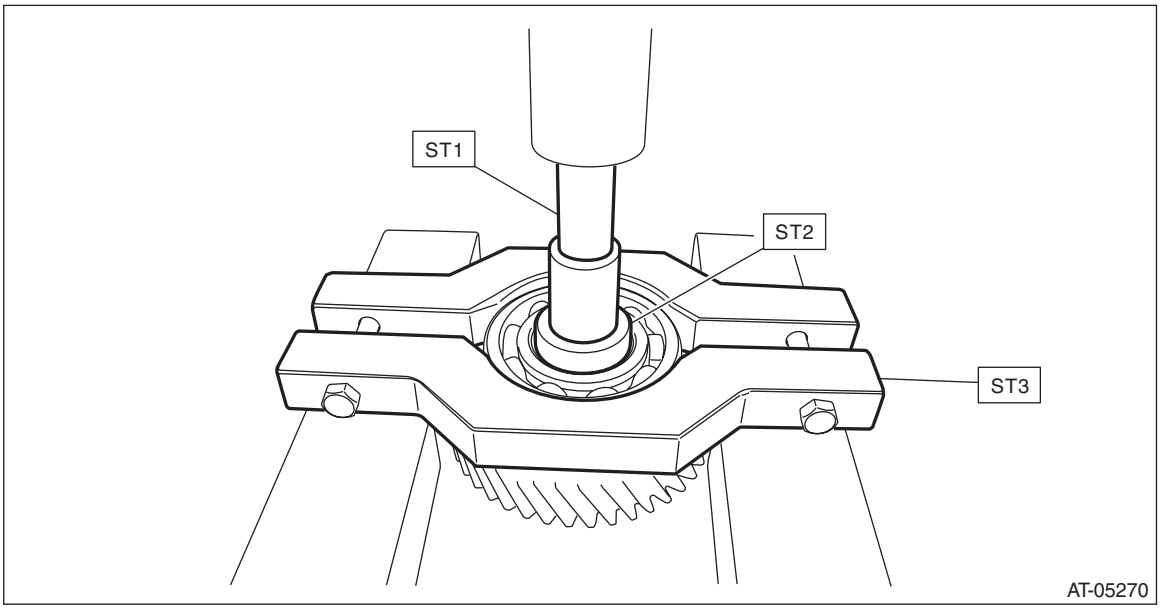

D: ASSEMBLY

1) Using the ST, install the ball bearing to bearing retainer.
ST 398177700 INSTALLER

NOTE:
- Use a new ball bearing.
- Make sure to install the ball bearing in the right direction.
- Apply CVTF to the press-fitting area.

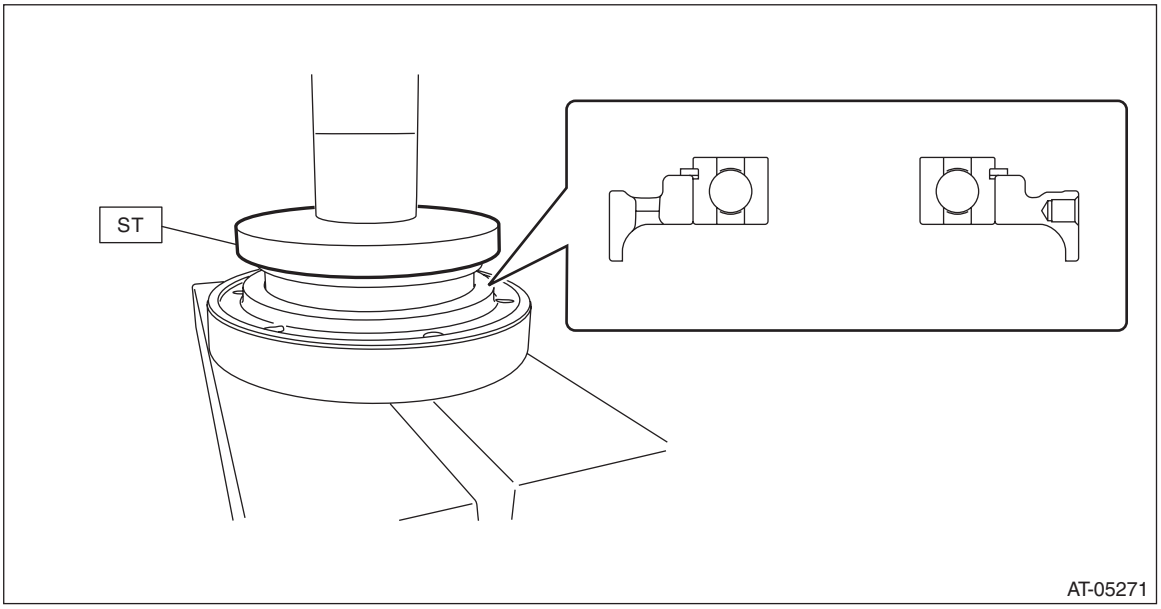

2) Install the snap ring.

3) Using the ST, install the reduction driven gear.
ST 499277200 INSTALLER

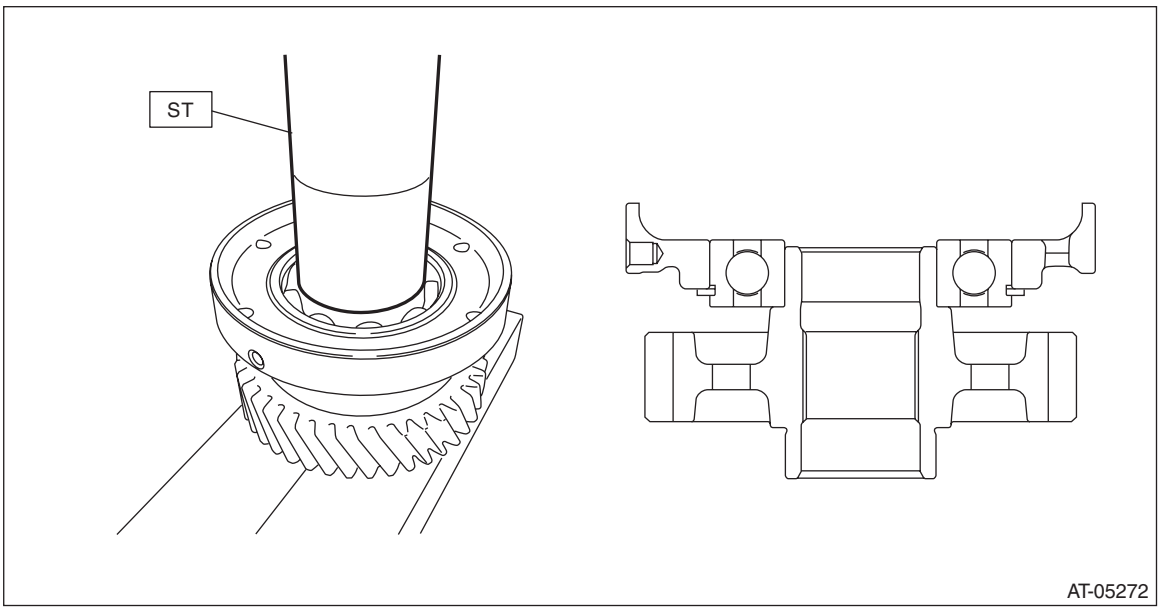

E: INSPECTION

- Check the ball bearing for smooth rotation.
- Check the ball bearing for excessive looseness.
- Check the reduction driven gear for breakage or damage.
- Check the clearance between snap ring and transmission case and replace the snap ring as necessary.

F: ADJUSTMENT

1) Measure clearance “A” between snap ring and transmission case.

Specification:
0.05 — 0.25 mm (0.002 — 0.01 in)

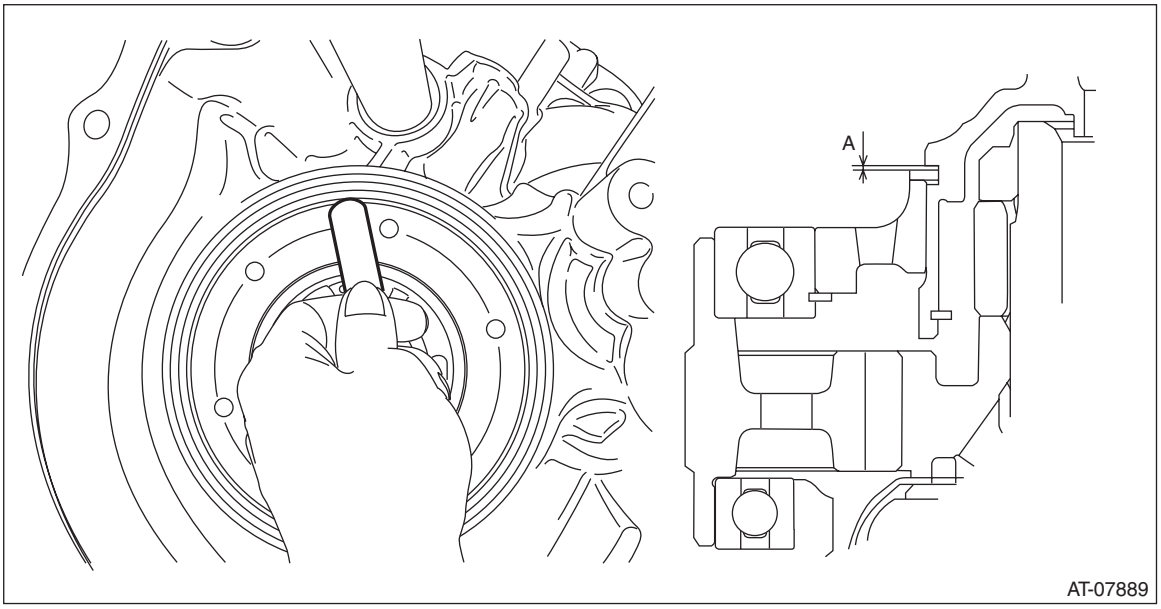

2) If clearance “A” is out of standard, select the snap ring within standard.

Snap ring	
Part No.	Thickness mm (in)
805100460	2.0 (0.079)
805100461	2.1 (0.083)
805100462	2.2 (0.087)
805100463	2.3 (0.091)
805100464	2.4 (0.094)

39.Transmission Control Device

A: REMOVAL

1) Remove the transmission assembly from the vehicle. <Ref. to CVT(TR690)-57, REMOVAL, Automatic Transmission Assembly.>
2) Remove the oil pan and control valve body. <Ref. to CVT(TR690)-113, REMOVAL, Control Valve Body.>
3) Remove the inhibitor switch. <Ref. to CVT(TR690)-96, REMOVAL, Inhibitor Switch.>
4) Remove the spring pin.

NOTE:
Prevent the spring pin from dropping in the transmission using paper towel etc.

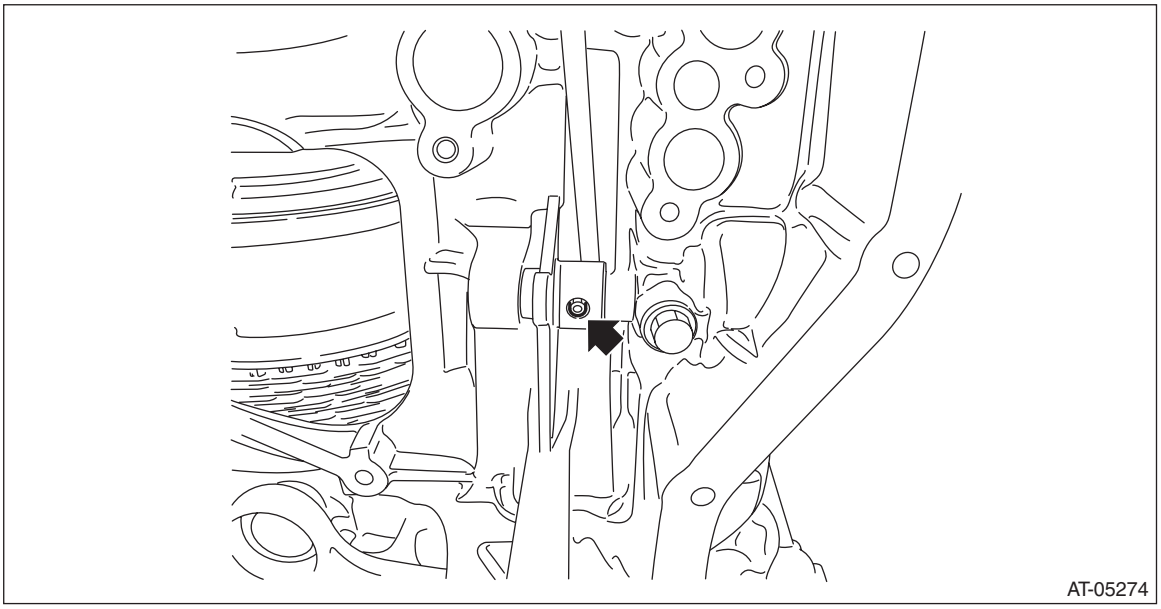

5) Remove the bolt and remove the range select lever, manual plate and parking rod.

NOTE:
Do not damage the lip of oil seal press-fitted in the case.

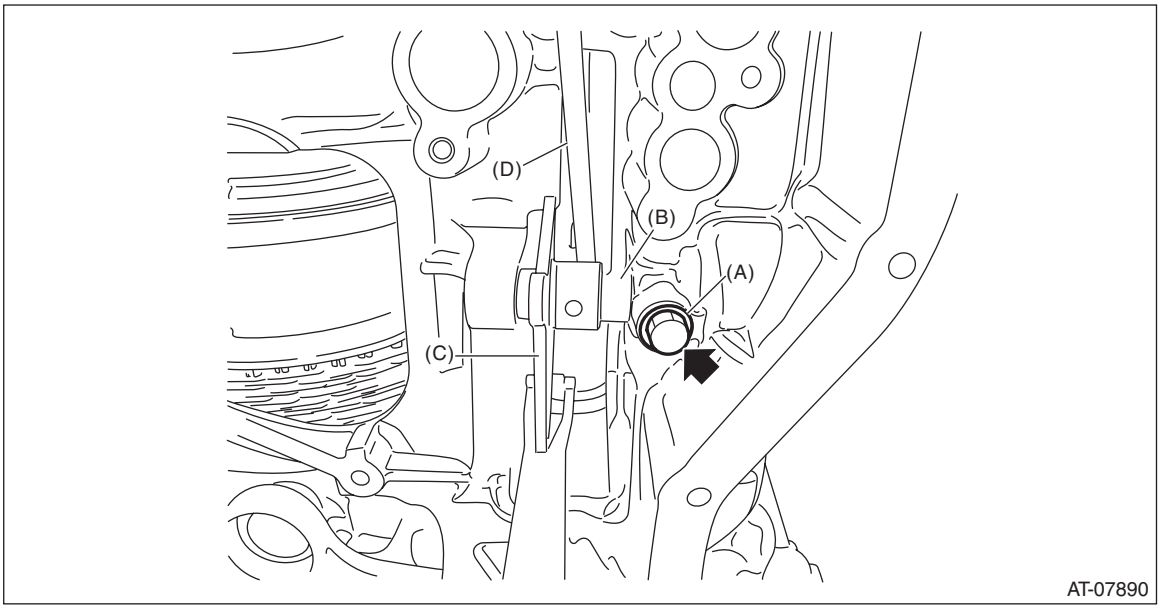

(A) Bolt
(B) Range select lever
(C) Manual plate
(D) Parking rod

6) Remove the detent spring.

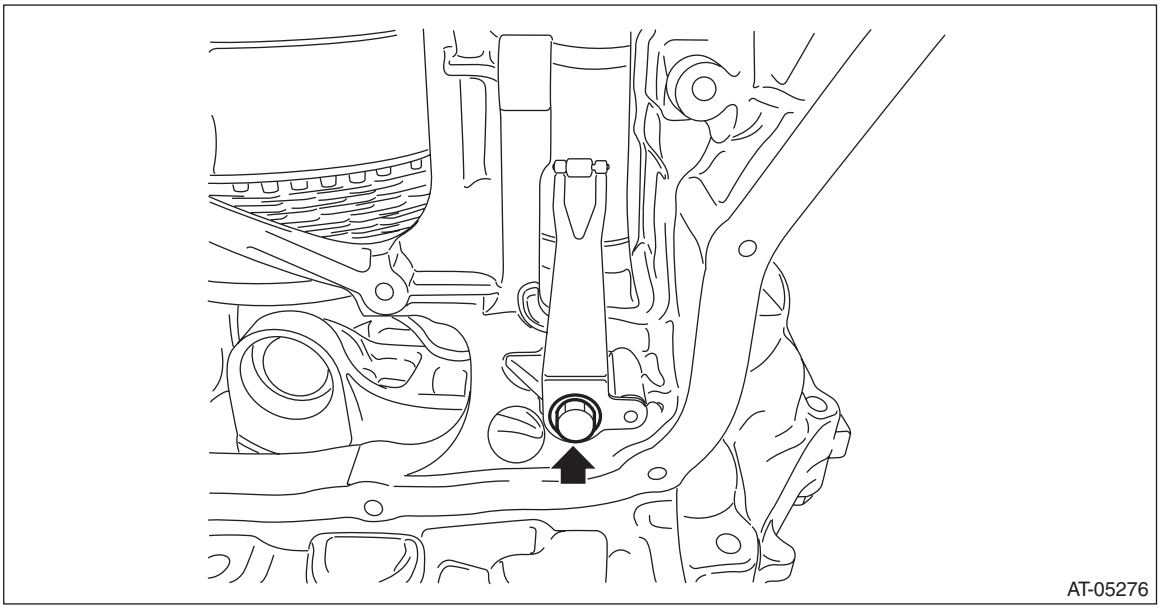

B: INSTALLATION

1) Install the detent spring.

Tightening torque:
7 N·m (0.7 kgf-m, 5.2 ft-lb)

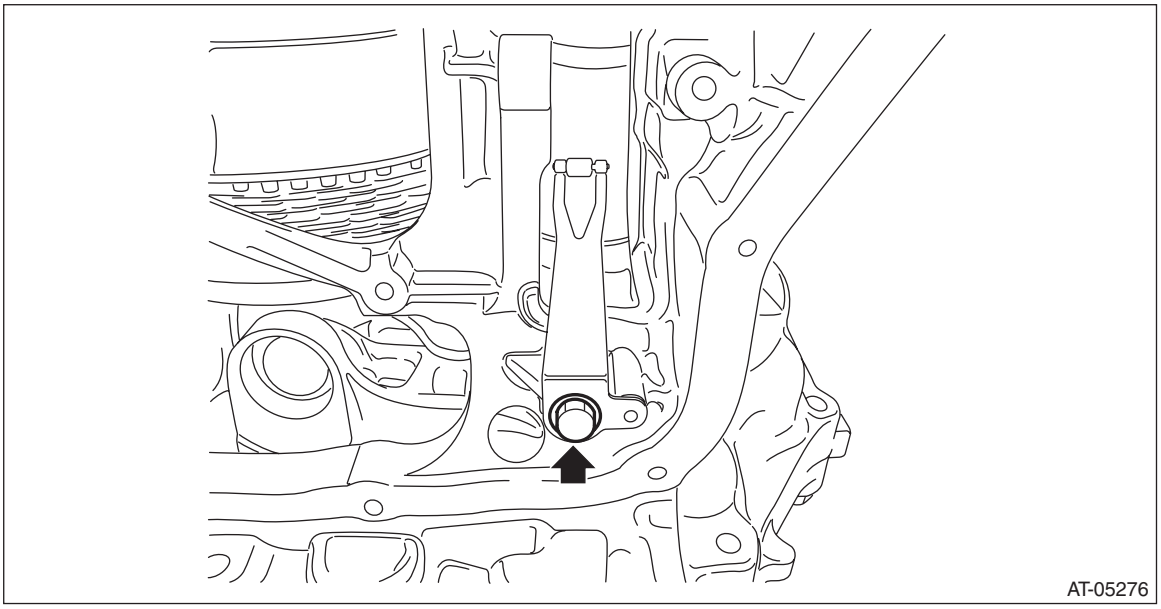

2) Install the manual plate, parking rod, range select lever and bolt.

Tightening torque:
7 N·m (0.7 kgf-m, 5.2 ft-lb)

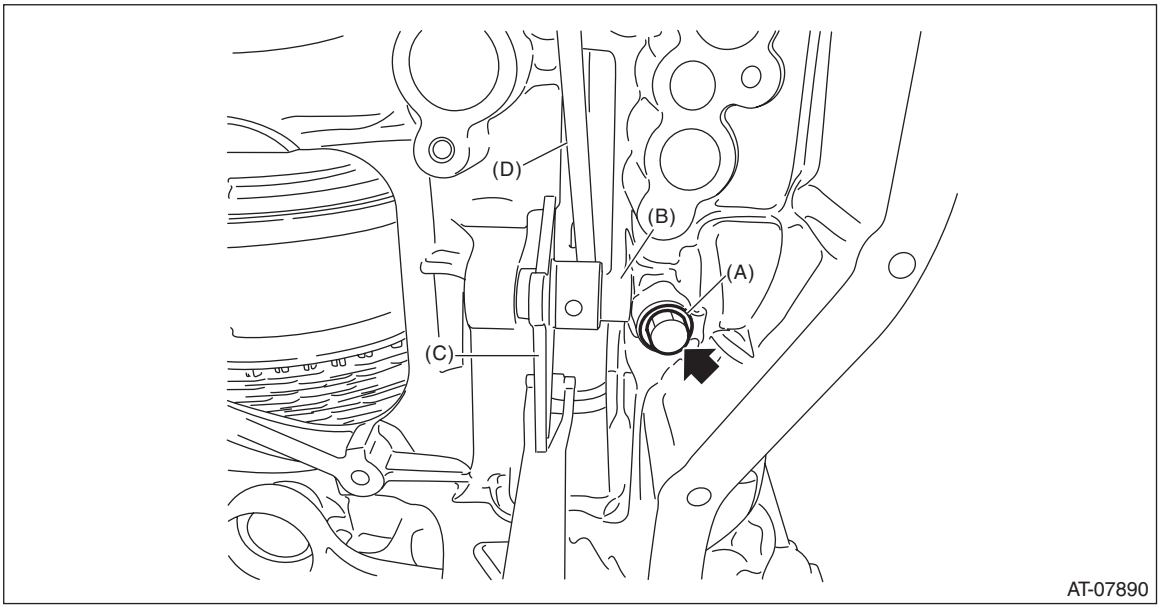

(A) Bolt
(B) Range select lever
(C) Manual plate
(D) Parking rod

3) Install the spring pin.

NOTE:
Use new spring pin.

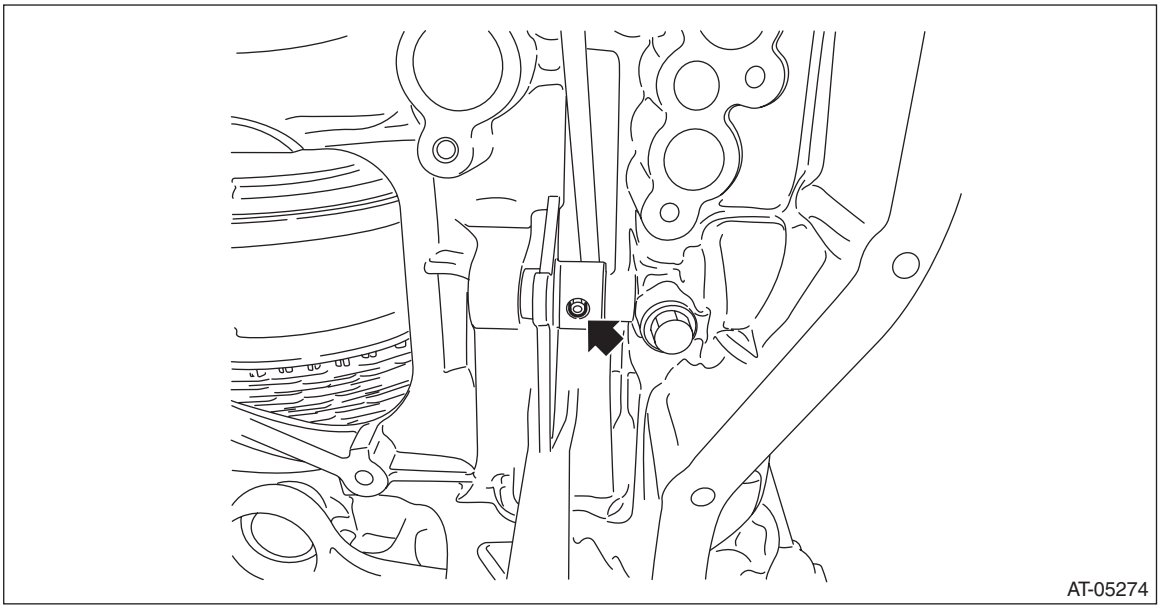

4) Install the inhibitor switch. <Ref. to CVT(TR690)-93, Inhibitor Switch.>
5) Adjust the inhibitor switch. <Ref. to CVT(TR690)-93, Inhibitor Switch.>
6) Install the control valve body and oil pan. <Ref. to CVT(TR690)-117, INSTALLATION, Control Valve Body.>
7) Install the transmission assembly to the vehicle. <Ref. to CVT(TR690)-70, INSTALLATION, Automatic Transmission Assembly.>

C: INSPECTION

Make sure that the manual lever and detent spring are not worn or otherwise damaged.

40.Transmission Case

A: REMOVAL

1) Remove the transmission assembly from the vehicle. <Ref. to CVT(TR690)-57, REMOVAL, Automatic Transmission Assembly.>
2) Remove the air breather hose. <Ref. to CVT(TR690)-136, REMOVAL, Air Breather Hose.>
3) Remove the transmission harness. <Ref. to CVT(TR690)-123, REMOVAL, Transmission Harness.>
4) Remove the secondary speed sensor. <Ref. to CVT(TR690)-100, REMOVAL, Secondary Speed Sensor.>
5) Remove the inhibitor switch. <Ref. to CVT(TR690)-96, REMOVAL, Inhibitor Switch.>
6) Remove the extension case. <Ref. to CVT(TR690)-143, REMOVAL, Extension Case.>
7) Remove the rear drive shaft. <Ref. to CVT(TR690)-147, REMOVAL, Rear Drive Shaft.>
8) Remove the transfer clutch assembly. <Ref. to CVT(TR690)-152, REMOVAL, Transfer Clutch.>
9) Remove the center differential carrier. <Ref. to CVT(TR690)-155, REMOVAL, Center Differential Carrier.>
10) Remove the transfer reduction driven gear assembly. <Ref. to CVT(TR690)-159, REMOVAL, Transfer Reduction Driven Gear.>
11) Remove the intermediate case. <Ref. to CVT(TR690)-166, REMOVAL, Intermediate Case.>
12) Remove the forward clutch assembly. <Ref. to CVT(TR690)-182, REMOVAL, Forward Clutch Assembly.>
13) Remove the reduction driven gear. <Ref. to CVT(TR690)-203, REMOVAL, Reduction Driven Gear.>
14) Remove the oil pan and control valve body. <Ref. to CVT(TR690)-113, REMOVAL, Control Valve Body.>

NOTE:
When removing the control valve body, also remove the pressure pipe if it is attached on the case.

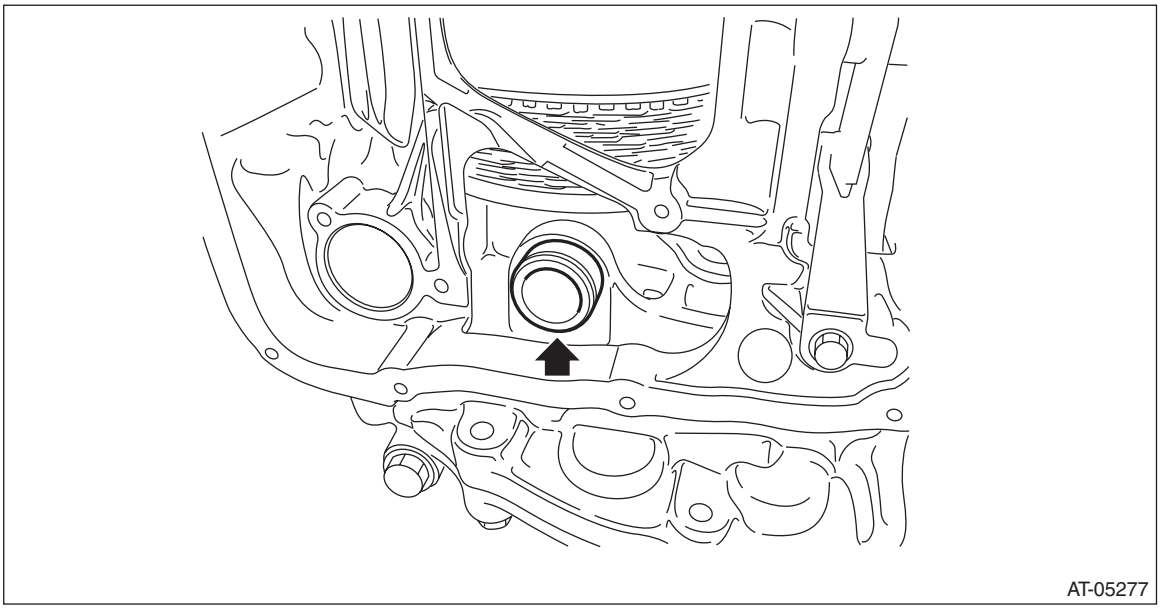

15) Remove the CVTF pipe using a tire lever etc.

NOTE:
Remove by hooking the stepped portion of CVTF pipe with a tire lever etc.

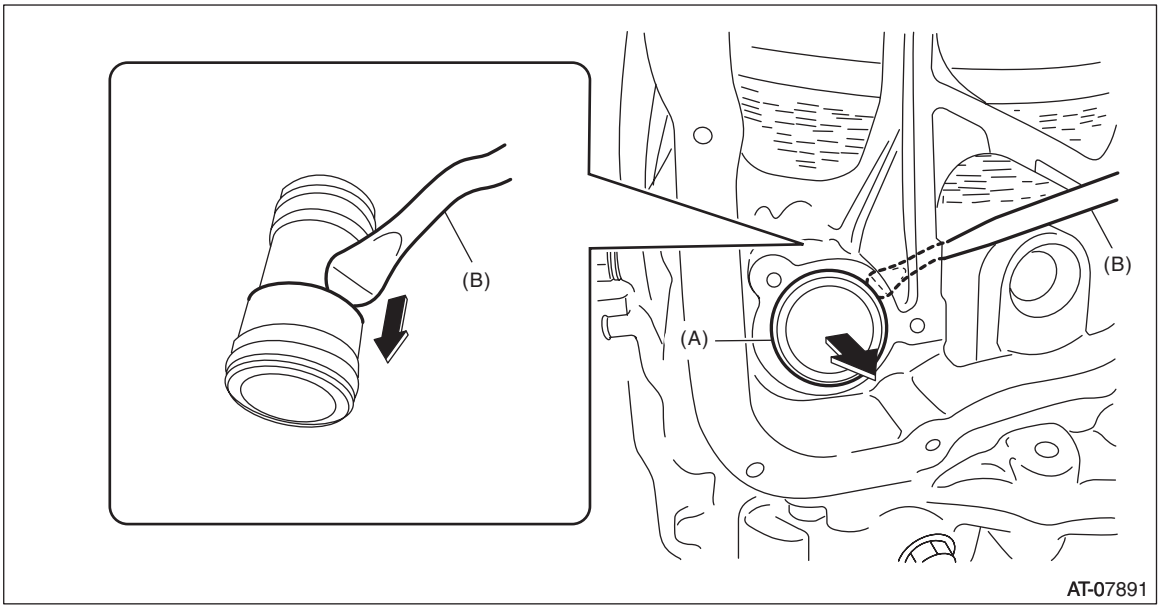

(A) CVTF pipe
(B) Tire lever

16) Remove the transmission case.

NOTE:
The total number of transmission case mounting bolts is 15.

17) Remove the O-ring of lubrication pipe.

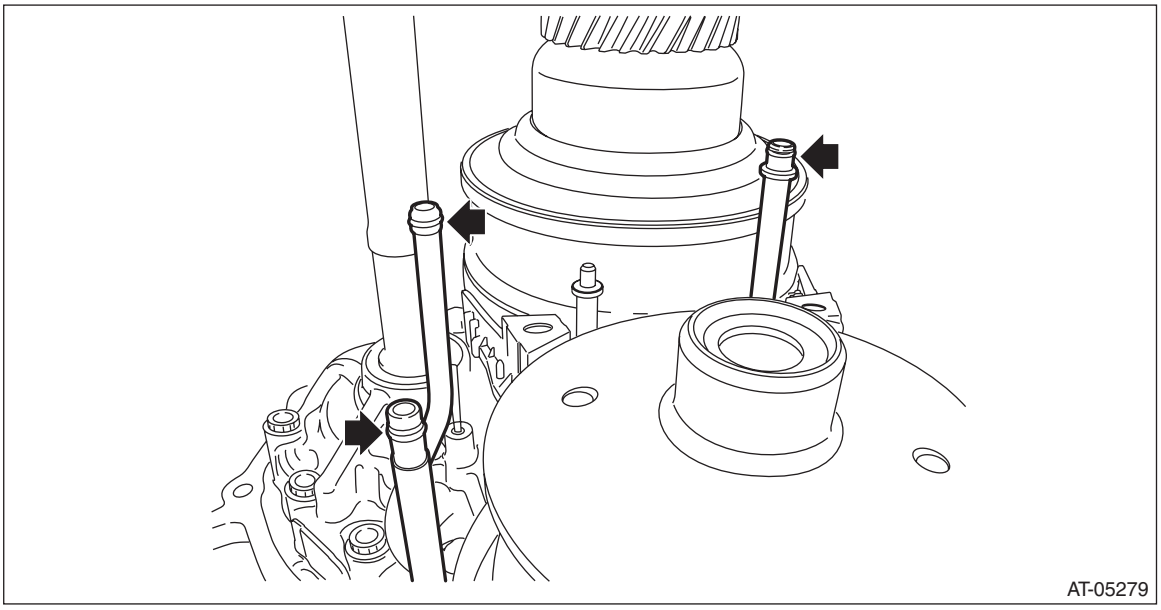

18) Remove the control device system. <Ref. to CVT(TR690)-210, REMOVAL, Transmission Control Device.>

B: INSTALLATION

1) Clean the mating surface of transmission case and converter case.
2) Install the control device system. <Ref. to CVT(TR690)-212, INSTALLATION, Transmission Control Device.>
3) Install the O-ring to the lubrication pipe.

NOTE:
- Use new O-rings.
- Apply CVTF to the O-rings.

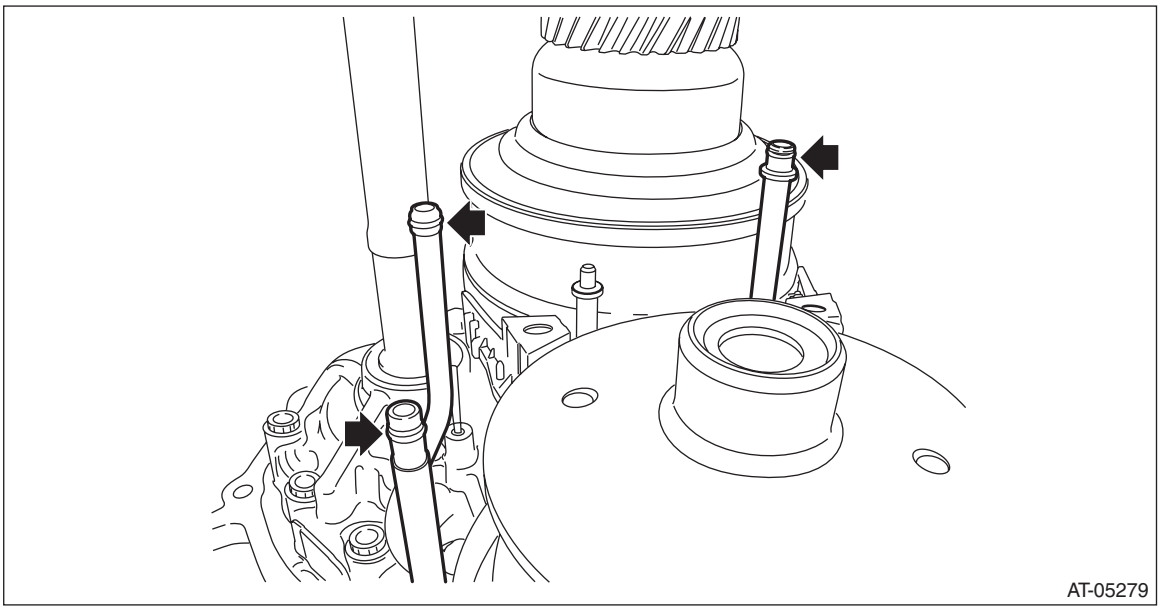

4) Make sure the lubrication pipe and support rod are in vertical position.

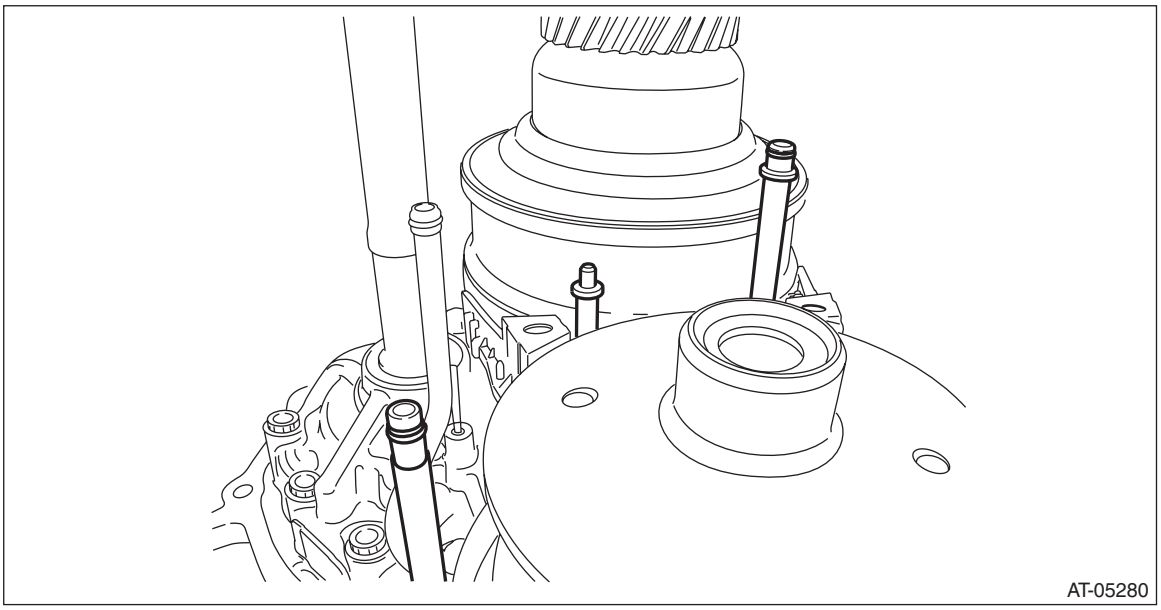

5) Apply liquid gasket seamlessly to the mating surface of transmission case.

Liquid gasket:
THREE BOND 1215B or equivalent

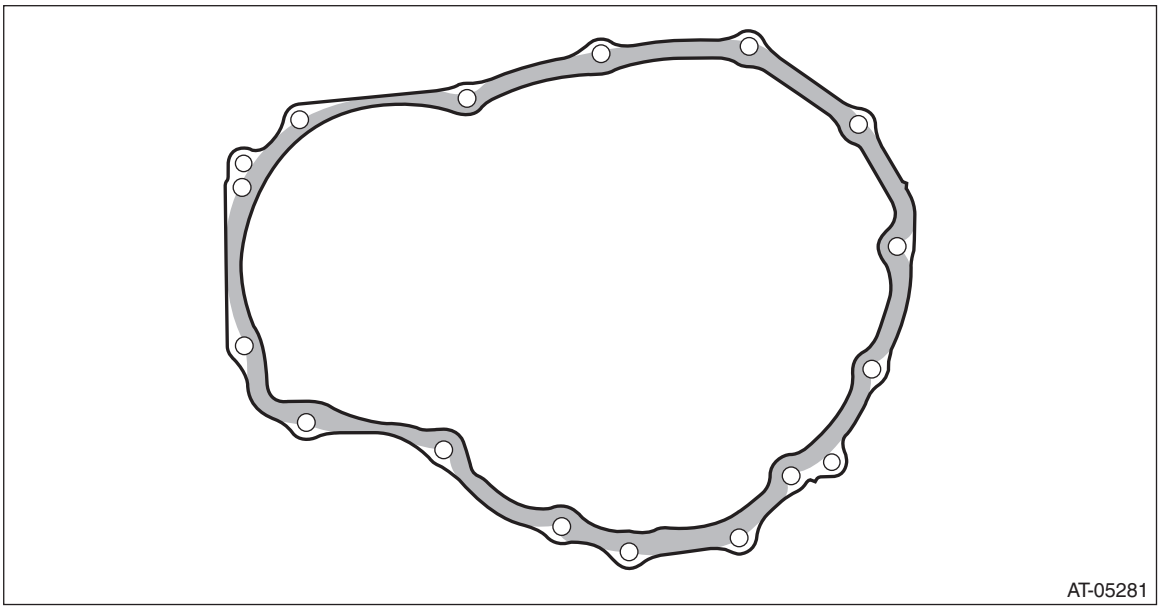

6) Install the transmission case.

CAUTION:
If the transmission case gets in contact with the lubrication pipe and support rod, do not install the transmission case forcibly.

NOTE:
• Install while checking the lubrication pipe and support rod is being inserted properly into transmission case.
• If installing the transmission is difficult, check if the lubrication pipe and support rod are bent.
• The total number of transmission case mounting bolts is 15.

Tightening torque:
41 N·m (4.2 kgf-m, 30.2 ft-lb)

7) Install the O-ring to CVTF pipe.

NOTE:
Use new O-rings.

8) The smaller opening of CVTF pipe should be inserted to transmission.

NOTE:
After installing, make sure the CVTF pipe does not stick out of transmission case.

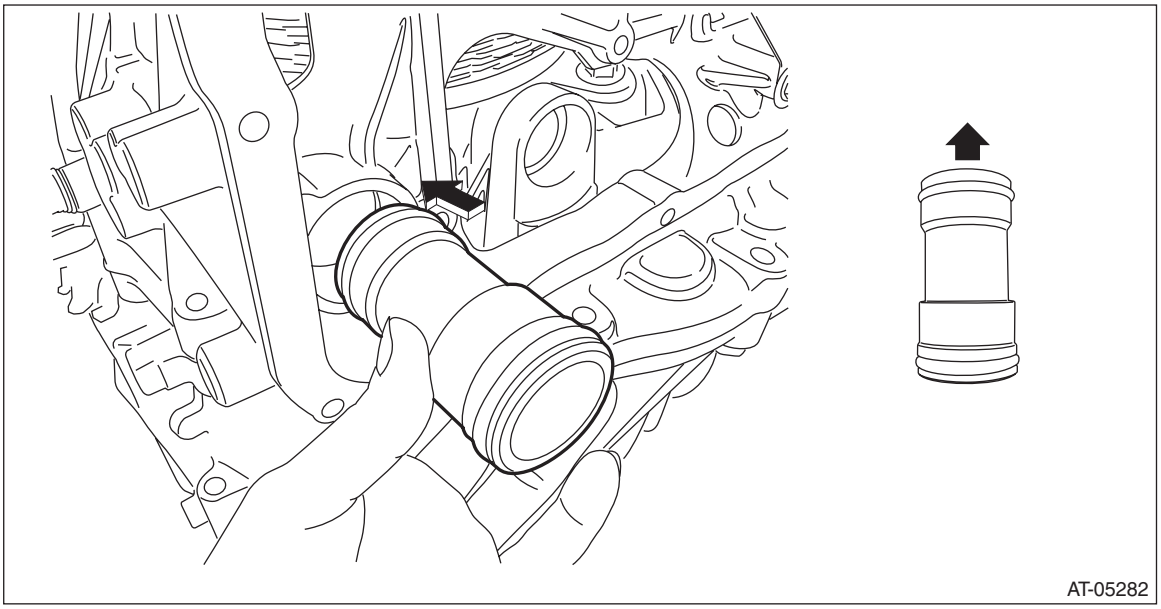

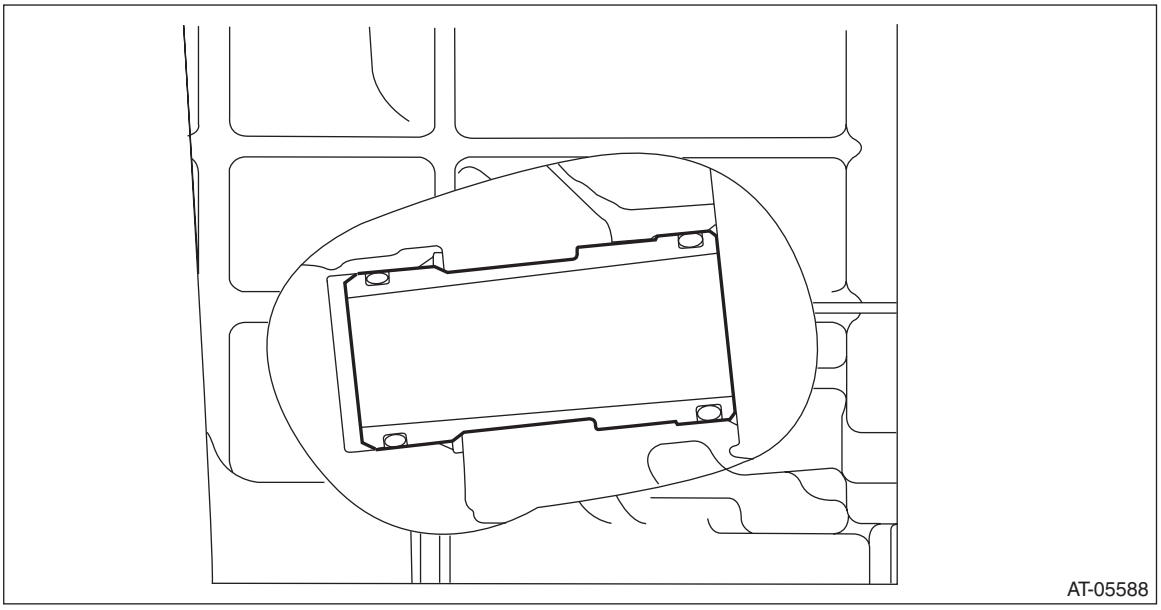

9) Install the reduction driven gear. <Ref. to CVT(TR690)-204, INSTALLATION, Reduction Driven Gear.>
10) Install the forward clutch assembly. <Ref. to CVT(TR690)-183, INSTALLATION, Forward Clutch Assembly.>
11) Install the intermediate case. <Ref. to CVT(TR690)-167, INSTALLATION, Intermediate Case.>
12) Install the transfer reduction driven gear assembly. <Ref. to CVT(TR690)-159, INSTALLATION, Transfer Reduction Driven Gear.>
13) Install the center differential carrier. <Ref. to CVT(TR690)-156, INSTALLATION, Center Differential Carrier.>
14) Install the transfer clutch assembly. <Ref. to CVT(TR690)-152, INSTALLATION, Transfer Clutch.>
15) Install the rear drive shaft. <Ref. to CVT(TR690)-147, INSTALLATION, Rear Drive Shaft.>
16) Install the extension case. <Ref. to CVT(TR690)-144, INSTALLATION, Extension Case.>
17) Install the inhibitor switch. <Ref. to CVT(TR690)-98, INSTALLATION, Inhibitor Switch.>
18) Install the secondary speed sensor. <Ref. to CVT(TR690)-101, INSTALLATION, Secondary Speed Sensor.>
19) Install the transmission harness. <Ref. to CVT(TR690)-125, INSTALLATION, Transmission Harness.>

20) Install the control valve body and oil pan. <Ref. to CVT(TR690)-117, INSTALLATION, Control Valve Body.>
21) Install the air breather hose. <Ref. to CVT(TR690)-136, INSTALLATION, Air Breather Hose.>
22) Install the transmission assembly to the vehicle. <Ref. to CVT(TR690)-70, INSTALLATION, Automatic Transmission Assembly.>

C: DISASSEMBLY

1) Remove the CVTF inlet pipe and CVTF outlet pipe.

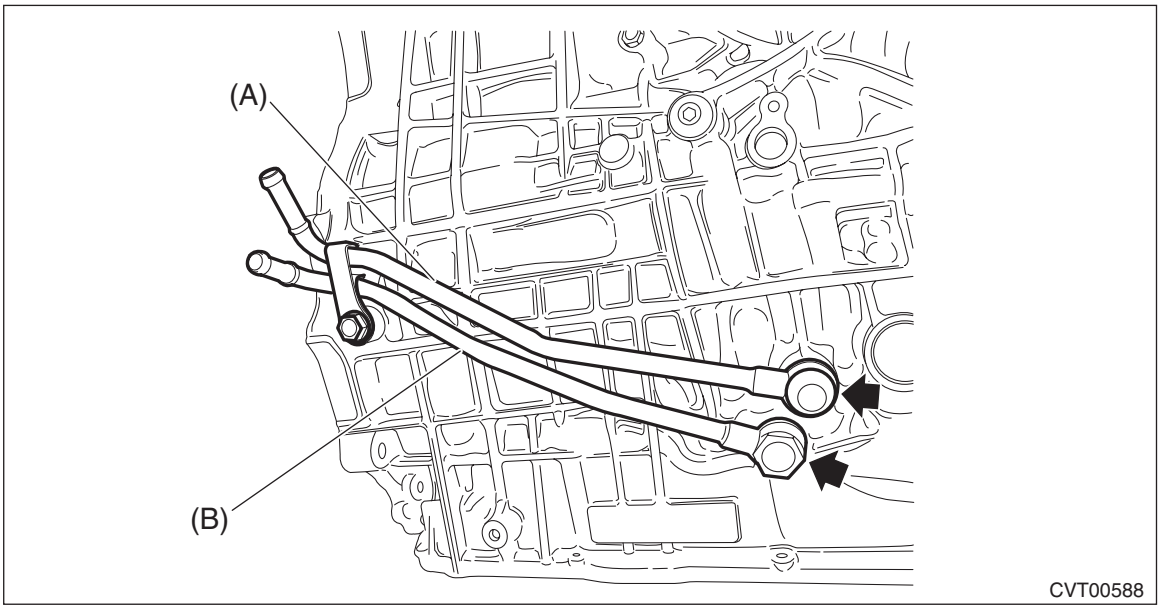

(A) CVTF outlet pipe
(B) CVTF inlet pipe

2) Remove all plugs from the transmission case.

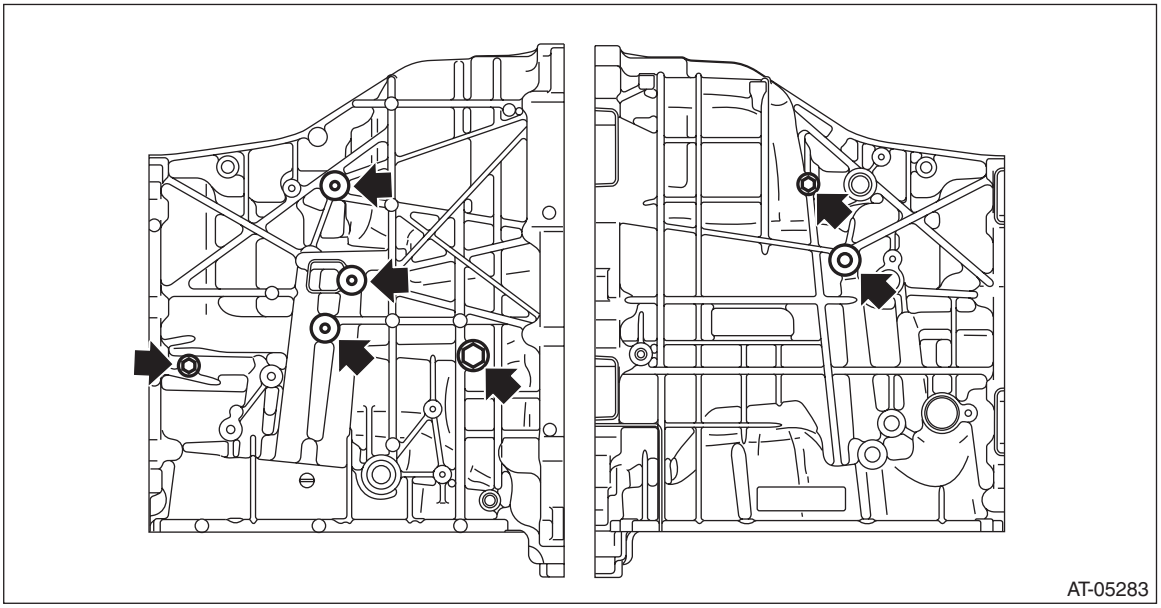

3) Remove the lubrication pipe.

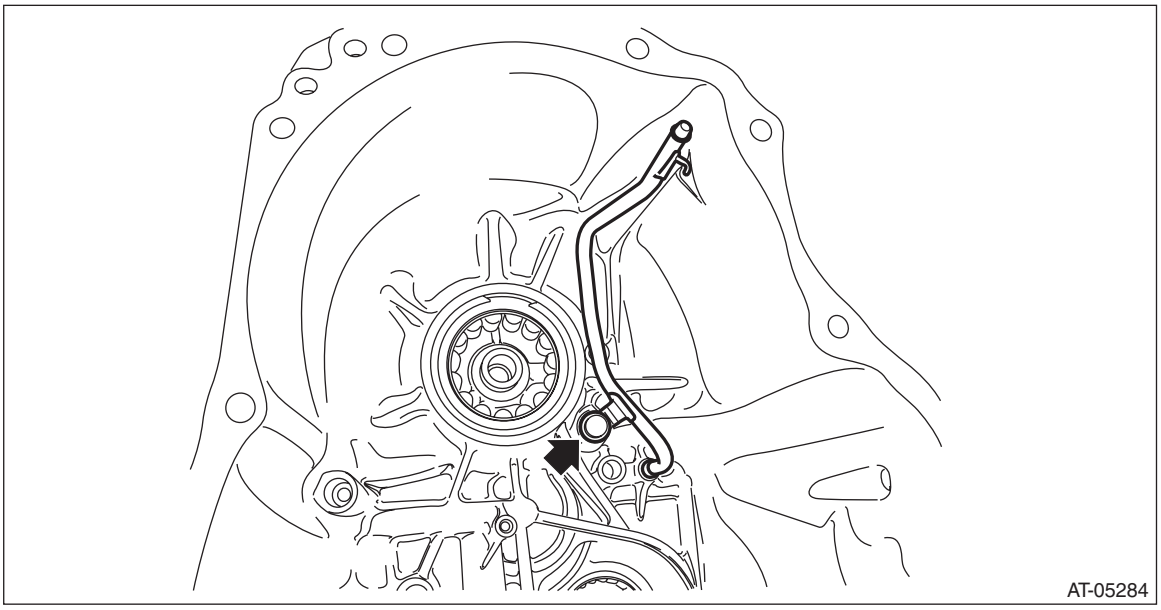

4) Remove the oil seal using a screwdriver wrapped with cloth etc.

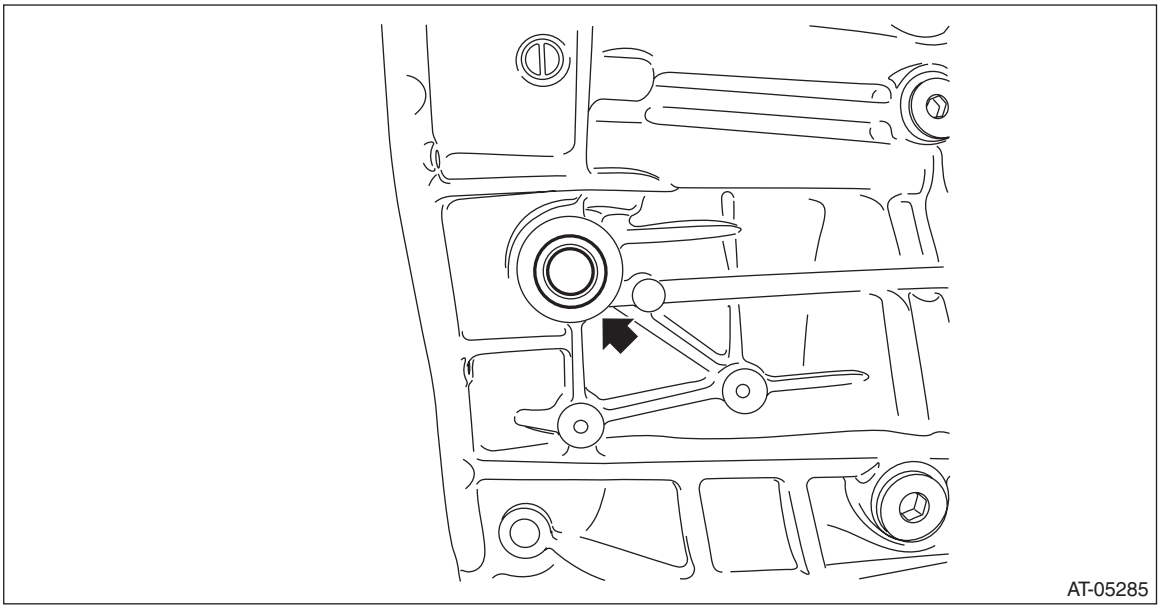

5) Remove the ball bearing from reduction driven gear using ST.
ST 398527700 PULLER ASSY

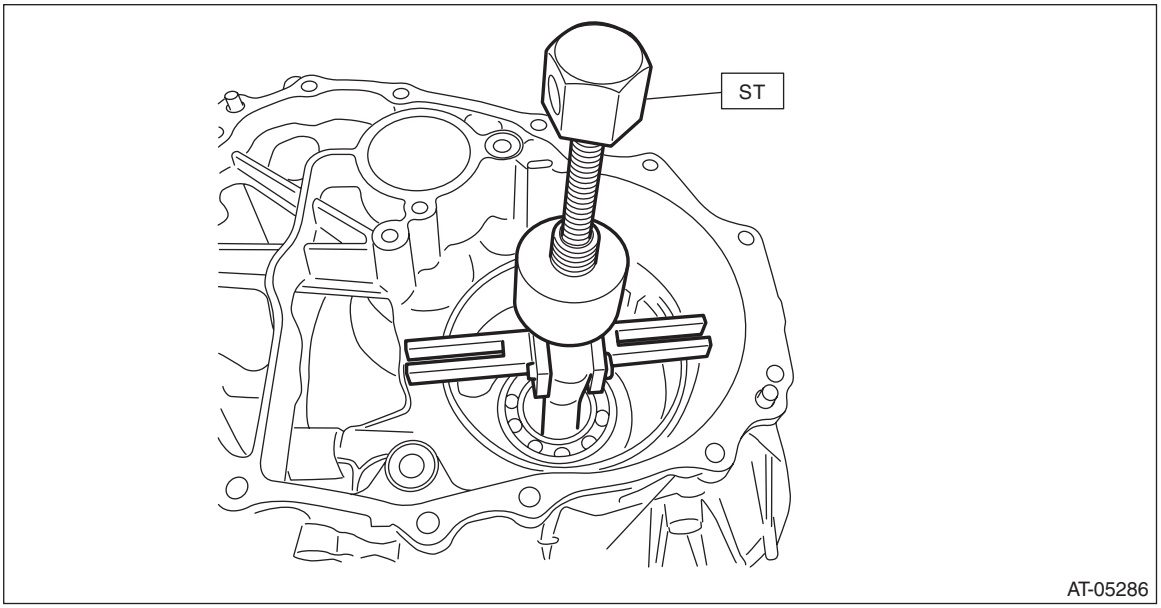

6) Remove the snap ring on primary pulley side.

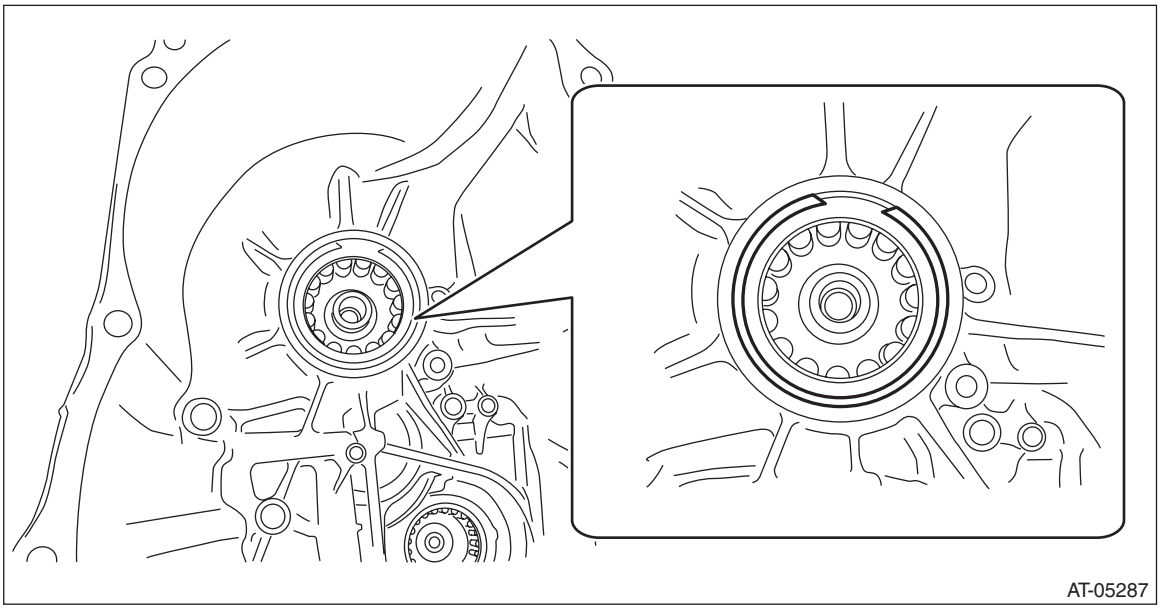

7) Using the ST, remove the roller bearing on primary pulley side.

NOTE:
Warm up the bearing area of transmission case using a drier or heat gun.
ST 398527700 PULLER ASSY

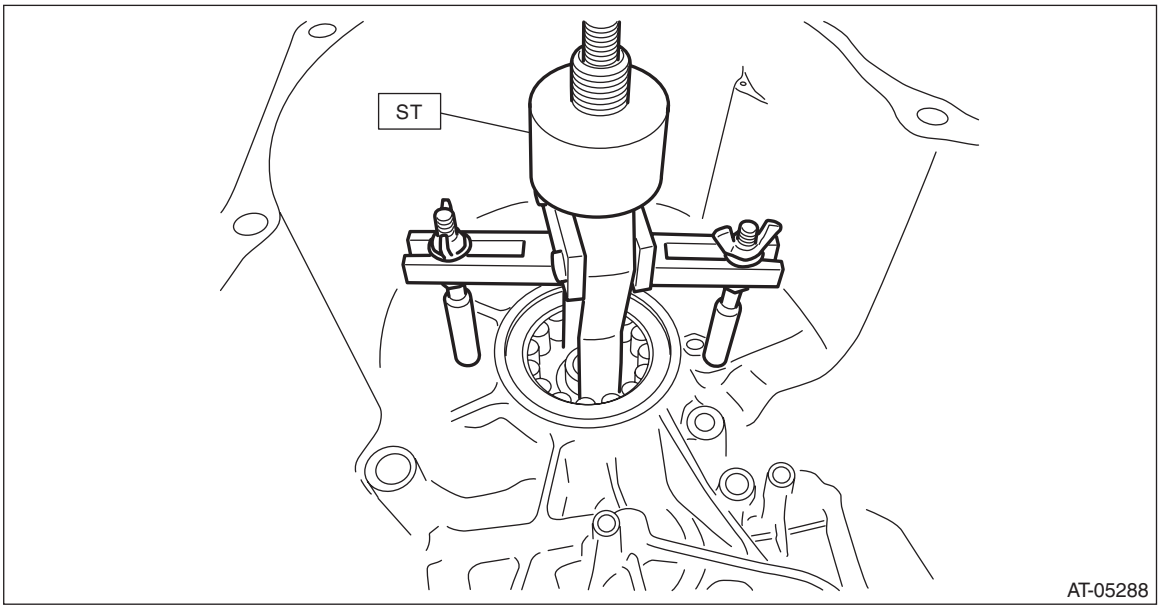

8) Remove the snap ring on secondary pulley side.

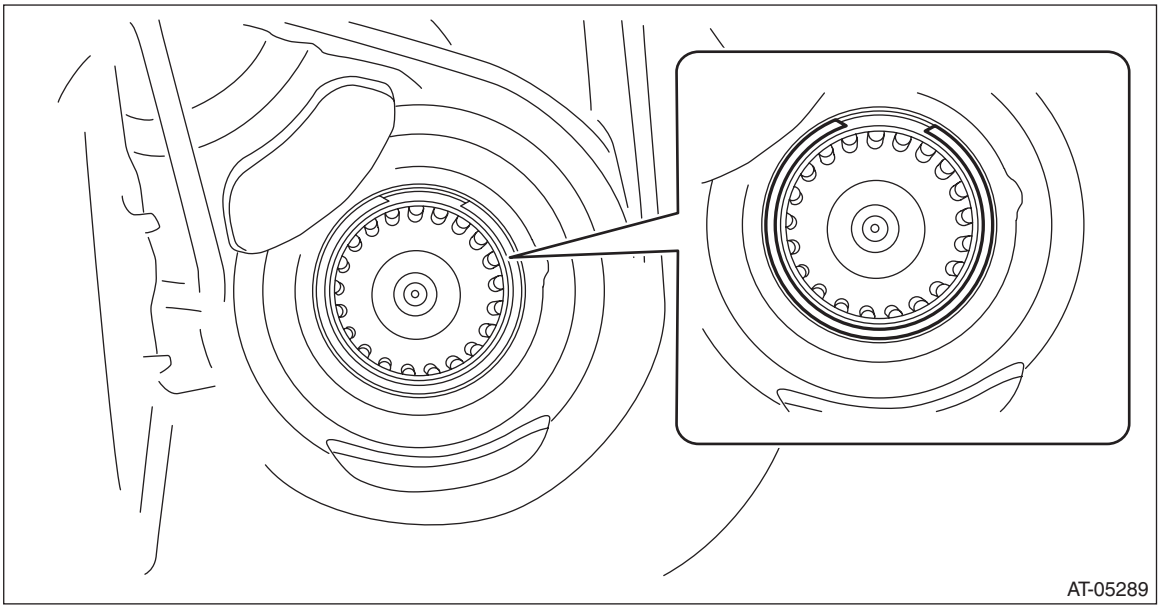

9) Using the ST, remove the roller bearing on secondary pulley side.

NOTE:
Warm up the bearing area of transmission case using a drier or heat gun.
ST 398527700 PULLER ASSY

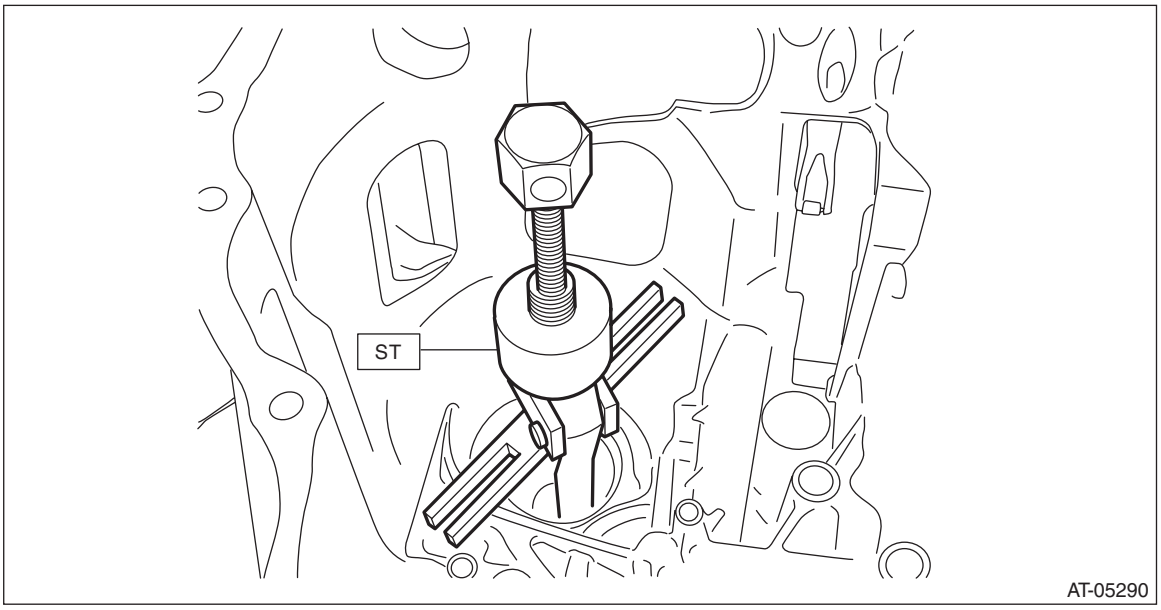

10) Remove the CVTF filter by blowing compressed air through the transmission case hole.

NOTE:
Hold the CVTF filter with a finger to prevent compressed air from leaking.

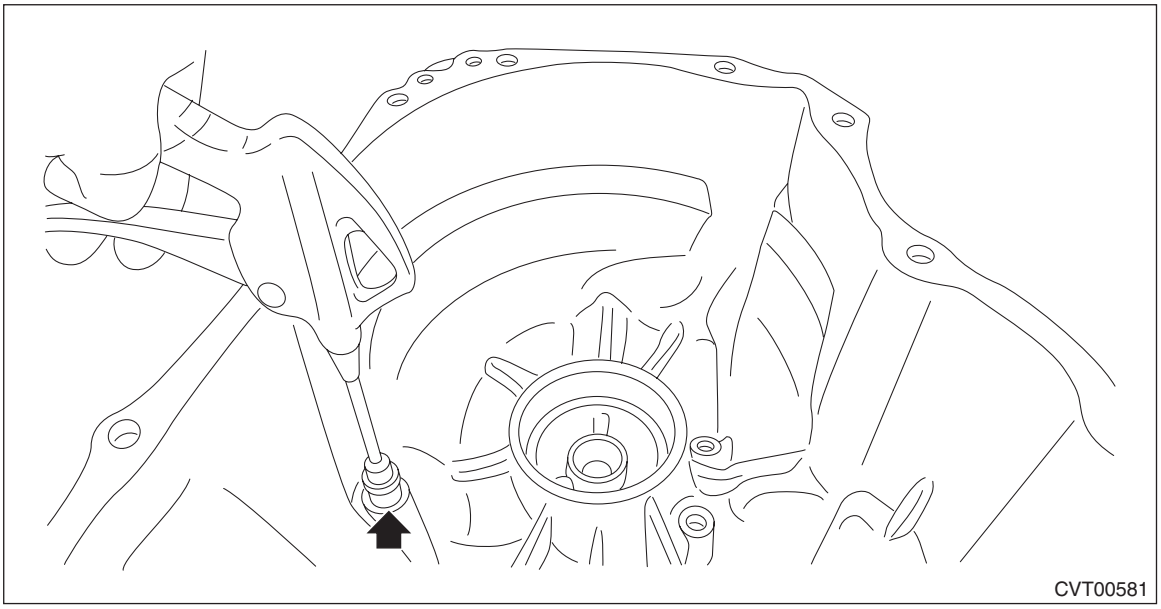

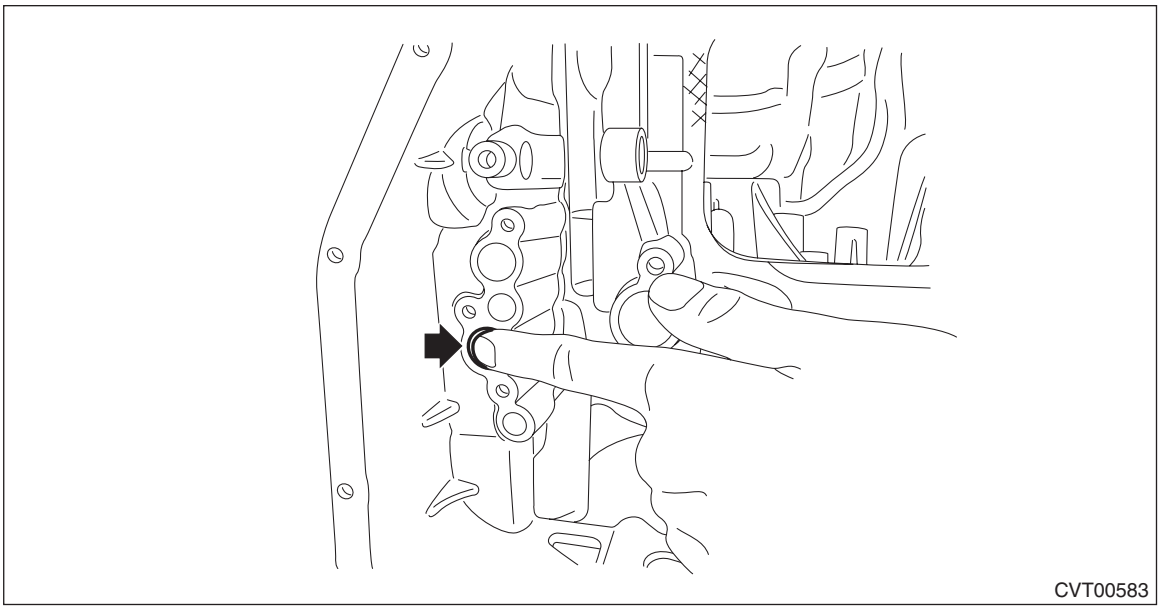
CVT00583

D: ASSEMBLY

1) Install the CVTF filter.

NOTE:
- Use a new CVTF filter.
- Apply CVTF to the CVTF filter.
- Make sure that the CVTF filter does not protrude from the transmission case.

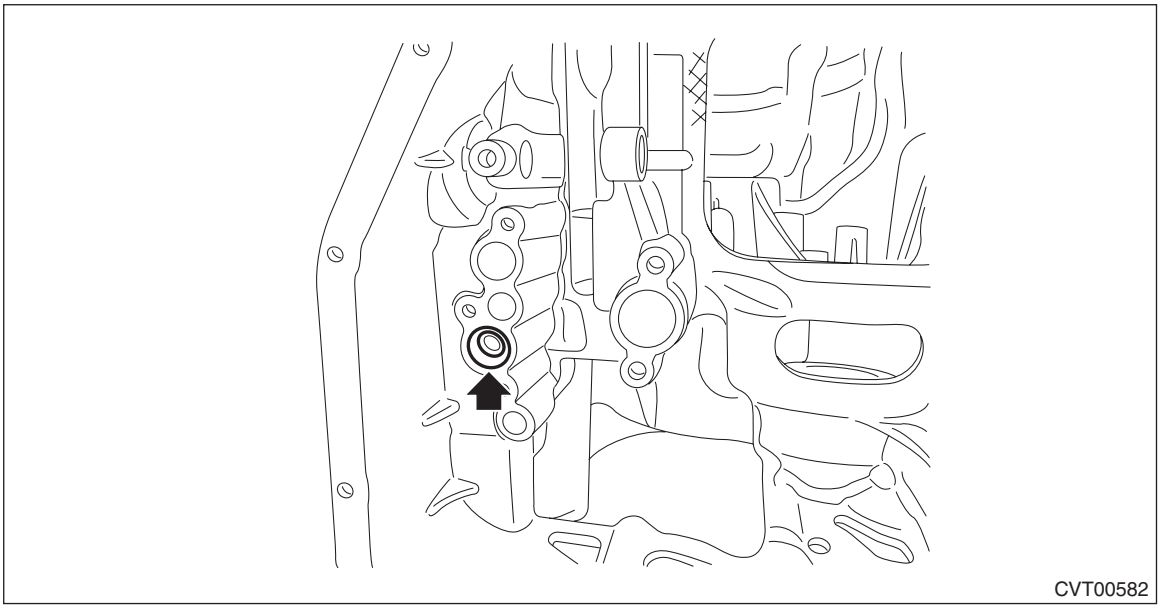
CVT00582

2) Using the ST, install the oil seal.
ST 18657AA000 INSTALLER

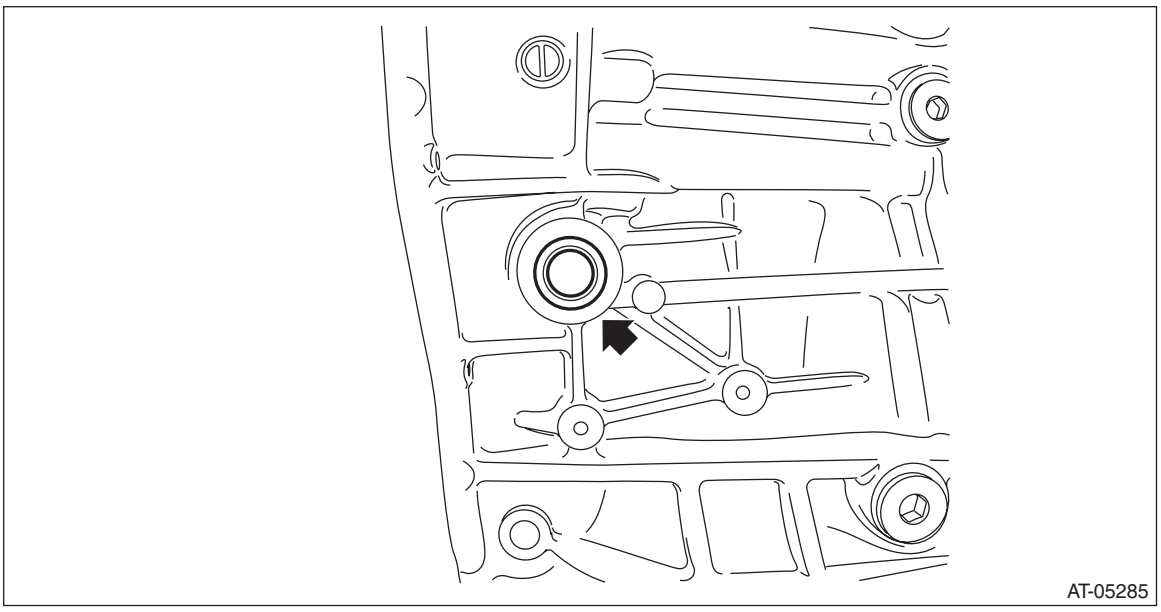

3) Using ST1 and ST2, install the ball bearing on the reduction gear side.

NOTE:
Use a new ball bearing.
ST1 398177700 INSTALLER
ST2 499755602 PRESS SNAP RING

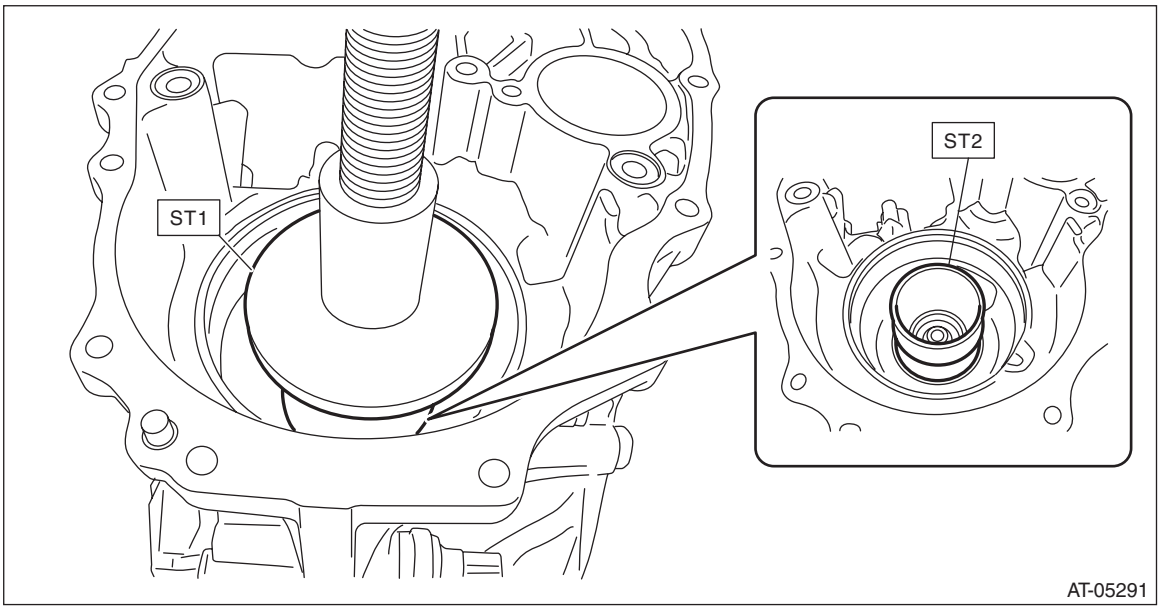

4) Using ST1 and ST2, install the roller bearing on primary pulley side.

NOTE:
- Use a new roller bearing.
- Make adjustment so that the press gets in contact with the center of ST2.

ST1 398177700 INSTALLER
ST2 20299AG010 BASE

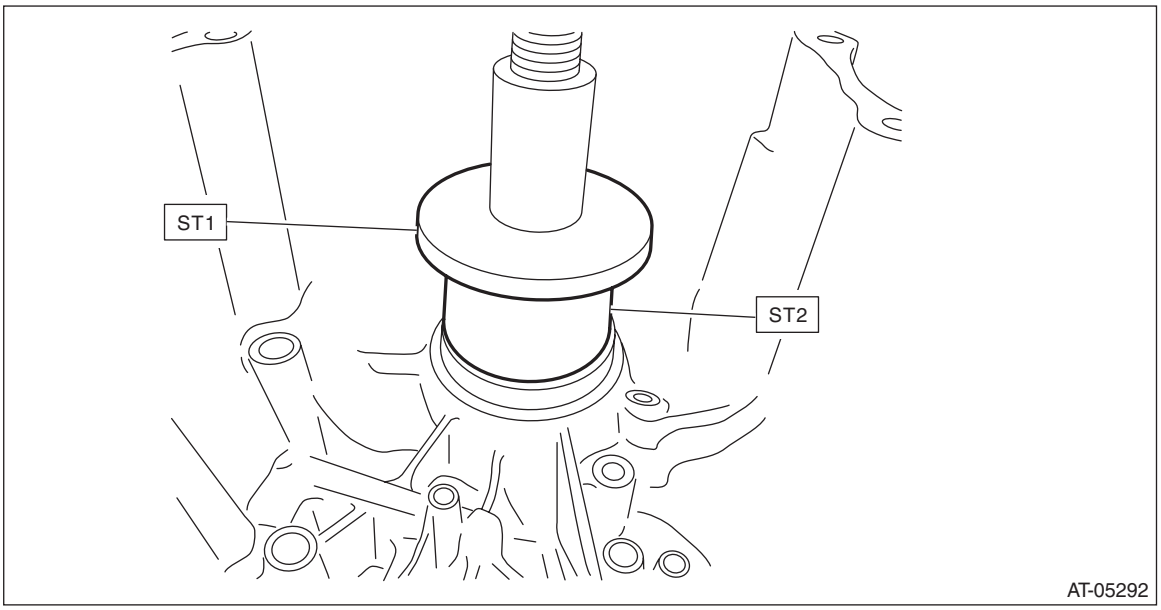

5) Install the snap ring on primary pulley side.

NOTE:
Use new snap rings.

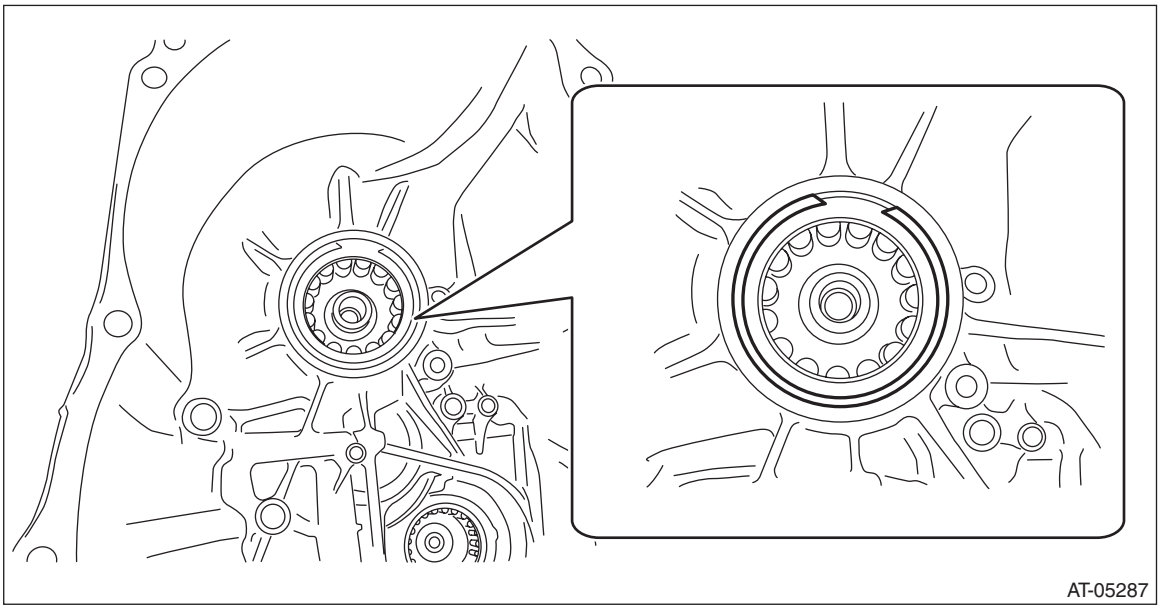

6) Using ST1 and ST2, install the roller bearing on secondary pulley side.

NOTE:
- Use a new roller bearing.
- Make adjustment so that the press gets in contact with the center of ST2.

ST1 398177700 INSTALLER
ST2 499755602 PRESS SNAP RING

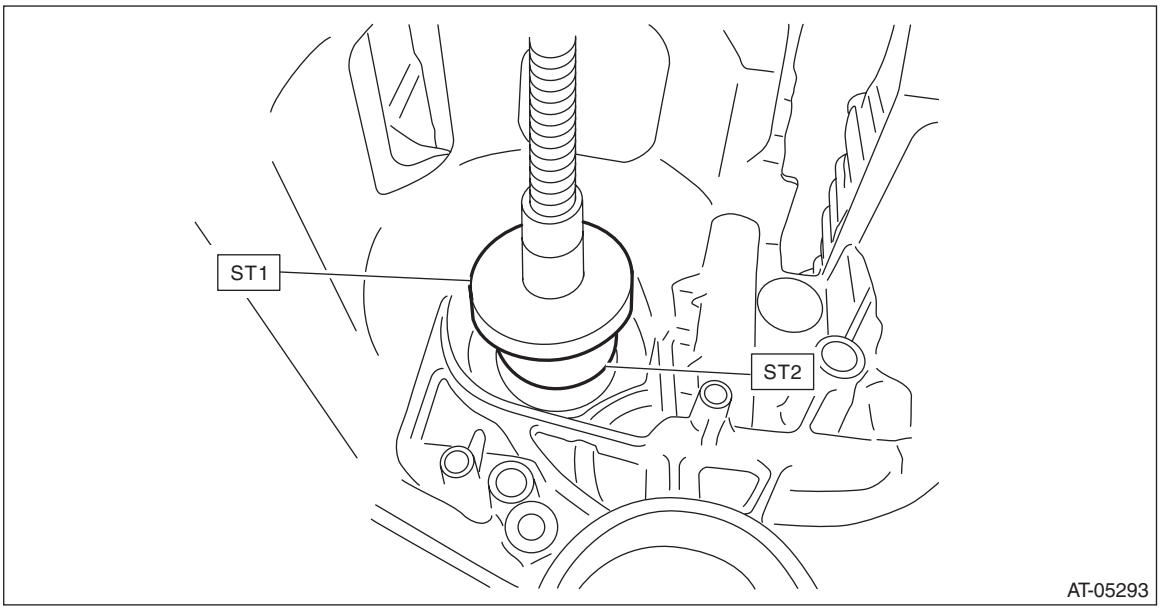

7) Install the snap ring on secondary pulley side.

NOTE:
Use new snap rings.

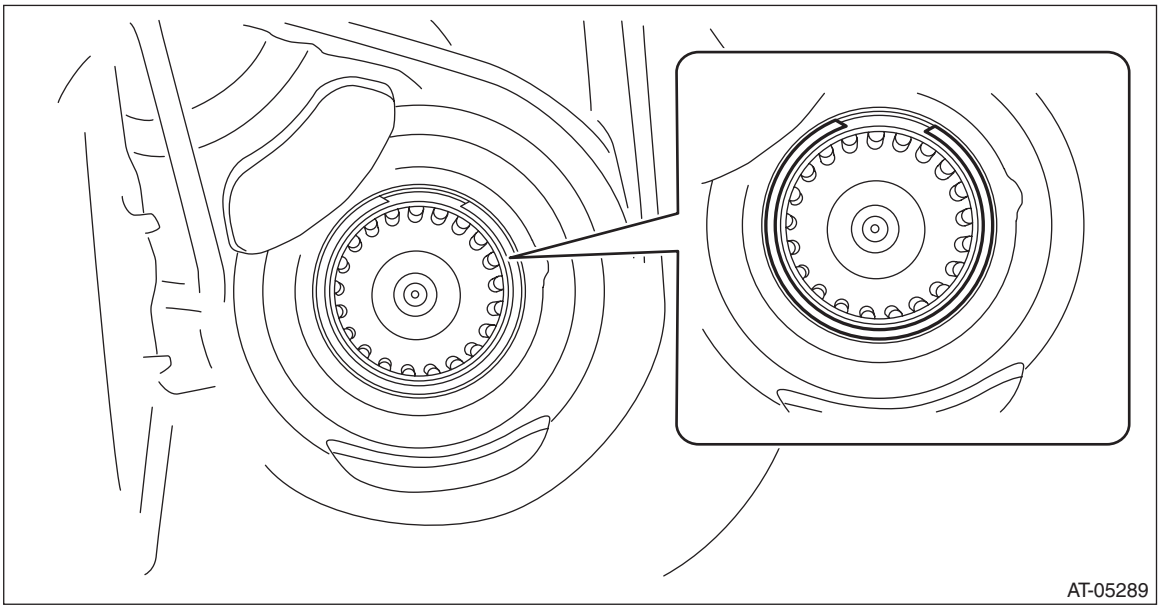

8) Install all plugs.

NOTE:
Use new gaskets and O-rings.

Tightening torque:
T1: 13 N·m (1.3 kgf-m, 9.6 ft-lb)
T2: 25 N·m (2.5 kgf-m, 18.4 ft-lb)
T3: 35 N·m (3.5 kgf-m, 25.8 ft-lb)

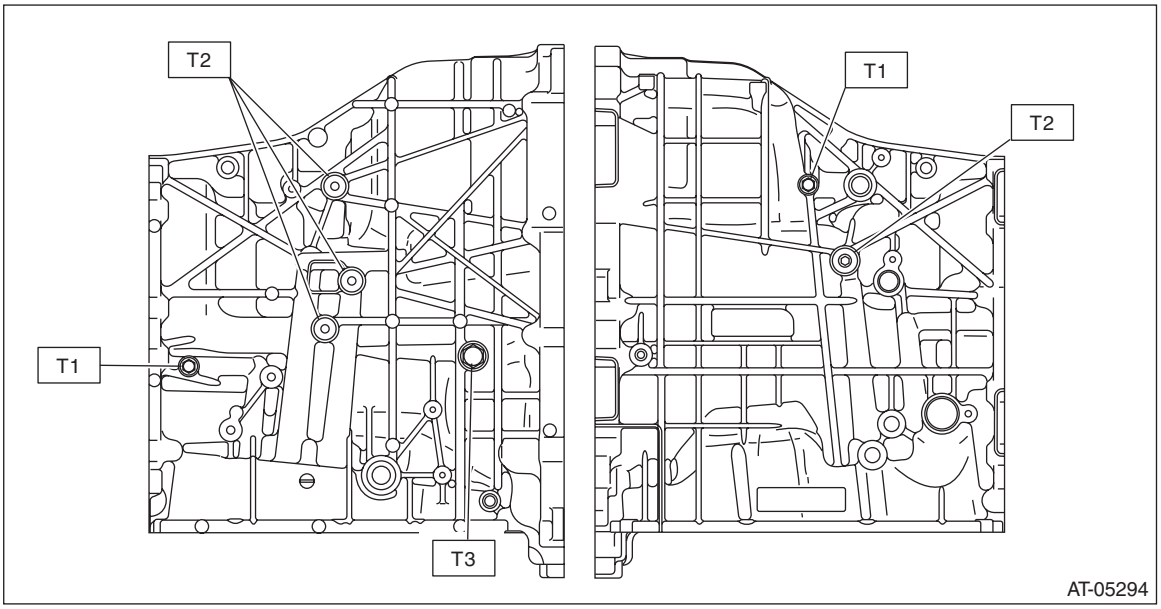

9) Install the lubrication pipe and O-ring.

NOTE:
- Use new O-rings.
- Apply CVTF to the O-rings.

Tightening torque:
16 N·m (1.6 kgf-m, 11.8 ft-lb)

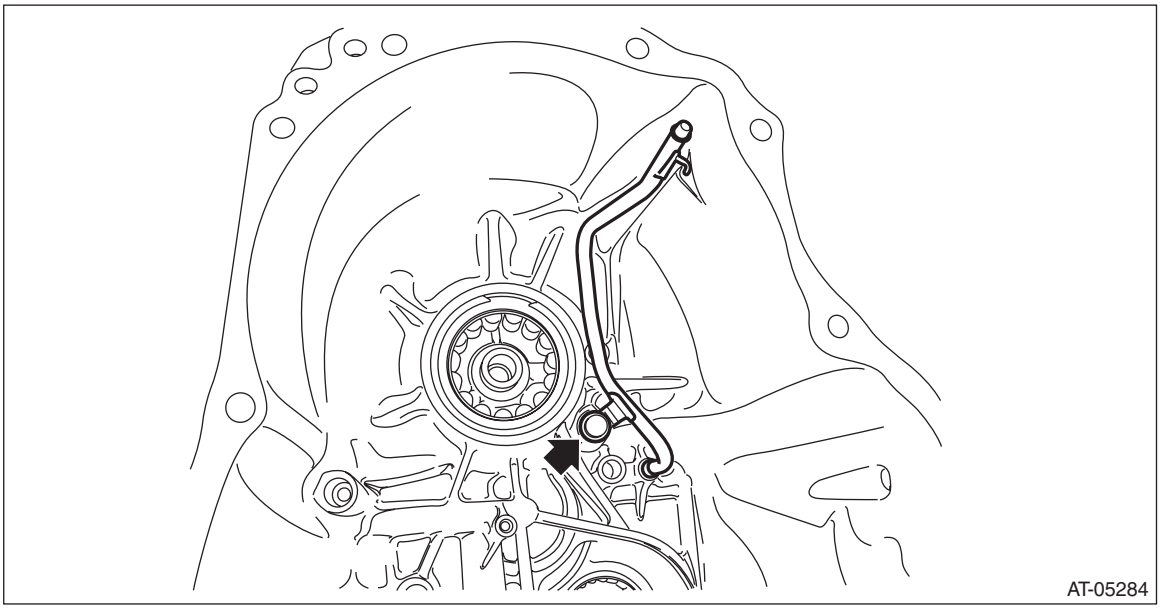

10) Install the CVTF inlet pipe and CVTF outlet pipe.

NOTE:
Use a new gasket.

Tightening torque:
T1: 16 N·m (1.6 kgf-m, 11.8 ft-lb)
T2: 40 N·m (4.1 kgf-m, 29.5 ft-lb)

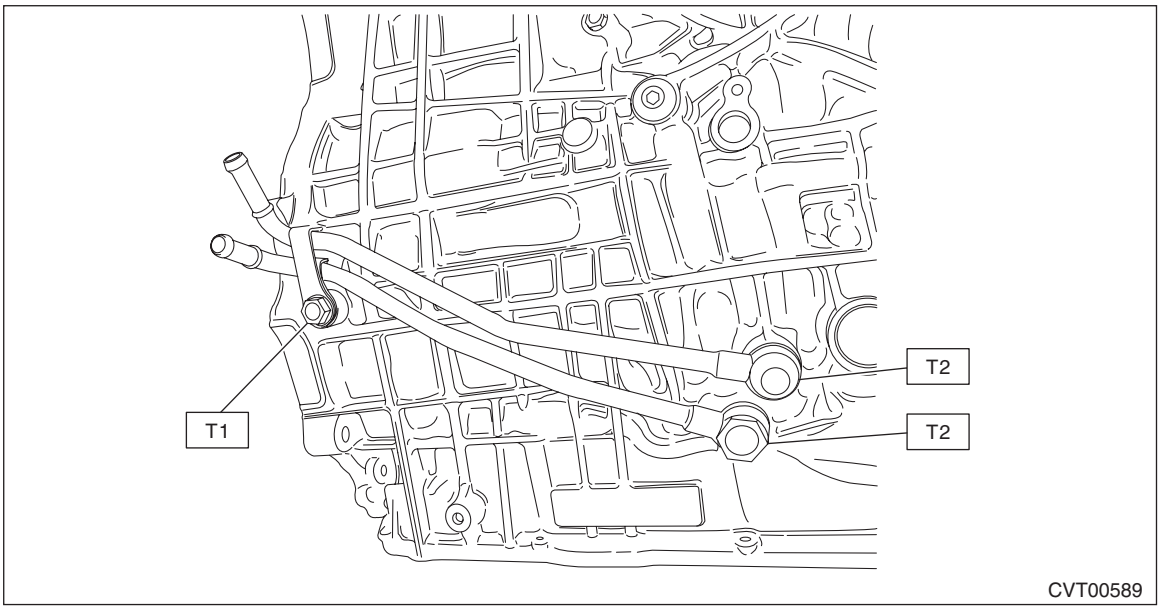

E: INSPECTION

- Check the transmission case for damage.
- Check for leakage of CVTF from the connection between converter case and transmission case.
- Check for leakage of CVTF from the connection between intermediate case and transmission case.
- Check the lubrication pipe for bend or damage.
- Check the bearing for smooth operation.
- Check the bearing for seizure or wear.

F: ADJUSTMENT

NOTE:
When replacing the transmission case with a new part, perform the following check and adjustment for the selection.

- Select the thrust bearing for the forward clutch assembly. <Ref. to CVT(TR690)-201, ADJUSTMENT, Forward Clutch Assembly.>
- Select the snap ring for the reduction gear. <Ref. to CVT(TR690)-209, ADJUSTMENT, Reduction Driven Gear.>

41.Primary Pulley and Secondary Pulley

A: REMOVAL

NOTE:
Always replace primary pulley and secondary pulley as an assembly because they are non-disassembled parts.
1) Remove the transmission assembly from the vehicle. <Ref. to CVT(TR690)-57, REMOVAL, Automatic Transmission Assembly.>
2) Remove the air breather hose. <Ref. to CVT(TR690)-136, REMOVAL, Air Breather Hose.>
3) Remove the oil pan and control valve body. <Ref. to CVT(TR690)-113, REMOVAL, Control Valve Body.>
4) Remove the transmission harness. <Ref. to CVT(TR690)-123, REMOVAL, Transmission Harness.>
5) Remove the extension case. <Ref. to CVT(TR690)-143, REMOVAL, Extension Case.>
6) Remove the rear drive shaft. <Ref. to CVT(TR690)-147, REMOVAL, Rear Drive Shaft.>
7) Remove the transfer clutch assembly. <Ref. to CVT(TR690)-152, REMOVAL, Transfer Clutch.>
8) Remove the center differential carrier. <Ref. to CVT(TR690)-155, REMOVAL, Center Differential Carrier.>
9) Remove the transfer reduction driven gear assembly. <Ref. to CVT(TR690)-159, REMOVAL, Transfer Reduction Driven Gear.>
10) Remove the intermediate case. <Ref. to CVT(TR690)-166, REMOVAL, Intermediate Case.>
11) Remove the forward clutch assembly. <Ref. to CVT(TR690)-182, REMOVAL, Forward Clutch Assembly.>
12) Remove the transmission case. <Ref. to CVT(TR690)-214, REMOVAL, Transmission Case.>
13) Set the ST to the secondary pulley, and expand the V groove of pulley until the variator chain gets completely loose.
ST 18769AA000 EXPANDER PULLEY

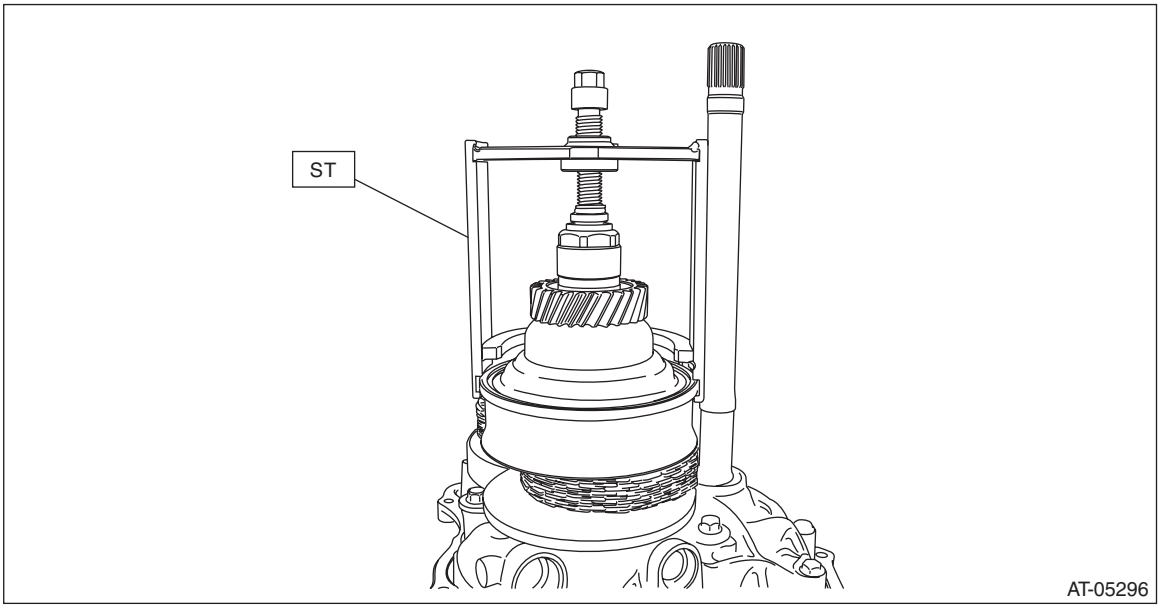

14) Remove the chain guide from lubrication pipe and support rod.

15) Remove the lubrication pipe and support rod.

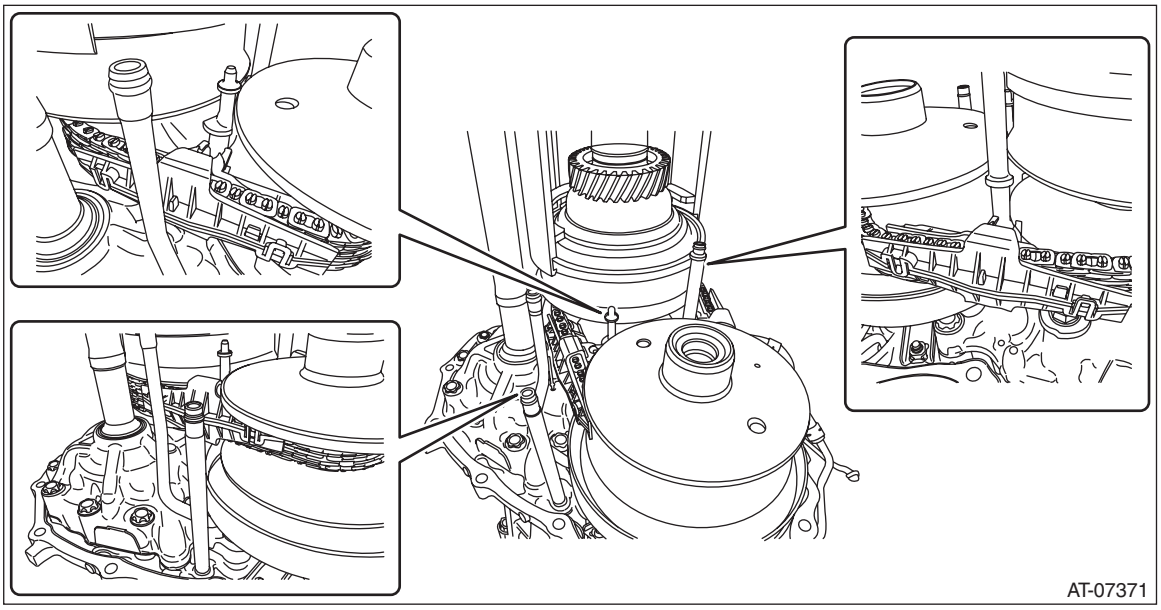

16) Detach the four claws to remove the two chain guides.

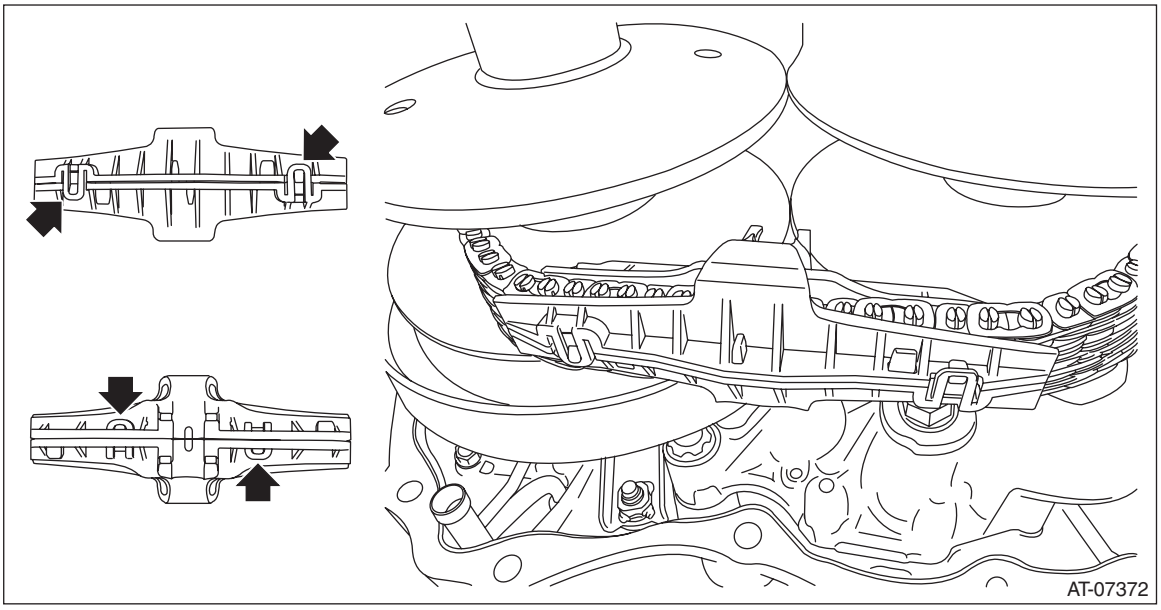

17) Remove the secondary pulley mounting bolt.

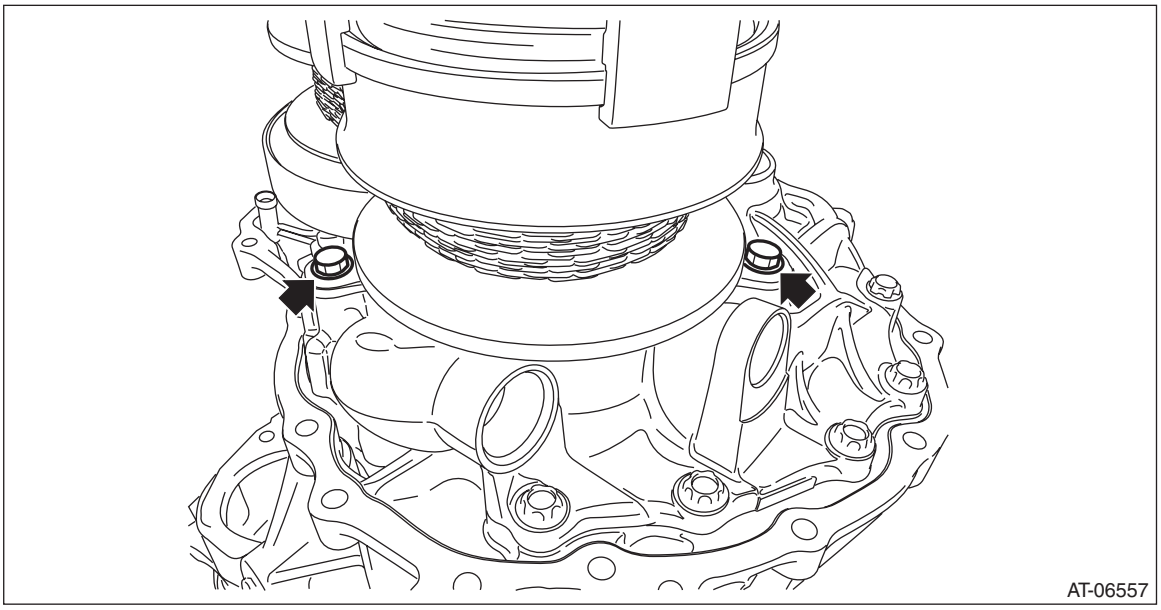

18) Remove the secondary pulley from drive pinion retainer and intersect the V groove of secondary pulley and V groove of primary pulley. Remove the variator chain from secondary pulley and remove the secondary pulley.

CAUTION:
Cover the V grooves of secondary pulley and primary pulley with cloth to protect the both pulleys and variator chain from scratching.

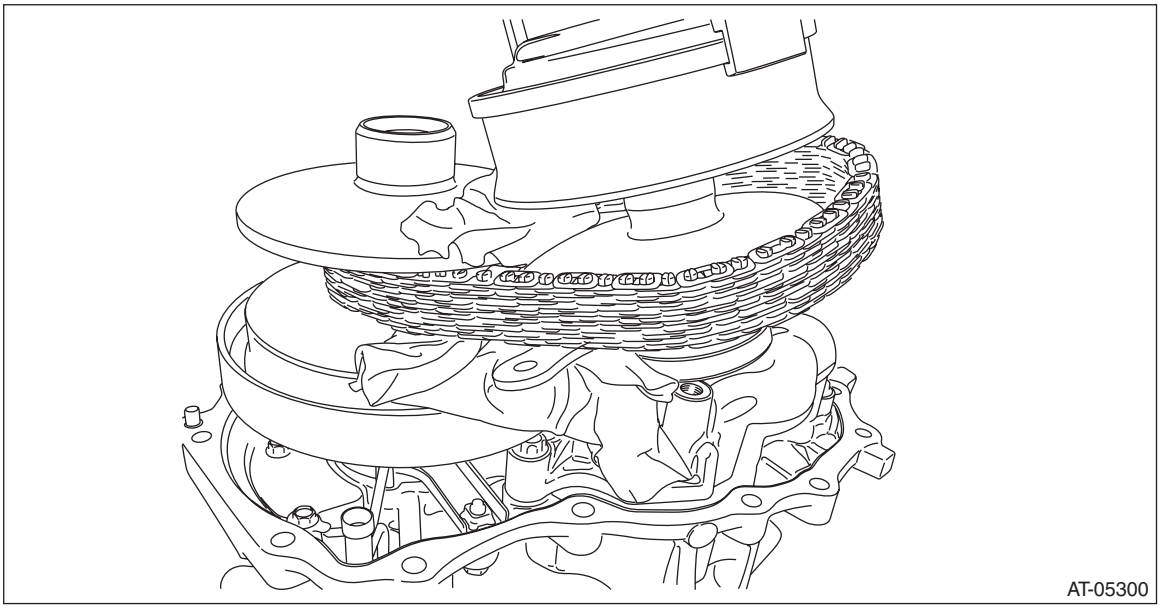

19) Remove the variator chain from primary pulley.

20) Remove the primary pulley mounting bolt.

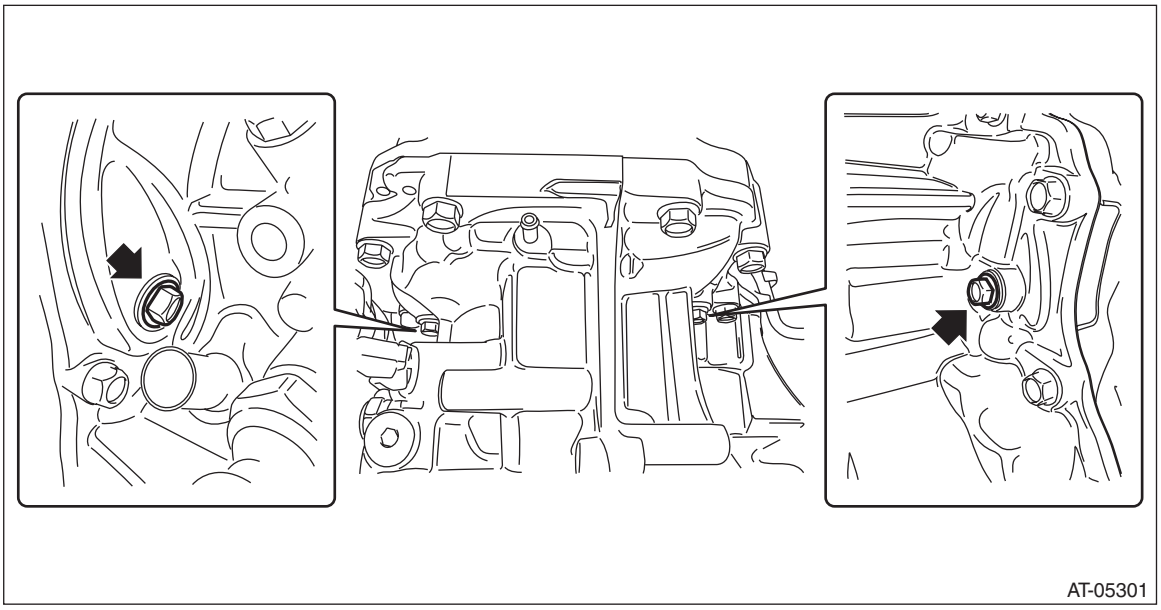

21) Remove the primary pulley.
22) Remove the two seal rings from drive pinion retainer.

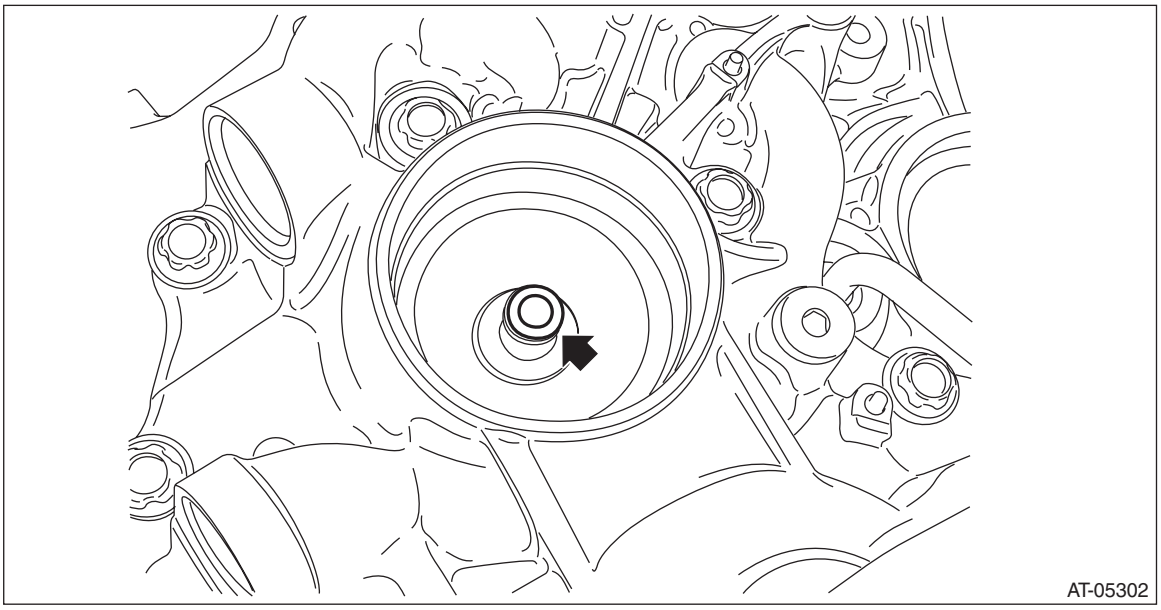

23) Remove the two seal rings from primary pulley.

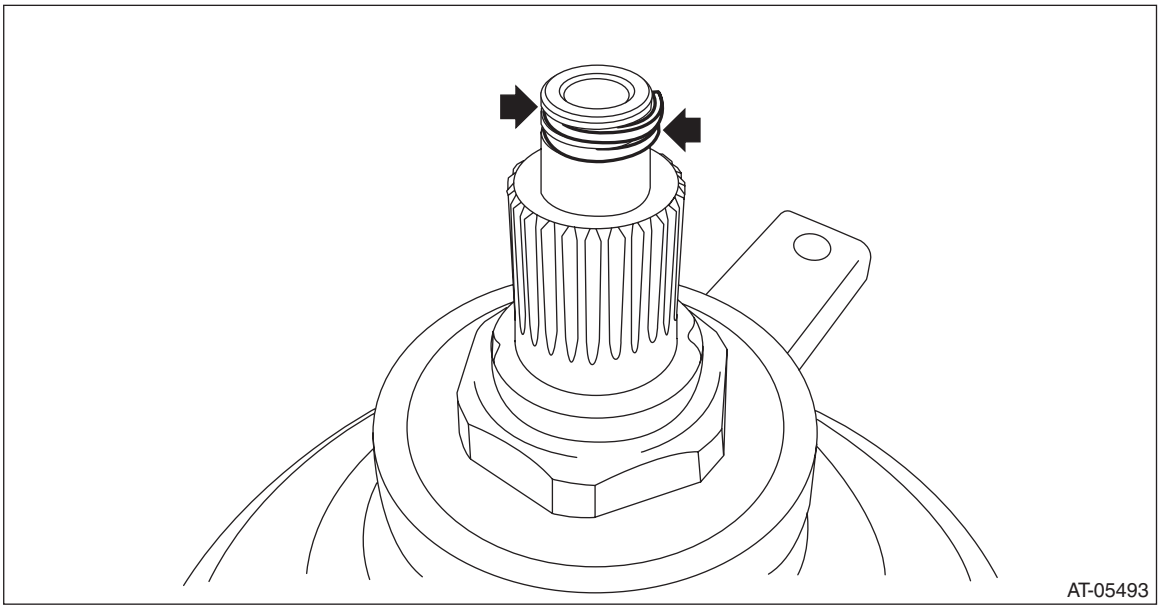

B: INSTALLATION

1) Select shims for pulley alignment. <Ref. to CVT(TR690)-240, ADJUSTMENT, Primary Pulley and Secondary Pulley.>
2) Install the two seal rings to drive pinion retainer.

NOTE:
- Use new seal rings.
- Apply CVTF to the seal rings.
- When installing the seal rings, do not expand the seal rings too much.

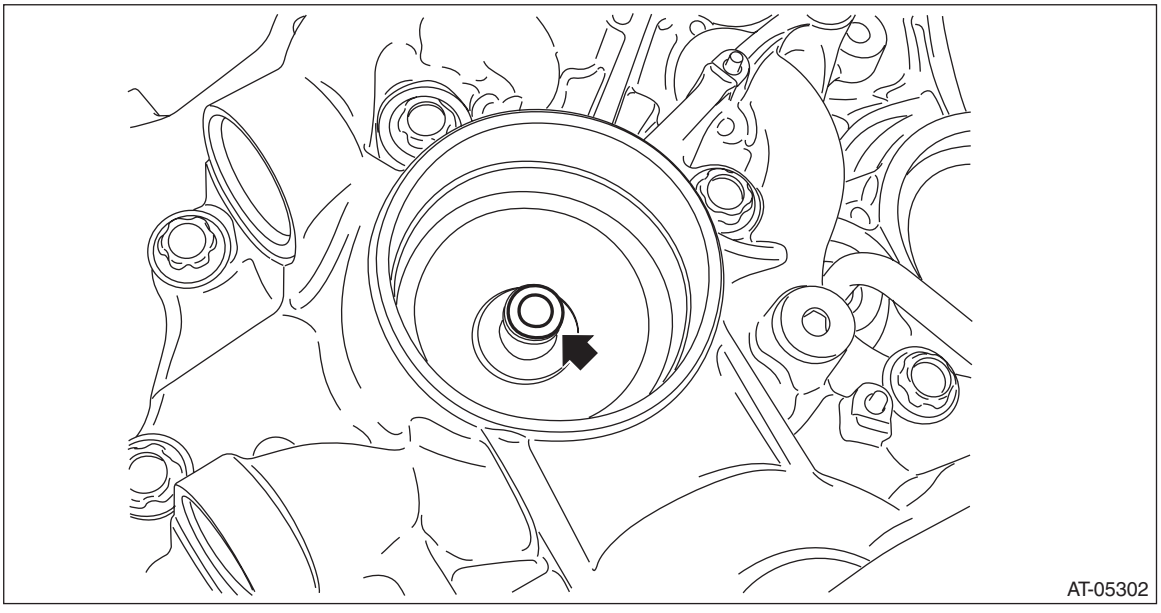

3) Install the selected shims to the primary pulley bearing catch surface.

4) Install the two seal rings to primary pulley.

NOTE:
- Use new seal rings.
- Apply CVTF to the seal rings.

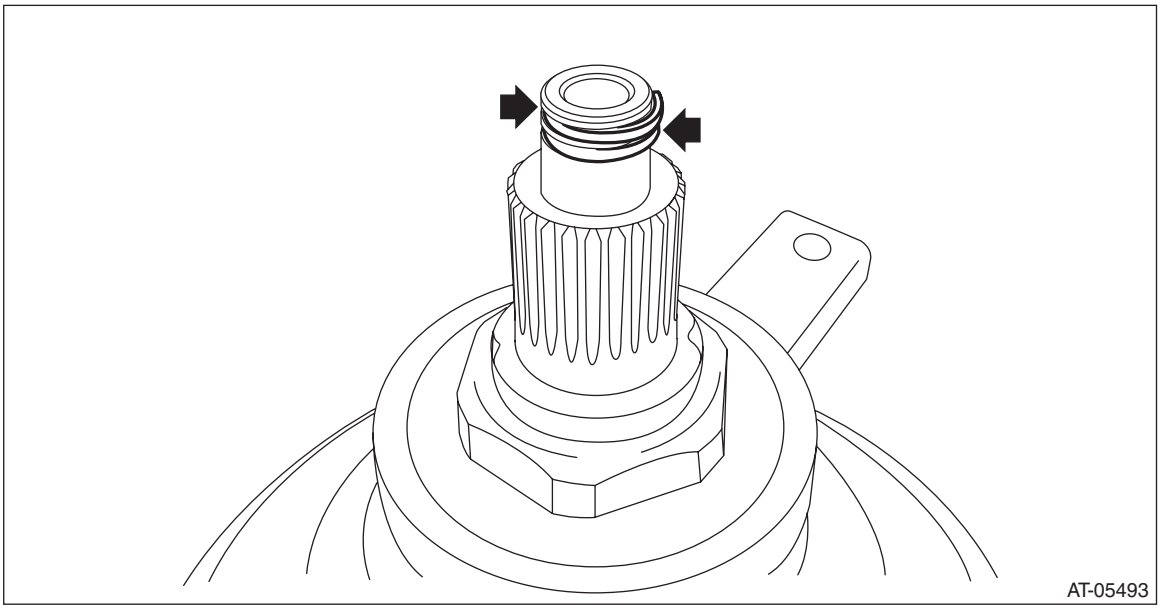

5) Install the primary pulley and adjust the position of bolt holes of primary bearing retainer and converter case to tighten the primary pulley bolt.

NOTE:
Use a new seal washer.

Tightening torque:
21 N·m (2.1 kgf-m, 15.5 ft-lb)

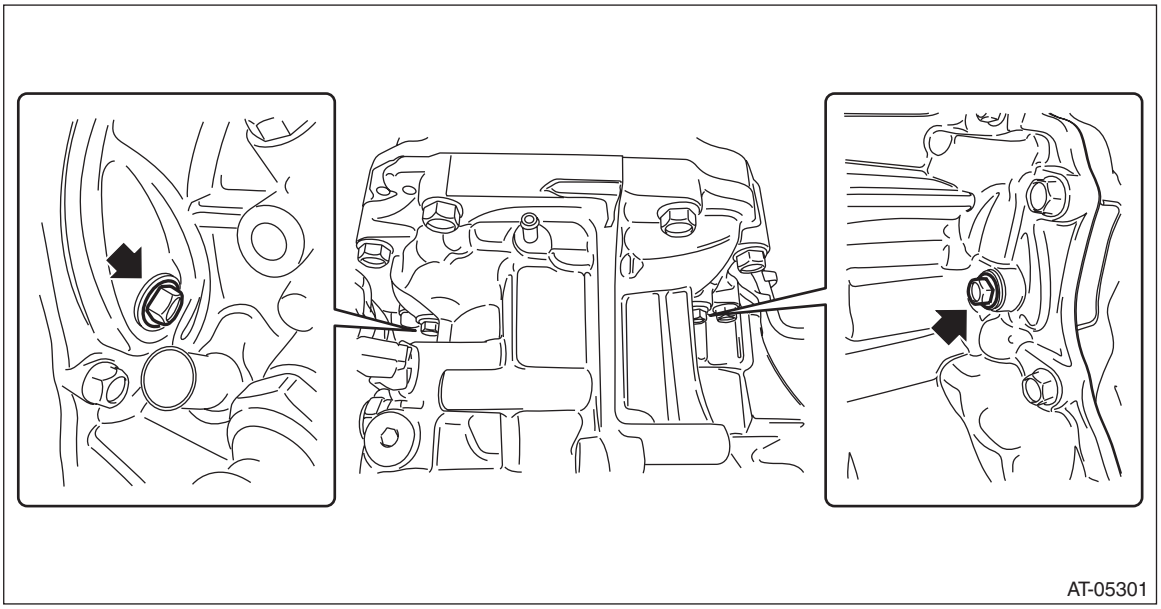

6) Set the ST to secondary pulley and expand the V groove of pulley.
ST 18769AA000 EXPANDER PULLEY

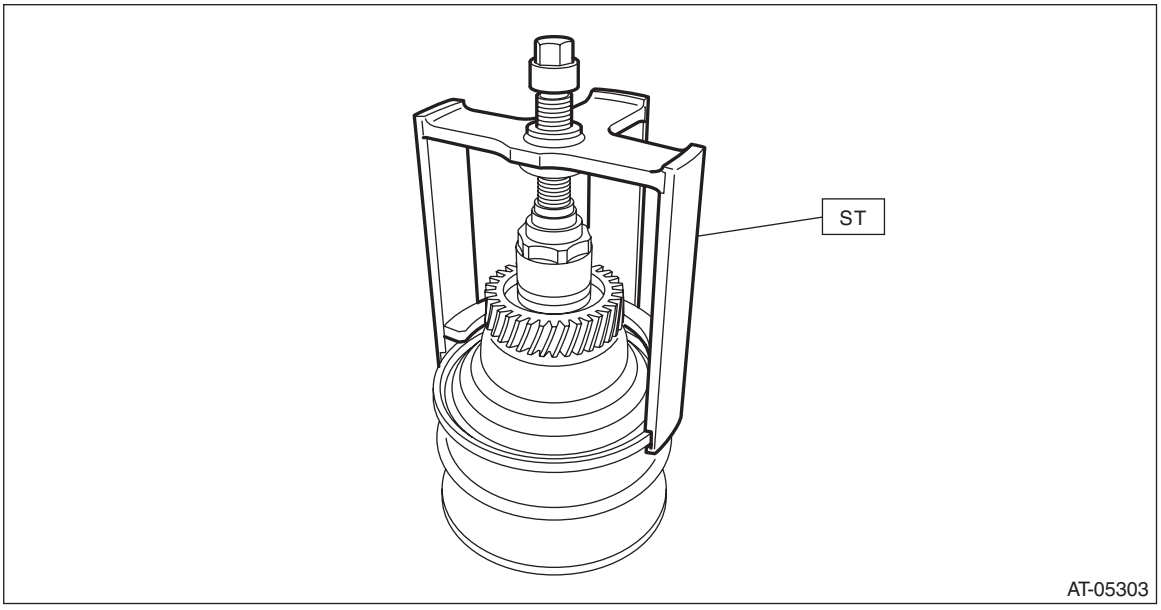

7) Place the variator chain on the primary pulley groove and attach the secondary pulley and variator chain together to the drive pinion retainer.

CAUTION:
Cover the V grooves of primary pulley and secondary pulley with cloth to protect the both pulleys and variator chain from scratching.

(1) Place the variator chain on primary pulley.
(2) Intersect the V groove of primary pulley and the V groove of secondary pulley and install the secondary pulley while placing the variator chain on secondary pulley.

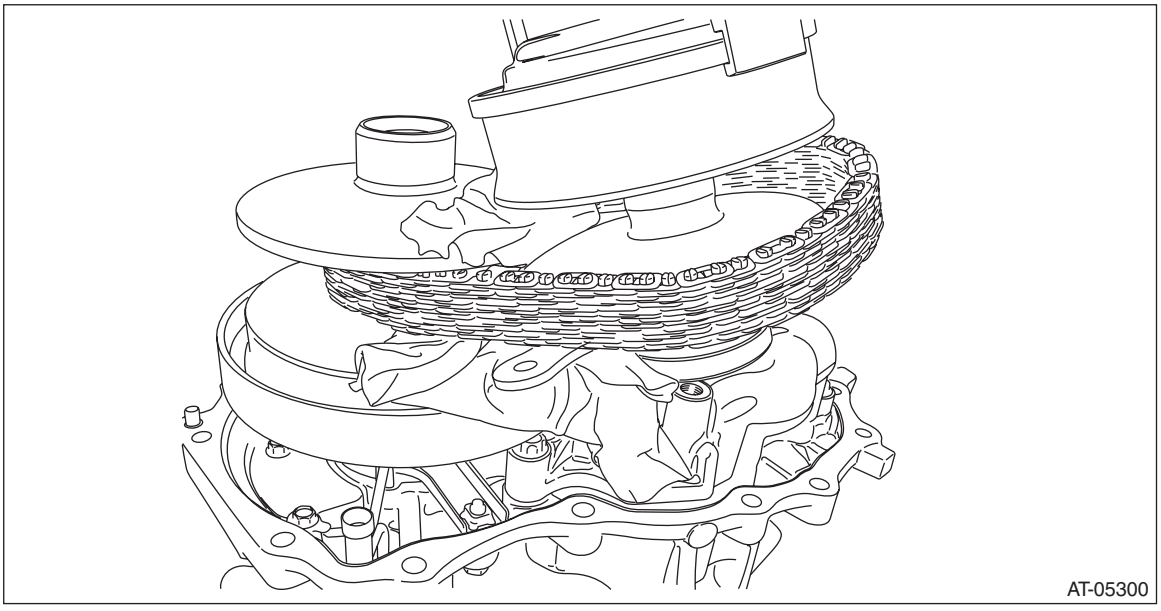

(3) While aligning the bolt hole of secondary bearing retainer and the bolt hole of driving pinion retainer, install the secondary pulley to drive pinion retainer.

8) Install the secondary pulley bolt.

NOTE:
Apply CVTF to the bolt.

Tightening torque:
33 N·m (3.4 kgf-m, 24.3 ft-lb)

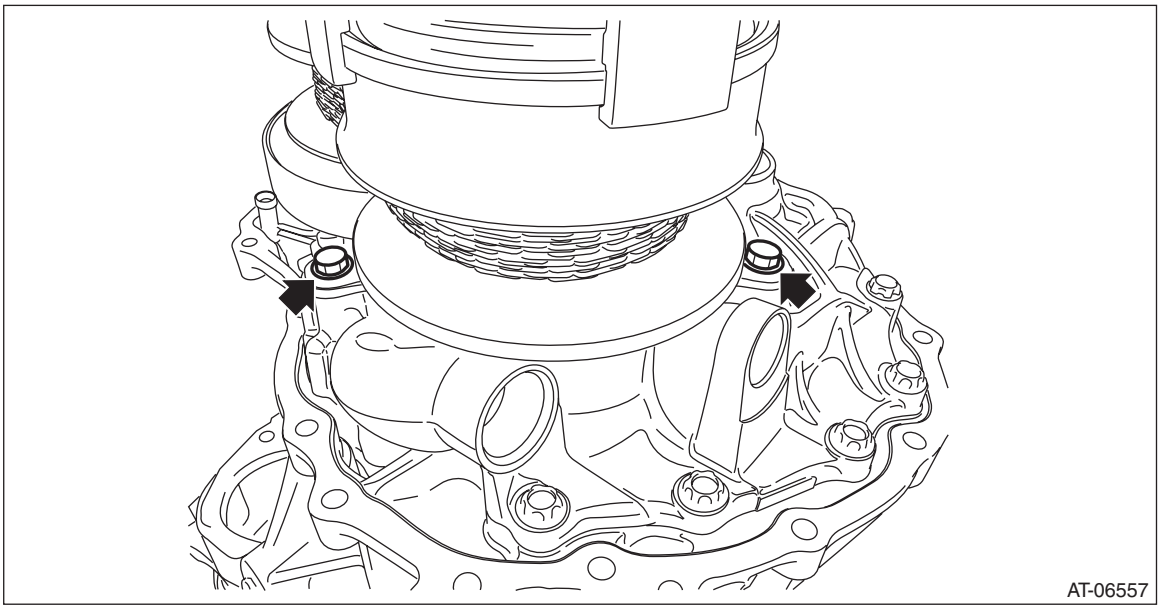

9) Install the chain guide.

NOTE:
Install it with two claws facing outward and with two claws facing inward.

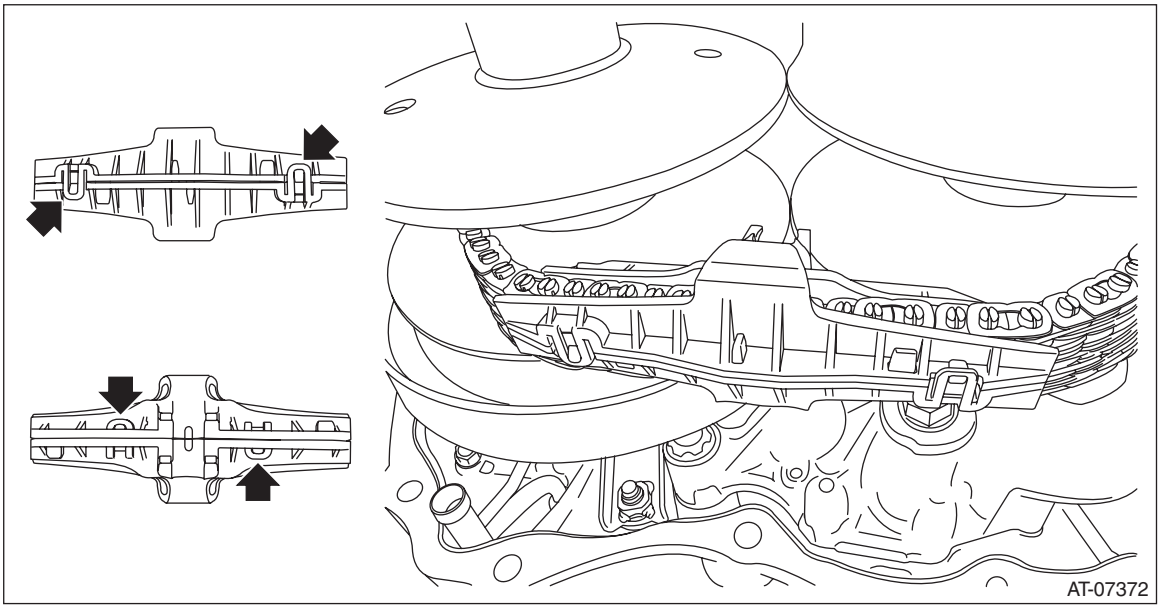

10) Engage the cutout portions of support rod and drive pinion retainer and install the support rod.

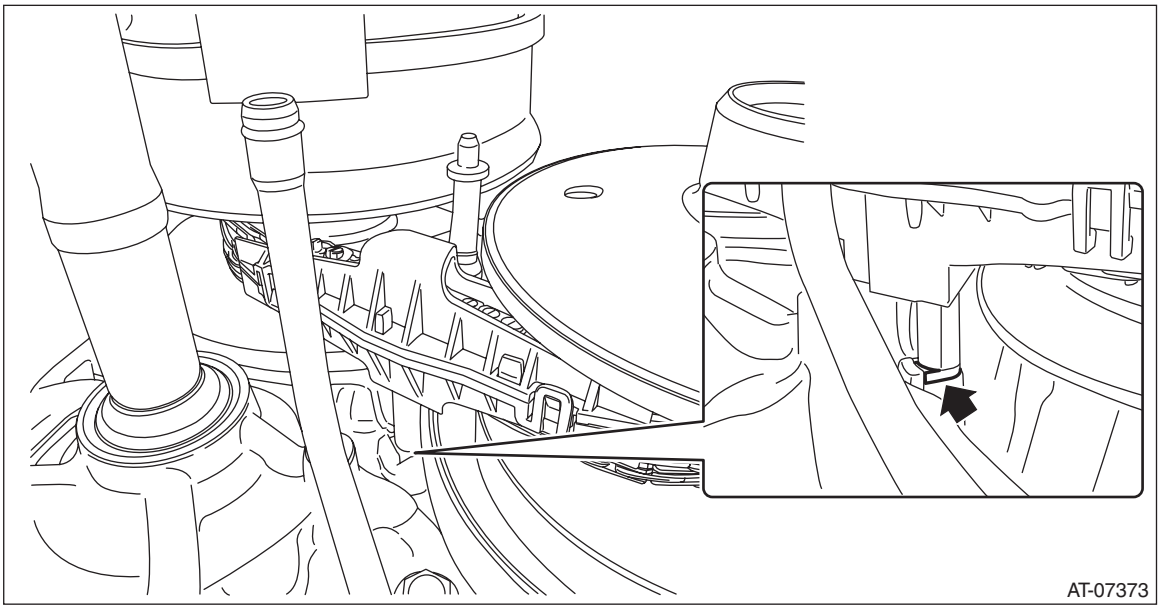

11) Engage the cutout portions of lubrication pipe and drive pinion retainer and install the lubrication pipe.

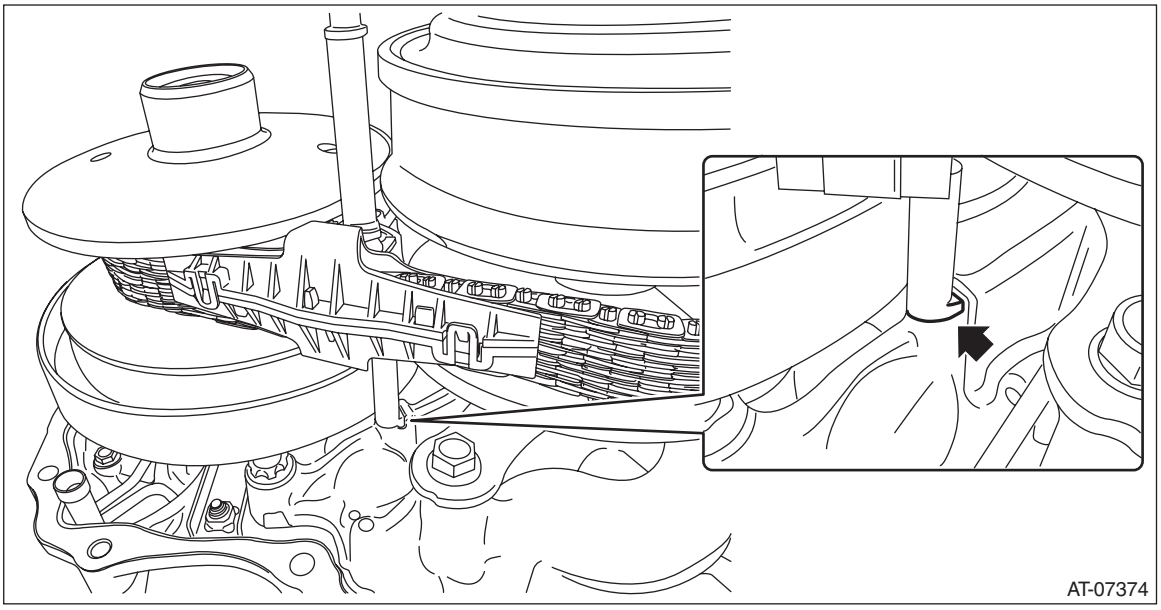

12) Install the chain guide so that the lubrication pipe and support rod run through between the protrusions of each chain guide. Then remove the ST (EXPANDER PULLEY).

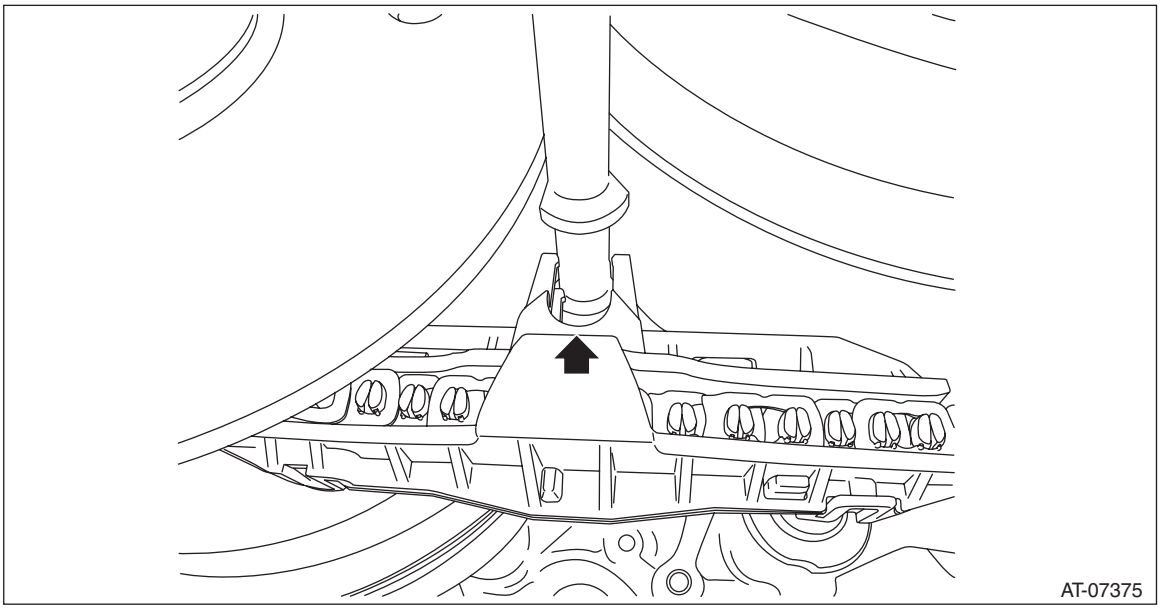

13) Install the O-ring to the lubrication pipe.

NOTE:
Use new O-rings.

14) Install the lubrication pipe.

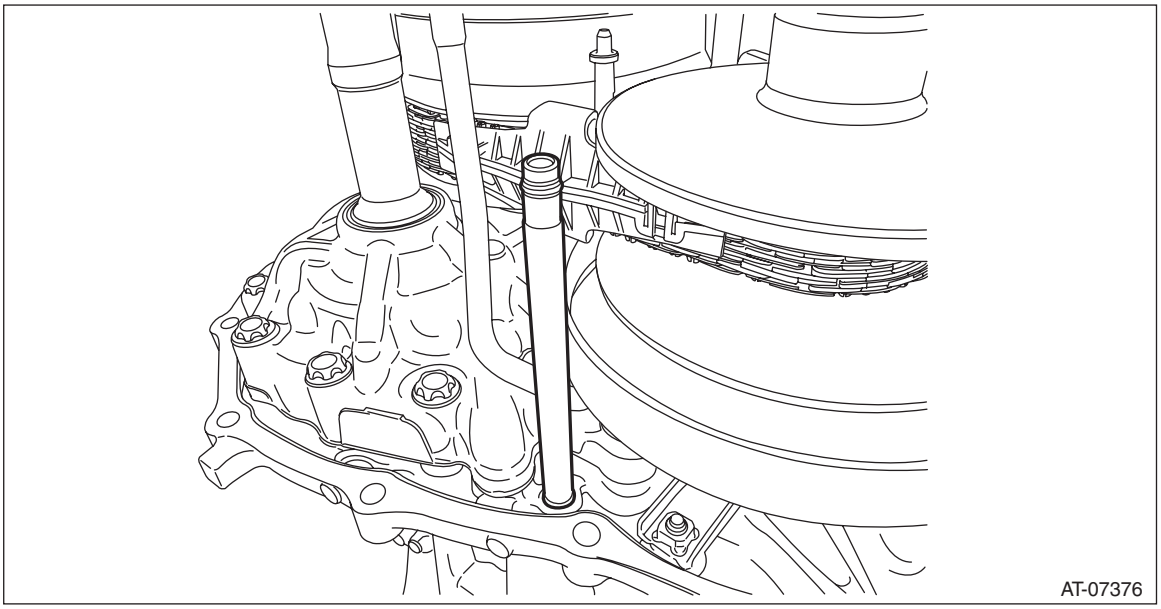

15) Install the transmission case. <Ref. to CVT(TR690)-216, INSTALLATION, Transmission Case.>
16) Install the forward clutch assembly. <Ref. to CVT(TR690)-183, INSTALLATION, Forward Clutch Assembly.>
17) Install the intermediate case. <Ref. to CVT(TR690)-167, INSTALLATION, Intermediate Case.>
18) Install the transfer reduction driven gear assembly. <Ref. to CVT(TR690)-159, INSTALLATION, Transfer Reduction Driven Gear.>
19) Install the center differential carrier. <Ref. to CVT(TR690)-156, INSTALLATION, Center Differential Carrier.>
20) Install the transfer clutch assembly. <Ref. to CVT(TR690)-152, INSTALLATION, Transfer Clutch.>
21) Install the rear drive shaft. <Ref. to CVT(TR690)-147, INSTALLATION, Rear Drive Shaft.>
22) Install the extension case. <Ref. to CVT(TR690)-144, INSTALLATION, Extension Case.>
23) Install the transmission harness. <Ref. to CVT(TR690)-125, INSTALLATION, Transmission Harness.>

24) Install the control valve body and oil pan. <Ref. to CVT(TR690)-117, INSTALLATION, Control Valve Body.>
25) Install the air breather hose. <Ref. to CVT(TR690)-136, INSTALLATION, Air Breather Hose.>
26) Install the transmission assembly to the vehicle. <Ref. to CVT(TR690)-70, INSTALLATION, Automatic Transmission Assembly.>

C: INSPECTION

- Check the surface of primary and secondary pulley cones for damage or wear.
- Check the primary and secondary pulley for damage.
- Check the bearing for seizure or wear.
- Apply CVTF to bearing and rotate the bearing to check for noise or dragging etc.

D: ADJUSTMENT

1. PROCEDURE IN REPLACEMENT OF PRIMARY AND SECONDARY PULLEY, OR IN REPLACEMENT OF PRIMARY PULLEY, SECONDARY PULLEY AND VARIATOR CHAIN

1) Measure depth “Lp” from the ST upper face to the primary pulley bearing catch surface at several points and calculate the average.
ST 499575400 GAUGE

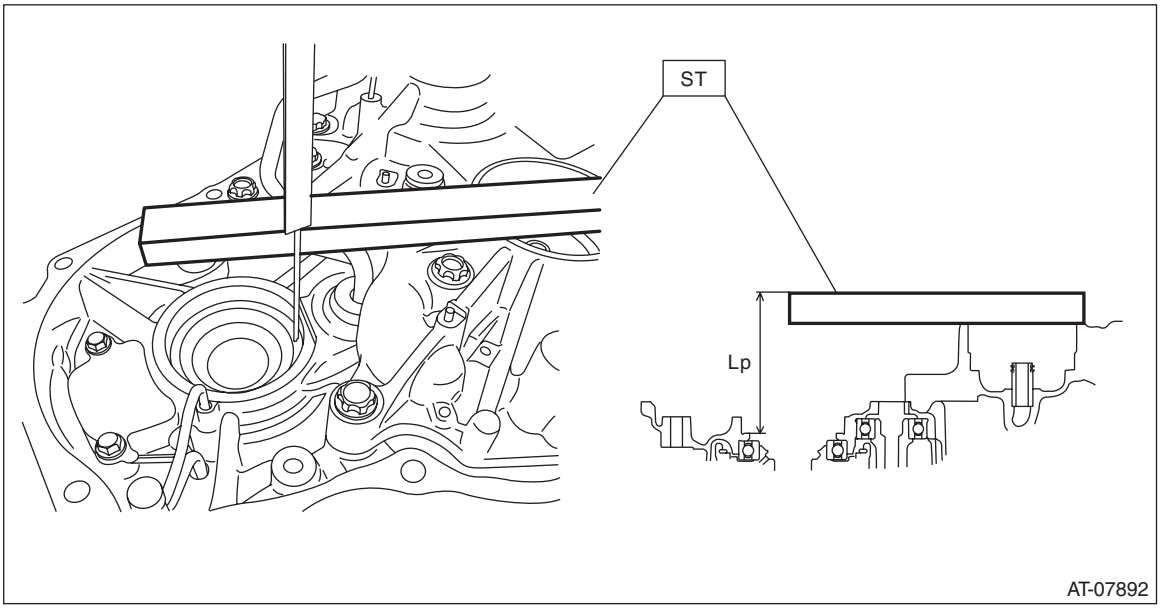

2) Measure height “Ls” from the drive pinion retainer upper face to the secondary pulley bearing catch surface at several points and calculate the average.
ST 499575400 GAUGE

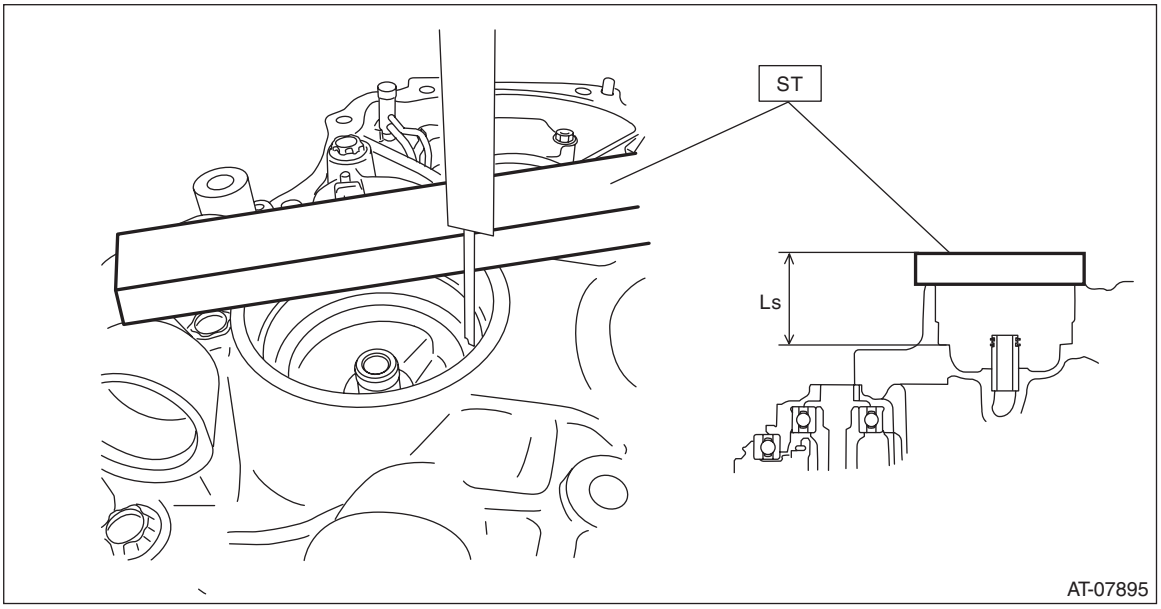

3) Calculate the following formula.
Calculation formula:
T (mm) = B + (Lp – Ls) + 31.601 – A
[T (in) = B + (Lp – Ls) + 1.224 – A]
T: Pulley alignment
A: Specified primary pulley dimension
B: Specified secondary pulley dimension
Lp: Depth from the ST upper face to the primary pulley bearing catch surface
Ls: Depth from the ST upper face to the secondary pulley bearing catch surface
31.601 mm (1.224 in): Constant

Pulley alignment T mm (in)	Shim thickness mm (in)
0.050 — 0.150 (0.002 — 0.006)	0.1 (0.004)
0.151 — 0.250 (0.006 — 0.01)	0.2 (0.008)
0.251 — 0.350 (0.01 — 0.014)	0.3 (0.012)
0.351 — 0.450 (0.014 — 0.018)	0.4 (0.016)
0.451 — 0.550 (0.018 — 0.022)	0.5 (0.020)
0.551 — 0.650 (0.022 — 0.026)	0.6 (0.024)
0.651 — 0.750 (0.026 — 0.030)	0.7 (0.028)
0.751 — 0.850 (0.030 — 0.033)	0.8 (0.031)
0.851 — 0.950 (0.033 — 0.037)	0.9 (0.035)

4) Select one to two shims so that the total thickness meets the value obtained from step 3).

Part No.	Shim thickness mm (in)
32451AA000	0.1 (0.004)
32451AA010	0.2 (0.008)
32451AA020	0.3 (0.012)
32451AA030	0.4 (0.016)
32451AA040	0.5 (0.020)

2. PROCEDURE WHEN REPLACING ONLY DRIVE PINION RETAINER OR CONVERTER CASE

1) Clean the mating surface of current drive pinion retainer and converter case.
2) Measure and record the shim thickness that is attached on the current converter case.
3) Using the current drive pinion retainer, measure depth “Lp1” from the ST upper face to the primary pulley bearing catch surface at several points and calculate the average.
ST 499575400 GAUGE

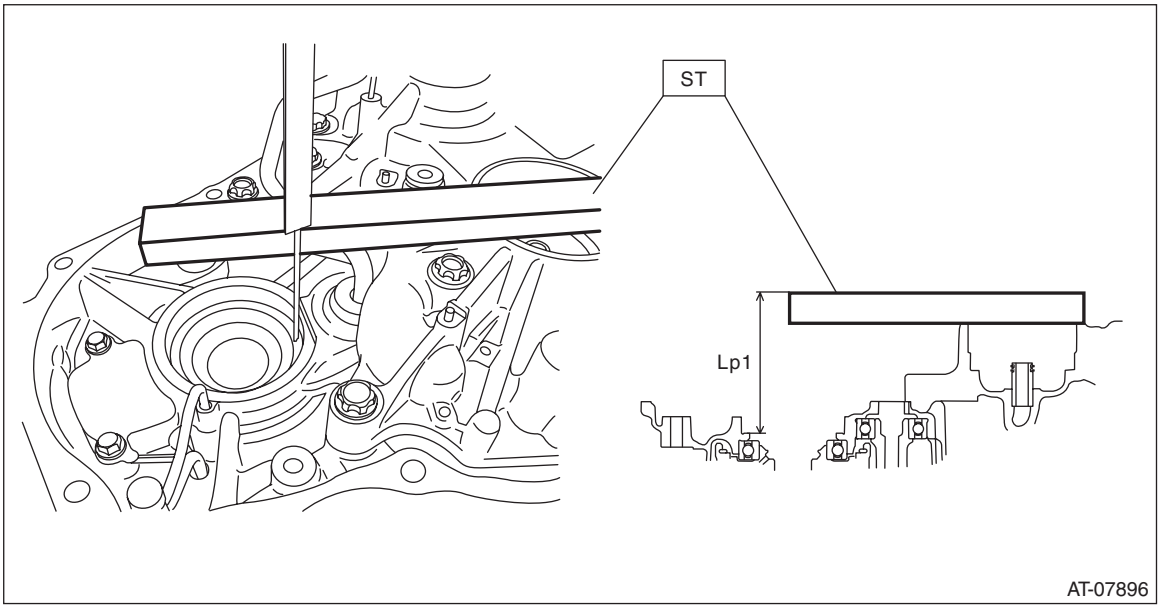

4) Using the current drive pinion retainer or current converter case, measure the depth “Ls1” from the ST upper face to the secondary pulley bearing catch surface at several points and calculate the average.
ST 499575400 GAUGE

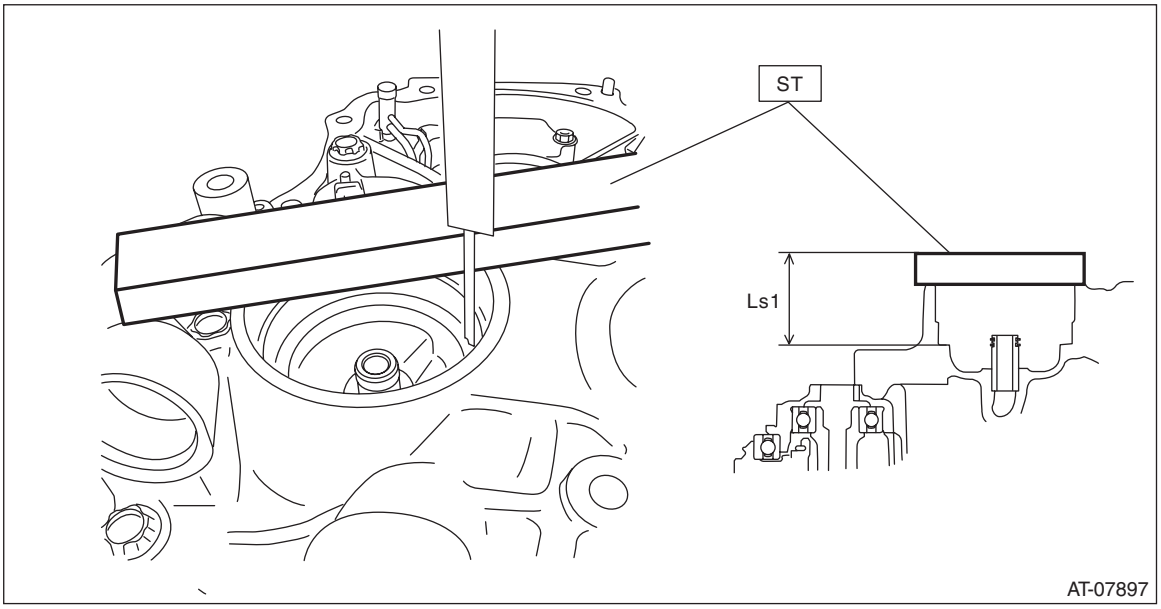

5) Calculate the “LD1” using the following formula and record it.
Calculation formula:
LD1 mm (in) = Lp1 – Ls1
LD1: Height from the primary pulley bearing catch surface to the secondary pulley bearing catch surface
Lp1: Depth from the ST upper face to the primary pulley bearing catch surface
Ls1: Depth from the ST upper face to the secondary pulley bearing catch surface

6) Using the new drive pinion retainer or new converter case, measure depth “Lp2” from the ST upper face to the primary pulley bearing catch surface at several points and calculate the average.
ST 499575400 GAUGE

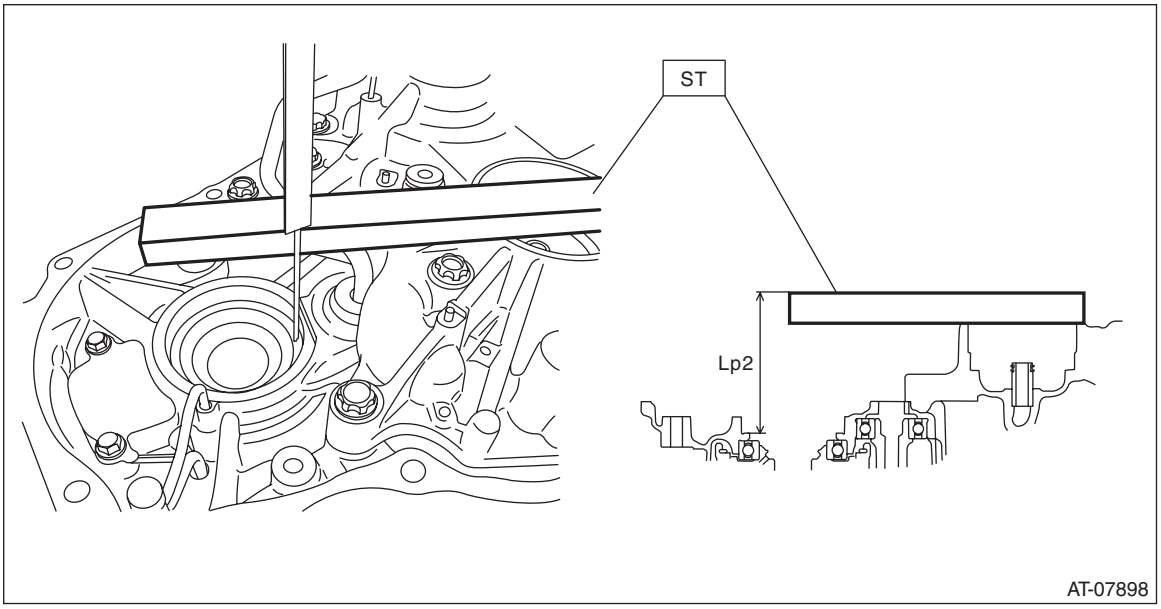

7) Using the new drive pinion retainer or new converter case, measure the depth “Ls2” from the ST upper face to the secondary pulley bearing catch surface at several points and calculate the average.
ST 499575400 GAUGE

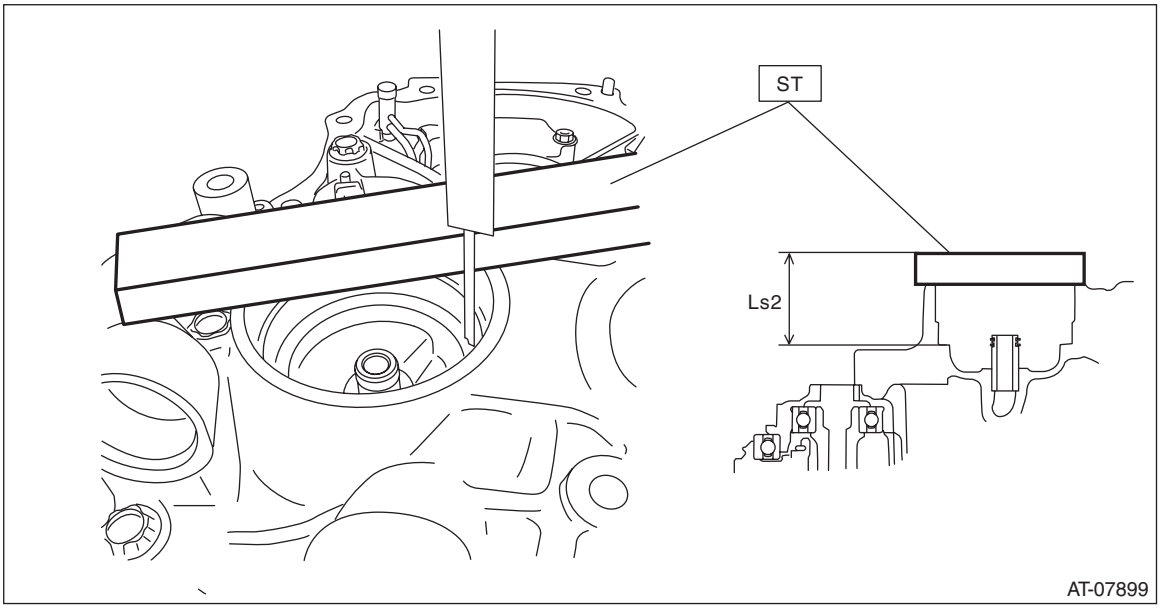

8) Calculate the “LD2” using the following formula and record it.
Calculation formula:
LD2 mm (in) = Lp2 – Ls2
LD2: Height from the primary pulley bearing catch surface to the secondary pulley bearing catch surface
Lp2: Depth from the ST upper face to the primary pulley bearing catch surface
Ls2: Depth from the ST upper face to the secondary pulley bearing catch surface

9) Calculate the recorded values of “LD1” and “LD2” to obtain the positive number to select the shims.
Calculation formula: T1 mm (in) = LD1 – LD2 or T2 mm (in) = LD2 – LD1
T1, T2: Difference between new drive pinion retainer or new converter case and current drive pinion retainer or current converter case
LD1: Calculated value of current drive pinion retainer or current converter case
LD2: Calculated value of new drive pinion retainer or new converter case

Difference of the case (T1) mm (in)	Shim selection procedure
0 — 0.020 (0 — 0.00078)	Select new shim of same thickness with the shim that is used on primary pulley side of the current converter case.
0.021 — 0.070 (0.000827 — 0.00275)	Select new shim of same thickness with the shim that is used on primary pulley side of the current converter case.
0.071 — 0.125 (0.00279 — 0.00492)	Select the shim 0.1 mm thinner than the shim that is used on primary pulley side of the current converter case.
0.126 — 0.170 (0.00496 — 0.00669)	Select the shim 0.1 mm thinner than the shim that is used on primary pulley side of the current converter case.
0.171 — 0.230 (0.00673 — 0.00905)	Select the shim 0.2 mm thinner than the shim that is used on primary pulley side of the current converter case.
0.231 — 0.250 (0.00909 — 0.00984)	Select the shim 0.3 mm thinner than the shim that is used on primary pulley side of the current converter case.
0.251 — 0.300 (0.00988 — 0.01181)	Select the shim 0.3 mm thinner than the shim that is used on primary pulley side of the current converter case.

Difference of the case (T2) mm (in)	Shim selection procedure
0 — 0.020 (0 — 0.00078)	Select new shim of same thickness with the shim that is used on primary pulley side of the current converter case.
0.021 — 0.080 (0.000827 — 0.00315)	Select new shim of same thickness with the shim that is used on primary pulley side of the current converter case.
0.081 — 0.100 (0.00318 — 0.00393)	Select the shim 0.1 mm thicker than the shim that is used on primary pulley side of the current converter case.
0.101 — 0.120 (0.00397 — 0.00472)	Select the shim 0.1 mm thicker than the shim that is used on primary pulley side of the current converter case.
0.121 — 0.180 (0.00476 — 0.00708)	Select the shim 0.1 mm thicker than the shim that is used on primary pulley side of the current converter case.
0.181 — 0.220 (0.00712 — 0.00866)	Select the shim 0.2 mm thicker than the shim that is used on primary pulley side of the current converter case.
0.221 — 0.280 (0.00870 — 0.01102)	Select the shim 0.2 mm thicker than the shim that is used on primary pulley side of the current converter case.
0.281 — 0.300 (0.01106 — 0.01181)	Select the shim 0.3 mm thicker than the shim that is used on primary pulley side of the current converter case.

Part No.	Shim thickness mm (in)
32451AA000	0.1 (0.004)
32451AA010	0.2 (0.008)
32451AA020	0.3 (0.012)
32451AA030	0.4 (0.016)
32451AA040	0.5 (0.020)

42.Variator Chain

A: REMOVAL

For removal of variator chain, refer to “Primary Pulley and Secondary Pulley”. <Ref. to CVT(TR690)-230, REMOVAL, Primary Pulley and Secondary Pulley.>

B: INSTALLATION

For installation of variator chain, refer to “Primary Pulley and Secondary Pulley”. <Ref. to CVT(TR690)-234, INSTALLATION, Primary Pulley and Secondary Pulley.>

C: INSPECTION

Check the variator chain for damage and wear.

43.Drive Pinion Shaft Assembly

A: REMOVAL

1) Remove the transmission assembly from the vehicle. <Ref. to CVT(TR690)-57, REMOVAL, Automatic Transmission Assembly.>
2) Remove the air breather hose. <Ref. to CVT(TR690)-136, REMOVAL, Air Breather Hose.>
3) Remove the oil pan and control valve body. <Ref. to CVT(TR690)-113, REMOVAL, Control Valve Body.>
4) Remove the transmission harness. <Ref. to CVT(TR690)-123, REMOVAL, Transmission Harness.>
5) Remove the extension case. <Ref. to CVT(TR690)-143, REMOVAL, Extension Case.>
6) Remove the rear drive shaft. <Ref. to CVT(TR690)-147, REMOVAL, Rear Drive Shaft.>
7) Remove the transfer clutch assembly. <Ref. to CVT(TR690)-152, REMOVAL, Transfer Clutch.>
8) Remove the center differential carrier. <Ref. to CVT(TR690)-155, REMOVAL, Center Differential Carrier.>
9) Remove the transfer reduction driven gear assembly. <Ref. to CVT(TR690)-159, REMOVAL, Transfer Reduction Driven Gear.>
10) Remove the intermediate case. <Ref. to CVT(TR690)-166, REMOVAL, Intermediate Case.>
11) Remove the forward clutch assembly. <Ref. to CVT(TR690)-182, REMOVAL, Forward Clutch Assembly.>
12) Remove the transmission case. <Ref. to CVT(TR690)-214, REMOVAL, Transmission Case.>
13) Remove the primary pulley, secondary pulley and variator chain. <Ref. to CVT(TR690)-230, REMOVAL, Primary Pulley and Secondary Pulley.>
14) Using the ST, remove the drive pinion retainer and lubrication pipe.
ST 18270KA020 SOCKET (E20)

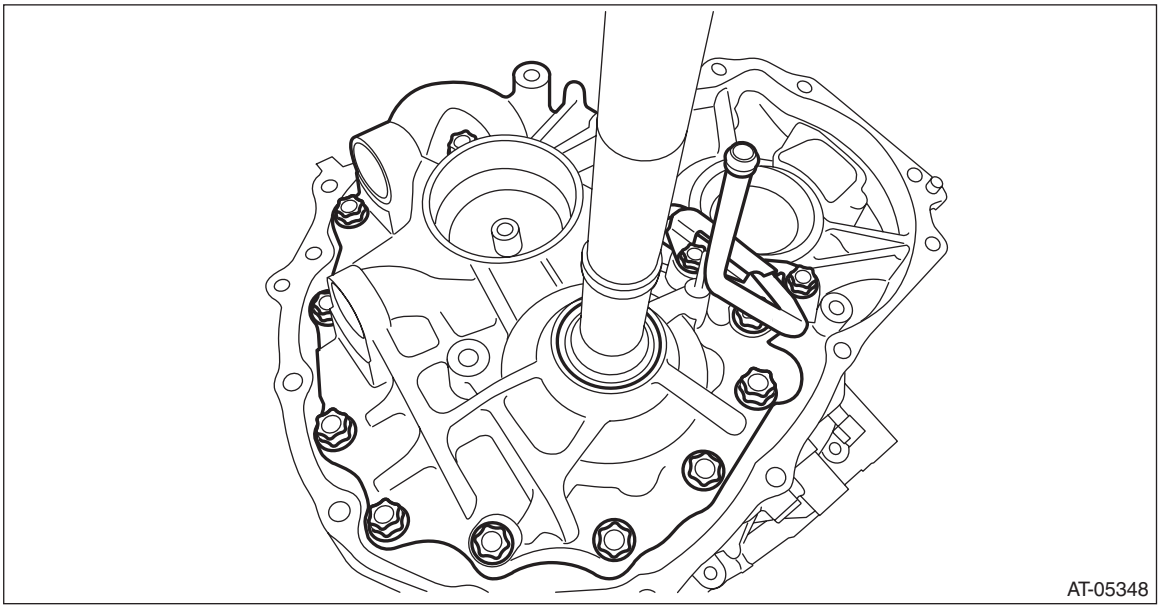

15) Remove the O-rings.

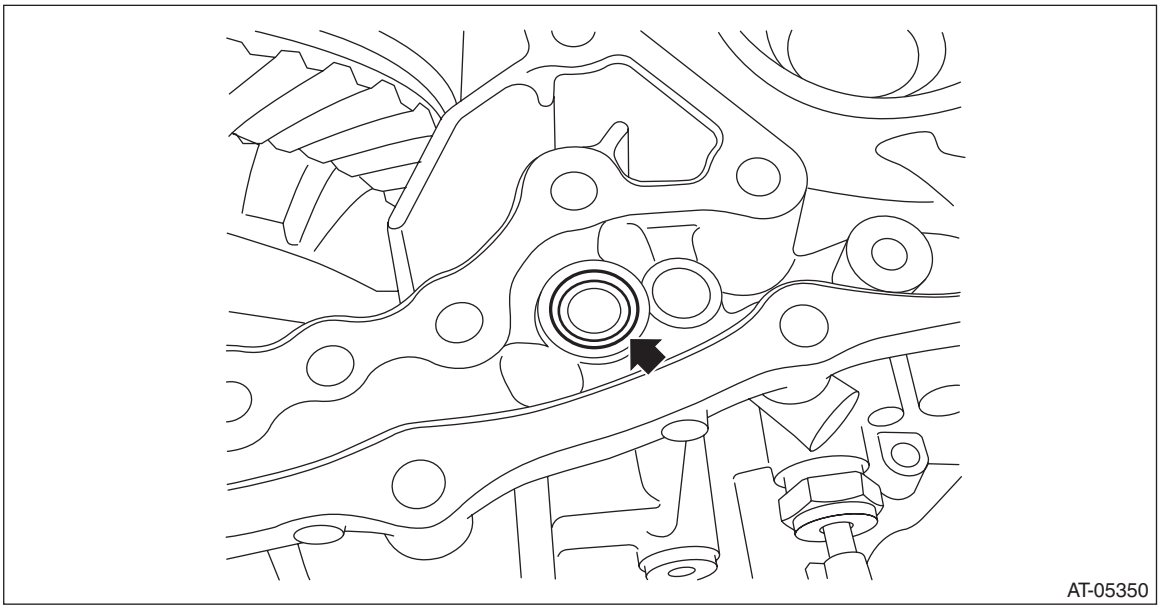

16) Remove the oil pump and the plate.

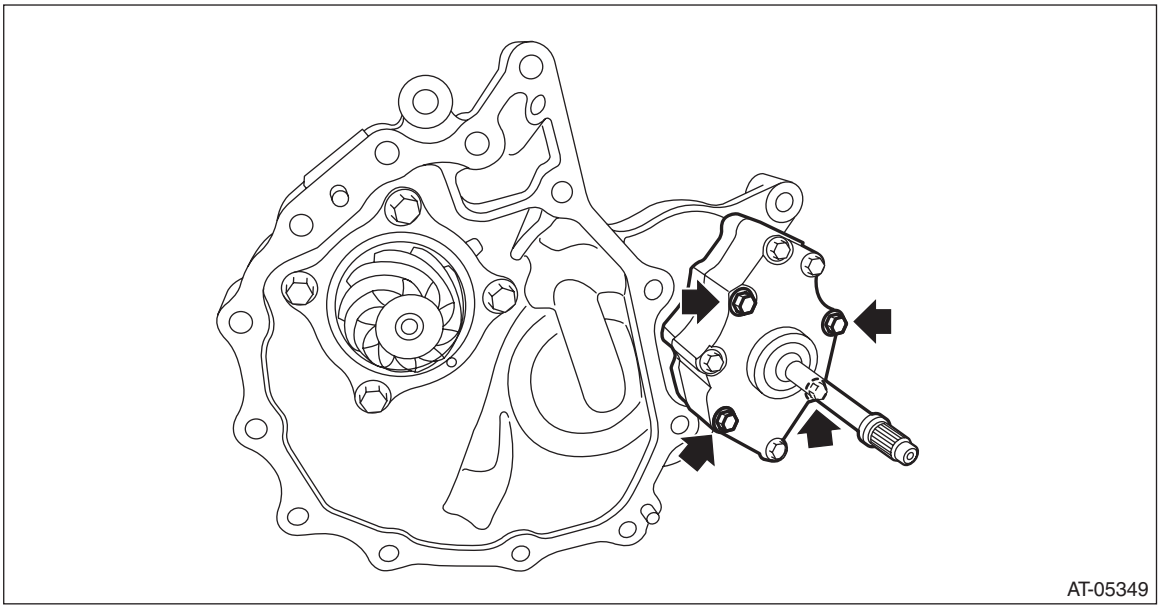

17) Remove the O-rings.

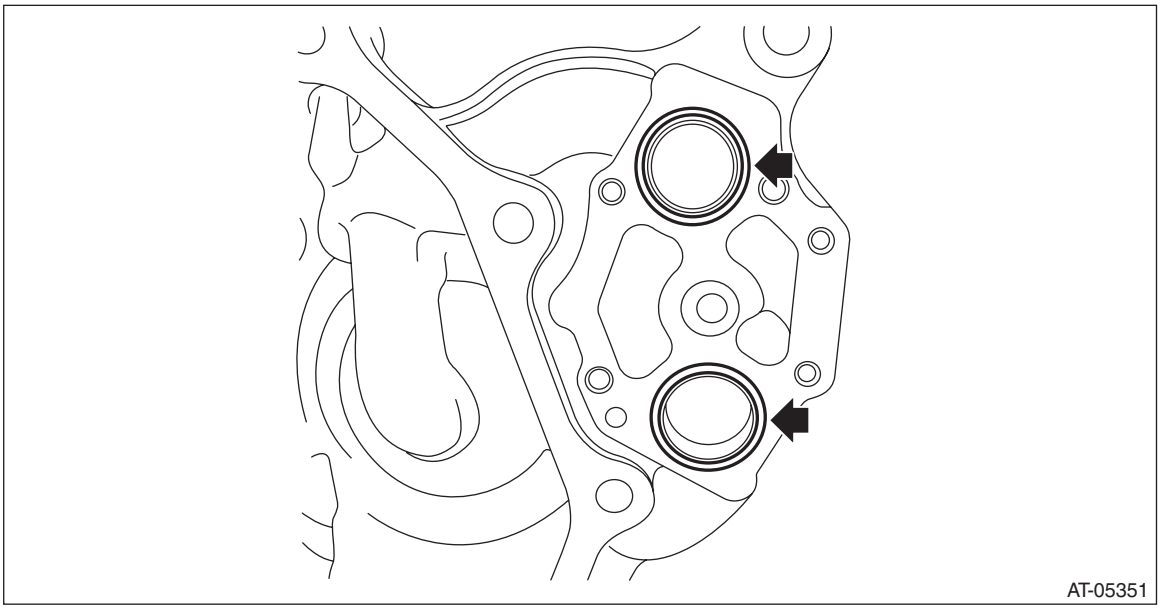

B: INSTALLATION

1) Clean the mating surface of drive pinion retainer and converter case.
2) Adjust the backlash and tooth contact between drive pinion shaft assembly and the front differential side gear. <Ref. to CVT(TR690)-260, ADJUSTMENT, Drive Pinion Shaft Assembly.>
3) Install the O-ring for oil pump to drive pinion retainer.

NOTE:
- Use new O-rings.
- Apply CVTF to the O-rings.

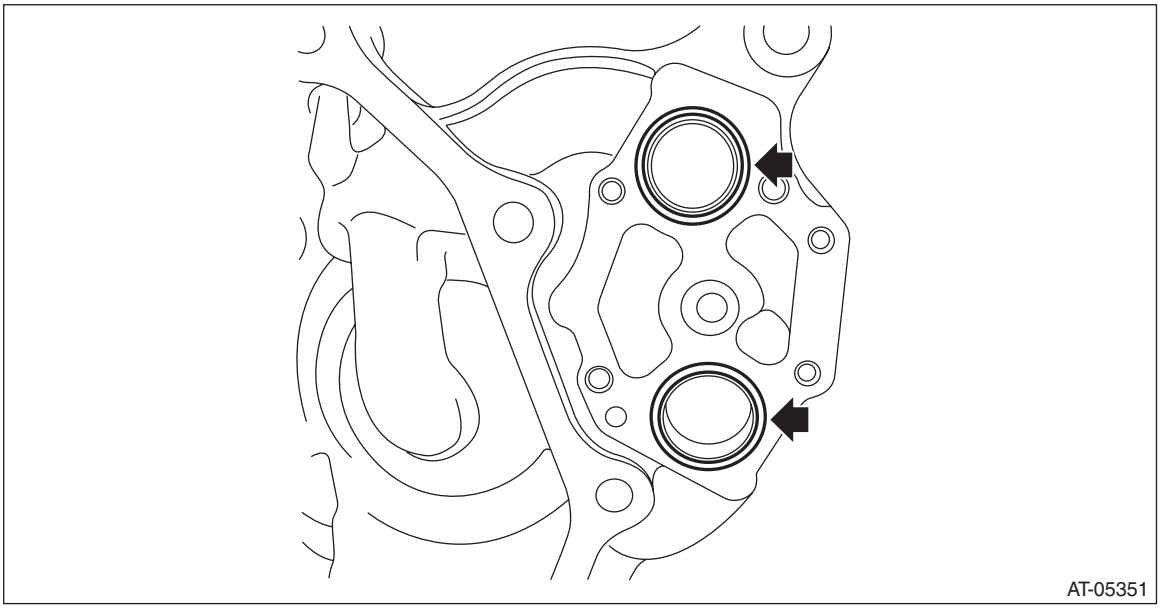

4) Install the plate and the oil pump.

NOTE:
Apply CVTF to the bolt.

Tightening torque:
8.5 N·m (0.9 kgf-m, 6.3 ft-lb)

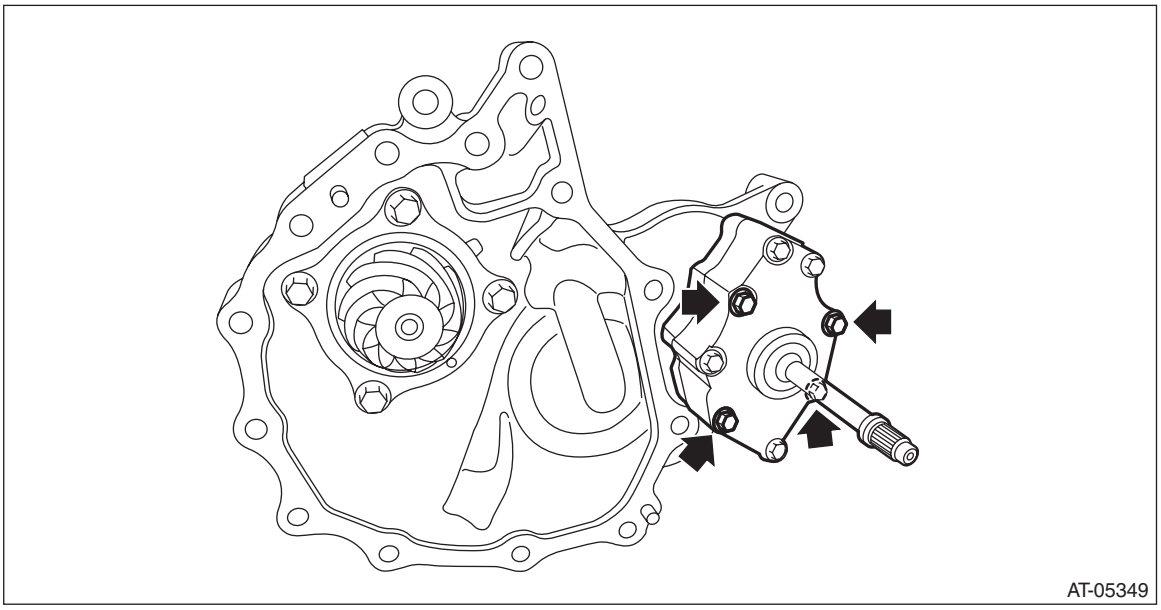

5) Apply liquid gasket seamlessly to the mating surface of drive pinion retainer.

NOTE:
Be careful not to block the arrowed hole when applying liquid gasket.

Liquid gasket:
THREE BOND 1215B or equivalent

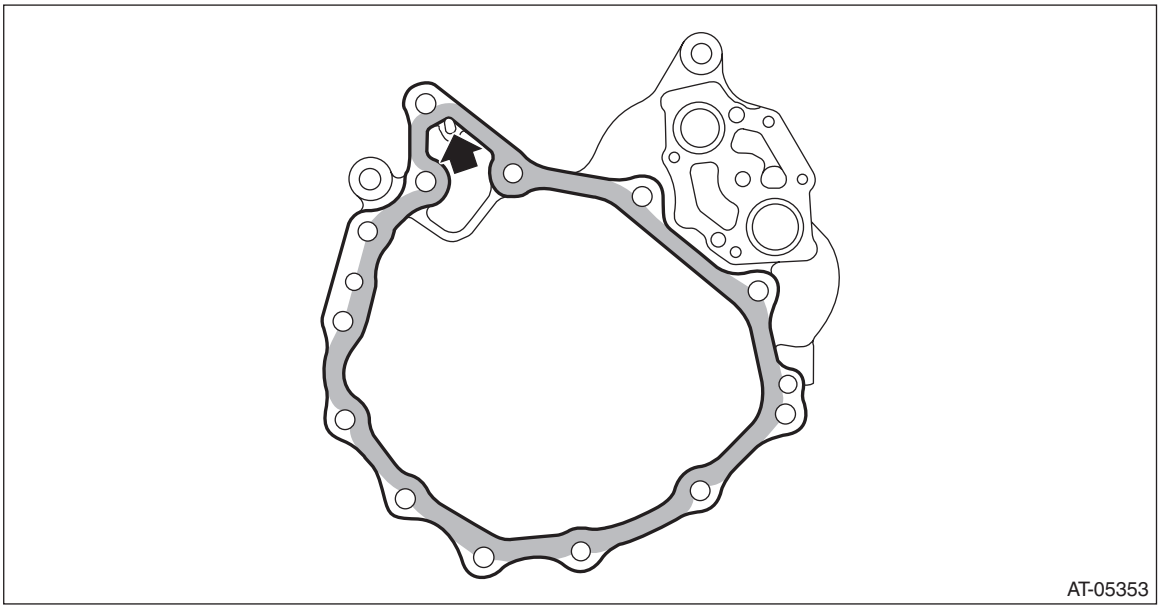

6) Install the O-ring to the lubrication pipe.

NOTE:
- Use new O-rings.
- Apply CVTF to the O-rings.

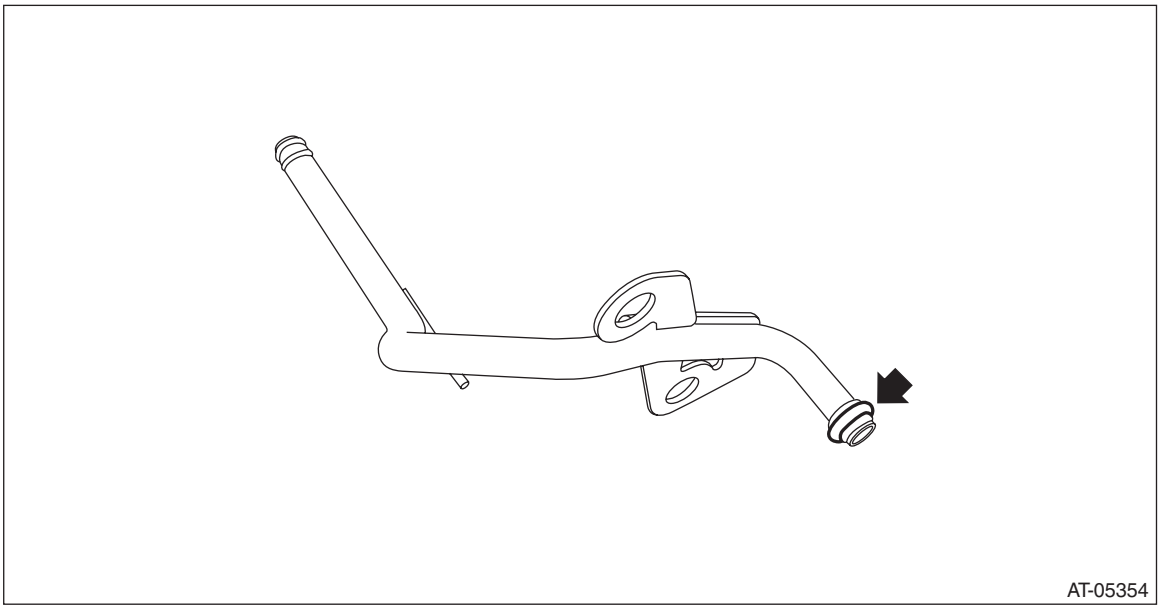

7) Install the drive pinion retainer and lubrication pipe to converter case and tighten the bolt using the ST.
ST 18270KA020 SOCKET (E20)

NOTE:
Do not confuse the three different-length bolts when installing.

Tightening torque:
43 N·m (4.4 kgf-m, 31.7 ft-lb)

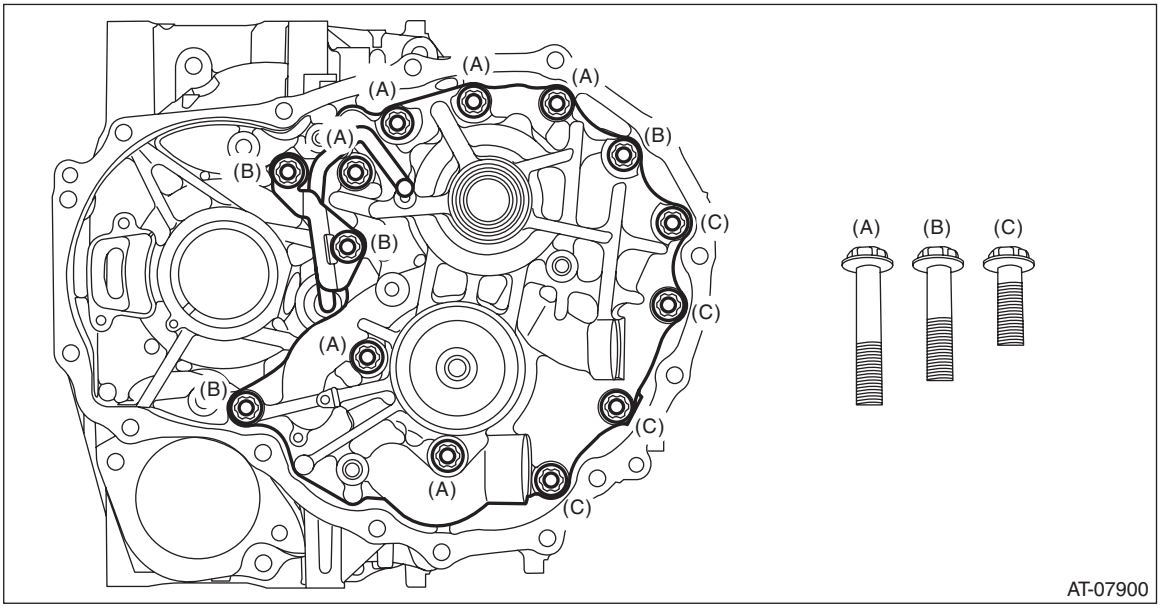

8) Install the primary pulley, secondary pulley and variator chain. <Ref. to CVT(TR690)-234, INSTALLATION, Primary Pulley and Secondary Pulley.>
9) Install the transmission case. <Ref. to CVT(TR690)-216, INSTALLATION, Transmission Case.>
10) Install the forward clutch assembly. <Ref. to CVT(TR690)-183, INSTALLATION, Forward Clutch Assembly.>
11) Install the intermediate case. <Ref. to CVT(TR690)-167, INSTALLATION, Intermediate Case.>

12) Install the transfer reduction driven gear assembly. <Ref. to CVT(TR690)-159, INSTALLATION, Transfer Reduction Driven Gear.>
13) Install the center differential carrier. <Ref. to CVT(TR690)-156, INSTALLATION, Center Differential Carrier.>
14) Install the transfer clutch assembly. <Ref. to CVT(TR690)-152, INSTALLATION, Transfer Clutch.>
15) Install the rear drive shaft. <Ref. to CVT(TR690)-147, INSTALLATION, Rear Drive Shaft.>
16) Install the extension case. <Ref. to CVT(TR690)-144, INSTALLATION, Extension Case.>
17) Install the transmission harness. <Ref. to CVT(TR690)-125, INSTALLATION, Transmission Harness.>
18) Install the oil pan and control valve body. <Ref. to CVT(TR690)-117, INSTALLATION, Control Valve Body.>
19) Install the air breather hose. <Ref. to CVT(TR690)-136, INSTALLATION, Air Breather Hose.>
20) Install the transmission assembly to the vehicle. <Ref. to CVT(TR690)-70, INSTALLATION, Automatic Transmission Assembly.>

C: DISASSEMBLY

1) Remove the drive pinion assembly.

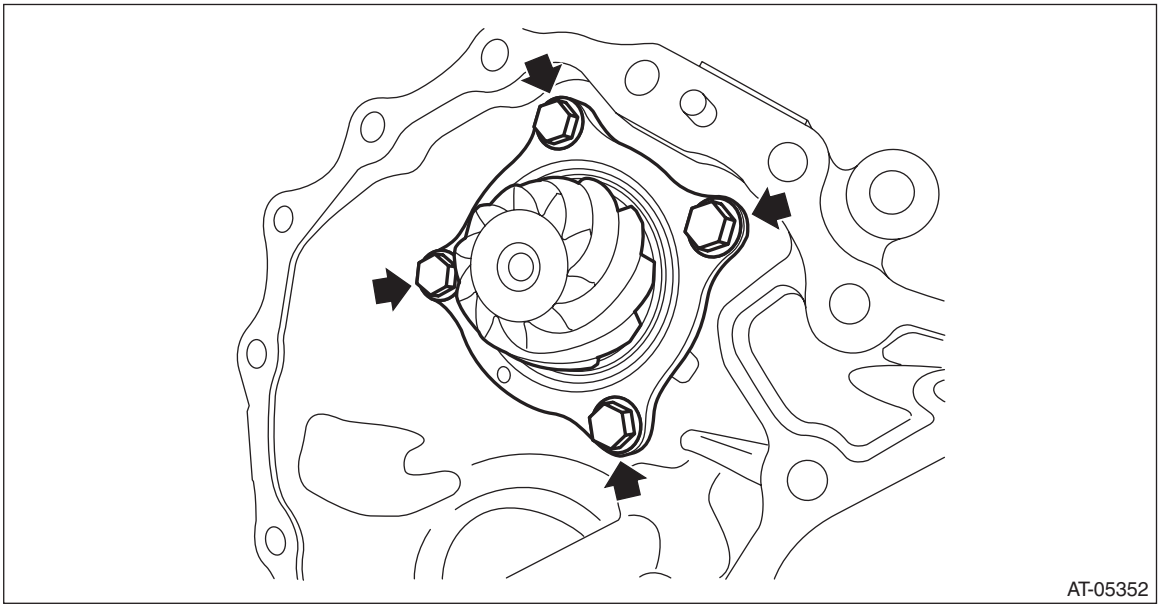

2) Flatten the tab of the lock nut.

3) Using ST1 and ST2, fix at the spline portion of drive pinion shaft to remove the lock nut.
ST1 18621AA000 ADAPTER WRENCH
ST2 18667AA010 HOLDER

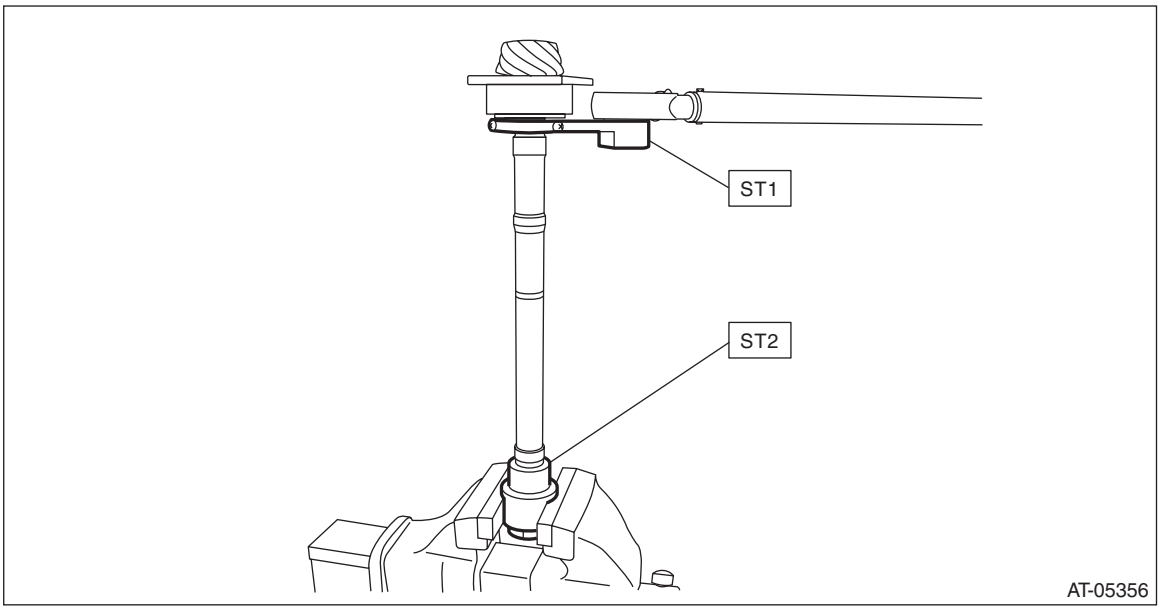

4) Remove the taper roller bearing and outer race from drive pinion shaft.

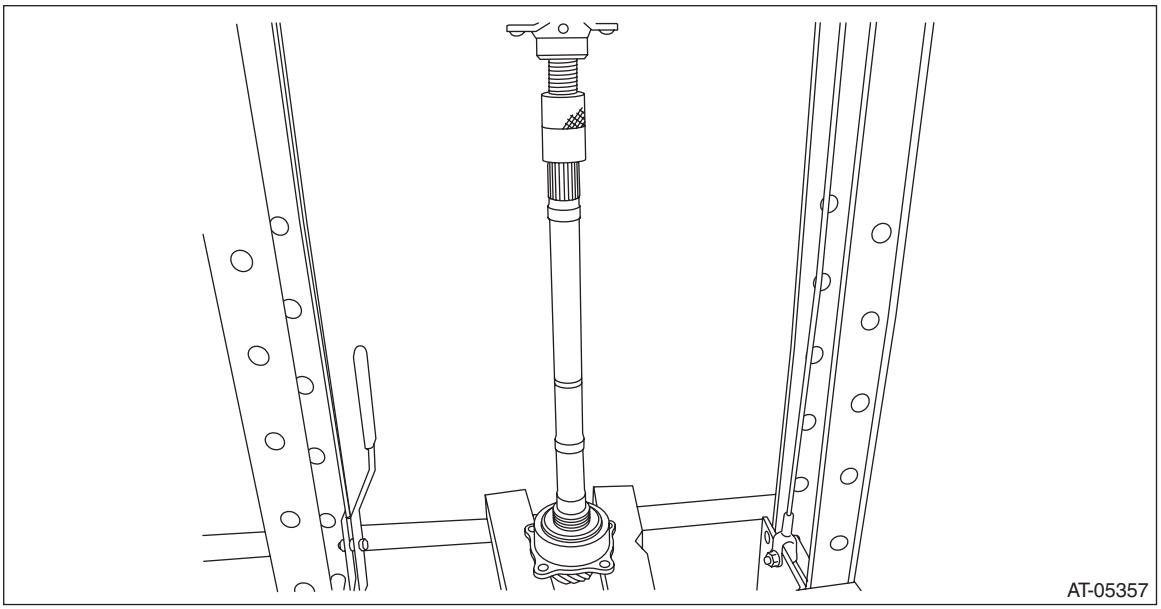

5) Remove the inner bearing inner race from the drive pinion shaft using ST.
ST 498077000 REMOVER

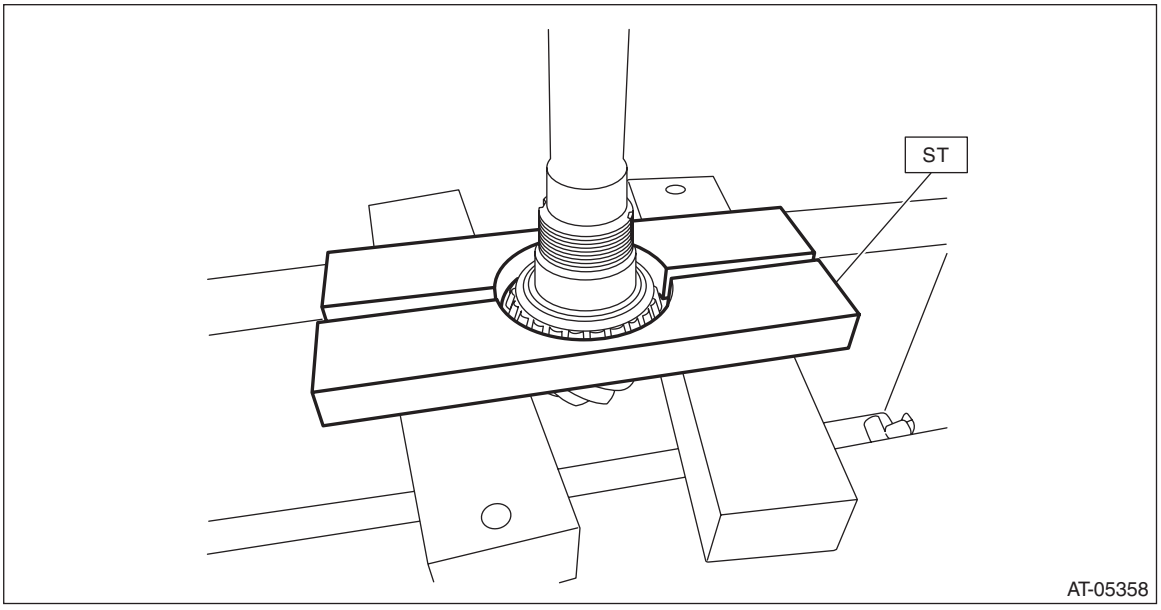

6) Remove the two oil seals using a screwdriver wrapped with cloth, etc.

CAUTION:
Do not damage the fitting surface of drive pinion bearing.

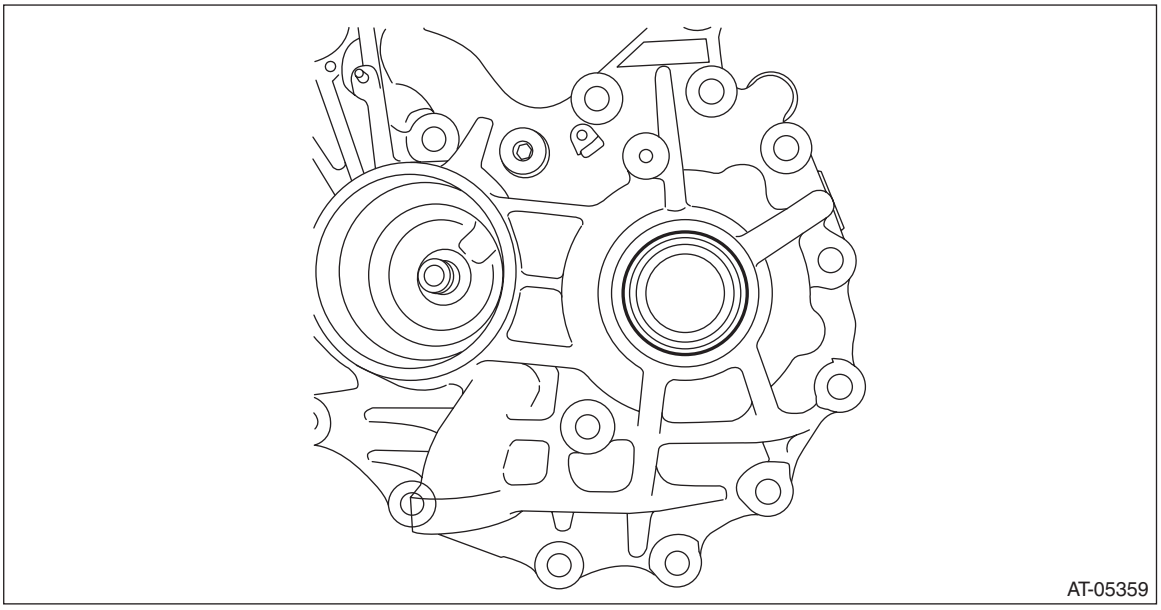

7) Remove the plug from drive pinion retainer.

D: ASSEMBLY

1) Install the O-ring to plug and install the plug to drive pinion retainer.

NOTE:
- Use new O-rings.
- Apply CVTF to the O-rings.

Tightening torque:
25 N·m (2.5 kgf-m, 18.4 ft-lb)

2) Using the ST, install the oil seal to drive pinion retainer.

NOTE:
- Apply CVTF to the oil seal press-fitting surface and lip.
- Install the oil seal in the correct direction.

Pulley side

ST 18657AA020 OIL SEAL INSTALLER

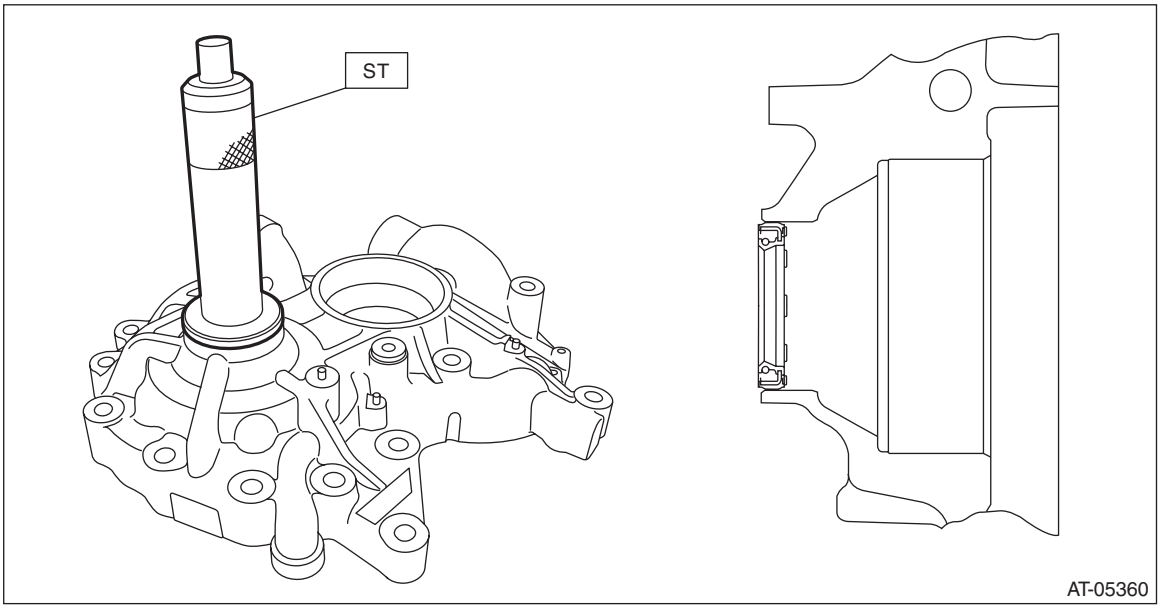

Front differential side

ST 499277100 BUSHING 1-2 INSTALLER

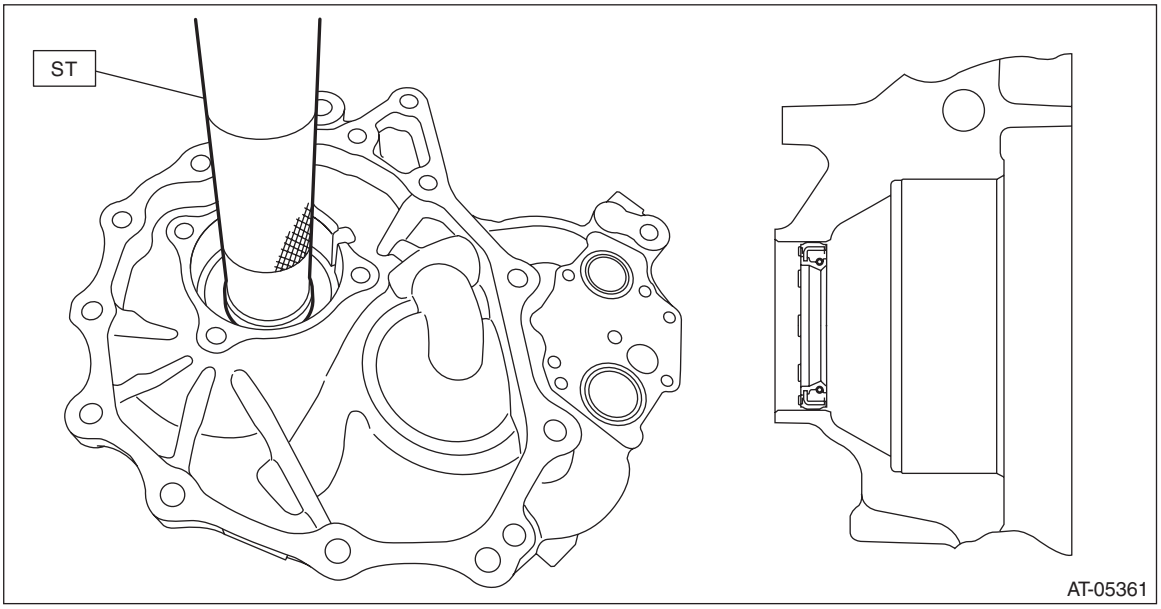

3) Measure the dimension “A” of drive pinion shaft.
ST 398643600 GAUGE

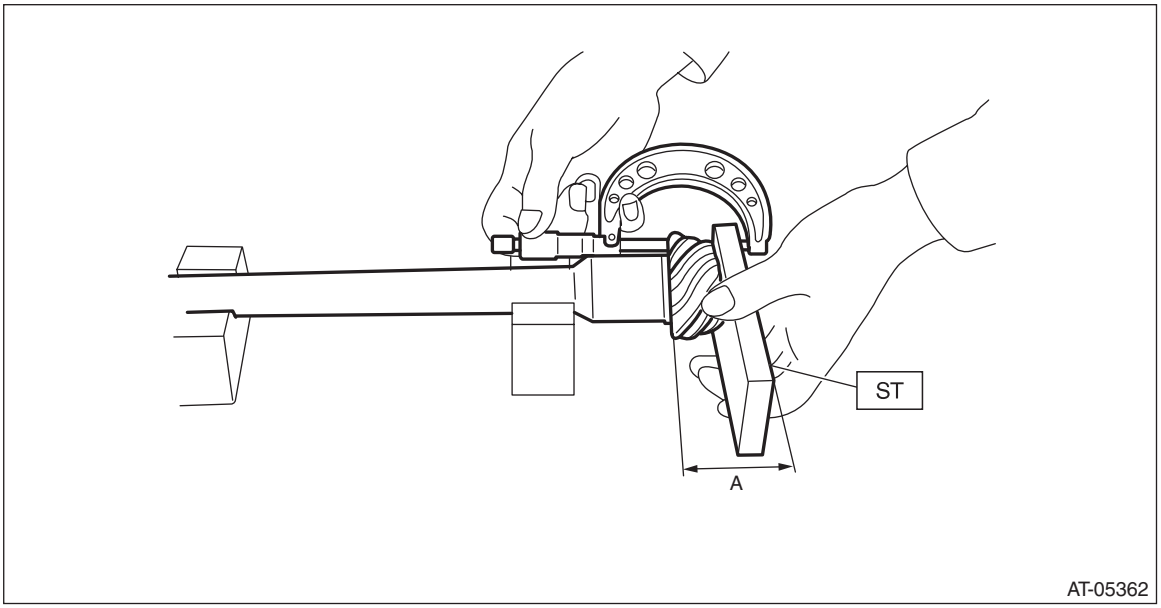

4) Press-fit the new taper roller bearing front side inner race using the ST.
ST 499277200 INSTALLER

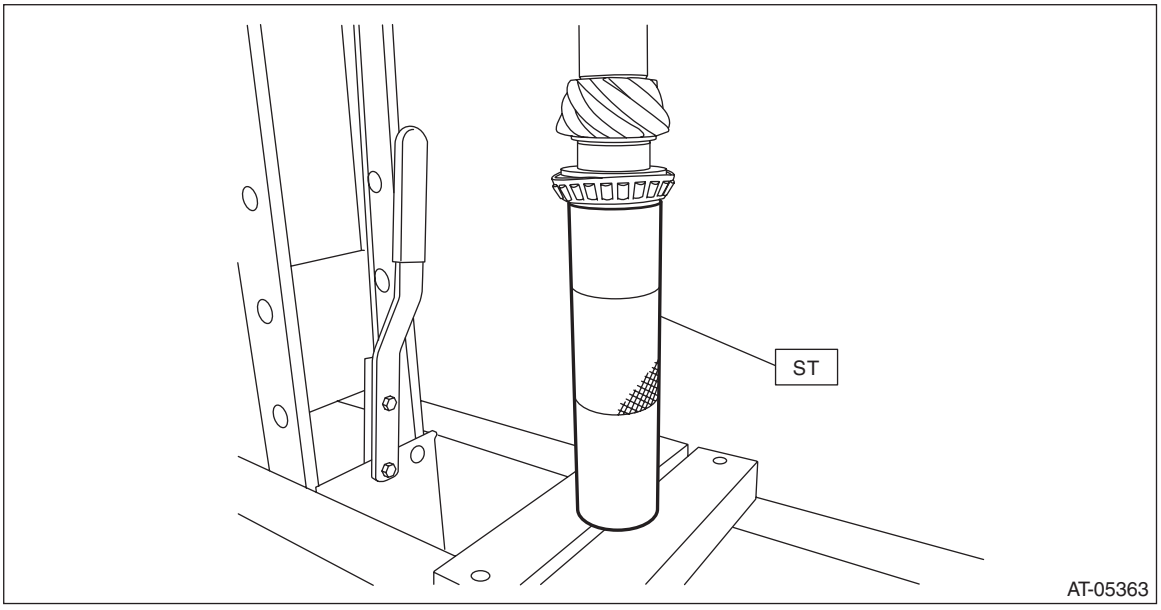

5) Press-fit the new taper roller bearing rear side inner race and outer race together.

CAUTION:
Damage may result if too much force is applied to the roller bearing.

NOTE:
Press in to a position where the bearing rotates smoothly without play.

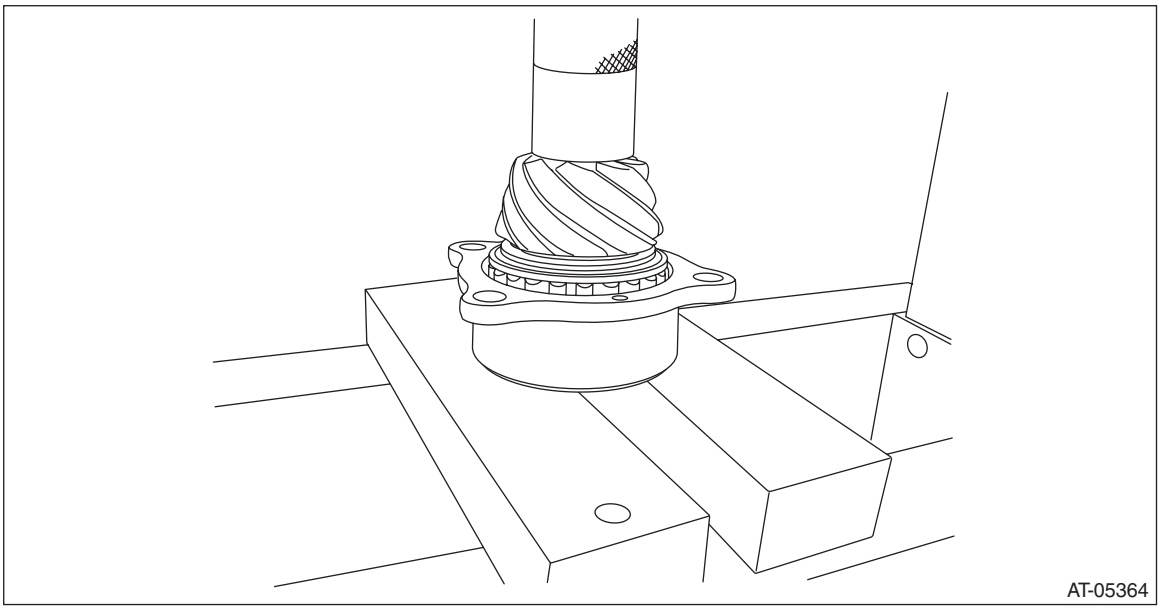

6) Tighten a new lock nut using the ST.
Using the following formula, calculate the torque for a torque wrench.
T2 = L2/(L1 + L2) × T1
T1: 130 N·m (13.3 kgf-m, 95.9 ft-lb)
[Required torque setting]
T2: Tightening torque
L1: ST1 length 0.1 m (3.94 in)
L2: Torque wrench length
Example:

Torque wrench length m (in)	Tightening torque N·m (kgf-m, ft-lb)
0.4 (15.75)	104 (10.6, 76.7)
0.45 (17.72)	106 (10.8, 78.2)
0.5 (19.69)	108 (11.0, 79.7)
0.55 (21.65)	110 (11.2, 81.1)

ST1 18621AA000 ADAPTER WRENCH
ST2 18667AA010 HOLDER

NOTE:
Tighten the lock nut while directly aligning ST1 and torque wrench.

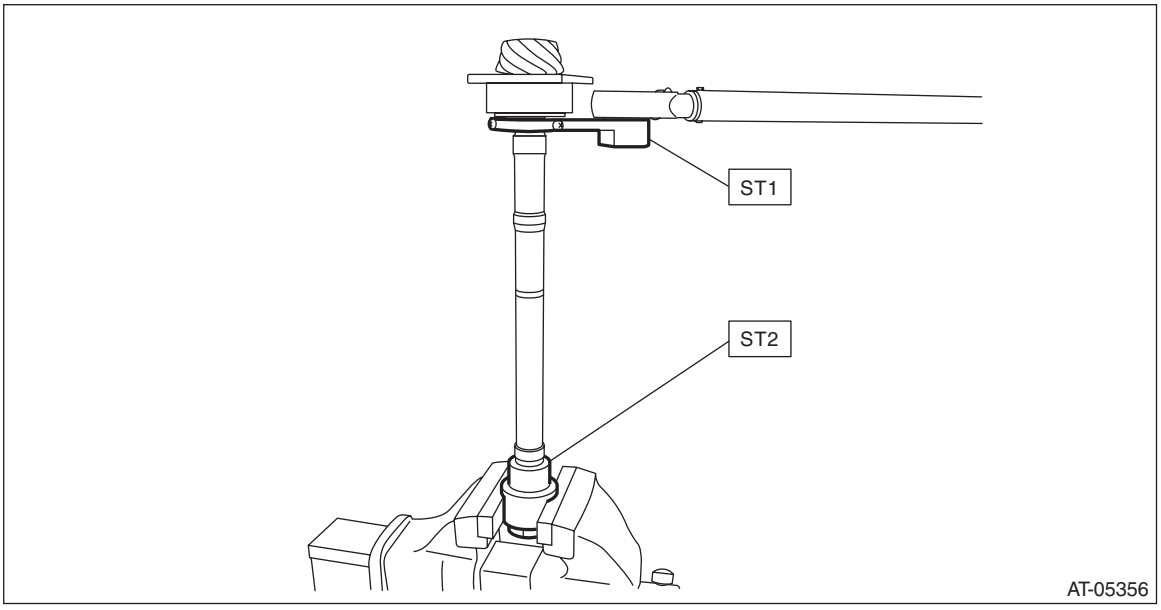

7) Apply differential gear oil to roller of bearing and rotate the bearing several times.
8) Measure the starting torque of the bearing. Make sure the starting torque is within the specified range. If the torque is not within specified range, replace the roller bearing.

Starting torque:
16.3 — 42.7 N (1.7 — 4.4 kgf, 4.4 — 9.6 lbf)

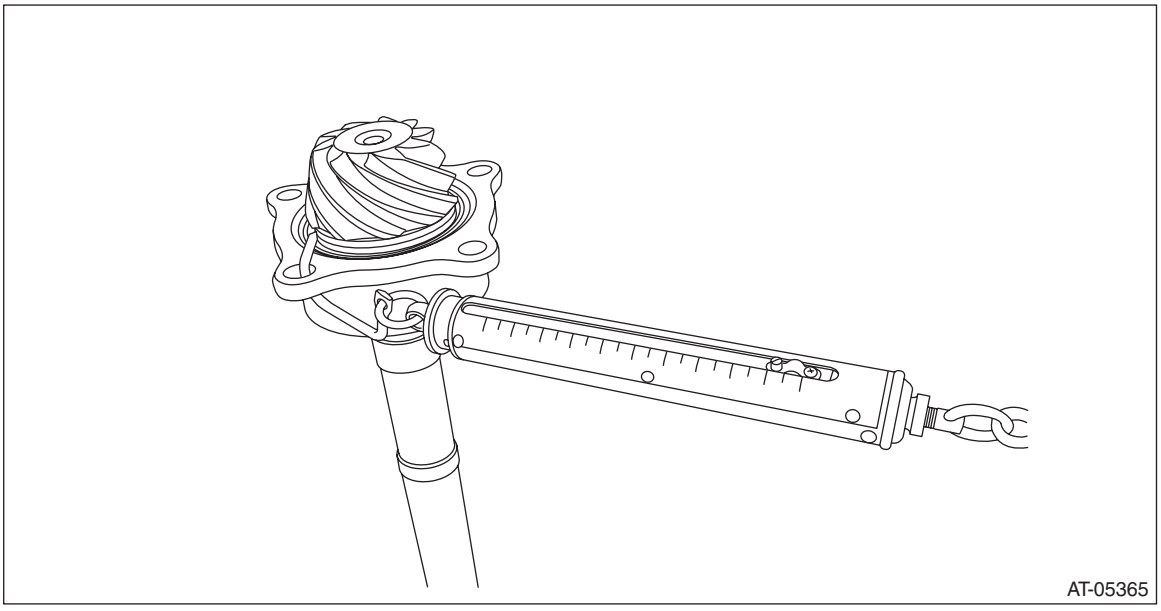

9) Crimp the lock nut in 2 locations.

10) Measure the dimension “B” of the drive pinion shaft.
ST 398643600 GAUGE

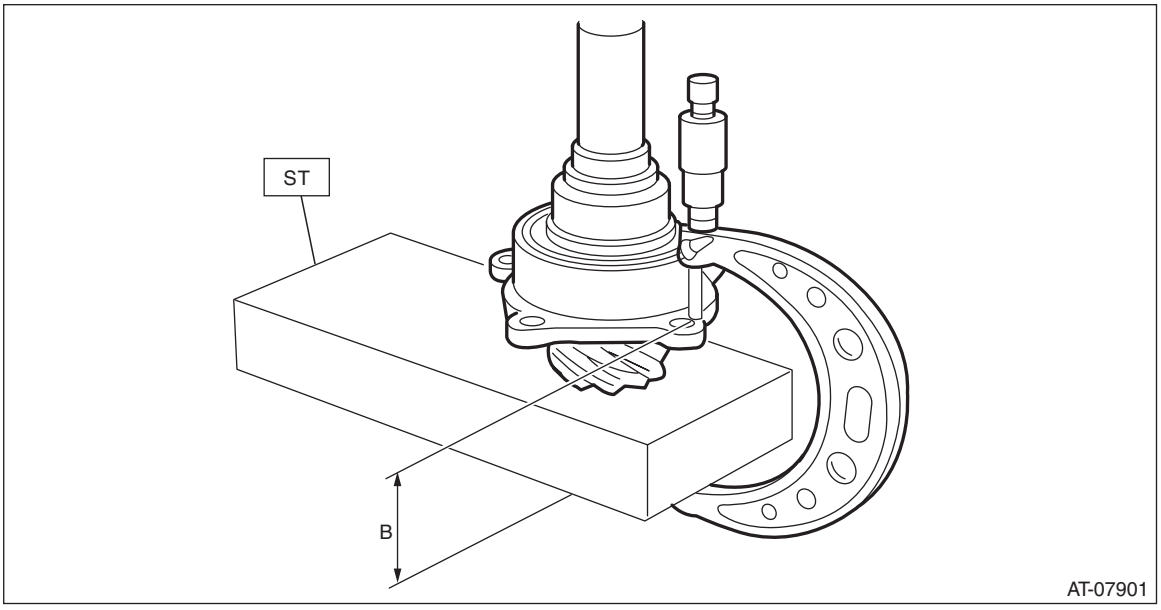

11) Obtain the thickness “T” mm (in) of the drive pinion shim using the following formula.
T = 6.55±0.1225 – (B – A)
[T in = 0.258±0.0048 – (B – A)]
T: Shim thickness
A: Height from ST to drive pinion shaft bearing catch saucer
B: Height from ST to drive pinion retainer case side end face
12) Select three or less shims from following table.

Drive pinion shim	
Part No.	Thickness mm (in)
31451AA050	0.150 (0.0059)
31451AA060	0.175 (0.0069)
31451AA070	0.200 (0.0079)
31451AA080	0.225 (0.0089)
31451AA090	0.250 (0.0098)
31451AA100	0.275 (0.0108)
31451AA240	0.300 (0.0118)

13) Install the shims selected for drive pinion retainer and drive pinion shaft assembly.

NOTE:
Be careful not to bend the shim.

Tightening torque:
70 N·m (7.1 kgf-m, 51.6 ft-lb)

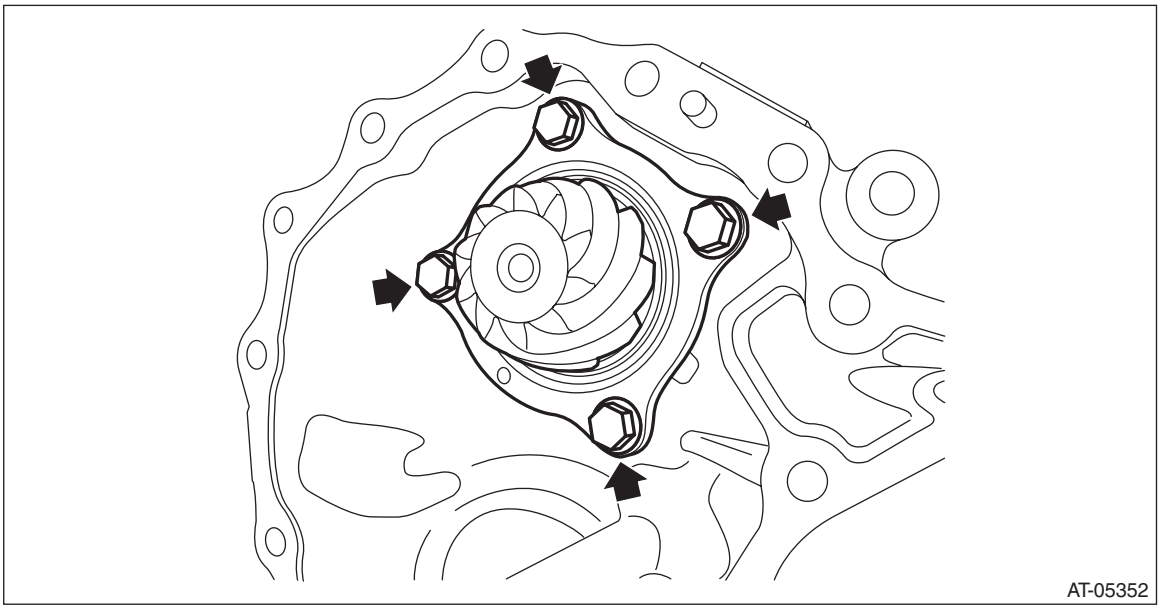

E: INSPECTION

- Make sure that all component parts are free of scratches, holes and other faults.
- Check the tooth contact. <Ref. to CVT(TR690)-260, ADJUSTMENT, Drive Pinion Shaft Assembly.>
- Apply CVTF to bearing and rotate the bearing to check for noise or dragging etc.
- Check the bearing preload of drive pinion shaft.

CAUTION:
Before measuring, apply differential gear oil to roller of bearing and rotate the bearing several times.

Starting torque:
16.3 — 42.7 N (1.7 — 4.4 kgf, 4.4 — 9.6 lbf)

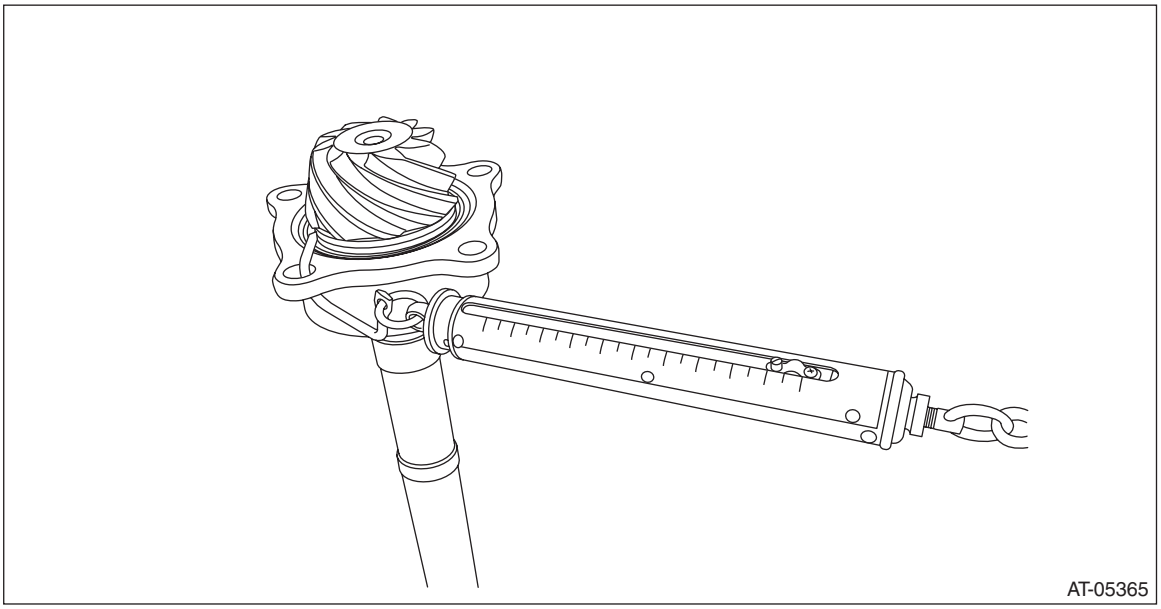

F: ADJUSTMENT

1) Remove the liquid gasket from the mating surface completely.
2) Using the ST, install the drive pinion retainer to converter case.
ST 18270KA020 SOCKET (E20)

NOTE:
Do not confuse the three different-length bolts when installing.

Tightening torque:
43 N·m (4.4 kgf-m, 31.7 ft-lb)

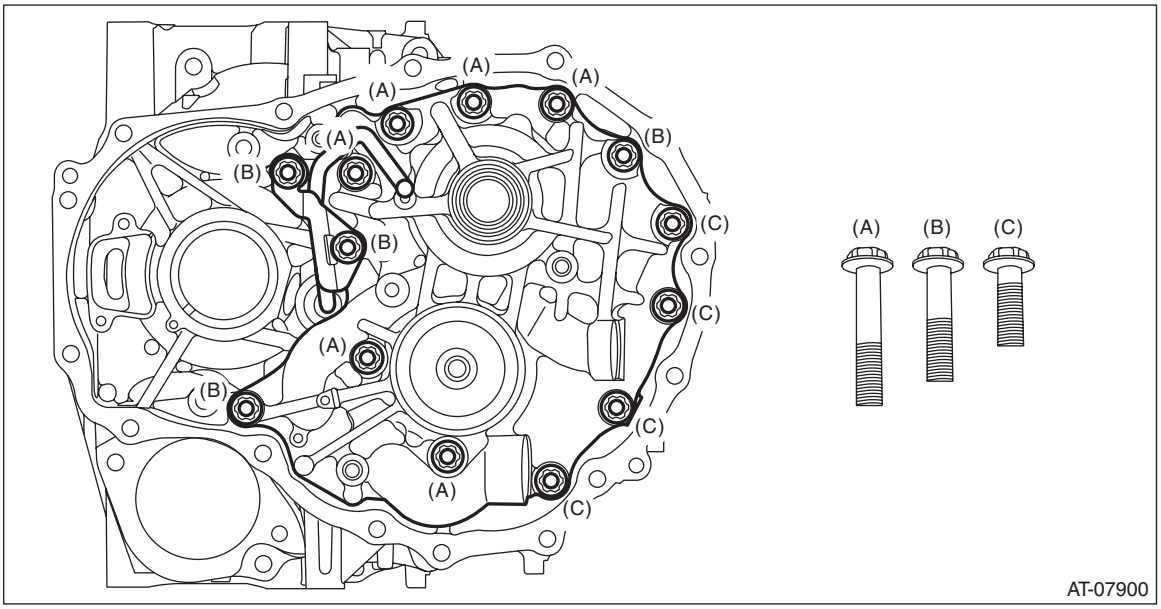

3) Rotate the drive pinion several times using ST1 and ST2.
ST1 18667AA010 HOLDER
ST2 499787700 WRENCH

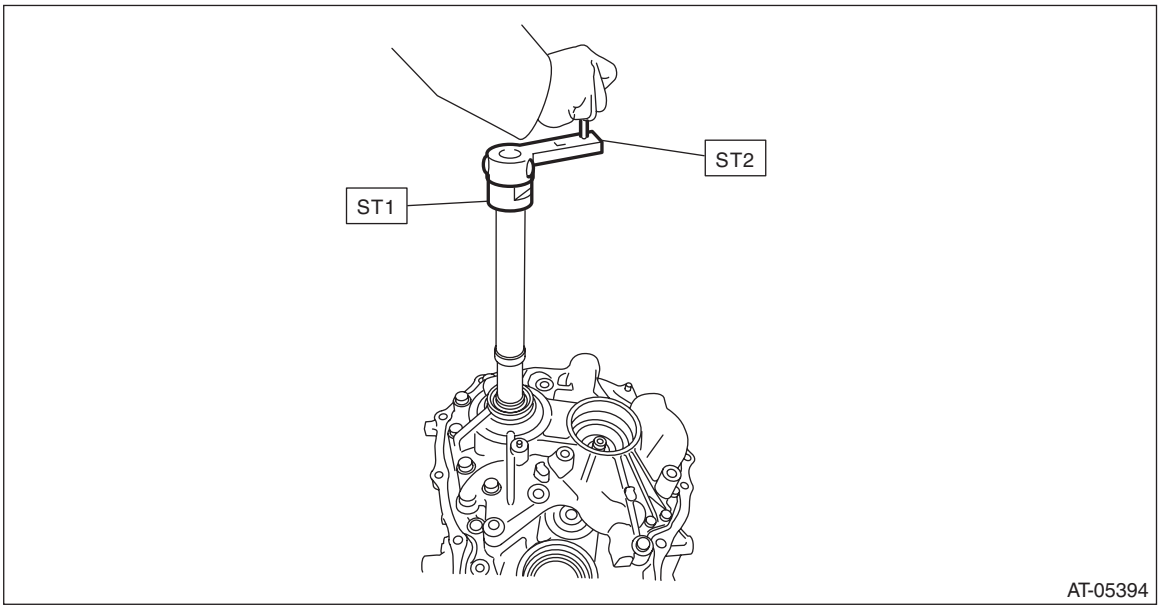

4) Adjust the drive pinion and hypoid driven gear backlash. <Ref. to CVT(TR690)-280, ADJUSTMENT, Front Differential Assembly.>
5) Using the ST, remove the drive pinion retainer from converter case.
ST 18270KA020 SOCKET (E20)

6) Apply lead-free red dye evenly on the both sides of three to four teeth of the hypoid driven gear. Then install the drive pinion retainer and rotate the drive pinion in both directions several times. Remove the drive pinion retainer and check the tooth contact pattern.
If the teeth contact is inappropriate, adjust the backlash or thickness of the shim. <Ref. to CVT(TR690)-280, ADJUSTMENT, Front Differential Assembly.>

NOTE:
After correction, wipe off the lead-free red dye.

- Correct tooth contact

Check item: Tooth contact surface is slightly shifted toward the toe side under a no-load condition. (When driving, it moves towards the heel side.)

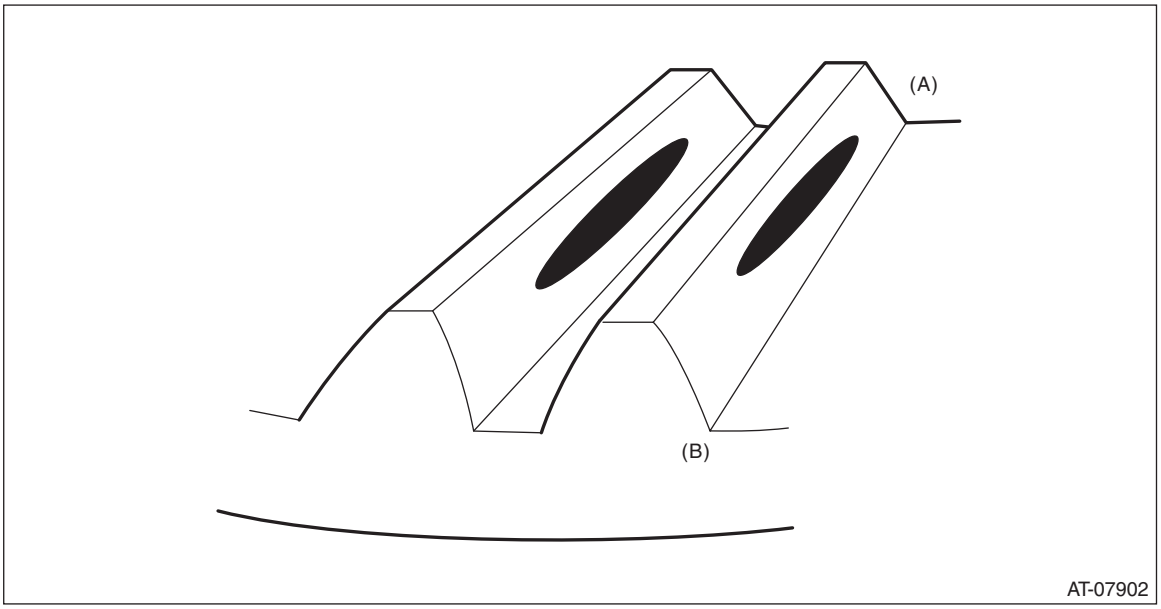

(A) Toe side
(B) Heel side

- Face contact

Check item: Backlash is too large.
Contact pattern

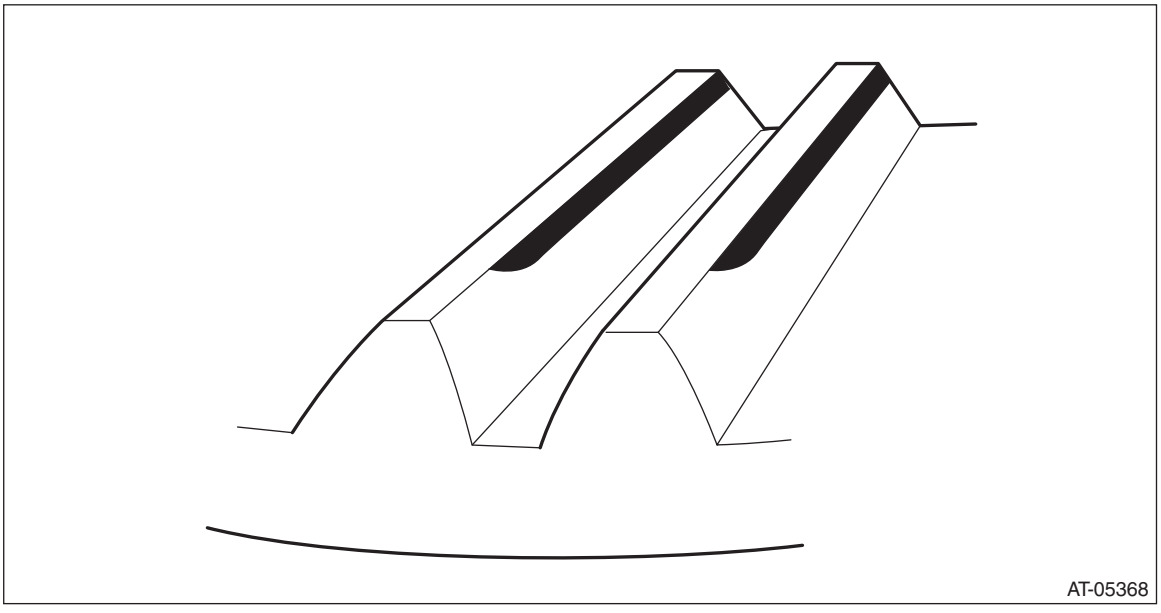

Corrective action: Increase thickness of pinion height adjusting washer according to the procedure for bringing drive pinion close to hypoid driven gear side.

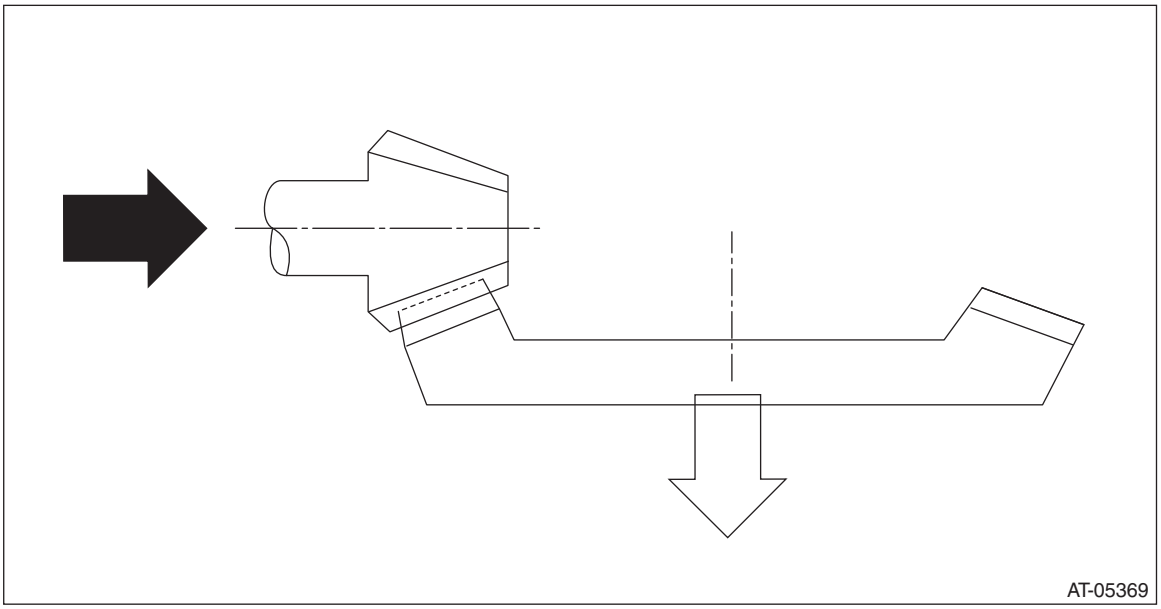

- Flank contact

Check item: Backlash is too small.

Contact pattern

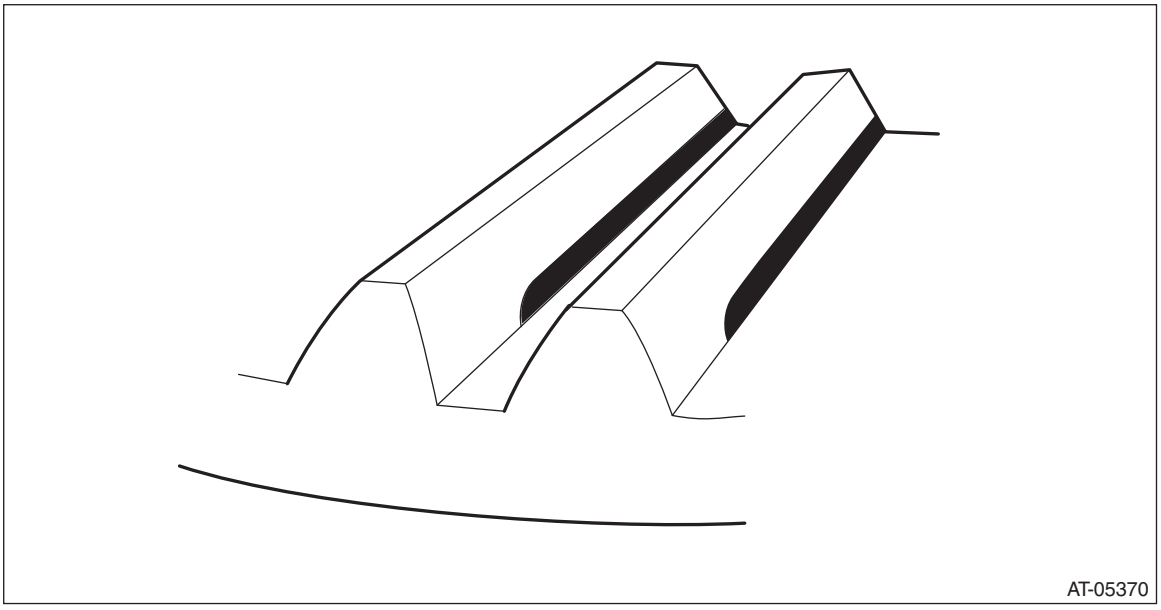

Corrective action: Reduce the thickness of pinion height adjusting washer according to the procedure for bringing drive pinion away from hypoid driven gear.

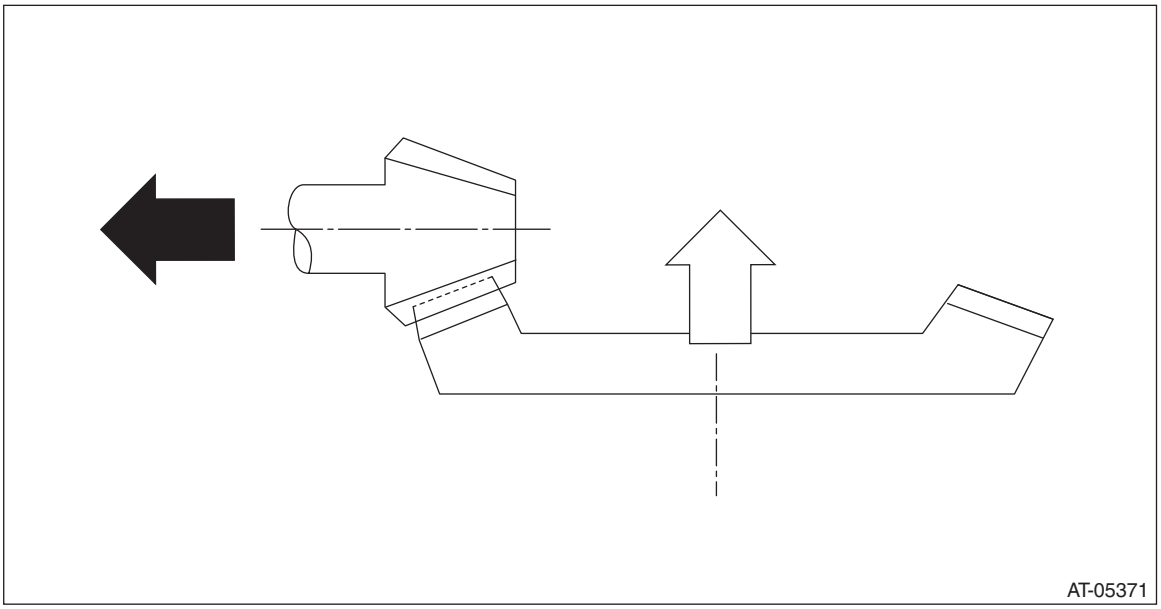

- Toe contact (inside contact)

Check item: Teeth contact area is too small.

Contact pattern

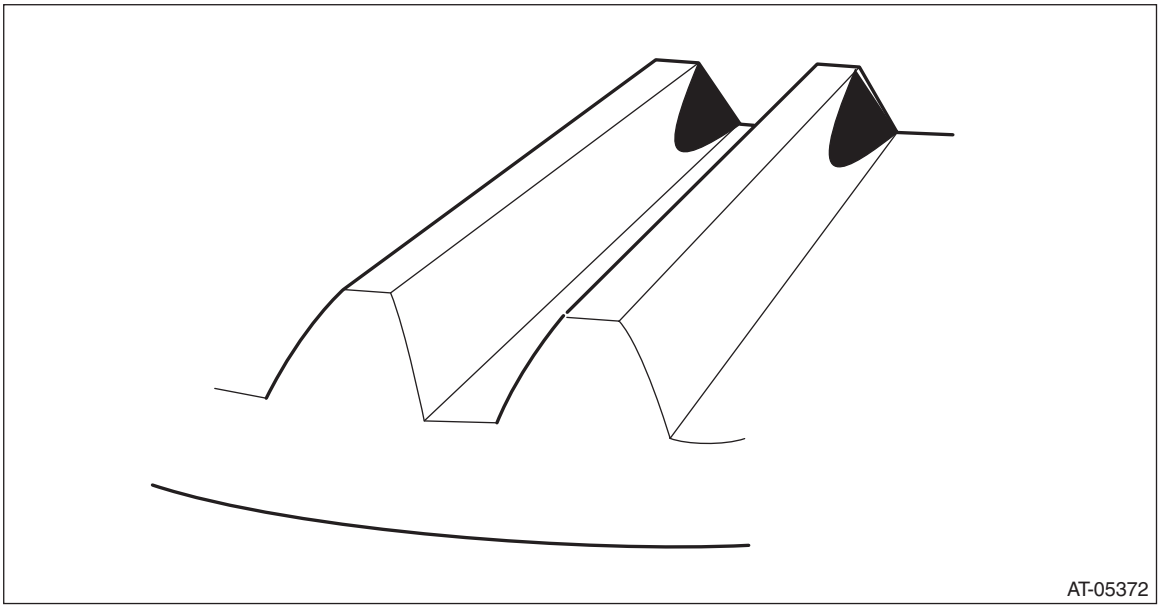

Corrective action: Reduce the thickness of pinion height adjusting washer according to the procedure for bringing drive pinion away from hypoid driven gear side.

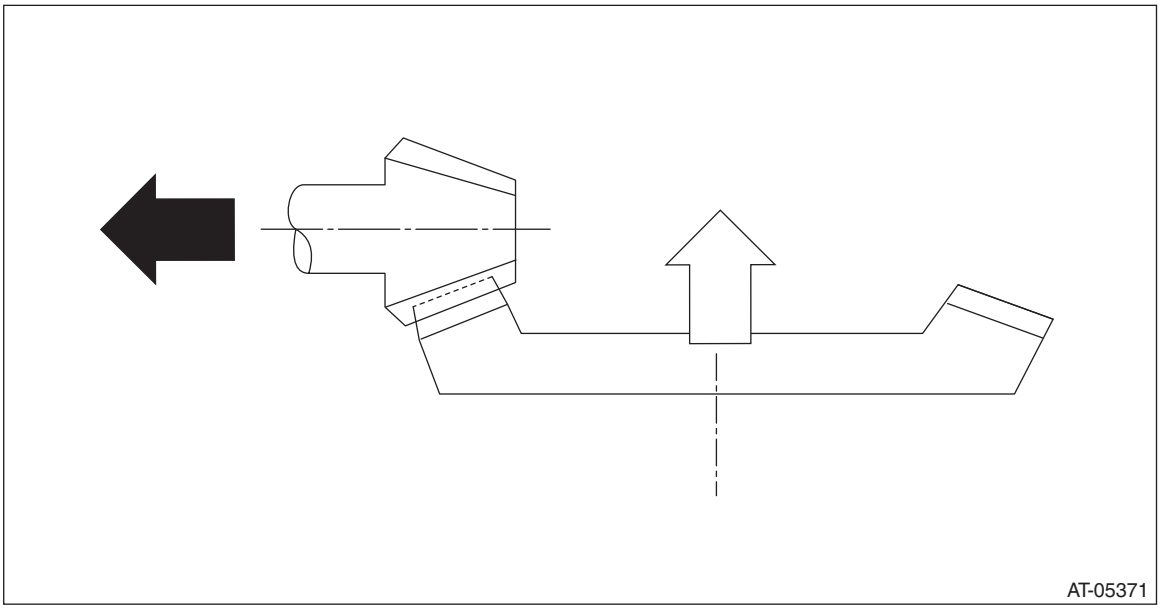

- Heel contact (outside end contact)

Check item: Teeth contact area is too small.

Contact pattern

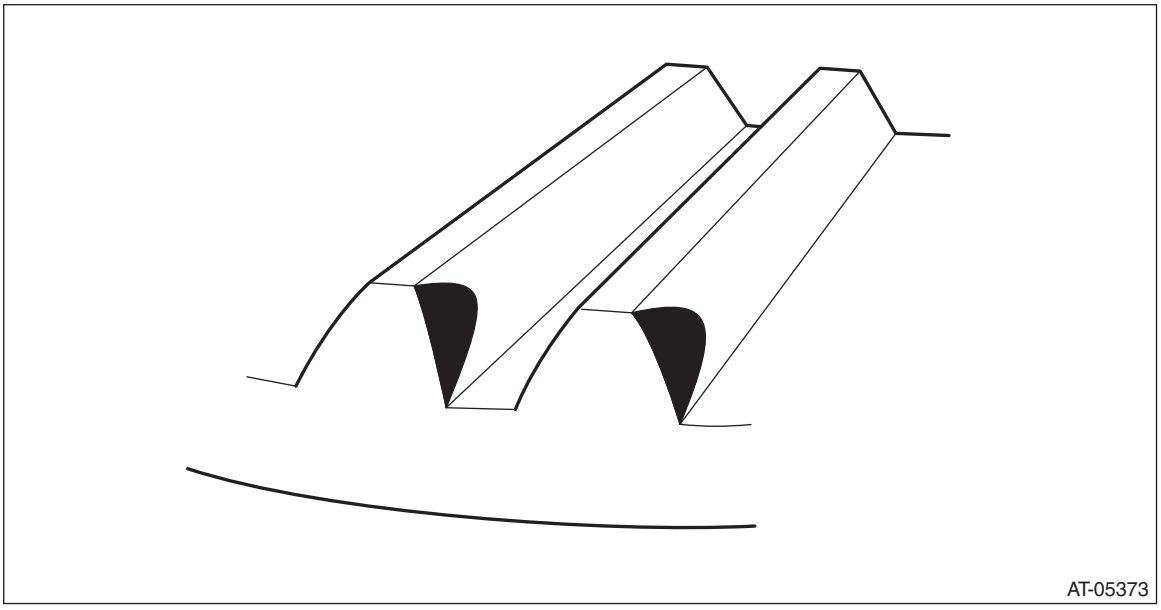

Corrective action: Increase the thickness of the pinion height adjusting washer according to the procedures for moving the drive pinion closer to the hypoid driven gear.

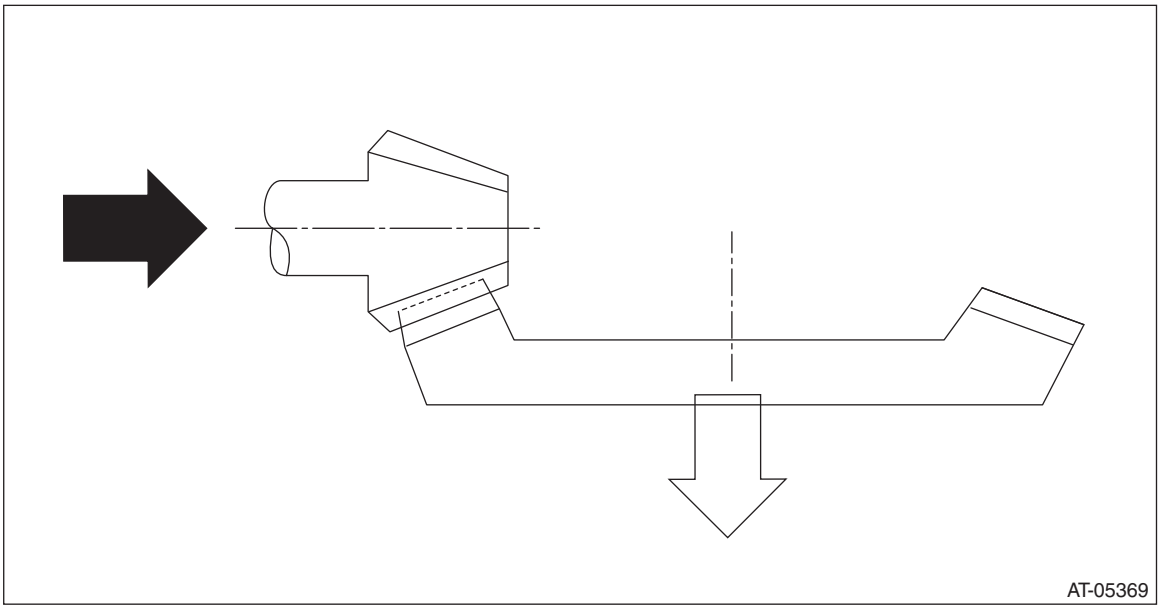

7) If tooth contact is correct, mark the differential side retainer position and loosen. After fitting a new O-ring and oil seal, screw in the differential side retainer to the marked position.
8) Tighten the lock plate with specified torque.

Tightening torque:
25 N·m (2.5 kgf-m, 18.4 ft-lb)

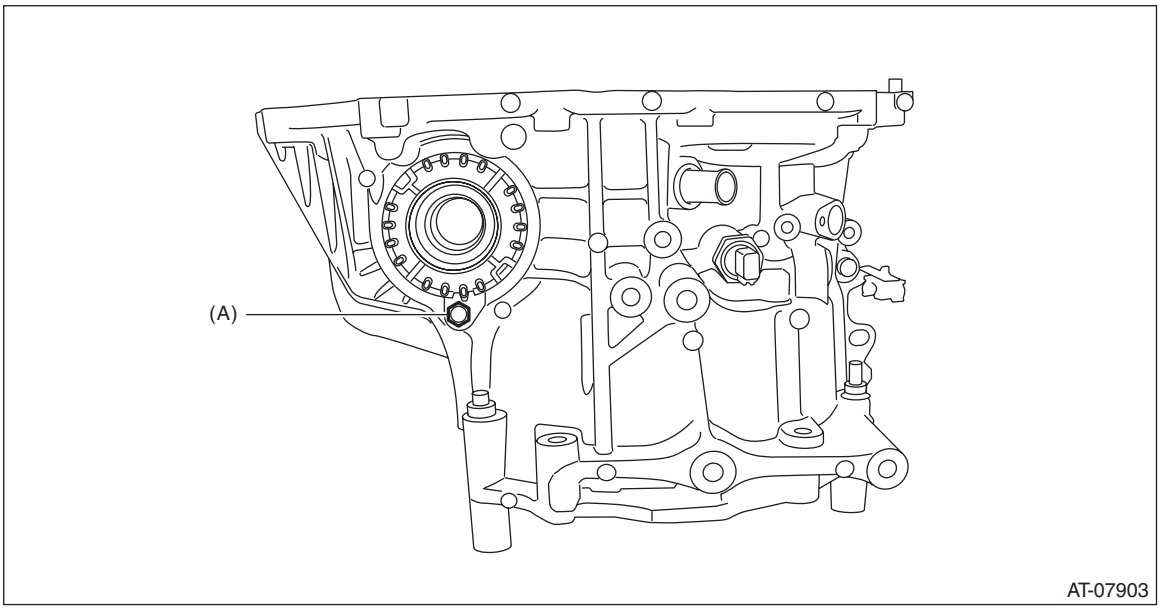

(A) Lock plate

44.Front Differential Assembly

A: REMOVAL

1) Remove the transmission assembly from the vehicle. <Ref. to CVT(TR690)-57, REMOVAL, Automatic Transmission Assembly.>
2) Remove the air breather hose. <Ref. to CVT(TR690)-136, REMOVAL, Air Breather Hose.>
3) Remove the oil pan and control valve body. <Ref. to CVT(TR690)-113, REMOVAL, Control Valve Body.>
4) Remove the transmission harness. <Ref. to CVT(TR690)-123, REMOVAL, Transmission Harness.>
5) Remove the extension case. <Ref. to CVT(TR690)-143, REMOVAL, Extension Case.>
6) Remove the rear drive shaft. <Ref. to CVT(TR690)-147, REMOVAL, Rear Drive Shaft.>
7) Remove the transfer clutch assembly. <Ref. to CVT(TR690)-152, REMOVAL, Transfer Clutch.>
8) Remove the center differential carrier. <Ref. to CVT(TR690)-155, REMOVAL, Center Differential Carrier.>
9) Remove the transfer reduction driven gear assembly. <Ref. to CVT(TR690)-159, REMOVAL, Transfer Reduction Driven Gear.>
10) Remove the intermediate case. <Ref. to CVT(TR690)-166, REMOVAL, Intermediate Case.>
11) Remove the forward clutch assembly. <Ref. to CVT(TR690)-182, REMOVAL, Forward Clutch Assembly.>
12) Remove the transmission case. <Ref. to CVT(TR690)-214, REMOVAL, Transmission Case.>
13) Remove the primary pulley, secondary pulley and variator chain. <Ref. to CVT(TR690)-230, REMOVAL, Primary Pulley and Secondary Pulley.>
14) Remove the drive pinion shaft assembly. <Ref. to CVT(TR690)-246, REMOVAL, Drive Pinion Shaft Assembly.>
15) Remove the lock plates on both sides.

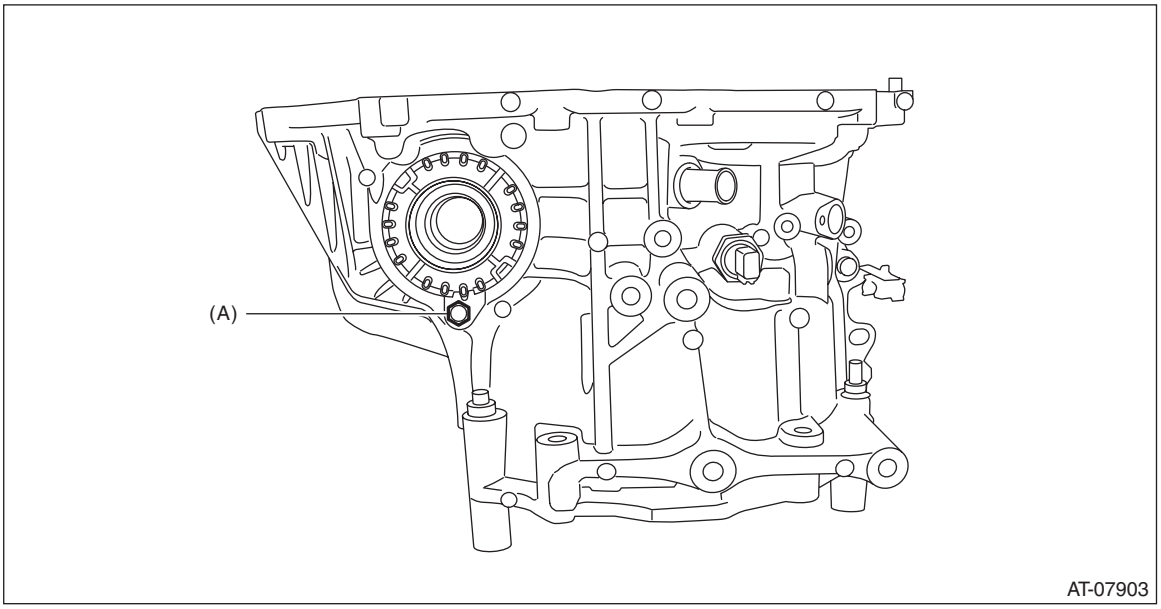

(A) Lock plate

16) Remove the differential side retainers using ST.
ST 18658AA020 WRENCH COMPL RETAINER

NOTE:
• Support the differential case assembly by hand to avoid damaging the retainer mounting hole of the converter case.

- When keeping the retainers aside, use labels etc. to avoid confusing the left and right.

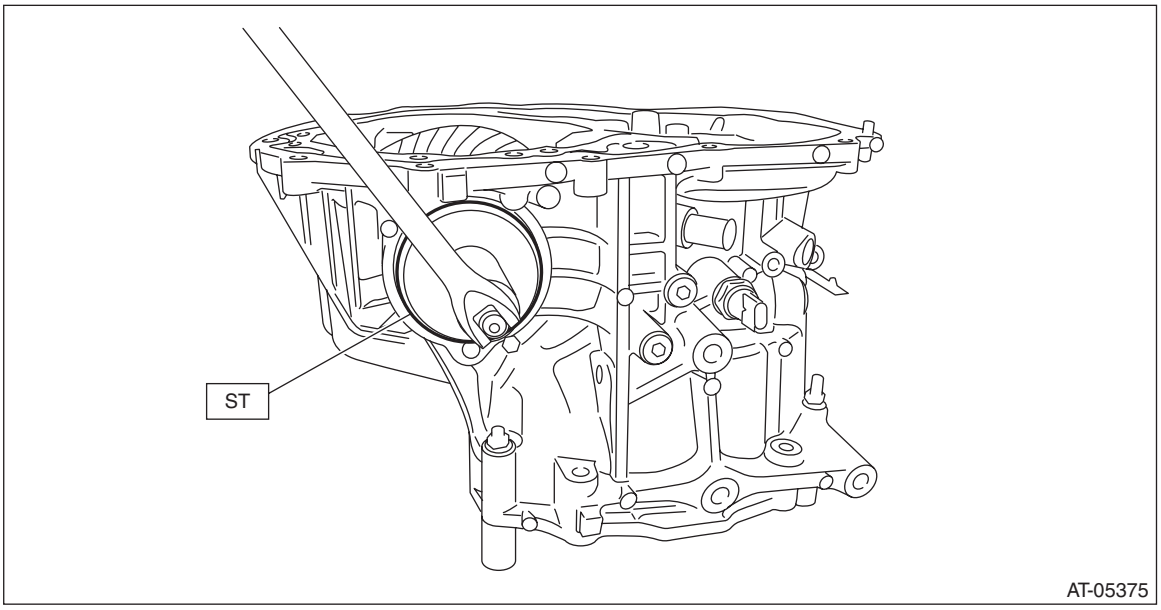

17) Remove the front differential assembly while being careful not to damage the attachment part of the retainer.
18) Remove the oil seals and O-rings from both differential side retainers. <Ref. to CVT(TR690)-272, SIDE RETAINER, DISASSEMBLY, Front Differential Assembly.>

B: INSTALLATION

1) Install the front differential assembly to the converter case.

NOTE:
Be careful not to damage the inside of the case (especially the mating surface of the differential side retainers).
2) Temporarily install the differential side retainers using ST.
ST 18658AA020 WRENCH COMPL RETAINER

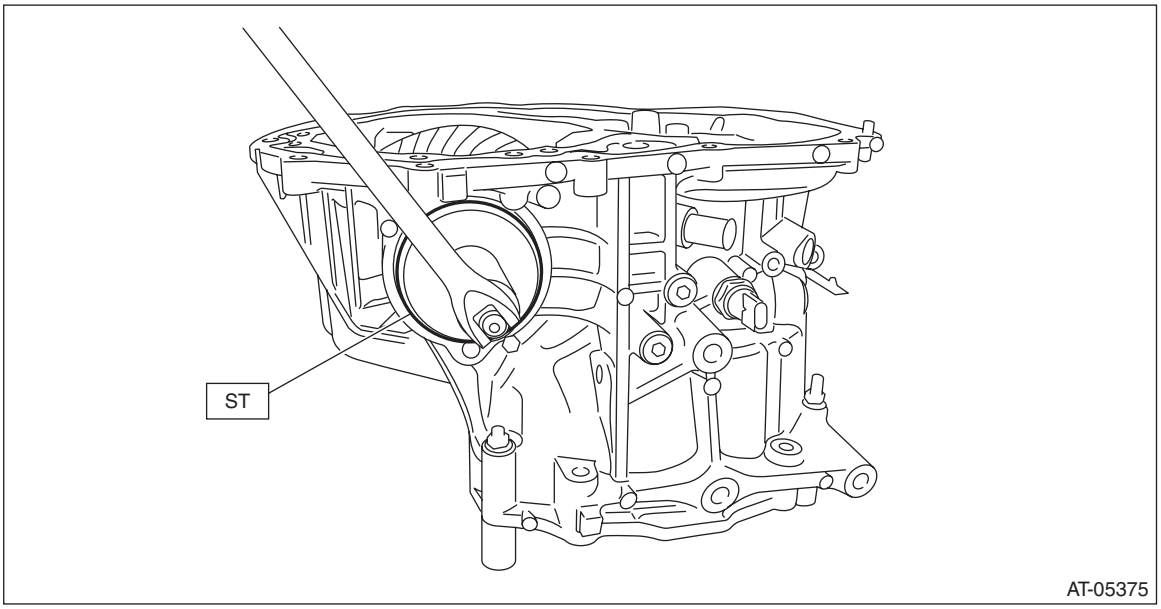

3) Adjust the backlash of the front differential. <Ref. to CVT(TR690)-280, ADJUSTMENT, Front Differential Assembly.>
4) Inspect and adjust the tooth contact. <Ref. to CVT(TR690)-260, ADJUSTMENT, Drive Pinion Shaft Assembly.>

5) Remove the differential side retainers and install the O-rings and oil seals. <Ref. to CVT(TR690)-279, SIDE RETAINER, ASSEMBLY, Front Differential Assembly.>

NOTE:
- Record how many turns were needed to remove.
- Use new O-rings and oil seals.

6) Install the differential side retainers using ST.

NOTE:
When attaching, turn the differential side retainer by the same number of turns it took to remove, and align the marks.
ST 18658AA020 WRENCH COMPL RETAINER
7) Install the lock plate.

Tightening torque:
25 N·m (2.5 kgf-m, 18.4 ft-lb)

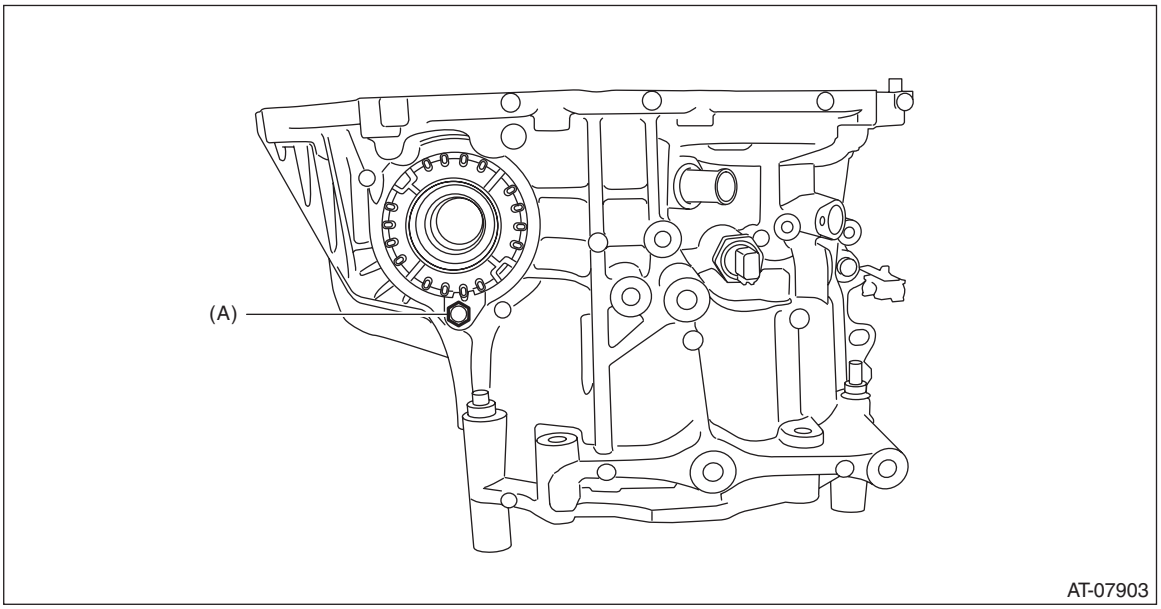

(A) Lock plate

8) Install the drive pinion shaft assembly. <Ref. to CVT(TR690)-248, INSTALLATION, Drive Pinion Shaft Assembly.>
9) Install the primary pulley, secondary pulley and variator chain. <Ref. to CVT(TR690)-234, INSTALLATION, Primary Pulley and Secondary Pulley.>
10) Install the transmission case. <Ref. to CVT(TR690)-216, INSTALLATION, Transmission Case.>
11) Install the forward clutch assembly. <Ref. to CVT(TR690)-183, INSTALLATION, Forward Clutch Assembly.>
12) Install the intermediate case. <Ref. to CVT(TR690)-167, INSTALLATION, Intermediate Case.>
13) Install the transfer reduction driven gear assembly. <Ref. to CVT(TR690)-159, INSTALLATION, Transfer Reduction Driven Gear.>
14) Install the center differential carrier. <Ref. to CVT(TR690)-156, INSTALLATION, Center Differential Carrier.>
15) Install the transfer clutch assembly. <Ref. to CVT(TR690)-152, INSTALLATION, Transfer Clutch.>
16) Install the rear drive shaft. <Ref. to CVT(TR690)-147, INSTALLATION, Rear Drive Shaft.>
17) Install the extension case. <Ref. to CVT(TR690)-144, INSTALLATION, Extension Case.>
18) Install the transmission harness. <Ref. to CVT(TR690)-125, INSTALLATION, Transmission Harness.>
19) Install the control valve body and oil pan. <Ref. to CVT(TR690)-117, INSTALLATION, Control Valve Body.>
20) Install the air breather hose. <Ref. to CVT(TR690)-136, INSTALLATION, Air Breather Hose.>

21) Install the transmission assembly to the vehicle. <Ref. to CVT(TR690)-70, INSTALLATION, Automatic Transmission Assembly.>

C: DISASSEMBLY

1. DIFFERENTIAL CASE ASSEMBLY

1) Remove the taper roller bearing using the ST.
ST 498077000 REMOVER

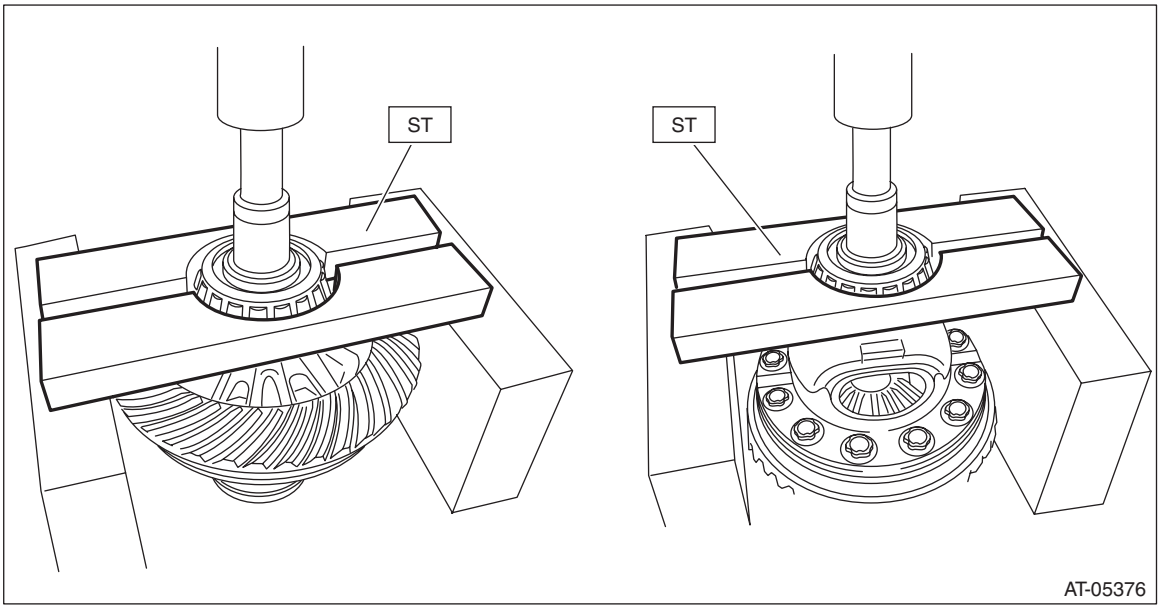

2) Remove the hypoid driven gear mounting bolt using the ST.
ST 18270KA020 SOCKET (E20)

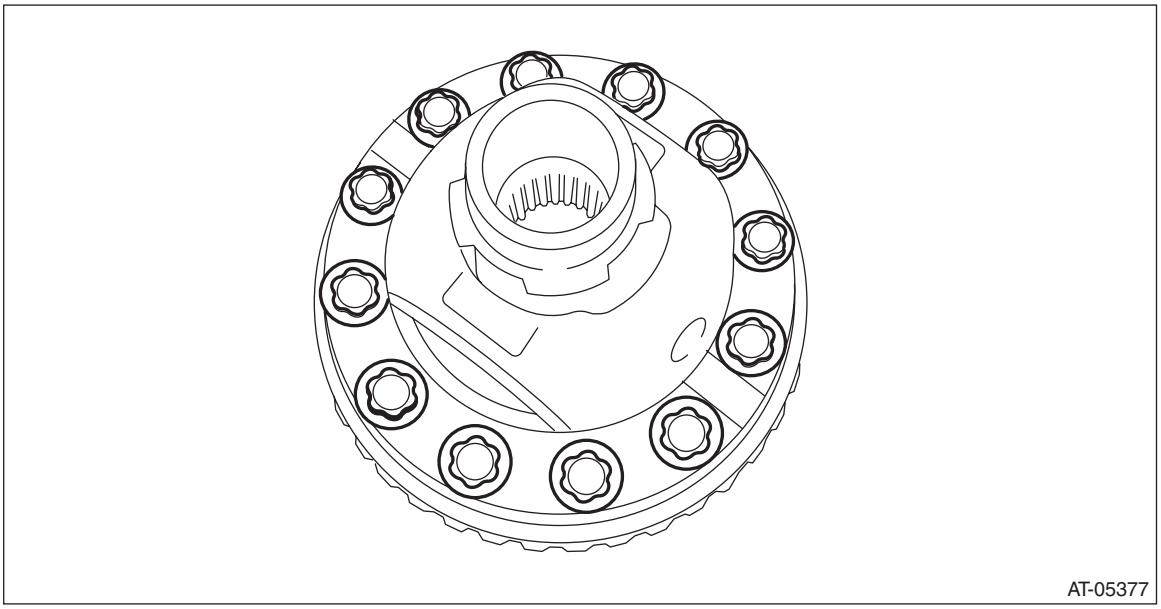

3) Remove the differential case (LH).

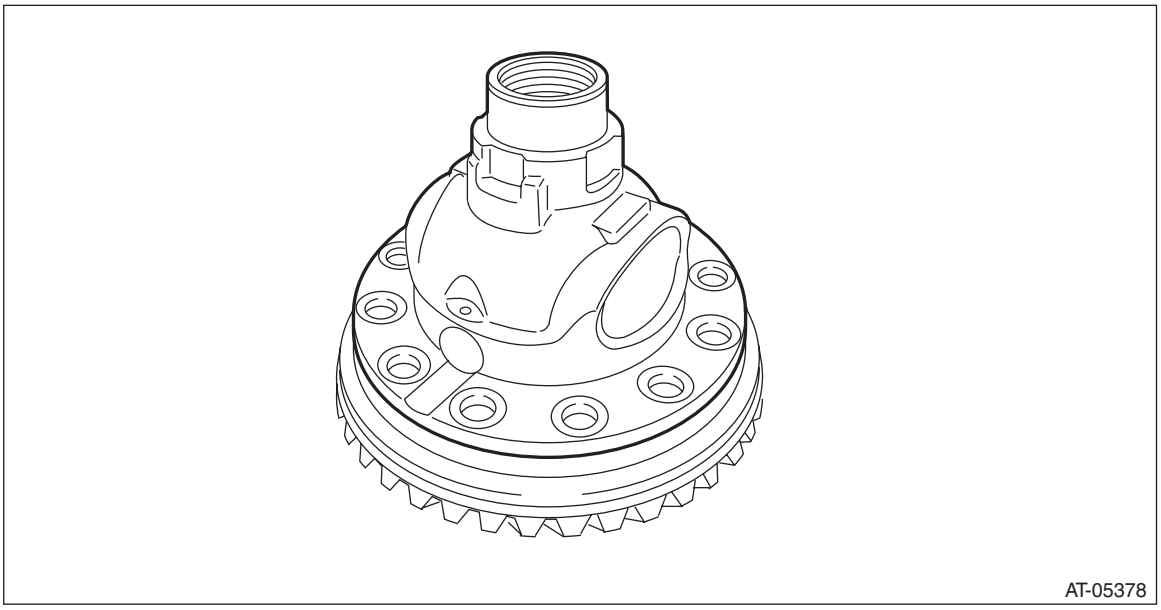

4) Remove the differential bevel gear and washer from differential case.

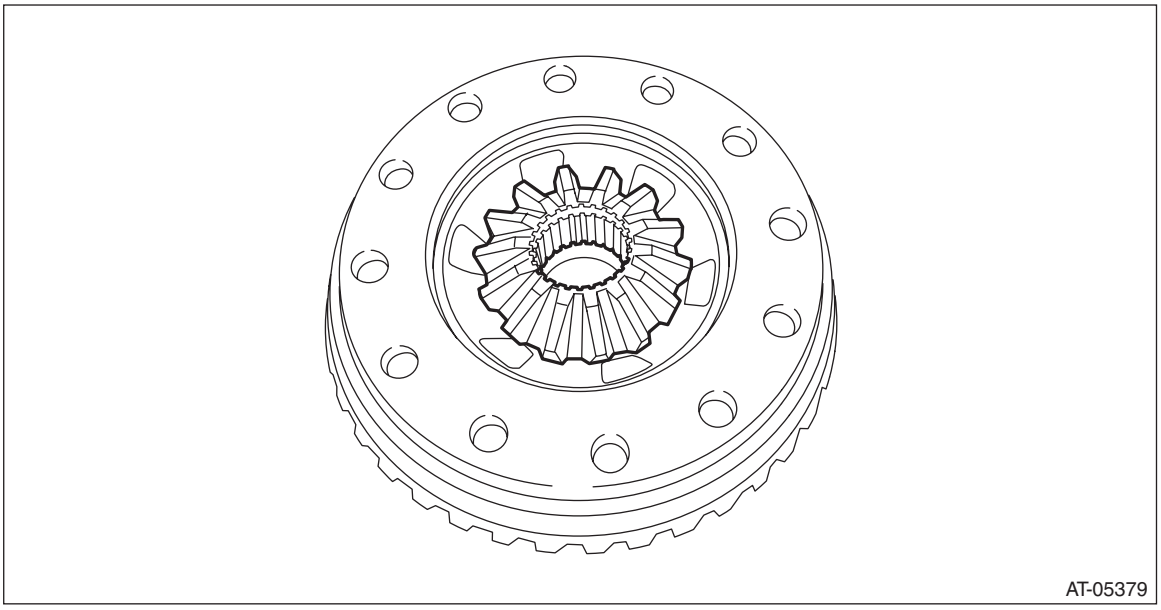

5) Remove the straight pin.

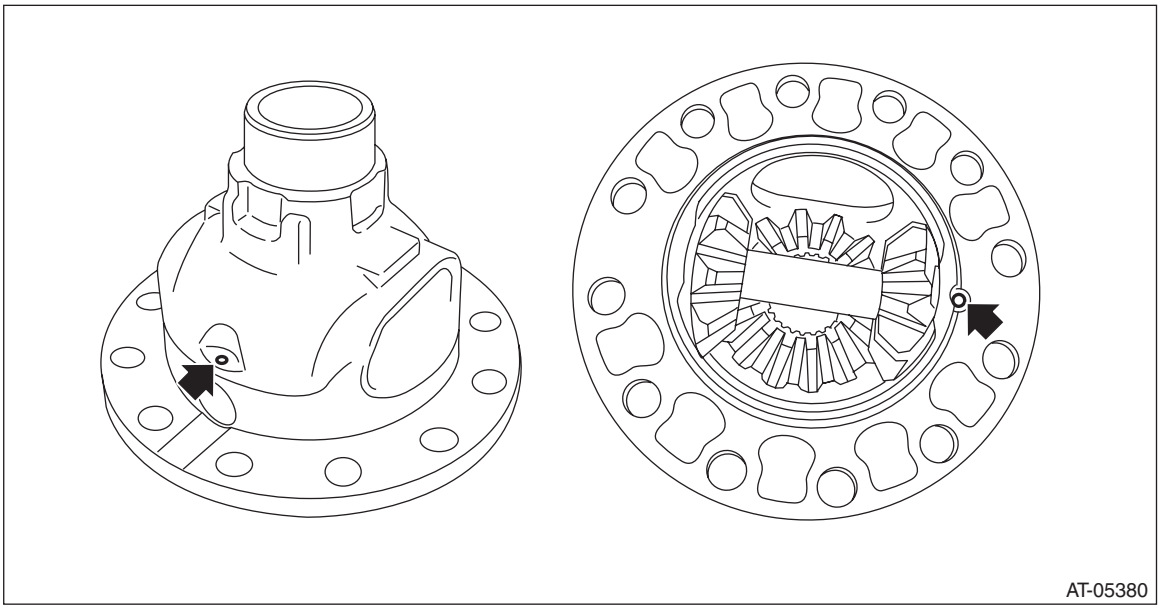

6) Remove the pinion shaft, then remove the differential bevel gear, washer and differential bevel pinion.

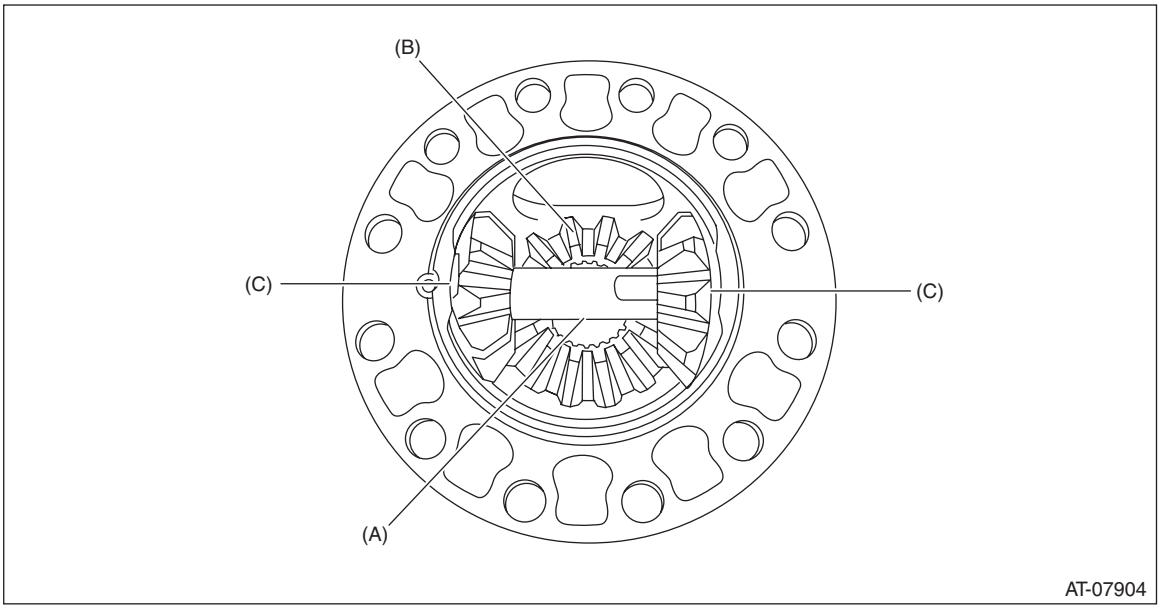

(A) Pinion shaft
(B) Differential bevel gear
(C) Differential bevel pinion

2. SIDE RETAINER

NOTE:
After adjusting the drive pinion backlash and tooth contact, replace the oil seal and O-ring with new parts.
1) Remove the O-ring.

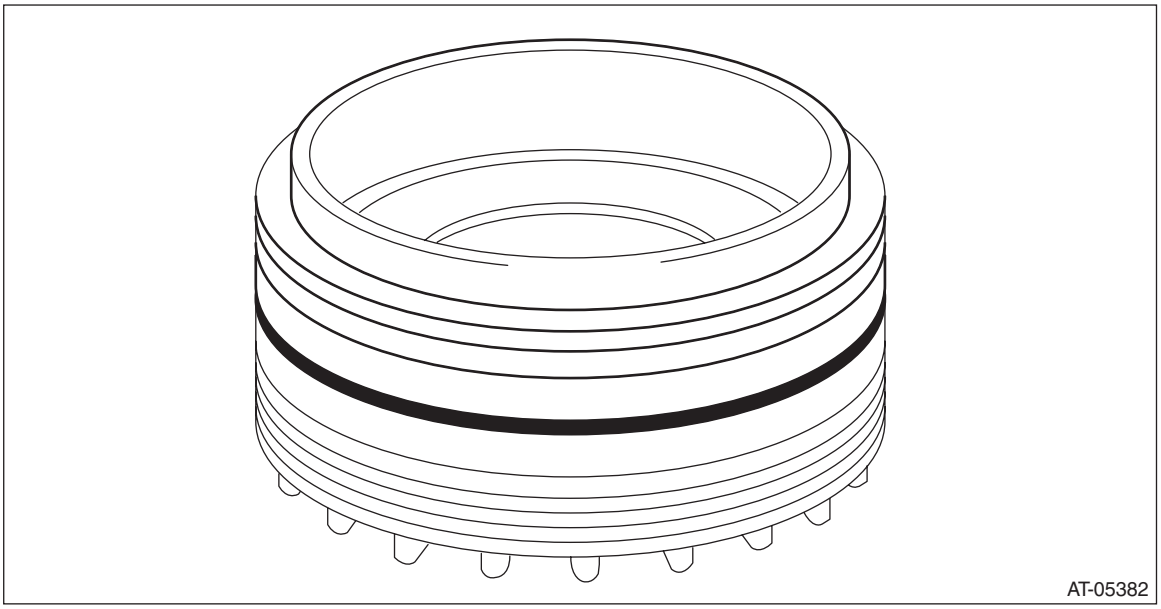

2) Remove the oil seal.

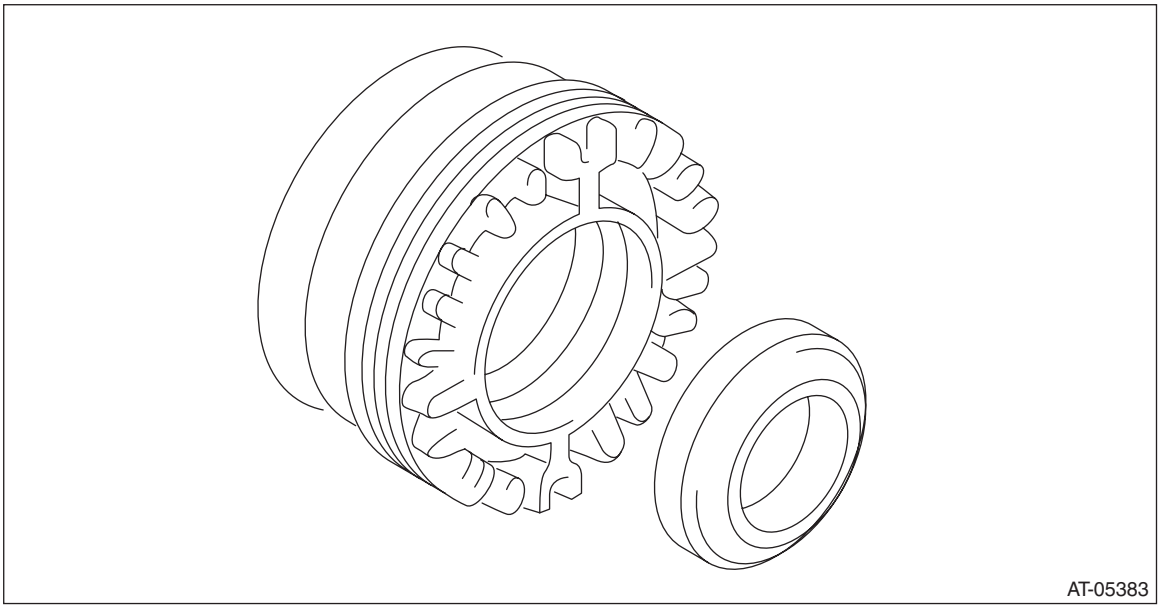

3) Remove the SPLIT PIN (ST), and then remove the claw.
ST 398527700 PULLER ASSY

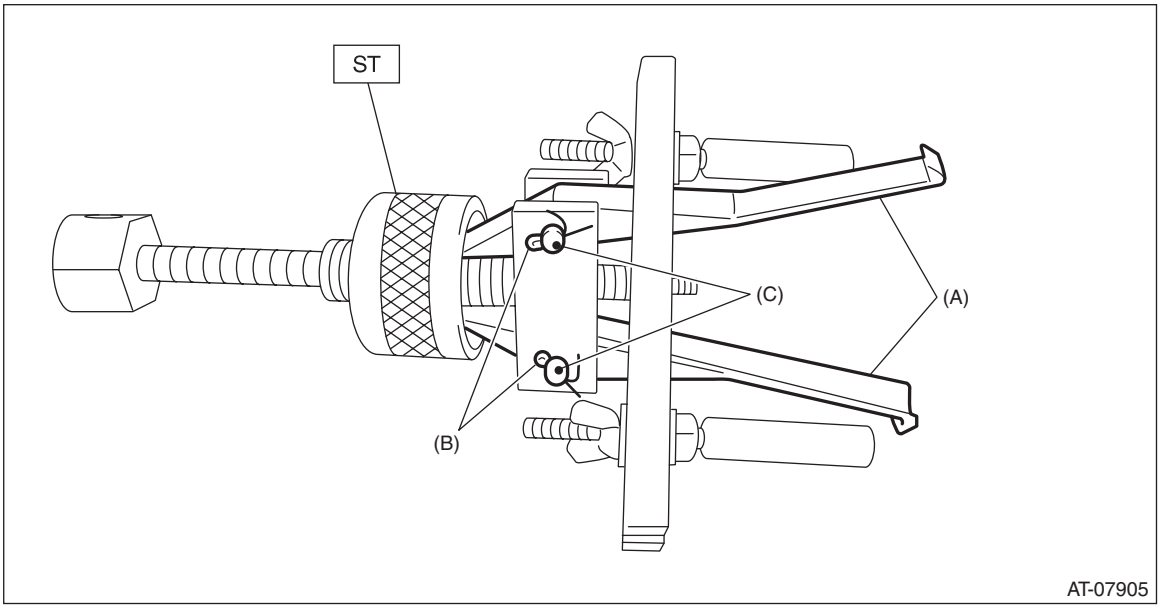

(A) Claw
(B) Split pin
(C) Pin

4) Attach two claws to the outer race, and set the ST to side retainer.
ST 398527700 PULLER ASSY

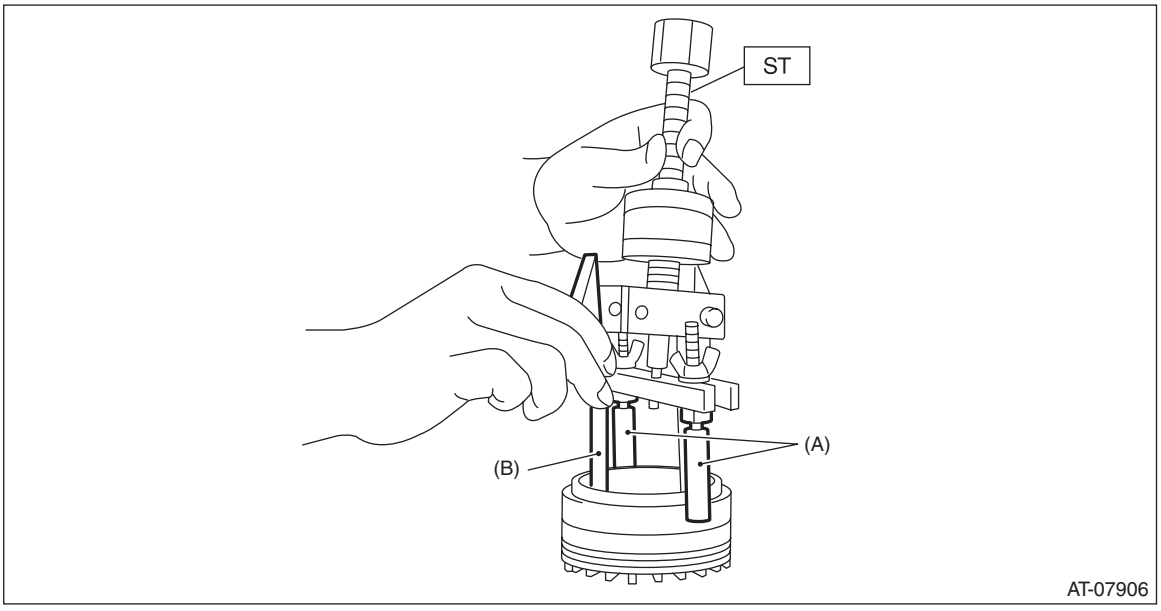

(A) Shaft
(B) Claw

5) Restore the removed claws to original position, and install the pin and split pin.

6) Hold the shaft of ST to avoid removing from side retainer, and then remove the bearing outer race.
ST 398527700 PULLER ASSY

NOTE:
Replace the bearing inner and outer races as a single unit.

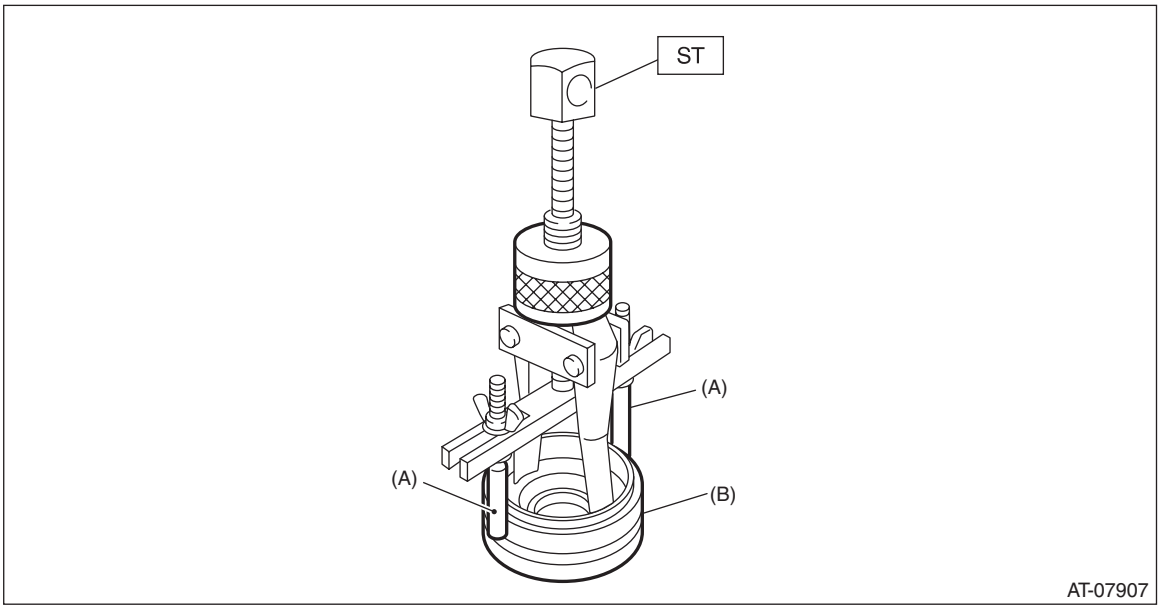

(A) Shaft
(B) Side retainer

D: ASSEMBLY

1. DIFFERENTIAL CASE ASSEMBLY

1) Install the washer and differential bevel gear into differential case (LH).

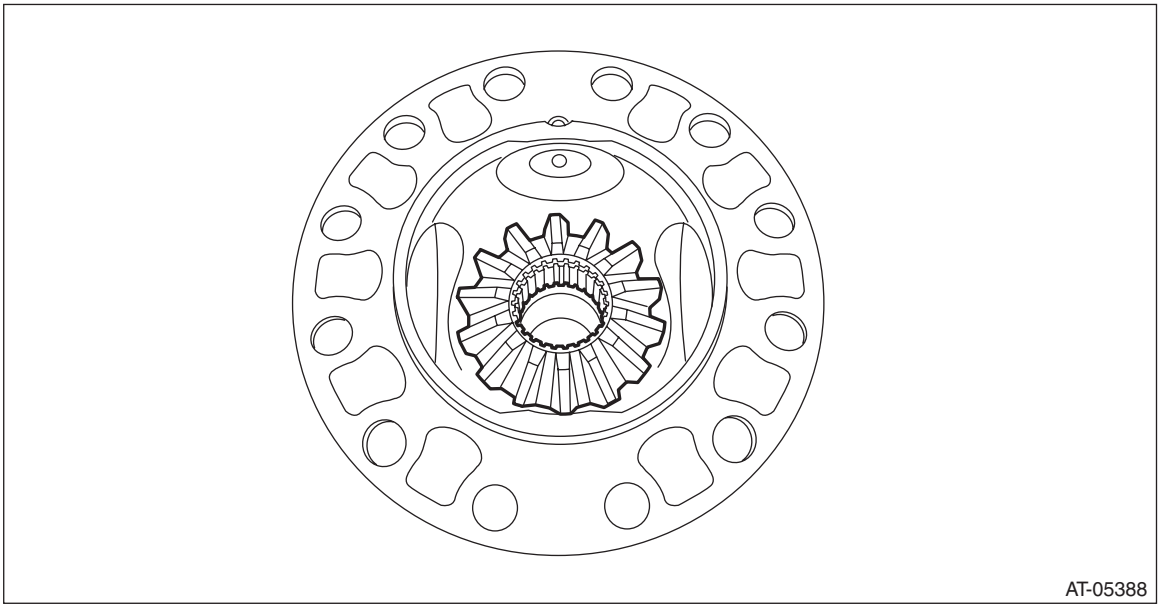

2) Install the differential bevel gear pinions into differential case (LH) and install the pinion shaft.

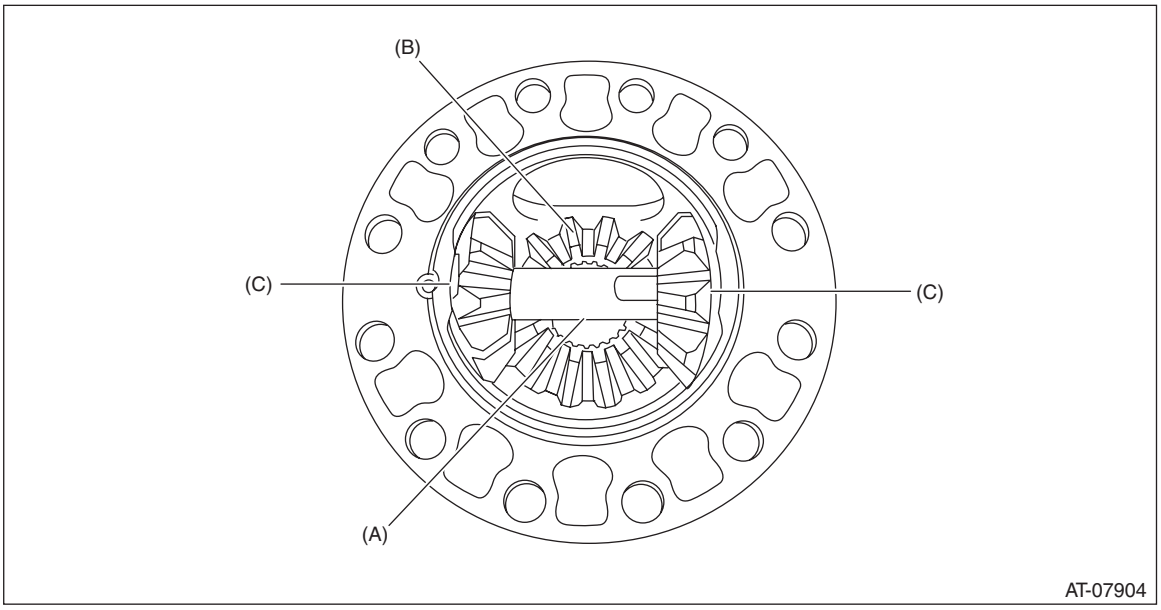

(A) Pinion shaft
(B) Differential bevel gear
(C) Differential bevel pinion

3) Install the straight pin.

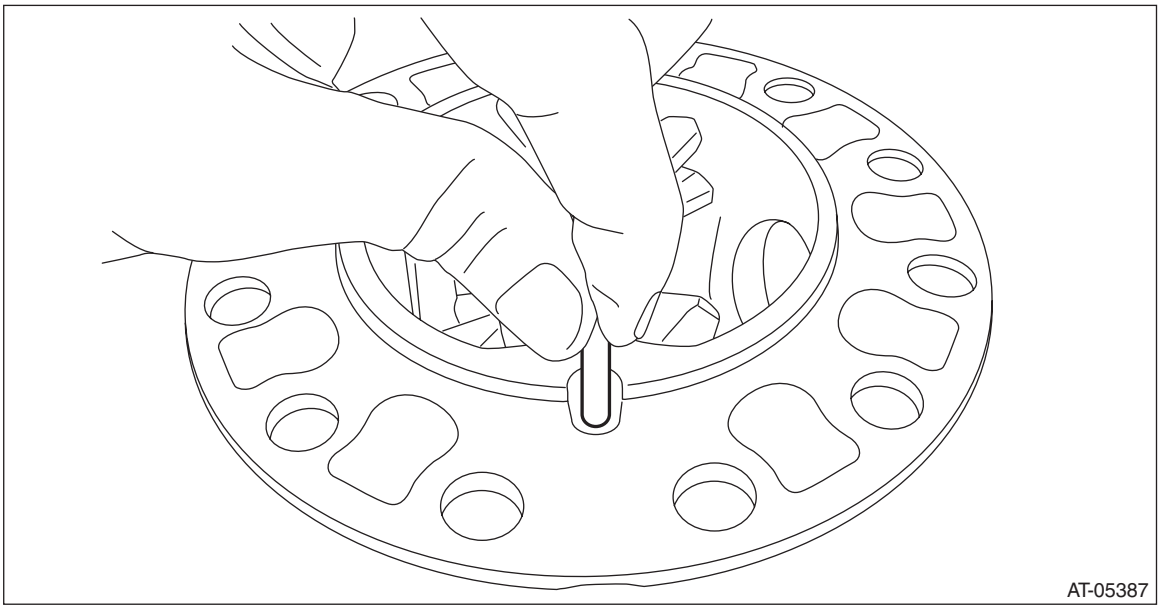

4) Install the differential case (RH) to hypoid driven gear and secure with vise.

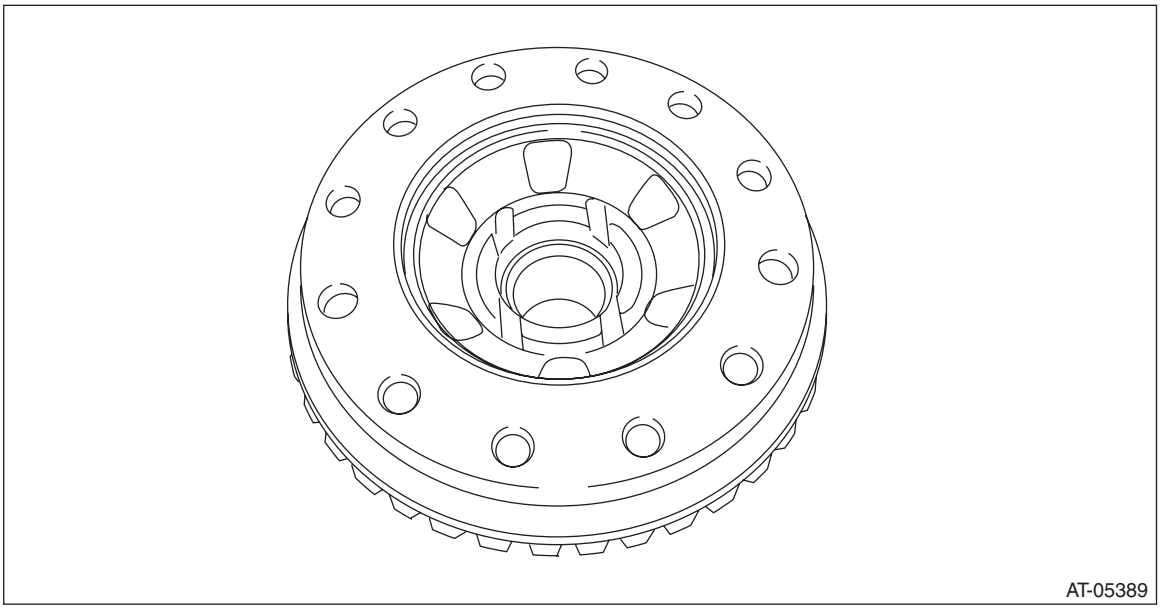

5) Install the washer and differential bevel gear to the differential case (RH).

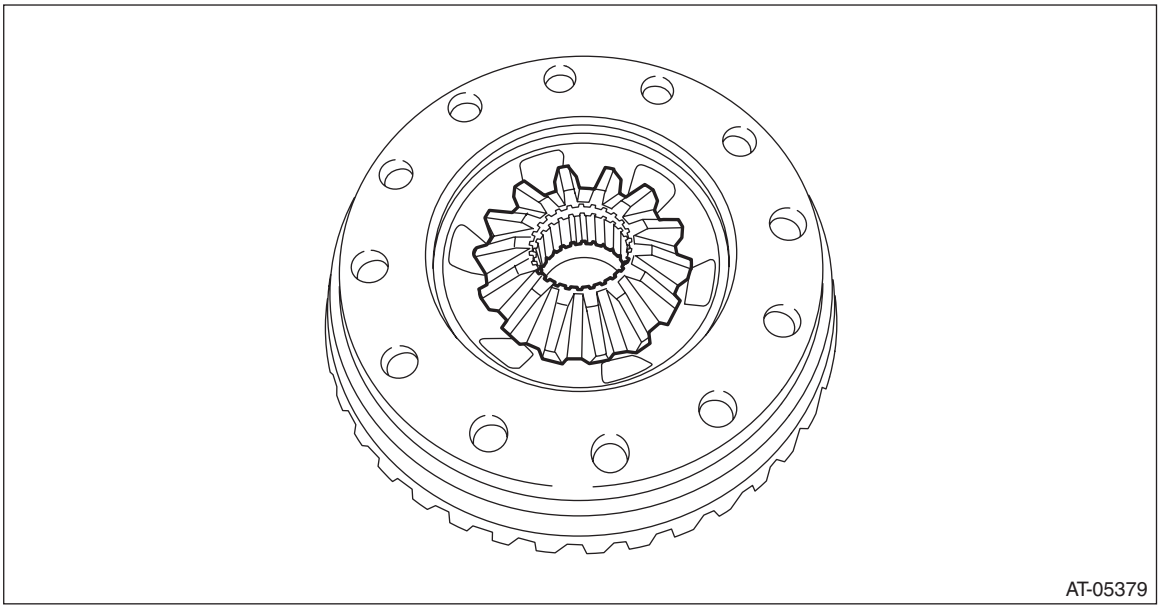

6) Using the ST, install the hypoid driven gear by tightening the installation bolt.
ST 18270KA020 SOCKET (E20)

Tightening torque:
20 N·m (2.0 kgf-m, 14.8 ft-lb)

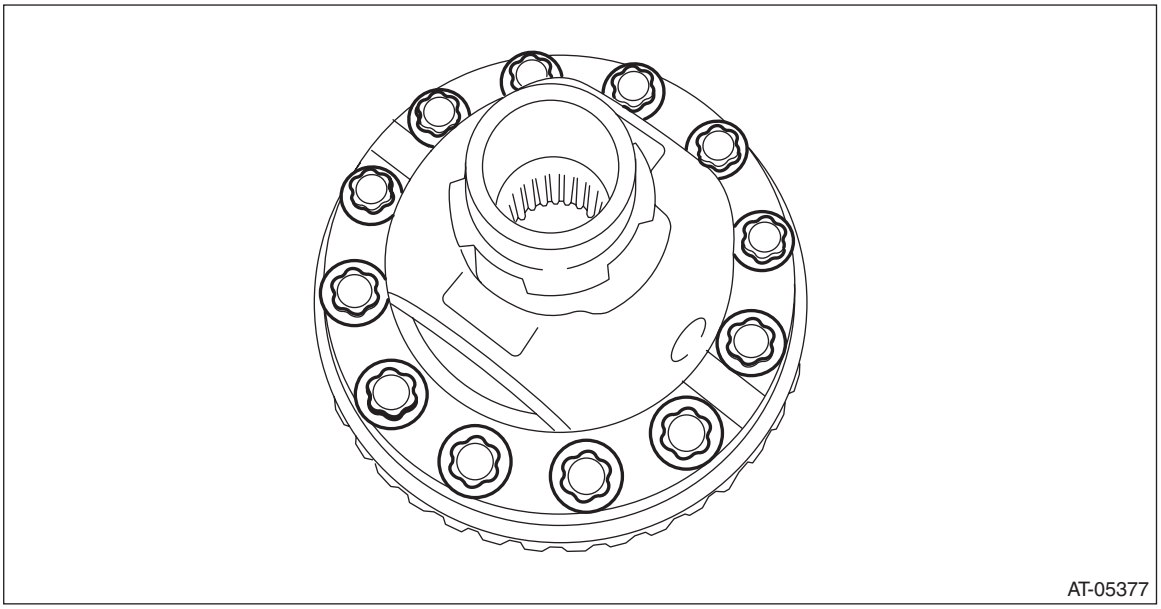

7) While checking the tightening angle with the angle gauge, further tighten the hypoid driven gear mounting bolts.

Tightening angle:
45°±2°

8) Measurement of backlash (selection of washer)
(1) Install the SUBARU genuine axle shaft to differential case.
Part No. 38415AA070 Axle shaft
(2) Measure the gear backlash using ST1 and ST2, and then insert the ST2 through the window of differential case.
ST1 498247001 MAGNET BASE
ST2 498247100 DIAL GAUGE

NOTE:
• Measure the backlash by applying a differential bevel pinion tooth between two differential bevel gear teeth.
• When measuring, fix the differential bevel pinion in place with a screwdriver covered with cloth, or a similar tool.

Specification:
0.13 — 0.18 mm (0.0051 — 0.0071 in)

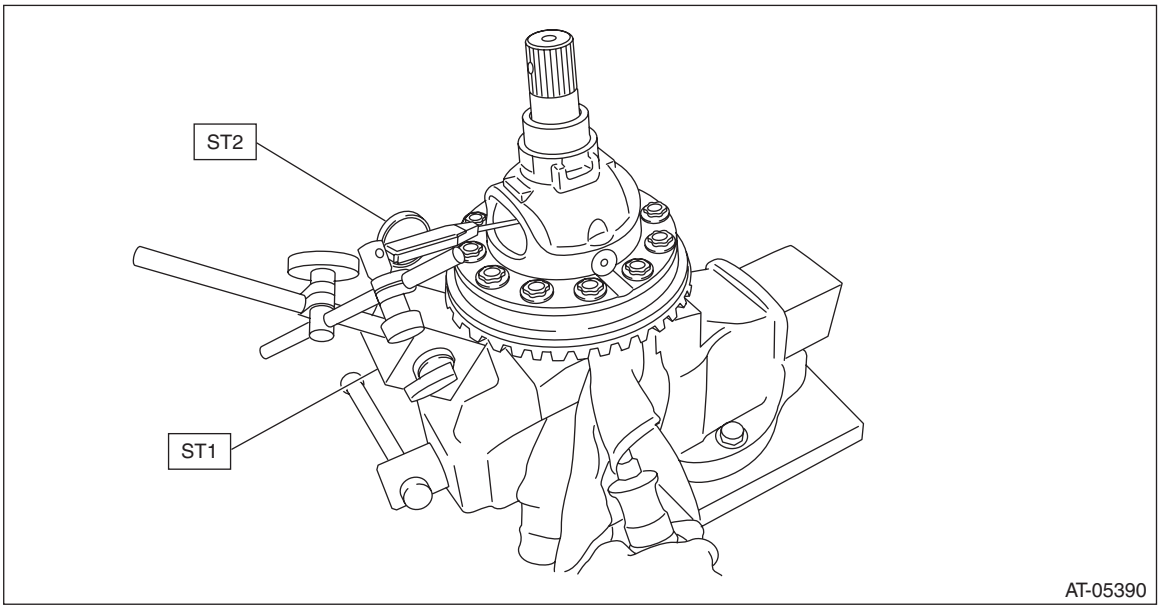

(3) If the backlash is not within specification, select a washer from the table below and replace.

Washer	
Part No.	Thickness mm (in)
803038021	0.95 (0.037)
803038022	1.00 (0.039)
803038023	1.05 (0.041)

9) Using the ST, install the left and right taper roller bearings.
ST1 499277100 BUSHING 1-2 INSTALLER
ST2 398497701 SEAT

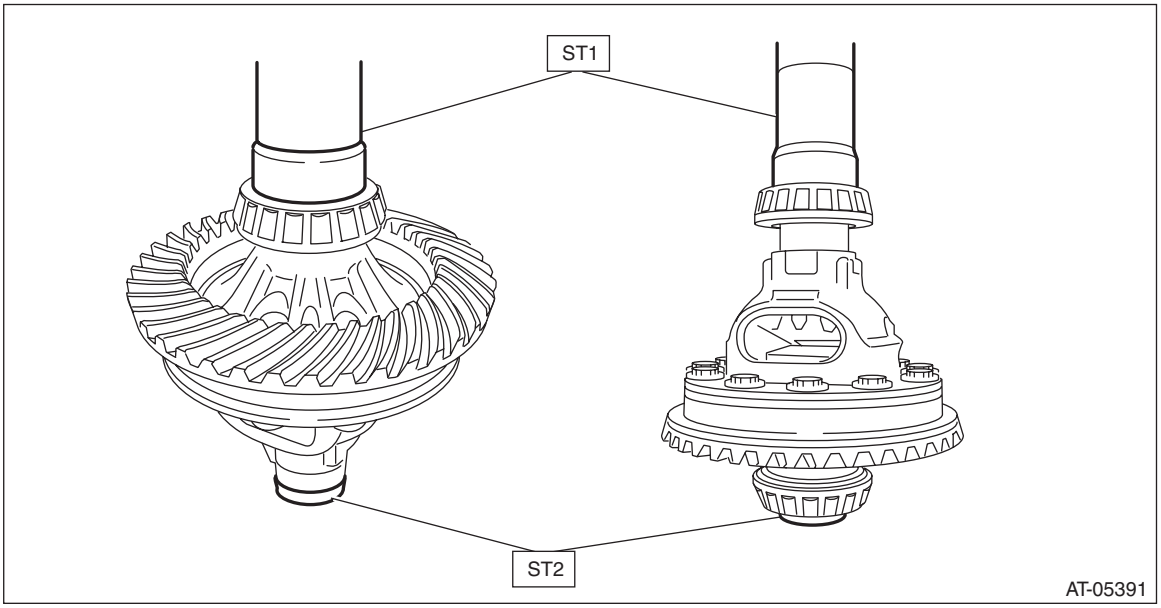

2. SIDE RETAINER

NOTE:
After adjusting the backlash and tooth contact, replace the oil seal and O-ring of side retainer with new parts.
1) Press-fit the bearing outer race to side retainer.
2) Using the ST, install the oil seal.

NOTE:
- Use a new oil seal.
- Apply differential oil to the oil seal lip.
- Oil seal has an identification mark (R, L). When installing oil seals, do not confuse the left and right.

ST 18675AA000 DIFFERENTIAL SIDE OIL SEAL INSTALLER

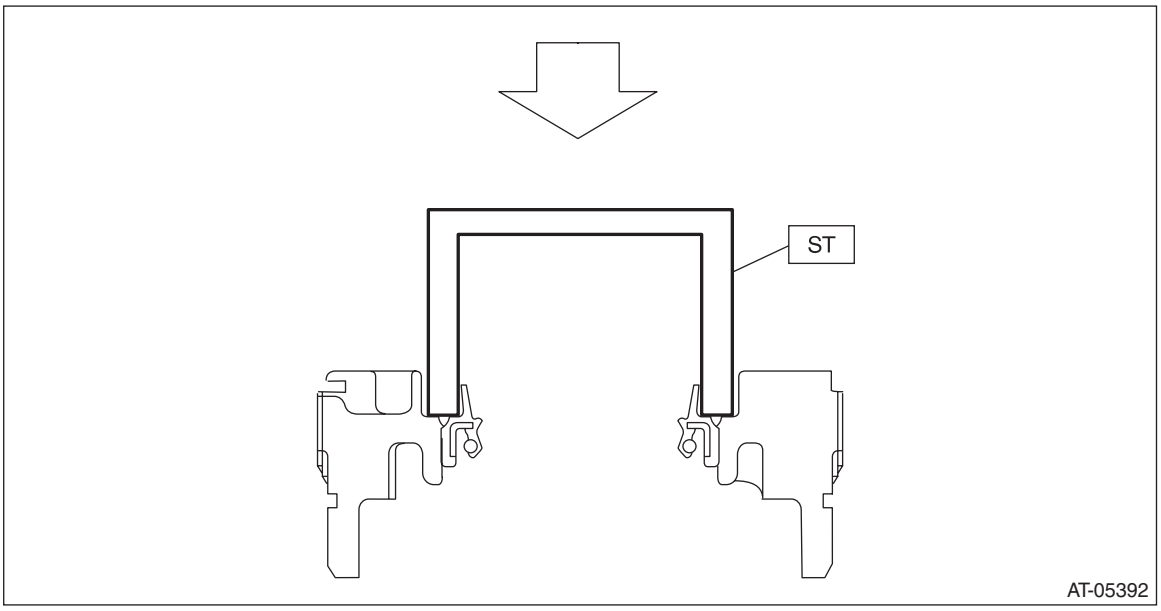

3) Install the O-rings.

NOTE:
- Use new O-rings.
- Apply gear oil to O-ring.

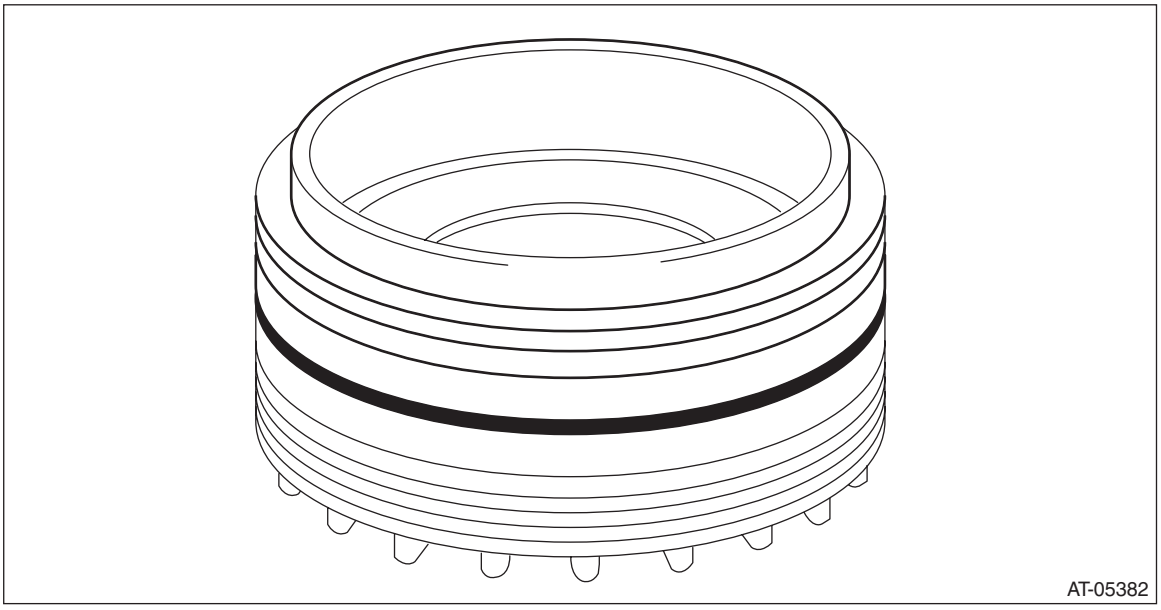

E: INSPECTION

- Check each component for scratches, damage or other faults.
- Inspect the backlash of the pinion gear.

Specification:
0.13 — 0.18 mm (0.0051 — 0.0071 in)

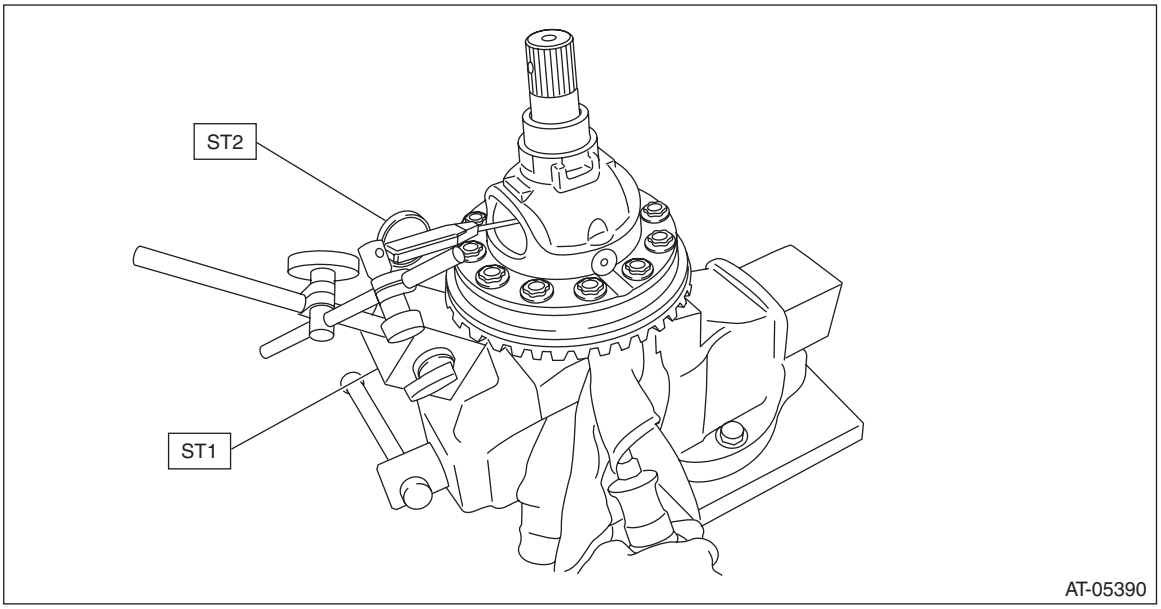

- Measure the hypoid gear backlash, and then adjust it to be within specification. <Ref. to CVT(TR690)-280, ADJUSTMENT, Front Differential Assembly.>

F: ADJUSTMENT

1) Using the ST, screw-in the retainer until resistance is felt.

NOTE:
RH side should be screwed-in more than LH side.
ST 18658AA020 WRENCH COMPL RETAINER

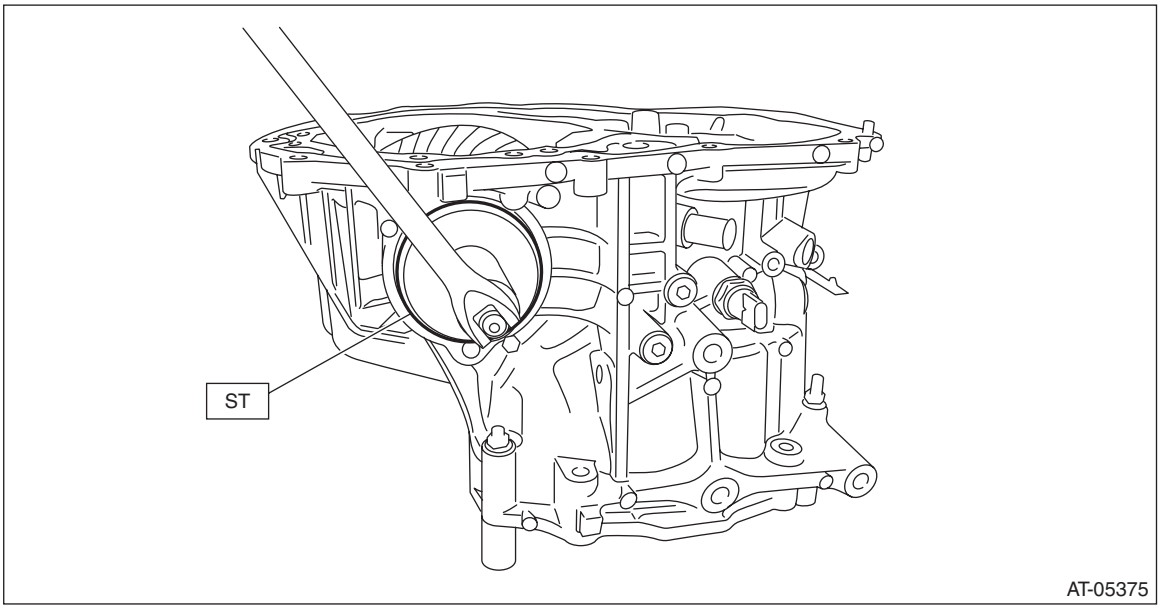

2) Remove the remaining liquid gasket from the mating surface completely.

3) Using the ST, install the drive pinion assembly to converter case.
ST 18270KA020 SOCKET (E20)

NOTE:
Do not confuse the three different-length bolts when installing.

Tightening torque:
43 N·m (4.4 kgf-m, 31.7 ft-lb)

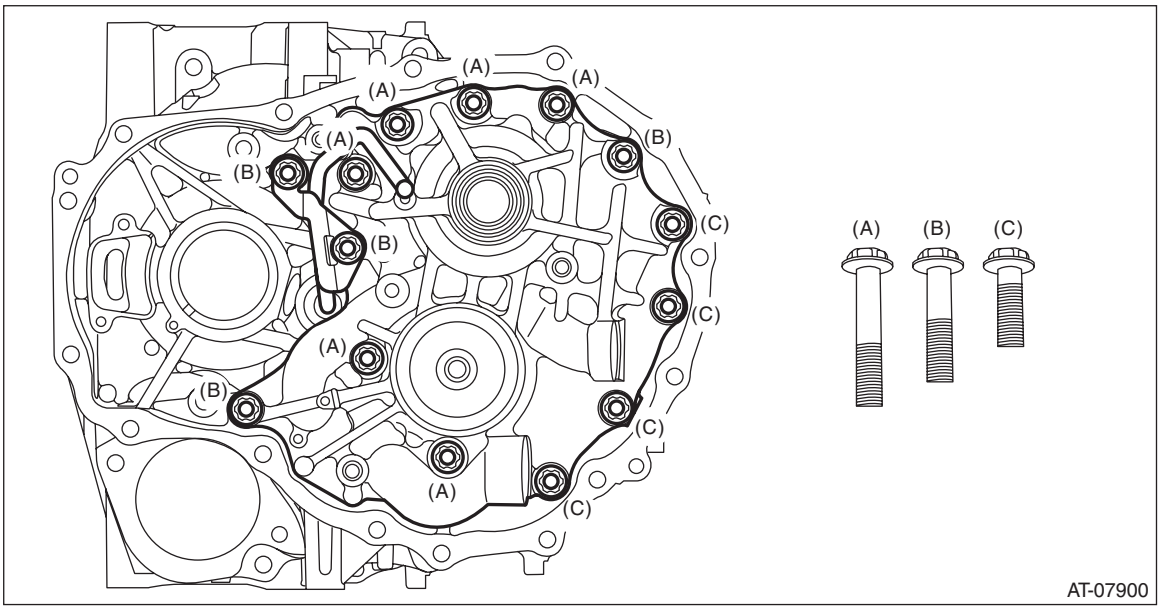

4) Rotate the drive pinion shaft ten times or more using ST1 and ST2.
ST1 18667AA010 HOLDER
ST2 499787700 WRENCH

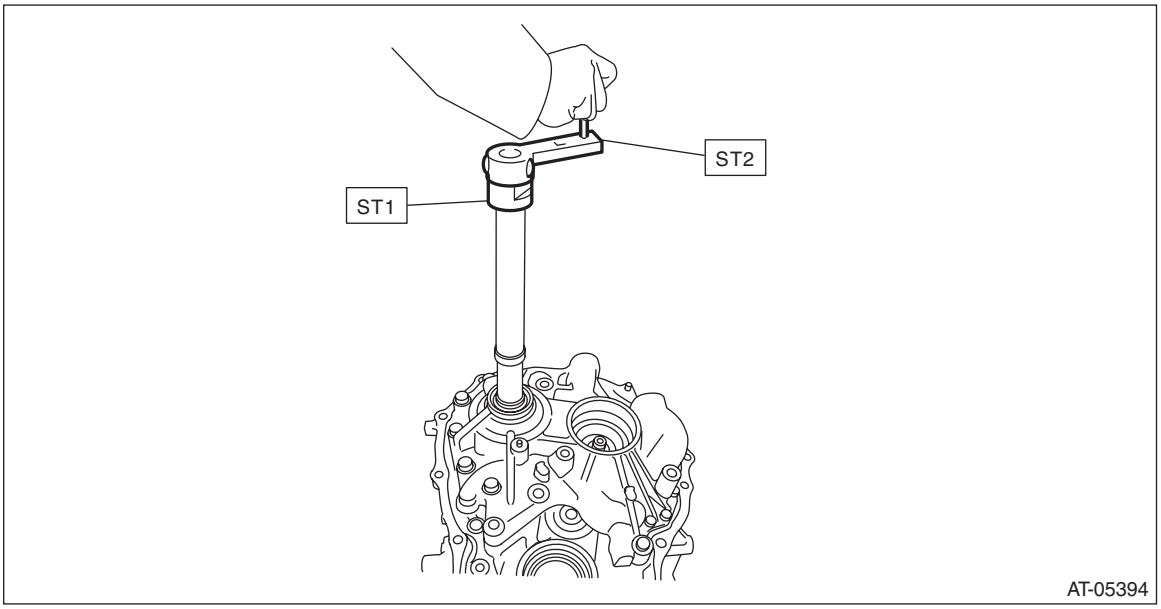

5) While rotating the pinion shaft, tighten the retainer LH and loosen the retainer RH until the shaft can't be turned anymore. The backlash is “zero” when the pinion shaft comes to the point where it doesn't rotate.

6) After the “zero” state is established, loosen the retainer LH by 3 notches and secure it with the lock plate. Loosen the retainer RH and retighten until it stops. Rotate the drive pinion 2 or 3 times. Tighten the retainer RH further 1-3/4 notches. This sets the preload. Finally, secure the retainer with its lock plate.

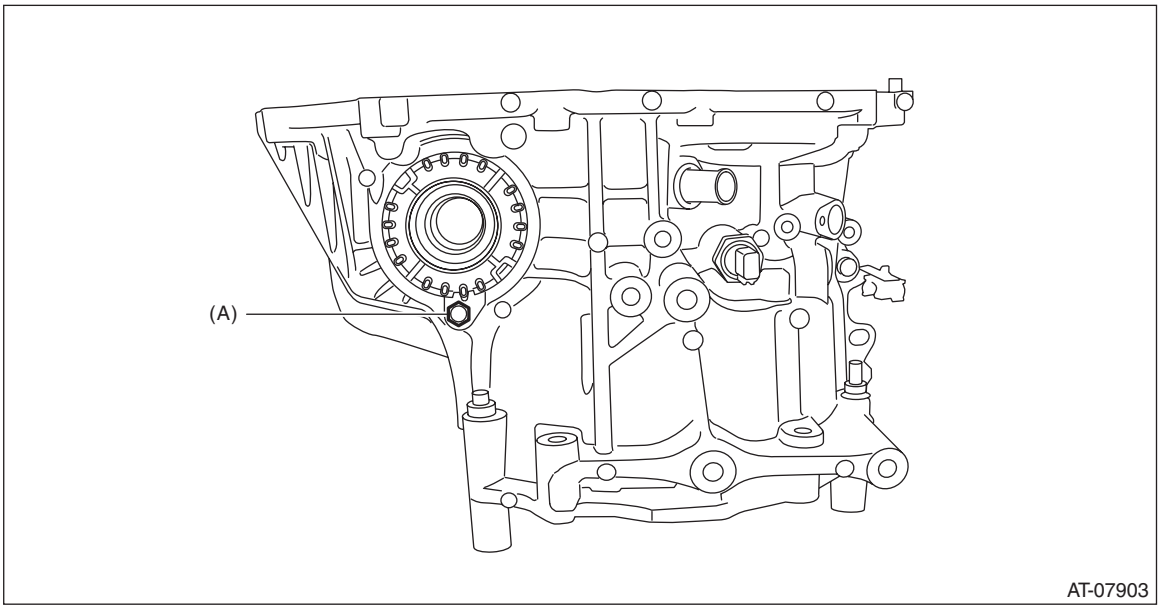

(A) Lock plate

NOTE:
Turning the retainer by every one tooth changes the backlash approx. 0.05 mm (0.0020 in).

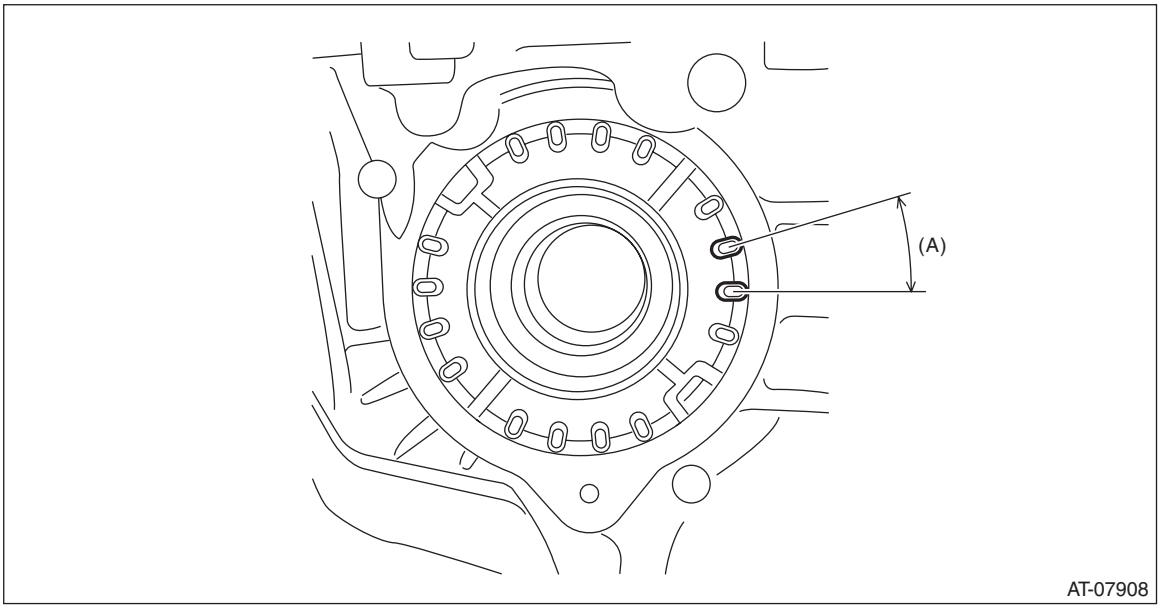

(A) 1 tooth

7) Insert the two SUBARU genuine axle shafts into differential case.
Part No. 38415AA070 Axle shaft

8) Wrap the drive shaft pinion shaft with cloth and pinch with vise pliers. Install the installation bolt into the bolt hole of secondary pulley and secure the bolt and vise pliers using a band or wire.
Make sure the drive pinion shaft does not move.

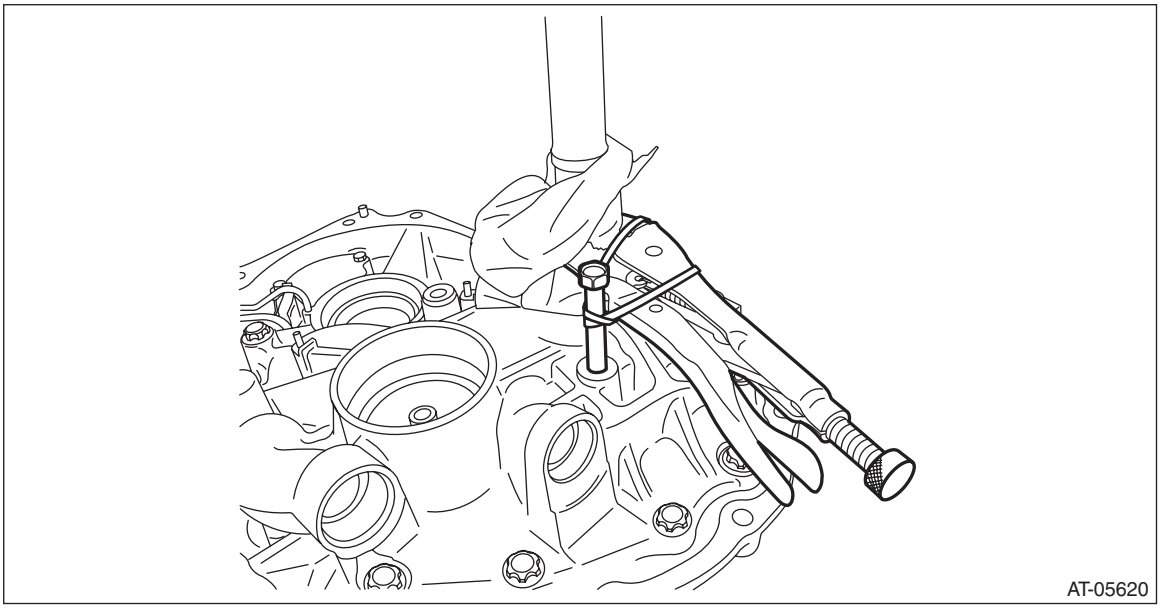

9) Check the backlash is within specification using ST1, ST2 and ST3.
ST1 498255400 PLATE
ST2 498247001 MAGNET BASE
ST3 498247100 DIAL GAUGE

Backlash:
0.13 — 0.18 mm (0.005 — 0.007 in)

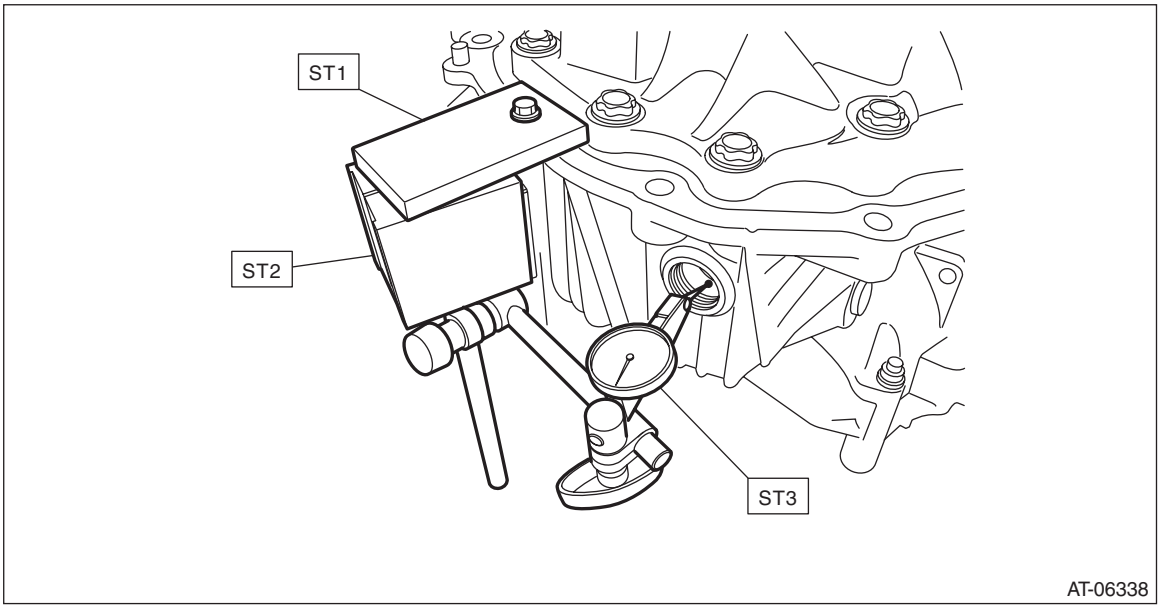

10) Adjust the teeth contact of the front differential and drive shaft. <Ref. to CVT(TR690)-260, ADJUSTMENT, Drive Pinion Shaft Assembly.>

45.Oil Pump

A: REMOVAL

NOTE:
Refer to “Drive Pinion Shaft” for removal procedures. <Ref. to CVT(TR690)-246, REMOVAL, Drive Pinion Shaft Assembly.>

B: INSTALLATION

NOTE:
Refer to “Drive Pinion Shaft” for installation procedures. <Ref. to CVT(TR690)-248, INSTALLATION, Drive Pinion Shaft Assembly.>

C: INSPECTION

Check the following items.
- Check the oil pump for damage and wear.
- Rotate the oil pump by hand, and check that it rotates smoothly.

1) Measure the secondary pressure. <Ref. to CVT(TR690)-50, INSPECTION, Secondary Pressure (Line Pressure) Test.>
2) Remove the oil pan and oil strainer. <Ref. to CVT(TR690)-113, REMOVAL, Control Valve Body.>
3) Check oil strainer for clogging.
When oil strainer has no clogging, replace the oil pump.

46.Oil Pump Chain

A: REMOVAL

1) Remove the transmission assembly from the vehicle. <Ref. to CVT(TR690)-57, REMOVAL, Automatic Transmission Assembly.>
2) Remove the torque converter assembly. <Ref. to CVT(TR690)-141, REMOVAL, Torque Converter Assembly.>
3) Remove the oil pump chain cover.

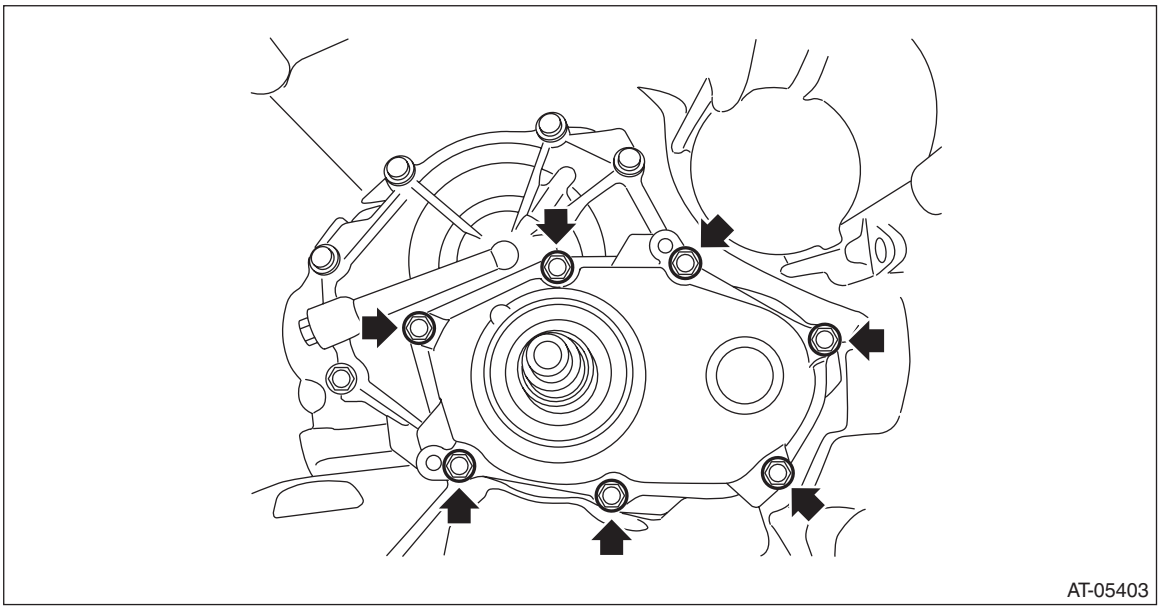

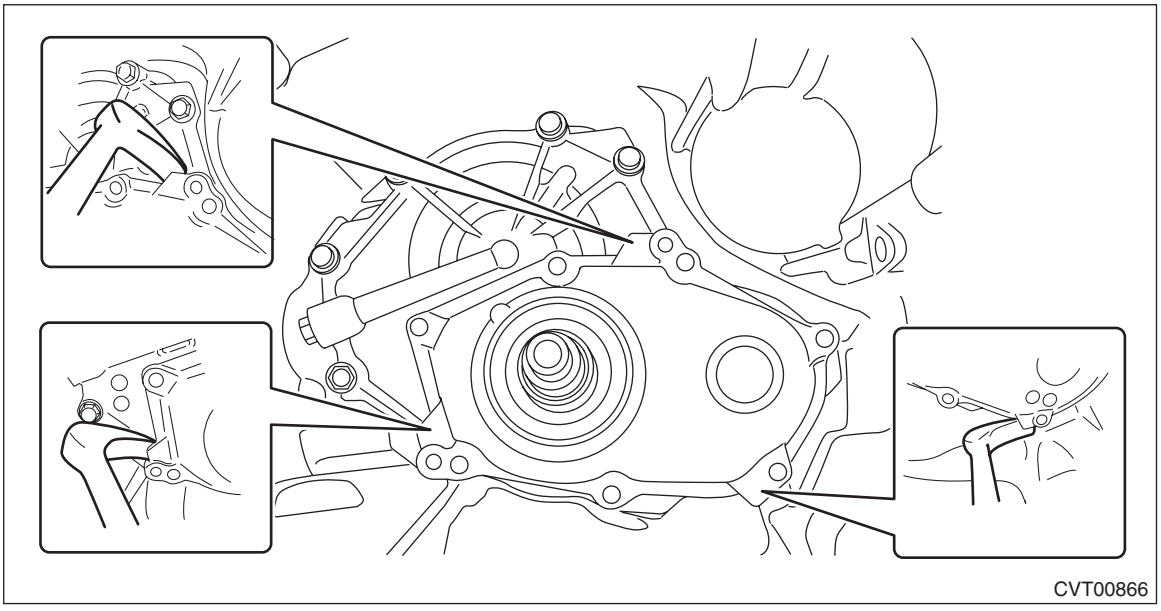

4) Remove the seal ring from center support COMPL.

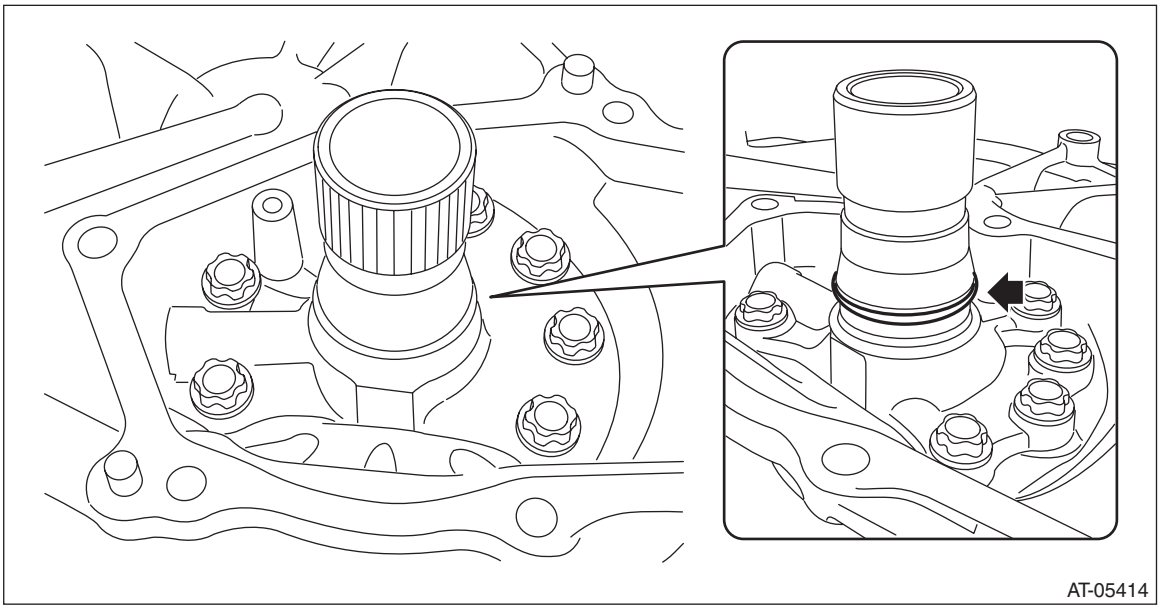

5) Remove the driven sprocket from oil pump chain cover to remove the oil pump chain.

NOTE:
The driven sprocket is replaced as an assembly only, because it is a non-disassembly part.

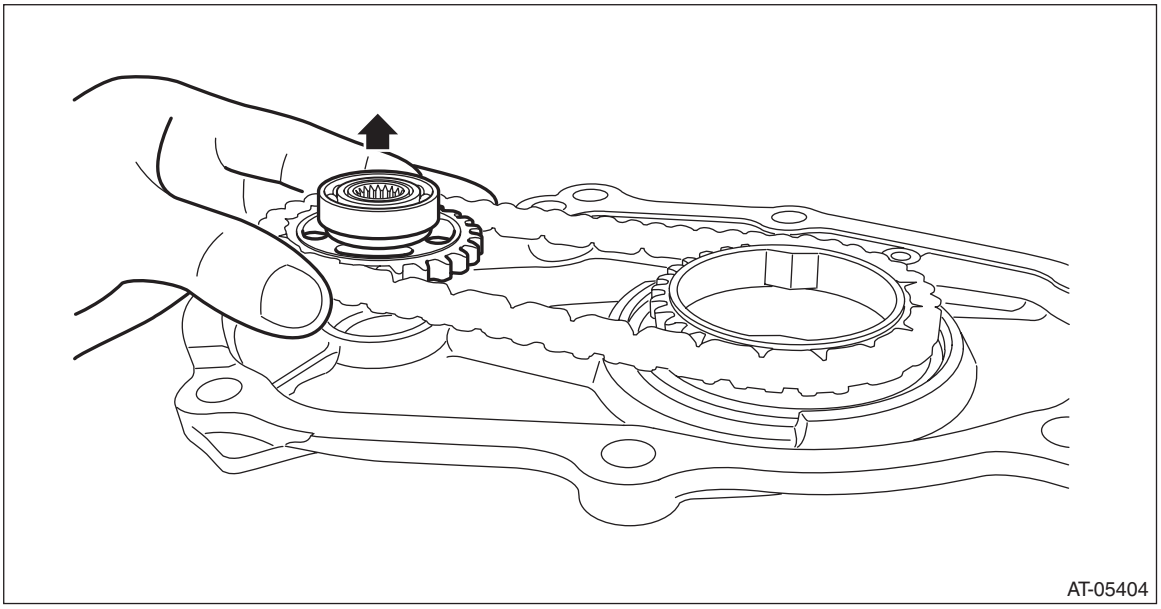

6) Remove the snap ring.

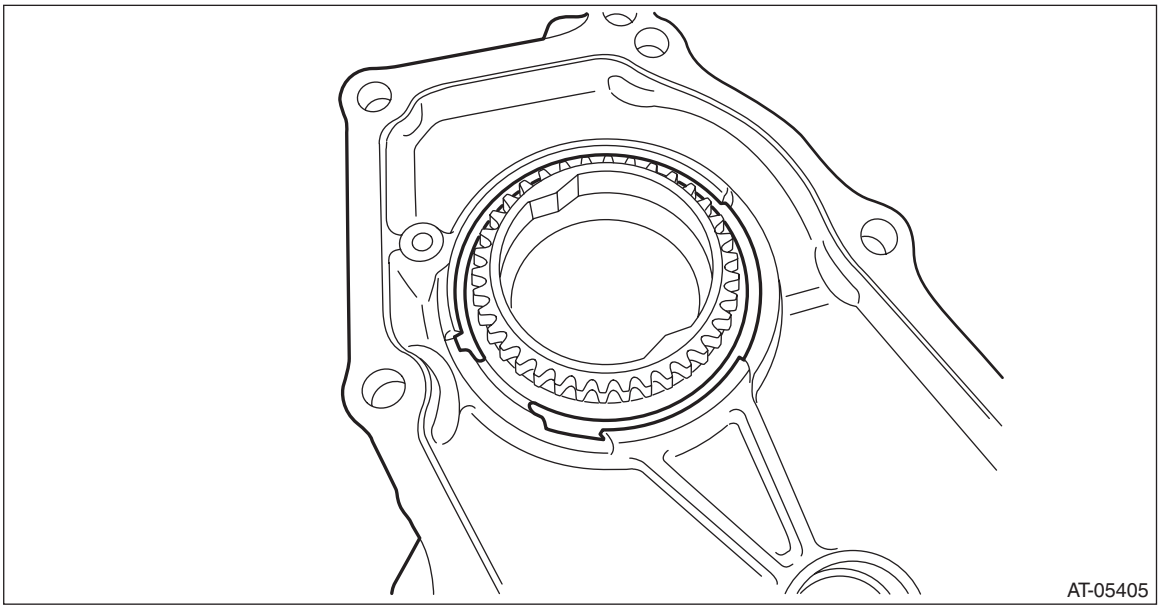

7) Remove the drive sprocket.

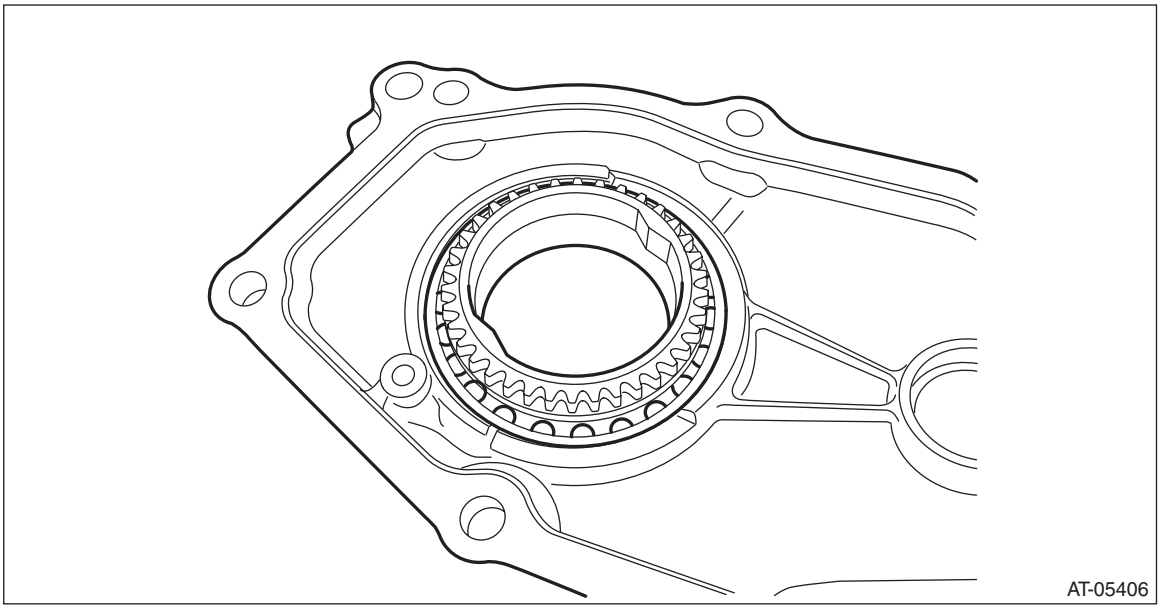

8) Remove the oil seal from the oil pump chain cover.

B: INSTALLATION

1) Clean the mating surface of oil pump chain cover and converter case cover.
2) Using the ST, install the oil seal.
ST 499755602 PRESS SNAP RING

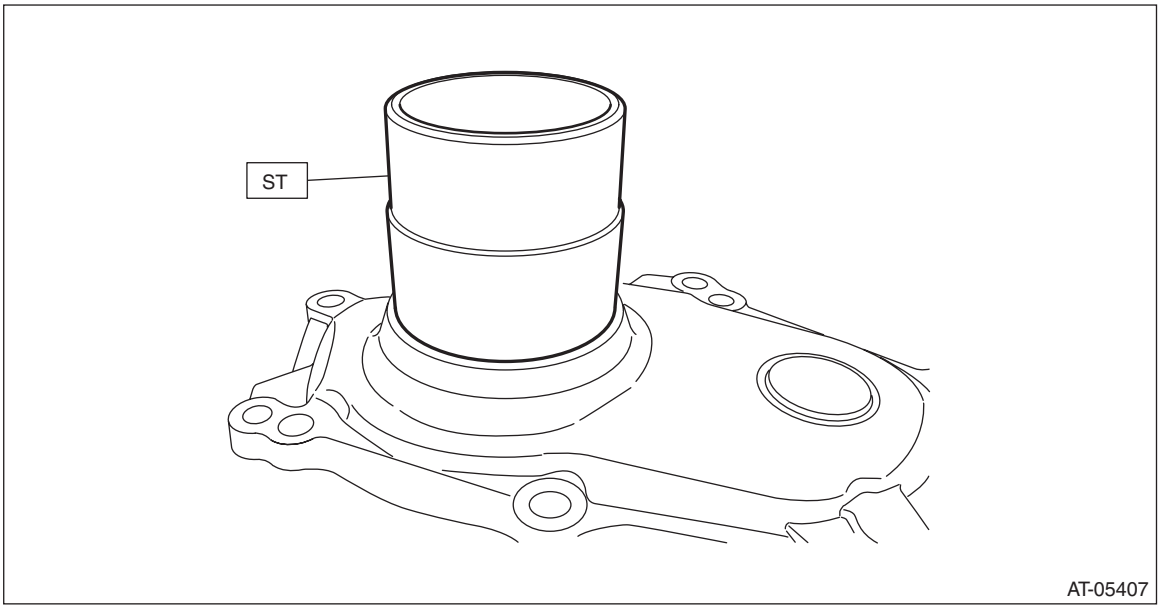

3) Install the drive sprocket and install the snap ring.

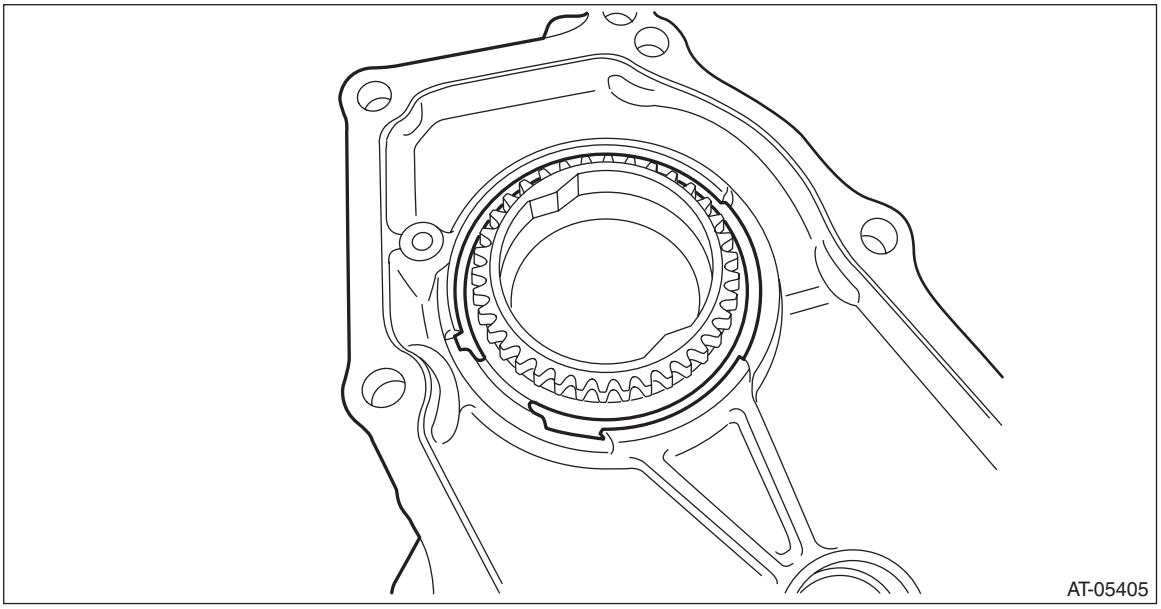

4) Place the oil pump chain on drive sprocket.

5) Place the oil pump chain on driven sprocket and install the driven sprocket to oil pump chain cover.

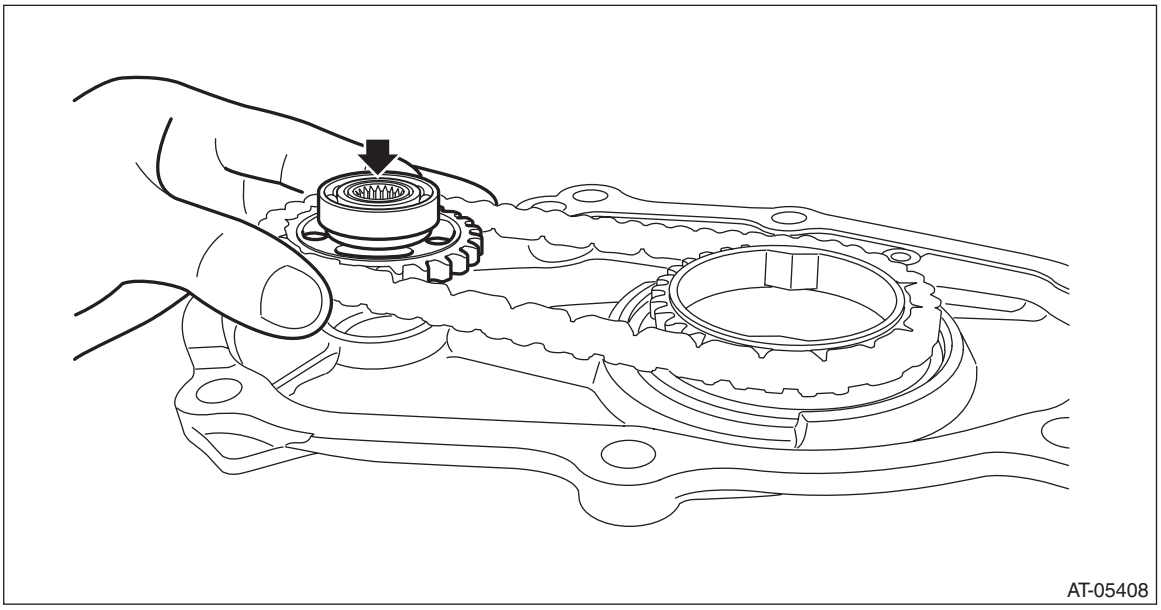

6) Install the seal ring to center support COMPL.

NOTE:
- Use new seal rings.
- Apply CVTF to the seal rings.

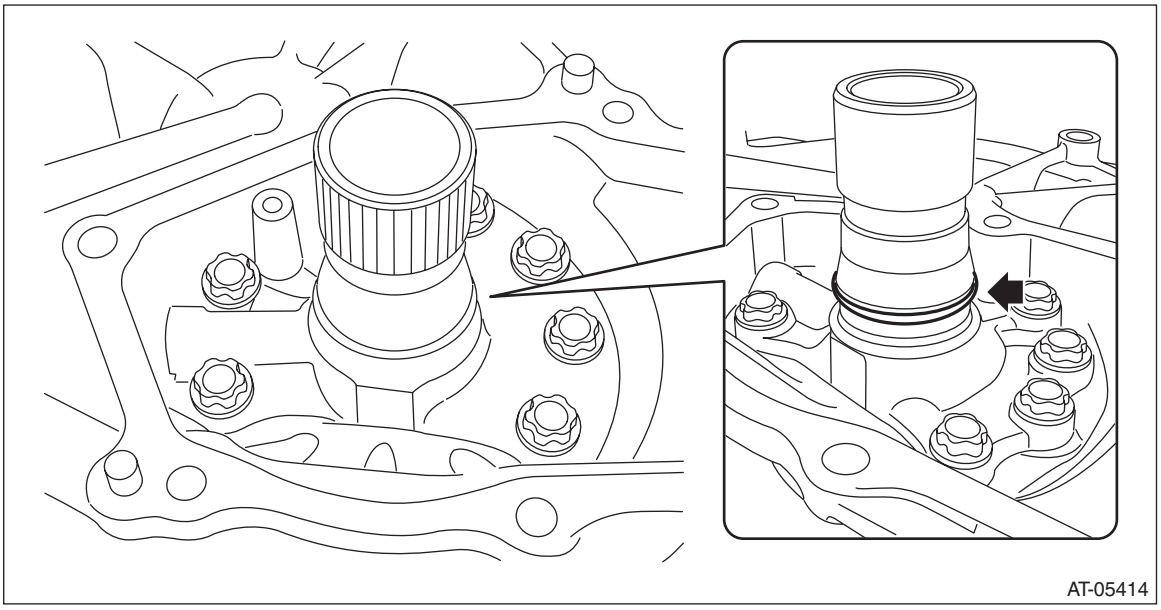

7) Apply liquid gasket seamlessly to the mating surface of oil pump chain cover.

CAUTION:
Do not apply liquid gasket at the arrowed hole.

Liquid gasket:
THREE BOND 1215B or equivalent

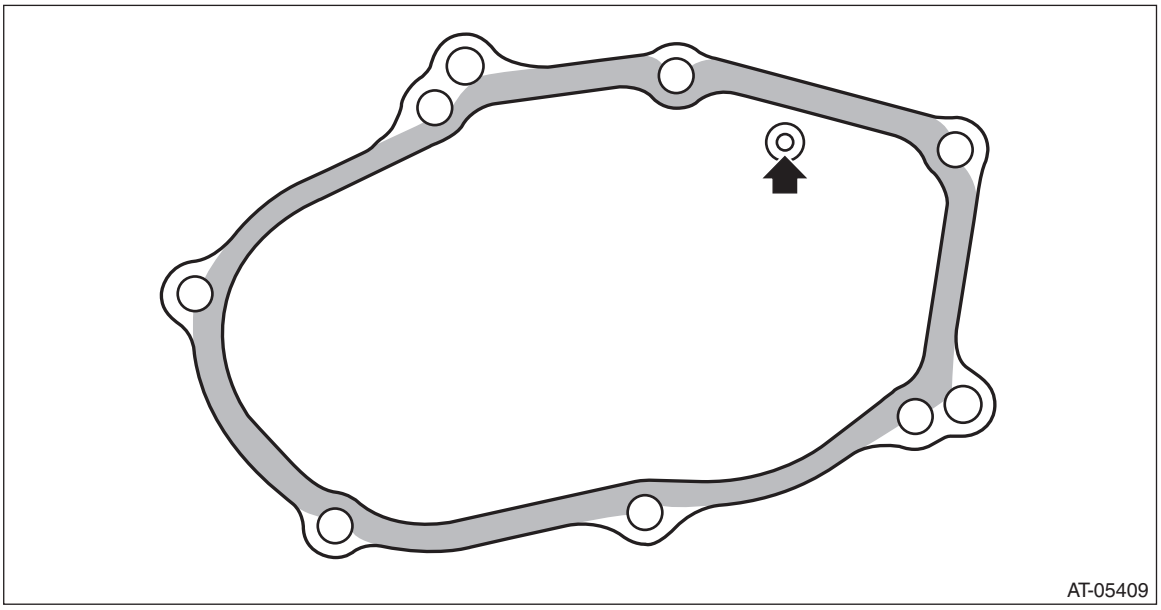

8) Install the oil pump chain cover.

NOTE:
There are two types of bolt.

Tightening torque:
24 N·m (2.4 kgf-m, 17.7 ft-lb)

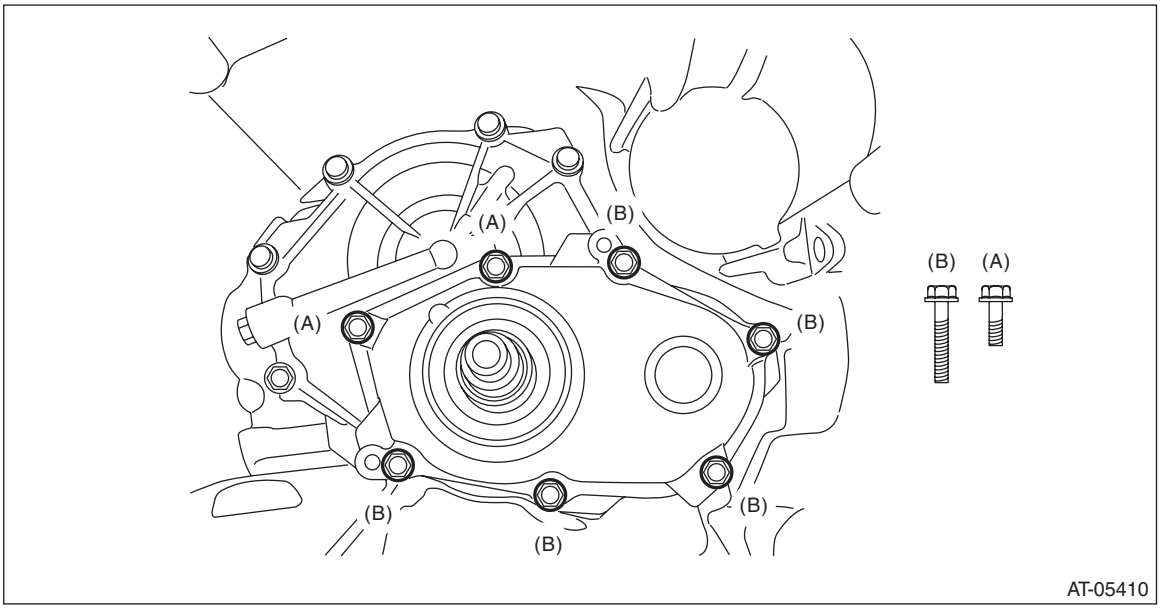

9) Install the torque converter assembly. <Ref. to CVT(TR690)-141, INSTALLATION, Torque Converter Assembly.>
10) Install the transmission assembly to the vehicle. <Ref. to CVT(TR690)-70, INSTALLATION, Automatic Transmission Assembly.>

C: DISASSEMBLY

1. DRIVE SPROCKET

1) Remove the ball bearing using ST.
ST1 498077600 REMOVER
ST2 399513600 INSTALLER

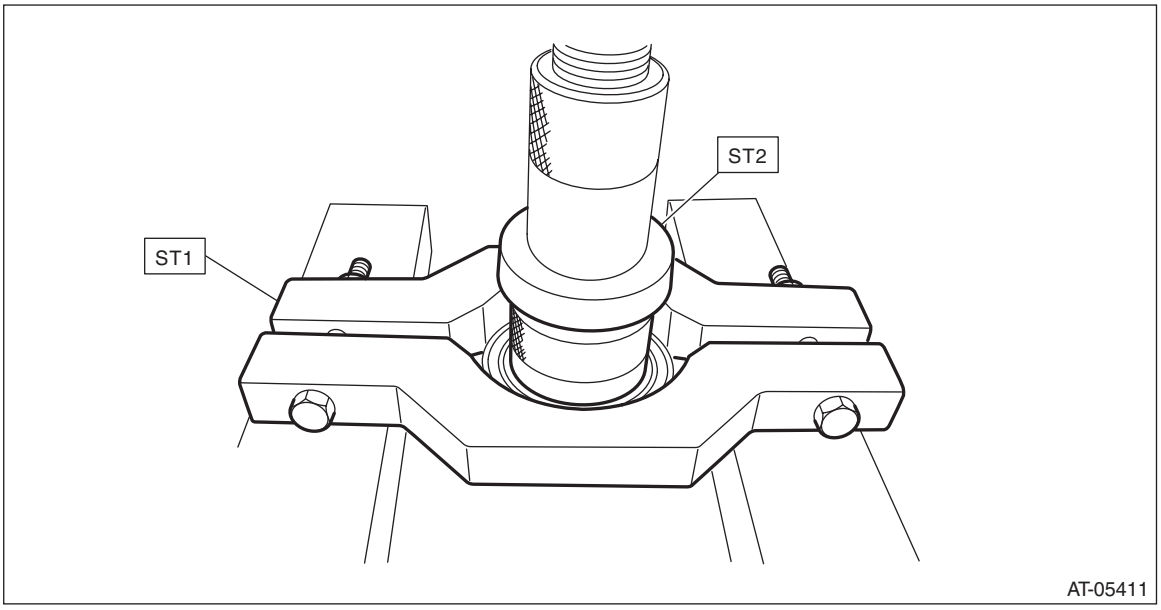

D: ASSEMBLY

1. DRIVE SPROCKET

1) Using the ST, install the ball bearing.

NOTE:
Use a new ball bearing.
ST 499755602 PRESS SNAP RING

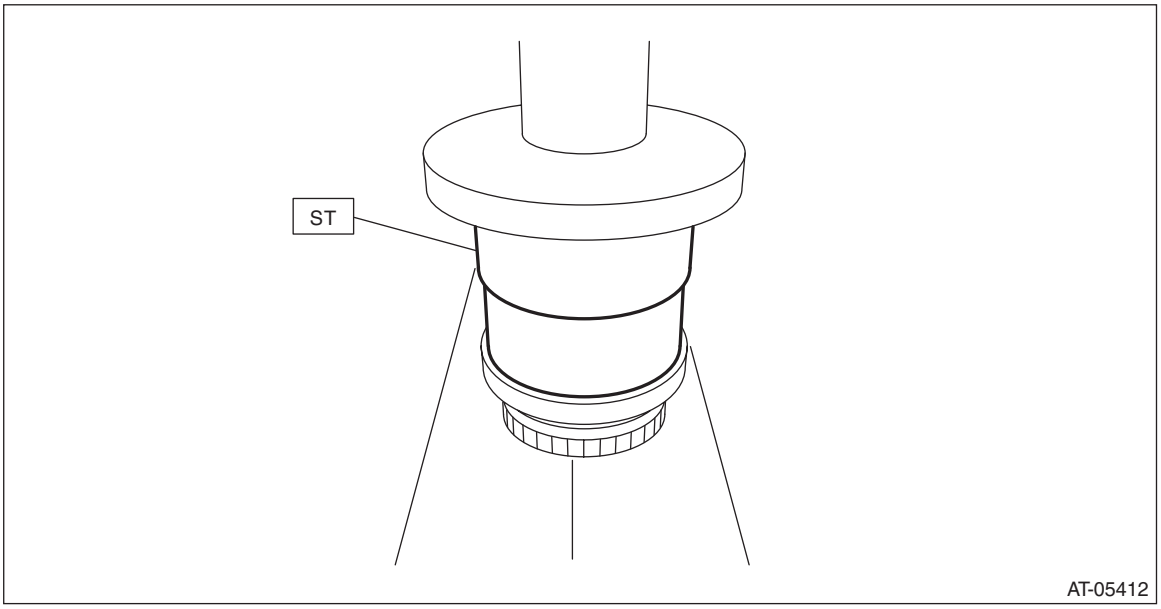

E: INSPECTION

- Check the oil pump chain for damage.
- Replace if gear teeth are broken, damaged, sharpen or excessively worn.
- Check the bearing for seizure or wear.
- Apply CVTF to bearing and rotate the bearing to check for noise or dragging etc.
- Check the oil pump chain cover for damage.
- Check for leakage of CVTF from the mating surface of oil pump chain cover.
- Check the oil seal for damage.

47.Converter Case Cover

A: REMOVAL

1) Remove the transmission assembly from the vehicle. <Ref. to CVT(TR690)-57, REMOVAL, Automatic Transmission Assembly.>
2) Remove the air breather hose. <Ref. to CVT(TR690)-136, REMOVAL, Air Breather Hose.>
3) Remove the oil pan and control valve body. <Ref. to CVT(TR690)-113, REMOVAL, Control Valve Body.>
4) Remove the transmission harness. <Ref. to CVT(TR690)-123, REMOVAL, Transmission Harness.>
5) Remove the extension case. <Ref. to CVT(TR690)-143, REMOVAL, Extension Case.>
6) Remove the rear drive shaft. <Ref. to CVT(TR690)-147, REMOVAL, Rear Drive Shaft.>
7) Remove the transfer clutch assembly. <Ref. to CVT(TR690)-152, REMOVAL, Transfer Clutch.>
8) Remove the center differential carrier. <Ref. to CVT(TR690)-155, REMOVAL, Center Differential Carrier.>
9) Remove the transfer reduction driven gear assembly. <Ref. to CVT(TR690)-159, REMOVAL, Transfer Reduction Driven Gear.>
10) Remove the intermediate case. <Ref. to CVT(TR690)-166, REMOVAL, Intermediate Case.>
11) Remove the forward clutch assembly. <Ref. to CVT(TR690)-182, REMOVAL, Forward Clutch Assembly.>
12) Remove the transmission case. <Ref. to CVT(TR690)-214, REMOVAL, Transmission Case.>
13) Remove the primary pulley, secondary pulley and variator chain. <Ref. to CVT(TR690)-230, REMOVAL, Primary Pulley and Secondary Pulley.>
14) Remove the drive pinion shaft assembly. <Ref. to CVT(TR690)-246, REMOVAL, Drive Pinion Shaft Assembly.>
15) Remove the oil stopper plate and lubrication pipe.

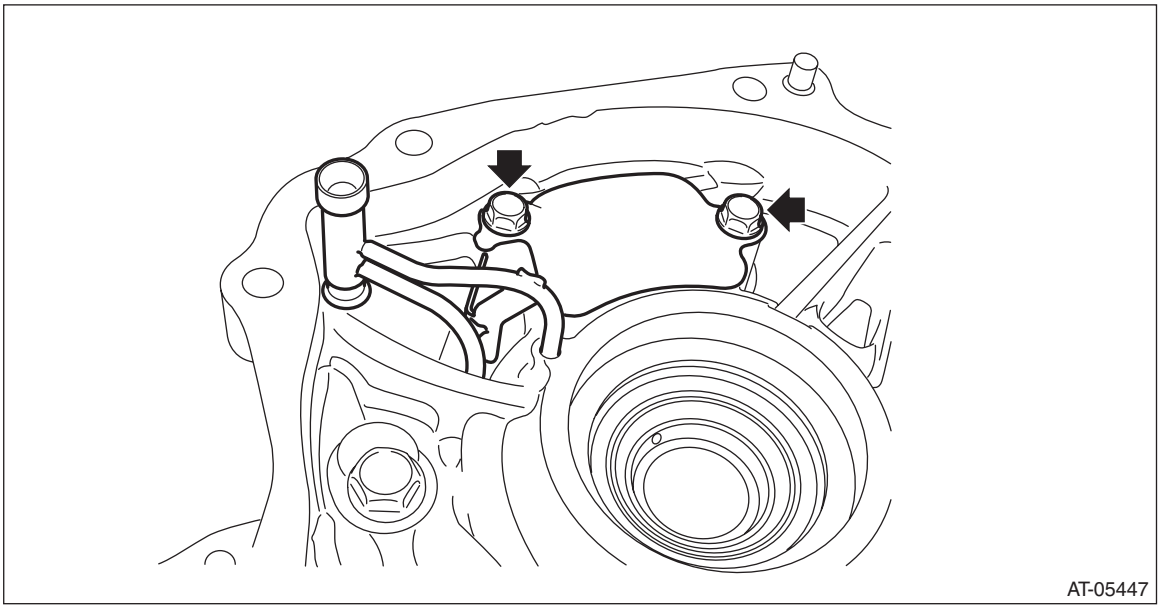

16) Flip over the converter case.
17) Remove the oil pump chain cover and the oil pump chain. <Ref. to CVT(TR690)-285, REMOVAL, Oil Pump Chain.>

18) Remove the converter case cover.

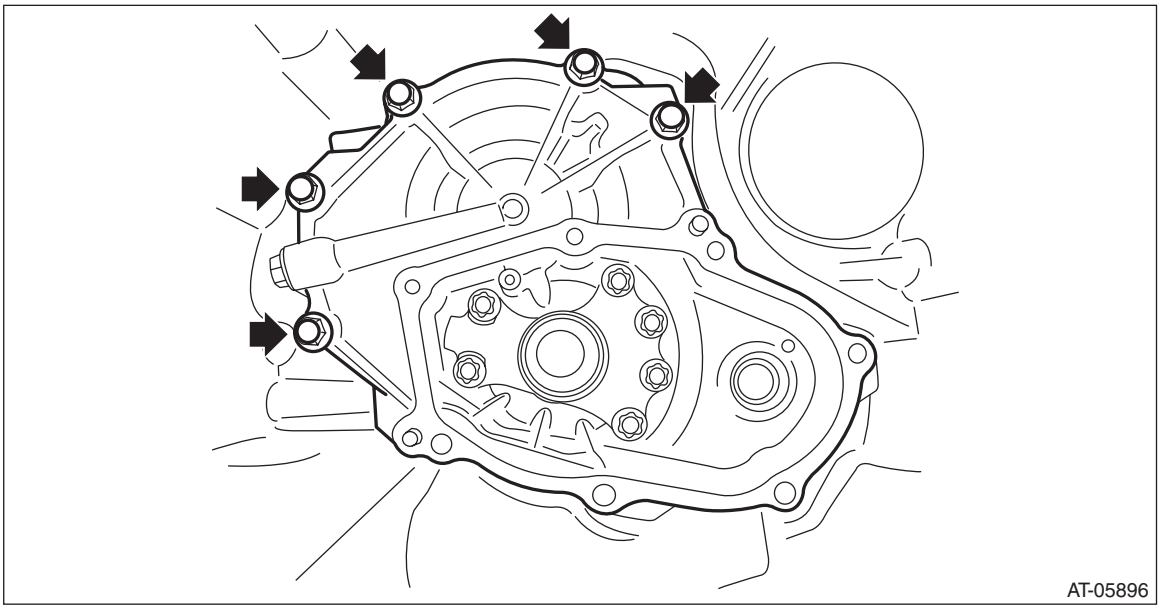

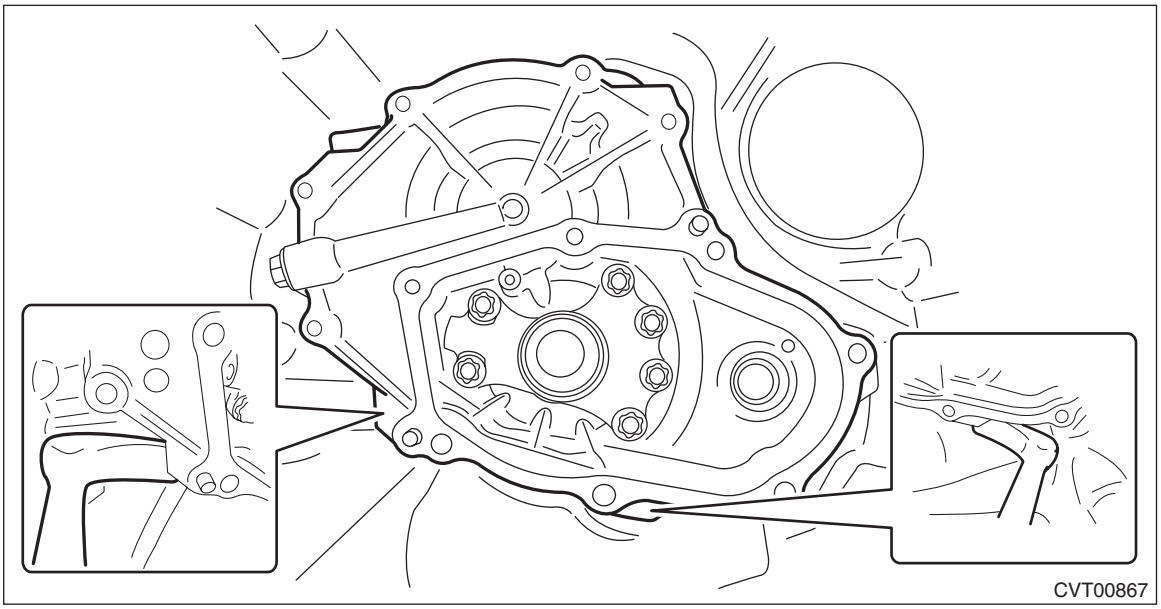

19) Remove the O-rings.

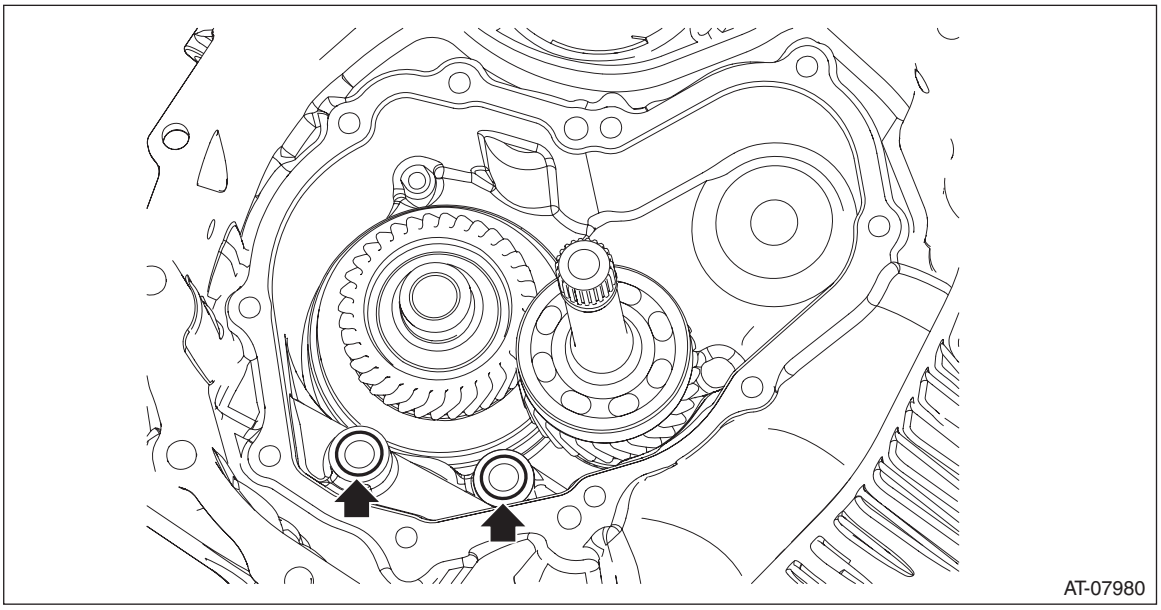

20) Remove the seal ring from converter case cover.

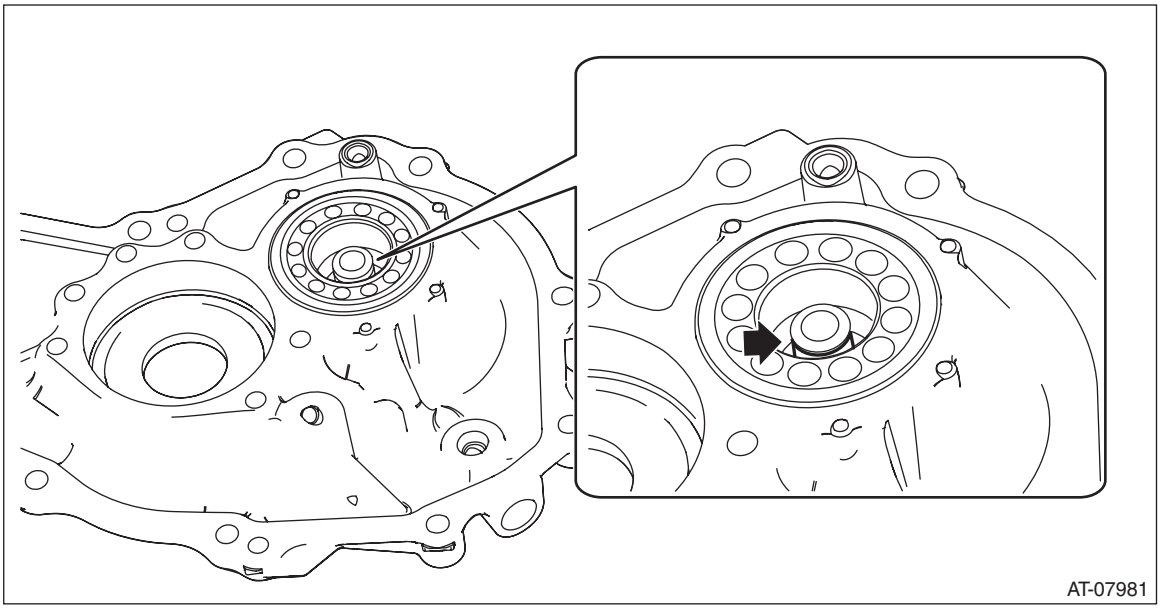

21) Using the ST, remove the ball bearing from the converter case cover.
(1) Remove the claw of ST1, and attach the claw of ST2.
ST1 398527700 PULLER ASSY
ST2 18760AA000 CLAW

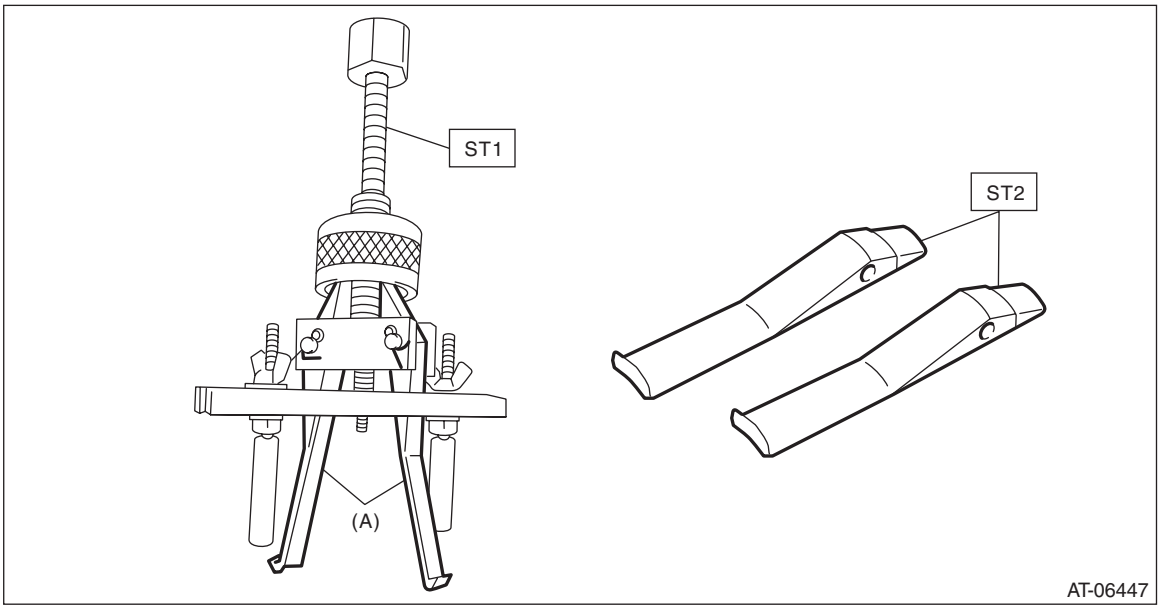

(A) Claw

(2) Using the ST, remove the ball bearing from the converter case cover.
ST1 398527700 PULLER ASSY
ST2 18760AA000 CLAW

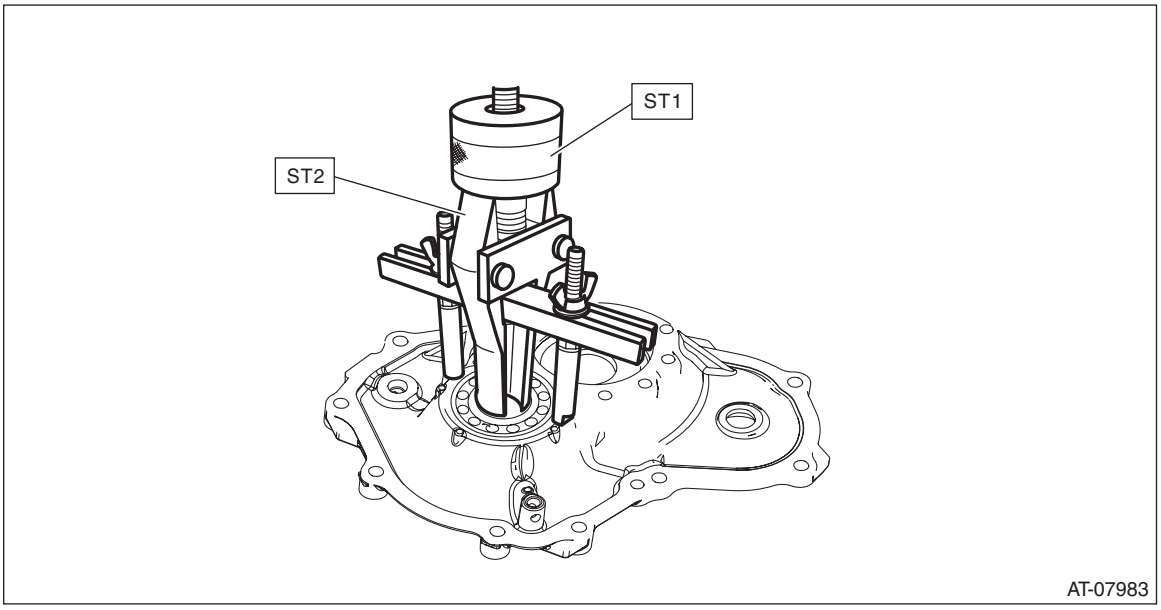

B: INSTALLATION

1) Clean the mating surface of converter case cover and converter case.
2) Adjust the shims of front reduction drive gear and front reduction driven gear. <Ref. to CVT(TR690)-309, ADJUSTMENT, Front Reduction Drive Gear.> <Ref. to CVT(TR690)-317, ADJUSTMENT, Front Reduction Driven Gear.>
3) Apply CVTF to the selected shims and install on the bearing catch surface of the front reduction driven gear.
4) Using the ST, install the ball bearing to the converter case cover.

NOTE:
Use a new ball bearing.
ST 499755602 PRESS SNAP RING

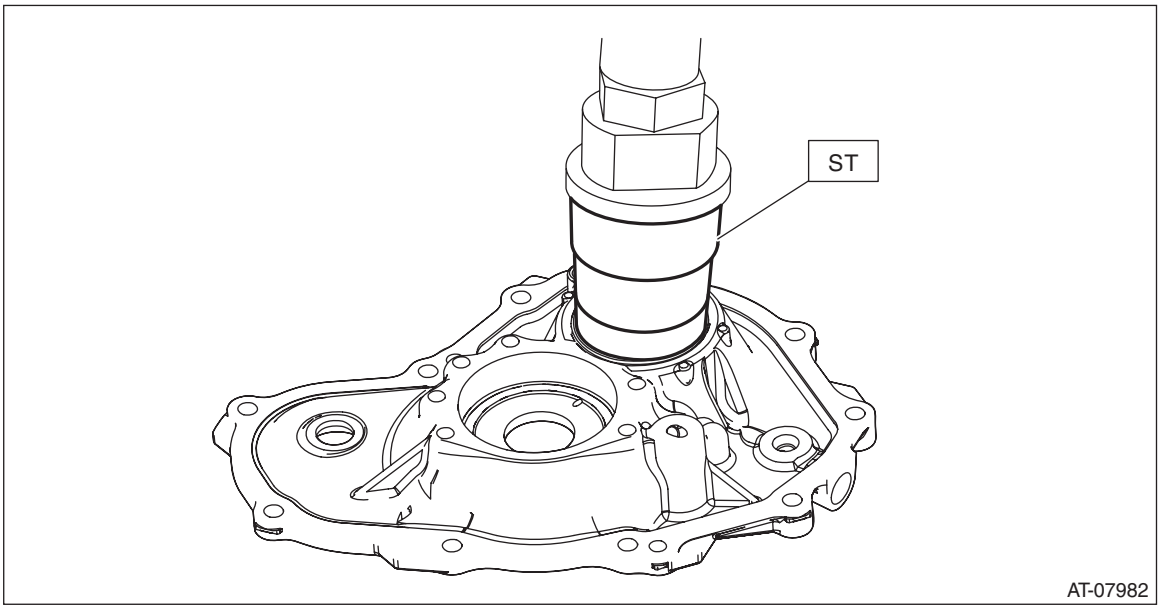

5) Install the O-rings.

NOTE:
- Use new O-rings.
- Apply CVTF to the O-rings.

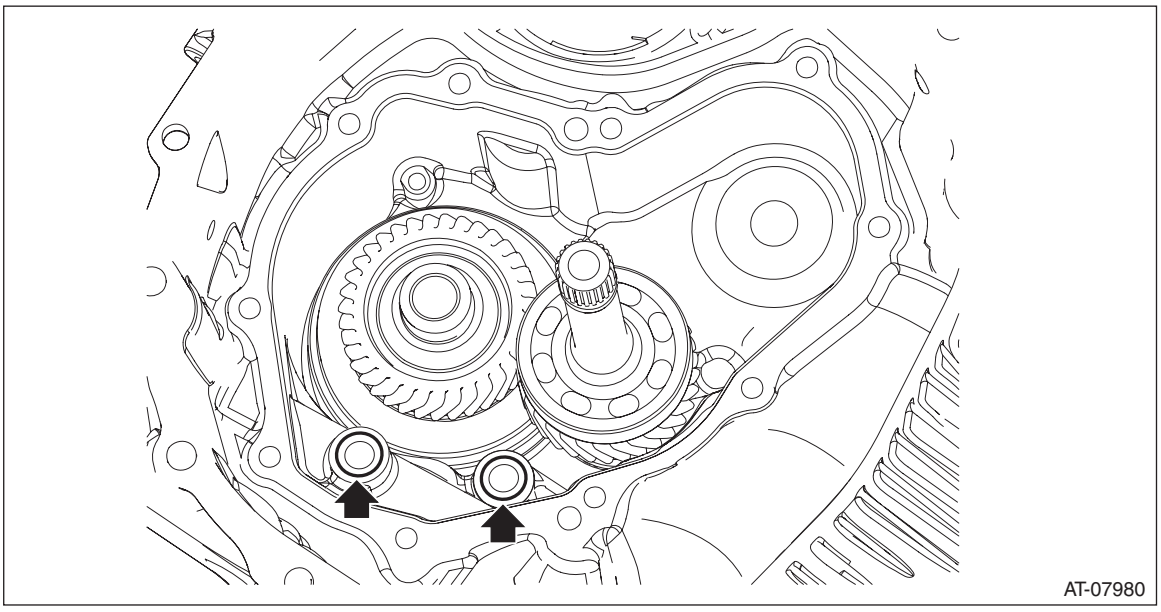

6) Apply CVTF to the selected shims and install on the bearing catch surface of the front reduction drive gear.

7) Install the seal ring to converter case cover.

NOTE:
- Use new seal rings.
- When installing the seal rings, do not expand the seal rings too much.

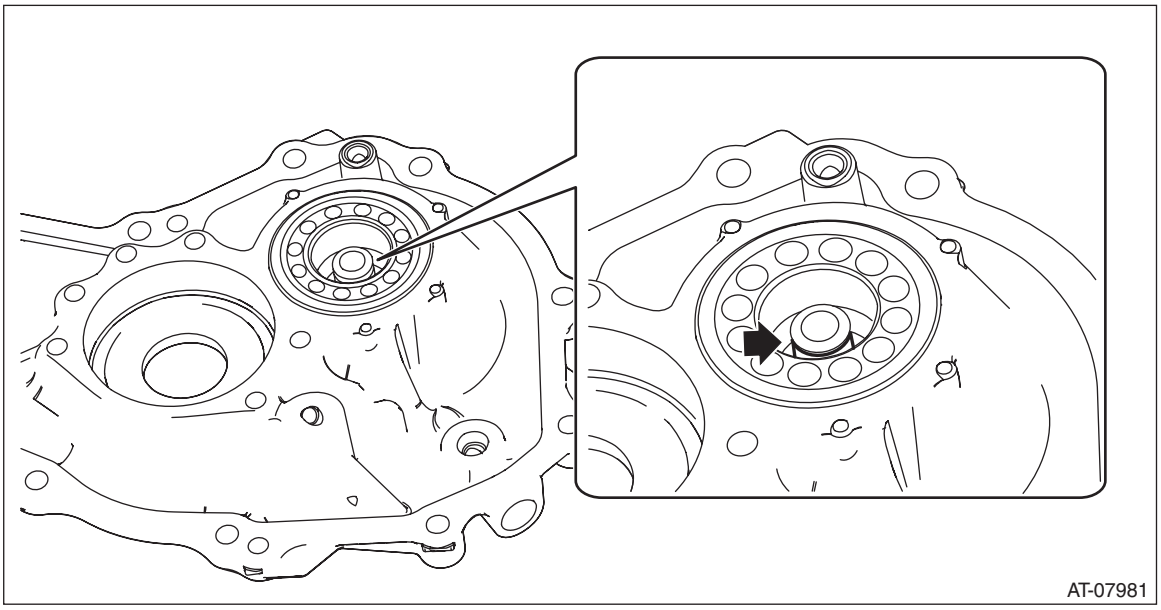

8) Apply liquid gasket seamlessly to the mating surface of converter case cover.

Liquid gasket:
THREE BOND 1215B or equivalent

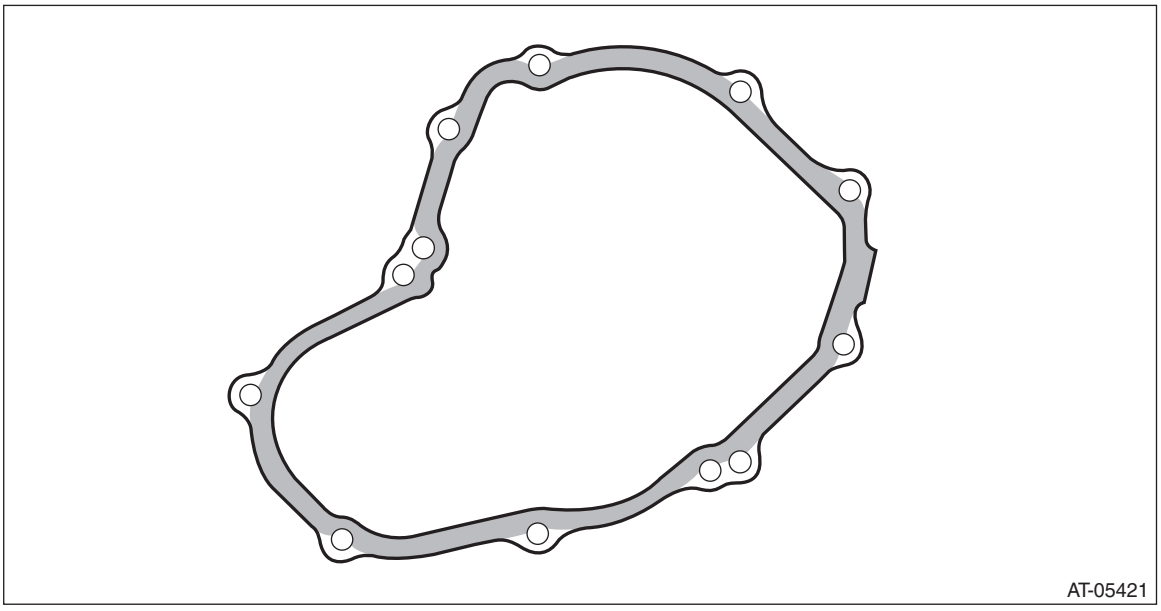

9) Install the converter case cover.

Tightening torque:
24 N·m (2.4 kgf-m, 17.7 ft-lb)

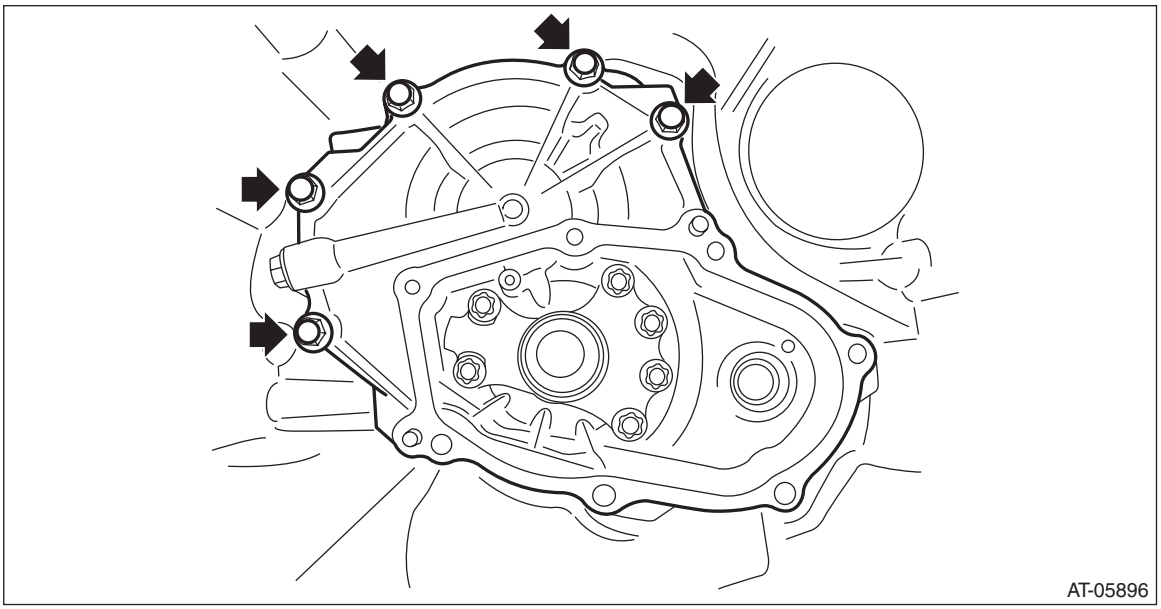

10) Install the oil pump chain cover and the oil pump chain. <Ref. to CVT(TR690)-288, INSTALLATION, Oil Pump Chain.>
11) Flip over the converter case cover.
12) Install the oil stopper plate and lubrication pipe.

Tightening torque:
9 N·m (0.9 kgf-m, 6.6 ft-lb)

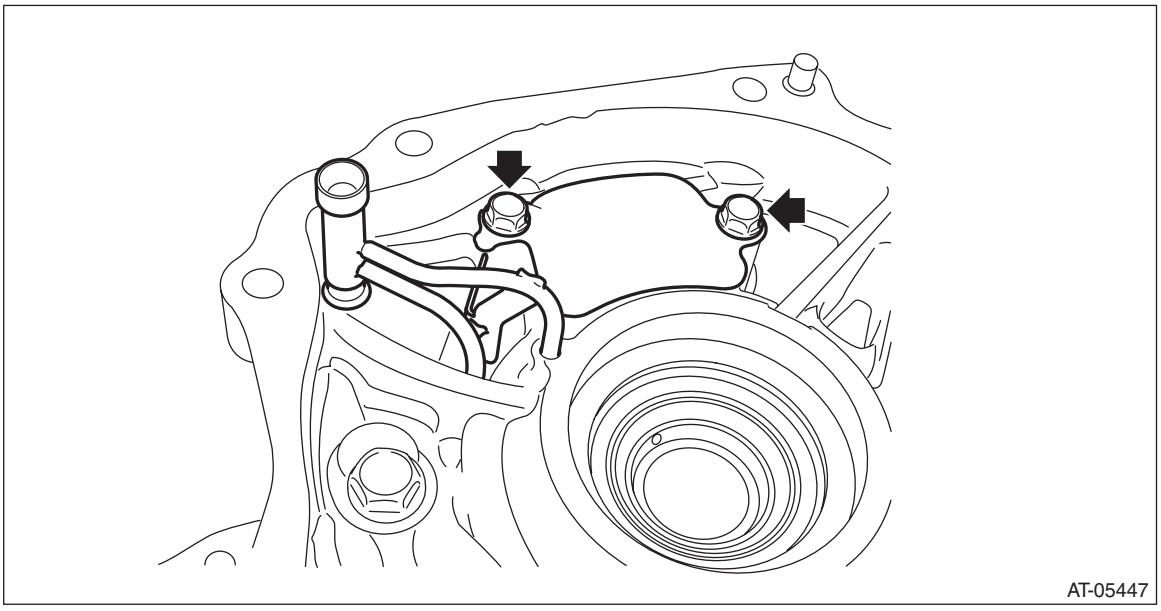

13) Install the drive pinion shaft assembly. <Ref. to CVT(TR690)-248, INSTALLATION, Drive Pinion Shaft Assembly.>
14) Install the primary pulley, secondary pulley and variator chain. <Ref. to CVT(TR690)-234, INSTALLATION, Primary Pulley and Secondary Pulley.>
15) Install the transmission case. <Ref. to CVT(TR690)-216, INSTALLATION, Transmission Case.>
16) Install the forward clutch assembly. <Ref. to CVT(TR690)-183, INSTALLATION, Forward Clutch Assembly.>
17) Install the intermediate case. <Ref. to CVT(TR690)-167, INSTALLATION, Intermediate Case.>

18) Install the transfer reduction driven gear assembly. <Ref. to CVT(TR690)-159, INSTALLATION, Transfer Reduction Driven Gear.>
19) Install the center differential carrier. <Ref. to CVT(TR690)-156, INSTALLATION, Center Differential Carrier.>
20) Install the transfer clutch assembly. <Ref. to CVT(TR690)-152, INSTALLATION, Transfer Clutch.>
21) Install the rear drive shaft. <Ref. to CVT(TR690)-147, INSTALLATION, Rear Drive Shaft.>
22) Install the extension case. <Ref. to CVT(TR690)-144, INSTALLATION, Extension Case.>
23) Install the transmission harness. <Ref. to CVT(TR690)-125, INSTALLATION, Transmission Harness.>
24) Install the control valve body and oil pan. <Ref. to CVT(TR690)-117, INSTALLATION, Control Valve Body.>
25) Install the air breather hose. <Ref. to CVT(TR690)-136, INSTALLATION, Air Breather Hose.>
26) Install the transmission assembly to the vehicle. <Ref. to CVT(TR690)-70, INSTALLATION, Automatic Transmission Assembly.>

C: DISASSEMBLY

1) Using ST, remove the center support COMPL.
ST 18270KA010 SOCKET (E16)

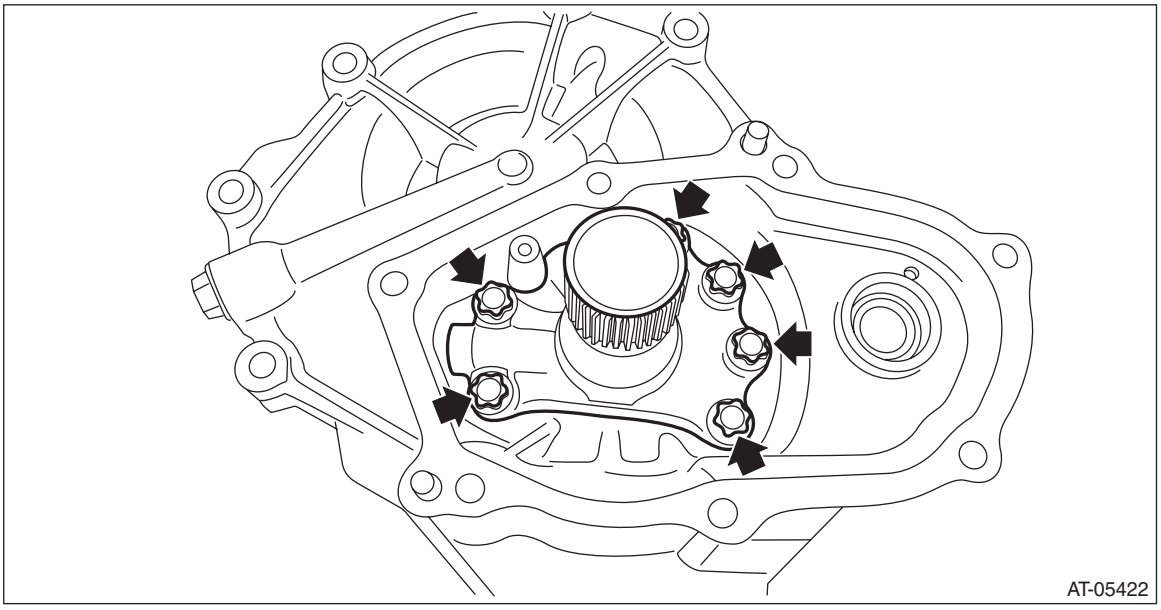

2) Remove the plug and O-ring.

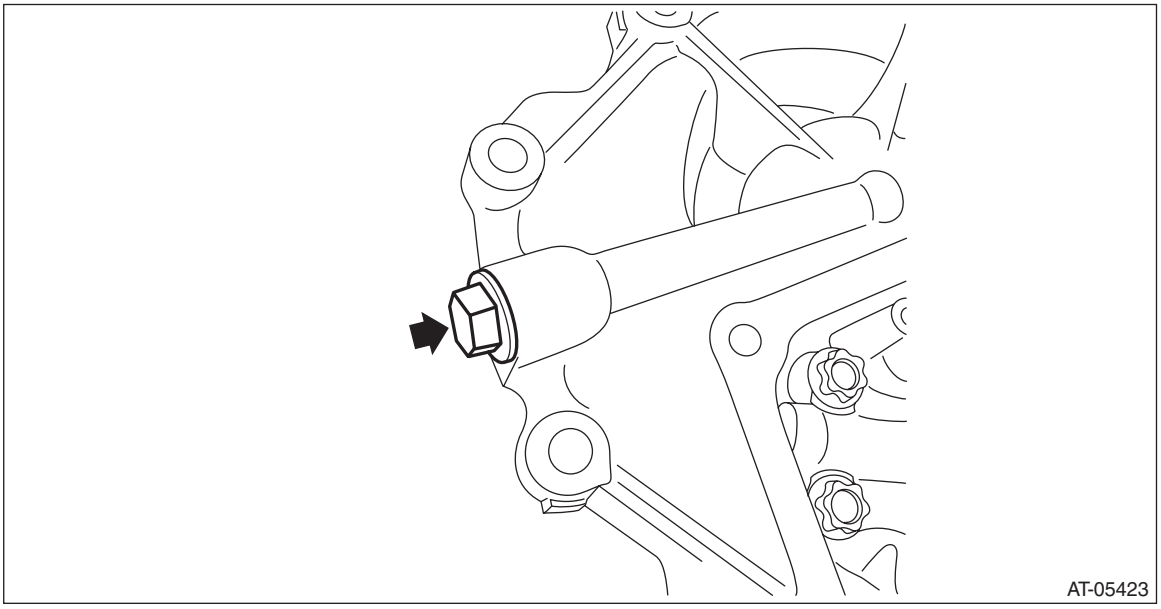

D: ASSEMBLY

1) Install the plugs.

NOTE:
- Use new O-rings.
- Apply CVTF to the O-ring.

Tightening torque:
25 N·m (2.5 kgf-m, 18.4 ft-lb)

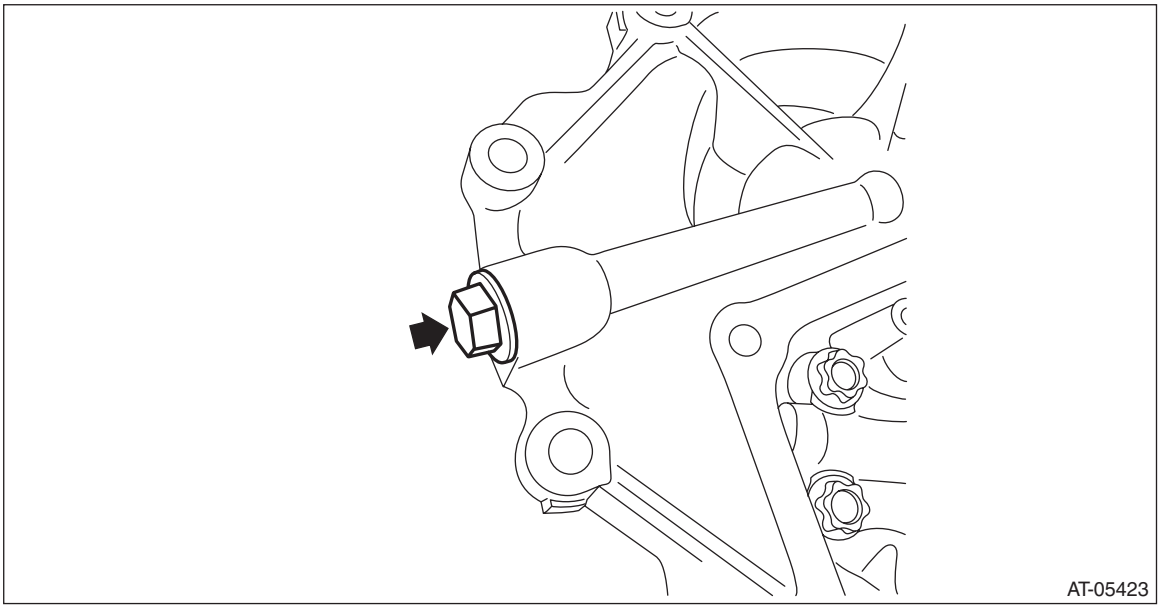

2) Using ST, install the center support COMPL.
ST 18270KA010 SOCKET (E16)

Tightening torque:
21.5 N·m (2.2 kgf-m, 15.9 ft-lb)

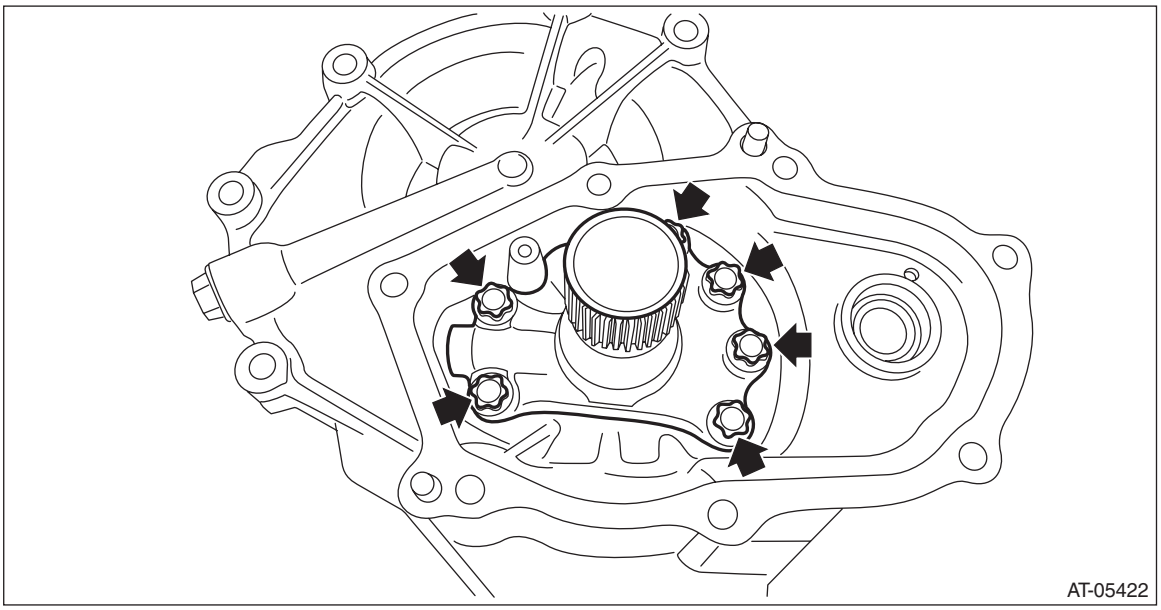

E: INSPECTION

- Check for leakage of CVTF from the connection between converter case and converter case cover.
- Check there is no damage or cracks on the converter case cover.

F: ADJUSTMENT

When replacing the converter case cover, select the following shims.

- Select the shim for front reduction drive gear. <Ref. to CVT(TR690)-309, ADJUSTMENT, Front Reduction Drive Gear.>
- Select the shim for front reduction driven gear. <Ref. to CVT(TR690)-317, ADJUSTMENT, Front Reduction Driven Gear.>

48.Front Reduction Drive Gear

A: REMOVAL

1) Remove the transmission assembly from the vehicle. <Ref. to CVT(TR690)-57, REMOVAL, Automatic Transmission Assembly.>
2) Remove the air breather hose. <Ref. to CVT(TR690)-136, REMOVAL, Air Breather Hose.>
3) Remove the oil pan and control valve body. <Ref. to CVT(TR690)-113, REMOVAL, Control Valve Body.>
4) Remove the transmission harness. <Ref. to CVT(TR690)-123, REMOVAL, Transmission Harness.>
5) Remove the primary speed sensor. <Ref. to CVT(TR690)-103, REMOVAL, Primary Speed Sensor.>
6) Remove the extension case. <Ref. to CVT(TR690)-143, REMOVAL, Extension Case.>
7) Remove the rear drive shaft. <Ref. to CVT(TR690)-147, REMOVAL, Rear Drive Shaft.>
8) Remove the transfer clutch assembly. <Ref. to CVT(TR690)-152, REMOVAL, Transfer Clutch.>
9) Remove the center differential carrier. <Ref. to CVT(TR690)-155, REMOVAL, Center Differential Carrier.>
10) Remove the transfer reduction driven gear assembly. <Ref. to CVT(TR690)-159, REMOVAL, Transfer Reduction Driven Gear.>
11) Remove the intermediate case. <Ref. to CVT(TR690)-166, REMOVAL, Intermediate Case.>
12) Remove the forward clutch assembly. <Ref. to CVT(TR690)-182, REMOVAL, Forward Clutch Assembly.>
13) Remove the transmission case. <Ref. to CVT(TR690)-214, REMOVAL, Transmission Case.>
14) Remove the primary pulley, secondary pulley and variator chain. <Ref. to CVT(TR690)-230, REMOVAL, Primary Pulley and Secondary Pulley.>
15) Remove the drive pinion shaft assembly. <Ref. to CVT(TR690)-246, REMOVAL, Drive Pinion Shaft Assembly.>
16) Remove the oil pump chain cover and the oil pump chain. <Ref. to CVT(TR690)-285, REMOVAL, Oil Pump Chain.>
17) Remove the converter case cover. <Ref. to CVT(TR690)-293, REMOVAL, Converter Case Cover.>
18) Remove the front reduction drive gear and front reduction driven gear together.

NOTE:
Remove the front reduction driven shaft while holding it.

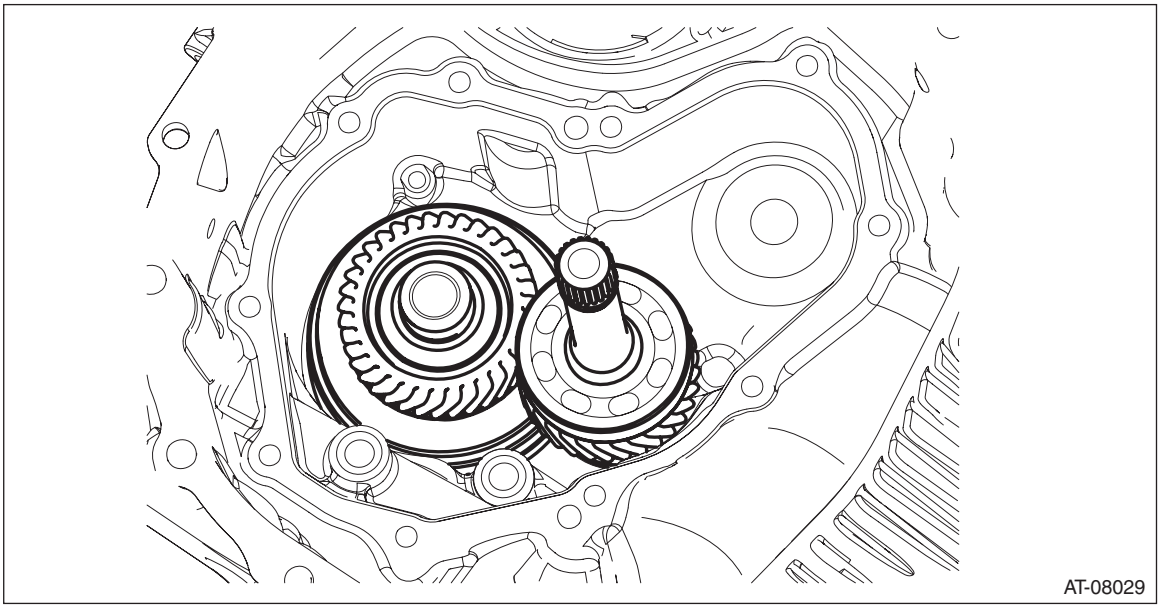

19) Remove the shims of the front reduction driven gear from the converter case.

20) Remove the seal rings.

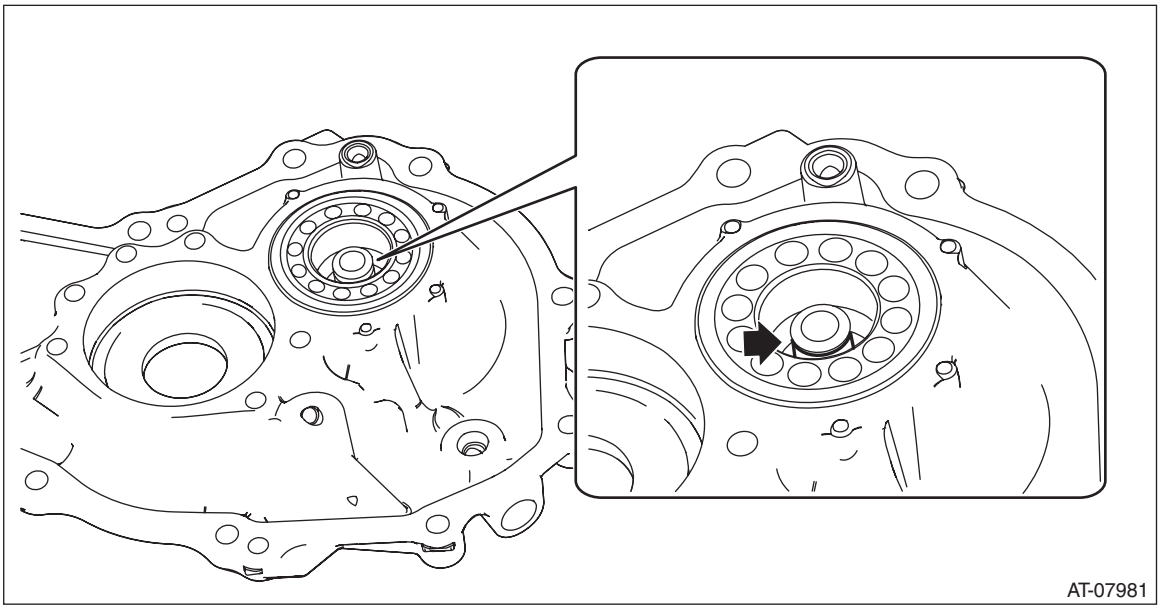

B: INSTALLATION

1) Clean the mating surface of converter case cover and converter case.
2) Select the shim for front reduction drive gear. <Ref. to CVT(TR690)-309, ADJUSTMENT, Front Reduction Drive Gear.>
3) Apply CVTF to the shims and install on the bearing catch surface of the front reduction drive gear.
4) Install the seal ring to converter case cover.

NOTE:
- Use new seal rings.
- When installing the seal rings, do not expand the seal rings too much.

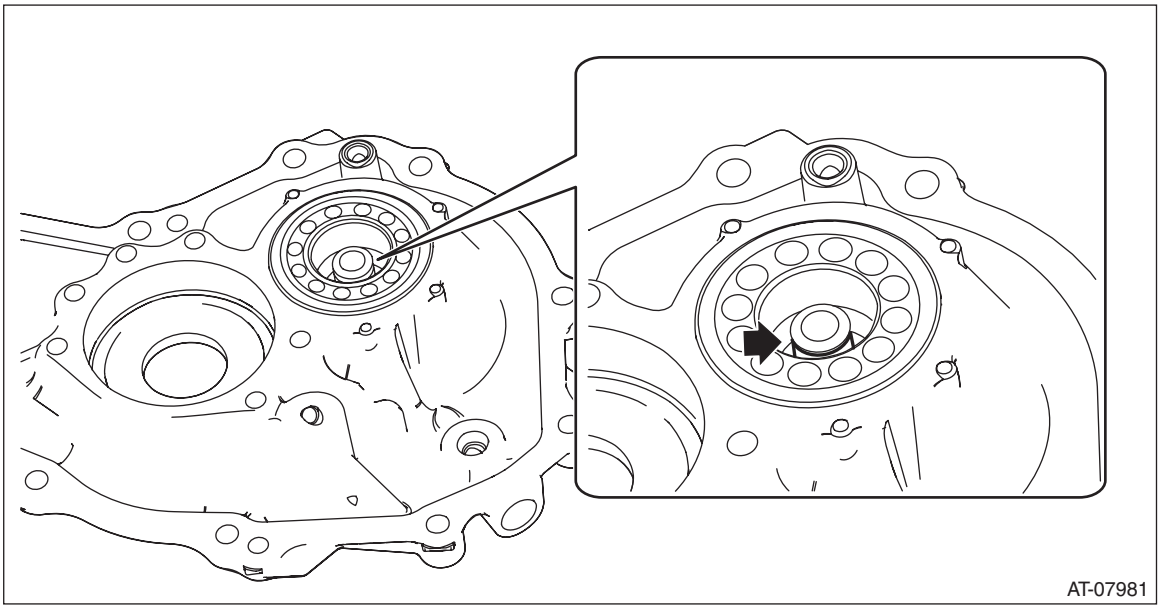

5) Install the front reduction drive gear and front reduction driven gear together.

CAUTION:
Be careful not to detach the spline of input clutch and the spline of front reduction driven shaft.

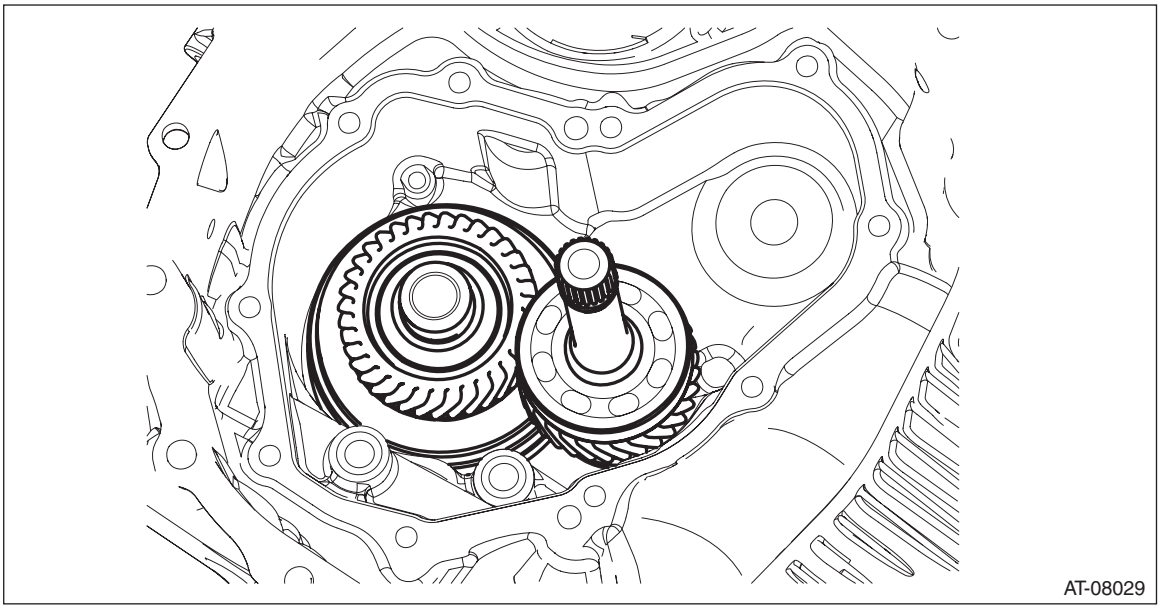

6) Install the converter case cover. <Ref. to CVT(TR690)-297, INSTALLATION, Converter Case Cover.>
7) Install the oil pump chain cover and the oil pump chain. <Ref. to CVT(TR690)-288, INSTALLATION, Oil Pump Chain.>
8) Install the drive pinion shaft assembly. <Ref. to CVT(TR690)-248, INSTALLATION, Drive Pinion Shaft Assembly.>
9) Install the primary pulley, secondary pulley and variator chain. <Ref. to CVT(TR690)-234, INSTALLATION, Primary Pulley and Secondary Pulley.>
10) Install the transmission case. <Ref. to CVT(TR690)-216, INSTALLATION, Transmission Case.>
11) Install the forward clutch assembly. <Ref. to CVT(TR690)-183, INSTALLATION, Forward Clutch Assembly.>
12) Install the intermediate case. <Ref. to CVT(TR690)-167, INSTALLATION, Intermediate Case.>
13) Install the transfer reduction driven gear assembly. <Ref. to CVT(TR690)-159, INSTALLATION, Transfer Reduction Driven Gear.>
14) Install the center differential carrier. <Ref. to CVT(TR690)-156, INSTALLATION, Center Differential Carrier.>
15) Install the transfer clutch assembly. <Ref. to CVT(TR690)-152, INSTALLATION, Transfer Clutch.>
16) Install the rear drive shaft. <Ref. to CVT(TR690)-147, INSTALLATION, Rear Drive Shaft.>
17) Install the extension case. <Ref. to CVT(TR690)-144, INSTALLATION, Extension Case.>
18) Install the primary speed sensor. <Ref. to CVT(TR690)-104, INSTALLATION, Primary Speed Sensor.>
19) Install the transmission harness. <Ref. to CVT(TR690)-125, INSTALLATION, Transmission Harness.>
20) Install the control valve body and oil pan. <Ref. to CVT(TR690)-117, INSTALLATION, Control Valve Body.>
21) Install the air breather hose. <Ref. to CVT(TR690)-136, INSTALLATION, Air Breather Hose.>
22) Install the transmission assembly to the vehicle. <Ref. to CVT(TR690)-70, INSTALLATION, Automatic Transmission Assembly.>

C: DISASSEMBLY

1) Remove the seal ring and O-ring.

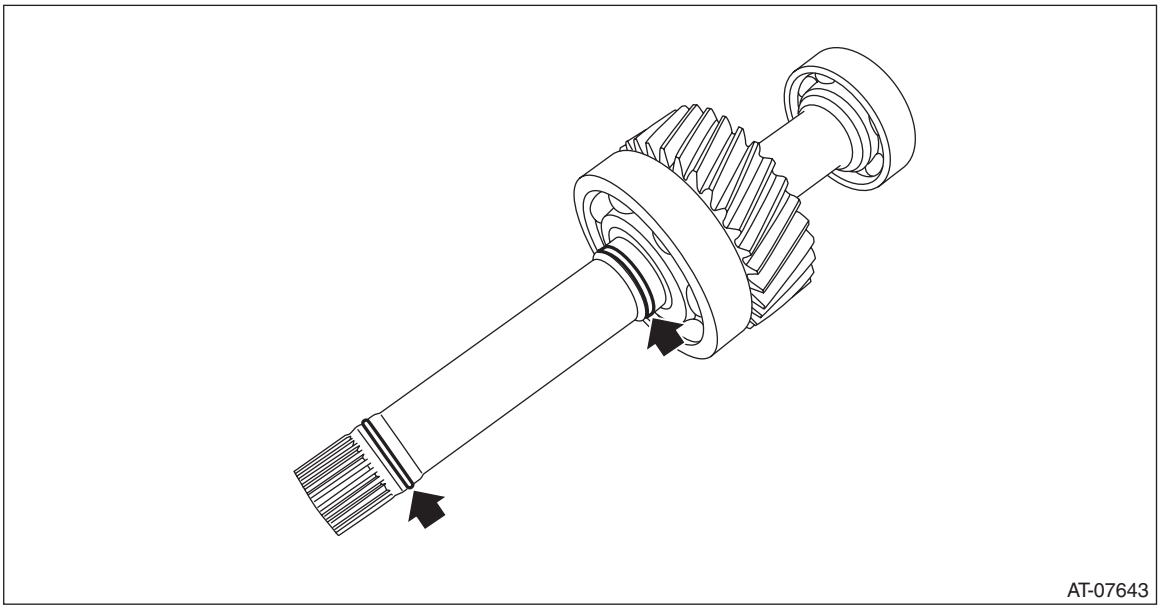

2) Using the ST, remove the ball bearing from front reduction drive gear.
ST 899864100 REMOVER

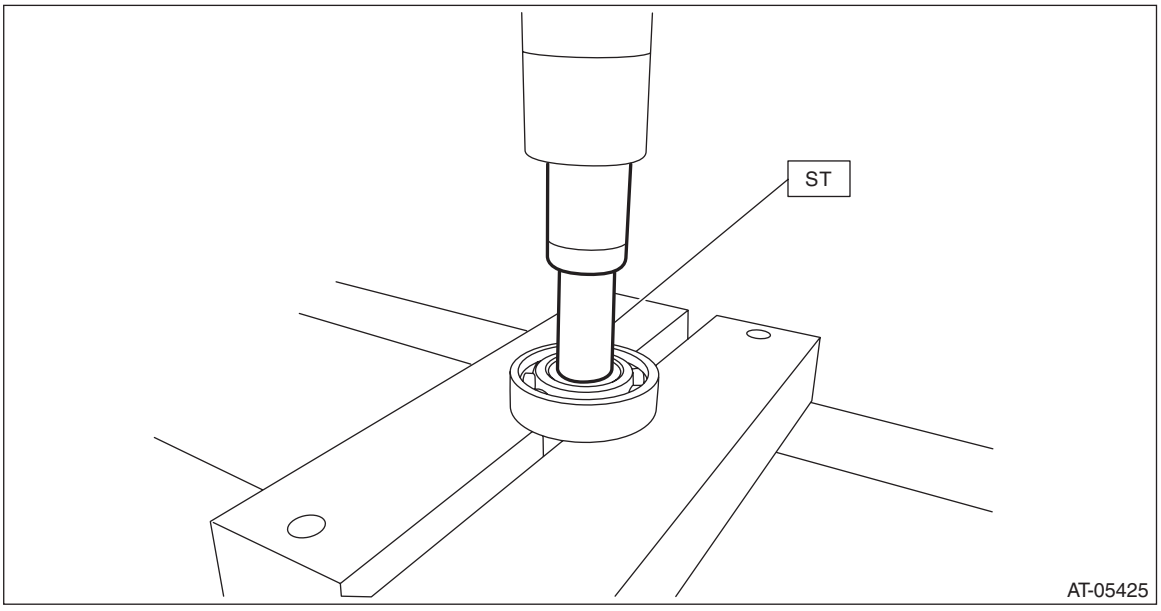

3) Using the ST, remove the ball bearing from front reduction drive gear.
ST 498077000 REMOVER

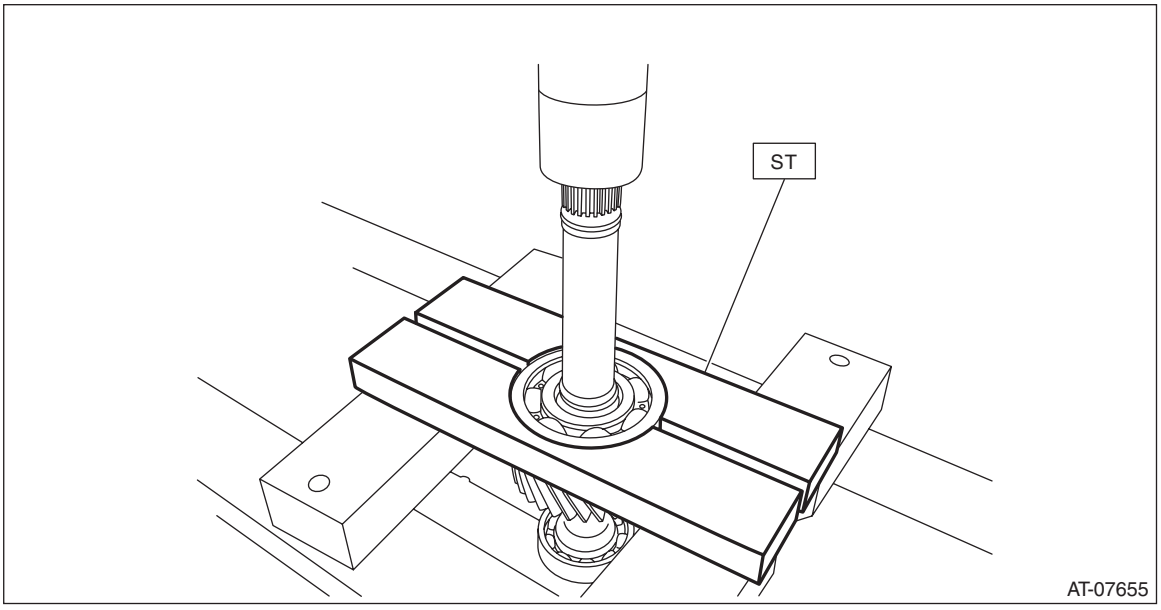

D: ASSEMBLY

1) Using the ST, install the ball bearing to front reduction drive gear.

NOTE:
Use a new ball bearing.
ST 18651AA000 INSTALLER

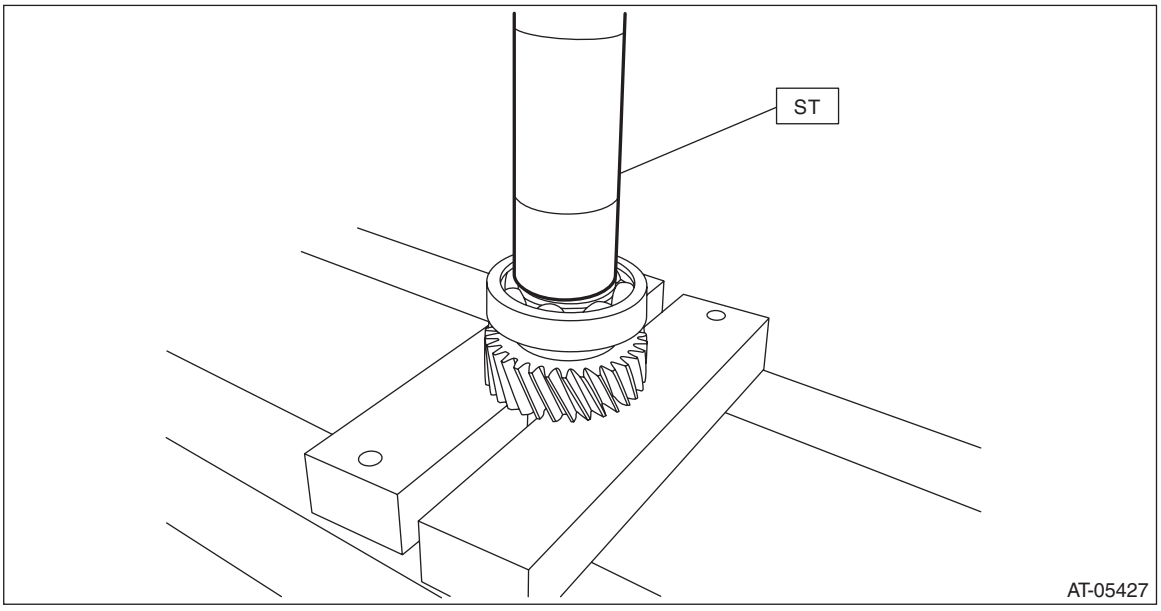

2) Using ST1 and ST2, install the ball bearing to front reduction drive gear.

NOTE:
Use a new ball bearing.
ST1 499757002 INSTALLER
ST2 398177700 INSTALLER

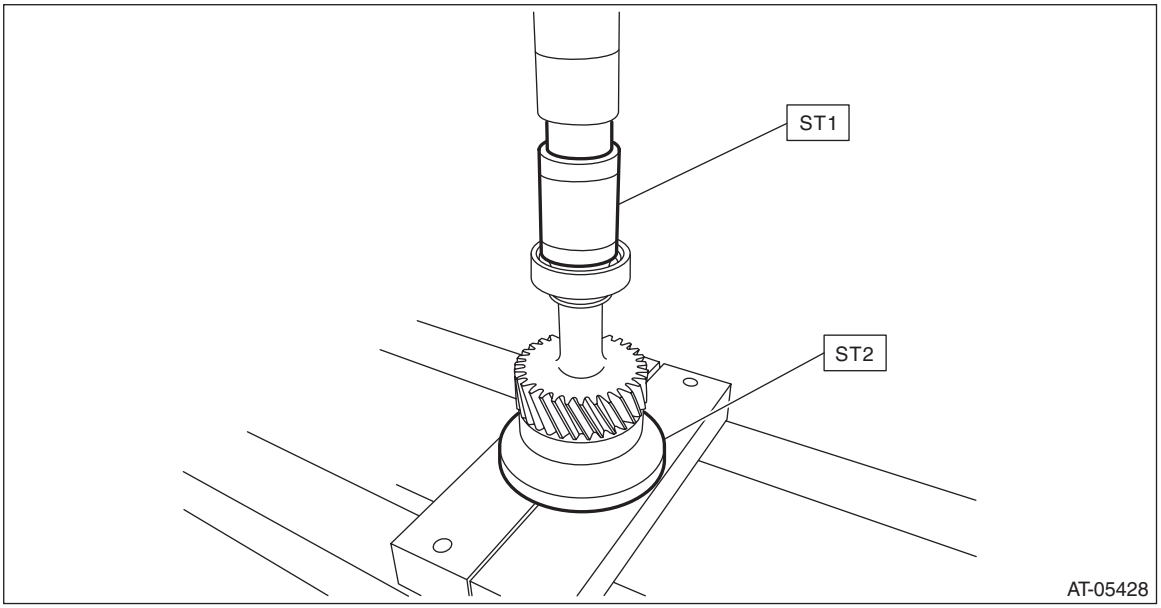

3) Install the seal rings.

NOTE:
- Use new seal rings.
- When installing the seal rings, do not expand the seal rings too much.
- Install the O-ring when installing the torque converter assembly.

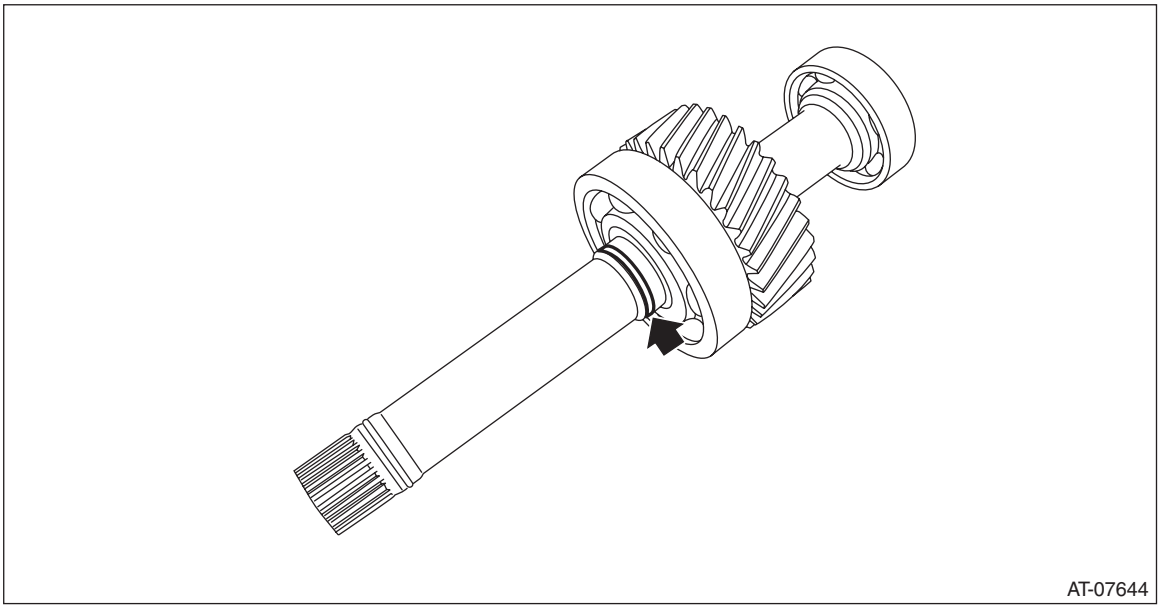

E: INSPECTION

- Replace if its tooth surfaces are broken, damaged or excessively worn.
- Check the bearing for seizure or wear.
- Apply CVTF to bearing and rotate the bearing to check for noise or dragging etc.

F: ADJUSTMENT

1) Measure height “A” from the ST upper face to the bearing end face using the ST.
ST 398643600 GAUGE

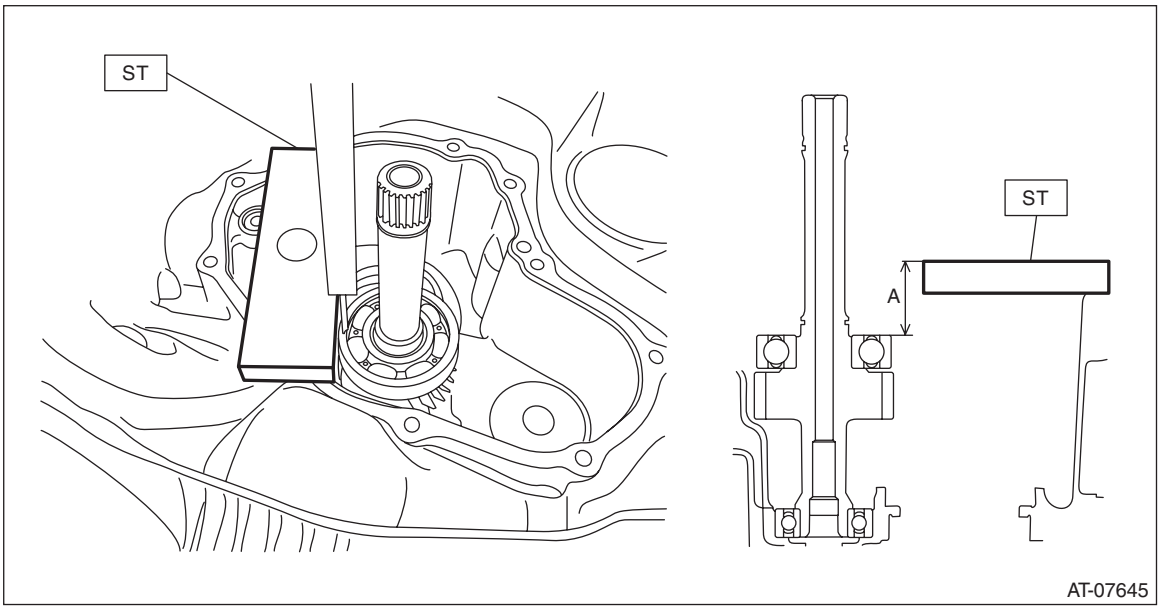

2) Measure depth “B” from the converter case cover upper face to the bearing catch surface.

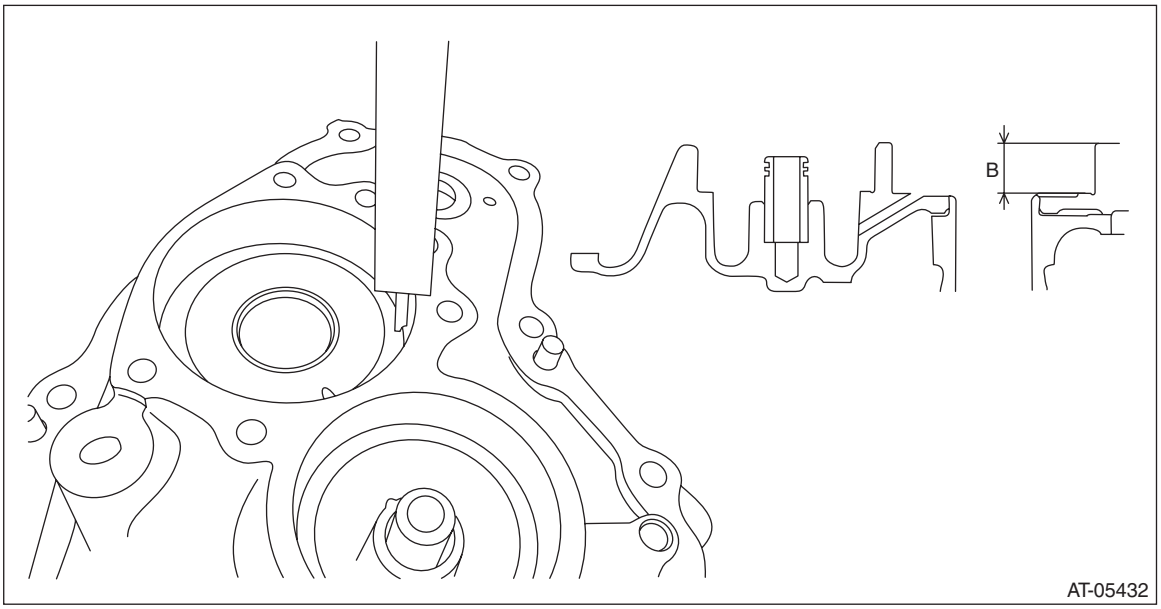

3) Using the ST, measure height “C” from the ST upper face to the converter case cover mating surface.
ST 398643600 GAUGE

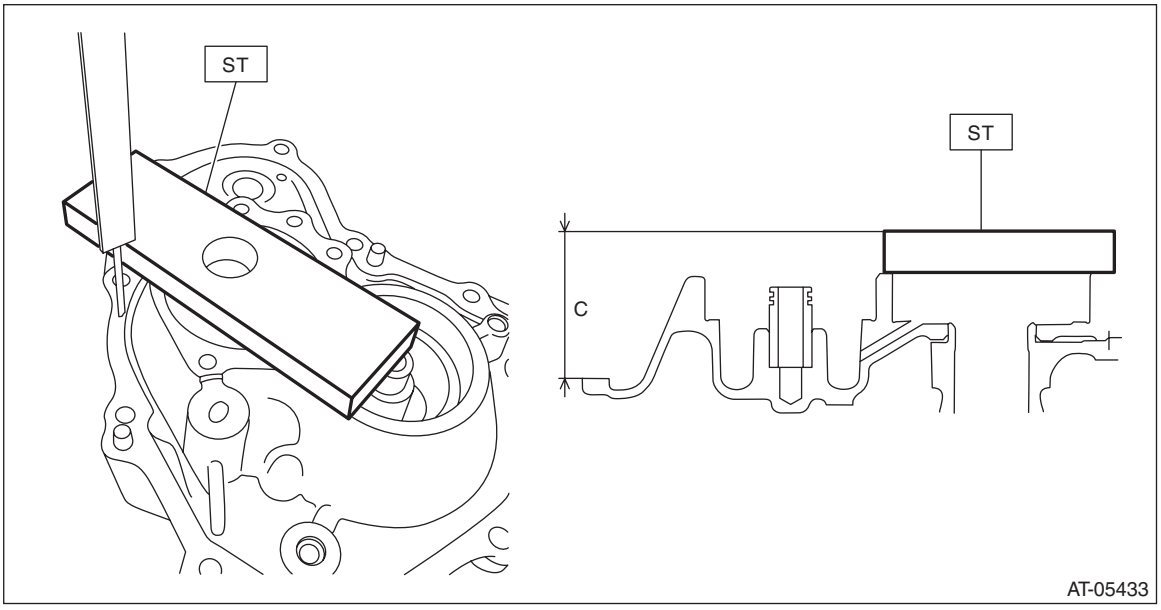

4) Using the following formula, calculate clearance “T” to select shims.
Calculation formula:
T mm = (A – 15) – ((C – 15) – B)
[T in = (A – 0.591) – ((C – 0.591) – B)]
T: Clearance
A: Depth from the ST upper face to the bearing end surface
B: Depth from the converter case cover upper face to the bearing catch surface
C: Height from the ST upper face to the converter case cover mating surface
15 mm (0.591 in): Thickness of ST

Clearance “T” mm (in)	Thickness of shim mm (in)	Part No.
1.070 — 1.174 (0.042 — 0.045)	1.0 (0.039)	31288AA160
1.175 — 1.274 (0.046 — 0.049)	1.1 (0.043)	31288AA170
1.275 — 1.374 (0.050 — 0.053)	1.2 (0.047)	31288AA180
1.375 — 1.474 (0.054 — 0.057)	1.3 (0.051)	31288AA220
1.475 — 1.580 (0.058 — 0.062)	1.4 (0.055)	31288AA230

49.Front Reduction Driven Gear

A: REMOVAL

NOTE:
For removal of front reduction driven gear, refer to the “Front Reduction Drive Gear”. <Ref. to CVT(TR690)-303, REMOVAL, Front Reduction Drive Gear.>

B: INSTALLATION

NOTE:
For installation of front reduction driven gear, refer to the “Front Reduction Drive Gear”. <Ref. to CVT(TR690)-304, INSTALLATION, Front Reduction Drive Gear.>

C: DISASSEMBLY

1) Remove the front reduction driven shaft from the front reduction driven gear.
2) Remove the snap ring.

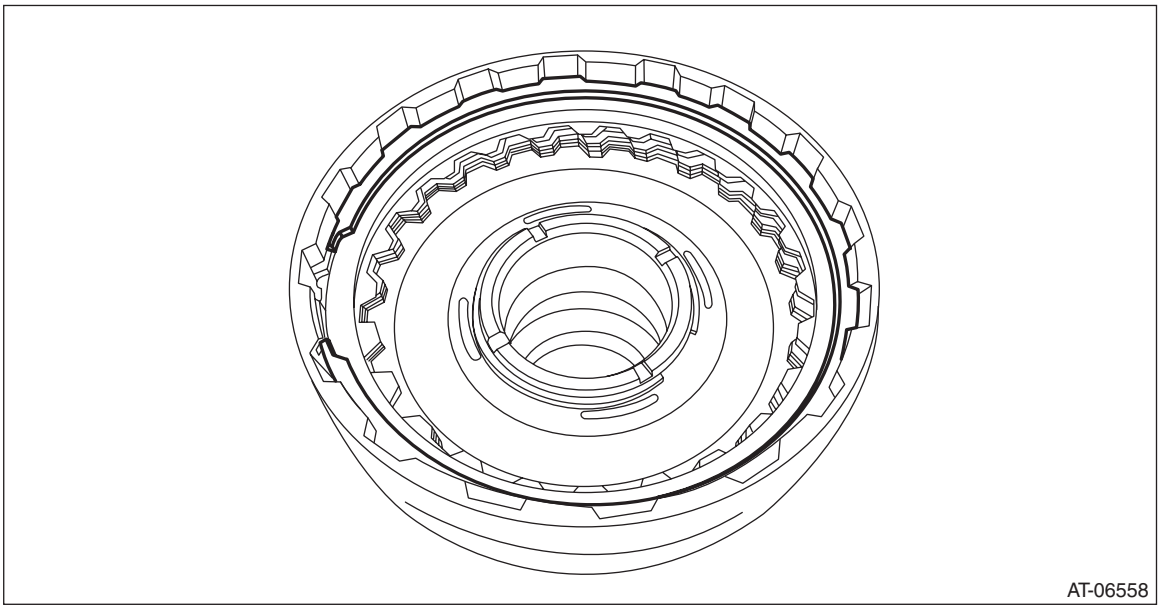

3) Remove the retaining plate, drive plate, driven plate and dish plate.

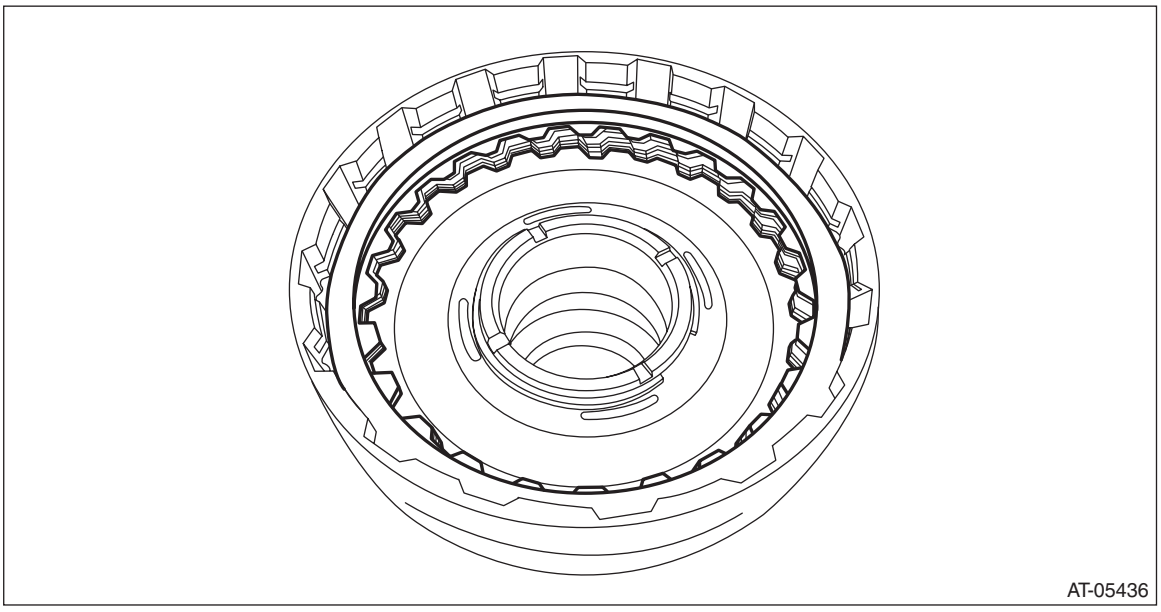

4) Remove the seal ring from front reduction driven shaft.

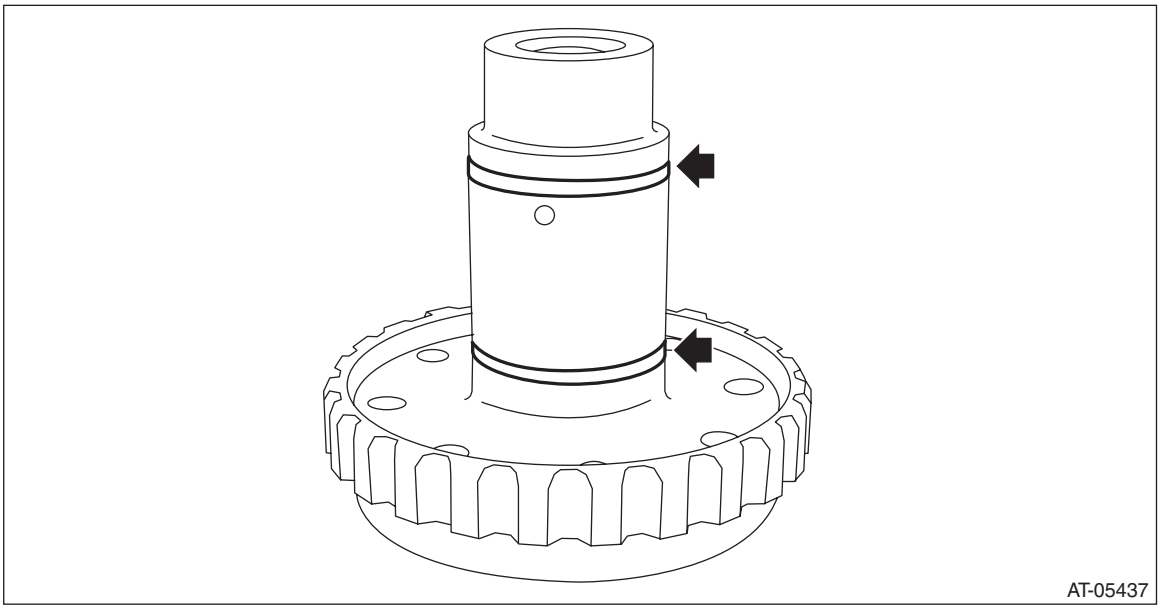

5) Remove the ball bearing, while tapping the entire circumference around the ball bearing outer race a little at a time through the front reduction driven shaft hole using the round bar with diameter of 7 mm (0.28 in).

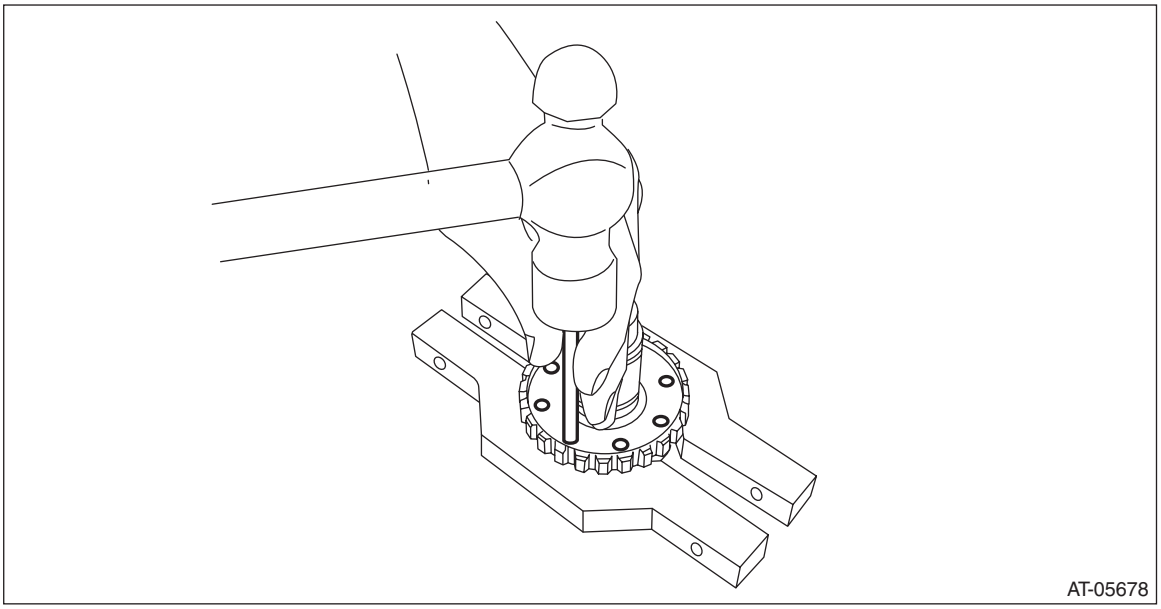

D: ASSEMBLY

1) Place the dish plate, driven plate, drive plate and retaining plate neatly in this order on surface table.

NOTE:
Make sure of the direction of dish plate.

2) Set the dial gauge to retaining plate, and read its scale.

NOTE:
The value, which is read in the gauge at this time, is zero point.

3) Scale and record the weight "Z" of a flat board which will be put on retaining plate.

NOTE:
- Use a stiff board which does not bend against load as a flat board to be put on retaining plate.
- Use a flat board weighing less than 130 N (13.3 kgf, 29.2 lb).

4) Put the flat board on retaining plate.

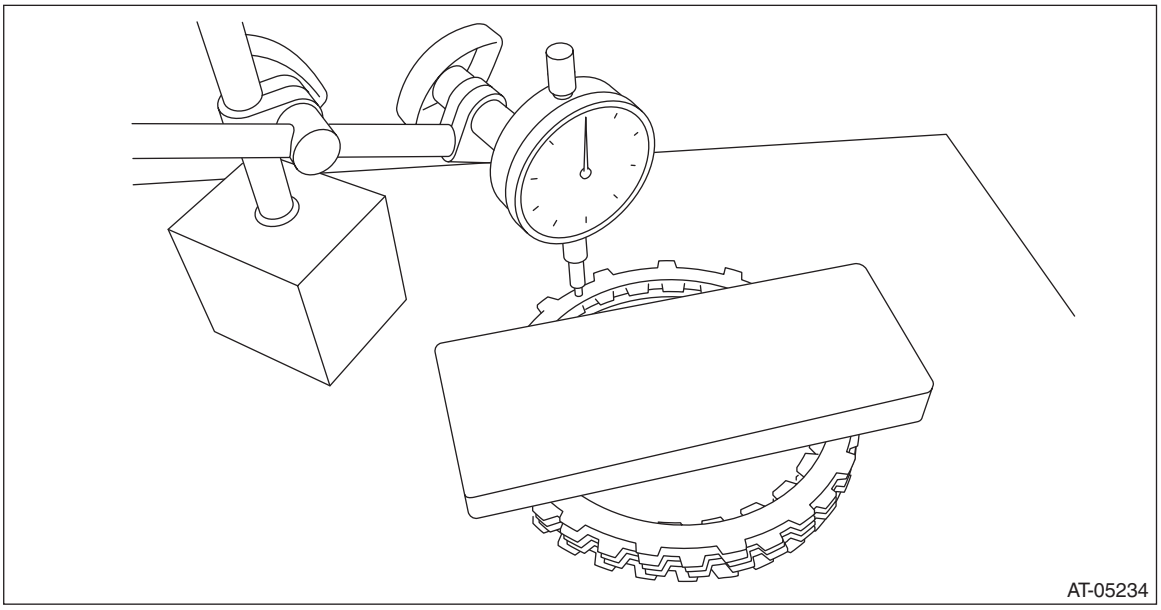

5) Using the following formula, calculate load “N”, a force of pressing with push/pull gauge.
N = 130 N (13.3 kgf, 29.2 lb) – Z
130 N (13.3 kgf, 29.2 lb): Load applied to clutch plate
Z: Flat board weight
6) Press the center of retaining plate by applying a force of “N” using push/pull gauge, and then measure and record the compression amount “A”.

NOTE:
Measure at four points with a 90° interval and calculate the average.

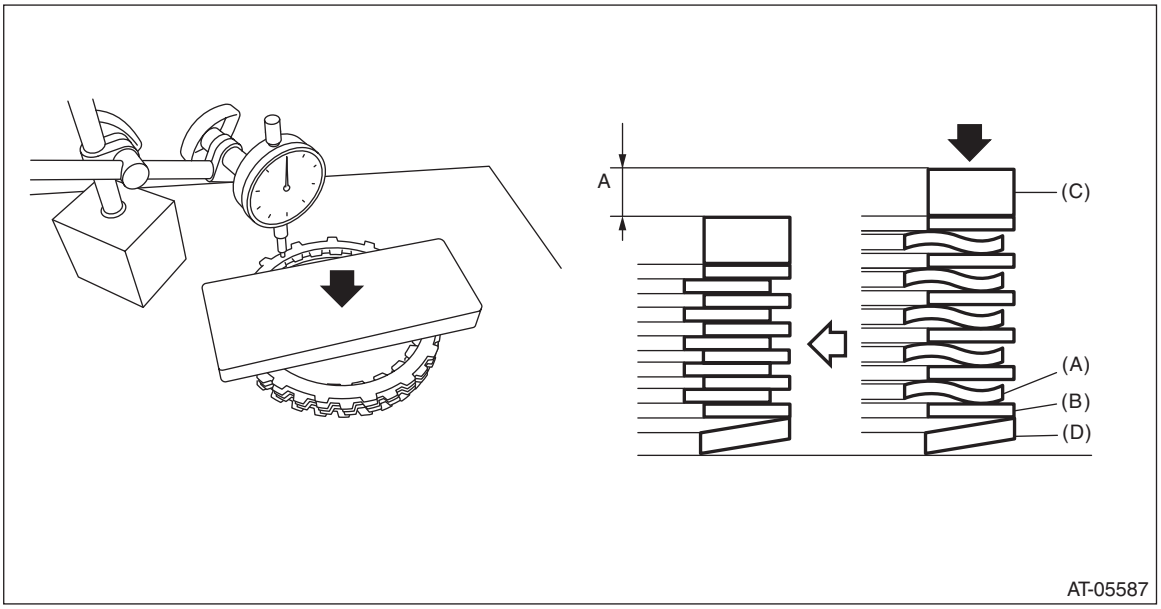

(A) Drive plate
(B) Driven plate
(C) Retaining plate
(D) Dish plate

7) Install the dish plate, driven plate, drive plate, retaining plate and snap ring.

NOTE:
Make sure of the direction of dish plate.

8) Measure and record the clearance “B” between the retaining plate and snap ring.

NOTE:
Before measuring, press down the whole circumference of retaining plate using your finger.

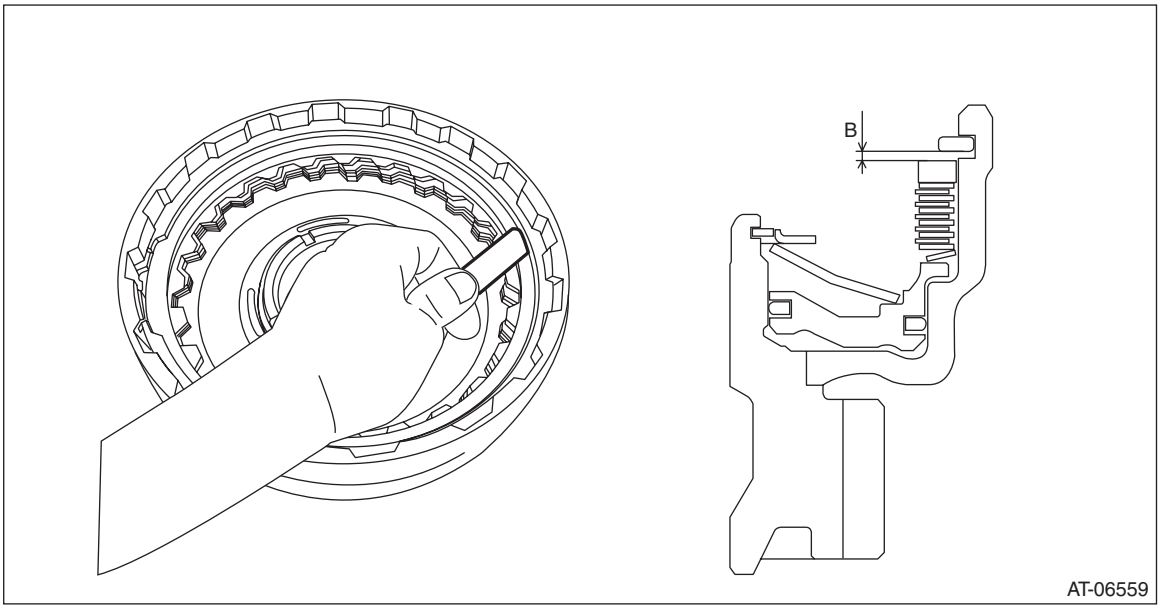

9) Piston stroke calculation
Calculate with A and B dimensions recorded before.
If out of standard, replace with a new drive plate and adjust it within standard.
S mm (in) = A + B
S: Piston stroke
A: Compression amount of drive plate and dish plate
B: Clearance between retaining plate and snap ring

Specification:
2.4 — 2.8 mm (0.094 — 0.11 in)

Retaining plate	
Part No.	Thickness mm (in)
31667AA430	3.1 (0.122)
31667AA440	3.3 (0.130)
31667AA450	3.5 (0.138)

10) Press-fit the ball bearing into front driven shaft.

NOTE:
Use a new ball bearing.

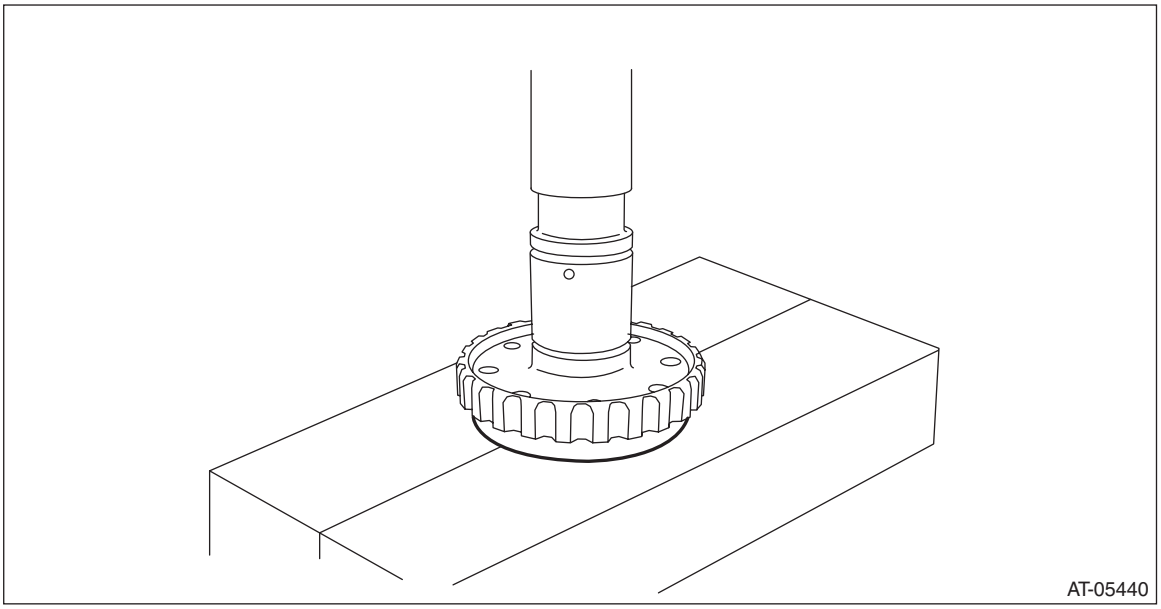

11) Install the seal ring to the front driven shaft.

NOTE:
- Install a new seal ring.
- Apply CVTF to the seal rings.

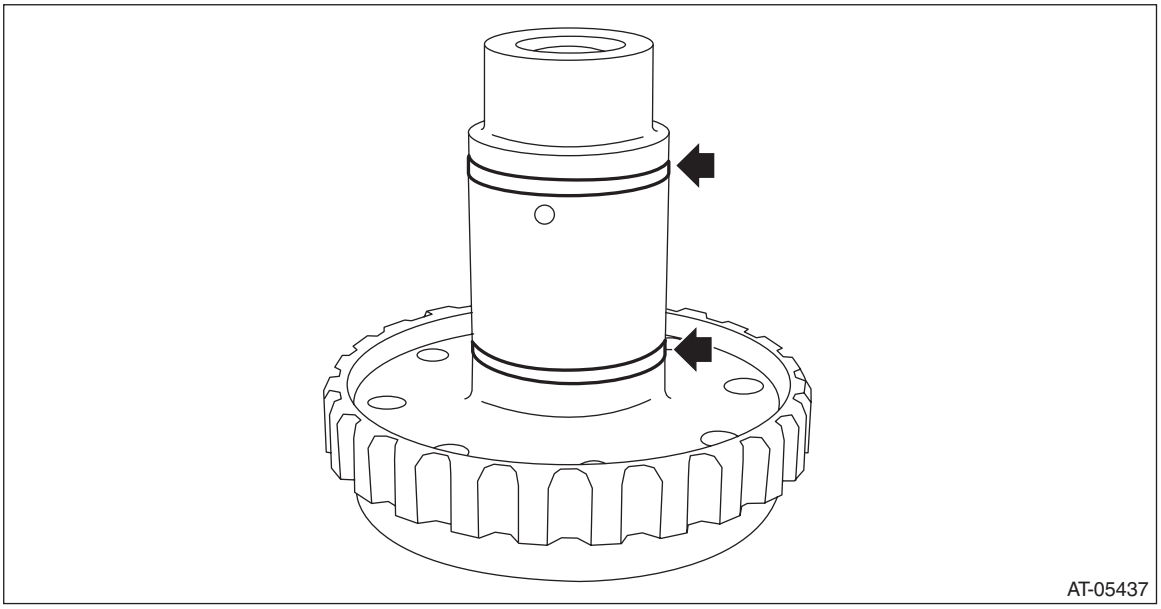

12) Install the front reduction driven shaft to the front reduction driven gear.

13) Install the front reduction driven gear assembly to converter case cover.

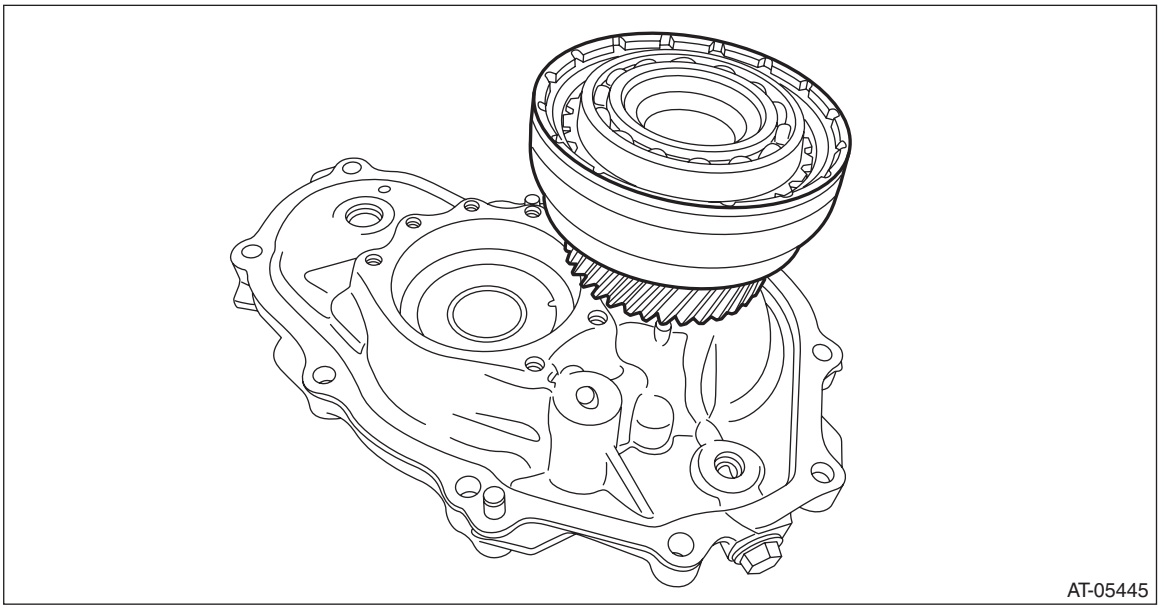

14) Apply compressed air intermittently to check the piston operation.

NOTE:
Hold the arrowed area with a finger.

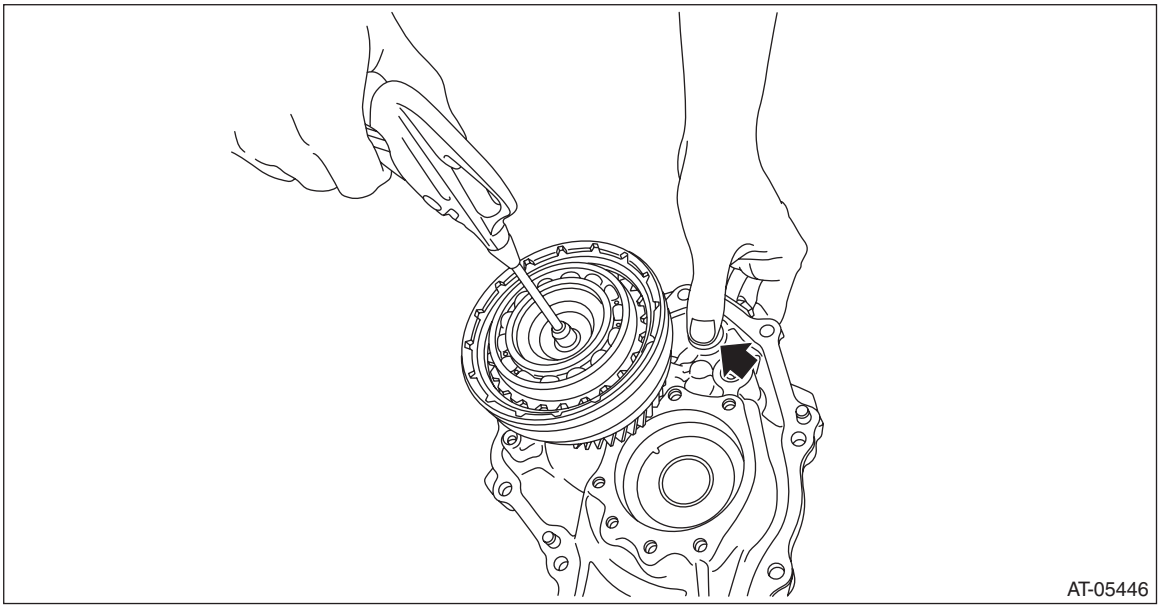

E: INSPECTION

- Check the drive plate for wear and damage.
- Check the driven plate for discoloration (burnt color).
- Check for worn snap ring, fatigue or damaged return spring or deformed piston retainer.
- Replace if its tooth surfaces are broken, damaged or excessively worn.
- Check the bearing for seizure or wear.
- Apply CVTF to bearing and rotate the bearing to check for noise or dragging etc.

F: ADJUSTMENT

1) If the ball bearing is attached, remove the bearing and shims. <Ref. to CVT(TR690)-293, REMOVAL, Converter Case Cover.>
2) Using the ST, measure height “A” from the ST upper face to the mating surface of the case.
ST 398643600 GAUGE

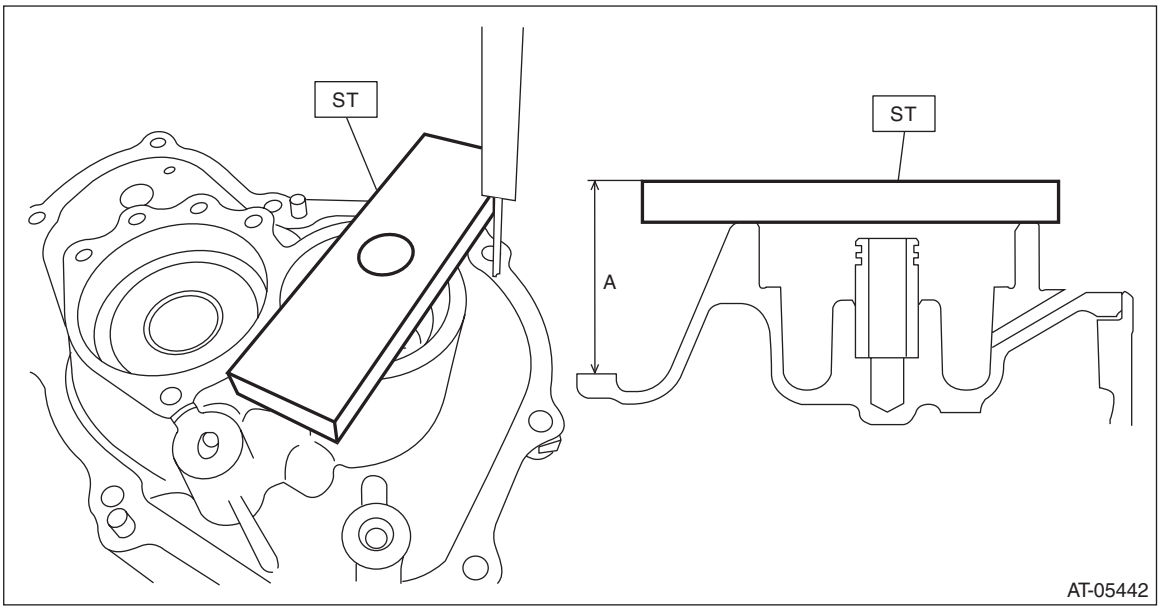

3) Measure depth “B” from the converter case cover upper face to the bearing catch surface.

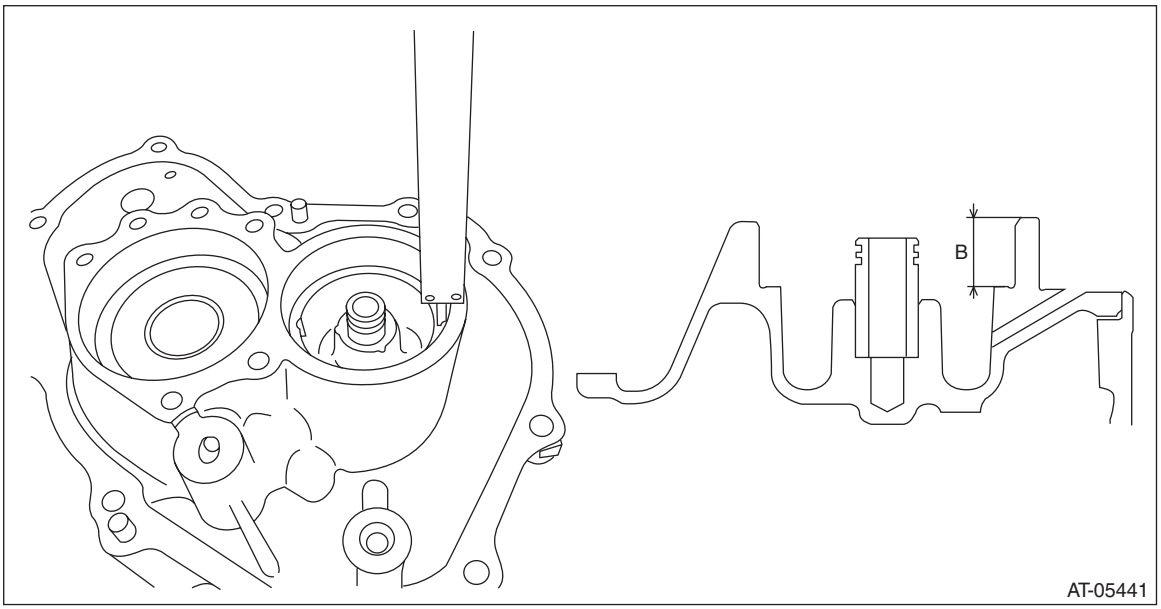

4) Install the ball bearing to the reduction driven gear.

NOTE:
Use a new ball bearing.

5) Measure depth “C” from the ST upper face to the bearing end face using the ST.
ST 398643600 GAUGE

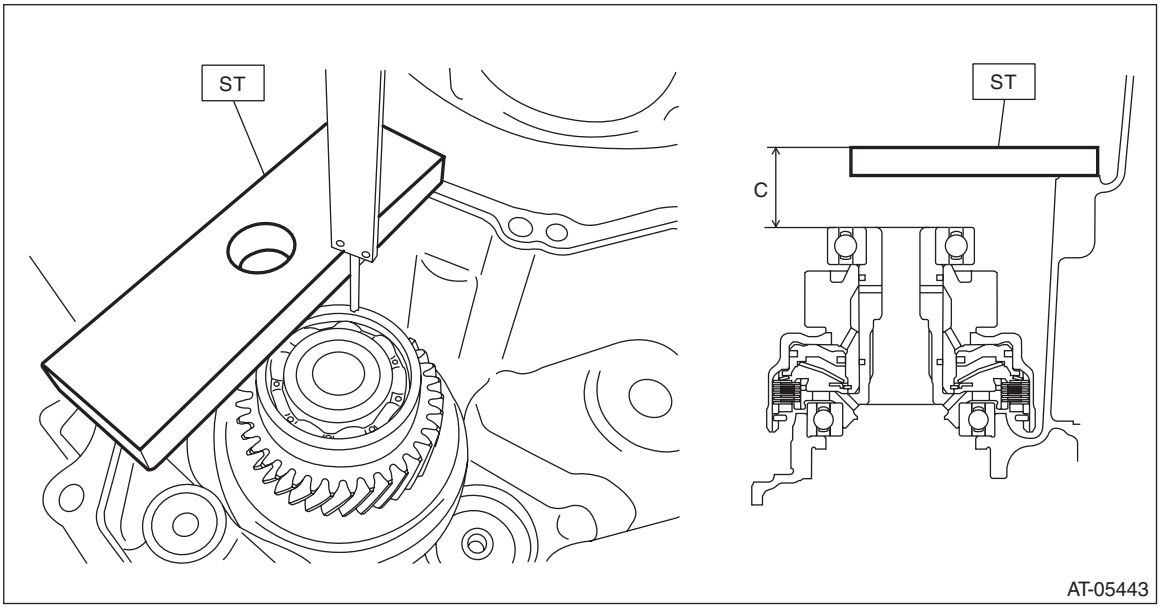

6) Calculate clearance “T” using the following formula.
Formula: T mm = (C – 15) – ((A – 15) – B)
[T in = (C – 0.591) – ((A – 0.591) – B)]
T: Clearance
A: Height from the ST upper face to the converter case mating surface
B: Depth from the converter case cover upper face to the bearing catch surface
C: Depth from the ST upper face to the bearing end face
15 mm (0.591 in): Thickness of ST

Clearance “T” mm (in)	Thickness of shim mm (in)
0.470 — 0.569 (0.019 — 0.021)	0.4 (0.016)
0.570 — 0.669 (0.022 — 0.025)	0.5 (0.020)
0.670 — 0.769 (0.026 — 0.029)	0.6 (0.024)
0.770 — 0.869 (0.030 — 0.033)	0.7 (0.028)
0.870 — 0.980 (0.034 — 0.039)	0.8 (0.031)

7) Select one to two shims so that the total thickness meets the value obtained from above.

Part No.	Thickness of shim mm (in)
31288AA130	0.2 (0.008)
31288AA140	0.3 (0.012)
31288AA150	0.5 (0.020)

50.Converter Case

A: REMOVAL

1) Remove the transmission assembly from the vehicle. <Ref. to CVT(TR690)-57, REMOVAL, Automatic Transmission Assembly.>
2) Remove the air breather hose. <Ref. to CVT(TR690)-136, REMOVAL, Air Breather Hose.>
3) Remove the oil pan and control valve body. <Ref. to CVT(TR690)-113, REMOVAL, Control Valve Body.>
4) Remove the transmission harness. <Ref. to CVT(TR690)-123, REMOVAL, Transmission Harness.>
5) Remove the secondary pressure sensor. <Ref. to CVT(TR690)-111, REMOVAL, Secondary Pressure Sensor.>
6) Remove the primary speed sensor. <Ref. to CVT(TR690)-103, REMOVAL, Primary Speed Sensor.>
7) Remove the extension case. <Ref. to CVT(TR690)-143, REMOVAL, Extension Case.>
8) Remove the rear drive shaft. <Ref. to CVT(TR690)-147, REMOVAL, Rear Drive Shaft.>
9) Remove the transfer clutch assembly. <Ref. to CVT(TR690)-152, REMOVAL, Transfer Clutch.>
10) Remove the center differential carrier. <Ref. to CVT(TR690)-155, REMOVAL, Center Differential Carrier.>
11) Remove the transfer reduction driven gear assembly. <Ref. to CVT(TR690)-159, REMOVAL, Transfer Reduction Driven Gear.>
12) Remove the intermediate case. <Ref. to CVT(TR690)-166, REMOVAL, Intermediate Case.>
13) Remove the forward clutch assembly. <Ref. to CVT(TR690)-182, REMOVAL, Forward Clutch Assembly.>
14) Remove the transmission case. <Ref. to CVT(TR690)-214, REMOVAL, Transmission Case.>
15) Remove the primary pulley, secondary pulley and variator chain. <Ref. to CVT(TR690)-230, REMOVAL, Primary Pulley and Secondary Pulley.>
16) Remove the drive pinion shaft assembly. <Ref. to CVT(TR690)-246, REMOVAL, Drive Pinion Shaft Assembly.>
17) Remove the front differential assembly. <Ref. to CVT(TR690)-266, REMOVAL, Front Differential Assembly.>
18) Remove the oil pump chain cover and the oil pump chain. <Ref. to CVT(TR690)-285, REMOVAL, Oil Pump Chain.>
19) Remove the converter case cover. <Ref. to CVT(TR690)-293, REMOVAL, Converter Case Cover.>
20) Remove the front reduction drive gear and front reduction driven gear. <Ref. to CVT(TR690)-303, REMOVAL, Front Reduction Drive Gear.>

B: INSTALLATION

1) Install the front reduction drive gear and front reduction driven gear. <Ref. to CVT(TR690)-304, INSTALLATION, Front Reduction Drive Gear.>
2) Install the converter case cover. <Ref. to CVT(TR690)-297, INSTALLATION, Converter Case Cover.>
3) Install the oil pump chain cover and the oil pump chain. <Ref. to CVT(TR690)-288, INSTALLATION, Oil Pump Chain.>
4) Install the front differential assembly. <Ref. to CVT(TR690)-267, INSTALLATION, Front Differential Assembly.>
5) Install the drive pinion shaft assembly. <Ref. to CVT(TR690)-248, INSTALLATION, Drive Pinion Shaft Assembly.>
6) Install the primary pulley, secondary pulley and variator chain. <Ref. to CVT(TR690)-234, INSTALLATION, Primary Pulley and Secondary Pulley.>
7) Install the transmission case. <Ref. to CVT(TR690)-214, REMOVAL, Transmission Case.>
8) Install the forward clutch assembly. <Ref. to CVT(TR690)-183, INSTALLATION, Forward Clutch Assembly.>
9) Install the intermediate case. <Ref. to CVT(TR690)-167, INSTALLATION, Intermediate Case.>
10) Install the transfer reduction driven gear. <Ref. to CVT(TR690)-159, INSTALLATION, Transfer Reduction Driven Gear.>
11) Install the center differential carrier. <Ref. to CVT(TR690)-156, INSTALLATION, Center Differential Carrier.>
12) Install the transfer clutch assembly. <Ref. to CVT(TR690)-152, INSTALLATION, Transfer Clutch.>
13) Install the rear drive shaft. <Ref. to CVT(TR690)-147, INSTALLATION, Rear Drive Shaft.>

14) Install the extension case. <Ref. to CVT(TR690)-144, INSTALLATION, Extension Case.>
15) Install the primary speed sensor. <Ref. to CVT(TR690)-104, INSTALLATION, Primary Speed Sensor.>
16) Install the secondary pressure sensor. <Ref. to CVT(TR690)-111, INSTALLATION, Secondary Pressure Sensor.>
17) Install the transmission harness. <Ref. to CVT(TR690)-125, INSTALLATION, Transmission Harness.>
18) Install the control valve body and oil pan. <Ref. to CVT(TR690)-117, INSTALLATION, Control Valve Body.>
19) Install the air breather hose. <Ref. to CVT(TR690)-136, INSTALLATION, Air Breather Hose.>
20) Install the transmission assembly to the vehicle. <Ref. to CVT(TR690)-70, INSTALLATION, Automatic Transmission Assembly.>

C: DISASSEMBLY

1) Remove the CVTF cooler pipe COMPL.

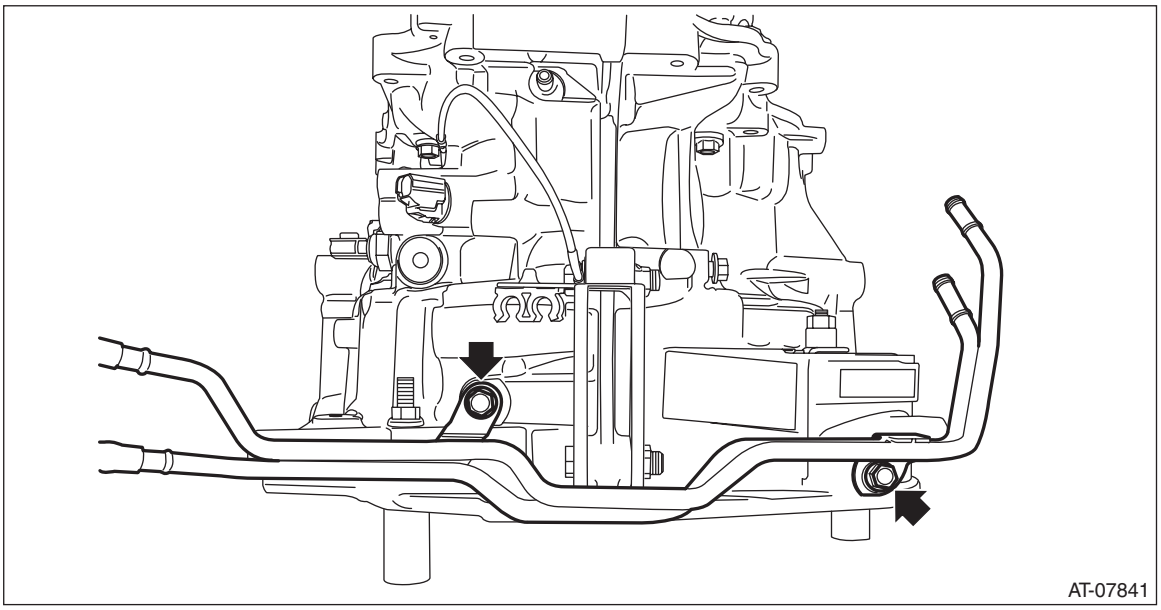

2) Remove the pitching stopper bracket and transmission radio ground cord, if mounted.
3) Remove the oil drain plug and overflow drain plug. <Ref. to CVT(TR690)-42, REPLACEMENT, Differential Gear Oil.>
4) Remove all plugs.

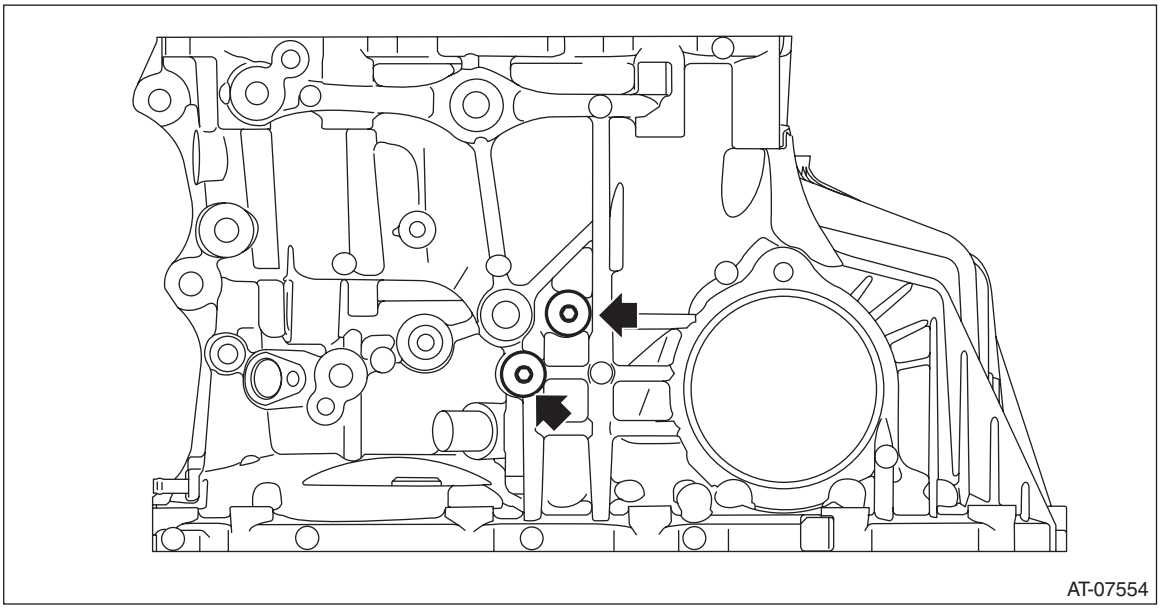

D: ASSEMBLY

1) Install the oil drain plug.

NOTE:
Use a new gasket.

Tightening torque:
25 N·m (2.5 kgf-m, 18.4 ft-lb)

2) Temporarily install the overflow drain plug.

NOTE:
Replace the gasket of overflow drain plug with a new part after installing the transmission assembly to vehicle and adjusting differential gear oil.

3) Install all plugs.

NOTE:
Use new O-rings.

Tightening torque:
25 N·m (2.5 kgf-m, 18.4 ft-lb)

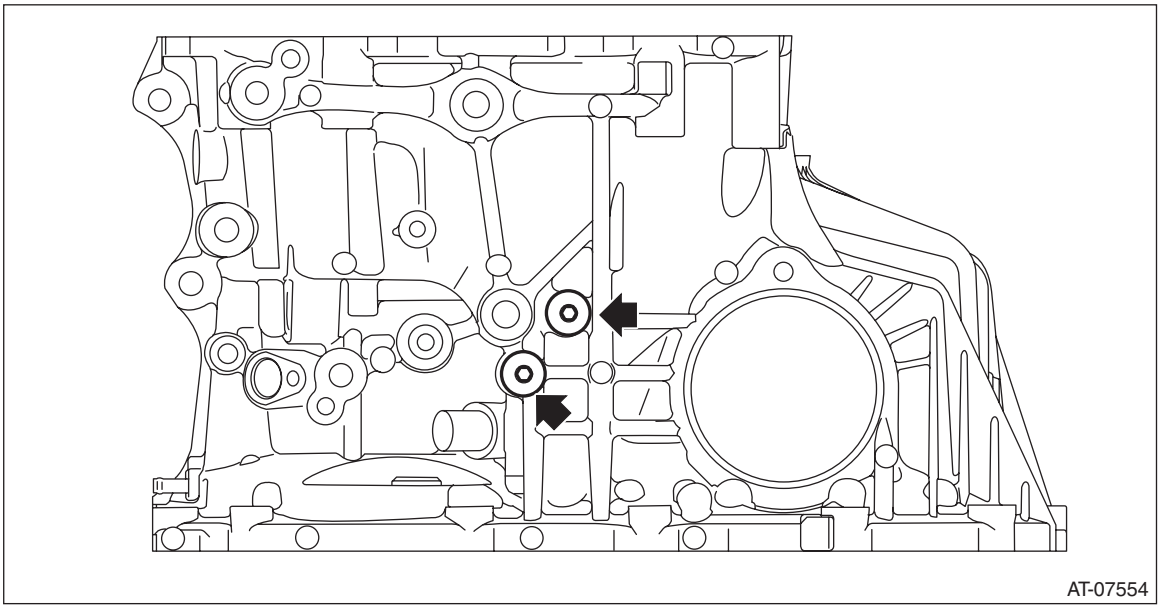

4) Install the pitching stopper bracket and transmission radio ground cord.

CAUTION:
Be careful not to deform or damage the terminal of transmission radio ground cord.

Tightening torque:
41 N·m (4.2 kgf-m, 30.2 ft-lb)

5) Install the CVTF cooler pipe COMPL.

Tightening torque:
16 N·m (1.6 kgf-m, 11.8 ft-lb)

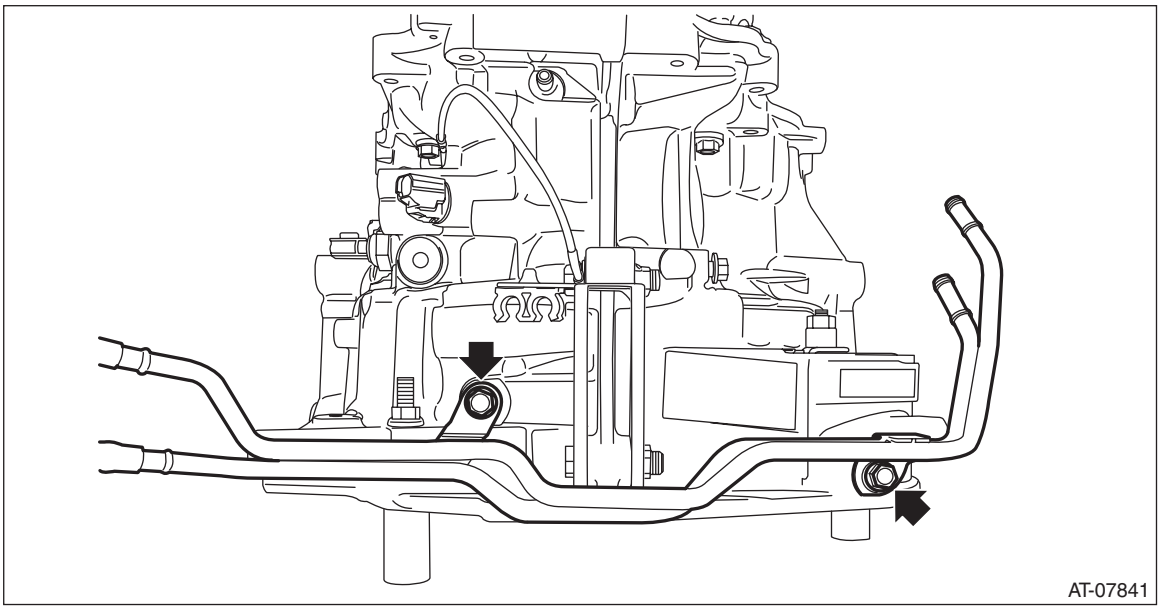

E: INSPECTION

- Check for leakage of CVTF from the connection between converter case and transmission case.
- Check there is no damage or cracks on the converter case.

F: ADJUSTMENT

When replacing the converter case cover, select the following shims.

- Select the shim for front reduction drive gear. <Ref. to CVT(TR690)-309, ADJUSTMENT, Front Reduction Drive Gear.>
- Select the shim for front reduction driven gear. <Ref. to CVT(TR690)-317, ADJUSTMENT, Front Reduction Driven Gear.>
- Select shims for primary pulley. <Ref. to CVT(TR690)-240, ADJUSTMENT, Primary Pulley and Secondary Pulley.>

51.Diagnostics with Phenomenon

A: INSPECTION

Symptoms	Faulty parts
Stall speed is low after warming-up, with select lever in “D” or “R” range.	Engine control system
Vehicle does not move despite engine speed rising up, with select lever in “D” or “R” range.	• Engine control system • Select cable • CVTF • Secondary pressure circuit • Pulley, gear and variator chain • Forward/reverse changeover section • TCM • Control valve body • Inhibitor switch
Vehicle does not move by engine stall, with select lever in “D” or “R” range.	• Parking mechanism • Select cable • Bearing • Forward/reverse changeover section
Excessive shock occurs at starting, with select lever in “D” or “R” range.	• Secondary pressure circuit • Pulley, gear and variator chain
Acceleration speed from standstill is insufficient, with select lever in “D” or “R” range.	• Control valve body • Forward/reverse changeover section
Engine speed suddenly rises up during driving, with select lever in “D” or “R” range.	• Control valve body • Secondary pressure circuit • Primary pressure circuit
Vibration occurs during driving, with select lever in “D” or “R” range.	• Secondary pressure circuit • Primary pressure circuit • Forward/reverse changeover section • Pulley and variator chain • Torque converter assembly • Hydraulic pressure circuit to torque converter • Control valve body
Sudden braking occurs during driving, with select lever in “D” or “R” range.	• Secondary pressure circuit • Primary pressure circuit • Control valve body
During deceleration, lockup clutch does not disengage until just before halting, with select lever in “D” or “R” range.	• Control valve body • Torque converter assembly
Engine stalls with vehicle at a standstill, with select lever in “D” or “R” range.	• Engine control system • Control valve body
Excessive lockup shock occurs during driving, with select lever in “D” range.	Control valve body
Slipping occurs at lockup, or lockup does not occur during driving, with select lever in “D” range.	• Control valve body • Lockup hydraulic line • Torque converter assembly
Excessive shift shock occurs when shifting the select lever from “N” range to “D” range, or from “N” range to “R” range.	• Inhibitor switch • Control valve body • Forward/reverse changeover section
Vehicle does not keep at standstill with select lever in “P” range, or parking cannot be released when shifting from “P” range to another range.	• Select cable • Parking mechanism
Select lever does not shift smoothly.	• Select cable • Inhibitor switch • Detent spring • Manual plate

CONTINUOUSLY VARIABLE TRANSMISSION (DIAGNOSTICS)

CVT(diag)

		Page
1.	Basic Diagnostic Procedure	2
2.	Check List for Interview	4
3.	General Description	5
4.	Electrical Component Location	7
5.	Transmission Control Module (TCM) I/O Signal	10
6.	Subaru Select Monitor	14
7.	Read Diagnostic Trouble Code (DTC)	18
8.	Clear Memory Mode	19
9.	Inspection Mode	20
10.	Drive Cycle	21
11.	Active Test	25
12.	Learning Control	26
13.	AT OIL TEMP Warning Light Display	28
14.	AWD Warning Light Display	31
15.	Diagnostic Procedure for Subaru Select Monitor Communication	33
16.	List of Diagnostic Trouble Code (DTC)	36
17.	Diagnostic Procedure with Diagnostic Trouble Code (DTC)	40
18.	Diagnostic Procedure without Diagnostic Trouble Code (DTC)	169
19.	Diagnostics with Phenomenon	170

1. Basic Diagnostic Procedure

A: PROCEDURE

Step		Check	Yes	No
1	**CHECK PRE-INSPECTION.** 1) Ask the customer when and how the trouble occurred using the interview check list. <Ref. to CVT(diag)-4, Check List for Interview.> 2) Before performing diagnostics, check the following items which might affect CVT problems. • General inspection <Ref. to CVT(diag)-5, INSPECTION, General Description.> • Disconnection of harness connector • Visual check for harness damage • Oil leakage • Stall speed test <Ref. to CVT(TR690)-47, Stall Test.> • Secondary pressure test <Ref. to CVT(TR690)-50, Secondary Pressure (Line Pressure) Test.> • Transfer clutch pressure test <Ref. to CVT(TR690)-53, Transfer Clutch Pressure Test.> • Time lag test <Ref. to CVT(TR690)-49, Time Lag Test.> • Road test <Ref. to CVT(TR690)-45, Road Test.> • Inhibitor switch <Ref. to CVT(TR690)-93, Inhibitor Switch.>	Is the check result OK?	Go to step **2**.	Repair the items which may be affecting the CVT trouble.
2	**CHECK AT OIL TEMP LIGHT.** Turn the ignition switch to ON and wait for at least 2 seconds.	Does the AT OIL TEMP light illuminate?	Go to step **3**.	Check the AT OIL TEMP light.
3	**CHECK AT OIL TEMP LIGHT.** Start the engine and wait for 2 seconds or more.	Does the AT OIL TEMP light blink?	Go to step **4**.	Go to step **5**.
4	**CHECK DTC DISPLAY.** Read the DTC. NOTE: If the communication function of Subaru Select Monitor cannot be executed normally, check the communication circuit. <Ref. to CVT(diag)-33, COMMUNICATION FOR INITIALIZING IMPOSSIBLE, Diagnostic Procedure for Subaru Select Monitor Communication.>	Is DTC displayed on Subaru Select Monitor?	Record the DTC, time stamp and freeze frame data. Go to step **6**. NOTE: • For the time stamp, refer to LAN section. <Ref. to LAN(diag)-6, TIME STAMP, CAUTION, General Description.> • Depending on DTCs, time stamp may not be stored.	Go to step **5**.

	Step	Check	Yes	No
5	**PERFORM GENERAL DIAGNOSTICS.** 1) Inspect using “Diagnostic Procedure without Diagnostic Trouble Code (DTC)”. <Ref. to CVT(diag)-169, Diagnostic Procedure without Diagnostic Trouble Code (DTC).> 2) Inspect using “Diagnostics with Phenomenon”. <Ref. to CVT(diag)-170, Diagnostics with Phenomenon.> 3) Perform the Inspection Mode. <Ref. to CVT(diag)-20, Inspection Mode.> 4) Read the DTC.	Is DTC displayed on Subaru Select Monitor?	Go to step **6**.	Finish the diagnosis.
6	**PERFORM DIAGNOSIS.** 1) Inspect by referring to “Diagnostic Procedure with Diagnostic Trouble Code (DTC)”. <Ref. to CVT(diag)-40, Diagnostic Procedure with Diagnostic Trouble Code (DTC).> NOTE: For the DTC table, refer to “List of Diagnostic Trouble Code (DTC)”. <Ref. to CVT(diag)-36, List of Diagnostic Trouble Code (DTC).> 2) Repair the trouble cause. 3) Perform the Clear Memory Mode. 4) Perform the Inspection Mode. <Ref. to CVT(diag)-20, Inspection Mode.> 5) Read the DTC.	Is DTC displayed on Subaru Select Monitor?	Inspect by referring to “Diagnostic Procedure with Diagnostic Trouble Code (DTC)”. <Ref. to CVT(diag)-40, Diagnostic Procedure with Diagnostic Trouble Code (DTC).>	Finish the diagnosis.

2. Check List for Interview

A: CHECK

Check the following items when a problem has occurred.

NOTE:
Use copies of this page for interviewing customers.

Customer's name			
Date of purchase			
Date of repair			
Transmission model	Transmission	V.I.N.	
Odometer reading	km (miles)		
Frequency	❑ Continuous ❑ Intermittent (times/day)		
Weather	❑ Fine ❑ Cloudy ❑ Rainy ❑ Snowy ❑ Other ( )		
Place	❑ Highland ❑ Suburbs ❑ Inner city ❑ Uphill ❑ Downhill ❑ Rough road ❑ Other ( )		
Ambient air temperature	❑ Hot ❑ Warm ❑ Cool ❑ Cold		
Vehicle speed	km/h (MPH)		
AT OIL TEMP light	❑ Blinks continuously	❑ Does not blink	
Select lever position	❑ P ❑ R ❑ N ❑ D ❑ Manual mode		
Driving condition	❑ Not affected ❑ At racing ❑ While decelerating	❑ At starting ❑ While accelerating ❑ While turning (❑ RH/❑ LH)	❑ While idling ❑ When cruising (Vehicle speed km/h) ❑ Immediately after starting the engine
Manual mode	❑ ON ❑ OFF		
Symptoms	❑ Vehicle does not move (❑ Any position ❑ Particular position)		
	❑ Vehicle does not move (no load racing condition as in N range)		
	❑ Vehicle does not move (engine speed does not increase, felt as stall condition)		
	❑ Noise or vibration (Describe concretely:)		
	❑ Shock felt at N → D selection (seconds after shifting, when engine cold or after warm-up)		
	❑ Shock felt at N → R selection (seconds after shifting, when engine cold or after warm-up)		
	❑ Shifting is wrong (Describe concretely:)		
	❑ Shock or judder during driving		
	❑ Fails to accelerate.		
	❑ Engine speed increases abruptly during driving		
	❑ Shock or judder during standing start		
	❑ Select lever does not move		
	❑ Other ( )		

3. General Description

A: CAUTION

1) The airbag system wiring harness is routed near the TCM.

CAUTION:
• All the airbag system wiring harnesses and connectors are colored yellow. Do not use an electric test equipment to check these circuits.
• Be careful not to damage the airbag system wiring harness when performing diagnostics or servicing the TCM.

2) When measuring the voltage or resistance of individual sensor or all electrical control modules, use a tapered pin with a diameter of 0.6 mm (0.024 in) or less and touch it to the tip of terminal. Never insert the tapered pin into the terminal because it deforms inside which may lead to malfunction.

CAUTION:
If a pin (or similar) was inserted in TCM connector, replace the TCM connector.

3) The TCM connector is waterproof. When measuring the TCM connector terminal voltage, or the resistance between the terminals, use the ST.
ST 18460AA040 CHECK BOARD

B: INSPECTION

1. BATTERY

Check the battery. <Ref. to SC(w/o STI)-51, INSPECTION, Battery.>

2. TRANSMISSION GROUND

Make sure that the ground terminal bolt is tightened securely.

Tightening torque:
16 N·m (1.6 kgf-m, 11.8 ft-lb)

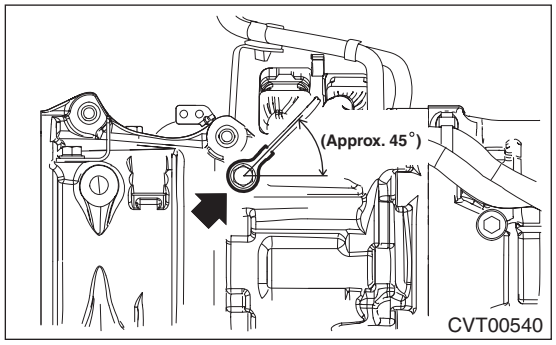

3. OPERATION OF SHIFT SELECT LEVER

Make sure there is no noise, dragging or contact pattern in each select lever range.

WARNING:
Stop the engine while checking operation of the select lever.

C: PREPARATION TOOL

1. SPECIAL TOOL

ILLUSTRATION	TOOL NUMBER	DESCRIPTION	REMARKS
 STSSM4	—	SUBARU SELECT MONITOR 4	Used for setting of each function and trouble-shooting for electrical system. NOTE: For detailed operation procedures of Subaru Select Monitor 4, refer to “Application help”.
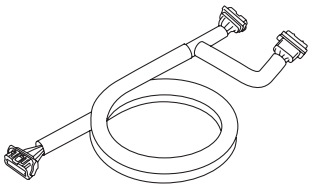 ST18460AA040	18460AA040	CHECK BOARD	Used for measuring voltage and resistance of TCM terminals.

2. GENERAL TOOL

TOOL NAME	REMARKS
Circuit tester	Used for measuring resistance, voltage and current.
Oscilloscope	Used for measuring the sensor.
DST-i	Used together with Subaru Select Monitor 4.

4. Electrical Component Location

A: LOCATION

1. CONTROL MODULE

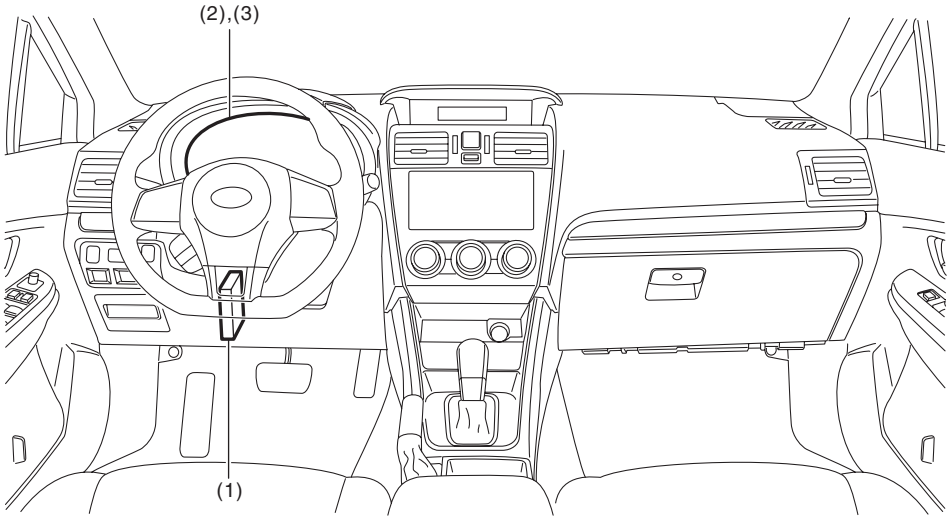

CVT00536

(1) Transmission control module (TCM)
(2) AWD light
(3) AT OIL TEMP light

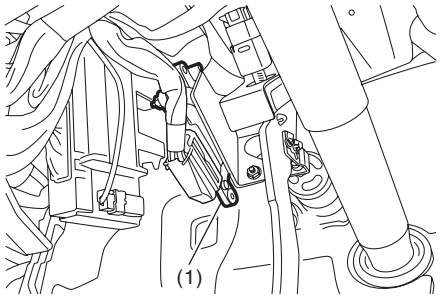

CVT01447

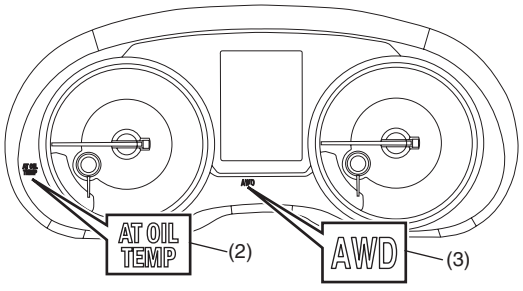

CVT00552

2. SENSOR

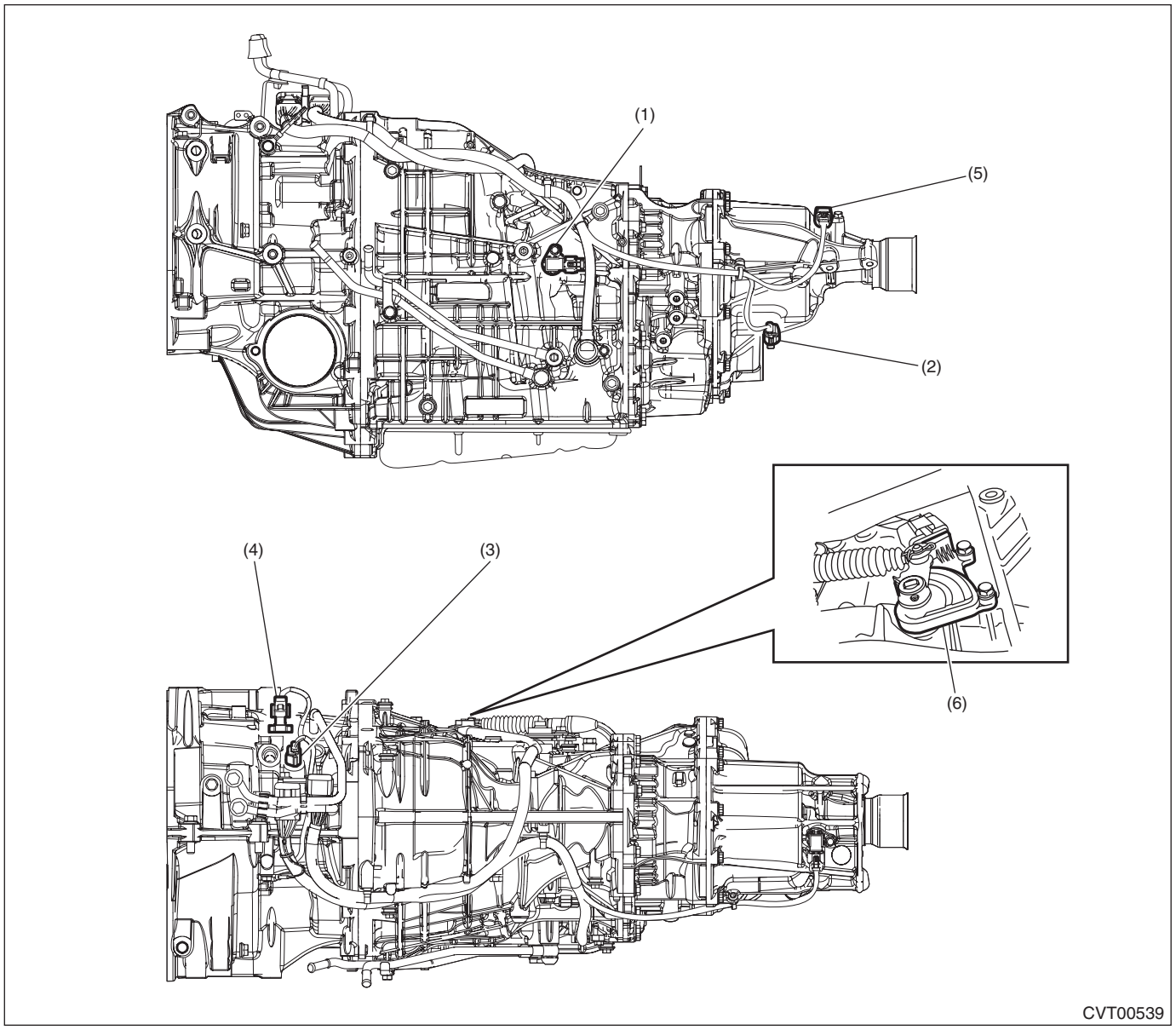

(1) Secondary speed sensor
(2) Front wheel speed sensor
(3) Primary speed sensor
(4) Secondary pressure sensor
(5) Rear wheel speed sensor
(6) Inhibitor switch

3. SOLENOID

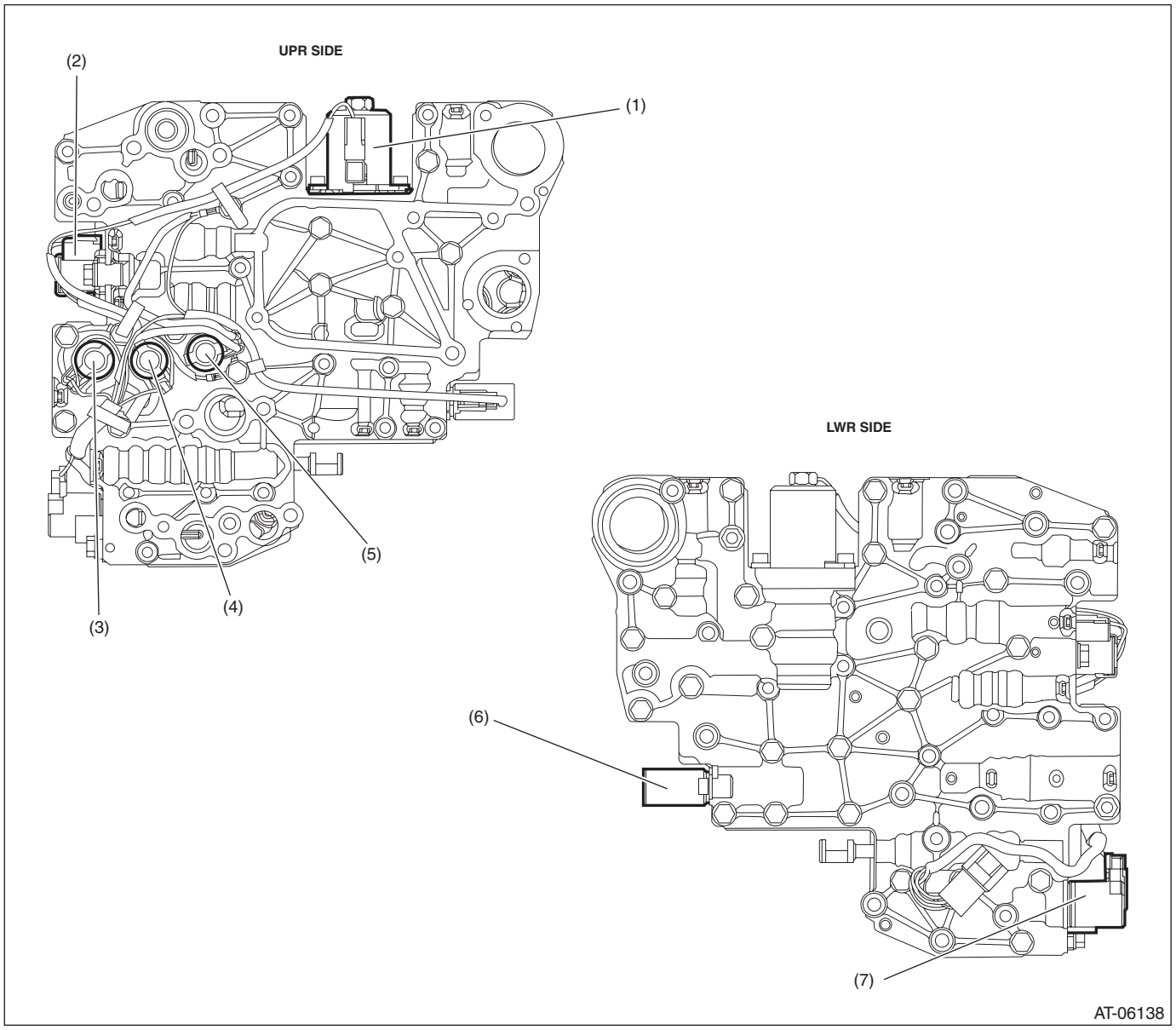

(1) Secondary solenoid
(2) AWD solenoid
(3) Lock-up duty solenoid
(4) Primary DOWN solenoid
(5) Primary UP solenoid
(6) F&R solenoid
(7) Lock-up ON/OFF solenoid

5. Transmission Control Module (TCM) I/O Signal

A: ELECTRICAL SPECIFICATION

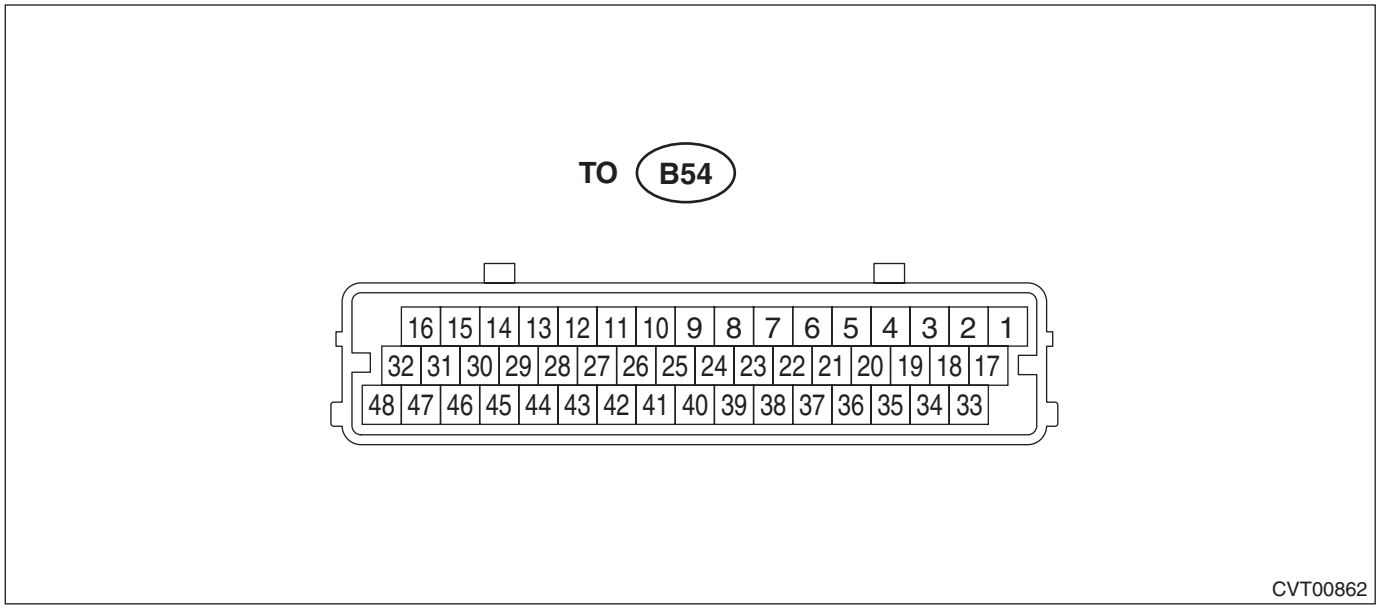

NOTE:
Measure after warming up.

Item	Terminal No.	Measuring condition	Measurement value	Resistance between terminal and chassis ground	Remarks
Backup power supply	34	—	10 — 13 V	—	
Ignition power supply	41	—	10 — 13 V	—	
Main power supply	8	—	10 — 13 V	—	
Main power supply	24	—	10 — 13 V	—	
Main power supply	40	—	10 — 13 V	—	
Manual mode switch	20	Manual mode switch ON	Less than 1 V	—	
		Manual mode switch OFF	8 V or more	—	
Manual mode UP switch	19	Manual mode UP switch ON	Less than 1 V	—	
		Manual mode UP switch OFF	8 V or more	—	
Manual mode DOWN switch	18	Manual mode DOWN switch ON	Less than 1 V	—	
		Manual mode DOWN switch OFF	8 V or more	—	
Stop light switch	29	Stop light switch ON	8 V or more	—	
		Stop light switch OFF	Less than 1 V	—	
P range switch	38	P range	Less than 1 V	—	
		Except for P range	8 V or more	—	
R range switch	37	R range	Less than 1 V	—	
		Except for R range	8 V or more	—	
N range switch	36	N range	Less than 1 V	—	
		Except for N range	8 V or more	—	
D range switch	35	D range	Less than 1 V	—	
		Except for D range	8 V or more	—	

Item	Terminal No.	Measuring condition	Measurement value	Resistance between terminal and chassis ground	Remarks
ATF temperature sensor	6	ATF temperature at 20°C (68°F)	Approx. 2.6 V	Approx. 2.6 kΩ	
		ATF temperature at 80°C (176°F)	Approx. 0.7 V	Approx. 370 Ω	
ATF temperature sensor GND	1	Always	Approx. 0 V	—	
Secondary pressure sensor power supply output	33	Ignition switch ON	5 V	—	
Secondary pressure sensor	5	Ignition switch ON, engine OFF	Approx. 0.5 V (0 MPa)	—	Value increases with increase of engine load. (0.5 — 4.5 V)
		Ignition switch ON, engine ON	Approx. 1.0 V (1.0 MPa)	—	
Secondary pressure sensor GND	2	Always	Approx. 0 V	—	
Primary speed sensor	14	While driving	0 or 5 V	—	Refer to the waveform (sensor)
Secondary speed sensor	13	While driving	0 or 5 V	—	Refer to the waveform (sensor)
Front wheel speed sensor	12	Engine ON, “P” or “N” range	0 or 5 V	—	Refer to the waveform (sensor)
Rear wheel speed sensor	11	Engine ON, “P” or “N” range	0 or 5 V	—	Refer to the waveform (sensor)
Self shut output	25	For three seconds after ignition switch ON and OFF	Less than 1 V	—	
		Ignition switch OFF	8 V or more		
F&R solenoid	16	Engine ON	Refer to the waveform (solenoid (1))	Approx. 4 — 6 Ω	Resistance value at 20°C (68°F). Value is higher as the temperature increase.
Secondary solenoid	32	Engine ON	Refer to the waveform (solenoid (2))	Approx. 5 — 7 Ω	Resistance value at 20°C (68°F). Value is higher as the temperature increase.
Primary UP solenoid	47	Engine ON, while UP shifting	Refer to the waveform (solenoid (3))	Approx. 10 — 13.5 Ω	Resistance value at 20°C (68°F). Value is higher as the temperature increase.
Primary DOWN solenoid	30	Engine ON, while DOWN shifting	Refer to the waveform (solenoid (4))	Approx. 10 — 13.5 Ω	Resistance value at 20°C (68°F). Value is higher as the temperature increase.
Lock-up duty solenoid	15	Lock-up ON	Refer to the waveform (solenoid (5))	Approx. 10 — 13.5 Ω	Resistance value at 20°C (68°F). Value is higher as the temperature increase.
AWD solenoid	48	Engine ON, “P” or “N” range	Refer to the waveform (solenoid (6))	Approx. 2 — 4.5 Ω	Resistance value at 20°C (68°F). Value is higher as the temperature increase.
		Engine ON, “D” range, brake ON	Refer to the waveform (solenoid (7))		

Item	Terminal No.	Measuring condition	Measurement value	Resistance between terminal and chassis ground	Remarks
Lock-up ON/OFF solenoid	31	With lock-up OFF	Less than 1 V	Approx. 13 — 18.5 Ω	Resistance value at 20°C (68°F). Value is higher as the temperature increase.
		With lock-up ON and in “R” range	Battery voltage or higher		
CAN communication line (+)	43	—	—	—	
CAN communication line (–)	44	—	—	—	
GND	26	Always	Approx. 0 V	—	
GND	42	Always	Approx. 0 V	—	

B: WAVEFORM

1. SENSOR

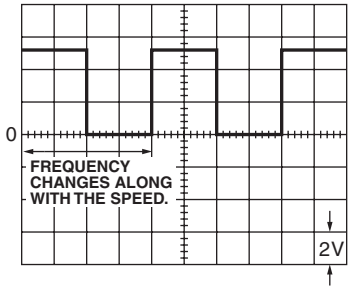

AT-04690

2. SOLENOID

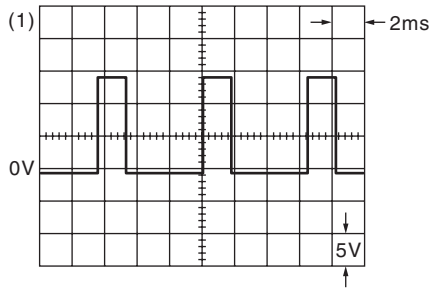

AT-05529

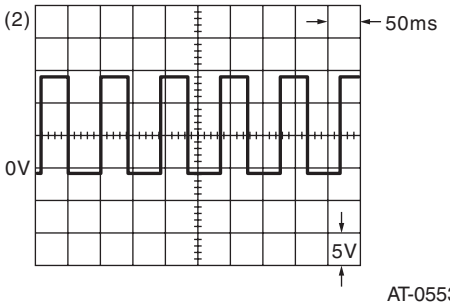

AT-05531

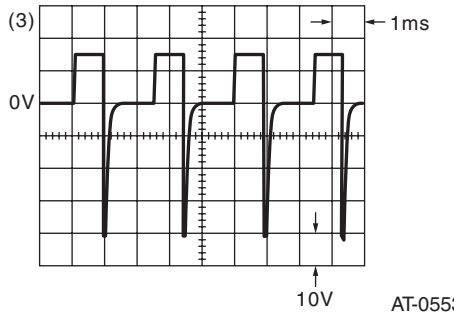

AT-05532

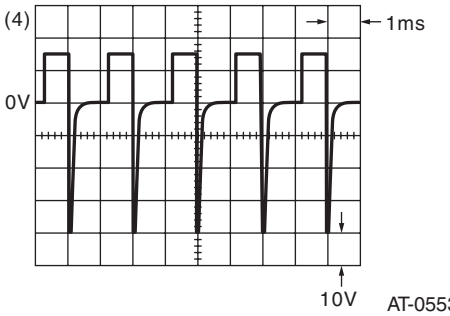

AT-05530

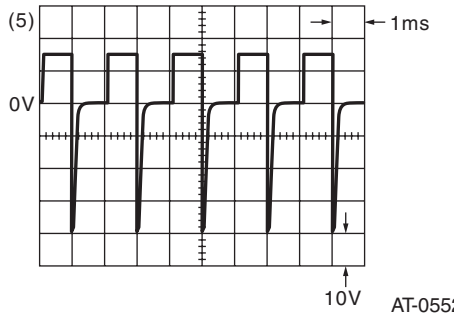

AT-05526

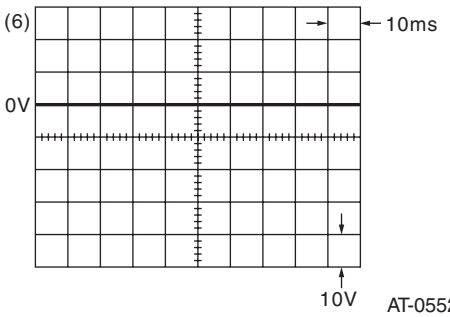

AT-05527

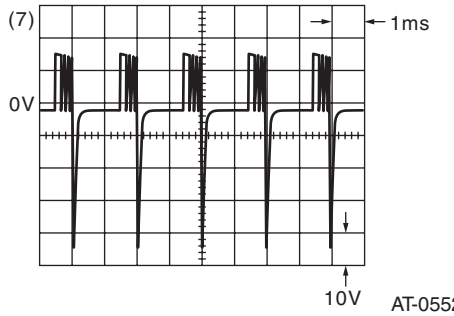

AT-05528

6. Subaru Select Monitor

A: OPERATION

1. HOW TO USE SUBARU SELECT MONITOR

For detailed operation procedures, refer to “Application help”.

2. READ CURRENT DATA

1) On «Start» display, select «Diagnosis».
2) On «Vehicle selection» display, input the vehicle information and select «Confirmed».
3) On «Main Menu» display, select «Each System».
4) On «Select System» display, select «Transmission Control System».
5) On «Select Function» display, select «Data Monitor».

Display	Contents	Unit of measure
Engine Speed	Engine speed signal transmitted from the ECM. Calculated from crankshaft position sensor signal. TCM input value.	rpm
Turbine Revolution Speed	Turbine rotation speed which is based on the primary pulley rotation speed calculated by the TCM using signals from the primary speed sensor, and is accelerated by the reduction gear ratio.	rpm
Accel opening angle	Accelerator pedal opening angle transmitted from the ECM. Value calculated from the accelerator pedal position sensor output. TCM input value.	%
Front Wheel Speed	Front wheel speed calculated from the forward/reverse clutch output axis rotation speed.	km/h or MPH
Rear Wheel Speed	Rear wheel speed calculated from the forward/reverse clutch output axis rotation speed.	km/h or MPH
ATF Temperature	Value calculated from the ATF temperature sensor output value. ATF temperature of the oil pan section.	°C or °F
Lock Up Duty Ratio	Lock-up duty solenoid control duty ratio. TCM output value.	%
Lock-Up ON/OFF Solenoid	Lock-up ON/OFF solenoid drive signal. Set to ON at a lockup condition. TCM output value.	ON or OFF
Transfer Duty Ratio	Transfer duty solenoid control duty ratio. TCM output value.	%
Actual Gear Ratio	Current gear ratio (rotation ratio of the pulley) calculated from the primary pulley axis rotation speed and the secondary pulley axis rotation speed.	—
Primary Rev Speed	Primary pulley rotation speed calculated by the TCM using signals from the primary speed sensor.	rpm
Secondary Rev Speed	Secondary pulley rotation speed calculated by the TCM using signals from the secondary speed sensor.	rpm
Front Wheel Speed	Front wheel rotation speed calculated from the forward/reverse clutch output axis rotation speed.	rpm
Rear Wheel Speed	Rear wheel rotation speed calculated from the forward/reverse clutch output axis rotation speed.	rpm
Stop Light Switch	Stop light SW signal. Set to ON when the brake pedal is depressed. TCM input value.	ON or OFF
Secondary Set Current	Value of the indicator current for controlling the secondary solenoid calculated by the TCM.	mA
Secondary Actual Current	Actual current value of the secondary solenoid. TCM output value.	mA
F&R Linear Solenoid Set Current	Value of the indicator current for controlling the F&R linear solenoid calculated by the TCM.	mA
F&R Linear Solenoid Actual Current	Actual current value of the F&R linear solenoid. TCM output value.	mA
ECU ACC	Battery voltage. TCM input value.	V
Primary UP Duty	Primary UP solenoid control duty ratio. TCM output value.	%
Primary DOWN Duty	Primary DOWN solenoid control duty ratio. TCM output value.	%
P Range	Inhibitor SW signal. Set to ON when the select lever is in P range. TCM input value.	ON or OFF

Display	Contents	Unit of measure
R Range	Inhibitor SW signal. Set to ON when the select lever is in R range. TCM input value.	ON or OFF
N Range	Inhibitor SW signal. Set to ON when the select lever is in N range. TCM input value.	ON or OFF
D Range	Inhibitor SW signal. Set to ON when the select lever is in D range. TCM input value.	ON or OFF
SI Drive mode(Display)	Currently selected SI-DRIVE mode, which is transmitted from meter. Determined by the SI-DRIVE SW operation. TCM input value.	I, S or S#
SI Drive mode(Control)	Current SI-DRIVE mode in ECM control, which is transmitted from the ECM. Determined by adjusting the mode determined by the SI-DRIVE SW operation inside the ECM. TCM input value.	I, S or S#
Shift Step in Manual Mode	Gear shift position in manual mode or in multi-stage shifting mode. TCM output value.	—
Tiptronic Mode Switch	Manual mode SW signal. Set to ON when the select lever is in the manual shift gate. TCM input value.	ON or OFF
Up Switch	Status of the paddle shift up SW. Set to ON when the plus (+) side of the steering wheel paddle shift is pulled. TCM input value.	ON or OFF
Down Switch	Status of the paddle shift down SW. Set to ON when the minus (–) side of the steering wheel paddle shift is pulled. TCM input value.	ON or OFF
secondary pressure sensor voltage.	Voltage value after an analog/digital conversion is done inside the TCM using the signal input from the secondary pressure sensor. TCM input value.	V
ATF Temp sensor voltage.	Sensor voltage value input from the ATF temperature sensor to the TCM. TCM input value.	V
Diagnosis Lamp	Transmission failure detection status. Set to ON when a failure is detected. AT oil temperature warning light blinks at 2 Hz. TCM output value.	ON or OFF
ATF Temperature Lamp	ATF high temperature detection status. Set to ON when high temperature is detected. AT oil temperature warning light illuminates. TCM output value.	ON or OFF
AT learning	AT initial learning completion status. AT oil temperature warning light blinks at 4 Hz when the learning is not completed. TCM output value.	Complete or Not Completed
Ignition SW ON Count	Number of times the ignition switch is turned ON since the vehicle was manufactured.	times
Count	Shows whether the elapsed time counter after turning ON the ignition switch is synchronized with the integrated unit (master unit) or an original counter. “Common” means the integrated unit, and “Originally” means that the original counter is used.	—
Time Count	Shows the elapsed time after turning ON the ignition switch.	ms
Actual Secondary Pressure	Pressure value applied to the secondary pulley cylinder (line pressure) detected by the secondary pressure sensor.	MPa
System Voltage	Power supply voltage supplied to the backup power supply (≈ battery voltage).	V

NOTE:
For detailed operation procedures, refer to “Application help”.

3. READ FREEZE FRAME DATA

1) On «Start» display, select «Diagnosis».
2) On «Vehicle selection» display, input the vehicle information and select «Confirmed».
3) On «Main Menu» display, select «Each System».
4) On «Select System» display, select «Transmission Control System».
5) On «Select Function» display, select «DTC».
6) On «DTC» display, select «FFD».

Display	Contents	Unit of measure
Engine Speed	Engine speed signal transmitted from the ECM. Calculated from crankshaft position sensor signal. TCM input value.	rpm
Turbine Revolution Speed	Turbine rotation speed which is based on the primary pulley rotation speed calculated by the TCM using signals from the primary speed sensor, and is accelerated by the reduction gear ratio.	rpm
Accel opening angle	Accelerator pedal opening angle transmitted from the ECM. Value calculated from the accelerator pedal position sensor output. TCM input value.	%
Front Wheel Speed	Front wheel speed calculated from the forward/reverse clutch output axis rotation speed.	km/h or MPH
Rear Wheel Speed	Rear wheel speed calculated from the forward/reverse clutch output axis rotation speed.	km/h or MPH
ATF Temperature	Value calculated from the ATF temperature sensor output value. ATF temperature of the oil pan section.	°C or °F
Lock Up Duty Ratio	Lock-up duty solenoid control duty ratio. TCM output value.	%
Lock-Up ON/OFF Solenoid	Lock-up ON/OFF solenoid drive signal. Set to ON at a lockup condition. TCM output value.	ON or OFF
Transfer Duty Ratio	Transfer duty solenoid control duty ratio. TCM output value.	%
Actual Gear Ratio	Current gear ratio (rotation ratio of the pulley) calculated from the primary pulley axis rotation speed and the secondary pulley axis rotation speed.	—
Primary Rev Speed	Primary pulley rotation speed calculated by the TCM using signals from the primary speed sensor.	rpm
Secondary Rev Speed	Secondary pulley rotation speed calculated by the TCM using signals from the secondary speed sensor.	rpm
Front Wheel Speed	Front wheel rotation speed calculated from the forward/reverse clutch output axis rotation speed.	rpm
Rear Wheel Speed	Rear wheel rotation speed calculated from the forward/reverse clutch output axis rotation speed.	rpm
Stop Light Switch	Stop light SW signal. Set to ON when the brake pedal is depressed. TCM input value.	ON or OFF
Secondary Set Current	Value of the indicator current for controlling the secondary solenoid calculated by the TCM.	mA
Secondary Actual Current	Actual current value of the secondary solenoid. TCM output value.	mA
F&R Linear Solenoid Set Current	Value of the indicator current for controlling the F&R linear solenoid calculated by the TCM.	mA
F&R Linear Solenoid Actual Current	Actual current value of the F&R linear solenoid. TCM output value.	mA
ECU ACC	Battery voltage. TCM input value.	V
Primary UP Duty	Primary UP solenoid control duty ratio. TCM output value.	%
Primary DOWN Duty	Primary DOWN solenoid control duty ratio. TCM output value.	%
P Range	Inhibitor SW signal. Set to ON when the select lever is in P range. TCM input value.	ON or OFF
R Range	Inhibitor SW signal. Set to ON when the select lever is in R range. TCM input value.	ON or OFF
N Range	Inhibitor SW signal. Set to ON when the select lever is in N range. TCM input value.	ON or OFF
D Range	Inhibitor SW signal. Set to ON when the select lever is in D range. TCM input value.	ON or OFF

Display	Contents	Unit of measure
SI Drive mode(Display)	Currently selected SI-DRIVE mode, which is transmitted from meter. Determined by the SI-DRIVE SW operation. TCM input value.	I, S or S#
SI Drive mode(Control)	Current SI-DRIVE mode in ECM control, which is transmitted from the ECM. Determined by adjusting the mode determined by the SI-DRIVE SW operation inside the ECM. TCM input value.	I, S or S#
Shift Step in Manual Mode	Gear shift position in manual mode or in multi-stage shifting mode. TCM output value.	—
Tiptronic Mode Switch	Manual mode SW signal. Set to ON when the select lever is in the manual shift gate. TCM input value.	ON or OFF
Up Switch	Status of the paddle shift up SW. Set to ON when the plus (+) side of the steering wheel paddle shift is pulled. TCM input value.	ON or OFF
Down Switch	Status of the paddle shift down SW. Set to ON when the minus (–) side of the steering wheel paddle shift is pulled. TCM input value.	ON or OFF
secondary pressure sensor voltage.	Voltage value after an analog/digital conversion is done inside the TCM using the signal input from the secondary pressure sensor. TCM input value.	V
ATF Temp sensor voltage.	Sensor voltage value input from the ATF temperature sensor to the TCM. TCM input value.	V
Diagnosis Lamp	Transmission failure detection status. Set to ON when a failure is detected. AT oil temperature warning light blinks at 2 Hz. TCM output value.	ON or OFF
ATF Temperature Lamp	ATF high temperature detection status. Set to ON when high temperature is detected. AT oil temperature warning light illuminates. TCM output value.	ON or OFF
Ignition SW ON Count	Number of times the ignition switch is turned ON since the vehicle was manufactured.	times
Count	Shows whether the elapsed time counter after turning ON the ignition switch is synchronized with the integrated unit (master unit) or an original counter. “Common” means the integrated unit, and “Originally” means that the original counter is used.	—
Time Count	Shows the elapsed time after turning ON the ignition switch.	ms
Actual Secondary Pressure	Pressure value applied to the secondary pulley cylinder (line pressure) detected by the secondary pressure sensor.	MPa
System Voltage	Power supply voltage supplied to the backup power supply (≈ battery voltage).	V

NOTE:
For detailed operation procedures, refer to “Application help”.

7. Read Diagnostic Trouble Code (DTC)

A: OPERATION

1) On «Start» display, select «Diagnosis».
2) On «Vehicle selection» display, input the vehicle information and select «Confirmed».
3) On «Main Menu» display, select «Each System».
4) On «Select System» display, select «Transmission Control System».
5) On «Select Function» display, select «DTC».

NOTE:
• For details concerning the DTC, refer to “List of Diagnostic Trouble Code (DTC)”. <Ref. to CVT(diag)-36, List of Diagnostic Trouble Code (DTC).>
• For detailed operation procedures, refer to “Application help”.

8. Clear Memory Mode

A: OPERATION

1) On «Start» display, select «Diagnosis».
2) On «Vehicle selection» display, input the vehicle information and select «Confirmed».
3) On «Main Menu» display, select «Each System».
4) On «Select System» display, select «Transmission Control System».
5) On «Select Function» display, select «DTC».
6) On «DTC» display, select «Clear Memory».

NOTE:
For detailed operation procedures, refer to “Application help”.

9. Inspection Mode

A: PROCEDURE

<Ref. to CVT(TR690)-45, Road Test.>

10.Drive Cycle

A: PROCEDURE

It is possible to complete diagnosis of the DTC by performing the indicated drive cycle. After the repair for the DTC, perform a necessary drive cycle and make sure the function recovers and the DTC is recorded.

1. PREPARATION FOR DRIVE CYCLE

1) Check that the battery voltage is 12 V or more and fuel remains approx. half [20 — 40 L (5.3 — 10.6 US gal, 4.4 — 8.8 Imp gal)].
2) After performing the diagnostics and Clear Memory Mode, check that no DTC remains. <Ref. to CVT(diag)-19, Clear Memory Mode.>

NOTE:
Perform the drive cycle after warming up the engine except when the ATF temperature at engine start is specified.

2. DRIVE CYCLE A

DTC	Item	Condition
P0601	Internal Control Module Memory Checksum Error	Perform the drive cycle A twice.
P0604	Internal Control Module Random Access Memory (RAM) Error	Perform the drive cycle A twice.
P062F	Internal Control Module EEPROM Error	Perform the drive cycle A twice.
P0712	Transmission Fluid Temperature Sensor "A" Circuit Low	—
P0842	Transmission Fluid Pressure Sensor/Switch "A" Circuit Low	—
P0843	Transmission Fluid Pressure Sensor/Switch "A" Circuit High	—
P0890	TCM Power Relay Sense Circuit Low	—
P0962	Pressure Control Solenoid "A" Control Circuit Low	—
P0963	Pressure Control Solenoid "A" Control Circuit High	—
P0966	Pressure Control Solenoid "B" Control Circuit Low	—
P0967	Pressure Control Solenoid "B" Control Circuit High	—
P160A	Random Access Memory (RAM) Error	Perform the drive cycle A twice.
P2530	Ignition Switch Run Position Circuit	—
P2763	Torque Converter Clutch Pressure Control Solenoid Control Circuit High	Perform the drive cycle A, then perform the drive cycle C.

Diagnostic procedure:
1) Start the engine.
2) Depress the brake pedal and move the select lever to each range at an interval of five seconds.

NOTE:
Move the select lever in the following order: “P” → “R” → “N” → “D” → “N” → “R” → “P”.

3. DRIVE CYCLE B

DTC	Item	Condition
P0711	Transmission Fluid Temperature Sensor "A" Circuit Range/Performance	—

Diagnostic procedure:
1) Start the engine under condition that ATF temperature is at 20°C (68°F) or below.
2) Drive in any driving pattern for 20 minutes. (Include driving at a constant legal speed (for 20 seconds) at least once.)

NOTE:
Repeat two or more driving cycles in this driving pattern.

4. DRIVE CYCLE C

DTC	Item	Condition
P0500	Vehicle Speed Sensor "A" Circuit	—
P0720	Output Shaft Speed Sensor Circuit	—
P0721	Output Shaft Speed Sensor Circuit Range/Performance	—
P0970	Pressure Control Solenoid "C" Control Circuit Low	—
P0971	Pressure Control Solenoid "C" Control Circuit High	—
P0973	Shift Solenoid "A" Control Circuit Low	—
P0974	Shift Solenoid "A" Control Circuit High	—
P0976	Shift Solenoid "B" Control Circuit Low	—
P0977	Shift Solenoid "B" Control Circuit High	—
P1706	Rear Output Shaft Speed Sensor Circuit No Signal	—
P170B	Rear Output Shaft Speed Sensor Circuit Range/Performance	—
P2158	Vehicle Speed Sensor "B" Circuit	—
P2746	Intermediate Shaft Speed Sensor "B" Circuit Range/Performance	—
P2747	Intermediate Shaft Speed Sensor "B" Circuit No Signal	—
P2750	Intermediate Shaft Speed Sensor "C" Circuit Range/Performance	—
P2751	Intermediate Shaft Speed Sensor "C" Circuit No Signal	—
P2763	Torque Converter Clutch Pressure Control Solenoid Control Circuit High	Perform the drive cycle A, then perform the drive cycle C.
P2764	Torque Converter Clutch Pressure Control Solenoid Control Circuit Low	—
P2769	Torque Converter Clutch Circuit Low	—
P2770	Torque Converter Clutch Circuit High	—

Diagnostic procedure:
1) Start the engine.
2) Accelerate slowly to a legal speed, and then decelerate slowly to a stop.

5. DRIVE CYCLE D

DTC	Item	Condition
P0713	Transmission Fluid Temperature Sensor "A" Circuit High	—
P0730	Incorrect Gear Ratio	—
P0746	Pressure Control Solenoid "A" Performance/Stuck Off	Perform the drive cycle D twice.
P0747	Pressure Control Solenoid "A" Stuck On	Perform the drive cycle D twice.
P0751	Shift Solenoid "A" Performance/Stuck Off	Perform the drive cycle D twice.
P0752	Shift Solenoid "A" Stuck On	Perform the drive cycle D twice.
P0756	Shift Solenoid "B" Performance/Stuck Off	Perform the drive cycle D twice.
P0757	Shift Solenoid "B" Stuck On	Perform the drive cycle D twice.
P0776	Pressure Control Solenoid "B" Performance/Stuck Off	Perform the drive cycle D twice.
P0841	Transmission Fluid Pressure Sensor/Switch "A" Circuit Range/Performance	—
P0961	Pressure Control Solenoid "A" Control Circuit Range/Performance	—
P0965	Pressure Control Solenoid "B" Control Circuit Range/Performance	—
P2757	Torque Converter Clutch Pressure Control Solenoid Control Circuit Performance/Stuck Off	Perform the drive cycle D twice.
P2758	Torque Converter Clutch Pressure Control Solenoid Control Circuit Stuck On	Perform the drive cycle D twice.

Diagnostic procedure:
1) Start the engine.
2) Drive in any driving pattern for 20 minutes. (Include driving at a constant legal speed (for 20 seconds) at least once.)

6. DRIVE CYCLE E

DTC	Item	Condition
P0801	Reverse Inhibit Control Circuit/Open	—
U0073	Control Module Communication Bus Off	—
U0100	Lost Communication With ECM/PCM “A”	—
U0122	Lost Communication With Vehicle Dynamics Control Module	—
U0140	Lost Communication With Body Control Module	—
U0155	Lost Communication With Instrument Panel Cluster (IPC) Control Module	—
U0164	Lost Communication With HVAC Control Module	—
U0401	Invalid Data Received From ECM/PCM “A”	—
U0416	Invalid Data Received From Vehicle Dynamics Control Module	—
U0422	Invalid Data Received From Body Control Module	—
U0423	Invalid Data Received From Instrument Panel Cluster Control Module	—
U0424	Invalid Data Received From HVAC Control Module	—
U1235	Lost Communication With EyeSight	—
U1433	Invalid Data Received From EyeSight	—

Diagnostic procedure:
1) Start the engine.

7. DRIVE CYCLE F

DTC	Item	Condition
P0705	Transmission Range Sensor "A" Circuit (PRNDL Input)	—

Diagnostic procedure:
1) Start the engine.
2) Depress the brake pedal and move the select lever to each range at an interval of five seconds.

NOTE:
Move the select lever in the following order: “P” → “R” → “N” → “D”.
3) Maintain the engine speed to 2,000 rpm for five seconds or more.

8. DRIVE CYCLE G

DTC	Item	Condition
P0708	Transmission Range Sensor "A" Circuit High	—

Diagnostic procedure:
1) Start the engine.
2) Drive for three seconds at 16 km/h (10 MPH).

NOTE:
Drive in “D” range and “R” range.

9. DRIVE CYCLE H

DTC	Item	Condition
P0719	Brake Switch "B" Circuit Low	—
P0724	Brake Switch "B" Circuit High	—
P0951	Auto Shift Manual Control Circuit Range/Performance	—

Diagnostic procedure:
1) Start the engine.
2) Operate the stop light switch or the manual mode switch.

NOTE:
Drive in “D” range and “R” range.
3) Read the data of the stop light switch or the manual mode switch using the Subaru Select Monitor. Or measure the terminal voltage.

11.Active Test

A: OPERATION

CAUTION:
- **Be sure to perform the active test while the engine is not running.**
- **After executing the active test, execute the Clear Memory Mode. <Ref. to CVT(diag)-19, Clear Memory Mode.>**

1) On «Start» display, select «Diagnosis».
2) On «Vehicle selection» display, input the vehicle information and select «Confirmed».
3) On «Main Menu» display, select «Each System».
4) On «Select System» display, select «Transmission Control System».
5) On «Select Function» display, select «Active Test».

Item	SSM display	Execution condition
Activating the actuator ON/OFF	F&R Clutch Solenoid	When all of the following conditions are met: • P range • Ignition switch is ON (engine stops) • Battery voltage is 10.9 V or more
	Secondary Solenoid	
	Primary Down Solenoid	
	Primary Up Solenoid	
	AWD Solenoid	
	Lock-Up Duty Solenoid	
	Lock-Up ON/OFF Solenoid	

NOTE:
For detailed operation procedures, refer to “Application help”.

12.Learning Control

A: GENERAL DESCRIPTION

- Follow the messages displayed on the Subaru Select Monitor when working.
- When the following work is performed, perform learning work for the transmission.

Replacement of TCM/Replacement or disassembly of transmission assembly/Replacement of control valve body/Clearing AT leaning value is executed.

B: PROCEDURE

1. PREPARATION FOR LEARNING

1) Warm up or cool down until the ATF temperature displayed on the Subaru Select Monitor is 40 — 65°C (104 — 149°F).
2) After stopping the vehicle, shift the select lever to “P” range.
3) Apply the parking brake.
4) Lift up the vehicle.

CAUTION:
While working, be sure to keep the lower edge of the tires 30 cm or more above the ground as vehicle will vibrate.
5) Connect the Subaru Select Monitor to data link connector.
6) Turn the ignition switch to ON.
7) Turn off all switches causing an electrical load, such as headlights, A/C, seat heater and rear defogger, etc.

2. SIMPLE LEARNING

NOTE:
Simple learning is performed with the vehicle lifted, without actually running the vehicle.

CAUTION:
Do not turn the power of the Subaru Select Monitor OFF during work, and do not disconnect the data link connector.
1) On «Start» display, select «Diagnosis».
2) On «Vehicle selection» display, input the vehicle information and select «Confirmed».
3) On «Main Menu» display, select «Each System».
4) On «Select System» display, select «Transmission Control System».
5) On «Select Function» display, select «Work Support».
6) On «Work Support» display, select «AT learning mode».
7) Follow the messages displayed on the screen when working.

NOTE:
During AT learning in progress, AT OIL TEMP light in the combination meter starts flashing at 2 Hz and the learning operation starts. When the AT OIL TEMP light which was flashing at 2 Hz goes off, the following message is displayed on the screen.

8) When «AT learning normally ended.» is displayed, simple AT learning is completed.

NOTE:
- If communication error occurs during learning, retry the “AT learning mode” from the beginning.
- If the message «Execute AT learning again after fixing troubles of the vehicle» appears during learning, select [OK] and display the DTC list. After repairing the locations indicated by the DTC, start the “AT learning mode” over from the beginning.
- When communication error occurs during learning, select lever does not shift occasionally. If select lever does not shift, turn the ignition switch to OFF before operating the select lever.
- If the message «AT learning ended abnormally. Try again from the beginning.» is displayed, start the “AT learning mode” over from the beginning.

Display	Main causes for abnormal termination
AT learning ended abnormally. Try again from the beginning.	• Fault is detected during AT learning. • The accelerator pedal is depressed during AT learning. • An unspecified operation was performed during AT learning • ATF temperature becomes out of specification during AT learning. • Battery voltage is low. • Malfunction indicator light illuminates. • Parking brake is not applied hard enough. • Brake pedal is not fully depressed. • Abnormal idle speed increase, etc.

- For detailed operation procedures, refer to “PC application help for Subaru Select Monitor”.

13.AT OIL TEMP Warning Light Display

A: OPERATION

The AT OIL TEMP light illuminates or blinks, when the ATF temperature is high and malfunction occurs in CVT.

- At normal condition

After turning the ignition switch to ON, illuminates for 2 seconds then goes off.

- When ATF temperature is high

AT OIL TEMP light illuminates when the ATF temperature is abnormally high with the ignition switch ON.

- When malfunction is detected

AT OIL TEMP light blinks at 2 Hz when the TCM detects the malfunction of CVT with the ignition switch ON. In this case, inspect using “Diagnostic Procedure with Diagnostic Trouble Code (DTC)”. <Ref. to CVT(diag)-40, Diagnostic Procedure with Diagnostic Trouble Code (DTC).>

- When AT learning is not finished

AT OIL TEMP light repeats “Blinking at 4 Hz → Turning OFF” every two seconds, when the AT learning is not completed with the ignition switch ON. In this case, perform the “Learning”. (During AT learning, the light blinks at 2 Hz or illuminates.) <Ref. to CVT(diag)-26, Learning Control.>

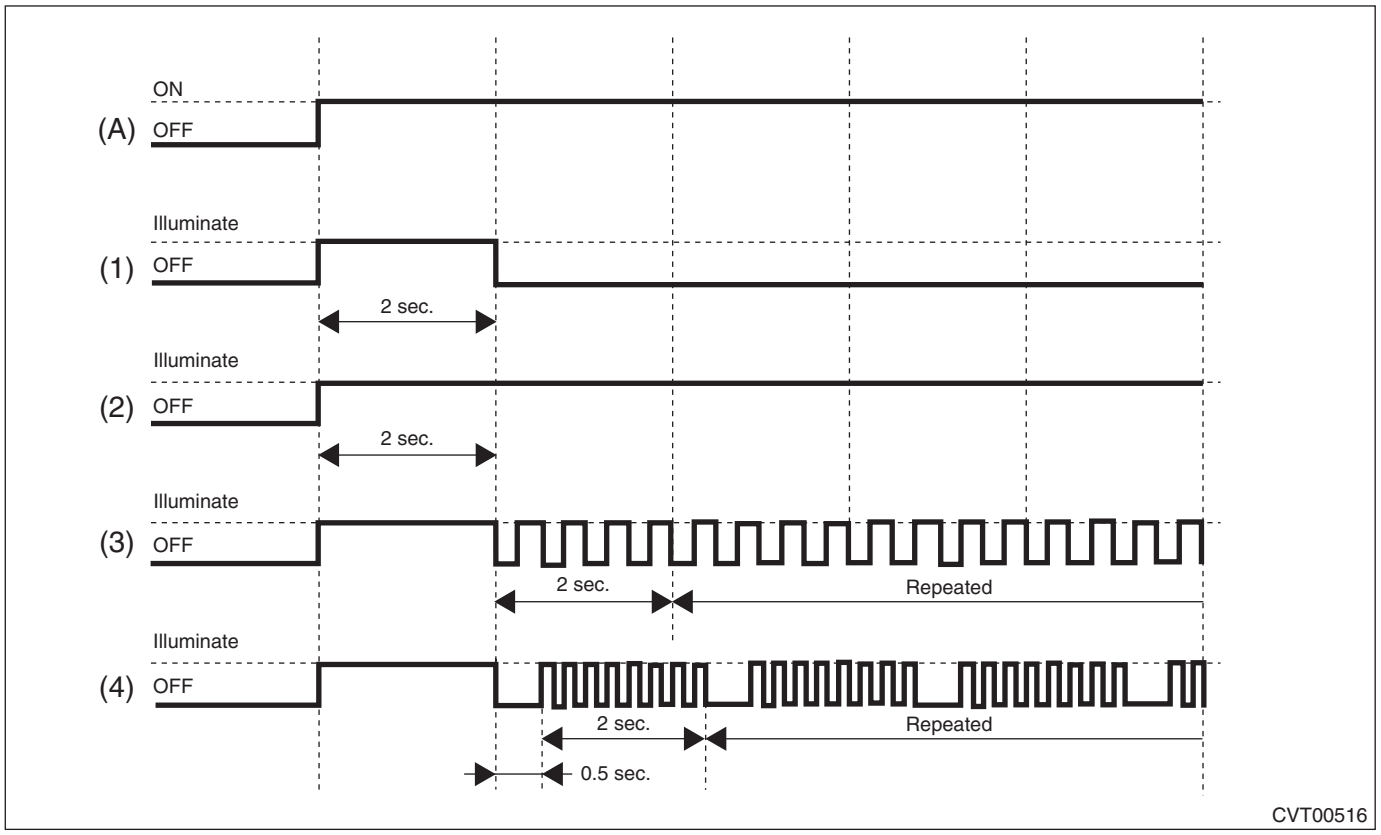

(A) Ignition switch condition

(1) At normal condition
(2) When ATF temperature is high
(3) When malfunction is detected
(4) When AT learning is not finished

If the AT OIL TEMP light does not illuminate, or illumination patterns are not as above, check the AT OIL TEMP light circuit. <Ref. to CVT(diag)-29, INSPECTION, AT OIL TEMP Warning Light Display.>

B: INSPECTION

DIAGNOSIS:

- CAN communication is lost with the combination meter.
- Combination meter malfunction
- TCM is in special control mode.
- AT learning is not finished.

TROUBLE SYMPTOM:

- When the ignition switch is turned to ON, the AT OIL TEMP light does not illuminate.
- AT OIL TEMP light remains lit after engine start.

	Step	Check	Yes	No
1	**CHECK DTC.** Read the DTC relating the TCM using the Subaru Select Monitor.	Is DTC U0155 or U0423 displayed?	Perform the self-diagnosis of combination meter.	Go to step **2**.
2	**CHECK DTC.** Read the DTC relating the TCM using the Subaru Select Monitor.	Are DTCs other than U0155 and U0423 displayed?	Perform the diagnosis according to DTC.	Go to step **3**.
3	**CHECK COMBINATION METER.** Read DTC of combination meter.	Is DTC displayed?	Perform the diagnosis according to DTC.	Go to step **4**.
4	**CHECK AT OIL TEMP LIGHT.** Turn the ignition switch to ON.	Does AT OIL TEMP light illuminate and then go off in 2 seconds?	Go to step **5**.	Perform the self-diagnosis of combination meter. <Ref. to IDI-6, SELF-DIAGNOSIS DISPLAY MODE, OPERATION, Combination Meter System.>
5	**CHECK AT OIL TEMP LIGHT.** Start the engine.	Does the AT OIL TEMP light go off?	Current condition is normal. Go back to Basic Diagnostic Procedure. <Ref. to CVT(diag)-2, Basic Diagnostic Procedure.>	Go to step **6**.
6	**CHECK DTC.** Read the DTC relating the TCM using the Subaru Select Monitor.	Is DTC displayed?	Perform the diagnosis according to DTC.	Go to step **7**.
7	**CHECK TCM.** Read the data of «ATF Temperature Lamp» using the Subaru Select Monitor.	Is “ON” displayed?	Go to step **8**.	Perform the self-diagnosis of combination meter. <Ref. to IDI-6, SELF-DIAGNOSIS DISPLAY MODE, OPERATION, Combination Meter System.>
8	**CHECK TCM.** Read the data of «ATF Temp.» using the Subaru Select Monitor.	Is the display 125°C or more?	Go to step **9**.	Replace the TCM. <Ref. to CVT(TR690)-126, Transmission Control Module (TCM).>

	Step	Check	Yes	No
9	**CHECK ATF TEMPERATURE.** Check the real fluid temperature from the transmission case surface temperature.	Does it clearly differ from the «ATF Temp.» displayed on Subaru Select Monitor?	Perform the diagnosis according to DTC P0712. If there is no problem, perform the diagnosis according to DTC P0713.	When ATF temperature can be judged as actually high, perform the diagnosis again after the ATF temperature lowers.

14.AWD Warning Light Display

A: OPERATION

AWD light blinks when a fault occurs in AWD.

- At normal condition

After turning the ignition switch to ON, illuminates for 2 seconds then goes off.

- When malfunction is detected

AWD light blinks at 2 Hz when any of the following malfunctions are detected with the ignition switch ON.

1. When tire with different diameter is installed.
2. When air pressure of any of four tires is excessively low.

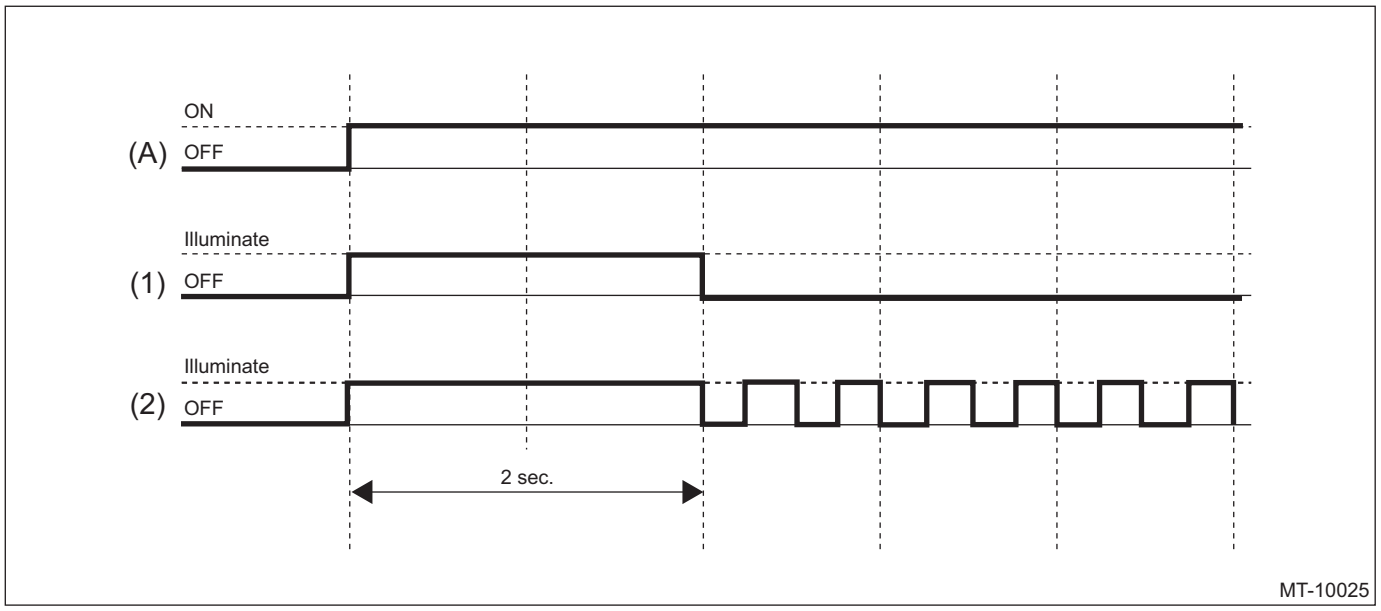

(A) Ignition switch condition

(1) At normal condition (2) When malfunction is detected

If the AWD light does not illuminate, or illumination patterns are not as above, check the AWD light circuit. <Ref. to CVT(diag)-32, INSPECTION, AWD Warning Light Display.>

B: INSPECTION

DIAGNOSIS:
- CAN communication is lost with the combination meter.
- Combination meter malfunction

TROUBLE SYMPTOM:
- When the ignition switch is turned to ON, the AWD light does not illuminate.
- AWD light remains lit after engine start.
- AWD light is blinking immediately after engine start.

	Step	Check	Yes	No
1	**CHECK DTC.** Read the DTC relating the TCM using the Subaru Select Monitor.	Is DTC U0155 or U0423 displayed?	Perform the self-diagnosis of combination meter.	Go to step **2**.
2	**CHECK DTC.** Read the DTC relating the TCM using the Subaru Select Monitor.	Are DTCs other than U0155 and U0423 displayed?	Perform the diagnosis according to DTC.	Go to step **3**.
3	**CHECK COMBINATION METER.** Read DTC of combination meter.	Is DTC displayed?	Perform the diagnosis according to DTC.	Go to step **4**.
4	**CHECK AWD LIGHT.** Turn the ignition switch to ON.	Does AWD light illuminate and then go off in 2 seconds?	Go to step **5**.	Perform the self-diagnosis of combination meter. <Ref. to IDI-6, SELF-DIAGNOSIS DISPLAY MODE, OPERATION, Combination Meter System.>
5	**CHECK AWD LIGHT.** Start the engine.	Does the AWD light go off?	Current condition is normal. Go back to Basic Diagnostic Procedure. <Ref. to CVT(diag)-2, Basic Diagnostic Procedure.>	Go to step **6**.
6	**CHECK DTC.** Read the DTC relating the TCM using the Subaru Select Monitor.	Is DTC displayed?	Perform the diagnosis according to DTC.	Go to step **7**.
7	**CHECK COMBINATION METER.** Perform the self-diagnosis of combination meter. <Ref. to IDI-6, SELF-DIAGNOSIS DISPLAY MODE, OPERATION, Combination Meter System.>	Is there any trouble with the combination meter?	Repair the combination meter.	Replace the TCM. <Ref. to CVT(TR690)-126, Transmission Control Module (TCM).>

15.Diagnostic Procedure for Subaru Select Monitor Communication

A: COMMUNICATION FOR INITIALIZING IMPOSSIBLE

DIAGNOSIS:
Defective harness connector
TROUBLE SYMPTOM:
Subaru Select Monitor communication failure

CAUTION:
Use the check board when measuring the TCM terminal voltage and resistance.

WIRING DIAGRAM:

CVT control system <Ref. to WI-144, CVT Control System.>

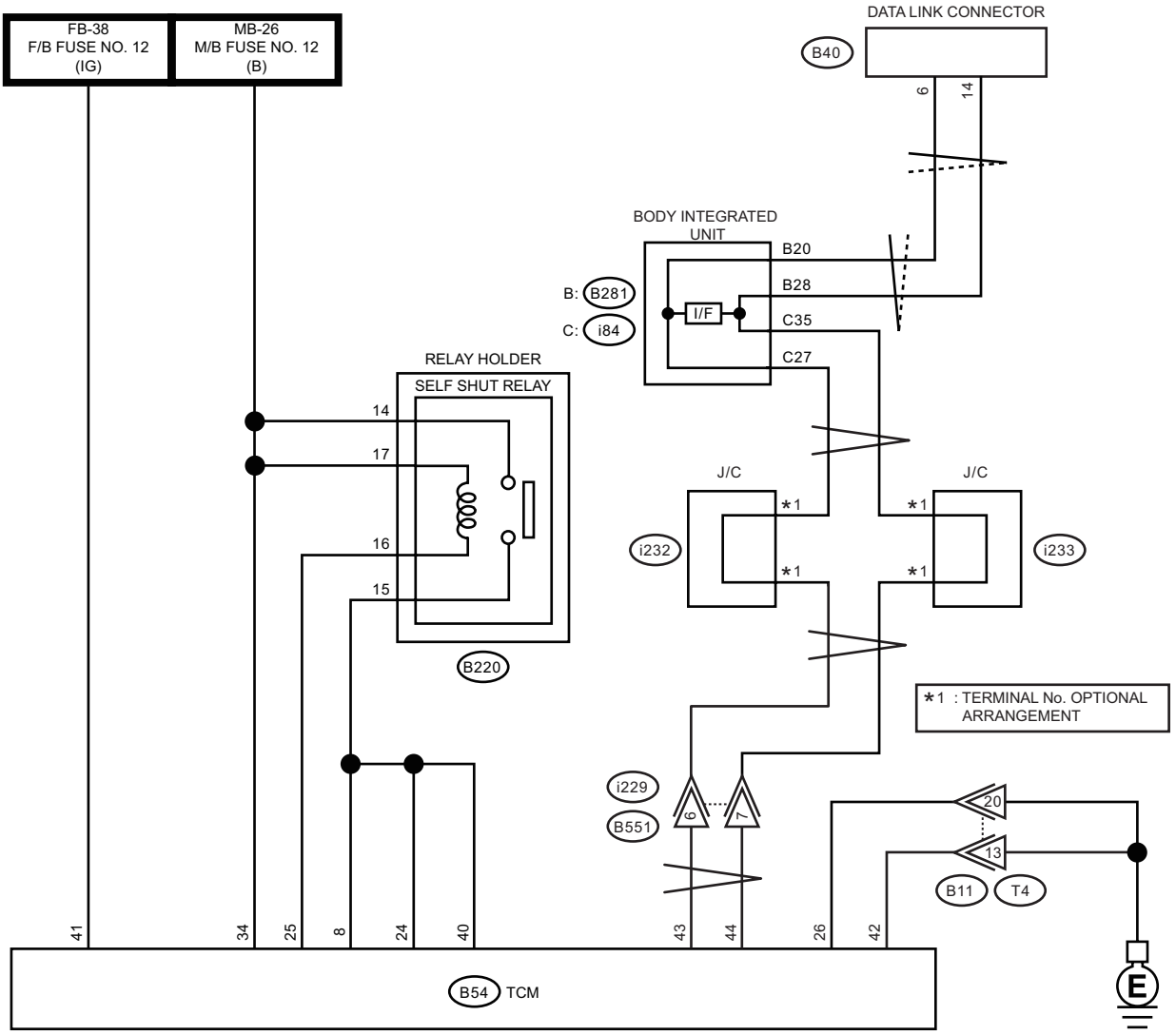

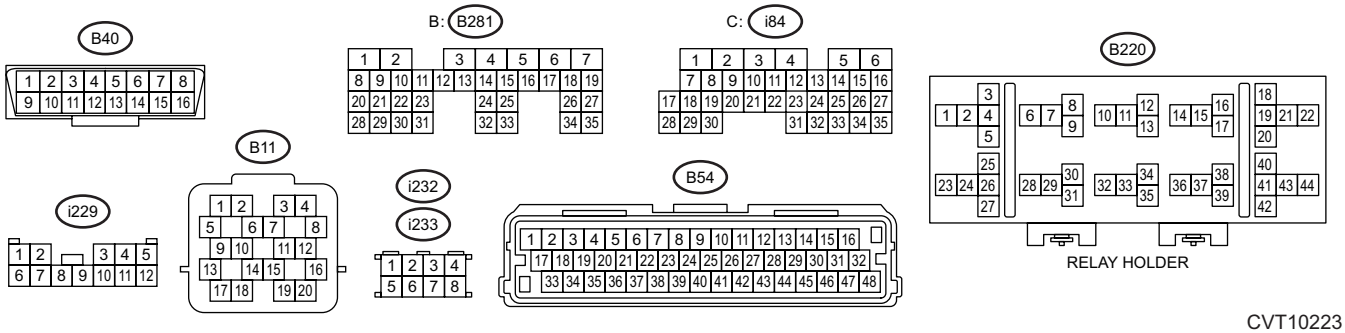

CVT10223

Step		Check	Yes	No
1	**CHECK IGNITION SWITCH.**	Is the ignition switch ON?	Go to step **2**.	Turn the ignition switch to ON, and select the transmission using the Subaru Select Monitor.

	Step	Check	Yes	No
2	**CHECK BATTERY.** 1) Turn the ignition switch to OFF. 2) Measure the battery voltage.	Is the voltage 11 V or more?	Go to step **3**.	Charge or replace the battery.
3	**CHECK BATTERY TERMINAL.**	Is there poor contact at battery terminal?	Repair or tighten the battery terminal.	Go to step **4**.
4	**CHECK INSTALLATION OF TCM CONNECTOR.** Turn the ignition switch to OFF.	Is the TCM connector inserted into the TCM until the clamp locks?	Go to step **5**.	Insert the TCM connector to TCM.
5	**CHECK LAN SYSTEM.** Perform the diagnosis for LAN system. <Ref. to LAN(diag)-2, Basic Diagnostic Procedure.>	Is there any fault in LAN system?	Perform the diagnosis according to DTC for LAN system. <Ref. to LAN(diag)-109, List of Diagnostic Trouble Code (DTC).>	Go to step **6**.
6	**CHECK SUBARU SELECT MONITOR COMMUNICATION.** 1) Turn the ignition switch to ON. 2) Check whether communication to transmission system can be executed normally.	Is «Select Function» displayed?	Check DTC of TCM. <Ref. to CVT(diag)-18, Read Diagnostic Trouble Code (DTC).>	Go to step **7**.
7	**CHECK POWER SUPPLY CIRCUIT.** 1) Turn the ignition switch to OFF. 2) Disconnect the TCM connector. 3) Turn the ignition switch to ON. (Engine OFF) 4) Measure the ignition power supply voltage between TCM connector and chassis ground. ***Connector & terminal*** ***(B54) No. 8 (+) — Chassis ground (–):*** ***(B54) No. 24 (+) — Chassis ground (–):*** ***(B54) No. 34 (+) — Chassis ground (–):*** ***(B54) No. 40 (+) — Chassis ground (–):*** ***(B54) No. 41 (+) — Chassis ground (–):***	Is the voltage 10 — 13 V?	Go to step **8**.	Repair the open circuit of harness between TCM and battery.
8	**CHECK HARNESS CONNECTOR BETWEEN TCM AND CHASSIS GROUND.** 1) Turn the ignition switch to OFF. 2) Measure the resistance of harness between TCM connector and chassis ground. ***Connector & terminal*** ***(B54) No. 26 — Chassis ground:*** ***(B54) No. 42 — Chassis ground:***	Is the resistance less than 10 Ω?	Go to step **9**.	Repair the open circuit of the TCM ground circuit and poor contact of connector.
9	**CHECK POOR CONTACT OF CONNECTOR.**	Is there poor contact of control module power supply, ground circuit and data link connector?	Repair the connector.	Replace the TCM. <Ref. to CVT(TR690)-126, Transmission Control Module (TCM).>

16.List of Diagnostic Trouble Code (DTC)

A: LIST

DTC	Item	Content of diagnosis	Reference
P0500	Vehicle Speed Sensor "A" Circuit	Wheel speed data from VDC CM&H/U is abnormal.	<Ref. to CVT(diag)-40, DTC P0500 VEHICLE SPEED SENSOR "A" CIRCUIT, Diagnostic Procedure with Diagnostic Trouble Code (DTC).>
P0601	Internal Control Module Memory Checksum Error	TCM ROM is faulty.	<Ref. to CVT(diag)-41, DTC P0601 INTERNAL CONTROL MODULE MEMORY CHECKSUM ERROR, Diagnostic Procedure with Diagnostic Trouble Code (DTC).>
P0604	Internal Control Module Random Access Memory (RAM) Error	TCM RAM is faulty.	<Ref. to CVT(diag)-42, DTC P0604 INTERNAL CONTROL MODULE RANDOM ACCESS MEMORY (RAM) ERROR, Diagnostic Procedure with Diagnostic Trouble Code (DTC).>
P062F	Internal Control Module EEPROM Error	TCM EEPROM is faulty.	<Ref. to CVT(diag)-43, DTC P062F INTERNAL CONTROL MODULE EEPROM ERROR, Diagnostic Procedure with Diagnostic Trouble Code (DTC).>
P0705	Transmission Range Sensor "A" Circuit (PRNDL Input)	Inhibitor switch malfunction or short circuit	<Ref. to CVT(diag)-44, DTC P0705 TRANSMISSION RANGE SENSOR "A" CIRCUIT (PRNDL INPUT), Diagnostic Procedure with Diagnostic Trouble Code (DTC).>
P0708	Transmission Range Sensor "A" Circuit High	Inhibitor switch malfunction or open circuit	<Ref. to CVT(diag)-46, DTC P0708 TRANSMISSION RANGE SENSOR "A" CIRCUIT HIGH, Diagnostic Procedure with Diagnostic Trouble Code (DTC).>
P0711	Transmission Fluid Temperature Sensor "A" Circuit Range/Performance	ATF temperature sensor is faulty or input signal circuit is faulty.	<Ref. to CVT(diag)-49, DTC P0711 TRANSMISSION FLUID TEMPERATURE SENSOR "A" CIRCUIT RANGE/PERFORMANCE, Diagnostic Procedure with Diagnostic Trouble Code (DTC).>
P0712	Transmission Fluid Temperature Sensor "A" Circuit Low	ATF temperature sensor is faulty or input signal circuit is shorted.	<Ref. to CVT(diag)-50, DTC P0712 TRANSMISSION FLUID TEMPERATURE SENSOR "A" CIRCUIT LOW, Diagnostic Procedure with Diagnostic Trouble Code (DTC).>
P0713	Transmission Fluid Temperature Sensor "A" Circuit High	ATF temperature sensor is faulty or input signal circuit is open or shorted.	<Ref. to CVT(diag)-52, DTC P0713 TRANSMISSION FLUID TEMPERATURE SENSOR "A" CIRCUIT HIGH, Diagnostic Procedure with Diagnostic Trouble Code (DTC).>
P0719	Brake Switch "B" Circuit Low	Brake switch is faulty or input signal circuit is open or shorted.	<Ref. to CVT(diag)-54, DTC P0719 BRAKE SWITCH "B" CIRCUIT LOW, Diagnostic Procedure with Diagnostic Trouble Code (DTC).>
P0720	Output Shaft Speed Sensor Circuit	Front wheel speed sensor is faulty or input signal circuit is open or shorted.	<Ref. to CVT(diag)-56, DTC P0720 OUTPUT SHAFT SPEED SENSOR CIRCUIT, Diagnostic Procedure with Diagnostic Trouble Code (DTC).>
P0721	Output Shaft Speed Sensor Circuit Range/Performance	Front wheel speed sensor characteristics is abnormal.	<Ref. to CVT(diag)-60, DTC P0721 OUTPUT SHAFT SPEED SENSOR CIRCUIT RANGE/PERFORMANCE, Diagnostic Procedure with Diagnostic Trouble Code (DTC).>
P0724	Brake Switch "B" Circuit High	Brake switch is faulty or input signal circuit is shorted.	<Ref. to CVT(diag)-61, DTC P0724 BRAKE SWITCH "B" CIRCUIT HIGH, Diagnostic Procedure with Diagnostic Trouble Code (DTC).>
P0730	Incorrect Gear Ratio	Primary speed sensor, secondary speed sensor, control valve, or chain is faulty.	<Ref. to CVT(diag)-63, DTC P0730 INCORRECT GEAR RATIO, Diagnostic Procedure with Diagnostic Trouble Code (DTC).>
P0746	Pressure Control Solenoid "A" Performance/ Stuck Off	Secondary solenoid is faulty, hydraulic circuit is stuck in low pressure side.	<Ref. to CVT(diag)-65, DTC P0746 PRESSURE CONTROL SOLENOID "A" PERFORMANCE/STUCK OFF, Diagnostic Procedure with Diagnostic Trouble Code (DTC).>
P0747	Pressure Control Solenoid "A" Stuck On	Secondary solenoid is faulty, hydraulic circuit is stuck in high pressure side.	<Ref. to CVT(diag)-69, DTC P0747 PRESSURE CONTROL SOLENOID "A" STUCK ON, Diagnostic Procedure with Diagnostic Trouble Code (DTC).>
P0751	Shift Solenoid "A" Performance/Stuck Off	Primary UP solenoid is faulty, hydraulic circuit is stuck in low pressure side.	<Ref. to CVT(diag)-73, DTC P0751 SHIFT SOLENOID "A" PERFORMANCE/STUCK OFF, Diagnostic Procedure with Diagnostic Trouble Code (DTC).>

DTC	Item	Content of diagnosis	Reference
P0752	Shift Solenoid "A" Stuck On	Primary UP solenoid is faulty, hydraulic circuit is stuck in high pressure side.	<Ref. to CVT(diag)-76, DTC P0752 SHIFT SOLENOID "A" STUCK ON, Diagnostic Procedure with Diagnostic Trouble Code (DTC).>
P0756	Shift Solenoid "B" Performance/Stuck Off	Primary DOWN solenoid is faulty, hydraulic circuit is stuck in low pressure side.	<Ref. to CVT(diag)-79, DTC P0756 SHIFT SOLENOID "B" PERFORMANCE/STUCK OFF, Diagnostic Procedure with Diagnostic Trouble Code (DTC).>
P0757	Shift Solenoid "B" Stuck On	Primary DOWN solenoid is faulty, hydraulic circuit is stuck in high pressure side.	<Ref. to CVT(diag)-82, DTC P0757 SHIFT SOLENOID "B" STUCK ON, Diagnostic Procedure with Diagnostic Trouble Code (DTC).>
P0776	Pressure Control Solenoid "B" Performance/ Stuck Off	F&R solenoid is faulty, hydraulic circuit is stuck in low pressure side.	<Ref. to CVT(diag)-85, DTC P0776 PRESSURE CONTROL SOLENOID "B" PERFORMANCE/STUCK OFF, Diagnostic Procedure with Diagnostic Trouble Code (DTC).>
P0801	Reverse Inhibit Control Circuit/Open	Shift lock solenoid is faulty or output signal circuit is open or shorted.	<Ref. to CVT(diag)-88, DTC P0801 REVERSE INHIBIT CONTROL CIRCUIT/OPEN, Diagnostic Procedure with Diagnostic Trouble Code (DTC).>
P0841	Transmission Fluid Pressure Sensor/Switch "A" Circuit Range/Performance	Secondary pressure sensor or control valve is faulty	<Ref. to CVT(diag)-89, DTC P0841 TRANSMISSION FLUID PRESSURE SENSOR/SWITCH "A" CIRCUIT RANGE/PERFORMANCE, Diagnostic Procedure with Diagnostic Trouble Code (DTC).>
P0842	Transmission Fluid Pressure Sensor/Switch "A" Circuit Low	Secondary pressure sensor is faulty or input signal circuit is open or shorted.	<Ref. to CVT(diag)-94, DTC P0842 TRANSMISSION FLUID PRESSURE SENSOR/SWITCH "A" CIRCUIT LOW, Diagnostic Procedure with Diagnostic Trouble Code (DTC).>
P0843	Transmission Fluid Pressure Sensor/Switch "A" Circuit High	Secondary pressure sensor is faulty or input signal circuit is shorted.	<Ref. to CVT(diag)-96, DTC P0843 TRANSMISSION FLUID PRESSURE SENSOR/SWITCH "A" CIRCUIT HIGH, Diagnostic Procedure with Diagnostic Trouble Code (DTC).>
P0890	TCM Power Relay Sense Circuit Low	Self-shut relay is faulty or input signal circuit is open or shorted.	<Ref. to CVT(diag)-98, DTC P0890 TCM POWER RELAY SENSE CIRCUIT LOW, Diagnostic Procedure with Diagnostic Trouble Code (DTC).>
P0951	Auto Shift Manual Control Circuit Range/Performance	Manual mode switch is faulty or input signal circuit is open or shorted.	<Ref. to CVT(diag)-100, DTC P0951 AUTO SHIFT MANUAL CONTROL CIRCUIT RANGE/PERFORMANCE, Diagnostic Procedure with Diagnostic Trouble Code (DTC).>
P0961	Pressure Control Solenoid "A" Control Circuit Range/Performance	Characteristics of secondary solenoid is abnormal.	<Ref. to CVT(diag)-102, DTC P0961 PRESSURE CONTROL SOLENOID "A" CONTROL CIRCUIT RANGE/PERFORMANCE, Diagnostic Procedure with Diagnostic Trouble Code (DTC).>
P0962	Pressure Control Solenoid "A" Control Circuit Low	Secondary solenoid is faulty or output signal circuit is shorted.	<Ref. to CVT(diag)-104, DTC P0962 PRESSURE CONTROL SOLENOID "A" CONTROL CIRCUIT LOW, Diagnostic Procedure with Diagnostic Trouble Code (DTC).>
P0963	Pressure Control Solenoid "A" Control Circuit High	Secondary solenoid is faulty or output signal circuit is open or shorted.	<Ref. to CVT(diag)-106, DTC P0963 PRESSURE CONTROL SOLENOID "A" CONTROL CIRCUIT HIGH, Diagnostic Procedure with Diagnostic Trouble Code (DTC).>
P0965	Pressure Control Solenoid "B" Control Circuit Range/Performance	F&R solenoid, forward clutch or control valve is faulty.	<Ref. to CVT(diag)-108, DTC P0965 PRESSURE CONTROL SOLENOID "B" CONTROL CIRCUIT RANGE/PERFORMANCE, Diagnostic Procedure with Diagnostic Trouble Code (DTC).>
P0966	Pressure Control Solenoid "B" Control Circuit Low	F&R solenoid is faulty or output signal circuit is shorted.	<Ref. to CVT(diag)-110, DTC P0966 PRESSURE CONTROL SOLENOID "B" CONTROL CIRCUIT LOW, Diagnostic Procedure with Diagnostic Trouble Code (DTC).>
P0967	Pressure Control Solenoid "B" Control Circuit High	F&R solenoid is faulty or output signal circuit is open or shorted.	<Ref. to CVT(diag)-112, DTC P0967 PRESSURE CONTROL SOLENOID "B" CONTROL CIRCUIT HIGH, Diagnostic Procedure with Diagnostic Trouble Code (DTC).>
P0970	Pressure Control Solenoid "C" Control Circuit Low	AWD solenoid is faulty or output signal circuit is shorted.	<Ref. to CVT(diag)-114, DTC P0970 PRESSURE CONTROL SOLENOID "C" CONTROL CIRCUIT LOW, Diagnostic Procedure with Diagnostic Trouble Code (DTC).>
P0971	Pressure Control Solenoid "C" Control Circuit High	AWD solenoid is faulty or output signal circuit is open or shorted.	<Ref. to CVT(diag)-116, DTC P0971 PRESSURE CONTROL SOLENOID "C" CONTROL CIRCUIT HIGH, Diagnostic Procedure with Diagnostic Trouble Code (DTC).>

DTC	Item	Content of diagnosis	Reference
P0973	Shift Solenoid "A" Control Circuit Low	Primary UP solenoid is faulty or output signal circuit is shorted.	<Ref. to CVT(diag)-118, DTC P0973 SHIFT SOLENOID "A" CONTROL CIRCUIT LOW, Diagnostic Procedure with Diagnostic Trouble Code (DTC).>
P0974	Shift Solenoid "A" Control Circuit High	Primary UP solenoid is faulty or output signal circuit is open or shorted.	<Ref. to CVT(diag)-120, DTC P0974 SHIFT SOLENOID "A" CONTROL CIRCUIT HIGH, Diagnostic Procedure with Diagnostic Trouble Code (DTC).>
P0976	Shift Solenoid "B" Control Circuit Low	Primary DOWN solenoid is faulty or output signal circuit is shorted.	<Ref. to CVT(diag)-122, DTC P0976 SHIFT SOLENOID "B" CONTROL CIRCUIT LOW, Diagnostic Procedure with Diagnostic Trouble Code (DTC).>
P0977	Shift Solenoid "B" Control Circuit High	Primary DOWN solenoid is faulty or output signal circuit is open or shorted.	<Ref. to CVT(diag)-124, DTC P0977 SHIFT SOLENOID "B" CONTROL CIRCUIT HIGH, Diagnostic Procedure with Diagnostic Trouble Code (DTC).>
P160A	Random Access Memory (RAM) Error	TCM RAM is faulty.	<Ref. to CVT(diag)-126, DTC P160A RANDOM ACCESS MEMORY (RAM) ERROR, Diagnostic Procedure with Diagnostic Trouble Code (DTC).>
P1706	Rear Output Shaft Speed Sensor Circuit No Signal	Rear wheel speed sensor is faulty or input signal circuit is open or shorted.	<Ref. to CVT(diag)-127, DTC P1706 REAR OUTPUT SHAFT SPEED SENSOR CIRCUIT NO SIGNAL, Diagnostic Procedure with Diagnostic Trouble Code (DTC).>
P170B	Rear Output Shaft Speed Sensor Circuit Range/Performance	Rear wheel speed sensor characteristics is abnormal.	<Ref. to CVT(diag)-131, DTC P170B REAR OUTPUT SHAFT SPEED SENSOR CIRCUIT RANGE/PERFORMANCE, Diagnostic Procedure with Diagnostic Trouble Code (DTC).>
P2158	Vehicle Speed Sensor "B" Circuit	Wheel speed data from VDC CM&H/U is abnormal.	<Ref. to CVT(diag)-132, DTC P2158 VEHICLE SPEED SENSOR "B" CIRCUIT, Diagnostic Procedure with Diagnostic Trouble Code (DTC).>
P2530	Ignition Switch Run Position Circuit	Ignition SW circuit is faulty.	<Ref. to CVT(diag)-133, DTC P2530 IGNITION SWITCH RUN POSITION CIRCUIT, Diagnostic Procedure with Diagnostic Trouble Code (DTC).>
P2746	Intermediate Shaft Speed Sensor "B" Circuit Range/Performance	Primary speed sensor is faulty or input signal circuit is open or shorted.	<Ref. to CVT(diag)-135, DTC P2746 INTERMEDIATE SHAFT SPEED SENSOR "B" CIRCUIT RANGE/PERFORMANCE, Diagnostic Procedure with Diagnostic Trouble Code (DTC).>
P2747	Intermediate Shaft Speed Sensor "B" Circuit No Signal	Primary speed sensor signal no input	<Ref. to CVT(diag)-136, DTC P2747 INTERMEDIATE SHAFT SPEED SENSOR "B" CIRCUIT NO SIGNAL, Diagnostic Procedure with Diagnostic Trouble Code (DTC).>
P2750	Intermediate Shaft Speed Sensor "C" Circuit Range/Performance	Secondary speed sensor is faulty or input signal circuit is open or shorted.	<Ref. to CVT(diag)-140, DTC P2750 INTERMEDIATE SHAFT SPEED SENSOR "C" CIRCUIT RANGE/PERFORMANCE, Diagnostic Procedure with Diagnostic Trouble Code (DTC).>
P2751	Intermediate Shaft Speed Sensor "C" Circuit No Signal	Secondary speed sensor signal no input	<Ref. to CVT(diag)-142, DTC P2751 INTERMEDIATE SHAFT SPEED SENSOR "C" CIRCUIT NO SIGNAL, Diagnostic Procedure with Diagnostic Trouble Code (DTC).>
P2757	Torque Converter Clutch Pressure Control Solenoid Control Circuit Performance/Stuck Off	Lock-up duty solenoid is faulty, hydraulic circuit is stuck in low pressure side.	<Ref. to CVT(diag)-146, DTC P2757 TORQUE CONVERTER CLUTCH PRESSURE CONTROL SOLENOID CONTROL CIRCUIT PERFORMANCE/STUCK OFF, Diagnostic Procedure with Diagnostic Trouble Code (DTC).>
P2758	Torque Converter Clutch Pressure Control Solenoid Control Circuit Stuck On	Lock-up duty solenoid is faulty, hydraulic circuit is stuck in high pressure side.	<Ref. to CVT(diag)-150, DTC P2758 TORQUE CONVERTER CLUTCH PRESSURE CONTROL SOLENOID CONTROL CIRCUIT STUCK ON, Diagnostic Procedure with Diagnostic Trouble Code (DTC).>
P2763	Torque Converter Clutch Pressure Control Solenoid Control Circuit High	Lock-up duty solenoid is faulty or output signal circuit is open or shorted.	<Ref. to CVT(diag)-154, DTC P2763 TORQUE CONVERTER CLUTCH PRESSURE CONTROL SOLENOID CONTROL CIRCUIT HIGH, Diagnostic Procedure with Diagnostic Trouble Code (DTC).>
P2764	Torque Converter Clutch Pressure Control Solenoid Control Circuit Low	Lock-up duty solenoid is faulty or output signal circuit is shorted.	<Ref. to CVT(diag)-156, DTC P2764 TORQUE CONVERTER CLUTCH PRESSURE CONTROL SOLENOID CONTROL CIRCUIT LOW, Diagnostic Procedure with Diagnostic Trouble Code (DTC).>

DTC	Item	Content of diagnosis	Reference
P2769	Torque Converter Clutch Circuit Low	Lock-up ON/OFF solenoid is faulty or output signal circuit is shorted.	<Ref. to CVT(diag)-158, DTC P2769 TORQUE CONVERTER CLUTCH CIRCUIT LOW, Diagnostic Procedure with Diagnostic Trouble Code (DTC).>
P2770	Torque Converter Clutch Circuit High	Lock-up ON/OFF solenoid is faulty or output signal circuit is open or shorted.	<Ref. to CVT(diag)-160, DTC P2770 TORQUE CONVERTER CLUTCH CIRCUIT HIGH, Diagnostic Procedure with Diagnostic Trouble Code (DTC).>
U0073	Control Module Communication Bus Off	CAN bus is shorted or communication error.	<Ref. to CVT(diag)-162, DTC U0073 CONTROL MODULE COMMUNICATION BUS OFF, Diagnostic Procedure with Diagnostic Trouble Code (DTC).>
U0100	Lost Communication With ECM/PCM “A”	Detected that the engine data has not yet arrived.	<Ref. to CVT(diag)-162, DTC U0100 LOST COMMUNICATION WITH ECM/PCM “A”, Diagnostic Procedure with Diagnostic Trouble Code (DTC).>
U0122	Lost Communication With Vehicle Dynamics Control Module	Detected that the VDC data has not yet arrived.	<Ref. to CVT(diag)-163, DTC U0122 LOST COMMUNICATION WITH VEHICLE DYNAMICS CONTROL MODULE, Diagnostic Procedure with Diagnostic Trouble Code (DTC).>
U0140	Lost Communication With Body Control Module	Detected that the body integrated unit data has not yet arrived.	<Ref. to CVT(diag)-163, DTC U0140 LOST COMMUNICATION WITH BODY CONTROL MODULE, Diagnostic Procedure with Diagnostic Trouble Code (DTC).>
U0155	Lost Communication With Instrument Panel Cluster (IPC) Control Module	Detected that the meter data has not yet arrived.	<Ref. to CVT(diag)-164, DTC U0155 LOST COMMUNICATION WITH INSTRUMENT PANEL CLUSTER (IPC) CONTROL MODULE, Diagnostic Procedure with Diagnostic Trouble Code (DTC).>
U0164	Lost Communication With HVAC Control Module	Detected that the air conditioner data has not yet arrived.	<Ref. to CVT(diag)-164, DTC U0164 LOST COMMUNICATION WITH HVAC CONTROL MODULE, Diagnostic Procedure with Diagnostic Trouble Code (DTC).>
U0401	Invalid Data Received From ECM/PCM “A”	Detected abnormality of the engine data.	<Ref. to CVT(diag)-165, DTC U0401 INVALID DATA RECEIVED FROM ECM/PCM “A”, Diagnostic Procedure with Diagnostic Trouble Code (DTC).>
U0416	Invalid Data Received From Vehicle Dynamics Control Module	Detected abnormality of the VDC data.	<Ref. to CVT(diag)-165, DTC U0416 INVALID DATA RECEIVED FROM VEHICLE DYNAMICS CONTROL MODULE, Diagnostic Procedure with Diagnostic Trouble Code (DTC).>
U0422	Invalid Data Received From Body Control Module	Detected abnormality of the body integrated unit data.	<Ref. to CVT(diag)-166, DTC U0422 INVALID DATA RECEIVED FROM BODY CONTROL MODULE, Diagnostic Procedure with Diagnostic Trouble Code (DTC).>
U0423	Invalid Data Received From Instrument Panel Cluster Control Module	Detected abnormality of the meter data.	<Ref. to CVT(diag)-166, DTC U0423 INVALID DATA RECEIVED FROM INSTRUMENT PANEL CLUSTER CONTROL MODULE, Diagnostic Procedure with Diagnostic Trouble Code (DTC).>
U0424	Invalid Data Received From HVAC Control Module	Detected abnormality of the air conditioner data.	<Ref. to CVT(diag)-167, DTC U0424 INVALID DATA RECEIVED FROM HVAC CONTROL MODULE, Diagnostic Procedure with Diagnostic Trouble Code (DTC).>
U1235	Lost Communication With EyeSight	Detected that the EyeSight data has not yet arrived.	<Ref. to CVT(diag)-167, DTC U1235 LOST COMMUNICATION WITH EyeSight, Diagnostic Procedure with Diagnostic Trouble Code (DTC).>
U1433	Invalid Data Received From EyeSight	Detected abnormality of the EyeSight data.	<Ref. to CVT(diag)-168, DTC U1433 INVALID DATA RECEIVED FROM EyeSight, Diagnostic Procedure with Diagnostic Trouble Code (DTC).>

17.Diagnostic Procedure with Diagnostic Trouble Code (DTC)

A: DTC P0500 VEHICLE SPEED SENSOR "A" CIRCUIT

DTC DETECTING CONDITION:
Immediately at fault recognition
TROUBLE SYMPTOM:
VDC does not operate.

Step		Check	Yes	No
1	**CHECK DTC.** Read the DTC of VDC system using the Subaru Select Monitor.	Is DTC displayed?	Perform the diagnosis according to DTC. <Ref. to VDC(diag)-55, List of Diagnostic Trouble Code (DTC).>	Repair the poor contact of connector and harness between VDCCM&H/U and wheel speed sensor.

1. OUTLINE OF DIAGNOSIS

- Detect the malfunction of VDC wheel speed sensor.
- Judge as NG when the wheel speed sensor normal status signal from VDC is cleared.

2. EXECUTION CONDITION

Secondary parameters	Execution condition
12 V battery system voltage	≥ 10.9 V

3. DIAGNOSTIC METHOD

If the duration of time while the following conditions are met is longer than the time indicated, judge as NG.

Judgment Value

Malfunction Criteria	Threshold Value
Signal of malfunction from Vehicle dynamics control module NOTE: The Vehicle dynamics control module detects malfunction if one of the speed sensors does not output a signal and the other vehicle speed sensor output signal is above 7.46 MPH	ON

Time Needed for Diagnosis: 2.5 seconds
Malfunction Indicator Light Illumination: Does not illuminate.

B: DTC P0601 INTERNAL CONTROL MODULE MEMORY CHECKSUM ERROR

DTC DETECTING CONDITION:
Detected when two consecutive driving cycles with fault occur.
TROUBLE SYMPTOM:
TCM ROM malfunction

	Step	Check	Yes	No
1	**CHECK DTC.** 1) Perform the Clear Memory Mode using the Subaru Select Monitor. <Ref. to CVT(diag)-19, Clear Memory Mode.> 2) Read the DTC.	Is DTC P0601 displayed?	Replace the TCM. <Ref. to CVT(TR690)-126, Transmission Control Module (TCM).>	Current condition is normal. Check for interference from noise, etc.

1. OUTLINE OF DIAGNOSIS

- Detect the malfunction in ROM area of the TCM.
- Judge as NG when the consistency in the ROM area is lost.

2. EXECUTION CONDITION

Secondary parameters	Execution condition
12 V battery system voltage	≥ 9 V

3. DIAGNOSTIC METHOD

If the duration of time while the following conditions are met is longer than the time indicated, judge as NG.

Judgment Value

Malfunction Criteria	Threshold Value
Checksum (ROM)	Error

Time Needed for Diagnosis: Immediately
Malfunction Indicator Light Illumination: Illuminates when malfunction occurs in 2 continuous driving cycles.

C: DTC P0604 INTERNAL CONTROL MODULE RANDOM ACCESS MEMORY (RAM) ERROR

DTC DETECTING CONDITION:
Detected when two consecutive driving cycles with fault occur.
TROUBLE SYMPTOM:
TCM RAM malfunction

Step		Check	Yes	No
1	**CHECK DTC.** 1) Perform the Clear Memory Mode using the Subaru Select Monitor. <Ref. to CVT(diag)-19, Clear Memory Mode.> 2) Read the DTC.	Is DTC P0604 displayed?	Replace the TCM. <Ref. to CVT(TR690)-126, Transmission Control Module (TCM).>	Current condition is normal. Check for interference from noise, etc.

1. OUTLINE OF DIAGNOSIS

- Detect the malfunction in RAM area of the TCM.
- Judge as NG if an attempt to write to RAM area failed.

2. EXECUTION CONDITION

Secondary parameters	Execution condition
12 V battery system voltage	≥ 10 V

3. DIAGNOSTIC METHOD

If the duration of time while the following conditions are met is longer than the time indicated, judge as NG.

Judgment Value

Malfunction Criteria	Threshold Value
Writing-check (RAM) NOTE: This check is carried out about the RAM only used for CAN communication.	Error

Time Needed for Diagnosis: Immediately
Malfunction Indicator Light Illumination: Illuminates when malfunction occurs in 2 continuous driving cycles.

D: DTC P062F INTERNAL CONTROL MODULE EEPROM ERROR

DTC DETECTING CONDITION:
Detected when two consecutive driving cycles with fault occur.
TROUBLE SYMPTOM:
TCM EEPROM malfunction

	Step	Check	Yes	No
1	**CHECK DTC.** 1) Perform the Clear Memory Mode using the Subaru Select Monitor. <Ref. to CVT(diag)-19, Clear Memory Mode.> 2) Read the DTC.	Is DTC P062F displayed?	Replace the TCM. <Ref. to CVT(TR690)-126, Transmission Control Module (TCM).>	Current condition is normal. Check for interference from noise, etc.

1. OUTLINE OF DIAGNOSIS

Diagnosis 1
- Detect the malfunction in EEPROM area of the TCM.
- Judge as NG if an attempt to write to EEPROM area failed.

Diagnosis 2
- Detect the malfunction in EEPROM area of the TCM.
- Judge as NG when the consistency in the EEPROM area is lost.

2. EXECUTION CONDITION

Secondary parameters	Execution condition
Diagnosis 1	
12 V battery system voltage	≥ 9 V
Diagnosis 2	
12 V battery system voltage	≥ 9 V

3. DIAGNOSTIC METHOD

If the duration of time while the following conditions are met is longer than the time indicated, judge as NG.

Judgment Value

Malfunction Criteria	Threshold Value
Diagnosis 1	
Writing-check (EEPROM)	Error
Diagnosis 2	
Checksum (EEPROM)	Error

Time Needed for Diagnosis: Immediately
Malfunction Indicator Light Illumination: Illuminates when malfunction occurs in 2 continuous driving cycles.

E: DTC P0705 TRANSMISSION RANGE SENSOR "A" CIRCUIT (PRNDL INPUT)

DTC DETECTING CONDITION:
Immediately at fault recognition
TROUBLE SYMPTOM:
- Shift characteristics are erroneous.
- The range position of the select lever and the position of shift indicator display do not match.

CAUTION:
Use the check board when measuring the TCM terminal voltage and resistance.
WIRING DIAGRAM:
CVT control system <Ref. to WI-144, CVT Control System.>

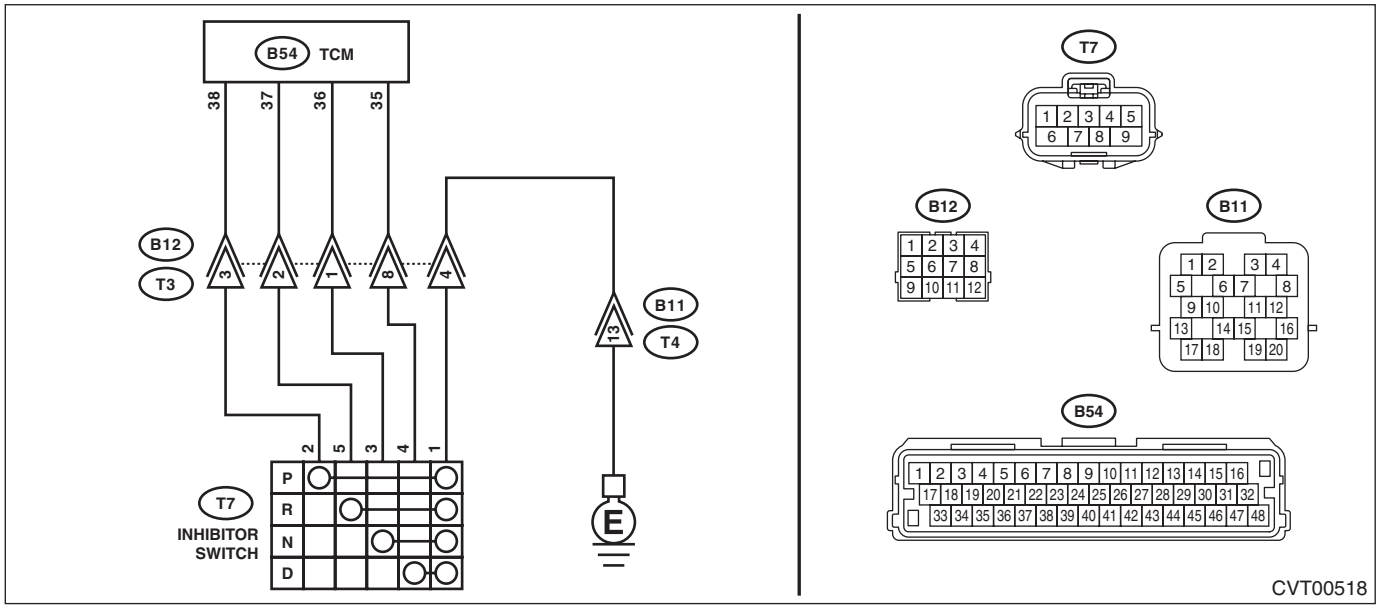

Step		Check	Yes	No
1	**CHECK INPUT SIGNAL FOR TCM.** 1) Turn the ignition switch to ON. 2) Move the select lever to each range, and read the data of «P Range», «R Range Signal», «N Range» and «D Range Signal» using the Subaru Select Monitor.	Is display “OFF” for the range other than corresponding range?	Go to step **5**.	Go to step **2**.
2	**CHECK HARNESS.** 1) Turn the ignition switch to OFF. 2) Disconnect the TCM connector. 3) Disconnect the transmission connector. 4) Measure the resistance between TCM connector and chassis ground. ***Connector & terminal*** ***(B54) No. 38 — Chassis ground:*** ***(B54) No. 37 — Chassis ground:*** ***(B54) No. 36 — Chassis ground:*** ***(B54) No. 35 — Chassis ground:***	Is each resistance 1 MΩ or more?	Go to step **3**.	Repair the short circuit of body harness.
3	**CHECK HARNESS.** 1) Disconnect the inhibitor switch connector. 2) Measure the resistance between transmission connector and chassis ground. ***Connector & terminal*** ***(T3) No. 3 — Chassis ground:*** ***(T3) No. 2 — Chassis ground:*** ***(T3) No. 1 — Chassis ground:*** ***(T3) No. 8 — Chassis ground:***	Is each resistance 1 MΩ or more?	Go to step **4**.	Repair the short circuit of transmission harness.

	Step	Check	Yes	No
4	**CHECK INHIBITOR SWITCH.** Move the select lever to each range, and measure the resistance between inhibitor switch terminals. ***Terminals*** ***No. 2 — No. 1:*** ***No. 5 — No. 1:*** ***No. 3 — No. 1:*** ***No. 4 — No. 1:***	Is the resistance other than corresponding range 1 MΩ or more?	Go to step **5**.	Replace the inhibitor switch. <Ref. to CVT(TR690)-93, Inhibitor Switch.>
5	**CHECK FOR POOR CONTACT.**	Is there poor contact between TCM, inhibitor switch, transmission ground?	Repair the poor contact.	Replace the TCM. <Ref. to CVT(TR690)-126, Transmission Control Module (TCM).>

1. OUTLINE OF DIAGNOSIS

- Detect the malfunction of Range Switch.
- Judge as NG if more than one input of Range Switch are detected.

2. EXECUTION CONDITION

Secondary parameters	Execution condition
12 V battery system voltage	≥ 10 V
Engine speed	≥ 400 rpm

3. DIAGNOSTIC METHOD

If the duration of time while the following conditions are met is longer than the time indicated, judge as NG.

Judgment Value

Malfunction Criteria	Threshold Value
Two or more transmission range switches ON NOTE: "Transmission range switch ON" is defined as transmission range switch input voltage < 1.7 V.	True

Time Needed for Diagnosis: 3 seconds
Malfunction Indicator Light Illumination: Illuminates as soon as a malfunction occurs.

F: DTC P0708 TRANSMISSION RANGE SENSOR "A" CIRCUIT HIGH

DTC DETECTING CONDITION:
Immediately at fault recognition
TROUBLE SYMPTOM:
- Shift characteristics are erroneous.
- The range position of the select lever and the position of shift indicator display do not match.

CAUTION:
Use the check board when measuring the TCM terminal voltage and resistance.
WIRING DIAGRAM:
CVT control system <Ref. to WI-144, CVT Control System.>

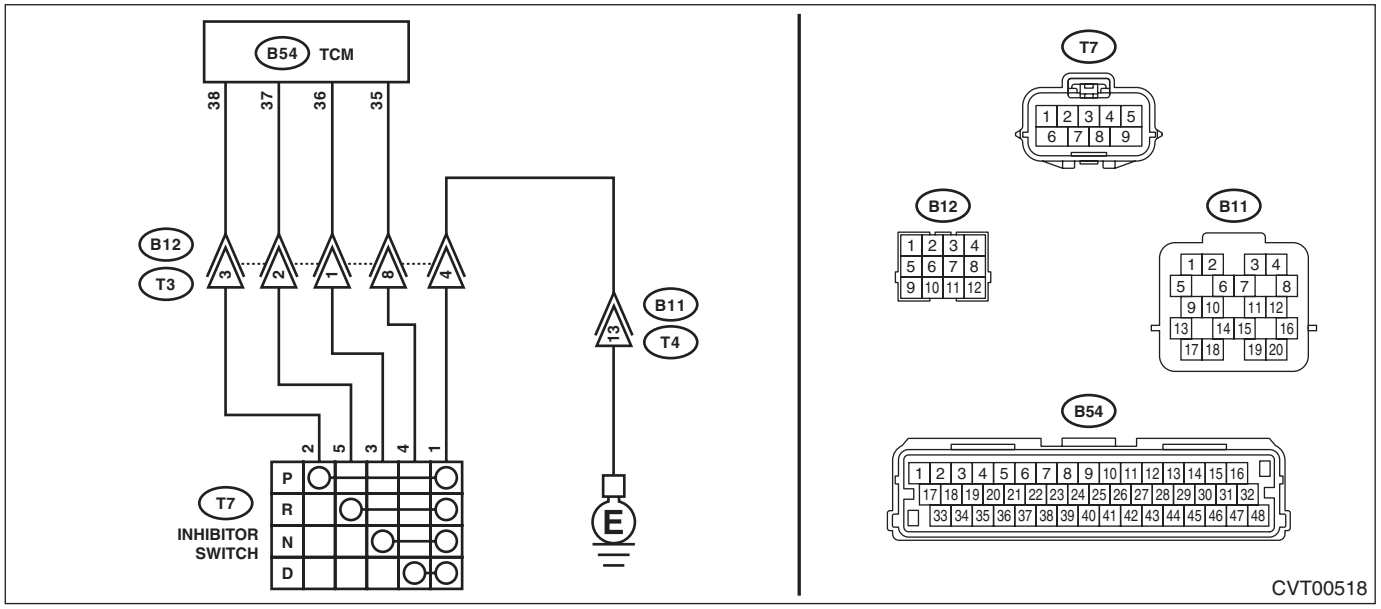

	Step	Check	Yes	No
1	**CHECK INPUT SIGNAL FOR TCM.** 1) Turn the ignition switch to ON. 2) Move the select lever to each range, and read the data of «P Range», «R Range Signal», «N Range» and «D Range Signal» using the Subaru Select Monitor.	Is the display of the corresponding range “ON”?	Go to step **7**.	Go to step **2**.
2	**CHECK HARNESS.** 1) Turn the ignition switch to OFF. 2) Disconnect the TCM connector. 3) Disconnect the transmission connector. 4) Measure the resistance of harness between TCM connector and transmission connector. ***Connector & terminal*** ***(B54) No. 38 — (B12) No. 3:*** ***(B54) No. 37 — (B12) No. 2:*** ***(B54) No. 36 — (B12) No. 1:*** ***(B54) No. 35 — (B12) No. 8:***	Is each resistance less than 1 Ω?	Go to step **3**.	Repair the open circuit of body harness.
3	**CHECK HARNESS.** Measure the resistance of harness between inhibitor switch connector and transmission ground. ***Connector & terminal*** ***(T7) No. 1 — Transmission ground:***	Is the resistance less than 1 Ω?	Go to step **4**.	Repair the open circuit of harness.

	Step	Check	Yes	No
4	**CHECK HARNESS.** 1) Disconnect the inhibitor switch connector. 2) Measure the resistance between transmission connector and inhibitor switch connector. ***Connector & terminal*** ***(T3) No. 3 — (T7) No. 2:*** ***(T3) No. 2 — (T7) No. 5:*** ***(T3) No. 1 — (T7) No. 3:*** ***(T3) No. 8 — (T7) No. 4:***	Is each resistance less than 1 Ω?	Go to step **5**.	Repair the open circuit of transmission harness.
5	**CHECK INHIBITOR SWITCH.** Move the select lever to each range, and measure the resistance between inhibitor switch terminals. ***Terminals*** ***No. 2 — No. 1:*** ***No. 5 — No. 1:*** ***No. 3 — No. 1:*** ***No. 4 — No. 1:***	Is the resistance of the corresponding range less than 1 MΩ?	Go to step **6**.	Replace the inhibitor switch. <Ref. to CVT(TR690)-93, Inhibitor Switch.>
6	**CHECK HARNESS.** 1) Turn the ignition switch to ON. 2) Measure the voltage between each connector and chassis ground. ***Connector & terminal*** ***Transmission connector (B12 side)*** ***(B12) No. 3 (+) — Chassis ground (–):*** ***(B12) No. 2 (+) — Chassis ground (–):*** ***(B12) No. 1 (+) — Chassis ground (–):*** ***(B12) No. 8 (+) — Chassis ground (–):*** ***Transmission connector (T7 side)*** ***(T7) No. 2 (+) — Chassis ground (–):*** ***(T7) No. 5 (+) — Chassis ground (–):*** ***(T7) No. 3 (+) — Chassis ground (–):*** ***(T7) No. 4 (+) — Chassis ground (–):***	Is each voltage less than 1 V?	Go to step **7**.	Repair the harness which outputs 1 V or more.
7	**CHECK FOR POOR CONTACT.**	Is there poor contact between TCM, inhibitor switch, transmission ground?	Repair the poor contact.	Replace the TCM. <Ref. to CVT(TR690)-126, Transmission Control Module (TCM).>

1. OUTLINE OF DIAGNOSIS

- Detect the malfunction of Range Switch.
- Judge as NG if there is no input from all Range Switches.

2. EXECUTION CONDITION

Secondary parameters	Execution condition
12 V battery system voltage	≥ 10 V
Vehicle speed (calculated from measured output shaft speed * sensor)	≥ 6 MPH

* Measured output shaft speed: Measured rear output shaft speed × 0.543 ** + Measured front output shaft speed × (1 – 0.543)
** 0.543: Center differential gear ratio

3. DIAGNOSTIC METHOD

If the duration of time while the following conditions are met is longer than the time indicated, judge as NG.

Judgment Value

Malfunction Criteria	Threshold Value
All transmission range switches OFF NOTE: “Transmission range switch OFF” is defined as transmission range switch input voltage ≥ 3.4 V.	True

Time Needed for Diagnosis: 3 seconds
Malfunction Indicator Light Illumination: Illuminates as soon as a malfunction occurs.

G: DTC P0711 TRANSMISSION FLUID TEMPERATURE SENSOR "A" CIRCUIT RANGE/PERFORMANCE

DTC DETECTING CONDITION:
Detected when two consecutive driving cycles with fault occur.
TROUBLE SYMPTOM:
- Excessive shift shock
- Shift characteristics malfunction

NOTE:
For the diagnostic procedure, perform the diagnosis according to DTC P0712 and P0713. <Ref. to CVT(diag)-50, DTC P0712 TRANSMISSION FLUID TEMPERATURE SENSOR "A" CIRCUIT LOW, Diagnostic Procedure with Diagnostic Trouble Code (DTC).> <Ref. to CVT(diag)-52, DTC P0713 TRANSMISSION FLUID TEMPERATURE SENSOR "A" CIRCUIT HIGH, Diagnostic Procedure with Diagnostic Trouble Code (DTC).>

1. OUTLINE OF DIAGNOSIS

Diagnosis 1
- Judge the malfunction of the transmission oil temperature sensor characteristics (stuck to low temperature side).
- Judge as NG if the amount of oil temperature change since ignition ON is equal to or below the predetermined value.

Diagnosis 2
- Judge the malfunction of the transmission oil temperature sensor characteristics (stuck to high temperature side).
- Judge as NG when the difference between engine coolant temperature and CVT oil temperature is equal to or more than specified value at starting.

2. EXECUTION CONDITION

Secondary parameters	Execution condition
Diagnosis 1	
12 V battery system voltage (The timer is held when the following conditions are not satisfied.)	≥ 10 V
Transmission range	Drive
Vehicle speed (calculated from measured output shaft speed * sensor)	≥ 21.9 MPH
Diagnosis 2	
12 V battery system voltage	≥ 10 V
ECT at the end of the previous drive cycle – ECT at engine start	≥ 40 degC

* Measured output shaft speed: Measured rear output shaft speed × 0.543 ** + Measured front output shaft speed × (1 – 0.543)
** 0.543: Center differential gear ratio

3. DIAGNOSTIC METHOD

If the duration of time while the following conditions are met is longer than the time indicated, judge as NG.

Judgment Value

Malfunction Criteria	Threshold Value
Diagnosis 1	
Absolute change of measured Transmission fluid temperature sensor input voltage	< 0.049 V
Transmission fluid temperature	< 20 degC
Diagnosis 2	
Transmission fluid temperature – ECT at engine start	> 46 degC

Time Needed for Diagnosis:
- **Diagnosis 1:** 600 s
- **Diagnosis 2:** 300 s

Malfunction Indicator Light Illumination: Illuminates when malfunction occurs in 2 continuous driving cycles.

H: DTC P0712 TRANSMISSION FLUID TEMPERATURE SENSOR "A" CIRCUIT LOW

DTC DETECTING CONDITION:
Immediately at fault recognition
TROUBLE SYMPTOM:
- Excessive shift shock
- Shift characteristics malfunction

CAUTION:
Use the check board when measuring the TCM terminal voltage and resistance.
WIRING DIAGRAM:
CVT control system <Ref. to WI-144, CVT Control System.>

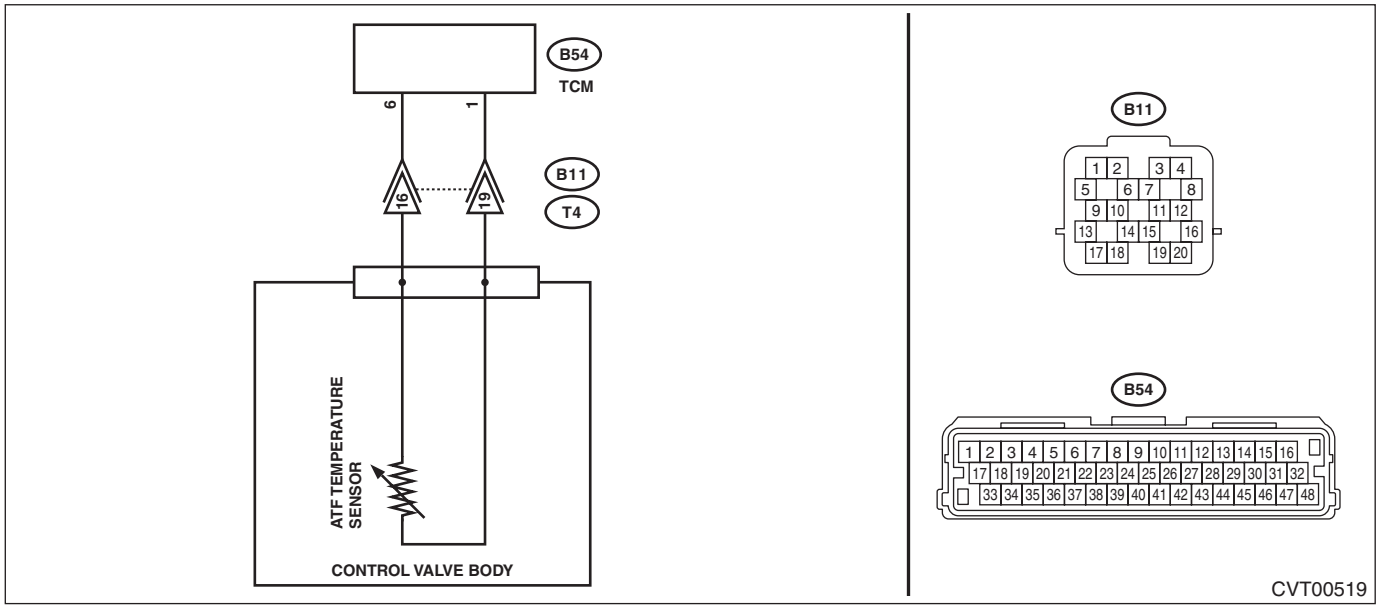

Step		Check	Yes	No
1	**CHECK HARNESS.** 1) Turn the ignition switch to OFF. 2) Disconnect the TCM connector. 3) Measure the resistance of harness between TCM connector and chassis ground. ***Connector & terminal*** ***(B54) No. 1 — Chassis ground:*** ***(B54) No. 6 — Chassis ground:***	Is the resistance 1 MΩ or more?	Go to step **4**.	Go to step **2**.
2	**CHECK HARNESS.** 1) Disconnect the transmission connector. 2) Measure the resistance between transmission connector and transmission body. ***Connector & terminal*** ***(T4) No. 16 — Transmission body:*** ***(T4) No. 19 — Transmission body:***	Is the resistance 1 MΩ or more?	Repair the short circuit of body harness.	Go to step **3**.
3	**CHECK HARNESS INSIDE TRANSMISSION.** **CAUTION:** **Start work after ATF cools down.** 1) Remove the transmission oil pan. 2) Check for the harness pinch, damage.	Is there any fault in the harness?	Replace the transmission harness.	Go to step **4**.

	Step	Check	Yes	No
4	**CHECK ATF TEMPERATURE SENSOR.** Measure the resistance between transmission connector terminals. ***Connector & terminal (T4) No. 16 — No. 19:*** NOTE: Perform the measurements using multiple oil temperatures.	Is resistance as follows? Fluid temperature 0°C → Approx. 6.2 kΩ Fluid temperature 20°C → Approx. 2.6 kΩ Fluid temperature 80°C → Approx. 370 Ω	Replace the TCM. <Ref. to CVT(TR690)-126, Transmission Control Module (TCM).>	Replace the control valve body. <Ref. to CVT(TR690)-113, Control Valve Body.>

1. OUTLINE OF DIAGNOSIS

- Detect the ground short circuit of transmission oil temperature sensor.
- Judge as NG if the voltage detected by the transmission oil temperature sensor is lower than the predetermined value.

2. EXECUTION CONDITION

Secondary parameters	Execution condition
12 V battery system voltage	≥ 9 V

3. DIAGNOSTIC METHOD

If the duration of time while the following conditions are met is longer than the time indicated, judge as NG.

Judgment Value

Malfunction Criteria	Threshold Value
Measured Transmission fluid temperature sensor input voltage (Transmission fluid temperature)	< 0.132 V (> 150 degC)

Time Needed for Diagnosis: 1 second
Malfunction Indicator Light Illumination: Illuminates as soon as a malfunction occurs.

I: DTC P0713 TRANSMISSION FLUID TEMPERATURE SENSOR "A" CIRCUIT HIGH

DTC DETECTING CONDITION:
Immediately at fault recognition
TROUBLE SYMPTOM:
- Excessive shift shock
- Shift characteristics malfunction

CAUTION:
Use the check board when measuring the TCM terminal voltage and resistance.
WIRING DIAGRAM:
CVT control system <Ref. to WI-144, CVT Control System.>

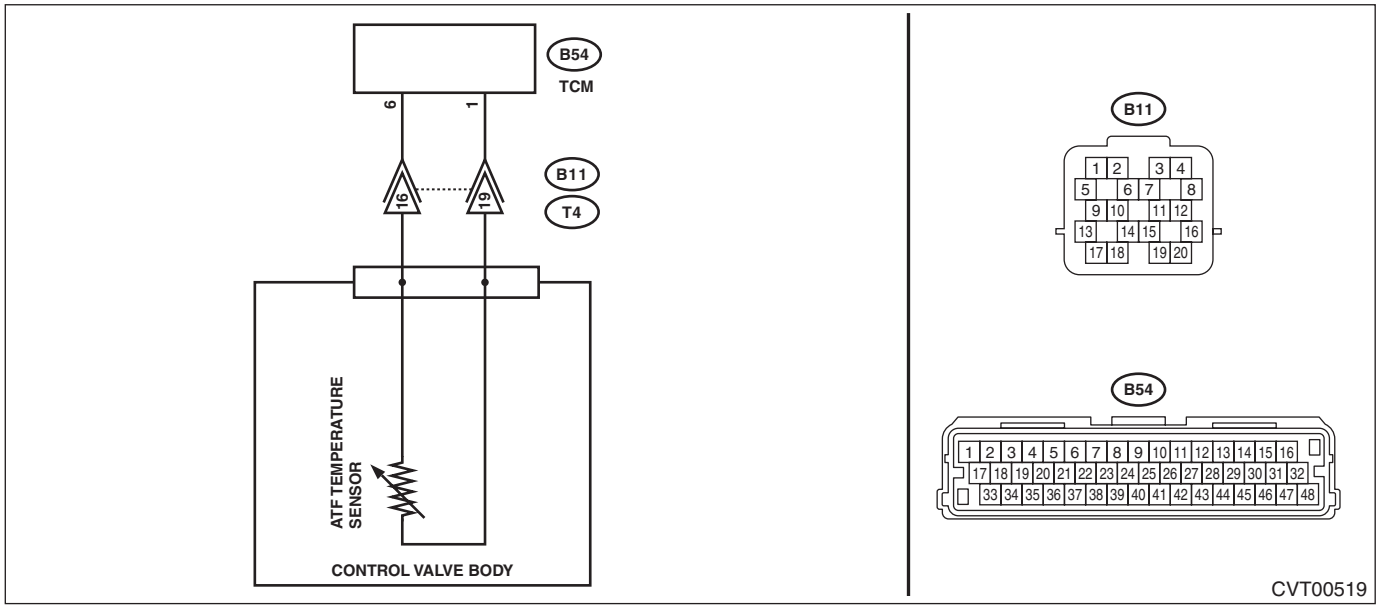

	Step	Check	Yes	No
1	**CHECK HARNESS.** 1) Turn the ignition switch to OFF. 2) Disconnect the TCM connector. 3) Turn the ignition switch to ON. 4) Measure the voltage between TCM connectors. ***Connector & terminal*** ***(B54) No. 6 (+) — (B54) No. 1 (–):***	Is the voltage 5 V or more?	Repair the short circuit of harness.	Go to step **2**.
2	**CHECK HARNESS.** 1) Turn the ignition switch to OFF. 2) Disconnect the transmission connector. 3) Measure the resistance between TCM connector and transmission connectors. ***Connector & terminal*** ***(B54) No. 6 — (B11) No. 16:*** ***(B54) No. 1 — (B11) No. 19:***	Is the resistance less than 1 Ω?	Go to step **3**.	Repair the open circuit of body harness.
3	**CHECK ATF TEMPERATURE SENSOR.** Measure the resistance between transmission connector terminals. ***Connector & terminal*** ***(T4) No. 16 — No. 19:***	Is the resistance 1 MΩ or more?	Repair the open circuit of transmission harness.	Go to step **4**.

	Step	Check	Yes	No
4	**CHECK ATF TEMPERATURE SENSOR.** 1) Connect all connectors. 2) Start the engine. 3) Warm up until the ATF temperature exceeds 50°C (122°F). 4) Turn the ignition switch to OFF. 5) Disconnect the transmission connector. 6) Measure the resistance between transmission connector terminals. ***Connector & terminal (T4) No. 16 — No. 19:***	Is the resistance 730 — 1120 Ω?	Go to step **5**.	Go to step **7**.
5	**CHECK ATF TEMPERATURE SENSOR.** Measure the resistance between transmission connector terminals. ***Connector & terminal (T4) No. 16 — No. 19:***	Does the resistance value increase gradually while the ATF temperature decreases?	Go to step **6**.	Replace the control valve body. <Ref. to CVT(TR690)-113, Control Valve Body.>
6	**CHECK INPUT SIGNAL FOR TCM.** 1) Connect the connector to transmission. 2) Turn the ignition switch to ON. (Do not start engine.) 3) Read the data of «ATF Temp.» using the Subaru Select Monitor.	Does the ATF temperature gradually decrease?	Check for poor contact of the ATF temperature sensor and transmission connector harness, and repair the defective part.	Go to step **7**.
7	**CHECK FOR POOR CONTACT.**	Is there poor contact of ATF temperature sensor circuit?	Repair the poor contact.	Replace the TCM. <Ref. to CVT(TR690)-126, Transmission Control Module (TCM).>

1. OUTLINE OF DIAGNOSIS

- Detect short circuit to power supply or open circuit of the transmission oil temperature sensor 5 V system.
- Judge as NG if the voltage detected by the transmission oil temperature sensor is higher than the predetermined value.

2. EXECUTION CONDITION

Secondary parameters	Execution condition
12 V battery system voltage	≥ 9 V
Vehicle speed (calculated from measured output shaft speed * sensor)	≥ 6.3 MPH
Above condition satisfied for	≥ 50 s

* Measured output shaft speed: Measured rear output shaft speed × 0.543 ** + Measured front output shaft speed × (1 – 0.543)
** 0.543: Center differential gear ratio

3. DIAGNOSTIC METHOD

If the duration of time while the following conditions are met is longer than the time indicated, judge as NG.

Judgment Value

Malfunction Criteria	Threshold Value
Measured Transmission fluid temperature sensor input voltage (Transmission fluid temperature)	> 4.502 V (< – 53 degC)

Time Needed for Diagnosis: 1 second
Malfunction Indicator Light Illumination: Illuminates as soon as a malfunction occurs.

J: DTC P0719 BRAKE SWITCH "B" CIRCUIT LOW

DTC DETECTING CONDITION:
Immediately at fault recognition
TROUBLE SYMPTOM:
Gear is not shifted down when climbing a hill or driving down a hill.

CAUTION:
Use the check board when measuring the TCM terminal voltage and resistance.
WIRING DIAGRAM:
Stop light system <Ref. to WI-351, Stop Light System.>

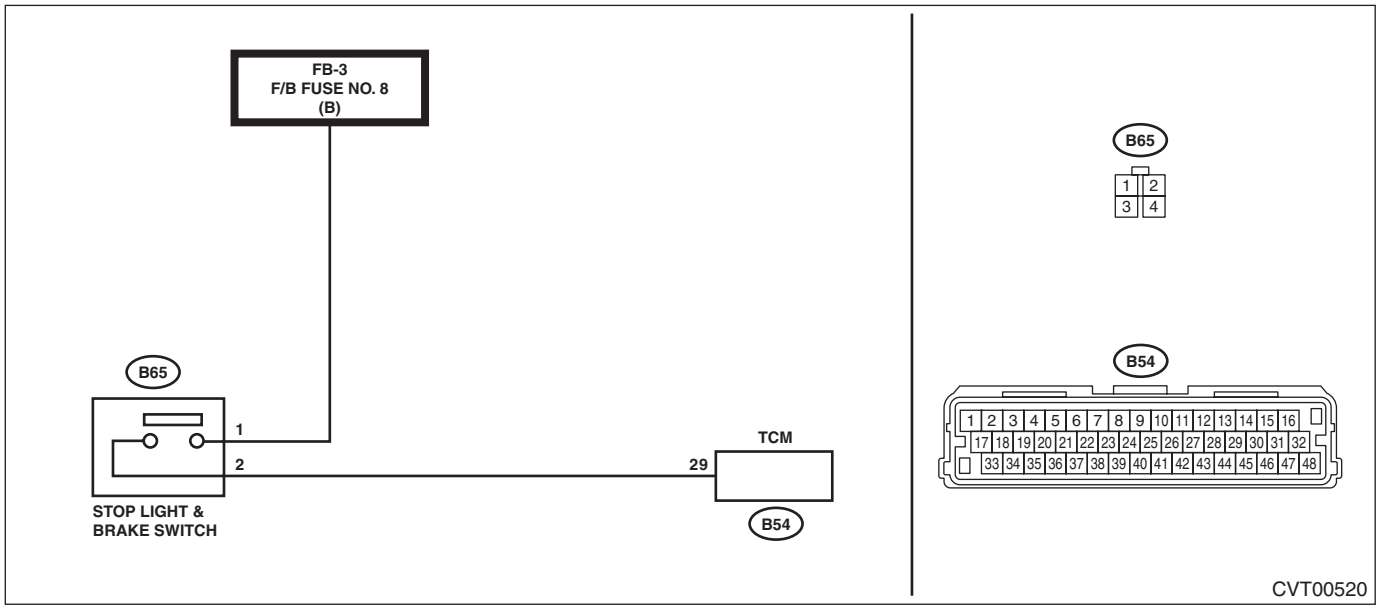

Step		Check	Yes	No
1	**CHECK FUSE.** 1) Turn the ignition switch to OFF. 2) Remove the fuse (No. 8). 3) Check the fuse.	Is the check result OK?	Go to step **2**.	Replace the fuse (No. 8). If the new fuse (No. 8) has blown out easily, repair the short circuit of harness between fuse (No. 8) and stop light switch.
2	**CHECK HARNESS.** 1) Turn the ignition switch to OFF. 2) Disconnect the TCM connector. 3) Disconnect the stop light switch connector. 4) Measure the resistance between TCM connector and stop light switch connector. ***Connector & terminal*** ***(B54) No. 29 — (B65) No. 2:***	Is the resistance less than 1 Ω?	Go to step **3**.	Repair the open circuit of harness.
3	**CHECK HARNESS.** Measure the resistance between the stop light switch connector and fuse (No. 8). ***Connector & terminal*** ***(B65) No. 1 — fuse (No. 8):***	Is the resistance less than 1 Ω?	Go to step **4**.	Repair the open circuit of harness.

	Step	Check	Yes	No
4	**CHECK INPUT SIGNAL FOR TCM.** 1) Install the fuse (No. 8). 2) Connect the stop light switch connector. 3) Depress the brake pedal. 4) Measure the voltage between TCM connector and chassis ground. ***Connector & terminal*** ***(B54) No. 29 (+) — Chassis ground (–):***	Is the voltage 10 V or more?	Go to step **5**.	Replace the stop light switch. <Ref. to BR-100, Stop Light Switch.>
5	**CHECK INPUT SIGNAL FOR TCM.** 1) Connect the TCM connector. 2) With brake pedal depressed, read the data of «Stop Light Switch» using Subaru Select Monitor.	Is "ON" displayed?	Current condition is normal. Check for poor contact in connectors or harnesses, and repair the defective part.	Go to step **6**.
6	**CHECK FOR POOR CONTACT.**	Is there poor contact of input signal of stop light switch?	Repair the poor contact.	Replace the TCM. <Ref. to CVT(TR690)-126, Transmission Control Module (TCM).>

1. OUTLINE OF DIAGNOSIS

- Detect no input from the brake signal.
- Judge as NG if a predetermined number of deceleration occurs while the cruise control is set to OFF and the brake is OFF.

2. EXECUTION CONDITION

Secondary parameters	Execution condition
Cruise control	OFF

3. DIAGNOSTIC METHOD

If the duration of time while the following conditions are met is longer than the time indicated, judge as NG.

Judgment Value

Malfunction Criteria	Threshold Value
Number of times that vehicle speed changes from 30 km/h to 1 km/h while the brake SW is OFF	> 10 count

Time Needed for Diagnosis: Immediately
Malfunction Indicator Light Illumination: Does not illuminate.

K: DTC P0720 OUTPUT SHAFT SPEED SENSOR CIRCUIT

DTC DETECTING CONDITION:
Immediately at fault recognition
TROUBLE SYMPTOM:
- Shock occurs when selecting shift position.
- Shift control malfunction

CAUTION:
Use the check board when measuring the TCM terminal voltage and resistance.
WIRING DIAGRAM:
CVT control system <Ref. to WI-144, CVT Control System.>

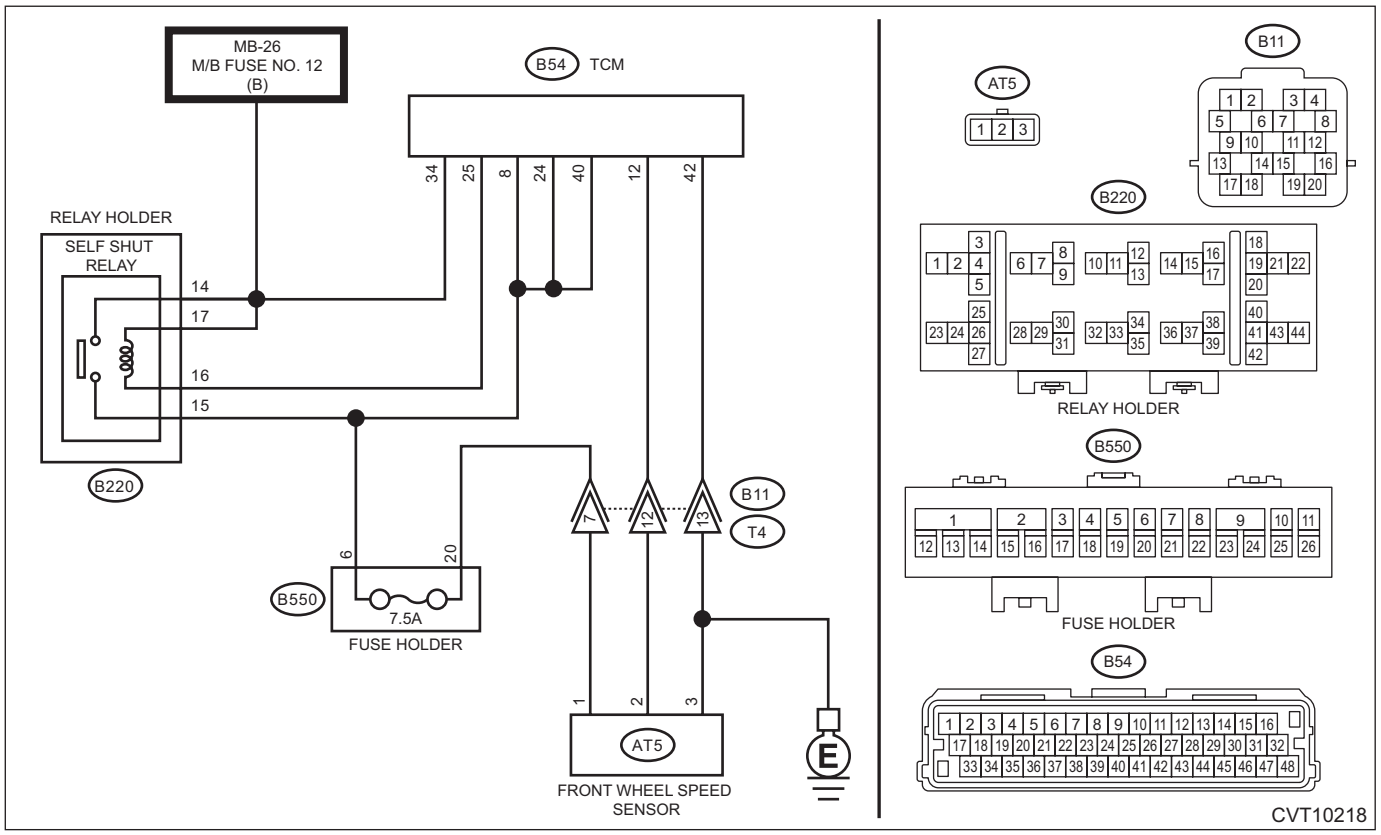

Step		Check	Yes	No
1	**CHECK FUSE.** 1) Turn the ignition switch to OFF. 2) Remove the fuse (7.5 A) from the fuse holder. 3) Check the fuse.	Is the check result OK?	Go to step **2**.	Replace the fuse. If the fuse blows out easily, repair the short circuit of harness.
2	**CHECK HARNESS.** 1) Disconnect the TCM connector. 2) Remove the self shut relay. 3) Measure the resistance between TCM connector and relay holder. ***Connector & terminal*** ***(B54) No. 25 — (B220) No. 16:*** ***(B54) No. 8 — (B220) No. 15:*** ***(B54) No. 24 — (B220) No. 15:*** ***(B54) No. 40 — (B220) No. 15:***	Is the resistance less than 1 Ω?	Go to step **3**.	Repair the open circuit of harness.

	Step	Check	Yes	No
3	**CHECK HARNESS.** Measure the resistance between TCM connector and chassis ground. ***Connector & terminal*** ***(B54) No. 25 — Chassis ground:*** ***(B54) No. 8 — Chassis ground:*** ***(B54) No. 24 — Chassis ground:*** ***(B54) No. 40 — Chassis ground:***	Is the resistance 1 MΩ or more?	Go to step **4**.	Repair the short circuit of harness.
4	**CHECK RELAY POWER SUPPLY.** Measure the voltage between relay holder and chassis ground. ***Connector & terminal*** ***(B220) No. 14 (+) — Chassis ground (–):*** ***(B220) No. 17 (+) — Chassis ground (–):***	Is the voltage 10 V or more?	Go to step **5**.	Repair the open or short circuit of harness.
5	**CHECK SELF SHUT RELAY.** Measure the resistance between self shut relay terminals. ***Terminals*** ***No. 16 — No. 17:***	Is the resistance 110 — 140 Ω?	Go to step **6**.	Replace the self shut relay.
6	**CHECK SELF SHUT RELAY.** Measure the resistance between self shut relay terminals. ***Terminals*** ***No. 14 — No. 15:***	Is the resistance 1 MΩ or more?	Go to step **7**.	Replace the self shut relay.
7	**CHECK INPUT SIGNAL FOR TCM.** 1) Connect the TCM connector. 2) Install the self shut relay. 3) Read the data of «Control module voltage» using Subaru Select Monitor.	Is the «Control module voltage» 10 V or more?	Current condition is normal. Check for poor contact in connectors or harnesses, and repair the defective part.	Go to step **8**.
8	**CHECK HARNESS.** 1) Turn the ignition switch to OFF. 2) Disconnect the TCM connector. 3) Disconnect the transmission connector. 4) Measure the resistance between TCM connector and transmission connectors. ***Connector & terminal*** ***(B54) No. 12 — (B11) No. 12:*** ***(B54) No. 42 — (B11) No. 13:*** ***(B550) No. 20 — (B11) No. 7:***	Is the resistance less than 1 Ω?	Go to step **9**.	Repair the open circuit of harness.
9	**CHECK HARNESS.** Measure the resistance between TCM connector and chassis ground. ***Connector & terminal*** ***(B54) No. 12 — Chassis ground:***	Is the resistance 1 MΩ or more?	Go to step **10**.	Repair the short circuit of harness.
10	**CHECK HARNESS.** Measure the resistance between relay holder and fuse holder. ***Connector & terminal*** ***(B220) No. 15 — (B550) No. 6:***	Is the resistance less than 1 Ω?	Go to step **11**.	Repair the open circuit of harness.
11	**CHECK TRANSMISSION HARNESS.** 1) Install the fuse. 2) Connect the TCM connector. 3) Turn the ignition switch to ON. 4) Measure the voltage between transmission connector terminals. ***Connector & terminal*** ***(B11) No. 7 (+) — Chassis ground (–):***	Is the voltage approx. 10 — 13 V?	Go to step **12**.	Repair the open circuit of harness or poor contact of connector.

	Step	Check	Yes	No
12	**CHECK INPUT SIGNAL FOR TCM.** 1) Turn the ignition switch to OFF. 2) Connect the transmission connector. 3) Lift up the vehicle. 4) Start the engine. 5) Slowly increase the speed to 30 km/h (19 MPH). 6) Read the data of «Front Wheel Speed» using Subaru Select Monitor.	Does the value of «Front Wheel Speed» change according to the engine speed?	Current condition is normal. Repair the poor contacts of harnesses of front wheel speed sensor and transmission connector.	Go to step **13**.
13	**CHECK TRANSMISSION HARNESS.** 1) Turn the ignition switch to OFF. 2) Disconnect the transmission connector. 3) Disconnect the front wheel speed sensor connector. 4) Measure the resistance between transmission connector and front wheel speed sensor connector. ***Connector & terminal*** ***(T4) No. 7 — (AT5) No. 1:*** ***(T4) No. 12 — (AT5) No. 2:*** ***(T4) No. 13 — (AT5) No. 3:***	Is the resistance less than 1 Ω?	Go to step **14**.	Replace the transmission harness.
14	**CHECK FRONT WHEEL SPEED SENSOR HARNESS.** Measure the resistance between transmission connector and chassis ground. ***Connector & terminal*** ***(T4) No. 7 — Chassis ground:*** ***(T4) No. 12 — Chassis ground:***	Is the resistance 1 MΩ or more?	Go to step **15**.	Repair the short circuit of harness.
15	**CHECK FRONT WHEEL SPEED SENSOR.** 1) Turn the ignition switch to OFF. 2) Replace the front wheel speed sensor. <Ref. to CVT(TR690)-106, Front Wheel Speed Sensor.> 3) Perform the Clear Memory Mode. <Ref. to CVT(diag)-19, Clear Memory Mode.> 4) Read the DTC.	Is DTC P0720 displayed?	Go to step **16**.	The original front wheel speed sensor is defective.
16	**CHECK SELF SHUT RELAY.** 1) Turn the ignition switch to OFF. 2) Replace the self shut relay. 3) Perform the Clear Memory Mode. <Ref. to CVT(diag)-19, Clear Memory Mode.> 4) Read the DTC.	Is DTC P0720 displayed?	Replace the TCM. <Ref. to CVT(TR690)-126, Transmission Control Module (TCM).>	The original self shut relay is defective.

1. OUTLINE OF DIAGNOSIS

- Detect no input signal from the front wheel speed sensor.
- Judge as NG if there is no output from the front wheel speed sensor while the forward/reverse clutch is engaged and the wheel speed from VDC is equal to or higher than the predetermined value.

2. EXECUTION CONDITION

Secondary parameters	Execution condition
12 V battery system voltage	≥ 10 V
Vehicle speed (calculated from wheel speed sensor)	≥ 3 MPH
Transmission range	Drive or Reverse

3. DIAGNOSTIC METHOD

If the duration of time while the following conditions are met is longer than the time indicated, judge as NG.

Judgment Value

Malfunction Criteria	Threshold Value
Measured front output shaft speed	0 rpm

Time Needed for Diagnosis: 0.5 seconds
Malfunction Indicator Light Illumination: Illuminates as soon as a malfunction occurs.

L: DTC P0721 OUTPUT SHAFT SPEED SENSOR CIRCUIT RANGE/PERFORMANCE

DTC DETECTING CONDITION:
Immediately at fault recognition
TROUBLE SYMPTOM:
- Acceleration is poor during standing start.
- No lock-up occurs.
- The engine stalls when the vehicle is stopped.
- Shift control malfunction

Step		Check	Yes	No
1	**CHECK DTC.** Read the DTC using Subaru Select Monitor.	Besides DTC P0721, is DTC P1706 or P0500 displayed?	Perform the diagnosis according to DTCs other than P0721.	Perform the diagnosis according to DTC P0720. <Ref. to CVT(diag)-56, DTC P0720 OUTPUT SHAFT SPEED SENSOR CIRCUIT, Diagnostic Procedure with Diagnostic Trouble Code (DTC).>

1. OUTLINE OF DIAGNOSIS

- Detect the malfunction of front wheel speed sensor characteristics.
- Judge as NG when the deviation between vehicle speed from VDC and front wheel speed sensor becomes equal to or larger than the predetermined value.

2. EXECUTION CONDITION

Secondary parameters	Execution condition
12 V battery system voltage	≥ 10 V
Vehicle speed (calculated from wheel speed sensor)	≥ 12 MPH

3. DIAGNOSTIC METHOD

If the duration of time while the following conditions are met is longer than the time indicated, judge as NG.
Judgment Value

Malfunction Criteria	Threshold Value
ABS *: Vehicle speed (calculated from front output shaft speed sensor) – Vehicle speed (calculated from wheel speed sensor)	> 10 MPH

* ABS: Absolute value
Time Needed for Diagnosis: 5 seconds
Malfunction Indicator Light Illumination: Illuminates as soon as a malfunction occurs.

M: DTC P0724 BRAKE SWITCH "B" CIRCUIT HIGH

DTC DETECTING CONDITION:
Immediately at fault recognition
TROUBLE SYMPTOM:
Gear is not shifted down when climbing a hill or driving down a hill.

CAUTION:
Use the check board when measuring the TCM terminal voltage and resistance.
WIRING DIAGRAM:
Stop light system <Ref. to WI-351, Stop Light System.>

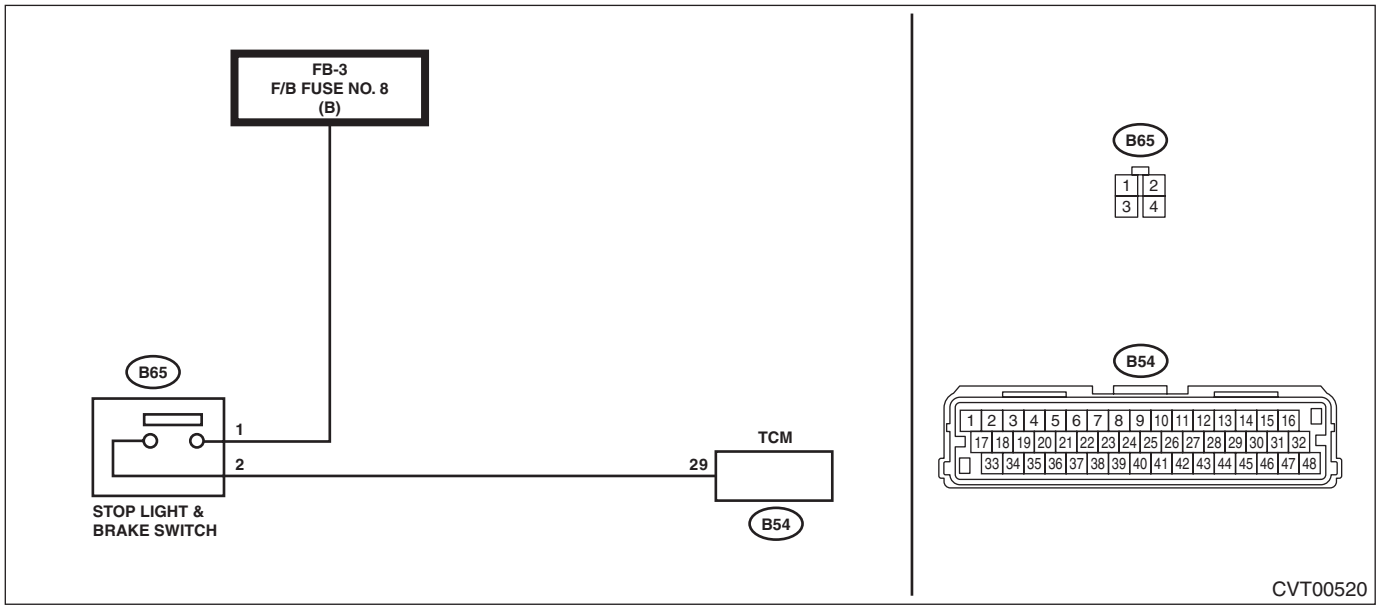

Step		Check	Yes	No
1	**CHECK STOP LIGHT SWITCH.** 1) Turn the ignition switch to OFF. 2) Disconnect the stop light switch connector. 3) Measure the resistance between stop light switch. ***Terminals*** ***No. 1 — No. 2:***	Is the resistance 1 MΩ or more?	Go to step **2**.	Replace the stop light switch. <Ref. to BR-100, Stop Light Switch.>
2	**CHECK HARNESS.** 1) Disconnect the TCM connector. 2) Turn the ignition switch to ON. 3) Measure the voltage between TCM connector and chassis ground. ***Connector & terminal*** ***(B54) No. 29 (+) — Chassis ground (–):***	Is the voltage 10 V or more?	Repair the short circuit of harness.	Go to step **3**.
3	**CHECK INPUT SIGNAL FOR TCM.** 1) Connect all connectors. 2) Turn the ignition switch to ON. 3) Read the data of «Stop Light Switch» using Subaru Select Monitor.	Is “OFF” displayed?	Current condition is normal. Check for poor contact in connectors or harnesses, and repair the defective part.	Go to step **4**.
4	**CHECK FOR POOR CONTACT.**	Is there poor contact of input signal of stop light switch?	Repair the poor contact.	Replace the TCM. <Ref. to CVT(TR690)-126, Transmission Control Module (TCM).>

1. OUTLINE OF DIAGNOSIS

- Detect the brake signal stuck to ON.
- Judge as NG if a predetermined number of acceleration occurs while the cruise control is set to OFF and the brake is ON.

2. EXECUTION CONDITION

Secondary parameters	Execution condition
Cruise control	OFF

3. DIAGNOSTIC METHOD

If the duration of time while the following conditions are met is longer than the time indicated, judge as NG.

Judgment Value

Malfunction Criteria	Threshold Value
Number of times that vehicle speed changes from 1 km/h to 30 km/h while the brake SW is ON	> 10 count

Time Needed for Diagnosis: Immediately
Malfunction Indicator Light Illumination: Does not illuminate.

N: DTC P0730 INCORRECT GEAR RATIO

DTC DETECTING CONDITION:
Immediately at fault recognition
TROUBLE SYMPTOM:

- Acceleration is poor during standing start.
- Shift control malfunction
- Engine speed increases abruptly.

	Step	Check	Yes	No
1	**CHECK TRANSMISSION FLUID.** Check the amount of ATF. <Ref. to CVT(TR690)-36, ADJUSTMENT, CVTF.>	Is the check result OK?	Go to step **2**.	Adjust the amount of ATF. <Ref. to CVT(TR690)-36, ADJUSTMENT, CVTF.>
2	**CHECK TRANSMISSION FLUID.** Check the condition of ATF. <Ref. to CVT(TR690)-40, CONDITION CHECK, CVTF.>	Is the check result OK?	Go to step **3**.	Check according to the “Corrective action” of ATF (CVTF) “CONDITION CHECK”. <Ref. to CVT(TR690)-40, CONDITION CHECK, CVTF.>
3	**CHECK INPUT SIGNAL FOR TCM.** 1) Lift up the vehicle. 2) Start the engine. 3) Warm up until the ATF temperature reaches to 40 — 70°C (104 — 158°F). 4) Depress the brake pedal, and shift the select lever to “D” range. 5) Shift the select lever to “P” range. 6) Stabilize the engine speed at idle. 7) Read the data of «Actual Secondary Pressure» using Subaru Select Monitor.	Is the «Actual Secondary Pressure» 0.5 — 1.5 MPa?	Go to step **4**.	Perform the diagnosis according to DTC P0841. <Ref. to CVT(diag)-89, DTC P0841 TRANSMISSION FLUID PRESSURE SENSOR/SWITCH "A" CIRCUIT RANGE/PERFORMANCE, Diagnostic Procedure with Diagnostic Trouble Code (DTC).>
4	**CHECK INPUT SIGNAL FOR TCM.** 1) Set the select lever to “D” range. 2) Release the brake pedal to stabilize the engine speed and front wheel speed. 3) Read the data of «Actual Gear Ratio» using Subaru Select Monitor.	Is the «Actual Gear Ratio» 2.0 — 2.4?	Go to step **5**.	Go to step **6**.
5	**CHECK INPUT SIGNAL FOR TCM.** 1) Set the select lever to “D” range. 2) Slowly increase the speed to 40 km/h (25 MPH) and keep the constant speed. 3) Read the data of «Actual Gear Ratio» using Subaru Select Monitor.	Is the «Actual Gear Ratio» 0.5 — 0.8?	Go to step **6**.	Replace the transmission assembly. <Ref. to CVT(TR690)-57, Automatic Transmission Assembly.>
6	**DRIVING CHECK BY INSPECTION MODE.** 1) Turn the ignition switch to OFF. 2) Perform a drive check based on the “Inspection Mode”. <Ref. to CVT(diag)-20, Inspection Mode.>	Does the AT OIL TEMP light blink and is DTC P0730 displayed?	Replace the transmission assembly. <Ref. to CVT(TR690)-57, Automatic Transmission Assembly.>	Current condition is normal. It is possible that temporary poor contact occurs.

1. OUTLINE OF DIAGNOSIS

- Detect the abnormality in transmission gear ratio control function.
- Judge as NG if the discrepancy between the transmission target gear ratio (as internal data) and the actual gear ratio becomes the specified value or more. (Compare the value of "Gear Ratio Target × Secondary pulley speed ≈ Target primary speed equivalent value" with the value of primary pulley speed sensor.)

2. EXECUTION CONDITION

Secondary parameters	Execution condition
12 V battery system voltage	≥ 10 V
Engine speed	≥ 400 rpm
Transmission range	Drive

3. DIAGNOSTIC METHOD

If the duration of time while the following conditions are met is longer than the time indicated, judge as NG.

Judgment Value

Malfunction Criteria	Threshold Value
ABS *: Target primary pulley shaft speed – Measured primary pulley shaft speed	≥ 600 rpm
(Commanded duty of shift up pressure control solenoid	≥ 90%
or	
Commanded duty of shift down pressure control solenoid)	≥ 90%

* ABS: Absolute value

Time Needed for Diagnosis: 5 seconds

Malfunction Indicator Light Illumination: Illuminates as soon as a malfunction occurs.

O: DTC P0746 PRESSURE CONTROL SOLENOID "A" PERFORMANCE/STUCK OFF

DTC DETECTING CONDITION:
Detected when two consecutive driving cycles with fault occur.
TROUBLE SYMPTOM:
- Shift control malfunction
- CVT chain slippage

WIRING DIAGRAM:
CVT control system <Ref. to WI-144, CVT Control System.>

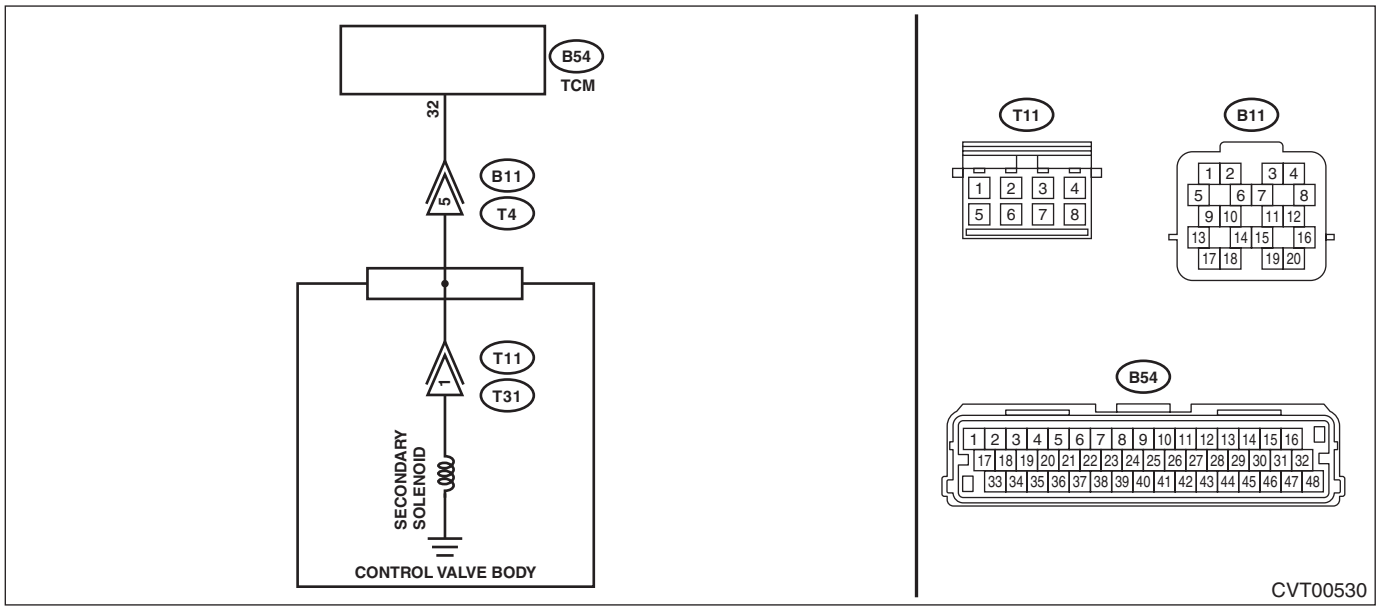

Step		Check	Yes	No
1	**CHECK DTC.** Read the DTC using Subaru Select Monitor.	Besides DTC P0746, is any of the DTCs P0842, P0843, P0962 and P0963 displayed?	Perform the diagnosis according to DTCs other than P0746.	Go to step **2**.
2	**CHECK SECONDARY SOLENOID (ACTIVE TEST).** 1) Turn the ignition switch to ON. 2) Using the Subaru Select Monitor, perform forced operation of the secondary solenoid. <Ref. to CVT(diag)-25, Active Test.>	Does the indication of 0 → 500 mA appear repeatedly during forced operation, and does operating sound emit during indicating 500 mA?	Go to step **5**.	Go to step **3**.
3	**CHECK SECONDARY SOLENOID.** 1) Turn the ignition switch to OFF. 2) Disconnect the transmission connector. 3) Measure the resistance between transmission connector and transmission body. ***Connector & terminal*** ***(T4) No. 5 — Transmission body:***	Is the resistance approx. 5 — 7 Ω? (when cold)	Go to step **7**.	Go to step **4**.
4	**CHECK HARNESS.** Check the transmission harness. (Open circuit, short circuit to power supply, short circuit to ground, and poor contact)	Is the check result OK?	Go to step **7**.	Repair the harness.
5	**CHECK TRANSMISSION FLUID.** 1) Connect the transmission connector. 2) Check the amount of ATF. <Ref. to CVT(TR690)-36, ADJUSTMENT, CVTF.>	Is the check result OK?	Go to step **6**.	Adjust the amount of ATF. <Ref. to CVT(TR690)-36, ADJUSTMENT, CVTF.>

	Step	Check	Yes	No
6	**CHECK TRANSMISSION FLUID.** Check the condition of ATF. <Ref. to CVT(TR690)-40, CONDITION CHECK, CVTF.>	Is the check result OK?	Go to step **7**.	Check according to the "Corrective action" of ATF (CVTF) "CONDITION CHECK". <Ref. to CVT(TR690)-40, CONDITION CHECK, CVTF.>
7	**CHECK INPUT SIGNAL FOR TCM.** 1) Lift up the vehicle. 2) Start the engine. 3) Warm up until the ATF temperature reaches to 40 — 70°C (104 — 158°F). 4) Depress the brake pedal, and shift the select lever to "D" range. 5) Shift the select lever to "P" range. 6) Stabilize the engine speed at idle. 7) Read the data of «Actual Secondary Pressure» using Subaru Select Monitor.	Is the «Actual Secondary Pressure» 0.5 — 1.5 MPa?	Go to step **8**.	Replace the control valve body. <Ref. to CVT(TR690)-113, Control Valve Body.>
8	**CHECK INPUT SIGNAL FOR TCM.** 1) Keep the engine speed at 3,000 rpm. 2) Read the data of «Actual Secondary Pressure» using Subaru Select Monitor.	Is the «Actual Secondary Pressure» higher than step 7 value? Does the value change according to the engine speed, within the range of 1.5 — 2.5 MPa?	Go to step **9**.	Replace the control valve body. <Ref. to CVT(TR690)-113, Control Valve Body.>
9	**CHECK TCM INPUT SIGNAL (STALL TEST).** 1) Apply the parking brake. 2) Set the select lever to "D" range. 3) Depress the brake pedal firmly. 4) Slowly open the accelerator fully, and stabilize the engine speed. 5) Read the data of «Actual Secondary Pressure» using Subaru Select Monitor. **CAUTION:** **Do not perform a stall test for over 5 seconds at a time.**	Is the «Actual Secondary Pressure» higher than step 8 value? Does the value change according to the engine speed, within the range of 4.5 — 6.0 MPa?	Go to step **10**.	Replace the control valve body. <Ref. to CVT(TR690)-113, Control Valve Body.>
10	**DRIVING CHECK BY INSPECTION MODE.** 1) Turn the ignition switch to OFF. 2) Perform a drive check based on the "Inspection Mode". <Ref. to CVT(diag)-20, Inspection Mode.>	Does the AT OIL TEMP light blink and is DTC P0746 displayed?	Perform the secondary pressure test. <Ref. to CVT(TR690)-50, Secondary Pressure (Line Pressure) Test.>	Current condition is normal. It is possible that temporary poor contact occurs.

1. OUTLINE OF DIAGNOSIS

• Detect the malfunction of transmission line pressure solenoid and hydraulic circuit (stuck to low pressure side).
• Judge as NG when the actual line pressure drops to or below the predetermined value.

2. EXECUTION CONDITION

Secondary parameters	Execution condition
Diagnosis 1	
12 V battery system voltage	≥ 10 V
Engine speed	≥ 1000 rpm
Measured line pressure control solenoid valve current	≤ 0.75 A
Torque converter clutch circuit control solenoid output command	ON
Diagnosis 2	
12 V battery system voltage	≥ 10 V
Engine speed	≥ 1000 rpm
Measured line pressure control solenoid valve current	≤ 0.75 A
Torque converter clutch circuit control solenoid output command	OFF

3. DIAGNOSTIC METHOD

If the duration of time while the following conditions are met is longer than the time indicated, judge as NG.

Judgment Value

Malfunction Criteria	Threshold Value
Diagnosis 1	
Measured line pressure	< Map 1 kPa
Diagnosis 2	
Measured line pressure	< Map 2 kPa

Map 1

		Engine speed (rpm)						
		0	500	1000	1500	2000	2500	3000
Transmission fluid temperature (degC)	– 40	0	0	490	577	681	783	884
	– 20	0	0	490	577	681	783	884
	0	0	0	415	468	533	612	701
	20	0	0	399	454	515	569	642
	40	0	0	381	432	489	552	605
	60	0	0	225	280	338	407	465
	80	0	0	218	279	338	404	472
	100	0	0	195	276	320	381	448
	120	0	0	167	246	298	365	431
	140	0	0	170	252	308	365	436

		Engine speed (rpm)						
		3500	4000	4500	5000	5500	6000	6500
Transmission fluid temperature (degC)	– 40	1010	1114	1191	1273	1359	1419	1448
	– 20	1010	1114	1191	1273	1359	1419	1448
	0	802	933	1073	1183	1282	1374	1424
	20	726	832	965	1128	1257	1370	1459
	40	683	775	890	1039	1200	1318	1411
	60	525	618	728	873	1050	1196	1288
	80	517	599	707	849	1015	1163	1255
	100	509	576	669	796	931	1072	1195
	120	491	543	664	772	874	1000	1110
	140	482	547	635	723	845	947	1074

Map 2

		Engine speed (rpm)						
		0	500	1000	1500	2000	2500	3000
Transmission fluid temperature (degC)	– 40	0	0	493	578	690	783	887
	– 20	0	0	493	578	690	783	887
	0	0	0	376	440	517	597	699
	20	0	0	386	452	524	599	687
	40	0	0	359	422	492	566	648
	60	0	0	336	394	459	529	612
	80	0	0	327	386	451	517	601
	100	0	0	312	377	438	503	580
	120	0	0	303	367	430	493	566
	140	0	0	296	367	429	490	563

		Engine speed (rpm)						
		3500	4000	4500	5000	5500	6000	6500
Transmission fluid temperature (degC)	– 40	1020	1117	1196	1286	1378	1439	1477
	– 20	1020	1117	1196	1286	1378	1439	1477
	0	806	954	1099	1201	1301	1412	1498
	20	796	933	1095	1214	1317	1426	1532
	40	744	849	1032	1167	1285	1397	1483
	60	711	805	953	1115	1244	1345	1428
	80	676	779	906	1064	1213	1310	1391
	100	656	750	870	1014	1167	1261	1343
	120	644	728	835	970	1117	1233	1292
	140	638	717	812	928	1063	1182	1257

Time Needed for Diagnosis: 5 seconds
Malfunction Indicator Light Illumination: Illuminates when malfunction occurs in 2 continuous driving cycles.

P: DTC P0747 PRESSURE CONTROL SOLENOID "A" STUCK ON

DTC DETECTING CONDITION:
Detected when two consecutive driving cycles with fault occur.
TROUBLE SYMPTOM:
- Acceleration is poor during standing start.
- Shift control malfunction

WIRING DIAGRAM:
CVT control system <Ref. to WI-144, CVT Control System.>

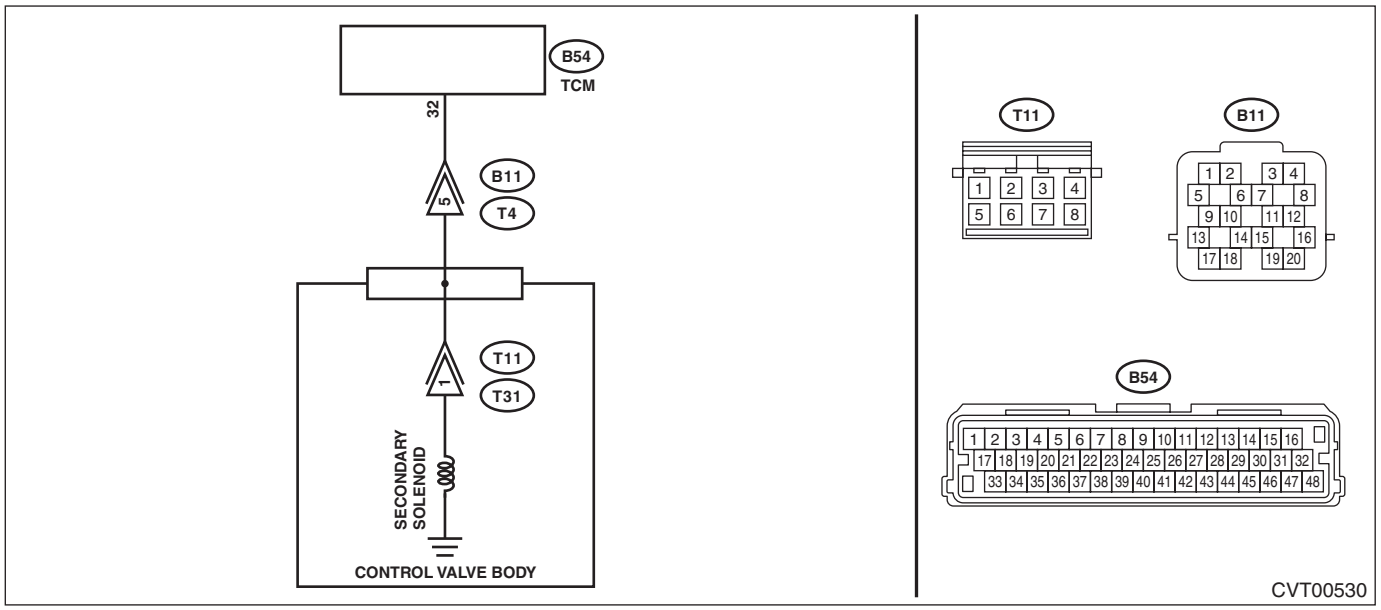

Step		Check	Yes	No
1	**CHECK DTC.** Read the DTC using Subaru Select Monitor.	Besides DTC P0747, is any of the DTCs P0842, P0843, P0962 and P0963 displayed?	Perform the diagnosis according to DTCs other than P0747.	Go to step **2**.
2	**CHECK SECONDARY SOLENOID (ACTIVE TEST).** 1) Turn the ignition switch to ON. 2) Using the Subaru Select Monitor, perform forced operation of the secondary solenoid. <Ref. to CVT(diag)-25, Active Test.>	Does the indication of 0 → 500 mA appear repeatedly during forced operation, and does operating sound emit during indicating 500 mA?	Go to step **5**.	Go to step **3**.
3	**CHECK SECONDARY SOLENOID.** 1) Turn the ignition switch to OFF. 2) Disconnect the transmission connector. 3) Measure the resistance between transmission connector and transmission body. ***Connector & terminal*** ***(T4) No. 5 — Transmission body:***	Is the resistance approx. 5 — 7 Ω? (when cold)	Go to step **7**.	Go to step **4**.
4	**CHECK HARNESS.** Check the transmission harness. (Open circuit, short circuit to power supply, short circuit to ground, and poor contact)	Is the check result OK?	Go to step **7**.	Repair the harness.
5	**CHECK TRANSMISSION FLUID.** 1) Connect the transmission connector. 2) Check the amount of ATF. <Ref. to CVT(TR690)-36, ADJUSTMENT, CVTF.>	Is the check result OK?	Go to step **6**.	Adjust the amount of ATF. <Ref. to CVT(TR690)-36, ADJUSTMENT, CVTF.>

	Step	Check	Yes	No
6	**CHECK TRANSMISSION FLUID.** Check the condition of ATF. <Ref. to CVT(TR690)-40, CONDITION CHECK, CVTF.>	Is the check result OK?	Go to step **7**.	Check according to the "Corrective action" of ATF (CVTF) "CONDITION CHECK". <Ref. to CVT(TR690)-40, CONDITION CHECK, CVTF.>
7	**CHECK INPUT SIGNAL FOR TCM.** 1) Lift up the vehicle. 2) Start the engine. 3) Warm up until the ATF temperature reaches to 40 — 70°C (104 — 158°F). 4) Depress the brake pedal, and shift the select lever to "D" range. 5) Shift the select lever to "P" range. 6) Stabilize the engine speed at idle. 7) Read the data of «Actual Secondary Pressure» using Subaru Select Monitor.	Is the «Actual Secondary Pressure» 0.5 — 1.5 MPa?	Go to step **8**.	Replace the control valve body. <Ref. to CVT(TR690)-113, Control Valve Body.>
8	**CHECK INPUT SIGNAL FOR TCM.** 1) Keep the engine speed at 3,000 rpm. 2) Read the data of «Actual Secondary Pressure» using Subaru Select Monitor.	Is the «Actual Secondary Pressure» higher than step 7 value? Does the value change according to the engine speed, within the range of 1.5 — 2.5 MPa?	Go to step **9**.	Replace the control valve body. <Ref. to CVT(TR690)-113, Control Valve Body.>
9	**CHECK TCM INPUT SIGNAL (STALL TEST).** 1) Apply the parking brake. 2) Set the select lever to "D" range. 3) Depress the brake pedal firmly. 4) Slowly open the accelerator fully, and stabilize the engine speed. 5) Read the data of «Actual Secondary Pressure» using Subaru Select Monitor. **CAUTION:** **Do not perform a stall test for over 5 seconds at a time.**	Is the «Actual Secondary Pressure» higher than step 8 value? Does the value change according to the engine speed, within the range of 4.5 — 6.0 MPa?	Go to step **10**.	Replace the control valve body. <Ref. to CVT(TR690)-113, Control Valve Body.>
10	**DRIVING CHECK BY INSPECTION MODE.** 1) Turn the ignition switch to OFF. 2) Perform a drive check based on the "Inspection Mode". <Ref. to CVT(diag)-20, Inspection Mode.>	Does the AT OIL TEMP light blink and is DTC P0747 displayed?	Perform the secondary pressure test. <Ref. to CVT(TR690)-50, Secondary Pressure (Line Pressure) Test.>	Current condition is normal. It is possible that temporary poor contact occurs.

1. OUTLINE OF DIAGNOSIS

• Detect the malfunction of transmission line pressure solenoid and hydraulic circuit (stuck to high pressure side).
• Judge as NG when the actual line pressure rises to or above the predetermined value.

2. EXECUTION CONDITION

Secondary parameters	Execution condition
Diagnosis 1	
12 V battery system voltage	≥ 10 V
Engine speed	≥ 1000 rpm
Measured line pressure control solenoid valve current	≥ 0.5 A
Torque converter clutch circuit control solenoid output command	OFF
Diagnosis 2	
12 V battery system voltage	≥ 10 V
Engine speed	≥ 1000 rpm
Measured line pressure control solenoid valve current	≥ 0.5 A
Torque converter clutch circuit control solenoid output command	ON

3. DIAGNOSTIC METHOD

If the duration of time while the following conditions are met is longer than the time indicated, judge as NG.

Judgment Value

Malfunction Criteria	Threshold Value
Diagnosis 1	
Measured line pressure	> Map 1 kPa
Diagnosis 2	
Measured line pressure	> Map 2 kPa

Map 1: Torque converter clutch circuit control solenoid output command = OFF

		Engine speed (rpm)						
		0	500	1000	1500	2000	2500	3000
Transmission fluid temperature (degC)	– 40	25600	25600	5752	5752	5712	5616	5531
	– 20	25600	25600	5752	5752	5712	5616	5531
	0	25600	25600	5510	5565	5605	5649	5701
	20	25600	25600	5414	5476	5537	5579	5617
	40	25600	25600	5359	5359	5445	5514	5567
	60	25600	25600	5312	5312	5401	5490	5545
	80	25600	25600	5312	5312	5401	5490	5545
	100	25600	25600	5343	5343	5343	5427	5499
	120	25600	25600	5140	5140	5140	5281	5348
	140	25600	25600	5277	5277	5277	5277	5372

		Engine speed (rpm)						
		3500	4000	4500	5000	5500	6000	6500
Transmission fluid temperature (degC)	– 40	5549	5556	5581	5612	5671	5706	5719
	– 20	5549	5556	5581	5612	5671	5706	5719
	0	5750	5801	5851	5911	5976	6026	6078
	20	5664	5710	5769	5822	5862	5927	5983
	40	5610	5659	5718	5777	5825	5873	5929
	60	5578	5621	5668	5718	5763	5813	5863
	80	5578	5621	5668	5718	5763	5813	5863
	100	5577	5609	5650	5694	5739	5796	5810
	120	5415	5450	5482	5523	5549	5585	5604
	140	5480	5530	5560	5596	5628	5608	5661

Map 2: Torque converter clutch circuit control solenoid output command = ON

		Engine speed (rpm)						
		0	500	1000	1500	2000	2500	3000
Transmission fluid temperature (degC)	– 40	25600	25600	6213	5778	5748	5640	5608
	– 20	25600	25600	6213	5778	5748	5640	5608
	0	25600	25600	5512	5563	5603	5644	5677
	20	25600	25600	5379	5438	5510	5562	5600
	40	25600	25600	5277	5277	5381	5470	5533
	60	25600	25600	5316	5316	5336	5431	5503
	80	25600	25600	5403	5403	5403	5444	5519
	100	25600	25600	5381	5381	5381	5381	5446
	120	25600	25600	5255	5255	5255	5255	5336
	140	25600	25600	5128	5128	5128	5128	5174

		Engine speed (rpm)						
		3500	4000	4500	5000	5500	6000	6500
Transmission fluid temperature (degC)	– 40	5590	5582	5599	5635	5689	5740	5824
	– 20	5590	5582	5599	5635	5689	5740	5824
	0	5714	5758	5805	5881	5941	5998	6046
	20	5644	5691	5739	5795	5850	5899	5958
	40	5579	5629	5678	5737	5788	5844	5900
	60	5552	5595	5648	5697	5747	5800	5854
	80	5568	5617	5667	5709	5761	5833	5854
	100	5524	5587	5615	5666	5725	5784	5798
	120	5421	5473	5525	5570	5626	5636	5659
	140	5269	5326	5361	5401	5434	5440	5470

Time Needed for Diagnosis: 5 seconds
Malfunction Indicator Light Illumination: Illuminates when malfunction occurs in 2 continuous driving cycles.

Q: DTC P0751 SHIFT SOLENOID "A" PERFORMANCE/STUCK OFF

DTC DETECTING CONDITION:
Detected when two consecutive driving cycles with fault occur.
TROUBLE SYMPTOM:
- Shift control malfunction
- Engine speed increases abruptly.

WIRING DIAGRAM:
CVT control system <Ref. to WI-144, CVT Control System.>

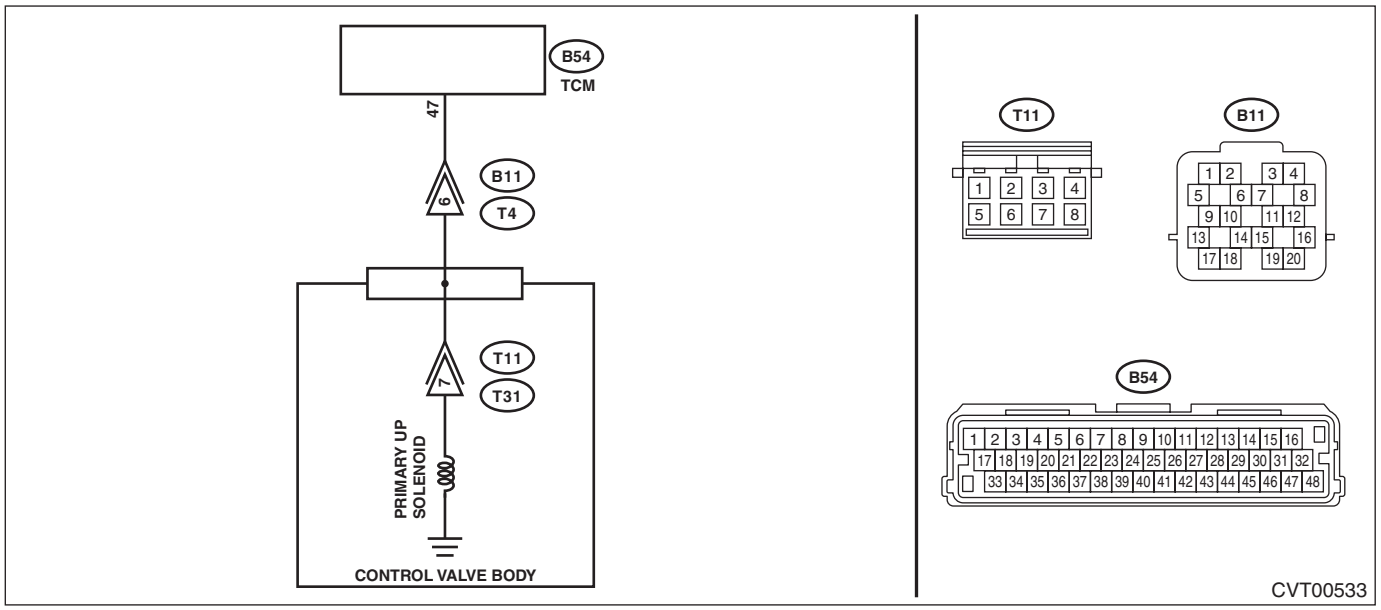

	Step	Check	Yes	No
1	**CHECK DTC.** Read the DTC using Subaru Select Monitor.	Besides DTC P0751, is any of the DTCs P0973, P0974, P0976, P0977, P2747 and P2751 displayed?	Perform the diagnosis according to DTCs other than P0751.	Go to step **2**.
2	**CHECK PRIMARY UP SOLENOID (ACTIVE TEST).** 1) Turn the ignition switch to ON. 2) Using the Subaru Select Monitor, perform forced operation of the primary UP solenoid. <Ref. to CVT(diag)-25, Active Test.>	Does the indication of 0 → 50% appear repeatedly during forced operation, and does operating sound emit during indicating 50%?	Go to step **5**.	Go to step **3**.
3	**CHECK PRIMARY UP SOLENOID.** 1) Turn the ignition switch to OFF. 2) Disconnect the transmission connector. 3) Measure the resistance between transmission connector and transmission body. ***Connector & terminal*** ***(T4) No. 6 — Transmission body:***	Is the resistance approx. 10 — 13.5 Ω? (when cold)	Go to step **7**.	Go to step **4**.
4	**CHECK HARNESS.** Check the transmission harness. (Open circuit, short circuit to power supply, short circuit to ground, and poor contact)	Is the check result OK?	Go to step **7**.	Repair the harness.
5	**CHECK TRANSMISSION FLUID.** 1) Connect the transmission connector. 2) Check the amount of ATF. <Ref. to CVT(TR690)-36, ADJUSTMENT, CVTF.>	Is the check result OK?	Go to step **6**.	Adjust the amount of ATF. <Ref. to CVT(TR690)-36, ADJUSTMENT, CVTF.>

	Step	Check	Yes	No
6	**CHECK TRANSMISSION FLUID.** Check the condition of ATF. <Ref. to CVT(TR690)-40, CONDITION CHECK, CVTF.>	Is the check result OK?	Go to step **7**.	Check according to the "Corrective action" of ATF (CVTF) "CONDITION CHECK". <Ref. to CVT(TR690)-40, CONDITION CHECK, CVTF.>
7	**CHECK INPUT SIGNAL FOR TCM.** 1) Lift up the vehicle. 2) Start the engine. 3) Warm up until the ATF temperature reaches to 40 — 70°C (104 — 158°F). 4) Depress the brake pedal, and shift the select lever to "D" range. 5) Shift the select lever to "P" range. 6) Stabilize the engine speed at idle. 7) Read the data of «Actual Secondary Pressure» using Subaru Select Monitor.	Is the «Actual Secondary Pressure» 0.5 — 1.5 MPa?	Go to step **8**.	Replace the transmission assembly. <Ref. to CVT(TR690)-57, Automatic Transmission Assembly.>
8	**CHECK INPUT SIGNAL FOR TCM.** 1) Set the select lever to "D" range. 2) Release the brake pedal to stabilize the engine speed and front wheel speed. 3) Read the data of «Actual Gear Ratio» using Subaru Select Monitor. NOTE: Before operation, set SI-DRIVE to I mode.	Is the «Actual Gear Ratio» 2.0 — 2.4?	Go to step **9**.	Replace the transmission assembly. <Ref. to CVT(TR690)-57, Automatic Transmission Assembly.>
9	**CHECK INPUT SIGNAL FOR TCM.** 1) Set the select lever to "D" range. 2) Slowly increase the speed to 40 km/h (25 MPH) and keep to a constant speed. 3) Read the data of «Actual Gear Ratio» using Subaru Select Monitor. NOTE: Before operation, set SI-DRIVE to I mode.	Is the «Actual Gear Ratio» 0.5 — 0.8?	Go to step **10**.	Replace the transmission assembly. <Ref. to CVT(TR690)-57, Automatic Transmission Assembly.>
10	**DRIVING CHECK BY INSPECTION MODE.** 1) Turn the ignition switch to OFF. 2) Perform a drive check based on the "Inspection Mode". <Ref. to CVT(diag)-20, Inspection Mode.>	Does the AT OIL TEMP light blink and is DTC P0751 displayed?	Replace the transmission assembly. <Ref. to CVT(TR690)-57, Automatic Transmission Assembly.>	Current condition is normal. It is possible that temporary poor contact occurs.

1. OUTLINE OF DIAGNOSIS

• Detect the malfunction of shift-up fluid pressure control solenoid and hydraulic circuit characteristics (stuck to low pressure side).
• Judge as NG if the amount of gear rate change per second is equal to or larger than the predetermined value, even though the up-shift command is issued.

2. EXECUTION CONDITION

Secondary parameters	Execution condition
12 V battery system voltage	≥ 10 V
Commanded duty of shift down pressure control solenoid	0%
Engine speed	≥ 1000 rpm
Actual pulley ratio*	> 1.5 and < 2.348

* Actual pulley ratio: Measured primary pulley shaft speed / Measured secondary pulley shaft speed

3. DIAGNOSTIC METHOD

If the duration of time while the following conditions are met is longer than the time indicated, judge as NG.

Judgment Value

Malfunction Criteria	Threshold Value
Actual pulley ratio * change for 1 second	> – 0.08
Commanded duty of shift up pressure control solenoid	≥ 90%

* Actual pulley ratio: Measured primary pulley shaft speed / Measured secondary pulley shaft speed

Time Needed for Diagnosis: 1 second

Malfunction Indicator Light Illumination: Illuminates when malfunction occurs in 2 continuous driving cycles.

R: DTC P0752 SHIFT SOLENOID "A" STUCK ON

DTC DETECTING CONDITION:
Detected when two consecutive driving cycles with fault occur.
TROUBLE SYMPTOM:
- Acceleration is poor during standing start.
- Shift control malfunction

WIRING DIAGRAM:
CVT control system <Ref. to WI-144, CVT Control System.>

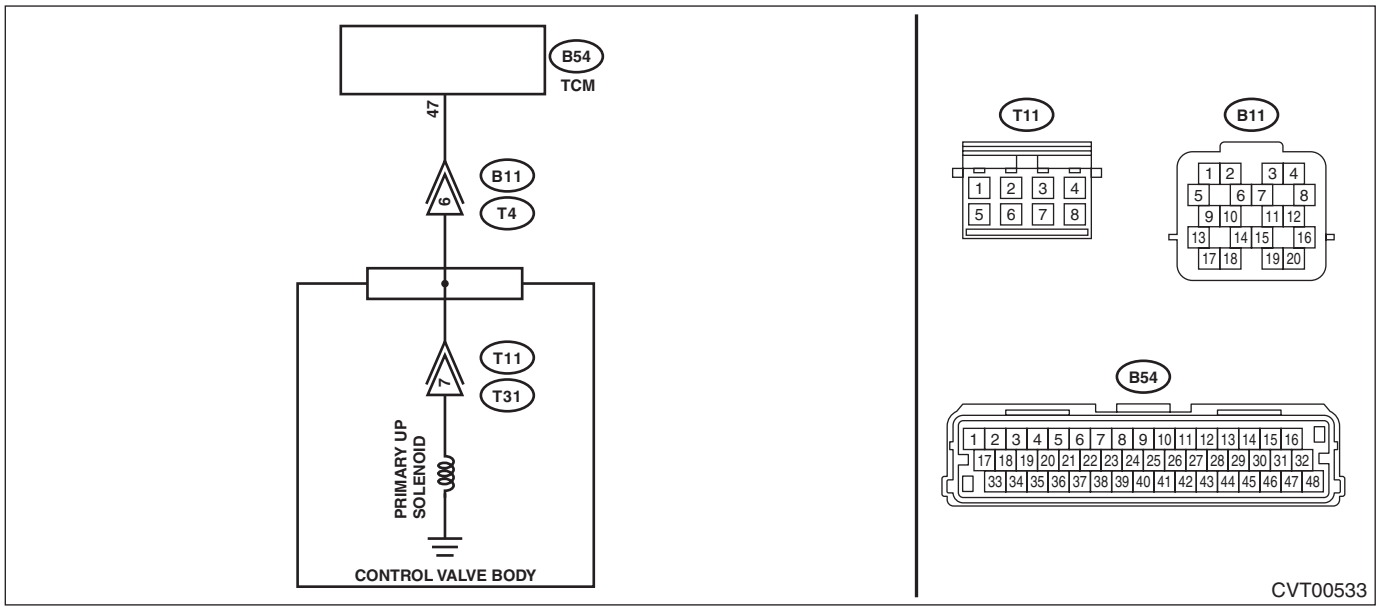

	Step	Check	Yes	No
1	**CHECK DTC.** Read the DTC using Subaru Select Monitor.	Besides DTC P0752, is any of the DTCs P0973, P0974, P0976, P0977, P2747 and P2751 displayed?	Perform the diagnosis according to DTCs other than P0752.	Go to step **2**.
2	**CHECK PRIMARY UP SOLENOID (ACTIVE TEST).** 1) Turn the ignition switch to ON. 2) Using the Subaru Select Monitor, perform forced operation of the primary UP solenoid. <Ref. to CVT(diag)-25, Active Test.>	Does the indication of 0 → 50% appear repeatedly during forced operation, and does operating sound emit during indicating 50%?	Go to step **5**.	Go to step **3**.
3	**CHECK PRIMARY UP SOLENOID.** 1) Turn the ignition switch to OFF. 2) Disconnect the transmission connector. 3) Measure the resistance between transmission connector and transmission body. ***Connector & terminal*** ***(T4) No. 6 — Transmission body:***	Is the resistance approx. 10 — 13.5 Ω? (when cold)	Go to step **7**.	Go to step **4**.
4	**CHECK HARNESS.** Check the transmission harness. (Open circuit, short circuit to power supply, short circuit to ground, and poor contact)	Is the check result OK?	Go to step **7**.	Repair the harness.
5	**CHECK TRANSMISSION FLUID.** 1) Connect the transmission connector. 2) Check the amount of ATF. <Ref. to CVT(TR690)-36, ADJUSTMENT, CVTF.>	Is the check result OK?	Go to step **6**.	Adjust the amount of ATF. <Ref. to CVT(TR690)-36, ADJUSTMENT, CVTF.>

	Step	Check	Yes	No
6	**CHECK TRANSMISSION FLUID.** Check the condition of ATF. <Ref. to CVT(TR690)-40, CONDITION CHECK, CVTF.>	Is the check result OK?	Go to step **7**.	Check according to the "Corrective action" of ATF (CVTF) "CONDITION CHECK". <Ref. to CVT(TR690)-40, CONDITION CHECK, CVTF.>
7	**CHECK INPUT SIGNAL FOR TCM.** 1) Lift up the vehicle. 2) Start the engine. 3) Warm up until the ATF temperature reaches to 40 — 70°C (104 — 158°F). 4) Depress the brake pedal, and shift the select lever to "D" range. 5) Shift the select lever to "P" range. 6) Stabilize the engine speed at idle. 7) Read the data of «Actual Secondary Pressure» using Subaru Select Monitor.	Is the «Actual Secondary Pressure» 0.5 — 1.5 MPa?	Go to step **8**.	Replace the transmission assembly. <Ref. to CVT(TR690)-57, Automatic Transmission Assembly.>
8	**CHECK INPUT SIGNAL FOR TCM.** 1) Set the select lever to "D" range. 2) Release the brake pedal to stabilize the engine speed and front wheel speed. 3) Read the data of «Actual Gear Ratio» using Subaru Select Monitor. NOTE: Before operation, set SI-DRIVE to I mode.	Is the «Actual Gear Ratio» 2.0 — 2.4?	Go to step **9**.	Replace the transmission assembly. <Ref. to CVT(TR690)-57, Automatic Transmission Assembly.>
9	**CHECK INPUT SIGNAL FOR TCM.** 1) Set the select lever to "D" range. 2) Slowly increase the speed to 40 km/h (25 MPH) and keep to a constant speed. 3) Read the data of «Actual Gear Ratio» using Subaru Select Monitor. NOTE: Before operation, set SI-DRIVE to I mode.	Is the «Actual Gear Ratio» 0.5 — 0.8?	Go to step **10**.	Replace the transmission assembly. <Ref. to CVT(TR690)-57, Automatic Transmission Assembly.>
10	**DRIVING CHECK BY INSPECTION MODE.** 1) Turn the ignition switch to OFF. 2) Perform a drive check based on the "Inspection Mode". <Ref. to CVT(diag)-20, Inspection Mode.>	Does the AT OIL TEMP light blink and is DTC P0752 displayed?	Replace the transmission assembly. <Ref. to CVT(TR690)-57, Automatic Transmission Assembly.>	Current condition is normal. It is possible that temporary poor contact occurs.

1. OUTLINE OF DIAGNOSIS

• Detect the malfunction of shift-up fluid pressure control solenoid and hydraulic circuit characteristics (stuck to high pressure side).
• Judge as NG if the amount of gear rate change per second is within the predetermined value, even though the down-shift command is issued.

2. EXECUTION CONDITION

Secondary parameters	Execution condition
12 V battery system voltage	≥ 10 V
Commanded duty of shift up pressure control solenoid	0%
Engine speed	≥ 1000 rpm
Actual pulley ratio*	< 0.5

* Actual pulley ratio: Measured primary pulley shaft speed / Measured secondary pulley shaft speed

3. DIAGNOSTIC METHOD

If the duration of time while the following conditions are met is longer than the time indicated, judge as NG.

Judgment Value

Malfunction Criteria	Threshold Value
Actual pulley ratio * change for 1 second	> – 0.08 and < 0.08
Commanded duty of shift down pressure control solenoid	> 80%

* Actual pulley ratio: Measured primary pulley shaft speed / Measured secondary pulley shaft speed

Time Needed for Diagnosis: 1 second

Malfunction Indicator Light Illumination: Illuminates when malfunction occurs in 2 continuous driving cycles.

S: DTC P0756 SHIFT SOLENOID "B" PERFORMANCE/STUCK OFF

DTC DETECTING CONDITION:
Detected when two consecutive driving cycles with fault occur.
TROUBLE SYMPTOM:
- Acceleration is poor during standing start.
- Shift control malfunction

WIRING DIAGRAM:
CVT control system <Ref. to WI-144, CVT Control System.>

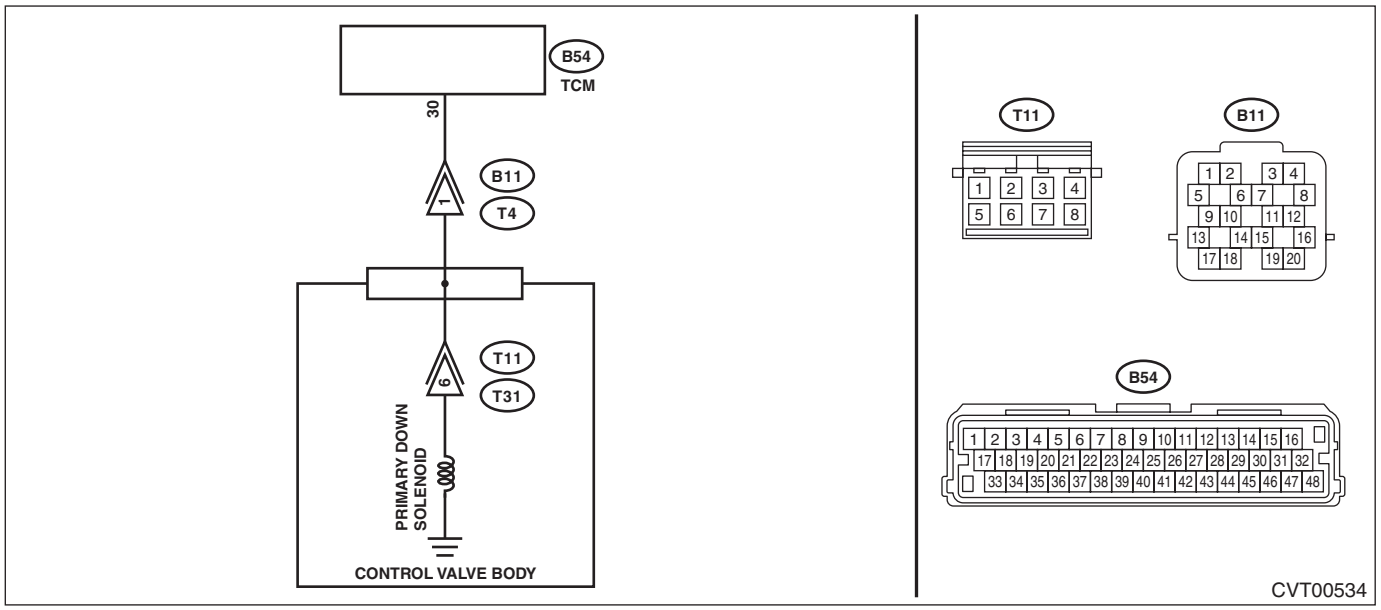

	Step	Check	Yes	No
1	**CHECK DTC.** Read the DTC using Subaru Select Monitor.	Besides DTC P0756, is any of the DTCs P0973, P0974, P0976, P0977, P2747 and P2751 displayed?	Perform the diagnosis according to DTCs other than P0756.	Go to step **2**.
2	**CHECK PRIMARY DOWN SOLENOID (ACTIVE TEST).** 1) Turn the ignition switch to ON. 2) Using the Subaru Select Monitor, perform forced operation of the primary DOWN solenoid. <Ref. to CVT(diag)-25, Active Test.>	Does the indication of 0 → 50% appear repeatedly during forced operation, and does operating sound emit during indicating 50%?	Go to step **5**.	Go to step **3**.
3	**CHECK PRIMARY DOWN SOLENOID.** 1) Turn the ignition switch to OFF. 2) Disconnect the transmission connector. 3) Measure the resistance between transmission connector and transmission body. ***Connector & terminal*** ***(T4) No. 1 — Transmission body:***	Is the resistance approx. 10 — 13.5 Ω? (when cold)	Go to step **7**.	Go to step **4**.
4	**CHECK HARNESS.** Check the transmission harness. (Open circuit, short circuit to power supply, short circuit to ground, and poor contact)	Is the check result OK?	Go to step **7**.	Repair the harness.
5	**CHECK TRANSMISSION FLUID.** 1) Connect the transmission connector. 2) Check the amount of ATF. <Ref. to CVT(TR690)-36, ADJUSTMENT, CVTF.>	Is the check result OK?	Go to step **6**.	Adjust the amount of ATF. <Ref. to CVT(TR690)-36, ADJUSTMENT, CVTF.>

	Step	Check	Yes	No
6	**CHECK TRANSMISSION FLUID.** Check the condition of ATF. <Ref. to CVT(TR690)-40, CONDITION CHECK, CVTF.>	Is the check result OK?	Go to step **7**.	Check according to the "Corrective action" of ATF (CVTF) "CONDITION CHECK". <Ref. to CVT(TR690)-40, CONDITION CHECK, CVTF.>
7	**CHECK INPUT SIGNAL FOR TCM.** 1) Lift up the vehicle. 2) Start the engine. 3) Warm up until the ATF temperature reaches to 40 — 70°C (104 — 158°F). 4) Depress the brake pedal, and shift the select lever to "D" range. 5) Shift the select lever to "P" range. 6) Stabilize the engine speed at idle. 7) Read the data of «Actual Secondary Pressure» using Subaru Select Monitor.	Is the «Actual Secondary Pressure» 0.5 — 1.5 MPa?	Go to step **8**.	Replace the transmission assembly. <Ref. to CVT(TR690)-57, Automatic Transmission Assembly.>
8	**CHECK INPUT SIGNAL FOR TCM.** 1) Set the select lever to "D" range. 2) Release the brake pedal to stabilize the engine speed and front wheel speed. 3) Read the data of «Actual Gear Ratio» using Subaru Select Monitor. NOTE: Before operation, set SI-DRIVE to I mode.	Is the «Actual Gear Ratio» 2.0 — 2.4?	Go to step **9**.	Replace the transmission assembly. <Ref. to CVT(TR690)-57, Automatic Transmission Assembly.>
9	**CHECK INPUT SIGNAL FOR TCM.** 1) Set the select lever to "D" range. 2) Slowly increase the speed to 40 km/h (25 MPH) and keep to a constant speed. 3) Read the data of «Actual Gear Ratio» using Subaru Select Monitor. NOTE: Before operation, set SI-DRIVE to I mode.	Is the «Actual Gear Ratio» 0.5 — 0.8?	Go to step **10**.	Replace the transmission assembly. <Ref. to CVT(TR690)-57, Automatic Transmission Assembly.>
10	**DRIVING CHECK BY INSPECTION MODE.** 1) Turn the ignition switch to OFF. 2) Perform a drive check based on the "Inspection Mode". <Ref. to CVT(diag)-20, Inspection Mode.>	Does the AT OIL TEMP light blink and is DTC P0756 displayed?	Replace the transmission assembly. <Ref. to CVT(TR690)-57, Automatic Transmission Assembly.>	Current condition is normal. It is possible that temporary poor contact occurs.

1. OUTLINE OF DIAGNOSIS

• Detect the malfunction of shift-down fluid pressure control solenoid characteristics and hydraulic circuit characteristics (stuck to low pressure side).
• Judge as NG if the amount of gear rate change per second is within the predetermined value, even though the down-shift command is issued.

2. EXECUTION CONDITION

Secondary parameters	Execution condition
12 V battery system voltage	≥ 10 V
Engine speed	≥ 1000 rpm
Commanded duty of shift up pressure control solenoid	0%
Actual pulley ratio*	≥ 0.363 and ≤ 2.348

* Actual pulley ratio: Measured primary pulley shaft speed / Measured secondary pulley shaft speed

3. DIAGNOSTIC METHOD

If the duration of time while the following conditions are met is longer than the time indicated, judge as NG.

Judgment Value

Malfunction Criteria	Threshold Value
Actual pulley ratio * change for 1 second	> – 0.08 and < 0.08
Commanded duty of shift down pressure control solenoid	> 80%

* Actual pulley ratio: Measured primary pulley shaft speed / Measured secondary pulley shaft speed

Time Needed for Diagnosis: 1 second

Malfunction Indicator Light Illumination: Illuminates when malfunction occurs in 2 continuous driving cycles.

T: DTC P0757 SHIFT SOLENOID "B" STUCK ON

DTC DETECTING CONDITION:
Detected when two consecutive driving cycles with fault occur.
TROUBLE SYMPTOM:
- Vibration occurs at shift change.
- Shift control malfunction

WIRING DIAGRAM:
CVT control system <Ref. to WI-144, CVT Control System.>

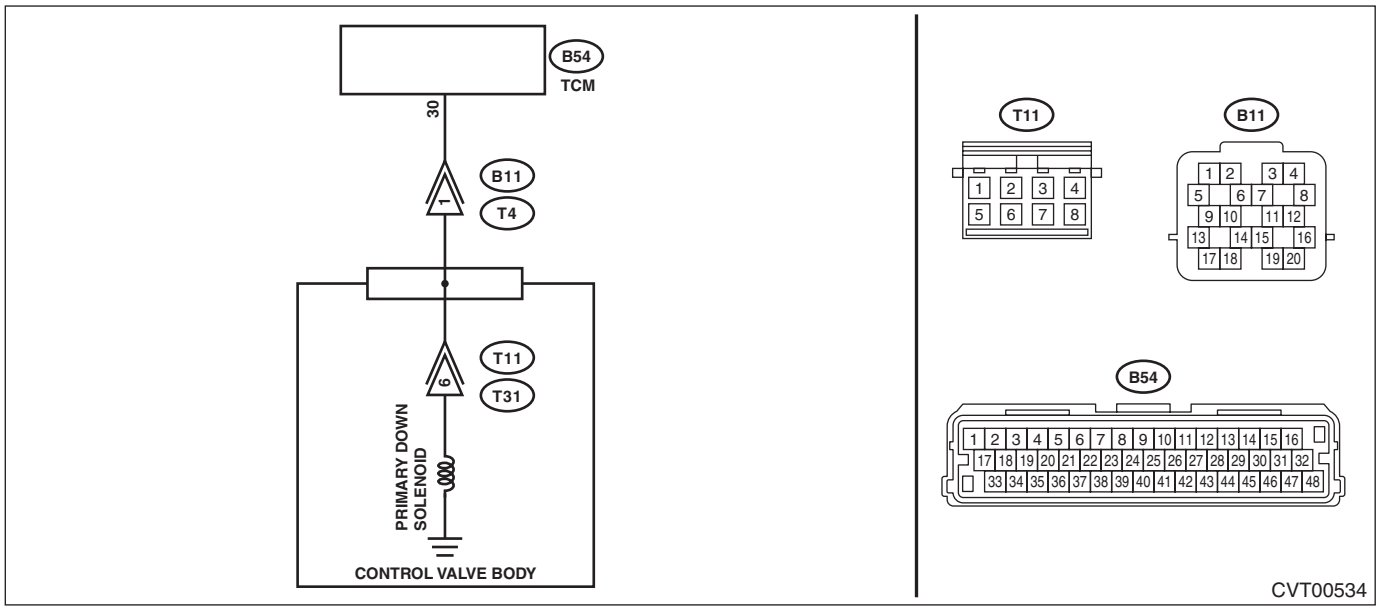

	Step	Check	Yes	No
1	**CHECK DTC.** Read the DTC using Subaru Select Monitor.	Besides DTC P0757, is any of the DTCs P0973, P0974, P0976, P0977, P2747 and P2751 displayed?	Perform the diagnosis according to DTCs other than P0757.	Go to step **2**.
2	**CHECK PRIMARY DOWN SOLENOID (ACTIVE TEST).** 1) Turn the ignition switch to ON. 2) Using the Subaru Select Monitor, perform forced operation of the primary DOWN solenoid. <Ref. to CVT(diag)-25, Active Test.>	Does the indication of 0 → 50% appear repeatedly during forced operation, and does operating sound emit during indicating 50%?	Go to step **5**.	Go to step **3**.
3	**CHECK PRIMARY DOWN SOLENOID.** 1) Turn the ignition switch to OFF. 2) Disconnect the transmission connector. 3) Measure the resistance between transmission connector and transmission body. ***Connector & terminal*** ***(T4) No. 1 — Transmission body:***	Is the resistance approx. 10 — 13.5 Ω? (when cold)	Go to step **7**.	Go to step **4**.
4	**CHECK HARNESS.** Check the transmission harness. (Open circuit, short circuit to power supply, short circuit to ground, and poor contact)	Is the check result OK?	Go to step **7**.	Repair the harness.
5	**CHECK TRANSMISSION FLUID.** 1) Connect the transmission connector. 2) Check the amount of ATF. <Ref. to CVT(TR690)-36, ADJUSTMENT, CVTF.>	Is the check result OK?	Go to step **6**.	Adjust the amount of ATF. <Ref. to CVT(TR690)-36, ADJUSTMENT, CVTF.>

	Step	Check	Yes	No
6	**CHECK TRANSMISSION FLUID.** Check the condition of ATF. <Ref. to CVT(TR690)-40, CONDITION CHECK, CVTF.>	Is the check result OK?	Go to step **7**.	Check according to the "Corrective action" of ATF (CVTF) "CONDITION CHECK". <Ref. to CVT(TR690)-40, CONDITION CHECK, CVTF.>
7	**CHECK INPUT SIGNAL FOR TCM.** 1) Lift up the vehicle. 2) Start the engine. 3) Warm up until the ATF temperature reaches to 40 — 70°C (104 — 158°F). 4) Depress the brake pedal, and shift the select lever to "D" range. 5) Shift the select lever to "P" range. 6) Stabilize the engine speed at idle. 7) Read the data of «Actual Secondary Pressure» using Subaru Select Monitor.	Is the «Actual Secondary Pressure» 0.5 — 1.5 MPa?	Go to step **8**.	Replace the transmission assembly. <Ref. to CVT(TR690)-57, Automatic Transmission Assembly.>
8	**CHECK INPUT SIGNAL FOR TCM.** 1) Set the select lever to "D" range. 2) Release the brake pedal to stabilize the engine speed and front wheel speed. 3) Read the data of «Actual Gear Ratio» using Subaru Select Monitor. NOTE: Before operation, set SI-DRIVE to I mode.	Is the «Actual Gear Ratio» 2.0 — 2.4?	Go to step **9**.	Replace the transmission assembly. <Ref. to CVT(TR690)-57, Automatic Transmission Assembly.>
9	**CHECK INPUT SIGNAL FOR TCM.** 1) Set the select lever to "D" range. 2) Slowly increase the speed to 40 km/h (25 MPH) and keep to a constant speed. 3) Read the data of «Actual Gear Ratio» using Subaru Select Monitor. NOTE: Before operation, set SI-DRIVE to I mode.	Is the «Actual Gear Ratio» 0.5 — 0.8?	Go to step **10**.	Replace the transmission assembly. <Ref. to CVT(TR690)-57, Automatic Transmission Assembly.>
10	**DRIVING CHECK BY INSPECTION MODE.** 1) Turn the ignition switch to OFF. 2) Perform a drive check based on the "Inspection Mode". <Ref. to CVT(diag)-20, Inspection Mode.>	Does the AT OIL TEMP light blink and is DTC P0757 displayed?	Replace the transmission assembly. <Ref. to CVT(TR690)-57, Automatic Transmission Assembly.>	Current condition is normal. It is possible that temporary poor contact occurs.

1. OUTLINE OF DIAGNOSIS

• Detect the malfunction of shift-down fluid pressure control solenoid characteristics and hydraulic circuit characteristics (stuck to high pressure side).
• Judge as NG if the amount of gear rate change per second is equal to or larger than the predetermined value, even though the up-shift command is issued.

2. EXECUTION CONDITION

Secondary parameters	Execution condition
12 V battery system voltage	≥ 10 V
Engine speed	≥ 1000 rpm
Commanded duty of shift down pressure control solenoid	0%
Actual pulley ratio*	≥ 0.363 and ≤ 2.348

* Actual pulley ratio: Measured primary pulley shaft speed / Measured secondary pulley shaft speed

3. DIAGNOSTIC METHOD

If the duration of time while the following conditions are met is longer than the time indicated, judge as NG.

Judgment Value

Malfunction Criteria	Threshold Value
Actual pulley ratio * change for 1 second	> 0.04
Commanded duty of shift up pressure control solenoid	> 50%

* Actual pulley ratio: Measured primary pulley shaft speed / Measured secondary pulley shaft speed

Time Needed for Diagnosis: 10 seconds

Malfunction Indicator Light Illumination: Illuminates when malfunction occurs in 2 continuous driving cycles.

U: DTC P0776 PRESSURE CONTROL SOLENOID "B" PERFORMANCE/STUCK OFF

DTC DETECTING CONDITION:
Detected when two consecutive driving cycles with fault occur.
TROUBLE SYMPTOM:
- Engine speed increases abruptly, and can not accelerate.
- Excessive slippage is felt.

WIRING DIAGRAM:
CVT control system <Ref. to WI-144, CVT Control System.>

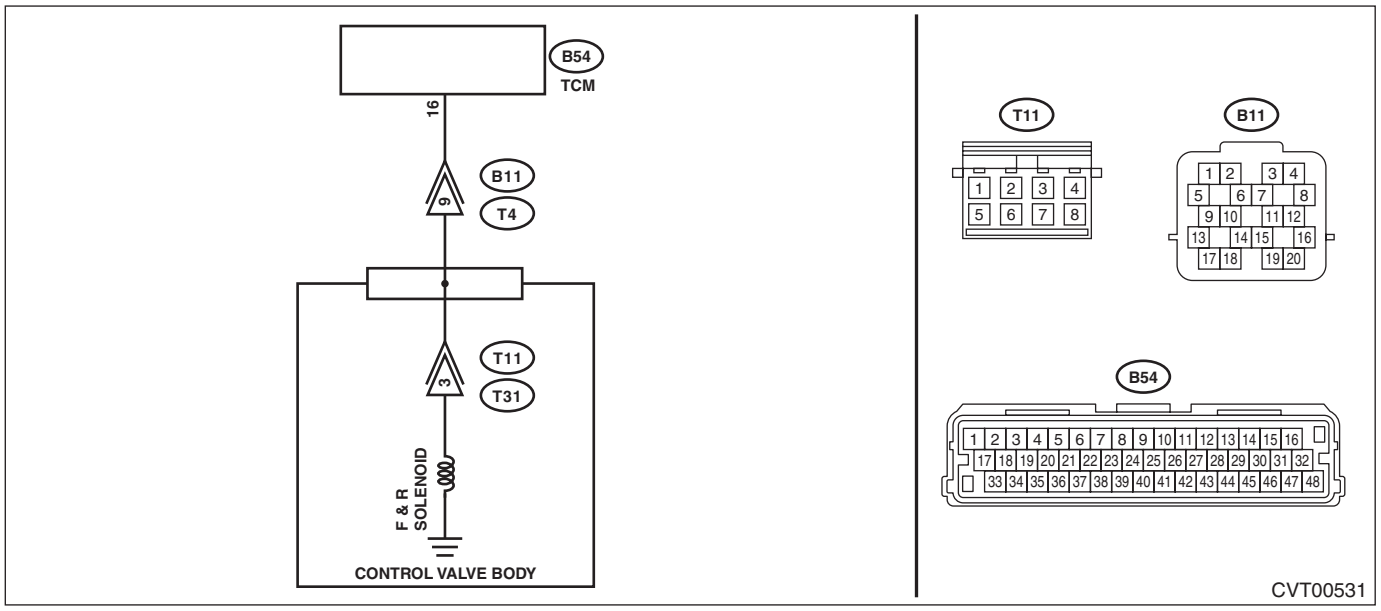

Step		Check	Yes	No
1	**CHECK DTC.** Read the DTC using Subaru Select Monitor.	Besides DTC P0776, is any of the DTCs P0720, P0966, P0967, P1706 and P2751 displayed?	Perform the diagnosis according to DTCs other than P0776.	Go to step **2**.
2	**CHECK F&R SOLENOID (ACTIVE TEST).** 1) Turn the ignition switch to ON. 2) Using the Subaru Select Monitor, perform forced operation of the F&R solenoid. <Ref. to CVT(diag)-25, Active Test.>	Does the indication of 0 → 500 mA appear repeatedly during forced operation, and does operating sound emit during indicating 500 mA?	Go to step **5**.	Go to step **3**.
3	**CHECK F&R SOLENOID.** 1) Turn the ignition switch to OFF. 2) Disconnect the transmission connector. 3) Measure the resistance between transmission connector and transmission body. ***Connector & terminal*** ***(T4) No. 9 — Transmission body:***	Is the resistance approx. 4 — 6 Ω? (when cold)	Go to step **7**.	Go to step **4**.
4	**CHECK HARNESS.** Check the transmission harness. (Open circuit, short circuit to power supply, short circuit to ground, and poor contact)	Is the check result OK?	Go to step **7**.	Repair the harness.
5	**CHECK TRANSMISSION FLUID.** 1) Connect the transmission connector. 2) Check the amount of ATF. <Ref. to CVT(TR690)-36, ADJUSTMENT, CVTF.>	Is the check result OK?	Go to step **6**.	Adjust the amount of ATF. <Ref. to CVT(TR690)-36, ADJUSTMENT, CVTF.>

	Step	Check	Yes	No
6	**CHECK TRANSMISSION FLUID.** Check the condition of ATF. <Ref. to CVT(TR690)-40, CONDITION CHECK, CVTF.>	Is the check result OK?	Go to step **7**.	Check according to the “Corrective action” of ATF (CVTF) “CONDITION CHECK”. <Ref. to CVT(TR690)-40, CONDITION CHECK, CVTF.>
7	**CHECK INPUT SIGNAL FOR TCM.** 1) Lift up the vehicle. 2) Start the engine. 3) Warm up until the ATF temperature reaches to 40 — 70°C (104 — 158°F). 4) Depress the brake pedal, and shift the select lever to “D” range. 5) Shift the select lever to “P” range. 6) Stabilize the engine speed at idle. 7) Read the data of «Actual Secondary Pressure» using Subaru Select Monitor.	Is the «Actual Secondary Pressure» 0.5 — 1.5 MPa?	Go to step **8**.	Perform the diagnosis according to DTC P0841. <Ref. to CVT(diag)-89, DTC P0841 TRANSMISSION FLUID PRESSURE SENSOR/SWITCH "A" CIRCUIT RANGE/PERFORMANCE, Diagnostic Procedure with Diagnostic Trouble Code (DTC).>
8	**STALL TEST.** Perform the stall test. <Ref. to CVT(TR690)-47, Stall Test.>	Is the result of the stall test OK?	Go to step **9**.	Replace the transmission assembly if the stall speed is higher than the standard value of the stall test. <Ref. to CVT(TR690)-57, Automatic Transmission Assembly.>
9	**DRIVING CHECK BY INSPECTION MODE.** 1) Turn the ignition switch to OFF. 2) Perform a drive check based on the “Inspection Mode”. <Ref. to CVT(diag)-20, Inspection Mode.>	Does the AT OIL TEMP light blink and is DTC P0776 displayed?	Replace the transmission assembly. <Ref. to CVT(TR690)-57, Automatic Transmission Assembly.>	Current condition is normal. It is possible that temporary poor contact occurs.

1. OUTLINE OF DIAGNOSIS

• Detect the malfunction of transmission forward/reverse clutch pressure solenoid and hydraulic circuit characteristics (stuck to low pressure side).
• Judge as NG if the value calculated by "output speed – secondary pulley speed" becomes the predetermined value or more, even though the forward/reverse clutch is engaged.

2. EXECUTION CONDITION

Secondary parameters	Execution condition
Diagnosis 1	
12 V battery system voltage	≥ 10 V
Transmission range	Drive
Measured secondary pulley shaft speed	≥ 100 rpm
Measured output shaft speed *	≥ 100 rpm
Commanded forward & reverse clutch pressure control solenoid current	< 0.9 A
Engine speed	≥ 400 rpm
Diagnosis 2	
12 V battery system voltage	≥ 10 V
Transmission range	Drive
Measured output shaft speed *	< 100 rpm
Commanded forward & reverse clutch pressure control solenoid current	< 0.9 A
Accelerator pedal position (from ECM)	> 6%
Engine speed	≥ 400 rpm

* Measured output shaft speed: Measured rear output shaft speed × 0.543 ** + Measured front output shaft speed × (1 – 0.543)
** 0.543: Center differential gear ratio

3. DIAGNOSTIC METHOD

If the duration of time while the following conditions are met is longer than the time indicated, judge as NG.

Judgment Value

Malfunction Criteria	Threshold Value
Diagnosis 1	
ABS *: Measured output shaft speed ** – Measured secondary pulley shaft speed /1.322	> Table 1 rpm
Diagnosis 2	
Measured secondary pulley shaft speed	> 600 rpm

* ABS: Absolute value
* Measured output shaft speed: Measured rear output shaft speed × 0.543 *** + Measured front output shaft speed × (1 – 0.543)
*** 0.543: Center differential gear ratio

Table 1

Vehicle speed (MPH)	0	13	25	38	50	63	75
ABS: Measured output shaft speed – Measured primary pulley shaft speed(rpm)	150	100	100	100	100	100	100

Vehicle speed (MPH)	88	100	113	125	138	150	159
ABS: Measured output shaft speed – Measured primary pulley shaft speed|(rpm)	100	100	100	100	100	100	100

Time Needed for Diagnosis: 5 seconds
Malfunction Indicator Light Illumination: Illuminates when malfunction occurs in 2 continuous driving cycles.

V: DTC P0801 REVERSE INHIBIT CONTROL CIRCUIT/OPEN

DTC DETECTING CONDITION:
Immediately at fault recognition

NOTE:
For diagnostic procedures, refer to “BODY CONTROL SYSTEM (DIAGNOSTICS)”. <Ref. to BC(diag)-45, DTC B1016 SHIFT LOCK CIRCUIT, Diagnostic Procedure with Diagnostic Trouble Code (DTC).>

1. OUTLINE OF DIAGNOSIS

- Detect the malfunction of shift lock solenoid or circuit.
- Judge as NG if abnormal signal from the integrated unit is received, when bus off is not detected and there is no trouble in CAN between the integrated unit.

2. EXECUTION CONDITION

Secondary parameters	Execution condition
None	

3. DIAGNOSTIC METHOD

If the duration of time while the following conditions are met is longer than the time indicated, judge as NG.

Judgment Value

Malfunction Criteria	Threshold Value
Shift lock solenoid system circuit abnormal (received from BIU)	ON

Time Needed for Diagnosis: 1 second
Malfunction Indicator Light Illumination: Does not illuminate.

W: DTC P0841 TRANSMISSION FLUID PRESSURE SENSOR/SWITCH "A" CIRCUIT RANGE/PERFORMANCE

DTC DETECTING CONDITION:
Immediately at fault recognition
TROUBLE SYMPTOM:
- Acceleration is poor during standing start.
- Shift control malfunction
- Engine speed increases abruptly.

CAUTION:
- **Before performing diagnosis, record the freeze frame data.**
- **Use the check board when measuring the TCM terminal voltage and resistance.**

WIRING DIAGRAM:
CVT control system <Ref. to WI-144, CVT Control System.>

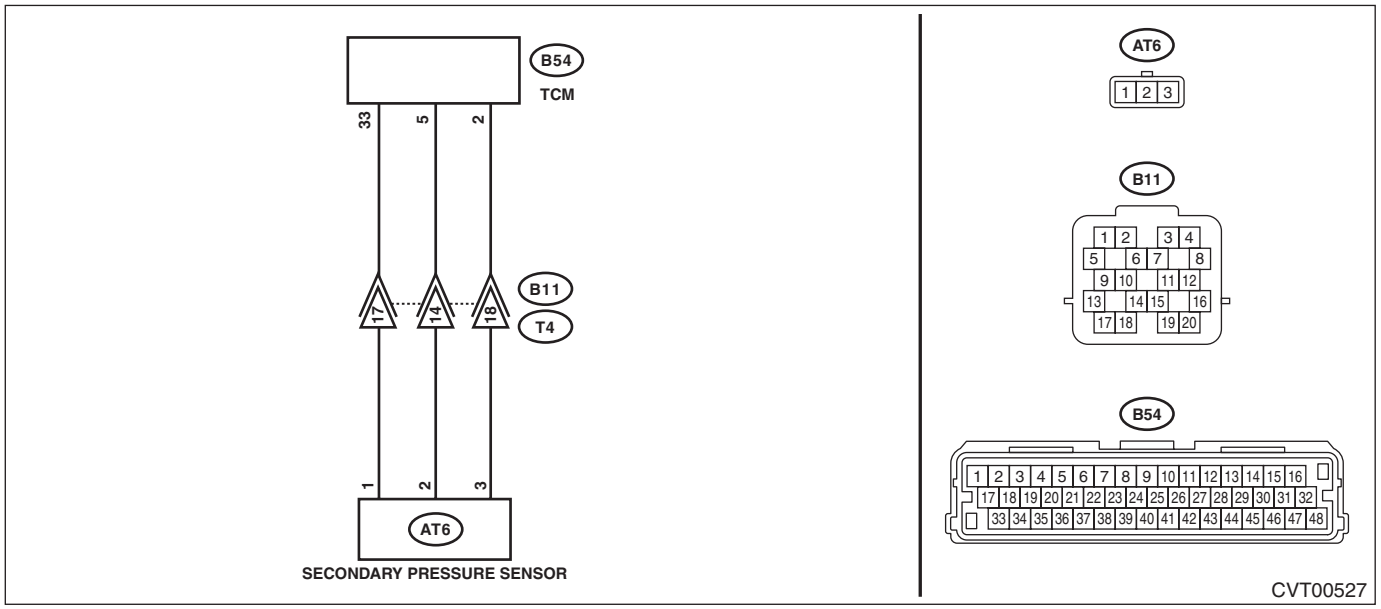

Step		Check	Yes	No
1	**CHECK DTC.** Read the DTC using Subaru Select Monitor.	Are DTCs other than P0841 displayed?	Perform the diagnosis according to DTC. After the diagnosis, start the engine, and drive for 20 minutes in any driving pattern. (Include driving at a constant legal speed (for 20 seconds) at least once.) Read the DTC, and if P0841 alone is detected, Go to step **2**.	Go to step **2**.
2	**CHECK INPUT SIGNAL FOR TCM.** 1) Turn the ignition switch to ON. 2) Read the data of «secondary pressure sensor voltage» using Subaru Select Monitor. (While shaking the secondary pressure sensor harness)	Is the value of «secondary pressure sensor voltage» 0.39 — 0.61 V?	Go to step **10**.	Go to step **3**.

	Step	Check	Yes	No
3	**CHECK HARNESS.** 1) Turn the ignition switch to OFF. 2) Disconnect the TCM connector. 3) Disconnect the secondary pressure sensor connector. 4) Measure the resistance between TCM connector and secondary pressure sensor connector. ***Connector & terminal*** ***(B54) No. 2 — (AT6) No. 3:*** ***(B54) No. 5 — (AT6) No. 2:*** ***(B54) No. 33 — (AT6) No. 1:***	Is the resistance less than 1 Ω?	Go to step **4**.	Repair the open circuit of harness.
4	**CHECK HARNESS.** Measure the resistance between TCM connectors. ***Connector & terminal*** ***(B54) No. 2 — (B54) No. 33:*** ***(B54) No. 5 — (B54) No. 2:*** ***(B54) No. 33 — (B54) No. 5:***	Is the resistance 1 MΩ or more?	Go to step **5**.	Repair the short circuit of harness.
5	**CHECK HARNESS.** Measure the resistance between TCM connector and transmission body. ***Connector & terminal*** ***(B54) No. 2 — Transmission body:*** ***(B54) No. 5 — Transmission body:*** ***(B54) No. 33 — Transmission body:***	Is the resistance 1 MΩ or more?	Go to step **6**.	Repair the short circuit of harness.
6	**CHECK POWER SUPPLY FOR SECONDARY PRESSURE SENSOR.** 1) Turn the ignition switch to ON. 2) Measure the voltage between TCM connectors. ***Connector & terminal*** ***(B54) No. 33 (+) — (B54) No. 2 (–):***	Is the voltage 4.6 — 5.4 V?	Go to step **7**.	Check for poor contact of connector, and if no fault is found, replace the TCM. <Ref. to CVT(TR690)-126, Transmission Control Module (TCM).>
7	**CHECK POWER SUPPLY FOR SECONDARY PRESSURE SENSOR.** 1) Turn the ignition switch to OFF. 2) Connect the secondary pressure sensor connector. 3) Turn the ignition switch to ON. 4) Measure the voltage between TCM connectors. ***Connector & terminal*** ***(B54) No. 33 (+) — (B54) No. 2 (–):***	Is the voltage 4.6 — 5.4 V?	Go to step **8**.	Replace the secondary pressure sensor. <Ref. to CVT(TR690)-111, Secondary Pressure Sensor.>
8	**CHECK SECONDARY PRESSURE SENSOR OUTPUT.** Measure the voltage between TCM connectors. ***Connector & terminal*** ***(B54) No. 5 (+) — (B54) No. 2 (–):***	Is the voltage 0.39 — 0.61 V?	Check for poor contact of connector, and if no fault is found, replace the TCM. <Ref. to CVT(TR690)-126, Transmission Control Module (TCM).>	Go to step **9**.

	Step	Check	Yes	No
9	**CHECK CONNECTOR.** 1) Turn the ignition switch to OFF. 2) Disconnect the TCM connector. 3) Disconnect the secondary pressure sensor connector. 4) Check the TCM connector (B54) and the secondary pressure sensor connector (AT6).	Is there any fault in the TCM connector or the secondary pressure connector?	Repair the connector, or replace harness.	Go to step **10**.
10	**CHECK TRANSMISSION FLUID.** 1) Connect all connectors. 2) Check the amount of ATF. <Ref. to CVT(TR690)-36, ADJUSTMENT, CVTF.>	Is the ATF amount correct?	Go to step **11**.	Adjust the amount of ATF. <Ref. to CVT(TR690)-36, ADJUSTMENT, CVTF.> Go to step **11**.
11	**CHECK INPUT SIGNAL FOR TCM.** 1) Perform the Clear Memory Mode. 2) Start the engine. 3) Warm up until the ATF temperature reaches to 40 — 70°C (104 — 158°F). 4) Depress the brake pedal and move the select lever to each range at an interval of five seconds. NOTE: Move the select lever in the following order: “P” → “R” → “N” → “D” → “N” → “R” → “P”. 5) Stabilize the engine speed at idle. 6) Read the data of «Actual Secondary Pressure» using Subaru Select Monitor.	Is the «Actual Secondary Pressure» 0.5 — 1.5 MPa?	Go to step **12**.	Replace the secondary pressure sensor. <Ref. to CVT(TR690)-111, Secondary Pressure Sensor.>
12	**CHECK INPUT SIGNAL FOR TCM.** 1) Shift the select lever to “P” range. 2) Keep the engine speed at 3,000 rpm. 3) Read the data of «Actual Secondary Pressure» using Subaru Select Monitor.	Is the «Actual Secondary Pressure» 1.5 — 2.5 MPa? And is the difference of the actual oil pressure 0.2 MPa or more compared with the value measured in step 11?	Go to step **13**.	Replace the secondary pressure sensor. <Ref. to CVT(TR690)-111, Secondary Pressure Sensor.>
13	**CHECK FREEZE FRAME DATA.** 1) Turn the ignition switch to OFF. 2) Check the recorded freeze frame data.	Was the detected symptom low-voltage malfunction? <Ref. to CVT(diag)-93, CLASSIFICATION OF SYMPTOM USING FREEZE FRAME DATA, DTC P0841 TRANSMISSION FLUID PRESSURE SENSOR/SWITCH "A" CIRCUIT RANGE/PERFORMANCE, Diagnostic Procedure with Diagnostic Trouble Code (DTC).>	Replace the transmission assembly. <Ref. to CVT(TR690)-57, Automatic Transmission Assembly.>	Go to step **14**.
14	**CHECK TCM INPUT SIGNAL (STALL TEST).** 1) Lift up the vehicle. 2) Start the engine. 3) Apply the parking brake. 4) Set the select lever to “D” range. 5) Depress the brake pedal firmly. 6) Slowly open the accelerator fully, and stabilize the engine speed. 7) Read the data of «Actual Secondary Pressure» using Subaru Select Monitor.	Is the «Actual Secondary Pressure» 4.5 — 6.0 MPa?	Replace the transmission assembly. <Ref. to CVT(TR690)-57, Automatic Transmission Assembly.>	Go to step **15**.

	Step	Check	Yes	No
15	**CHECK TCM INPUT SIGNAL (STALL TEST).** Check the «Actual Secondary Pressure» in step 14.	Is the «Actual Secondary Pressure» 4.5 MPa or less?	Replace the transmission assembly. <Ref. to CVT(TR690)-57, Automatic Transmission Assembly.>	Replace the control valve body. <Ref. to CVT(TR690)-113, Control Valve Body.>

1. CLASSIFICATION OF SYMPTOM USING FREEZE FRAME DATA

Apply the values of «Actual Secondary Pressure» and «Secondary Actual Current» recorded in the freeze frame data onto the graph shown in the following figure, and judge if either low-voltage malfunction or high-voltage malfunction occurs.

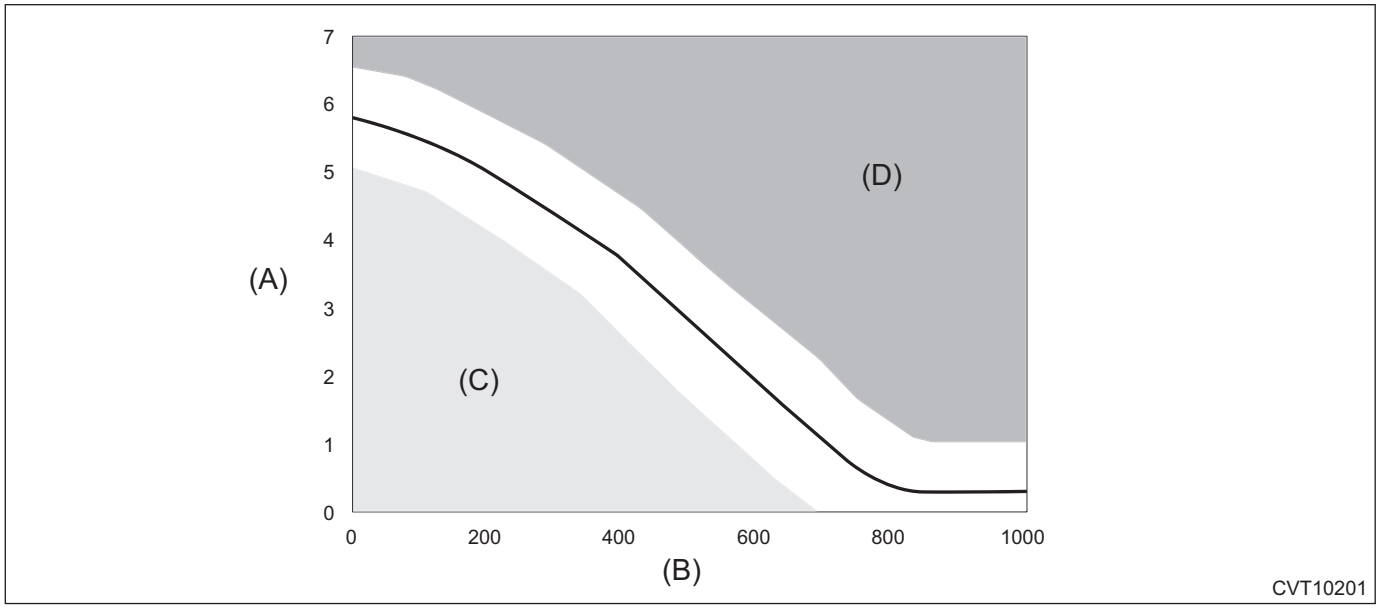

(A) Actual secondary pressure (MPa)
(B) Secondary actual current (mA)
(C) Low-voltage malfunction
(D) High-voltage malfunction

NOTE:
Symptom that the DTC P0841 illuminates can be classified into 2 patterns.
- Low-voltage malfunction: detected due to insufficient oil pressure
- High-voltage malfunction: detected due to excessive oil pressure

2. OUTLINE OF DIAGNOSIS

- Detect the malfunction of transmission fluid pressure control function.
- Judge as NG if a discrepancy between the target secondary oil pressure (as internal data) and the detected value of the secondary oil pressure sensor becomes the specified value or more.

3. EXECUTION CONDITION

Secondary parameters	Execution condition
12 V battery system voltage	≥ 10 V
Engine speed	≥ Table 1 rpm

Table 1

Target line pressure (kPa)	0	500	1000	1500	2000	3000	4000	5000	6000
Engine speed (rpm)	400	600	965	1180	1370	1670	1930	2150	2340

4. DIAGNOSTIC METHOD

If the duration of time while the following conditions are met is longer than the time indicated, judge as NG.

Judgment Value

Malfunction Criteria	Threshold Value
ABS *: Target line pressure – Measured line pressure	≥ 500 kPa

* ABS: Absolute value

Time Needed for Diagnosis: 5 seconds

Malfunction Indicator Light Illumination: Illuminates as soon as a malfunction occurs.

X: DTC P0842 TRANSMISSION FLUID PRESSURE SENSOR/SWITCH "A" CIRCUIT LOW

DTC DETECTING CONDITION:
Immediately at fault recognition
TROUBLE SYMPTOM:
Shift characteristics malfunction

CAUTION:
Use the check board when measuring the TCM terminal voltage and resistance.
WIRING DIAGRAM:
CVT control system <Ref. to WI-144, CVT Control System.>

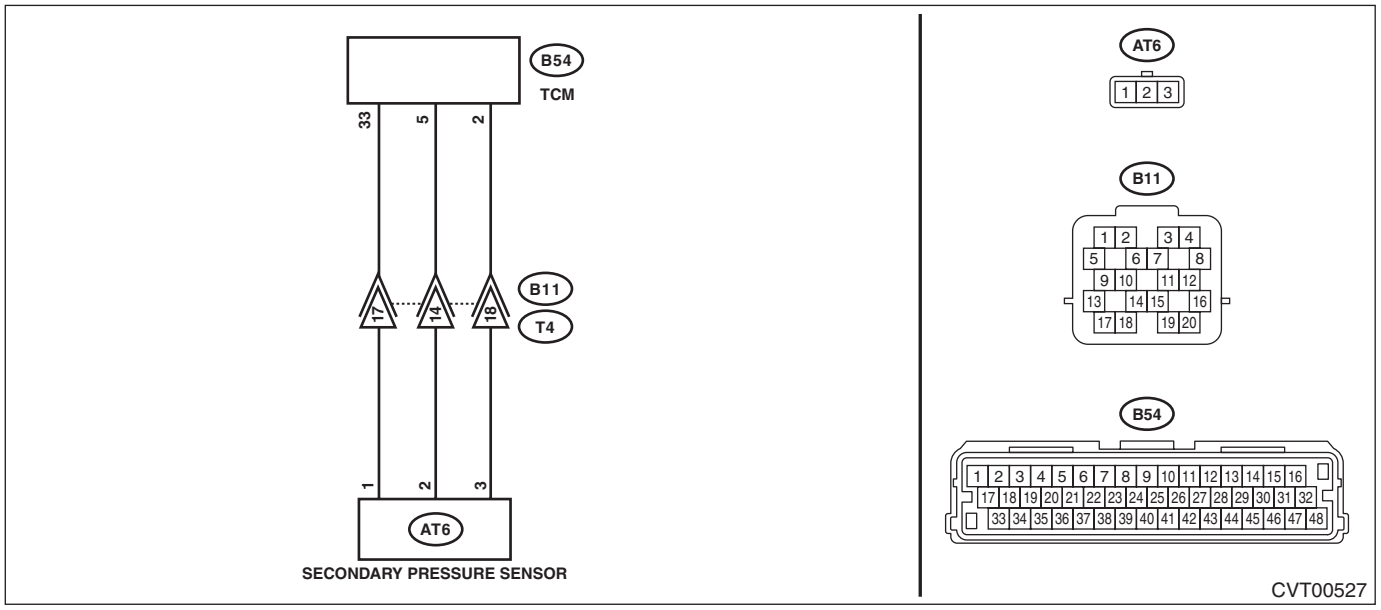

	Step	Check	Yes	No
1	**CHECK INPUT SIGNAL FOR TCM.** 1) Start the engine. 2) Warm up until the ATF temperature reaches to 40 — 70°C (104 — 158°F). 3) Depress the brake pedal, and shift the select lever to “D” range. 4) Shift the select lever to “P” range. 5) Stabilize the engine speed at idle. 6) Read the data of «Actual Secondary Pressure» using Subaru Select Monitor.	Is the «Actual Secondary Pressure» 0.5 — 1.5 MPa?	Check for poor contact of connector.	Go to step **2**.
2	**CHECK HARNESS.** 1) Turn the ignition switch to OFF. 2) Disconnect the TCM connector. 3) Disconnect the transmission connector. 4) Measure the resistance between TCM connector and transmission connectors. ***Connector & terminal*** ***(B54) No. 2 — (B11) No. 18:*** ***(B54) No. 5 — (B11) No. 14:*** ***(B54) No. 33 — (B11) No. 17:***	Is the resistance less than 1 Ω?	Go to step **3**.	Repair the open circuit of harness.
3	**CHECK HARNESS.** Measure the resistance between TCM connector and chassis ground. ***Connector & terminal*** ***(B54) No. 5 — Chassis ground:*** ***(B54) No. 33 — Chassis ground:***	Is the resistance 1 MΩ or more?	Go to step **4**.	Repair the short circuit of harness.

	Step	Check	Yes	No
4	**CHECK TRANSMISSION HARNESS.** 1) Disconnect the secondary pressure sensor connector. 2) Measure the resistance between transmission connector and secondary pressure sensor connector. ***Connector & terminal*** ***(T4) No. 14 — (AT6) No. 2:*** ***(T4) No. 17 — (AT6) No. 1:*** ***(T4) No. 18 — (AT6) No. 3:***	Is the resistance less than 1 Ω?	Go to step **5**.	Repair the open circuit of harness.
5	**CHECK TRANSMISSION HARNESS.** Measure the resistance between transmission connector and chassis ground. ***Connector & terminal*** ***(T4) No. 14 — Chassis ground:*** ***(T4) No. 17 — Chassis ground:***	Is the resistance 1 MΩ or more?	Go to step **6**.	Repair the short circuit of harness.
6	**CHECK POWER SUPPLY FOR SECONDARY PRESSURE SENSOR.** 1) Connect the TCM connector. 2) Connect the transmission connector. 3) Turn the ignition switch to ON. 4) Measure the voltage between secondary pressure sensor connector terminals. ***Connector & terminal*** ***(AT6) No. 1 (+) — (AT6) No. 3 (–):***	Is the voltage 4.5 V or more?	Replace the secondary pressure sensor. <Ref. to CVT(TR690)-111, Secondary Pressure Sensor.> If the replacement of the sensor do not eliminate the malfunction, replace the TCM. <Ref. to CVT(TR690)-126, Transmission Control Module (TCM).>	Check for poor contact of connector, and if no fault is found, replace the TCM. <Ref. to CVT(TR690)-126, Transmission Control Module (TCM).>

1. OUTLINE OF DIAGNOSIS

- Detect the ground short circuit of the transmission line pressure sensor.
- Judge as NG if the voltage detected by the transmission line pressure sensor is lower than the predetermined value.

2. EXECUTION CONDITION

Secondary parameters	Execution condition
12 V battery system voltage	≥ 9 V

3. DIAGNOSTIC METHOD

If the duration of time while the following conditions are met is longer than the time indicated, judge as NG.

Judgment Value

Malfunction Criteria	Threshold Value
Measured line pressure sensor input voltage (Line pressure)	< 0.195 V (< – 574 kPa)

Time Needed for Diagnosis: 0.5 seconds
Malfunction Indicator Light Illumination: Illuminates as soon as a malfunction occurs.

Y: DTC P0843 TRANSMISSION FLUID PRESSURE SENSOR/SWITCH "A" CIRCUIT HIGH

DTC DETECTING CONDITION:
Immediately at fault recognition
TROUBLE SYMPTOM:
Shift characteristics malfunction

CAUTION:
Use the check board when measuring the TCM terminal voltage and resistance.
WIRING DIAGRAM:
CVT control system <Ref. to WI-144, CVT Control System.>

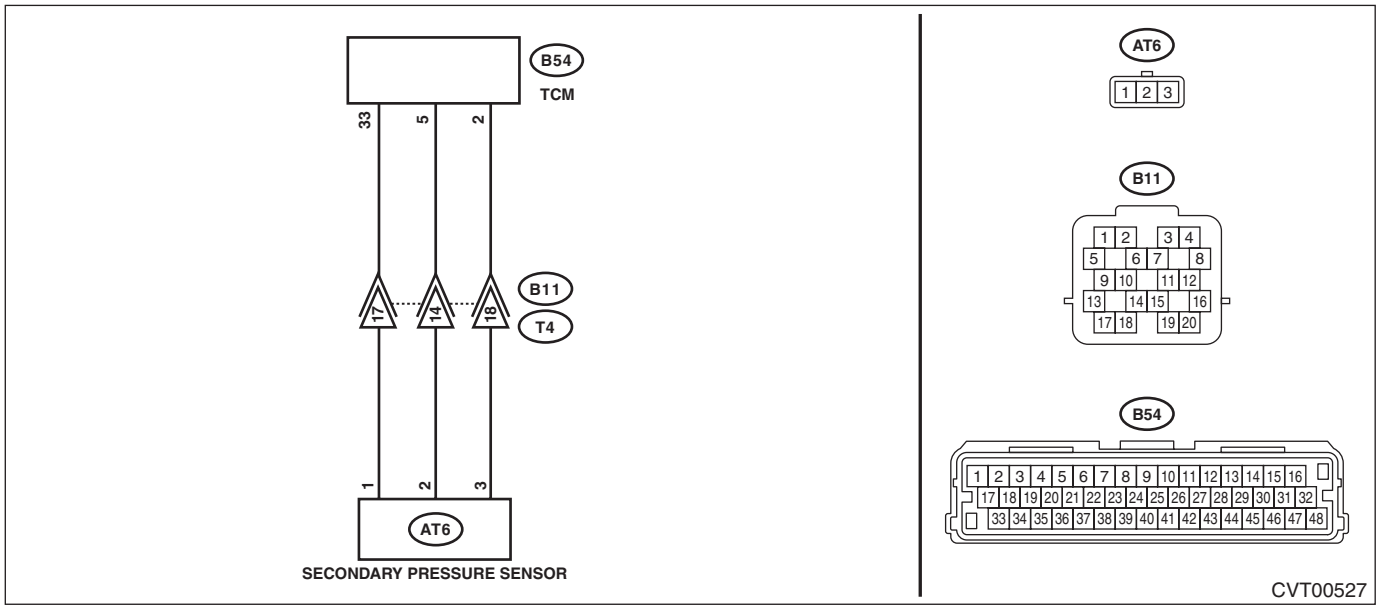

	Step	Check	Yes	No
1	**CHECK INPUT SIGNAL FOR TCM.** 1) Start the engine. 2) Warm up until the ATF temperature reaches to 40 — 70°C (104 — 158°F). 3) Depress the brake pedal, and shift to “D” range. 4) Shift the select lever to “P” range. 5) Stabilize the engine speed at idle. 6) Read the data of «Actual Secondary Pressure» using Subaru Select Monitor.	Is the «Actual Secondary Pressure» 0.5 — 1.5 MPa?	Check for poor contact of connector.	Go to step **2**.
2	**CHECK HARNESS.** 1) Turn the ignition switch to OFF. 2) Disconnect the TCM connector. 3) Disconnect the transmission connector. 4) Turn the ignition switch to ON. 5) Measure the voltage between TCM connector and chassis ground. ***Connector & terminal*** ***(B54) No. 5 (+) — Chassis ground (–):*** ***(B54) No. 33 (+) — Chassis ground (–):***	Is the voltage approx. 0 V?	Go to step **3**.	Repair the short circuit of harness.
3	**CHECK HARNESS.** 1) Turn the ignition switch to OFF. 2) Measure the resistance between TCM connector terminals. ***Connector & terminal*** ***(B54) No. 5 — (B54) No. 33:***	Is the resistance less than 1 Ω?	Repair the short circuit of harness.	Go to step **4**.

	Step	Check	Yes	No
4	**CHECK TRANSMISSION HARNESS.** 1) Disconnect the secondary pressure sensor connector. 2) Turn the ignition switch to ON. 3) Measure the voltage between transmission connector and chassis ground. ***Connector & terminal*** ***(T4) No. 14 (+) — Chassis ground (–):*** ***(T4) No. 17 (+) — Chassis ground (–):***	Is the voltage approx. 0 V?	Go to step **5**.	Repair the short circuit of harness.
5	**CHECK TRANSMISSION HARNESS.** 1) Turn the ignition switch to OFF. 2) Measure the resistance between transmission connector terminals. ***Connector & terminal*** ***(T4) No. 14 — (T4) No. 17:***	Is the resistance less than 1 Ω?	Repair the short circuit of harness.	Go to step **6**.
6	**CHECK POWER SUPPLY FOR SECONDARY PRESSURE SENSOR.** 1) Connect the TCM connector. 2) Connect the transmission connector. 3) Turn the ignition switch to ON. 4) Measure the voltage between secondary pressure sensor connector terminals. ***Connector & terminal*** ***(AT6) No. 1 (+) — (AT6) No. 3 (–):***	Is the voltage 4.5 V or more?	Replace the secondary pressure sensor. <Ref. to CVT(TR690)-111, Secondary Pressure Sensor.> If the replacement of the sensor do not eliminate the malfunction, replace the TCM. <Ref. to CVT(TR690)-126, Transmission Control Module (TCM).>	Check for poor contact of connector, and if no fault is found, replace the TCM. <Ref. to CVT(TR690)-126, Transmission Control Module (TCM).>

1. OUTLINE OF DIAGNOSIS

- Detect short circuit to power supply or open circuit of the transmission line pressure sensor 5 V system.
- Judge as NG if the voltage detected by the transmission line pressure sensor is higher than the predetermined value.

2. EXECUTION CONDITION

Secondary parameters	Execution condition
12 V battery system voltage	≥ 9 V

3. DIAGNOSTIC METHOD

If the duration of time while the following conditions are met is longer than the time indicated, judge as NG.

Judgment Value

Malfunction Criteria	Threshold Value
Measured line pressure sensor input voltage (Line pressure)	> 4.883 V (> 8200 kPa)

Time Needed for Diagnosis: 1.5 seconds
Malfunction Indicator Light Illumination: Illuminates as soon as a malfunction occurs.

Z: DTC P0890 TCM POWER RELAY SENSE CIRCUIT LOW

DTC DETECTING CONDITION:
Immediately at fault recognition
TROUBLE SYMPTOM:
Gear is not changed.

CAUTION:
• After diagnosis, perform Clear Memory Mode for ECM. <Ref. to EN(w/o STI)(diag)-82, Clear Memory Mode.>
• Use the check board when measuring the TCM terminal voltage and resistance.
WIRING DIAGRAM:
CVT control system <Ref. to WI-144, CVT Control System.>

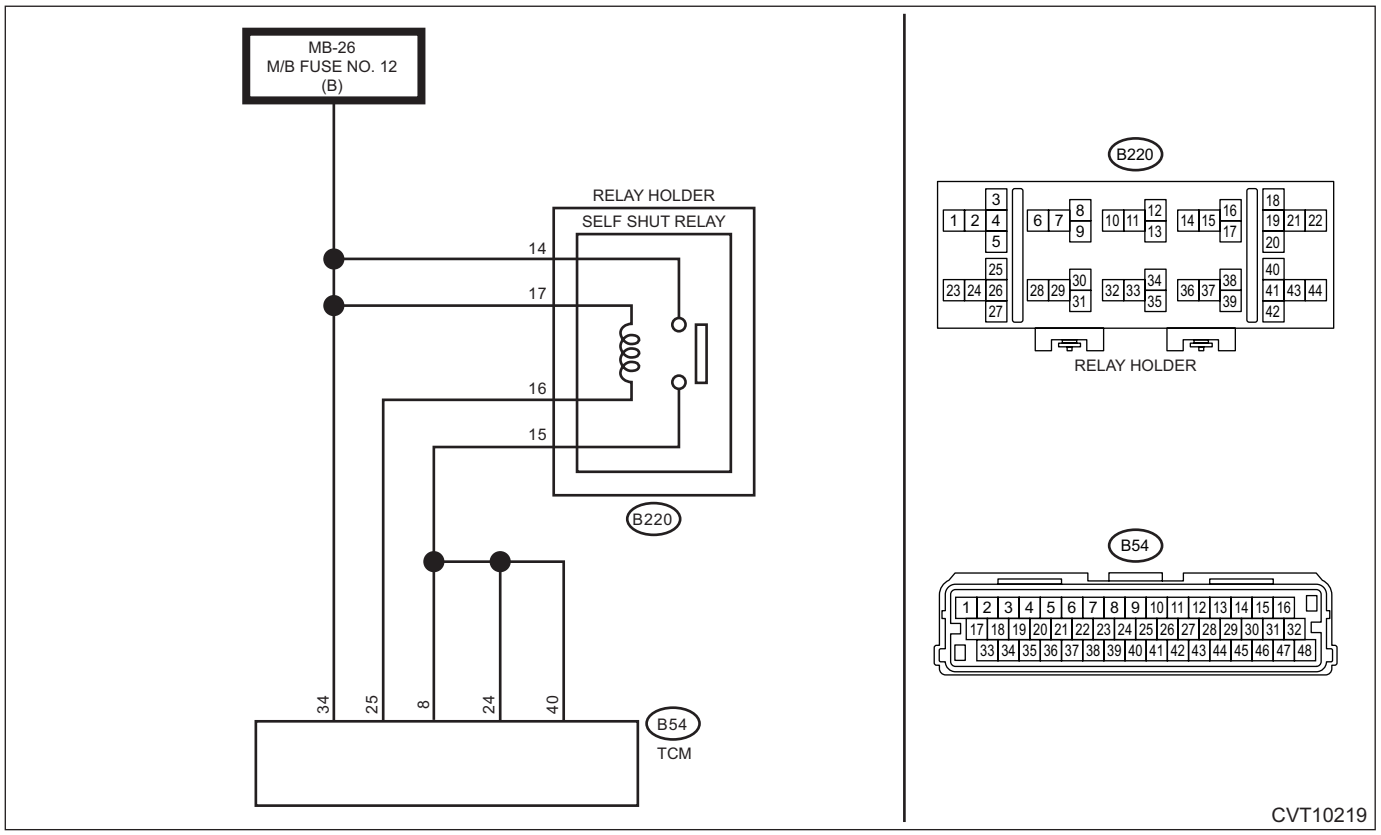

Step		Check	Yes	No
1	**CHECK HARNESS.** 1) Disconnect the TCM connector. 2) Remove the self shut relay. 3) Measure the resistance between TCM connector and relay holder. ***Connector & terminal*** ***(B54) No. 25 — (B220) No. 16:*** ***(B54) No. 8 — (B220) No. 15:*** ***(B54) No. 24 — (B220) No. 15:*** ***(B54) No. 40 — (B220) No. 15:***	Is the resistance less than 1 Ω?	Go to step **2**.	Repair the open circuit of harness.
2	**CHECK HARNESS.** Measure the resistance between TCM connector and chassis ground. ***Connector & terminal*** ***(B54) No. 25 — Chassis ground:*** ***(B54) No. 8 — Chassis ground:*** ***(B54) No. 24 — Chassis ground:*** ***(B54) No. 40 — Chassis ground:***	Is the resistance 1 MΩ or more?	Go to step **3**.	Repair the short circuit of harness.

	Step	Check	Yes	No
3	**CHECK RELAY POWER SUPPLY.** Measure the voltage between relay holder and chassis ground. ***Connector & terminal*** ***(B220) No. 14 (+) — Chassis ground (–):*** ***(B220) No. 17 (+) — Chassis ground (–):***	Is the voltage 10 V or more?	Go to step **4**.	Repair the open or short circuit of harness.
4	**CHECK SELF SHUT RELAY.** Measure the resistance between self shut relay terminals. ***Terminals*** ***No. 16 — No. 17:***	Is the resistance 110 — 140 Ω?	Go to step **5**.	Replace the self shut relay.
5	**CHECK SELF SHUT RELAY.** Measure the resistance between self shut relay terminals. ***Terminals*** ***No. 14 — No. 15:***	Is the resistance 1 MΩ or more?	Go to step **6**.	Replace the self shut relay.
6	**CHECK INPUT SIGNAL FOR TCM.** 1) Connect the TCM connector. 2) Install the self shut relay. 3) Read the data of «Control module voltage» using Subaru Select Monitor.	Is the «Control module voltage» 10 V or more?	Current condition is normal. Check for poor contact in connectors or harnesses, and repair the defective part.	Go to step **7**.
7	**CHECK SELF SHUT RELAY.** 1) Turn the ignition switch to OFF. 2) Replace the self shut relay. 3) Perform the Clear Memory Mode. <Ref. to CVT(diag)-19, Clear Memory Mode.> 4) Read the DTC.	Is DTC P0890 displayed?	Replace the TCM. <Ref. to CVT(TR690)-126, Transmission Control Module (TCM).>	The original self shut relay is defective.

1. OUTLINE OF DIAGNOSIS

- Detect the malfunction of transmission fluid pressure solenoid drive power supply relay circuit.
- Judge as NG if the transmission fluid pressure solenoid drive power supply voltage is lower than the predetermined value.

2. EXECUTION CONDITION

Secondary parameters	Execution condition
12 V battery system voltage	≥ 9 V
TCM Power Relay output command	ON
Ignition state	Run or Crank

3. DIAGNOSTIC METHOD

If the duration of time while the following conditions are met is longer than the time indicated, judge as NG.

Judgment Value

Malfunction Criteria	Threshold Value
Measured TCM input voltage which is supplied from 12 V battery system through the TCM Power Relay	< 2 V

Time Needed for Diagnosis: 0.5 seconds
Malfunction Indicator Light Illumination: Illuminates as soon as a malfunction occurs.

AA:DTC P0951 AUTO SHIFT MANUAL CONTROL CIRCUIT RANGE/PERFORMANCE

DTC DETECTING CONDITION:
Immediately at fault recognition
TROUBLE SYMPTOM:
Manual mode can not be set.

CAUTION:
Use the check board when measuring the TCM terminal voltage and resistance.
WIRING DIAGRAM:
CVT control system <Ref. to WI-144, CVT Control System.>

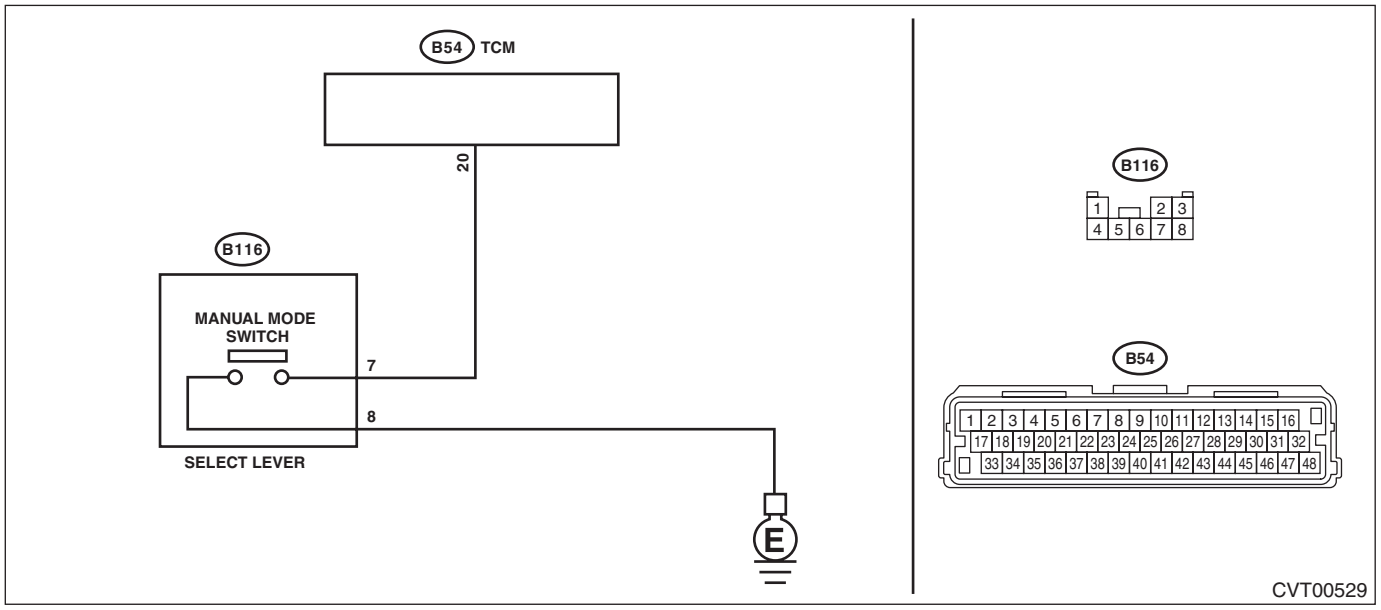

	Step	Check	Yes	No
1	**CHECK HARNESS.** 1) Turn the ignition switch to OFF. 2) Disconnect the manual mode switch connector. 3) Measure the resistance between manual mode switch connector and chassis ground. ***Connector & terminal*** ***(B116) No. 8 — Chassis ground:***	Is the resistance less than 1 Ω?	Go to step **2**.	Repair the open circuit of harness.
2	**CHECK MANUAL MODE SWITCH.** Measure the resistance between manual mode switch terminals. ***Terminals*** ***No. 7 — No. 8:***	Is the resistance 1 MΩ or more?	Go to step **3**.	Replace the select lever assembly. <Ref. to CS-25, Select Lever.>
3	**CHECK MANUAL MODE SWITCH.** 1) Shift the select lever to manual mode. 2) Measure the resistance between manual mode switch terminals. ***Terminals*** ***No. 7 — No. 8:***	Is the resistance less than 1 Ω?	Go to step **4**.	Replace the select lever assembly. <Ref. to CS-25, Select Lever.>
4	**CHECK HARNESS.** 1) Disconnect the TCM connector. 2) Measure the resistance between TCM connector and manual mode switch connector. ***Connector & terminal*** ***(B54) No. 20 — (B116) No. 7:***	Is the resistance less than 1 Ω?	Go to step **5**.	Repair the open circuit of harness or poor contact of connector.

	Step	Check	Yes	No
5	**CHECK HARNESS.** Measure the resistance between manual mode switch connector and chassis ground. ***Connector & terminal*** ***(B116) No. 7 — Chassis ground:***	Is the resistance 1 MΩ or more?	Go to step **6**.	Repair the short circuit of harness.
6	**CHECK INPUT SIGNAL FOR TCM.** 1) Connect all connectors. 2) Turn the ignition switch to ON. 3) Set the select lever to “D” range. 4) Read the data of «Tiptronic Mode Switch» using Subaru Select Monitor.	Does the value of «Tiptronic Mode Switch» change to “ON” with select lever in manual mode, and “OFF” with select lever in other than manual mode?	Current condition is normal.	Go to step **7**.
7	**CHECK FOR POOR CONTACT.**	Is there poor contact of the manual mode switch circuit?	Repair the poor contact.	Replace the TCM. <Ref. to CVT(TR690)-126, Transmission Control Module (TCM).>

1. OUTLINE OF DIAGNOSIS

- Detect the short circuit to ground (ground-fault) in manual SW circuit.
- Judge as NG if the manual SW is ON in P, R or N range.

2. EXECUTION CONDITION

Secondary parameters	Execution condition
None	

3. DIAGNOSTIC METHOD

If the duration of time while the following conditions are met is longer than the time indicated, judge as NG.

Judgment Value

Malfunction Criteria	Threshold Value
Manual SW status in other than D range	ON

Time Needed for Diagnosis: 5 s
Malfunction Indicator Light Illumination: Does not illuminate.

AB:DTC P0961 PRESSURE CONTROL SOLENOID "A" CONTROL CIRCUIT RANGE/PERFORMANCE

DTC DETECTING CONDITION:
Immediately at fault recognition

TROUBLE SYMPTOM:
- Acceleration is poor during standing start.
- Shift control malfunction
- Engine speed increases abruptly.

WIRING DIAGRAM:
CVT control system <Ref. to WI-144, CVT Control System.>

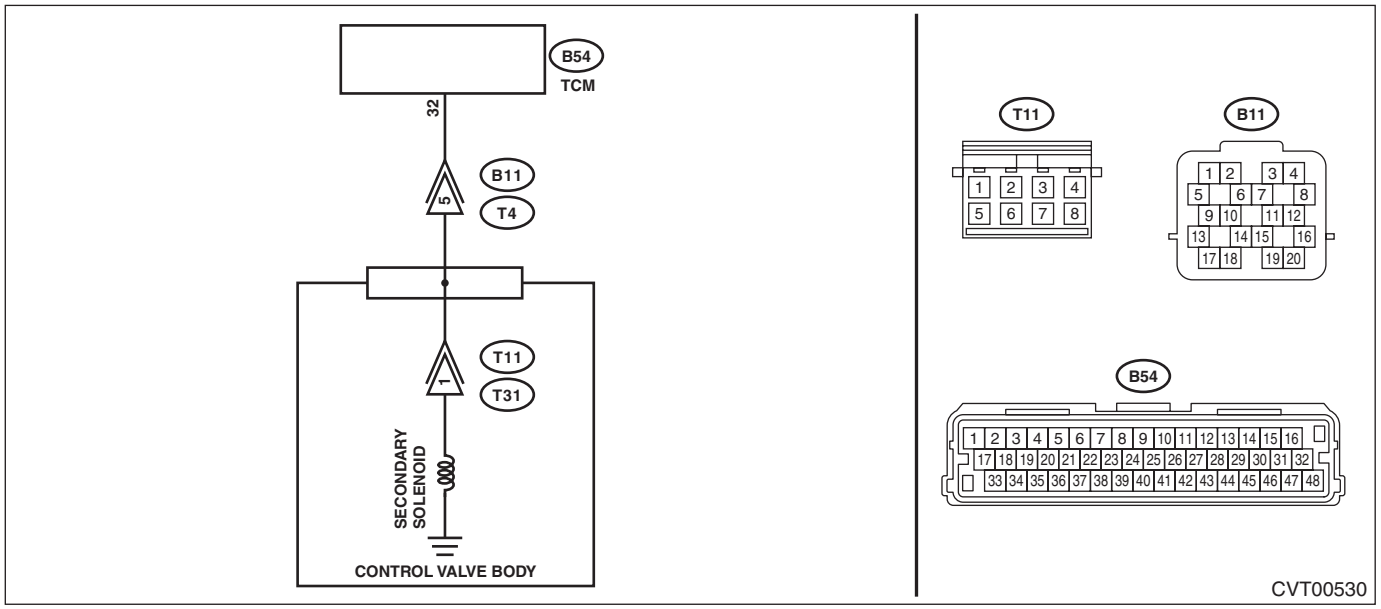

Step		Check	Yes	No
1	**CHECK DTC.** Read the DTC using Subaru Select Monitor.	Besides DTC P0961, is DTC P0962 or P0963 displayed?	Perform the diagnosis according to DTCs other than P0961.	Go to step **2**.
2	**CHECK SECONDARY SOLENOID (ACTIVE TEST).** 1) Turn the ignition switch to ON. 2) Using the Subaru Select Monitor, perform forced operation of the secondary solenoid. <Ref. to CVT(diag)-25, Active Test.>	Does the indication change as 300 → 500 → 700 mA during forced operation, and does «Sec. Sol. Actual Current» synchronize with «Sec. Sol. Set Current»?	Go to step **3**.	Go to step **4**.
3	**CHECK FOR POOR CONTACT.** Check for poor contact of harness and connector between TCM and secondary solenoid.	Is there poor contact?	Repair the poor contact of harness and connector.	Recheck the poor contact of harness and connector. Replace the TCM if no fault is found. <Ref. to CVT(TR690)-126, Transmission Control Module (TCM).>
4	**CHECK SECONDARY SOLENOID.** 1) Turn the ignition switch to OFF. 2) Disconnect the transmission connector. 3) Measure the resistance between transmission connector and transmission body. ***Connector & terminal*** ***(T4) No. 5 — Transmission body:***	Is the resistance approx. 5 — 7 Ω? (when cold)	Replace the control valve body. <Ref. to CVT(TR690)-113, Control Valve Body.>	Repair or replace the harness.

1. OUTLINE OF DIAGNOSIS

- Detect the malfunction of transmission line pressure solenoid drive circuit.
- Judge as NG when the deviation between target current and actual current of the transmission line pressure solenoid becomes equal to or larger than the predetermined value.

2. EXECUTION CONDITION

Secondary parameters	Execution condition
12 V battery system voltage	≥ 9 V

3. DIAGNOSTIC METHOD

If the duration of time while the following conditions are met is longer than the time indicated, judge as NG.

Judgment Value

Malfunction Criteria	Threshold Value
ABS *: Target line pressure control solenoid valve current – Measured line pressure control solenoid valve current	> 0.2 A

* ABS: Absolute value

Time Needed for Diagnosis: 5 seconds

Malfunction Indicator Light Illumination: Illuminates as soon as a malfunction occurs.

AC:DTC P0962 PRESSURE CONTROL SOLENOID "A" CONTROL CIRCUIT LOW

DTC DETECTING CONDITION:
Immediately at fault recognition
TROUBLE SYMPTOM:
- Engine speed increases abruptly, and can not start.
- Engine speed increases abruptly during driving.

CAUTION:
Use the check board when measuring the TCM terminal voltage and resistance.
WIRING DIAGRAM:
CVT control system <Ref. to WI-144, CVT Control System.>

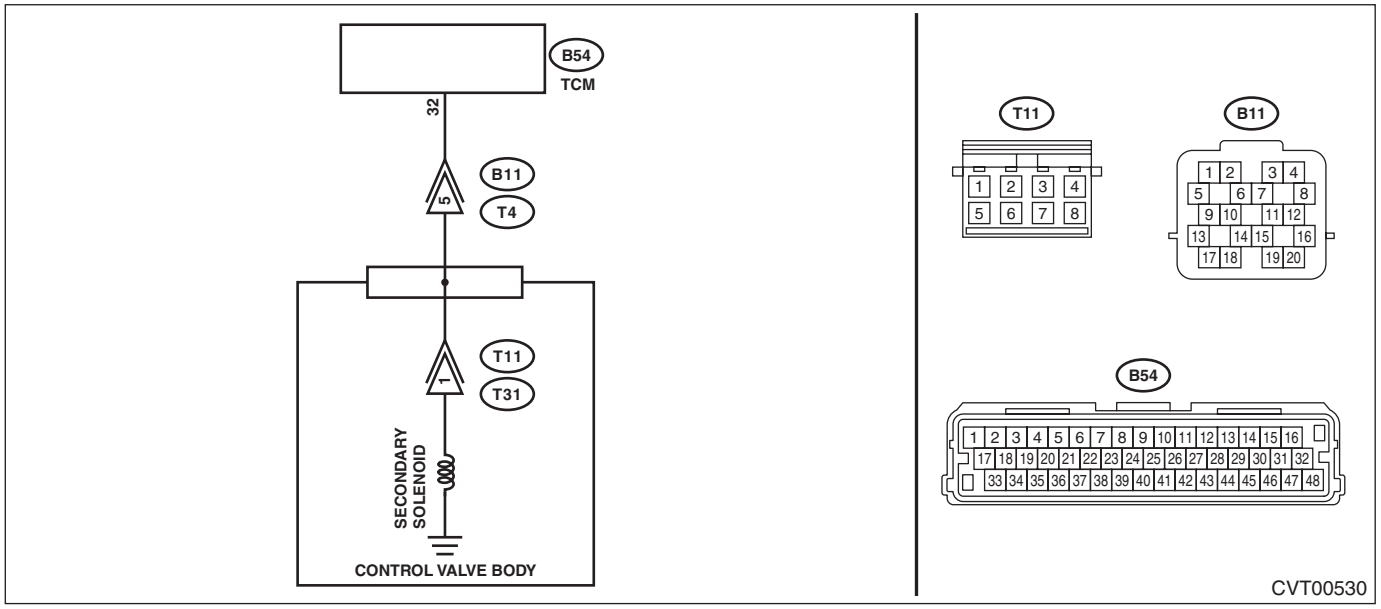

Step		Check	Yes	No
1	**CHECK INPUT SIGNAL FOR TCM.** 1) After driving with warm up condition, park the vehicle while depressing the brake pedal at "N" range. 2) Read the data of «Secondary Set Current» and «Secondary Actual Current» using Subaru Select Monitor.	Does the value of «Secondary Set Current» and «Secondary Actual Current» almost correspond?	Check for poor contact of connector.	Go to step **2**.
2	**CHECK HARNESS.** 1) Turn the ignition switch to OFF. 2) Disconnect the TCM connector. 3) Disconnect the transmission connector. 4) Measure the resistance between TCM connector and chassis ground. ***Connector & terminal*** ***(B54) No. 32 — Chassis ground:***	Is the resistance 1 MΩ or more?	Go to step **3**.	Repair the short circuit of harness.
3	**CHECK SECONDARY SOLENOID.** Measure the resistance between transmission connector and transmission body. ***Connector & terminal*** ***(T4) No. 5 — Transmission body:***	Is the resistance approx. 5 — 7 Ω? (when cold)	Check for poor contact of connector, and if no fault is found, replace the TCM. <Ref. to CVT(TR690)-126, Transmission Control Module (TCM).>	Go to step **4**.

	Step	Check	Yes	No
4	**CHECK HARNESS INSIDE TRANSMISSION.** **CAUTION:** **Start work after ATF cools down.** 1) Remove the transmission oil pan. 2) Check for the harness pinch, damage.	Is there any fault in the harness?	Replace the transmission harness.	Go to step **5**.
5	**CHECK HARNESS INSIDE TRANSMISSION.** 1) Disconnect the control valve body connector. 2) Measure the resistance between transmission connector and transmission body. ***Connector & terminal*** ***(T4) No. 5 — Transmission body:***	Is the resistance 1 MΩ or more?	Replace the control valve body. <Ref. to CVT(TR690)-113, Control Valve Body.>	Replace the transmission harness.

1. OUTLINE OF DIAGNOSIS

Diagnosis 1
- Detect the ground short of the transmission line pressure solenoid drive circuit.
- Judge as NG if the transmission line pressure solenoid drive current is higher than the predetermined value.

Diagnosis 2
- Detect the ground short of the transmission line pressure solenoid drive circuit.
- Judge as NG when an abnormal signal is received from the solenoid driver IC of the transmission line pressure solenoid drive circuit.

2. EXECUTION CONDITION

Secondary parameters	Execution condition
Diagnosis 1	
12 V battery system voltage	≥ 9 V
Commanded line pressure control solenoid valve current	≥ 0.1 A
Diagnosis 2	
12 V battery system voltage	≥ 9 V

3. DIAGNOSTIC METHOD

If the duration of time while the following conditions are met is longer than the time indicated, judge as NG.

Judgment Value

Malfunction Criteria	Threshold Value
Diagnosis 1	
Measured line pressure control solenoid valve current	≥ 1.1 A
Diagnosis 2	
Signal of malfunction from solenoid driver IC As defined by: Measured line pressure control solenoid valve current ≥ 1.2 A	ON

Time Needed for Diagnosis: 0.5 seconds
Malfunction Indicator Light Illumination: Illuminates as soon as a malfunction occurs.

AD:DTC P0963 PRESSURE CONTROL SOLENOID "A" CONTROL CIRCUIT HIGH

DTC DETECTING CONDITION:
Immediately at fault recognition
TROUBLE SYMPTOM:
- Engine speed increases abruptly, and can not start.
- Engine speed increases abruptly during driving.

CAUTION:
Use the check board when measuring the TCM terminal voltage and resistance.
WIRING DIAGRAM:
CVT control system <Ref. to WI-144, CVT Control System.>

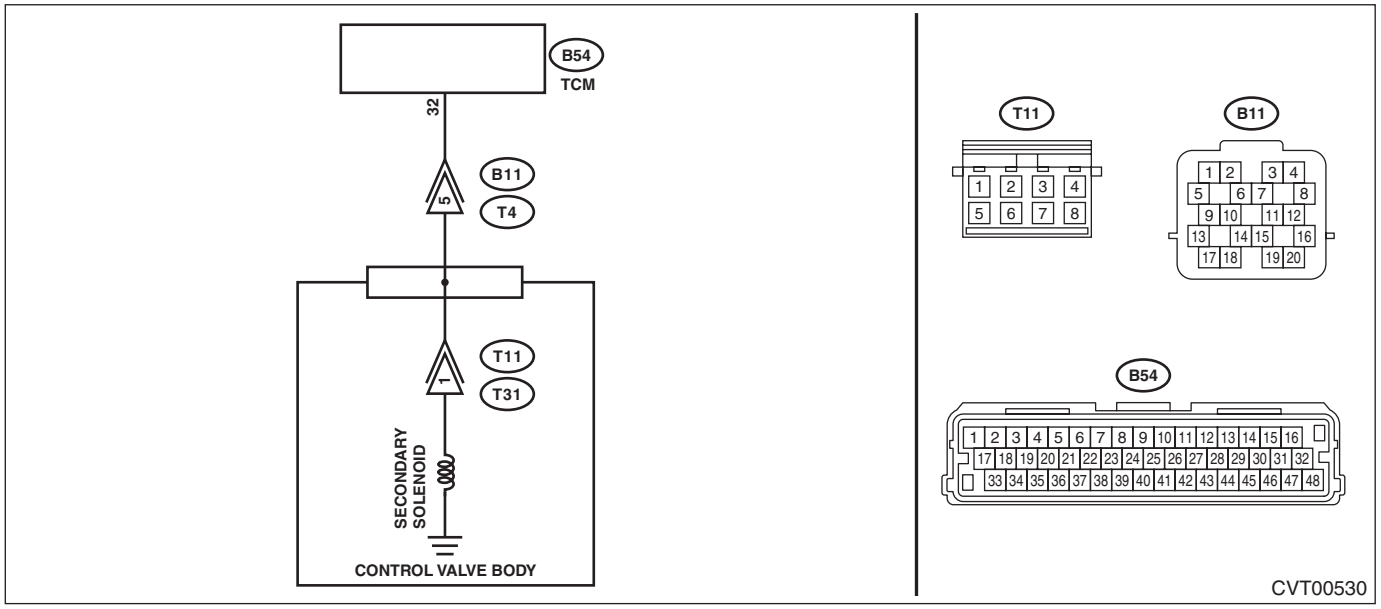

Step		Check	Yes	No
1	**CHECK INPUT SIGNAL FOR TCM.** 1) After driving with warm up condition, park the vehicle while depressing the brake pedal at "N" range. 2) Read the data of «Secondary Set Current» and «Secondary Actual Current» using Subaru Select Monitor.	Does the value of «Secondary Set Current» and «Secondary Actual Current» almost correspond?	Check for poor contact of connector.	Go to step **2**.
2	**CHECK HARNESS.** 1) Turn the ignition switch to OFF. 2) Disconnect the TCM connector. 3) Disconnect the transmission connector. 4) Measure the resistance between TCM connector and transmission connectors. ***Connector & terminal*** ***(B54) No. 32 — (B11) No. 5:***	Is the resistance less than 1 Ω?	Go to step **3**.	Repair the open circuit of harness.
3	**CHECK HARNESS.** 1) Turn the ignition switch to ON. 2) Measure the voltage between TCM connector and chassis ground. ***Connector & terminal*** ***(B54) No. 32 (+) — Chassis ground (–):***	Is the voltage approx. 0 V?	Go to step **4**.	Repair the short circuit of harness.

	Step	Check	Yes	No
4	**CHECK SECONDARY SOLENOID.** Measure the resistance between transmission connector and transmission body. ***Connector & terminal*** ***(T4) No. 5 — Transmission body:***	Is the resistance approx. 5 — 7 Ω? (when cold)	Check for poor contact of connector, and if no fault is found, replace the TCM. <Ref. to CVT(TR690)-126, Transmission Control Module (TCM).>	Go to step **5**.
5	**CHECK HARNESS INSIDE TRANSMISSION.** **CAUTION:** **Start work after ATF cools down.** 1) Remove the transmission oil pan. 2) Check for the harness pinch, damage.	Is there any fault in the harness?	Replace the transmission harness.	Go to step **6**.
6	**CHECK HARNESS INSIDE TRANSMISSION.** 1) Disconnect the control valve body connector. 2) Turn the ignition switch to ON. 3) Measure the voltage between transmission connector and transmission body. ***Connector & terminal*** ***(T4) No. 5 (+) — Transmission body (–):***	Is the voltage approx. 0 V?	Replace the control valve body. <Ref. to CVT(TR690)-113, Control Valve Body.>	Replace the transmission harness.

1. OUTLINE OF DIAGNOSIS

- Detect short circuit to power supply or open circuit of the transmission line pressure solenoid drive circuit.
- Judge as NG if the transmission line pressure solenoid drive current is lower than the predetermined value.

2. EXECUTION CONDITION

Secondary parameters	Execution condition
12 V battery system voltage	≥ 9 V
Commanded line pressure control solenoid valve current	≥ 0.2 A

3. DIAGNOSTIC METHOD

If the duration of time while the following conditions are met is longer than the time indicated, judge as NG.

Judgment Value

Malfunction Criteria	Threshold Value
Measured line pressure control solenoid valve current	< 0.1 A

Time Needed for Diagnosis: 0.5 seconds
Malfunction Indicator Light Illumination: Illuminates as soon as a malfunction occurs.

AE:DTC P0965 PRESSURE CONTROL SOLENOID "B" CONTROL CIRCUIT RANGE/PERFORMANCE

DTC DETECTING CONDITION:
Immediately at fault recognition

TROUBLE SYMPTOM:
- Engine speed increases abruptly, and can not accelerate.
- Excessive slippage is felt.

WIRING DIAGRAM:
CVT control system <Ref. to WI-144, CVT Control System.>

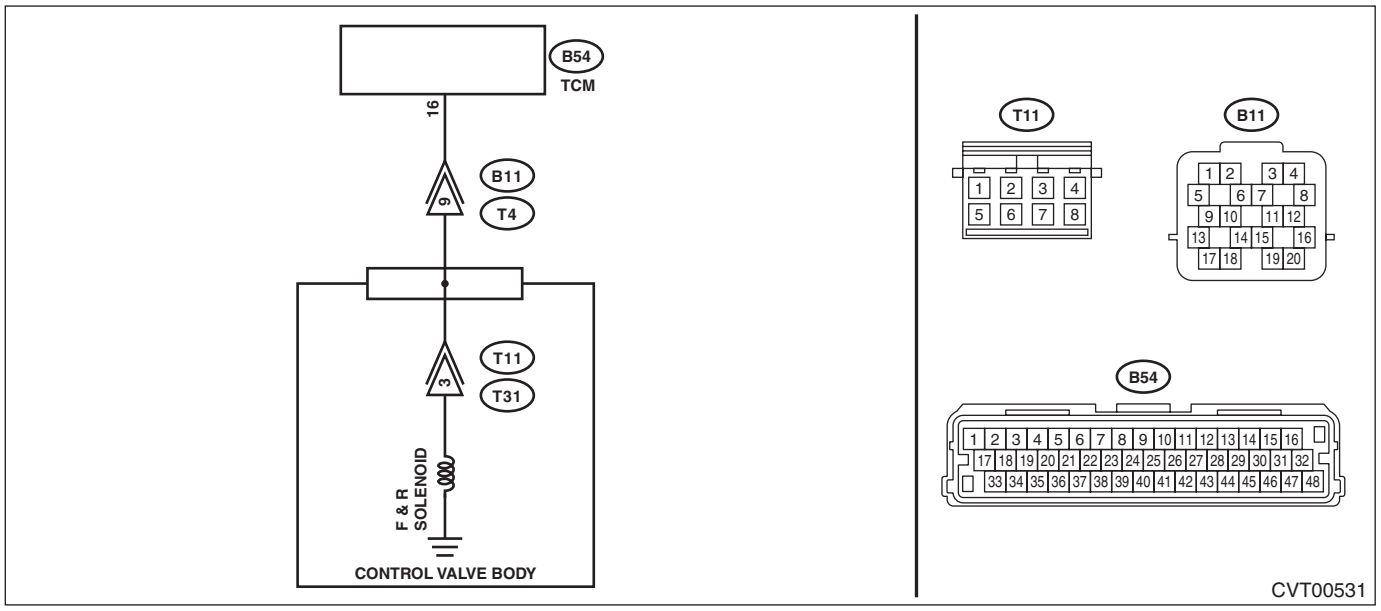

Step		Check	Yes	No
1	**CHECK DTC.** Read the DTC using Subaru Select Monitor.	Besides DTC P0965, is any of the DTCs P0720, P0966, P0967, P1706 and P2751 displayed?	Perform the diagnosis according to DTCs other than P0965.	Go to step **2**.
2	**CHECK F&R SOLENOID (ACTIVE TEST).** 1) Turn the ignition switch to ON. 2) Using the Subaru Select Monitor, perform forced operation of the F&R solenoid. <Ref. to CVT(diag)-25, Active Test.>	Does the indication change as 300 → 500 → 700 mA during forced operation, and does «F&R Linear Solenoid Actual Current» synchronize with «F&R Linear Solenoid Set Current»?	Go to step **3**.	Go to step **4**.
3	**CHECK FOR POOR CONTACT.** Check for poor contact of harness and connector between TCM and F&R solenoid.	Is there poor contact?	Repair the poor contact of harness and connector.	Recheck the poor contact of harness and connector. Replace the TCM if no fault is found. <Ref. to CVT(TR690)-126, Transmission Control Module (TCM).>
4	**CHECK F&R SOLENOID.** 1) Turn the ignition switch to OFF. 2) Disconnect the transmission connector. 3) Measure the resistance between transmission connector and transmission body. ***Connector & terminal*** ***(T4) No. 9 — Transmission body:***	Is the resistance approx. 4 — 6 Ω? (when cold)	Replace the control valve body. <Ref. to CVT(TR690)-113, Control Valve Body.>	Repair or replace the harness.

1. OUTLINE OF DIAGNOSIS

Diagnosis 1
• Detect the malfunction of transmission forward/reverse clutch pressure solenoid drive circuit characteristics.
• Judge as NG when the deviation between set current and actual current of the transmission forward/reverse clutch pressure solenoid drive circuit becomes equal to or larger than the predetermined value.
Diagnosis 2
• Detect the malfunction of transmission forward/reverse clutch pressure solenoid drive circuit characteristics.
• Judge as NG when the transmission forward/reverse clutch pressure solenoid drive current is within the predetermined value.

2. EXECUTION CONDITION

Secondary parameters	Execution condition
Diagnosis 1	
12 V battery system voltage	≥ 9 V
Diagnosis 2	
12 V battery system voltage	≥ 9 V

3. DIAGNOSTIC METHOD

If the duration of time while the following conditions are met is longer than the time indicated, judge as NG.

Judgment Value

Malfunction Criteria	Threshold Value
Diagnosis 1	
ABS *: Target forward & reverse clutch pressure control solenoid current – Measured forward & reverse clutch pressure control solenoid current	> 0.2 A
Diagnosis 2	
Measured forward & reverse clutch pressure control solenoid current	> 1.08 A and ≤ 1.6 A

* ABS: Absolute value
Time Needed for Diagnosis: 5 seconds
Malfunction Indicator Light Illumination: Illuminates as soon as a malfunction occurs.

AF:DTC P0966 PRESSURE CONTROL SOLENOID "B" CONTROL CIRCUIT LOW

DTC DETECTING CONDITION:
Immediately at fault recognition
TROUBLE SYMPTOM:
Excessive shift shock

CAUTION:
Use the check board when measuring the TCM terminal voltage and resistance.
WIRING DIAGRAM:
CVT control system <Ref. to WI-144, CVT Control System.>

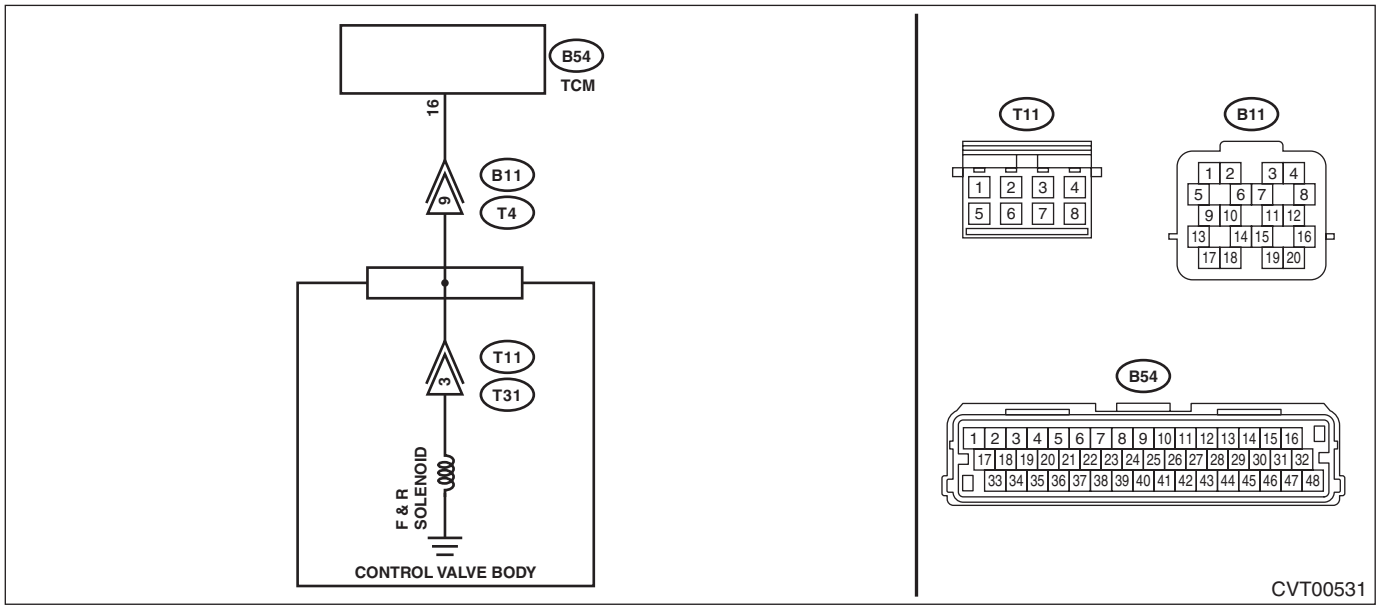

Step		Check	Yes	No
1	**CHECK INPUT SIGNAL FOR TCM.** 1) After driving with warm up condition, park the vehicle while depressing the brake pedal at "D" range. 2) Read the data of «Commanded Forward & Reverse Linear Solenoid Current» and «Actual Forward & Reverse Linear Solenoid Current» using Subaru Select Monitor.	Does the value of «Commanded Forward & Reverse Linear Solenoid Current» and «Actual Forward & Reverse Linear Solenoid Current» almost correspond?	Check for poor contact of connector.	Go to step **2**.
2	**CHECK HARNESS.** 1) Turn the ignition switch to OFF. 2) Disconnect the TCM connector. 3) Disconnect the transmission connector. 4) Measure the resistance between TCM connector and chassis ground. ***Connector & terminal*** ***(B54) No. 16 — Chassis ground:***	Is the resistance 1 MΩ or more?	Go to step **3**.	Repair the short circuit of harness.
3	**CHECK F&R SOLENOID.** Measure the resistance between transmission connector and transmission body. ***Connector & terminal*** ***(T4) No. 9 — Transmission body:***	Is the resistance approx. 4 — 6 Ω? (when cold)	Check for poor contact of connector, and if no fault is found, replace the TCM. <Ref. to CVT(TR690)-126, Transmission Control Module (TCM).>	Go to step **4**.

	Step	Check	Yes	No
4	**CHECK HARNESS INSIDE TRANSMISSION.** **CAUTION:** **Start work after ATF cools down.** 1) Remove the transmission oil pan. 2) Check for the harness pinch, damage.	Is there any fault in the harness?	Replace the transmission harness.	Go to step **5**.
5	**CHECK HARNESS INSIDE TRANSMISSION.** 1) Disconnect the control valve body connector. 2) Measure the resistance between transmission connector and transmission body. ***Connector & terminal*** ***(T4) No. 9 — Transmission body:***	Is the resistance 1 MΩ or more?	Replace the control valve body. <Ref. to CVT(TR690)-113, Control Valve Body.>	Replace the transmission harness.

1. OUTLINE OF DIAGNOSIS

- Detect the short circuit to ground in transmission forward/reverse clutch pressure solenoid circuit.
- Judge as NG when an abnormal signal is received from the solenoid driver IC of the transmission forward/reverse clutch pressure solenoid drive circuit.

2. EXECUTION CONDITION

Secondary parameters	Execution condition
12 V battery system voltage	≥ 9 V

3. DIAGNOSTIC METHOD

If the duration of time while the following conditions are met is longer than the time indicated, judge as NG.

Judgment Value

Malfunction Criteria	Threshold Value
Signal of malfunction from solenoid driver IC As defined by: Measured forward & reverse clutch pressure control solenoid current ≥ 1.6 A	ON

Time Needed for Diagnosis: 0.02 seconds
Malfunction Indicator Light Illumination: Illuminates as soon as a malfunction occurs.

AG:DTC P0967 PRESSURE CONTROL SOLENOID "B" CONTROL CIRCUIT HIGH

DTC DETECTING CONDITION:
Immediately at fault recognition
TROUBLE SYMPTOM:
Engine speed increases abruptly, and can not start.

CAUTION:
Use the check board when measuring the TCM terminal voltage and resistance.
WIRING DIAGRAM:
CVT control system <Ref. to WI-144, CVT Control System.>

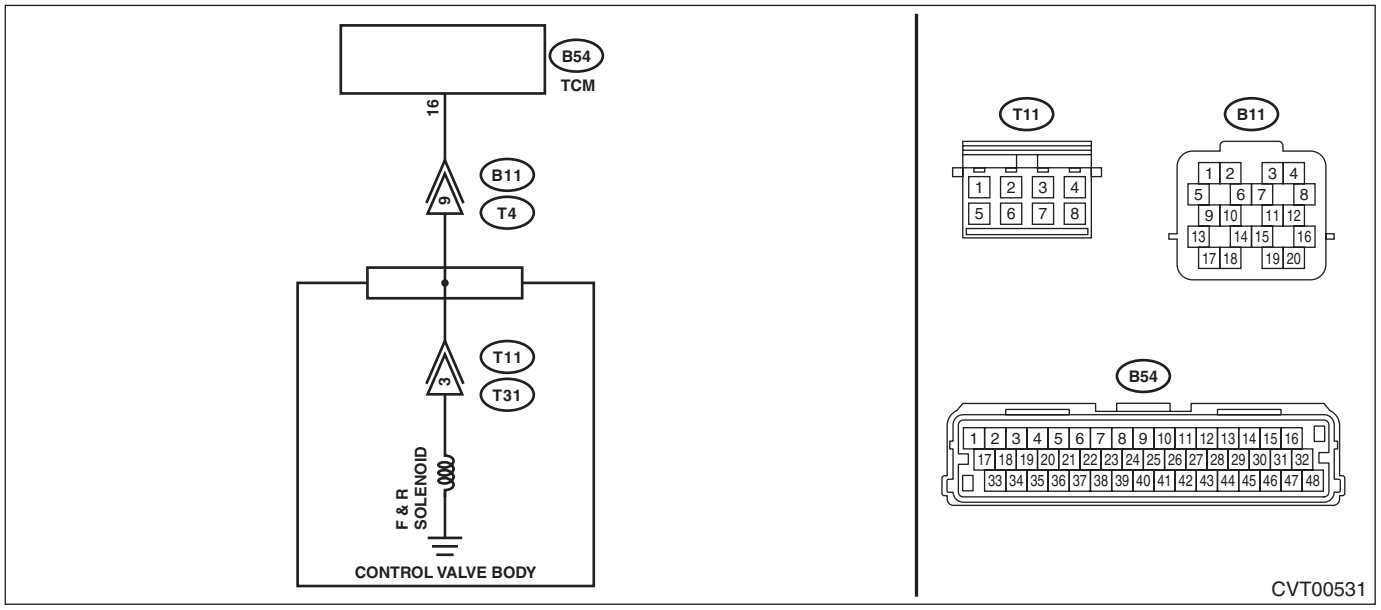

	Step	Check	Yes	No
1	**CHECK INPUT SIGNAL FOR TCM.** 1) After driving with warm up condition, park the vehicle while depressing the brake pedal at "D" range. 2) Read the data of «Commanded Forward & Reverse Linear Solenoid Current» and «Actual Forward & Reverse Linear Solenoid Current» using Subaru Select Monitor.	Does the value of «Commanded Forward & Reverse Linear Solenoid Current» and «Actual Forward & Reverse Linear Solenoid Current» almost correspond?	Check for poor contact of connector.	Go to step **2**.
2	**CHECK HARNESS.** 1) Turn the ignition switch to OFF. 2) Disconnect the TCM connector. 3) Disconnect the transmission connector. 4) Measure the resistance between TCM connector and transmission connectors. ***Connector & terminal*** ***(B54) No. 16 — (B11) No. 9:***	Is the resistance less than 1 Ω?	Go to step **3**.	Repair the open circuit of harness.
3	**CHECK HARNESS.** 1) Turn the ignition switch to ON. 2) Measure the voltage between TCM connector and chassis ground. ***Connector & terminal*** ***(B54) No. 16 (+) — Chassis ground (–):***	Is the voltage approx. 0 V?	Go to step **4**.	Repair the short circuit of harness.

	Step	Check	Yes	No
4	**CHECK F&R SOLENOID.** Measure the resistance between transmission connector and transmission body. ***Connector & terminal*** ***(T4) No. 9 — Transmission body:***	Is the resistance approx. 4 — 6 Ω? (when cold)	Check for poor contact of connector, and if no fault is found, replace the TCM. <Ref. to CVT(TR690)-126, Transmission Control Module (TCM).>	Go to step **5**.
5	**CHECK HARNESS INSIDE TRANSMISSION.** **CAUTION:** **Start work after ATF cools down.** 1) Remove the transmission oil pan. 2) Check for the harness pinch, damage.	Is there any fault in the harness?	Replace the transmission harness.	Go to step **6**.
6	**CHECK HARNESS INSIDE TRANSMISSION.** 1) Disconnect the control valve body connector. 2) Turn the ignition switch to ON. 3) Measure the voltage between transmission connector and transmission body. ***Connector & terminal*** ***(T4) No. 9 (+) — Transmission body (–):***	Is the voltage approx. 0 V?	Replace the control valve body. <Ref. to CVT(TR690)-113, Control Valve Body.>	Replace the transmission harness.

1. OUTLINE OF DIAGNOSIS

• Detect open circuit or short circuit to power supply in the transmission forward/reverse clutch pressure solenoid circuit.
• Judge as NG if the transmission forward/reverse clutch pressure solenoid drive current is lower than the predetermined value.

2. EXECUTION CONDITION

Secondary parameters	Execution condition
12 V battery system voltage	≥ 9 V
Target forward & reverse clutch pressure control solenoid current	≥ 0.1 A

3. DIAGNOSTIC METHOD

If the duration of time while the following conditions are met is longer than the time indicated, judge as NG.

Judgment Value

Malfunction Criteria	Threshold Value
Signal of malfunction from solenoid driver IC As defined by: Measured forward & reverse clutch pressure control solenoid current < 5.9 mA	ON

Time Needed for Diagnosis: 1 second
Malfunction Indicator Light Illumination: Illuminates as soon as a malfunction occurs.

AH:DTC P0970 PRESSURE CONTROL SOLENOID "C" CONTROL CIRCUIT LOW

DTC DETECTING CONDITION:
Immediately at fault recognition
TROUBLE SYMPTOM:
Drivability getting worse.

CAUTION:
Use the check board when measuring the TCM terminal voltage and resistance.
WIRING DIAGRAM:
CVT control system <Ref. to WI-144, CVT Control System.>

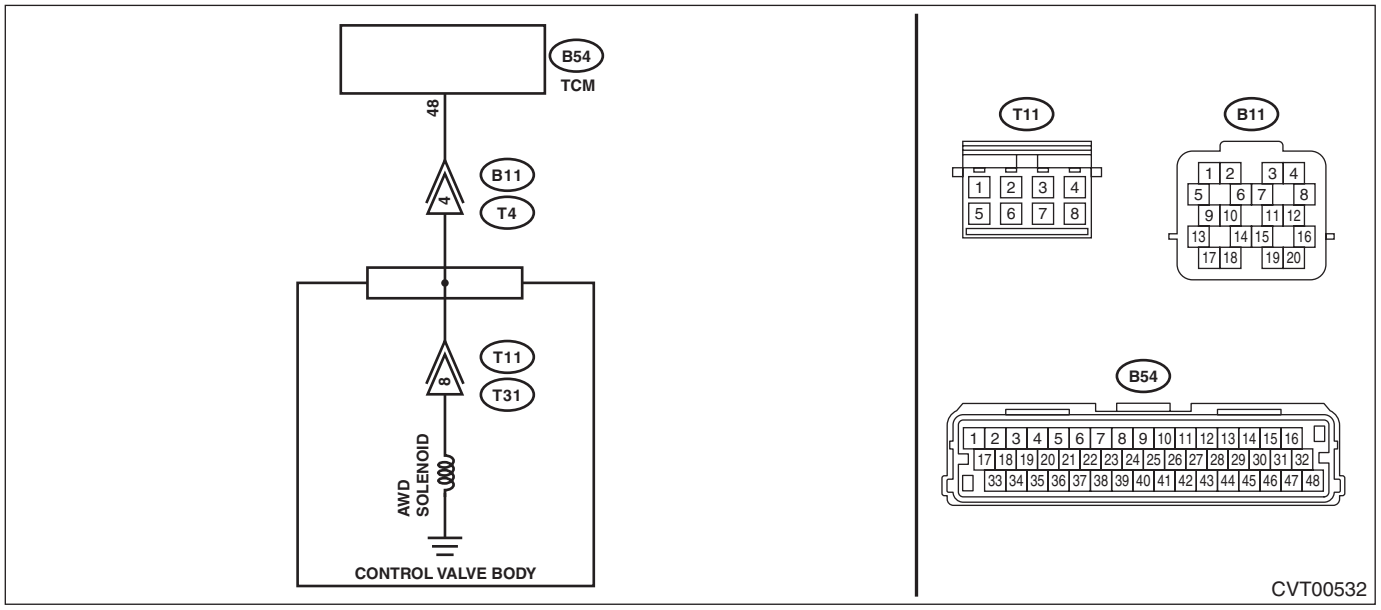

Step		Check	Yes	No
1	**CHECK HARNESS.** 1) Turn the ignition switch to OFF. 2) Disconnect the TCM connector. 3) Disconnect the transmission connector. 4) Measure the resistance between TCM connector and chassis ground. ***Connector & terminal*** ***(B54) No. 48 — Chassis ground:***	Is the resistance 1 MΩ or more?	Go to step **2**.	Repair the short circuit of harness.
2	**CHECK AWD SOLENOID.** Measure the resistance between transmission connector and transmission body. ***Connector & terminal*** ***(T4) No. 4 — Transmission body:***	Is the resistance approx. 2 — 4.5 Ω? (when cold)	Check for poor contact of connector, and if no fault is found, replace the TCM. <Ref. to CVT(TR690)-126, Transmission Control Module (TCM).>	Go to step **3**.
3	**CHECK HARNESS INSIDE TRANSMISSION.** **CAUTION:** **Start work after ATF cools down.** 1) Remove the transmission oil pan. 2) Check for the harness pinch, damage.	Is there any fault in the harness?	Replace the transmission harness.	Go to step **4**.

	Step	Check	Yes	No
4	**CHECK HARNESS INSIDE TRANSMISSION.** 1) Disconnect the control valve body connector. 2) Measure the resistance between transmission connector and transmission body. ***Connector & terminal*** ***(T4) No. 4 — Transmission body:***	Is the resistance 1 MΩ or more?	Replace the control valve body. <Ref. to CVT(TR690)-113, Control Valve Body.>	Replace the transmission harness.

1. OUTLINE OF DIAGNOSIS

- Detect the short circuit to ground in transfer solenoid circuit.
- Judge as NG when the number of detection of short circuit to ground counted by a detecting circuit in the transfer solenoid drive circuit exceeds 10 times.

2. EXECUTION CONDITION

Secondary parameters	Execution condition
Target duty cycle	0%

3. DIAGNOSTIC METHOD

If the duration of time while the following conditions are met is longer than the time indicated, judge as NG.

Judgment Value

Malfunction Criteria	Threshold Value
Malfunction signal from solenoid driver IC	≥ 10 count

Time Needed for Diagnosis: Immediately
Malfunction Indicator Light Illumination: Does not illuminate.

AI: DTC P0971 PRESSURE CONTROL SOLENOID "C" CONTROL CIRCUIT HIGH

DTC DETECTING CONDITION:
Immediately at fault recognition
TROUBLE SYMPTOM:
- Tight corner braking phenomenon occurs.
- Drivability getting worse.

CAUTION:
Use the check board when measuring the TCM terminal voltage and resistance.
WIRING DIAGRAM:
CVT control system <Ref. to WI-144, CVT Control System.>

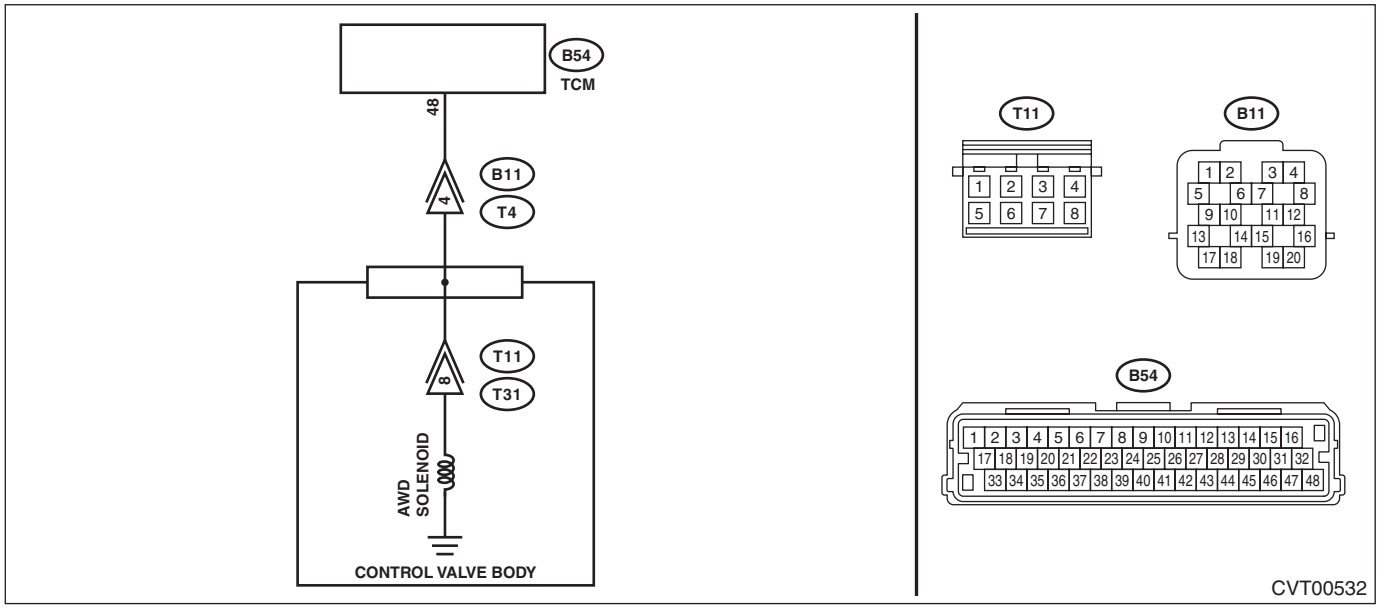

Step		Check	Yes	No
1	**CHECK HARNESS.** 1) Turn the ignition switch to OFF. 2) Disconnect the TCM connector. 3) Disconnect the transmission connector. 4) Measure the resistance between TCM connector and transmission connectors. ***Connector & terminal*** ***(B54) No. 48 — (B11) No. 4:***	Is the resistance less than 1 Ω?	Go to step **2**.	Repair the open circuit of harness.
2	**CHECK HARNESS.** 1) Turn the ignition switch to ON. 2) Measure the voltage between TCM connector and chassis ground. ***Connector & terminal*** ***(B54) No. 48 (+) — Chassis ground (–):***	Is the voltage approx. 0 V?	Go to step **3**.	Repair the short circuit of harness.
3	**CHECK AWD SOLENOID.** Measure the resistance between transmission connector and transmission body. ***Connector & terminal*** ***(T4) No. 4 — Transmission body:***	Is the resistance approx. 2 — 4.5 Ω? (when cold)	Check for poor contact of connector, and if no fault is found, replace the TCM. <Ref. to CVT(TR690)-126, Transmission Control Module (TCM).>	Go to step **4**.

	Step	Check	Yes	No
4	**CHECK HARNESS INSIDE TRANSMISSION.** **CAUTION:** **Start work after ATF cools down.** 1) Remove the transmission oil pan. 2) Check for the harness pinch, damage.	Is there any fault in the harness?	Replace the transmission harness.	Go to step **5**.
5	**CHECK HARNESS INSIDE TRANSMISSION.** 1) Disconnect the control valve body connector. 2) Turn the ignition switch to ON. 3) Measure the voltage between transmission connector and transmission body. ***Connector & terminal*** ***(T4) No. 4 (+) — Transmission body (–):***	Is the voltage approx. 0 V?	Replace the control valve body. <Ref. to CVT(TR690)-113, Control Valve Body.>	Replace the transmission harness.

1. OUTLINE OF DIAGNOSIS

- Detect open circuit or short circuit to power supply in the transfer solenoid circuit.
- Judge as NG when the number of detection of open circuit or short circuit to power supply counted by a detecting circuit in the transfer solenoid drive circuit exceeds 10 times.

2. EXECUTION CONDITION

Secondary parameters	Execution condition
Target duty cycle	100%

3. DIAGNOSTIC METHOD

If the duration of time while the following conditions are met is longer than the time indicated, judge as NG.

Judgment Value

Malfunction Criteria	Threshold Value
Malfunction signal from solenoid driver IC	≥ 10 count

Time Needed for Diagnosis: Immediately
Malfunction Indicator Light Illumination: Does not illuminate.

AJ:DTC P0973 SHIFT SOLENOID "A" CONTROL CIRCUIT LOW

DTC DETECTING CONDITION:
Immediately at fault recognition
TROUBLE SYMPTOM:
Gear is not changed. (No up-shift)

CAUTION:
Use the check board when measuring the TCM terminal voltage and resistance.
WIRING DIAGRAM:
CVT control system <Ref. to WI-144, CVT Control System.>

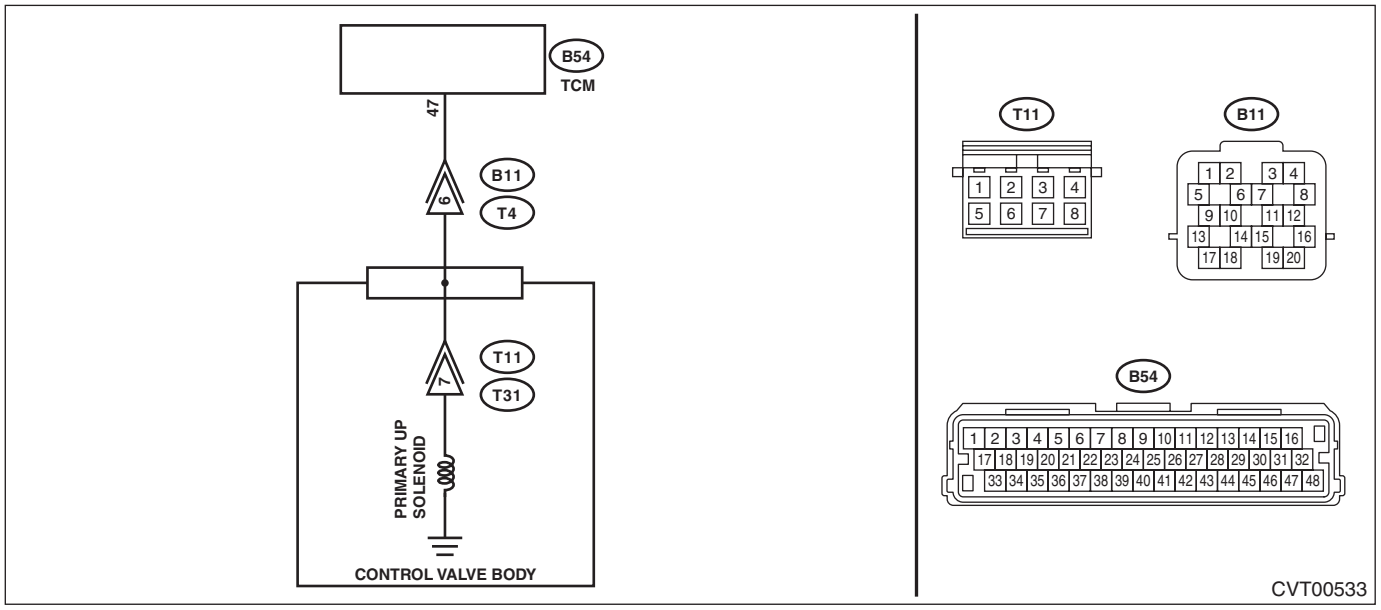

Step		Check	Yes	No
1	**CHECK HARNESS.** 1) Turn the ignition switch to OFF. 2) Disconnect the TCM connector. 3) Disconnect the transmission connector. 4) Measure the resistance between TCM connector and chassis ground. ***Connector & terminal*** ***(B54) No. 47 — Chassis ground:***	Is the resistance 1 MΩ or more?	Go to step **2**.	Repair the short circuit of harness.
2	**CHECK PRIMARY UP SOLENOID.** Measure the resistance between transmission connector and transmission body. ***Connector & terminal*** ***(T4) No. 6 — Transmission body:***	Is the resistance approx. 10 — 13.5 Ω? (when cold)	Check for poor contact of connector, and if no fault is found, replace the TCM. <Ref. to CVT(TR690)-126, Transmission Control Module (TCM).>	Go to step **3**.
3	**CHECK HARNESS INSIDE TRANSMISSION.** **CAUTION:** **Start work after ATF cools down.** 1) Remove the transmission oil pan. 2) Check for the harness pinch, damage.	Is there any fault in the harness?	Replace the transmission harness.	Go to step **4**.

	Step	Check	Yes	No
4	**CHECK HARNESS INSIDE TRANSMISSION.** 1) Disconnect the control valve body connector. 2) Measure the resistance between transmission connector and transmission body. ***Connector & terminal*** ***(T4) No. 6 — Transmission body:***	Is the resistance 1 MΩ or more?	Replace the control valve body. <Ref. to CVT(TR690)-113, Control Valve Body.>	Replace the transmission harness.

1. OUTLINE OF DIAGNOSIS

- Detect the ground short of the shift-up fluid pressure control solenoid drive circuit.
- Judge as NG when an abnormal signal is received from the solenoid driver IC of the shift-up fluid pressure control solenoid drive circuit.

2. EXECUTION CONDITION

Secondary parameters	Execution condition
12 V battery system voltage	≥ 9 V
Commanded duty of shift up pressure control solenoid	100%

3. DIAGNOSTIC METHOD

If the duration of time while the following conditions are met is longer than the time indicated, judge as NG.

Judgment Value

Malfunction Criteria	Threshold Value
Signal of malfunction from solenoid driver IC As defined by: Measured shift up pressure control solenoid voltage ≤ 0.8 V	ON

Time Needed for Diagnosis: 0.2 seconds
Malfunction Indicator Light Illumination: Illuminates as soon as a malfunction occurs.

AK:DTC P0974 SHIFT SOLENOID "A" CONTROL CIRCUIT HIGH

DTC DETECTING CONDITION:
Immediately at fault recognition
TROUBLE SYMPTOM:
Gear is not changed. (No up-shift)

CAUTION:
Use the check board when measuring the TCM terminal voltage and resistance.
WIRING DIAGRAM:
CVT control system <Ref. to WI-144, CVT Control System.>

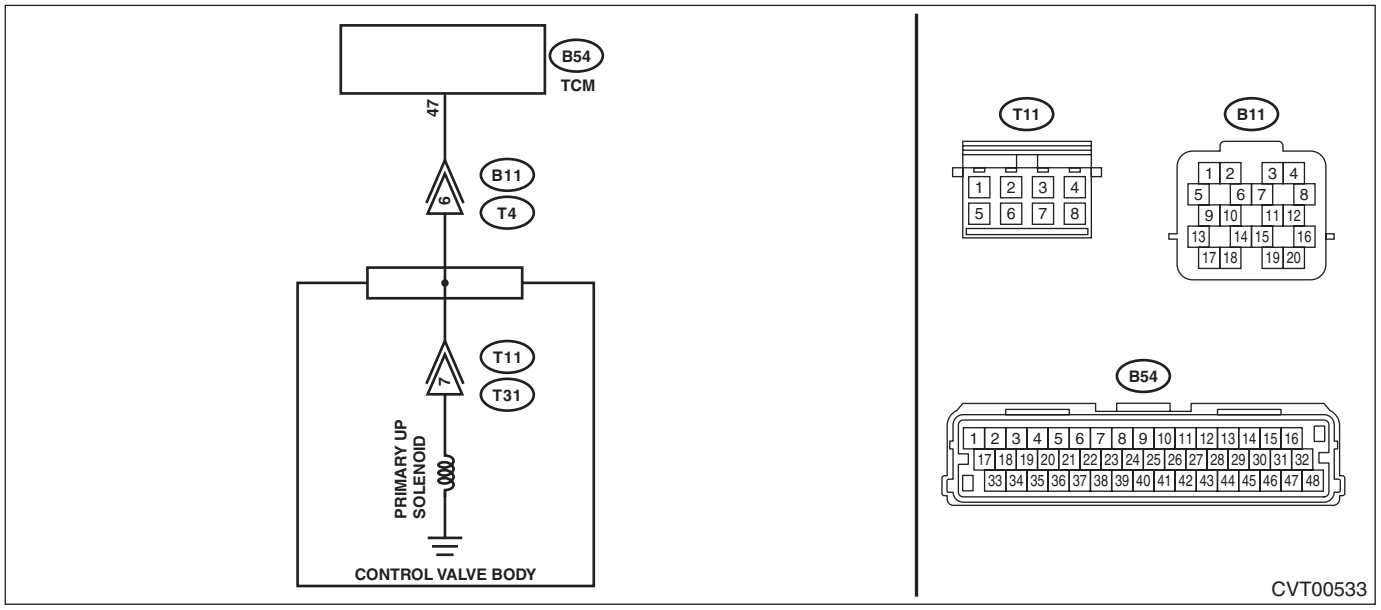

Step		Check	Yes	No
1	**CHECK HARNESS.** 1) Turn the ignition switch to OFF. 2) Disconnect the TCM connector. 3) Disconnect the transmission connector. 4) Measure the resistance between TCM connector and transmission connectors. ***Connector & terminal*** ***(B54) No. 47 — (B11) No. 6:***	Is the resistance less than 1 Ω?	Go to step **2**.	Repair the open circuit of harness.
2	**CHECK HARNESS.** 1) Turn the ignition switch to ON. 2) Measure the voltage between TCM connector and chassis ground. ***Connector & terminal*** ***(B54) No. 47 (+) — Chassis ground (–):***	Is the voltage approx. 0 V?	Go to step **3**.	Repair the short circuit of harness.
3	**CHECK PRIMARY UP SOLENOID.** Measure the resistance between transmission connector and transmission body. ***Connector & terminal*** ***(T4) No. 6 — Transmission body:***	Is the resistance approx. 10 — 13.5 Ω? (when cold)	Check for poor contact of connector, and if no fault is found, replace the TCM. <Ref. to CVT(TR690)-126, Transmission Control Module (TCM).>	Go to step **4**.
4	**CHECK HARNESS INSIDE TRANSMISSION.** **CAUTION:** **Start work after ATF cools down.** 1) Remove the transmission oil pan. 2) Check for the harness pinch, damage.	Is there any fault in the harness?	Replace the transmission harness.	Go to step **5**.

Step		Check	Yes	No
5	**CHECK HARNESS INSIDE TRANSMISSION.** 1) Disconnect the control valve body connector. 2) Turn the ignition switch to ON. 3) Measure the voltage between transmission connector and transmission body. ***Connector & terminal*** ***(T4) No. 6 (+) — Transmission body (–):***	Is the voltage approx. 0 V?	Replace the control valve body. <Ref. to CVT(TR690)-113, Control Valve Body.>	Replace the transmission harness.

1. OUTLINE OF DIAGNOSIS

• Detect short circuit to power supply or open circuit of the shift-up fluid pressure control solenoid drive circuit.
• Judge as NG when an abnormal signal is received from the solenoid driver IC of the shift-up fluid pressure control solenoid drive circuit.

2. EXECUTION CONDITION

Secondary parameters	Execution condition
12 V battery system voltage	≥ 9 V
Commanded duty of shift up pressure control solenoid	0%

3. DIAGNOSTIC METHOD

If the duration of time while the following conditions are met is longer than the time indicated, judge as NG.

Judgment Value

Malfunction Criteria	Threshold Value
Signal of malfunction from solenoid driver IC As defined by: Measured shift up pressure control solenoid voltage ≥ 2.5 V	ON

Time Needed for Diagnosis: 0.2 seconds
Malfunction Indicator Light Illumination: Illuminates as soon as a malfunction occurs.

AL:DTC P0976 SHIFT SOLENOID "B" CONTROL CIRCUIT LOW

DTC DETECTING CONDITION:
Immediately at fault recognition
TROUBLE SYMPTOM:
Gear is not changed. (No down-shift)

CAUTION:
Use the check board when measuring the TCM terminal voltage and resistance.
WIRING DIAGRAM:
CVT control system <Ref. to WI-144, CVT Control System.>

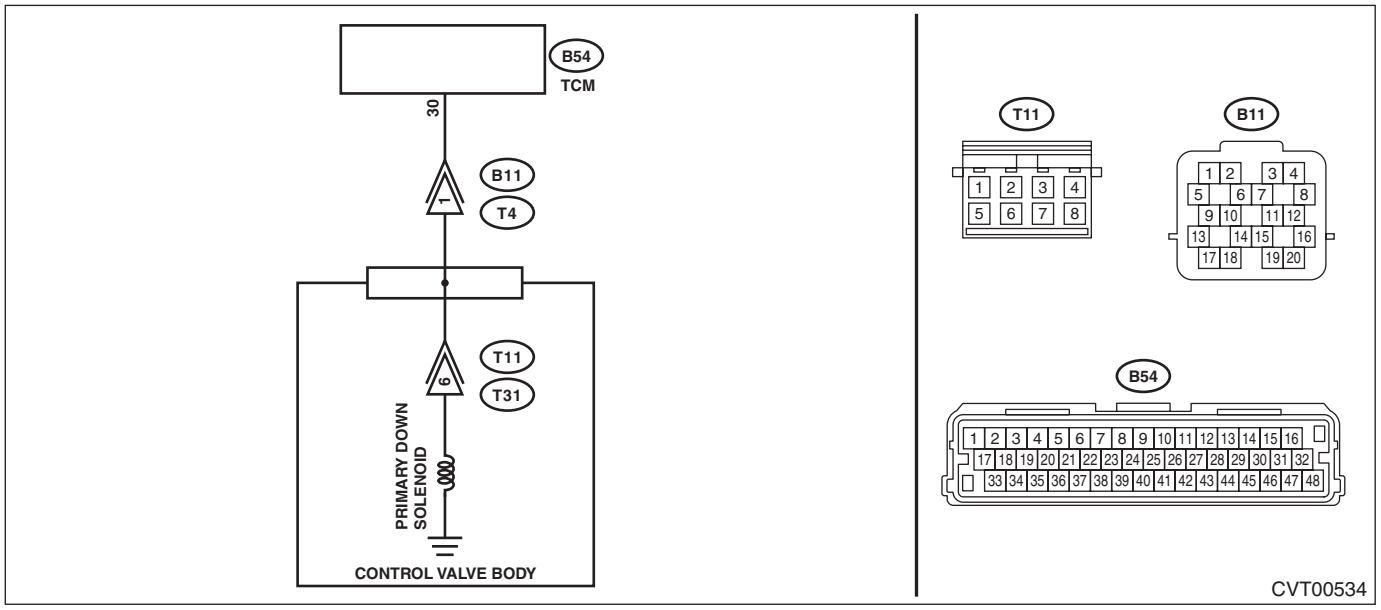

Step		Check	Yes	No
1	**CHECK HARNESS.** 1) Turn the ignition switch to OFF. 2) Disconnect the TCM connector. 3) Disconnect the transmission connector. 4) Measure the resistance between TCM connector and chassis ground. ***Connector & terminal*** ***(B54) No. 30 — Chassis ground:***	Is the resistance 1 MΩ or more?	Go to step **2**.	Repair the short circuit of harness.
2	**CHECK PRIMARY DOWN SOLENOID.** Measure the resistance between transmission connector and transmission body. ***Connector & terminal*** ***(T4) No. 1 — Transmission body:***	Is the resistance approx. 10 — 13.5 Ω? (when cold)	Check for poor contact of connector, and if no fault is found, replace the TCM. <Ref. to CVT(TR690)-126, Transmission Control Module (TCM).>	Go to step **3**.
3	**CHECK HARNESS INSIDE TRANSMISSION.** **CAUTION:** **Start work after ATF cools down.** 1) Remove the transmission oil pan. 2) Check for the harness pinch, damage.	Is there any fault in the harness?	Replace the transmission harness.	Go to step **4**.

	Step	Check	Yes	No
4	**CHECK HARNESS INSIDE TRANSMISSION.** 1) Disconnect the control valve body connector. 2) Measure the resistance between transmission connector and transmission body. ***Connector & terminal*** ***(T4) No. 1 — Transmission body:***	Is the resistance 1 MΩ or more?	Replace the control valve body. <Ref. to CVT(TR690)-113, Control Valve Body.>	Replace the transmission harness.

1. OUTLINE OF DIAGNOSIS

- Detect the ground short of the shift-down fluid pressure control solenoid drive circuit.
- Judge as NG when an abnormal signal is received from the solenoid driver IC of the shift-down fluid pressure control solenoid drive circuit.

2. EXECUTION CONDITION

Secondary parameters	Execution condition
12 V battery system voltage	≥ 9 V
Commanded duty of shift down pressure control solenoid	100%

3. DIAGNOSTIC METHOD

If the duration of time while the following conditions are met is longer than the time indicated, judge as NG.

Judgment Value

Malfunction Criteria	Threshold Value
Signal of malfunction from solenoid driver IC As defined by: Measured shift down pressure control solenoid voltage ≤ 0.8 V	ON

Time Needed for Diagnosis: 0.2 seconds
Malfunction Indicator Light Illumination: Illuminates as soon as a malfunction occurs.

AM:DTC P0977 SHIFT SOLENOID "B" CONTROL CIRCUIT HIGH

DTC DETECTING CONDITION:
Immediately at fault recognition
TROUBLE SYMPTOM:
Gear is not changed. (No down-shift)

CAUTION:
Use the check board when measuring the TCM terminal voltage and resistance.
WIRING DIAGRAM:
CVT control system <Ref. to WI-144, CVT Control System.>

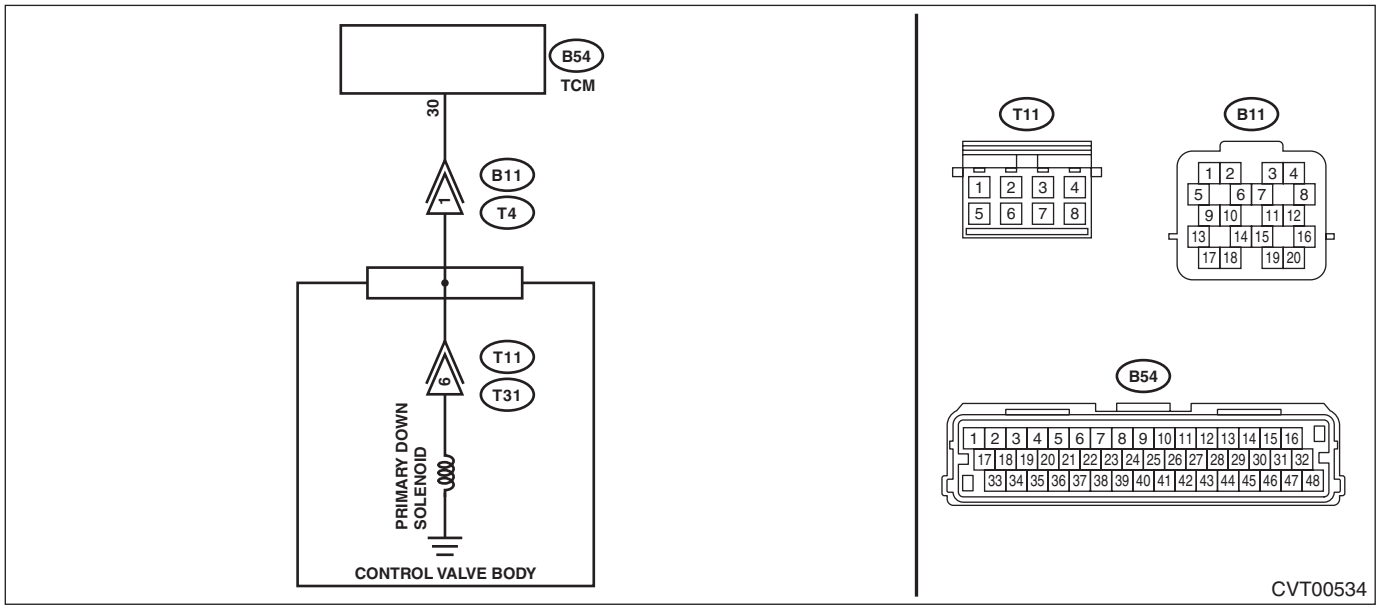

Step		Check	Yes	No
1	**CHECK HARNESS.** 1) Turn the ignition switch to OFF. 2) Disconnect the TCM connector. 3) Disconnect the transmission connector. 4) Measure the resistance between TCM connector and transmission connectors. ***Connector & terminal*** ***(B54) No. 30 — (B11) No. 1:***	Is the resistance less than 1 Ω?	Go to step **2**.	Repair the open circuit of harness.
2	**CHECK HARNESS.** 1) Turn the ignition switch to ON. 2) Measure the voltage between TCM connector and chassis ground. ***Connector & terminal*** ***(B54) No. 30 (+) — Chassis ground (–):***	Is the voltage approx. 0 V?	Go to step **3**.	Repair the short circuit of harness.
3	**CHECK PRIMARY DOWN SOLENOID.** Measure the resistance between transmission connector and transmission body. ***Connector & terminal*** ***(T4) No. 1 — Transmission body:***	Is the resistance approx. 10 — 13.5 Ω? (when cold)	Check for poor contact of connector, and if no fault is found, replace the TCM. <Ref. to CVT(TR690)-126, Transmission Control Module (TCM).>	Go to step **4**.
4	**CHECK HARNESS INSIDE TRANSMISSION.** **CAUTION:** **Start work after ATF cools down.** 1) Remove the transmission oil pan. 2) Check for the harness pinch, damage.	Is there any fault in the harness?	Replace the transmission harness.	Go to step **5**.

	Step	Check	Yes	No
5	**CHECK HARNESS INSIDE TRANSMISSION.** 1) Disconnect the control valve body connector. 2) Turn the ignition switch to ON. 3) Measure the voltage between transmission connector and transmission body. ***Connector & terminal*** ***(T4) No. 1 (+) — Transmission body (–):***	Is the voltage approx. 0 V?	Replace the control valve body. <Ref. to CVT(TR690)-113, Control Valve Body.>	Replace the transmission harness.

1. OUTLINE OF DIAGNOSIS

• Detect short circuit to power supply or open circuit of the shift-down fluid pressure control solenoid drive circuit.
• Judge as NG when an abnormal signal is received from the solenoid driver IC of the shift-down fluid pressure control solenoid drive circuit.

2. EXECUTION CONDITION

Secondary parameters	Execution condition
12 V battery system voltage	≥ 9 V
Commanded duty of shift down pressure control solenoid	0%

3. DIAGNOSTIC METHOD

If the duration of time while the following conditions are met is longer than the time indicated, judge as NG.

Judgment Value

Malfunction Criteria	Threshold Value
Signal of malfunction from solenoid driver IC As defined by: Measured shift down pressure control solenoid voltage ≥ 2.5 V	ON

Time Needed for Diagnosis: 0.2 seconds
Malfunction Indicator Light Illumination: Illuminates as soon as a malfunction occurs.

AN:DTC P160A RANDOM ACCESS MEMORY (RAM) ERROR

DTC DETECTING CONDITION:
Detected when two consecutive driving cycles with fault occur.
TROUBLE SYMPTOM:
TCM RAM malfunction

Step		Check	Yes	No
1	**CHECK DTC.** 1) Perform the Clear Memory Mode using the Subaru Select Monitor. <Ref. to CVT(diag)-19, Clear Memory Mode.> 2) Read the DTC.	Is DTC P160A displayed?	Replace the TCM. <Ref. to CVT(TR690)-126, Transmission Control Module (TCM).>	Current condition is normal. Check for interference from noise, etc.

1. OUTLINE OF DIAGNOSIS

- Detect the malfunction in RAM area of the TCM.
- Judge as NG if an attempt to write to RAM area failed.

2. EXECUTION CONDITION

Secondary parameters	Execution condition
12 V battery system voltage	≥ 9 V

3. DIAGNOSTIC METHOD

If the duration of time while the following conditions are met is longer than the time indicated, judge as NG.

Judgment Value

Malfunction Criteria	Threshold Value
Writing-check (RAM) NOTE: This check is carried out about the RAM used except for CAN communication.	Error

Time Needed for Diagnosis: Immediately
Malfunction Indicator Light Illumination: Illuminates when malfunction occurs in 2 continuous driving cycles.

AO:DTC P1706 REAR OUTPUT SHAFT SPEED SENSOR CIRCUIT NO SIGNAL

DTC DETECTING CONDITION:
Immediately at fault recognition
TROUBLE SYMPTOM:
AWD does not function.

CAUTION:
Use the check board when measuring the TCM terminal voltage and resistance.
WIRING DIAGRAM:
CVT control system <Ref. to WI-144, CVT Control System.>

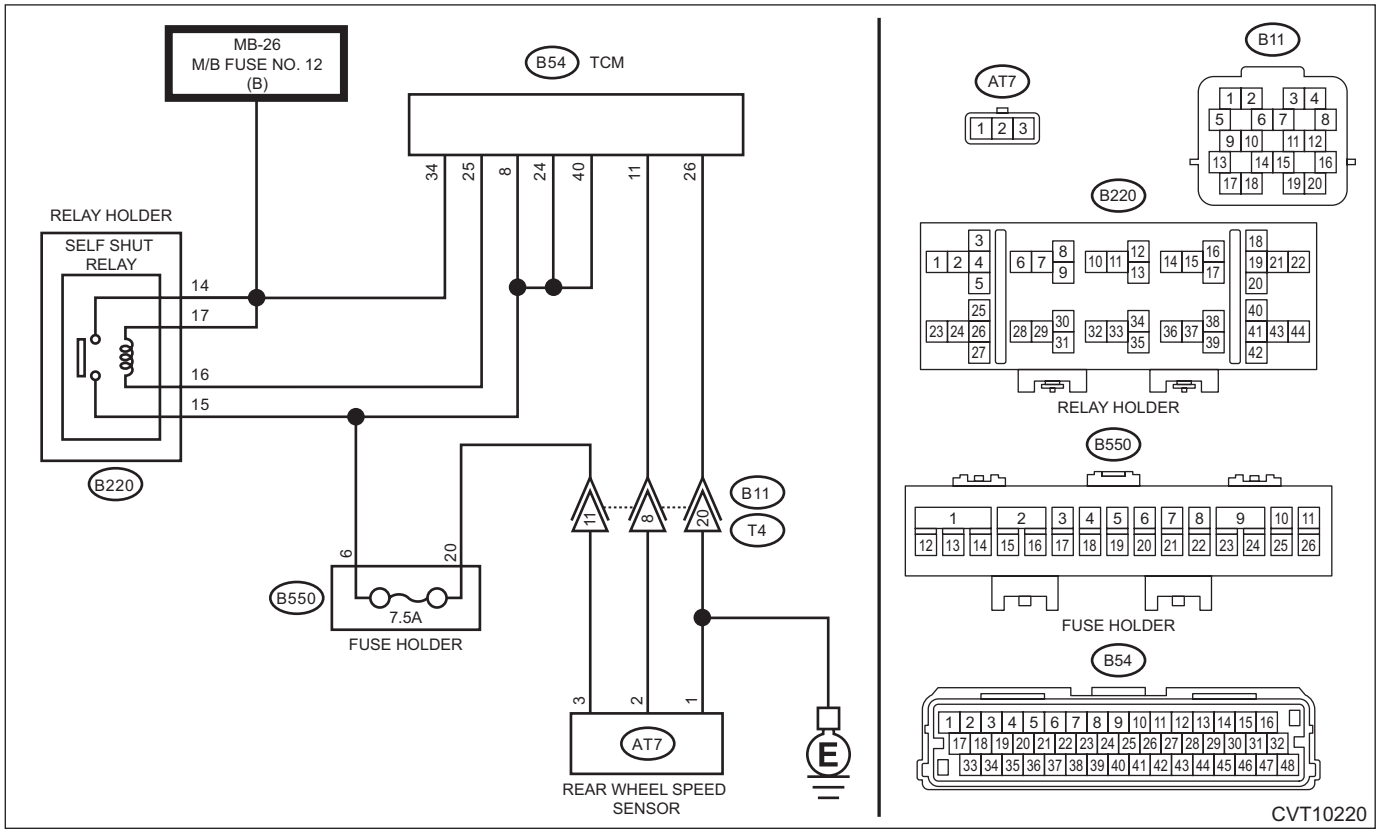

Step		Check	Yes	No
1	**CHECK FUSE.** 1) Turn the ignition switch to OFF. 2) Remove the fuse (7.5 A) from the fuse holder. 3) Check the fuse.	Is the check result OK?	Go to step **2**.	Replace the fuse. If the fuse blows out easily, repair the short circuit of harness.
2	**CHECK HARNESS.** 1) Disconnect the TCM connector. 2) Remove the self shut relay. 3) Measure the resistance between TCM connector and relay holder. ***Connector & terminal*** ***(B54) No. 25 — (B220) No. 16:*** ***(B54) No. 8 — (B220) No. 15:*** ***(B54) No. 24 — (B220) No. 15:*** ***(B54) No. 40 — (B220) No. 15:***	Is the resistance less than 1 Ω?	Go to step **3**.	Repair the open circuit of harness.

	Step	Check	Yes	No
3	**CHECK HARNESS.** Measure the resistance between TCM connector and chassis ground. ***Connector & terminal*** ***(B54) No. 25 — Chassis ground:*** ***(B54) No. 8 — Chassis ground:*** ***(B54) No. 24 — Chassis ground:*** ***(B54) No. 40 — Chassis ground:***	Is the resistance 1 MΩ or more?	Go to step **4**.	Repair the short circuit of harness.
4	**CHECK RELAY POWER SUPPLY.** Measure the voltage between relay holder and chassis ground. ***Connector & terminal*** ***(B220) No. 14 (+) — Chassis ground (–):*** ***(B220) No. 17 (+) — Chassis ground (–):***	Is the voltage 10 V or more?	Go to step **5**.	Repair the open or short circuit of harness.
5	**CHECK SELF SHUT RELAY.** Measure the resistance between self shut relay terminals. ***Terminals*** ***No. 16 — No. 17:***	Is the resistance 110 — 140 Ω?	Go to step **6**.	Replace the self shut relay.
6	**CHECK SELF SHUT RELAY.** Measure the resistance between self shut relay terminals. ***Terminals*** ***No. 14 — No. 15:***	Is the resistance 1 MΩ or more?	Go to step **7**.	Replace the self shut relay.
7	**CHECK INPUT SIGNAL FOR TCM.** 1) Connect the TCM connector. 2) Install the self shut relay. 3) Read the data of «Control module voltage» using Subaru Select Monitor.	Is the «Control module voltage» 10 V or more?	Current condition is normal. Check for poor contact in connectors or harnesses, and repair the defective part.	Go to step **8**.
8	**CHECK HARNESS.** 1) Turn the ignition switch to OFF. 2) Disconnect the TCM connector. 3) Disconnect the transmission connector. 4) Measure the resistance between TCM connector and transmission connectors. ***Connector & terminal*** ***(B54) No. 11 — (B11) No. 8:*** ***(B54) No. 26 — (B11) No. 20:*** ***(B550) No. 20 — (B11) No. 11:***	Is the resistance less than 1 Ω?	Go to step **9**.	Repair the open circuit of harness.
9	**CHECK HARNESS.** Measure the resistance between TCM connector and chassis ground. ***Connector & terminal*** ***(B54) No. 11 — Chassis ground:***	Is the resistance 1 MΩ or more?	Go to step **10**.	Repair the short circuit of harness.
10	**CHECK HARNESS.** Measure the resistance between relay holder and fuse holder. ***Connector & terminal*** ***(B220) No. 15 — (B550) No. 6:***	Is the resistance less than 1 Ω?	Go to step **11**.	Repair the open circuit of harness.
11	**CHECK TRANSMISSION HARNESS.** 1) Install the fuse. 2) Connect the TCM connector. 3) Turn the ignition switch to ON. 4) Measure the voltage between transmission connector terminals. ***Connector & terminal*** ***(B11) No. 11 (+) — Chassis ground (–):***	Is the voltage approx. 10 — 13 V?	Go to step **12**.	Repair the open circuit of harness or poor contact of connector.

	Step	Check	Yes	No
12	**CHECK INPUT SIGNAL FOR TCM.** 1) Turn the ignition switch to OFF. 2) Connect the transmission connector. 3) Lift up the vehicle. 4) Start the engine. 5) Slowly increase the speed to 30 km/h (19 MPH). 6) Read the data of «Rear Wheel Speed» using Subaru Select Monitor.	Does the value of «Rear Wheel Speed» change according to the engine speed?	Current condition is normal. Repair the poor contacts of harnesses of rear wheel speed sensor and transmission connector.	Go to step **13**.
13	**CHECK TRANSMISSION HARNESS.** 1) Turn the ignition switch to OFF. 2) Disconnect the transmission connector. 3) Disconnect the rear wheel speed sensor connector. 4) Measure the resistance between transmission connector and rear wheel speed sensor connector. ***Connector & terminal*** ***(T4) No. 20 — (AT7) No. 1:*** ***(T4) No. 8 — (AT7) No. 2:*** ***(T4) No. 11 — (AT7) No. 3:***	Is the resistance less than 1 Ω?	Go to step **14**.	Replace the transmission harness.
14	**CHECK REAR WHEEL SPEED SENSOR HARNESS.** Measure the resistance between transmission connector and chassis ground. ***Connector & terminal*** ***(T4) No. 8 — Chassis ground:*** ***(T4) No. 11 — Chassis ground:***	Is the resistance 1 MΩ or more?	Go to step **15**.	Repair the short circuit of harness.
15	**CHECK REAR WHEEL SPEED SENSOR.** 1) Turn the ignition switch to OFF. 2) Replace the rear wheel speed sensor. <Ref. to CVT(TR690)-108, Rear Wheel Speed Sensor.> 3) Perform the Clear Memory Mode. <Ref. to CVT(diag)-19, Clear Memory Mode.> 4) Read the DTC.	Is DTC P1706 displayed?	Go to step **16**.	The original rear wheel speed sensor is defective.
16	**CHECK SELF SHUT RELAY.** 1) Turn the ignition switch to OFF. 2) Replace the self shut relay. 3) Perform the Clear Memory Mode. <Ref. to CVT(diag)-19, Clear Memory Mode.> 4) Read the DTC.	Is DTC P1706 displayed?	Replace the TCM. <Ref. to CVT(TR690)-126, Transmission Control Module (TCM).>	The original self shut relay is defective.

1. OUTLINE OF DIAGNOSIS

- Detect the no input signal from the rear wheel speed sensor.
- Judge as NG if there is no output from the rear wheel speed sensor while the forward/reverse clutch is engaged and the wheel speed from VDC is equal to or higher than the predetermined value.

2. EXECUTION CONDITION

Secondary parameters	Execution condition
12 V battery system voltage	≥ 10 V
Vehicle speed (calculated from wheel speed sensor)	≥ 3 MPH
Transmission range	Drive or Reverse

3. DIAGNOSTIC METHOD

If the duration of time while the following conditions are met is longer than the time indicated, judge as NG.

Judgment Value

Malfunction Criteria	Threshold Value
Measured rear front output shaft speed	0 rpm

Time Needed for Diagnosis: 3 seconds
Malfunction Indicator Light Illumination: Illuminates as soon as a malfunction occurs.

AP:DTC P170B REAR OUTPUT SHAFT SPEED SENSOR CIRCUIT RANGE/PERFORMANCE

DTC DETECTING CONDITION:
Immediately at fault recognition
TROUBLE SYMPTOM:
- Acceleration is poor during standing start.
- No lock-up occurs.
- The engine stalls when the vehicle is stopped.
- Shift control malfunction

Step		Check	Yes	No
1	**CHECK DTC.** Read the DTC using Subaru Select Monitor.	Besides DTC P170B, is any of the DTCs P0720, P1706 and P0500 displayed?	Perform the diagnosis according to DTCs other than P170B.	Perform the diagnosis according to DTC P1706. <Ref. to CVT(diag)-127, DTC P1706 REAR OUTPUT SHAFT SPEED SENSOR CIRCUIT NO SIGNAL, Diagnostic Procedure with Diagnostic Trouble Code (DTC).>

1. OUTLINE OF DIAGNOSIS

- Detect the malfunction of rear wheel speed sensor characteristics.
- Judge as NG when the deviation between vehicle speed from VDC and rear wheel speed sensor becomes equal to or larger than the predetermined value.

2. EXECUTION CONDITION

Secondary parameters	Execution condition
12 V battery system voltage	≥ 10 V
Vehicle speed (calculated from wheel speed sensor)	≥ 12 MPH
Transmission range	Drive or Reverse

3. DIAGNOSTIC METHOD

If the duration of time while the following conditions are met is longer than the time indicated, judge as NG.
Judgment Value

Malfunction Criteria	Threshold Value
ABS *: Vehicle speed (calculated from rear output shaft speed) – Vehicle speed (calculated from wheel speed sensor)	> 10 MPH

* ABS: Absolute value
Time Needed for Diagnosis: 5 seconds
Malfunction Indicator Light Illumination: Illuminates as soon as a malfunction occurs.

AQ:DTC P2158 VEHICLE SPEED SENSOR "B" CIRCUIT

DTC DETECTING CONDITION:
Immediately at fault recognition
TROUBLE SYMPTOM:
VDC does not operate.

Step		Check	Yes	No
1	**CHECK DTC.** Read the DTC of VDC system using the Subaru Select Monitor.	Is DTC displayed?	Perform the diagnosis according to DTC. <Ref. to VDC(diag)-55, List of Diagnostic Trouble Code (DTC).>	Repair the poor contact of connector and harness between VDCCM&H/U and wheel speed sensor.

1. OUTLINE OF DIAGNOSIS

- Detect the malfunction of VDC wheel speed sensor.
- Judge as NG when the wheel speed sensor normal status signal from VDC is cleared.

2. EXECUTION CONDITION

Secondary parameters	Execution condition
12 V battery system voltage	≥ 10.9 V

3. DIAGNOSTIC METHOD

If the duration of time while the following conditions are met is longer than the time indicated, judge as NG.
Judgment Value

Malfunction Criteria	Threshold Value
Vehicle speed (rear wheel) from vehicle dynamics control module NOTE: The Vehicle dynamics control module detects malfunction if either of rear wheel speed sensors does not output a signal and the other vehicle speed sensor output signal is above 7.46 MPH	≥ 186.4 MPH

Time Needed for Diagnosis: 2.5 seconds
Malfunction Indicator Light Illumination: Illuminates as soon as a malfunction occurs.

AR:DTC P2530 IGNITION SWITCH RUN POSITION CIRCUIT

Immediately at fault recognition
TROUBLE SYMPTOM:
Faulty TCM operation

CAUTION:
Use the check board when measuring the TCM terminal voltage and resistance.
WIRING DIAGRAM:
CVT control system <Ref. to WI-144, CVT Control System.>

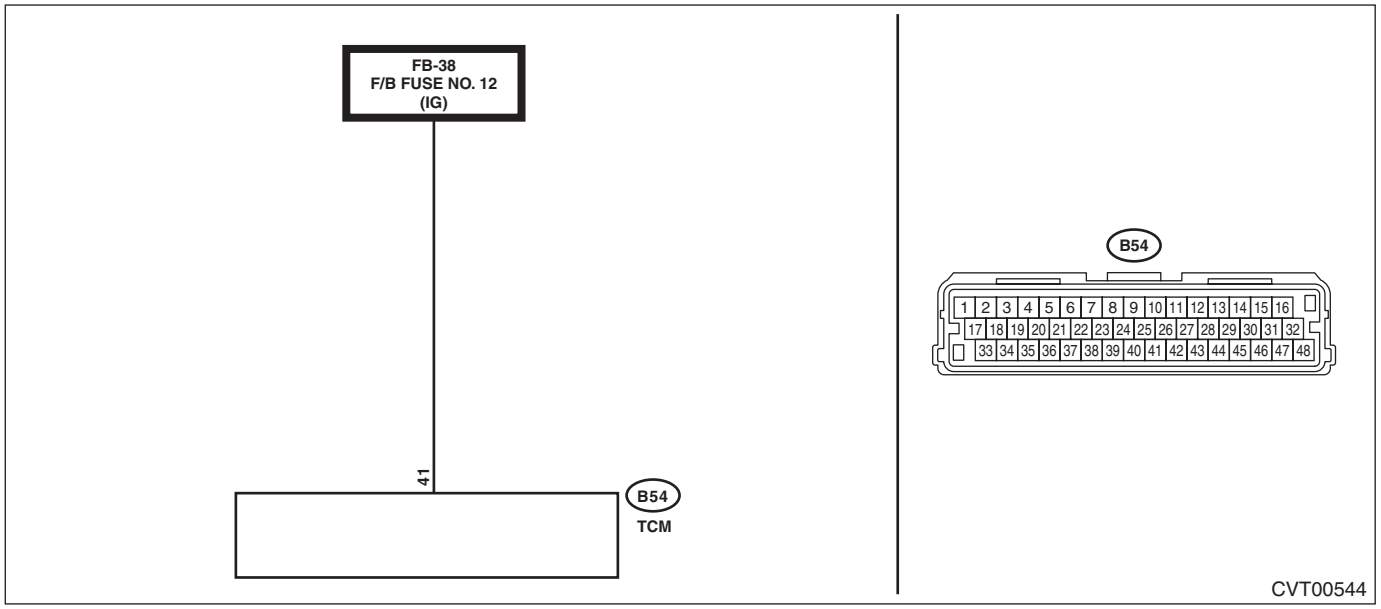

Step		Check	Yes	No
1	**CHECK CONNECTOR.** Check the installing condition of TCM connector.	Is the TCM connector installed properly?	Go to step **2**.	Install the TCM connector.

Step		Check	Yes	No
2	**CHECK INPUT VOLTAGE OF TCM.** 1) Turn the ignition switch to ON. 2) Measure the voltage between TCM connector and chassis ground. (While wiggling the harness) ***Connector & terminal*** ***(B54) No. 41 (+) — Chassis ground (–):***	Is the voltage 8 V or more?	Even if DTC is detected, the circuit has returned to a normal condition at this time. Reproduce the failure, and then perform the diagnosis again. NOTE: In this case, the following items may be the cause of fault. • Open circuit or short circuit to ground of harness between TCM connector and ignition switch connector (IG relay 1 connector for model with push button start) • Poor contact of ignition switch connector (IG relay 1 connector for model with push button start) • Poor contact of ignition switch (IG relay 1 for model with push button start)	Repair the harness and connector. NOTE: In this case, repair the following item: • Open circuit or short circuit to ground of harness between TCM connector and ignition switch connector (IG relay 1 connector for model with push button start) • Poor contact of ignition switch connector (IG relay 1 connector for model with push button start) • Poor contact of ignition switch (IG relay 1 for model with push button start)

1. OUTLINE OF DIAGNOSIS

- Detect the malfunction of ignition SW circuit.
- Judge as NG if the ignition SW signals are lost 5 times or more even though the engine is ON.

2. EXECUTION CONDITION

Secondary parameters	Execution condition
12 V battery system voltage	≥ 10.9 V
Engine speed	≥ 400 rpm

3. DIAGNOSTIC METHOD

If the duration of time while the following conditions are met is longer than the time indicated, judge as NG.

Judgment Value

Malfunction Criteria	Threshold Value
Count of temporarily discontinuous input of ignition switch	≥ 5 count

Time Needed for Diagnosis: 5 seconds
Malfunction Indicator Light Illumination: Illuminates as soon as a malfunction occurs.

AS:DTC P2746 INTERMEDIATE SHAFT SPEED SENSOR "B" CIRCUIT RANGE/ PERFORMANCE

DTC DETECTING CONDITION:
Immediately at fault recognition
TROUBLE SYMPTOM:
- Standing start problems
- Shock occurs when engaging the lockup clutch.
- Shock occurs when selecting shift position.

Step		Check	Yes	No
1	**CHECK DTC.** Read the DTC using Subaru Select Monitor.	Besides DTC P2746, is any of the DTCs P2747, U0100 and U0401 displayed?	Perform the diagnosis according to DTCs other than P2746.	Perform the diagnosis according to DTC P2747. <Ref. to CVT(diag)-136, DTC P2747 INTERMEDIATE SHAFT SPEED SENSOR "B" CIRCUIT NO SIGNAL, Diagnostic Procedure with Diagnostic Trouble Code (DTC).>

1. OUTLINE OF DIAGNOSIS

- Detect the malfunction of primary speed sensor signal characteristics.
- Judge as NG if the value calculated by “engine speed – primary pulley speed” becomes equal to or larger than the predetermined value.

2. EXECUTION CONDITION

Secondary parameters	Execution condition
12 V battery system voltage	≥ 10 V
Engine speed	≥ 400 rpm

3. DIAGNOSTIC METHOD

If the duration of time while the following conditions are met is longer than the time indicated, judge as NG.
Judgment Value

Malfunction Criteria	Threshold Value
Measured primary pulley shaft speed × 1.129 *	< Table 1 rpm

* 1.129: Primary reduction gear ratio

Table 1

Engine speed (rpm)	3700	3727	3755	3782	3856	4019	4213	4456
Measured primary pulley shaft speed × 1.129 (rpm)	0	500	1000	1500	2000	2500	3000	3500

Engine speed (rpm)	4786	5213	5651	6101	6569	7044	7520
Measured primary pulley shaft speed × 1.129 (rpm)	4000	4500	5000	5500	6000	6500	7000

Time Needed for Diagnosis: 10 seconds
Malfunction Indicator Light Illumination: Illuminates as soon as a malfunction occurs.

AT:DTC P2747 INTERMEDIATE SHAFT SPEED SENSOR "B" CIRCUIT NO SIGNAL

DTC DETECTING CONDITION:
Immediately at fault recognition
TROUBLE SYMPTOM:
- Standing start problems
- Shock occurs when engaging the lockup clutch.
- Shock occurs when selecting shift position.

CAUTION:
Use the check board when measuring the TCM terminal voltage and resistance.
WIRING DIAGRAM:
CVT control system <Ref. to WI-144, CVT Control System.>

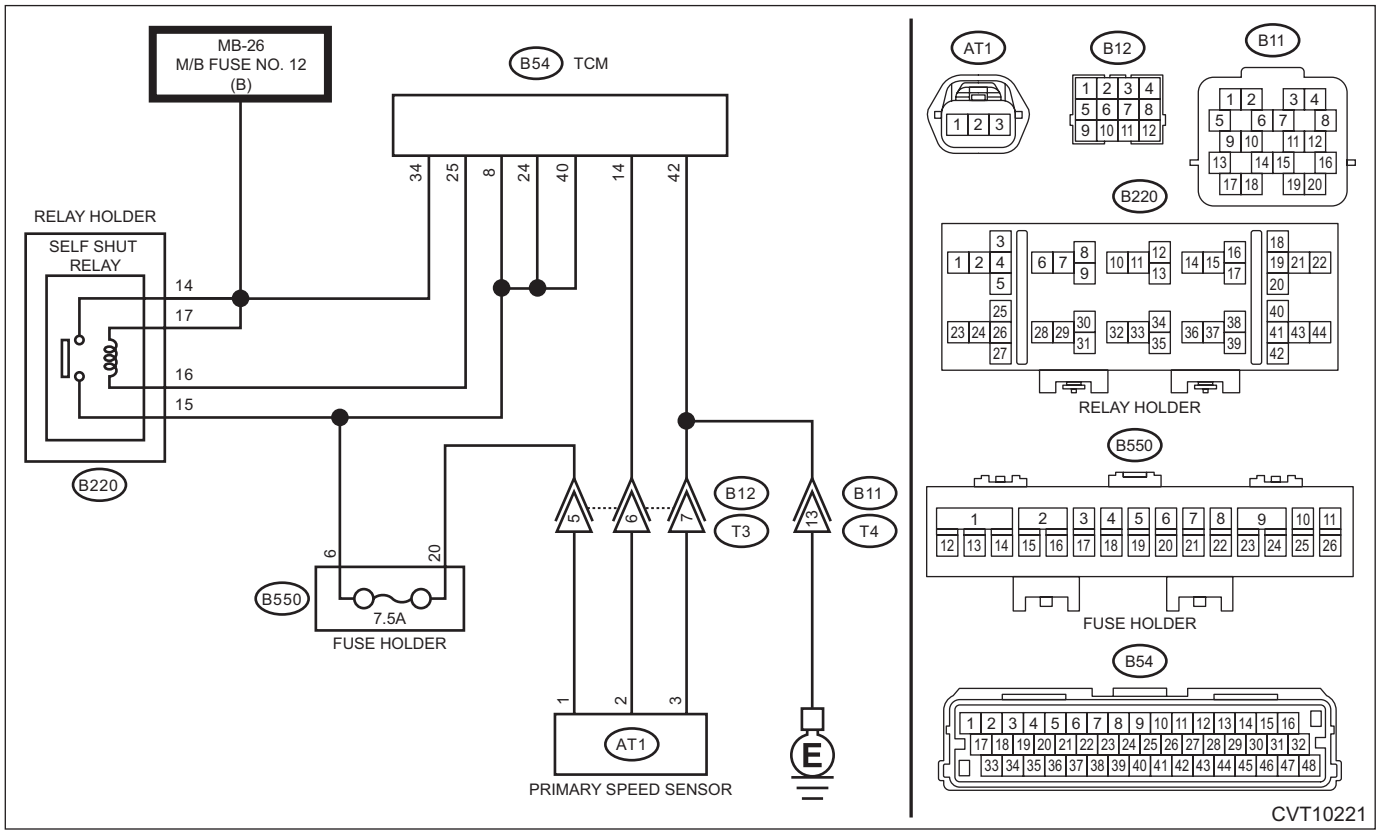

Step		Check	Yes	No
1	**CHECK FUSE.** 1) Turn the ignition switch to OFF. 2) Remove the fuse (7.5 A) from the fuse holder. 3) Check the fuse.	Is the check result OK?	Go to step **2**.	Replace the fuse. If the fuse blows out easily, repair the short circuit of harness.
2	**CHECK HARNESS.** 1) Disconnect the TCM connector. 2) Remove the self shut relay. 3) Measure the resistance between TCM connector and relay holder. ***Connector & terminal*** ***(B54) No. 25 — (B220) No. 16:*** ***(B54) No. 8 — (B220) No. 15:*** ***(B54) No. 24 — (B220) No. 15:*** ***(B54) No. 40 — (B220) No. 15:***	Is the resistance less than 1 Ω?	Go to step **3**.	Repair the open circuit of harness.

	Step	Check	Yes	No
3	**CHECK HARNESS.** Measure the resistance between TCM connector and chassis ground. ***Connector & terminal*** ***(B54) No. 25 — Chassis ground:*** ***(B54) No. 8 — Chassis ground:*** ***(B54) No. 24 — Chassis ground:*** ***(B54) No. 40 — Chassis ground:***	Is the resistance 1 MΩ or more?	Go to step **4**.	Repair the short circuit of harness.
4	**CHECK RELAY POWER SUPPLY.** Measure the voltage between relay holder and chassis ground. ***Connector & terminal*** ***(B220) No. 14 (+) — Chassis ground (–):*** ***(B220) No. 17 (+) — Chassis ground (–):***	Is the voltage 10 V or more?	Go to step **5**.	Repair the open or short circuit of harness.
5	**CHECK SELF SHUT RELAY.** Measure the resistance between self shut relay terminals. ***Terminals*** ***No. 16 — No. 17:***	Is the resistance 110 — 140 Ω?	Go to step **6**.	Replace the self shut relay.
6	**CHECK SELF SHUT RELAY.** Measure the resistance between self shut relay terminals. ***Terminals*** ***No. 14 — No. 15:***	Is the resistance 1 MΩ or more?	Go to step **7**.	Replace the self shut relay.
7	**CHECK INPUT SIGNAL FOR TCM.** 1) Connect the TCM connector. 2) Install the self shut relay. 3) Read the data of «Control module voltage» using Subaru Select Monitor.	Is the «Control module voltage» 10 V or more?	Current condition is normal. Check for poor contact in connectors or harnesses, and repair the defective part.	Go to step **8**.
8	**CHECK HARNESS.** 1) Turn the ignition switch to OFF. 2) Disconnect the TCM connector. 3) Disconnect the transmission connector. 4) Measure the resistance between TCM connector and transmission connectors. ***Connector & terminal*** ***(B54) No. 42 — (B11) No. 13:*** ***(B54) No. 14 — (B12) No. 6:*** ***(B54) No. 42 — (B12) No. 7:*** ***(B550) No. 20 — (B12) No. 5:***	Is the resistance less than 1 Ω?	Go to step **9**.	Repair the open circuit of harness.
9	**CHECK HARNESS.** Measure the resistance between TCM connector and chassis ground. ***Connector & terminal*** ***(B54) No. 14 — Chassis ground:***	Is the resistance 1 MΩ or more?	Go to step **10**.	Repair the short circuit of harness.
10	**CHECK HARNESS.** Measure the resistance between relay holder and fuse holder. ***Connector & terminal*** ***(B220) No. 15 — (B550) No. 6:***	Is the resistance less than 1 Ω?	Go to step **11**.	Repair the open circuit of harness.
11	**CHECK TRANSMISSION HARNESS.** 1) Install the fuse. 2) Connect the TCM connector. 3) Turn the ignition switch to ON. 4) Measure the voltage between transmission connector terminals. ***Connector & terminal*** ***(B12) No. 5 (+) — Chassis ground (–):***	Is the voltage 10 — 13 V?	Go to step **12**.	Repair the open circuit of harness or poor contact of connector.

	Step	Check	Yes	No
12	**CHECK INPUT SIGNAL FOR TCM.** 1) Turn the ignition switch to OFF. 2) Connect the transmission connector. 3) Lift up the vehicle. 4) Start the engine. 5) Set the select lever to “D” range. 6) Read the data of «Primary Rev Speed» using Subaru Select Monitor.	Does the value of «Primary Rev Speed» change according to those of «Turbine Revolution Speed»?	Current condition is normal. Repair the poor contacts of harnesses of primary speed sensor and transmission connector.	Go to step **13**.
13	**CHECK TRANSMISSION HARNESS.** 1) Turn the ignition switch to OFF. 2) Disconnect the transmission connector. 3) Disconnect the primary speed sensor connector. 4) Measure the resistance between transmission connector and primary speed sensor connector. ***Connector & terminal*** ***(T3) No. 5 — (AT1) No. 1:*** ***(T3) No. 6 — (AT1) No. 2:*** ***(T3) No. 7 — (AT1) No. 3:***	Is the resistance less than 1 Ω?	Go to step **14**.	Replace the transmission harness.
14	**CHECK PRIMARY SPEED SENSOR HARNESS.** Measure the resistance between transmission connector and chassis ground. ***Connector & terminal*** ***(T3) No. 5 — Chassis ground:*** ***(T3) No. 6 — Chassis ground:***	Is the resistance 1 MΩ or more?	Go to step **15**.	Repair the short circuit of harness.
15	**CHECK PRIMARY SPEED SENSOR.** 1) Turn the ignition switch to OFF. 2) Replace the primary speed sensor. <Ref. to CVT(TR690)-103, Primary Speed Sensor.> 3) Perform the Clear Memory Mode. <Ref. to CVT(diag)-19, Clear Memory Mode.> 4) Read the DTC.	Is DTC P2747 displayed?	Go to step **16**.	The original primary speed sensor is defective.
16	**CHECK SELF SHUT RELAY.** 1) Turn the ignition switch to OFF. 2) Replace the self shut relay. 3) Perform the Clear Memory Mode. <Ref. to CVT(diag)-19, Clear Memory Mode.> 4) Read the DTC.	Is DTC P2747 displayed?	Replace the TCM. <Ref. to CVT(TR690)-126, Transmission Control Module (TCM).>	The original self shut relay is defective.

1. OUTLINE OF DIAGNOSIS

- Detect no input signal from the primary speed sensor.
- Judge as NG if there is no input signal from the primary pulley speed sensor, while the secondary pulley speed sensor has the input signal although the primary and secondary pulleys are interlocked via the chain.

2. EXECUTION CONDITION

Secondary parameters	Execution condition
12 V battery system voltage	≥ 10 V
Measured secondary pulley shaft speed	≥ 500 rpm

3. DIAGNOSTIC METHOD

If the duration of time while the following conditions are met is longer than the time indicated, judge as NG.

Judgment Value

Malfunction Criteria	Threshold Value
Measured primary pulley shaft speed	0 rpm

Time Needed for Diagnosis: 0.5 seconds
Malfunction Indicator Light Illumination: Illuminates as soon as a malfunction occurs.

AU:DTC P2750 INTERMEDIATE SHAFT SPEED SENSOR "C" CIRCUIT RANGE/ PERFORMANCE

DTC DETECTING CONDITION:
Immediately at fault recognition
TROUBLE SYMPTOM:
- Shifting shock is felt.
- Acceleration is poor during standing start.
- Shift control malfunction

Step		Check	Yes	No
1	**CHECK DTC.** Read the DTC using Subaru Select Monitor.	Besides DTC P2750, is DTC P2747 or P2751 displayed?	Perform the diagnosis according to DTCs other than P2750.	Perform the diagnosis according to DTC P2751. <Ref. to CVT(diag)-142, DTC P2751 INTERMEDIATE SHAFT SPEED SENSOR "C" CIRCUIT NO SIGNAL, Diagnostic Procedure with Diagnostic Trouble Code (DTC).>

1. OUTLINE OF DIAGNOSIS

Diagnosis 1
- Detect the malfunction of secondary speed sensor signal characteristics.
- Judge as NG when the secondary pulley speed against the primary pulley speed goes outside the possible range considering the hardware capabilities.

Diagnosis 2
- Detect the malfunction of secondary speed sensor signal characteristics.
- Judge as NG if the secondary speed exceeds the predetermined value.

2. EXECUTION CONDITION

Secondary parameters	Execution condition
Diagnosis 1	
12 V battery system voltage	≥ 9 V
Transmission range	Drive or Reverse
Measured primary pulley shaft speed /Measured front output shaft speed	≥ 0.36 and ≤ 2.34
Diagnosis 2	
12 V battery system voltage	≥ 9 V
Transmission range	Drive or Reverse
Measured primary pulley shaft speed / Measured output shaft speed *	≥ 0.36 and ≤ 2.34

* Measured output shaft speed: Measured rear output shaft speed × 0.543 ** + Measured front output shaft speed × (1 – 0.543)
** 0.543: Center differential gear ratio

3. DIAGNOSTIC METHOD

If the duration of time while the following conditions are met is longer than the time indicated, judge as NG.

Judgment Value

Malfunction Criteria	Threshold Value
Diagnosis 1	
Measured primary pulley shaft speed / Measured secondary pulley shaft speed	< 0.33 or > 2.58
Diagnosis 2	
Measured secondary pulley shaft speed	> 12250 rpm

Time Needed for Diagnosis: 5 seconds
Malfunction Indicator Light Illumination: Illuminates as soon as a malfunction occurs.

AV:DTC P2751 INTERMEDIATE SHAFT SPEED SENSOR "C" CIRCUIT NO SIGNAL

DTC DETECTING CONDITION:
Immediately at fault recognition
TROUBLE SYMPTOM:
- Shifting shock is felt.
- Acceleration is poor during standing start.
- Shift control malfunction

CAUTION:
Use the check board when measuring the TCM terminal voltage and resistance.
WIRING DIAGRAM:
CVT control system <Ref. to WI-144, CVT Control System.>

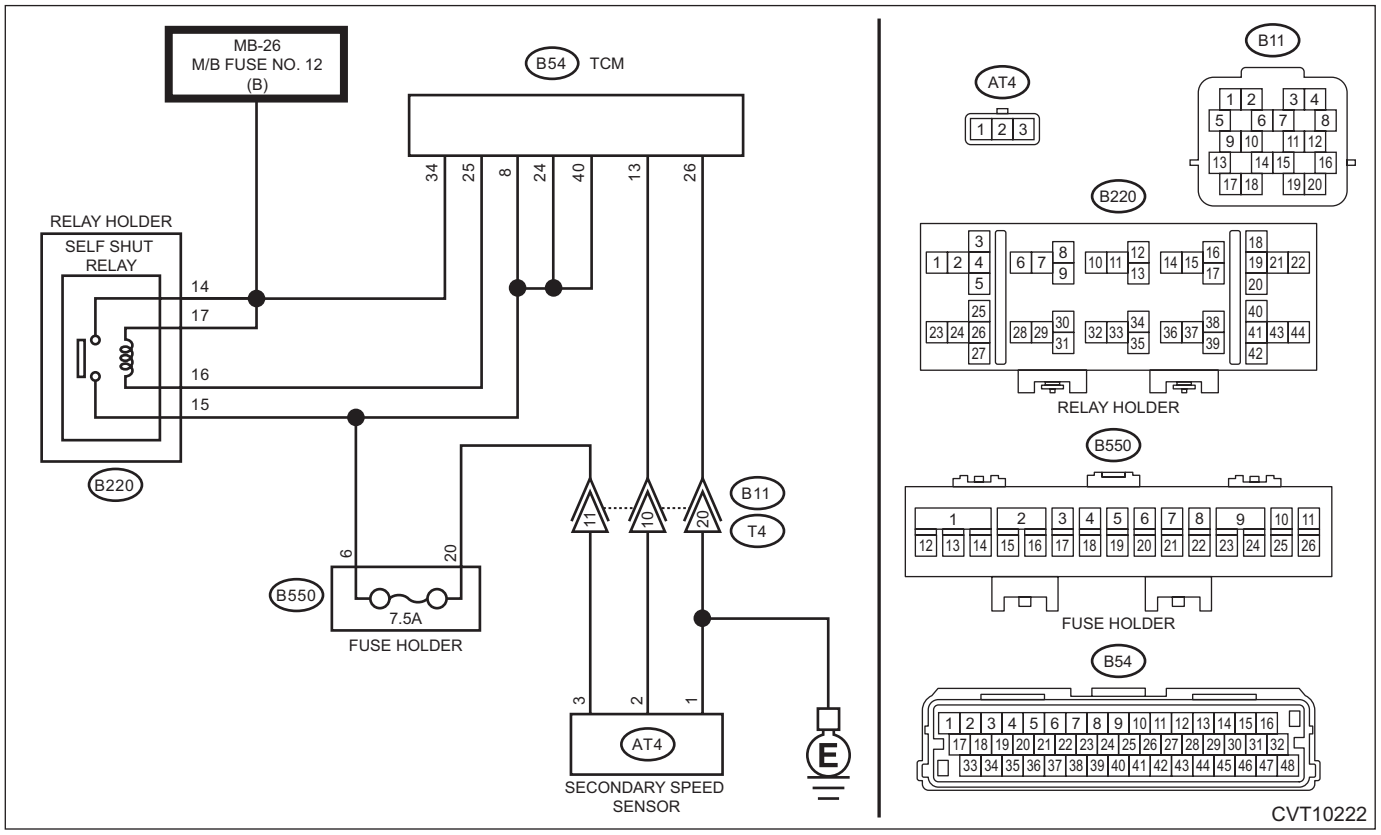

Step		Check	Yes	No
1	**CHECK FUSE.** 1) Turn the ignition switch to OFF. 2) Remove the fuse (7.5 A) from the fuse holder. 3) Check the fuse.	Is the check result OK?	Go to step **2**.	Replace the fuse. If the fuse blows out easily, repair the short circuit of harness.
2	**CHECK HARNESS.** 1) Disconnect the TCM connector. 2) Remove the self shut relay. 3) Measure the resistance between TCM connector and relay holder. ***Connector & terminal*** ***(B54) No. 25 — (B220) No. 16:*** ***(B54) No. 8 — (B220) No. 15:*** ***(B54) No. 24 — (B220) No. 15:*** ***(B54) No. 40 — (B220) No. 15:***	Is the resistance less than 1 Ω?	Go to step **3**.	Repair the open circuit of harness.

	Step	Check	Yes	No
3	**CHECK HARNESS.** Measure the resistance between TCM connector and chassis ground. ***Connector & terminal*** ***(B54) No. 25 — Chassis ground:*** ***(B54) No. 8 — Chassis ground:*** ***(B54) No. 24 — Chassis ground:*** ***(B54) No. 40 — Chassis ground:***	Is the resistance 1 MΩ or more?	Go to step **4**.	Repair the short circuit of harness.
4	**CHECK RELAY POWER SUPPLY.** Measure the voltage between relay holder and chassis ground. ***Connector & terminal*** ***(B220) No. 14 (+) — Chassis ground (–):*** ***(B220) No. 17 (+) — Chassis ground (–):***	Is the voltage 10 V or more?	Go to step **5**.	Repair the open or short circuit of harness.
5	**CHECK SELF SHUT RELAY.** Measure the resistance between self shut relay terminals. ***Terminals*** ***No. 16 — No. 17:***	Is the resistance 110 — 140 Ω?	Go to step **6**.	Replace the self shut relay.
6	**CHECK SELF SHUT RELAY.** Measure the resistance between self shut relay terminals. ***Terminals*** ***No. 14 — No. 15:***	Is the resistance 1 MΩ or more?	Go to step **7**.	Replace the self shut relay.
7	**CHECK INPUT SIGNAL FOR TCM.** 1) Connect the TCM connector. 2) Install the self shut relay. 3) Read the data of «Control module voltage» using Subaru Select Monitor.	Is the «Control module voltage» 10 V or more?	Current condition is normal. Check for poor contact in connectors or harnesses, and repair the defective part.	Go to step **8**.
8	**CHECK HARNESS.** 1) Turn the ignition switch to OFF. 2) Disconnect the TCM connector. 3) Disconnect the transmission connector. 4) Measure the resistance between TCM connector and transmission connectors. ***Connector & terminal*** ***(B54) No. 13 — (B11) No. 10:*** ***(B54) No. 26 — (B11) No. 20:*** ***(B550) No. 20 — (B11) No. 11:***	Is the resistance less than 1 Ω?	Go to step **9**.	Repair the open circuit of harness.
9	**CHECK HARNESS.** Measure the resistance between TCM connector and chassis ground. ***Connector & terminal*** ***(B54) No. 13 — Chassis ground:***	Is the resistance 1 MΩ or more?	Go to step **10**.	Repair the short circuit of harness.
10	**CHECK HARNESS.** Measure the resistance between relay holder and fuse holder. ***Connector & terminal*** ***(B220) No. 15 — (B550) No. 6:***	Is the resistance less than 1 Ω?	Go to step **11**.	Repair the open circuit of harness.
11	**CHECK TRANSMISSION HARNESS.** 1) Install the fuse. 2) Connect the TCM connector. 3) Turn the ignition switch to ON. 4) Measure the voltage between transmission connector terminals. ***Connector & terminal*** ***(B11) No. 11 (+) — Chassis ground (–):***	Is the voltage 10 — 13 V?	Go to step **12**.	Repair the open circuit of harness or poor contact of connector.

	Step	Check	Yes	No
12	**CHECK INPUT SIGNAL FOR TCM.** 1) Turn the ignition switch to OFF. 2) Connect the transmission connector. 3) Lift up the vehicle. 4) Start the engine. 5) Set the select lever to “D” range. 6) Read the data of «Secondary Rev Speed» using Subaru Select Monitor.	Does the value of «Secondary Rev Speed» change according to those of «Front Wheel Speed»?	Current condition is normal. Repair the poor contacts of harnesses of secondary speed sensor and transmission connector.	Go to step **13**.
13	**CHECK TRANSMISSION HARNESS.** 1) Turn the ignition switch to OFF. 2) Disconnect the transmission connector. 3) Disconnect the secondary speed sensor connector. 4) Measure the resistance between transmission connector and secondary speed sensor connector. ***Connector & terminal*** ***(T4) No. 10 — (AT4) No. 2:*** ***(T4) No. 11 — (AT4) No. 3:*** ***(T4) No. 20 — (AT4) No. 1:***	Is the resistance less than 1 Ω?	Go to step **14**.	Replace the transmission harness.
14	**CHECK SECONDARY SPEED SENSOR HARNESS.** Measure the resistance between transmission connector and chassis ground. ***Connector & terminal*** ***(T4) No. 10 — Chassis ground:*** ***(T4) No. 11 — Chassis ground:***	Is the resistance 1 MΩ or more?	Go to step **15**.	Repair the short circuit of harness.
15	**CHECK SECONDARY SPEED SENSOR.** 1) Turn the ignition switch to OFF. 2) Replace the secondary speed sensor. <Ref. to CVT(TR690)-100, Secondary Speed Sensor.> 3) Perform the Clear Memory Mode. <Ref. to CVT(diag)-19, Clear Memory Mode.> 4) Read the DTC.	Is DTC P2751 displayed?	Go to step **16**.	The original secondary speed sensor is defective.
16	**CHECK SELF SHUT RELAY.** 1) Turn the ignition switch to OFF. 2) Replace the self shut relay. 3) Perform the Clear Memory Mode. <Ref. to CVT(diag)-19, Clear Memory Mode.> 4) Read the DTC.	Is DTC P2751 displayed?	Replace the TCM. <Ref. to CVT(TR690)-126, Transmission Control Module (TCM).>	The original self shut relay is defective.

1. OUTLINE OF DIAGNOSIS

- Detect the no input signal from the secondary speed sensor.
- Judge as NG if there is no input signal from the secondary pulley speed sensor, while the primary pulley speed sensor has the input signal although the primary and secondary pulleys are interlocked via the chain.

2. EXECUTION CONDITION

Secondary parameters	Execution condition
12 V battery system voltage	≥ 9 V
Transmission range	Drive or Reverse
Measured primary pulley shaft speed	≥ 1000 rpm

3. DIAGNOSTIC METHOD

If the duration of time while the following conditions are met is longer than the time indicated, judge as NG.

Judgment Value

Malfunction Criteria	Threshold Value
Measured secondary pulley shaft speed	0 rpm

Time Needed for Diagnosis: 0.5 seconds
Malfunction Indicator Light Illumination: Illuminates as soon as a malfunction occurs.

AW:DTC P2757 TORQUE CONVERTER CLUTCH PRESSURE CONTROL SOLENOID CONTROL CIRCUIT PERFORMANCE/STUCK OFF

DTC DETECTING CONDITION:
Detected when two consecutive driving cycles with fault occur.
TROUBLE SYMPTOM:
No lock-up occurs.
WIRING DIAGRAM:
CVT control system <Ref. to WI-144, CVT Control System.>

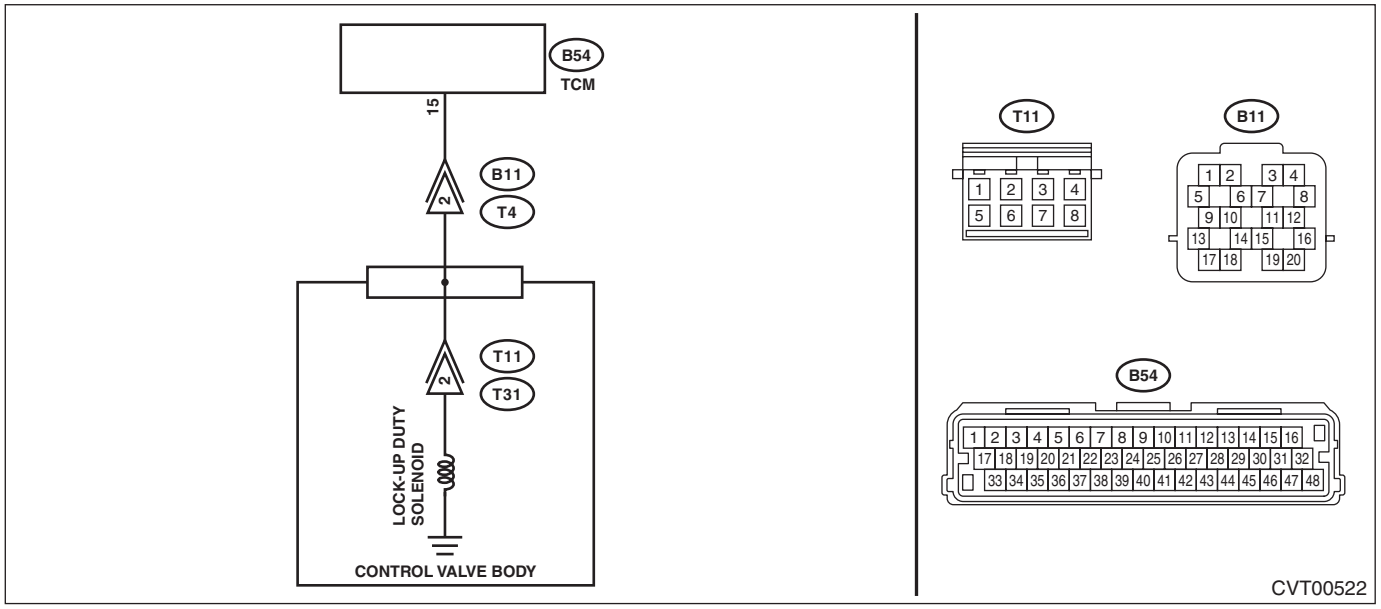

	Step	Check	Yes	No
1	**CHECK DTC.** Read the DTC using Subaru Select Monitor.	Is a DTC other than DTC P2757 displayed?	Perform the diagnosis according to DTCs other than P2757.	Go to step **2**.
2	**CHECK LOCK-UP DUTY SOLENOID (ACTIVE TEST).** 1) Turn the ignition switch to ON. 2) Using the Subaru Select Monitor, perform forced operation of the lock-up duty solenoid. <Ref. to CVT(diag)-25, Active Test.>	Does the indication of 0 → 50% appear repeatedly during forced operation, and does operating sound emit during indicating 50%?	Go to step **8**.	Go to step **3**.
3	**CHECK LOCK-UP DUTY SOLENOID.** 1) Turn the ignition switch to OFF. 2) Disconnect the transmission connector. 3) Measure the resistance between transmission connector and transmission body. ***Connector & terminal*** ***(T4) No. 2 — Transmission body:***	Is the resistance approx. 10 — 13.5 Ω? (when cold)	Replace the control valve body. <Ref. to CVT(TR690)-113, Control Valve Body.>	Go to step **4**.
4	**CHECK HARNESS.** 1) Disconnect the TCM connector. 2) Measure the resistance between TCM connector and transmission connectors. ***Connector & terminal*** ***(B54) No. 15 — (B11) No. 2:***	Is the resistance less than 1 Ω?	Go to step **5**.	Repair the open circuit of harness.
5	**CHECK HARNESS.** Measure the resistance between TCM connector and transmission body. ***Connector & terminal*** ***(B54) No. 15 — Transmission body:***	Is the resistance 1 MΩ or more?	Go to step **6**.	Repair the short circuit of harness.

	Step	Check	Yes	No
6	**CHECK HARNESS.** **CAUTION:** **Start work after ATF cools down.** 1) Remove the transmission oil pan. 2) Disconnect the control valve body connector. 3) Measure the resistance between transmission connector and control valve body connector. ***Connector & terminal*** ***(T4) No. 2 — (T11) No. 2:***	Is the resistance less than 1 Ω?	Go to step **7**.	Repair the open circuit of harness.
7	**CHECK HARNESS.** Measure the resistance between transmission connector and control valve body. ***Connector & terminal*** ***(T11) No. 2 — Control valve body:***	Is the resistance 1 MΩ or more?	Replace the control valve body. <Ref. to CVT(TR690)-113, Control Valve Body.>	Repair the short circuit of harness.
8	**CHECK TRANSMISSION FLUID.** 1) Connect all connectors. 2) Check the amount of ATF. <Ref. to CVT(TR690)-36, ADJUSTMENT, CVTF.>	Is the check result OK?	Go to step **9**.	Adjust the amount of ATF. <Ref. to CVT(TR690)-36, ADJUSTMENT, CVTF.>
9	**CHECK TRANSMISSION FLUID.** Check the condition of ATF. <Ref. to CVT(TR690)-40, CONDITION CHECK, CVTF.>	Is the check result OK?	Go to step **10**.	Check according to the “Corrective action” of ATF (CVTF) “CONDITION CHECK”. <Ref. to CVT(TR690)-40, CONDITION CHECK, CVTF.>
10	**CHECK INPUT SIGNAL FOR TCM.** 1) Lift up the vehicle. 2) Start the engine. 3) Warm up until the ATF temperature reaches to 40 — 70°C (104 — 158°F). 4) Depress the brake pedal, and shift the select lever to “D” range. 5) Shift the select lever to “P” range. 6) Stabilize the engine speed at idle. 7) Read the data of «Actual Secondary Pressure» using Subaru Select Monitor.	Is the «Actual Secondary Pressure» 0.5 — 1.5 MPa?	Replace the control valve body. <Ref. to CVT(TR690)-113, Control Valve Body.> Go to step **11**.	Perform the diagnosis according to DTC P0841. <Ref. to CVT(diag)-89, DTC P0841 TRANSMISSION FLUID PRESSURE SENSOR/SWITCH "A" CIRCUIT RANGE/PERFORMANCE, Diagnostic Procedure with Diagnostic Trouble Code (DTC).>

	Step	Check	Yes	No
11	**DRIVING CHECK FOR LOCK-UP CONDITION.** 1) Perform the Clear Memory Mode. <Ref. to CVT(diag)-19, Clear Memory Mode.> 2) Turn the ignition switch to OFF. 3) Start the engine. 4) Warm up until the ATF temperature exceeds 50°C. 5) Drive the vehicle for one minute or more while keeping such constant speed that «Lock Up Duty Ratio» is 70% or more, and «Front Wheel Speed» is 40 km/h (25 MPH) or more, which are displayed on the Subaru Select Monitor. 6) Turn the ignition switch to OFF. 7) Start the engine. 8) Perform the procedure in step 5) again. 9) Read the DTC using Subaru Select Monitor.	Does the AT OIL TEMP light blink and is DTC P2757 displayed?	Replace the torque converter assembly. <Ref. to CVT(TR690)-141, Torque Converter Assembly.>	Current condition is normal. It is possible that temporary poor contact occurs.

1. OUTLINE OF DIAGNOSIS

• Detect the malfunction of lock-up fluid pressure control solenoid, and hydraulic circuit, or drive circuit characteristics (stuck to low pressure side).
• Judge as NG if the deviation between engine speed and primary pulley speed becomes equal to or larger than the predetermined value, even though the lock-up command is issued.

2. EXECUTION CONDITION

Secondary parameters	Execution condition
12 V battery system voltage	≥ 10 V
Engine speed	≥ 1000 rpm
Transmission range	Drive
Commanded duty of torque converter clutch pressure control solenoid	≥ 95%
Measured primary pulley shaft speed × 1.129 * (rpm)	> Table 1 rpm

* 1.129: Primary reduction gear ratio

Table 1

Engine speed (rpm)	3700	3727	3755	3782	3856	4019	4213	4456
Measured primary pulley shaft speed × 1.129 (rpm)	0	500	1000	1500	2000	2500	3000	3500

Engine speed (rpm)	4786	5213	5651	6101	6569	7044	7520
Measured primary pulley shaft speed × 1.129 (rpm)	4000	4500	5000	5500	6000	6500	7000

3. DIAGNOSTIC METHOD

If the duration of time while the following conditions are met is longer than the time indicated, judge as NG.

Judgment Value

Malfunction Criteria	Threshold Value
ABS *: Engine speed – Measured primary pulley shaft speed × 1.129 **	> Table 2 rpm

* ABS: Absolute value
** 1.129: Primary reduction gear ratio

Table 2

Engine speed (rpm)	0	500	1000	1500	2000	2500	3000	3500
ABS *: Engine speed – Measured primary pulley shaft speed × 1.129 (rpm)	200	200	200	200	200	200	200	200

Engine speed (rpm)	4000	4500	5000	5500	6000	6500	7000
ABS *: Engine speed – Measured primary pulley shaft speed × 1.129 (rpm)	200	200	200	200	200	200	200

* ABS: Absolute value

Time Needed for Diagnosis: 10 seconds

Malfunction Indicator Light Illumination: Illuminates when malfunction occurs in 2 continuous driving cycles.

AX:DTC P2758 TORQUE CONVERTER CLUTCH PRESSURE CONTROL SOLENOID CONTROL CIRCUIT STUCK ON

DTC DETECTING CONDITION:
Detected when two consecutive driving cycles with fault occur.
TROUBLE SYMPTOM:
The engine stalls when the vehicle is stopped.
WIRING DIAGRAM:
CVT control system <Ref. to WI-144, CVT Control System.>

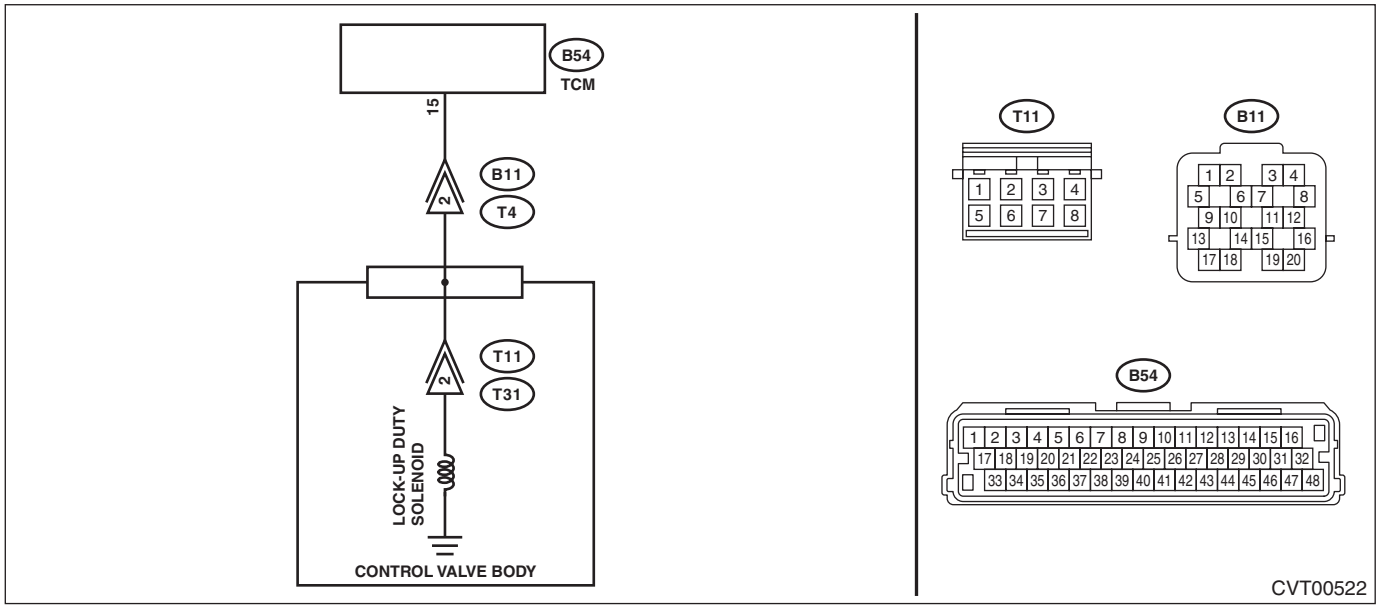

Step		Check	Yes	No
1	**CHECK DTC.** Read the DTC using Subaru Select Monitor.	Is a DTC other than DTC P2758 displayed?	Perform the diagnosis according to DTCs other than P2758.	Go to step **2**.
2	**CHECK LOCK-UP DUTY SOLENOID (ACTIVE TEST).** 1) Turn the ignition switch to ON. 2) Using the Subaru Select Monitor, perform forced operation of the lock-up duty solenoid. <Ref. to CVT(diag)-25, Active Test.>	Does the indication of 0 → 50% appear repeatedly during forced operation, and does operating sound emit during indicating 50%?	Go to step **8**.	Go to step **3**.
3	**CHECK LOCK-UP DUTY SOLENOID.** 1) Turn the ignition switch to OFF. 2) Disconnect the transmission connector. 3) Measure the resistance between transmission connector and transmission body. ***Connector & terminal*** ***(T4) No. 2 — Transmission body:***	Is the resistance approx. 10 — 13.5 Ω? (when cold)	Replace the control valve body. <Ref. to CVT(TR690)-113, Control Valve Body.>	Go to step **4**.
4	**CHECK HARNESS.** 1) Disconnect the TCM connector. 2) Measure the resistance between TCM connector and transmission connectors. ***Connector & terminal*** ***(B54) No. 15 — (B11) No. 2:***	Is the resistance less than 1 Ω?	Go to step **5**.	Repair the open circuit of harness.
5	**CHECK HARNESS.** Measure the resistance between TCM connector and transmission body. ***Connector & terminal*** ***(B54) No. 15 — Transmission body:***	Is the resistance 1 MΩ or more?	Go to step **6**.	Repair the short circuit of harness.

	Step	Check	Yes	No
6	**CHECK HARNESS.** **CAUTION:** **Start work after ATF cools down.** 1) Remove the transmission oil pan. 2) Disconnect the control valve body connector. 3) Measure the resistance between transmission connector and control valve body connector. ***Connector & terminal*** ***(T4) No. 2 — (T11) No. 2:***	Is the resistance less than 1 Ω?	Go to step **7**.	Repair the open circuit of harness.
7	**CHECK HARNESS.** Measure the resistance between transmission connector and control valve body. ***Connector & terminal*** ***(T11) No. 2 — Control valve body:***	Is the resistance 1 MΩ or more?	Replace the control valve body. <Ref. to CVT(TR690)-113, Control Valve Body.>	Repair the short circuit of harness.
8	**CHECK TRANSMISSION FLUID.** 1) Connect all connectors. 2) Check the amount of ATF. <Ref. to CVT(TR690)-36, ADJUSTMENT, CVTF.>	Is the check result OK?	Go to step **9**.	Adjust the amount of ATF. <Ref. to CVT(TR690)-36, ADJUSTMENT, CVTF.>
9	**CHECK TRANSMISSION FLUID.** Check the condition of ATF. <Ref. to CVT(TR690)-40, CONDITION CHECK, CVTF.>	Is the check result OK?	Go to step **10**.	Check according to the “Corrective action” of ATF (CVTF) “CONDITION CHECK”. <Ref. to CVT(TR690)-40, CONDITION CHECK, CVTF.>
10	**CHECK INPUT SIGNAL FOR TCM.** 1) Lift up the vehicle. 2) Start the engine. 3) Warm up until the ATF temperature reaches to 40 — 70°C (104 — 158°F). 4) Depress the brake pedal, and shift the select lever to “D” range. 5) Shift the select lever to “P” range. 6) Stabilize the engine speed at idle. 7) Read the data of «Actual Secondary Pressure» using Subaru Select Monitor.	Is the «Actual Secondary Pressure» 0.5 — 1.5 MPa?	Replace the control valve body. <Ref. to CVT(TR690)-113, Control Valve Body.> Go to step **11**.	Perform the diagnosis according to DTC P0841. <Ref. to CVT(diag)-89, DTC P0841 TRANSMISSION FLUID PRESSURE SENSOR/SWITCH "A" CIRCUIT RANGE/PERFORMANCE, Diagnostic Procedure with Diagnostic Trouble Code (DTC).>

	Step	Check	Yes	No
11	**DRIVING CHECK FOR LOCK-UP CONDITION.** 1) Perform the Clear Memory Mode. <Ref. to CVT(diag)-19, Clear Memory Mode.> 2) Turn the ignition switch to OFF. 3) Start the engine. 4) Warm up until the ATF temperature exceeds 50°C. 5) Drive the vehicle for one minute or more while keeping such constant speed that «Lock Up Duty Ratio» is 0%, and «Front Wheel Speed» is 5 km/h (3 MPH) or less, which are displayed on the Subaru Select Monitor. 6) Turn the ignition switch to OFF. 7) Start the engine. 8) Perform the procedure in step 5) again. 9) Read the DTC using Subaru Select Monitor.	Does the AT OIL TEMP light blink and is DTC P2758 displayed? Or does the engine stall?	Replace the torque converter assembly. <Ref. to CVT(TR690)-141, Torque Converter Assembly.>	Current condition is normal. It is possible that temporary poor contact occurs.

1. OUTLINE OF DIAGNOSIS

• Detect the malfunction of lock-up fluid pressure control solenoid, and hydraulic circuit, or drive circuit characteristics (stuck to high pressure side).
• Judge as NG if the gear ratio is 1.5 or larger and the change rate of the gear ratio per second is equal to or more than the predetermined value, even though the lock-up command is issued.

2. EXECUTION CONDITION

Secondary parameters	Execution condition
12 V battery system voltage	≥ 10 V
Engine speed	≥ 1000 rpm
Transmission range	Drive
Engine torque	> Table 1 N·m
Commanded duty of torque converter clutch pressure control solenoid	≤ 0%

Table 1

Engine coolant temperature (degC)	– 40	– 20	0	20	40	60	80	100
Engine torque (N·m)	80	80	80	80	80	50	50	50

3. DIAGNOSTIC METHOD

If the duration of time while the following conditions are met is longer than the time indicated, judge as NG.

Judgment Value

Malfunction Criteria	Threshold Value
ABS *: Engine speed – Measured primary pulley shaft speed × 1.129 **	< Table 2 rpm

* ABS: Absolute value
** 1.129: Primary reduction gear ratio

Table 2

Engine speed (rpm)	0	500	1000	1500	2000	2500	3000	3500
ABS *: Engine speed – Measured primary pulley shaft speed × 1.129 (rpm)	0	0	50	50	50	50	50	50

Engine speed (rpm)	4000	4500	5000	5500	6000	6500	7000
ABS *: Engine speed – Measured primary pulley shaft speed × 1.129 (rpm)	50	50	50	50	50	50	50

* ABS: Absolute value
Time Needed for Diagnosis: 10 seconds
Malfunction Indicator Light Illumination: Illuminates when malfunction occurs in 2 continuous driving cycles.

AY:DTC P2763 TORQUE CONVERTER CLUTCH PRESSURE CONTROL SOLENOID CONTROL CIRCUIT HIGH

DTC DETECTING CONDITION:
Immediately at fault recognition
TROUBLE SYMPTOM:
- No lock-up occurs.
- Engine stalls.

CAUTION:
Use the check board when measuring the TCM terminal voltage and resistance.
WIRING DIAGRAM:
CVT control system <Ref. to WI-144, CVT Control System.>

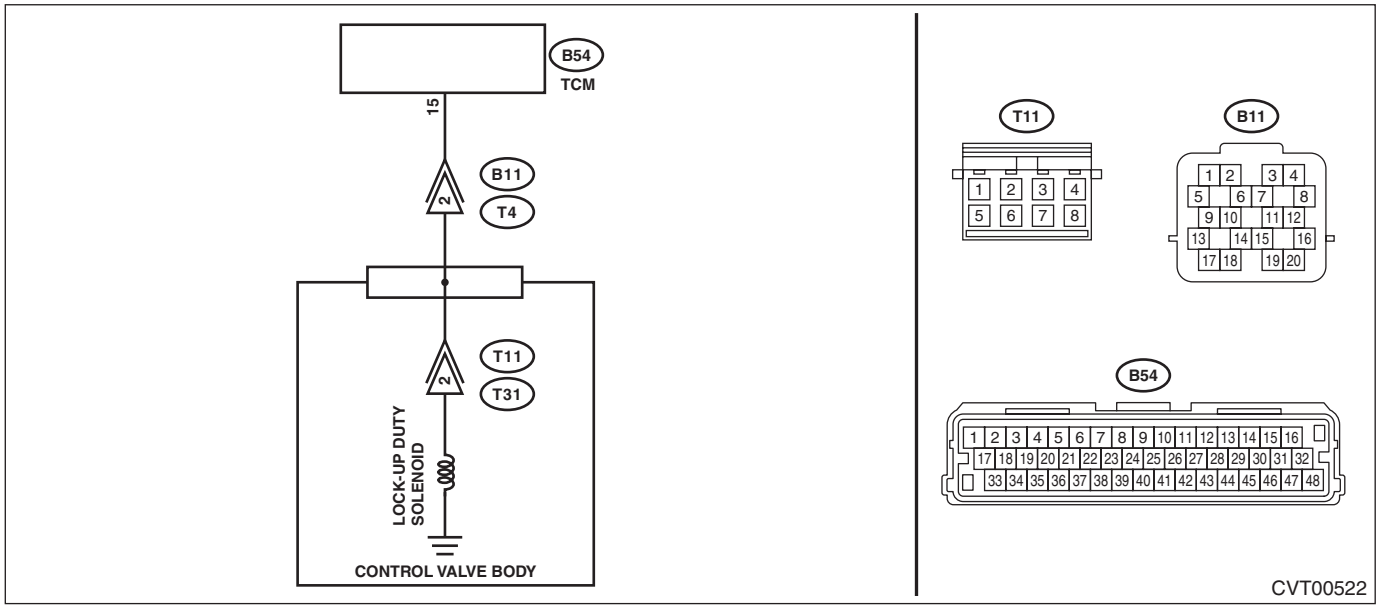

Step		Check	Yes	No
1	**CHECK HARNESS.** 1) Turn the ignition switch to OFF. 2) Disconnect the TCM connector. 3) Disconnect the transmission connector. 4) Measure the resistance between TCM connector and transmission connectors. ***Connector & terminal*** ***(B54) No. 15 — (B11) No. 2:***	Is the resistance less than 1 Ω?	Go to step **2**.	Repair the open circuit of harness.
2	**CHECK HARNESS.** 1) Turn the ignition switch to ON. 2) Measure the voltage between TCM connector and chassis ground. ***Connector & terminal*** ***(B54) No. 15 (+) — Chassis ground (–):***	Is the voltage approx. 0 V?	Go to step **3**.	Repair the short circuit of harness.
3	**CHECK LOCK-UP DUTY SOLENOID.** Measure the resistance between transmission connector and transmission body. ***Connector & terminal*** ***(T4) No. 2 — Transmission body:***	Is the resistance approx. 10 — 13.5 Ω? (when cold)	Check for poor contact of connector, and if no fault is found, replace the TCM. <Ref. to CVT(TR690)-126, Transmission Control Module (TCM).>	Go to step **4**.

	Step	Check	Yes	No
4	**CHECK HARNESS INSIDE TRANSMISSION.** **CAUTION:** **Start work after ATF cools down.** 1) Remove the transmission oil pan. 2) Check for the harness pinch, damage.	Is there any fault in the harness?	Replace the transmission harness.	Go to step **5**.
5	**CHECK HARNESS INSIDE TRANSMISSION.** 1) Disconnect the control valve body connector. 2) Turn the ignition switch to ON. 3) Measure the voltage between transmission connector and transmission body. ***Connector & terminal*** ***(T4) No. 2 (+) — Transmission body (–):***	Is the voltage approx. 0 V?	Replace the control valve body. <Ref. to CVT(TR690)-113, Control Valve Body.>	Replace the transmission harness.

1. OUTLINE OF DIAGNOSIS

• Detect short circuit to power supply or open circuit of the lock-up clutch pressure control solenoid drive circuit.
• Judge as NG when an abnormal signal is received from the solenoid driver IC of the lock-up clutch pressure control solenoid drive circuit.

2. EXECUTION CONDITION

Secondary parameters	Execution condition
12 V battery system voltage	≥ 9 V
Commanded duty of torque converter clutch pressure control solenoid	0%

3. DIAGNOSTIC METHOD

If the duration of time while the following conditions are met is longer than the time indicated, judge as NG.

Judgment Value

Malfunction Criteria	Threshold Value
Signal of malfunction from solenoid driver IC	ON
As defined by:	
Measured torque converter clutch pressure control solenoid voltage ≥ 2.5 V	

Time Needed for Diagnosis: 0.2 seconds
Malfunction Indicator Light Illumination: Illuminates as soon as a malfunction occurs.

AZ:DTC P2764 TORQUE CONVERTER CLUTCH PRESSURE CONTROL SOLENOID CONTROL CIRCUIT LOW

DTC DETECTING CONDITION:
Immediately at fault recognition
TROUBLE SYMPTOM:
No lock-up occurs.

CAUTION:
Use the check board when measuring the TCM terminal voltage and resistance.
WIRING DIAGRAM:
CVT control system <Ref. to WI-144, CVT Control System.>

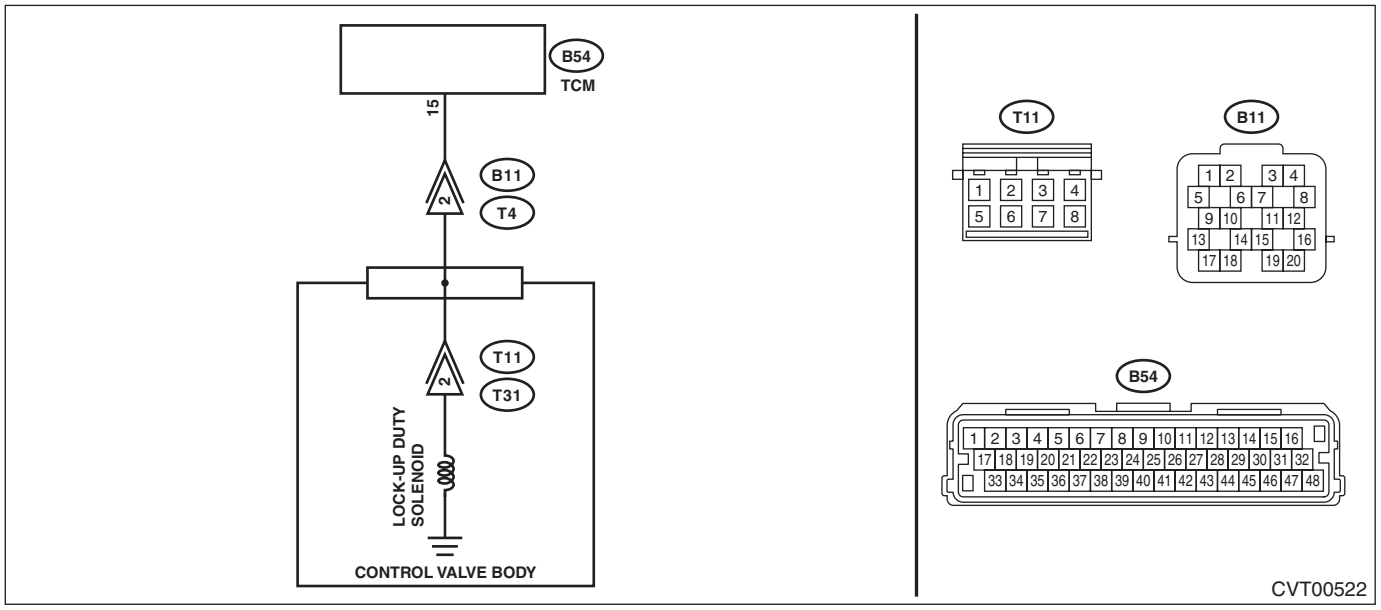

	Step	Check	Yes	No
1	**CHECK HARNESS.** 1) Turn the ignition switch to OFF. 2) Disconnect the TCM connector. 3) Disconnect the transmission connector. 4) Measure the resistance between TCM connector and chassis ground. ***Connector & terminal*** ***(B54) No. 15 — Chassis ground:***	Is the resistance 1 MΩ or more?	Go to step **2**.	Repair the short circuit of harness.
2	**CHECK LOCK-UP DUTY SOLENOID.** Measure the resistance between transmission connector and transmission body. ***Connector & terminal*** ***(T4) No. 2 — Transmission body:***	Is the resistance approx. 10 — 13.5 Ω? (when cold)	Check for poor contact of connector, and if no fault is found, replace the TCM. <Ref. to CVT(TR690)-126, Transmission Control Module (TCM).>	Go to step **3**.
3	**CHECK HARNESS INSIDE TRANSMISSION.** **CAUTION:** **Start work after ATF cools down.** 1) Remove the transmission oil pan. 2) Check for the harness pinch, damage.	Is there any fault in the harness?	Replace the transmission harness.	Go to step **4**.

	Step	Check	Yes	No
4	**CHECK HARNESS INSIDE TRANSMISSION.** 1) Disconnect the control valve body connector. 2) Measure the resistance between transmission connector and transmission body. ***Connector & terminal*** ***(T4) No. 2 — Transmission body:***	Is the resistance 1 MΩ or more?	Replace the control valve body. <Ref. to CVT(TR690)-113, Control Valve Body.>	Replace the transmission harness.

1. OUTLINE OF DIAGNOSIS

- Detect the ground short of the lock-up clutch pressure control solenoid drive circuit.
- Judge as NG when an abnormal signal is received from the solenoid driver IC of the lock-up clutch pressure control solenoid drive circuit.

2. EXECUTION CONDITION

Secondary parameters	Execution condition
12 V battery system voltage	≥ 9 V
Commanded duty of torque converter clutch pressure control solenoid	100%

3. DIAGNOSTIC METHOD

If the duration of time while the following conditions are met is longer than the time indicated, judge as NG.

Judgment Value

Malfunction Criteria	Threshold Value
Signal of malfunction from solenoid driver IC As defined by: Measured torque converter clutch pressure control solenoid voltage ≤ 0.8 V	ON

Time Needed for Diagnosis: 0.2 seconds
Malfunction Indicator Light Illumination: Illuminates as soon as a malfunction occurs.

BA:DTC P2769 TORQUE CONVERTER CLUTCH CIRCUIT LOW

DTC DETECTING CONDITION:
Immediately at fault recognition
TROUBLE SYMPTOM:
No lock-up occurs.

CAUTION:
Use the check board when measuring the TCM terminal voltage and resistance.
WIRING DIAGRAM:
CVT control system <Ref. to WI-144, CVT Control System.>

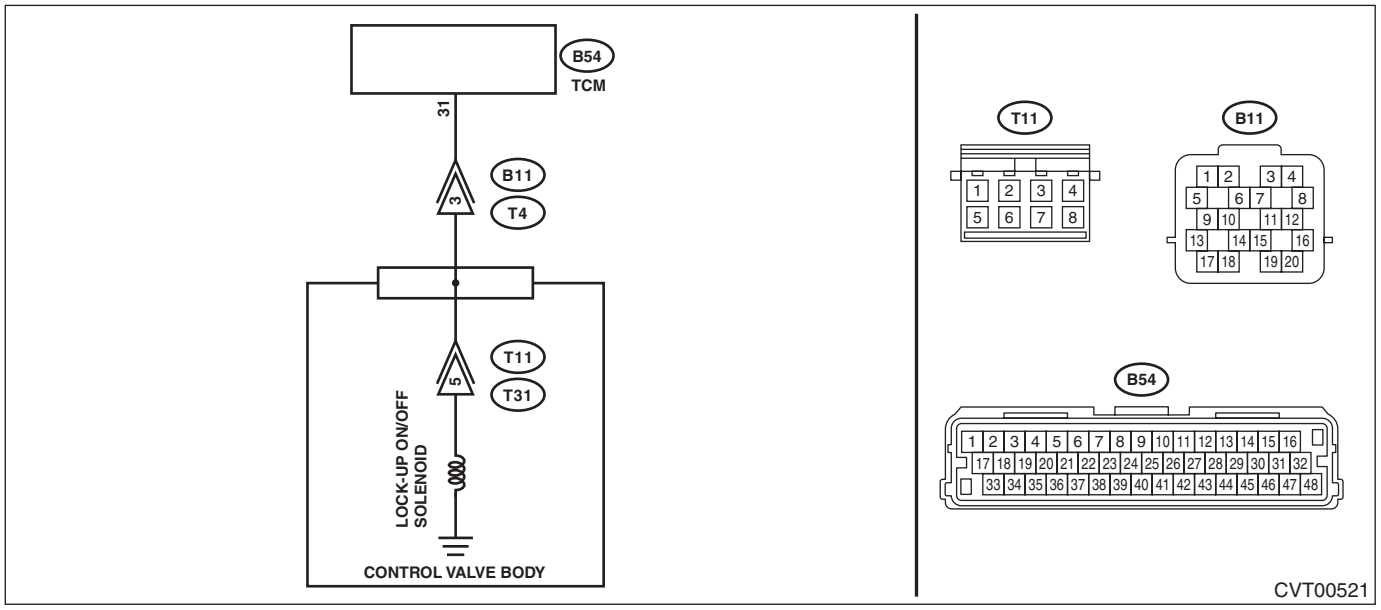

Step		Check	Yes	No
1	**CHECK HARNESS.** 1) Turn the ignition switch to OFF. 2) Disconnect the TCM connector. 3) Disconnect the transmission connector. 4) Measure the resistance between TCM connector and chassis ground. ***Connector & terminal*** ***(B54) No. 31 — Chassis ground:***	Is the resistance 1 MΩ or more?	Go to step **2**.	Repair the short circuit of harness.
2	**CHECK LOCK UP ON/OFF SOLENOID.** Measure the resistance between transmission connector and transmission body. ***Connector & terminal*** ***(T4) No. 3 — Transmission body:***	Is the resistance approx. 13 — 18.5 Ω? (when cold)	Check for poor contact of connector, and if no fault is found, replace the TCM. <Ref. to CVT(TR690)-126, Transmission Control Module (TCM).>	Go to step **3**.
3	**CHECK HARNESS INSIDE TRANSMISSION.** **CAUTION:** **Start work after ATF cools down.** 1) Remove the transmission oil pan. 2) Check for the harness pinch, damage.	Is there any fault in the harness?	Replace the transmission harness.	Go to step **4**.

	Step	Check	Yes	No
4	**CHECK HARNESS INSIDE TRANSMISSION.** 1) Disconnect the control valve body connector. 2) Measure the resistance between transmission connector and transmission body. ***Connector & terminal*** ***(T4) No. 3 — Transmission body:***	Is the resistance 1 MΩ or more?	Replace the control valve body. <Ref. to CVT(TR690)-113, Control Valve Body.>	Replace the transmission harness.

1. OUTLINE OF DIAGNOSIS

- Detect the ground short of the lock-up clutch ON/OFF solenoid drive circuit.
- Judge as NG when an abnormal signal is received from the solenoid driver IC of the lock-up clutch ON/OFF solenoid drive circuit.

2. EXECUTION CONDITION

Secondary parameters	Execution condition
12 V battery system voltage	≥ 9 V
Torque converter clutch circuit control solenoid output command	ON

3. DIAGNOSTIC METHOD

If the duration of time while the following conditions are met is longer than the time indicated, judge as NG.

Judgment Value

Malfunction Criteria	Threshold Value
Signal of malfunction from solenoid driver IC As defined by: Measured torque converter clutch circuit control solenoid voltage ≤ 0.8 V	ON

Time Needed for Diagnosis: 0.2 seconds
Malfunction Indicator Light Illumination: Illuminates as soon as a malfunction occurs.

BB:DTC P2770 TORQUE CONVERTER CLUTCH CIRCUIT HIGH

DTC DETECTING CONDITION:
Immediately at fault recognition
TROUBLE SYMPTOM:
No lock-up occurs.

CAUTION:
Use the check board when measuring the TCM terminal voltage and resistance.
WIRING DIAGRAM:
CVT control system <Ref. to WI-144, CVT Control System.>

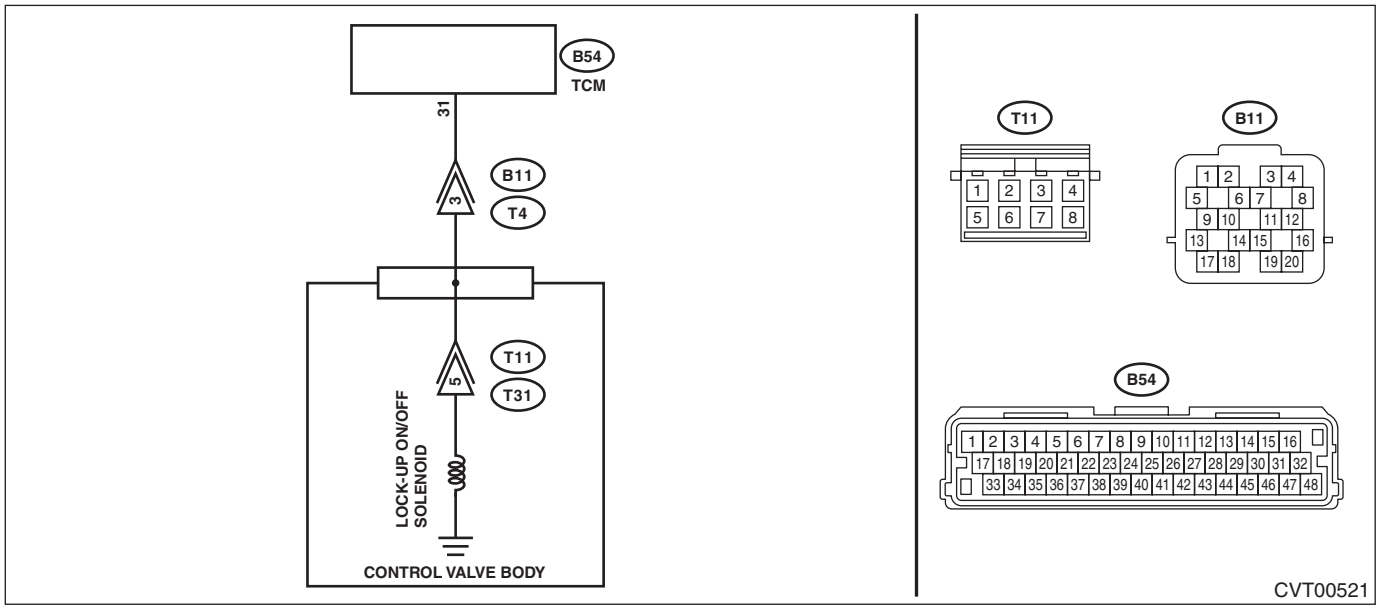

Step		Check	Yes	No
1	**CHECK HARNESS.** 1) Turn the ignition switch to OFF. 2) Disconnect the TCM connector. 3) Disconnect the transmission connector. 4) Measure the resistance between TCM connector and transmission connectors. ***Connector & terminal*** ***(B54) No. 31 — (B11) No. 3:***	Is the resistance less than 1 Ω?	Go to step **2**.	Repair the open circuit of harness.
2	**CHECK HARNESS.** 1) Turn the ignition switch to ON. 2) Measure the voltage between TCM connector and chassis ground. ***Connector & terminal*** ***(B54) No. 31 (+) — Chassis ground (–):***	Is the voltage approx. 0 V?	Go to step **3**.	Repair the short circuit of harness.
3	**CHECK LOCK UP ON/OFF SOLENOID.** Measure the resistance between transmission connector and transmission body. ***Connector & terminal*** ***(T4) No. 3 — Transmission body:***	Is the resistance approx. 13 — 18.5 Ω? (when cold)	Check for poor contact of connector, and if no fault is found, replace the TCM. <Ref. to CVT(TR690)-126, Transmission Control Module (TCM).>	Go to step **4**.
4	**CHECK HARNESS INSIDE TRANSMISSION.** **CAUTION:** **Start work after ATF cools down.** 1) Remove the transmission oil pan. 2) Check for the harness pinch, damage.	Is there any fault in the harness?	Replace the transmission harness.	Go to step **5**.

Step		Check	Yes	No
5	**CHECK HARNESS INSIDE TRANSMISSION.** 1) Disconnect the control valve body connector. 2) Turn the ignition switch to ON. 3) Measure the voltage between transmission connector and transmission body. ***Connector & terminal*** ***(T4) No. 3 (+) — Transmission body (–):***	Is the voltage approx. 0 V?	Replace the control valve body. <Ref. to CVT(TR690)-113, Control Valve Body.>	Replace the transmission harness.

1. OUTLINE OF DIAGNOSIS

- Detect open circuit or short circuit to ground in the lock-up clutch ON/OFF solenoid drive circuit.
- Judge as NG when an abnormal signal is received from the solenoid driver IC of the lock-up clutch ON/OFF solenoid drive circuit.

2. EXECUTION CONDITION

Secondary parameters	Execution condition
12 V battery system voltage	≥ 9 V
Torque converter clutch circuit control solenoid output command	OFF

3. DIAGNOSTIC METHOD

If the duration of time while the following conditions are met is longer than the time indicated, judge as NG.

Judgment Value

Malfunction Criteria	Threshold Value
Signal of malfunction from solenoid driver IC As defined by: Measured torque converter clutch circuit control solenoid voltage ≥ 2.5 V	ON

Time Needed for Diagnosis: 0.2 seconds
Malfunction Indicator Light Illumination: Illuminates as soon as a malfunction occurs.

BC:DTC U0073 CONTROL MODULE COMMUNICATION BUS OFF

NOTE:
Refer to “LAN SYSTEM (DIAGNOSTICS)” for diagnostic procedure. <Ref. to LAN(diag)-2, Basic Diagnostic Procedure.>

1. OUTLINE OF DIAGNOSIS

- Detect malfunction of CAN communication.
- Judge as NG when CAN communication failure has occurred.

2. EXECUTION CONDITION

Secondary parameters	Execution condition
12 V battery system voltage	≥ 10 V
Measured primary pulley shaft speed	> 0 rpm
or	
Transmission range	Drive or Reverse

3. DIAGNOSTIC METHOD

If the duration of time while the following conditions are met is longer than the time indicated, judge as NG.

Judgment Value

Malfunction Criteria	Threshold Value
CAN bus condition	Bus off

Time Needed for Diagnosis: 2 seconds
Malfunction Indicator Light Illumination: Illuminates as soon as a malfunction occurs.

BD:DTC U0100 LOST COMMUNICATION WITH ECM/PCM “A”

NOTE:
Refer to “LAN SYSTEM (DIAGNOSTICS)” for diagnostic procedures. <Ref. to LAN(diag)-2, Basic Diagnostic Procedure.>

1. OUTLINE OF DIAGNOSIS

- Detect malfunction of CAN communication.
- Judge as NG when CAN communication failure occurs with the ECM.

2. EXECUTION CONDITION

Secondary parameters	Execution condition
12 V battery system voltage	≥ 10 V
Measured primary pulley shaft speed	> 0 rpm
or	
Transmission range	Drive or Reverse

3. DIAGNOSTIC METHOD

If the duration of time while the following conditions are met is longer than the time indicated, judge as NG.

Judgment Value

Malfunction Criteria	Threshold Value
CAN data from ECM	Lost

Time Needed for Diagnosis: 0.5 seconds
Malfunction Indicator Light Illumination: Illuminates as soon as a malfunction occurs.

BE:DTC U0122 LOST COMMUNICATION WITH VEHICLE DYNAMICS CONTROL MODULE

NOTE:
Refer to “LAN SYSTEM (DIAGNOSTICS)” for diagnostic procedures. <Ref. to LAN(diag)-2, Basic Diagnostic Procedure.>

1. OUTLINE OF DIAGNOSIS

- Detect malfunction of CAN communication.
- Judge as NG when CAN communication failure occurs with the VDC CM.

2. EXECUTION CONDITION

Secondary parameters	Execution condition
12 V battery system voltage	≥ 10 V
Measured primary pulley shaft speed	> 0 rpm
or	
Transmission range	Drive or Reverse

3. DIAGNOSTIC METHOD

If the duration of time while the following conditions are met is longer than the time indicated, judge as NG.

Judgment Value

Malfunction Criteria	Threshold Value
CAN data from Vehicle Dynamics Control Module	Lost

Time Needed for Diagnosis: 0.5 seconds
Malfunction Indicator Light Illumination: Illuminates as soon as a malfunction occurs.

BF:DTC U0140 LOST COMMUNICATION WITH BODY CONTROL MODULE

NOTE:
Refer to “LAN SYSTEM (DIAGNOSTICS)” for diagnostic procedures. <Ref. to LAN(diag)-2, Basic Diagnostic Procedure.>

1. OUTLINE OF DIAGNOSIS

- Detect malfunction of CAN communication.
- Judge as NG when CAN communication failure occurs with the body integrated unit.

2. EXECUTION CONDITION

Secondary parameters	Execution condition
Turbine shaft speed	> 0 rpm
or	
D range switch	ON

3. DIAGNOSTIC METHOD

If the duration of time while the following conditions are met is longer than the time indicated, judge as NG.

Judgment Value

Malfunction Criteria	Threshold Value
CAN data from BIU	Lost

Time Needed for Diagnosis: 2 seconds
Malfunction Indicator Light Illumination: Does not illuminate.

BG:DTC U0155 LOST COMMUNICATION WITH INSTRUMENT PANEL CLUSTER (IPC) CONTROL MODULE

NOTE:
Refer to “LAN SYSTEM (DIAGNOSTICS)” for diagnostic procedures. <Ref. to LAN(diag)-2, Basic Diagnostic Procedure.>

1. OUTLINE OF DIAGNOSIS

- Detect malfunction of CAN communication.
- Judge as NG when CAN communication failure occurs with the combination meter.

2. EXECUTION CONDITION

Secondary parameters	Execution condition
Turbine shaft speed	> 0 rpm
or	
D range switch	ON

3. DIAGNOSTIC METHOD

If the duration of time while the following conditions are met is longer than the time indicated, judge as NG.

Judgment Value

Malfunction Criteria	Threshold Value
CAN data from combination meter	Lost

Time Needed for Diagnosis: 2 seconds
Malfunction Indicator Light Illumination: Does not illuminate.

BH:DTC U0164 LOST COMMUNICATION WITH HVAC CONTROL MODULE

NOTE:
Refer to “LAN SYSTEM (DIAGNOSTICS)” for diagnostic procedure. <Ref. to LAN(diag)-2, Basic Diagnostic Procedure.>

1. OUTLINE OF DIAGNOSIS

- Detect malfunction of CAN communication.
- Judge as NG when CAN communication failure occurs with the A/C control panel.

2. EXECUTION CONDITION

Secondary parameters	Execution condition
Turbine shaft speed	> 0 rpm
or	
D range switch	ON

3. DIAGNOSTIC METHOD

If the duration of time while the following conditions are met is longer than the time indicated, judge as NG.

Judgment Value

Malfunction Criteria	Threshold Value
CAN data from A/C control panel	Lost

Time Needed for Diagnosis: 2 seconds
Malfunction Indicator Light Illumination: Does not illuminate.

BI: DTC U0401 INVALID DATA RECEIVED FROM ECM/PCM "A"

NOTE:
Refer to "LAN SYSTEM (DIAGNOSTICS)" for diagnostic procedures. <Ref. to LAN(diag)-2, Basic Diagnostic Procedure.>

1. OUTLINE OF DIAGNOSIS

- Detect malfunction of CAN communication.
- Judge as NG when data received from ECM is not normal.

2. EXECUTION CONDITION

Secondary parameters	Execution condition
12 V battery system voltage	≥ 10 V
Measured primary pulley shaft speed	> 0 rpm
or	
Transmission range	Drive or Reverse

3. DIAGNOSTIC METHOD

If the duration of time while the following conditions are met is longer than the time indicated, judge as NG.

Judgment Value

Malfunction Criteria	Threshold Value
CAN data from ECM	Did not change

Time Needed for Diagnosis: 2 seconds
Malfunction Indicator Light Illumination: Illuminates as soon as a malfunction occurs.

BJ:DTC U0416 INVALID DATA RECEIVED FROM VEHICLE DYNAMICS CONTROL MODULE

NOTE:
Refer to "LAN SYSTEM (DIAGNOSTICS)" for diagnostic procedures. <Ref. to LAN(diag)-2, Basic Diagnostic Procedure.>

1. OUTLINE OF DIAGNOSIS

- Detect malfunction of CAN communication.
- Judge as NG when data received from VDC CM is not normal.

2. EXECUTION CONDITION

Secondary parameters	Execution condition
12 V battery system voltage	≥ 10 V
Measured primary pulley shaft speed	> 0 rpm
or	
Transmission range	Drive or Reverse

3. DIAGNOSTIC METHOD

If the duration of time while the following conditions are met is longer than the time indicated, judge as NG.

Judgment Value

Malfunction Criteria	Threshold Value
CAN data from Vehicle Dynamics Control Module	Did not change

Time Needed for Diagnosis: 2 seconds
Malfunction Indicator Light Illumination: Illuminates as soon as a malfunction occurs.

BK:DTC U0422 INVALID DATA RECEIVED FROM BODY CONTROL MODULE

NOTE:
Refer to “LAN SYSTEM (DIAGNOSTICS)” for diagnostic procedures. <Ref. to LAN(diag)-2, Basic Diagnostic Procedure.>

1. OUTLINE OF DIAGNOSIS

- Detect malfunction of CAN communication.
- Judge as NG when data received from the body integrated unit is not normal.

2. EXECUTION CONDITION

Secondary parameters	Execution condition
Turbine shaft speed or D range switch	> 0 rpm ON

3. DIAGNOSTIC METHOD

If the duration of time while the following conditions are met is longer than the time indicated, judge as NG.

Judgment Value

Malfunction Criteria	Threshold Value
CAN data from BIU	Freeze

Time Needed for Diagnosis: 2 seconds
Malfunction Indicator Light Illumination: Does not illuminate.

BL:DTC U0423 INVALID DATA RECEIVED FROM INSTRUMENT PANEL CLUSTER CONTROL MODULE

NOTE:
Refer to “LAN SYSTEM (DIAGNOSTICS)” for diagnostic procedures. <Ref. to LAN(diag)-2, Basic Diagnostic Procedure.>

1. OUTLINE OF DIAGNOSIS

- Detect malfunction of CAN communication.
- Judge as NG when data received from the combination meter is not normal.

2. EXECUTION CONDITION

Secondary parameters	Execution condition
Turbine shaft speed or D range switch	> 0 rpm ON

3. DIAGNOSTIC METHOD

If the duration of time while the following conditions are met is longer than the time indicated, judge as NG.

Judgment Value

Malfunction Criteria	Threshold Value
CAN data from combination meter	Freeze

Time Needed for Diagnosis: 2 seconds
Malfunction Indicator Light Illumination: Does not illuminate.

BM:DTC U0424 INVALID DATA RECEIVED FROM HVAC CONTROL MODULE

NOTE:
Refer to “LAN SYSTEM (DIAGNOSTICS)” for diagnostic procedure. <Ref. to LAN(diag)-2, Basic Diagnostic Procedure.>

1. OUTLINE OF DIAGNOSIS

- Detect malfunction of CAN communication.
- Judge as NG when data received from the A/C control panel is not normal.

2. EXECUTION CONDITION

Secondary parameters	Execution condition
Turbine shaft speed or D range switch	> 0 rpm ON

3. DIAGNOSTIC METHOD

If the duration of time while the following conditions are met is longer than the time indicated, judge as NG.

Judgment Value

Malfunction Criteria	Threshold Value
CAN data from A/C control panel	Freeze

Time Needed for Diagnosis: 2 seconds
Malfunction Indicator Light Illumination: Does not illuminate.

BN:DTC U1235 LOST COMMUNICATION WITH EyeSight

NOTE:
Refer to “LAN SYSTEM (DIAGNOSTICS)” for diagnostic procedure. <Ref. to LAN(diag)-2, Basic Diagnostic Procedure.>

1. OUTLINE OF DIAGNOSIS

- Detect malfunction of CAN communication.
- Judge as NG when CAN communication failure occurs with the stereo camera.

2. EXECUTION CONDITION

Secondary parameters	Execution condition
Turbine shaft speed or D range switch	> 0 rpm ON

3. DIAGNOSTIC METHOD

If the duration of time while the following conditions are met is longer than the time indicated, judge as NG.

Judgment Value

Malfunction Criteria	Threshold Value
CAN data from stereo camera	Lost

Time Needed for Diagnosis: 2 seconds
Malfunction Indicator Light Illumination: Does not illuminate.

BO:DTC U1433 INVALID DATA RECEIVED FROM EyeSight

NOTE:
Refer to “LAN SYSTEM (DIAGNOSTICS)” for diagnostic procedure. <Ref. to LAN(diag)-2, Basic Diagnostic Procedure.>

1. OUTLINE OF DIAGNOSIS

- Detect malfunction of CAN communication.
- Judge as NG when data received from the stereo camera is not normal.

2. EXECUTION CONDITION

Secondary parameters	Execution condition
Turbine shaft speed or D range switch	> 0 rpm ON

3. DIAGNOSTIC METHOD

If the duration of time while the following conditions are met is longer than the time indicated, judge as NG.

Judgment Value

Malfunction Criteria	Threshold Value
CAN data from stereo camera	Freeze

Time Needed for Diagnosis: 2 seconds
Malfunction Indicator Light Illumination: Does not illuminate.

18.Diagnostic Procedure without Diagnostic Trouble Code (DTC)

A: CHECK SHIFT INDICATOR

DIAGNOSIS:

- CAN communication is abnormal with the combination meter.
- Combination meter malfunction

TROUBLE SYMPTOM:

- Shift indicator does not display or remains displayed.
- Shift indicator display does not change.

	Step	Check	Yes	No
1	**CHECK DTC.** Read the DTC relating the TCM using the Subaru Select Monitor.	Is DTC U0155 or U0423 displayed?	Perform the self-diagnosis of combination meter.	Go to step **2**.
2	**CHECK DTC.** Read the DTC relating the TCM using the Subaru Select Monitor.	Are DTCs other than U0155 and U0423 displayed?	Perform the diagnosis according to DTC.	Go to step **3**.
3	**CHECK COMBINATION METER.** Read DTC of combination meter.	Is DTC displayed?	Perform the diagnosis according to DTC.	Go to step **4**.
4	**CHECK TCM.** 1) Operate the + side of the paddle shift switch. 2) Read the data of «Up Switch» using the Subaru Select Monitor.	Does it change between ON and OFF according to the operation?	Go to step **5**.	Check for poor contact between TCM and paddle shift UP switch, and repair the defective part.
5	**CHECK TCM.** 1) Operate the – side of the paddle shift switch. 2) Read the data of «Down Switch» using the Subaru Select Monitor.	Does it change between ON and OFF according to the operation?	Go to step **6**.	Check for poor contact between TCM and paddle shift down switch, and repair the defective part.
6	**CHECK TCM.** 1) Turn the ignition switch OFF, then turn it ON again. 2) Shift the select lever to manual mode. 3) Read the data of «Shift step in Manu. mode» using the Subaru Select Monitor.	Is “1” displayed?	Go to step **7**.	Perform the diagnosis according to DTC P0951. <Ref. to CVT(diag)-100, DTC P0951 AUTO SHIFT MANUAL CONTROL CIRCUIT RANGE/ PERFORMANCE, Diagnostic Procedure with Diagnostic Trouble Code (DTC).>
7	**CHECK TCM.** 1) Shift up the select lever. 2) Read the data of «Shift step in Manu. mode» using the Subaru Select Monitor.	Is “2” displayed?	Current condition is normal.	Replace the TCM. <Ref. to CVT(TR690)-126, Transmission Control Module (TCM).>

19.Diagnostics with Phenomenon

A: INSPECTION

Symptoms	Faulty parts
Engine stalls when driving in “D” or “R” range, or selecting “N” → “D”, “N” → “R”.	• Control valve • Engine control system
While driving in “D” range, vibration occurs immediately before the stop or engine stalls.	• Control valve • Torque converter
Vehicle cannot shift while driving in “D” range.	• Control valve • TCM • Shift mechanism • Power supply system
Excessive shock when selecting “N” → “D”, and “N” → “R”.	• Control valve • TCM • F&R clutch pack • ATF deterioration or lack
Excessive shock at standing start in “D” range.	• Control valve • TCM • F&R clutch pack • ATF deterioration or lack
Engine speed increases abruptly during driving in “D” or “R” range.	• Control valve • Secondary pressure sensor • F&R clutch pack • ATF deterioration or lack
Vehicle can not start when depressing the accelerator pedal in “D” or “R” range, or acceleration is very poor. (without abrupt engine increase)	• Control valve • F&R clutch pack • Shift mechanism • Parking mechanism • Engine control system • Power supply system
Shift indicator in combination meter displays the position which differs from select lever position.	• Inhibitor switch • Select cable related • Combination meter
Manual mode enters even though the select lever and paddle shift switch is not operated.	• Manual mode switch • Paddle shift switch • Select lever • TCM
Engine speed increases abruptly in “D” or “R” range, vehicle can not start.	• F&R clutch pack • Select cable related
Manual mode can not be set	• Select lever • TCM

MANUAL TRANSMISSION AND DIFFERENTIAL

6MT(TY75)

		Page
1.	General Description	2
2.	Transmission Gear Oil	24
3.	Manual Transmission Assembly	26
4.	Transmission Mounting System	37
5.	Oil Seal	41
6.	Differential Side Retainer Oil Seal	43
7.	Switches and Harness	46
8.	Air Breather Hose	49
9.	Preparation for Overhaul	50
10.	Transfer Case and Extension Case Assembly	51
11.	Transfer Drive Gear	62
12.	Transfer Driven Gear	65
13.	Center Differential	69
14.	Shift Link Assembly	71
15.	Transmission Case	84
16.	Main Shaft Assembly	91
17.	Drive Pinion Shaft Assembly	106
18.	Front Differential Assembly	125
19.	Reverse Idler Gear	137
20.	Shifter Fork and Rod	149
21.	General Diagnostic Table	157

1. General Description

A: SPECIFICATION

1. MANUAL TRANSMISSION AND DIFFERENTIAL

Type			6-forward speeds and 1-reverse (all stage with synchromesh)
Transmission gear ratio		1st	3.454
		2nd	1.947
		3rd	1.296
		4th	0.972
		5th	0.780
		6th	0.666
		Rev.	3.636
Front reduction gear	Final	Type of gear	Hypoid
		Gear ratio	4.111
Rear reduction gear	Transfer	Type of gear	Helical
		Gear ratio	1.000
Front differential	Type and number of gear		Straight bevel gear (bevel pinion: 2, bevel gear: 2)
Center differential	Type and number of gear		Straight bevel gear (bevel pinion: 2, bevel gear: 2, viscous coupling)
Transmission gear oil capacity			3.3 L (3.5 US qt, 2.9 Imp qt)

2. TRANSMISSION GEAR OIL

CAUTION:
If an alternative transmission gear oil is used, you may not have expected functionality and performance.

Recommended oil:
SUBARU GEAR OIL EXTRA MT

Alternative:
GL-5 (75W-90)

B: COMPONENT

1. TRANSMISSION CASE

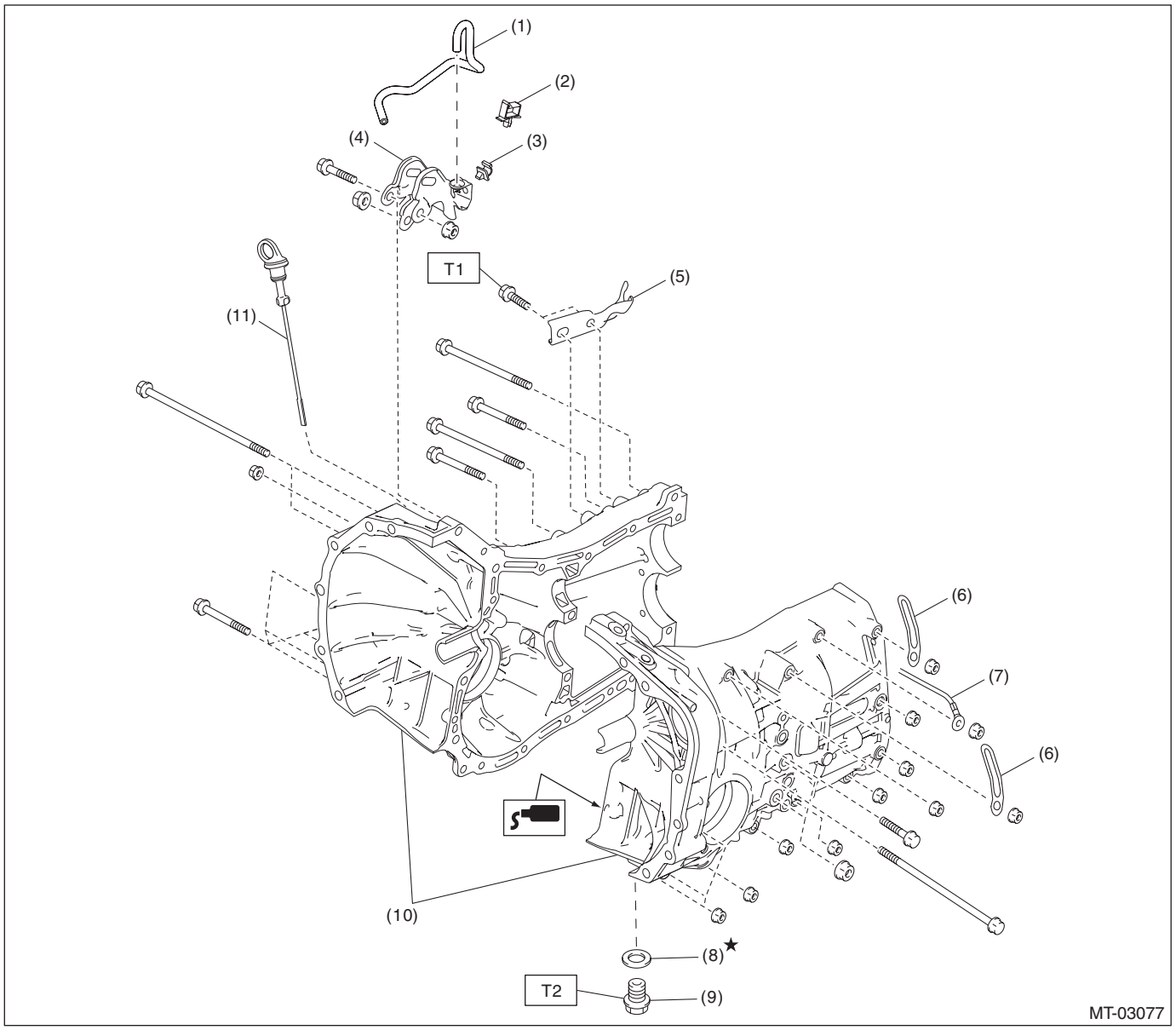

(1)	Air breather hose	(7)	Transmission radio ground cord
(2)	Clamp	(8)	Gasket
(3)	Hose clamp	(9)	Drain plug
(4)	Pitching stopper bracket	(10)	Transmission case ASSY
(5)	Select bracket	(11)	Oil level gauge
(6)	Harness clip		

Tightening torque: N·m (kgf-m, ft-lb)

T1: 18 (1.8, 13.3)

T2: 44 (4.5, 32.5) (aluminum gasket, silver)

70 (7.1, 51.6) (copper gasket, brown)

70 (7.1, 51.6) (metal gasket, black)

Transmission case tightening torque

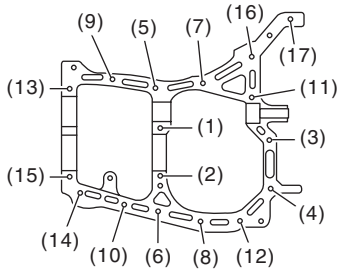

Bolt No.	Bolt size mm	Tightening torque: N·m (kgf-m, ft-lb)
(5) — (15)	8	25 (2.5, 18.4)
(1) — (4) (16), (17)	10	40 (4.1, 29.5)

2. DRIVE PINION SHAFT ASSEMBLY

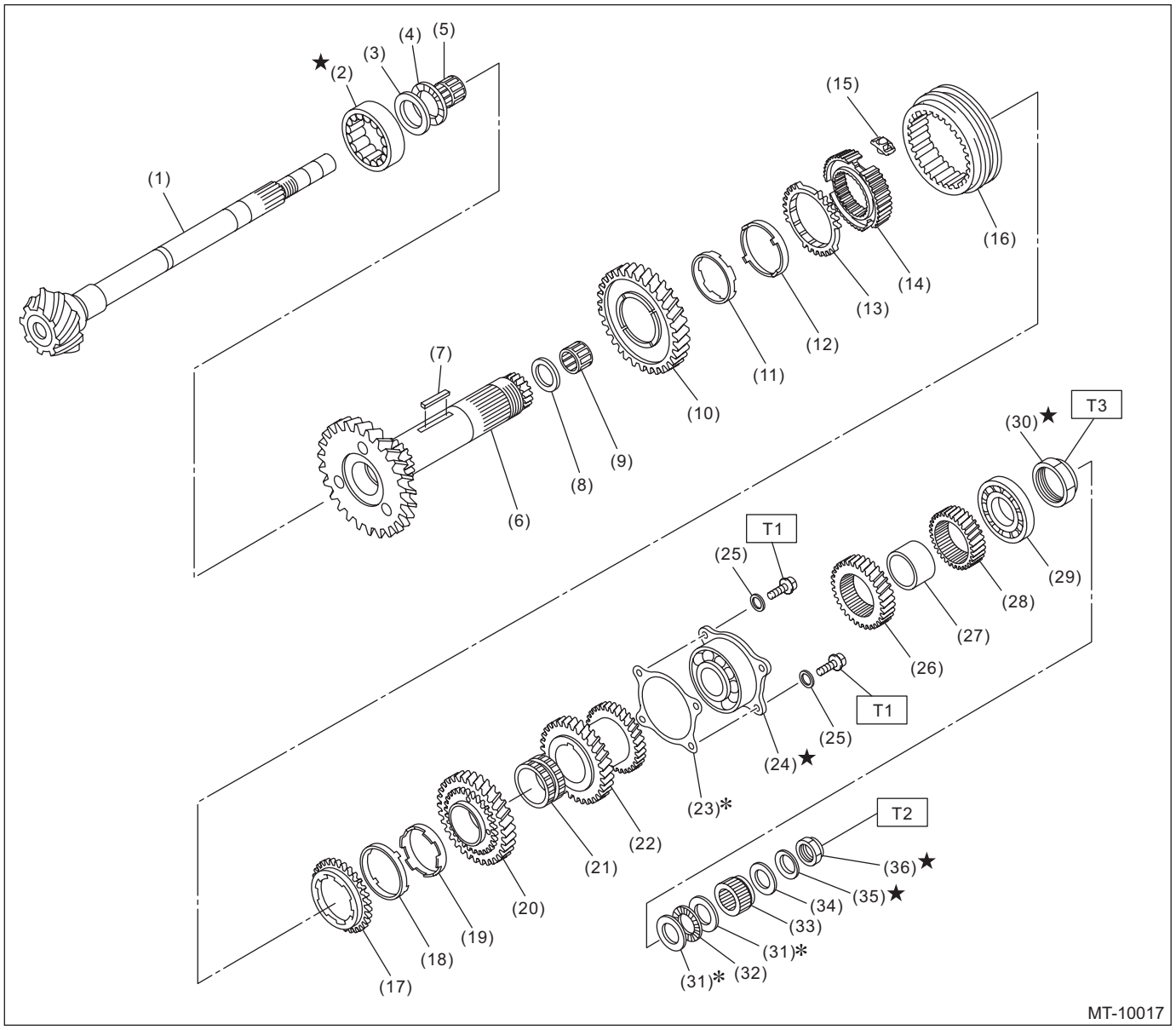

(1) Drive pinion shaft
(2) Roller bearing
(3) Washer
(4) Thrust bearing
(5) Needle bearing
(6) Driven shaft
(7) Key
(8) Drive pinion collar
(9) Needle bearing
(10) 1st driven gear
(11) 1st inner baulk ring
(12) 1st synchro cone
(13) 1st outer baulk ring
(14) 1st-2nd synchronizer hub
(15) 1st-2nd shifting insert
(16) 1st-2nd coupling sleeve
(17) 2nd outer baulk ring
(18) 2nd synchro cone
(19) 2nd inner baulk ring
(20) 2nd driven gear
(21) 2nd driven gear bushing
(22) 3rd-4th driven gear
(23) Drive pinion shim
(24) Double ball bearing
(25) Spring washer
(26) 5th driven gear
(27) Drive pinion spacer
(28) 6th driven gear
(29) Ball bearing
(30) Lock nut
(31) Adjusting washer
(32) Thrust bearing
(33) Differential bevel gear sleeve
(34) Washer
(35) Lock washer
(36) Lock nut

Tightening torque: N·m (kgf-m, ft-lb)
T1: 30 (3.1, 22.1)
T2: 126 (12.8, 92.9)
T3: 440 (44.9, 324.5)

3. MAIN SHAFT ASSY

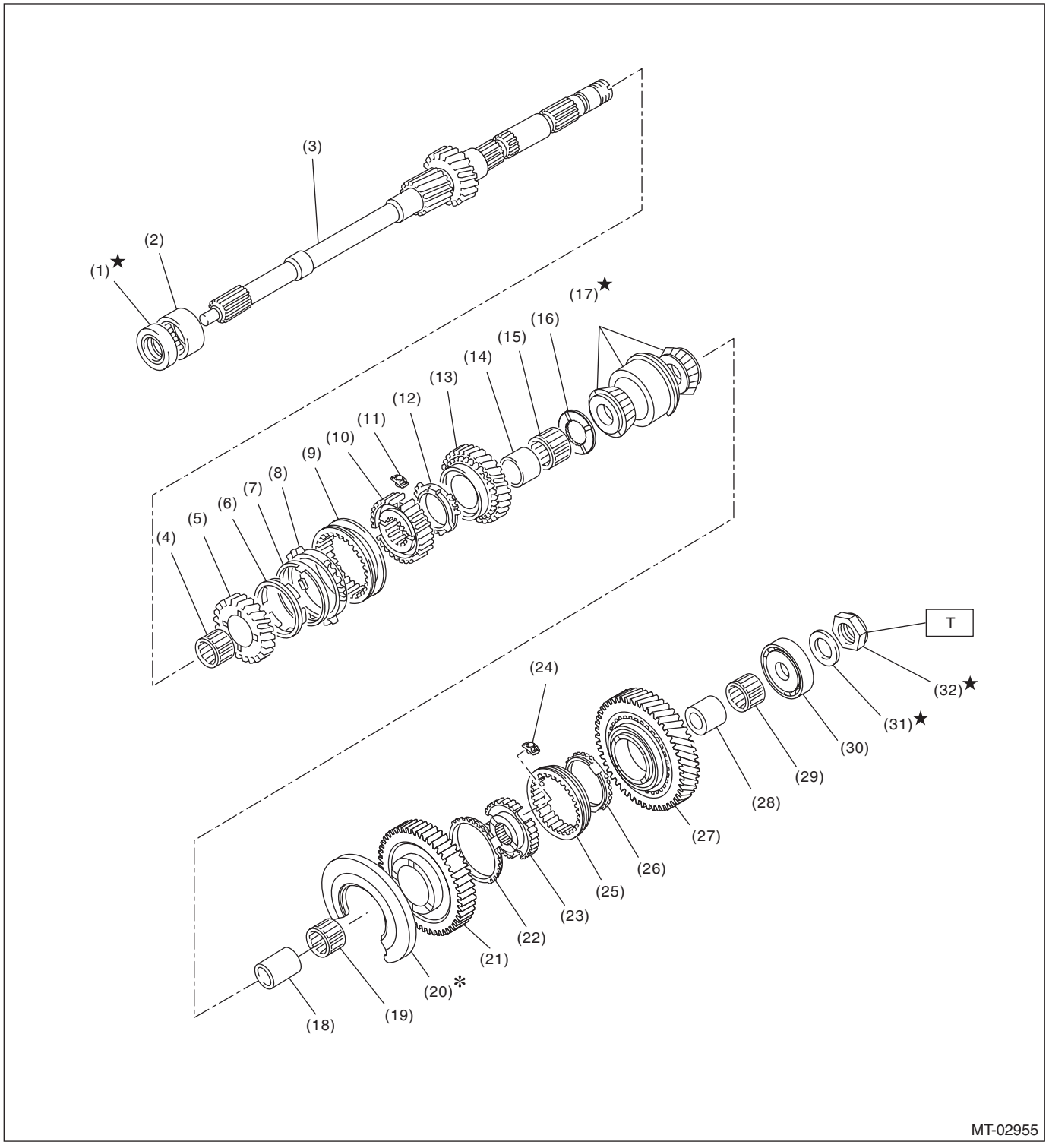

(1) Oil seal
(2) Needle bearing
(3) Main shaft
(4) 3rd needle bearing
(5) 3rd drive gear
(6) 3rd inner baulk ring
(7) 3rd synchro cone
(8) 3rd outer baulk ring
(9) 3rd-4th coupling sleeve
(10) 3rd-4th synchronizer hub
(11) 3rd-4th shifting insert
(12) 4th baulk ring
(13) 4th drive gear
(14) 4th needle bearing race
(15) 4th needle bearing
(16) 4th gear thrust washer
(17) Double taper roller bearing
(18) 5th needle bearing race
(19) 5th needle bearing
(20) Main shaft rear plate
(21) 5th drive gear
(22) 5th baulk ring
(23) 5th-6th synchronizer hub
(24) 5th-6th shifting insert
(25) 5th-6th coupling sleeve
(26) 6th baulk ring
(27) 6th drive gear
(28) 6th needle bearing race
(29) 6th needle bearing
(30) Ball bearing
(31) Lock washer
(32) Lock nut

Tightening torque: N·m (kgf-m, ft-lb)
T: 160 (16.3, 118.0)

4. REVERSE IDLER GEAR ASSY

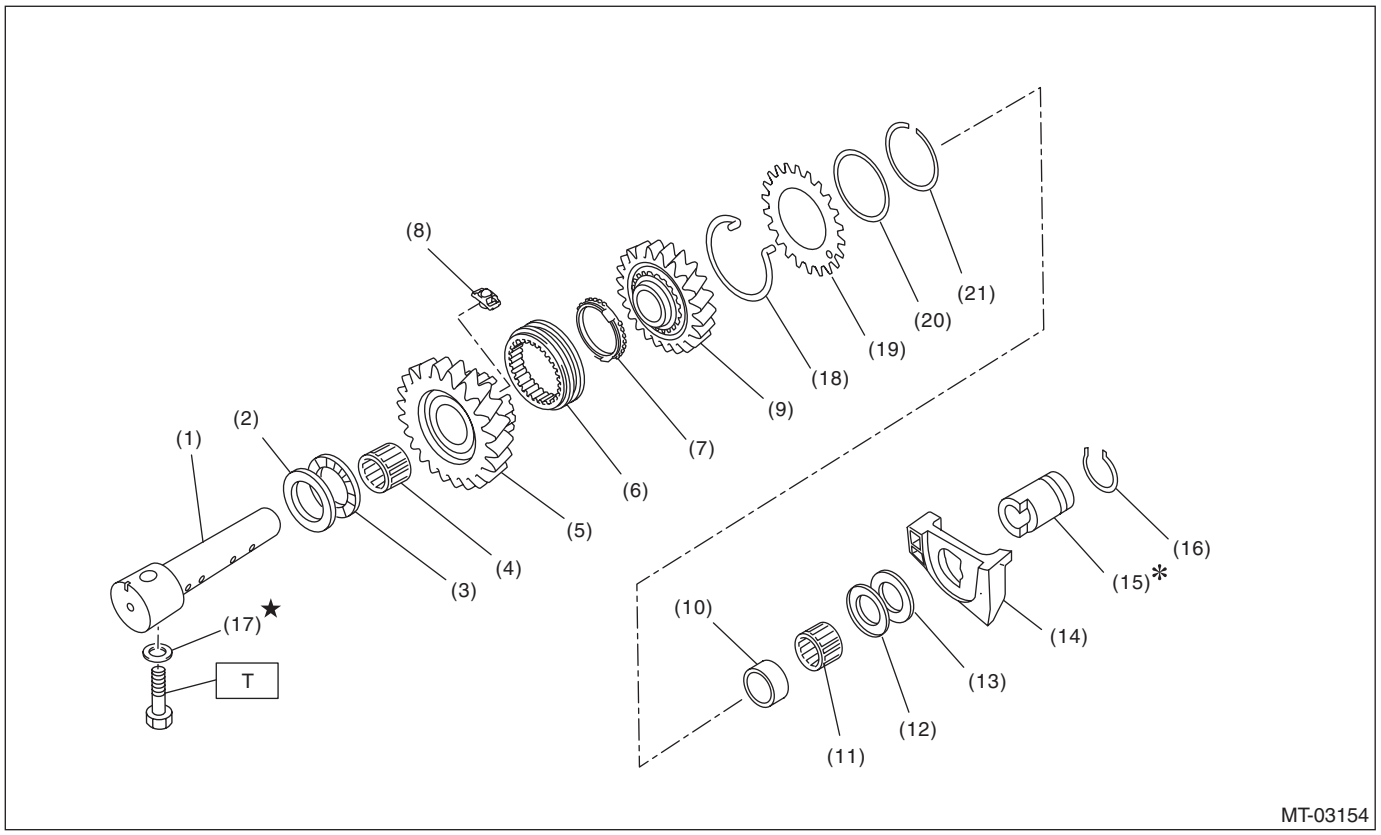

(1) Reverse idler gear shaft
(2) Reverse idler gear washer
(3) Thrust bearing
(4) Needle bearing
(5) Reverse idler gear No. 2
(6) Reverse coupling sleeve
(7) Reverse baulk ring
(8) Reverse shifting insert
(9) Reverse idler gear
(10) Reverse idler gear collar
(11) Needle bearing
(12) Thrust bearing
(13) Reverse idler gear washer
(14) Oil case guide
(15) Reverse idler gear bushing
(16) Snap ring
(17) Gasket
(18) Reverse idler spring
(19) Reverse idler sub gear
(20) Friction plate
(21) Snap ring

Tightening torque: N·m (kgf-m, ft-lb)
T: 25 (2.5, 18.4)

5. SHIFTER FORK AND SHIFTER ROD

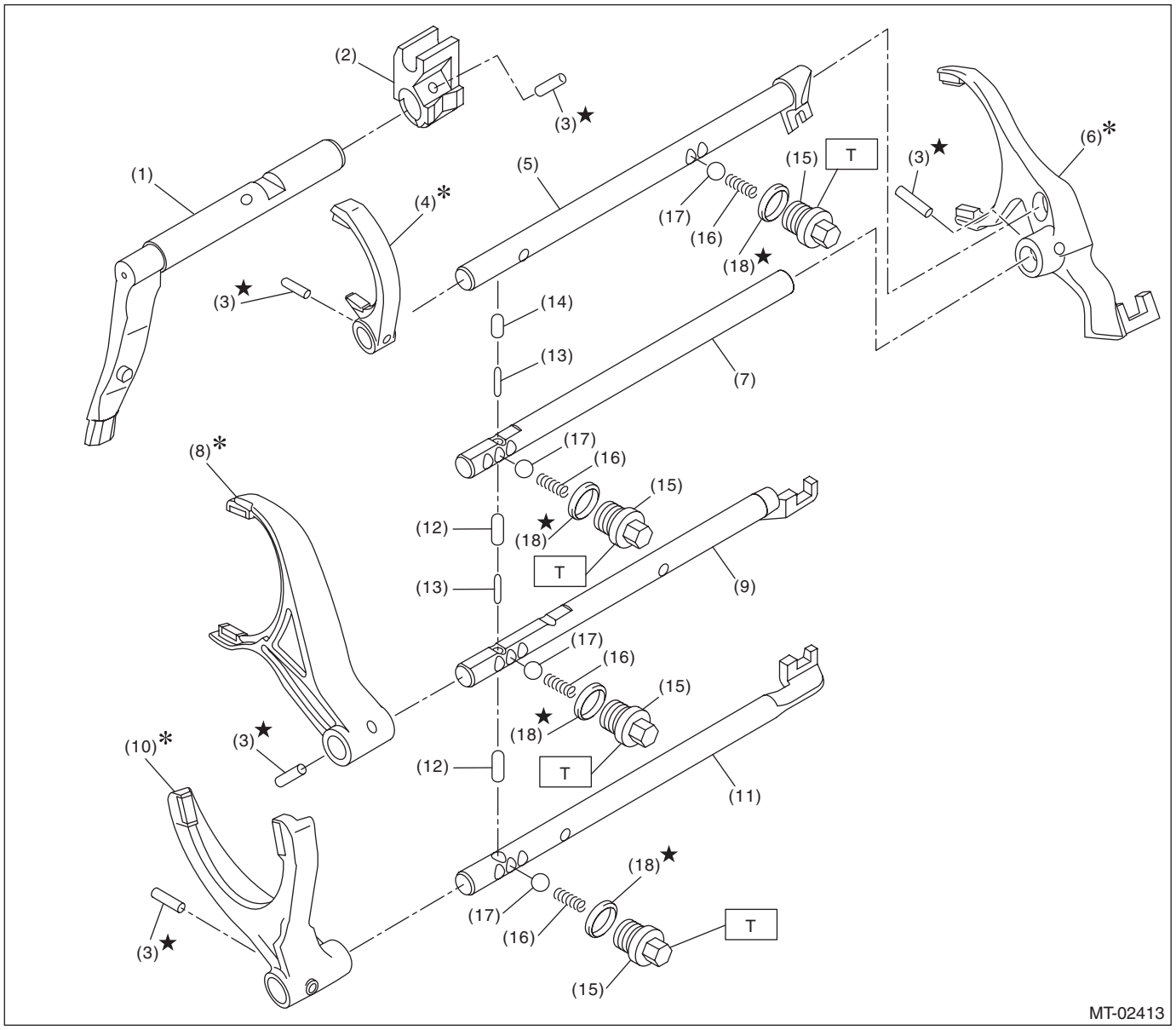

(1) Shifter arm
(2) Selector arm
(3) Straight pin
(4) Reverse shifter fork
(5) Reverse fork rod
(6) 5th-6th shifter fork
(7) 5th-6th fork rod
(8) 3rd-4th shifter fork
(9) 3rd-4th fork rod
(10) 1st-2nd shifter fork
(11) 1st-2nd fork rod
(12) Interlock plunger
(13) Interlock plunger
(14) Interlock plunger
(15) Checking ball plug
(16) Checking ball spring
(17) Check ball
(18) Gasket

Tightening torque: N·m (kgf-m, ft-lb)
T: 20 (2.0, 14.8)

6. TRANSFER CASE AND EXTENSION

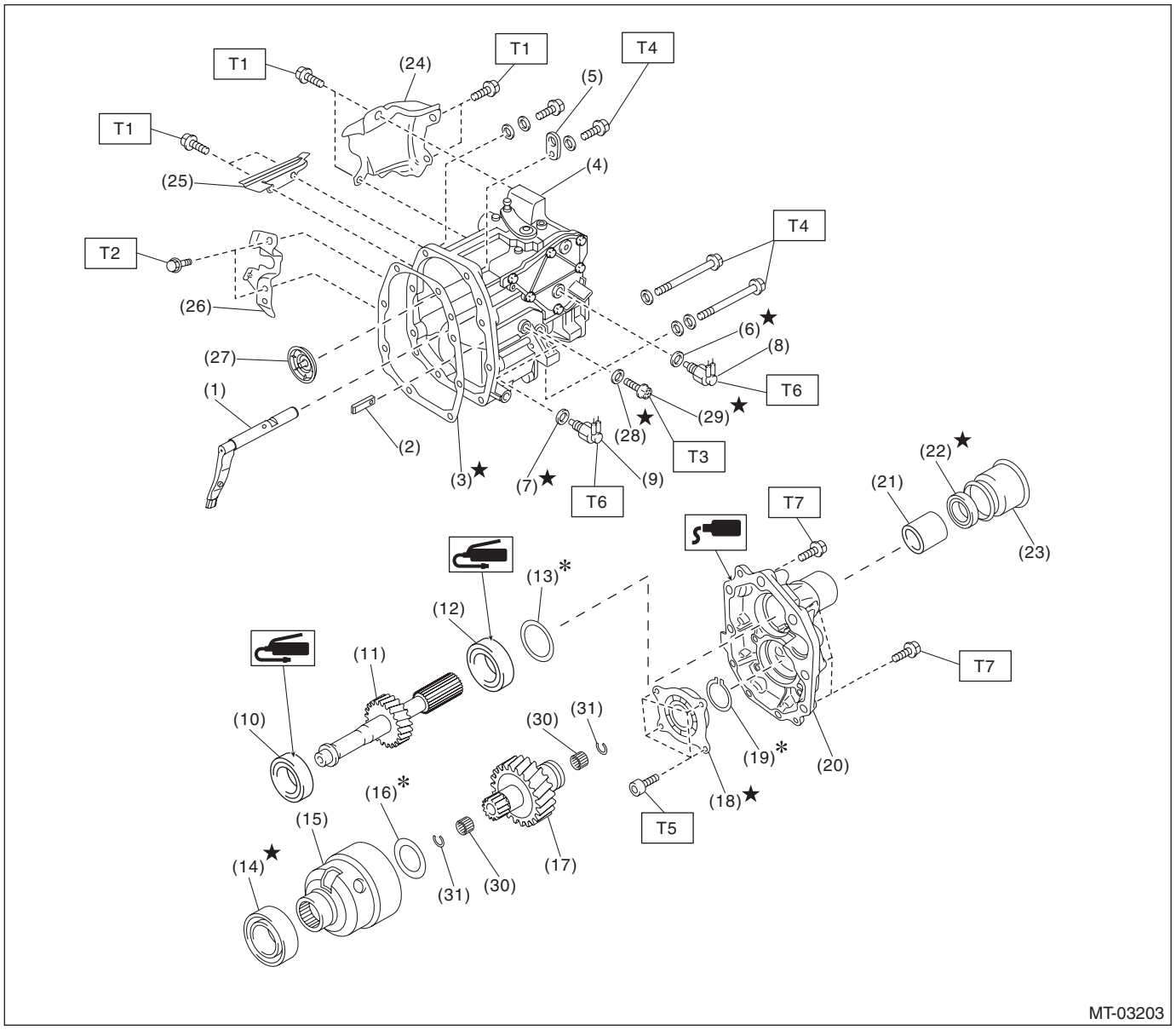

(1) Shifter arm
(2) Interlock plate
(3) Gasket
(4) Transfer case
(5) Transmission hanger
(6) Gasket
(7) Gasket
(8) Neutral position switch
(9) Back-up light switch
(10) Taper roller bearing (transfer case side)
(11) Transfer driven gear
(12) Taper roller bearing (extension case side)
(13) Adjusting washer
(14) Ball bearing
(15) Center differential
(16) Adjusting washer
(17) Transfer drive gear
(18) Ball bearing
(19) Snap ring
(20) Extension case
(21) Bushing
(22) Oil seal
(23) Dust cover
(24) Transfer cover
(25) Dust cover
(26) Shift bracket
(27) Oil guide
(28) Gasket
(29) Precoat bolt
(30) Needle bearing
(31) Snap ring

Tightening torque: N·m (kgf-m, ft-lb)
T1: 15 (1.5, 11.1)
T2: 18 (1.8, 13.3)
T3: 20 (2.0, 14.8)
T4: 24.5 (2.5, 18.1)
T5: 26 (2.7, 19.2)
T6: 32.3 (3.3, 23.8)
T7: 40 (4.1, 29.5)

7. SHIFT LINK ASSEMBLY

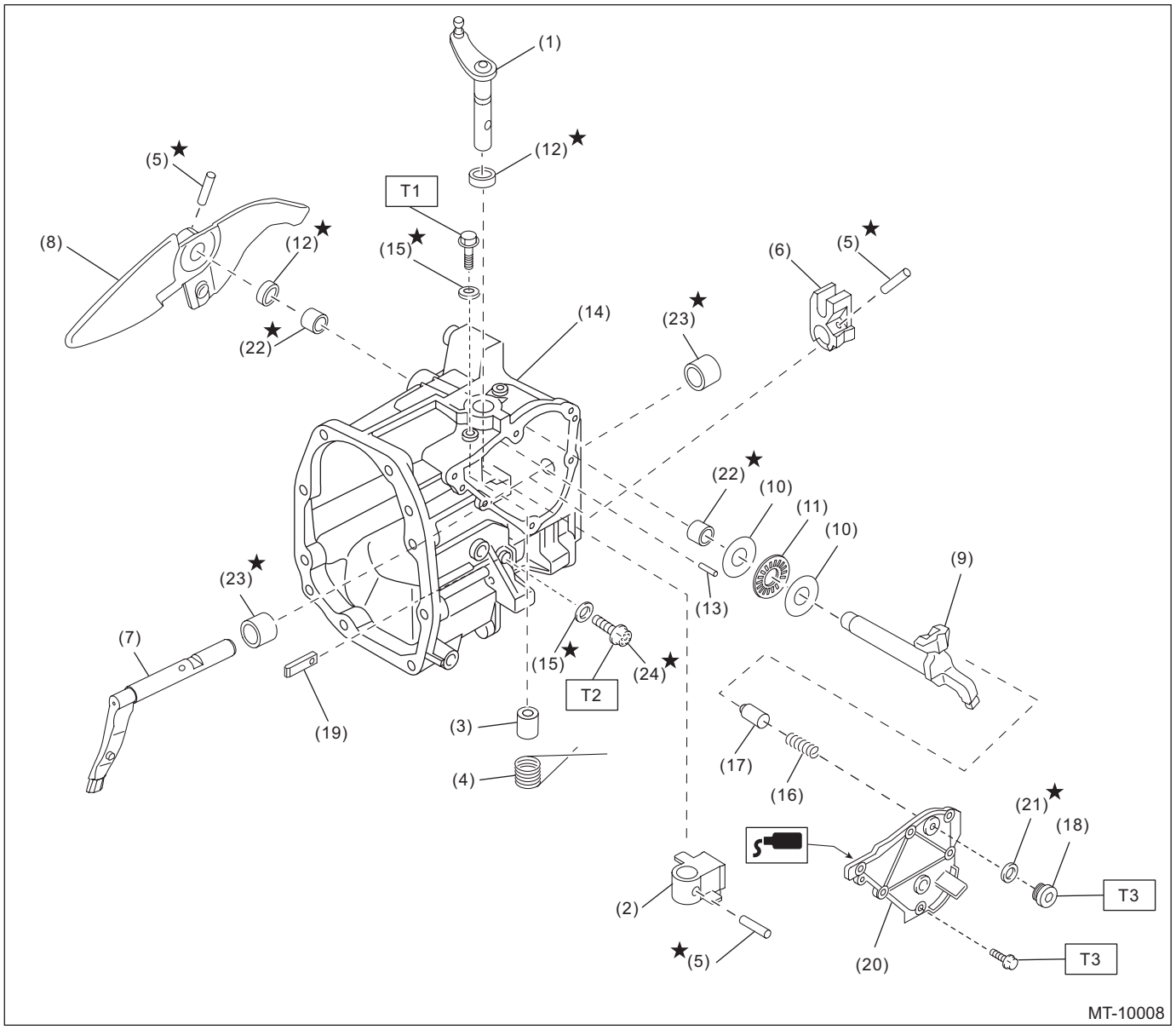

(1) Selector lever COMPL
(2) Selector arm No. 2
(3) Shifter arm collar
(4) Neutral set spring
(5) Straight pin
(6) Selector arm
(7) Shifter arm
(8) Shift lever COMPL
(9) Shifter arm No. 2
(10) Adjusting washer
(11) Thrust bearing
(12) Oil seal
(13) Straight pin
(14) Transfer case
(15) Gasket
(16) Checking ball spring
(17) Shift accent plunger
(18) Seal bolt
(19) Interlock plate
(20) Transmission cover
(21) Seal ring
(22) Needle bearing
(23) Roller bearing
(24) Precoat bolt

Tightening torque: N·m (kgf-m, ft-lb)
T1: 6.4 (0.7, 4.7)
T2: 20 (2.0, 14.8)
T3: 25 (2.5, 18.4)

8. FRONT DIFFERENTIAL

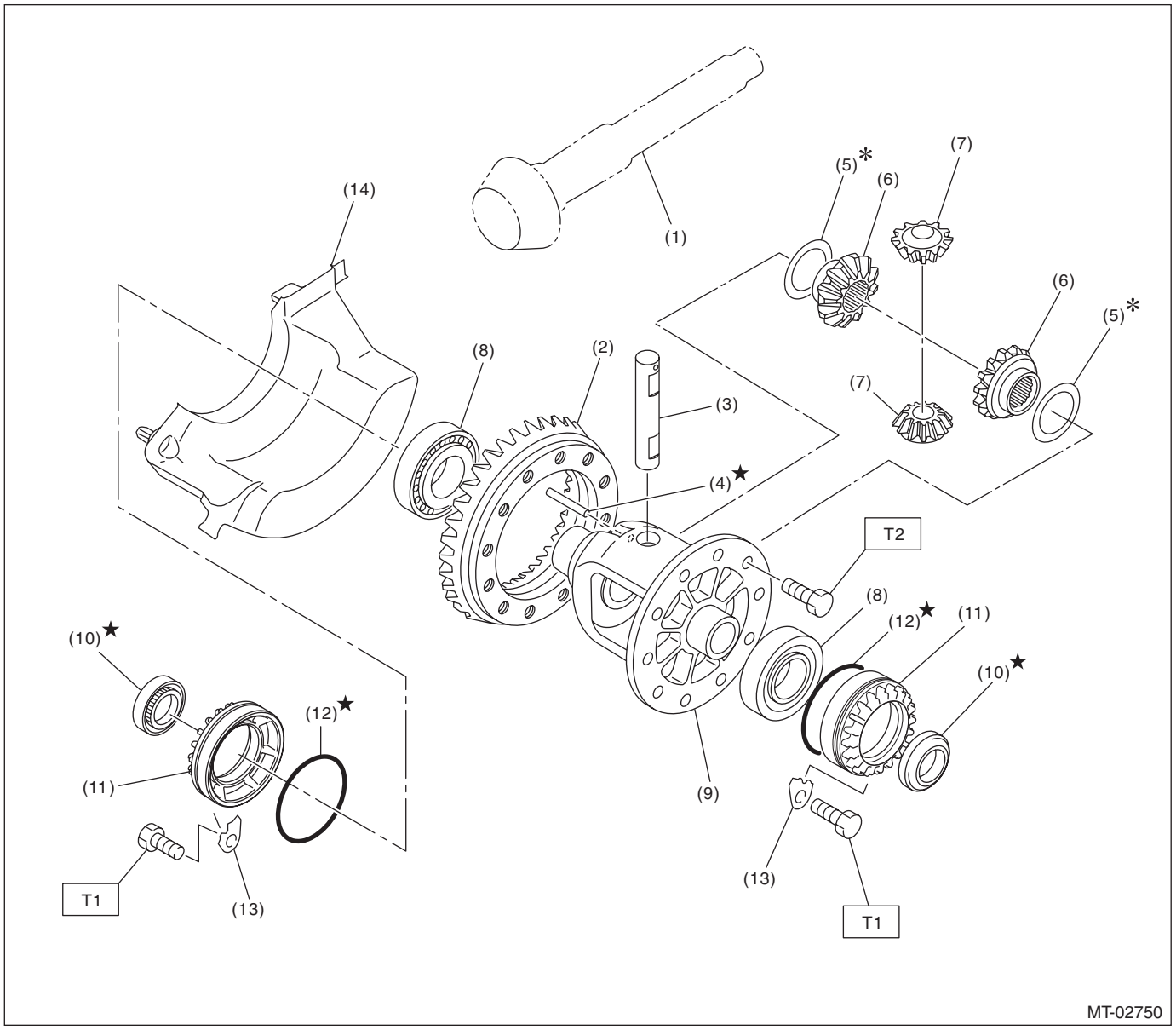

(1) Drive pinion shaft
(2) Hypoid driven gear
(3) Pinion shaft
(4) Straight pin
(5) Adjusting washer
(6) Differential bevel gear
(7) Differential bevel pinion
(8) Taper roller bearing
(9) Differential case
(10) Oil seal
(11) Differential side retainer
(12) O-ring
(13) Retainer lock plate
(14) Front oil guide

Tightening torque: N·m (kgf-m, ft-lb)
T1: 25 (2.5, 18.4)
T2: 62 (6.3, 45.7)

9. TRANSMISSION MOUNTING

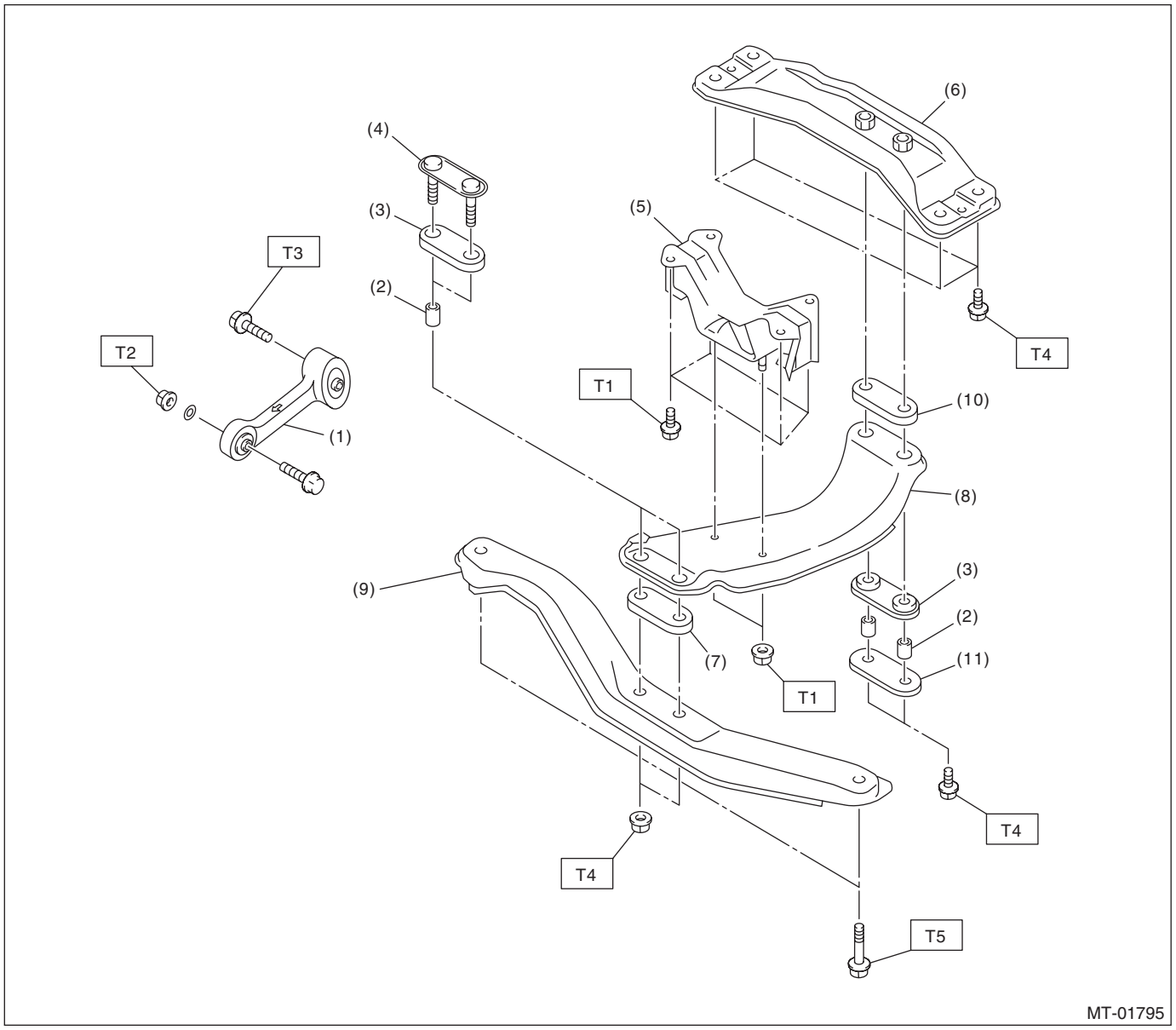

(1)	Pitching stopper	(7)	Upper cushion rubber	***Tightening torque: N·m (kgf-m, ft-lb)***
(2)	Spacer	(8)	Center crossmember	***T1: 35 (3.6, 25.8)***
(3)	Lower cushion rubber	(9)	Front crossmember	***T2: 50 (5.1, 36.9)***
(4)	Front plate	(10)	Rear cushion rubber	***T3: 58 (5.9, 42.8)***
(5)	Transmission cushion rubber	(11)	Rear plate	***T4: 70 (7.1, 51.6)***
(6)	Rear crossmember			***T5: 140 (14.3, 103.3)***

C: CAUTION

- Remove contamination including dirt and corrosion before removal, installation or disassembly.
- Keep the disassembled parts in order and protect them from dust and dirt.
- Before removal, installation or disassembly, be sure to clarify the failure. Avoid unnecessary removal, installation, disassembly and replacement.
- When disassembling the case and other light alloy parts, disassemble by using a plastic hammer. Do not pry apart with screwdrivers or other tools.
- Vehicle components are extremely hot after driving. Be wary of receiving burns from heated parts.
- Use SUBARU genuine gear oil, grease or equivalent. Do not mix gear oil, grease, etc. of different grades or manufacturers.
- Be sure to tighten fasteners including bolts and nuts to the specified torque.
- Place shop jacks or rigid racks at the specified points.
- Apply gear oil onto sliding or revolving surfaces before installation.
- Replace deformed or damaged snap rings with new parts.
- Before installing O-rings or oil seals, apply sufficient amount of gear oil to avoid damage and deformation.
- Be careful not to incorrectly install or fail to install O-rings, snap rings and other such parts.
- Before securing a part on a vise, place cushioning material such as wood blocks, aluminum plate, or cloth between the part and the vise.
- Avoid damaging the mating surface of the case.
- Before applying liquid gasket, completely remove and clean the old liquid gasket.
- Be careful of handling the oil seal, O-ring and gasket. If the contact surface of them is damaged, oil leakage may occur.
- When pressing-in the oil seal, make sure that the oil seal lip portion and outer surface are not damaged or tilted.
- When replacing the taper roller bearing, replace the outer race and inner race as a set.
- When replacing the hypoid gear, replace the hypoid driven gear and drive pinion shaft as a set.
- Replace the bolts if the seating surface or the thread surface is excessively rusted.

D: PREPARATION TOOL

1. SPECIAL TOOL

ILLUSTRATION	TOOL NUMBER	DESCRIPTION	REMARKS
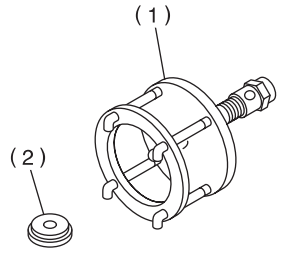 ST-899524100	899524100	PULLER SET	Used for removing the front differential taper roller bearing. (1) Puller (2) Cap
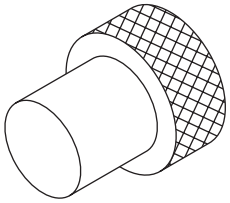 ST-399780104	399780104	WEIGHT	Used for adjusting preload on the front differential taper roller bearing.
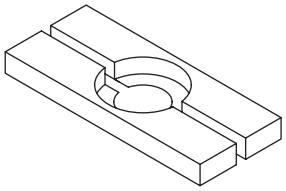 ST-498077000	498077000	REMOVER	• Used for removing the roller bearing and washer of the drive pinion shaft assembly. • Used for removing the transfer driven gear taper roller bearing.
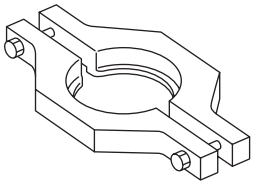 ST-498077600	498077600	REMOVER	Used for removing the center differential ball bearing.

ILLUSTRATION	TOOL NUMBER	DESCRIPTION	REMARKS
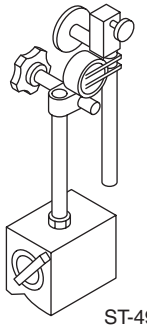 ST-498247001	498247001	MAGNET BASE	• Used for measuring the backlash of differential bevel pinion gear and hypoid driven gear. • Used together with DIAL GAUGE (498247100).
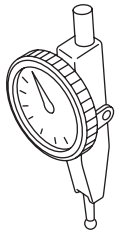 ST-498247100	498247100	DIAL GAUGE	• Used for measuring the backlash of differential bevel pinion gear and hypoid driven gear. • Used together with MAGNET BASE (498247001).
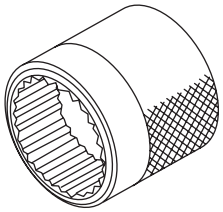 ST18667AA020	18667AA020	HOLDER	• Used for removing and installing the drive pinion shaft assembly lock nut. • Used for measuring the backlash of hypoid driven gear. • Used for adjusting preload on the front differential taper roller bearing.
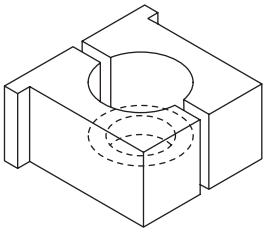 ST-498937000	498937000	TRANSMISSION HOLDER	Used for removing and installing the main shaft assembly lock nut.
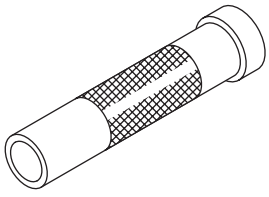 ST-499277100	499277100	BUSHING 1-2 INSTALLER	• Used for installing the drive pinion shaft assembly washer. • Used for installing the front differential taper roller bearing inner race.

ILLUSTRATION	TOOL NUMBER	DESCRIPTION	REMARKS
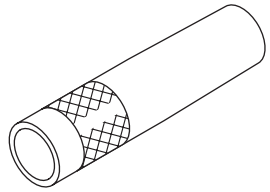 ST-499277200	499277200	INSTALLER	• Used for installing the 3rd-4th driven gear, 5th driven gear, ball bearing and 6th driven gear. • Used for installing the drive pinion shaft assembly washer.
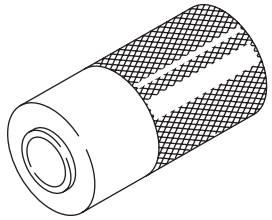 ST-927640000	927640000	INSTALLER	Used for installing the taper roller bearing (transfer case side) of transfer driven gear.
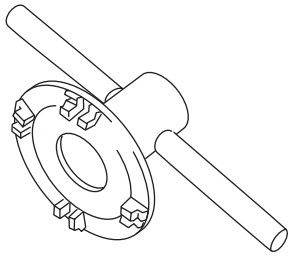 ST18630AA010	18630AA010	WRENCH COMPL RETAINER	• Used for removing and installing the differential side retainer. • Used for adjusting preload on the front differential taper roller bearing. • Used for adjusting the backlash of hypoid driven gear. • WRENCH COMPL RETAINER (499787000) can also be used.
 ST18722AA010	18722AA010	REMOVER	Used for removing the 5th drive gear and 6th drive gear.
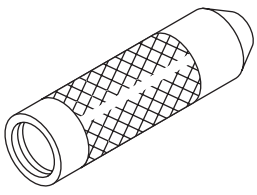 ST-499877000	499877000	RACE 4-5 INSTALLER	• Used for installing the 4th, 5th and 6th drive gear needle bearing races and the main shaft assembly double taper roller bearings. • Used together with REMOVER (899714110).

ILLUSTRATION	TOOL NUMBER	DESCRIPTION	REMARKS
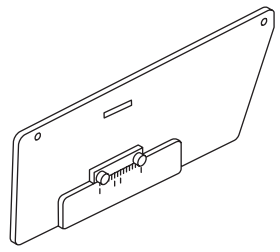 ST-499917500	499917500	DRIVE PINION GAUGE ASSY	Used for adjusting the drive pinion shaft assembly shim.
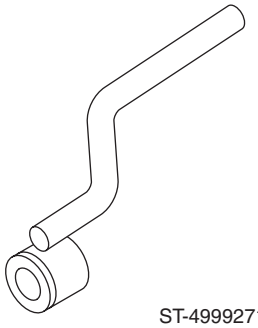 ST-499927100	499927100	HANDLE	Used for backlash measurement of the hypoid driven gear and preload adjustment of the front differential taper roller bearing.
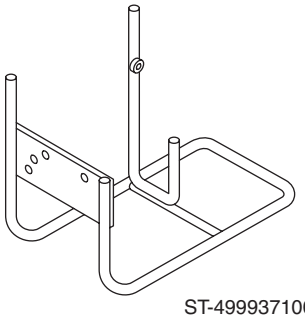 ST-499937100	499937100	TRANSMISSION STAND	Used for disassembling and assembling the transmission.
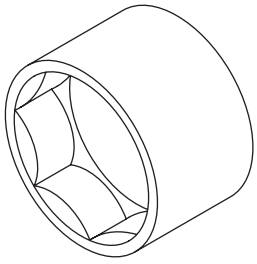 ST-499987003	499987003	SOCKET WRENCH (35)	Used for removing and installing the main shaft assembly lock nut.
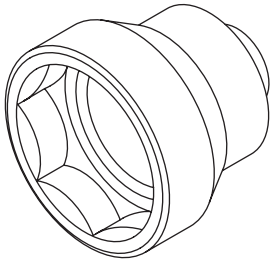 ST-499987300	499987300	SOCKET WRENCH (50)	Used for removing and installing the driven shaft lock nut.

ILLUSTRATION	TOOL NUMBER	DESCRIPTION	REMARKS
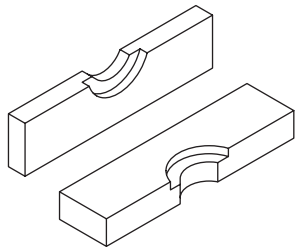 ST-899714110	899714110	REMOVER	Used for removing and installing the parts of main shaft assembly and driven shaft.
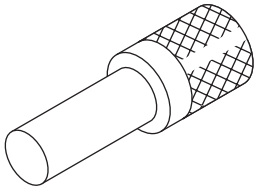 ST-899864100	899864100	REMOVER	• Used for removing the parts of the main shaft assembly. • Used for removing the transfer driven gear taper roller bearing (transfer case side) and for installing it (extension case side). • Used for removing the transfer drive gear ball bearing. • Used for installing the transfer case taper roller bearing.
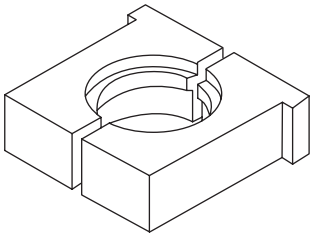 ST18680AA020	18680AA020	HOLDER	• Used for removing and installing the drive pinion shaft assembly lock nut. • Used for removing and installing the driven shaft lock nut.
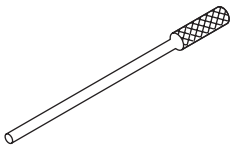 ST-899904100	899904100	STRAIGHT PIN REMOVER	Used for removing and installing the straight pin.
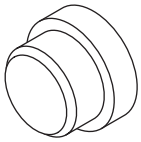 ST-398497701	398497701	SEAT	• Used for installing the front differential taper roller bearing. • Used together with BUSHING 1-2 INSTALLER (499277100).

ILLUSTRATION	TOOL NUMBER	DESCRIPTION	REMARKS
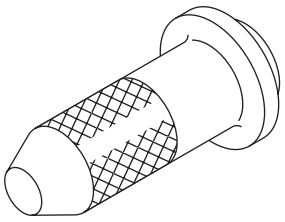 ST-498057300	498057300	INSTALLER	Used for installing the extension case oil seal.
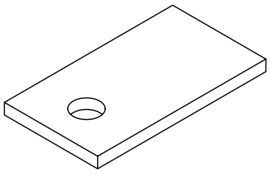 ST-498255400	498255400	PLATE	Used for measuring the hypoid driven gear backlash.
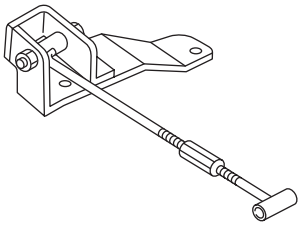 ST41099AC000	41099AC000	ENGINE SUPPORT ASSY	Used for supporting engine.
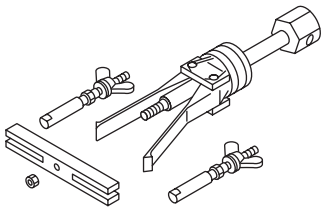 ST-398527700	398527700	PULLER ASSY	• Used for removing the extension case oil seal. • Used for removing the front differential taper roller bearing outer race. • Used for removing the differential side retainer oil seal.
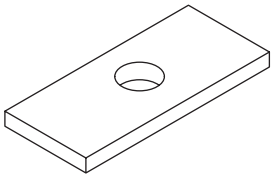 ST-398643600	398643600	GAUGE	Used for adjusting the extension end play.

ILLUSTRATION	TOOL NUMBER	DESCRIPTION	REMARKS
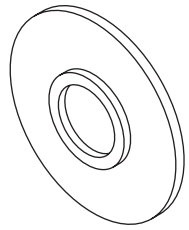 ST-398177700	398177700	INSTALLER	• Used for installing the transfer drive gear ball bearing. • Used for installing the 4th drive gear needle bearing race.
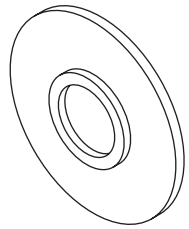 ST-498175500	498175500	INSTALLER	Used for installing the taper roller bearing of transfer driven gear (extension case side).
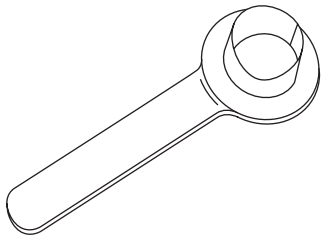 ST28399SA010	28399SA010	OIL SEAL PROTECTOR	Used for protecting the oil seal from damage when inserting the front drive shaft.
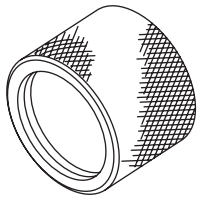 ST18675AA000	18675AA000	DIFFERENTIAL SIDE OIL SEAL INSTALLER	Used for installing the differential side retainer oil seal.
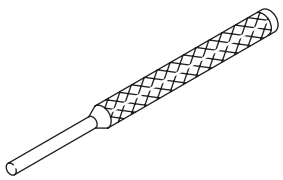 ST-398791700	398791700	REMOVER	Used for removing and installing the straight pin.

ILLUSTRATION	TOOL NUMBER	DESCRIPTION	REMARKS
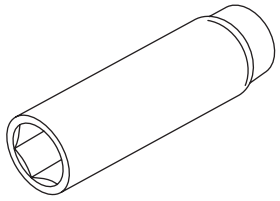 ST18662AA010	18662AA010	SOCKET (27)	• Used for removing and installing the drive pinion shaft assembly lock nut. • Used for measuring the starting torque of the drive pinion shaft assembly.
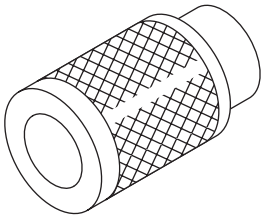 ST-899754112	899754112	PRESS	• Used for removing driven shaft parts. • Used to install the main shaft assembly ball bearing.
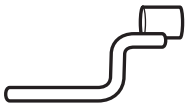 ST18631AA000	18631AA000	HANDLE	Used for installing transfer case assembly and extension case assembly.
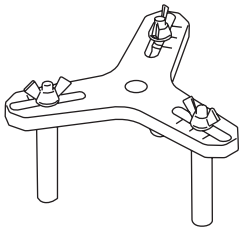 ST18762AA001	18762AA001	COMPRESSOR SPECIAL TOOL	• Used for removing the 1st driven gear. • COMPRESSOR SPECIAL TOOL (18762AA000) can also be used.
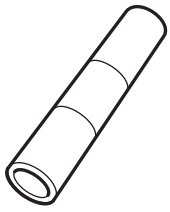 ST18654AA000	18654AA000	INSTALLER	Used for installing the 2nd driven gear bushing.

ILLUSTRATION	TOOL NUMBER	DESCRIPTION	REMARKS
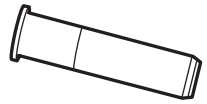 ST18657AA000	18657AA000	INSTALLER	Used for installing the transfer case oil seal.
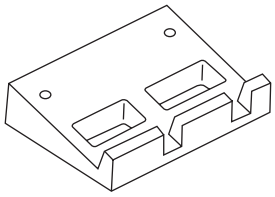 ST-498267200	498267200	CYLINDER HEAD TABLE	Used for removing and installing the roller bearing of the transfer case.
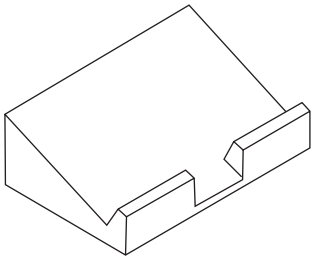 ST-498267300	498267300	CYLINDER HEAD TABLE	Used for removing and installing the roller bearing of the transfer case.
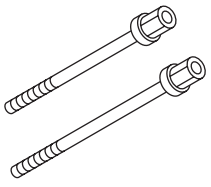 ST18763AA000	18763AA000	COMPRESSOR SHAFT	Used for removing and installing the needle bearing of the transfer case.
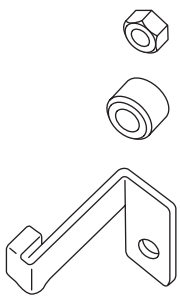 ST-498277200	498277200	STOPPER SET	• Used for installing the needle bearing of the transfer case. • Use only the spacer.

2. GENERAL TOOL

TOOL NAME	REMARKS
Circuit tester	Used for measuring resistance, voltage and current.
TORX® bit T70	Used for removing and installing the drain plug.
Spring pin remover	Used for removing and installing the straight pin. (3 — 3.3 mm)
Socket driver (TORX® 45 size, tamper resistant type)	Used for removing and installing interlock plate.

2. Transmission Gear Oil

A: INSPECTION

1) Park the vehicle on a level surface.
2) Turn the ignition switch to OFF, and wait until the engine cools.
3) Remove the oil level gauge and wipe it clean.
4) Reinsert the oil level gauge all the way. Be sure that the oil level gauge is correctly inserted in the proper direction.
5) Pull out the oil level gauge again, and check the oil level. If it is below the lower level, check for oil leakage and add oil through the oil level gauge hole to bring the level up to the upper level.

CAUTION:
The length of the oil level gauge varies depending on models and destinations. Make sure to use the appropriate oil level gauge.

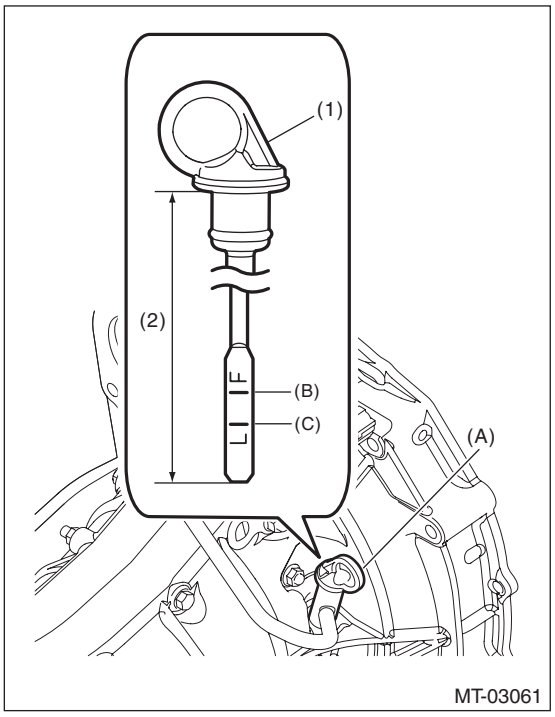

(A) Oil level gauge
(B) Upper level
(C) Lower level

(1) Gray
(2) 195.9 mm (7.71 in)

B: REPLACEMENT

1) Pull out the oil level gauge.
2) Lift up the vehicle.
3) Using the TORX® bit T70, remove the drain plug, and drain the transmission gear oil completely.

CAUTION:
• Immediately after the vehicle has been running or after idling for a long time, the gear oil will be hot. Be careful not to receive burns.
• Be careful not to spill the gear oil on the exhaust pipe, to prevent emission of smoke or causing a fire. If gear oil is spilt, wipe it off completely.
4) Attach the drain plug using TORX® bit T70.

NOTE:
- Install the drain plug after draining transmission gear oil.
- Use a new gasket.

Tightening torque:
44 N·m (4.5 kgf-m, 32.5 ft-lb) (aluminum gasket, silver)
70 N·m (7.1 kgf-m, 51.6 ft-lb) (copper gasket, brown)
70 N·m (7.1 kgf-m, 51.6 ft-lb) (metal gasket, black)

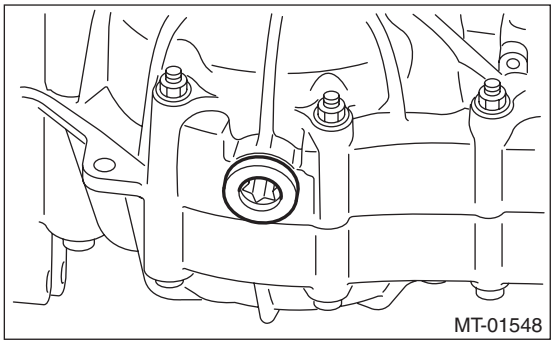

5) Lower the vehicle.
6) Fill with transmission gear oil through the oil level gauge hole.

CAUTION:
If an alternative gear oil is used, you may not have expected functionality and performance.

Recommended gear oil:
SUBARU GEAR OIL EXTRA MT

Alternative:
GL-5 (75W-90)

Gear oil capacity:
3.3 L (3.5 US qt, 2.9 Imp qt)
7) Check the transmission gear oil amount, and confirm that it is within the specification.

3. Manual Transmission Assembly

A: REMOVAL

1) Open the front hood completely.
2) Disconnect the ground terminal from battery sensor. <Ref. to NT-6, BATTERY, NOTE, Note.>
3) Remove the collector cover. <Ref. to IN(w/o STI)-7, REMOVAL, Collector Cover.>
4) Remove the intercooler and the intercooler stay. <Ref. to IN(w/o STI)-43, REMOVAL, Intercooler.>
5) Disconnect the clips and the following connectors, then remove the transmission radio ground cord terminal and the engine rear hanger.

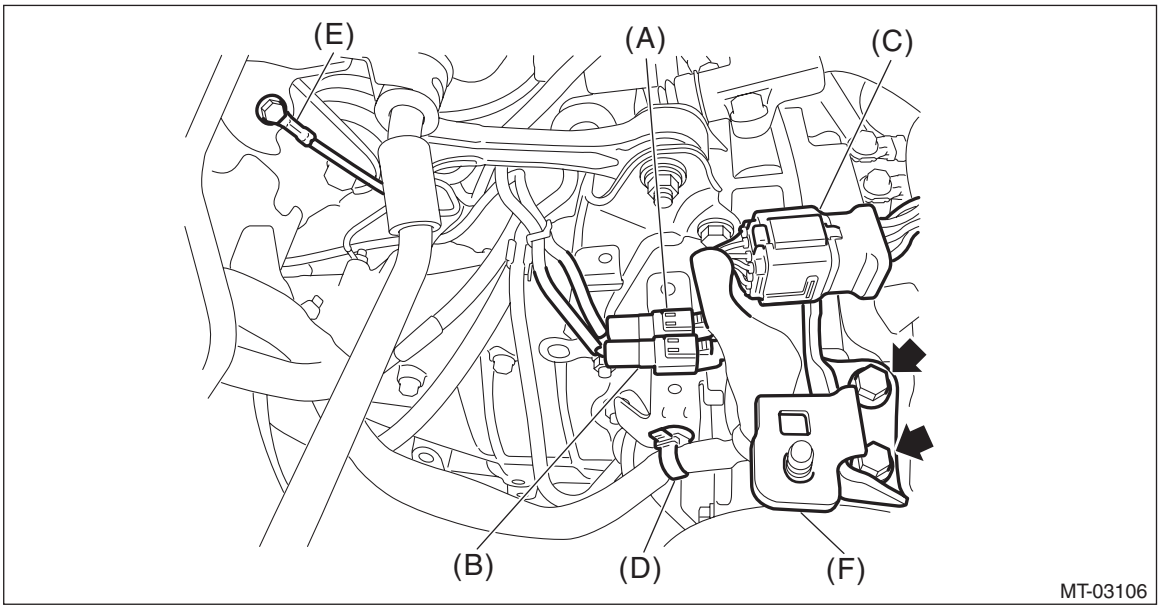

(A)	Neutral position switch connector (2P, brown)	(B)	Back-up light switch connector (2P, gray)	(C)	Engine harness connector (16P, brown)
(D)	Clip	(E)	Transmission radio ground cord terminal	(F)	Engine rear hanger

6) Remove the operating cylinder and suspend on a wire.

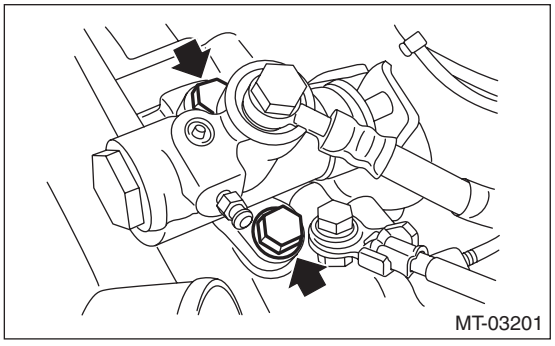

7) Remove the pitching stopper. <Ref. to 6MT(TY75)-37, PITCHING STOPPER, REMOVAL, Transmission Mounting System.>

8) Disconnect the engine ground terminal.

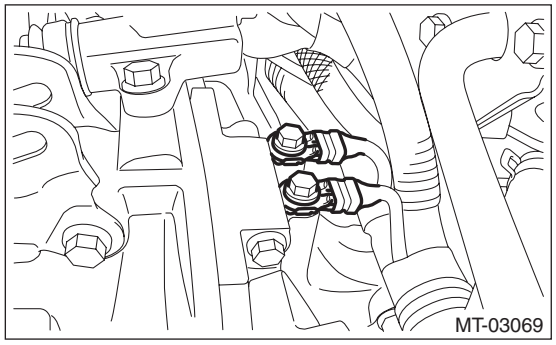

9) Set the ST.
ST 41099AC000 ENGINE SUPPORT ASSY

NOTE:
Place a washer with 4 mm (0.16 in) thickness into the gap between the engine block and ST.

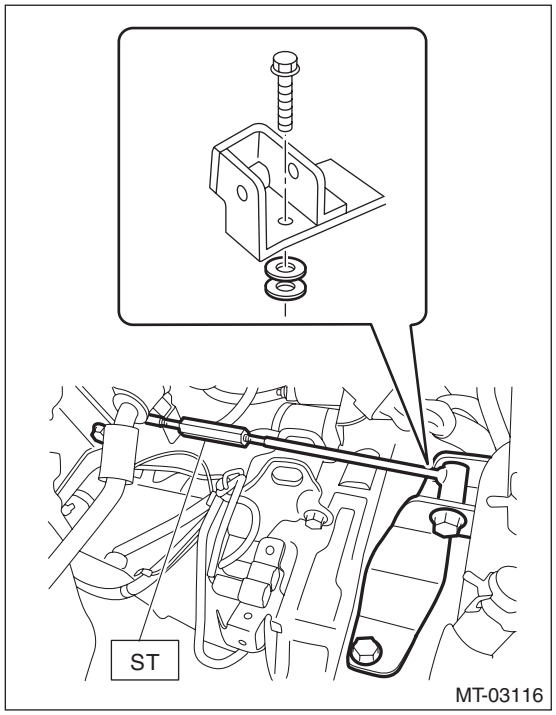

10) Remove the starter. <Ref. to SC(w/o STI)-7, REMOVAL, Starter.>
11) Remove the bolts which hold upper side of transmission to engine.

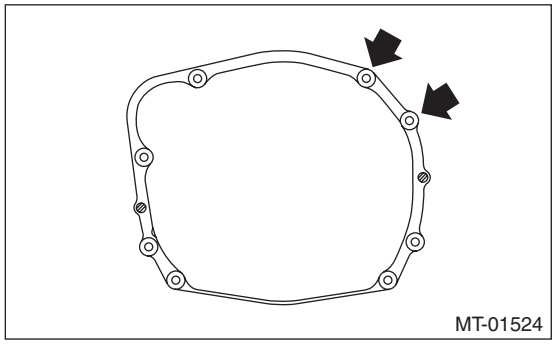

12) Remove the front tires.
13) Lift up the vehicle.
14) Remove the center exhaust pipe (rear). <Ref. to EX(w/o STI)-32, REMOVAL, Center Exhaust Pipe.>
15) Drain transmission gear oil completely. <Ref. to 6MT(TY75)-25, REPLACEMENT, Transmission Gear Oil.>

16) Remove the center exhaust cover.

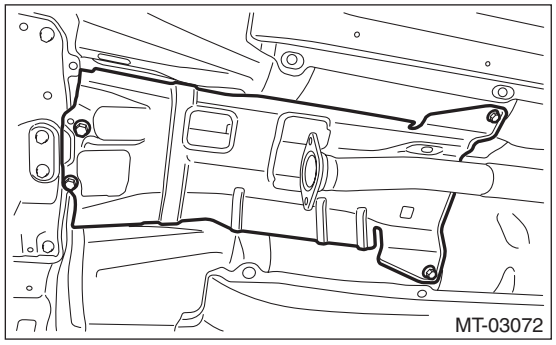

17) Remove the hanger bracket.

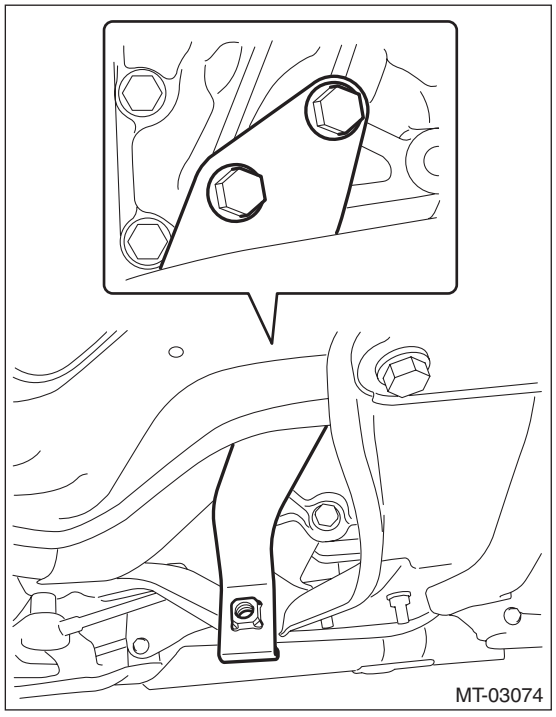

18) Remove the propeller shaft. <Ref. to DS-12, REMOVAL, Propeller Shaft.>
19) Remove the MT gear shift cable and MT gear select cable from MT gear shift lever. <Ref. to CS-59, EXCEPT FOR STI MODEL, REMOVAL, MT Gear Shift Lever.>

CAUTION:
- **Do not bend MT gear shift cable and MT gear select cable at a sharp angle.**
- **If the MT gear select cable is removed from the selector lever COMPL on the transmission side, replace with new MT gear select cable.**

20) Remove the stabilizer link.

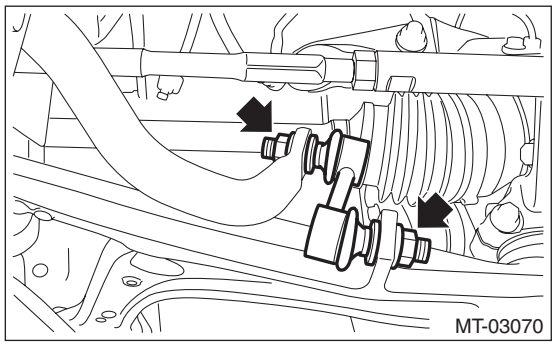

21) Remove the bolt securing the ball joint of the front arm to the housing, then separate the front arms and the housing.

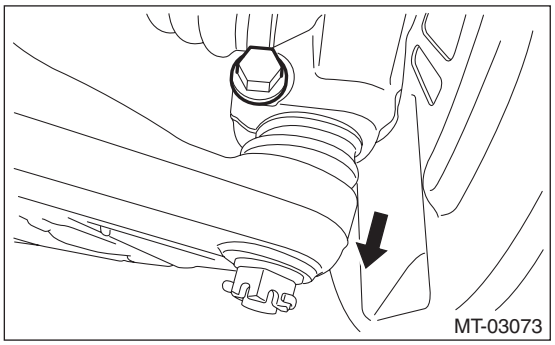

22) Using a crowbar, separate the left and right front drive shafts.

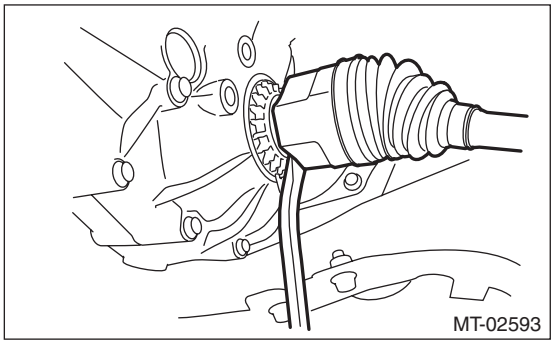

23) Remove the bolts and nuts which hold lower side of transmission to engine.

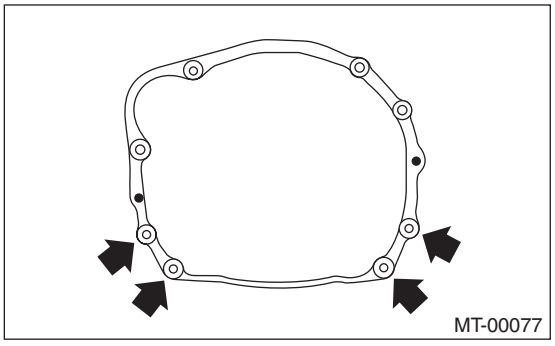

24) Place the transmission jack under the transmission.

CAUTION:
Always support the transmission case with a transmission jack.

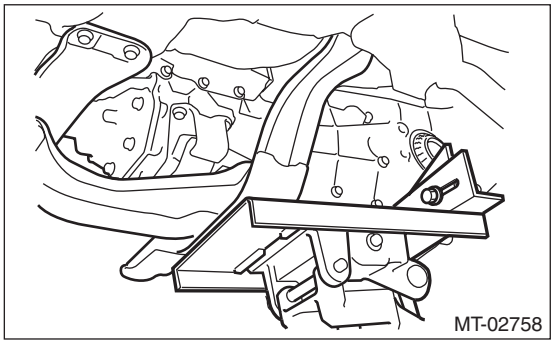

25) Remove the front crossmember and the rear crossmember.

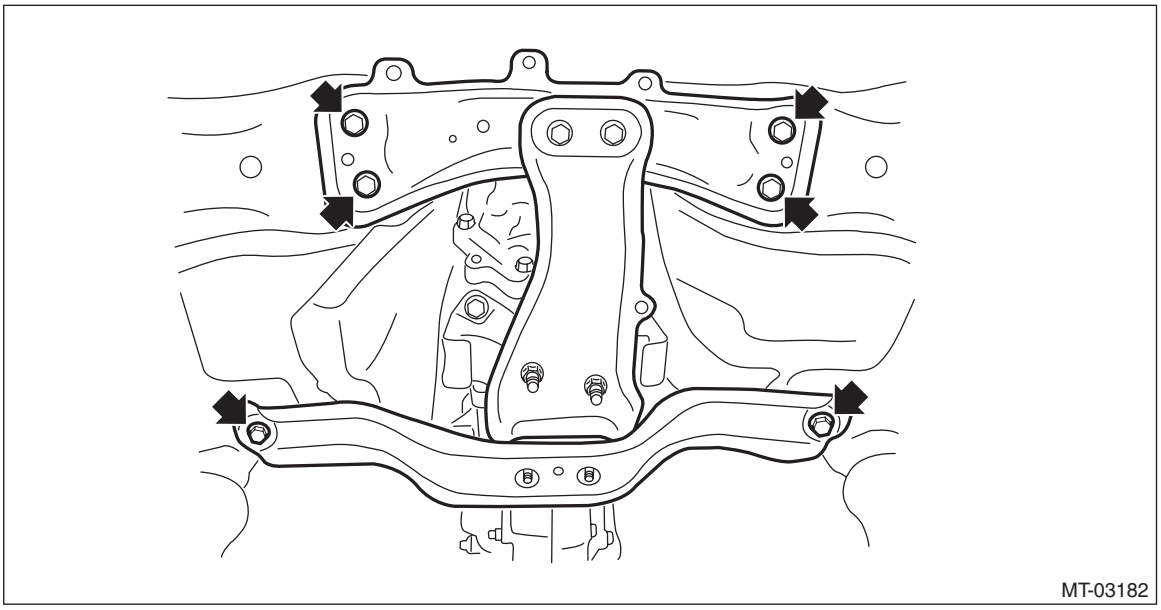

26) While lowering the transmission jack, tighten the turnbuckle of the ST, and incline the engine unit rearward.
27) Remove the transmission assembly.

NOTE:
Move the transmission jack towards the rear until the main shaft is withdrawn from the clutch disc.
28) Remove the transmission cushion rubber.

B: INSTALLATION

1) Replace the differential side retainer oil seal. <Ref. to 6MT(TY75)-43, REPLACEMENT, Differential Side Retainer Oil Seal.>

NOTE:
- Be sure to replace the oil seal after removing the front drive shaft.
- When a new oil seal has been installed, replacement is not required.

ST 18675AA000 DIFFERENTIAL SIDE OIL SEAL INSTALLER

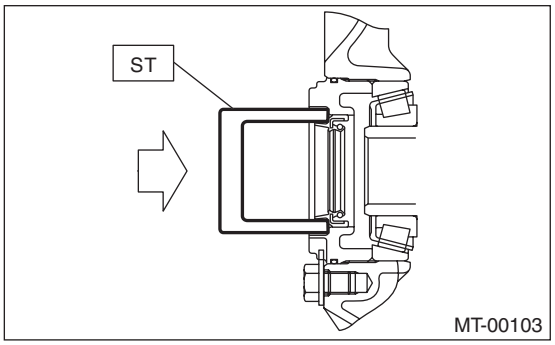

2) Strike and bend the transmission hanger of transmission rear with a rubber hammer etc. so that it gets in contact with the transmission case.

CAUTION:
Do not apply excessive load or impact to the transmission case.

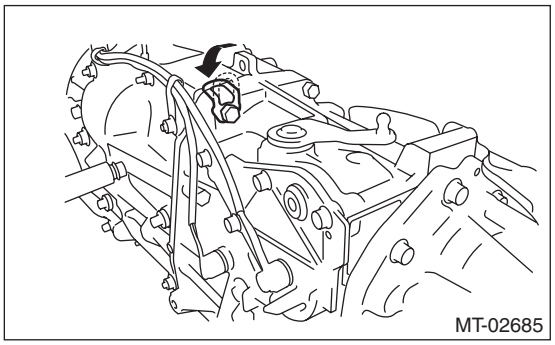

3) Install the transmission cushion rubber to the transmission, and tighten the bolt (A).
4) Install the transmission cushion rubber to the center crossmember, and temporarily tighten the nut (B).

Tightening torque:
Bolt (A)
35 N·m (3.6 kgf-m, 25.8 ft-lb)

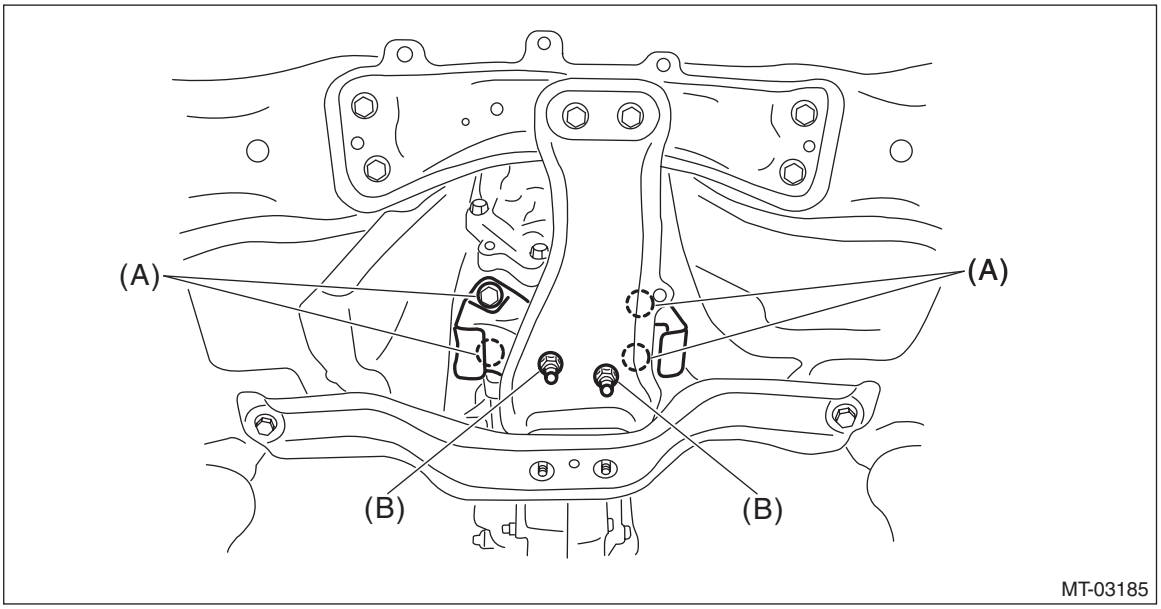

5) Install the transmission assembly onto the engine.
(1) Lift up the transmission gradually using a transmission jack.
(2) Engage at the spline section.

NOTE:
Be careful not to hit the main shaft against the clutch cover.
6) While raising the transmission jack, loosen the turnbuckle of the ST, and set the engine unit to the original position.
7) Install the front crossmember and rear crossmember.

8) Tighten the transmission cushion rubber mounting nut.

Tightening torque:
T1: 70 N·m (7.1 kgf-m, 51.6 ft-lb)
T2: 140 N·m (14.3 kgf-m, 103.3 ft-lb)
T3: 35 N·m (3.6 kgf-m, 25.8 ft-lb)

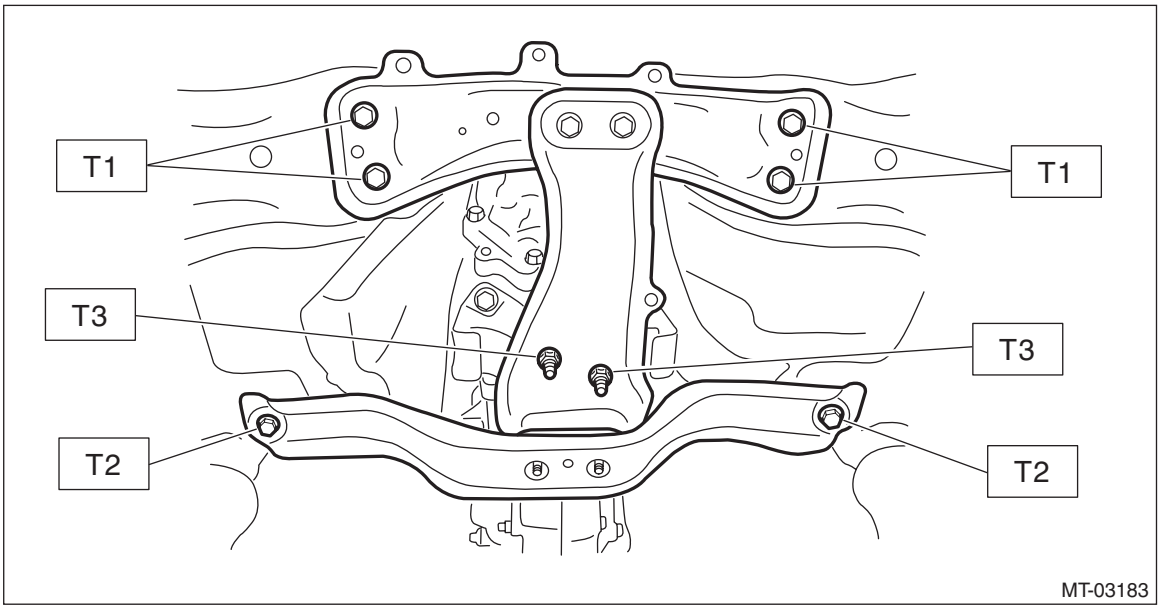

9) Take out the transmission jack.
10) Tighten the bolts and nuts which hold the lower side of transmission to the engine.

Tightening torque:
50 N·m (5.1 kgf-m, 36.9 ft-lb)

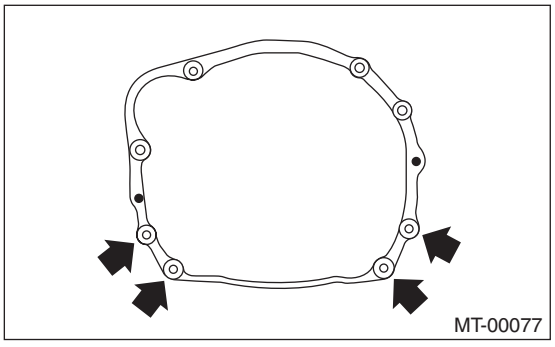

11) Install the ST to the transmission, and then install the front drive shaft.
ST 28399SA010 OIL SEAL PROTECTOR

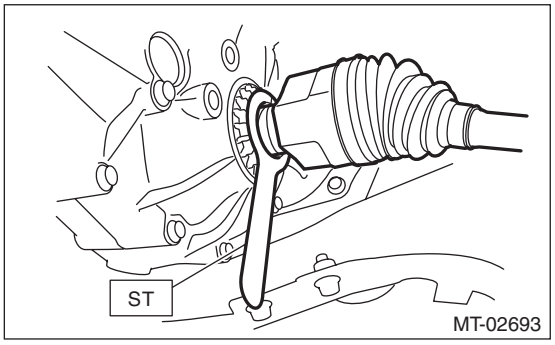

12) Insert the front arm ball joint and tighten the mounting bolt.

Tightening torque:
50 N·m (5.1 kgf-m, 36.9 ft-lb)

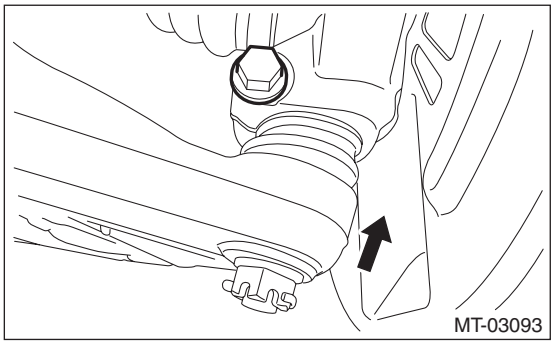

13) Install the stabilizer link.

Tightening torque:
60 N·m (6.1 kgf-m, 44.3 ft-lb)

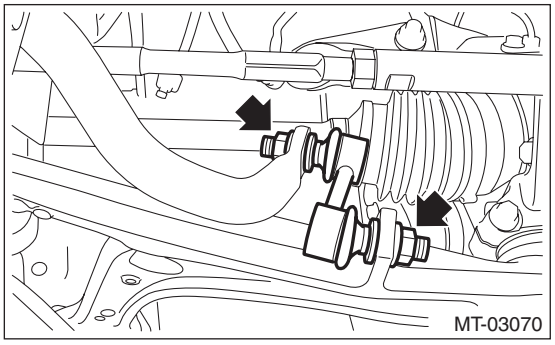

14) Install the MT gear shift cable and MT gear select cable to MT gear shift lever. <Ref. to CS-64, EXCEPT FOR STI MODEL, INSTALLATION, MT Gear Shift Lever.>

CAUTION:
- **Do not bend MT gear shift cable and MT gear select cable at a sharp angle.**
- **If the MT gear select cable is removed from the selector lever COMPL on the transmission side, replace with new MT gear select cable.**

15) Install the hanger bracket.

Tightening torque:
23 N·m (2.3 kgf-m, 17.0 ft-lb)

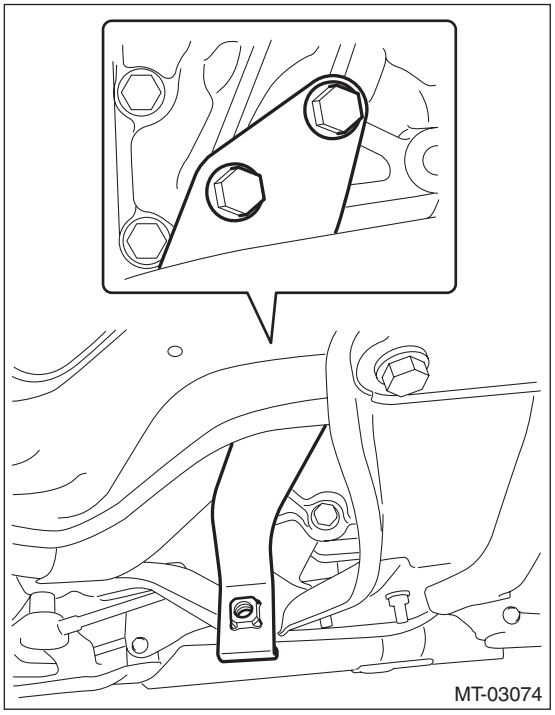

16) Install the propeller shaft. <Ref. to DS-14, INSTALLATION, Propeller Shaft.>
17) Install the center exhaust cover.

Tightening torque:
18 N·m (1.8 kgf-m, 13.3 ft-lb)

18) Install the center exhaust pipe (rear). <Ref. to EX(w/o STI)-37, INSTALLATION, Center Exhaust Pipe.>
19) Lower the vehicle.
20) Install the starter. <Ref. to SC(w/o STI)-8, INSTALLATION, Starter.>
21) Tighten the bolts which hold the upper side of the transmission to the engine.

Tightening torque:
50 N·m (5.1 kgf-m, 36.9 ft-lb)

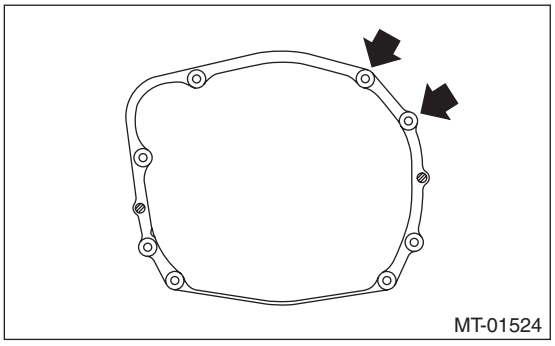

22) Remove the ST.

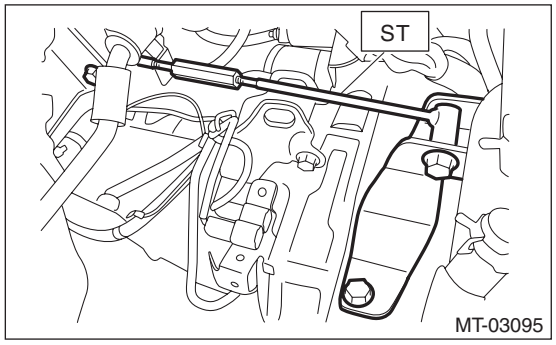

23) Install the pitching stopper. <Ref. to 6MT(TY75)-38, PITCHING STOPPER, INSTALLATION, Transmission Mounting System.>

24) Install the engine ground terminals.

Tightening torque:
19 N·m (1.9 kgf-m, 14.0 ft-lb)

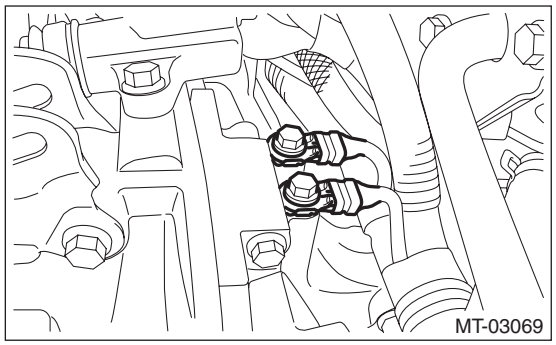

25) Install the operating cylinder.

Tightening torque:
37 N·m (3.8 kgf-m, 27.3 ft-lb)

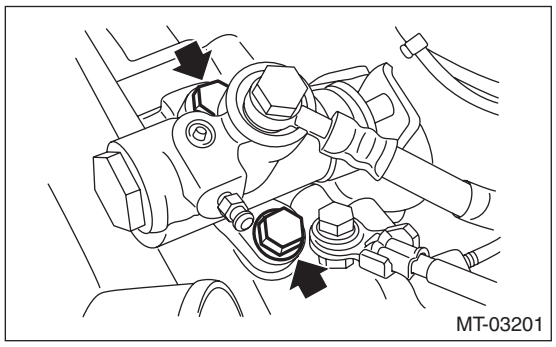

26) Install the transmission radio ground cord terminal and the engine rear hanger, connect the following connectors, and then secure the clip on the bracket.

Tightening torque:
Transmission radio ground cord terminal
13 N·m (1.3 kgf-m, 9.6 ft-lb)
Engine rear hanger
21 N·m (2.1 kgf-m, 15.5 ft-lb)

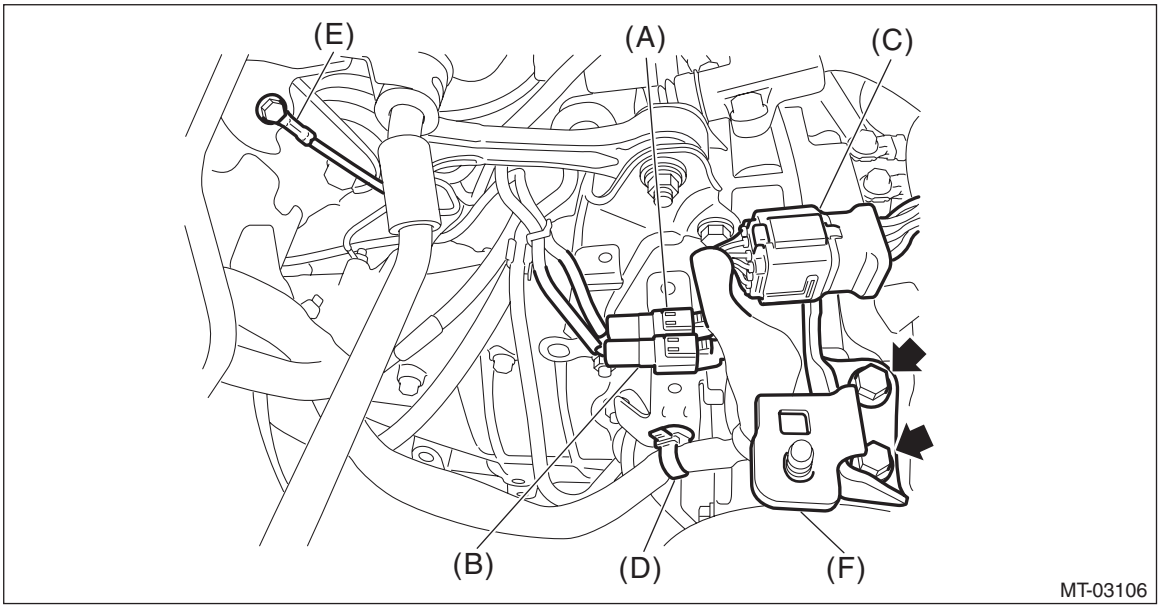

(A)	Neutral position switch connector (2P, brown)	(B)	Back-up light switch connector (2P, gray)	(C)	Engine harness connector (16P, brown)
(D)	Clip	(E)	Transmission radio ground cord terminal	(F)	Engine rear hanger

27) Pour in transmission gear oil and check the oil level. <Ref. to 6MT(TY75)-24, Transmission Gear Oil.>
28) Install the intercooler stay and the intercooler. <Ref. to IN(w/o STI)-45, INSTALLATION, Intercooler.>
29) Install the front tires.
30) Install the collector cover. <Ref. to IN(w/o STI)-10, INSTALLATION, Collector Cover.>
31) Connect the ground terminal to battery sensor. <Ref. to NT-6, BATTERY, NOTE, Note.>

4. Transmission Mounting System

A: REMOVAL

1. PITCHING STOPPER

1) Disconnect the ground terminal from battery sensor. <Ref. to NT-6, BATTERY, NOTE, Note.>
2) Remove the collector cover. <Ref. to IN(w/o STI)-7, REMOVAL, Collector Cover.>
3) Remove the intercooler. <Ref. to IN(w/o STI)-43, REMOVAL, Intercooler.>
4) Remove the pitching stopper.

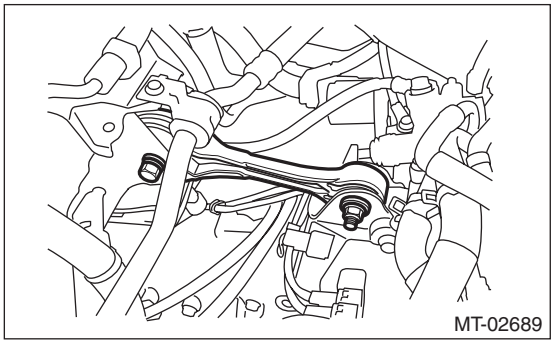

2. CROSSMEMBER AND CUSHION RUBBER

1) Disconnect the ground terminal from battery sensor. <Ref. to NT-6, BATTERY, NOTE, Note.>
2) Lift up the vehicle.
3) Remove the center exhaust pipe (rear). <Ref. to EX(w/o STI)-32, REMOVAL, Center Exhaust Pipe.>
4) Remove the center exhaust cover.

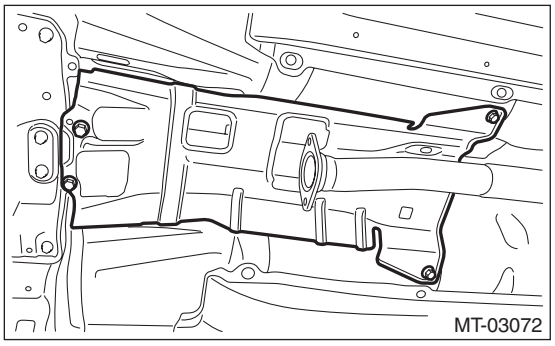

5) Set the transmission jack.

CAUTION:
Always support the transmission case with a transmission jack.

6) Remove the front crossmember and the rear crossmember.

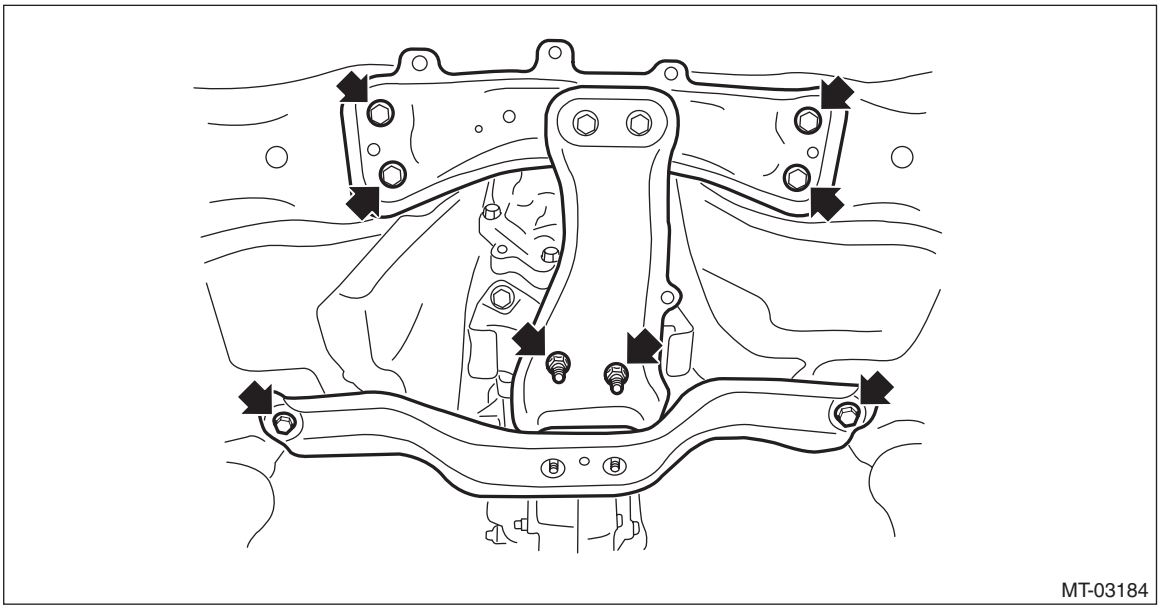

7) Remove the transmission cushion rubber.

B: INSTALLATION

1. PITCHING STOPPER

1) Install the pitching stopper.

Tightening torque:
T1: 50 N·m (5.1 kgf-m, 36.9 ft-lb)
T2: 58 N·m (5.9 kgf-m, 42.8 ft-lb)

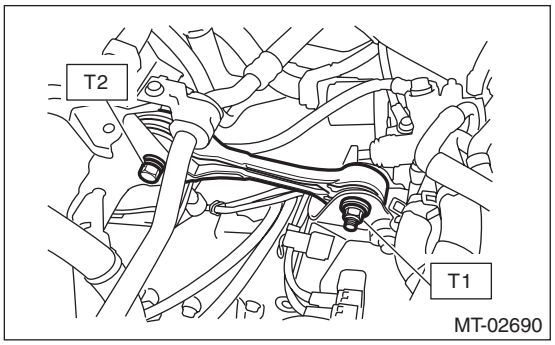

2) Install the intercooler. <Ref. to IN(w/o STI)-45, INSTALLATION, Intercooler.>
3) Install the collector cover. <Ref. to IN(w/o STI)-10, INSTALLATION, Collector Cover.>
4) Connect the ground terminal to battery sensor. <Ref. to NT-6, BATTERY, NOTE, Note.>

2. CROSSMEMBER AND CUSHION RUBBER

1) Install the transmission cushion rubber to the transmission, and tighten the bolt (A).
2) Install the transmission cushion rubber to the center crossmember, and temporarily tighten the nut (B).

Tightening torque:
Bolt (A)
35 N·m (3.6 kgf-m, 25.8 ft-lb)

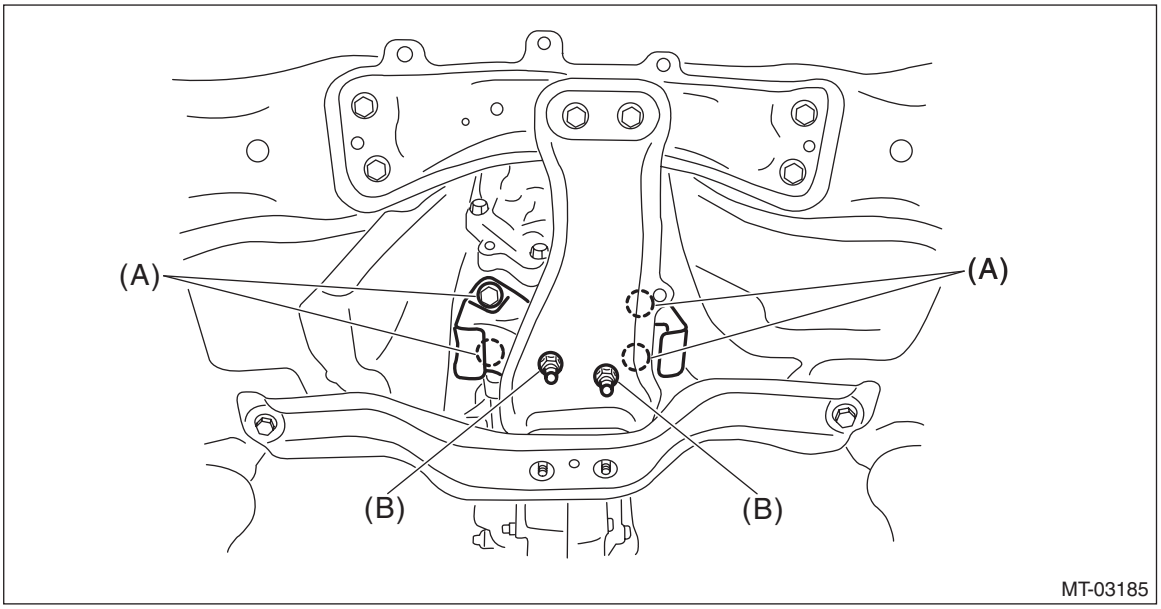

3) Install the front crossmember and rear crossmember.
4) Tighten the transmission cushion rubber mounting nut.

Tightening torque:
T1: 70 N·m (7.1 kgf-m, 51.6 ft-lb)
T2: 140 N·m (14.3 kgf-m, 103.3 ft-lb)
T3: 35 N·m (3.6 kgf-m, 25.8 ft-lb)

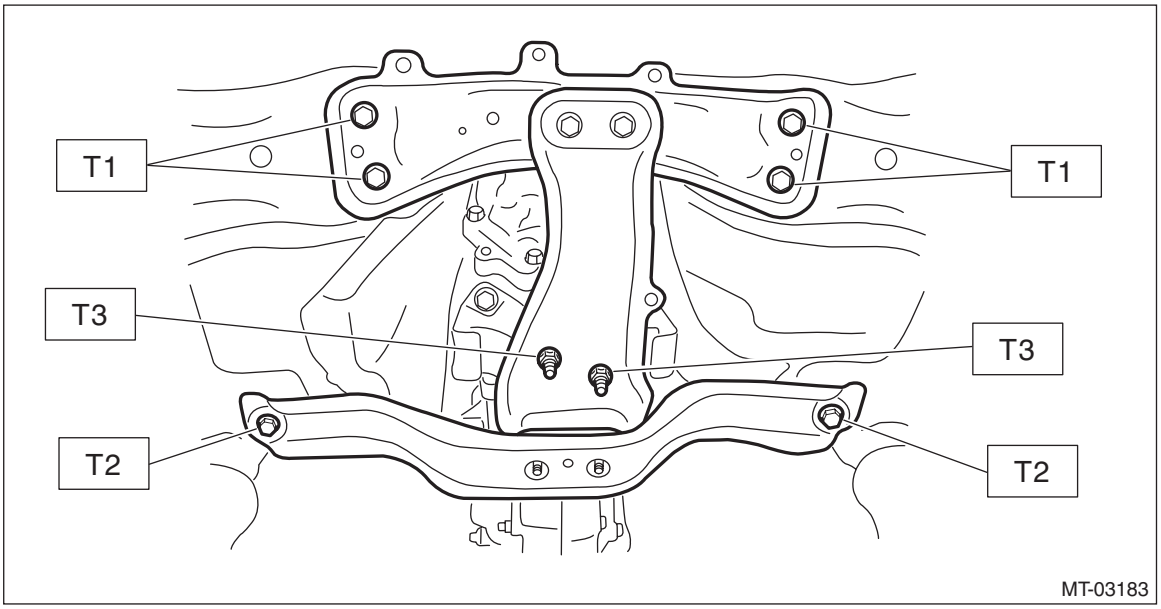

5) Remove the transmission jack.
6) Install the center exhaust cover.

Tightening torque:
18 N·m (1.8 kgf-m, 13.3 ft-lb)

7) Install the center exhaust pipe (rear). <Ref. to EX(w/o STI)-37, INSTALLATION, Center Exhaust Pipe.>
8) Lower the vehicle.
9) Connect the ground terminal to battery sensor. <Ref. to NT-6, BATTERY, NOTE, Note.>

C: INSPECTION

Check the following; repair or replace the faulty parts.

1. PITCHING STOPPER

Check the pitching stopper for bends or damage. Check that the rubber is not stiff, cracked or otherwise damaged.

2. CROSSMEMBER AND CUSHION RUBBER

Check the crossmember for bends or damage. Check that the cushion rubber is not stiff, cracked or otherwise damaged.

5. Oil Seal

A: INSPECTION

Check for leakage of transmission gear oil from the oil seal. If there is oil leakage, replace the oil seal with the new part and check the propeller shaft.

B: REPLACEMENT

1) Disconnect the ground terminal from battery sensor. <Ref. to NT-6, BATTERY, NOTE, Note.>
2) Lift up the vehicle.
3) Clean the transmission exterior.
4) Using the TORX® bit T70, remove the drain plug, and drain the transmission gear oil completely.

CAUTION:
• Immediately after the vehicle has been running or after idling for a long time, the gear oil will be hot. Be careful not to receive burns.
• Be careful not to spill the gear oil on the exhaust pipe, to prevent emission of smoke or causing a fire. If gear oil is spilled, wipe it off completely.
5) Attach the drain plug using TORX® bit T70.

NOTE:
Use a new gasket.

Tightening torque:
44 N·m (4.5 kgf-m, 32.5 ft-lb) (aluminum gasket, silver)
70 N·m (7.1 kgf-m, 51.6 ft-lb) (copper gasket, brown)
70 N·m (7.1 kgf-m, 51.6 ft-lb) (metal gasket, black)

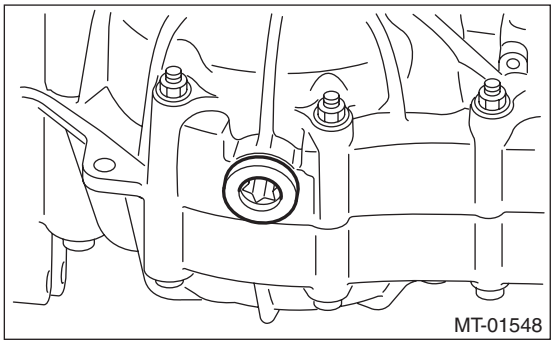

6) Remove the rear exhaust pipe. <Ref. to EX(w/o STI)-47, REMOVAL, Rear Exhaust Pipe.>
7) Remove the center exhaust cover.

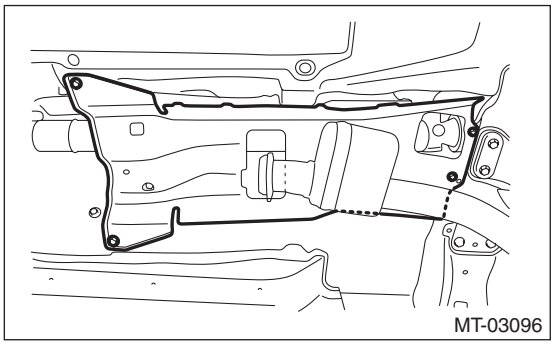

8) Remove the propeller shaft. <Ref. to DS-12, REMOVAL, Propeller Shaft.>

9) Using the ST, remove the oil seal.
ST 398527700 PULLER ASSY

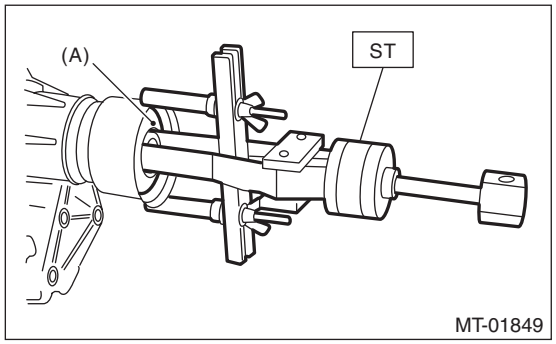

(A) Oil seal

10) Using the ST, install the oil seal.

NOTE:
- When grease is not applied to the oil seal lips, apply the transmission gear oil to the oil seal lips.
- Use a new oil seal.

ST 498057300 INSTALLER

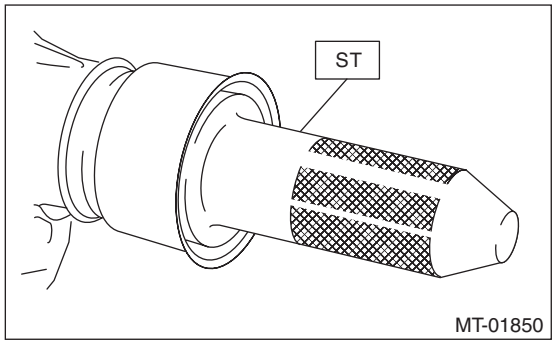

11) Install the propeller shaft. <Ref. to DS-14, INSTALLATION, Propeller Shaft.>
12) Install the center exhaust cover.

Tightening torque:
18 N·m (1.8 kgf-m, 13.3 ft-lb)

13) Install the rear exhaust pipe. <Ref. to EX(w/o STI)-48, INSTALLATION, Rear Exhaust Pipe.>
14) Lower the vehicle.
15) Pour in transmission gear oil and check the oil level. <Ref. to 6MT(TY75)-24, Transmission Gear Oil.>
16) Connect the ground terminal to battery sensor. <Ref. to NT-6, BATTERY, NOTE, Note.>

6. Differential Side Retainer Oil Seal

A: INSPECTION

Check for transmission gear oil leaks at differential side retainer oil seal. If there is oil leakage, replace the oil seal with the new part and check the drive shaft.

B: REPLACEMENT

1) Disconnect the ground terminal from battery sensor. <Ref. to NT-6, BATTERY, NOTE, Note.>
2) Remove the front tires.
3) Lift up the vehicle.
4) Using the TORX® bit T70, remove the drain plug, and drain the transmission gear oil completely.

CAUTION:
• Immediately after the vehicle has been running or after idling for a long time, the gear oil will be hot. Be careful not to receive burns.
• Be careful not to spill the gear oil on the exhaust pipe, to prevent emission of smoke or causing a fire. If gear oil is spilled, wipe it off completely.
5) Attach the drain plug using TORX® bit T70.

NOTE:
Use a new gasket.

Tightening torque:
44 N·m (4.5 kgf-m, 32.5 ft-lb) (aluminum gasket, silver)
70 N·m (7.1 kgf-m, 51.6 ft-lb) (copper gasket, brown)
70 N·m (7.1 kgf-m, 51.6 ft-lb) (metal gasket, black)

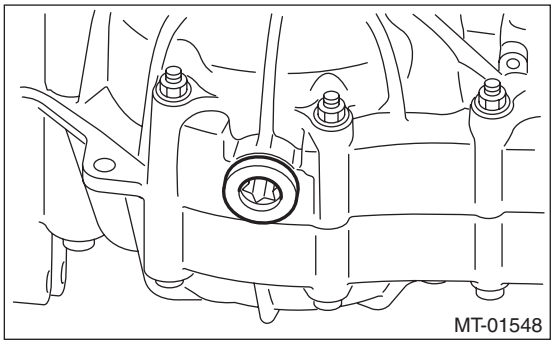

6) Remove the center exhaust pipe (rear). <Ref. to EX(w/o STI)-32, REMOVAL, Center Exhaust Pipe.>
7) Remove the stabilizer link.

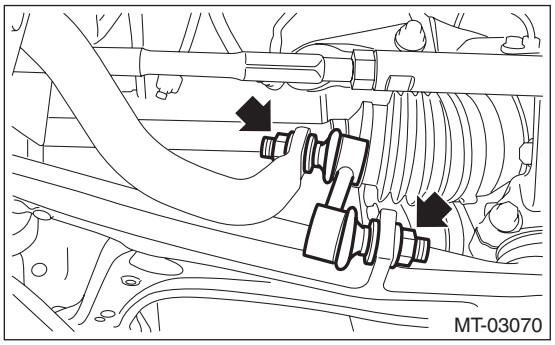

8) Remove the bolt securing the ball joint of the front arm to the housing, then separate the front arms and the housing.

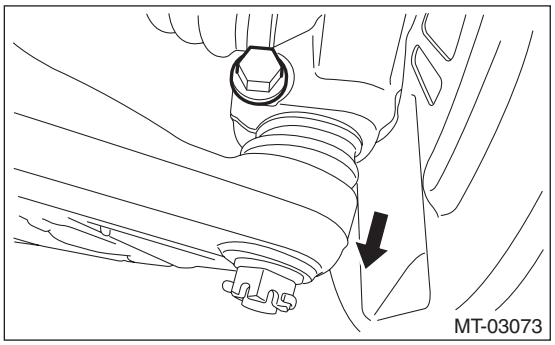

9) Using a crowbar, separate the left and right front drive shafts.

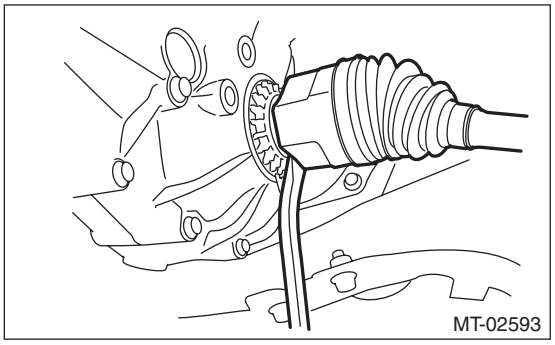

10) Remove the differential side retainer oil seal.

NOTE:
- Be sure to replace the oil seal after removing the front drive shaft from the transmission.
- Use the ST 398527700 PULLER ASSY to remove the oil seal. If removing the oil seal with a flat tip screwdriver, be careful not to scratch the differential side retainer.

11) Using the ST, install the differential side retainer oil seal by lightly tapping with a plastic hammer.

CAUTION:
- **Apply transmission gear oil to the oil seal lips, and install the oil seal while being careful not to deform the lip.**
- **Check the identification marks (L, R) during installation not to mix up the oil seals RH and LH.**

NOTE:
Use a new oil seal.
ST 18675AA000 DIFFERENTIAL SIDE OIL SEAL INSTALLER

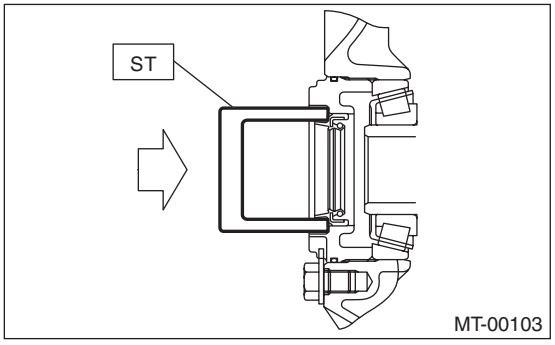

12) Install the ST to the transmission, and then install the front drive shaft.
ST 28399SA010 OIL SEAL PROTECTOR

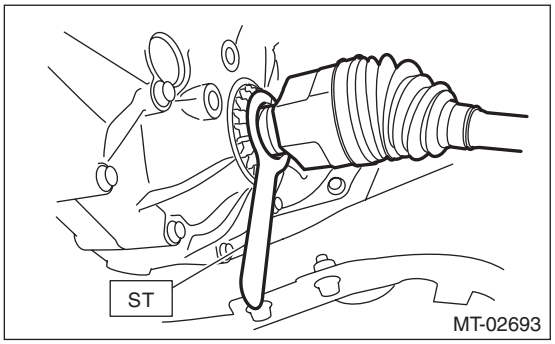

13) Insert the front arm ball joint and tighten the mounting bolt.

Tightening torque:
50 N·m (5.1 kgf-m, 36.9 ft-lb)

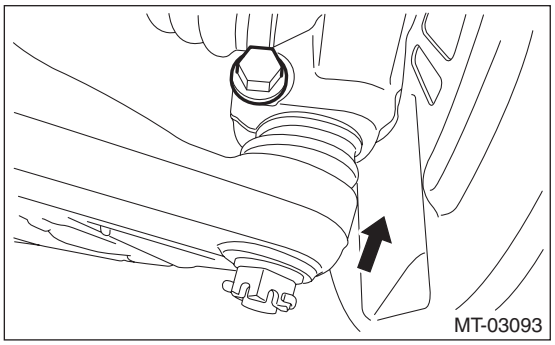

14) Install the stabilizer link.

Tightening torque:
60 N·m (6.1 kgf-m, 44.3 ft-lb)

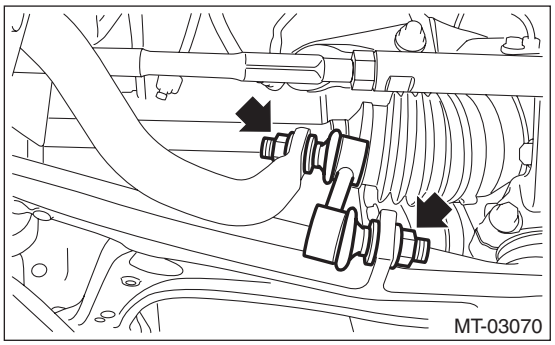

15) Install the center exhaust pipe (rear). <Ref. to EX(w/o STI)-37, INSTALLATION, Center Exhaust Pipe.>
16) Lower the vehicle.
17) Pour in transmission gear oil and check the oil level. <Ref. to 6MT(TY75)-24, Transmission Gear Oil.>
18) Install the front tires.
19) Connect the ground terminal to battery sensor. <Ref. to NT-6, BATTERY, NOTE, Note.>

7. Switches and Harness

A: REMOVAL

1. BACK-UP LIGHT AND NEUTRAL POSITION SWITCH

1) Disconnect the ground terminal from battery sensor. <Ref. to NT-6, BATTERY, NOTE, Note.>
2) Remove the collector cover. <Ref. to IN(w/o STI)-7, REMOVAL, Collector Cover.>
3) Remove the intercooler. <Ref. to IN(w/o STI)-43, REMOVAL, Intercooler.>
4) Disconnect the connector back-up light switch & neutral position switch.

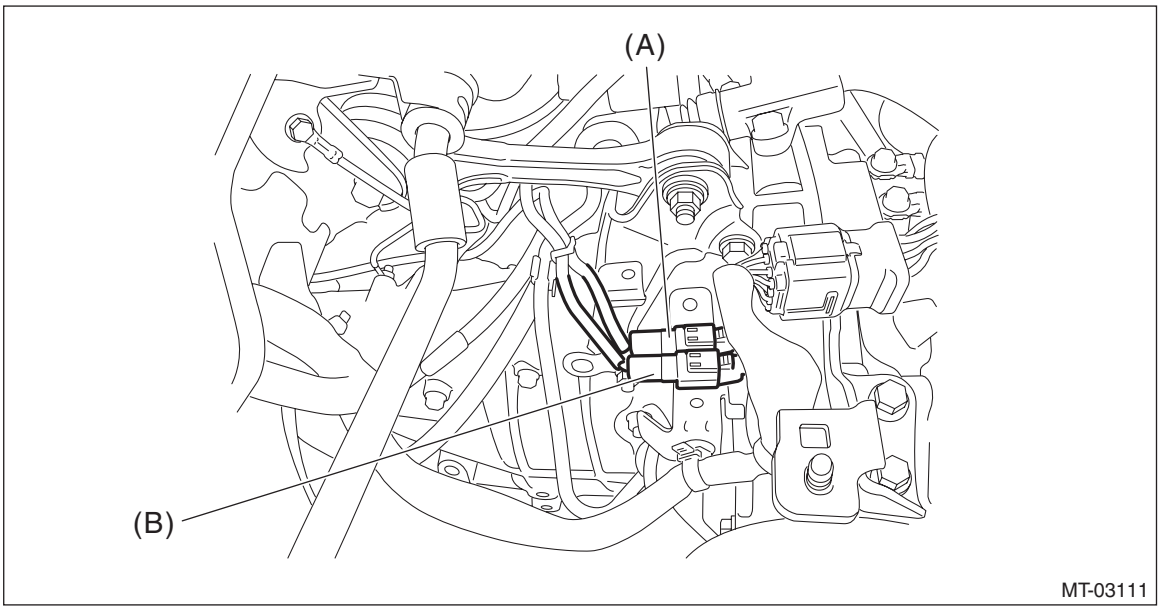

(A) Neutral position switch connector (2P, brown)
(B) Back-up light switch connector (2P, gray)

5) Remove the harness connector from bracket.
6) Lift up the vehicle.
7) Remove the harness from each clip.
8) Remove the back-up light switch & neutral position switch with the harness.

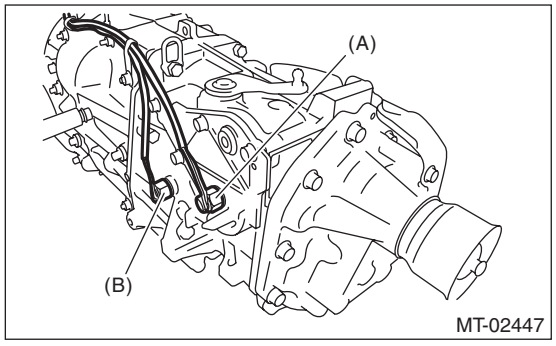

(A) Neutral position switch
(B) Back-up light switch

B: INSTALLATION

1. BACK-UP LIGHT AND NEUTRAL POSITION SWITCH

1) Install the back-up light switch & neutral position switch with the harness.

NOTE:
Use a new gasket.

Tightening torque:
32.3 N·m (3.3 kgf-m, 23.8 ft-lb)

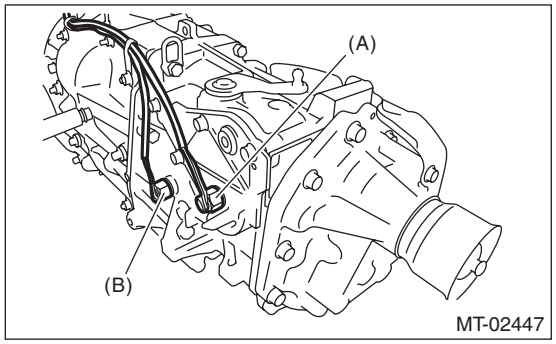

(A) Neutral position switch
(B) Back-up light switch

2) Secure the harness on each clip.
3) Lower the vehicle.
4) Install the harness connector to the bracket.
5) Connect the connectors of back-up light switch & neutral position switch.
6) Install the intercooler. <Ref. to IN(w/o STI)-45, INSTALLATION, Intercooler.>
7) Install the collector cover. <Ref. to IN(w/o STI)-10, INSTALLATION, Collector Cover.>
8) Connect the ground terminal to battery sensor. <Ref. to NT-6, BATTERY, NOTE, Note.>

C: INSPECTION

1. BACK-UP LIGHT SWITCH

1) Turn the ignition switch to OFF.
2) Disconnect the back light switch connector.
3) Measure the resistance between the back-up light switch terminals.

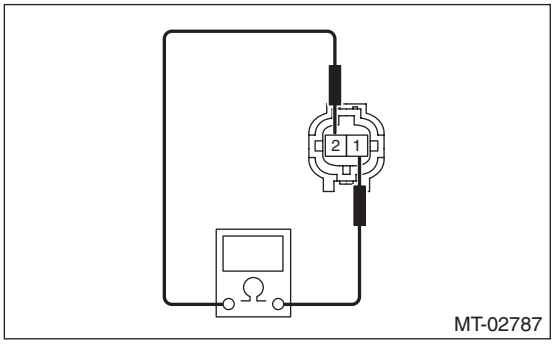

Gear shift position	Terminal No.	Specified resistance
Reverse position	1 and 2	Less than 1 Ω
Other positions		1 MΩ or more

4) Replace faulty parts.

2. NEUTRAL POSITION SWITCH

1) Turn the ignition switch to OFF.
2) Disconnect the connector of neutral position switch.
3) Measure the resistance between neutral position switch terminals.

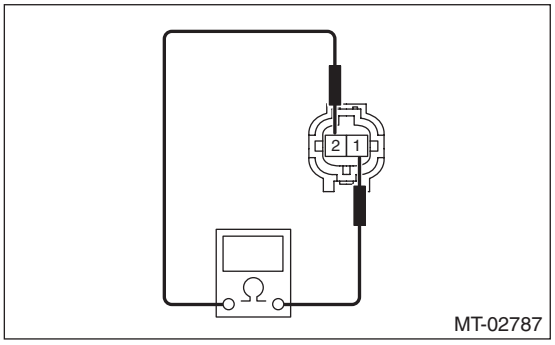

Gear shift position	Terminal No.	Specified resistance
Neutral position	1 and 2	Less than 1 Ω
Other positions		1 MΩ or more

4) Replace faulty parts.

8. Air Breather Hose

A: REMOVAL

1) Disconnect the ground terminal from battery sensor. <Ref. to NT-6, BATTERY, NOTE, Note.>
2) Remove the collector cover. <Ref. to IN(w/o STI)-7, REMOVAL, Collector Cover.>
3) Remove the intercooler. <Ref. to IN(w/o STI)-43, REMOVAL, Intercooler.>
4) Remove the air breather hose.

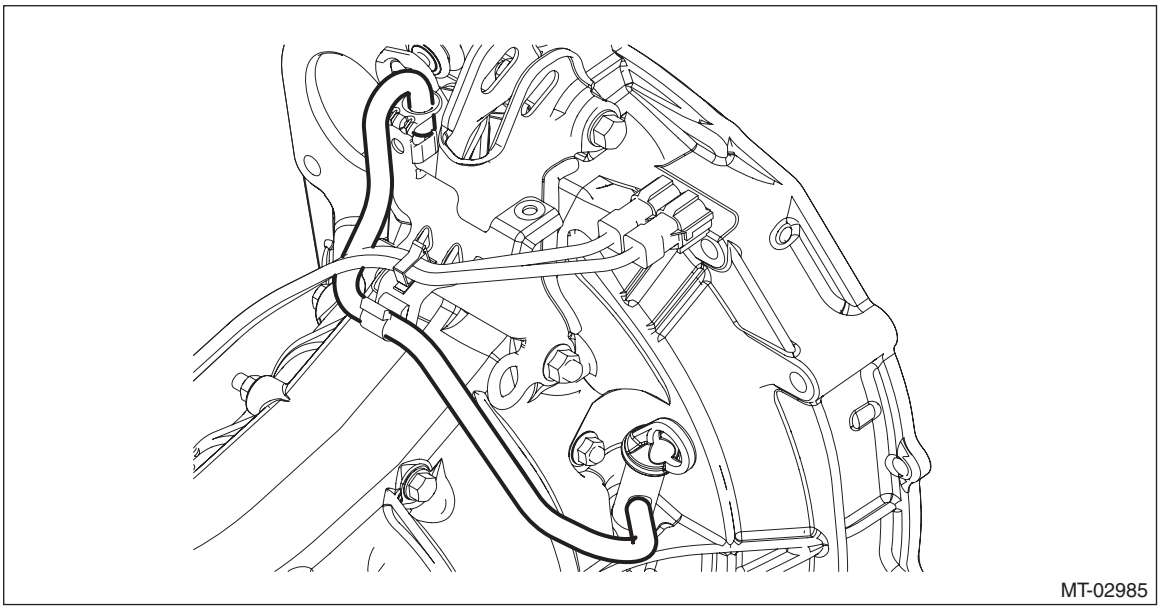

B: INSTALLATION

Install in the reverse order of removal.

NOTE:

- When installing the air breather hose, pay attention to the positions of the two markings on the hose and make sure the markings come to the same position as when removed.
- Securely insert the air breather hose until the hose end contacts the catch of the pitching stopper bracket.

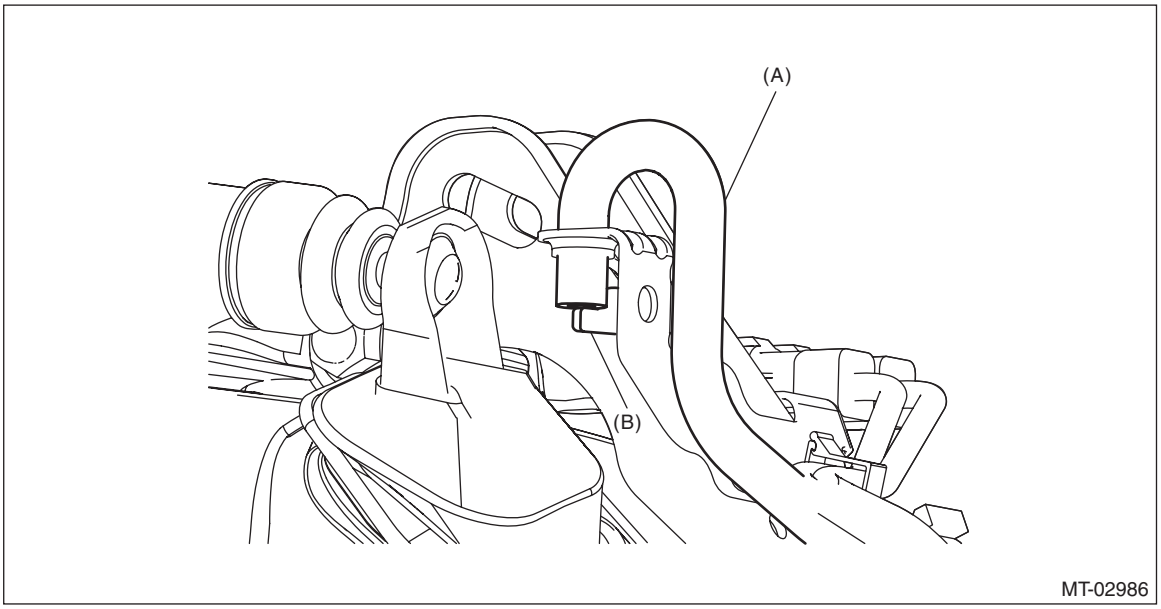

(A) Air breather hose (B) Catch

C: INSPECTION

Check the hose for peeling, crack or clogging.

9. Preparation for Overhaul

A: PROCEDURE

1) Clean oil, grease, dirt and dust from the transmission.
2) When transmission gear oil remains in the transmission, using the TORX® bit T70, remove the drain plug, and drain the gear oil completely.
3) Attach the drain plug using TORX® bit T70.

NOTE:
Use a new gasket.

Tightening torque:
44 N·m (4.5 kgf-m, 32.5 ft-lb) (aluminum gasket, silver)
70 N·m (7.1 kgf-m, 51.6 ft-lb) (copper gasket, brown)
70 N·m (7.1 kgf-m, 51.6 ft-lb) (metal gasket, black)

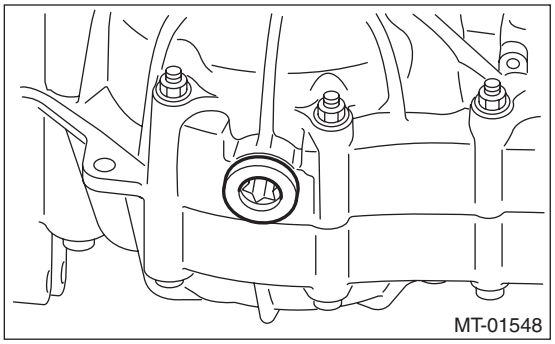

4) Attach the transmission to the ST.
ST 499937100 TRANSMISSION STAND

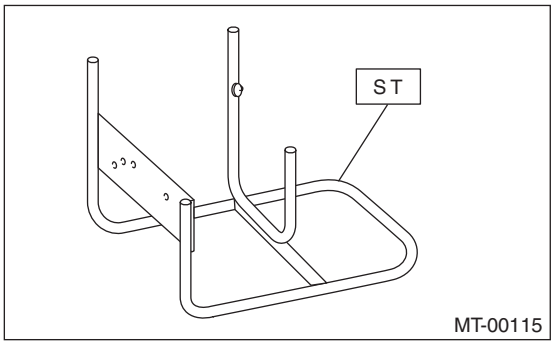

5) Apply transmission gear oil to rotating parts before assembly.
6) All disassembled parts, if to be reused, should be reinstalled in the original positions.
7) Gaskets, lock washers and lock nuts must be replaced with new ones.
8) Apply liquid gasket to the specified areas to prevent leakage.

10.Transfer Case and Extension Case Assembly

A: REMOVAL

1) Remove the manual transmission assembly from the vehicle. <Ref. to 6MT(TY75)-26, REMOVAL, Manual Transmission Assembly.>
2) Remove the back-up light switch and the neutral position switch. <Ref. to 6MT(TY75)-46, REMOVAL, Switches and Harness.>
3) Remove the transfer case together with the extension case assembly.
(1) Remove the transmission cover.

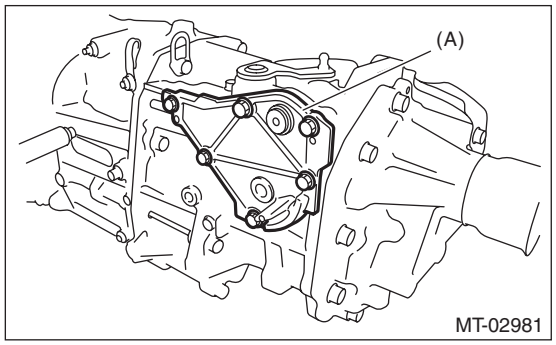

(A) Transmission cover

(2) Set and hold the selector lever COMPL to the 1st-2nd side, and remove the transfer case and extension case assembly as a unit.

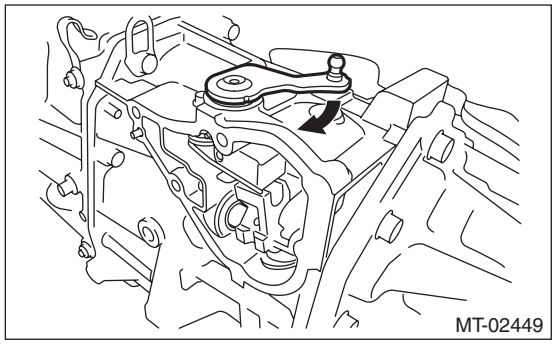

4) Remove the transfer cover.

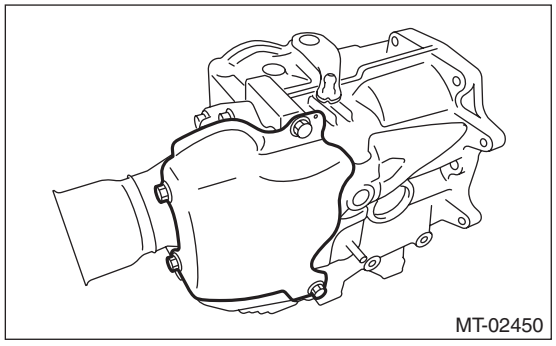

5) Use the ST to push out the spring pin, and remove the shift lever COMPL.
ST 398791700 REMOVER

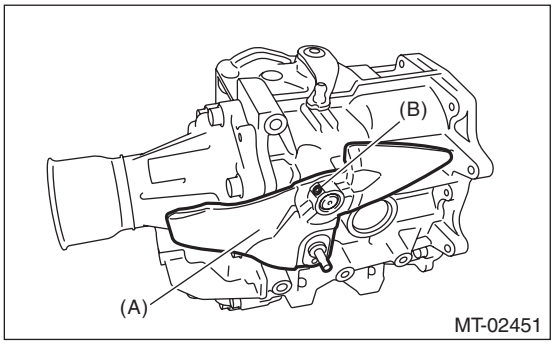

(A) Shift lever COMPL
(B) Straight pin

6) Remove the extension case assembly.

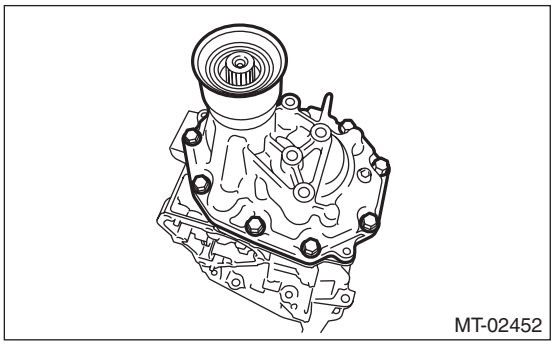

7) Remove the transfer driven gear and center differential as a unit.

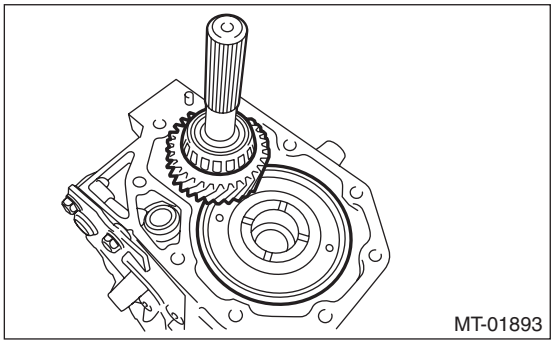

8) Remove the taper roller bearing (extension case side) outer race and the adjusting washer.

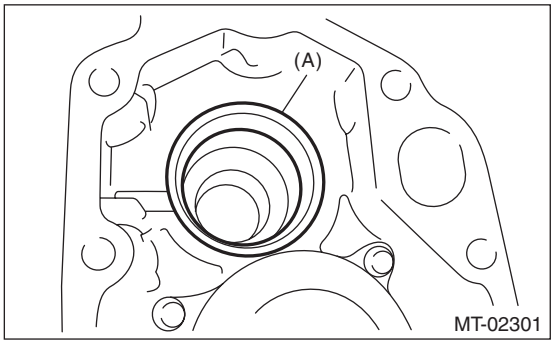

(A) Taper roller bearing (extension case side) outer race

B: INSTALLATION

1) Clean the mating surfaces of the transmission case, transfer case and extension case.
2) Apply a coat of grease to the taper roller bearing (transfer case side) of transfer driven gear and the roller rolling surface of the taper roller bearing (extension case side).

Grease:
NICHIMOLY N-130 or equivalent

3) Install the center differential and the transfer driven gear.

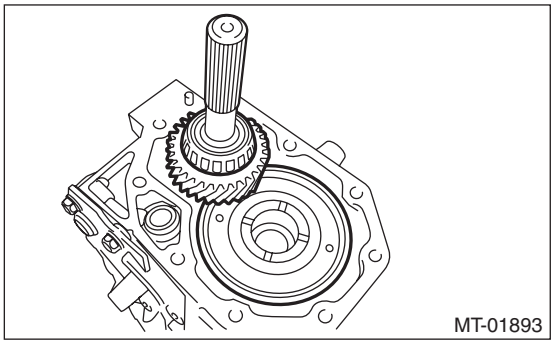

4) Install the taper roller bearing (extension case side) outer race to the transfer driven gear.
5) While pressing the taper roller bearing (extension case side) outer race horizontally, rotate the transfer driven gear for ten turns.
6) Measure the height “W” between transfer case and taper roller bearing (transfer case side) on the transfer driven gear.

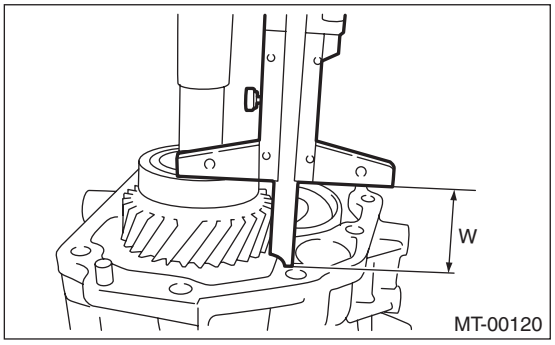

7) Measure the depth “X” of taper roller bearing insertion part of the extension case.

NOTE:
Measure while the taper roller bearing (extension case side) outer race and the adjusting washer are removed.

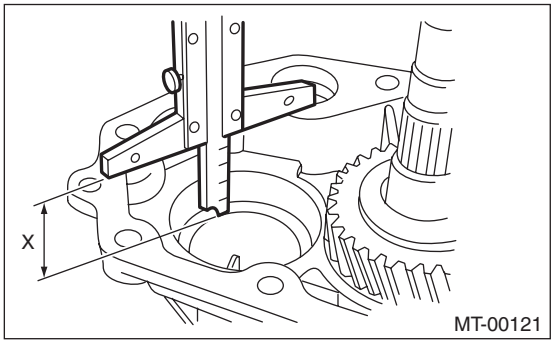

8) Calculate the adjusting washer thickness “t” using the following calculation.
t = X – W + (0.15 — 0.2 mm (0.006 — 0.008 in))
X: Depth of taper roller bearing insertion part of extension case
W: Height between transfer case and taper roller bearing (transfer case side) on transfer driven gear
0.15 — 0.20 mm (0.006 — 0.008 in): Amount of standard protrusion
9) Select the adjusting washer with the nearest value in the following table.

NOTE:
Be sure that it is always within the preload.

Preload of taper roller bearing (extension case side) (amount of standard protrusion): 0.15 — 0.20 mm (0.006 — 0.008 in)

Adjusting washer (50 × 61 × t)	
Part No.	Thickness mm (in)
803050060	0.50 (0.0197)
803050061	0.55 (0.0217)
803050062	0.60 (0.0236)
803050063	0.65 (0.0256)
803050064	0.70 (0.0276)
803050065	0.75 (0.0295)
803050066	0.80 (0.0315)
803050067	0.85 (0.0335)
803050068	0.90 (0.0354)
803050069	0.95 (0.0374)
803050070	1.00 (0.0394)
803050071	1.05 (0.0413)
803050072	1.10 (0.0433)
803050073	1.15 (0.0453)
803050074	1.20 (0.0472)
803050075	1.25 (0.0492)
803050076	1.30 (0.0512)
803050077	1.35 (0.0531)
803050078	1.40 (0.0551)
803050079	1.45 (0.0571)

10) Install the selected adjusting washer and taper roller bearing (extension case side) outer race.

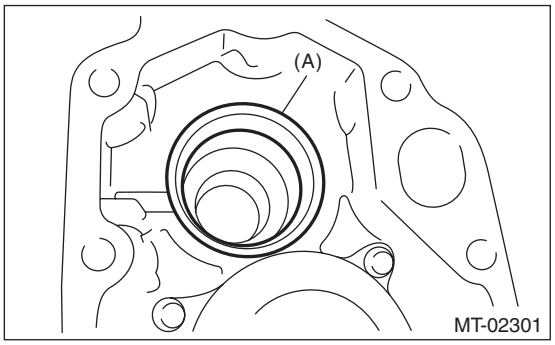

(A) Taper roller bearing (extension case side) outer race

11) Measure the depth “S” between the transfer case + ST and the center differential.
ST 398643600 GAUGE

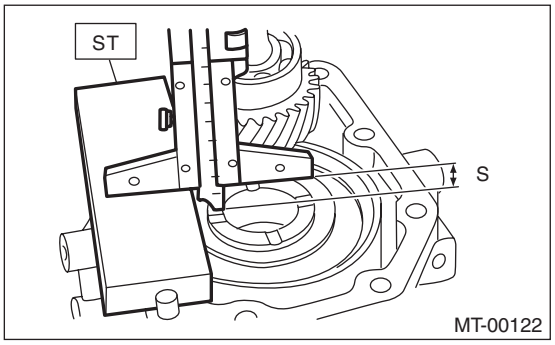

12) Measure the height “T” between the extension case + ST and the transfer drive gear.
ST 398643600 GAUGE

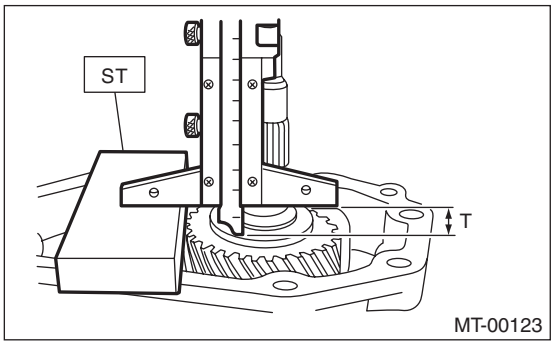

13) Calculate the adjusting washer thickness “U” using the following calculation.
U = S + T – 30 mm (1.18 in) – (0.15 — 0.35 mm (0.0059 — 0.0138 in))
S: Depth between the transfer case + ST and the center differential
T: Height between the extension case + ST and the transfer drive gear
30 mm (1.18 in): Thickness of ST 15 mm (0.59 in) × 2
0.15 — 0.35 mm (0.0059 — 0.0138 in): Clearance
14) Select a suitable adjusting washer in the following table.

Clearance:
0.15 — 0.35 mm (0.0059 — 0.0138 in)

Adjusting washer	
Part No.	Thickness mm (in)
803036050	0.9 (0.035)
803036054	1.0 (0.039)
803036051	1.1 (0.043)
803036055	1.2 (0.047)
803036052	1.3 (0.051)
803036056	1.4 (0.055)
803036053	1.5 (0.059)
803036057	1.6 (0.063)
803036058	1.7 (0.067)
803036080	1.8 (0.071)
803036081	1.9 (0.075)

15) Install the adjusting washer to center differential.

16) Apply liquid gasket seamlessly.

Liquid gasket:
THREE BOND 1215B or equivalent

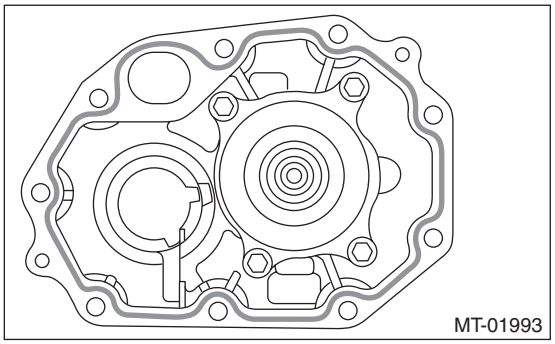

17) Install the extension case assembly.

Tightening torque:
40 N·m (4.1 kgf-m, 29.5 ft-lb)

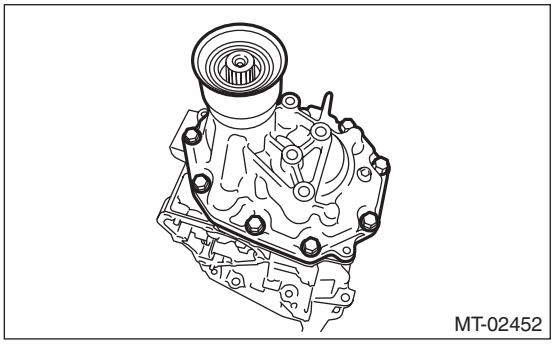

18) Temporarily install the gasket to the transmission case side.

NOTE:
Use a new gasket.

19) Install the transfer case together with the extension case assembly.
(1) While moving the HANDLE to align the spline position, press in the transfer case assembly until the knock pin comes slightly out of transfer case.

ST 18631AA000 HANDLE

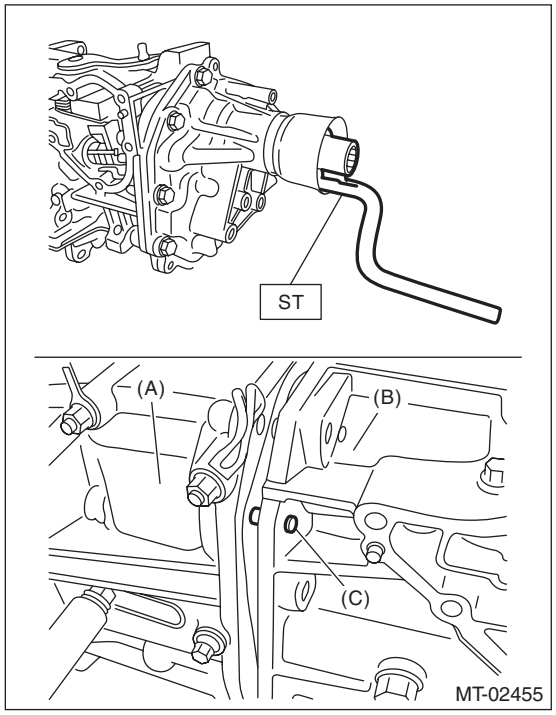

(A) Transmission case
(B) Transfer case
(C) Knock pin

(2) Set and hold the selector lever COMPL to the 1st-2nd side, and install the transfer case assembly so that the shifter arm edge and fork rod does not contact.

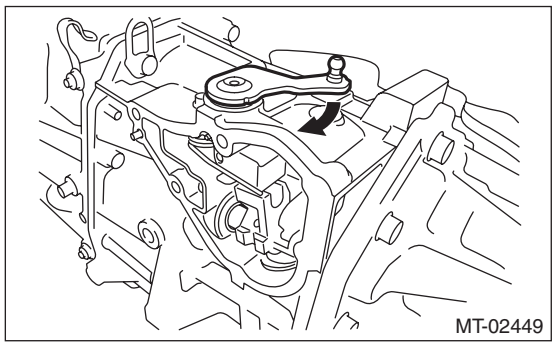

20) Temporarily install the transfer case assembly.

21) Install the shift lever COMPL, then insert the remover or similar tool instead of straight pin.

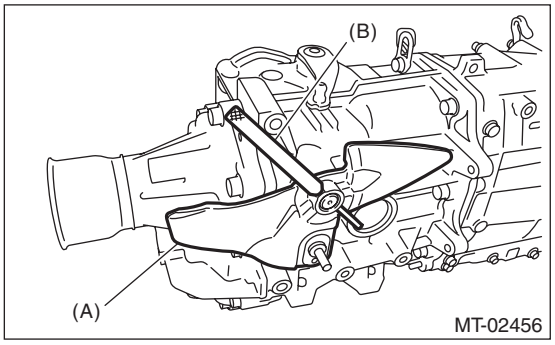

(A) Shift lever COMPL
(B) Remover

22) Operate the selector arm and remover to confirm the correct shifting into each gear is possible.
23) Install the transfer case assembly.

Tightening torque:
24.5 N·m (2.5 kgf-m, 18.1 ft-lb)

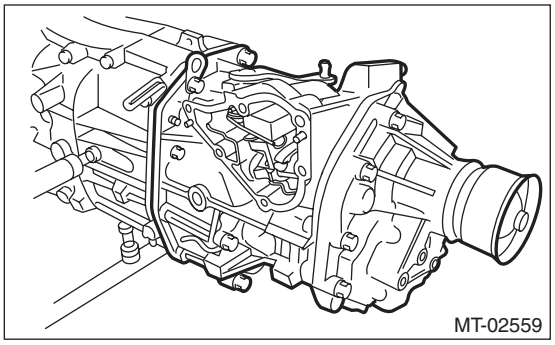

24) Install the shift lever COMPL and secure it with the straight pin.

NOTE:
Use a new straight pin.

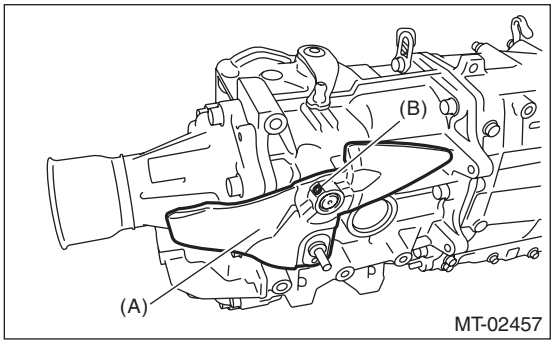

(A) Shift lever COMPL
(B) Straight pin

25) Install the transfer cover.
(1) Temporarily install the transfer cover mounting bolts.
(2) Tighten bolts in order of (B), (A), (C), (D).

Tightening torque:
15 N·m (1.5 kgf-m, 11.1 ft-lb)

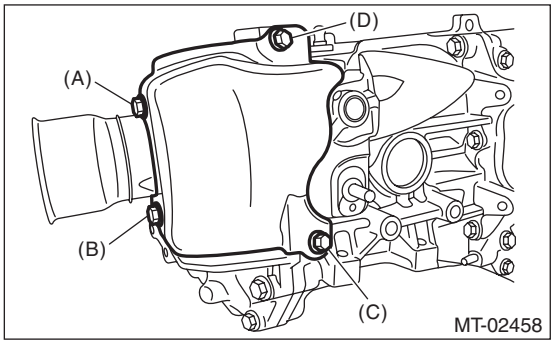

26) Apply liquid gasket seamlessly.

Liquid gasket:
THREE BOND 1215B or equivalent

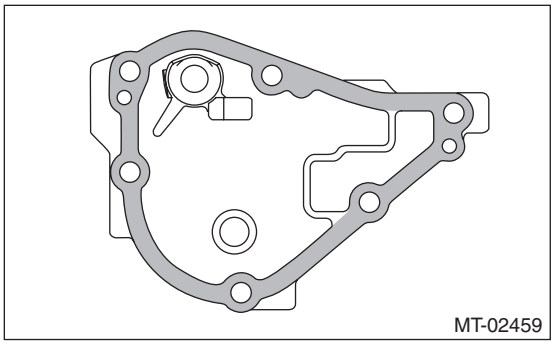

27) Install the transmission cover.

Tightening torque:
25 N·m (2.5 kgf-m, 18.4 ft-lb)

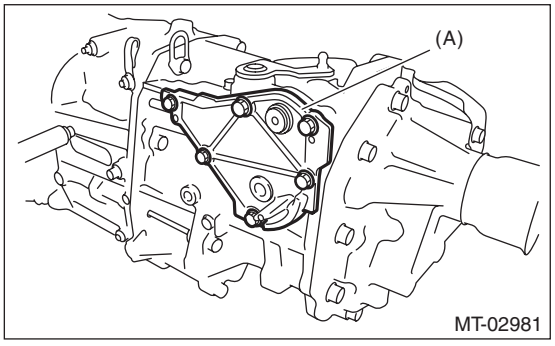

(A) Transmission cover

28) Install the back-up light switch and the neutral position switch. <Ref. to 6MT(TY75)-47, INSTALLATION, Switches and Harness.>
29) Install the manual transmission assembly to the vehicle. <Ref. to 6MT(TY75)-30, INSTALLATION, Manual Transmission Assembly.>

C: DISASSEMBLY

1. TRANSFER CASE

1) Remove the interlock plate.

NOTE:
Do not remove the precoat bolt (B) if the parts are assembled as a transmission assembly.

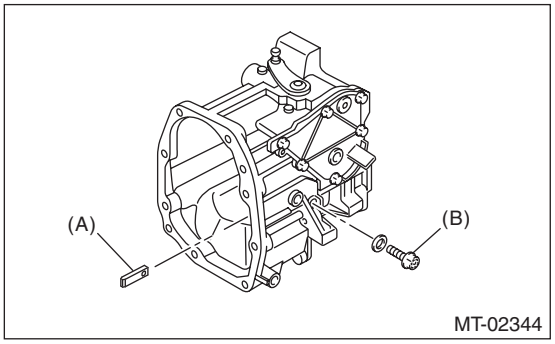

(A) Interlock plate
(B) Precoat bolt

2) Remove the shift link assembly. <Ref. to 6MT(TY75)-71, REMOVAL, Shift Link Assembly.>

2. EXTENSION CASE

1) Remove the transfer drive gear assembly. <Ref. to 6MT(TY75)-62, REMOVAL, Transfer Drive Gear.>
2) Remove the oil seal from the extension case. <Ref. to 6MT(TY75)-41, REPLACEMENT, Oil Seal.>
3) Remove the dust cover.

D: ASSEMBLY

1. TRANSFER CASE

1) Install the shift link assembly to the transfer case. <Ref. to 6MT(TY75)-77, INSTALLATION, Shift Link Assembly.>
2) Install the interlock plate.

NOTE:
- Use a new bolt and gasket.
- Clean the bolt threads before installing the interlock plate.

Tightening torque:
20 N·m (2.0 kgf-m, 14.8 ft-lb)

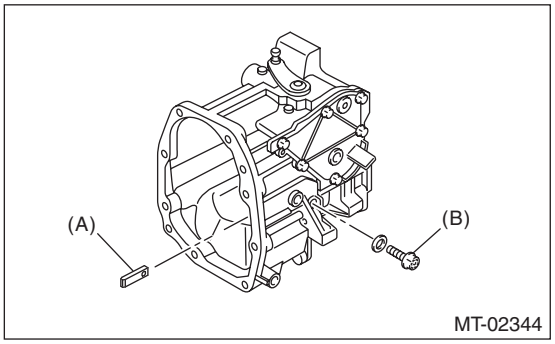

(A) Interlock plate
(B) Precoat bolt

2. EXTENSION CASE

1) Using the ST, install the oil seal to the extension case. <Ref. to 6MT(TY75)-41, REPLACEMENT, Oil Seal.>

NOTE:
Use a new oil seal.

2) Install the dust cover.

3) Install the transfer drive gear to the extension case. <Ref. to 6MT(TY75)-62, INSTALLATION, Transfer Drive Gear.>

11.Transfer Drive Gear

A: REMOVAL

1) Remove the manual transmission assembly from the vehicle. <Ref. to 6MT(TY75)-26, REMOVAL, Manual Transmission Assembly.>
2) Remove the back-up light switch and the neutral position switch. <Ref. to 6MT(TY75)-46, REMOVAL, Switches and Harness.>
3) Remove the transfer case together with the extension case assembly. <Ref. to 6MT(TY75)-51, REMOVAL, Transfer Case and Extension Case Assembly.>
4) Remove the extension case assembly.
5) Remove the transfer driven gear. <Ref. to 6MT(TY75)-65, REMOVAL, Transfer Driven Gear.>
6) Remove the transfer drive gear.

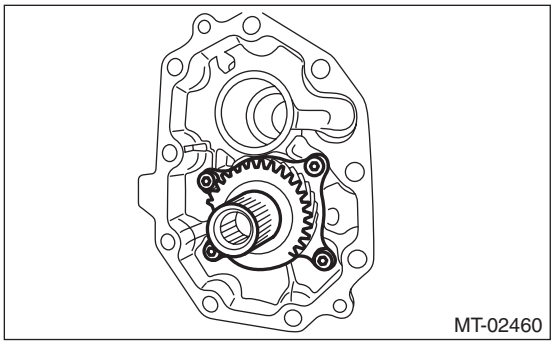

B: INSTALLATION

1) Install the transfer drive gear.

Tightening torque:
26 N·m (2.7 kgf-m, 19.2 ft-lb)

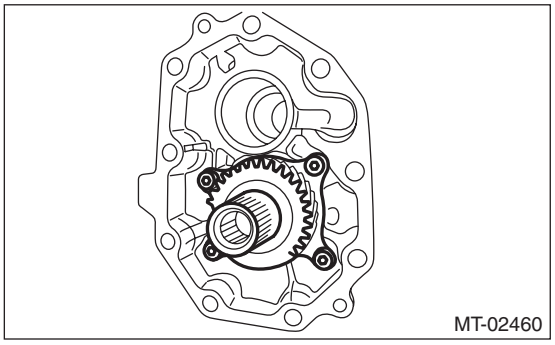

2) Install the transfer driven gear. <Ref. to 6MT(TY75)-66, INSTALLATION, Transfer Driven Gear.>
3) Select the adjusting washer. <Ref. to 6MT(TY75)-53, INSTALLATION, Transfer Case and Extension Case Assembly.>
4) Install the transfer case and the extension case assembly. <Ref. to 6MT(TY75)-53, INSTALLATION, Transfer Case and Extension Case Assembly.>
5) Install the back-up light switch and the neutral position switch. <Ref. to 6MT(TY75)-47, INSTALLATION, Switches and Harness.>
6) Install the manual transmission assembly to the vehicle. <Ref. to 6MT(TY75)-30, INSTALLATION, Manual Transmission Assembly.>

C: DISASSEMBLY

1) Remove the snap ring.

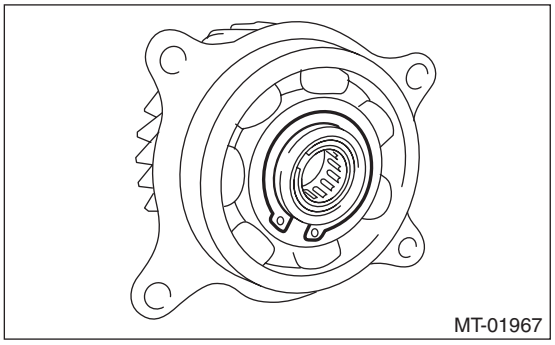

2) Remove the ball bearing.
ST 899864110 REMOVER

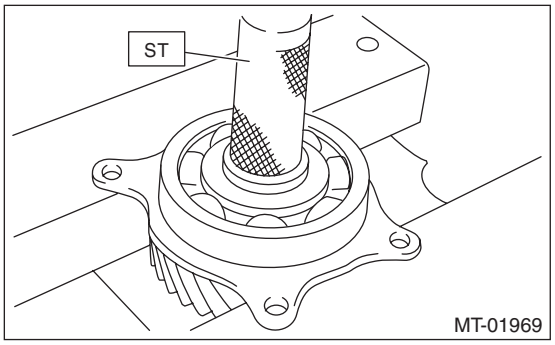

3) Remove the snap ring from transfer drive gear, and remove the needle bearing.

D: ASSEMBLY

1) Install the needle bearing and snap ring to the transfer drive gear.
2) Set the ST to the ball bearing inner race, then install the transfer drive gear.

CAUTION:
Do not apply a load in excess of 10 kN (1 ton, 1.1 US ton, 1.0 Imp ton).

NOTE:
Use a new ball bearing.
ST 398177700 INSTALLER

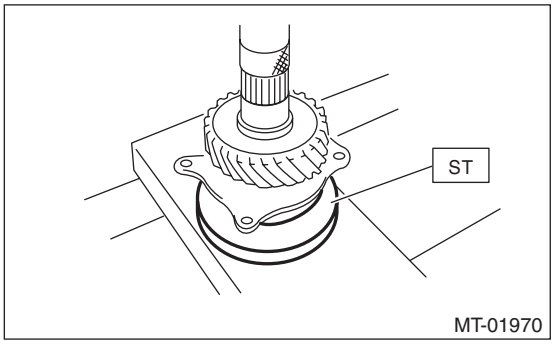

3) Install the snap ring.

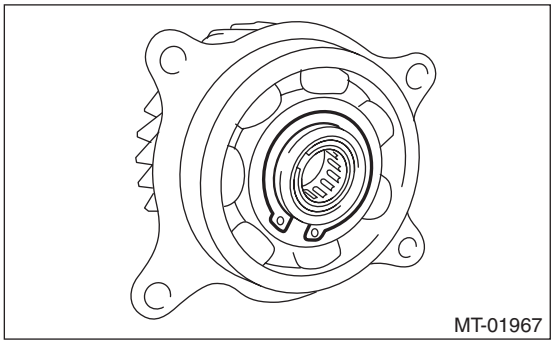

4) Inspect the clearance between the snap ring and the ball bearing. <Ref. to 6MT(TY75)-64, INSPECTION, Transfer Drive Gear.>

E: INSPECTION

1) Ball bearing
Replace the ball bearing in following cases.
- In case of broken or rusty ball bearings
- In case of worn or damaged ball bearings
- When the ball bearings fail to turn smoothly or emit noise in rotation after transmission gear oil has been applied.

2) Transfer drive gear
If the tooth face of transfer drive gear and the shaft are excessively broken or damaged, replace the transfer drive gear.
3) Measure the clearance between snap ring and inner race of ball bearing with a thickness gauge.

Clearance:
0.01 — 0.15 mm (0.0004 — 0.0059 in)

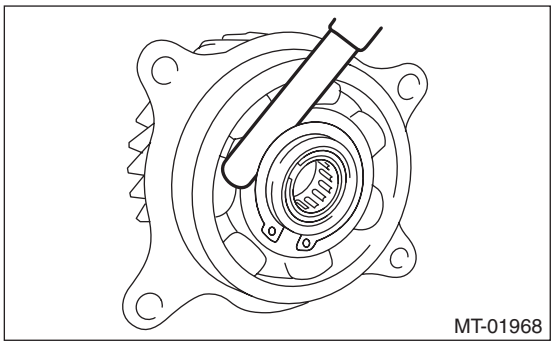

If the measurement is not within specification, select a suitable snap ring and replace it.

Snap ring (outer-30)	
Part No.	Thickness mm (in)
805030041	1.53 (0.0602)
805030042	1.65 (0.0650)
805030043	1.77 (0.0697)

12.Transfer Driven Gear

A: REMOVAL

1) Remove the manual transmission assembly from the vehicle. <Ref. to 6MT(TY75)-26, REMOVAL, Manual Transmission Assembly.>
2) Remove the back-up light switch and the neutral position switch. <Ref. to 6MT(TY75)-46, REMOVAL, Switches and Harness.>
3) Remove the transfer case together with the extension case assembly. <Ref. to 6MT(TY75)-51, REMOVAL, Transfer Case and Extension Case Assembly.>
4) Remove the extension case assembly.
5) Remove the transfer driven gear and center differential as a unit.

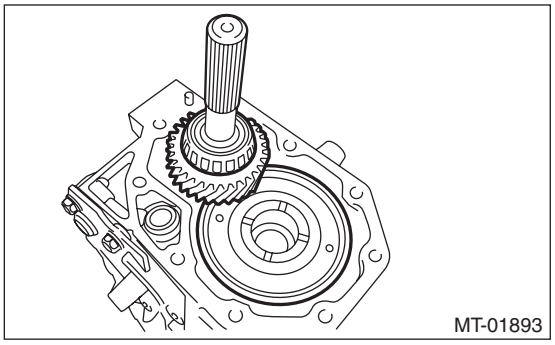

6) Remove the taper roller bearing outer race.

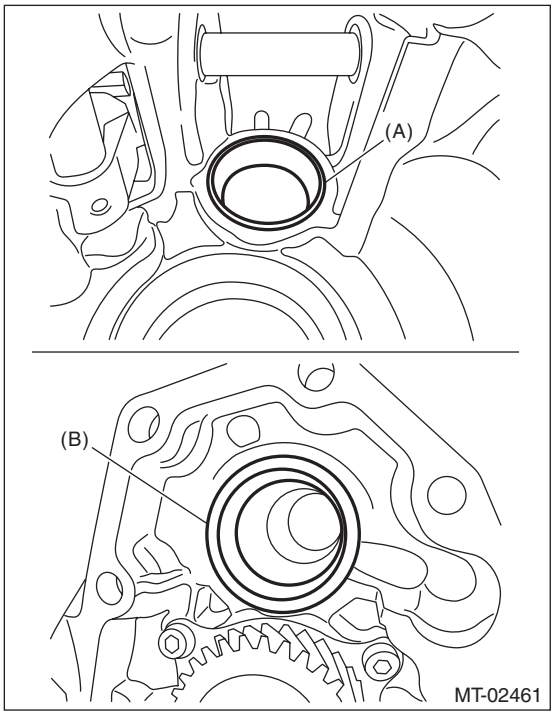

(A) Taper roller bearing (transfer case side) outer race
(B) Taper roller bearing (extension case side) outer race

B: INSTALLATION

1) Install the taper roller bearing (transfer case side) outer race.

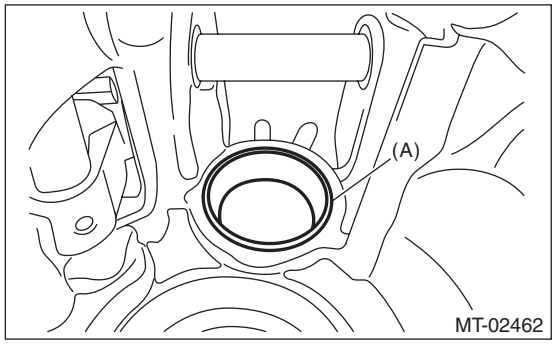

(A) Taper roller bearing (transfer case side) outer race

2) Apply a coat of grease to the taper roller bearing (transfer case side) of transfer driven gear and the roller rolling surface of the taper roller bearing (extension case side).

Grease:
NICHIMOLY N-130 or equivalent

3) Install the transfer driven gear and center differential as a unit.

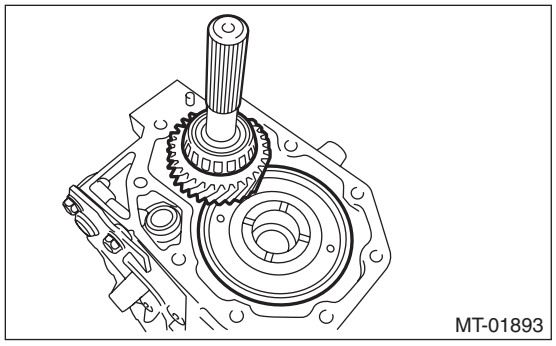

4) Select the adjusting washer. <Ref. to 6MT(TY75)-53, INSTALLATION, Transfer Case and Extension Case Assembly.>
5) Install the selected adjusting washer and taper roller bearing (extension case side) outer race to the extension case.
6) Install the transfer case and the extension case assembly. <Ref. to 6MT(TY75)-53, INSTALLATION, Transfer Case and Extension Case Assembly.>
7) Install the back-up light switch and the neutral position switch. <Ref. to 6MT(TY75)-47, INSTALLATION, Switches and Harness.>
8) Install the manual transmission assembly to the vehicle. <Ref. to 6MT(TY75)-30, INSTALLATION, Manual Transmission Assembly.>

C: DISASSEMBLY

1) Using the ST, remove the taper roller bearing (extension case side).
ST 498077000 REMOVER

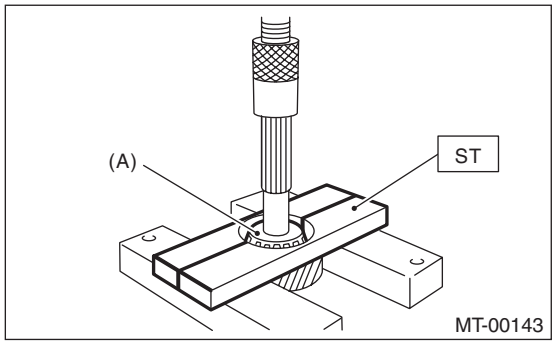

(A) Taper roller bearing (extension case side)

2) Using ST1 and ST2, remove the taper roller bearing (transfer case side).
ST1 498077000 REMOVER
ST2 899864100 REMOVER

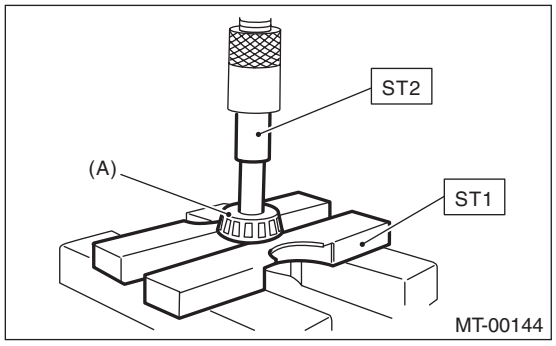

(A) Taper roller bearing (transfer case side)

D: ASSEMBLY

1) Using the ST, install the taper roller bearing (transfer case side).

CAUTION:
Do not apply a load in excess of 10 kN (1 ton, 1.1 US ton, 1.0 Imp ton).

NOTE:
Be careful when handling because the taper roller bearing and the outer race are used as a set.
ST 927640000 INSTALLER

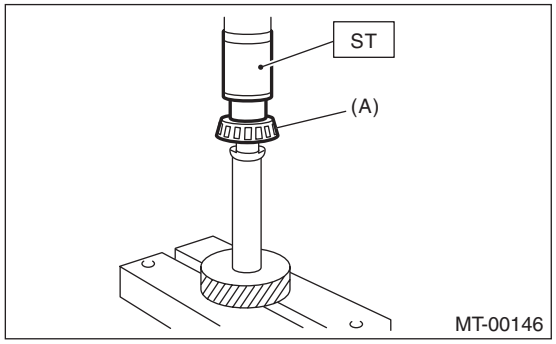

(A) Taper roller bearing (transfer case side)

2) Using the ST, install the taper roller bearing (extension case side).

CAUTION:
Do not apply a load in excess of 10 kN (1 ton, 1.1 US ton, 1.0 Imp ton).

NOTE:
Be careful when handling because the taper roller bearing and the outer race are used as a set.
ST1 498175500 INSTALLER
ST2 899864100 REMOVER

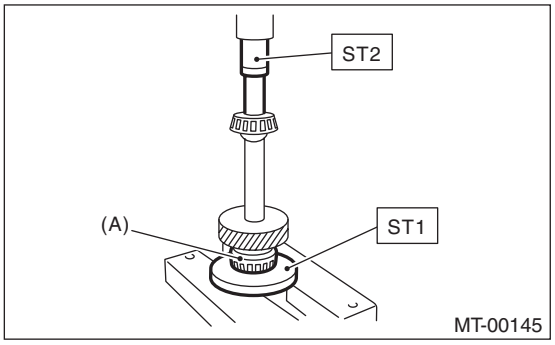

(A) Taper roller bearing (extension case side)

E: INSPECTION

1) Taper roller bearing
Replace the taper roller bearing in the following cases.
- In case of broken or rusty taper roller bearings
- In case of worn or damaged taper roller bearings
- When the taper roller bearings fail to turn smoothly or emit noise in rotation after transmission gear oil has been applied.

2) Transfer driven gear
If the tooth face of transfer driven gear and the shaft are excessively broken or damaged, replace the transfer driven gear.

13.Center Differential

A: REMOVAL

1) Remove the manual transmission assembly from the vehicle. <Ref. to 6MT(TY75)-26, REMOVAL, Manual Transmission Assembly.>
2) Remove the back-up light switch and the neutral position switch. <Ref. to 6MT(TY75)-46, REMOVAL, Switches and Harness.>
3) Remove the transfer case together with the extension case assembly. <Ref. to 6MT(TY75)-51, REMOVAL, Transfer Case and Extension Case Assembly.>
4) Remove the extension case assembly.
5) Remove the center differential and transfer driven gear as a unit. <Ref. to 6MT(TY75)-65, REMOVAL, Transfer Driven Gear.>

B: INSTALLATION

1) Install the center differential and transfer driven gear into the transfer case as a unit. <Ref. to 6MT(TY75)-66, INSTALLATION, Transfer Driven Gear.>
2) Select the adjusting washer. <Ref. to 6MT(TY75)-53, INSTALLATION, Transfer Case and Extension Case Assembly.>
3) Install the transfer driven gear. <Ref. to 6MT(TY75)-66, INSTALLATION, Transfer Driven Gear.>
4) Install the transfer case together with the extension case assembly. <Ref. to 6MT(TY75)-53, INSTALLATION, Transfer Case and Extension Case Assembly.>
5) Install the back-up light switch and the neutral position switch. <Ref. to 6MT(TY75)-47, INSTALLATION, Switches and Harness.>
6) Install the manual transmission assembly to the vehicle. <Ref. to 6MT(TY75)-30, INSTALLATION, Manual Transmission Assembly.>

C: DISASSEMBLY

Remove the ball bearing using ST.

NOTE:
Center differential is a non-disassembled part which should not be disassembled.
ST 498077600 REMOVER

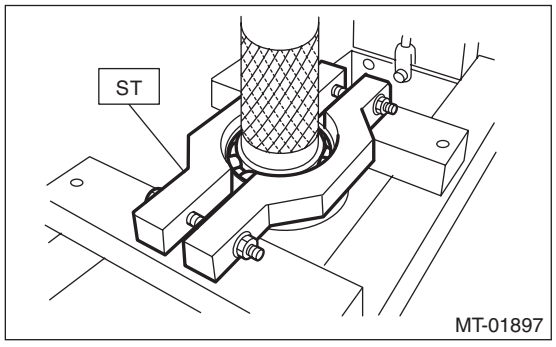

D: ASSEMBLY

Install the ball bearings.

CAUTION:
Do not apply a load in excess of 10 kN (1 ton, 1.1 US ton, 1.0 Imp ton).

NOTE:
Use a new ball bearing.

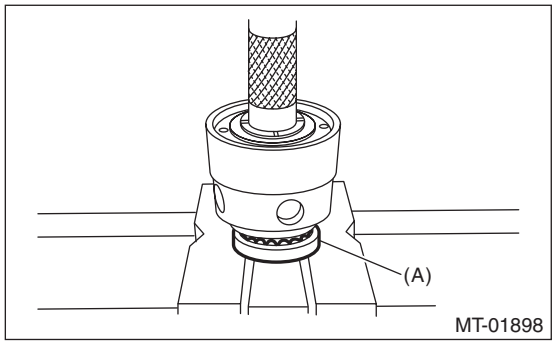

(A) Ball bearing

E: INSPECTION

1) Ball bearing
Replace the ball bearing in following cases.
- In case of broken or rusty ball bearings
- In case of worn or damaged ball bearings
- When the ball bearings fail to turn smoothly or emit noise in rotation after transmission gear oil has been applied.
- When the ball bearing has other defects.

2) Center differential
If there is wear or damage, replace the center differential assembly.

14.Shift Link Assembly

A: REMOVAL

1) Remove the manual transmission assembly from the vehicle. <Ref. to 6MT(TY75)-26, REMOVAL, Manual Transmission Assembly.>
2) Remove the back-up light switch and the neutral position switch. <Ref. to 6MT(TY75)-46, REMOVAL, Switches and Harness.>
3) Remove the transfer case together with the extension case assembly. <Ref. to 6MT(TY75)-51, REMOVAL, Transfer Case and Extension Case Assembly.>
4) Remove the extension case assembly.
5) Remove the center differential and transfer driven gear as a unit. <Ref. to 6MT(TY75)-65, REMOVAL, Transfer Driven Gear.>
6) Pull out the straight pin.

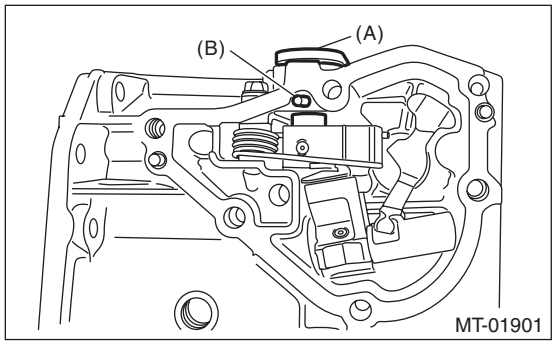

(A) Selector lever COMPL
(B) Straight pin

7) Use the ST to remove the straight pin, and remove the selector lever COMPL.
ST 398791700 REMOVER

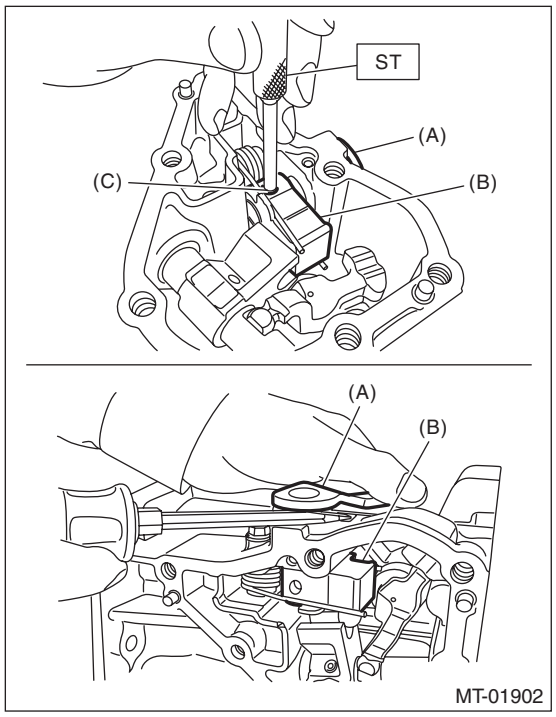

(A) Selector lever COMPL
(B) Selector arm No. 2
(C) Straight pin

8) Remove the selector arm No. 2.

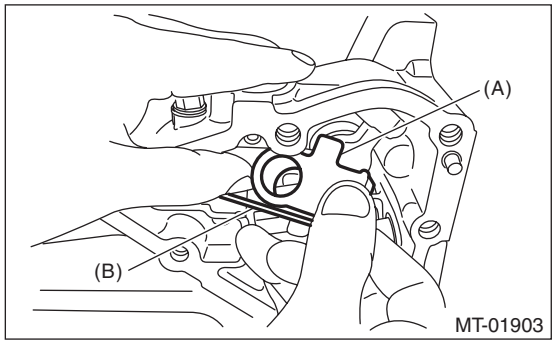

(A) Selector arm No. 2
(B) Neutral set spring

9) Remove the bolts and remove the shifter arm collar and neutral set spring.

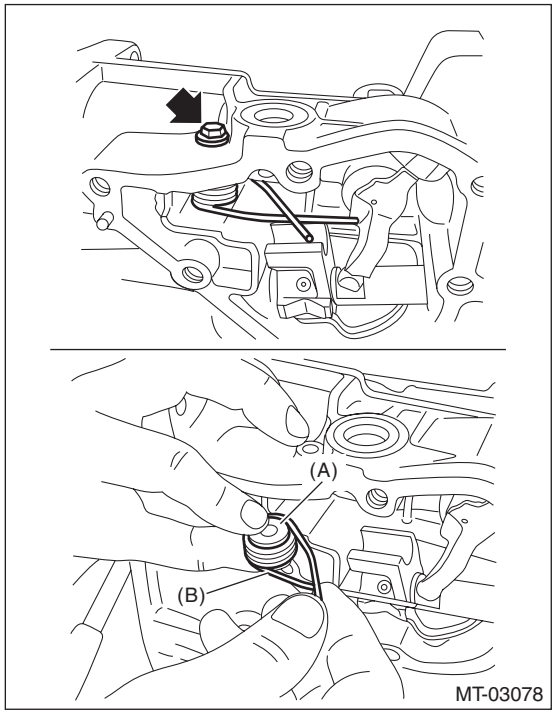

(A) Shifter arm collar
(B) Neutral set spring

10) Remove the shifter arm No. 2, adjusting washers and thrust bearing.

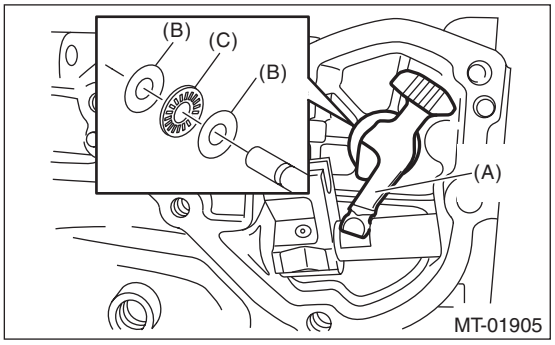

(A) Shifter arm No. 2
(B) Adjusting washer
(C) Thrust bearing

11) Use the ST to remove the straight pin, and remove the shifter arm and selector arm.
ST 398791700 REMOVER

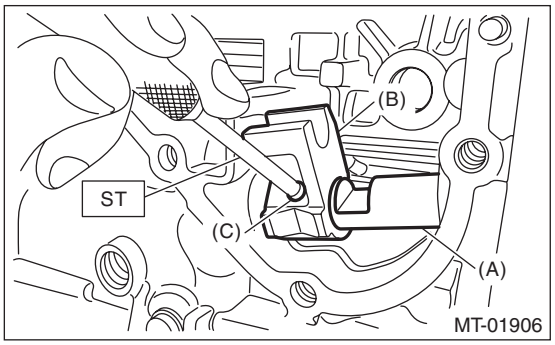

(A) Shifter arm
(B) Selector arm
(C) Straight pin

12) Remove the oil seal using a screwdriver wrapped with tape, etc.

NOTE:
The illustration shows the oil seal of selector lever COMPL. Perform the same procedures for removing the shifter arm No. 2.

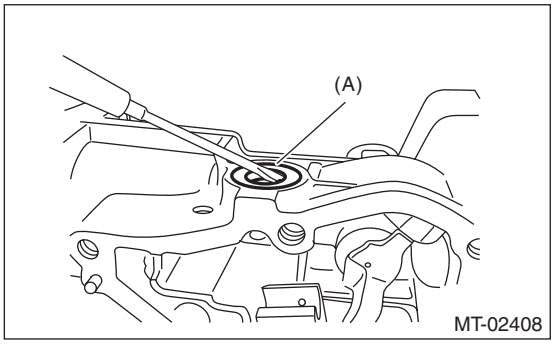

(A) Oil seal

13) Remove the needle bearing by using a tube with the diameter of 20 mm (0.79 in) or 21 mm (0.83 in) and the ST.
ST 18763AA000 COMPRESSOR SHAFT

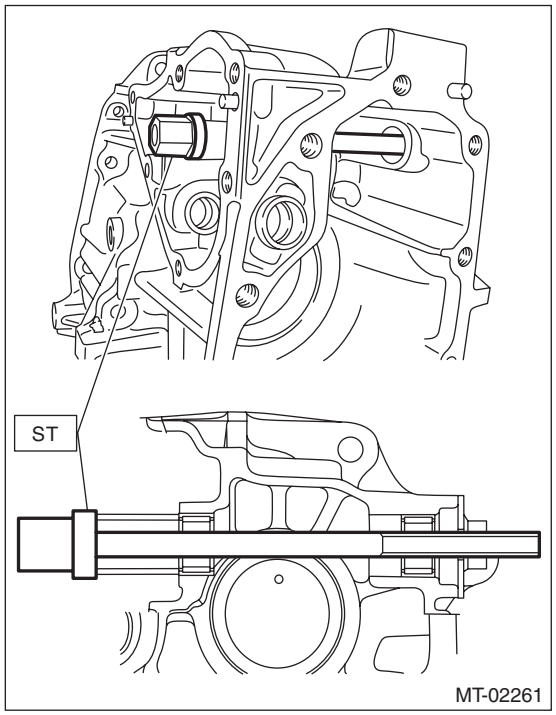

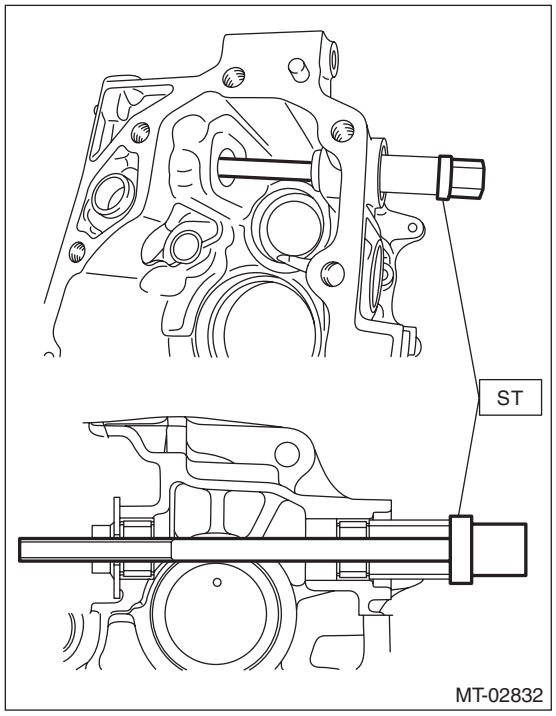

14) Set ST1, ST2 and transfer case to a press.

NOTE:
- Set the ST2 under ST1.
- Set the transfer case so that the hole for shifter arm is positioned vertically.

ST1 498267300 CYLINDER HEAD TABLE
ST2 498267200 CYLINDER HEAD TABLE

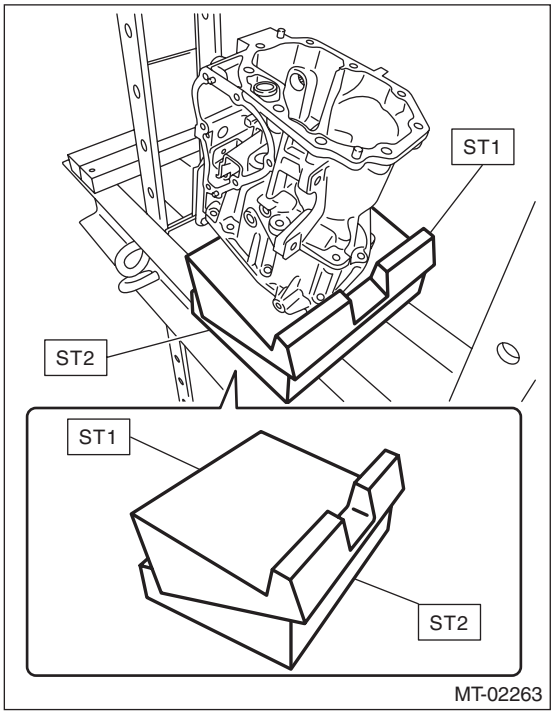

15) Remove the roller bearing by using a round bar with the diameter of 22 mm (0.87 in) or 23 mm (0.91 in).

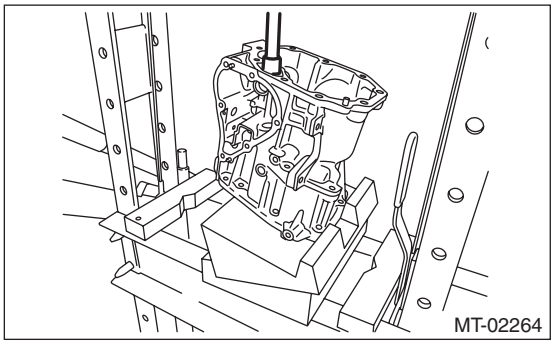

16) Flip over the transfer case, and set an iron plate between transfer case and ST.

NOTE:
- Insert the iron plate which is thicker than the exposed length of the transfer case knock pin between the ST and transfer case.
- Set the iron plate so that the transfer case knock pin does not ride on the iron plate.

17) Remove the roller bearing by using a tube with the diameter of 22 mm (0.87 in) or 23 mm (0.91 in).

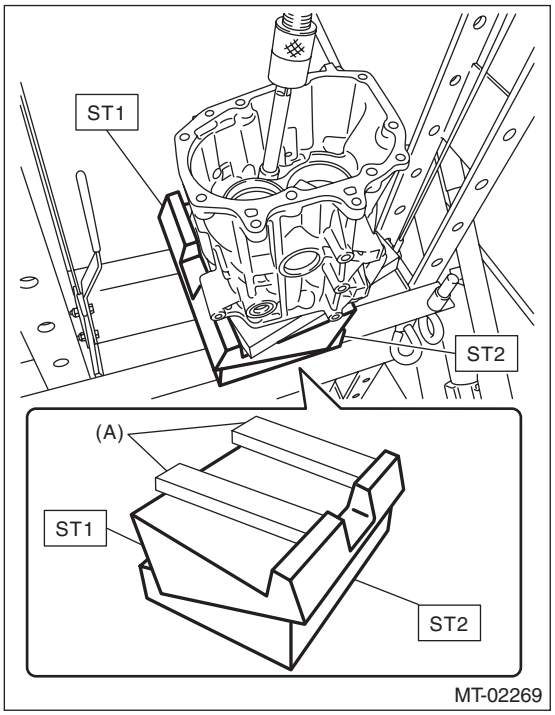

(A) Iron plate

18) Remove the shift accent plunger and the check ball spring.

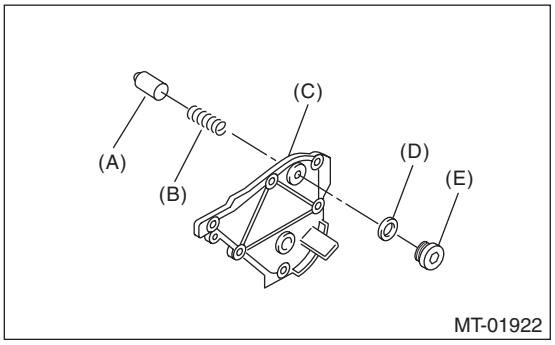

(A) Shift accent plunger
(B) Checking ball spring
(C) Transmission cover
(D) Seal ring
(E) Seal bolt

B: INSTALLATION

1) Clean the mating surface of the transmission cover and transfer case.
2) Install the shift accent plunger and the check ball spring.

NOTE:
Use new seal rings.

Tightening torque:
25 N·m (2.5 kgf-m, 18.4 ft-lb)

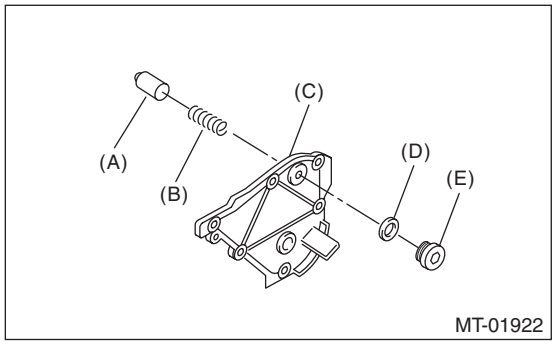

(A) Shift accent plunger
(B) Checking ball spring
(C) Transmission cover
(D) Seal ring
(E) Seal bolt

3) Using the ST, install the needle bearing.

NOTE:
- Use a new needle bearing.
- If the press-fit depth exceeds the service limit, replace with a new needle bearing.

ST1 18763AA000 COMPRESSOR SHAFT
ST2 498277200 STOPPER SET

Press-fit depth of needle bearing:
A: 8.5±0.2 mm (0.33±0.01 in) from the end of transfer case

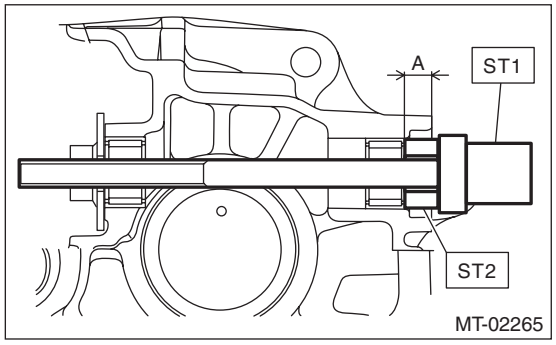

B: 0.2±0.2 mm (0.01±0.01 in) from the end of transfer case

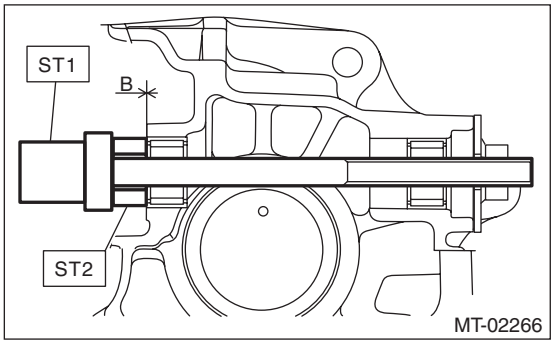

4) Set ST1, ST2 and transfer case to a press.

NOTE:
- Set the ST2 under ST1.
- Set the transfer case so that the hole for shifter arm is positioned vertically.

ST1 498267300 CYLINDER HEAD TABLE
ST2 498267200 CYLINDER HEAD TABLE

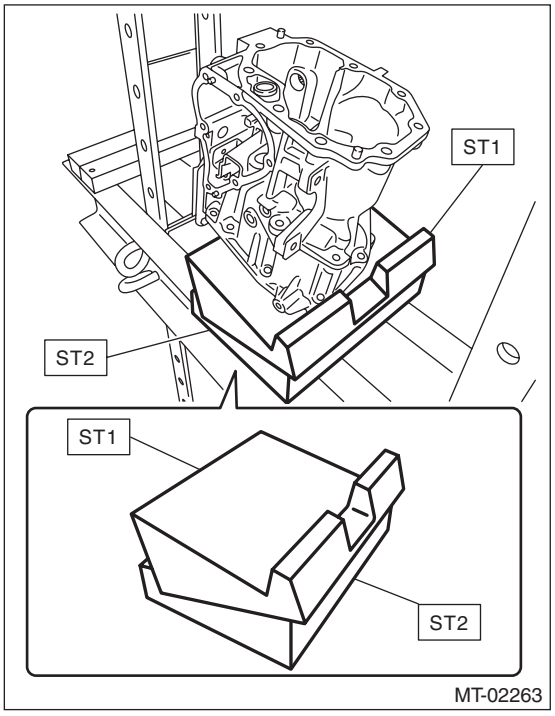

5) Using the ST, install the roller bearing.

NOTE:
- Use a new roller bearing.
- Gradually perform the press-fit operation while measuring the press-fit depth.
- If the press-fit depth exceeds the service limit, replace with a new bearing.

ST 899864100 REMOVER

Press-fit depth of roller bearing:
A: 5.1±0.2 mm (0.20±0.01 in) from the finished surface of transfer case

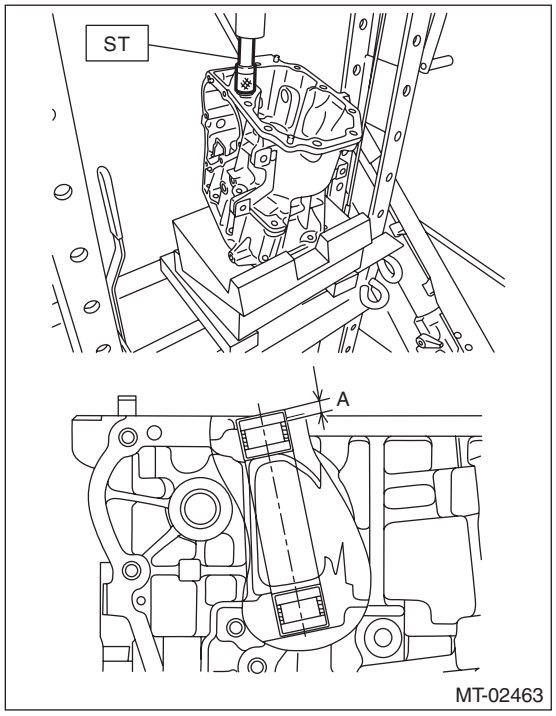

6) Flip over the transfer case, and set an iron plate between transfer case and ST.

NOTE:
- Insert the iron plate which is thicker than the exposed length of the transfer case knock pin between the ST and transfer case.
- Set the parts while taking care that the transfer case knock pin and the roller bearing do not ride over the iron plate.

7) Using the ST, install the roller bearing.

NOTE:
- Use a new roller bearing.
- Gradually perform the press-fit operation while measuring the press-fit depth.
- If the press-fit depth exceeds the service limit, replace with a new bearing.

ST 899864100 REMOVER

Press-fit depth of roller bearing:
A: 0±0.2 mm (0±0.01 in) from the end of transfer case

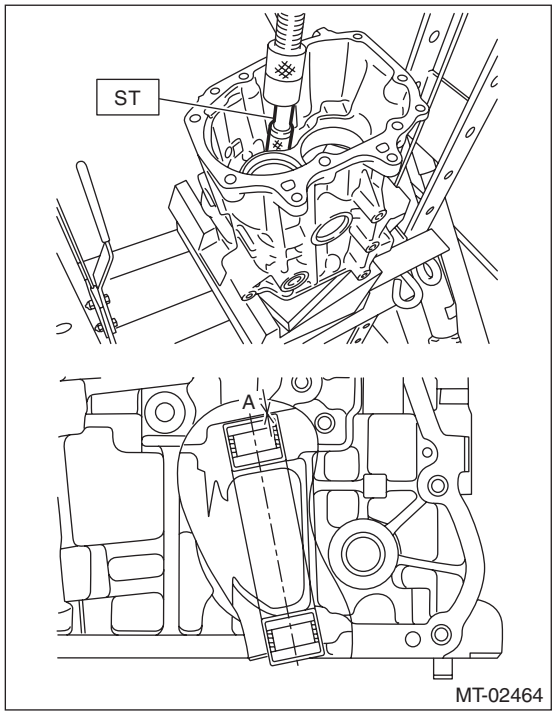

8) Using the ST, install the oil seal.

NOTE:
- Use a new oil seal.
- The illustration shows the oil seal of selector lever COMPL. Perform the same procedures for installing the oil seal of shifter arm No. 2.
- Apply transmission gear oil to the oil seal lips.

ST 18657AA000 INSTALLER

Press-fit depth of oil seal:
1±0.2 mm (0.04±0.01 in) from the end of transfer case

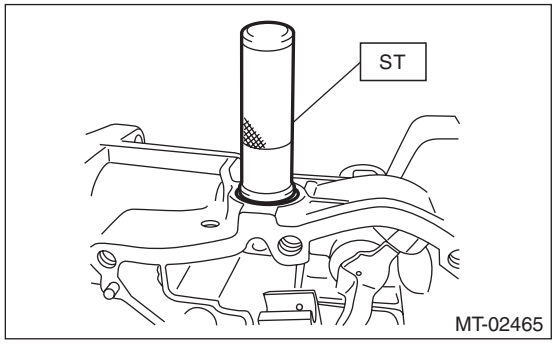

9) Insert the shifter arm and fix with a straight pin.

NOTE:
Use a new straight pin.
ST 398791700 REMOVER

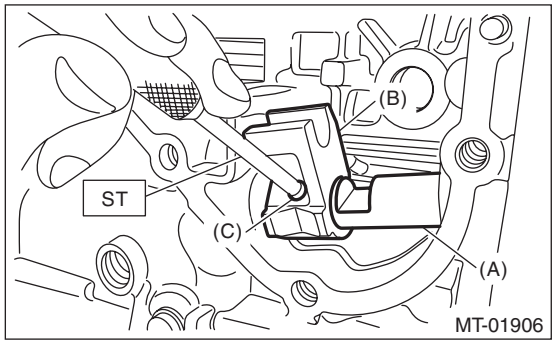

(A) Shifter arm
(B) Selector arm
(C) Straight pin

10) Install the shifter arm No. 2, adjusting washers and thrust bearing.

CAUTION:
Be careful not to damage the oil seal.

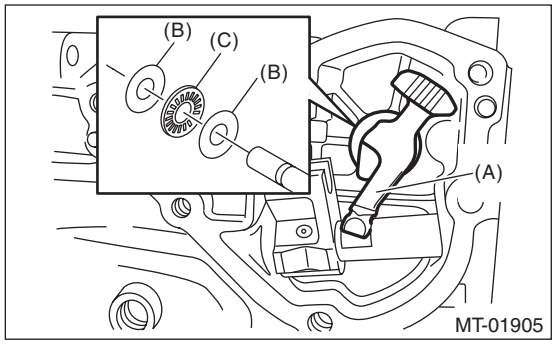

(A) Shifter arm No. 2
(B) Adjusting washer
(C) Thrust bearing

11) Install the shifter arm collar and neutral set spring.

NOTE:
Use a new gasket.

Tightening torque:
6.4 N·m (0.7 kgf-m, 4.7 ft-lb)

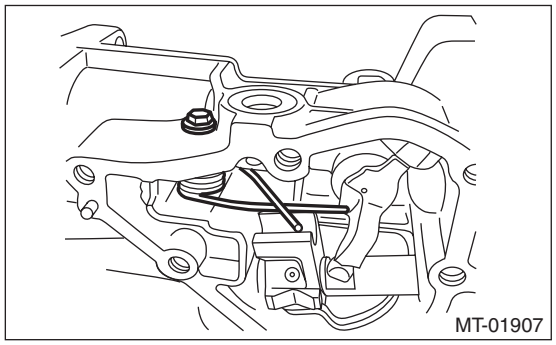

12) Install the selector arm No. 2.

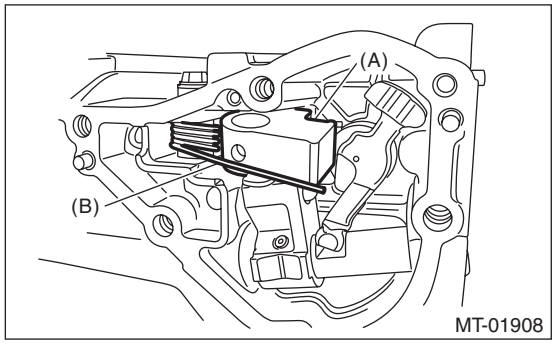

(A) Selector arm No. 2
(B) Neutral set spring

13) Insert the selector lever COMPL and fix with a straight pin.

CAUTION:
Be careful not to damage the oil seal.

NOTE:
Use a new straight pin.
ST 398791700 REMOVER

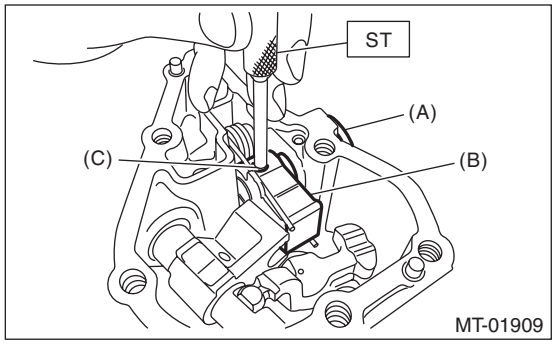

(A) Selector lever COMPL
(B) Selector arm No. 2
(C) Straight pin

14) Insert a new straight pin.

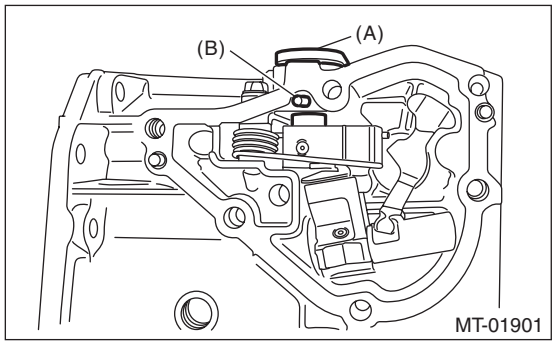

(A) Selector lever COMPL
(B) Straight pin

15) Install the center differential and transfer driven gear as a unit.
16) Install the transfer case and the extension case assembly. <Ref. to 6MT(TY75)-53, INSTALLATION, Transfer Case and Extension Case Assembly.>

17) Apply liquid gasket seamlessly.

Liquid gasket:
THREE BOND 1215B or equivalent

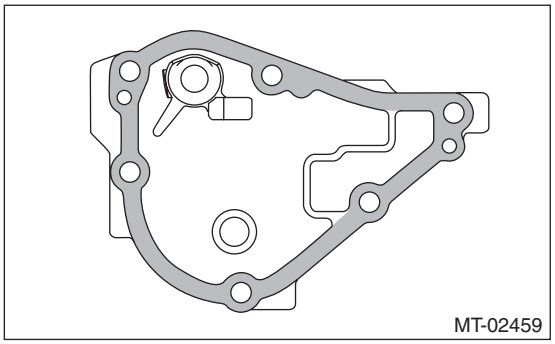

18) Install the transmission cover.

Tightening torque:
25 N·m (2.5 kgf-m, 18.4 ft-lb)

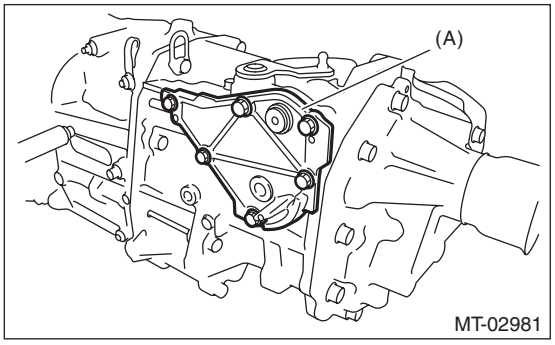

(A) Transmission cover

19) Install the back-up light switch and the neutral position switch. <Ref. to 6MT(TY75)-47, INSTALLATION, Switches and Harness.>
20) Install the manual transmission assembly to the vehicle. <Ref. to 6MT(TY75)-30, INSTALLATION, Manual Transmission Assembly.>

15.Transmission Case

A: REMOVAL

1) Remove the manual transmission assembly from the vehicle. <Ref. to 6MT(TY75)-26, REMOVAL, Manual Transmission Assembly.>
2) Remove the clutch release lever and the release bearing. <Ref. to CL-17, REMOVAL, Release Bearing and Lever.>
3) Remove the transfer case together with the extension case assembly. <Ref. to 6MT(TY75)-51, REMOVAL, Transfer Case and Extension Case Assembly.>
4) Remove the bearing mounting bolt.

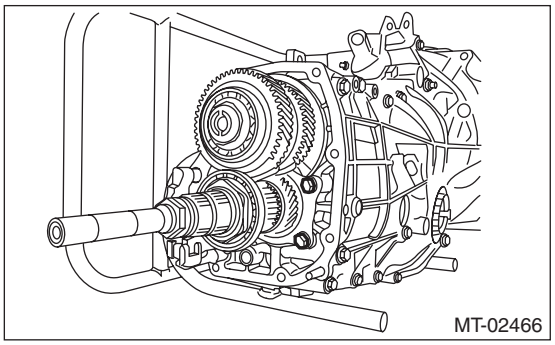
MT-02466

5) Remove the main shaft rear plate.

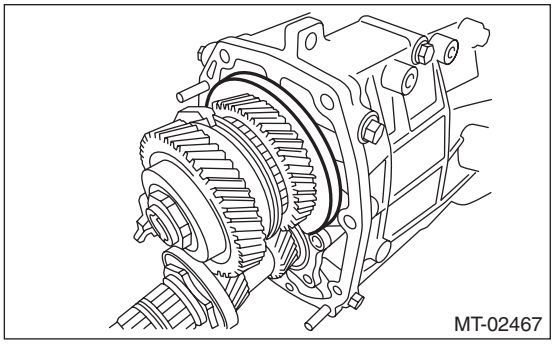
MT-02467

6) Remove the bolts and nuts, and separate the transmission case into the right and left cases.

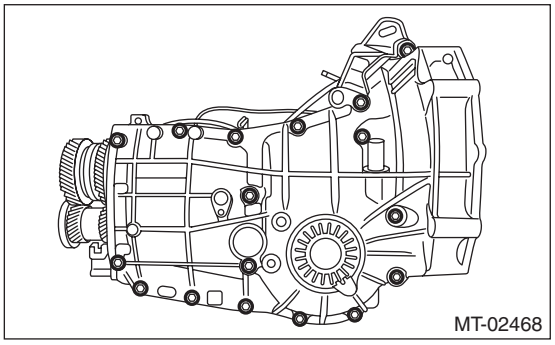
MT-02468

7) Remove the drive pinion shaft assembly.

NOTE:
Use a hammer handle, etc. to remove if too tight.

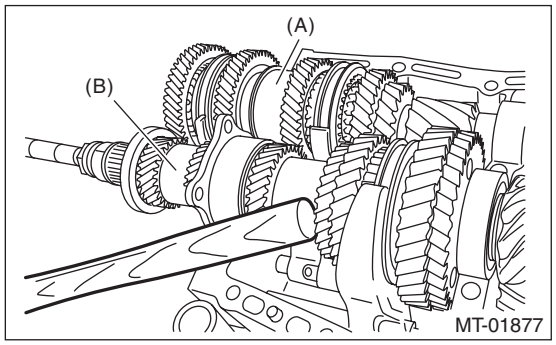

(A) Main shaft ASSY
(B) Drive pinion shaft ASSY

8) Remove the main shaft assembly.
9) Remove the front differential assembly.

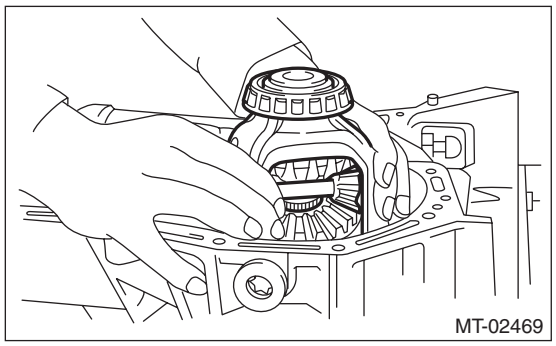

10) Remove the differential side retainers and taper roller bearing outer races on the left and right sides. <Ref. to 6MT(TY75)-125, REMOVAL, Front Differential Assembly.>

NOTE:
Do not confuse the right and left taper roller bearing outer races.
11) Remove the reverse idler gear. <Ref. to 6MT(TY75)-137, REMOVAL, Reverse Idler Gear.>
12) Remove the shifter fork and rod. <Ref. to 6MT(TY75)-149, REMOVAL, Shifter Fork and Rod.>
13) Remove the front oil guide.

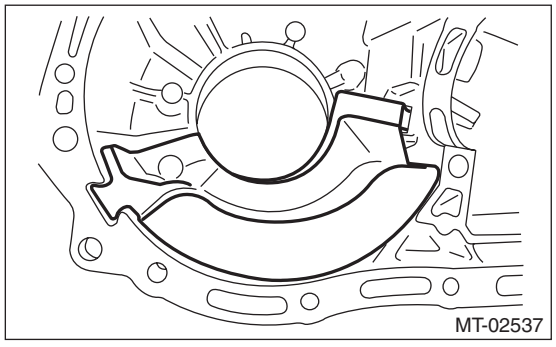

B: INSTALLATION

1) Wipe off grease, oil and dust on the mating surfaces of transmission cases with cleaning solvent.
2) Install the shifter fork and rod. <Ref. to 6MT(TY75)-151, INSTALLATION, Shifter Fork and Rod.>
3) Install the reverse idler gear. <Ref. to 6MT(TY75)-139, INSTALLATION, Reverse Idler Gear.>
4) Select the drive pinion shim. <Ref. to 6MT(TY75)-106, INSTALLATION, Drive Pinion Shaft Assembly.>
5) Install the taper roller bearing outer race to the transmission case LH side, and install the differential side retainer with the O-ring removed.
6) Install the front differential assembly.
7) Install the main shaft assembly.

NOTE:
Align to install the needle bearing knock pin hole to the transmission case knock pin.
8) Install the selected drive pinion shims and drive pinion shaft assembly.

NOTE:
Align the roller bearing knock pin hole to the transmission case knock pin.
9) Align the left and right side of the transmission case, and tighten it with 17 mounting bolts.

NOTE:
- Insert bolts (11) and (16) from the LH side of the transmission case.
- Match the cases together so that the drive pinion shims are not caught between the cases.

Tightening torque:
8 mm bolt
25 N·m (2.5 kgf-m, 18.4 ft-lb)
★ ***10 mm bolt***
40 N·m (4.1 kgf-m, 29.5 ft-lb)

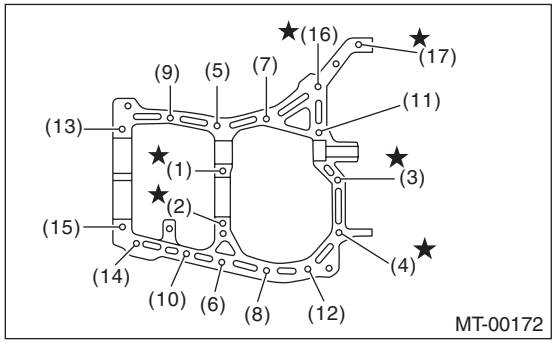

10) Install the taper roller bearing outer race to the RH side of the transmission case.
11) Tighten the bearing mounting bolts.

Tightening torque:
30 N·m (3.1 kgf-m, 22.1 ft-lb)

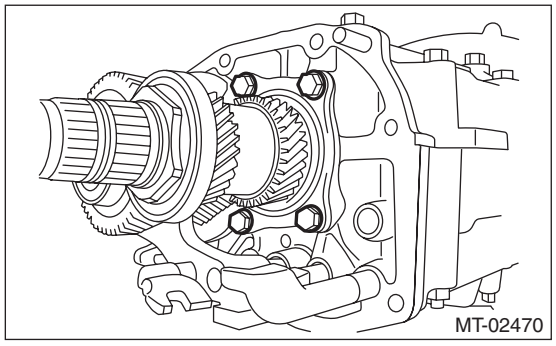

12) Perform backlash adjustment of the hypoid driven gear and preload adjustment of the taper roller bearing.

(1) Attach the ST on drive pinion shaft assembly.

ST 18667AA020 HOLDER

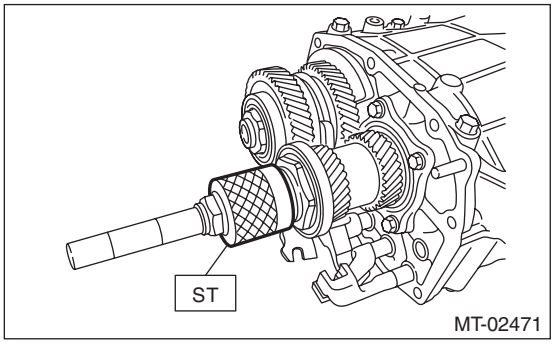

(2) Place the transmission case with the LH side facing downward, and put ST1 on the taper roller bearing outer race.

(3) Screw in the differential side retainer from the bottom into LH side case using ST2. Fit the ST3 on the main shaft. Shift the gear into 4th or 5th, and turn the shaft several times. Screw in the differential side retainer while rotating the ST3 until a slight resistance is felt on ST2.

This is the contact point of the hypoid driven gear and the drive pinion shaft. Repeat the above sequence several times to ensure the contact point.

ST1 399780104 WEIGHT
ST2 18630AA010 WRENCH COMPL RETAINER
ST3 499927100 HANDLE

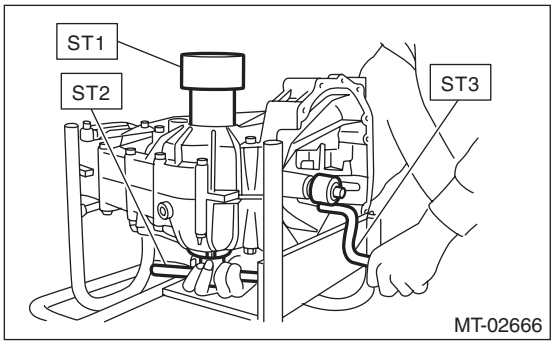

(4) Remove the WEIGHT, and screw in the differential side retainer without the O-ring into the RH side of the transmission case, and stop at the point where a slight resistance is felt.

NOTE:
In this condition, the backlash between hypoid driven gear and drive pinion shaft is zero.

ST 18630AA010 WRENCH COMPL RETAINER

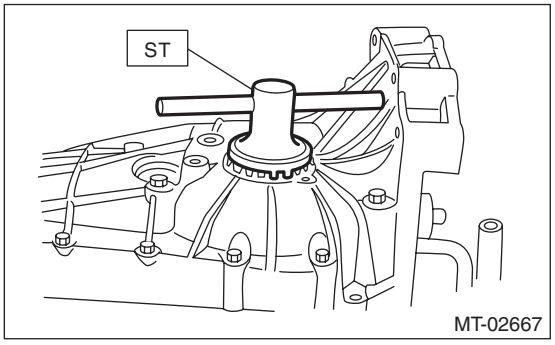

(5) Loosen the differential side retainer on the LH side of the transmission case by 3 notches, and turn the differential side retainer on the RH side of the transmission case by 3 notches in order to apply backlash.

(6) Screw in the differential side retainer of the RH side of the transmission case additionally by 1 notch in order to apply preload on taper roller bearing.

(7) Tighten temporarily both the retainer lock plates LH and RH, and put marks on both the differential side retainer and retainer lock plate for later readjustment.

NOTE:
When it is difficult to attach the retainer lock plate, turn over the retainer lock plate and attach.

(8) Turn the transmission main shaft several times while tapping around the differential side retainer lightly with plastic hammer.

13) Inspect and adjust backlash and tooth contact of the hypoid driven gear. <Ref. to 6MT(TY75)-131, INSPECTION, Front Differential Assembly.>
14) Separate the transmission case into left and right parts. <Ref. to 6MT(TY75)-84, REMOVAL, Transmission Case.>
15) Check each shifter fork. <Ref. to 6MT(TY75)-153, INSPECTION, Shifter Fork and Rod.>
16) Select a main shaft rear plate. <Ref. to 6MT(TY75)-105, ADJUSTMENT, Main Shaft Assembly.>
17) Install the front oil guide.

NOTE:
Fit in all the way.

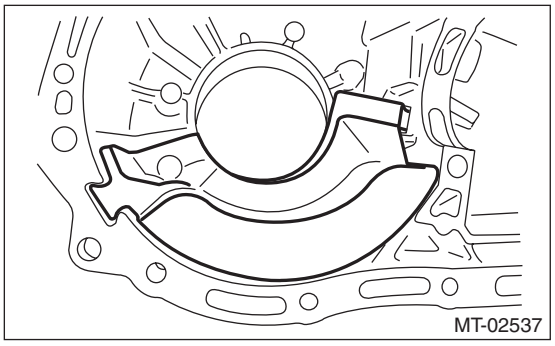
MT-02537

18) Apply liquid gasket, then join the right side and left side of the case together.

Liquid gasket:
THREE BOND 1215B or equivalent

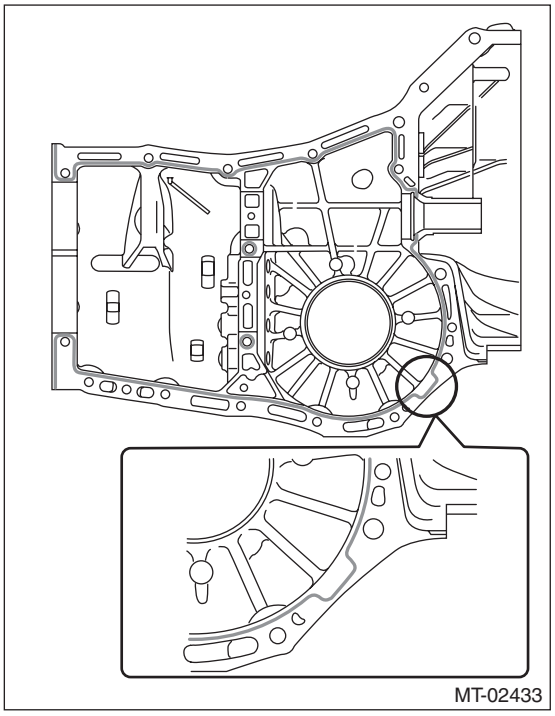
MT-02433

19) Tighten 17 bolts with brackets and clips as shown in the figure.

NOTE:
- Insert bolts (11) and (16) from the LH side of the transmission case.
- Match the cases together so that the drive pinion shims are not caught between the cases.

Tightening torque:
8 mm bolt
25 N·m (2.5 kgf-m, 18.4 ft-lb)
★ ***10 mm bolt***
40 N·m (4.1 kgf-m, 29.5 ft-lb)

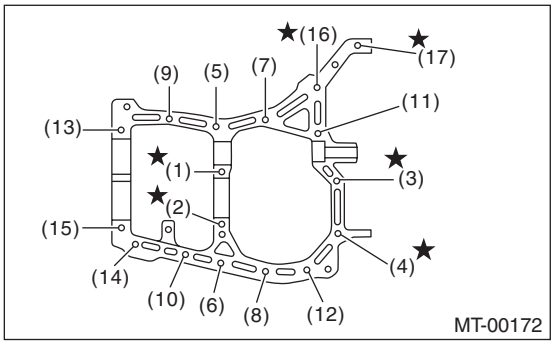

20) Tighten the bearing mounting bolts.

Tightening torque:
30 N·m (3.1 kgf-m, 22.1 ft-lb)

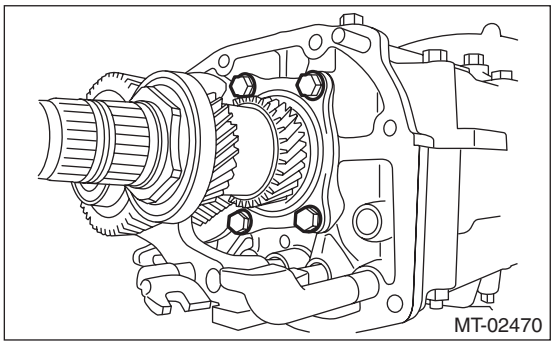

21) Remove the retainer lock plate, and loosen the differential side retainer until the groove of the O-ring appears. Fit the O-ring into the groove and tighten the differential side retainer into the position where it was not loosened.

NOTE:
- When loosening the differential side retainer, record the number of the turns made.
- Perform this for both left and right differential side retainers.
- Use new O-rings.
- Apply transmission gear oil to O-ring.

22) Install the retainer lock plate.

Tightening torque:
T: 25 N·m (2.5 kgf-m, 18.4 ft-lb)

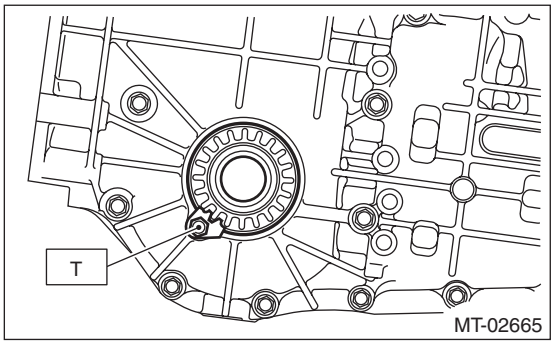

23) Install the transfer case together with the extension case assembly. <Ref. to 6MT(TY75)-53, INSTALLATION, Transfer Case and Extension Case Assembly.>
24) Install the clutch release lever and release bearing. <Ref. to CL-17, INSTALLATION, Release Bearing and Lever.>
25) Install the manual transmission assembly to the vehicle. <Ref. to 6MT(TY75)-30, INSTALLATION, Manual Transmission Assembly.>

C: INSPECTION

Check the transmission case for cracks, damage, or oil leaks.

16.Main Shaft Assembly

A: REMOVAL

1) Remove the manual transmission assembly from the vehicle. <Ref. to 6MT(TY75)-26, REMOVAL, Manual Transmission Assembly.>
2) Remove the transfer case together with the extension case assembly. <Ref. to 6MT(TY75)-51, REMOVAL, Transfer Case and Extension Case Assembly.>
3) Remove the transmission case. <Ref. to 6MT(TY75)-84, REMOVAL, Transmission Case.>
4) Remove the drive pinion shaft assembly. <Ref. to 6MT(TY75)-106, REMOVAL, Drive Pinion Shaft Assembly.>
5) Remove the main shaft assembly.

B: INSTALLATION

1) Attach the needle bearing and oil seal to the front of the main shaft assembly.

NOTE:
- Wrap the clutch splined section with vinyl tape to prevent damage to the oil seal.
- Apply NICHIMOLY N-130 or the equivalent to the sealing lip of the oil seal.
- Use a new oil seal.

2) Rotate the reverse idler sub gear by two teeth from free status in the direction of the arrow to make it engage with the reverse gear of the main shaft and install the main shaft assembly.
   (1) When the reverse idler sub gear is at free status, put alignment marks on reverse idler sub gear and reverse idler gear.
   (2) Rotate the alignment mark on the reverse idler sub gear side in the arrow direction by two teeth, and secure it with a wire.

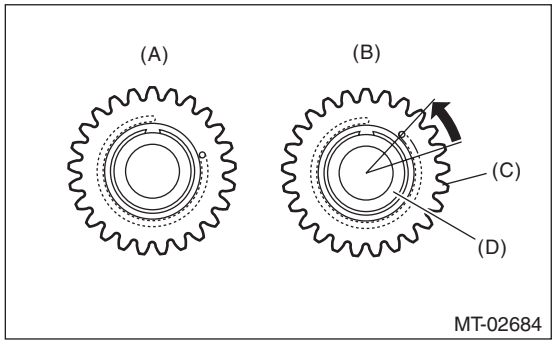

(A) Free status
(B) Set status
(C) Reverse idler sub gear
(D) Reverse idler gear

3) Fit the transmission case knock pin to the knock pin hole of the needle bearing outer race and install the main shaft assembly.

NOTE:
- Align the end face of the seal with surface (A) when installing the oil seal.

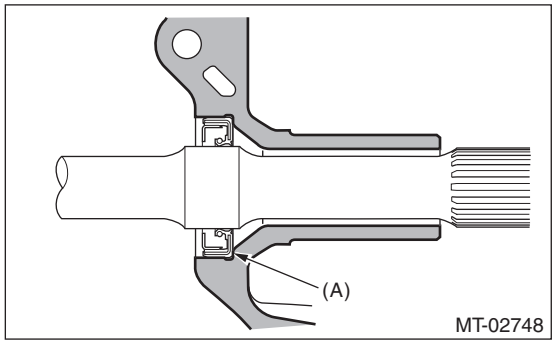

• Face the cutout portion of the snap ring for the double taper roller bearing to the drive pinion shaft assembly.

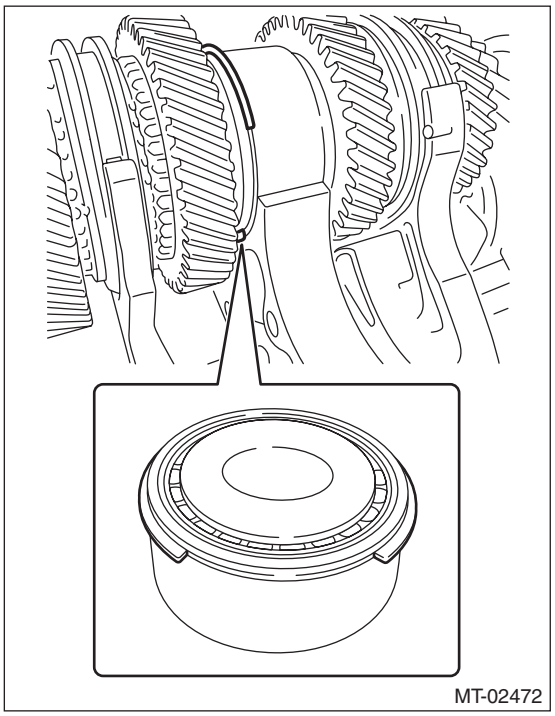

4) After installing the main shaft, check that the reverse idler gear and reverse idler sub gear are misaligned by two teeth and remove the wire.
5) Install the drive pinion shaft assembly. <Ref. to 6MT(TY75)-106, INSTALLATION, Drive Pinion Shaft Assembly.>
6) Check each shifter fork. <Ref. to 6MT(TY75)-153, INSPECTION, Shifter Fork and Rod.>
7) Select a main shaft rear plate. <Ref. to 6MT(TY75)-105, ADJUSTMENT, Main Shaft Assembly.>
8) Install the transmission case. <Ref. to 6MT(TY75)-86, INSTALLATION, Transmission Case.>
9) Install the transfer case together with the extension case assembly. <Ref. to 6MT(TY75)-53, INSTALLATION, Transfer Case and Extension Case Assembly.>
10) Install the manual transmission assembly to the vehicle. <Ref. to 6MT(TY75)-30, INSTALLATION, Manual Transmission Assembly.>

C: DISASSEMBLY

NOTE:
When replacing the coupling sleeve and synchronizer hub, replace them as a set. Because these must engage at the specified point, avoid disassembly as much as possible. If it is necessary to disassemble, mark the engaging points on the splines beforehand.
1) Put vinyl tape around the main shaft spline and pull out the oil seal and needle bearing by hand to prevent the oil seal from being damaged.
2) Flatten the tab of the lock nut.

3) Remove the lock nut and lock washer using ST1 and ST2.
ST1 498937000 TRANSMISSION HOLDER
ST2 499987003 SOCKET WRENCH (35)

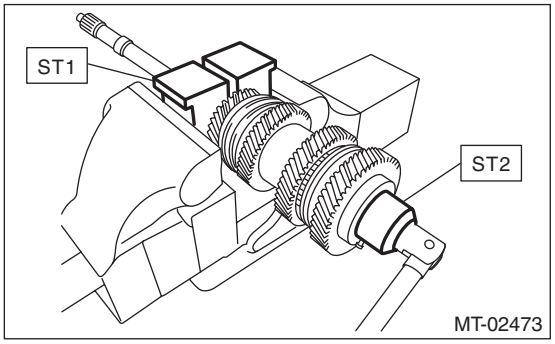

4) Remove the 6th drive gear and ball bearing using the ST1, ST2 and a press.
ST1 899864100 REMOVER
ST2 18722AA010 REMOVER

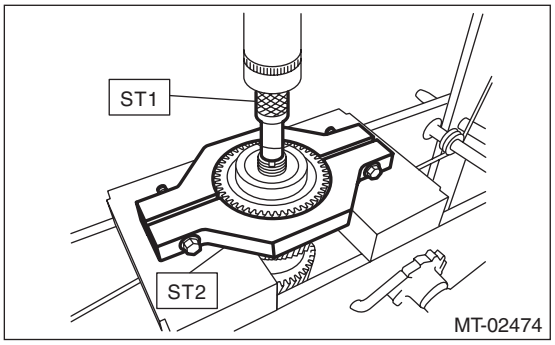

5) Remove the 6th needle bearing, 6th baulk ring, 5th-6th shifting insert and 5th-6th coupling sleeve.

CAUTION:
When removing the 5th-6th coupling sleeve, be careful not to lose the 5th-6th shifting insert.
6) Remove the 5th drive gear, 6th needle bearing race, 5th baulk ring, 5th-6th synchronizer hub and 5th needle bearing using the ST1, ST2 and a press.
ST1 899864100 REMOVER
ST2 18722AA010 REMOVER

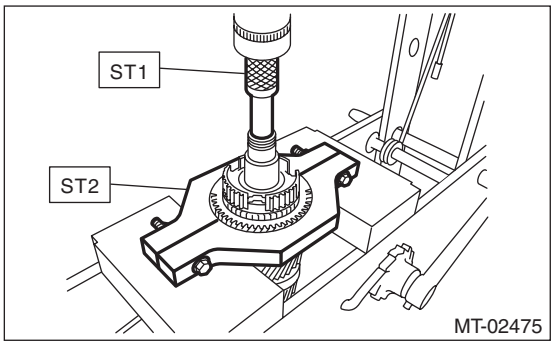

7) Shift the 3rd-4th coupling sleeve to the 3rd side.

8) Remove the 4th drive gear, 4th gear thrust washer, double taper roller bearing and 5th needle bearing race using the ST1, ST2 and a press.
ST1 899864100 REMOVER
ST2 899714110 REMOVER

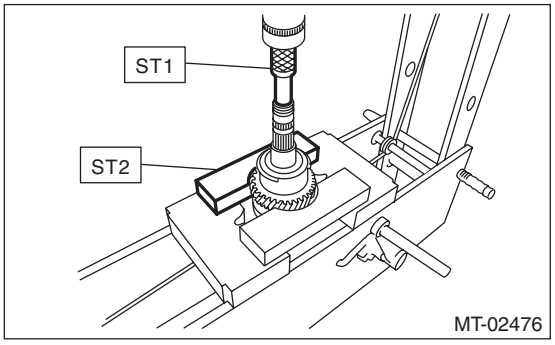

9) Remove the 4th baulk ring, 4th needle bearing, 3rd-4th shifting insert and 3rd-4th coupling sleeve.

CAUTION:
When removing the 3rd-4th coupling sleeve, be careful not to lose the 3rd-4th shifting insert.
10) Remove the 3rd drive gear, 4th needle bearing race, 3rd-4th synchronizer hub, 3rd inner baulk ring, 3rd synchro cone, 3rd outer baulk ring and 3rd needle bearing using the ST1, ST2 and a press.
ST1 899864100 REMOVER
ST2 899714110 REMOVER

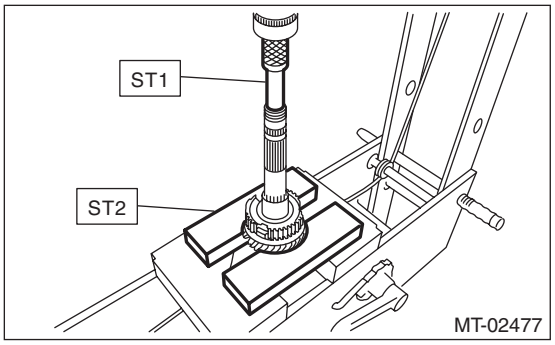

D: ASSEMBLY

NOTE:
- Match the alignment marks, and install the coupling sleeve and then install the shifting insert.
- Make sure that there is no large clearance at both sides of the shifting insert after assembly.

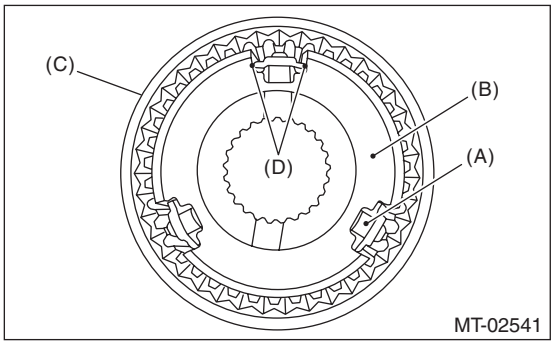

(A) Shifting insert
(B) Synchronizer hub
(C) Coupling sleeve
(D) There is no large clearance at this part.

1) Install the 3rd needle bearing, 3rd drive gear, 3rd outer baulk ring, 3rd synchro cone, 3rd inner baulk ring and 3rd-4th synchronizer hub.

NOTE:
- Install the 3rd-4th synchronizer hub in the correct direction.
- Align the protrusion of the 3rd outer baulk ring into the groove of the 3rd-4th synchronizer hub.

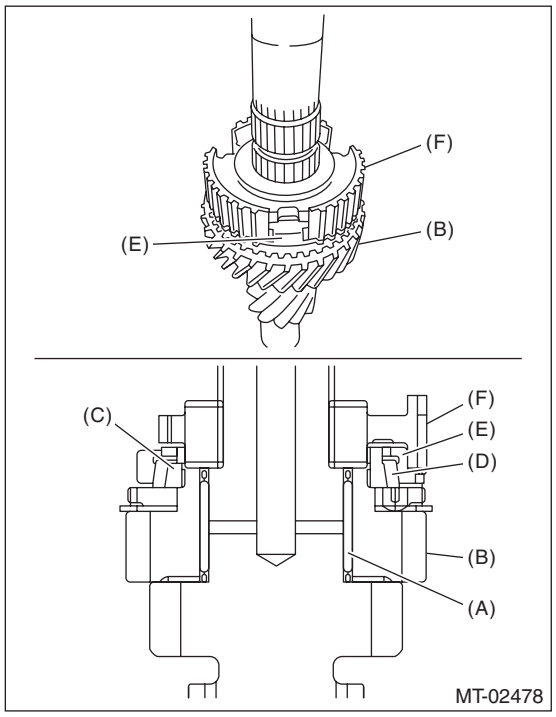

(A) 3rd needle bearing
(B) 3rd drive gear
(C) 3rd inner baulk ring
(D) 3rd synchro cone
(E) 3rd outer baulk ring
(F) 3rd-4th synchronizer hub

2) Install the 4th needle bearing race using ST1, ST2, ST3 and a press.

CAUTION:
Do not apply a load in excess of 10 kN (1 ton, 1.1 US ton, 1.0 Imp ton).

ST1 899714110 REMOVER
ST2 499877000 RACE 4-5 INSTALLER
ST3 398177700 INSTALLER

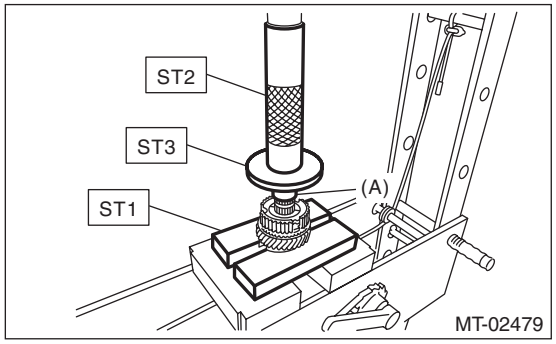

(A) 4th needle bearing race

3) Install the 3rd-4th coupling sleeve.

NOTE:
- Install the 3rd-4th coupling sleeve in the correct direction.
- Align the alignment marks of 3rd-4th coupling sleeve and the 3rd-4th synchronizer hub.

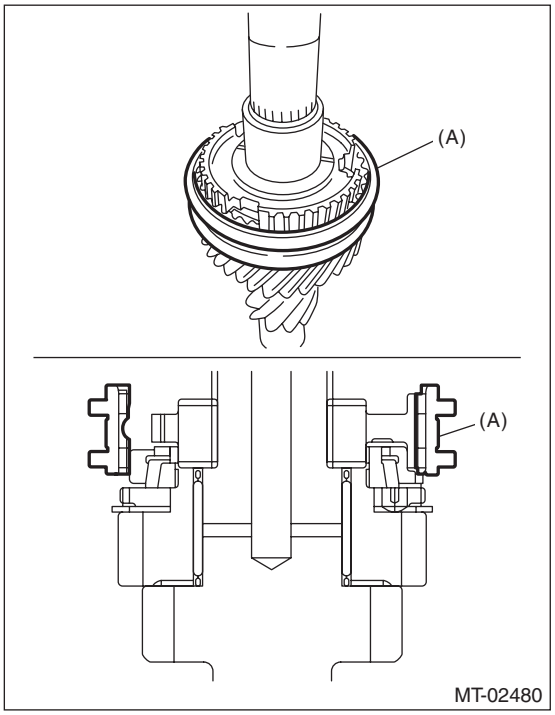

(A) 3rd-4th coupling sleeve

4) Install the 3rd-4th shifting insert.

NOTE:
Press in the ball part to install.

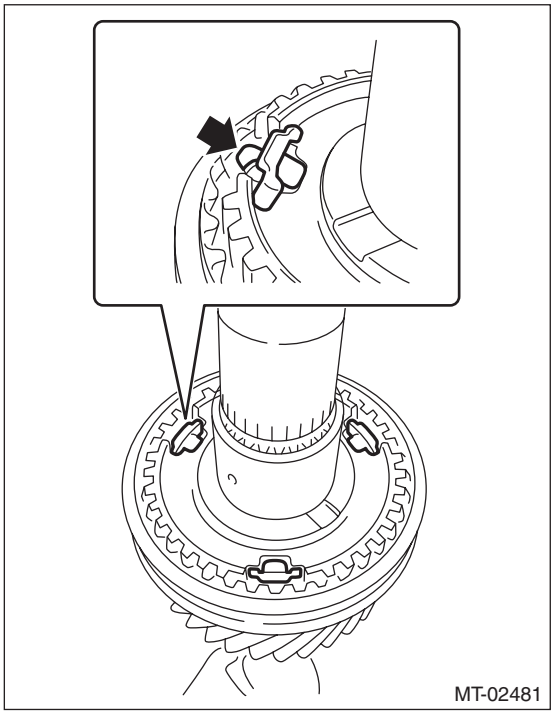

5) Install the 4th baulk ring, 4th needle bearing, 4th drive gear and 4th gear thrust washer.

NOTE:
- Align the protrusion of the 4th baulk ring into the groove of the 3rd-4th synchronizer hub.
- Install the 4th gear thrust washer with the groove side facing the 4th drive gear.

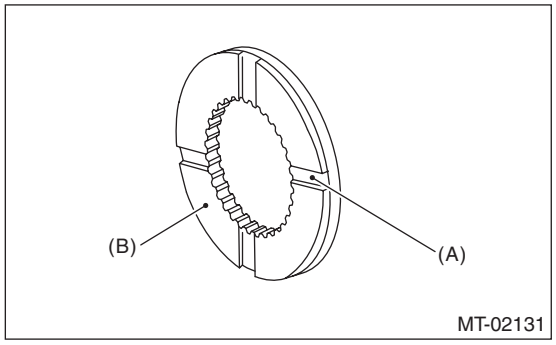

(A) Groove
(B) Face this surface to the 4th gear side.

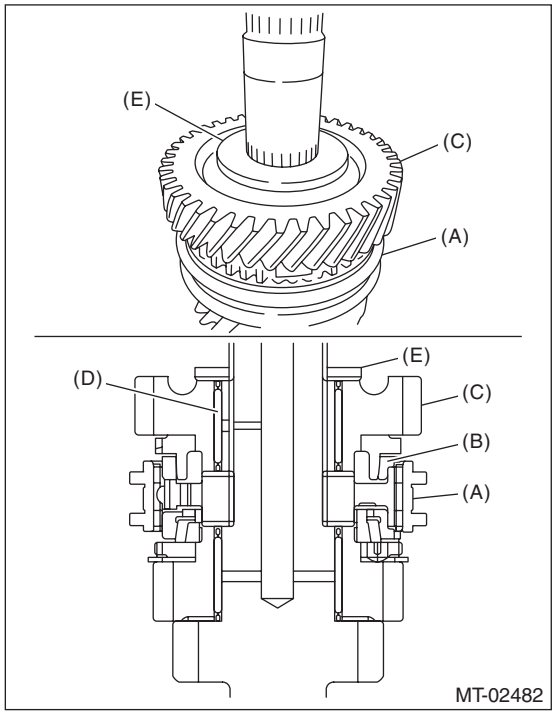

(A) 3rd-4th coupling sleeve
(B) 4th baulk ring
(C) 4th drive gear
(D) 4th needle bearing
(E) 4th gear thrust washer

6) Install the double taper roller bearing using ST1, ST2 and a press.

CAUTION:
Do not apply a load in excess of 10 kN (1 ton, 1.1 US ton, 1.0 Imp ton).

NOTE:
- Use a new double taper roller bearing.
- Install the double taper roller bearing with snap ring side facing the 5th drive gear side.

ST1 899714110 REMOVER
ST2 499877000 RACE 4-5 INSTALLER

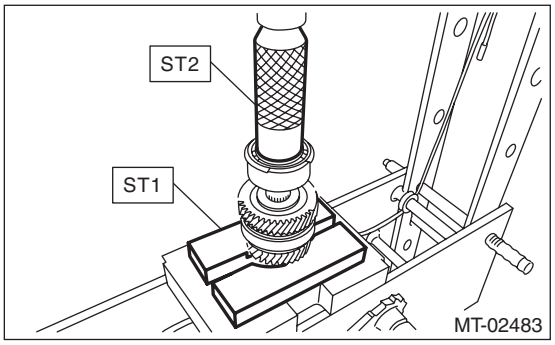

7) Make sure that the double taper roller bearing turns smoothly.
8) Install the 5th needle bearing race using ST1, ST2 and press.

CAUTION:
Do not apply a load in excess of 10 kN (1 ton, 1.1 US ton, 1.0 Imp ton).
ST1 899714110 REMOVER
ST2 499877000 RACE 4-5 INSTALLER

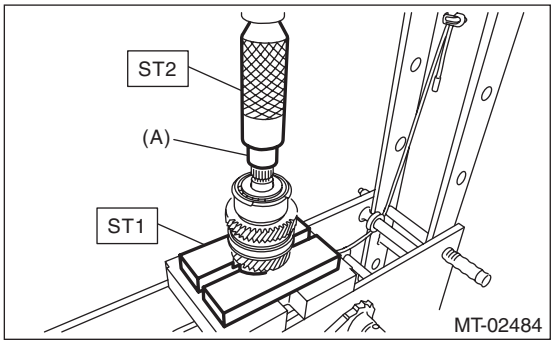

(A) 5th needle bearing race

9) Install the 5th needle bearing, 5th drive gear, 5th baulk ring, and 5th-6th synchronizer hub.

NOTE:
- Align the protrusion part of the 5th baulk ring with the groove of the 5th-6th synchronizer hub.
- Install the 5th-6th synchronizer hub in the correct direction.

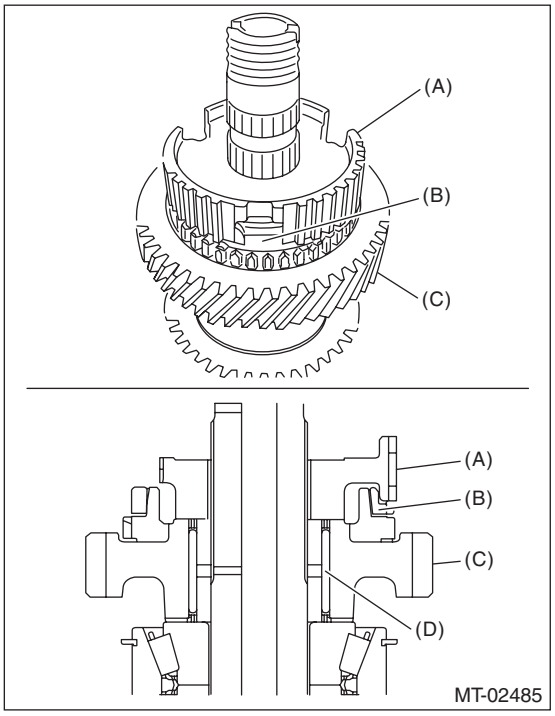

(A) 5th-6th synchronizer hub
(B) 5th baulk ring
(C) 5th drive gear
(D) 5th needle bearing (cage: black)

10) Install the 6th needle bearing race using ST1, ST2 and press.

CAUTION:
Do not apply a load in excess of 10 kN (1 ton, 1.1 US ton, 1.0 Imp ton).
ST1 899714110 REMOVER
ST2 499877000 RACE 4-5 INSTALLER

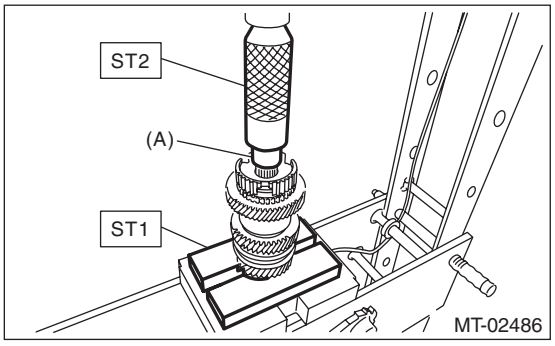

(A) 6th needle bearing race

11) Install the 5th-6th coupling sleeve.

NOTE:
- Install the 5th-6th coupling sleeve in the correct direction.
- Align the alignment marks of 5th-6th coupling sleeve and the 5th-6th synchronizer hub.

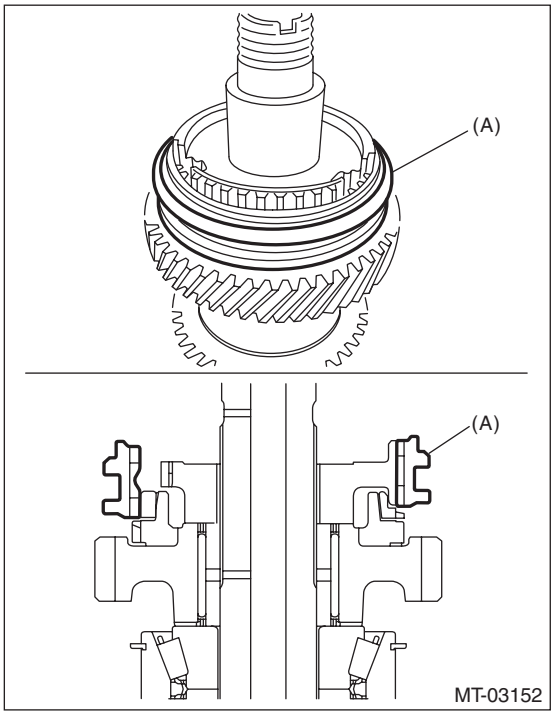

(A) 5th-6th coupling sleeve

12) Install the 5th-6th shifting insert.

NOTE:
Press in the ball part to install.

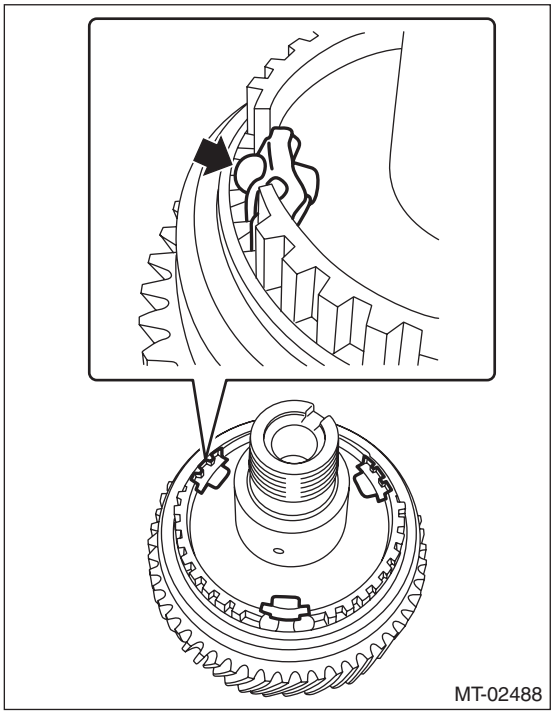

13) Install the 6th baulk ring, 6th drive gear and 6th needle bearing.

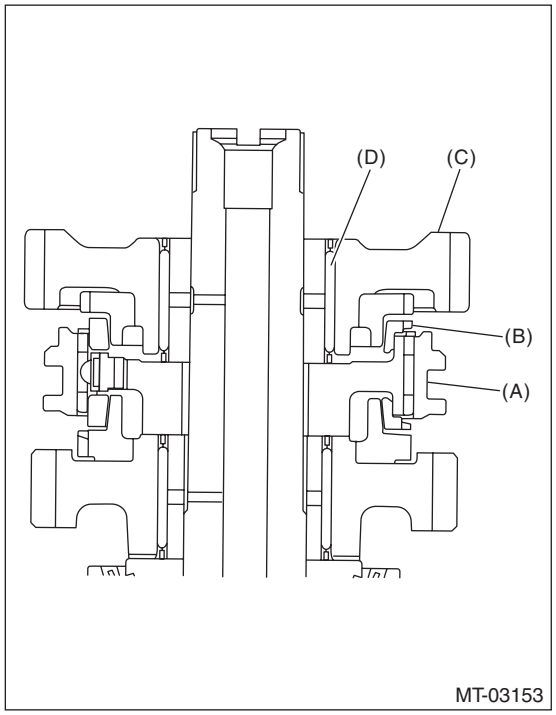

(A) 5th-6th coupling sleeve
(B) 6th baulk ring
(C) 6th drive gear
(D) 6th needle bearing (cage: silver)

14) Install the ball bearing using ST2 and a press.

CAUTION:
Do not apply a load in excess of 10 kN (1 ton, 1.1 US ton, 1.0 Imp ton).

NOTE:
Install the ball bearing with the side which does not have lock nut mounting dent facing 6th drive gear.
ST1 899714110 REMOVER
ST2 899754112 PRESS

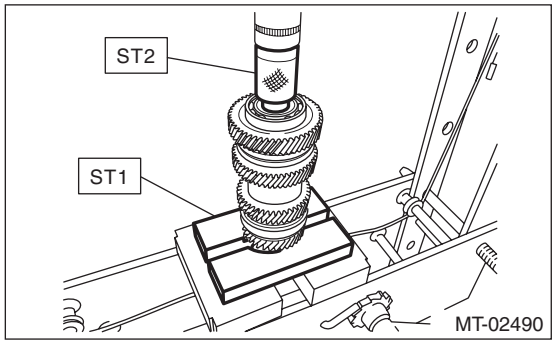

15) Install the lock washer.

NOTE:
- Use a new lock washer.
- Install the lock washer in the correct direction.

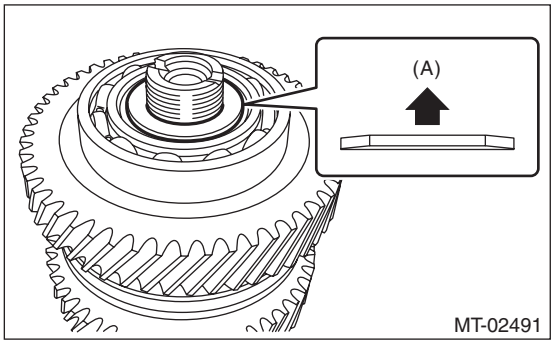

(A) Lock nut side

16) Install the lock nut using ST1 and ST2.

NOTE:
Use a new lock nut.

Tightening torque:
160 N·m (16.3 kgf-m, 118.0 ft-lb)

ST1 498937000 TRANSMISSION HOLDER
ST2 499987003 SOCKET WRENCH (35)

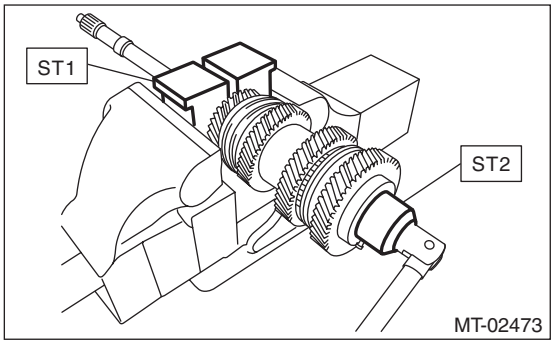

17) Crimp the lock nut at two locations so that the dimension (B) becomes 23.3 mm (0.92 in) or less.

CAUTION:
When crimping the lock nut, be careful not to crack it.

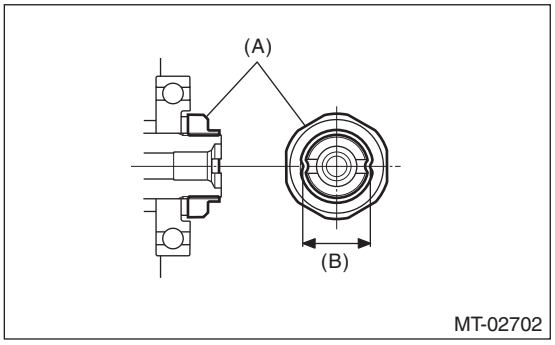

(A) Lock nut
(B) Outer dimension after crimping

E: INSPECTION

Disassembled parts should be washed with cleaning solvent first, then inspected.
1) Bearing
Replace the bearings in the following cases.
- When the bearing balls, outer races and inner races are broken or rusty.
- When the bearing is worn.
- When the bearings fail to turn smoothly or emit noise in rotation after transmission gear oil has been applied.
- When bearing has other defects.

2) Bushing (each gear)
Replace the bushing in following cases.
- When the sliding surface is damaged or abnormally worn.
- When the inner wall is abnormally worn.

3) Gear
Replace gears in the following cases.
- Replace the gear with new part if its tooth surfaces are broken, damaged or excessively worn.
- Correct or replace if the cone that contacts the baulk ring is rough or damaged.
- Repair or replace if the inner surface or end face is damaged.

4) Baulk ring, synchro cone
Replace the baulk ring and synchro cone in the following cases.
- When the inner surface or end face is damaged.
- When the baulk ring inner surface is abnormally or partially worn down.
- When the contact surface of the baulk ring insert section is cracked or abnormally worn.
- If the gap between the end faces of the baulk ring and the gear splined part is excessively small, check the clearance (A) while pressing the ring against the cone.

Clearance (A):
0.5 mm (0.020 in) or more
- Single cone

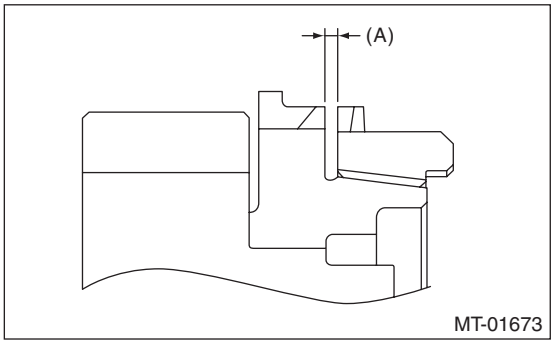

- Double cone

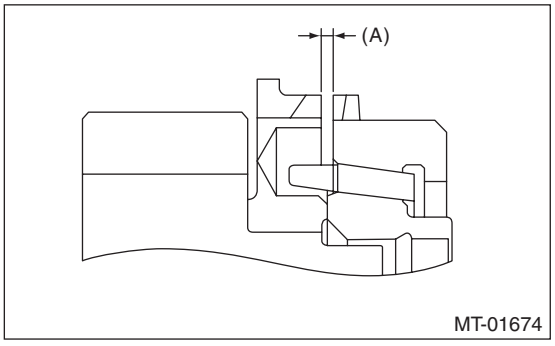

• Apply transmission gear oil to the cone of the gear and while press-fitting the baulk ring, check there is no rotation in the circumferential direction.

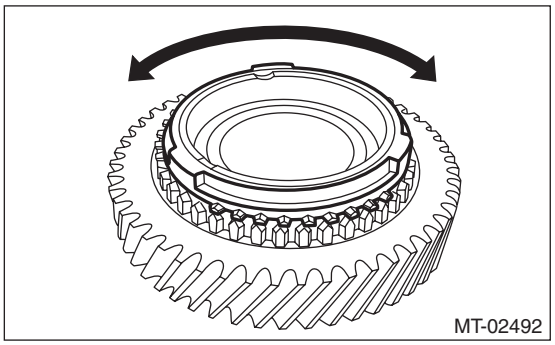

5) Coupling sleeve and synchronizer hub
• Check the slipping condition of the coupling sleeve.
• Check the splines on the coupling sleeve and synchronizer hub for wear.

6) Shifting insert
Replace the shifting insert if there is deformation, excessive wear on the ball section or any defectiveness.

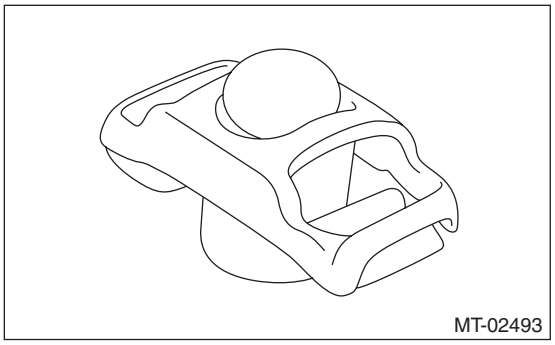

7) Oil seal
Replace the oil seal if the lip is deformed, hardened, worn or defective in any way.

8) Gearshift mechanism
Repair or replace the gearshift mechanism if excessively worn, bent or defective in any way.

F: ADJUSTMENT

Selection of main shaft rear plate:
Measure the protrusion amount (A) of bearing from transmission main case surface, and select a suitable plate in the following table.

NOTE:
Before measuring, tap the end of main shaft with a plastic hammer lightly in order to make the clearance zero between the main case surface and moving flange of bearing.

Dimension (A) mm (in)	Part No.	Mark
4.00 — 4.13 (0.1575 — 0.1626)	32294AA041	1
3.87 — 4.00 (0.1524 — 0.1575)	32294AA051	2

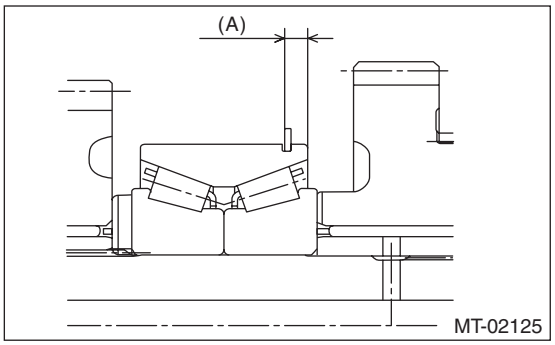

17.Drive Pinion Shaft Assembly

A: REMOVAL

1) Remove the manual transmission assembly from the vehicle. <Ref. to 6MT(TY75)-26, REMOVAL, Manual Transmission Assembly.>
2) Remove the transfer case together with the extension case assembly. <Ref. to 6MT(TY75)-51, REMOVAL, Transfer Case and Extension Case Assembly.>
3) Remove the transmission case. <Ref. to 6MT(TY75)-84, REMOVAL, Transmission Case.>
4) Remove the drive pinion shaft assembly.

NOTE:
Use a hammer handle, etc. to remove if too tight.

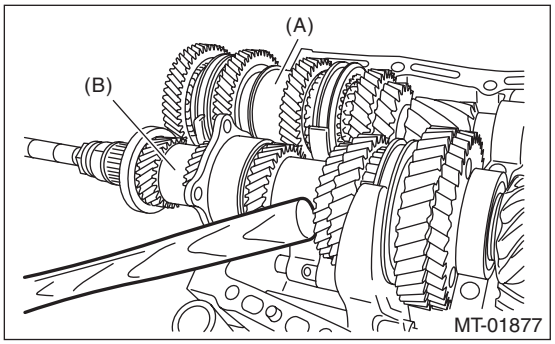

(A) Main shaft ASSY
(B) Drive pinion shaft ASSY

5) Remove the main shaft assembly.

B: INSTALLATION

1) Remove the front differential assembly.
2) Hypoid gear set match mark/No.: The number (A) on top of the drive pinion, and the number on the hypoid driven gear are set numbers for the two gears. Use a pair having the same numbers.
The figure (B) below shows a number for shim adjustment. If no number is shown, the value is zero.

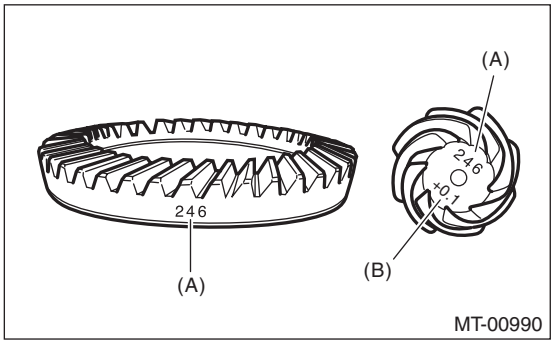

(A) Set number
(B) Number for shim adjustment

3) Place the drive pinion shaft assembly on transmission main case RH without shim and tighten the bearing mounting bolts.
4) Perform the adjustment of ST.

(1) Loosen the two bolts and adjust so that the scale indicates 0.5 correctly when the plate end and the scale end are on the same level.

ST 499917500 DRIVE PINION GAUGE ASSY

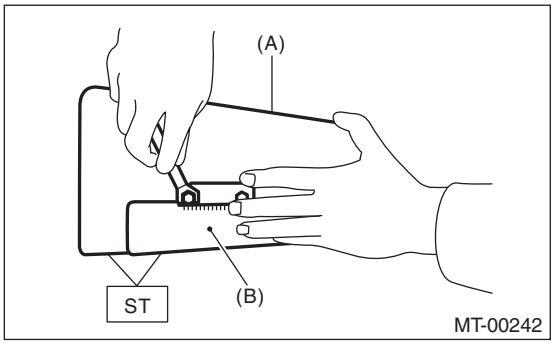

(A) Plate
(B) Scale

(2) Tighten the two bolts.

5) Position the ST by inserting the knock pin of ST into the knock hole of transmission case.

ST 499917500 DRIVE PINION GAUGE ASSY

6) Slide the drive pinion gauge scale with finger tip and read the value at the point where it matches with the end face of drive pinion.

ST 499917500 DRIVE PINION GAUGE ASSY

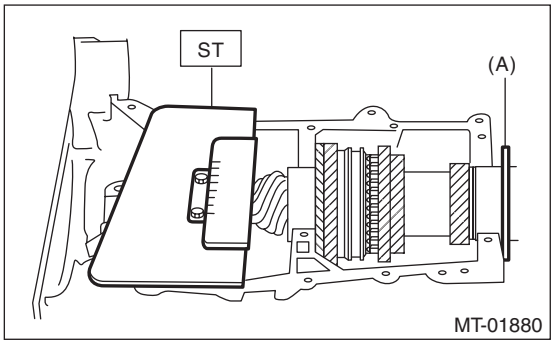

(A) Adjust the clearance to zero without drive pinion shims.

7) The thickness of drive pinion shims shall be determined by adding the value indicated on drive pinion to the value indicated on the ST. (Add if the number on drive pinion is prefixed by +, and subtract if the number is prefixed by –.)

8) Select one to three drive pinion shim(s) from the following table for the value determined as described above, and take the shim(s) whose thickness is closest to the said value.

NOTE:
Install the shim with it's cut in facing the shifter fork & rod side.

Drive pinion shim	
Part No.	Thickness mm (in)
32295AA031	0.150 (0.0059)
32295AA041	0.175 (0.0069)
32295AA051	0.200 (0.0079)
32295AA061	0.225 (0.0089)
32295AA071	0.250 (0.0098)
32295AA081	0.275 (0.0108)
32295AA091	0.300 (0.0118)
32295AA101	0.500 (0.0197)

9) Install the front differential assembly. <Ref. to 6MT(TY75)-126, INSTALLATION, Front Differential Assembly.>
10) Fit the transmission case knock pin to the knock pin hole of the roller bearing and install the drive pinion shaft assembly.
11) Install the main shaft assembly. <Ref. to 6MT(TY75)-91, INSTALLATION, Main Shaft Assembly.>
12) Check each shifter fork. <Ref. to 6MT(TY75)-153, INSPECTION, Shifter Fork and Rod.>
13) Install the transmission case. <Ref. to 6MT(TY75)-86, INSTALLATION, Transmission Case.>
14) Install the transfer case together with the extension case assembly. <Ref. to 6MT(TY75)-53, INSTALLATION, Transfer Case and Extension Case Assembly.>
15) Install the manual transmission assembly to the vehicle. <Ref. to 6MT(TY75)-30, INSTALLATION, Manual Transmission Assembly.>

C: DISASSEMBLY

NOTE:
• Attach a cloth to the end of driven shaft (on the frictional side of the thrust needle bearing) to prevent damage during disassembly or reassembly.
• When replacing the coupling sleeve and synchronizer hub, replace them as a set. Because these must engage at the specified point, avoid disassembly as much as possible. If it is necessary to disassemble, mark the engaging points on the splines beforehand.
1) Flatten the tab of the lock nut.
2) Remove the lock nut using ST1, ST2 and ST3.
ST1 18680AA020 HOLDER
ST2 18667AA020 HOLDER
ST3 18662AA010 SOCKET WRENCH (27)

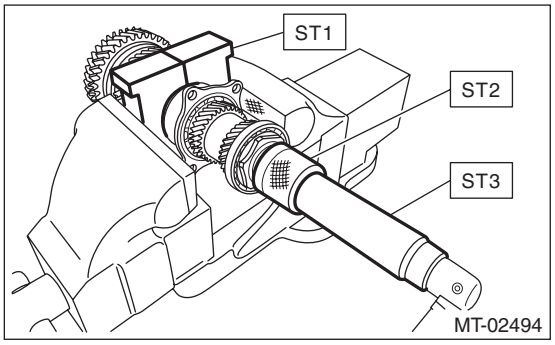

3) Remove the lock washer, washer, differential bevel gear sleeve, adjusting washer No. 1, thrust bearing and adjusting washer No. 2.

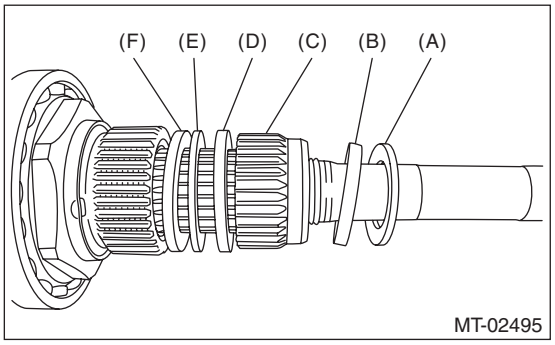

(A) Lock washer
(B) Washer
(C) Differential bevel gear sleeve
(D) Adjusting washer No. 1 (25 × 36 × t)
(E) Thrust bearing (25 × 36 × 2)
(F) Adjusting washer No. 2 (25 × 36 × t)

4) Draw out the drive pinion shaft from driven shaft.

5) Remove the needle bearing and drive pinion collar.

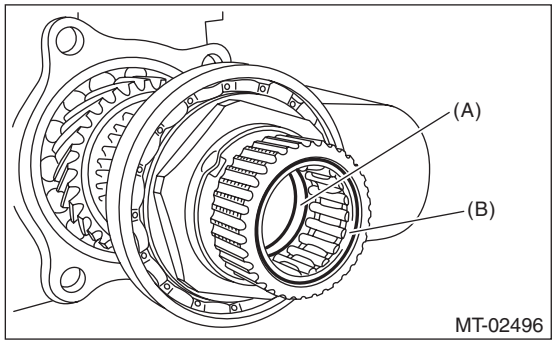

(A) Drive pinion collar
(B) Needle bearing (25 × 30 × 20)

6) Remove the needle bearing and thrust bearing.

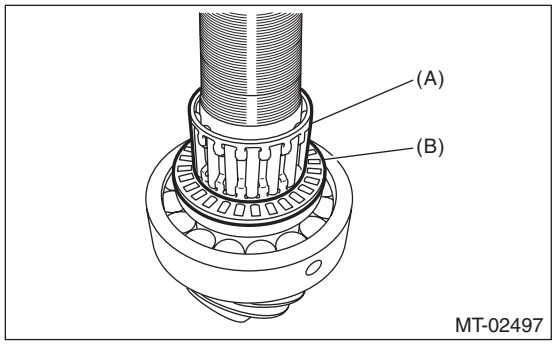

(A) Needle bearing (30 × 37 × 23)
(B) Thrust bearing (33 × 50 × 3)

7) Remove the roller bearing and washer using ST and a press.
ST 498077000 REMOVER

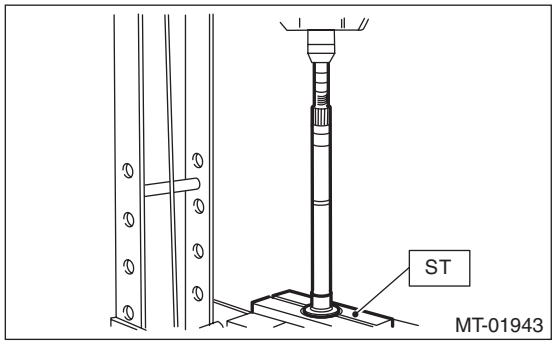

8) Flatten the tab of the lock nut.

9) Remove the lock nut using ST1 and ST2.
ST1 499987300 SOCKET WRENCH (50)
ST2 18680AA020 HOLDER

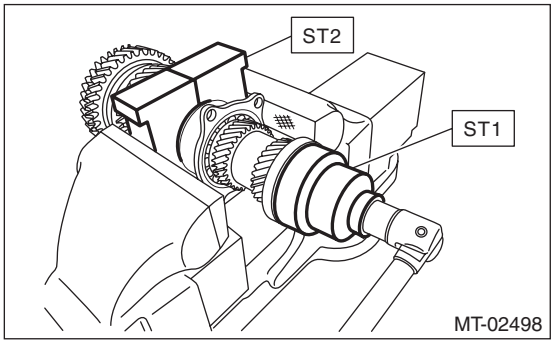

10) Remove the ball bearing, 6th driven gear and drive pinion spacer using the ST1, ST2 and a press.
ST1 899754112 PRESS
ST2 899714110 REMOVER

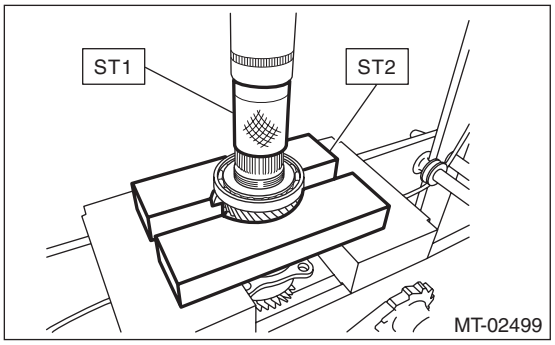

11) Remove the 5th driven gear, double ball bearing and 3rd-4th driven gear using ST1, ST2 and a press.
ST1 899754112 PRESS
ST2 899714110 REMOVER

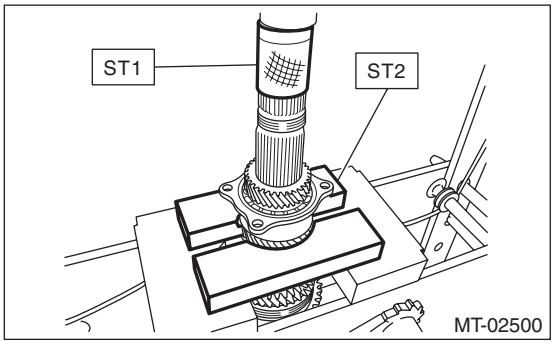

12) Remove the key.
13) Remove the 2nd driven gear, 2nd inner baulk ring, 2nd synchro cone, 2nd outer baulk ring, 1st-2nd shifting insert and 1st-2nd coupling sleeve.

CAUTION:
When removing 1st-2nd coupling sleeve, be careful not to lose the 1st-2nd shifting insert.

14) Remove the 1st driven gear, 1st inner baulk ring, 1st synchro cone, 1st outer baulk ring, 2nd driven gear bushing and 1st-2nd synchronizer hub using ST and a press.
ST 18762AA001 COMPRESSOR SPECIAL TOOL

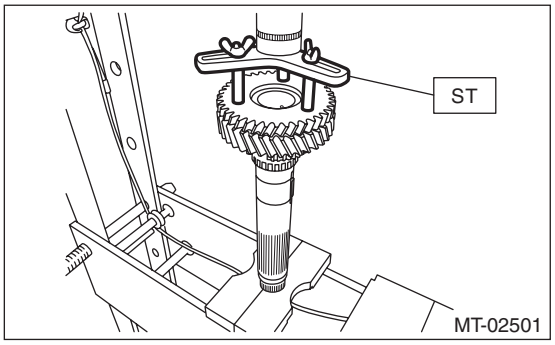

D: ASSEMBLY

NOTE:
- Match the alignment marks, and install the coupling sleeve and then install the shifting insert.
- Make sure that there is no large clearance at both sides of the shifting insert after assembly.

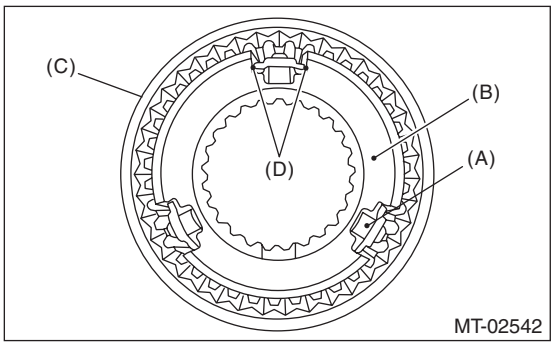

(A) Shifting insert
(B) Synchronizer hub
(C) Coupling sleeve
(D) There is no large clearance at this part.

1) Install the 1st driven gear, 1st inner baulk ring, 1st synchro cone, 1st outer baulk ring and 1st-2nd synchronizer hub.

NOTE:
- Install the 1st-2nd synchronizer hub in proper direction.
- Align the protrusion of the 1st outer baulk ring into the groove of the 1st-2nd synchronizer hub.

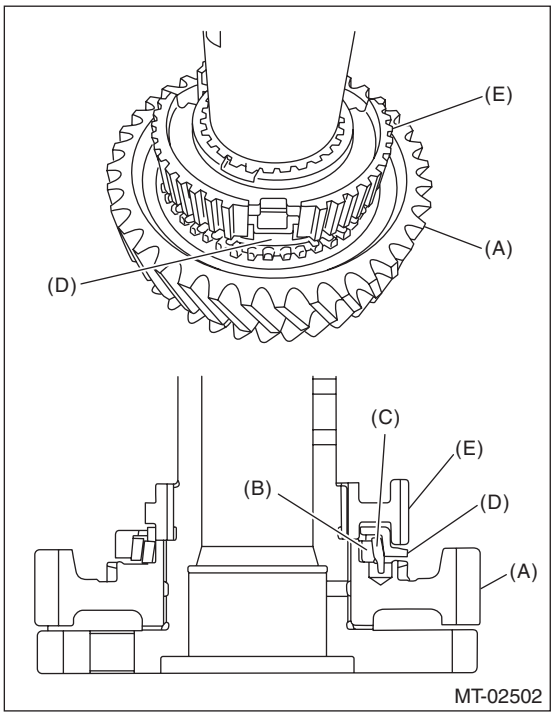

(A) 1st driven gear
(B) 1st inner baulk ring
(C) 1st synchro cone
(D) 1st outer baulk ring
(E) 1st-2nd synchronizer hub

2) Install the 2nd driven gear bushing using ST and a press.

CAUTION:
Do not apply a load in excess of 10 kN (1 ton, 1.1 US ton, 1.0 Imp ton).

NOTE:
- Attach a cloth to the end of the driven shaft to prevent damage.
- When press fitting, align the oil holes of the driven shaft and 2nd driven gear bushing.

ST 18654AA000 INSTALLER

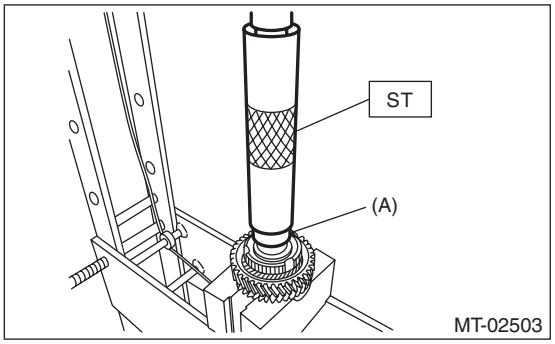

(A) 2nd driven gear bushing

3) Install the 1st-2nd coupling sleeve.

NOTE:
- Install the 1st-2nd coupling sleeve in proper direction.
- Align the alignment marks of 1st-2nd coupling sleeve and the 1st-2nd synchronizer hub.

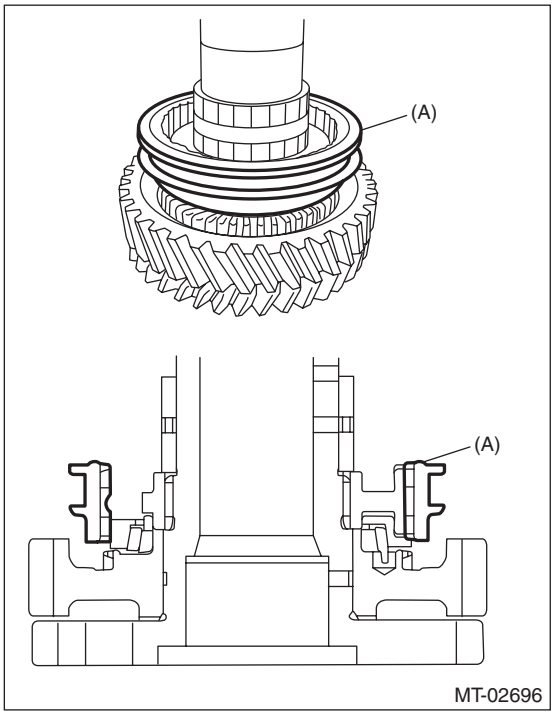

(A) 1st-2nd coupling sleeve

4) Install the 1st-2nd shifting insert.

NOTE:
Press in the ball part to install.

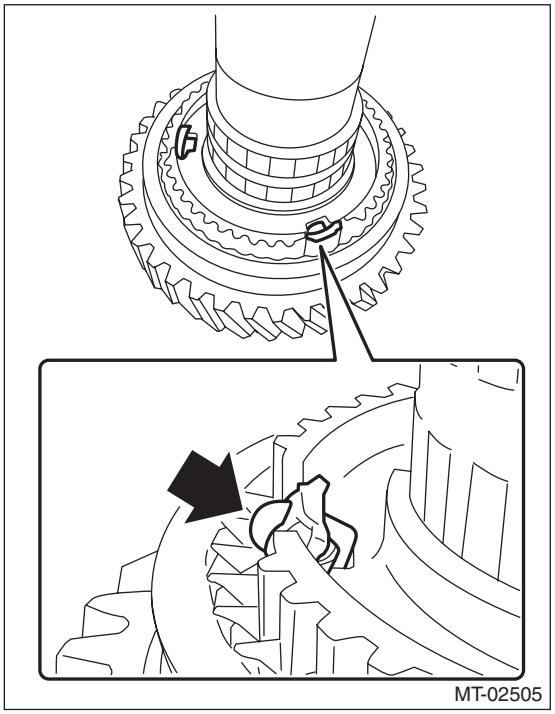

5) Install the 2nd outer baulk ring, 2nd synchro cone, 2nd inner baulk ring and 2nd driven gear.

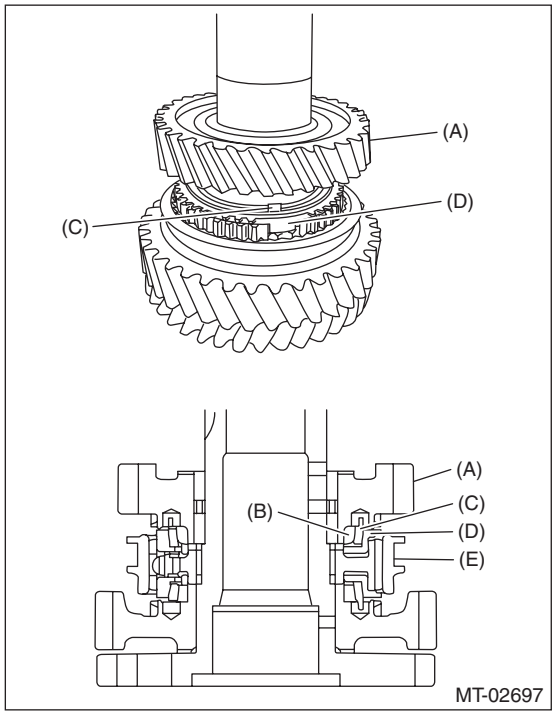

(A) 2nd driven gear
(B) 2nd inner baulk ring
(C) 2nd synchro cone
(D) 2nd outer baulk ring
(E) 1st-2nd coupling sleeve

6) Install the key to the driven shaft.
7) Using the ST and a press, install the 3rd-4th driven gear.

CAUTION:
Do not apply a load in excess of 10 kN (1 ton, 1.1 US ton, 1.0 Imp ton).

NOTE:
- Match the groove on the 3rd-4th driven gear to the key.
- Install the 3rd-4th driven gear in the proper direction.

ST 499277200 INSTALLER

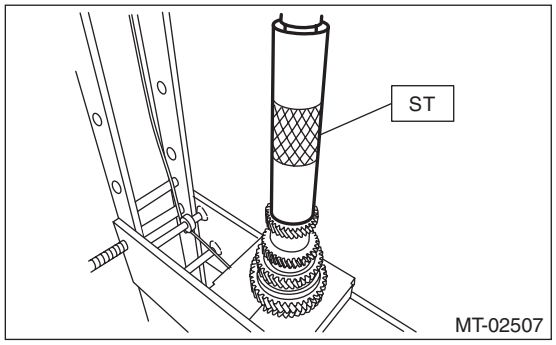

8) Using the ST and a press, install the double ball bearing.

CAUTION:
Do not apply a load in excess of 10 kN (1 ton, 1.1 US ton, 1.0 Imp ton).

NOTE:
Use a new double ball bearing.
ST 499277200 INSTALLER

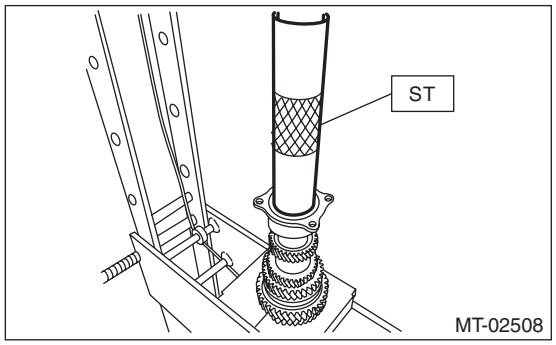

9) Install the 5th driven gear using ST and press.

CAUTION:
Do not apply a load in excess of 10 kN (1 ton, 1.1 US ton, 1.0 Imp ton).

NOTE:
Install the 5th driven gear with the groove side facing the 6th driven gear.
ST 499277200 INSTALLER

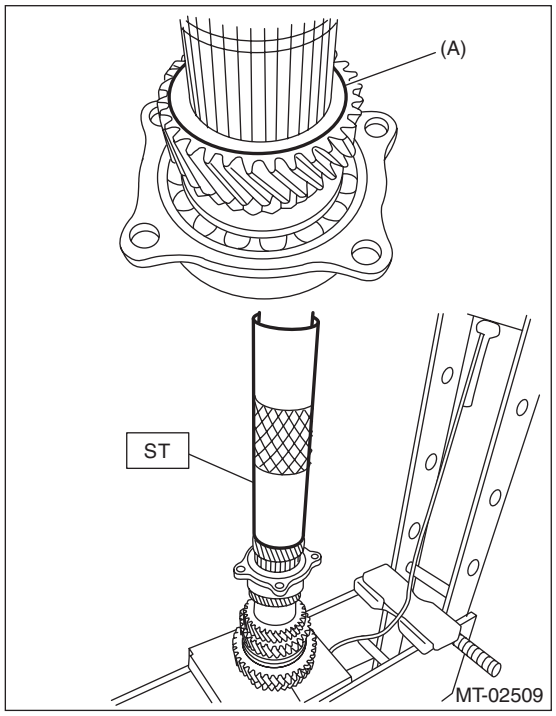

(A) Install with the groove side facing the 6th driven gear.

10) Install the drive pinion spacer to the driven shaft.

11) Install the 6th driven gear using ST and press.

CAUTION:
Do not apply a load in excess of 10 kN (1 ton, 1.1 US ton, 1.0 Imp ton).

NOTE:
Install with the stepped side on the end surface of the 6th driven gear facing the rear ball bearing side.
ST 499277200 INSTALLER

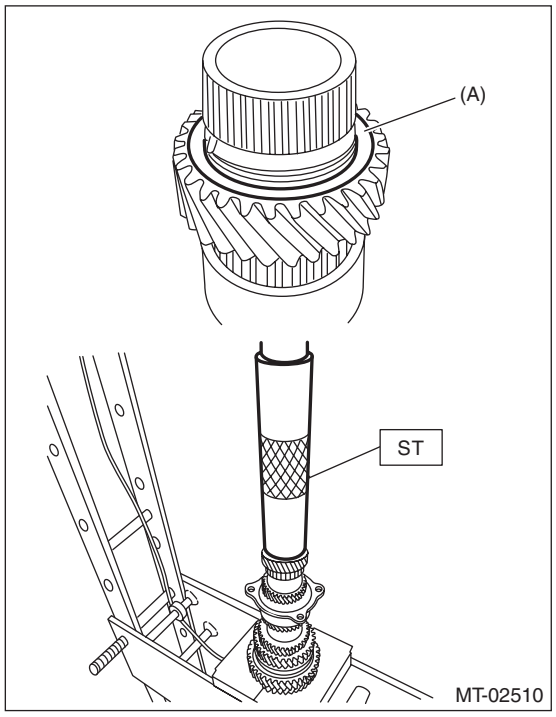

(A) Install with the stepped side facing the rear ball bearing.

12) Using the ST and a press, install the ball bearing.

CAUTION:
Do not apply a load in excess of 10 kN (1 ton, 1.1 US ton, 1.0 Imp ton).
ST 499277200 INSTALLER

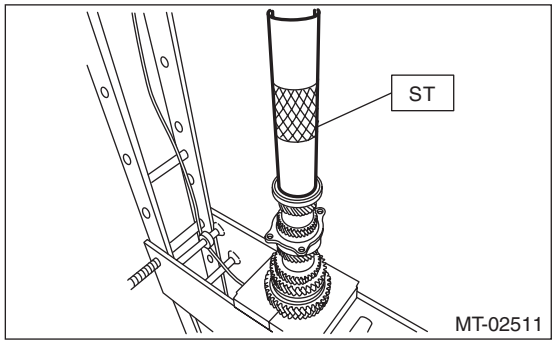

13) Install the lock nut using ST1 and ST2.

NOTE:
Use a new lock nut.

Tightening torque:
440 N·m (44.9 kgf-m, 324.5 ft-lb)

ST1 499987300 SOCKET WRENCH (50)
ST2 18680AA020 HOLDER

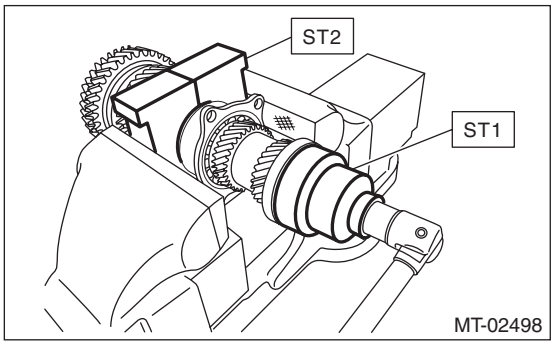

14) Using a spring scale, check that the initial load of the ball bearings is 0.1 to 1.5 N (0.01 to 0.15 kgf, 0.02 to 0.34 lbf).

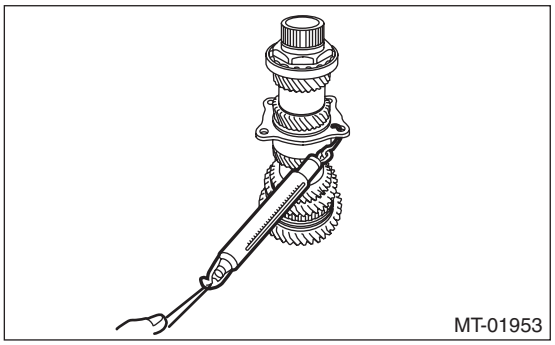

15) Crimp the lock nut at two locations so that the dimension (B) becomes 39.1 mm (1.54 in) or less.

CAUTION:
When crimping the lock nut, be careful not to crack it.

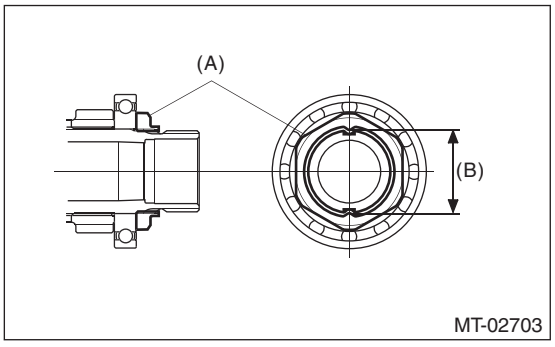

(A) Lock nut
(B) Outer dimension after crimping

16) Install the roller bearing.

NOTE:
- Use a new roller bearing.
- Install with the knock pin hole of the roller bearing outer race facing the rear side.

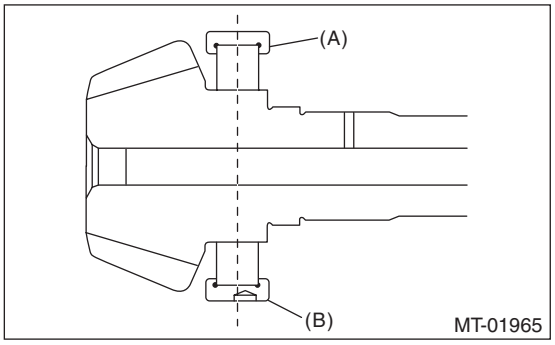

(A) Roller bearing
(B) Knock pin hole

17) Install the washer using ST1, ST2 and a press.

CAUTION:
Do not apply a load in excess of 10 kN (1 ton, 1.1 US ton, 1.0 Imp ton).
ST1 499277100 BUSHING 1-2 INSTALLER
ST2 499277200 INSTALLER

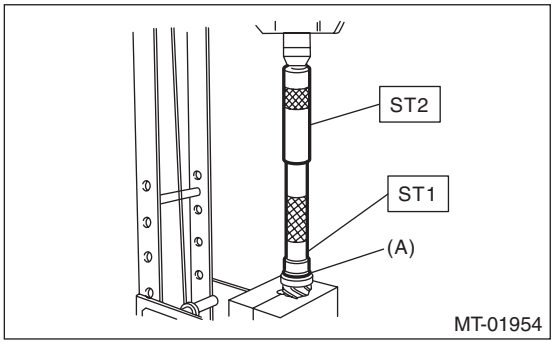

(A) Washer

18) Install the thrust bearing and needle bearing and install the driven shaft assembly.

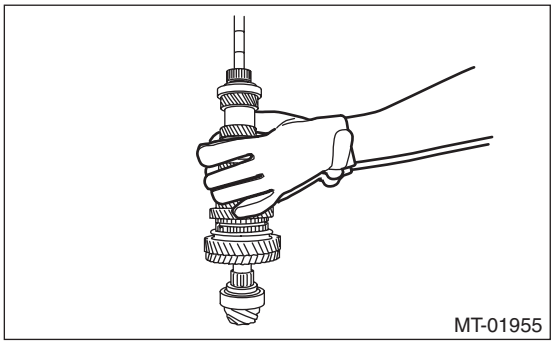

19) Install the drive pinion collar, needle bearing, adjusting washer No. 2, thrust bearing, adjusting washer No. 1 and differential bevel gear sleeve in this order.

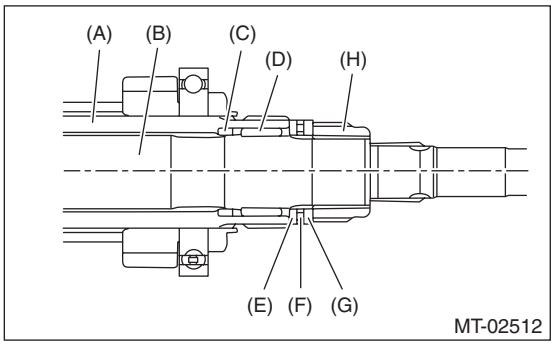

(A) Driven shaft
(B) Drive pinion shaft
(C) Drive pinion collar
(D) Needle bearing (25 × 30 × 20)
(E) Adjusting washer No. 2 (25 × 36 × t)
(F) Thrust bearing (25 × 36 × 2)
(G) Adjusting washer No. 1 (25 × 36 × t)
(H) Differential bevel gear sleeve

20) Adjust the thrust bearing preload. <Ref. to 6MT(TY75)-121, THRUST BEARING PRELOAD, ADJUSTMENT, Drive Pinion Shaft Assembly.>

E: INSPECTION

Disassembled parts should be washed with cleaning solvent first, then inspected.
1) Bearing
Replace the bearings in the following cases.
- When the bearing balls, outer races and inner races are broken or rusty.
- When the bearing is worn.
- When the bearings fail to turn smoothly or emit noise in rotation after transmission gear oil has been applied.
- The double ball bearing of the drive pinion shaft should be checked for smooth rotation before the drive pinion shaft assembly is disassembled. In this case, because a preload is working on the bearing, its rotation feels like it is slightly dragging unlike other bearings.

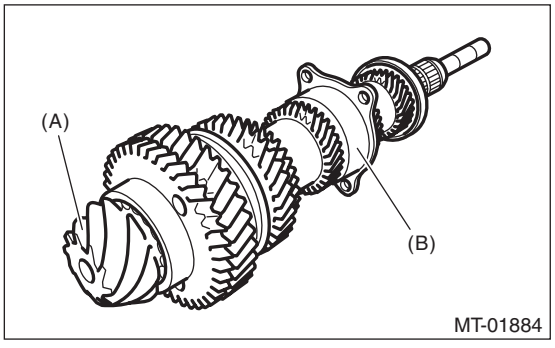

(A) Drive pinion shaft
(B) Double ball bearing

- When bearing has other defects.

2) Bushing (each gear)
Replace the bushing in following cases.
- When the sliding surface is damaged or abnormally worn.
- When the inner wall is abnormally worn.

3) Gear
Replace gears in the following cases.
- Replace the gear with new part if its tooth surfaces are broken, damaged or excessively worn.
- Correct or replace if the cone that contacts the baulk ring is rough or damaged.
- Correct or replace if the inner surface or end face is damaged.

4) Baulk ring, synchro cone
Replace the baulk ring and synchro cone in the following cases.
- When the inner surface and end face are damaged.
- When the baulk ring inner surface is abnormally or partially worn down.
- If the gap between the end faces of the baulk ring and the gear splined part is excessively small, check the clearance (A) while pressing the ring against the cone.

Clearance (A):
0.5 mm (0.020 in) or more

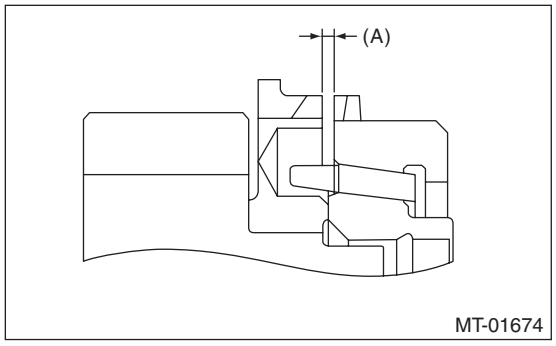

- When the contact surface of the baulk ring insert section is damaged or abnormally worn.
- Apply transmission gear oil to the cone of the gear and while press-fitting the baulk ring, check there is no rotation in the circumferential direction.

5) Coupling sleeve and synchronizer hub
- Check the slipping condition of the coupling sleeve.
- Check the splines on the coupling sleeve and synchronizer hub for wear.

6) Shifting insert
Replace the shifting insert if there is deformation, excessive wear on the ball section or any defectiveness.

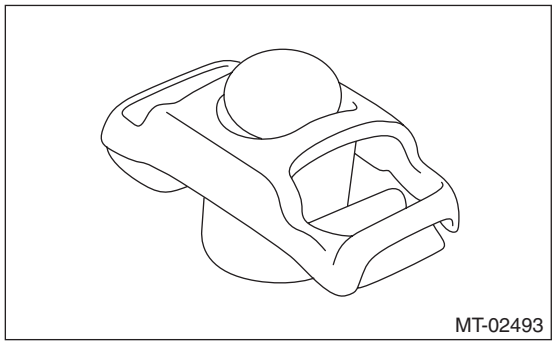

F: ADJUSTMENT

1. THRUST BEARING PRELOAD

1) Select a suitable adjusting washer No. 1 so that dimension (H) will be zero in a visual check. Position the washer (20 × 31 × 4) and lock washer (20 × 31 × 2.3) and attach the lock nut (20 × 11).

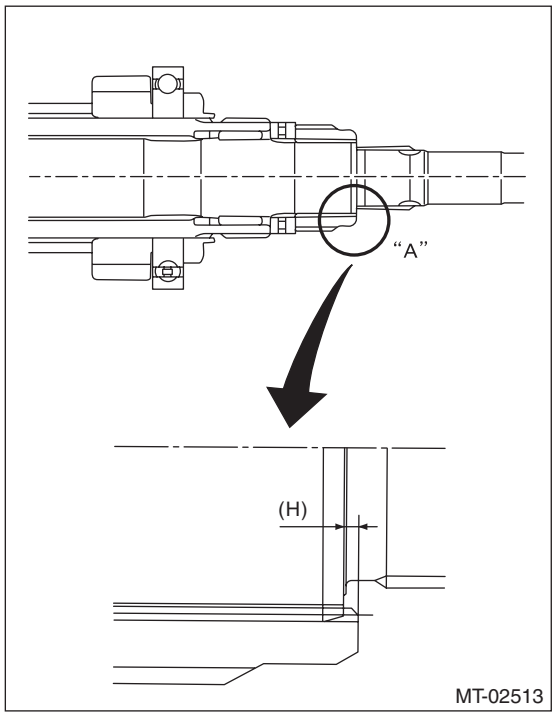

2) Install the lock nut with ST1, ST2 and ST3.

NOTE:
- Use new lock nuts and lock washers.
- Install the lock washer in the correct direction.

Tightening torque:
126 N·m (12.8 kgf-m, 92.9 ft-lb)
ST1 18680AA020 HOLDER
ST2 18667AA020 HOLDER
ST3 18662AA010 SOCKET (27)

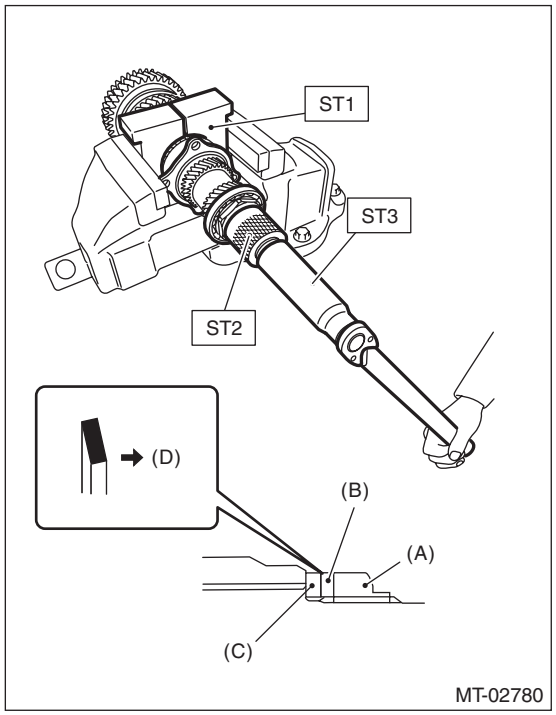

(A) Lock nut
(B) Lock washer
(C) Washer
(D) Lock nut side

3) After removing the ST2 used in step 2), measure the starting torque using torque driver.

Starting torque:
0.3 — 0.8 N·m (0.03 — 0.08 kgf-m, 0.2 — 0.6 ft-lb)
ST1 18680AA020 HOLDER
ST3 18662AA010 SOCKET (27)

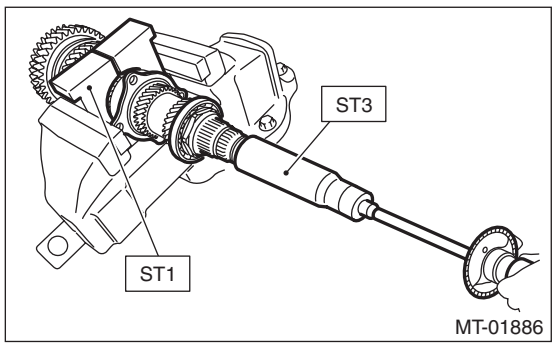

4) If the starting torque is not within the specified limit, select new adjusting washer No. 1 and recheck starting torque.

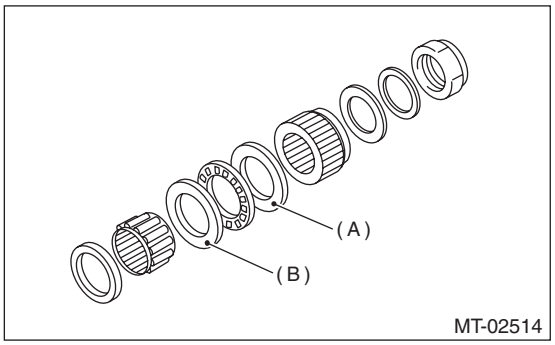

(A) Adjusting washer No. 1
(B) Adjusting washer No. 2

Adjusting washer No. 1	
Part No.	Thickness mm (in)
803025071	2.925 (0.1152)
803025072	2.950 (0.1161)
803025073	2.975 (0.1171)
803025074	3.000 (0.1181)
803025075	3.025 (0.1191)
803025076	3.050 (0.1201)
803025077	3.075 (0.1211)

5) If the specified starting torque cannot be obtained by the selection of adjusting washer No. 1, select adjusting washer No. 2 from the list below. Repeat steps 1) through 4) to adjust starting torque.

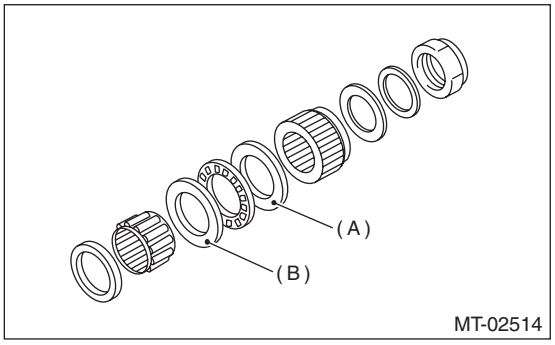

(A) Adjusting washer No. 1
(B) Adjusting washer No. 2

Starting torque	Dimension H	Adjusting washer No. 2
Low	Small	Select thicker one.
High	Large	Select thinner one.

Adjusting washer No. 2	
Part No.	Thickness mm (in)
803025070	2.850 (0.1122)
803025074	3.000 (0.1181)
803025078	3.150 (0.1240)

6) Recheck that the starting torque is within the specified range, and crimp the lock nut at two locations so that the dimension (B) becomes 20.1 mm (0.79 in) or less.

CAUTION:
When crimping the lock nut, be careful not to crack it.

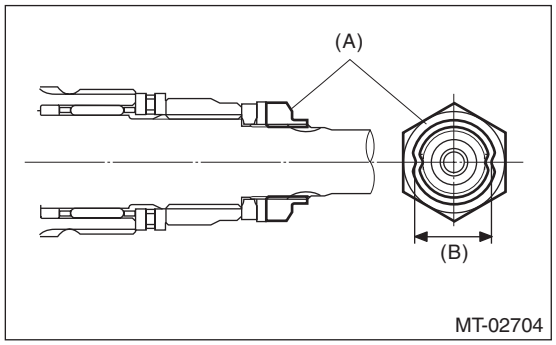

(A) Lock nut
(B) Outer dimension after crimping

18.Front Differential Assembly

A: REMOVAL

1) Remove the manual transmission assembly from the vehicle. <Ref. to 6MT(TY75)-26, REMOVAL, Manual Transmission Assembly.>
2) Remove the transfer case together with the extension case assembly. <Ref. to 6MT(TY75)-51, REMOVAL, Transfer Case and Extension Case Assembly.>
3) Remove the transmission case. <Ref. to 6MT(TY75)-84, REMOVAL, Transmission Case.>
4) Remove the drive pinion shaft assembly. <Ref. to 6MT(TY75)-106, REMOVAL, Drive Pinion Shaft Assembly.>
5) Remove the main shaft assembly. <Ref. to 6MT(TY75)-91, REMOVAL, Main Shaft Assembly.>
6) Remove the front differential assembly.

NOTE:
- Do not confuse the right and left taper roller bearing outer races.
- Be careful not to damage the oil seal of differential side retainer.

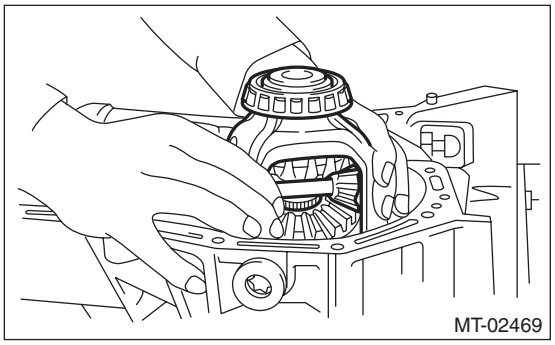
MT-02469

7) Remove the differential side retainers using ST.
ST 18630AA010 WRENCH COMPL RETAINER

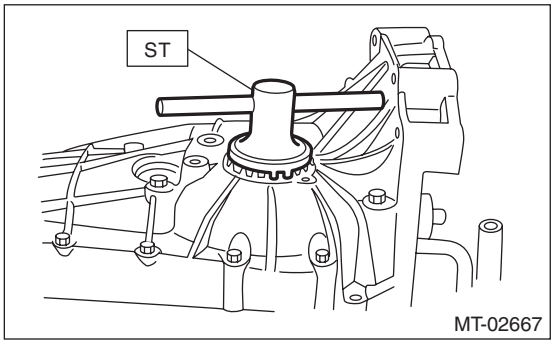

MT-02667

8) Remove the taper roller bearing outer race from the transmission case.
ST 398527700 PULLER ASSY

B: INSTALLATION

1) Install the differential side retainers using ST.
ST 18630AA010 WRENCH COMPL RETAINER
2) Install the taper roller bearing outer race to the transmission case.
3) Install the front differential assembly.

CAUTION:
Make sure the oil seal lip is not folded.

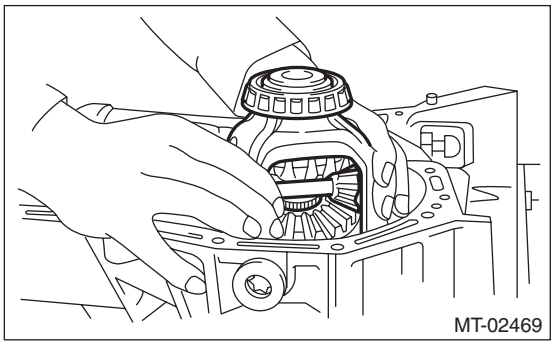

4) Install the main shaft assembly. <Ref. to 6MT(TY75)-91, INSTALLATION, Main Shaft Assembly.>
5) Install the drive pinion shaft assembly. <Ref. to 6MT(TY75)-106, INSTALLATION, Drive Pinion Shaft Assembly.>
6) Install the transmission case. <Ref. to 6MT(TY75)-86, INSTALLATION, Transmission Case.>
7) Install the transfer case together with the extension case assembly. <Ref. to 6MT(TY75)-53, INSTALLATION, Transfer Case and Extension Case Assembly.>
8) Install the manual transmission assembly to the vehicle. <Ref. to 6MT(TY75)-30, INSTALLATION, Manual Transmission Assembly.>

C: DISASSEMBLY

1. DIFFERENTIAL CASE ASSEMBLY

1) Loosen the twelve bolts and remove hypoid driven gear.

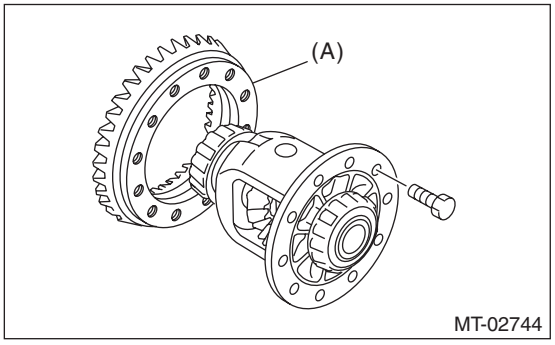

(A) Hypoid driven gear

2) Drive out the straight pin from differential assembly toward hypoid driven gear side.
ST 899904100 STRAIGHT PIN REMOVER

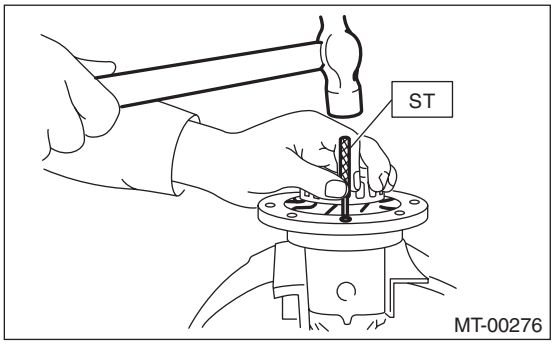

3) Pull out the pinion shaft, and remove the differential bevel pinion, differential bevel gear and adjusting washer.

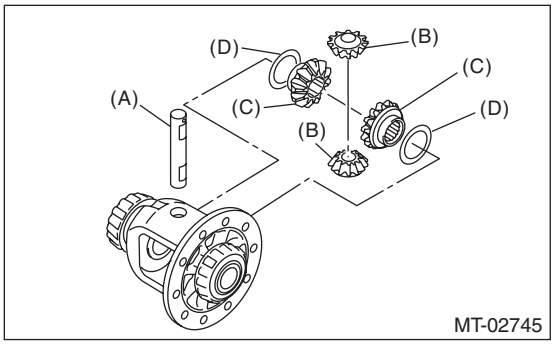

(A) Pinion shaft
(B) Differential bevel pinion
(C) Differential bevel gear
(D) Adjusting washer

4) Using the ST, remove the taper roller bearing.
ST 899524100 PULLER SET

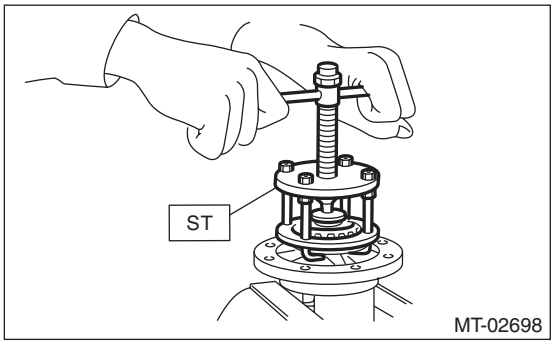

2. DIFFERENTIAL SIDE RETAINER

1) Remove the O-rings.

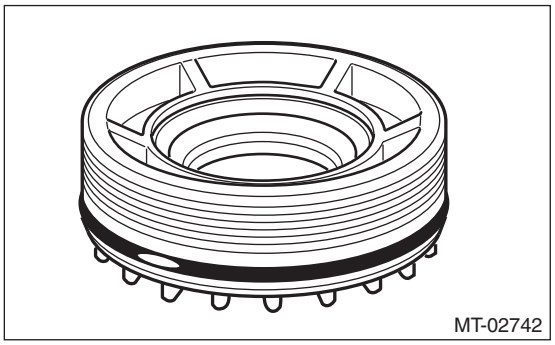

2) Remove the oil seal.

NOTE:
Remove using the flat tip screwdriver.

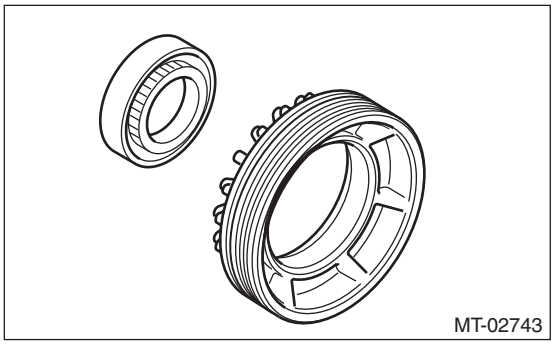

D: ASSEMBLY

1. DIFFERENTIAL CASE ASSEMBLY

1) Install the differential bevel gear and differential bevel pinion together with adjusting washer, and insert the pinion shaft.

NOTE:
Face the chamfered side of adjusting washer toward differential bevel gear.

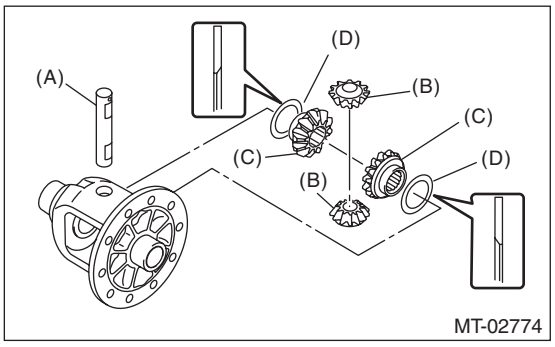

(A) Pinion shaft
(B) Differential bevel pinion
(C) Differential bevel gear
(D) Adjusting washer

2) Measure the backlash between the differential bevel gear and differential bevel pinion. Adjust the backlash if not within specified limit. <Ref. to 6MT(TY75)-132, DIFFERENTIAL BEVEL PINION GEAR BACKLASH, INSPECTION, Front Differential Assembly.>

NOTE:
Be sure the differential bevel pinion gear teeth contact adjacent gear teeth during measurement.

Standard backlash
0.13 — 0.18 mm (0.0051 — 0.0071 in)
ST1 498247001 MAGNET BASE
ST2 498247100 DIAL GAUGE

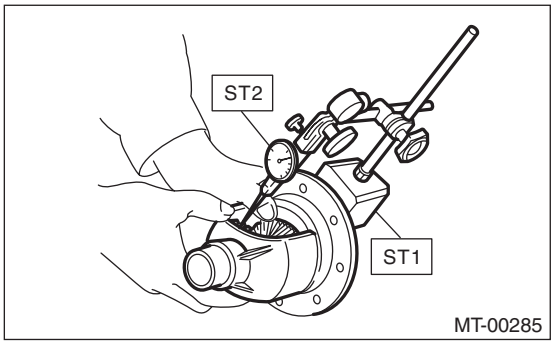

3) Align the pinion shaft pin hole with the differential case pin hole, and drive the straight pin into the holes from the hypoid driven gear side using the ST.

NOTE:
Use a new straight pin. After driving, crimp the area around the hole, and make sure that the straight pin will not come out.
ST 899904100 STRAIGHT PIN REMOVER

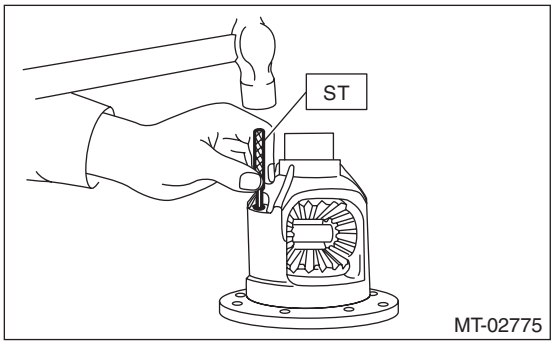

4) Install the taper roller bearing.

CAUTION:
Do not apply a load in excess of 10 kN (1 ton, 1.1 US ton, 1.0 Imp ton).

NOTE:
Be careful when handling because the taper roller bearing and the outer race are used as a set.
ST1 499277100 BUSHING 1-2 INSTALLER
ST2 398497701 SEAT

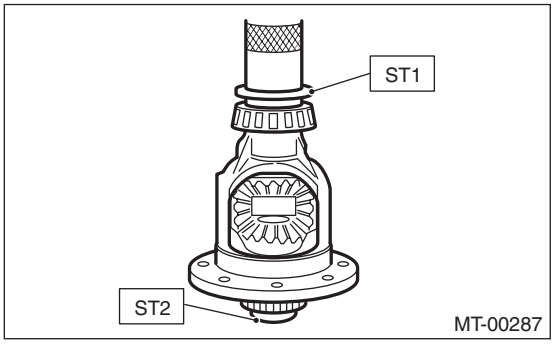

5) Install the hypoid driven gear using twelve bolts.

Tightening torque:
T: 62 N·m (6.3 kgf-m, 45.7 ft-lb)

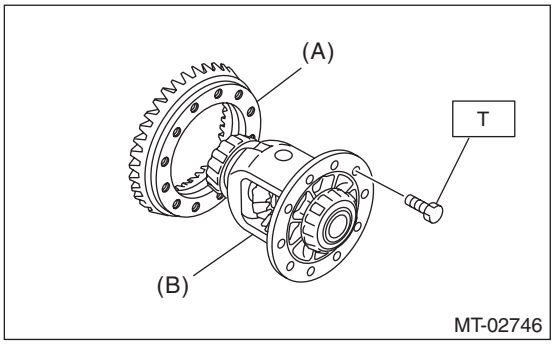

(A) Hypoid driven gear
(B) Differential case

2. DIFFERENTIAL SIDE RETAINER

1) Using the ST, install the oil seal by lightly tapping with a plastic hammer.

NOTE:
- Use a new oil seal.
- Apply transmission gear oil to the oil seal lips, and install the oil seal while being careful not to deform the lip.
- Check the identification marks (L, R), and attach the oil seals RH and LH.

ST 18675AA000 DIFFERENTIAL SIDE OIL SEAL INSTALLER

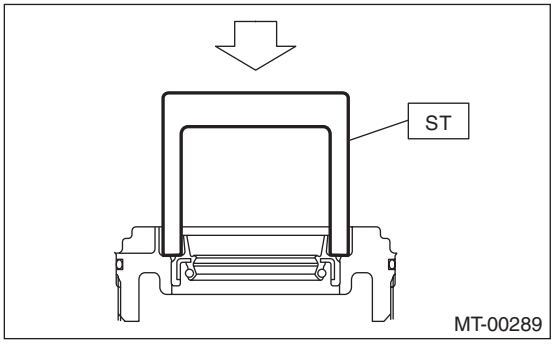

2) Install the O-rings.

NOTE:
- Use new O-rings.
- Apply transmission gear oil to O-ring.
- Do not stretch or damage the O-ring.
- Install the O-ring after hypoid driven gear backlash adjustment and completion of tooth contact inspection.

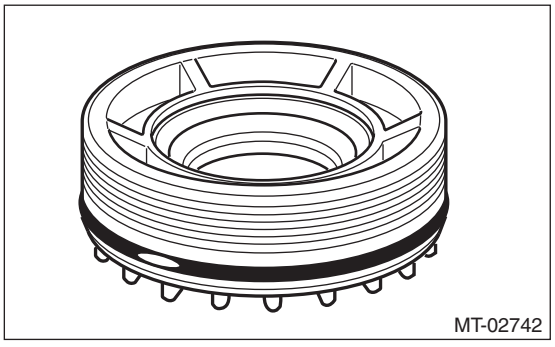

E: INSPECTION

Repair or replace the differential gear in the following cases:
- When the hypoid driven gear and drive pinion shaft tooth surfaces are damaged, excessively worn, or seized.
- When the roller bearing on the drive pinion shaft has a worn or damaged roller path.
- When there is damage, wear or seizure of the differential bevel pinion, differential bevel gear, adjusting washer, pinion shaft or straight pin.
- When the differential case sliding surfaces are worn or damaged.

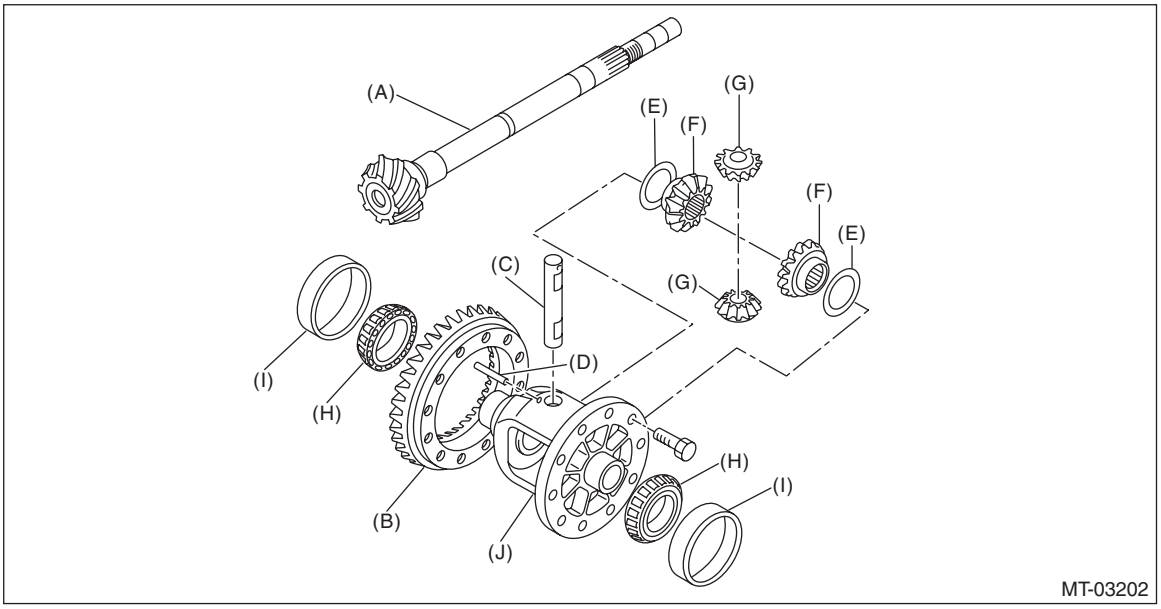

(A) Drive pinion shaft
(B) Hypoid driven gear
(C) Pinion shaft
(D) Straight pin
(E) Adjusting washer
(F) Differential bevel gear
(G) Differential bevel pinion
(H) Taper roller bearing inner race
(I) Taper roller bearing outer race
(J) Differential case

1. DIFFERENTIAL BEVEL PINION GEAR BACKLASH

Measure the backlash between the differential bevel gear and differential bevel pinion. Adjust the backlash if not within specified limit. <Ref. to 6MT(TY75)-133, ADJUSTMENT, Front Differential Assembly.>

Standard backlash

0.13 — 0.18 mm (0.0051 — 0.0071 in)

ST1 498247001 MAGNET BASE
ST2 498247100 DIAL GAUGE

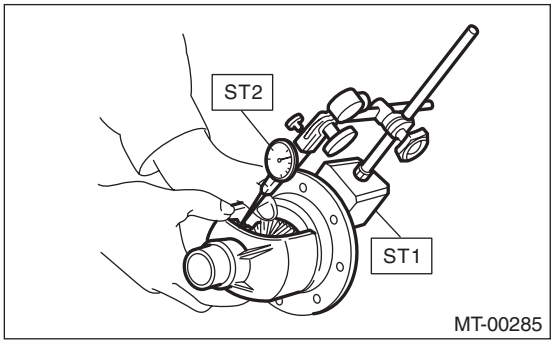

2. HYPOID DRIVEN GEAR BACKLASH

1) Set the ST1, ST2 and ST3. Insert the dial gauge probe through drain plug hole so that the probe comes in contact with the tooth surface on the right corner, and check the backlash.
ST1 498247001 MAGNET BASE
ST2 498247100 DIAL GAUGE
ST3 498255400 PLATE
2) Install SUBARU genuine axle shafts to both sides, rotate in the inversion direction so that the gauge contacts the tooth surface, and read the dial gauge.

NOTE:
If the backlash is outside the specified range, adjust it by turning the differential side retainers on the left and right side.

Backlash

0.13 — 0.18 mm (0.0051 — 0.0071 in)

Part No. 38415AA100 Axle shaft

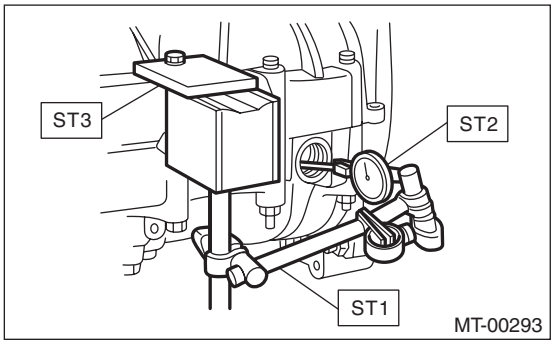

3. TOOTH CONTACT OF HYPOID DRIVEN GEAR

Check tooth contact of hypoid driven gear as follows: Apply a thin uniform coat of red lead on both teeth surfaces on 3 or 4 teeth of the hypoid gear. Move the hypoid driven gear back and forth by turning the transmission main shaft until a definite contact pattern is developed on the hypoid driven gear, and judge whether face contact is correct. When the contact pattern is not correct, adjust. <Ref. to 6MT(TY75)-133, ADJUSTMENT, Front Differential Assembly.>

- Tooth contact is correct.

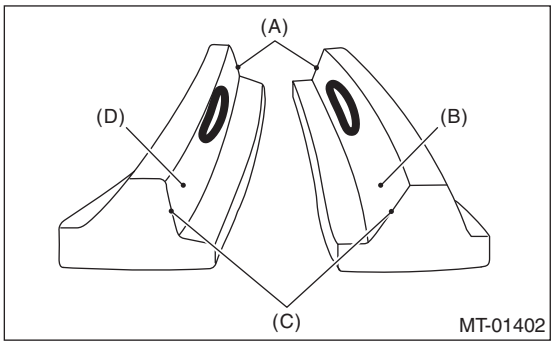

(A) Toe
(B) Coast side
(C) Heel
(D) Drive side

F: ADJUSTMENT

1. DIFFERENTIAL BEVEL PINION GEAR BACKLASH

1) Disassemble the front differential assembly. <Ref. to 6MT(TY75)-126, DISASSEMBLY, Front Differential Assembly.>
2) Select the adjusting washer from the table and install.

Adjusting washer	
Part No.	Thickness mm (in)
803038021	0.925 — 0.950 (0.0364 — 0.0374)
803038022	0.975 — 1.000 (0.0384 — 0.0394)
803038023	1.025 — 1.050 (0.0404 — 0.0413)

3) Adjust until the standard value is obtained.

Backlash:
Standard
0.13 — 0.18 mm (0.0051 — 0.0071 in)

2. HYPOID DRIVEN GEAR BACKLASH

Adjust the backlash by turning the differential side retainers on the left and right side.
ST 18630AA010 WRENCH COMPL RETAINER

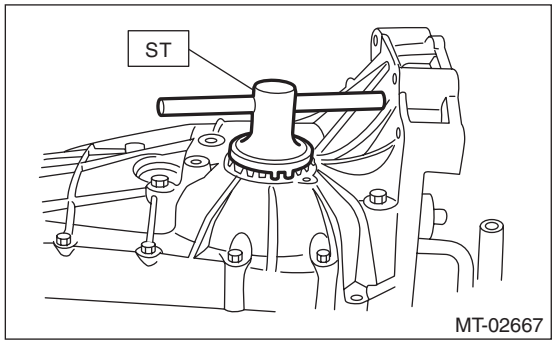

NOTE:
Each time the differential side retainer rotates by one notch (A), the backlash changes by 0.05 mm (0.0020 in).

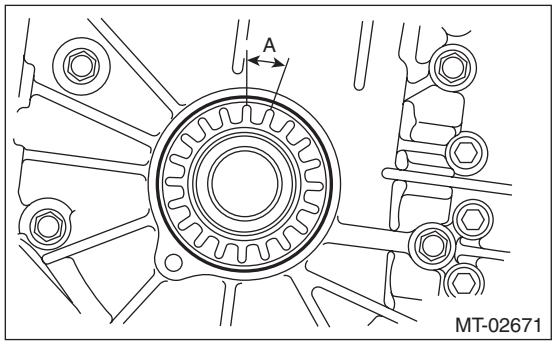

3. TOOTH CONTACT OF HYPOID DRIVEN GEAR

1) Adjust until correct teeth contact is obtained.
2) Check tooth contact, and perform the adjustment as follows.

- Correct tooth contact

Check item: Tooth contact surface is slightly shifted toward the toe side under a no-load condition. (When driving, it moves towards the heel side.)

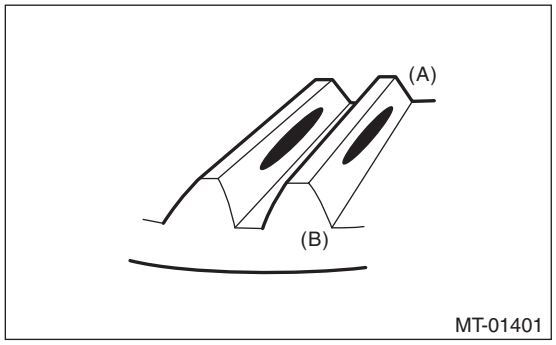

(A) Toe side
(B) Heel side

- Face contact

Check item: Backlash is too large.

Contact pattern

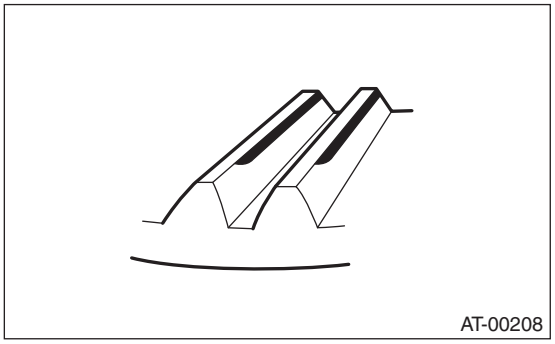

Corrective action: Tighten the differential side retainer to move the hypoid driven gear closer to the drive pinion shaft.

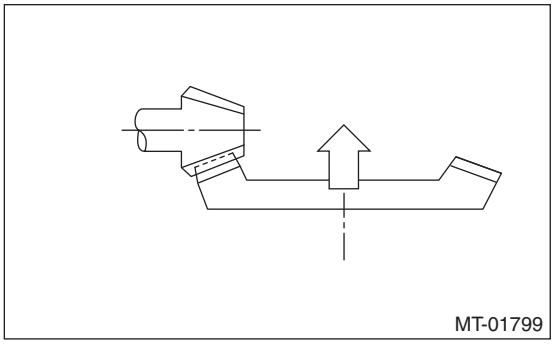

- Flank contact

Check item: Backlash is too small.

Contact pattern

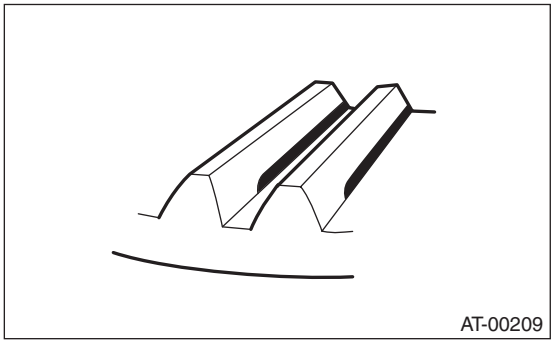

Corrective action: Loosen the differential side retainer to move the hypoid driven gear away from the drive pinion shaft.

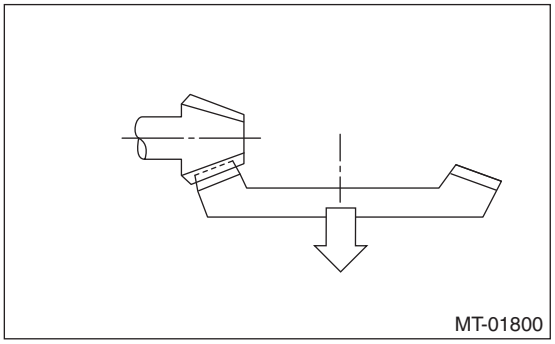

- Toe contact (inside contact)

Check item: Teeth contact area is too small.

Contact pattern

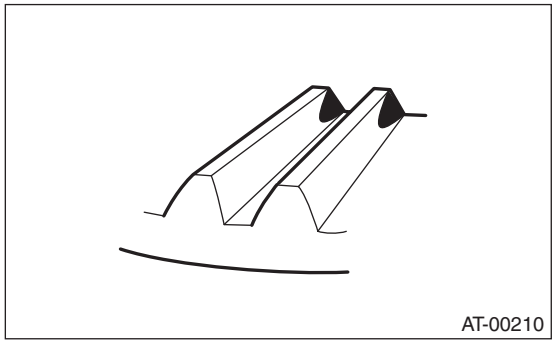

Corrective action: Increase the thickness of drive pinion shim and tighten the differential side retainer to move the hypoid driven gear closer to the drive pinion shaft according to the procedure for bringing drive pinion shaft away from hypoid driven gear.

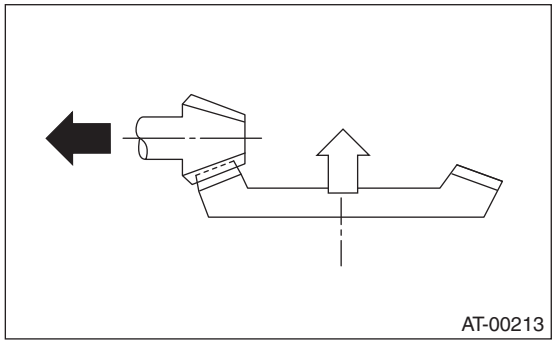

- Heel contact (outside end contact)

Check item: Teeth contact area is too small.

Contact pattern

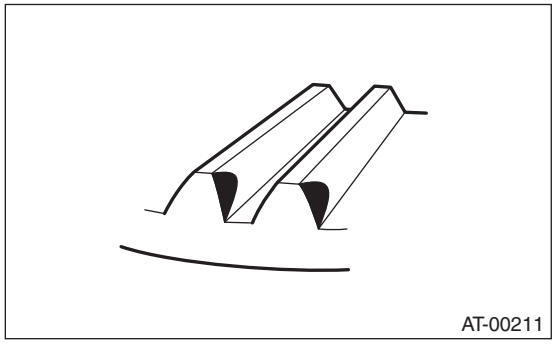

Corrective action: Reduce thickness of the drive pinion shim according to the procedures for moving the drive pinion shaft closer to hypoid driven gear. Also loosen the differential side retainer to move the hypoid driven gear away from the drive pinion shaft.

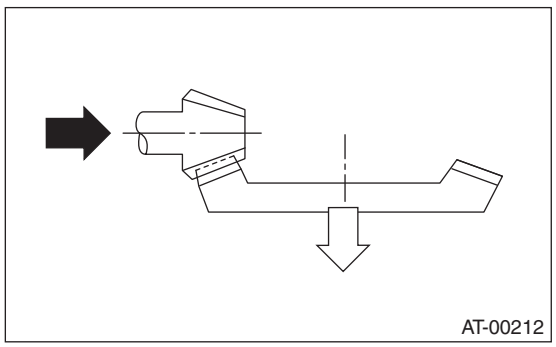

19.Reverse Idler Gear

A: REMOVAL

1) Remove the manual transmission assembly from the vehicle. <Ref. to 6MT(TY75)-26, REMOVAL, Manual Transmission Assembly.>
2) Remove the back-up light switch and the neutral position switch. <Ref. to 6MT(TY75)-46, REMOVAL, Switches and Harness.>
3) Remove the transfer case together with the extension case assembly. <Ref. to 6MT(TY75)-51, REMOVAL, Transfer Case and Extension Case Assembly.>
4) Remove the transmission case. <Ref. to 6MT(TY75)-84, REMOVAL, Transmission Case.>
5) Remove the drive pinion shaft assembly. <Ref. to 6MT(TY75)-106, REMOVAL, Drive Pinion Shaft Assembly.>
6) Remove the main shaft assembly. <Ref. to 6MT(TY75)-91, REMOVAL, Main Shaft Assembly.>
7) Remove the front differential assembly. <Ref. to 6MT(TY75)-125, REMOVAL, Front Differential Assembly.>
8) Shift into 4th.
9) Remove the snap ring.

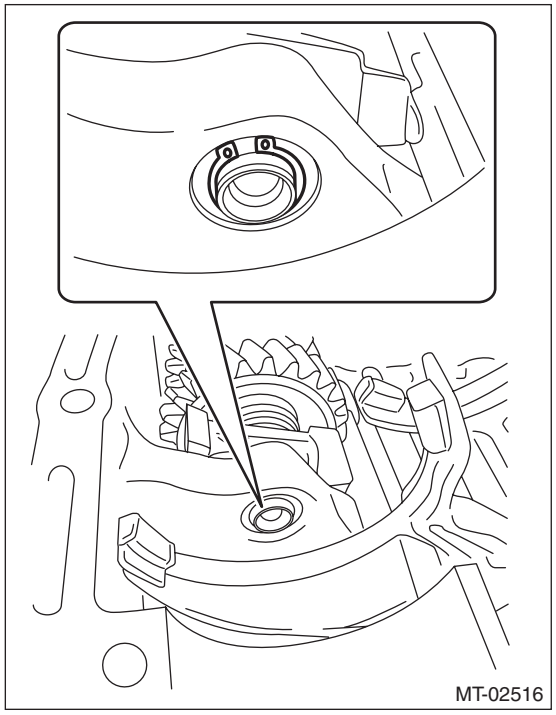

10) Remove the reverse idler gear shaft securing bolt.

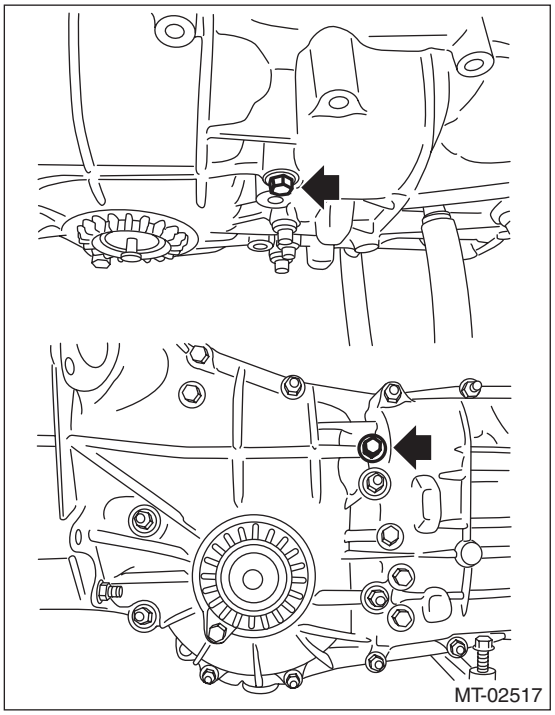

11) Remove the reverse idler gear shaft by pushing it out.

NOTE:
Support the reverse idler gear assembly with hands to avoid collapsing.

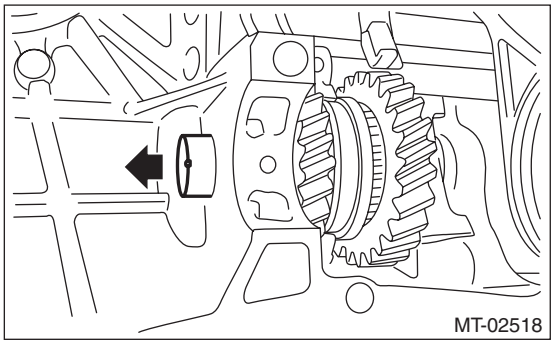

12) Remove the reverse idler gear.
13) Remove the reverse idler gear bushing.

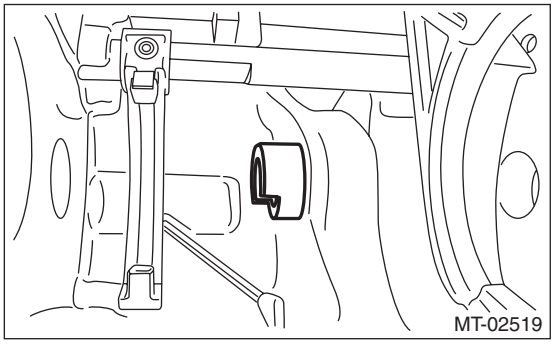

B: INSTALLATION

NOTE:
Rotate the reverse idler sub gear by two teeth from free status in the direction of the arrow to make it engage with the reverse gear of the main shaft and install the main shaft assembly.

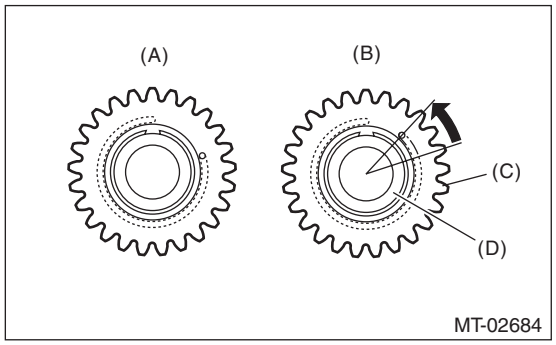

(A) Free status
(B) Set status
(C) Reverse idler sub gear
(D) Reverse idler gear

1) Install the reverse idler gear bushing with the cutout portion of the reverse idler gear bushing facing the front of the transmission.

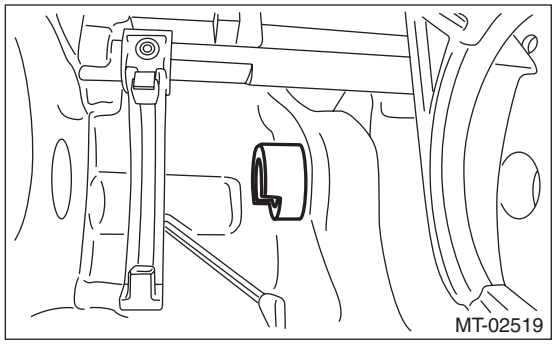

2) Assembling reverse idler gear assembly
(1) Install the reverse coupling sleeve to the reverse idler gear No. 2.

NOTE:
- Install the reverse coupling sleeve in the correct direction.
- Make sure that the oval-shaped cutout portion inside the reverse coupling sleeve matches the center of the reverse idler gear No. 2 groove.

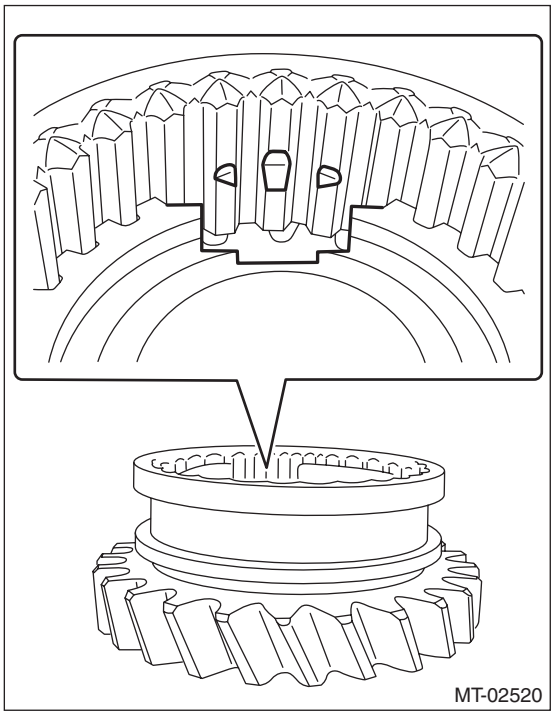

(2) Install the reverse shifting insert.

NOTE:
Press in the ball part to install.

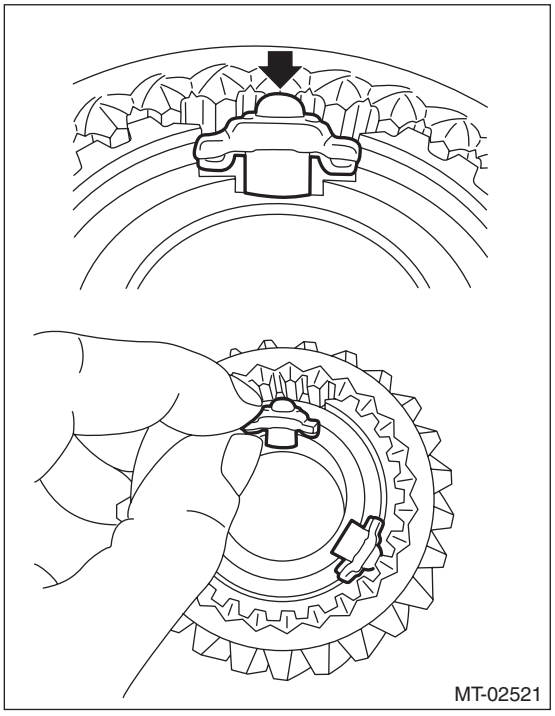

(3) Install the reverse baulk ring and reverse idler gear.

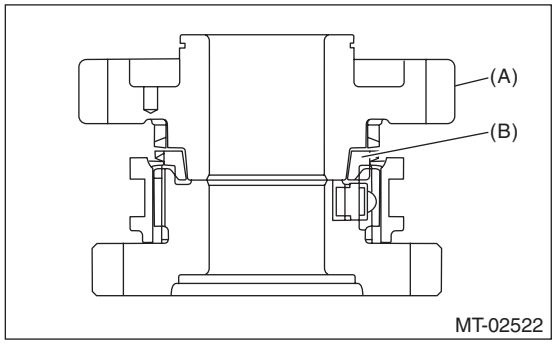

(A) Reverse idler gear
(B) Reverse baulk ring

(4) Install the needle bearing and reverse idler gear collar.

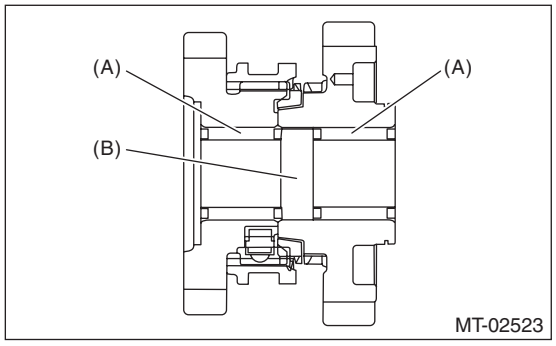

(A) Needle bearing
(B) Reverse idler gear collar

(5) Install the thrust bearing and reverse idler gear washer.

NOTE:
Install the thrust bearing in the correct direction.

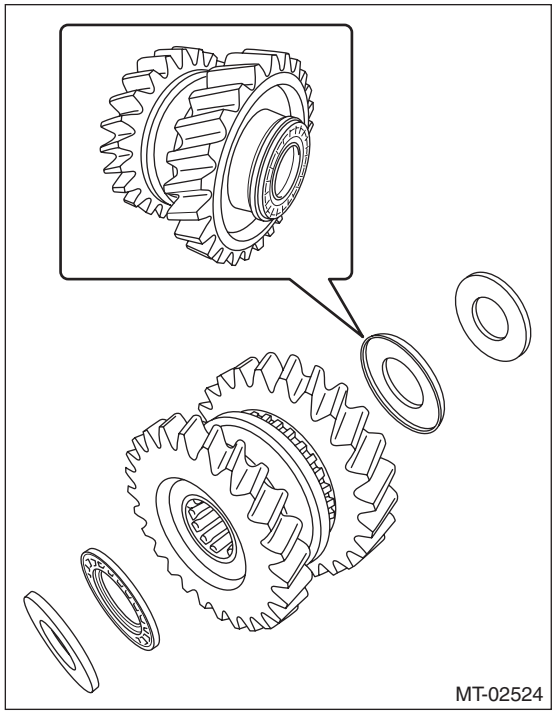

3) Install the assembled reverse idler gear assembly to the transmission case and hold it with hands.
4) Install the reverse idler gear shaft.

NOTE:
- Install with the cutout portion of the reverse idler gear shaft facing the RH side of the transmission case.
- Make sure that the groove of the reverse idler gear shaft comes out of the reverse idler gear bushing.

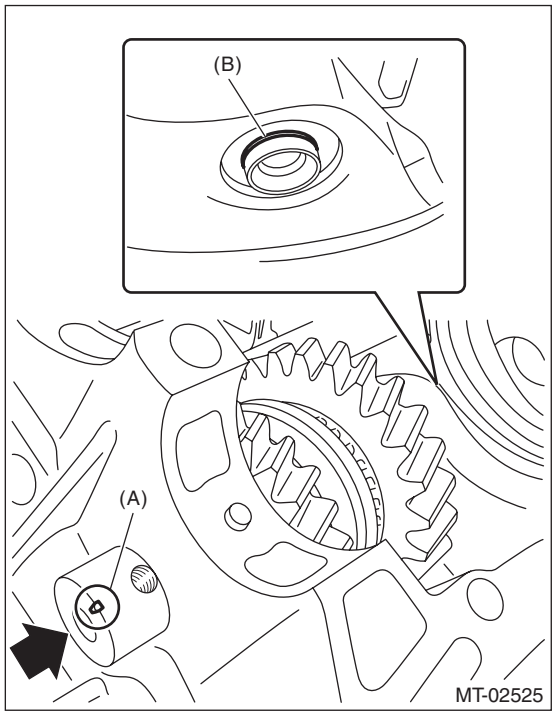

(A) Cutout portion of the reverse idler gear shaft
(B) Snap ring installation groove

5) Install the reverse idler gear shaft securing bolt.

Tightening torque:
25 N·m (2.5 kgf-m, 18.4 ft-lb)

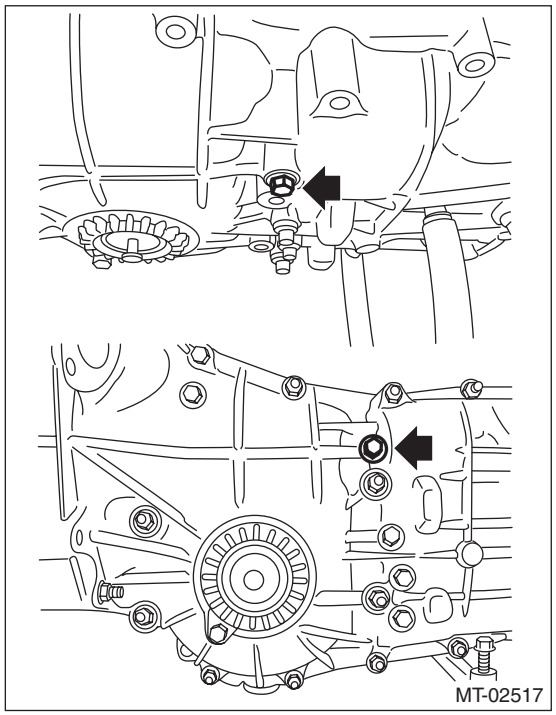

6) Install the snap ring.

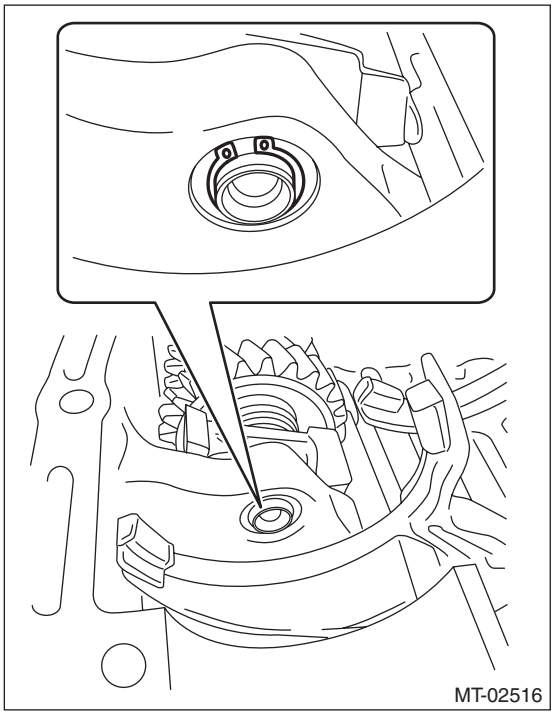

7) Select the reverse idler gear bushing. <Ref. to 6MT(TY75)-148, ADJUSTMENT, Reverse Idler Gear.>
8) Remove the reverse idler gear assembly and replace with the selected bushing. <Ref. to 6MT(TY75)-137, REMOVAL, Reverse Idler Gear.>
9) Install the reverse idler gear assembly, oil case guide and reverse idler gear shaft.

NOTE:
- Install with the cutout portion of the reverse idler gear shaft facing the RH side of the transmission case.
- Make sure that the groove of the reverse idler gear shaft comes out of the reverse idler gear bushing.
- Insert the cutout portion of the reverse idler gear bushing into the oil case guide.

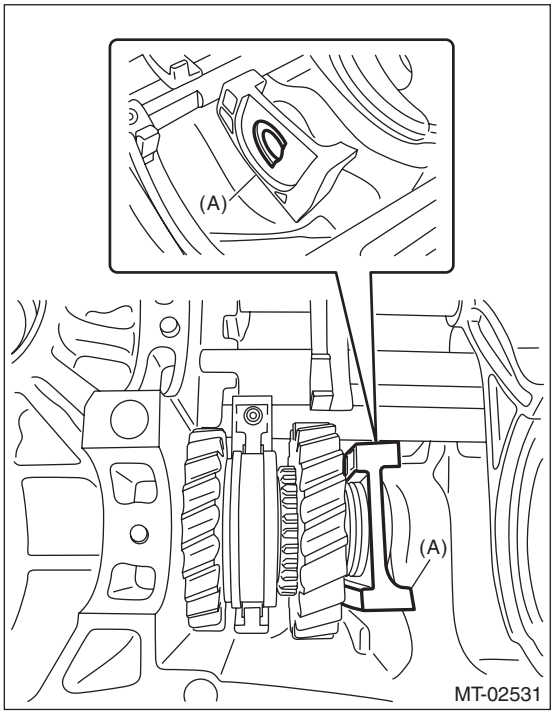

(A) Oil case guide

10) Install the reverse idler gear shaft securing bolt.

NOTE:
Use a new gasket.

Tightening torque:
25 N·m (2.5 kgf-m, 18.4 ft-lb)

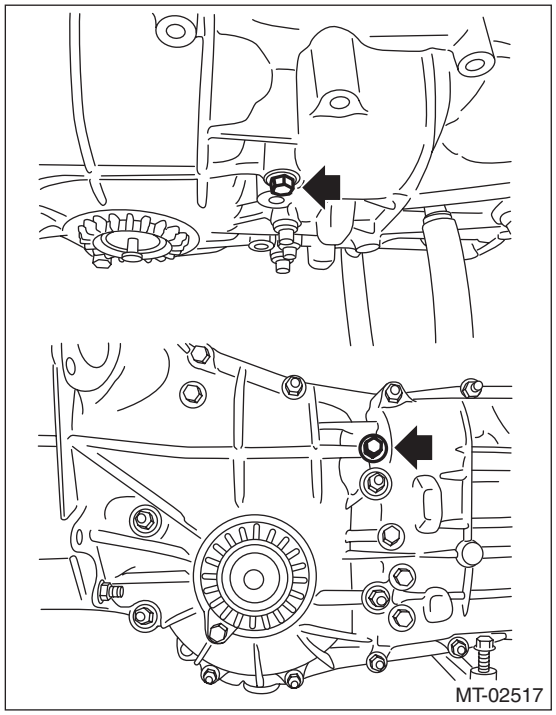

11) Install the snap ring.

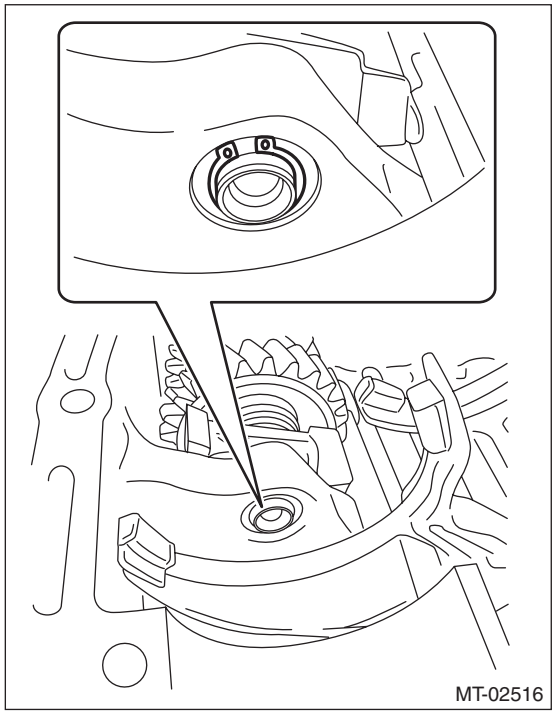

12) Check the reverse shifter fork. <Ref. to 6MT(TY75)-153, INSPECTION, Shifter Fork and Rod.>
13) Install the front differential assembly. <Ref. to 6MT(TY75)-126, INSTALLATION, Front Differential Assembly.>
14) Install the main shaft assembly. <Ref. to 6MT(TY75)-91, INSTALLATION, Main Shaft Assembly.>

15) Install the drive pinion shaft assembly. <Ref. to 6MT(TY75)-106, INSTALLATION, Drive Pinion Shaft Assembly.>
16) Install the transmission case. <Ref. to 6MT(TY75)-86, INSTALLATION, Transmission Case.>
17) Install the transfer case together with the extension case assembly. <Ref. to 6MT(TY75)-53, INSTALLATION, Transfer Case and Extension Case Assembly.>
18) Install the back-up light switch and the neutral position switch. <Ref. to 6MT(TY75)-47, INSTALLATION, Switches and Harness.>
19) Install the manual transmission assembly to the vehicle. <Ref. to 6MT(TY75)-30, INSTALLATION, Manual Transmission Assembly.>

C: DISASSEMBLY

1. REVERSE IDLER GEAR ASSY

1) Remove the snap ring and friction plate.

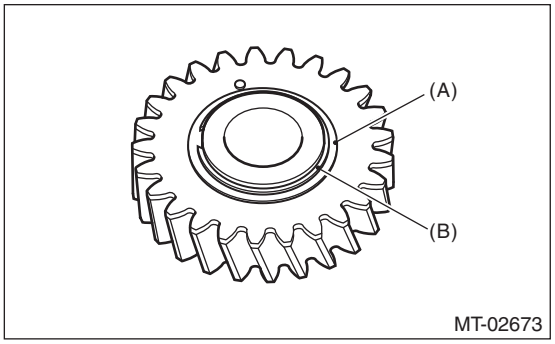

(A) Friction plate
(B) Snap ring

2) Remove the reverse idler sub gear and reverse idler spring.

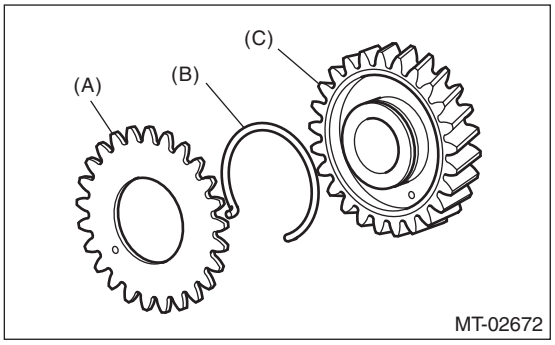

(A) Reverse idler sub gear
(B) Reverse idler spring
(C) Reverse idler gear

D: ASSEMBLY

1. REVERSE IDLER GEAR ASSY

1) Attach the reverse idler sub gear and reverse idler spring.

NOTE:
Point the stamp (marking A) towards the outside, and install the reverse idler sub gear.

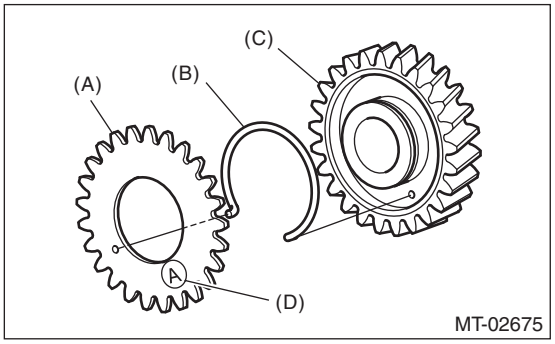

(A) Reverse idler sub gear
(B) Reverse idler spring
(C) Reverse idler gear
(D) Stamp (marking A)

2) Install the friction plate and snap ring.

NOTE:
Make sure the friction plate is installed in the proper direction.

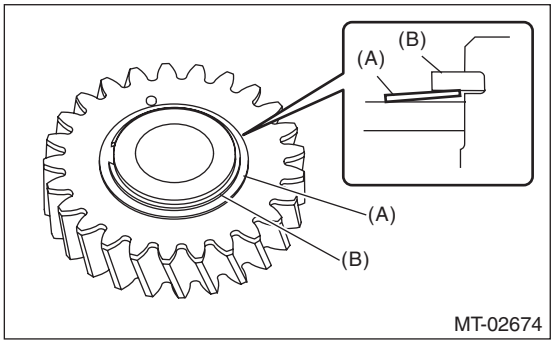

(A) Friction plate
(B) Snap ring

E: INSPECTION

1) Check the clearance between the reverse idler gear bushing and reverse idler gear washer. If the value is out of specification, select the appropriate reverse idler gear bushing and adjust.

Clearance (a):
0.1 — 0.3 mm (0.004 — 0.012 in)

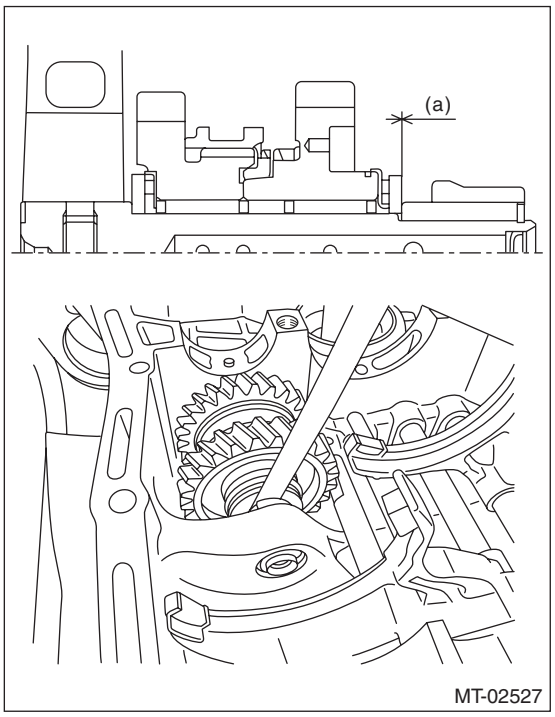

2) Check the reverse idler gear and reverse idler gear shaft for damage. Replace if it is damaged.
3) Apply transmission gear oil to the cone of the reverse idler gear and while press-fitting the reverse baulk ring, check there is no rotation in the circumferential direction.

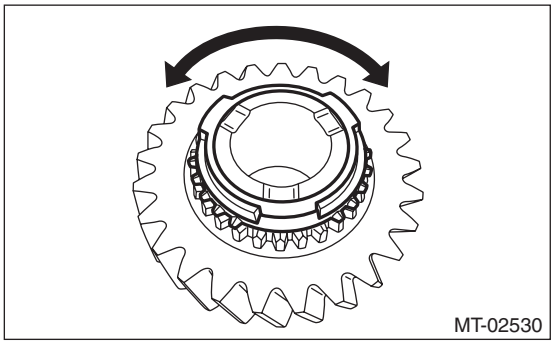

4) Reverse coupling sleeve
- Check the sliding condition of the reverse coupling sleeve.
- Check the splines on the reverse coupling sleeve and reverse idler gear for wear.

5) Reverse shifting insert
Replace the reverse shifting insert if there is deformation, excessive wear on the ball section or any defectiveness.

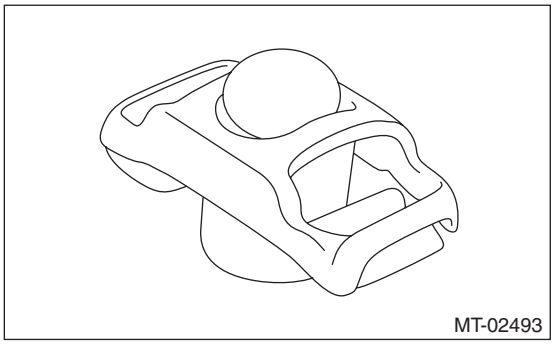

F: ADJUSTMENT

1) Select the appropriate reverse idler gear bushing from the table below, and adjust until the clearance between the reverse idler gear and reverse idler gear washer is within specification.

Clearance (a):
0.1 — 0.3 mm (0.004 — 0.012 in)

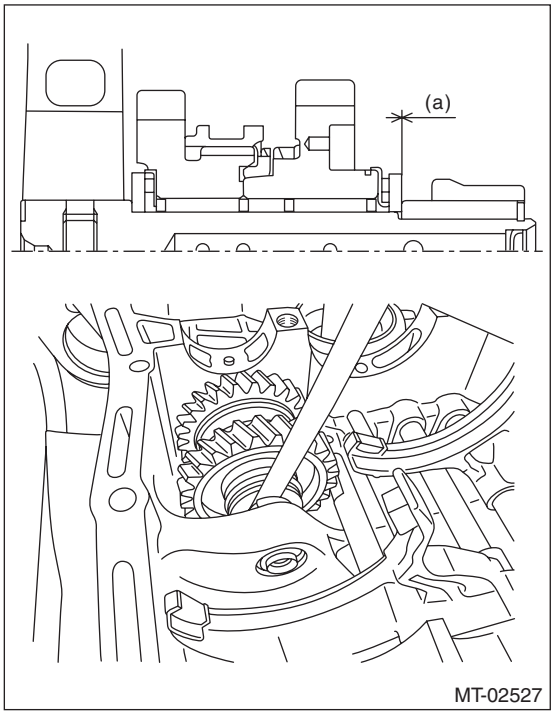

Reverse idler gear bushing		
Part No.	Length mm (in)	Groove for identification
32289AA080	27.75 (1.093)	None
32289AA090	27.90 (1.098)	1
32289AA100	28.05 (1.104)	2
32289AA110	28.20 (1.110)	3
32289AA120	28.35 (1.116)	4

20.Shifter Fork and Rod

A: REMOVAL

1) Remove the manual transmission assembly from the vehicle. <Ref. to 6MT(TY75)-26, REMOVAL, Manual Transmission Assembly.>
2) Remove the back-up light switch and the neutral position switch. <Ref. to 6MT(TY75)-46, REMOVAL, Switches and Harness.>
3) Remove the transfer case together with the extension case assembly. <Ref. to 6MT(TY75)-51, REMOVAL, Transfer Case and Extension Case Assembly.>
4) Remove the transmission case. <Ref. to 6MT(TY75)-84, REMOVAL, Transmission Case.>
5) Remove the drive pinion shaft assembly. <Ref. to 6MT(TY75)-106, REMOVAL, Drive Pinion Shaft Assembly.>
6) Remove the main shaft assembly. <Ref. to 6MT(TY75)-91, REMOVAL, Main Shaft Assembly.>
7) Remove the front differential assembly. <Ref. to 6MT(TY75)-125, REMOVAL, Front Differential Assembly.>
8) Remove the reverse idler gear assembly. <Ref. to 6MT(TY75)-137, REMOVAL, Reverse Idler Gear.>
9) Remove the check ball plugs, check ball springs and check balls.

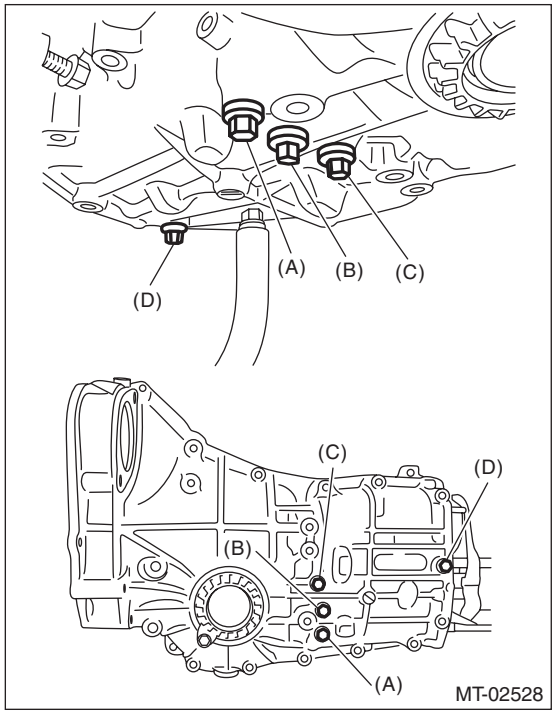

(A) 1st-2nd
(B) 3rd-4th
(C) 5th-6th
(D) Rev.

10) Use the ST to push out the straight pin of 5th-6th shifter fork and reverse shifter fork, and remove the 5th-6th shifter fork, reverse shifter fork, 5th-6th fork rod and reverse fork rod.

NOTE:
Tap out the reverse shifter fork straight pin, after setting the gear into reverse position. In the neutral position, removing is impossible because the clearance between transmission case is narrow.
ST 398791700 REMOVER

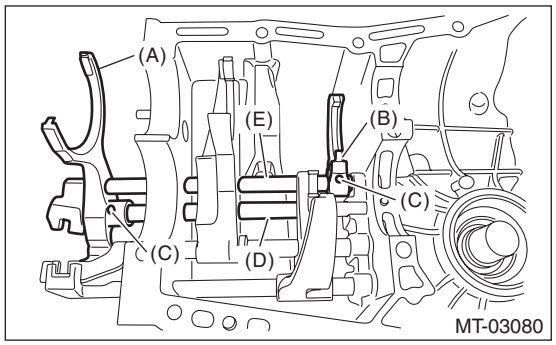

(A) 5th-6th shifter fork
(B) Reverse shifter fork
(C) Straight pin
(D) 5th-6th fork rod
(E) Reverse fork rod

11) Drive out the straight pin by tapping with the ST, and remove the 3rd-4th shifter fork and 3rd-4th fork rod.

NOTE:
When removing the 3rd-4th fork rod, keep other fork rods in neutral.
ST 398791700 REMOVER

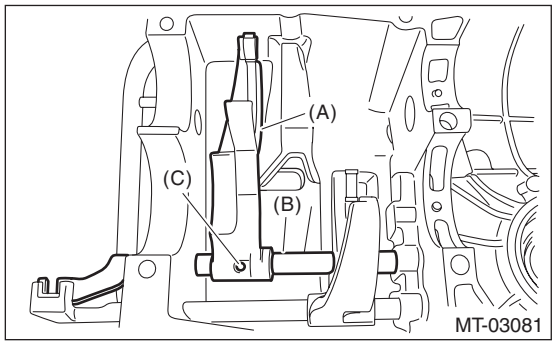

(A) 3rd-4th shifter fork
(B) 3rd-4th fork rod
(C) Straight pin

12) Drive out the straight pin by tapping with the ST, and remove the 1st-2nd shifter fork and 1st-2nd fork rod.
ST 398791700 REMOVER

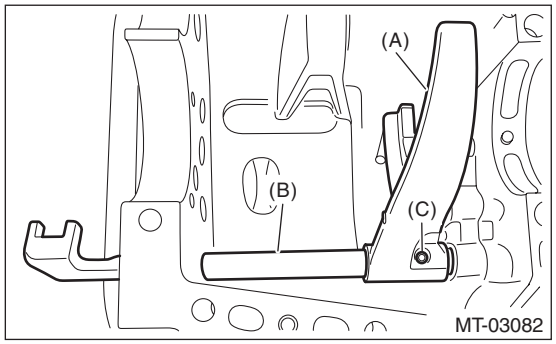

(A) 1st-2nd shifter fork
(B) 1st-2nd fork rod
(C) Straight pin

B: INSTALLATION

1) Install the 1st-2nd fork rod to the 1st-2nd shifter fork through the hole on the rear of the transmission case.
2) Align the holes on the 1st-2nd fork rod and 1st-2nd shifter fork, and drive the straight pin into these holes using the ST to fix.

NOTE:
Use a new straight pin.
ST 398791700 REMOVER

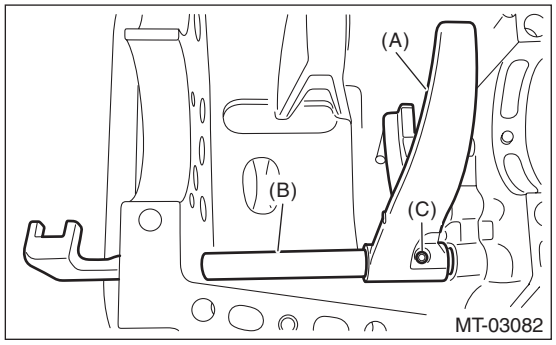

(A) 1st-2nd shifter fork
(B) 1st-2nd fork rod
(C) Straight pin

3) Install the 3rd-4th fork rod to the 3rd-4th shifter fork through the hole on the rear of the transmission case.

4) Align the holes on the 3rd-4th fork rod and 3rd-4th shifter fork, and drive the straight pin into these holes using the ST to fix.

NOTE:
- Use a new straight pin.
- Set other fork rods to neutral.
- Check that the positions of interlock plunger is correct.

ST 398791700 REMOVER

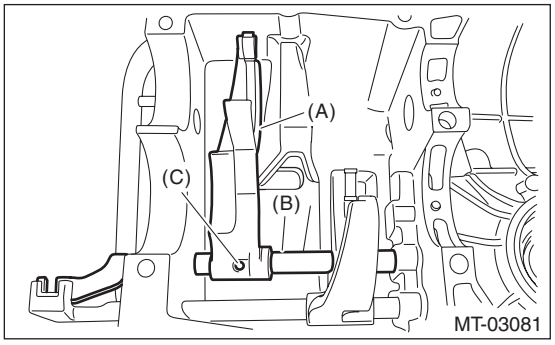

(A) 3rd-4th shifter fork
(B) 3rd-4th fork rod
(C) Straight pin

5) Install the 5th-6th fork rod into 5th-6th shifter fork, then insert through the hole on the rear of transmission case. Align the hole of the 5th-6th shifter fork with the hole on the transmission case, then insert the reverse fork rod to install the reverse shifter fork.
6) Align the holes on the 5th-6th fork rod and 5th-6th shifter fork and the holes on the reverse fork rod and reverse shifter fork, and drive the straight pin into these holes using the ST to fix.

NOTE:
- Use a new straight pin.
- Set other fork rods to neutral.
- Check that the positions of interlock plunger is correct.

ST 398791700 REMOVER

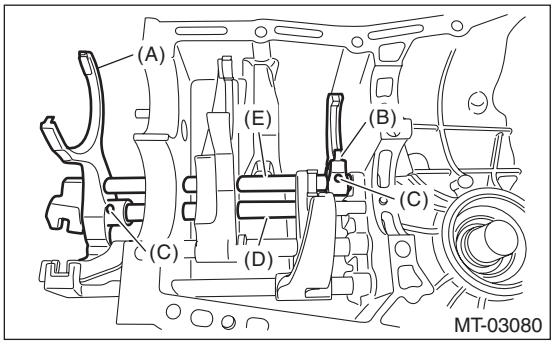

(A) 5th-6th shifter fork
(B) Reverse shifter fork
(C) Straight pin
(D) 5th-6th fork rod
(E) Reverse fork rod

7) Install the check ball plugs, check ball springs and check balls.

Tightening torque:
20 N·m (2.0 kgf-m, 14.8 ft-lb)

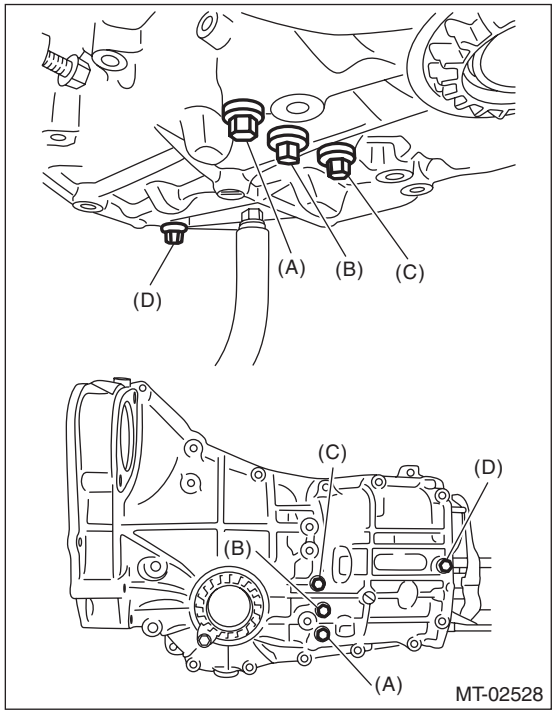

(A) 1st-2nd
(B) 3rd-4th
(C) 5th-6th
(D) Rev.

8) Install the reverse idler gear assembly. <Ref. to 6MT(TY75)-139, INSTALLATION, Reverse Idler Gear.>
9) Install the front differential assembly. <Ref. to 6MT(TY75)-126, INSTALLATION, Front Differential Assembly.>
10) Install the main shaft assembly. <Ref. to 6MT(TY75)-91, INSTALLATION, Main Shaft Assembly.>
11) Install the drive pinion shaft assembly. <Ref. to 6MT(TY75)-106, INSTALLATION, Drive Pinion Shaft Assembly.>
12) Install the transmission case. <Ref. to 6MT(TY75)-86, INSTALLATION, Transmission Case.>
13) Install the transfer case together with the extension case assembly. <Ref. to 6MT(TY75)-53, INSTALLATION, Transfer Case and Extension Case Assembly.>
14) Install the back-up light switch and the neutral position switch. <Ref. to 6MT(TY75)-47, INSTALLATION, Switches and Harness.>
15) Install the manual transmission assembly to the vehicle. <Ref. to 6MT(TY75)-30, INSTALLATION, Manual Transmission Assembly.>

C: INSPECTION

1) Check the shifter fork and fork rod for damage. Replace if it is damaged.
2) Gearshift mechanism
Repair or replace the gearshift mechanism if excessively worn, bent or defective in any way.

3) Inspect the clearance between 2nd driven gear and coupling sleeve. If any clearance is not within specifications, replace the shifter fork as required.

Clearance (a):
7.4 — 7.8 mm (0.291 — 0.307 in)

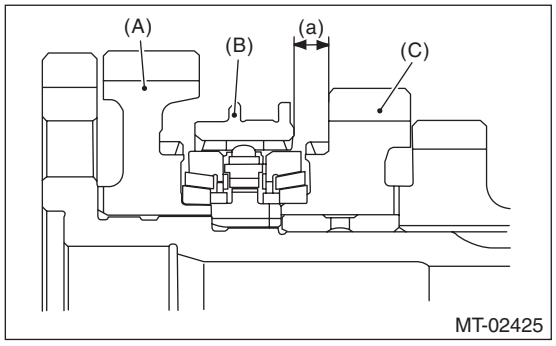

(A) 1st driven gear
(B) Coupling sleeve
(C) 2nd driven gear

1st-2nd shifter fork		
Part No.	Mark	Remarks
32804AA120	1	Approaches 2nd gear by 0.2 mm (0.008 in).
32804AA130	No mark	Standard
32804AA140	2	Approaches 1st gear by 0.2 mm (0.008 in).

4) Inspect the clearance between the 3rd, 4th drive gear and the coupling sleeve. If any clearance is not within specifications, replace the shifter fork as required.

Clearance (a), (b):
7.5 mm (0.295 in)

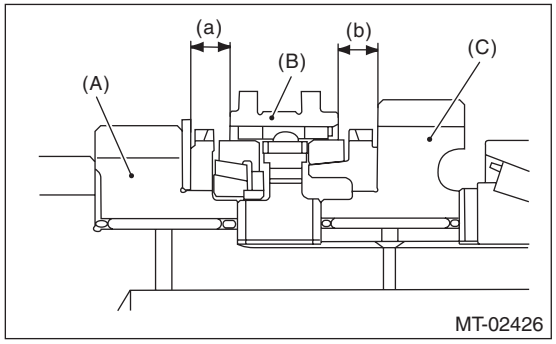

(A) 3rd drive gear
(B) Coupling sleeve
(C) 4th drive gear

3rd-4th shifter fork		
Part No.	Mark	Remarks
32810AA061	1	Approaches 4th gear by 0.2 mm (0.008 in).
32810AA071	No mark	Standard
32810AA101	3	Approaches 3rd gear by 0.2 mm (0.008 in).

5) Inspect the clearance between 5th, 6th drive gear and coupling sleeve. If any clearance is not within specifications, replace the shifter fork as required.

Clearance (a), (b):
7.5 mm (0.295 in)

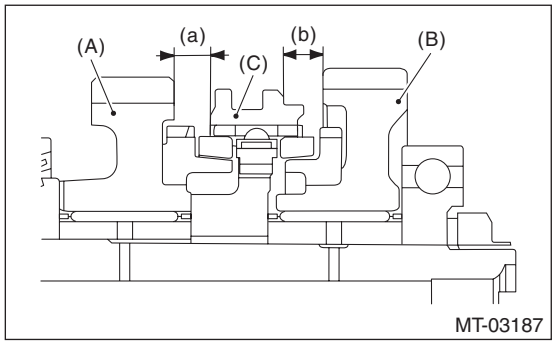

(A) 5th drive gear
(B) 6th drive gear
(C) Coupling sleeve

5th-6th shifter fork		
Part No.	Mark	Remarks
32940AA050	1	Approaches 5th gear by 0.2 mm (0.008 in).
32940AA060	No mark	Standard
32940AA070	2	Approaches 6th gear by 0.2 mm (0.008 in).

6) Check the clearance between the reverse idler gear and reverse coupling sleeve. If any clearance is not within specifications, replace the shifter fork as required.

Clearance (a):
0.50 mm (0.020 in) or less

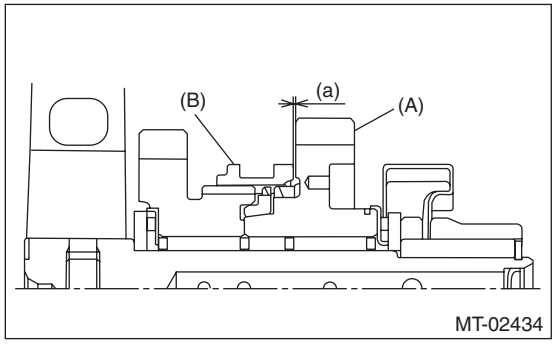

(A) Reverse idler gear
(B) Reverse coupling sleeve

Reverse shifter fork		
Part No.	Mark	Remarks
32941AA070	2	Approaches reverse idler gear by 0.3 mm (0.012 in).
32941AA060	No mark	Standard
32941AA050	1	Approaches reverse idler gear No. 2 by 0.3 mm (0.012 in).

7) Inspect the rod end clearances (A) and (B). If any clearance is not within specifications, replace the rod or fork as required.

Clearance (A):
1st-2nd — 3rd-4th
0.1 — 0.9 mm (0.004 — 0.035 in)

Clearance (B):
3rd-4th — 5th-6th
0.2 — 1.0 mm (0.008 — 0.039 in)

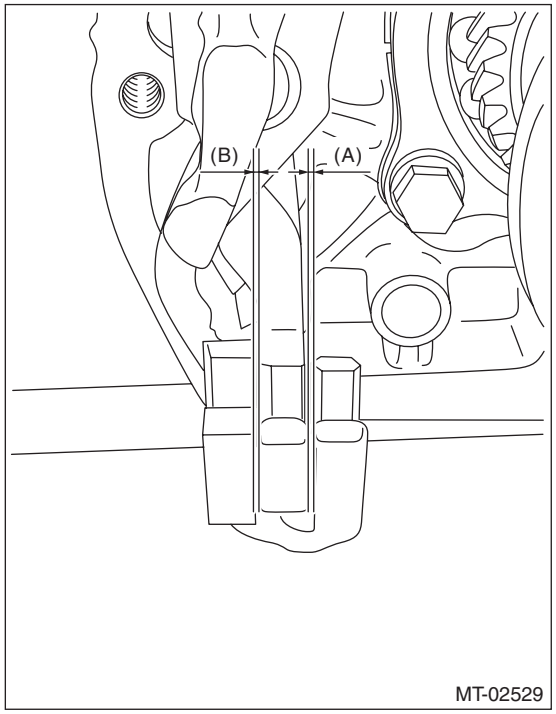

21.General Diagnostic Table

A: INSPECTION

1. MANUAL TRANSMISSION

Symptoms	Possible cause	Corrective action
1. Gears are difficult to intermesh. NOTE: The cause for difficulty in shifting gears can be classified into two types: One is a defective gear shift system and the other is defective transmission. However, if the operation is heavy and engagement of the gears is difficult, a defective clutch disengagement may also be responsible. Check whether the clutch is correctly functioning, before checking the gear shift system and transmission.	(a) Worn, damaged or burred chamfer at internal spline of the sleeve	Replace.
	(b) Worn, damaged or burred chamfer of gear spline	Replace.
	(c) Worn or scratched bushings	Replace.
	(d) Incorrect contact or wear between baulk ring and gear cone	Repair or replace.
2. Gear slip-out • Gear slips out when coasting on rough road. • Gear slips out during acceleration.	(a) Defective pitching stopper adjustment	Replace.
	(b) Loose engine mounting bolts	Tighten or replace.
	(c) Worn shifter fork or broken check ball spring	Replace.
	(d) Worn or damaged ball bearing	Replace.
	(e) Excessive clearance between splines of synchronizer hub and synchronizer sleeve	Replace.
	(f) Synchronizer hub tooth step wear	Replace.
	(g) Worn 1st driven gear and driven shaft	Replace.
	(h) Worn 2nd driven gear and bushing	Replace.
	(i) Worn 3rd drive gear and needle bearing	Replace.
	(j) Worn 4th drive gear and needle bearing	Replace.
	(k) Worn 5th drive gear and needle bearing	Replace.
	(l) Worn 6th drive gear and needle bearing	Replace.
	(m) Worn reverse idler gear and needle bearing	Replace.
3. Noise emitted from transmission NOTE: If a noise is heard when the vehicle is parked with its engine idling and if a noise ceases when the clutch is disengaged, it may be considered that the noise is coming from the transmission.	(a) Insufficient or improper lubrication	Lubricate with specified oil or replace.
	(b) Worn or damaged gears and bearings NOTE: If the trouble is only wear of the gear teeth surfaces, only a high whirring noise will occur at high speeds, but if any part is broken, rhythmical clicking sounds will be heard even at low speeds.	Replace.

2. DIFFERENTIAL

Symptoms	Possible cause	Corrective action
1. Broken differential (case, gear, bearing, etc.) NOTE: Noise will occur, and eventually the differential will not be able to operate due to broken pieces obstructing the gear revolution.	(a) Insufficient or improper oil	Disassemble the differential and replace the broken component parts. At the same time, check other component parts for any trouble, and replace if necessary.
	(b) Use of vehicle under severe conditions such as excessive load or improper use of the clutch	Readjust the preload and backlash of the bearing, and the contact surface of gear.
	(c) Improper adjustment of taper roller bearing	Adjust.
	(d) Improper adjustment of the drive pinion and the hypoid driven gear	Adjust.
	(e) Excessive backlash of a vehicle under severe operating conditions due to worn differential side gear, adjusting washer or differential pinion	Add recommended oil to the specified level. Do not use vehicle under severe operating conditions.
	(f) Loose hypoid driven gear clamping bolts	Tighten.
2. Differential and hypoid gear noises Troubles of the differential and hypoid gear always appear as noise problems. Therefore noise is the first indication of trouble. However, noises from the engine, muffler, tire, exhaust gas, bearing, body, etc. are easily mistaken for the differential noise. Pay special attention to the hypoid gear noise because it is easily confused with other gear noises. There are the following four kinds of noises. • Gear noise when driving: If noise increases as the vehicle speed increases, it may be due to insufficient gear oil, incorrect gear engagement, damaged gears, etc. • Gear noise when coasting: Damaged gears due to misadjusted bearings and incorrect shim adjustment • Bearing noise when driving or coasting: Cracked, broken or damaged bearings • Noise mainly when turning: Noise from differential side gear, differential pinion or differential pinion shaft, etc.	(a) Insufficient oil	Replenish or replace with the specified amount of recommended oil.
	(b) Improper adjustment of hypoid driven gear and drive pinion	Check the tooth contact.
	(c) Worn teeth of hypoid driven gear and drive pinion	Replace as a set. Readjust the bearing preload.
	(d) Loose roller bearing	Readjust the backlash of the hypoid driven gear to drive pinion, and check the tooth contact.
	(e) Distorted hypoid driven gear or differential case	Replace.
	(f) Worn adjusting washer and differential pinion shaft	Replace.

MANUAL TRANSMISSION AND DIFFERENTIAL

6MT(TY85)

		Page
1.	General Description	2
2.	Transmission Gear Oil	27
3.	Oil Seal	28
4.	Differential Side Retainer Oil Seal	29
5.	Transmission Mounting System	30
6.	Manual Transmission Assembly	32
7.	Driver's Control Center Differential Control Module	37
8.	DCCD Multi Select Switch	38
9.	Preparation for Overhaul	39
10.	Air Breather Hose	40
11.	Back-up Light Switch	41
12.	Neutral Position Switch	42
13.	Extension Case	43
14.	Reverse Check System	50
15.	Transfer Drive Gear	53
16.	Transfer Driven Gear	55
17.	Center Differential	57
18.	Transmission Case	58
19.	Main Shaft Assembly	64
20.	Driven Gear Assembly	78
21.	Reverse Idler Gear Assembly	87
22.	Drive Pinion Shaft Assembly	92
23.	Front Differential Assembly	98
24.	Shifter Fork and Rod	104
25.	Clutch Housing	118
26.	General Diagnostic Table	120

1. General Description

A: SPECIFICATION

1. MANUAL TRANSMISSION AND DIFFERENTIAL

Type			6-forward speeds and 1-reverse (all stage with synchromesh)
Transmission gear ratio		1st	3.636
		2nd	2.235
		3rd	1.521
		4th	1.137
		5th	0.971
		6th	0.756
		Rev.	3.545
Front reduction gear	Final	Type of gear	Hypoid
		Gear ratio	3.900
Rear reduction gear	Transfer	Type of gear	Helical
		Gear ratio	1.103
Front differential	Type and number of gear		Planetary gear (pinion gear: 8, gear: 2)
	LSD type		Helical
Center differential	Type and number of gear		Planetary gear (Internal gear: 1, pinion gear: 6, sun gear: 1, and solenoid compression variable control multiplate clutch)
Transmission gear oil capacity			4.1 L (4.3 US qt, 3.6 Imp qt)

2. TRANSMISSION GEAR OIL

Recommended oil:
GL-5 (75W-90) or equivalent

B: COMPONENT

1. CLUTCH HOUSING

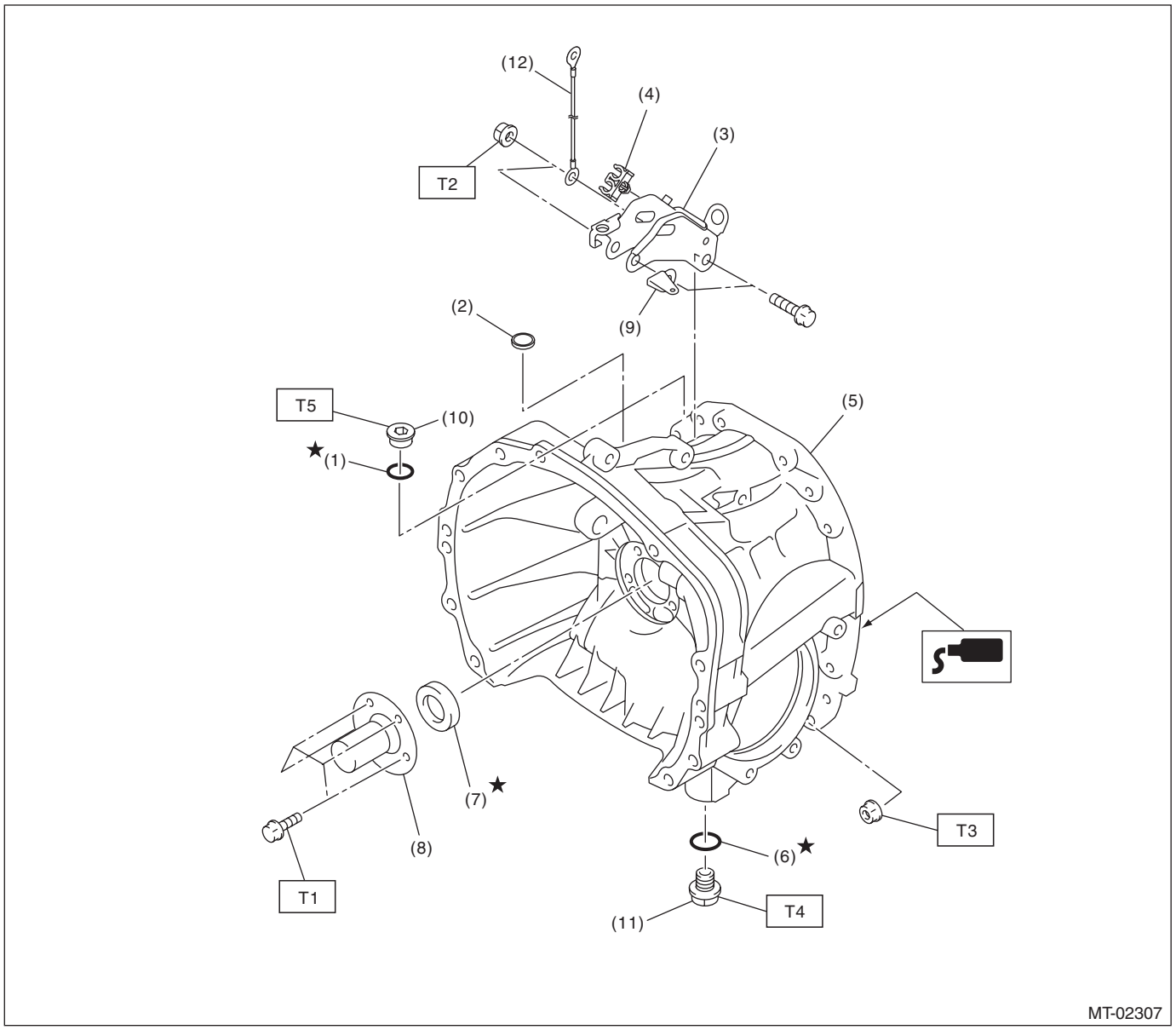

(1)	Gasket	(7)	Oil seal	***Tightening torque: N·m (kgf-m, ft-lb)***
(2)	Plug	(8)	Clutch release bearing guide	***T1: 6.4 (0.7, 4.7)***
(3)	Pitching stopper bracket	(9)	Clutch return spring bracket	***T2: 41 (4.2, 30.2)***
(4)	Clip	(10)	Plug	***T3: 50 (5.1, 36.9)***
(5)	Clutch housing	(11)	Drain plug	***T4: 70 (7.1, 51.6)***
(6)	Gasket	(12)	Transmission radio ground cord	***T5: 46 (4.7, 33.9)***

2. ADAPTER PLATE

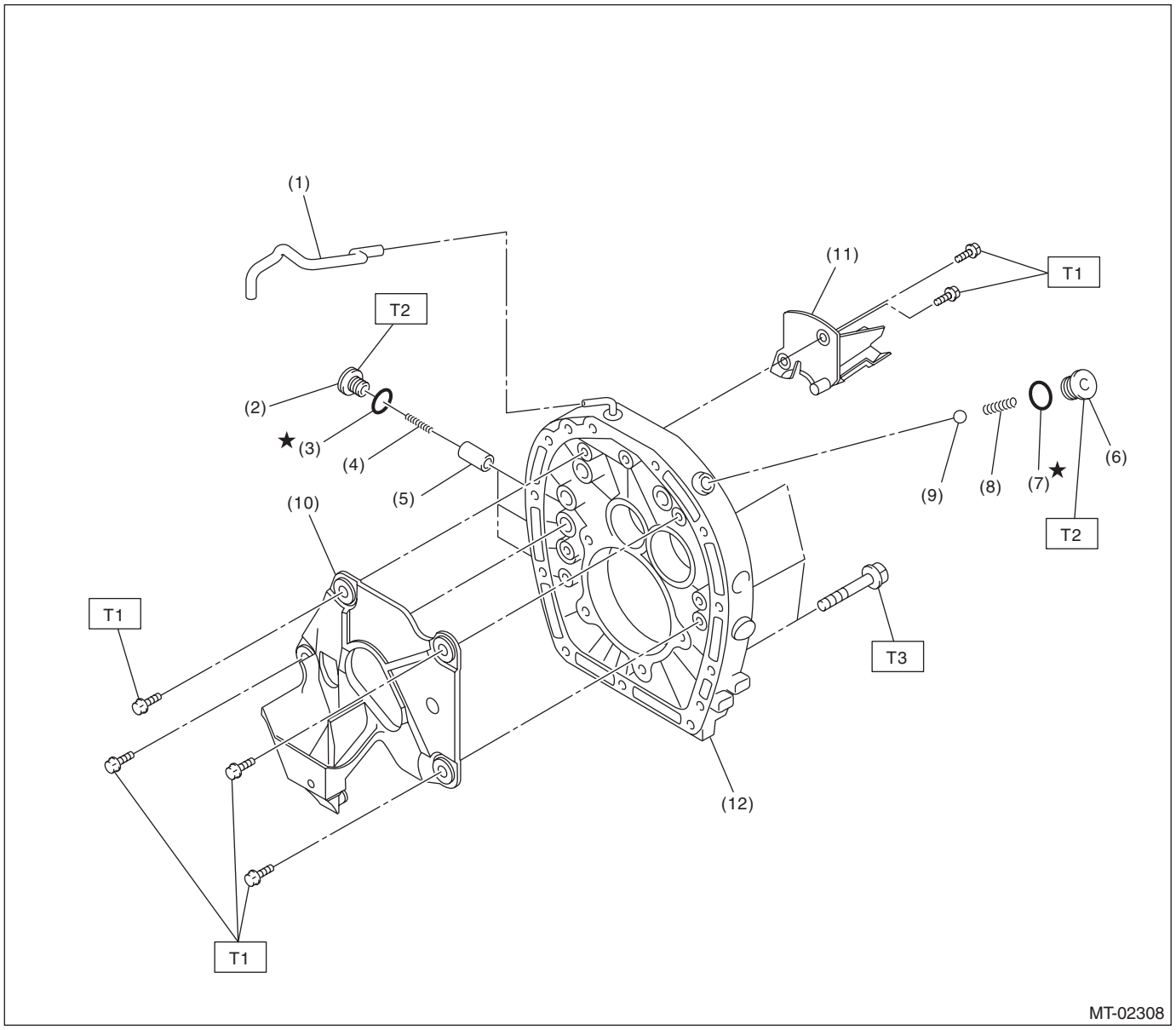

(1)	Air breather hose	(7)	O-ring
(2)	Check plug	(8)	Checking ball spring
(3)	O-ring	(9)	Check ball
(4)	Checking ball spring	(10)	Oil guide A
(5)	Shift accent plunger	(11)	Oil guide B
(6)	Check plug	(12)	Adapter plate

Tightening torque: N·m (kgf-m, ft-lb)
T1: 18 (1.8, 13.3)
T2: 25 (2.5, 18.4)
T3: 50 (5.1, 36.9)

3. TRANSMISSION CASE

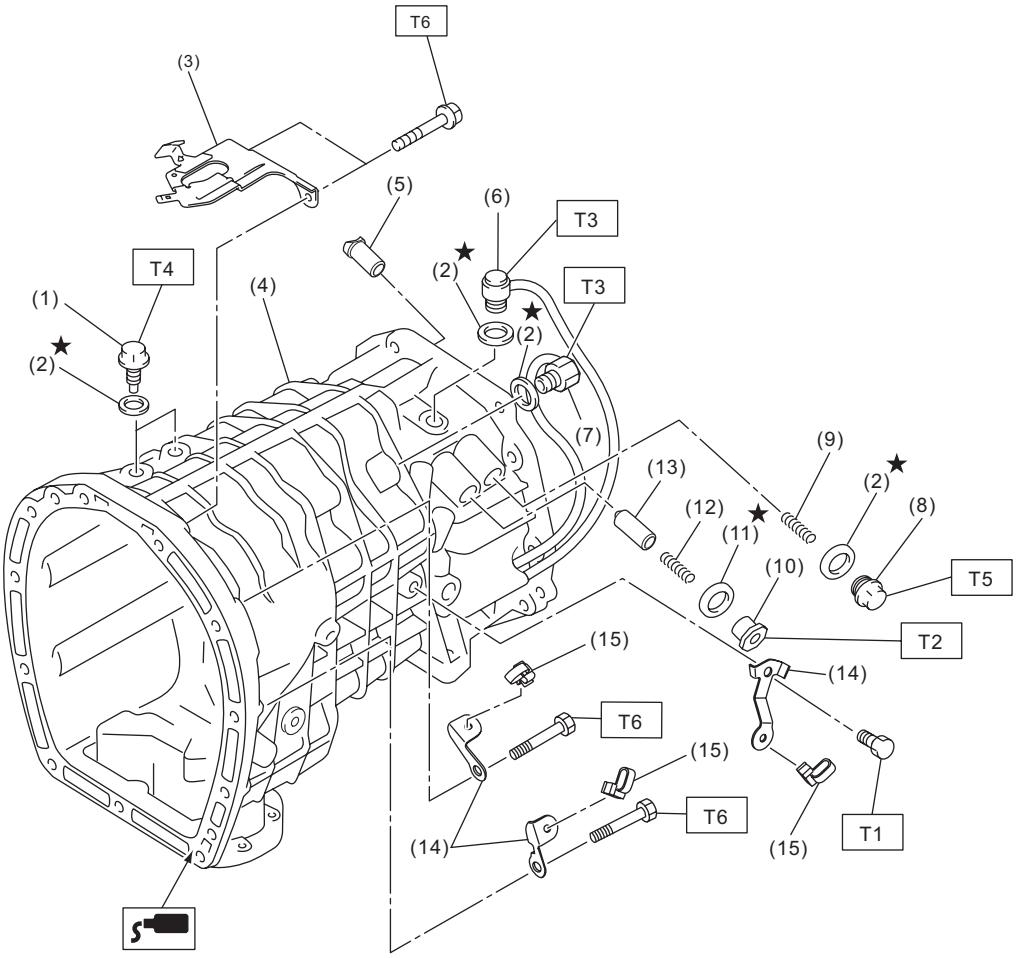

MT-10000

(1)	Pilot bolt	(9)	Return spring
(2)	Gasket	(10)	Plug
(3)	Transmission harness stay	(11)	O-ring
(4)	Transmission case	(12)	Checking ball spring
(5)	Selector plunger	(13)	Shift accent plunger
(6)	Neutral position switch	(14)	Harness bracket
(7)	Back-up light switch	(15)	Band clip
(8)	Plug		

Tightening torque: N·m (kgf-m, ft-lb)
T1: 16 (1.6, 11.8)
T2: 25 (2.5, 18.4)
T3: 32 (3.3, 23.6)
T4: 34 (3.5, 25.1)
T5: 41 (4.2, 30.2)
T6: 50 (5.1, 36.9)

4. OIL PAN & OIL GUIDE

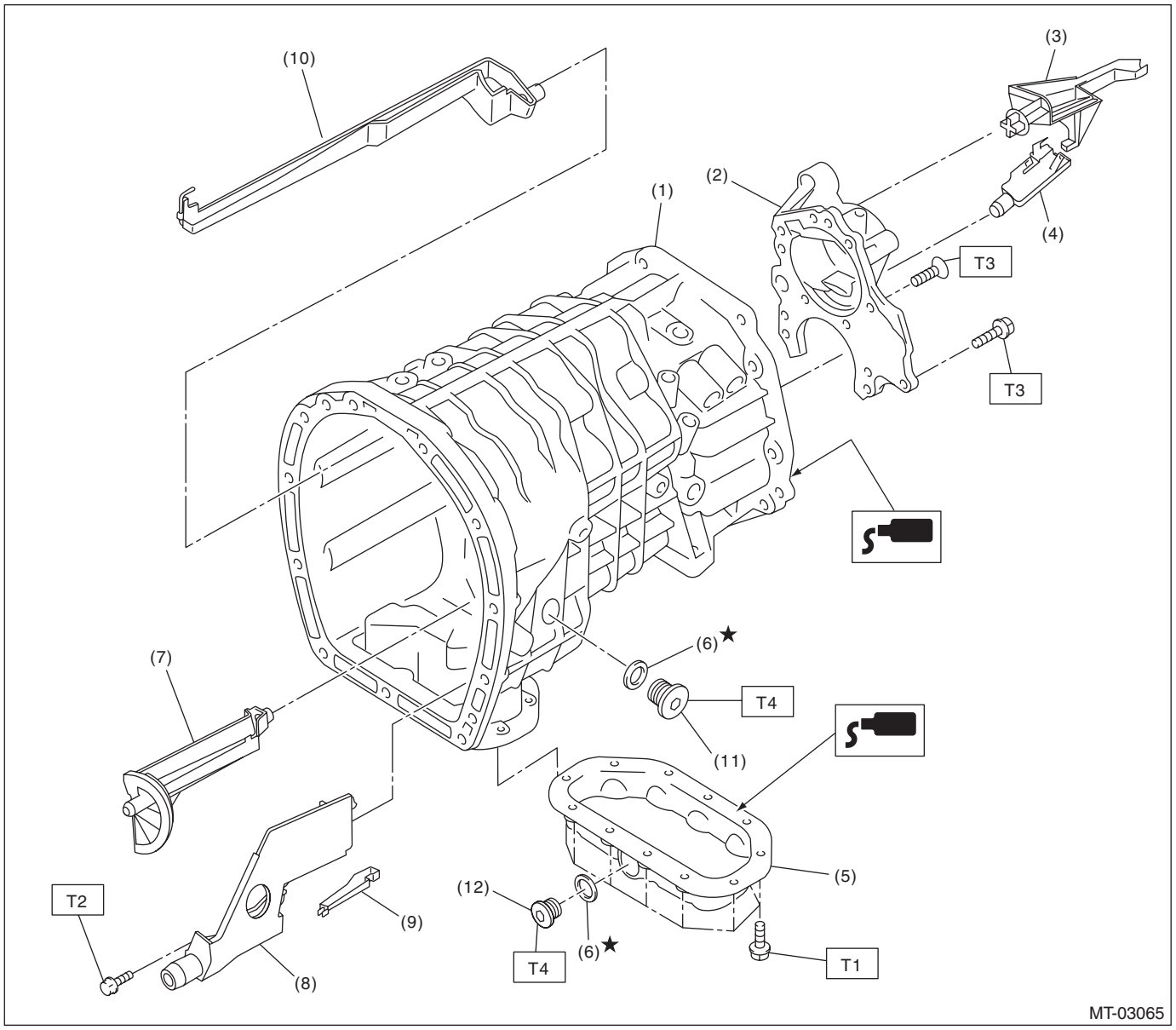

(1)	Transmission case	(7)	Oil guide F
(2)	Transfer bearing holder	(8)	Oil guide D
(3)	Oil guide G	(9)	Oil guide E
(4)	Oil guide H	(10)	Oil guide C
(5)	Oil pan	(11)	Filler plug
(6)	Gasket	(12)	Drain plug

Tightening torque: N·m (kgf-m, ft-lb)
T1: 6.4 (0.7, 4.7)
T2: 18 (1.8, 13.3)
T3: 25 (2.5, 18.4)
T4: 50 (5.1, 36.9)

5. EXTENSION CASE AND CENTER DIFFERENTIAL

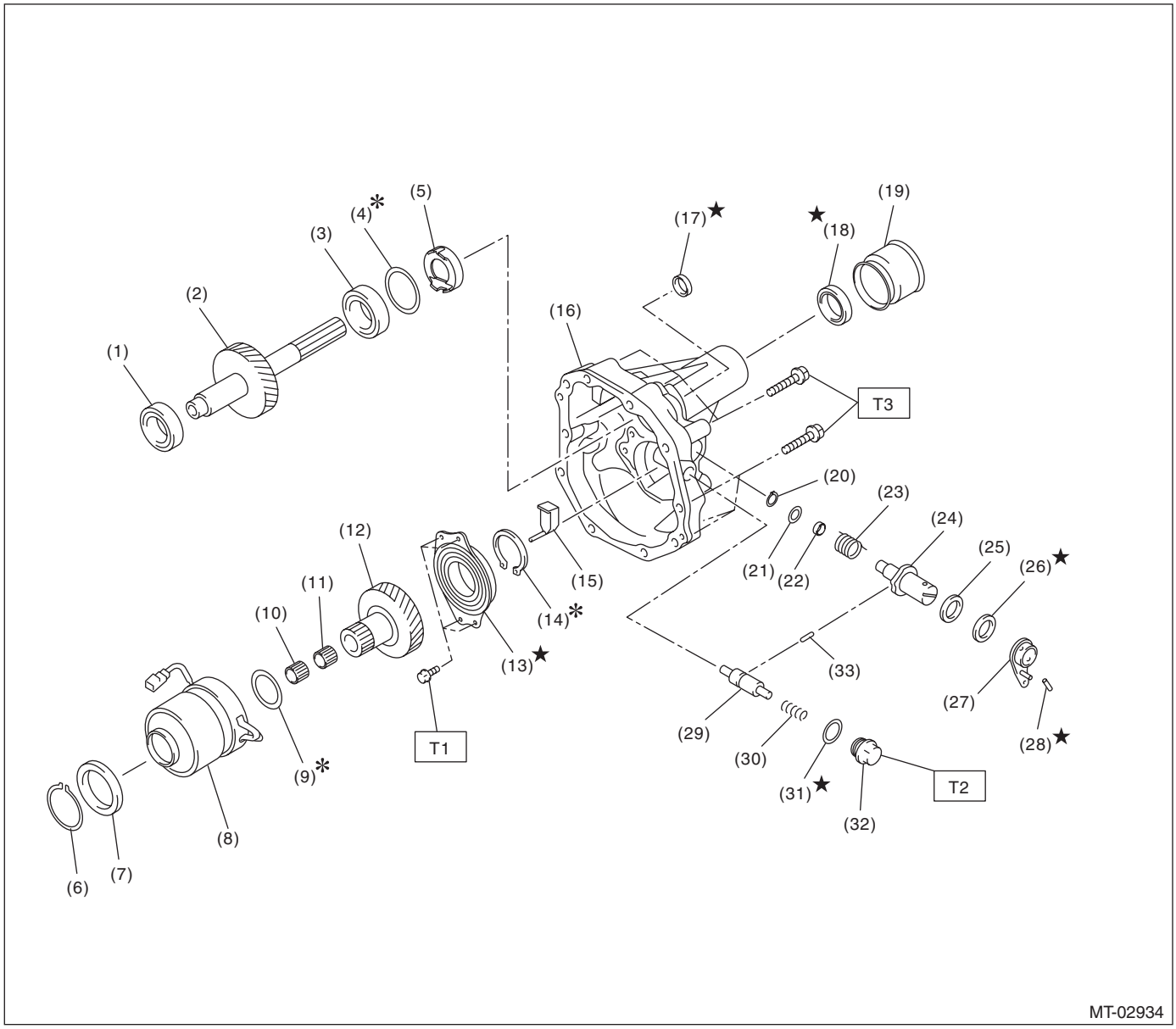

(1) Taper roller bearing (transmission case side)
(2) Transfer driven gear
(3) Taper roller bearing (extension case side)
(4) Adjusting washer
(5) Oil plate
(6) Snap ring
(7) Collar
(8) Center differential
(9) Adjusting washer
(10) Needle bearing
(11) Needle bearing
(12) Transfer drive gear
(13) Ball bearing (with flange)
(14) Snap ring
(15) Oil guide
(16) Extension case
(17) Oil seal
(18) Oil seal
(19) Dust cover
(20) Snap ring
(21) Washer
(22) Bushing
(23) Return spring
(24) Reverse check shaft
(25) Ball bearing
(26) Oil seal
(27) Reverse check lever
(28) Straight pin
(29) Reverse check plunger
(30) Reverse check spring
(31) Gasket
(32) Plug
(33) Reverse lock plunger

Tightening torque: N·m (kgf-m, ft-lb)
T1: 25 (2.5, 18.4)
T2: 41 (4.2, 30.2)
T3: 48 (4.9, 35.4)

6. SHIFTER FORK AND FORK ROD

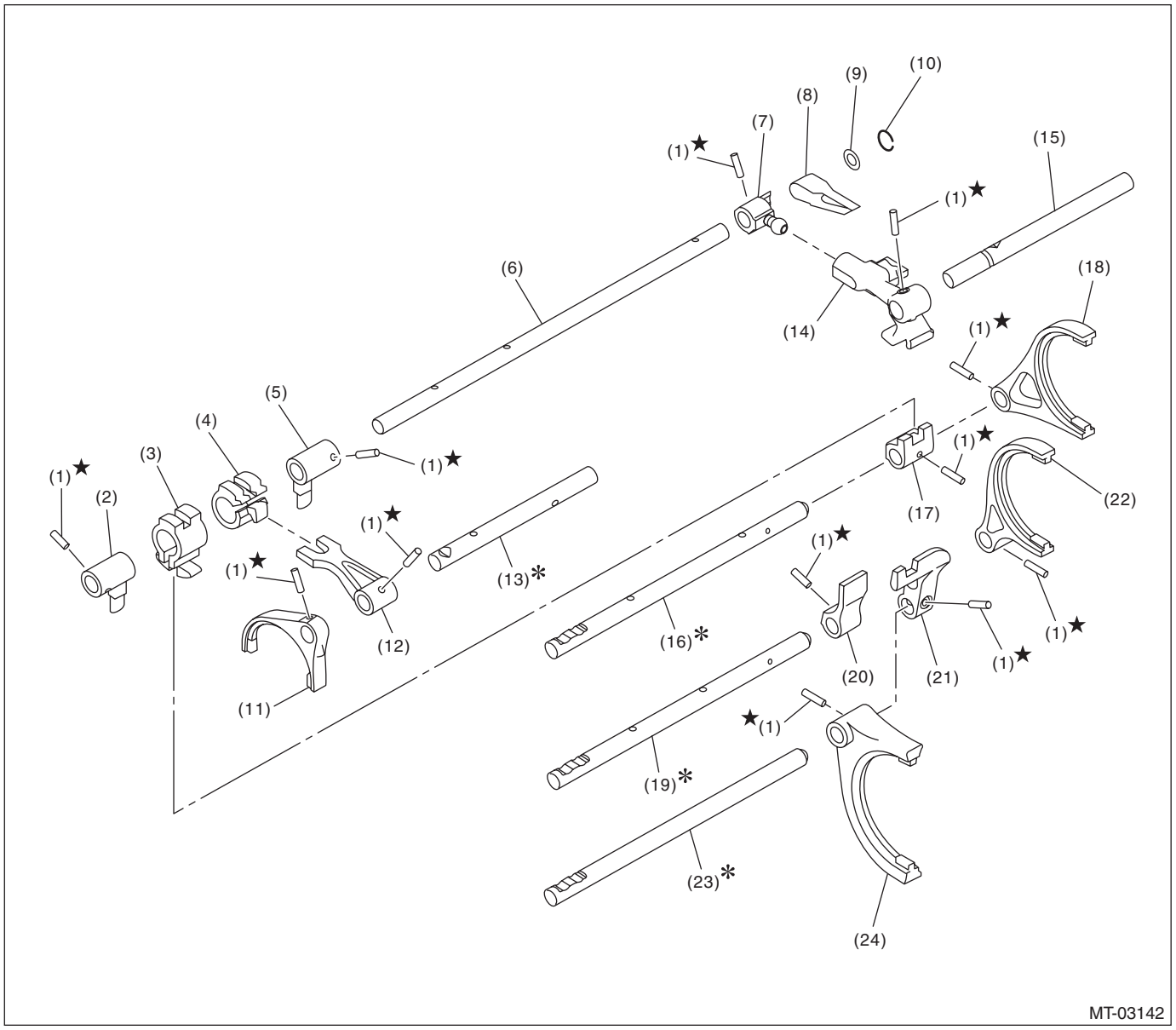

(1)	Straight pin	(9)	Washer	(17)	5th-6th shifter arm
(2)	Interlock arm	(10)	Snap ring	(18)	5th-6th shifter fork
(3)	Interlock block	(11)	Reverse shifter fork	(19)	3rd-4th fork rod
(4)	Reverse interlock block	(12)	Reverse shifter arm	(20)	3rd-4th shifter arm
(5)	Interlock arm	(13)	Reverse fork rod	(21)	1st-2nd shifter arm
(6)	Striking rod	(14)	Selector arm	(22)	3rd-4th shifter fork
(7)	Selector arm No. 2	(15)	Shifter arm shaft	(23)	1st-2nd fork rod
(8)	Neutral set spring	(16)	5th-6th fork rod	(24)	1st-2nd shifter fork

7. MAIN SHAFT ASSY

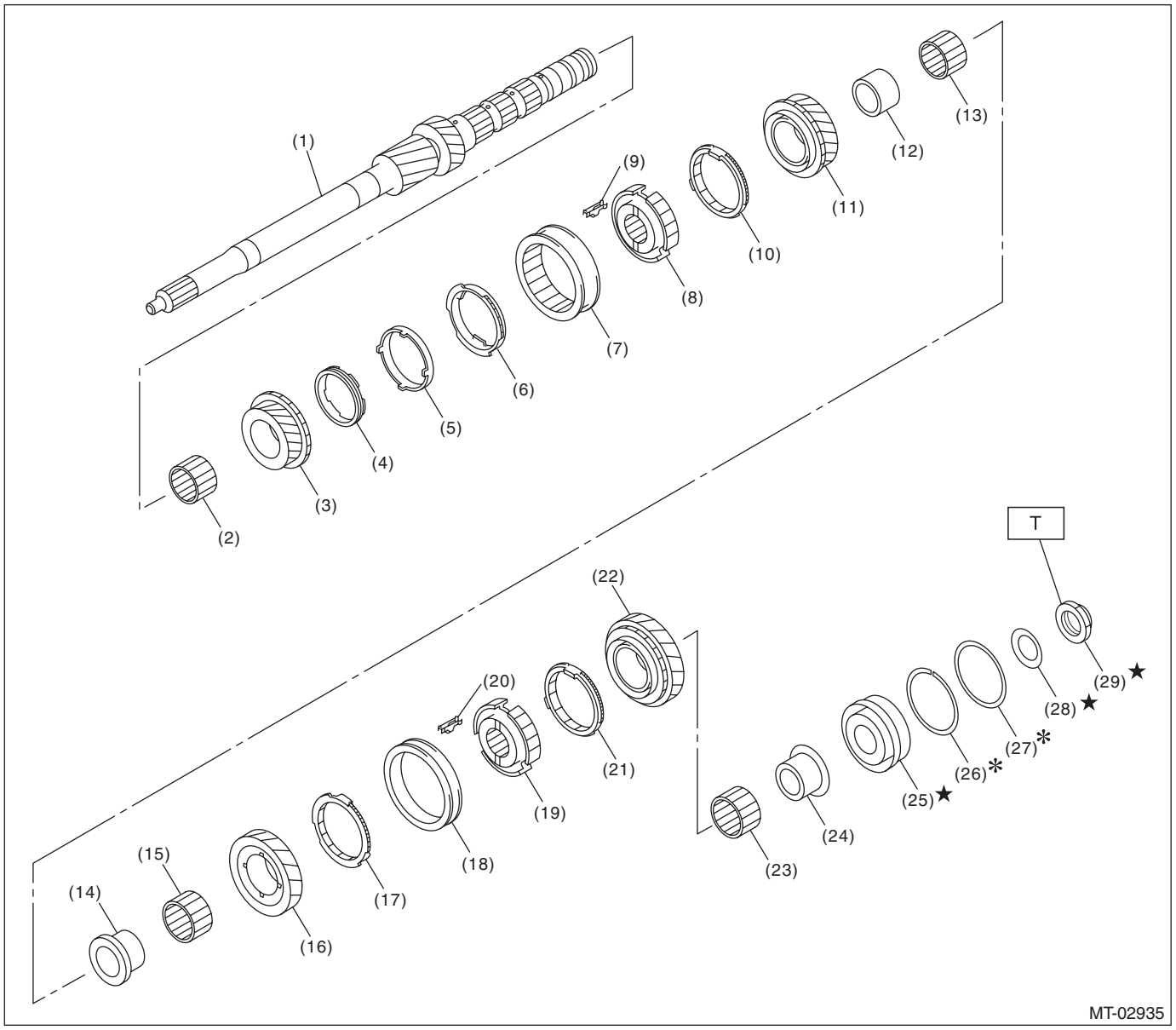

(1) Main shaft
(2) 3rd needle bearing
(3) 3rd drive gear
(4) 3rd inner baulk ring
(5) 3rd synchro cone
(6) 3rd outer baulk ring
(7) 3rd-4th coupling sleeve
(8) 3rd-4th synchronizer hub
(9) 3rd-4th shifting insert
(10) 4th baulk ring
(11) 4th drive gear
(12) 4th needle bearing race
(13) 4th needle bearing
(14) 5th drive gear bushing
(15) 5th needle bearing
(16) 5th drive gear
(17) 5th baulk ring
(18) 5th-6th coupling sleeve
(19) 5th-6th synchronizer hub
(20) 5th-6th shifting insert
(21) 6th baulk ring
(22) 6th drive gear
(23) 6th needle bearing
(24) 6th drive gear bushing
(25) Double taper roller bearing
(26) Snap ring
(27) Adjusting washer
(28) Lock washer
(29) Lock nut

Tightening torque: N·m (kgf-m, ft-lb)
T: 392 (40.0, 289.1)

8. DRIVE PINION SHAFT ASSY & DRIVEN GEAR ASSY

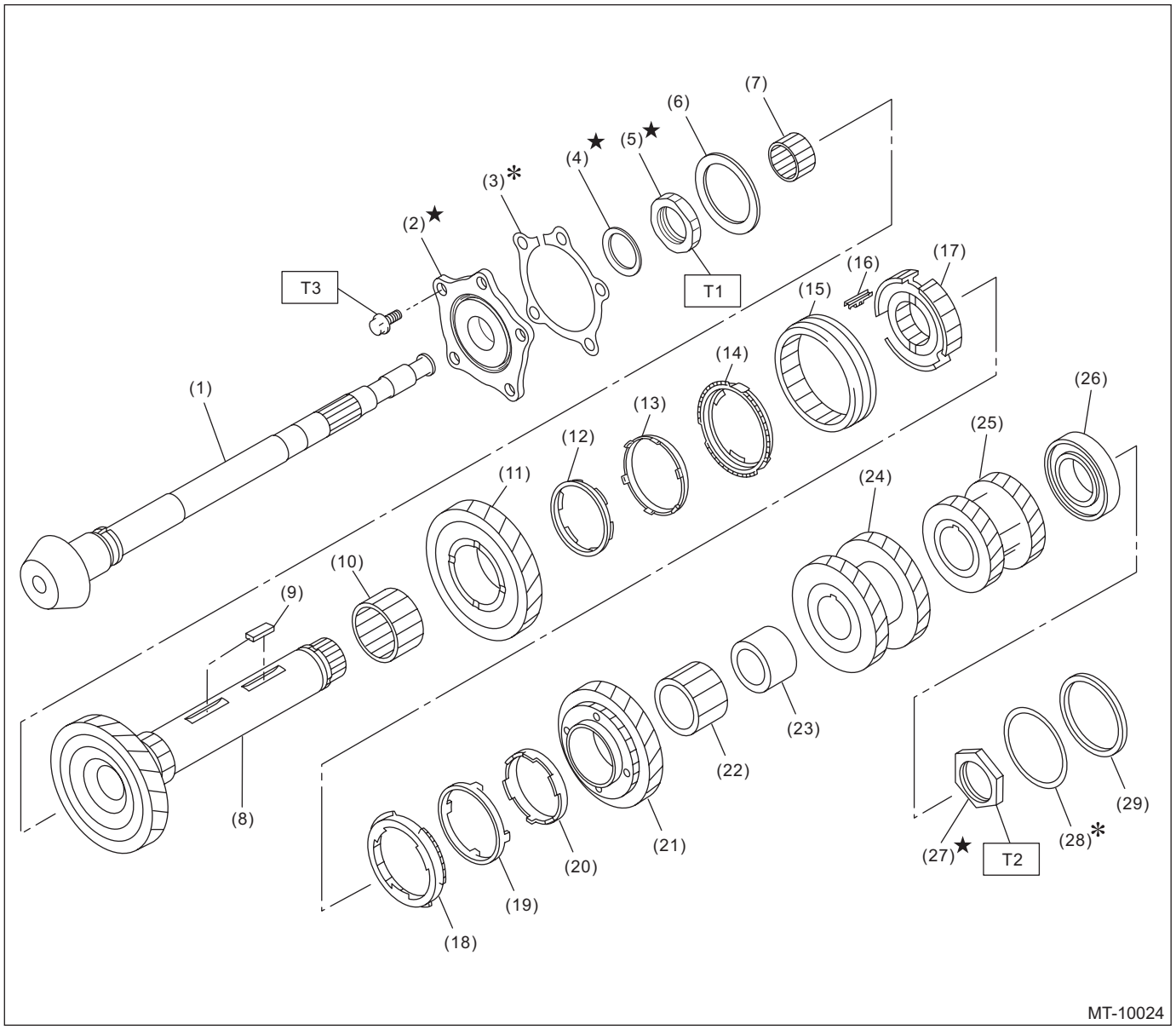

(1) Drive pinion shaft
(2) Double taper roller bearing
(3) Drive pinion shim
(4) Lock washer
(5) Lock nut
(6) Thrust bearing
(7) Needle bearing
(8) Driven shaft
(9) Key
(10) 1st needle bearing
(11) 1st driven gear
(12) 1st inner baulk ring
(13) 1st synchro cone
(14) 1st outer baulk ring
(15) 1st-2nd coupling sleeve
(16) 1st-2nd shifting insert
(17) 1st-2nd synchronizer hub
(18) 2nd outer baulk ring
(19) 2nd synchro cone
(20) 2nd inner baulk ring
(21) 2nd driven gear
(22) 2nd needle bearing
(23) 2nd driven gear bushing
(24) 3rd-4th driven gear
(25) 5th-6th driven gear
(26) Ball bearing
(27) Lock nut
(28) Adjusting washer
(29) Collar

Tightening torque: N·m (kgf-m, ft-lb)
T1: 285 (29.1, 210.2)
****265 (27.0, 195.4)***
T2: 570 (58.1, 420.4)
****530 (54.0, 390.9)***
T3: 54 (5.5, 39.8)

* Tightening torque when using the ST

9. REVERSE IDLER GEAR ASSY

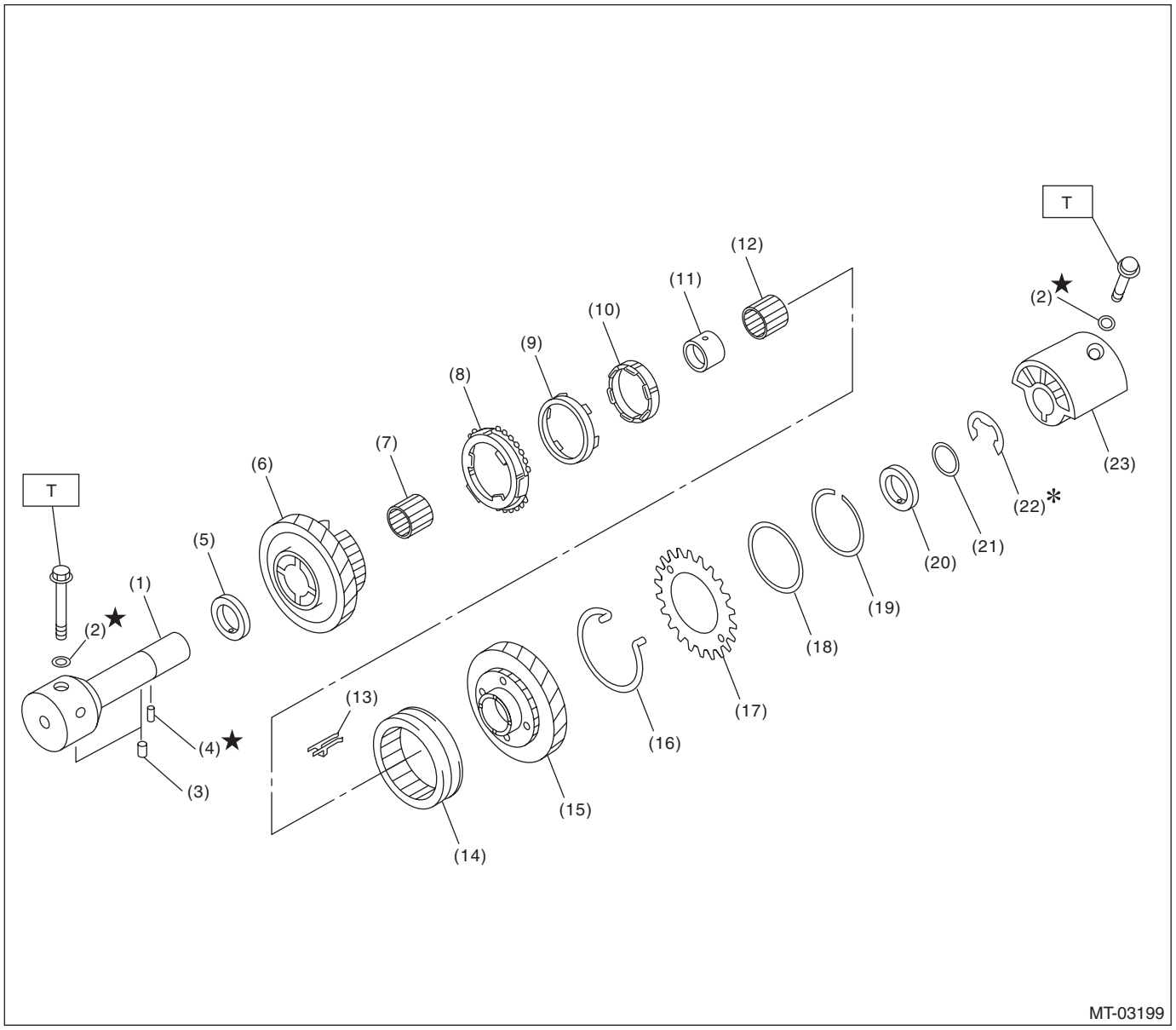

(1) Reverse idler gear shaft
(2) Gasket
(3) Knock pin
(4) Straight pin
(5) Counter high and low washer
(6) Reverse idler gear No. 2
(7) Needle bearing
(8) Reverse outer baulk ring
(9) Reverse synchro cone
(10) Reverse inner baulk ring
(11) Reverse idler gear bushing
(12) Needle bearing
(13) Shifting insert
(14) Reverse coupling sleeve
(15) Reverse idler gear
(16) Reverse idler spring
(17) Reverse idler sub gear
(18) Friction plate
(19) Snap ring
(20) Counter high and low washer
(21) Washer
(22) Snap ring
(23) Reverse idler holder

Tightening torque: N·m (kgf-m, ft-lb)
T: 25 (2.5, 18.4)

10.FRONT DIFFERENTIAL ASSY

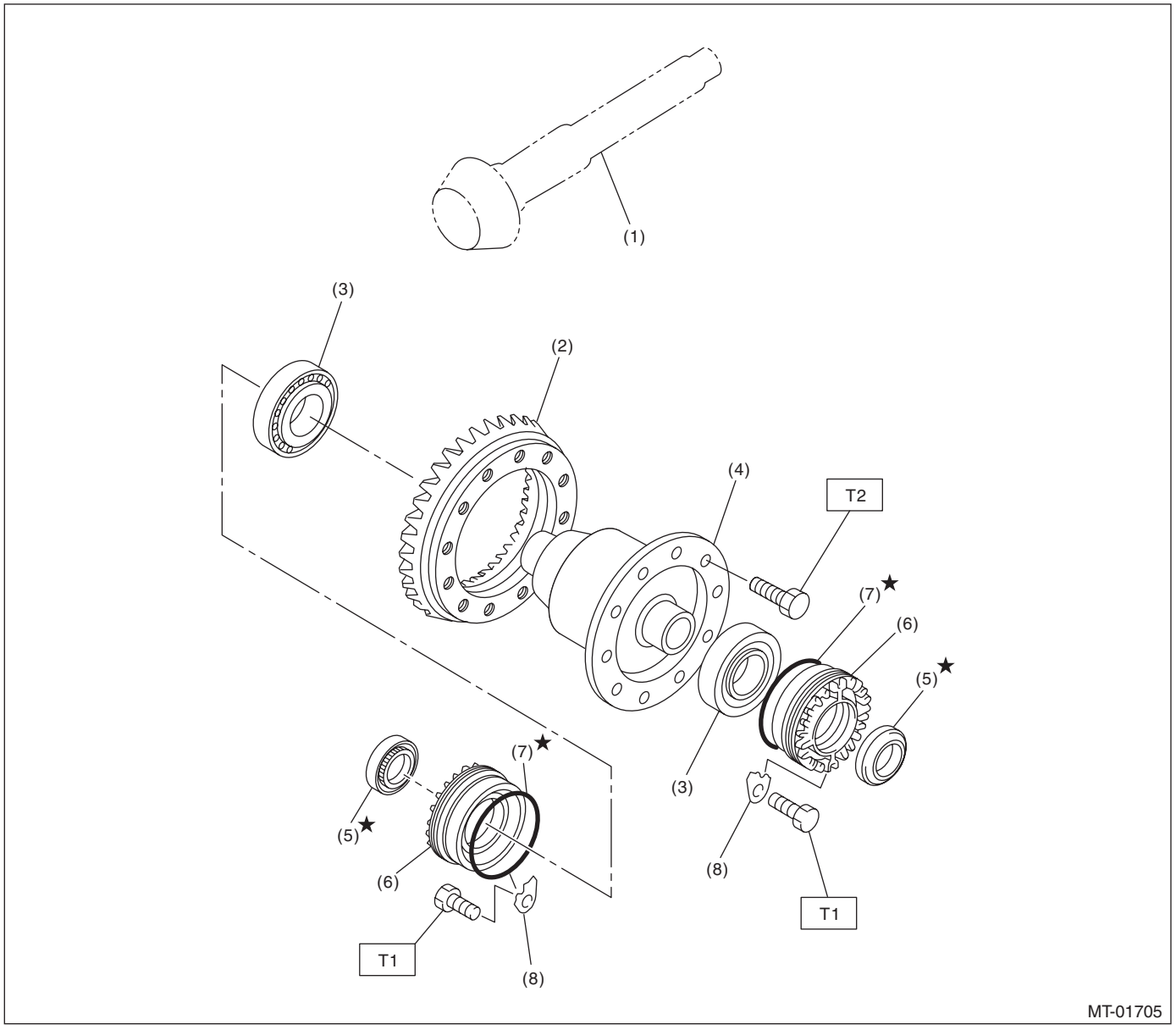

(1)	Drive pinion shaft	(5)	Oil seal
(2)	Hypoid driven gear	(6)	Differential side retainer
(3)	Taper roller bearing	(7)	O-ring
(4)	Differential ASSY	(8)	Retainer lock plate

Tightening torque: N·m (kgf-m, ft-lb)
T1: 25 (2.5, 18.4)
T2: 69 (7.0, 50.9)

11.TRANSMISSION MOUNTING

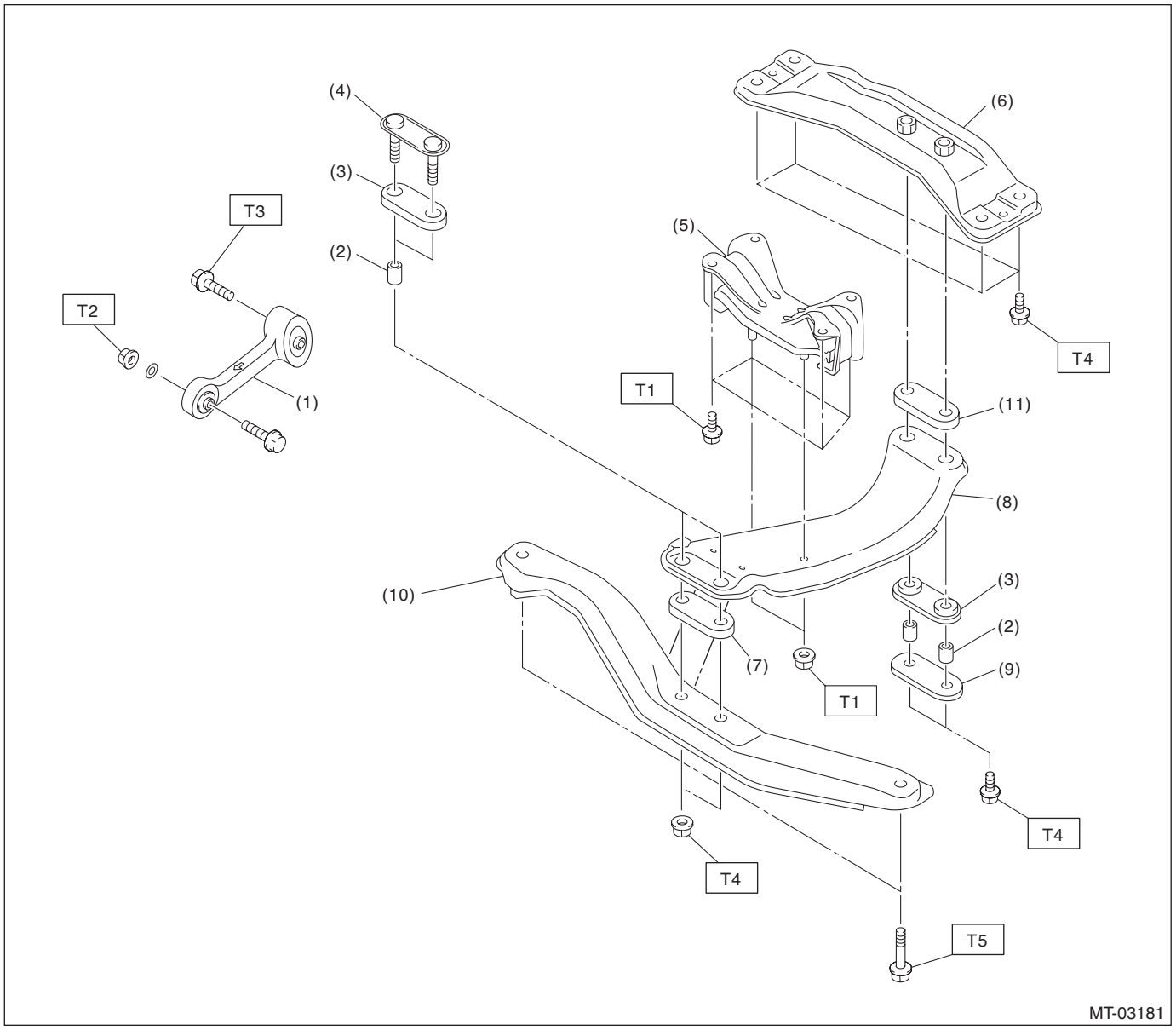

(1)	Pitching stopper	(7)	Upper cushion rubber	***Tightening torque: N·m (kgf-m, ft-lb)***
(2)	Spacer	(8)	Center crossmember	***T1: 35 (3.6, 25.8)***
(3)	Lower cushion rubber	(9)	Rear plate	***T2: 50 (5.1, 36.9)***
(4)	Front plate	(10)	Front crossmember	***T3: 58 (5.9, 42.8)***
(5)	Transmission cushion rubber	(11)	Rear cushion rubber	***T4: 70 (7.1, 51.6)***
(6)	Rear crossmember			***T5: 140 (14.3, 103.3)***

C: CAUTION

- Remove contamination including dirt and corrosion before removal, installation or disassembly.
- Keep the disassembled parts in order and protect them from dust and dirt.
- Before removal, installation or disassembly, be sure to clarify the failure. Avoid unnecessary removal, installation, disassembly and replacement.
- When disassembling the case and other light alloy parts, disassemble by using a plastic hammer. Do not pry apart with screwdrivers or other tools.
- Vehicle components are extremely hot after driving. Be wary of receiving burns from heated parts.
- Use SUBARU genuine transmission gear oil, grease or equivalent. Do not mix transmission gear oil, grease etc. of different grades or manufacturers.
- Be sure to tighten fasteners including bolts and nuts to the specified torque.
- Place shop jacks or rigid racks at the specified points.
- Apply transmission gear oil onto sliding or revolving surfaces before installation.
- Always replace deformed or damaged snap rings.
- Before installing O-rings or oil seals, apply sufficient amount of transmission gear oil to avoid damage and deformation.
- Be careful not to incorrectly install or fail to install O-rings, snap rings and other such parts.
- Before securing a part on a vise, place cushioning materials such as wood blocks, aluminum plates, or waste cloth between the part and the vise.
- Avoid damaging the mating surface of the case.
- Before applying liquid gasket, completely remove and clean the old liquid gasket.
- Be careful of handling the oil seal, O-ring and gasket. If the contact surface of them is damaged, oil leakage may occur.
- When pressing-in the oil seal, make sure that the oil seal lip portion and outer surface are not damaged or tilted.
- When replacing the taper roller bearing, replace the outer race and inner race as a set.
- When replacing the hypoid gear, replace the ring gear and pinion gear as a set.
- Replace the bolts if the seating surface or the thread surface is excessively rusted.

D: PREPARATION TOOL

1. SPECIAL TOOL

ILLUSTRATION	TOOL NUMBER	DESCRIPTION	REMARKS
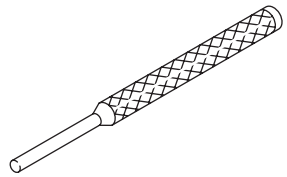 ST-398791700	398791700	REMOVER	Used for removing and installing the straight pin.
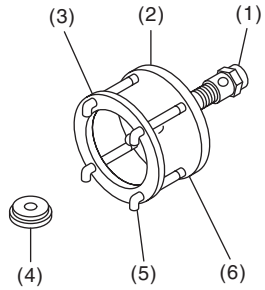 ST-399527700	399527700	PULLER SET	Used for removing the taper roller bearing (differential). (1) BOLT (899521412) (2) PULLER (399527702) (3) HOLDER (399527703) (4) SEAT (398497701) (5) BOLT (899520107) (6) NUT (021008000)
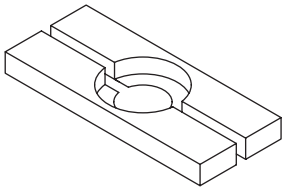 ST-498515700	498515700	REMOVER	Used for removing the taper roller bearing of transfer driven gear.
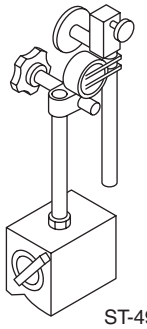 ST-498247001	498247001	MAGNET BASE	• Used for measuring the backlash between hypoid driven gears. • Used with DIAL GAUGE (498247100).

ILLUSTRATION	TOOL NUMBER	DESCRIPTION	REMARKS
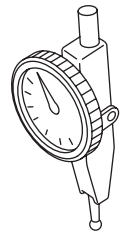 ST-498247100	498247100	DIAL GAUGE	• Used for measuring the backlash between hypoid driven gears. • Used with MAGNET BASE (498247001).
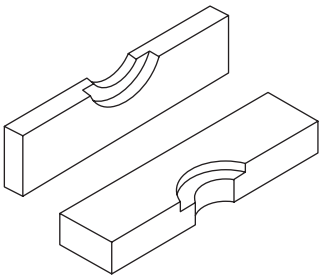 ST-899858600	899858600	REMOVER	Used for removing the taper roller bearing.
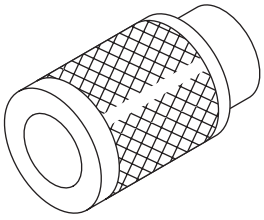 ST-499757002	499757002	INSTALLER	Used for installing the taper roller bearing of transfer driven gear (transmission case side).
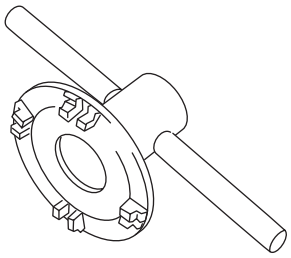 ST18630AA010	18630AA010	WRENCH COMPL RETAINER	• Used for removing and installing the differential side retainer RH. • Used for adjusting the backlash of hypoid driven gear. • WRENCH ASSY (499787000) can also be used.
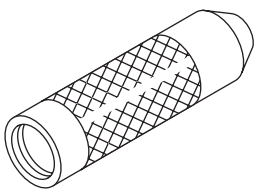 ST-499877000	499877000	RACE 4-5 INSTALLER	Used for disassembling the driven shaft and transfer driven gear.

ILLUSTRATION	TOOL NUMBER	DESCRIPTION	REMARKS
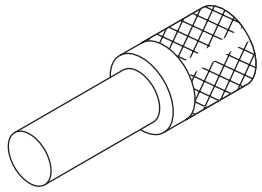 ST-899864100	899864100	REMOVER	• Used for removing the parts of the main shaft assembly and drive pinion shaft assembly. • Used for removing and installing the transfer driven gear taper roller bearing.
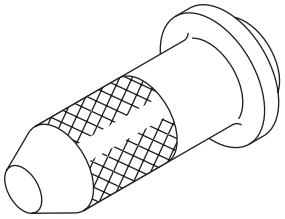 ST-498057300	498057300	INSTALLER	Used for installing the extension case oil seal.
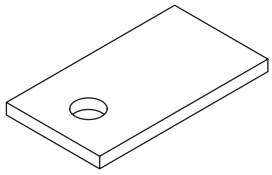 ST-498255400	498255400	PLATE	Used for measuring the hypoid driven gear backlash.
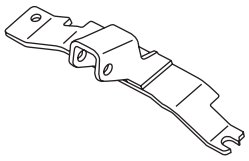 ST41099AA012	41099AA012	ENGINE SUPPORT BRACKET	• Used for supporting engine. • ENGINE SUPPORT BRACKET (41099AA010 or 41099AA011) can also be used.
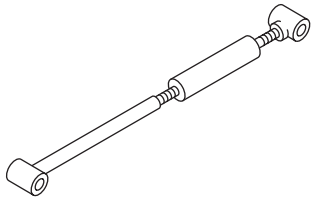 ST41099AA020	41099AA020	ENGINE SUPPORT	• Used for supporting engine. • Used together with ENGINE SUPPORT BRACKET (41099AA012).

ILLUSTRATION	TOOL NUMBER	DESCRIPTION	REMARKS
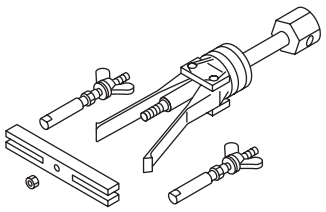 ST-398527700	398527700	PULLER ASSY	• Used for removing the extension case oil seal. • Used for removing the front differential taper roller bearing outer race. (Used together with 18760AA000 (CLAW).)
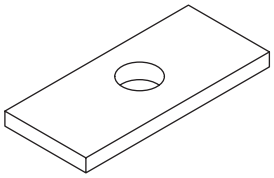 ST-398643600	398643600	GAUGE	Used for adjusting total end play, extension end play and drive pinion shim.
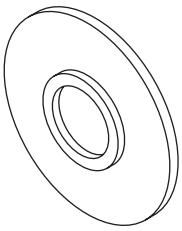 ST-398177700	398177700	INSTALLER	• Used for assembling the main shaft assembly. • Used for installing the transfer driven gear taper roller bearing (extension case side).
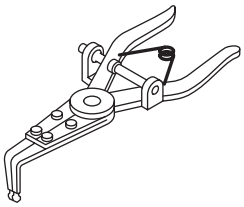 ST-399893600	399893600	PLIER	• Used for removing and installing the neutral set spring. • Used together with CLAW (18756AA000).
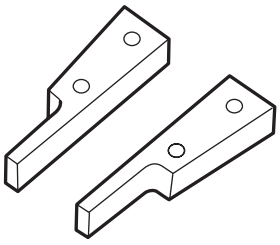 ST18756AA000	18756AA000	CLAW	• Used for removing and installing the neutral set spring. • Used together with PLIER (399893600).

ILLUSTRATION	TOOL NUMBER	DESCRIPTION	REMARKS
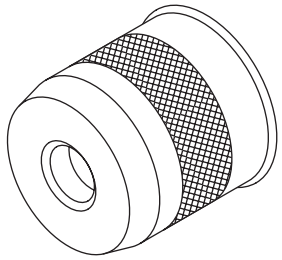 ST-499247400	499247400	INSTALLER	Used for installing the ball bearing of the transfer drive gear.
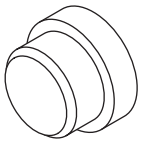 ST-398497701	398497701	SEAT	• Used for installing the ball bearing of the transfer drive gear. • Used for installing the front differential taper roller bearing.
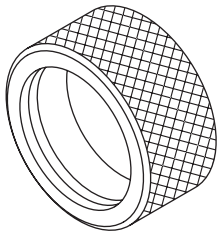 ST-398437700	398437700	INSTALLER	Used for installing the front differential taper roller bearing.
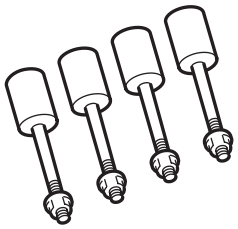 ST18632AA000	18632AA000	STAND ASSY	Used for disassembling and assembling the transmission.
 ST18671AA000	18671AA000	OIL SEAL GUIDE	• Used for installing the reverse check shaft oil seal. • Used for installing the shifter arm shaft oil seal. • Used together with INSTALLER (18657AA010).

ILLUSTRATION	TOOL NUMBER	DESCRIPTION	REMARKS
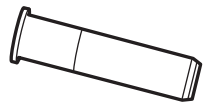 ST18657AA010	18657AA010	INSTALLER	• Used for installing the reverse check shaft oil seal. • Used together with OIL SEAL GUIDE (18671AA000).
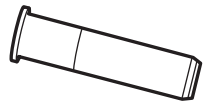 ST18657AA000	18657AA000	INSTALLER	• Used for installing the shifter arm shaft oil seal. • Used together with OIL SEAL GUIDE (18671AA000).
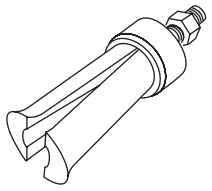 ST18758AA000	18758AA000	PULLER	Used for removing the transfer driven gear taper roller bearing outer race.
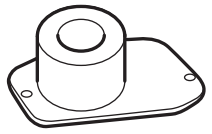 ST18831AA000	18831AA000	GAUGE	Used for selecting the transfer driven gear adjusting washer.
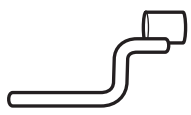 ST18631AA000	18631AA000	HANDLE	Used for measuring the front differential back-lash.

ILLUSTRATION	TOOL NUMBER	DESCRIPTION	REMARKS
 ST18754AA000	18754AA000	REMOVER	Used to remove parts of the driven gear.
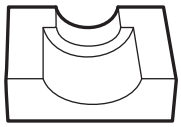 ST18665AA000	18665AA000	HOLDER	• Used for removing and installing the main shaft assembly lock nut. • Used together with BASE (18664AA000).
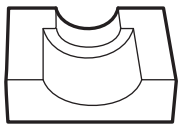 ST18666AA000	18666AA000	HOLDER	• Used for removing and installing the driven shaft lock nut. • Used together with BASE (18664AA000).
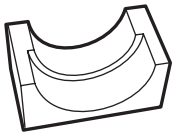 ST18667AA000	18667AA000	HOLDER	• Used for removing and installing the drive pinion shaft assembly lock nut. • Used together with BASE (18664AA000).
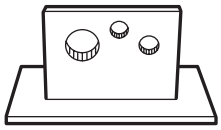 ST18664AA000	18664AA000	BASE	• Used for removing and installing the main shaft assembly lock nut. • Used for removing and installing the drive pinion shaft assembly lock nut. • Used for removing and installing the driven shaft lock nut.

ILLUSTRATION	TOOL NUMBER	DESCRIPTION	REMARKS
 ST18722AA010	18722AA010	REMOVER	Used for disassembling the main shaft assembly.
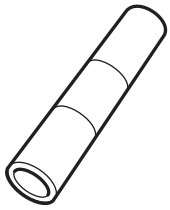 ST18651AA000	18651AA000	INSTALLER	Used for assembling the main shaft assembly.
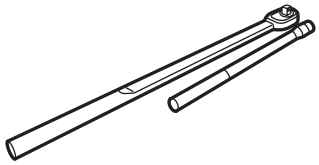 ST18852AA000	18852AA000	TORQUE WRENCH	• Used to tighten the main shaft assembly lock nut. • Used to tighten the drive pinion shaft assembly lock nut. • Used to tighten the driven shaft lock nut.
 ST18668AA000	18668AA000	PUNCH	Used to crimp the main shaft assembly lock nut.
 ST18669AA000	18669AA000	PUNCH	Used to crimp the driven shaft lock nut.

ILLUSTRATION	TOOL NUMBER	DESCRIPTION	REMARKS
 ST18670AA000	18670AA000	PUNCH	Used to crimp the drive pinion shaft assembly lock nut.
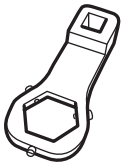 ST18620AA000	18620AA000	ADAPTER WRENCH	Used for removing and installing the driven shaft lock nut.
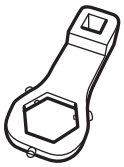 ST18621AA000	18621AA000	ADAPTER WRENCH	Used for removing and installing the drive pinion shaft assembly lock nut.
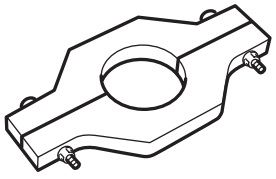 ST18723AA000	18723AA000	REMOVER	Used for disassembling the driven shaft.
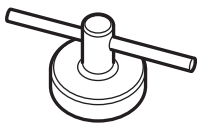 ST18630AA000	18630AA000	WRENCH ASSY	Used for removing and installing the differential side retainer LH.

ILLUSTRATION	TOOL NUMBER	DESCRIPTION	REMARKS
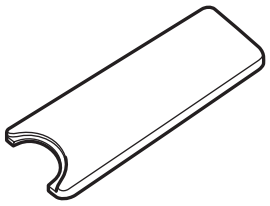 ST18672AA000	18672AA000	GUIDE CLIP	Used for installing the reverse idler gear snap ring.
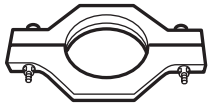 ST18720AA000	18720AA000	REMOVER	Used for disassembling the main shaft assembly.
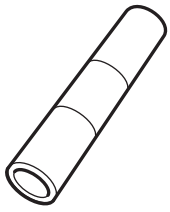 ST18654AA000	18654AA000	INSTALLER	Used for assembling the driven shaft.
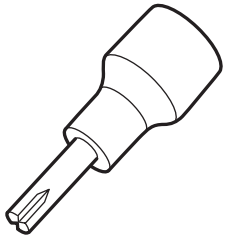 ST18663AA000	18663AA000	SOCKET	Used for removing and installing the transfer bearing holder.
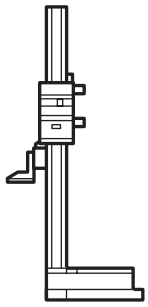 ST18853AA000	18853AA000	HEIGHT GAUGE	• Used for selecting the fork rod. • Used for selecting the snap ring and washer of the main shaft assembly.

ILLUSTRATION	TOOL NUMBER	DESCRIPTION	REMARKS
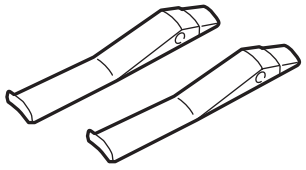 ST18760AA000	18760AA000	CLAW	• Used for removing the front differential taper roller bearing outer race. • Used together with PULLER ASSY (398527700).
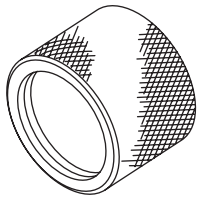 ST18675AA000	18675AA000	DIFFERENTIAL SIDE OIL SEAL INSTALLER	Used for installing the differential side retainer oil seal.
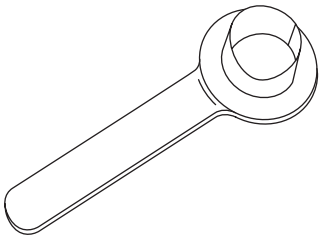 ST28399SA010	28399SA010	OIL SEAL PROTECTOR	Used for protecting oil seal when installing front drive shaft.
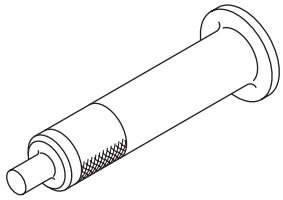 ST18657AA020	18657AA020	OIL SEAL INSTALLER	Used for installing the oil seal.
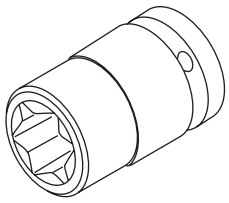 ST18270KA020	18270KA020	SOCKET (E20)	Used for removing and installing the hypoid driven gear.

2. GENERAL TOOL

TOOL NAME	REMARKS
Circuit tester	Used for measuring resistance, voltage and current.
TORX® bit T70	Used for removing and installing the drain plug.
Depth gauge	Used for measuring the transmission end play.

2. Transmission Gear Oil

A: INSPECTION

1) Lift up the vehicle.
2) Remove the filler plug.

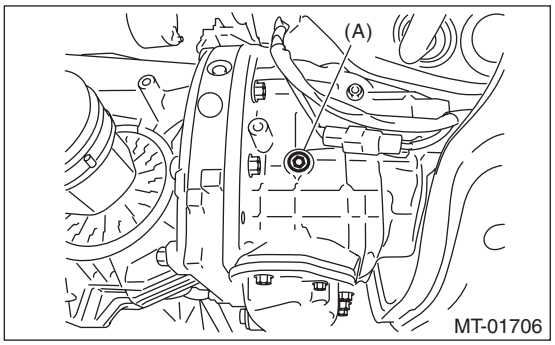

(A) Filler plug

3) Check that the transmission gear oil level is up to the bottom of the filler plug. If the transmission gear oil level is low, confirm that there is no oil leakage and refill up to the bottom of filler plug.
4) Using a new gasket, and tighten the filler plug.

Tightening torque:
50 N·m (5.1 kgf-m, 36.9 ft-lb)

B: REPLACEMENT

1) Lift up the vehicle.
2) Remove the filler plug.

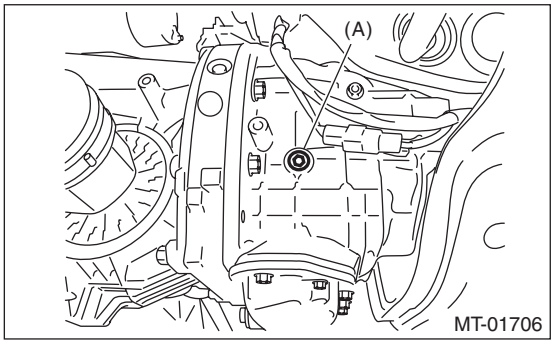

(A) Filler plug

3) Remove the two drain plugs (oil pan side, clutch housing side), and then drain the transmission gear oil completely.

CAUTION:
• Immediately after running the vehicle or after idling for a long time, the transmission gear oil will be hot. Be careful not to receive burns.
• Be careful not to spill the transmission gear oil on exhaust pipe to prevent it from emitting smoke or causing fires. If transmission gear oil is spilled on the exhaust pipe, wipe it off completely.

NOTE:
• Tighten the drain plug of the transmission gear oil after draining the transmission gear oil.
• Always use a new gasket.
• Use TORX® bit T70 to remove and install the drain plug on clutch housing side.

Tightening torque:
Oil pan side
50 N·m (5.1 kgf-m, 36.9 ft-lb)
Clutch housing side
70 N·m (7.1 kgf-m, 51.6 ft-lb)

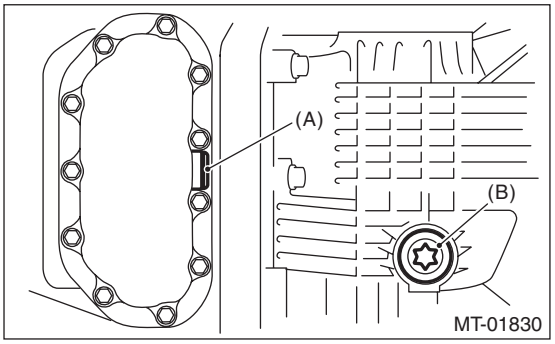

(A) Drain plug (oil pan side)
(B) Drain plug (clutch housing side)

4) Pour transmission gear oil to the bottom end of filler plug.

NOTE:
Carefully refill transmission gear oil while checking the level. Excessive or insufficient oil must be avoided.

Recommended gear oil:
GL-5 (75W-90) or equivalent

Transmission gear oil capacity
4.1 L (4.3 US qt, 3.6 Imp qt)
5) Check the level of the transmission gear oil.
6) Using a new gasket, and tighten the filler plug.

Tightening torque:
50 N·m (5.1 kgf-m, 36.9 ft-lb)

3. Oil Seal

A: INSPECTION

Check that there is no oil leaking from the oil seal. If there is any deformation, hardening, wear or other malfunctions of the oil seal, perform the following:

- Replace the oil seal.
- Inspect the propeller shaft.

B: REPLACEMENT

1) Disconnect the ground cable from battery.
2) Lift up the vehicle.
3) Clean the transmission exterior.
4) Drain transmission gear oil completely. <Ref. to 6MT(TY85)-27, REPLACEMENT, Transmission Gear Oil.>
5) Remove the rear exhaust pipe and muffler. <Ref. to EX(STI)-12, REMOVAL, Rear Exhaust Pipe.> <Ref. to EX(STI)-14, REMOVAL, Muffler.>
6) Remove the center exhaust cover.
7) Remove the propeller shaft. <Ref. to DS-12, REMOVAL, Propeller Shaft.>
8) Using the ST, remove the oil seal.
ST 398527700 PULLER ASSY

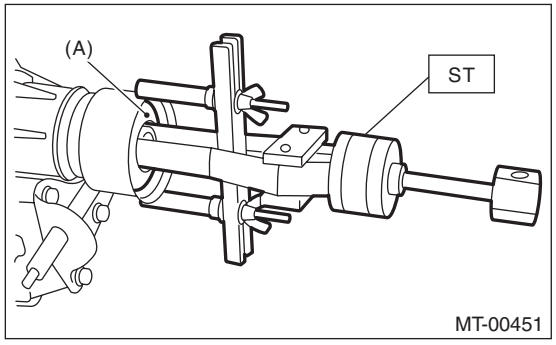

(A) Oil seal

9) Using the ST, install the oil seal.

NOTE:
- When grease is not applied to the oil seal lips, apply the transmission gear oil to the oil seal lips.
- Use a new oil seal.

ST 498057300 INSTALLER

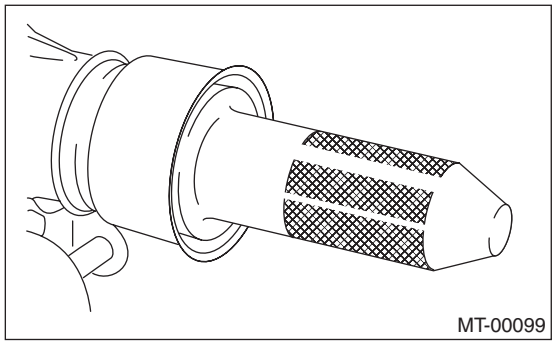

10) Install the propeller shaft. <Ref. to DS-14, INSTALLATION, Propeller Shaft.>
11) Install the center exhaust cover.

Tightening torque:
18 N·m (1.8 kgf-m, 13.3 ft-lb)

12) Install the rear exhaust pipe and muffler. <Ref. to EX(STI)-12, INSTALLATION, Rear Exhaust Pipe.> <Ref. to EX(STI)-15, INSTALLATION, Muffler.>
13) Pour in transmission gear oil and check the oil level. <Ref. to 6MT(TY85)-27, REPLACEMENT, Transmission Gear Oil.>
14) Lower the vehicle.
15) Connect the battery ground terminal.

4. Differential Side Retainer Oil Seal

A: INSPECTION

Check that there is no oil leaking from the differential side retainer oil seal. If there is oil leakage, perform the following procedures.

- Replace the oil seal.
- Check the front drive shaft.

B: REPLACEMENT

1) Disconnect the ground cable from battery.
2) Remove the front tires.
3) Lift up the vehicle.
4) Remove the front exhaust pipe and center exhaust pipe. <Ref. to EX(STI)-5, REMOVAL, Front Exhaust Pipe.>
5) Drain transmission gear oil completely. <Ref. to 6MT(TY85)-27, REPLACEMENT, Transmission Gear Oil.>
6) Separate the front drive shaft from the transmission. <Ref. to DS-45, REMOVAL, Front Drive Shaft.>
7) Remove the differential side retainer oil seal by using a flat tip screwdriver or similar tools.
8) Using the ST, install the differential side retainer oil seal by lightly tapping with a hammer.

ST 18675AA000 DIFFERENTIAL SIDE OIL SEAL INSTALLER

9) Apply transmission gear oil to the oil seal lips.
10) Set the ST to the differential side retainer.

ST 28399SA010 OIL SEAL PROTECTOR

11) Install the front drive shaft into the transmission.

NOTE:
Replace the circlip of drive shaft with a new part.

12) Install the front drive shaft into transmission, remove the ST and insert the drive shaft securely.

ST 28399SA010 OIL SEAL PROTECTOR

13) Install the front exhaust pipe and the center exhaust pipe. <Ref. to EX(STI)-5, INSTALLATION, Front Exhaust Pipe.>
14) Pour transmission gear oil to the bottom end of filler plug. <Ref. to 6MT(TY85)-27, REPLACEMENT, Transmission Gear Oil.>
15) Lower the vehicle.
16) Install the front tires.
17) Connect the battery ground terminal.

5. Transmission Mounting System

A: REMOVAL

1. PITCHING STOPPER

1) Disconnect the ground cable from battery.
2) Remove the intercooler. <Ref. to IN(STI)-13, REMOVAL, Intercooler.>
3) Remove the pitching stopper.

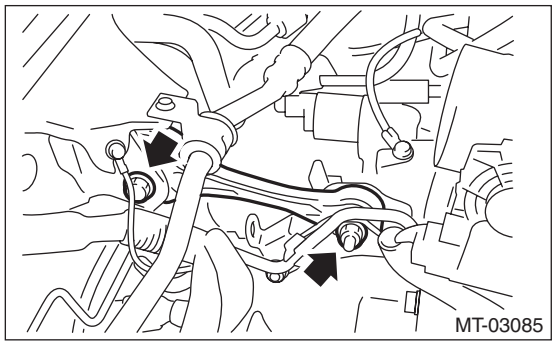

2. CROSSMEMBER AND CUSHION RUBBER

1) Disconnect the ground cable from battery.
2) Lift up the vehicle.
3) Remove the center exhaust pipe. <Ref. to EX(STI)-7, REMOVAL, Center Exhaust Pipe.>
4) Remove the rear exhaust pipe and muffler. <Ref. to EX(STI)-12, REMOVAL, Rear Exhaust Pipe.> <Ref. to EX(STI)-14, REMOVAL, Muffler.>
5) Remove the center exhaust cover.
6) Set the transmission jack.

CAUTION:
Always support the transmission case with a transmission jack.

7) Remove the front crossmember and the rear crossmember.

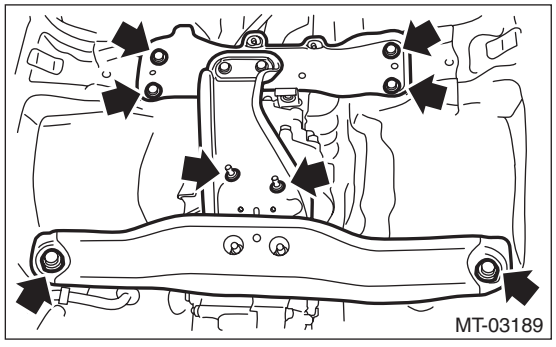

8) Remove the transmission cushion rubber.

B: INSTALLATION

1. PITCHING STOPPER

1) Install the pitching stopper.

Tightening torque:
T1: 50 N·m (5.1 kgf-m, 36.9 ft-lb)
T2: 58 N·m (5.9 kgf-m, 42.8 ft-lb)

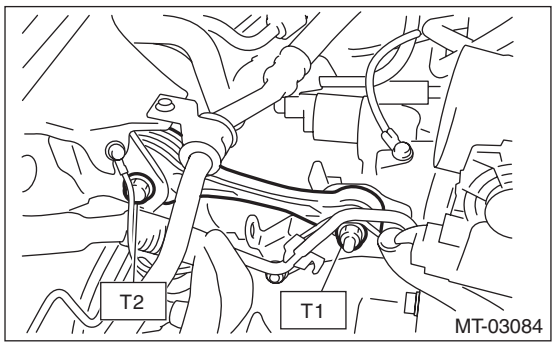

2) Install the intercooler. <Ref. to IN(STI)-14, INSTALLATION, Intercooler.>
3) Connect the battery ground terminal.

2. CROSSMEMBER AND CUSHION RUBBER

1) Install the transmission cushion rubber to the transmission, and tighten the bolt (A).
2) Install the transmission cushion rubber to the center crossmember, and temporarily tighten the nut (B).

Tightening torque:
Bolt (A)
35 N·m (3.6 kgf-m, 25.8 ft-lb)

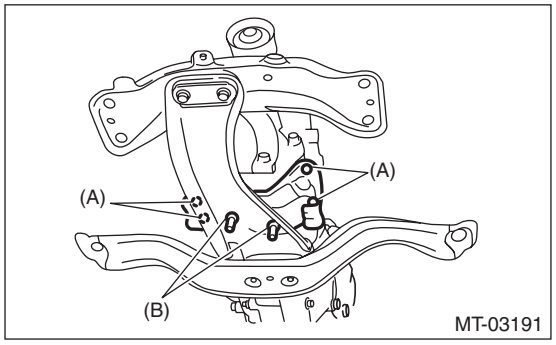

3) Install the front crossmember and rear crossmember.

4) Tighten the transmission cushion rubber mounting nut.

Tightening torque:
T1: 35 N·m (3.6 kgf-m, 25.8 ft-lb)
T2: 70 N·m (7.1 kgf-m, 51.6 ft-lb)
T3: 140 N·m (14.3 kgf-m, 103 ft-lb)

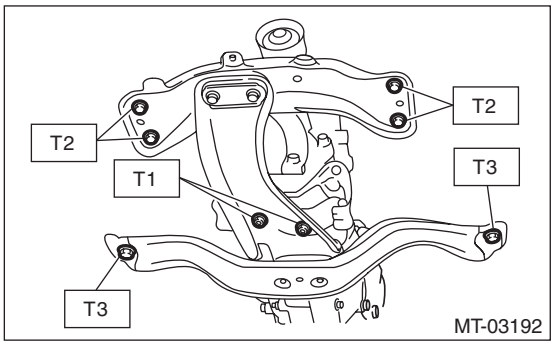

5) Remove the transmission jack.
6) Install the center exhaust cover.

Tightening torque:
18 N·m (1.8 kgf-m, 13.3 ft-lb)

7) Install the rear exhaust pipe and muffler. <Ref. to EX(STI)-12, INSTALLATION, Rear Exhaust Pipe.> <Ref. to EX(STI)-15, INSTALLATION, Muffler.>
8) Install the center exhaust pipe. <Ref. to EX(STI)-8, INSTALLATION, Center Exhaust Pipe.>
9) Lower the vehicle.
10) Connect the battery ground terminal.

C: INSPECTION

Perform the following inspection procedures and repair or replace faulty parts.

1. PITCHING STOPPER

Check the pitching stopper for bends or damage. Check that the rubber is not stiff, cracked or otherwise damaged.

2. CROSSMEMBER AND CUSHION RUBBER

Check the crossmember for bending or damage. Check that the cushion rubber is not stiff, cracked, or otherwise damaged.

6. Manual Transmission Assembly

A: REMOVAL

1) Disconnect the ground cable from battery.
2) Remove the intercooler. <Ref. to IN(STI)-13, REMOVAL, Intercooler.>
3) Disconnect the following harness connectors, and then remove the intercooler stay RH No. 2.

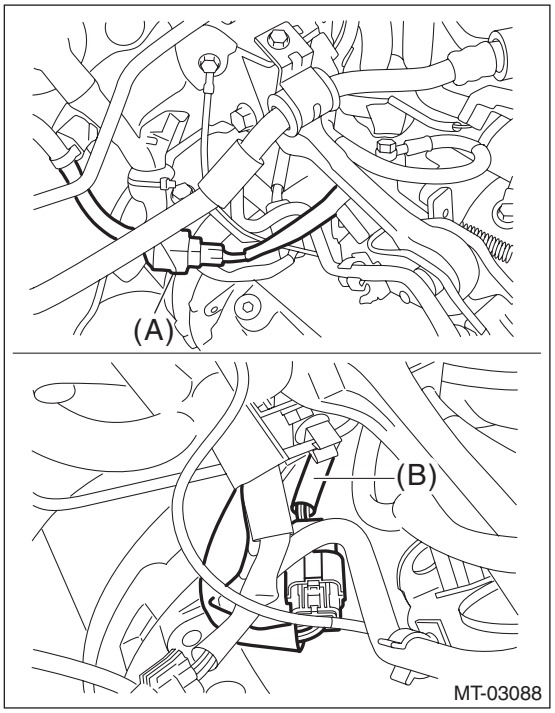

(A) Rear oxygen sensor connector
(B) Neutral position switch backup light switch connector

4) Remove the secondary air combination valve. <Ref. to EC(STI)-56, SECONDARY AIR COMBINATION VALVE LH, REMOVAL, Secondary Air Combination Valve.>
5) Disconnect the transmission radio ground cord terminal.

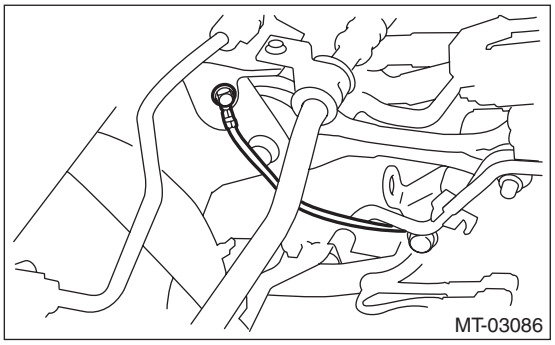

6) Remove the starter assembly. <Ref. to SC(STI)-7, REMOVAL, Starter.>
7) Remove the operating cylinder.

NOTE:
Hang the removed operating cylinder with a piece of wire.

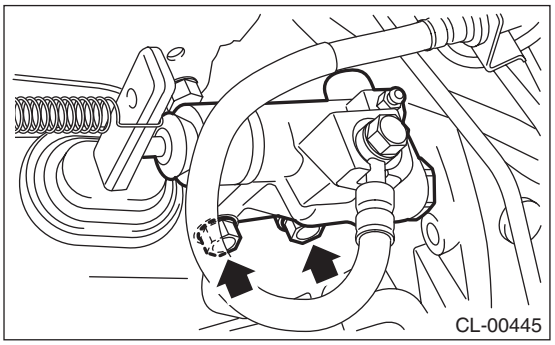

8) Remove the return spring.

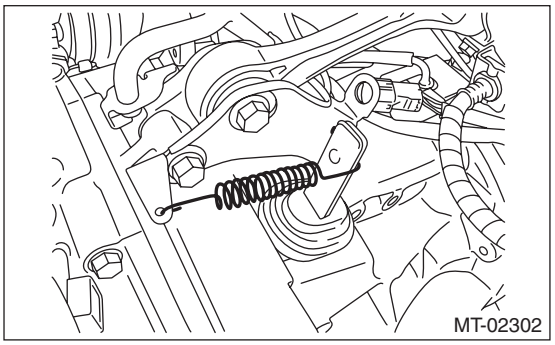

9) Remove the pitching stopper. <Ref. to 6MT(TY85)-30, PITCHING STOPPER, REMOVAL, Transmission Mounting System.>
10) Remove the pitching stopper bracket, clutch return spring bracket, and transmission radio ground cable.
11) Set the ST.

ST1 41099AA012 ENGINE SUPPORT BRACKET
ST2 41099AA020 ENGINE SUPPORT

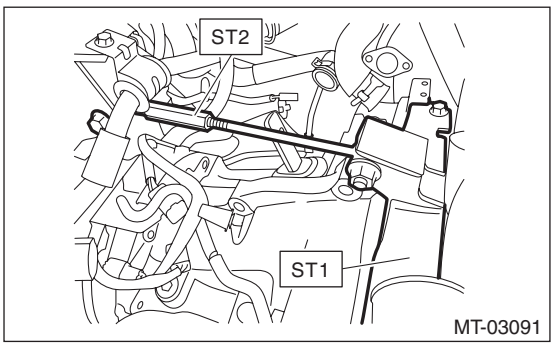

12) Remove the clutch release lever shaft.
(1) Remove the plug using a hexagon wrench.
(2) Attach a 6 mm (0.24 in) bolt to the release lever shaft, and pull out the release lever shaft.
(3) Lift the release fork, and remove from the claw of the release bearing. Pull the release fork to the engine side, and make it so that it moves freely.

13) Remove the center exhaust pipe. <Ref. to EX(STI)-7, REMOVAL, Center Exhaust Pipe.>
14) Remove the bolts which hold upper side of transmission to engine.

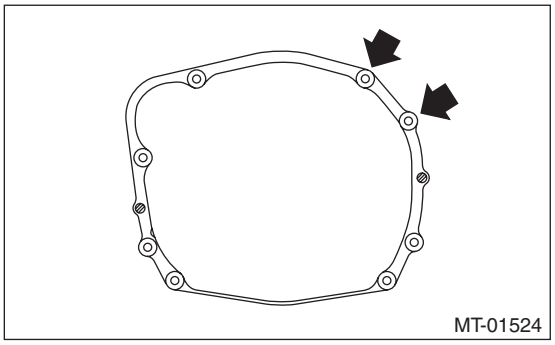
MT-01524

15) Remove the front wheels.
16) Lift up the vehicle.
17) Drain transmission gear oil completely. <Ref. to 6MT(TY85)-27, REPLACEMENT, Transmission Gear Oil.>
18) Remove the center exhaust cover.
19) Remove the propeller shaft. <Ref. to DS-12, REMOVAL, Propeller Shaft.>
20) Remove the stabilizer link.

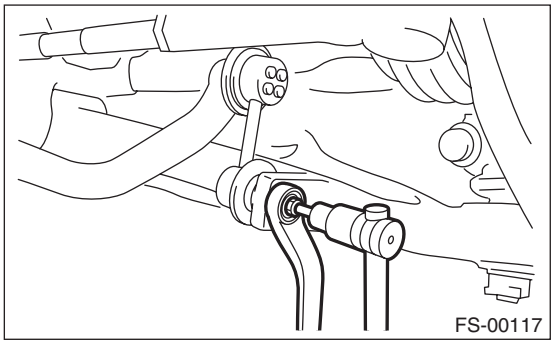
FS-00117

21) Remove the ball joint of front arm from the housing.

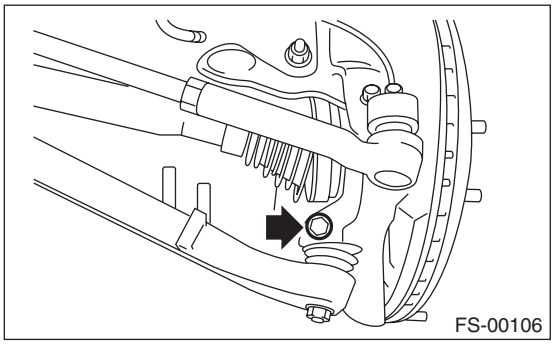
FS-00106

22) Remove the front drive shaft. <Ref. to DS-45, REMOVAL, Front Drive Shaft.>
23) Place the transmission jack under the transmission.

CAUTION:
Always support the transmission case with a transmission jack.

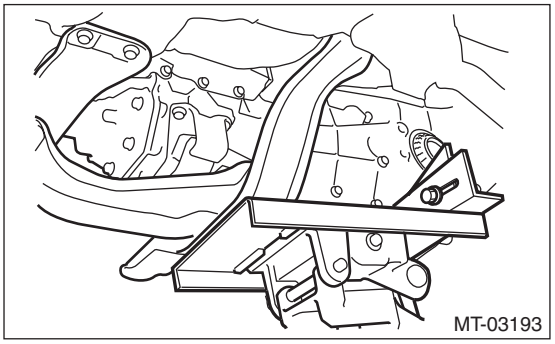
MT-03193

24) Remove the front crossmember and the rear crossmember.

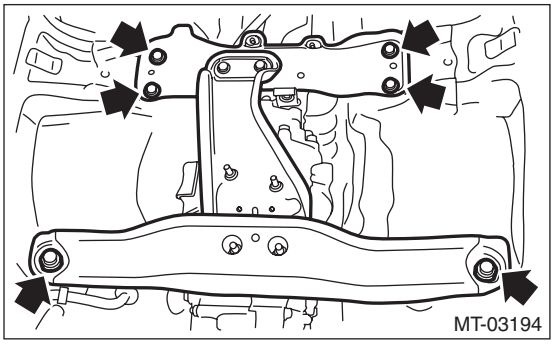
MT-03194

25) Move the transmission to the right side of the vehicle, and remove the joint COMPL, stay bolts and reverse check cable.

NOTE:
If the transmission is not moved aside, the joint COMPL and stay bolts may contact the body and cause damage.

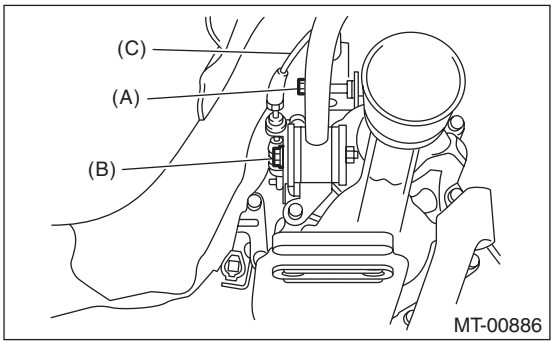

MT-00886

(A) Joint COMPL bolt
(B) Stay bolt
(C) Reverse check cable

26) Tighten the turnbuckle of the ST to tilt the engine assembly towards the back.

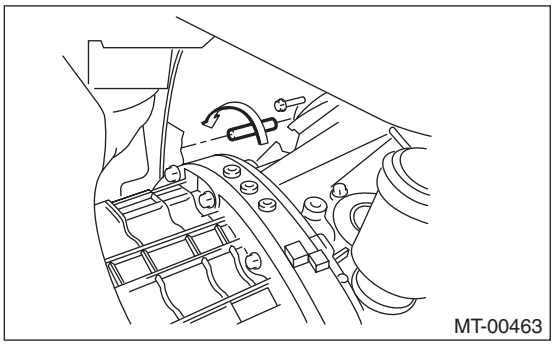

27) Remove the bolts and nuts holding the bottom of transmission to the engine, and remove the transmission assembly.

NOTE:
• During removal, be careful not to hit the transmission against the body when pulling towards the rear.
• The clutch pipe and breather pipe may interfere with each other. Remove carefully.

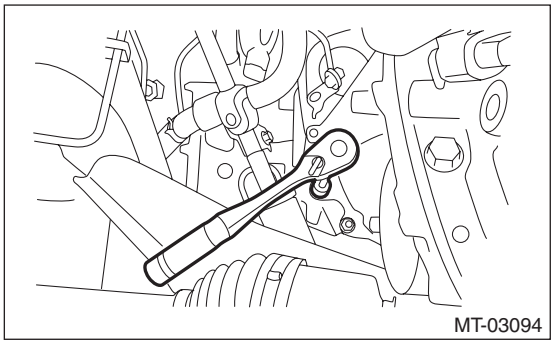

28) Remove the transmission cushion rubber.

B: INSTALLATION

1) Set the release fork, release bearing and release lever shaft to the transmission. <Ref. to CL-17, INSTALLATION, Release Bearing and Lever.>
2) Replace the differential side retainer oil seal. <Ref. to 6MT(TY85)-29, REPLACEMENT, Differential Side Retainer Oil Seal.>

NOTE:
Be sure to replace the oil seal after removing the front drive shaft.

3) Strike and bend the transmission hanger of transmission rear with a rubber hammer etc. so that it gets in contact with the transmission case.

CAUTION:
Do not apply extra overload or impact to the transmission case.

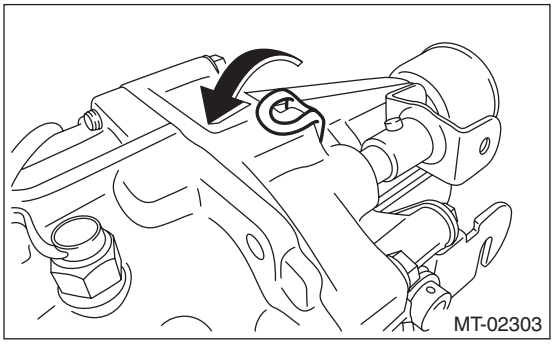

4) Install the transmission cushion rubber to the transmission, and tighten the bolt (A).
5) Install the transmission cushion rubber to the center crossmember, and temporarily tighten the nut (B).

Tightening torque:
Bolt (A)
35 N·m (3.6 kgf-m, 25.8 ft-lb)

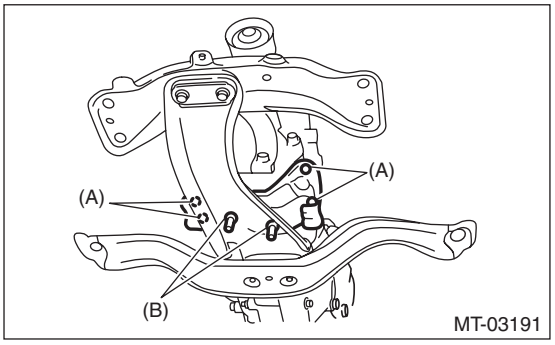

6) Install the transmission assembly onto the engine.

7) Tighten the bolts and nuts which hold the lower side of transmission to the engine.

NOTE:
• Make sure that the main shaft spline is completely inserted.
• Make sure that the rear end of the engine is set low.

Tightening torque:
50 N·m (5.1 kgf-m, 36.9 ft-lb)

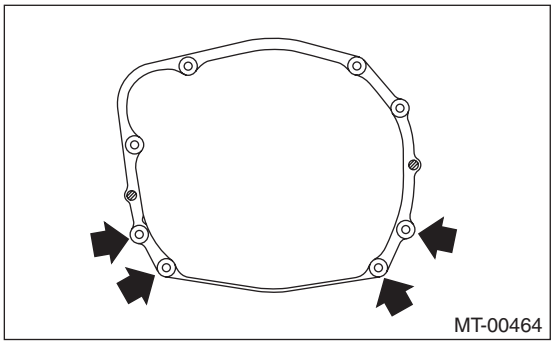

8) Loosen the turnbuckle of ST to return the engine to its original position.

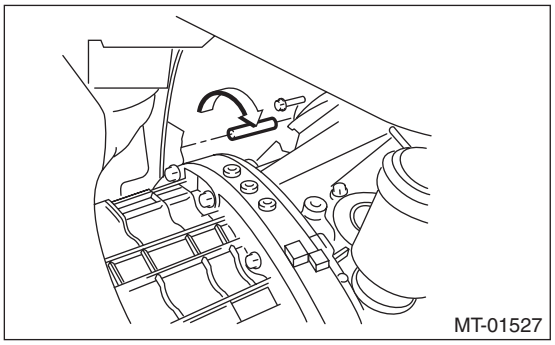

9) Move the transmission to the right side of the vehicle, and attach the joint COMPL, stay bolts and reverse check cable.

Tightening torque:
T1: 12 N·m (1.2 kgf-m, 8.9 ft-lb)
T2: 32 N·m (3.3 kgf-m, 23.6 ft-lb)

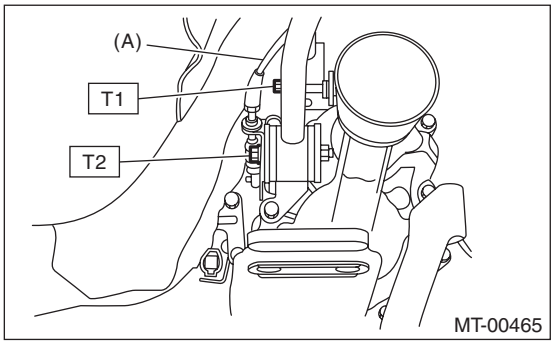

(A) Reverse check cable

10) Install the front crossmember and rear crossmember.

11) Tighten the transmission cushion rubber mounting nut.

Tightening torque:
T1: 35 N·m (3.6 kgf-m, 25.8 ft-lb)
T2: 70 N·m (7.1 kgf-m, 51.6 ft-lb)
T3: 140 N·m (14.3 kgf-m, 103 ft-lb)

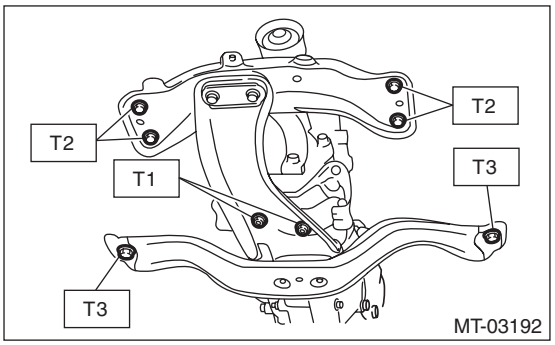

12) Lower the vehicle.
13) Install the starter. <Ref. to SC(STI)-7, INSTALLATION, Starter.>
14) Tighten the bolts which hold the upper side of the transmission to the engine.

Tightening torque:
50 N·m (5.1 kgf-m, 36.9 ft-lb)
15) Make sure that the release bearing is completely inserted.

NOTE:
• Push the release fork towards the operating cylinder side until a clicking sound is heard. Pull the release fork towards the engine side. If the release fork is not in contact with the case, the setting is complete.
• Confirm that the boot cover is set securely.

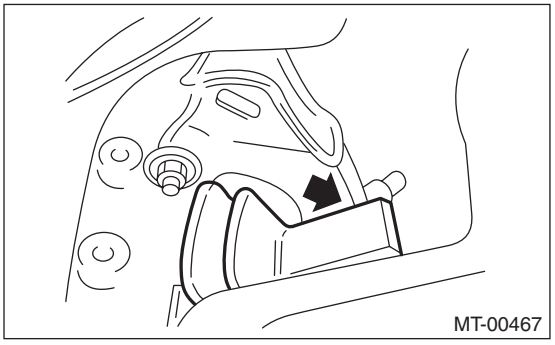

16) Install the pitching stopper bracket, clutch return spring bracket, and transmission radio ground cable.

Tightening torque:
41 N·m (4.2 kgf-m, 30.2 ft-lb)
17) Install the pitching stopper. <Ref. to 6MT(TY85)-30, INSTALLATION, Transmission Mounting System.>
18) Install the return spring.

19) Install the operating cylinder.

Tightening torque:
41 N·m (4.2 kgf-m, 30.2 ft-lb)

NOTE:
Check that the clutch hose is routed properly.
20) Install the starter assembly. <Ref. to SC(STI)-7, INSTALLATION, Starter.>
21) Install the transmission radio ground terminal.

Tightening torque:
13 N·m (1.3 kgf-m, 9.6 ft-lb)
22) Install the secondary air combination valve. <Ref. to EC(STI)-56, SECONDARY AIR COMBINATION VALVE LH, INSTALLATION, Secondary Air Combination Valve.>
23) Connect the following harness connectors, and then install the intercooler stay RH No. 2.

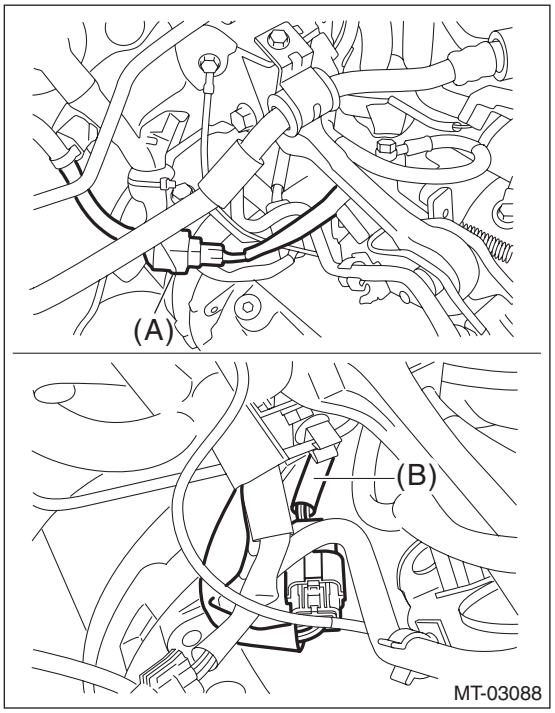

(A) Rear oxygen sensor connector
(B) Neutral position switch backup light switch connector

24) Lift up the vehicle.
25) Set the ST to differential side retainer.
ST 28399SA010 OIL SEAL PROTECTOR
26) Install the front drive shaft into the transmission.

NOTE:
Replace the circlip of drive shaft with a new part.
27) Install the front drive shaft into transmission, remove the ST and insert the drive shaft securely.
ST 28399SA010 OIL SEAL PROTECTOR
28) Install the ball joint of the front arm.

Tightening torque:
50 N·m (5.1 kgf-m, 36.9 ft-lb)
29) Install the stabilizer link.

Tightening torque:
60 N·m (6.1 kgf-m, 44.3 ft-lb)

NOTE:
Use a new self-locking nut.
30) Install the propeller shaft. <Ref. to DS-14, INSTALLATION, Propeller Shaft.>
31) Install the center exhaust cover.

Tightening torque:
18 N·m (1.8 kgf-m, 13.3 ft-lb)
32) Install the center exhaust pipe. <Ref. to EX(STI)-8, INSTALLATION, Center Exhaust Pipe.>
33) Fill the transmission gear oil. <Ref. to 6MT(TY85)-27, REPLACEMENT, Transmission Gear Oil.>
34) Lower the vehicle.
35) Install the intercooler. <Ref. to IN(STI)-14, INSTALLATION, Intercooler.>
36) Connect the battery ground terminal.

7. Driver's Control Center Differential Control Module

A: REMOVAL

For removal of driver's control center differential control module, refer to the "FU(STI)" section. <Ref. to FU(STI)-56, REMOVAL, Engine Control Module (ECM).>

B: INSTALLATION

For installation of driver's control center differential control module, refer to the "FU(STI)" section. <Ref. to FU(STI)-56, INSTALLATION, Engine Control Module (ECM).>

8. DCCD Multi Select Switch

A: REMOVAL

For removal of DCCD multi select switch, refer to the “FU(STI)” section. <Ref. to FU(STI)-55, REMOVAL, SI-DRIVE (SUBARU Intelligent Drive) Selector.>

B: INSTALLATION

For installation of DCCD multi select switch, refer to the “FU(STI)” section. <Ref. to FU(STI)-55, INSTALLATION, SI-DRIVE (SUBARU Intelligent Drive) Selector.>

C: INSPECTION

1) Check that the DCCD multi select switch does not have deformation, cracks, or other damages.
2) Measure the resistance between DCCD multi select switch selector terminals.

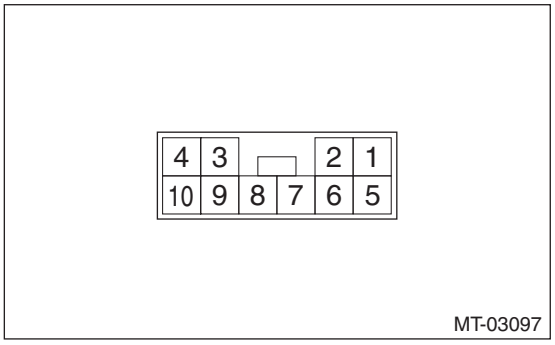

Switch position	Terminal No.	Standard
AUTO / MANU (when the AUTO / MANU switch is pushed in)	1 and 9	Less than 1 Ω
C.DIFF + (when the C.DIFF switch knob is pressed in the C.DIFF + direction)	2 and 9	Less than 1 Ω
C.DIFF – (when the C.DIFF switch knob is pressed in the C.DIFF – direction)	3 and 9	Less than 1 Ω

9. Preparation for Overhaul

A: PROCEDURE

1) Clean oil, grease, dirt and dust from the transmission.
2) Attach the ST on the transmission.
ST 18632AA000 STAND ASSY

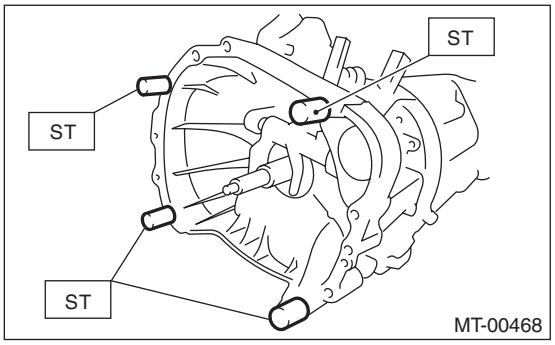

3) Apply transmission gear oil to rotating parts before assembly.
4) When reusing disassembled parts, reinstall in the original positions.
5) Gaskets, lock washers and lock nuts must be replaced with new parts.
6) Apply liquid gasket to the specified areas to prevent leakage.

10.Air Breather Hose

A: REMOVAL

1) Disconnect the ground cable from battery.
2) Remove the intercooler. <Ref. to IN(STI)-13, REMOVAL, Intercooler.>
3) Remove the air breather hose.

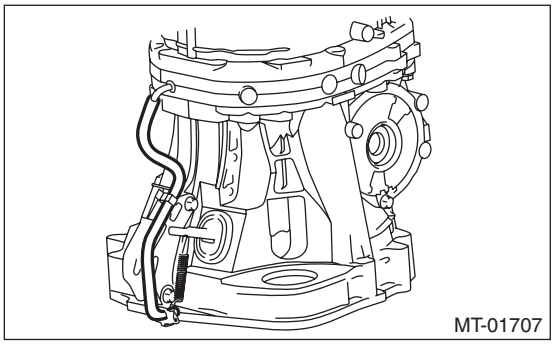

B: INSTALLATION

1) Install the air breather hose.
2) Install the intercooler. <Ref. to IN(STI)-14, INSTALLATION, Intercooler.>
3) Connect the battery ground terminal.

C: INSPECTION

Make sure the hose is not cracked or clogged.

11.Back-up Light Switch

A: REMOVAL

1) Remove the manual transmission assembly from the vehicle. <Ref. to 6MT(TY85)-32, REMOVAL, Manual Transmission Assembly.>
2) Disconnect the back-up light switch connector.

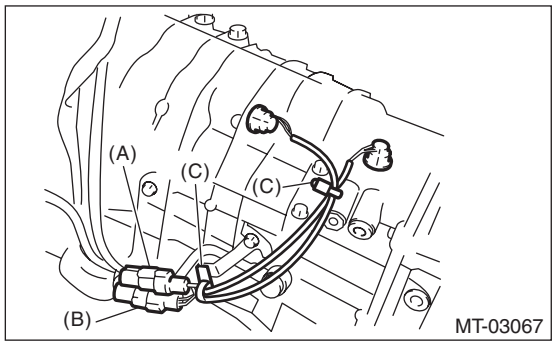

(A) Back-up light switch connector (2P, gray)
(B) Neutral position switch connector (2P, brown)
(C) Clip

3) Disconnect the back-up light switch.

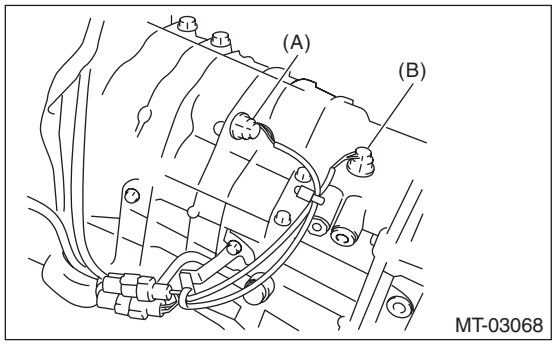

(A) Back-up light switch
(B) Neutral position switch

B: INSTALLATION

1) Install the back-up light switch.

NOTE:
Use a new gasket.

Tightening torque:
32 N·m (3.3 kgf-m, 23.6 ft-lb)

2) Connect the back-up light switch connector.
3) Install the manual transmission assembly to the vehicle. <Ref. to 6MT(TY85)-34, INSTALLATION, Manual Transmission Assembly.>

C: INSPECTION

1) Disconnect the ground cable from battery.
2) Remove the intercooler. <Ref. to IN(STI)-13, REMOVAL, Intercooler.>
3) Disconnect the transmission harness and chassis harness.

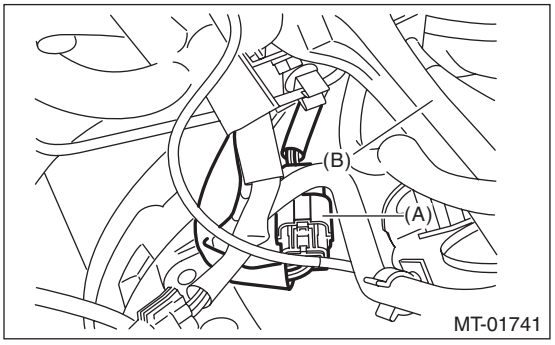

(A) Transmission harness connectors
(B) Pitching stopper

4) Measure the resistance between the back-up light switch terminals. If it is not within the specification, replace the back-up light switch.

Gear shift position	Terminal No.	Standard
Back position	3 and 6	Less than 1 Ω
Other positions		1 MΩ or more

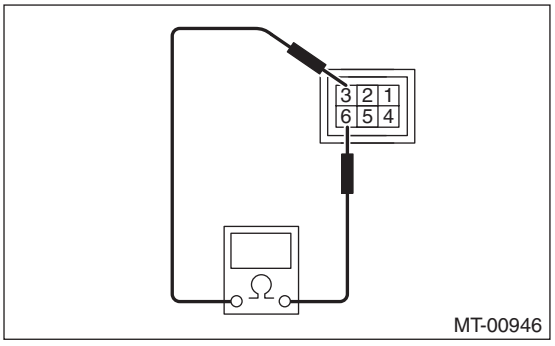

12.Neutral Position Switch

A: REMOVAL

1) Remove the manual transmission assembly from the vehicle. <Ref. to 6MT(TY85)-32, REMOVAL, Manual Transmission Assembly.>
2) Disconnect the connector and clip of the neutral position switch.

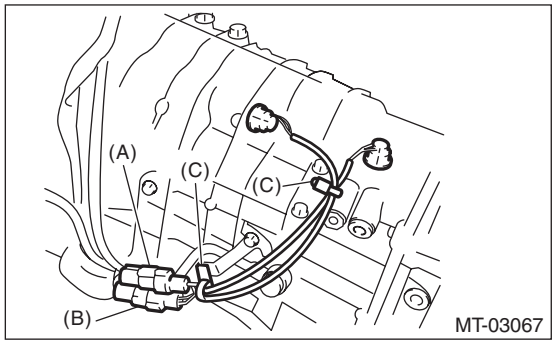

(A) Back-up light switch connector (2P, gray)
(B) Neutral position switch connector (2P, brown)
(C) Clip

3) Remove the neutral position switch.

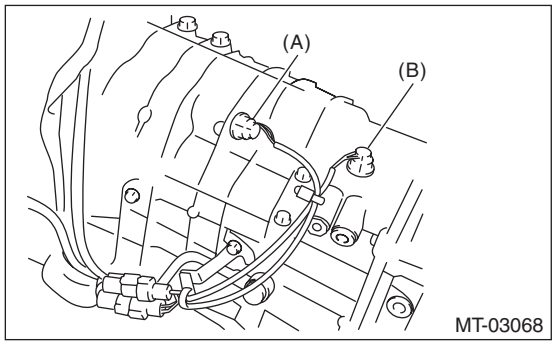

(A) Back-up light switch
(B) Neutral position switch

B: INSTALLATION

1) Install the neutral position switch.

NOTE:
Use a new gasket.

Tightening torque:
32 N·m (3.3 kgf-m, 23.6 ft-lb)

2) Connect the connector and clip of the neutral position switch.
3) Install the manual transmission assembly to the vehicle. <Ref. to 6MT(TY85)-34, INSTALLATION, Manual Transmission Assembly.>

C: INSPECTION

1) Disconnect the ground cable from battery.
2) Remove the intercooler. <Ref. to IN(STI)-13, REMOVAL, Intercooler.>
3) Disconnect the transmission harness and chassis harness.

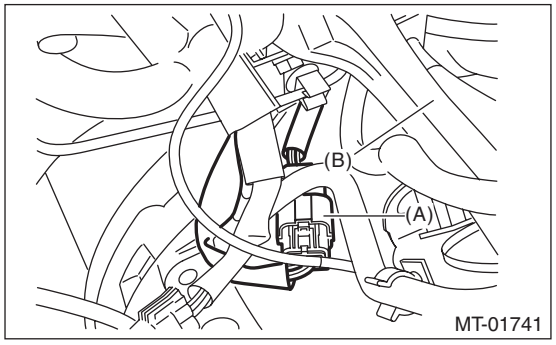

(A) Transmission harness connectors
(B) Pitching stopper

4) Measure the resistance between neutral position switch terminals. If not within the standard values, replace the neutral position switch.

Gear shift position	Terminal No.	Standard
Neutral position	2 and 5	Less than 1 Ω
Other positions		1 MΩ or more

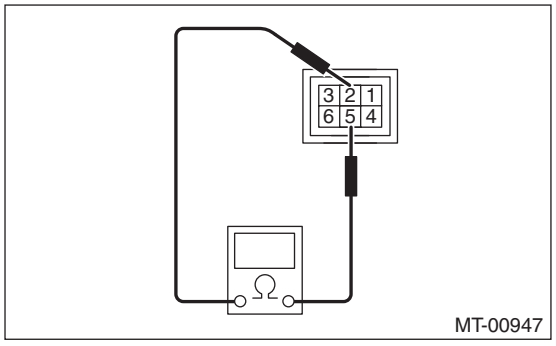

13.Extension Case

A: REMOVAL

1) Remove the manual transmission assembly from the vehicle. <Ref. to 6MT(TY85)-32, REMOVAL, Manual Transmission Assembly.>
2) Prepare the transmission for overhaul. <Ref. to 6MT(TY85)-39, Preparation for Overhaul.>
3) Remove the extension case.

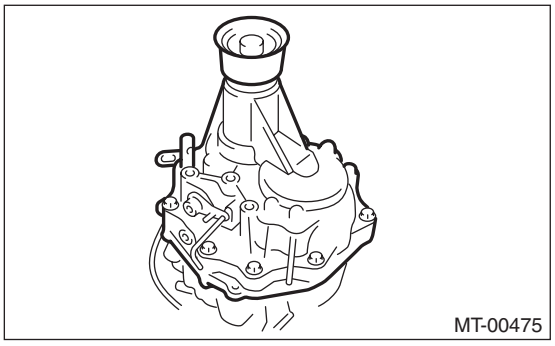

4) Remove any remaining liquid gasket from the extension case and transmission case.

B: INSTALLATION

1) Select the adjusting washer of the transfer driven gear, and attach it to the extension case. <Ref. to 6MT(TY85)-45, ADJUSTMENT, Extension Case.>
2) Install the taper roller bearing (extension case side) outer race to the extension case.

CAUTION:
Apply transmission gear oil onto sliding or revolving surfaces before installation.
3) Select the adjusting washer of the transfer drive gear, and attach it to the center differential.
4) Apply liquid gasket to the transmission case.

Liquid gasket:
THREE BOND 1215B or equivalent

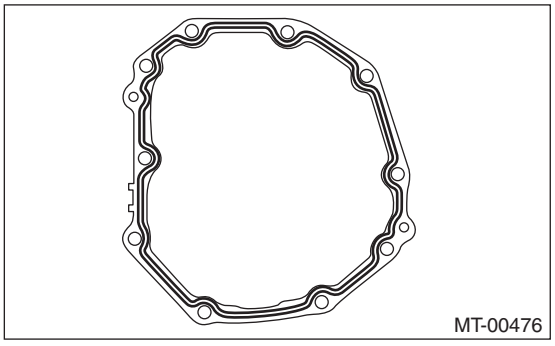

5) Install the extension case.

Tightening torque:
48 N·m (4.9 kgf-m, 35.4 ft-lb)

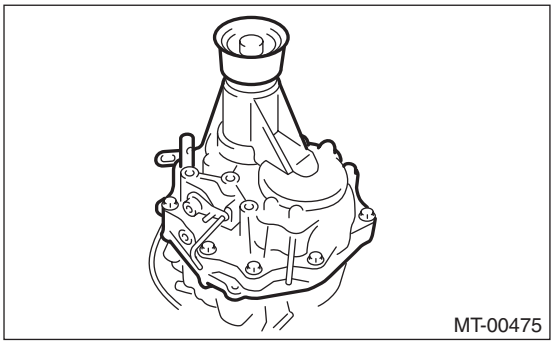

NOTE:
Insert the stopper section of the center differential between the oil guide.

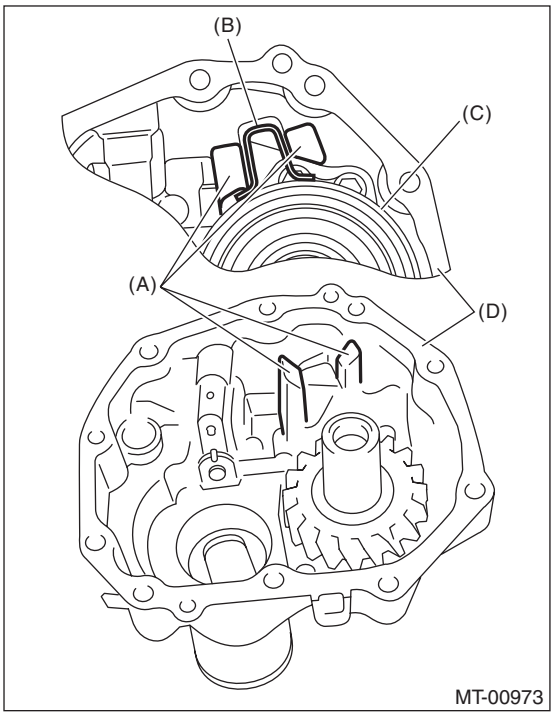

(A) Oil guide
(B) Stopper
(C) Center differential
(D) Extension case

6) Install the manual transmission assembly to the vehicle. <Ref. to 6MT(TY85)-34, INSTALLATION, Manual Transmission Assembly.>

C: DISASSEMBLY

1) Remove the transfer drive gear. <Ref. to 6MT(TY85)-53, REMOVAL, Transfer Drive Gear.>

2) Remove the oil guide.

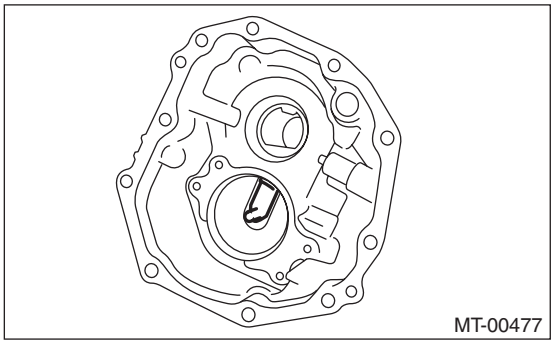

3) Remove the shift bracket.

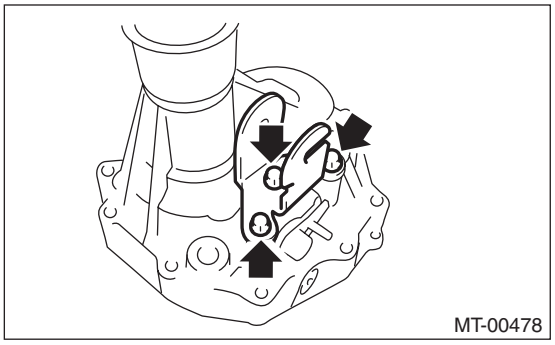

4) Using the ST, remove the taper roller bearing (extension case side) outer race.
ST 18758AA000 PULLER

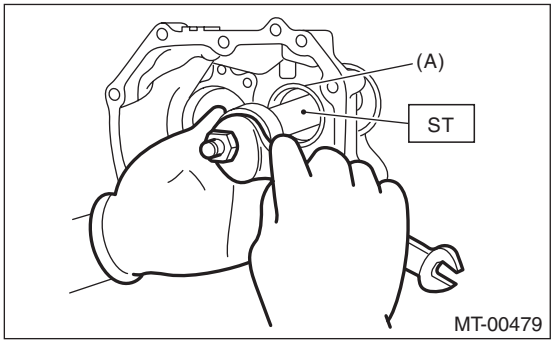

(A) Taper roller bearing (extension case side) outer race

5) Remove the adjusting washer and oil plate.

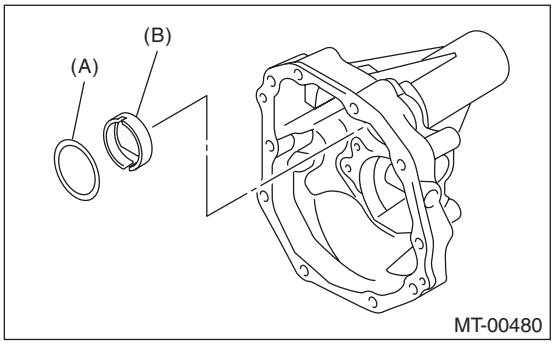

(A) Adjusting washer
(B) Oil plate

6) Remove the shifter arm oil seal.

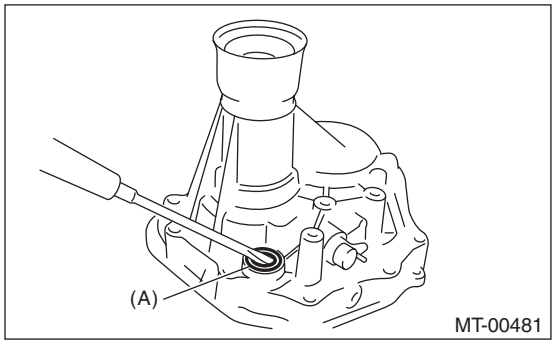

(A) Oil seal

7) Remove the reverse check system. <Ref. to 6MT(TY85)-50, REMOVAL, Reverse Check System.>
8) Remove the extension case oil seal. <Ref. to 6MT(TY85)-28, REPLACEMENT, Oil Seal.>

D: ASSEMBLY

1) Install the reverse check system. <Ref. to 6MT(TY85)-50, INSTALLATION, Reverse Check System.>
2) Install the extension case oil seal. <Ref. to 6MT(TY85)-28, REPLACEMENT, Oil Seal.>
3) Using the ST, install the shifter arm shaft oil seal.
ST1 18657AA000 INSTALLER
ST2 18671AA000 OIL SEAL GUIDE

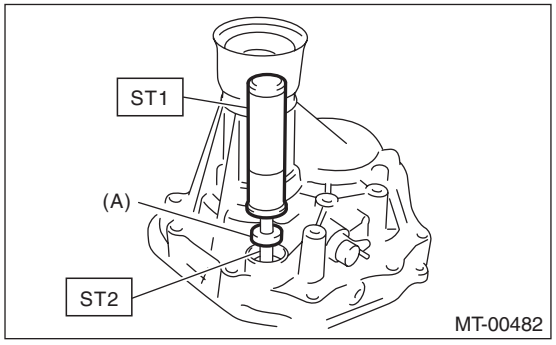

(A) Oil seal

4) Install the oil plate.

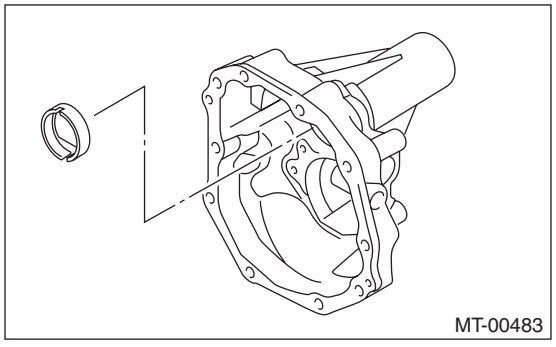

5) Select the adjusting washer, and attach to the extension case. <Ref. to 6MT(TY85)-45, ADJUSTMENT, Extension Case.>
6) Install the taper roller bearing (extension case side) outer race to the extension case.

CAUTION:
Apply transmission gear oil onto sliding or revolving surfaces before installation.
7) Install the shift bracket.

Tightening torque:
25 N·m (2.5 kgf-m, 18.4 ft-lb)

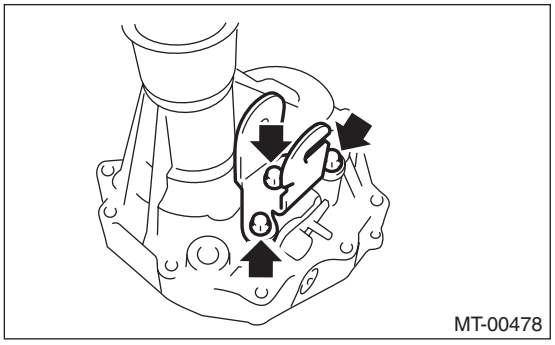

8) Attach the oil guide and the transfer drive gear. <Ref. to 6MT(TY85)-53, INSTALLATION, Transfer Drive Gear.>

E: INSPECTION

1) Check to make sure there is no damage or cracks on the extension case. If damage or cracking is found, replace the extension case.
2) Inspect for oil leaks at the extension case and transmission case oil seals and mating surfaces. If there are oil leaks, replace the oil seal and liquid gasket.

F: ADJUSTMENT

1. TRANSFER DRIVEN GEAR ADJUSTING WASHER ADJUSTMENT

1) Using the ST, remove the taper roller bearing (extension case side) outer race.
ST 18758AA000 PULLER

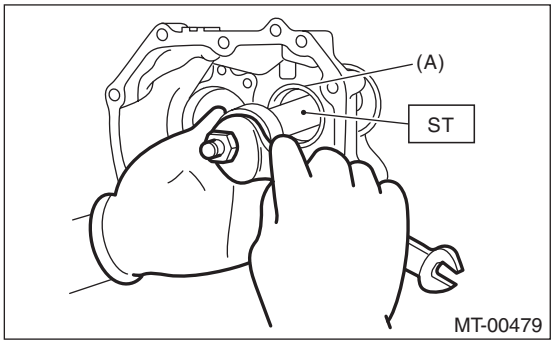

(A) Taper roller bearing (extension case side) outer race

2) Remove the adjusting washer.
3) Measure depth “Z” between the extension case end area and the taper roller bearing (extension case side) contact area.
ST 398643600 GAUGE

NOTE:
When measuring depth “Z”, subtract the thickness of the ST [15 mm (0.59 in)] from the measured value.

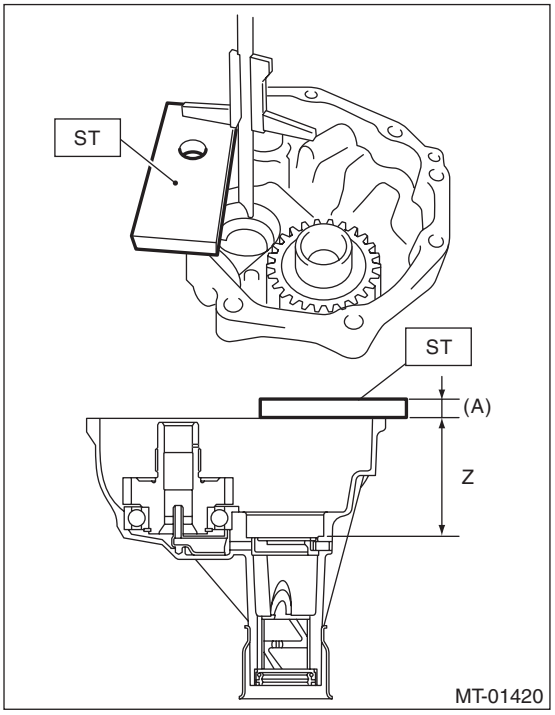

(A) 15 mm (0.59 in)

4) Remove the transfer driven gear. <Ref. to 6MT(TY85)-55, REMOVAL, Transfer Driven Gear.>
5) Remove the center differential. <Ref. to 6MT(TY85)-57, REMOVAL, Center Differential.>
6) Remove the oil guides G and H.

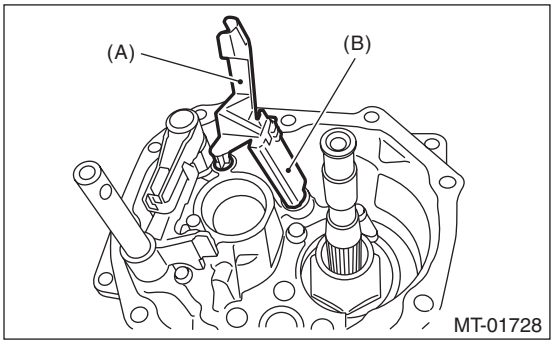

(A) Oil guide G
(B) Oil guide H

7) Remove the snap ring and washer from the selector arm area.

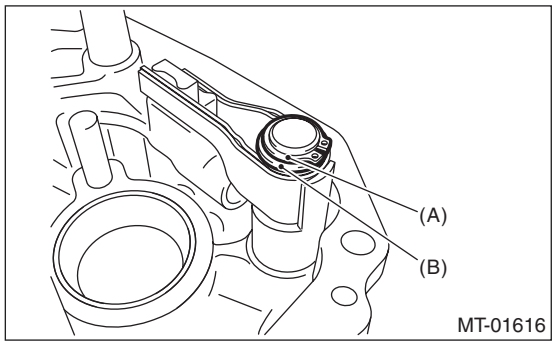

(A) Snap ring
(B) Washer

8) Using an ST, remove the neutral set spring and support.
ST1 18756AA000 CLAW
ST2 399893600 PLIER

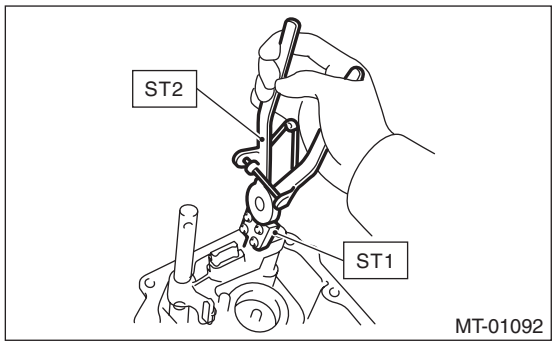

9) Lift the striking rod, and remove the straight pin.

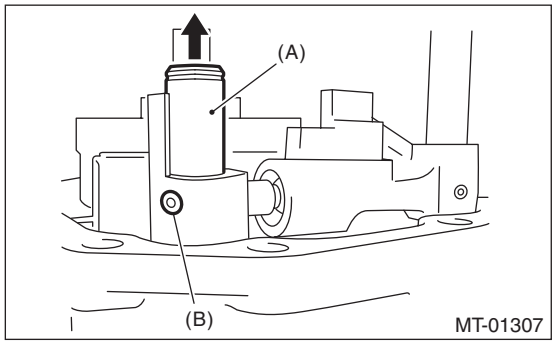

(A) Striking rod
(B) Straight pin

10) Remove the selector arm No. 2, shifter arm shaft, selector plunger, shift accent plunger and spring.

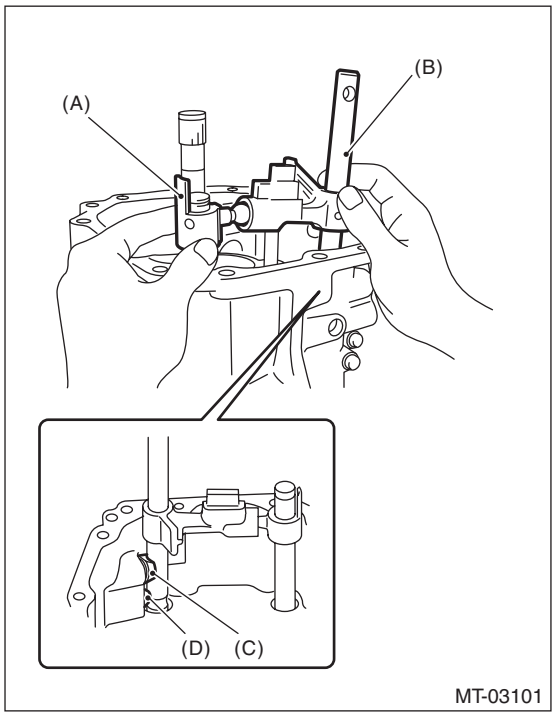

(A) Selector arm No. 2
(B) Shifter arm shaft
(C) Selector plunger
(D) Shift accent plunger

11) Attach the taper roller bearing (extension case side) to the transfer driven gear.
12) Set the ST.
ST 18831AA000 GAUGE

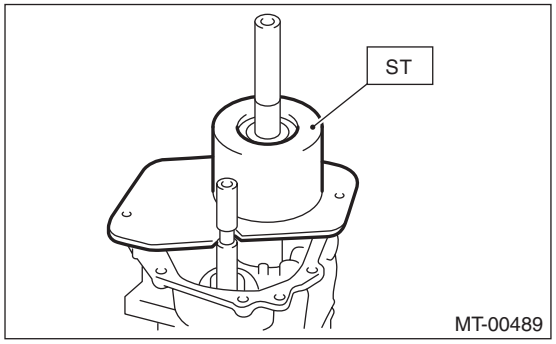

13) Turn the transfer driven gear 10 or more times to seat the taper roller bearing properly.

14) Measure depth “Y” between the end of the ST and the taper roller bearing (extension case side).
ST 18831AA000 GAUGE

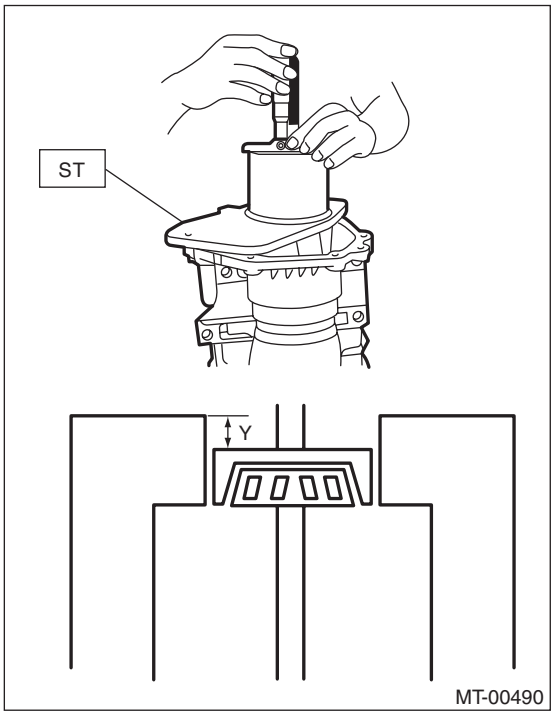

15) Using the following calculation, calculate the transfer driven gear adjusting washer value “t”.
t = Z – (100 – Y) – {0.02 — 0.11 mm (0.0008 — 0.0043 in)}

t mm (in)	Transfer driven gear adjusting washer thickness
Y mm (in)	Depth between the end of the ST and the taper roller bearing (extension case side)
Z mm (in)	Depth between the end of the extension case and the taper roller bearing (extension case side) contact area
0.02 — 0.11 mm (0.0008 — 0.0043 in)	Standard clearance between the adjusting washer and the taper roller bearing (extension case side)
100 mm (3.94 in)	Height of ST

16) Refer to the calculated value “t” to select the closest adjusting washer from the following table.

Standard clearance between the adjusting washer and the taper roller bearing (extension case side)
0.02 — 0.11 mm (0.0008 — 0.0043 in)

NOTE:
Match to be within the standard clearance range.

Adjusting washer (50 × 61 × t)	
Part No.	Thickness t mm (in)
803050060	0.50 (0.0197)
803050061	0.55 (0.0217)
803050062	0.60 (0.0236)
803050063	0.65 (0.0256)
803050064	0.70 (0.0276)
803050065	0.75 (0.0295)
803050066	0.80 (0.0315)
803050067	0.85 (0.0335)
803050068	0.90 (0.0354)
803050069	0.95 (0.0374)
803050070	1.00 (0.0394)
803050071	1.05 (0.0413)
803050072	1.10 (0.0433)
803050073	1.15 (0.0453)
803050074	1.20 (0.0472)
803050075	1.25 (0.0492)
803050076	1.30 (0.0512)
803050077	1.35 (0.0531)
803050078	1.40 (0.0551)
803050079	1.45 (0.0570)

17) Install the selector arm No. 2, shifter arm shaft, selector plunger, shift accent plunger and spring.

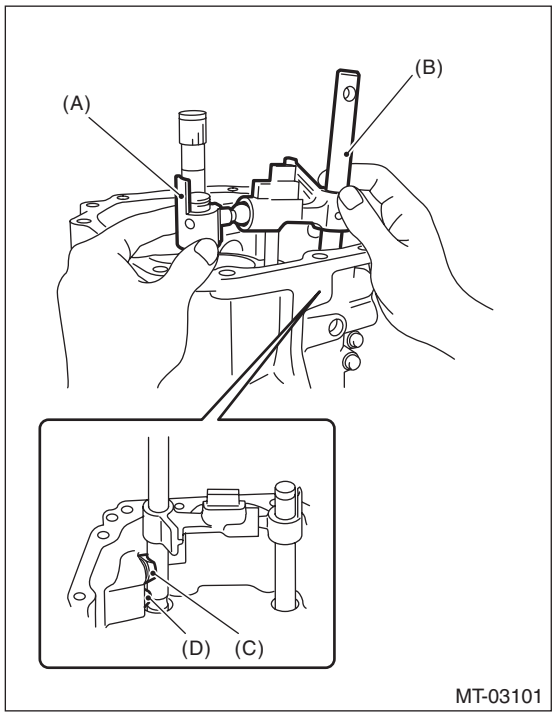

(A) Selector arm No. 2
(B) Shifter arm shaft
(C) Selector plunger
(D) Shift accent plunger

18) Install a new straight pin.
19) Using the ST, install the neutral set spring and support.
ST1 18756AA000 CLAW
ST2 399893600 PLIER

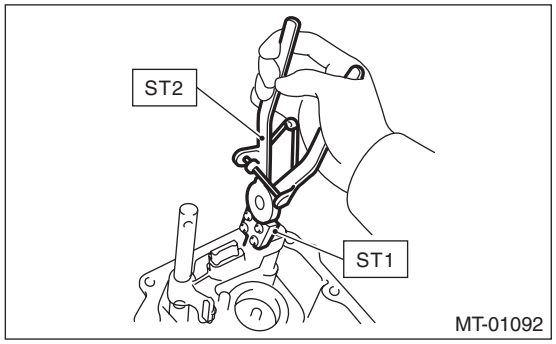

20) Install the washer and snap ring to the selector arm area.

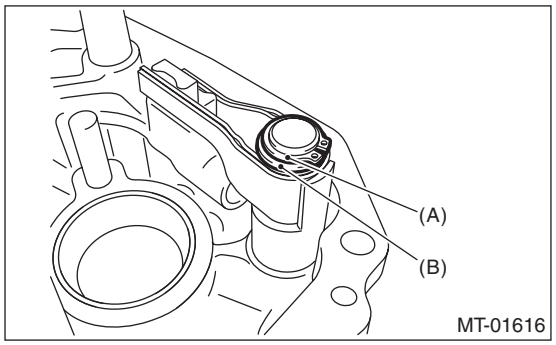

(A) Snap ring
(B) Washer

21) Install the center differential. <Ref. to 6MT(TY85)-57, INSTALLATION, Center Differential.>

2. TRANSFER DRIVE GEAR ADJUSTING WASHER SELECTION

1) Measure height "Z" between the transmission case end area and ST.
ST 398643600 GAUGE

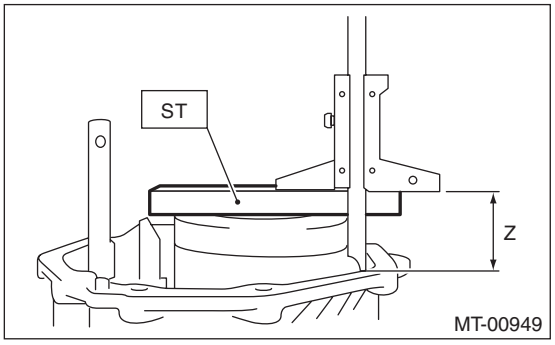

2) Measure depth "Y" between the end of the ST and the transfer drive gear.
ST 398643600 GAUGE

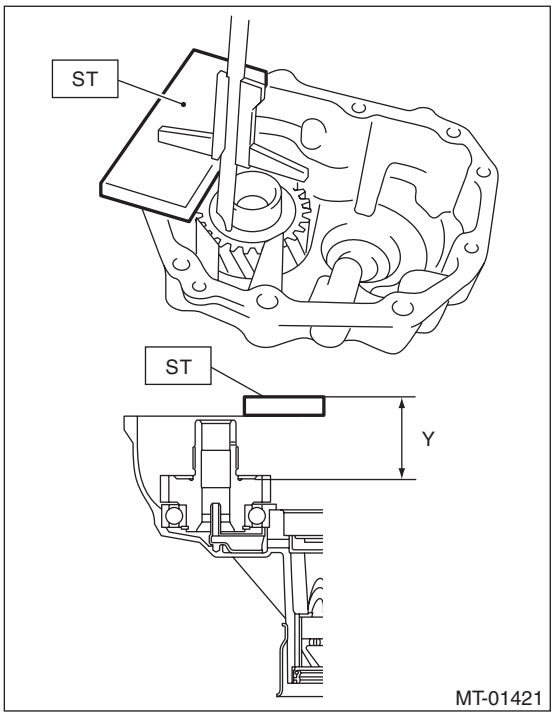

3) Using the following calculation, calculate the transfer drive gear adjusting washer value "t".
t = {Y – 15 mm (0.59 in)} – {Z – 15 mm (0.59 in)} – 0.75 — 0.95 mm (0.030 — 0.037 in)

t mm (in)	Transfer drive gear adjusting washer thickness
Y mm (in)	Depth between the end of the ST and the transfer drive gear
Z mm (in)	Height from the end of the transmission case to the end of the ST.
0.75 — 0.95 mm (0.030 — 0.037 in)	Standard clearance between the adjusting washer and transfer drive gear
15 mm (0.591 in)	Thickness of ST

4) Refer to the calculated value "t" to select the closest adjusting washer from the following table.

Standard clearance between the adjusting washer and transfer drive gear
0.75 — 0.95 mm (0.030 — 0.037 in)

NOTE:
Match to be within the standard clearance range.

Adjusting washer (36.3 × 52 × t)	
Part No.	Thickness mm (in)
803036070	0.80 (0.0315)
803036071	0.95 (0.0374)
803036072	1.10 (0.0433)
803036073	1.25 (0.0492)
803036074	1.40 (0.0551)
803036075	0.65 (0.0256)

5) Install the selected adjusting washer.

14.Reverse Check System

A: REMOVAL

1) Remove the manual transmission assembly from the vehicle. <Ref. to 6MT(TY85)-32, REMOVAL, Manual Transmission Assembly.>
2) Prepare the transmission for overhaul. <Ref. to 6MT(TY85)-39, Preparation for Overhaul.>
3) Remove the extension case. <Ref. to 6MT(TY85)-43, REMOVAL, Extension Case.>
4) Remove the snap ring and washer.

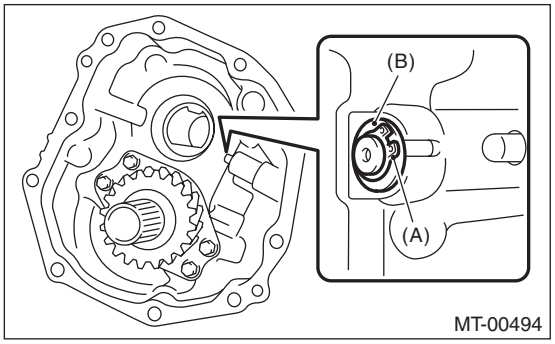

(A) Snap ring
(B) Washer

5) Remove the reverse check shaft and return spring.

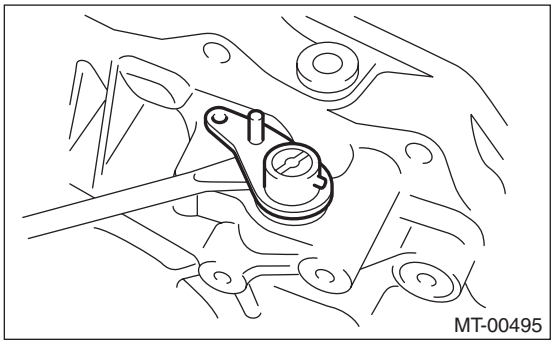

6) Remove the straight pin, and remove the reverse check lever and oil seal.

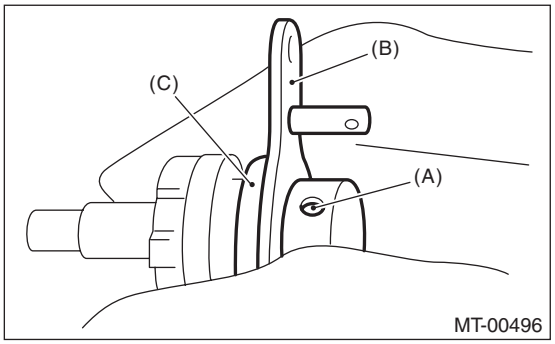

(A) Straight pin
(B) Reverse check lever
(C) Oil seal

7) Remove the plug, then remove the gasket, reverse check spring and reverse check plunger.

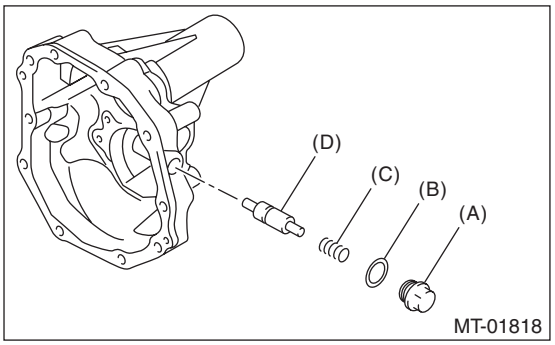

(A) Plug
(B) Gasket
(C) Reverse check spring
(D) Reverse check plunger

8) Remove the reverse lock plunger.

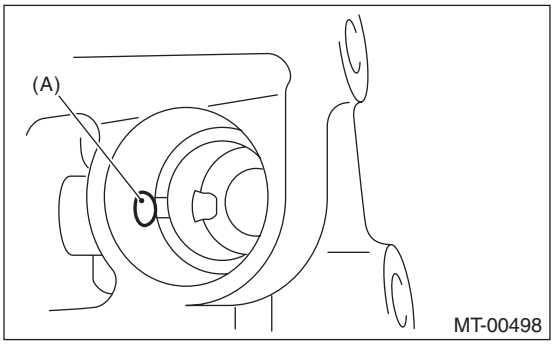

(A) Reverse lock plunger

B: INSTALLATION

1) Insert the reverse lock plunger.
2) Install the reverse check plunger, reverse check spring, gasket and plug in order.

NOTE:
Use a new gasket.

Tightening torque:
41 N·m (4.2 kgf-m, 30.2 ft-lb)

3) Install the return spring and reverse check shaft.

NOTE:
Confirm that the end of the spring matches the hole of the reverse check shaft and the cut out of the extension case.

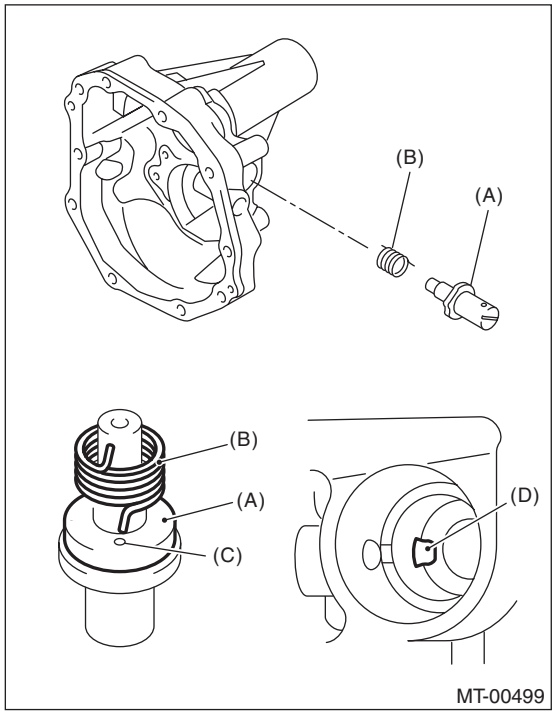

(A) Reverse check shaft
(B) Return spring
(C) Hole
(D) Cut out

4) Install the washer and snap ring.
5) Attach ST1 to the reverse check shaft. Install the new oil seal, and push it in using ST2.
ST1 18671AA000 OIL SEAL GUIDE
ST2 18657AA010 INSTALLER

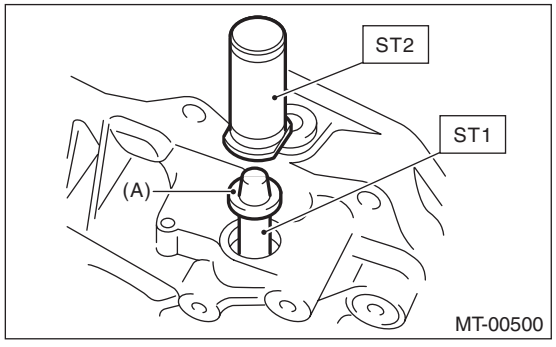

(A) Oil seal

6) Insert the reverse check lever, and turn the reverse check shaft until the reverse check plunger is first pushed in.

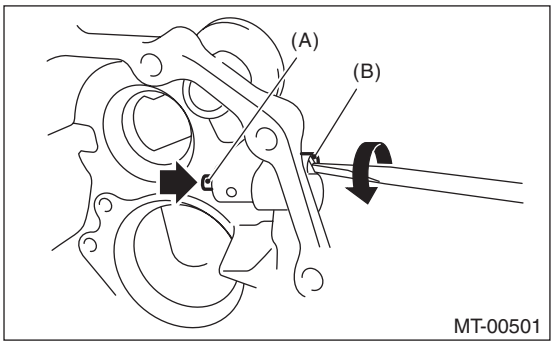

(A) Reverse check plunger
(B) Reverse check shaft

7) Match the hole of the reverse check lever and the reverse check shaft, and attach the straight pin.

NOTE:
Use a new straight pin.

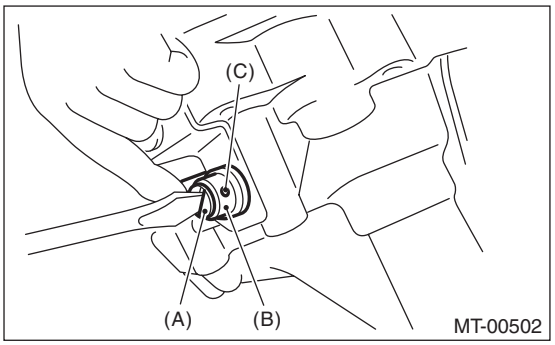

(A) Reverse check shaft
(B) Reverse check lever
(C) Hole

8) Check that the reverse check is operating correctly. <Ref. to 6MT(TY85)-52, INSPECTION, Reverse Check System.>
9) Install the extension case. <Ref. to 6MT(TY85)-43, INSTALLATION, Extension Case.>
10) Install the manual transmission assembly to the vehicle. <Ref. to 6MT(TY85)-34, INSTALLATION, Manual Transmission Assembly.>

C: INSPECTION

1) Check that there is no damage on any parts.
2) Check that the reverse check lever is operating smoothly.
3) Inspect that there is no oil leak at the oil seal section of the reverse check shaft. If there is oil leakage, replace the oil seal.
4) Check the operation of the reverse check.
   (1) When the reverse check lever is in the following position, the reverse check plunger is pressed, or the gear can shift into reverse.

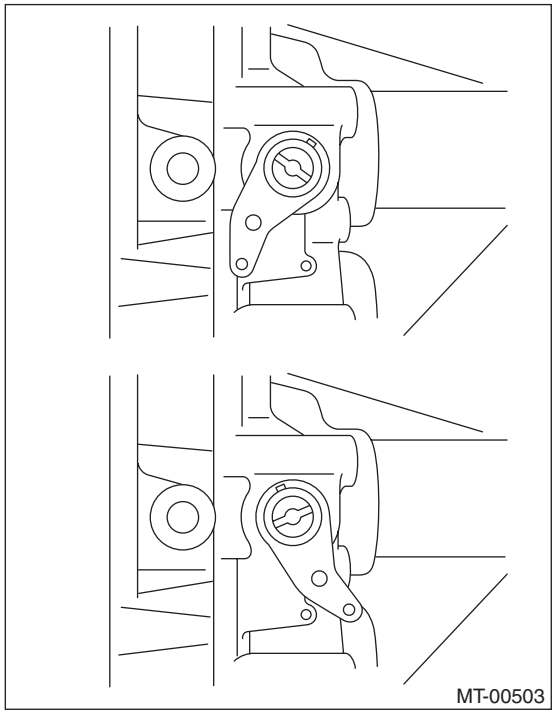

   (2) When the reverse check lever is in the following position, the reverse check plunger is not pressed, or the gear cannot shift into reverse.

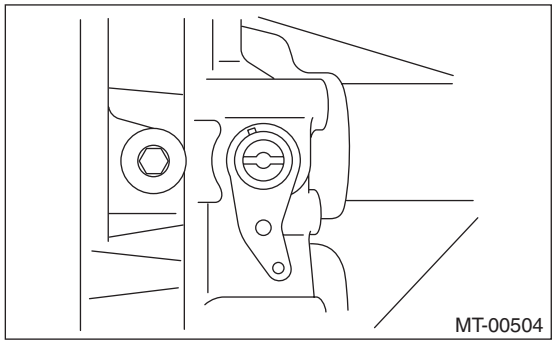

5) If it is not as specified, reassemble the reverse check system.

15.Transfer Drive Gear

A: REMOVAL

1) Remove the manual transmission assembly from the vehicle. <Ref. to 6MT(TY85)-32, REMOVAL, Manual Transmission Assembly.>
2) Prepare the transmission for overhaul. <Ref. to 6MT(TY85)-39, Preparation for Overhaul.>
3) Remove the extension case. <Ref. to 6MT(TY85)-43, REMOVAL, Extension Case.>
4) Remove the transfer drive gear.

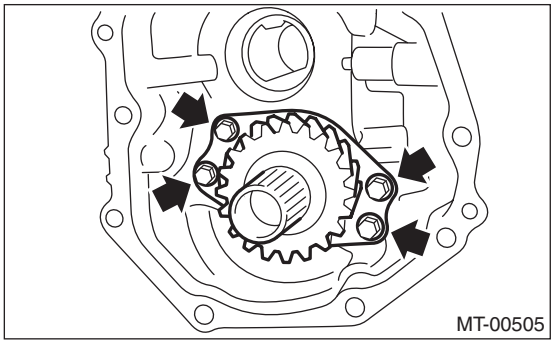
MT-00505

B: INSTALLATION

1) Install the transfer drive gear.

Tightening torque:
25 N·m (2.5 kgf-m, 18.4 ft-lb)

2) When the ball bearing, transfer drive gear or snap ring are replaced, select an appropriate adjusting washer for the transfer drive gear. <Ref. to 6MT(TY85)-44, ASSEMBLY, Extension Case.>
3) Install the extension case. <Ref. to 6MT(TY85)-43, INSTALLATION, Extension Case.>
4) Install the manual transmission assembly to the vehicle. <Ref. to 6MT(TY85)-34, INSTALLATION, Manual Transmission Assembly.>

C: DISASSEMBLY

1) Remove the snap ring.

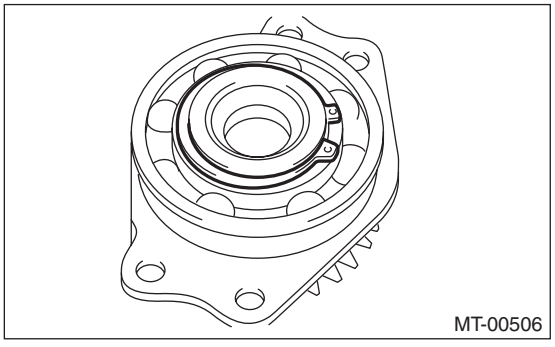
MT-00506

2) Remove the ball bearing using ST.
ST 499877000 RACE 4-5 INSTALLER

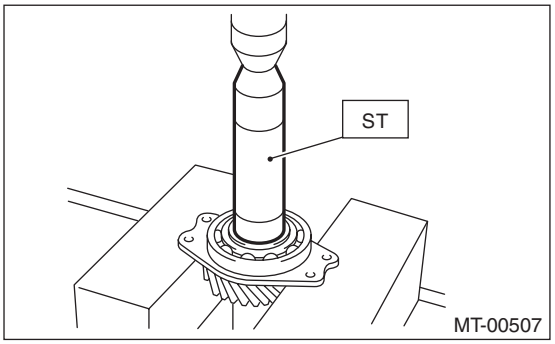

MT-00507

D: ASSEMBLY

1) Using the ST, install the ball bearing.

NOTE:
Use a new ball bearing.
ST1 499247400 INSTALLER
ST2 398497701 SEAT

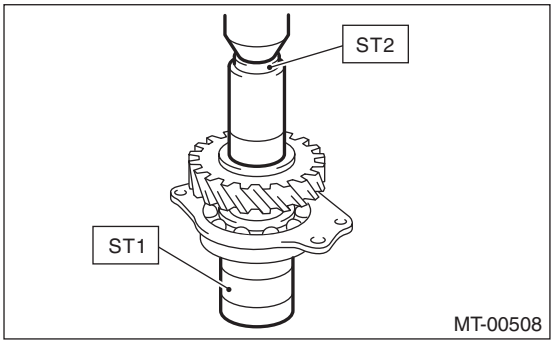

MT-00508

2) Install the snap ring.

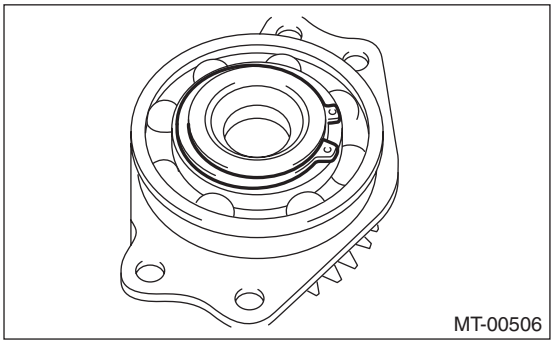
MT-00506

3) Inspect the clearance between the snap ring and the ball bearing. <Ref. to 6MT(TY85)-54, INSPECTION, Transfer Drive Gear.>

E: INSPECTION

1) Ball bearing
Replace the bearings in the following cases.
- Damage or rust on the bearings
- Wear, or damage
- The bearing does not rotate smoothly or an abnormal noise is emitted.

2) Transfer drive gear
Replace the drive gear in following case:
- If the drive gear tooth surface and shaft are excessively damaged or broken.

3) Measure the clearance between the snap ring and ball bearing inner race with a thickness gauge.

Standard clearance between the snap ring and inner race:
0 — 0.15 mm (0 — 0.0059 in)

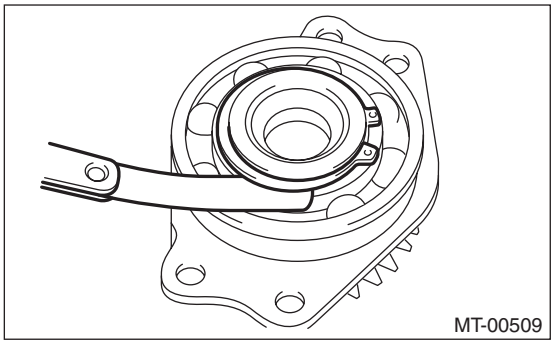

4) If the measurement is out of specifications, reselect an appropriate snap ring.

Snap ring	
Part No.	Thickness mm (in)
805045050	1.76 (0.069)
805045060	1.88 (0.074)
805045070	2.00 (0.079)

After replacing the snap ring, reinspect the clearance.

16.Transfer Driven Gear

A: REMOVAL

1) Remove the manual transmission assembly from the vehicle. <Ref. to 6MT(TY85)-32, REMOVAL, Manual Transmission Assembly.>
2) Prepare the transmission for overhaul. <Ref. to 6MT(TY85)-39, Preparation for Overhaul.>
3) Remove the extension case. <Ref. to 6MT(TY85)-43, REMOVAL, Extension Case.>
4) Remove the transfer driven gear.

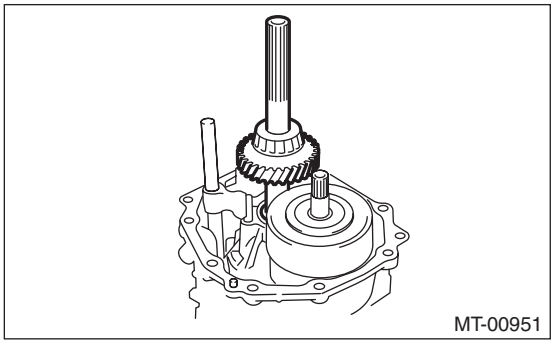

B: INSTALLATION

1) Install the transfer driven gear.

CAUTION:
Apply transmission gear oil onto sliding or revolving surfaces before installation.
2) When the taper roller bearing or the transfer driven gear is replaced, select an appropriate adjusting washer for the transfer driven gear. <Ref. to 6MT(TY85)-45, ADJUSTMENT, Extension Case.>
3) Install the extension case. <Ref. to 6MT(TY85)-43, INSTALLATION, Extension Case.>
4) Install the manual transmission assembly to the vehicle. <Ref. to 6MT(TY85)-34, INSTALLATION, Manual Transmission Assembly.>

C: DISASSEMBLY

1) Using the ST, remove the taper roller bearing (extension case side).
ST 498515700 REMOVER

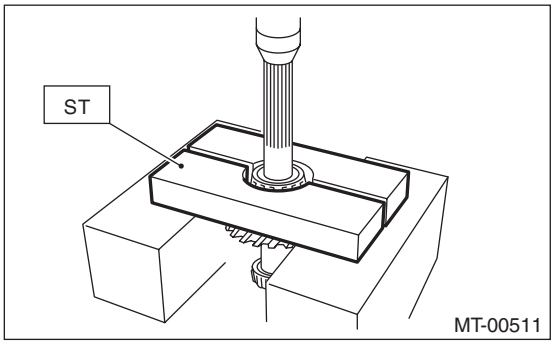

2) Using the ST, remove the taper roller bearing (transmission case side).
ST1 899858600 REMOVER
ST2 899864100 REMOVER

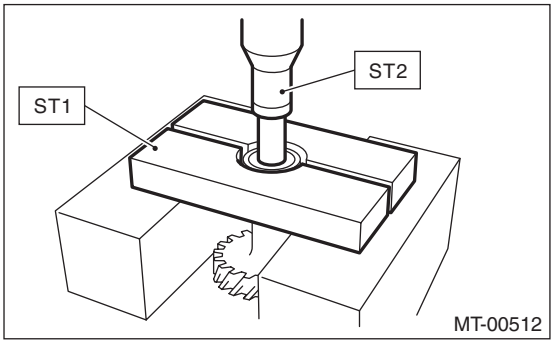

D: ASSEMBLY

1) Using the ST, install the taper roller bearing (transmission case side).
ST 499757002 INSTALLER

CAUTION:
• Do not apply pressure in excess of 10 kN (1 ton, 1.1 US ton, 1.0 Imp ton).
• Apply transmission gear oil onto sliding or revolving surfaces before installation.

NOTE:
Be careful when handling because the taper roller bearing and the outer race are used as a set.

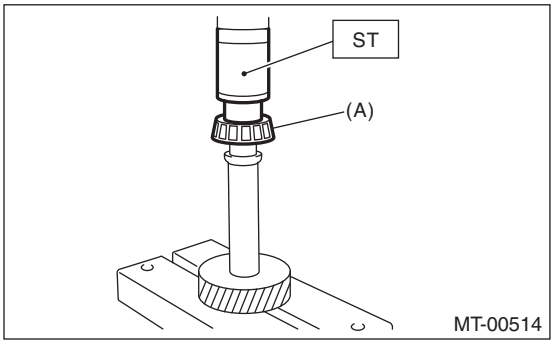

(A) Taper roller bearing (transmission case side)

2) Using the ST, install the taper roller bearing (extension case side).
ST1 398177700 INSTALLER
ST2 899864100 REMOVER

CAUTION:
• Do not apply pressure in excess of 10 kN (1 ton, 1.1 US ton, 1.0 Imp ton).
• Apply transmission gear oil onto sliding or revolving surfaces before installation.

NOTE:
Be careful when handling because the taper roller bearing and the outer race are used as a set.

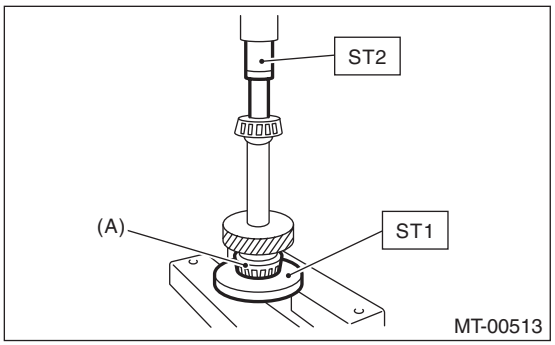

(A) Taper roller bearing (extension case side)

E: INSPECTION

1) Taper roller bearing
Replace the bearings in the following cases.
• Damage or rust on the bearings
• Wear, or damage
• After applying transmission gear oil, bearing does not rotate smoothly or an abnormal noise is emitted.
2) Transfer driven gear
Replace the driven gear in the following cases.
• If the driven gear tooth surface and shaft are excessively damaged or broken.

17.Center Differential

A: REMOVAL

1) Remove the manual transmission assembly from the vehicle. <Ref. to 6MT(TY85)-32, REMOVAL, Manual Transmission Assembly.>
2) Prepare the transmission for overhaul. <Ref. to 6MT(TY85)-39, Preparation for Overhaul.>
3) Remove the extension case. <Ref. to 6MT(TY85)-43, REMOVAL, Extension Case.>
4) Remove the transfer driven gear. <Ref. to 6MT(TY85)-55, REMOVAL, Transfer Driven Gear.>
5) Disconnect the center differential connector.
6) Remove the adjusting washer and center differential.

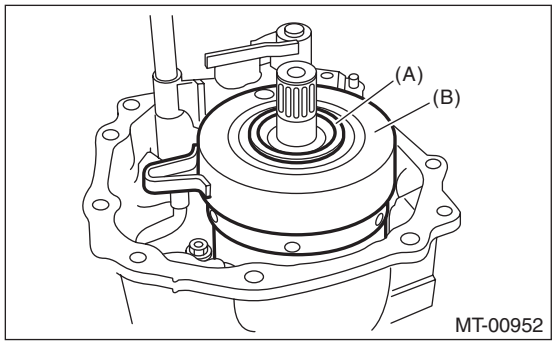

(A) Adjusting washer
(B) Center differential

7) Remove the needle bearing.

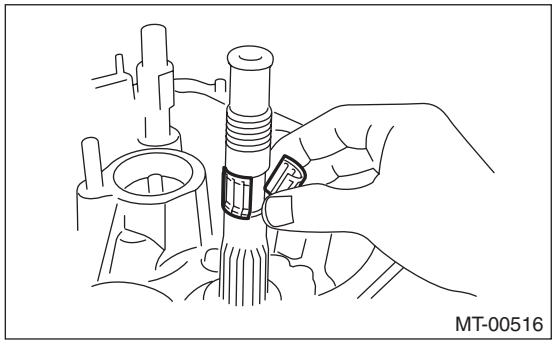

B: INSTALLATION

1) Install the needle bearing.

CAUTION:
Apply transmission gear oil onto sliding or revolving surfaces before installation.

2) Install the adjusting washer and center differential.
3) When replacing the center differential, select and install the appropriate transfer drive gear and adjusting washer. <Ref. to 6MT(TY85)-45, ADJUSTMENT, Extension Case.>
4) Connect the center differential connector, and affix to the oil guide.
5) Install the transfer driven gear. <Ref. to 6MT(TY85)-55, INSTALLATION, Transfer Driven Gear.>
6) Install the extension case. <Ref. to 6MT(TY85)-43, INSTALLATION, Extension Case.>
7) Install the manual transmission assembly to the vehicle. <Ref. to 6MT(TY85)-34, INSTALLATION, Manual Transmission Assembly.>

C: INSPECTION

Check that there is no damage on the center differential. Replace if damaged.

18.Transmission Case

A: REMOVAL

1) Remove the manual transmission assembly from the vehicle. <Ref. to 6MT(TY85)-32, REMOVAL, Manual Transmission Assembly.>
2) Prepare the transmission for overhaul. <Ref. to 6MT(TY85)-39, Preparation for Overhaul.>
3) Remove the neutral position switch, back-up light switch and harness. <Ref. to 6MT(TY85)-42, REMOVAL, Neutral Position Switch.> <Ref. to 6MT(TY85)-41, REMOVAL, Back-up Light Switch.>
4) Remove the extension case. <Ref. to 6MT(TY85)-43, REMOVAL, Extension Case.>
5) Remove the transfer driven gear. <Ref. to 6MT(TY85)-55, REMOVAL, Transfer Driven Gear.>
6) Remove the center differential. <Ref. to 6MT(TY85)-57, REMOVAL, Center Differential.>
7) Remove the oil guides G and H.

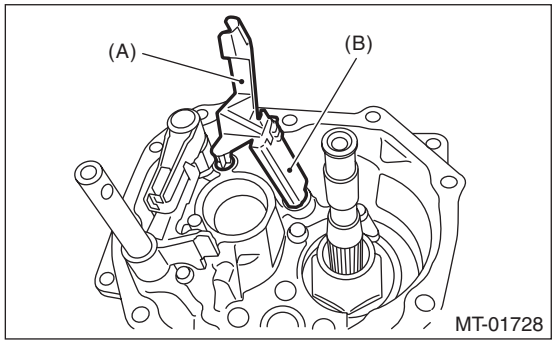

(A) Oil guide G
(B) Oil guide H

8) Remove the snap ring and washer from the selector arm area.

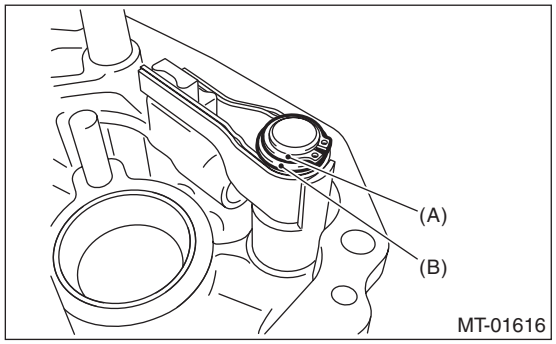

(A) Snap ring
(B) Washer

9) Using an ST, remove the neutral set spring and support.
ST1 18756AA000 CLAW
ST2 399893600 PLIER

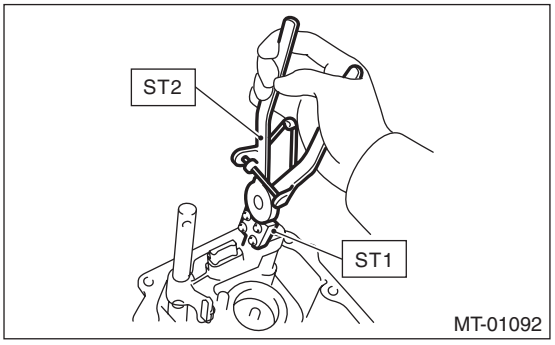

10) Lift the striking rod, and remove the straight pin.

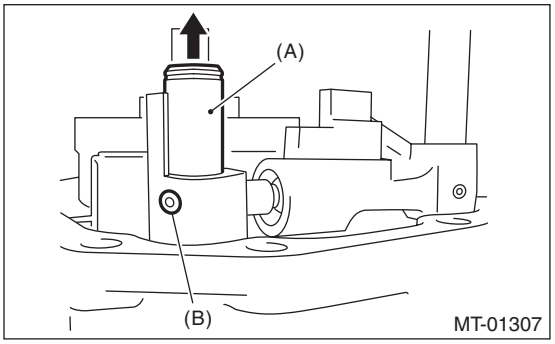

(A) Striking rod
(B) Straight pin

11) Remove the selector arm No. 2, shifter arm shaft, selector plunger, shift accent plunger and spring.

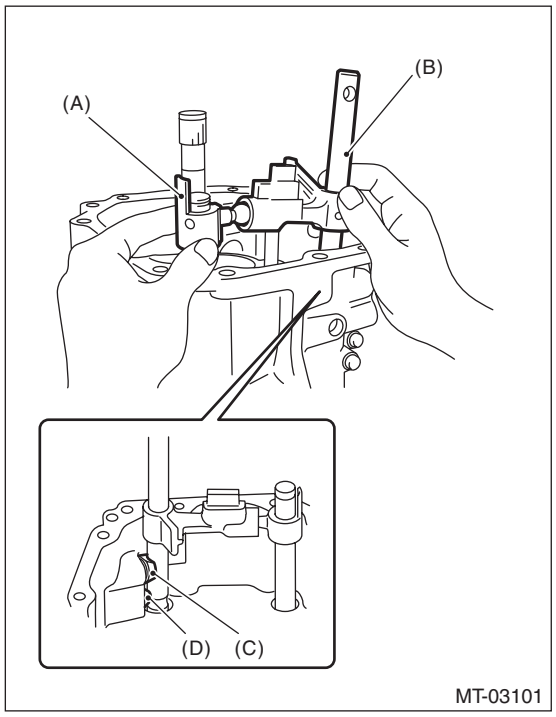

(A) Selector arm No. 2
(B) Shifter arm shaft
(C) Selector plunger
(D) Shift accent plunger

12) Remove the transfer bearing holder.

NOTE:
Using a general tool may cause damage. Remove the bolt using the ST.
ST 18663AA000 SOCKET

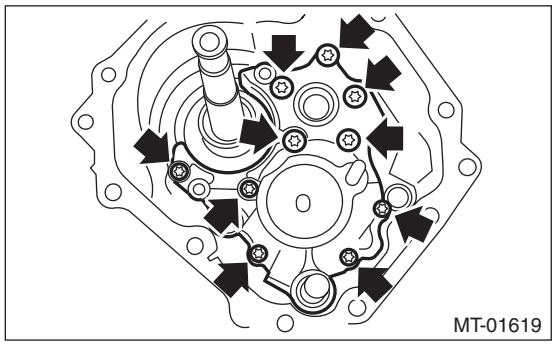

13) Remove the washer on the main shaft section.

14) Remove the driven gear assembly shim and spacer.

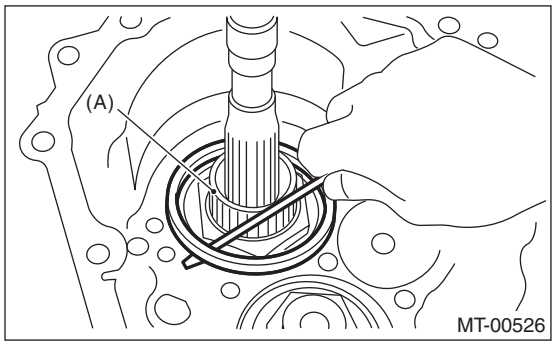

(A) Driven gear ASSY

15) Remove the snap ring.

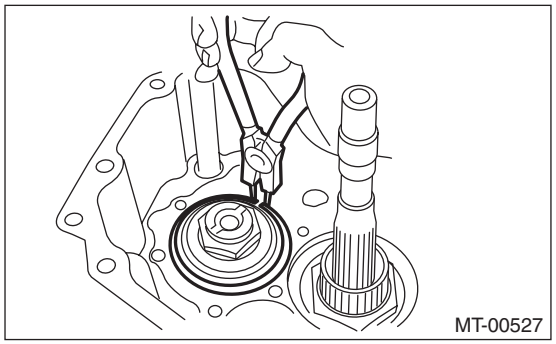

16) Remove the pilot bolt.

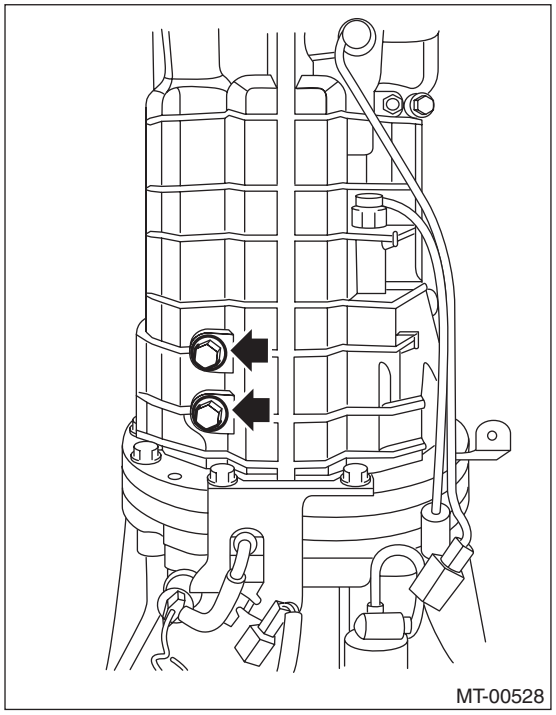

17) Remove the holder reverse bolt.

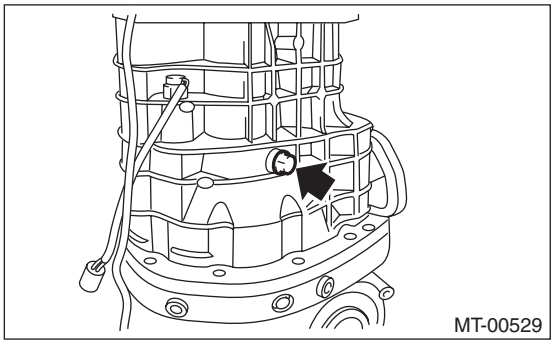

18) Remove the transmission case.

NOTE:
If the oil guide is caught between the shift fork, it may be difficult to remove the transmission case. Move the oil guide, then remove. Do not pull on the transmission case with excessive force.

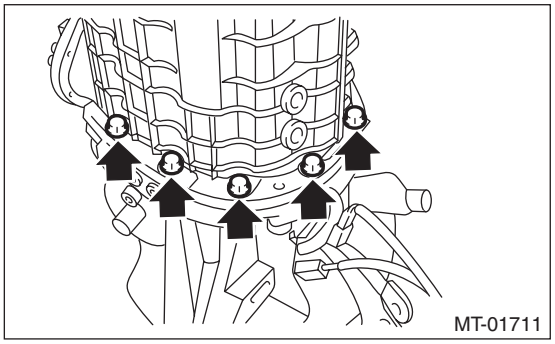

19) Remove any remaining liquid gasket from the transmission case and adapter plate.

B: INSTALLATION

1) Check that the shifter fork and the interlock block are both shifted into the neutral position. If they are not, shift into the neutral position.

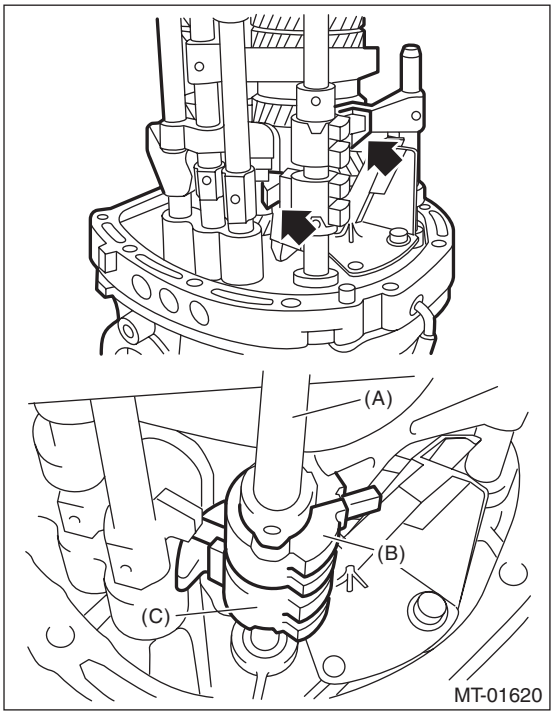

(A) Striking rod
(B) Reverse interlock block
(C) Interlock block

2) Apply liquid gasket to the adapter plate.

Liquid gasket:
THREE BOND 1215B or equivalent

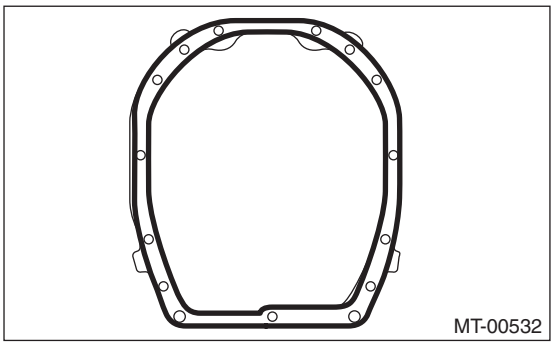

3) Install the transmission case.

4) By inspecting from the pilot bolt attachment hole, check that the interlock block and the reverse interlock block are aligned to the neutral position. If not aligned, remove the transmission case, and shift the shifter fork and interlock block to the neutral position.

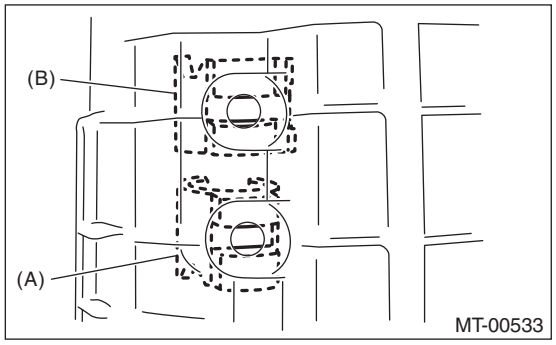

(A) Interlock block
(B) Reverse interlock block

5) Use a new gasket to temporarily attach the pilot bolt.
6) Install the transmission case with the bolts and nuts.

Tightening torque:
50 N·m (5.1 kgf-m, 36.9 ft-lb)
7) Tighten the pilot bolt.

Tightening torque:
34 N·m (3.5 kgf-m, 25.1 ft-lb)
8) Tighten the holder reverse bolt.

Tightening torque:
25 N·m (2.5 kgf-m, 18.4 ft-lb)

9) Install the snap ring and washer for the main shaft assembly, and washer and collar for the driven gear assembly.

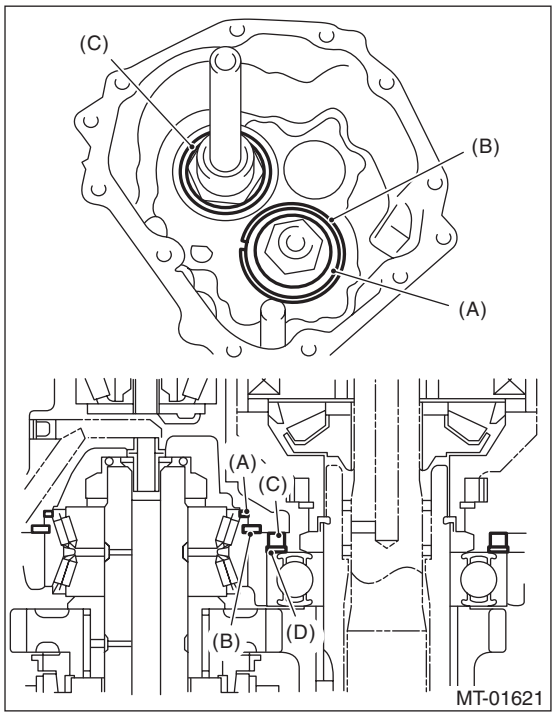

(A) Washer
(B) Snap ring
(C) Collar
(D) Washer

10) Install the transfer bearing holder.

Tightening torque:
25 N·m (2.5 kgf-m, 18.4 ft-lb)
ST 18663AA000 SOCKET
11) When replacing the transfer bearing holder, select the appropriate transfer driven gear and adjusting washer, and install to the extension case. <Ref. to 6MT(TY85)-45, ADJUSTMENT, Extension Case.>
12) Install the selector arm No. 2, shifter arm shaft, selector plunger, shift accent plunger and spring.
13) Install a new straight pin.
14) Using the ST, install the neutral set spring.
ST1 18756AA000 CLAW
ST2 399893600 PLIER
15) Install the snap ring and washer to the selector arm area.
16) Install the oil guides G and H.
17) Install the center differential. <Ref. to 6MT(TY85)-57, INSTALLATION, Center Differential.>
18) Install the transfer driven gear. <Ref. to 6MT(TY85)-55, INSTALLATION, Transfer Driven Gear.>

19) Install the extension case. <Ref. to 6MT(TY85)-43, INSTALLATION, Extension Case.>
20) Install the neutral position switch, back-up light switch and harness. <Ref. to 6MT(TY85)-42, INSTALLATION, Neutral Position Switch.> <Ref. to 6MT(TY85)-41, INSTALLATION, Back-up Light Switch.>
21) Install the manual transmission assembly to the vehicle. <Ref. to 6MT(TY85)-34, INSTALLATION, Manual Transmission Assembly.>

C: DISASSEMBLY

1) Remove the transmission harness from the transmission case.

NOTE:
Remove the connector by disengaging the connector claw from the inside of the transmission.
2) Remove the oil guides C, D, E, F and harness bracket.

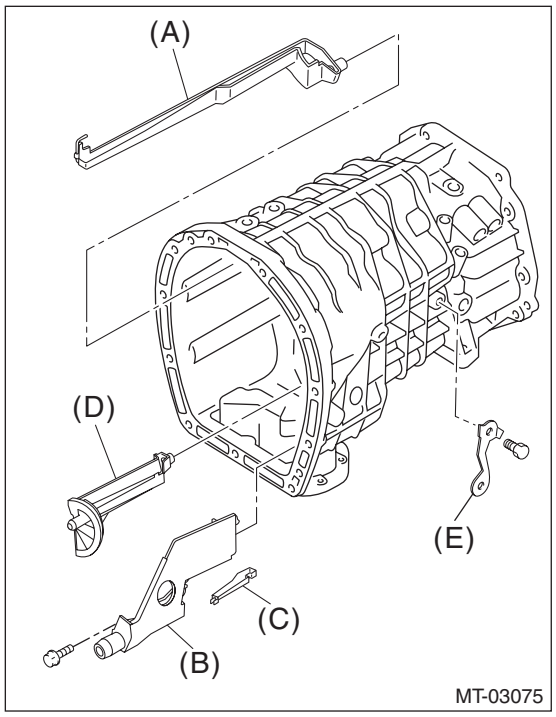

(A) Oil guide C
(B) Oil guide D
(C) Oil guide E
(D) Oil guide F
(E) Harness bracket

3) Remove the oil pan.

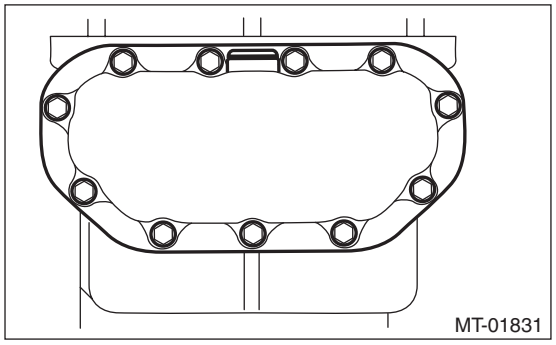

4) Remove any remaining liquid gasket from the transmission case and oil pan.

D: ASSEMBLY

1) Apply liquid gasket to the oil pan.

Liquid gasket:
THREE BOND 1215B or equivalent

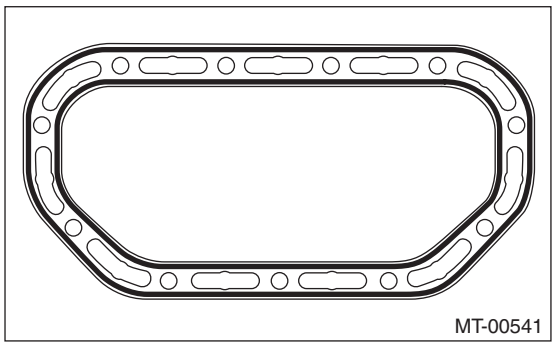

2) Install the oil pan.

Tightening torque:
6.4 N·m (0.7 kgf-m, 4.7 ft-lb)

3) Install the oil guides C, D, E, F and harness bracket.

Tightening torque:
T1: 16 N·m (1.6 kgf-m, 11.8 ft-lb)
T2: 18 N·m (1.8 kgf-m, 13.3 ft-lb)

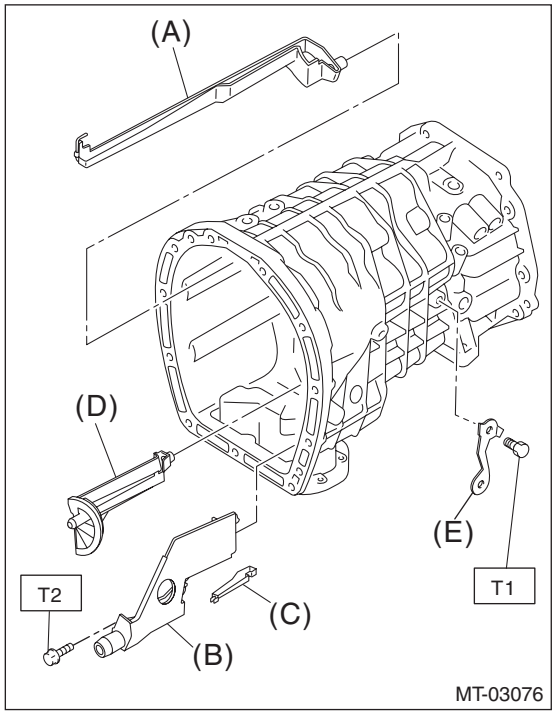

(A) Oil guide C
(B) Oil guide D
(C) Oil guide E
(D) Oil guide F
(E) Harness bracket

4) Install the transmission harness to the transmission.

NOTE:
Install the transmission harness connector by aligning the protrusions of the transmission and transmission harness connector.

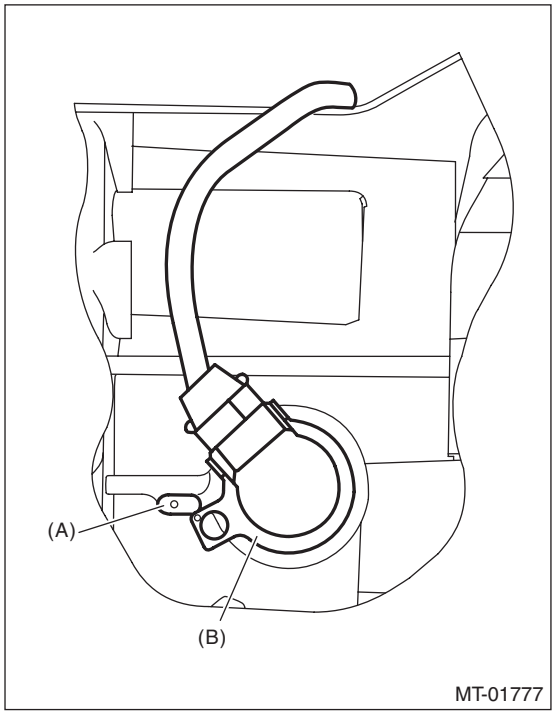

(A) Protrusion
(B) Transmission harness connectors

E: INSPECTION

1) If the sludge is accumulated in the oil pan, use a waste cloth to wipe it off completely.
2) Check that there is no damage on any parts. Replace damaged parts with new parts.

19.Main Shaft Assembly

A: REMOVAL

1) Remove the manual transmission assembly from the vehicle. <Ref. to 6MT(TY85)-32, REMOVAL, Manual Transmission Assembly.>
2) Prepare the transmission for overhaul. <Ref. to 6MT(TY85)-39, Preparation for Overhaul.>
3) Remove the neutral position switch, back-up light switch and harness. <Ref. to 6MT(TY85)-42, REMOVAL, Neutral Position Switch.> <Ref. to 6MT(TY85)-41, REMOVAL, Back-up Light Switch.>
4) Remove the extension case. <Ref. to 6MT(TY85)-43, REMOVAL, Extension Case.>
5) Remove the transfer driven gear. <Ref. to 6MT(TY85)-55, REMOVAL, Transfer Driven Gear.>
6) Remove the center differential. <Ref. to 6MT(TY85)-57, REMOVAL, Center Differential.>
7) Remove the transmission case. <Ref. to 6MT(TY85)-58, REMOVAL, Transmission Case.>
8) Remove the striking rod.
9) Remove the oil guide B.

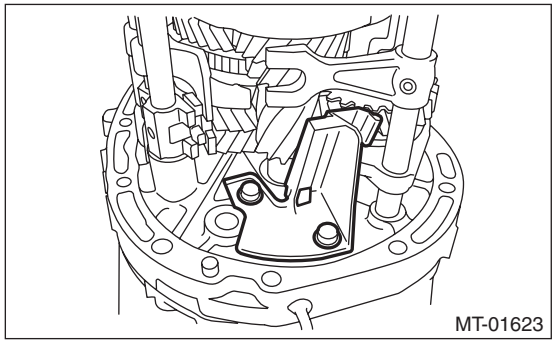
MT-01623

10) Use a screwdriver to shift to the 4th gear position.

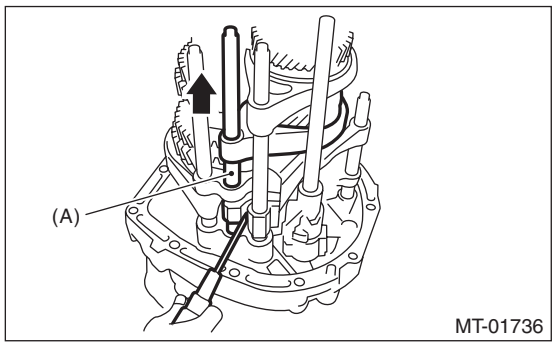

MT-01736

(A) 3rd-4th fork rod

11) Remove the reverse idler holder.

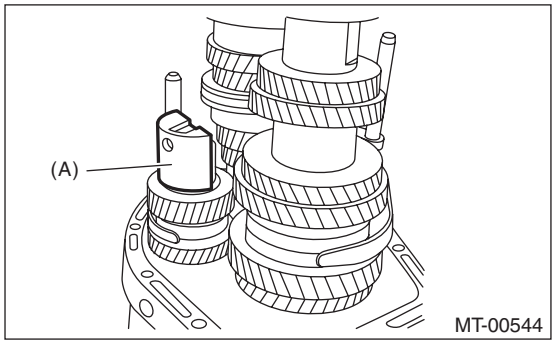

MT-00544

(A) Reverse idler holder

12) Remove the check plug, O-ring, check ball spring, shift accent plunger and check ball from the adapter plate.

NOTE:
Do not reuse the O-ring.

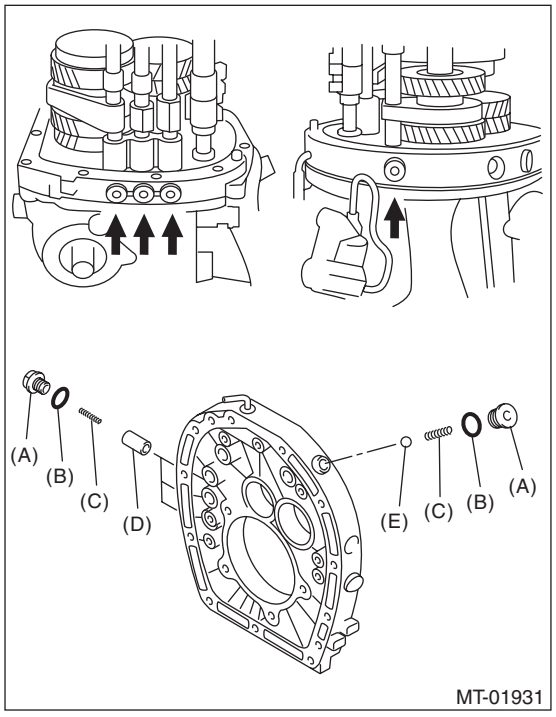

MT-01931

(A) Check plug
(B) O-ring
(C) Checking ball spring
(D) Shift accent plunger
(E) Check ball

13) Remove the bolt and gasket holding the reverse idler gear shaft.

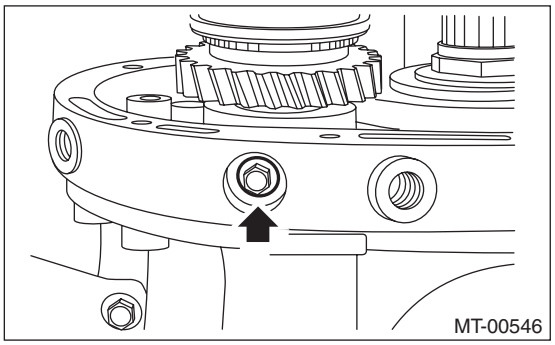

14) Push the main shaft assembly, driven gear assembly, reverse idler gear and shifter forks to remove from the adapter plate all at once.

NOTE:
A helper is required to perform this work.

B: INSTALLATION

1) Adjust the 3rd-4th and 5th-6th fork rods. <Ref. to 6MT(TY85)-109, ADJUSTMENT, Shifter Fork and Rod.>
2) Rotate the reverse idler sub gear in the arrow direction by two teeth, and secure it with a wire.

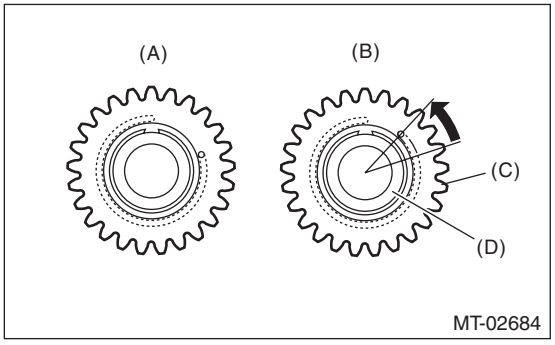

(A) Free status
(B) Set status
(C) Reverse idler sub gear
(D) Reverse idler gear

3) Attach the driven gear assembly to the 1st-2nd shifter fork assembly.

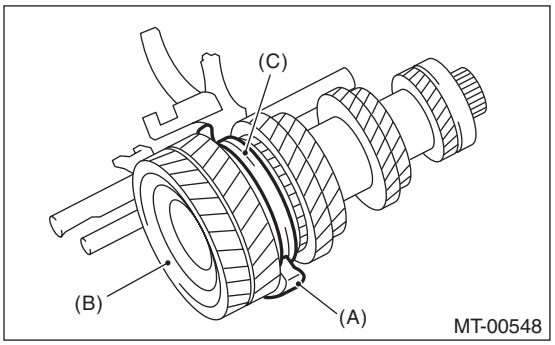

(A) 1st-2nd shifter fork
(B) Driven gear ASSY
(C) 1st-2nd coupling sleeve

4) Attach the main shaft assembly to the 3rd-4th shifter fork, and assemble to the driven gear assembly.

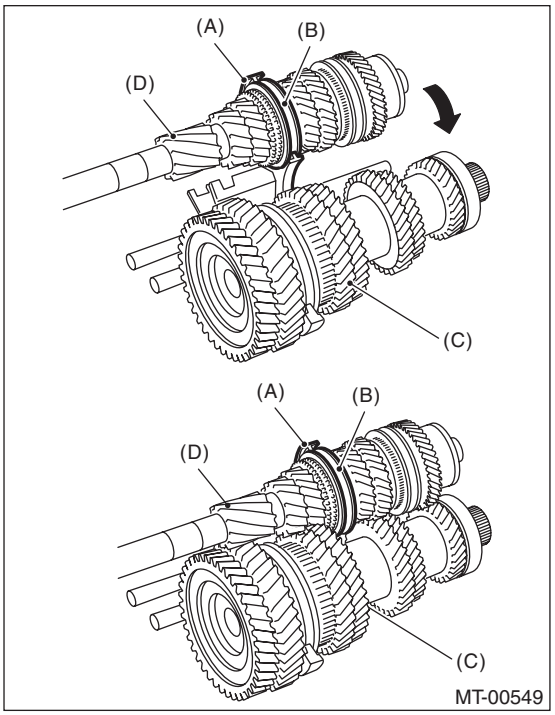

(A) 3rd-4th shifter fork
(B) 3rd-4th coupling sleeve
(C) Driven gear ASSY
(D) Main shaft assembly

5) Attach the 5th-6th shifter fork assembly to the main shaft assembly.

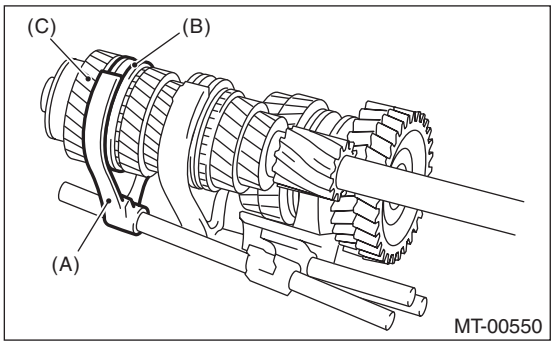

(A) 5th-6th shifter fork
(B) 5th-6th coupling sleeve
(C) Main shaft assembly

6) Attach the reverse shifter fork assembly to the reverse idler gear assembly.

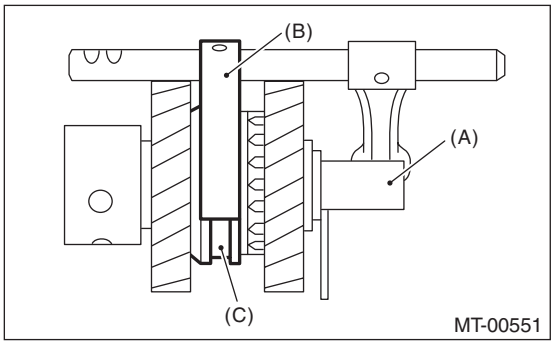

(A) Reverse idler gear ASSY
(B) Reverse shifter fork
(C) Reverse coupling sleeve

7) Install the reverse idler gear assembly.

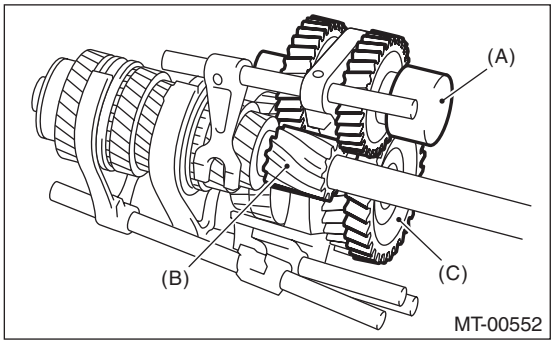

(A) Reverse idler gear ASSY
(B) 1st drive gear
(C) Reverse gear (driven shaft)

8) Install the thrust bearing of the driven gear assembly.

9) Push on the shifter forks, main shaft assembly, driven gear assembly and reverse idler gear assemblies, to attach to the adapter plate all at once.

NOTE:
A helper is required to perform this work.

10) As necessary, remove the wire used to secure from the reverse idler gear.

11) Install the shift accent plunger, check ball spring, new O-ring and check plugs.

Tightening torque:
25 N·m (2.5 kgf-m, 18.4 ft-lb)

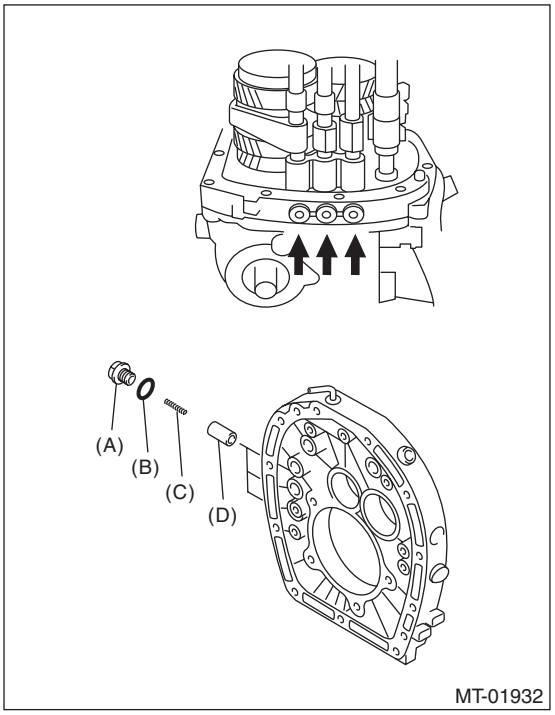

(A) Check plug
(B) O-ring
(C) Checking ball spring
(D) Shift accent plunger

12) Install the check ball, check ball spring, new O-ring and check plugs.

Tightening torque:
25 N·m (2.5 kgf-m, 18.4 ft-lb)

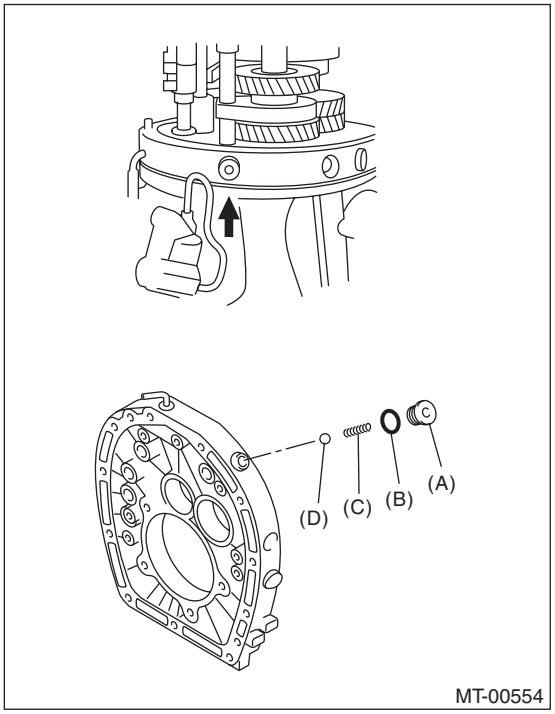

(A) Check plug
(B) O-ring
(C) Checking ball spring
(D) Check ball

13) Install the bolt and a new gasket holding the reverse idler shaft.

Tightening torque:
25 N·m (2.5 kgf-m, 18.4 ft-lb)

14) Use a screwdriver to shift to the 4th gear position.
15) Install the reverse idler holder.
16) Install the oil guide B.

Tightening torque:
18 N·m (1.8 kgf-m, 13.3 ft-lb)

17) Install the striking rod.
18) Install the transmission case. <Ref. to 6MT(TY85)-60, INSTALLATION, Transmission Case.>
19) Install the selected main shaft snap ring and washers.
20) Install the center differential. <Ref. to 6MT(TY85)-57, INSTALLATION, Center Differential.>
21) Install the transfer driven gear. <Ref. to 6MT(TY85)-55, INSTALLATION, Transfer Driven Gear.>
22) Install the extension case. <Ref. to 6MT(TY85)-43, INSTALLATION, Extension Case.>
23) Install the neutral position switch, back-up light switch and harness. <Ref. to 6MT(TY85)-42, INSTALLATION, Neutral Position Switch.> <Ref. to 6MT(TY85)-41, INSTALLATION, Back-up Light Switch.>
24) Install the manual transmission assembly to the vehicle. <Ref. to 6MT(TY85)-34, INSTALLATION, Manual Transmission Assembly.>

C: DISASSEMBLY

NOTE:
Individual coupling sleeves and synchronizer hubs meet at a specified position. Before disassembly, mark the meeting position of the coupling sleeve and synchronizer hub.
1) Affix the ST to the work table.
ST 18664AA000 BASE
2) Flatten the tab of the lock nut.
3) Set the main shaft assembly to the ST, and remove the lock nut and lock washer.
ST1 18665AA000 HOLDER
ST2 18664AA000 BASE

NOTE:
Use a 38 mm socket wrench.

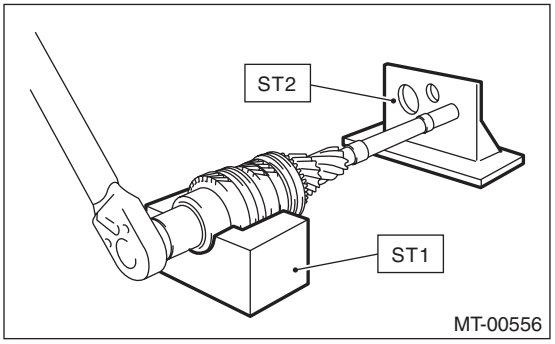

4) Remove the main shaft assembly from the ST.

5) Set the ST1 to the 6th drive gear, and use a press to remove the double taper roller bearing and outer race, 6th drive gear bushing and 6th drive gear.
ST1 18722AA010 REMOVER
ST2 899864100 REMOVER

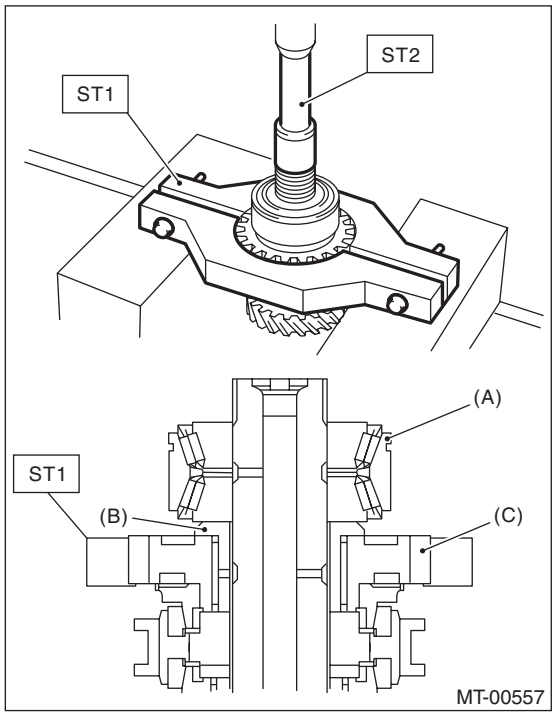

(A) Double taper roller bearing
(B) 6th drive gear bushing
(C) 6th drive gear

6) Remove the 5th-6th coupling sleeve, 6th needle bearing and 6th baulk ring.

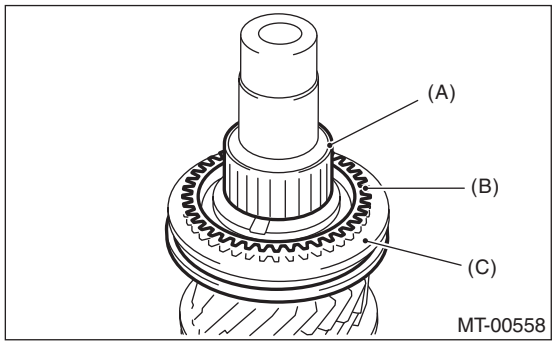

(A) 6th needle bearing
(B) 6th baulk ring
(C) 5th-6th coupling sleeve

7) Set the ST to the 3rd drive gear, and use a press to remove individual parts.
ST 18720AA000 REMOVER

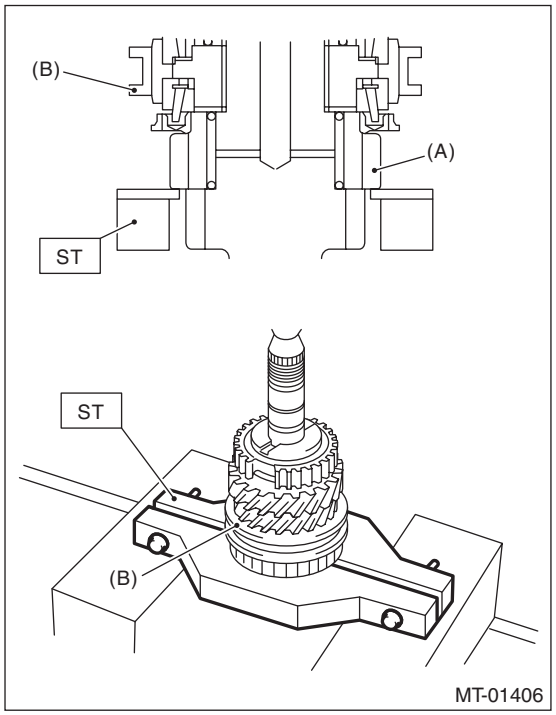

(A) 3rd drive gear
(B) 3rd-4th coupling sleeve

D: ASSEMBLY

NOTE:
When replacing the following parts, replace as a set.
- Coupling sleeve and synchronizer hub
- 3rd outer baulk ring, 3rd synchro cone and 3rd inner baulk ring
- Double taper roller bearing

1) Apply adequate transmission gear oil to the main shaft, 3rd needle bearing and 3rd drive gear inner surface.
2) Install the 3rd needle bearing and 3rd drive gear to the main shaft.

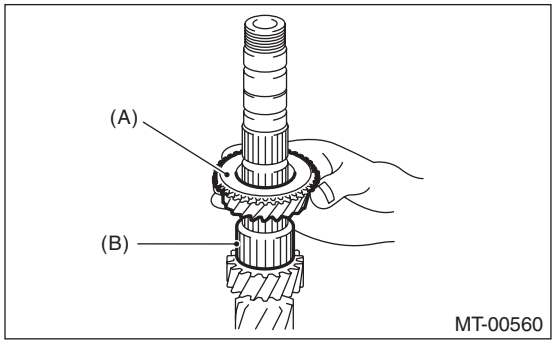

(A) 3rd drive gear
(B) 3rd needle bearing

3) Install the 3rd inner baulk ring, 3rd synchro cone and 3rd outer baulk ring.

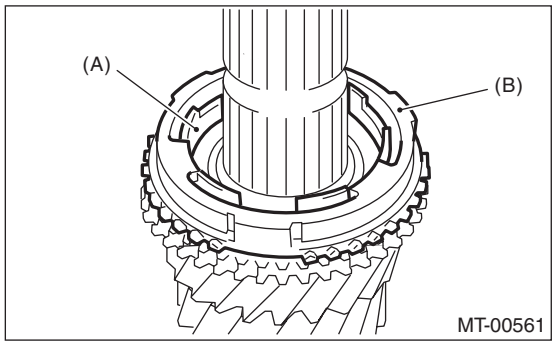

(A) 3rd inner baulk ring
(B) 3rd outer baulk ring

NOTE:
Install the 3rd synchro cone by aligning the protrusion of the 3rd synchro cone with the hole on the 3rd drive gear.

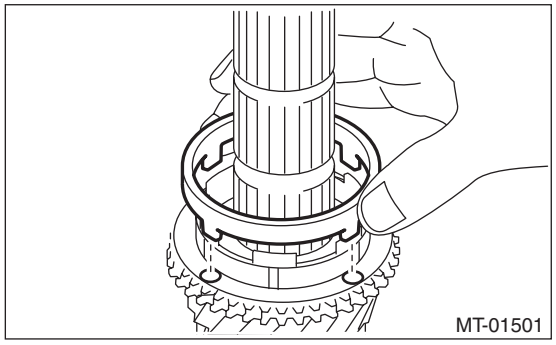

4) Install the 3rd-4th synchronizer hub and 4th needle bearing race.

CAUTION:
Apply transmission gear oil onto sliding or revolving surfaces before installation.

(1) Being careful of the install direction of the 3rd-4th synchronizer hub, set to the main shaft.

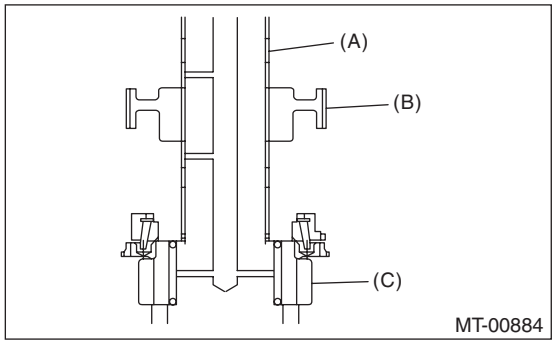

(A) Main shaft
(B) 3rd-4th synchronizer hub
(C) 3rd drive gear

(2) With the main shaft oil hole and 4th needle bearing race oil hole out of alignment, attach to the main shaft.

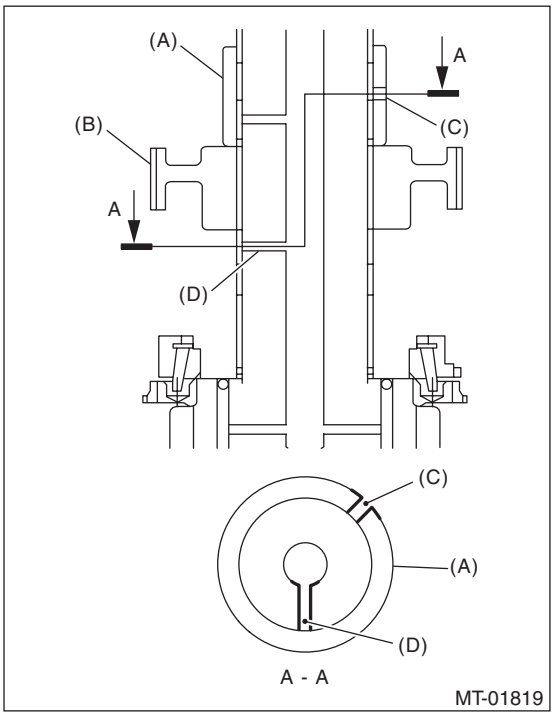

(A) 4th needle bearing race
(B) 3rd-4th synchronizer hub
(C) 4th needle bearing race oil hole
(D) Main shaft oil hole

(3) Using the ST, push in to the 3rd-4th synchronizer hub and 4th needle bearing race all at once.

ST1 18651AA000 INSTALLER
ST2 398177700 INSTALLER

CAUTION:
Do not apply pressure in excess of 40 kN (4.0 ton, 4.4 US ton, 3.9 Imp ton).

NOTE:
When pushing into the 3rd-4th synchronizer hub and 4th needle bearing race, move the 3rd outer baulk ring to match the protrusion of the 3rd outer baulk ring and the cut out of the 3rd-4th synchronizer hub.

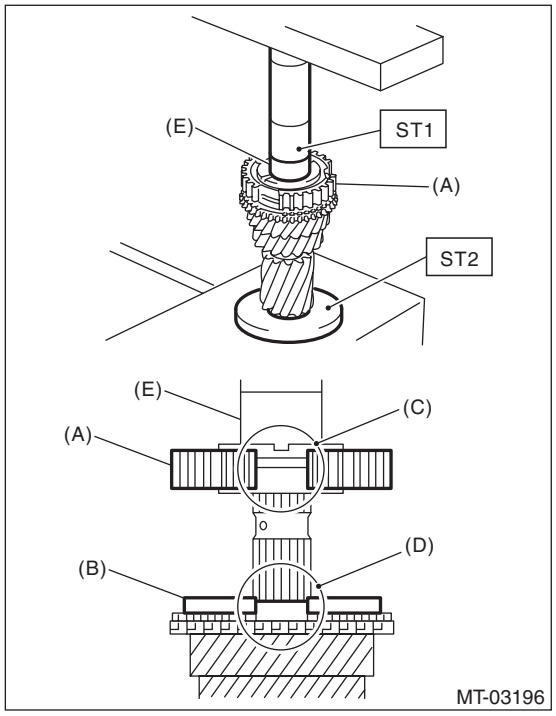

(A) 3rd-4th synchronizer hub
(B) 3rd outer baulk ring
(C) Cut out of the 3rd-4th synchronizer hub
(D) Protrusion of the 3rd outer baulk ring
(E) 4th needle bearing race

5) Make sure that the 3rd drive gear can be turned smoothly by hand. If it does not turn smoothly, reassemble.
6) Attach the 3rd-4th shifting insert at the appropriate position of the 3rd-4th coupling sleeve.

NOTE:
- The location angle of each shifting insert is 120°.
- Refer to the following figure to install the shifting insert.

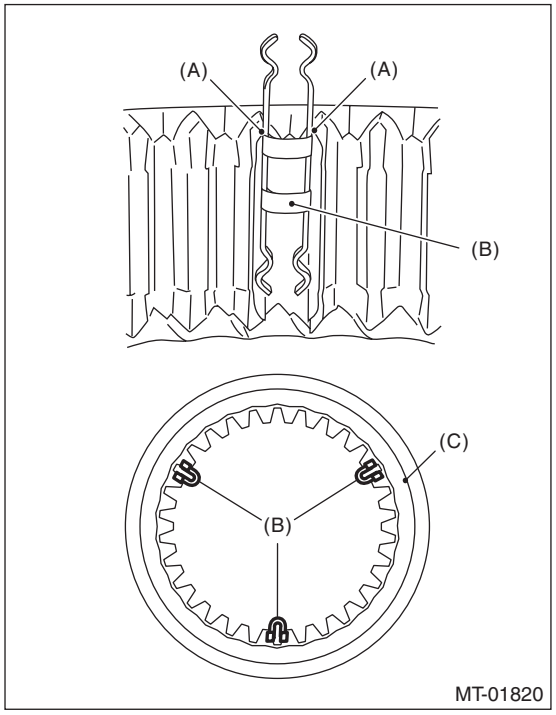

(A) Attach the straight part of the shifting insert to the sleeve convex portion.
(B) 3rd-4th shifting insert
(C) 3rd-4th coupling sleeve

7) Attach the 3rd-4th coupling sleeve to the 3rd-4th synchronizer hub.

CAUTION:
Apply transmission gear oil onto sliding or revolving surfaces before installation.

NOTE:
• There is an identification groove on the 3rd-4th coupling sleeve.
• Place the groove towards the 3rd drive gear, and attach the 3rd-4th coupling sleeve.

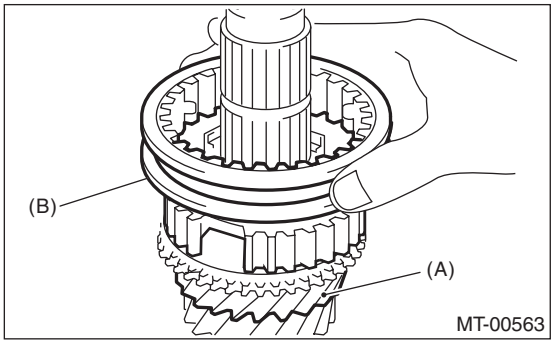

(A) 3rd drive gear
(B) 3rd-4th sleeve identification groove (1)

8) Install the 4th baulk ring.

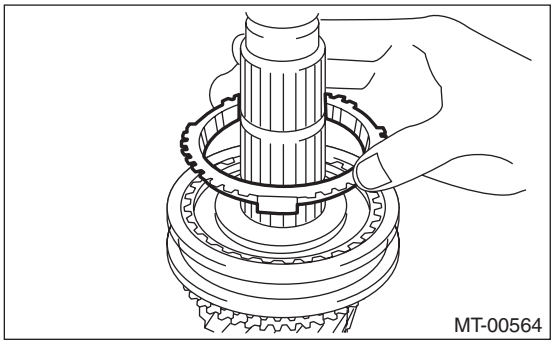

9) Apply adequate transmission gear oil to the main shaft, 4th needle bearing and 4th drive gear inner surface.
10) Install the 4th needle bearing and 4th drive gear.

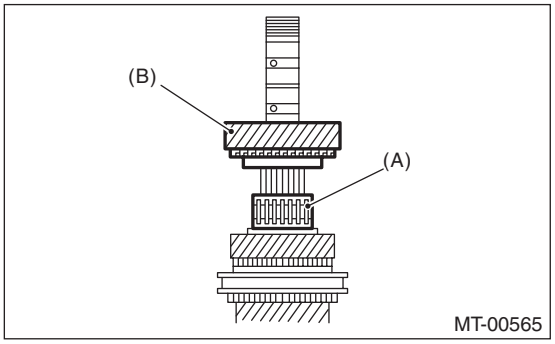

(A) 4th needle bearing
(B) 4th drive gear

11) Install the 5th drive gear bushing.
(1) With the main shaft oil hole and 5th drive gear bushing oil hole out of alignment, attach to the main shaft.

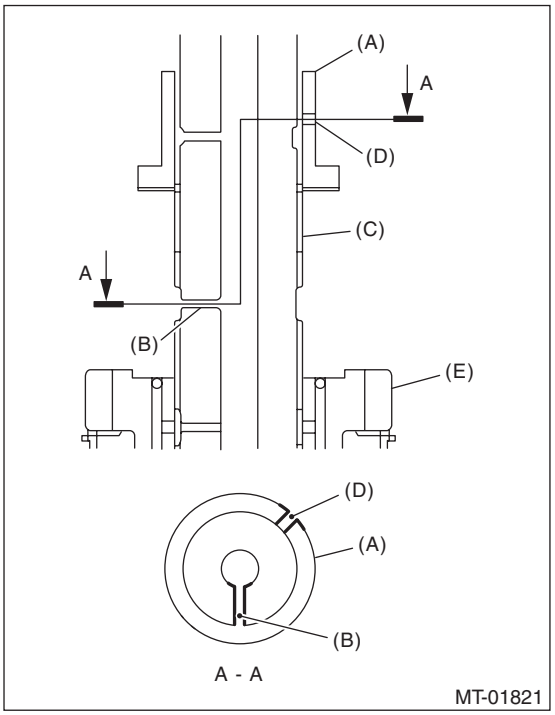

(A) 5th drive gear bushing
(B) Main shaft oil hole
(C) Main shaft
(D) 5th drive gear bushing oil hole
(E) 4th drive gear

(2) Using the ST, push into the 5th drive gear bushing.
ST1 18651AA000 INSTALLER
ST2 398177700 INSTALLER

CAUTION:
Do not apply pressure in excess of 40 kN (4.0 ton, 4.4 US ton, 3.9 Imp ton).

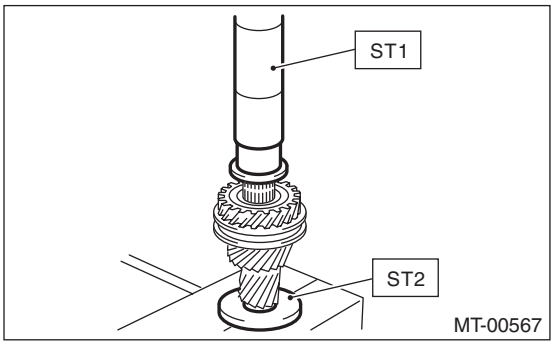

12) Make sure that the 4th drive gear can be turned smoothly by hand. If it does not turn smoothly, reassemble.

13) Apply adequate transmission gear oil to the main shaft, 5th needle bearing and 5th drive gear inner surface.
14) Install the 5th needle bearing and 5th drive gear.

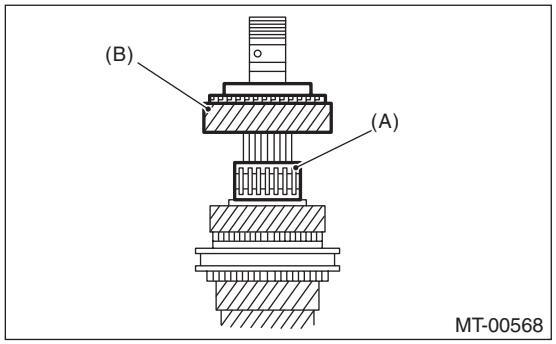

(A) 5th needle bearing
(B) 5th drive gear

15) Install the 5th baulk ring.

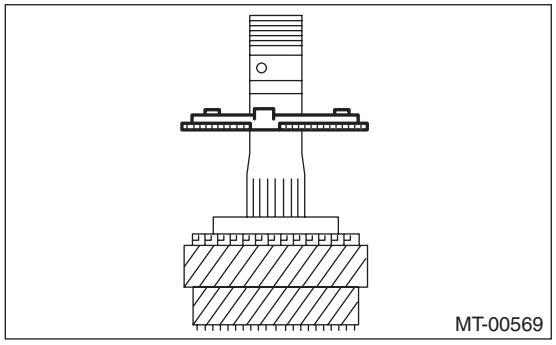

16) Install the 5th-6th synchronizer hub.

CAUTION:
Apply transmission gear oil onto sliding or revolving surfaces before installation.

(1) Being careful of the install direction of the 5th-6th synchronizer hub, set to the main shaft.

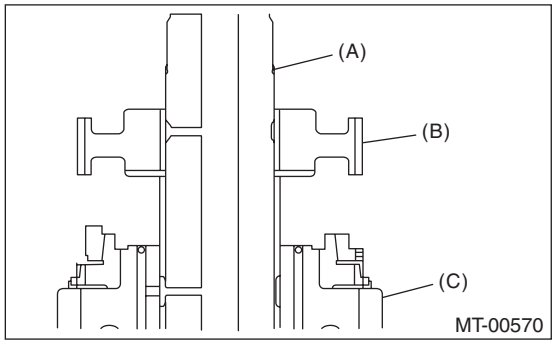

(A) Main shaft
(B) 5th-6th synchronizer hub
(C) 5th drive gear

(2) Using the ST, push into the 5th-6th synchronizer hub.

ST1 18651AA000 INSTALLER
ST2 398177700 INSTALLER

CAUTION:
Do not apply pressure in excess of 40 kN (4.0 ton, 4.4 US ton, 3.9 Imp ton).

NOTE:
When pushing into the 5th-6th synchronizer hub, move the 5th outer baulk ring to match the protrusion of the 5th outer baulk ring and the cut out of the 5th-6th drive gear bushing.

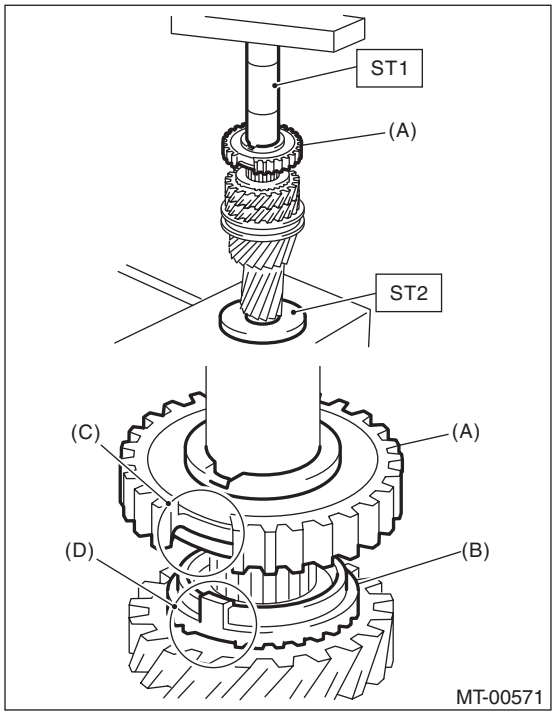

(A) 5th-6th synchronizer hub
(B) 5th outer baulk ring
(C) Cut out of the 5th-6th synchronizer hub
(D) Protrusion of the 5th outer baulk ring

17) Make sure that the 5th drive gear can be turned smoothly by hand. If it does not turn smoothly, reassemble.
18) Attach the 5th-6th shifting insert at the appropriate position of the 5th-6th coupling sleeve.

NOTE:
• The location angle of each shifting insert is 120°.
• Refer to the following figure to install the shifting insert key.

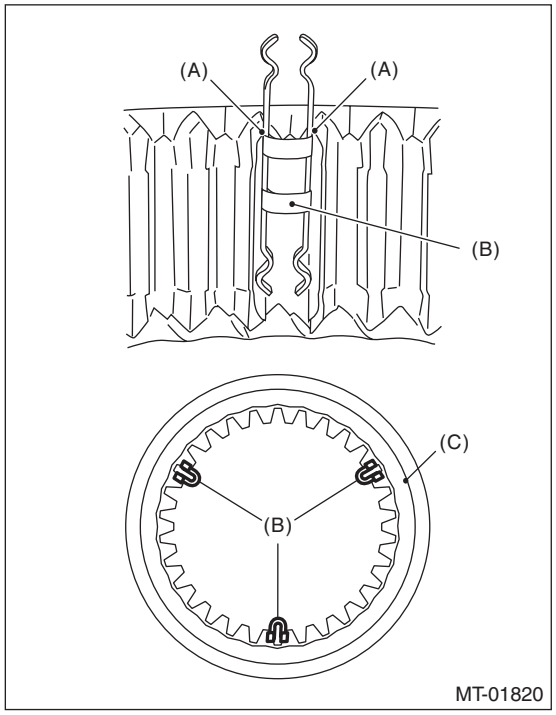

(A) Attach the straight part of the shifting insert to the sleeve convex portion.
(B) 5th-6th shifting insert
(C) 5th-6th coupling sleeve

19) Attach the 5th-6th coupling sleeve to the 5th-6th synchronizer hub.

CAUTION:
Apply transmission gear oil onto sliding or revolving surfaces before installation.

NOTE:
• There are two identification grooves on the 5th-6th coupling sleeve.
• Place the grooves towards the 5th drive gear, and attach the 5th-6th coupling sleeve.

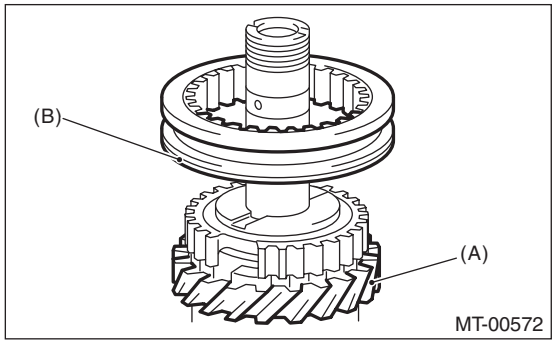

(A) 5th drive gear
(B) 5th-6th coupling sleeve identification groove (2)

20) Install the 6th baulk ring.

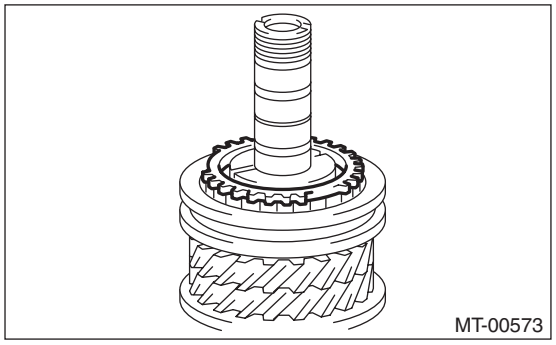

21) Apply adequate transmission gear oil to the main shaft, 6th needle bearing and 6th drive gear inner surface.
22) Install the 6th drive gear.

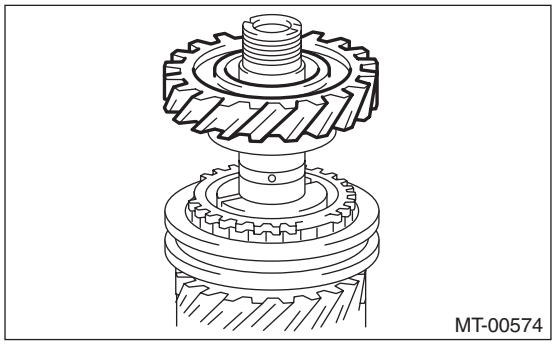

23) Install the 6th needle bearing.

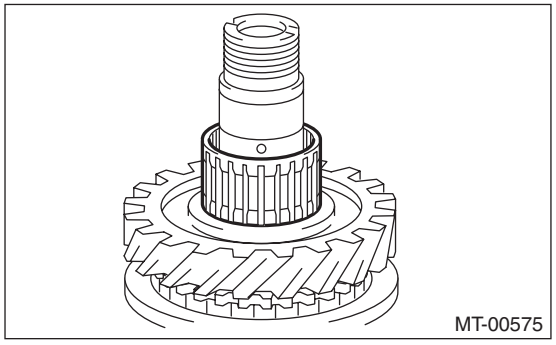

24) With 6th drive gear bushing oil hole and the main shaft oil hole out of alignment, attach to the main shaft.

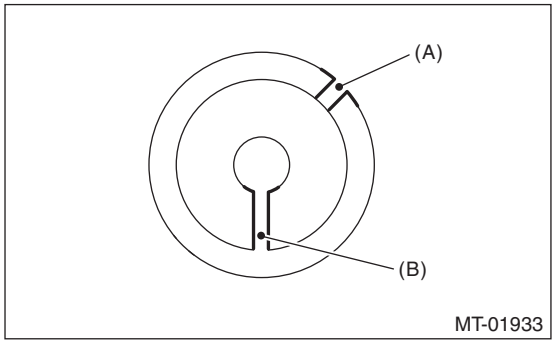

(A) 6th drive gear bushing oil hole
(B) Main shaft oil hole

25) Using the ST, install the 6th drive gear bushing.
ST1 18651AA000 INSTALLER
ST2 398177700 INSTALLER

CAUTION:
Do not apply pressure in excess of 40 kN (4.0 ton, 4.4 US ton, 3.9 Imp ton).

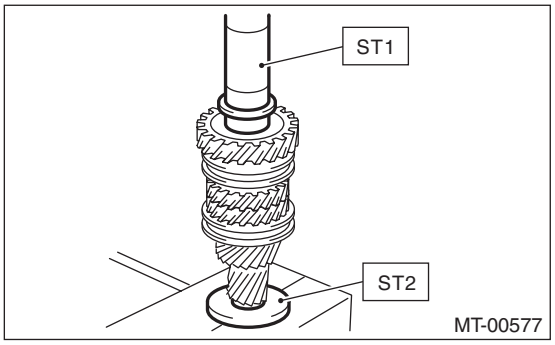

26) Make sure that the 6th drive gear can be turned smoothly by hand. If it does not turn smoothly, reassemble.
27) Using the ST, install the double taper roller bearing inner race (front side).
ST1 18651AA000 INSTALLER
ST2 398177700 INSTALLER

CAUTION:
Do not apply pressure in excess of 40 kN (4.0 ton, 4.4 US ton, 3.9 Imp ton).

NOTE:
Use a new double taper roller bearing.

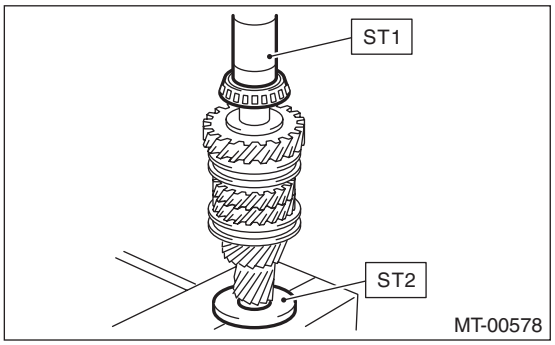

28) Using the ST, install the outer race and inner race (rear side) of the double taper roller bearing.
ST1 18651AA000 INSTALLER
ST2 398177700 INSTALLER

CAUTION:
Do not apply pressure in excess of 40 kN (4.0 ton, 4.4 US ton, 3.9 Imp ton).

NOTE:
• Confirm that the outer race and inner race are installed in the proper direction.
• Push in until there is no backlash on the double taper roller bearing outer race and the bearing turns smoothly by hand.

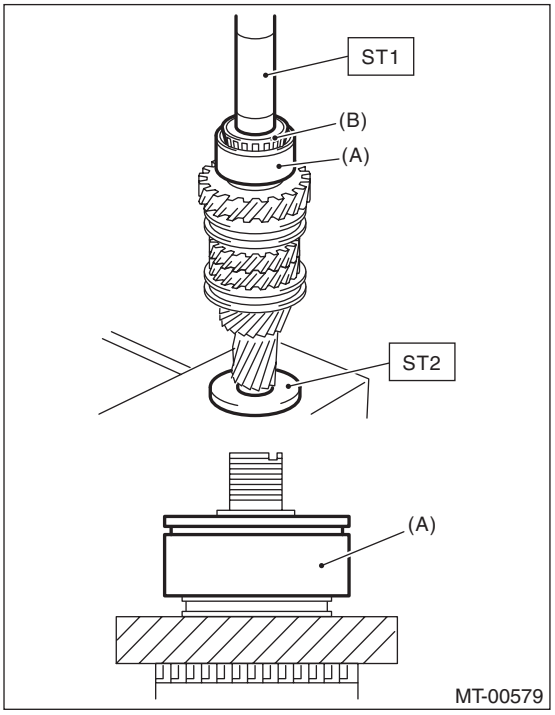

(A) Double taper roller bearing outer race
(B) Double taper roller bearing inner race (rear side)

29) Make sure that the double taper roller bearing turns smoothly by hand. If it does not turn smoothly, replace the double taper roller bearing as a set, and reassemble.
30) Attach a new lock washer and a new lock nut.

CAUTION:
Apply transmission gear oil to the lock washer and lock nut before installation.

31) Set the main shaft assembly to the ST, and tighten the lock nut.
ST1 18665AA000 HOLDER
ST2 18664AA000 BASE

NOTE:
Make sure the lock washer is installed in the proper direction.

Tightening torque:
392 N·m (40.0 kgf-m, 289.1 ft-lb)

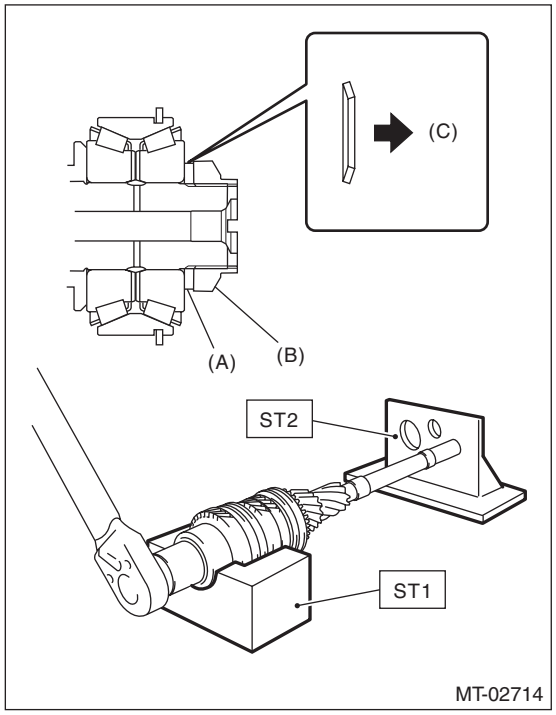

(A) Lock washer
(B) Lock nut
(C) Nut side

32) Using the ST, crimp the lock nut in 4 locations, with dimensions within A 27±0.3 mm (1.06±0.01 in).
ST 18668AA000 PUNCH

NOTE:
Do not damage the crimp area of the lock nut.

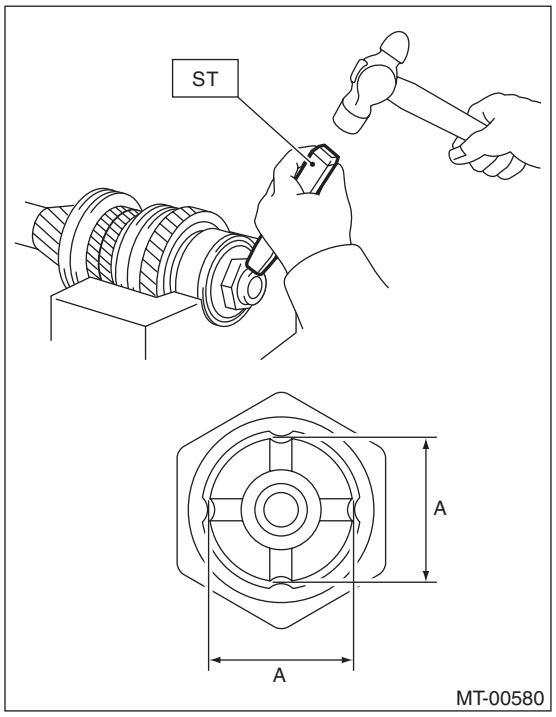

E: INSPECTION

Disassembled parts should be washed with cleaning solvent first, then inspected carefully.
1) Bearing
Replace the bearings in the following cases.
- Wear, rusting or damage of the bearings
- The bearing does not rotate smoothly or an abnormal noise is emitted when turning.
- The bearing has other defects.

2) Bushing (each gear)
Replace the bushing in following cases.
- The sliding surface is damaged or abnormally worn.

3) Gear
Replace gears in the following cases.
- The gear teeth surface is damaged or excessively worn.
- The contact area of the baulk ring is damaged.
- The inner face of the gear is worn.

4) Baulk ring, synchro cone
Replace the baulk ring and synchro cone in the following cases.
- Wear, rusting or damage of the baulk ring

5) Shifting insert
Replace the shifting insert if deformed, excessively worn or defective in any way.

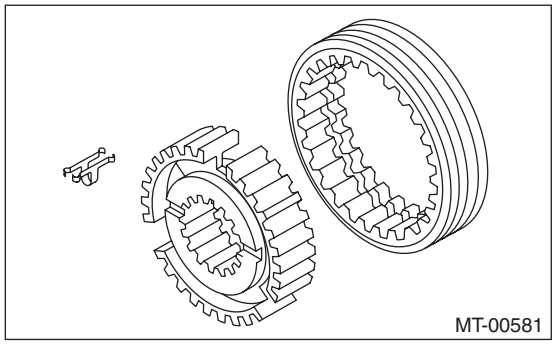

F: ADJUSTMENT

1. MAIN SHAFT SNAP RING & ADJUSTING WASHER SELECTION

NOTE:
In the following conditions, perform the procedures below.
- 1st to 6th driven gear replacement
- 1st and 2nd synchro ring assembly replacement
- Ball bearing replacement
- Adapter plate replacement
- Driven shaft replacement

1) Insert the drive pinion shaft assembly into the adapter plate.

NOTE:
Confirm that the thrust bearing outer race has not been removed and the drive pinion is not lifted.

2) Set the height gauge to the adapter plate. Lower the height gauge indicator to the mating surface of the adapter plate and case, and set to zero points.
ST 18853AA000 HEIGHT GAUGE

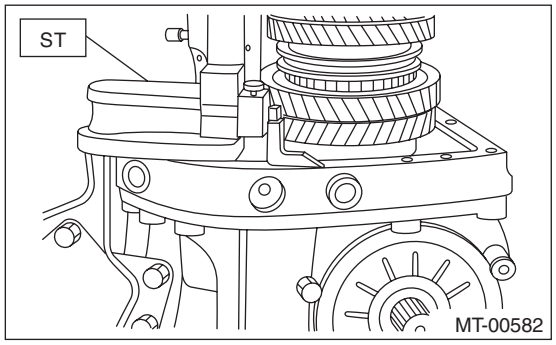

NOTE:
- The adapter plate will be the base point for the measurement. Use a scraper to remove any gasket material remaining on the end face.
- During measurement, do not place the height gauge in the shaded area shown in the figure.

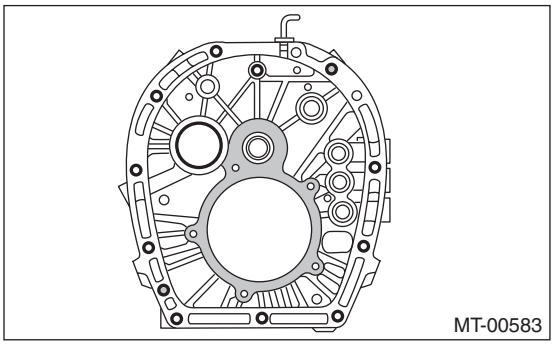

3) Measure the height to the ball bearing end face. (Height H)

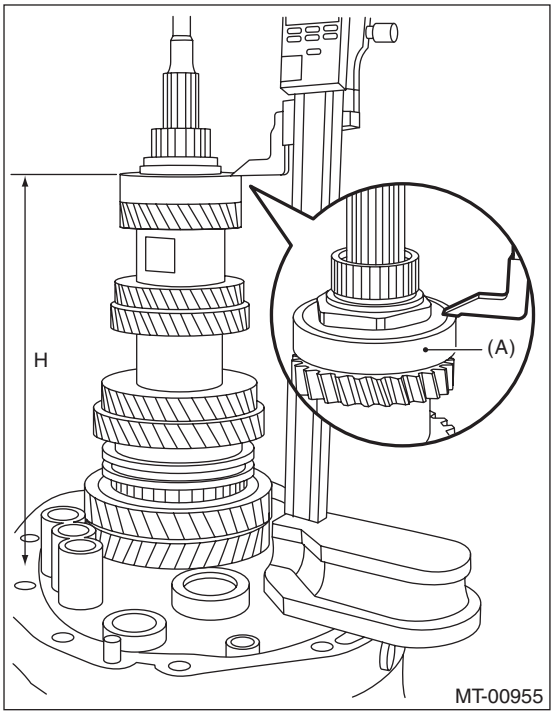

(A) Ball bearing

NOTE:
Set the height gauge indicator near the measurement target, and lock dial (1) as shown in the figure. Turn dial (2), and set the indicator to the end face of the bearing.

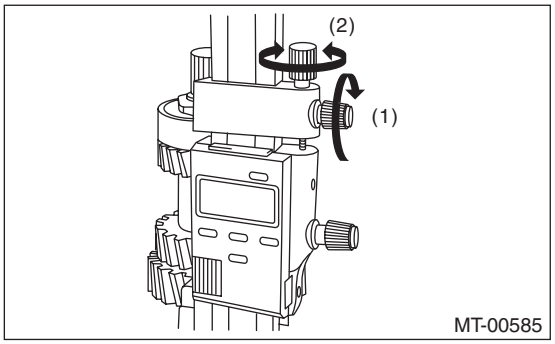

Turn approximately 120° at a time, and measure the ball bearing in 5 locations. Round down the 2 highest and 2 lowest measurement values. The remaining center value is used as the measurement value.
4) According to the measurement value, select the snap ring and adjusting washer from the following table.

Snap ring		
H: mm (in)	Part No.	Thickness: mm (in)
270.83 — 271.40 (10.66 — 10.69)	805072010	1.65 (0.065)
271.41 — 271.98 (10.69 — 10.71)	805072011	1.95 (0.077)
271.99 — 272.56 (10.71 — 10.73)	805072012	2.25 (0.089)

Adjusting washer		
H: mm (in)	Part No.	Thickness: mm (in)
270.83 — 271.40 (10.66 — 10.69)	803067012	1.6 (0.063)
271.41 — 271.98 (10.69 — 10.71)	803067011	1.3 (0.051)
271.99 — 272.56 (10.71 — 10.73)	803067010	1.0 (0.039)

20.Driven Gear Assembly

A: REMOVAL

1) Remove the manual transmission assembly from the vehicle. <Ref. to 6MT(TY85)-32, REMOVAL, Manual Transmission Assembly.>
2) Prepare the transmission for overhaul. <Ref. to 6MT(TY85)-39, Preparation for Overhaul.>
3) Remove the neutral position switch, back-up light switch and harness. <Ref. to 6MT(TY85)-42, REMOVAL, Neutral Position Switch.> <Ref. to 6MT(TY85)-41, REMOVAL, Back-up Light Switch.>
4) Remove the extension case. <Ref. to 6MT(TY85)-43, REMOVAL, Extension Case.>
5) Remove the transfer driven gear. <Ref. to 6MT(TY85)-55, REMOVAL, Transfer Driven Gear.>
6) Remove the center differential. <Ref. to 6MT(TY85)-57, REMOVAL, Center Differential.>
7) Remove the transmission case. <Ref. to 6MT(TY85)-58, REMOVAL, Transmission Case.>
8) Remove the driven gear assembly. <Ref. to 6MT(TY85)-64, REMOVAL, Main Shaft Assembly.>
9) Remove the 1st needle bearing.

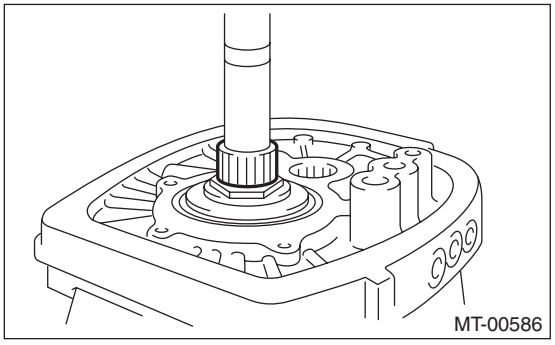
MT-00586

10) Remove the thrust needle bearing.

B: INSTALLATION

1) Adjust the main shaft snap ring. <Ref. to 6MT(TY85)-76, ADJUSTMENT, Main Shaft Assembly.>
2) Adjust the 1st-2nd fork rod. <Ref. to 6MT(TY85)-109, ADJUSTMENT, Shifter Fork and Rod.>
3) Install the thrust needle bearing.

NOTE:
Confirm that the thrust needle bearing is installed in the proper direction.

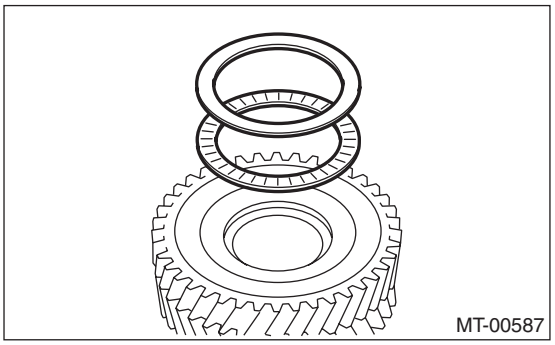
MT-00587

4) Install the 1st needle bearing.
5) Install the driven gear assembly. <Ref. to 6MT(TY85)-65, INSTALLATION, Main Shaft Assembly.>
6) Install the transmission case. <Ref. to 6MT(TY85)-60, INSTALLATION, Transmission Case.>
7) Adjust the backlash of the driven gear assembly in the axial direction. <Ref. to 6MT(TY85)-85, ADJUSTMENT, Driven Gear Assembly.>
8) Install the center differential. <Ref. to 6MT(TY85)-57, INSTALLATION, Center Differential.>
9) Install the transfer driven gear. <Ref. to 6MT(TY85)-55, INSTALLATION, Transfer Driven Gear.>
10) Install the extension case. <Ref. to 6MT(TY85)-43, INSTALLATION, Extension Case.>
11) Install the neutral position switch, back-up light switch and harness. <Ref. to 6MT(TY85)-42, INSTALLATION, Neutral Position Switch.> <Ref. to 6MT(TY85)-41, INSTALLATION, Back-up Light Switch.>
12) Install the manual transmission assembly to the vehicle. <Ref. to 6MT(TY85)-34, INSTALLATION, Manual Transmission Assembly.>

C: DISASSEMBLY

NOTE:
Individual coupling sleeves and synchronizer hubs meet at a specified position. Before disassembly, mark the meeting position of the coupling sleeve and synchronizer hub.
1) Affix the ST to the work table.
ST 18664AA000 BASE
2) Flatten the tab of the lock nut.

3) Attach ST3 to the lock nut, set the driven gear assembly to the ST, and remove the lock nut.
ST1 18666AA000 HOLDER
ST2 18664AA000 BASE
ST3 18620AA000 ADAPTER WRENCH

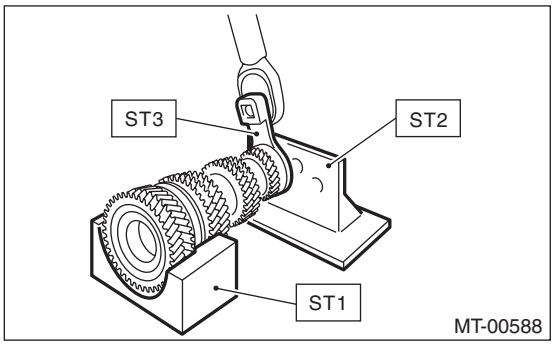

4) Attach ST1 to the 6th driven gear, then remove the ball bearing and 5th-6th driven gear.
ST1 18723AA000 REMOVER
ST2 499877000 RACE 4-5 INSTALLER

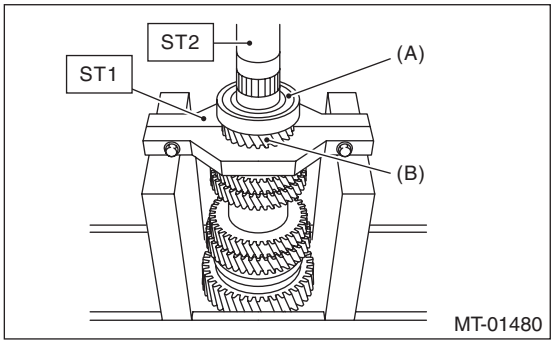

(A) Ball bearing
(B) 5th-6th driven gear

5) Attach ST1 to the 4th driven gear, then remove the 3rd-4th driven gear.
ST1 18723AA000 REMOVER
ST2 499877000 RACE 4-5 INSTALLER

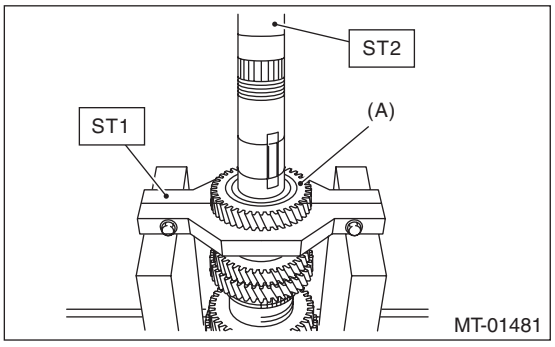

(A) 3rd-4th driven gear

6) Remove the key.

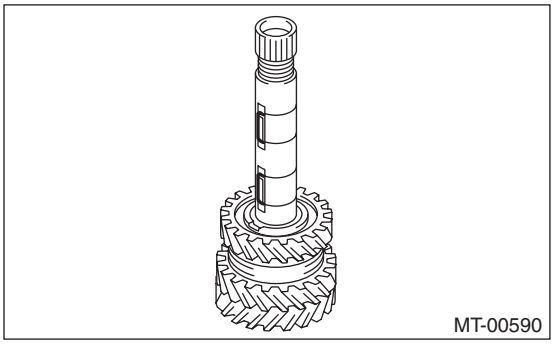

7) Remove the 2nd driven gear.

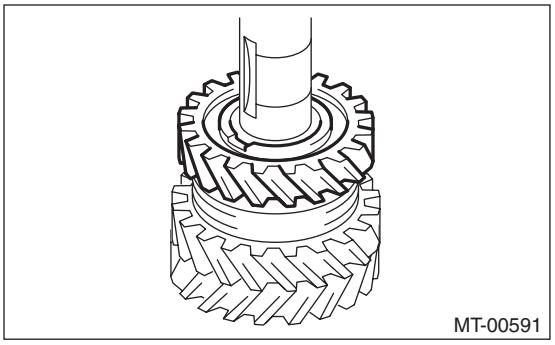

8) Remove the 2nd needle bearing and 1st-2nd coupling sleeve.

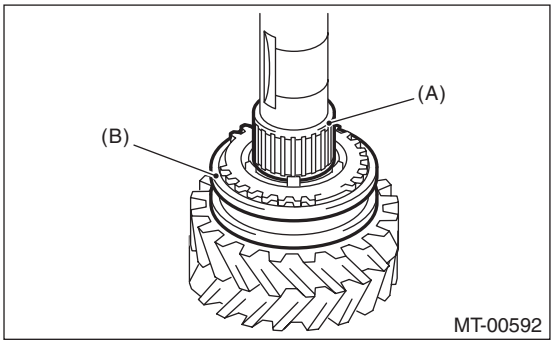

(A) 2nd needle bearing
(B) 1st-2nd coupling sleeve

9) Remove the 2nd outer baulk ring, 2nd synchro cone and 2nd inner baulk ring.

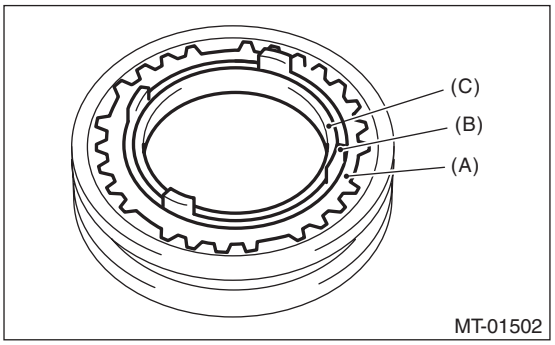

(A) 2nd outer baulk ring
(B) 2nd synchro cone
(C) 2nd inner baulk ring

10) Using the ST, remove individual parts.
ST 18754AA000 REMOVER

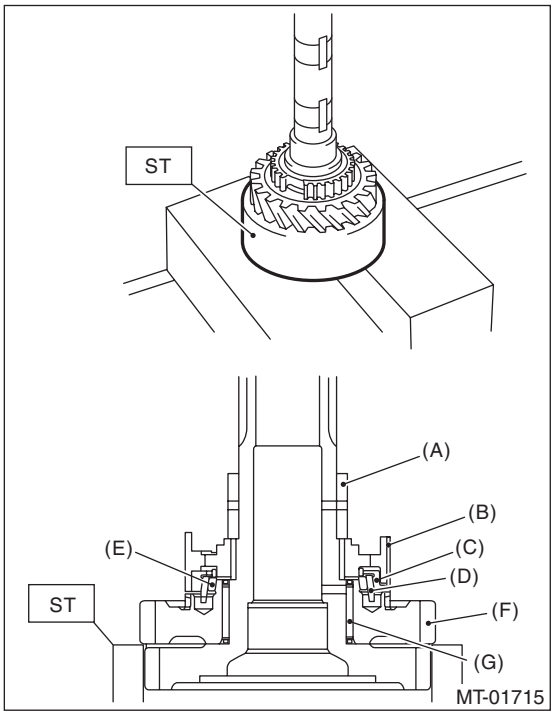

(A) 2nd drive gear bushing
(B) 1st-2nd synchronizer hub
(C) 1st outer baulk ring
(D) 1st synchro cone
(E) 1st inner baulk ring
(F) 1st driven gear
(G) 1st needle bearing

D: ASSEMBLY

NOTE:
When replacing the following parts, replace as a set.
- Coupling sleeve and synchronizer hub
- 1st outer baulk ring, 1st synchro cone and 1st inner baulk ring
- 2nd outer baulk ring, 2nd synchro cone and 2nd inner baulk ring

1) Apply adequate transmission gear oil to the main shaft, 1st needle bearing and 1st driven gear inner surface.

2) Install the 1st needle bearing.

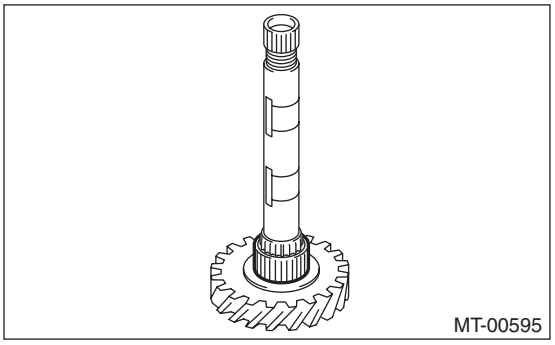

3) Attach the 1st driven gear to the driven shaft.

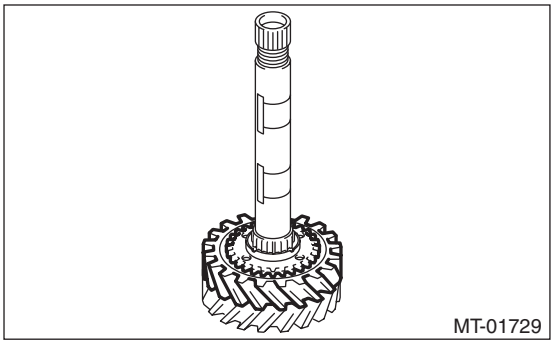

4) Install the 1st inner baulk ring.

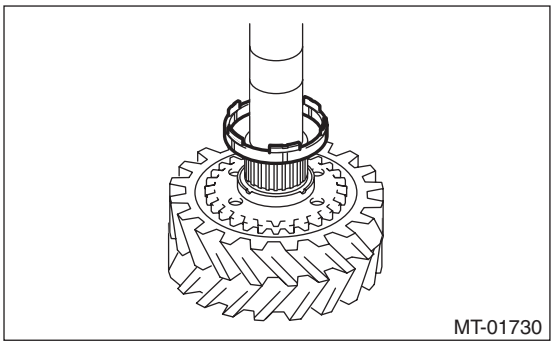

5) Match the protrusion of the 1st synchro cone to the hole of the 1st driven gear, then install.

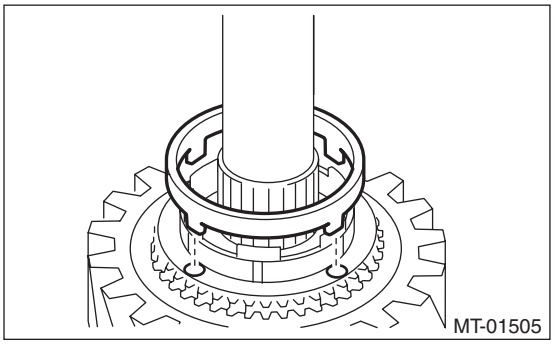

6) Install the 1st outer baulk ring.

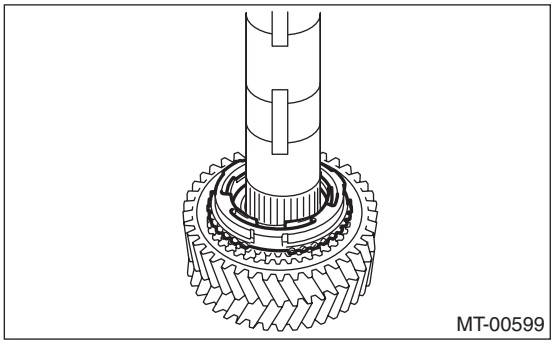

7) Install the 1st-2nd synchronizer hub.

CAUTION:
Apply transmission gear oil onto sliding or revolving surfaces before installation.

NOTE:
• Match the cut out of the 1st-2nd synchronizer hub with the protrusion on the outer baulk ring, then install.
• Make sure that the 1st-2nd synchronizer hub is installed in the correct direction.

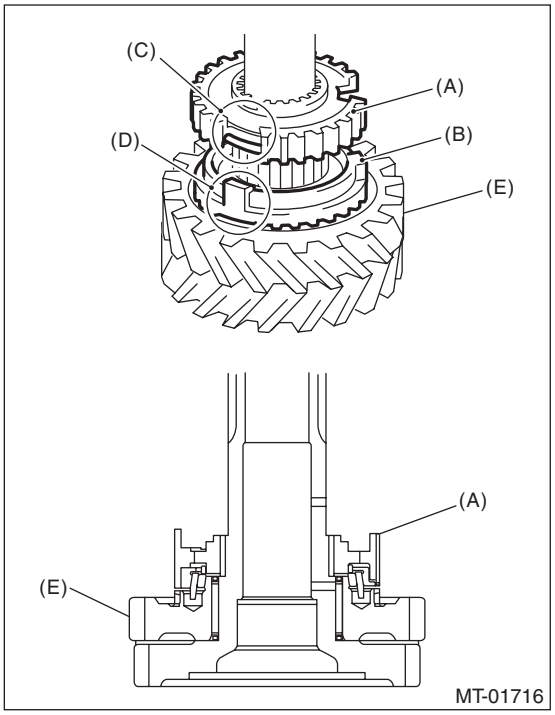

(A) 1st-2nd synchronizer hub
(B) 1st outer baulk ring
(C) Cut out of the 1st-2nd synchronizer hub
(D) Protrusion of the 1st outer baulk ring
(E) 1st driven gear

8) Using the ST, install the 1st-2nd synchronizer hub and 2nd driven gear bushing.
ST 18654AA000 INSTALLER

CAUTION:
Do not apply pressure in excess of 40 kN (4.0 ton, 4.4 US ton, 3.9 Imp ton).

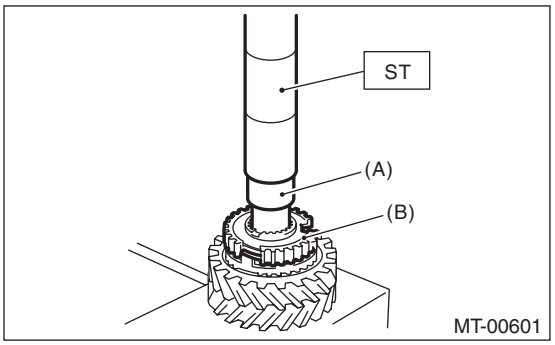

(A) 2nd driven gear bushing
(B) 1st-2nd synchronizer hub

9) Make sure that the 1st driven gear can be turned smoothly by hand. If it does not turn smoothly, reassemble.

10) Attach the 1st-2nd coupling sleeve to the 1st-2nd synchronizer hub.

NOTE:
• Make sure that the 1st-2nd coupling sleeve is installed in the correct direction.
• Align the 1st-2nd synchronizer hub cut out section (three places) and the key grooves (three places) of shifting insert that are located inside the 1st-2nd coupling sleeve.
• Set the 1st-2nd coupling sleeve and 1st driven gear so that they contact each other.

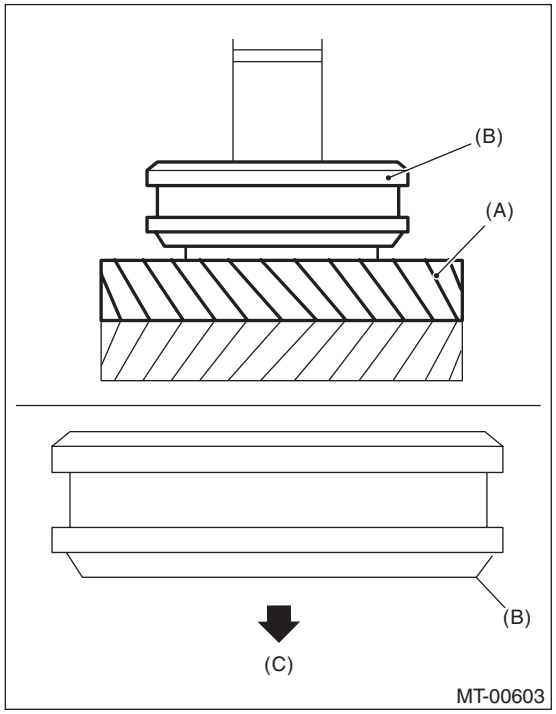

(A) 1st driven gear
(B) 1st-2nd coupling sleeve
(C) 1st driven gear side

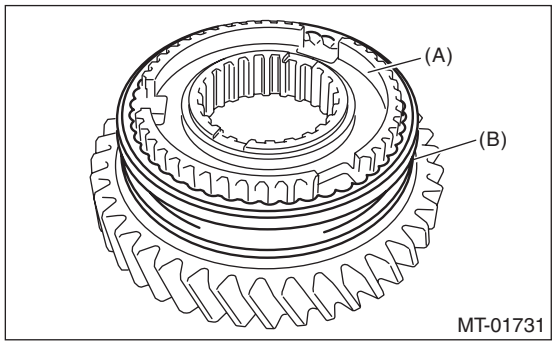

(A) 1st-2nd synchronizer hub
(B) 1st-2nd coupling sleeve

11) Attach the 1st-2nd shifting insert to the appropriate position of the 1st-2nd coupling sleeve.

NOTE:
• The location angle of each shifting insert is 120°.
• Install the 1st-2nd shifting insert to the key grooves (three places) of shifting insert that are located inside the 1st-2nd coupling sleeve.

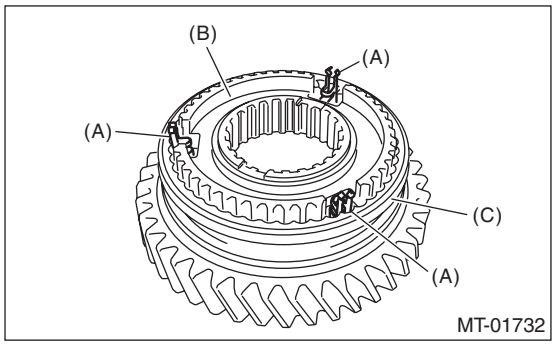

(A) 1st-2nd shifting insert
(B) 1st-2nd synchronizer hub
(C) 1st-2nd coupling sleeve

12) Install the 2nd outer baulk ring.

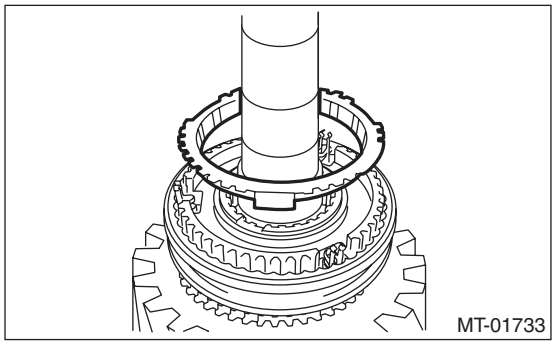

13) Install the 2nd synchro cone.

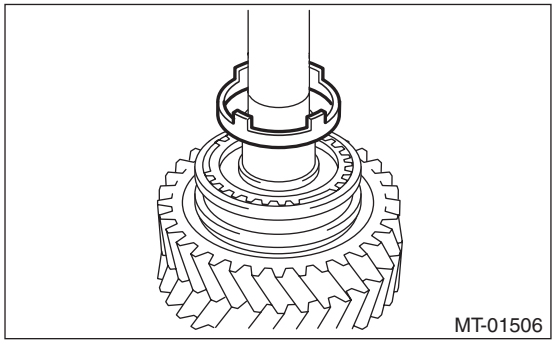

14) Install the 2nd inner baulk ring.

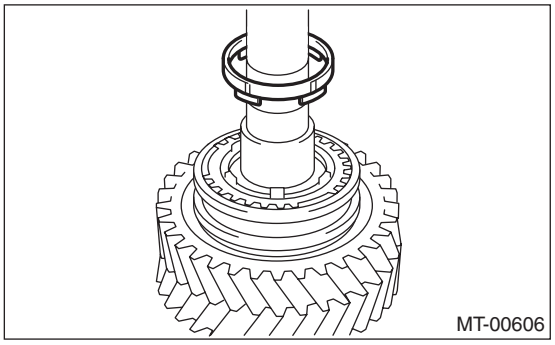

15) Apply adequate transmission gear oil to the 2nd driven gear bushing, 2nd needle bearing and 2nd driven gear inner surface.
16) Install the 2nd needle bearing and 2nd driven gear.

NOTE:
Match the protrusion of the 2nd synchro cone to the hole of the 2nd driven gear, then install.

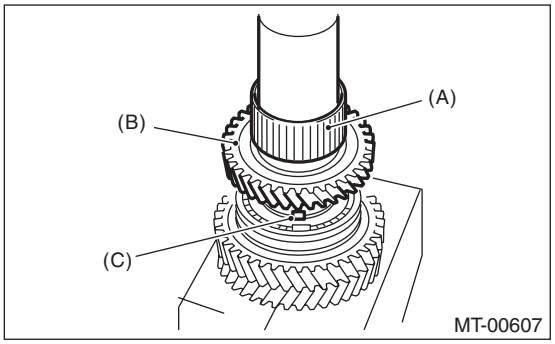

(A) 2nd needle bearing
(B) 2nd driven gear
(C) Protrusion of the 2nd synchro cone

17) Attach the key.

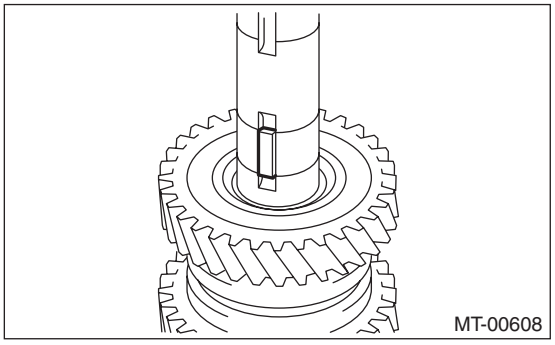

18) Using the ST, install the 3rd-4th driven gear.
ST 18654AA000 INSTALLER

CAUTION:
• Do not apply pressure in excess of 40 kN (4.0 ton, 4.4 US ton, 3.9 Imp ton).
• Apply transmission gear oil onto sliding or revolving surfaces before installation.

NOTE:
• Make sure that the 3rd-4th driven gear is installed in the correct direction.
• Match the groove on the 3rd-4th driven gear to the key.

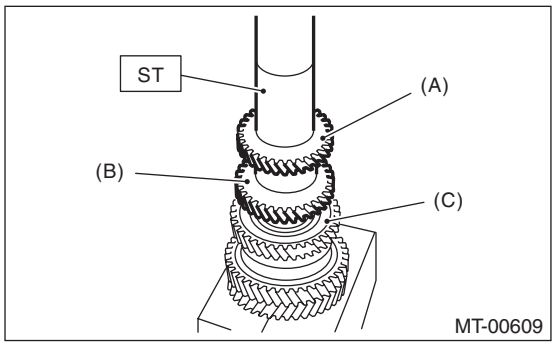

(A) 4th gear
(B) 3rd gear
(C) 2nd gear

19) Make sure that the 2nd driven gear can be turned smoothly by hand. If it does not turn smoothly, reassemble.
20) Attach the key.

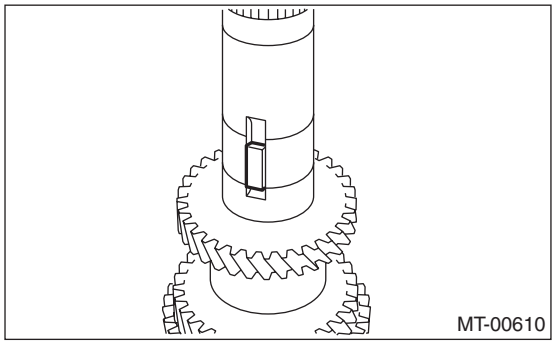

21) Using the ST, install the 5th-6th driven gear.
ST 18654AA000 INSTALLER

CAUTION:
Do not apply pressure in excess of 40 kN (4.0 ton, 4.4 US ton, 3.9 Imp ton).

NOTE:
• Make sure that the 5th-6th driven gear is installed in the correct direction.
• Match the groove on the 5th-6th driven gear to the key.

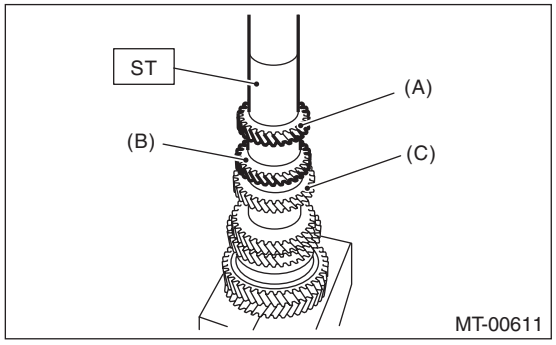

(A) 6th gear
(B) 5th gear
(C) 4th gear

22) Using the ST, install the ball bearing.
ST 18654AA000 INSTALLER

CAUTION:
Do not apply pressure in excess of 40 kN (4.0 ton, 4.4 US ton, 3.9 Imp ton).

NOTE:
Face the sealing section of the ball bearing to the lock nut side, and install the ball bearing.

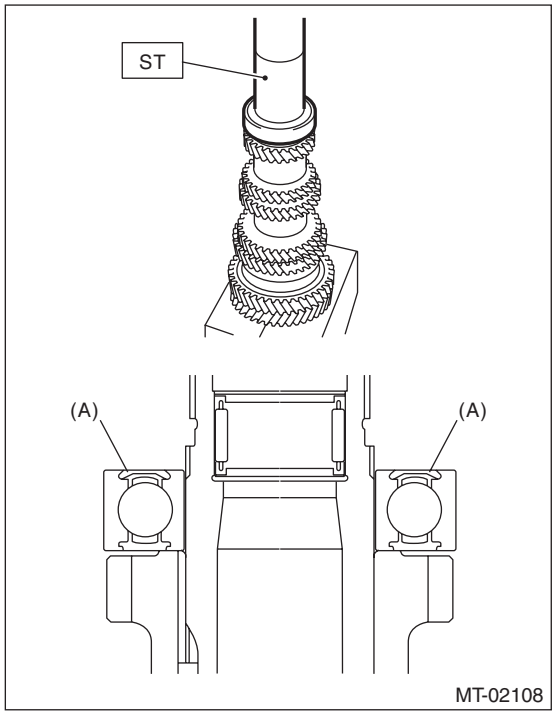

(A) Sealing

23) Make sure that the ball bearing turns smoothly by hand. If it does not turn smoothly, reassemble.
24) Install a new lock nut.

25) Attach ST3 to the lock nut, attach ST to the driven gear assembly, and tighten the lock nut.
ST1 18666AA000 HOLDER
ST2 18664AA000 BASE
ST3 18620AA000 ADAPTER WRENCH
ST4 18852AA000 TORQUE WRENCH

Tightening torque:
530 N·m (54.0 kgf-m, 390.9 ft-lb)

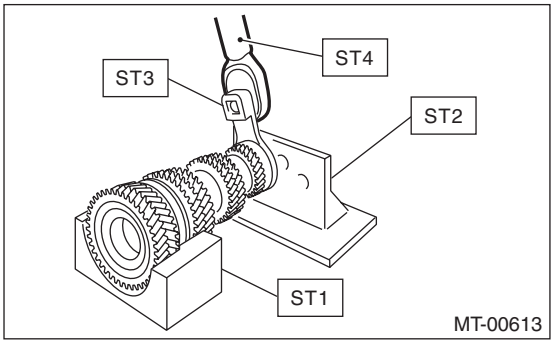

NOTE:
When using a torque wrench other than ST4, use the calculation below to calculate and tighten the lock nut.
T = L1/(0.1 + L1) × 570

T N·m (kgf-m, ft-lb)	Torque wrench setting
L1 m (in)	Torque wrench length
0.1 m (3.94 in)	Length of ST
570 N·m (58.1 kgf-m, 420 ft-lb)	Tightening torque (lock nut)

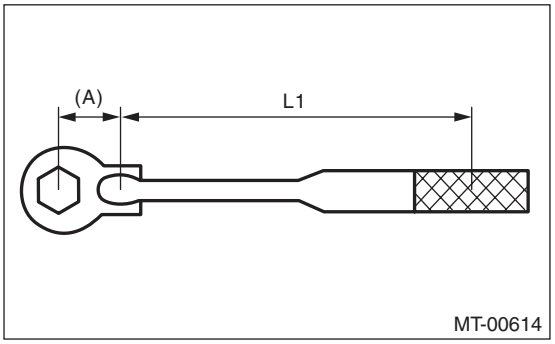

(A) 0.1 m (3.94 in)

26) Using the ST, crimp the lock nut in 4 locations, with dimensions within A 44±0.5 mm (1.73±0.02 in).
ST 18669AA000 PUNCH DRIVEN SHAFT

NOTE:
Do not damage the crimp area of the lock nut.

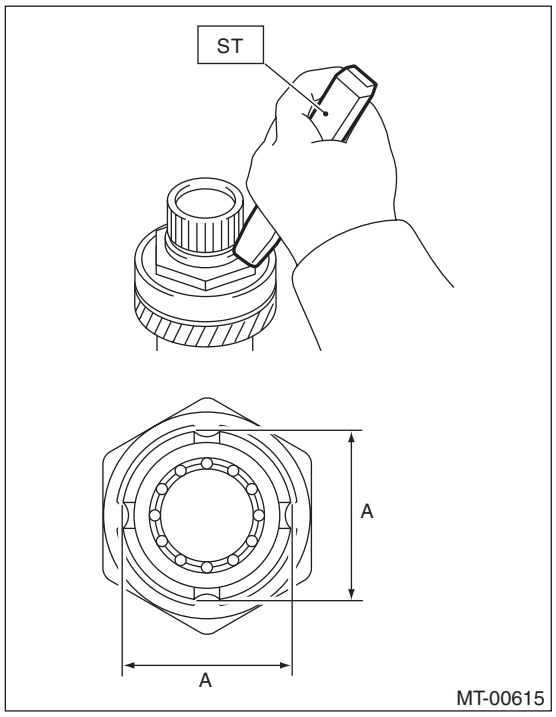

E: INSPECTION

Disassembled parts should be washed with cleaning solvent first, then inspected carefully.
1) Bearing
Replace the bearings in the following cases.
• Wear, rusting or damage of the bearings
• The bearing does not rotate smoothly or an abnormal noise is emitted when turning.
• The bearing has other defects.
2) Bushing (each gear)
Replace the bushing in following cases.
• The sliding surface is damaged or abnormally worn.
3) Gear
Replace gears in the following cases.
• The gear teeth surface is damaged or excessively worn.
• The contact area of the baulk ring is damaged.
• The inner face of the gear is worn.
4) Baulk ring, synchro cone
Replace the baulk ring and synchro cone in the following cases.
• Wear, rusting or damage of the baulk ring
5) Shifting insert
Replace the shifting insert key if deformed, excessively worn or defective in any way.

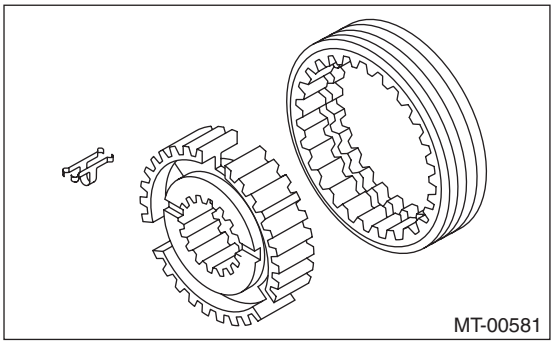

F: ADJUSTMENT

1) Measure the length “H” from the transmission case and transfer bearing holder mating surface, to the end face of the ball bearing.

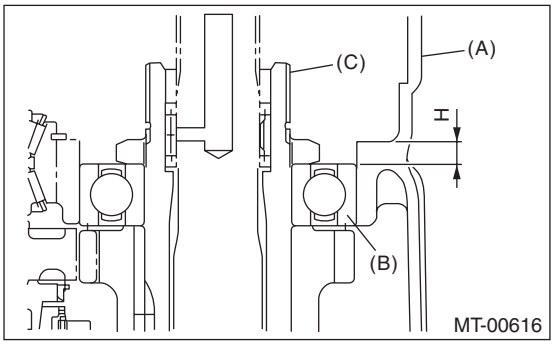

(A) Transmission case
(B) Ball bearing
(C) Driven gear ASSY

2) Using the following calculation, calculate the thickness of the driven gear assembly adjusting washer.
T = H – {5.8±0.05 mm (0.23±0.002 in)} – {0.1 — 0.3 mm (0.0039 — 0.0118 in)}

T	Adjusting washer thickness
H	Length from the transmission case and transfer bearing holder mating surface to the end face of the ball bearing
5.8±0.05 mm (0.23±0.002 in)	Collar thickness
0.1 — 0.3 mm (0.0039 — 0.0118 in)	Driven gear assembly axial direction backlash standard

3) Select 0 to 3 adjusting washers from the following table, and adjust to the backlash that is closest to the standard value.

Driven gear assembly axial direction backlash standard:
0.1 — 0.3 mm (0.0039 — 0.0118 in)

Adjusting washer	
Part No.	Thickness T mm (in)
803072030	0.15 (0.0059)
803072031	0.30 (0.0118)
803072032	0.45 (0.0177)
803072033	0.60 (0.0236)

21.Reverse Idler Gear Assembly

A: REMOVAL

1) Remove the manual transmission assembly from the vehicle. <Ref. to 6MT(TY85)-32, REMOVAL, Manual Transmission Assembly.>
2) Prepare the transmission for overhaul. <Ref. to 6MT(TY85)-39, Preparation for Overhaul.>
3) Remove the neutral position switch, back-up light switch and harness. <Ref. to 6MT(TY85)-42, REMOVAL, Neutral Position Switch.> <Ref. to 6MT(TY85)-41, REMOVAL, Back-up Light Switch.>
4) Remove the extension case. <Ref. to 6MT(TY85)-43, REMOVAL, Extension Case.>
5) Remove the transfer driven gear. <Ref. to 6MT(TY85)-55, REMOVAL, Transfer Driven Gear.>
6) Remove the center differential. <Ref. to 6MT(TY85)-57, REMOVAL, Center Differential.>
7) Remove the transmission case. <Ref. to 6MT(TY85)-58, REMOVAL, Transmission Case.>
8) Remove the reverse idler gear assembly. <Ref. to 6MT(TY85)-64, REMOVAL, Main Shaft Assembly.>

B: INSTALLATION

1) Select the reverse fork rod. <Ref. to 6MT(TY85)-109, ADJUSTMENT, Shifter Fork and Rod.>
2) Install the reverse idler gear assembly. <Ref. to 6MT(TY85)-65, INSTALLATION, Main Shaft Assembly.>
3) Install the transmission case. <Ref. to 6MT(TY85)-60, INSTALLATION, Transmission Case.>
4) Install the center differential. <Ref. to 6MT(TY85)-57, INSTALLATION, Center Differential.>
5) Install the transfer driven gear. <Ref. to 6MT(TY85)-55, INSTALLATION, Transfer Driven Gear.>
6) Install the extension case. <Ref. to 6MT(TY85)-43, INSTALLATION, Extension Case.>
7) Install the neutral position switch, back-up light switch and harness. <Ref. to 6MT(TY85)-42, INSTALLATION, Neutral Position Switch.> <Ref. to 6MT(TY85)-41, INSTALLATION, Back-up Light Switch.>
8) Install the manual transmission assembly to the vehicle. <Ref. to 6MT(TY85)-34, INSTALLATION, Manual Transmission Assembly.>

C: DISASSEMBLY

NOTE:
Reverse coupling sleeves and reverse gears meet at a specified position. Before disassembly, mark the meeting position of the reverse coupling sleeve and synchronizer hub.
1) Remove the straight pin.

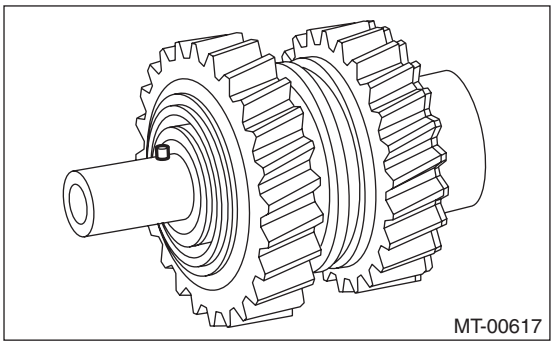

2) Remove the snap ring and washer.

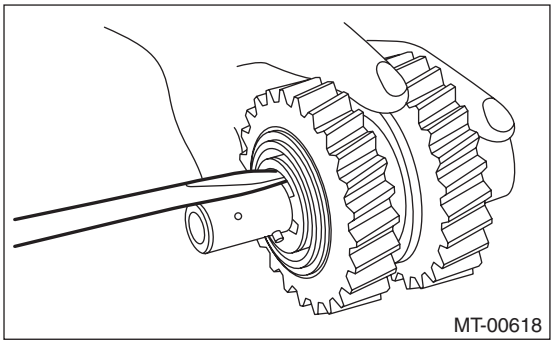

3) Remove the counter high & low washer and reverse idler gear.

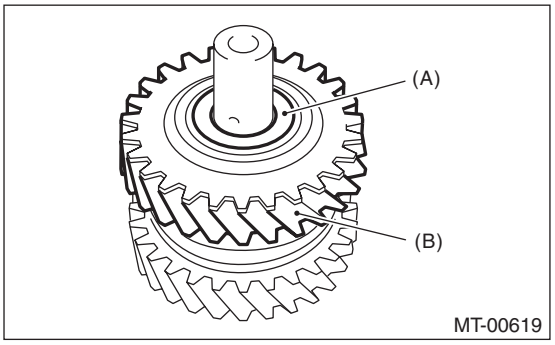

(A) Counter high and low washer
(B) Reverse idler gear

4) Remove the knock pin and reverse idler gear needle bearing.

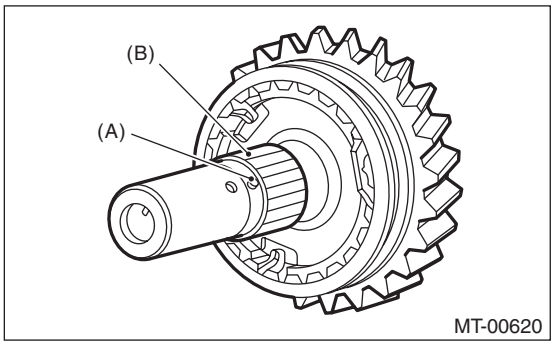

(A) Knock pin
(B) Reverse idler gear needle bearing

5) Remove the collar.
6) Remove the reverse coupling sleeve.

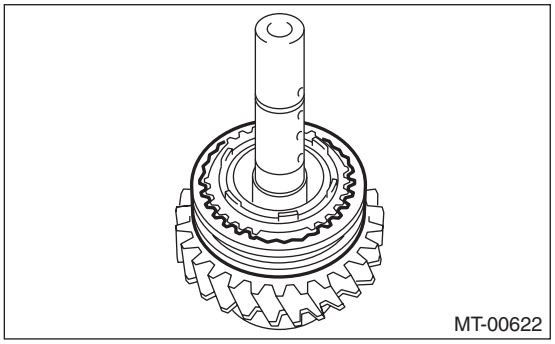

7) Remove the reverse outer baulk ring, reverse synchro cone and reverse inner baulk ring from the reverse coupling sleeve.

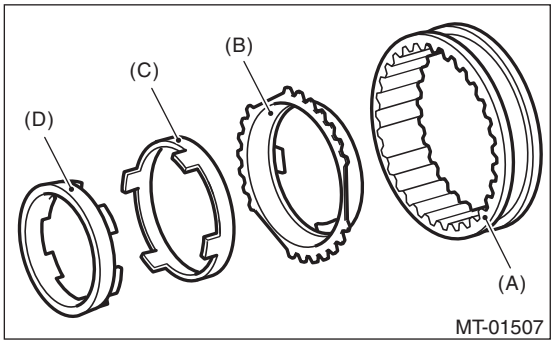

(A) Reverse coupling sleeve
(B) Reverse outer baulk ring
(C) Reverse synchro cone
(D) Reverse inner baulk ring

8) Remove reverse idler gear No. 2.

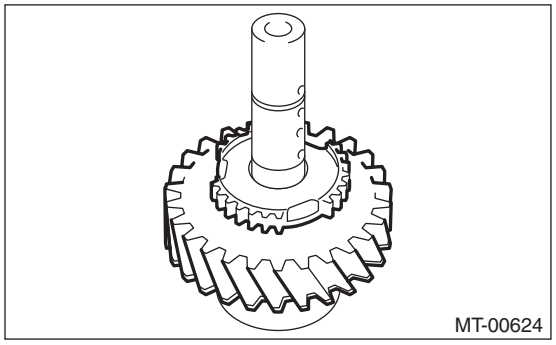

9) Remove the counter high & low washer and needle bearing.

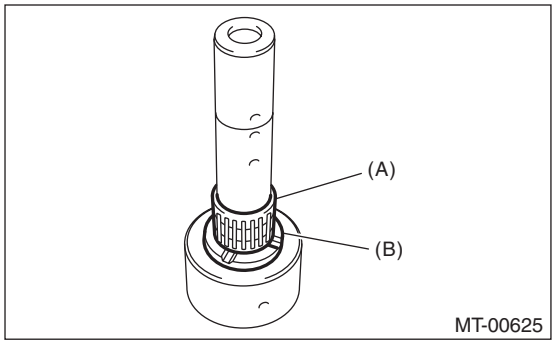

(A) Needle bearing
(B) Counter high and low washer

10) Remove the knock pin.

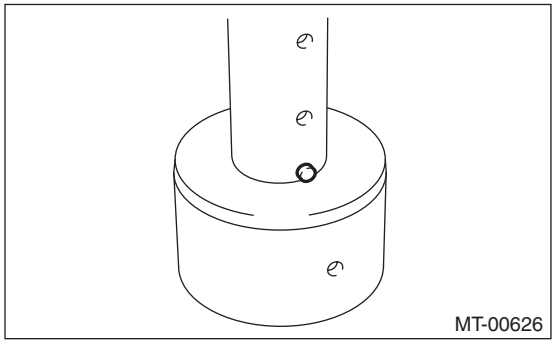

11) Remove the snap ring and friction plate.

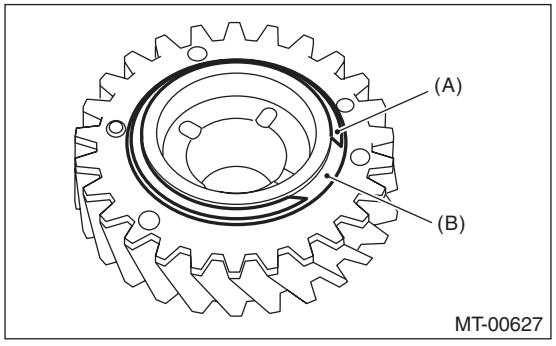

(A) Snap ring
(B) Friction plate

12) Remove the reverse idler sub gear and reverse idler spring.

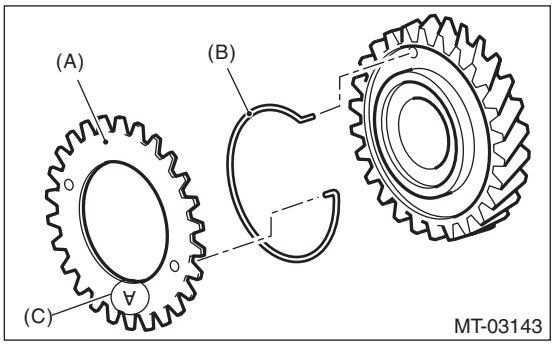

(A) Reverse idler sub gear
(B) Reverse idler spring
(C) Stamp (marking A)

D: ASSEMBLY

1) Attach the reverse idler sub gear and reverse idler spring.

NOTE:
• Point the stamp (marking A) towards the outside, and install the reverse idler sub gear.

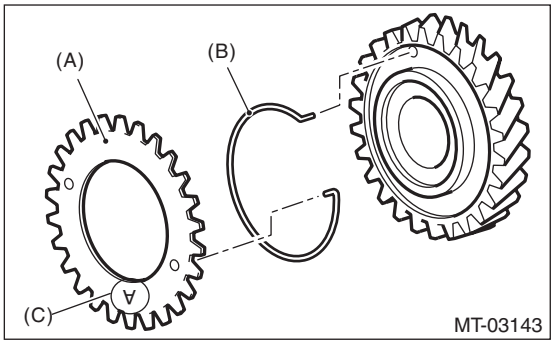

(A) Reverse idler sub gear
(B) Reverse idler spring
(C) Stamp (marking A)

• While paying attention to the direction of the reverse idler sub gear attachment hole, attach the reverse idler spring and reverse idler sub gear.

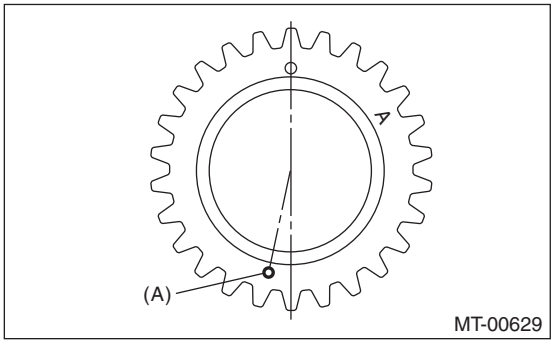

(A) Attachment hole

2) Install the friction plate and snap ring.

NOTE:
Confirm that the friction plate is installed in the proper direction.

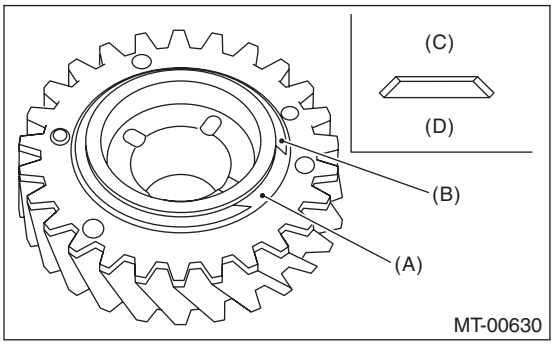

(A) Friction plate
(B) Snap ring
(C) Snap ring side
(D) Reverse idler sub gear side

3) Apply adequate transmission gear oil to the reverse idler gear shaft, needle bearing and reverse drive gear inner surface.
4) Install the knock pin.

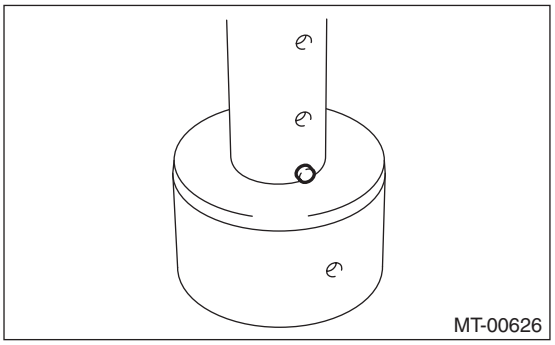

5) Install the counter high & low washer and needle bearing.

NOTE:
Point the groove towards the reverse idler gear, and attach the washer.

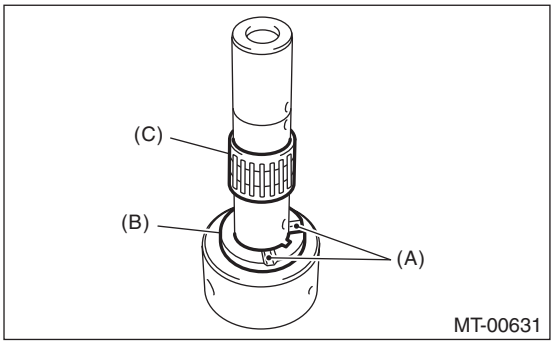

(A) Groove
(B) Counter high and low washer
(C) Needle bearing

6) Install the reverse idler gear No. 2.

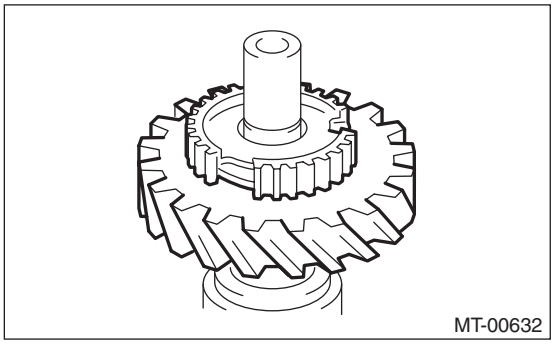

7) Attach the shifting insert to the appropriate location of the reverse coupling sleeve.

NOTE:
- The location angle of each shifting insert is 120°.
- Refer to the following figure to install the shifting insert.

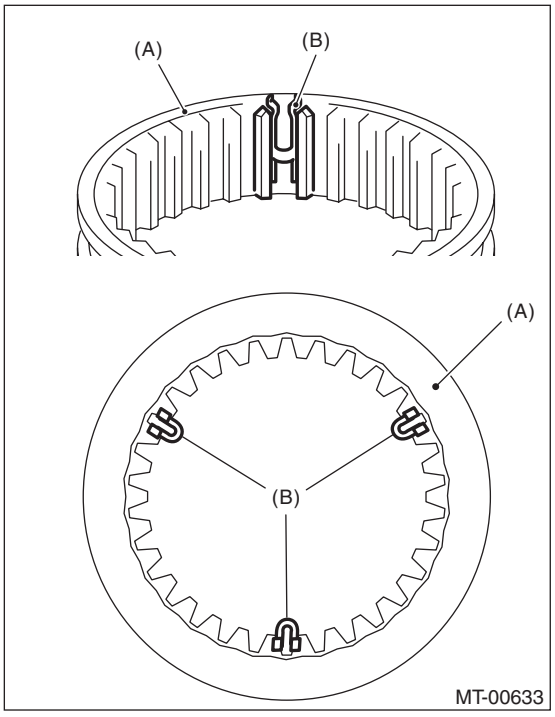

(A) Reverse sleeve
(B) Shifting insert

8) Install the reverse coupling sleeve to the reverse idler gear No. 2.

NOTE:
Confirm that the reverse coupling sleeve is installed in the proper direction.

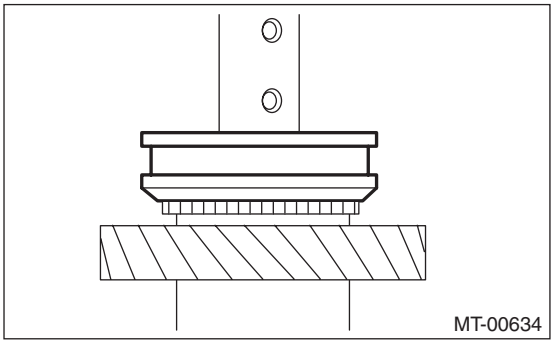

9) Apply adequate transmission gear oil to the collar, needle bearing and reverse drive gear inner surface.

10) Install the reverse outer baulk ring, reverse synchro cone and reverse inner baulk ring.

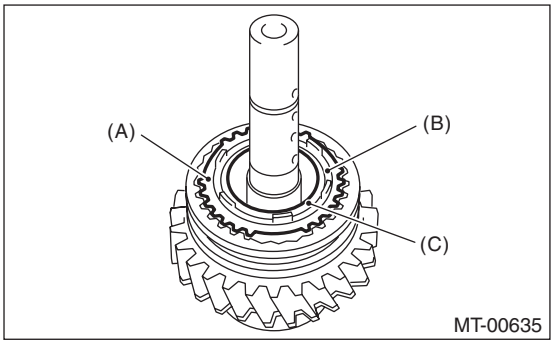

(A) Reverse outer baulk ring
(B) Reverse synchro cone
(C) Reverse inner baulk ring

11) Install the collar and needle bearing, then the knock pin.

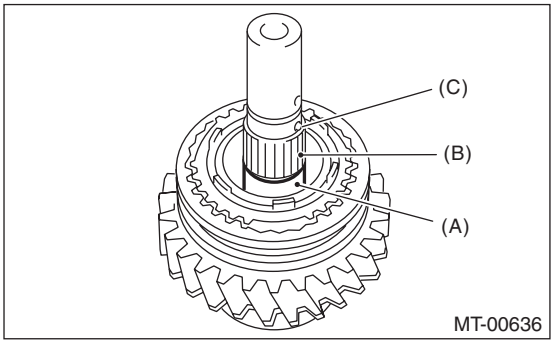

(A) Collar
(B) Needle bearing
(C) Knock pin

12) Match the protrusion of the reverse synchro cone to the hole on the reverse idler gear, and install the reverse idler gear.

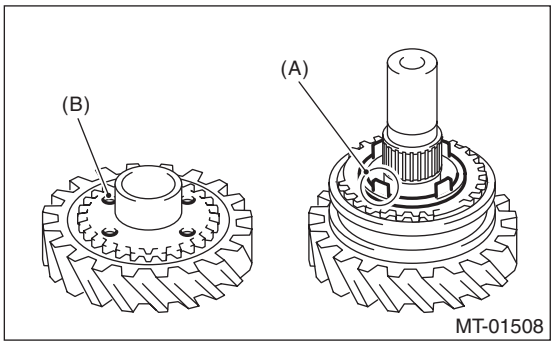

(A) Protrusion on the reverse synchro cone
(B) Hole of the reverse idler gear

13) Point the groove towards the reverse idler gear, and attach the counter high & low washer and the washer.
14) Using the ST, install the snap ring.
ST 18672AA000 GUIDE CLIP

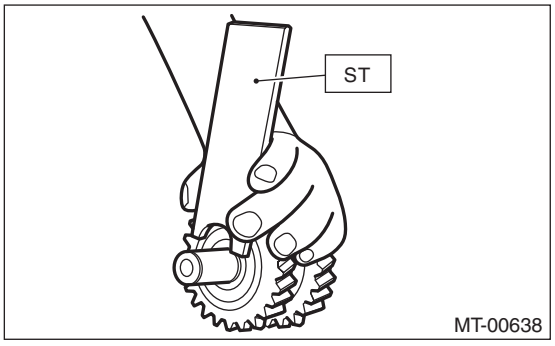

15) Inspect and adjust the clearance between the snap ring and the washer. <Ref. to 6MT(TY85)-91, INSPECTION, Reverse Idler Gear Assembly.>
16) Install a new straight pin.

E: INSPECTION

Disassembled parts should be washed with cleaning solvent first, then inspected carefully.
1) Bearing
Replace the bearings in the following cases.
• Wear, rusting or damage of the bearings
• The bearing does not rotate smoothly or an abnormal noise is emitted when turning.
• The bearing has other defects.
2) Bushing (each gear)
Replace the bushing in following cases.
• The sliding surface is damaged or abnormally worn.
3) Gear
Replace gears in the following cases.
• The gear teeth surface is damaged or excessively worn.
• The contact area of the baulk ring is damaged.
• The inner face of the gear is worn.
4) Baulk ring, synchro cone
Replace the baulk ring and synchro cone in the following cases.
• Wear, rusting or damage of the baulk ring
5) Shifting insert
Replace the shifting insert if deformed, excessively worn or defective in any way.

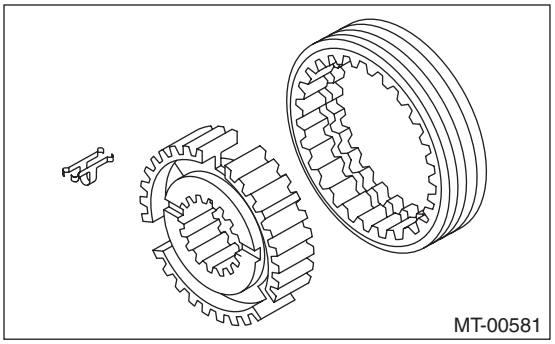

6) Check clearance between the snap ring and washer.

Clearance specification:
0.1 — 0.3 mm (0.0039 — 0.0118 in)

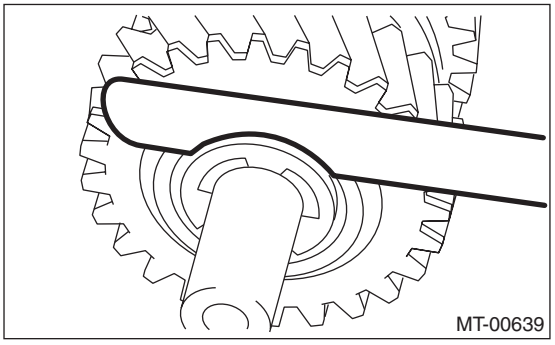

If the clearance is out of the specification, select a snap ring from the following table and replace it.

Snap ring	
Part No.	Thickness mm (in)
031319000	1.50 (0.059)
805019030	1.60 (0.062)
805019010	1.72 (0.068)

After replacing the snap ring, inspect the clearance.

22.Drive Pinion Shaft Assembly

A: REMOVAL

1) Remove the manual transmission assembly from the vehicle. <Ref. to 6MT(TY85)-32, REMOVAL, Manual Transmission Assembly.>
2) Prepare the transmission for overhaul. <Ref. to 6MT(TY85)-39, Preparation for Overhaul.>
3) Remove the neutral position switch, back-up light switch and harness. <Ref. to 6MT(TY85)-42, REMOVAL, Neutral Position Switch.> <Ref. to 6MT(TY85)-41, REMOVAL, Back-up Light Switch.>
4) Remove the extension case. <Ref. to 6MT(TY85)-43, REMOVAL, Extension Case.>
5) Remove the transfer driven gear. <Ref. to 6MT(TY85)-55, REMOVAL, Transfer Driven Gear.>
6) Remove the center differential. <Ref. to 6MT(TY85)-57, REMOVAL, Center Differential.>
7) Remove the transmission case. <Ref. to 6MT(TY85)-58, REMOVAL, Transmission Case.>
8) Remove the individual gear assemblies. <Ref. to 6MT(TY85)-64, REMOVAL, Main Shaft Assembly.>
9) Remove the drive pinion shaft assembly.

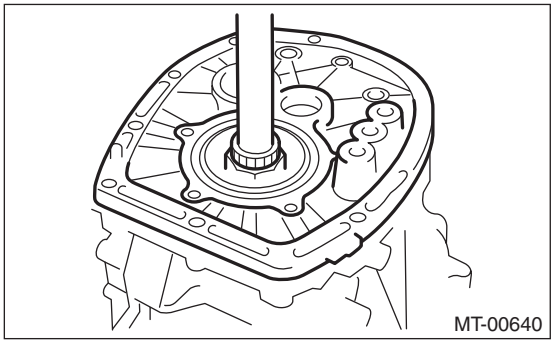
MT-00640

B: INSTALLATION

1) Remove any remaining gasket material from the drive plate and clutch housing.
2) Apply liquid gasket to the clutch housing.

Liquid gasket:
THREE BOND 1215B or equivalent

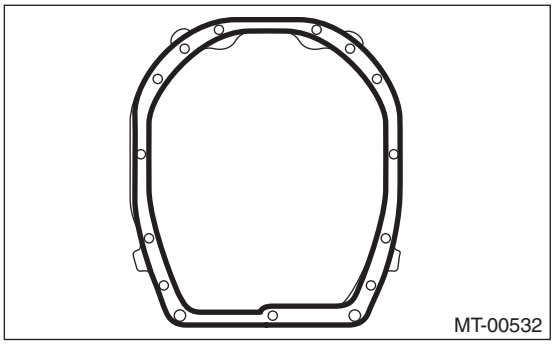
MT-00532

3) Install the individual gear assemblies. <Ref. to 6MT(TY85)-65, INSTALLATION, Main Shaft Assembly.>
4) Install the transmission case. <Ref. to 6MT(TY85)-60, INSTALLATION, Transmission Case.>
5) Install the center differential. <Ref. to 6MT(TY85)-57, INSTALLATION, Center Differential.>
6) Install the transfer driven gear. <Ref. to 6MT(TY85)-55, INSTALLATION, Transfer Driven Gear.>
7) Install the extension case. <Ref. to 6MT(TY85)-43, INSTALLATION, Extension Case.>
8) Install the neutral position switch, back-up light switch and harness. <Ref. to 6MT(TY85)-42, INSTALLATION, Neutral Position Switch.> <Ref. to 6MT(TY85)-41, INSTALLATION, Back-up Light Switch.>
9) Install the manual transmission assembly to the vehicle. <Ref. to 6MT(TY85)-34, INSTALLATION, Manual Transmission Assembly.>

C: DISASSEMBLY

NOTE:
Replace the drive pinion shaft and hypoid driven gear as a set.
1) Remove the oil guide A.

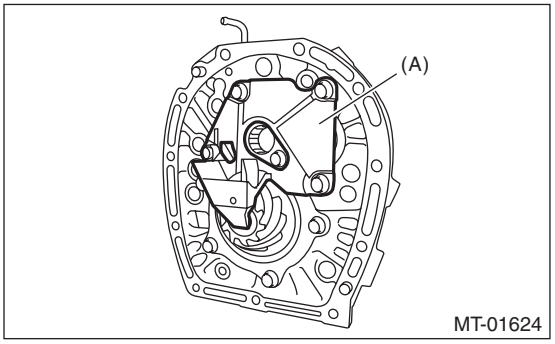

MT-01624

(A) Oil guide A

2) Remove the drive pinion shaft and shim from the adapter plate.

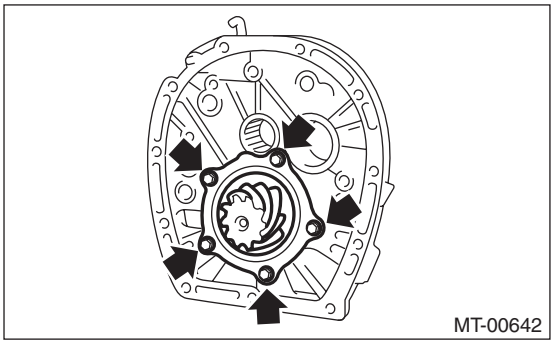
MT-00642

3) Affix the ST to the work table.
ST 18664AA000 BASE

4) Flatten the tab of the lock nut.
5) Attach ST3 to the lock nut, and set the drive pinion shaft to ST. Remove the lock nut and lock washer.
ST1 18667AA000 HOLDER
ST2 18664AA000 BASE
ST3 18621AA000 ADAPTER WRENCH

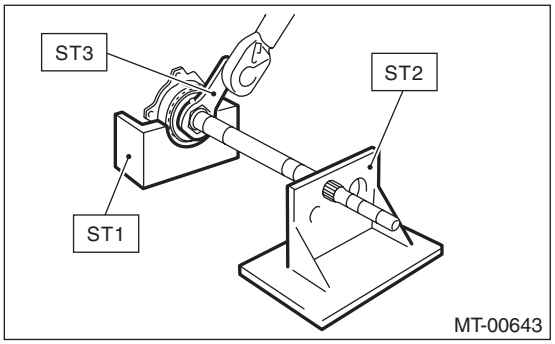

6) Using the ST, remove the double taper roller bearing assembly.
ST 18723AA000 REMOVER

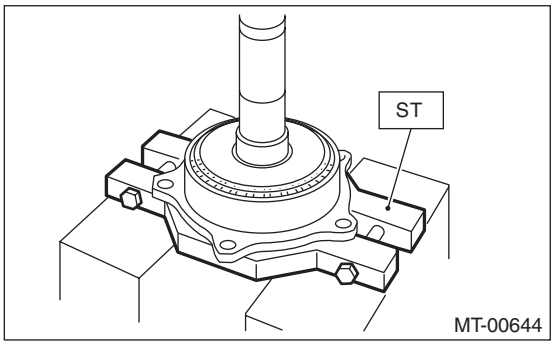

D: ASSEMBLY

1) Using the ST, measure drive pinion measurement A.

NOTE:
When selecting the drive pinion shim, refer to measurement A.
ST 398643600 GAUGE

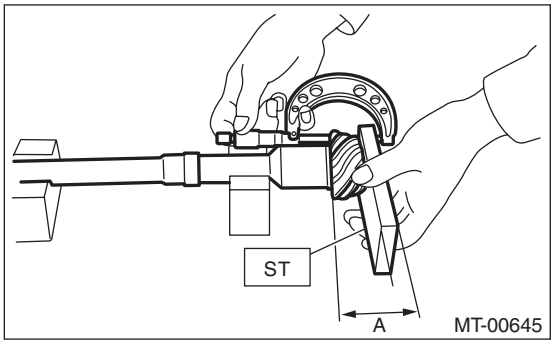

2) Using the ST and a press, attach the double taper roller bearing inner race (front side) to the drive pinion shaft.
ST 18723AA000 REMOVER

CAUTION:
Do not apply pressure in excess of 40 kN (4.0 ton, 4.4 US ton, 3.9 Imp ton).

NOTE:
Use a new double taper roller bearing.

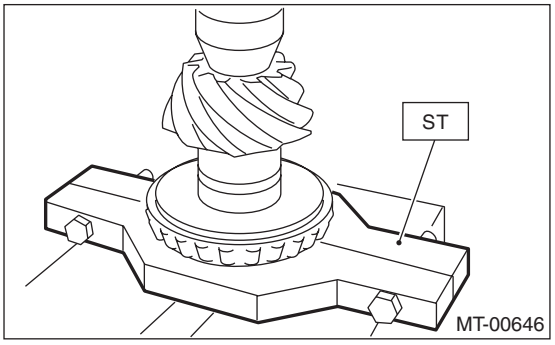

3) Using the ST and a press, attach the double taper roller bearing outer race and the double taper roller bearing to the drive pinion shaft.
ST 18723AA000 REMOVER

NOTE:
- Use a new double taper roller bearing.
- Push in to a position where the bearing rotates smoothly.

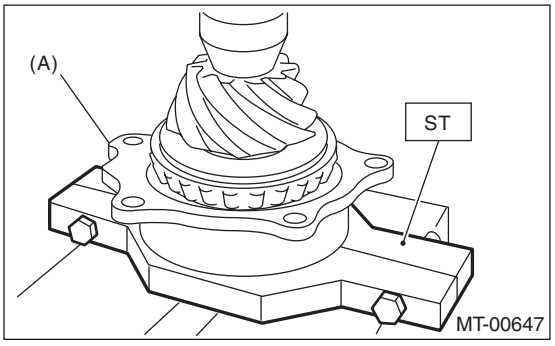

(A) Double taper roller bearing outer race

4) Attach a new lock washer and a new lock nut.
5) Set the ST to the drive pinion, and tighten the lock nut.
ST1 18667AA000 HOLDER
ST2 18664AA000 BASE
ST3 18621AA000 ADAPTER WRENCH
ST4 18852AA000 TORQUE WRENCH

NOTE:
- Tighten using the ST and the straight line torque wrench.
- Make sure the lock washer is installed in the proper direction.

Tightening torque:
265 N·m (27.0 kgf-m, 195.4 ft-lb)

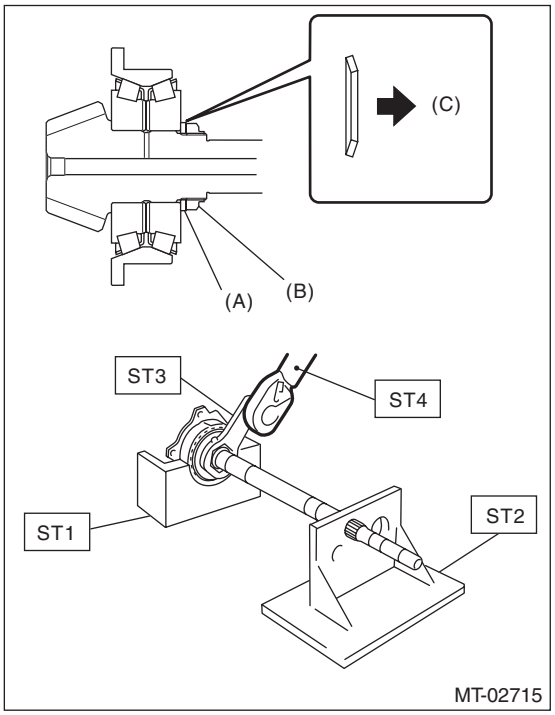

(A) Lock washer
(B) Lock nut
(C) Nut side

NOTE:
When using a torque wrench other than ST4, use the calculation below to calculate and tighten the lock nut.
Tighten using the ST and the straight line torque wrench.
T = L1/(0.1 + L1) × 285

T N·m (kgf-m, ft-lb)	Torque wrench setting
L1 m (in)	Torque wrench length
0.1 m (3.94 in)	Length of ST
285 N·m (29.0 kgf-m, 210 ft-lb)	Tightening torque (lock nut)

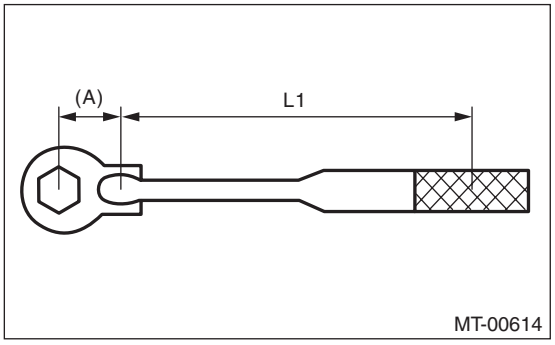

(A) 0.1 m (3.94 in)

6) Measure the starting torque. <Ref. to 6MT(TY85)-95, INSPECTION, Drive Pinion Shaft Assembly.>
7) Using the ST, crimp the lock nut in 2 locations, with dimensions within A 37±0.5 mm (1.46±0.02 in).
ST 18670AA000 PUNCH

NOTE:
Do not damage the crimp area of the lock nut.

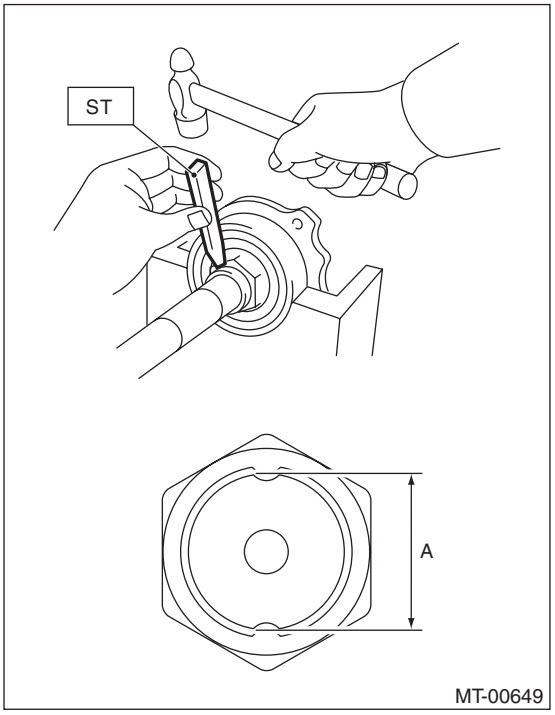

8) Using the ST, measure drive pinion measurement B.
ST 398643600 GAUGE

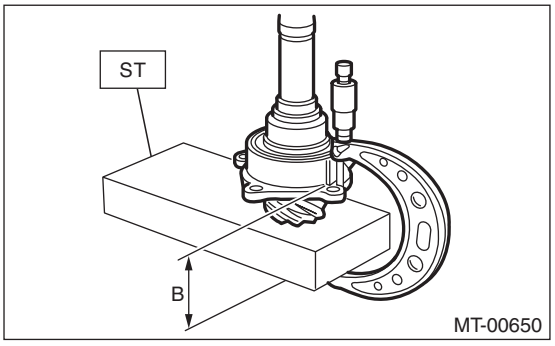

9) Calculate from the calculation below to select 1 or 2 drive pinion shims from the following table.
6.5±0.0625 mm – (B – A) [0.26±0.0025 in – (B – A)]

NOTE:
A: Measurement value in step 1)
B: Measurement value in step 8)

Drive pinion shim	
Part No.	Thickness mm (in)
32295AA270	0.15 (0.0059)
32295AA280	0.175 (0.0069)
32295AA290	0.20 (0.0079)
32295AA300	0.225 (0.0089)
32295AA310	0.25 (0.0098)
32295AA320	0.275 (0.0108)

10) Apply transmission gear oil to the side face of the double taper roller bearing, and attach the drive pinion shaft and the selected shims to the adapter plate.

Tightening torque:
54 N·m (5.5 kgf-m, 39.8 ft-lb)

11) Install the oil guide A.

Tightening torque:
18 N·m (1.8 kgf-m, 13.3 ft-lb)

E: INSPECTION

1) Using a spring scale, measure the starting torque. If the starting torque is outside the specification range, replace the double taper roller bearing.

Starting torque:
0 — 0.95 N (0 — 0.097 kgf, 0 — 0.21 lbf)

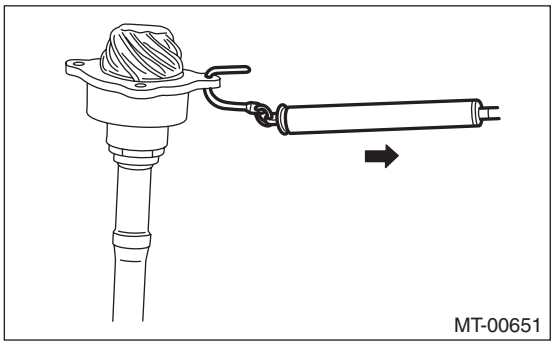

2) Gear
Replace gears in the following cases.
- The gear teeth surface is damaged or excessively worn.

3) Bearing
Replace the bearings in the following cases.
- Wear, rusting or damage of the bearings
- The bearing does not rotate smoothly or an abnormal noise is emitted when turning.

4) Adapter plate
Replace the adapter plate in the following cases:
- Wear, rusting or damage of the bearings
- Damage of the adapter plate

5) Check that the pipes and pipe chambers are not damaged or clogged. Repair or replace if damaged or clogged.

F: ADJUSTMENT

1) Inspect and adjust the hypoid driven gear-to-drive pinion backlash. <Ref. to 6MT(TY85)-102, HYPOID DRIVEN GEAR BACKLASH, ADJUSTMENT, Front Differential Assembly.>

2) Apply a thin uniform coat of lead-free red dye on the surfaces of 3 or 4 hypoid driven gear teeth.

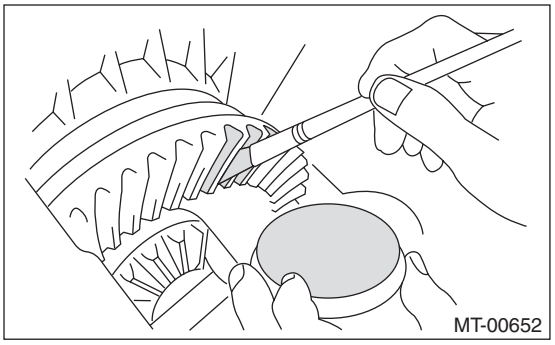

3) Install the drive pinion shaft assembly to the clutch housing, and tighten at least 4 bolts.

NOTE:
Install with the remaining liquid gasket, so that the clutch housing and the adapter plate will not be damaged.

Tightening torque:
50 N·m (5.1 kgf-m, 36.9 ft-lb)

4) Turn a few times using the ST.
ST 18631AA000 HANDLE

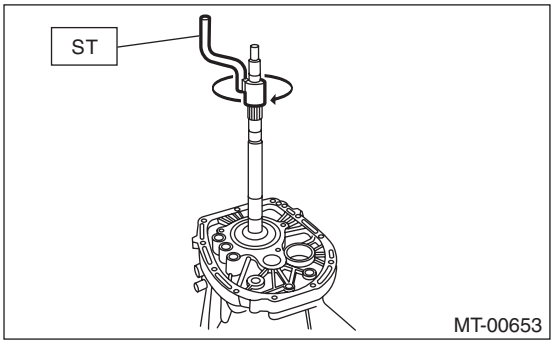

5) Remove the drive pinion shaft assembly, and inspect the mating condition of the teeth. If the tooth contact is not correct, adjust the backlash or shim thickness.

• Correct tooth contact

Check item: Tooth contact surface is slightly shifted toward the toe side under a no-load condition. (When driving, it moves towards the heel side.)

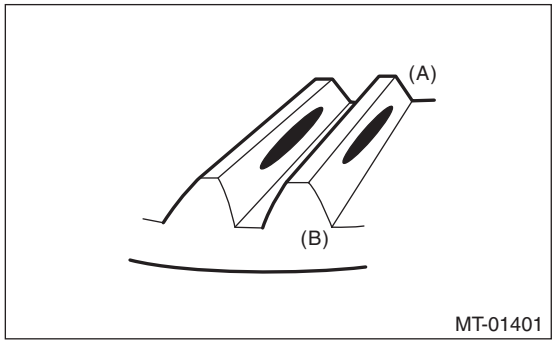

(A) Toe side
(B) Heel side

• Face contact

Check item: Backlash is too large.

Contact pattern

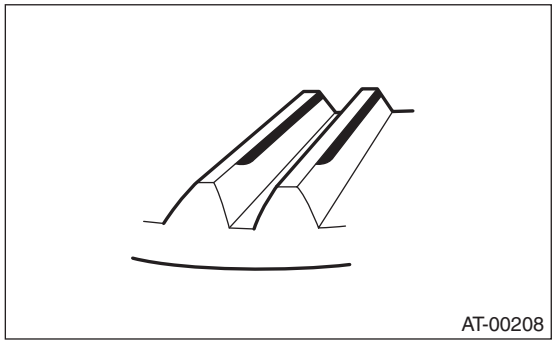

Corrective action: Tighten the side retainer to move the driven gear closer to the drive pinion shaft.

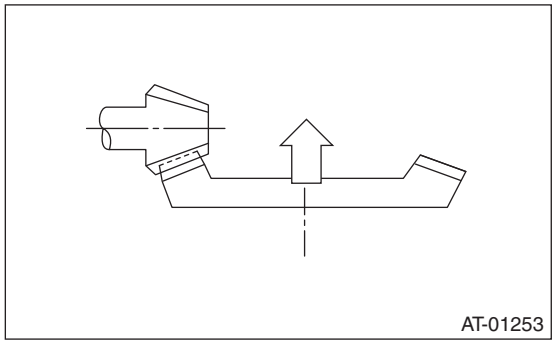

• Flank contact

Check item: Backlash is too small.

Contact pattern

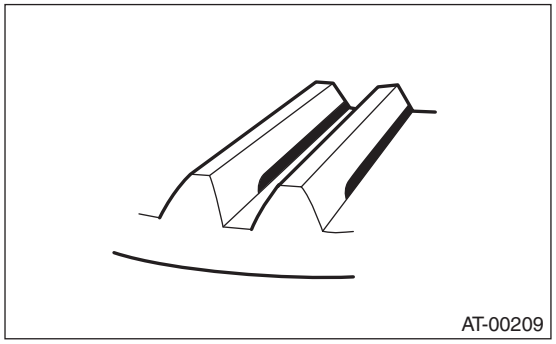

Corrective action: Loosen the side retainer to move the driven gear away from the drive pinion shaft.

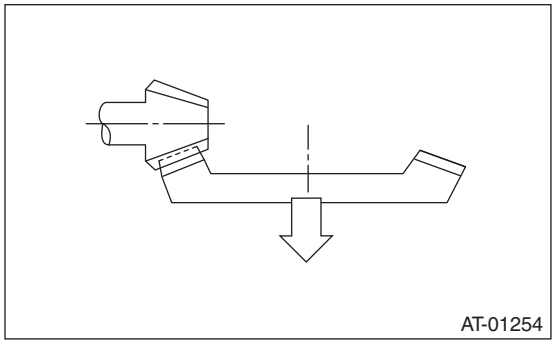

• Toe contact (inside contact)

Check item: Teeth contact area is too small.

Contact pattern

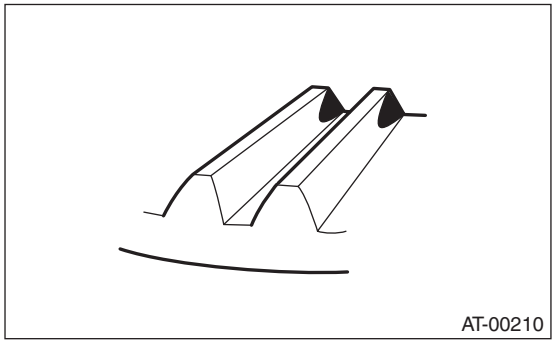

Adjustment: Reduce the thickness of the drive pinion shim according to the procedure for moving the drive pinion away from the driven gear.

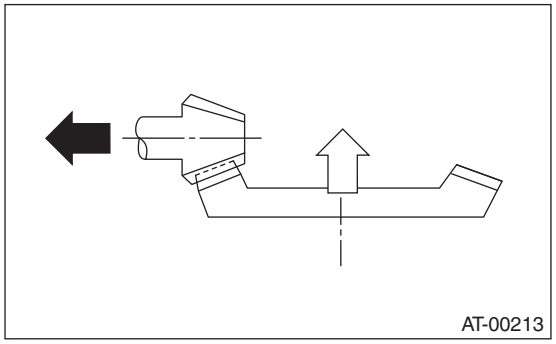

- Heel contact (outside end contact)

Check item: Teeth contact area is too small.

Contact pattern

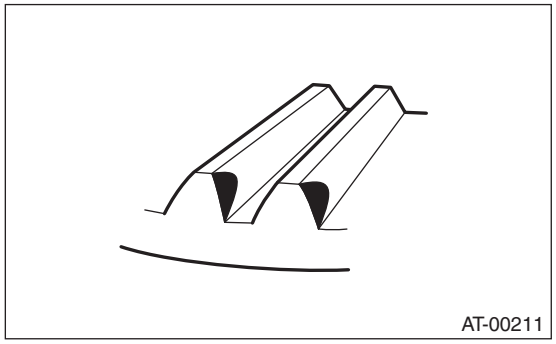

Adjustment: Increase thickness of the drive pinion shim according to the procedures for moving the drive pinion closer to the driven gear.

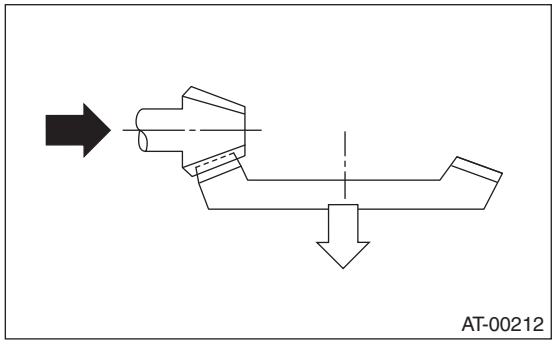

23.Front Differential Assembly

A: REMOVAL

1) Remove the manual transmission assembly. <Ref. to 6MT(TY85)-32, REMOVAL, Manual Transmission Assembly.>
2) Prepare the transmission for overhaul. <Ref. to 6MT(TY85)-39, Preparation for Overhaul.>
3) Remove the neutral position switch, back-up light switch and harness. <Ref. to 6MT(TY85)-42, REMOVAL, Neutral Position Switch.> <Ref. to 6MT(TY85)-41, REMOVAL, Back-up Light Switch.>
4) Remove the extension case. <Ref. to 6MT(TY85)-43, REMOVAL, Extension Case.>
5) Remove the transfer driven gear. <Ref. to 6MT(TY85)-55, REMOVAL, Transfer Driven Gear.>
6) Remove the center differential. <Ref. to 6MT(TY85)-57, REMOVAL, Center Differential.>
7) Remove the transmission case. <Ref. to 6MT(TY85)-58, REMOVAL, Transmission Case.>
8) Remove the individual gear assemblies. <Ref. to 6MT(TY85)-64, REMOVAL, Main Shaft Assembly.>
9) Remove the drive pinion shaft assembly. <Ref. to 6MT(TY85)-92, REMOVAL, Drive Pinion Shaft Assembly.>
10) Remove the retainer lock plates on both sides.

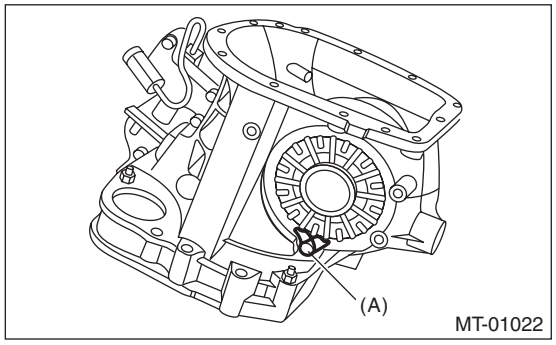

(A) Retainer lock plate

11) Remove the differential side retainers on both sides using the ST.

ST1 18630AA010 WRENCH COMPL RETAINER (RH SIDE)
ST2 18630AA000 WRENCH ASSY (LH SIDE)

NOTE:
Be careful not to damage the section where the clutch case retainer will be attached.

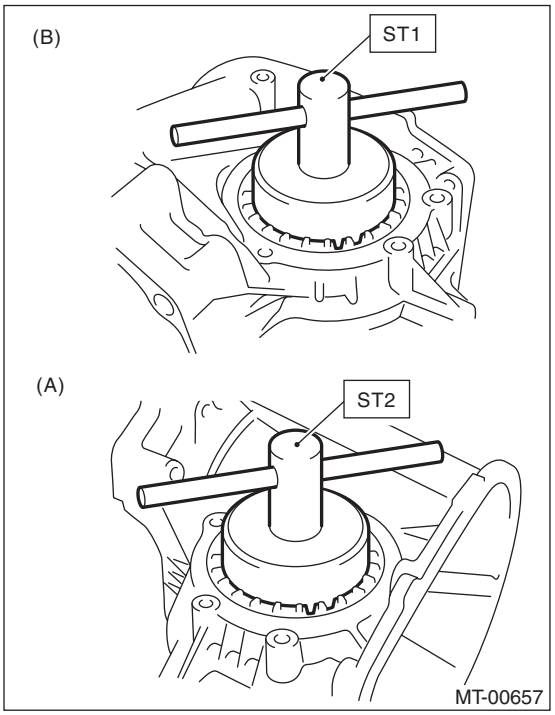

(A) LH side
(B) RH side

12) Remove the front differential.

B: INSTALLATION

1) Install the differential assembly to the clutch housing.
2) Apply oil to the screw threads of the differential side retainer.
3) Remove the O-rings on both sides of the differential side retainer.
4) Install the differential side retainers to both sides, using the ST.

ST1 18630AA010 WRENCH COMPL RETAINER (RH SIDE)
ST2 18630AA000 WRENCH ASSY (LH SIDE)

NOTE:
Be careful not to damage the oil seal.
5) Inspect and adjust the hypoid driven gear backlash. <Ref. to 6MT(TY85)-101, HYPOID DRIVEN GEAR BACKLASH, INSPECTION, Front Differential Assembly.>
6) Inspect and adjust the tooth contact. <Ref. to 6MT(TY85)-95, ADJUSTMENT, Drive Pinion Shaft Assembly.>

7) Mark the mating positions of the left and right differential side retainers and the clutch housing.

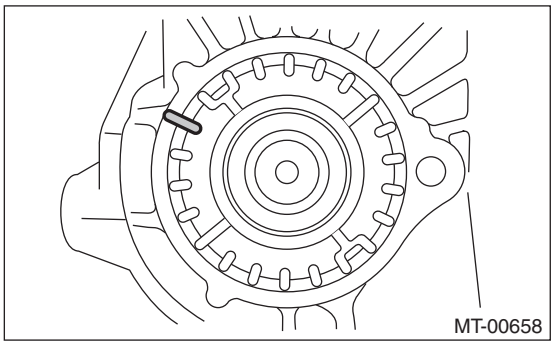

8) Remove the differential side retainers from both sides.

NOTE:
When removing the side retainer, record how many times it was turned to remove.

9) Install new O-rings to the differential side retainers on both sides.

10) Attach the differential side retainers to both sides.

NOTE:
When attaching, turn the side retainer the same number of turns it took to remove, and align the marks.

11) Install the retainer lock plate.

Tightening torque:
25 N·m (2.5 kgf-m, 18.4 ft-lb)

NOTE:
Be careful not to confuse the left and right side retainer lock plates.

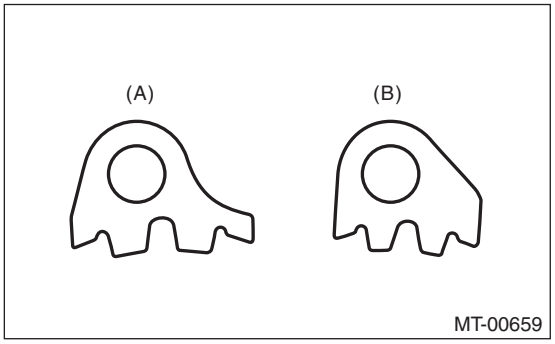

(A) LH
(B) RH

12) Remove any remaining liquid gasket from the clutch housing and adapter plate.

13) Apply liquid gasket to the clutch housing.

Liquid gasket:
THREE BOND 1215B or equivalent

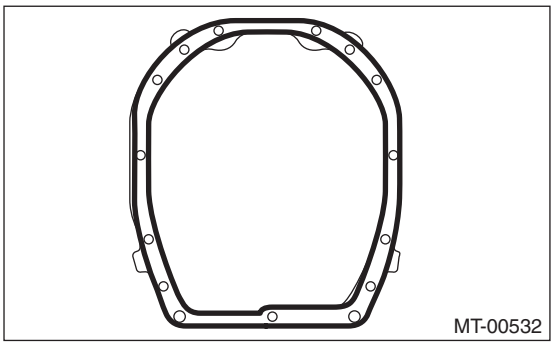

14) Install the drive pinion shaft assembly. <Ref. to 6MT(TY85)-92, INSTALLATION, Drive Pinion Shaft Assembly.>

15) Install the individual gear assemblies all at once. <Ref. to 6MT(TY85)-65, INSTALLATION, Main Shaft Assembly.>

16) Install the transmission case. <Ref. to 6MT(TY85)-60, INSTALLATION, Transmission Case.>

17) Install the center differential. <Ref. to 6MT(TY85)-57, INSTALLATION, Center Differential.>

18) Install the transfer driven gear. <Ref. to 6MT(TY85)-55, INSTALLATION, Transfer Driven Gear.>

19) Install the extension case. <Ref. to 6MT(TY85)-43, INSTALLATION, Extension Case.>

20) Install the neutral position switch, back-up light switch and harness. <Ref. to 6MT(TY85)-42, INSTALLATION, Neutral Position Switch.> <Ref. to 6MT(TY85)-41, INSTALLATION, Back-up Light Switch.>

21) Install the manual transmission assembly to the vehicle. <Ref. to 6MT(TY85)-34, INSTALLATION, Manual Transmission Assembly.>

C: DISASSEMBLY

1. DIFFERENTIAL CASE

1) Fix the differential assembly on a vice, and remove the hypoid driven gear.
ST 18270KA020 SOCKET (E20)

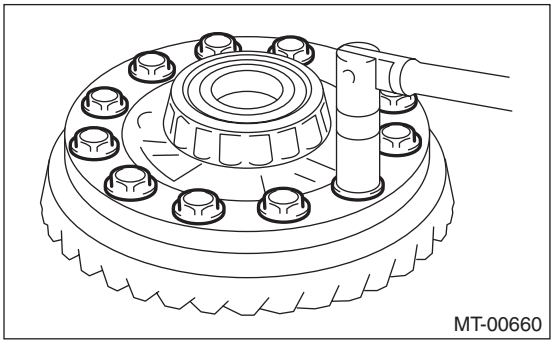

2) Remove the taper roller bearing of the hypoid driven gear using the ST.
ST 399527700 PULLER SET

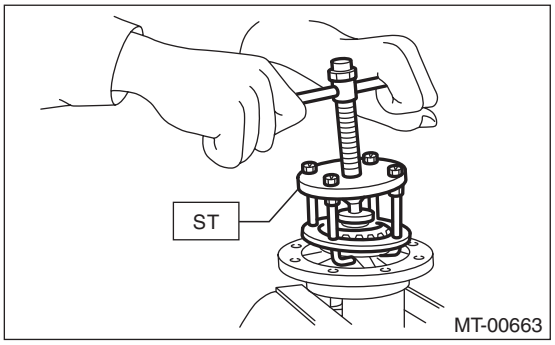

2. DIFFERENTIAL SIDE RETAINER

1) Remove the O-rings.

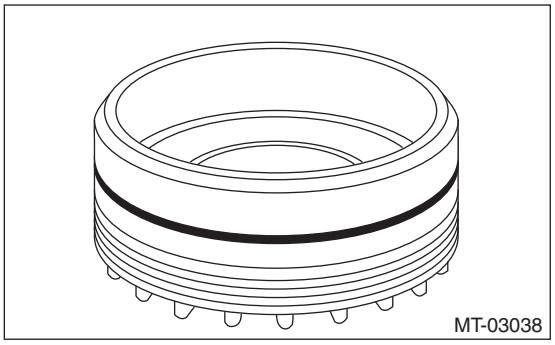

2) Remove the oil seal.

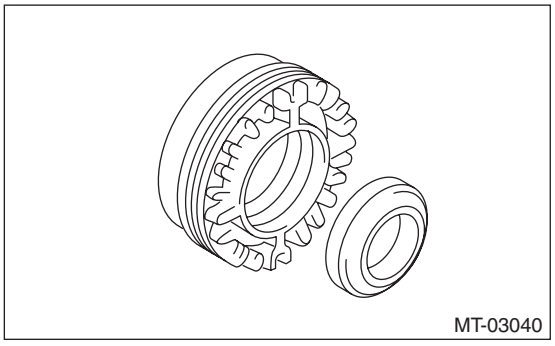

3) Remove the claw of ST1, and attach the claw of ST2.
ST1 398527700 PULLER ASSY
ST2 18760AA000 CLAW

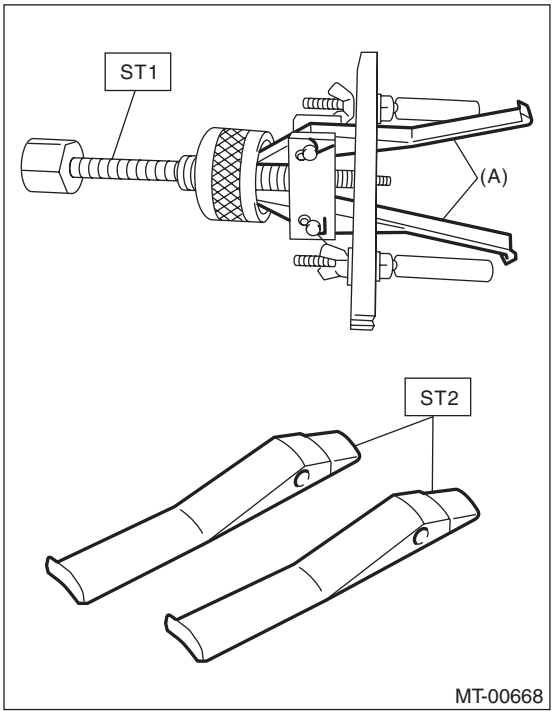

(A) Claw

4) Using the ST, remove the taper roller bearing outer race.
ST1 398527700 PULLER ASSY
ST2 18760AA000 CLAW

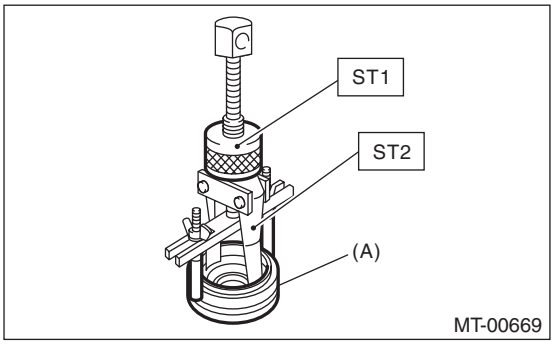

(A) Differential side retainer

D: ASSEMBLY

1. DIFFERENTIAL CASE

1) Using the ST, attach the RH and LH taper roller bearing inner races to the differential case.
ST1 398437700 INSTALLER
ST2 398497701 SEAT

CAUTION:
Do not apply pressure in excess of 20 kN (2.0 ton, 2.2 US ton, 2.0 Imp ton).

NOTE:
Always replace the taper roller bearing inner race and outer race as a set.

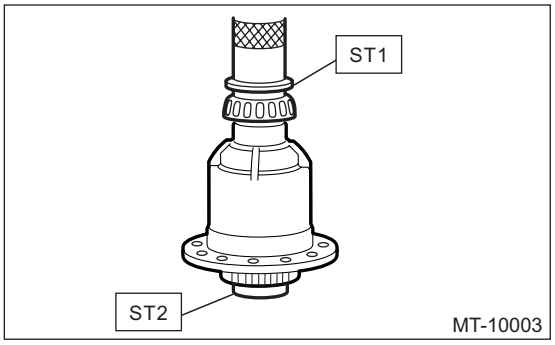

2) Install the hypoid driven gear to differential case.
ST 18270KA020 SOCKET (E20)

Tightening torque:
69 N·m (7.0 kgf-m, 50.9 ft-lb)

2. DIFFERENTIAL SIDE RETAINER

NOTE:
Install the oil seal and O-ring of side retainer after the adjustment of backlash and tooth contact.
1) Attach the taper roller bearing outer race to the differential side retainer.
2) Using the ST, install the oil seal.
ST 18675AA000 DIFFERENTIAL SIDE OIL SEAL INSTALLER

NOTE:
- Use a new oil seal.
- Apply oil to the oil seal lips.

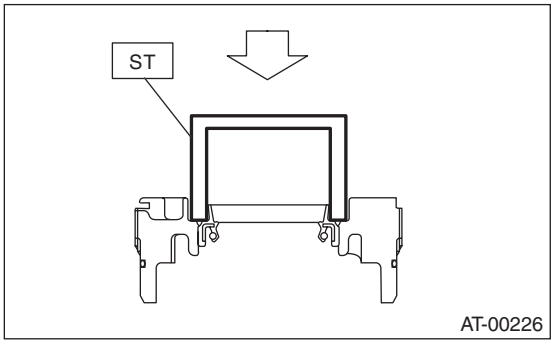

3) Install the O-rings.

NOTE:
Use new O-rings.

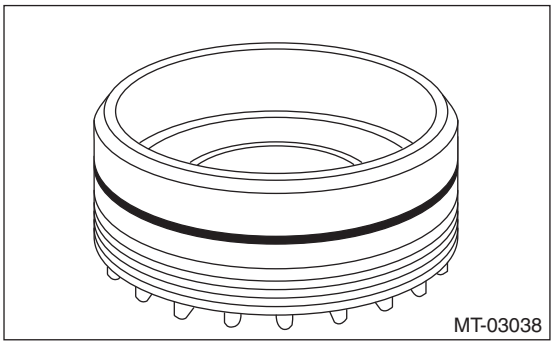

E: INSPECTION

Repair or replace the differential in the following cases:
- If gears are damaged, seized, or are excessively worn.
- If differential case sliding surfaces are damaged, seized, or are excessively worn.
- If there is damage, rust or wear in the bearings or bearing locations.
- If the bearing does not rotate smoothly or an abnormal noise is emitted when turning.

1. HYPOID DRIVEN GEAR BACKLASH

Inspect the hypoid driven gear backlash. Adjust if out of standard. <Ref. to 6MT(TY85)-102, HYPOID DRIVEN GEAR BACKLASH, ADJUSTMENT, Front Differential Assembly.>

2. TOOTH CONTACT OF HYPOID DRIVEN GEAR

1) Check that the hypoid driven gear backlash is within the standard value. Adjust if out of standard. <Ref. to 6MT(TY85)-102, HYPOID DRIVEN GEAR BACKLASH, ADJUSTMENT, Front Differential Assembly.>
2) Apply a thin uniform coat of lead-free red dye on the surfaces of 3 or 4 hypoid driven gear teeth.

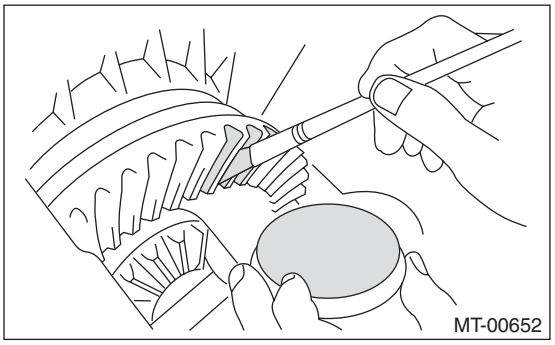

3) Attach the drive pinion shaft assembly, and affix with at least 4 bolts.

NOTE:
Use old gaskets and washers to prevent the mating surfaces of the housing from becoming damaged.

Tightening torque:
50 N·m (5.1 kgf-m, 36.9 ft-lb)

4) Turn the drive pinion shaft to the left and right for several turns.
5) Remove the drive pinion shaft assembly, and inspect the mating condition of the teeth. If tooth contact is not correct, perform adjustment. <Ref. to 6MT(TY85)-95, ADJUSTMENT, Drive Pinion Shaft Assembly.>
- Correct tooth contact

NOTE:
In a no load condition, the tooth contact from the center to the toe side is 50-60%. (While driving, the tooth contact will shift towards the heel side.)

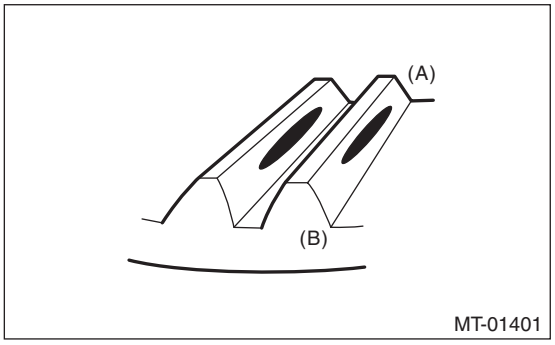

(A) Toe side
(B) Heel side

F: ADJUSTMENT

1. HYPOID DRIVEN GEAR BACKLASH

1) Attach the RH and LH differential side retainers.
ST1 18630AA010 WRENCH COMPL RETAINER (RH SIDE)
ST2 18630AA000 WRENCH ASSY (LH SIDE)

NOTE:
- Tighten the side retainer on the RH side a little further than that of the LH side.
- WRENCH ASSY (499787000) can also be used.

2) Attach the drive pinion shaft assembly, and affix with 5 bolts.

NOTE:
Use old gaskets and washers to prevent the mating surfaces of the housing from becoming damaged.

Tightening torque:
50 N·m (5.1 kgf-m, 36.9 ft-lb)

3) Using the ST, loosen the differential side retainer RH, and tighten the differential side retainer LH until the hypoid driven gear just contacts the drive pinion.
ST1 18630AA010 WRENCH COMPL RETAINER (RH SIDE)
ST2 18630AA000 WRENCH ASSY (LH SIDE)
4) Use the ST to turn the drive pinion shaft a few times.
ST 18631AA000 HANDLE

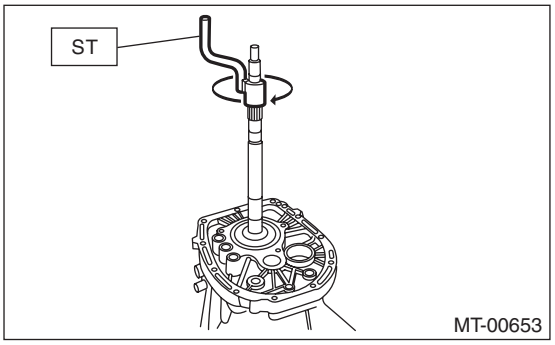

5) Repeat steps 3) and 4) until differential side retainer LH does not turn anymore. For differential side retainer RH, tighten until the inner race and outer race just comes into contact. This is the “zero” backlash state.
6) Mark the mating positions of the left and right differential side retainers and the clutch housing.

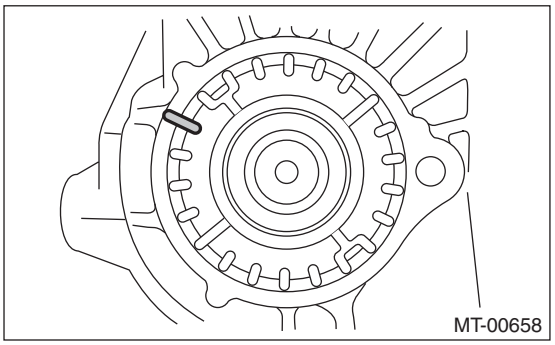

7) Return the differential side retainer LH by 3 notches, and tighten the differential side retainer RH by 3 notches.
8) Temporarily attach the LH side retainer lock plate.
9) Tighten the differential side retainer RH by 1.25 notches.
10) Temporarily attach the RH side retainer lock plate.

NOTE:
- If the lock plate cannot be aligned, adjust the position toward the tightened side.
- The notch on the lock plate moves by 0.5 notch if the lock plate is turned upside down when installed.

11) Use the ST to fix the drive pinion shaft in place.
ST 18621AA000 ADAPTER WRENCH

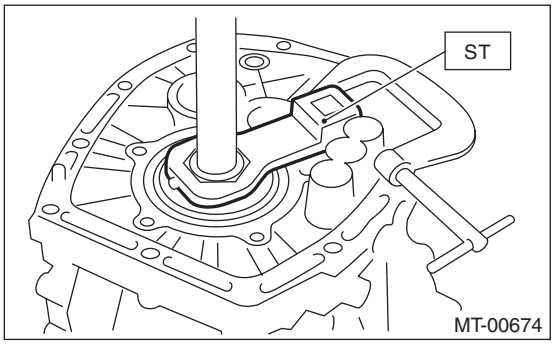

12) Install the SUBARU genuine axle shaft to the front differential left and right sides.
Part No. 38415AA000 Axle shaft
13) Move the axle shaft, and measure the hypoid driven gear backlash.
ST1 498255400 PLATE
ST2 498247001 MAGNET BASE
ST3 498247100 DIAL GAUGE

Hypoid driven gear backlash:
0.13 — 0.18 mm (0.0051 — 0.0071 in)

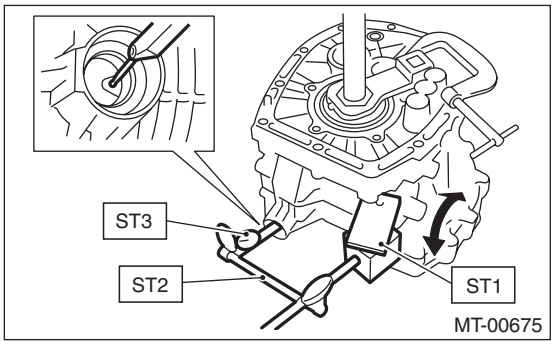

14) If the backlash is out of specified range, remove the left and right retainer lock plates and loosen RH side differential side retainer. Then, adjust the LH side differential side retainer by turning it, and attach the LH side retainer lock plate.
15) Tighten the RH side differential side retainer until the inner race and outer race just come into contact.

2. TOOTH CONTACT OF HYPOID DRIVEN GEAR

Regarding teeth contact conditions, refer to the drive pinion section. <Ref. to 6MT(TY85)-101, TOOTH CONTACT OF HYPOID DRIVEN GEAR, INSPECTION, Front Differential Assembly.>

24.Shifter Fork and Rod

A: REMOVAL

1) Remove the manual transmission assembly from the vehicle. <Ref. to 6MT(TY85)-32, REMOVAL, Manual Transmission Assembly.>
2) Prepare the transmission for overhaul. <Ref. to 6MT(TY85)-39, Preparation for Overhaul.>
3) Remove the neutral position switch, back-up light switch and harness. <Ref. to 6MT(TY85)-42, REMOVAL, Neutral Position Switch.> <Ref. to 6MT(TY85)-41, REMOVAL, Back-up Light Switch.>
4) Remove the extension case. <Ref. to 6MT(TY85)-43, REMOVAL, Extension Case.>
5) Remove the transfer driven gear. <Ref. to 6MT(TY85)-55, REMOVAL, Transfer Driven Gear.>
6) Remove the center differential. <Ref. to 6MT(TY85)-57, REMOVAL, Center Differential.>
7) Remove the transmission case. <Ref. to 6MT(TY85)-58, REMOVAL, Transmission Case.>
8) Remove the individual gear assemblies. <Ref. to 6MT(TY85)-64, REMOVAL, Main Shaft Assembly.>

B: INSTALLATION

1) Install the individual gear assemblies all at once. <Ref. to 6MT(TY85)-65, INSTALLATION, Main Shaft Assembly.>
2) Install the transmission case. <Ref. to 6MT(TY85)-60, INSTALLATION, Transmission Case.>
3) Install the center differential. <Ref. to 6MT(TY85)-57, INSTALLATION, Center Differential.>
4) Install the transfer driven gear. <Ref. to 6MT(TY85)-55, INSTALLATION, Transfer Driven Gear.>
5) Install the extension case. <Ref. to 6MT(TY85)-43, INSTALLATION, Extension Case.>
6) Install the neutral position switch, back-up light switch and harness. <Ref. to 6MT(TY85)-42, INSTALLATION, Neutral Position Switch.> <Ref. to 6MT(TY85)-41, INSTALLATION, Back-up Light Switch.>
7) Install the manual transmission assembly to the vehicle. <Ref. to 6MT(TY85)-34, INSTALLATION, Manual Transmission Assembly.>

C: DISASSEMBLY

1. REVERSE SHIFTER FORK

1) Remove the reverse shifter fork using the ST.
ST 398791700 REMOVER

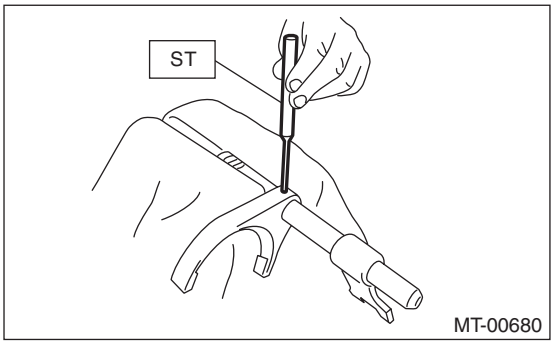

2) Remove the reverse shifter arm using the ST.
ST 398791700 REMOVER

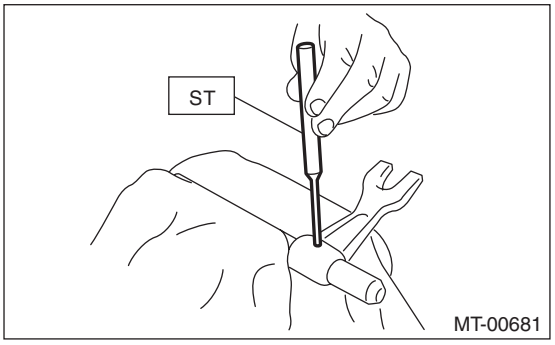

2. 1ST-2ND, 3RD-4TH SHIFTER FORK

1) Using the ST, remove the 3rd-4th shifter fork.
ST 398791700 REMOVER

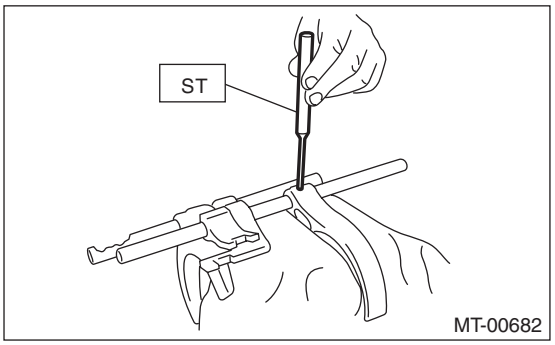

2) Using the ST, remove the 3rd-4th shifter arm.
ST 398791700 REMOVER

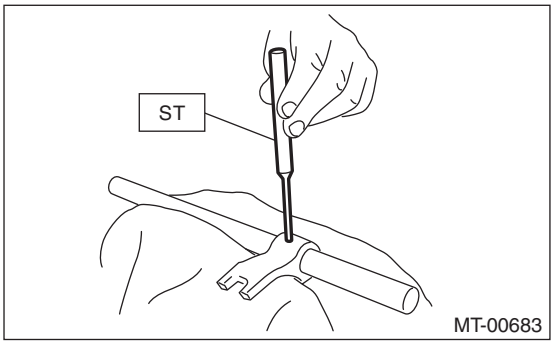

3) Using the ST, remove the 1st-2nd shifter arm and 1st-2nd shifter fork.
ST 398791700 REMOVER

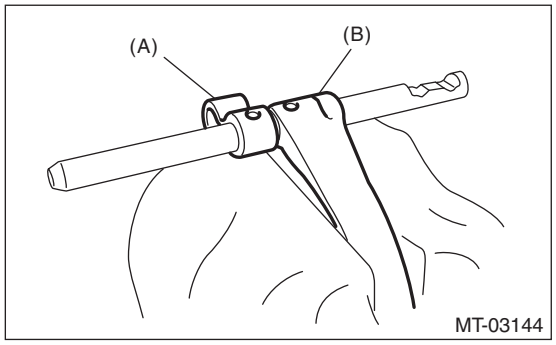

(A) 1st-2nd shifter arm
(B) 1st-2nd shifter fork

3. 5TH-6TH SHIFTER FORK

1) Using the ST, remove the 5th-6th shifter fork.
ST 398791700 REMOVER

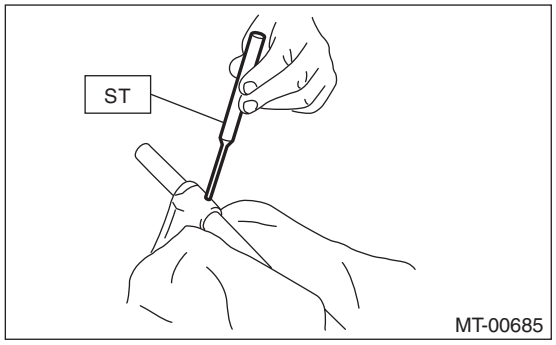

2) Using the ST, remove the 5th-6th shifter arm.
ST 398791700 REMOVER

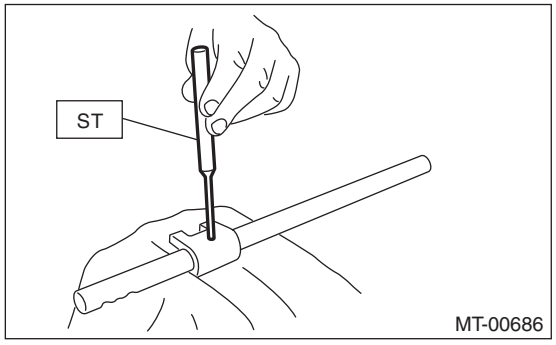

4. SHIFTER ARM SHAFT

Remove the selector arm using the ST.
ST 398791700 REMOVER

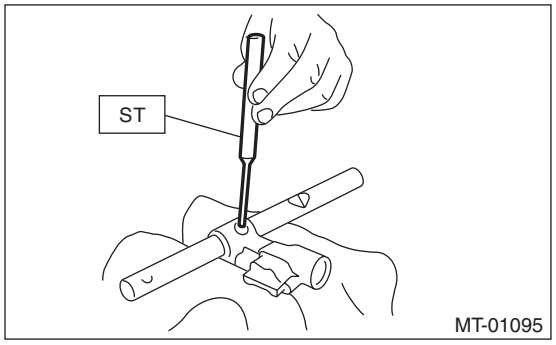

5. STRIKING ROD

1) Remove the reverse interlock block and the interlock block from the striking rod.

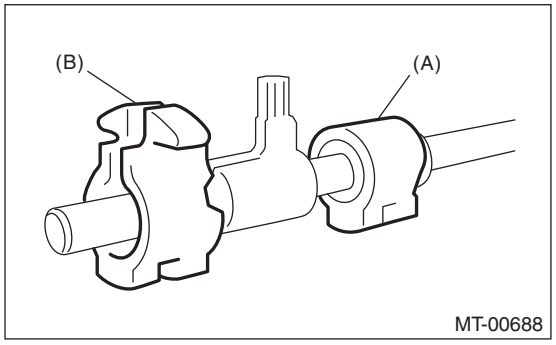

(A) Reverse interlock block
(B) Interlock block

2) Remove the reverse interlock arm using the ST.
ST 398791700 REMOVER

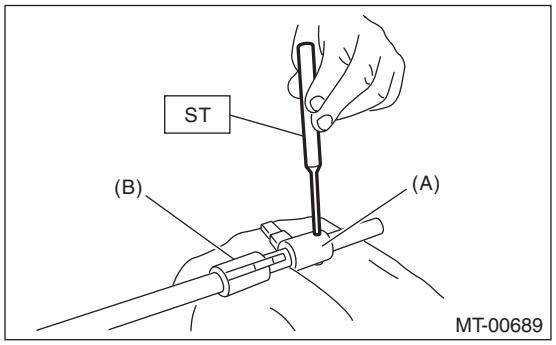

(A) Reverse interlock arm
(B) Interlock arm

3) Remove the interlock arm using the ST.
ST 398791700 REMOVER

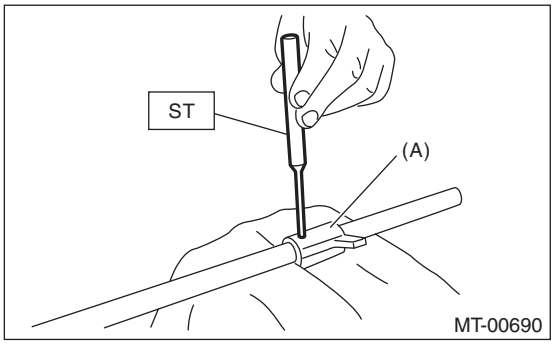

(A) Interlock arm

D: ASSEMBLY

1. REVERSE SHIFTER FORK

1) Using the ST, install the reverse shifter fork.
ST 398791700 REMOVER

NOTE:
• Confirm that the reverse shifter fork and rod are installed in the proper direction.
• Use a new straight pin.

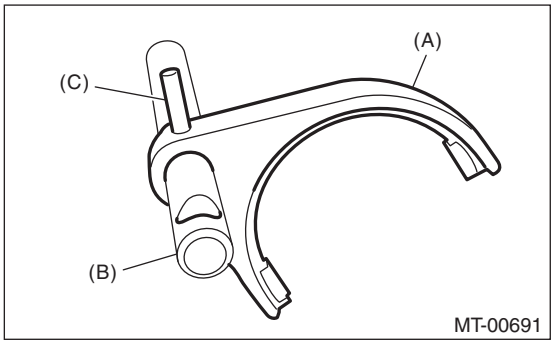

(A) Reverse shifter fork
(B) Reverse fork rod
(C) Straight pin

2) Using the ST, install the reverse shifter arm.
ST 398791700 REMOVER

NOTE:
• Confirm that the reverse shifter arm and rod are installed in the proper direction.
• Use a new straight pin.

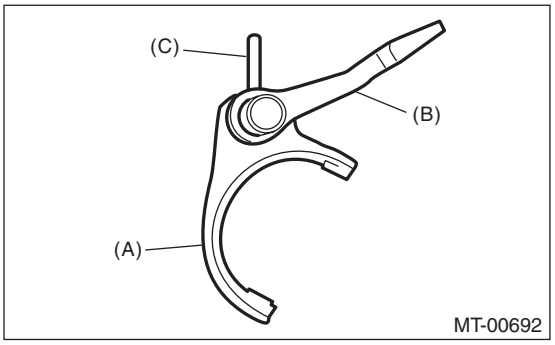

(A) Reverse shifter fork
(B) Reverse shifter arm
(C) Straight pin

2. 1ST-2ND, 3RD-4TH SHIFTER FORK

1) Using the ST, install the 1st-2nd shifter fork.
ST 398791700 REMOVER

NOTE:
• Make sure that the 1st-2nd shifter fork and rod are installed in the correct direction.
• Use a new straight pin.

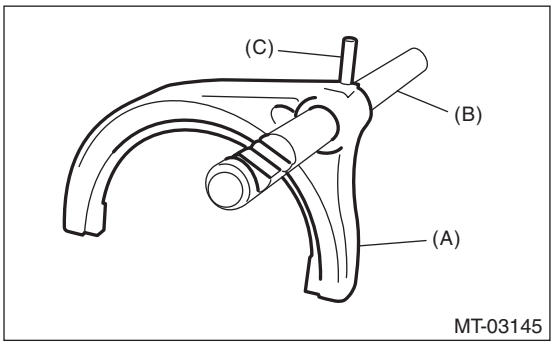

(A) 1st-2nd shifter fork
(B) 1st-2nd fork rod
(C) Straight pin

2) Using the ST, install the 1st-2nd shifter arm.
ST 398791700 REMOVER

NOTE:
• Make sure that the 1st-2nd shifter arm and fork are installed in the correct direction.
• Use a new straight pin.

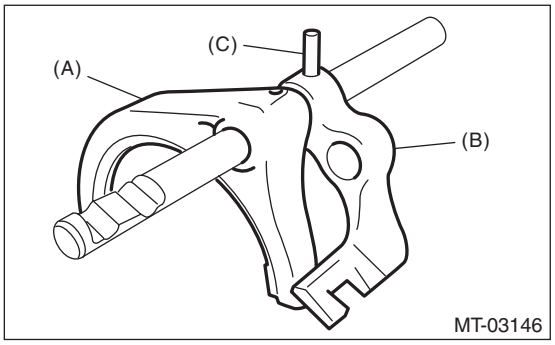

(A) 1st-2nd shifter fork
(B) 1st-2nd shifter arm
(C) Straight pin

3) Using the ST, install the 3rd-4th shifter arm.
ST 398791700 REMOVER

NOTE:
• Make sure that the 3rd-4th shifter arm and rod are installed in the correct direction.
• Use a new straight pin.

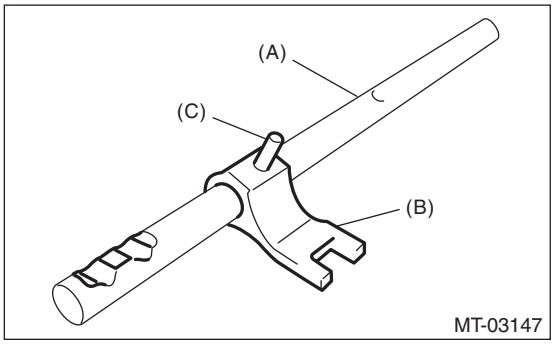

(A) 3rd-4th shifter rod
(B) 3rd-4th shifter arm
(C) Straight pin

4) Attach the 3rd-4th fork rod to the 1st-2nd shifter arm.

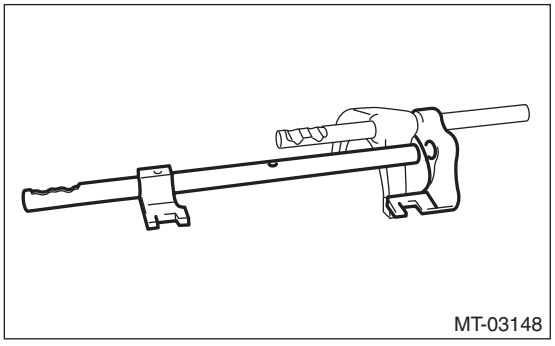

5) Using the ST, install the 3rd-4th shifter fork.
ST 398791700 REMOVER

NOTE:
• Make sure that the 3rd-4th shifter fork is installed in the correct direction.
• Use a new straight pin.

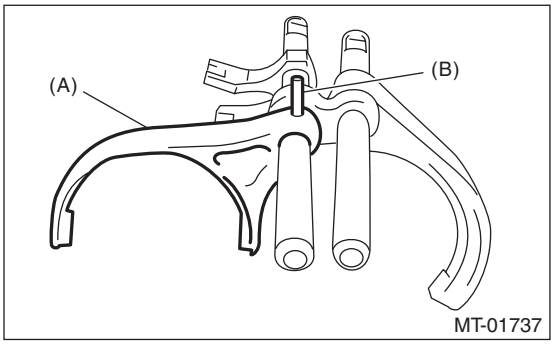

(A) 3rd-4th shifter fork
(B) Straight pin

3. 5TH-6TH SHIFTER FORK

1) Using the ST, install the 5th-6th shifter arm.
ST 398791700 REMOVER

NOTE:
• Make sure that the 5th-6th shifter arm and rod are installed in the correct direction.
• Use a new straight pin.

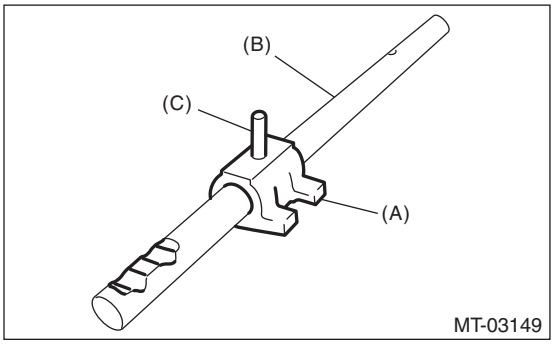

(A) 5th-6th shifter arm
(B) 5th-6th fork rod
(C) Straight pin

2) Using the ST, install the 5th-6th shifter fork.
ST 398791700 REMOVER

NOTE:
• Make sure that the 5th-6th shifter fork and arm are installed in the correct direction.
• Use a new straight pin.

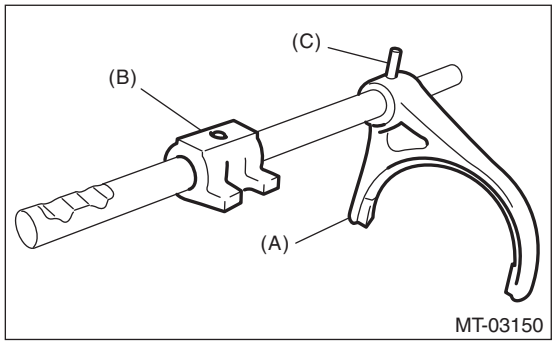

(A) 5th-6th shifter fork
(B) 5th-6th shifter arm
(C) Straight pin

4. SHIFTER ARM SHAFT

Using the ST, install the selector arm.
ST 398791700 REMOVER

NOTE:
• Confirm that the selector arm and shaft are installed in the proper direction.
• Use a new straight pin.

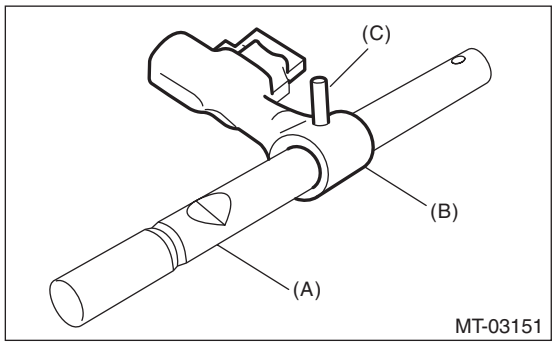

(A) Shifter arm shaft
(B) Selector arm
(C) Straight pin

5. STRIKING ROD

1) Using the ST, install the reverse interlock arm and interlock arm.
ST 398791700 REMOVER

NOTE:
• Confirm that the reverse interlock arm and rod are installed in the proper direction.
• Confirm that the interlock arm and rod are installed in the proper direction.
• Use a new straight pin.

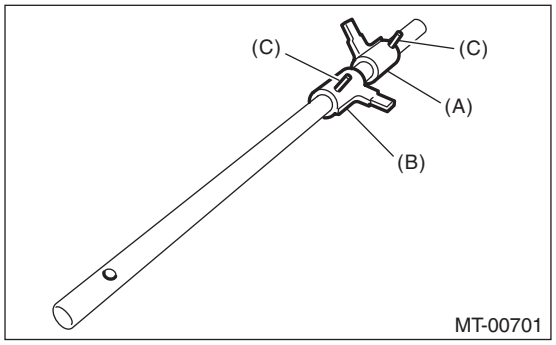

(A) Reverse interlock arm
(B) Interlock arm
(C) Straight pin

2) Attach the reverse interlock block and interlock block to the striking rod.

NOTE:
Confirm that the reverse interlock block and interlock block are installed in the proper direction.

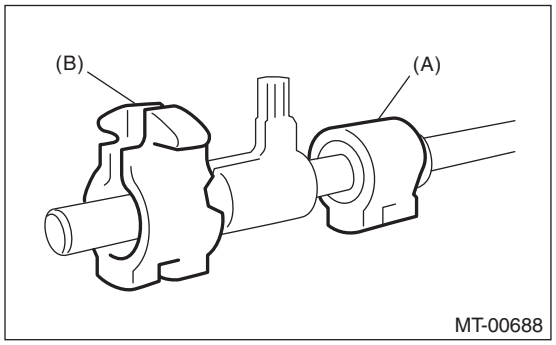

(A) Reverse interlock block
(B) Interlock block

E: INSPECTION

1) Check the shift shaft and shift rod for damage. Replace if damaged.
2) Repair or replace the gearshift mechanism if excessively worn, bent or defective in any way.

F: ADJUSTMENT

1. 1ST-2ND FORK ROD SELECTION

NOTE:
In the following conditions, perform the procedures below.
- Replacement of the 1st and 2nd driven gear
- 1st and 2nd synchro ring assembly replacement
- Adapter plate replacement
- Driven shaft replacement
- 1st-2nd synchronizer hub and coupling sleeve assembly replacement.

1) Insert the drive pinion shaft assembly into the adapter plate.

NOTE:
Confirm that the thrust bearing outer race has not been removed and the drive pinion is not lifted.

2) Set the height gauge to the adapter plate. Lower the height gauge indicator to the mating surface of the adapter plate and case, and set to zero points.
ST 18853AA000 HEIGHT GAUGE

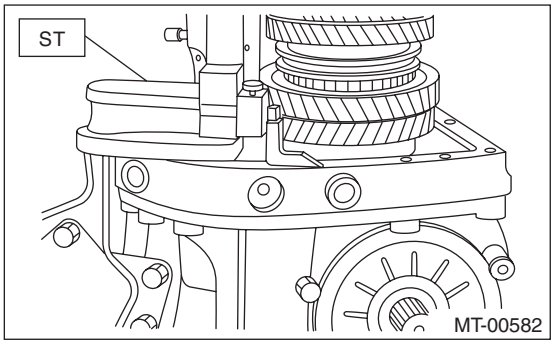

NOTE:
- The adapter plate will be the base point for the measurement. Use a scraper to remove any gasket material remaining on the end face.
- During measurement, do not place the height gauge in the shaded area shown in the figure.

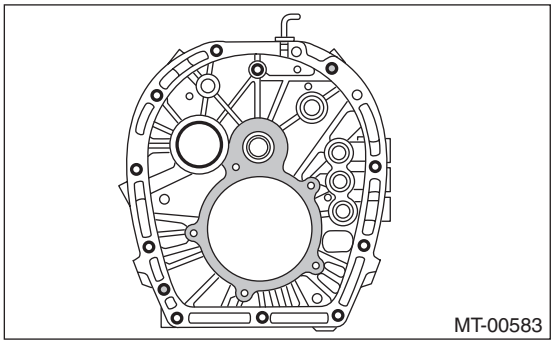

3) Select the main shaft snap ring. <Ref. to 6MT(TY85)-76, ADJUSTMENT, Main Shaft Assembly.>

4) Measure “B1” and “B2” as shown in the figure.

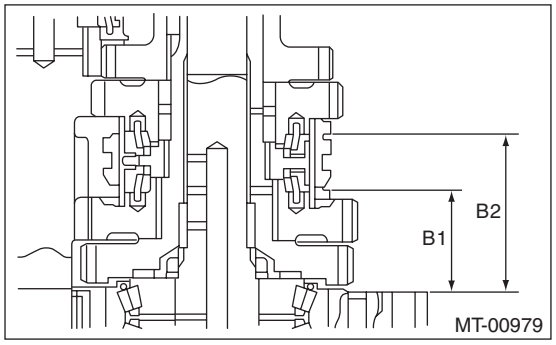

5) Shift down the 1st-2nd coupling sleeve all the way to the 1st driven gear side, and measure “B1”.

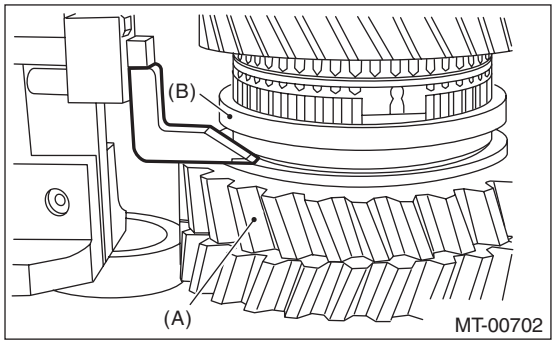

(A) 1st driven gear
(B) 1st-2nd coupling sleeve

NOTE:
- Set the height gauge indicator near the measurement target, and lock dial (1) as shown in the figure. Turn dial (2), and set the indicator to the 1st side end surface of the coupling sleeve.
- Turn approximately 72° at a time, and measure the coupling sleeve in 5 locations. Round down the 2 highest and 2 lowest measurement values. The remaining center value is used as the measurement value.

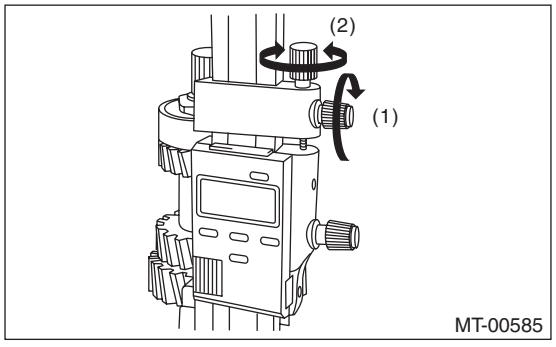

6) Set the height gauge indicator upside down.

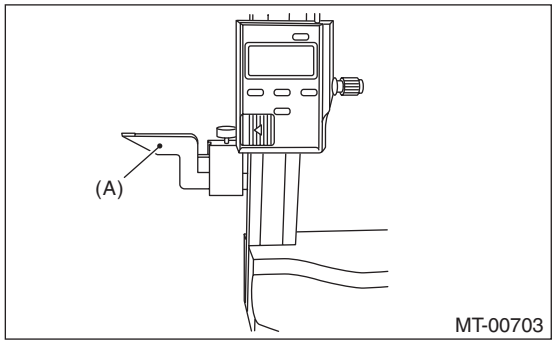

(A) Indicator

7) Shift up the 1st-2nd coupling sleeve all the way to the 2nd driven gear side, and measure “B2”.

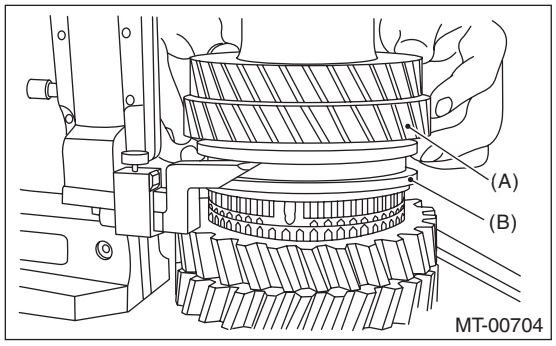

(A) 2nd driven gear
(B) 1st-2nd coupling sleeve

NOTE:
• Set the height gauge indicator near the measurement target, and lock dial (1) as shown in the figure. Turn dial (2), and set the indicator to the 2nd side end surface of the coupling sleeve.
• The measurement is to be performed with two persons, while holding the coupling sleeve straight.
• Turn approximately 72° at a time, and measure the coupling sleeve in 5 locations. Round down the 2 highest and 2 lowest measurement values. The remaining center value is used as the measurement value.

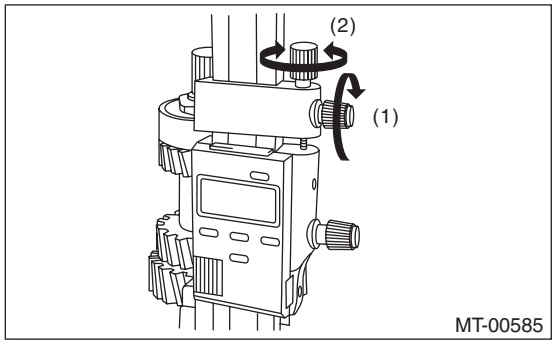

8) According to both of the measurements, calculate the neutral position of the 1st-2nd coupling sleeve. From the following calculation, select a fork rod which matches the calculated value.
Calculation: T = (B1 + B2) / 2
T: 1st-2nd coupling sleeve center position
B1: Height from the adapter plate end to the coupling sleeve end, when shifted to 1st gear
B2: Measured height from the adapter plate end to the coupling sleeve end, when shifted to 2nd gear: +55 mm (2.17 in)

NOTE:
Attach the indicator upside down in comparison to the setting procedures for the zero point. Add “d1” [Value: 55 mm (2.17 in)] from the figure below to “B2”, and measure “B2”.

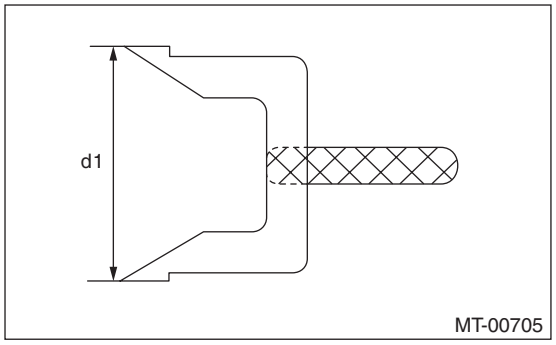

T mm (in)	Lot No. (marking)
62.58 — 62.78 (2.4638 — 2.4717)	32801AA370 (5)
62.78 — 62.98 (2.4717 — 2.4795)	32801AA380 (4)
62.98 — 63.18 (2.4795 — 2.4874)	32801AA390 (2)
63.18 — 63.38 (2.4874 — 2.4953)	32801AA400 (1)
63.38 — 63.58 (2.4953 — 2.5031)	32801AA410 (3)

2. 3RD-4TH FORK ROD SELECTION

NOTE:
In the following conditions, perform the procedures below.
• Main shaft replacement
• 3rd, and 3rd to 6th drive gear and bushing replacement
• 3rd, and 3rd to 6th synchro assembly replacement
• 3rd-4th synchronizer hub and coupling sleeve assembly replacement

1) Insert the main shaft assembly into the adapter plate.
2) Set the height gauge to the adapter plate. Lower the height gauge indicator to the top surface of the snap ring groove, and set to the zero point on the upper side of the double taper roller bearing.
ST 18853AA000 HEIGHT GAUGE

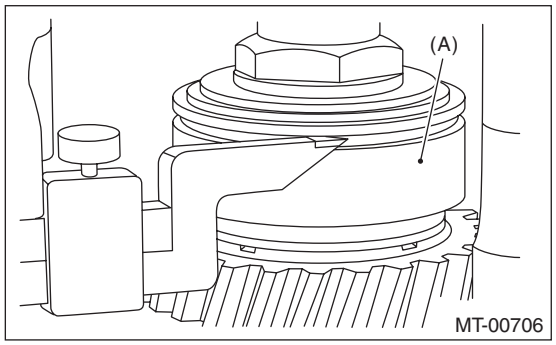

(A) Double taper roller bearing

NOTE:
• The height gauge will be set on the adapter plate during the measurement. Use a scraper to remove any gasket material remaining on the end face.
• During measurement, do not place the height gauge in the shaded area shown in the figure.

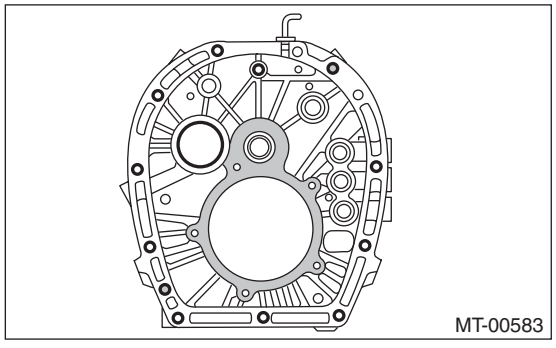

3) Use a height gauge to measure “C1” and “C2” as shown in the figure.

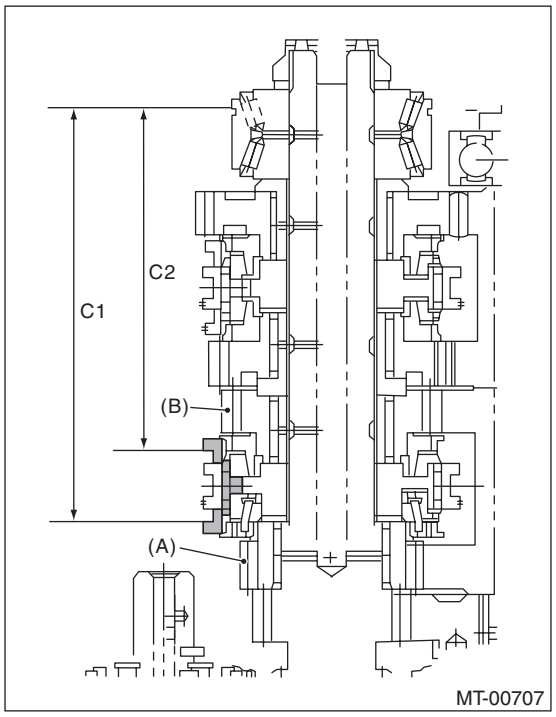

(A) 3rd drive gear
(B) 4th drive gear

(1) Shift up the 3rd-4th coupling sleeve all the way to the 4th drive gear side, and measure “C2”.

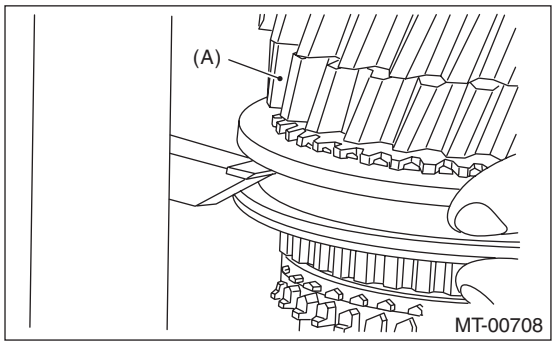

(A) 4th drive gear

NOTE:
• Set the height gauge indicator near the measurement target, and lock dial (1) as shown in the figure.
• Turn dial (2), and set the indicator to the 4th side end surface of the coupling sleeve.
• The measurement is to be performed with two persons, while holding the coupling sleeve straight.
• Turn approximately 72° at a time, and measure the coupling sleeve in 5 locations. Round down the 2 highest and 2 lowest measurement values. The remaining center value is used as the measurement value.

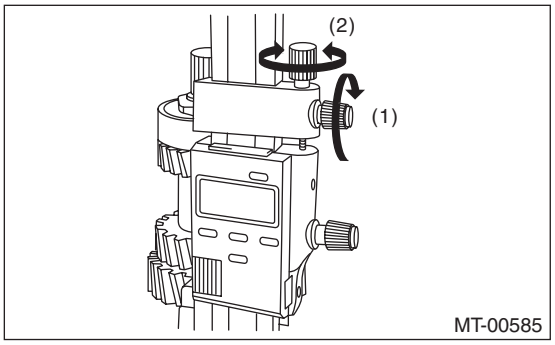

(2) Set the height gauge indicator upside down.

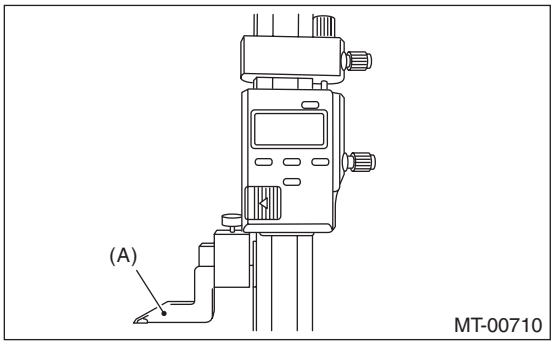

(A) Indicator

(3) Shift down the 3rd-4th coupling sleeve all the way to the 3rd drive gear side, and measure "C1".

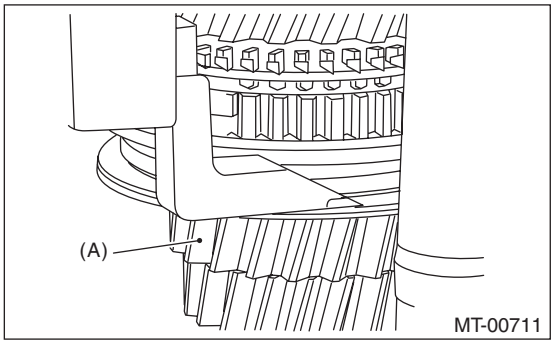

(A) 3rd drive gear

NOTE:
• Set the height gauge indicator near the measurement target, and lock dial (1) as shown in the figure. Turn dial (2), and set the indicator to the 3rd side end surface of the coupling sleeve.
• Turn approximately 72° at a time, and measure the coupling sleeve in 5 locations. Round down the 2 highest and 2 lowest measurement values. The remaining center value is used as the measurement value.

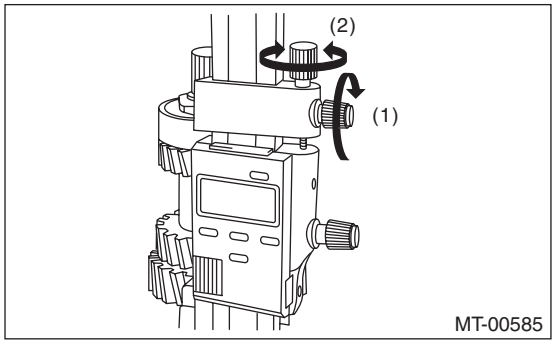

4) According to both of the measurements, calculate the neutral position of the 3rd-4th coupling sleeve. From the following calculation, select a fork rod which matches the calculated value.
Calculation: T = (C1 + C2) / 2
T: 3rd-4th coupling sleeve center position
C1: Measured depth from the double taper roller bearing snap ring groove to the coupling sleeve end, when shifted to 3rd gear: +55 mm (2.17 in)
C2: Measured depth from the double taper roller bearing snap ring groove to the coupling sleeve end, when shifted to 4th gear

NOTE:
Attach the indicator upside down in comparison to the setting procedures for the zero point. Add “d1” [Value: 55 mm (2.17 in)] from the figure below to “C1”, and measure “C1”.

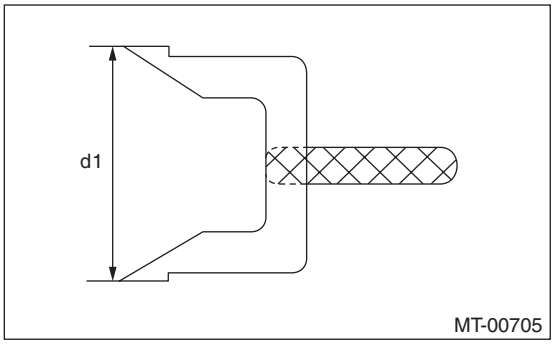

T mm (in)	Lot No. (marking)		
	M.SFT Snap ring 805072010 [t = 1.65 mm (0.065 in)]	M.SFT Snap ring 805072011 [t = 1.95 mm (0.077 in)]	M.SFT Snap ring 805072012 [t = 2.25 mm (0.089 in)]
137.22 — 137.52 (5.4024 — 5.4142)	32809AA240 (none)	32809AA250 (2)	32809AA260 (4)
137.52 — 137.82 (5.4142 — 5.4260)	32809AA230 (1)	32809AA240 (none)	32809AA250 (2)
137.82 — 138.12 (5.4260 — 5.4379)	32809AA220 (3)	32809AA230 (1)	32809AA240 (none)
T = Thickness			

3. 5TH-6TH FORK ROD SELECTION

NOTE:
In the following conditions, perform the procedures below.
- Main shaft replacement
- 3rd to 6th drive gear and bushing replacement
- 3rd to 6th synchro ring assembly replacement
- 3rd-4th synchronizer hub and coupling sleeve assembly replacement
- 5th-6th synchronizer hub and coupling sleeve assembly replacement

1) Insert the main shaft assembly into the adapter plate.
2) Set the height gauge to the adapter plate. Lower the height gauge indicator to the upper face of the snap ring groove or the upper side of the double taper roller bearing. Set to zero point.
ST 18853AA000 HEIGHT GAUGE

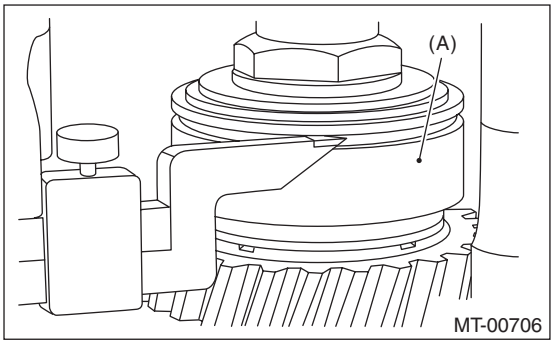

(A) Double taper roller bearing

NOTE:
- The height gauge will be set on the adapter plate during the measurement. Use a scraper to remove any gasket material remaining on the end face.
- During measurement, do not place the height gauge in the shaded area shown in the figure.

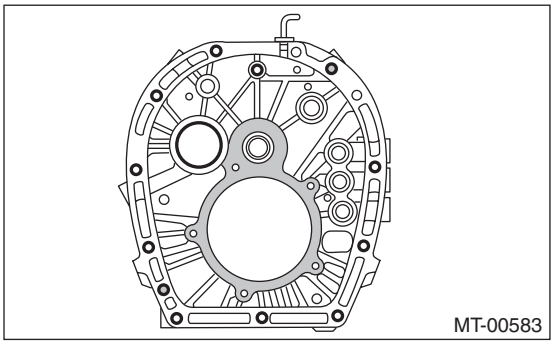

3) Use a height gauge to measure “D1” and “D2” as shown in the figure.

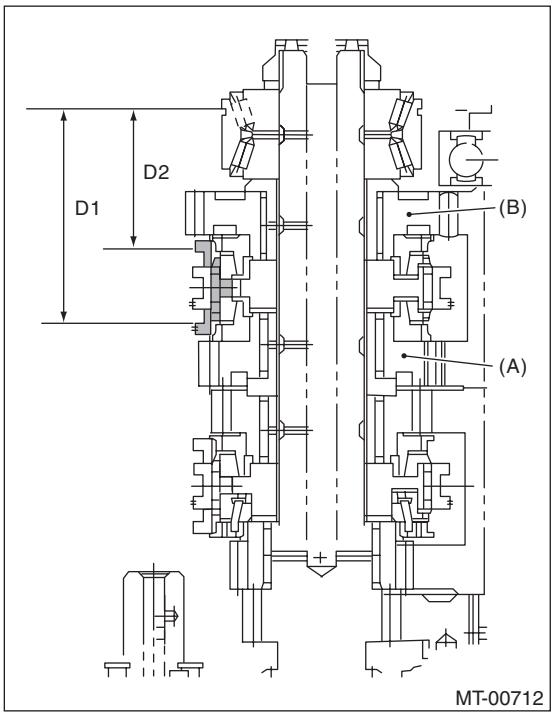

(A) 5th drive gear
(B) 6th drive gear

(1) Shift up the 5th-6th coupling sleeve all the way to the 6th drive gear side, and measure “D2”.

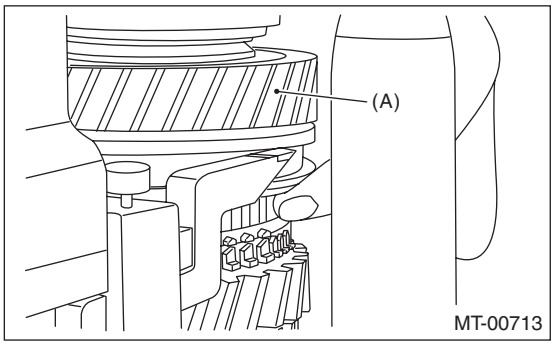

(A) 6th drive gear

NOTE:
• Set the height gauge indicator near the measurement target, and lock dial (1) as shown in the figure. Turn dial (2), and set the indicator to the 6th side end surface of the coupling sleeve.
• The measurement is to be performed with two persons, while holding the coupling sleeve straight.
• Turn approximately 72° at a time, and measure the coupling sleeve in 5 locations. Round down the 2 highest and 2 lowest measurement values. The remaining center value is used as the measurement value.

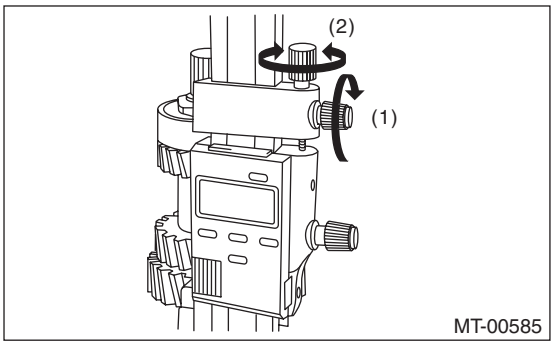

(2) Set the height gauge indicator upside down.

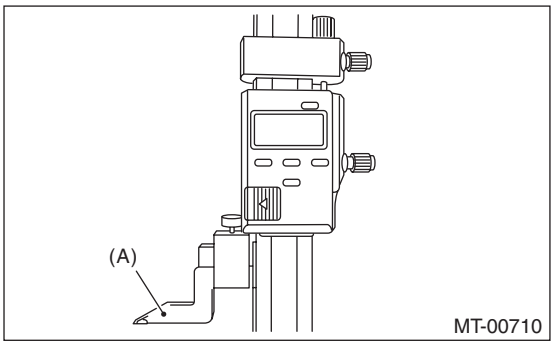

(A) Indicator

(3) Shift down the 5th-6th coupling sleeve all the way to the 5th drive gear side, and measure “D1”.

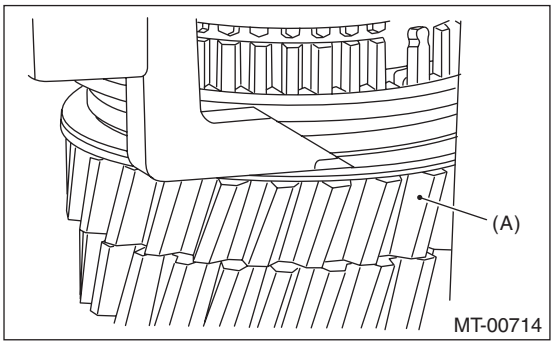

(A) 5th drive gear

NOTE:
• Set the height gauge indicator near the measurement target, and lock dial (1) as shown in the figure. Turn dial (2), and set the indicator to the 5th side end surface of the coupling sleeve.
• Turn approximately 72° at a time, and measure the coupling sleeve in 5 locations. Round down the 2 highest and 2 lowest measurement values. The remaining center value is used as the measurement value.

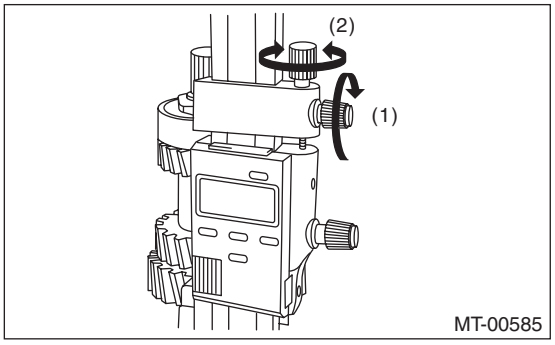

4) According to both of the measurements, calculate the neutral position of the 5th-6th coupling sleeve. From the following calculation, select a fork rod which matches the calculated value.
Calculation: T = (D1 + D2) / 2
T: 5th-6th coupling sleeve center position
D1: Measured length from the double taper roller bearing snap ring groove to the coupling sleeve groove end, when shifted to 5th gear [Value: +55 mm (2.17 in)]
D2: Measured length from the double taper roller bearing snap ring groove to the coupling sleeve groove end, when shifted to 6th gear

NOTE:
Attach the indicator upside down in comparison to the setting procedures for the zero point. Add “d1” [Value: 55 mm (2.17 in)] from the figure below to “D1”, and measure “D1”.

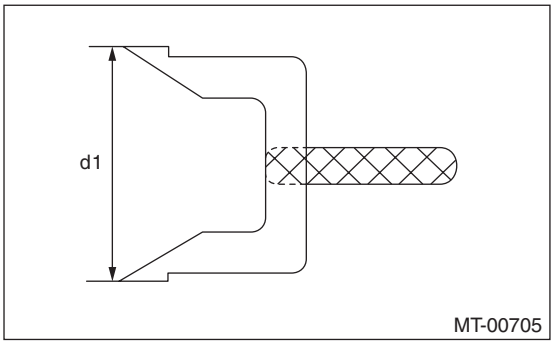

T mm (in)	Lot No. (marking)		
	M.SFT Snap ring 805072010 [t = 1.65 mm (0.065 in)]	M.SFT Snap ring 805072011 [t = 1.95 mm (0.077 in)]	M.SFT Snap ring 805072012 [t = 2.25 mm (0.089 in)]
64.12 — 64.42 (2.5244 — 2.5362)	32945AA110 (none)	32945AA120 (2)	32945AA130 (4)
64.42 — 64.72 (2.5362 — 2.5480)	32945AA100 (1)	32945AA110 (none)	32945AA120 (2)
64.72 — 65.02 (2.5480 — 2.5598)	32945AA090 (3)	32945AA100 (1)	32945AA110 (none)
T = Thickness			

4. REVERSE FORK ROD SELECTION

NOTE:
In the following conditions, perform the procedures below.
- Reverse idler gear replacement.
- Reverse idler gear No. 2 replacement.
- Adapter plate replacement.
- Base replacement.

1) Insert the reverse idler gear assembly into the adapter plate.
2) Tighten the reverse idler gear shaft attachment bolts.

Tightening torque:
25 N·m (2.5 kgf-m, 18.4 ft-lb)

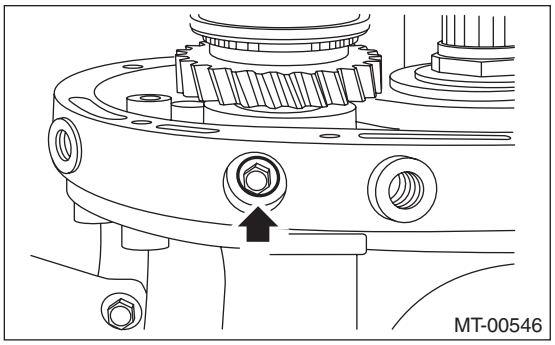

3) Set the height gauge to the adapter plate. Lower the height gauge indicator to the mating surface of the adapter plate and case, and set to zero points.
ST 18853AA000 HEIGHT GAUGE

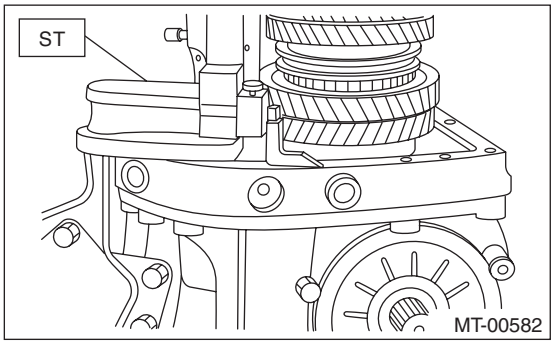

NOTE:
- The adapter plate will be the base point for the measurement. Use a scraper to remove any gasket material remaining on the end face.
- During measurement, do not place the height gauge in the shaded area shown in the figure.

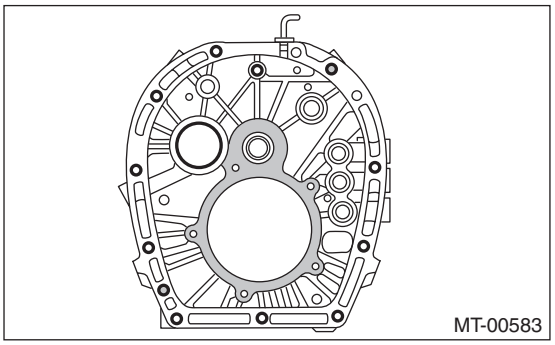

4) Shift the reverse coupling sleeve to the reverse idler gear No. 2, and measure “T”.

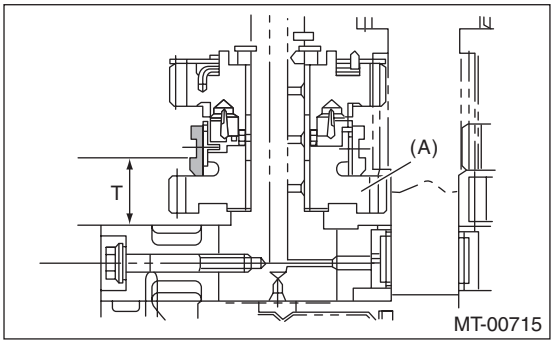

(A) Reverse idler gear No. 2

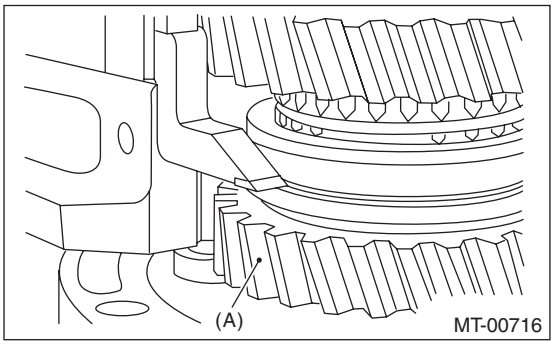

(A) Reverse idler gear No. 2

NOTE:
• Set the height gauge indicator near the measurement target, and lock dial (1) as shown in the figure. Turn dial (2), and set the indicator to the end face of the reverse coupling sleeve side.
• Turn approximately 72° at a time, and measure the coupling sleeve in 5 locations. Round down the 2 highest and 2 lowest measurement values. The remaining center value is used as the measurement value.

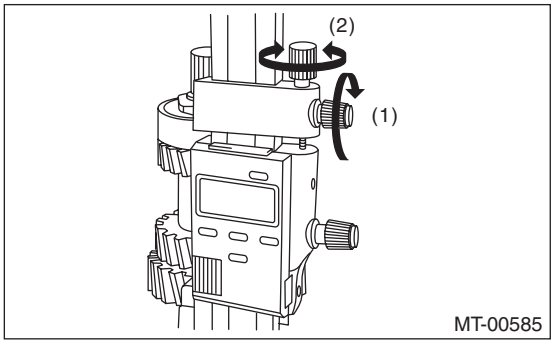

5) Calculate the neutral position of the reverse coupling sleeve according to the measurement. From the following calculation, select a fork rod which matches the calculated value.
Calculation: T + 4.8 mm (0.189 in)

T + 4.8 mm (0.189 in) mm (in)	Lot No. (marking)
33.50 — 33.80 (1.3189 — 1.3307)	32816AA190 (1)
33.80 — 34.10 (1.3307 — 1.3425)	32816AA200 (none)
34.10 — 34.40 (1.3425 — 1.3543)	32816AA210 (2)
T = Thickness	

25.Clutch Housing

A: REMOVAL

1) Remove the manual transmission assembly from the vehicle. <Ref. to 6MT(TY85)-32, REMOVAL, Manual Transmission Assembly.>
2) Prepare the transmission for overhaul. <Ref. to 6MT(TY85)-39, Preparation for Overhaul.>
3) Remove the neutral position switch, back-up light switch and harness. <Ref. to 6MT(TY85)-42, REMOVAL, Neutral Position Switch.> <Ref. to 6MT(TY85)-41, REMOVAL, Back-up Light Switch.>
4) Remove the extension case. <Ref. to 6MT(TY85)-43, REMOVAL, Extension Case.>
5) Remove the transfer driven gear. <Ref. to 6MT(TY85)-55, REMOVAL, Transfer Driven Gear.>
6) Remove the center differential. <Ref. to 6MT(TY85)-57, REMOVAL, Center Differential.>
7) Remove the transmission case. <Ref. to 6MT(TY85)-58, REMOVAL, Transmission Case.>
8) Remove the individual gear assemblies. <Ref. to 6MT(TY85)-64, REMOVAL, Main Shaft Assembly.>
9) Remove the drive pinion shaft assembly. <Ref. to 6MT(TY85)-92, REMOVAL, Drive Pinion Shaft Assembly.>
10) Remove the front differential assembly. <Ref. to 6MT(TY85)-98, REMOVAL, Front Differential Assembly.>

B: INSTALLATION

1) Install the pitching stopper bracket.

Tightening torque:
41 N·m (4.2 kgf-m, 30.2 ft-lb)

2) Install the front differential assembly. <Ref. to 6MT(TY85)-98, INSTALLATION, Front Differential Assembly.>
3) Install the drive pinion shaft assembly. <Ref. to 6MT(TY85)-92, INSTALLATION, Drive Pinion Shaft Assembly.>
4) Install the individual gear assemblies all at once. <Ref. to 6MT(TY85)-65, INSTALLATION, Main Shaft Assembly.>
5) Install the transmission case. <Ref. to 6MT(TY85)-60, INSTALLATION, Transmission Case.>
6) Install the center differential. <Ref. to 6MT(TY85)-57, INSTALLATION, Center Differential.>
7) Install the transfer driven gear. <Ref. to 6MT(TY85)-55, INSTALLATION, Transfer Driven Gear.>
8) Install the extension case. <Ref. to 6MT(TY85)-43, INSTALLATION, Extension Case.>
9) Install the neutral position switch, back-up light switch and harness. <Ref. to 6MT(TY85)-42, INSTALLATION, Neutral Position Switch.> <Ref. to 6MT(TY85)-41, INSTALLATION, Back-up Light Switch.>
10) Install the manual transmission assembly to the vehicle. <Ref. to 6MT(TY85)-34, INSTALLATION, Manual Transmission Assembly.>

C: DISASSEMBLY

1) Remove the clutch release bearing guide.

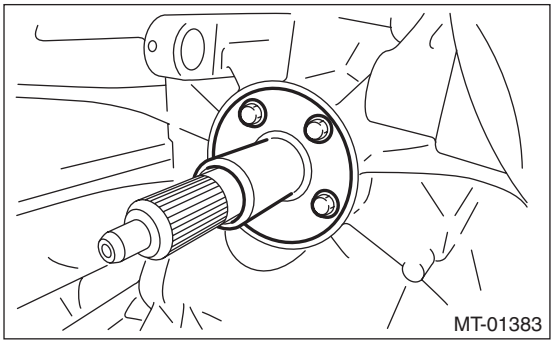
MT-01383

2) Remove the oil seal.

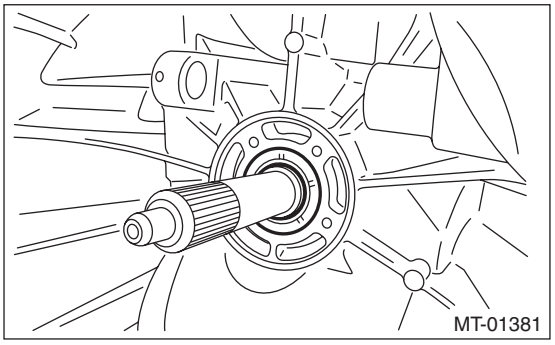
MT-01381

D: ASSEMBLY

1) Attach the oil seal to the clutch housing, being careful not to damage the seal.

NOTE:
Use a new oil seal.
ST 18657AA020 OIL SEAL INSTALLER

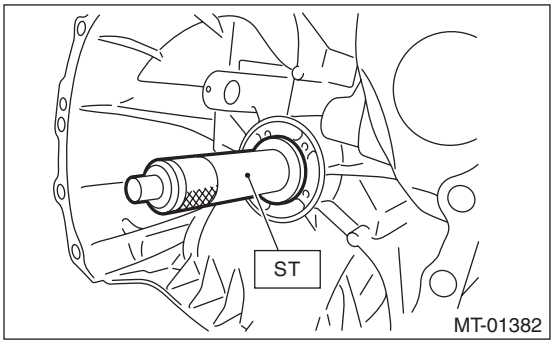

MT-01382

2) Install the clutch release bearing guide.

Tightening torque:
6.4 N·m (0.7 kgf-m, 4.7 ft-lb)

E: INSPECTION

1) Check to make sure there is no damage or cracks on the clutch housing. If there is excessive damage, replace the clutch housing.
2) Inspect the clutch housing for transmission gear oil leakage. If any oil leaks are found, repair or replace the applicable part.

26.General Diagnostic Table

A: INSPECTION

1. MANUAL TRANSMISSION

Symptoms	Possible cause	Corrective action
1. Gears are difficult to engage. NOTE: If it is difficult to shift, there are two possible causes. One is a defective gear shift system and the other is defective transmission. However, if the operation is heavy and engagement of the gears is difficult, a defective clutch function may also be responsible. Check whether the clutch is correctly functioning, before checking the gear shift system and transmission.	(a) Worn, damaged or burred chamfer at internal spline of the coupling sleeve	Replace.
	(b) Gear spline wear, damage, dents	Replace.
	(c) Worn or scratched bushings	Replace.
	(d) Incorrect contact or wear between synchronizer ring and gear cone	Repair or replace.
2. Gear slip-out • Gear slips out when coasting on rough road. • Gear slips out during acceleration.	(a) Defective pitching stopper adjustment	Adjust.
	(b) Loose engine mounting bolts	Tighten or replace.
	(c) Worn shifter fork, broken shifter fork rail spring	Replace.
	(d) Worn or damaged ball bearing	Replace.
	(e) Excessive clearance between splines of synchronizer hub and synchronizer sleeve	Replace.
	(f) Worn in the synchronizer hub chamfer angle	Replace.
	(g) Worn 1st driven gear, needle bearing and race	Replace.
	(h) Worn 2nd driven gear, needle bearing and race	Replace.
	(i) Worn 3rd drive gear and bushing	Replace.
	(j) Worn 4th drive gear and bushing	Replace.
	(k) Worn 5th drive gear and bushing	Replace.
	(l) Worn 6th drive gear and bushing	Replace.
	(m) Worn reverse idler gear and bushing	Replace.
3. Noise emitted from transmission NOTE: If a noise is heard when the vehicle is parked with its engine idling and ceases when the clutch is disengaged, it may be considered that the noise is coming from the transmission.	(a) Insufficient or improper lubrication	Replenish or replace with the specified amount of recommended oil.
	(b) Worn or damaged gears and bearings NOTE: If the trouble is only wear of the gear teeth surfaces, only a high whirring noise will occur at high speeds, but if any part is broken, rhythmical clicking sounds will be heard even at low speeds.	Replace.

2. DIFFERENTIAL

Symptoms	Possible cause	Corrective action
1. Broken differential (case, gear, bearing, etc.) NOTE: Noise will occur, and eventually the differential will not be able to operate due to broken pieces obstructing the gear revolution.	(a) Insufficient or improper oil	Disassemble the differential and replace broken components. At the same time check other components for any trouble, and replace if necessary.
	(b) Use of vehicle under severe conditions such as excessive load and improper use of the clutch	Readjust the preload and backlash of the bearing, and the contact surface of gear.
	(c) Improper adjustment of taper roller bearing	Adjust.
	(d) Improper adjustment of the drive pinion and the hypoid driven gear	Adjust.
	(e) Loose hypoid driven gear clamping bolts	Tighten.
2. Differential and hypoid gear noise Troubles of the differential and hypoid gear always appear as noise problems. Therefore noise is the first indication of trouble. However, noise from the engine, muffler, tire, exhaust gas, bearing, body, etc. are easily mistaken for noise from the differential. Pay special attention to the hypoid gear noise because it is easily confused with other gear noises. There are the following three kinds of noises. • Gear noise when driving: If noise increases as the vehicle speed increases, it may be due to insufficient gear oil, incorrect gear engagement, damaged gears, etc. • Gear noise during coasting: Damaged gears due to misadjusted bearings and incorrect shim adjustment. • Bearing noise when driving or coasting: Cracked, broken or damaged bearings.	(a) Insufficient oil	Replenish or replace with the specified amount of recommended oil.
	(b) Improper adjustment of hypoid driven gear and drive pinion	Check the tooth contact.
	(c) Worn teeth of hypoid driven gear and drive pinion	Replace as a set. Readjust the bearing preload.
	(d) Loose roller bearing	Readjust the backlash of the hypoid driven gear to drive pinion, and check the tooth contact.
	(e) Distorted hypoid driven gear or differential case	Replace.

MANUAL TRANSMISSION AND DIFFERENTIAL (DIAGNOSTICS)

6MT(diag)

		Page
1.	Basic Diagnostic Procedure	2
2.	Check List for Interview	3
3.	General Description	4
4.	Electrical Component Location	5
5.	Driver's Control Center Differential (DCCD) Control Module I/O Signal	6
6.	Subaru Select Monitor	8
7.	Read Diagnostic Trouble Code (DTC)	9
8.	Drive Cycle	10
9.	Clear Memory Mode	11
10.	Drivers Control Center Differential (DCCD) Mode Display	12
11.	AWD Warning Light Display	15
12.	Diagnostic Procedure for Subaru Select Monitor Communication	17
13.	List of Diagnostic Trouble Code (DTC)	19
14.	Diagnostic Procedure with Diagnostic Trouble Code (DTC)	20
15.	Diagnostic Procedure without Diagnostic Trouble Code (DTC)	30
16.	Diagnostics with Phenomenon	34

1. Basic Diagnostic Procedure

A: PROCEDURE

	Step	Check	Yes	No
1	**START INSPECTIONS.** 1) Use the Check List for Interview to confirm the condition of the problem from the user. <Ref. to 6MT(diag)-3, Check List for Interview.> 2) Check the items related to DCCD. • General inspection <Ref. to 6MT(diag)-4, INSPECTION, General Description.> • Disconnection of harness connector • Visual check for harness connector damage • Oil leakage	Is the check result OK?	Go to step **2**.	Repair the defective items.
2	**CHECK DTC.** Read the DTC. <Ref. to 6MT(diag)-8, Subaru Select Monitor.> NOTE: • Refer to "List of Diagnostic Trouble Code (DTC)" for DTC. <Ref. to 6MT(diag)-19, List of Diagnostic Trouble Code (DTC).> • If the communication function of Subaru Select Monitor cannot be executed normally, check the communication circuit. <Ref. to 6MT(diag)-8, Subaru Select Monitor.>	Are DTC, time stamp and freeze frame data displayed?	Record the DTC, time stamp and freeze frame data. Go to step **3**. NOTE: • For the time stamp, refer to LAN section. <Ref. to LAN(diag)-6, TIME STAMP, CAUTION, General Description.> • Depending on DTCs, time stamp may not be stored.	Inspect based on the general diagnosis table. <Ref. to 6MT(diag)-34, Diagnostics with Phenomenon.>
3	**PERFORM DIAGNOSIS.** 1) Inspect and repair all DTC using the "Diagnostic Procedure with Diagnostic Trouble Code (DTC)". <Ref. to 6MT(diag)-20, Diagnostic Procedure with Diagnostic Trouble Code (DTC).> NOTE: Refer to "List of Diagnostic Trouble Code (DTC)" for DTC. <Ref. to 6MT(diag)-19, List of Diagnostic Trouble Code (DTC).> 2) Start the engine. 3) Read the DTC using Subaru Select Monitor. <Ref. to 6MT(diag)-8, Subaru Select Monitor.>	Is DTC displayed?	Record all DTC using the "Diagnostic Procedure with Diagnostic Trouble Code (DTC)" for the inspection. <Ref. to 6MT(diag)-20, Diagnostic Procedure with Diagnostic Trouble Code (DTC).> Repeat execute diagnosis until DTC no longer appears.	Inspect based on the general diagnosis table. <Ref. to 6MT(diag)-34, Diagnostics with Phenomenon.>

2. Check List for Interview

A: CHECK

Check the following items when a problem has occurred.

NOTE:
Use copies of this page for interviewing customers.

Customer's name			
Date of purchase			
Date of repair			
Transmission model	Transmission	V.I.N.	
Odometer distance	km or miles		
Frequency	❑ Continuous ❑ Intermittent (times a day)		
Weather	❑ Fine ❑ Cloudy ❑ Rainy ❑ Snowy ❑ Other ( )		
Place	❑ Highland ❑ Suburbs ❑ Inner city ❑ Uphill ❑ Rough road ❑ Other ( )		
Ambient air temperature	❑ Hot ❑ Warm ❑ Cool ❑ Cold		
Vehicle speed	km/h (MPH)		
DCCD mode indicator	❑ Flashing	❑ Light OFF	❑ Blinking, other than light off
Driving condition	❑ Not affected ❑ While decelerating	❑ At starting ❑ While accelerating	❑ While turning (❑ RH/❑ LH) ❑ When cruising
Symptoms	❑ Will not change to AUTO or MANUAL		
	❑ The forward/rear torque distribution does not change		
	❑ Will not become differential free		
	❑ Will not become differential lock		
	❑ A tight corner braking symptom occurs in AUTO mode or in MANUAL mode with differential free		
	❑ Noise or vibration		
	❑ Other ( )		

3. General Description

A: CAUTION

The airbag system wiring harness is routed near the DCCD control module.

CAUTION:
• Airbag system wiring harnesses and connectors are yellow. Do not use an electric test equipment to check these circuits.
• Be careful not to damage the airbag system wiring harness when performing diagnostics or repair of the DCCD control module.
• When measuring the voltage and resistance of each control module or each sensor, use a tapered pin with a diameter of less than 0.64 mm (0.025 in) in order to avoid poor contact. Also, do not insert the pin more than 5 mm (0.2 in) into the part.

B: INSPECTION

1. POWER SUPPLY

1) Check the battery. <Ref. to SC(STI)-24, INSPECTION, Battery.>
2) Check the fuse condition.
3) Check the connecting condition of harness and harness connector.

C: PREPARATION TOOL

1. SPECIAL TOOL

ILLUSTRATION	TOOL NUMBER	DESCRIPTION	REMARKS
 STSSM4	—	SUBARU SELECT MONITOR 4	Used for setting of each function and trouble-shooting for electrical system. NOTE: For detailed operation procedures of Subaru Select Monitor 4, refer to “Application help”.

2. GENERAL TOOL

TOOL NAME	REMARKS
Circuit tester	Used for measuring resistance, voltage and current.
Oscilloscope	Used for measuring the sensor.
DST-i	Used together with Subaru Select Monitor 4.

4. Electrical Component Location

A: LOCATION

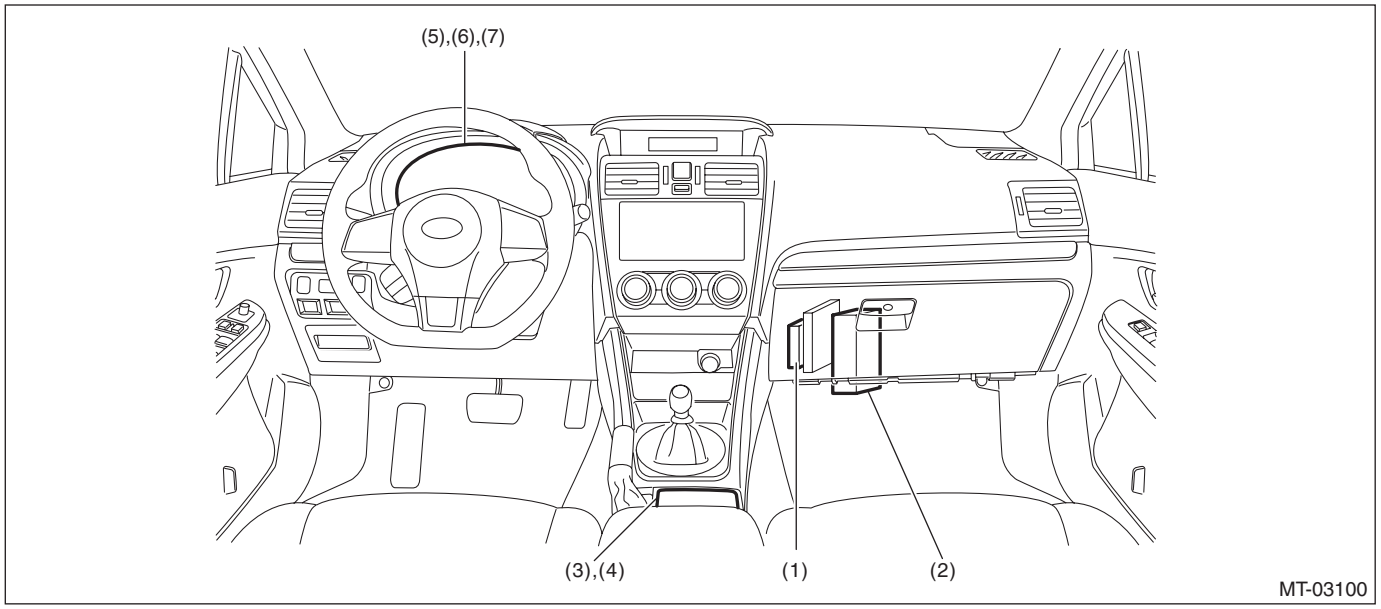

(1) DCCD control module
(2) DCCD relay
(3) C.DIFF +/– switch
(4) Mode change switch
(5) DCCD mode indicator
(6) Rear differential oil temperature warning light
(7) AWD light

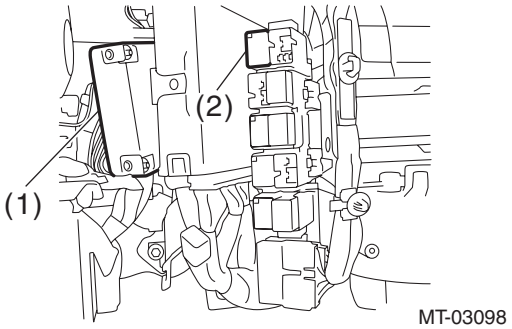

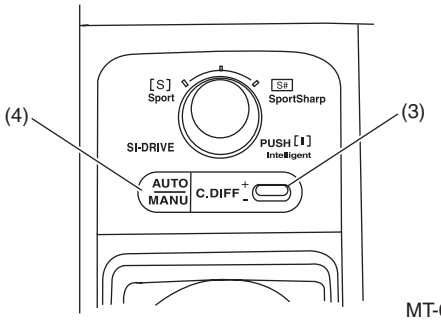

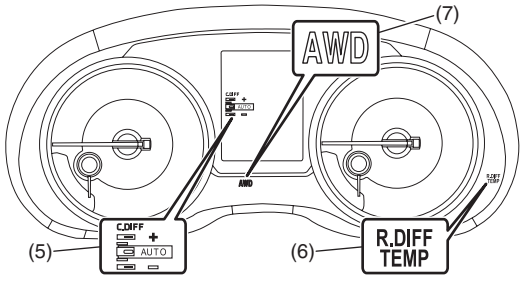

5. Driver's Control Center Differential (DCCD) Control Module I/O Signal

A: ELECTRICAL SPECIFICATION

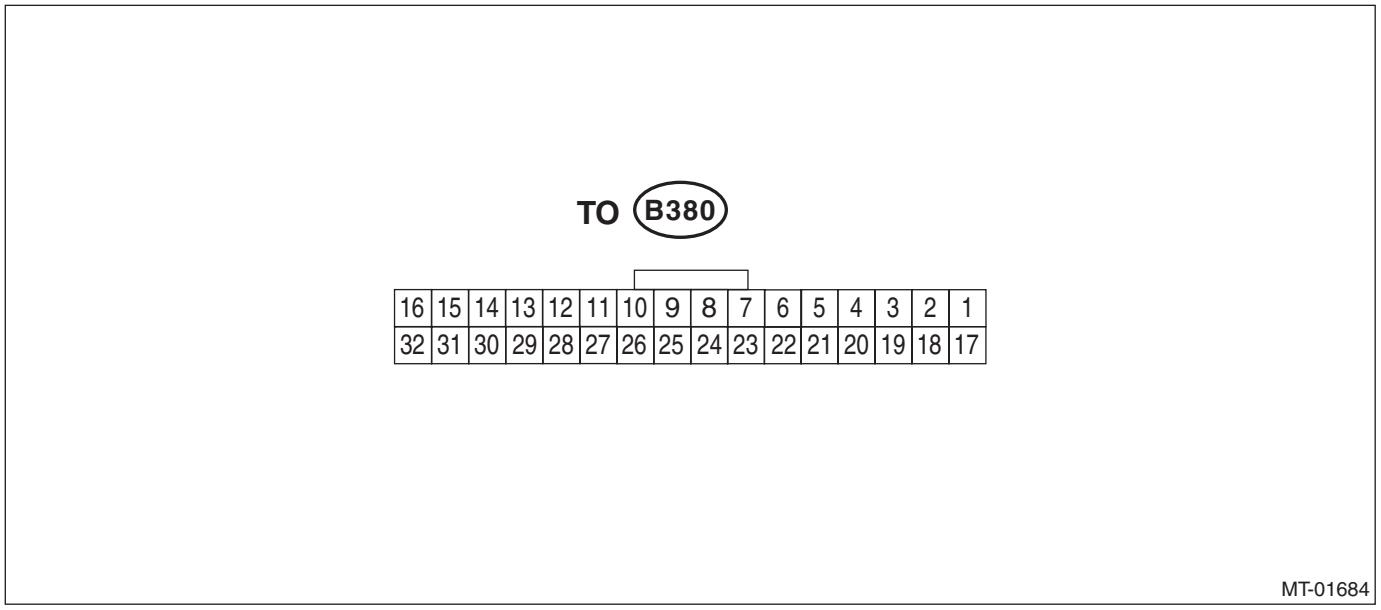

Check with ignition switch ON.					
Item	Measured terminal (Connector & Terminal No.)		Measuring condition	Voltage (V)	Resistance (Ω)
	Positive terminal	Ground terminal			
DCCD output	(B380) No. 15	(B380) No. 32	When differential is locked (when DCCD manual mode display is locked)	5.5 — 8.0	1.2 — 2.5
			When differential is free (When the parking brake is pulled)	Less than 0.5	
DCCD power supply	(B380) No. 13	Chassis ground	Ignition switch ON	10 — 13	—
	(B380) No. 14				—
Backup power supply	(B380) No. 12	Chassis ground	—	10 — 13	—
Ignition power supply	(B380) No. 11	Chassis ground	Ignition switch ON	10 — 13	—
DCCD relay	(B380) No. 7	Chassis ground	Ignition switch ON	Less than 1.0	—
Mode change switch	(B380) No. 6	Chassis ground	When the switch is not pressed	8.0 or more	—
			When the switch is pressed	Less than 1	—
CAN communication signal (+)	(B380) No. 2	Chassis ground	Ignition switch ON	Pulse signal	
CAN communication signal (–)	(B380) No. 18	Chassis ground	Ignition switch ON	Pulse signal	
System ground circuit	(B380) No. 28	Chassis ground	—	0	Less than 1.0
	(B380) No. 29	Chassis ground			
	(B380) No. 30	Chassis ground			
	(B380) No. 31	Chassis ground			
System ground circuit	(B380) No. 17	Chassis ground	—	0	Less than 1.0
C.DIFF + switch	(B380) No. 22	Chassis ground	When the switch is not pressed/ is pressed	8.0/1.0	
C.DIFF – switch	(B380) No. 4	Chassis ground	When the switch is not pressed/ is pressed	8.0/1.0	

B: WIRING DIAGRAM

Refer to "WIRING SYSTEM". <Ref. to WI-151, Driver's Control Center Differential Control System.>

6. Subaru Select Monitor

A: OPERATION

1. HOW TO USE SUBARU SELECT MONITOR

For detailed operation procedures, refer to “Application help”.

2. READ CURRENT DATA

1) On «Start» display, select «Diagnosis».
2) On «Vehicle selection» display, input the vehicle information and select «Confirmed».
3) On «Main Menu» display, select «Each System».
4) On «Select System» display, select «DCCD».
5) On «Select Function» display, select «Data Monitor».

Display	Item	Unit of measure
Ignition SW ON Count	Total number of ignition switch ON	times
Count	Counter	—
Time Count	Elapsed time after ignition switch ON	ms
Battery Voltage	Battery voltage	V
DCCD Mode	AUTO selection mode	*1
DCCD Torque Allocation	Manual mode torque distribution	*2
C-Diff. Real Current	Center differential actual current	A
C-Diff. Indicate Current	Center differential indicator current	A
Center Diff. Relay	Center differential relay ON instruction	ON or OFF
AUTO/MANUAL Mode Switch	Mode change switch	ON or OFF
Up Switch	C.DIFF + switch	ON or OFF
Down Switch	C.DIFF – switch	ON or OFF
FR Wheel Speed	Front vehicle speed sensor (RH)	km/h or MPH
FL Wheel Speed	Front vehicle speed sensor (LH)	km/h or MPH
RR Wheel Speed	Rear vehicle speed sensor (RH)	km/h or MPH
RL Wheel Speed	Rear vehicle speed sensor (LH)	km/h or MPH
Steering Angle Sensor	Steering angle	deg
Yaw Rate	Yaw rate	deg/s
Lateral G	Lateral acceleration	m/s ¯2
Stop Light Switch	Stop light switch signal	ON or OFF
Parking Position Switch	Parking switch	ON or OFF
Accel opening angle	Accelerator position	%
Engine Speed	Engine speed signal	rpm
Neutral switch	Neutral signal	Neutral or Other than Neutral
Rear Diff. Oil Temp Lamp	Rear differential oil temperature warning light	Turn Off or Other than Turn Off

*1: Displayed by the number
0 in the manual mode
1 in AUTO[–] / 2 in AUTO / 3 in AUTO[+]
*2: Displayed by the number
0 in AUTO mode
1, 2, 3, 4, 5, 6 in manual mode

NOTE:
For detailed operation procedures, refer to “Application help”.

7. Read Diagnostic Trouble Code (DTC)

A: OPERATION

1) On «Start» display, select «Diagnosis».
2) On «Vehicle selection» display, input the vehicle information and select «Confirmed».
3) On «Main Menu» display, select «Each System».
4) On «Select System» display, select «DCCD».
5) On «Select Function» display, select «DTC».

NOTE:
• For details concerning the DTC, refer to “List of Diagnostic Trouble Code (DTC)”. <Ref. to 6MT(diag)-19, List of Diagnostic Trouble Code (DTC).>
• For detailed operation procedures, refer to “Application help”.

8. Drive Cycle

A: PROCEDURE

It is possible to complete diagnosis of the DTC by performing the indicated drive cycle. After the repair for the DTC, perform a necessary drive cycle and make sure the function recovers and the DTC is recorded.

1. PREPARATION FOR DRIVE CYCLE

1) Check that the battery voltage is 12 V or more and fuel remains approx. half [20 — 40 L (5.3 — 10.6 US gal, 4.4 — 8.8 Imp gal)].
2) After performing the diagnostics and Clear Memory Mode, check that no DTC remains. <Ref. to 6MT(diag)-11, Clear Memory Mode.>

NOTE:
Perform the drive cycle after warming up the engine except when the ATF temperature at engine start is specified.

2. DRIVE CYCLE A

DTC	Item	Condition
P1875	Center Differential Solenoid Circuit	—

Diagnostic procedure:
1) Turn the ignition switch to OFF.
2) Apply the parking brake.
3) Start the engine.
4) Make sure that the rear differential oil temperature warning light is off.
5) Set DCCD to manual mode.
6) Set torque level of DCCD to “LOCK”.
7) Stop the vehicle and idle for 10 seconds or more.
8) Read the current malfunction code using Subaru Select Monitor.

NOTE:
In step 7), do not depress the brake pedal.

3. DRIVE CYCLE B

DTC	Item	Condition
P1521	Brake Switch Signal	—

Diagnostic procedure:
1) Repeat acceleration/deceleration between 0 km/h (0 MPH) and 40 km/h (25 MPH) 10 times or more.
2) Read the current malfunction code using Subaru Select Monitor.

NOTE:
Always use the brake pedal during deceleration.

9. Clear Memory Mode

A: OPERATION

1) On «Start» display, select «Diagnosis».
2) On «Vehicle selection» display, input the vehicle information and select «Confirmed».
3) On «Main Menu» display, select «Each System».
4) On «Select System» display, select «DCCD».
5) On «Select Function» display, select «DTC».
6) On «DTC» display, select «Clear Memory».

NOTE:
For detailed operation procedures, refer to “Application help”.

10.Drivers Control Center Differential (DCCD) Mode Display

A: OPERATION

When there is a problem with a part or module, DCCD manual mode display blinks. (DCCD manual mode display blinks even in AUTO mode condition.) The blinking starts when the problem is detected, and continues until the ignition switch is turned OFF. The faulty parts can be recognized by reading DTC with the Subaru Select Monitor.
DCCD mode display is as shown in the figure.

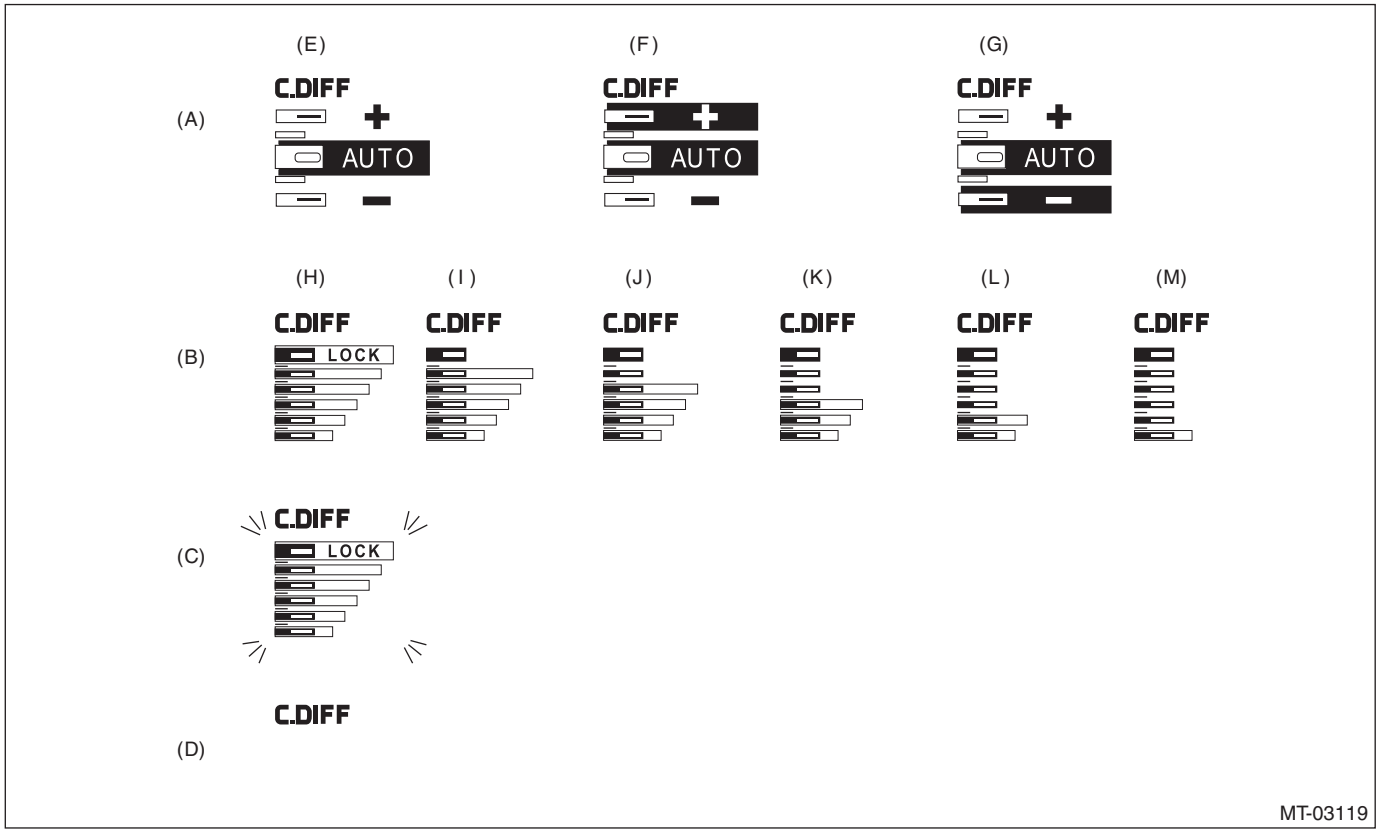

(A) AUTO mode display
(B) Manual mode display
(C) If faulty (blinks at 1 Hz cycle)
(D) At protection control (light off)
(E) AUTO
(F) AUTO +
(G) AUTO –
(H) 6 (LOCK)
(I) 5
(J) 4
(K) 3
(L) 2
(M) 1 (FREE)

B: INSPECTION

DIAGNOSIS:

- Defective CAN communication
- DCCD control module malfunction
- Combination meter malfunction

TROUBLE SYMPTOM:

DCCD mode display does not change even when the C.DIFF +/– switch is operated.

	Step	Check	Yes	No
1	**CHECK COMBINATION METER.** Check the combination meter. <Ref. to IDI-6, SELF-DIAGNOSIS DISPLAY MODE, OPERATION, Combination Meter System.>	Is the check result OK?	Go to step **2**.	Repair it according to combination meter diagnostics.
2	**CHECK IGNITION POWER SUPPLY CIRCUIT OF DCCD CONTROL MODULE.** 1) Connect the Subaru Select Monitor to the vehicle. 2) Turn the ignition switch to ON. 3) Read the data of «Battery voltage» using Subaru Select Monitor.	Is the voltage 10 V or more?	Go to step **3**.	Repair the open circuit of harness between fuse (F/B No. 12) and DCCD control module, or between fuse (F/B No. 12) and battery.
3	**CHECK DTC.**	Is DTC P0606 or U code displayed?	Perform the diagnosis according to DTC.	Go to step **4**.
4	**CHECK MODE CHANGE SWITCH.** Read the data of «AUTO/MANUAL Mode Switch» using the Subaru Select Monitor.	Does the display change to ON/OFF according to the mode change switch operation?	Go to step **5**.	Check the mode change switch.
5	**CHECK C.DIFF +/– SWITCH (UP/DOWN).** Read the data of «Up Switch» and «Down Switch» using the Subaru Select Monitor.	Does the display change to ON/OFF according to the C.DIFF +/– switch operation?	Go to step **6**.	Check the C.DIFF +/– switch.
6	**CHECK REAR DIFFERENTIAL OIL TEMPERATURE WARNING LIGHT.**	Is the rear differential oil temperature warning light blinking?	Check the rear differential oil temperature sensor.	Go to step **7**.
7	**CHECK REAR DIFFERENTIAL OIL TEMPERATURE WARNING LIGHT.**	Does the rear differential oil temperature warning light illuminate?	Protection control is ON due to high rear differential oil temperature. Perform the inspection again after rear differential oil temperature lowers.	Go to step **8**.
8	**CHECK AWD LIGHT.**	Is the AWD light off?	Go to step **9**.	Perform the diagnosis according to AWD light display.
9	**CHECK DCCD AUTO MODE DISPLAY.** Set to AUTO mode by pressing the mode change switch.	Does the DCCD AUTO mode display illuminate?	Go to step **10**.	Replace the DCCD control module. <Ref. to 6MT(TY85)-37, Driver's Control Center Differential Control Module.>
10	**CHECK DCCD AUTO MODE DISPLAY.** Read the data of «DCCD Mode» using Subaru Select Monitor.	Does the DCCD AUTO mode display change according to the C.DIFF +/– switch operation?	Go to step **11**.	Replace the DCCD control module. <Ref. to 6MT(TY85)-37, Driver's Control Center Differential Control Module.>

	Step	Check	Yes	No
11	**CHECK INDICATION OF DCCD MANUAL MODE DISPLAY.** Press the mode change switch to enter the manual mode.	Does the DCCD manual mode display illuminate?	Go to step **12**.	Replace the DCCD control module. <Ref. to 6MT(TY85)-37, Driver's Control Center Differential Control Module.>
12	**CHECK INDICATION OF DCCD MANUAL MODE DISPLAY.** Read the data of «DCCD Torque Allocation» using the Subaru Select Monitor.	Does the DCCD manual mode display change according to the C.DIFF +/– switch operation?	Go to step **13**.	Replace the DCCD control module. <Ref. to 6MT(TY85)-37, Driver's Control Center Differential Control Module.>
13	**CHECK OTHER DTC.**	Is any other DTC displayed?	Perform the diagnosis according to DTC.	DCCD mode display is normal.

11.AWD Warning Light Display

A: OPERATION

AWD light blinks when a fault occurs in AWD.

- At normal condition

After the ignition switch is turned to ON, AWD light illuminates for 2 seconds.

- When malfunction is detected

AWD light blinks at 2 Hz when any of the following malfunctions are detected with the ignition switch ON.

1. When tire with different diameter is installed.
2. When air pressure of any of four tires is excessively low.

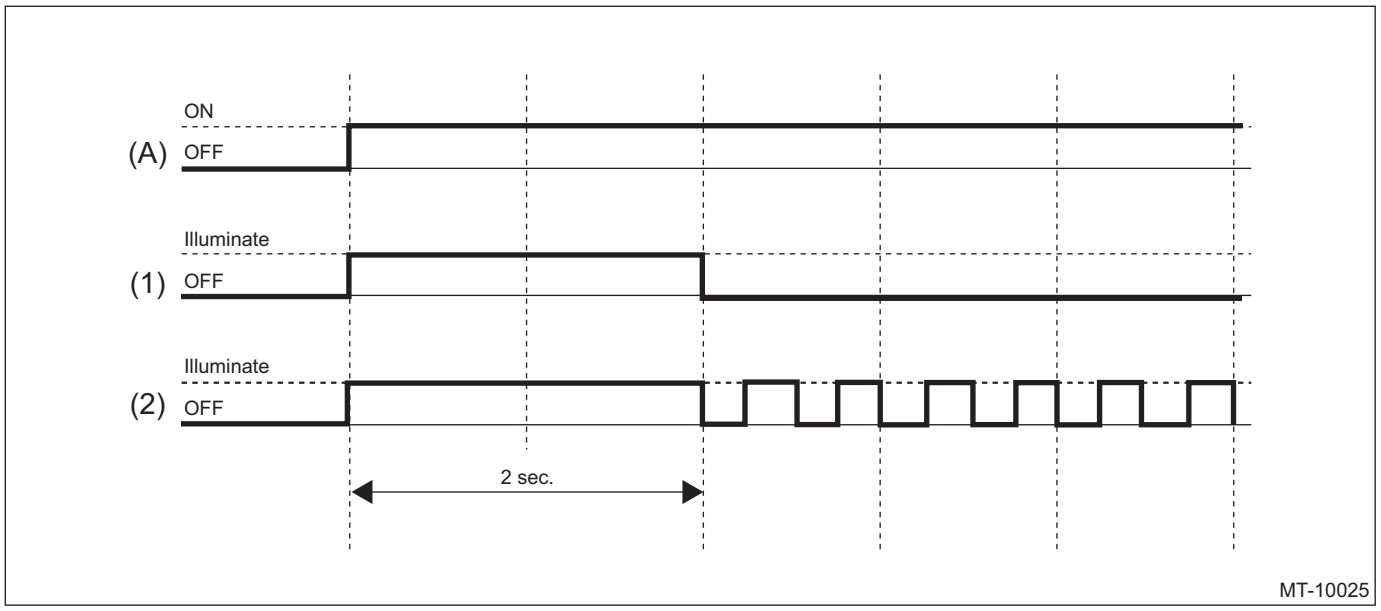

(A) Ignition switch condition

(1) At normal condition (2) When malfunction is detected

If the AWD light does not illuminate, or illumination patterns are not as above, check the AWD light circuit. <Ref. to 6MT(diag)-16, INSPECTION, AWD Warning Light Display.>

B: INSPECTION

DIAGNOSIS:
- Defective CAN communication
- DCCD control module malfunction
- Combination meter malfunction

TROUBLE SYMPTOM:
- When the ignition switch is turned to ON, the AWD light does not illuminate.
- AWD light illuminates after 2 seconds have elapsed after turning the ignition switch to ON.
- AWD light starts blinking right after 2 seconds have elapsed after turning the ignition switch to ON.

	Step	Check	Yes	No
1	**CHECK AWD LIGHT.** Turn the ignition switch to ON.	Does AWD light illuminate for 2 seconds after turning the ignition switch to ON?	Go to step **2**.	Perform the self-diagnosis of combination meter. <Ref. to IDI-6, SELF-DIAGNOSIS DISPLAY MODE, OPERATION, Combination Meter System.>
2	**CHECK AWD LIGHT.** 1) Turn the ignition switch to OFF. 2) Turn the ignition switch to ON.	Does AWD light go off after two seconds have elapsed after turning the ignition switch to ON?	Current condition is normal. Go back to Basic Diagnostic Procedure. <Ref. to 6MT(diag)-2, Basic Diagnostic Procedure.>	Go to step **3**.
3	**CHECK DTC.** Read the DTC of DCCD using the Subaru Select Monitor.	Is DTC displayed?	Perform the diagnosis according to DTC.	Go to step **4**.
4	**CHECK COMBINATION METER.** Perform the self-diagnosis of combination meter. <Ref. to IDI-6, SELF-DIAGNOSIS DISPLAY MODE, OPERATION, Combination Meter System.>	Is there any trouble with the combination meter?	Repair the combination meter.	Replace the DCCD control module. <Ref. to 6MT(TY85)-37, Driver's Control Center Differential Control Module.>

12.Diagnostic Procedure for Subaru Select Monitor Communication

A: COMMUNICATION FOR INITIALIZING IMPOSSIBLE

DIAGNOSIS:
Defective harness connector
TROUBLE SYMPTOM:
Subaru Select Monitor communication failure
WIRING DIAGRAM:
Drivers control center differential control system <Ref. to WI-151, Driver's Control Center Differential Control System.>

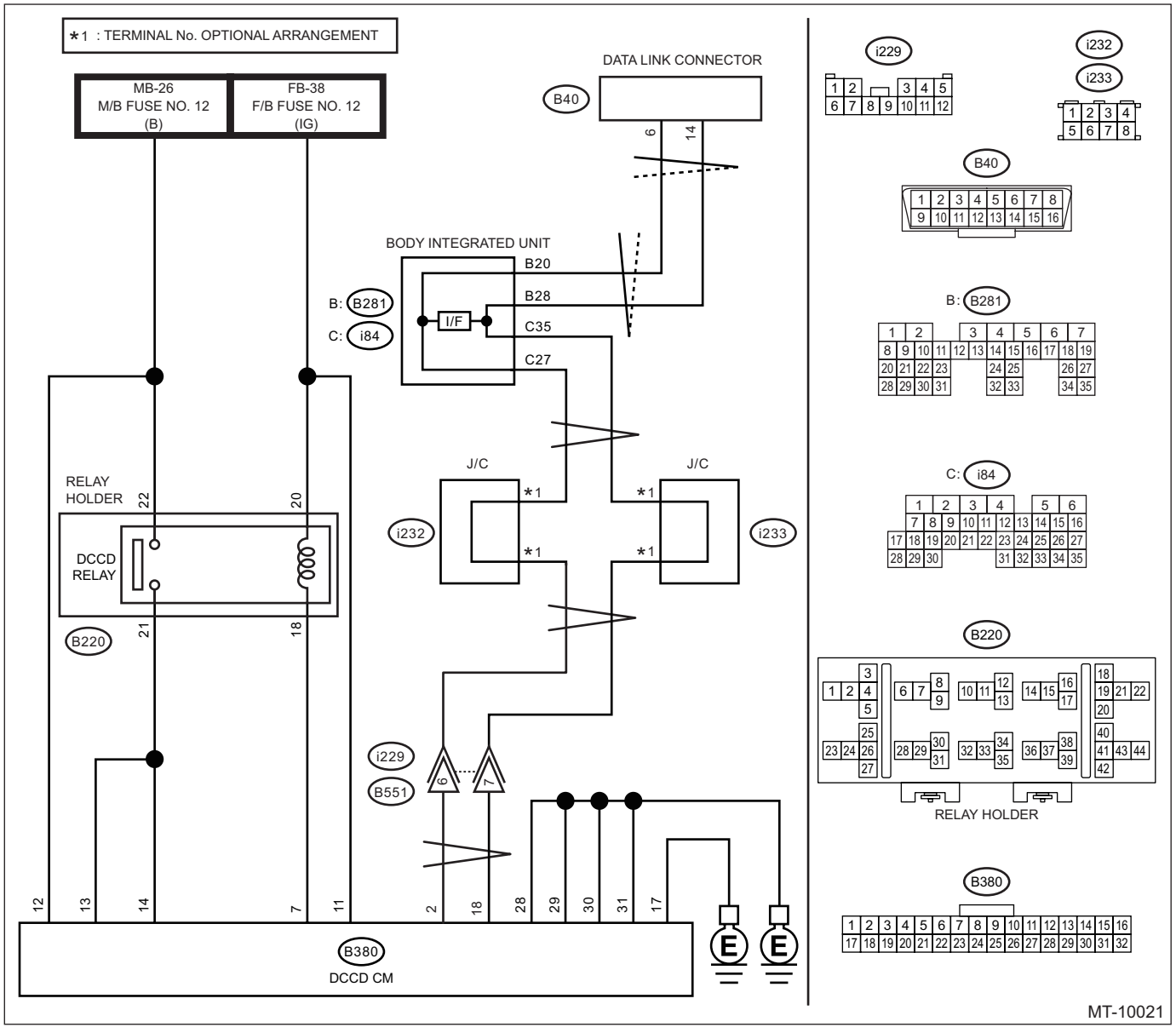

Step	Check	Yes	No
1 **CHECK IGNITION SWITCH.**	Is the ignition switch ON?	Go to step **2**.	Turn the ignition switch to ON, and select the DCCD using the Subaru Select Monitor.

	Step	Check	Yes	No
2	**CHECK BATTERY.** 1) Turn the ignition switch to OFF. 2) Measure the battery voltage.	Is the voltage 11 V or more?	Go to step **3**.	Charge or replace the battery.
3	**CHECK BATTERY TERMINAL.**	Is there poor contact at battery terminal?	Repair or tighten the battery terminal.	Go to step **4**.
4	**CHECK INSTALLATION OF DCCD CONTROL MODULE CONNECTOR.** Turn the ignition switch to OFF.	Is the DCCD control module connector inserted into the DCCD control module until locked by the clamp?	Go to step **5**.	Insert the DCCD control module connector into DCCD control module.
5	**CHECK LAN SYSTEM.** Perform the diagnosis for LAN system. <Ref. to LAN(diag)-2, Basic Diagnostic Procedure.>	Is there any fault in LAN system?	Perform the diagnosis according to DTC for LAN system. <Ref. to LAN(diag)-109, List of Diagnostic Trouble Code (DTC).>	Go to step **6**.
6	**CHECK SUBARU SELECT MONITOR COMMUNICATION.** 1) Turn the ignition switch to ON. 2) Check whether communication to DCCD system can be executed normally.	Is «Select Function» displayed?	Check DTC of the DCCD control module. <Ref. to 6MT(diag)-9, Read Diagnostic Trouble Code (DTC).>	Go to step **7**.
7	**CHECK POWER SUPPLY CIRCUIT.** 1) Turn the ignition switch to ON. (Engine OFF) 2) Measure the ignition power supply voltage between the DCCD control module connector and chassis ground. ***Connector & terminal*** ***(B380) No. 11 (+) — Chassis ground (–):*** ***(B380) No. 12 (+) — Chassis ground (–):*** ***(B380) No. 13 (+) — Chassis ground (–):*** ***(B380) No. 14 (+) — Chassis ground (–):***	Is the voltage 10 — 13 V?	Go to step **8**.	Repair the open circuit in the harness between the DCCD control module and the battery.
8	**CHECK HARNESS CONNECTOR BETWEEN DCCD CONTROL MODULE AND CHASSIS GROUND.** 1) Turn the ignition switch to OFF. 2) Disconnect the connector from DCCD control module. 3) Measure the resistance of harness between DCCD control module connector and chassis ground. ***Connector & terminal*** ***(B380) No. 17 — Chassis ground:*** ***(B380) No. 28 — Chassis ground:*** ***(B380) No. 29 — Chassis ground:*** ***(B380) No. 30 — Chassis ground:*** ***(B380) No. 31 — Chassis ground:***	Is the resistance less than 10 Ω?	Go to step **9**.	Repair the open circuit of the DCCD control module ground circuit and the poor contact of connector.
9	**CHECK POOR CONTACT OF CONNECTOR.**	Is there poor contact of DCCD control module power supply, ground circuit and data link connector?	Repair the connector.	Replace the DCCD control module. <Ref. to 6MT(TY85)-37, Driver's Control Center Differential Control Module.>

13.List of Diagnostic Trouble Code (DTC)

A: LIST

1. SUBARU SELECT MONITOR DISPLAY

DTC	Item	Content of diagnosis	Reference
P0606	Control Module Processor	Driver's control center differential control module is faulty.	<Ref. to 6MT(diag)-20, DTC P0606 CONTROL MODULE PROCESSOR, Diagnostic Procedure with Diagnostic Trouble Code (DTC).>
P1521	Brake Switch Signal	Stop light switch circuit is open or shorted.	<Ref. to 6MT(diag)-22, DTC P1521 BRAKE SWITCH SIGNAL, Diagnostic Procedure with Diagnostic Trouble Code (DTC).>
P176A	Vehicle Dynamics Control Module System	VDC system failure	<Ref. to 6MT(diag)-23, DTC P176A VEHICLE DYNAMICS CONTROL SYSTEM, Diagnostic Procedure with Diagnostic Trouble Code (DTC).>
P1875	Center Differential Solenoid Circuit	Open or short in the driver's control center differential circuit	<Ref. to 6MT(diag)-24, DTC P1875 CENTER DIFFERENTIAL SOLENOID CIRCUIT, Diagnostic Procedure with Diagnostic Trouble Code (DTC).>
U0073	Control Module Communication Bus Off	Defective CAN communication	<Ref. to 6MT(diag)-29, DTC U0073 CONTROL MODULE COMMUNICATION BUS OFF, Diagnostic Procedure with Diagnostic Trouble Code (DTC).>
U0100	Lost Communication With ECM/PCM "A"	Defective CAN communication	<Ref. to 6MT(diag)-29, DTC U0100 LOST COMMUNICATION WITH ECM/PCM "A", Diagnostic Procedure with Diagnostic Trouble Code (DTC).>
U0122	Lost Communication With Vehicle Dynamics Control Module	Defective CAN communication	<Ref. to 6MT(diag)-29, DTC U0122 LOST COMMUNICATION WITH VEHICLE DYNAMICS CONTROL MODULE, Diagnostic Procedure with Diagnostic Trouble Code (DTC).>
U0140	Lost Communication With Body Control Module	Defective CAN communication	<Ref. to 6MT(diag)-29, DTC U0140 LOST COMMUNICATION WITH BODY CONTROL MODULE, Diagnostic Procedure with Diagnostic Trouble Code (DTC).>
U0155	Lost Communication With Instrument Panel Cluster (IPC) Control Module	Defective CAN communication	<Ref. to 6MT(diag)-29, DTC U0155 LOST COMMUNICATION WITH INSTRUMENT PANEL CLUSTER (IPC) CONTROL MODULE, Diagnostic Procedure with Diagnostic Trouble Code (DTC).>
U0401	Invalid Data Received From ECM/PCM "A"	Defective CAN communication	<Ref. to 6MT(diag)-29, DTC U0401 INVALID DATA RECEIVED FROM ECM/PCM "A", Diagnostic Procedure with Diagnostic Trouble Code (DTC).>
U0416	Invalid Data Received From Vehicle Dynamics Control Module	Defective CAN communication	<Ref. to 6MT(diag)-29, DTC U0416 INVALID DATA RECEIVED FROM VEHICLE DYNAMICS CONTROL MODULE, Diagnostic Procedure with Diagnostic Trouble Code (DTC).>
U0422	Invalid Data Received From Body Control Module	Defective CAN communication	<Ref. to 6MT(diag)-29, DTC U0422 INVALID DATA RECEIVED FROM BODY CONTROL MODULE, Diagnostic Procedure with Diagnostic Trouble Code (DTC).>
U0423	Invalid Data Received From Instrument Panel Cluster Control Module	Defective CAN communication	<Ref. to 6MT(diag)-29, DTC U0423 INVALID DATA RECEIVED FROM INSTRUMENT PANEL CLUSTER CONTROL MODULE, Diagnostic Procedure with Diagnostic Trouble Code (DTC).>
U1201	CAN-HS Counter Abnormal	Defective CAN communication	<Ref. to 6MT(diag)-29, DTC U1201 CAN-HS COUNTER ABNORMAL, Diagnostic Procedure with Diagnostic Trouble Code (DTC).>

14.Diagnostic Procedure with Diagnostic Trouble Code (DTC)

A: DTC P0606 CONTROL MODULE PROCESSOR

DIAGNOSIS START CONDITION:
At DCCD control module initialization (when power is turned to ON)
Malfunction judgment criteria:
When CAN function of microcomputer is abnormal (when CAN register read/write is abnormal)
TROUBLE SYMPTOM:
- Center differential does not operate.
- An oversteer tendency will become apparent.

WIRING DIAGRAM:
Drivers control center differential control system <Ref. to WI-151, Driver's Control Center Differential Control System.>

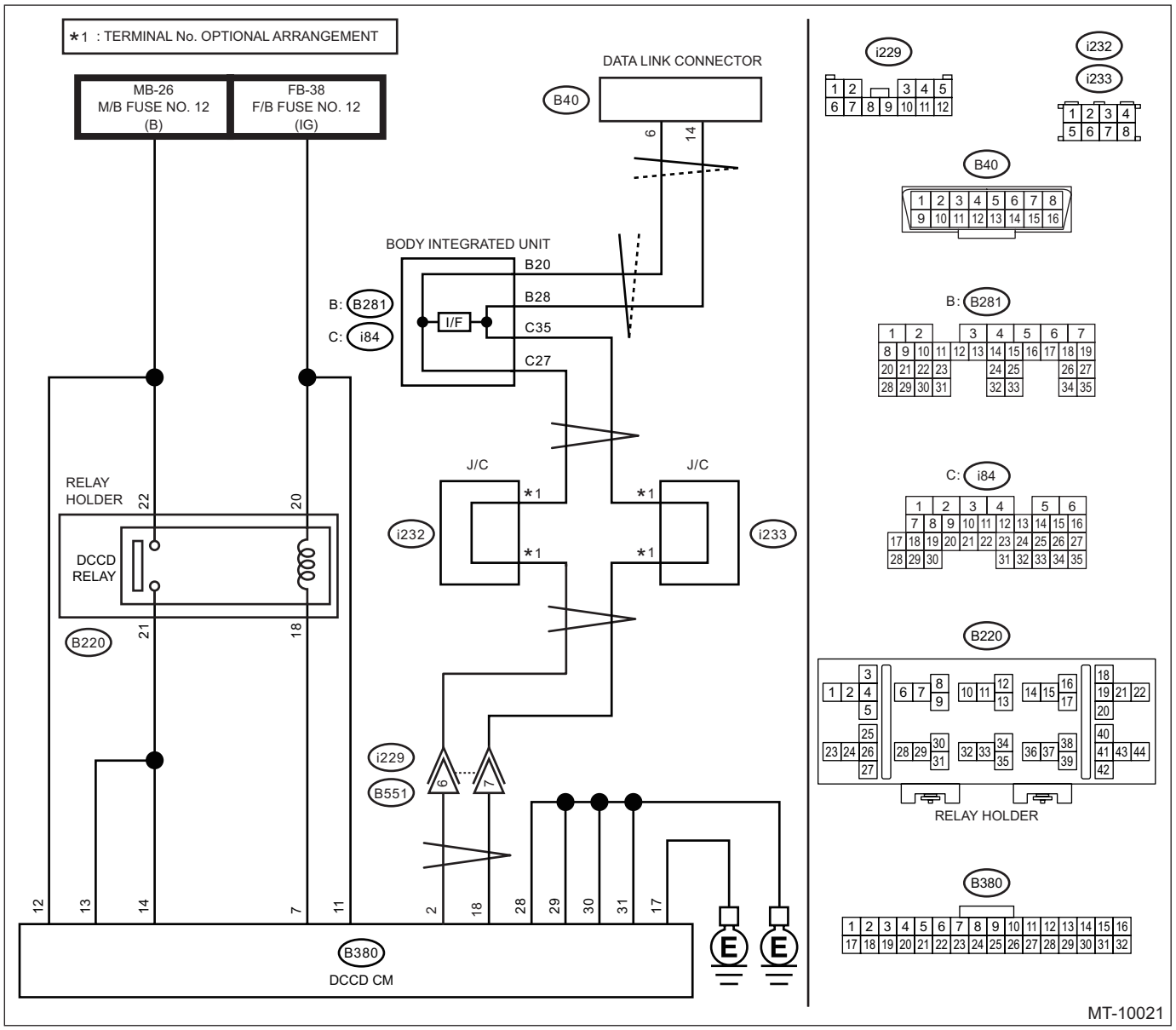

	Step	Check	Yes	No
1	**CHECK INPUT VOLTAGE OF DCCD CONTROL MODULE.** 1) Turn the ignition switch to ON. 2) Measure the voltage between DCCD control module and chassis ground. ***Connector & terminal*** ***(B380) No. 11 (+) — Chassis ground (–):***	Is the voltage 10 — 13 V?	Go to step **2**.	Repair the open or short to ground in the power supply circuit.
2	**CHECK INPUT VOLTAGE OF DCCD CONTROL MODULE.** 1) Start the engine. 2) Measure the voltage between DCCD control module and chassis ground. ***Connector & terminal*** ***(B380) No. 11 (+) — Chassis ground (–):***	Is the voltage 13 — 15 V?	Go to step **3**.	Repair the open or short to ground in the power supply circuit.
3	**CHECK DCCD CONTROL MODULE GROUND HARNESS.** 1) Turn the ignition switch to ON. 2) Measure the voltage between DCCD control module and chassis ground. ***Connector & terminal*** ***(B380) No. 28 (+) — Chassis ground (–):*** ***(B380) No. 29 (+) — Chassis ground (–):*** ***(B380) No. 30 (+) — Chassis ground (–):*** ***(B380) No. 31 (+) — Chassis ground (–):***	Is the voltage less than 1 V?	Check for poor contact of connector, if a fault is not found, replace the DCCD control module. <Ref. to 6MT(TY85)-37, Driver's Control Center Differential Control Module.>	Repair the harness and connector.

B: DTC P1521 BRAKE SWITCH SIGNAL

DIAGNOSIS START CONDITION:
DTC P0606 and U code are not recorded.
Malfunction judgment criteria:
When any of the following conditions is established
- Detect deceleration of 30 km/h (19 MPH) → 0 km/h (0 MPH) 10 consecutive times with stop light SW OFF
- Detect acceleration of 0 km/h (0 MPH) → 30 km/h (19 MPH) 10 consecutive times with stop light SW ON

DIAGNOSIS:
Stop light switch circuit is open or shorted.
TROUBLE SYMPTOM:
- Center differential does not operate.
- An oversteer tendency will become apparent.

	Step	Check	Yes	No
1	**CHECK DTC.**	Does the DTC related to stop light SW appear in the VDC diagnostics test mode?	Perform the diagnosis according to DTC.	Go to step **2**.
2	**CHECK IGNITION POWER SUPPLY CIRCUIT OF DCCD CONTROL MODULE.** 1) Connect the Subaru Select Monitor to the vehicle. 2) Turn the ignition switch to ON. 3) Read the data of «Battery voltage» using Subaru Select Monitor.	Is the voltage 10 V or more?	Go to step **3**.	Repair the open circuit of harness between fuse (F/B No. 12) and DCCD control module, or between fuse (F/B No. 12) and battery.
3	**CHECK DTC.**	Is DTC P0606 or U code displayed?	Perform the diagnosis according to DTC.	Go to step **4**.
4	**CHECK DCCD CONTROL MODULE.** 1) Turn the ignition switch to ON. 2) Read the data of «Stop Light Switch» using Subaru Select Monitor.	Does the «Stop Light Switch» change to ON/OFF according to the depressing/releasing operation of the brake?	Go to step **5**.	Replace the DCCD control module. <Ref. to 6MT(TY85)-37, Driver's Control Center Differential Control Module.>
5	**CHECK OTHER DTC.**	Is a DTC other than DTC P1521 displayed?	Perform the diagnosis according to DTC.	Current condition is normal.

C: DTC P176A VEHICLE DYNAMICS CONTROL SYSTEM

DIAGNOSIS START CONDITION:
When all the following conditions are established
- DTC P0606 and U code are not recorded.
- Engine speed is 400 rpm or more

Malfunction judgment criteria:
When any of the following conditions is established
- Continuous time of VDC sensor failure status is 0.1 second or more
- Continuous time of VDC wheel speed sensor failure status is 0.1 second or more

TROUBLE SYMPTOM:
- Center differential does not operate.
- An oversteer tendency will become apparent.

Step		Check	Yes	No
1	**CHECK DTC.** Read the DTC of VDC system using the Subaru Select Monitor.	Is DTC of VDC system displayed?	Perform the diagnosis according to DTC. <Ref. to VDC(diag)-55, List of Diagnostic Trouble Code (DTC).>	Current condition is normal.

D: DTC P1875 CENTER DIFFERENTIAL SOLENOID CIRCUIT

DIAGNOSIS START CONDITION:

- Overcurrent detection (short circuit, etc.)
  Always
- Zero current stuck detection (open circuit, defective power supply, etc.)
  Center differential indicator current ≥ 0.48 A

DIAGNOSIS:

Center differential output signal circuit is open or shorted.

TROUBLE SYMPTOM:

- Center differential does not operate.
- The lock ratio of the center differential does not change, or malfunction occurs.
- A tight corner braking symptom occurs.
- An oversteer tendency will become apparent.
- A tendency to understeer occurs during high speed cornering.

WIRING DIAGRAM:

Drivers control center differential control system <Ref. to WI-151, Driver's Control Center Differential Control System.>

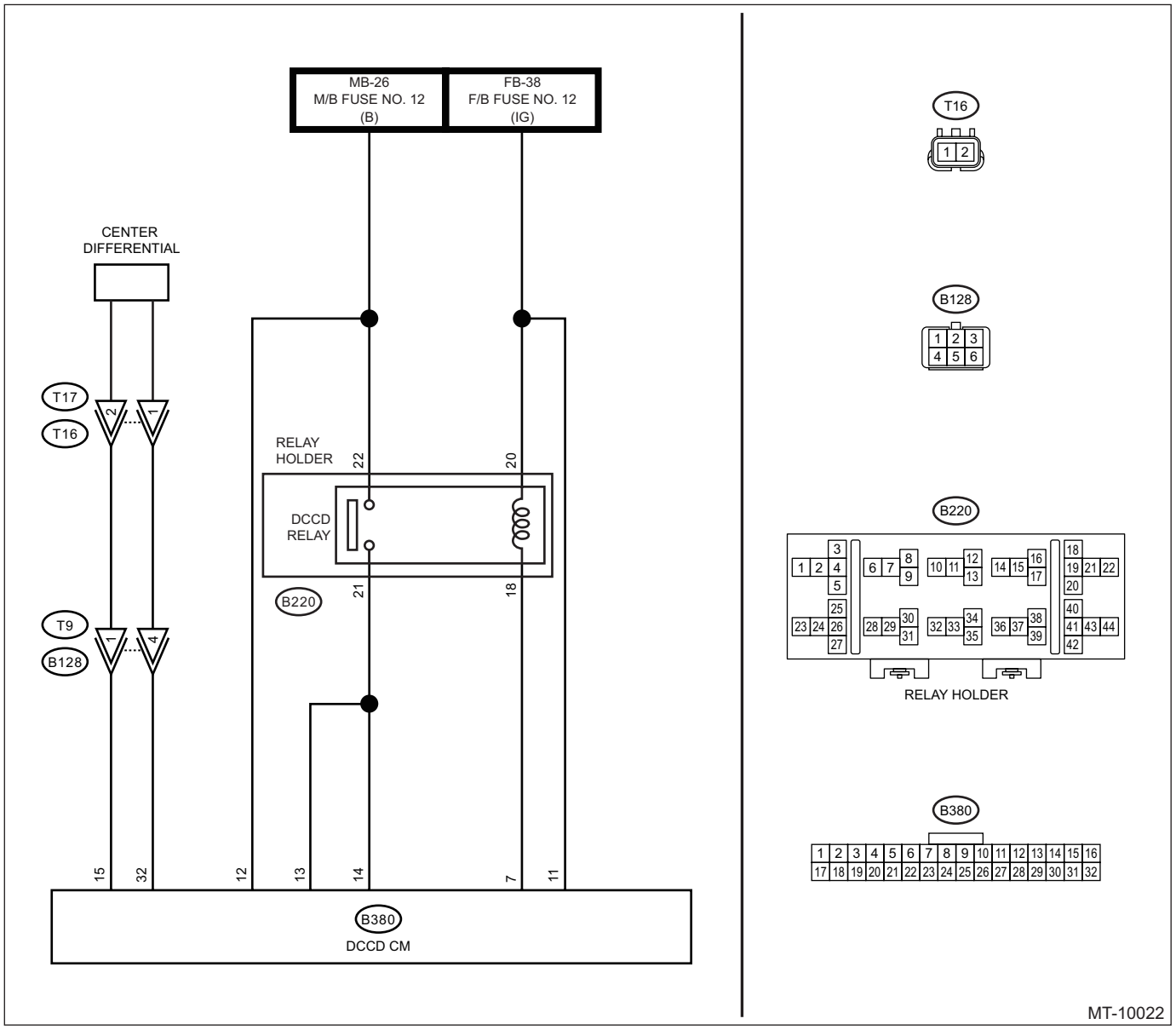

	Step	Check	Yes	No
1	**CHECK DTC.**	Is a DTC other than DTC P1875 displayed?	Perform the diagnosis according to DTC.	Go to step **2**.
2	**CHECK HARNESS BETWEEN DCCD CONTROL MODULE AND TRANSMISSION HARNESS.** 1) Turn the ignition switch to OFF. 2) Disconnect the DCCD control module connector. 3) Disconnect the transmission harness connector and the bulk harness connector. 4) Measure the resistance of harness between DCCD control module connector and transmission harness connector. ***Connector & terminal*** ***(B380) No. 15 — (B128) No. 1:*** ***(B380) No. 32 — (B128) No. 4:***	Is the resistance less than 1 Ω?	Go to step **3**.	Repair the bulk harness open circuit between DCCD control module and transmission harness.
3	**CHECK HARNESS BETWEEN DCCD CONTROL MODULE AND TRANSMISSION HARNESS.** Measure the resistance between DCCD control module connector and chassis ground. ***Connector & terminal*** ***(B380) No. 15 — Chassis ground:*** ***(B380) No. 32 — Chassis ground:***	Is the resistance 1 MΩ or more?	Go to step **4**.	Repair the bulk harness short circuit between DCCD control module and transmission harness.
4	**CHECK CENTER DIFFERENTIAL.** Measure the resistance between transmission harness connector terminals. ***Connector & terminal*** ***(T9) No. 1 — No. 4:***	Is the resistance 1.2 — 2.5 Ω?	Go to step **5**.	Replace the center differential. <Ref. to 6MT(TY85)-57, Center Differential.>
5	**CHECK OUTPUT SIGNAL OF DCCD CONTROL MODULE.** 1) Connect all harness connectors. 2) Turn the ignition switch to ON. 3) Release the parking brake. 4) Press the mode change switch to enter the manual mode. 5) Press the C.DIFF +/– switch to enter the lock position. 6) Measure the voltage between DCCD control module connectors. ***Connector & terminal*** ***(B380) No. 15 (+) — No. 32 (–):***	Is the voltage 5.5 — 8.0 V?	Go to step **6**.	Go to step **7**.
6	**CHECK OUTPUT SIGNAL OF DCCD CONTROL MODULE.** 1) Move the C.DIFF +/– switch from the differential lock position to the differential free position. 2) Read the voltage between DCCD control module connectors. ***Connector & terminal*** ***(B380) No. 15 (+) — No. 32 (–):***	Does the voltage drop in stages according to the DCCD manual mode display?	Current condition is normal.	Go to step **7**.

	Step	Check	Yes	No
7	**CHECK FUSE (M/B NO. 12).** 1) Turn the ignition switch to OFF. 2) Remove the fuse (M/B No. 12).	Is the fuse (M/B No. 12) blown out?	Replace the fuse (M/B No. 12). If the new fuse (M/B No. 12) has blown out easily, check for the short circuit to chassis ground of harness between fuse (M/B No. 12) and DCCD control module, or between fuse (M/B No. 12) and relay.	Go to step **8**.
8	**CHECK POWER SUPPLY CIRCUIT OF DCCD RELAY.** 1) Install the fuse. 2) Turn the ignition switch to ON. 3) Measure the voltage between DCCD control module connector and chassis ground. ***Connector & terminal*** ***(B380) No. 13 (+) — Chassis ground (–):*** ***(B380) No. 14 (+) — Chassis ground (–):***	Is the voltage 8 V or more?	Go to step **17**.	Go to step **9**.
9	**CHECK POWER SUPPLY CIRCUIT OF DCCD RELAY.** 1) Turn the ignition switch to OFF. 2) Disconnect the DCCD relay harness connector. 3) Measure the voltage between DCCD relay harness connector and chassis ground. ***Connector & terminal*** ***(B220) No. 22 (+) — Chassis ground (–):***	Is the voltage 10 V or more?	Go to step **10**.	Repair the open or short circuit between fuse (M/B No. 12), DCCD relay, and battery.
10	**CHECK IGNITION POWER SUPPLY CIRCUIT OF DCCD RELAY.** 1) Turn the ignition switch to ON. 2) Measure the voltage between DCCD relay and chassis ground. ***Connector & terminal*** ***(B220) No. 20 (+) — Chassis ground (–):***	Is the voltage 10 V or more?	Go to step **11**.	Repair the open circuit between fuse (F/B No. 12), DCCD relay, and battery.
11	**CHECK HARNESS BETWEEN DCCD CONTROL MODULE AND DCCD RELAY.** 1) Turn the ignition switch to OFF. 2) Disconnect the connector from DCCD control module. 3) Measure resistance of the harness between DCCD control module connector and DCCD relay connector. ***Connector & terminal*** ***(B380) No. 7 — (B220) No. 18:*** ***(B380) No. 13 — (B220) No. 21:*** ***(B380) No. 14 — (B220) No. 21:***	Is the resistance less than 1 Ω?	Go to step **12**.	Repair the open circuit of harness between DCCD control module connector and DCCD relay connector.
12	**CHECK HARNESS BETWEEN DCCD CONTROL MODULE AND DCCD RELAY.** Measure the resistance of harness between DCCD control module connector and chassis ground. ***Connector & terminal*** ***(B380) No. 7 — Chassis ground:*** ***(B380) No. 13 — Chassis ground:*** ***(B380) No. 14 — Chassis ground:***	Is the resistance 1 MΩ or more?	Go to step **13**.	Repair the short circuit of harness between DCCD control module connector and DCCD relay connector.

	Step	Check	Yes	No
13	**CHECK DCCD RELAY.** Measure the resistance between DCCD relay terminals. ***Terminals*** ***No. 21 — No. 22:***	Is the resistance 1 MΩ or more?	Go to step **14**.	Replace the DCCD relay.
14	**CHECK DCCD RELAY.** 1) Connect the battery positive lead to terminal No. 20. 2) Connect the battery negative lead to terminal No. 18. 3) Measure the resistance between DCCD relay terminals. ***Terminals*** ***No. 21 — No. 22:***	Is the resistance less than 1 Ω?	Go to step **15**.	Replace the DCCD relay.
15	**CHECK DCCD CONTROL MODULE RELAY DRIVE CIRCUIT.** 1) Connect all connectors. 2) Turn the ignition switch to ON. 3) Measure the voltage between DCCD control module and chassis ground. ***Connector & terminal*** ***(B380) No. 7 (+) — Chassis ground (–):***	Is the voltage less than 1 V?	Go to step **16**.	Go to step **19**.
16	**CHECK IGNITION POWER SUPPLY CIRCUIT OF DCCD CONTROL MODULE.** Measure the voltage between DCCD control module and chassis ground. ***Connector & terminal*** ***(B380) No. 13 (+) — Chassis ground (–):*** ***(B380) No. 14 (+) — Chassis ground (–):***	Is the voltage 8 V or more?	Go to step **17**.	Go to step **19**.
17	**CHECK CENTER DIFFERENTIAL.** 1) Turn the ignition switch to OFF. 2) Connect the Subaru Select Monitor to data link connector. 3) Turn the ignition switch to ON. 4) Run the Subaru Select Monitor. 5) Press the mode change switch to enter the manual mode. 6) Release the parking brake. 7) Press the C.DIFF +/– switch to enter the lock position. 8) Read the data of «C-Diff. Indicate Current» and «C-Diff. Real Current» using Subaru Select Monitor.	Are «C-Diff. Indicate Current» and «C-Diff. Real Current» both approximately 3.6 — 4.0 A?	Go to step **18**.	Go to step **19**.
18	**CHECK CENTER DIFFERENTIAL.** 1) Operate the C.DIFF +/– switch so that the reading of «C-Diff. Indicate Current» becomes 1.6 A using the Subaru Select Monitor. 2) Read the data of «C-Diff. Real Current» using Subaru Select Monitor.	Is «C-Diff. Real Current» about the same as «C-Diff. Indicate Current»?	Go to step **20**.	Go to step **19**.
19	**CHECK POOR CONTACT OF HARNESS CONNECTORS.**	Is there poor contact of the harness connector?	Repair the poor contact.	Replace the DCCD control module. <Ref. to 6MT(TY85)-37, Driver's Control Center Differential Control Module.>

	Step	Check	Yes	No
20	**CHECK DTC.** 1) Perform the Clear Memory Mode. <Ref. to 6MT(diag)-11, Clear Memory Mode.> 2) Read the DTC using the Select Monitor. <Ref. to 6MT(diag)-9, Read Diagnostic Trouble Code (DTC).>	Is DTC P1875 displayed?	Replace the DCCD control module. <Ref. to 6MT(TY85)-37, Driver's Control Center Differential Control Module.>	Go to step **21**.
21	**CHECK DTC.**	Is a DTC other than DTC P1875 displayed?	Perform the diagnosis according to DTC.	Current condition is normal.

E: DTC U0073 CONTROL MODULE COMMUNICATION BUS OFF

NOTE:
Refer to “LAN SYSTEM (DIAGNOSTICS)” for diagnostic procedure. <Ref. to LAN(diag)-2, Basic Diagnostic Procedure.>

F: DTC U0100 LOST COMMUNICATION WITH ECM/PCM “A”

NOTE:
Refer to “LAN SYSTEM (DIAGNOSTICS)” for diagnostic procedure. <Ref. to LAN(diag)-2, Basic Diagnostic Procedure.>

G: DTC U0122 LOST COMMUNICATION WITH VEHICLE DYNAMICS CONTROL MODULE

NOTE:
Refer to “LAN SYSTEM (DIAGNOSTICS)” for diagnostic procedure. <Ref. to LAN(diag)-2, Basic Diagnostic Procedure.>

H: DTC U0140 LOST COMMUNICATION WITH BODY CONTROL MODULE

NOTE:
Refer to “LAN SYSTEM (DIAGNOSTICS)” for diagnostic procedure. <Ref. to LAN(diag)-2, Basic Diagnostic Procedure.>

I: DTC U0155 LOST COMMUNICATION WITH INSTRUMENT PANEL CLUSTER (IPC) CONTROL MODULE

NOTE:
Refer to “LAN SYSTEM (DIAGNOSTICS)” for diagnostic procedure. <Ref. to LAN(diag)-2, Basic Diagnostic Procedure.>

J: DTC U0401 INVALID DATA RECEIVED FROM ECM/PCM “A”

NOTE:
Refer to “LAN SYSTEM (DIAGNOSTICS)” for diagnostic procedure. <Ref. to LAN(diag)-2, Basic Diagnostic Procedure.>

K: DTC U0416 INVALID DATA RECEIVED FROM VEHICLE DYNAMICS CONTROL MODULE

NOTE:
Refer to “LAN SYSTEM (DIAGNOSTICS)” for diagnostic procedure. <Ref. to LAN(diag)-2, Basic Diagnostic Procedure.>

L: DTC U0422 INVALID DATA RECEIVED FROM BODY CONTROL MODULE

NOTE:
Refer to “LAN SYSTEM (DIAGNOSTICS)” for diagnostic procedure. <Ref. to LAN(diag)-2, Basic Diagnostic Procedure.>

M: DTC U0423 INVALID DATA RECEIVED FROM INSTRUMENT PANEL CLUSTER CONTROL MODULE

NOTE:
Refer to “LAN SYSTEM (DIAGNOSTICS)” for diagnostic procedure. <Ref. to LAN(diag)-2, Basic Diagnostic Procedure.>

N: DTC U1201 CAN-HS COUNTER ABNORMAL

NOTE:
Refer to “LAN SYSTEM (DIAGNOSTICS)” for diagnostic procedure. <Ref. to LAN(diag)-2, Basic Diagnostic Procedure.>

15.Diagnostic Procedure without Diagnostic Trouble Code (DTC)

A: CHECK PARKING BRAKE SWITCH

DIAGNOSIS:
Input signal circuit of parking brake switch is open or shorted.
TROUBLE SYMPTOM:
- It does not show a differential free tendency even when the parking brake switch is applied.
- Remains differential free even when the parking brake switch is released.

WIRING DIAGRAM:
Drivers control center differential control system <Ref. to WI-151, Driver's Control Center Differential Control System.>

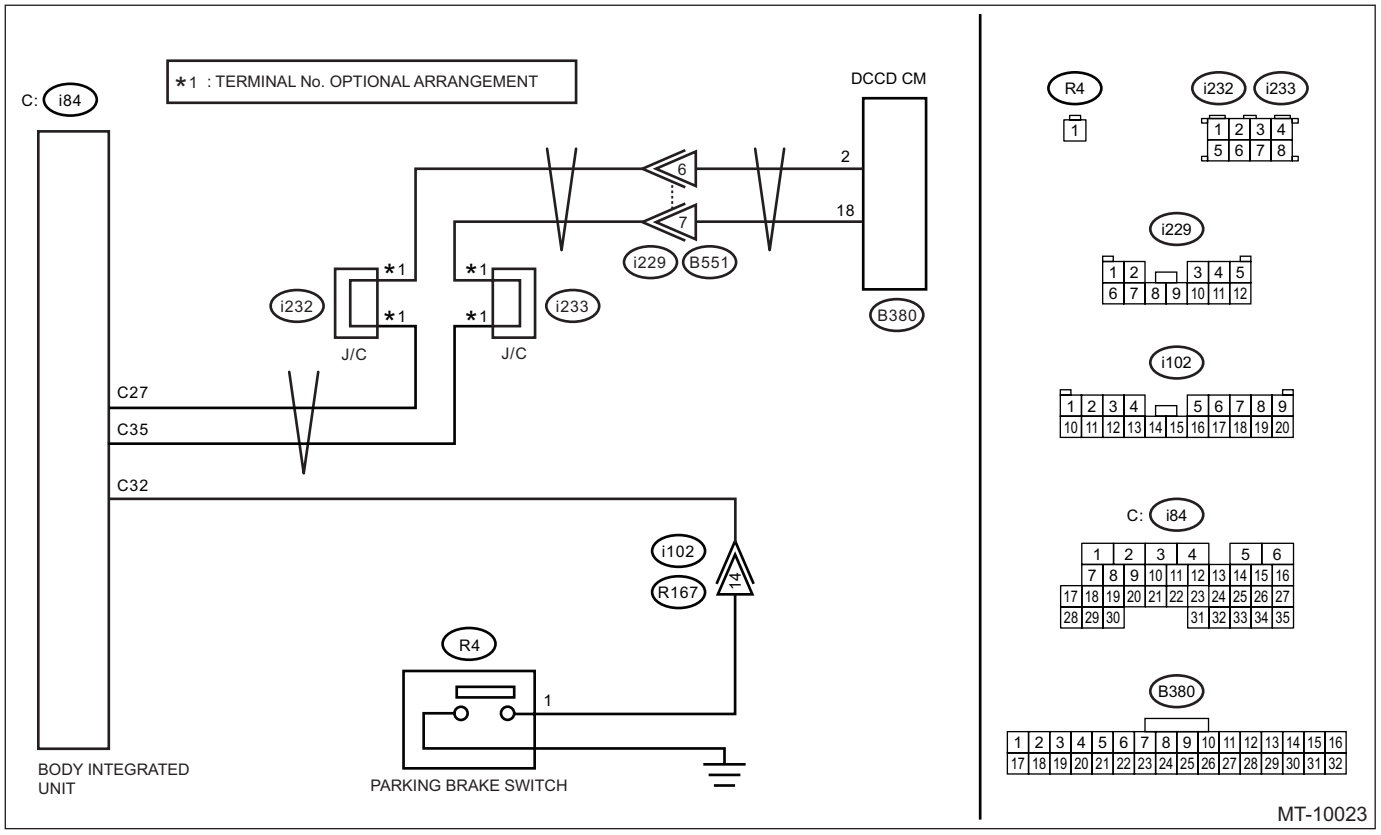

Step		Check	Yes	No
1	**CHECK IGNITION CIRCUIT OF DCCD CONTROL MODULE.** 1) Connect the Subaru Select Monitor to the vehicle. 2) Turn the ignition switch to ON. 3) Read the data of «Battery voltage» using Subaru Select Monitor.	Is the voltage 10 V or more?	Go to step **2**.	Repair the open circuit of harness between fuse (F/B No. 12) and DCCD control module, or between fuse (F/B No. 12) and battery.
2	**CHECK DTC.**	Is DTC P0606 or U code displayed?	Perform the diagnosis according to DTC.	Go to step **3**.
3	**CHECK DCCD CONTROL MODULE.** 1) Operate the parking brake lever. 2) Read the data of «Parking Position Switch» using Subaru Select Monitor.	Is the ON/OFF normally detected?	Current condition is normal.	Go to step **4**.
4	**CHECK BODY INTEGRATED UNIT.** 1) Operate the parking brake lever. 2) Read the data of «Parking Position Switch» using Subaru Select Monitor.	Is the ON/OFF normally detected?	Go to step **7**.	Go to step **5**.

	Step	Check	Yes	No
5	**CHECK HARNESS BETWEEN BODY INTEGRATED UNIT AND PARKING BRAKE SWITCH.** 1) Turn the ignition switch to OFF. 2) Disconnect the connector from body integrated unit. 3) Check for open circuit, short circuit to battery and short circuit to ground between the body integrated unit connector and parking brake switch connector. ***Connector & terminal*** ***(i84) No. 32 — (R4) No. 1:***	Is there any fault in the harness?	Repair or replace the harness.	Go to step **6**.
6	**CHECK PARKING BRAKE SWITCH.** Measure the resistance between parking brake switch terminals.	Is the resistance less than 10 Ω when the parking brake lever is pulled? Is the resistance 1 MΩ or more when the parking brake lever is lowered?	Replace the body integrated unit.	Replace the parking brake switch.
7	**CHECK DTC.** Read the DTC of the LAN system using the Subaru Select Monitor.	Is DTC of CAN communication displayed?	Perform the diagnosis according to DTC. <Ref. to LAN(diag)-109, List of Diagnostic Trouble Code (DTC).>	Replace the DCCD control module. <Ref. to 6MT(TY85)-37, Driver's Control Center Differential Control Module.>

B: CHECK DCCD MULTI SELECT SWITCH

DIAGNOSIS:
Input signal of DCCD multi select switch is open or shorted.
TROUBLE SYMPTOM:
- Does not enter the manual mode or auto mode when the mode change switch is pressed.
- Mode does not change in AUTO mode.
- Initial torque can not be changed in manual mode.

NOTE:
Other switch input can not be received if either mode change switch or C.DIFF +/– switch is stuck ON.
WIRING DIAGRAM:
Drivers control center differential control system <Ref. to WI-151, Driver's Control Center Differential Control System.>

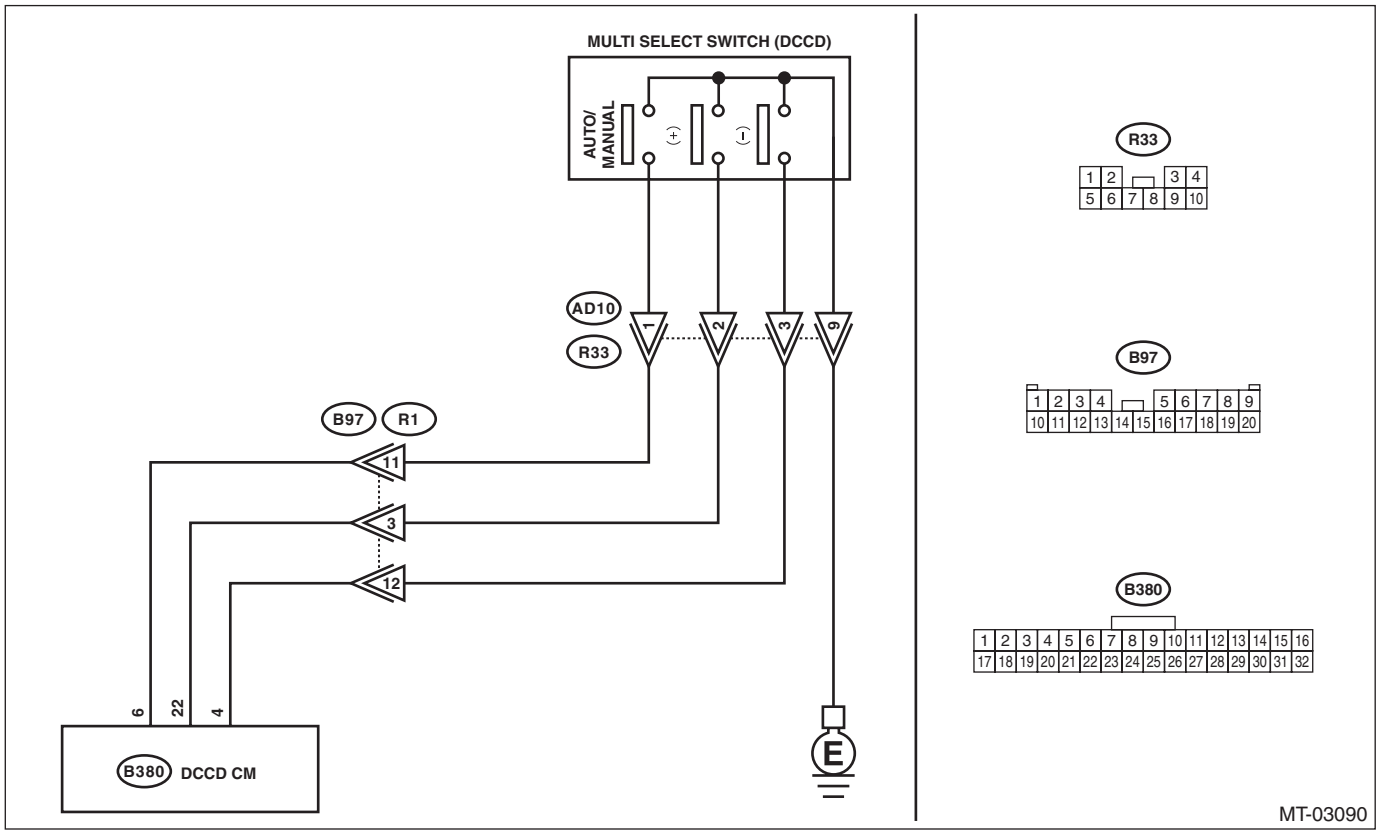

	Step	Check	Yes	No
1	**CHECK DCCD CONTROL MODULE.** 1) Press the manual mode change switch. 2) Read the data of «AUTO/MANUAL Mode Switch» using the Subaru Select Monitor.	Does the data change from OFF/ON?	Go to step **2**.	Go to step **4**.
2	**CHECK DCCD CONTROL MODULE.** 1) Push the multi select switch toward plus. 2) Read the data of «Up Switch» using the Subaru Select Monitor.	Does the data change from OFF/ON?	Go to step **3**.	Go to step **5**.
3	**CHECK DCCD CONTROL MODULE.** 1) Push the multi select switch toward minus. 2) Read the data of «Down Switch» using the Subaru Select Monitor.	Does the data change from OFF/ON?	Current condition is normal.	Go to step **6**.

	Step	Check	Yes	No
4	**CHECK MODE CHANGE SWITCH.** 1) Disconnect the multi select switch connector. 2) Press the mode change switch. 3) Using the tester, measure the resistance between terminals. ***Connector & terminal*** ***(AD10) No. 1 — No. 9:***	Is the resistance less than 1 Ω?	Go to step **7**.	Replace the multi select switch. <Ref. to FU(STI)-55, SI-DRIVE (SUBARU Intelligent Drive) Selector.>
5	**CHECK MULTI SELECT SWITCH.** 1) Push the multi select switch toward plus. 2) Using the tester, measure the resistance between terminals. ***Connector & terminal*** ***(AD10) No. 2 — No. 9:***	Is the resistance less than 1 Ω?	Go to step **7**.	Replace the multi select switch. <Ref. to FU(STI)-55, SI-DRIVE (SUBARU Intelligent Drive) Selector.>
6	**CHECK MULTI SELECT SWITCH.** 1) Push the multi select switch toward minus. 2) Using the tester, measure the resistance between terminals. ***Connector & terminal*** ***(AD10) No. 3 — No. 9:***	Is the resistance less than 1 Ω?	Go to step **7**.	Replace the multi select switch. <Ref. to FU(STI)-55, SI-DRIVE (SUBARU Intelligent Drive) Selector.>
7	**CHECK HARNESS.** Use a tester to measure the resistance between the multi select switch harness connector and chassis ground. ***Connector & terminal*** ***(R33) No. 9 — Chassis ground:***	Is the resistance less than 1 Ω?	Go to step **8**.	Repair or replace the ground circuit.
8	**CHECK HARNESS.** 1) Disconnect the connector from DCCD control module. 2) Use a tester to measure the resistance between the DCCD control module and the multi select switch. ***Connector & terminal*** ***(R33) No. 1 — (B380) No. 6:*** ***(R33) No. 2 — (B380) No. 22:*** ***(R33) No. 3 — (B380) No. 4:***	Is the resistance less than 1 Ω?	Go to step **9**.	Repair or replace the open circuit of the harness.
9	**CHECK HARNESS.** Using the tester, measure the resistance between terminals. ***Connector & terminal*** ***(R33) No. 1 — (R33) No. 2:*** ***(R33) No. 1 — (R33) No. 3:*** ***(R33) No. 2 — (R33) No. 3:***	Is the resistance 1 MΩ or more?	Go to step **10**.	Repair or replace the short of harness.
10	**CHECK HARNESS.** Using the tester, measure the resistance between terminals. ***Connector & terminal*** ***(R33) No. 1 — Chassis ground:*** ***(R33) No. 2 — Chassis ground:*** ***(R33) No. 3 — Chassis ground:***	Is the resistance 1 MΩ or more?	Replace the DCCD control module. <Ref. to 6MT(TY85)-37, Driver's Control Center Differential Control Module.>	Repair or replace the short of harness.

16.Diagnostics with Phenomenon

A: INSPECTION

Symptoms	Faulty parts
A tight corner braking symptom occurs.	• VDCCM&H/U • ABS wheel speed sensor • Yaw rate & G sensor • Steering angle sensor • CAN communication signal • Center differential • C.DIFF +/– switch • Mode change switch • Tire/Wheel • DCCD control module • ECM • Body integrated unit
An oversteer tendency will become apparent.	• Throttle position sensor • ECM • C.DIFF +/– switch • Mode change switch • Tire/Wheel • DCCD control module • Center differential • DCCD relay • Rear differential oil temperature sensor • Neutral position switch • Steering angle sensor • VDCCM&H/U • CAN communication signal • Body integrated unit • Yaw rate & G sensor
A tendency to understeer occurs during high speed cornering.	• VDCCM&H/U • ABS wheel speed sensor • CAN communication signal • Throttle position sensor • Yaw rate & G sensor • Center differential • ECM • Engine speed signal • Neutral position switch • Steering angle sensor • Body integrated unit
Torque characteristics of the center differential do not change.	• C.DIFF +/– switch • DCCD relay • Center differential • DCCD control module
DCCD indicator does not operate. (is not displayed)	• Combination meter • DCCD control module
DCCD indicator does not operate even when the C.DIFF +/– switch is operated. (Displayed but does not change. or, the display blinks.)	• C.DIFF +/– switch • Combination meter • DCCD control module
DCCD AUTO mode does not operate even when the C.DIFF +/– switch is operated. (Displayed but does not change.)	• Mode change switch • Combination meter • DCCD control module • Body integrated unit • CAN communication signal

Symptoms	Faulty parts
DCCD AUTO mode display does not illuminate.	• Mode change switch • Combination meter • DCCD control module • Body integrated unit • CAN communication signal
Will not become differential free or remains differential free.	• Parking brake switch • Center differential • Mode change switch • C.DIFF +/– switch • Rear differential • Tire/Wheel • DCCD relay • Rear differential oil temperature sensor • DCCD control module • ECM • Body integrated unit • VDCCM&H/U • Yaw rate & G sensor • CAN communication signal
ABS does not operate.	• VDCCM&H/U • CAN communication signal • Stop light switch • DCCD control module • ECM • Body integrated unit • Yaw rate & G sensor
Will not lock the differential or the differential is continually locked.	• VDCCM&H/U • ABS wheel speed sensor • CAN communication signal • Center differential • C.DIFF +/– switch • Mode change switch • Tire/Wheel • DCCD control module • DCCD relay • ECM • Body integrated unit • Yaw rate & G sensor

CLUTCH SYSTEM

CL

		Page
1.	General Description	2
2.	Clutch Disc and Cover	12
3.	Flywheel	15
4.	Release Bearing and Lever	17
5.	Operating Cylinder	21
6.	Master Cylinder	24
7.	Clutch Pipe and Hose	27
8.	Clutch Fluid	28
9.	Clutch Fluid Air Bleeding	29
10.	Clutch Pedal	31
11.	Clutch Switch	35
12.	General Diagnostic Table	39

1. General Description

A: SPECIFICATION

Model			STI	Except for STI
Transmission type			6MT	
Clutch cover	Type		Pull type	Push type
	Diaphragm set load N (kgf, lbf)		9,120 (930, 2051)	7,450 (760, 1,675)
Clutch disc	Facing material		Woven (non-asbestos)	
	O.D. × I.D. × Thickness mm (in)	Clutch cover side	240 × 160 × 3.5 (9.45 × 6.30 × 0.138)	230 × 155 × 3.5 (9.06 × 6.10 × 0.138)
		Flywheel side	240 × 160 × 3.2 (9.45 × 6.30 × 0.126)	230 × 155 × 3.2 (9.06 × 6.10 × 0.126)
	Spline outer diameter mm (in)		25.2 (0.992), (number of teeth: 24)	
	Depth of rivet head mm (in)	Clutch cover side	1.65 — 2.25 (0.065 — 0.089)	
		Flywheel side	1.35 — 1.95 (0.053 — 0.077)	
		Limit of sinking	0.8 (0.031)	
	Deflection limit mm (in)		0.7 (0.028) at R = 115 (4.53)	0.7 (0.028) at R = 110 (4.33)
Clutch release lever ratio			1.7	1.6
Release bearing			Grease-packed self-aligning	
Clutch pedal	Full stroke mm (in)		130 — 135 (5.12 — 5.31)	135 — 140 (5.31 — 5.51)
	Free play mm (in)		4 — 11 (0.16 — 0.43)	
Flywheel	Type		Conventional	Flexible

B: COMPONENT

1. CLUTCH ASSEMBLY

- STI model

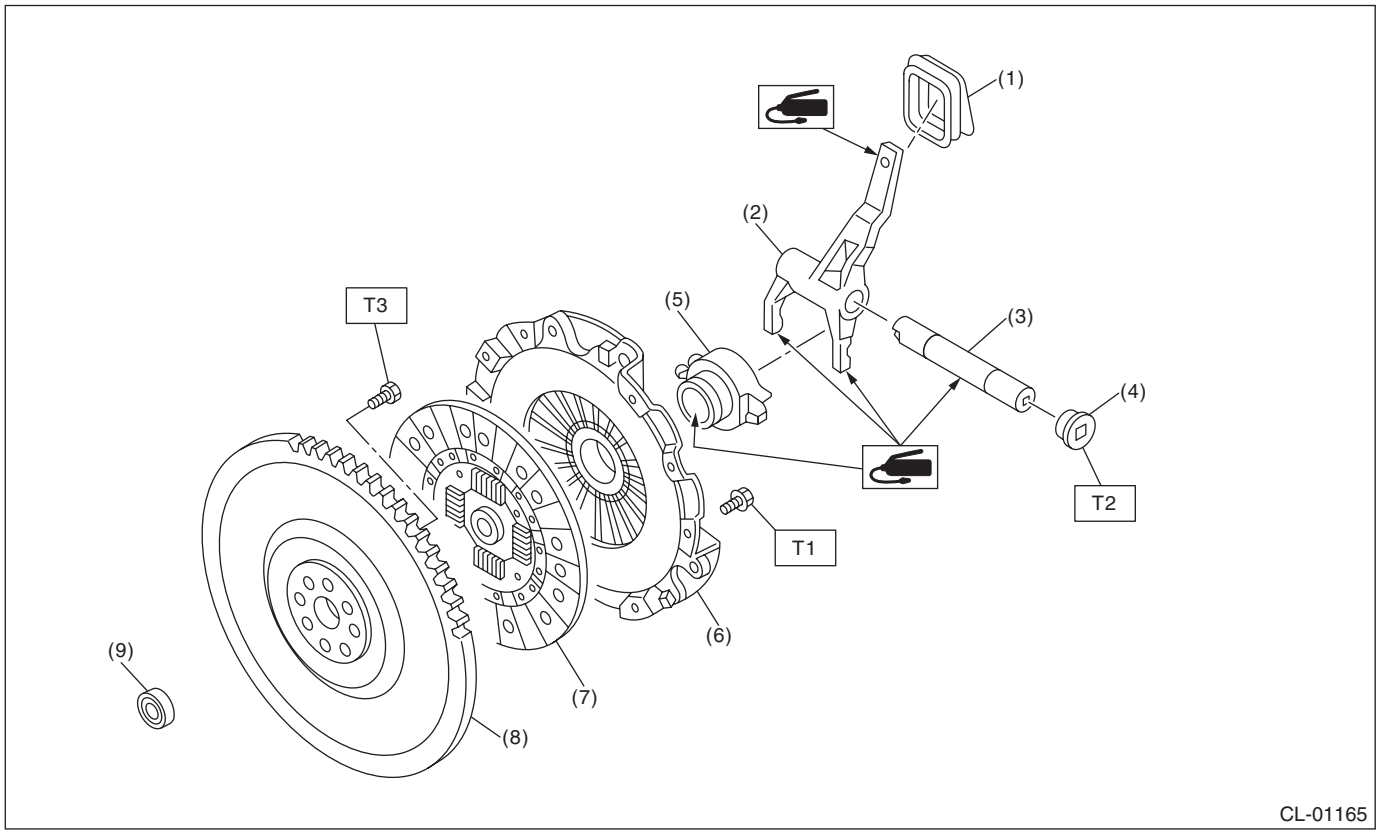

(1)	Dust cover	(6)	Clutch cover	
(2)	Release lever	(7)	Clutch disc	
(3)	Clutch release lever shaft	(8)	Conventional flywheel	
(4)	Plug	(9)	Pilot bearing	
(5)	Release bearing			

Tightening torque: N·m (kgf-m, ft-lb)
T1: 16 (1.6, 11.8)
T2: 48 (4.9, 35.4)
T3: 75 (7.6, 55.3)

- Except for STI model

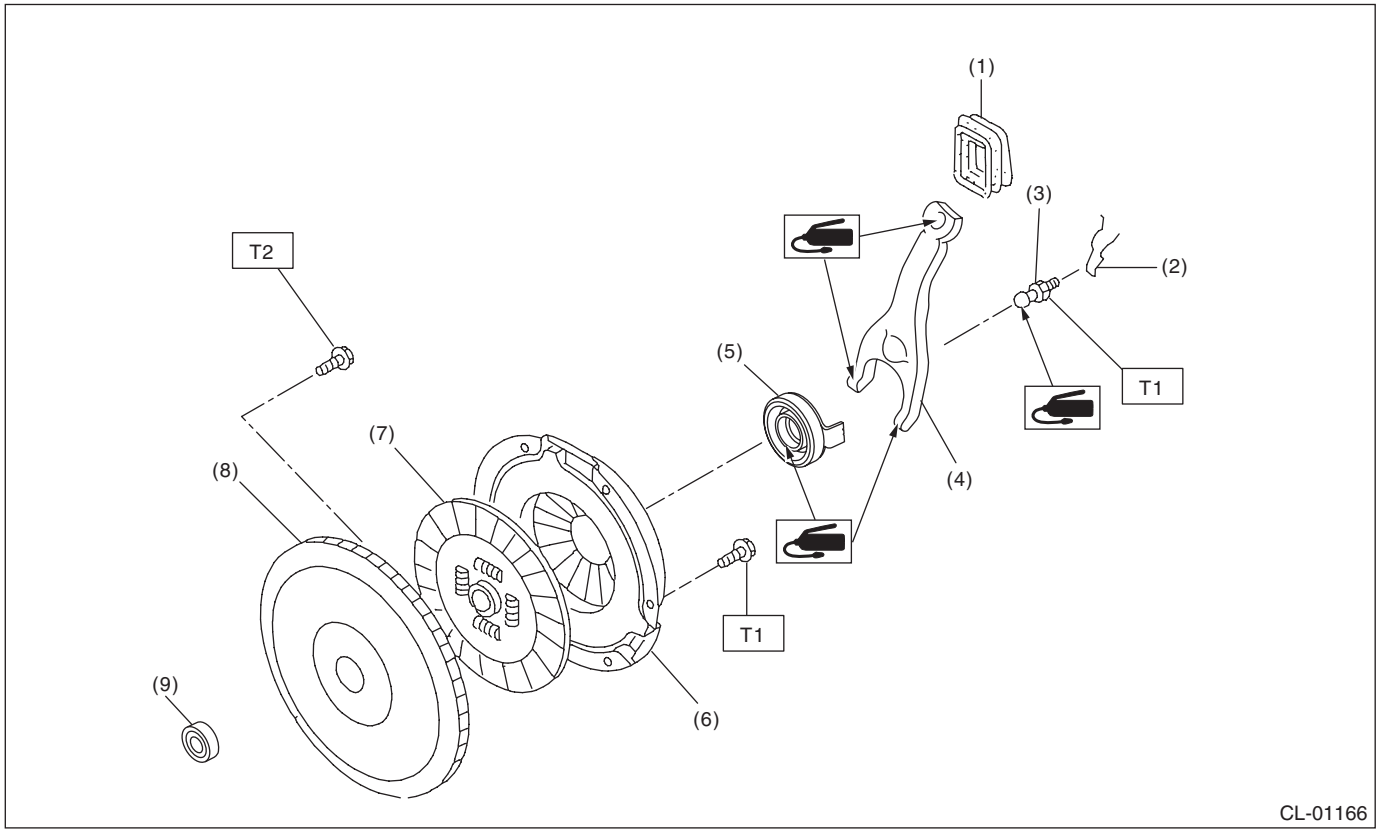

(1) Dust cover
(2) Lever spring
(3) Pivot
(4) Release lever
(5) Release bearing
(6) Clutch cover
(7) Clutch disc
(8) Flexible flywheel
(9) Pilot bearing

Tightening torque: N·m (kgf-m, ft-lb)
T1: 16 (1.6, 11.8)
T2: <Ref. to CL-16, EXCEPT FOR STI MODEL, INSTALLATION, Flywheel.>

2. CLUTCH PIPE AND HOSE

- STI model

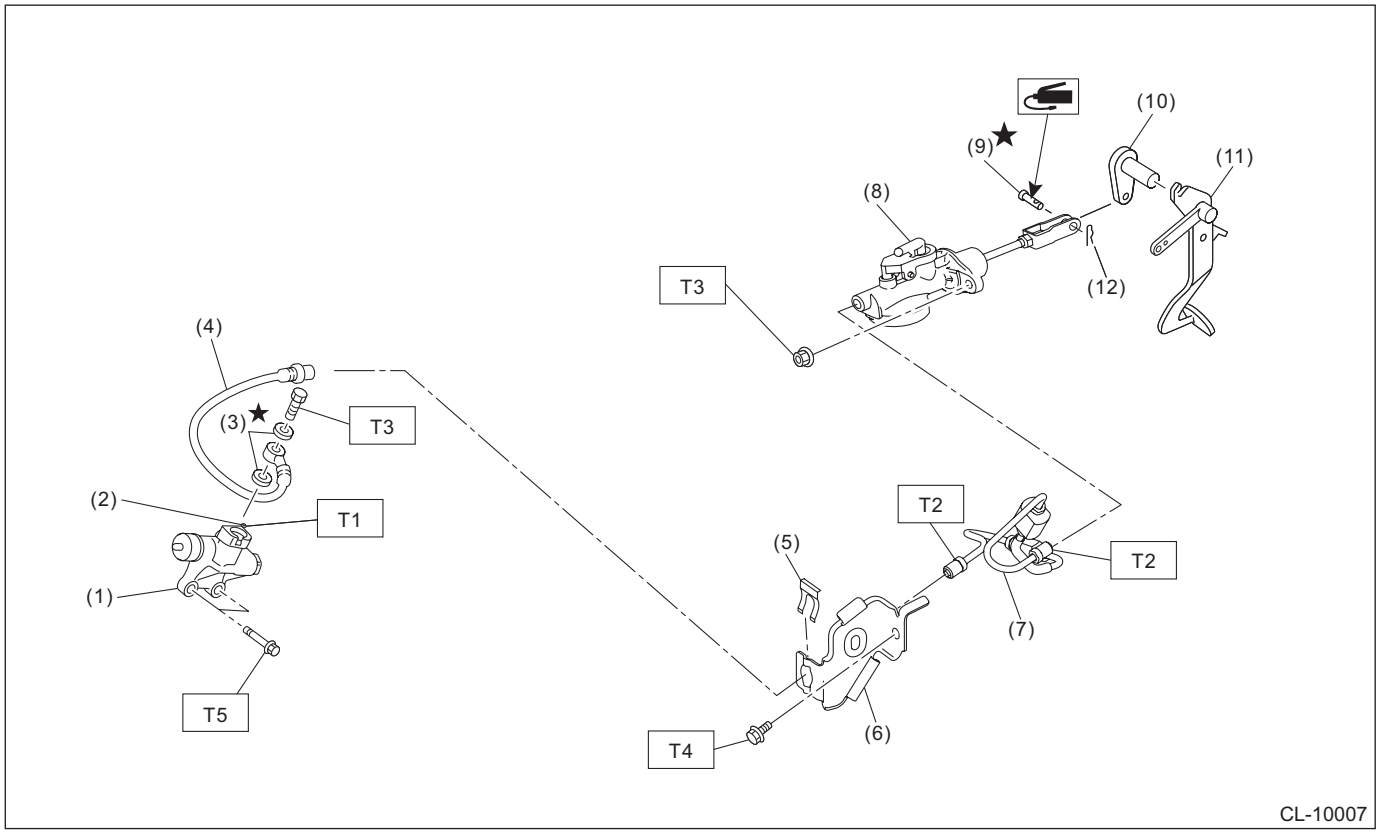

(1)	Operating cylinder	(7)	Clutch pipe	***Tightening torque: N·m (kgf-m, ft-lb)***
(2)	Bleeder screw	(8)	Master cylinder ASSY	***T1: 7.8 (0.8, 5.8)***
(3)	Gasket	(9)	Clevis pin	***T2: 15 (1.5, 11.1)***
(4)	Clutch hose	(10)	Lever	***T3: 18 (1.8, 13.3)***
(5)	Clamp	(11)	Pedal	***T4: 25 (2.5, 18.4)***
(6)	Clutch hose bracket	(12)	Snap pin	***T5: 41 (4.2, 30.2)***

- Except for STI model

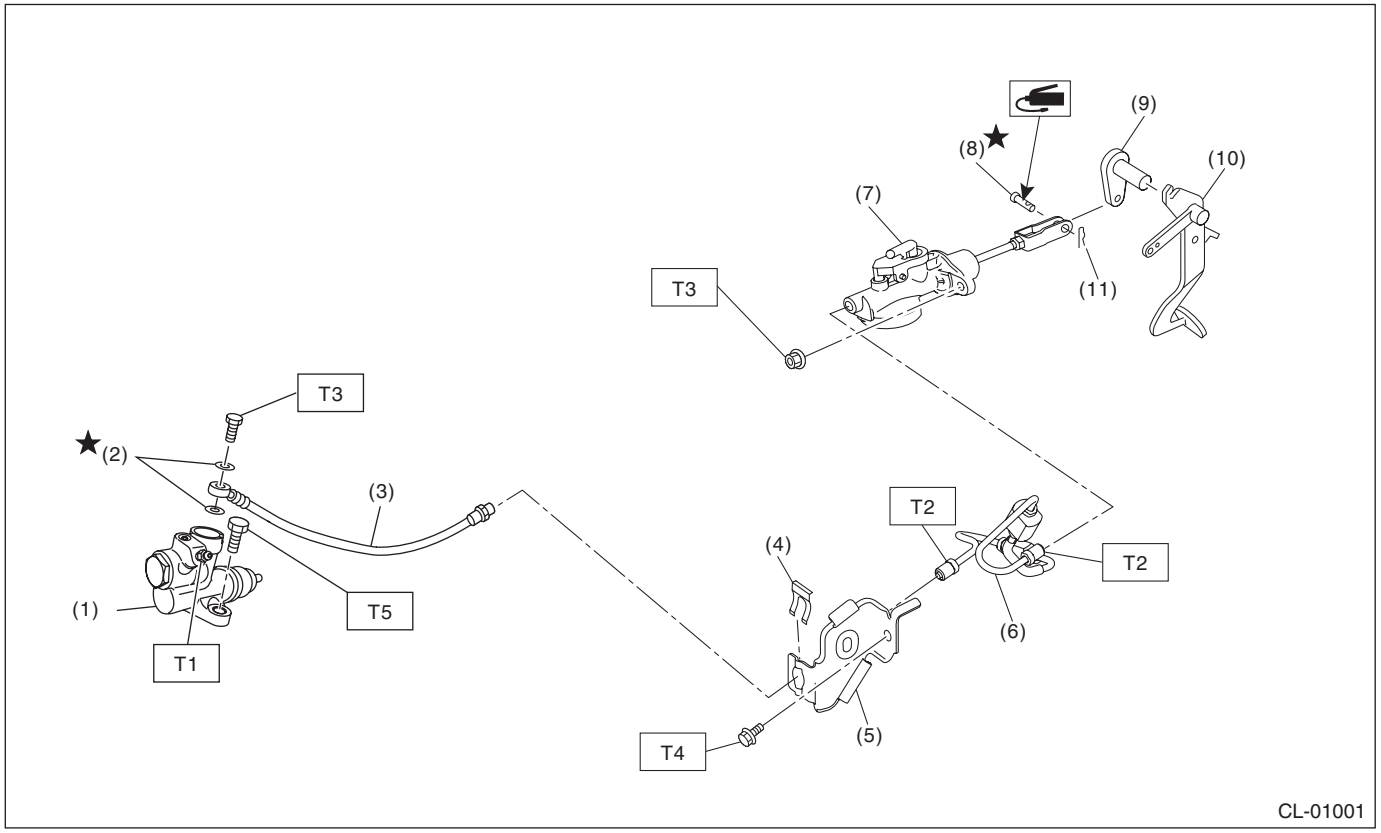

(1)	Operating cylinder	(7)	Master cylinder ASSY
(2)	Gasket	(8)	Clevis pin
(3)	Clutch hose	(9)	Lever
(4)	Clamp	(10)	Pedal
(5)	Clutch hose bracket	(11)	Snap pin
(6)	Clutch pipe		

Tightening torque: N·m (kgf-m, ft-lb)
T1: 7.8 (0.8, 5.8)
T2: 15 (1.5, 11.1)
T3: 18 (1.8, 13.3)
T4: 25 (2.5, 18.4)
T5: 37 (3.8, 27.3)

3. OPERATING CYLINDER

- Except for STI model

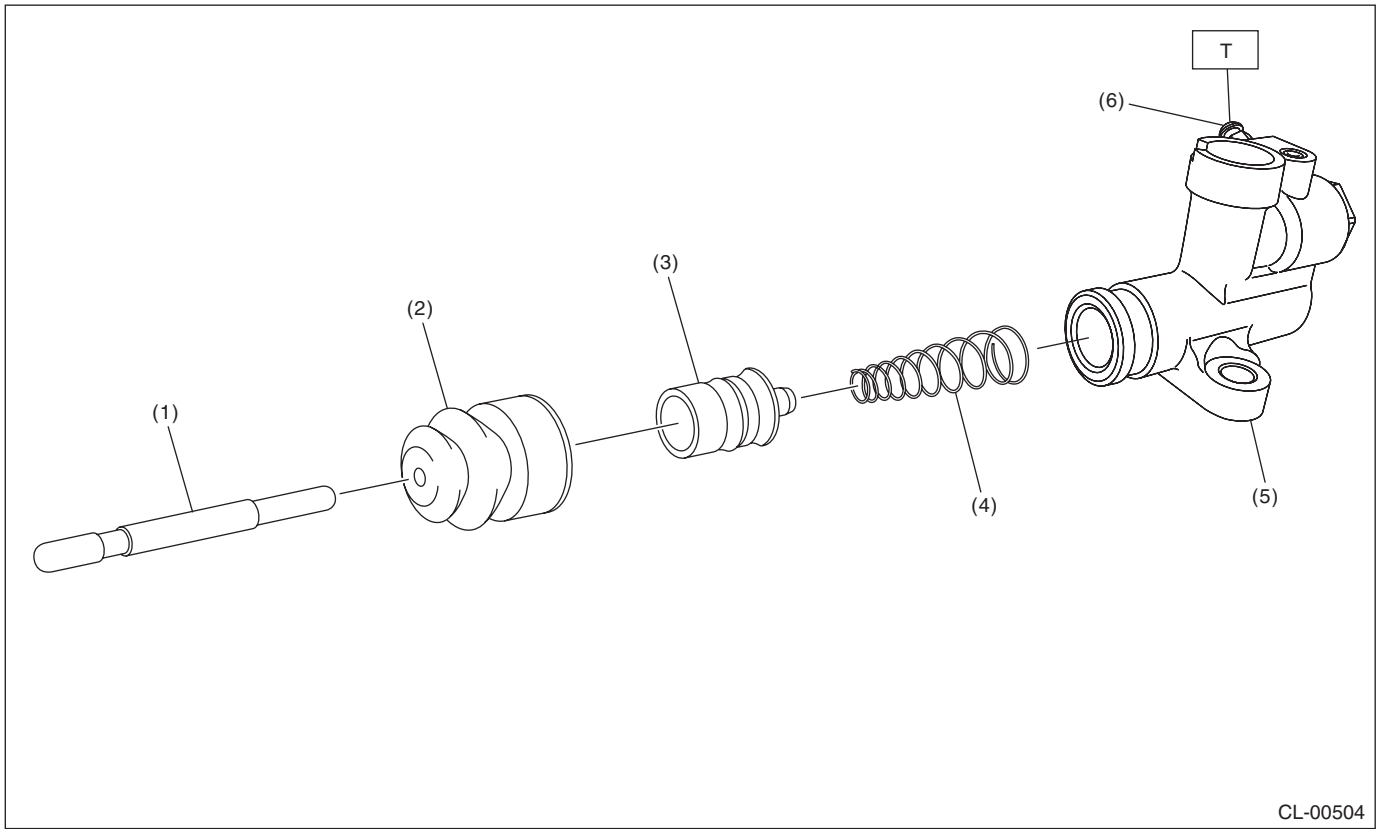

(1) Push rod
(2) Boot
(3) Piston
(4) Piston spring
(5) Operating cylinder
(6) Bleeder screw

Tightening torque: N·m (kgf-m, ft-lb)
T: 7.8 (0.8, 5.8)

4. MASTER CYLINDER

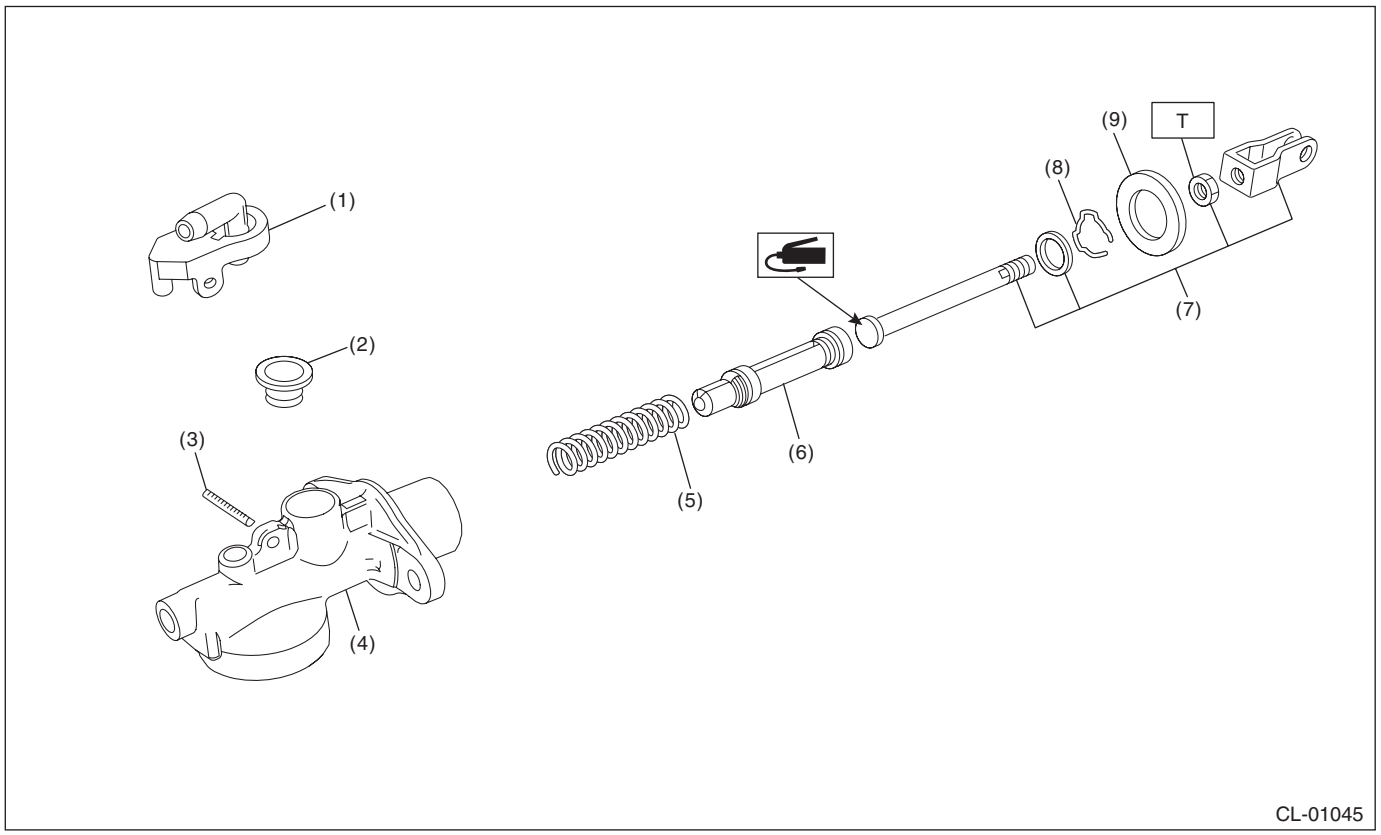

(1) Nipple
(2) Oil seal
(3) Straight pin
(4) Master cylinder
(5) Return spring
(6) Piston
(7) Push rod ASSY
(8) Piston stop ring
(9) Seat

Tightening torque: N·m (kgf-m, ft-lb)
T: 10 (1.0, 7.4)

5. CLUTCH PEDAL

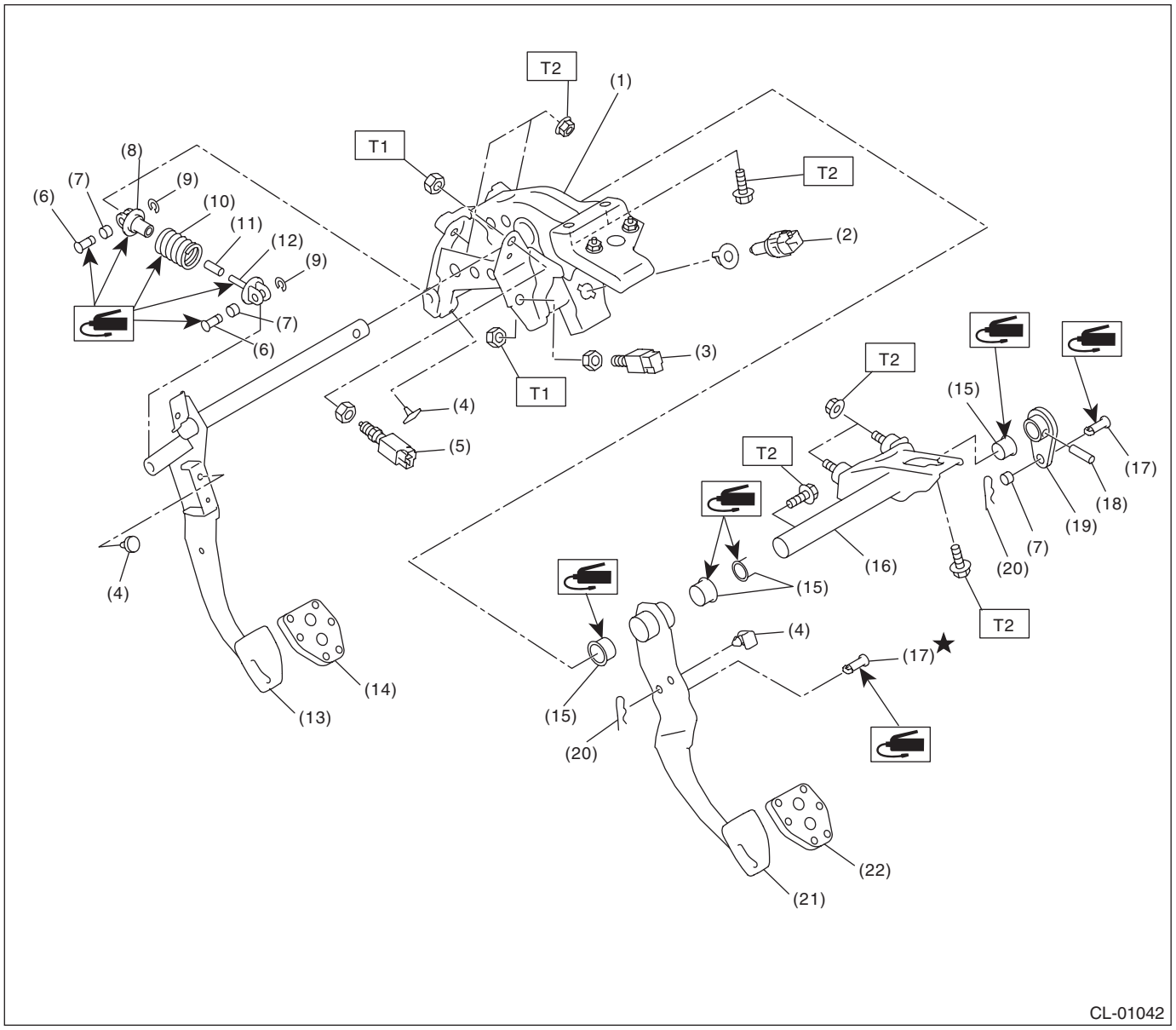

(1) Pedal bracket
(2) Stop light switch
(3) Clutch switch
(4) Stopper
(5) Clutch start switch
(6) Clutch clevis pin
(7) Bushing C
(8) Assist rod B
(9) Clip
(10) Assist spring
(11) Assist bushing
(12) Assist rod A
(13) Clutch pedal
(14) Clutch pedal pad (sport type)
(15) Pedal bushing
(16) Clutch master cylinder bracket
(17) Clevis pin
(18) Spring pin
(19) Lever
(20) Snap pin
(21) Brake pedal
(22) Brake pedal pad (sport type)

Tightening torque: N·m (kgf-m, ft-lb)
T1: 8 (0.8, 5.9)
T2: 18 (1.8, 13.3)

C: CAUTION

- Remove contamination including dirt and corrosion before removal, installation or disassembly.
- Keep the disassembled parts in order and protect them from dust and dirt.
- Before removal, installation or disassembly, be sure to clarify the failure. Avoid unnecessary removal, installation, disassembly and replacement.
- Vehicle components are extremely hot after driving. Be wary of receiving burns from heated parts.
- Use SUBARU genuine fluid, grease etc. or equivalent. Do not mix fluid, grease, etc. of different grades or manufacturers.
- Be sure to tighten fasteners including bolts and nuts to the specified torque.
- Apply grease onto sliding or revolving surfaces before installation.
- Before installing O-rings or snap rings, apply sufficient amount of fluid to avoid damage and deformation.
- Before securing a part in a vise, place cushioning material such as wood blocks, aluminum plate or cloth between the part and the vise.
- Keep fluid away from the vehicle body. If any fluid contacts the vehicle body, immediately flush the area with water.

D: PREPARATION TOOL

1. SPECIAL TOOL

ILLUSTRATION	TOOL NUMBER	DESCRIPTION	REMARKS
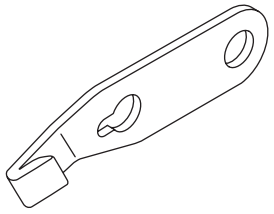 ST-498497100	498497100	CRANKSHAFT STOPPER	Used for stopping rotation of the flywheel.
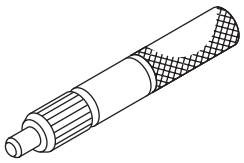 ST-499747100	499747100	CLUTCH DISC GUIDE	Used for installing the clutch disc to the flywheel.
 STSSM4	—	SUBARU SELECT MONITOR 4	Used for setting of each function and trouble-shooting for electrical system. NOTE: For detailed operation procedures of Subaru Select Monitor 4, refer to “Application help”.

2. GENERAL TOOL

TOOL NAME	REMARKS
Circuit tester	Used for measuring resistance, voltage and current.
Dial gauge	Used for measuring clutch disc run-out.
Depth gauge	Used for measuring clutch disc wear.
Angle gauge	Used for installing the flywheel.
DST-i	Used together with Subaru Select Monitor 4.

2. Clutch Disc and Cover

A: REMOVAL

1) Remove the transmission assembly from the vehicle. <Ref. to 6MT(TY75)-26, REMOVAL, Manual Transmission Assembly.> <Ref. to 6MT(TY85)-32, REMOVAL, Manual Transmission Assembly.>
2) Attach the ST on the flywheel.
ST 499747100 CLUTCH DISC GUIDE

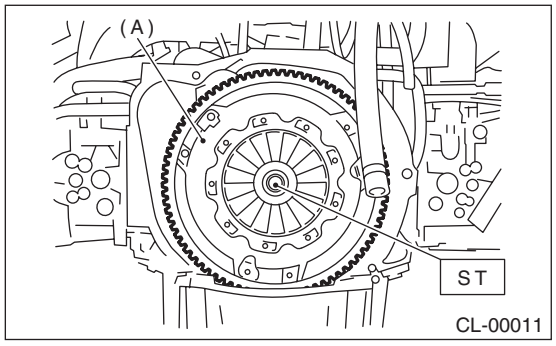

(A) Clutch cover

3) Remove the clutch cover and clutch disc.

NOTE:
• Take care not to allow oil to touch the clutch disc face.
• Do not disassemble the clutch cover or clutch disc.

B: INSTALLATION

1) Insert the ST into the clutch disc and attach to the flywheel by inserting the ST end into pilot bearing.

NOTE:
When installing the clutch disc, be careful to attach in the correct direction.
ST 499747100 CLUTCH DISC GUIDE

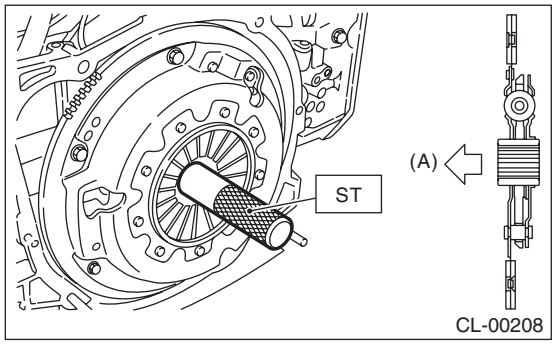

(A) Flywheel side

2) Install the clutch cover and tighten the bolts to specified torque.

NOTE:
• When installing a clutch cover, position the clutch cover so that the spacing between the unbalance marks (paint mark) on the flywheel and clutch cover is 120° or more apart. (The unbalance mark indicates the direction of residual unbalance.)
• Temporarily tighten the bolts by hand. Each bolt should be tightened to the specified torque in a crisscross order.

Tightening torque:
16 N·m (1.6 kgf-m, 11.8 ft-lb)
• STI model

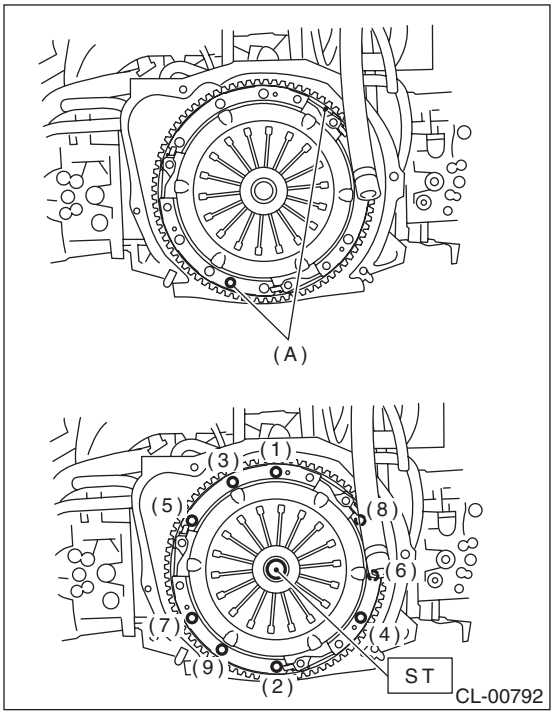

(A) Unbalance mark (paint)

• Except for STI model

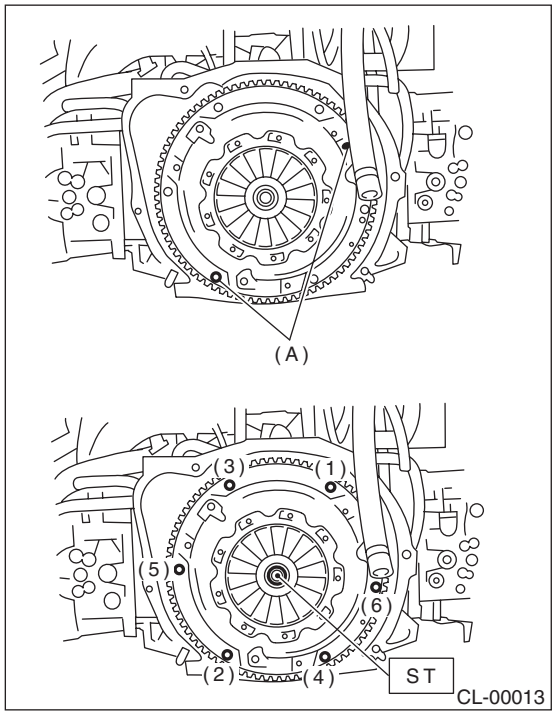

(A) Unbalance mark (paint)

3) Remove the ST.
ST 499747100 CLUTCH DISC GUIDE
4) Install the transmission assembly. <Ref. to 6MT(TY75)-30, INSTALLATION, Manual Transmission Assembly.> <Ref. to 6MT(TY85)-34, INSTALLATION, Manual Transmission Assembly.>

C: INSPECTION

1. CLUTCH DISC

1) Facing wear
Measure the depth from the facing surface to the rivet head. Replace if the face is worn locally or worn down to less than the specified value.

Depth to rivet head:
Limit of sinking
0.8 mm (0.031 in)

NOTE:
Do not wash the clutch disc with any type of cleaning fluid.

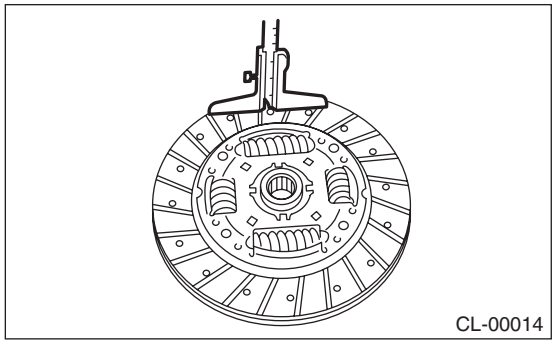

2) Hardened facing
Replace the clutch disc.
3) Oil soakage on facing
Replace the clutch disc and inspect the transmission front oil seal, transmission case mating surface, engine rear oil seal and other locations for oil leakage.

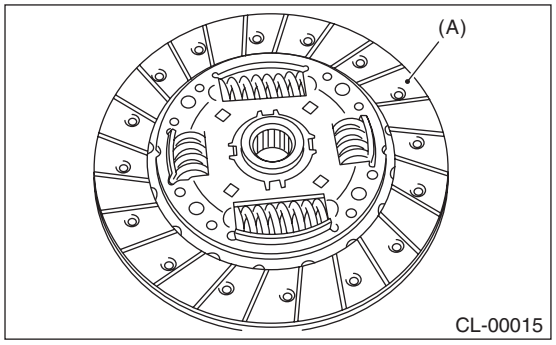

(A) Clutch facing

4) Deflection on facing
If deflection exceeds the specified value at the outer circumference of the facing, replace the clutch disc.
ST 499747100 CLUTCH DISC GUIDE

Limit for deflection:
STI model
0.7 mm (0.028 in) at R = 115 mm (4.53 in)
Except for STI model
0.7 mm (0.028 in) at R = 110 mm (4.33 in)

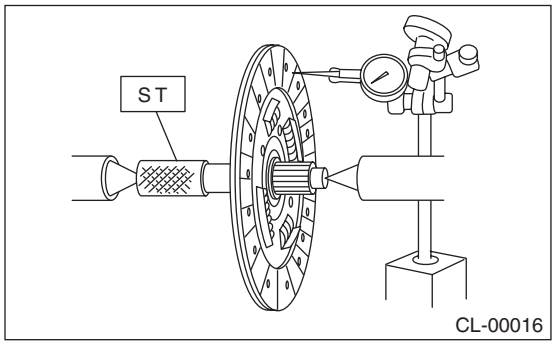

5) If there is spline wear, loose rivets, failed damper springs, etc., replace the clutch disc.

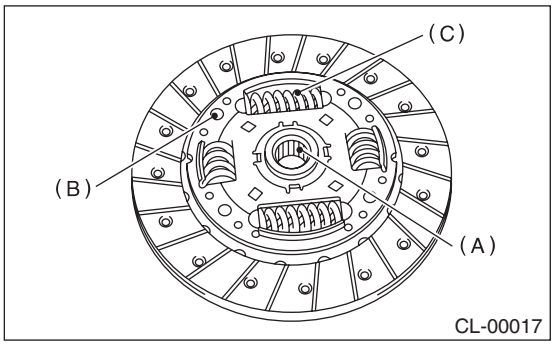

(A) Spline
(B) Rivet
(C) Damper spring

2. CLUTCH COVER

NOTE:
Visually check the following items without disassembling, and replace or repair if defective.
1) Loose thrust rivet
2) Damaged or worn bearing contact area at the center of diaphragm spring

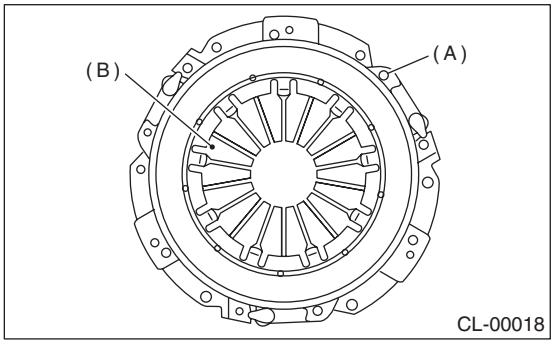

(A) Thrust rivet
(B) Diaphragm spring

3) Damaged or worn disc contact surface of the pressure plate
4) Loose strap plate installation area
5) Worn diaphragm sliding area

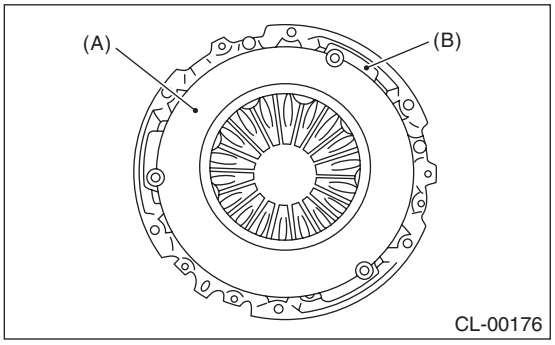

(A) Pressure plate
(B) Strap plate

3. Flywheel

A: REMOVAL

1) Remove the transmission assembly. <Ref. to 6MT(TY75)-26, REMOVAL, Manual Transmission Assembly.> <Ref. to 6MT(TY85)-32, REMOVAL, Manual Transmission Assembly.>
2) Remove the clutch cover and clutch disc. <Ref. to CL-12, REMOVAL, Clutch Disc and Cover.>
3) Using the ST, remove the flywheel.
ST 498497100 CRANKSHAFT STOPPER

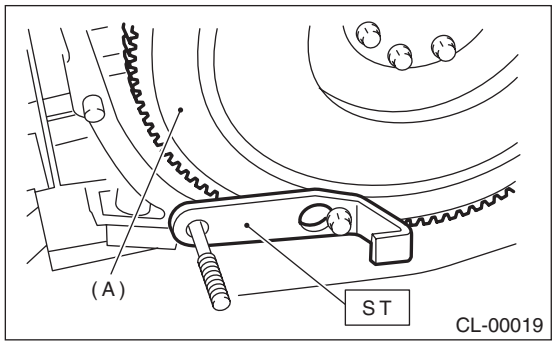

(A) Flywheel

4) Drive out the pilot bearing from the flywheel.

B: INSTALLATION

1. STI MODEL

1) Press in a new pilot bearing to the position where it is flush with the flywheel surface or up to 0.4 mm (0.016 in) deeper than that.

CAUTION:
Do not press the bearing inner ring.

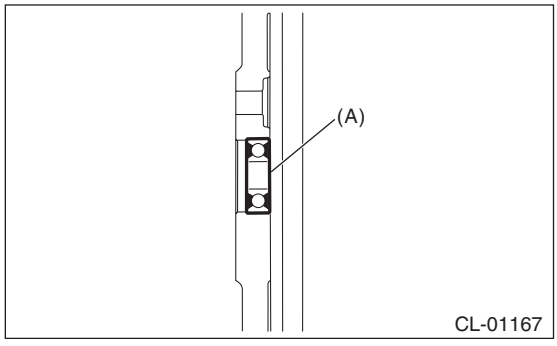

(A) Pilot bearing

2) Install the flywheel and ST.
ST 498497100 CRANKSHAFT STOPPER

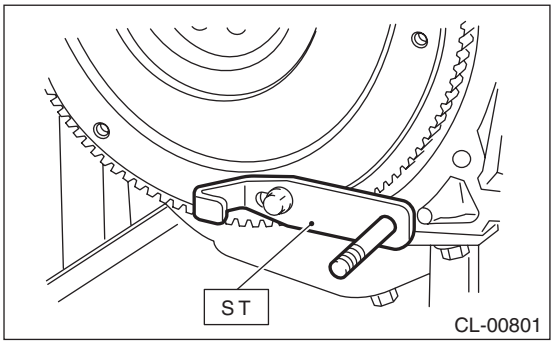

3) Tighten the flywheel mounting bolts to the specified torque.

NOTE:
Tighten the flywheel attachment bolts gradually. Each bolt should be tightened to the specified torque in a crisscross order.

Tightening torque:
75 N·m (7.6 kgf-m, 55.3 ft-lb)

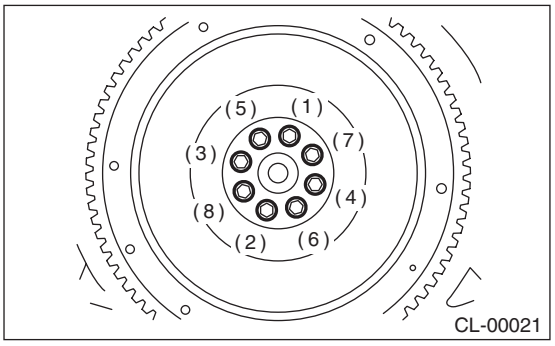

4) Install the clutch disc and clutch cover. <Ref. to CL-12, INSTALLATION, Clutch Disc and Cover.>
5) Install the transmission assembly. <Ref. to 6MT(TY85)-34, INSTALLATION, Manual Transmission Assembly.>

2. EXCEPT FOR STI MODEL

1) Press in a new pilot bearing to the position where it is flush with the flywheel surface or up to 0.4 mm (0.016 in) deeper than that.

CAUTION:
Do not press the bearing inner ring.

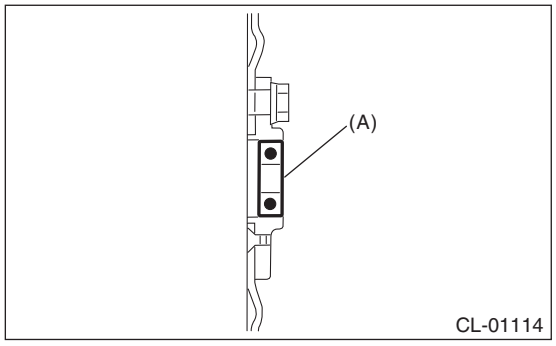

(A) Pilot bearing

2) Temporarily install the crankshaft position sensor plate and flywheel.

NOTE:
Align the knock pin hole of the crankshaft position sensor plate to the knock pin of the crankshaft to secure the knock pin.

3) Attach the ST.

ST 498497100 CRANKSHAFT STOPPER

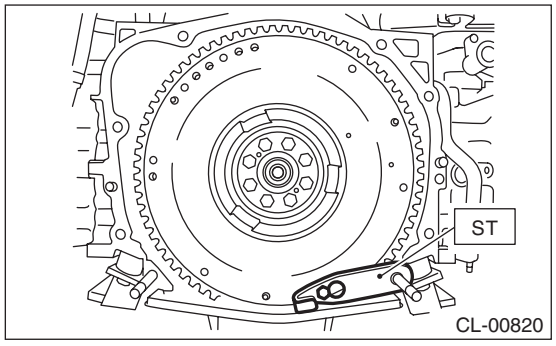

4) Tighten the flywheel mounting bolts in two stages.

(1) Tighten the flywheel attachment bolts.

Tightening torque:
30 N·m (3.1 kgf-m, 22.1 ft-lb)

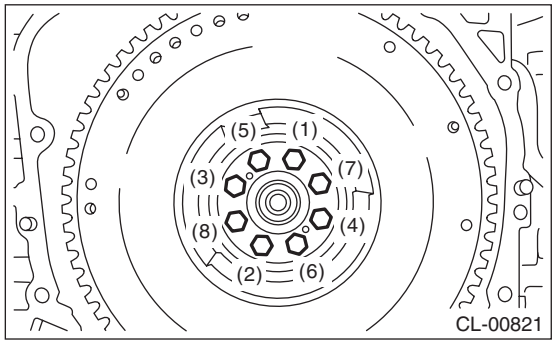

(2) While checking the tightening angle with the angle gauge, further tighten the flywheel mounting bolts.

Tightening angle:
30° — 35°

5) Install the clutch disc and clutch cover. <Ref. to CL-12, INSTALLATION, Clutch Disc and Cover.>

6) Install the transmission assembly. <Ref. to 6MT(TY75)-30, INSTALLATION, Manual Transmission Assembly.>

C: INSPECTION

CAUTION:
Because the center pilot bearing is grease-sealed and is a non-lubrication type, do not wash with gasoline or solvents.

1) If there is damage or defectiveness in the facing sliding surface or ring gear, replace the flywheel.

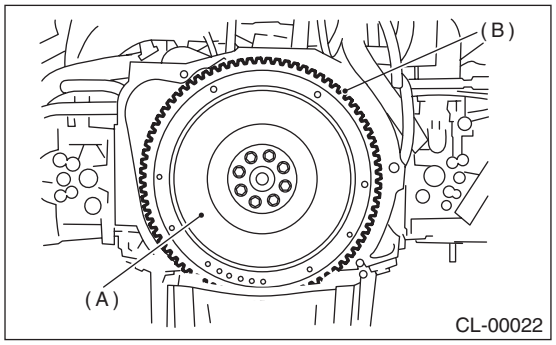

(A) Flywheel
(B) Ring gear

2) Smoothness of rotation
Rotate the ball bearing while applying pressure in the thrust direction.

3) If any noise or excessive play is noted, replace the pilot bearing.

4. Release Bearing and Lever

A: REMOVAL

1. STI MODEL

1) Remove the transmission assembly from the vehicle. <Ref. to 6MT(TY85)-32, REMOVAL, Manual Transmission Assembly.>
2) Remove the release lever from the transmission.
3) Using a flat tip screwdriver, remove the release bearing from the clutch cover.

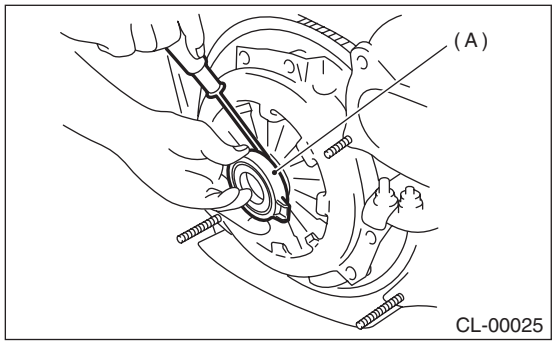

(A) Release bearing

2. EXCEPT FOR STI MODEL

1) Remove the transmission assembly from the vehicle. <Ref. to 6MT(TY75)-26, REMOVAL, Manual Transmission Assembly.>
2) Remove the dust cover.

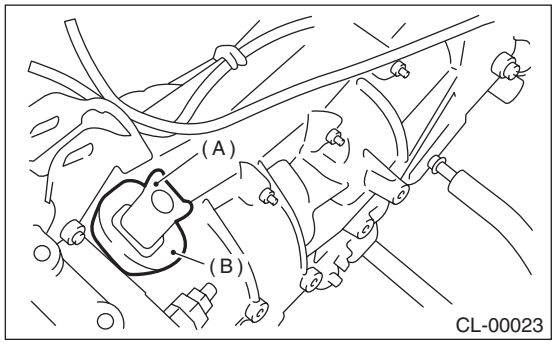

(A) Release lever
(B) Dust cover

3) Remove the attachment point of lever spring by inserting a screwdriver through the clutch housing release lever hole. Then remove the release lever together with the release bearing.

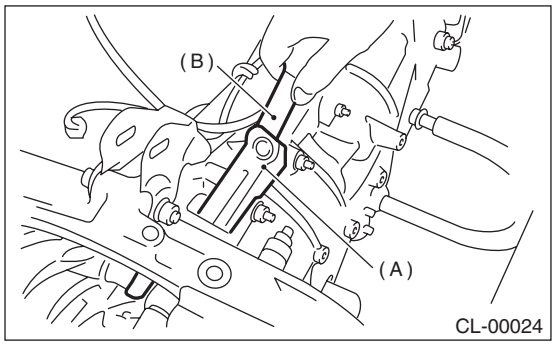

(A) Release lever
(B) Screwdriver

B: INSTALLATION

1. STI MODEL

NOTE:
Apply the specified grease to lubricate to the following points before installation.
- Release lever shaft
- Contact surface of release lever and bearing
- Transmission main shaft spline
- Contact surface of release bearing and clutch release bearing guide

Grease:
NICHIMOLY N-130 or equivalent

1) Attach the release bearing to the transmission.
2) Insert the release lever into the release bearing tab.

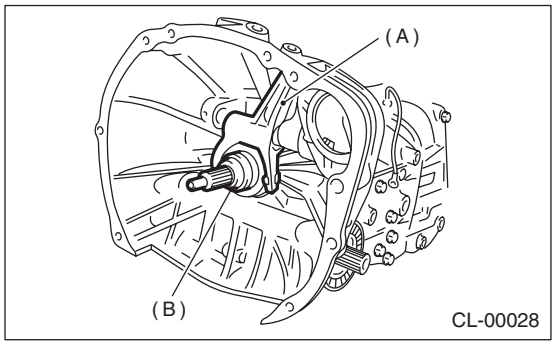

(A) Release lever
(B) Release bearing

3) Insert the release lever shaft into the release lever.

NOTE:
Make sure the cut portion of the release lever shaft comes into contact with the spring pin.

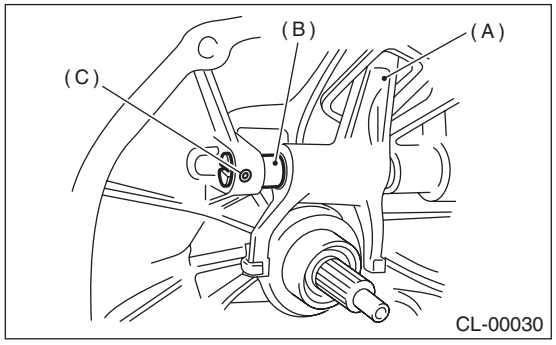

(A) Release lever
(B) Release lever shaft
(C) Spring pin

4) Tighten the plugs.

Tightening torque:
48 N·m (4.9 kgf-m, 35.4 ft-lb)

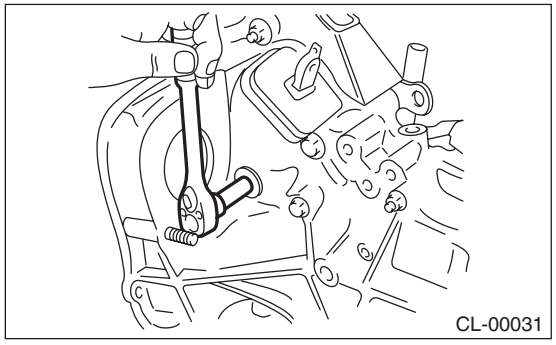

5) Operate the release lever and check if the release bearing moves smoothly.
6) Apply grease to the contact surface of the release lever and operating cylinder.

Grease:
NICHIMOLY N-130 or equivalent

7) Apply grease to splines.

Grease:
NICHIMOLY N-130 or equivalent

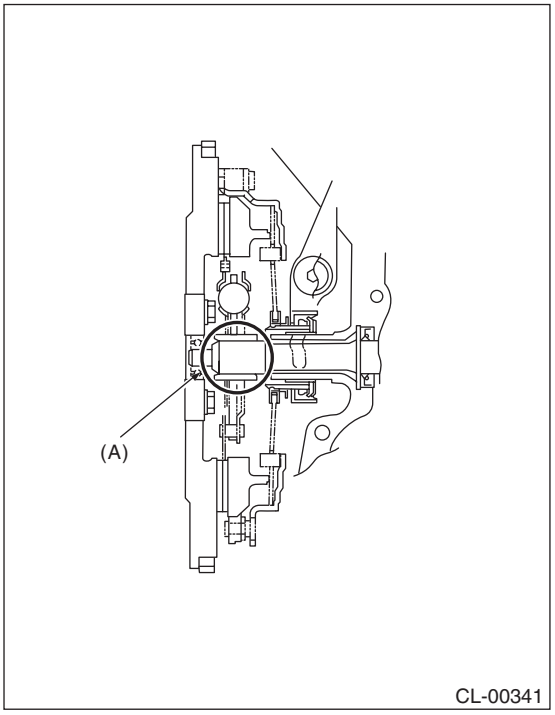

(A) Spline

8) Install the transmission assembly. <Ref. to 6MT(TY85)-34, INSTALLATION, Manual Transmission Assembly.>

2. EXCEPT FOR STI MODEL

NOTE:
Apply the specified grease to lubricate to the following points before installation.
- Contact surface of lever and pivot
- Contact surface of lever and bearing
- Transmission main shaft spline
- Contact surface of release bearing and transmission case

Grease:
NICHIMOLY N-130 or equivalent

1) Install the release bearing by inserting the release lever into the clutch housing release lever hole. Then, fit the lever spring onto the raised portion of the pivot by pushing the release lever to the pivot and twisting it to both sides.

2) Install the dust cover.

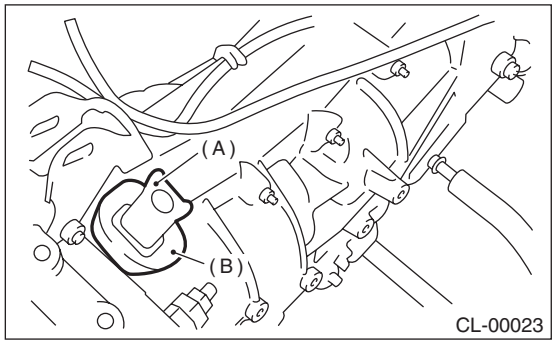

(A) Release lever
(B) Dust cover

3) Operate the release lever and check if the release bearing moves smoothly.
4) Apply grease to the contact surface of the release lever and operating cylinder.

Grease:
NICHIMOLY N-130 or equivalent
5) Install the transmission assembly. <Ref. to 6MT(TY75)-30, INSTALLATION, Manual Transmission Assembly.>

C: INSPECTION

1. RELEASE BEARING

CAUTION:
Since this bearing is grease-sealed and is a non-lubrication type, do not wash with gasoline or any other solvent when servicing the clutch.
1) Check the bearing for smooth movement by applying force to the bearing in the radial direction.

Radial direction stroke:
1.6 mm (0.063 in) or more

- ***STI model***

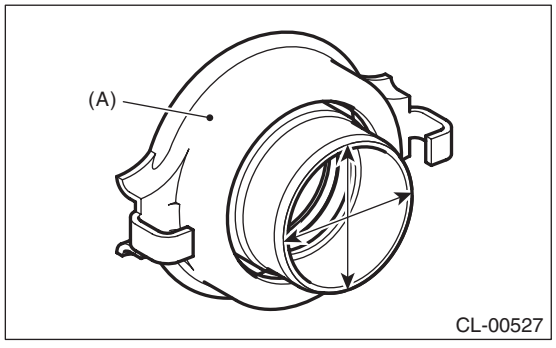

(A) Bearing case

- ***Except for STI model***

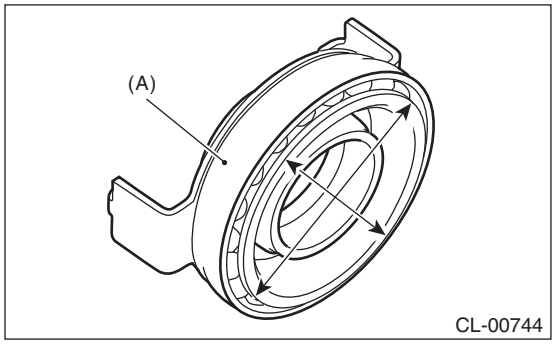

(A) Bearing case

2) While applying force to the bearing in the rotational direction, check the bearing for smooth rotation.

- **STI model**

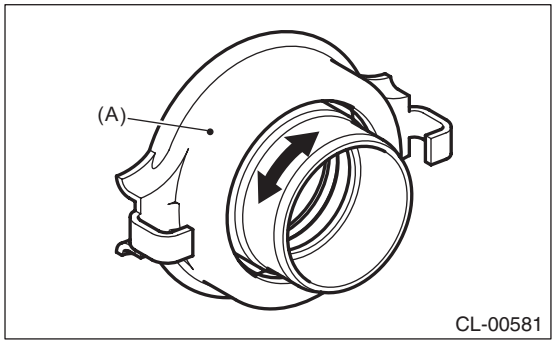

(A) Bearing case

- **Except for STI model**

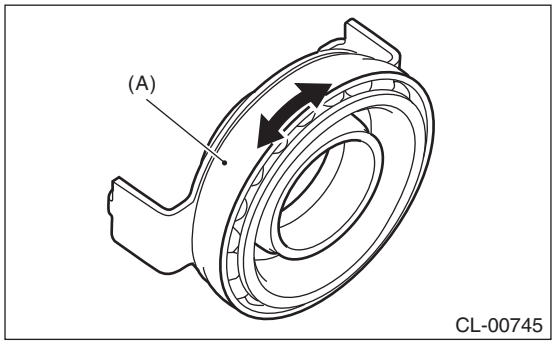

(A) Bearing case

3) Check for wear and damage at the bearing case surface in contact with the lever.

2. RELEASE LEVER

Check for wear in release shaft contact area and release bearing case contact area of the lever.

- **STI model**

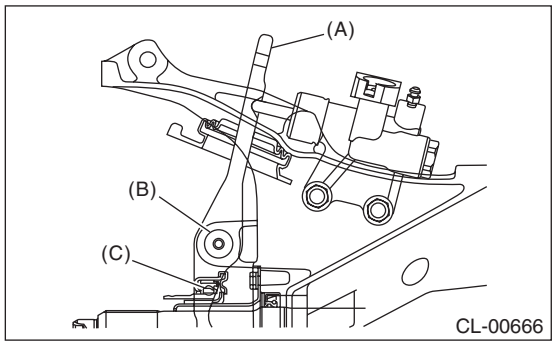

(A) Release lever
(B) Release shaft
(C) Release bearing

- **Except for STI model**

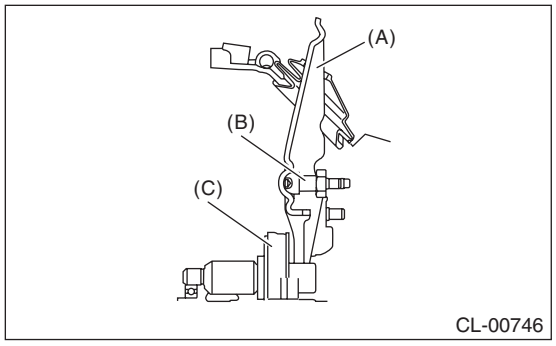

(A) Release lever
(B) Pivot
(C) Release bearing

5. Operating Cylinder

A: REMOVAL

CAUTION:
Brake fluid spilled on the vehicle body will harm the paint surface; therefore, wash it off with water and wipe clean quickly if spilled.

1) Disconnect the ground cable from battery. <Ref. to NT-6, BATTERY, NOTE, Note.>

NOTE:
For models other than STI model, disconnect the ground terminal from battery sensor.

2) Remove the collector cover. (Except for STI model) <Ref. to IN(w/o STI)-7, REMOVAL, Collector Cover.>

3) Remove the intercooler. <Ref. to IN(STI)-13, REMOVAL, Intercooler.> <Ref. to IN(w/o STI)-43, REMOVAL, Intercooler.>

4) Remove the starter. (STI model) <Ref. to SC(STI)-7, REMOVAL, Starter.>

5) Disconnect the clutch hose.

CAUTION:
- **Cover the hose joint to prevent the brake fluid from flowing out.**
- **Do not loosen or remove the cap bolts.**
- STI model

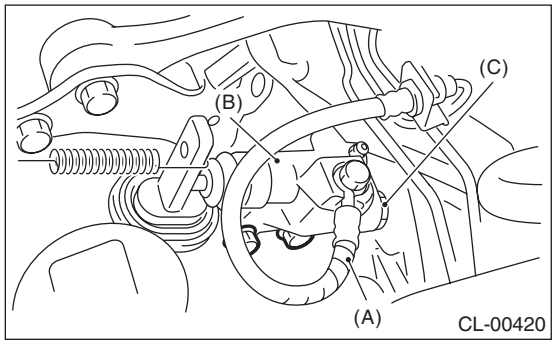

(A) Clutch hose
(B) Operating cylinder
(C) Cap bolt

- Except for STI model

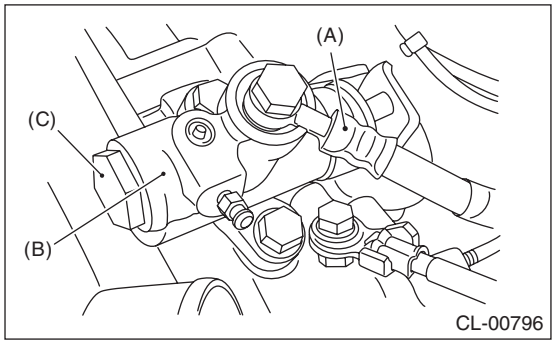

(A) Clutch hose
(B) Operating cylinder
(C) Cap bolt

6) Remove the operating cylinder.
- STI model

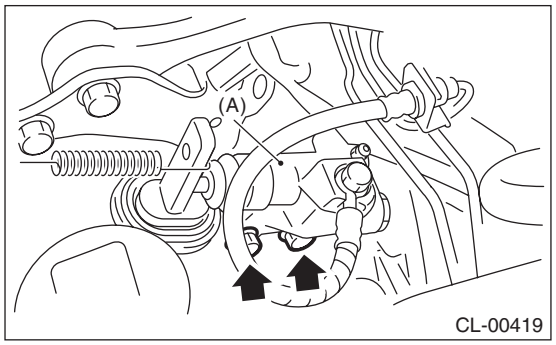

(A) Operating cylinder

- Except for STI model

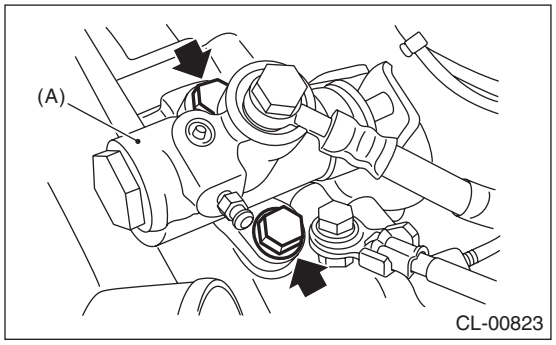

(A) Operating cylinder

B: INSTALLATION

1) Install in the reverse order of removal.

NOTE:
- Use a new gasket.
- Before installing the operating cylinder, apply grease to the contact point of the release lever and operating cylinder.

Grease
NICHIMOLY N-130 or equivalent
- Be sure to install the clutch hose with the mark side facing upward.
- Be careful not to twist the clutch hose during installation.
- STI model

Tightening torque:
T1: 18 N·m (1.8 kgf-m, 13.3 ft-lb)
T2: 41 N·m (4.2 kgf-m, 30.2 ft-lb)

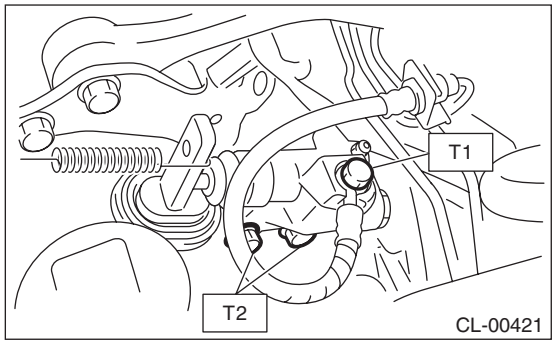

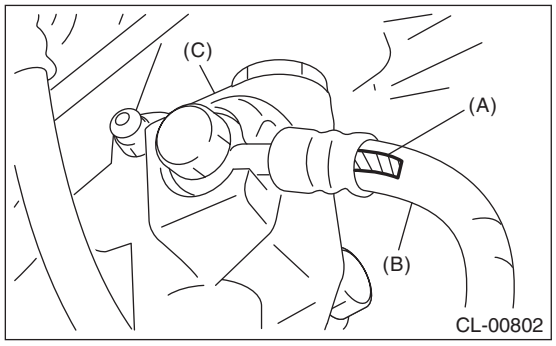

(A) Mark
(B) Clutch hose
(C) Operating cylinder

- Except for STI model

Tightening torque:
T1: 18 N·m (1.8 kgf-m, 13.3 ft-lb)
T2: 37 N·m (3.8 kgf-m, 27.3 ft-lb)

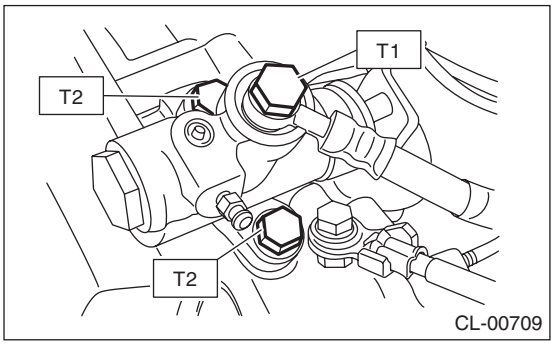

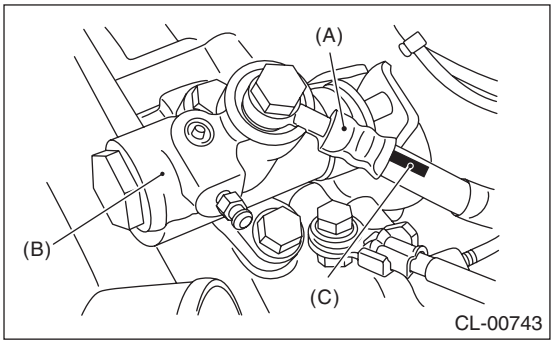

(A) Clutch hose
(B) Operating cylinder
(C) Mark

2) After bleeding air from the operating cylinder, ensure that the clutch operates properly.
<Ref. to CL-29, Clutch Fluid Air Bleeding.>

C: DISASSEMBLY

CAUTION:
Do not disassemble the STI model.

1) Remove the boot and push rod.

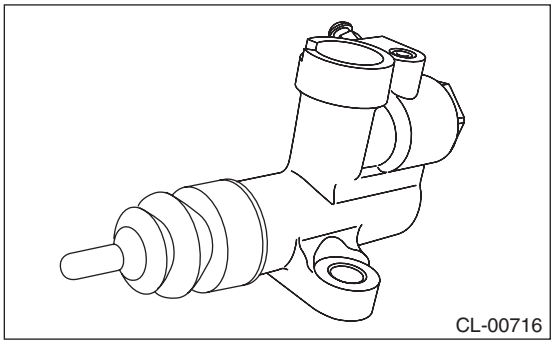

2) Apply compressed air through clutch hose attachment hole.

NOTE:
Face the piston hole down and place a piece of wood underneath to prevent the piston from popping out.

3) Separate the piston and piston spring.

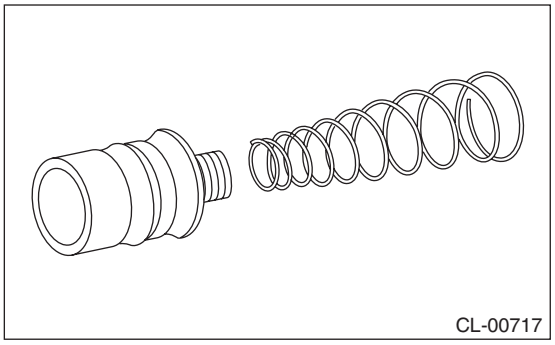

D: ASSEMBLY

NOTE:
During assembly, apply hydraulic oil to all parts.

Recommended brake fluid:
New FMVSS No. 116 DOT3 or DOT4

1) Install the piston spring onto the piston.
2) Insert piston into the operating cylinder.
3) Install push rod to the boot.
4) Install boot and push rod to the operating cylinder.

E: INSPECTION

1) Check that the operating cylinder is not damaged. If operating cylinder is damaged, replace it.
2) Check the brake fluid leakage on the operating cylinder or the boot for damage. Replace the operating cylinder if brake fluid leaks or damages are noted.

6. Master Cylinder

A: REMOVAL

CAUTION:
• Be careful not to spill the brake fluid. Brake fluid spilled on the vehicle body will harm the paint surface; wash it off with water and wipe clean quickly if spilled.
• Before handling the airbag system components, refer to "CAUTION" of "General Description" in "AIRBAG SYSTEM". <Ref. to AB-9, CAUTION, General Description.>
1) Turn the ignition switch to OFF.
2) Disconnect the ground cable from battery and wait for at least 60 seconds before starting work. <Ref. to NT-6, BATTERY, NOTE, Note.>

NOTE:
For models other than STI model, disconnect the ground terminal from battery sensor.
3) Remove the collector cover. (Except for STI model) <Ref. to IN(w/o STI)-7, REMOVAL, Collector Cover.>
4) Drain the brake fluid. <Ref. to CL-28, Clutch Fluid.>
5) Remove the instrument panel lower cover. <Ref. to EI-62, REMOVAL, Instrument Panel Lower Cover.>
6) Remove the knee airbag module. <Ref. to AB-34, REMOVAL, Knee Airbag Module.>
7) Remove the snap pin and clevis pin, and then separate the push rod of the master cylinder.

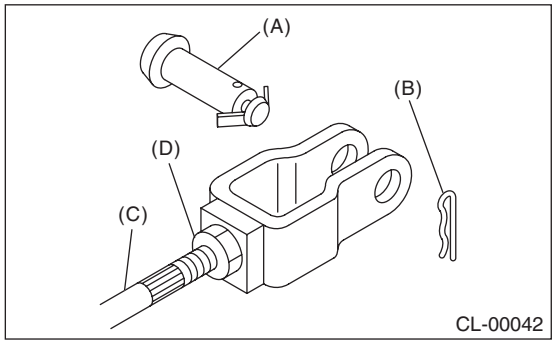

(A) Clevis pin
(B) Snap pin
(C) Push rod
(D) Lock nut

8) Remove the intercooler. <Ref. to IN(STI)-13, REMOVAL, Intercooler.> <Ref. to IN(w/o STI)-43, REMOVAL, Intercooler.>

9) Disconnect the clutch pipe and reservoir hose.

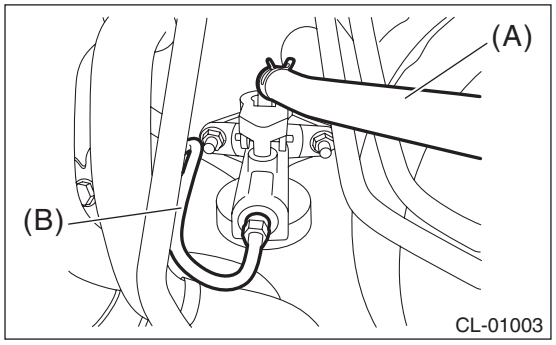

(A) Reservoir hose
(B) Clutch pipe

10) Remove the clutch hose bracket from the bulkhead.
11) Remove the master cylinder.

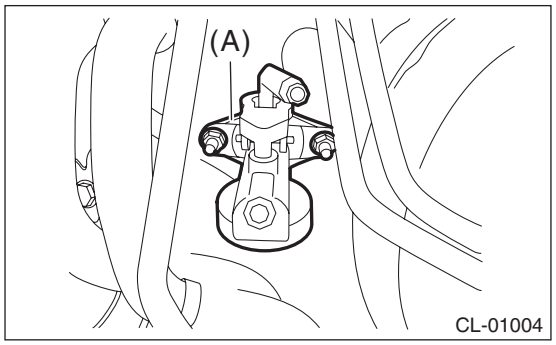

(A) Master cylinder

B: INSTALLATION

1) Attach the clutch hose bracket to the bulkhead.

Tightening torque:
25 N·m (2.5 kgf-m, 18.4 ft-lb)
2) Install the master cylinder to the body, and connect the clutch pipe and the reservoir hose.

Tightening torque:
T1: 15 N·m (1.5 kgf-m, 11.1 ft-lb)
T2: 18 N·m (1.8 kgf-m, 13.3 ft-lb)

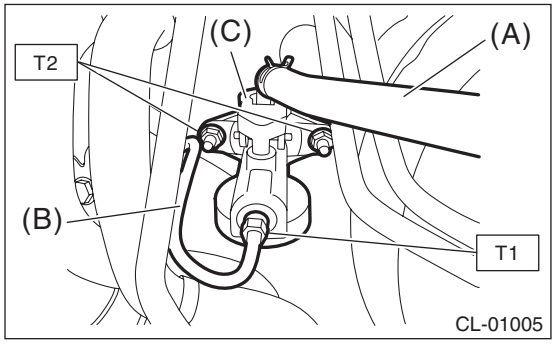

(A) Reservoir hose
(B) Clutch pipe
(C) Master cylinder

3) Connect the push rod of the master cylinder, and install the clevis pin and snap pin.

CAUTION:
Always use a new clevis pin.

NOTE:
Apply grease to the clevis pin.

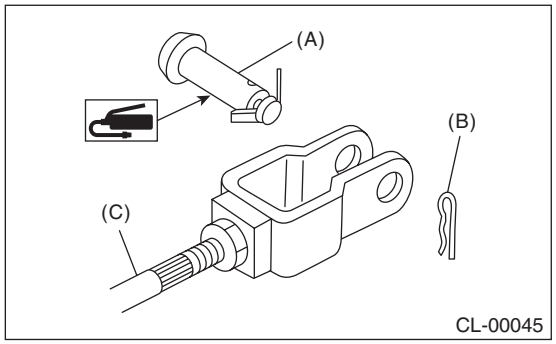

(A) Clevis pin
(B) Snap pin
(C) Push rod

4) Install the knee airbag module. <Ref. to AB-34, INSTALLATION, Knee Airbag Module.>
5) Fill the recommended brake fluid. <Ref. to CL-28, Clutch Fluid.>
6) After bleeding air from the clutch system, ensure that the clutch operates properly.
<Ref. to CL-29, Clutch Fluid Air Bleeding.>
7) Install the instrument panel lower cover. <Ref. to EI-63, INSTALLATION, Instrument Panel Lower Cover.>
8) Install the intercooler. <Ref. to IN(STI)-14, INSTALLATION, Intercooler.> <Ref. to IN(w/o STI)-45, INSTALLATION, Intercooler.>
9) Install the collector cover. (Except for STI model) <Ref. to IN(w/o STI)-10, INSTALLATION, Collector Cover.>
10) Connect the battery ground terminal. <Ref. to NT-6, BATTERY, NOTE, Note.>

NOTE:
For models other than STI model, connect the ground terminal to battery sensor.

C: DISASSEMBLY

1) Remove the straight pin and nipple.

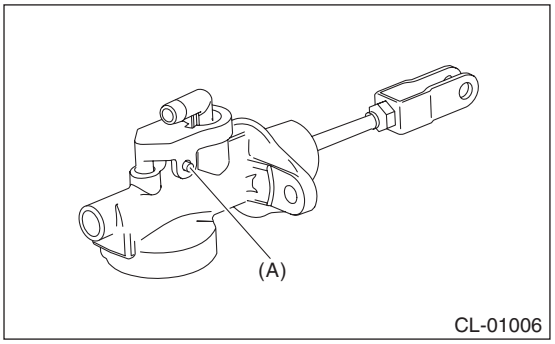

(A) Straight pin

2) Remove the oil seal.

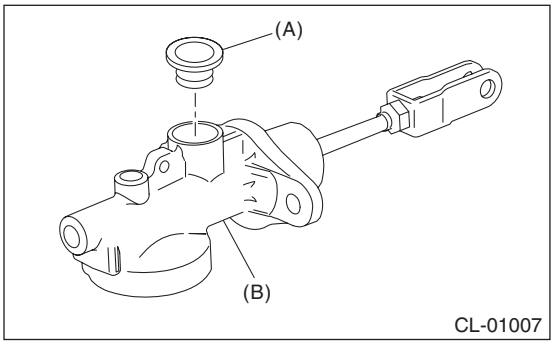

(A) Oil seal
(B) Master cylinder

3) Move the seat towards the rear.

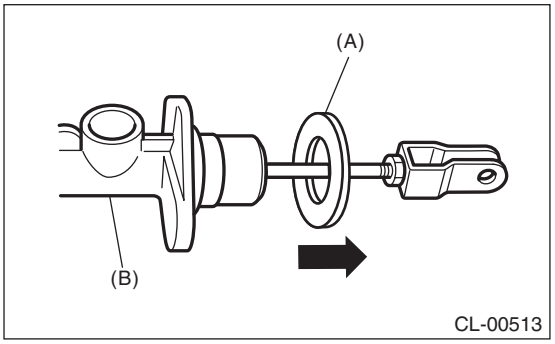

(A) Seat
(B) Master cylinder

4) Remove the piston stop ring.

CAUTION:
When removing the piston stop ring, be careful to prevent the rod, washer, piston and return spring from popping out.

D: ASSEMBLY

1) Apply a coat of grease to the contact surfaces of the push rod and piston before installation.

Grease:
SILICONE GREASE G-40M or equivalent

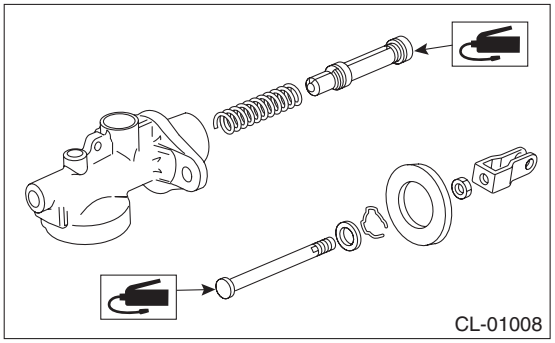

2) Assemble in the reverse order of disassembly.

Tightening torque:
10 N·m (1.0 kgf-m, 7.4 ft-lb)

E: INSPECTION

If any damage, deformation, wear, swelling, rust or other faults are found on the cylinder, piston, push rod, reservoir tank, return spring, seat or hose, replace the faulty part.

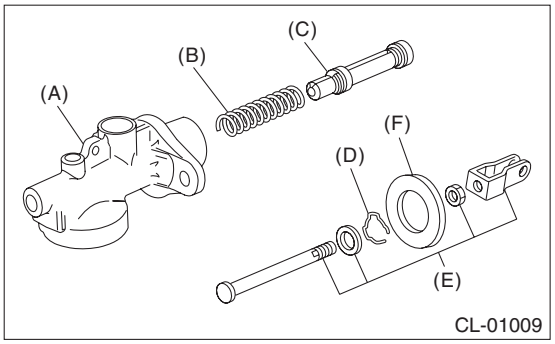

(A) Master cylinder body
(B) Return spring
(C) Piston
(D) Piston stop ring
(E) Push rod ASSY
(F) Seat

7. Clutch Pipe and Hose

A: REMOVAL

1) Disconnect the ground cable from battery. <Ref. to NT-6, BATTERY, NOTE, Note.>

NOTE:
For models other than STI model, disconnect the ground terminal from battery sensor.
2) Remove the collector cover. (Except for STI model) <Ref. to IN(w/o STI)-7, REMOVAL, Collector Cover.>
3) Remove the intercooler. <Ref. to IN(STI)-13, REMOVAL, Intercooler.> <Ref. to IN(w/o STI)-43, REMOVAL, Intercooler.>
4) Drain the brake fluid. <Ref. to CL-28, Clutch Fluid.>
5) Remove the clutch pipe from the master cylinder.
6) Disconnect the hose from operating cylinder.
7) Remove the clutch hose bracket from the bulkhead.
8) Remove the clutch pipe from the clutch hose.
9) Remove the clutch pipe and clamp from the clutch hose bracket.

B: INSTALLATION

1) Install the clutch hose and clamp to the clutch hose bracket.

NOTE:
Be sure to install the clutch hose with the mark side facing towards vehicle top.
2) Connect the clutch pipe to the clutch hose.

Tightening torque:
15 N·m (1.5 kgf-m, 11.1 ft-lb)

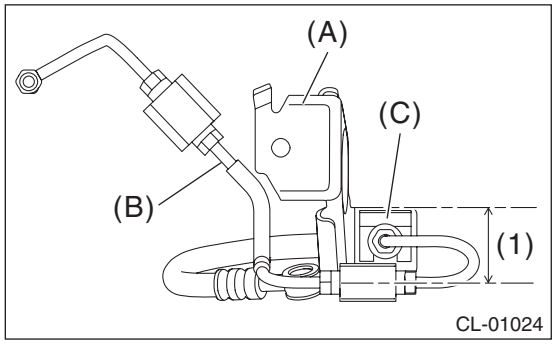

(A) Clutch hose bracket
(B) Clutch pipe
(C) Clamp

(1) Attach the clutch pipe in parallel to the clutch hose bracket as shown in the figure.

3) Attach the clutch hose bracket to the bulkhead.

Tightening torque:
25 N·m (2.5 kgf-m, 18.4 ft-lb)

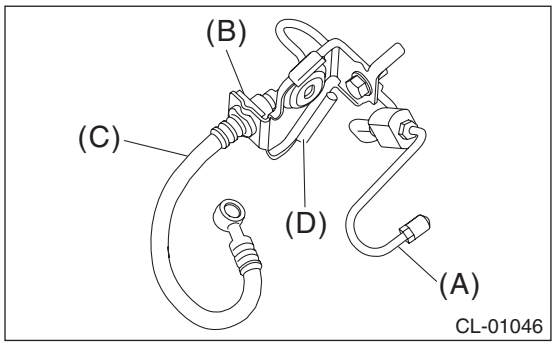

(A) Clutch pipe
(B) Clamp
(C) Clutch hose
(D) Clutch hose bracket

4) Connect the clutch hose to the operating cylinder.

NOTE:
- Use a new gasket.
- Be sure to install the clutch hose with the mark side facing upward.
- Be careful not to twist the clutch hose during installation.

Tightening torque:
18 N·m (1.8 kgf-m, 13.3 ft-lb)
5) Connect the clutch pipes to the master cylinder.

Tightening torque:
15 N·m (1.5 kgf-m, 11.1 ft-lb)
6) Bleed air from brake fluid. <Ref. to CL-29, Clutch Fluid Air Bleeding.>
7) Install the intercooler. <Ref. to IN(STI)-13, REMOVAL, Intercooler.> <Ref. to IN(w/o STI)-43, REMOVAL, Intercooler.>
8) Install the collector cover. (Except for STI model) <Ref. to IN(w/o STI)-10, INSTALLATION, Collector Cover.>
9) Connect the battery ground terminal. <Ref. to NT-6, BATTERY, NOTE, Note.>

NOTE:
For models other than STI model, connect the ground terminal to battery sensor.

C: INSPECTION

Check the pipes and hoses for breaks and damage. Check the joint for brake fluid leakage. If crack, breakage or damage is found, repair or replace the faulty pipe or hose.

8. Clutch Fluid

A: INSPECTION

CAUTION:
Be careful not to spill the brake fluid. Brake fluid spilled on the vehicle body will harm the paint surface; wash it off with water and wipe clean quickly if spilled.

1) Park the vehicle on a level surface.
2) Check the brake fluid level using the scale on the outside of the reservoir tank. If the level is below “MIN”, add fluid to bring it up to “MAX”, and also inspect for leakage.

CAUTION:
This reservoir tank has the brake fluid chamber and the clutch fluid chamber. When checking the fluid level, always check the fluid from the clutch fluid chamber side where the tank hose is connected.

Recommended brake fluid:
New FMVSS No. 116 DOT3 or DOT4

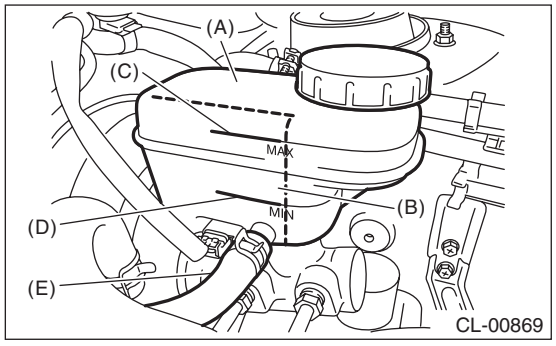

(A) Reservoir tank
(B) Clutch fluid chamber
(C) MAX. level
(D) MIN. level
(E) Tank hose

B: REPLACEMENT

CAUTION:
• Be careful not to spill the brake fluid. Brake fluid spilled on the vehicle body will harm the paint surface; wash it off with water and wipe clean quickly if spilled.
• Use new FMVSS No. 116 DOT3 or DOT4.
• Cover the air bleeder with cloth to prevent brake fluid from being splashed on surrounding parts when loosening the bleeder.
• Avoid mixing brake fluid of different brands to prevent fluid performance from degrading.
• Be careful not to allow dirt or dust to enter the reservoir tank.

NOTE:
• During the bleeding operation, keep the reservoir tank filled with brake fluid to prevent entry of air.
• Clutch pedal must be operated very slowly.
• Bleed air from the oil line with help of a co-worker.
• The required amount of brake fluid is approximately 150 mL (5.1 US fl oz, 5.3 Imp fl oz) for total clutch system.

1) Remove the collector cover. (Except for STI model) <Ref. to IN(w/o STI)-7, REMOVAL, Collector Cover.>
2) Remove the intercooler. <Ref. to IN(STI)-13, REMOVAL, Intercooler.> <Ref. to IN(w/o STI)-43, REMOVAL, Intercooler.>
3) Drain the brake fluid from the air bleeder of the operating cylinder.
4) Refill the reservoir tank with recommended brake fluid.

Recommended brake fluid:
New FMVSS No. 116 DOT3 or DOT4

5) Bleed air from brake fluid. <Ref. to CL-29, Clutch Fluid Air Bleeding.>
6) Install the intercooler. <Ref. to IN(STI)-14, INSTALLATION, Intercooler.> <Ref. to IN(w/o STI)-45, INSTALLATION, Intercooler.>
7) Install the collector cover. (Except for STI model) <Ref. to IN(w/o STI)-10, INSTALLATION, Collector Cover.>

9. Clutch Fluid Air Bleeding

A: PROCEDURE

CAUTION:
Be careful not to spill the brake fluid. Brake fluid spilled on the vehicle body will harm the paint surface; wash it off with water and wipe clean quickly if spilled.

1. STI MODEL

NOTE:
Bleed air from the oil line with help of a co-worker.
1) Disconnect the ground cable from battery. <Ref. to NT-6, BATTERY, NOTE, Note.>
2) Remove the intercooler. <Ref. to IN(STI)-13, REMOVAL, Intercooler.>
3) Remove the starter. <Ref. to SC(STI)-7, REMOVAL, Starter.>
4) Remove the operating cylinder.

NOTE:
Do not remove the clutch hose.

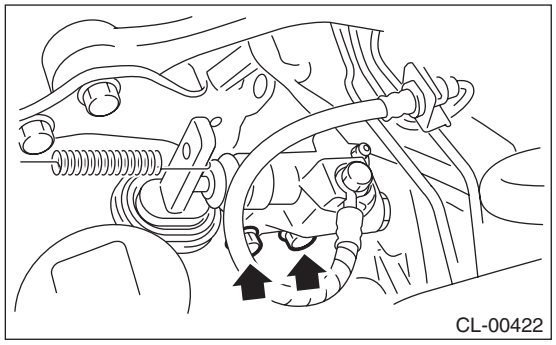
CL-00422

5) Hold the piston with a clamp to prevent piston from popping out.

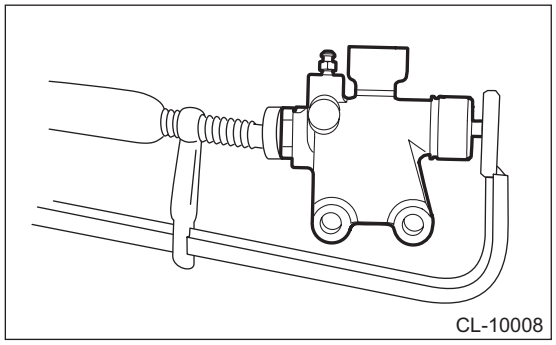
CL-10008

6) Fit one end of a vinyl tube into the air bleeder of the operating cylinder, and put the other end into a container.

7) Slowly depress the clutch pedal and keep it depressed. Then open the air bleeder to discharge air together with the brake fluid. Release the air bleeder for 1 or 2 seconds. Next, close the air bleeder, and slowly release the clutch pedal.

NOTE:
When performing this procedure, place the screw portion of the air bleeder higher than the end of operating cylinder.

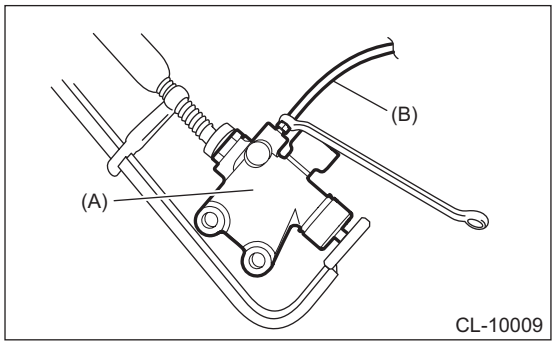

CL-10009

(A) Operating cylinder
(B) Vinyl tube

8) Repeat procedure 7), until there are no more air bubbles appearing from the air bleeder.

CAUTION:
Cover the air bleeder with cloth to prevent brake fluid from being splashed on surrounding parts when loosening the bleeder.
9) Tighten the air bleeder.

Tightening torque:
7.8 N·m (0.8 kgf-m, 5.8 ft-lb)
10) Install the operating cylinder.

Tightening torque:
41 N·m (4.2 kgf-m, 30.2 ft-lb)
11) After stepping on the clutch pedal, make sure that there are no leaks evident in the entire clutch system.
12) After bleeding the air from clutch system, ensure that the clutch operates properly.
13) Install the starter. <Ref. to SC(STI)-7, INSTALLATION, Starter.>
14) Install the intercooler. <Ref. to IN(STI)-14, INSTALLATION, Intercooler.>
15) Connect the battery ground terminal. <Ref. to NT-6, BATTERY, NOTE, Note.>

2. EXCEPT FOR STI MODEL

NOTE:
Bleed air from the oil line with help of a co-worker.
1) Disconnect the ground terminal from battery sensor. <Ref. to NT-6, BATTERY, NOTE, Note.>
2) Remove the collector cover. <Ref. to IN(w/o STI)-7, REMOVAL, Collector Cover.>
3) Remove the intercooler. <Ref. to IN(w/o STI)-43, REMOVAL, Intercooler.>
4) Fit one end of a vinyl tube into the air bleeder of the operating cylinder, and put the other end into a container.

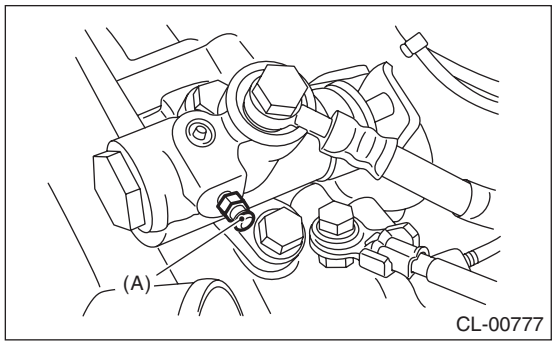

(A) Air bleeder

5) Slowly depress the clutch pedal several times and keep it depressed. Then open the air bleeder to discharge air together with the brake fluid. Release the air bleeder for 1 or 2 seconds. Next, close the air bleeder, and slowly release the clutch pedal.

CAUTION:
Cover the air bleeder with cloth to prevent brake fluid from being splashed on surrounding parts when loosening the bleeder.

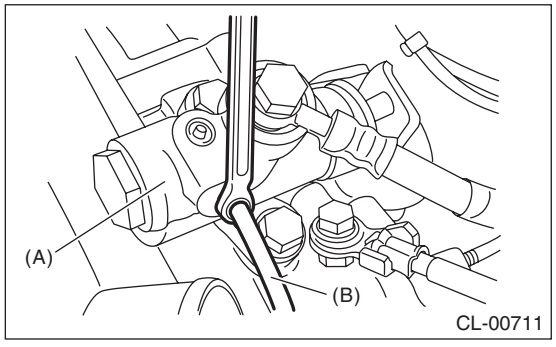

(A) Operating cylinder
(B) Vinyl tube

6) Repeat procedure 5), until there are no more air bubbles appearing from the air bleeder.

7) Tighten the air bleeder.

Tightening torque:
T: 7.8 N·m (0.8 kgf-m, 5.8 ft-lb)

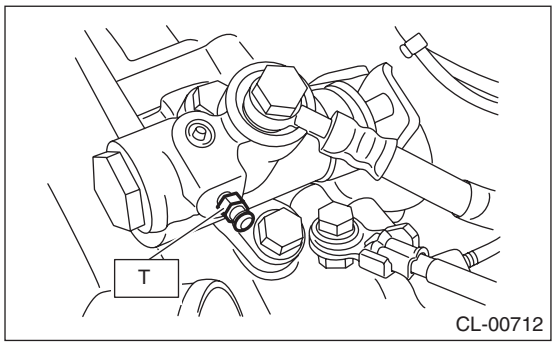

8) After stepping on the clutch pedal, make sure that there are no leaks evident in the entire clutch system.
9) After bleeding the air from clutch system, ensure that the clutch operates properly.
10) Install the intercooler. <Ref. to IN(w/o STI)-45, INSTALLATION, Intercooler.>
11) Install the collector cover. <Ref. to IN(w/o STI)-10, INSTALLATION, Collector Cover.>
12) Connect the ground terminal to battery sensor. <Ref. to NT-6, BATTERY, NOTE, Note.>

10.Clutch Pedal

A: REMOVAL

CAUTION:
Before handling the airbag system components, refer to "CAUTION" of "General Description" in "AIRBAG SYSTEM". <Ref. to AB-9, CAUTION, General Description.>

1) Turn the ignition switch to OFF.
2) Disconnect the ground cable from battery and wait for at least 60 seconds before starting work. <Ref. to NT-6, BATTERY, NOTE, Note.>

NOTE:
For models other than STI model, disconnect the ground terminal from battery sensor.

3) Remove the collector cover. (Except for STI model) <Ref. to IN(w/o STI)-7, REMOVAL, Collector Cover.>
4) Remove the steering column. <Ref. to PS-25, REMOVAL, Steering Column.>
5) Disconnect the connector from the stop light switch and clutch switch.
6) Remove the snap pins from clevis pins which secure the lever to the push rod and operating rod.
7) Pull out the clevis pins which secures the lever to the push rod and operating rod.

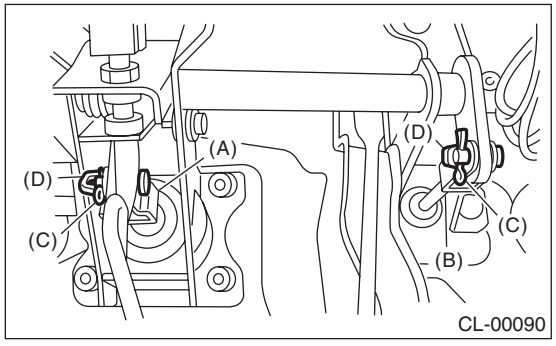

(A) Operating rod
(B) Push rod
(C) Snap pin
(D) Clevis pin

8) Remove the intercooler. <Ref. to IN(STI)-13, REMOVAL, Intercooler.> <Ref. to IN(w/o STI)-43, REMOVAL, Intercooler.>
9) Remove the clutch hose bracket mounting bolt.
10) Remove the nut which secures the clutch master cylinder.

NOTE:
- Remove the master cylinder from the stud bolt.
- Hold the clutch pipe with a wire or a string to avoid the pipe from bending.

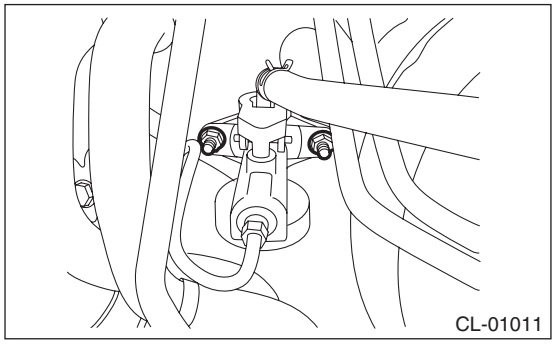

11) Remove the bolts and nuts which secure the brake pedal and clutch pedal, and remove the pedal assembly.

B: INSTALLATION

1) Install in the reverse order of removal.

CAUTION:
Always use a new clevis pin.

Tightening torque:
Except for knee airbag module
18 N.m (1.8 kgf-m, 13.3 ft-lb)
Knee airbag module
7.5 N·m (0.76 kgf-m, 5.5 ft-lb)

2) Adjust the clutch pedal after installation. <Ref. to CL-33, ADJUSTMENT, Clutch Pedal.>
3) Check the clutch start system.

C: DISASSEMBLY

1) Remove the clutch switches.
2) Remove the clip, assist spring, rod and bushing.

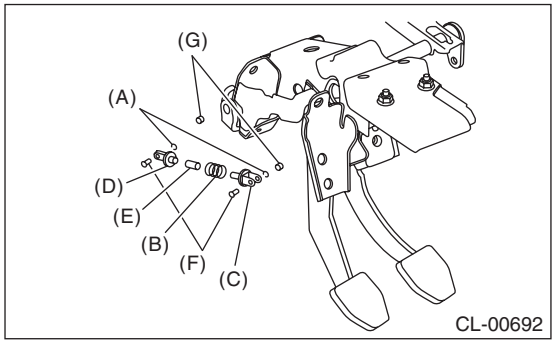

(A) Clip
(B) Assist spring
(C) Assist rod A
(D) Assist rod B
(E) Assist bushing
(F) Clutch clevis pin
(G) Bushing

3) Remove the spring pin and lever.

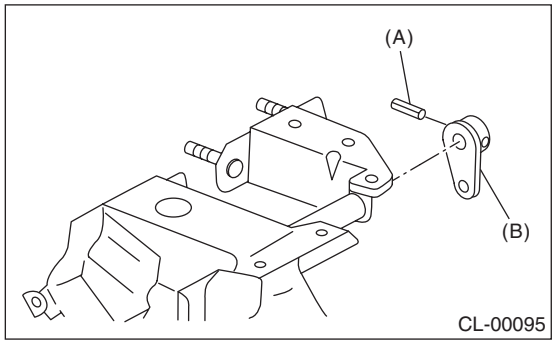

(A) Spring pin
(B) Lever

4) Remove the clutch pedal and pedal bushings.

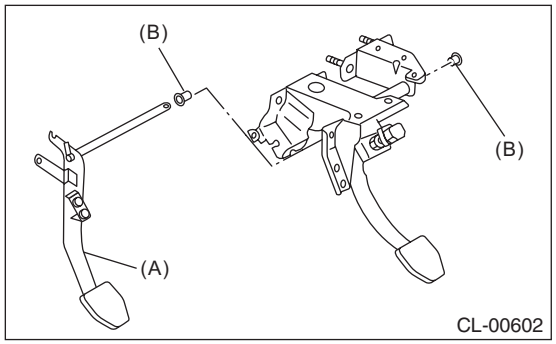

(A) Clutch pedal
(B) Pedal bushing

5) Remove the stopper and clutch pedal pad.

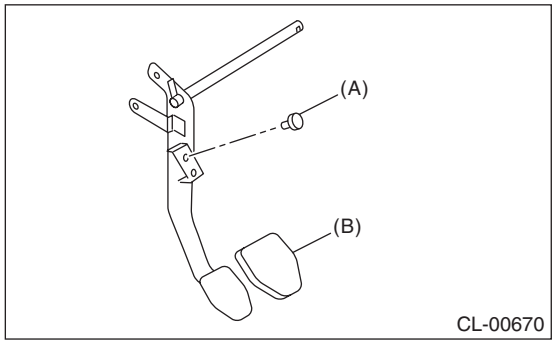

(A) Stopper
(B) Clutch pedal pad

6) Remove the stopper.

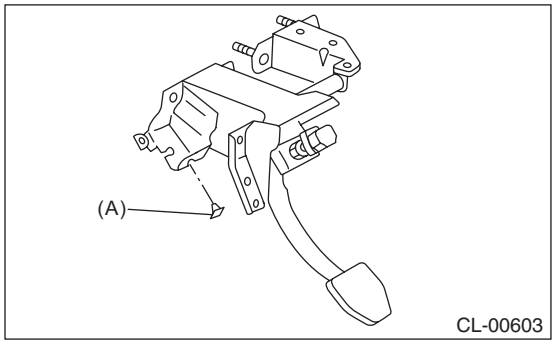

(A) Stopper

D: ASSEMBLY

1) Attach the stopper and clutch pedal pad to the clutch pedal.
2) Install the clutch switch to the pedal bracket.
3) Clean the pedal bushing holes of the clutch pedal and the brake pedal, apply grease, and install the pedal bushings.
4) Install the clutch pedal, brake pedal and lever to the pedal bracket, and fix with a spring pin.
5) Install the assist rod A, assist rod B, assist bushing and assist spring to the clutch pedal and pedal bracket.

E: INSPECTION

1) Check the free play of the clutch pedal.

NOTE:
Check by pressing the pedal.

Clutch pedal free play:
4 — 11 mm (0.16 — 0.43 in)

2) Move the clutch pedal pads in the lateral direction with a force of approximately 10 N (1 kgf, 2 lbf) to check that the clutch pedal deflection is within the service limit.

CAUTION:
If the play exceeds the service limit, replace the bushing with a new part.

Deflection of the clutch pedal:
Service limit
4.0 mm (0.157 in) or less

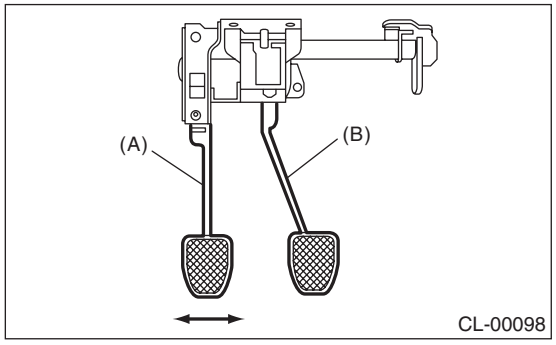

(A) Clutch pedal
(B) Brake pedal

F: ADJUSTMENT

1) Turn the lock nut until the full stroke of clutch pedal becomes within the specification.

CAUTION:
When adjusting the full stroke of clutch pedal, do not turn the clutch switch.

NOTE:
If the lock nut cannot adjust the full stroke of clutch pedal to the specified value, adjust it by turning the master cylinder push rod.

Clutch pedal full stroke A:
STI model
130 — 135 mm (5.12 — 5.31 in)
Except for STI model
135 — 140 mm (5.31 — 5.51 in)

Tightening torque (clutch switch lock nut):
T: 8 N·m (0.8 kgf-m, 5.9 ft-lb)

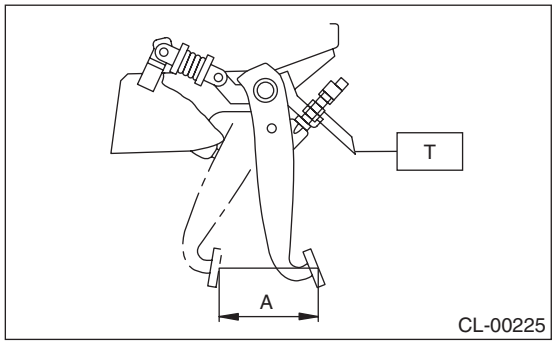

2) If the full stroke is not within the specified value, loosen the clutch switch lock nut to adjust.

Tightening torque:
8 N·m (0.8 kgf-m, 5.9 ft-lb)

3) Loosen the push rod lock nuts.

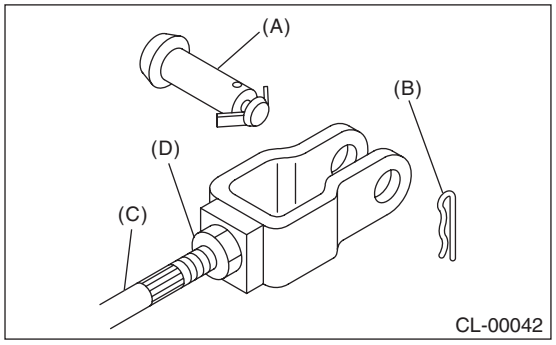

(A) Clevis pin
(B) Snap pin
(C) Push rod
(D) Push rod lock nut

4) Rotate the push rod to adjust.
(1) Make sure that the clutch pedal contacts the clutch switch side when the pedal is released.
(2) Make sure that the clutch pedal contacts the clutch pedal bracket stopper when the clutch pedal is at the maximum stroke position.

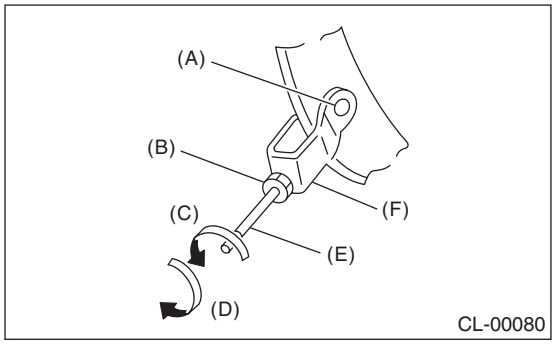

(A) Clevis hole
(B) Push rod lock nut
(C) In the shorter direction
(D) In the longer direction
(E) Push rod
(F) Clevis

5) Turn the push rod to shorten until a clearance is gained on the clutch switch side.

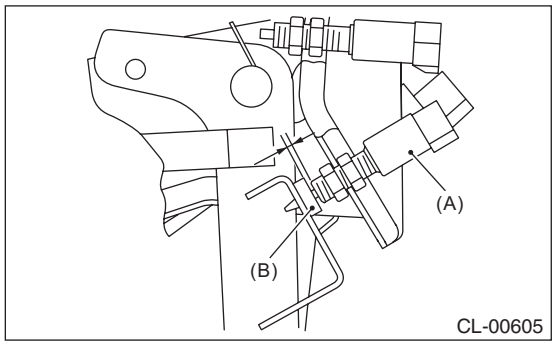

(A) Clutch switch
(B) Stopper

6) Turn the push rod to lengthen until clutch pedal contacts the clutch switch.
7) Turn further in the direction that will shorten the push rod (arrow direction shown in figure) by 270°.

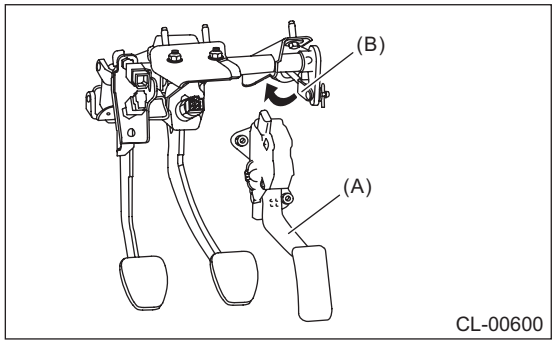

(A) Accelerator pedal
(B) Clevis

8) Check that the clevis pin moves smoothly by moving it in the left and right directions.
9) Tighten the push rod lock nut.

Tightening torque (push rod lock nut):
T: 10 N·m (1.0 kgf-m, 7.4 ft-lb)

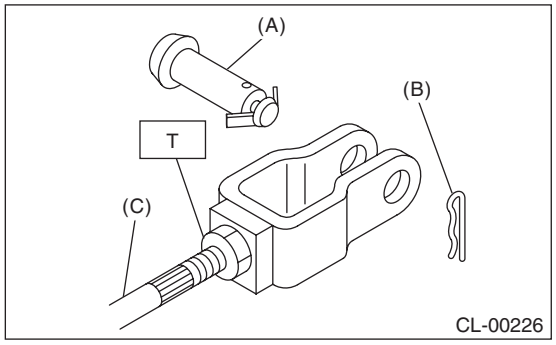

(A) Clevis pin
(B) Snap pin
(C) Push rod

10) Depress and release the clutch pedal two or three times to ensure that the clutch pedal and release lever operate smoothly. If the clutch pedal and release lever do not operate smoothly, bleed air from the clutch hydraulic system. <Ref. to CL-29, Clutch Fluid Air Bleeding.>
11) Measure the clutch pedal full stroke length again to ensure that it is within specifications. If it is not within specifications, repeat adjustment procedures again from the beginning.

Clutch pedal full stroke:
STI model
130 — 135 mm (5.12 — 5.31 in)
Except for STI model
135 — 140 mm (5.31 — 5.51 in)

12) Push the release lever until the operating cylinder push rod retracts. Check that the brake fluid level in the reservoir tank increases.

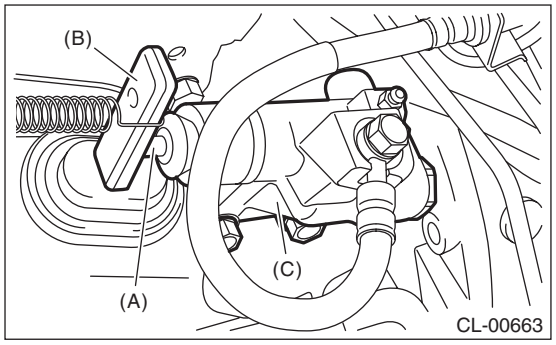

(A) Push rod
(B) Release lever
(C) Operating cylinder

13) If the brake fluid level increases, hydraulic clutch play is correct.
14) If the brake fluid level does not increase or push rod does not retract, readjust the clutch pedal.
15) Check the brake fluid level using the scale on the outside of reservoir tank. <Ref. to CL-28, INSPECTION, Clutch Fluid.>

11.Clutch Switch

A: REMOVAL

CAUTION:
Before handling the airbag system components, refer to "CAUTION" of "General Description" in "AIRBAG SYSTEM". <Ref. to AB-9, CAUTION, General Description.>

1) Turn the ignition switch to OFF.
2) Disconnect the ground cable from battery and wait for at least 60 seconds before starting work. <Ref. to NT-6, BATTERY, NOTE, Note.>

NOTE:
For models other than STI model, disconnect the ground terminal from battery sensor.

3) Remove the instrument panel lower cover. <Ref. to EI-62, REMOVAL, Instrument Panel Lower Cover.>
4) Remove the knee airbag module. <Ref. to AB-34, REMOVAL, Knee Airbag Module.>
5) Disconnect the connector from the clutch switch and clutch start switch.
6) Remove the clutch switch and clutch start switch.

B: INSTALLATION

1. CLUTCH SWITCH (CRUISE CONTROL)

1) Install the clutch switch.
2) Move the clevis pin of push rod to left and right, retain it at the position where it moves smoothly, and measure the clutch pedal stroke.

Clutch pedal full stroke A:
STI model
130 — 135 mm (5.12 — 5.31 in)
Except for STI model
135 — 140 mm (5.31 — 5.51 in)

Tightening torque:
T: 8 N·m (0.8 kgf-m, 5.9 ft-lb)

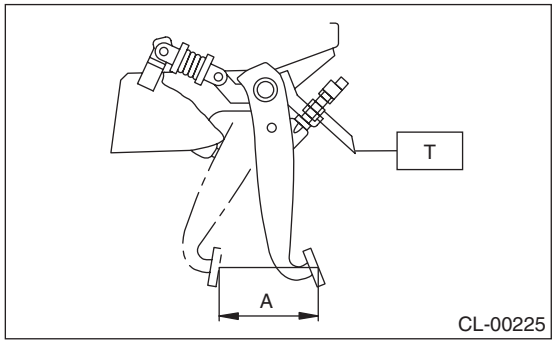

3) If the clutch pedal stroke is out of specification, adjust the stroke. <Ref. to CL-33, ADJUSTMENT, Clutch Pedal.>
4) Connect the clutch switch connector.
5) Thereafter, install in the reverse order of removal.

Tightening torque:
Knee airbag module
7.5 N·m (0.76 kgf-m, 5.5 ft-lb)

2. CLUTCH START SWITCH

1) Remove the snap pin and clevis pin connecting the clutch pedal and operating rod.

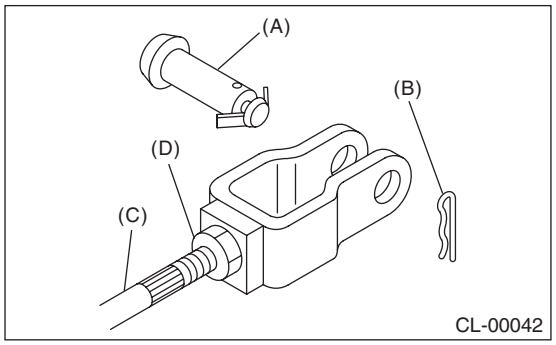

(A) Clevis pin
(B) Snap pin
(C) Push rod
(D) Lock nut

2) Install the clutch start switch so that the clutch switch turns on when the clearance between clutch pedal stopper and clutch pedal is within the specification described below.

Clearance A:
6.3 — 8.6 mm (0.25 — 0.34 in)

Tightening torque:
8 N·m (0.8 kgf-m, 5.9 ft-lb)

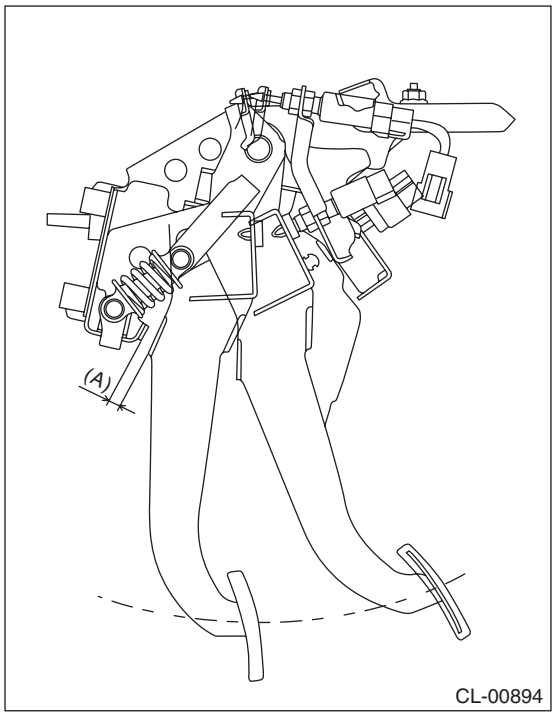

NOTE:
• Using a plate of the same thickness for the clearance facilitates the adjustment operation.
• Using the Subaru Select Monitor or a tester, check the position where the switch turns on.
Check the following figure for the terminal layout of the harness connector.

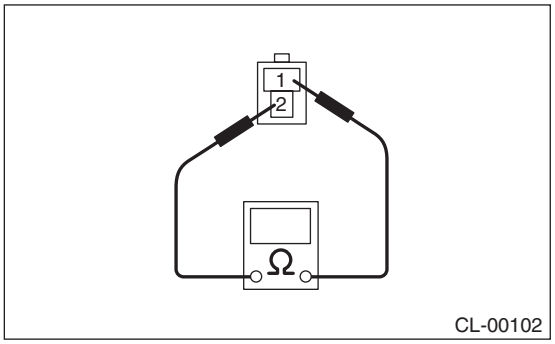

• When performing adjustment by the clearance between clutch start switch and clutch pedal plate, perform installation according to the following gap.

Clearance B:
8.6 — 9.0 mm (0.34 — 0.35 in)

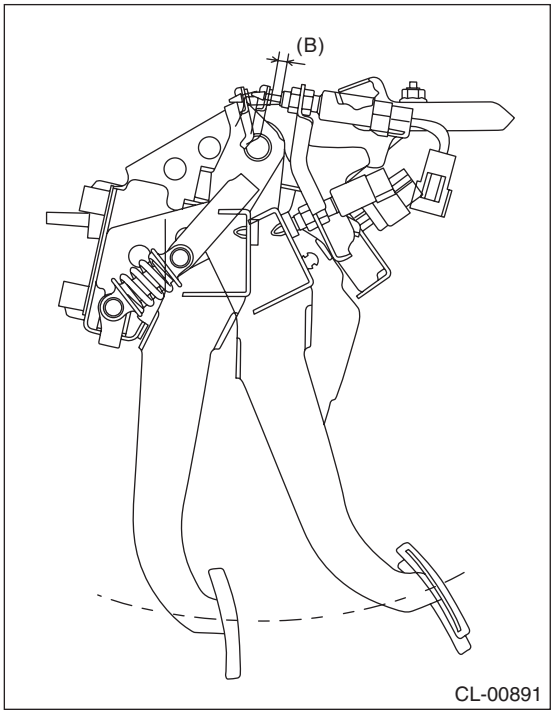

3) Connect the clutch start switch connector.
4) Make sure that engine does not start with clutch pedal not depressed.
5) Make sure that engine starts with clutch pedal depressed.
6) Thereafter, install in the reverse order of removal.

Tightening torque:
Knee airbag module
7.5 N·m (0.76 kgf-m, 5.5 ft-lb)

C: INSPECTION

1. CLUTCH START SWITCH

1) Perform the following inspections. If the clutch start switch does not operate normally, adjust the switch, and check it again. <Ref. to CL-37, ADJUSTMENT, Clutch Switch.>
• Make sure that engine does not start with clutch pedal not depressed.
• Make sure that engine starts with clutch pedal fully depressed.
2) When the clutch start switch does not operate normally even if it is adjusted, check the clutch start switch for continuity.
(1) Remove the clutch start switch. <Ref. to CL-35, REMOVAL, Clutch Switch.>
(2) Measure the resistance between terminal 1 and 2 of the switch. If the resistance is not at the standard value, replace the switch.

Condition	Terminal No.	Specified resistance
ON	No. 1 — No. 2	Less than 1 Ω
OFF	No. 1 — No. 2	1 MΩ or more

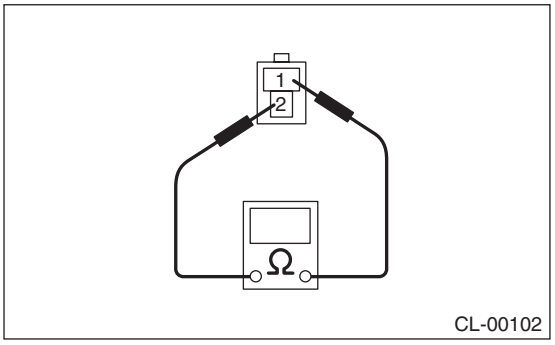

(3) Check that the switch is turned on and off in dimension L.

Dimension L:
9 — 10 mm (0.35 — 0.39 in)

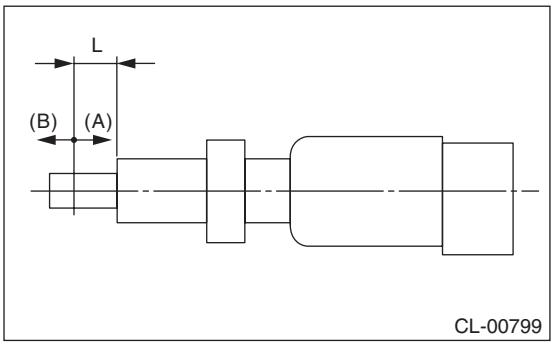

(A) ON
(B) OFF

(4) Install the clutch start switch. <Ref. to CL-35, CLUTCH START SWITCH, INSTALLATION, Clutch Switch.>

2. CLUTCH SWITCH

1) Check the clutch switch for continuity.
(1) Disconnect the connector of clutch switch.
(2) Measure the resistance between terminal 1 and 2 of the switch. If the resistance is not within the specification, check the clutch stroke and installation condition, and check the clutch switch again.

Condition	Terminal No.	Specified resistance
When clutch pedal is depressed	No. 1 — No. 2	1 MΩ or more
When the clutch pedal is not depressed	No. 1 — No. 2	Less than 1 Ω

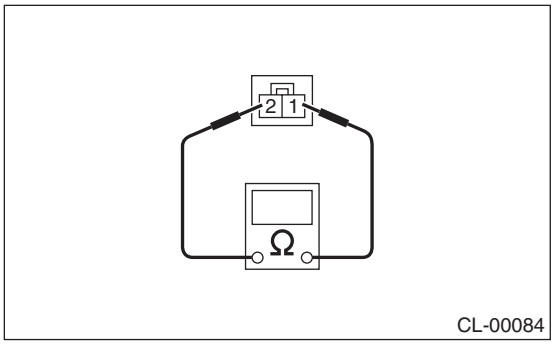

2) When the clutch switch does not operate normally even if the clutch stroke and installation condition are normal, check the clutch switch for continuity.
(1) Remove the clutch switches. <Ref. to CL-35, REMOVAL, Clutch Switch.>
(2) Measure the resistance between terminal 1 and 2 of the switch. If the resistance is not at the standard value, replace the switch.

Condition	Terminal No.	Specified resistance
ON	No. 1 — No. 2	Less than 1 Ω
OFF	No. 1 — No. 2	1 MΩ or more

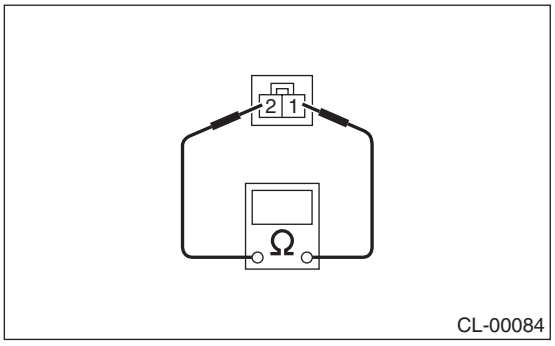

(3) Check that the switch is turned on and off in dimension L.

Dimension L:
5 — 6.5 mm (0.2 — 0.26 in)

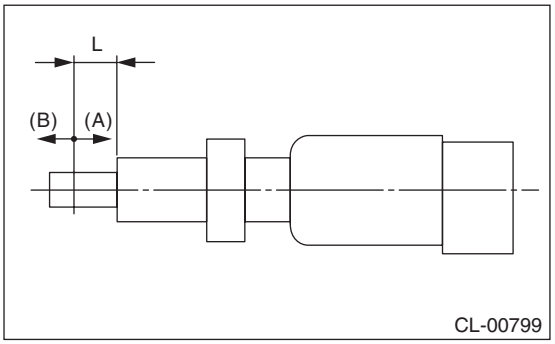

(A) ON
(B) OFF

(4) Install the clutch switch. <Ref. to CL-35, CLUTCH SWITCH (CRUISE CONTROL), INSTALLATION, Clutch Switch.>

D: ADJUSTMENT

1) Loosen the lock nut of the clutch start switch.

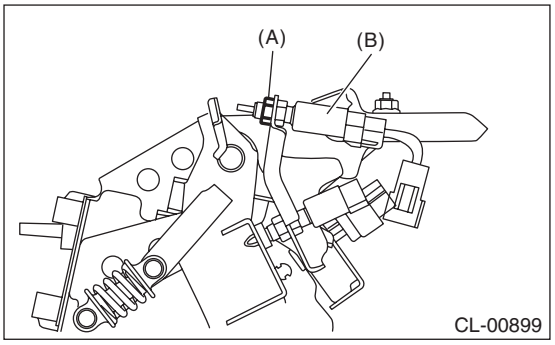

(A) Lock nut
(B) Clutch start switch

2) Disconnect the harness connector of the clutch start switch.
3) Remove the snap pin and clevis pin connecting the clutch pedal and operating rod.

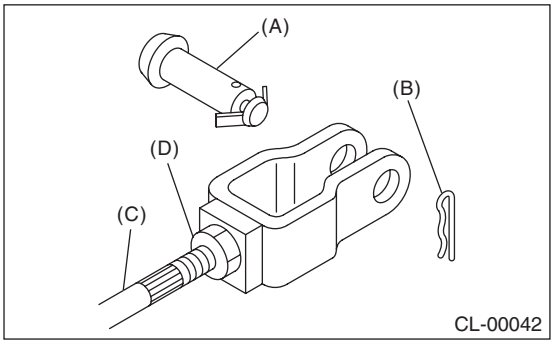

(A) Clevis pin
(B) Snap pin
(C) Push rod
(D) Lock nut

4) Adjust the clutch start switch so that the switch turns on when the clearance between clutch pedal stopper and clutch pedal is within the specification described below, and then tighten the lock nut.

Clearance A:
6.3 — 8.6 mm (0.25 — 0.34 in)

Tightening torque:
8 N·m (0.8 kgf-m, 5.9 ft-lb)

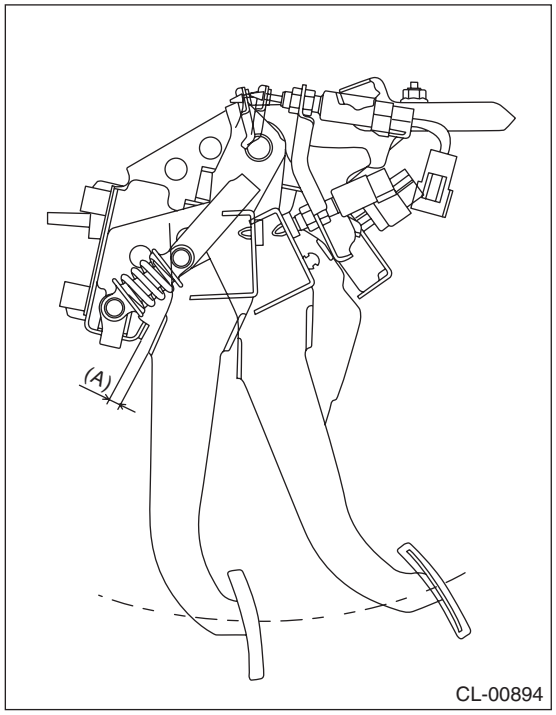

NOTE:
• Using a plate of the same thickness for the clearance facilitates the adjustment operation.
• Using the Subaru Select Monitor or a tester, check the position where the switch turns on.
Check the following figure for the terminal layout of the harness connector.

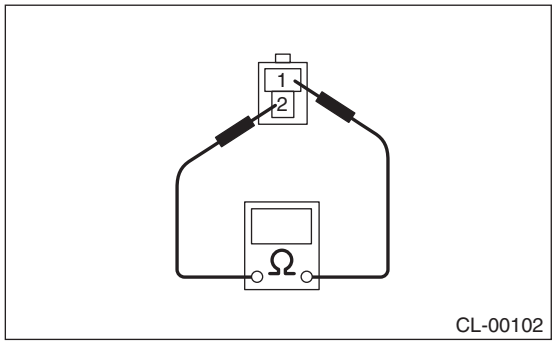

• When performing adjustment by the clearance between clutch start switch and clutch pedal plate, perform installation according to the following gap.

Clearance B:
8.6 — 9.0 mm (0.34 — 0.35 in)

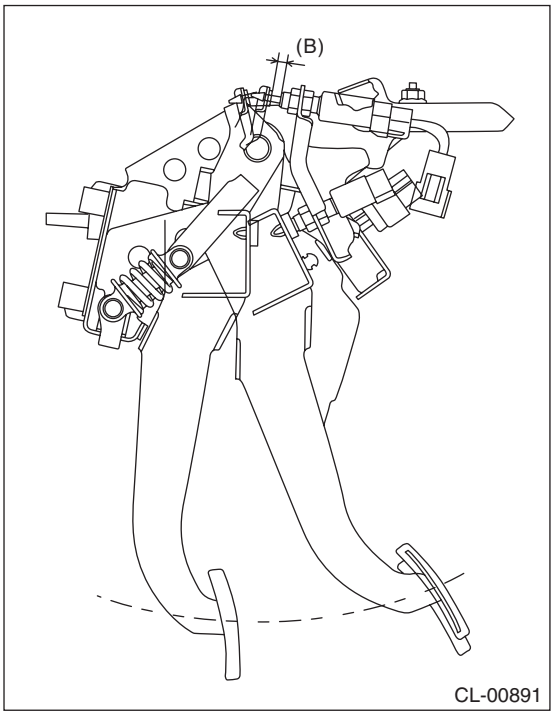

5) Connect the clutch start switch connector.

12.General Diagnostic Table

A: INSPECTION

1. CLUTCH

Symptoms	Possible cause	Corrective action
1. Clutch slippage It is hard to perceive clutch slippage in the early stage, but pay attention to the following symptoms. • Engine temporarily speeds up when the accelerator ON immediately after shifting. • High-speed driving is not possible; especially rapid acceleration is not possible and vehicle speed does not increase in proportion to the increase in engine speed. • Power drops particularly when ascending a slope, and there is a burning smell of the clutch plate. • Method of testing: Park the vehicle and fully apply the parking brake. Disengage the clutch and shift the transmission gear into the 1st. Gradually increase the engine speed while gradually allowing the clutch to engage. The clutch function is satisfactory if the engine stalls. However, the clutch is slipping if the vehicle does not move forward and the engine does not stall.	(a) Oil on the clutch face	Replace.
	(b) Worn clutch face	Replace.
	(c) Deteriorated diaphragm spring	Replace.
	(d) Warped pressure plate or flywheel	Repair or replace.
	(e) Defective release bearing holder	Repair or replace.
2. Clutch drags. As a symptom of this trouble, a harsh scratching noise occurs and control becomes difficult when shifting gears. The symptom becomes more apparent when shifting into the 1st gear. However, because most trouble of this sort is due to a defective synchronization mechanism, perform the following tests. • Method of testing: <Ref. to CL-40, DIAGNOSTIC DIAGRAM OF CLUTCH DRAG, INSPECTION, General Diagnostic Table.> The problem is caused by insufficient disengagement of the clutch if an abnormal noise occurs during this test.	(a) Worn or rusty clutch disc hub spline	Replace the clutch disc.
	(b) Excessive deflection of clutch disc face	Repair or replace.
	(c) Crankshaft pilot needle bearing sticking	Replace.
	(d) Cracked clutch disc face	Replace.
	(e) Stuck clutch disc (smeared by oil or water)	Replace.
3. Clutch chatters. Clutch chattering is an unpleasant vibration to the whole vehicle when the vehicle is just started with clutch partially engaged.	(a) Adhesion of oil on the clutch face	Replace the clutch disc.
	(b) Weak or broken damper spring	Replace the clutch disc.
	(c) Poor contact of the disc surface or excessively worn disc	Replace the faulty clutch disc.
	(d) Warped pressure plate or flywheel	Repair or replace.
	(e) Loose disc rivets	Replace the clutch disc.
	(f) Loose engine mounting	Retighten or replace mounting.
	(g) Loose pitching stopper	Retighten or replace the pitching stopper.
4. Noisy clutch Examine whether the noise is generated when the clutch is disengaged, engaged, or partially engaged.	(a) Broken, worn or insufficiently lubricated release bearing	Replace the release bearing.
	(b) Insufficient lubrication of the pilot bearing	Replace the pilot bearing.
	(c) Loose clutch disc hub	Replace the clutch disc.
	(d) Loose damper spring retainer	Replace the clutch disc.
	(e) Deteriorated or broken damper spring	Replace the clutch disc.

Symptoms	Possible cause	Corrective action
5. Clutch grabs suddenly. When starting the vehicle with the clutch partially engaged, the clutch engages suddenly and the vehicle jumps instead of making a smooth start.	(a) Grease or oil on facing	Replace the clutch disc.
	(b) Deteriorated cushioning spring	Replace the clutch disc.
	(c) Worn or rusted spline of clutch disc or main shaft	Take off rust, apply grease or replace clutch disc or main shaft.
	(d) Deteriorated or broken damper spring	Replace the clutch disc.
	(e) Loose engine mounting	Retighten or replace mounting.
	(f) Deteriorated diaphragm spring	Replace.

2. CLUTCH PEDAL

Symptoms	Corrective action
Insufficient clutch pedal free play	Adjust the free play of the pedal.
Excessively worn and damaged pedal shaft and/or bushing	Replace the bushing or shaft with a new part.

3. DIAGNOSTIC DIAGRAM OF CLUTCH DRAG

	Step	Check	Yes	No
1	**CHECK GEAR NOISE.** 1) Start the engine. 2) While idling the engine, step on the clutch pedal and quickly shift from neutral to reverse.	Is there any abnormal noise from the transmission gear?	Go to step **2**.	Clutch is normal.
2	**CHECK GEAR NOISE.** Depress the clutch pedal at idle and shift from neutral to reverse within 0.5 — 1.0 second.	Is there any abnormal noise from the transmission gear?	Go to step **3**.	Defective transmission or excessive clutch drag torque. Inspect pilot bearing, clutch disc, transmission and clutch disc hub spline.
3	**CHECK GEAR NOISE.** 1) Depress the clutch pedal at idle and shift from neutral to reverse within 0.5 — 1.0 second. 2) While stepping on the clutch pedal, shift from neutral to reverse, reverse to neutral several times.	Is there any abnormal noise from the transmission gear?	Inadequate clutch disengage. Inspect the clutch disc, clutch cover, clutch release, and clutch pedal free play.	Clutch and flywheel seizure. Inspect the clutch disc and the spline of the clutch disc hub.

CHASSIS SECTION

This service manual has been prepared to provide SUBARU service personnel with the necessary information and data for the correct maintenance and repair of SUBARU vehicles.
This manual includes the procedures for maintenance, disassembling, reassembling, inspection and adjustment of components and diagnostics for guidance of experienced mechanics.
Please peruse and utilize this manual fully to ensure complete repair work for satisfying our customers by keeping their vehicle in optimum condition. When replacement of parts during repair work is needed, be sure to use SUBARU genuine parts.

All information, illustration and specifications contained in this manual are based on the latest product information available at the time of publication approval.

FRONT SUSPENSION	FS
REAR SUSPENSION	RS
WHEEL AND TIRE SYSTEM	WT
TIRE PRESSURE MONITORING SYSTEM (DIAGNOSTICS)	TPM(diag)
DIFFERENTIALS	DI
TRANSFER CASE	TC
DRIVE SHAFT SYSTEM	DS
VEHICLE DYNAMICS CONTROL (VDC)	VDC
VEHICLE DYNAMICS CONTROL (VDC) (DIAGNOSTICS)	VDC(diag)
BRAKE	BR
BRAKE VACUUM CONTROL (BVC) (DIAGNOSTICS)	BVC(diag)
PARKING BRAKE	PB
POWER ASSISTED SYSTEM (POWER STEERING)	PS
POWER ASSISTED SYSTEM (POWER STEERING) (DIAGNOSTICS)	PS(diag)

FRONT SUSPENSION

FS

Page

1. General Description 2
2. Wheel Alignment 10
3. Front Crossmember 20
4. Front Crossmember Support Plate 27
5. Front Stabilizer 29
6. Front Ball Joint 31
7. Front Arm 35
8. Front Strut 42
9. General Diagnostic Table 49

1. General Description

A: SPECIFICATION

1. FRONT ALIGNMENT (INSPECTION VALUE)

• WRX model

Tire size		235/45R17	245/40R18
Wheel arch height (Tolerance: $^{+12\ mm}_{-24\ mm}$ ($^{+0.47\ in}_{-0.94\ in}$))	mm (in)	375 (14.76)	370 (14.57)
Camber (tolerance: ±0°30′ Differences between RH and LH: 30′ or less)		–0°45′	
Caster (referential value)		6°30′	6°35′
Steering angle (tolerance: ±1.5°)	Inner wheel	37.5°	36.4°
	Outer wheel	32.9°	32.0°
Toe-in	mm (in)	0±3 (0±0.12) Toe angle (sum of both wheels): 0°±0°16′	
Kingpin angle (referential value)		15°15′	15°20′

• STI model

Tire size		245/40R18
Wheel arch height (Tolerance: $^{+12\ mm}_{-24\ mm}$ ($^{+0.47\ in}_{-0.94\ in}$))	mm (in)	370 (14.57)
Camber (tolerance: ±0°30′ Differences between RH and LH: 30′ or less)		–0°45′
Caster (referential value)		6°35′
Steering angle (tolerance: ±1.5°)	Inner wheel	36.3°
	Outer wheel	32.0°
Toe-in	mm (in)	0±3 (0±0.12) Toe angle (sum of both wheels): 0°±0°16′
Kingpin angle (referential value)		15°20′

2. REAR ALIGNMENT (INSPECTION VALUE)

• WRX model

Tire size		235/45R17	245/40R18
Wheel arch height (Tolerance: $^{+12\ mm}_{-24\ mm}$ ($^{+0.47\ in}_{-0.94\ in}$))	mm (in)	367 (14.45)	361 (14.21)
Camber (tolerance: ±0°45′ Differences between RH and LH: 45′ or less)		–1°30′	–1°40′
Toe-in	mm (in)	IN3±3 (IN0.12±0.12)	
		Toe angle (sum of both wheels): IN0°16′±16′	
Thrust angle (tolerance: 0°00′±30′)		0°00′	

• STI model

Tire size		245/40R18
Wheel arch height (Tolerance: $^{+12\ mm}_{-24\ mm}$ ($^{+0.47\ in}_{-0.94\ in}$))	mm (in)	362 (14.25)
Camber (tolerance: ±0°45′ Differences between RH and LH: 45′ or less)		–1°40′
Toe-in	mm (in)	IN3±3 (IN0.12±0.12)
		Toe angle (sum of both wheels): IN0°16′±16′
Thrust angle (tolerance: 0°00′±30′)		0°00′

NOTE:
- Adjust with the value less than the inspection value, taking aging variation into consideration.
- Front toe-in, rear toe-in and front camber can be adjusted. Adjust if the value of toe-in or camber exceeds the tolerance range of the specification chart.
- Other items except for front toe-in, rear toe-in and front camber that are described in the specification chart cannot be adjusted.
- If other items exceed the tolerance range of the specification chart, check the suspension parts and connections for deformation. If defective, replace with new parts.

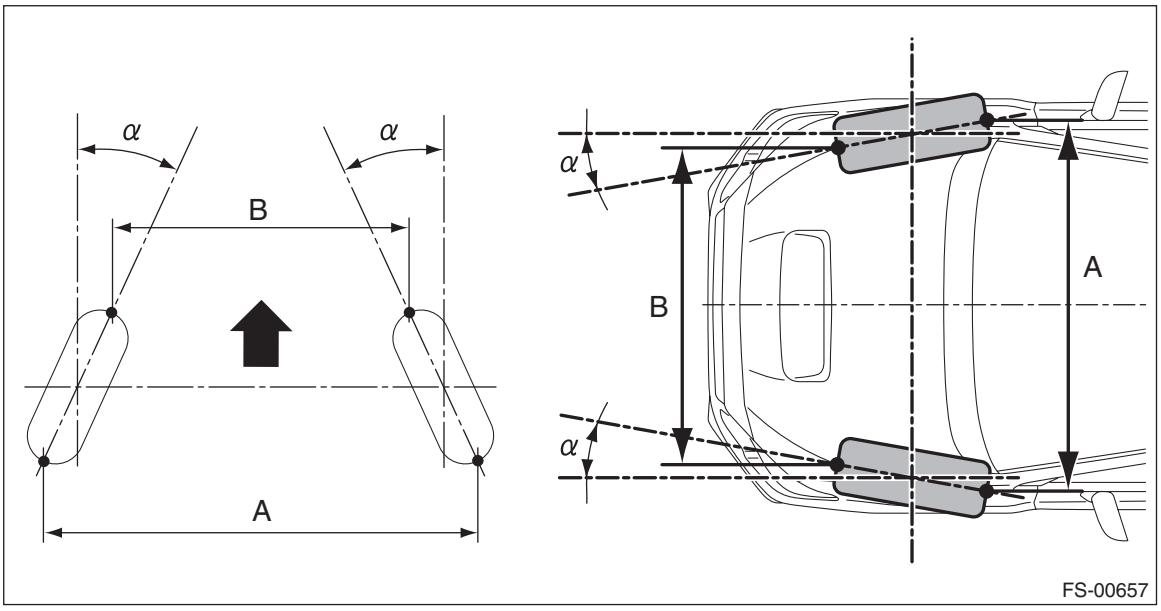

A – B = Positive: Toe-in, Negative: Toe-out

α = Individual toe angles

B: COMPONENT

1. FRONT SUSPENSION

- Electric power steering model

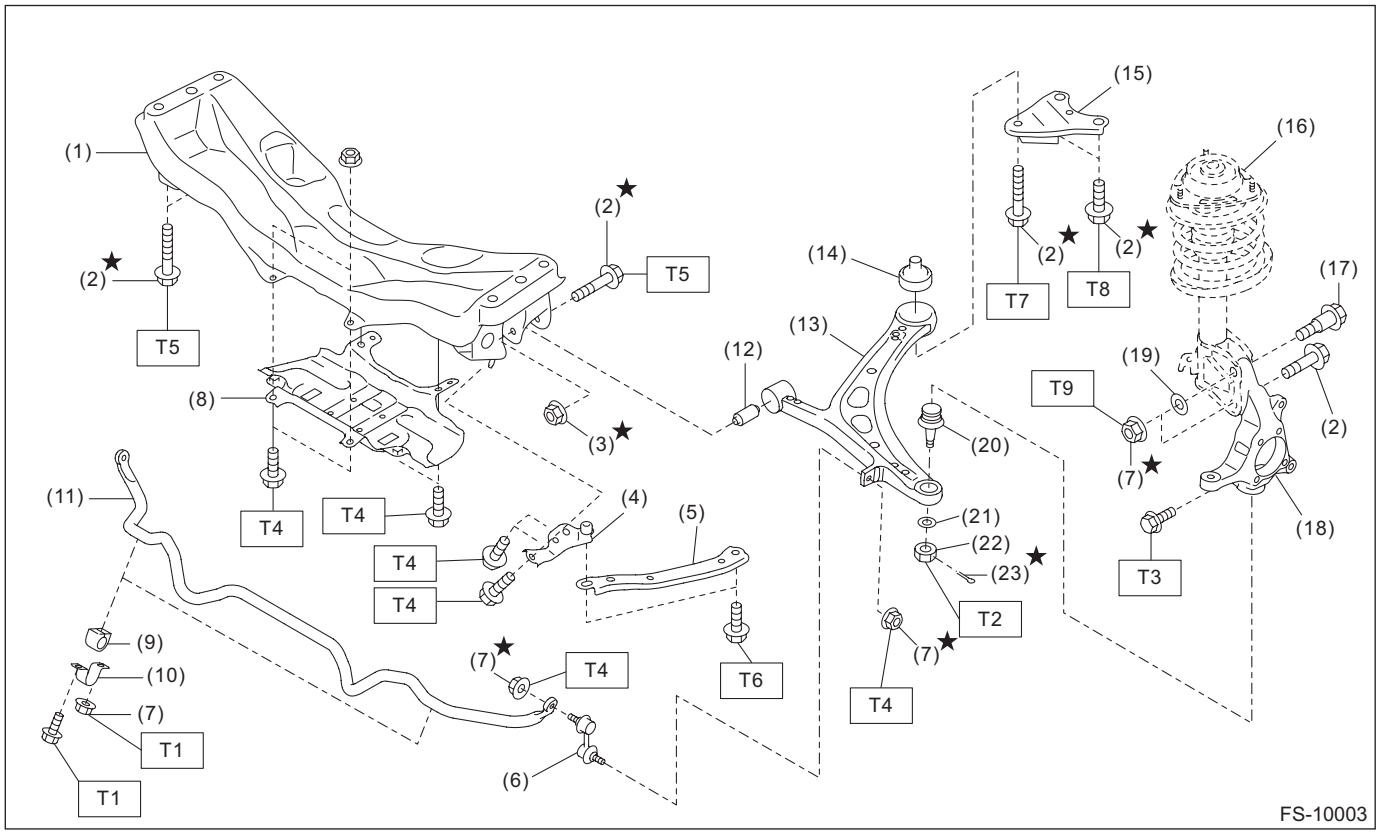

(1)	Front crossmember COMPL	(13)	Front arm ASSY
(2)	Flange bolt	(14)	Pillow ball bushing
(3)	Self-locking nut	(15)	Front arm rear plate
(4)	Support plate - front crossmember	(16)	Front strut ASSY
(5)	Front support	(17)	Adjusting bolt
(6)	Stabilizer link	(18)	Housing ASSY - front axle
(7)	Flange nut	(19)	Adjusting washer
(8)	Front crossmember support	(20)	Ball joint ASSY
(9)	Bushing - stabilizer	(21)	Washer
(10)	Clamp - stabilizer bushing	(22)	Castle nut
(11)	Front stabilizer	(23)	Cotter pin
(12)	Bushing front - front arm		

Tightening torque: N·m (kgf-m, ft-lb)

T1: 25 (2.5, 18.4)
T2: 39 (4, 28.8)
T3: 50 (5.1, 36.9)
T4: 60 (6.1, 44.3)
T5: 95 (9.7, 70.1)
T6: 100 (10.2, 73.8)
T7: 140 (14.3, 103.3)
T8: 150 (15.3, 110.6)
T9: 155 (15.8, 114.3)

- Hydraulic power steering model

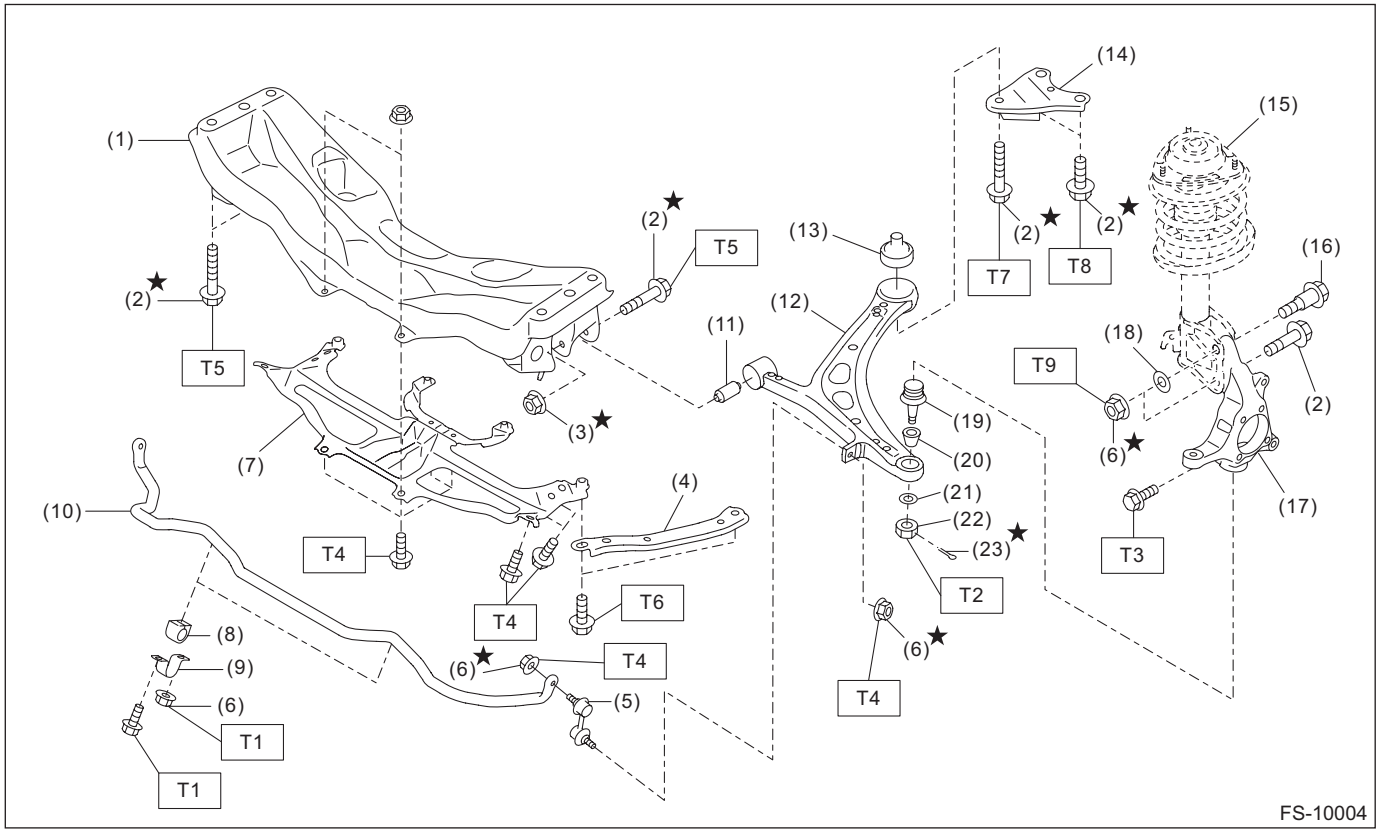

(1)	Front crossmember COMPL	(13)	Pillow ball bushing	***Tightening torque: N·m (kgf-m, ft-lb)***	
(2)	Flange bolt	(14)	Front arm rear plate	***T1:***	***25 (2.5, 18.4)***
(3)	Self-locking nut	(15)	Front strut ASSY	***T2:***	***39 (4, 28.8)***
(4)	Front support	(16)	Adjusting bolt	***T3:***	***50 (5.1, 36.9)***
(5)	Stabilizer link	(17)	Housing ASSY - front axle	***T4:***	***60 (6.1, 44.3)***
(6)	Flange nut	(18)	Adjusting washer	***T5:***	***95 (9.7, 70.1)***
(7)	Front crossmember support	(19)	Ball joint ASSY	***T6:***	***100 (10.2, 73.8)***
(8)	Bushing - stabilizer	(20)	Boss - transverse link	***T7:***	***140 (14.3, 103.3)***
(9)	Clamp - stabilizer bushing	(21)	Washer	***T8:***	***150 (15.3, 110.6)***
(10)	Front stabilizer	(22)	Castle nut	***T9:***	***155 (15.8, 114.3)***
(11)	Bushing front - front arm	(23)	Cotter pin		
(12)	Front arm ASSY				

2. FRONT STRUT

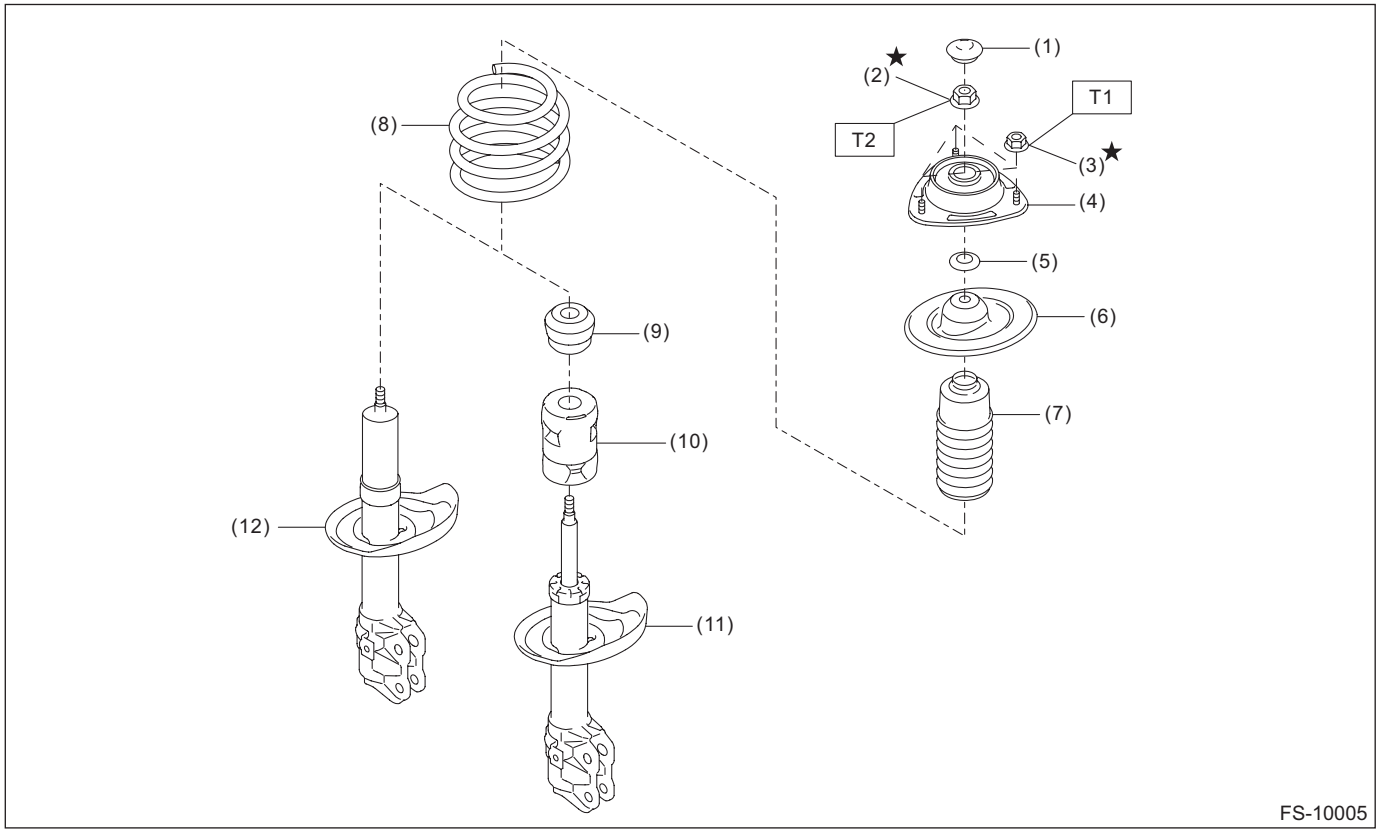

(1) Dust seal - front strut
(2) Self-locking nut
(3) Flange nut
(4) Strut mount - front
(5) Spacer - front strut
(6) Spring seat - front strut UPR
(7) Dust cover - front strut
(8) Coil spring - front
(9) Helper - front strut (standard damper)
(10) Dust cover inner (standard damper)
(11) Strut COMPL - front (standard damper)
(12) Strut COMPL - front (inverted damper)

Tightening torque: N·m (kgf-m, ft-lb)
T1: 20 (2, 14.8)
T2: 55 (5.6, 40.6)

C: CAUTION

- When performing any work, always wear work clothes, a work cap and protective shoes. Additionally, wear a helmet, protective goggles, etc. if necessary.
- When disposing of strut COMPL - front, be sure to bleed the oil or gas out completely. Also, do not expose to flames or fire.
- When performing a repair, identify the cause of trouble and avoid unnecessary removal, disassembly and replacement.
- Use SUBARU genuine grease, the recommended or equivalent. Do not mix grease etc. of different grades or manufacturers.
- Do not secure a part in a vise directly. Place cushioning materials such as wood pieces, blocks, aluminum plates, or waste cloth between the part and the vise.
- Be sure to tighten fasteners including bolts and nuts to the specified torque.
- Always use the jack-up point when the shop jacks or rigid racks are used to support the vehicle.
- When the suspension-related components have been removed, installed or replaced, perform the following adjustment.
  - Lane keep assist learning value clear (model with EyeSight): <Ref. to ES(diag)-50, OPERATION, CLEAR ACTIVE LANE KEEP SYSTEM LEARNING VALUE.>
  - VDC sensor midpoint setting mode: <Ref. to VDC-17, ADJUSTMENT, VDC Control Module and Hydraulic Control Unit (VDCCM&H/U).>
- For parts which are not reusable, always use new parts. Other parts should be replaced with new parts as required.
- When handling oil or fuel, adhere to the following to prevent unexpected accident.
  - Be careful with fire.
  - Prepare a container to catch grease or oil, etc. If any grease or oil spills, wipe it off and clean immediately to prevent from penetrating into floor or flowing outside.
  - Follow all government and local regulations concerning disposal of refuse when disposing.
- Be sure that the surface of brake disc or brake pad is free from grease or oil.
- Before disconnecting connectors of sensors or units, be sure to disconnect the ground cable from battery.
- Some vehicle components are extremely hot immediately after driving. Be wary of receiving burns from heated parts.

D: PREPARATION TOOL

1. SPECIAL TOOL

ILLUSTRATION	TOOL NUMBER	DESCRIPTION	REMARKS
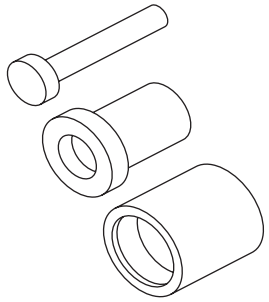 ST-927680000	927680000	INSTALLER & REMOVER SET	Used for replacing the bushing front - front arm of front arm assembly.
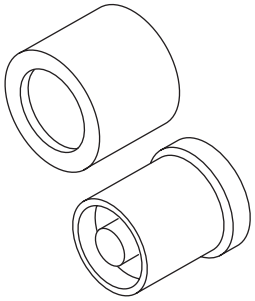 ST20099AE020	20099AE020	INSTALLER & REMOVER	Used for replacing pillow ball bushing of aluminum front arm.
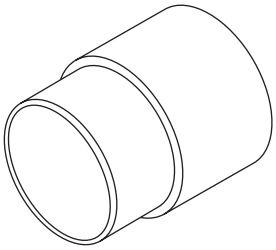 ST28099PA010	28099PA010	HOUSING STAND	• Used for removing pillow ball bushing of aluminum front arm. • Used together with INSTALLER & REMOVER (20099AE020).
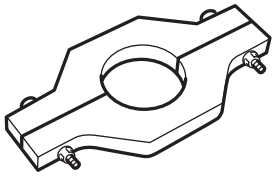 ST18723AA000	18723AA000	REMOVER	• Used for assembling pillow ball bushing of aluminum front arm. • Used together with INSTALLER & REMOVER (20099AE020).

ILLUSTRATION	TOOL NUMBER	DESCRIPTION	REMARKS
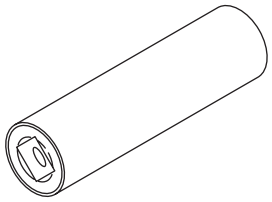 ST20299AG020	20299AG020	STUD BOLT SOCKET	Used for removing and installing the stud bolt for front arm assembly installing portion.
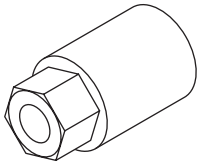 ST20399AG000	20399AG000	STRUT MOUNT SOCKET	• Used for disassembling and assembling strut assembly and shock absorber assembly. • Used for checking center nut torque of strut assembly and shock absorber assembly.
 STSSM4	—	SUBARU SELECT MONITOR 4	Used for setting of each function and trouble-shooting for electrical system. NOTE: For detailed operation procedures of Subaru Select Monitor 4, refer to “Application help”.

2. GENERAL TOOL

TOOL NAME	REMARKS
DST-i	Used together with Subaru Select Monitor 4.
Alignment gauge	Used for measuring wheel alignment.
Alignment gauge adapter	Used for measuring wheel alignment.
Turning radius gauge	Used for measuring wheel alignment.
Toe-in gauge	Used for toe-in measurement.
Tie-rod ball joint puller	Used for disconnecting tie-rod end.
Dial gauge	Used for damper strut measurement.
Coil spring compressor	Used for disassembling and assembling strut assembly and shock absorber assembly.
Shackle	• Two units used for hanging power unit. • Attached to both end of chain sling and connected to engine hook. • Load capacity: 250 kg (551 lb) or more
Sling belt	• Used for removing and installing crossmembers. • Width: 35 — 40 mm (1.38 — 1.57 in) • Length: 2 m (6.6 ft) • Load capacity: 1 t (2205 lb) or more

2. Wheel Alignment

A: INSPECTION

Check the following items before performing the wheel alignment measurement.
- Tire inflation pressure
- Uneven wear of RH and LH tires, or difference of sizes
- Tire runout
- Excessive play and wear of ball joint
- Excessive play and wear of tie-rod end
- Excessive play of wheel bearing
- Right and left wheel base imbalance
- Deformation and excessive play of steering link
- Deformation and excessive play of suspension parts

Check, adjust and measure the wheel alignment in accordance with the following procedures.

1	Wheel arch height (front and rear wheels)	Inspection: <Ref. to FS-11, WHEEL ARCH HEIGHT, INSPECTION, Wheel Alignment.>
	↓	
2	Camber (front and rear wheels)	Inspection: <Ref. to FS-12, CAMBER, INSPECTION, Wheel Alignment.> Adjustment: <Ref. to FS-14, FRONT CAMBER, ADJUSTMENT, Wheel Alignment.>
	↓	
3	Caster (front wheel)	Inspection: <Ref. to FS-12, CASTER, INSPECTION, Wheel Alignment.>
	↓	
4	Adjustment of difference between right and left steering angles	Inspection: <Ref. to FS-13, STEERING ANGLE, INSPECTION, Wheel Alignment.> Adjustment: <Ref. to FS-16, ADJUSTMENT OF DIFFERENCE BETWEEN RIGHT AND LEFT STEERING ANGLES, ADJUSTMENT, Wheel Alignment.>
	↓	
5	Front wheel toe-in	Inspection: <Ref. to FS-13, FRONT WHEEL TOE-IN, INSPECTION, Wheel Alignment.> Adjustment: <Ref. to FS-16, FRONT WHEEL TOE-IN, ADJUSTMENT, Wheel Alignment.>
	↓	
6	Rear wheel toe-in	Inspection: <Ref. to FS-11, WHEEL ARCH HEIGHT, INSPECTION, Wheel Alignment.> Adjustment: <Ref. to FS-17, REAR WHEEL TOE-IN, ADJUSTMENT, Wheel Alignment.>
	↓	
7	Thrust angle	Inspection: <Ref. to FS-14, THRUST ANGLE, INSPECTION, Wheel Alignment.> Adjustment: <Ref. to FS-18, THRUST ANGLE, ADJUSTMENT, Wheel Alignment.>

1. WHEEL ARCH HEIGHT

1) Park the vehicle on a level surface.
2) Empty the vehicle so that it is at “curb weight”.

NOTE:
Empty the trunk or luggage room, load the spare tire, jack and service tools, and fill up the fuel tank.

3) Set the steering wheel in a straight-ahead position, and stabilize the suspension by moving the vehicle in a straight line for 5 m (16 ft) or more.
4) Suspend a thread from the wheel arch (point “A” in the figure below) and affix at a position directly above the center of wheel.
5) Measure the distance between the point “A” and the center of wheel.

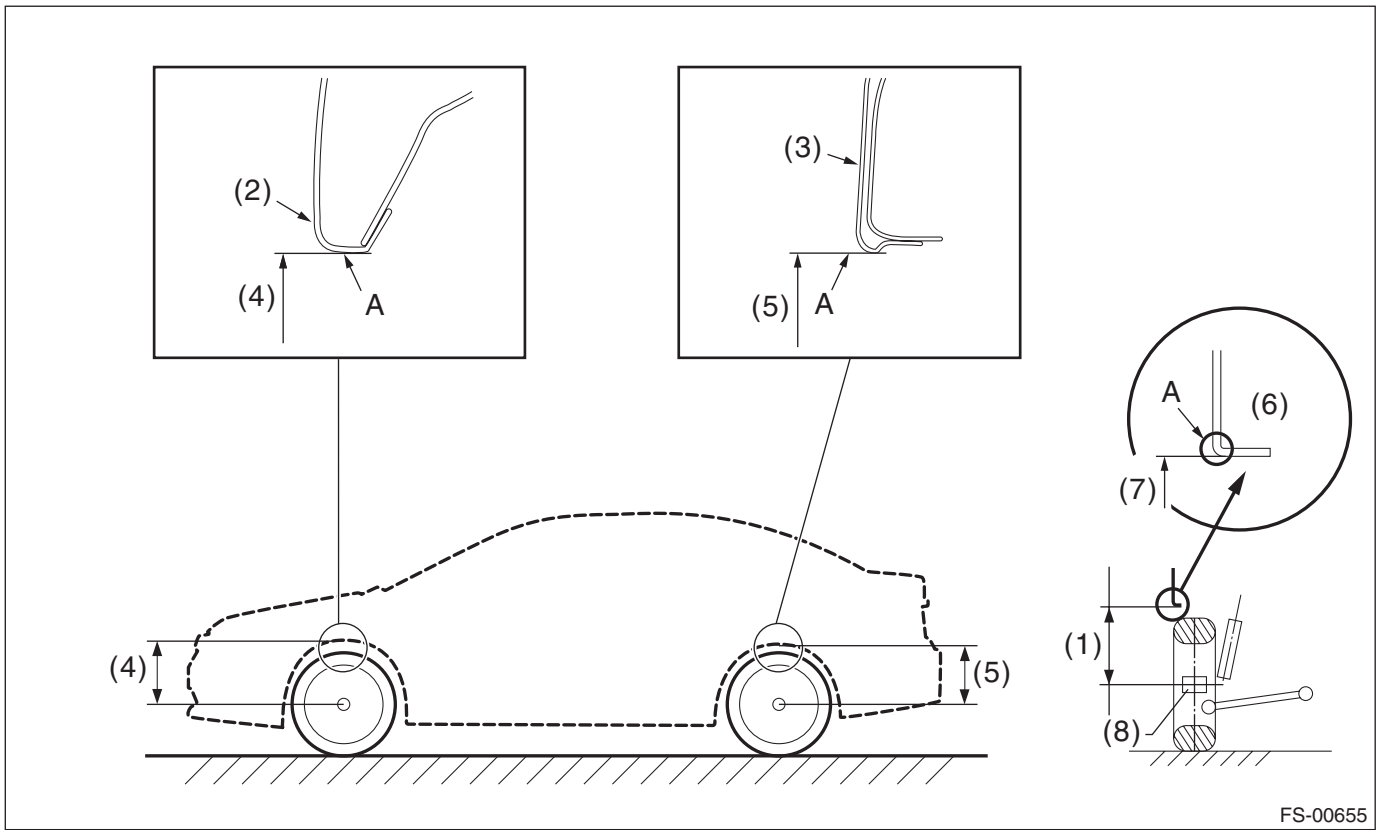

(1) Wheel arch height
(2) Front fender
(3) Rear quarter
(4) Front wheel arch height
(5) Rear wheel arch height
(6) Flange bend line
(7) Point of measurement
(8) End of spindle

Model	Tire size	Wheel arch height specification mm (in) (Tolerance: $^{+12\ mm}_{-24\ mm}$ ($^{+0.47\ in}_{-0.94\ in}$))	
		Front	Rear
WRX model	235/45R17	375 (14.76)	367 (14.45)
	245/40R18	370 (14.57)	361 (14.21)
STI model	245/40R18	370 (14.57)	362 (14.25)

2. CAMBER

1) Place the front wheel on the turning radius gauge.

NOTE:
Make sure the ground contact surfaces of the front and rear wheels are at the same height.

2) Set the adapter into the center of wheel, and then set the wheel alignment gauge.

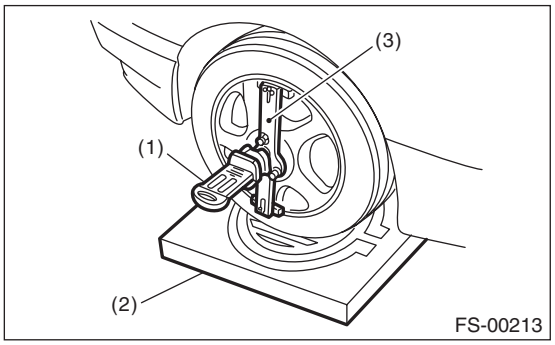

(1) Alignment gauge
(2) Turning radius gauge
(3) Adapter

3) Measure the camber angle in accordance with the operation manual for wheel alignment gauge.

Model	Tire size	Camber (difference between RH and LH 35′ or less)
WRX model	235/45R17	–0°45′±0°30′
	245/40R18	
STI model	245/40R18	

3. CASTER

1) Place the front wheel on the turning radius gauge. Make sure the ground contact surfaces of the front and rear wheels are at the same height.

2) Set the adapter into the center of wheel, and then set the wheel alignment gauge.

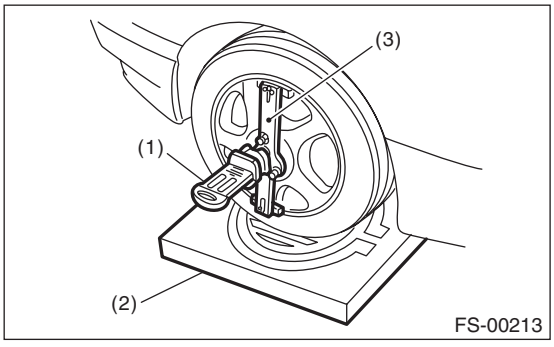

(1) Alignment gauge
(2) Turning radius gauge
(3) Adapter

3) Measure the caster angle in accordance with the operation manual for wheel alignment gauge.

Model	Tire size	Caster
WRX model	235/45R17	6°30′
	245/40R18	6°35′
STI model	245/40R18	6°35′

4. STEERING ANGLE

1) Place the vehicle on turning radius gauge.
2) While depressing the brake pedal, turn the steering wheel fully to the left and right.
3) With the steering wheel held at each fully turned position, measure both the inner and outer wheel steering angles.

Model	Tire size	Inner wheel	Outer wheel
WRX model	235/45R17	37.5°±1.5°	32.9°±1.5°
	245/40R18	36.4°±1.5°	32.0°±1.5°
STI model	245/40R18	36.3°±1.5°	32.0°±1.5°

5. FRONT WHEEL TOE-IN

Toe-in: Inspection value
0±3 mm (0±0.12 in)

1) Set the toe-in gauge in the position at wheel axis center height behind the right and left front tires.
2) Place a mark at the center of both left and right tires, and measure distance “A” between the marks.
3) Move the vehicle forward to rotate the tires 180°.

NOTE:
Be sure to rotate the tires in the forward direction.
4) Measure the distance “B” between the left and right marks.
Find toe-in using the following calculation:

A – B = Toe-in

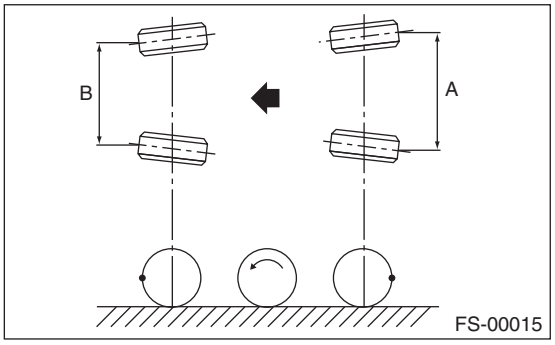

6. REAR WHEEL TOE-IN

Refer to the FRONT WHEEL TOE-IN for rear toe-in inspection procedures. <Ref. to FS-13, FRONT WHEEL TOE-IN, INSPECTION, Wheel Alignment.>

Toe-in: Inspection value
3±3 mm (0.12±0.12 in)

7. THRUST ANGLE

1) Park the vehicle on a level surface.
2) Move the vehicle 3 — 4 meters (10 — 13 feet) straight forward.
3) Draw the center of loci for both the front and rear axles.
4) Measure distance “L” between the center lines of the axle loci.

Thrust angle: Inspection value
0°±30′
Less than 30′ when “L” is 23 mm (0.9 in) or less

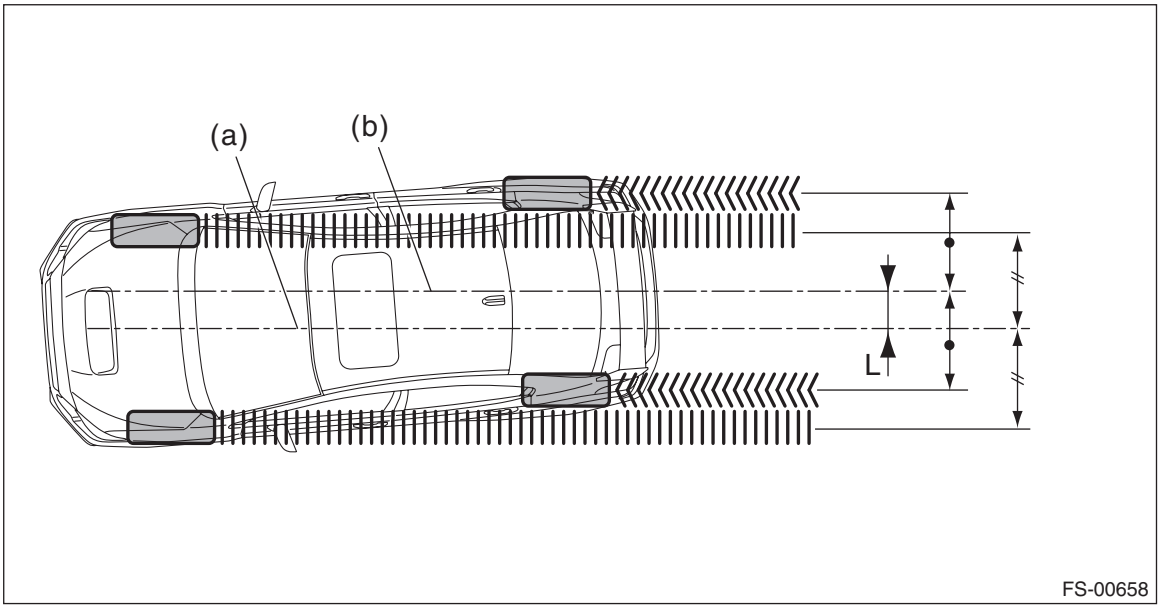

(a) Center line of loci (front axle) (b) Center line of loci (rear axle)

B: ADJUSTMENT

CAUTION:
When the wheel alignment has been adjusted, perform the following adjustment.
– Lane keep assist learning value clear (model with EyeSight): <Ref. to ES(diag)-50, OPERATION, CLEAR ACTIVE LANE KEEP SYSTEM LEARNING VALUE.>
– Steering angle sensor adjustment: <Ref. to VDC-17, ADJUSTMENT, VDC Control Module and Hydraulic Control Unit (VDCCM&H/U).>

1. FRONT CAMBER

1) Adjust the camber angle to the following value.

Model	Tire size	Camber (difference between RH and LH 35′ or less)
WRX model	235/45R17	–0°45′±0°30′
	245/40R18	
STI model	245/40R18	

2) Loosen the two flange nuts while holding the strut bolts.

3) Turn the camber adjusting bolt so that the camber is set at specification.

NOTE:
Moving the adjusting bolt by one scale changes the camber by approximately 0°15′.

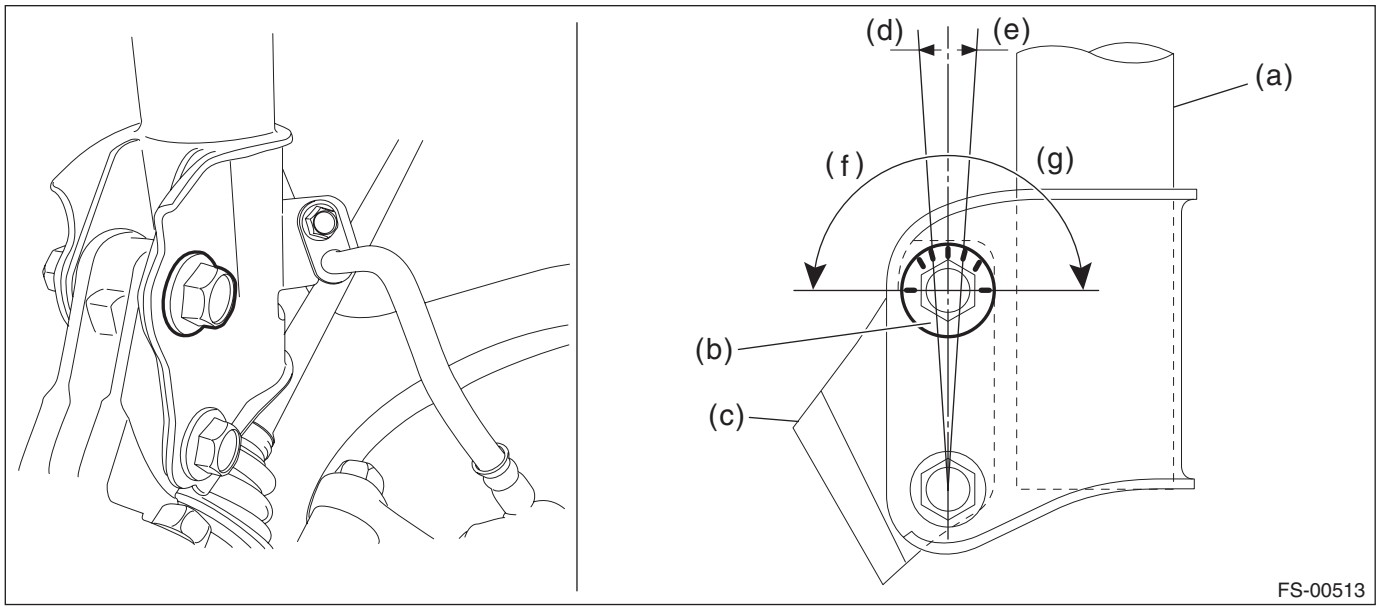

(a) Strut ASSY
(b) Adjusting bolt
(c) Housing ASSY - front axle
(d) Outer direction
(e) Inner direction
(f) Camber is increased.
(g) Camber is decreased.

To increase camber.	
Rotate the left side counterclockwise.	Rotate the right side clockwise.
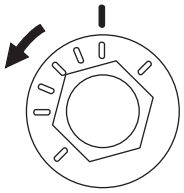 FS-00352	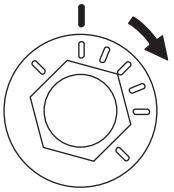 FS-00353

To decrease camber.	
Rotate the left side clockwise.	Rotate the right side counterclockwise.
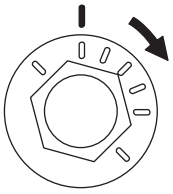 FS-00353	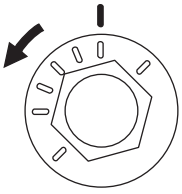 FS-00352

4) Tighten two new flange nuts.

Tightening torque:
155 N·m (15.8 kgf-m, 114.3 ft-lb)

NOTE:
While holding the adjusting bolt side, tighten the nut side.

2. ADJUSTMENT OF DIFFERENCE BETWEEN RIGHT AND LEFT STEERING ANGLES

1) Operate the steering system from lock to lock and stop operating it at the center position from lock to lock, and then install the steering wheel in the straight-ahead position.

NOTE:
Using of the steering wheel angle sensor output values shown on Subaru Select Monitor will facilitate your work.
2) Before adjusting toe-in, be sure to adjust the steering wheel in the straight-ahead position (steering angle sensor output: 0 deg).

3. FRONT WHEEL TOE-IN

When adjusting the toe-in, adjust it to the following value.

Toe-in: Adjustment value
0±2 mm (0±0.08 in)
1) Check that the left and right wheel steering angles are within specification.
2) Loosen the left and right side steering tie-rod lock nuts (a).
3) Turn the left and right tie-rods by equal amounts until the toe-in is at the specification.

NOTE:
Both the left and right tie-rods are right-hand threaded. To increase toe-in, turn both tie-rods clockwise by equal amount (viewing from the inside of vehicle).
4) Tighten the tie-rod lock nut (a).

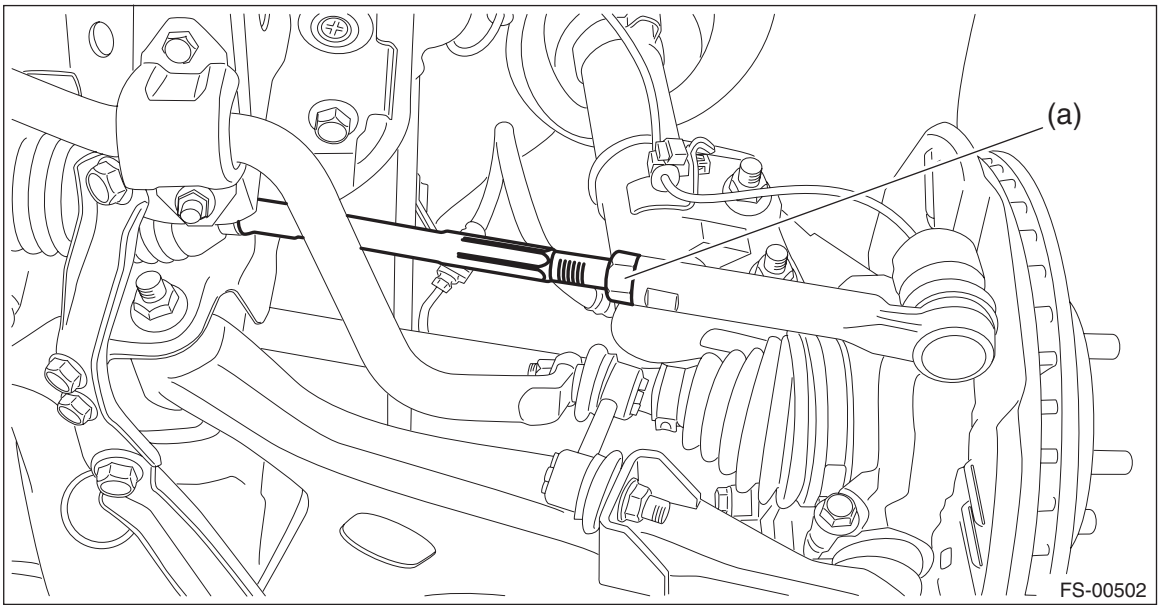

Tightening torque:
85 N·m (8.7 kgf-m, 62.7 ft-lb)
5) Check and correct the tie-rod boot if twisted.

4. REAR WHEEL TOE-IN

When adjusting, adjust it to the following value.

Toe-in: Adjustment value
3±2 mm (0.12±0.08 in)

1) Loosen the self-locking nut after holding the bolt head section of lateral link assembly - front.

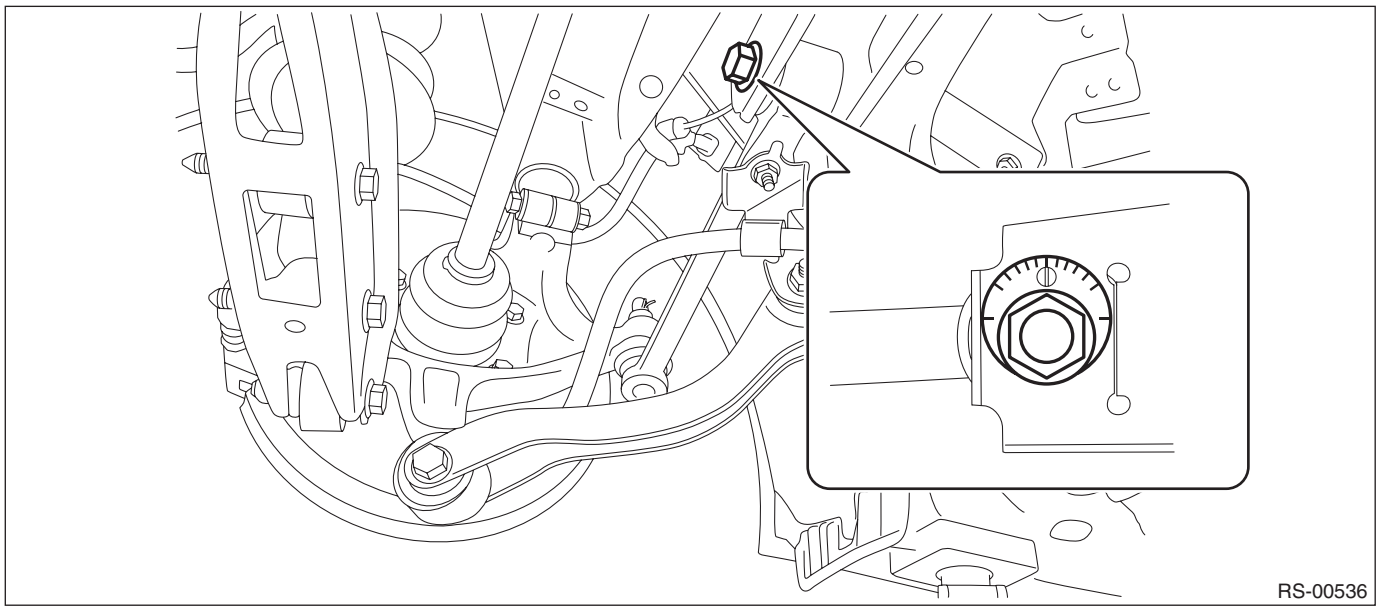

2) Turn the adjusting bolt until toe-in is within the specification.

NOTE:
When the left and right wheels are adjusted for toe-in at the same time, the movement of one scale graduation changes toe-in by approx. 6.0 mm (0.24 in).

To increase toe-in.	
Rotate the left side clockwise.	Rotate the right side counterclockwise.
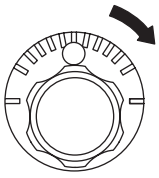 FS-00018	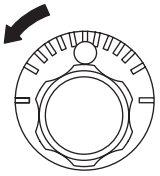 FS-00019

To decrease toe-in.	
Rotate the left side counterclockwise.	Rotate the right side clockwise.
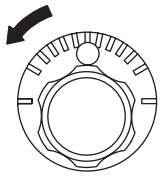 FS-00019	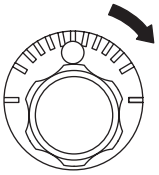 FS-00018

3) Attach and tighten a new self-locking nut.

Tightening torque:
100 N·m (10.2 kgf-m, 73.8 ft-lb)

NOTE:
While holding the adjusting bolt side, tighten the nut side.

5. THRUST ANGLE

When adjusting, adjust it to the following value.

Thrust angle: Adjustment value
0°±20′
Less than 20′ when "L" is 15 mm (0.6 in) or less

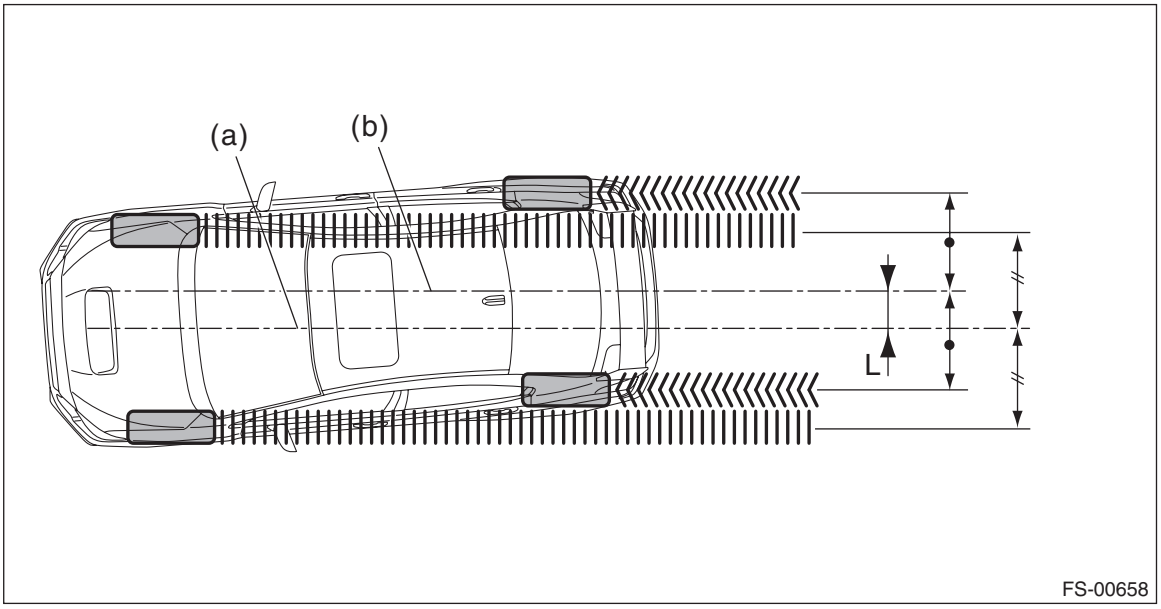

(a) Center line of loci (front axle) (b) Center line of loci (rear axle)

1) Make thrust angle adjustments by turning the toe-in adjusting bolts of the rear suspension equally in the same direction.
2) When one rear wheel is adjusted in a toe-in direction, adjust the other rear wheel equally in toe-out direction, in order to make the thrust angle adjustment.
3) When the left and right adjusting bolts are turned by one graduation, the thrust angle will change approx. 15′. (“L” is approx. 11 mm (0.43 in).)

NOTE:
Thrust angle is a mean value of left and right wheel toe angles in relation to the vehicle body center line. Vehicle is driven straight in the thrust angle direction while slanting in the oblique direction depending on the degree of the mean thrust angle.

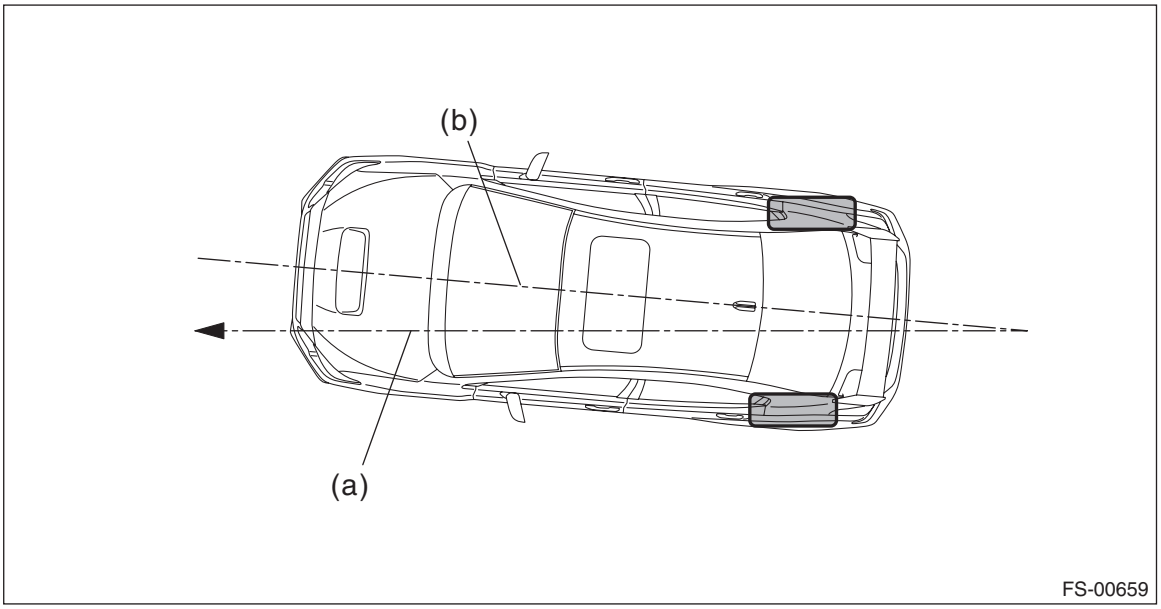

(a) Thrust angle (b) Body center line

Thrust angle:
$\gamma = (\alpha - \beta)/2$
α: Rear RH wheel toe-in angle
β: Rear LH wheel toe-in angle
Substitute only the positive toe-in values from each wheel into α and β in the calculation.

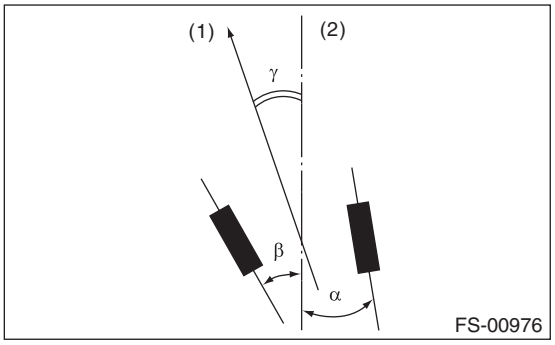

(1) Front
(2) Body center line

3. Front Crossmember

A: REMOVAL

CAUTION:
For electric power steering model, be careful of the following items.
• The power steering control module continues to operate after the engine stops and calculates the temperature in the control module. Therefore, before starting service of the power steering system which requires disconnection of the connector, stop the engine and allow approx. 30 minutes until the control module becomes cold.
• Be careful not to let any foreign matter (dust, water, oil, etc.) enter into the power steering control module connector when removing or installing. If a foreign matter enters, completely remove it.
1) Disconnect the ground cable from battery. <Ref. to NT-6, BATTERY, NOTE, Note.>

NOTE:
For model with battery sensor, disconnect the ground terminal from battery sensor.
2) Lift up the vehicle, and then remove the front wheels.
3) Remove the under cover - front. <Ref. to EI-22, REMOVAL, Front Under Cover.>
4) Remove the universal joint assembly - steering. <Ref. to PS-21, REMOVAL, Universal Joint.>
5) Change the hood stay location from (A) to (B) to open the front hood completely.

Tightening torque:
20 N·m (2 kgf-m, 14.8 ft-lb)

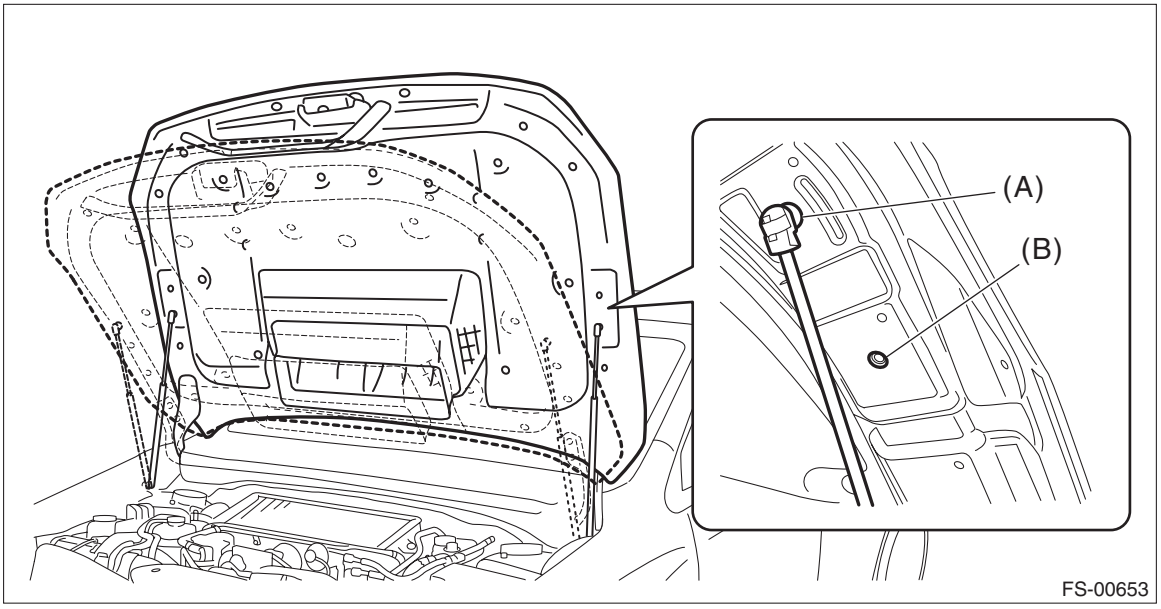

6) Remove the V-belt covers. (STI model)
7) Remove the collector cover. (Except for STI model) <Ref. to IN(w/o STI)-7, REMOVAL, Collector Cover.>
8) Disconnect the connector and harness clamp from power steering control module. (Electric power steering model)
9) Disconnect the power steering hose from the steering gearbox. (Hydraulic power steering model)

10) Remove the engine mounting and the crossmember assembly.
(1) Support the engine with a lifting device and wire ropes.
(2) While lifting up the vehicle, also raise up the lifting device simultaneously.

CAUTION:
Be careful not to damage the vehicle with a lifting device or wire ropes.

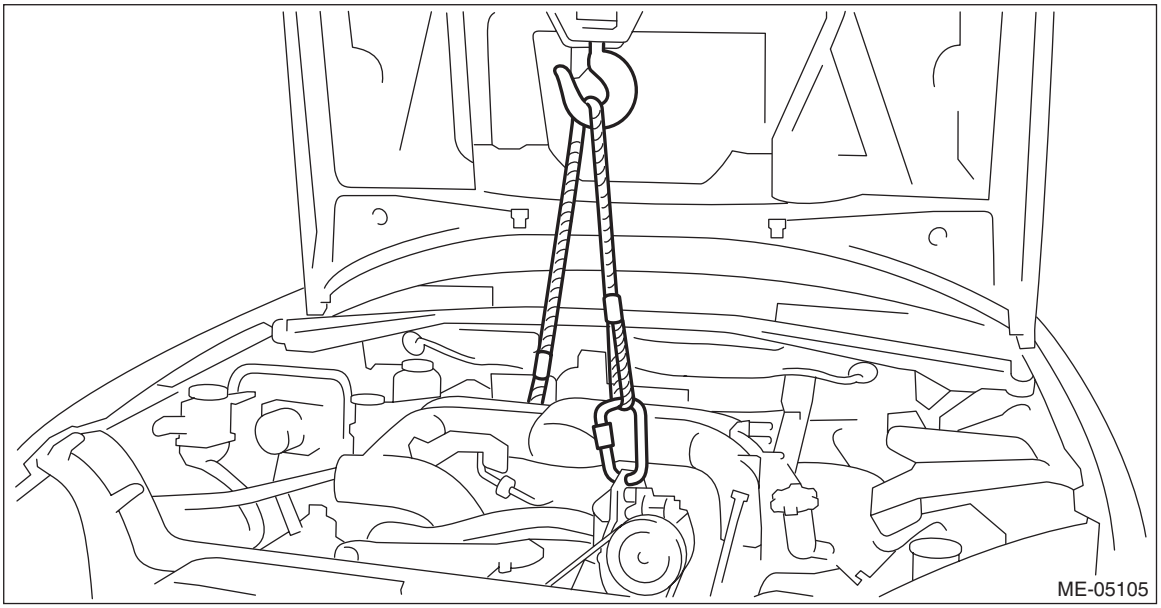

(3) Raise up the lifting device, and lift the engine body by approx. 10 mm (0.39 in).
(4) Attach the sling belt so that it wraps around the both frames using the shackle.

CAUTION:
- **Be sure to attach the sling belt to ensure safety in operation.**
- **Use a sling belt with the length of 2 m (6.6 ft), the width of 35 — 40 mm (1.38 — 1.57 in) and the load capacity of 1 t (2205 lb) or more.**

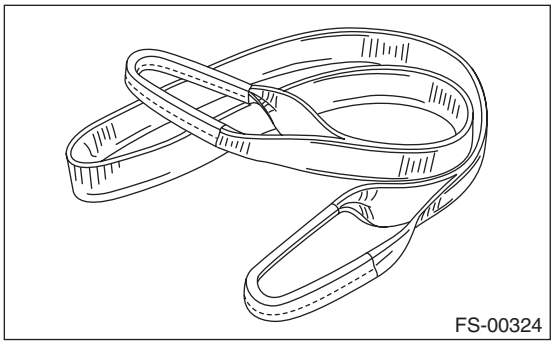

- **Use a shackle with the load capacity of 0.5 t (1103 lb) or more.**

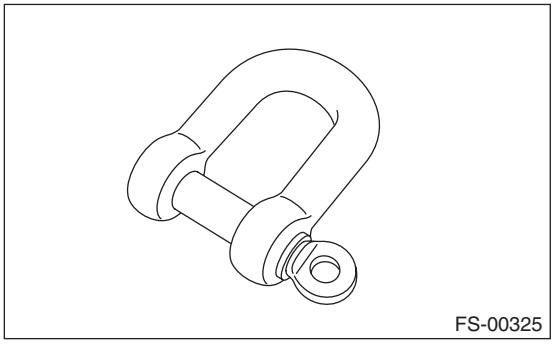

(5) Remove the nuts which secure the engine mounting to the front crossmember assembly.

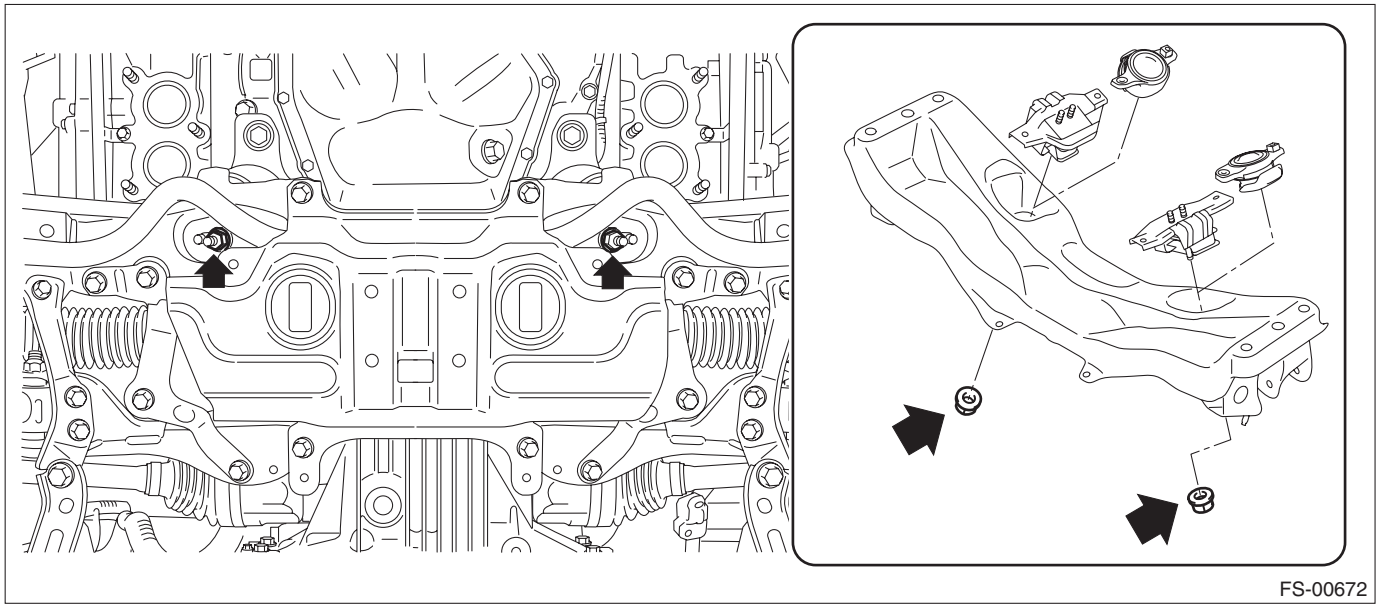
FS-00672

11) Remove the front crossmember support and the support plate - front crossmember. <Ref. to FS-27, REMOVAL, Front Crossmember Support Plate.>
12) Remove the front exhaust pipe.
- STI model: <Ref. to EX(STI)-5, REMOVAL, Front Exhaust Pipe.>
- Except for STI model: <Ref. to EX(w/o STI)-9, REMOVAL, Front Exhaust Pipe.>

13) Remove the front stabilizer. <Ref. to FS-29, REMOVAL, Front Stabilizer.>
14) Disconnect the tie-rod end.
   (1) Pull out the cotter pin (a).
   (2) Remove the castle nut (b).
   (3) Using a tie-rod ball joint puller, remove the tie-rod end (c).

Preparation tool:
Tie-rod ball joint puller

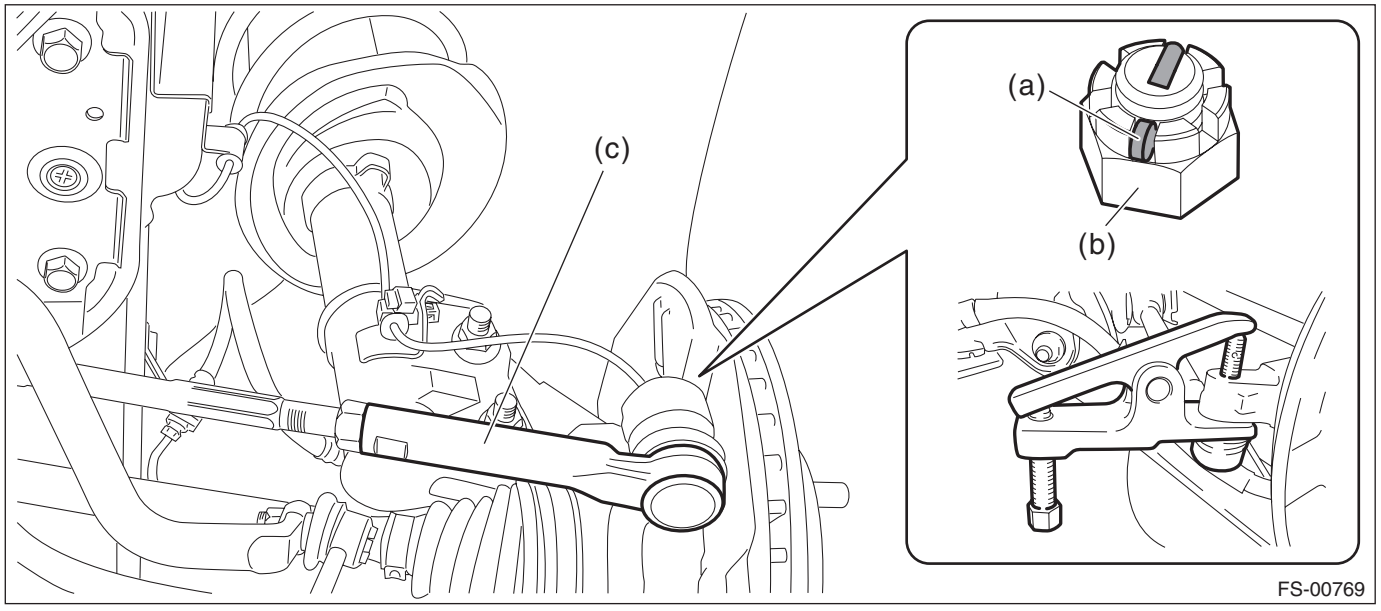

FS-00769

15) Remove the front arm assembly. <Ref. to FS-35, REMOVAL, Front Arm.>
16) Remove the front crossmember assembly.

CAUTION:
• When lowering the transmission jack, make sure that the tie-rod end and the drive shaft boot do not interfere. The drive shaft boot may be damaged.
• The front crossmember assembly is heavy. Make sure that it is firmly supported so that it is level.
(1) Support the front crossmember assembly from the bottom side using a transmission jack.
(2) Remove the bolts which secure the front crossmember assembly to the body.
(3) Lower the transmission jack slowly, and then lower the front crossmember assembly together with the steering gearbox assembly.
(4) Remove the steering gearbox assembly from the front crossmember assembly.

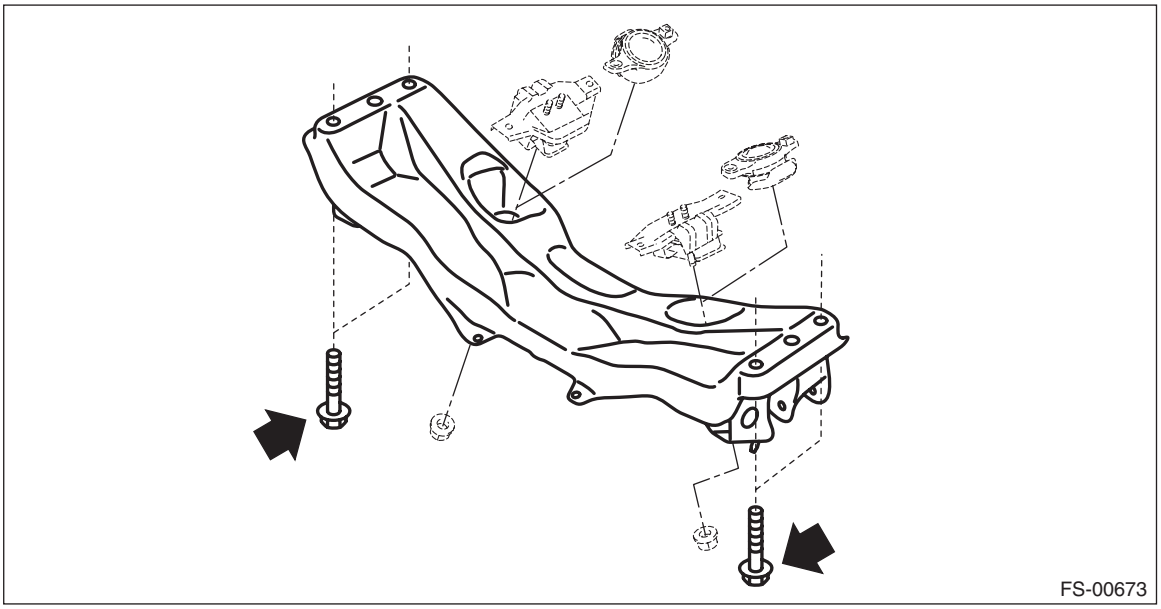
FS-00673

B: INSTALLATION

CAUTION:
- **When raising the transmission jack, make sure that the tie-rod end and the drive shaft boot do not interfere. The drive shaft boot may be damaged.**
- **The front crossmember assembly is heavy. Make sure that it is firmly supported so that it is level.**
- **For parts which are not reusable, always use new parts.**
- **Always tighten the bushing in the state where the vehicle is at curb weight and the wheels are in full contact with the ground.**
- **Install the clamp - stabilizer bushing with the arrow mark facing the front of the vehicle.**

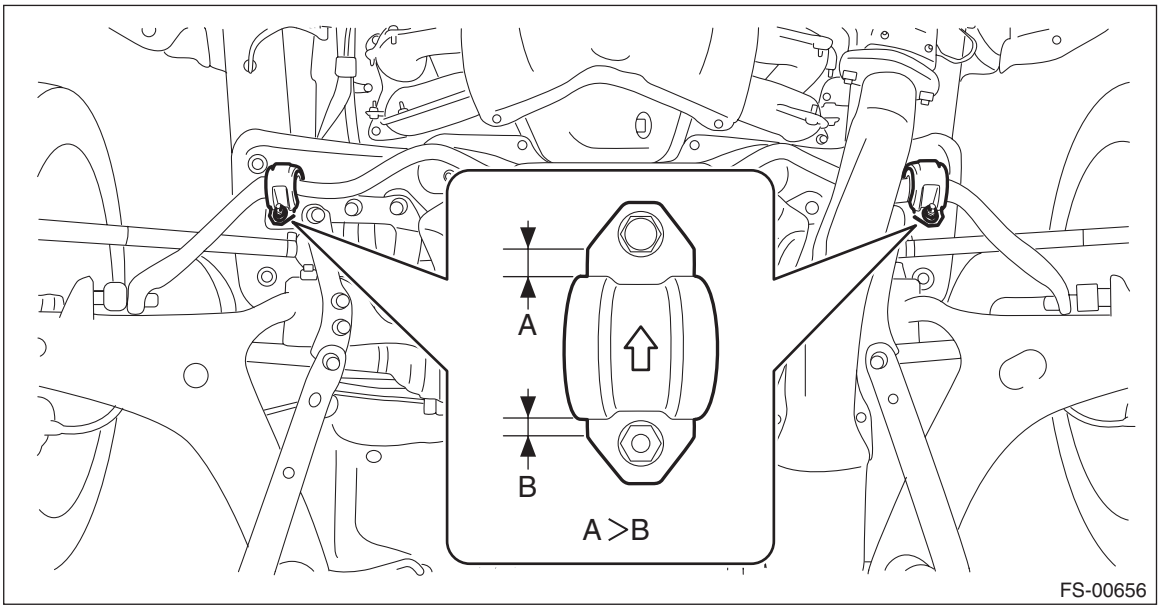

- **Install the under cover - front so that the front end of the under cover (b) comes inside the bumper face - front (a).**

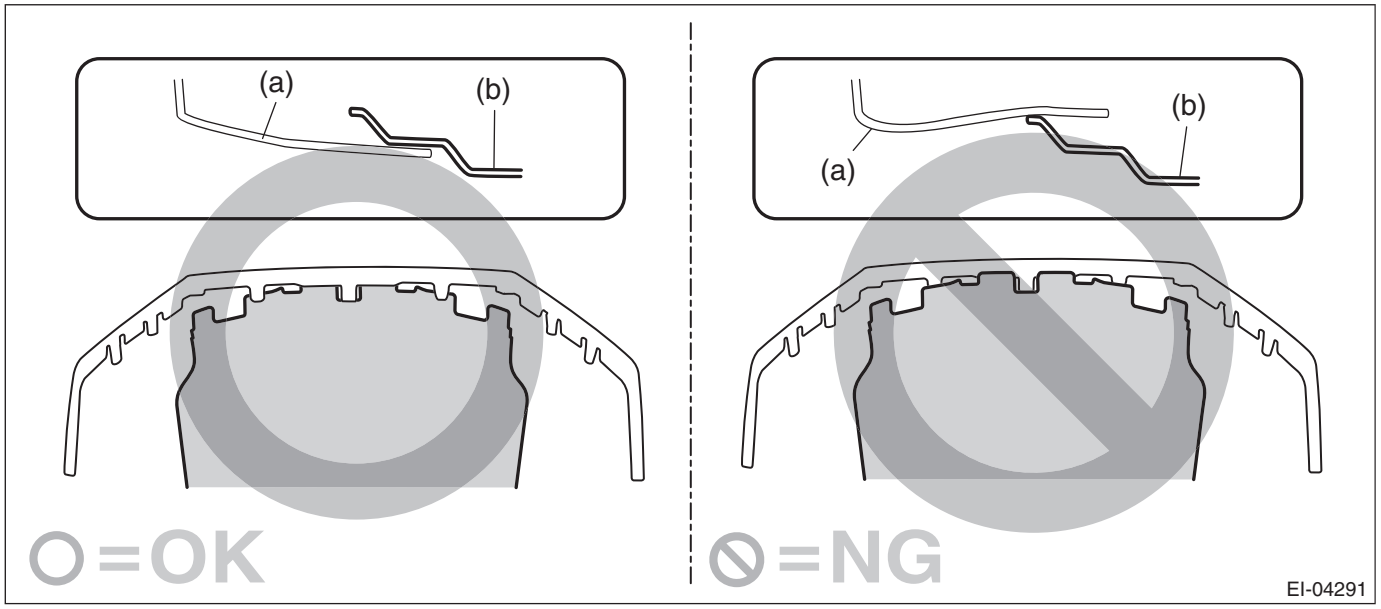

1) Install the front crossmember assembly.

NOTE:
Check the crossmember for damage or cracks, and correct or replace if defective.
(1) Install the steering gearbox assembly to the front crossmember assembly.
(2) Install the bolts which secure the front crossmember assembly to the body.

Tightening torque:
Refer to "COMPONENT" of "General Description" for the tightening torque. <Ref. to FS-4, FRONT SUSPENSION, COMPONENT, General Description.>

2) Install the front arm assembly.

NOTE:
When tightening the castle nut, tighten the castle nut to the specified torque first, then tighten it further but within 60° until the hole in the ball stud is aligned with a slot in castle nut.

Tightening torque:
39 N·m (4 kgf-m, 28.8 ft-lb)

3) Insert a new cotter pin and secure the castle nut.
4) Install the tie-rod end.

NOTE:
When tightening the castle nut, tighten the castle nut to the specified torque first, then tighten it further but within 60° until the hole in the ball stud is aligned with a slot in castle nut.

Tightening torque:
27 N·m (2.7 kgf-m, 19.9 ft-lb)

5) Insert a new cotter pin and secure the castle nut.
6) Install the front stabilizer.

CAUTION:
Install the clamp - stabilizer bushing with the arrow mark facing the front of the vehicle.

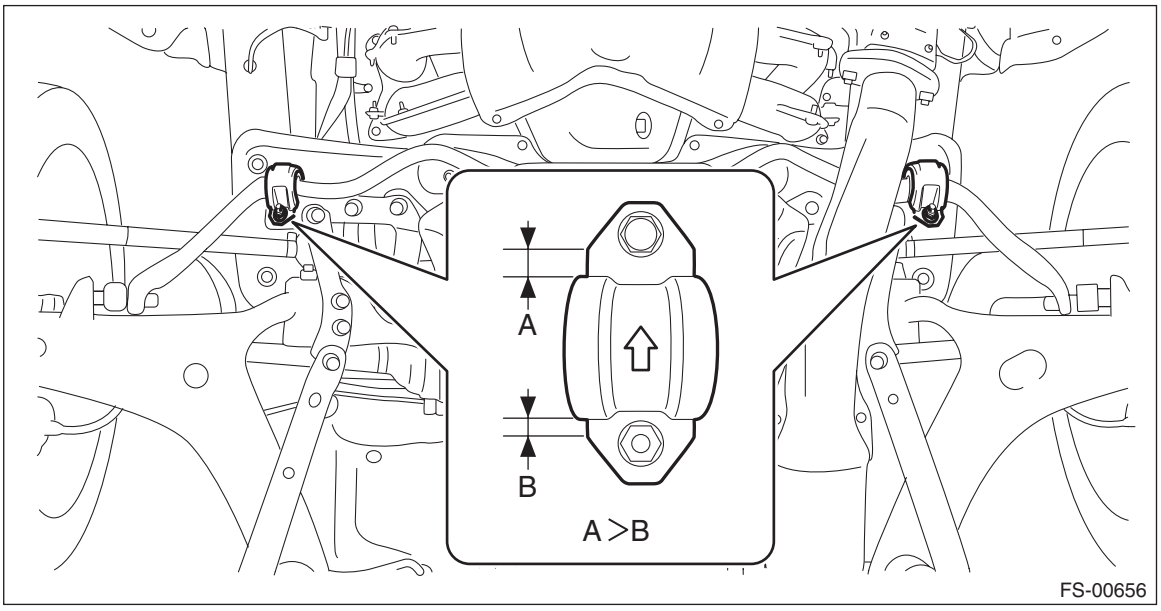

Tightening torque:
Refer to "COMPONENT" of "General Description" for the tightening torque. <Ref. to FS-4, FRONT SUSPENSION, COMPONENT, General Description.>

7) Install the front exhaust pipe.
- STI model: <Ref. to EX(STI)-5, INSTALLATION, Front Exhaust Pipe.>
- Except for STI model: <Ref. to EX(w/o STI)-17, INSTALLATION, Front Exhaust Pipe.>

8) Install the front crossmember support and the support plate - front crossmember.

Tightening torque:
Refer to "COMPONENT" of "General Description" for the tightening torque. <Ref. to FS-4, FRONT SUSPENSION, COMPONENT, General Description.>

9) Install the engine mounting and the crossmember assembly with new nuts.

CAUTION:
Be careful not to damage the vehicle with a lifting device or wire ropes.

Tightening torque:
Engine mount — front crossmember assembly: 60 N·m (6.1 kgf-m, 44.3 ft-lb)

10) Install the power steering hose to the steering gearbox. (Hydraulic power steering model) <Ref. to PS-84, INSTALLATION, Pipe Assembly.>
11) Install the connector and harness clamp to the power steering control module. (Electric power steering model) <Ref. to PS-100, INSTALLATION, Power Steering Control Module.>
12) Install the V-belt cover. (STI model)

Tightening torque:
7.5 N·m (0.8 kgf-m, 5.5 ft-lb)

13) Install the collector cover. (Except for STI model) <Ref. to IN(w/o STI)-10, INSTALLATION, Collector Cover.>
14) Change the hood stay location to support the front hood at ordinary position.

Tightening torque:
20 N·m (2 kgf-m, 14.8 ft-lb)

15) Install the universal joint assembly - steering. <Ref. to PS-22, INSTALLATION, Universal Joint.>
16) Install the under cover - front. <Ref. to EI-23, INSTALLATION, Front Under Cover.>
17) Install the front wheels and lower the vehicle.

Tightening torque:
120 N·m (12.2 kgf-m, 88.5 ft-lb)

18) Connect the battery ground terminal. <Ref. to NT-6, BATTERY, NOTE, Note.>
19) Inspect the wheel alignment and adjust if necessary.
- Inspection: <Ref. to FS-10, INSPECTION, Wheel Alignment.>
- Adjustment: <Ref. to FS-14, ADJUSTMENT, Wheel Alignment.>

CAUTION:
When the wheel alignment has been adjusted, perform the following adjustment.
– Lane keep assist learning value clear (model with EyeSight): <Ref. to ES(diag)-50, OPERATION, CLEAR ACTIVE LANE KEEP SYSTEM LEARNING VALUE.>
– Steering angle sensor adjustment: <Ref. to VDC-17, ADJUSTMENT, VDC Control Module and Hydraulic Control Unit (VDCCM&H/U).>

20) Perform reinitialization of the auto headlight beam leveler system. (Model with auto headlight beam leveler) <Ref. to LI-18, PROCEDURE, Auto Headlight Beam Leveler System.>

4. Front Crossmember Support Plate

A: REMOVAL

1) Lift up the vehicle.
2) Remove the under cover - front. <Ref. to EI-22, REMOVAL, Front Under Cover.>
3) Remove the bolt, and remove the front crossmember support.

- Electric power steering model

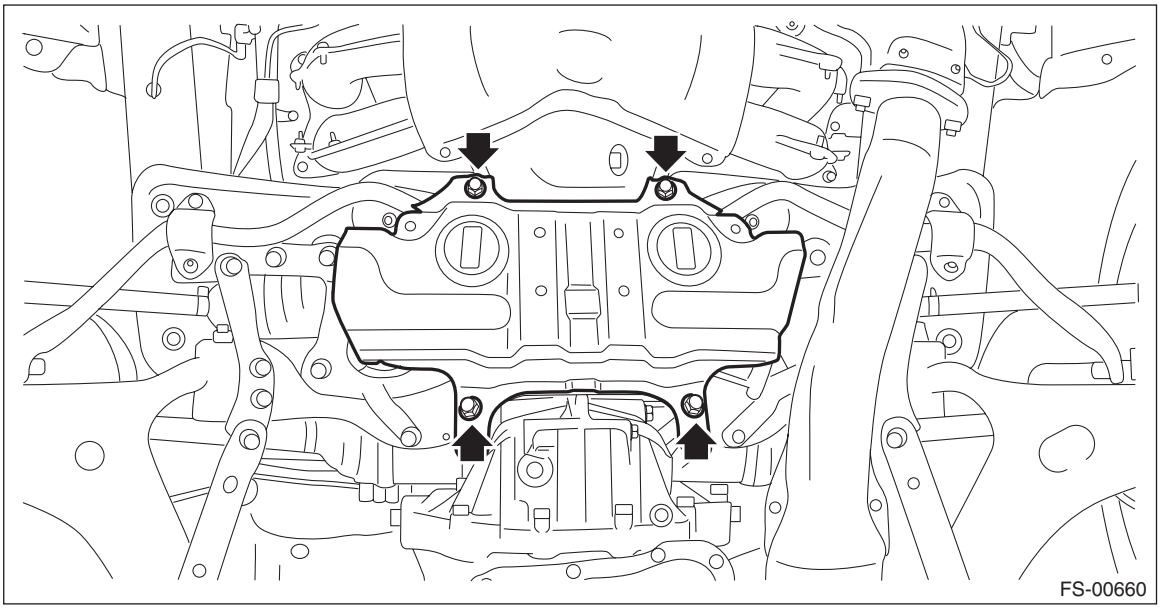

- Hydraulic power steering model

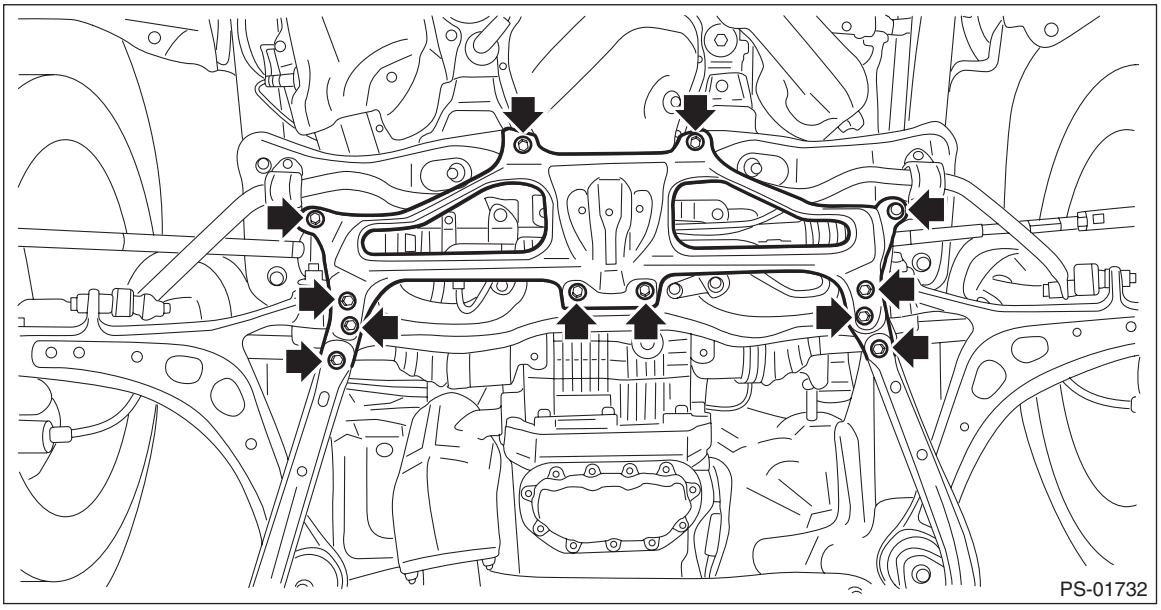

4) Remove the bolt, and remove the support plate - front crossmember (a).

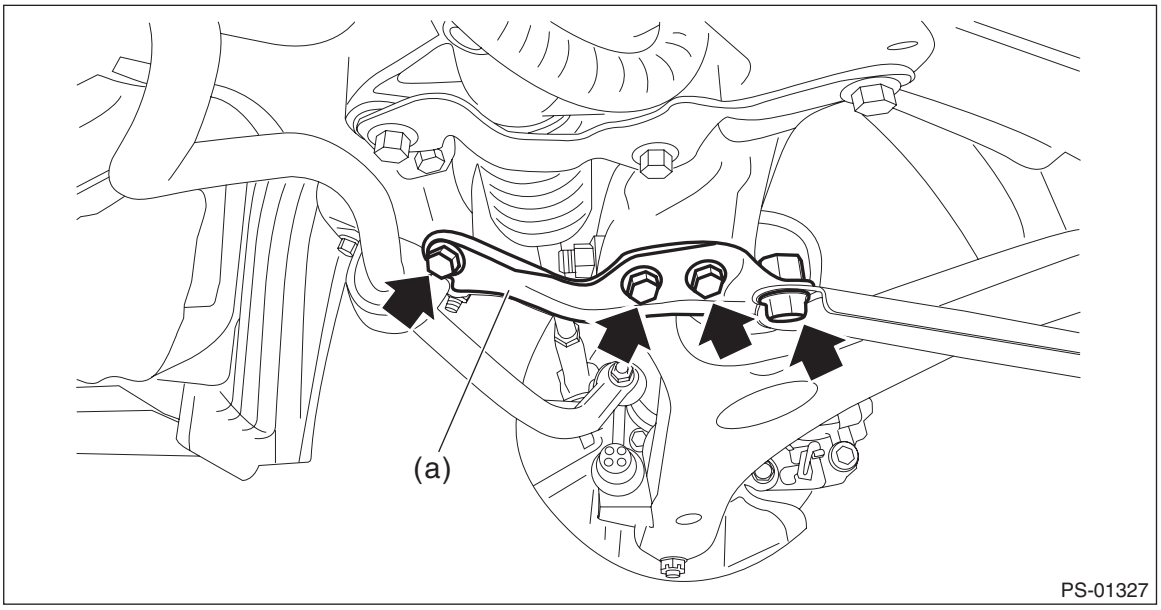

B: INSTALLATION

CAUTION:
Install the under cover - front so that the front end of the under cover (b) comes inside the bumper face - front (a).

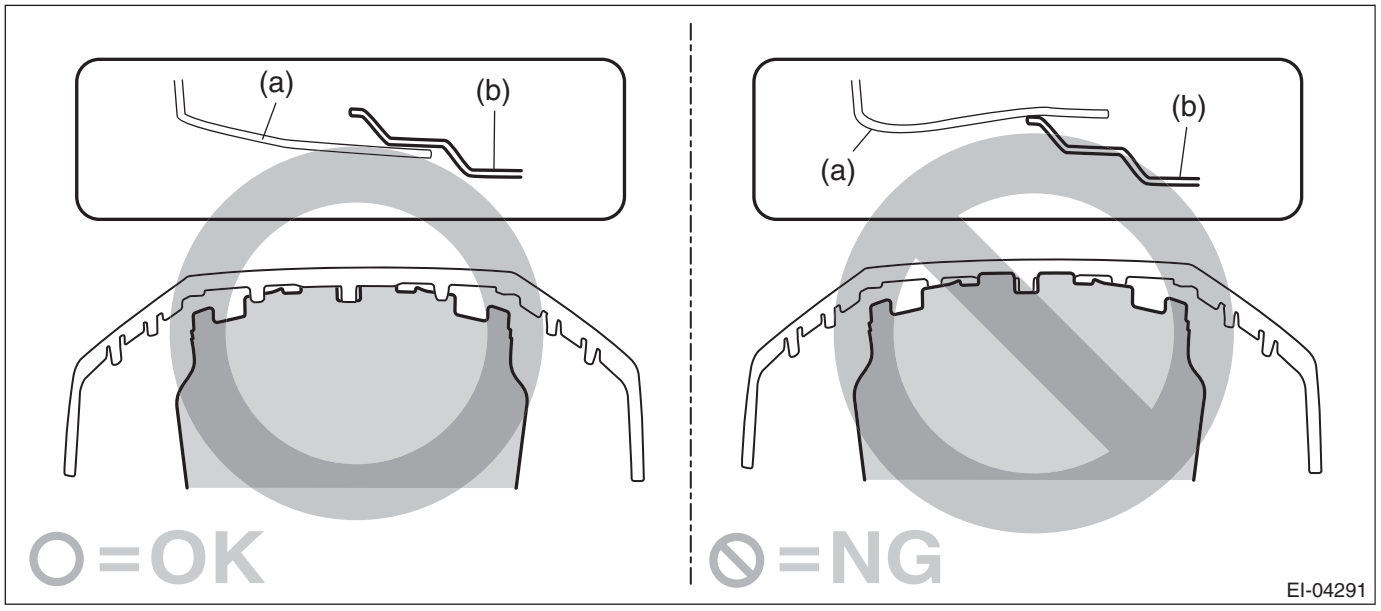

1) Install the front crossmember support and the support plate - front crossmember.

Tightening torque:
Refer to "COMPONENT" of "General Description" for the tightening torque. <Ref. to FS-4, COMPONENT, General Description.>

2) Install the under cover - front. <Ref. to EI-23, INSTALLATION, Front Under Cover.>
3) Lower the vehicle.

5. Front Stabilizer

A: REMOVAL

1) Lift up the vehicle, and then remove the left and right front wheels.
2) Remove the under cover - front. <Ref. to EI-22, REMOVAL, Front Under Cover.>
3) Remove the front crossmember support. <Ref. to FS-27, REMOVAL, Front Crossmember Support Plate.>
4) Remove the front stabilizer.
   (1) Remove the left and right stabilizer links.
   (2) Remove the clamp - stabilizer bushing on the left and right sides.

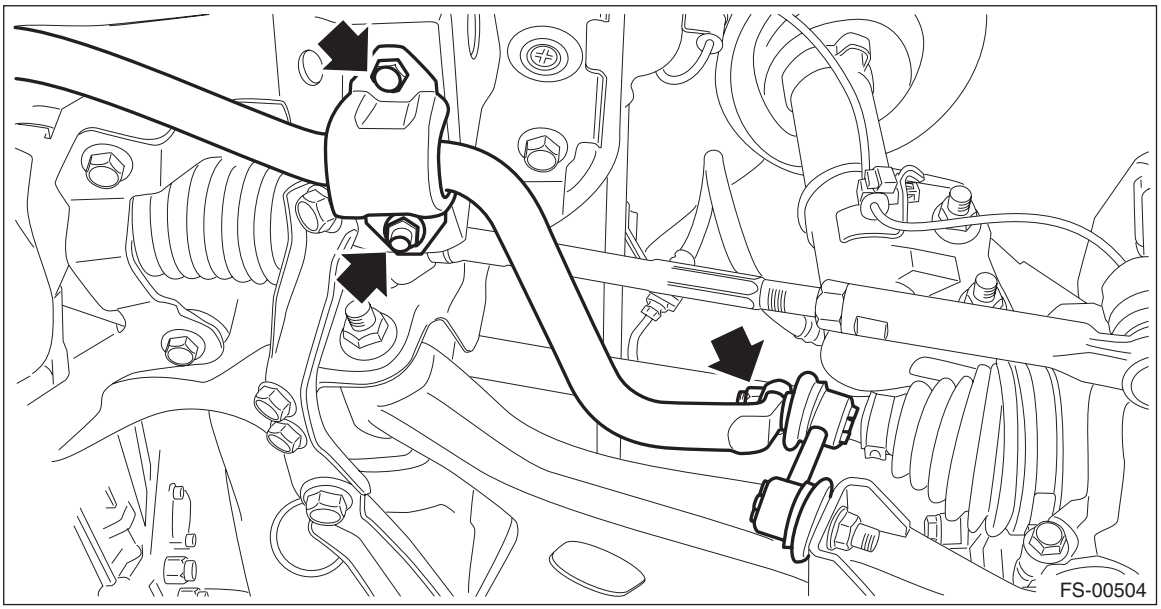

B: INSTALLATION

CAUTION:
Install the under cover - front so that the front end of the under cover (b) comes inside the bumper face - front (a).

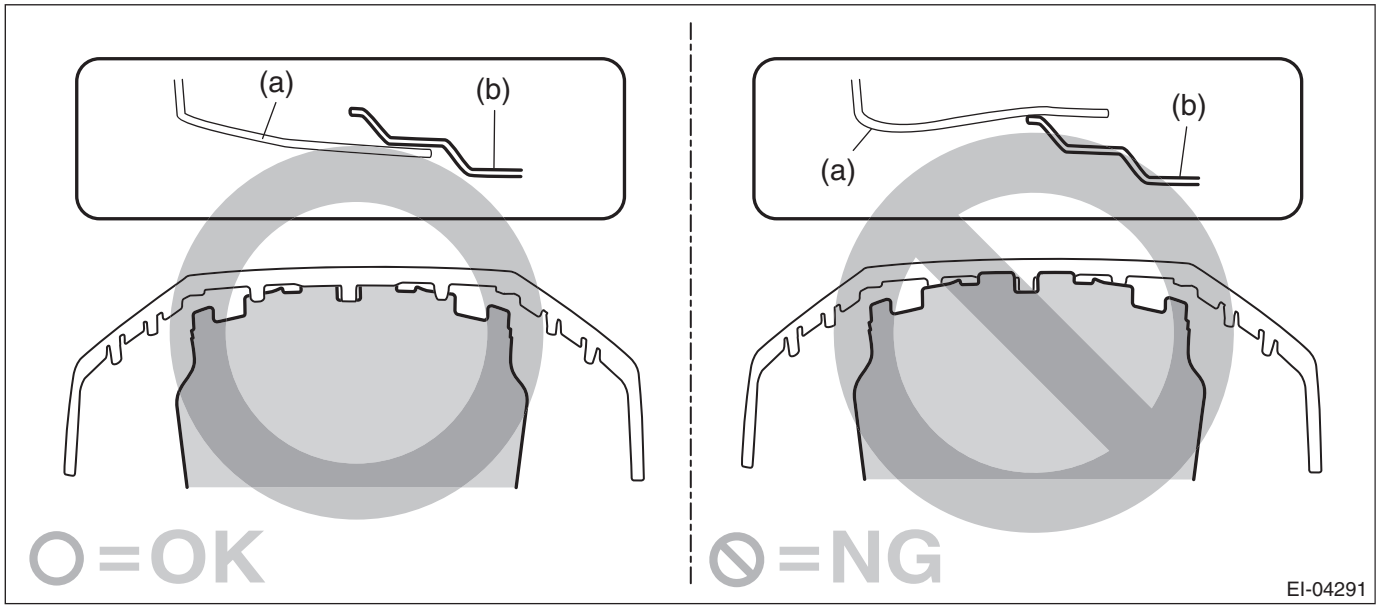

1) Before installation, inspect the following items and replace any faulty part with a new one.
- Check the bushing - stabilizer for abnormal cracks, fatigue or damage.
- Check the stabilizer link for damage.

2) Install the front stabilizer.

CAUTION:
Install the clamp - stabilizer bushing with the arrow mark facing the front of the vehicle.

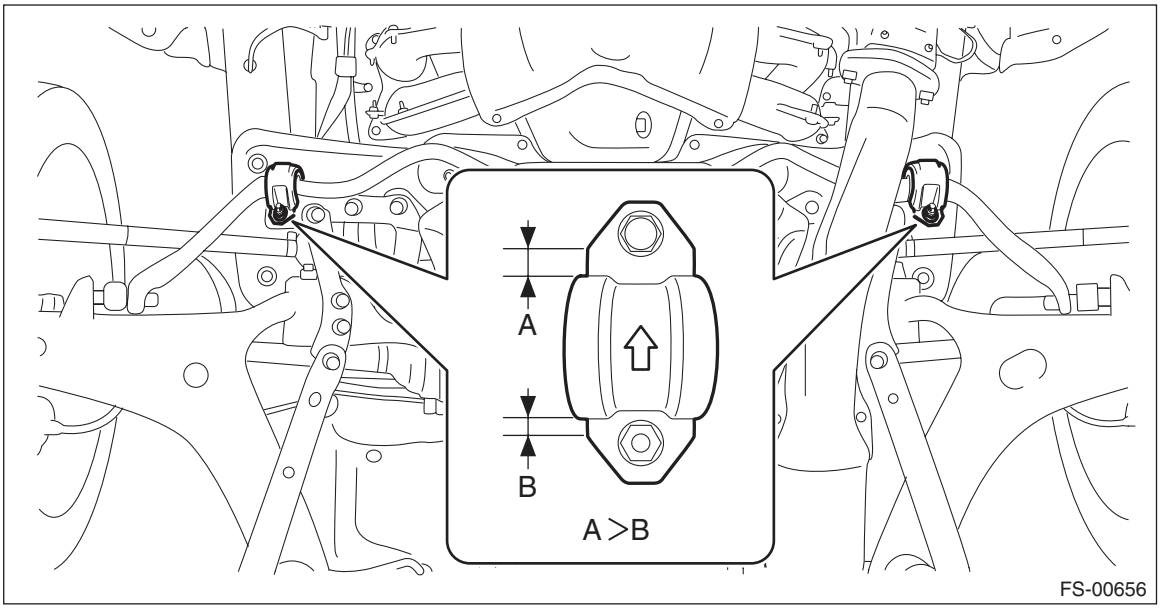

Tightening torque:
Stabilizer link: 60 N·m (6.1 kgf-m, 44.3 ft-lb)
Clamp - stabilizer: 25 N·m (2.5 kgf-m, 18.4 ft-lb)

3) Install the front crossmember support.

Tightening torque:
Refer to "COMPONENT" of "General Description" for the tightening torque. <Ref. to FS-4, FRONT SUSPENSION, COMPONENT, General Description.>

4) Install the under cover - front. <Ref. to EI-23, INSTALLATION, Front Under Cover.>
5) Lower the vehicle, and install the front wheels.

Tightening torque:
120 N·m (12.2 kgf-m, 88.5 ft-lb)

6. Front Ball Joint

A: REMOVAL

1) Lift up the vehicle, and then remove the front wheels.
2) Remove the under cover - front. <Ref. to EI-22, REMOVAL, Front Under Cover.>
3) Remove the clamp - stabilizer bushing on the left and right sides.

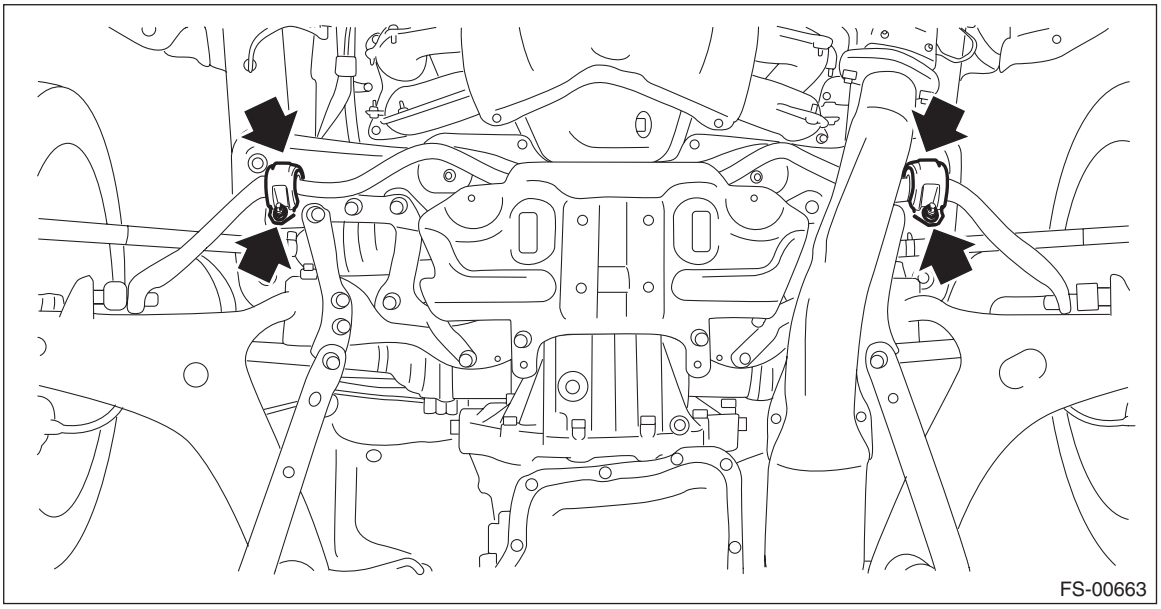

4) Remove the ball joint assembly.
   (1) Pull out the cotter pin (a), and remove the castle nut (b).
   (2) Pull down the front arm assembly, and remove the ball stud.
   (3) Remove the bolt from the housing assembly - front axle.

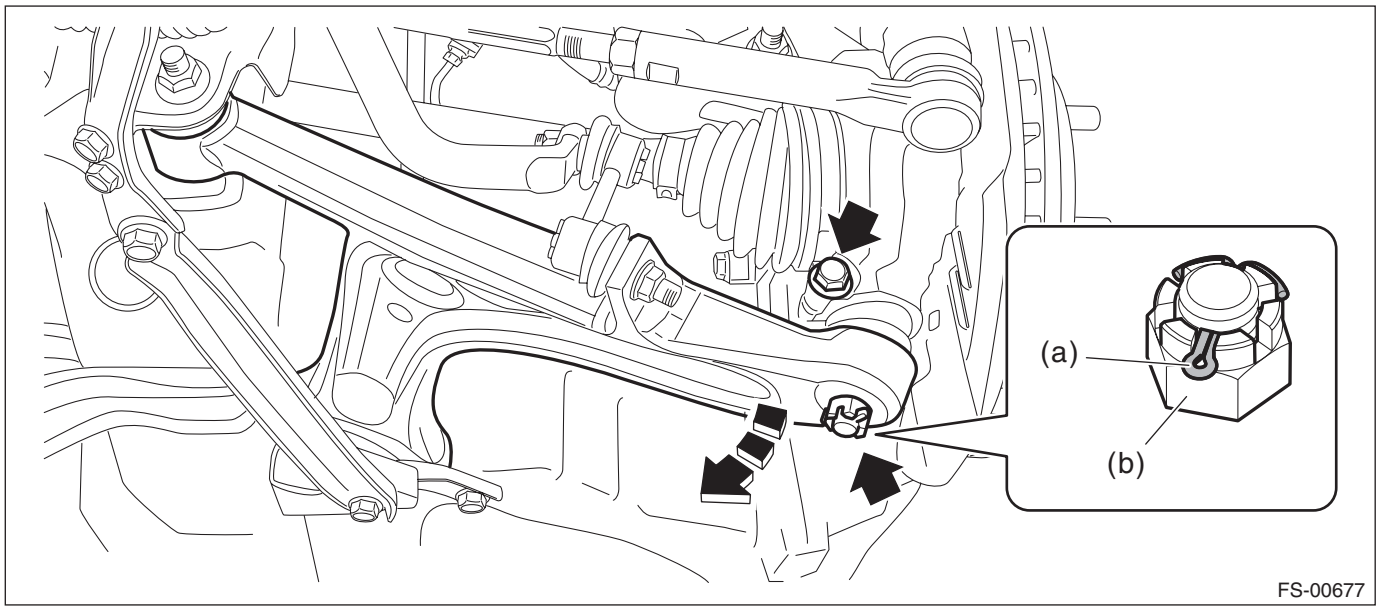

   (4) Pull out the ball joint assembly.

B: INSTALLATION

CAUTION:
- **For parts which are not reusable, always use new parts.**
- **Do not apply grease to the tapered portion of ball stud.**
- **Install the under cover - front so that the front end of the under cover (b) comes inside the bumper face - front (a).**

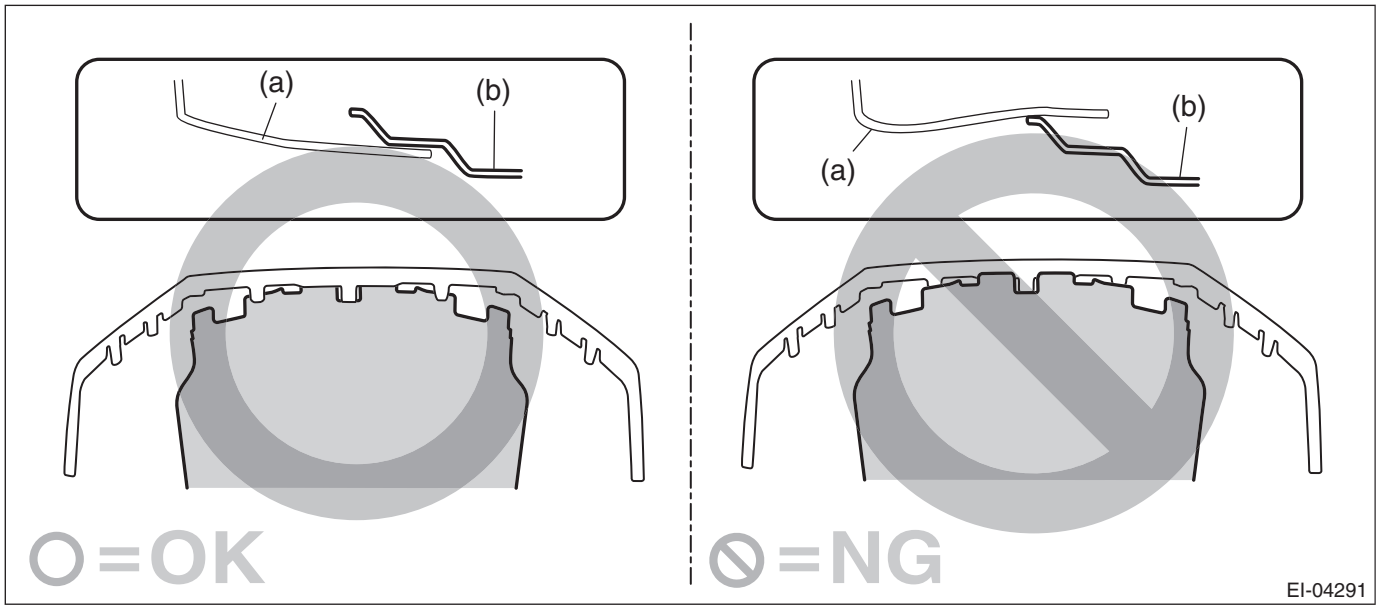

1) Install the ball joint assembly.

CAUTION:
Before tightening, make sure the bottom surface of the housing assembly - front axle and the stepped section of ball joint are in contact.

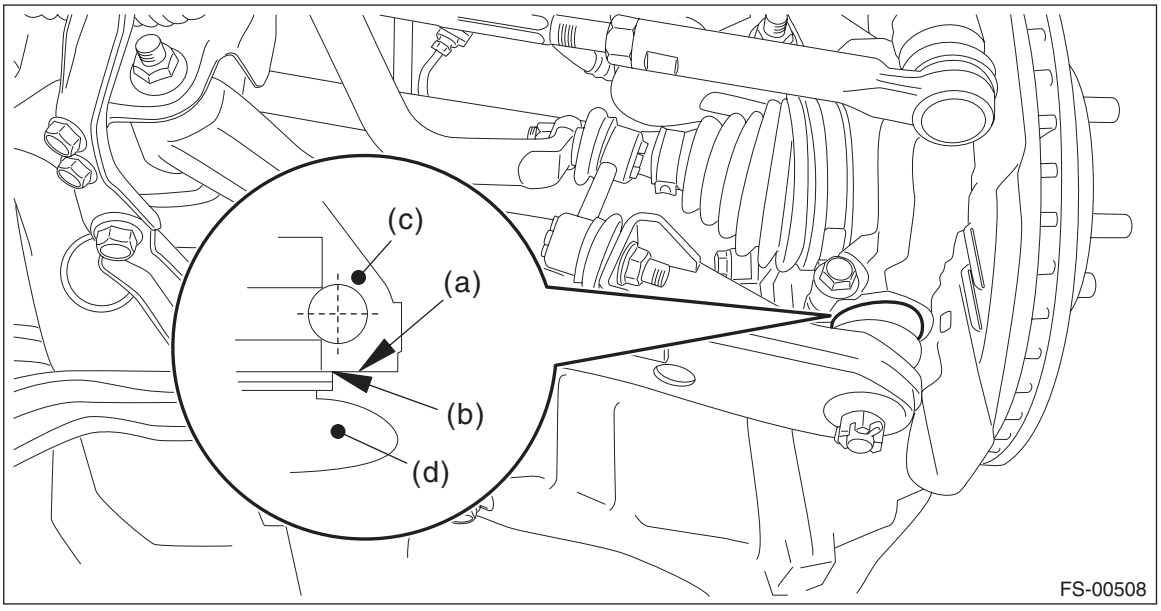

(a) Bottom surface of housing ASSY - front axle
(b) Raised section of ball joint
(c) Housing ASSY - front axle
(d) Ball joint ASSY

Tightening torque:
50 N·m (5.1 kgf-m, 36.9 ft-lb)

2) Connect the ball joint assembly to the front arm assembly.

NOTE:
When tightening the castle nut, tighten the castle nut to the specified torque first, then tighten it further but within 60° until the hole in the ball stud is aligned with a slot in castle nut.

Tightening torque:
39 N·m (4 kgf-m, 28.8 ft-lb)

3) Insert a new cotter pin and secure the castle nut.
4) Install the clamp - stabilizer bushing.

CAUTION:
Install the clamp - stabilizer bushing with the arrow mark facing the front of the vehicle.

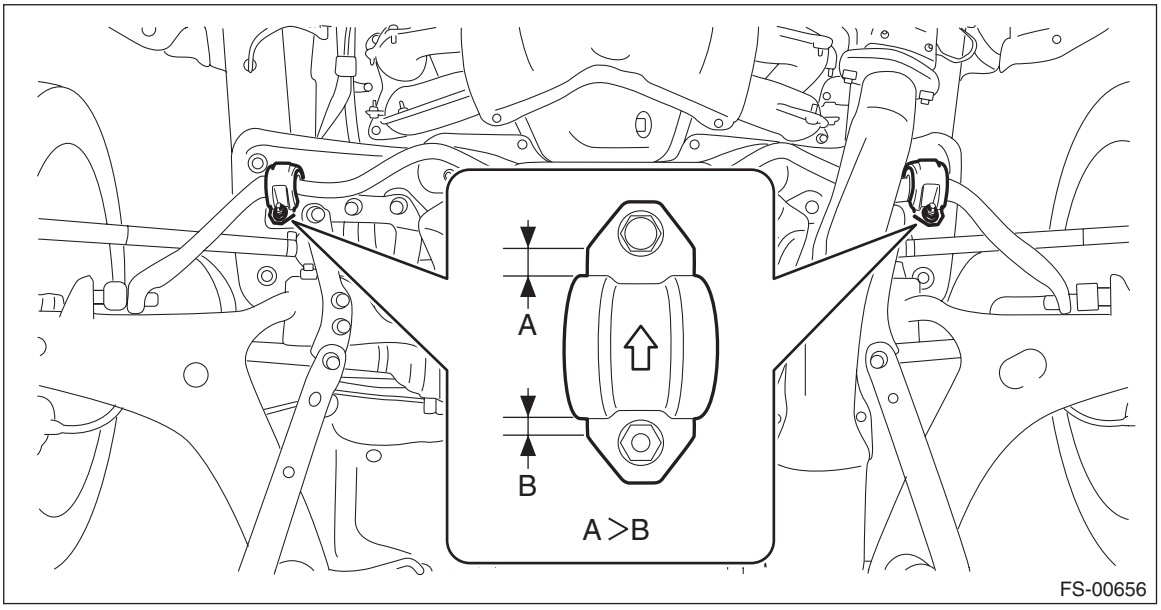

Tightening torque:
25 N·m (2.5 kgf-m, 18.4 ft-lb)

5) Install the under cover - front. <Ref. to EI-23, INSTALLATION, Front Under Cover.>
6) Install the front wheels.

Tightening torque:
120 N·m (12.2 kgf-m, 88.5 ft-lb)

C: INSPECTION

1) Check that there is no looseness by moving the upper and lower portions of front tire in an axial direction with the brake pedal depressed.

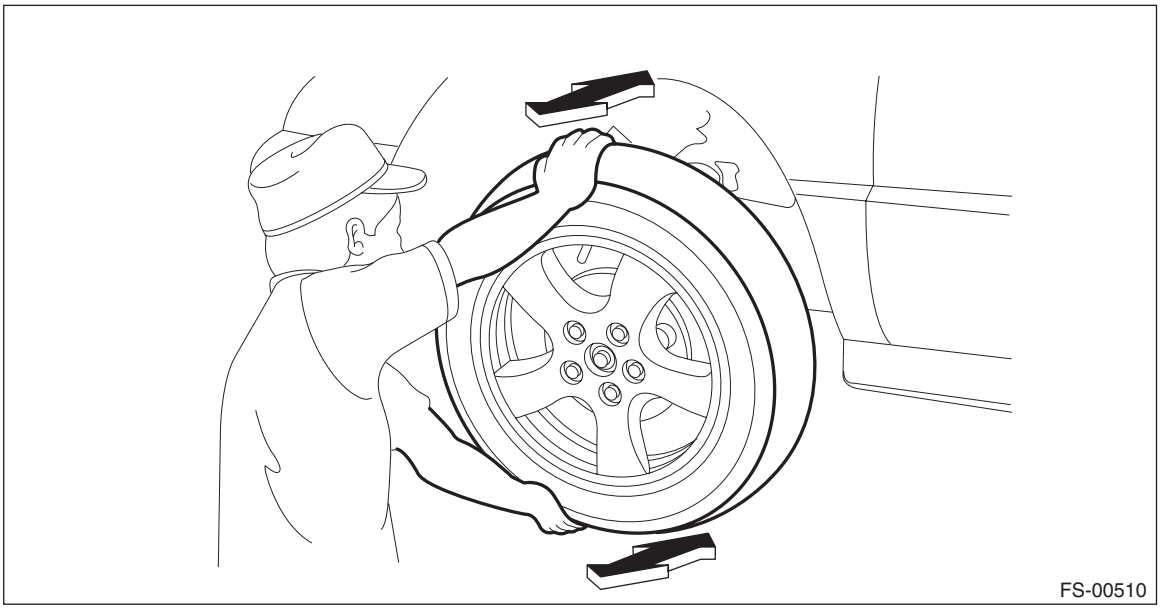

- **Looseness exists** → Replace the ball joint assembly. <Ref. to FS-31, REMOVAL, Front Ball Joint.>

2) Check that there is no looseness by moving the upper and lower portions of front tire in an axial direction with the brake pedal released.

- **Looseness exists** → Check the hub unit COMPL - front axle. <Ref. to DS-29, INSPECTION, Front Hub Unit Bearing.>

3) Replace the ball joint assembly if the dust cover is damaged when visually inspecting the dust cover.

7. Front Arm

A: REMOVAL

1) Lift up the vehicle, and then remove the front wheels.
2) Remove the under cover - front. <Ref. to EI-22, REMOVAL, Front Under Cover.>
3) Remove the front arm assembly.
   (1) Remove the bolt, and then detach the front support.
   (2) Remove the bolts and nuts, and then remove the front arm rear plate.
   (3) Remove the nut and disconnect the stabilizer link.
   (4) Pull out the cotter pin (a), remove the castle nut (b), and remove the ball joint assembly from front arm assembly.
   (5) Remove the nuts, pull out the flange bolt, and remove the front arm assembly.

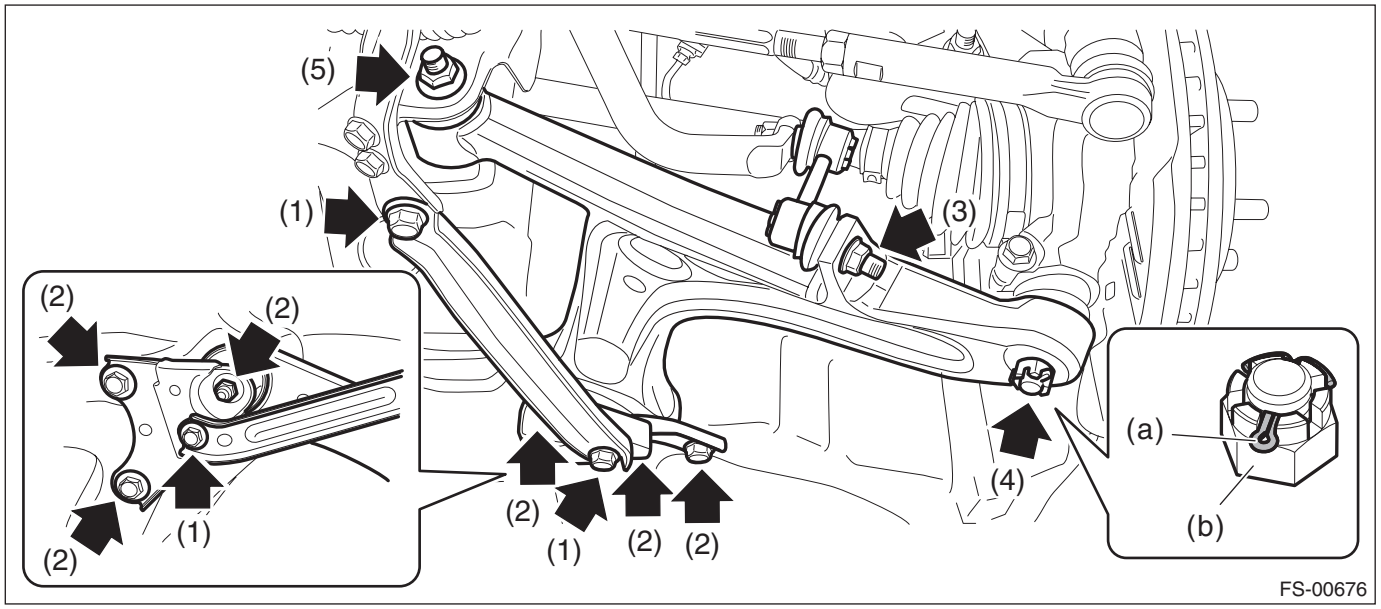

B: INSTALLATION

CAUTION:
- **For parts which are not reusable, always use new parts.**
- **Install the under cover - front so that the front end of the under cover (b) comes inside the bumper face - front (a).**

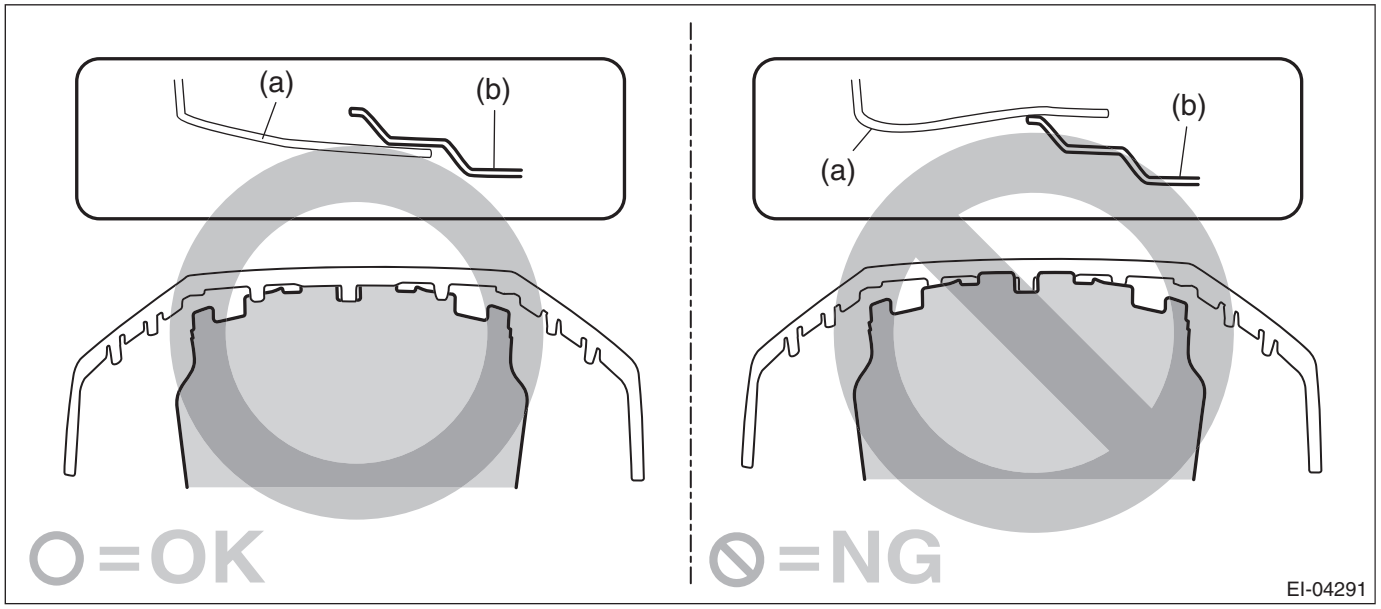

1) Before installation, inspect the following items and replace any faulty part with a new one.
- Check the front arm assembly for damage or cracks, and replace if defective.
- Visually check the bushing for abnormal cracks, fatigue or damage.
- Visually check the dust cover on the ball joint assembly for damage.

2) Using new self-locking nuts and flange bolts, temporarily tighten the front arm assembly to the front crossmember assembly.
3) Connect the front arm assembly to the ball joint assembly.

CAUTION:
Before tightening, make sure the bottom surface of the housing assembly - front axle and the stepped section of ball joint are in contact.

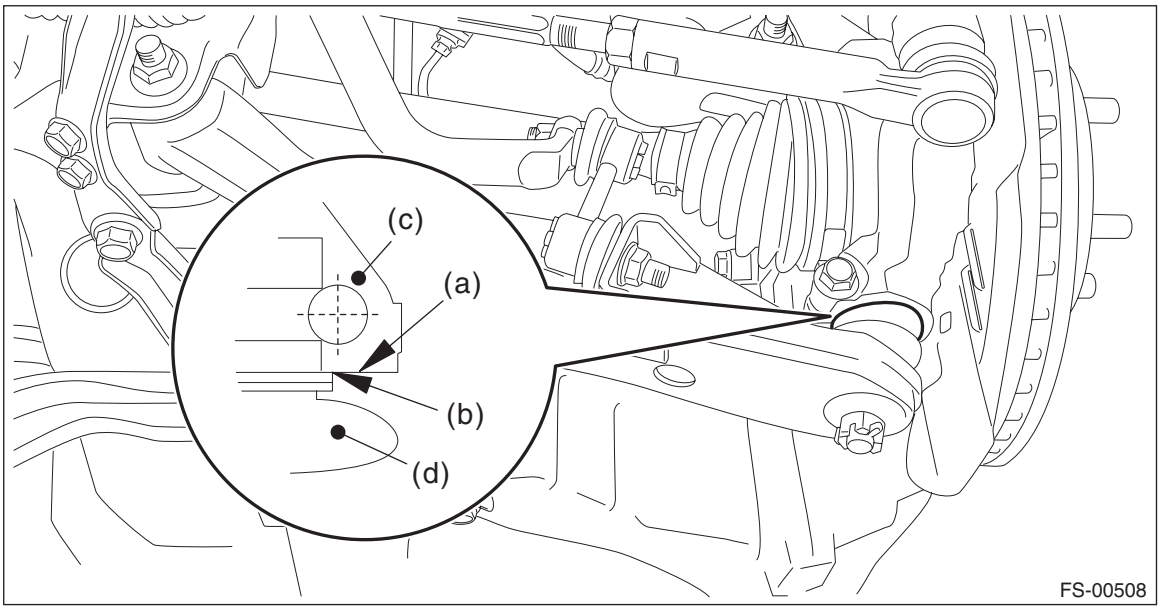

(a) Bottom surface of housing ASSY - front axle
(c) Housing ASSY - front axle
(d) Ball joint ASSY
(b) Raised section of ball joint

Tightening torque:
50 N·m (5.1 kgf-m, 36.9 ft-lb)

4) Install the stabilizer link.

Tightening torque:
60 N·m (6.1 kgf-m, 44.3 ft-lb)

5) Install the under cover - front. <Ref. to EI-23, INSTALLATION, Front Under Cover.>
6) Install the front wheels.

Tightening torque:
120 N·m (12.2 kgf-m, 88.5 ft-lb)

7) Unload the vehicle from the lift, and tighten the bolt which secures the front arm assembly to the front crossmember assembly while the wheels are in full contact with the ground and the vehicle is at curb weight.

Tightening torque:
Refer to "COMPONENT" of "General Description" for the tightening torque. <Ref. to FS-4, FRONT SUSPENSION, COMPONENT, General Description.>

8) Inspect the wheel alignment and adjust if necessary.
- Inspection: <Ref. to FS-10, INSPECTION, Wheel Alignment.>
- Adjustment: <Ref. to FS-14, ADJUSTMENT, Wheel Alignment.>

CAUTION:
When the wheel alignment has been adjusted, perform the following adjustment.
– Lane keep assist learning value clear (model with EyeSight): <Ref. to ES(diag)-50, OPERATION, CLEAR ACTIVE LANE KEEP SYSTEM LEARNING VALUE.>
– Steering angle sensor adjustment: <Ref. to VDC-17, ADJUSTMENT, VDC Control Module and Hydraulic Control Unit (VDCCM&H/U).>
9) Perform reinitialization of the auto headlight beam leveler system. (Model with auto headlight beam leveler) <Ref. to LI-18, PROCEDURE, Auto Headlight Beam Leveler System.>

C: DISASSEMBLY

1. BUSHING FRONT - FRONT ARM

1) Put an alignment mark on the front arm assembly based on the split portion of the bushing intermediate plate of the busing front - front arm.

CAUTION:
Always put an alignment mark for aligning the position on bushing installation.

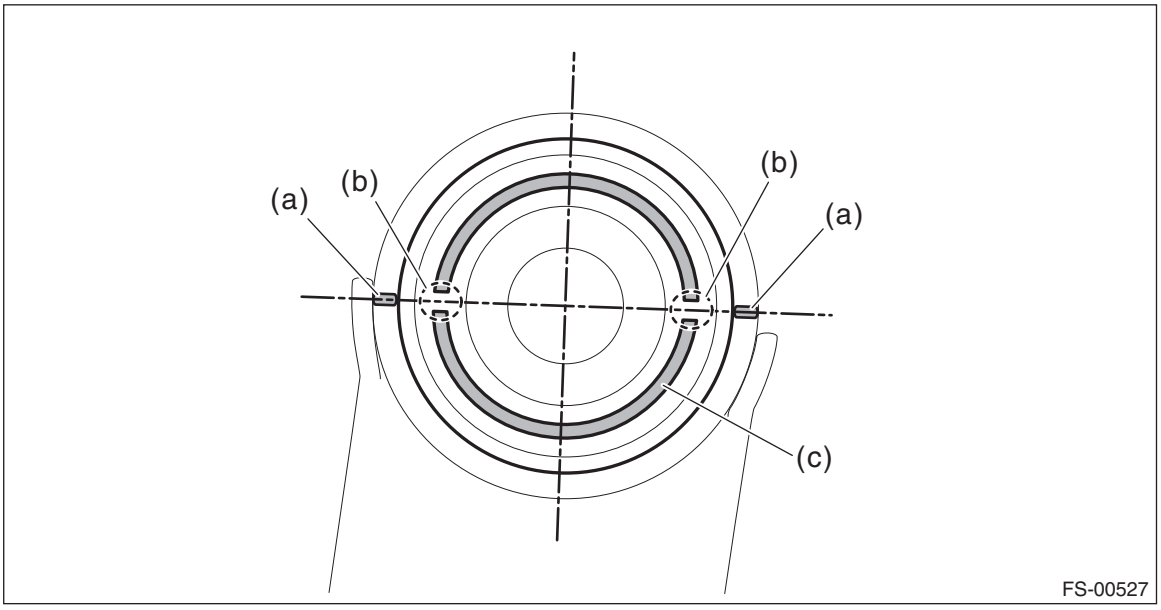

(a) Put an alignment mark.
(b) Split portion of bushing intermediate plate
(c) Bushing intermediate plate

2) Using the ST and a press, remove the busing front - front arm.

Preparation tool:
ST: INSTALLER & REMOVER SET (927680000)

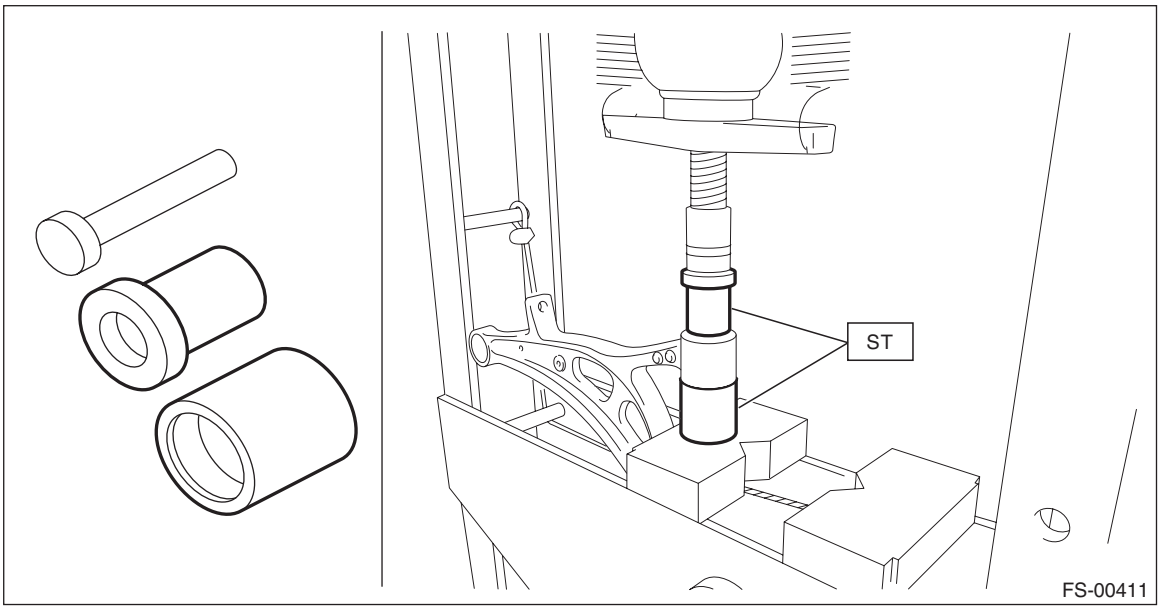

2. BUSHING REAR - FRONT ARM

1) Put an alignment mark on the front arm assembly based on the center of recess portion of the busing rear - front arm.
2) Using the ST and a press, remove the busing rear - front arm.

Preparation tool:
ST1: INSTALLER & REMOVER (20099AE020)
ST2: HOUSING STAND (28099PA010)

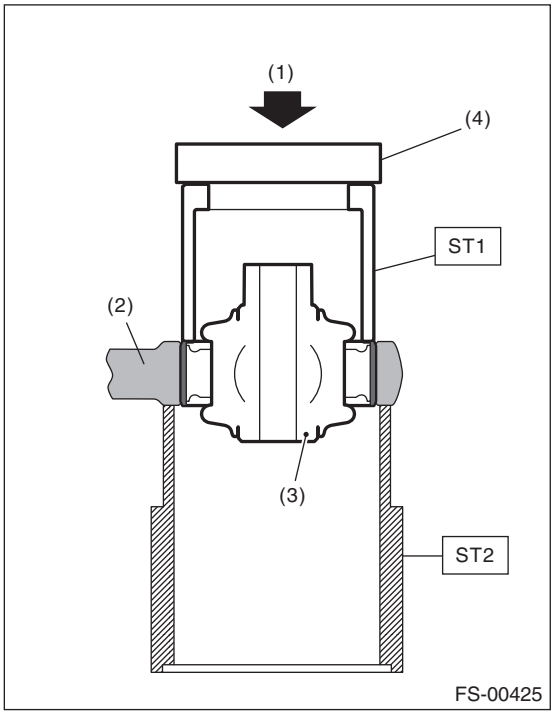

(1) Press
(2) Front arm ASSY
(3) Bushing rear - front arm
(4) Plate

NOTE:
Place a metal plate on the ST1 to use the press.

D: ASSEMBLY

1. BUSHING FRONT - FRONT ARM

1) Before assembly, inspect the following items and replace any faulty part with a new one.
- Check the front arm assembly for damage or cracks, and replace if defective.
- Visually check the bushing for abnormal cracks, fatigue or damage.
- Visually check the dust cover on the ball joint assembly for damage.

2) Align the alignment mark on the front arm assembly to the split portion of the bushing intermediate plate of the busing front - front arm.
3) Using the ST and a press, assemble the busing front - front arm.

Preparation tool:
ST: INSTALLER & REMOVER SET (927680000)

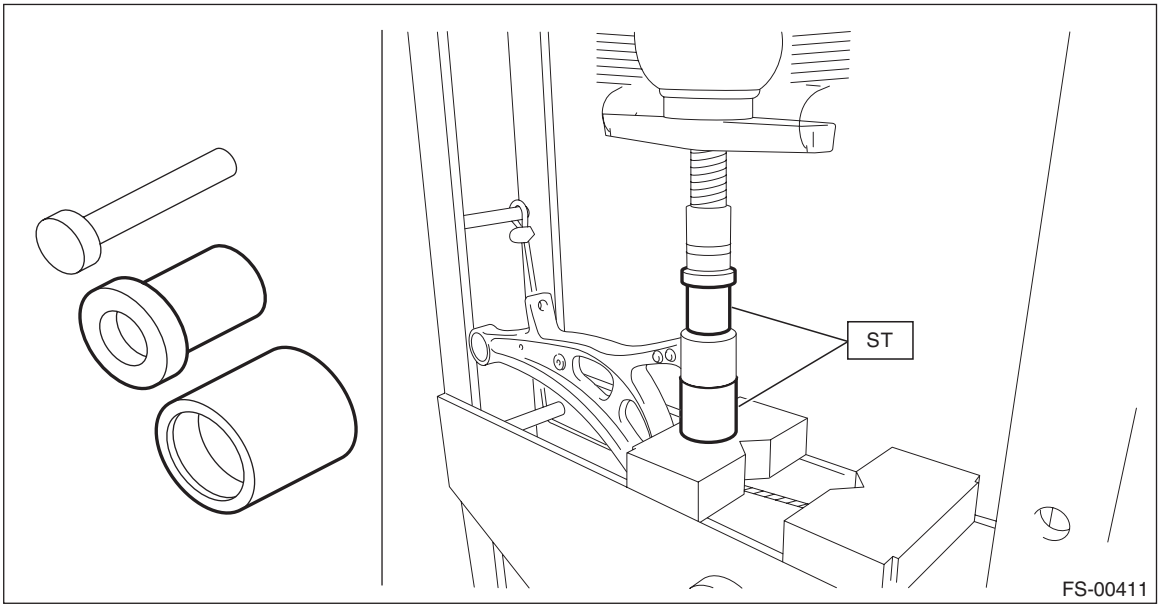

2. BUSHING REAR - FRONT ARM

1) Before installation, inspect the following items and replace any faulty part with a new one.
- Check the front arm assembly for damage or cracks, and replace if defective.
- Visually check the bushing for abnormal cracks, fatigue or damage.
- Visually check the dust cover on the ball joint assembly for damage.

2) Using the ST and a press, install the busing rear - front arm.

CAUTION:
Install with the longer inner cylinder of the pillow ball bushing facing upward and the shorter facing downward.

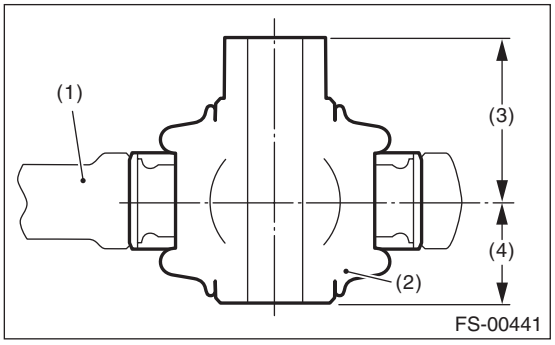

(1) Front arm
(2) Bushing inner cylinder
(3) Longer
(4) Shorter

Preparation tool:
ST1: INSTALLER & REMOVER (20099AE020)
ST2: HOUSING STAND (28099PA010)

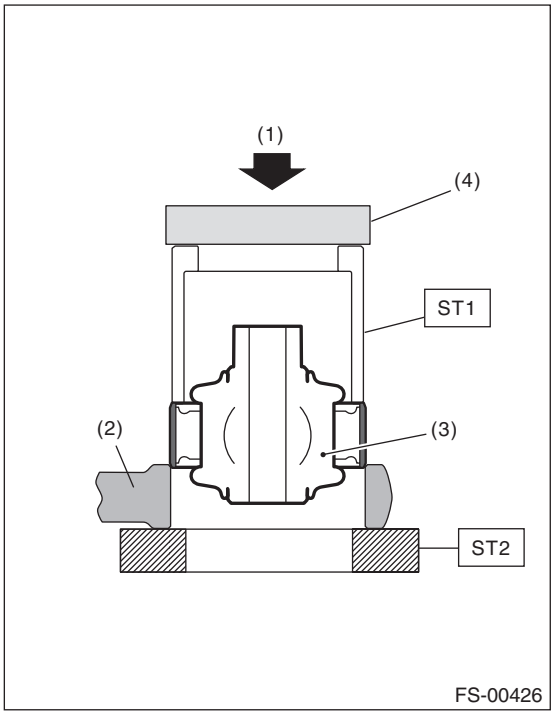

(1) Press
(2) Front arm ASSY
(3) Bushing rear - front arm
(4) Plate

8. Front Strut

A: REMOVAL

1) Lift up the vehicle, and then remove the front wheels.
2) Remove the strut assembly.
   (1) Place an alignment mark (a) on the adjusting bolt and the strut.
   (2) Remove the brake hose bracket.
   (3) Remove the clamp of ABS wheel speed sensor harness.
   (4) Remove the adjusting bolts and flange bolts for the strut assembly.

CAUTION:
While holding the adjusting bolt side, tighten the nut side.

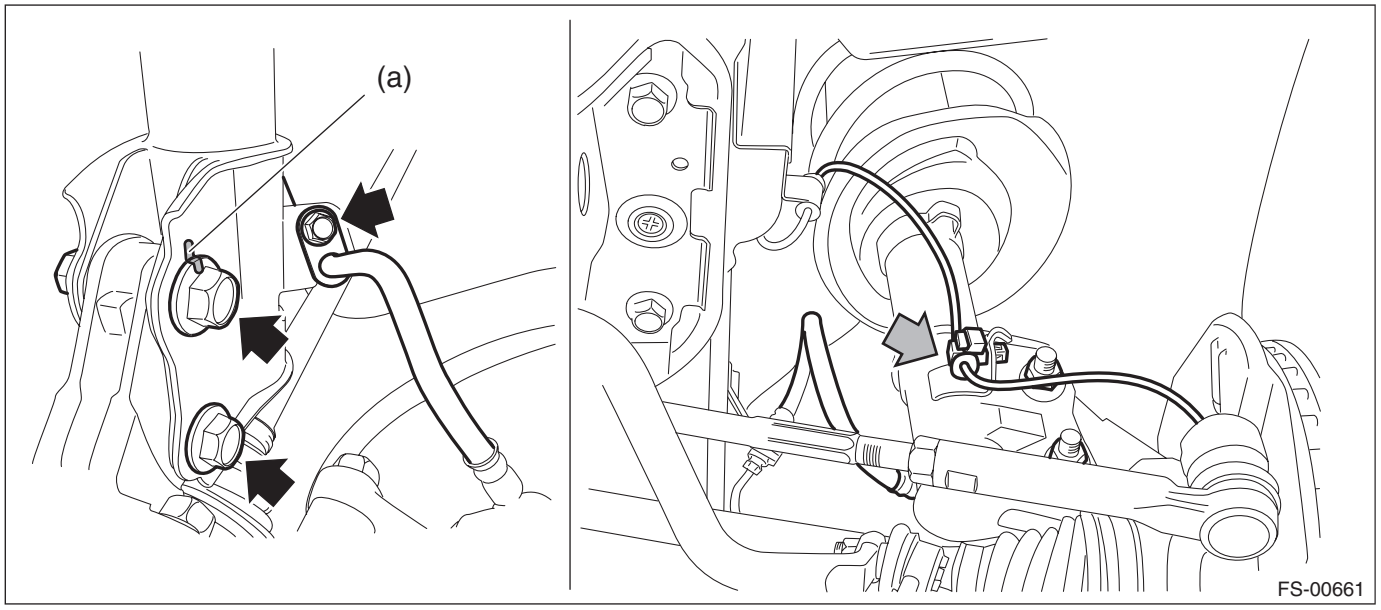

   (5) Remove the three nuts securing strut mount to body.

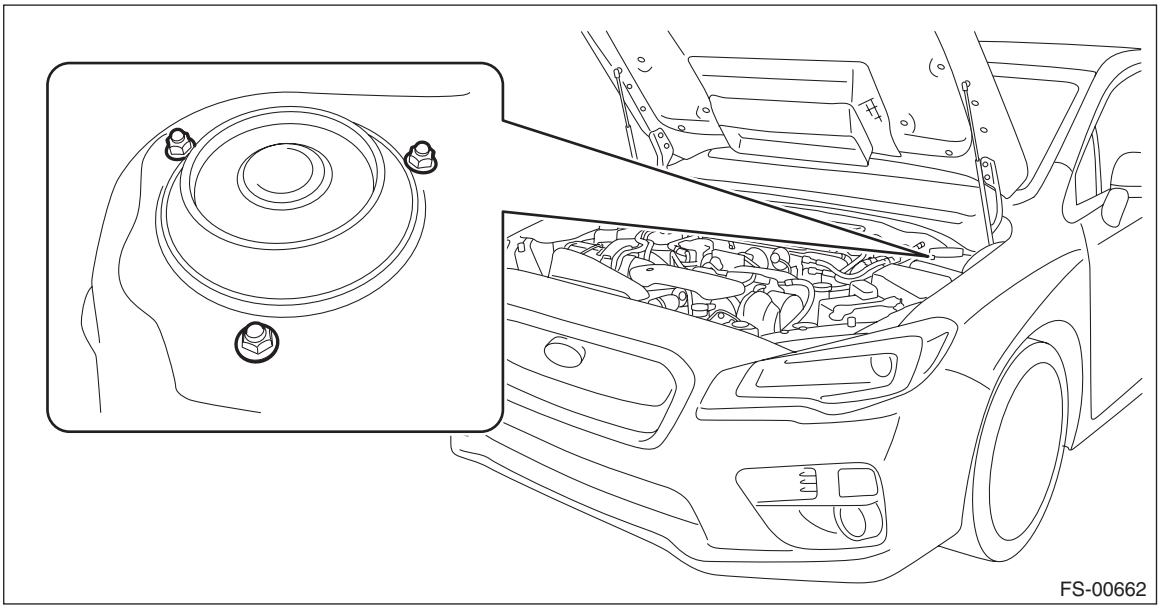

B: INSTALLATION

CAUTION:
For parts which are not reusable, always use new parts.
1) Install the strut mount - front at the upper side of the strut to the vehicle body.

Tightening torque:
20 N·m (2 kgf-m, 14.8 ft-lb)
2) Align alignment marks on the camber adjusting bolt and the strut, and install the strut to the housing assembly - front axle.

NOTE:
While holding the bolt head of adjusting bolt, tighten the nut.

Tightening torque:
155 N·m (15.8 kgf-m, 114.3 ft-lb)
3) Secure the ABS wheel speed sensor harness bracket to the strut.

CAUTION:
During the installation, make sure that the marking of ABS wheel speed sensor harness does not twist.
4) Install the brake hose bracket.

Tightening torque:
33 N·m (3.4 kgf-m, 24.3 ft-lb)
5) Install the front wheels.

Tightening torque:
120 N·m (12.2 kgf-m, 88.5 ft-lb)
6) Inspect the wheel alignment and adjust if necessary.
- Inspection: <Ref. to FS-10, INSPECTION, Wheel Alignment.>
- Adjustment: <Ref. to FS-14, ADJUSTMENT, Wheel Alignment.>

CAUTION:
When the wheel alignment has been adjusted, perform the following adjustment.
– Lane keep assist learning value clear (model with EyeSight): <Ref. to ES(diag)-50, OPERATION, CLEAR ACTIVE LANE KEEP SYSTEM LEARNING VALUE.>
– Steering angle sensor adjustment: <Ref. to VDC-17, ADJUSTMENT, VDC Control Module and Hydraulic Control Unit (VDCCM&H/U).>
7) Perform reinitialization of the auto headlight beam leveler system. (Model with auto headlight beam leveler) <Ref. to LI-18, PROCEDURE, Auto Headlight Beam Leveler System.>

C: DISASSEMBLY

1) Using a coil spring compressor, compress the coil spring.
2) Using a hexagon wrench to prevent strut rod from turning, remove the self-locking nut with ST.

CAUTION:
When installing the coil spring compressor to the coil spring, follow the operation manual accompanied with the coil spring compressor during operation.

Preparation tool:
ST: STRUT MOUNT SOCKET (20399AG000)

NOTE:
<Example of coil spring compressor installation>
The installing position of coil spring compressor varies depending on the coil spring shape and winding number.

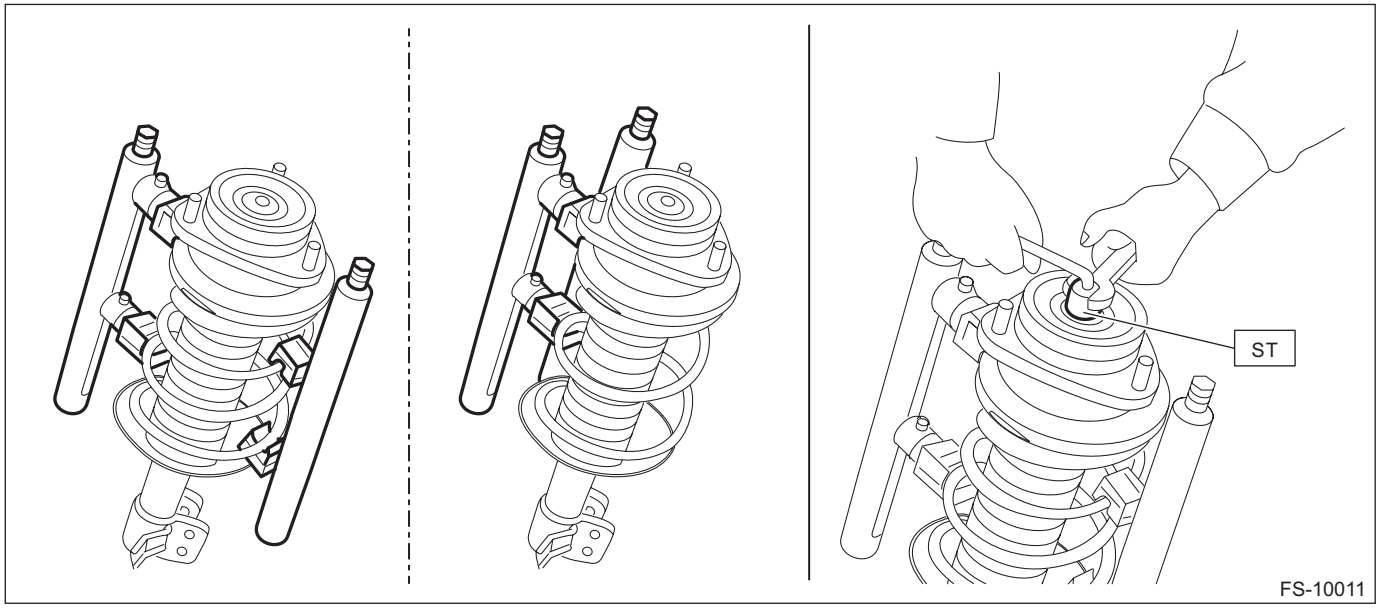

3) Remove the strut mount - front, spacer - front strut, dust cover - front strut and spring seat - front strut UPR from the strut COMPL.
4) Gradually decrease the compression force of compressor, and remove the coil spring.
5) Remove the dust cover - inner and the helper - front strut.

D: ASSEMBLY

1) Before assembly, check each part. <Ref. to FS-47, INSPECTION, Front Strut.>
2) Using a coil spring compressor, compress the coil spring.

CAUTION:
When installing the coil spring compressor to the coil spring, follow the operation manual accompanied with the coil spring compressor during operation.

NOTE:
Make sure that the vertical install direction of the coil spring is as shown in the figure.

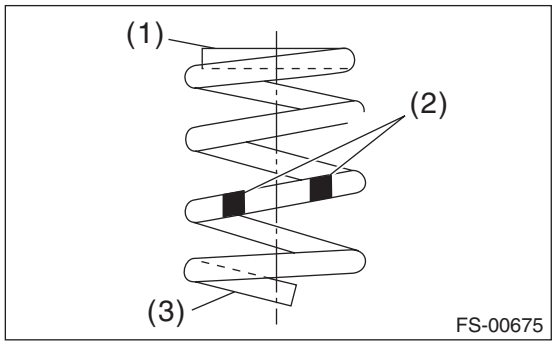

(1) Diameter is small (upper part)
(2) Identification paint
(3) Diameter is large (bottom part)

3) Set the coil spring correctly so that its end face (a) contacts the vertical surface (b) of the spring seat - front strut LWR as shown in the figure.

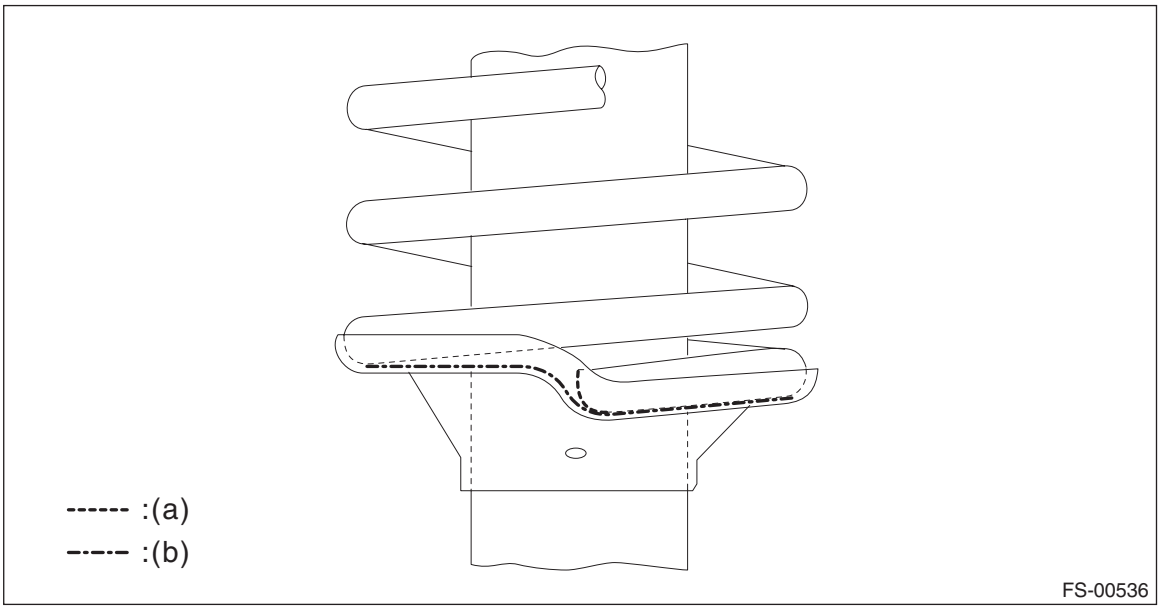

4) Install the dust cover - inner and the helper - front strut to the piston rod.

5) Pull the piston rod fully upward, and install the spring seat and the dust cover - front strut.

NOTE:
Position the spring seat - front strut UPR as shown in the figure.

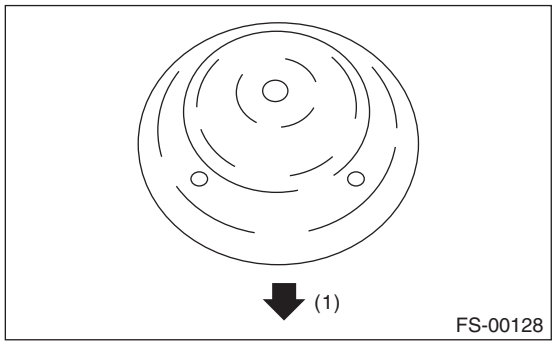

(1) Outside of body

6) Install the spacer - front strut and the strut mount - front to the piston rod, and temporarily tighten a new self-locking nut.
7) Using a hexagon wrench to prevent strut rod from turning, tighten the new self-locking nut with ST.

CAUTION:
Make sure that the strut mount - front turns smoothly after tightening.

Preparation tool:
ST: STRUT MOUNT SOCKET (20399AG000)

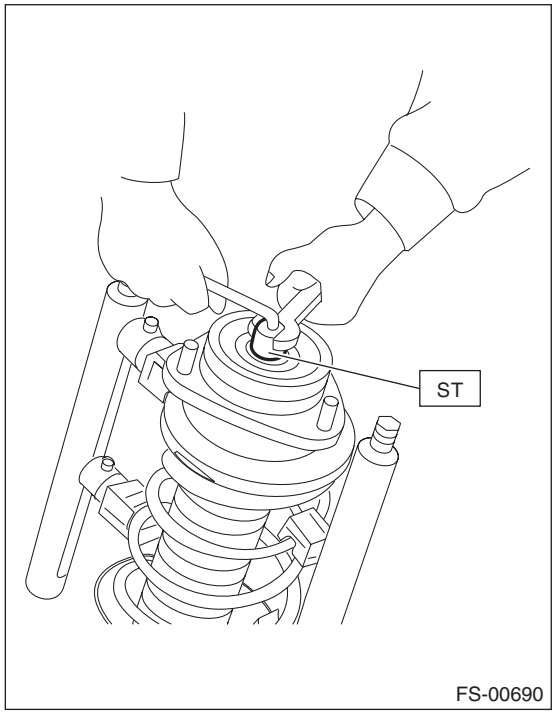

Tightening torque:
55 N·m (5.6 kgf-m, 40.6 ft-lb)
8) Loosen the coil spring compressor carefully.

E: INSPECTION

Check the removed part for wear, damage and cracks, and then repair or replace it if defective.

1. STRUT

1) Check for oil leaks.
2) Move the piston rod up and down to check that it operates smoothly without any hitch.
3) Check the piston rod runout.

Preparation tool:

Dial gauge

(1) Fix the outer shell.
(2) Extend the piston rod until it stops retracting, and set the dial gauge at the L position from the end of the piston rod.

Measuring point:

L = 10 mm (0.39 in)

(3) While applying a force of W [20 N (2 kgf, 4 lbf)] to the arrowed section, read the dial gauge indication P_1.
(4) While applying a force of W_2 20 N (2 kgf, 4 lbf) from the opposite side of W_1, read the dial gauge indication P_2.

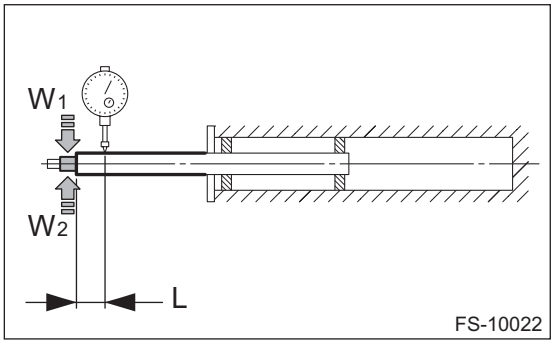

Play limit ($P_1 + P_2$): 0.8 mm (0.031 in)

4) Replace the strut if faulty is found in the inspection or limit value is exceeded.

2. STRUT MOUNT - FRONT

Check the rubber part for deformation, cracks or deterioration, and then replace it with a new part if defective.

3. DUST COVER - INNER

If cracks or damage are found, replace it with a new part.

4. COIL SPRING - FRONT

If cracks, damage or deformation are found, replace it with a new part.

5. HELPER - FRONT STRUT

If major cracks or damage are found, replace it with a new part.

6. DUST COVER - FRONT

If major cracks or damage are found, replace it with a new part.

F: DISPOSAL

CAUTION:
• Before handling the strut damper and shock absorber, be sure to wear goggles to protect eyes from gas, oil and cutting powder.
• Do not disassemble the strut damper and shock absorber or place them into a fire.
• When discarding gas filled strut dampers and shock absorbers, drill holes in them to purge the gas.
1) Place the strut damper and shock absorber on a level surface with the piston rod fully expanded.
2) Make a hole into the specified position 30 mm (1.18 in) deep using a drill with 2 — 3 mm (0.08 — 0.12 in) diameter. (standard damper model)

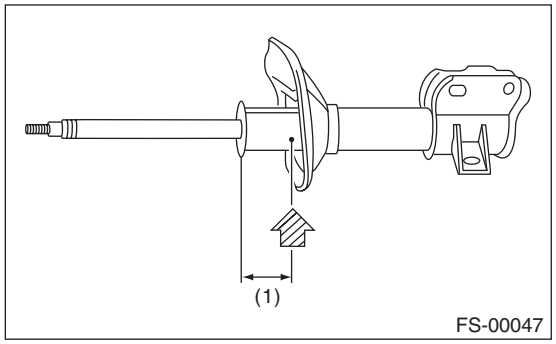

(1) 40 mm (1.57 in)

3) Using a 2 — 3 mm (0.08 — 0.12 in) dia. drill, make a hole into the position (1) first, and then (2). (inverted damper model)

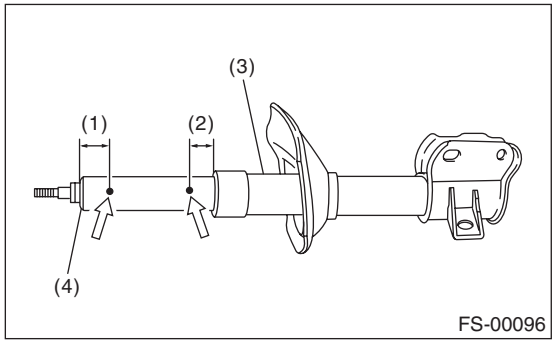

(1) 20 mm (0.78 in)
(2) 10 mm (0.39 in)
(3) Strut
(4) Damping tube

9. General Diagnostic Table

A: INSPECTION

1. IMPROPER VEHICLE POSTURE OR IMPROPER WHEEL ARCH HEIGHT

Possible cause	Corrective action
(1) Deformation or damage of suspension parts	Replace.
(2) Defective strut COMPL or shock absorber COMPL	Replace.
(3) Improper installation of strut assembly or shock absorber assembly	Replace with appropriate parts.
(4) Installation of the wrong coil spring	Replace with appropriate parts.

2. POOR RIDE COMFORT

1) Large rebound shock
2) Rocking of the vehicle continues too long after running over bump and hump.
3) Excessive shock in bumping

Possible cause	Corrective action
(1) Damaged coil spring	Replace.
(2) Overinflation of tires	Adjust.
(3) Improper wheel arch height	Replace the coil springs with new parts.
(4) Fault in operation of strut or shock absorber	Replace.
(5) Damage or deformation of strut mount or shock absorber mount	Replace.
(6) Unsuitable length (maximum or minimum) of strut or shock absorber	Replace with appropriate parts.
(7) Abnormal deformation or loss of bushing	Replace.
(8) Deformation or damage of helper in strut assembly or shock absorber	Replace.
(9) Oil leakage from the strut or shock absorber	Replace.

3. NOISE

Possible cause	Corrective action
(1) Wear or damage of strut or shock absorber component parts	Replace.
(2) Loosening of the suspension link installing bolt	Tighten to the specified torque.
(3) Abnormal deformation or loss of bushing	Replace.
(4) Unsuitable length (maximum or minimum) of strut or shock absorber	Replace with appropriate parts.
(5) Damaged coil spring	Replace.
(6) Wear or damage of the ball joint	Replace.
(7) Deformation of the clamp - stabilizer bushing	Replace.

REAR SUSPENSION

RS

Page

1. General Description 2
2. Wheel Alignment 8
3. Rear Sub Frame 9
4. Rear Stabilizer 14
5. Rear Trailing Link 16
6. Upper Arm 19
7. Front Lateral Link 21
8. Rear Lateral Link 24
9. Rear Shock Absorber 27
10. General Diagnostic Table 33

1. General Description

A: SPECIFICATION

1. WRX MODEL

Tire size		235/45R17	245/40R18
Wheel arch height (Tolerance: $^{+12\ mm}_{-24\ mm}$ ($^{+0.47\ in}_{-0.94\ in}$))	mm (in)	367 (14.45)	361 (14.21)
Camber (tolerance: ±0°45′ Differences between RH and LH: 45′ or less)		–1°30′	–1°40′
Toe-in	mm (in)	IN3±3 (IN0.12±0.12)	
		Toe angle (sum of both wheels): IN0°16′±16′	
Thrust angle (tolerance: 0°00′±30′)		0°00′	

2. STI MODEL

Tire size		245/40R18
Wheel arch height (Tolerance: $^{+12\ mm}_{-24\ mm}$ ($^{+0.47\ in}_{-0.94\ in}$))	mm (in)	362 (14.25)
Camber (tolerance: ±0°45′ Differences between RH and LH: 45′ or less)		–1°40′
Toe-in	mm (in)	IN3±3 (IN0.12±0.12)
		Toe angle (sum of both wheels): IN0°16′±16′
Thrust angle (tolerance: 0°00′±30′)		0°00′

NOTE:
• Adjust with the value less than the inspection value, taking aging variation into consideration.
• Front toe-in, rear toe-in and front camber can be adjusted. Adjust if the value of toe-in or camber exceeds the tolerance range of the specification chart.
• Other items except for front toe-in, rear toe-in and front camber that are described in the specification chart cannot be adjusted.
• If other items exceed the tolerance range of the specification chart, check the suspension parts and connections for deformation. If defective, replace with new parts.

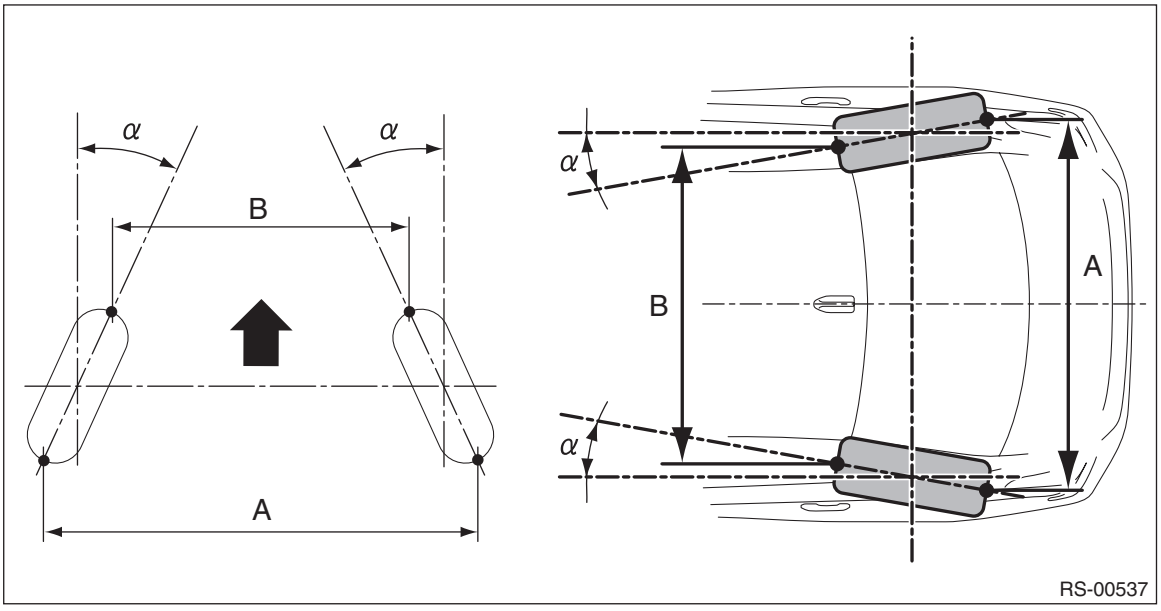

A – B = Positive: Toe-in, Negative: Toe-out

α = Individual toe angles

B: COMPONENT

1. REAR SUSPENSION

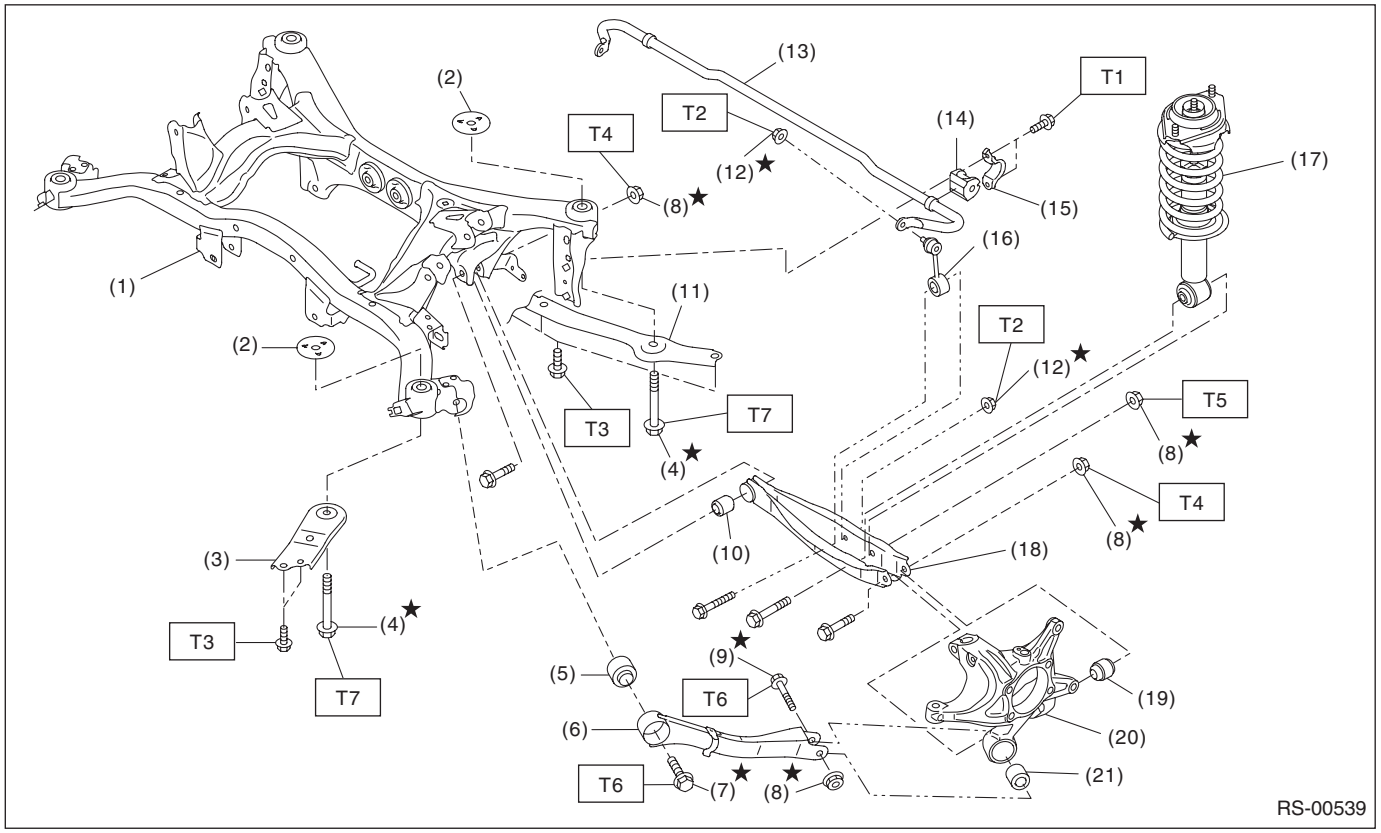

(1)	Rear sub frame ASSY	(11)	Rear support sub frame	(21)	Bushing - trailing link
(2)	Stopper UPR	(12)	Flange nut		
(3)	Support - sub frame	(13)	Rear stabilizer	***Tightening torque: N·m (kgf-m, ft-lb)***	
(4)	Flange bolt A	(14)	Bushing - stabilizer	***T1:***	***30 (3.1, 22.1)***
(5)	Bushing A - trailing link	(15)	Clamp - stabilizer bushing	***T2:***	***38 (3.9, 28)***
(6)	Trailing link	(16)	Stabilizer link	***T3:***	***70 (7.1, 51.6)***
(7)	Flange bolt B	(17)	Rear shock absorber ASSY	***T4:***	***80 (8.2, 59)***
(8)	Self-locking nut	(18)	Rear lateral link ASSY	***T5:***	***85 (8.7, 62.7)***
(9)	Flange bolt C	(19)	Bushing - rear axle housing	***T6:***	***110 (11.2, 81.1)***
(10)	Bushing C - lateral link rear	(20)	Housing ASSY - rear axle	***T7:***	***145 (14.8, 106.9)***

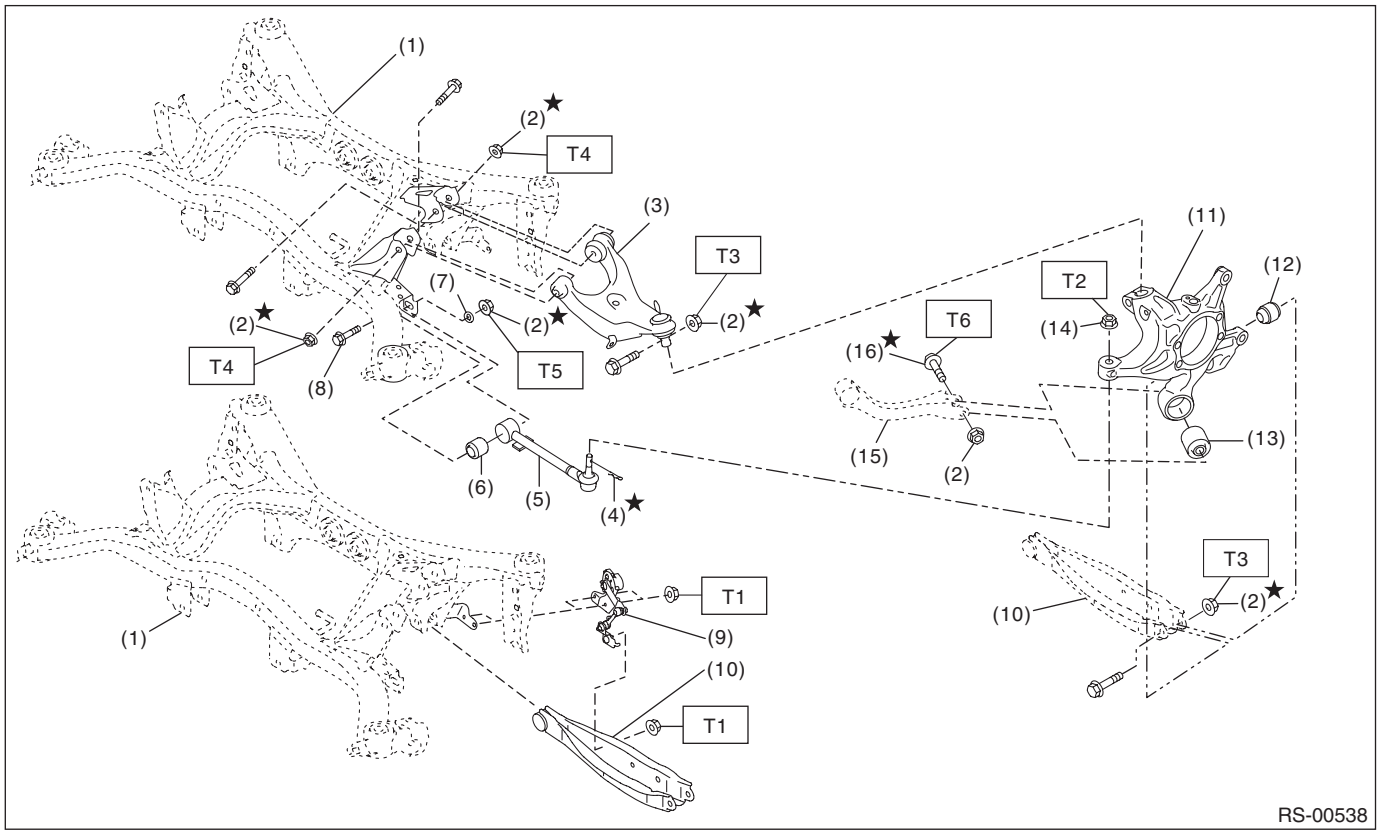

(1)	Rear sub frame ASSY	(9)	Sensor ASSY - headlight beam leveler (models with auto headlight beam leveler only)	***Tightening torque: N·m (kgf-m, ft-lb)***
(2)	Self-locking nut	(10)	Lateral link ASSY - rear	***T1: 7.5 (0.8, 5.5)***
(3)	Rear upper arm ASSY	(11)	Housing ASSY - rear axle	***T2: 60 (6.1, 44.3)***
(4)	Snap pin	(12)	Bushing - rear axle housing	***T3: 80 (8.2, 59)***
(5)	Lateral link ASSY - front	(13)	Bushing - trailing link	***T4: 90 (9.2, 66.4)***
(6)	Bushing B - lateral link	(14)	Flange nut	***T5: 100 (10.2, 73.8)***
(7)	Adjusting washer	(15)	Trailing link	***T6: 110 (11.2, 81.1)***
(8)	Adjusting bolt	(16)	Flange bolt	

2. REAR SHOCK ABSORBER

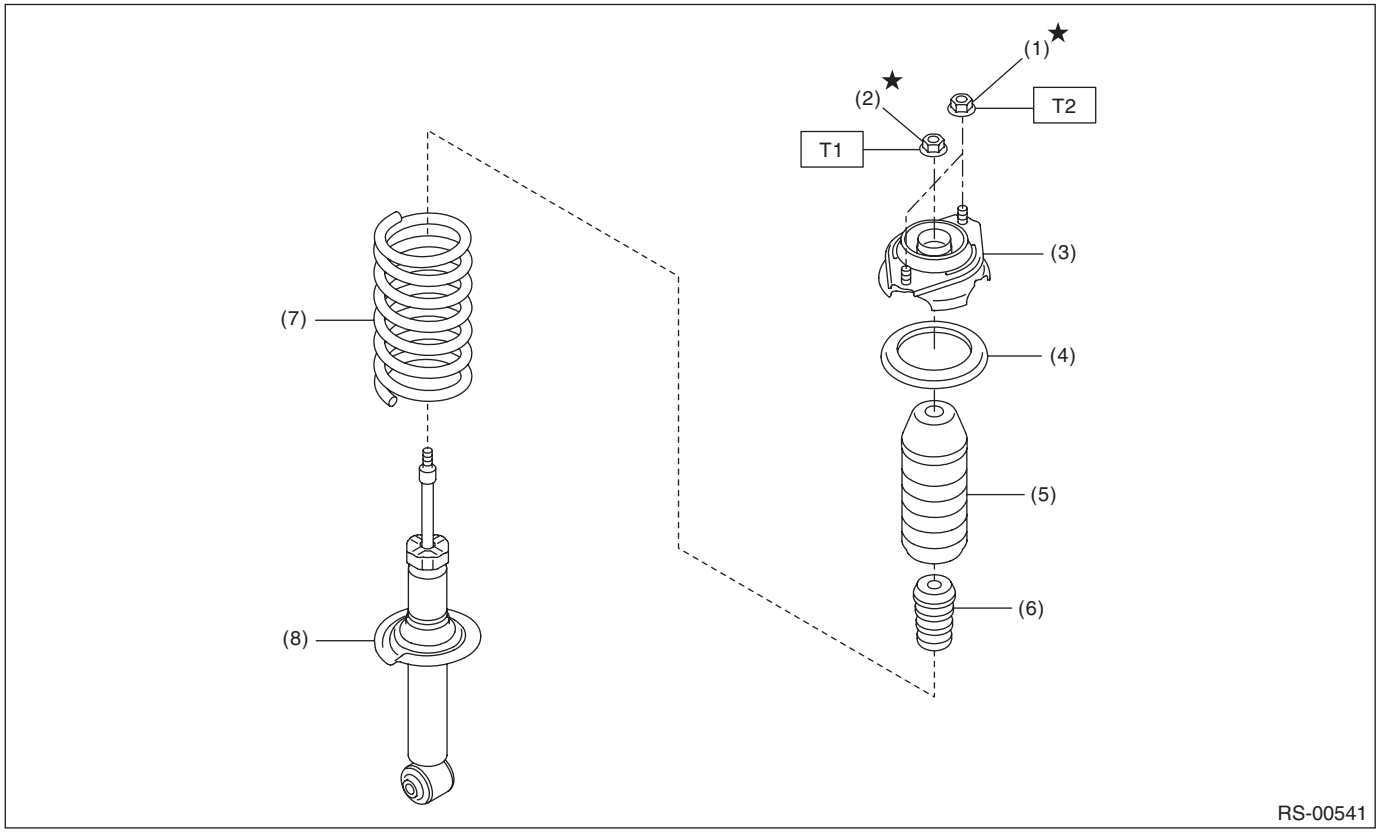

(1) Flange nut
(2) Self-locking nut
(3) Shock mount - rear
(4) Rubber seat - shock UPR
(5) Dust cover - rear shock
(6) Helper - rear
(7) Coil spring - rear
(8) Shock absorber COMPL - rear

Tightening torque: N·m (kgf-m, ft-lb)
T1: 25 (2.5, 18.4)
T2: 30 (3.1, 22.1)

C: CAUTION

- When performing any work, always wear work clothes, a work cap and protective shoes. Additionally, wear a helmet, protective goggles, etc. if necessary.
- When disposing of shock absorbers, be sure to bleed the oil or gas out completely. Also, do not expose to flames or fire.
- When performing a repair, identify the cause of trouble and avoid unnecessary removal, disassembly and replacement.
- Use SUBARU genuine grease, the recommended or equivalent. Do not mix grease etc. of different grades or manufacturers.
- Do not secure a part in a vise directly. Place cushioning materials such as wood blocks, aluminum plates, or waste cloth between the part and the vise.
- Be sure to tighten fasteners including bolts and nuts to the specified torque.
- Always use the jack-up point when the shop jacks or rigid racks are used to support the vehicle.
- When the suspension-related components have been removed/installed or replaced, perform “VDC sensor midpoint setting mode” of the VDC. <Ref. to VDC-17, ADJUSTMENT, VDC Control Module and Hydraulic Control Unit (VDCCM&H/U).>
- For parts which are not reusable, always use new parts. Other parts should be replaced with new parts as required.
- When handling oil or fuel, adhere to the following to prevent unexpected accident.
  – Be careful with fire.
  – Prepare a container to catch grease or oil, etc. If any grease or oil spills, wipe it off and clean immediately to prevent from penetrating into floor or flowing outside.
  – Follow all government and local regulations concerning disposal of refuse when disposing.
- Be sure that the surface of brake disc or brake pad is free from grease or oil.
- Before disconnecting connectors of sensors or units, be sure to disconnect the ground cable from battery.
- Some vehicle components are extremely hot immediately after driving. Be wary of receiving burns from heated parts.

D: PREPARATION TOOL

1. SPECIAL TOOL

ILLUSTRATION	TOOL NUMBER	DESCRIPTION	REMARKS
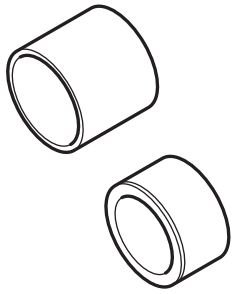 ST20099PA010	20099PA010	INSTALLER & REMOVER	• Used for replacing the bushing A - trailing link of the housing assembly - rear axle. • Used together with BUSHING REMOVER (20099FG000).
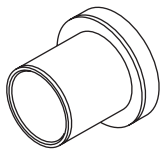 ST20099FG000	20099FG000	BUSHING REMOVER	• Used for replacing the bushing A - trailing link of the housing assembly - rear axle. • Used together with base part of INSTALLER & REMOVER (20099PA000).

ILLUSTRATION	TOOL NUMBER	DESCRIPTION	REMARKS
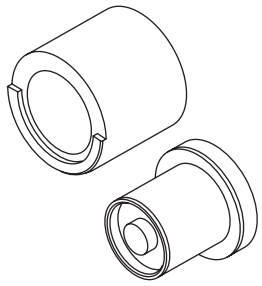 ST20099AE000	20099AE000	INSTALLER & REMOVER	Used for replacing the bushing B - lateral link.
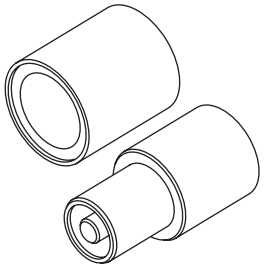 ST20099AE010	20099AE010	INSTALLER & REMOVER	Used for replacing the bushing C - lateral link.
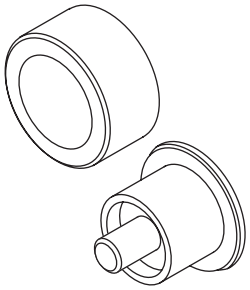 ST20099AE040	20099AE040	INSTALLER & REMOVER	Used for replacing the bushing C - lateral link.
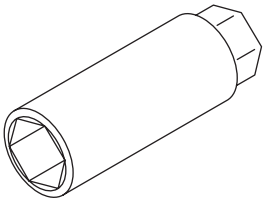 ST20399FG000	20399FG000	STRUT MOUNT SOCKET	• Used for disassembling and assembling strut assembly and shock absorber assembly. • Used for checking center nut torque of strut assembly and shock absorber assembly.

2. GENERAL TOOL

TOOL NAME	REMARKS
Alignment tester	Used for measuring wheel alignment.
Toe-in gauge	Used for toe-in measurement.
Jack	Used for removing and installing suspension.
Bearing puller	Used for removing bushings.
Tie-rod ball joint puller	Used for disconnecting the lateral link assembly - front.
Coil spring compressor	Used for disassembling and assembling strut assembly and shock absorber assembly.

2. Wheel Alignment

A: INSPECTION

NOTE:
For wheel alignment, measure or adjust the front and rear wheels at a time. Refer to “Wheel Alignment” in “FRONT SUSPENSION” section for measurement and adjustment procedures of wheel alignment.

- Inspection: <Ref. to FS-10, INSPECTION, Wheel Alignment.>
- Adjustment: <Ref. to FS-14, ADJUSTMENT, Wheel Alignment.>

3. Rear Sub Frame

A: REMOVAL

1) Disconnect the ground cable from battery. <Ref. to NT-6, BATTERY, NOTE, Note.>

NOTE:
For model with battery sensor, disconnect the ground terminal from battery sensor.
2) Lift up the vehicle, and then remove the rear wheels.
3) Remove the rear exhaust pipe.
- STI model: <Ref. to EX(STI)-12, REMOVAL, Rear Exhaust Pipe.>
- Except for STI model: <Ref. to EX(w/o STI)-47, REMOVAL, Rear Exhaust Pipe.>

4) Remove the propeller shaft assembly. <Ref. to DS-12, REMOVAL, Propeller Shaft.>
5) Remove the clip and bolt on the harness clamp, and remove the rear ABS wheel speed sensor.

CAUTION:
- **Be careful not to damage the sensor.**
- **Do not apply excessive force to the sensor harness.**

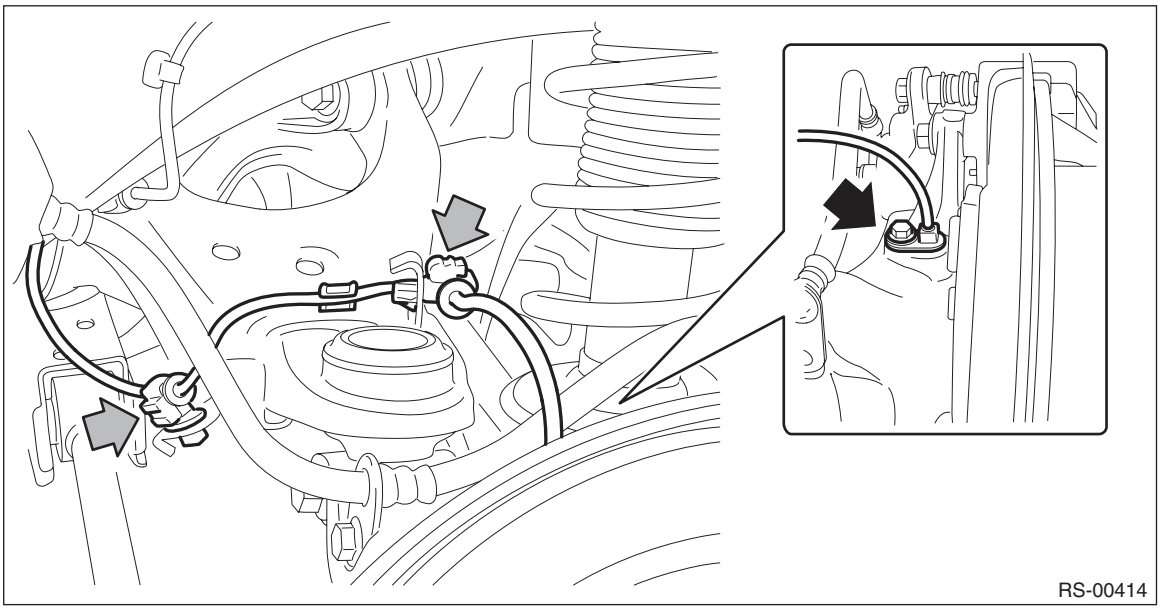

6) Remove the disc brake assembly - rear. <Ref. to BR-55, REMOVAL, Rear Disc Brake Assembly.>
7) Remove the cable assembly - parking brake and the parking brake shoe. (Models without EyeSight) <Ref. to PB-15, REMOVAL, Parking Brake Assembly (Rear Disc Brake).>

8) Disconnect the electronic parking brake harness. (Models with EyeSight) <Ref. to PB-11, REMOVAL, Parking Brake Cable.>

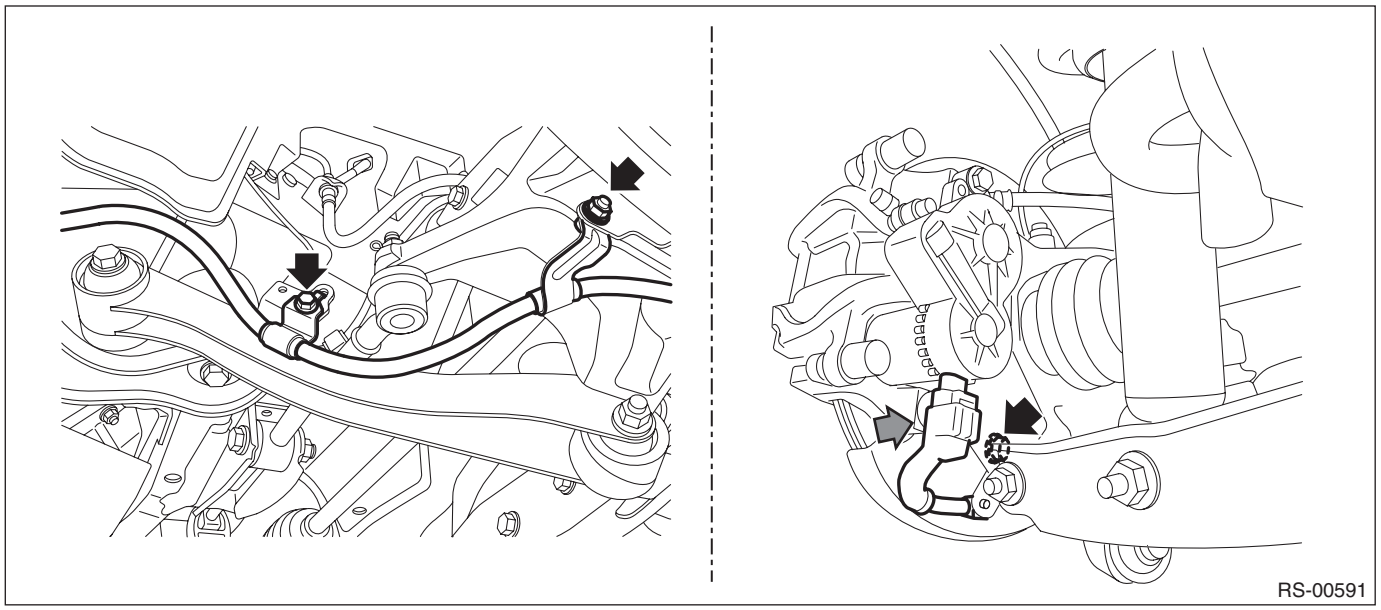

9) Remove the clamp of the sub rear harness.

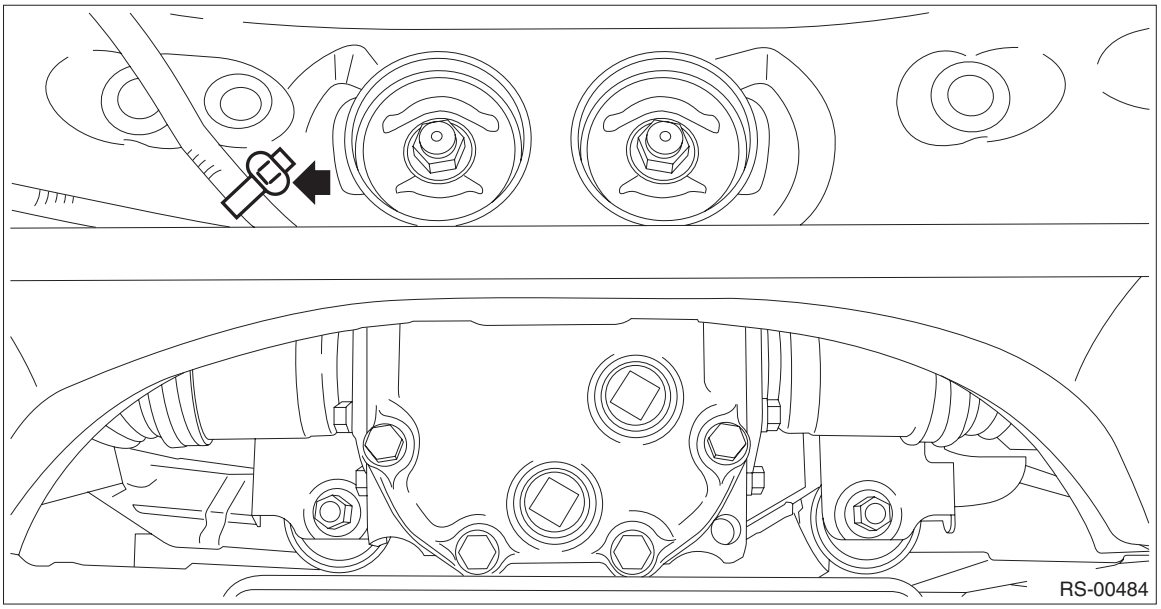

10) Remove the sensor assembly - headlight beam leveler. (Model with auto headlight beam leveler) <Ref. to LI-77, REMOVAL, Rear Height Sensor.>

11) Remove the fuel tank protector.

- STI model: <Ref. to FU(STI)-66, REMOVAL, Fuel Tank Protector.>
- Except for STI model: <Ref. to FU(w/o STI)-144, REMOVAL, Fuel Tank Protector.>

12) Remove the rear sub frame assembly.
(1) Remove the bolts and nuts from the lower side of rear shock absorber assembly.

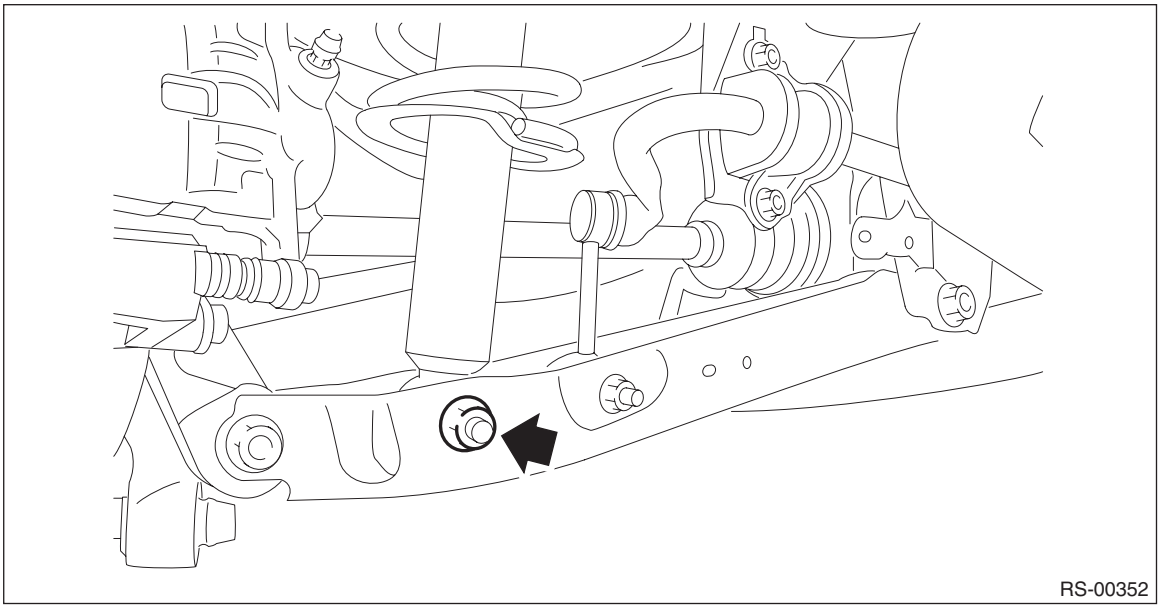
RS-00352

(2) Support the rear sub frame assembly using a transmission jack.

CAUTION:
The rear sub frame assembly is heavy. Make sure that it is horizontally-supported.

(3) Remove the bolt, and remove the left and right sub frame supports and the rear sub frame support.
(4) Remove the rear sub frame assembly.

CAUTION:
While checking there is no dragging of harness and wire, lower it slowly with a transmission jack.

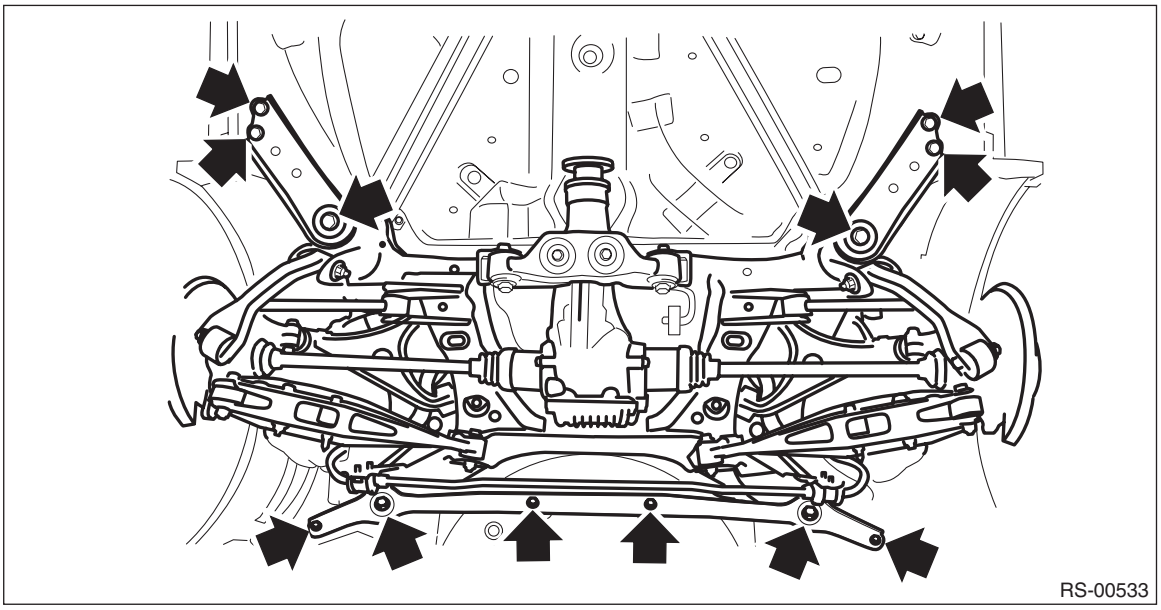
RS-00533

13) As necessary, remove each part from the rear sub frame assembly.

B: INSTALLATION

CAUTION:
- **For parts which are not reusable, always use new parts.**
- **Always tighten the bushing in the state where the vehicle is at curb weight and the wheels are in full contact with the ground.**
- **During the installation, make sure that the marking of ABS wheel speed sensor harness does not twist.**

1) Check the removed parts for wear, damage and crack, and repair or replace them if faulty.
2) Install each part to the rear sub frame assembly.

Tightening torque:
Refer to "COMPONENT" of "General Description" for the tightening torque. <Ref. to RS-3, COMPONENT, General Description.>

3) Install the rear sub frame assembly.
   (1) Lift the rear sub frame assembly using a transmission jack.
   (2) Install the right and left sub frame supports and the rear support sub frame, and install the rear sub frame assembly.

CAUTION:
- **The rear sub frame assembly is heavy. Make sure that it is horizontally-supported.**
- **While checking there is no dragging of harness and wire, raise it slowly with a transmission jack.**

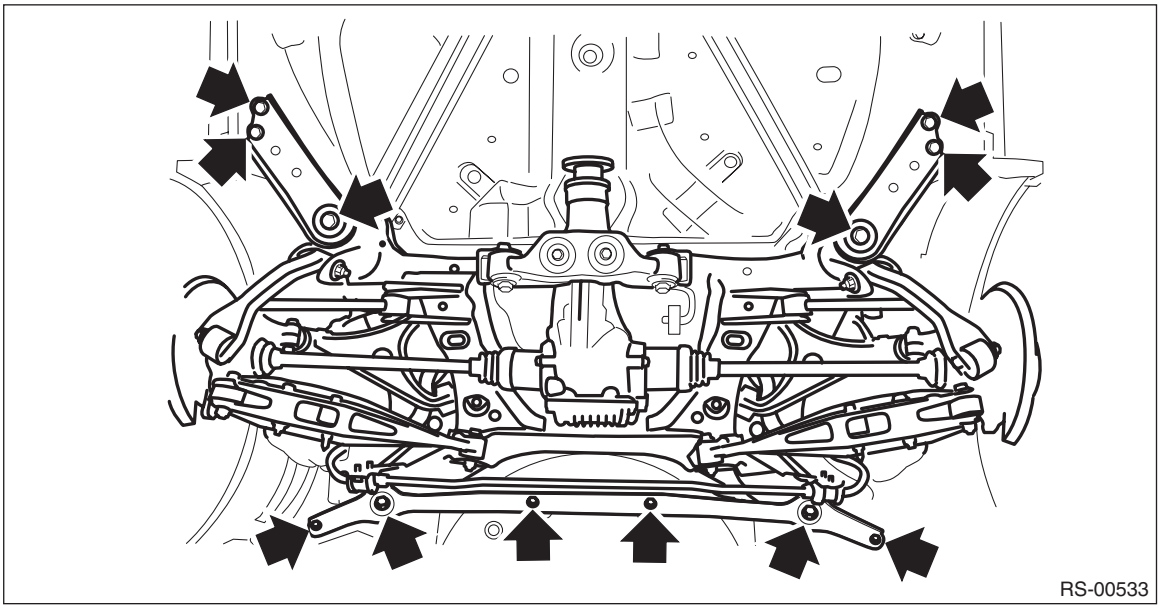

Tightening torque:
Refer to "COMPONENT" of "General Description" for the tightening torque. <Ref. to RS-3, COMPONENT, General Description.>

4) Install the bolts and nuts on the lower side of rear shock absorber assembly.

Tightening torque:
85 N·m (8.7 kgf-m, 62.6 ft-lb)

5) Install the fuel tank protector.
- STI model: <Ref. to FU(STI)-66, INSTALLATION, Fuel Tank Protector.>
- Except for STI model: <Ref. to FU(w/o STI)-144, INSTALLATION, Fuel Tank Protector.>

6) Install the sensor assembly - headlight beam leveler. (Model with auto headlight beam leveler)

CAUTION:
Do not apply impact to the sensor assembly - headlight beam leveler or forcibly move the arm. Doing so may cause sensor damage and malfunction.

Tightening torque:
7.5 N·m (0.8 kgf-m, 5.5 ft-lb)

7) Install the clamp of the sub rear harness.
8) Install the cable assembly - parking brake. (Models without EyeSight) <Ref. to PB-17, INSTALLATION, Parking Brake Assembly (Rear Disc Brake).>
9) Install the electronic parking brake harness. (Models with EyeSight)

Tightening torque:
18 N·m (1.8 kgf-m, 13.3 ft-lb)

10) Install the brake hose bracket and the disc brake assembly - rear.

Tightening torque:
Brake hose bracket: 33 N·m (3.4 kgf-m, 24.3 ft-lb)
Disc brake assembly - rear (STI model): 65 N·m (6.6 kgf-m, 47.9 ft-lb)
Disc brake assembly - rear (except for STI model): 66 N·m (6.7 kgf-m, 48.7 ft-lb)

11) Install the rear ABS wheel speed sensor.

Tightening torque:
7.5 N·m (0.8 kgf-m, 5.5 ft-lb)

12) Install the propeller shaft assembly. <Ref. to DS-14, INSTALLATION, Propeller Shaft.>
13) Install the rear exhaust pipe.
- STI model: <Ref. to EX(STI)-12, INSTALLATION, Rear Exhaust Pipe.>
- Except for STI model: <Ref. to EX(w/o STI)-48, INSTALLATION, Rear Exhaust Pipe.>

14) Install the rear wheels and lower the vehicle.

Tightening torque:
120 N·m (12.2 kgf-m, 88.5 ft-lb)

15) Inspect the wheel alignment and adjust if necessary.
- Inspection: <Ref. to FS-10, INSPECTION, Wheel Alignment.>
- Adjustment: <Ref. to FS-14, ADJUSTMENT, Wheel Alignment.>

CAUTION:
When the wheel alignment has been adjusted, perform the following adjustment.
– Lane keep assist learning value clear (model with EyeSight): <Ref. to ES(diag)-50, OPERATION, CLEAR ACTIVE LANE KEEP SYSTEM LEARNING VALUE.>
– Steering angle sensor adjustment: <Ref. to VDC-17, ADJUSTMENT, VDC Control Module and Hydraulic Control Unit (VDCCM&H/U).>

16) Connect the battery ground terminal. <Ref. to NT-6, BATTERY, NOTE, Note.>
17) Perform reinitialization of the auto headlight beam leveler system. (Model with auto headlight beam leveler) <Ref. to LI-18, PROCEDURE, Auto Headlight Beam Leveler System.>

C: INSPECTION

Check the removed parts for wear, damage and crack, and repair or replace them if faulty.

4. Rear Stabilizer

A: REMOVAL

1) Lift up the vehicle, and then remove the rear wheels.
2) Remove the rear stabilizer.
   (1) Remove the nut and disconnect the right and left stabilizer links.
   (2) Detach the right and left clamps - stabilizer bushing and remove the rear stabilizer.

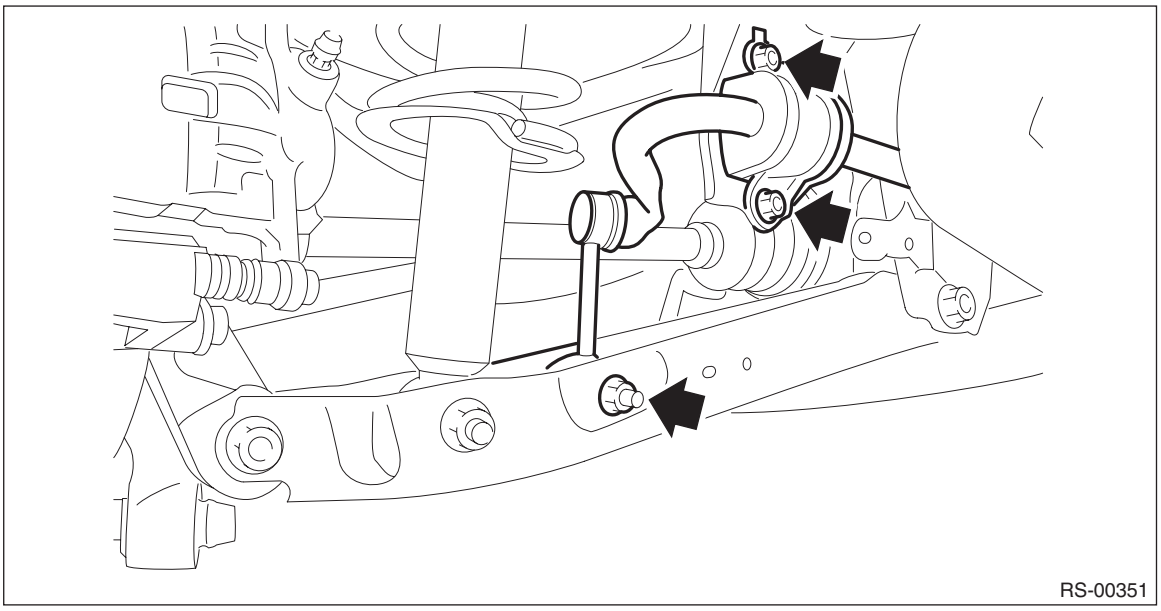

B: INSTALLATION

CAUTION:
- **For parts which are not reusable, always use new parts.**
- **Always tighten the bushing in the state where the vehicle is at curb weight and the wheels are in full contact with the ground.**
- **Install the clamp - stabilizer bushing with the "G" character facing upward.**
- **When installing, align the edge of identification paint (a) to the end face of the bushing (b).**

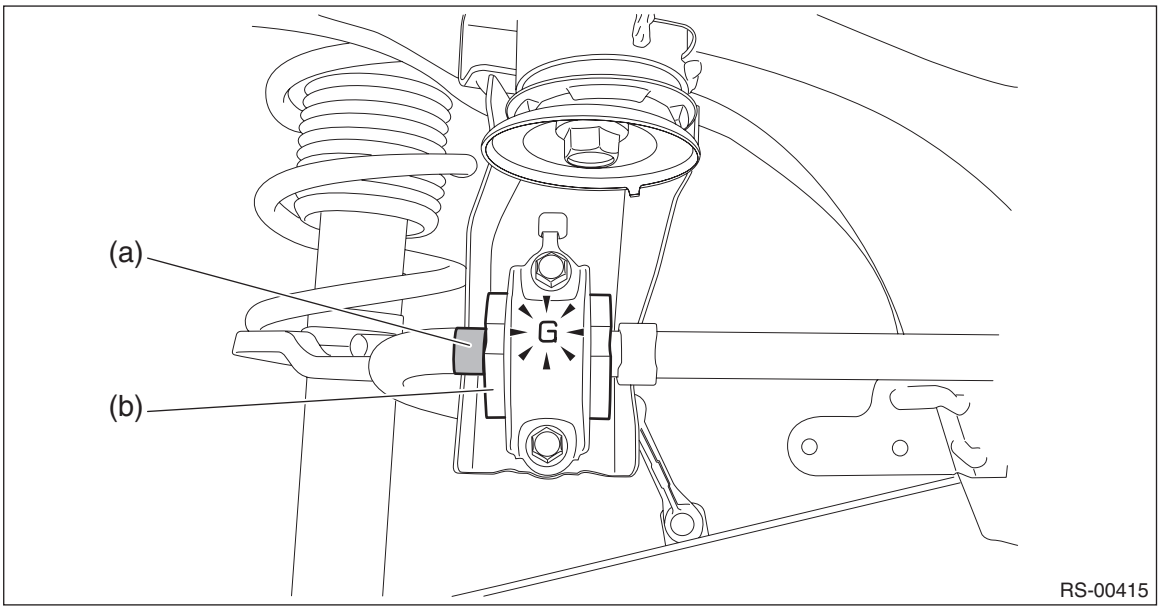

1) Before installation, inspect the following items and replace any faulty part with a new one.
- Check the bushing - stabilizer for abnormal cracks, fatigue or damage.
- Check the stabilizer link for damage.

2) Install the rear stabilizer.

Tightening torque:
Clamp - stabilizer bushing: 30 N·m (3.1 kgf-m, 22.1 ft-lb)
Stabilizer link: 38 N·m (3.9 kgf-m, 28 ft-lb)

3) Install the rear wheels and lower the vehicle.

Tightening torque:
120 N·m (12.2 kgf-m, 88.5 ft-lb)

5. Rear Trailing Link

A: REMOVAL

1) Lift up the vehicle, and then remove the rear wheels.
2) Remove the bolts and nuts, and then remove the trailing link.

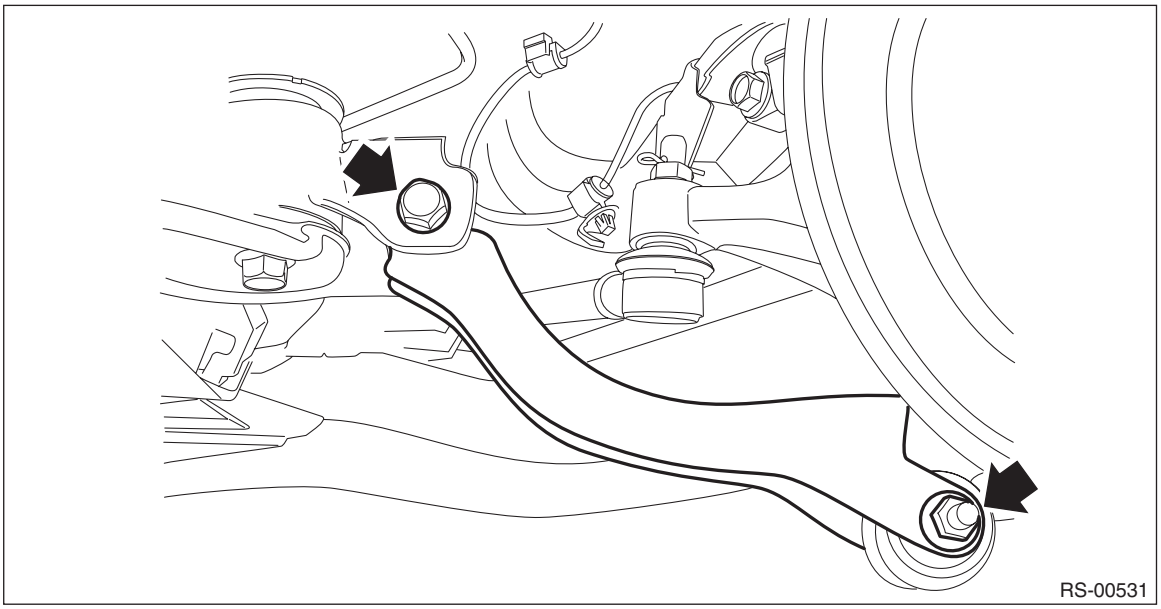

B: INSTALLATION

CAUTION:
- **For parts which are not reusable, always use new parts.**
- **Always tighten the bushing in the state where the vehicle is at curb weight and the wheels are in full contact with the ground.**

1) Install the trailing link.

Tightening torque:
110 N·m (11.2 kgf-m, 81.1 ft-lb)

2) Install the rear wheels and lower the vehicle.

Tightening torque:
120 N·m (12.2 kgf-m, 88.5 ft-lb)

C: DISASSEMBLY

1. BUSHING A - TRAILING LINK

Using the ST, push out the bushing A - trailing link.

Preparation tool:
ST-A: INSTALLER (20099FG000)
ST-B: INSTALLER & REMOVER (BASE) (20099PA010)

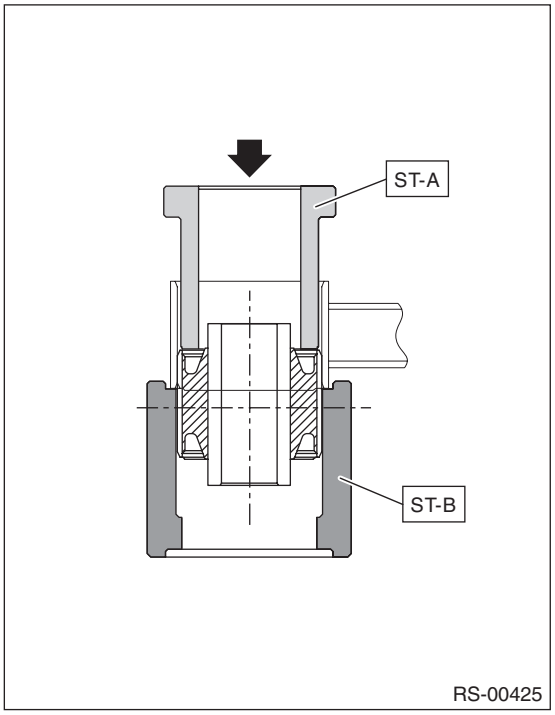

2. BUSHING - TRAILING LINK

For the removal procedure of bushing - trailing link, refer to “Rear Axle” in the “DRIVE SHAFT SYSTEM” section. <Ref. to DS-36, BUSHING - TRAILING LINK, DISASSEMBLY, Rear Axle.>

D: ASSEMBLY

1. BUSHING A - TRAILING LINK

1) Before assembly, inspect the following items and replace any faulty part with a new one.
- Perform visual check for damage or bend on the trailing link.
- Visually check the bushing for abnormal cracks, fatigue or damage.

2) Using the ST-A and ST-B, press-fit the bushing.

CAUTION:
Make sure to press the bushing straight in.

Preparation tool:
ST-A: INSTALLER (20099FG000)
ST-B: INSTALLER & REMOVER (BASE) (20099PA010)

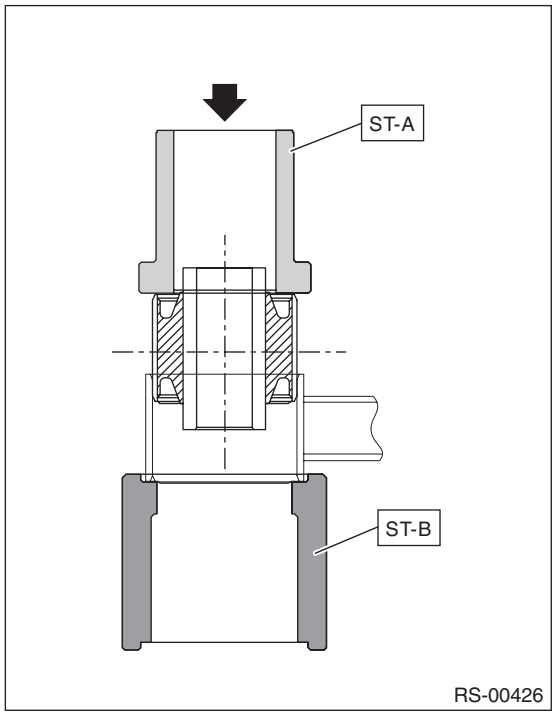

2. BUSHING - TRAILING LINK

For the installation procedure of bushing - trailing link, refer to “Rear Axle” in the “DRIVE SHAFT SYSTEM” section. <Ref. to DS-36, BUSHING - TRAILING LINK, DISASSEMBLY, Rear Axle.>

6. Upper Arm

A: REMOVAL

1) Disconnect the ground cable from battery. <Ref. to NT-6, BATTERY, NOTE, Note.>

NOTE:
For model with battery sensor, disconnect the ground terminal from battery sensor.
2) Lift up the vehicle, and then remove the rear wheels.
3) Remove the rear sub frame assembly. <Ref. to RS-9, REMOVAL, Rear Sub Frame.>
4) Remove the bolts and nuts to remove the upper arm assembly.

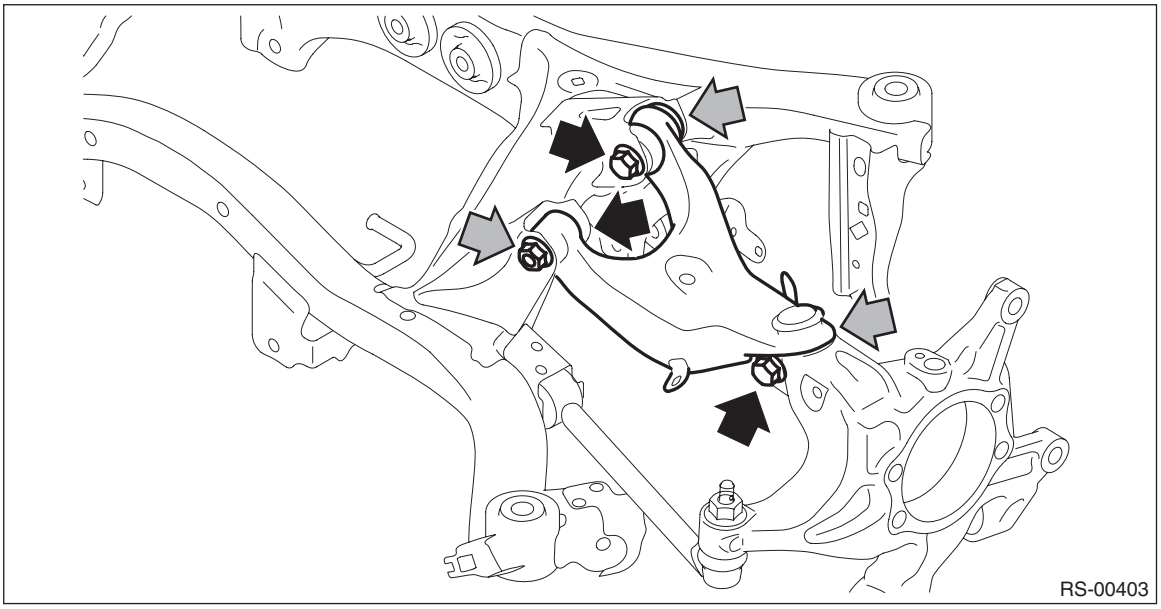

B: INSTALLATION

CAUTION:
- **For parts which are not reusable, always use new parts.**
- **Always tighten the bushing when the arm is positioned in the state where the vehicle is at curb weight and the wheels are in full contact with the ground.**

1) Before installation, inspect the following items and replace any faulty part with a new one.
- Visually check the upper arm assembly for damage and deformation.
- Visually check the bushing for abnormal cracks, fatigue or damage.
- Visually check the dust cover on the ball joint for abnormal cracks, fatigue or damage.

2) Install the upper arm assembly.
   (1) Make the installation sections of the rear lateral link assembly (the bolt on the housing assembly - rear axle side and the bolt on the rear sub frame assembly side) horizontal.
   (2) Install the upper arm assembly to the rear sub frame assembly.

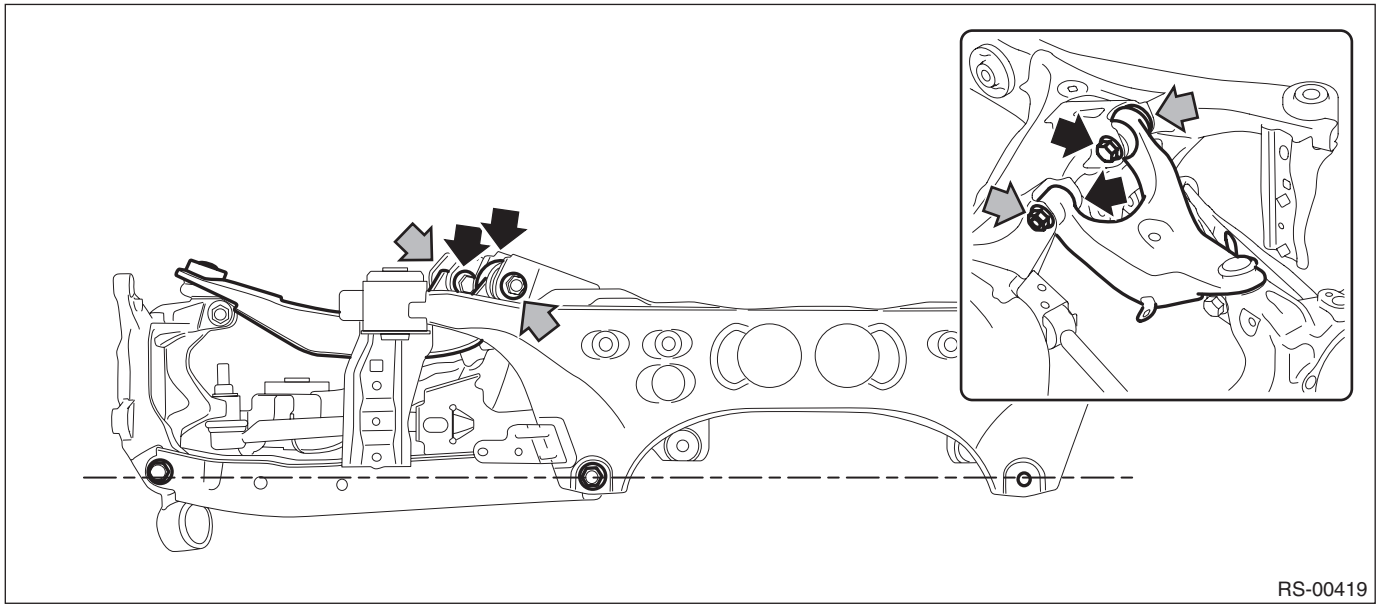

Tightening torque:
Upper arm assembly — rear sub frame assembly: 90 N·m (9.2 kgf-m, 66.4 ft-lb)

3) Connect the upper arm assembly and the housing assembly - rear axle.

Tightening torque:
Upper arm assembly — housing assembly - rear axle: 80 N·m (8.2 kgf-m, 59 ft-lb)

4) Install the rear sub frame assembly. <Ref. to RS-12, INSTALLATION, Rear Sub Frame.>
5) Install the rear wheels and lower the vehicle.

Tightening torque:
120 N·m (12.2 kgf-m, 88.5 ft-lb)

6) Inspect the wheel alignment and adjust if necessary.
- Inspection: <Ref. to FS-10, INSPECTION, Wheel Alignment.>
- Adjustment: <Ref. to FS-14, ADJUSTMENT, Wheel Alignment.>

CAUTION:
When the wheel alignment has been adjusted, perform the following adjustment.
– Lane keep assist learning value clear (model with EyeSight): <Ref. to ES(diag)-50, OPERATION, CLEAR ACTIVE LANE KEEP SYSTEM LEARNING VALUE.>
– Steering angle sensor adjustment: <Ref. to VDC-17, ADJUSTMENT, VDC Control Module and Hydraulic Control Unit (VDCCM&H/U).>

7) Connect the battery ground terminal. <Ref. to NT-6, BATTERY, NOTE, Note.>
8) Perform reinitialization of the auto headlight beam leveler system. (Model with auto headlight beam leveler) <Ref. to LI-18, PROCEDURE, Auto Headlight Beam Leveler System.>

7. Front Lateral Link

A: REMOVAL

1) Lift up the vehicle, and then remove the rear wheels.
2) Remove the trailing link. <Ref. to RS-16, REMOVAL, Rear Trailing Link.>
3) Remove the nuts, and remove the cable assembly - parking brake or the electronic parking brake harness.

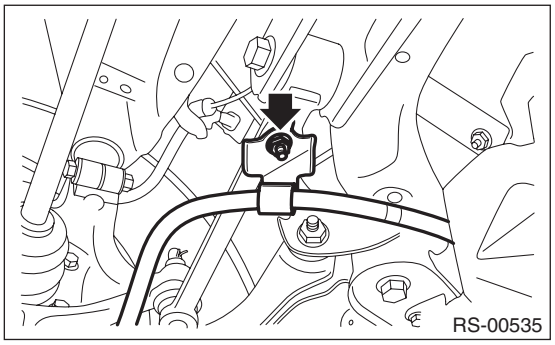

4) Remove the lateral link assembly - front.
   (1) Remove the snap pin (a) and nut (b).
   (2) Remove the ball joint from the housing assembly - rear axle.

Preparation tool:
Tie-rod ball joint puller

   (3) Scribe alignment marks (c) on the adjusting bolt for lateral link assembly - front and on the rear sub frame assembly.
   (4) Remove the adjusting bolt (d), and remove the lateral link assembly - front.

CAUTION:
When removing the adjusting bolt (d), make sure to fix the bolt head in place when loosening the nut (e).

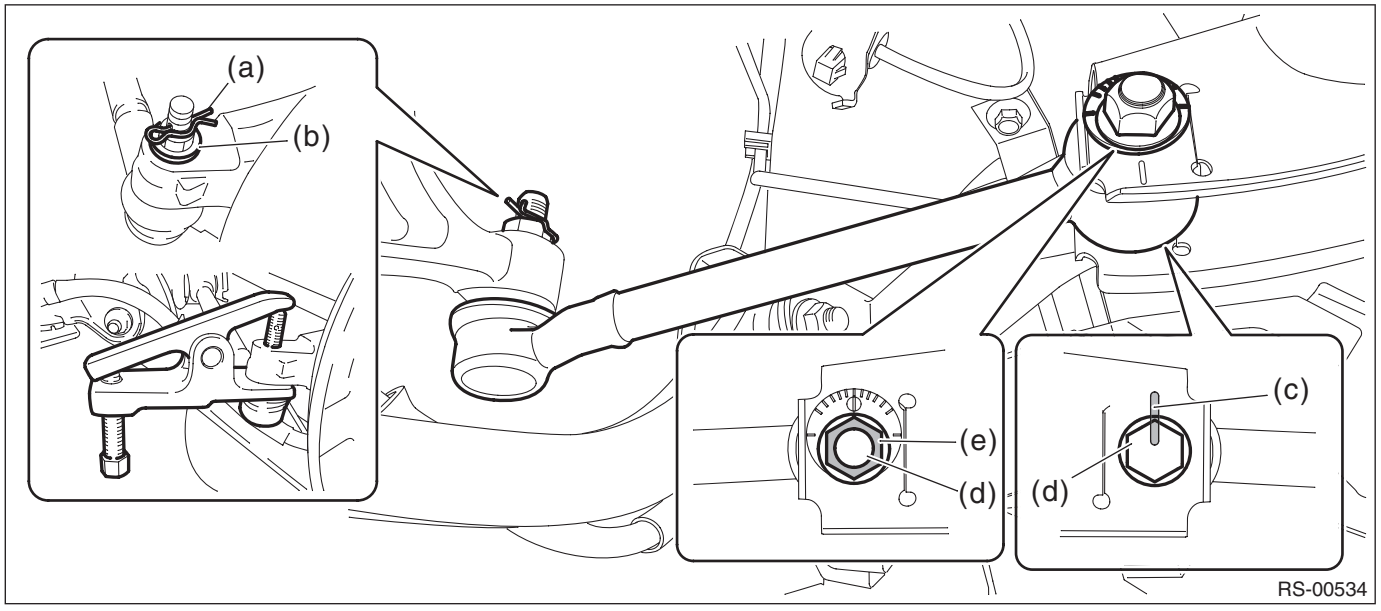

B: INSTALLATION

CAUTION:
• For parts which are not reusable, always use new parts.
• Always tighten the bushing in the state where the vehicle is at curb weight and the wheels are in full contact with the ground.
1) Before installation, inspect the following items and replace any faulty part with a new one.
• Visually check the lateral link assembly - front for damage and deformation.
• Visually check the bushing for abnormal cracks, fatigue or damage.
• Visually check the dust cover on the ball joint for abnormal cracks, fatigue or damage.
2) Install the lateral link assembly - front.

CAUTION:
• When installing the adjusting bolt (d), make sure to fix the bolt head in place and tighten the nut side (e).
• Align alignment marks (c) on the adjusting bolt for lateral link assembly - front and on the rear sub frame assembly.

Tightening torque:
Refer to "COMPONENT" of "General Description" for the tightening torque. <Ref. to RS-3, COMPONENT, General Description.>
3) Install the nuts, and install the cable assembly - parking brake or the electronic parking brake harness.

Tightening torque:
18 N·m (1.8 kgf-m, 13.3 ft-lb)
4) Install the trailing link.

Tightening torque:
110 N·m (11.2 kgf-m, 81.1 ft-lb)
5) Install the rear wheels and lower the vehicle.

Tightening torque:
120 N·m (12.2 kgf-m, 88.5 ft-lb)
6) Inspect the wheel alignment and adjust if necessary.
• Inspection: <Ref. to FS-10, INSPECTION, Wheel Alignment.>
• Adjustment: <Ref. to FS-14, ADJUSTMENT, Wheel Alignment.>

CAUTION:
When the wheel alignment has been adjusted, perform the following adjustment.
– Lane keep assist learning value clear (model with EyeSight): <Ref. to ES(diag)-50, OPERATION, CLEAR ACTIVE LANE KEEP SYSTEM LEARNING VALUE.>
– Steering angle sensor adjustment: <Ref. to VDC-17, ADJUSTMENT, VDC Control Module and Hydraulic Control Unit (VDCCM&H/U).>

C: DISASSEMBLY

Using the ST, push out the bushing B - lateral link.

Preparation tool:
ST-A & ST-B: INSTALLER & REMOVER (20099AE000)

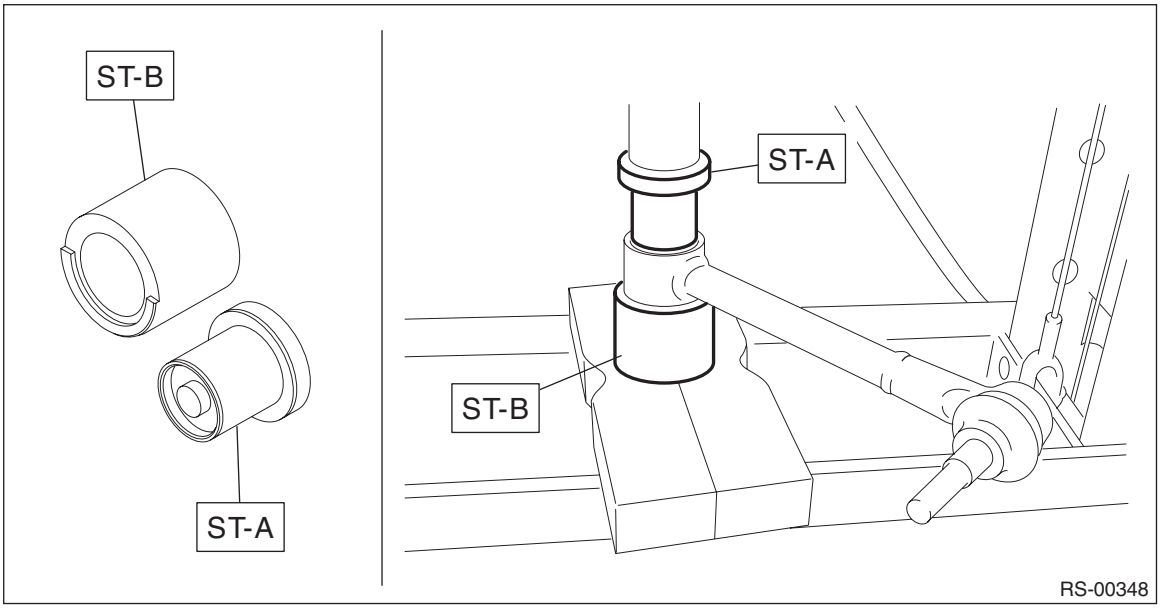

D: ASSEMBLY

1) Before assembly, inspect the following items and replace any faulty part with a new one.
- Visually check the lateral link assembly - front for damage and deformation.
- Visually check the bushing for abnormal cracks, fatigue or damage.
- Visually check the dust cover on the ball joint for damage.

2) Using the ST, press-fit the bushing B - lateral link.

CAUTION:
Make sure to press the bushing straight in.

Preparation tool:
ST-A & ST-B: INSTALLER & REMOVER (20099AE000)

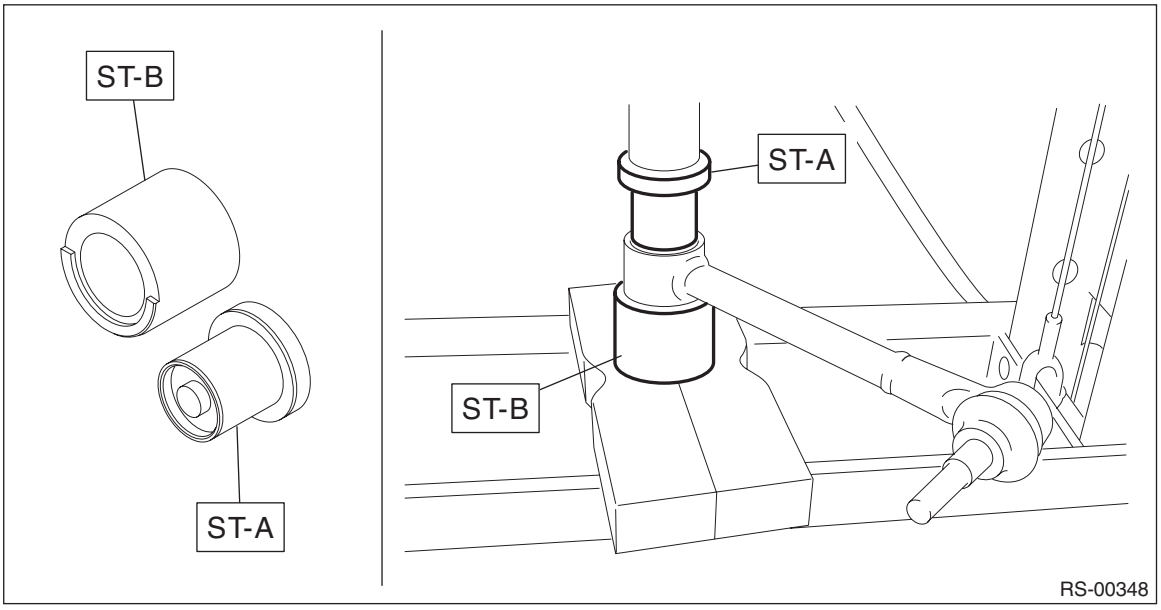

8. Rear Lateral Link

A: REMOVAL

1) Disconnect the ground cable from battery. <Ref. to NT-6, BATTERY, NOTE, Note.>

NOTE:
For model with battery sensor, disconnect the ground terminal from battery sensor.
2) Lift up the vehicle, and then remove the rear wheels.
3) Remove the sensor assembly - headlight beam leveler. (Model with auto headlight beam leveler) <Ref. to LI-77, REMOVAL, Rear Height Sensor.>
4) Remove the lateral link assembly - rear.
   (1) Remove the nut and disconnect the rear stabilizer link.
   (2) Remove the bolts and nuts, and remove the lower side of rear shock absorber assembly.
   (3) Remove the bolts and nuts, and remove the lateral link assembly - rear.

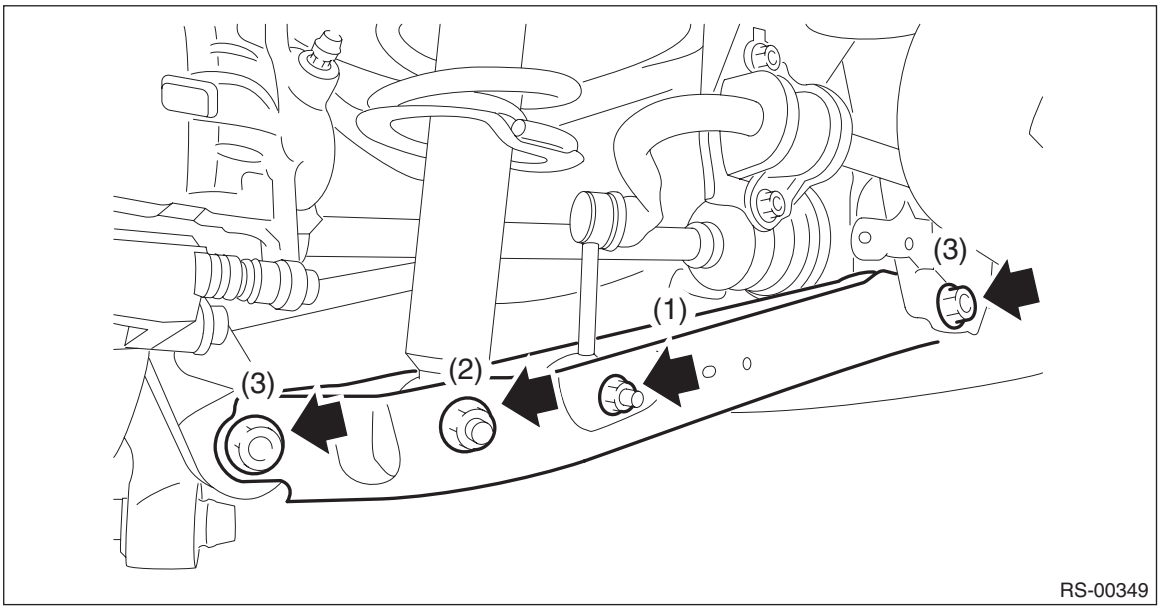

B: INSTALLATION

CAUTION:
- **For parts which are not reusable, always use new parts.**
- **Always tighten the bushing in the state where the vehicle is at curb weight and the wheels are in full contact with the ground.**

1) Before installation, inspect the following items and replace any faulty part with a new one.
- Visually check the lateral link assembly - rear for damage and deformation.
- Visually check the bushing for abnormal cracks, fatigue or damage.

2) Install the lateral link assembly - rear.

Tightening torque:
Refer to "COMPONENT" of "General Description" for the tightening torque. <Ref. to RS-3, COMPONENT, General Description.>

3) Install the sensor assembly - headlight beam leveler. (Model with auto headlight beam leveler)

CAUTION:
Do not apply impact to the sensor assembly - headlight beam leveler or forcibly move the arm. Doing so may cause sensor damage and malfunction.

Tightening torque:
7.5 N·m (0.8 kgf-m, 5.5 ft-lb)

4) Install the rear wheels and lower the vehicle.

Tightening torque:
120 N·m (12.2 kgf-m, 88.5 ft-lb)

5) Connect the battery ground terminal. <Ref. to NT-6, BATTERY, NOTE, Note.>
6) Inspect the wheel alignment and adjust if necessary.
- Inspection: <Ref. to FS-10, INSPECTION, Wheel Alignment.>
- Adjustment: <Ref. to FS-14, ADJUSTMENT, Wheel Alignment.>

CAUTION:
When the wheel alignment has been adjusted, perform the following adjustment.
– Lane keep assist learning value clear (model with EyeSight): <Ref. to ES(diag)-50, OPERATION, CLEAR ACTIVE LANE KEEP SYSTEM LEARNING VALUE.>
– Steering angle sensor adjustment: <Ref. to VDC-17, ADJUSTMENT, VDC Control Module and Hydraulic Control Unit (VDCCM&H/U).>
7) Perform reinitialization of the auto headlight beam leveler system. (Model with auto headlight beam leveler) <Ref. to LI-19, REINITIALIZATION, PROCEDURE, Auto Headlight Beam Leveler System.>

C: DISASSEMBLY

Using the ST, push out the bushing.

Preparation tool:
ST-A & ST-B: INSTALLER & REMOVER (20099AE010)
ST-C: INSTALLER & REMOVER (20099AE040)

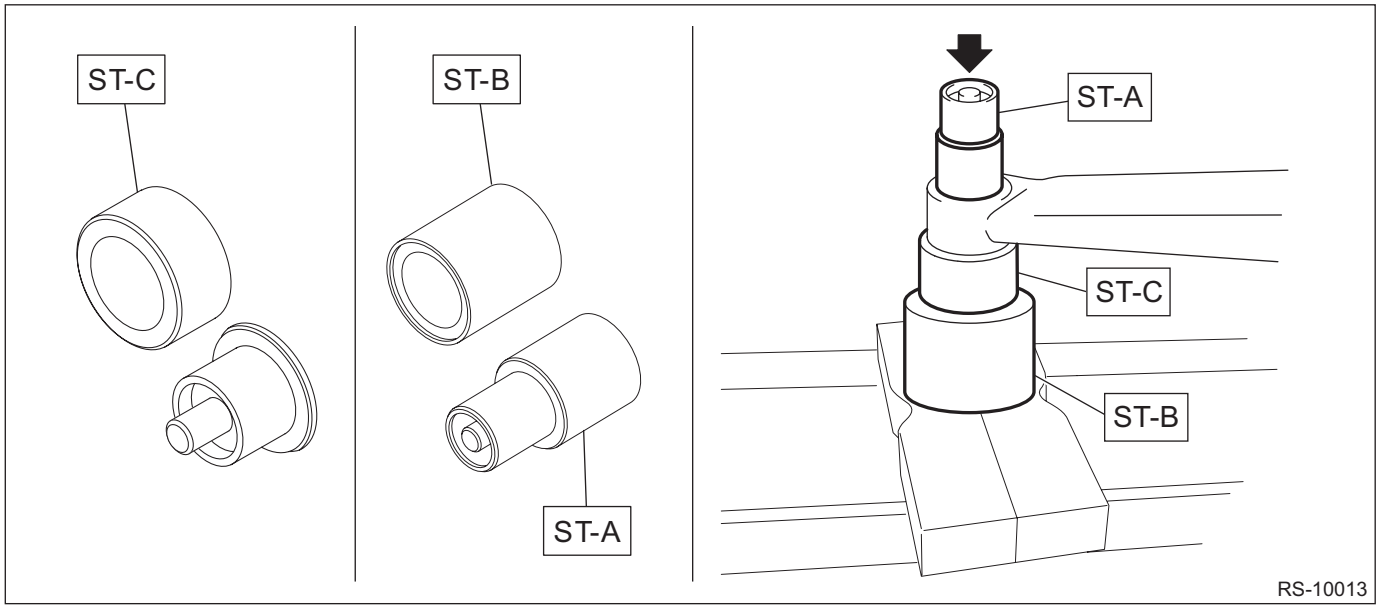

D: ASSEMBLY

1) Before assembly, inspect the following items and replace any faulty part with a new one.
- Visually check the lateral link assembly - rear for damage and deformation.
- Visually check the bushing for abnormal cracks, fatigue or damage.

2) Using the ST, press the bushing into place.

Preparation tool:
ST-A & ST-B: INSTALLER & REMOVER (20099AE010)

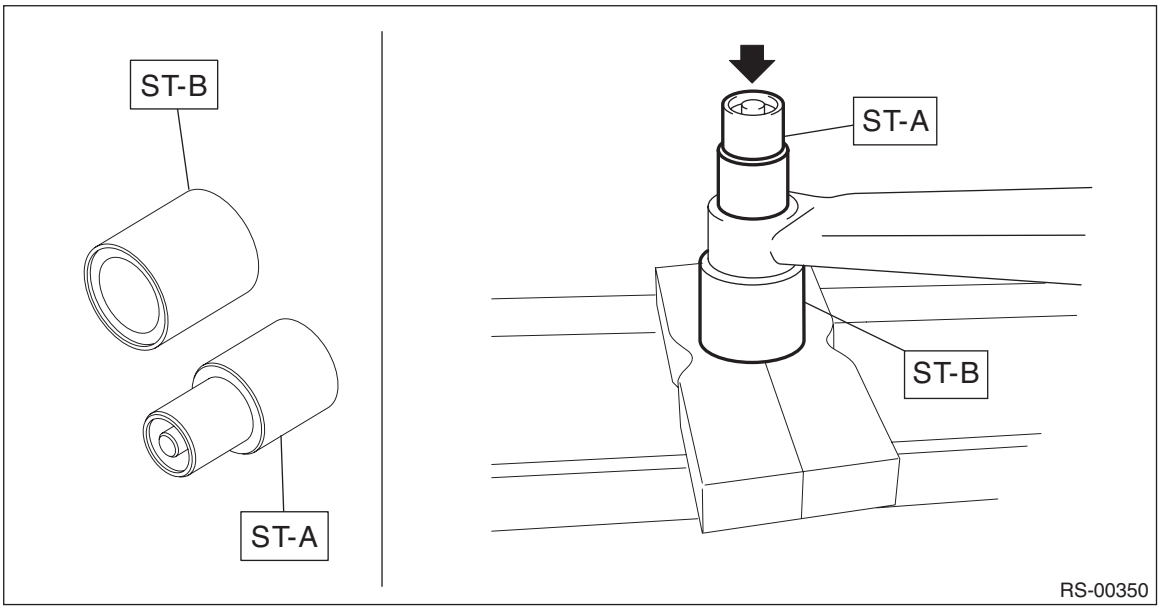

9. Rear Shock Absorber

A: REMOVAL

1) Disconnect the ground cable from battery. <Ref. to NT-6, BATTERY, NOTE, Note.>

NOTE:
For model with battery sensor, disconnect the ground terminal from battery sensor.

2) Lift up the vehicle, and then remove the rear wheels.
3) Remove the sensor assembly - headlight beam leveler. (Model with auto headlight beam leveler) <Ref. to LI-77, REMOVAL, Rear Height Sensor.>
4) Remove the bolts and nuts, and lower the lateral link assembly - rear.
   (1) Remove the nut and disconnect the rear stabilizer link.
   (2) Remove the bolts from the lower side of rear shock absorber assembly.
   (3) Disconnect the housing assembly - rear axle from the lateral link assembly - rear.

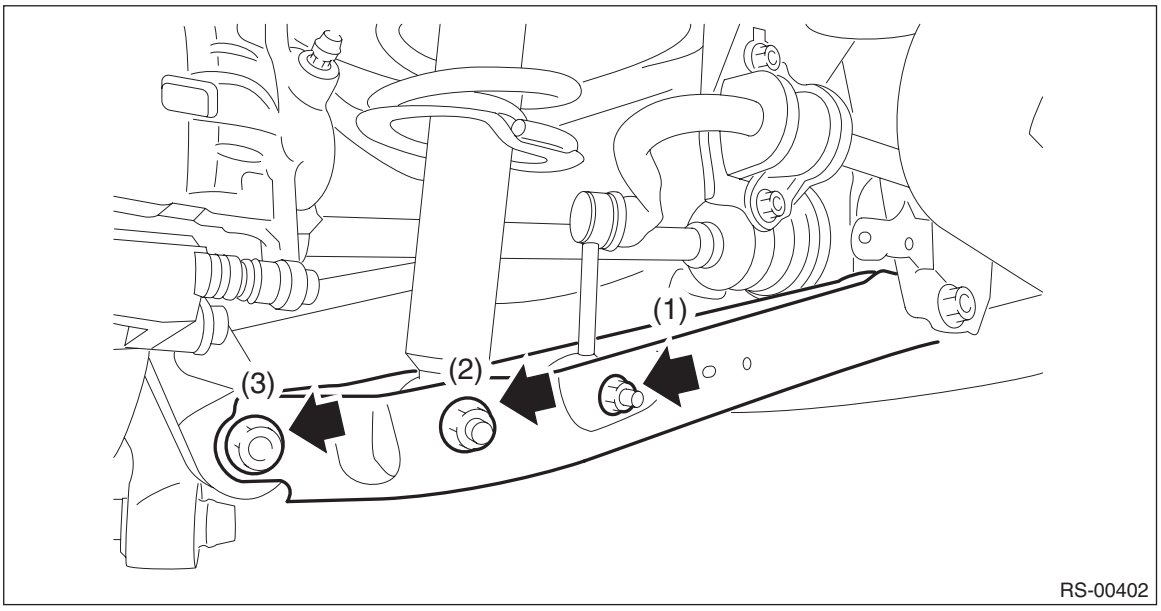

5) Take out the trunk mat.
6) Tilt the rear seat backrest forward.
7) Remove the clips, and turn over the trim panel - trunk side.

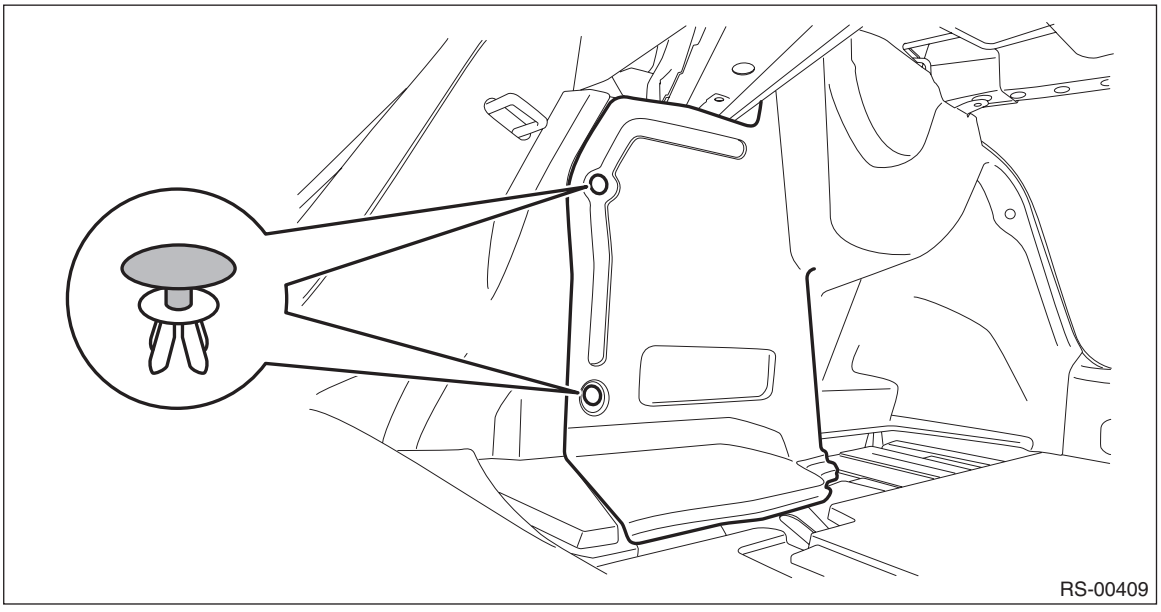

8) Remove the nuts on the upper side of rear shock absorber assembly.

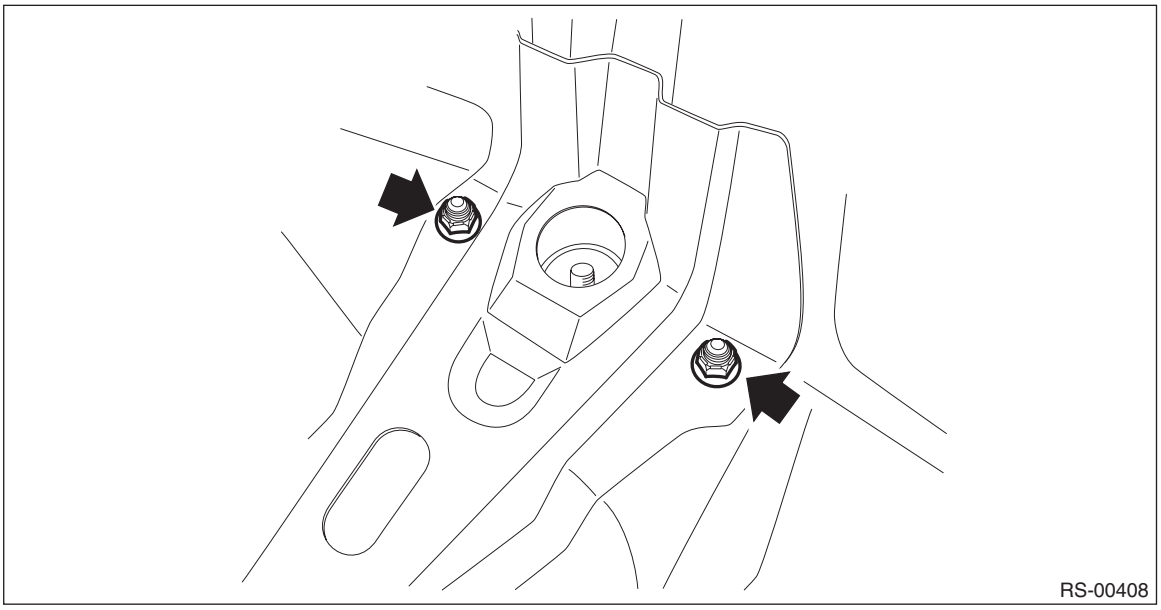

9) Lower the lateral link assembly - rear, and remove the rear shock absorber assembly.

B: INSTALLATION

CAUTION:
- **For parts which are not reusable, always use new parts.**
- **Always tighten the bushing in the state where the vehicle is at curb weight and the wheels are in full contact with the ground.**

1) Install the rear shock absorber assembly.
   (1) Lower the lateral link assembly - rear, and place the rear shock absorber assembly inside.
   (2) Lower the lateral link assembly - rear, and install the upper side of rear shock absorber assembly.

Tightening torque:
30 N·m (3.1 kgf-m, 22.1 ft-lb)
   (3) Install the bolts on the lower side of rear shock absorber assembly.

Tightening torque:
85 N·m (8.7 kgf-m, 62.7 ft-lb)
   (4) Install the lateral link assembly - rear and the stabilizer link.

Tightening torque:
Refer to "COMPONENT" of "General Description" for the tightening torque. <Ref. to RS-3, COMPONENT, General Description.>
   (5) Install the sensor assembly - headlight beam leveler. (Model with auto headlight beam leveler)

CAUTION:
Do not apply impact to the sensor assembly - headlight beam leveler or forcibly move the arm. Doing so may cause sensor damage and malfunction.

Tightening torque:
7.5 N·m (0.8 kgf-m, 5.5 ft-lb)

2) Install the clips, and install the trim panel - trunk side.

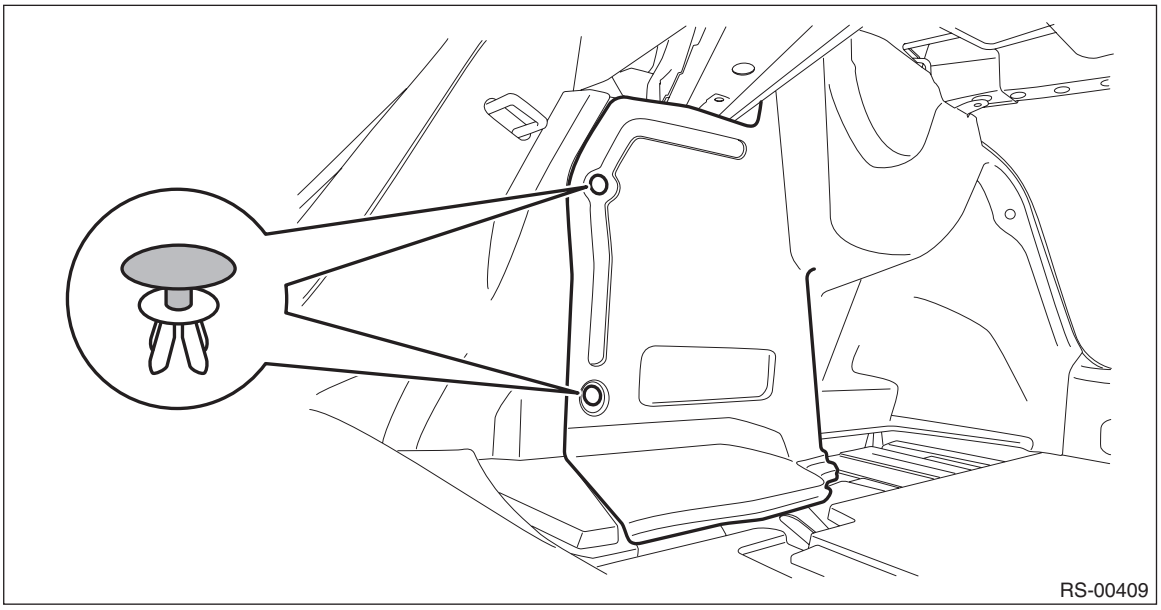

3) Install the trunk mat, and return the rear seat backrest to the lock position.
4) Install the rear wheels and lower the vehicle.

Tightening torque:
120 N·m (12.2 kgf-m, 88.5 ft-lb)

5) Inspect the wheel alignment and adjust if necessary.
- Inspection: <Ref. to FS-10, INSPECTION, Wheel Alignment.>
- Adjustment: <Ref. to FS-14, ADJUSTMENT, Wheel Alignment.>

CAUTION:
When the wheel alignment has been adjusted, perform the following adjustment.
– Lane keep assist learning value clear (model with EyeSight): <Ref. to ES(diag)-50, OPERATION, CLEAR ACTIVE LANE KEEP SYSTEM LEARNING VALUE.>
– Steering angle sensor adjustment: <Ref. to VDC-17, ADJUSTMENT, VDC Control Module and Hydraulic Control Unit (VDCCM&H/U).>

6) Connect the battery ground terminal. <Ref. to NT-6, BATTERY, NOTE, Note.>
7) Perform reinitialization of the auto headlight beam leveler system. (Model with auto headlight beam leveler) <Ref. to LI-19, REINITIALIZATION, PROCEDURE, Auto Headlight Beam Leveler System.>

C: DISASSEMBLY

1) Using a coil spring compressor, compress the coil spring.
2) Using a hexagon wrench to prevent the shock absorber piston rod from turning, remove the self-locking nut with ST.

CAUTION:
When installing the coil spring compressor to the coil spring, follow the operation manual accompanied with the coil spring compressor during operation.

Preparation tool:
ST: STRUT MOUNT SOCKET (20399FG000)

NOTE:
<Example of coil spring compressor installation>
The installing position of coil spring compressor varies depending on the coil spring shape and winding number.

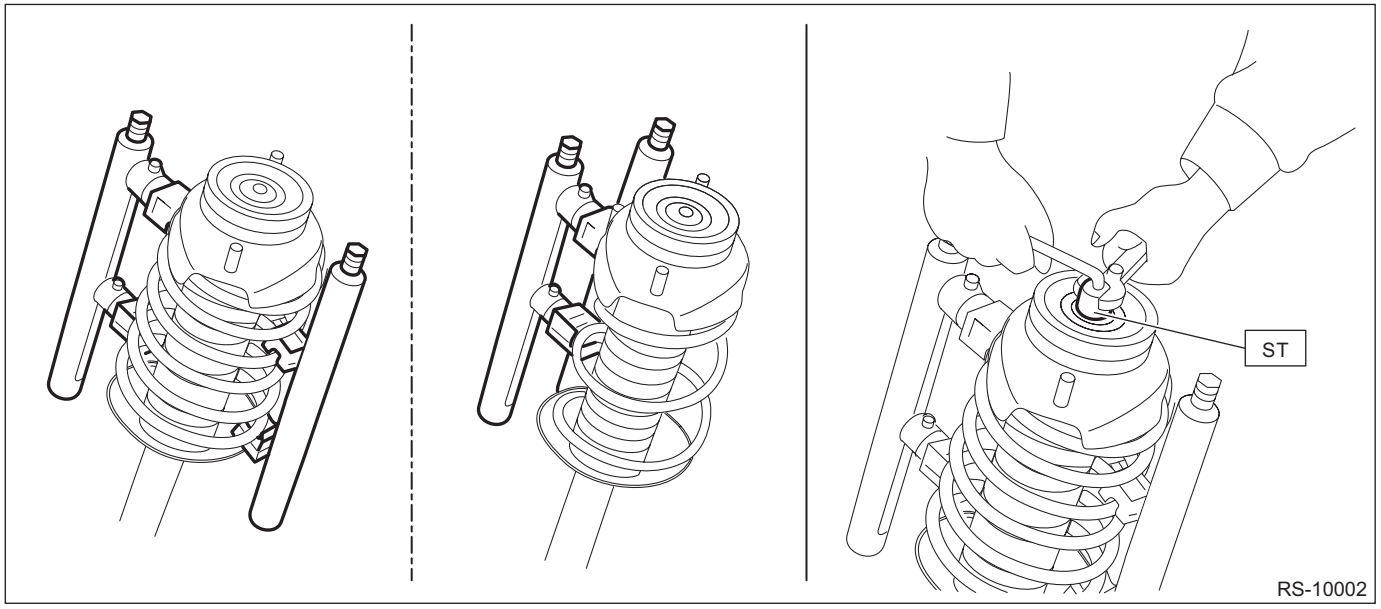

3) Remove the rubber seat - shock UPR and shock mount - rear from the shock absorber COMPL - rear.
4) Gradually decrease the compression pressure of compressor, and remove the coil spring - rear.
5) Remove the helper - rear and the dust cover - rear shock.

D: ASSEMBLY

1) Before assembly, check each part. <Ref. to RS-32, INSPECTION, Rear Shock Absorber.>
2) Using a coil spring compressor, compress the coil spring - rear.

CAUTION:
When installing the coil spring compressor to the coil spring, follow the operation manual accompanied with the coil spring compressor during operation.

3) Install by aligning with the edge surface of the coil spring - rear and the stopper portion of the lower side spring seat.

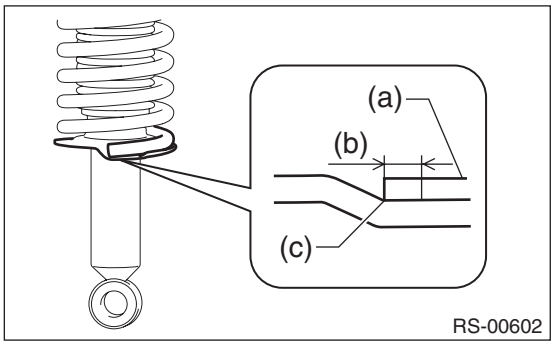

(a) Coil spring - rear
(b) 0+10 mm (0+0.4 in)
(c) Spring seat stopper portion

4) Install the helper - rear and the dust cover - rear shock to the piston rod.
5) Fully pull up the piston rod in the upward direction.
6) Temporarily tighten the rubber seat - shock UPR and the shock mount - rear with new self-locking nuts.

NOTE:
Position the shock mount - rear as shown in the figure.

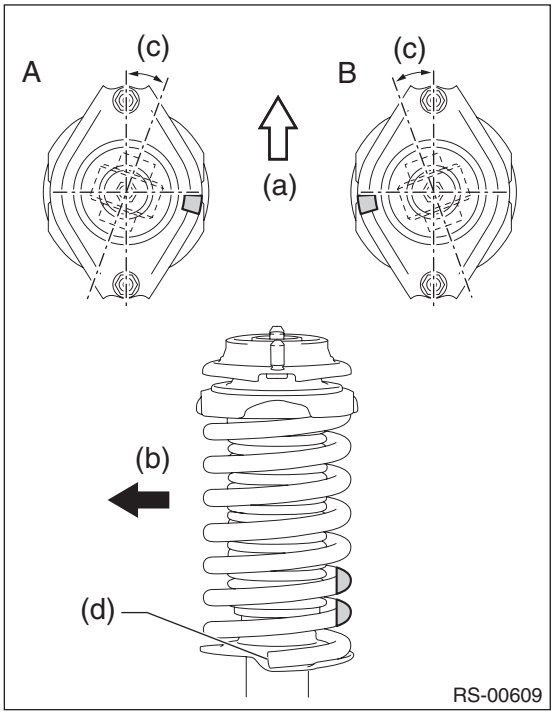

A LH side
B RH side

(a) Front side of vehicle
(b) Vehicle outside
(c) 0°±10°
(d) End portion of coil spring - rear

7) Using a hexagon wrench to prevent the shock absorber piston rod from turning, tighten the new self-locking nut with ST.

CAUTION:
Make sure that the shock mount - rear turns smoothly after tightening.

Preparation tool:
ST: STRUT MOUNT SOCKET (20399AG000)

Tightening torque:
25 N·m (2.5 kgf-m, 18.4 ft-lb)
8) Loosen the coil spring compressor carefully.

E: INSPECTION

Refer to “Front Strut” in “FRONT SUSPENSION” section for inspection procedures. <Ref. to FS-47, INSPECTION, Front Strut.>

F: DISPOSAL

CAUTION:
• Before discarding the strut COMPL and the shock absorber COMPL, be sure to wear goggles to protect eyes from gas, oil and cutting powder.
• Do not disassemble the strut COMPL and the shock absorber COMPL or throw them into flames.
• When discarding the strut COMPL and the shock absorber COMPL filled with gas, drill a hole on them to purge the gas.
1) Place the shock absorber on a level surface with the piston rod fully expanded.
2) Make a hole into the specified position 30 mm (1.18 in) deep using a drill with 2 — 3 mm (0.08 — 0.12 in) diameter.

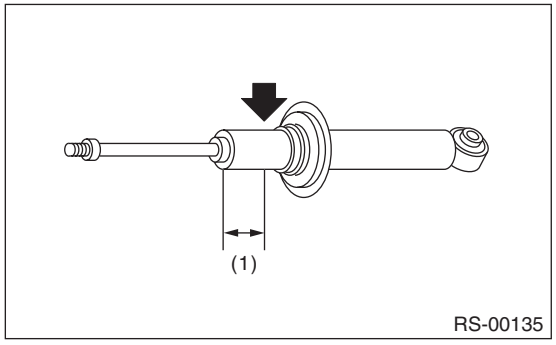

(1) 40 mm (1.57 in)

10.General Diagnostic Table

A: INSPECTION

1. IMPROPER VEHICLE POSTURE OR IMPROPER WHEEL ARCH HEIGHT

Possible cause	Corrective action
(1) Permanent distortion or damaged coil spring	Replace.
(2) Rough operation of shock absorber	Replace.
(3) Installation of the wrong shock absorber	Replace with proper parts.
(4) Installation of the wrong coil spring	Replace with proper parts.

2. POOR RIDE COMFORT

1) Large rebound shock
2) Rocking of the vehicle continues too long after running over bump and hump.
3) Excessive shock in bumping

Possible cause	Corrective action
(1) Damaged coil spring	Replace.
(2) Overinflation of tires	Adjust.
(3) Improper wheel arch height	Replace the coil springs with new parts.
(4) Defective operation of shock absorber	Replace.
(5) Damage or deformation of shock absorber mount	Replace.
(6) Unsuitable length (maximum or minimum) of shock absorber	Replace with appropriate parts.
(7) Deformation or loss of bushing	Replace.
(8) Deformation or damage of helper in shock absorber	Replace.
(9) Oil leakage from the shock absorber	Replace.

3. NOISE

Possible cause	Corrective action
(1) Wear or damage of shock absorber component parts	Replace.
(2) Loosening of the suspension link or arm installing bolt	Tighten to the specified torque.
(3) Deformation or loss of bushing	Replace.
(4) Unsuitable length (maximum or minimum) of shock absorber	Replace with appropriate parts.
(5) Damaged coil spring	Replace.
(6) Wear or damage of the ball joint	Replace.
(7) Deformation of the clamp - stabilizer bushing	Replace.

WHEEL AND TIRE SYSTEM

WT

Page

1. General Description 2
2. Tire and Wheel 5
3. Temporary Tire 7
4. Tire Pressure Monitoring System 8
5. General Diagnostic Table 12

1. General Description

A: SPECIFICATION

1. NOTE

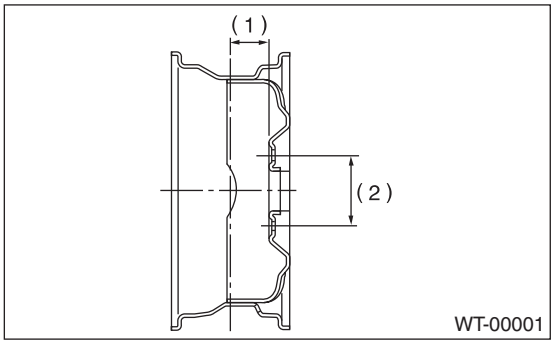

(1) Inset
(2) P.C.D.

NOTE:
Size and inflation pressure of the standard equipment tire, temporary tire and appropriate tire for equipment are described on the “Tire inflation pressure” label attached to the body side of the driver’s door.

2. STANDARD EQUIPMENT TIRE & WHEEL

• STI model

Tire size	Wheel size	Inset mm (in)	P.C.D. mm (in)	Tire inflation pressure kPa (kgf/cm^2, psi)	
				Front wheel	Rear wheel
245/40R18 97W	18 × 8$^1/_2$J	55 (2.17)	114.3 (4.5)	230 (2.3, 33)	220 (2.2, 32)

• Except for STI model

Tire size	Wheel size	Inset mm (in)	P.C.D. mm (in)	Tire inflation pressure kPa (kgf/cm^2, psi)	
				Front wheel	Rear wheel
245/40R18 97W	18 × 8$^1/_2$J	55 (2.17)	114.3 (4.5)	230 (2.3, 33)	220 (2.2, 32)
235/45R17 94W	17 × 8 J				

3. TEMPORARY TIRE & WHEEL

Tire size	Wheel size	Inset mm (in)	P.C.D. mm (in)	Tire inflation pressure kPa (kgf/cm^2, psi)	
				Front wheel	Rear wheel
T145/70D17 106M	17 × 4T	30 (1.18)	114.3 (4.5)	Not used	420 (4.2, 60)
205/50R17 89V	17 × 7J	55 (2.17)			230 (2.3, 33)

4. SERVICE DATA

Part	Axial runout	Radial runout
Steel wheel	1.5 mm (0.059 in)	
Aluminum wheel	1 mm (0.039 in)	

Wheel balancing	Standard	Service limit
Dynamic unbalance	5 g (0.18 oz) or less	

B: COMPONENT

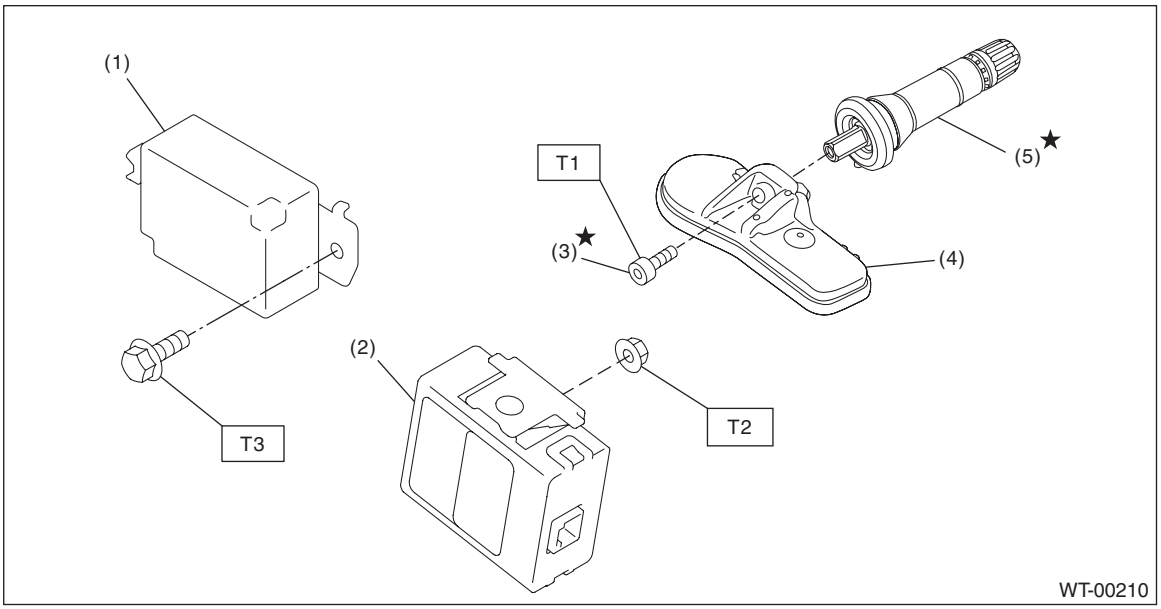

(1) TPMS & keyless entry control module (model without keyless access with push button start)
(2) TPMS CM (model with keyless access with push button start)
(3) Screw
(4) Transmitter (snap in type)
(5) Valve

Tightening torque: N·m (kgf-m, ft-lb)

T1: 1.4 (0.1, 1)
T2: 7.5 (0.8, 5.5)
T3: 13 (1.3, 9.6)

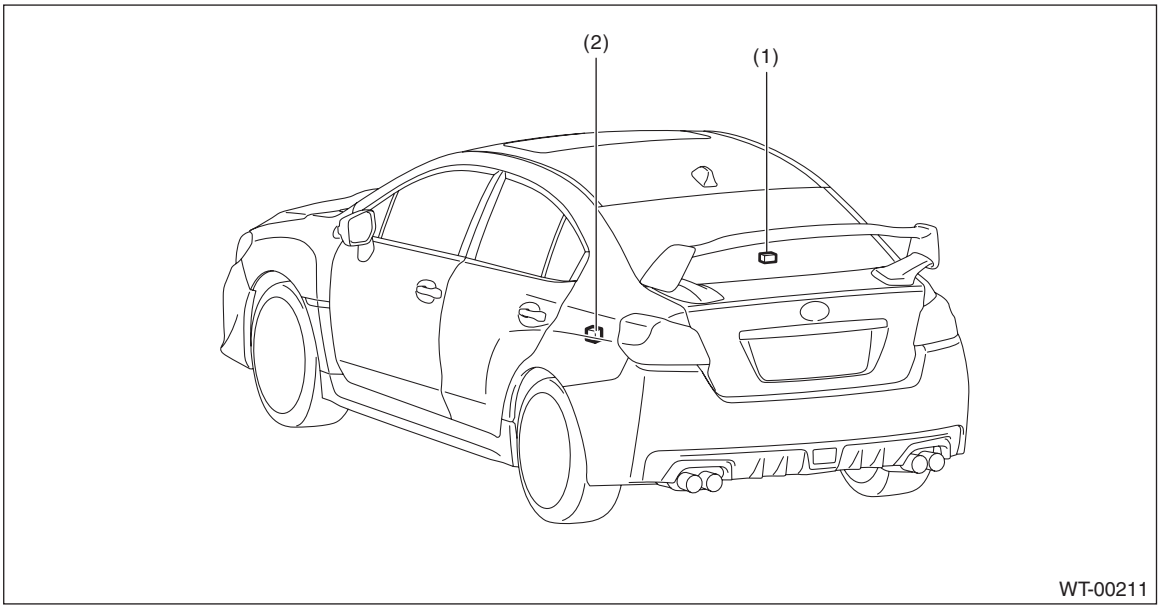

(1) TPMS & keyless entry control module (model with keyless access with push button start)
(2) TPMS CM ASSY (model with keyless access with push button start)

C: PREPARATION TOOL

1. GENERAL TOOL

TOOL NAME	REMARKS
Air pressure gauge	Used for measuring tire air pressure.
Dial gauge	Used for measuring wheel runout.
Wheel balancer	Used for adjusting wheel balance.

2. Tire and Wheel

A: REMOVAL

1) Lift up the vehicle.
2) Remove the wheel nut.
3) Remove the wheels.

CAUTION:
When removing the wheels, be careful not to damage the bolt - hub.

B: INSTALLATION

1) Install the wheels to vehicle.
2) Tighten the wheel nuts to the specified torque.

Tightening torque:
120 N·m (12.2 kgf-m, 88.5 ft-lb)

C: INSPECTION

1. TIRE

CAUTION:
When replacing a tire, make sure to use tires of the same size, construction and load range as originally installed.

1) Tire size and tire inflation pressure check <Ref. to WT-2, SPECIFICATION, General Description.>
2) Cracks, damage and wear check
3) Tire runout check
   (1) Lift up the vehicle.
   (2) Slowly rotate the wheel to check rim “runout” using a dial gauge.

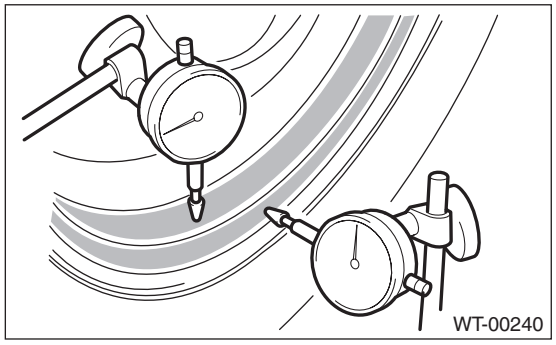

- Aluminum wheel

Service limit:
Axial and longitudinal runout: 1 mm (0.039 in)

- Steel wheel

Service limit:
Axial and longitudinal runout: 1.5 mm (0.059 in)

   (3) If the rim runout exceeds service limit, replace the wheel.

2. TIRE ROTATION

NOTE:
Rotate tires periodically (9,600 km/6,000 miles) in order to prolong life and to prevent uneven wear.
Rotate tires as shown in the figure depending on whether or not the direction of the tire rotation is specified.

- When the direction of tire rotation is not specified

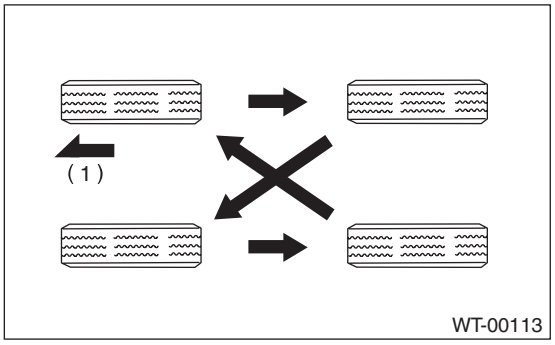

(1) Front side of vehicle

- When the direction of tire rotation is specified

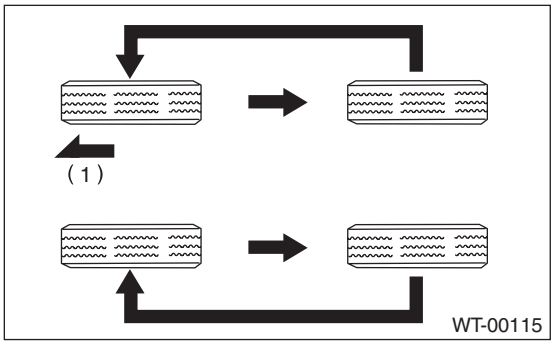

(1) Front side of vehicle

3. WHEEL BALANCING

1) Using the wheel balancer, measure wheel balance.
2) Adjust the wheel balancing.

NOTE:
- Unbalance after adjusting the wheel balancing should be 5 g (0.18 oz) or less.
- When using the adhesive type weight, degrease the surface where the adhesive type weight will be applied securely.
- After applying the adhesive type weight, apply a force to the weight and attain full adhesion.
- Using the knock-on type weight, check the size of the knock-on part.

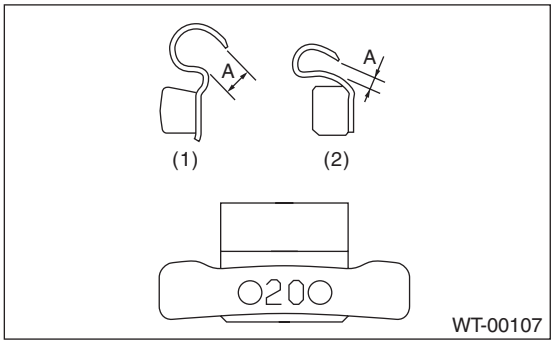

(1) Knock-on type weight for aluminum wheel
(2) Knock-on type weight for steel wheel

Service limit A:
Knock-on type weight for steel wheel: 2 mm (0.079 in)
Knock-on type weight for aluminum wheel: 5 mm (0.197 in)

3. Temporary Tire

A: NOTE

"T-type" or "Temporary" tire for temporary use is equipped as a temporary tire.

CAUTION:
• The "T-type" or "Temporary" tire is only for temporary use. Replace with a standard equipment sized tire as soon as possible.
• Do not use standard sized tire chains for "T-type" or "Temporary" tires. Because tire size is small, tire chains can not be installed properly and will damage the vehicle and tires if they are detached while driving.
• Do not drive at a speed greater than 80 km/h (50 MPH).
• Drive the vehicle as slowly as possible and avoid bumps on the road.

B: REPLACEMENT

Refer to "Tire and Wheel" for removal and installation of the "T-type" or "Temporary" tire. <Ref. to WT-5, Tire and Wheel.>

C: INSPECTION

For inspection of the "T-type" or "Temporary" tire, refer to "Inspection" for standard equipment tire. <Ref. to WT-5, TIRE, INSPECTION, Tire and Wheel.>

4. Tire Pressure Monitoring System

A: REMOVAL

1. TRANSMITTER (TIRE INFLATION PRESSURE SENSOR)

1) Remove the wheels from the vehicle. <Ref. to WT-5, REMOVAL, Tire and Wheel.>
2) Remove the tires from wheels.

CAUTION:
Use a tire changer when removing the tire from the wheel.
3) Loosen the screw to remove the transmitter from the valve stem.

CAUTION:
Do not reuse the valve and screw.
Replace the valve and screw with a new part even when reusing transmitter.

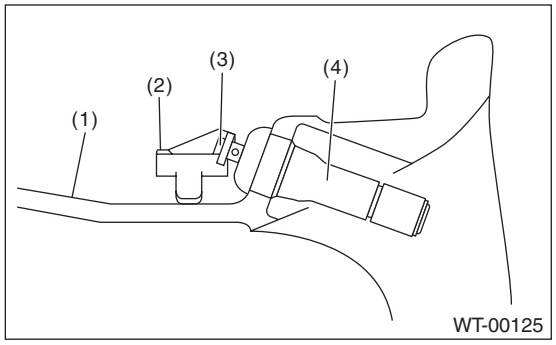

(1) Wheel
(2) Transmitter
(3) Screw
(4) Valve

4) Remove the valve from the wheel.

2. TPMS & KEYLESS CONTROL MODULE

NOTE:
- TPMS CM for keyless entry model is integrated with the keyless entry control module.
- For removal procedures, refer to “SECURITY AND LOCKS” section. <Ref. to SL-78, REMOVAL, Keyless Entry Control Module.>

3. TPMS CM

NOTE:
TPMS CM for model with keyless access with push button start is separated from the keyless access control module.

1) Disconnect the ground cable from battery. <Ref. to NT-6, BATTERY, NOTE, Note.>

NOTE:
For model with battery sensor, remove the ground terminal from battery sensor.

2) Remove the trunk room mat.
3) Remove the trim panel - trunk rear.
   (1) Remove the clip.
   (2) Release the claws, and remove the trim panel - trunk rear.

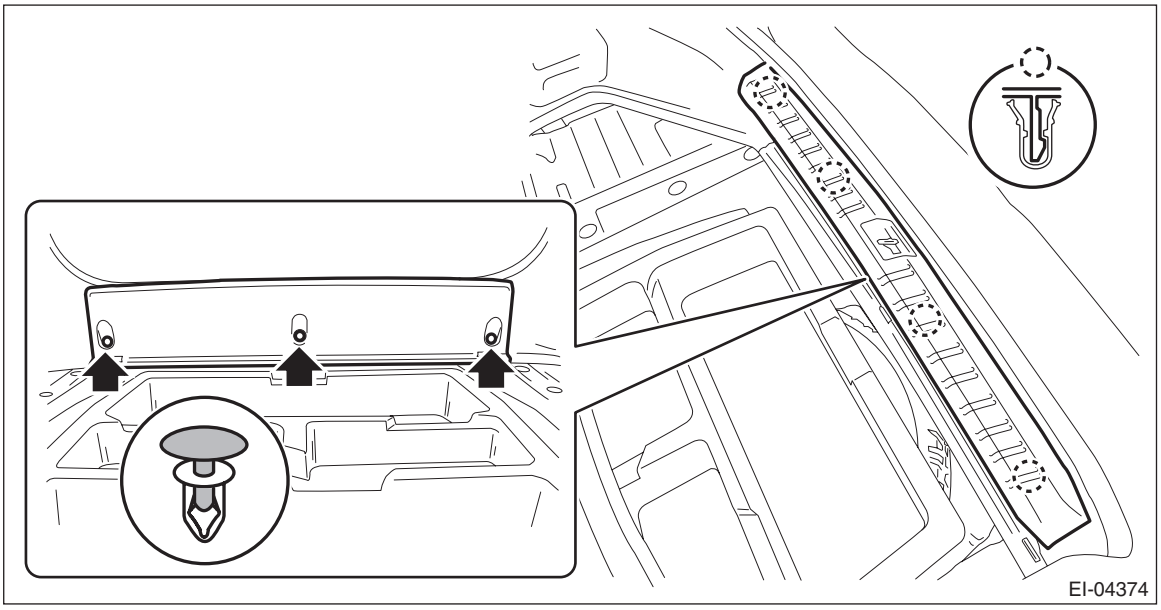

4) Remove the trim panel - trunk side LH. <Ref. to EI-98, REMOVAL, Trunk Room Trim.>
5) Remove the TPMS CM.
   (1) Disconnect the connector.
   (2) Remove the nuts to remove the TPMS CM.

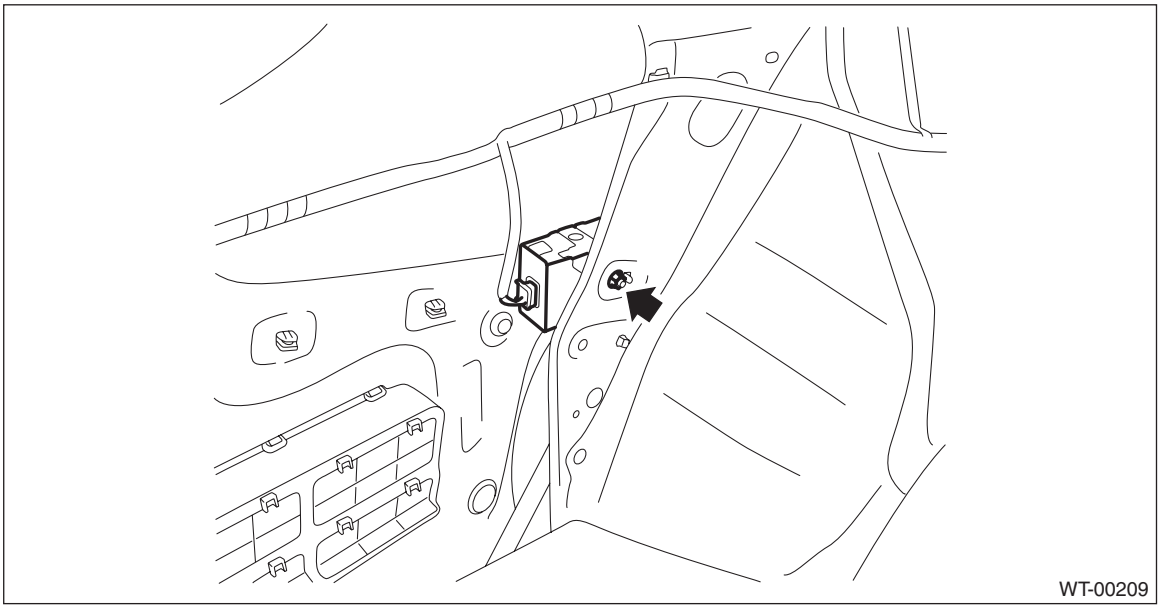

B: INSTALLATION

1. TRANSMITTER (TIRE INFLATION PRESSURE SENSOR)

CAUTION:
Use the new transmitter assembly or replace the new valve and screw, when installing.
1) Replace the valve and screw with a new part when reusing transmitter.

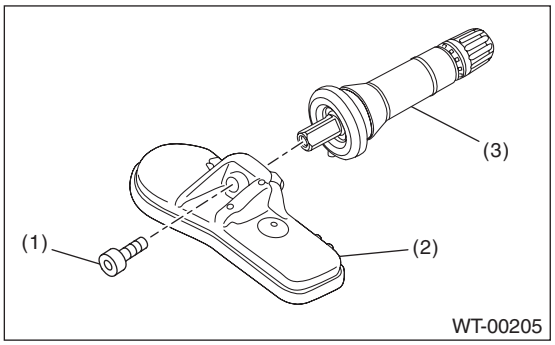

(1) Screw
(2) Transmitter
(3) Valve

Tightening torque:
1.4 N·m (0.1 kgf-m, 1 ft-lb)
2) Install the transmitter to the wheel by aligning it with valve hole.

NOTE:
When using the jig that pulls the valve cap by hooking its neck part, use another short-type cap.
3) Install the tires to wheels.

CAUTION:
- **Use a tire changer when installing tire to wheel.**
- **To prevent damaging the transmitter, set the tire changer boom in the position as shown in the figure.**

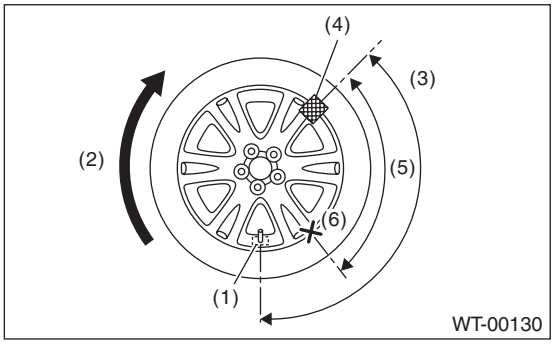

(1) Transmitter
(2) Direction of turn table rotation
(3) 135°
(4) Tire changer boom
(5) 90°
(6) Starting point for fitting the bead to the rim

4) Install the wheels to vehicle. <Ref. to WT-5, INSTALLATION, Tire and Wheel.>
5) Register the transmitter ID when the transmitter has been replaced. <Ref. to TPM(diag)-12, Register Transmitter (ID).>

2. TPMS & KEYLESS CONTROL MODULE

NOTE:
- TPMS CM for keyless entry model is integrated with the keyless entry control module.
- For installation procedures, refer to “SECURITY AND LOCKS” section. <Ref. to SL-78, INSTALLATION, Keyless Entry Control Module.>

3. TPMS CM

NOTE:
TPMS CM for model with keyless access with push button start is separated from the keyless access control module.

1) Install the TPMS CM.

Tightening torque:
7.5 N·m (0.8 kgf-m, 5.5 ft-lb)

2) Install the trim panel - trunk side LH.
3) Install the trim panel - trunk rear.
4) Connect the battery ground terminal. <Ref. to NT-6, BATTERY, NOTE, Note.>

5. General Diagnostic Table

A: INSPECTION

Symptoms	Possible cause	Corrective action
Wheel is out of balance.	Improperly inflated tire.	Adjust the tire pressure.
	Uneven wear	Check the tire referring to “Abnormal tire wear” in this table, carry out the procedure and replace the tire.
	Front wheel alignment	Check or adjust the front wheel alignment. • Inspection: <Ref. to FS-10, INSPECTION, Wheel Alignment.> • Adjustment: <Ref. to FS-14, ADJUSTMENT, Wheel Alignment.>
	Rear wheel alignment	Check or adjust the rear wheel alignment. • Inspection: <Ref. to FS-10, INSPECTION, Wheel Alignment.> • Adjustment: <Ref. to FS-14, ADJUSTMENT, Wheel Alignment.>
	Front strut	Check the front strut. <Ref. to FS-47, INSPECTION, Front Strut.>
	Rear shock absorber	Check the rear shock absorber. <Ref. to RS-32, INSPECTION, Rear Shock Absorber.>
	Housing ASSY - front axle	Check the housing assembly - front axle. <Ref. to DS-29, INSPECTION, Front Hub Unit Bearing.>
	Hub unit COMPL - front axle	Check the hub unit COMPL - front axle. <Ref. to DS-29, INSPECTION, Front Hub Unit Bearing.>
	Hub unit COMPL - rear axle	Check the hub unit COMPL - rear axle. <Ref. to DS-44, INSPECTION, Rear Hub Unit Bearing.>
Vehicle is abnormally out of balance.	Improperly inflated tire.	Adjust the tire pressure.
	Uneven wear	Check the tire referring to “Abnormal tire wear” in this table, carry out the procedure and replace the tire.
	Front stabilizer	Inspect the front stabilizer.
	Front wheel alignment	Check or adjust the front wheel alignment. • Inspection: <Ref. to FS-10, INSPECTION, Wheel Alignment.> • Adjustment: <Ref. to FS-14, ADJUSTMENT, Wheel Alignment.>
	Rear wheel alignment	Check or adjust the rear wheel alignment. • Inspection: <Ref. to FS-10, INSPECTION, Wheel Alignment.> • Adjustment: <Ref. to FS-14, ADJUSTMENT, Wheel Alignment.>
Abnormal wheel vibration	Improperly inflated tire.	Adjust the tire pressure.
	Uneven wear	Check the tire referring to “Abnormal tire wear” in this table, carry out the procedure and replace the tire.
	Improper wheel balancing	Check the wheel balance. <Ref. to WT-6, WHEEL BALANCING, INSPECTION, Tire and Wheel.>
	Housing ASSY - front axle	Check the housing assembly - front axle. <Ref. to DS-29, INSPECTION, Front Hub Unit Bearing.>
	Hub unit COMPL - front axle	Check the hub unit COMPL - front axle. <Ref. to DS-29, INSPECTION, Front Hub Unit Bearing.>
	Hub unit COMPL - rear axle	Check the hub unit COMPL - rear axle. <Ref. to DS-44, INSPECTION, Rear Hub Unit Bearing.>

Symptoms	Possible cause	Corrective action
Abnormal tire wear	Improperly inflated tire.	Adjust the tire pressure.
	Improper wheel balancing	Check the wheel balance. <Ref. to WT-6, WHEEL BALANCING, INSPECTION, Tire and Wheel.>
	Front wheel alignment	Check or adjust the front wheel alignment. • Inspection: <Ref. to FS-10, INSPECTION, Wheel Alignment.> • Adjustment: <Ref. to FS-14, ADJUSTMENT, Wheel Alignment.>
	Rear wheel alignment	Check or adjust the rear wheel alignment. • Inspection: <Ref. to FS-10, INSPECTION, Wheel Alignment.> • Adjustment: <Ref. to FS-14, ADJUSTMENT, Wheel Alignment.>

TIRE PRESSURE MONITORING SYSTEM (DIAGNOSTICS)

TPM(diag)

		Page
1.	Basic Diagnostic Procedure	2
2.	General Description	4
3.	Electrical Component Location	6
4.	Control Module I/O Signal	7
5.	Subaru Select Monitor	8
6.	Read Diagnostic Trouble Code (DTC)	9
7.	Clear Memory Mode	10
8.	Read Current Data	11
9.	Register Transmitter (ID)	12
10.	Display Transmitter (ID)	13
11.	Inspection Mode	14
12.	Tire Pressure Warning Light / Trouble Indicator Light Illumination Pattern	15
13.	List of Diagnostic Trouble Code (DTC)	18
14.	Diagnostic Procedure with Diagnostic Trouble Code (DTC)	20
15.	General Diagnostic Table	31

1. Basic Diagnostic Procedure

A: PROCEDURE

CAUTION:
Remove foreign matter (dust, water, oil, etc.) from the TPMS & keyless entry CM connector or TPMS CM connector during removal and installation.

NOTE:
To check harness for open or short circuits, shake the suspected trouble spot or connector.

	Step	Check	Yes	No
1	**CHECK PRE-INSPECTION.** 1) Check with the user regarding when the warning light lit or started blinking. 2) Before performing diagnostics, check all components which may adversely affect the tire pressure monitor system. <Ref. to TPM(diag)-4, INSPECTION, General Description.>	Is the check result of the component that might affect the tire pressure monitor system OK?	Go to step **2**.	Repair or replace each component.
2	**CHECK DTC.** 1) Turn the ignition switch to OFF. 2) Connect the Subaru Select Monitor to data link connector. 3) Turn the ignition switch to ON and run the Subaru Select Monitor. NOTE: If the communication function of the Subaru Select Monitor cannot be executed normally, check the communication circuit. <Ref. to TPM(diag)-8, COMMUNICATION FOR INITIALIZING IMPOSSIBLE, INSPECTION, Subaru Select Monitor.> 4) Read the DTC. <Ref. to TPM(diag)-9, OPERATION, Read Diagnostic Trouble Code (DTC).>	Is DTC displayed?	Go to step **4**.	Go to step **3**.
3	**PERFORM GENERAL DIAGNOSTICS.** 1) Perform the inspection by referring to “General Diagnostic Table”. <Ref. to TPM(diag)-31, General Diagnostic Table.> 2) Perform the Clear Memory Mode. <Ref. to TPM(diag)-10, OPERATION, Clear Memory Mode.> 3) Perform the Inspection Mode. <Ref. to TPM(diag)-14, Inspection Mode.> 4) Read the DTC. <Ref. to TPM(diag)-9, OPERATION, Read Diagnostic Trouble Code (DTC).> Check that the DTC is not displayed.	Does the tire pressure warning light illuminates for about 2 seconds and then foes off after turning on the ignition switch, and then go out?	Finish the diagnosis.	Check the tire inflation pressure warning light. <Ref. to TPM(diag)-15, Tire Pressure Warning Light / Trouble Indicator Light Illumination Pattern.>

	Step	Check	Yes	No
4	**REPRODUCTION OF FAILURE.** 1) Perform the drive test. Drive the vehicle at 40 km/h (25 MPH) or faster for at least 10 minutes. 2) Read the DTC. <Ref. to TPM(diag)-9, OPERATION, Read Diagnostic Trouble Code (DTC).>	Is DTC displayed as current malfunction?	Go to step **5**.	When DTC is displayed as "Past faults", the system has returned to a normal condition at this time. Reproduce the failure, and then perform the diagnosis again. NOTE: In this case, there may be temporary poor communication due to radio wave environment inside/outside the vehicle.
5	**PERFORM DIAGNOSIS.** 1) Refer to "List of Diagnostic Trouble Code (DTC)". 2) Correct the cause of trouble. 3) Perform the Clear Memory Mode. <Ref. to TPM(diag)-10, OPERATION, Clear Memory Mode.> 4) Perform the drive test. Drive the vehicle at 40 km/h (25 MPH) or faster for at least 10 minutes. 5) Read the DTC. <Ref. to TPM(diag)-9, OPERATION, Read Diagnostic Trouble Code (DTC).>	Is DTC displayed?	Repeat steps 1 to 4 until DTC is not shown.	Finish the diagnosis.

2. General Description

A: CAUTION

1. SUPPLEMENTAL RESTRAINT SYSTEM "AIRBAG"

Airbag system wiring harness is routed near the TPM control module.

CAUTION:
- **Do not use electrical test equipment on any of the airbag system wiring harness circuits.**
- **Be careful not to damage the wiring harness of the airbag system when servicing the TPMS & keyless entry CM or TPMS CM.**

2. TPMS & KEYLESS ENTRY CM OR TPMS CM

- If the transmitter is replaced, ID registration for the transmitter is required. <Ref. to TPM(diag)-12, OPERATION, Register Transmitter (ID).>
- When adjusting tire pressure indoors in winter, there is a big temperature difference between the indoor facilities and outside. Once the car is outside where the temperature is lower, the air pressure in the tires will drop, causing the tire pressure warning light to illuminate, even if the pressure in the tires was adjusted to standard values indoors. To avoid this, it is necessary to adjust the tire pressure to the high side in consideration of the difference in temperature between inside and outside according to the following table.
- 235/45R17, 245/40R18

Temperature °C (°F)	Indoor temperature	15.5 (60)		
	Ambient temperature	–1 (30)	–12 (10)	–23 (–10)
Air pressure kPa (psi)	Front	250 (36)	265 (38)	280 (40)
	Rear	240 (35)	255 (37)	270 (39)

B: INSPECTION

Before performing diagnosis, check the following item which might affect the quality of the tire pressure monitoring system.

1. TIRE

- Inspect that the tire pressure is within the specification while the tire is cool. (Refer to Tire Caution Label.)
- Check the tires for damage or the insertion of foreign matters.

2. BATTERY

Check the battery. <Ref. to SC(STI)-24, Battery.> <Ref. to SC(w/o STI)-50, Battery.>

C: PREPARATION TOOL

1. SPECIAL TOOL

ILLUSTRATION	TOOL NUMBER	DESCRIPTION	REMARKS
 STSSM4	—	SUBARU SELECT MONITOR 4	Used for setting of each function and trouble-shooting for electrical system. NOTE: For detailed operation procedures of Subaru Select Monitor 4, refer to “Application help”.

2. GENERAL TOOL

TOOL NAME	REMARKS
Circuit tester	Used for measuring resistance, voltage and current.
Transmitter registration tool	Used to register the transmitter ID. Manufacturer: Kent-Moore Item number: J45295
DST-i	Used together with Subaru Select Monitor 4.

3. Electrical Component Location

A: LOCATION

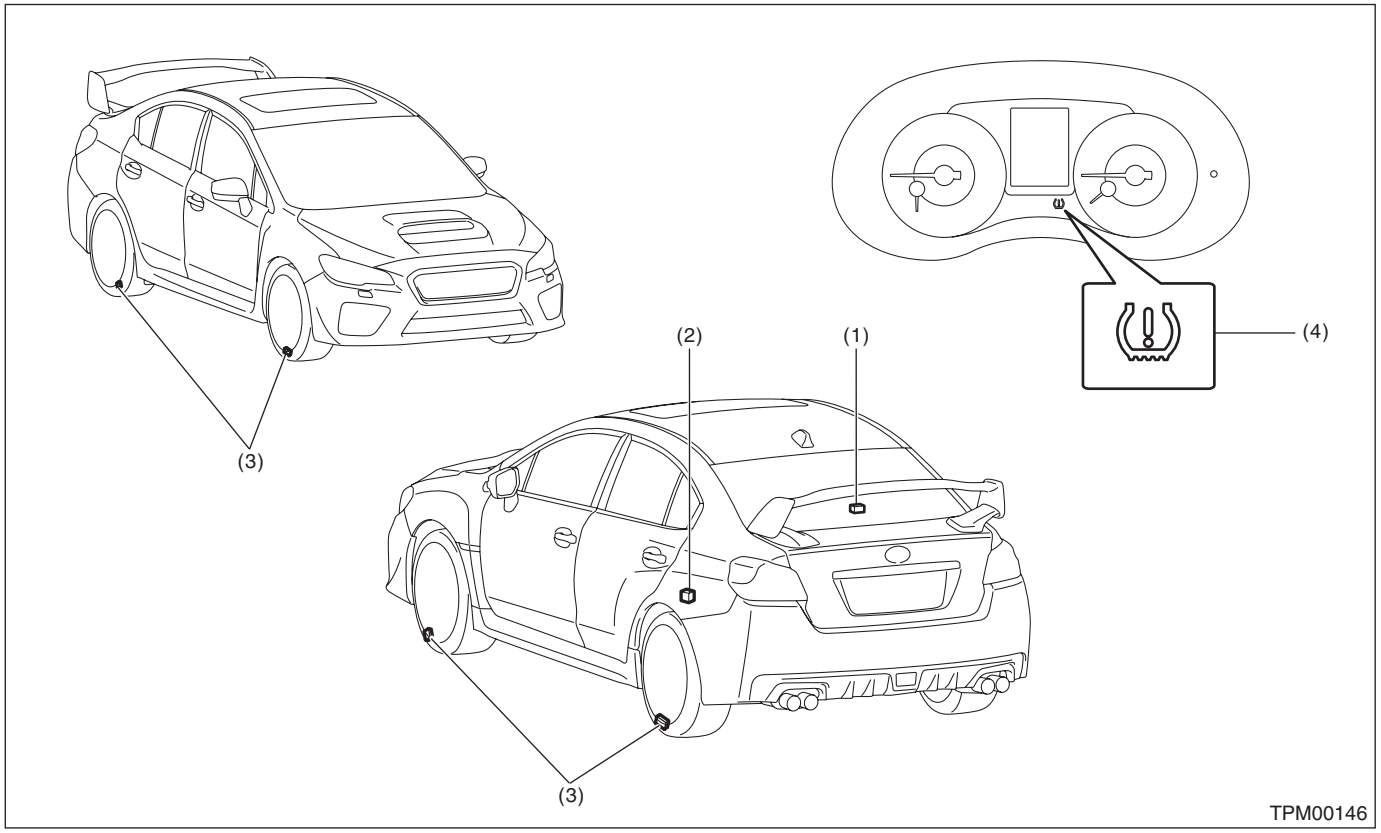

(1) TPMS & keyless entry CM (without keyless access with push button start)
(2) TPMS CM (with keyless access with push button start)
(3) Snap-in type transmitter
(4) Tire pressure warning light

4. Control Module I/O Signal

A: ELECTRICAL SPECIFICATION

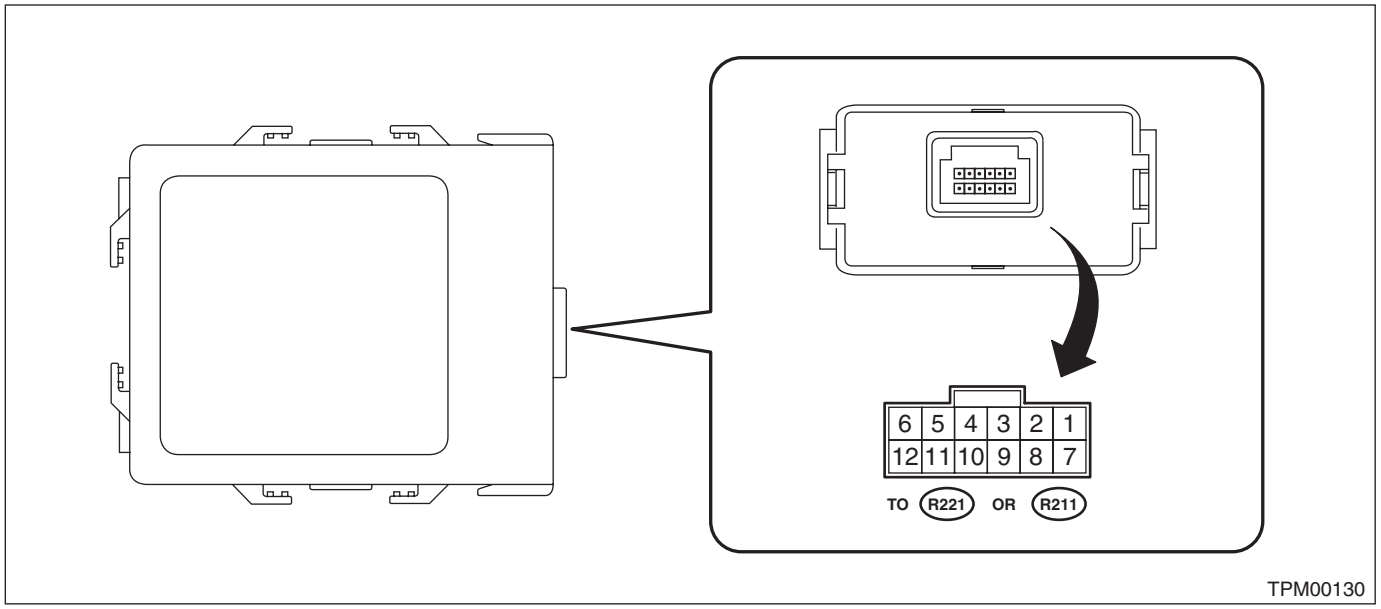

Terminal No.	Content	Measured value and measuring conditions	Remarks
1	—	—	—
2	—	—	—
3	—	—	—
4	Ignition power supply	10 — 13 V (when the ignition switch is ON)	—
5	GND	0 V (always)	—
6	Battery power supply	10 — 13 V (always)	—
7	—	—	—
8	—	—	—
9	—	—	—
10	—	—	—
11	Body integrated unit	—	—
12	—	—	—

B: WIRING DIAGRAM

Refer to “Tire Pressure Monitoring System” in the wiring diagram. <Ref. to WI-362, WIRING DIAGRAM, Tire Pressure Monitoring System.>

5. Subaru Select Monitor

A: OPERATION

For operation procedures, refer to “Application help”.

NOTE:
If TPMS & keyless entry CM or TPMS CM and Subaru Select Monitor cannot communicate, check the communication circuit. <Ref. to TPM(diag)-8, INSPECTION, Subaru Select Monitor.>

B: INSPECTION

1. COMMUNICATION FOR INITIALIZING IMPOSSIBLE

DETECTING CONDITION:
Defective harness connector
TROUBLE SYMPTOM:
Communication is impossible between the TPMS & keyless entry CM or TPMS CM and the Subaru Select Monitor.

	Step	Check	Yes	No
1	**CHECK IGNITION SWITCH.**	Is the ignition switch ON?	Go to step **2**.	Turn the ignition switch to ON, and select TPM mode using Subaru Select Monitor.
2	**CHECK BATTERY.** Check the battery voltage.	Is the voltage 11 V or more?	Go to step **3**.	Charge or replace the battery.
3	**CHECK BATTERY TERMINAL.** Check the battery terminal.	Is there poor contact at battery terminal?	Repair or tighten the battery terminal.	Go to step **4**.
4	**CHECK SUBARU SELECT MONITOR COMMUNICATION.** 1) Turn the ignition switch to ON. 2) Using the Subaru Select Monitor, check whether communication to other systems can be executed normally.	Is the system name displayed on Subaru Select Monitor?	Go to step **6**.	Go to step **5**.
5	**CHECK SUBARU SELECT MONITOR COMMUNICATION.** Connect the Subaru Select Monitor to another vehicle.	Is the communication for initializing with the connected vehicle possible?	Perform the inspection according to the diagnosis for LAN system. <Ref. to LAN(diag)-2, Basic Diagnostic Procedure.>	Replace or repair the Subaru Select Monitor.
6	**CHECK BODY INTEGRATED UNIT COMMUNICATION.** 1) Connect the Subaru Select Monitor to the target vehicle. 2) On «Each System» display, select «Body Control».	Is communication for initializing possible?	Perform the diagnosis for DTC U1500. <Ref. to BC(diag)-50, DTC U1500 KEYLESS UART COM. MALFUNCTION, Diagnostic Procedure with Diagnostic Trouble Code (DTC).>	Perform the inspection according to the diagnosis for LAN system. <Ref. to LAN(diag)-2, Basic Diagnostic Procedure.>

6. Read Diagnostic Trouble Code (DTC)

A: OPERATION

1) On «Start» display, select «Diagnosis».
2) On «Vehicle selection» display, input the target vehicle information and select «Confirmed».
3) On «Main Menu» display, select «Each System».
4) On «Select System» display, select «Tire Pressure Monitor» and then select «Enter».
5) On «Select Function» display, select «DTC».

NOTE:
- For detailed operation procedures, refer to “Application help”.
- For details concerning DTCs, refer to List of Diagnostic Trouble Code (DTC). <Ref. to TPM(diag)-18, List of Diagnostic Trouble Code (DTC).>
- All DTCs detected will be displayed.
- If a particular DTC is not properly stored in memory (due to a voltage drop of the TPMS & keyless entry CM or TPMS CM power supply, etc.) when a problem occurs, a DTC suffixed with a question mark appears on the Subaru Select Monitor display. This shows it may be an unreliable reading.
- When DTC is not displayed, check the indicator circuit and communication circuit. <Ref. to TPM(diag)-15, Tire Pressure Warning Light / Trouble Indicator Light Illumination Pattern.>

7. Clear Memory Mode

A: OPERATION

1) On «Start» display, select «Diagnosis».
2) On «Vehicle selection» display, input the target vehicle information and select «Confirmed».
3) On «Main Menu» display, select «Each System».
4) On «Select System» display, select «Tire Pressure Monitor» and then select «Enter».
5) On «Select Function» display, select «DTC».
6) On «DTC» display, select «Clear Memory».

NOTE:
For detailed operation procedures, refer to “Application help”.

8. Read Current Data

A: OPERATION

1) On «Start» display, select «Diagnosis».
2) On «Vehicle selection» display, input the target vehicle information and select «Confirmed».
3) On «Main Menu» display, select «Each System».
4) On «Select System» display, select «Tire Pressure Monitor» and then select «Enter».
5) On «Select Function» display, select «Data Monitor».

NOTE:
For detailed operation procedures, refer to “Application help”.

B: LIST

Display	Contents to be displayed	Unit of measure
Tire 1 FN code	LEARN, LOW BAT, OFF, WAKE, RE ME, NORMAL	LEARN: Transmitted transmitter ID using the transmitter registration tool LOW BAT: Transmitter battery voltage running low OFF: Transmitter function stops (no data transmission) RE ME: Tire air changes ±8.4 kPa WAKE: When data transmission is started from a stopped state. NORMAL: Conditions other than above
Tire 2 FN code		
Tire 3 FN code		
Tire 4 FN code		
Tire 1 air pressure	Value converted to tire pressure from data delivered from transmitter is displayed. (The figure may differ from the actual measured values.)	kPa, psig, mmHg, inHg
Tire 2 air pressure		kPa, psig, mmHg, inHg
Tire 3 air pressure		kPa, psig, mmHg, inHg
Tire 4 air pressure		kPa, psig, mmHg, inHg
Vehicle Speed	Vehicle speed signal which is input in control module	km/h, MPH
Pressure warning	Threshold where tire pressure warning light illuminates	kPa, psig, mmHg, inHg
Return pressure	Threshold where tire pressure warning light goes out	kPa, psig, mmHg, inHg

9. Register Transmitter (ID)

A: OPERATION

Perform the registration procedure of the transmitter in the following cases:
- Transmitter is replaced.
- TPMS & keyless entry CM or TPMS CM is replaced.

NOTE:
- If registration of the transmitter ID is not possible after two attempts, replace the TPMS & keyless entry CM or TPMS CM. <Ref. to WT-8, Tire Pressure Monitoring System.>
- During the registration, turn the ignition switch to OFF and end the Subaru Select Monitor. Or if the registration is not performed for 5 minutes or more, the registration mode is cancelled.
- When rotating tires, there is no affect on the performance or functions of the tire pressure monitoring control module even if the transmitter (ID) is not registered, however, the tire position displayed on the Subaru Select Monitor will be incorrect.

1) Adjust all tire pressures to the specifications.
2) Connect the Subaru Select Monitor, and select «Diagnosis» on the «Start» display.
3) On «Vehicle selection» display, input the target vehicle information and select «Confirmed».
4) On «Main Menu» display, select «Each System».
5) On «Select System» display, select «Tire Pressure Monitor» and then select «Enter».
6) On «Select Function» display, select «Work Support».
7) On «Work Support» display, select «Transmitter ID regist».
8) «ID registration mode When execute Registered ID is deleted Continue?» is displayed, select [OK].
9) Contact the transmitter registration tool to the side wall area near the air valve on the front left tire, and press the switch. The transmitter ID is sent to the TPMS & keyless entry CM or TPMS CM. (At this time, the tire pressure warning light blinks to confirm that the registration has started.)

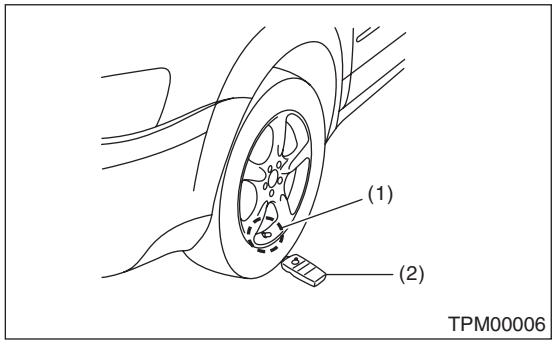

(1) Air valve (transmitter)
(2) Transmitter registration tool

NOTE:
- The registration order of transmitter ID is not specified.
- The transmitter registration tool is used by touching the side wall area near the transmitter.
- When registration of each tire is completed, «ID registration completed» is displayed on the Select Monitor screen.
- If registration procedure stop in the halfway (turning ignition switch to OFF, wrong registration order, etc), proceed from step 5).

10) When ID registration is completed, the tire pressure warning light remains lit for approximately 2 seconds, to end the registration. Switch to the screen displaying the transmitter ID on the Subaru Select Monitor display. <Ref. to TPM(diag)-13, Display Transmitter (ID).>
11) Check the transmitter ID that was registered, then perform a driving test. <Ref. to TPM(diag)-14, Inspection Mode.>

10.Display Transmitter (ID)

A: OPERATION

For detailed operation procedures, refer to Read Current Data. <Ref. to TPM(diag)-11, Read Current Data.>

11.Inspection Mode

A: PROCEDURE

Reproduce the malfunction occurrence condition as much as possible. Drive the vehicle at 40 km/h (25 MPH) or faster for at least ten minutes.

12. Tire Pressure Warning Light / Trouble Indicator Light Illumination Pattern

A: INSPECTION

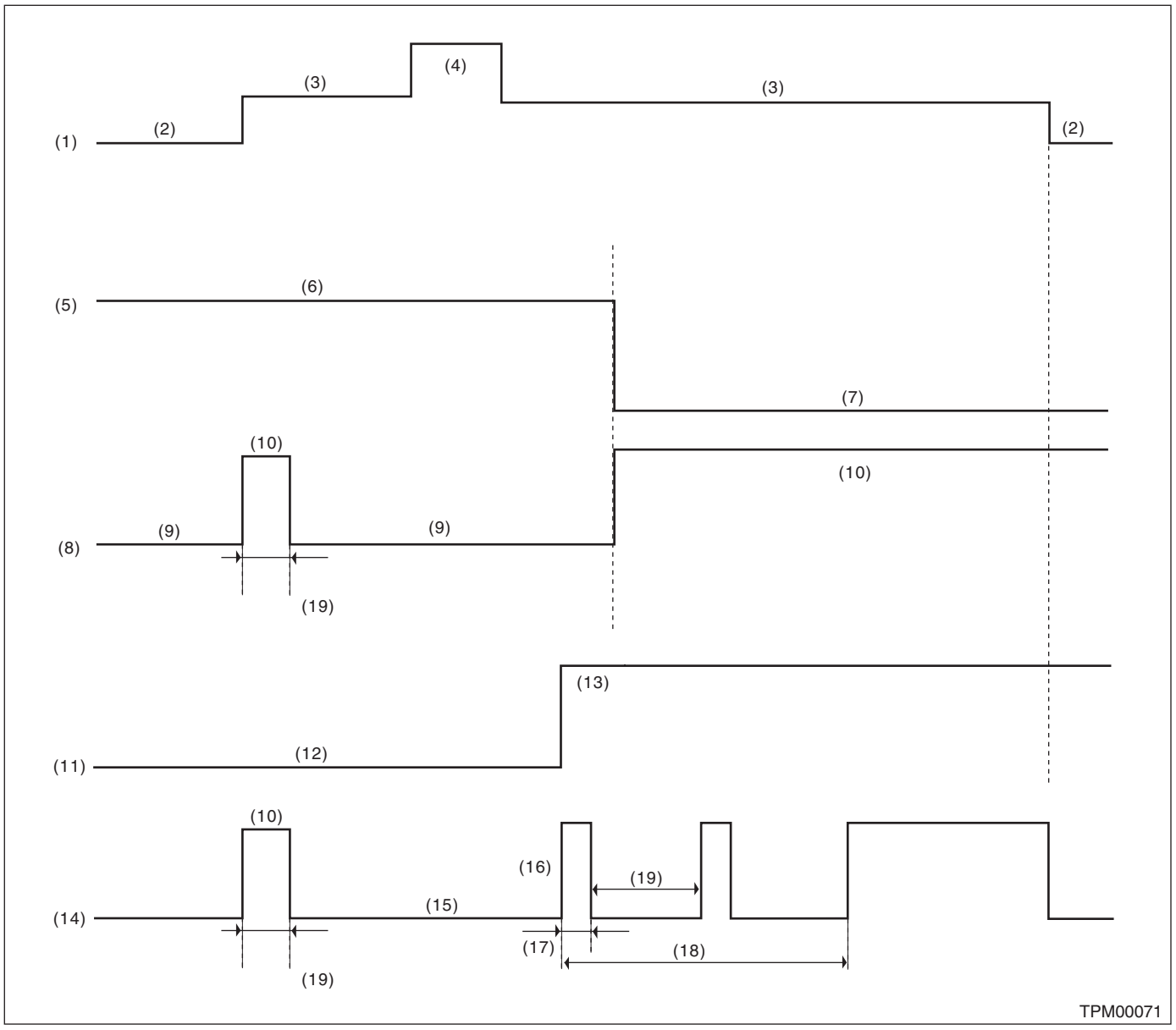

(1) Ignition switch
(2) OFF
(3) ON
(4) Start
(5) Tire inflation pressure condition
(6) Meet the specification
(7) Less than standard value (For the pressure warning level, refer to “CURRENT DATA”.) <Ref. to TPM(diag)-11, LIST, Read Current Data.>
(8) Tire inflation pressure warning light (pressure condition)
(9) Light OFF
(10) Light ON
(11) System status
(12) Normal
(13) Malfunction
(14) Tire inflation pressure warning light (system condition)
(15) Light OFF
(16) Blink
(17) 1 second
(18) Blinks 25 times
(19) 2 seconds

1) When the tire pressure warning light does not illuminate in accordance with this illumination pattern, there must be an electrical malfunction.
2) If the tire pressure warning light does not go off, check the TPMS & keyless entry CM or TPMS CM/warning light circuit and the combination meter circuit. <Ref. to TPM(diag)-16, TIRE PRESSURE WARNING LIGHT DOES NOT COME OFF, Tire Pressure Warning Light / Trouble Indicator Light Illumination Pattern.>

NOTE:
If the problem is fixed while driving at approximately 40 km/h (25 MPH) after the tire pressure warning light blinks/lights, the warning light goes out and the tire pressure monitor system operates normally. (If there is a decrease in tire pressure, or a malfunction of the system, the malfunction history is displayed.)

B: TIRE PRESSURE WARNING LIGHT DOES NOT COME ON

DETECTING CONDITION:
Defective combination meter
TROUBLE SYMPTOM:
When the ignition switch is turned to ON, the tire pressure warning light does not turn on (for approx. 2 seconds).

	Step	Check	Yes	No
1	**CHECK DTC.** Connect the Subaru Select Monitor, and read the DTC. <Ref. to TPM(diag)-9, OPERATION, Read Diagnostic Trouble Code (DTC).>	Is DTC displayed?	Perform the diagnosis according to the DTC. <Ref. to TPM(diag)-18, List of Diagnostic Trouble Code (DTC).>	Go to step **2**.
2	**CHECK COMBINATION METER.** From «Active Test» for the combination meter, perform «TPMS warning». <Ref. to IDI(diag)-20, System Operation Check Mode.>	Does the tire pressure warning light illuminate?	Replace the TPMS & keyless entry CM or TPMS CM. <Ref. to WT-8, Tire Pressure Monitoring System.>	Replace the combination meter. <Ref. to IDI-13, REMOVAL, Combination Meter.>

C: TIRE PRESSURE WARNING LIGHT DOES NOT COME OFF

DETECTING CONDITION:
- Defective combination meter
- Tires pressure drop
- Transmitter ID not registered

TROUBLE SYMPTOM:
Tire pressure warning light remains illuminating after engine starts.

	Step	Check	Yes	No
1	**CHECK DTC.** Connect the Subaru Select Monitor, and read the DTC. <Ref. to TPM(diag)-9, OPERATION, Read Diagnostic Trouble Code (DTC).>	Is DTC displayed?	Perform the diagnosis according to the DTC. <Ref. to TPM(diag)-18, List of Diagnostic Trouble Code (DTC).>	Go to step **2**.
2	**CHECK TRANSMITTER (ID).** Display the transmitter ID of the tire pressure monitor system.	Is the transmitter ID registered?	Go to step **3**.	Register the transmitter ID. <Ref. to TPM(diag)-12, OPERATION, Register Transmitter (ID).>
3	**CHECK TRANSMITTER DATA OUTPUT.** 1) Select data display of the tire pressure monitoring. 2) Start the engine and check the tire pressure warning light output.	Is the warning light output ON?	Replace the TPMS & keyless entry CM or TPMS CM. <Ref. to WT-8, Tire Pressure Monitoring System.>	Replace the combination meter. <Ref. to IDI-13, REMOVAL, Combination Meter.>

D: TIRE PRESSURE WARNING LIGHT IS 25 TIMES BLINKING AND TURN ON

DETECTING CONDITION:

- Defective TPMS & keyless entry CM or TPMS CM
- Defective harness
- Transmitter is faulty.

TROUBLE SYMPTOM:

Every time the engine starts, tire pressure warning light blinks 25 times and then illuminates.

	Step	Check	Yes	No
1	**CHECK DTC.** Connect the Subaru Select Monitor, and read the DTC. <Ref. to TPM(diag)-9, OPERATION, Read Diagnostic Trouble Code (DTC).>	Is DTC displayed?	Perform the diagnosis according to the DTC. <Ref. to TPM(diag)-18, List of Diagnostic Trouble Code (DTC).>	Go to step **2**.
2	**CHECK LAN COMMUNICATION.** Inspect LAN system. <Ref. to LAN(diag)-2, PROCEDURE, Basic Diagnostic Procedure.>	Is the check result OK?	Perform the diagnosis for DTC U1500. <Ref. to BC(diag)-50, DTC U1500 KEYLESS UART COM. MALFUNCTION, Diagnostic Procedure with Diagnostic Trouble Code (DTC).>	Repair it according to the diagnosis for LAN system.

13.List of Diagnostic Trouble Code (DTC)

A: LIST

DTC	Item	Contents of diagnosis	Remarks
C2021	Tire 1 Air Pressure Low (Normal Mode)	Tire pressure of tire 1 is reduced.	<Ref. to TPM(diag)-20, DTC C2021 TIRE 1 AIR PRESSURE LOW (NORMAL MODE), Diagnostic Procedure with Diagnostic Trouble Code (DTC).>
C2022	Tire 2 Air Pressure Low (Normal Mode)	Tire pressure of tire 2 is reduced.	<Ref. to TPM(diag)-20, DTC C2022 TIRE 2 AIR PRESSURE LOW (NORMAL MODE), Diagnostic Procedure with Diagnostic Trouble Code (DTC).>
C2023	Tire 3 Air Pressure Low (Normal Mode)	Tire pressure of tire 3 is reduced.	<Ref. to TPM(diag)-20, DTC C2023 TIRE 3 AIR PRESSURE LOW (NORMAL MODE), Diagnostic Procedure with Diagnostic Trouble Code (DTC).>
C2024	Tire 4 Air Pressure Low (Normal Mode)	Tire pressure of tire 4 is reduced.	<Ref. to TPM(diag)-21, DTC C2024 TIRE 4 AIR PRESSURE LOW (NORMAL MODE), Diagnostic Procedure with Diagnostic Trouble Code (DTC).>
C2121	Transmitter 1 No Data	Data cannot be received from transmitter 1.	<Ref. to TPM(diag)-21, DTC C2121 TRANSMITTER 1 NO DATA, Diagnostic Procedure with Diagnostic Trouble Code (DTC).>
C2122	Transmitter 2 No Data	Data cannot be received from transmitter 2.	<Ref. to TPM(diag)-21, DTC C2122 TRANSMITTER 2 NO DATA, Diagnostic Procedure with Diagnostic Trouble Code (DTC).>
C2123	Transmitter 3 No Data	Data cannot be received from transmitter 3.	<Ref. to TPM(diag)-21, DTC C2123 TRANSMITTER 3 NO DATA, Diagnostic Procedure with Diagnostic Trouble Code (DTC).>
C2124	Transmitter 4 No Data	Data cannot be received from transmitter 4.	<Ref. to TPM(diag)-22, DTC C2124 TRANSMITTER 4 NO DATA, Diagnostic Procedure with Diagnostic Trouble Code (DTC).>
C2221	Transmitter 1 Pressure Data Abnormal	Transmitter 1 data contents are abnormal.	<Ref. to TPM(diag)-23, DTC C2221 TRANSMITTER 1 PRESSURE DATA ABNORMAL, Diagnostic Procedure with Diagnostic Trouble Code (DTC).>
C2222	Transmitter 2 Pressure Data Abnormal	Transmitter 2 data contents are abnormal.	<Ref. to TPM(diag)-23, DTC C2222 TRANSMITTER 2 PRESSURE DATA ABNORMAL, Diagnostic Procedure with Diagnostic Trouble Code (DTC).>
C2223	Transmitter 3 Pressure Data Abnormal	Transmitter 3 data contents are abnormal.	<Ref. to TPM(diag)-23, DTC C2223 TRANSMITTER 3 PRESSURE DATA ABNORMAL, Diagnostic Procedure with Diagnostic Trouble Code (DTC).>
C2224	Transmitter 4 Pressure Data Abnormal	Transmitter 4 data contents are abnormal.	<Ref. to TPM(diag)-24, DTC C2224 TRANSMITTER 4 PRESSURE DATA ABNORMAL, Diagnostic Procedure with Diagnostic Trouble Code (DTC).>
C2321	Transmitter 1 Function Code Abnormal	Function code has error.	<Ref. to TPM(diag)-25, DTC C2321 TRANSMITTER 1 FUNCTION CODE ABNORMAL, Diagnostic Procedure with Diagnostic Trouble Code (DTC).>
C2322	Transmitter 2 Function Code Abnormal	Function code has error.	<Ref. to TPM(diag)-25, DTC C2322 TRANSMITTER 2 FUNCTION CODE ABNORMAL, Diagnostic Procedure with Diagnostic Trouble Code (DTC).>
C2323	Transmitter 3 Function Code Abnormal	Function code has error.	<Ref. to TPM(diag)-25, DTC C2323 TRANSMITTER 3 FUNCTION CODE ABNORMAL, Diagnostic Procedure with Diagnostic Trouble Code (DTC).>
C2324	Transmitter 4 Function Code Abnormal	Function code has error.	<Ref. to TPM(diag)-26, DTC C2324 TRANSMITTER 4 FUNCTION CODE ABNORMAL, Diagnostic Procedure with Diagnostic Trouble Code (DTC).>
C2421	Transmitter 1 Battery Voltage Low	Transmitter battery voltage is low.	<Ref. to TPM(diag)-27, DTC C2421 TRANSMITTER 1 BATTERY VOLTAGE LOW, Diagnostic Procedure with Diagnostic Trouble Code (DTC).>
C2422	Transmitter 2 Battery Voltage Low	Transmitter battery voltage is low.	<Ref. to TPM(diag)-27, DTC C2422 TRANSMITTER 2 BATTERY VOLTAGE LOW, Diagnostic Procedure with Diagnostic Trouble Code (DTC).>
C2423	Transmitter 3 Battery Voltage Low	Transmitter battery voltage is low.	<Ref. to TPM(diag)-27, DTC C2423 TRANSMITTER 3 BATTERY VOLTAGE LOW, Diagnostic Procedure with Diagnostic Trouble Code (DTC).>

DTC	Item	Contents of diagnosis	Remarks
C2424	Transmitter 4 Battery Voltage Low	Transmitter battery voltage is low.	<Ref. to TPM(diag)-28, DTC C2424 TRANSMITTER 4 BATTERY VOLTAGE LOW, Diagnostic Procedure with Diagnostic Trouble Code (DTC).>
C2521	Speed Abnormal	Vehicle speed signal is not input to the control module when the vehicle speed is 6 km/h (3.7 MPH) or more.	<Ref. to TPM(diag)-29, DTC C2521 SPEED ABNORMAL, Diagnostic Procedure with Diagnostic Trouble Code (DTC).>

14.Diagnostic Procedure with Diagnostic Trouble Code (DTC)

A: DTC C2021 TIRE 1 AIR PRESSURE LOW (NORMAL MODE)

NOTE:
Refer to DTC C2024 for diagnostic procedure. <Ref. to TPM(diag)-21, DTC C2024 TIRE 4 AIR PRESSURE LOW (NORMAL MODE), Diagnostic Procedure with Diagnostic Trouble Code (DTC).>

B: DTC C2022 TIRE 2 AIR PRESSURE LOW (NORMAL MODE)

NOTE:
Refer to DTC C2024 for diagnostic procedure. <Ref. to TPM(diag)-21, DTC C2024 TIRE 4 AIR PRESSURE LOW (NORMAL MODE), Diagnostic Procedure with Diagnostic Trouble Code (DTC).>

C: DTC C2023 TIRE 3 AIR PRESSURE LOW (NORMAL MODE)

NOTE:
Refer to DTC C2024 for diagnostic procedure. <Ref. to TPM(diag)-21, DTC C2024 TIRE 4 AIR PRESSURE LOW (NORMAL MODE), Diagnostic Procedure with Diagnostic Trouble Code (DTC).>

D: DTC C2024 TIRE 4 AIR PRESSURE LOW (NORMAL MODE)

DTC DETECTING CONDITION:
Inflation pressure of tires dropped below the specified value.

NOTE:
For the specifications, refer to “CURRENT DATA”. <Ref. to TPM(diag)-11, LIST, Read Current Data.>
TROUBLE SYMPTOM:
Tire pressure warning light illuminates.

	Step	Check	Yes	No
1	**CHECK TIRES.** Lift up the vehicle and check for damage in the tires.	Are there cracks or damage?	Replace the tire.	Go to step **2**.
2	**CHECK TIRES.** Check the tire air pressure.	Is the tire pressure in the specifications?	Go to step **3**.	Adjust the air pressure.
3	**CHECK TRANSMITTER.** 1) Drive at 40 km/h (25 MPH) or more. 2) Confirm the current data «Tire 1 air pressure»«Tire 2 air pressure»«Tire 3 air pressure»«Tire 4 air pressure» of the tire pressure monitor. <Ref. to TPM(diag)-11, Read Current Data.>	Is there a transmitter with different data?	Replace the transmitter (tire pressure sensor) with different display. <Ref. to WT-8, Tire Pressure Monitoring System.>	Go to step **4**.
4	**PERFORM DRIVING TEST.** 1) Perform the Clear Memory Mode. <Ref. to TPM(diag)-10, OPERATION, Clear Memory Mode.> 2) Perform a driving test. <Ref. to TPM(diag)-14, PROCEDURE, Inspection Mode.> 3) Read the DTC. <Ref. to TPM(diag)-9, OPERATION, Read Diagnostic Trouble Code (DTC).>	Is the same DTC displayed?	Replace the TPMS & keyless entry CM or TPMS CM. <Ref. to WT-8, Tire Pressure Monitoring System.>	Even if the DTC is displayed, the system has returned to a normal condition at this time. While the malfunction is present, perform the diagnosis again.

CAUTION:
When driving vehicle to perform driving test, there should be always 2 persons (driver and checker) to check.

E: DTC C2121 TRANSMITTER 1 NO DATA

NOTE:
Refer to DTC C2124 for diagnostic procedure. <Ref. to TPM(diag)-22, DTC C2124 TRANSMITTER 4 NO DATA, Diagnostic Procedure with Diagnostic Trouble Code (DTC).>

F: DTC C2122 TRANSMITTER 2 NO DATA

NOTE:
Refer to DTC C2124 for diagnostic procedure. <Ref. to TPM(diag)-22, DTC C2124 TRANSMITTER 4 NO DATA, Diagnostic Procedure with Diagnostic Trouble Code (DTC).>

G: DTC C2123 TRANSMITTER 3 NO DATA

NOTE:
Refer to DTC C2124 for diagnostic procedure. <Ref. to TPM(diag)-22, DTC C2124 TRANSMITTER 4 NO DATA, Diagnostic Procedure with Diagnostic Trouble Code (DTC).>

H: DTC C2124 TRANSMITTER 4 NO DATA

DTC DETECTING CONDITION:
Data from each transmitter is not received for 8 minutes.
TROUBLE SYMPTOM:
Tire pressure warning light blinks 25 times and then illuminates.

	Step	Check	Yes	No
1	**REPRODUCTION OF FAILURE.** 1) Perform the drive test. Drive the vehicle at 40 km/h (25 MPH) or faster for at least 10 minutes. 2) Read the DTC. <Ref. to TPM(diag)-9, OPERATION, Read Diagnostic Trouble Code (DTC).>	Is DTC displayed as current malfunction?	Go to step **2**.	When DTC is displayed as "Past faults", the system has returned to a normal condition at this time. Reproduce the failure, and then perform the diagnosis again. NOTE: In this case, there may be temporary poor communication due to radio wave environment inside/outside the vehicle.
2	**START FRONT LEFT TRANSMITTER.** 1) Connect the Subaru Select Monitor and then turn the ignition switch to ON. 2) Select "Transmit ID data monitor". <Ref. to TPM(diag)-13, OPERATION, Display Transmitter (ID).> 3) Use the transmitter registration tool and transmit the ID from the FL transmitter to check "Latest reception ID".	Is "Latest reception ID" updated?	Go to step **3**.	Replace the front left transmitter. <Ref. to WT-8, Tire Pressure Monitoring System.>
3	**CHECK FRONT LEFT TRANSMITTER ID.** Compare the ID on the latest ID display with «Registered ID 1».	Are the two IDs same?	Go to step **4**.	Record the received ID update as the FL transmitter. Go to step **4**.
4	**START FRONT RIGHT TRANSMITTER.** Use the transmitter registration tool and transmit the ID from the FR transmitter to check "Latest reception ID".	Is "Latest reception ID" updated?	Go to step **5**.	Replace the front right transmitter. <Ref. to WT-8, Tire Pressure Monitoring System.>
5	**CHECK FRONT RIGHT TRANSMITTER ID.** Compare the ID on the latest ID display with «Registered ID 2».	Are the two IDs same?	Go to step **6**.	Record the received ID update as the FR transmitter. Go to step **6**.
6	**START REAR RIGHT TRANSMITTER.** Use the transmitter registration tool and transmit the ID from the RR transmitter to check "Latest reception ID".	Is "Latest reception ID" updated?	Go to step **7**.	Replace the rear right transmitter. <Ref. to WT-8, Tire Pressure Monitoring System.>
7	**CHECK REAR RIGHT TRANSMITTER ID.** Compare the ID on the latest ID display with «Registered ID 3».	Are the two IDs same?	Go to step **8**.	Record the received ID update as the RR transmitter. Go to step **8**.

	Step	Check	Yes	No
8	**START REAR LEFT TRANSMITTER.** Use the transmitter registration tool and transmit the ID from the RL transmitter to check "Latest reception ID".	Is "Latest reception ID" updated?	Go to step **9**.	Replace the rear left transmitter. <Ref. to WT-8, Tire Pressure Monitoring System.>
9	**CHECK REAR LEFT TRANSMITTER ID.** Compare the ID on the latest ID display with «Registered ID 4».	Are the two IDs same?	Go to step **10**.	Record the received ID update as the RL transmitter. Go to step **10**.
10	**CHECK MALFUNCTION TRANSMITTER.**	Is ID recorded by this procedure?	Go to step **11**.	Go to step **2**.
11	**CHECK MALFUNCTION TRANSMITTER.** Check the registered ID of the transmitter indicated by DTC.	Is there checked ID in the record?	Replace the transmitter of the recorded position. <Ref. to WT-8, Tire Pressure Monitoring System.>	Replace the transmitter showing the latest ID that is not included in the registered IDs. <Ref. to WT-8, Tire Pressure Monitoring System.>

CAUTION:
When driving vehicle to perform driving test, there should be always 2 persons (driver and checker) to check.

I: DTC C2221 TRANSMITTER 1 PRESSURE DATA ABNORMAL

NOTE:
Refer to DTC C2224 for diagnostic procedure. <Ref. to TPM(diag)-24, DTC C2224 TRANSMITTER 4 PRESSURE DATA ABNORMAL, Diagnostic Procedure with Diagnostic Trouble Code (DTC).>

J: DTC C2222 TRANSMITTER 2 PRESSURE DATA ABNORMAL

NOTE:
Refer to DTC C2224 for diagnostic procedure. <Ref. to TPM(diag)-24, DTC C2224 TRANSMITTER 4 PRESSURE DATA ABNORMAL, Diagnostic Procedure with Diagnostic Trouble Code (DTC).>

K: DTC C2223 TRANSMITTER 3 PRESSURE DATA ABNORMAL

NOTE:
Refer to DTC C2224 for diagnostic procedure. <Ref. to TPM(diag)-24, DTC C2224 TRANSMITTER 4 PRESSURE DATA ABNORMAL, Diagnostic Procedure with Diagnostic Trouble Code (DTC).>

L: DTC C2224 TRANSMITTER 4 PRESSURE DATA ABNORMAL

DTC DETECTING CONDITION:

- When comparing the data from each transmitter to the previous data, the change is large.
- The pressure exceeds what the transmitter can measure. (Excessive pressure)

TROUBLE SYMPTOM:

Tire pressure warning light blinks 25 times and then illuminates.

	Step	Check	Yes	No
1	**REPRODUCTION OF FAILURE.** 1) Perform the drive test. Drive the vehicle at 40 km/h (25 MPH) or faster for at least 10 minutes. 2) Read the DTC. <Ref. to TPM(diag)-9, OPERATION, Read Diagnostic Trouble Code (DTC).>	Is DTC displayed as current malfunction?	Go to step **2**.	When DTC is displayed as “Past faults”, the system has returned to a normal condition at this time. Reproduce the failure, and then perform the diagnosis again. NOTE: In this case, there may be temporary poor communication due to radio wave environment inside/outside the vehicle.
2	**START FRONT LEFT TRANSMITTER.** 1) Connect the Subaru Select Monitor and then turn the ignition switch to ON. 2) Select “Transmit ID data monitor”. <Ref. to TPM(diag)-13, OPERATION, Display Transmitter (ID).> 3) Use the transmitter registration tool and transmit the ID from the FL transmitter to check “Latest reception ID”.	Is “Latest reception ID” updated?	Go to step **3**.	Replace the front left transmitter. <Ref. to WT-8, Tire Pressure Monitoring System.>
3	**CHECK FRONT LEFT TRANSMITTER ID.** Compare the ID on the latest ID display with «Registered ID 1».	Are the two IDs same?	Go to step **4**.	Record the received ID update as the FL transmitter. Go to step **4**.
4	**START FRONT RIGHT TRANSMITTER.** Use the transmitter registration tool and transmit the ID from the FR transmitter to check “Latest reception ID”.	Is “Latest reception ID” updated?	Go to step **5**.	Replace the front right transmitter. <Ref. to WT-8, Tire Pressure Monitoring System.>
5	**CHECK FRONT RIGHT TRANSMITTER ID.** Compare the ID on the latest ID display with «Registered ID 2».	Are the two IDs same?	Go to step **6**.	Record the received ID update as the FR transmitter. Go to step **6**.
6	**START REAR RIGHT TRANSMITTER.** Use the transmitter registration tool and transmit the ID from the RR transmitter to check “Latest reception ID”.	Is “Latest reception ID” updated?	Go to step **7**.	Replace the rear right transmitter. <Ref. to WT-8, Tire Pressure Monitoring System.>
7	**CHECK REAR RIGHT TRANSMITTER ID.** Compare the ID on the latest ID display with «Registered ID 3».	Are the two IDs same?	Go to step **8**.	Record the received ID update as the RR transmitter. Go to step **8**.

	Step	Check	Yes	No
8	**START REAR LEFT TRANSMITTER.** Use the transmitter registration tool and transmit the ID from the RL transmitter to check "Latest reception ID".	Is "Latest reception ID" updated?	Go to step **9**.	Replace the rear left transmitter. <Ref. to WT-8, Tire Pressure Monitoring System.>
9	**CHECK REAR LEFT TRANSMITTER ID.** Compare the ID on the latest ID display with «Registered ID 4».	Are the two IDs same?	Go to step **10**.	Record the received ID update as the RL transmitter. Go to step **10**.
10	**CHECK MALFUNCTION TRANSMITTER.**	Is ID recorded by this procedure?	Go to step **11**.	Go to step **2**.
11	**CHECK MALFUNCTION TRANSMITTER.** Check the registered ID of the transmitter indicated by DTC.	Is there checked ID in the record?	Replace the transmitter of the recorded position. <Ref. to WT-8, Tire Pressure Monitoring System.>	Replace the transmitter showing the latest ID that is not included in the registered IDs. <Ref. to WT-8, Tire Pressure Monitoring System.>

M: DTC C2321 TRANSMITTER 1 FUNCTION CODE ABNORMAL

NOTE:
Refer to DTC C2324 for diagnostic procedure. <Ref. to TPM(diag)-26, DTC C2324 TRANSMITTER 4 FUNCTION CODE ABNORMAL, Diagnostic Procedure with Diagnostic Trouble Code (DTC).>

N: DTC C2322 TRANSMITTER 2 FUNCTION CODE ABNORMAL

NOTE:
Refer to DTC C2324 for diagnostic procedure. <Ref. to TPM(diag)-26, DTC C2324 TRANSMITTER 4 FUNCTION CODE ABNORMAL, Diagnostic Procedure with Diagnostic Trouble Code (DTC).>

O: DTC C2323 TRANSMITTER 3 FUNCTION CODE ABNORMAL

NOTE:
Refer to DTC C2324 for diagnostic procedure. <Ref. to TPM(diag)-26, DTC C2324 TRANSMITTER 4 FUNCTION CODE ABNORMAL, Diagnostic Procedure with Diagnostic Trouble Code (DTC).>

P: DTC C2324 TRANSMITTER 4 FUNCTION CODE ABNORMAL

DTC DETECTING CONDITION:
Unexpected function codes received from each transmitter.
TROUBLE SYMPTOM:
Tire pressure warning light blinks 25 times and then illuminates.

	Step	Check	Yes	No
1	**REPRODUCTION OF FAILURE.** 1) Perform the drive test. Drive the vehicle at 40 km/h (25 MPH) or faster for at least 10 minutes. 2) Read the DTC. <Ref. to TPM(diag)-9, OPERATION, Read Diagnostic Trouble Code (DTC).>	Is DTC displayed as current malfunction?	Go to step **2**.	When DTC is displayed as "Past faults", the system has returned to a normal condition at this time. Reproduce the failure, and then perform the diagnosis again. NOTE: In this case, there may be temporary poor communication due to radio wave environment inside/outside the vehicle.
2	**START FRONT LEFT TRANSMITTER.** 1) Connect the Subaru Select Monitor and then turn the ignition switch to ON. 2) Select "Transmit ID data monitor". <Ref. to TPM(diag)-13, OPERATION, Display Transmitter (ID).> 3) Use the transmitter registration tool and transmit the ID from the FL transmitter to check "Latest reception ID".	Is "Latest reception ID" updated?	Go to step **3**.	Replace the front left transmitter. <Ref. to WT-8, Tire Pressure Monitoring System.>
3	**CHECK FRONT LEFT TRANSMITTER ID.** Compare the ID on the latest ID display with «Registered ID 1».	Are the two IDs same?	Go to step **4**.	Record the received ID update as the FL transmitter. Go to step **4**.
4	**START FRONT RIGHT TRANSMITTER.** Use the transmitter registration tool and transmit the ID from the FR transmitter to check "Latest reception ID".	Is "Latest reception ID" updated?	Go to step **5**.	Replace the front right transmitter. <Ref. to WT-8, Tire Pressure Monitoring System.>
5	**CHECK FRONT RIGHT TRANSMITTER ID.** Compare the ID on the latest ID display with «Registered ID 2».	Are the two IDs same?	Go to step **6**.	Record the received ID update as the FR transmitter. Go to step **6**.
6	**START REAR RIGHT TRANSMITTER.** Use the transmitter registration tool and transmit the ID from the RR transmitter to check "Latest reception ID".	Is "Latest reception ID" updated?	Go to step **7**.	Replace the rear right transmitter. <Ref. to WT-8, Tire Pressure Monitoring System.>
7	**CHECK REAR RIGHT TRANSMITTER ID.** Compare the ID on the latest ID display with «Registered ID 3».	Are the two IDs same?	Go to step **8**.	Record the received ID update as the RR transmitter. Go to step **8**.

	Step	Check	Yes	No
8	**START REAR LEFT TRANSMITTER.** Use the transmitter registration tool and transmit the ID from the RL transmitter to check "Latest reception ID".	Is "Latest reception ID" updated?	Go to step **9**.	Replace the rear left transmitter. <Ref. to WT-8, Tire Pressure Monitoring System.>
9	**CHECK REAR LEFT TRANSMITTER ID.** Compare the ID on the latest ID display with «Registered ID 4».	Are the two IDs same?	Go to step **10**.	Record the received ID update as the RL transmitter. Go to step **10**.
10	**CHECK MALFUNCTION TRANSMITTER.**	Is ID recorded by this procedure?	Go to step **11**.	Replace the transmitter indicated by diagnostics trouble code (DTC). <Ref. to WT-8, Tire Pressure Monitoring System.>
11	**CHECK MALFUNCTION TRANSMITTER.** Check the registered ID of the transmitter indicated by DTC.	Is there checked ID in the record?	Replace the transmitter of the recorded position. <Ref. to WT-8, Tire Pressure Monitoring System.>	Replace the transmitter indicated by diagnostics trouble code (DTC). <Ref. to WT-8, Tire Pressure Monitoring System.>

Q: DTC C2421 TRANSMITTER 1 BATTERY VOLTAGE LOW

NOTE:
Refer to DTC C2424 for diagnostic procedure. <Ref. to TPM(diag)-28, DTC C2424 TRANSMITTER 4 BATTERY VOLTAGE LOW, Diagnostic Procedure with Diagnostic Trouble Code (DTC).>

R: DTC C2422 TRANSMITTER 2 BATTERY VOLTAGE LOW

NOTE:
Refer to DTC C2424 for diagnostic procedure. <Ref. to TPM(diag)-28, DTC C2424 TRANSMITTER 4 BATTERY VOLTAGE LOW, Diagnostic Procedure with Diagnostic Trouble Code (DTC).>

S: DTC C2423 TRANSMITTER 3 BATTERY VOLTAGE LOW

NOTE:
Refer to DTC C2424 for diagnostic procedure. <Ref. to TPM(diag)-28, DTC C2424 TRANSMITTER 4 BATTERY VOLTAGE LOW, Diagnostic Procedure with Diagnostic Trouble Code (DTC).>

T: DTC C2424 TRANSMITTER 4 BATTERY VOLTAGE LOW

DTC DETECTING CONDITION:
Low battery signals received 20 times from each transmitter.
TROUBLE SYMPTOM:
Tire pressure warning light blinks 25 times and then illuminates.

	Step	Check	Yes	No
1	**REPRODUCTION OF FAILURE.** 1) Perform the drive test. Drive the vehicle at 40 km/h (25 MPH) or faster for at least 10 minutes. 2) Read the DTC. <Ref. to TPM(diag)-9, OPERATION, Read Diagnostic Trouble Code (DTC).>	Is DTC displayed as current malfunction?	Go to step **2**.	When DTC is displayed as "Past faults", the system has returned to a normal condition at this time. Reproduce the failure, and then perform the diagnosis again. NOTE: In this case, there may be temporary poor communication due to radio wave environment inside/outside the vehicle.
2	**CHECK TRANSMITTER.** 1) Replace all transmitters and register their IDs. <Ref. to TPM(diag)-12, OPERATION, Register Transmitter (ID).> 2) Perform the Clear Memory Mode, and perform driving test.	Is the fault eliminated?	Internal battery of the transmitter had worn out.	Replace the TPMS & keyless entry CM or TPMS CM. <Ref. to WT-8, Tire Pressure Monitoring System.>

U: DTC C2521 SPEED ABNORMAL

DTC DETECTING CONDITION:
Vehicle speed function codes were received from the transmitter, but the vehicle speed signal was not input to the module.

TROUBLE SYMPTOM:
Tire pressure warning light blinks 25 times and then illuminates.

WIRING DIAGRAM:
Tire Pressure Monitoring System <Ref. to WI-362, WIRING DIAGRAM, Tire Pressure Monitoring System.>

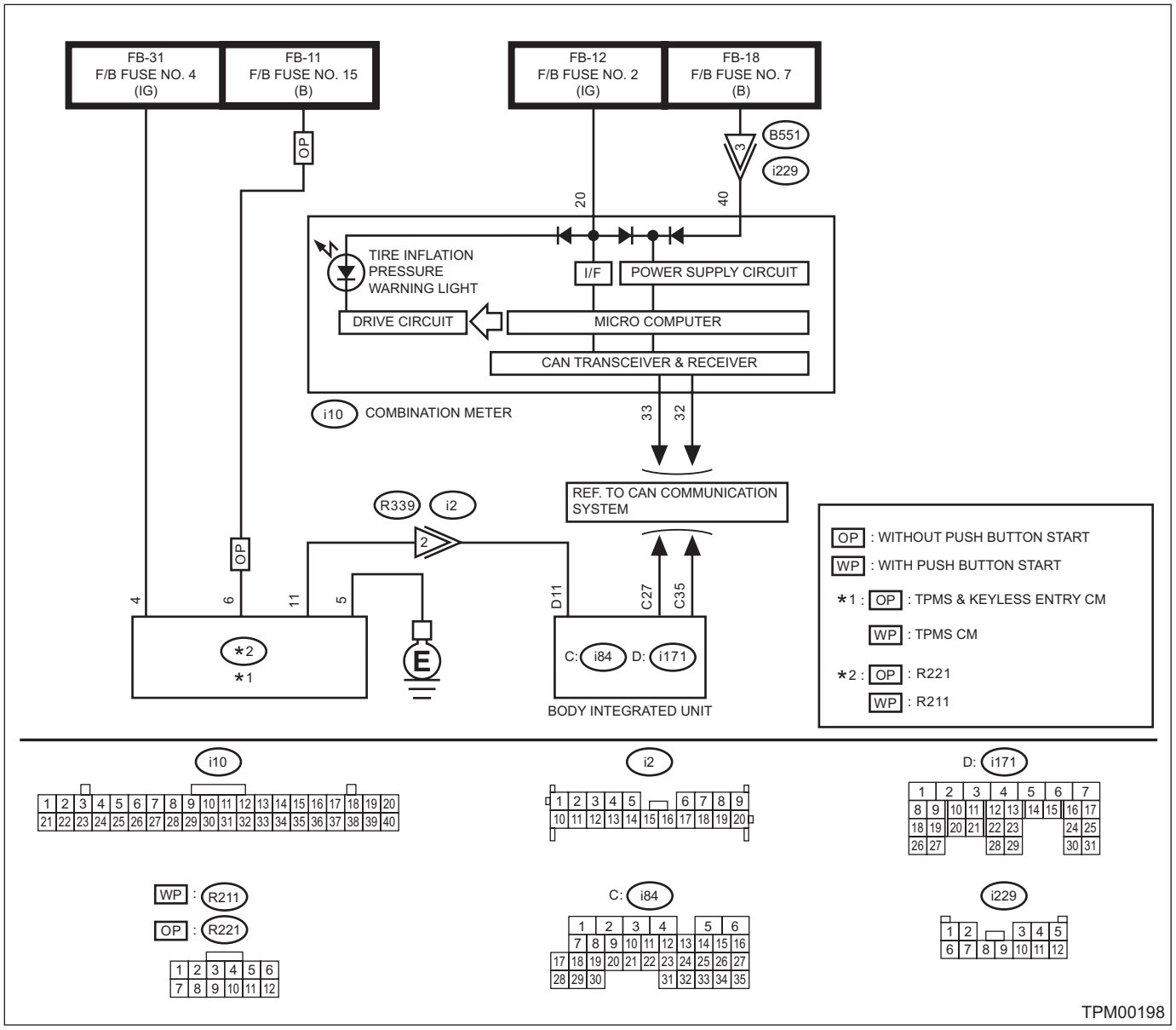

Step		Check	Yes	No
1	**CHECK LAN COMMUNICATION.** Inspect LAN system. <Ref. to LAN(diag)-2, PROCEDURE, Basic Diagnostic Procedure.>	Is the check result OK?	Go to step **2**.	Repair it according to the diagnosis for LAN system.

Step		Check	Yes	No
2	**CHECK HARNESS (OPEN CIRCUIT).** Measure the resistance between TPMS & keyless entry CM or TPMS CM and body integrated unit. ***Connector & terminal*** ***Without keyless access with push button start*** ***(R221) No. 11 — (i171) No. 11:*** ***(R221) No. 5 — Chassis ground:*** ***With keyless access with push button start*** ***(R211) No. 11 — (i171) No. 11:*** ***(R211) No. 5 — Chassis ground:***	Is the resistance less than 10 Ω?	Go to step **3**.	Repair the harness.
3	**CHECK CONNECTOR.** Check each connector.	Is there poor contact or any other faults?	Repair the connector.	Replace the TPMS & keyless entry CM or TPMS CM. <Ref. to WT-8, Tire Pressure Monitoring System.>

15.General Diagnostic Table

A: INSPECTION

Symptoms		Faulty parts
Tire pressure warning light illuminates.	Tire pressure is reduced.	• Improper tire pressure adjustment • Punctured tire
Tire pressure warning light blinks 25 times and then illuminates.	Tire pressure monitoring system has malfunction.	• Air pressure sensor malfunction • Air pressure sensor is out of battery. • Defective TPMS & keyless entry CM or TPMS CM • Defective vehicle harness • Defective combination meter
Tire pressure is dropping but the warning light does not illuminate.	Tire pressure warning light does not illuminate.	• Air pressure sensor is faulty. • Defective TPMS & keyless entry CM or TPMS CM • Defective combination meter

DIFFERENTIALS

DI

Page

1. General Description 2
2. Differential Gear Oil 17
3. Front Differential Assembly 20
4. Rear Differential (T-type) 21
5. Rear Differential Front Oil Seal 53
6. Rear Differential Side Oil Seal 55
7. Rear Differential Front Member 56
8. Rear Differential Mount Bushing 57
9. General Diagnostic Table 61

1. General Description

A: SPECIFICATION

1. REAR DIFFERENTIAL

When replacing a rear differential assembly, select the correct one according to the following table.

NOTE:
• Using a different rear differential assembly will cause the drive train and tires to drag or emit abnormal noise.
• For option code, refer to “ID” section. <Ref. to ID-2, IDENTIFICATION, Identification.>

Model	2.5 L high power turbo	2.0 L turbo	
	6MT	6MT	CVT
Rear differential type	T-type		
Identification	H5	B1	B2
LSD type	Torsen	—	
Type of gear	Hypoid gear		
Gear ratio (number of gear teeth)	3.545 (39/11)	4.111 (37/9)	3.900 (39/10)
Oil capacity	1.0 L (1.1 US qt, 0.9 Imp qt)	0.8 L (0.8 US qt, 0.7 Imp qt)	0.8 L (0.8 US qt, 0.7 Imp qt)
Rear differential gear oil	GL-5		

2. IDENTIFICATION

Identification positions are shown in the following figures.

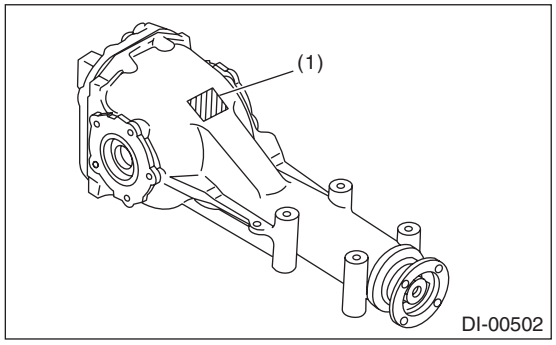

(1) Identification

3. REAR DIFFERENTIAL GEAR OIL

Recommended gear oil:
GL–5 (75W-90) or equivalent

CAUTION:
Each oil manufacturer has its base oil and additives. Thus, do not mix two or more brands.

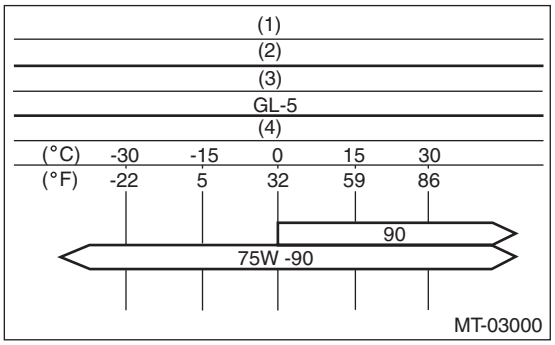

(1) Item
(2) Rear differential gear oil
(3) API classification
(4) SAE viscosity No. and applicable temperature

4. SERVICE DATA

Drive pinion bearing preload (for new bearing)	Measured with spring measurement (measured at companion flange bolt hole) N (kgf, lbf)	T-type (B1, B2)	18.1 — 38.8 (1.8 — 4.0, 4.1 — 8.7)
		T-type (H5)	24.1 — 38.6 (2.5 — 3.9, 5.4 — 8.7)
	Measured with torque wrench N·m (kgf-m, ft-lb)	T-type (B1, B2)	0.69 — 1.47 (0.07 — 0.15, 0.51 — 1.08)
		T-type (H5)	0.98 — 1.57 (0.10 — 0.16, 0.72 — 1.16)
Side gear backlash mm (in)		T-type (B1, B2)	0.10 — 0.20 (0.004 — 0.008)
Side bearing standard width mm (in)			20.00 (0.7874)
Hypoid driven gear to drive pinion backlash mm (in)			0.10 — 0.20 (0.004 — 0.008)
Hypoid driven gear runout on its back surface mm (in)			0.05 (0.002)
Companion flange mating surface runout mm (in)			0.08 (0.003)
Companion flange runout on its inner surface mm (in)			0.08 (0.003)
Total preload (measured from the companion flange bolt hole) N (kgf, lbf)		T-type (B1, B2)	20.7 — 54.4 (2.1 — 5.5, 4.7 — 12.2)
		T-type (H5)	26.5 — 53 (2.7 — 5.4, 6.0 — 11.9)

B: COMPONENT

1. REAR DIFFERENTIAL (T-TYPE (B1, B2))

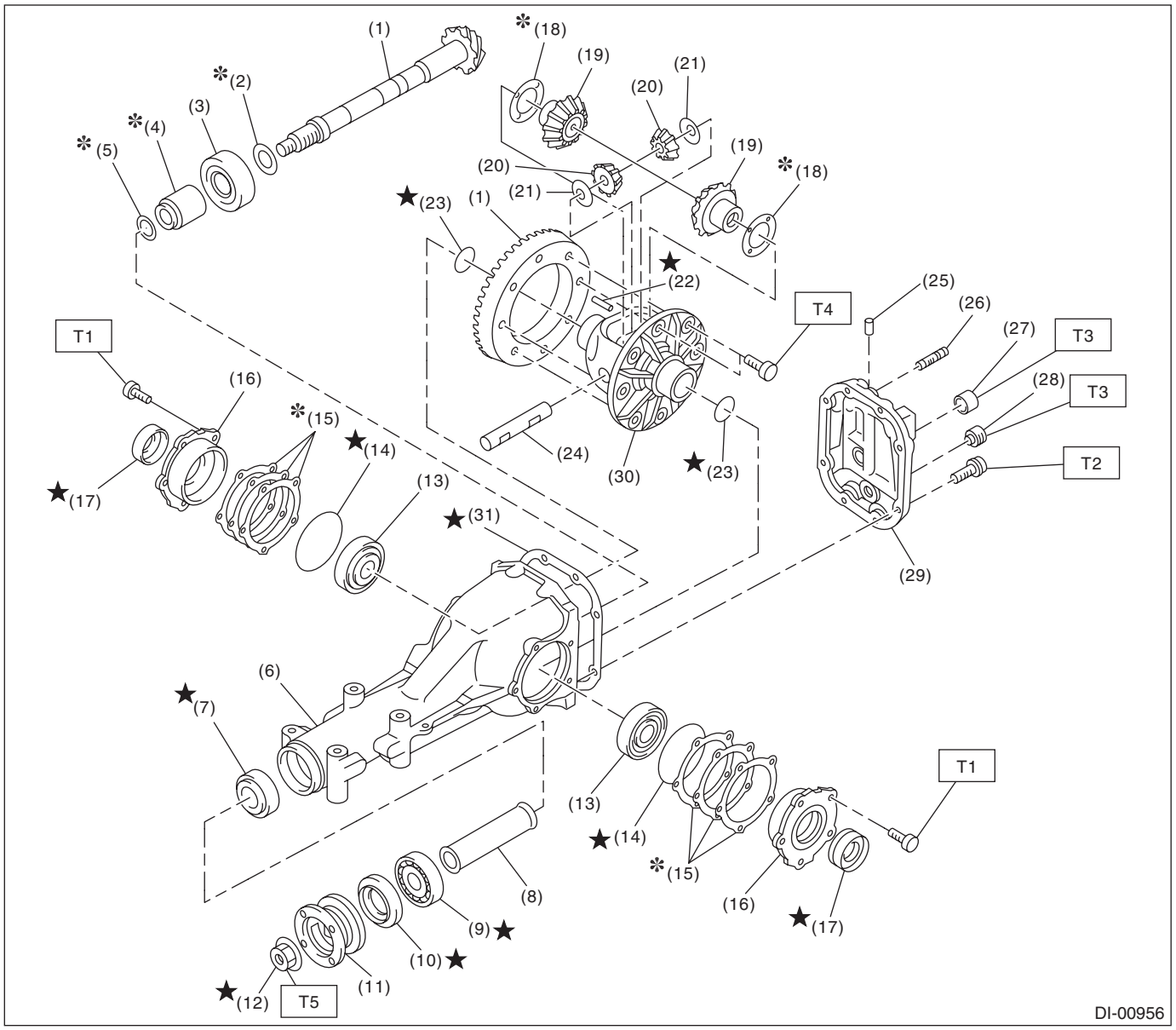

(1)	Hypoid driven gear and drive pinion set	(14)	O-ring	(27)	Filler plug
(2)	Pinion height adjusting washer	(15)	Side retainer shim	(28)	Drain plug
(3)	Rear bearing	(16)	Side retainer	(29)	Rear cover
(4)	Preload adjusting spacer	(17)	Side oil seal	(30)	Differential case
(5)	Preload adjusting washer	(18)	Side gear thrust washer	(31)	Gasket
(6)	Differential carrier	(19)	Side gear		
(7)	Front bearing	(20)	Pinion mate gear		
(8)	Spacer	(21)	Pinion mate gear washer		
(9)	Pilot bearing	(22)	Pinion shaft lock pin		
(10)	Front oil seal	(23)	Snap ring		
(11)	Companion flange	(24)	Pinion mate shaft		
(12)	Self-locking nut	(25)	Air breather cap		
(13)	Side bearing	(26)	Stud bolt		

Tightening torque: N·m (kgf-m, ft-lb)

T1: 10.5 (1.1, 7.7)
T2: 29.5 (3.0, 21.8)
T3: 49 (5.0, 36.1)
T4: 103 (10.5, 76.0)
T5: 181.5 (18.5, 133.9)

2. REAR DIFFERENTIAL (T-TYPE (H5))

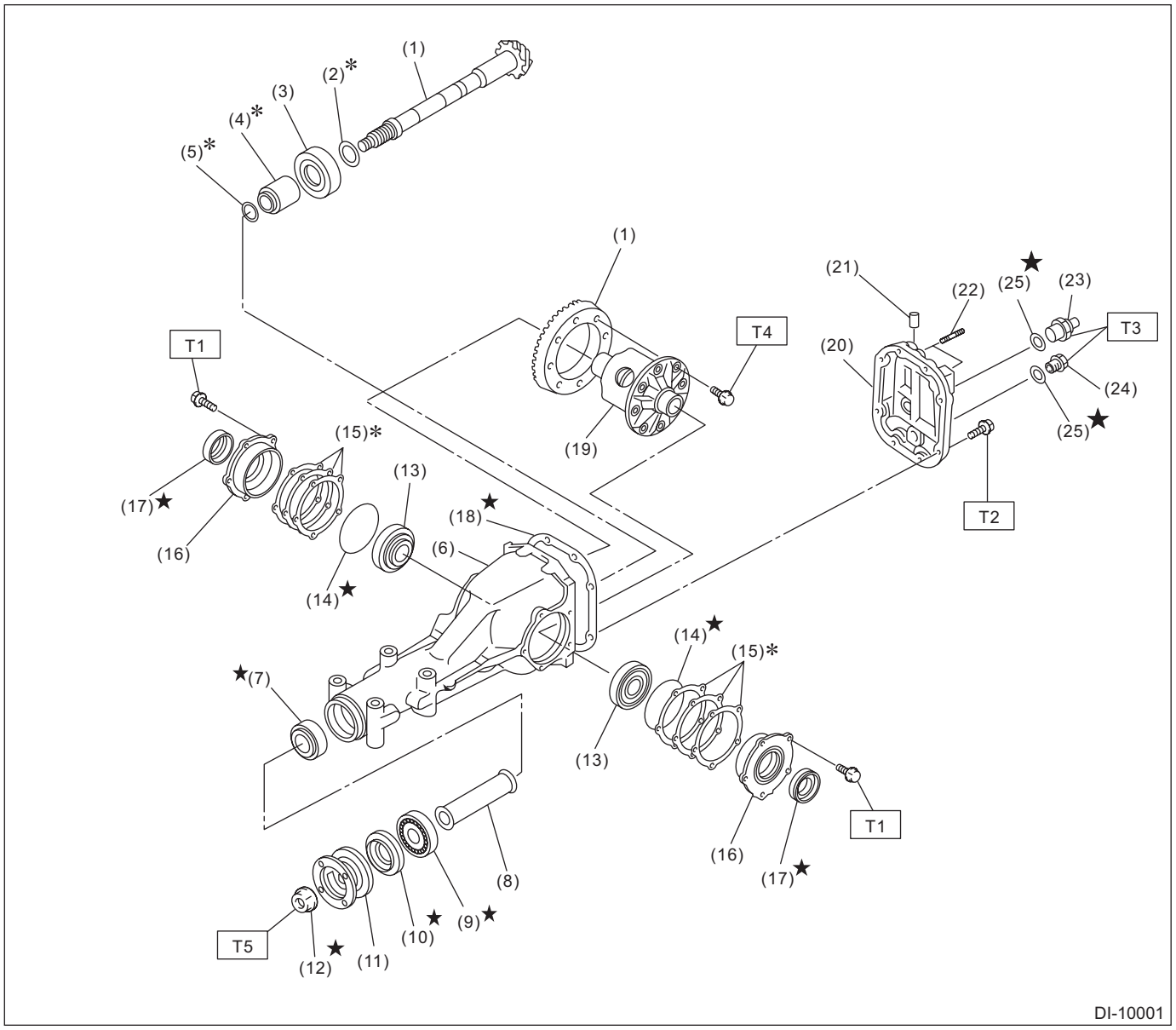

(1) Hypoid driven gear and drive pinion set
(2) Pinion height adjusting washer
(3) Rear bearing
(4) Preload adjusting spacer
(5) Preload adjusting washer
(6) Differential carrier
(7) Front bearing
(8) Spacer
(9) Pilot bearing
(10) Front oil seal
(11) Companion flange
(12) Self-locking nut
(13) Side bearing
(14) O-ring
(15) Side retainer shim
(16) Side retainer
(17) Side oil seal
(18) Gasket
(19) Differential case ASSY
(20) Rear cover
(21) Air breather cap
(22) Stud bolt
(23) Oil temperature sensor
(24) Drain plug
(25) Gasket

Tightening torque: N·m (kgf-m, ft-lb)
T1: 10.5 (1.1, 7.7)
T2: 44 (4.5, 32.5)
T3: 60 (6.1, 44.3)
T4: 103 (10.5, 76.0)
T5: 181.5 (18.5, 133.9)

3. REAR DIFFERENTIAL MOUNTING SYSTEM

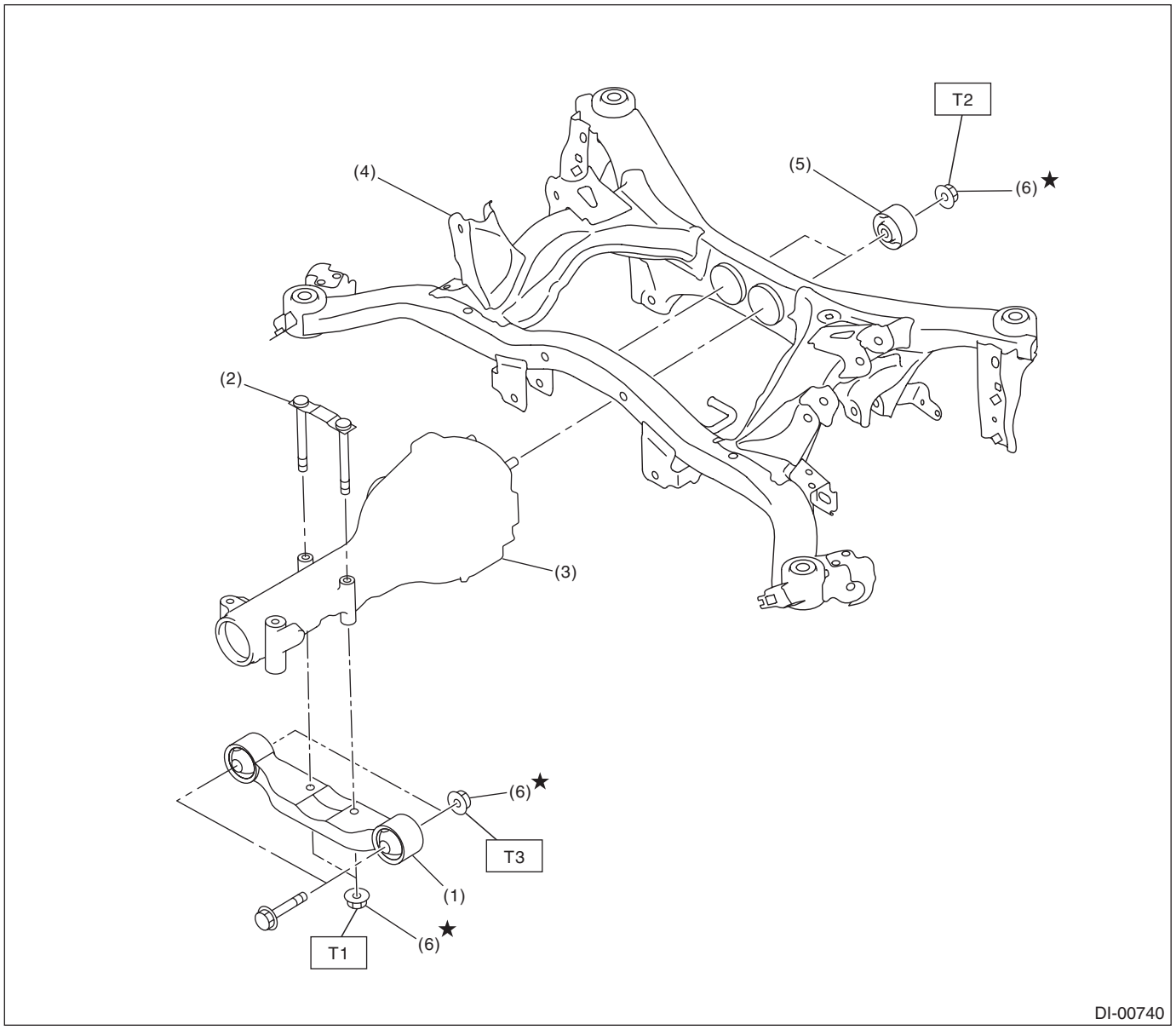

(1)	Rear differential front member	(4)	Rear sub frame	
(2)	Rear differential member plate	(5)	Rear differential mount bushing	
(3)	Rear differential ASSY	(6)	Self-locking nut	

Tightening torque: N·m (kgf-m, ft-lb)
T1: 50 (5.1, 36.9)
T2: 70 (7.1, 51.6)
T3: 110 (11.2, 81.1)

C: CAUTION

- When performing any work, always wear work clothes, a work cap and protective shoes. Additionally, wear a helmet, protective goggles, etc. if necessary.
- Remove contamination including dirt and corrosion before removal, installation, disassembly or assembly.
- Keep the disassembled parts in order and protect them from dust and dirt.
- When performing a repair, identify the cause of trouble and avoid unnecessary removal, disassembly and replacement.
- Use SUBARU genuine grease, the recommended or equivalent. Do not mix grease etc. of different grades or manufacturers.
- Do not secure a part in a vise directly. Place cushioning materials such as wood pieces, blocks, aluminum plates, or waste cloth between the part and the vise.
- Be sure to tighten fasteners including bolts and nuts to the specified torque.
- Always use the jack-up point when the shop jacks or rigid racks are used to support the vehicle.
- Apply grease onto sliding or revolving surfaces before installation.
- Before installing the O-ring or snap ring, apply a sufficient amount of gear oil to avoid damage and deformation.
- Avoid damaging the mating surface of the case.
- For parts which are not reusable, always use new parts. Other parts should be replaced with new parts as required.
- When handling oil or fuel, adhere to the following to prevent unexpected accident.
  - Be careful with fire.
  - Prepare a container to catch grease or oil, etc. If any grease or oil spills, wipe it off and clean immediately to prevent from penetrating into floor or flowing outside.
  - Follow all government and local regulations concerning disposal of refuse when disposing.
- Before disconnecting connectors of sensors or units, be sure to disconnect the ground cable from battery.
- Some vehicle components are extremely hot immediately after driving. Be wary of receiving burns from heated parts.

D: PREPARATION TOOL

1. SPECIAL TOOL

ILLUSTRATION	TOOL NUMBER	DESCRIPTION	REMARKS
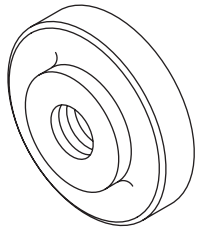 ST-398477702	398477702	DRIFT	Used for installing the front bearing race.
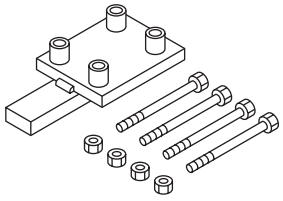 ST-398217700	398217700	ATTACHMENT SET	Stand for rear differential carrier disassembly and assembly.
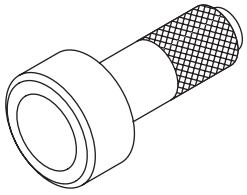 ST-498447120	498447120	INSTALLER	Used for installing the front oil seal.
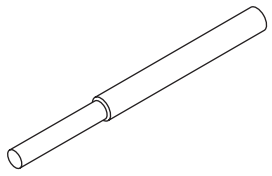 ST-398467700	398467700	DRIFT	Used for removing drive pinion shaft, pilot bearing and front bearing cone.

ILLUSTRATION	TOOL NUMBER	DESCRIPTION	REMARKS
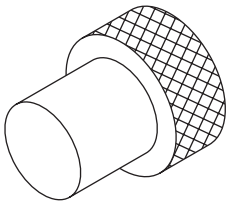 ST-399780104	399780104	WEIGHT	• Used for installing the pilot bearing and the companion flange. • Used for installing the front bearing cone. (T-type (B1, B2))
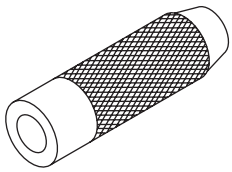 ST-899580100	899580100	INSTALLER	• Used for installing the pilot bearing. • Used for installing the front bearing cone. (T-type (B1, B2))
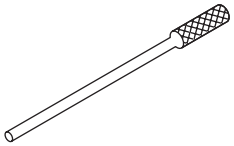 ST-899904100	899904100	STRAIGHT PIN REMOVER	Used for removing and installing the pinion mate shaft lock pin. (T-type (B1, B2))
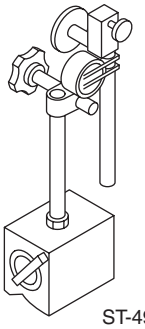 ST-498247001	498247001	MAGNET BASE	• Used for measuring backlash between side gear and pinion, and hypoid gear. • Used together with DIAL GAUGE (498247100).
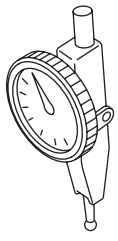 ST-498247100	498247100	DIAL GAUGE	• Used for measuring backlash between side gear and pinion, and hypoid gear. • Used together with MAGNET BASE (498247001).

ILLUSTRATION	TOOL NUMBER	DESCRIPTION	REMARKS
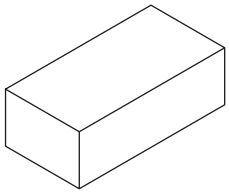 ST-398507704	398507704	BLOCK	Used for adjusting pinion height and preload. (T-type (B1, B2))
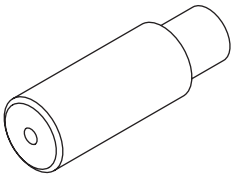 ST-398457700	398457700	ATTACHMENT	Used for removing the side retainer.
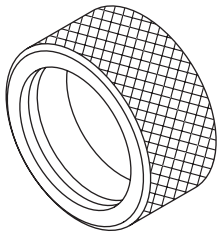 ST-398437700	398437700	OIL SEAL INSTALLER	Used for installing the side oil seal.
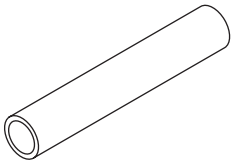 ST-398507703	398507703	DUMMY COLLAR	• Used for adjusting pinion height and preload. • Used for installing the front bearing cone.
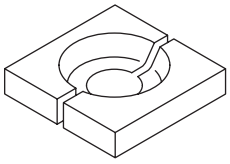 ST-398517700	398517700	REPLACER	Used for removing rear bearing cone.

ILLUSTRATION	TOOL NUMBER	DESCRIPTION	REMARKS
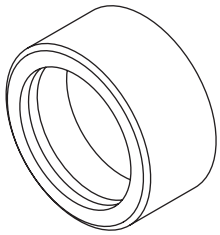 ST-398487700	398487700	DRIFT	Used for installing side bearing cone.
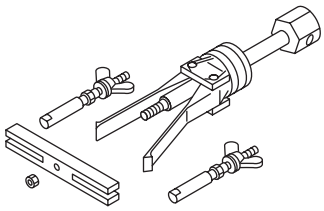 ST-398527700	398527700	PULLER ASSY	• Used for removing front oil seal. • Used for removing the side bearing race. • Used for removing side oil seal.
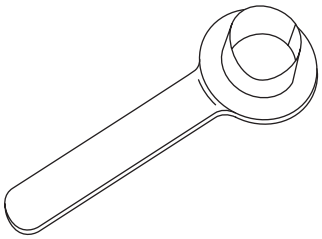 ST28099PA090	28099PA090	OIL SEAL PROTECTOR	Used for installing the rear drive shaft to the rear differential. (For oil seal protection)
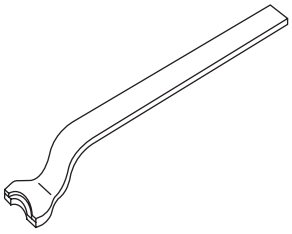 ST28099PA100	28099PA100	DRIVE SHAFT REMOVER	Used for removing the rear drive shaft from rear differential.
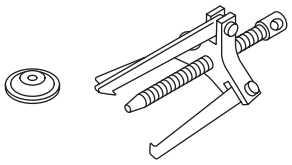 ST-399703600	399703600	PULLER ASSY	Used for removing companion flange.

ILLUSTRATION	TOOL NUMBER	DESCRIPTION	REMARKS
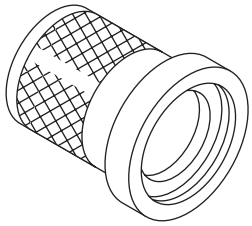 ST-899874100	899874100	INSTALLER	Used for installing the companion flange.
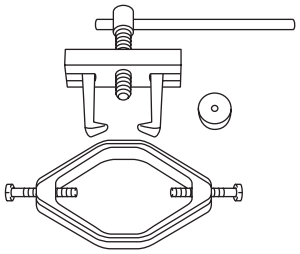 ST18759AA000	18759AA000	PULLER ASSY	Used for removing the side bearing cone.
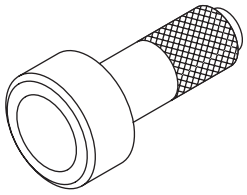 ST-398417700	398417700	DRIFT	Used for installing side bearing race.
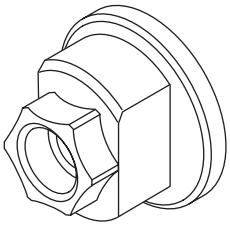 ST-498937110	498937110	HOLDER DRIVE PINION	Used for installing the pilot bearing and the companion flange. (T-type (H5))
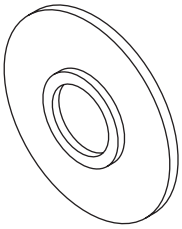 ST18674AA000	18674AA000	INSTALLER	Used for installing the rear bearing cone. (T-type (H5))

ILLUSTRATION	TOOL NUMBER	DESCRIPTION	REMARKS
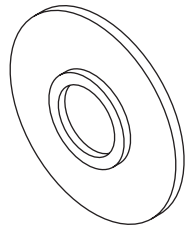 ST-398177700	398177700	INSTALLER	Used for installing the rear bearing cone. (T-type (B1, B2))
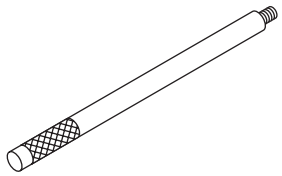 ST-398477701	398477701	HANDLE	Used for installing the front and rear bearing races. (T-type (B1, B2))
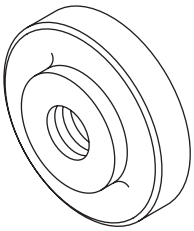 ST-398477703	398477703	DRIFT 2	Used for installing the rear bearing race. (T-type (B1, B2))
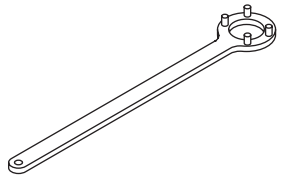 ST-498427200	498427200	FLANGE WRENCH	Used for stopping rotation of companion flange when removing and tightening self-lock nut. (T-type (B1, B2))
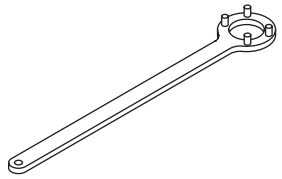 ST18633AA000	18633AA000	WRENCH COMPL	Used for preventing rotation of companion flange when loosening and tightening self-lock nut. (T-type (H5))

ILLUSTRATION	TOOL NUMBER	DESCRIPTION	REMARKS
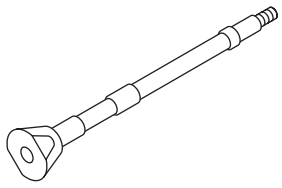 ST-398507702	398507702	DUMMY SHAFT	Used for adjusting pinion height and preload. (T-type (B1, B2))
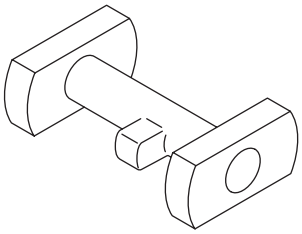 ST-398507701	398507701	DIFFERENTIAL CARRIER GAUGE	Used for adjusting pinion height. (T-type (B1, B2))
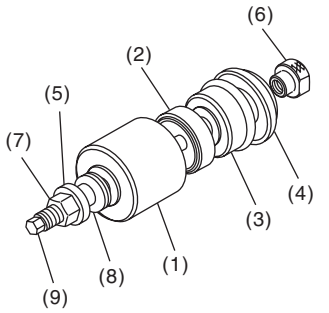 ST41399FG001	41399FG001	SPECIAL TOOL ASSY	• Used for removing and installing the rear differential mount bushing. • Use (1), (2), (5), (6), (7), (8) and (9) for removal. • Use (3), (4), (5), (6), (7), (8) and (9) for installation. (1) SPECIAL TOOL A (41399FG010) (2) SPECIAL TOOL C (41399FG031) (3) SPECIAL TOOL B (41399FG020) (4) SPECIAL TOOL D (41399FG041) (5) SPECIAL TOOL SLEEVE (41399FG050) (6) SPECIAL TOOL RING (41399FG061) (7) SPECIAL TOOL NUT (41399FG070) (8) SPECIAL TOOL BEARING (41399FG080) (9) SPECIAL TOOL SHAFT (41399FG091)
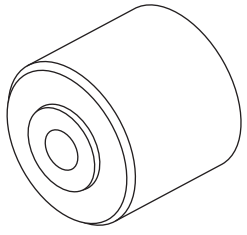 ST41399FG010	41399FG010	SPECIAL TOOL A	• Used for removing the rear differential mount bushing. • For combination of tools for removal, refer to “SPECIAL TOOL ASSY (41399FG001)”.

ILLUSTRATION	TOOL NUMBER	DESCRIPTION	REMARKS
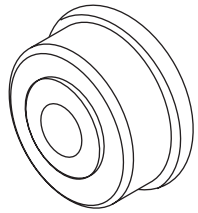 ST41399FG020	41399FG020	SPECIAL TOOL B	• Used for installing the rear differential mount bushing. • For combination of tools for installation, refer to “SPECIAL TOOL ASSY (41399FG001)”.
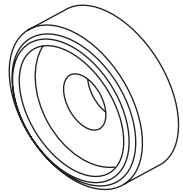 ST41399FG031	41399FG031	SPECIAL TOOL C	• Used for removing the rear differential mount bushing. • For combination of tools for removal, refer to “SPECIAL TOOL ASSY (41399FG001)”.
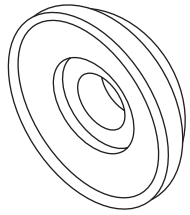 ST41399FG041	41399FG041	SPECIAL TOOL D	• Used for installing the rear differential mount bushing. • For combination of tools for installation, refer to “SPECIAL TOOL ASSY (41399FG001)”.
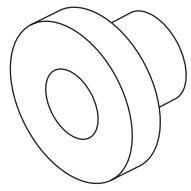 ST41399FG050	41399FG050	SPECIAL TOOL SLEEVE	• Used for removing and installing the rear differential mount bushing. • For combination of tools for removal and installation, refer to “SPECIAL TOOL ASSY (41399FG001)”.
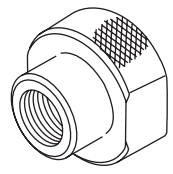 ST41399FG061	41399FG061	SPECIAL TOOL RING	• Used for removing and installing the rear differential mount bushing. • For combination of tools for removal and installation, refer to “SPECIAL TOOL ASSY (41399FG001)”.

ILLUSTRATION	TOOL NUMBER	DESCRIPTION	REMARKS
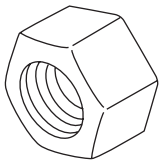 ST41399FG070	41399FG070	SPECIAL TOOL NUT	• Used for removing and installing the rear differential mount bushing. • For combination of tools for removal and installation, refer to “SPECIAL TOOL ASSY (41399FG001)”.
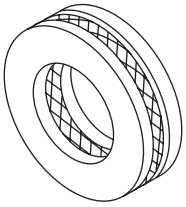 ST41399FG080	41399FG080	SPECIAL TOOL BEARING	• Used for removing and installing the rear differential mount bushing. • For combination of tools for removal and installation, refer to “SPECIAL TOOL ASSY (41399FG001)”.
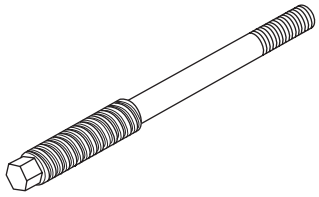 ST41399FG091	41399FG091	SPECIAL TOOL SHAFT	• Used for removing and installing the rear differential mount bushing. • For combination of tools for removal and installation, refer to “SPECIAL TOOL ASSY (41399FG001)”.

2. GENERAL TOOL

TOOL NAME	REMARKS
Transmission jack	Used for removing and installing the rear differential.
Puller	Used for removing the side bearing retainer.
Thickness gauge	Used for measuring clearance.
Hexagon wrench	Used for installing and removing the oil filler plug and oil drain plug.

2. Differential Gear Oil

A: INSPECTION

1) Disconnect the ground cable from battery. <Ref. to NT-6, BATTERY, NOTE, Note.>

NOTE:
For models other than STI model, disconnect the ground terminal from battery sensor.
2) Lift up the vehicle.
3) Disconnect the oil temperature sensor connector. (T-type (H5))

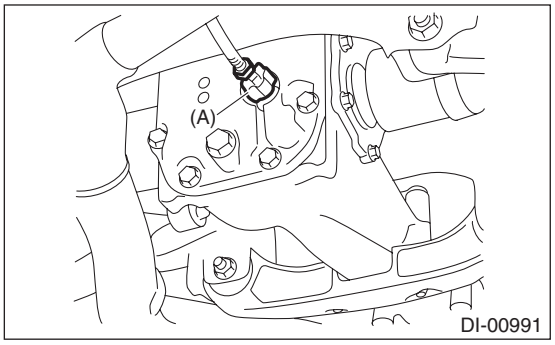

(A) Oil temperature sensor connector

4) Remove the filler plug or the oil temperature sensor, and then check the gear oil. Replace the gear oil if it is contaminated, deteriorated or cloudy. <Ref. to DI-18, REPLACEMENT, Differential Gear Oil.>
5) Check that the gear oil level is within –5 mm (–0.2 in) from the bottom of the filler plug hole. If the level is low, make sure that there is no oil leakage and refill up to the bottom of filler plug hole.

- T-type (B1, B2)

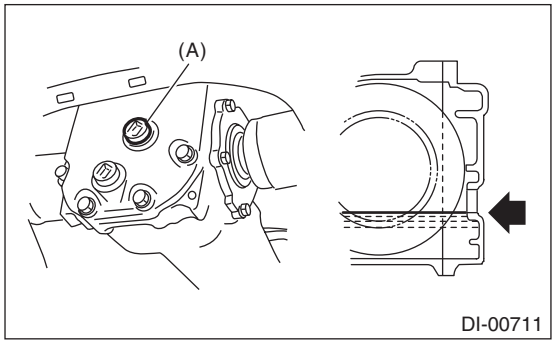

(A) Filler plug

- T-type (H5)

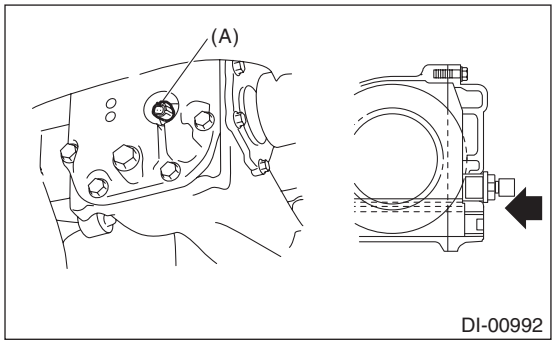

(A) Oil temperature sensor

6) Install the filler plug or the oil temperature sensor.

NOTE:
- Degrease the thread portion of B1 and B2 sufficiently and apply liquid gasket to the filler plug.

Liquid gasket:
THREE BOND 1105 (Part No. 004403010) or equivalent
- Use a new gasket for H5.

Tightening torque:
B1, B2
49 N·m (5.0 kgf-m, 36.1 ft-lb)
H5
60 N·m (6.1 kgf-m, 44.3 ft-lb)

B: REPLACEMENT

CAUTION:
• Gear oil is extremely hot just after driving. Be wary of receiving burns.
• Be careful not to spill the differential gear oil on exhaust pipe. If gear oil is spilled, wipe it off completely.

1) Disconnect the ground cable from battery. <Ref. to NT-6, BATTERY, NOTE, Note.>

NOTE:
For models other than STI model, disconnect the ground terminal from battery sensor.

2) Lift up the vehicle.

3) Disconnect the oil temperature sensor connector. (T-type (H5))

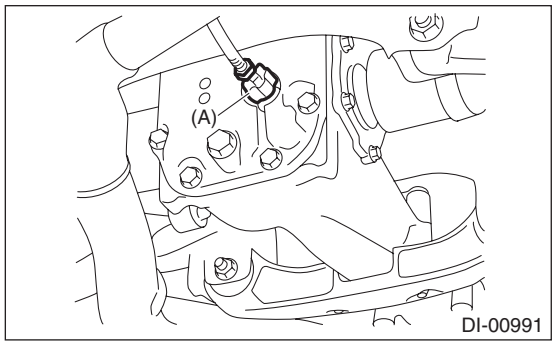

(A) Oil temperature sensor connector

4) Remove the drain plug and filler plug or the oil temperature sensor, and drain the gear oil.

• T-type (B1, B2)

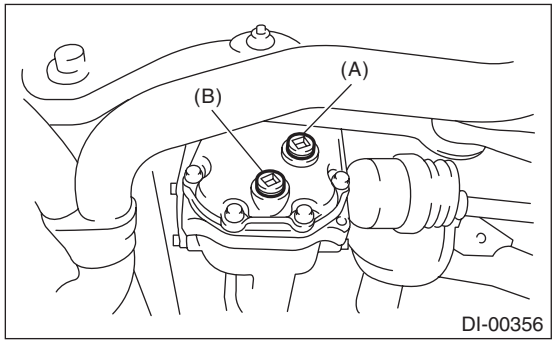

(A) Filler plug
(B) Drain plug

• T-type (H5)

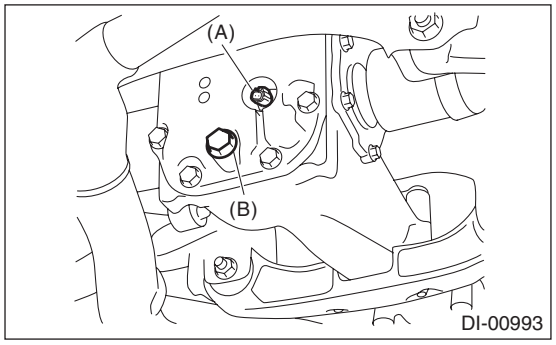

(A) Oil temperature sensor
(B) Drain plug

5) Install the drain plug.

NOTE:
• Degrease the thread portion of B1 and B2 sufficiently and apply liquid gasket to the filler plug.

Liquid gasket:
THREE BOND 1105 (Part No. 004403010) or equivalent
• Use a new gasket for H5.

Tightening torque:
B1, B2
49 N·m (5.0 kgf-m, 36.1 ft-lb)
H5
60 N·m (6.1 kgf-m, 44.3 ft-lb)

6) Fill the differential carrier with gear oil to the bottom of filler plug hole or the oil temperature sensor hole.

NOTE:
Carefully refill gear oil while watching the level. Excessive or insufficient oil must be avoided.

Recommended gear oil:
<Ref. to DI-2, SPECIFICATION, General Description.>

Oil capacity:
B1, B2
0.8 L (0.8 US qt, 0.7 Imp qt)
H5
1.0 L (1.1 US qt, 0.9 Imp qt)

- T-type (B1, B2)

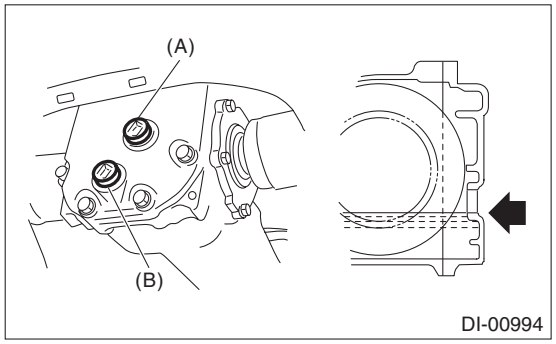

(A) Filler plug
(B) Drain plug

- T-type (H5)

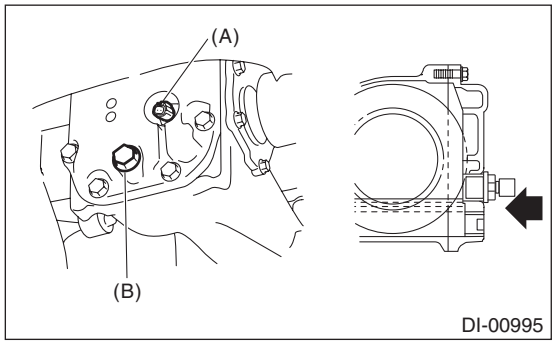

(A) Oil temperature sensor
(B) Drain plug

7) Install the filler plug or the oil temperature sensor.

NOTE:
- Degrease the thread portion of B1 and B2 sufficiently and apply liquid gasket to the filler plug.

Liquid gasket:
THREE BOND 1105 (Part No. 004403010) or equivalent
- Use a new gasket for H5.

Tightening torque:
B1, B2
49 N·m (5.0 kgf-m, 36.1 ft-lb)
H5
60 N·m (6.1 kgf-m, 44.3 ft-lb)

3. Front Differential Assembly

A: NOTE

1. CVT (TR690) MODEL

For front differential for the CVT (TR690) model, refer to the “CVT (TR690)” section. <Ref. to CVT(TR690)-266, Front Differential Assembly.>

2. 6MT (TY75) MODEL

For front differential for the 6MT (TY75) model, refer to the “6MT (TY75)” section. <Ref. to 6MT(TY75)-125, REMOVAL, Front Differential Assembly.>

3. 6MT (TY85) MODEL

For front differential for the 6MT (TY85) model, refer to the “6MT (TY85)” section. <Ref. to 6MT(TY85)-98, REMOVAL, Front Differential Assembly.>

4. Rear Differential (T-type)

A: REMOVAL

1) Shift the select lever or gear shift lever to neutral.
2) Release the parking brake.
3) Disconnect the ground cable from battery. <Ref. to NT-6, BATTERY, NOTE, Note.>

NOTE:
For models other than STI model, disconnect the ground terminal from battery sensor.
4) Lift up the vehicle.
5) Remove the rear wheels.
6) Disconnect the oil temperature sensor connector. (H5)

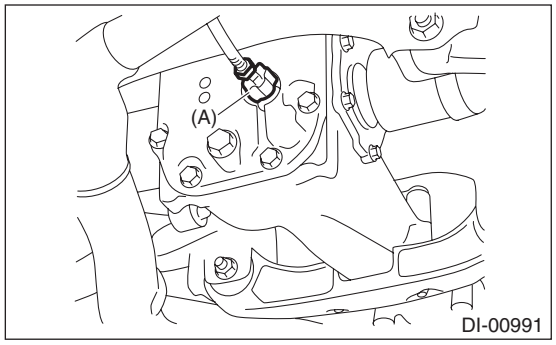

(A) Oil temperature sensor connector

7) Drain differential gear oil. <Ref. to DI-18, REPLACEMENT, Differential Gear Oil.>
8) Remove the rear exhaust pipe.
- Except for STI model

<Ref. to EX(w/o STI)-47, REMOVAL, Rear Exhaust Pipe.>
- STI model

<Ref. to EX(STI)-12, REMOVAL, Rear Exhaust Pipe.>
9) Remove the center exhaust cover.

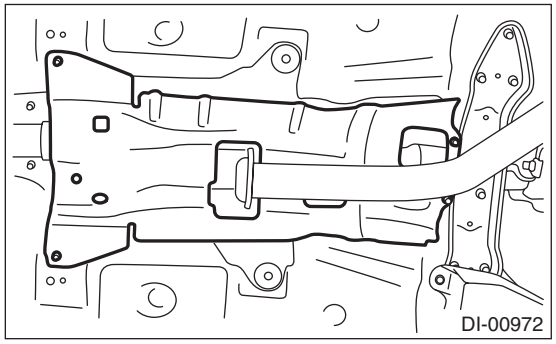

10) Remove the propeller shaft. <Ref. to DS-12, REMOVAL, Propeller Shaft.>
11) Loosen the self-lock nuts which hold the rear differential to the rear sub frame assembly.

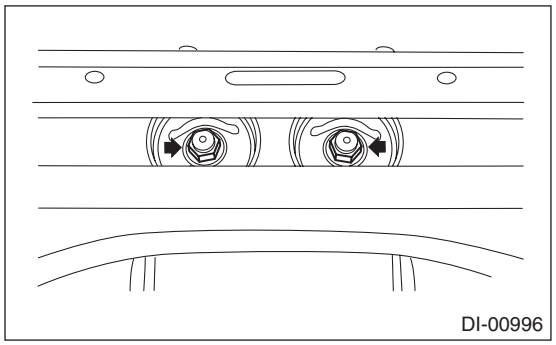

12) Remove the DOJ of rear drive shaft from rear differential using ST.

NOTE:
When removing the DOJ from the rear differential, fit the ST to the bolts as shown in the figure so as not to damage the side retainer.
ST 28099PA100 DRIVE SHAFT REMOVER

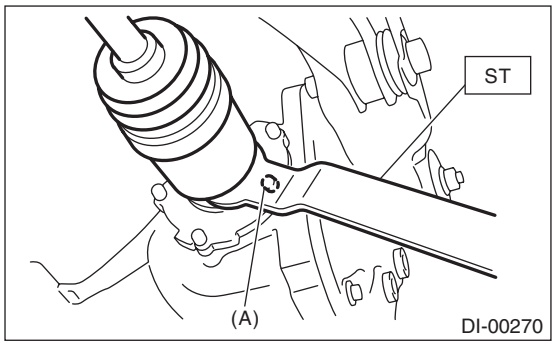

(A) Bolt

13) Set the rear differential to transmission jack.

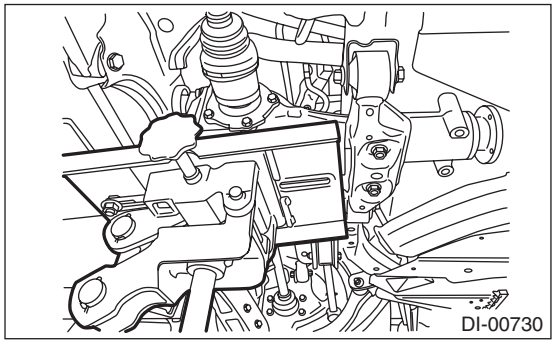

14) Remove the rear differential front member.

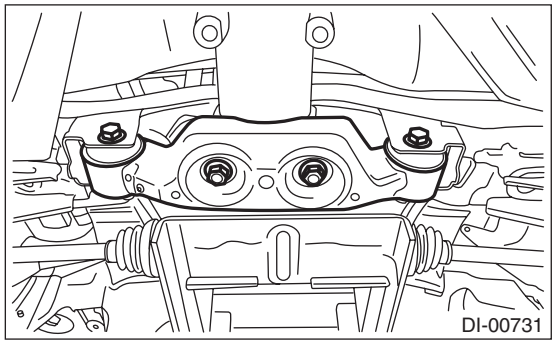

15) Remove the self-lock nuts which hold the rear differential to the rear sub frame assembly.

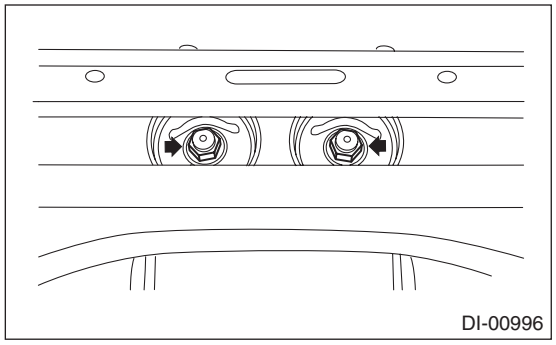

16) Pull out the rear differential stud bolt from rear differential mount bushing.

NOTE:
When removing the stud bolt from the rear differential mount bushing, carefully adjust the angle and location of transmission jack and jack stand, if necessary.

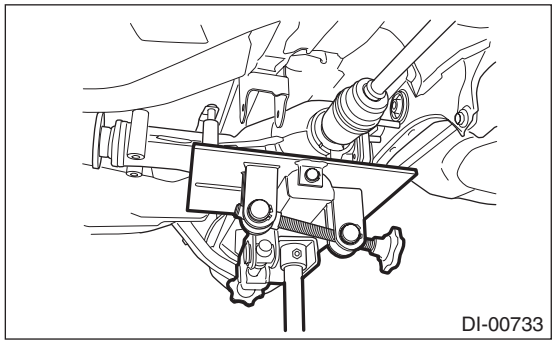

17) Lower the transmission jack.

18) Pull out the rear drive shaft from the rear differential.

NOTE:
If it is difficult to pull out the rear drive shaft from the rear differential, remove it using a ST.
ST 28099PA100 DRIVE SHAFT REMOVER

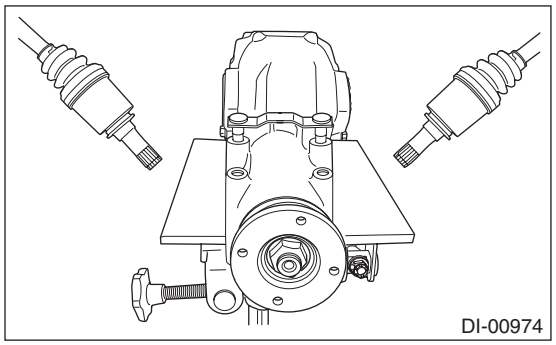

19) Lower the transmission jack.
20) Secure the rear drive shaft to rear lateral link using wire.

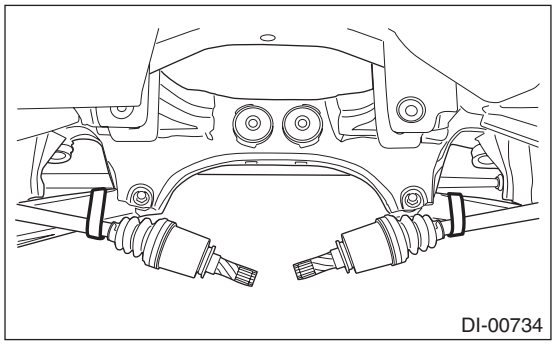

21) Remove the rear differential member plate from rear differential.

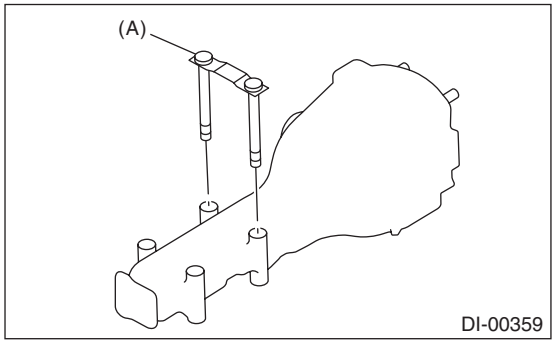

(A) Rear differential member plate

B: INSTALLATION

1) Attach the rear differential member plate to the rear differential.

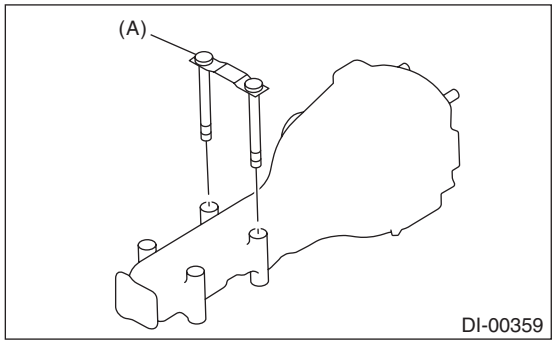

(A) Rear differential member plate

2) Set the rear differential to transmission jack.
3) Set the ST to the rear differential.
ST 28099PA090 OIL SEAL PROTECTOR

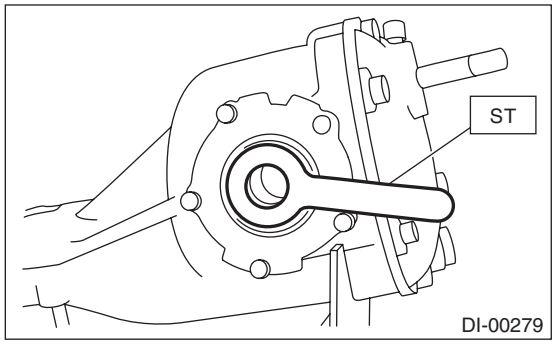

4) Insert the rear drive shaft until the spline portion of the rear drive shaft exceeds the side oil seal.

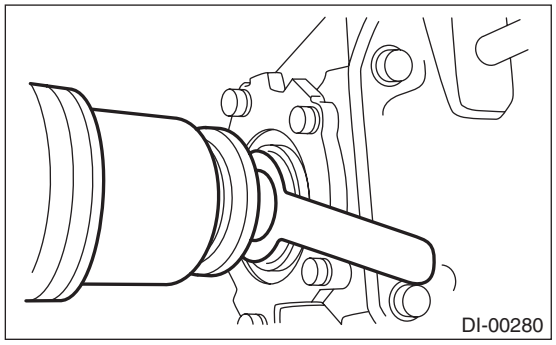

5) Remove ST from rear differential.

6) Push the rear differential from side to side to insert the DOJ into rear differential completely.

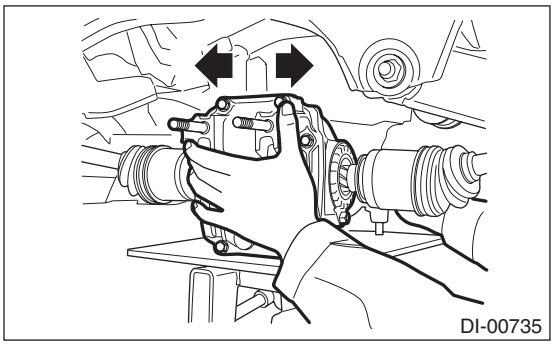

7) Adjust the transmission jack, if necessary, and insert the rear differential stud bolt into the rear differential mount bushing properly.

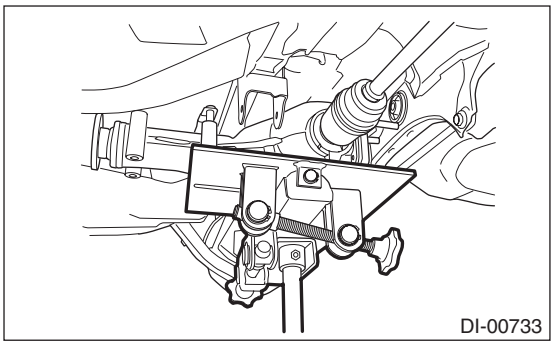

8) After inserting the rear differential stud bolt into the rear differential mount bushing, lift up the transmission jack and align the rear differential to its attachment position.

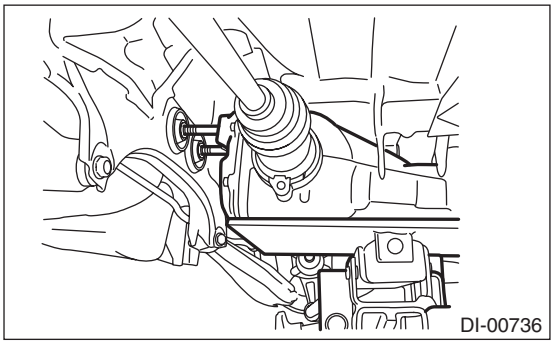

9) Tighten a new self-locking nut temporarily to the rear differential stud bolt.

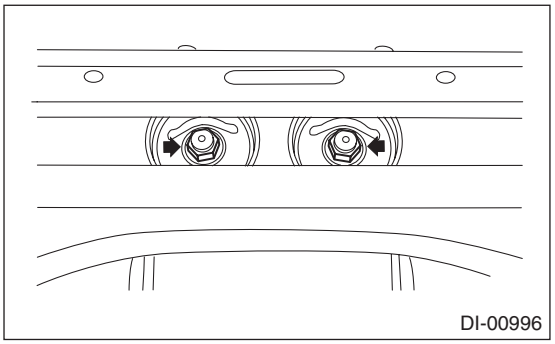

10) Install the rear differential front member, and temporarily attach and tighten a new self-locking nut.

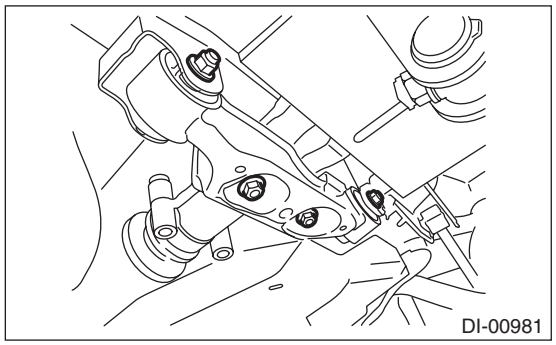

11) Remove the transmission jack.
12) Tighten the self-locking nut.

Tightening torque:
T1: 50 N·m (5.1 kgf-m, 36.9 ft-lb)
T2: 110 N·m (11.2 kgf-m, 81.1 ft-lb)

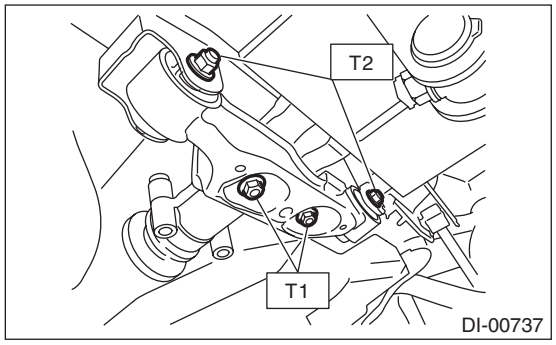

13) Tighten the self-locking nut.

Tightening torque:
70 N·m (7.1 kgf-m, 51.6 ft-lb)

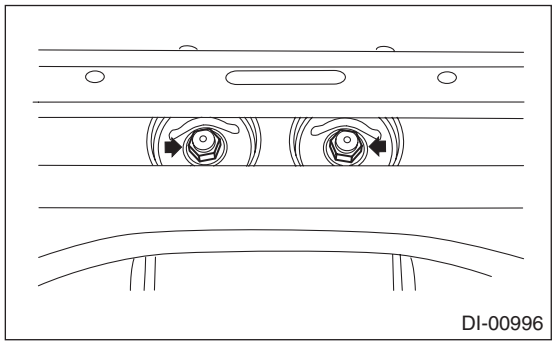

14) Install the propeller shaft. <Ref. to DS-14, INSTALLATION, Propeller Shaft.>

15) Install the center exhaust cover.

Tightening torque:
18 N·m (1.8 kgf-m, 13.3 ft-lb)

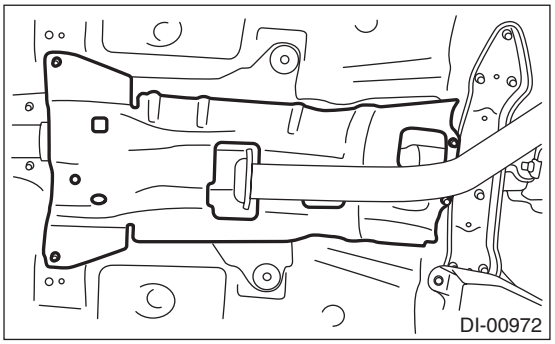

16) Install the rear exhaust pipe.
• Except for STI model
<Ref. to EX(w/o STI)-48, INSTALLATION, Rear Exhaust Pipe.>
• STI model
<Ref. to EX(STI)-12, INSTALLATION, Rear Exhaust Pipe.>
17) Fill differential gear oil. <Ref. to DI-18, REPLACEMENT, Differential Gear Oil.>
18) Installing procedure hereafter is in the reverse order of removal.

C: DISASSEMBLY

1. T-TYPE (B1, B2)

To detect the real cause of trouble, inspect the following items before disassembling.
• Tooth contact and backlash between hypoid driven gear and drive pinion
• Hypoid driven gear runout on its back surface
• Total preload of drive pinion
1) Set the ST on vise and install the differential assembly to ST.
ST 398217700 ATTACHMENT SET

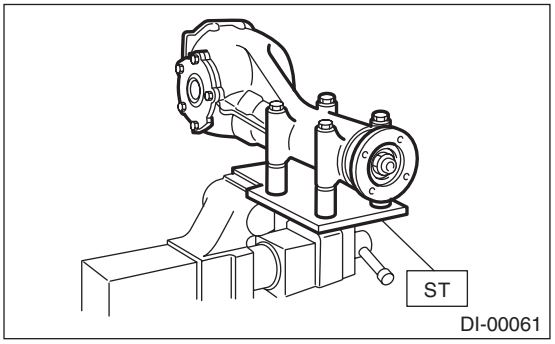

2) Remove the drain plug and filler plug.

3) Remove the air breather cap.

NOTE:
• Do not attempt to remove the air breather cap unless necessary.
• Whenever the air breather cap is removed, replace it with a new part.

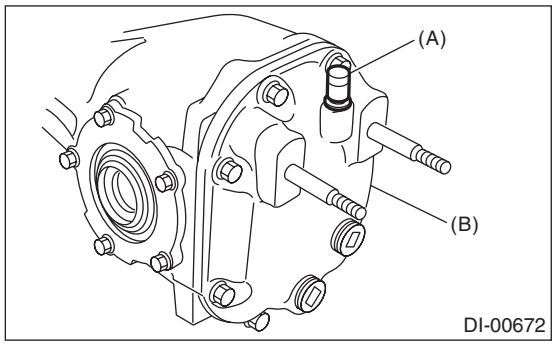

(A) Air breather cap
(B) Rear cover

4) Remove the bolts, and then remove the rear cover.
5) Remove the stud bolts from rear cover if necessary.
6) Remove the side retainer attachment bolts, set the ST to differential case, and extract the side retainers RH and LH with a puller.

NOTE:
• Side retainer shim of each side should be kept together with its mating retainer.
• Keep the side retainers separate by attaching tags or in similar ways to make it possible to identify RH and LH sides during reassembly.
ST 398457700 ATTACHMENT

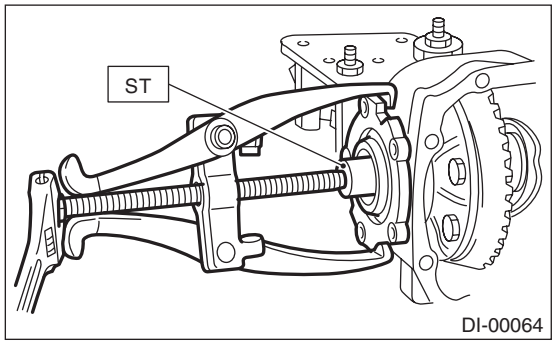

7) Pull out the differential case assembly from the differential carrier.

NOTE:
Be careful not to hit the teeth of hypoid driven gear against the differential carrier.

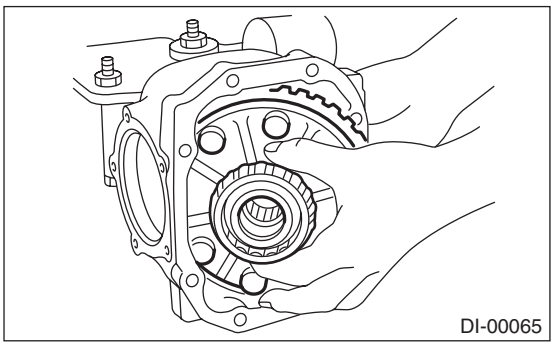

8) Remove the oil seal and O-ring from the side retainer.
9) When replacing the side bearing, remove the bearing race from the side retainer using ST.
ST 398527700 PULLER ASSY

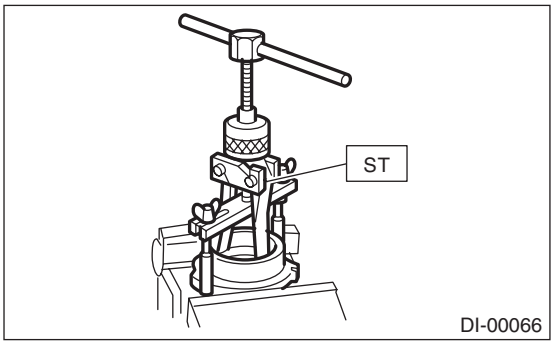

10) Using the ST, remove the bearing cone.

NOTE:
• Do not attempt to disassemble the parts unless necessary.
• Set the ST so that its claws catch the edge of the bearing cone.
• Never mix up the RH and LH bearing races and cones.
ST 18759AA000 PULLER ASSY

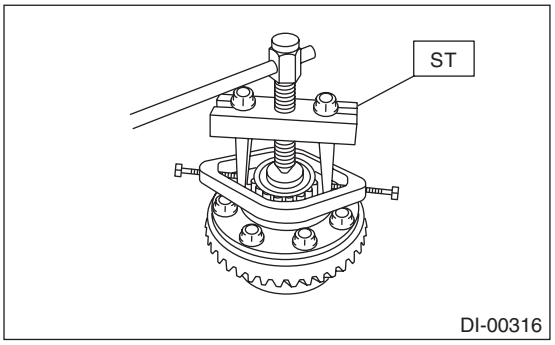

11) Remove the hypoid driven gear by loosening hypoid driven gear bolts.

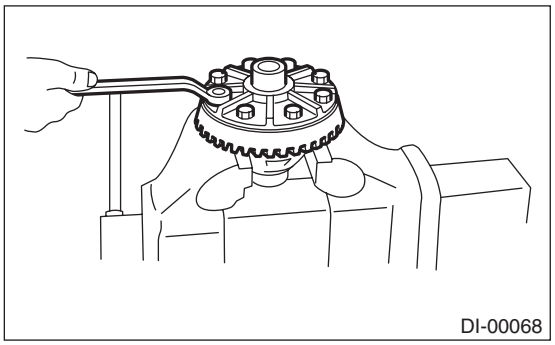

12) Remove the pinion shaft lock pin from hypoid driven gear side using ST.
ST 899904100 STRAIGHT PIN REMOVER

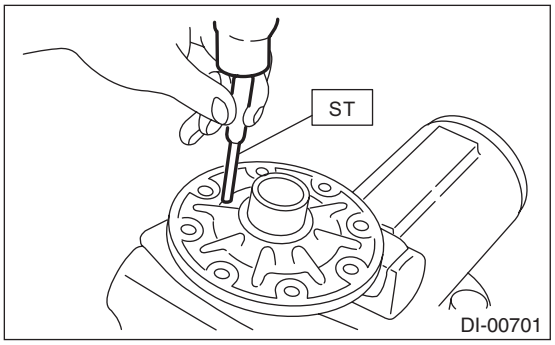

13) Draw out the pinion mate shaft, and remove pinion mate gears, pinion mate gear washers, side gears, and side gear thrust washers.

NOTE:
The gears and washers should be marked with RH or LH, front or rear, or kept separately.

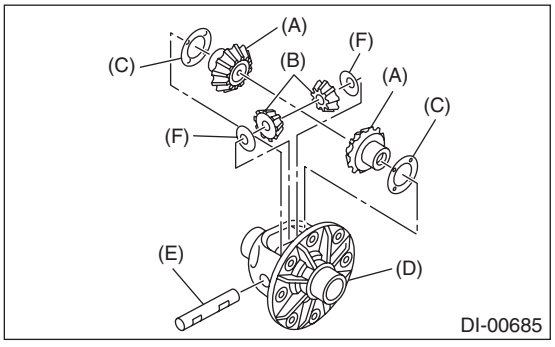

(A) Side gear
(B) Pinion mate gear
(C) Side gear thrust washer
(D) Differential case
(E) Pinion mate shaft
(F) Pinion mate gear washer

14) Remove the self-locking nut while securing the companion flange with ST.
ST 498427200 FLANGE WRENCH

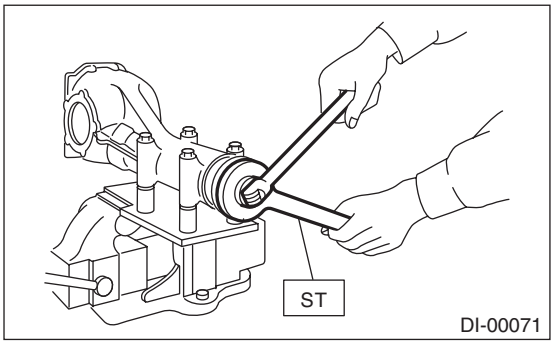

15) Extract the companion flange with a puller.

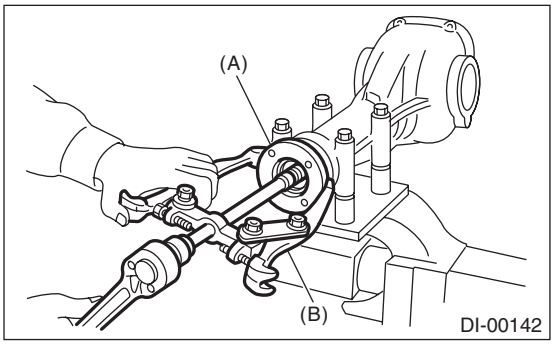

(A) Companion flange
(B) Puller

16) Press the end of drive pinion shaft using ST and remove the rear bearing cone, preload adjusting spacer and washer.

NOTE:
Hold the drive pinion so as not to drop it.
ST 398467700 DRIFT

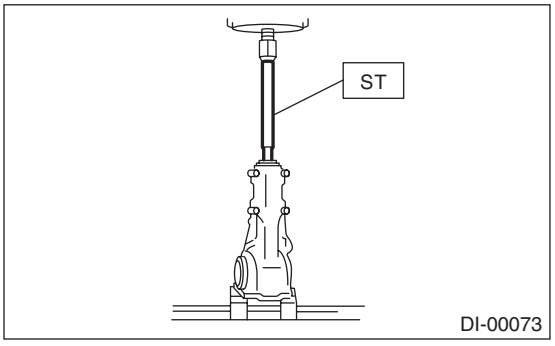

17) Remove the rear bearing cone from drive pinion by supporting the cone with ST.

NOTE:
Place the replacer so that its center-recessed side faces the bearing cone.
ST 398517700 REPLACER

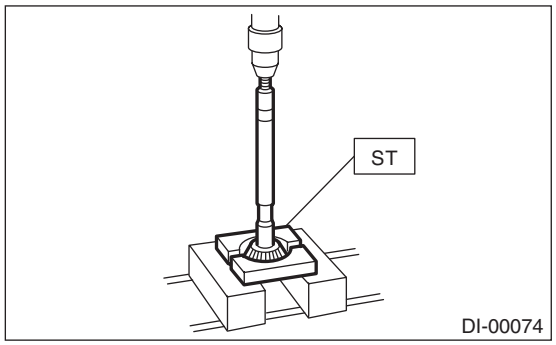

18) Remove the front oil seal from differential carrier using ST.
ST 398527700 PULLER ASSY

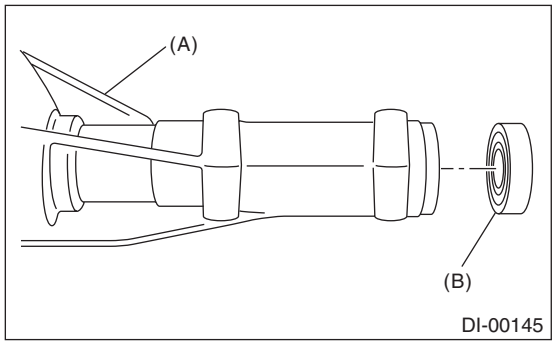

(A) Differential carrier
(B) Front oil seal

19) Remove the pilot bearing together with the front bearing cone and spacer using the ST.
ST 398467700 DRIFT

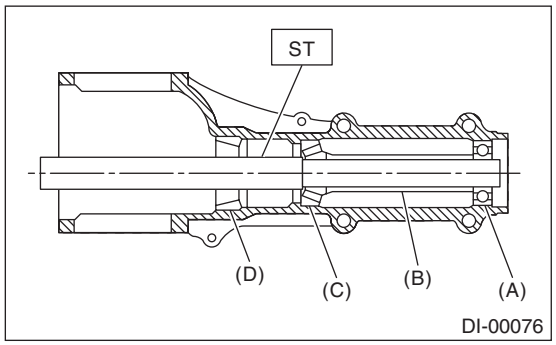

(A) Pilot bearing
(B) Spacer
(C) Front bearing
(D) Rear bearing race

20) When replacing the bearings, use a brass bar to tap out the front bearing race and rear bearing race in this order to remove them.

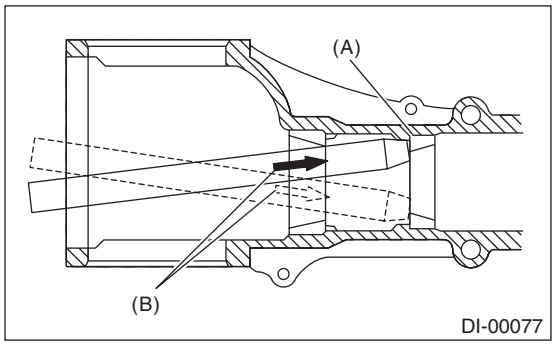

(A) 2 cutout portions along diagonal lines
(B) Tap alternately with brass bar.

2. T-TYPE (H5)

To detect the real cause of trouble, inspect the following items before disassembling.
- Tooth contact and backlash between hypoid driven gear and drive pinion
- Hypoid driven gear runout on its back surface
- Total preload of drive pinion

1) Set the ST on vise and install the differential assembly to ST.
ST 398217700 ATTACHMENT SET

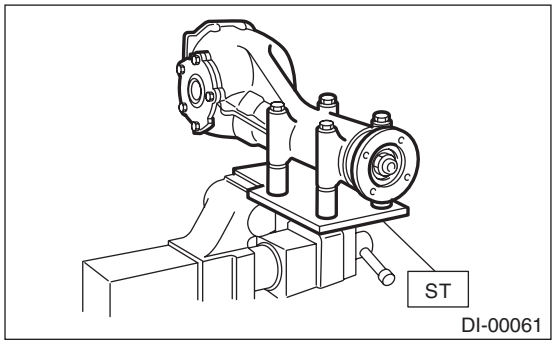

2) Remove the drain plug and the oil temperature sensor, and drain the gear oil.

NOTE:
Remove the oil temperature sensor and the adapter as a unit.

3) Remove the air breather cap.

NOTE:
• Do not attempt to remove the air breather cap unless necessary.
• Whenever the air breather cap is removed, replace it with a new part.

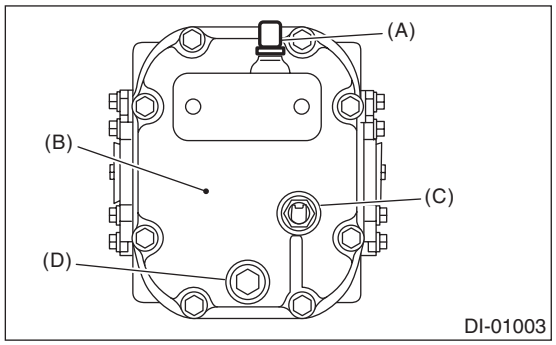

(A) Air breather cap
(B) Rear cover
(C) Oil temperature sensor
(D) Drain plug

4) Remove the bolts, and then remove the rear cover.
5) Remove the stud bolts from rear cover if necessary.
6) Remove the side retainer attachment bolts, set the ST to differential case, and extract the side retainers RH and LH with a puller.

NOTE:
• Side retainer shim of each side should be kept together with its mating retainer.
• Keep the side retainers separate by attaching tags or in similar ways to make it possible to identify RH and LH sides during reassembly.

ST 398457700 ATTACHMENT

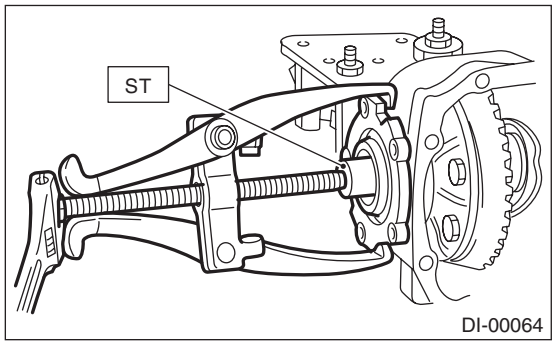

7) Pull out the differential case assembly from the differential carrier.

NOTE:
Be careful not to hit the teeth of hypoid driven gear against the differential carrier.

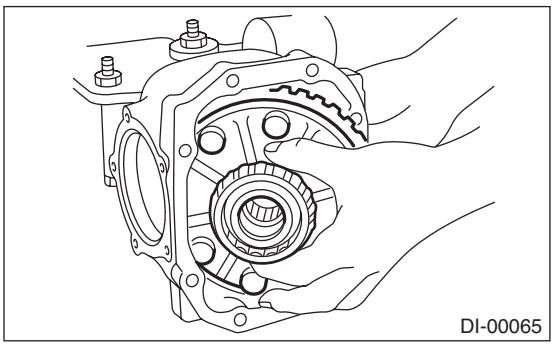

8) Remove the oil seal and O-ring from the side retainer.
9) When replacing the side bearing, remove the bearing race from the side retainer using ST.

ST 398527700 PULLER ASSY

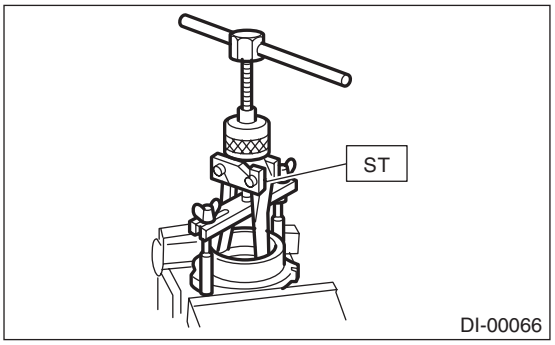

10) Using the ST, remove the bearing cone.

NOTE:
• Do not attempt to disassemble the parts unless necessary.
• Set the puller so that its claws catch the edge of the bearing cone.
• Never mix up the RH and LH bearing races and cones.

ST 18759AA000 PULLER ASSY

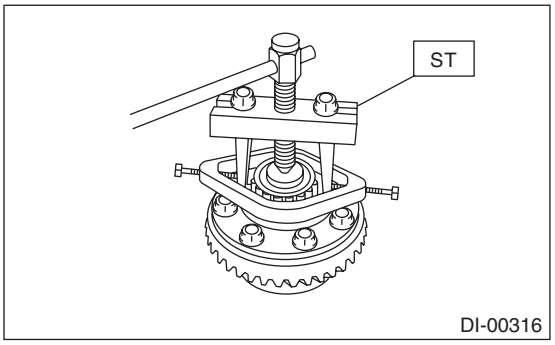

11) Remove the hypoid driven gear by loosening hypoid driven gear bolts.

NOTE:
Do not disassemble the differential case assembly.

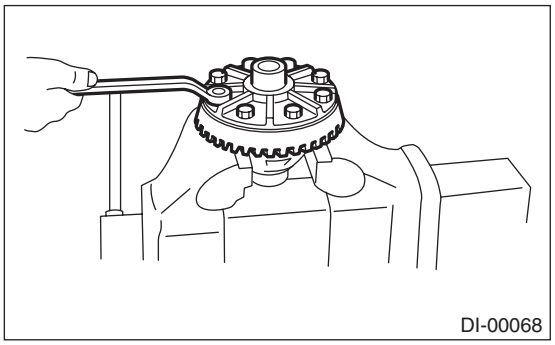

12) Remove the self-locking nut while securing the companion flange with ST.
ST 18633AA000 WRENCH COMPL

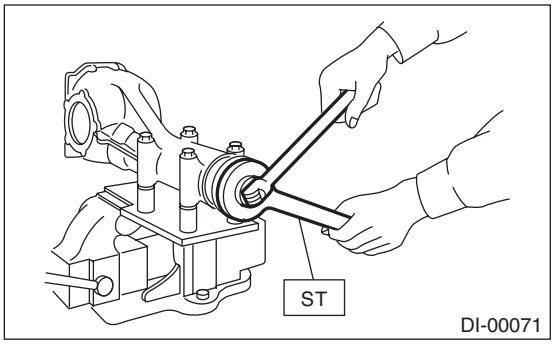

13) Extract the companion flange with a puller.

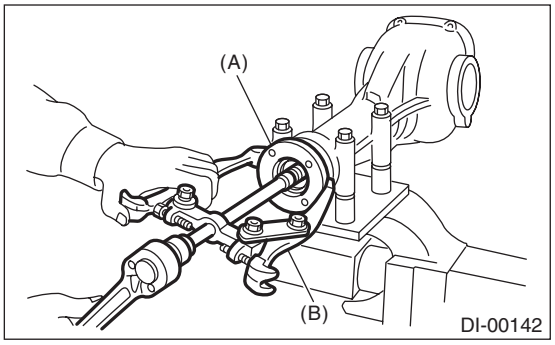

(A) Companion flange
(B) Puller

14) Press the end of drive pinion shaft by using the ST, and remove the drive pinion shaft, rear bearing cone, preload adjusting spacer and washer.

NOTE:
Hold the drive pinion so as not to drop it.
ST 398467700 DRIFT

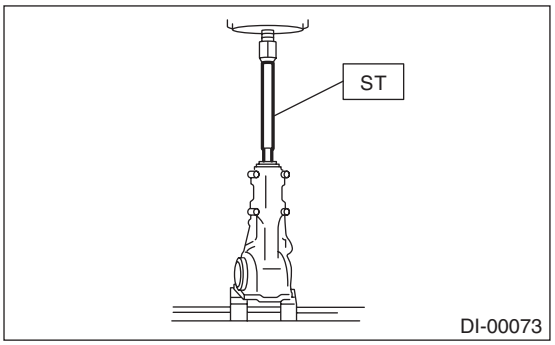

15) Remove the rear bearing cone from drive pinion by supporting the cone with ST.

NOTE:
Place the replacer so that its center-recessed side faces the bearing cone.
ST 398517700 REPLACER

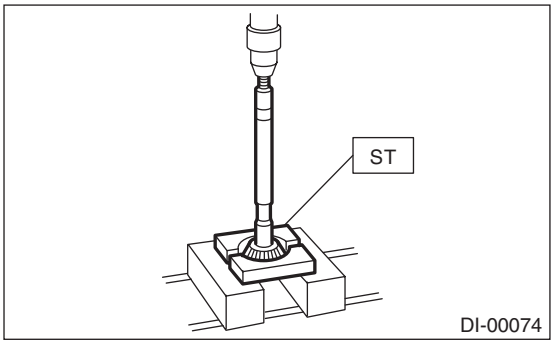

16) Remove the front oil seal from differential carrier using ST.
ST 398527700 PULLER ASSY

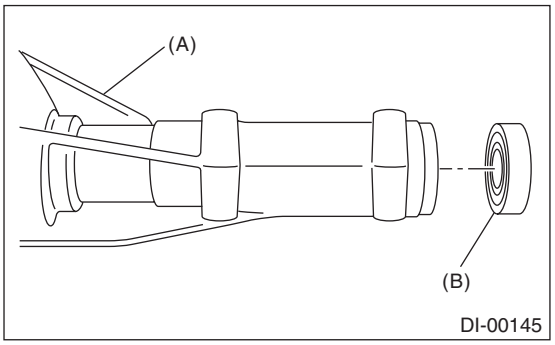

(A) Differential carrier
(B) Front oil seal

17) Remove the pilot bearing together with the front bearing cone and spacer using the ST.
ST 398467700 DRIFT

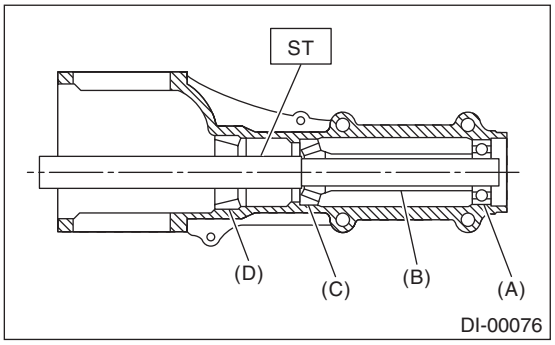

(A) Pilot bearing
(B) Spacer
(C) Front bearing
(D) Rear bearing race

18) When replacing the bearings, use a brass bar to tap out the front bearing race and rear bearing race in this order to remove them.

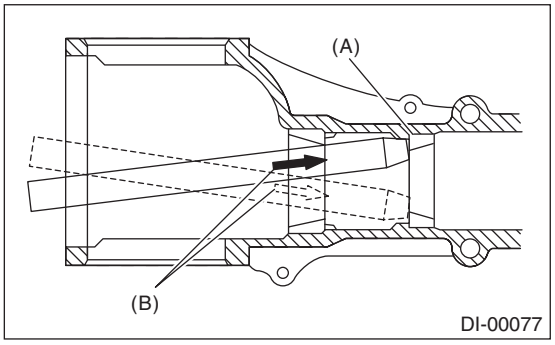

(A) 2 cutout portions along diagonal lines
(B) Tap alternately with brass bar.

D: ASSEMBLY

1. T-TYPE (B1, B2)

NOTE:
• Assemble in the reverse order of disassembly.
• Check and adjust each part during assembly.
• Keep the shims and washers in order, so that they are not improperly installed.
• Thoroughly clean the surfaces on which the shims, washers and bearings are to be installed.
• Apply differential gear oil when installing the bearings and thrust washers.
• Be careful not to mix up the RH and LH bearing races.
• Replace the gasket, oil seal and O-ring with a new part.
• Be careful not to mix up the rear differential side oil seal RH and LH.
• Apply differential gear oil to the lips when installing the oil seal.

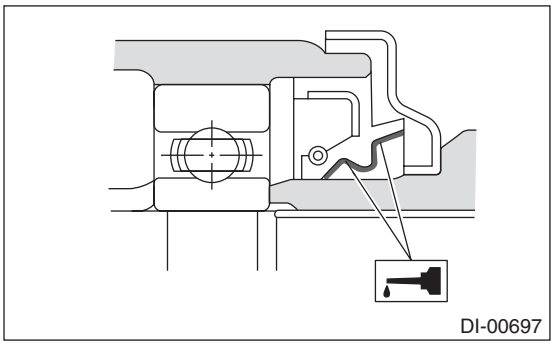

1) Adjusting preload for front and rear bearings

NOTE:
Adjust the bearing preload between front and rear bearings with preload adjusting spacer and washer. Pinion height adjusting washer is not affected by this adjustment. The adjustment must not be carried out with oil seal inserted.

(1) Install the rear bearing race into the differential carrier using ST1 and ST2.
ST1 398477701 HANDLE
ST2 398477703 DRIFT 2

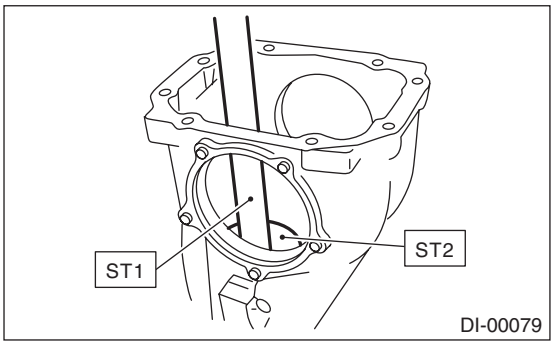

(2) Install the front bearing race to the differential carrier using ST1 and ST2.

NOTE:
Use a new front bearing race.
ST1 398477701 HANDLE
ST2 398477702 DRIFT

(3) Insert ST1 into the differential carrier with the pinion height adjusting washer and rear bearing cone fitted onto it.

NOTE:
• At this time, install a provisionally selected or previously used pinion height adjusting washer. Measure and record the thickness.
• If tooth contact (drive pinion, hypoid driven gear) is normal in the inspection before disassembling, verify that the washer is not deformed, and then reuse the used washer.

(4) Install the preload adjusting spacer and washer, front bearing cone, ST2, companion flange and self-locking nut.

NOTE:
Use new front bearing cone.
ST1 398507702 DUMMY SHAFT
ST2 398507703 DUMMY COLLAR

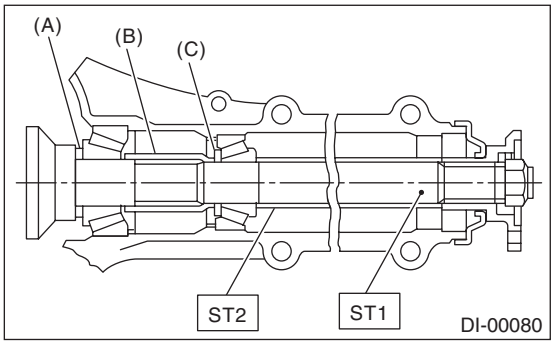

(A) Pinion height adjusting washer
(B) Preload adjusting spacer
(C) Preload adjusting washer

(5) Turn the ST1 by hand to smooth the bearing, and tighten the self-locking nut while measuring the initial load or initial torque with a spring scale or torque wrench. Select the preload adjusting washer and spacer so that the specified preload is obtained when nut is tightened to the specified torque.

NOTE:
• Measure the preload in direction of tangent to the flange.
• Be careful not to give excessive preload.
• When tightening the self-locking nut, lock ST1 with ST2 as shown in the figure.
ST1 398507702 DUMMY SHAFT
ST2 398507704 BLOCK

Tightening torque:
181.5 N·m (18.5 kgf-m, 133.9 ft-lb)

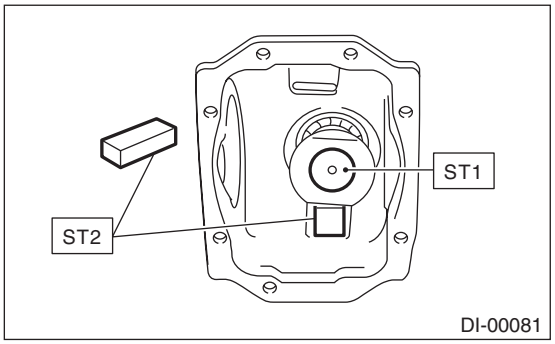

Initial load:
18.1 — 38.8 N (1.8 — 4.0 kgf, 4.1 — 8.7 lbf)

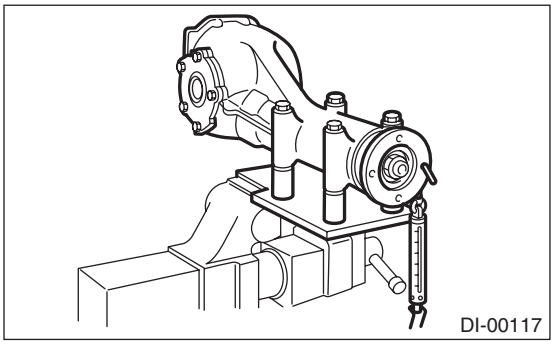

Initial torque:
0.69 — 1.47 N·m (0.07 — 0.15 kgf-m, 0.51 — 1.08 ft-lb)

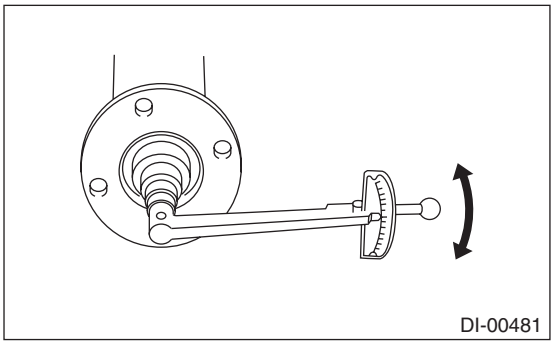

Preload adjusting washer	
Part No.	Thickness mm (in)
383705200	2.59 (0.1020)
383715200	2.57 (0.1012)
383725200	2.55 (0.1004)
383735200	2.53 (0.0996)
383745200	2.51 (0.0988)
383755200	2.49 (0.0980)
383765200	2.47 (0.0972)
383775200	2.45 (0.0965)
383785200	2.43 (0.0957)
383795200	2.41 (0.0949)
383805200	2.39 (0.0941)
383815200	2.37 (0.0933)
383825200	2.35 (0.0925)
383835200	2.33 (0.0917)
383845200	2.31 (0.0909)

Preload adjusting spacer	
Part No.	Length mm (in)
383695201	56.2 (2.213)
383695202	56.4 (2.220)
383695203	56.6 (2.228)
383695204	56.8 (2.236)
383695205	57.0 (2.244)
383695206	57.2 (2.252)

2) Adjusting drive pinion height:
Adjust the drive pinion height with pinion height adjusting washer installed between the rear bearing cone and the back of pinion gear.

(1) Attach the ST2.

ST1 398507702 DUMMY SHAFT
ST2 398507701 DIFFERENTIAL CARRIER GAUGE
ST3 398507703 DUMMY COLLAR

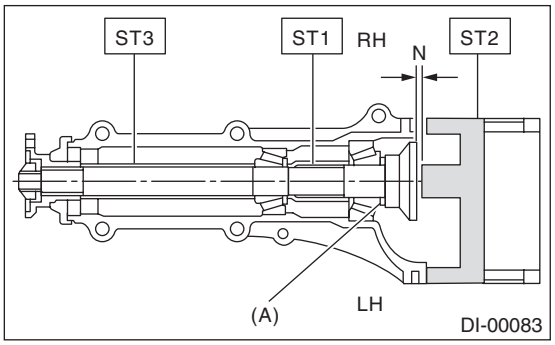

(A) Pinion height adjusting washer

(2) Measure the clearance "N" between the end of ST2 and the end surface of ST1 by using a thickness gauge.

NOTE:
Make sure there is no clearance between the differential carrier and ST2.

ST1 398507702 DUMMY SHAFT
ST2 398507701 DIFFERENTIAL CARRIER GAUGE

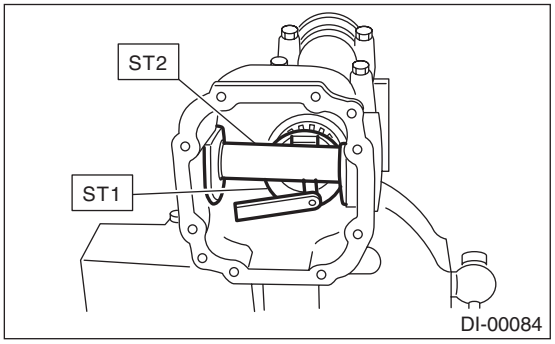

(3) Obtain the thickness of pinion height adjusting washer to be inserted from the following formula, and replace the temporarily installed washer with this one.

$T = To + N - (H \times 0.01) - 0.20$ mm (0.0079 in)

T	Thickness of pinion height adjusting washer mm (in)	
To	Thickness of washer temporarily inserted mm (in)	
N	Clearance of thickness gauge mm (in)	
H	Figure marked on drive pinion head	
Memo:		

(Example of calculation)
To = 3.39 mm (0.1335 in)
N = 0.24 mm (0.0094 in)
H = + 1
T = 3.39 mm (0.1335 in) + 0.24 mm (0.0094 in) – 0.01 mm (0.0004 in) – 0.20 mm (0.0079 in) = 3.42 mm (0.1346 in)
Result: Thickness = 3.42 mm (0.1346 in)
Therefore use washer 383605200.

Pinion height adjusting washer	
Part No.	Thickness mm (in)
383495200	3.09 (0.1217)
383505200	3.12 (0.1228)
383515200	3.15 (0.1240)
383525200	3.18 (0.1252)
383535200	3.21 (0.1264)
383545200	3.24 (0.1276)
383555200	3.27 (0.1287)
383565200	3.30 (0.1299)
383575200	3.33 (0.1311)
383585200	3.36 (0.1323)
383595200	3.39 (0.1335)
383605200	3.42 (0.1346)
383615200	3.45 (0.1358)
383625200	3.48 (0.1370)
383635200	3.51 (0.1382)
383645200	3.54 (0.1394)
383655200	3.57 (0.1406)
383665200	3.60 (0.1417)
383675200	3.63 (0.1429)
383685200	3.66 (0.1441)

3) Install the selected pinion height adjusting washer on drive pinion, and press the rear bearing cone into position with ST.
ST 398177700 INSTALLER

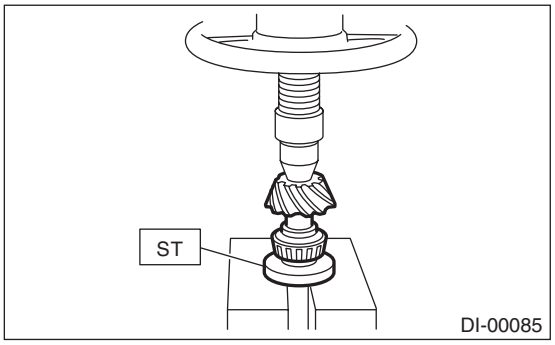

4) Insert the drive pinion into the differential carrier, and install the preselected preload adjusting spacer and washer.

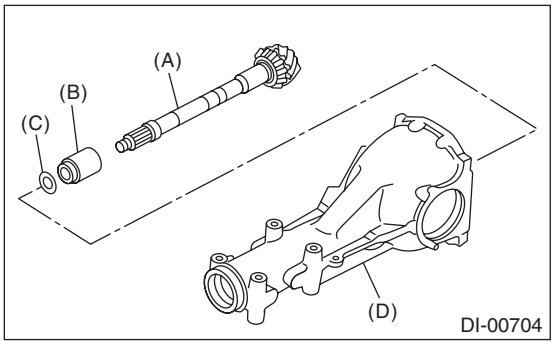

(A) Drive pinion
(B) Preload adjusting spacer
(C) Preload adjusting washer
(D) Differential carrier

5) Press-fit the front bearing cone with ST1, ST2 and ST3.
ST1 398507703 DUMMY COLLAR
ST2 399780104 WEIGHT
ST3 899580100 INSTALLER

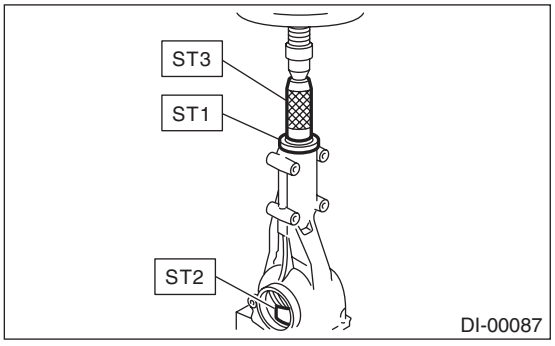

6) Insert the spacer, then press-fit the pilot bearing with ST1 and ST2.

NOTE:
Use a new pilot bearing.
ST1 399780104 WEIGHT
ST2 899580100 INSTALLER

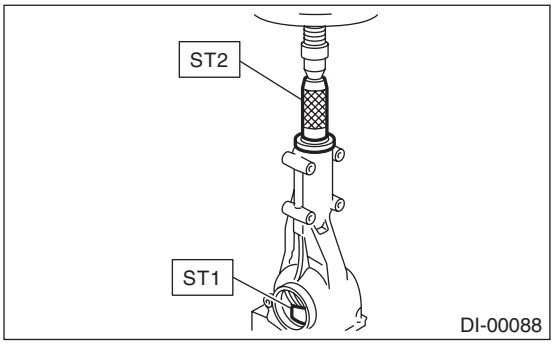

7) Using the ST, install the oil seal.

NOTE:
- Use a new oil seal.
- Press-fit until the oil seal end comes 1 mm (0.04 in) inward from end of carrier.
- Apply differential gear oil to the oil seal lips.

ST 498447120 INSTALLER

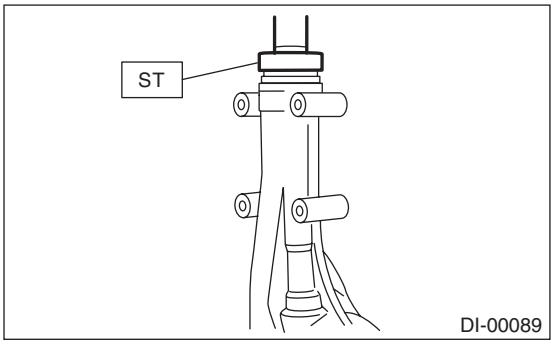

8) Press-fit the companion flange with ST1 and ST2.

NOTE:
Be careful not to damage the bearing.
ST1 899874100 INSTALLER
ST2 399780104 WEIGHT

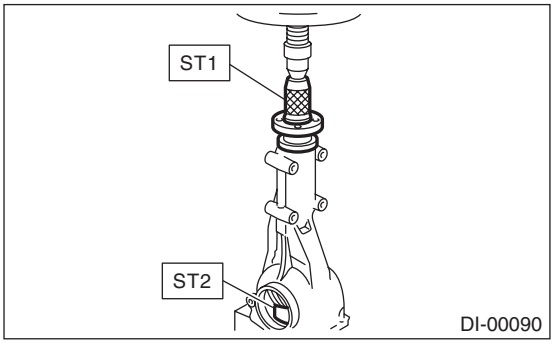

9) Apply seal material on the drive pinion shaft thread and new self-locking nut seat.

Seal material:
THREE BOND 1324 (Part No. 004403042) or equivalent

10) Attach the new self-locking nut and use the ST to fix the companion flange in place, then tighten the self-locking nut.

Tightening torque:
181.5 N·m (18.5 kgf-m, 133.9 ft-lb)

ST 498427200 FLANGE WRENCH

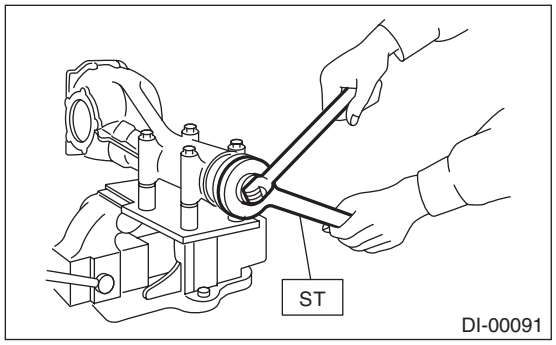

11) Check the initial torque or initial load.

Initial load:
18.1 — 38.8 N (1.8 — 4.0 kgf, 4.1 — 8.7 lbf)

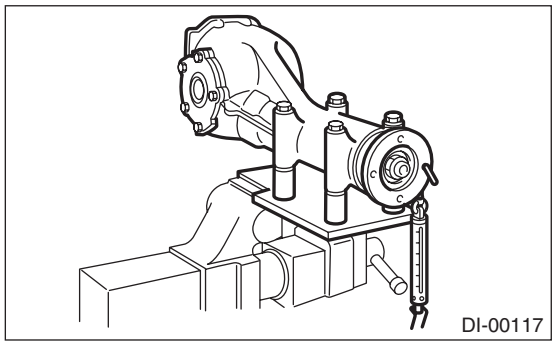

Initial torque:
0.69 — 1.47 N·m (0.07 — 0.15 kgf-m, 0.51 — 1.08 ft-lb)

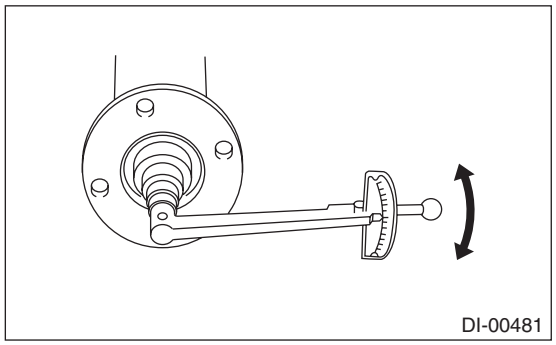

12) Assembling differential case
(1) Install the side gears and pinion mate gears, with their side gear thrust washers, pinion mate gear washer, and pinion mate shaft, into the differential case.

NOTE:
• Apply gear oil on both sides of the washer and on the pinion mate shaft before installing.
• Insert the pinion mate shaft into the differential case by aligning the pin holes.

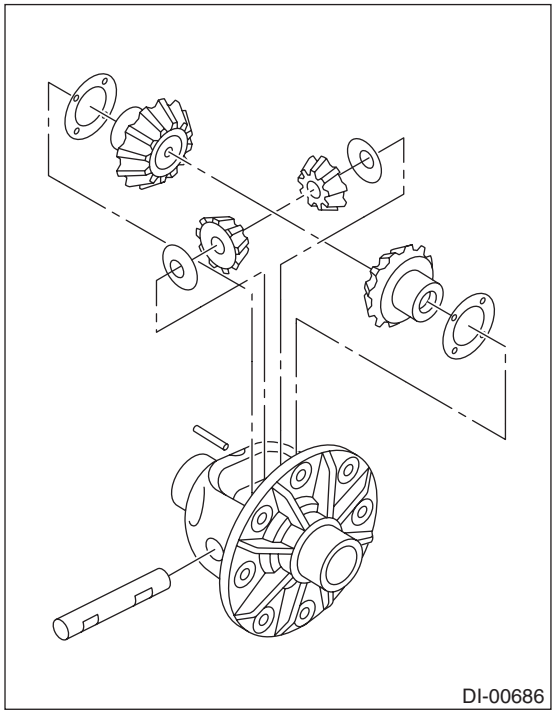

(2) Measure the side gear backlash.

Side gear backlash:
0.10 — 0.20 mm (0.004 — 0.008 in)

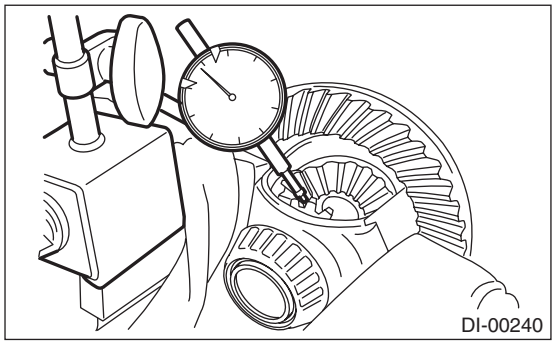

(3) Adjust the backlash as specified by selecting side gear thrust washer.

Side gear thrust washer	
Part No.	Thickness mm (in)
383445201	0.75 — 0.80 (0.0295 — 0.0315)
383445202	0.80 — 0.85 (0.0315 — 0.0335)
383445203	0.85 — 0.90 (0.0335 — 0.0354)

(4) Check the condition of rotation after applying oil to the gear tooth surfaces and washer surfaces.
(5) Drive the pinion shaft lock pin into the differential case.

NOTE:
Use a new pinion shaft lock pin.
ST 899904100 STRAIGHT PIN REMOVER
13) Install the driven gear to the differential case.

NOTE:
• Before installing bolts, apply seal material to bolt threads.

Seal material:
THREE BOND 1324 (Part No. 004403042) or equivalent
• Make sure there is no clearance between the differential case and driven gear.
• Tighten opposing bolts in order.

Tightening torque:
103 N·m (10.5 kgf-m, 76.0 ft-lb)

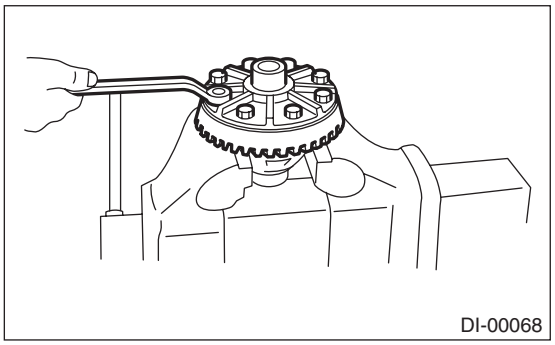
DI-00068

14) Using the ST, press-fit the side bearing to the differential case.
ST 398487700 DRIFT

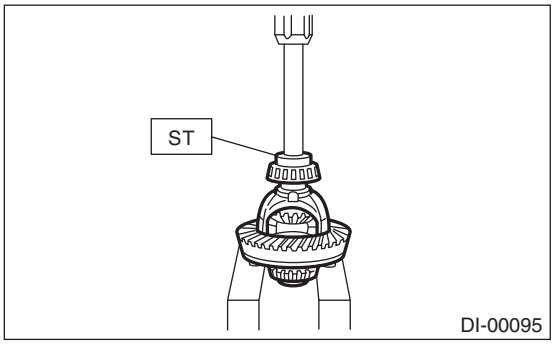

DI-00095

15) Using the ST, press-fit the side bearing outer race to the side retainer.

CAUTION:
Make sure that the bearing outer races and cones are properly assembled.
ST 398417700 DRIFT

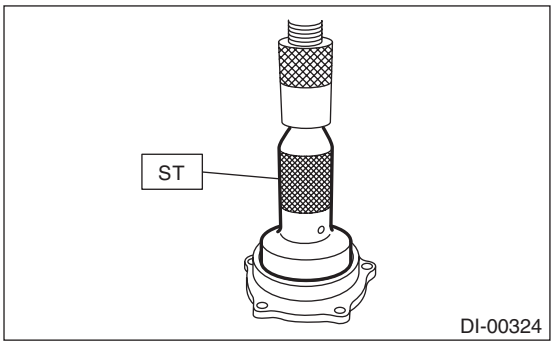

DI-00324

16) Side retainer shim adjustment
(1) The hypoid driven gear backlash and side bearing preload can be adjusted by the side retainer shim thickness.
(2) Install the differential case assembly into differential carrier in the reverse order of disassembly.

NOTE:
Be careful not to hit the teeth of hypoid driven gear against the differential carrier.

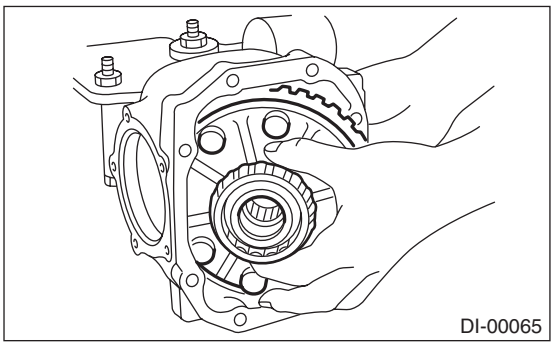
DI-00065

(3) Install the side retainer shim.

NOTE:
• Be careful not to mix up the side retainer shim RH and LH.
• Replace broken or corroded side retainer shims with a new part of the same thickness.

Side retainer shim	
Part No.	Thickness mm (in)
383475201	0.20 (0.0079)
383475202	0.25 (0.0098)
383475203	0.30 (0.0118)
383475204	0.40 (0.0157)
383475205	0.50 (0.0197)

(4) Align the arrow mark on the differential carrier with the arrow mark on the side retainer when installing the side retainer.

NOTE:
Be careful that the side bearing outer race is not damaged by the bearing roller.

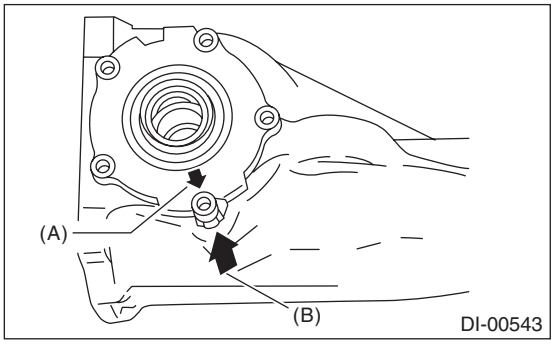

(A) Arrow mark (on the side retainer)
(B) Arrow mark (on the differential carrier)

(5) Tighten the side retainer bolts.

Tightening torque:
10.5 N·m (1.1 kgf-m, 7.7 ft-lb)

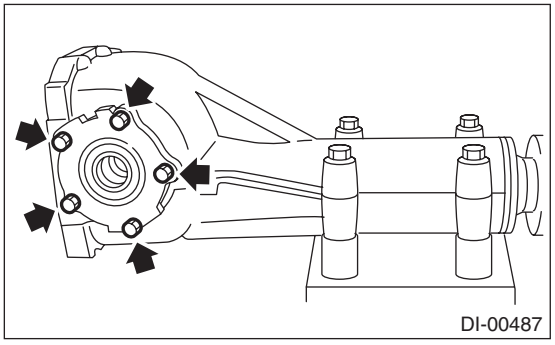

(6) Measure the hypoid driven gear to drive pinion backlash. Set the magnet base on differential carrier. Align the contact point of dial gauge with tooth face of hypoid driven gear, and move hypoid driven gear while holding drive pinion still. Read the value indicated on dial gauge. If the backlash is outside the standard range, adjust the side retainer shim by the following method.

• When backlash is less than 0.1 mm (0.004 in):
Reduce the thickness of shim on the back side of the hypoid driven gear and increase the thickness of shims on the teeth side of the hypoid driven gear.

• When backlash exceeds 0.2 mm (0.008 in):
Increase the thickness of shim on the back side of the hypoid driven gear and reduce the thickness of shims on the teeth side of the hypoid driven gear.

Backlash:
0.10 — 0.20 mm (0.004 — 0.008 in)

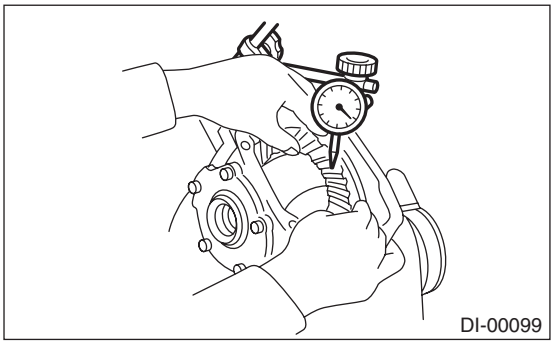

(7) Measure the total preload of the drive pinion. If the total preload is outside the specification range, adjust the thickness of side retainer shims, increasing/reducing both shims by an even amount at a time.

Total preload:
20.7 — 54.4 N (2.1 — 5.5 kgf, 4.7 — 12.2 lbf)

17) Recheck the hypoid driven gear to drive pinion backlash.

Backlash:
0.10 — 0.20 mm (0.004 — 0.008 in)

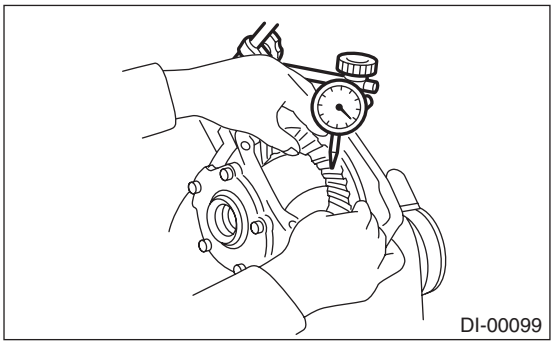

18) Check pinion and hypoid driven gears rotate smoothly and make sure of the hypoid driven gear runout on its back surface. If the hypoid driven gear runout on its back surface exceeds the specification, check for any foreign objects between the hypoid driven gear and differential case, and for any deformation of the differential case or hypoid driven gear.

Hypoid driven gear back surface runout:
0.05 mm (0.002 in)

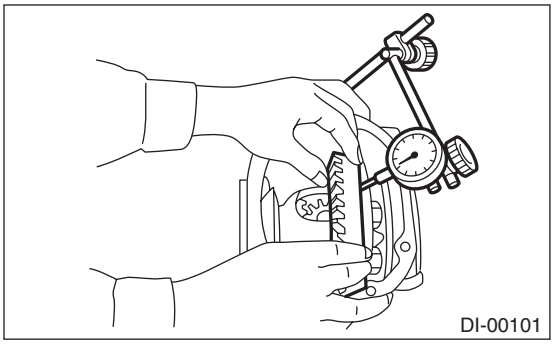

19) Check and adjustment of the tooth contact of hypoid driven gear and drive pinion

(1) Apply lead-free red dye evenly on the both sides of three to four teeth of the hypoid driven gear. Check the contact pattern after rotating the hypoid driven gear several revolutions back and forth until a definite contact pattern appears on the hypoid driven gear.

(2) When the contact pattern is not correct, re-adjust.

NOTE:
Be sure to wipe off the lead-free red dye completely after the adjustment is completed.

- Correct tooth contact

Check item: Tooth contact pattern is slightly shifted toward toe side under no-load rotation. (When driving, it moves towards the heel side.)

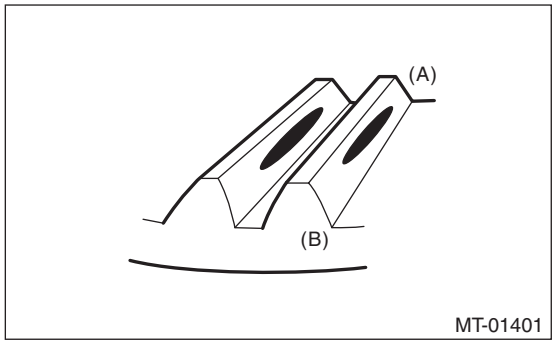

(A) Toe side
(B) Heel side

- Face contact

Check item: Backlash is too large.
Contact pattern

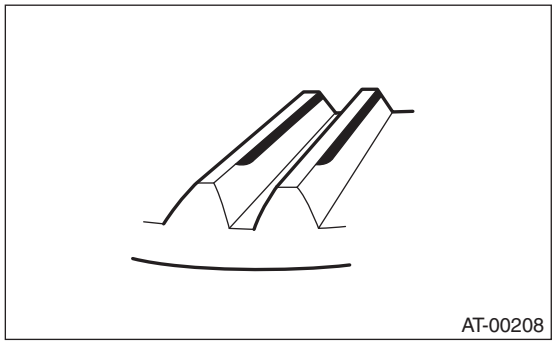

Corrective action: Increase thickness of pinion height adjusting washer according to the procedure for bringing drive pinion close to hypoid driven gear side.

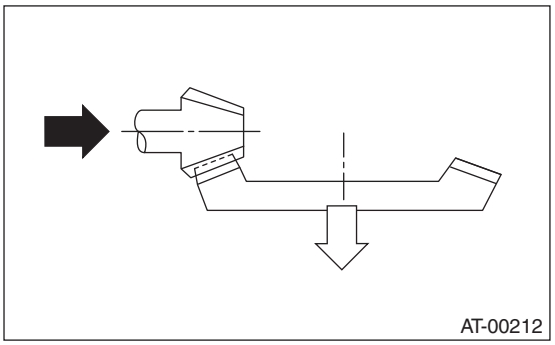

- Flank contact

Check item: Backlash is too small.
Contact pattern

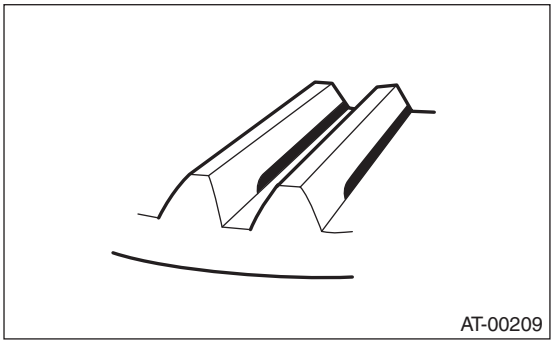

Corrective action: Reduce the thickness of pinion height adjusting washer according to the procedure for bringing drive pinion away from hypoid driven gear.

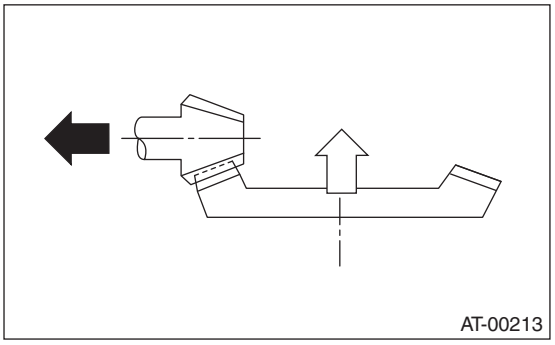

• Toe contact (inside contact)

Check item: Teeth contact area is too small.

Contact pattern

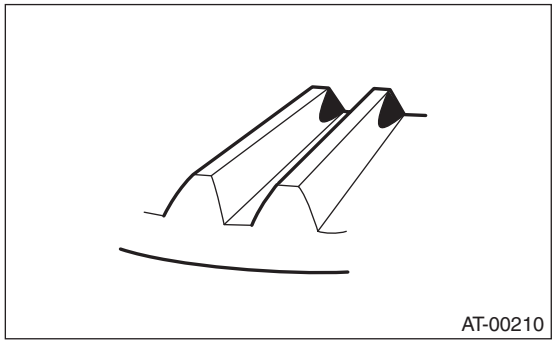

Corrective action: Reduce the thickness of pinion height adjusting washer according to the procedure for bringing drive pinion away from hypoid driven gear.

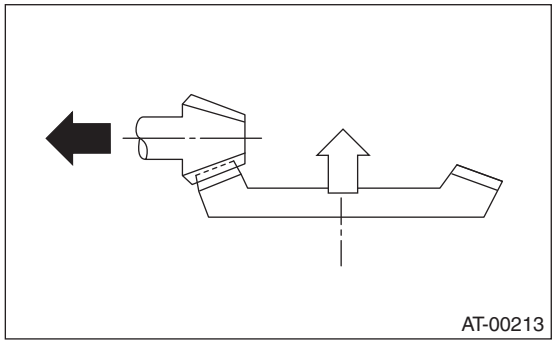

• Heel contact (outside end contact)

Check item: Teeth contact area is too small.

Contact pattern

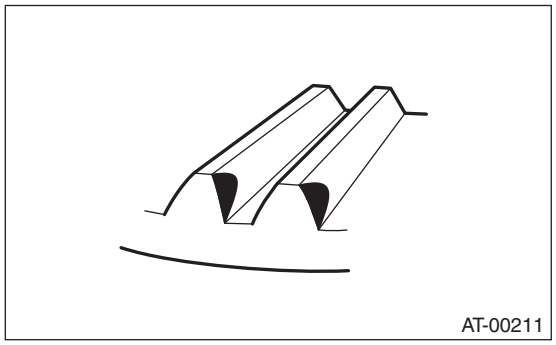

Corrective action: Increase thickness of pinion height adjusting washer according to the procedure for bringing drive pinion close to hypoid driven gear side.

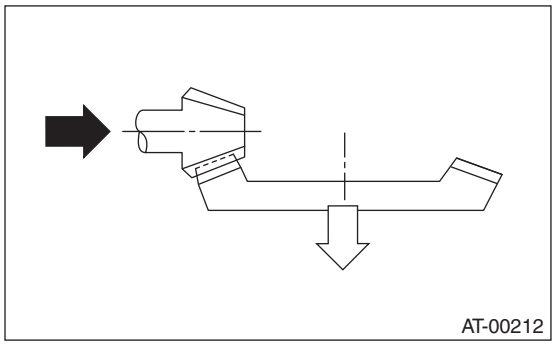

20) If proper tooth contact is not obtained, readjust the drive pinion height by changing the RH and LH side retainer shims and the hypoid gear backlash.

(1) Drive pinion height

ST1 398507702 DUMMY SHAFT

ST2 398507701 DIFFERENTIAL CARRIER GAUGE

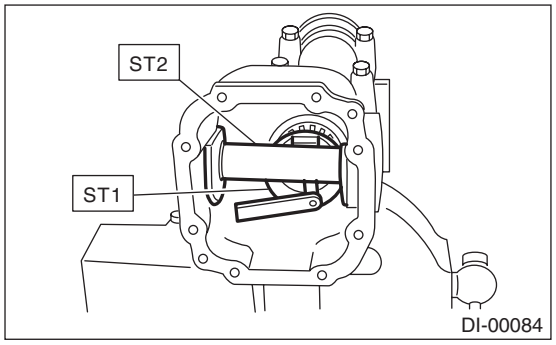

T = To + N – (H × 0.01) – 0.20 mm (0.0079 in)

T	Thickness of pinion height adjusting washer mm (in)	
To	Thickness of washer temporarily inserted mm (in)	
N	Clearance of thickness gauge mm (in)	
H	Figure marked on drive pinion head	
Memo:		

(2) Hypoid gear backlash

Backlash:
0.10 — 0.20 mm (0.004 — 0.008 in)

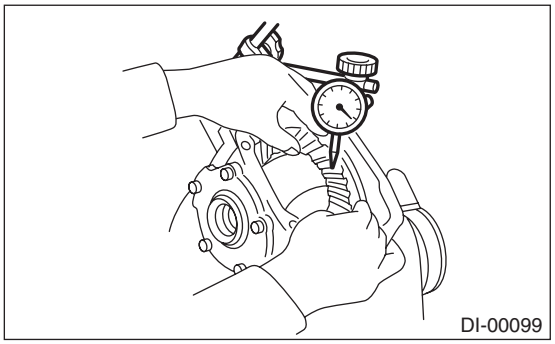
DI-00099

21) Remove the RH and LH side retainers.
22) Install the O-ring to left and right side retainers.

NOTE:
Use new O-rings.

23) Install the oil seal to the side retainers on both sides. <Ref. to DI-55, REPLACEMENT, Rear Differential Side Oil Seal.>
24) Align the arrow mark on the differential carrier with the arrow mark on the side retainer when installing the side retainer.

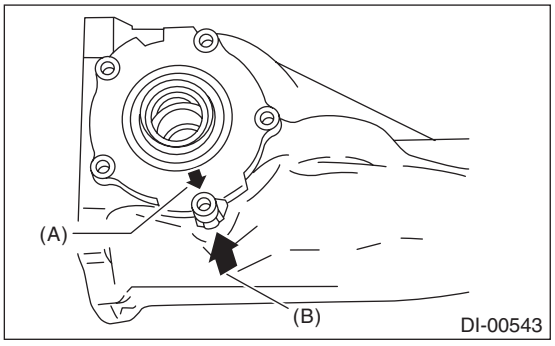

(A) Arrow mark (on the side retainer)
(B) Arrow mark (on the differential carrier)

25) Apply liquid gasket to the bolts indicated by arrows, and tighten the bolts.

Liquid gasket:
THREE BOND 1110F, THREE BOND 1110B or equivalent

Tightening torque:
10.5 N·m (1.1 kgf-m, 7.7 ft-lb)

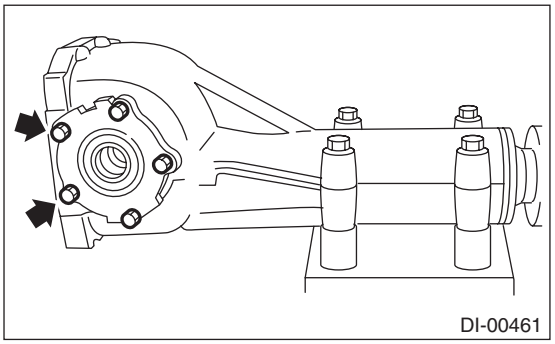
DI-00461

26) Install the gasket and rear cover, and tighten the bolts to specified torque.

NOTE:
Use a new gasket.

Tightening torque:
29.5 N·m (3.0 kgf-m, 21.8 ft-lb)

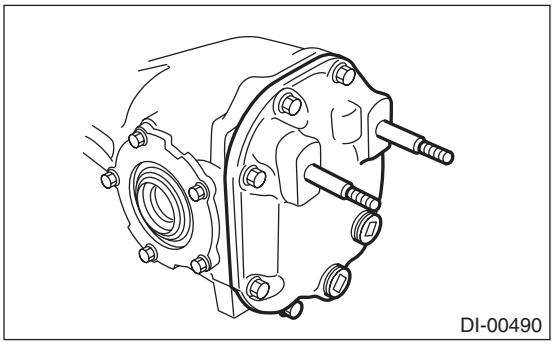
DI-00490

27) When the stud bolts are removed from the rear cover, install the stud bolts so that the exposed length of stud bolt is within the range of “L”.

CAUTION:
• Do not tighten forcibly if the exposed length of stud bolt does not fall within the specified range. Remove the stud bolt, and check for contamination of foreign matter and any defects in the screw hole.
• Do not tighten with a tightening torque of 49 N·m (5.0 kgf-m, 36.1 ft-lb) (reference value) or more.

Exposed length L of stud bolt:
59.0 — 61.0 mm (2.32 — 2.40 in)

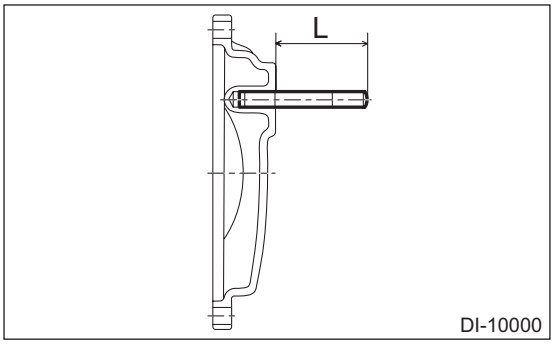

28) Install the air breather cap.

NOTE:
When installing the air breather cap, do not tap section (A). Be sure to tap section (B) to install.

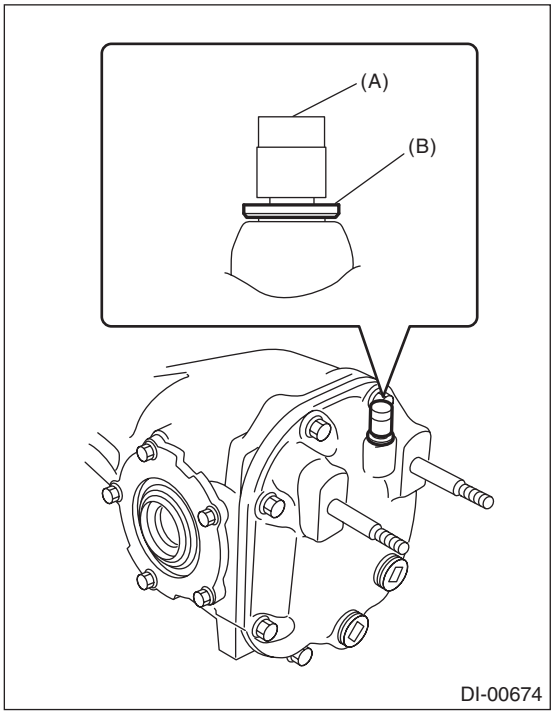

29) Install the drain plug.

NOTE:
Apply liquid gasket to the drain plug.

Liquid gasket:
THREE BOND 1105 (Part No. 004403010) or equivalent

Tightening torque:
49 N·m (5.0 kgf-m, 36.1 ft-lb)

30) Install the filler plug.

NOTE:
After installing the rear differential assembly to the vehicle, fill the gear oil, then apply liquid gasket, and tighten to the specified torque. <Ref. to DI-18, REPLACEMENT, Differential Gear Oil.>

2. T-TYPE (H5)

NOTE:
- Assemble in the reverse order of disassembly.
- Check and adjust each part during assembly.
- Keep the shims and washers in order, so that they are not improperly installed.
- Thoroughly clean the surfaces on which the shims, washers and bearings are to be installed.
- Apply differential gear oil when installing the bearings and thrust washers.
- Be careful not to mix up the RH and LH bearing races.
- Replace the gasket, oil seal and O-ring with a new part.
- Be careful not to mix up the rear differential side oil seal RH and LH.
- Apply differential gear oil to the lips when installing the oil seal.

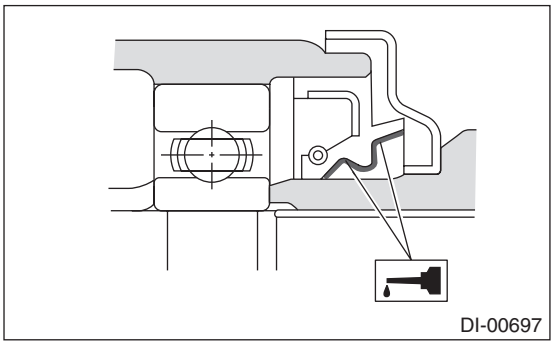

1) Adjusting preload for front and rear bearings

NOTE:
Adjust the bearing preload between front and rear bearings with spacer and washer. Pinion height adjusting washer is not affected by this adjustment. The adjustment must not be carried out with oil seal inserted.

2) Using the ST, press-fit the rear bearing race to the differential carrier.
ST 398417700 DRIFT

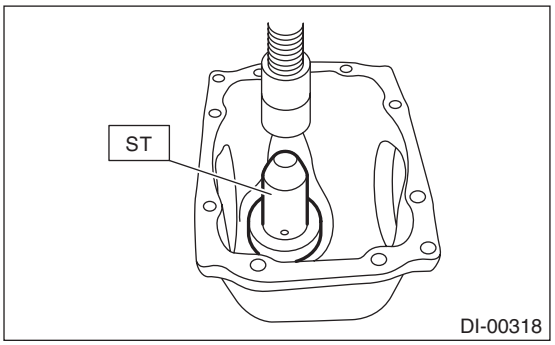

3) Using the ST, press-fit the front bearing race to the differential carrier.

NOTE:
Use a new front bearing race.
ST 398477702 DRIFT

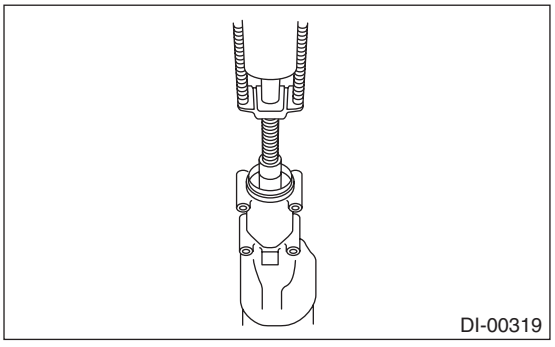

4) Selecting the pinion height adjusting washer

(1) Measure the thickness of the inserted pinion height adjusting washer.

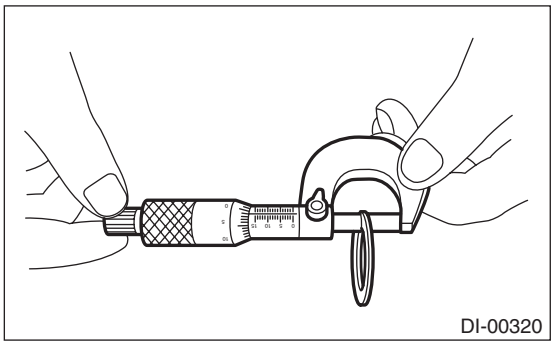

(2) Read the markings on both the current drive pinion gear and the new pinion gear.

NOTE:
No marking means 0 (zero).

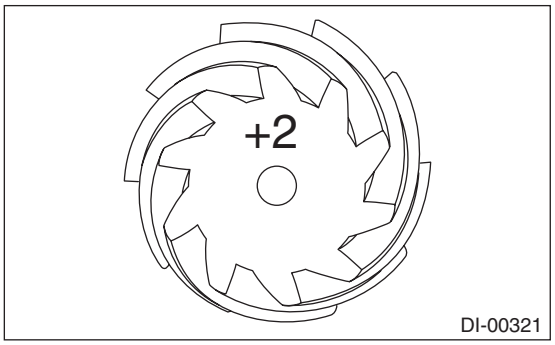

(3) Calculate the thickness of pinion height adjusting washer to be inserted from the following formula, and replace the installed washer with a new washer of the calculated thickness.
$T = T1 + (T2 \times 0.01 - T3 \times 0.01)$

T	Thickness of selected pinion height adjusting washer mm (in)	
T1	Thickness of inserted pinion height adjusting washer mm (in)	
T2	Number of the installed drive pinion gear marking mm (in)	
T3	Number of new drive pinion gear marking mm (in)	
Memo:		

(Example of calculation)
T1 = 3.30 mm (0.1299 in), T2 = +2, T3 = –1
$T = 3.30 \text{ mm } (0.1299 \text{ in}) + \{(2 \times 0.01) - (-1 \times 0.01)\} = 3.33 \text{ mm } (0.1311 \text{ in})$
Result: Thickness = 3.33 mm (0.1311 in)
The washer with part number 38336AA310 is used.

Pinion height adjusting washer	
Part No.	Thickness mm (in)
38336AA230	3.09 (0.1217)
38336AA240	3.12 (0.1228)
38336AA250	3.15 (0.1240)
38336AA260	3.18 (0.1252)
38336AA270	3.21 (0.1264)
38336AA280	3.24 (0.1276)
38336AA290	3.27 (0.1287)
38336AA300	3.30 (0.1299)
38336AA310	3.33 (0.1311)
38336AA320	3.36 (0.1323)
38336AA330	3.39 (0.1335)
38336AA340	3.42 (0.1346)
38336AA350	3.45 (0.1358)
38336AA360	3.48 (0.1370)
38336AA370	3.51 (0.1382)
38336AA380	3.54 (0.1394)
38336AA390	3.57 (0.1406)
38336AA400	3.60 (0.1417)
38336AA410	3.63 (0.1429)
38336AA420	3.66 (0.1441)

5) Install the selected pinion height adjusting washer on drive pinion, and push the rear bearing cone into position with ST.
ST 18674AA000 INSTALLER

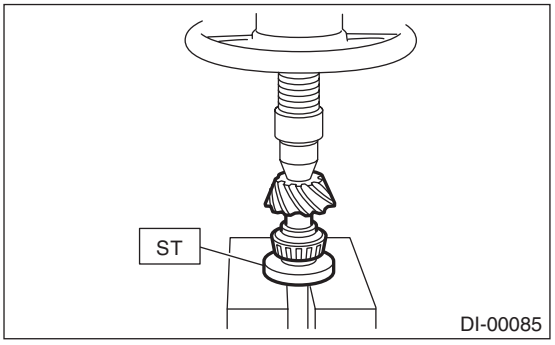

6) Insert the drive pinion into the differential carrier, and install the originally attached preload adjusting spacer and washer.

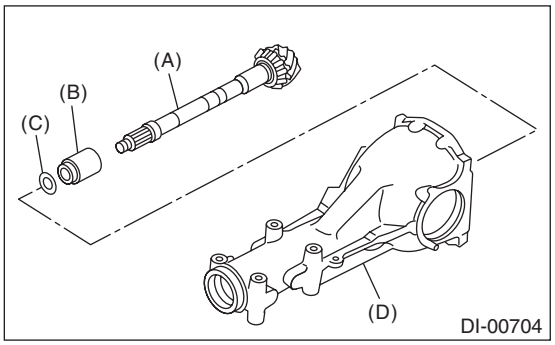

(A) Drive pinion
(B) Preload adjusting spacer
(C) Preload adjusting washer
(D) Differential carrier

7) Install the front bearing cone.

NOTE:
Use new front bearing cone.

8) Insert the spacer and press-fit the pilot bearing using ST.

NOTE:
Use a new pilot bearing.

ST1 399780104 WEIGHT
ST2 899580100 INSTALLER
ST3 398507703 DUMMY COLLAR
ST4 498937110 HOLDER DRIVE PINION

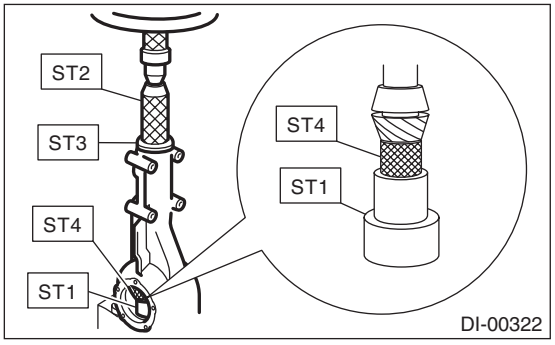

9) Press-fit the companion flange with ST1, ST2, and ST3.

NOTE:
Be careful not to damage the bearing.

ST1 899874100 INSTALLER
ST2 399780104 WEIGHT
ST3 498937110 HOLDER DRIVE PINION

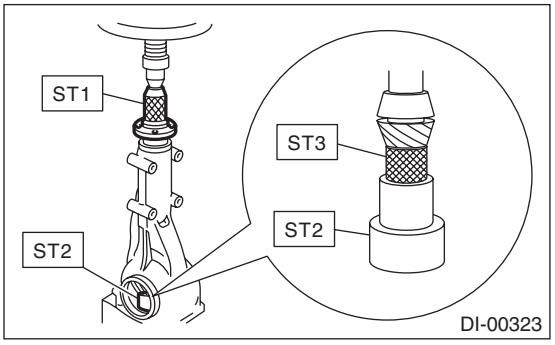

10) Attach the self-locking nut and use the ST to fix the companion flange in place, then tighten the self-locking nut.

Tightening torque:
181.5 N·m (18.5 kgf-m, 133.9 ft-lb)

ST 18633AA000 WRENCH COMPL

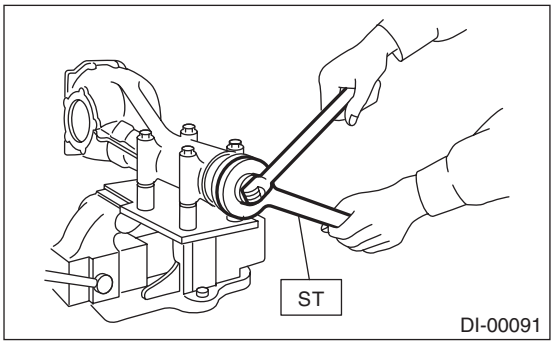

11) Rotate the drive pinion shaft 10 times or more to fit it in the respective taper roller bearing, and then measure the initial load or initial torque.

Initial load:
24.1 — 38.6 N (2.5 — 3.9 kgf, 5.4 — 8.7 lbf)

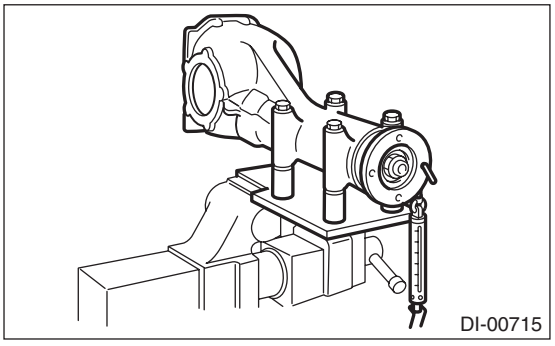

Initial torque:
0.98 — 1.57 N·m (0.10 — 0.16 kgf-m, 0.72 — 1.16 ft-lb)

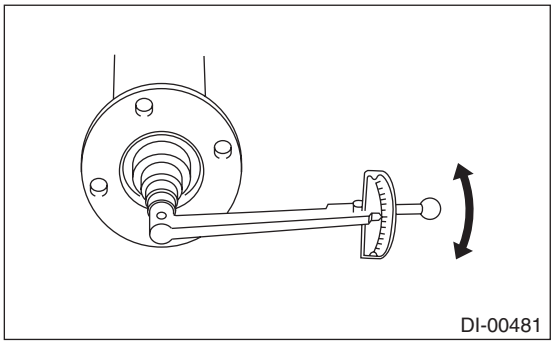

12) When the bearing preload is out of the specified range, select the preload adjusting washer and spacer from the following table in order to make it within the specified range.

Preload adjusting washer	
Part No.	Thickness mm (in)
383705200	2.59 (0.1020)
383715200	2.57 (0.1012)
383725200	2.55 (0.1004)
383735200	2.53 (0.0996)
383745200	2.51 (0.0988)
383755200	2.49 (0.0980)
383765200	2.47 (0.0972)
383775200	2.45 (0.0965)
383785200	2.43 (0.0957)
383795200	2.41 (0.0949)
383805200	2.39 (0.0941)
383815200	2.37 (0.0933)
383825200	2.35 (0.0925)
383835200	2.33 (0.0917)
383845200	2.31 (0.0909)

Preload adjusting spacer	
Part No.	Length mm (in)
31454AA130	52.2 (2.055)
31454AA140	52.4 (2.063)
31454AA150	52.6 (2.071)
31454AA160	52.8 (2.079)
31454AA170	53.0 (2.087)
31454AA180	53.2 (2.094)

13) Remove the self-locking nut while securing the companion flange with ST.
ST 18633AA000 WRENCH COMPL

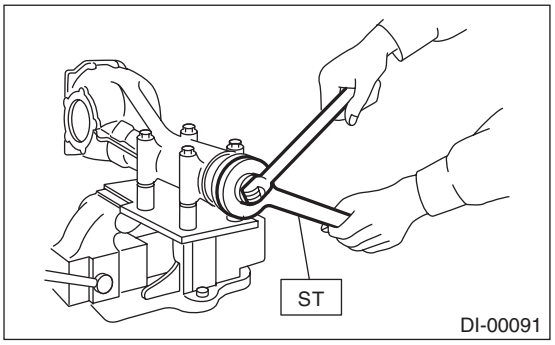

14) Extract the companion flange with a puller.

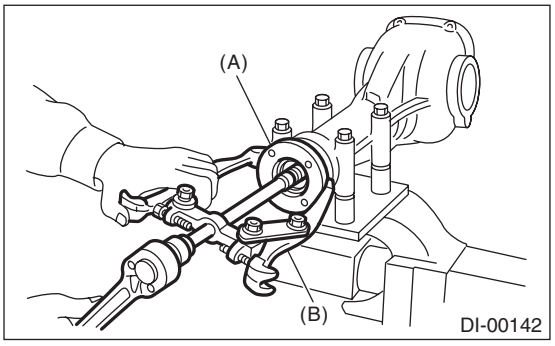

(A) Companion flange
(B) Puller

15) Using the ST, install the oil seal.

NOTE:
- Use a new oil seal.
- Press-fit until the oil seal end comes 1 mm (0.04 in) inward from end of carrier.
- Apply differential gear oil to the oil seal lips.

ST 498447120 INSTALLER

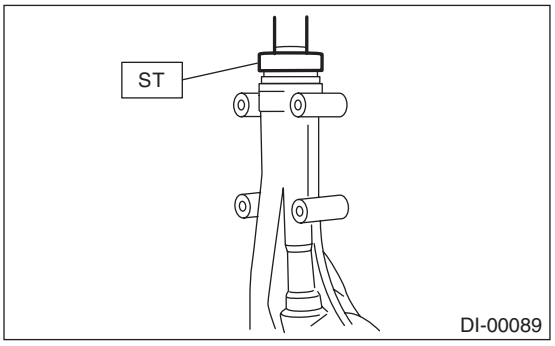

16) Press-fit the companion flange with ST1, ST2, and ST3.
ST1 899874100 INSTALLER
ST2 399780104 WEIGHT
ST3 498937110 HOLDER DRIVE PINION

NOTE:
Be careful not to damage the bearing.

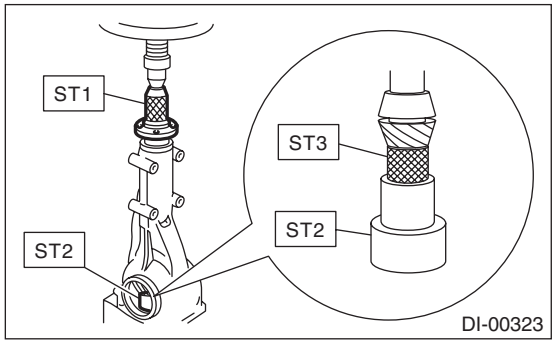

17) Apply seal material on the drive pinion shaft thread and new self-locking nut seat.

Seal material:
THREE BOND 1324 (Part No. 004403042) or equivalent

18) Attach the new self-locking nut and use the ST to fix the companion flange in place, then tighten the self-locking nut.

Tightening torque:
181.5 N·m (18.5 kgf-m, 133.9 ft-lb)
ST 18633AA000 WRENCH COMPL

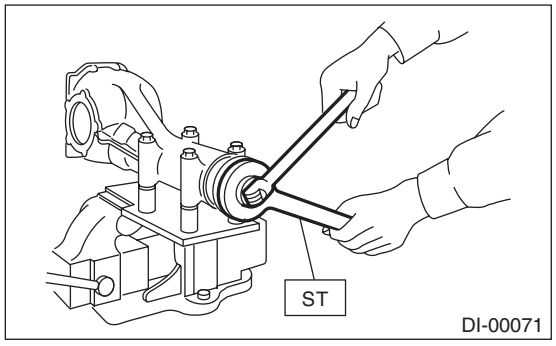

19) Check the initial torque or initial load.

Initial load:
24.1 — 38.6 N (2.5 — 3.9 kgf, 5.4 — 8.7 lbf)

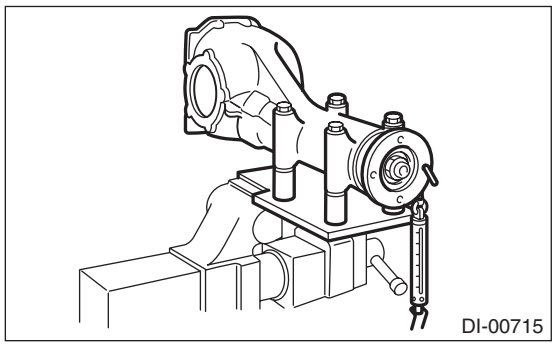

Initial torque:
0.98 — 1.57 N·m (0.10 — 0.16 kgf-m, 0.72 — 1.16 ft-lb)

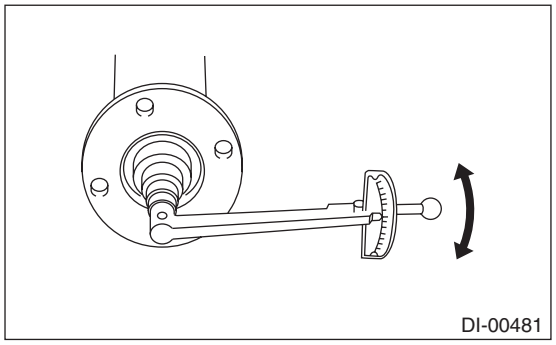

20) Install the driven gear to the differential case.

NOTE:
• Before installing bolts, apply seal material to bolt threads.

Seal material:
THREE BOND 1324 (Part No. 004403042) or equivalent

• Make sure there is no clearance between the differential case and driven gear.
• Tighten opposing bolts in order.

Tightening torque:
103 N·m (10.5 kgf-m, 76.0 ft-lb)

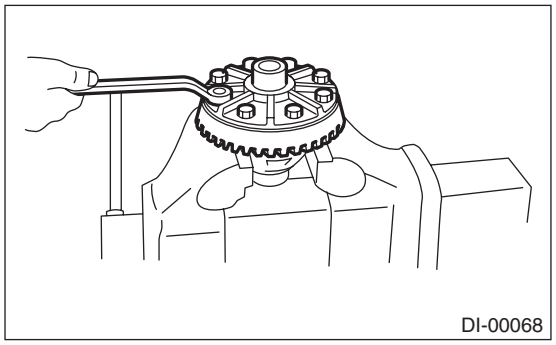

21) Using the ST, press-fit the side bearing to the differential case.
ST 398487700 DRIFT

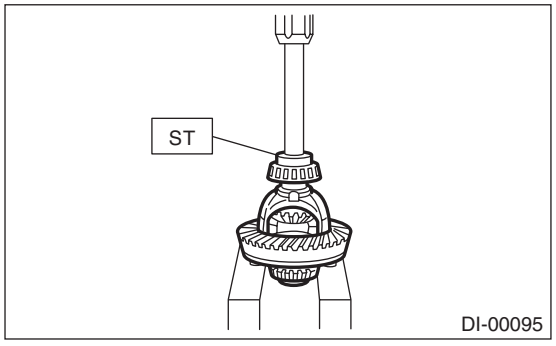

22) Using the ST, press-fit the side bearing outer race to the side retainer.

CAUTION:
Make sure that the bearing outer races and cones are properly assembled.
ST 398417700 DRIFT

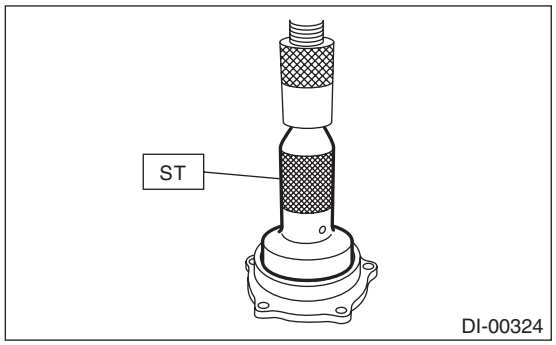

23) Side retainer shim adjustment
(1) The hypoid driven gear backlash and side bearing preload can be adjusted by the side retainer shim thickness.
(2) Install the differential case assembly into differential carrier in the reverse order of disassembly.

NOTE:
Be careful not to hit the teeth of hypoid driven gear against the differential carrier.

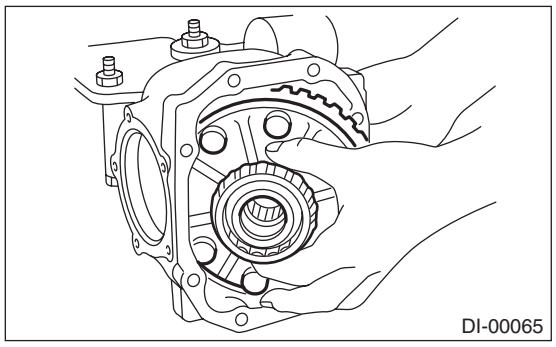

(3) Install the side retainer shim.

NOTE:
• Be careful not to mix up the side retainer shim RH and LH.
• Replace broken or corroded side retainer shims with a new part of the same thickness.

Side retainer shim	
Part No.	Thickness mm (in)
383475201	0.20 (0.0079)
383475202	0.25 (0.0098)
383475203	0.30 (0.0118)
383475204	0.40 (0.0157)
383475205	0.50 (0.0197)

(4) During installation, align the arrow mark on the differential carrier with the arrow mark on the side retainer when installing the side retainer.

NOTE:
Be careful that side bearing outer race is not damaged by the bearing roller.

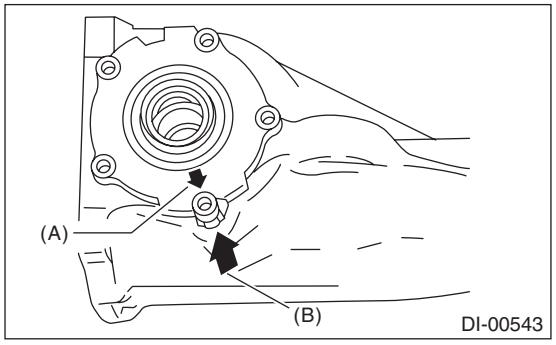

(A) Arrow mark (on the side retainer)
(B) Arrow mark (on the differential carrier)

(5) Tighten the side retainer bolts.

Tightening torque:
10.5 N·m (1.1 kgf-m, 7.7 ft-lb)

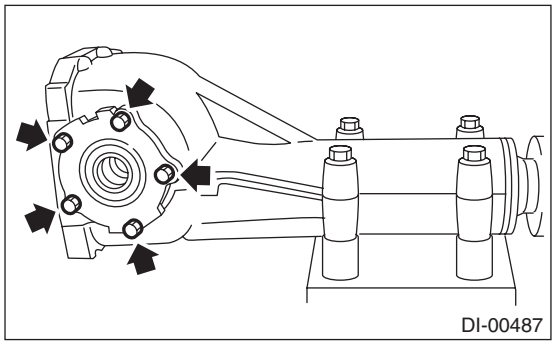

(6) Measure the hypoid driven gear to drive pinion backlash. Set the magnet base on differential carrier. Align the contact point of dial gauge with tooth face of hypoid driven gear, and move hypoid driven gear while holding drive pinion still. Read the value indicated on dial gauge. If the backlash is outside the standard range, adjust the side retainer shim by the following method.

• **When backlash is less than 0.1 mm (0.004 in):**
Reduce the thickness of shim on the back side of the hypoid driven gear and increase the thickness of shims on the teeth side of the hypoid driven gear.
• **When backlash exceeds 0.2 mm (0.008 in):**
Increase the thickness of shim on the back side of the hypoid driven gear and reduce the thickness of shims on the teeth side of the hypoid driven gear.

Backlash:
0.10 — 0.20 mm (0.004 — 0.008 in)

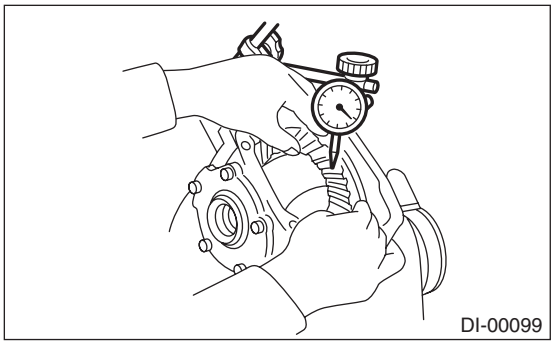

(7) Measure the total preload of the drive pinion. If the total preload is not within specification, adjust the thickness of side retainer shims, increasing/reducing both shims by an even amount on both sides.

Total preload:
26.5 — 53 N (2.7 — 5.4 kgf, 6.0 — 11.9 lbf)

24) Recheck the hypoid driven gear to drive pinion backlash.

Backlash:
0.10 — 0.20 mm (0.004 — 0.008 in)

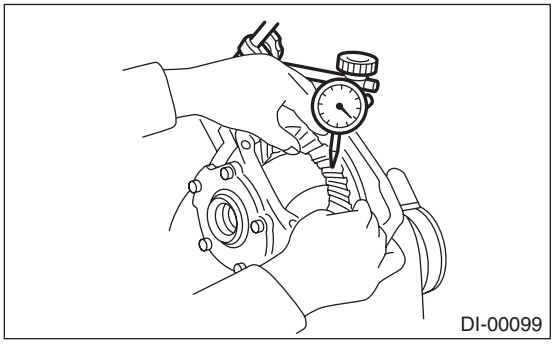

25) Check drive pinion and hypoid driven gears rotate smoothly and make sure of the hypoid driven gear runout on its back surface. If the runout on the back side of the hypoid driven gear exceeds the specification, check for any foreign material between the hypoid driven gear and differential case, and for any deformation of the case or gear.

Hypoid driven gear back surface runout:
0.05 mm (0.002 in)

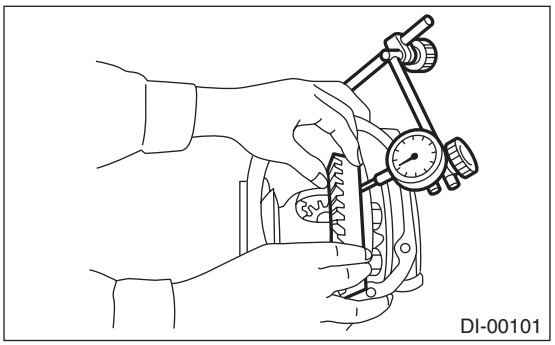

26) Checking and adjusting the tooth contact of hypoid driven gear

(1) Apply lead-free red dye evenly on the both sides of three to four teeth of the hypoid driven gear. Check the contact pattern after rotating the hypoid driven gear several revolutions back and forth until a definite contact pattern appears on the hypoid driven gear.

(2) When the contact pattern is not correct, readjust.

NOTE:
Be sure to wipe off the lead-free red dye completely after the adjustment is completed.

• Correct tooth contact
Check item: Tooth contact pattern is slightly shifted toward toe side under no-load rotation. (When driving, it moves towards the heel side.)

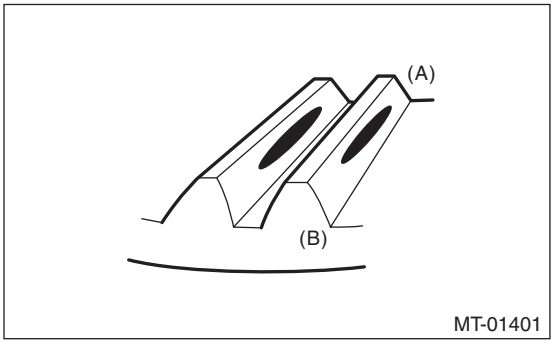

(A) Toe side
(B) Heel side

• Face contact

Check item: Backlash is too large.

Contact pattern

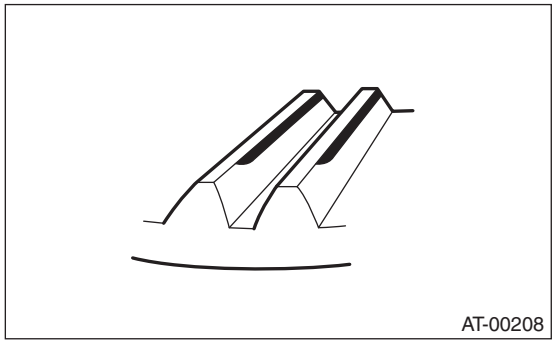

Corrective action: Increase thickness of pinion height adjusting washer according to the procedure for bringing drive pinion close to hypoid driven gear side.

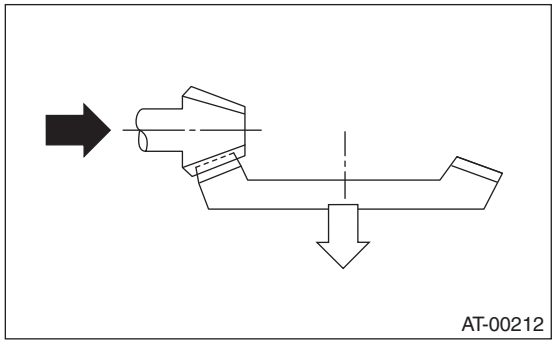

• Flank contact

Check item: Backlash is too small.

Contact pattern

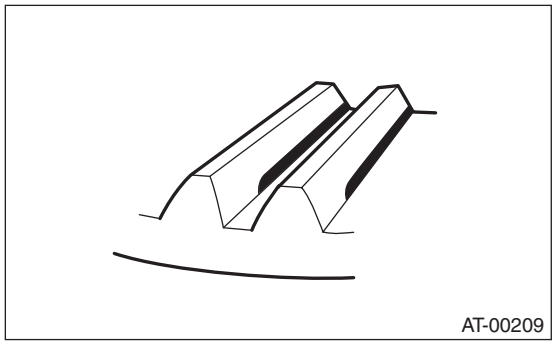

Corrective action: Reduce the thickness of pinion height adjusting washer according to the procedure for bringing drive pinion away from hypoid driven gear.

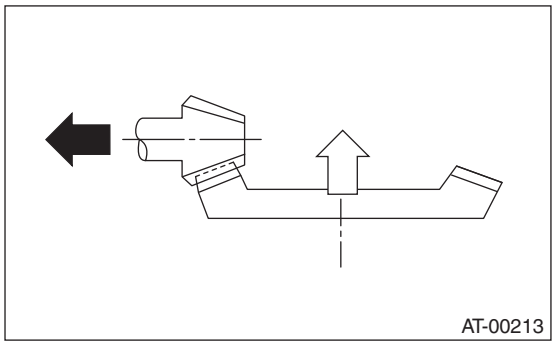

• Toe contact (inside contact)

Check item: Teeth contact area is too small.

Contact pattern

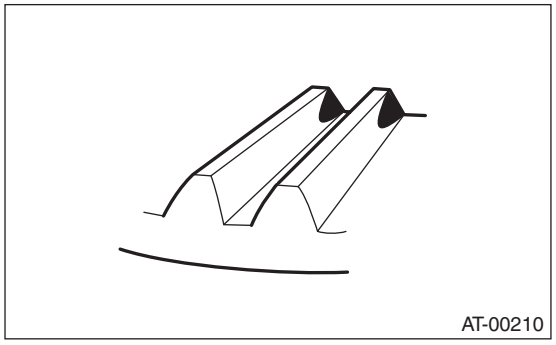

Corrective action: Reduce the thickness of pinion height adjusting washer according to the procedure for bringing drive pinion away from hypoid driven gear.

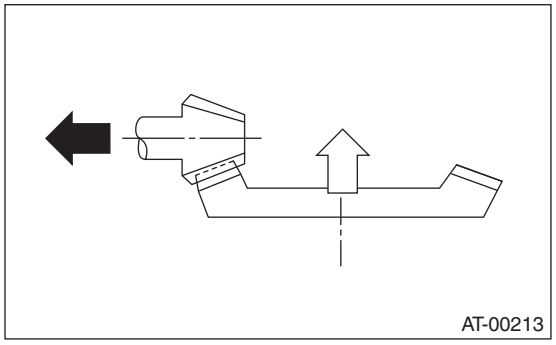

• Heel contact (outside end contact)
Check item: Teeth contact area is too small.
Contact pattern

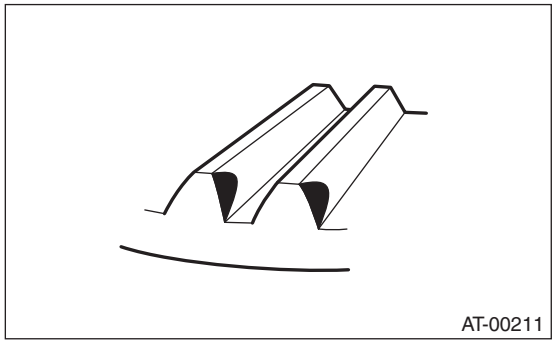

Corrective action: Increase thickness of pinion height adjusting washer according to the procedure for bringing drive pinion close to hypoid driven gear side.

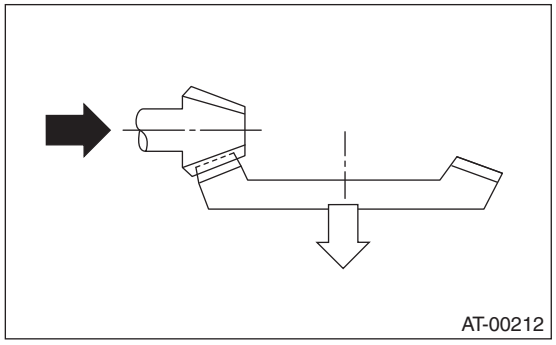

27) If proper tooth contact is not obtained, readjust the drive pinion height by changing the RH and LH side retainer shims and the hypoid gear backlash.
28) Remove the RH and LH side retainers.
29) Install the O-ring to left and right side retainers.

NOTE:
Use new O-rings.
30) Install the oil seal to the side retainers on both sides. <Ref. to DI-55, REPLACEMENT, Rear Differential Side Oil Seal.>
31) Align the arrow mark on the differential carrier with the arrow mark on the side retainer during installation.

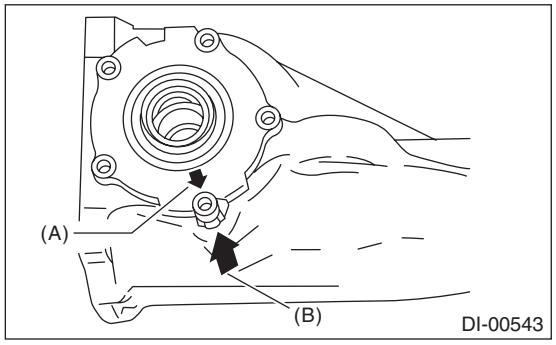

(A) Arrow mark (on the side retainer)
(B) Arrow mark (on the differential carrier)

32) Apply liquid gasket to the bolts indicated by arrows, and tighten the side retainer bolt.

Liquid gasket:
THREE BOND 1110F (Part No. K0879Y0021), THREE BOND 1110B or equivalent

Tightening torque:
10.5 N·m (1.1 kgf-m, 7.7 ft-lb)

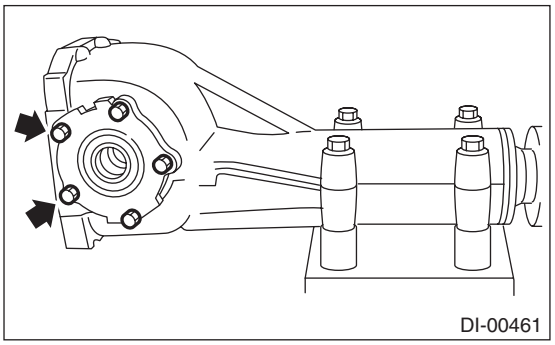

33) Install the gasket and rear cover, and tighten the bolts to specified torque.

NOTE:
Use a new gasket.

Tightening torque:
44 N·m (4.5 kgf-m, 32.5 ft-lb)

34) When the stud bolts are removed from the rear cover, install the stud bolts so that the exposed length of stud bolt is within the range of “L”.

CAUTION:
• Do not tighten forcibly if the exposed length of stud bolt does not fall within the specified range. Remove the stud bolt, and check for contamination of foreign matter and any defects in the screw hole.
• Do not tighten with a tightening torque of 55 N·m (5.6 kgf-m, 40.6 ft-lb) (reference value) or more.

Exposed length L of stud bolt:
59.0 — 61.0 mm (2.32 — 2.40 in)

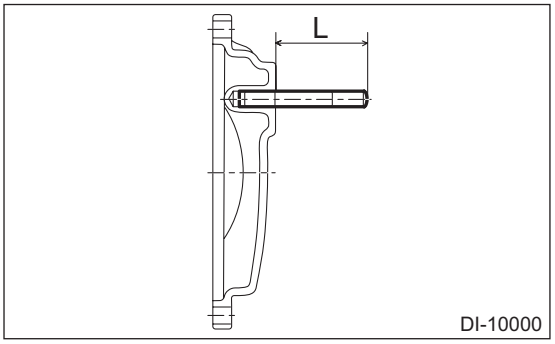

35) Install the air breather cap.

NOTE:
When installing the air breather cap, do not tap section (A). Be sure to tap section (B) to install.

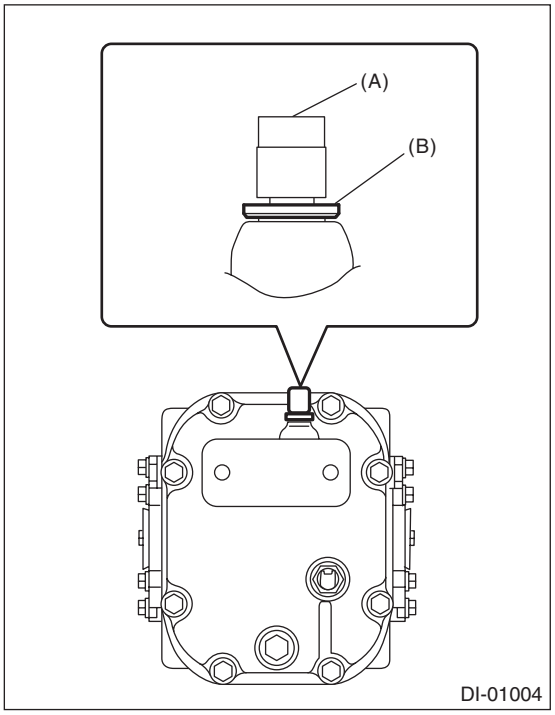

36) Install the drain plug.

NOTE:
Use a new gasket.

Tightening torque:
60 N·m (6.1 kg-m, 44.3 ft-lb)

37) Install the oil temperature sensor.

NOTE:
• Install the oil temperature sensor and the adapter as a unit.
• After installing the rear differential assembly to the vehicle, fill the gear oil, then use a new gasket, and tighten to the specified torque. <Ref. to DI-18, REPLACEMENT, Differential Gear Oil.>

E: INSPECTION

Wash all the disassembled parts clean, and examine them for wear, damage and other defects. Repair or replace the defective parts as necessary.
1) Hypoid driven gear and drive pinion
• If there is evidently an abnormal tooth contact, find out the cause and adjust until the teeth contact correctly. Replace the gear if there is an excessive worn or an incapable adjustment.
• If crack, cutout or seizure is found, replace the parts as a set. Slight damage of some teeth can be corrected by oil stone or the like.
2) Side gear and pinion mate gear (T-type (B1, B2))
• Replace if cracks, scoring or other defects are evident on the tooth surface.
• Replace if thrust washer contact surface is worn or scored. Slight damages of the surface can be corrected by oil stones or equivalent.
3) Bearing
Replace if seizure, peeling, wear, rust, dragging during rotation, noise or other defect is evident.
4) Thrust washer of side gear and pinion mate gear (T-type (B1, B2))
Replace if seized, flawed, abnormally worn or having other defects.
5) Oil seal
Replace if deformed or damaged, and at every disassembling.
6) Differential carrier
Replace if the bearing bores are worn or damaged.
7) Differential case
Replace if sliding surfaces are abnormally worn, burned, or cracked.
8) Companion flange
Replace if the oil seal lip contact surface shows cracking.

9) Rear differential oil temperature sensor (T-type (H5))

(1) Check that the rear differential oil temperature sensor has no deformation, cracks or other damages.

(2) Immerse the rear differential oil temperature sensor and a thermometer in water.

CAUTION:
Take care not to allow water to get into the rear differential oil temperature sensor connector. If water gets into the connector, completely remove any water inside.

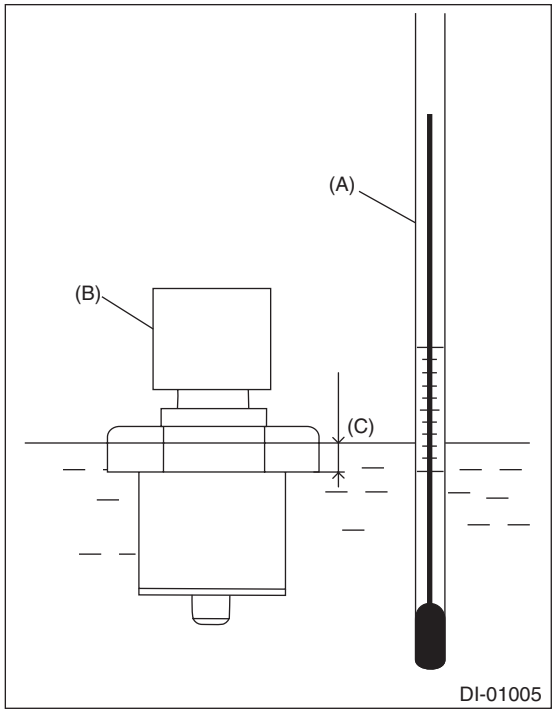

(A) Thermometer
(B) Rear differential oil temperature sensor
(C) Hexagonal part height: To approx. $^{2}/_{3}$

(3) Raise water temperature gradually, measure the resistance between the rear differential oil temperature sensor terminals when the temperature is 20°C (68°F) and 80°C (176°F).

NOTE:
• Stir the water to make the temperature of the water as uniform as possible.
• Take the resistance value only after it becomes steady.
• After inspection, wipe off the water completely.

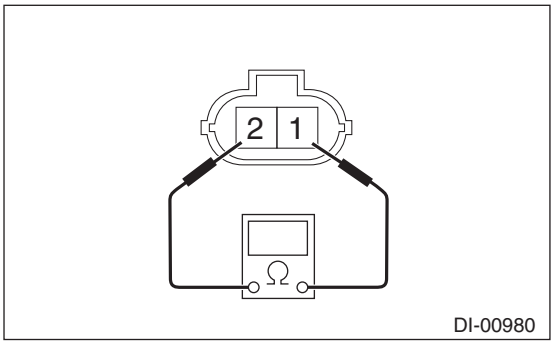

Water temperature	Terminal No.	Standard
20°C (68°F)	1 and 2	2.233 — 2.701 [kΩ]
80°C (176°F)		0.3122 — 0.3385 [kΩ]

1. SIDE GEAR BACKLASH (T-TYPE (B1, B2))

Using a dial gauge, check the backlash of side gear.

Side gear backlash:
0.10 — 0.20 mm (0.004 — 0.008 in)

If the side gear backlash is not within the specification, select the side gear thrust washer and adjust the side gear backlash as specified.

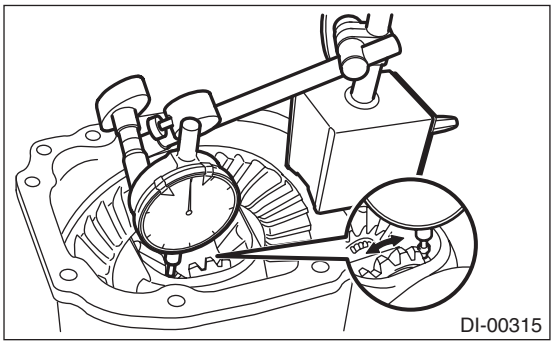

2. HYPOID DRIVEN GEAR BACKLASH

Using a dial gauge, check the backlash of hypoid driven gear.

Hypoid driven gear backlash:
0.10 — 0.20 mm (0.004 — 0.008 in)

If the hypoid driven gear backlash is outside the specification range, adjust the side bearing preload and repair if necessary.

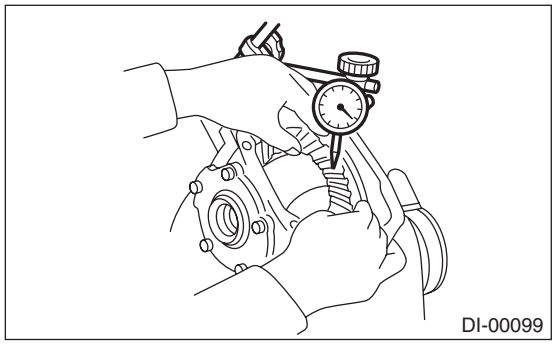

3. HYPOID DRIVEN GEAR RUNOUT ON ITS BACK SURFACE

Using a dial gauge, check the hypoid driven gear back surface runout.

Hypoid driven gear back surface runout:
0.05 mm (0.002 in)

If the hypoid driven gear runout on its back surface exceeds the limit, replace the hypoid driven gear.

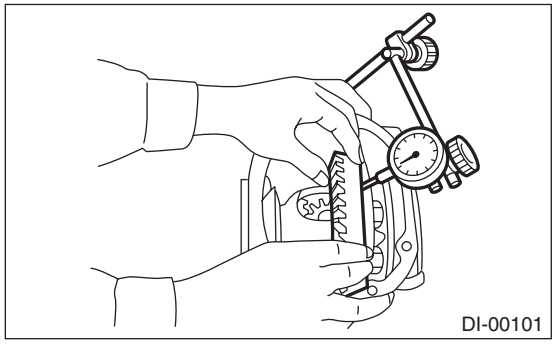

4. TOOTH CONTACT BETWEEN HYPOID DRIVEN GEAR AND DRIVE PINION

Inspect the tooth contact between the hypoid driven gear and drive pinion. <Ref. to DI-30, ASSEMBLY, Rear Differential (T-type).>

5. TOTAL PRELOAD

Using a spring scale, check the total preload.

Total preload:
T-type (B1, B2):
20.7 — 54.4 N (2.1 — 5.5 kgf, 4.7 — 12.2 lbf)
T-type (H5):
26.5 — 53 N (2.7 — 5.4 kgf, 6.0 — 11.9 lbf)

If the total preload is not within the specification, adjust the side retainer shim.

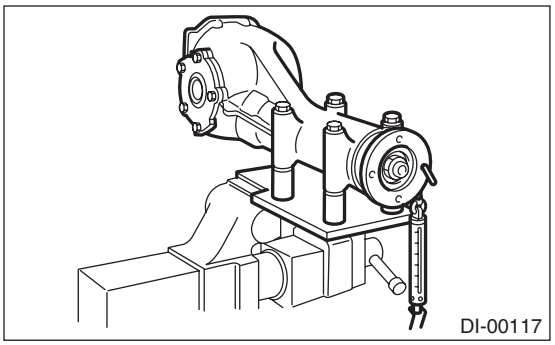

6. COMPANION FLANGE

1) If rust or dirt is attached to the companion flange, remove them.
2) Set a dial gauge at a companion flange surface (mating surface of propeller shaft and companion flange), and then measure the companion flange runout.

Limit of runout:
0.08 mm (0.003 in)

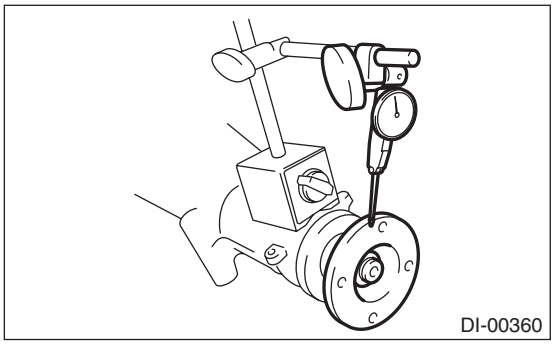

3) Set the gauge inside of the companion flange, and measure the runout.

Limit of runout:
0.08 mm (0.003 in)

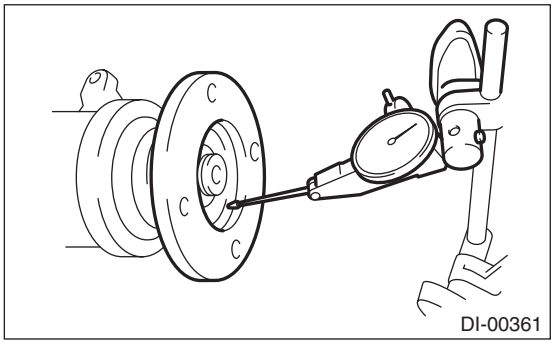

4) If either runout exceeds the limit, move the phase of companion flange and drive pinion 90° each, and find the point where the runout is within the limit.
5) If the runout exceeds the limit after changing the phase, replace the companion flange and recheck the runout.
6) If the runout exceeds the limit after replacing the companion flange, the drive pinion may be assembled incorrectly or bearing is faulty.

F: ADJUSTMENT

1. SIDE GEAR BACKLASH (T-TYPE (B1, B2))

Adjust the side gear backlash. <Ref. to DI-30, ASSEMBLY, Rear Differential (T-type).>

2. HYPOID DRIVEN GEAR BACKLASH

Adjust hypoid driven gear backlash. <Ref. to DI-30, ASSEMBLY, Rear Differential (T-type).>

3. TOOTH CONTACT BETWEEN HYPOID DRIVEN GEAR AND DRIVE PINION

Adjust the tooth contact between hypoid driven gear and drive pinion gear. <Ref. to DI-30, ASSEMBLY, Rear Differential (T-type).>

4. TOTAL PRELOAD

Adjust the side retainer shim. <Ref. to DI-30, ASSEMBLY, Rear Differential (T-type).>

5. Rear Differential Front Oil Seal

A: INSPECTION

Make sure that there is no leakage from front oil seal portion. If there is any leakage replace the oil seal and inspect the propeller shaft.

B: REPLACEMENT

1) Shift the select lever or gear shift lever to neutral.
2) Release the parking brake.
3) Disconnect the ground cable from battery. <Ref. to NT-6, BATTERY, NOTE, Note.>

NOTE:
For models other than STI model, disconnect the ground terminal from battery sensor.
4) Lift up the vehicle.
5) Disconnect the oil temperature sensor connector. (T-type (H5))

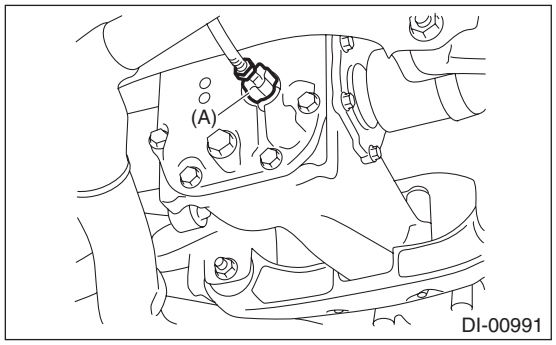

(A) Oil temperature sensor connector

6) Drain differential gear oil. <Ref. to DI-18, REPLACEMENT, Differential Gear Oil.>
7) Remove the rear exhaust pipe.
- Except for STI model

<Ref. to EX(w/o STI)-47, REMOVAL, Rear Exhaust Pipe.>
- STI model

<Ref. to EX(STI)-12, REMOVAL, Rear Exhaust Pipe.>
8) Remove the center exhaust cover.

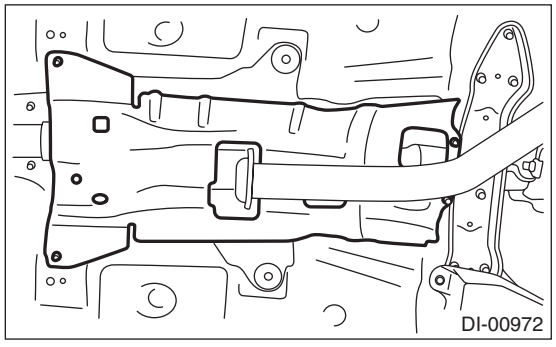

9) Remove the propeller shaft. <Ref. to DS-12, REMOVAL, Propeller Shaft.>
10) Check the initial torque and write it down.
11) Remove the self-locking nut while holding the companion flange with ST.
ST 498427200 FLANGE WRENCH

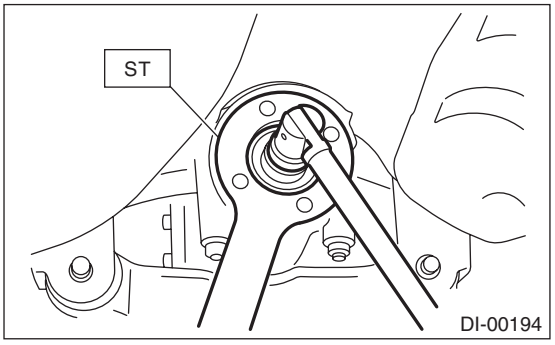

12) Extract the companion flange using the ST.
ST 399703600 PULLER ASSY

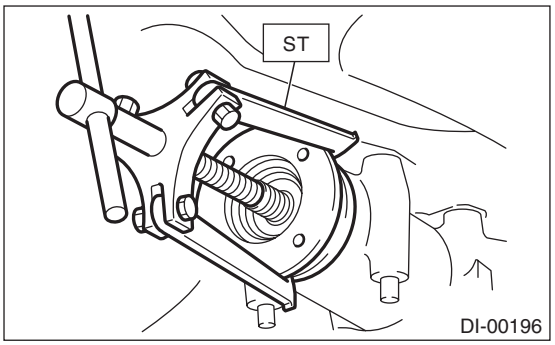

13) Remove the oil seal using ST or screwdriver.
ST 398527700 PULLER ASSY

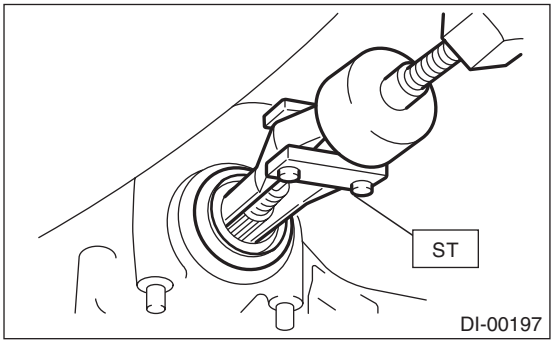

14) Using the ST, install the oil seal.

NOTE:
- Use a new oil seal.
- Apply differential gear oil to the oil seal lips.

ST 498447120 INSTALLER

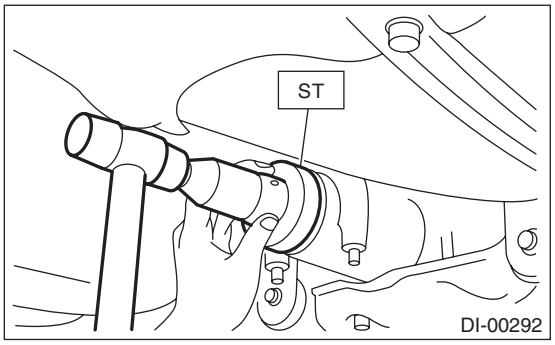

15) Install the companion flange.

NOTE:
Use a plastic hammer to install companion flange.

16) Tighten the self-locking nut to the specified torque so that the initial torque of companion flange becomes the same as that of before oil seal replacement.

NOTE:
- Use a new self-locking nut.
- Before installing the self-locking nut, apply the seal material to the threads of the drive pinion shaft and to the seating surface of the self-locking nut.

Seal material:
THREE BOND 1324 (Part No. 004403042) or equivalent

Tightening torque:
167 — 196 N·m (17.0 — 20.0 kgf-m, 123.2 — 144.6 ft-lb)

ST 498427200 FLANGE WRENCH

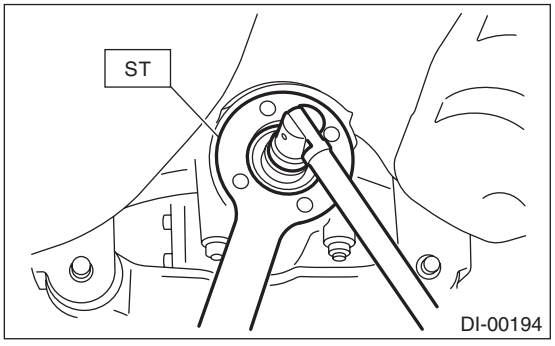

17) Hereafter, perform assembly in the reverse order of disassembly.

18) Fill differential gear oil. <Ref. to DI-18, REPLACEMENT, Differential Gear Oil.>

6. Rear Differential Side Oil Seal

A: INSPECTION

Check that there is no oil leakage from the side oil seal. If there is any leakage, replace the oil seal.

B: REPLACEMENT

1) Remove the rear differential. <Ref. to DI-21, REMOVAL, Rear Differential (T-type).>
2) Remove the rear differential side oil seal using a ST or screwdriver wrapped with vinyl tape to prevent the side retainer from scratching.
ST 398527700 PULLER ASSY

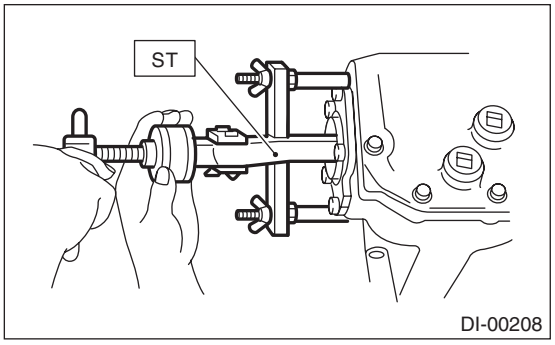

3) Using the ST, install the oil seal.

CAUTION:
Pay attention to the left and right of the oil seal.

NOTE:
- Use a new oil seal.
- Apply differential gear oil to the oil seal lips.

ST 398437700 OIL SEAL INSTALLER

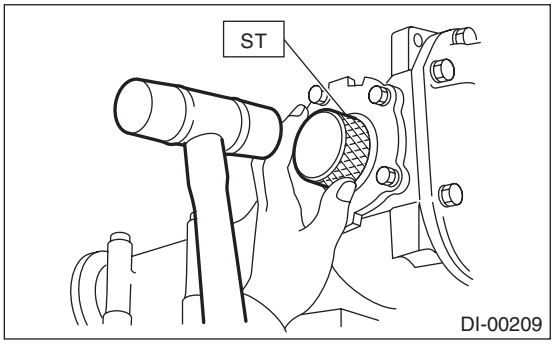

4) Install the rear differential. <Ref. to DI-23, INSTALLATION, Rear Differential (T-type).>

7. Rear Differential Front Member

A: REMOVAL

1) Disconnect the ground cable from battery. <Ref. to NT-6, BATTERY, NOTE, Note.>

NOTE:
For models other than STI model, disconnect the ground terminal from battery sensor.
2) Lift up the vehicle.
3) Support the rear differential using transmission jack, and then remove the rear differential front member.

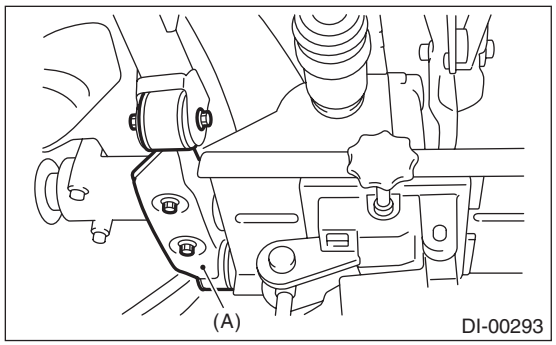

(A) Rear differential front member

B: INSTALLATION

1) Install the rear differential front member, and temporarily attach and tighten a new self-locking nut.

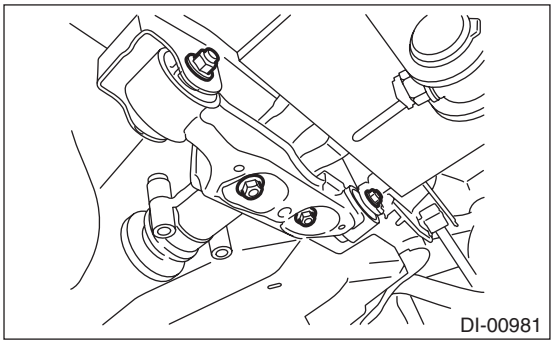

2) Remove the transmission jack.
3) Tighten the self-locking nut.

Tightening torque:
T1: 50 N·m (5.1 kgf-m, 36.9 ft-lb)
T2: 110 N·m (11.2 kgf-m, 81.1 ft-lb)

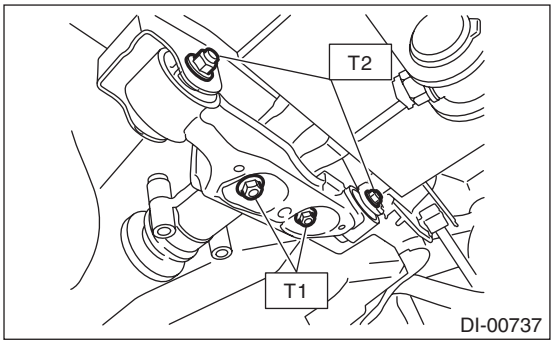

C: INSPECTION

1) Check the rear differential front member for damage, bend and corrosion.
If damage, bend or corrosion is excessive, replace the rear differential front member.
2) Check the bushings of rear differential front member for cracking, hardening and damage. If cracking, hardening or damage is excessive, replace rear differential front member.

8. Rear Differential Mount Bushing

A: INSPECTION

Check the rear differential mount bushing for cracks, hardening or damage. If cracking, hardening or damage is excessive, replace rear differential mount bushing.

B: REPLACEMENT

CAUTION:
• Apply the molybdenum grease on the square thread of the ST (shaft and nut) before use.
• If there was so much rust in the rear differential mount bushing, remove the rust before starting work.

1) Remove the rear differential. <Ref. to DI-21, REMOVAL, Rear Differential (T-type).>
2) Fit the ST to the periphery of the sub frame cylinder, and make sure that the ST does not contact with welded spots or spatters.
ST 41399FG010 SPECIAL TOOL A

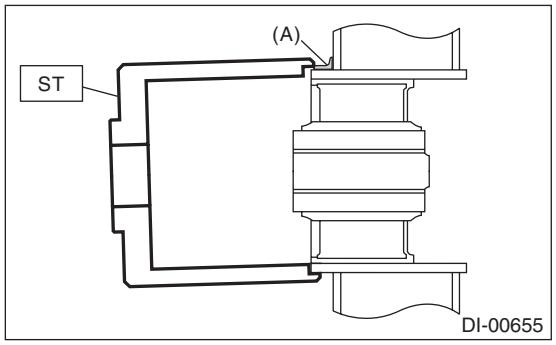

(A) Welded spot

3) If the ST contacts with welded spots or spatters, remove the excessive welds or spatters with sander or the equivalent so that the ST contacts the cylinder peripheral part.

CAUTION:
Performing the operation with the ST contacting with welded spots or spatters may break the ST. Be sure to remove excessive welds or spatters before the operation.

4) Set ST1, ST2, ST3, ST4 and ST5 as shown in the figure.
ST1 41399FG091 SPECIAL TOOL SHAFT
ST2 41399FG070 SPECIAL TOOL NUT
ST3 41399FG050 SPECIAL TOOL SLEEVE
ST4 41399FG080 SPECIAL TOOL BEARING
ST5 41399FG010 SPECIAL TOOL A

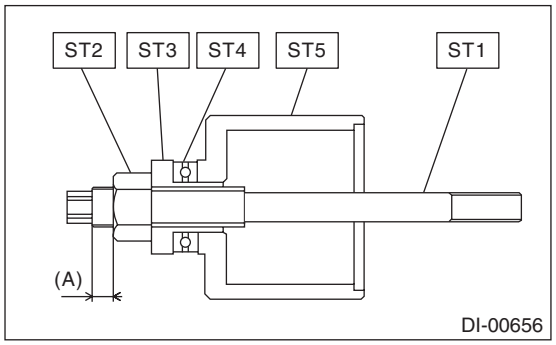

(A) 5 mm (0.2 in) or less

5) Fit and hold the ST1 and ST2 to the rear differential mount bushing from the rear side of vehicle.
ST1 41399FG031 SPECIAL TOOL C
ST2 41399FG061 SPECIAL TOOL RING

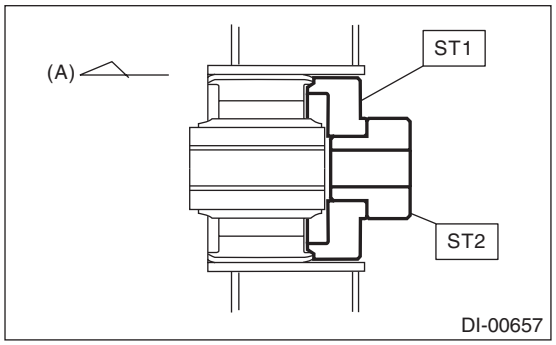

(A) Front side of vehicle

6) Insert the ST set in the step 4) through the rear differential mount bushing hole from the front side of vehicle, and screw in the ST1 by hand till the front end of ST1 comes out slightly from the rear end of ST2.
ST1 41399FG091 SPECIAL TOOL SHAFT
ST2 41399FG061 SPECIAL TOOL RING

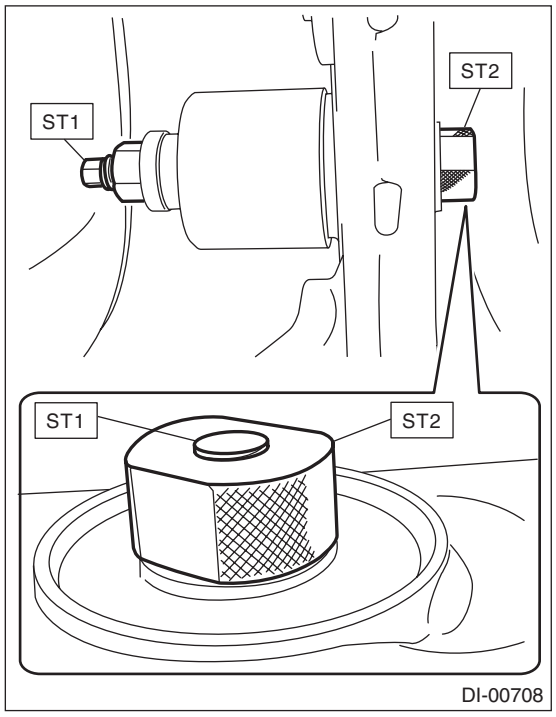

7) Hold the ST1 to prevent it from rotating, and screw in the ST3 by hand till there is no loose fit on the ST2.

CAUTION:
When setting the ST to the vehicle, always make sure that the ST2 fits the periphery of the sub frame cylinder and is not tilted.
ST1 41399FG091 SPECIAL TOOL SHAFT
ST2 41399FG010 SPECIAL TOOL A
ST3 41399FG070 SPECIAL TOOL NUT

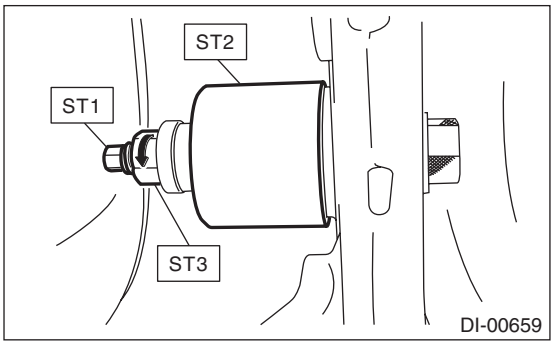

8) Hold the ST1 with a tool to prevent it from rotating, and screw in the ST2 to remove the rear differential mount bushing.

CAUTION:
• Rotation of ST1 will damage the screw at the rear end of rear differential mount bushing. Never rotate the ST1.
• If the ST starts to tilt while removing the rear differential mount bushing, stop the work and set the ST again.
ST1 41399FG091 SPECIAL TOOL SHAFT
ST2 41399FG070 SPECIAL TOOL NUT

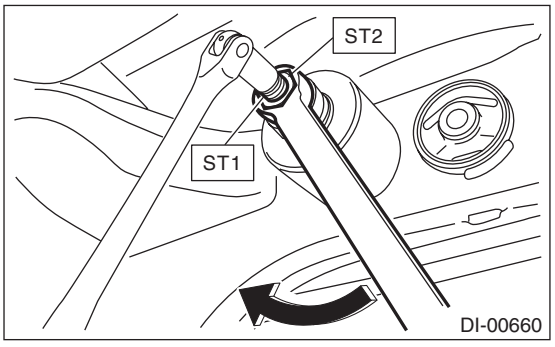

9) Set ST1, ST2, ST3, ST4, ST5 and rear differential mount bushing as shown in the figure.

NOTE:
- Set the ST2 nut near to the end of ST1 screw.
- Hold the rear differential mount bushing with the arrow marked side facing toward the rear of the vehicle, and set the rear differential mount bushing to the ST so that the arrow mark faces upward.
- Mark the bottom end of rear differential mount bushing to identify the installing direction.

ST1 41399FG091 SPECIAL TOOL SHAFT
ST2 41399FG070 SPECIAL TOOL NUT
ST3 41399FG050 SPECIAL TOOL SLEEVE
ST4 41399FG080 SPECIAL TOOL BEARING
ST5 41399FG020 SPECIAL TOOL B

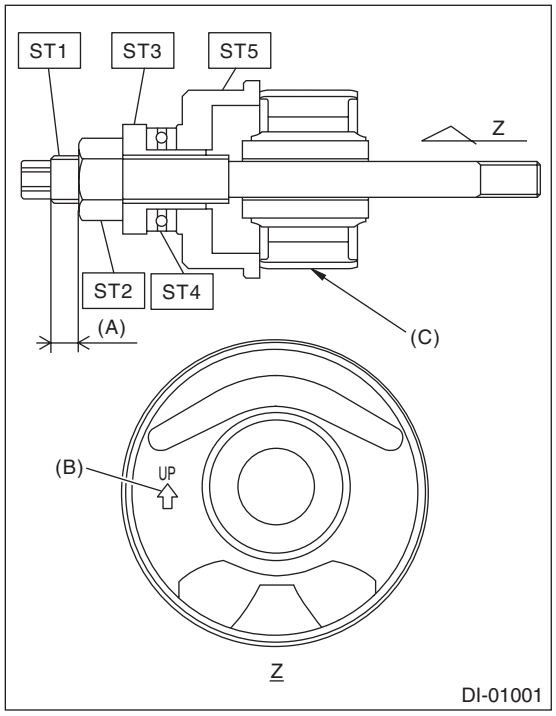

(A) 8 mm (0.31 in) or more
(B) Arrow mark
(C) Marked position

10) Attach ST1 to the ST2, and fit and hold the STs as a unit to the sub frame from the rear side of vehicle.

ST1 41399FG061 SPECIAL TOOL RING
ST2 41399FG041 SPECIAL TOOL D

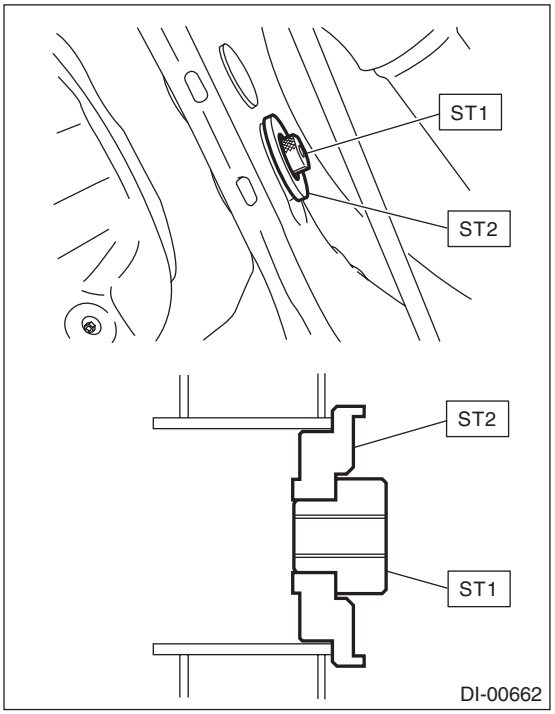

11) Insert the ST and rear differential mount bushing set in the step 9) through the sub frame from the front side of vehicle, and screw in the ST1 by hand till the front end of ST1 comes out slightly from the rear end of ST2.

CAUTION:
Set the rear differential mount bushing with its mark facing the bottom end direction.
ST1 41399FG091 SPECIAL TOOL SHAFT
ST2 41399FG061 SPECIAL TOOL RING

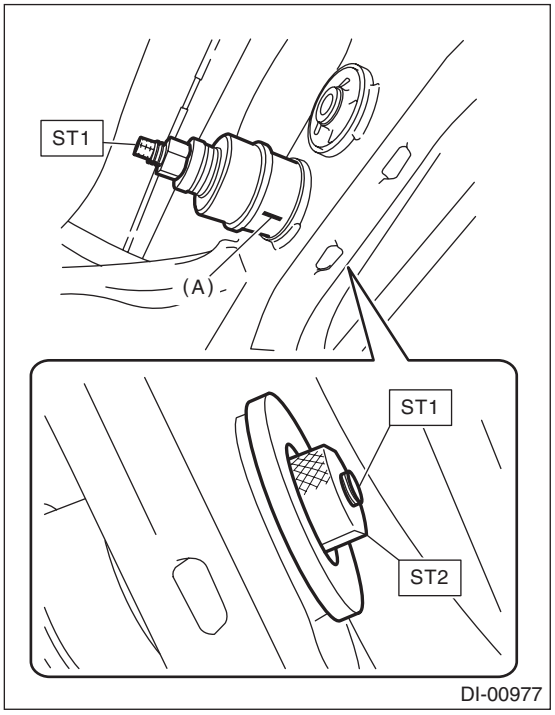

(A) Mark

12) Hold the ST1 to prevent it from rotating, and screw in the ST2 by hand till there is no loose fit on the ST and the rear differential mount bushing.

CAUTION:
Make sure that the ST and rear differential mount bushing are not tilted.
ST1 41399FG091 SPECIAL TOOL SHAFT
ST2 41399FG070 SPECIAL TOOL NUT

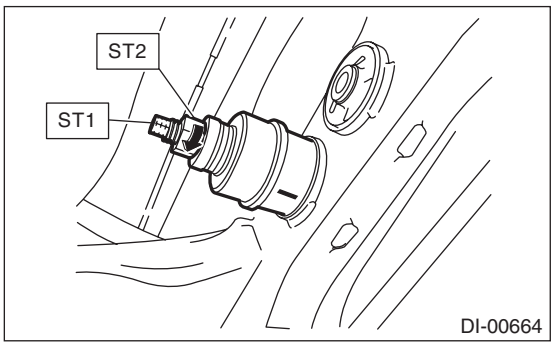

13) Screw in the ST2 while holding the ST1 with a tool to prevent it from rotating, and press-fit the rear differential mount bushing to the front end of sub frame cylinder.
ST1 41399FG091 SPECIAL TOOL SHAFT
ST2 41399FG070 SPECIAL TOOL NUT

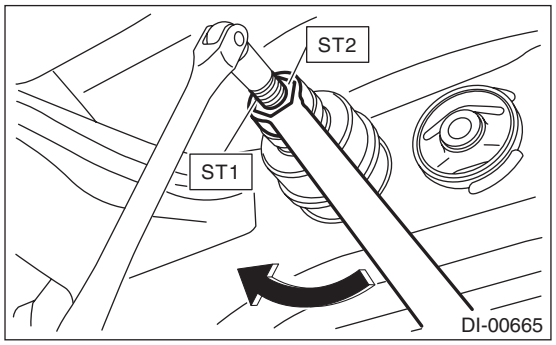

14) Make sure that the rear differential mount bushing is inserted to the front end of sub frame cylinder.

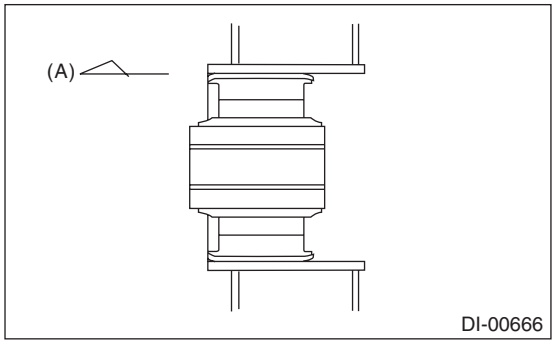

(A) Front side of vehicle

15) Install the rear differential. <Ref. to DI-23, INSTALLATION, Rear Differential (T-type).>

9. General Diagnostic Table

A: INSPECTION

Symptom or trouble	Possible cause	Remedy
1. Oil leakage	(1) Worn, scratched, or incorrectly seated front or side oil seal. Scored, battered or excessively worn sliding surface of companion flange.	Repair or replace.
	(2) Clogged or damaged air breather cap.	Clean, repair or replace.
	(3) Loose bolts on the side retainer, or incorrectly fitted O-ring.	Tighten the bolts to specified torque. Replace the O-ring.
	(4) Loose rear cover attachment bolts or damaged gasket.	Replace the gasket, and tighten the bolts to specified torque.
	(5) Loose filler plug (oil temperature sensor) or drain plug.	• Apply liquid gasket, and tighten to the specified torque. (T-type (B1, B2)) • Replace the gasket, and tighten to the specified torque. (T-type (H5))
	(6) Wear, damage or incorrect fitting of drive shaft, side retainer or oil seal.	Repair or replace.
2. Seizure NOTE: Seized or damaged parts should be replaced, and also other parts should be thoroughly checked for any defect and should be repaired or replaced as required.	(1) Insufficient backlash for hypoid gear.	Readjust or replace.
	(2) Excessive preload for side, rear or front bearing.	Readjust or replace.
	(3) Insufficient or improper oil used.	Add recommended oil to the specified level.
3. Damage NOTE: Damaged parts should be replaced, and also other parts should be thoroughly checked for any defect and should be repaired or replaced as required.	(1) Improper backlash for hypoid gear.	Readjust or replace.
	(2) Insufficient or excessive preload for side, rear or front bearing.	Readjust or replace.
	(3) Excessive backlash for differential gear.	• Replace gear or thrust washer. (T-type (B1, B2)) • Replace the differential case assembly. (T-type (H5))
	(4) Loose bolts and nuts such as hypoid driven gear bolt.	Retighten.
	(5) Damage due to overloading.	Replace.
4. Noises when starting or shifting gears NOTE: Noises may be caused by differential assembly, universal joint, wheel bearing, etc. Find out what is actually making noise before disassembling.	(1) Improper tooth contact of hypoid driven gear and drive pinion.	Readjust. (Drive pinion adjustment and backlash adjustment)
	(2) Excessive backlash for hypoid driven gear.	Replace the gear or the pinion height adjusting washer.
	(3) Excessive backlash for side gear.	• Replace gear or thrust washer. (T-type (B1, B2)) • Replace the differential case assembly. (T-type (H5))
	(4) Insufficient preload for front or rear bearing.	Readjust.
	(5) Loose drive pinion nut.	Tighten to the specified torque.
	(6) Loose bolts and nuts such as side retainer attachment bolt.	Tighten to the specified torque.
5. Noises when cornering	(1) Damaged differential gear.	• Replace. (T-type (B1, B2)) • Replace the differential case assembly. (T-type (H5))
	(2) Excessive wear or damage of thrust washer.	Replace. (T-type (B1, B2))
	(3) Broken pinion mate shaft.	Replace. (T-type (B1, B2))
	(4) Stuck or damaged side bearing.	Replace.

Symptom or trouble	Possible cause	Remedy
6. Gear Noise NOTE: Since noises from engine, muffler, transmission, propeller shaft, wheel bearings, tires, and body are sometimes mistaken for noises from differential assembly, be careful in checking them. Inspection methods to locate noises include coasting, accelerating, cruising, and lifting-up all four wheels. Perform these inspections according to the condition of trouble. When listening to noises, shift the gear into four-wheel drive and fourth speed position, trying to pick up only differential noise.	(1) Improper tooth contact of hypoid driven gear and drive pinion.	Readjust or replace the hypoid gear set.
	(2) Improper backlash of the hypoid driven gear.	Readjust.
	(3) Scored or chipped teeth of hypoid gear.	Replace hypoid gear set.
	(4) Scuffed hypoid gear.	Replace hypoid gear set.
	(5) Improper preload for front or rear bearings.	Readjust.
	(6) Stuck, scored or chipped teeth of front or rear bearing.	Replace.
	(7) Stuck, scored or chipped teeth of side bearing.	Replace.
	(8) Vibrating differential gear.	Replace the differential gear.

TRANSFER CASE

TC

Page

1. General Description 2
2. Transfer Case and Extension Case Assembly 3
3. Transfer Clutch 4
4. Extension Case 5
5. Oil Seal 6
6. Transfer Drive Gear 7
7. Transfer Driven Gear 8
8. Reduction Driven Gear 9
9. Center Differential Carrier 10
10. Center Differential 11
11. Transfer Clutch Pressure Test 12

1. General Description

A: NOTE

For general description, refer to “CVT (TR690)”, “6MT (TY85)” or “6MT (TY75)” section.
CVT (TR690) model:
<Ref. to CVT(TR690)-3, General Description.>
6MT (TY85) model:
<Ref. to 6MT(TY85)-2, General Description.>
6MT (TY75) model:
<Ref. to 6MT(TY75)-2, General Description.>

2. Transfer Case and Extension Case Assembly

A: NOTE

For removal, installation and inspection, refer to “6MT (TY75)” section. <Ref. to 6MT(TY75)-51, Transfer Case and Extension Case Assembly.>

3. Transfer Clutch

A: NOTE

For removal, installation and inspection, refer to “CVT (TR690)” section. <Ref. to CVT(TR690)-152, Transfer Clutch.>

4. Extension Case

A: NOTE

For removal, installation and inspection, refer to “CVT (TR690)” or “6MT (TY85)” section.
CVT (TR690) model:
<Ref. to CVT(TR690)-143, Extension Case.>
6MT (TY85) model:
<Ref. to 6MT(TY85)-43, Extension Case.>

5. Oil Seal

A: NOTE

For removal, installation and inspection, refer to “CVT (TR690)”, “6MT (TY85)” or “6MT (TY75)” section.
CVT (TR690) model:
<Ref. to CVT(TR690)-88, Extension Case Oil Seal.>
6MT (TY85) model:
<Ref. to 6MT(TY85)-28, Oil Seal.>
6MT (TY75) model:
<Ref. to 6MT(TY75)-41, Oil Seal.>

6. Transfer Drive Gear

A: NOTE

For removal, installation and inspection, refer to “6MT (TY85)” or “6MT (TY75)” section.
6MT (TY85) model:
<Ref. to 6MT(TY85)-53, Transfer Drive Gear.>
6MT (TY75) model:
<Ref. to 6MT(TY75)-62, Transfer Drive Gear.>

7. Transfer Driven Gear

A: NOTE

For removal, installation and inspection, refer to “6MT (TY85)” or “6MT (TY75)” section.
6MT (TY85) model:
<Ref. to 6MT(TY85)-55, Transfer Driven Gear.>
6MT (TY75) model:
<Ref. to 6MT(TY75)-65, Transfer Driven Gear.>

8. Reduction Driven Gear

A: NOTE

For removal, installation and inspection, refer to “CVT (TR690)” section. <Ref. to CVT(TR690)-203, Reduction Driven Gear.>

9. Center Differential Carrier

A: NOTE

For removal, installation and inspection, refer to “CVT (TR690)” section. <Ref. to CVT(TR690)-155, Center Differential Carrier.>

10.Center Differential

A: NOTE

For removal, installation and inspection, refer to “6MT (TY85)” and “6MT (TY75)” sections.
6MT (TY85) model:
<Ref. to 6MT(TY85)-57, Center Differential.>
6MT (TY75) model:
<Ref. to 6MT(TY75)-69, Center Differential.>

11.Transfer Clutch Pressure Test

A: NOTE

For inspection, refer to the “CVT (TR690)” section.
<Ref. to CVT(TR690)-53, Transfer Clutch Pressure Test.>

DRIVE SHAFT SYSTEM

DS

		Page
1.	General Description	2
2.	Propeller Shaft	12
3.	Front Axle	18
4.	Front Hub Unit Bearing	24
5.	Rear Axle	30
6.	Rear Hub Unit Bearing	38
7.	Front Drive Shaft	45
8.	Rear Drive Shaft	61
9.	General Diagnostic Table	75

1. General Description

A: SPECIFICATION

1. PROPELLER SHAFT

Model			Except for STI model	STI model
Propeller shaft type			EDJ	3UJ+CPS
Front propeller shaft joint-to-joint length: L_1	mm (in)	CVT	578.0 (22.76)	633.0 (24.92)
		MT	735.5 (28.96)	
Rear propeller shaft joint-to-joint length: L_2		mm (in)	723.0 (28.46)	753.5 (29.67)
Outer diameter of tube:	mm (in)	D_1	63.5 (2.50)	70.0 (2.76)
		D_2	57.5 (2.26)	57.0 (2.24)

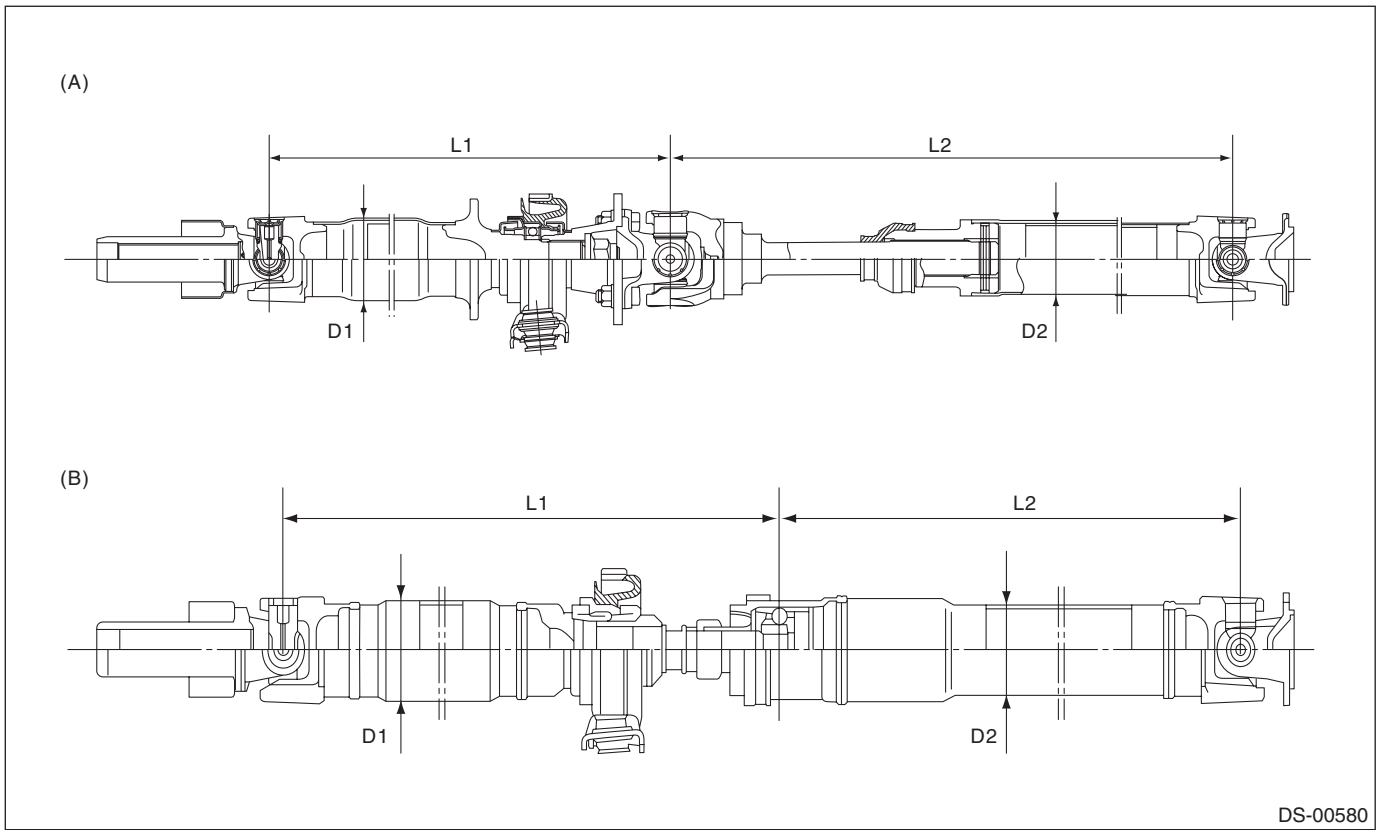

(A) 3UJ + CPS type (B) EDJ type

2. FRONT DRIVE SHAFT ASSEMBLY

Model	Type of drive shaft	Axle diameter ϕ mm (in)	Axle length mm (in)
Except for STI model	EBJ + PTJ	22 (0.87)	338.4 (13.32)
STI model	AC + AAR	28 (1.10)	343.1 (13.51)

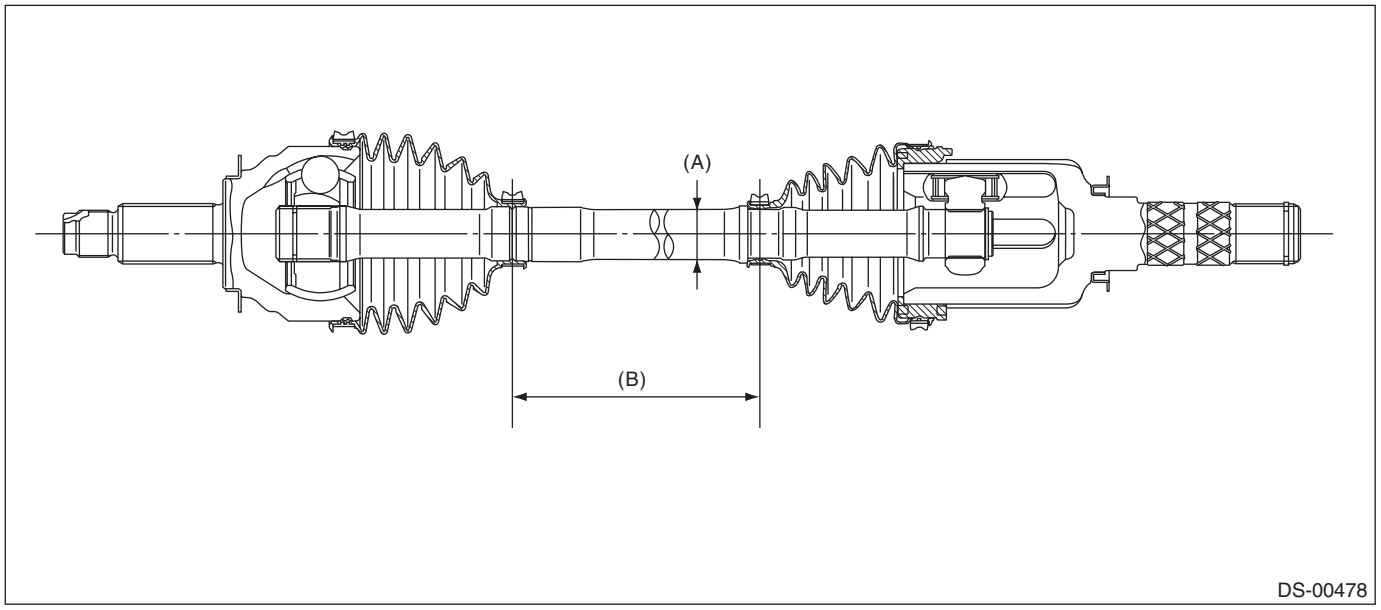

(A) Axle diameter (B) Axle length

3. REAR DRIVE SHAFT ASSEMBLY

Model	Type of drive shaft	Axle diameter ϕ mm (in)	Axle length mm (in)
Except for STI model	EBJ + DOJ	22 (0.87)	388.5 (15.3)
STI model	EBJ + EDJ	25 (0.98)	339.5 (13.37)

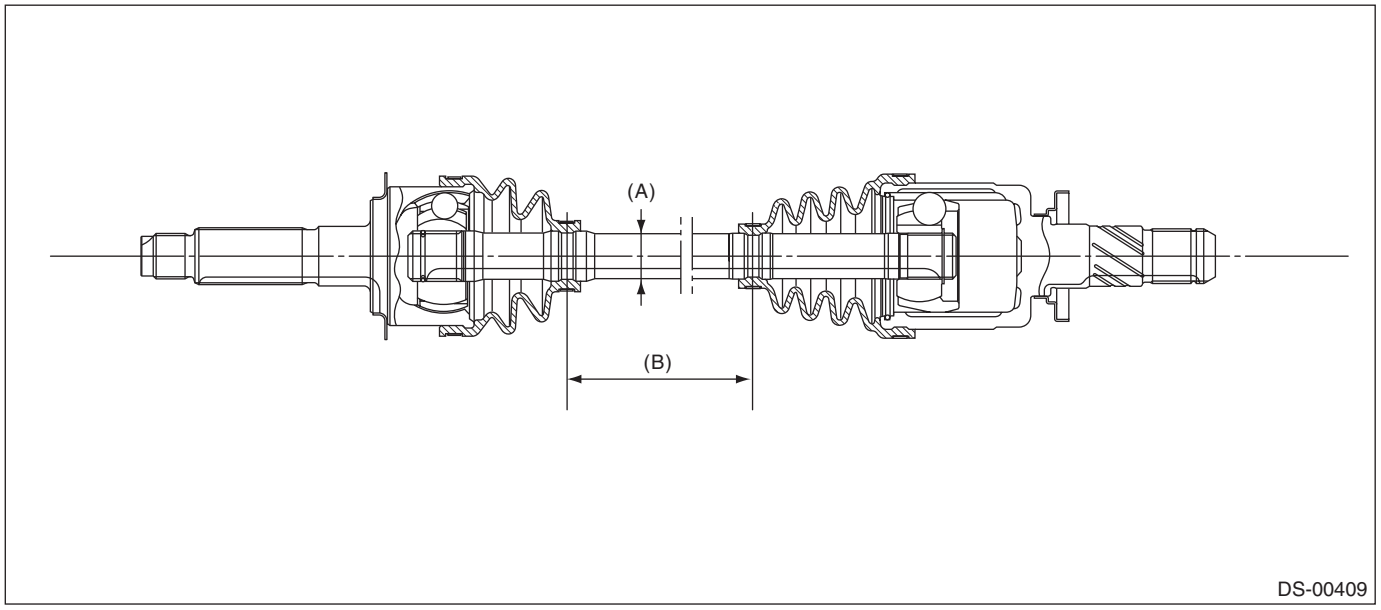

(A) Axle diameter (B) Axle length

B: COMPONENT

1. PROPELLER SHAFT

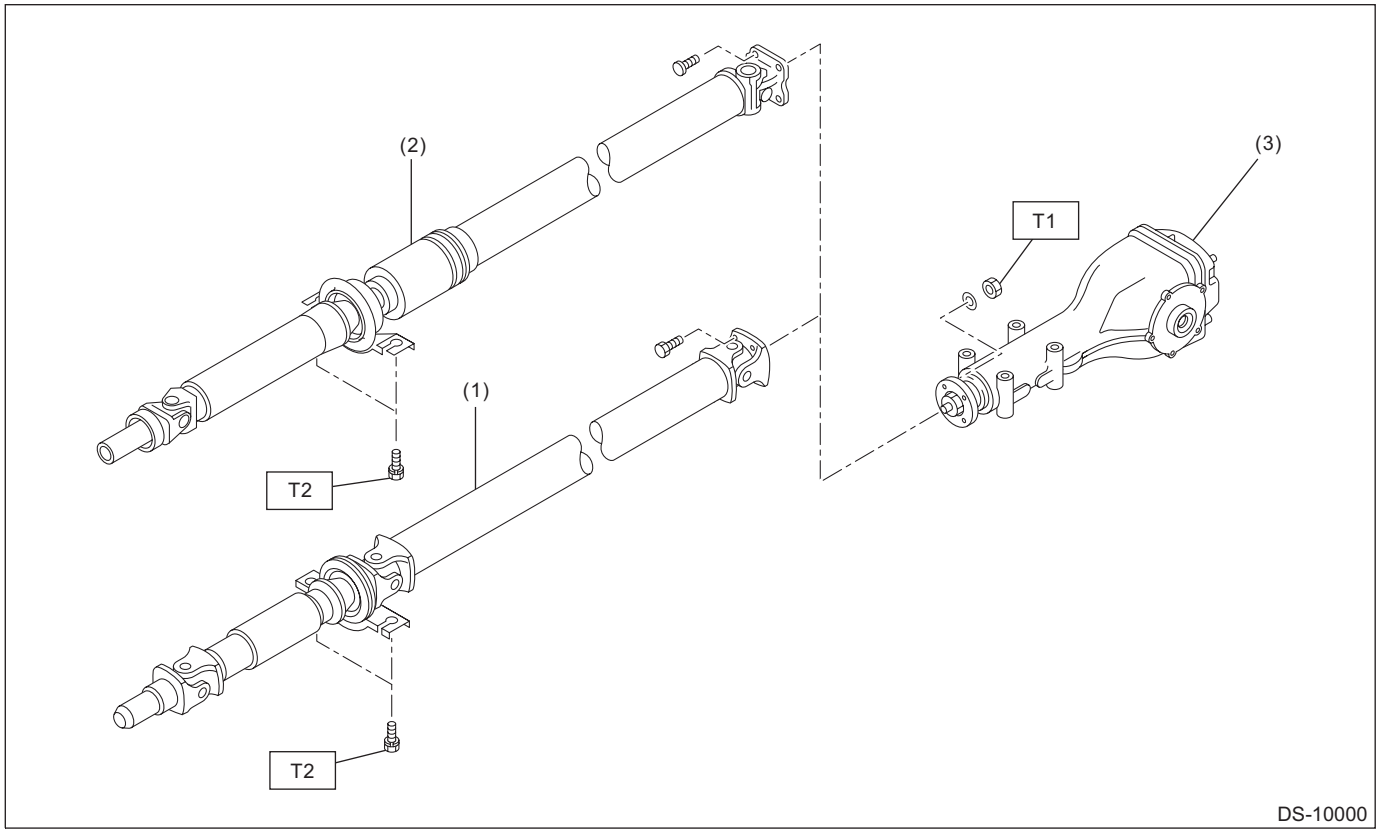

(1) Propeller shaft (3UJ+CPS type)
(2) Propeller shaft (EDJ-type)
(3) Rear differential (T-type)

Tightening torque: N·m (kgf-m, ft-lb)
T1: 31 (3.2, 22.9)
T2: 52 (5.3, 38.4)

2. FRONT AXLE

- Except for STI model

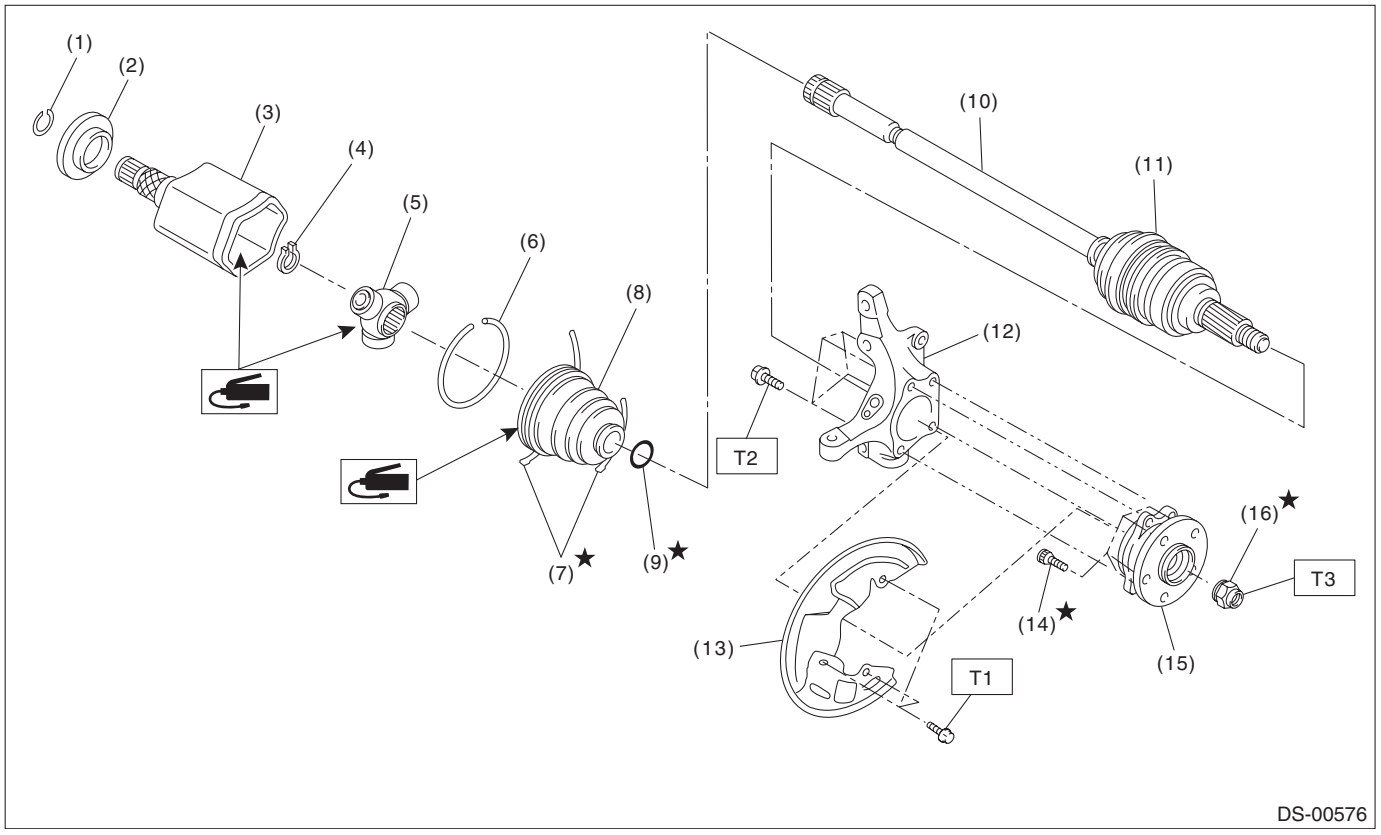

(1) Circlip
(2) Baffle plate
(3) Outer race (PTJ)
(4) Snap ring
(5) Trunnion
(6) Snap ring
(7) Boot band
(8) Boot (PTJ)
(9) O-ring
(10) EBJ shaft ASSY
(11) Boot (AC)
(12) Housing
(13) Back plate - front brake
(14) Hub bolt
(15) Hub unit COMPL - front axle
(16) Axle nut

Tightening torque: N·m (kgf-m, ft-lb)
T1: 18 (1.8, 13.3)
T2: 65 (6.6, 47.9)
T3: 220 (22.4, 162.3)

- STI model

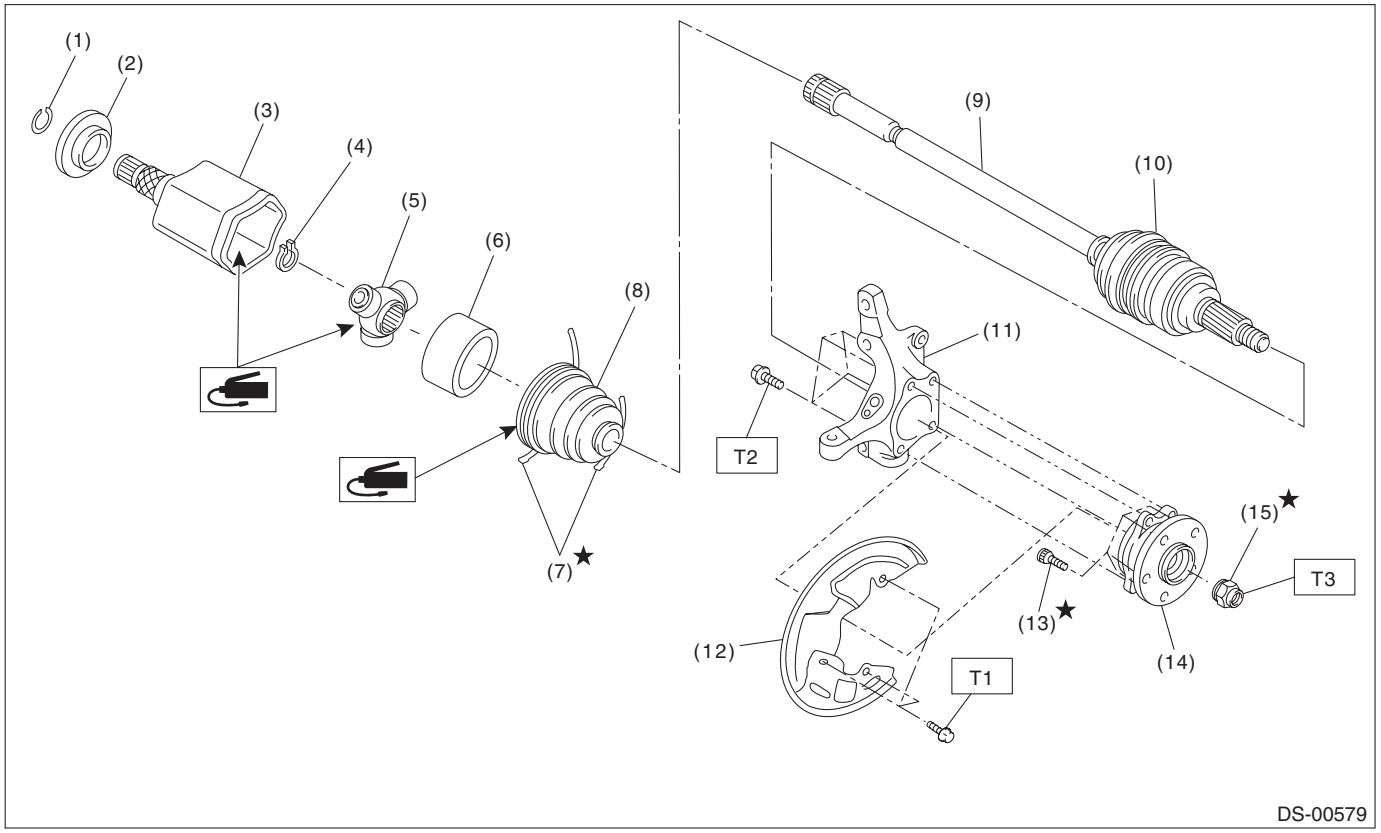

(1) Circlip
(2) Baffle plate
(3) Outer race (AAR)
(4) Snap ring
(5) Trunnion
(6) Grommet
(7) Boot band
(8) Boot (AAR)
(9) AC shaft ASSY
(10) Boot (AC)
(11) Housing
(12) Back plate - front brake
(13) Hub bolt
(14) Hub unit COMPL - front axle
(15) Axle nut

Tightening torque: N·m (kgf-m, ft-lb)
T1: 18 (1.8, 13.3)
T2: 65 (6.6, 47.9)
T3: 220 (22.4, 162.3)

3. REAR AXLE

- Except for STI model

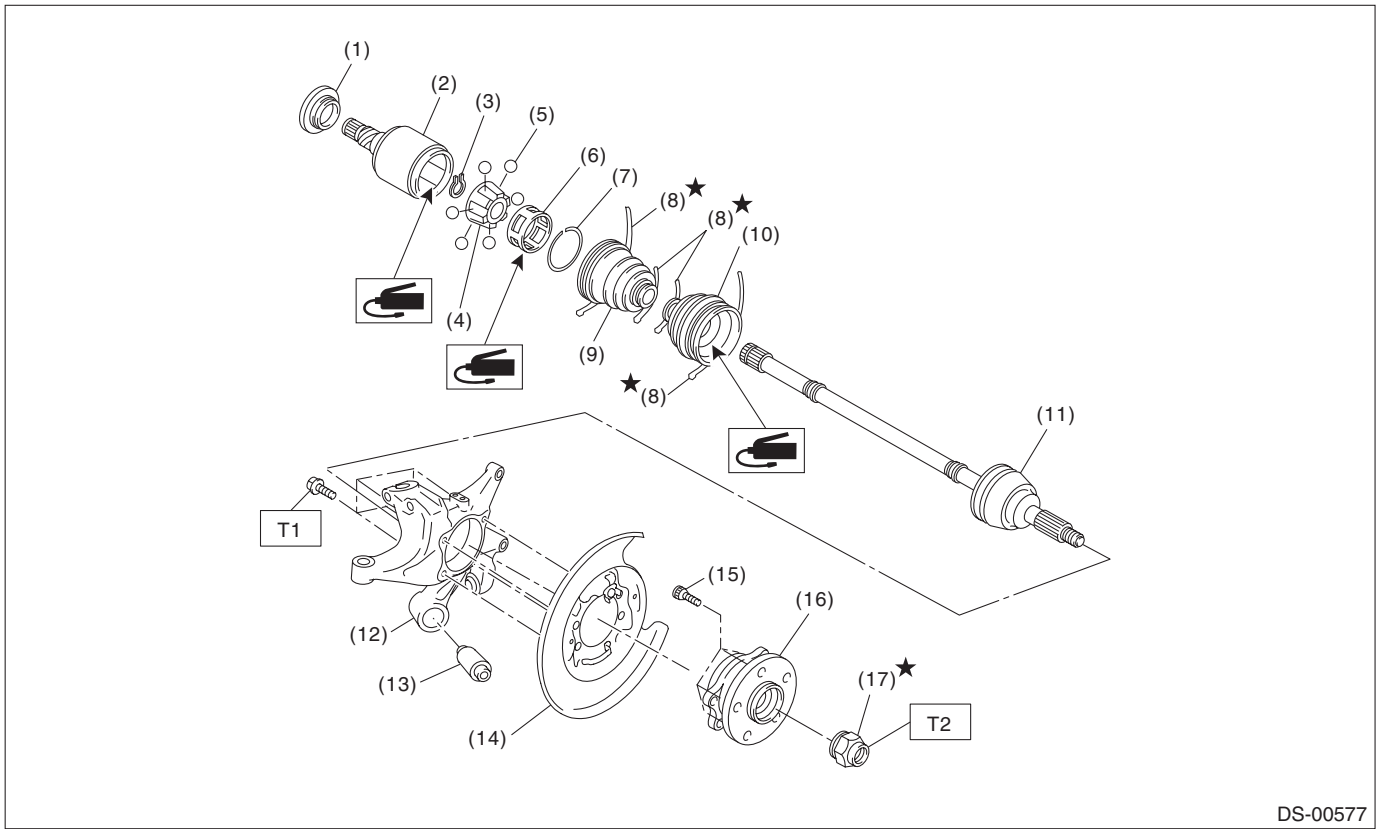

(1) Baffle plate
(2) Outer race (DOJ)
(3) Snap ring
(4) Inner race
(5) Ball
(6) Cage
(7) Snap ring
(8) Boot band
(9) Boot (DOJ)
(10) Boot (BJ)
(11) EBJ shaft ASSY
(12) Rear axle housing
(13) Bushing
(14) Back plate - rear brake
(15) Hub bolt
(16) Hub unit COMPL - rear axle
(17) Axle nut

Tightening torque: N·m (kgf-m, ft-lb)
T1: 65 (6.6, 47.9)
T2: 190 (19.4, 140.1)

- STI model

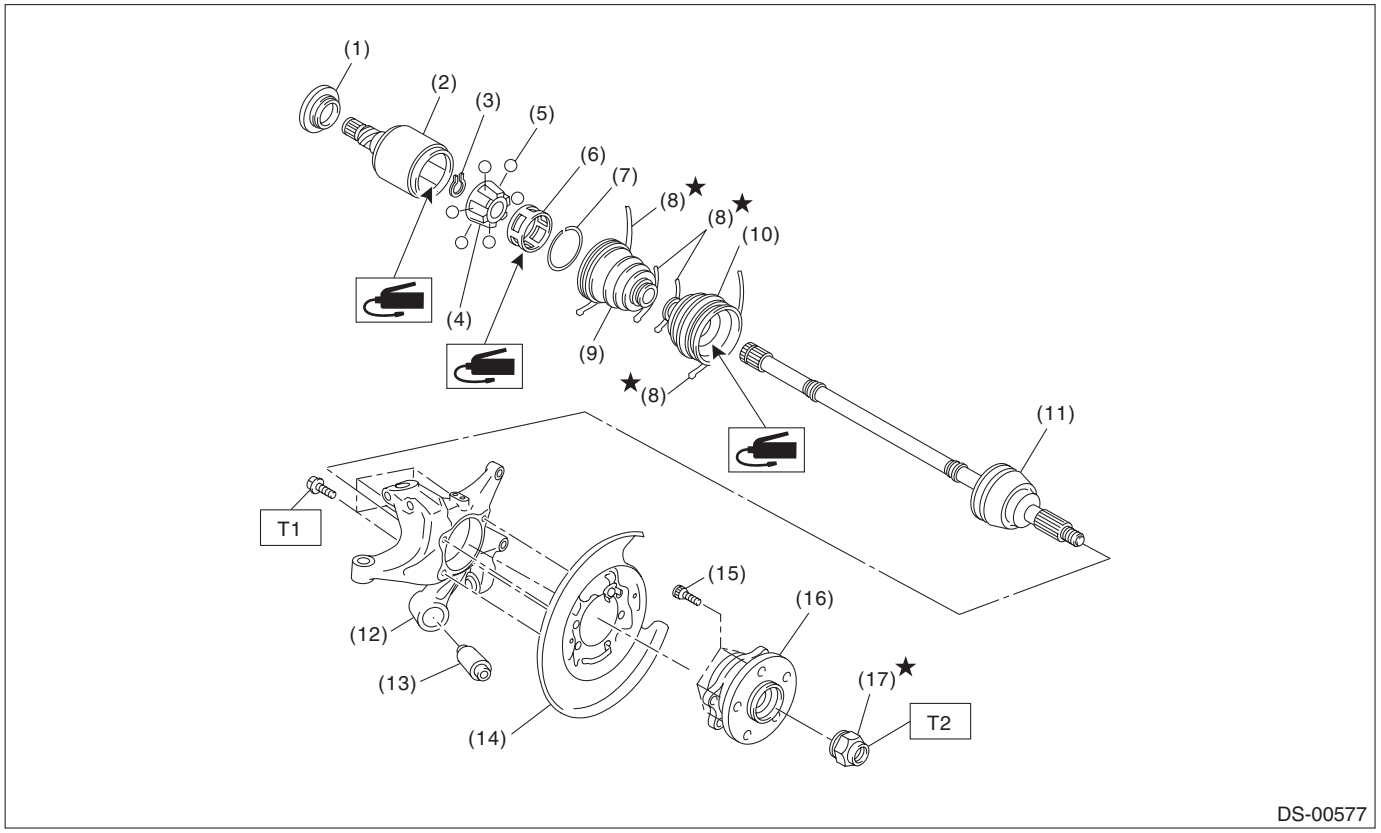

(1)	Baffle plate	(8)	Boot band	(15)	Hub bolt
(2)	Outer race (EDJ)	(9)	Boot (EDJ)	(16)	Hub unit COMPL - rear axle
(3)	Snap ring	(10)	Boot (EBJ)	(17)	Axle nut
(4)	Inner race	(11)	EBJ shaft ASSY		
(5)	Ball	(12)	Rear axle housing	***Tightening torque: N·m (kgf-m, ft-lb)***	
(6)	Cage	(13)	Bushing	***T1:***	***65 (6.6, 47.9)***
(7)	Snap ring	(14)	Back plate - rear brake	***T2:***	***190 (19.4, 140.1)***

C: CAUTION

- When performing any work, always wear work clothes, a work cap and protective shoes. Additionally, wear a helmet, protective goggles, etc. if necessary.
- Remove contamination including dirt and corrosion before removal, installation, disassembly or assembly.
- When performing a repair, identify the cause of trouble and avoid unnecessary removal, disassembly and replacement.
- Some vehicle components are extremely hot immediately after driving. Be wary of receiving burns from heated parts.
- Use SUBARU genuine grease, the recommended or equivalent. Do not mix grease etc. of different grades or manufacturers.
- Be sure to tighten fasteners including bolts and nuts to the specified torque.
- Always use the jack-up point when the shop jacks or rigid racks are used to support the vehicle.
- Apply grease onto sliding or revolving surfaces before installation.
- Be sure that the surface of brake disc, brake pad or brake shoe is free from grease or oil.
- Do not secure a part in a vise directly. Place cushioning materials such as wood blocks, aluminum plates, or waste cloth between the part and the vise.
- When the suspension-related components have been removed or replaced, perform “VSC(VDC) Centering Mode” of the VDC. <Ref. to VDC-17, ADJUSTMENT, VDC Control Module and Hydraulic Control Unit (VDCCM&H/U).>

D: PREPARATION TOOL

1. SPECIAL TOOL

ILLUSTRATION	Part No.	DESCRIPTION	REMARKS
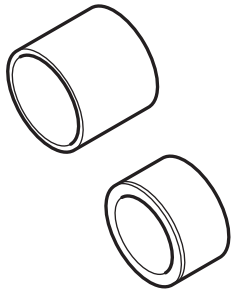 ST20099PA010	20099PA010	INSTALLER & REMOVER	• Used for replacing the bushing - trailing link of the housing assembly - rear axle. • Used together with BUSHING REMOVER (20099FG000).
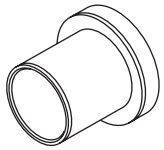 ST20099FG000	20099FG000	BUSHING REMOVER	• Used for replacing the bushing - trailing link of the housing assembly - rear axle. • Used together with base part of INSTALLER & REMOVER (20099PA010).
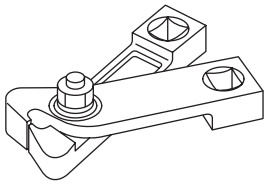 ST28099AC000	28099AC000	BOOT BAND PLIER	Used for tightening the band - boot. (for front drive shaft)
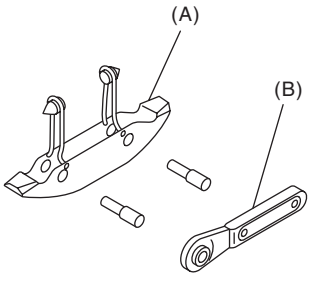 ST-925091000	925091000	BAND TIGHTENING TOOL	Used for tightening the band - boot. (A) Jig for the band (B) Ratchet wrench

ILLUSTRATION	Part No.	DESCRIPTION	REMARKS
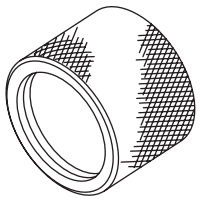 ST18675AA000	18675AA000	DIFFERENTIAL SIDE OIL SEAL INSTALLER	Used for installing the differential side retainer oil seal.
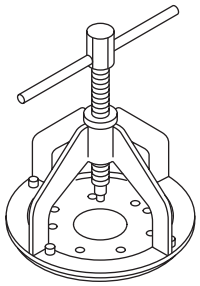 ST-926470000	926470000	AXLE SHAFT PULLER	• Used for removing the drive shaft. • Used together with AXLE SHAFT PULLER PLATE (28099PA110).
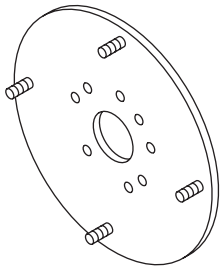 ST28099PA110	28099PA110	AXLE SHAFT PULLER PLATE	• Used for removing the drive shaft. • Exchange with the plate of the AXLE SHAFT PULLER (926470000) to use.
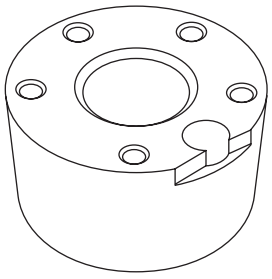 ST28099PA080	28099PA080	HUB STAND	Used for assembling the bolt - hub of the hub.
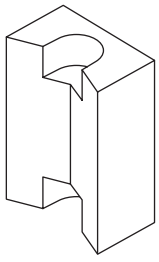 ST28399AG000	28399AG000	HUB STAND	Used for extracting the bolt - hub.

ILLUSTRATION	Part No.	DESCRIPTION	REMARKS
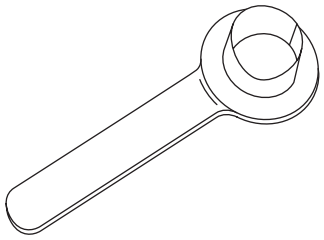 ST28399SA010	28399SA010	OIL SEAL PROTECTOR	• Used for installing front drive shaft into front differential. • For protecting the oil seal.
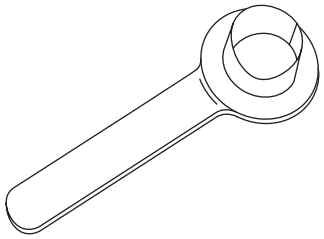 ST28099PA090	28099PA090	OIL SEAL PROTECTOR	• Used for installing the rear drive shaft to the rear differential. • For protecting the oil seal.

2. GENERAL TOOL

TOOL NAME	REMARKS
Tie-rod ball joint puller	Used for disconnecting joints.
Dial gauge	Used for inspecting the propeller shaft run-out.
Extension cap	Used for preventing leakage of gear oil or CVTF.
Crowbar	Used for extracting drive shaft.
Needle nose pliers	Used for tightening the band - boot of the rear drive shaft. • Snap-on 96BCP Or equivalent.

2. Propeller Shaft

A: REMOVAL

CAUTION:
- **Before removing propeller shaft, wrap metal parts with a cloth or rubber material.**
- **Do not disassemble the center EDJ of the propeller shaft.**
- **Before removing the propeller shaft, wrap the center joint part with a cloth, etc. If the joint is bent during removal, the rubber boot may be damaged due to interference with metal parts.**

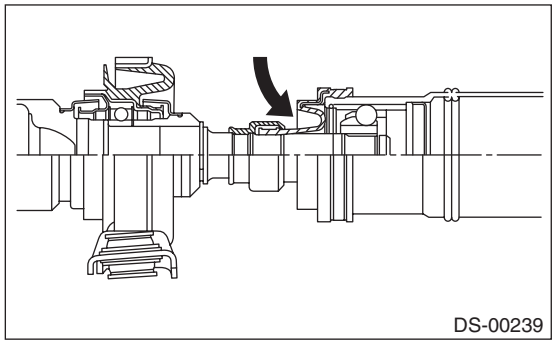

1) Shift the select lever or gear shift lever to neutral.
2) Release the parking brake.
3) Lift up the vehicle.
4) Remove the center exhaust pipe.
- STI model: <Ref. to EX(STI)-7, REMOVAL, Center Exhaust Pipe.>
- Except for STI model: <Ref. to EX(w/o STI)-32, REMOVAL, Center Exhaust Pipe.>

5) Remove the rear exhaust pipe.
- STI model: <Ref. to EX(STI)-12, REMOVAL, Rear Exhaust Pipe.>
- Except for STI model: <Ref. to EX(w/o STI)-47, REMOVAL, Rear Exhaust Pipe.>

6) Remove the bolts, and then remove the center exhaust cover.

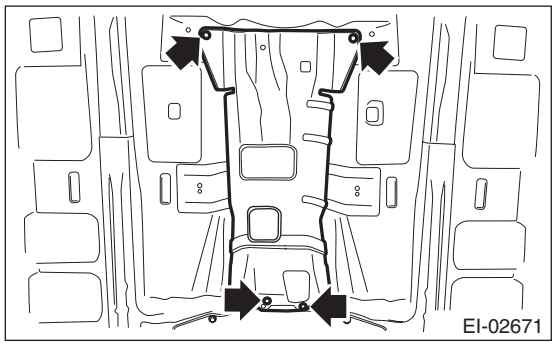

7) Remove the propeller shaft assembly.

CAUTION:
- **Do not disassemble the propeller shaft.**
- **Use a container to catch CVTF or oil flowing from propeller shaft.**
- **To prevent CVTF from leaking, install extension cap etc. to the transmission.**
- **Be careful not to damage oil seals and contact surface of the sleeve yoke.**

(1) Place alignment marks (A) on the flange yoke and rear differential.

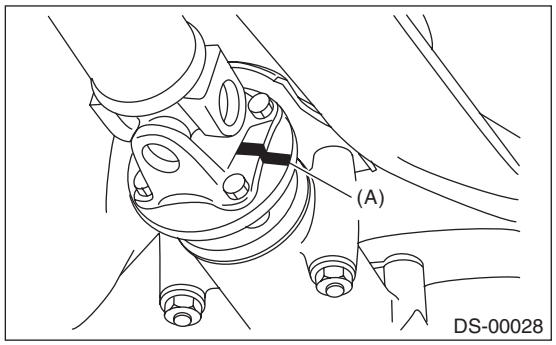

(2) Remove the bolts and remove the propeller shaft from the rear differential.

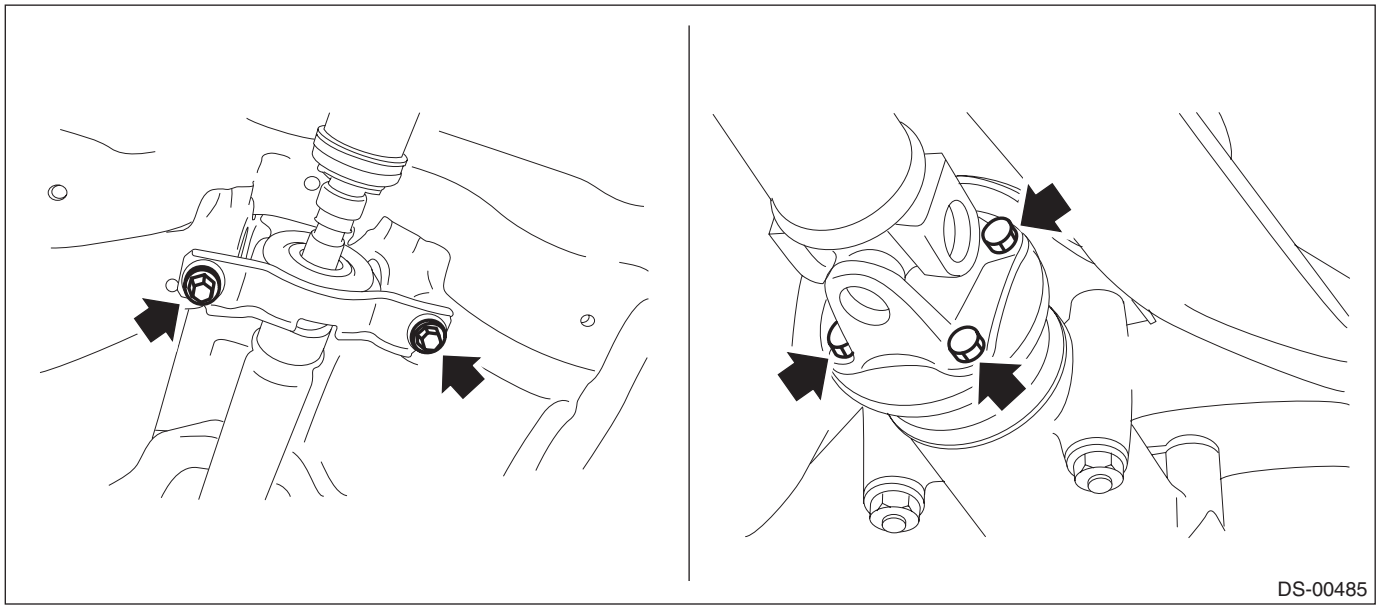

(3) Remove the end of propeller shaft from the transmission.

NOTE:
Use a container to catch oil flowing from propeller shaft.

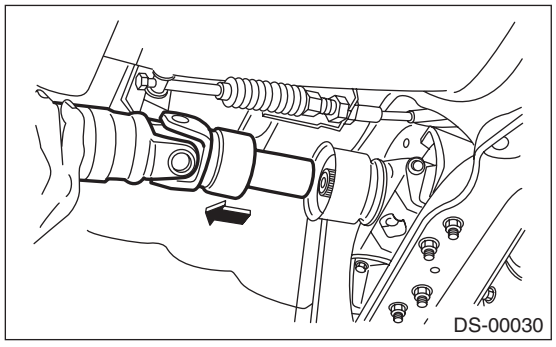

(4) Install extension cap (A) to the transmission.

NOTE:
If extension cap (A) is not available, place vinyl bag over opening and fasten with string to prevent gear oil from leaking.

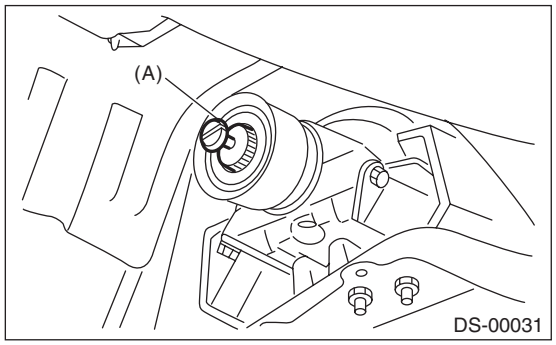

B: INSTALLATION

1) Before installation, check the following items, and replace the propeller shaft assembly as necessary.
- Dents or cracks on the tube surface
- Splines for deformation or abnormal wear
- Unsmooth joint operation or abnormal noise
- Center bearing for free play, noise or non-smooth operation.
- Oil seals for abnormal wear or damage
- Damaged center bearing

2) Apply fluid or gear oil to the oil seal lip and the propeller shaft.
Recommended fluid/oil: <Ref. to RM-3, FLUID, RECOMMENDED MATERIALS, Recommended Materials.>
3) Insert the sleeve yoke into the transmission and attach center bearing to body.

Tightening torque:
52 N·m (5.3 kgf-m, 38.4 ft-lb)

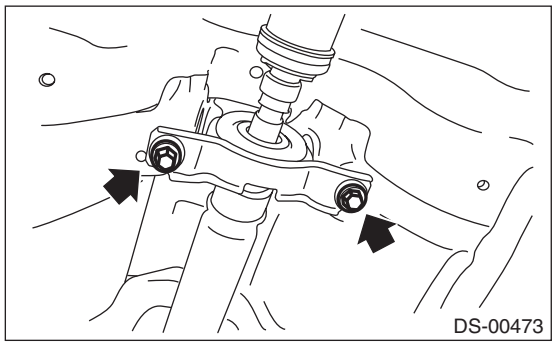

4) Align the alignment marks (A), and connect the yoke flange and rear differential.

Tightening torque:
31 N·m (3.2 kgf-m, 22.9 ft-lb)

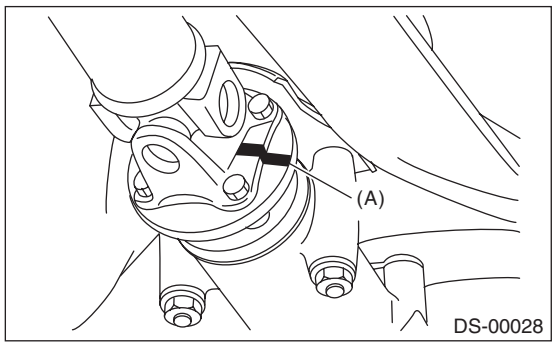

5) Check the propeller shaft with the propeller shaft installed to the vehicle. <Ref. to DS-15, INSPECTION, Propeller Shaft.>
6) Install the center exhaust cover.

Tightening torque:
18 N·m (1.8 kgf-m, 13.3 ft-lb)

7) Install the rear exhaust pipe.
- STI model: <Ref. to EX(STI)-12, INSTALLATION, Rear Exhaust Pipe.>
- Except for STI model: <Ref. to EX(w/o STI)-48, INSTALLATION, Rear Exhaust Pipe.>

8) Install the center exhaust pipe.
- STI model: <Ref. to EX(STI)-8, INSTALLATION, Center Exhaust Pipe.>
- Except for STI model: <Ref. to EX(w/o STI)-37, INSTALLATION, Center Exhaust Pipe.>

9) Install the under cover - front. <Ref. to EI-23, INSTALLATION, Front Under Cover.>
10) Lower the vehicle.

C: INSPECTION

Check the propeller shaft with the propeller shaft installed to the vehicle.
1) Shift the select lever or gear shift lever to neutral.
2) Release the parking brake.
3) Lift up the vehicle.
4) Remove the center exhaust pipe.
- STI model: <Ref. to EX(STI)-7, REMOVAL, Center Exhaust Pipe.>
- Except for STI model: <Ref. to EX(w/o STI)-32, REMOVAL, Center Exhaust Pipe.>

5) Remove the rear exhaust pipe.
- STI model: <Ref. to EX(STI)-12, REMOVAL, Rear Exhaust Pipe.>
- Except for STI model: <Ref. to EX(w/o STI)-47, REMOVAL, Rear Exhaust Pipe.>

6) Remove the bolts, and then remove the center exhaust cover.

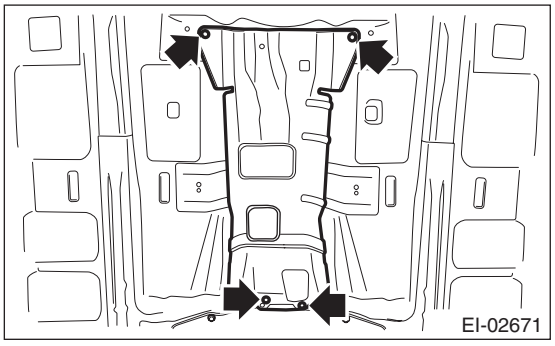

7) Check the propeller shaft mounting bolt for looseness.
   (1) Yoke flange mounting bolts which connect to the rear differential
   (2) Center bearing bracket mounting bolts

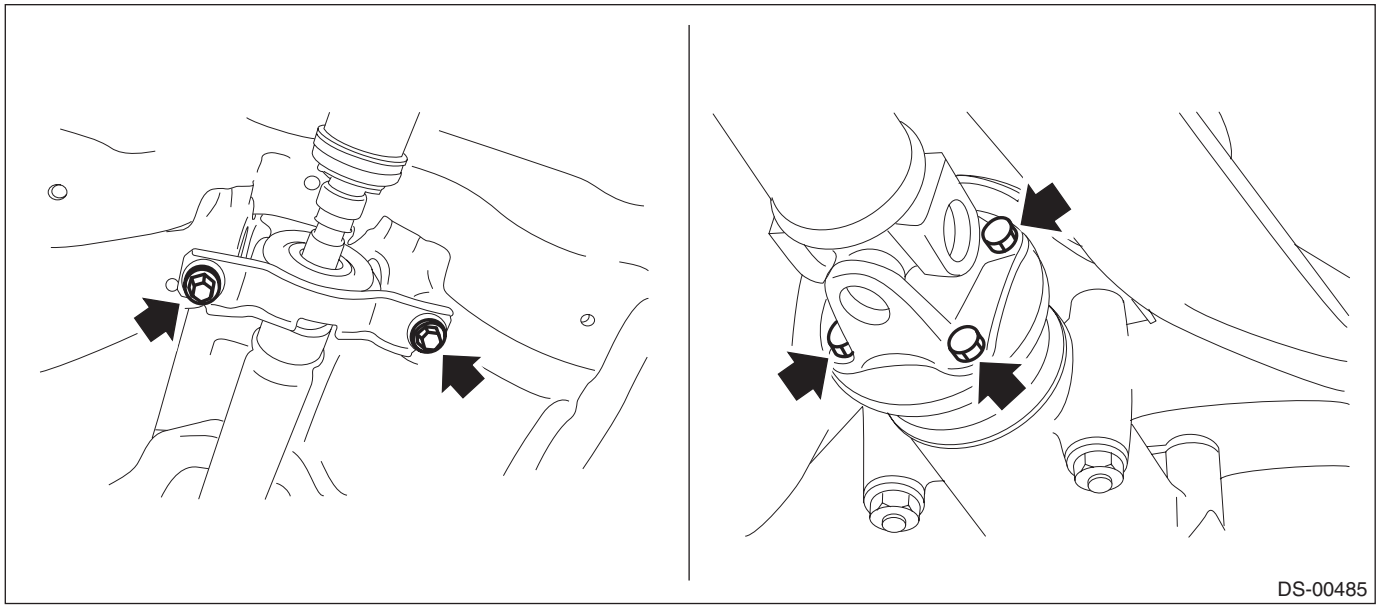

8) Check the spline and bearing for the propeller shaft.
   (1) Turn the propeller shaft by hand to check if abnormal free play exists at splines.
   (2) Also move yokes to check if abnormal free play exists at spiders and bearings.

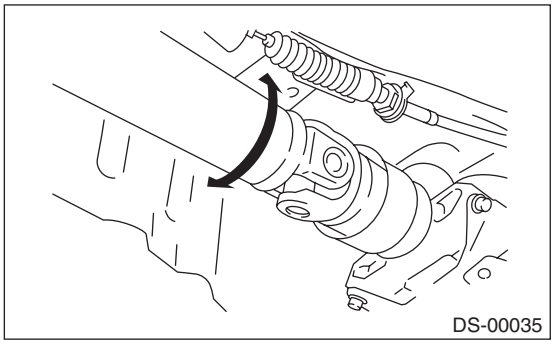

9) Measure the deflection of the propeller shaft.
(1) Set the dial gauge (B) with its indicator stem at the center of the propeller shaft (A).
(2) Turn the propeller shaft (A) slowly by hands to check for runout of the propeller shaft.

Runout:
Limit: 0.6 mm (0.024 in)

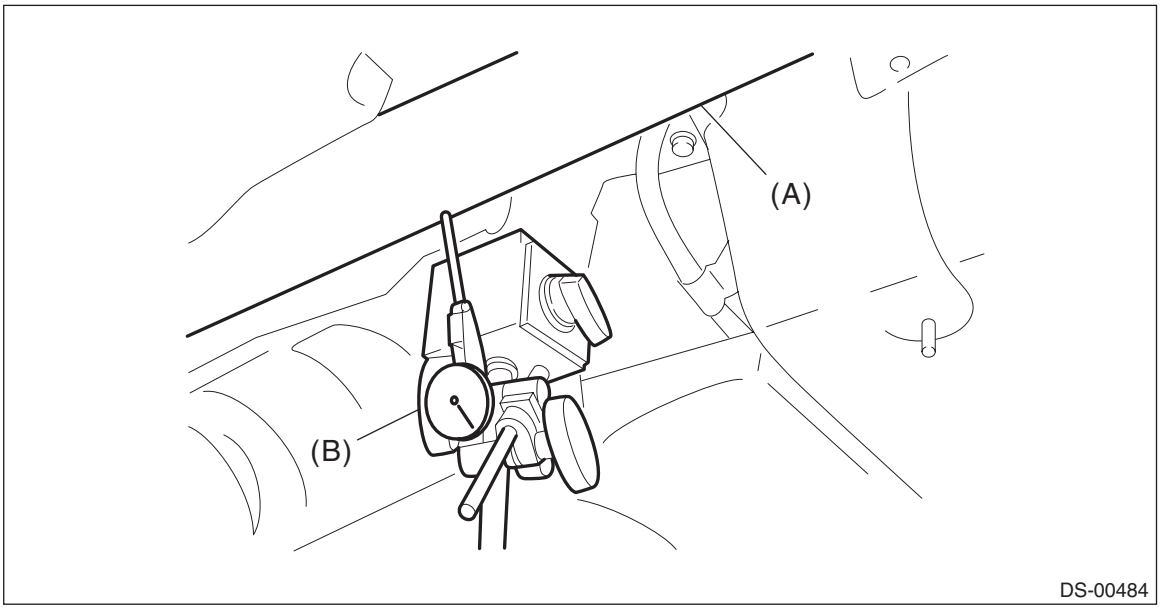

10) Check the center bearing for free play.
Move the propeller shaft near the center bearing up, down, left, right by hand, to check for any abnormal free play of the bearings.

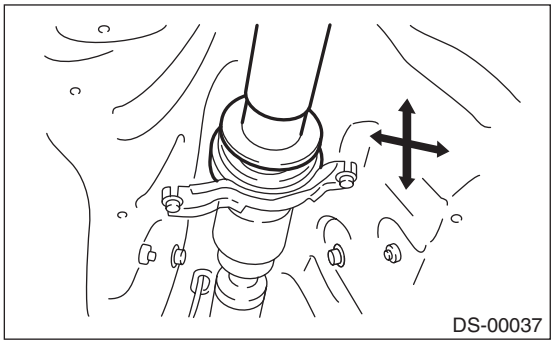

11) Replace the propeller shaft assembly if faulty is found in the inspection.

3. Front Axle

A: REMOVAL

1) Lift up the vehicle, and then remove the front wheels.
2) Remove the nut - axle.

CAUTION:
Do not loosen the nut - axle while the front axle is loaded. Doing so may damage the hub unit COMPL.

(1) Lift the crimped section of the nut - axle.
(2) Remove the nut - axle using a socket wrench while depressing the brake pedal.

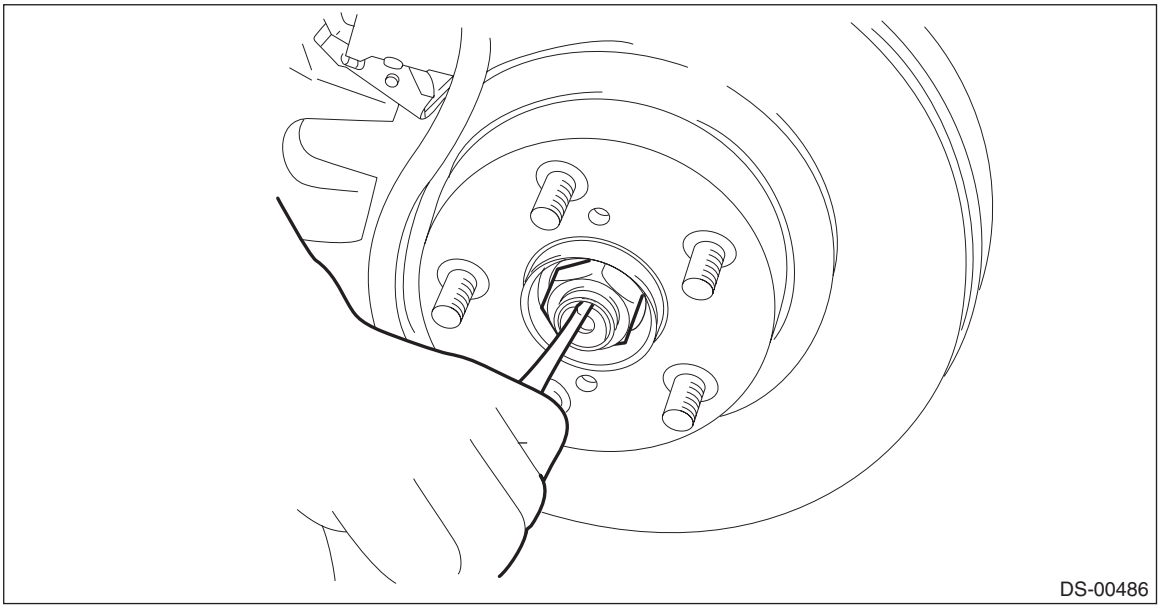

3) Remove the disc brake assembly. <Ref. to BR-29, REMOVAL, Front Disc Brake Assembly.>
4) Remove the disc rotor. <Ref. to BR-25, REMOVAL, Front Disc Rotor.>
5) Remove the bolts, and remove the front ABS wheel speed sensor.

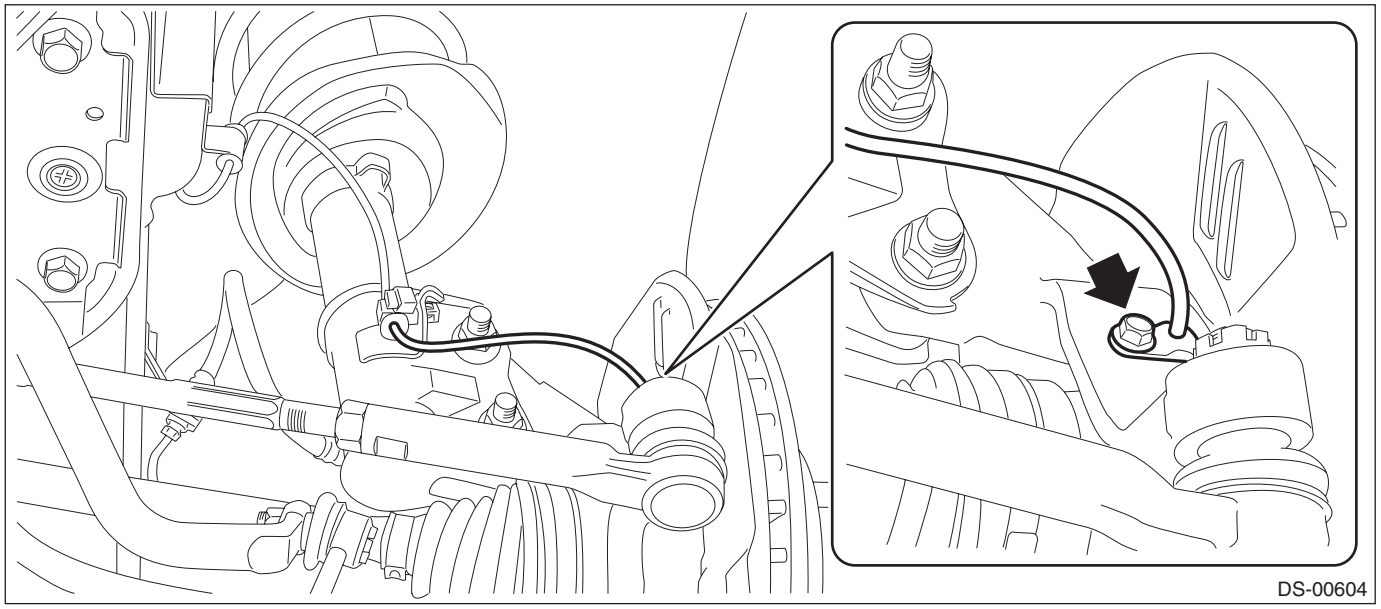

6) Disconnect the tie-rod end.
   (1) Pull out the cotter pin (a).
   (2) Remove the castle nut (b).
   (3) Using a tie-rod ball joint puller, remove the tie-rod end (c).

CAUTION:
Be careful not to damage the boot of the joint.

Preparation tool:
Tie-rod ball joint puller

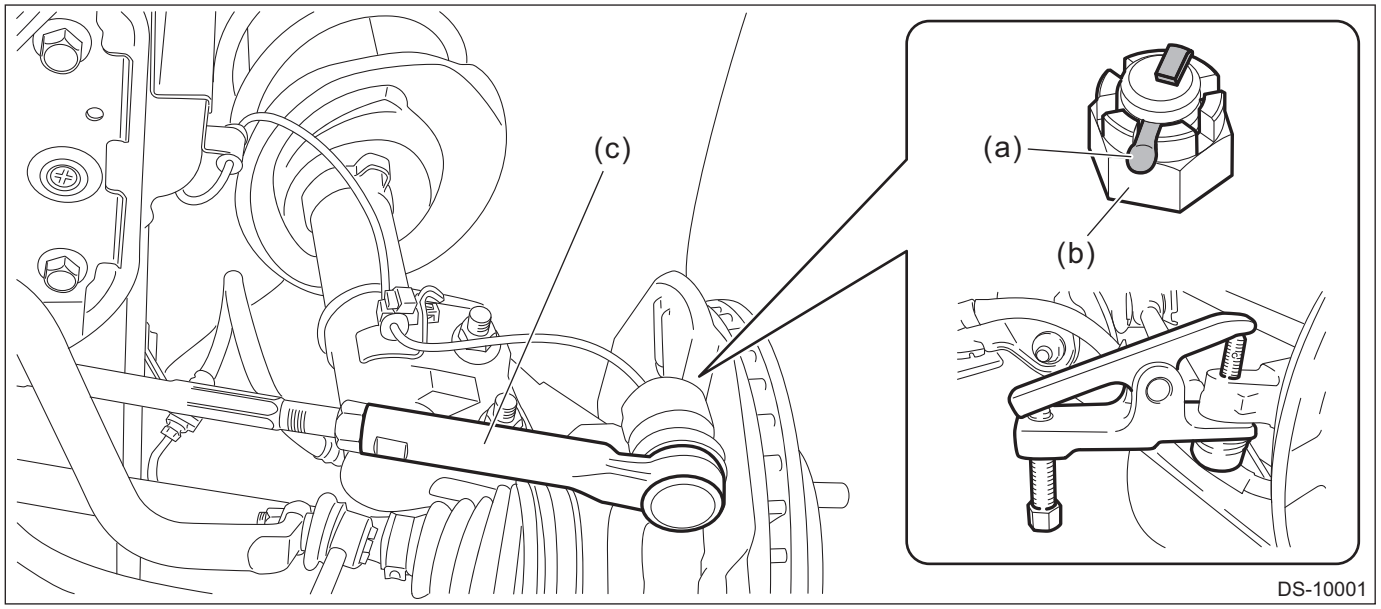

7) Remove the stabilizer link and ball joint.

CAUTION:
Be careful not to damage the boot of the joint.

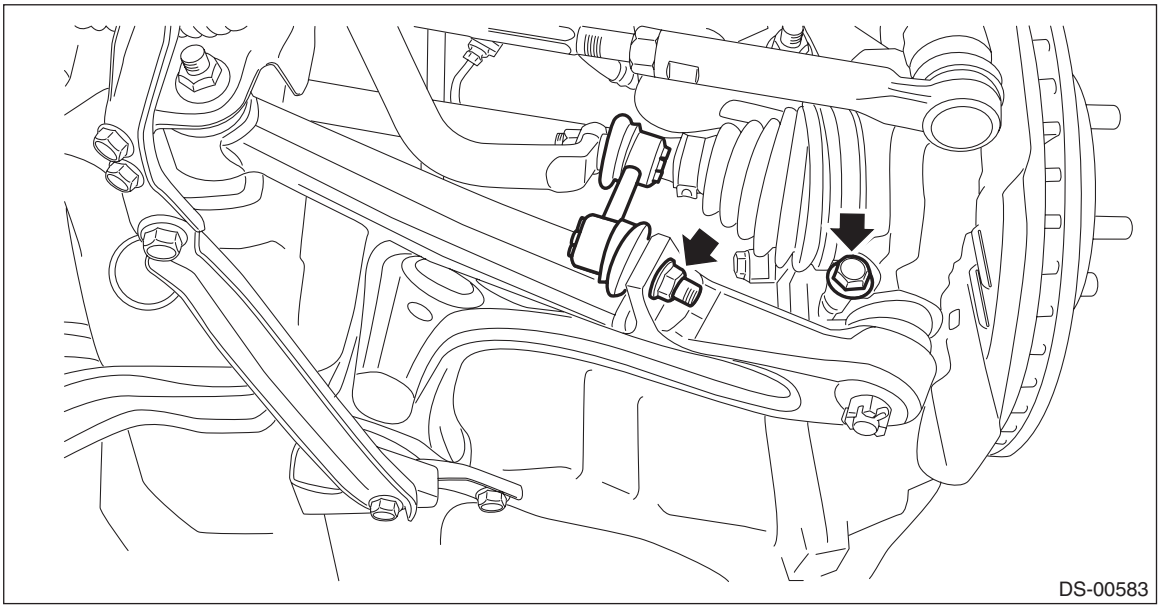

8) Remove the front drive shaft. <Ref. to DS-45, REMOVAL, Front Drive Shaft.>
9) Remove the housing assembly - front axle.

CAUTION:
- **Be careful of the weight of the housing assembly - front axle.**
- **Be careful not to damage the spline portion of the drive shaft.**

(1) Place an alignment mark (a) on the adjusting bolt and the strut assembly.
(2) Remove the adjusting bolts and flange bolts for the strut assembly, and then remove the housing assembly - front axle.

NOTE:
While holding the adjusting bolt side, tighten the nut side.

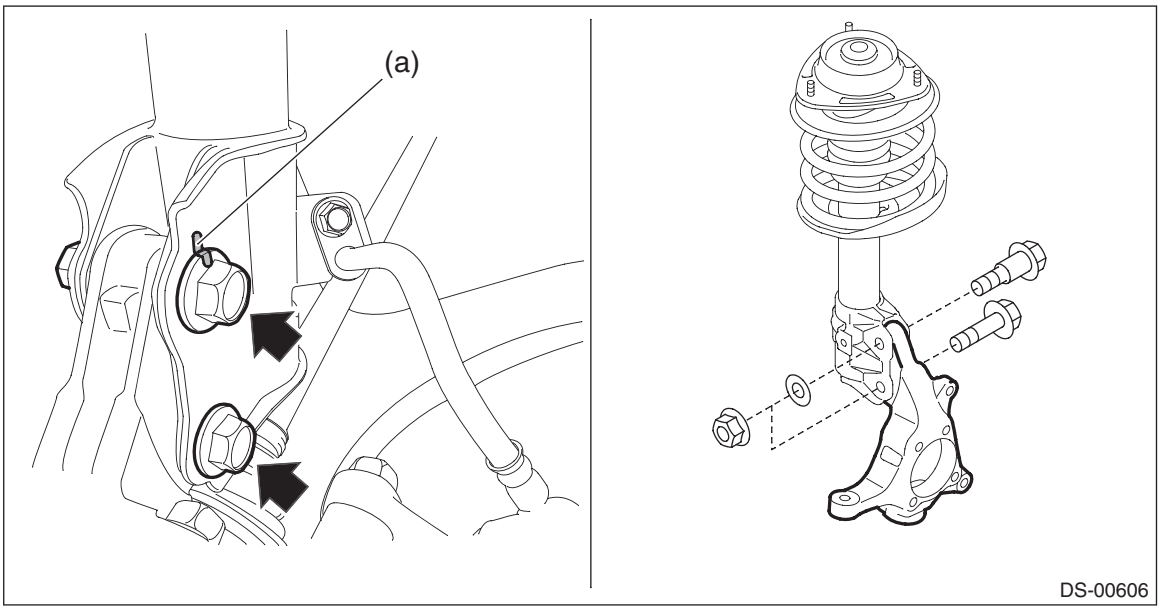

10) For removal of the hub unit COMPL - front axle, refer to “Front Hub Unit Bearing”. <Ref. to DS-24, REMOVAL, Front Hub Unit Bearing.>

B: INSTALLATION

1) Install the housing assembly - front axle to the strut assembly.
   (1) Align alignment marks on the camber adjusting bolt and strut.
   (2) While holding the bolt head of adjusting bolt, tighten the nut.

Tightening torque:
155 N·m (15.8 kgf-m, 114.3 ft-lb)

2) Install the front drive shaft assembly. <Ref. to DS-46, INSTALLATION, Front Drive Shaft.>
3) Install the ball joint assembly.

CAUTION:
• Before tightening, make sure the bottom surface of the housing assembly - front axle and the stepped section of ball joint are in contact.
• Be careful not to damage the boot of the joint.

Tightening torque:
50 N·m (5.1 kgf-m, 36.9 ft-lb)

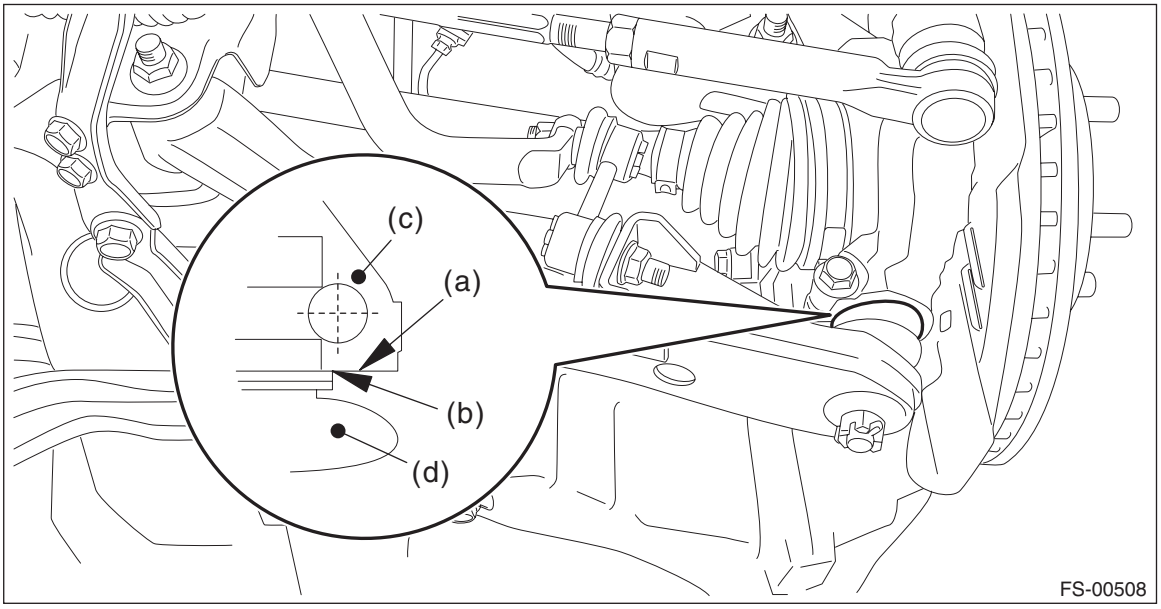

(a) Bottom surface of housing ASSY - front axle
(b) Raised section of ball joint
(c) Housing ASSY - front axle
(d) Ball joint ASSY

4) Install the front ABS wheel speed sensor.

Tightening torque:
7.5 N·m (0.8 kgf-m, 5.5 ft-lb)

5) Install the disc rotor.
6) Install the disc brake assembly.

Tightening torque:
STI model: 155 N·m (15.8 kgf-m, 114.3 ft-lb)
Except for STI model: 80 N·m (8.2 kgf-m, 59.0 ft-lb)

7) Install the brake hose bracket.

Tightening torque:
33 N·m (3.4 kgf-m, 24.3 ft-lb)

8) Install the stabilizer link.

Tightening torque:
60 N·m (6.1 kgf-m, 44.3 ft-lb)

9) Connect the tie-rod ends.
(1) Connect the tie-rod ends to the housing assembly - front axle.
(2) Tighten the castle nuts to the specified torque.

CAUTION:
When connecting the tie-rod, do not hit the cap at bottom of tie-rod end with a hammer.

Tightening torque:
27 N·m (2.8 kgf-m, 19.9 ft-lb)

(3) Tighten the castle nut within the range of 60° so that the cotter pin hole and cutout portion of the castle nut are aligned.
(4) Insert the cotter pin, and bend the tip of the pin to fix it.

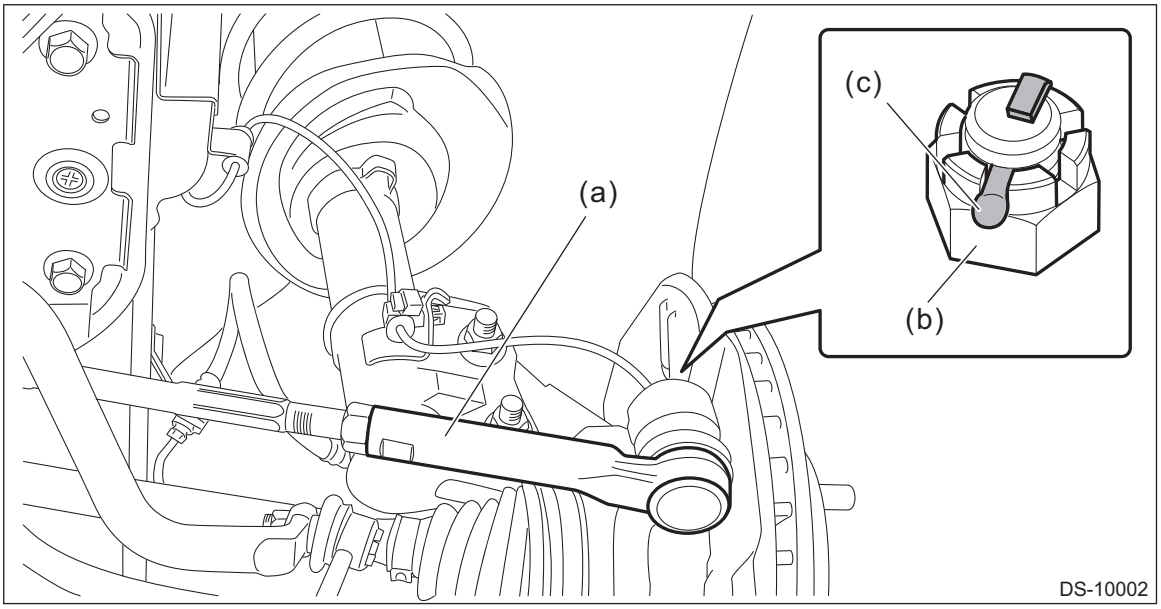

(a) Tie-rod end (b) Castle nut (c) Cotter pin

10) While depressing the brake pedal, tighten the nut - axle to the specified torque.

CAUTION:
Do not load the front axle before tightening the nut - axle. Doing so may damage the hub unit COMPL.

Tightening torque:
220 N·m (22.4 kgf-m, 162.3 ft-lb)

11) After tightening the nut - axle, lock it securely.

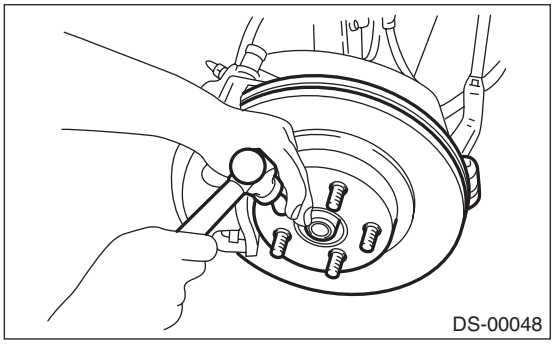

12) Install the front wheels, and perform the following inspections.

Tightening torque:
120 N·m (12.2 kgf-m, 88.5 ft-lb)

1. Check the wheels for smooth rotation.
2. Check that there is no looseness by moving the upper and lower portions of front tire in an axial direction with the brake pedal released.
   - **Looseness exists** → Check the hub unit COMPL - front axle. <Ref. to DS-29, INSPECTION, Front Hub Unit Bearing.>

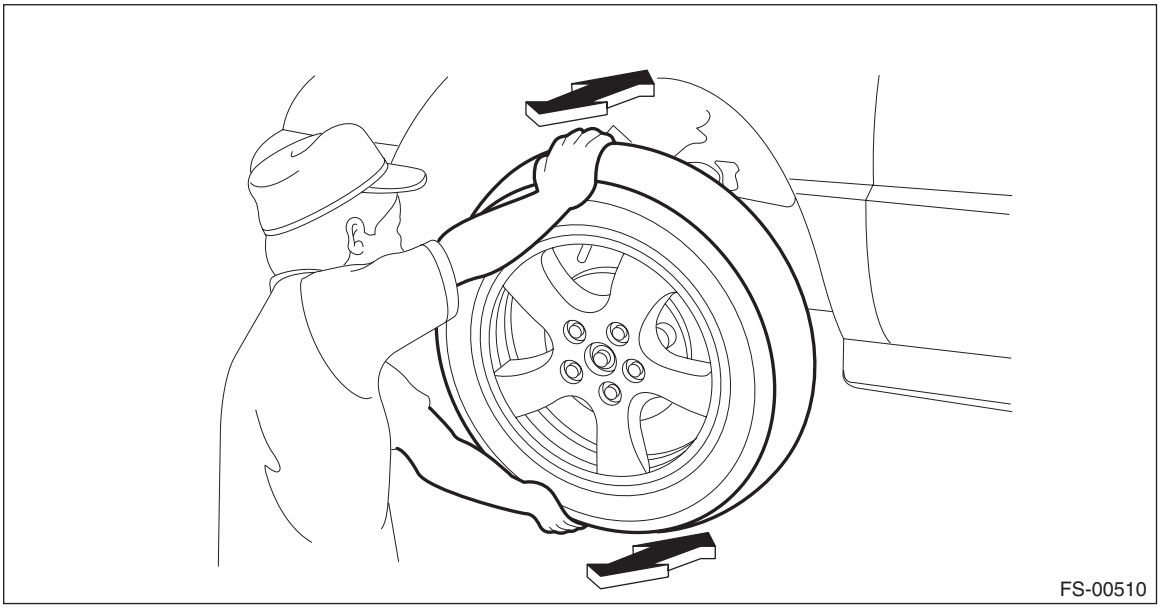

3. Check that there is no looseness by moving the upper and lower portions of front tire in an axial direction with the brake pedal depressed.
   - **Looseness exists** → Replace the ball joint assembly. <Ref. to FS-31, REMOVAL, Front Ball Joint.>

13) Inspect the wheel alignment and adjust if necessary.
- Inspection: <Ref. to FS-10, INSPECTION, Wheel Alignment.>
- Adjustment: <Ref. to FS-14, ADJUSTMENT, Wheel Alignment.>

CAUTION:
When the wheel alignment has been adjusted, perform the following adjustment.
– Lane keep assist learning value clear (model with EyeSight): <Ref. to ES(diag)-50, OPERATION, CLEAR ACTIVE LANE KEEP SYSTEM LEARNING VALUE.>
– Steering angle sensor adjustment: <Ref. to VDC-17, ADJUSTMENT, VDC Control Module and Hydraulic Control Unit (VDCCM&H/U).>

14) Perform reinitialization of the auto headlight beam leveler system. (Model with auto headlight beam leveler) <Ref. to LI-18, PROCEDURE, Auto Headlight Beam Leveler System.>

4. Front Hub Unit Bearing

A: REMOVAL

1) Lift up the vehicle, and then remove the front wheels.
2) Remove the nut - axle.

CAUTION:
Do not loosen the nut - axle while the front axle is loaded. Doing so may damage the hub unit COMPL.

(1) Lift the crimped section of the nut - axle.
(2) Remove the nut - axle using a socket wrench while depressing the brake pedal.

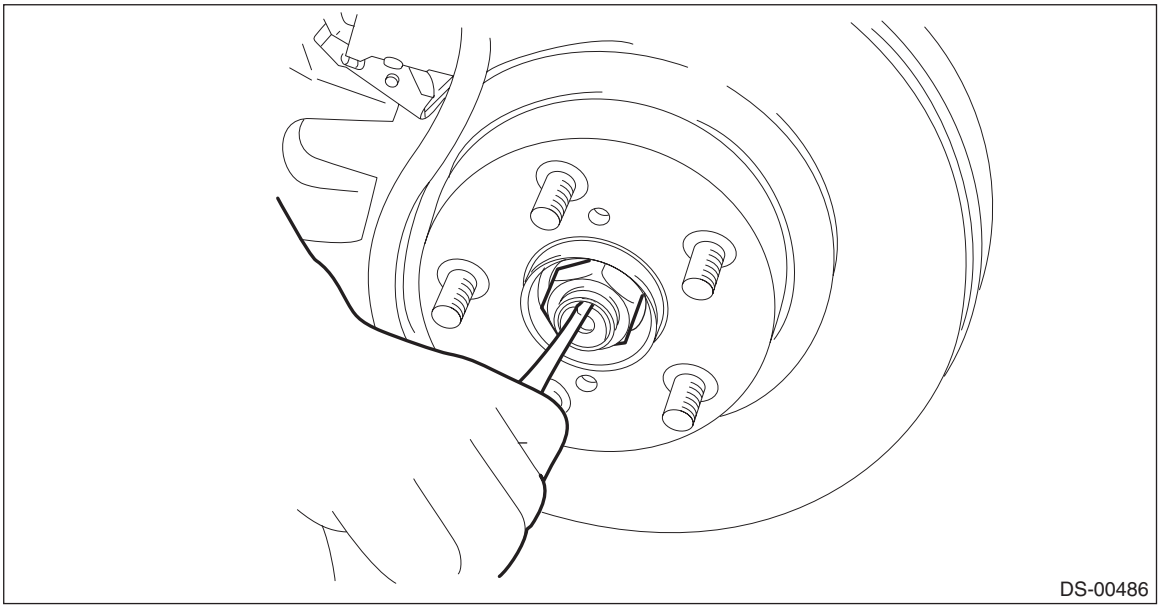

3) Remove the disc brake assembly. <Ref. to BR-29, REMOVAL, Front Disc Brake Assembly.>
4) Remove the disc rotor. <Ref. to BR-25, REMOVAL, Front Disc Rotor.>
5) Remove the bolts, and remove the front ABS wheel speed sensor.

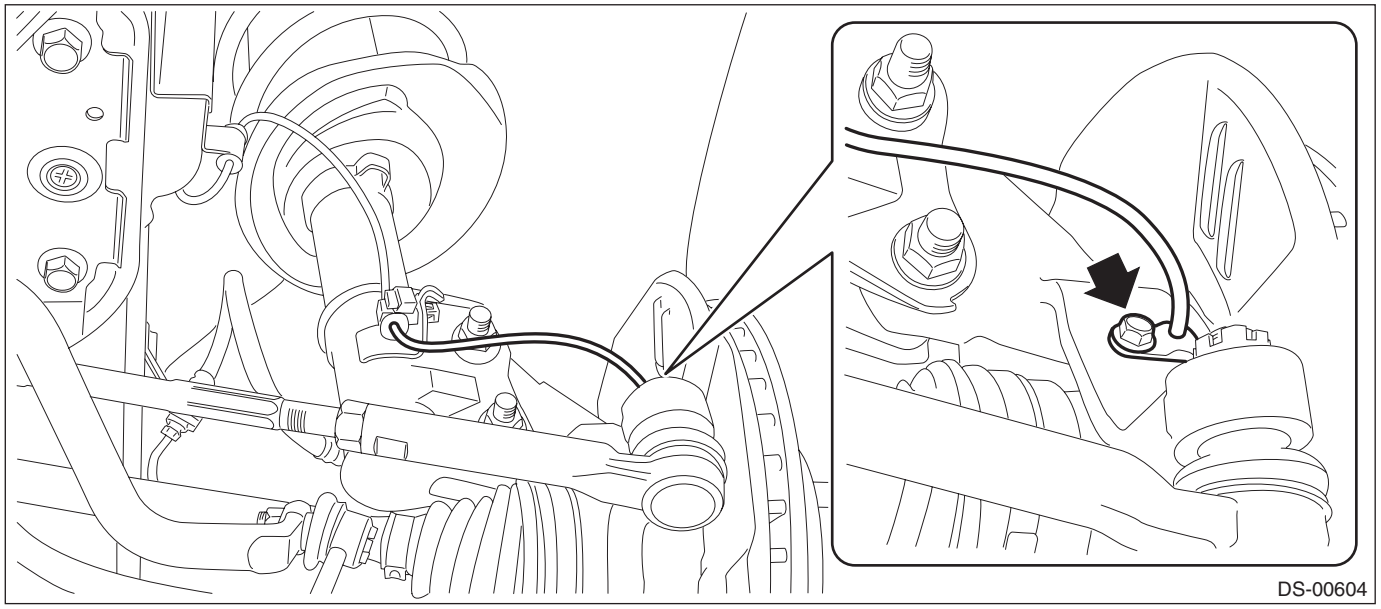

6) Remove the hub unit COMPL - front axle.

CAUTION:
- **Do not get closer the tool which charged magnetism to magnetic encoder.**
- **Be careful not to damage the magnetic encoder.**

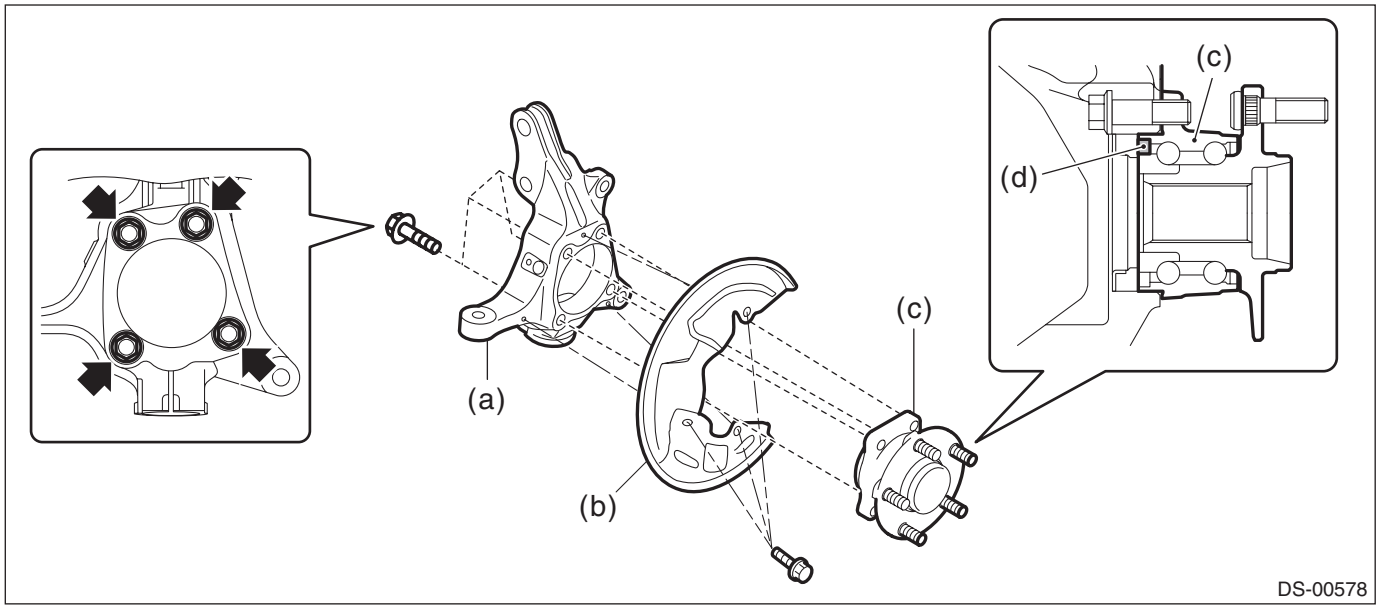

(a) Housing ASSY - front axle
(b) Back plate - front brake
(c) Hub unit COMPL - front axle
(d) Magnetic encoder

NOTE:
If it is hard to remove, use the ST.

Preparation tool:
ST1: AXLE SHAFT PULLER (926470000)
ST2: AXLE SHAFT PULLER PLATE (28099PA110)

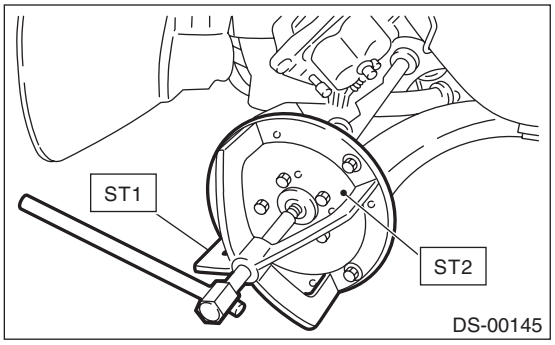

B: INSTALLATION

1) Tighten the back plate - front brake and the hub unit COMPL - front axle to the housing assembly - front axle with bolts.

CAUTION:
- **Do not get closer the tool which charged magnetism to magnetic encoder.**
- **Be careful not to damage the magnetic encoder.**

Tightening torque:
Back plate - front brake: 18 N·m (1.8 kgf-m, 13.3 ft-lb)
Hub unit COMPL - front axle: 65 N·m (6.6 kgf-m, 47.9 ft-lb)

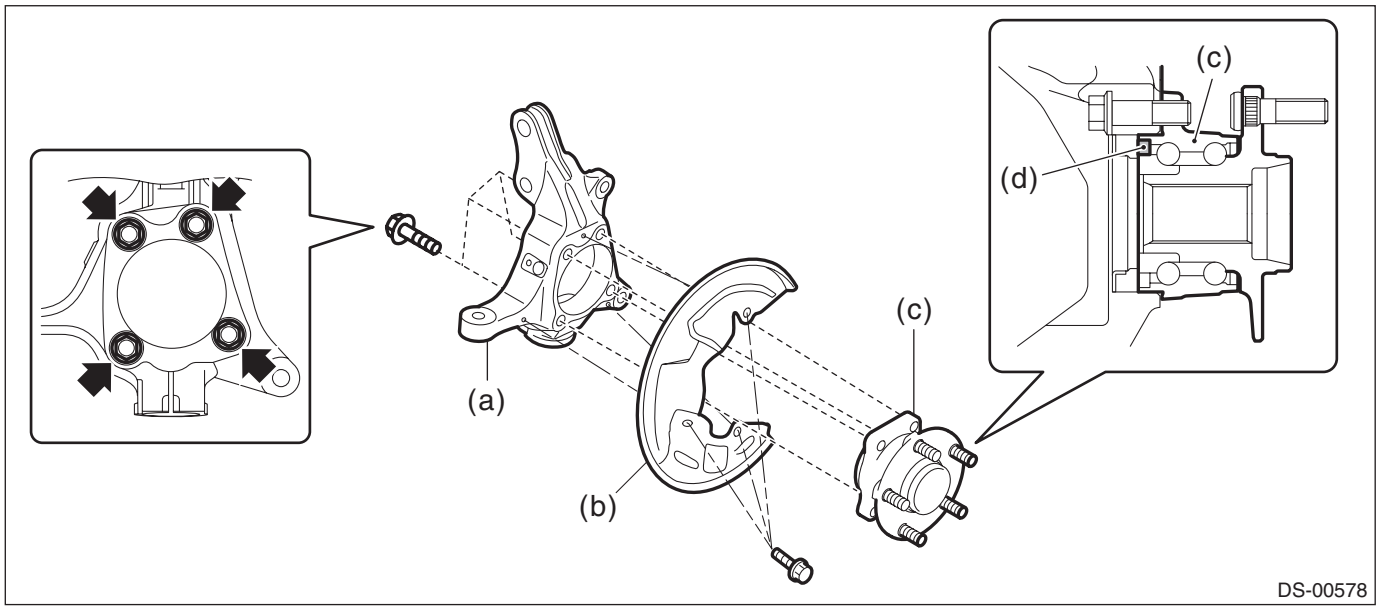

(a) Housing ASSY - front axle
(b) Back plate - front brake
(c) Hub unit COMPL - front axle
(d) Magnetic encoder

2) Install the front drive shaft assembly.

CAUTION:
- **Do not hammer the drive shaft assembly when installing.**
- **Use new nut - axle.**
  (1) Insert the drive shaft assembly into the hub spline, and pull it into the specified position.
  (2) Tighten the new nut - axle temporarily.

3) Install the disc rotor to the hub unit COMPL - front axle.
4) Install the disc brake assembly to the housing assembly - front axle.

Tightening torque:
STI model: 155 N·m (15.8 kgf-m, 114.3 ft-lb)
Except for STI model: 80 N·m (8.2 kgf-m, 59.0 ft-lb)

5) Install the brake hose bracket.

Tightening torque:
33 N·m (3.4 kgf-m, 24.3 ft-lb)

6) Install the front ABS wheel speed sensor.

Tightening torque:
7.5 N·m (0.8 kgf-m, 5.5 ft-lb)

7) While depressing the brake pedal, tighten new nuts - axle to the specified torque.

CAUTION:
Do not load the front axle before tightening the nut - axle. Doing so may damage the hub unit COMPL.

Tightening torque:
220 N·m (22.4 kgf-m, 162.3 ft-lb)

8) After tightening the nut - axle, lock it securely.

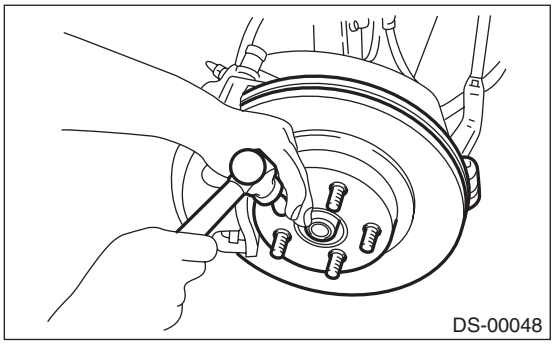

9) Install the front wheels, and perform the following inspections.

Tightening torque:
120 N·m (12.2 kgf-m, 88.5 ft-lb)

1. Check the wheels for smooth rotation.
2. Check that there is no looseness by moving the upper and lower portions of front tire in an axial direction with the brake pedal released.
   - **Looseness exists** → Check the hub unit COMPL - front axle. <Ref. to DS-29, INSPECTION, Front Hub Unit Bearing.>

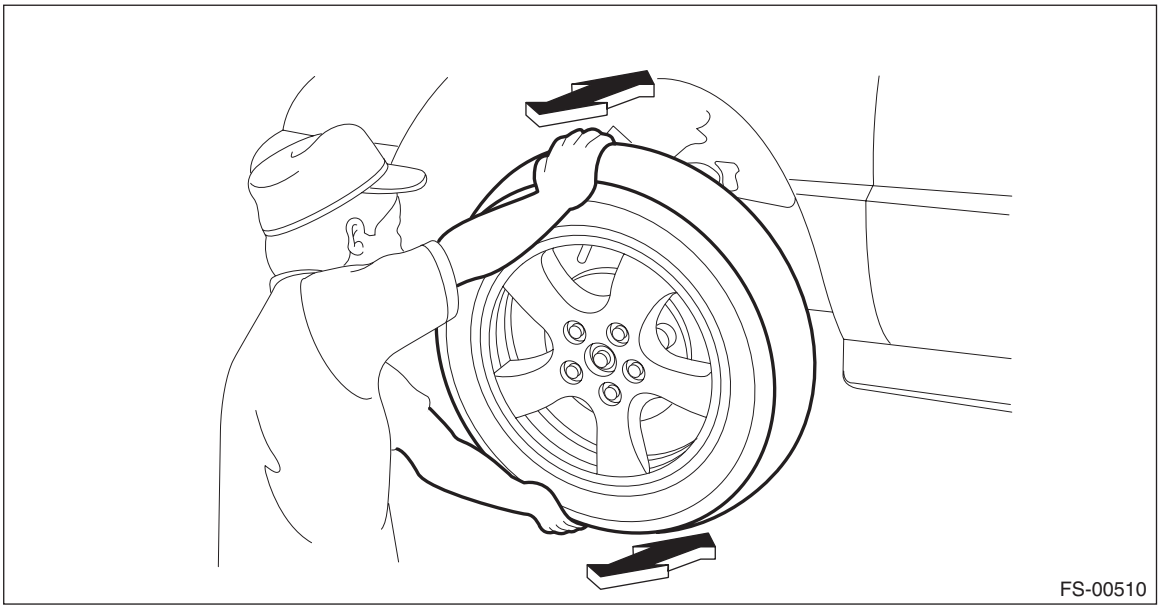

3. Check that there is no looseness by moving the upper and lower portions of front tire in an axial direction with the brake pedal depressed.
   - **Looseness exists** → Replace the ball joint assembly. <Ref. to FS-31, REMOVAL, Front Ball Joint.>

C: DISASSEMBLY

Using the ST or a hydraulic press, push out the bolt - hub (b) from the hub unit COMPL - front axle (a).

CAUTION:
- **Be careful not to hammer the bolts - hub. This may deform the hub unit COMPL.**
- **Do not reuse the bolt - hub.**

NOTE:
Since the hub unit COMPL can not be disassembled, only bolts - hub can be removed.

Preparation tool:
ST: HUB STAND (28399AG000)

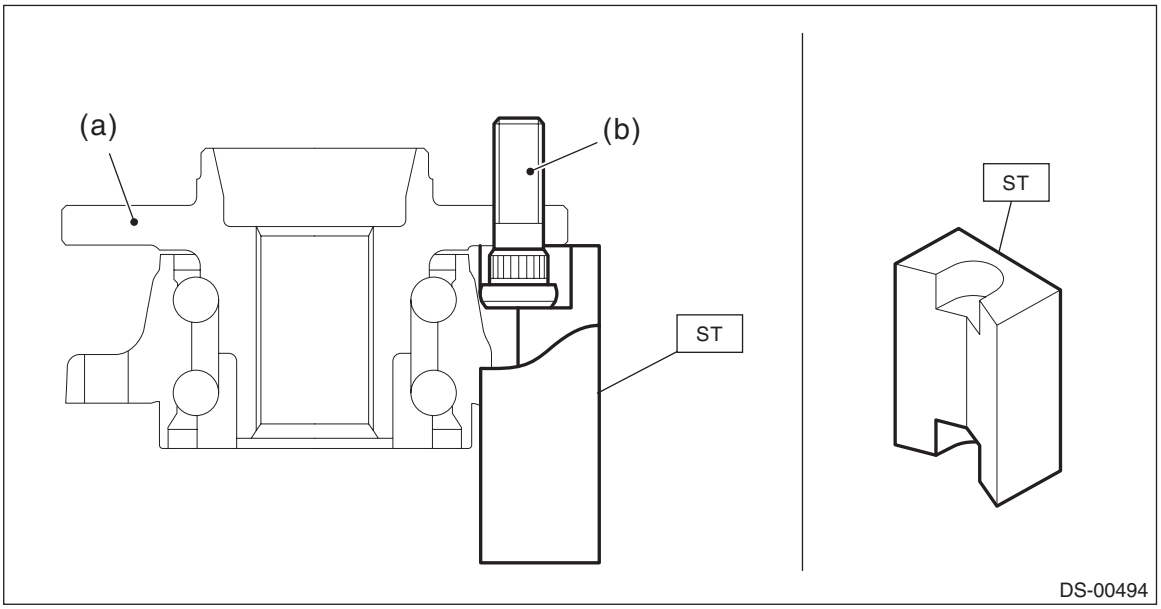

D: ASSEMBLY

1) Install the hub unit COMPL to the ST securely.

Preparation tool:
ST: HUB STAND (28099PA080)

2) Using a press, press new bolts - hub until their seating surfaces contact the hub unit COMPL.

NOTE:
Use the 12 mm (0.47 in) dia. holes in the HUB STAND to prevent bolts from tilting.

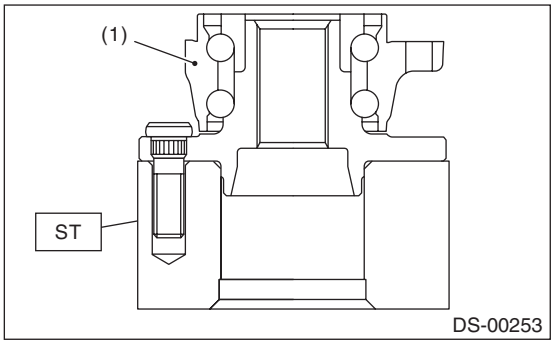

(1) Hub unit COMPL - front axle

E: INSPECTION

1) Moving the front tire up and down by hand, check there is no looseness in bearing, and check the wheel rotates smoothly.

CAUTION:
If there is any fault in the bearing, replace the hub unit COMPL.

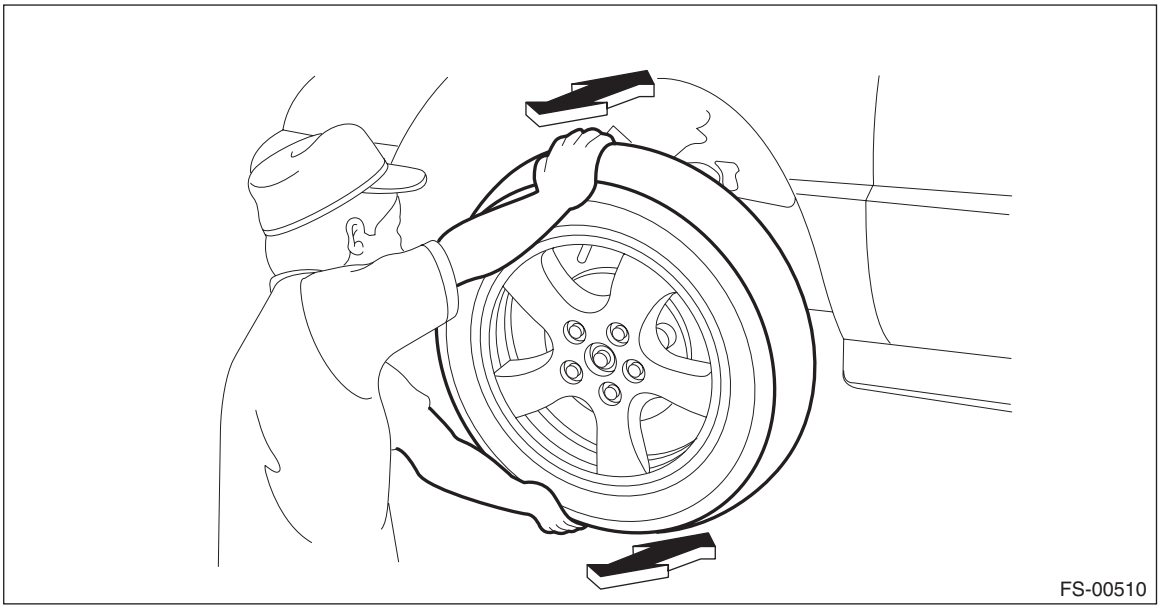

2) Inspect the hub unit bearing for axial looseness.
1. Remove the tire and disc rotor.
2. Using a dial gauge, check the axial looseness. Replace the hub unit COMPL if looseness exceeds the limit.

Service limit:
Maximum: 0.05 mm (0.0020 in)

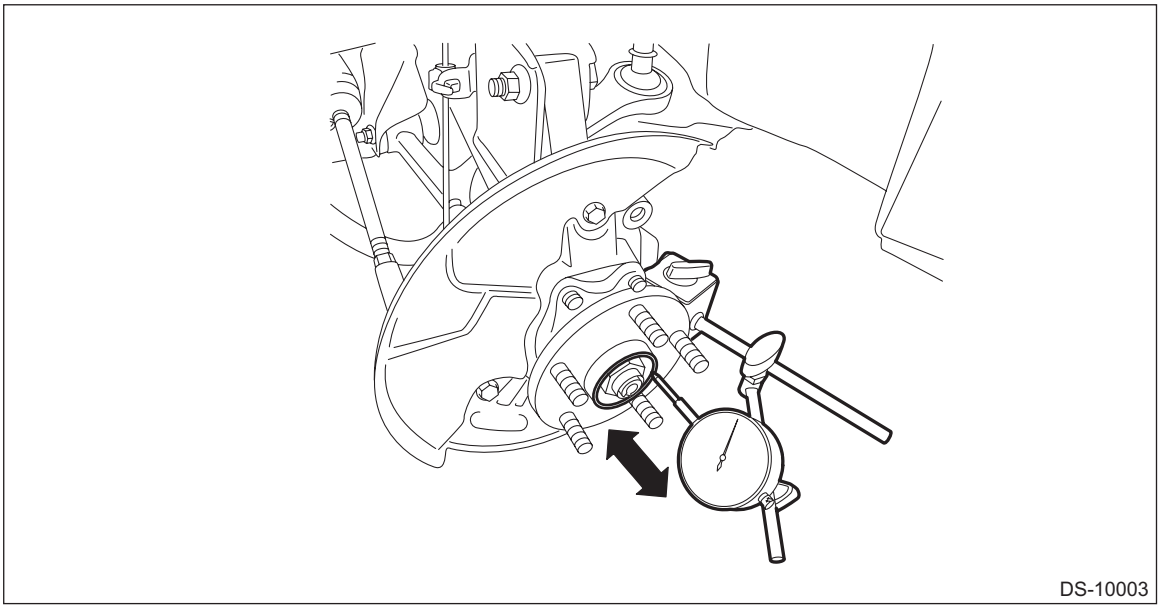

5. Rear Axle

A: REMOVAL

1) Disconnect the ground cable from battery. <Ref. to NT-6, BATTERY, NOTE, Note.>

NOTE:
For model with battery sensor, disconnect the ground terminal from battery sensor.
2) Lift up the vehicle, and then remove the rear wheels.
3) Remove the nut - axle.

CAUTION:
Do not loosen the nut - axle while the rear axle is loaded. Doing so may damage the hub unit COMPL.
(1) Lift the crimped section of the nut - axle.
(2) Remove the nut - axle using a socket wrench while depressing the brake pedal.

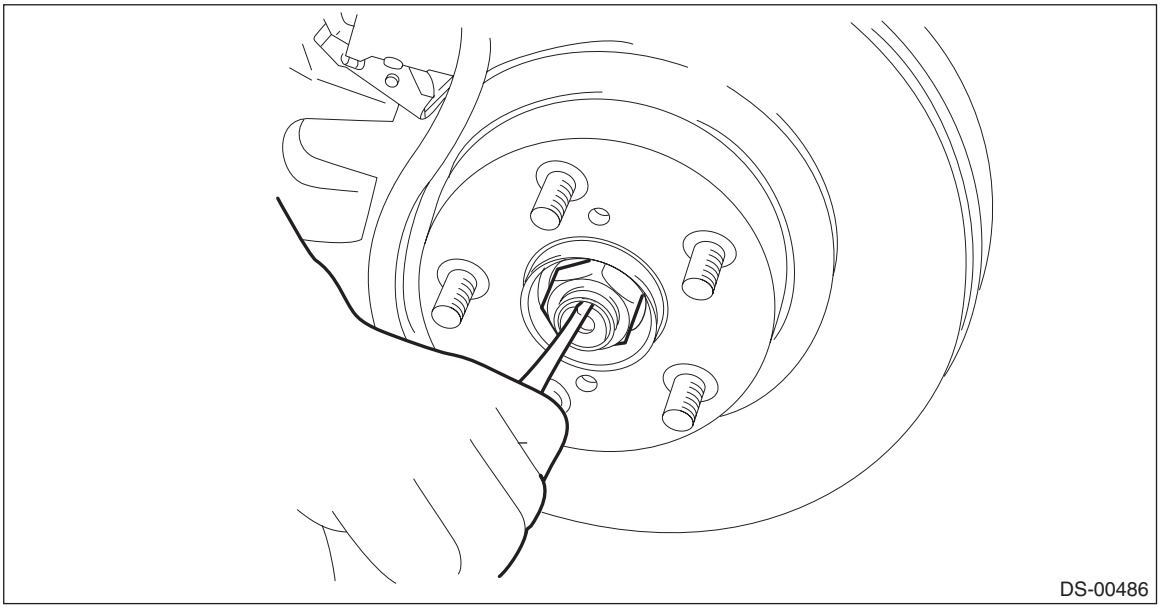

4) Remove the sensor assembly - headlight beam leveler. (Model with auto headlight beam leveler) <Ref. to LI-77, REMOVAL, Rear Height Sensor.>

5) Remove the bolts and nuts, and lower the lateral link assembly - rear.
   (1) Remove the nut and disconnect the rear stabilizer link.
   (2) Remove the bolts from the lower side of rear shock absorber assembly.
   (3) Disconnect the housing assembly - rear axle from the lateral link assembly - rear.

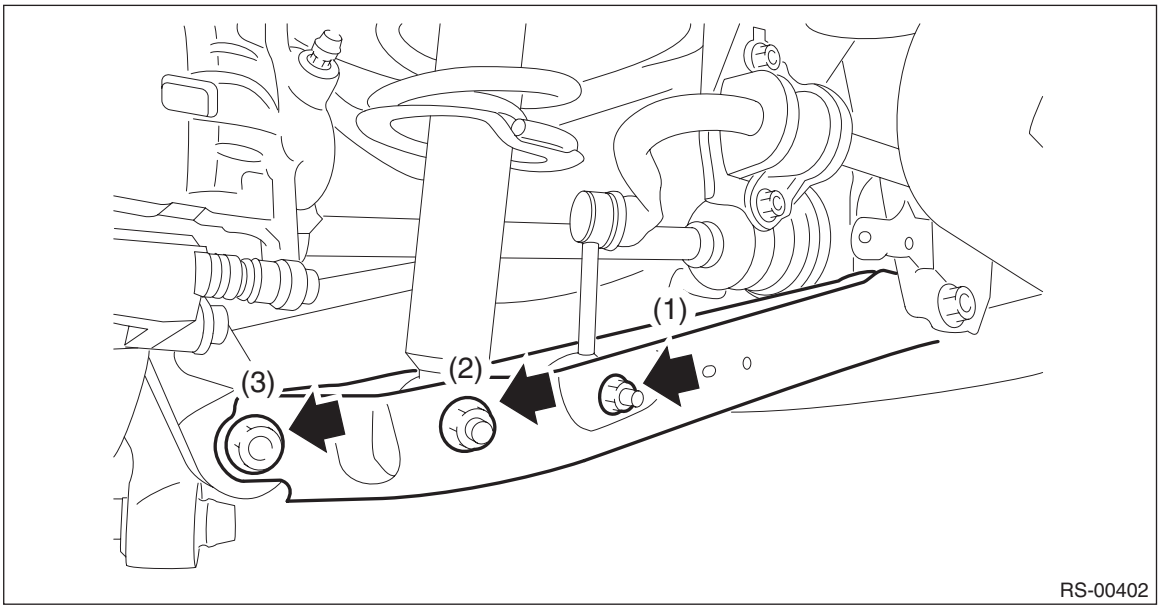

6) Remove the rear ABS wheel speed sensor from the housing assembly - rear axle.
   (1) Remove the bolts, and remove the ABS wheel speed sensor.
   (2) Remove the rear ABS wheel speed sensor harness from the upper arm.

CAUTION:
- **Be careful not to damage the sensor.**
- **Do not apply excessive force to the sensor harness.**

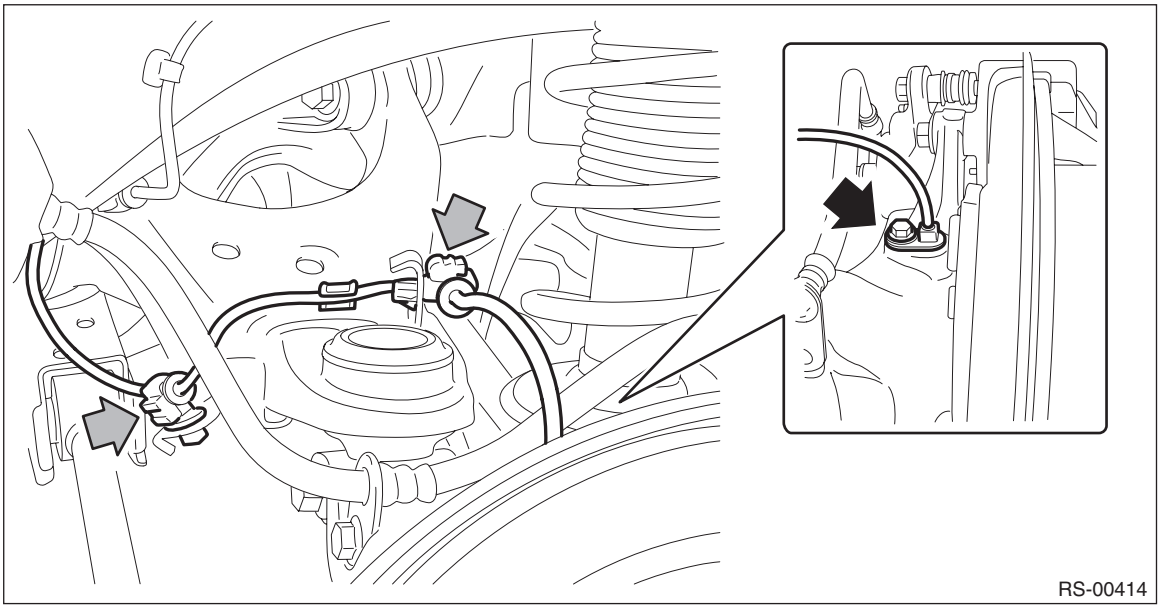

7) Remove the disc brake assembly.
(1) Remove the bolts and then remove the brake hose bracket and disc brake assembly.

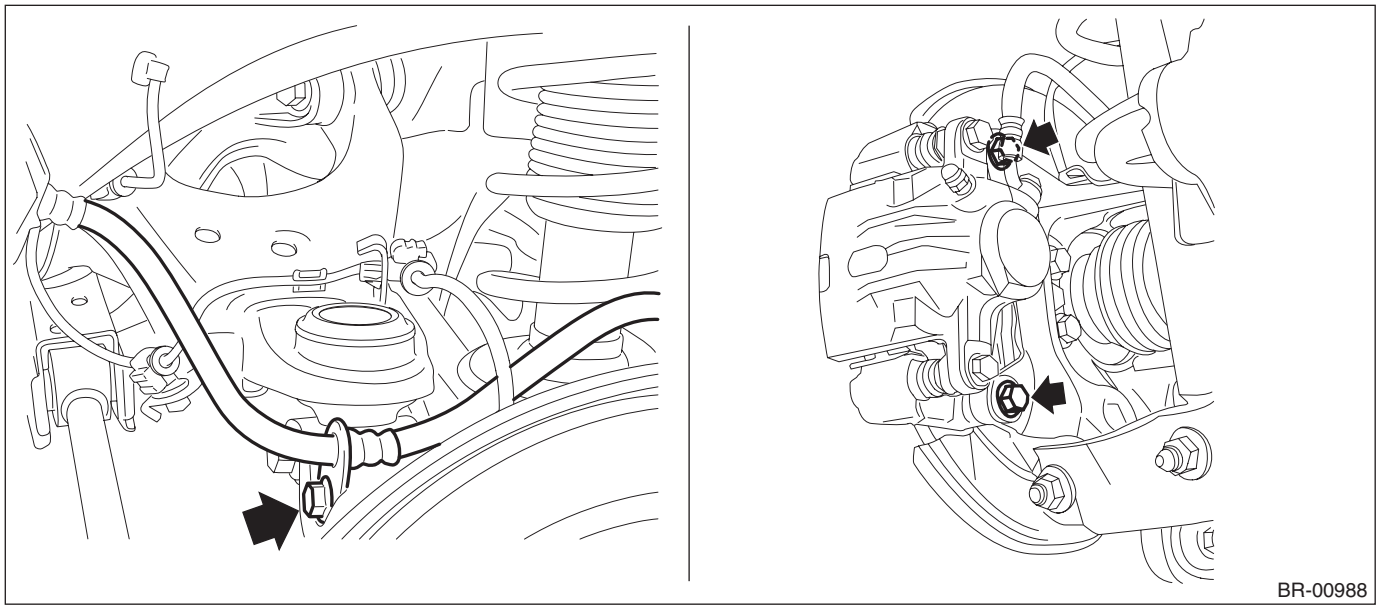

(2) Prepare wiring harnesses etc. to be discarded, and suspend the disc brake assembly from the shock absorber assembly.

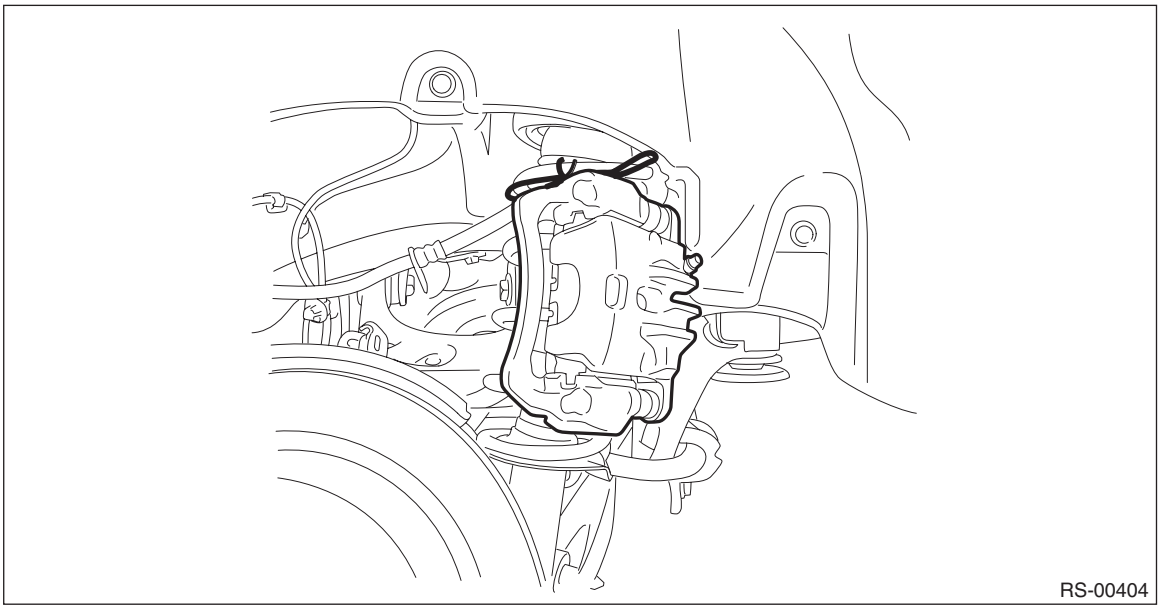

8) Remove the rear disc rotor. <Ref. to BR-46, REMOVAL, Rear Disc Rotor.>
9) Remove the rear drive shaft assembly. <Ref. to DS-61, REMOVAL, Rear Drive Shaft.>
10) Remove the lateral link assembly - front.
(1) Remove the snap pin (a) and nut (b).

(2) Remove the ball joint from the housing assembly - rear axle.

CAUTION:
Be careful not to damage the boot of the joint.

Preparation tool:
Tie-rod ball joint puller

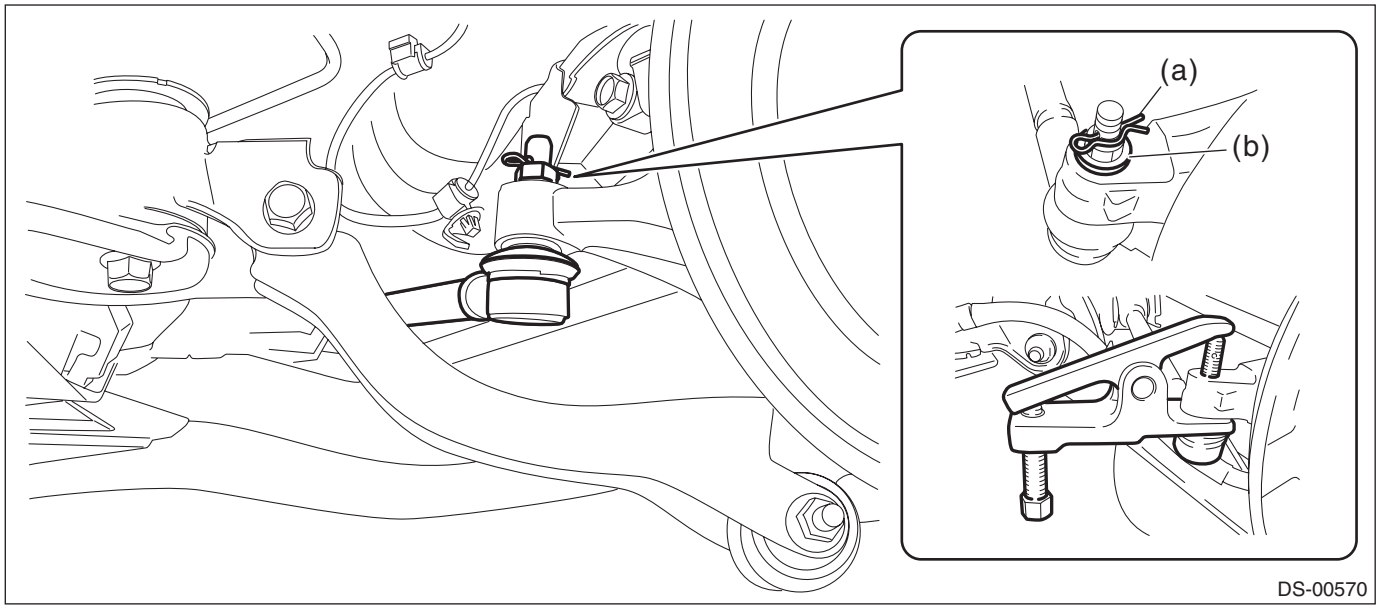

11) Remove the housing assembly - rear axle.

CAUTION:
- **Be careful of the weight of the housing assembly - rear axle.**
- **Be careful not to damage the spline portion of the drive shaft.**

(1) Remove the bolts, and disconnect the upper arm, trailing link and lateral link assembly - rear.

CAUTION:
Be careful not to damage the boot of the joint.

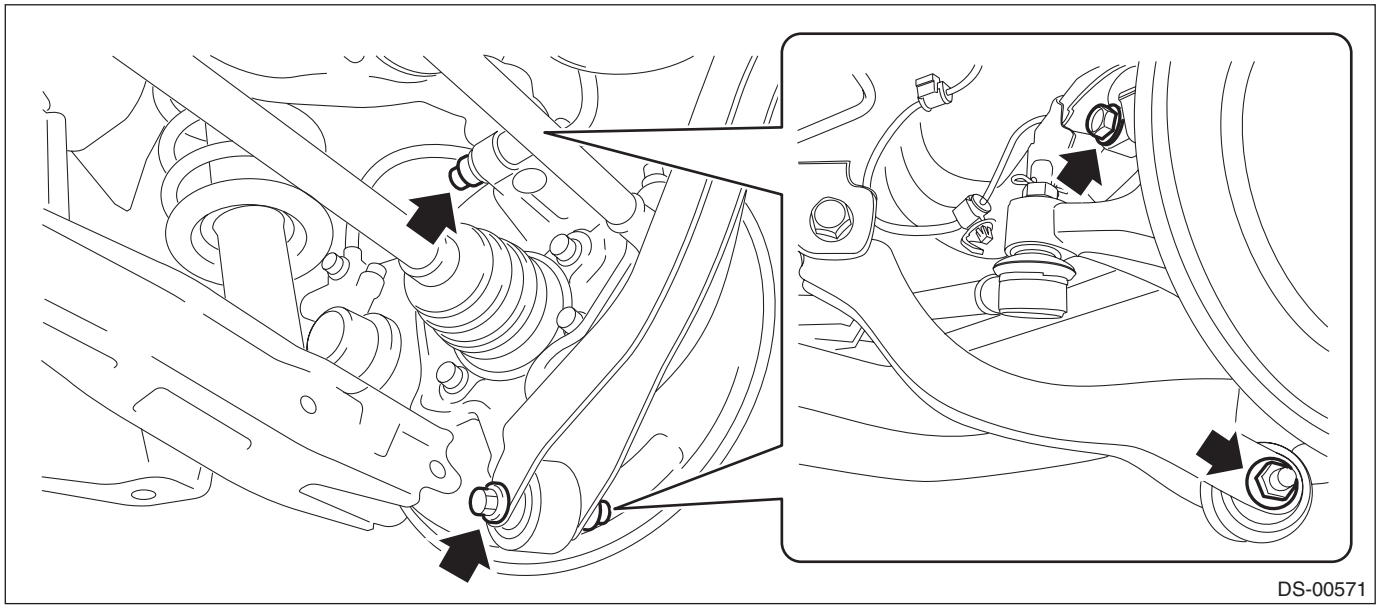

(2) Remove the housing assembly - rear axle.

12) Refer to “Rear Hub Unit Bearing” for removal of the hub unit COMPL - rear axle. <Ref. to DS-38, REMOVAL, Rear Hub Unit Bearing.>

B: INSTALLATION

1) Temporarily tighten the housing assembly - rear axle to the upper arm assembly.
2) Install the rear drive shaft assembly. <Ref. to DS-64, INSTALLATION, Rear Drive Shaft.>

CAUTION:
Do not hammer the drive shaft assembly when installing.
   (1) Insert the drive shaft assembly into the hub spline, and pull it into the specified position.
   (2) Tighten the new nut - axle temporarily.
3) Tighten the rear shock absorber assembly, rear stabilizer link and other links to the specified torque.

Tightening torque:
Rear suspension: <Ref. to RS-3, REAR SUSPENSION, COMPONENT, General Description.>
Rear shock absorber: <Ref. to RS-5, REAR SHOCK ABSORBER, COMPONENT, General Description.>
4) Install the rear disc rotor.
5) Install the disc brake assembly.

Tightening torque:
STI model: 65 N·m (6.6 kgf-m, 47.9 ft-lb)
Except for STI model: 66 N·m (6.7 kgf-m, 48.7 ft-lb)
6) Install the brake hose bracket and rear ABS wheel speed sensor.

Tightening torque:
Brake hose bracket: 33 N·m (3.4 kgf-m, 24.3 ft-lb)
Rear ABS wheel speed sensor: 7.5 N·m (0.8 kgf-m, 5.5 ft-lb)
7) Install the sensor assembly - headlight beam leveler. (Model with auto headlight beam leveler)

Tightening torque:
7.5 N·m (0.8 kgf-m, 5.5 ft-lb)
8) While depressing the brake pedal, tighten new nuts - axle to the specified torque.

CAUTION:
Do not load the rear axle before tightening the nut - axle. Doing so may damage the hub unit COMPL.

Tightening torque:
190 N·m (19.4 kgf-m, 140.1 ft-lb)
9) After tightening the nut - axle, lock it securely.

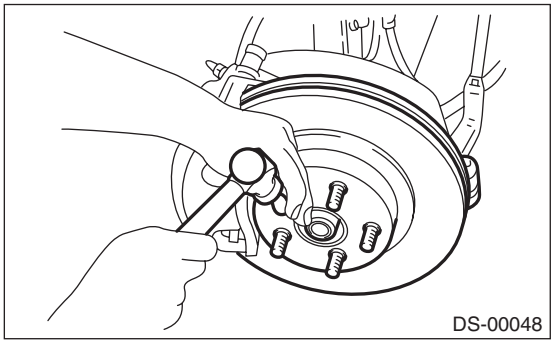

10) Install the rear wheels, and perform the following inspections.

Tightening torque:
120 N·m (12.2 kgf-m, 88.5 ft-lb)

1. Check the wheels for smooth rotation.
2. Check that there is no looseness by moving the upper and lower portions of rear tire in an axial direction with the brake pedal released.
   - **Looseness exists** → Check the hub unit COMPL - rear axle. <Ref. to DS-44, INSPECTION, Rear Hub Unit Bearing.>

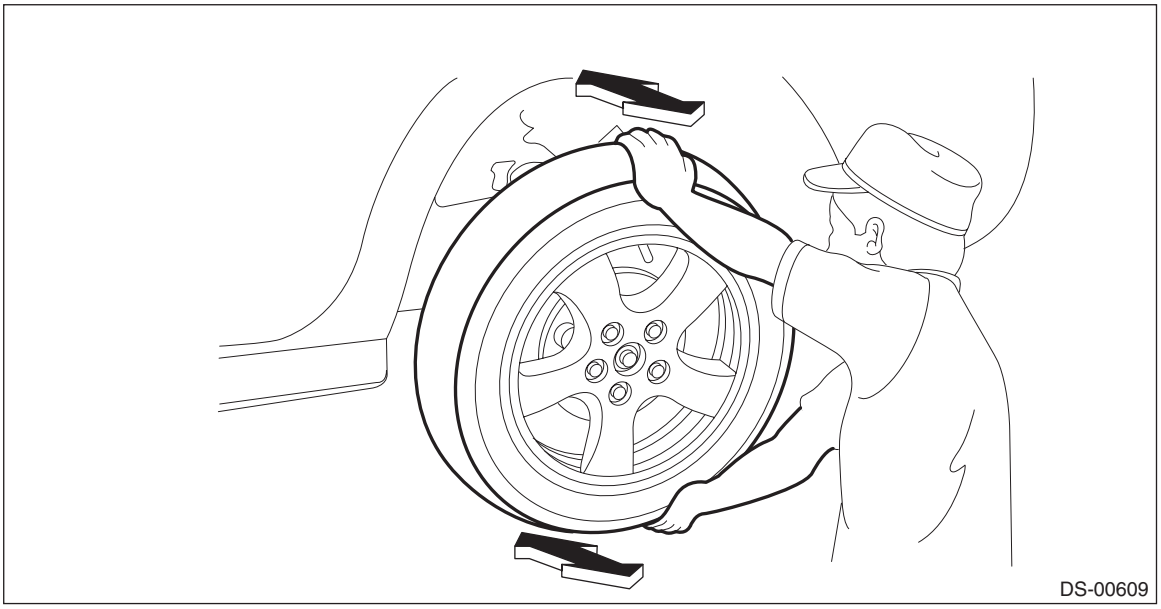

11) Inspect the wheel alignment and adjust if necessary.
- Inspection: <Ref. to FS-10, INSPECTION, Wheel Alignment.>
- Adjustment: <Ref. to FS-14, ADJUSTMENT, Wheel Alignment.>

CAUTION:
When the wheel alignment has been adjusted, perform the following adjustment.
– Lane keep assist learning value clear (model with EyeSight): <Ref. to ES(diag)-50, OPERATION, CLEAR ACTIVE LANE KEEP SYSTEM LEARNING VALUE.>
– Steering angle sensor adjustment: <Ref. to VDC-17, ADJUSTMENT, VDC Control Module and Hydraulic Control Unit (VDCCM&H/U).>

12) Perform reinitialization of the auto headlight beam leveler system. (Model with auto headlight beam leveler) <Ref. to LI-18, PROCEDURE, Auto Headlight Beam Leveler System.>

C: DISASSEMBLY

1. BUSHING - REAR AXLE HOUSING

Do not remove the housing assembly - rear axle because the bushing - rear axle housing cannot be replaced. If it is removed, replace the housing assembly - rear axle.

2. BUSHING - TRAILING LINK

1) Remove the housing assembly - rear axle. <Ref. to DS-30, REMOVAL, Rear Axle.>
2) Using the ST and a hydraulic press, push out the bushing.

Preparation tool:
ST1: BUSHING REMOVER (20099FG000)
ST2: INSTALLER & REMOVER (BASE) (20099PA010)

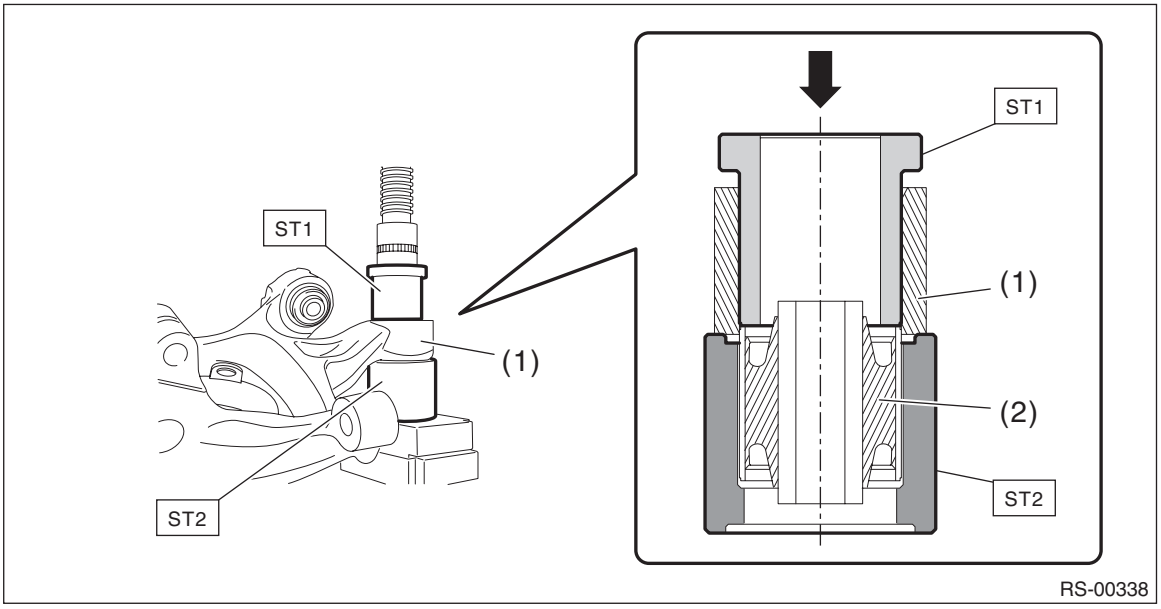

(1) Housing ASSY - rear axle
(2) Bushing - trailing link

D: ASSEMBLY

1. BUSHING - REAR AXLE HOUSING

Do not remove the housing assembly - rear axle because the bushing - rear axle housing cannot be replaced. If it is removed, replace the housing assembly - rear axle.

2. BUSHING - TRAILING LINK

1) Before assembly, inspect the following items and replace any faulty part with a new one.
- Perform visual check for damage or bend on the trailing link.
- Visually check the bushing for abnormal cracks, fatigue or damage.

2) Press-fit the bushing using ST and the hydraulic press.

CAUTION:
Make sure to press the bushing straight in.

Preparation tool:
ST1: BUSHING REMOVER (20099FG000)
ST2: INSTALLER & REMOVER (BASE) (20099PA010)

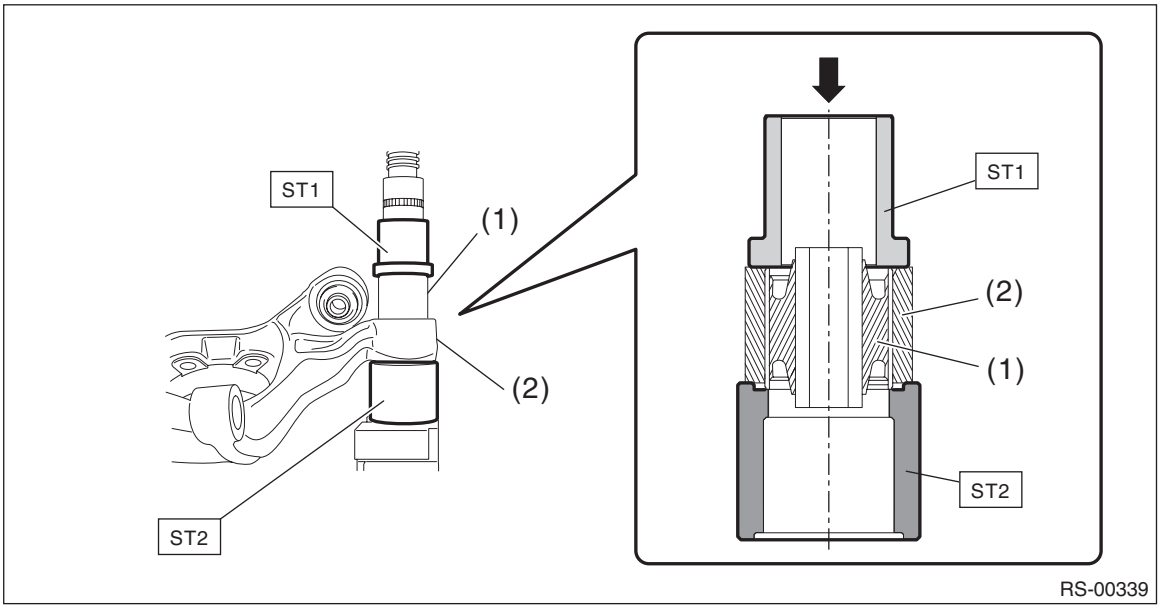

(1) Bushing
(2) Housing ASSY - rear axle

6. Rear Hub Unit Bearing

A: REMOVAL

1) Lift up the vehicle, and then remove the rear wheels.
2) Remove the nut - axle.

CAUTION:
Do not loosen the nut - axle while the rear axle is loaded. Doing so may damage the hub unit COMPL.

(1) Lift the crimped section of the nut - axle.
(2) Remove the nut - axle using a socket wrench while depressing the brake pedal.

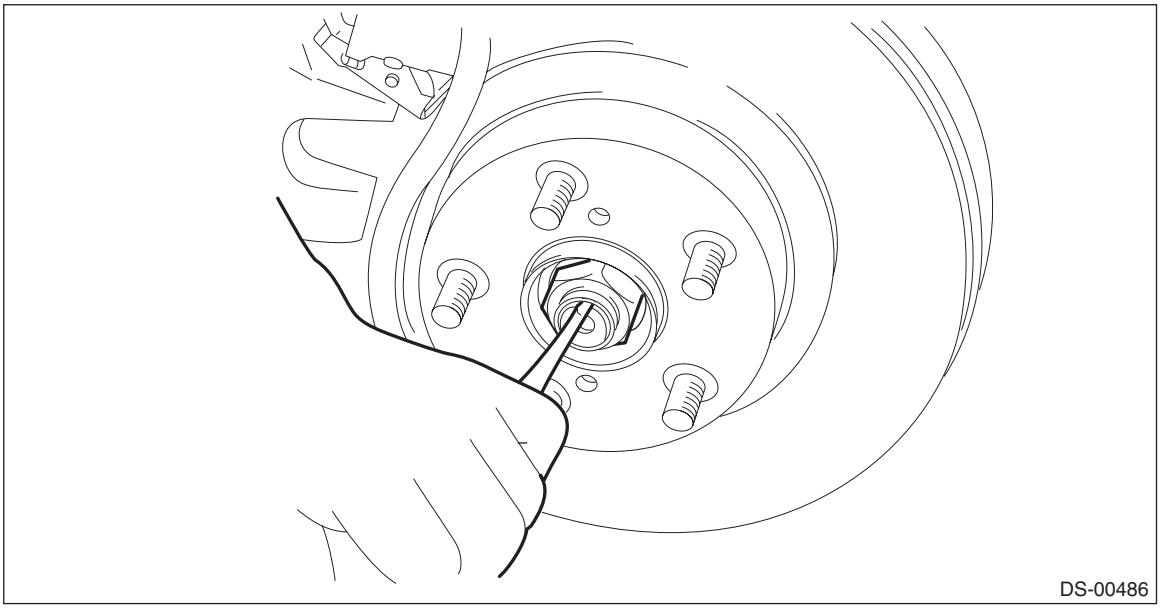
DS-00486

3) Remove the rear ABS wheel speed sensor.
(1) Remove the bolts, and remove the rear ABS wheel speed sensor.
(2) Remove the rear ABS wheel speed sensor harness from the upper arm.

CAUTION:
- **Be careful not to damage the sensor.**
- **Do not apply excessive force to the sensor harness.**

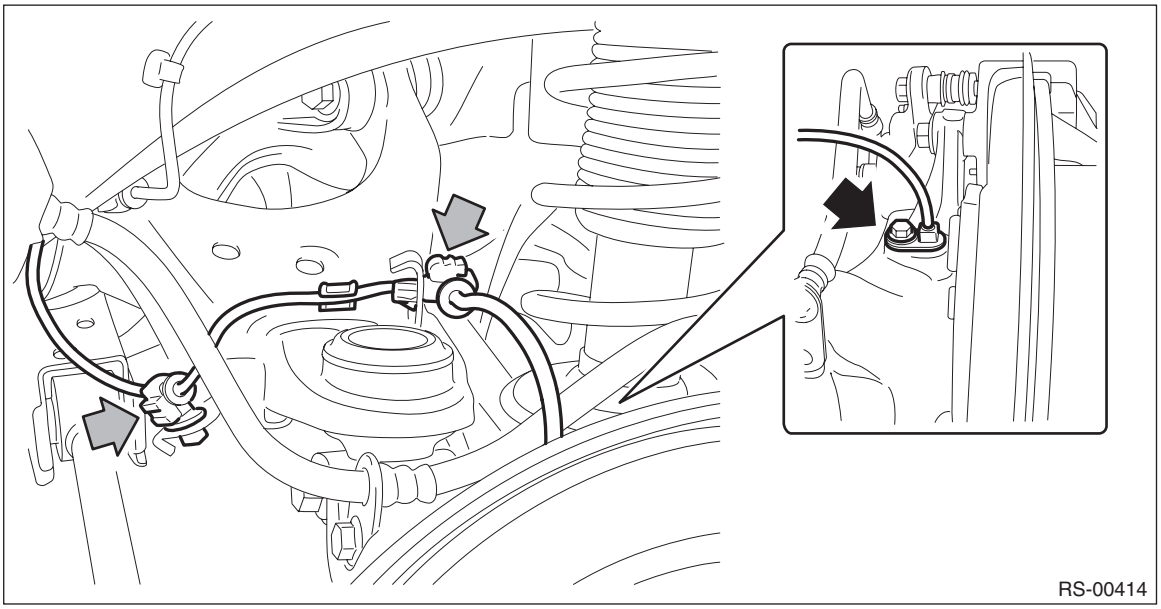
RS-00414

4) Remove the disc brake assembly. <Ref. to BR-55, REMOVAL, Rear Disc Brake Assembly.>
5) Remove the rear disc rotor. <Ref. to BR-46, REMOVAL, Rear Disc Rotor.>

6) Remove the hub unit COMPL - rear axle.

CAUTION:
- **Be careful not to damage the magnetic encoder.**
- **Do not get closer the tool which charged magnetism to magnetic encoder.**

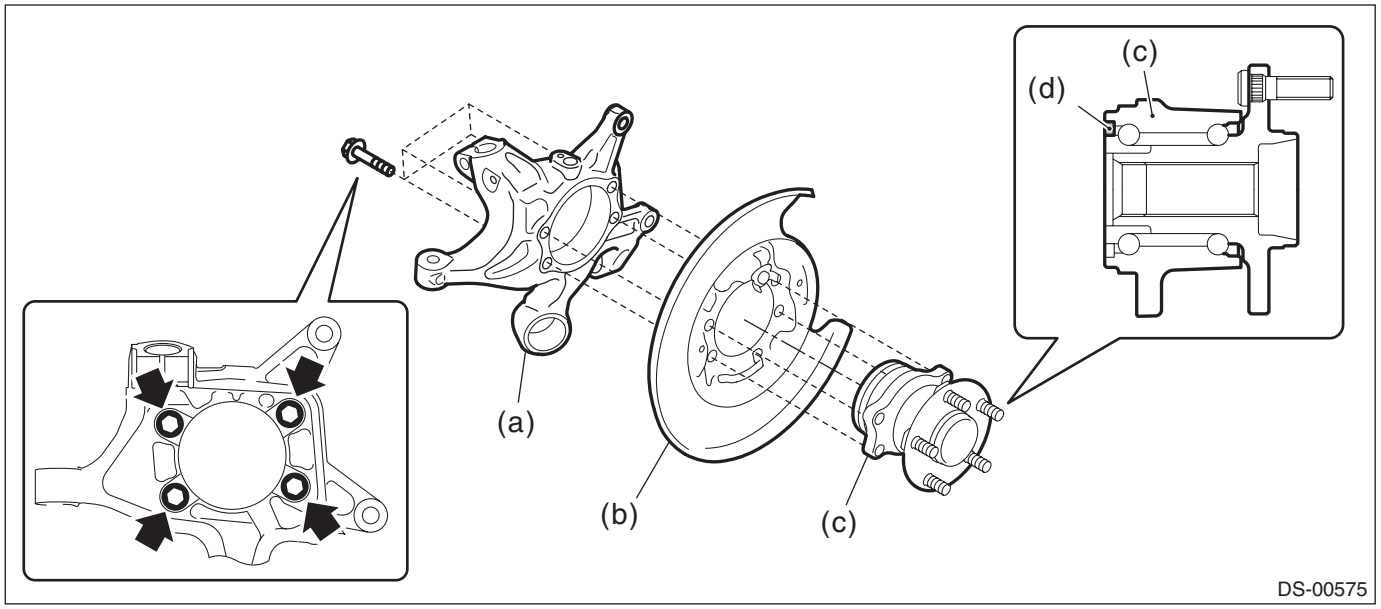

(a) Housing ASSY - rear axle
(b) Back plate - rear brake
(c) Hub unit COMPL - rear axle
(d) Magnetic encoder

NOTE:
If it is hard to remove, use the ST.

Preparation tool:
ST1: AXLE SHAFT PULLER (926470000)
ST2: AXLE SHAFT PULLER PLATE (28099PA110)

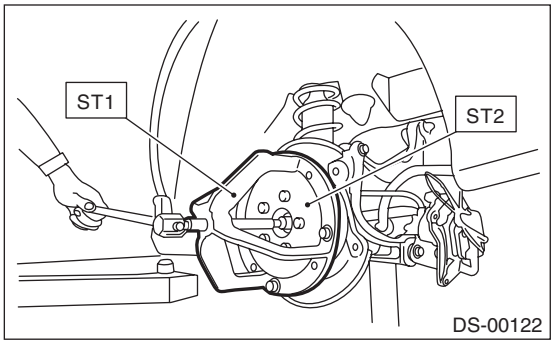

B: INSTALLATION

1) Place the back plate - rear brake between the housing assembly - rear axle and the hub unit COMPL - rear axle, and tighten the bolt.

CAUTION:
- **Do not get closer the tool which charged magnetism to magnetic encoder.**
- **Be careful not to damage the magnetic encoder.**

Tightening torque:
65 N·m (6.6 kgf-m, 47.9 ft-lb)

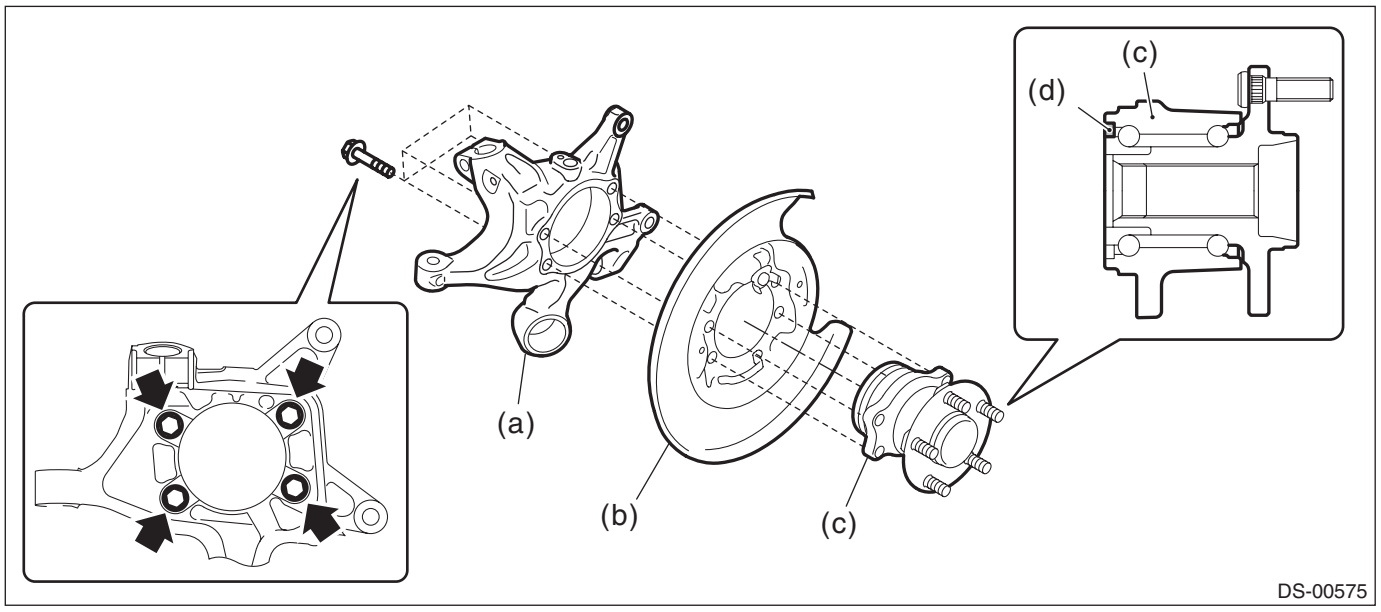

(a) Housing ASSY - rear axle
(b) Back plate - rear brake
(c) Hub unit COMPL - rear axle
(d) Magnetic encoder

2) Install the rear drive shaft assembly.

CAUTION:
Do not hammer the drive shaft assembly when installing.
(1) Insert the drive shaft assembly into the hub spline, and pull it into the specified position.
(2) Tighten the new nut - axle temporarily.
3) Install the disc rotor to the hub unit COMPL - rear axle.
4) Install the caliper body assembly to the housing assembly - rear axle.

Tightening torque:
STI model: 65 N·m (6.6 kgf-m, 47.9 ft-lb)
Except for STI model: 66 N·m (6.7 kgf-m, 48.7 ft-lb)
5) Install the brake hose bracket.

Tightening torque:
33 N·m (3.4 kgf-m, 24.3 ft-lb)
6) Install the rear ABS wheel speed sensor.

Tightening torque:
7.5 N·m (0.8 kgf-m, 5.5 ft-lb)

7) While depressing the brake pedal, tighten new nuts - axle to the specified torque.

CAUTION:
Do not load the rear axle before tightening the nut - axle. Doing so may damage the hub unit COMPL.

Tightening torque:
190 N·m (19.4 kgf-m, 140.1 ft-lb)

8) After tightening the nut - axle, lock it securely.

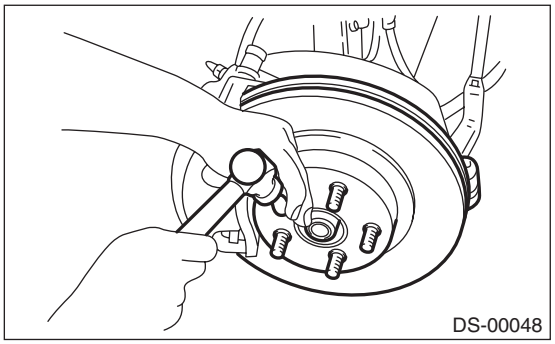

9) Install the rear wheels, and perform the following inspections.

Tightening torque:
120 N·m (12.2 kgf-m, 88.5 ft-lb)

1. Check the wheels for smooth rotation.
2. Check that there is no looseness by moving the upper and lower portions of rear tire in an axial direction with the brake pedal released.
   - **Looseness exists** → Check the hub unit COMPL - rear axle. <Ref. to DS-44, INSPECTION, Rear Hub Unit Bearing.>

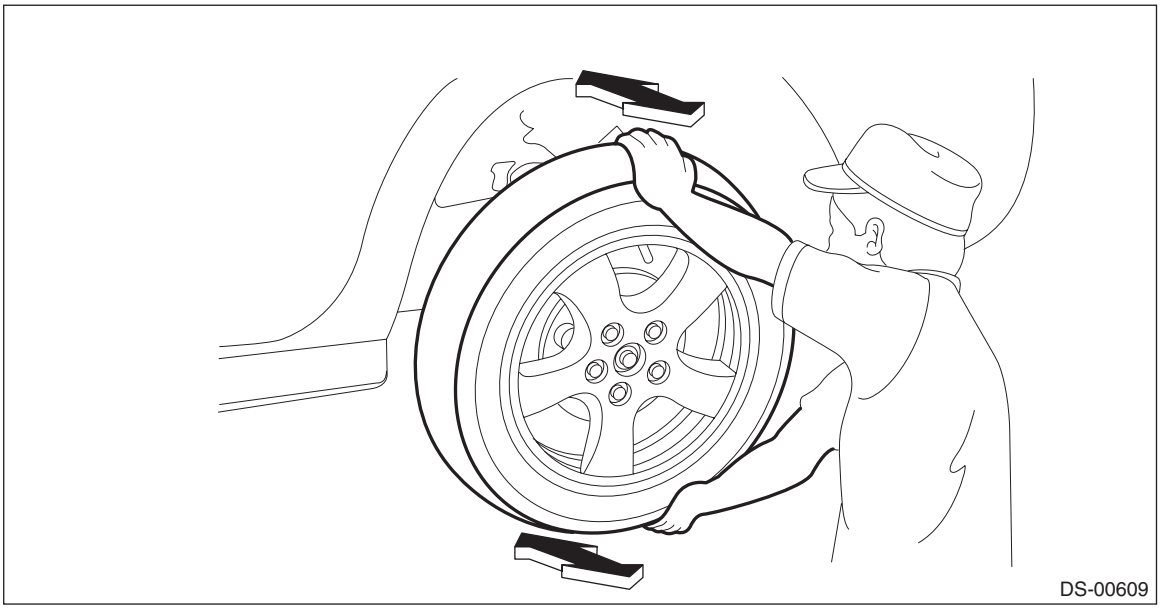

C: DISASSEMBLY

Using the ST or a hydraulic press, push out the bolt - hub (b) from the hub unit COMPL - rear axle (a).

CAUTION:
- **Be careful not to hammer the bolts - hub. This may deform the hub unit COMPL.**
- **Do not reuse the bolt - hub.**

NOTE:
Since the hub unit COMPL - rear axle cannot be disassembled, only bolts - hub can be removed.

Preparation tool:
ST: HUB STAND (28399AG000)

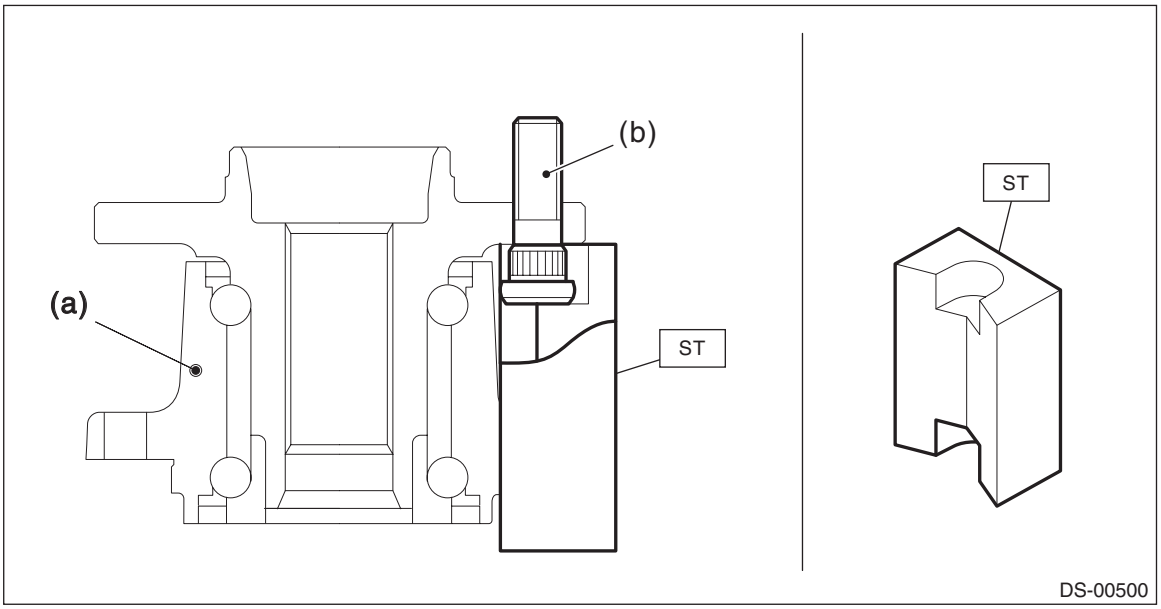

D: ASSEMBLY

1) Install the hub unit COMPL - rear axle to the ST securely.

Preparation tool:
ST: HUB STAND (28099PA080)

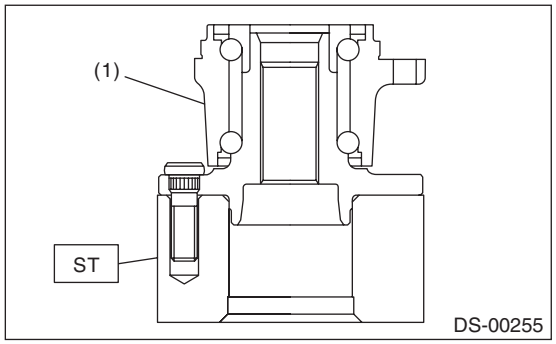

(1) Hub unit COMPL - rear axle

2) Using a press, press new bolts - hub (b) until their seating surfaces contact the hub unit COMPL - rear axle (a).

NOTE:
Use the 12 mm (0.47 in) dia. holes in the HUB STAND to prevent bolts from tilting.

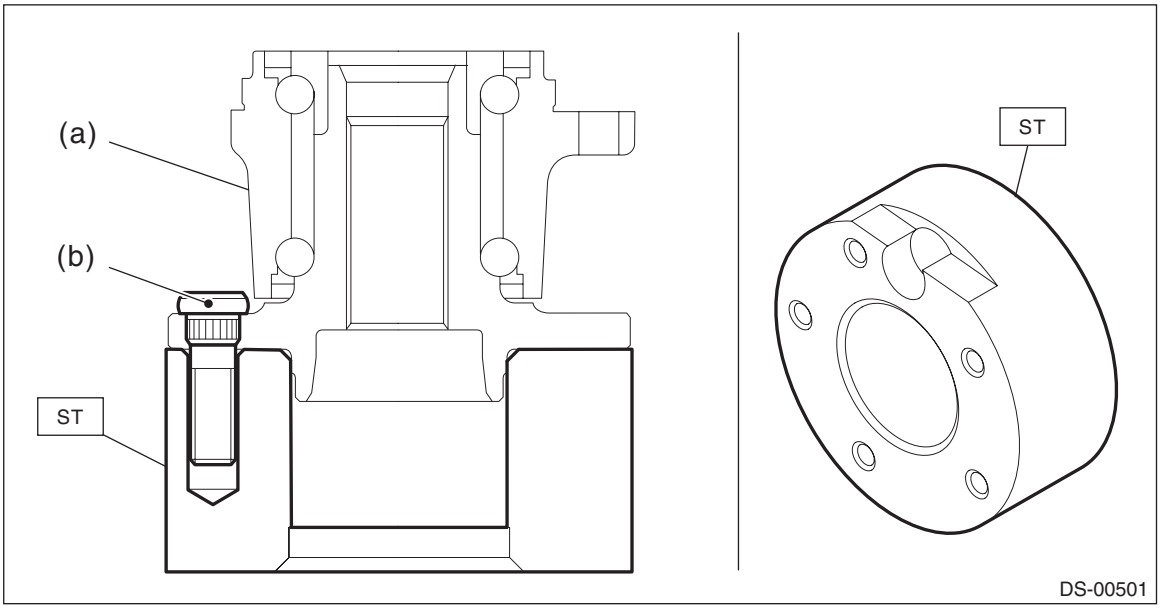

E: INSPECTION

1) Moving the rear tire up and down by hand, check there is no looseness in bearing, and check the wheel rotates smoothly.

CAUTION:
If there is any fault in the bearing, replace the hub unit COMPL - rear axle.

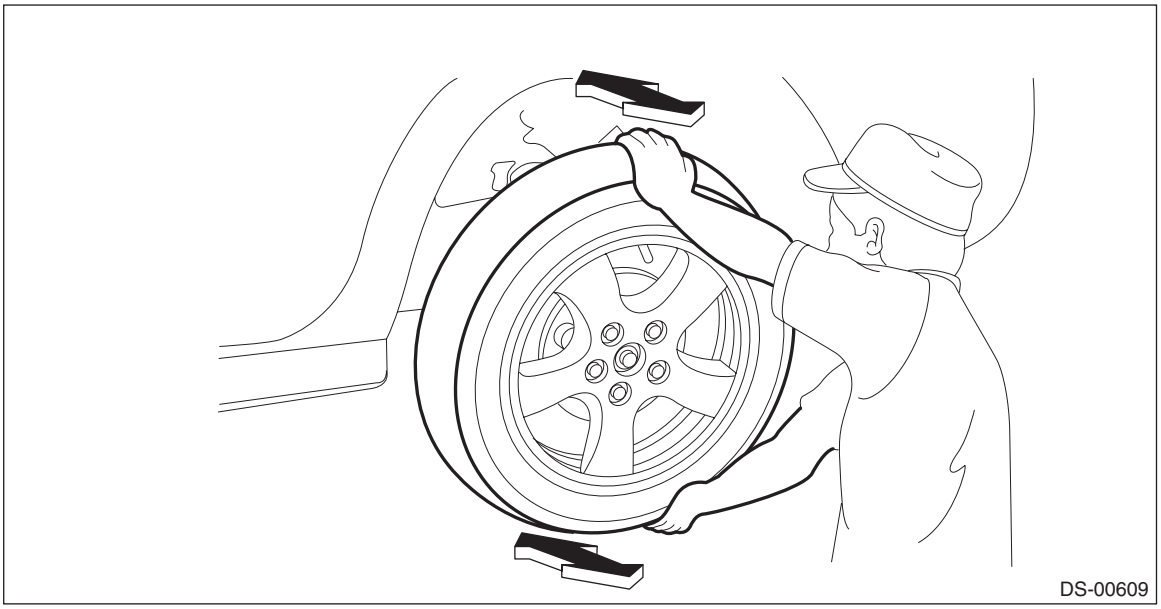

2) Inspect the hub unit bearing for axial looseness.

1. Remove the tire and disc rotor.
2. Using a dial gauge, check the axial looseness. Replace the hub unit COMPL if looseness exceeds the limit.

Service limit:
Maximum: 0.05 mm (0.0020 in)

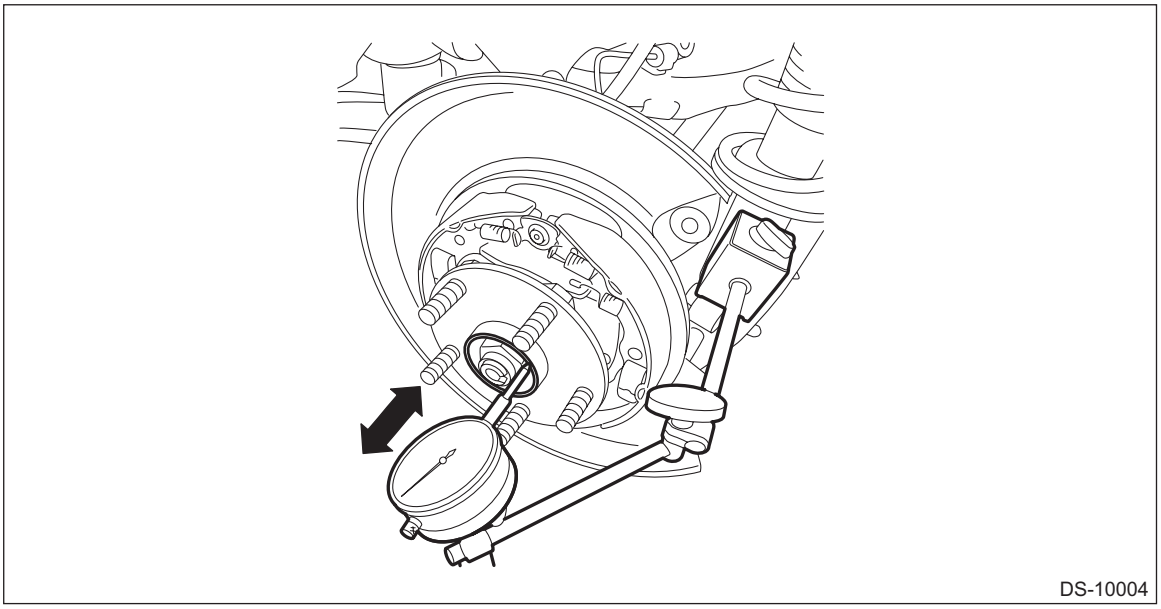

7. Front Drive Shaft

A: REMOVAL

1) Lift up the vehicle, and then remove the front wheels.
2) Remove the nut - axle.

CAUTION:
Do not loosen the nut - axle while the front axle is loaded. Doing so may damage the hub unit COMPL.

(1) Lift the crimped section of the nut - axle.
(2) Remove the nut - axle using a socket wrench while depressing the brake pedal.

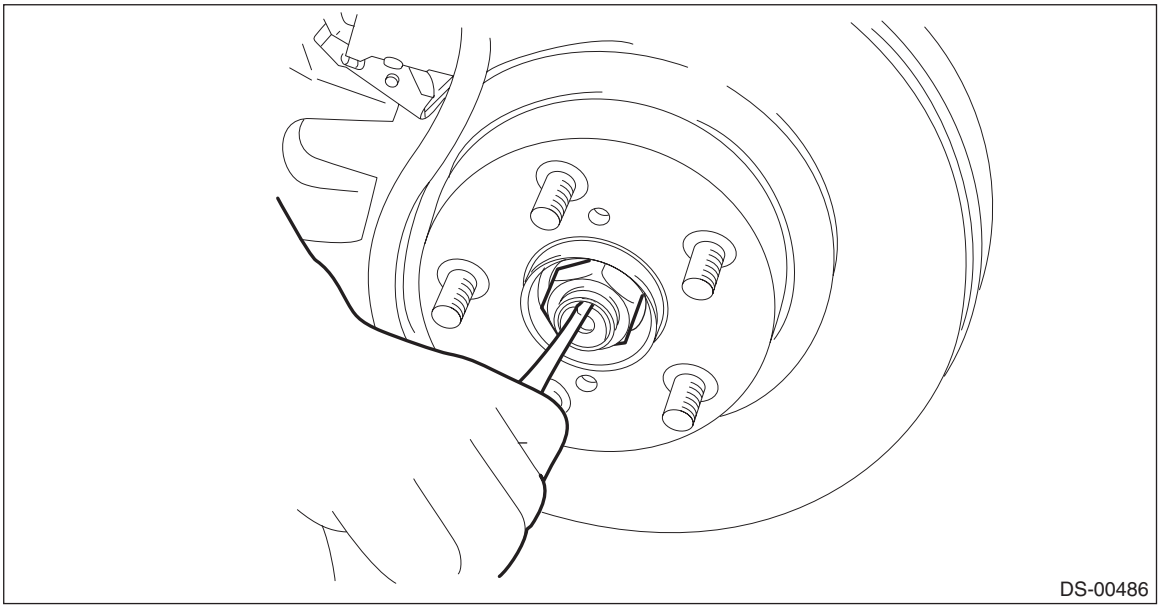
DS-00486

3) Drain the transmission gear oil. (MT model)
4) Drain differential gear oil. (CVT model)
5) Disconnect the ball joint assembly.

(1) Remove the nut and disconnect the front stabilizer link.
(2) Remove the bolts, disconnect the front arm ball joint, and lower the front arm assembly.

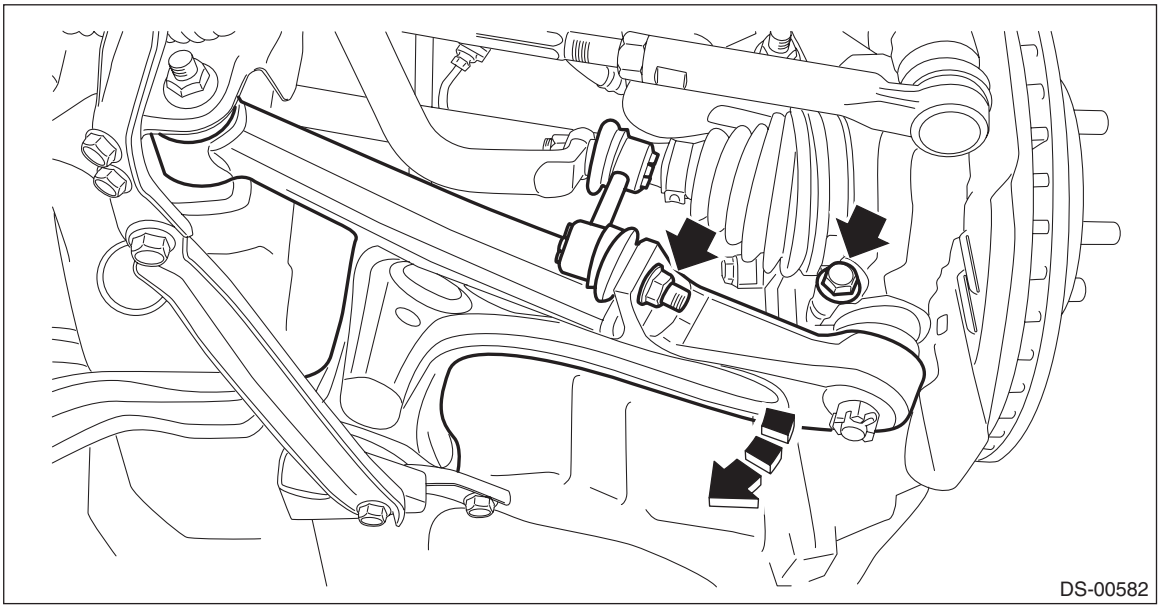
DS-00582

6) Remove the front drive shaft.
(1) Disconnect the housing assembly - front axle from the front drive shaft.

NOTE:
If it is hard to remove, use the ST.

Preparation tool:
ST1: AXLE SHAFT PULLER (926470000)
ST2: AXLE SHAFT PULLER PLATE (28099PA110)

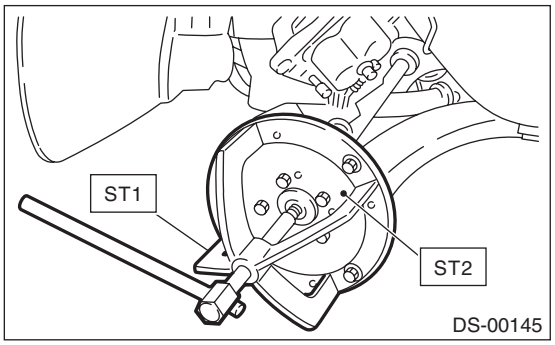

(2) Using a tire lever, remove the front drive shaft from transmission.

CAUTION:
Be careful not to allow the tire lever to damage holder area.

Preparation tool:
Tire lever

B: INSTALLATION

1) Before installation, check the drive shaft assembly. <Ref. to DS-60, INSPECTION, Front Drive Shaft.>
2) Replace the differential side retainer oil seal with a new part.
- MT model: <Ref. to 6MT(TY85)-29, REPLACEMENT, Differential Side Retainer Oil Seal.>
- CVT model: <Ref. to CVT(TR690)-90, REPLACEMENT, Differential Side Retainer Oil Seal.>

CAUTION:
After pulling out the drive shaft assembly, be sure to replace with a new oil seal.
3) Insert the drive shaft assembly into the hub spline, and pull it into the specified position.

CAUTION:
Do not hammer the drive shaft assembly when installing.
4) Tighten the new nut - axle temporarily.

5) Using the ST, install the front drive shaft assembly to the transmission.

Preparation tool:
ST: OIL SEAL PROTECTOR (28399SA010)

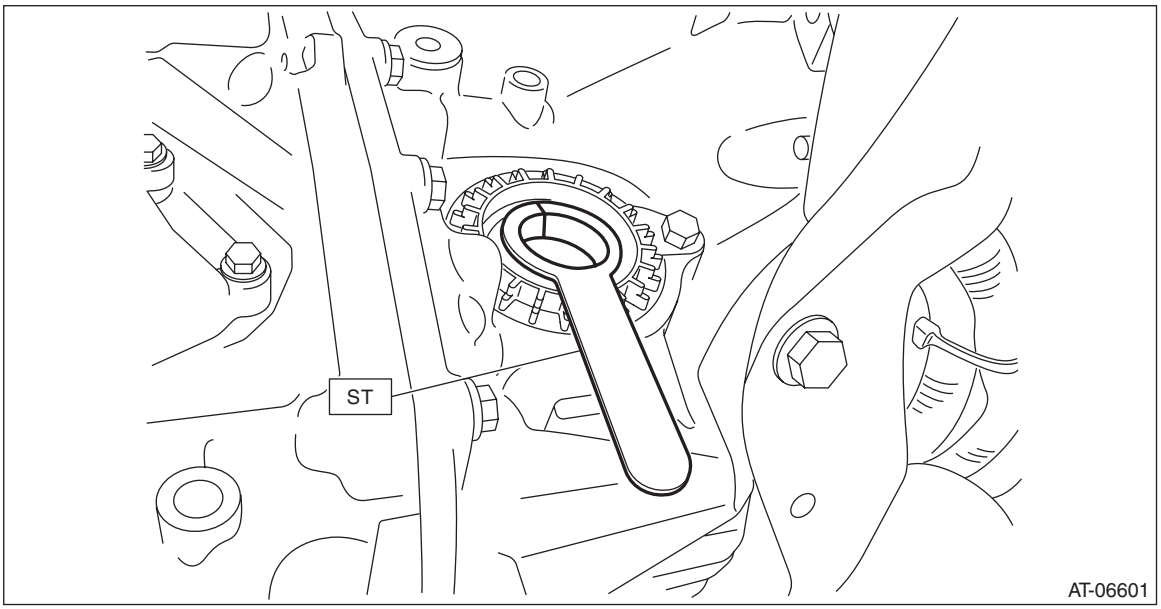

6) Install the ball joint assembly to the housing assembly - front axle.

CAUTION:
Before tightening, make sure the bottom surface of the housing assembly - front axle and the stepped section of ball joint are in contact.

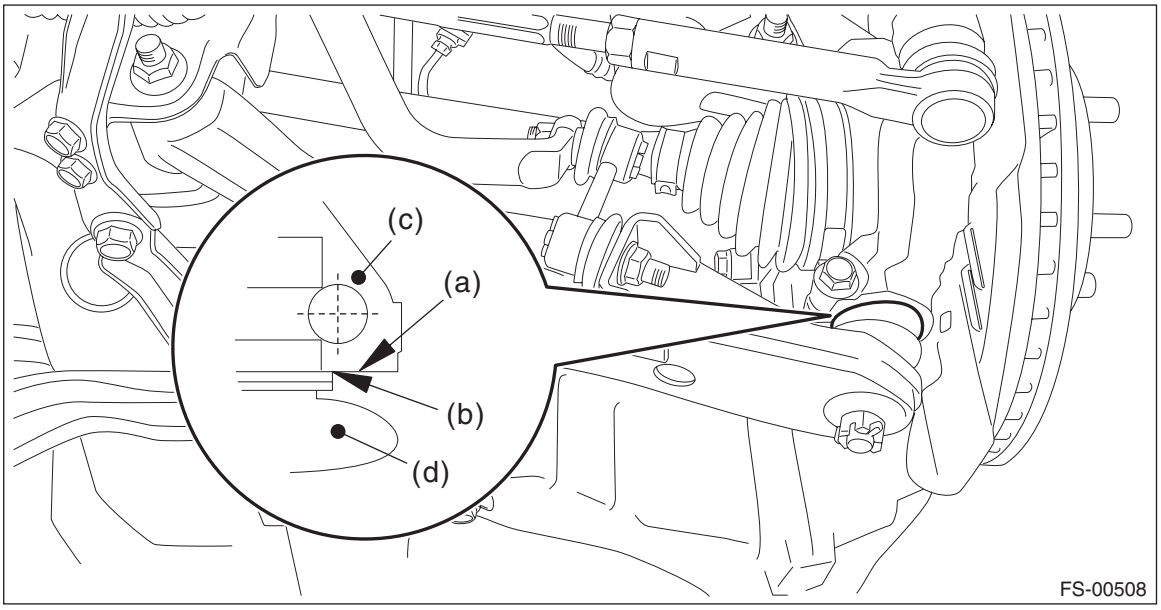

(a) Bottom surface of housing ASSY - front axle
(b) Raised section of ball joint
(c) Housing ASSY - front axle
(d) Ball joint

Tightening torque:
50 N·m (5.1 kgf-m, 36.9 ft-lb)

7) Install the stabilizer link.

Tightening torque:
60 N·m (6.1 kgf-m, 44.3 ft-lb)

8) While depressing the brake pedal, tighten new nuts - axle to the specified torque.

CAUTION:
Do not load the front axle before tightening the nut - axle. Doing so may damage the hub unit COMPL.

Tightening torque:
220 N·m (22.4 kgf-m, 162.3 ft-lb)
9) After tightening the nut - axle, lock it securely.
10) Fill transmission gear oil. (MT model)
11) Fill differential gear oil. (CVT model)
12) Install the front wheels.

Tightening torque:
120 N·m (12.2 kgf-m, 88.5 ft-lb)
13) Inspect the wheel alignment and adjust if necessary.
- Inspection: <Ref. to FS-10, INSPECTION, Wheel Alignment.>
- Adjustment: <Ref. to FS-14, ADJUSTMENT, Wheel Alignment.>

CAUTION:
When the wheel alignment has been adjusted, perform the following adjustment.
– Lane keep assist learning value clear (model with EyeSight): <Ref. to ES(diag)-50, OPERATION, CLEAR ACTIVE LANE KEEP SYSTEM LEARNING VALUE.>
– Steering angle sensor adjustment: <Ref. to VDC-17, ADJUSTMENT, VDC Control Module and Hydraulic Control Unit (VDCCM&H/U).>
14) Perform reinitialization of the auto headlight beam leveler system. (Model with auto headlight beam leveler) <Ref. to LI-18, PROCEDURE, Auto Headlight Beam Leveler System.>

C: DISASSEMBLY

1. AC + AAR TYPE

1) Remove the AAR outer race from shaft assembly.

CAUTION:
Be careful not to damage the boot.
(1) Place alignment marks on the shaft and outer race.

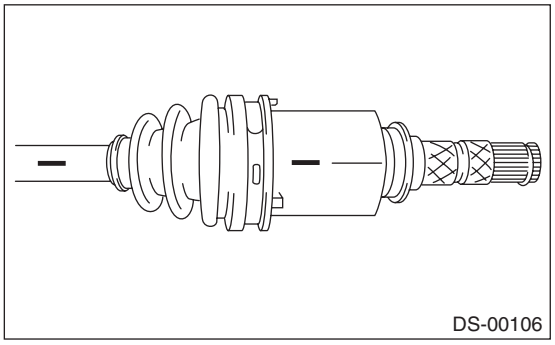
DS-00106

(2) Remove the AAR boot band and boot.

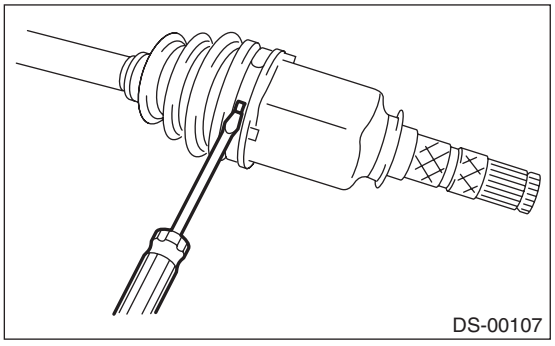
DS-00107

(3) Place the drive shaft between wooden blocks and fix it on a vise.

CAUTION:
Do not set the drive shaft directly on a vise.

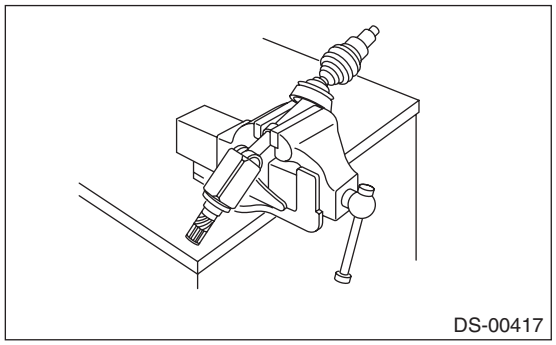

(4) Tap the staking are of the outer race alternately with a plastic or wooden bar, and remove one roller at a time.

CAUTION:
- **Tap the staking area (A) of the outer race.**
- **Do not use a metal bar as the outer race may deform.**
- **Be careful not to damage the roller parts.**

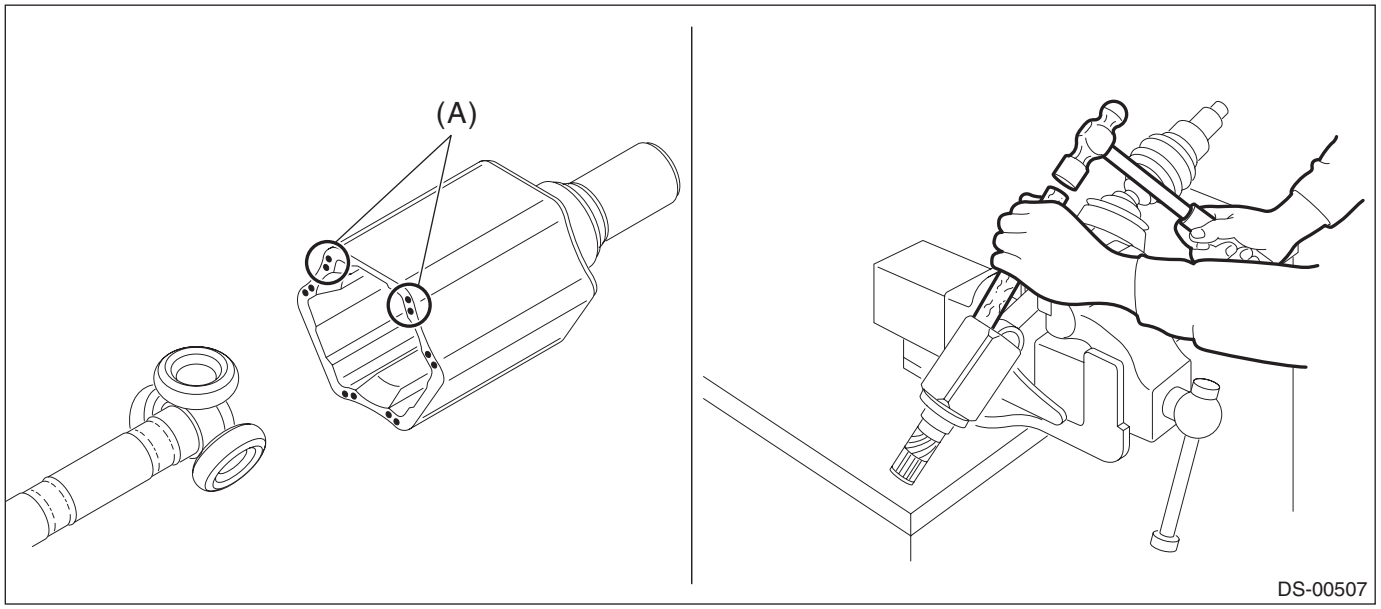

(5) Remove the outer race from shaft assembly.

CAUTION:
Make sure to have your associate hold the outer race when removing the third roller to prevent the outer race from falling.

(6) Wipe off grease.

CAUTION:
The grease is a special type of grease. Do not mix with other grease.

2) Remove the roller kit from trunnion.

CAUTION:
Be careful with the roller kit position.

(1) Place alignment marks on the roller kit and trunnion.

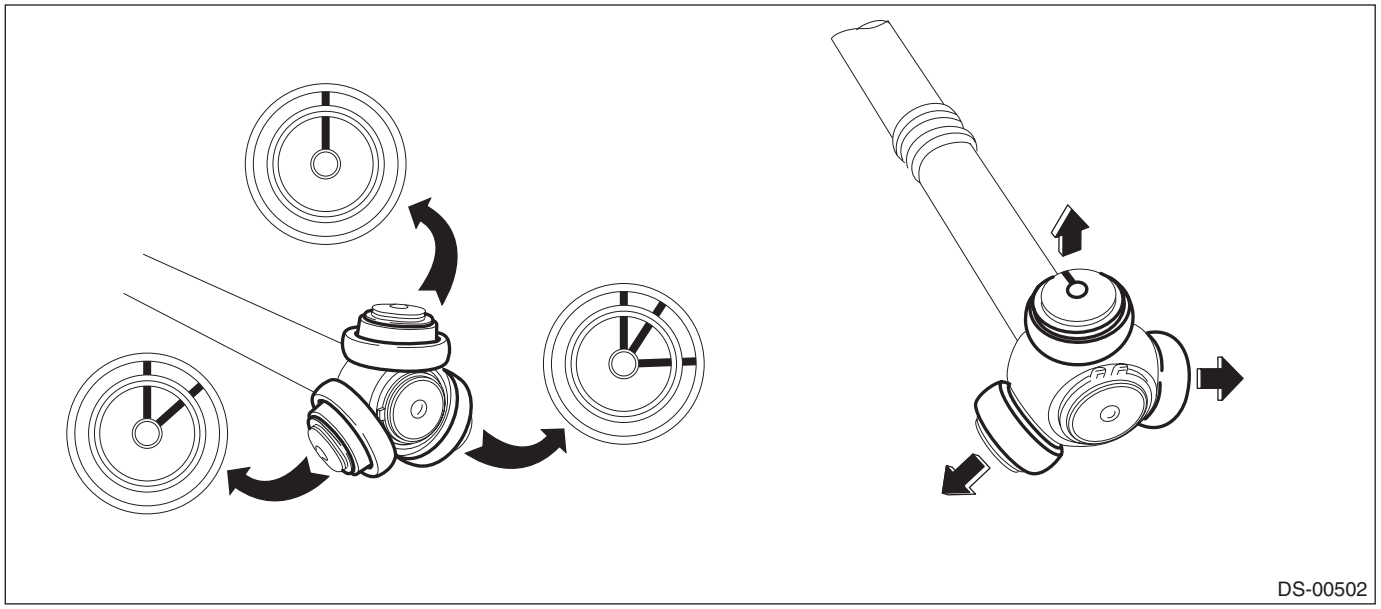

(2) Remove the roller kit from trunnion.

3) Remove the trunnion from the shaft.

(1) Place alignment marks on the trunnion and shaft.

(2) Remove the snap ring and trunnion.

CAUTION:
Be sure to wrap shaft splines with vinyl tape to protect the boot from scratches.

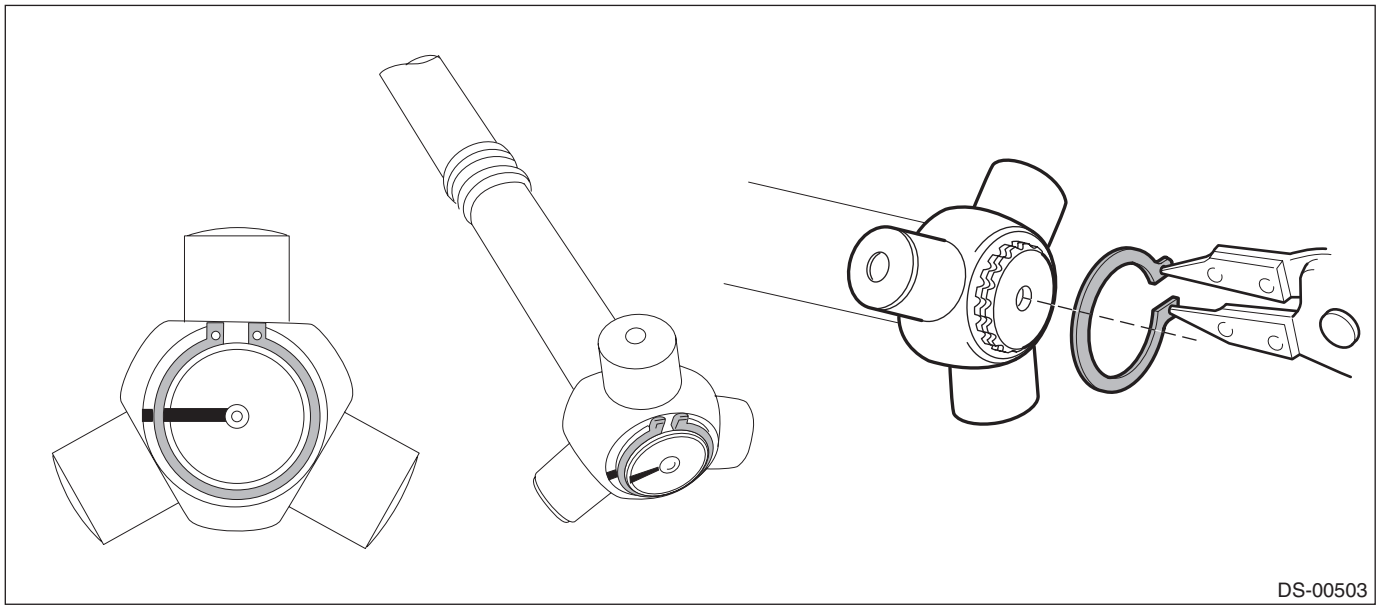

4) Remove the AAR boot.

NOTE:
The AC is a non-disassembly part, so the drive shaft disassembly stops here.

2. EBJ + PTJ TYPE

1) Place alignment marks on the shaft and outer race.

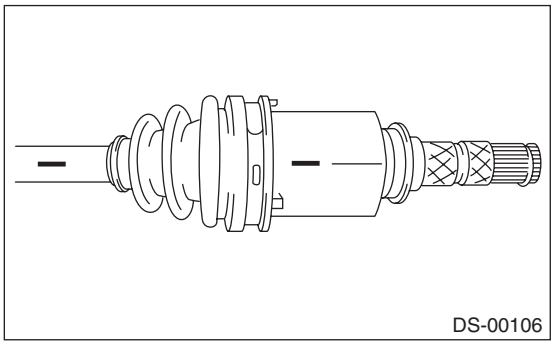

2) Remove the PTJ boot band and boot.

CAUTION:
Be careful not to damage the boot.

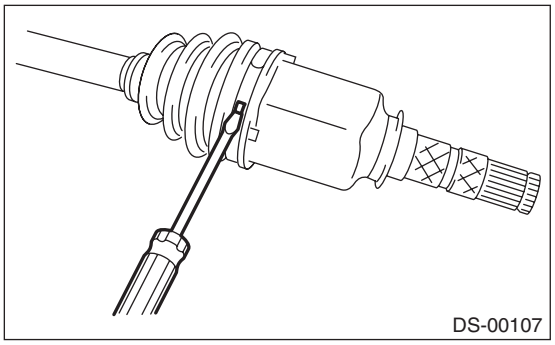

3) Remove the snap ring from PTJ outer race.

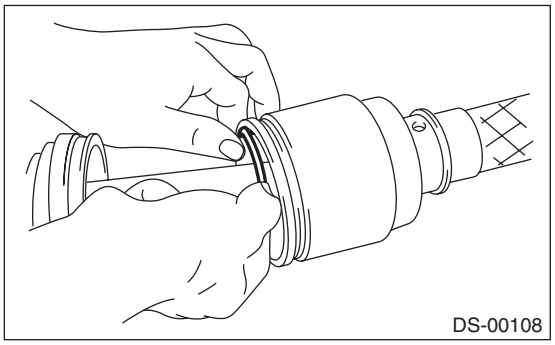

4) Remove the PTJ outer race from shaft assembly.
5) Wipe off grease.

CAUTION:
The grease is a special type of grease. Do not mix with other grease.

6) Place alignment marks on the roller kit and trunnion.

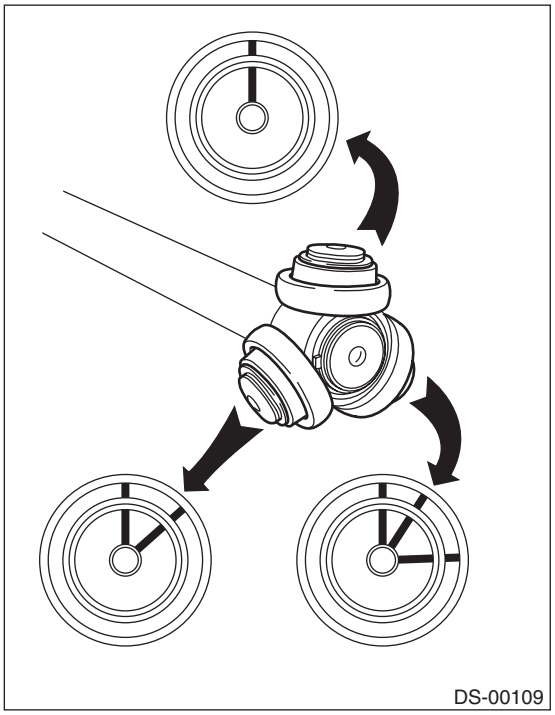

7) Remove the roller kit from trunnion.

CAUTION:
Be careful with the roller kit position.

8) Place alignment marks on the trunnion and shaft.

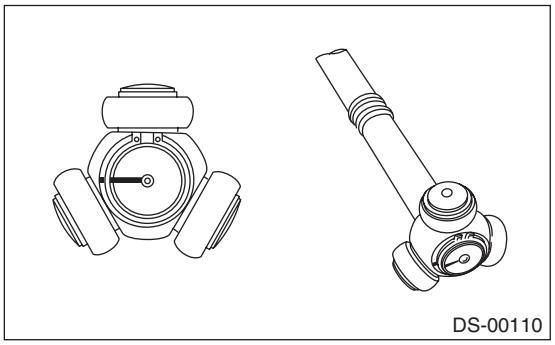

9) Remove the snap ring and trunnion.

CAUTION:
Be sure to wrap shaft splines with vinyl tape to protect the boot from scratches.

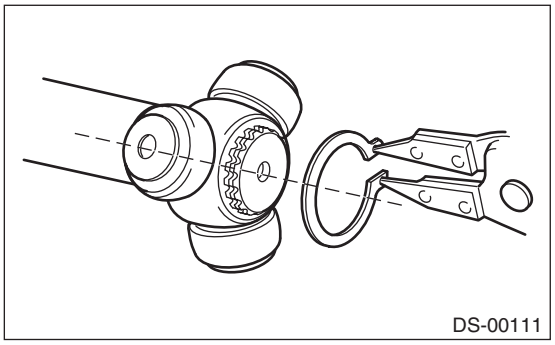

10) Remove the PTJ boot.
11) Remove the O-ring from the groove of the shaft.

NOTE:
The EBJ is a non-disassembly part, so the axle disassembly stops here.

D: ASSEMBLY

1. AC + AAR TYPE

NOTE:
Use specified grease.

AAR side:
One-Luber C

1) Pass the AAR boot through the shaft.
2) Install the trunnion to the shaft.
   (1) Match the alignment marks, and attach the trunnion onto the shaft.
   (2) Attach the snap ring to the shaft.

CAUTION:
Confirm that the snap ring is completely fitted in the shaft groove.

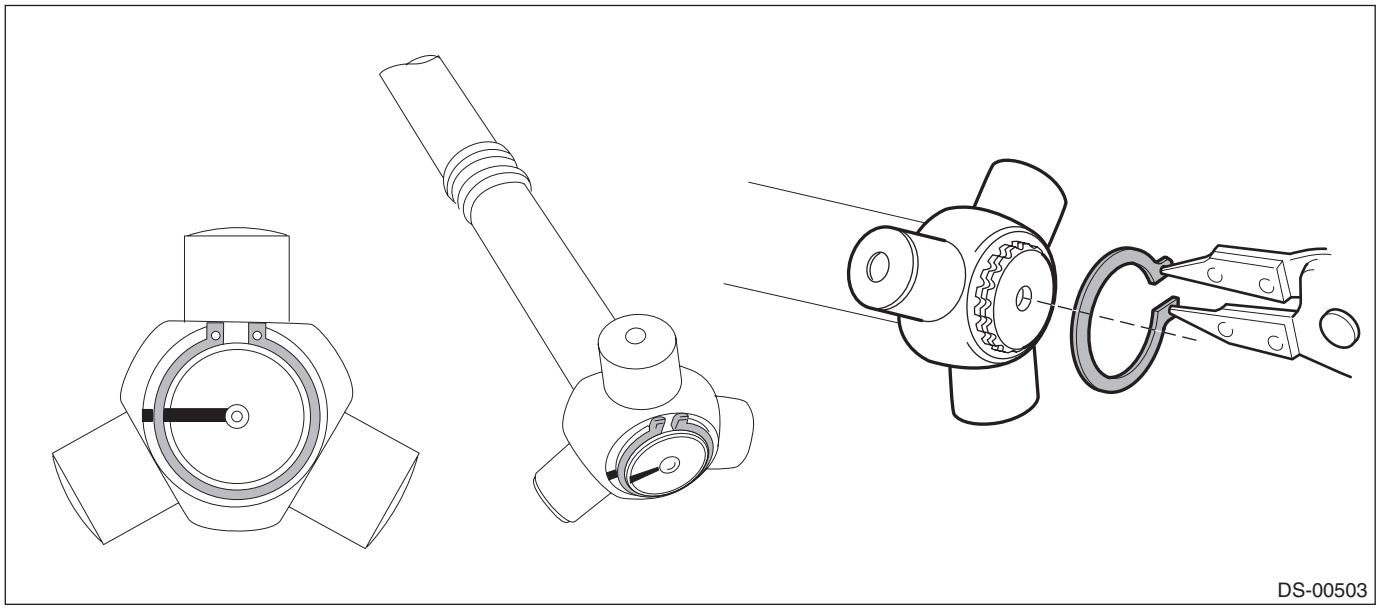

3) Fill 50 to 60 g (1.76 to 2.12 oz) of specified grease into the interior of AAR outer race.
4) Install the trunnion to the roller kit.
   (1) Apply a thin coat of specified grease to the roller kit and trunnion.
   (2) Place the drive shaft between wooden blocks and fix it on a vise.

CAUTION:
Do not set the drive shaft directly on a vise.
5) Align the alignment marks on the shaft and outer race.

6) Tap the insertion upper part of the outer race alternately using a plastic or wood bar shown in the figure, and then insert the roller one by one.

CAUTION:
- **Do not use a metal bar as the outer race may deform.**
- **Do not tap on the end of outer race (shaft part).**
- **Be careful not to deform the baffle plate.**

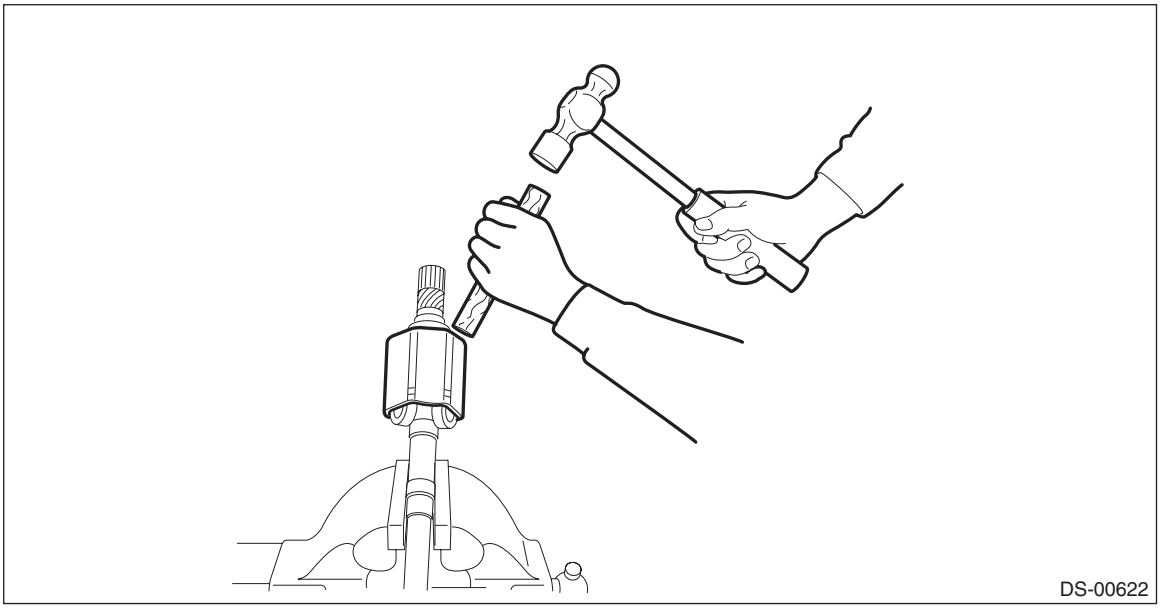

7) Apply an even coat of the specified grease 30 to 40 g (1.06 to 1.41 oz) to the entire inner surface of boot.
8) Install the AAR boot taking care not to twist it.

CAUTION:
Do not let grease get on groove of the outer race side.

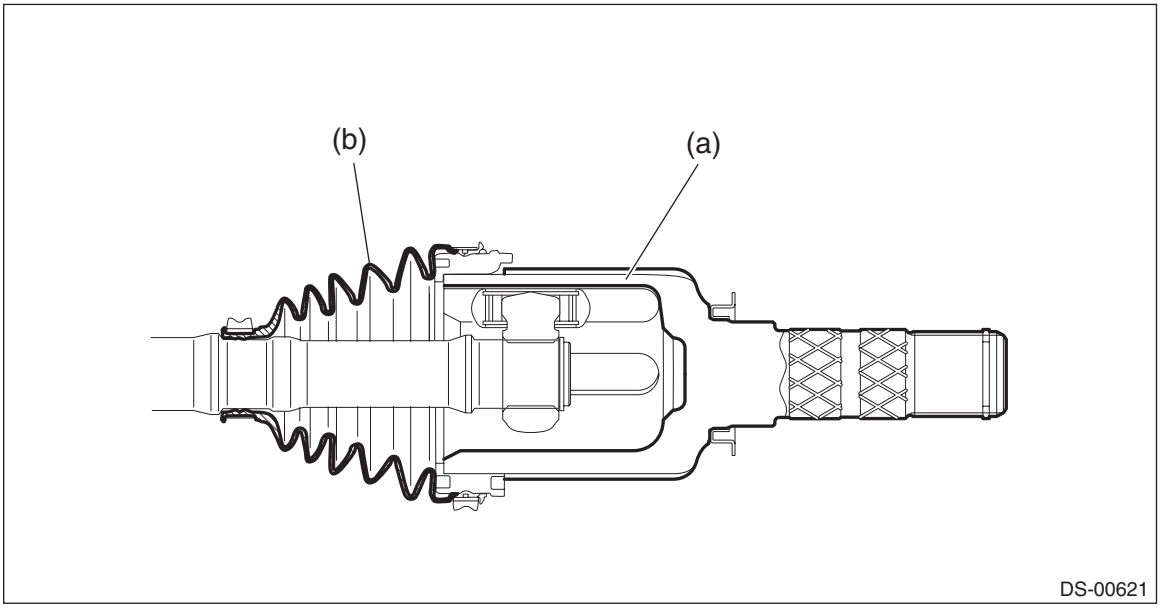

(a) Outer race
(b) Boot

9) Insert a flat tip screwdriver, etc. between outer race and boot to make pressure inside of boot as high as barometric pressure.
10) Tighten the boot band.
(1) Install the new large boot band and small boot band at the required positions.
(2) Connect the torque wrench and socket flex handle to the ST.

Preparation tool:
ST: BOOT BAND PLIERS (28099AC000)
Torque wrench
Socket flex handle
(3) Use a prepared tool, tighten the boot band.

Clearance at the crimped section of the boot band:
Large boot band: 1 mm (0.04 in) or less
Small boot band: 1 mm (0.04 in) or less

Tightening torque:
Large boot band: 178 N·m (18.1 kgf-m, 131.3 ft-lb)
Small boot band: 145 N·m (14.8 kgf-m, 106.9 ft-lb)

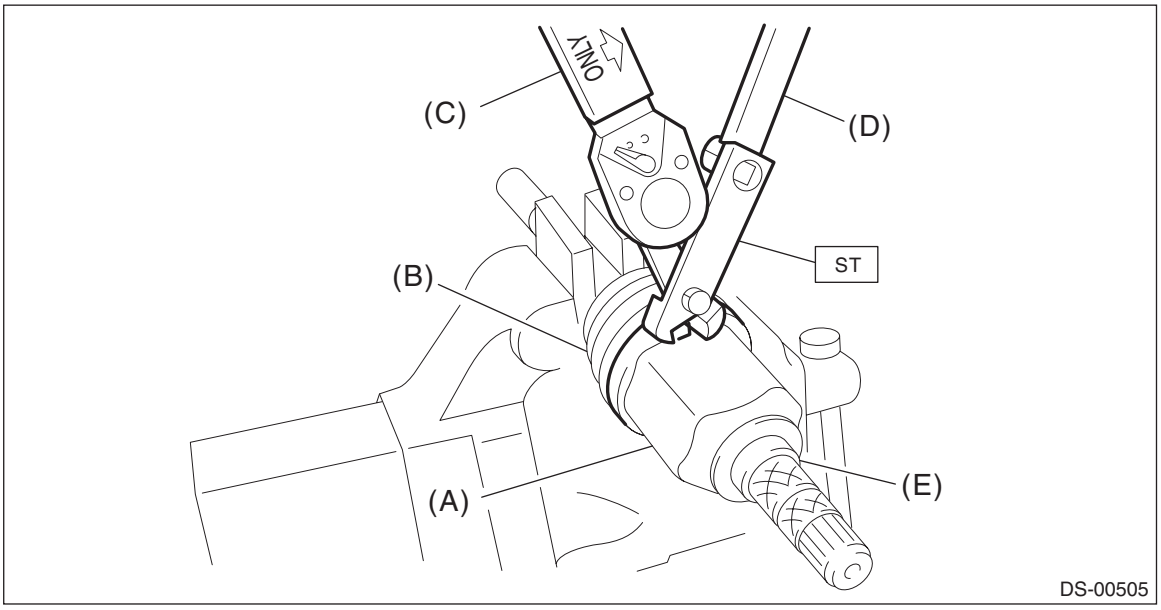

(A) Large boot band
(B) Boot
(C) Torque wrench
(D) Socket flex handle
(E) Outer race

11) Extend and retract the AAR repeatedly to provide an equal coating of grease.

2. EBJ + PTJ TYPE

1) Roll up a thick piece of paper to a size where the shaft can pass through, and affix with tape to form a cylinder.
2) Attach a new O-ring on this cylinder.

CAUTION:
- **Always use a new O-ring.**
- **Be careful that the O-ring does not become scratched and that there are no foreign objects attached to it.**
- **Make sure to install the O-ring so that it does not twist as much as possible.**
- **Do not stretch the O-ring to 30 mm (1.18 in) inner diameter or more.**

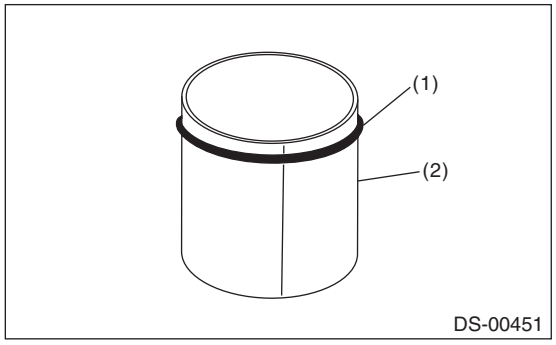

(1) O-ring
(2) Cylinder made with thick paper, etc.

3) Pass the cylinder material onto the shaft, and slide in the direction of the shaft axis.

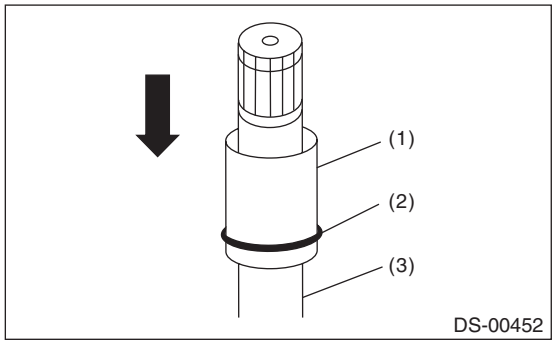

(1) Cylinder material
(2) O-ring
(3) Shaft

4) Clean the shaft boot groove, and wipe off the grease.

5) Slide the cylinder material near the shaft boot groove, and move the O-ring from the cylinder material onto the shaft boot groove.

CAUTION:
- **Attach the O-ring to the shaft boot groove center.**
- **Be careful that the O-ring does not become scratched and that there are no foreign objects attached to it.**
- **Make sure to install the O-ring so that it does not twist as much as possible.**
- **With the O-ring attached, do not wash with kerosene, gasoline, etc.**

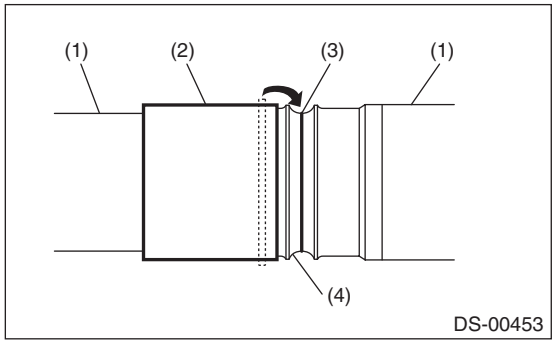

(1) Shaft
(2) Cylinder material
(3) O-ring
(4) Boot groove

6) Pass the PTJ small diameter boot band through the shaft.
7) Wrap vinyl tape around the splines of the shaft.

CAUTION:
To prevent damage to the boots, make sure to always wrap with vinyl tape for protection.
8) Install a new PTJ boot.

CAUTION:
Make sure to fit securely on the boot groove of the shaft.

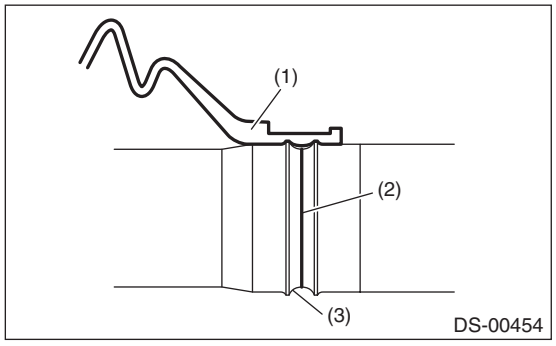

(1) PTJ boot
(2) O-ring
(3) Boot groove

9) Match the alignment marks, and attach the trunnion onto the shaft.

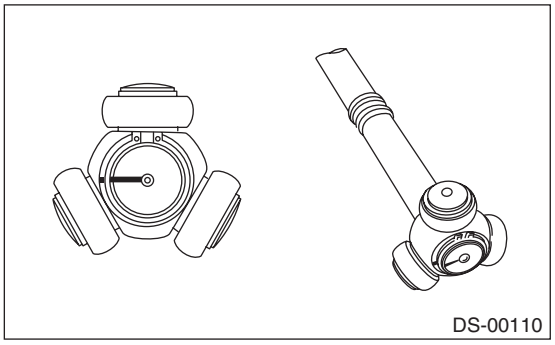

10) Attach the snap ring to the shaft.

CAUTION:
Confirm that the snap ring is completely fitted in the shaft groove.

11) Fill 100 to 110 g (3.53 to 3.88 oz) of specified grease into the interior of the PTJ outer race.

Grease:
NKG302

12) Apply a thin coat of specified grease to the roller kit and trunnion.
13) Match the alignment marks of the roller kit and trunnion, and attach the roller kit.

CAUTION:
Be careful with the roller kit position.

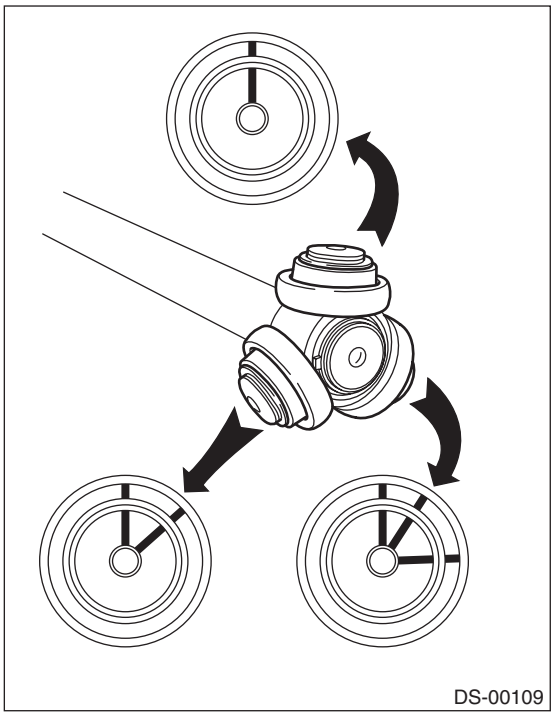

14) Match the alignment marks of the shaft and outer race, and attach the outer race.

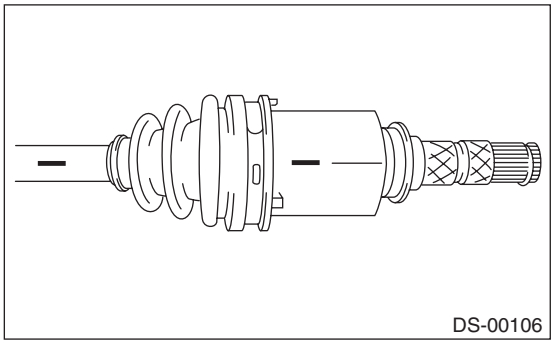

15) Install the snap ring in the groove of the PTJ outer race.

CAUTION:
Pull the shaft lightly and make sure that the snap ring is completely fitted in the groove.

16) Apply an even coat of the specified grease 30 to 40 g (1.06 to 1.41 oz) to the entire inner surface of boot.
17) Attach the PTJ boot taking care not to twist it.

CAUTION:
• Clean the large end of PTJ boot and the boot groove well, and remove the grease and other substances.
• When installing the PTJ boot, position the outer race of the PTJ at center of the stroke.

18) Set the new boot band at the specified position.
19) Tighten the boot bands using ST, torque wrench and socket flex handle.

CAUTION:
The large boot band is to be tightened so that the omega shaped part is at the position indicated in the figure below.

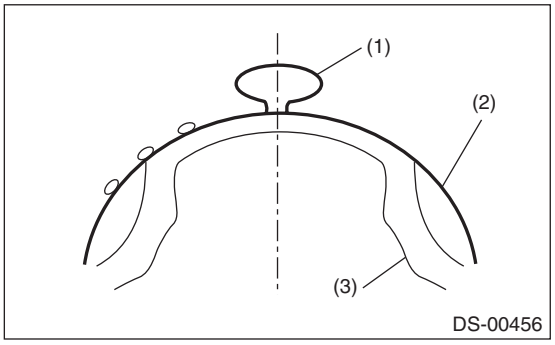

(1) Omega shaped part
(2) Boot band
(3) Outer race

Tightening torque:
Large boot band: 178 N·m (18.1 kgf-m, 131.3 ft-lb)
Small boot band: 145 N·m (14.8 kgf-m, 106.9 ft-lb)

Preparation tool:
ST: BOOT BAND PLIERS (28099AC000)

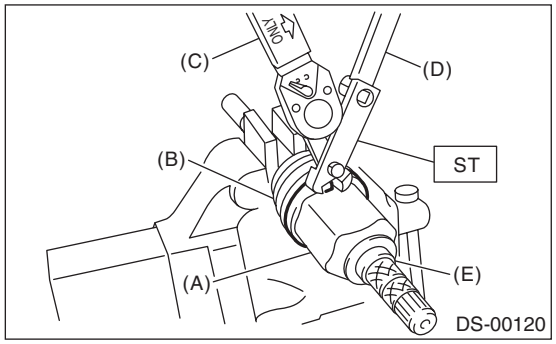

(A) Large boot band
(B) Boot
(C) Torque wrench
(D) Socket flex handle
(E) Outer race

20) Extend and retract the PTJ repeatedly so that grease is spread evenly.

E: INSPECTION

Check the removed parts for damage, wear, corrosion etc. If faulty, repair or replace.
- **AAR and AC:**

Check for seizure, corrosion, damage, wear and excessive play.
- **PTJ (pillow tripod joint):**

Check for seizure, corrosion, damage, wear and excessive play.
- **EBJ (High-Efficiency Compact Ball Fixed Joint):**

Check for seizure, corrosion, damage and excessive play.
- **Shaft:**

Check for excessive bending, twisting, damage and wear.
- **Boot:**

Check for wear, warping, breakage and scratches.
- **Grease:**

Check for discoloration and fluidity.

8. Rear Drive Shaft

A: REMOVAL

1) Disconnect the ground cable from battery. <Ref. to NT-6, BATTERY, NOTE, Note.>

NOTE:
For model with battery sensor, disconnect the ground terminal from battery sensor.
2) Lift up the vehicle, and then remove the rear wheels.
3) Remove the nut - axle.

CAUTION:
Do not loosen the nut - axle while the rear axle is loaded. Doing so may damage the hub unit COMPL.
(1) Lift the crimped section of the nut - axle.
(2) Remove the nut - axle using a socket wrench while depressing the brake pedal.

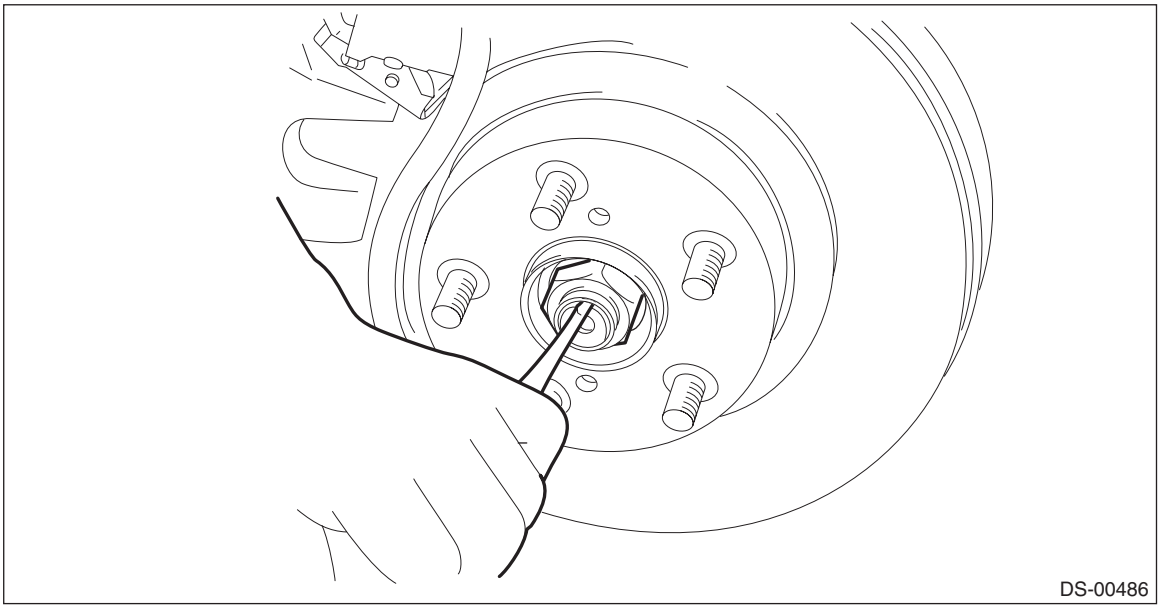

4) Remove the sensor assembly - headlight beam leveler. (Model with auto headlight beam leveler) <Ref. to LI-77, REMOVAL, Rear Height Sensor.>
5) Disconnect the oil temperature sensor connector. (Model with oil temperature sensor)
6) Drain differential gear oil.
7) Remove the propeller shaft. <Ref. to DS-12, REMOVAL, Propeller Shaft.>

8) Loosen the joint of rear differential assembly and rear drive shaft assembly.

CAUTION:
Fit the ST to the bolts as shown in the figure to prevent damage of the side bearing retainer.

Preparation tool:
ST: DRIVE SHAFT REMOVER (28099PA100)

(1) Pull out the rear drive shaft assembly by fitting the ST to the bolt (a) as shown in the figure.

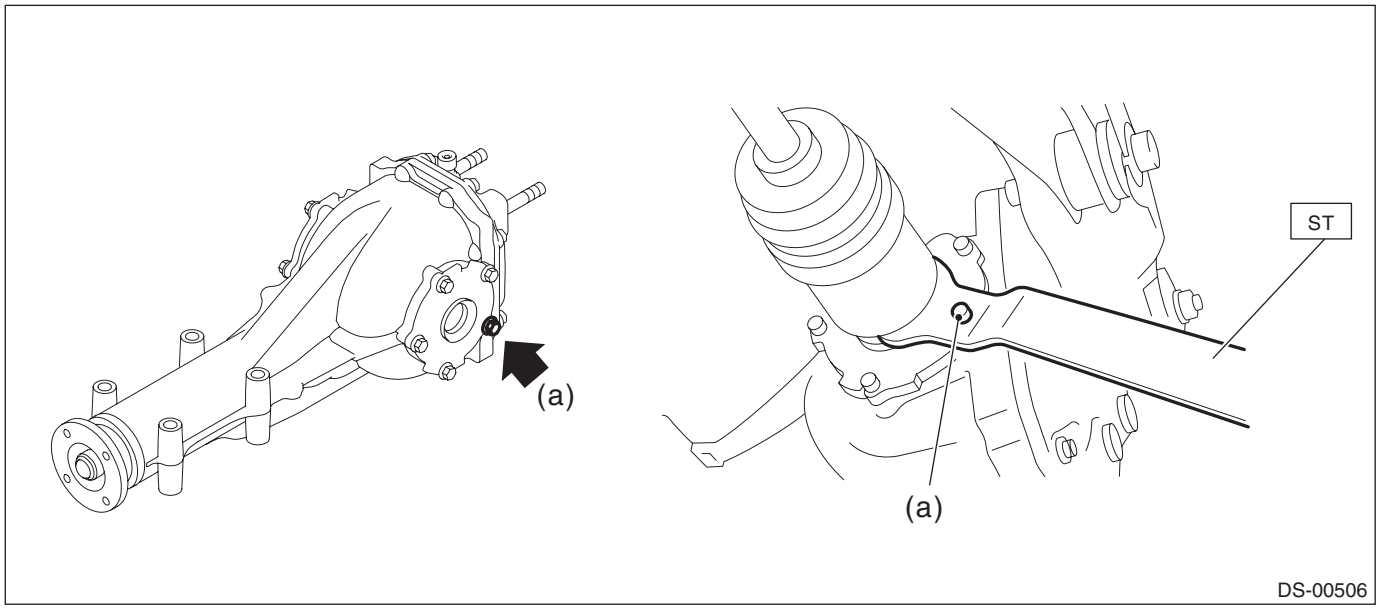

9) Remove the installation section of rear differential assembly.

(1) Support the rear differential assembly with a transmission jack.

(2) Remove the bolts which hold the rear differential front crossmember from the rear sub frame assembly.

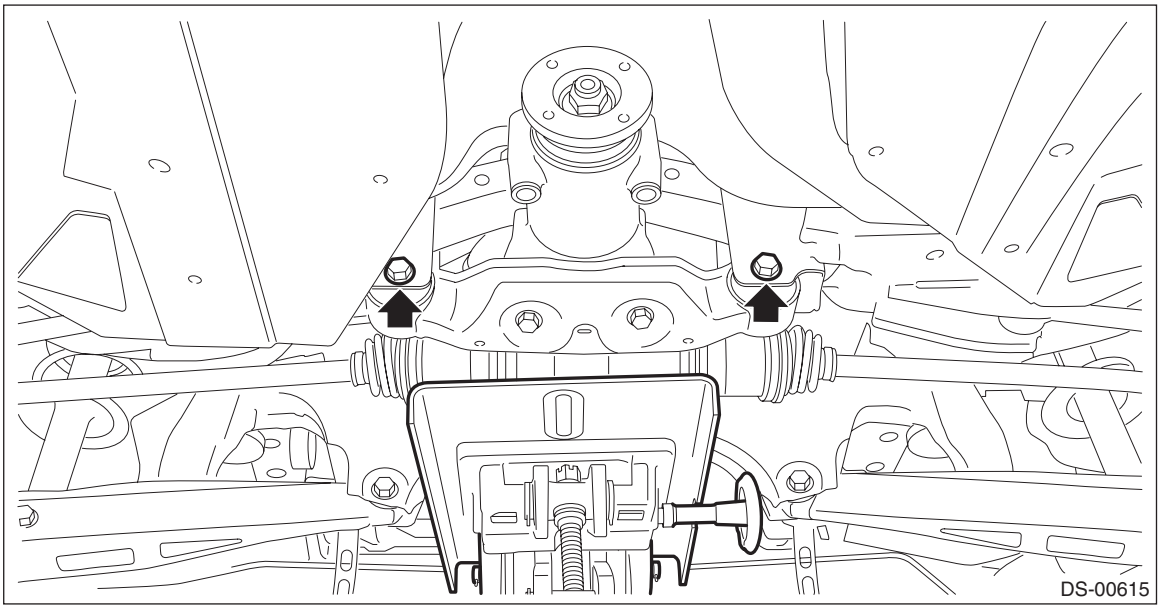

(3) Remove the self-locking nuts which hold the rear differential to the rear sub frame assembly.

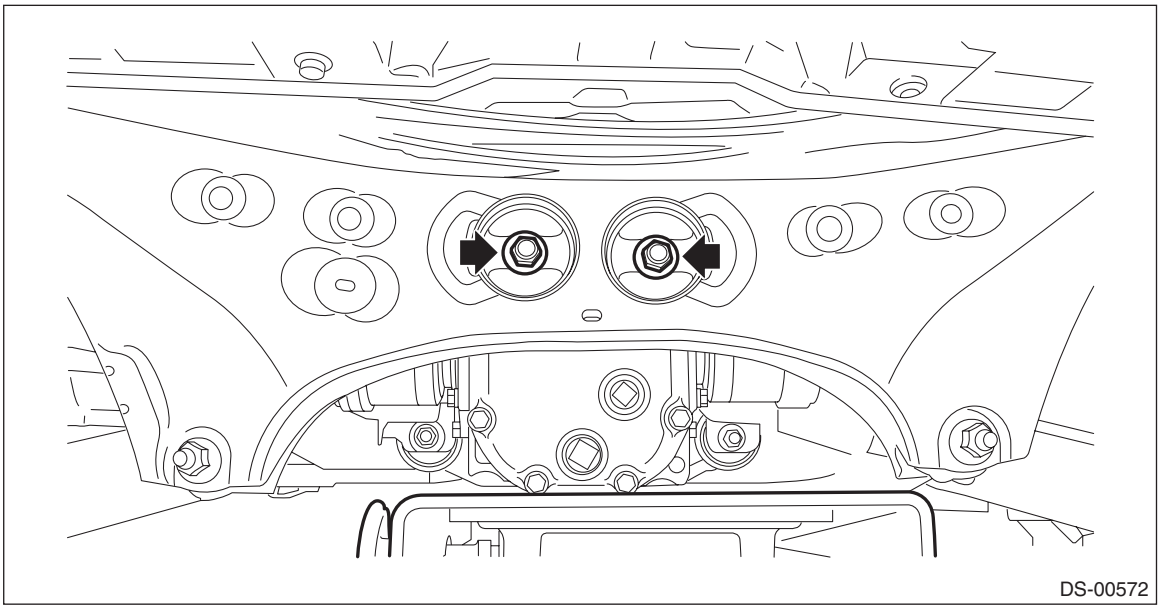

10) Completely pull out the rear drive shaft assembly while lowering the rear differential.

CAUTION:
Pay attention to avoid damaging the boot of drive shaft.

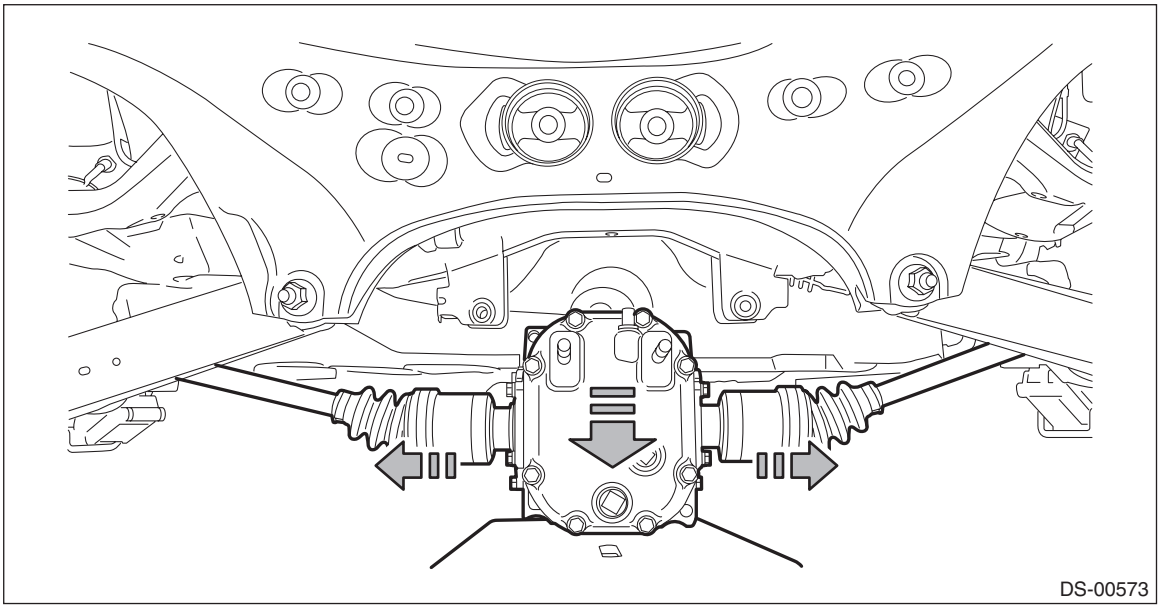

11) Remove the rear drive shaft assembly from the housing assembly - rear axle.

NOTE:
If it is hard to remove, use the ST.

Preparation tool:
ST1: AXLE SHAFT PULLER (926470000)
ST2: AXLE SHAFT PULLER PLATE (28099PA110)

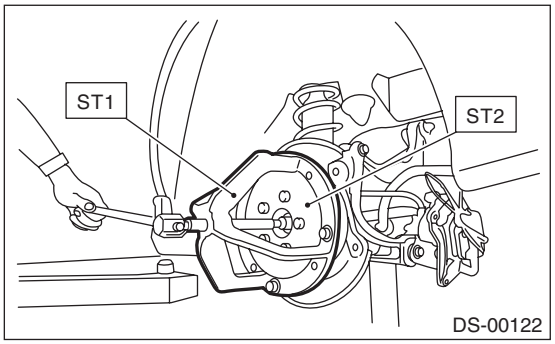

B: INSTALLATION

1) Replace the rear differential side oil seal. <Ref. to DI-55, REPLACEMENT, Rear Differential Side Oil Seal.>

NOTE:
After pulling out the drive shaft assembly, be sure to replace with a new oil seal.
2) Insert the drive shaft assembly into the rear hub spline, and pull it into the specified position.

CAUTION:
- **Be careful not to damage the magnetic encoder.**
- **Do not get closer the tool which charged magnetism to magnetic encoder.**
- **Do not hammer the drive shaft assembly when installing.**

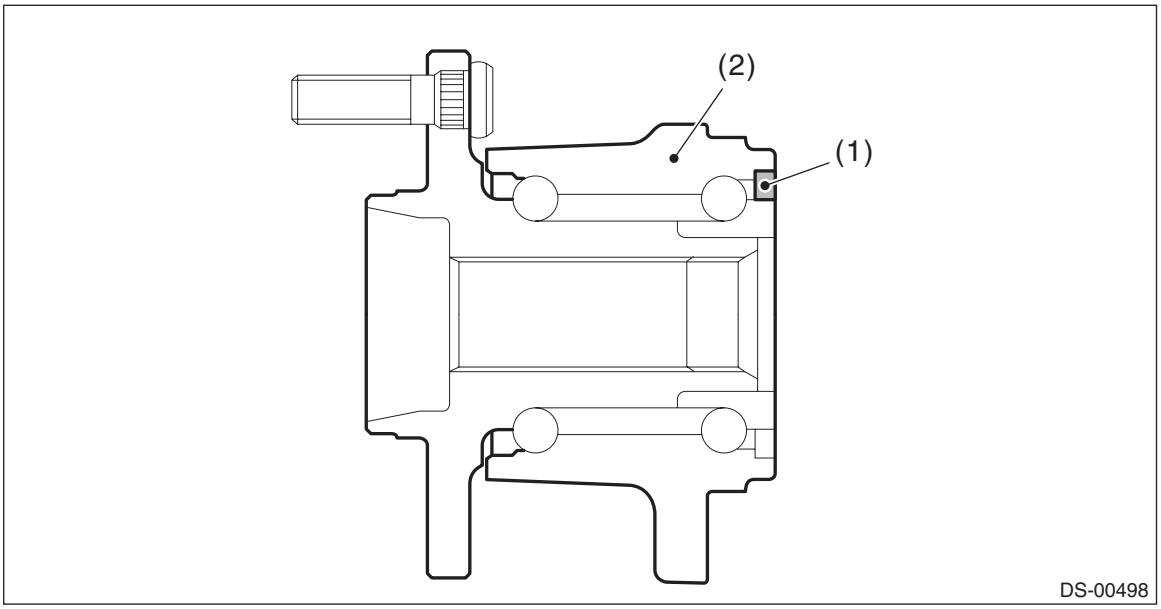

(1) Magnetic encoder
(2) Hub unit COMPL - rear axle

3) Temporarily tighten the nut - axle.
4) Using the ST, install the rear drive shaft assembly to the rear differential.

Preparation tool:
ST: OIL SEAL PROTECTOR (28099PA090)

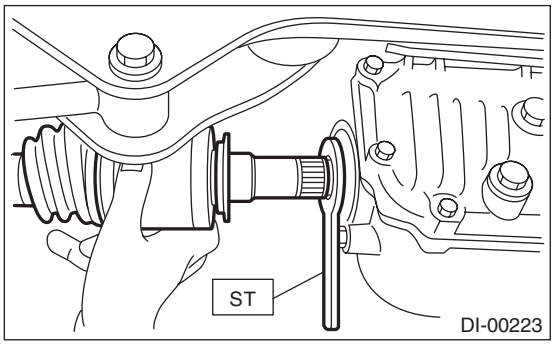

5) Install the rear differential assembly to the rear sub frame assembly.

CAUTION:
Be sure to use a new self-locking nut.

Tightening torque:
Differential assembly — bushing - differential: 70 N·m (7.1 kgf-m, 51.6 ft-lb)
Differential assembly — rear sub frame assembly: 110 N·m (11.2 kgf-m, 81.1 ft-lb)
6) Install the sensor assembly - headlight beam leveler. (Model with auto headlight beam leveler)

Tightening torque:
7.5 N·m (0.8 kgf-m, 5.5 ft-lb)
7) Install the oil temperature sensor connector. (Model with oil temperature sensor)
8) While pressing the brake pedal, tighten the new axle nuts to the specified torque.

CAUTION:
Do not load the rear axle before tightening the nut - axle. Doing so may damage the hub unit COMPL.

Tightening torque:
190 N·m (19.4 kgf-m, 140.1 ft-lb)
9) Lock the nut - axle securely.

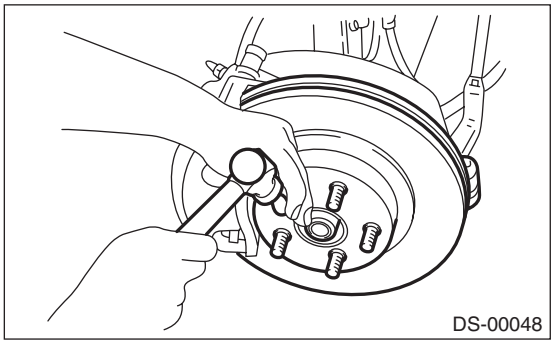

10) Fill differential gear oil.
11) Install the rear wheels.

Tightening torque:
120 N·m (12.2 kgf-m, 88.5 ft-lb)
12) Perform reinitialization of the auto headlight beam leveler system. (Model with auto headlight beam leveler) <Ref. to LI-18, PROCEDURE, Auto Headlight Beam Leveler System.>

C: DISASSEMBLY

1. EBJ + EDJ TYPE

1) Using a flat tip screwdriver or plier, loosen the boot band on the large end of EDJ boot.

CAUTION:
Be careful not to damage the boot.

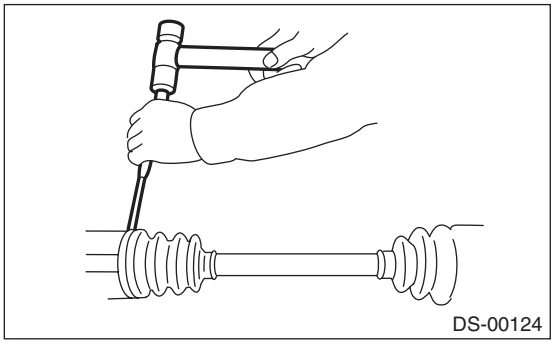

2) Remove the boot band on the small end of EDJ boot in the same manner.
3) Remove the large end of EDJ boot from EDJ outer race.
4) Remove the round snap ring at the neck of EDJ outer race with a flat tip screwdriver.

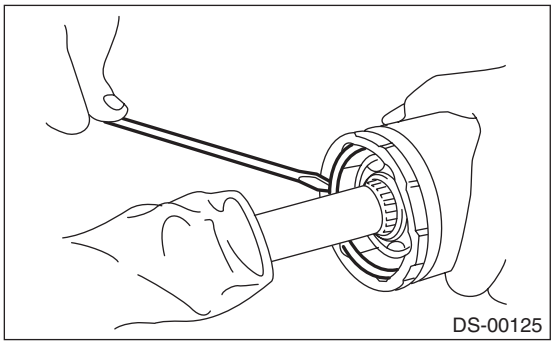

5) Remove the EDJ outer race from shaft assembly.
6) Wipe off the grease and take out the ball bearings.

CAUTION:
The grease is a special grease (grease for constant velocity joints). Do not mix with other greases.

NOTE:
Disassemble the parts taking care not to lose balls.

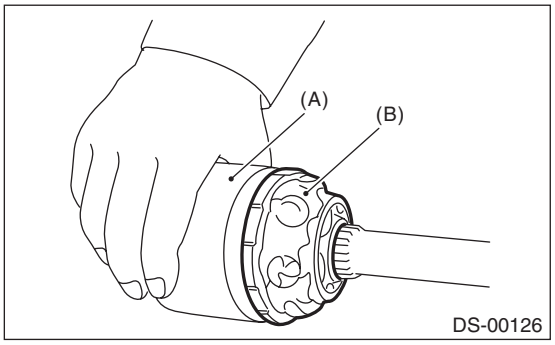

(A) Outer race
(B) Grease

7) To remove the cage from inner race, turn the cage by a half pitch to the track groove of inner race and shift the cage.
8) Using pliers, remove the snap ring fixing the inner race to the shaft.
9) Take out the EDJ inner race.
10) Take off the EDJ cage from shaft and remove the EDJ boot.

CAUTION:
Wrap shaft splines with vinyl tape to protect the boot from scratches.
11) Remove the EBJ boot using the same procedures as for the EDJ boot.

NOTE:
The EBJ is a non-disassembly part, so the drive shaft disassembly stops here.

2. EBJ + DOJ TYPE

1) Using a flat tip screwdriver or pliers, loosen the boot band on the large end of DOJ boot.

CAUTION:
Be careful not to damage the boot.

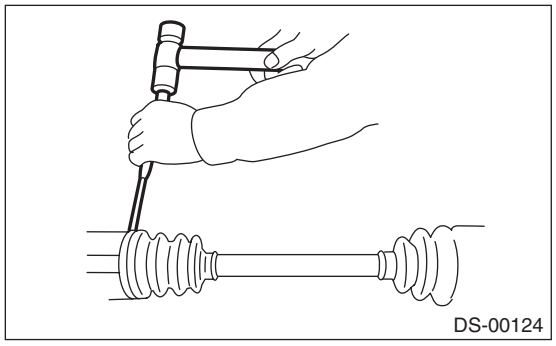
DS-00124

2) Remove the boot band on the small end of DOJ boot in the same manner.
3) Remove the large end of DOJ boot from DOJ outer race.
4) Remove the round snap ring at the neck of DOJ outer race with a flat tip screwdriver.

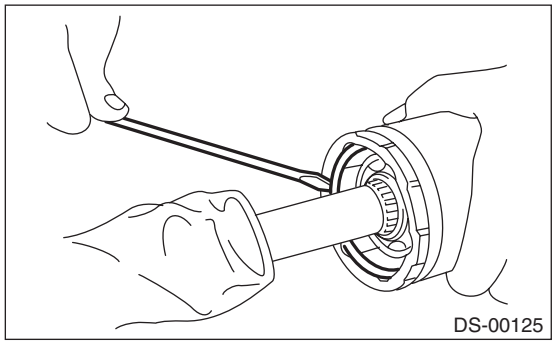
DS-00125

5) Take out the DOJ outer race from the shaft assembly.

6) Wipe off the grease and take out the ball bearings.

CAUTION:
The grease is a special grease (grease for constant velocity joints). Do not mix with other greases.

NOTE:
Disassemble the parts taking care not to lose balls.

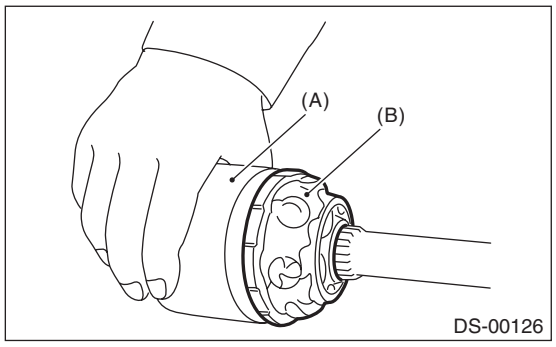

(A) Outer race
(B) Grease

7) To remove the cage from inner race, turn the cage by a half pitch to the track groove of inner race and shift the cage.
8) Using pliers, remove the snap ring fixing the inner race to the shaft.
9) Take out the DOJ inner race.
10) Take off the DOJ cage from shaft and remove the DOJ boot.

CAUTION:
Wrap shaft splines with vinyl tape to protect the boot from scratches.
11) Remove the EBJ boot using the same procedures as for the DOJ boot.

NOTE:
The EBJ is a non-disassembly part, so the drive shaft disassembly stops here.

D: ASSEMBLY

1. EBJ + EDJ TYPE

CAUTION:
Wrap shaft splines with vinyl tape to protect the boot from scratches.

NOTE:
Use specified grease.

EBJ side:
NKG814

EDJ side:
NKG814

1) Install the EBJ boot to the specified position, and fill it with 50 to 60 g (1.76 to 2.12 oz) of specified grease.
2) Place the EDJ boot at the center of shaft.

3) Insert the EDJ cage onto shaft.

NOTE:
Insert the cage with the cutout portion facing the shaft end, since the cage has an orientation.

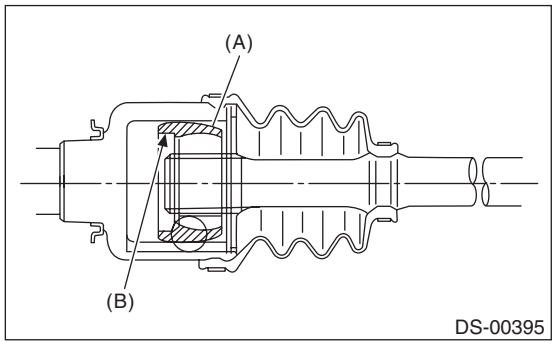

(A) Cage
(B) Cutout portion

4) Install the EDJ inner race on shaft and fix the snap ring in place with pliers.

NOTE:
Confirm that the snap ring is completely fitted in the shaft groove.

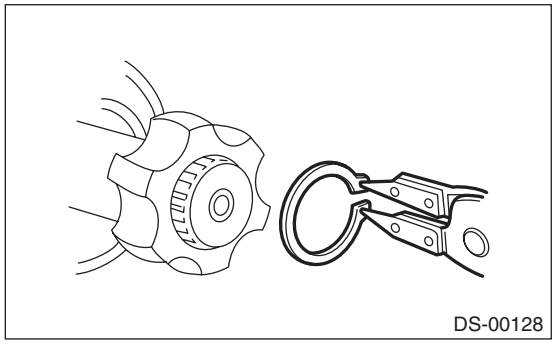

5) Install the cage to inner race fixed upon shaft.

NOTE:
Fit the cage with the protruding section aligned with the track on the inner race, and turn by a half pitch.

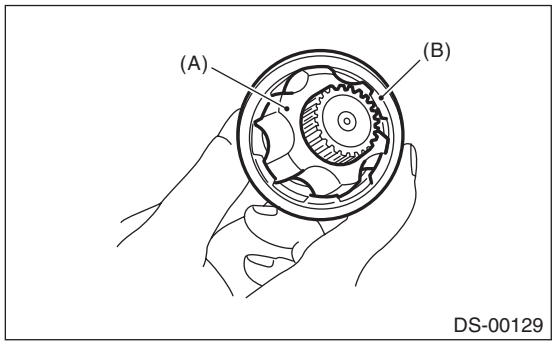

(A) Inner race
(B) Cage

6) Fill 80 to 90 g (2.82 to 3.17 oz) of specified grease into the inner side of the EDJ outer race.
7) Apply a thin coat of specified grease to the cage pocket and ball.
8) Insert the ball bearings into the cage pocket.

9) Align the outer race track and ball positions, and place the shaft, inner race, cage and ball bearings in the original positions, and then fix outer race in place.

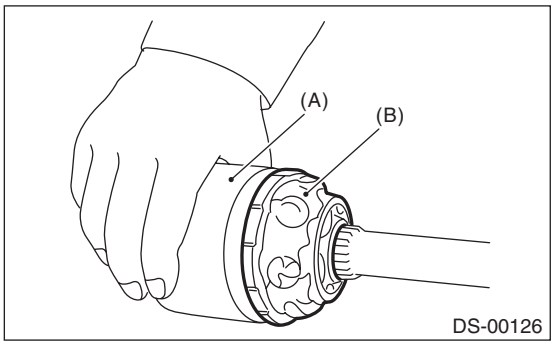

(A) Outer race
(B) Grease

10) Install the snap ring in the groove on the EDJ outer race.

NOTE:
- Assure that the balls, cage and inner race are completely fitted in the outer race of EDJ.
- Use care not to place the matched position of snap ring in the ball groove of outer race.
- Pull the shaft lightly and assure that the circlip is completely fitted in the groove.

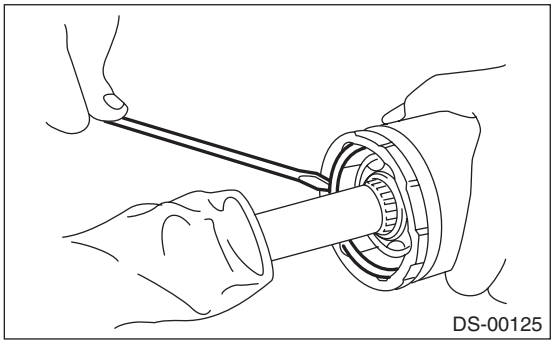

11) Apply an even coat of the specified grease [20 to 30 g (0.71 to 1.06 oz)] to the entire inner surface of boot. Also apply grease to the shaft.
12) Install the EDJ boot taking care not to twist it.

NOTE:
- The inside of the large end of EDJ boot and the boot groove shall be cleaned so as to be free from grease and other substances.
- When installing the EDJ boot, position the outer race of EDJ at center of the stroke.

13) Put a new band through the clip and wind twice in the band groove of the boot.
14) Pinch the end of band with pliers. Hold the clip and tighten securely.

NOTE:
When tightening boot, use care so that the air within the boot is appropriate.

15) Tighten the band using the ST.

NOTE:
Tighten the band until it cannot be moved by hand.

Preparation tool:
ST: BAND TIGHTENING TOOL (925091000)

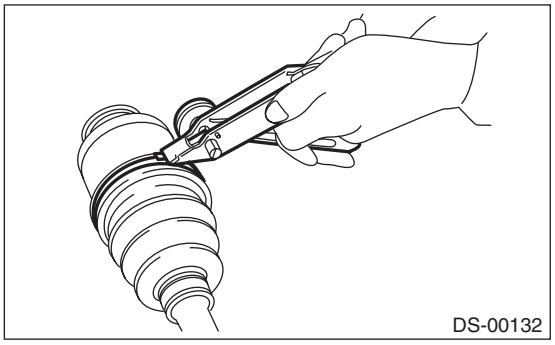

16) Tap the clip with the punch provided at the end of the ST.

NOTE:
Tap to an extent that the boot underneath is not damaged.

Preparation tool:
ST: BAND TIGHTENING TOOL (925091000)

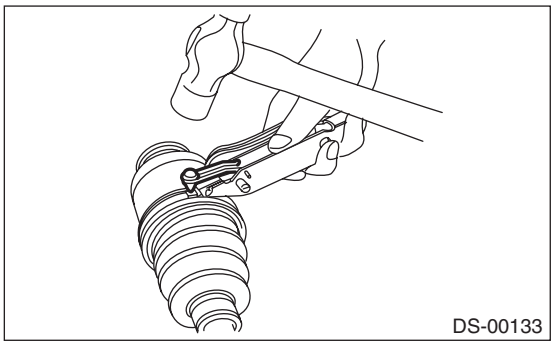

17) Cut off the band with an allowance of about 10 mm (0.39 in) left from the clip and bend this allowance over the clip.

NOTE:
Be careful so that the end of the band is in close contact with clip.
18) Install the EBJ boot using the same procedures as for the EDJ boot.
19) Extend and retract the EDJ repeatedly to provide an equal coating of grease.

2. EBJ + DOJ TYPE

CAUTION:
Wrap shaft splines with vinyl tape to protect the boot from scratches.

NOTE:
Use specified grease.

EBJ side:
NKG814

DOJ side:
NKG814

1) Install the EBJ boot to the specified position, and fill it with 50 to 60 g (1.76 to 2.12 oz) of specified grease.
2) Place the DOJ boot at the center of shaft.

3) Insert the DOJ cage onto shaft.

NOTE:
Insert the cage with the cutout portion facing the shaft end, since the cage has an orientation.

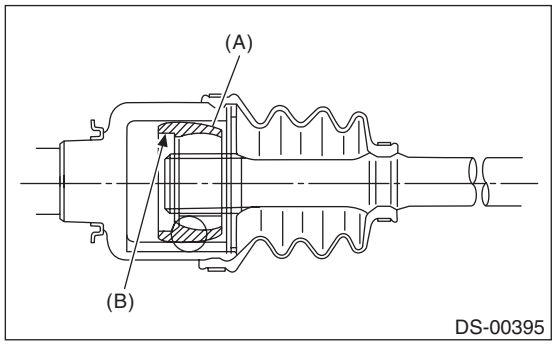

(A) Cage
(B) Cutout portion

4) Install the DOJ inner race on shaft and fix the snap ring in place with pliers.

NOTE:
Confirm that the snap ring is completely fitted in the shaft groove.

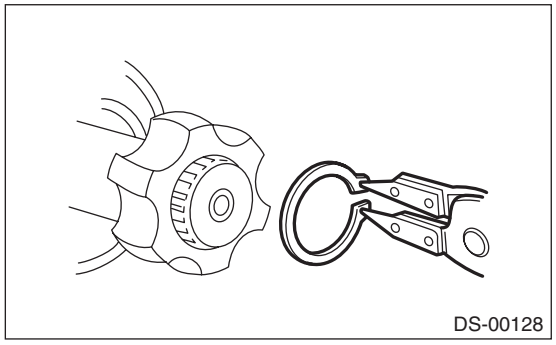

5) Install the cage to inner race fixed upon shaft.

NOTE:
Fit the cage with the protruding section aligned with the track on the inner race, and turn by a half pitch.

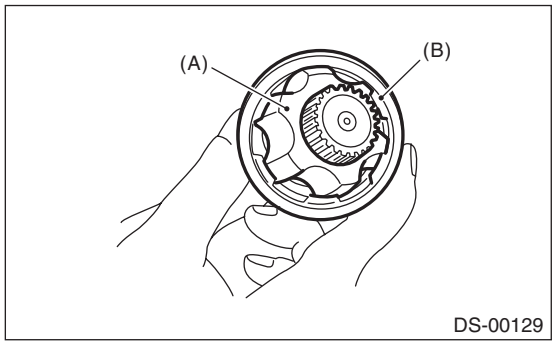

(A) Inner race
(B) Cage

6) Fill 80 to 90 g (2.82 to 3.17 oz) of specified grease into the inner side of the DOJ outer race.
7) Apply a thin coat of specified grease to the cage pocket and ball.
8) Insert the ball bearings into the cage pocket.

9) Align the outer race track and ball positions, and place the shaft, inner race, cage and ball bearings in the original positions, and then fix outer race in place.

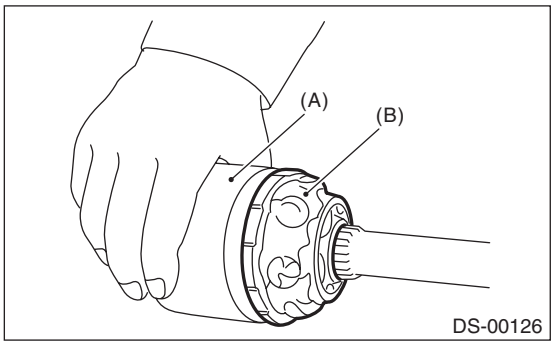

(A) Outer race
(B) Grease

10) Install the snap ring in the groove on the DOJ outer race.

NOTE:
- Assure that the balls, cage and inner race are completely fitted in the outer race of DOJ.
- Use care not to place the matched position of snap ring in the ball groove of outer race.
- Pull the shaft lightly and assure that the circlip is completely fitted in the groove.

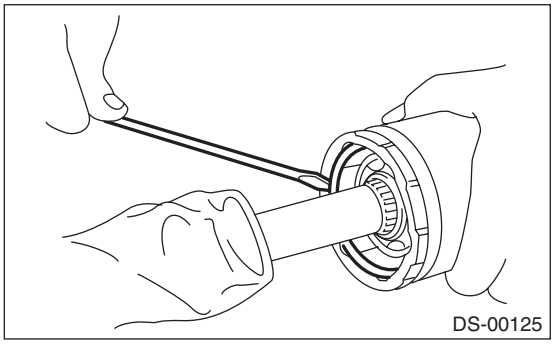

11) Apply an even coat of the specified grease [20 to 30 g (0.71 to 1.06 oz)] to the entire inner surface of boot. Also apply grease to the shaft.
12) Install the DOJ boot taking care not to twist it.

NOTE:
- The inside of the large end of DOJ boot and the boot groove shall be cleaned so as to be free from grease and other substances.
- When installing the DOJ boot, position the outer race of DOJ at center of the stroke.

13) Put a new band through the clip and wind twice in the band groove of the boot.
14) Pinch the end of band with pliers. Hold the clip and tighten securely.

NOTE:
When tightening boot, use care so that the air within the boot is appropriate.

15) Tighten the band using the ST.

NOTE:
Tighten the band until it cannot be moved by hand.

Preparation tool:
ST: BAND TIGHTENING TOOL (925091000)

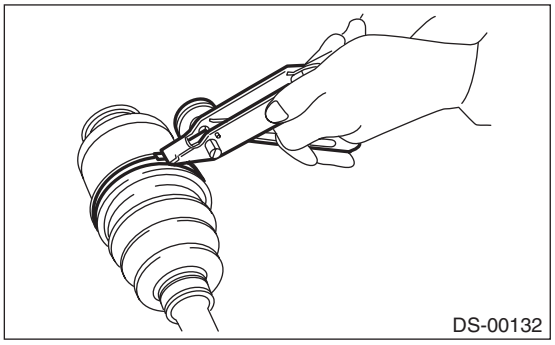

16) Tap the clip with the punch provided at the end of the ST.

NOTE:
Tap to an extent that the boot underneath is not damaged.

Preparation tool:
ST: BAND TIGHTENING TOOL (925091000)

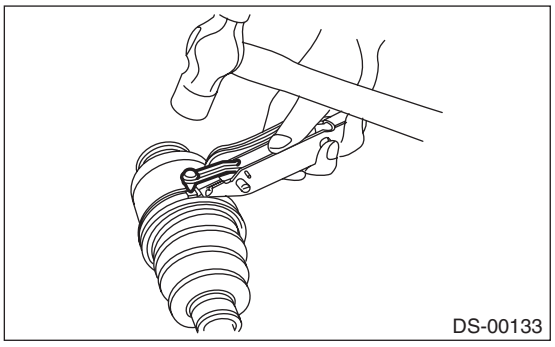

17) Cut off the band with an allowance of about 10 mm (0.39 in) left from the clip and bend this allowance over the clip.

NOTE:
Be careful so that the end of the band is in close contact with clip.
18) Install the EBJ boot using the same procedures as for the DOJ boot.
19) Extend and retract the DOJ repeatedly to provide an equal coating of grease.

E: INSPECTION

Check the removed parts for damage, wear, corrosion etc. Repair or replace if defective.
- **EDJ (High-Efficiency Compact Double Offset Joint):**

Check for seizure, corrosion, damage, wear and excessive play.
- **DOJ (Double Offset Joint):**

Check for seizure, corrosion, damage, wear and excessive play.
- **EBJ (High-Efficiency Compact Ball Fixed Joint):**

Check for seizure, corrosion, damage and excessive play.
- **Shaft:**

Check for excessive bending, twisting, damage and wear.
- **Boot:**

Check for wear, warping, breakage and scratches.
- **Grease:**

Check for discoloration and fluidity.

9. General Diagnostic Table

A: INSPECTION

NOTE:
Vibration while cruising may be caused by an unbalanced tire, improper tire inflation pressure, improper wheel alignment, etc.

Symptoms	Possible cause	Corrective action
Noise or vibration from propeller shaft	• Center bearing • Runout of propeller shaft • Loose or gap at connections	Inspect the propeller shaft. <Ref. to DS-15, INSPECTION, Propeller Shaft.>
Abnormal wheel vibration	Wheel is out of balance.	Check the wheel balance. <Ref. to WT-6, WHEEL BALANCING, INSPECTION, Tire and Wheel.>
	Front wheel alignment	Check the front wheel alignment. <Ref. to FS-10, INSPECTION, Wheel Alignment.>
	Rear wheel alignment	Check the rear wheel alignment. <Ref. to RS-8, INSPECTION, Wheel Alignment.>
	Front strut	Check the front strut. <Ref. to FS-47, INSPECTION, Front Strut.>
	Rear shock absorber	Check the rear shock absorber. <Ref. to RS-32, INSPECTION, Rear Shock Absorber.>
	Front drive shaft	Check the front drive shaft. <Ref. to DS-60, INSPECTION, Front Drive Shaft.>
	Rear drive shaft	Check the rear drive shaft. <Ref. to DS-74, INSPECTION, Rear Drive Shaft.>
	Hub unit COMPL - front axle	Check the hub unit COMPL - front axle. <Ref. to DS-29, INSPECTION, Front Hub Unit Bearing.>
	Hub unit COMPL - rear axle	Check the hub unit COMPL - rear axle. <Ref. to DS-44, INSPECTION, Rear Hub Unit Bearing.>
Noise from the underbody	Wheel is out of balance.	Check the wheel balance. <Ref. to WT-6, WHEEL BALANCING, INSPECTION, Tire and Wheel.>
	Front wheel alignment	Check the front wheel alignment. <Ref. to FS-10, INSPECTION, Wheel Alignment.>
	Rear wheel alignment	Check the rear wheel alignment. <Ref. to RS-8, INSPECTION, Wheel Alignment.>
	Front strut	Check the front strut. <Ref. to FS-47, INSPECTION, Front Strut.>
	Rear shock absorber	Check the rear shock absorber. <Ref. to RS-32, INSPECTION, Rear Shock Absorber.>

VEHICLE DYNAMICS CONTROL (VDC)

VDC

		Page
1.	General Description	2
2.	Relay and Fuse	7
3.	Vehicle Dynamics Control System	8
4.	VDC Control Module and Hydraulic Control Unit (VDCCM&H/U)	9
5.	ABS Sequence Control	20
6.	VDC Sequence Control	23
7.	Brake Lamp Relay	26
8.	Yaw Rate and G Sensor	27
9.	Steering Angle Sensor	28
10.	Front ABS Wheel Speed Sensor	32
11.	Rear ABS Wheel Speed Sensor	35
12.	Front Magnetic Encoder	38
13.	Rear Magnetic Encoder	39
14.	VDC OFF Switch	40
15.	Hill Hold Switch	42

1. General Description

A: SPECIFICATION

Item				Specification or identification
ABS wheel speed sensor	ABS wheel speed sensor gap (for reference)	Front		0.77 — 1.43 mm (0.03 — 0.056 in)
		Rear		0.44 — 1.76 mm (0.017 — 0.069 in)
	Identifications of harness (symbol)	Front	RH	G1
			LH	G2
		Rear	RH	G3
			LH	G4
VDCCM&H/U identification	Models without EyeSight			P7
	Models with EyeSight			P8

B: COMPONENT

1. ABS WHEEL SPEED SENSOR

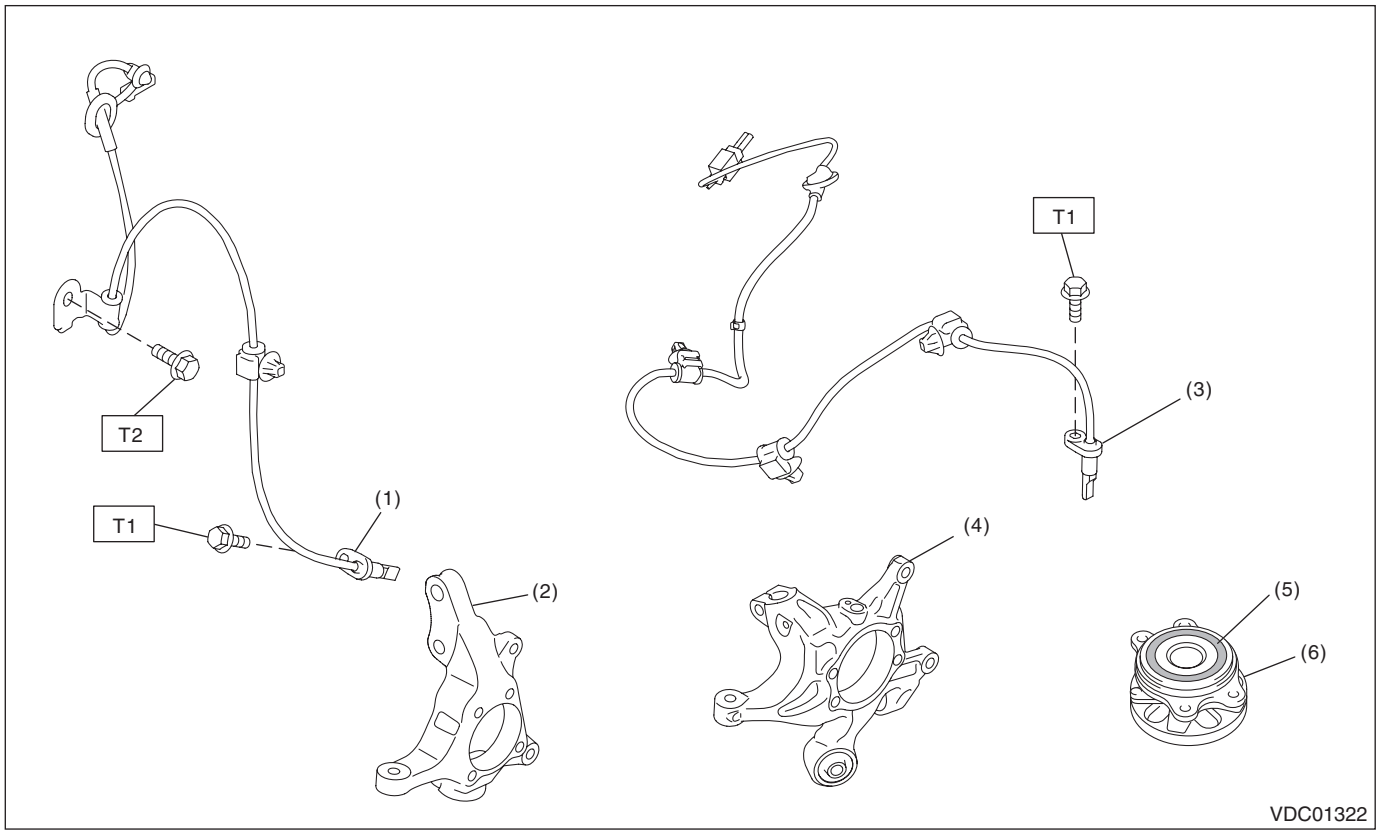

(1) Front ABS wheel speed sensor
(2) Housing ASSY - front axle
(3) Rear ABS wheel speed sensor
(4) Housing ASSY - rear axle
(5) Magnetic encoder
(6) Hub unit COMPL

Tightening torque: N·m (kgf-m, ft-lb)
T1: 7.5 (0.8, 5.5)
T2: 33 (3.4, 24.3)

2. STEERING ANGLE SENSOR

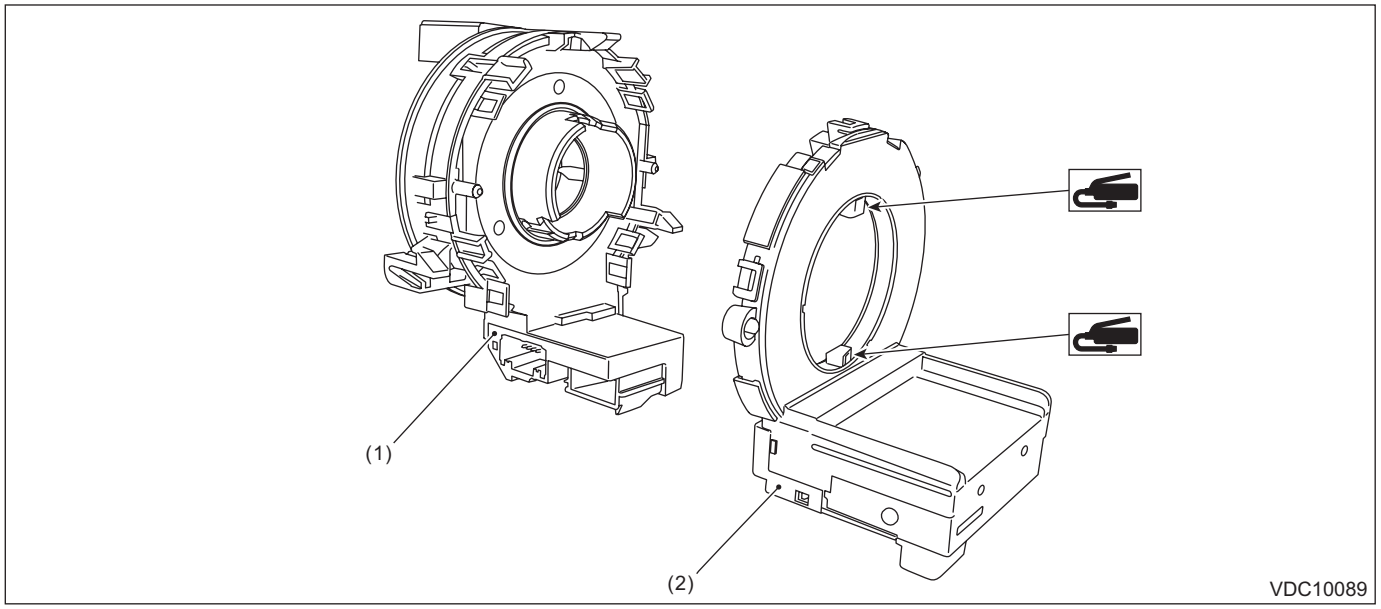

(1) Steering roll connector
(2) Steering angle sensor

3. VDC CONTROL MODULE & HYDRAULIC CONTROL UNIT (VDCCM&H/U)

- Models without EyeSight

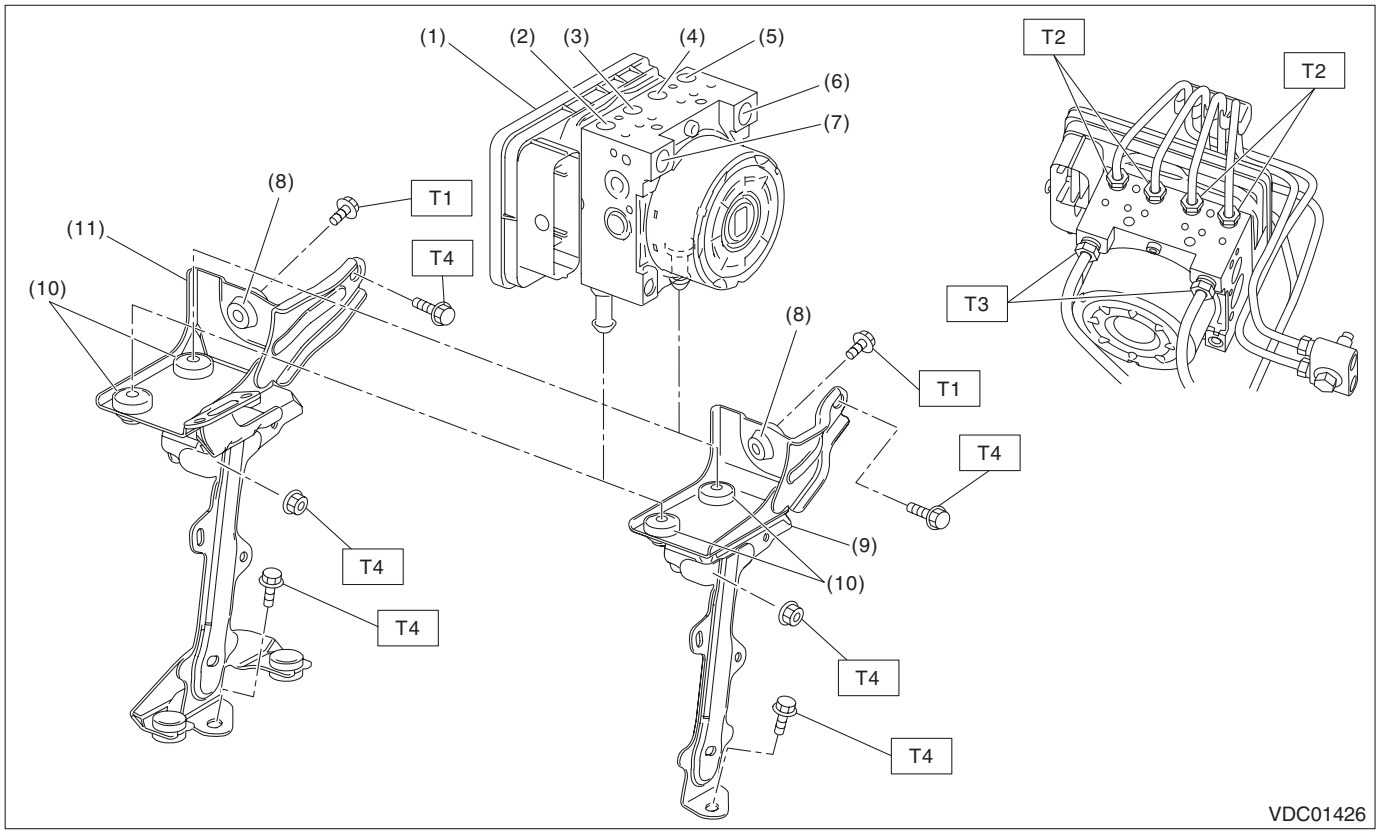

(1)	VDC control module and hydraulic control unit (VDCCM&H/U)	(7)	Secondary inlet	***Tightening torque: N·m (kgf-m, ft-lb)***
(2)	Rear RH outlet	(8)	Damper - hydraulic unit	***T1: 7.5 (0.8, 5.5)***
(3)	Front LH outlet	(9)	Bracket - hydraulic unit (STI model)	***T2: 15 (1.5, 11.1)***
(4)	Front RH outlet	(10)	Spacer	***T3: 19 (1.9, 14)***
(5)	Rear LH outlet	(11)	Bracket - hydraulic unit (except for STI model)	***T4: 33 (3.4, 24.3)***
(6)	Primary inlet			

- Models with EyeSight

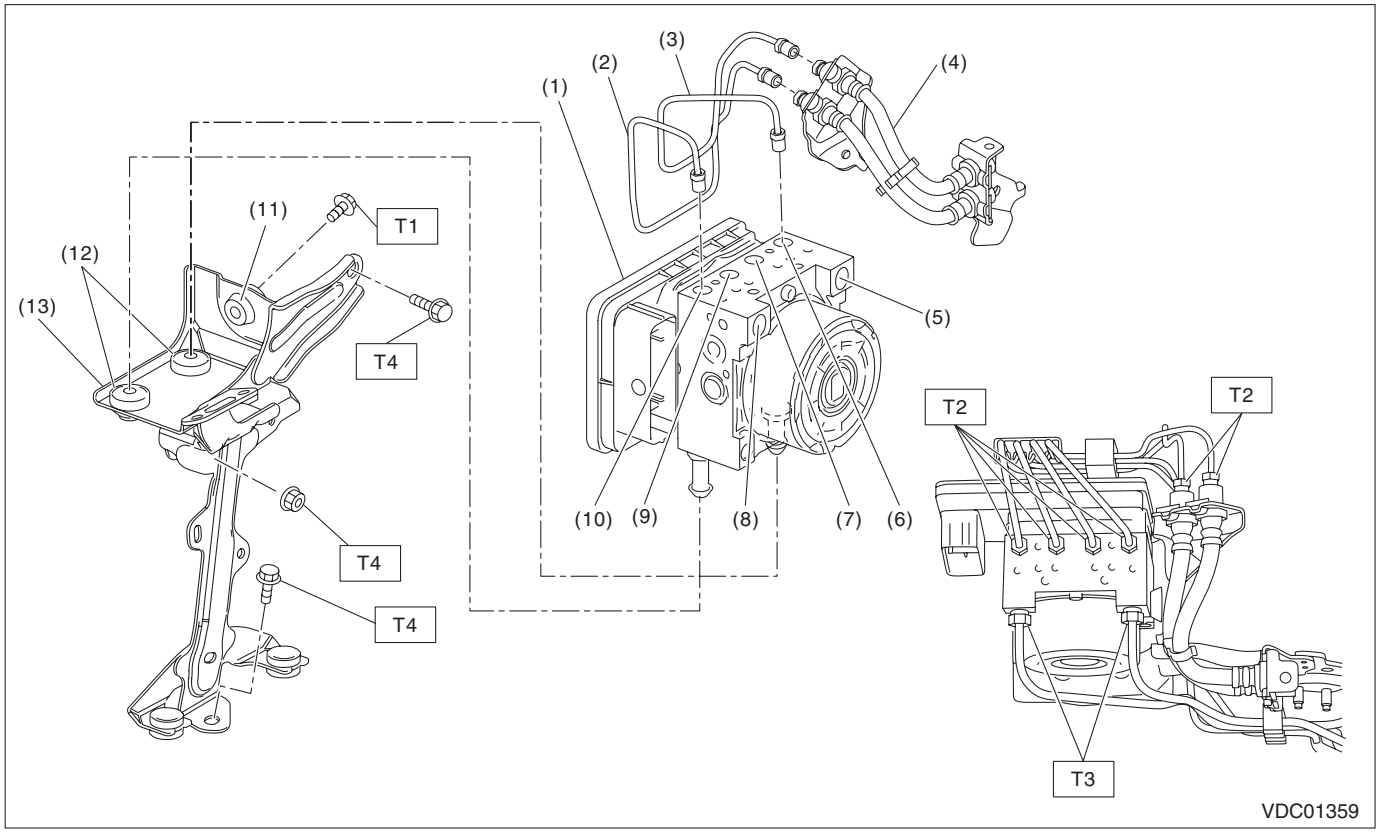

(1)	VDC control module and hydraulic control unit (VDCCM&H/U)	(8)	Secondary inlet
(2)	Pipe A	(9)	Front LH outlet
(3)	Pipe B	(10)	Rear RH outlet
(4)	Hose ASSY	(11)	Spacer
(5)	Primary inlet	(12)	Damper - hydraulic unit
(6)	Rear LH outlet	(13)	Bracket - hydraulic unit
(7)	Front RH outlet		

Tightening torque: N·m (kgf-m, ft-lb)

T1: 7.5 (0.8, 5.5)
T2: 15 (1.5, 11.1)
T3: 19 (1.9, 14)
T4: 33 (3.4, 24.3)

C: CAUTION

- When performing any work, always wear work clothes, a work cap and protective shoes. Additionally, wear a helmet, protective goggles, etc. if necessary.
- Remove contamination including dirt and corrosion before removal, installation, disassembly or assembly.
- Keep the disassembled parts in order and protect them from dust and dirt.
- When performing a repair, identify the cause of trouble and avoid unnecessary removal, disassembly and replacement.
- Some vehicle components are extremely hot immediately after driving. Be wary of receiving burns from heated parts.
- Be sure to tighten fasteners including bolts and nuts to the specified torque.
- Always use the jack-up point when the shop jacks or rigid racks are used to support the vehicle.
- When removing, installing or replacing the VDCCM&H/U, VDCCM&H/U bracket, steering wheel or steering angle sensor (steering roll connector), perform “VDC sensor midpoint setting mode” of the VDC. <Ref. to VDC-17, VDC SENSOR MIDPOINT SETTING MODE, ADJUSTMENT, VDC Control Module and Hydraulic Control Unit (VDCCM&H/U).>

D: PREPARATION TOOL

1. SPECIAL TOOL

ILLUSTRATION	TOOL NUMBER	DESCRIPTION	REMARKS
 STSSM4	—	SUBARU SELECT MONITOR 4	Used for setting of each function and trouble-shooting for electrical system. NOTE: For detailed operation procedures of Subaru Select Monitor 4, refer to “Application help”.

2. GENERAL TOOL

TOOL NAME	REMARKS
Circuit tester	Used for measuring resistance, voltage and current.
DST-i	Used together with Subaru Select Monitor 4.
Pressure gauge	Used for measuring oil pressure.
Oscilloscope	Used for measuring the sensor.
Steering wheel puller	Used for removing the steering wheel.

2. Relay and Fuse

A: LOCATION

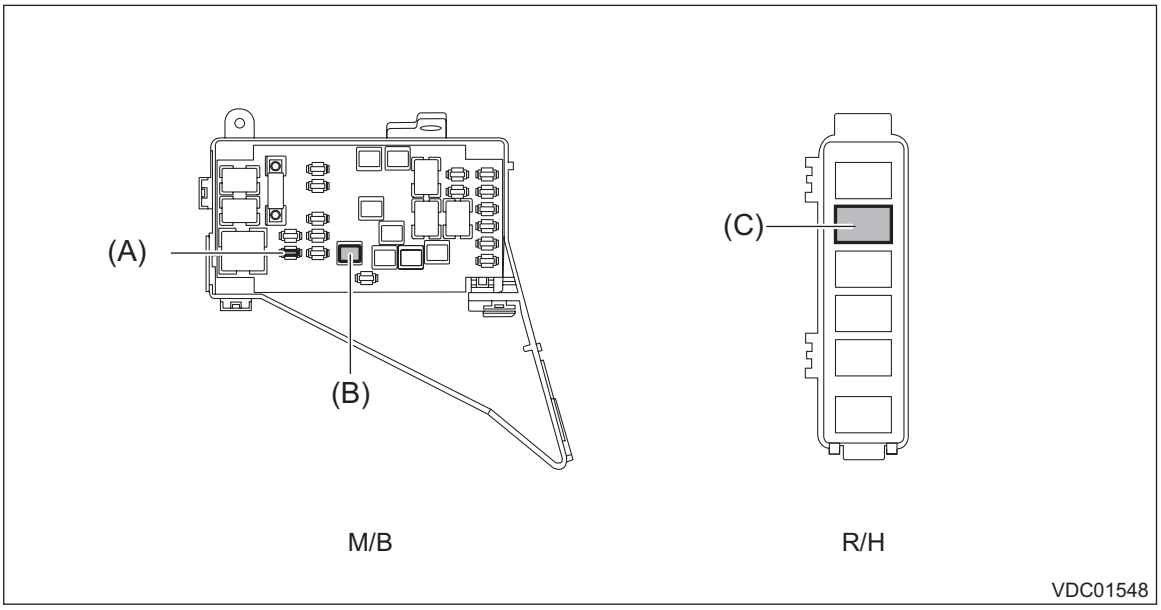

Main fuse box	Fuse 30A (VDC CM&H/U)	(A)
	Fuse 40A (VDC CM&H/U)	(B)
Relay holder	Brake light relay*	(C)
*: Model with EyeSight		

NOTE:
For other related fuses, refer to the wiring diagram. <Ref. to WI-31, Power Supply Circuit.>

B: INSPECTION

1. CHECK FUSE

1) Remove the fuse and inspect visually.
2) If the fuse is blown out, replace the fuse.

2. CHECK RELAY

1) Measure the resistance between relay terminals.

Terminal No.	Inspection conditions	Standard	Circuit
1 — 2	Always	1 MΩ or more	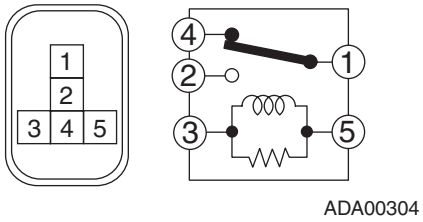
1 — 4	Always	Less than 1 Ω	
1 — 2	Apply battery voltage between terminals 3 and 5.	Less than 1 Ω	

2) Replace the relay if the inspection result is not within the standard value.

3. Vehicle Dynamics Control System

A: WIRING DIAGRAM

Refer to “Vehicle Dynamics Control System” in the wiring diagram. <Ref. to WI-368, WIRING DIAGRAM, Vehicle Dynamics Control System.>

B: ELECTRICAL SPECIFICATION

Refer to the Control Module I/O Signal of the “Vehicle Dynamics Control System (VDC) (DIAGNOSTICS)”. <Ref. to VDC(diag)-17, ELECTRICAL SPECIFICATION, Control Module I/O Signal.>

C: INSPECTION

Refer to the “Vehicle Dynamics Control System (VDC) (DIAGNOSTICS)”. <Ref. to VDC(diag)-135, INSPECTION, General Diagnostic Table.>

D: NOTE

For operation procedures of each component of the vehicle dynamics control system, refer to the respective section.

- VDC control module & hydraulic control unit (VDCCM&H/U): <Ref. to VDC-9, VDC Control Module and Hydraulic Control Unit (VDCCM&H/U).>
- Yaw rate & G sensor: <Ref. to VDC-27, Yaw Rate and G Sensor.>
- Steering angle sensor: <Ref. to VDC-28, Steering Angle Sensor.>
- Front ABS wheel speed sensor: <Ref. to VDC-32, Front ABS Wheel Speed Sensor.>
- Rear ABS wheel speed sensor: <Ref. to VDC-35, Rear ABS Wheel Speed Sensor.>
- Front magnetic encoder: <Ref. to VDC-38, Front Magnetic Encoder.>
- Rear magnetic encoder: <Ref. to VDC-39, Rear Magnetic Encoder.>
- VDC OFF switch: <Ref. to VDC-40, VDC OFF Switch.>
- Hill hold switch: <Ref. to VDC-42, Hill Hold Switch.>

4. VDC Control Module and Hydraulic Control Unit (VDCCM&H/U)

A: REMOVAL

CAUTION:
• Avoid unnecessary removal of parts in order to prevent fluid leakage.
• When the VDCCM&H/U components are removed, be sure to perform the installation according to the installation procedures. <Ref. to VDC-12, INSTALLATION, VDC Control Module and Hydraulic Control Unit (VDCCM&H/U).>

1) Disconnect the ground cable from battery. <Ref. to NT-6, BATTERY, NOTE, Note.>

NOTE:
For model with battery sensor, disconnect the ground terminal from battery sensor.

2) Remove the power steering control module. (Except for STI model) <Ref. to PS-100, REMOVAL, Power Steering Control Module.>
3) Remove the engine control module (ECM). (Except for STI model) <Ref. to FU(w/o STI)-124, REMOVAL, Engine Control Module (ECM).>
4) Remove the chamber assembly. (STI model) <Ref. to IN(STI)-23, REMOVAL, Chamber Assembly.>
5) Remove the VDC control module & hydraulic control unit (VDCCM&H/U).

CAUTION:
• Do not pull on the harness when disconnecting the connector.
• Wrap the brake pipe with a vinyl bag so as not to spill the brake fluid on the painted surface of the vehicle body.
• If brake fluid is spilled on the painted surface of the vehicle body, wash it off immediately with water and wipe clean.

(1) Remove any dirt from around the VDCCM&H/U.
(2) Remove the power steering control module. (Except for STI model) <Ref. to PS-100, REMOVAL, Power Steering Control Module.>
(3) Remove the nuts, and remove the bracket (a) from the bracket - connector front. (Except for STI model)

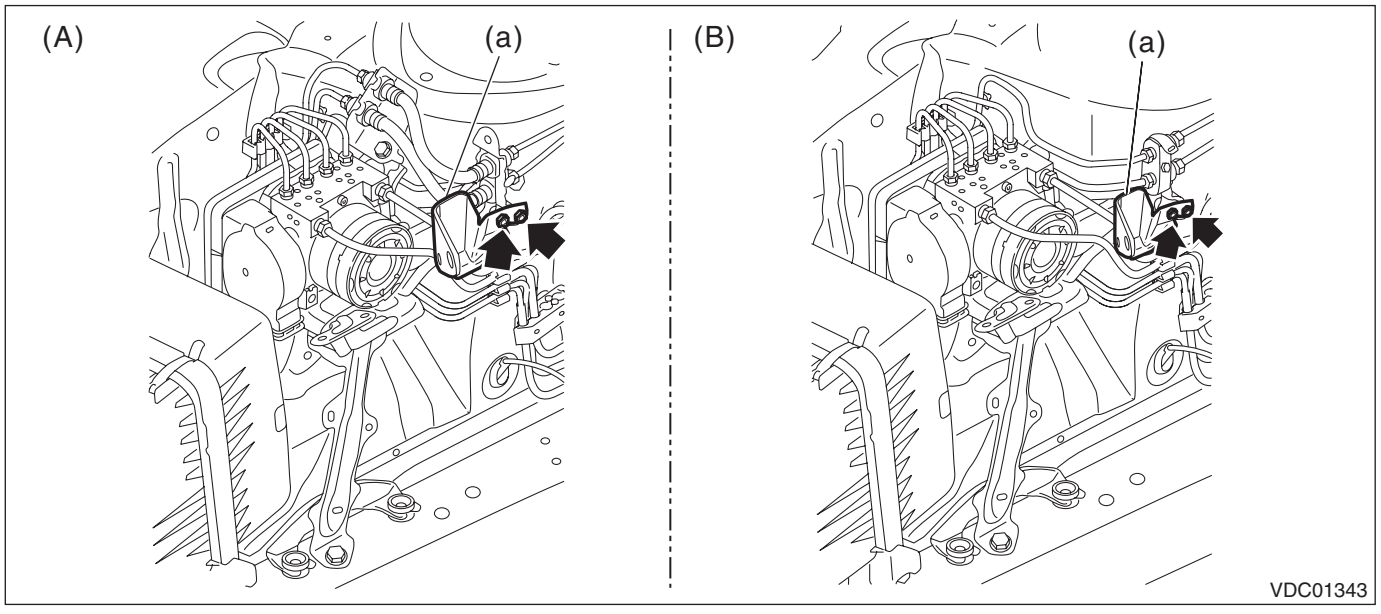

(A) Models with EyeSight (B) Models without EyeSight

(4) Pull up the lock lever (b) while pressing the lock button (a) and disconnect the VDCCM&H/U connector.

(5) Separate each brake pipe using a flare nut wrench.

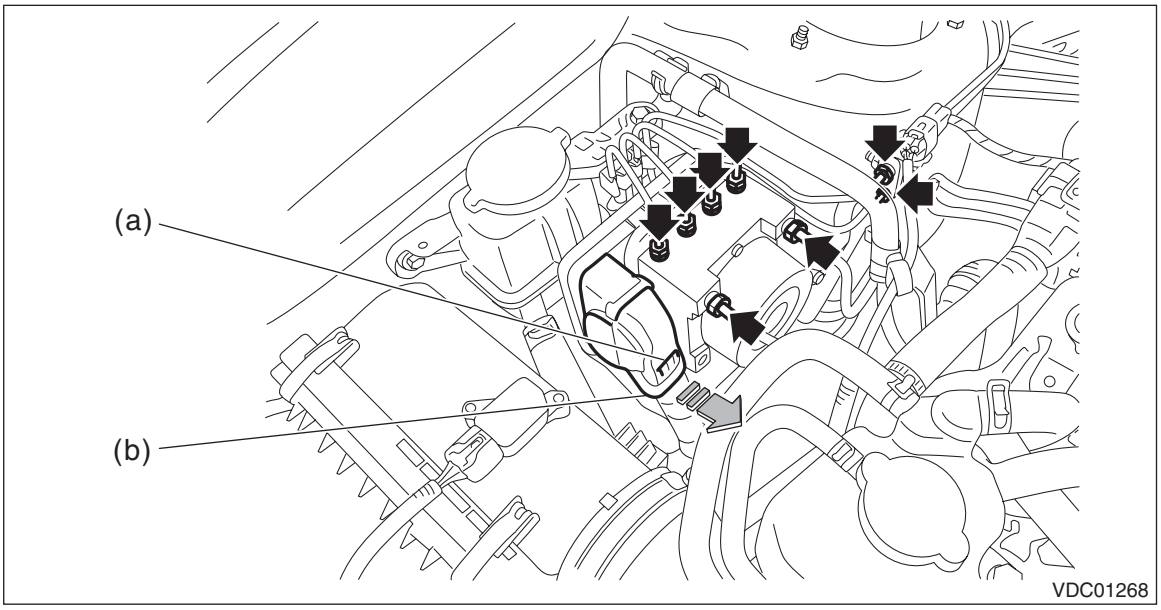

(6) Remove the bolts, and remove the bracket (a) and hose (b) from the bracket - hydraulic unit. (Models with EyeSight)

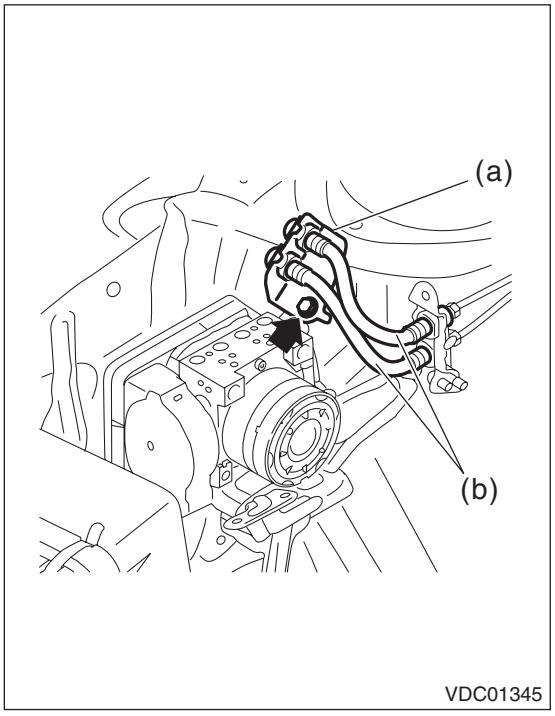

(7) Remove the bolts and nuts, and remove the bracket - hydraulic unit and the VDCCM&H/U.

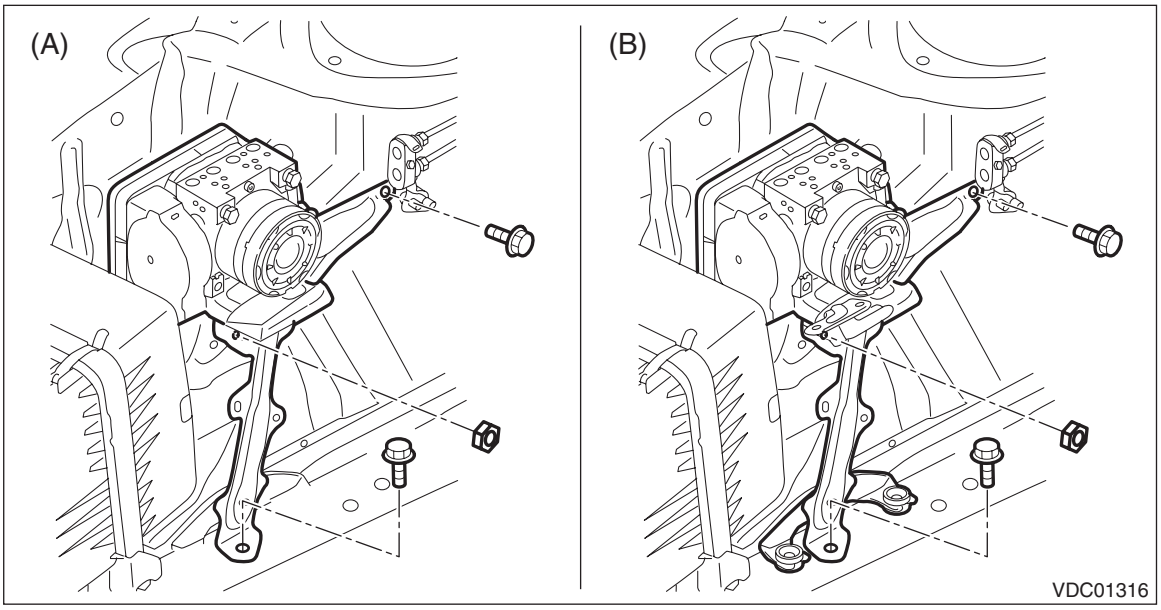

(A) STI model (B) Except for STI model

(8) Remove the bolts, and remove the VDCCM&H/U (a) from the bracket - hydraulic unit (b).

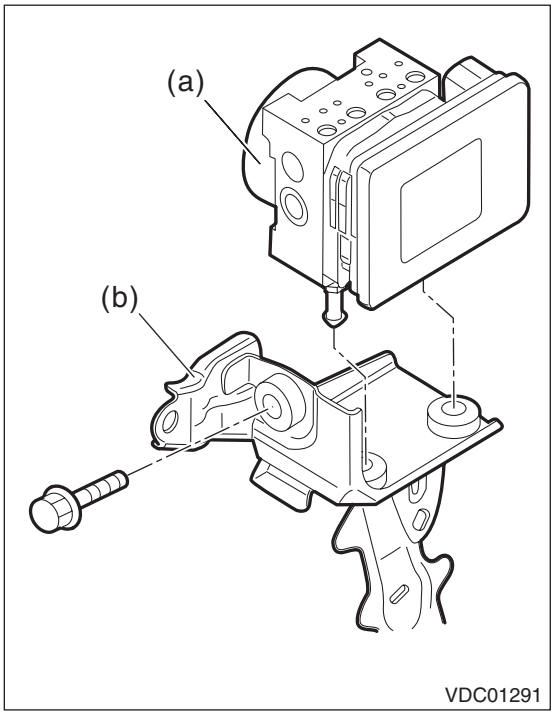

B: INSTALLATION

CAUTION:
• When installing the VDCCM&H/U to the bracket - hydraulic unit, make sure that there is no oil adhered to the bolts and the threads of VDCCM&H/U. If the oil is adhered, degrease it carefully before tightening.
• Connect the VDCCM&H/U connector securely.
1) Install the bracket - hydraulic unit and the VDCCM&H/U.
(1) Install the VDCCM&H/U to the bracket - hydraulic unit.

Tightening torque:
7.5 N·m (0.8 kgf-m, 5.5 ft-lb)
(2) Attach the bracket - hydraulic unit.

Tightening torque:
33 N·m (3.4 kgf-m, 23.8 ft-lb)
(3) Attach the bracket to the bracket - connector front. (Except for STI model)

Tightening torque:
7.5 N·m (0.8 kgf-m, 5.5 ft-lb)
(4) Install the power steering control module. (Except for STI model) <Ref. to PS-100, INSTALLATION, Power Steering Control Module.>
(5) Connect the VDCCM&H/U connector.
(6) Install each brake pipe using a flare nut wrench.

Tightening torque:
Refer to "COMPONENT" of "General Description". <Ref. to VDC-4, VDC CONTROL MODULE & HYDRAULIC CONTROL UNIT (VDCCM&H/U), COMPONENT, General Description.>
2) Install the chamber assembly. (STI model) <Ref. to IN(STI)-23, INSTALLATION, Chamber Assembly.>
3) Install the engine control module (ECM). (Except for STI model) <Ref. to FU(w/o STI)-125, INSTALLATION, Engine Control Module (ECM).>
4) Install the power steering control module. (Except for STI model) <Ref. to PS-100, INSTALLATION, Power Steering Control Module.>
5) Connect the battery ground terminal. <Ref. to NT-6, BATTERY, NOTE, Note.>
6) Bleed air from the brake system. <Ref. to BR-87, PROCEDURE, Air Bleeding.>
7) Perform parameter confirmation, selection, and registration.

NOTE:
• When the VDCCM&H/U is replaced with a new part, be sure to perform the selection • registration operation.
• When the registration has not been performed, the DTC code "Parameter selection error" is detected together with the ABS/EBD/VDC warning light illumination.
(1) Check that the applied model and grade of the relevant vehicle are included. <Ref. to VDC-19, VDCCM PARAMETER CHECK, MAINTENANCE MODE, VDC Control Module and Hydraulic Control Unit (VDCCM&H/U).>
(2) If the applied model and grade of the target vehicle are not included, perform parameter selection and registration. <Ref. to VDC-19, VDCCM PARAMETER SELECTION, MAINTENANCE MODE, VDC Control Module and Hydraulic Control Unit (VDCCM&H/U).>
8) Perform "VDC sensor midpoint setting mode". <Ref. to VDC-17, VDC SENSOR MIDPOINT SETTING MODE, ADJUSTMENT, VDC Control Module and Hydraulic Control Unit (VDCCM&H/U).>

C: INSPECTION

1) Check the identification (a) of the VDC control module & hydraulic control unit (VDCCM&H/U).

NOTE:
For the identification, refer to “SPECIFICATION” in “General Description”. <Ref. to VDC-2, SPECIFICATION, General Description.>

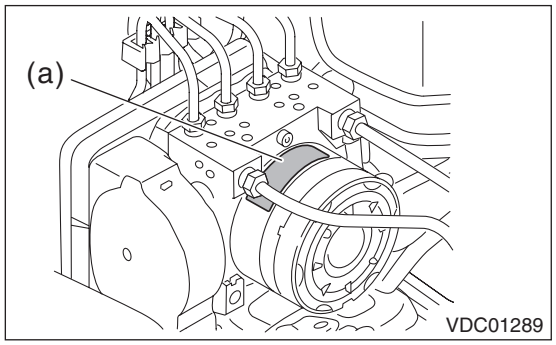

2) Check the condition of connection and settlement of connector, and correct or replace if defective.

1. CHECKING THE HYDRAULIC UNIT ABS OPERATION BY PRESSURE GAUGE

1) Lift up the vehicle, and then remove the wheel.
2) Remove the bleeder - screws from the front LH and front RH caliper bodies.
3) Connect two pressure gauges to front LH and front RH caliper bodies.

CAUTION:
- **Use a pressure gauge used exclusively for brake fluid measurement.**
- **Do not use the pressure gauge used for the measurement of transmission oil. Doing so will cause the piston seal to expand and deform.**

NOTE:
Wrap sealing tape around the pressure gauge.

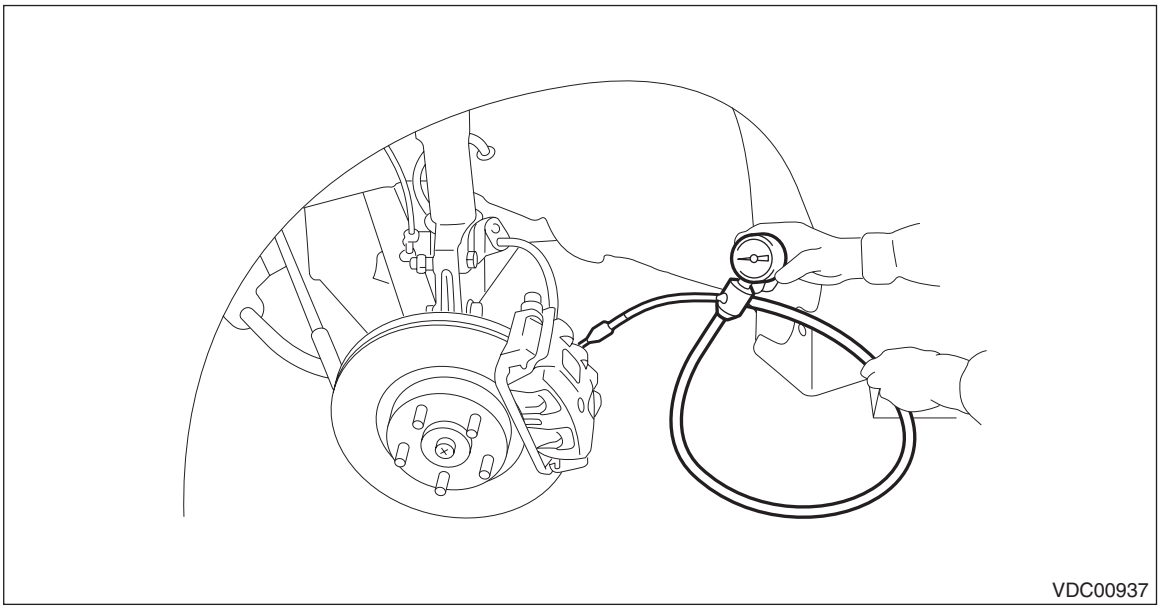

4) Bleed air from the pressure gauges and the front LH and front RH caliper bodies.
5) Perform ABS sequence control. <Ref. to VDC-20, ABS Sequence Control.>

NOTE:
When the hydraulic unit begins to work, first the front LH side performs decompression, hold and compression, and then the front RH side performs decompression, hold and compression.

6) Read values indicated on the pressure gauge and check if the fluctuation of the values between decompression and compression meets the standard values. Depress the brake pedal and check that the kick-back is normal, and tightness is normal.

Inspection conditions	Front wheel	Rear wheel
Initial value	3,500 kPa (36 kgf/cm^2, 511 psi)	3,500 kPa (36 kgf/cm^2, 511 psi)
When depressurized	500 kPa (5 kgf/cm^2, 73 psi) or less	500 kPa (5 kgf/cm^2, 73 psi) or less
When pressurized	3,500 kPa (36 kgf/cm^2, 511 psi) or more	3,500 kPa (36 kgf/cm^2, 511 psi) or more

7) Remove the pressure gauge from the front LH and front RH caliper bodies.
8) Install the bleeder - screws of the front LH and front RH caliper bodies.
9) Remove the bleeder - screws from the rear LH and rear RH caliper bodies.
10) Connect two pressure gauges to rear LH and rear RH caliper bodies.
11) Bleed air from the pressure gauges and the rear LH and rear RH caliper bodies.
12) Perform ABS sequence control. <Ref. to VDC-20, ABS Sequence Control.>

NOTE:
When the hydraulic unit begins to work, first the rear LH side performs decompression, hold and compression, and then the rear RH side performs decompression, hold and compression.
13) Read values indicated on the pressure gauge and check if the fluctuation of the values between decompression and compression meets specification. Depress the brake pedal and check that the kick-back is normal, and tightness is normal.
14) Remove the pressure gauge from the rear LH and rear RH caliper bodies.
15) Install the bleeder - screws of the rear LH and rear RH caliper bodies.
16) Bleed air from the brake system. <Ref. to BR-87, Air Bleeding.>

2. CHECKING THE HYDRAULIC UNIT ABS OPERATION WITH THE BRAKE TESTER

1) Set wheels other than the one to measure on free rollers.
2) Prepare for the ABS sequence control operation. <Ref. to VDC-20, ABS Sequence Control.>
3) Set the front wheels or rear wheels on the brake tester (a) and set the gear to neutral.

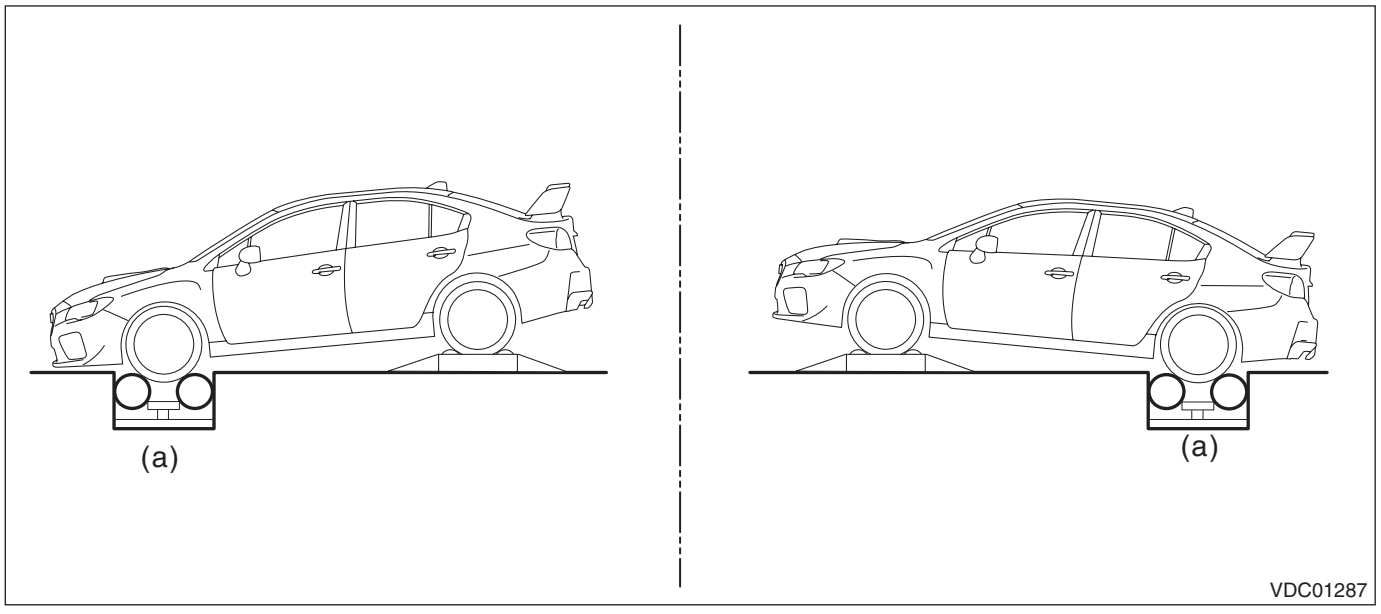

4) Operate the brake tester.

NOTE:
When any wheel speed reaches 10 km/h (6 MPH), the ABS sequence control stops and ABS operation is returned to the normal control mode.

5) Perform ABS sequence control. <Ref. to VDC-20, ABS Sequence Control.>

6) When the hydraulic unit begins to work, check the following work sequence.
   (1) The front LH wheel performs decompression, hold and compression in sequence, and subsequently the front RH wheel repeats the same cycle.
   (2) The rear RH wheel performs decompression, hold and compression in sequence, and subsequently the rear LH wheel repeats the same cycle.

7) Read values indicated on the brake tester and check if the fluctuation of the values between decompression and compression meets specification.

Inspection conditions	Front wheel	Rear wheel
Initial value	1,000 N (102 kgf, 225 lb)	1,000 N (102 kgf, 225 lb)
When depressurized	500 N (51 kgf, 112 lb) or less	500 N (51 kgf, 112 lb) or less
When pressurized	1,000 N (102 kgf, 225 lb) or more	1,000 N (102 kgf, 225 lb) or more

8) After the inspection, depress the brake pedal and check that it is not abnormally hard, and tightness is normal.

3. CHECKING THE HYDRAULIC UNIT VDC OPERATION USING A PRESSURE GAUGE

1) Lift up the vehicle, and then remove the wheel.
2) Remove the bleeder - screws from the front LH and front RH caliper bodies.
3) Connect two pressure gauges to front LH and front RH caliper bodies.

CAUTION:
- **Use a pressure gauge used exclusively for brake fluid measurement.**
- **Do not use a pressure gauge used for the measuring transmission oil pressure, as the piston seal may expand and deform.**

NOTE:
Wrap sealing tape around the pressure gauge.

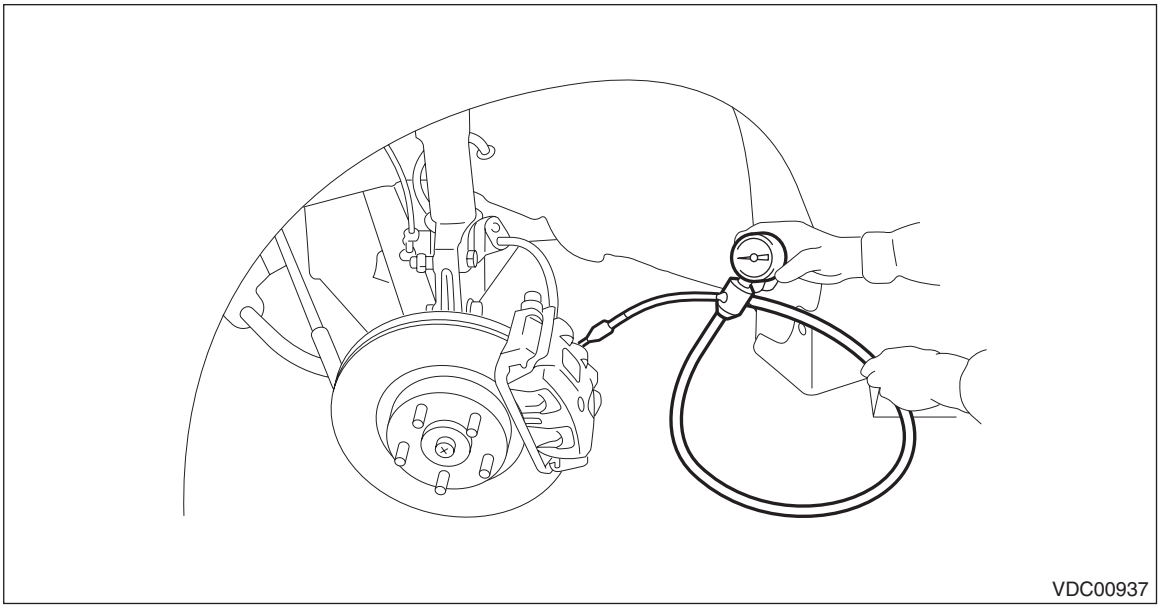

4) Bleed air from the pressure gauge.

5) Perform VDC sequence control. <Ref. to VDC-23, VDC Sequence Control.>

NOTE:
When the hydraulic unit begins to work, first the front LH side performs compression, hold and decompression, and then the front RH side performs compression, hold and decompression.

6) Read values indicated on the pressure gauge and check if the fluctuation of the values between decompression and compression meets specification. Depress the brake pedal and check that it is not abnormally hard, and tightness is normal.

Inspection conditions	Front wheel	Rear wheel
When pressurized	3,000 kPa (31 kgf/cm^2, 441 psi) or more	3,000 kPa (31 kgf/cm^2, 441 psi) or more
When depressurized	500 kPa (5 kgf/cm^2, 73 psi) or less	500 kPa (5 kgf/cm^2, 73 psi) or less

7) Remove the pressure gauge from the front LH and front RH caliper bodies.
8) Install the bleeder - screws of the front LH and front RH caliper bodies.
9) Remove the bleeder - screws from the rear LH and rear RH caliper bodies.
10) Connect two pressure gauges to rear LH and rear RH caliper bodies.
11) Bleed air from the pressure gauges and the rear LH and rear RH caliper bodies.
12) Perform VDC sequence control. <Ref. to VDC-23, VDC Sequence Control.>

NOTE:
When the hydraulic unit begins to work, first the rear RH side performs compression, hold and decompression, and then the rear LH side performs compression, hold and decompression.

13) Read the values indicated on the pressure gauges and check if it is within specification. Depress the brake pedal and check that it is not abnormally hard, and tightness is normal.
14) Remove the pressure gauge from the rear LH and rear RH caliper bodies.
15) Install the bleeder - screws of the rear LH and rear RH caliper bodies.
16) Bleed air from the brake system. <Ref. to BR-87, Air Bleeding.>

4. CHECK HYDRAULIC UNIT VDC OPERATION WITH BRAKE TESTER

1) Set wheels other than the one to measure on free rollers.
2) Prepare to operate the VDC sequence control. <Ref. to VDC-23, VDC Sequence Control.>
3) Set the front wheels or rear wheels on the brake tester (a) and set the gear to neutral.

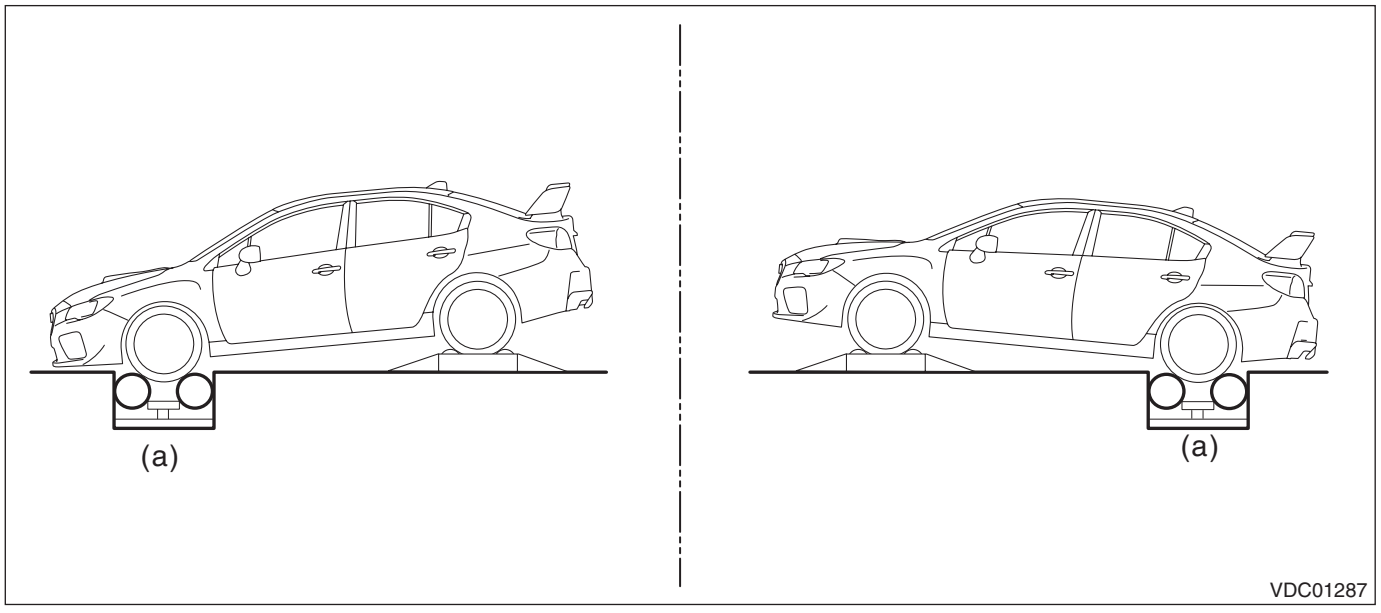

4) Operate the brake tester.

NOTE:
When any wheel speed reaches 10 km/h (6 MPH), the VDC sequence control stops and VDC operation is returned to the normal control mode.

5) Perform VDC sequence control. <Ref. to VDC-23, VDC Sequence Control.>
6) When the hydraulic unit begins to work, check the following work sequence.
   (1) The front LH wheel performs compression, hold and decompression in sequence, and subsequently the front RH wheel repeats the same cycle.
   (2) The rear RH wheel performs compression, hold and decompression in sequence, and subsequently the rear LH wheel repeats the same cycle.
7) Read values indicated on the brake tester and check if the fluctuation of the values between decompression and compression meets specification.

Inspection conditions	Front wheel	Rear wheel
When pressurized	2,000 N (204 kgf, 450 lbf) or more	2,000 N (204 kgf, 450 lbf) or more
When depressurized	500 N (51 kgf, 112 lbf) or less	500 N (51 kgf, 112 lbf) or less

8) After the inspection, depress the brake pedal and check that it is not abnormally hard, and tightness is normal.

D: ADJUSTMENT

1. VDC SENSOR MIDPOINT SETTING MODE

After installing, replacing or adjusting the following parts, perform the VDC sensor midpoint setting mode.
- Steering angle sensor
- Steering wheel
- Suspension parts
- Wheel alignment
- VDCCM&H/U
- VDCCM&H/U bracket

1) Park the vehicle on a level surface, and set the steering wheel to the neutral position.
2) Perform the VDC sensor 0 point setting mode.
   (1) Connect the Subaru Select Monitor.

NOTE:
For detailed operation procedures, refer to “Application help”.

   (2) Turn the ignition switch to ON.
   (3) On «Start» display, select «Diagnosis».
   (4) On «Vehicle selection» display, input the target vehicle information and select «Confirmed».
   (5) On «Main Menu» display, select «Each System».
   (6) On «Select System» display, select «Brake Control System» and select «Enter».
   (7) On «Select Function» display, select «Data Monitor».
   (8) From the data monitor item list, select «Steering Angle Sensor», «Longitudinal G Sensor» and «Lateral G sensor Output».
   (9) Check that the steering angle sensor output value is within the range of following values.
   - Model without EyeSight: –10 — 10 deg
   - Model with EyeSight: –2 — 2 deg

NOTE:
If the output value is different from the standard value, check the steering wheel.

   (10) Check that output values for the longitudinal G sensor and lateral G sensor are –2 — 2 m/s^2.

NOTE:
If the output value is not at the standard value, check the installing condition of the VDCCM&H/U and VDCCM&H/U bracket.

(11) On «Select Function» display, select «Work Support».
(12) From the work support item list, select «VSC(VDC) Centering Mode», and perform the setting according to the procedure displayed on the Subaru Select Monitor screen.
3) Drive the vehicle for 10 minutes, and check that there is no system malfunction or the warning light illumination while driving.
4) Make sure that the DTC is not stored.

E: MAINTENANCE MODE

1. BRAKE MAINTENANCE MODE

NOTE:
For brake maintenance mode, refer to “PARKING BRAKE” section. <Ref. to PB-21, BRAKE MAINTENANCE MODE, OPERATION, Parking Brake System.>

2. VDCCM PARAMETER READING

1) Perform reading of parameter.
(1) Connect the Subaru Select Monitor.

NOTE:
For detailed operation procedures, refer to “Application help”.
(2) Turn the ignition switch to ON.
(3) On «Start» display, select «Diagnosis».
(4) On «Vehicle selection» display, input the target vehicle information and select «Confirmed».
(5) On «Main Menu» display, select «Each System».
(6) On «Select System» display, select «Brake Control System» and select «Enter».
(7) On «Select Function» display, select «Work Support».
(8) On «Work Support» display, select «Reading of parameter: ECM to SSM».
2) Save and close the file.

3. VDCCM PARAMETER WRITING

1) Perform writing of parameter.
(1) Connect the Subaru Select Monitor.

NOTE:
For detailed operation procedures, refer to “Application help”.
(2) Turn the ignition switch to ON.
(3) On «Start» display, select «Diagnosis».
(4) On «Vehicle selection» display, input the target vehicle information and select «Confirmed».
(5) On «Main Menu» display, select «Each System».
(6) On «Select System» display, select «Brake Control System» and select «Enter».
(7) On «Select Function» display, select «Work Support».
(8) On «Work Support» display, select «Writing of parameter: SSM to ECM».
2) Open the file saved in the «Reading of parameter: ECM to SSM» procedure.
3) When the confirmation screen indicating the vehicle information appears, check that the correct applied model and grade are displayed and click the «OK» button.

4. VDCCM PARAMETER SELECTION

NOTE:
• When the VDCCM&H/U is replaced with a replacement part, be sure to perform the parameter selection/registration to the VDCCM&H/U using this function.
• To check the applied model, refer to the “Model number plate” attached to the vehicle. <Ref. to ID-2, IDENTIFICATION, Identification.>
• If you entered a wrong applied model, you can re-write it.
• When the registration has not been performed, the DTC code “Parameter” is detected together with the ABS/EBD/VDC warning light illumination.
• This function can be used for the replacement part of VDCCM&H/U.

1) Perform selection of parameter.
   (1) Connect the Subaru Select Monitor.

NOTE:
For detailed operation procedures, refer to “Application help”.

   (2) Turn the ignition switch to ON.
   (3) On «Start» display, select «Diagnosis».
   (4) On «Vehicle selection» display, input the target vehicle information and select «Confirmed».
   (5) On «Main Menu» display, select «Each System».
   (6) On «Select System» display, select «Brake Control System» and select «Enter».
   (7) On «Select Function» display, select «Work Support».
   (8) On «Work Support» display, select «Selection of Parameter».

2) Check the applied model and option code indicated on the “Model number plate”. <Ref. to ID-2, IDENTIFICATION, Identification.>
3) Enter the applied model of 7-digit alphanumeric characters and press the «Enter» key.
4) When the option code input screen appears after entering the applied model, enter the option code consisting of 4-digit alphanumeric characters, and press the «Enter» key. When the option code is 3 digits, add “0” (zero) in front and enter the code as 4 digits.
5) When the confirmation screen indicating the vehicle information appears, check that the correct applied model and grade are displayed and click the «OK» button.

NOTE:
When the displayed applied model and grade are different from those of the vehicle, perform registration operations again after clicking the [OK] button.

6) Execute the Clear Memory Mode after parameter selection and registration operations because the DTC for “Parameter selection error” is memorized. <Ref. to VDC(diag)-30, Clear Memory Mode.>

5. VDCCM PARAMETER CHECK

NOTE:
The parameter data registered in the VDCCM is shown on the display.

1) Perform confirming on parameter.
   (1) Connect the Subaru Select Monitor.

NOTE:
For detailed operation procedures, refer to “Application help”.

   (2) Turn the ignition switch to ON.
   (3) On «Start» display, select «Diagnosis».
   (4) On «Vehicle selection» display, input the target vehicle information and select «Confirmed».
   (5) On «Main Menu» display, select «Each System».
   (6) On «Select System» display, select «Brake Control System» and select «Enter».
   (7) On «Select Function» display, select «Work Support».
   (8) On «Work Support» display, select «Confirm on parameter».

2) Check that the applied model and grade of the relevant vehicle are included, and click the «OK» button.
3) If the applied model and grade of the target vehicle are not included, perform “parameter selection and registration”. <Ref. to VDC-19, VDCCM PARAMETER SELECTION, MAINTENANCE MODE, VDC Control Module and Hydraulic Control Unit (VDCCM&H/U).>

5. ABS Sequence Control

A: OPERATION

1) While the ABS sequence control is being performed, the operation of the hydraulic unit can be checked using the brake tester or pressure gauge after the hydraulic unit solenoid valve operation.
2) ABS sequence control can be started by the Subaru Select Monitor.

1. ABS SEQUENCE CONTROL WITH SUBARU SELECT MONITOR

NOTE:
In the event of any trouble, the ABS sequence control will not operate.
1) Connect the Subaru Select Monitor.

NOTE:
For detailed operation procedures, refer to “Application help”.
(1) Turn the ignition switch to ON.
(2) On «Start» display, select «Diagnosis».
(3) On «Vehicle selection» display, input the target vehicle information and select «Confirmed».
(4) On «Main Menu» display, select «Each System».
(5) On «Select System» display, select «Brake Control System» and select «Enter».
(6) On «Select Function» display, select «Work Support».
(7) From the work support item list, select «ABS Sequence Control Mode».
2) Follow the procedures displayed in the Subaru Select Monitor to execute the following.
(1) When using a brake tester, depress the brake pedal with a force of 100 N (10.2 kgf, 22.5 lbf).
(2) When using a pressure gauge, press the brake pedal so that the pressure gauge indicates 3,500 kPa (36 kgf/cm^2, 511 psi).
3) The brake system being operated is displayed on the Subaru Select Monitor.

2. CONDITIONS FOR ABS SEQUENCE CONTROL

NOTE:
The control operation starts at point A.

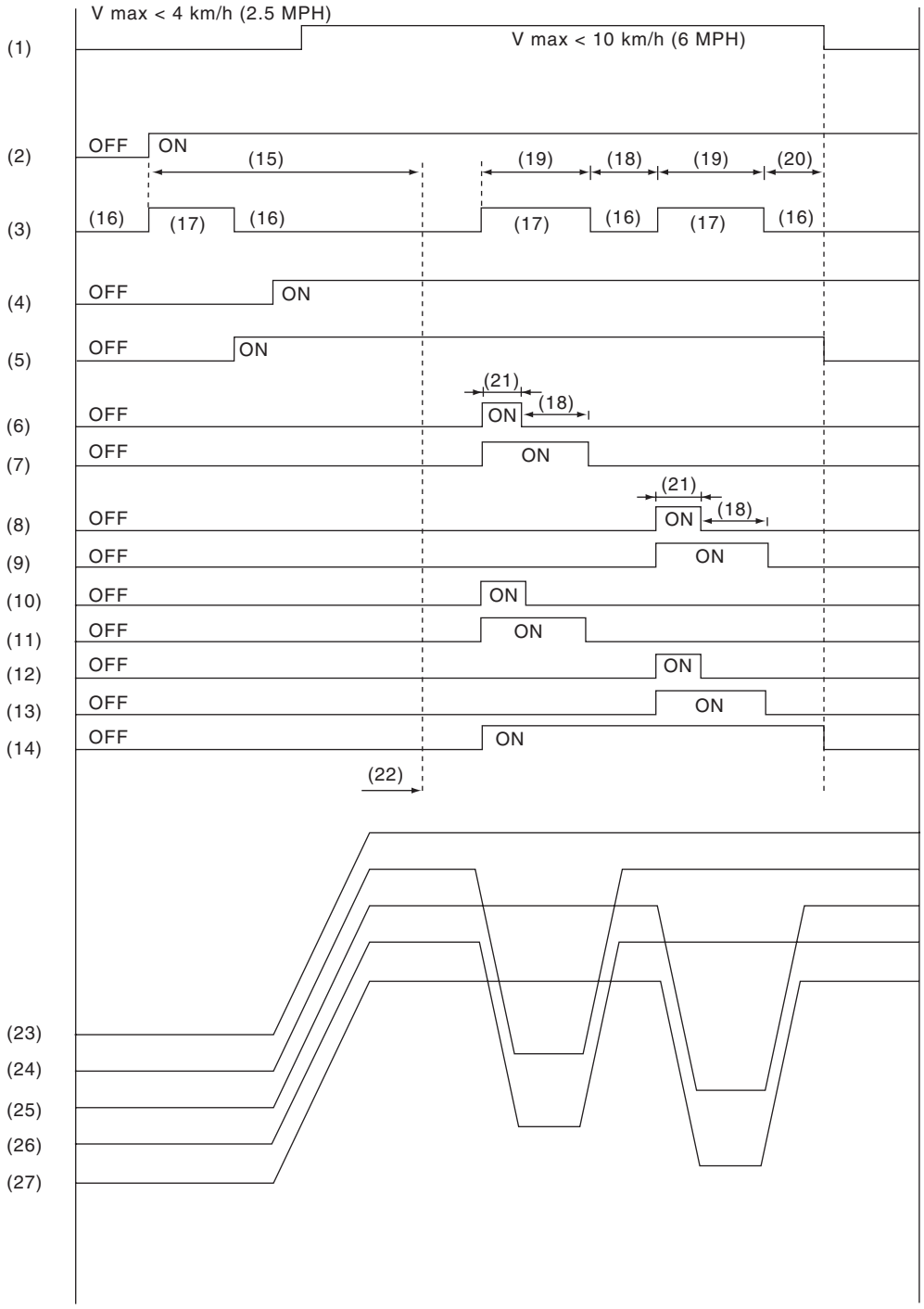

VDC01320

(1) All wheel speed
(2) Ignition key
(3) ABS warning light
(4) Switch - stop light
(5) Valve relay
(6) Front LH decompression valve
(7) Front LH compression valve
(8) Front RH decompression valve
(9) Front RH compression valve
(10) Rear RH decompression valve
(11) Rear RH compression valve
(12) Rear LH decompression valve
(13) Rear LH compression valve
(14) Pump motor
(15) A few seconds
(16) Light OFF
(17) Light ON
(18) 1.0 second
(19) 1.4 seconds
(20) 0.6 seconds
(21) 0.4 seconds
(22) Point A
(23) Master cylinder pressure
(24) Front LH wheel cylinder pressure
(25) Front RH wheel cylinder pressure
(26) Rear RH wheel cylinder pressure
(27) Rear LH wheel cylinder pressure

B: SPECIFICATION

1. CONDITIONS FOR COMPLETION OF ABS SEQUENCE CONTROL

When the following conditions develop, the ABS sequence control stops and ABS operation is returned to the normal control mode.

- When the speed of at least one wheel reaches 10 km/h (6 MPH).
- When the brake pedal is released during ABS sequence control and the switch - stop light becomes OFF.
- After completion of ABS sequence control.
- When a malfunction is detected.

6. VDC Sequence Control

A: OPERATION

1) While the VDC sequence control is performed, the operation of the hydraulic unit can be checked using the brake tester or pressure gauge after the hydraulic unit solenoid valve is operated.
2) VDC sequence control can be started by Subaru Select Monitor.

1. VDC SEQUENCE CONTROL WITH SUBARU SELECT MONITOR

NOTE:
In the event of any trouble, sequence control will not operate.
1) Connect the Subaru Select Monitor.

NOTE:
For detailed operation procedures, refer to “Application help”.
(1) Turn the ignition switch to ON.
(2) On «Start» display, select «Diagnosis».
(3) On «Vehicle selection» display, input the target vehicle information and select «Confirmed».
(4) On «Main Menu» display, select «Each System».
(5) On «Select System» display, select «Brake Control System» and select «Enter».
(6) On «Select Function» display, select «Work Support».
(7) From the work support item list, select «VDC Function Check Mode».
2) Operate according to the procedures displayed in the Subaru Select Monitor.
3) The brake system being operated is displayed on the Subaru Select Monitor.

2. CONDITIONS FOR VDC SEQUENCE CONTROL

NOTE:
The control operation starts at point A.

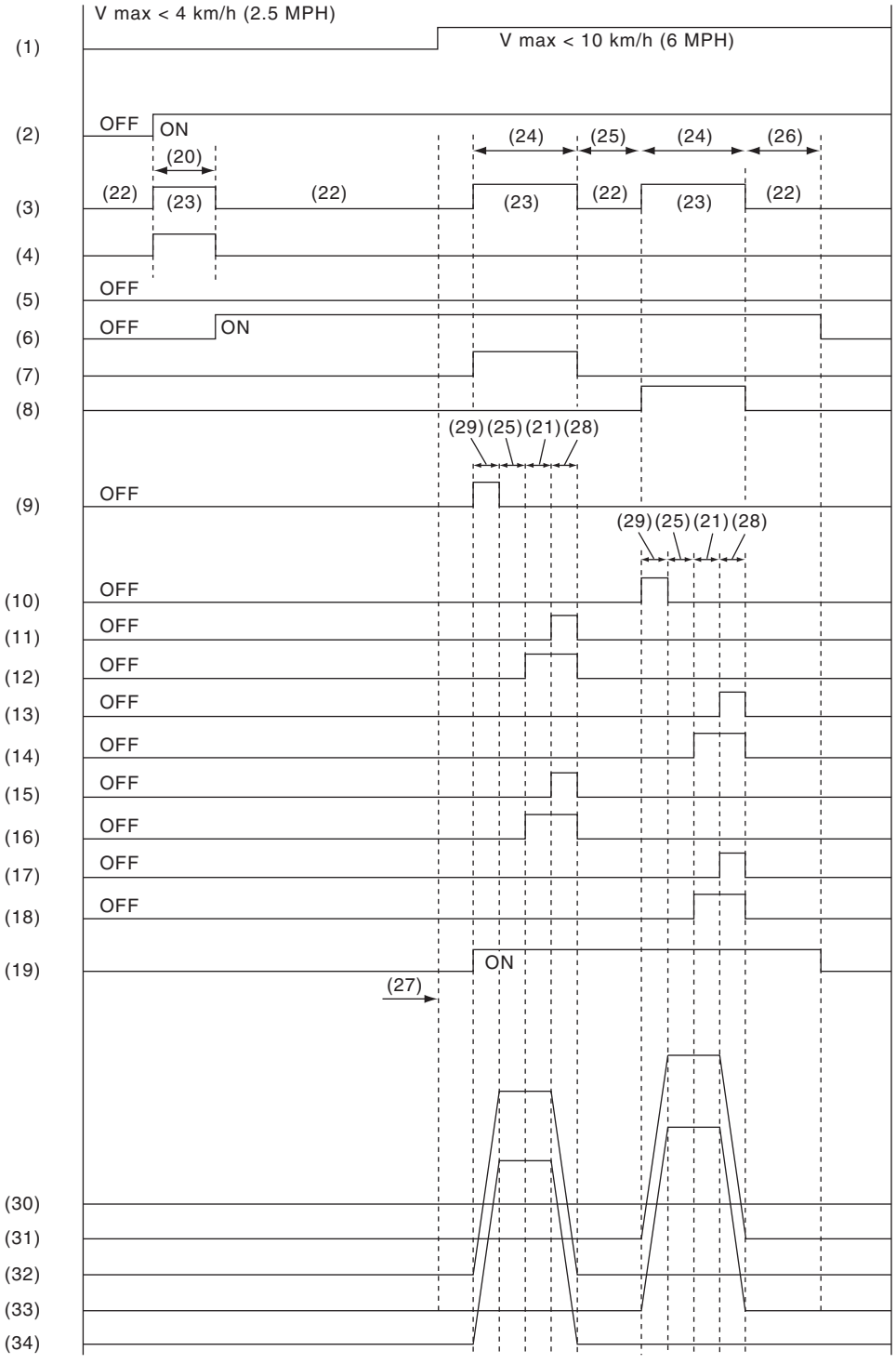

VDC01434

(1) All wheel speed
(2) Ignition key
(3) ABS warning light
(4) VDC warning light
(5) Switch - stop light
(6) Valve relay
(7) VDC switching valve 1 front LH
(8) VDC switching valve 1 front RH
(9) VDC switching valve 2 front LH
(10) VDC switching valve 2 front RH
(11) Front LH decompression valve
(12) Front LH compression valve
(13) Front RH decompression valve
(14) Front RH compression valve
(15) Rear RH decompression valve
(16) Rear RH compression valve
(17) Rear LH decompression valve
(18) Rear LH compression valve
(19) Pump motor
(20) A few seconds
(21) 1.2 seconds
(22) Light OFF
(23) Light ON
(24) 3.4 seconds
(25) 1 second
(26) 1.6 seconds
(27) Point A
(28) 0.4 seconds
(29) 0.8 seconds
(30) Master cylinder pressure
(31) Front RH wheel cylinder pressure
(32) Front LH wheel cylinder pressure
(33) Rear LH wheel cylinder pressure
(34) Rear RH wheel cylinder pressure

B: SPECIFICATION

1. CONDITIONS FOR COMPLETION OF VDC SEQUENCE CONTROL

When the following conditions develop, the VDC sequence control stops and VDC operation is returned to the normal control mode.

- When the speed of at least one wheel reaches 10 km/h (6 MPH).
- After completion of VDC sequence control.
- When a malfunction is detected.

7. Brake Lamp Relay

A: NOTE

For brake light relay, refer to “Relay and Fuse”. <Ref. to VDC-7, Relay and Fuse.>

B: OPERATION

1. BRAKE LIGHT LIGHTING OPERATION MODE BY SUBARU SELECT MONITOR

CAUTION:
For models with EyeSight, performing brake light relay compulsory operation may cause the EyeSight warning light to illuminate. If the brake light relay compulsory operation is performed, refer to “Basic Diagnostic Procedure” of “EyeSight (DIAGNOSTICS)” and check DTCs and then clear memory. <Ref. to ES(diag)-2, Basic Diagnostic Procedure.>

1) Connect the Subaru Select Monitor.

NOTE:
- In the event of any trouble, brake lamp lighting operation mode will not function.
- For detailed operation procedures, refer to “Application help”.
  (1) On «Start» display, select «Diagnosis».
  (2) On «Vehicle selection» display, input the target vehicle information and select «Confirmed».
  (3) On «Main Menu» display, select «Each System».
  (4) On «Select System» display, select «Brake Control System» and select «Enter».
  (5) On «Select Function» display, select «Work Support».
  (6) From the work support item list, select «Brake Lamp Lighting Operation» mode.

2) Operate according to the procedures displayed in the Subaru Select Monitor.

C: SPECIFICATION

1. CONDITIONS TO COMPLETE BRAKE LIGHT LIGHTING OPERATION MODE

When the following conditions develop, the brake lamp lighting operation mode stops and the normal control mode is restored.
- When the speed of at least one wheel reaches 10 km/h (6 MPH).
- When brake lamp lighting operation mode ends.
- When a malfunction is detected.

8. Yaw Rate and G Sensor

A: NOTE

Yaw rate & longitudinal G and lateral G sensor are integrated with the VDC control module & hydraulic control module (VDCCM&H/U).

B: INSPECTION

1. YAW RATE & LONGITUDINAL G AND LATERAL G SENSOR SIGNAL

	Step	Check	Yes	No
1	**CHECK YAW RATE & G SENSOR.** 1) Check the installation condition of the VDC control module & hydraulic control module (VDCCM&H/U). 2) Using the Subaru Select Monitor, display «Data monitor». 3) Read the output of «Yaw Rate Sensor», «Longitudinal G Sensor» and «Lateral G Sensor».	When the vehicle is placed horizontally, are the displayed values –1.5 — 1.5 m/s^2 for longitudinal G and lateral G sensor, and –4 — 4 deg/s for yaw rate sensor?	Go to step **2**.	Replace the VDC control module & hydraulic control unit (VDCCM&H/U).
2	**PERFORM DRIVING TEST.** Drive for approximately 10 minutes, and check that there is no system malfunction or the warning light illumination while driving.	Is there any abnormal movement or the warning light illumination while driving?	Perform the diagnosis according to DTCs for the VDC system. <Ref. to VDC(diag)-55, List of Diagnostic Trouble Code (DTC).>	G sensor is normal.

9. Steering Angle Sensor

A: REMOVAL

CAUTION:
• If the steering wheel and steering angle sensor are removed, perform "VSC(VDC) Centering Mode" of the VDC. <Ref. to VDC-17, VDC SENSOR MIDPOINT SETTING MODE, ADJUSTMENT, VDC Control Module and Hydraulic Control Unit (VDCCM&H/U).>
• Before handling the airbag system components, always refer to "CAUTION" of "General Description" in "AIRBAG SYSTEM". <Ref. to AB-9, CAUTION, General Description.>
• Always use the steering wheel puller for removal to avoid deforming the steering wheel.
• If the steering wheel has been removed, make sure that the steering roll connector is not turned from the original position.

1) Position the front wheels straight ahead.
2) Disconnect the ground cable from battery and wait for at least 60 seconds before starting work. <Ref. to NT-6, BATTERY, NOTE, Note.>

NOTE:
For model with battery sensor, disconnect the ground terminal from battery sensor.

3) Remove the driver's airbag module. <Ref. to AB-32, REMOVAL, Driver's Airbag Module.>
4) Remove the steering wheel. <Ref. to PS-16, REMOVAL, Steering Wheel.>
5) Remove the cover assembly - column.
   (1) Release the clips, and remove the cover assembly - steering UPR.

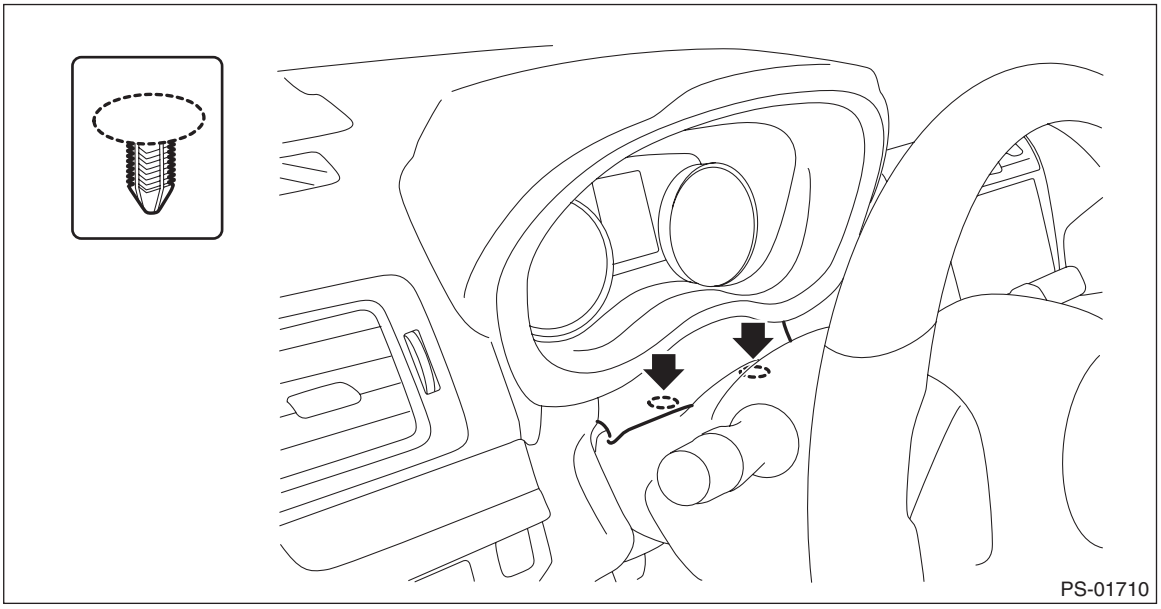

(2) Remove the screws.
(3) Remove the cap - key cylinder (a). (Model with keyless access with push button start)
(4) Release the claw, and remove the cover assembly - column UPR and the cover assembly - column LWR.

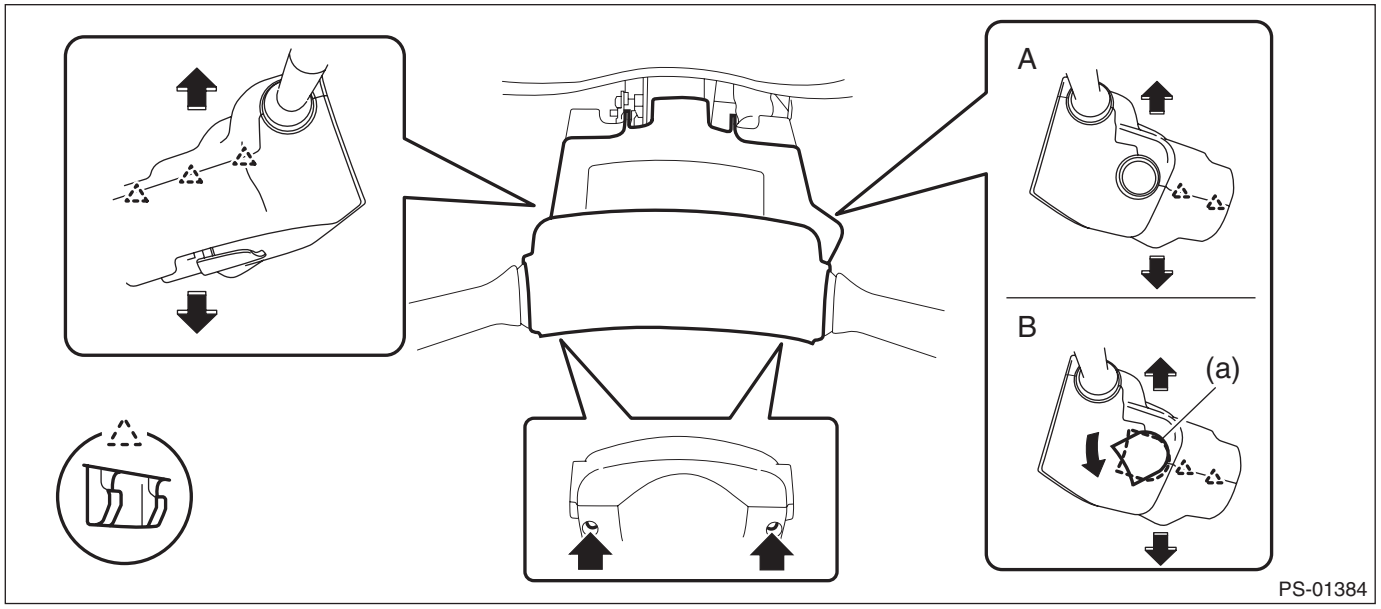

A Model without keyless access with push button start
B Model with keyless access with push button start

6) Remove the steering roll connector.

CAUTION:
Make sure that the steering roll connector is not turned from the original position.
(1) Disconnect the connector under the steering roll connector.
(2) Release the claws and remove the steering roll connector.

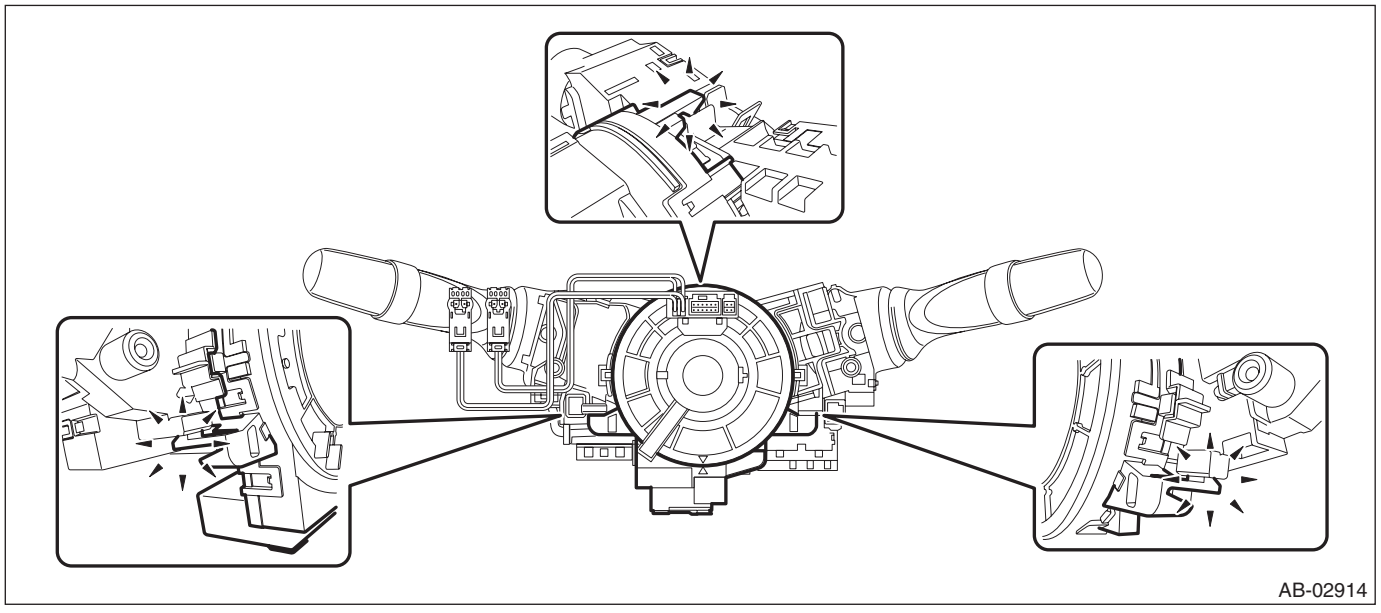

7) Remove the steering angle sensor.
(1) Release the claws and remove the steering angle sensor (b) from the steering roll connector (a).

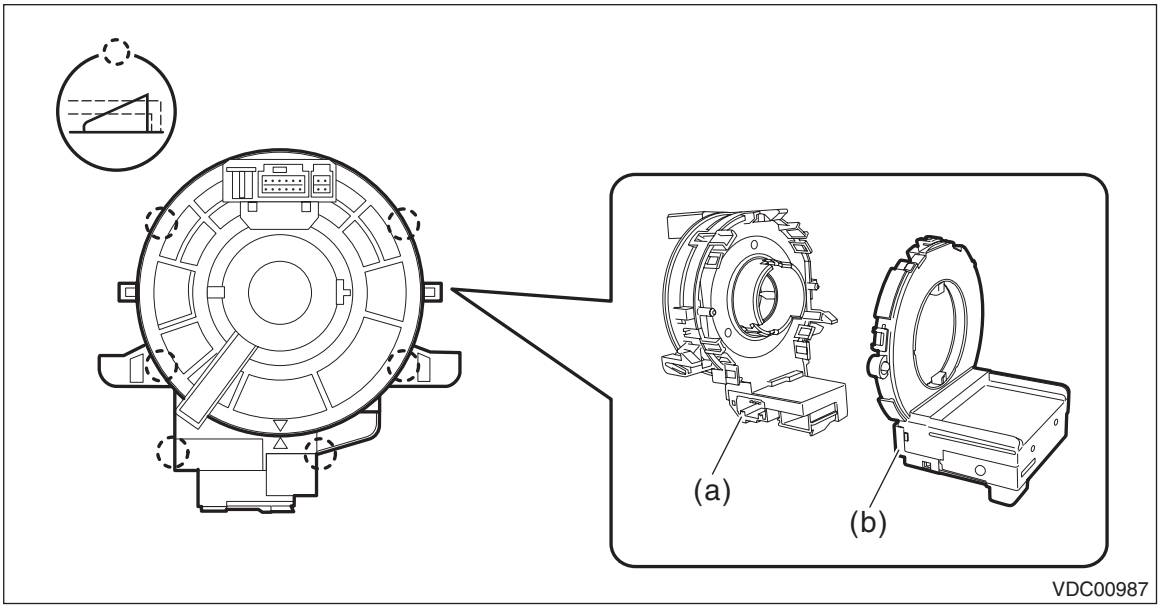

B: INSTALLATION

CAUTION:
• When removing, installing or replacing the VDCCM&H/U, VDCCM&H/U bracket, steering wheel or steering angle sensor (steering roll connector), perform "VSC(VDC) Centering Mode" of the VDC. <Ref. to VDC-17, VDC SENSOR MIDPOINT SETTING MODE, ADJUSTMENT, VDC Control Module and Hydraulic Control Unit (VDCCM&H/U).>
• Before handling the airbag system components, always refer to "CAUTION" of "General Description" in "AIRBAG SYSTEM". <Ref. to AB-9, CAUTION, General Description.>

1) Install the steering angle sensor.
(1) Apply grease to the protrusion (a) of the new steering angle sensor.

CAUTION:
Do not rotate the steering angle sensor protrusion.

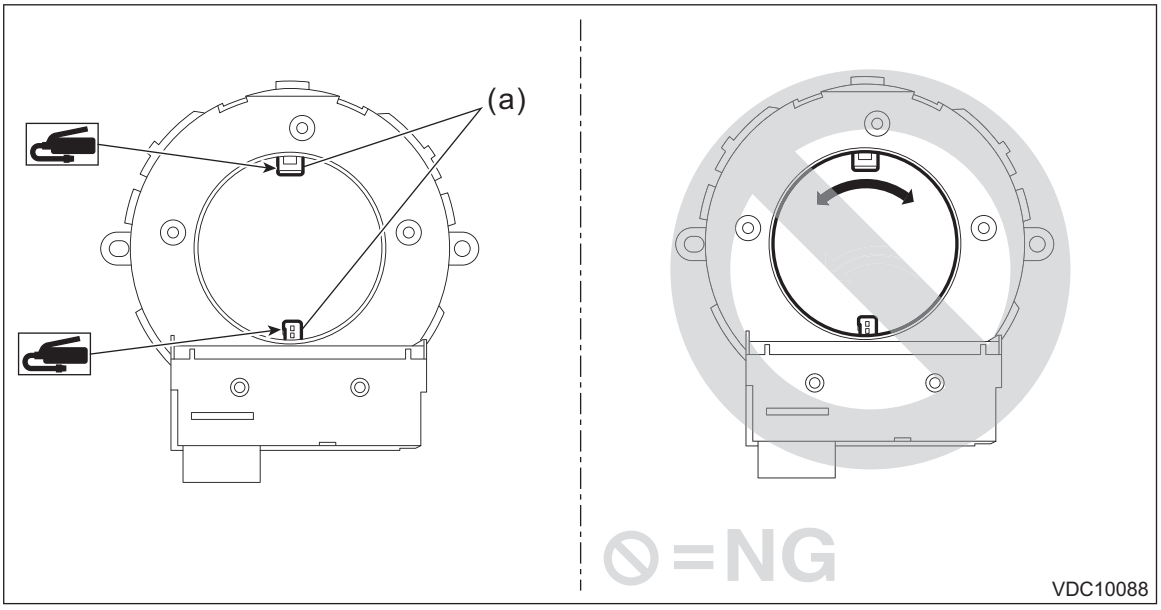

(2) Align the center of steering roll connector. <Ref. to AB-60, INSTALLATION, Roll Connector.>
(3) Align the position of the protrusion and install the steering angle sensor to the steering roll connector.

2) Install the cover assembly - column.
3) Install the steering wheel.

Tightening torque:
Steering wheel: 39 N·m (4 kgf-m, 28.8 ft-lb)

Clearance:
Between cover assembly - column and steering wheel: 4 — 6 mm (0.16 — 0.24 in)
4) Install the driver's airbag module. <Ref. to AB-33, INSTALLATION, Driver's Airbag Module.>
5) Connect the battery ground terminal. <Ref. to NT-6, BATTERY, NOTE, Note.>
6) Perform the neutral position setting of the steering angle sensor. <Ref. to VDC-17, VDC SENSOR MID-POINT SETTING MODE, ADJUSTMENT, VDC Control Module and Hydraulic Control Unit (VDCCM&H/U).>

10.Front ABS Wheel Speed Sensor

A: REMOVAL

1) Disconnect the ground cable from battery. <Ref. to NT-6, BATTERY, NOTE, Note.>

NOTE:
For model with battery sensor, disconnect the ground terminal from battery sensor.
2) Lift up the vehicle, and then remove the front wheels.
3) Remove the front ABS wheel speed sensor.

CAUTION:
- **Be careful not to damage the sensor.**
- **Do not apply excessive force to the sensor harness.**
- **Leave the sensor harness clamp on the vehicle side.**

(1) Disconnect the connector of the front ABS wheel speed sensor in the engine compartment.

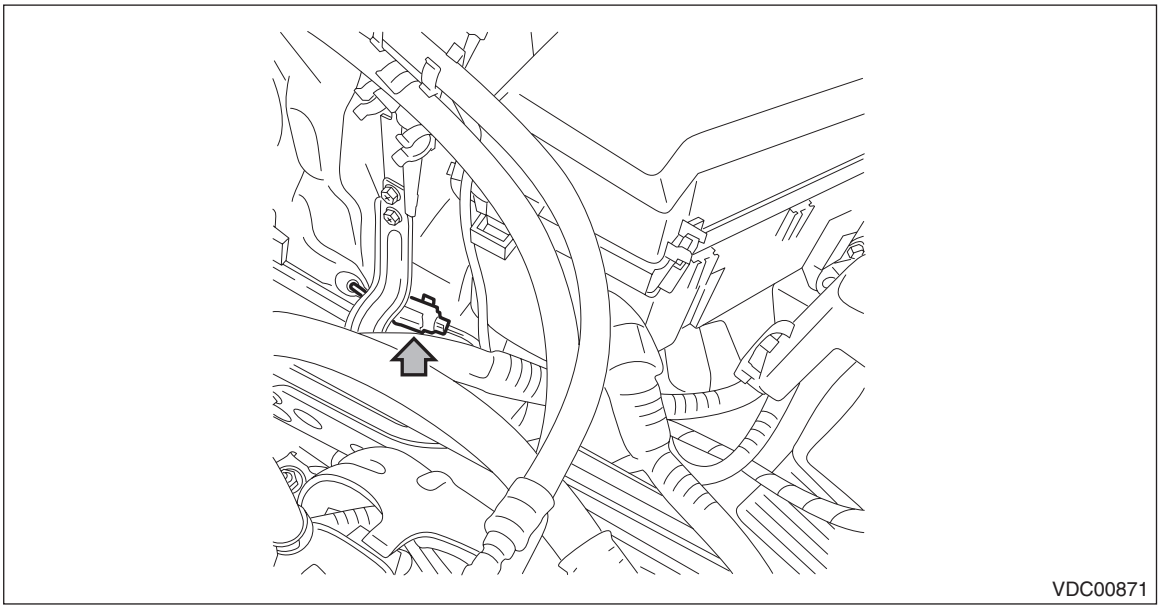

(2) Remove each harness clip and grommet.
(3) Remove the bolts, and remove the front ABS wheel speed sensor from the housing assembly - front axle.

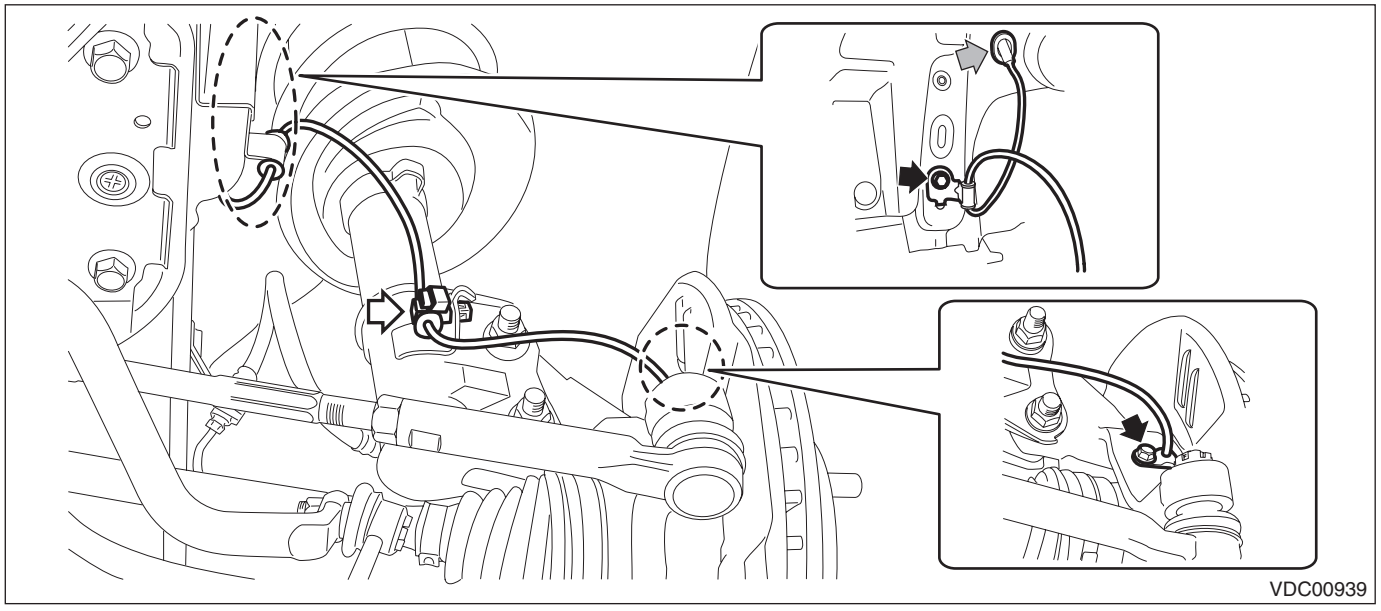

B: INSTALLATION

CAUTION:
- **Be careful not to damage the sensor.**
- **Do not apply excessive force to the sensor harness.**

1) Install the front ABS wheel speed sensor.

Tightening torque:
Front ABS wheel speed sensor: 7.5 N·m (0.8 kgf-m, 5.5 ft-lb)
Front ABS wheel speed sensor bracket: 33 N·m (3.4 kgf-m, 24.3 ft-lb)

2) Install the front wheels.

Tightening torque:
Front wheel: 120 N·m (12.2 kgf-m, 88.5 ft-lb)

3) Lower the vehicle.

NOTE:
Check if the harness is not pulled and does not come in contact with the suspension or body while operating the steering.

4) Connect the battery ground terminal. <Ref. to NT-6, BATTERY, NOTE, Note.>

C: INSPECTION

1. CHECK WITH SUBARU SELECT MONITOR

1) Connect the Subaru Select Monitor.

NOTE:
For detailed operation procedures, refer to “Application help”.
(1) On «Start» display, select «Diagnosis».
(2) On «Vehicle selection» display, input the target vehicle information and select «Confirmed».
(3) On «Main Menu» display, select «Each System».
(4) On «Select System» display, select «Brake Control System» and select «Enter».
(5) On «Select Function» display, select «Data Monitor».
(6) From the data monitor item list, select «FR Wheel Speed» and «FL Wheel Speed».

2) Check if the speed indicated on the display changes in the same manner as the speedometer reading during acceleration/deceleration when the steering wheel is in the straight-ahead position.

3) If the speed indicated on the display does not change in the inspection, check the ABS wheel speed sensor. <Ref. to VDC-34, CHECK ABS WHEEL SPEED SENSOR UNIT, INSPECTION, Front ABS Wheel Speed Sensor.>

2. CHECK ABS WHEEL SPEED SENSOR UNIT

1) Visually check the tip of the ABS wheel speed sensor for foreign particles or damage. If necessary, clean the tip or replace the ABS wheel speed sensor.
2) Disconnect the ABS wheel speed sensor connector.
3) Check the ABS wheel speed sensor cable for discontinuity. If defective, replace the ABS wheel speed sensor.
4) Connect a 12 V power supply to No. 1 terminal of ABS wheel speed sensor connector, then attach resistance to the No. 2 terminal. Rotate the wheel at about 2.75 km/h (2 MPH), and measure the voltage using an oscilloscope.

Standard value of output voltage:
0.7 — 1.4 V

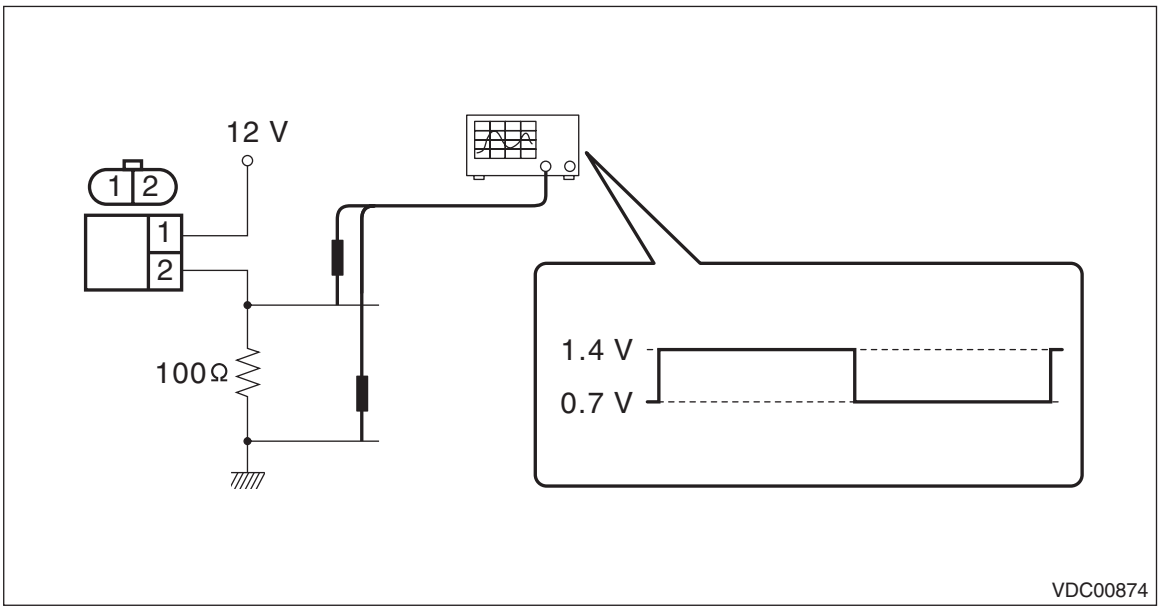

5) Replace the ABS wheel speed sensor if the inspection result is not within the standard value.

11.Rear ABS Wheel Speed Sensor

A: REMOVAL

1) Disconnect the ground cable from battery. <Ref. to NT-6, BATTERY, NOTE, Note.>

NOTE:
For model with battery sensor, disconnect the ground terminal from battery sensor.
2) Lift up the vehicle, and then remove the rear wheels.
3) Take out the trunk mat.
4) Tilt the backrest assembly of the rear seat forward.
5) Remove the clips located at the bottom of the cover COMPL - rear backrest LH and RH of the rear seat back.

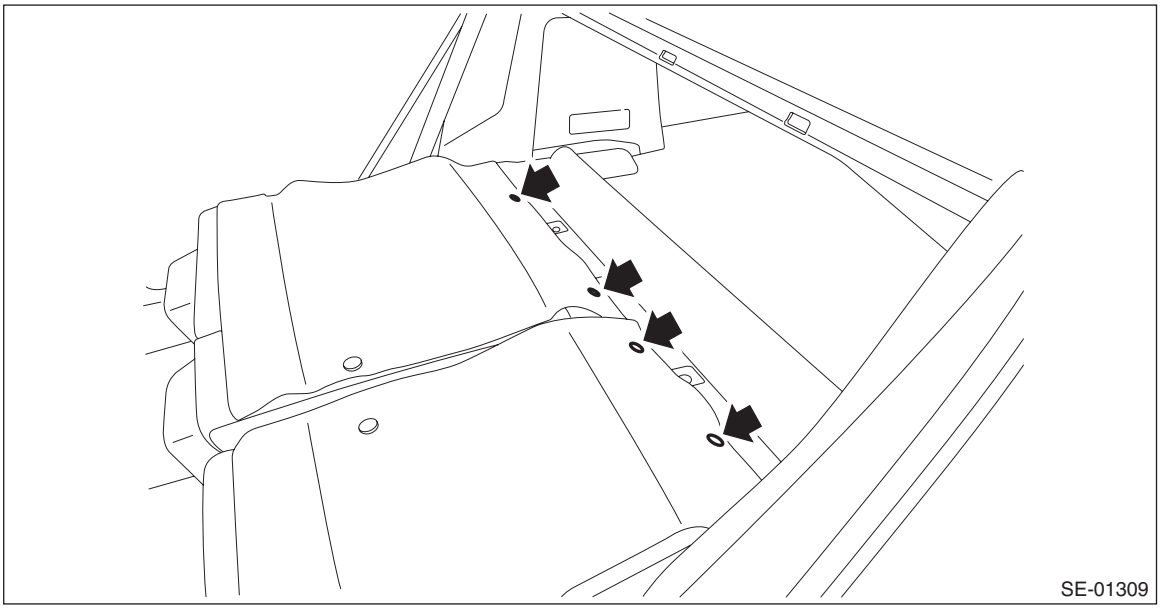

6) Remove the clips, and turn over the trim panel - trunk side.

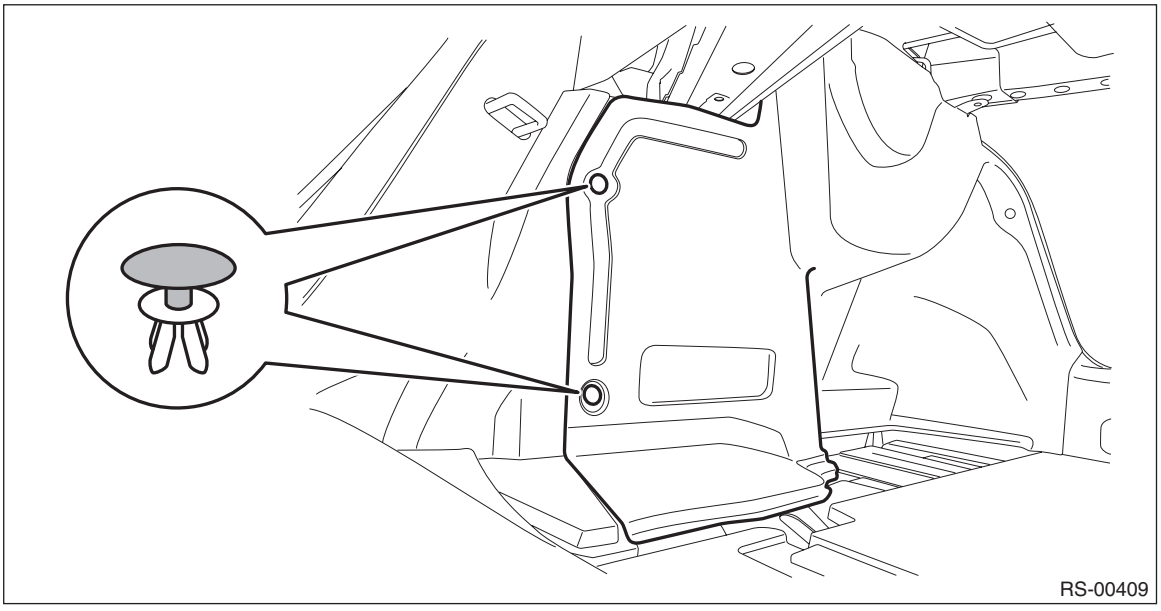

7) Remove the rear ABS wheel speed sensor.

CAUTION:
- **Be careful not to damage the sensor.**
- **Do not apply excessive force to the sensor harness.**
- **Leave the sensor harness clamp on the vehicle side.**

(1) Disconnect the connector of the rear ABS wheel speed sensor.

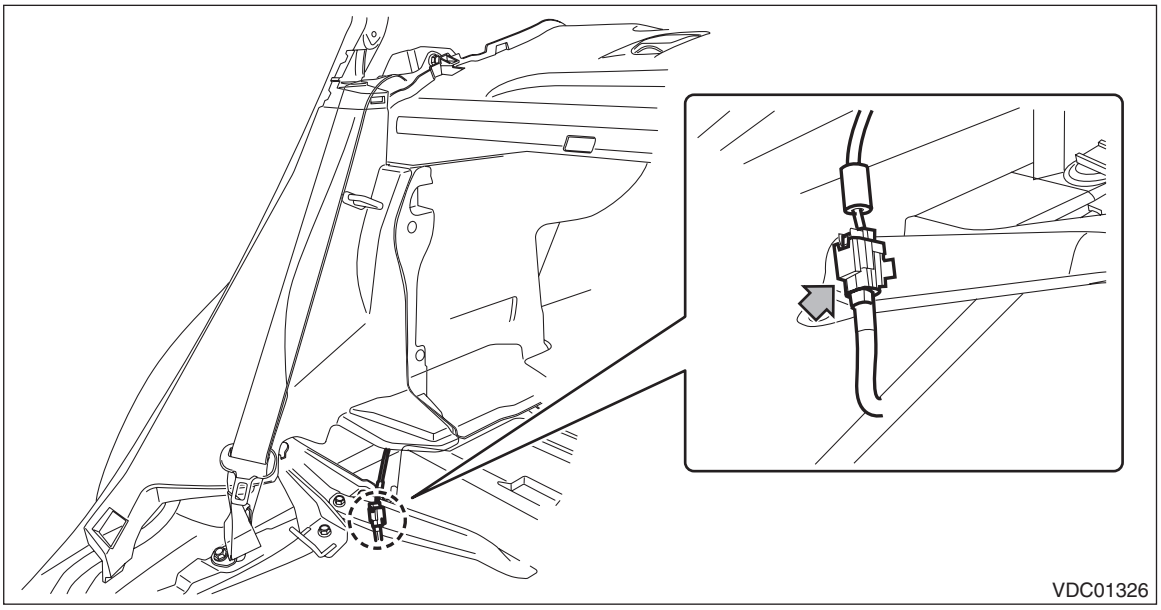

(2) Remove the grommet from the rear wheel housing, and pull out the connector of the rear ABS wheel speed sensor.
(3) Remove the clip and bolt on the harness clamp, and remove the rear ABS wheel speed sensor.

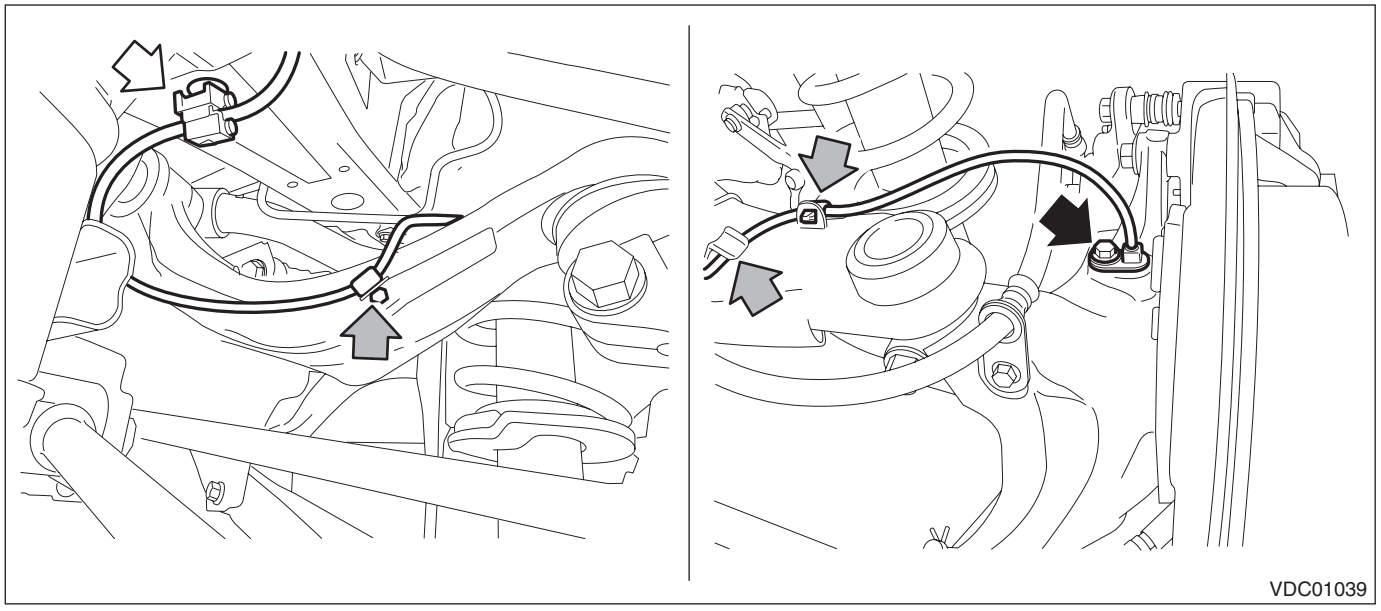

B: INSTALLATION

CAUTION:
- **Be careful not to damage the sensor.**
- **Do not apply excessive force to the sensor harness.**
- **Securely install the sensor harness to the rear upper arm assembly bracket.**

1) Install the rear ABS wheel speed sensor.

NOTE:
Check the identification (mark) on the harness to make sure there is no warpage. <Ref. to VDC-2, SPECIFICATION, General Description.>

Tightening torque:
Rear ABS wheel speed sensor: 7.5 N·m (0.8 kgf-m, 5.5 ft-lb)

2) Install the rear wheels.

Tightening torque:
Rear wheel: 120 N·m (12.2 kgf-m, 88.5 ft-lb)

3) Lower the vehicle.
4) Connect the battery ground terminal. <Ref. to NT-6, BATTERY, NOTE, Note.>

C: INSPECTION

1. CHECK WITH SUBARU SELECT MONITOR

1) Connect the Subaru Select Monitor.

NOTE:
For detailed operation procedures, refer to “Application help”.
(1) On «Start» display, select «Diagnosis».
(2) On «Vehicle selection» display, input the target vehicle information and select «Confirmed».
(3) On «Main Menu» display, select «Each System».
(4) On «Select System» display, select «Brake Control System» and select «Enter».
(5) On «Select Function» display, select «Data Monitor».
(6) From the data monitor item list, select «RR Wheel Speed» and «RL Wheel Speed».

2) Check if the speed indicated on the display changes in the same manner as the speedometer reading during acceleration/deceleration when the steering wheel is in the straight-ahead position.
3) If the speed indicated on the display does not change in the inspection, check the ABS wheel speed sensor. <Ref. to VDC-34, CHECK ABS WHEEL SPEED SENSOR UNIT, INSPECTION, Front ABS Wheel Speed Sensor.>

2. CHECK ABS WHEEL SPEED SENSOR UNIT

1) Visually check the tip of the ABS wheel speed sensor for foreign particles or damage. If necessary, clean the tip or replace the ABS wheel speed sensor.
2) Disconnect the ABS wheel speed sensor connector.
3) Check the ABS wheel speed sensor cable for discontinuity. If defective, replace the ABS wheel speed sensor.
4) Connect a 12 V power supply to No. 1 terminal of ABS wheel speed sensor connector, then attach resistance to the No. 2 terminal. Rotate the wheel at about 2.75 km/h (2 MPH), and measure the voltage using an oscilloscope.

Standard value of output voltage:
0.7 — 1.4 V

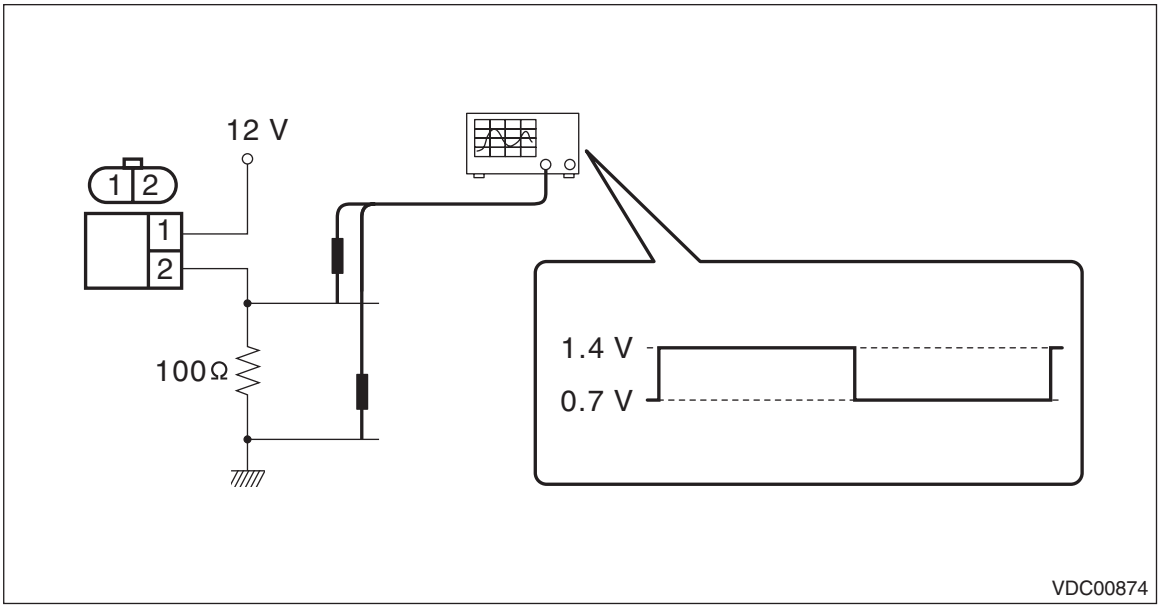

5) Replace the ABS wheel speed sensor if the inspection result is not within the standard value.

12.Front Magnetic Encoder

A: REMOVAL

Refer to “Front Hub Unit Bearing” for removal, because the front magnetic encoder is integrated with the hub unit COMPL - front axle. <Ref. to DS-24, REMOVAL, Front Hub Unit Bearing.>

B: INSTALLATION

Refer to “Front Hub Unit Bearing” for installation, because the front magnetic encoder is integrated with the hub unit COMPL - front axle. <Ref. to DS-26, INSTALLATION, Front Hub Unit Bearing.>

C: INSPECTION

Visually check the magnetic encoder for any damage. If necessary, replace with a new hub unit COMPL - front axle.

NOTE:
Because the magnetic encoder is integrated with hub unit COMPL, replace the hub unit COMPL with a new part if there is any defect found on the magnetic encoder.

13.Rear Magnetic Encoder

A: REMOVAL

Refer to “Rear Hub Unit Bearing” for removal, because the rear magnetic encoder is integrated with the hub unit COMPL - rear axle. <Ref. to DS-38, REMOVAL, Rear Hub Unit Bearing.>

B: INSTALLATION

Refer to “Rear Hub Unit Bearing” for installation, because the rear magnetic encoder is integrated with the hub unit COMPL - rear axle. <Ref. to DS-40, INSTALLATION, Rear Hub Unit Bearing.>

C: INSPECTION

Visually check the magnetic encoder parts for any damage. If necessary, replace with a new hub unit COMPL - rear axle.

NOTE:
Because the magnetic encoder is integrated with hub unit COMPL, replace the hub unit COMPL with a new part if there is any defect found on the magnetic encoder.

14.VDC OFF Switch

A: REMOVAL

1) Disconnect the ground cable from battery and wait for at least 60 seconds before starting work. <Ref. to NT-6, BATTERY, NOTE, Note.>

NOTE:
For model with battery sensor, disconnect the ground terminal from battery sensor.
2) Remove the cover assembly - instrument panel LWR driver OUT. <Ref. to EI-62, REMOVAL, Instrument Panel Lower Cover.>
3) Release the claws and remove the VDC OFF switch.

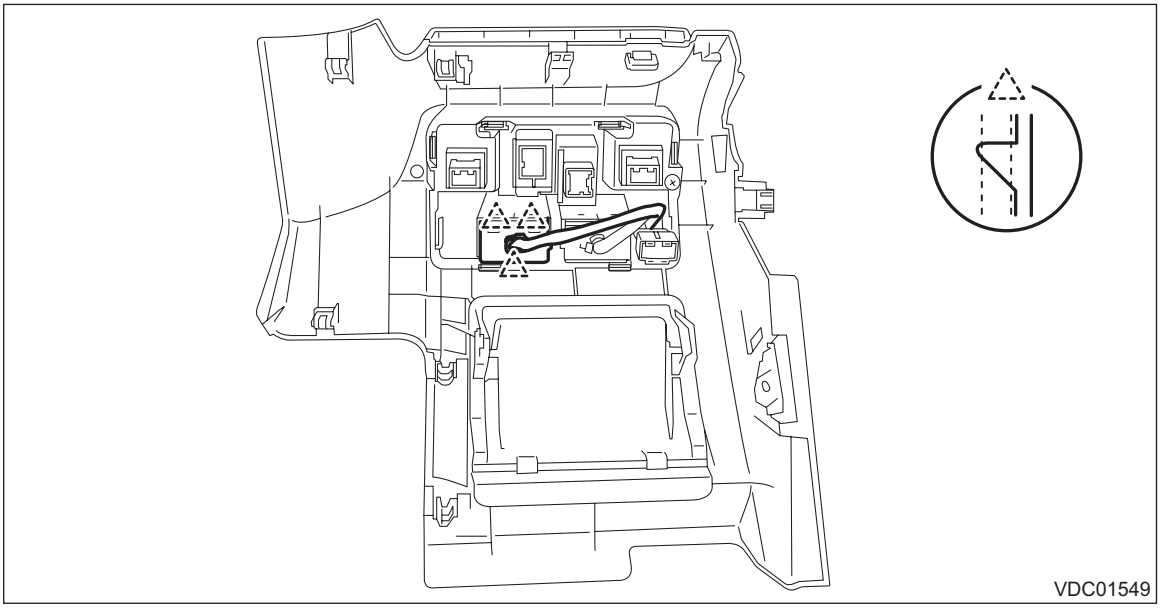

B: INSTALLATION

1) Install the VDC OFF switch.
2) Install the cover assembly - instrument panel LWR driver OUT.
3) Connect the battery ground terminal. <Ref. to NT-6, BATTERY, NOTE, Note.>

C: INSPECTION

1) Remove the VDC OFF switch. <Ref. to VDC-40, REMOVAL, VDC OFF Switch.>
2) Measure the resistance between the VDC OFF switch terminals.

Preparation tool:
Circuit tester

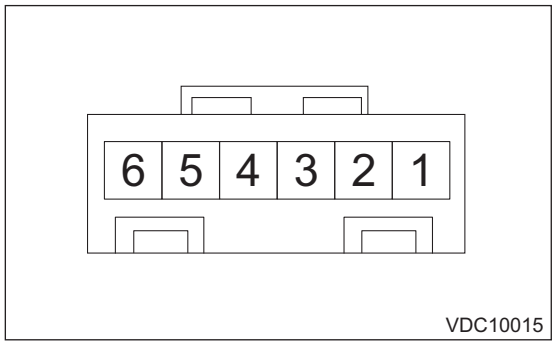

Terminal No.	Inspection conditions	Standard
5 — 6	Switch OFF	1 MΩ or more
	Switch ON	Less than 1 Ω

NOTE:
Replace the VDC OFF switch if the inspection result is not within the standard value.
3) Install the VDC OFF switch. <Ref. to VDC-40, REMOVAL, VDC OFF Switch.>

15.Hill Hold Switch

A: REMOVAL

1) Disconnect the ground terminal from battery sensor. <Ref. to NT-6, BATTERY, NOTE, Note.>
2) Remove the console box assembly. <Ref. to EI-67, MODEL WITH PARKING BRAKE LEVER, REMOVAL, Console Box.>
3) Remove the parking brake switch. <Ref. to PB-28, REMOVAL, Parking Brake Switch.>
4) Disconnect the connector, and remove the hill hold switch.

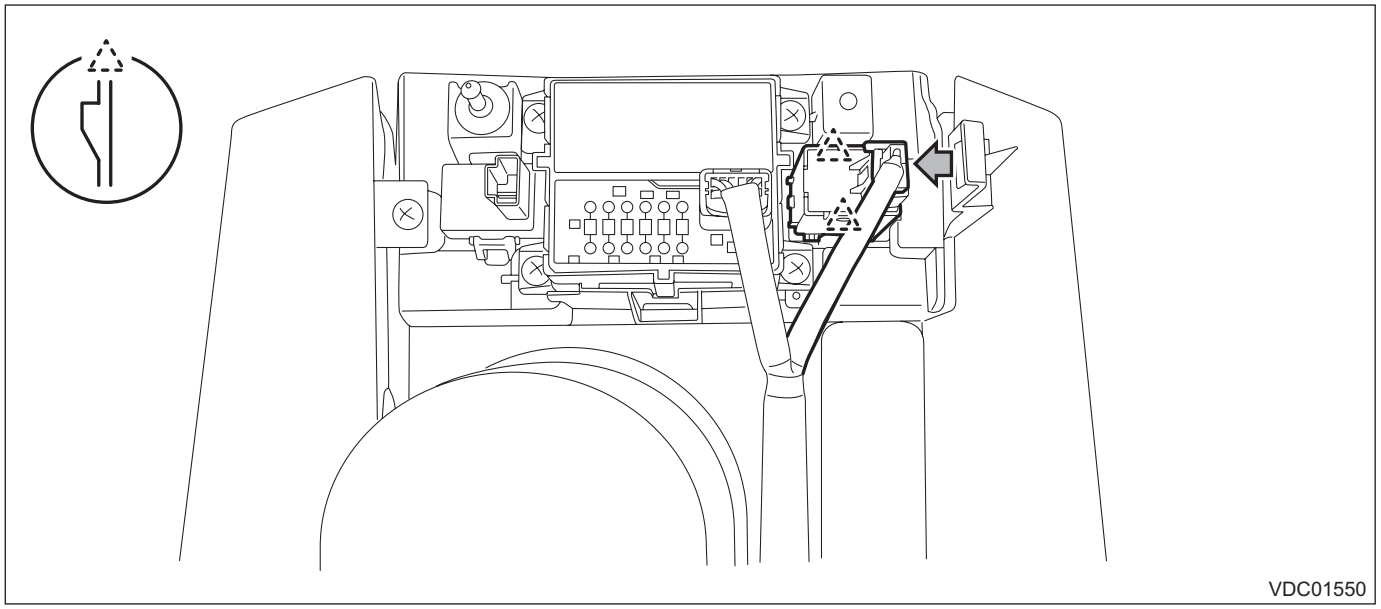

B: INSTALLATION

1) Install the hill hold switch.
2) Install the parking brake switch. <Ref. to PB-29, INSTALLATION, Parking Brake Switch.>
3) Install the console box assembly. <Ref. to EI-71, MODEL WITH PARKING BRAKE LEVER, INSTALLATION, Console Box.>
4) Connect the ground terminal to battery sensor. <Ref. to NT-6, BATTERY, NOTE, Note.>

C: INSPECTION

1) Measure the resistance between connector terminals.

Preparation tool:
Circuit tester

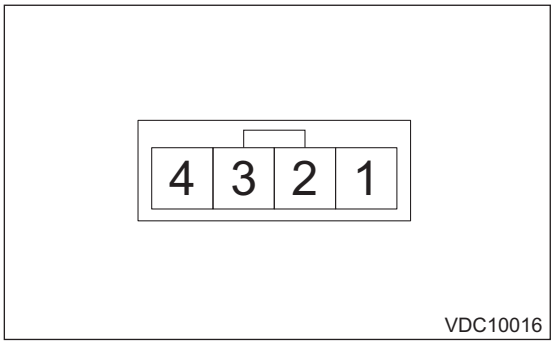

(1) Measure the resistance between hill hold switch terminals.

Terminal No.	Inspection conditions	Standard
1 — 4	Switch OFF	1 MΩ or more
	Switch ON	Less than 1 Ω

(2) Apply battery voltage between the connector terminals to check lighting condition of illumination inside the switch.

Terminal No.	Inspection conditions	Specification
2 (+) — 3 (–)	Apply battery voltage.	Light ON

2) Replace the hill hold switch if the inspection result is not within the standard value.

VEHICLE DYNAMICS CONTROL (VDC) (DIAGNOSTICS)

VDC(diag)

		Page
1.	Basic Diagnostic Procedure	2
2.	Check List for Interview	4
3.	General Description	12
4.	Electrical Component Location	14
5.	Control Module I/O Signal	17
6.	Subaru Select Monitor	20
7.	Read Diagnostic Trouble Code (DTC)	28
8.	Inspection Mode	29
9.	Clear Memory Mode	30
10.	Warning Light Illumination Pattern	31
11.	List of Diagnostic Trouble Code (DTC)	55
12.	Diagnostic Procedure with Diagnostic Trouble Code (DTC)	59
13.	General Diagnostic Table	135

1. Basic Diagnostic Procedure

A: PROCEDURE

CAUTION:
Remove foreign matter (dust, water, oil etc.) from the VDCCM&H/U connector during removal and installation.

NOTE:
- To check the harness for open or short circuits, shake problem spot or connector.
- Refer to “Check List for Interview”. <Ref. to VDC(diag)-4, Check List for Interview.>

	Step	Check	Yes	No
1	**CHECK PRE-INSPECTION.** 1) Ask the customer when and how the trouble occurred using the interview check list. <Ref. to VDC(diag)-4, Check List for Interview.> 2) Before performing diagnostics, check the component which might affect VDC or parking brake system problems. <Ref. to VDC(diag)-12, INSPECTION, General Description.>	Is the check result OK?	Go to step **2**.	Repair or replace each component.
2	**CHECK INDICATION OF DTC.** 1) Turn the ignition switch to OFF. 2) Connect the Subaru Select Monitor to data link connector. 3) Turn the ignition switch to ON and run the Subaru Select Monitor. 4) Read the DTC using the Subaru Select Monitor. <Ref. to VDC(diag)-28, OPERATION, Read Diagnostic Trouble Code (DTC).> NOTE: If the communication function of the Subaru Select Monitor cannot be executed properly, check the communication circuit. <Ref. to VDC(diag)-25, COMMUNICATION FOR INITIALIZING IMPOSSIBLE, INSPECTION, Subaru Select Monitor.>	Is DTC displayed on Subaru Select Monitor?	Record the DTC, time stamp and freeze frame data. Go to step **4**. NOTE: • For the time stamp, refer to LAN section. <Ref. to LAN(diag)-6, TIME STAMP, CAUTION, General Description.> • Depending on DTCs, time stamp may not be stored.	Go to step **3**.

	Step	Check	Yes	No
3	**PERFORM GENERAL DIAGNOSTICS.** 1) Perform the inspection by referring to “General Diagnostic Table”. <Ref. to VDC(diag)-135, INSPECTION, General Diagnostic Table.> 2) Perform the Clear Memory Mode. <Ref. to VDC(diag)-30, OPERATION, Clear Memory Mode.> 3) Perform the Inspection Mode. <Ref. to VDC(diag)-29, PROCEDURE, Inspection Mode.> 4) Read the DTC. <Ref. to VDC(diag)-28, OPERATION, Read Diagnostic Trouble Code (DTC).> 5) Check that the DTC is not displayed.	Do the VDC warning light & VDC indicator light, VDC OFF indicator light and ABS warning light go off after starting the engine? Do the electronic parking brake operation indicator light and hill hold indicator light go off with the electronic parking brake disengaged?	Finish the diagnosis.	Check the combination meter circuit. <Ref. to VDC(diag)-39, ABS WARNING LIGHT DOES NOT GO OFF, Warning Light Illumination Pattern.> <Ref. to VDC(diag)-40, VDC WARNING LIGHT AND VDC INDICATOR LIGHT DO NOT GO OFF, Warning Light Illumination Pattern.> <Ref. to VDC(diag)-41, ELECTRONIC PARKING BRAKE INDICATOR LIGHT, HILL HOLD INDICATOR LIGHT DO NOT GO OFF, Warning Light Illumination Pattern.> <Ref. to VDC(diag)-42, VDC OFF INDICATOR LIGHT DOES NOT GO OFF, Warning Light Illumination Pattern.>
4	**PERFORM DIAGNOSIS.** 1) Refer to “List of Diagnostic Trouble Code (DTC)”. NOTE: For the DTC list, refer to “List of Diagnostic Trouble Code (DTC)”. <Ref. to VDC(diag)-55, LIST, List of Diagnostic Trouble Code (DTC).> 2) Correct the cause of trouble. 3) Perform the Clear Memory Mode. <Ref. to VDC(diag)-30, OPERATION, Clear Memory Mode.> 4) Perform the Inspection Mode. <Ref. to VDC(diag)-29, PROCEDURE, Inspection Mode.> 5) Read the DTC. <Ref. to VDC(diag)-28, OPERATION, Read Diagnostic Trouble Code (DTC).>	Is DTC displayed?	Repeat step 4 until DTC is not shown.	Finish the diagnosis.

2. Check List for Interview

A: CHECK

Check the following item about the vehicle's state.

1. STATE OF ABS WARNING LIGHT

ABS warning light illuminates.	❑ Always ❑ Sometimes ❑ Only once ❑ Does not come on • When/How long does it illuminate?		
Ignition key position	❑ LOCK ❑ ACC ❑ ON (before starting engine) ❑ START ❑ ON (after starting engine, engine is running) ❑ ON (after starting engine, engine is at a standstill)		
Timing	❑ Immediately after turning the ignition switch to ON ❑ Immediately after turning the ignition switch to START		
	❑ While accelerating	—	km/h
		—	MPH
	❑ While driving at a constant speed	km/h	MPH
	❑ While decelerating	—	km/h
		—	MPH
	❑ When turning to the right	Steering angle:	deg
		Steering time:	Sec.
	❑ When turning to the left	Steering angle:	deg
		Steering time:	Sec.
	❑ When other electrical parts are operating		
	• Part name: • Operating condition:		

2. STATE OF VDC WARNING LIGHT & VDC INDICATOR LIGHT

VDC warning light & VDC indicator light illuminates.	❑ Always ❑ Sometimes ❑ Only once ❑ Does not illuminate • When/How long does it illuminate?		
Ignition key position	❑ LOCK ❑ ACC ❑ ON (before starting engine) ❑ START ❑ ON (after starting engine, engine is running) ❑ ON (after starting engine, engine is at a standstill)		
Timing	❑ Immediately after turning the ignition switch to ON ❑ Immediately after turning the ignition switch to START		
	❑ While accelerating	—	km/h
		—	MPH
	❑ While driving at a constant speed	km/h	MPH
	❑ While decelerating	—	km/h
		—	MPH
	❑ When turning to the right	Steering angle:	deg
		Steering time:	Sec.
	❑ When turning to the left	Steering angle:	deg
		Steering time:	Sec.
	❑ When other electrical parts are operating		
	• Part name: • Operating condition:		

3. STATE OF VDC OFF INDICATOR LIGHT

VDC OFF indicator light illuminates.	❑ Always ❑ Sometimes ❑ Only once ❑ Does not illuminate • When/How long does it illuminate?		
Ignition key position	❑ LOCK ❑ ACC ❑ ON (before starting engine) ❑ START ❑ ON (after starting engine, engine is running) ❑ ON (after starting engine, engine is at a standstill)		
Timing	❑ Immediately after turning the ignition switch to ON ❑ Immediately after turning the ignition switch to START		
	❑ While accelerating	—	km/h
		—	MPH
	❑ While driving at a constant speed	km/h	MPH
	❑ While decelerating	—	km/h
		—	MPH
	❑ When turning to the right	Steering angle:	deg
		Steering time:	Sec.
	❑ When turning to the left	Steering angle:	deg
		Steering time:	Sec.
	❑ When other electrical parts are operating		
	• Part name: • Operating condition:		

4. STATE OF BRAKE WARNING LIGHT

Brake warning light illuminates/goes off/ blinks.	❑ Always ❑ Sometimes ❑ Only once ❑ Does not illuminate ❑ Does not go off ❑ Blinks • When/How long does illuminate/go off/blink?		
Ignition key position	❑ LOCK ❑ ACC ❑ ON (before starting engine) ❑ START ❑ ON (after starting engine, engine is running) ❑ ON (after starting engine, engine is at a standstill)		
Timing	❑ Immediately after turning the ignition switch to ON ❑ Immediately after turning the ignition switch to START ❑ When the parking brake switch is pressed ❑ When the parking brake switch is pulled ❑ When the parking brake switch is pressed continually (times) ❑ When the parking brake switch is pulled continually (times)		
	❑ While accelerating	—	km/h
		—	MPH
	❑ While driving at a constant speed	km/h	MPH
	❑ While decelerating	—	km/h
		—	MPH
	❑ When turning to the right	Steering angle:	deg
		Steering time:	Sec.
	❑ When turning to the left	Steering angle:	deg
		Steering time:	Sec.
	❑ When other electrical parts are operating		
	• Part name: • Operating condition:		

5. CONDITION OF ELECTRONIC PARKING BRAKE OPERATION INDICATOR LIGHT

<table>
<tr><td>Electronic parking brake operation indicator light illuminates.</td><td colspan="3">❑ Always
❑ Sometimes
❑ Only once
❑ Does not illuminate
• When/How long does it illuminate?</td></tr>
<tr><td>Ignition key position</td><td colspan="3">❑ LOCK
❑ ACC
❑ ON (before starting engine)
❑ START
❑ ON (after starting engine, engine is running)
❑ ON (after starting engine, engine is at a standstill)</td></tr>
<tr><td rowspan="12">Timing</td><td colspan="3">❑ Immediately after turning the ignition switch to ON
❑ Immediately after turning the ignition switch to START
❑ When the parking brake switch is pressed
❑ When the parking brake switch is pulled
❑ When the parking brake switch is pressed continually (times)
❑ When the parking brake switch is pulled continually (times)</td></tr>
<tr><td rowspan="2">❑ While accelerating</td><td colspan="2">—</td><td>km/h</td></tr>
<tr><td colspan="2">—</td><td>MPH</td></tr>
<tr><td>❑ While driving at a constant speed</td><td>km/h</td><td>MPH</td></tr>
<tr><td rowspan="2">❑ While decelerating</td><td colspan="2">—</td><td>km/h</td></tr>
<tr><td colspan="2">—</td><td>MPH</td></tr>
<tr><td rowspan="2">❑ When turning to the right</td><td>Steering angle:</td><td>deg</td></tr>
<tr><td>Steering time:</td><td>Sec.</td></tr>
<tr><td rowspan="2">❑ When turning to the left</td><td>Steering angle:</td><td>deg</td></tr>
<tr><td>Steering time:</td><td>Sec.</td></tr>
<tr><td colspan="3">❑ When other electrical parts are operating</td></tr>
<tr><td colspan="3">• Part name:
• Operating condition:</td></tr>
</table>

6. ELECTRONIC PARKING BRAKE WARNING LIGHT CONDITION

<table>
<tr><td>Electronic parking brake warning light illuminates.</td><td colspan="3">❑ Always
❑ Sometimes
❑ Only once
❑ Does not illuminate
• When/How long does it illuminate?</td></tr>
<tr><td>Ignition key position</td><td colspan="3">❑ LOCK
❑ ACC
❑ ON (before starting engine)
❑ START
❑ ON (after starting engine, engine is running)
❑ ON (after starting engine, engine is at a standstill)</td></tr>
<tr><td rowspan="11">Timing</td><td colspan="3">❑ Immediately after turning the ignition switch to ON
❑ Immediately after turning the ignition switch to START
❑ When the parking brake switch is pressed
❑ When the parking brake switch is pulled
❑ When the parking brake switch is pressed continually (times)
❑ When the parking brake switch is pulled continually (times)</td></tr>
<tr><td rowspan="2">❑ While accelerating</td><td>—</td><td>km/h</td></tr>
<tr><td>—</td><td>MPH</td></tr>
<tr><td>❑ While driving at a constant speed</td><td>km/h</td><td>MPH</td></tr>
<tr><td rowspan="2">❑ While decelerating</td><td>—</td><td>km/h</td></tr>
<tr><td>—</td><td>MPH</td></tr>
<tr><td rowspan="2">❑ When turning to the right</td><td>Steering angle:</td><td>deg</td></tr>
<tr><td>Steering time:</td><td>Sec.</td></tr>
<tr><td rowspan="2">❑ When turning to the left</td><td>Steering angle:</td><td>deg</td></tr>
<tr><td>Steering time:</td><td>Sec.</td></tr>
<tr><td colspan="3">❑ When other electrical parts are operating</td></tr>
<tr><td colspan="3">• Part name:
• Operating condition:</td></tr>
</table>

7. HILL HOLD INDICATOR LIGHT CONDITION

Hill hold indicator light illuminates.	❑ Always ❑ Sometimes ❑ Only once ❑ Does not illuminate • When/How long does it illuminate?		
Ignition key position	❑ LOCK ❑ ACC ❑ ON (before starting engine) ❑ START ❑ ON (after starting engine, engine is running) ❑ ON (after starting engine, engine is at a standstill)		
Timing	❑ Immediately after turning the ignition switch to ON ❑ Immediately after turning the ignition switch to START ❑ When the hill hold switch is pressed (seconds) ❑ When the parking brake switch is pressed ❑ When the parking brake switch is pulled ❑ When the parking brake switch is pressed continually (times) ❑ When the parking brake switch is pulled continually (times)		
	❑ While accelerating	—	km/h
		—	MPH
	❑ While driving at a constant speed	km/h	MPH
	❑ While decelerating	—	km/h
		—	MPH
	❑ When turning to the right	Steering angle:	deg
		Steering time:	Sec.
	❑ When turning to the left	Steering angle:	deg
		Steering time:	Sec.
	❑ When other electrical parts are operating		
	• Part name: • Operating condition:		

8. CONDITIONS UNDER WHICH TROUBLE OCCURS

Environment	a) Weather	❑ Fine ❑ Cloudy ❑ Rainy ❑ Snowy ❑ Others:
	b) Ambient temperature	°C (°F)
	c) Road	❑ Inner city ❑ Suburbs ❑ Highway ❑ Local street ❑ Uphill ❑ Downhill ❑ Paved road ❑ Gravel road ❑ Muddy road ❑ Sandy place ❑ Straight road ❑ Sharp curve ❑ Gentle curve ❑ S-curve ❑ Road with a slope on both sides ❑ Others:
	d) Road surface	❑ Dry ❑ Wet ❑ Covered with fresh snow ❑ Covered with hardened snow ❑ Frozen slope ❑ Others:

Condition	a) Brakes	Deceleration:	G
		❑ continuous / ❑ intermittent	
	b) Accelerator	Acceleration:	G
		❑ continuous / ❑ intermittent	
	c) Vehicle speed	km/h	MPH
		❑ Advancing ❑ While accelerating ❑ While decelerating ❑ At low speed ❑ When turning ❑ Others:	
	d) Tire inflation pressure	Front RH tire:	kPa
		Front LH tire:	kPa
		Rear RH tire:	kPa
		Rear LH tire:	kPa
	e) Degree of wear	Front RH tire:	mm (in)
		Front LH tire:	mm (in)
		Rear RH tire:	mm (in)
		Rear LH tire:	mm (in)
	f) Steering wheel	❑ Sharp turning ❑ Gentle turning ❑ Straight forward motion ❑ Gentle return ❑ Sharp return	
	g) Tire/Wheel size	❑ Specified size ❑ Except specification ( )	
	h) Tire variation	❑ Summer tire ❑ Studless tire (brand:)	
	i) Tire chain is attached: ❑ Yes / ❑ No		
	j) Using T-type tires: ❑ Yes / ❑ No		
	k) Condition of suspension alignment:		
	l) Load condition:		
	m) Repaired parts are used: ❑ Yes / ❑ No		
	• Content:		
	n) Others:		

3. General Description

A: CAUTION

1. SUPPLEMENTAL RESTRAINT SYSTEM "AIRBAG"

Airbag system wiring harness is routed near the ABS wheel speed sensor and VDCCM&H/U.

CAUTION:
• Do not use the electrical test equipment on the airbag system wiring harnesses and connector circuits.
• Be careful not to damage the airbag system wiring harness when servicing the ABS wheel speed sensor and VDCCM&H/U.

B: INSPECTION

Before performing diagnosis, check the following items which might affect VDC problems.

1. BATTERY

Check the battery. <Ref. to SC(w/o STI)-51, INSPECTION, Battery.> <Ref. to SC(STI)-24, INSPECTION, Battery.>

2. GROUND

Check the installation of the ground bolt for VDC.

3. BRAKE FLUID

1) Check the brake fluid level.
2) Check the brake fluid for leaks.

4. HYDRAULIC UNIT

Check the hydraulic unit.
• When using the brake tester <Ref. to VDC-14, CHECKING THE HYDRAULIC UNIT ABS OPERATION WITH THE BRAKE TESTER, INSPECTION, VDC Control Module and Hydraulic Control Unit (VDCCM&H/U).>
• When not using the brake tester <Ref. to VDC-13, CHECKING THE HYDRAULIC UNIT ABS OPERATION BY PRESSURE GAUGE, INSPECTION, VDC Control Module and Hydraulic Control Unit (VDCCM&H/U).>

5. BRAKE DRAG

Check for brake drag.

6. BRAKE PAD AND ROTOR

Check the brake pad and rotor.
• Front <Ref. to BR-24, INSPECTION, Front Brake Pad.> <Ref. to BR-26, INSPECTION, Front Disc Rotor.>
• Rear <Ref. to BR-44, INSPECTION, Rear Brake Pad.> <Ref. to BR-52, INSPECTION, Rear Disc Rotor.>

7. PARKING BRAKE ASSEMBLY

Check and adjust the parking brake assembly.
• Check the disc rotor inner diameter and lining thickness. <Ref. to PB-19, INSPECTION, Parking Brake Assembly (Rear Disc Brake).>
• Adjust the shoe clearance. <Ref. to PB-19, ADJUSTMENT, Parking Brake Assembly (Rear Disc Brake).>

8. TIRE

Check the tire specifications, tire wear and air pressure. <Ref. to WT-2, SPECIFICATION, General Description.>

C: PREPARATION TOOL

1. SPECIAL TOOL

ILLUSTRATION	TOOL NUMBER	DESCRIPTION	REMARKS
 STSSM4	—	SUBARU SELECT MONITOR 4	Used for setting of each function and trouble-shooting for electrical system. NOTE: For detailed operation procedures of Subaru Select Monitor 4, refer to “Application help”.

2. GENERAL TOOL

TOOL NAME	REMARKS
Circuit tester	Used for measuring resistance, voltage and current.
Oscilloscope	Used for measuring the sensor.
DST-i	Used together with Subaru Select Monitor 4.

4. Electrical Component Location

A: LOCATION

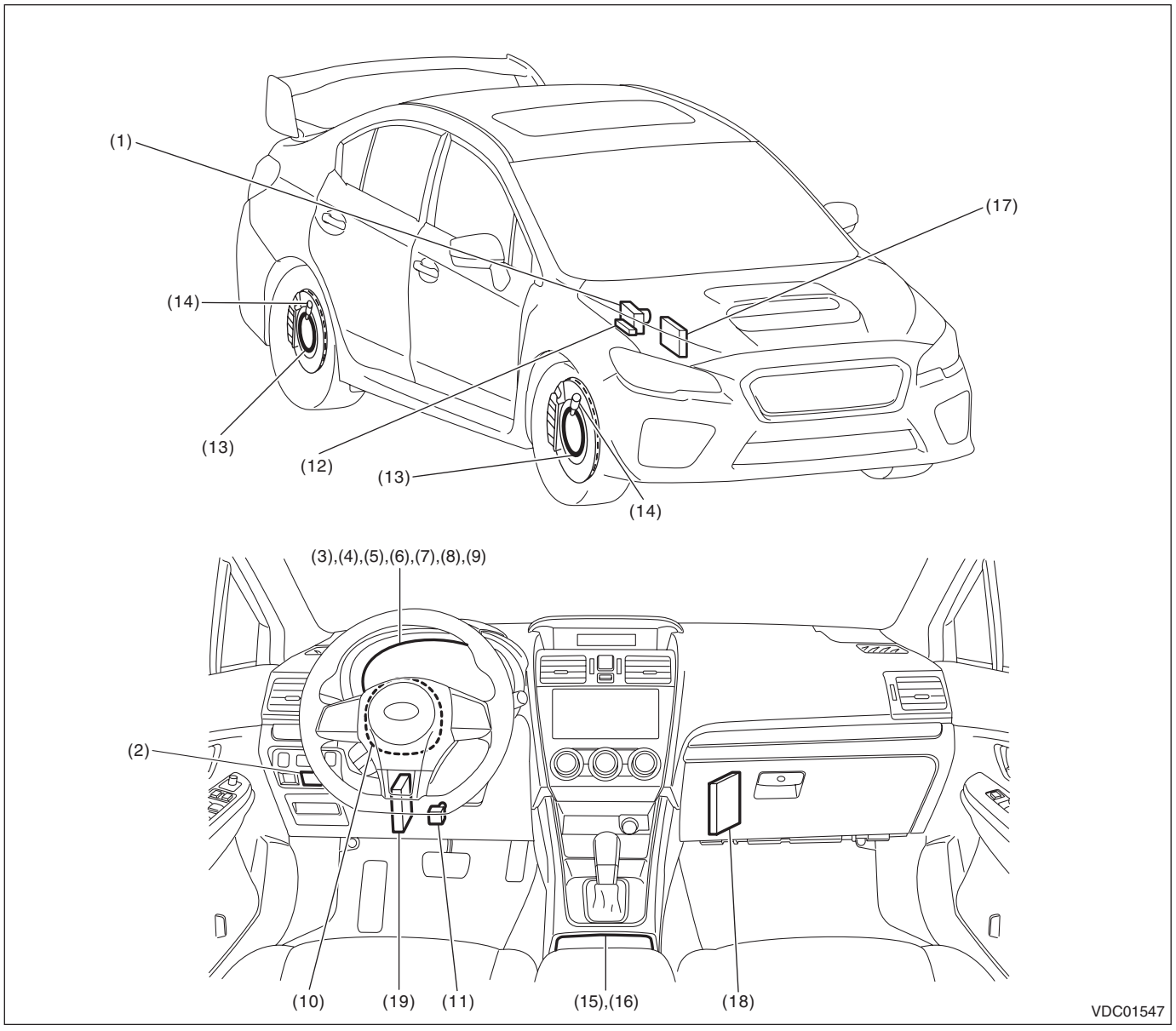

(1) VDC control module and hydraulic control unit (VDCCM&H/U)
(2) VDC OFF switch
(3) ABS warning light
(4) Brake warning light (EBD warning light) (model without EyeSight)
Brake warning light (EBD warning light) and electronic parking brake warning light (model with EyeSight)
(5) VDC warning light & VDC indicator light
(6) VDC OFF indicator light
(7) Hill start assist warning light (model without EyeSight)
Hill hold indicator light (model with EyeSight)
(8) VDC traction mode indicator light
(9) Electronic parking brake operation indicator light (model with EyeSight)
(10) Steering angle sensor
(11) Stop light and brake switch
(12) Stop light relay
(13) Magnetic encoder
(14) ABS wheel speed sensor
(15) Electronic parking brake switch (model with EyeSight)
(16) Hill hold switch (model with EyeSight)
(17) Engine control module (ECM) (CVT model)
(18) Engine control module (ECM) (MT model)
(19) Transmission control module (TCM)

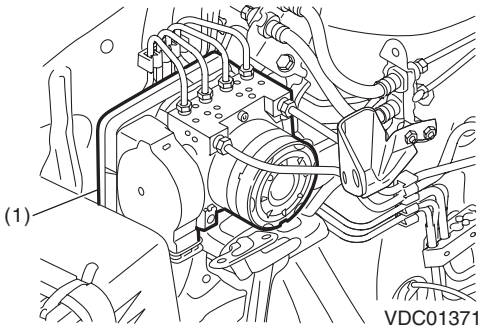

VDC01371

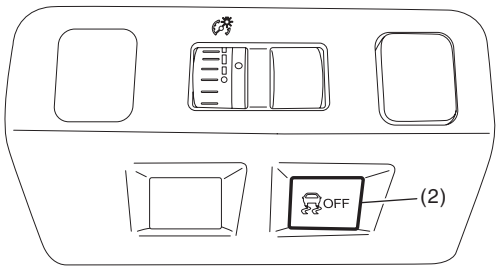

VDC01275

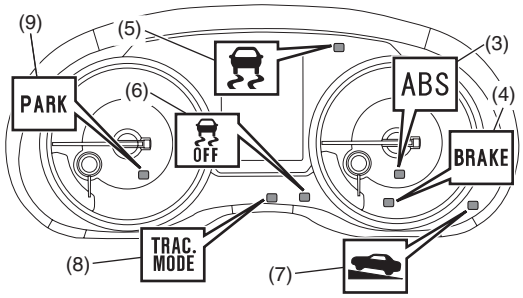

VDC01546

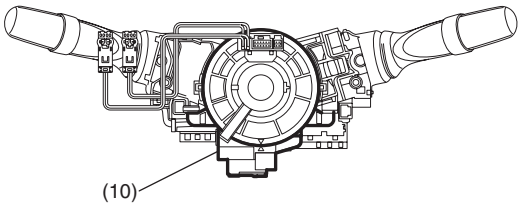

VDC01545

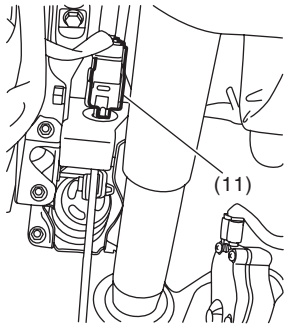

VDC01544

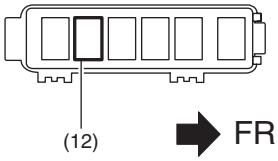

VDC01376

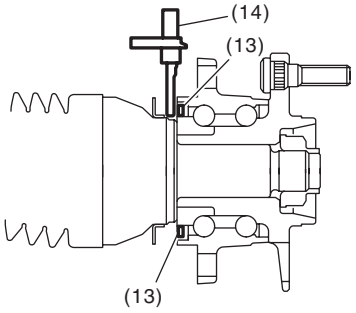

VDC01195

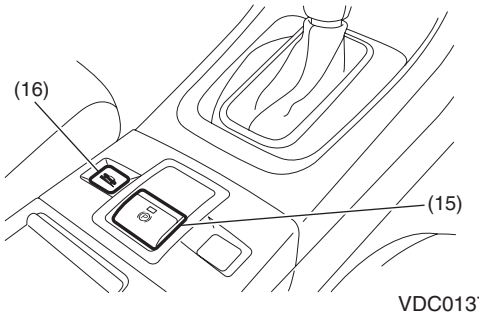

VDC01377

5. Control Module I/O Signal

A: ELECTRICAL SPECIFICATION

- Models without EyeSight

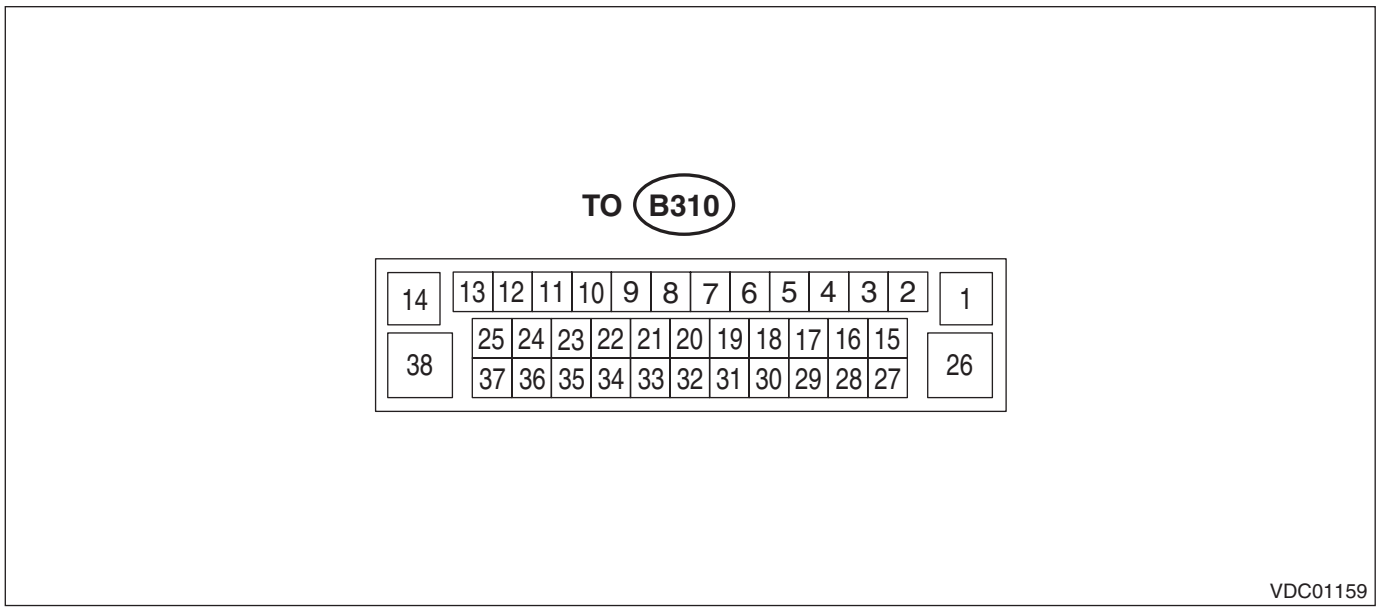

NOTE:

- Terminal numbers in VDCCM&H/U connector (on the control module side) are shown in the figure.
- When the connector is removed from the VDCCM&H/U, the brake warning light (EBD warning light), ABS warning light, VDC warning light & VDC indicator light, VDC OFF indicator light, and the hill start assist warning light illuminate.

Content			Terminal No. (+) — (–)	Input/Output signal Measured value and measuring conditions
Power supply			31 — 38	10 — 15 V when the ignition switch is ON.
ABS wheel speed sensor	Front LH wheel	Power supply	12 — 38	0 — 18 V when the ignition switch is ON.
		Signal	13	7 — 14 mA: Rectangle waveform
	Front RH wheel	Power supply	3 — 38	0 — 18 V when the ignition switch is ON.
		Signal	2	7 — 14 mA: Rectangle waveform
	Rear LH wheel	Power supply	5 — 38	0 — 18 V when the ignition switch is ON.
		Signal	6	7 — 14 mA: Rectangle waveform
	Rear RH wheel	Power supply	10 — 38	0 — 18 V when the ignition switch is ON.
		Signal	9	7 — 14 mA: Rectangle waveform
Valve relay power supply			1 — 38	10 — 15 V
Motor relay power supply			26 — 38	10 — 15 V
Stop light switch			27 — 38	1.5 V or less when the stop light is OFF; 10 — 15 V when the stop light is ON.
Vehicle speed output signal			30	0 ←→ 12 V pulse
VDC OFF switch			21 — 38	1 Ω or less when the OFF switch is “ON”; 1 MΩ or more when the switch is “OFF”.
CAN communication line (H)			36	Pulse signal
CAN communication line (L)			35	Pulse signal
Ground			38	—

- Models with EyeSight

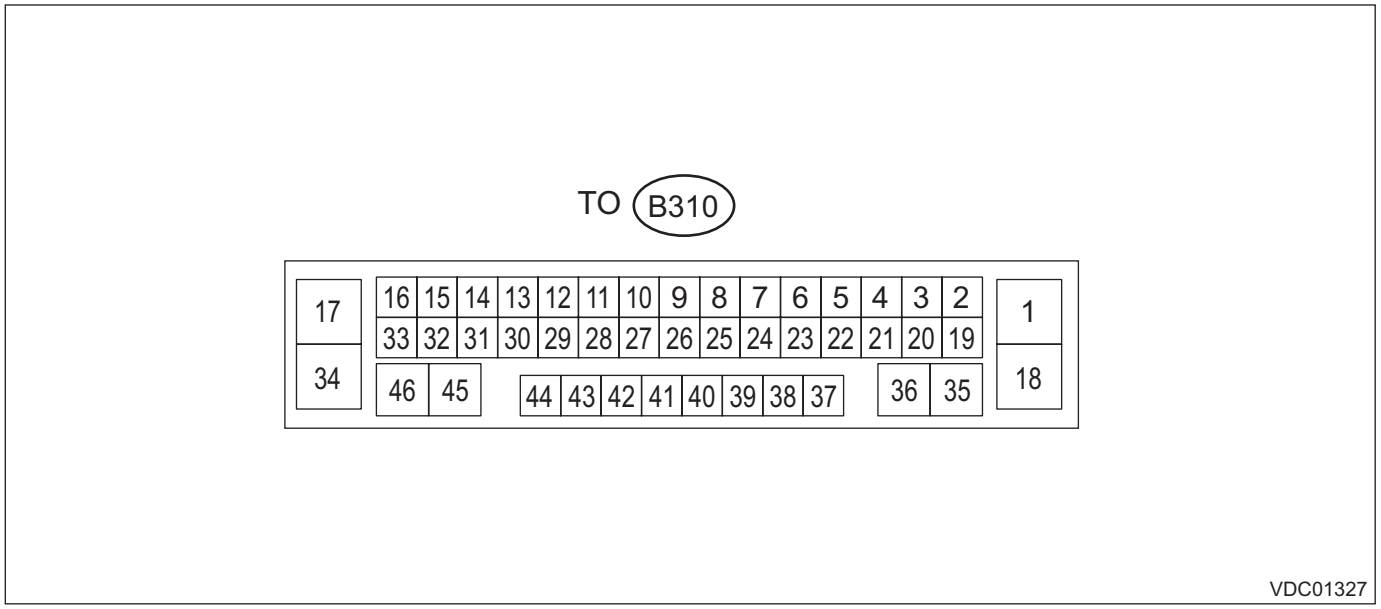

NOTE:
- Terminal numbers in VDCCM&H/U connector (on the control module side) are shown in the figure.
- When the connector is removed from the VDCCM&H/U, the brake warning light (EBD warning light), ABS warning light, VDC warning light & VDC indicator light, VDC OFF indicator light, and the hill hold indicator light illuminate.

Content			Terminal No. (+) — (–)	Input/Output signal Measured value and measuring conditions
Power supply			6 — 34	10 — 15 V when the ignition switch is ON.
ABS wheel speed sensor	Front LH wheel	Power supply	42 — 34	0 — 18 V when the ignition switch is ON.
		Signal	41	7 — 14 mA: Rectangle waveform
	Front RH wheel	Power supply	38 — 34	0 — 18 V when the ignition switch is ON.
		Signal	37	7 — 14 mA: Rectangle waveform
	Rear LH wheel	Power supply	40 — 34	0 — 18 V when the ignition switch is ON.
		Signal	39	7 — 14 mA: Rectangle waveform
	Rear RH wheel	Power supply	44 — 34	0 — 18 V when the ignition switch is ON.
		Signal	43	7 — 14 mA: Rectangle waveform
Valve relay power supply			1 — 34	10 — 15 V
Motor relay power supply			18 — 34	10 — 15 V
Stop light switch			19 — 34	1.5 V or less when the stop light is OFF; 10 — 15 V when the stop light is ON.
Stop light relay power supply			29 — 34	10 — 15 V when the ignition switch is ON.
Vehicle speed output signal			26	0 ←→ 12 V pulse
VDC OFF switch			2 — 34	1 Ω or less when the OFF switch is “ON”; 1 MΩ or more when the switch is “OFF”.
Parking brake switch			21	Pulse signal
Parking brake switch			22	Pulse signal
Parking brake switch			23	Pulse signal
Parking brake switch			28	Pulse signal
Rear brake caliper RH			35 — 36	Pulse signal
Rear brake caliper LH			45 — 46	Pulse signal
Hill hold switch			7 — 34	10 — 15 V when the hill hold switch is ON.
Electronic parking brake operation indicator light			4 — 34	0 V when the light is on; 10 — 15 V when the light is off.
CAN communication line (H)			13	Pulse signal
CAN communication line (L)			14	Pulse signal
Ground			34	—

B: WIRING DIAGRAM

Refer to “Vehicle Dynamics Control System” in the wiring diagram. <Ref. to WI-368, Vehicle Dynamics Control System.>

6. Subaru Select Monitor

A: OPERATION

1. HOW TO USE THE SUBARU SELECT MONITOR

For detailed operation procedures, refer to “Application help”.

2. READ CURRENT DATA

1) On «Start» display, select «Diagnosis».
2) On «Vehicle selection» display, input the vehicle information and select «Confirmed».
3) On «Main Menu» display, select «Each System».
4) On «Select System» display, select «Brake Control System».
5) On «Select Function» display, select «Data Monitor».

- Models without EyeSight

Display	Contents to be displayed	Unit of measure
Trip Count	Total number of ignition switch ON	times
Count	Counter	—
Time Count [msec]	Elapsed time after ignition switch ON	ms
FR Wheel Speed	Wheel speed detected by front ABS wheel speed sensor RH is displayed.	km/h or MPH
FL Wheel Speed	Wheel speed detected by front ABS wheel speed sensor LH is displayed.	km/h or MPH
RR Wheel Speed	Wheel speed detected by rear ABS wheel speed sensor RH is displayed.	km/h or MPH
RL Wheel Speed	Wheel speed detected by rear ABS wheel speed sensor LH is displayed.	km/h or MPH
Steering Angle Sensor	Steering angle detected by steering angle sensor is displayed.	deg
Yaw Rate Sensor	Angle of the vehicle detected by yaw rate sensor is displayed.	deg/s
Master Cylinder Pressure Sensor	Brake fluid pressure detected by pressure sensor is displayed.	bar
Longitudinal G Sensor	Vehicle longitudinal acceleration detected by longitudinal G sensor is displayed.	m/s^2
Lateral G Sensor	Vehicle lateral acceleration detected by lateral G sensor is displayed.	m/s^2
Ignition Voltage	Voltage supplied to VDCCM&H/U is displayed.	V
M. Relay monitor Voltage	Voltage applied to the motor relay is displayed.	V
Motor Relay Signal	Motor relay driving signal is displayed.	ON or OFF
Valve Relay Signal	Valve relay driving signal is displayed.	ON or OFF
EBD Warning Light	ON operation of the EBD warning light is displayed.	ON or OFF
ABS Warning Lamp	ON operation of the ABS warning light is displayed.	ON or OFF
VDC Warning Lamp	ON operation of the VDC warning light is displayed.	ON or OFF
EBD Control Flag	EBD operation condition is displayed.	ON or OFF
ABS Control Flag	ABS operation condition is displayed.	ON or OFF
TCS Control Flag	TCS operation condition is displayed.	ON or OFF
VDC Control Flag	VDC operation condition is displayed.	ON or OFF
E/G Torque Down Control Stop Flag	Engine control command signal is displayed.	1 or 0
E/G torques up Control Stop Flag	Engine control command signal is displayed.	1 or 0
VDC-OFF Light	ON/OFF condition of VDC OFF indicator light is displayed.	ON or OFF
OFF SW Signal	Operation condition of VDC OFF switch is displayed.	ON or OFF
Brake Light Switch	Brake ON/OFF is displayed.	ON or OFF
Clutch switch	Clutch ON/OFF is displayed. (MT model)	ON or OFF
Reverse Signal	Reverse gear ON/OFF is displayed. (MT model)	ON or OFF

- Models with EyeSight

Display	Contents to be displayed	Unit of measure
Trip Count	Total number of ignition switch ON	times
Count	Counter	—
Time Count [msec]	Elapsed time after ignition switch ON	ms
FR Wheel Speed	Wheel speed detected by front ABS wheel speed sensor RH is displayed.	km/h or MPH
FL Wheel Speed	Wheel speed detected by front ABS wheel speed sensor LH is displayed.	km/h or MPH
RR Wheel Speed	Wheel speed detected by rear ABS wheel speed sensor RH is displayed.	km/h or MPH
RL Wheel Speed	Wheel speed detected by rear ABS wheel speed sensor LH is displayed.	km/h or MPH
Steering Angle Sensor	Steering angle detected by steering angle sensor is displayed.	deg
Yaw Rate Sensor	Angle of the vehicle detected by yaw rate sensor is displayed.	deg/s
Master Cylinder Pressure Sensor	Brake fluid pressure detected by pressure sensor is displayed.	bar
Longitudinal G Sensor	Vehicle longitudinal acceleration detected by longitudinal G sensor is displayed.	m/s^2
Lateral G Sensor	Vehicle lateral acceleration detected by lateral G sensor is displayed.	m/s^2
Ignition Voltage	Voltage supplied to VDCCM&H/U is displayed.	V
M. Relay monitor Voltage	Voltage applied to the motor relay is displayed.	V
FL wheel cylinder pressure sensor output	FL wheel cylinder brake fluid pressure detected by pressure sensor is displayed.	bar
FR wheel cylinder pressure sensor output	FR wheel cylinder brake fluid pressure detected by pressure sensor is displayed.	bar
Motor Relay Signal	Motor relay driving signal is displayed.	ON or OFF
Valve Relay Signal	Valve relay driving signal is displayed.	ON or OFF
EBD Warning Light	ON operation of the EBD warning light is displayed.	ON or OFF
ABS Warning Lamp	ON operation of the ABS warning light is displayed.	ON or OFF
VDC Warning Lamp	ON operation of the VDC warning light is displayed.	ON or OFF
EBD Control Flag	EBD operation condition is displayed.	ON or OFF
ABS Control Flag	ABS operation condition is displayed.	ON or OFF
TCS Control Flag	TCS operation condition is displayed.	ON or OFF
VDC Control Flag	VDC operation condition is displayed.	ON or OFF
E/G Torque Down Control Stop Flag	Engine control command signal is displayed.	1 or 0
Stop-lamp relay drive signal	Brake light relay driving signal is displayed.	ON or OFF
E/G torques up Control Stop Flag	Engine control command signal is displayed.	1 or 0
VDC-OFF Light	ON/OFF condition of VDC OFF indicator light is displayed.	ON or OFF
OFF SW Signal	Operation condition of VDC OFF switch is displayed.	ON or OFF
Brake Light Switch	Brake ON/OFF is displayed.	ON or OFF
Incline	Incline of the vehicle is displayed.	%
Total Operation Number	Total number of the electronic parking brake operation is displayed.	times
Hill Hold Operation Number	Number of times that hill hold function activated at uphill parking is displayed.	times
Auto Operation Number	Number of times that an electronic parking brake operated automatically while using the adaptive cruise control is displayed.	times
Auto Cancel Number	Number of times that an automatic accelerator interlock cancel function operated at starting is displayed.	times
Parking Operation Number when driving	Number of the parking brake operation while driving is displayed.	times
Engine Torque	Engine torque is displayed.	N·m
Ambient Temp Sensor	Ambient temperature is displayed.	°C
Manual Parking Operation	Parking brake operation condition is displayed.	ON or OFF
Auto Parking Operation	Parking brake operation condition is displayed.	ON or OFF

Display	Contents to be displayed	Unit of measure
Parking Operation when driving	Parking brake operation condition is displayed.	ON or OFF
Parking Cancel	Parking brake operation condition is displayed.	ON or OFF
Hill Hold Lamp	Hill hold indicator control condition is displayed.	ON or OFF
IGN	Input condition of ignition signal is displayed.	ON or OFF
Brake Warning Light	Brake warning light control condition is displayed.	ON or OFF
Parking System Warning Light	Control condition of electric parking brake warning light is displayed.	ON or OFF
Neutral Signal	Input condition of neutral signal is displayed.	ON or OFF
Engine idle flag	Engine speed condition is displayed.	ON or OFF
Door Signal	Input condition of door (4 locations) open/close signal is displayed.	ON or OFF
Driver Seat Belt Signal	Input condition of driver's seat belt buckle signal is displayed.	ON or OFF

NOTE:
For detailed operation procedures, refer to "Application help".

3. FUNCTION CHECK

Display	Contents of display	Index No.
ABS Sequence Control Mode	Operate the valve and pump motor continuously to perform the ABS sequence control.	<Ref. to VDC-20, ABS Sequence Control.>
VDC Check Mode	Operate the valve and pump motor continuously to perform the VDC sequence control.	<Ref. to VDC-23, VDC Sequence Control.>
Brake Lamp Lighting Operation	Forcibly activate the stop light relay to illuminate the stop light.	<Ref. to VDC-26, BRAKE LIGHT LIGHTING OPERATION MODE BY SUBARU SELECT MONITOR, OPERATION, Brake Lamp Relay.>
VSC(VDC) Centering Mode	Set the steering angle sensor neutral position, and the lateral G sensor and longitudinal G sensor "0" point.	<Ref. to VDC-17, VDC SENSOR MIDPOINT SETTING MODE, ADJUSTMENT, VDC Control Module and Hydraulic Control Unit (VDCCM&H/U).>

4. MAINTENANCE MODE

Display	Contents of display	Index No.
Brake Maintenance Mode	Used when inspecting and repairing parts related to rear brake.	<Ref. to PB-21, BRAKE MAINTENANCE MODE, OPERATION, Parking Brake System.>
Reading of parameter: ECM to SSM	Read VDCCM parameter data.	<Ref. to VDC-18, VDCCM PARAMETER READING, MAINTENANCE MODE, VDC Control Module and Hydraulic Control Unit (VDCCM&H/U).>
Writing of parameter: SSM to ECM	Write the parameter data to the VDCCM.	<Ref. to VDC-18, VDCCM PARAMETER WRITING, MAINTENANCE MODE, VDC Control Module and Hydraulic Control Unit (VDCCM&H/U).>
Select Parameter	Select and register parameters in the VDCCM.	<Ref. to VDC-19, VDCCM PARAMETER SELECTION, MAINTENANCE MODE, VDC Control Module and Hydraulic Control Unit (VDCCM&H/U).>
Confirm on parameter	Parameters registered in the VDCCM are displayed.	<Ref. to VDC-19, VDCCM PARAMETER CHECK, MAINTENANCE MODE, VDC Control Module and Hydraulic Control Unit (VDCCM&H/U).>

5. READ FREEZE FRAME DATA

1) On «Start» display, select «Diagnosis».
2) On «Vehicle selection» display, input the vehicle information and select «Confirmed».
3) On «Main Menu» display, select «Each System».
4) On «Select System» display, select «Brake Control System».
5) On «Select Function» display, select «DTC».
6) On «DTC» display, select «FFD».

- Models without EyeSight

Display	Contents to be displayed	Unit of measure
Classification	Recorded trouble code is displayed.	—
Trip Count	Total number of ignition switch ON	times
Count	Counter	—
Time Count [msec]	Elapsed time after ignition switch ON	ms
FR Wheel Speed	Wheel speed detected by front ABS wheel speed sensor RH is displayed.	km/h or MPH
FL Wheel Speed	Wheel speed detected by front ABS wheel speed sensor LH is displayed.	km/h or MPH
RR Wheel Speed	Wheel speed detected by rear ABS wheel speed sensor RH is displayed.	km/h or MPH
RL Wheel Speed	Wheel speed detected by rear ABS wheel speed sensor LH is displayed.	km/h or MPH
Vehicle Speed	Vehicle speed calculated by VDC control module is displayed.	km/h or MPH
Steering Angle Sensor	Steering angle detected by steering angle sensor is displayed.	deg
Yaw Rate Sensor	Angle of the vehicle detected by yaw rate sensor is displayed.	deg/s
Master Cylinder Pressure Sensor	Brake fluid pressure detected by pressure sensor is displayed.	bar
Longitudinal G Sensor	Vehicle longitudinal acceleration detected by longitudinal G sensor is displayed.	m/s^2
Lateral G Sensor	Vehicle lateral acceleration detected by lateral G sensor is displayed.	m/s^2
Ignition Voltage	Voltage supplied to VDCCM&H/U is displayed.	V
Acceleration Pedal Position	Accelerator pedal opening angle is displayed.	%
Engine Speed	Engine speed on malfunction occurrence is displayed.	rpm
Steering Angle Flag	Whether the absolute angle of the steering angle sensor was determined is displayed.	Recognized or No recognition
EBD Control Flag	EBD operation condition is displayed.	ON or OFF
ABS Control Flag	ABS operation condition is displayed.	ON or OFF
TCS Control Flag	TCS operation condition is displayed.	ON or OFF
VDC Control Flag	VDC operation condition is displayed.	ON or OFF
E/G Torque Down Control Stop Flag	Engine control command signal is displayed.	1 or 0
E/G torques up Control Stop Flag	Engine control command signal is displayed.	1 or 0
OFF Switch Detection	ON/OFF condition of the VDC operated by the driver is displayed.	ON or OFF
Brake Light Switch	Brake ON/OFF is displayed.	ON or OFF
Clutch switch	Clutch ON/OFF is displayed. (MT model)	ON or OFF
Reverse Signal	Reverse gear ON/OFF is displayed. (MT model)	ON or OFF

- Models with EyeSight

Display	Contents to be displayed	Unit of measure
Classification	Recorded trouble code is displayed.	—
Trip Count	Total number of ignition switch ON	times
Count	Counter	—
Time Count [msec]	Elapsed time after ignition switch ON	ms
FR Wheel Speed	Wheel speed detected by front ABS wheel speed sensor RH is displayed.	km/h or MPH
FL Wheel Speed	Wheel speed detected by front ABS wheel speed sensor LH is displayed.	km/h or MPH
RR Wheel Speed	Wheel speed detected by rear ABS wheel speed sensor RH is displayed.	km/h or MPH
RL Wheel Speed	Wheel speed detected by rear ABS wheel speed sensor LH is displayed.	km/h or MPH
Vehicle Speed	Vehicle speed calculated by VDC control module is displayed.	km/h or MPH
Steering Angle Sensor	Steering angle detected by steering angle sensor is displayed.	deg
Yaw Rate Sensor	Angle of the vehicle detected by yaw rate sensor is displayed.	deg/s
Master Cylinder Pressure Sensor	Brake fluid pressure detected by pressure sensor is displayed.	bar
Longitudinal G Sensor	Vehicle longitudinal acceleration detected by longitudinal G sensor is displayed.	m/s^2
Lateral G Sensor	Vehicle lateral acceleration detected by lateral G sensor is displayed.	m/s^2
Ignition Voltage	Voltage supplied to VDC control module is displayed.	V
Acceleration Pedal Position	Accelerator pedal opening angle is displayed.	%
Engine Speed	Engine speed on malfunction occurrence is displayed.	rpm
FL wheel cylinder pressure sensor output	FL wheel cylinder brake fluid pressure detected by pressure sensor is displayed.	bar
FR wheel cylinder pressure sensor output	FR wheel cylinder brake fluid pressure detected by pressure sensor is displayed.	bar
Steering Angle Flag	Whether the absolute angle of the steering angle sensor was determined is displayed.	Recognized or No recognition
EBD Control Flag	EBD control condition is displayed.	ON or OFF
ABS Control Flag	ABS control condition is displayed.	ON or OFF
TCS Control Flag	TCS control condition is displayed.	ON or OFF
VDC Control Flag	VDC control condition is displayed.	ON or OFF
E/G Torque Down Control Stop Flag	Engine control command signal is displayed.	1 or 0
Stop-lamp relay drive signal	Brake light relay driving signal is displayed.	ON or OFF
E/G torques up Control Stop Flag	Engine control command signal is displayed.	1 or 0
OFF Switch Detection	ON/OFF condition of the VDC operated by the driver is displayed.	ON or OFF
Brake Light Switch	Brake ON/OFF is displayed.	ON or OFF
Engine Torque	Engine torque is displayed.	N·m
Ambient Temp Sensor	Ambient temperature is displayed.	°C
Manual Parking Operation	Parking brake operation condition is displayed.	ON or OFF
Auto Parking Operation	Parking brake operation condition is displayed.	ON or OFF
Parking Operation when driving	Parking brake operation condition is displayed.	ON or OFF
Parking Cancel	Parking brake operation condition is displayed.	ON or OFF
Hill Hold Lamp	Hill hold indicator control condition is displayed.	ON or OFF
IGN	Input condition of ignition signal is displayed.	ON or OFF
Neutral Signal	Input condition of neutral signal is displayed.	ON or OFF
Engine idle flag	Engine speed condition is displayed.	ON or OFF
Door Signal	Input condition of door (4 locations) open/close signal is displayed.	ON or OFF
Driver Seat Belt Signal	Input condition of driver's seat belt buckle signal is displayed.	ON or OFF

NOTE:
- Freeze frame data stored at the time of trouble occurrence is shown on the display.
- Each time a trouble occurs, the latest information is stored in the freeze frame data in memory.
- For detailed operation procedures, refer to "Application help".

B: INSPECTION

1. COMMUNICATION FOR INITIALIZING IMPOSSIBLE

DETECTING CONDITION:
Defective harness connector
TROUBLE SYMPTOM:
Communication is impossible between VDC and Subaru Select Monitor.
WIRING DIAGRAM:

- Models without EyeSight

Vehicle dynamics control system <Ref. to WI-368, WITHOUT EyeSight, WIRING DIAGRAM, Vehicle Dynamics Control System.>

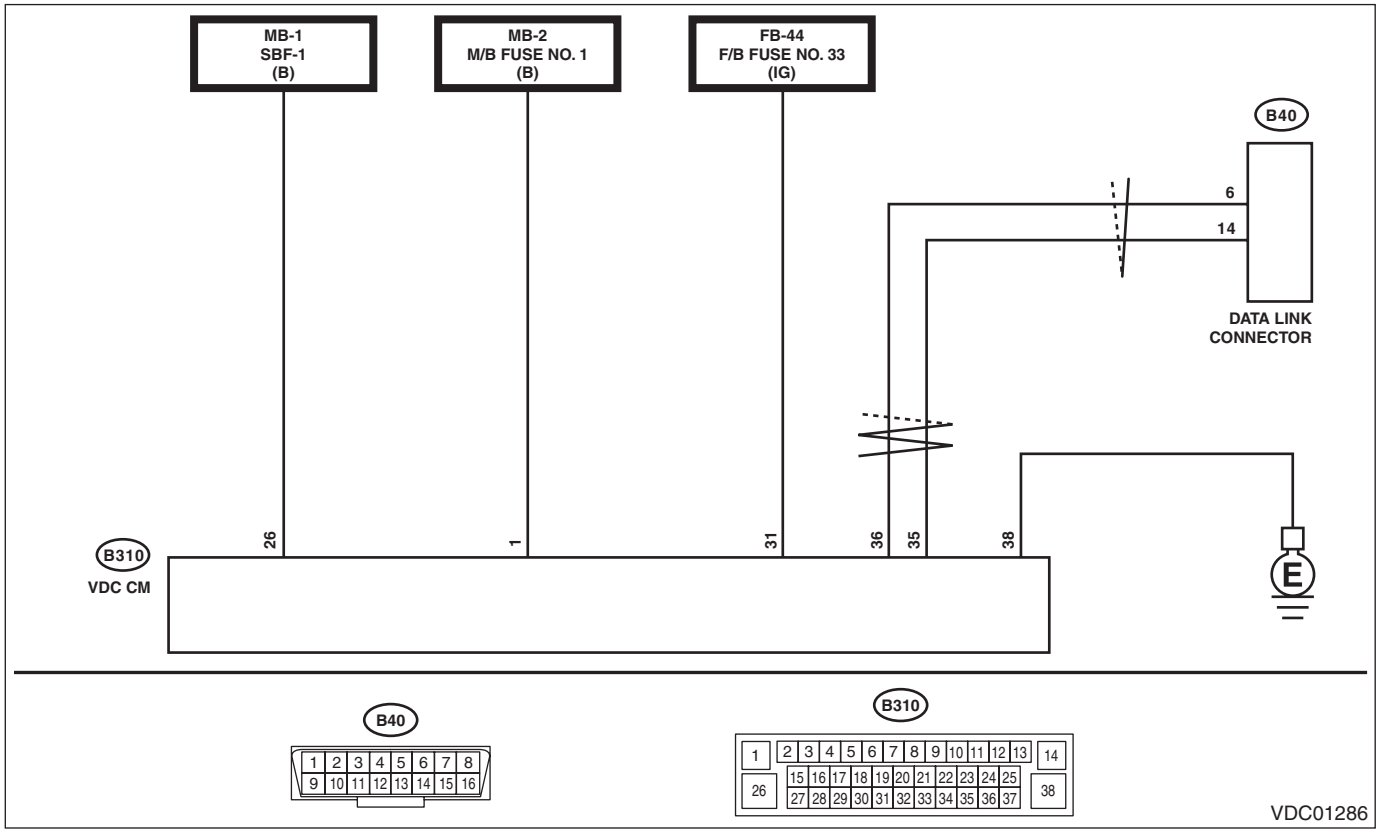

• Models with EyeSight

Vehicle dynamics control system <Ref. to WI-372, WITH EyeSight, WIRING DIAGRAM, Vehicle Dynamics Control System.>

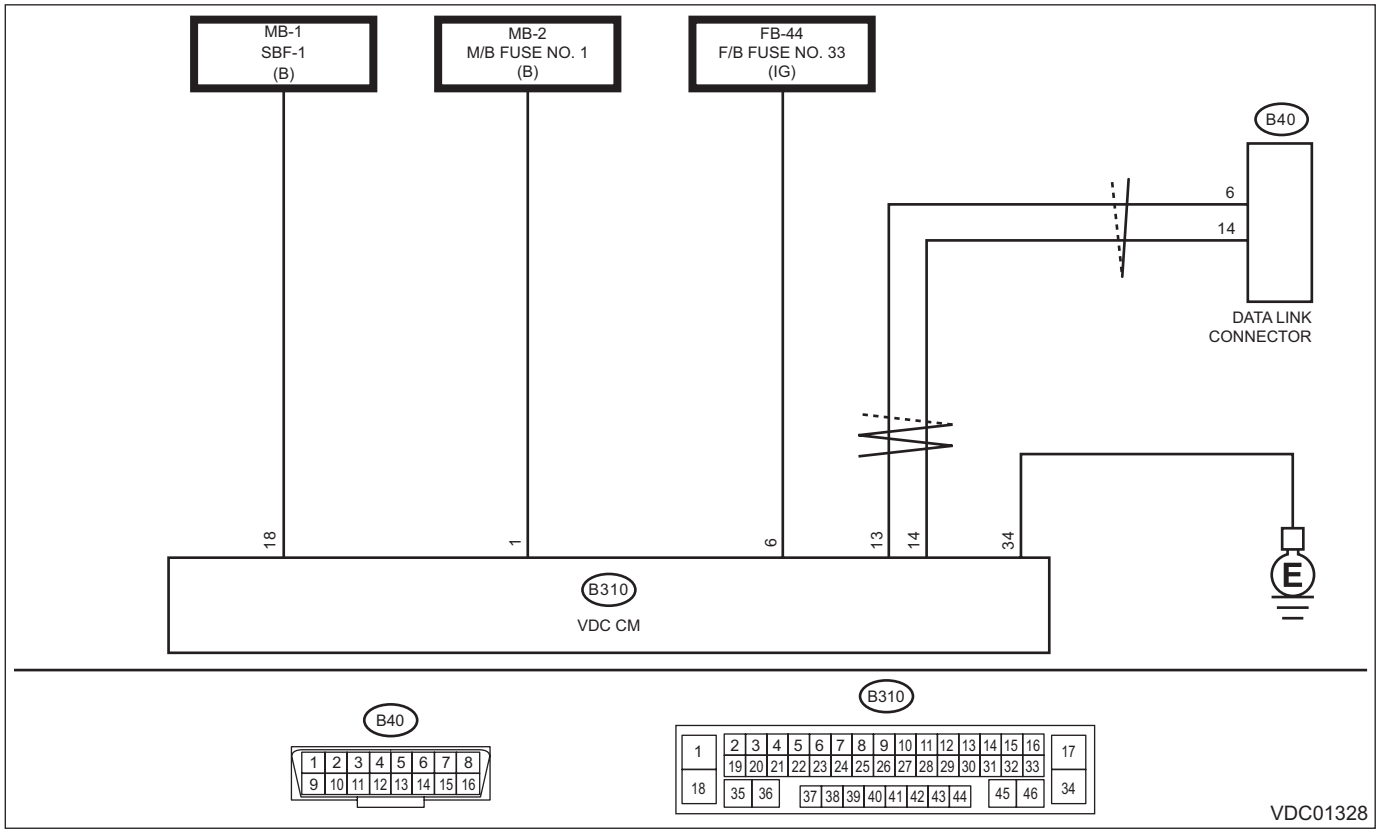

	Step	Check	Yes	No
1	**CHECK IGNITION SWITCH.**	Is the ignition switch ON?	Go to step **2**.	Turn the ignition switch to ON, and select VDC using the Subaru Select Monitor.
2	**CHECK BATTERY.** 1) Turn the ignition switch to OFF. 2) Measure the battery voltage.	Is the voltage 11 V or more?	Go to step **3**.	Charge or replace the battery.
3	**CHECK BATTERY TERMINAL.**	Is there poor contact at battery terminal?	Repair or tighten the battery terminal.	Go to step **4**.
4	**CHECK INSTALLATION OF VDCCM&H/U CONNECTOR.** Turn the ignition switch to OFF.	Is the VDCCM&H/U connector inserted into VDCCM&H/U until the clamp locks onto it?	Go to step **5**.	Insert VDCCM&H/U connector into VDCCM&H/U.
5	**CHECK LAN SYSTEM.** Perform the diagnosis for LAN system. <Ref. to LAN(diag)-2, Basic Diagnostic Procedure.>	Is there any fault in LAN system?	Perform the diagnosis according to DTC for LAN system. <Ref. to LAN(diag)-109, List of Diagnostic Trouble Code (DTC).>	Go to step **6**.
6	**CHECK SUBARU SELECT MONITOR COMMUNICATION.** 1) Turn the ignition switch to ON. 2) Check whether communication to VDC system can be executed normally.	Is «Select Function» displayed?	Check the DTC in VDC system. <Ref. to VDC(diag)-28, Read Diagnostic Trouble Code (DTC).>	Go to step **7**.

	Step	Check	Yes	No
7	**CHECK SUBARU SELECT MONITOR COMMUNICATION.** Connect the Subaru Select Monitor to another vehicle to check whether the communication for initializing can be executed normally.	Does the Subaru Select Monitor communicate normally?	Go to step **8**.	Repair or replace the Subaru Select Monitor.
8	**CHECK POWER SUPPLY CIRCUIT.** 1) Turn the ignition switch to ON. (Engine OFF) 2) Measure the ignition power supply voltage between VDCCM&H/U connector and chassis ground. ***Connector & terminal*** ***Models without EyeSight*** ***(B310) No. 1 (+) — Chassis ground (–):*** ***(B310) No. 26 (+) — Chassis ground (–):*** ***(B310) No. 31 (+) — Chassis ground (–):*** ***Models with EyeSight*** ***(B310) No. 1 (+) — Chassis ground (–):*** ***(B310) No. 6 (+) — Chassis ground (–):*** ***(B310) No. 18 (+) — Chassis ground (–):***	Is the voltage 10 — 15 V?	Go to step **9**.	Repair open circuit in harness between VDCCM&H/U and battery.
9	**CHECK HARNESS CONNECTOR BETWEEN VDCCM&H/U AND CHASSIS GROUND.** 1) Turn the ignition switch to OFF. 2) Disconnect the connector from the VDCCM&H/U. 3) Measure the resistance of harness between VDCCM&H/U connector and chassis ground. ***Connector & terminal*** ***Models without EyeSight*** ***(B310) No. 38 — Chassis ground:*** ***Models with EyeSight*** ***(B310) No. 34 — Chassis ground:***	Is the resistance less than 10 Ω?	Go to step **10**.	Repair the open circuit of VDCCM&H/U ground circuit and poor contact of connector.
10	**CHECK POOR CONTACT OF CONNECTOR.**	Is there poor contact of control module power supply, ground circuit and data link connector?	Repair the connector.	Replace the VDCCM&H/U. <Ref. to VDC-9, VDC Control Module and Hydraulic Control Unit (VDCCM&H/U).>

7. Read Diagnostic Trouble Code (DTC)

A: OPERATION

1) On «Start» display, select «Diagnosis».
2) On «Vehicle selection» display, input the vehicle information and select «Confirmed».
3) On «Main Menu» display, select «Each System».
4) On «Select System» display, select «Brake Control System».
5) On «Select Function» display, select «DTC».

NOTE:
- For details concerning the DTC, refer to “List of Diagnostic Trouble Code (DTC)”. <Ref. to VDC(diag)-55, List of Diagnostic Trouble Code (DTC).>
- For detailed operation procedures, refer to “Application help”.

8. Inspection Mode

A: PROCEDURE

1. VDC SYSTEM

1) Delete the DTC.
2) Drive the vehicle at least ten minutes. (Reproduce nearly the same condition as occurred when the DTC was recorded.)

NOTE:
Make sure the vehicle is not dragged to one side under usual driving condition.

2. ELECTRONIC PARKING BRAKE SYSTEM

1) Start the engine, and operate and release the electronic parking brake a few times with the vehicle at a standstill.
2) Check if the warning light illuminates and DTC is displayed.

NOTE:
If the DTC is displayed, perform the diagnosis using “Diagnostic Procedure with Diagnostic Trouble Code (DTC)”. <Ref. to VDC(diag)-59, Diagnostic Procedure with Diagnostic Trouble Code (DTC).>
3) Drive the vehicle at least 10 minutes, and operate and release the electronic parking brake a few times.

CAUTION:
Do not drive the vehicle with the warning light illuminated.

9. Clear Memory Mode

A: OPERATION

1) On «Start» display, select «Diagnosis».
2) On «Vehicle selection» display, input the vehicle information and select «Confirmed».
3) On «Main Menu» display, select «Each System».
4) On «Select System» display, select «Brake Control System».
5) On «Select Function» display, select «DTC».
6) On «DTC» display, select «Clear Memory».

NOTE:
For detailed operation procedures, refer to “Application help”.

10.Warning Light Illumination Pattern

A: INSPECTION

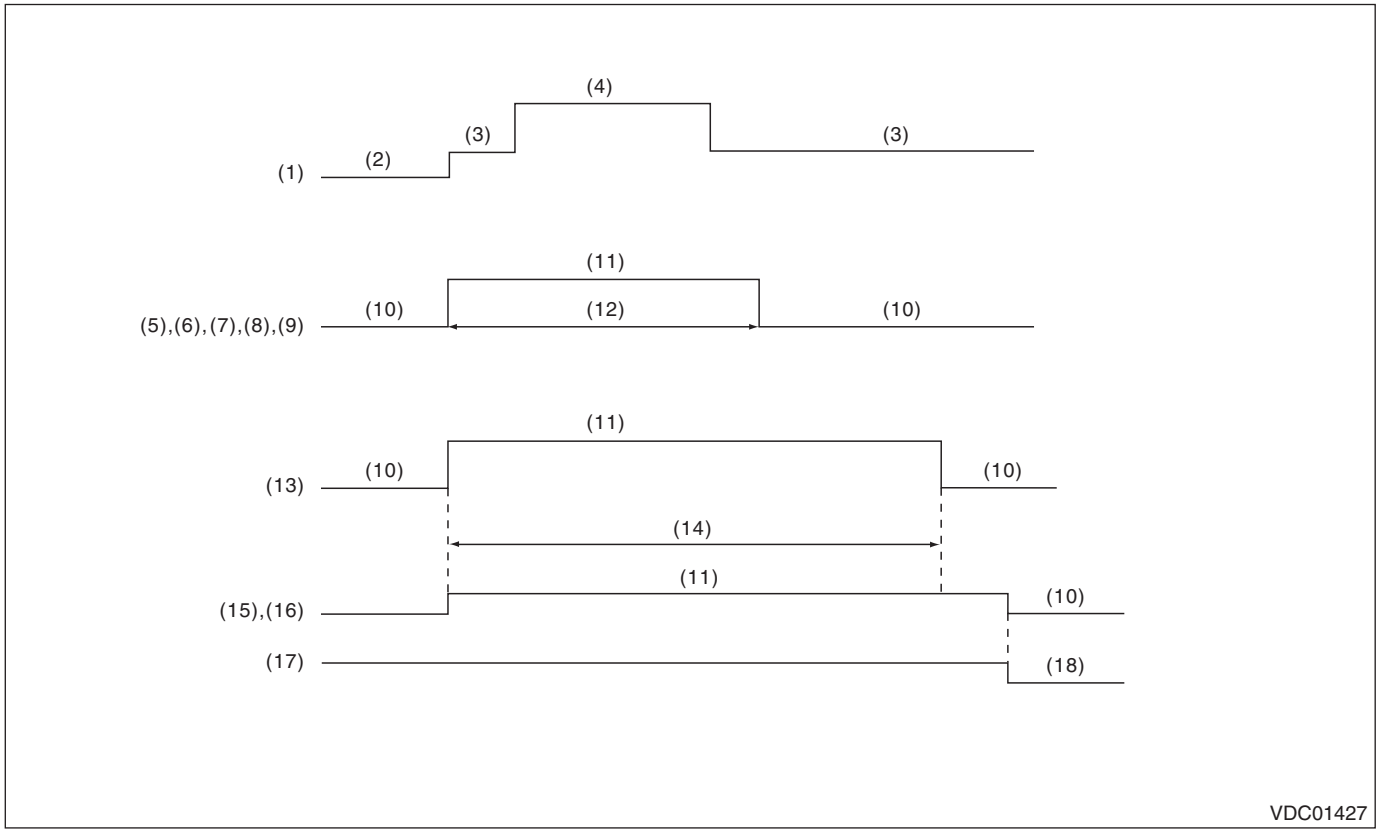

(1)	Ignition switch	(7)	VDC OFF indicator light	(13)	VDC warning light & VDC indicator light
(2)	OFF	(8)	Hill start assist warning light (model without EyeSight) Hill hold indicator light (model with EyeSight)	(14)	2 seconds or more
(3)	ON	(9)	VDC traction mode indicator light	(15)	Brake warning light (EBD warning light) (model without EyeSight)
(4)	Engine start	(10)	Light OFF	(16)	Electronic parking brake operation indicator light (model with EyeSight)
(5)	ABS warning light	(11)	Light ON	(17)	Parking brake
(6)	Brake warning light (EBD warning light) and electronic parking brake warning light (model with EyeSight)	(12)	2 seconds	(18)	Released

NOTE:
- Hill start assist warning light always illuminates when the hill start assist is in the OFF mode.
- The hill hold indicator light always illuminates when the hill hold is in the ON mode.

1) When warning lights or indicator lights do not illuminate in accordance with this illumination pattern, there must be an electrical malfunction.
2) When the warning lights or indicator lights remain constantly OFF, check the combination meter circuit. <Ref. to VDC(diag)-35, EBD WARNING LIGHT, ABS WARNING, VDC OFF INDICATOR LIGHT, VDC WARNING LIGHT AND VDC INDICATOR LIGHT DO NOT COME ON, Warning Light Illumination Pattern.> <Ref. to VDC(diag)-36, HILL START ASSIST WARNING LIGHT DOES NOT COME ON, Warning Light Illumination Pattern.> <Ref. to VDC(diag)-37, ELECTRONIC PARKING BRAKE INDICATOR LIGHT, HILL HOLD INDICATOR LIGHT DO NOT COME ON, Warning Light Illumination Pattern.>
3) When the ABS warning light, VDC OFF indicator light, VDC warning light & VDC indicator light, and hill start assist warning light do not go off, check the combination meter circuit or CAN communication circuit. <Ref. to VDC(diag)-39, ABS WARNING LIGHT DOES NOT GO OFF, Warning Light Illumination Pattern.> <Ref. to VDC(diag)-41, ELECTRONIC PARKING BRAKE INDICATOR LIGHT, HILL HOLD INDICATOR LIGHT DO NOT GO OFF, Warning Light Illumination Pattern.> <Ref. to VDC(diag)-42, VDC OFF INDICATOR LIGHT DOES NOT GO OFF, Warning Light Illumination Pattern.> <Ref. to VDC(diag)-40, VDC WARNING LIGHT AND VDC INDICATOR LIGHT DO NOT GO OFF, Warning Light Illumination Pattern.> <Ref. to VDC(diag)-44, HILL START ASSIST WARNING LIGHT DOES NOT GO OFF, Warning Light Illumination Pattern.>

NOTE:
• Even when the ABS warning light and the VDC warning light & VDC indicator light do not go off in 2 seconds after illuminating, the ABS and VDC functions are normal if the warning lights go off while the vehicle is driven. However, while these lights are on, the functions with their warning lights illuminated do not operate.
• It may take several minutes before the VDC warning light & VDC indicator light goes off, if the vehicle is parked under low temperature for a specified time. This is not defective because it is resulted from low engine coolant temperature. Perform the Clear Memory Mode because DTC may be recorded at this time. <Ref. to VDC(diag)-30, Clear Memory Mode.>
• With the vehicle jack-up/lift-up or set on free rollers, when the wheels lock or spin after starting the engine, ABS warning light, and VDC warning light & VDC indicator light may illuminate because VDCCM&H/U detects the abnormal conditions from ABS wheel speed sensor or longitudinal G sensor. In this case, this is not a malfunction. Perform the Clear Memory Mode. <Ref. to VDC(diag)-30, Clear Memory Mode.>
• When operation and release of the electronic parking brake is repeated excessively, the electronic parking brake warning light may illuminate or the electronic parking brake operation indicator light may blink and then the parking brake switch operation may not be accepted; this is not malfunction.

Warning Light Illumination Pattern

4) Warning light illumination pattern at VDC mode change
If illumination patterns of the VDC OFF indicator light and the VDC traction mode indicator light do not match the followings when the VDC OFF switch is operated, check the VDC OFF switch circuit, CAN communication circuit or combination meter circuit. <Ref. to VDC(diag)-50, VDC TRACTION MODE, VDC MODE DOES NOT CHANGE, Warning Light Illumination Pattern.>

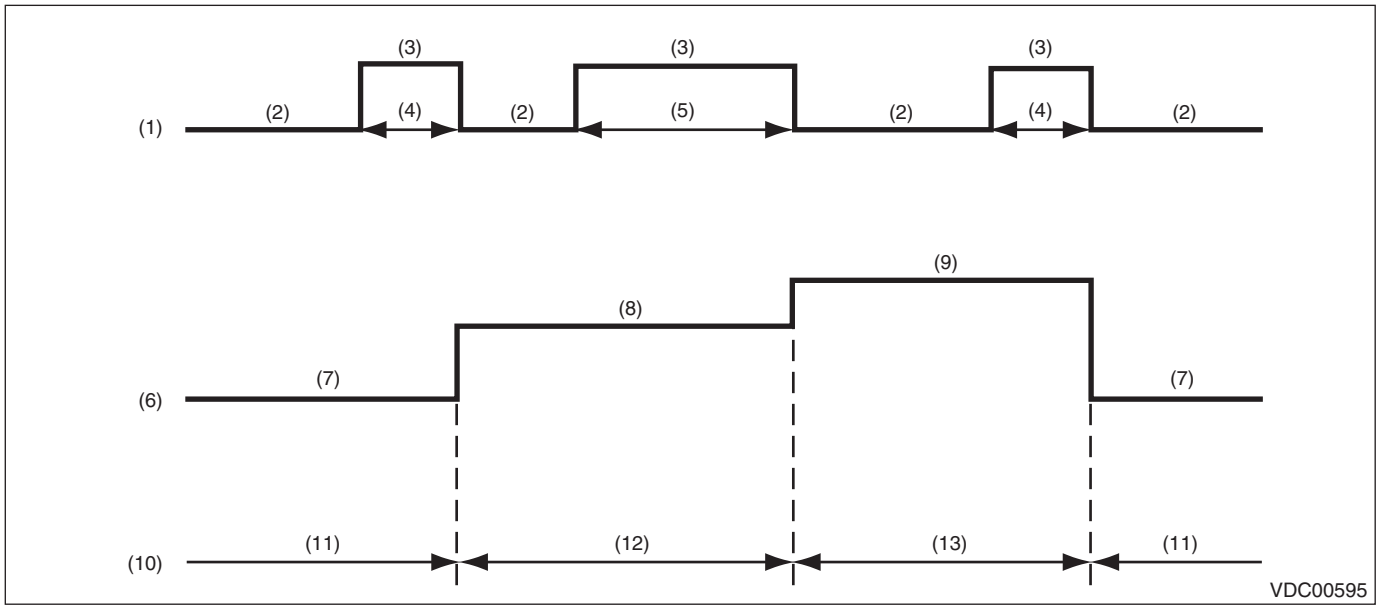

(1)	VDC OFF switch	(6)	VDC OFF indicator light and VDC traction mode indicator light	(10)	VDC mode
(2)	OFF	(7)	Light OFF	(11)	Normal mode
(3)	ON	(8)	VDC OFF indicator light and VDC traction mode indicator light ON	(12)	Traction mode
(4)	Less than 2 seconds	(9)	VDC OFF indicator light ON VDC traction mode indicator light OFF	(13)	OFF mode
(5)	2 seconds or more and less than 30 seconds				

5) Warning light illumination pattern at hill start assist OFF mode change (model without EyeSight)
When the VDC OFF switch is kept pressed, VDC OFF indicator light illuminates, then goes off in approx. 30 seconds. If the switch is released in 5 seconds after the light goes off then pressed again in 2 seconds, hill start assist warning light illuminates then mode is changed to hill start assist OFF mode. If hill start assist function ON/OFF does not change, check VDC OFF switch circuit, CAN communication circuit or combination meter circuit. <Ref. to VDC(diag)-53, HILL START ASSIST ON/OFF MODE, VDC MODE DOES NOT CHANGE, Warning Light Illumination Pattern.>

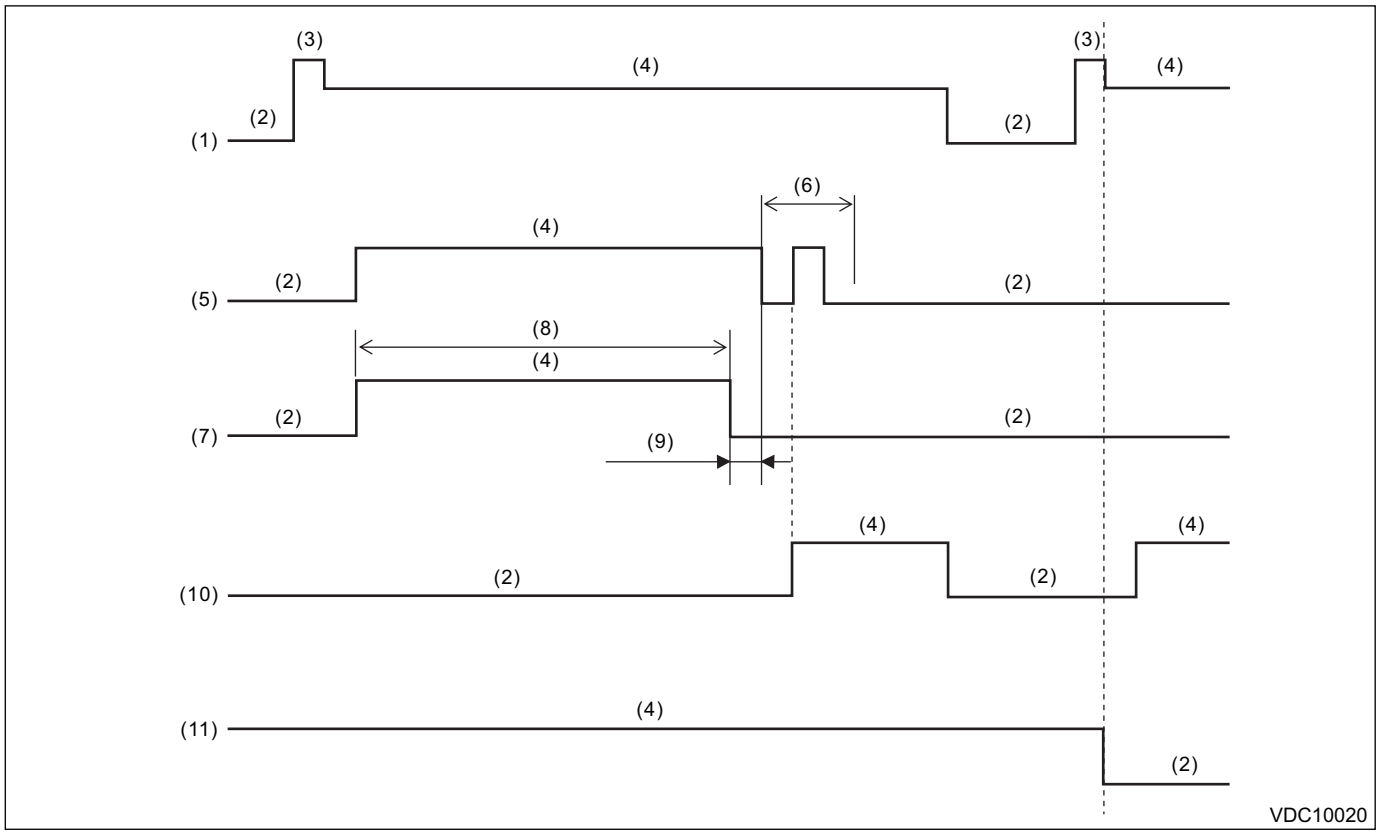

(1) Ignition key
(2) OFF
(3) Start
(4) ON
(5) VDC OFF switch
(6) Less than 2 seconds
(7) VDC OFF indicator light
(8) Approx. 30 seconds (until (7) goes off)
(9) 5 seconds or less
(10) Hill start assist warning light
(11) Hill start assist function

NOTE:
Hill start assist warning light always illuminates to inform that the hill start assist does not operate during hill start assist OFF mode.

B: EBD WARNING LIGHT, ABS WARNING, VDC OFF INDICATOR LIGHT, VDC WARNING LIGHT AND VDC INDICATOR LIGHT DO NOT COME ON

DETECTING CONDITION:
Defective combination meter

TROUBLE SYMPTOM:
When the ignition switch is turned to ON (engine OFF), EBD warning light, ABS warning light, VDC OFF indicator light, and VDC warning light & VDC indicator light do not illuminate.

NOTE:
When pressing the VDC OFF switch for 30 seconds or more, the VDC OFF indicator light goes off and cannot operate any more. When turning the ignition switch from OFF to ON, the OFF operation enabled status is restored.

	Step	Check	Yes	No
1	**CHECK OTHER INDICATOR LIGHT.** Turn the ignition switch to ON.	Immediately after the ignition switch is turned to ON, do all the indicator lights for VDC system and others illuminate?	Go to step **2**.	Check the combination meter. <Ref. to IDI-6, SELF-DIAGNOSIS DISPLAY MODE, OPERATION, Combination Meter System.>
2	**CHECK VDCCM.** When the engine does not start, display the current data of VDCCM using Subaru Select Monitor.	Immediately after the ignition switch is turned to ON, is the «EBD Warning Light» ON?	Go to step **3**.	Replace the VDCCM&H/U. <Ref. to VDC-9, VDC Control Module and Hydraulic Control Unit (VDCCM&H/U).>
3	**CHECK VDCCM.** When the engine does not start, display the current data of VDCCM using Subaru Select Monitor.	Immediately after the ignition switch is turned to ON, is the «ABS Warning Lamp» ON?	Go to step **4**.	Replace the VDCCM&H/U. <Ref. to VDC-9, VDC Control Module and Hydraulic Control Unit (VDCCM&H/U).>
4	**CHECK VDCCM.** When the engine does not start, display the current data of VDCCM using Subaru Select Monitor.	Immediately after the ignition switch is turned to ON, is the «VDC-OFF Light» ON?	Go to step **5**.	Replace the VDCCM&H/U. <Ref. to VDC-9, VDC Control Module and Hydraulic Control Unit (VDCCM&H/U).>
5	**CHECK VDCCM.** When the engine does not start, display the current data of VDCCM using Subaru Select Monitor.	Immediately after the ignition switch is turned to ON, is the «VDC Warning Lamp» ON?	Check the combination meter. <Ref. to IDI-6, SELF-DIAGNOSIS DISPLAY MODE, OPERATION, Combination Meter System.>	Replace the VDCCM&H/U. <Ref. to VDC-9, VDC Control Module and Hydraulic Control Unit (VDCCM&H/U).>

C: HILL START ASSIST WARNING LIGHT DOES NOT COME ON

DETECTING CONDITION:
Defective combination meter

TROUBLE SYMPTOM:
When the ignition switch is turned to ON (engine OFF), hill start assist warning light does not illuminate.

	Step	Check	Yes	No
1	**CHECK OTHER INDICATOR LIGHT.** Turn the ignition switch to ON. (Engine OFF)	Do other indicator lights illuminate?	Go to step **2**.	Check the combination meter. <Ref. to IDI-6, SELF-DIAGNOSIS DISPLAY MODE, OPERATION, Combination Meter System.>
2	**READ DTC.** Read the DTC. <Ref. to VDC(diag)-28, Read Diagnostic Trouble Code (DTC).>	Is DTC displayed?	Perform the diagnosis according to DTC. <Ref. to VDC(diag)-55, List of Diagnostic Trouble Code (DTC).>	Go to step **3**.
3	**CHECK LAN SYSTEM.** Perform the diagnosis for LAN system. <Ref. to LAN(diag)-2, Basic Diagnostic Procedure.>	Is there any fault in LAN system?	Perform the diagnosis according to DTC for LAN system. <Ref. to LAN(diag)-109, List of Diagnostic Trouble Code (DTC).>	Go to step **4**.
4	**CHECK COMBINATION METER.** Check the combination meter. <Ref. to IDI-6, SELF-DIAGNOSIS DISPLAY MODE, OPERATION, Combination Meter System.>	Is the check result OK?	Replace the VDCCM&H/U. <Ref. to VDC-9, VDC Control Module and Hydraulic Control Unit (VDCCM&H/U).>	Replace the combination meter. <Ref. to IDI-13, Combination Meter.>

D: ELECTRONIC PARKING BRAKE INDICATOR LIGHT, HILL HOLD INDICATOR LIGHT DO NOT COME ON

DETECTING CONDITION:
Defective combination meter

TROUBLE SYMPTOM:
When the ignition switch is turned to ON (engine OFF), electronic parking brake operation indicator light, hill hold indicator light do not illuminate.

	Step	Check	Yes	No
1	**CHECK OTHER INDICATOR LIGHT.** Turn the ignition switch to ON. (Engine OFF)	Do other indicator lights illuminate?	Go to step **2**.	Check the combination meter. <Ref. to IDI-6, SELF-DIAGNOSIS DISPLAY MODE, OPERATION, Combination Meter System.>
2	**READ DTC.** Read the DTC. <Ref. to VDC(diag)-28, Read Diagnostic Trouble Code (DTC).>	Is DTC displayed?	Perform the diagnosis according to DTC. <Ref. to VDC(diag)-55, List of Diagnostic Trouble Code (DTC).>	Go to step **3**.
3	**CHECK LAN SYSTEM.** Perform the diagnosis for LAN system. <Ref. to LAN(diag)-2, Basic Diagnostic Procedure.>	Is there any fault in LAN system?	Perform the diagnosis according to DTC for LAN system. <Ref. to LAN(diag)-109, List of Diagnostic Trouble Code (DTC).>	Go to step **4**.
4	**CHECK COMBINATION METER.** Check the combination meter. <Ref. to IDI-6, SELF-DIAGNOSIS DISPLAY MODE, OPERATION, Combination Meter System.>	Is the check result OK?	Replace the VDCCM&H/U. <Ref. to VDC-9, VDC Control Module and Hydraulic Control Unit (VDCCM&H/U).>	Replace the combination meter. <Ref. to IDI-13, Combination Meter.>

E: ELECTRONIC PARKING BRAKE INDICATOR LIGHT IS BLINKING

DETECTING CONDITION:

- When VDCCM&H/U was replaced
- When fault was detected or electronic parking brake switch was operated under faulty condition
- During the maintenance mode
- When electronic parking brake was operated while the vehicle was running on the free roller or while the tires were rotating with a help of the free roller
- When electronic parking brake was operated with the brake high in temperature or operated on a steep slope

TROUBLE SYMPTOM:

Electronic parking brake may not operate properly.

	Step	Check	Yes	No
1	**CHECK VDCCM&H/U.** NOTE: If VDCCM&H/U was not replaced, start the diagnosis from step 2.	Was electronic parking brake operated after replacement of VDCCM&H/U?	Go to step **2**.	It is normal if the electronic parking brake operation indicator light comes on by operating the electronic parking brake and goes off by disengaging.
2	**CHECK ELECTRONIC PARKING BRAKE WARNING LIGHT.** Turn the ignition switch to ON. (Engine OFF)	Does electronic parking brake warning light illuminate?	Perform the diagnosis according to DTC. <Ref. to VDC(diag)-55, List of Diagnostic Trouble Code (DTC).>	Go to step **3**.
3	**CHECK VEHICLE CONDITION.**	Is the brake condition other than overheating? Is the electronic parking brake is operated except on a steep road?	Normal	Go to step **4**.
4	**CHECK DRIVING CONDITION.**	Was the vehicle running except on the free roller?	Normal	Go to step **5**.
5	**CHECK OPERATION OF ELECTRONIC PARKING BRAKE.** 1) Perform the Clear Memory Mode. <Ref. to VDC(diag)-30, Clear Memory Mode.> 2) Perform the Inspection Mode. <Ref. to VDC(diag)-29, Inspection Mode.>	Does electronic parking brake operation indicator light blink?	Replace the VDCCM&H/U. <Ref. to VDC-9, VDC Control Module and Hydraulic Control Unit (VDCCM&H/U).>	Electronic parking brake was temporarily prohibited.

F: ABS WARNING LIGHT DOES NOT GO OFF

DETECTING CONDITION:

- Defective combination meter
- Defective engine
- Defective CAN communication

TROUBLE SYMPTOM:

ABS warning light does not go off when starting the engine.

	Step	Check	Yes	No
1	**READ DTC.** Read the DTC. <Ref. to VDC(diag)-28, Read Diagnostic Trouble Code (DTC).>	Is DTC displayed?	Perform the diagnosis according to DTC. <Ref. to VDC(diag)-55, List of Diagnostic Trouble Code (DTC).>	Go to step **2**.
2	**CHECK VDCCM.** Display the current data of VDCCM using Subaru Select Monitor.	Is the «ABS Warning Lamp» ON?	Go to step **3**.	Go to step **5**.
3	**CHECK WARNING LIGHT.** 1) Save the freeze frame data. 2) Perform the Clear Memory Mode. <Ref. to VDC(diag)-30, Clear Memory Mode.>	Does the ABS warning light go off?	Normal. Perform the Inspection Mode to check that the light does not turn ON again.	Go to step **4**.
4	**READ DTC.** Read the DTC after driving the vehicle at 40 km/h (25 MPH) or more.	Is DTC displayed?	Perform the diagnosis according to DTC. <Ref. to VDC(diag)-55, List of Diagnostic Trouble Code (DTC).>	Go to step **5**.
5	**CHECK LAN SYSTEM.** Perform the diagnosis for LAN system. <Ref. to LAN(diag)-2, Basic Diagnostic Procedure.>	Is there any fault in LAN system?	Perform the diagnosis according to DTC for LAN system. <Ref. to LAN(diag)-109, List of Diagnostic Trouble Code (DTC).>	Go to step **6**.
6	**CHECK COMBINATION METER.** Check the combination meter. <Ref. to IDI-6, SELF-DIAGNOSIS DISPLAY MODE, OPERATION, Combination Meter System.>	Is the check result OK?	Replace the VDCCM&H/U. <Ref. to VDC-9, VDC Control Module and Hydraulic Control Unit (VDCCM&H/U).>	Replace the combination meter. <Ref. to IDI-13, REMOVAL, Combination Meter.>

G: VDC WARNING LIGHT AND VDC INDICATOR LIGHT DO NOT GO OFF

DETECTING CONDITION:

- Defective combination meter
- Defective engine
- Defective CAN communication

TROUBLE SYMPTOM:

VDC warning light and VDC indicator light do not go off when starting the engine.

	Step	Check	Yes	No
1	**READ DTC.** Read the DTC. <Ref. to VDC(diag)-28, Read Diagnostic Trouble Code (DTC).>	Is DTC displayed?	Perform the diagnosis according to DTC. <Ref. to VDC(diag)-55, List of Diagnostic Trouble Code (DTC).>	Go to step **2**.
2	**CHECK VDCCM.** Display the current data of VDCCM using Subaru Select Monitor.	Is the «VDC Warning Lamp» ON?	Go to step **3**.	Go to step **5**.
3	**CHECK WARNING LIGHT.** 1) Save the freeze frame data. 2) Perform the Clear Memory Mode. <Ref. to VDC(diag)-30, Clear Memory Mode.>	Does the VDC warning light & VDC operation indicator light go off?	Normal. Perform the Inspection Mode to check that the light does not turn ON again.	Go to step **4**.
4	**READ DTC.** Read the DTC after driving the vehicle at 40 km/h (25 MPH) or more.	Is DTC displayed?	Perform the diagnosis according to DTC. <Ref. to VDC(diag)-55, List of Diagnostic Trouble Code (DTC).>	Go to step **5**.
5	**CHECK LAN SYSTEM.** Perform the diagnosis for LAN system. <Ref. to LAN(diag)-2, Basic Diagnostic Procedure.>	Is there any fault in LAN system?	Perform the diagnosis according to DTC for LAN system. <Ref. to LAN(diag)-109, List of Diagnostic Trouble Code (DTC).>	Go to step **6**.
6	**CHECK COMBINATION METER.** Check the combination meter. <Ref. to IDI-6, SELF-DIAGNOSIS DISPLAY MODE, OPERATION, Combination Meter System.>	Is the check result OK?	Replace the VDCCM&H/U. <Ref. to VDC-9, VDC Control Module and Hydraulic Control Unit (VDCCM&H/U).>	Replace the combination meter. <Ref. to IDI-13, REMOVAL, Combination Meter.>

H: ELECTRONIC PARKING BRAKE INDICATOR LIGHT, HILL HOLD INDICATOR LIGHT DO NOT GO OFF

DETECTING CONDITION:
Defective combination meter

TROUBLE SYMPTOM:
When starting the engine, the electronic parking brake operation indicator light, hill hold indicator light do not go off.

	Step	Check	Yes	No
1	**CHECK INDICATOR LIGHT.** 1) Start the engine. 2) Operate the electronic parking brake switch or hill hold switch.	Does the electronic parking brake operation indicator light or hill hold indicator light go off?	Normal.	Go to step **2**.
2	**READ DTC.** Read the DTC. <Ref. to VDC(diag)-28, Read Diagnostic Trouble Code (DTC).>	Is DTC displayed?	Perform the diagnosis according to DTC. <Ref. to VDC(diag)-55, List of Diagnostic Trouble Code (DTC).>	Go to step **3**.
3	**CHECK LAN SYSTEM.** Perform the diagnosis for LAN system. <Ref. to LAN(diag)-2, Basic Diagnostic Procedure.>	Is there any fault in LAN system?	Perform the diagnosis according to DTC. <Ref. to LAN(diag)-109, List of Diagnostic Trouble Code (DTC).>	Go to step **4**.
4	**CHECK VDCCM&H/U.** Connect the Subaru Select Monitor, and display the current data of VDCCM with the engine started.	Is «Parking System Warning Light» ON?	Replace the VDCCM&H/U. <Ref. to VDC-9, VDC Control Module and Hydraulic Control Unit (VDCCM&H/U).>	Go to step **5**.
5	**CHECK VDCCM&H/U.** Connect the Subaru Select Monitor, and display the current data of VDCCM with the engine started.	When the hill hold switch is not operated after starting the engine, is the «Hill hold lamp» ON?	Replace the VDCCM&H/U. <Ref. to VDC-9, VDC Control Module and Hydraulic Control Unit (VDCCM&H/U).>	Go to step **6**.
6	**CHECK COMBINATION METER.** Check the combination meter. <Ref. to IDI-6, SELF-DIAGNOSIS DISPLAY MODE, OPERATION, Combination Meter System.>	Is the check result OK?	Replace the VDCCM&H/U. <Ref. to VDC-9, VDC Control Module and Hydraulic Control Unit (VDCCM&H/U).>	Replace the combination meter. <Ref. to IDI-13, Combination Meter.>

I: VDC OFF INDICATOR LIGHT DOES NOT GO OFF

DETECTING CONDITION:

- Defective combination meter
- Defective CAN communication
- VDC OFF switch is shorted.

TROUBLE SYMPTOM:

VDC OFF indicator light does not go off when starting the engine.

WIRING DIAGRAM:

- Models without EyeSight

Vehicle dynamics control system <Ref. to WI-368, WITHOUT EyeSight, WIRING DIAGRAM, Vehicle Dynamics Control System.>

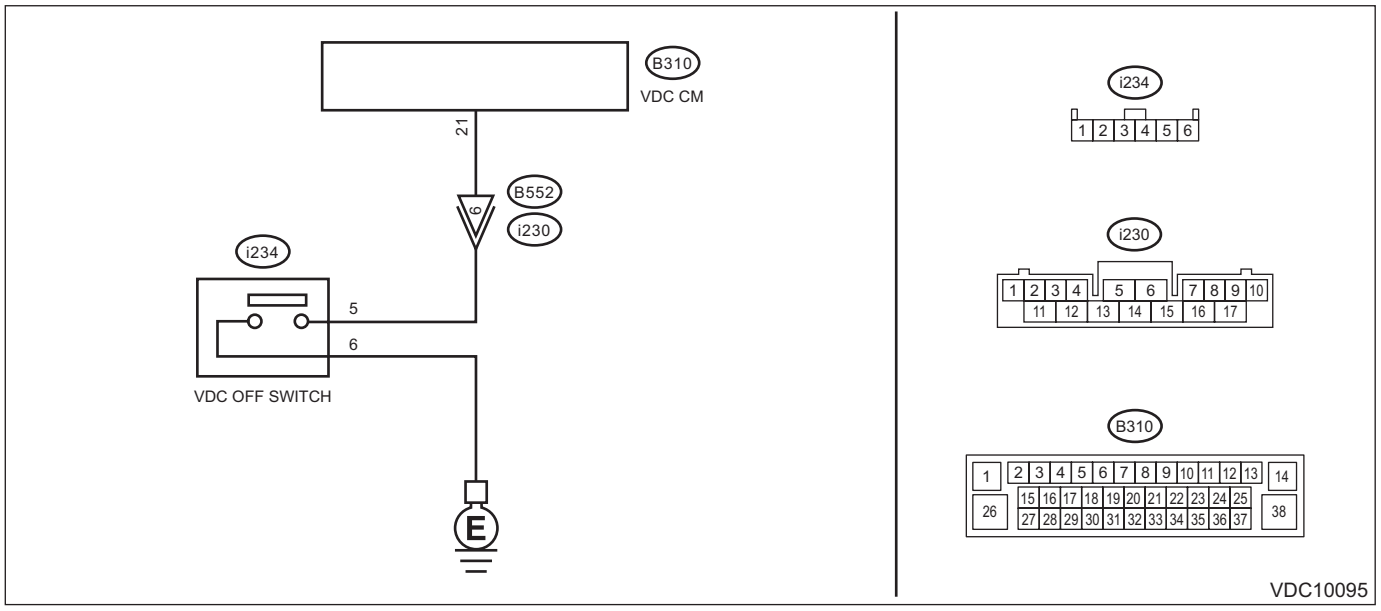

- Models with EyeSight

Vehicle dynamics control system <Ref. to WI-372, WITH EyeSight, WIRING DIAGRAM, Vehicle Dynamics Control System.>

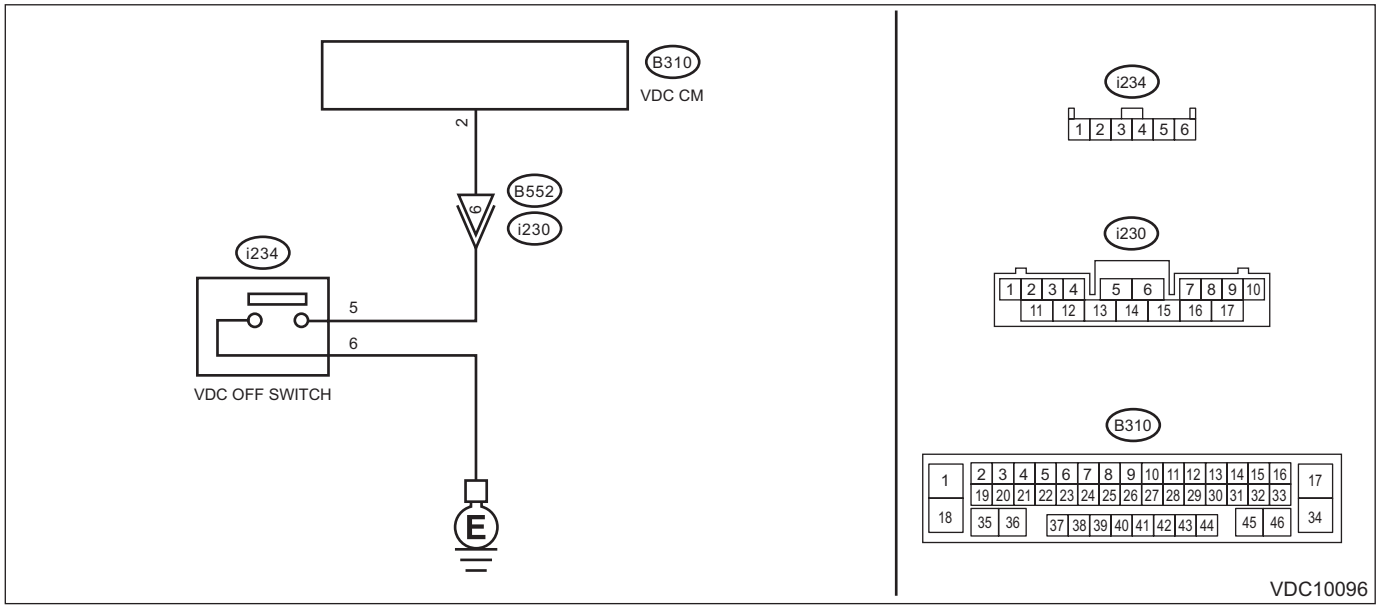

	Step	Check	Yes	No
1	**READ DTC.** Read the DTC. <Ref. to VDC(diag)-28, Read Diagnostic Trouble Code (DTC).>	Is DTC displayed?	Perform the diagnosis according to DTC. <Ref. to VDC(diag)-55, List of Diagnostic Trouble Code (DTC).>	Go to step **2**.
2	**CHECK VDC OFF SWITCH.** Connect the Subaru Select Monitor, and display the current data of VDCCM with the engine started.	Does «OFF SW Signal» change according to operation of VDC OFF switch?	Go to step **5**.	Go to step **3**.
3	**CHECK VDC OFF SWITCH.** Remove and check VDC OFF switch. <Ref. to VDC-40, VDC OFF Switch.>	Is the check result OK?	Go to step **4**.	Replace the VDC OFF switch.
4	**CHECK VDC OFF SWITCH CIRCUIT.** 1) Disconnect the connector from the VDCCM&H/U. 2) Measure the resistance between VDCCM&H/U connector and chassis ground. ***Connector & terminal*** ***Models without EyeSight*** ***(B310) No. 21 — Chassis ground:*** ***Models with EyeSight*** ***(B310) No. 2 — Chassis ground:***	Is the resistance less than 10 Ω?	Check the VDC OFF switch circuit.	Go to step **5**.
5	**CHECK LAN SYSTEM.** Perform the diagnosis for LAN system. <Ref. to LAN(diag)-2, Basic Diagnostic Procedure.>	Is there any fault in LAN system?	Perform the diagnosis according to DTC for LAN system. <Ref. to LAN(diag)-109, List of Diagnostic Trouble Code (DTC).>	Go to step **6**.
6	**CHECK COMBINATION METER.** Check the combination meter. <Ref. to IDI-6, SELF-DIAGNOSIS DISPLAY MODE, OPERATION, Combination Meter System.>	Is the check result OK?	Replace the VDCCM&H/U. <Ref. to VDC-9, VDC Control Module and Hydraulic Control Unit (VDCCM&H/U).>	Replace the combination meter. <Ref. to IDI-13, REMOVAL, Combination Meter.>

J: HILL START ASSIST WARNING LIGHT DOES NOT GO OFF

DETECTING CONDITION:

- Defective combination meter
- Defective CAN communication

TROUBLE SYMPTOM:

Hill start assist warning light does not go off when starting the engine.

	Step	Check	Yes	No
1	**CHECK HILL START ASSIST MODE.**	Is the hill start assist OFF?	Normal.	Go to step **2**.
2	**READ DTC.** Read the DTC. <Ref. to VDC(diag)-28, Read Diagnostic Trouble Code (DTC).>	Is DTC displayed?	Perform the diagnosis according to DTC. <Ref. to VDC(diag)-55, List of Diagnostic Trouble Code (DTC).>	Go to step **3**.
3	**CHECK LAN SYSTEM.** Perform the diagnosis for LAN system. <Ref. to LAN(diag)-2, Basic Diagnostic Procedure.>	Is there any fault in LAN system?	Perform the diagnosis according to DTC for LAN system. <Ref. to LAN(diag)-109, List of Diagnostic Trouble Code (DTC).>	Go to step **4**.
4	**CHECK COMBINATION METER.** Check the combination meter. <Ref. to IDI-6, SELF-DIAGNOSIS DISPLAY MODE, OPERATION, Combination Meter System.>	Is the check result OK?	Replace the VDCCM&H/U. <Ref. to VDC-9, VDC Control Module and Hydraulic Control Unit (VDCCM&H/U).>	Replace the combination meter. <Ref. to IDI-13, REMOVAL, Combination Meter.>

K: BRAKE WARNING LIGHT DOES NOT GO OFF

DETECTING CONDITION:

- Brake warning light circuit is shorted.
- Defective sensor/connector
- Defective CAN communication

TROUBLE SYMPTOM:

After starting the engine, the brake warning light does not go off even though the parking lever is released.

WIRING DIAGRAM:

- Models without EyeSight

Parking brake / brake fluid level warning light system <Ref. to WI-295, WITHOUT EyeSight, WIRING DIAGRAM, Parking Brake / Brake Fluid Level Warning Light System.>

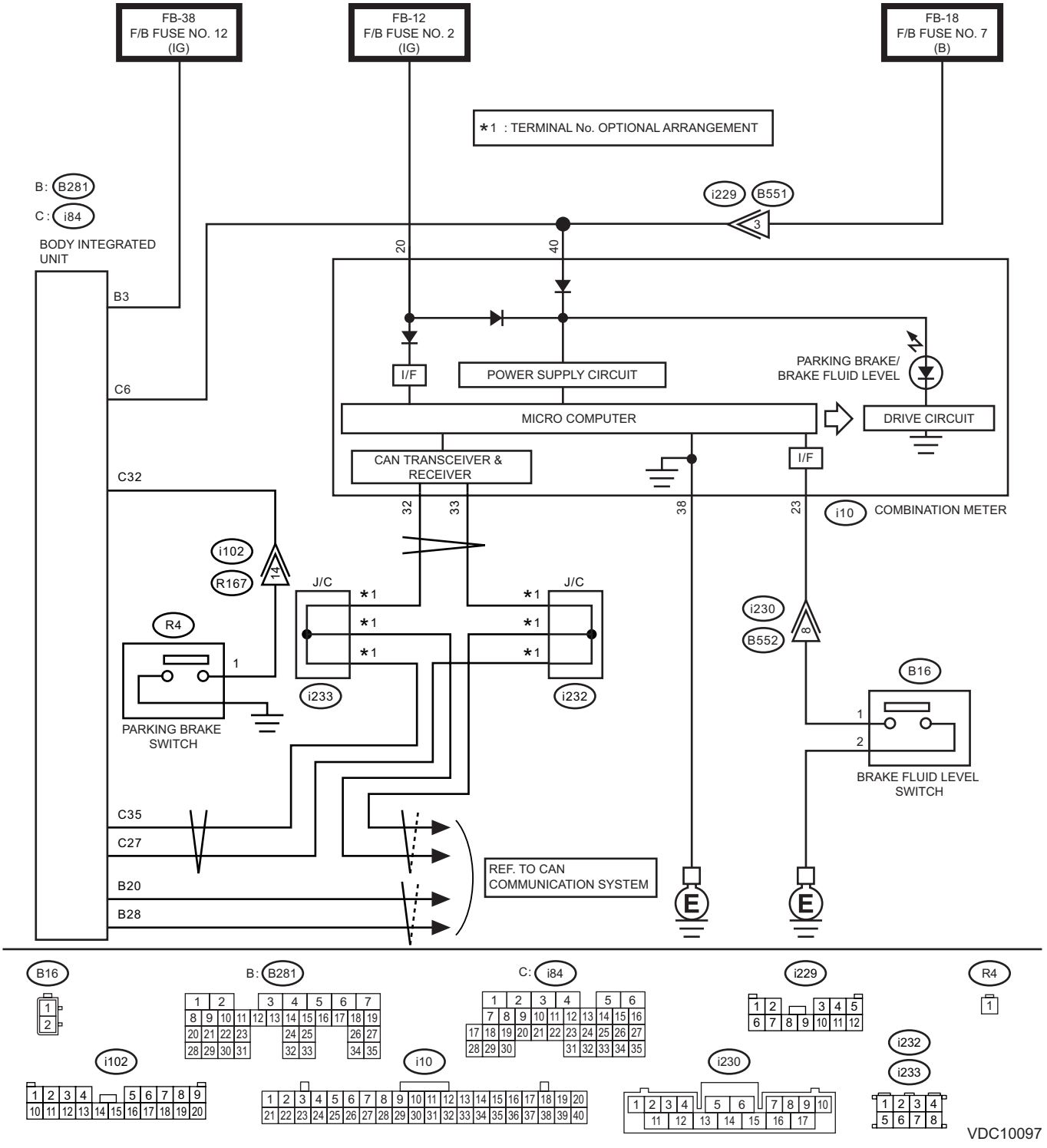

	Step	Check	Yes	No
1	**CHECK INSTALLATION OF VDCCM&H/U CONNECTOR.** 1) Turn the ignition switch to OFF. 2) Check that the VDCCM&H/U connector is inserted until it is locked by clamp.	Is the connector firmly inserted?	Go to step **2**.	Insert the VDCCM&H/U connector until it is locked by clamp.
2	**READ DTC.** Read the DTC. <Ref. to VDC(diag)-28, Read Diagnostic Trouble Code (DTC).>	Is DTC displayed?	Perform the diagnosis according to DTC. <Ref. to VDC(diag)-55, List of Diagnostic Trouble Code (DTC).>	Go to step **3**.
3	**CHECK LAN SYSTEM.** Perform the diagnosis for LAN system. <Ref. to LAN(diag)-2, Basic Diagnostic Procedure.>	Is there any fault in LAN system?	Perform the diagnosis according to DTC for LAN system. <Ref. to LAN(diag)-109, List of Diagnostic Trouble Code (DTC).>	Go to step **4**.
4	**CHECK BRAKE FLUID AMOUNT.** Check the amount of brake fluid in the reservoir tank of master cylinder.	Does the level of the brake fluid amount fall between the lines of “MAX” and “MIN”?	Go to step **5**.	Replenish brake fluid to the specified value.
5	**CHECK BRAKE FLUID LEVEL SWITCH.** 1) Turn the ignition switch to OFF. 2) Disconnect the level switch connector (B16) from master cylinder. 3) Measure the resistance of master cylinder terminals. ***Terminals*** ***No. 1 — No. 2:***	Is the resistance 1 MΩ or more?	Go to step **6**.	Replace the master cylinder. <Ref. to BR-71, Master Cylinder.>
6	**CHECK GROUND SHORT OF HARNESS.** 1) Disconnect the connector (i10) from combination meter. 2) Measure the resistance between combination meter connector and chassis ground. ***Connector & terminal*** ***(i10) No. 23 — Chassis ground:***	Is the resistance 1 MΩ or more?	Go to step **7**.	Repair the harness between combination meter and brake fluid level switch.
7	**CHECK PARKING BRAKE SWITCH.** 1) Disconnect the connector (R4) from parking brake switch. 2) Release the parking brake. 3) Measure the resistance between parking brake switch terminal and chassis ground.	Is the resistance 1 MΩ or more?	Go to step **8**.	Replace the parking brake switch.
8	**CHECK GROUND SHORT OF HARNESS.** 1) Disconnect the connector (i84) from body integrated unit. 2) Measure the resistance between body integrated unit connector and chassis ground. ***Connector & terminal*** ***(i84) No. 32 — Chassis ground:***	Is the resistance 1 MΩ or more?	Go to step **9**.	Repair the harness between body integrated unit and parking brake switch.
9	**CHECK POOR CONTACT OF CONNECTOR.** Check for poor contact of all connectors.	Is there poor contact?	Repair the connector.	Go to step **10**.
10	**CHECK COMBINATION METER.** Check the combination meter. <Ref. to IDI-6, SELF-DIAGNOSIS DISPLAY MODE, OPERATION, Combination Meter System.>	Is the check result OK?	Replace the VDCCM&H/U. <Ref. to VDC-9, VDC Control Module and Hydraulic Control Unit (VDCCM&H/U).>	Replace the combination meter. <Ref. to IDI-13, Combination Meter.>

WIRING DIAGRAM:

- Models with EyeSight

Parking brake / brake fluid level warning light system <Ref. to WI-296, WITH EyeSight, WIRING DIAGRAM, Parking Brake / Brake Fluid Level Warning Light System.>

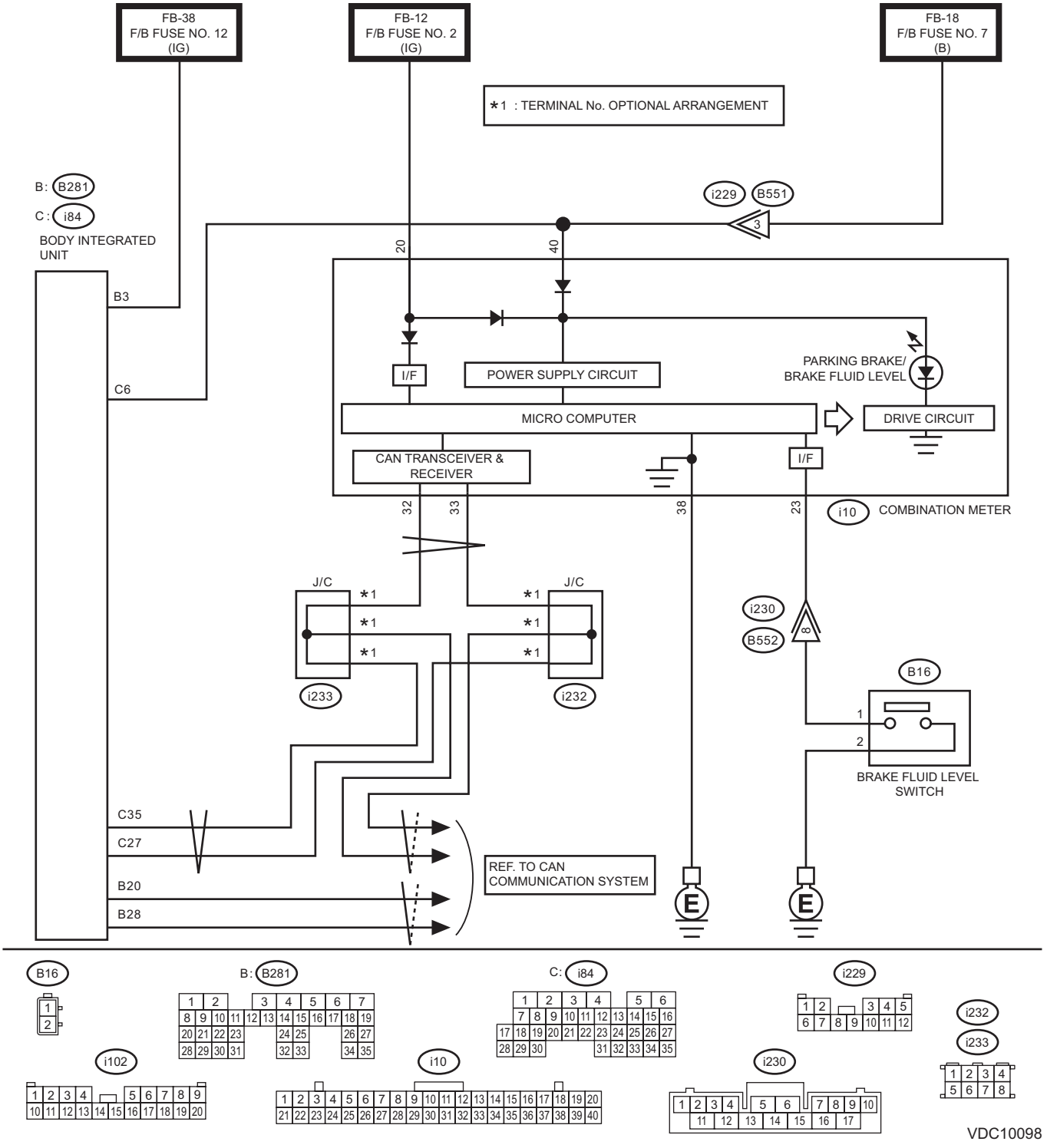

	Step	Check	Yes	No
1	**CHECK INSTALLATION OF VDCCM&H/U CONNECTOR.** 1) Turn the ignition switch to OFF. 2) Check that the VDCCM&H/U connector is inserted until it is locked by clamp.	Is the connector firmly inserted?	Go to step **2**.	Insert the VDCCM&H/U connector until it is locked by clamp.
2	**READ DTC.** Read the DTC. <Ref. to VDC(diag)-28, Read Diagnostic Trouble Code (DTC).>	Is DTC displayed?	Perform the diagnosis according to DTC. <Ref. to VDC(diag)-55, List of Diagnostic Trouble Code (DTC).>	Go to step **3**.
3	**CHECK LAN SYSTEM.** Perform the diagnosis for LAN system. <Ref. to LAN(diag)-2, Basic Diagnostic Procedure.>	Is there any fault in LAN system?	Perform the diagnosis according to DTC for LAN system. <Ref. to LAN(diag)-109, List of Diagnostic Trouble Code (DTC).>	Go to step **4**.
4	**CHECK BRAKE FLUID AMOUNT.** Check the amount of brake fluid in the reservoir tank of master cylinder.	Does the level of the brake fluid amount fall between the lines of “MAX” and “MIN”?	Go to step **5**.	Replenish brake fluid to the specified value.
5	**CHECK BRAKE FLUID LEVEL SWITCH.** 1) Turn the ignition switch to OFF. 2) Disconnect the level switch connector (B16) from master cylinder. 3) Measure the resistance of master cylinder terminals. ***Terminals*** ***No. 1 — No. 2:***	Is the resistance 1 MΩ or more?	Go to step **6**.	Replace the master cylinder. <Ref. to BR-71, Master Cylinder.>
6	**CHECK GROUND SHORT OF HARNESS.** 1) Disconnect the connector from the combination meter. 2) Measure the resistance between combination meter connector and chassis ground. ***Connector & terminal*** ***(i10) No. 23 — Chassis ground:***	Is the resistance 1 MΩ or more?	Go to step **7**.	Repair the harness connector between combination meter and brake fluid level switch.
7	**CHECK COMBINATION METER.** Check the combination meter. <Ref. to IDI-6, SELF-DIAGNOSIS DISPLAY MODE, OPERATION, Combination Meter System.>	Is the check result OK?	Replace the VDCCM&H/U. <Ref. to VDC-9, VDC Control Module and Hydraulic Control Unit (VDCCM&H/U).>	Replace the combination meter. <Ref. to IDI-13, Combination Meter.>

L: VDC MODE DOES NOT CHANGE

1. VDC TRACTION MODE

DETECTING CONDITION

- Defective combination meter
- Defective CAN communication
- Defective VDC OFF switch

TROUBLE SYMPTOM:

Even when the VDC OFF switch is operated, the VDC traction mode indicator light does not illuminate, or the illumination color does not change. (The VDC mode does not change)

NOTE:

- When the VDC OFF switch is pressed (2 seconds or less), the VDC traction mode indicator light illuminates in green and the VDC OFF indicator light illuminates in yellow. (Traction mode)
- When the VDC OFF switch is held down (2 seconds or more), the VDC OFF indicator light illuminates in yellow. (VDC OFF mode)
- When pressing the VDC OFF switch for 30 seconds or more, the VDC OFF indicator light goes off and cannot operate any more. When turning the ignition switch from OFF to ON, the OFF operation enabled status is restored.

WIRING DIAGRAM:

- Models without EyeSight

Vehicle dynamics control system <Ref. to WI-368, WITHOUT EyeSight, WIRING DIAGRAM, Vehicle Dynamics Control System.>

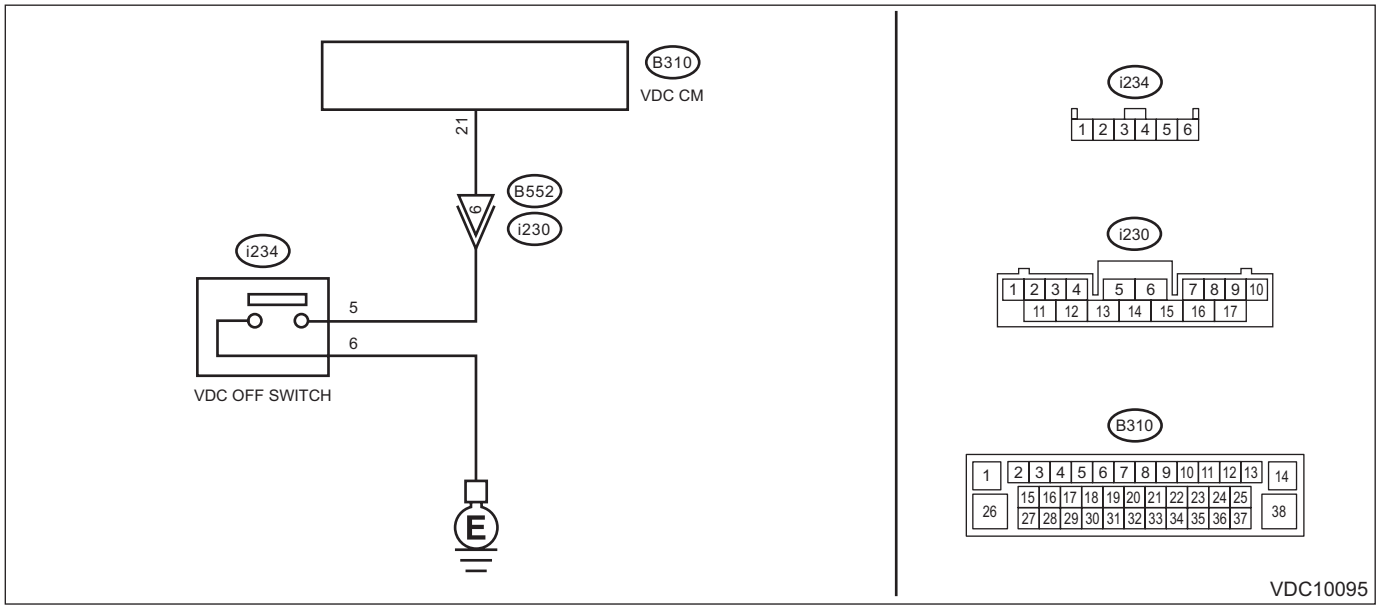

• Models with EyeSight

Vehicle dynamics control system <Ref. to WI-372, WITH EyeSight, WIRING DIAGRAM, Vehicle Dynamics Control System.>

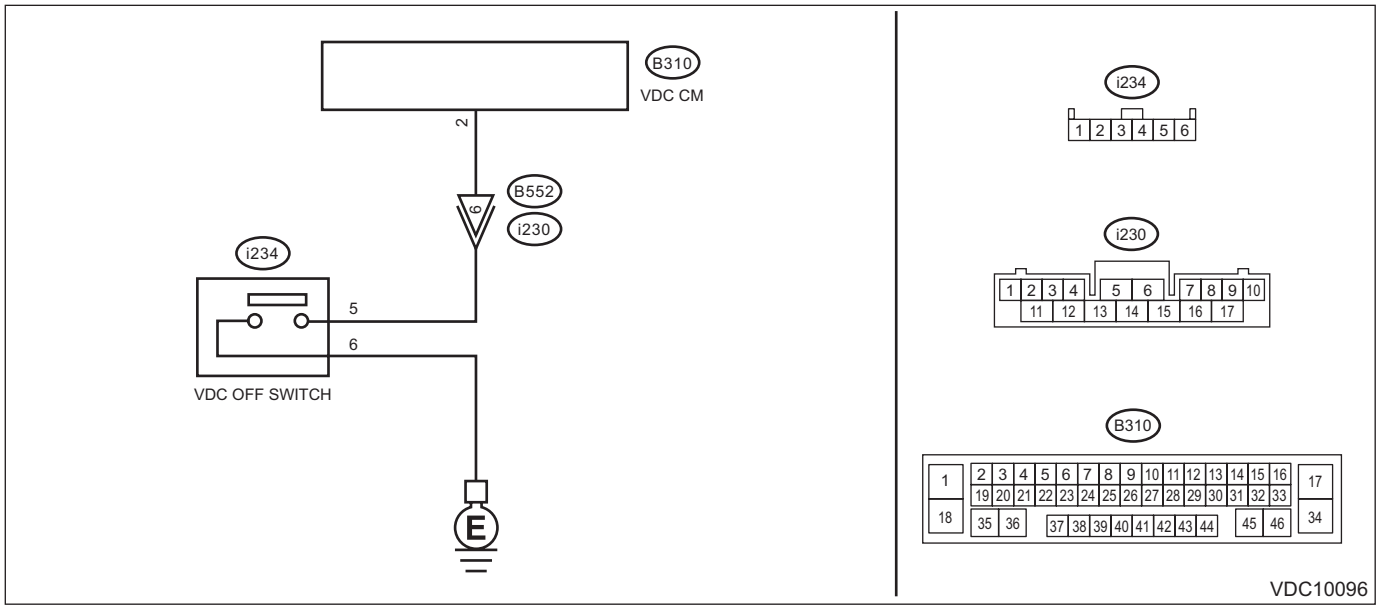

Step		Check	Yes	No
1	**READ DTC.** Read the DTC. <Ref. to VDC(diag)-28, Read Diagnostic Trouble Code (DTC).>	Is DTC displayed?	Perform the diagnosis according to DTC. <Ref. to VDC(diag)-55, List of Diagnostic Trouble Code (DTC).>	Go to step **2**.
2	**CHECK HARNESS.** 1) Turn the ignition switch to OFF. 2) Disconnect the connector from the VDCCM&H/U and VDC OFF switch. 3) Measure the resistance of harness between the VDCCM&H/U and VDC OFF switch connectors. ***Connector & terminal*** ***Models without EyeSight*** ***(B310) No. 21 — (i234) No. 5:*** ***Models with EyeSight*** ***(B310) No. 2 — (i234) No. 5:***	Is the resistance less than 1 Ω?	Go to step **3**.	Repair the harness between the VDCCM&H/U and VDC OFF switch connectors.
3	**CHECK GROUND SHORT OF HARNESS.** Measure the resistance between VDCCM&H/U connector and chassis ground. ***Connector & terminal*** ***Models without EyeSight*** ***(B310) No. 21 — Chassis ground:*** ***Models with EyeSight*** ***(B310) No. 2 — Chassis ground:***	Is the resistance 1 MΩ or more?	Go to step **4**.	Repair the harness between the VDCCM&H/U and VDC OFF switch connectors.
4	**CHECK HARNESS.** Measure the resistance of harness between VDC OFF switch connector and chassis ground. ***Connector & terminal*** ***(i234) No. 6 — Chassis ground:***	Is the resistance less than 10 Ω?	Go to step **5**.	Repair the harness between the VDC OFF switch connector and chassis ground.

	Step	Check	Yes	No
5	**CHECK VDC OFF SWITCH.** Check the VDC OFF switch. <Ref. to VDC-41, INSPECTION, VDC OFF Switch.>	Is the check result OK?	Go to step **6**.	Replace the VDC OFF switch. <Ref. to VDC-40, VDC OFF Switch.>
6	**CHECK LAN SYSTEM.** Perform the diagnosis for LAN system. <Ref. to LAN(diag)-2, Basic Diagnostic Procedure.>	Is there any fault in LAN system?	Perform the diagnosis according to DTC for LAN system. <Ref. to LAN(diag)-109, List of Diagnostic Trouble Code (DTC).>	Go to step **7**.
7	**CHECK COMBINATION METER.** Check the combination meter. <Ref. to IDI-9, INSPECTION, Combination Meter System.>	Is the check result OK?	Replace the VDCCM&H/U. <Ref. to VDC-9, VDC Control Module and Hydraulic Control Unit (VDCCM&H/U).>	Replace the combination meter. <Ref. to IDI-13, Combination Meter.>

2. HILL START ASSIST ON/OFF MODE

NOTE:
This diagnosis is applied only to the model without EyeSight.

DETECTING CONDITION

- Defective combination meter
- Defective CAN communication
- Defective VDC OFF switch

TROUBLE SYMPTOM:

Hill start assist warning light does not illuminate or go off when hill start assist function ON/OFF is changed. (Hill start assist mode does not change.)

NOTE:

- When the VDC OFF switch is kept pressed, VDC OFF indicator light illuminates in yellow, then goes off in approx. 30 seconds. If the switch is released in 5 seconds after the light goes off then pressed again in 2 seconds, hill start assist warning light illuminates then mode is changed to hill start assist OFF mode.
- Hill start assist warning light always illuminates to inform that the hill start assist does not operate during hill start assist OFF mode.
- When pressing the VDC OFF switch for 30 seconds or more, the VDC OFF indicator light goes off and cannot operate any more. When turning the ignition switch from OFF to ON, the operation enabled status is restored.

WIRING DIAGRAM:

Vehicle dynamics control system <Ref. to WI-368, WITHOUT EyeSight, WIRING DIAGRAM, Vehicle Dynamics Control System.>

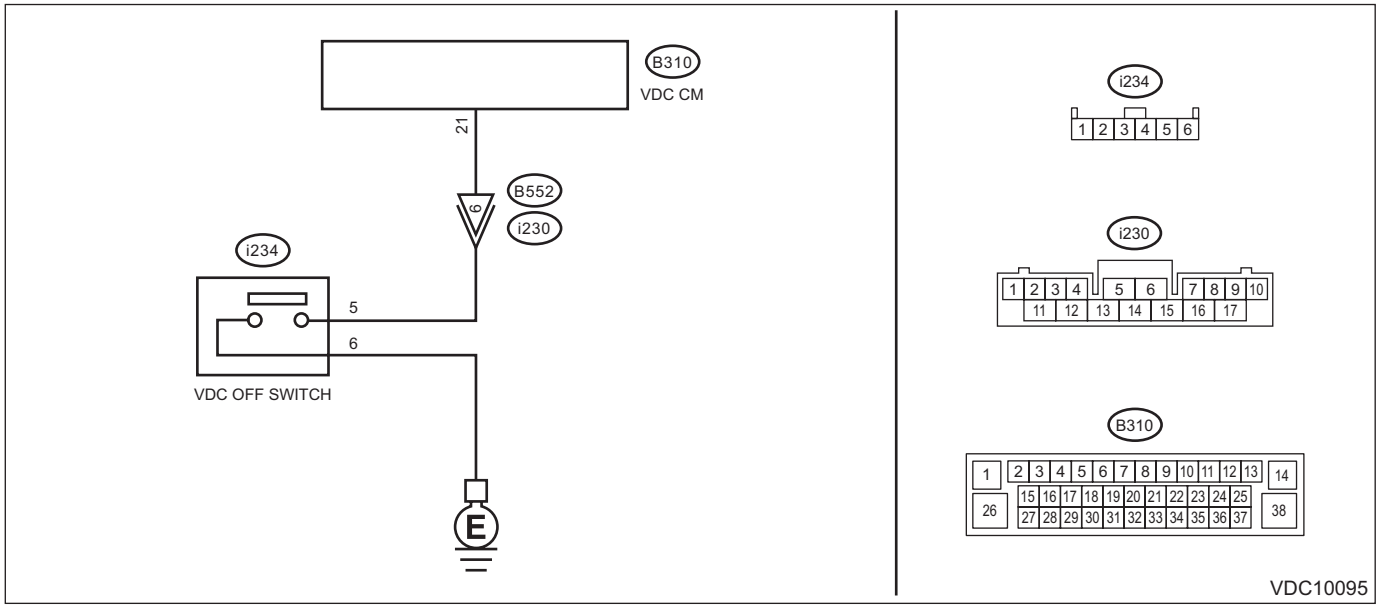

Step		Check	Yes	No
1	**READ DTC.** Read the DTC. <Ref. to VDC(diag)-28, Read Diagnostic Trouble Code (DTC).>	Is DTC displayed?	Perform the diagnosis according to DTC. <Ref. to VDC(diag)-55, List of Diagnostic Trouble Code (DTC).>	Go to step **2**.

	Step	Check	Yes	No
2	**CHECK HARNESS.** 1) Turn the ignition switch to OFF. 2) Disconnect the connector from the VDCCM&H/U and VDC OFF switch. 3) Measure the resistance of harness between the VDCCM&H/U and VDC OFF switch connectors. ***Connector & terminal*** ***(B310) No. 21 — (i234) No. 5:***	Is the resistance less than 1 Ω?	Go to step **3**.	Repair the harness between the VDCCM&H/U and VDC OFF switch connectors.
3	**CHECK GROUND SHORT OF HARNESS.** Measure the resistance between VDCCM&H/U connector and chassis ground. ***Connector & terminal*** ***(B310) No. 21 — Chassis ground:***	Is the resistance 1 MΩ or more?	Go to step **4**.	Repair the harness between the VDCCM&H/U and VDC OFF switch connectors.
4	**CHECK HARNESS.** Measure the resistance of harness between VDC OFF switch connector and chassis ground. ***Connector & terminal*** ***(i234) No. 6 — Chassis ground:***	Is the resistance less than 10 Ω?	Go to step **5**.	Repair the harness between the VDC OFF switch connector and chassis ground.
5	**CHECK VDC OFF SWITCH.** Check the VDC OFF switch. <Ref. to VDC-41, INSPECTION, VDC OFF Switch.>	Is the check result OK?	Go to step **6**.	Replace the VDC OFF switch. <Ref. to VDC-40, VDC OFF Switch.>
6	**CHECK LAN SYSTEM.** Perform the diagnosis for LAN system. <Ref. to LAN(diag)-2, Basic Diagnostic Procedure.>	Is there any fault in LAN system?	Perform the diagnosis according to DTC for LAN system. <Ref. to LAN(diag)-109, List of Diagnostic Trouble Code (DTC).>	Go to step **7**.
7	**CHECK COMBINATION METER.** Check the combination meter. <Ref. to IDI-9, INSPECTION, Combination Meter System.>	Is the check result OK?	Replace the VDCCM&H/U. <Ref. to VDC-9, VDC Control Module and Hydraulic Control Unit (VDCCM&H/U).>	Replace the combination meter. <Ref. to IDI-13, Combination Meter.>

11.List of Diagnostic Trouble Code (DTC)

A: LIST

DTC	Item	Content of diagnosis	Reference
C1211	Front Right ABS Sensor Circuit	Open/high input of front ABS wheel speed sensor RH	<Ref. to VDC(diag)-59, DTC C1211 FRONT RIGHT ABS SENSOR CIRCUIT, Diagnostic Procedure with Diagnostic Trouble Code (DTC).>
C1212	Front Right ABS Sensor Signal	Front ABS wheel speed sensor RH signal malfunction	<Ref. to VDC(diag)-65, DTC C1212 FRONT RIGHT ABS SENSOR SIGNAL, Diagnostic Procedure with Diagnostic Trouble Code (DTC).>
C1221	Front Left ABS Sensor Circuit	Open/high input of front ABS wheel speed sensor LH	<Ref. to VDC(diag)-59, DTC C1221 FRONT LEFT ABS SENSOR CIRCUIT, Diagnostic Procedure with Diagnostic Trouble Code (DTC).>
C1222	Front Left ABS Sensor Signal	Front ABS wheel speed sensor LH signal malfunction	<Ref. to VDC(diag)-65, DTC C1222 FRONT LEFT ABS SENSOR SIGNAL, Diagnostic Procedure with Diagnostic Trouble Code (DTC).>
C1231	Rear Right ABS Sensor Circuit	Open/high input of rear ABS wheel speed sensor RH	<Ref. to VDC(diag)-59, DTC C1231 REAR RIGHT ABS SENSOR CIRCUIT, Diagnostic Procedure with Diagnostic Trouble Code (DTC).>
C1232	Rear Right ABS Sensor Signal	Rear ABS wheel speed sensor RH signal malfunction	<Ref. to VDC(diag)-65, DTC C1232 REAR RIGHT ABS SENSOR SIGNAL, Diagnostic Procedure with Diagnostic Trouble Code (DTC).>
C1241	Rear Left ABS Sensor Circuit	Open/high input of rear ABS wheel speed sensor LH	<Ref. to VDC(diag)-60, DTC C1241 REAR LEFT ABS SENSOR CIRCUIT, Diagnostic Procedure with Diagnostic Trouble Code (DTC).>
C1242	Rear Left ABS Sensor Signal	Rear ABS wheel speed sensor LH signal malfunction	<Ref. to VDC(diag)-66, DTC C1242 REAR LEFT ABS SENSOR SIGNAL, Diagnostic Procedure with Diagnostic Trouble Code (DTC).>
C1311	FR Hold Valve	Front inlet solenoid valve RH malfunction in VDCCM&H/U	<Ref. to VDC(diag)-69, DTC C1311 FR HOLD VALVE, Diagnostic Procedure with Diagnostic Trouble Code (DTC).>
C1312	FR Pressure Reducing Valve	Front outlet solenoid valve RH malfunction in VDCCM&H/U	<Ref. to VDC(diag)-69, DTC C1312 FR PRESSURE REDUCING VALVE, Diagnostic Procedure with Diagnostic Trouble Code (DTC).>
C1321	FL Hold Valve	Front inlet solenoid valve LH malfunction in VDCCM&H/U	<Ref. to VDC(diag)-69, DTC C1321 FL HOLD VALVE, Diagnostic Procedure with Diagnostic Trouble Code (DTC).>
C1322	FL Pressure Reducing Valve	Front outlet solenoid valve LH malfunction in VDCCM&H/U	<Ref. to VDC(diag)-69, DTC C1322 FL PRESSURE REDUCING VALVE, Diagnostic Procedure with Diagnostic Trouble Code (DTC).>
C1331	RR Hold Valve	Rear inlet solenoid valve RH malfunction in VDCCM&H/U	<Ref. to VDC(diag)-69, DTC C1331 RR HOLD VALVE, Diagnostic Procedure with Diagnostic Trouble Code (DTC).>
C1332	RR Pressure Reducing Valve	Rear outlet solenoid valve RH malfunction in VDCCM&H/U	<Ref. to VDC(diag)-69, DTC C1332 RR PRESSURE REDUCING VALVE, Diagnostic Procedure with Diagnostic Trouble Code (DTC).>
C1341	RL Hold Valve	Rear inlet solenoid valve LH malfunction in VDCCM&H/U	<Ref. to VDC(diag)-69, DTC C1341 RL HOLD VALVE, Diagnostic Procedure with Diagnostic Trouble Code (DTC).>
C1342	RL Pressure Reducing Valve	Rear outlet solenoid valve LH malfunction in VDCCM&H/U	<Ref. to VDC(diag)-69, DTC C1342 RL PRESSURE REDUCING VALVE, Diagnostic Procedure with Diagnostic Trouble Code (DTC).>
C1351	Normal Opening Valve 1	Secondary cut valve malfunction in VDCCM&H/U	<Ref. to VDC(diag)-69, DTC C1351 NORMAL OPENING VALVE 1, Diagnostic Procedure with Diagnostic Trouble Code (DTC).>
C1352	Normal Opening Valve 2	Primary cut valve malfunction in VDCCM&H/U	<Ref. to VDC(diag)-69, DTC C1352 NORMAL OPENING VALVE 2, Diagnostic Procedure with Diagnostic Trouble Code (DTC).>
C1361	Normal Closing Valve 1	Secondary suction valve malfunction in VDCCM&H/U	<Ref. to VDC(diag)-69, DTC C1361 NORMAL CLOSING VALVE 1, Diagnostic Procedure with Diagnostic Trouble Code (DTC).>

DTC	Item	Content of diagnosis	Reference
C1362	Normal Closing Valve 2	Primary suction valve malfunction in VDCCM&H/U	<Ref. to VDC(diag)-70, DTC C1362 NORMAL CLOSING VALVE 2, Diagnostic Procedure with Diagnostic Trouble Code (DTC).>
C1411	Electrical Control Module	VDC control module malfunction	<Ref. to VDC(diag)-73, DTC C1411 ELECTRICAL CONTROL MODULE, Diagnostic Procedure with Diagnostic Trouble Code (DTC).>
C1412	Selected Parameter	VDC control module parameter failure	<Ref. to VDC(diag)-75, DTC C1412 SELECTED PARAMETER, Diagnostic Procedure with Diagnostic Trouble Code (DTC).>
C1413	Power Supply Voltage	Power voltage malfunction	<Ref. to VDC(diag)-76, DTC C1413 POWER SUPPLY VOLTAGE, Diagnostic Procedure with Diagnostic Trouble Code (DTC).>
C1422	VDC Interruption for Engine Convenience	VDC interrupted due to some reasons of the engine	<Ref. to VDC(diag)-79, DTC C1422 VDC INTERRUPTION FOR ENGINE CONVENIENCE, Diagnostic Procedure with Diagnostic Trouble Code (DTC).>
C1423	Different ECU Specifications	Different VDC control module specification	<Ref. to VDC(diag)-81, DTC C1423 DIFFERENT ECU SPECIFICATIONS, Diagnostic Procedure with Diagnostic Trouble Code (DTC).>
C1424	ECM	Engine control module is faulty	<Ref. to VDC(diag)-83, DTC C1424 ECM, Diagnostic Procedure with Diagnostic Trouble Code (DTC).>
C1431	AT	Transmission control module is faulty	<Ref. to VDC(diag)-84, DTC C1431 AT, Diagnostic Procedure with Diagnostic Trouble Code (DTC).>
C1511	Valve Relay	Defective valve relay	<Ref. to VDC(diag)-85, DTC C1511 VALVE RELAY, Diagnostic Procedure with Diagnostic Trouble Code (DTC).>
C1521	Motor Relay	Motor relay malfunction	<Ref. to VDC(diag)-88, DTC C1521 MOTOR RELAY, Diagnostic Procedure with Diagnostic Trouble Code (DTC).>
C1531	BLS Off Stuck	Stop light switch malfunction	<Ref. to VDC(diag)-91, DTC C1531 BLS OFF STUCK, Diagnostic Procedure with Diagnostic Trouble Code (DTC).>
C1532	BLS On Stuck	Stop light switch malfunction	<Ref. to VDC(diag)-94, DTC C1532 BLS ON STUCK, Diagnostic Procedure with Diagnostic Trouble Code (DTC).>
C1571	Brake Lamp Relay Off Stuck	Brake light relay malfunction	<Ref. to VDC(diag)-97, DTC C1571 BRAKE LAMP RELAY OFF STUCK, Diagnostic Procedure with Diagnostic Trouble Code (DTC).>
C1711	Steering Angle Sensor	Steering angle sensor malfunction	<Ref. to VDC(diag)-99, DTC C1711 STEERING ANGLE SENSOR, Diagnostic Procedure with Diagnostic Trouble Code (DTC).>
C1721	Yaw Rate Sensor	Defective yaw rate sensor	<Ref. to VDC(diag)-103, DTC C1721 YAW RATE SENSOR, Diagnostic Procedure with Diagnostic Trouble Code (DTC).>
C1732	Lateral G Sensor	Defective lateral G sensor	<Ref. to VDC(diag)-105, DTC C1732 LATERAL G SENSOR, Diagnostic Procedure with Diagnostic Trouble Code (DTC).>
C1733	Longitudinal G Sensor	Defective longitudinal G sensor	<Ref. to VDC(diag)-107, DTC C1733 LONGITUDINAL G SENSOR, Diagnostic Procedure with Diagnostic Trouble Code (DTC).>
C1741	Pressure Sensor	Defective pressure sensor	<Ref. to VDC(diag)-108, DTC C1741 PRESSURE SENSOR, Diagnostic Procedure with Diagnostic Trouble Code (DTC).>
C1742	Wheel Cylinder Pressure Sensor	Defective pressure sensor	<Ref. to VDC(diag)-109, DTC C1742 WHEEL CYLINDER PRESSURE SENSOR, Diagnostic Procedure with Diagnostic Trouble Code (DTC).>
C1811	System	System malfunction	<Ref. to VDC(diag)-110, DTC C1811 SYSTEM, Diagnostic Procedure with Diagnostic Trouble Code (DTC).>
C1921	Parking Position Switch Circuit	Parking switch malfunction	<Ref. to VDC(diag)-112, DTC C1921 PARKING POSITION SWITCH CIRCUIT, Diagnostic Procedure with Diagnostic Trouble Code (DTC).>

DTC	Item	Content of diagnosis	Reference
C1922	Hill Hold Switch Circuit	Hill hold switch malfunction	<Ref. to VDC(diag)-115, DTC C1922 HILL HOLD SWITCH CIRCUIT, Diagnostic Procedure with Diagnostic Trouble Code (DTC).>
C1935	Ignition Switch Circuit	No match of IGN input	<Ref. to VDC(diag)-117, DTC C1935 IGNITION SWITCH CIRCUIT, Diagnostic Procedure with Diagnostic Trouble Code (DTC).>
C1942	Power Supply Voltage	Electronic parking brake power supply voltage is faulty	<Ref. to VDC(diag)-119, DTC C1942 POWER SUPPLY VOLTAGE, Diagnostic Procedure with Diagnostic Trouble Code (DTC).>
C1951	Actuator	Electronic parking brake actuator line is faulty	<Ref. to VDC(diag)-121, DTC C1951 ACTUATOR, Diagnostic Procedure with Diagnostic Trouble Code (DTC).>
C1954	RH Actuator	Electronic parking brake RH actuator is faulty	<Ref. to VDC(diag)-123, DTC C1954 RH ACTUATOR, Diagnostic Procedure with Diagnostic Trouble Code (DTC).>
C1955	LH Actuator	Electronic parking brake LH actuator is faulty	<Ref. to VDC(diag)-125, DTC C1955 LH ACTUATOR, Diagnostic Procedure with Diagnostic Trouble Code (DTC).>
C1956	RH Actuator Circuit	RH actuator circuit malfunction	<Ref. to VDC(diag)-127, DTC C1956 RH ACTUATOR CIRCUIT, Diagnostic Procedure with Diagnostic Trouble Code (DTC).>
C1957	LH Actuator Circuit	LH actuator circuit malfunction	<Ref. to VDC(diag)-129, DTC C1957 LH ACTUATOR CIRCUIT, Diagnostic Procedure with Diagnostic Trouble Code (DTC).>
C1983	High Frequency Operation	Electronic parking brake operation is too frequent	<Ref. to VDC(diag)-131, DTC C1983 HIGH FREQUENCY OPERATION, Diagnostic Procedure with Diagnostic Trouble Code (DTC).>
C1984	Brake Maintenance Mode	Executing brake maintenance mode	<Ref. to VDC(diag)-132, DTC C1984 BRAKE MAINTENANCE MODE, Diagnostic Procedure with Diagnostic Trouble Code (DTC).>
C1985	Forbidden State of Dynamic Actuator Operation	Electronic parking brake actuator is faulty	<Ref. to VDC(diag)-133, DTC C1985 FORBIDDEN STATE OF DYNAMIC ACTUATOR OPERATION, Diagnostic Procedure with Diagnostic Trouble Code (DTC).>
U0073	Control Module Communication Bus Off	Defective CAN communication	<Ref. to VDC(diag)-133, DTC U0073 CONTROL MODULE COMMUNICATION BUS OFF, Diagnostic Procedure with Diagnostic Trouble Code (DTC).>
U0100	Lost Communication With ECM/PCM “A”	Defective CAN communication	<Ref. to VDC(diag)-133, DTC U0100 LOST COMMUNICATION WITH ECM/PCM “A”, Diagnostic Procedure with Diagnostic Trouble Code (DTC).>
U0101	Lost Communication With TCM	Defective CAN communication	<Ref. to VDC(diag)-133, DTC U0101 LOST COMMUNICATION WITH TCM, Diagnostic Procedure with Diagnostic Trouble Code (DTC).>
U0126	Lost Communication With Steering Angle Sensor Module	Defective CAN communication	<Ref. to VDC(diag)-133, DTC U0126 LOST COMMUNICATION WITH STEERING ANGLE SENSOR MODULE, Diagnostic Procedure with Diagnostic Trouble Code (DTC).>
U0140	Lost Communication With Body Control Module	Defective CAN communication	<Ref. to VDC(diag)-133, DTC U0140 LOST COMMUNICATION WITH BODY CONTROL MODULE, Diagnostic Procedure with Diagnostic Trouble Code (DTC).>
U0155	Lost Communication With Instrument Panel Cluster (IPC) Control Module	Defective CAN communication	<Ref. to VDC(diag)-134, DTC U0155 LOST COMMUNICATION WITH INSTRUMENT PANEL CLUSTER (IPC) CONTROL MODULE, Diagnostic Procedure with Diagnostic Trouble Code (DTC).>
U0401	Invalid Data Received From ECM/PCM “A”	Defective CAN communication	<Ref. to VDC(diag)-134, DTC U0401 INVALID DATA RECEIVED FROM ECM/PCM “A”, Diagnostic Procedure with Diagnostic Trouble Code (DTC).>
U0402	Invalid Data Received From TCM	Defective CAN communication	<Ref. to VDC(diag)-134, DTC U0402 INVALID DATA RECEIVED FROM TCM, Diagnostic Procedure with Diagnostic Trouble Code (DTC).>

DTC	Item	Content of diagnosis	Reference
U0422	Invalid Data Received From Body Control Module	Defective CAN communication	<Ref. to VDC(diag)-134, DTC U0422 INVALID DATA RECEIVED FROM BODY CONTROL MODULE, Diagnostic Procedure with Diagnostic Trouble Code (DTC).>
U0423	Invalid Data Received From Instrument Panel Cluster Control Module	Defective CAN communication	<Ref. to VDC(diag)-134, DTC U0423 INVALID DATA RECEIVED FROM INSTRUMENT PANEL CLUSTER CONTROL MODULE, Diagnostic Procedure with Diagnostic Trouble Code (DTC).>
U0428	Invalid Data Received From Steering Angle Sensor Module	Defective CAN communication	<Ref. to VDC(diag)-134, DTC U0428 INVALID DATA RECEIVED FROM STEERING ANGLE SENSOR MODULE, Diagnostic Procedure with Diagnostic Trouble Code (DTC).>
U1235	Lost Communication With EyeSight	Defective CAN communication	<Ref. to VDC(diag)-134, DTC U1235 LOST COMMUNICATION WITH EyeSight, Diagnostic Procedure with Diagnostic Trouble Code (DTC).>
U1433	Invalid Data Received From EyeSight	Defective CAN communication	<Ref. to VDC(diag)-134, DTC U1433 INVALID DATA RECEIVED FROM EyeSight, Diagnostic Procedure with Diagnostic Trouble Code (DTC).>

12.Diagnostic Procedure with Diagnostic Trouble Code (DTC)

A: DTC C1211 FRONT RIGHT ABS SENSOR CIRCUIT

NOTE:
For the diagnostic procedure, refer to “DTC C1241 REAR LEFT ABS SENSOR CIRCUIT”. <Ref. to VDC(diag)-60, DTC C1241 REAR LEFT ABS SENSOR CIRCUIT, Diagnostic Procedure with Diagnostic Trouble Code (DTC).>

B: DTC C1221 FRONT LEFT ABS SENSOR CIRCUIT

NOTE:
For the diagnostic procedure, refer to “DTC C1241 REAR LEFT ABS SENSOR CIRCUIT”. <Ref. to VDC(diag)-60, DTC C1241 REAR LEFT ABS SENSOR CIRCUIT, Diagnostic Procedure with Diagnostic Trouble Code (DTC).>

C: DTC C1231 REAR RIGHT ABS SENSOR CIRCUIT

NOTE:
For the diagnostic procedure, refer to “DTC C1241 REAR LEFT ABS SENSOR CIRCUIT”. <Ref. to VDC(diag)-60, DTC C1241 REAR LEFT ABS SENSOR CIRCUIT, Diagnostic Procedure with Diagnostic Trouble Code (DTC).>

D: DTC C1241 REAR LEFT ABS SENSOR CIRCUIT

DTC DETECTING CONDITION:

Judge as malfunction when the current value of the wheel speed sensor is out of normal range for a predetermined time or more.

TROUBLE SYMPTOM:

- ABS does not operate.
- VDC does not operate.
- Hill start assist does not operate. (Models without EyeSight)
- Hill hold does not function. (Models with EyeSight)
- EyeSight does not operate. (Models with EyeSight)

NOTE:

This DTC may be stored when the wheel speed sensor connector is disconnected regardless of the ignition switch condition (ON/OFF). Perform the Clear Memory Mode after diagnosis if a DTC is recorded. <Ref. to VDC(diag)-30, Clear Memory Mode.>

WIRING DIAGRAM:

- Models without EyeSight

Vehicle dynamics control system <Ref. to WI-368, WITHOUT EyeSight, WIRING DIAGRAM, Vehicle Dynamics Control System.>

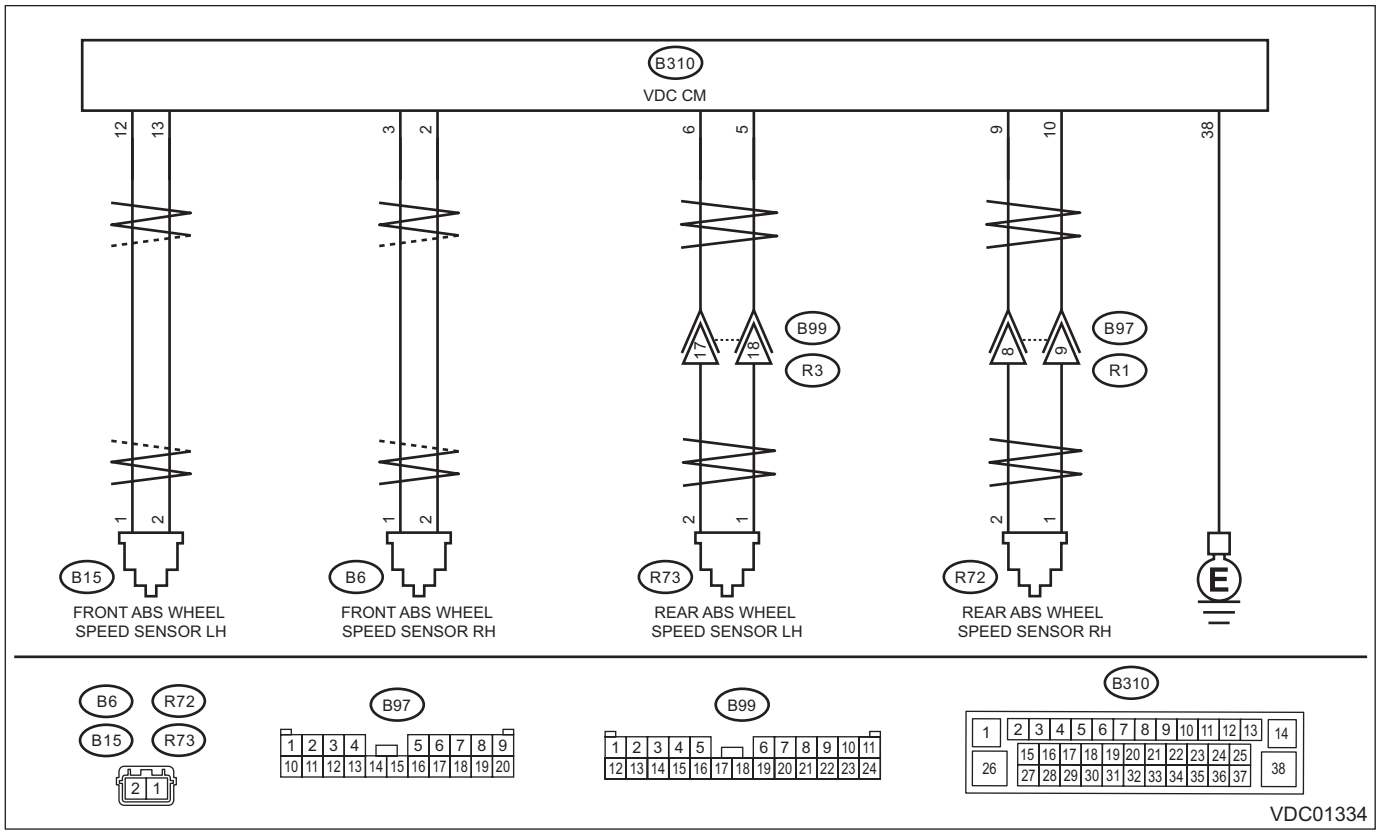

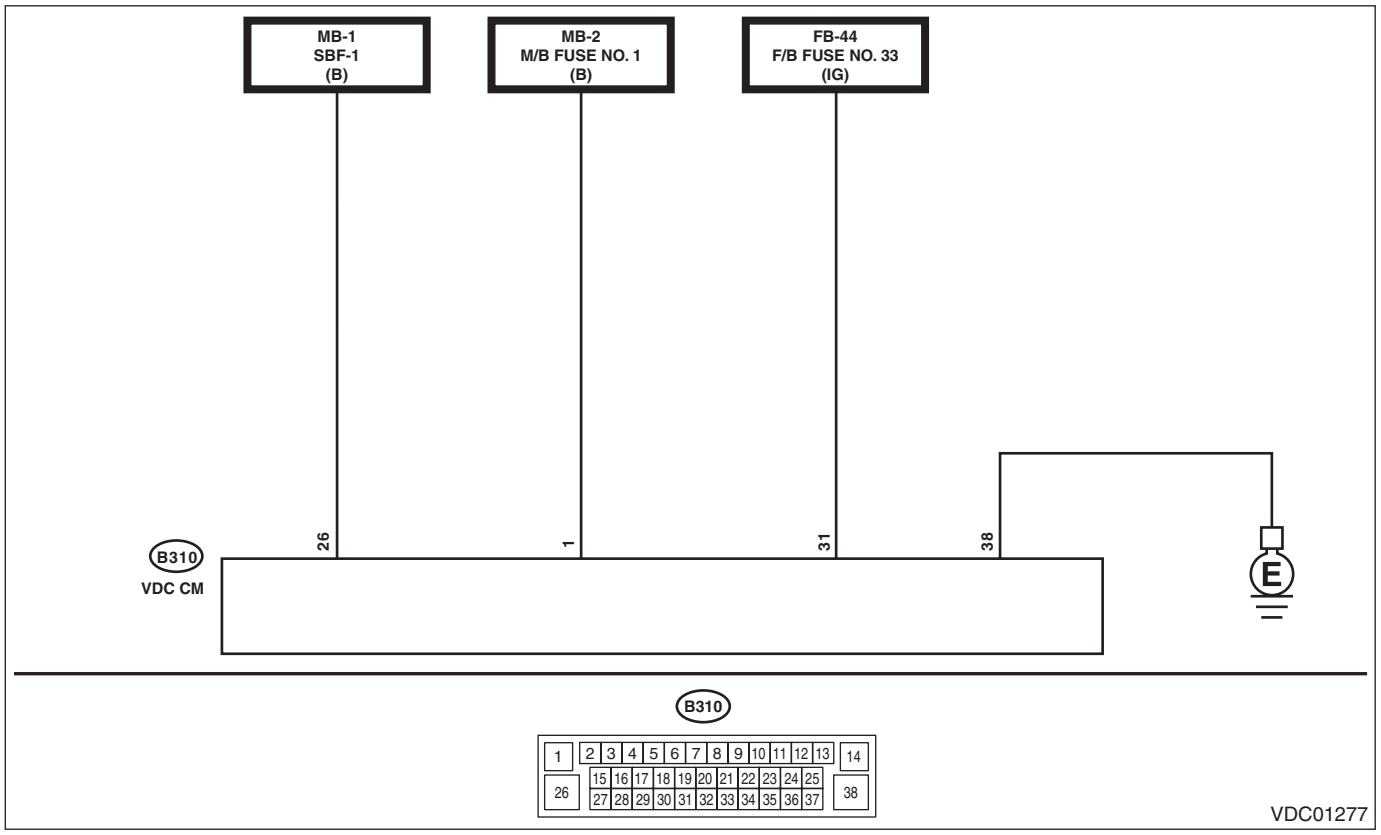
MB-1
SBF-1
(B)
MB-2
M/B FUSE NO. 1
(B)
FB-44
F/B FUSE NO. 33
(IG)
B310
VDC CM
26
1
31
38
E
B310
1
2 3 4 5 6 7 8 9 10 11 12 13
14
26
15 16 17 18 19 20 21 22 23 24 25
27 28 29 30 31 32 33 34 35 36 37
38
VDC01277

- Models with EyeSight

Vehicle dynamics control system <Ref. to WI-372, WITH EyeSight, WIRING DIAGRAM, Vehicle Dynamics Control System.>

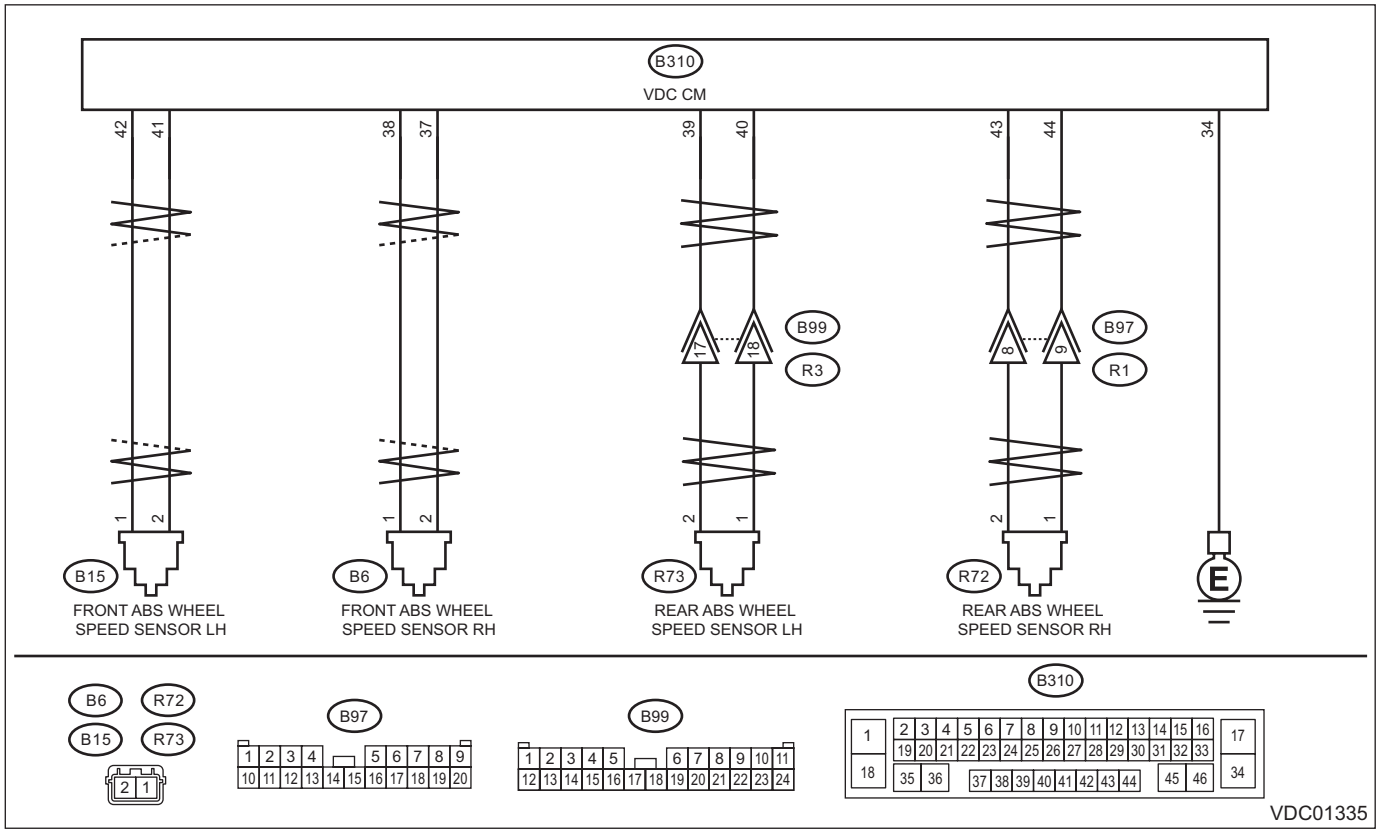

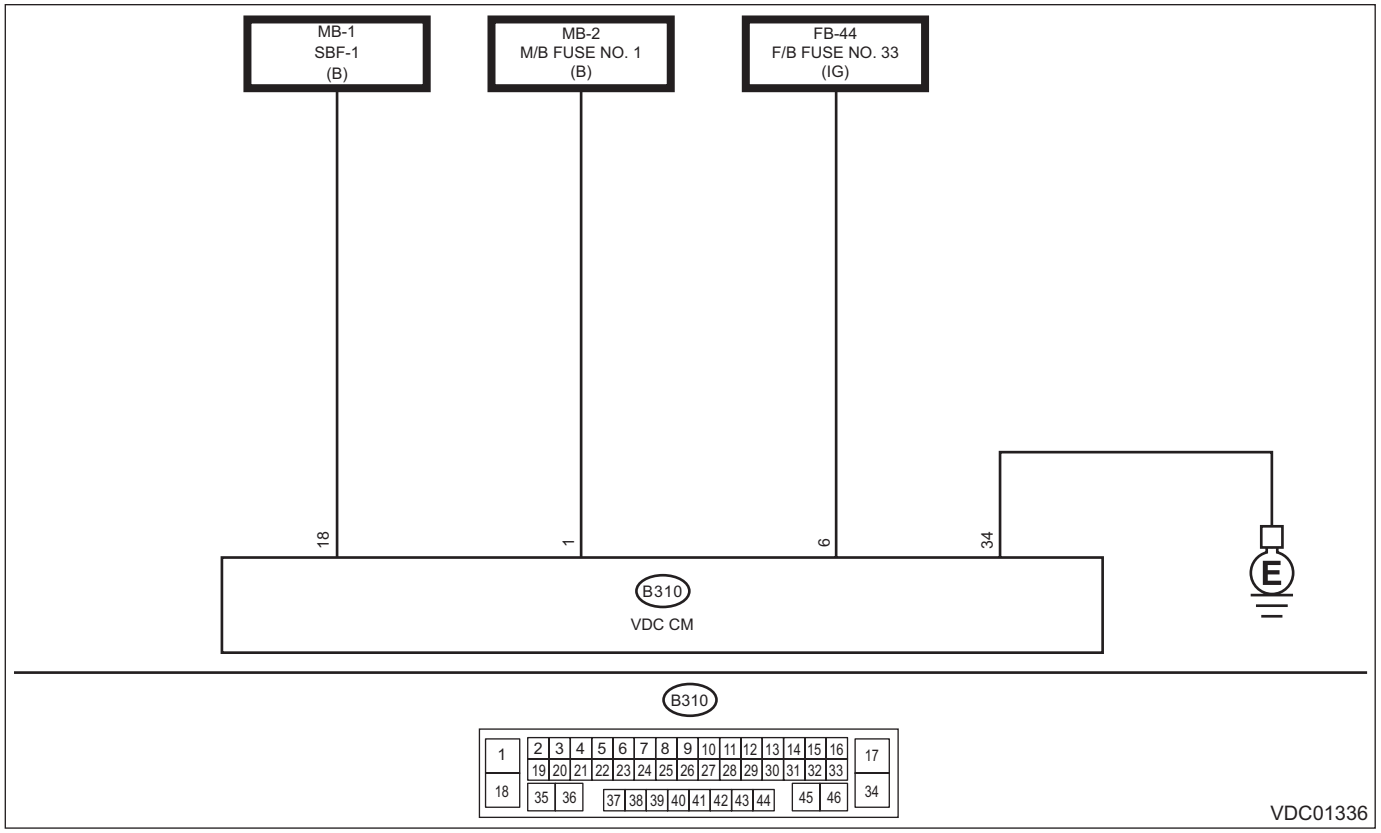

	Step	Check	Yes	No
1	**CHECK POOR CONTACT OF CONNECTOR.** Check if there is poor contact between VDCCM&H/U and ABS wheel speed sensor.	Is there poor contact?	Repair the connector.	Go to step **2**.
2	**CHECK HARNESS CONNECTOR BETWEEN VDCCM&H/U AND ABS WHEEL SPEED SENSOR (CHECK FOR OPEN CIRCUIT).** 1) Turn the ignition switch to OFF. 2) Disconnect the connector (B310) from the VDCCM&H/U. 3) Disconnect the connector from ABS wheel speed sensor. 4) Measure the resistance between VDCCM&H/U connector and ABS wheel speed sensor connector. ***Connector & terminal*** ***Models without EyeSight*** ***DTC C1211*** ***(B310) No. 3 — (B6) No. 1:*** ***(B310) No. 2 — (B6) No. 2:*** ***DTC C1221*** ***(B310) No. 12 — (B15) No. 1:*** ***(B310) No. 13 — (B15) No. 2:*** ***DTC C1231*** ***(B310) No. 10 — (R72) No. 1:*** ***(B310) No. 9 — (R72) No. 2:*** ***DTC C1241*** ***(B310) No. 5 — (R73) No. 1:*** ***(B310) No. 6 — (R73) No. 2:*** ***Models with EyeSight*** ***DTC C1211*** ***(B310) No. 38 — (B6) No. 1:*** ***(B310) No. 37 — (B6) No. 2:*** ***DTC C1221*** ***(B310) No. 42 — (B15) No. 1:*** ***(B310) No. 41 — (B15) No. 2:*** ***DTC C1231*** ***(B310) No. 44 — (R72) No. 1:*** ***(B310) No. 43 — (R72) No. 2:*** ***DTC C1241*** ***(B310) No. 40 — (R73) No. 1:*** ***(B310) No. 39 — (R73) No. 2:***	Is the resistance less than 1 Ω?	Go to step **3**.	Repair the harness connector between VDCCM&H/U and ABS wheel speed sensor.

	Step	Check	Yes	No
3	**CHECK GROUND SHORT OF HARNESS.** Measure the resistance between VDCCM&H/U connector and chassis ground. ***Connector & terminal*** ***Models without EyeSight*** ***DTC C1211*** ***(B310) No. 2 — Chassis ground:*** ***DTC C1221*** ***(B310) No. 13 — Chassis ground:*** ***DTC C1231*** ***(B310) No. 9 — Chassis ground:*** ***DTC C1241*** ***(B310) No. 6 — Chassis ground:*** ***Models with EyeSight*** ***DTC C1211*** ***(B310) No. 37 — Chassis ground:*** ***DTC C1221*** ***(B310) No. 41 — Chassis ground:*** ***DTC C1231*** ***(B310) No. 43 — Chassis ground:*** ***DTC C1241*** ***(B310) No. 39 — Chassis ground:***	Is the resistance 1 MΩ or more?	Go to step **4**.	Repair the harness connector between VDCCM&H/U and ABS wheel speed sensor.
4	**CHECK ABS WHEEL SPEED SENSOR POWER SUPPLY CIRCUIT.** 1) Connect the VDCCM&H/U connector. 2) Connect the ABS wheel speed sensor connector. 3) Turn the ignition switch to ON. 4) Measure the voltage between ABS wheel speed sensor connector and chassis ground. ***Connector & terminal*** ***DTC C1211*** ***(B6) No. 1 (+) — Chassis ground (–):*** ***DTC C1221*** ***(B15) No. 1 (+) — Chassis ground (–):*** ***DTC C1231*** ***(R72) No. 1 (+) — Chassis ground (–):*** ***DTC C1241*** ***(R73) No. 1 (+) — Chassis ground (–):***	Is the voltage 5 — 16 V?	Go to step **6**.	Go to step **5**.
5	**CHECK VDCCM&H/U POWER SUPPLY CIRCUIT.** 1) Turn the ignition switch to OFF. 2) Disconnect the VDCCM&H/U connector. 3) Turn the ignition switch to ON. 4) Measure the voltage between VDCCM&H/U connector terminals. ***Connector & terminal*** ***Models without EyeSight*** ***(B310) No. 1 (+) — (B310) No. 38 (–):*** ***(B310) No. 26 (+) — (B310) No. 38 (–):*** ***(B310) No. 31 (+) — (B310) No. 38 (–):*** ***Models with EyeSight*** ***(B310) No. 1 (+) — (B310) No. 34 (–):*** ***(B310) No. 6 (+) — (B310) No. 34 (–):*** ***(B310) No. 18 (+) — (B310) No. 34 (–):***	Is the voltage 10 — 15 V?	Go to step **6**.	Check the generator, battery and VDCCM&H/U power supply circuit.

	Step	Check	Yes	No
6	**CHECK ABS WHEEL SPEED SENSOR SIGNAL.** 1) Prepare an oscilloscope. 2) Check the ABS wheel speed sensor. <Ref. to VDC-34, CHECK ABS WHEEL SPEED SENSOR UNIT, INSPECTION, Front ABS Wheel Speed Sensor.> <Ref. to VDC-37, CHECK ABS WHEEL SPEED SENSOR UNIT, INSPECTION, Rear ABS Wheel Speed Sensor.>	Is the pattern the same waveform as shown in the figure?	Go to step **7**.	Replace the ABS wheel speed sensor. <Ref. to VDC-32, Front ABS Wheel Speed Sensor.> <Ref. to VDC-35, Rear ABS Wheel Speed Sensor.>
7	**CHECK VDCCM&H/U.** 1) Connect all connectors. 2) Perform the Clear Memory Mode. <Ref. to VDC(diag)-30, Clear Memory Mode.> 3) Perform the Inspection Mode. <Ref. to VDC(diag)-29, Inspection Mode.> 4) Read the DTC. <Ref. to VDC(diag)-28, Read Diagnostic Trouble Code (DTC).>	Is the same DTC displayed?	Replace the VDCCM&H/U. <Ref. to VDC-9, VDC Control Module and Hydraulic Control Unit (VDCCM&H/U).>	Go to step **8**.
8	**CHECK DETECTION OF OTHER DTCS FOR VDC.** <Ref. to VDC(diag)-28, Read Diagnostic Trouble Code (DTC).>	Is any other DTC displayed?	Perform the diagnosis according to DTC. <Ref. to VDC(diag)-55, List of Diagnostic Trouble Code (DTC).>	Currently, it is normal. There may have been a temporary poor contact in the harness and connector or a temporary noise interference.

E: DTC C1212 FRONT RIGHT ABS SENSOR SIGNAL

NOTE:
For the diagnostic procedure, refer to “DTC C1242 REAR LEFT ABS SENSOR SIGNAL”. <Ref. to VDC(diag)-66, DTC C1242 REAR LEFT ABS SENSOR SIGNAL, Diagnostic Procedure with Diagnostic Trouble Code (DTC).>

F: DTC C1222 FRONT LEFT ABS SENSOR SIGNAL

NOTE:
For the diagnostic procedure, refer to “DTC C1242 REAR LEFT ABS SENSOR SIGNAL”. <Ref. to VDC(diag)-66, DTC C1242 REAR LEFT ABS SENSOR SIGNAL, Diagnostic Procedure with Diagnostic Trouble Code (DTC).>

G: DTC C1232 REAR RIGHT ABS SENSOR SIGNAL

NOTE:
For the diagnostic procedure, refer to “DTC C1242 REAR LEFT ABS SENSOR SIGNAL”. <Ref. to VDC(diag)-66, DTC C1242 REAR LEFT ABS SENSOR SIGNAL, Diagnostic Procedure with Diagnostic Trouble Code (DTC).>

H: DTC C1242 REAR LEFT ABS SENSOR SIGNAL

DTC DETECTING CONDITION:

- A fault is detected if the time of decompression or hold exceeds the predetermined time.
- A fault is detected if noise of the wheel speed sensor signal is detected.
- A fault is detected if the wheel speed sensor signal is lost, or the wheel speed sensor signal continuously indicates significantly low speed by calculating the difference between maximum speed and minimum speed among the four wheels.
- A fault is detected if the wheel speed sensor signal continuously indicates excessively high or low speed.
- A fault is detected if the wheel speed sensor signal changes irregularly.
- A fault is detected if the wheel speed sensor signal drops cyclically.

TROUBLE SYMPTOM:

- ABS does not operate.
- VDC does not operate.
- Hill start assist does not operate. (Models without EyeSight)
- Hill hold does not function. (Models with EyeSight)
- EyeSight does not operate. (Models with EyeSight)

NOTE:
This DTC may be stored when the wheel speed sensor connector is disconnected regardless of the ignition switch condition (ON/OFF). Perform the Clear Memory Mode after diagnosis if a DTC is recorded. <Ref. to VDC(diag)-30, Clear Memory Mode.>

	Step	Check	Yes	No
1	**CHECK ABS WHEEL SPEED SENSOR AND FREEZE FRAME DATA USING SUBARU SELECT MONITOR.** 1) Using the Subaru Select Monitor, check the freeze frame data when DTC is detected. <Ref. to VDC(diag)-23, READ FREEZE FRAME DATA, OPERATION, Subaru Select Monitor.> 2) Compare «FR Wheel Speed», «FL Wheel Speed», «RR Wheel Speed» and «RL Wheel Speed» to determine a sensor that is not indicating the same value. 3) Check the current data of the wheel speed sensor that is not indicating the same value. <Ref. to VDC(diag)-20, READ CURRENT DATA, OPERATION, Subaru Select Monitor.>	Does the speed indicated on the data monitor change in response to the speedometer reading during acceleration/deceleration when the steering wheel is in the straight-ahead position? In addition, are the wheel speeds of the freeze frame data for 4 wheels almost the same?	Go to step **2**.	Go to step **7**.
2	**CHECK POOR CONTACT OF CONNECTOR.** 1) Turn the ignition switch to OFF. 2) Check for poor contact of the connector between VDCCM&H/U and ABS wheel speed sensor.	Is there poor contact of connectors between VDCCM&H/U and ABS wheel speed sensor?	Repair the connector.	Go to step **3**.
3	**CHECK CAUSE OF SIGNAL NOISE.** Make sure the radio wave devices and electronic components are installed correctly.	Are the radio wave devices and electronic components installed correctly?	Go to step **4**.	Install the radio wave devices and electronic components properly.
4	**CHECK CAUSE OF SIGNAL NOISE.** Check if the noise sources (such as an antenna) are installed near the sensor harness.	Are noise sources installed?	Install the noise sources apart from sensor harness.	Go to step **5**.
5	**CHECK VDCCM&H/U.** 1) Connect all connectors. 2) Perform the Clear Memory Mode. <Ref. to VDC(diag)-30, Clear Memory Mode.> 3) Perform the Inspection Mode. <Ref. to VDC(diag)-29, Inspection Mode.> 4) Read the DTC. <Ref. to VDC(diag)-28, Read Diagnostic Trouble Code (DTC).>	Is the same DTC displayed?	Replace the VDCCM&H/U. <Ref. to VDC-9, VDC Control Module and Hydraulic Control Unit (VDCCM&H/U).>	Go to step **6**.

	Step	Check	Yes	No
6	**CHECK DETECTION OF OTHER DTCS FOR VDC.** <Ref. to VDC(diag)-28, Read Diagnostic Trouble Code (DTC).>	Is any other DTC displayed?	Perform the diagnosis according to DTC. <Ref. to VDC(diag)-55, List of Diagnostic Trouble Code (DTC).>	Currently, it is normal. There may have been a temporary poor contact in the harness and connector or a temporary noise interference.
7	**CHECK INSTALLATION OF ABS WHEEL SPEED SENSOR.**	Is the ABS wheel speed sensor installation bolt tightened to 7.5 N·m (0.76 kgf-m, 5.5 ft-lb)?	Go to step **8**.	Tighten the ABS wheel speed sensor installation bolts.
8	**CHECK ABS WHEEL SPEED SENSOR SIGNAL.** 1) Prepare an oscilloscope. 2) Check the ABS wheel speed sensor. <Ref. to VDC-34, CHECK ABS WHEEL SPEED SENSOR UNIT, INSPECTION, Front ABS Wheel Speed Sensor.> <Ref. to VDC-37, CHECK ABS WHEEL SPEED SENSOR UNIT, INSPECTION, Rear ABS Wheel Speed Sensor.>	Does the oscilloscope indicate the waveform pattern like shown in the figure when the tire is slowly turned? Does the oscilloscope indication repeat the waveform pattern like shown in the figure when the tire is slowly turned in equal speed for one rotation or more?	Go to step **10**.	Go to step **9**.
9	**CHECK ABS WHEEL SPEED SENSOR OR MAGNETIC ENCODER.**	Are there foreign matter, breakage or damage at the tip of ABS wheel speed sensor or magnetic encoder?	Remove dirt thoroughly. Also replace the ABS wheel speed sensor or magnetic encoder as a unit with hub unit bearing if it is broken or damaged.	Go to step **10**.
10	**CHECK CAUSE OF SIGNAL NOISE.** Make sure the radio wave devices and electronic components are installed correctly.	Are the radio wave devices and electronic components installed correctly?	Go to step **11**.	Install the radio wave devices and electronic components properly.
11	**CHECK CAUSE OF SIGNAL NOISE.** Check if the noise sources (such as an antenna) are installed near the sensor harness.	Are noise sources installed?	Install the noise sources apart from sensor harness.	Go to step **12**.
12	**CHECK VDCCM&H/U.** 1) Connect all connectors. 2) Perform the Clear Memory Mode. <Ref. to VDC(diag)-30, Clear Memory Mode.> 3) Perform the Inspection Mode. <Ref. to VDC(diag)-29, Inspection Mode.> 4) Read the DTC. <Ref. to VDC(diag)-28, Read Diagnostic Trouble Code (DTC).>	Is the same DTC displayed?	Go to step **13**.	Go to step **14**.
13	**CHECK FREEZE FRAME DATA OF ABS WHEEL SPEED SENSOR USING SUBARU SELECT MONITOR.** 1) Using the Subaru Select Monitor, select “Freeze frame data”. <Ref. to VDC(diag)-23, READ FREEZE FRAME DATA, OPERATION, Subaru Select Monitor.> 2) Read the ABS wheel speed sensor output.	Is the ABS wheel speed sensor output different compared with other wheels?	Replace the ABS wheel speed sensor which has a difference. <Ref. to VDC-32, Front ABS Wheel Speed Sensor.> <Ref. to VDC-35, Rear ABS Wheel Speed Sensor.>	Replace the VDCCM&H/U. <Ref. to VDC-9, VDC Control Module and Hydraulic Control Unit (VDCCM&H/U).>

	Step	Check	Yes	No
14	**CHECK DETECTION OF OTHER DTCS FOR VDC.** <Ref. to VDC(diag)-28, Read Diagnostic Trouble Code (DTC).>	Is any other DTC displayed?	Perform the diagnosis according to DTC. <Ref. to VDC(diag)-55, List of Diagnostic Trouble Code (DTC).>	Currently, it is normal. There may have been a temporary poor contact in the harness and connector or a temporary noise interference. NOTE: Though the ABS warning light may remain on at this time, this is normal. Drive the vehicle at 40 km/h (25 MPH) or more in order to turn ABS warning light off. Be sure to drive the vehicle and check that the warning light goes off.

I: DTC C1311 FR HOLD VALVE

NOTE:
For the diagnostic procedure, refer to “DTC C1362 NORMAL CLOSING VALVE 2”. <Ref. to VDC(diag)-70, DTC C1362 NORMAL CLOSING VALVE 2, Diagnostic Procedure with Diagnostic Trouble Code (DTC).>

J: DTC C1312 FR PRESSURE REDUCING VALVE

NOTE:
For the diagnostic procedure, refer to “DTC C1362 NORMAL CLOSING VALVE 2”. <Ref. to VDC(diag)-70, DTC C1362 NORMAL CLOSING VALVE 2, Diagnostic Procedure with Diagnostic Trouble Code (DTC).>

K: DTC C1321 FL HOLD VALVE

NOTE:
For the diagnostic procedure, refer to “DTC C1362 NORMAL CLOSING VALVE 2”. <Ref. to VDC(diag)-70, DTC C1362 NORMAL CLOSING VALVE 2, Diagnostic Procedure with Diagnostic Trouble Code (DTC).>

L: DTC C1322 FL PRESSURE REDUCING VALVE

NOTE:
For the diagnostic procedure, refer to “DTC C1362 NORMAL CLOSING VALVE 2”. <Ref. to VDC(diag)-70, DTC C1362 NORMAL CLOSING VALVE 2, Diagnostic Procedure with Diagnostic Trouble Code (DTC).>

M: DTC C1331 RR HOLD VALVE

NOTE:
For the diagnostic procedure, refer to “DTC C1362 NORMAL CLOSING VALVE 2”. <Ref. to VDC(diag)-70, DTC C1362 NORMAL CLOSING VALVE 2, Diagnostic Procedure with Diagnostic Trouble Code (DTC).>

N: DTC C1332 RR PRESSURE REDUCING VALVE

NOTE:
For the diagnostic procedure, refer to “DTC C1362 NORMAL CLOSING VALVE 2”. <Ref. to VDC(diag)-70, DTC C1362 NORMAL CLOSING VALVE 2, Diagnostic Procedure with Diagnostic Trouble Code (DTC).>

O: DTC C1341 RL HOLD VALVE

NOTE:
For the diagnostic procedure, refer to “DTC C1362 NORMAL CLOSING VALVE 2”. <Ref. to VDC(diag)-70, DTC C1362 NORMAL CLOSING VALVE 2, Diagnostic Procedure with Diagnostic Trouble Code (DTC).>

P: DTC C1342 RL PRESSURE REDUCING VALVE

NOTE:
For the diagnostic procedure, refer to “DTC C1362 NORMAL CLOSING VALVE 2”. <Ref. to VDC(diag)-70, DTC C1362 NORMAL CLOSING VALVE 2, Diagnostic Procedure with Diagnostic Trouble Code (DTC).>

Q: DTC C1351 NORMAL OPENING VALVE 1

NOTE:
For the diagnostic procedure, refer to “DTC C1362 NORMAL CLOSING VALVE 2”. <Ref. to VDC(diag)-70, DTC C1362 NORMAL CLOSING VALVE 2, Diagnostic Procedure with Diagnostic Trouble Code (DTC).>

R: DTC C1352 NORMAL OPENING VALVE 2

NOTE:
For the diagnostic procedure, refer to “DTC C1362 NORMAL CLOSING VALVE 2”. <Ref. to VDC(diag)-70, DTC C1362 NORMAL CLOSING VALVE 2, Diagnostic Procedure with Diagnostic Trouble Code (DTC).>

S: DTC C1361 NORMAL CLOSING VALVE 1

NOTE:
For the diagnostic procedure, refer to “DTC C1362 NORMAL CLOSING VALVE 2”. <Ref. to VDC(diag)-70, DTC C1362 NORMAL CLOSING VALVE 2, Diagnostic Procedure with Diagnostic Trouble Code (DTC).>

T: DTC C1362 NORMAL CLOSING VALVE 2

DTC DETECTING CONDITION:

A fault is detected if electrical malfunction judgment is generated for VDCH/U solenoid valve.

TROUBLE SYMPTOM:

- ABS does not operate.
- EBD does not operate.
- VDC does not operate.
- Hill start assist does not operate. (Models without EyeSight)
- Hill hold does not function. (Models with EyeSight)
- EyeSight does not operate. (Models with EyeSight)

WIRING DIAGRAM:

- Models without EyeSight

Vehicle dynamics control system <Ref. to WI-368, WITHOUT EyeSight, WIRING DIAGRAM, Vehicle Dynamics Control System.>

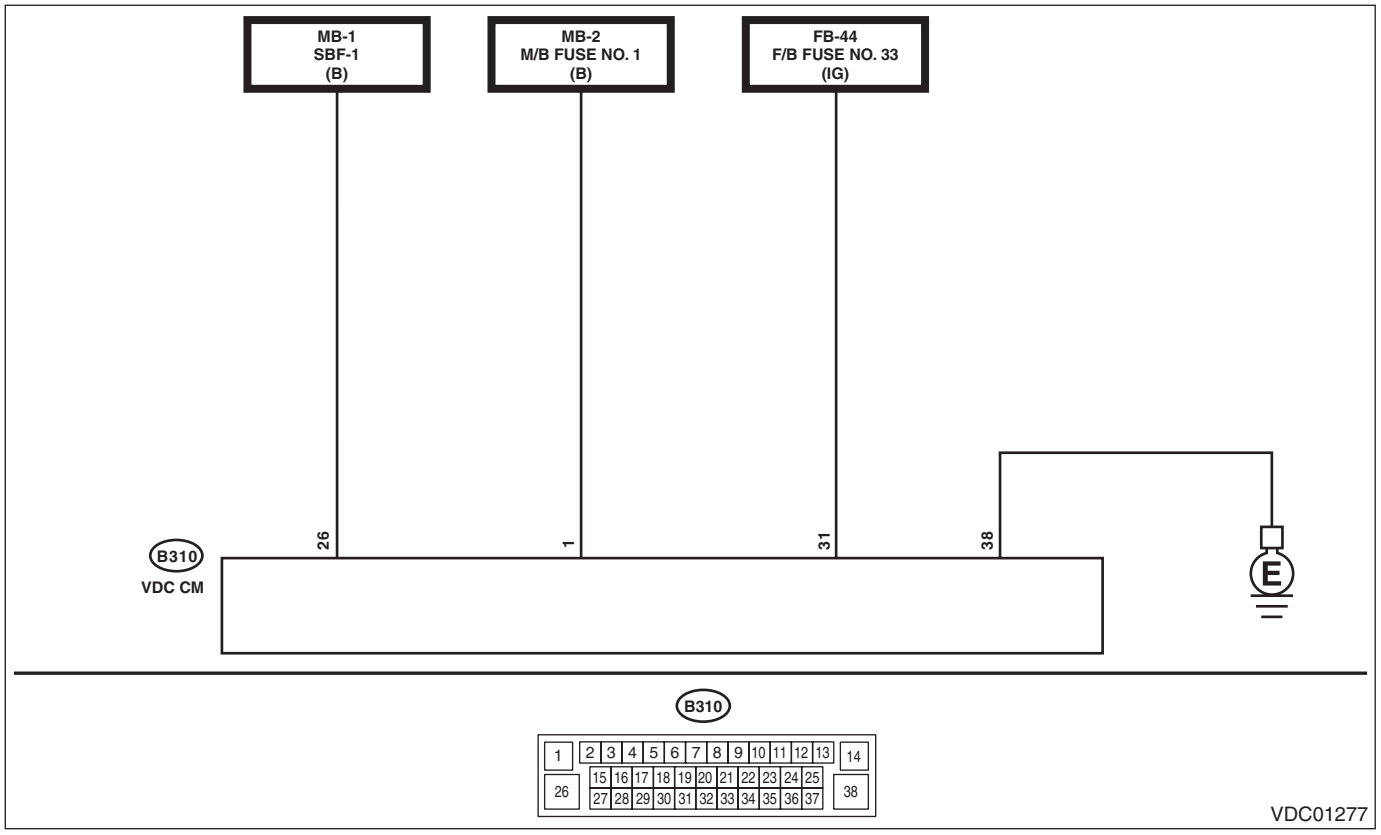

• Models with EyeSight

Vehicle dynamics control system <Ref. to WI-372, WITH EyeSight, WIRING DIAGRAM, Vehicle Dynamics Control System.>

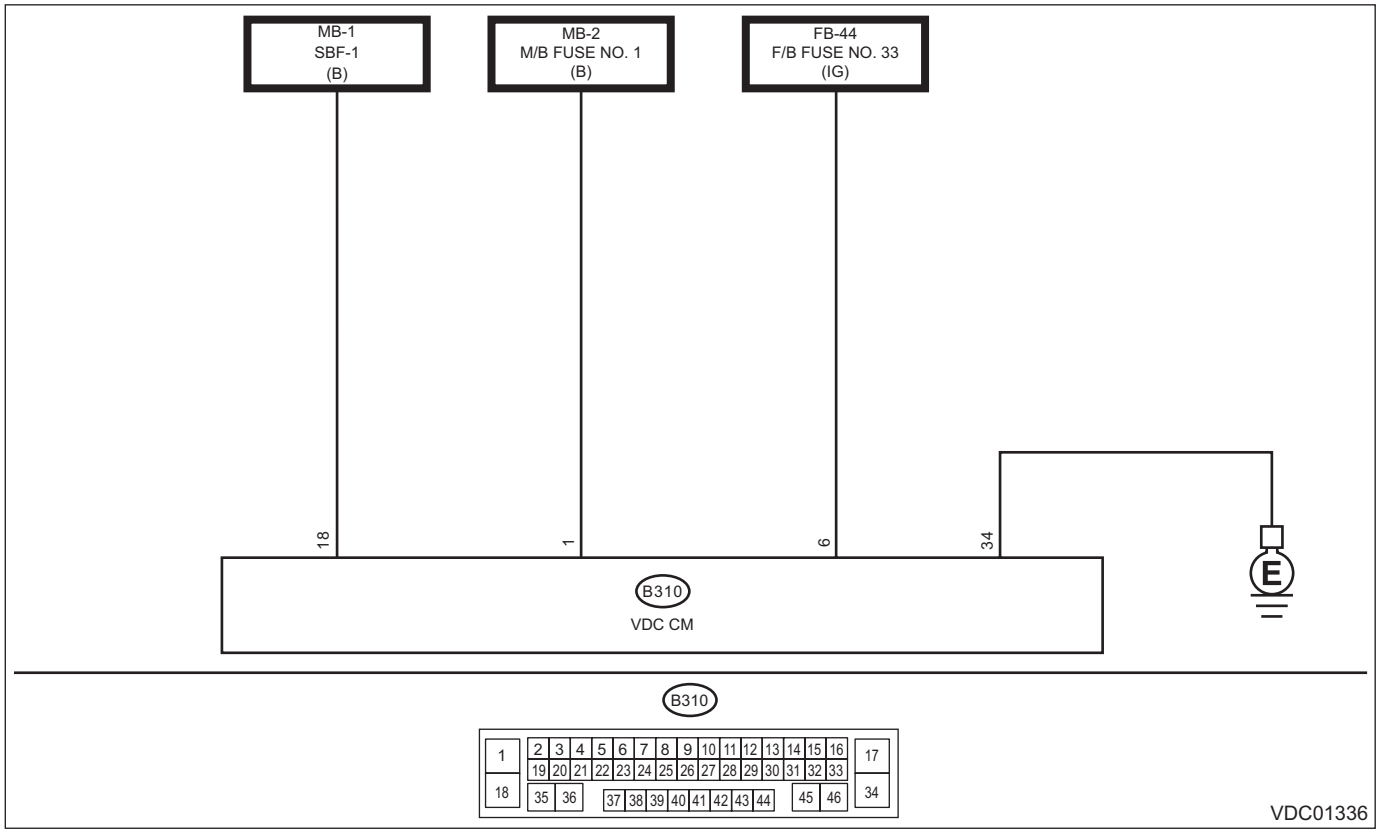

Step		Check	Yes	No
1	**CHECK VDCCM&H/U INPUT VOLTAGE.** 1) Turn the ignition switch to OFF. 2) Disconnect the connector from the VDCCM&H/U. 3) Run the engine at idle. 4) Measure the voltage between VDCCM&H/U connector and chassis ground. ***Connector & terminal*** ***Models without EyeSight*** ***(B310) No. 1 (+) — Chassis ground (–):*** ***(B310) No. 26 (+) — Chassis ground (–):*** ***(B310) No. 31 (+) — Chassis ground (–):*** ***Models with EyeSight*** ***(B310) No. 1 (+) — Chassis ground (–):*** ***(B310) No. 6 (+) — Chassis ground (–):*** ***(B310) No. 18 (+) — Chassis ground (–):***	Is the voltage 10 — 15 V?	Go to step **2**.	Repair the power supply circuit including the battery.
2	**CHECK VDCCM&H/U GROUND CIRCUIT (CHECK FOR OPEN CIRCUIT).** 1) Turn the ignition switch to OFF. 2) Measure the resistance between VDCCM&H/U connector and chassis ground. ***Connector & terminal*** ***Models without EyeSight*** ***(B310) No. 38 — Chassis ground:*** ***Models with EyeSight*** ***(B310) No. 34 — Chassis ground:***	Is the resistance less than 10 Ω?	Go to step **3**.	Repair the VDCCM&H/U ground harness.

	Step	Check	Yes	No
3	**CHECK POOR CONTACT OF CONNECTORS.**	Is there poor contact of connector between generator, battery and VDCCM&H/U?	Repair the connector.	Go to step **4**.
4	**CHECK VDCCM&H/U.** 1) Connect all connectors. 2) Perform the Clear Memory Mode. <Ref. to VDC(diag)-30, Clear Memory Mode.> 3) Perform the Inspection Mode. <Ref. to VDC(diag)-29, Inspection Mode.> 4) Read the DTC. <Ref. to VDC(diag)-28, Read Diagnostic Trouble Code (DTC).>	Is the same DTC displayed?	Replace the VDCCM&H/U. <Ref. to VDC-9, VDC Control Module and Hydraulic Control Unit (VDCCM&H/U).>	Go to step **5**.
5	**CHECK DETECTION OF OTHER DTCS FOR VDC.** <Ref. to VDC(diag)-28, Read Diagnostic Trouble Code (DTC).>	Is any other DTC displayed?	Perform the diagnosis according to DTC. <Ref. to VDC(diag)-55, List of Diagnostic Trouble Code (DTC).>	Currently, it is normal. There may have been a temporary poor contact in the harness and connector or a temporary noise interference.

U: DTC C1411 ELECTRICAL CONTROL MODULE

DTC DETECTING CONDITION:

- Judge as malfunction when ECM internal malfunction is detected.
- This malfunction is stored if the fluid pressure request from the electronic parking brake does not operate.

TROUBLE SYMPTOM:

- ABS does not operate sometimes.
- EBD does not operate sometimes.
- VDC does not operate.
- Hill start assist does not operate. (Models without EyeSight)
- Hill hold does not function. (Models with EyeSight)
- EyeSight does not operate. (Models with EyeSight)

WIRING DIAGRAM:

- Models without EyeSight

Vehicle dynamics control system <Ref. to WI-368, WITHOUT EyeSight, WIRING DIAGRAM, Vehicle Dynamics Control System.>

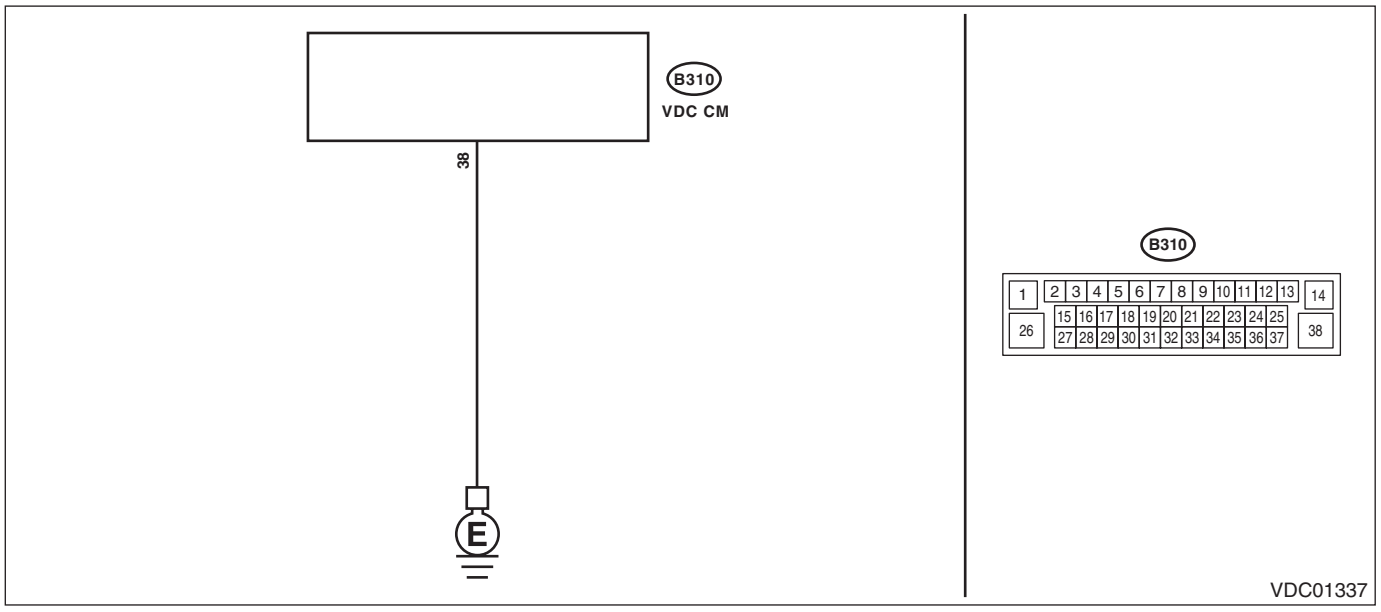

- Models with EyeSight

Vehicle dynamics control system <Ref. to WI-372, WITH EyeSight, WIRING DIAGRAM, Vehicle Dynamics Control System.>

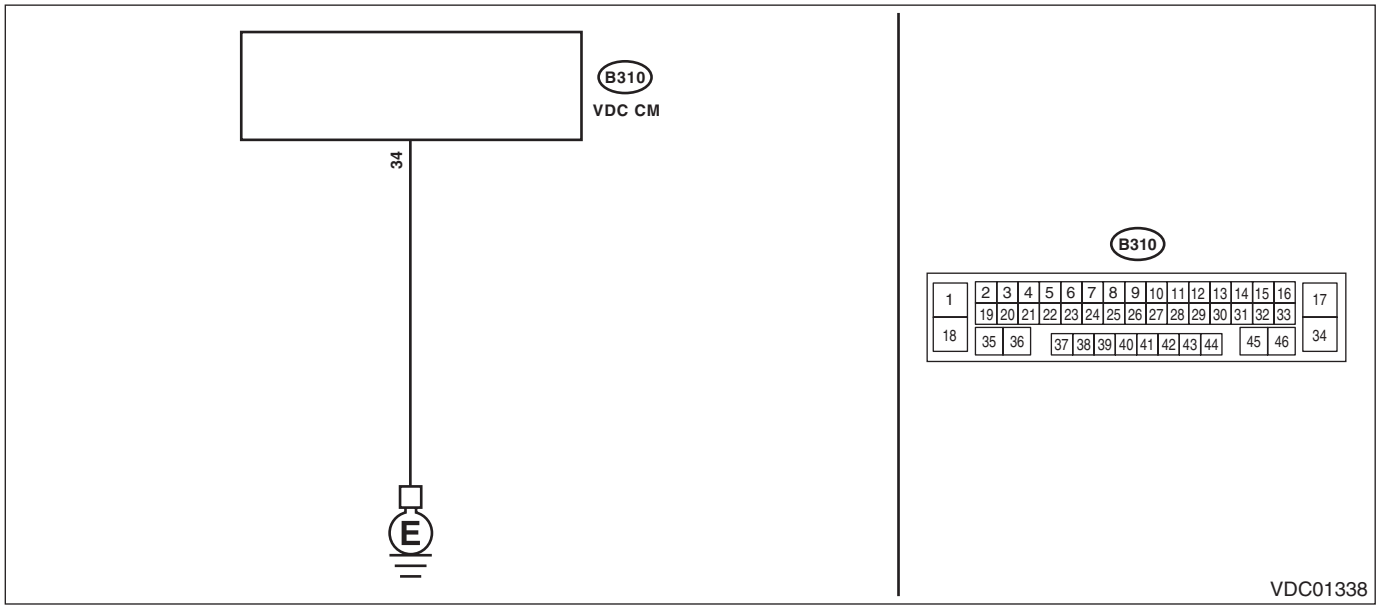

	Step	Check	Yes	No
1	**CHECK VDCCM&H/U GROUND CIRCUIT (CHECK FOR OPEN CIRCUIT).** 1) Turn the ignition switch to OFF. 2) Disconnect the connector from the VDCCM&H/U. 3) Measure the resistance between VDCCM&H/U and chassis ground. ***Connector & terminal*** ***Models without EyeSight*** ***(B310) No. 38 — Chassis ground:*** ***Models with EyeSight*** ***(B310) No. 34 — Chassis ground:***	Is the resistance less than 10 Ω?	Go to step **2**.	Repair the VDCCM&H/U ground harness.
2	**CHECK POOR CONTACT OF CONNECTORS.**	Is there poor contact of the connector between the battery, ignition switch and VDCCM&H/U?	Repair the connector.	Go to step **3**.
3	**CHECK CAUSE OF SIGNAL NOISE.**	Are the radio wave devices and electronic components installed correctly?	Go to step **4**.	Install the radio wave devices and electronic components properly.
4	**CHECK CAUSE OF SIGNAL NOISE.**	Is there a noise source (such as an antenna) installed near the sensor harness and VDCCM?	Install the noise sources apart from sensor harness and VDCCM.	Go to step **5**.
5	**CHECK VDCCM&H/U.** 1) Connect all connectors. 2) Perform the Clear Memory Mode. <Ref. to VDC(diag)-30, Clear Memory Mode.> 3) Perform the Inspection Mode. <Ref. to VDC(diag)-29, Inspection Mode.> 4) Read the DTC. <Ref. to VDC(diag)-28, Read Diagnostic Trouble Code (DTC).>	Is the same DTC displayed?	Replace the VDCCM&H/U. <Ref. to VDC-9, VDC Control Module and Hydraulic Control Unit (VDCCM&H/U).>	Go to step **6**.
6	**CHECK DETECTION OF OTHER DTCS FOR VDC.** <Ref. to VDC(diag)-28, Read Diagnostic Trouble Code (DTC).>	Is any other DTC displayed?	Perform the diagnosis according to DTC. <Ref. to VDC(diag)-55, List of Diagnostic Trouble Code (DTC).>	Currently, it is normal. There may have been a temporary poor contact in the harness and connector or a temporary noise interference.

V: DTC C1412 SELECTED PARAMETER

DTC DETECTING CONDITION:

- A fault is detected if abnormal set value is found on the vehicle model that were given some parameters.
- A fault is detected if 0 point setting compensation of the sensor is not yet performed.

TROUBLE SYMPTOM:

- ABS does not operate.
- VDC does not operate.
- Hill start assist does not operate. (Models without EyeSight)
- Hill hold does not function. (Models with EyeSight)
- EyeSight does not operate. (Models with EyeSight)

NOTE:
When the VDCCM&H/U is replaced, this DTC may be stored.

	Step	Check	Yes	No
1	**CHECK VDCCM&H/U IDENTIFICATION SYMBOL.** Check the identification symbol attached on the H/U. <Ref. to VDC-2, SPECIFICATION, General Description.>	Is the identification symbol correct?	Go to step **2**.	Replace the VDCCM&H/U. <Ref. to VDC-9, VDC Control Module and Hydraulic Control Unit (VDCCM&H/U).>
2	**CHECK PARAMETER SELECTED IN VDCCM.** <Ref. to VDC-19, VDCCM PARAMETER CHECK, MAINTENANCE MODE, VDC Control Module and Hydraulic Control Unit (VDCCM&H/U).>	Does the parameter registered in the VDCCM match the relevant vehicle?	Go to step **3**.	Select and register the correct parameter. <Ref. to VDC-19, VDCCM PARAMETER SELECTION, MAINTENANCE MODE, VDC Control Module and Hydraulic Control Unit (VDCCM&H/U).>
3	**CHECK SPECIFICATIONS OF OTHER CONTROL MODULES.** Check the specifications of ECM and TCM.	Are the specifications of ECM and TCM the same as vehicle specification?	Replace the VDCCM&H/U. <Ref. to VDC-9, VDC Control Module and Hydraulic Control Unit (VDCCM&H/U).>	Replace the ECM and TCM. <Ref. to FU(w/o STI)-124, Engine Control Module (ECM).> <Ref. to FU(STI)-56, Engine Control Module (ECM).> <Ref. to CVT(TR690)-126, Transmission Control Module (TCM).>

W: DTC C1413 POWER SUPPLY VOLTAGE

DTC DETECTING CONDITION:

A fault is detected if the power supply voltage is out of normal range for a predetermined time or more.

TROUBLE SYMPTOM:

- ABS does not operate.
- EBD may not operate.
- VDC does not operate.
- Hill start assist does not operate. (Models without EyeSight)
- Hill hold does not function. (Models with EyeSight)
- EyeSight does not operate. (Models with EyeSight)

NOTE:
Warning lights go off if voltage returns.

WIRING DIAGRAM:

- Models without EyeSight

Vehicle dynamics control system <Ref. to WI-368, WITHOUT EyeSight, WIRING DIAGRAM, Vehicle Dynamics Control System.>

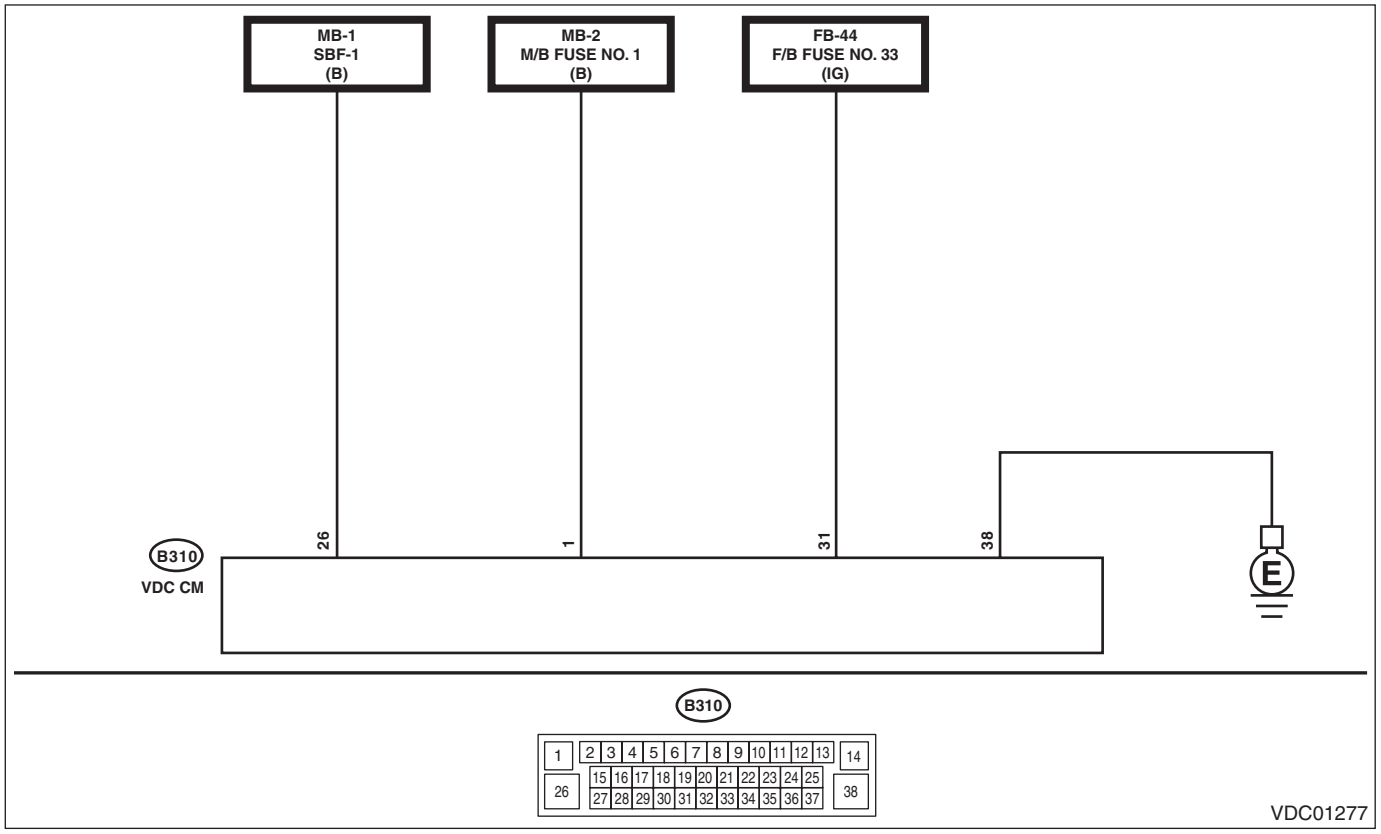

- Models with EyeSight

Vehicle dynamics control system <Ref. to WI-372, WITH EyeSight, WIRING DIAGRAM, Vehicle Dynamics Control System.>

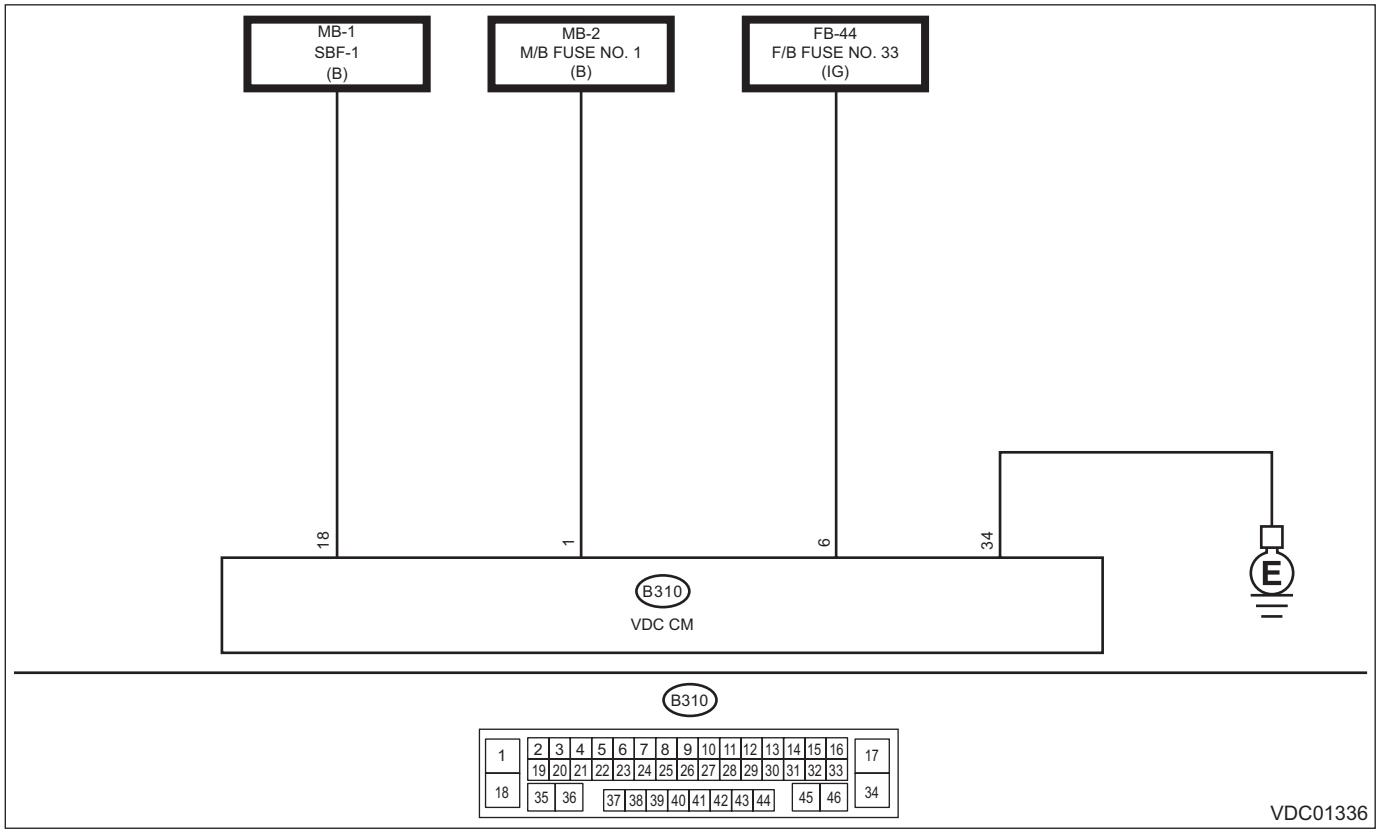

Step		Check	Yes	No
1	**CHECK GENERATOR.** 1) Start the engine. 2) Run the engine at idle after warming up. 3) Measure the voltage between generator terminal B and chassis ground. ***Terminals*** ***Generator terminal B (+) — Chassis ground (–):***	Is the voltage 10 — 15 V?	Go to step **2**.	Repair the generator.
2	**CHECK BATTERY TERMINAL.** Turn the ignition switch to OFF.	Are the positive and negative battery terminals installed tightly?	Go to step **3**.	Install the battery terminal correctly.

	Step	Check	Yes	No
3	**CHECK VDCCM&H/U INPUT VOLTAGE.** 1) Disconnect the connector from the VDCCM&H/U. 2) Run the engine at idle. 3) Operate devices such as headlights, air conditioner, rear defogger, etc. which produce an electrical load. 4) Measure the voltage between VDCCM&H/U connector and chassis ground. ***Connector & terminal*** ***Models without EyeSight*** ***(B310) No. 1 (+) — Chassis ground (–):*** ***(B310) No. 26 (+) — Chassis ground (–):*** ***(B310) No. 31 (+) — Chassis ground (–):*** ***Models with EyeSight*** ***(B310) No. 1 (+) — Chassis ground (–):*** ***(B310) No. 6 (+) — Chassis ground (–):*** ***(B310) No. 18 (+) — Chassis ground (–):***	Is the voltage 10 — 15 V?	Go to step **4**.	Repair the power supply circuit.
4	**CHECK VDCCM&H/U GROUND CIRCUIT (CHECK FOR OPEN CIRCUIT).** 1) Turn the ignition switch to OFF. 2) Measure the resistance between VDCCM&H/U connector and chassis ground. ***Connector & terminal*** ***Models without EyeSight*** ***(B310) No. 38 — Chassis ground:*** ***Models with EyeSight*** ***(B310) No. 34 — Chassis ground:***	Is the resistance less than 10 Ω?	Go to step **5**.	Repair the VDCCM&H/U ground harness circuit.
5	**CHECK POOR CONTACT OF CONNECTORS.**	Is there poor contact of connector between generator, battery and VDCCM&H/U?	Repair the connector.	Go to step **6**.
6	**CHECK VDCCM&H/U.** 1) Connect all connectors. 2) Perform the Clear Memory Mode. <Ref. to VDC(diag)-30, Clear Memory Mode.> 3) Perform the Inspection Mode. <Ref. to VDC(diag)-29, Inspection Mode.> 4) Read the DTC. <Ref. to VDC(diag)-28, Read Diagnostic Trouble Code (DTC).>	Is the same DTC displayed?	Replace the VDCCM&H/U. <Ref. to VDC-9, VDC Control Module and Hydraulic Control Unit (VDCCM&H/U).>	Go to step **7**.
7	**CHECK DETECTION OF OTHER DTCS FOR VDC.** <Ref. to VDC(diag)-28, Read Diagnostic Trouble Code (DTC).>	Is any other DTC displayed?	Perform the diagnosis according to DTC. <Ref. to VDC(diag)-55, List of Diagnostic Trouble Code (DTC).>	Currently, it is normal. There may have been a temporary poor contact in the harness and connector or a temporary noise interference.

X: DTC C1422 VDC INTERRUPTION FOR ENGINE CONVENIENCE

DTC DETECTING CONDITION:
A fault is detected if engine control prohibition flag from ECM is received.
TROUBLE SYMPTOM:
- VDC does not operate.
- Hill start assist does not operate. (Models without EyeSight)
- Hill hold does not function. (Models with EyeSight)

NOTE:
Warning lights go off if the cooperation control of ECM returns.

	Step	Check	Yes	No
1	**CHECK COOPERATION CONTROL FEASIBILITY OF ECM USING SUBARU SELECT MONITOR.** 1) Start the engine, and run the engine at idle approximately 5 minutes. 2) Using the Subaru Select Monitor, select “Data monitor”. <Ref. to VDC(diag)-20, READ CURRENT DATA, OPERATION, Subaru Select Monitor.> 3) Check the «E/G Torque Down Control Stop Flag» displayed on screen.	Does the «E/G Torque Down Control Stop Flag» indicate “1”?	Go to step **4**.	Go to step **2**.
2	**CHECK WARNING LIGHT.** Check whether the VDC warning light illuminates after driving for 1 minute or more at a speed of 10 km/h (6 MPH) or more.	Does the VDC warning light illuminate?	Go to step **3**.	VDC is normal. Perform the Clear Memory Mode. <Ref. to VDC(diag)-30, Clear Memory Mode.> NOTE: DTC may be recorded if cranking is performed during driving.
3	**CHECK POOR CONTACT OF CONNECTORS.**	Is there poor contact of ECM connector?	Repair the connector.	Go to step **4**.
4	**CHECK DTC OF ECM.** Read the DTC relating the ECM using the Subaru Select Monitor. <Ref. to EN(w/o STI)(diag)-63, Read Diagnostic Trouble Code (DTC).> <Ref. to EN(STI)(diag)-47, Read Diagnostic Trouble Code (DTC).>	Is DTC displayed?	Perform the diagnosis according to DTC. <Ref. to EN(w/o STI)(diag)-106, List of Diagnostic Trouble Code (DTC).> <Ref. to EN(STI)(diag)-96, List of Diagnostic Trouble Code (DTC).>	Go to step **5**.
5	**CHECK VDCCM&H/U.** 1) Connect all connectors. 2) Perform the Clear Memory Mode. <Ref. to VDC(diag)-30, Clear Memory Mode.> 3) Perform the Inspection Mode. <Ref. to VDC(diag)-29, Inspection Mode.> 4) Read the DTC. <Ref. to VDC(diag)-28, Read Diagnostic Trouble Code (DTC).>	Is the same DTC displayed?	Replace the VDCCM&H/U. <Ref. to VDC-9, VDC Control Module and Hydraulic Control Unit (VDCCM&H/U).>	Go to step **6**.

Step		Check	Yes	No
6	**CHECK DETECTION OF OTHER DTCS FOR VDC.** <Ref. to VDC(diag)-28, Read Diagnostic Trouble Code (DTC).>	Is any other DTC displayed?	Perform the diagnosis according to DTC. <Ref. to VDC(diag)-55, List of Diagnostic Trouble Code (DTC).>	Currently, it is normal. There may have been a temporary poor contact in the harness and connector or a temporary noise interference.

Y: DTC C1423 DIFFERENT ECU SPECIFICATIONS

DTC DETECTING CONDITION:

A fault is detected if the vehicle type information obtained from ECM via communication is different from the parameter setting information.

TROUBLE SYMPTOM:

- ABS does not operate.
- VDC does not operate.
- Hill start assist does not operate. (Models without EyeSight)
- Hill hold does not function. (Models with EyeSight)
- EyeSight does not operate. (Models with EyeSight)

NOTE:

When parameter selection for VDCCM is improper, this DTC may be memorized.

	Step	Check	Yes	No
1	**CHECK VDCCM&H/U IDENTIFICATION SYMBOL.** Check the identification symbol attached on the H/U. <Ref. to VDC-2, SPECIFICATION, General Description.>	Is the identification symbol correct?	Go to step **2**.	Replace the VDCCM&H/U. <Ref. to VDC-9, VDC Control Module and Hydraulic Control Unit (VDCCM&H/U).>
2	**CHECK PARAMETER SELECTED IN VDCCM.** <Ref. to VDC-19, VDCCM PARAMETER CHECK, MAINTENANCE MODE, VDC Control Module and Hydraulic Control Unit (VDCCM&H/U).>	Does the parameter registered in the VDCCM match the relevant vehicle?	CVT model: Go to step **3**. MT model: Go to step **5**.	Select and register the correct parameter. <Ref. to VDC-19, VDCCM PARAMETER SELECTION, MAINTENANCE MODE, VDC Control Module and Hydraulic Control Unit (VDCCM&H/U).>
3	**CHECK TCM SPECIFICATION.** Check the TCM specification.	Is the specification of TCM same as vehicle specification?	Go to step **4**.	Replace the TCM. <Ref. to CVT(TR690)-126, Transmission Control Module (TCM).>
4	**CHECK CVT SYSTEM.** 1) Start the engine. 2) Read the DTC of the CVT system. <Ref. to CVT(diag)-18, Read Diagnostic Trouble Code (DTC).>	Is DTC of CVT system displayed?	Perform the diagnosis according to DTC. <Ref. to CVT(diag)-36, List of Diagnostic Trouble Code (DTC).>	Go to step **5**.
5	**CHECK ECM SPECIFICATION.** Check the ECM specification.	Is the specification of ECM same as vehicle specification?	Go to step **6**.	Replace the ECM. <Ref. to FU(w/o STI)-124, Engine Control Module (ECM).> <Ref. to FU(STI)-56, Engine Control Module (ECM).>

	Step	Check	Yes	No
6	**CHECK ENGINE SYSTEM.** 1) Start the engine. 2) Read DTC of the engine system. <Ref. to EN(w/o STI)(diag)-63, Read Diagnostic Trouble Code (DTC).> <Ref. to EN(STI)(diag)-47, Read Diagnostic Trouble Code (DTC).>	Is engine system DTC displayed?	Perform the diagnosis according to DTC. <Ref. to EN(w/o STI)(diag)-106, List of Diagnostic Trouble Code (DTC).> <Ref. to EN(STI)(diag)-96, List of Diagnostic Trouble Code (DTC).>	Go to step **7**.
7	**CHECK VDCCM&H/U.** 1) Connect all connectors. 2) Perform the Clear Memory Mode. <Ref. to VDC(diag)-30, Clear Memory Mode.> 3) Perform the Inspection Mode. <Ref. to VDC(diag)-29, Inspection Mode.> 4) Read the DTC. <Ref. to VDC(diag)-28, Read Diagnostic Trouble Code (DTC).>	Is the same DTC displayed?	Replace the VDCCM&H/U. <Ref. to VDC-9, VDC Control Module and Hydraulic Control Unit (VDCCM&H/U).>	Go to step **8**.
8	**CHECK DETECTION OF OTHER DTCS FOR VDC.** <Ref. to VDC(diag)-28, Read Diagnostic Trouble Code (DTC).>	Is any other DTC displayed?	Perform the diagnosis according to DTC. <Ref. to VDC(diag)-55, List of Diagnostic Trouble Code (DTC).>	Currently, it is normal. There may have been a temporary poor contact in the harness and connector or a temporary noise interference.

Z: DTC C1424 ECM

DTC DETECTING CONDITION:

A fault is detected if malfunction judgment flag for the engine system is received from ECM for a predetermined time or more.

TROUBLE SYMPTOM:

- Hill start assist does not operate. (Models without EyeSight)
- Hill hold does not function. (Models with EyeSight)
- EyeSight does not operate. (Models with EyeSight)

	Step	Check	Yes	No
1	**CHECK ECM.** 1) Start the engine. 2) Read the DTC of the ECM. <Ref. to EN(w/o STI)(diag)-63, Read Diagnostic Trouble Code (DTC).> <Ref. to EN(STI)(diag)-47, Read Diagnostic Trouble Code (DTC).>	Is DTC displayed?	Perform the diagnosis according to DTC. <Ref. to EN(w/o STI)(diag)-106, List of Diagnostic Trouble Code (DTC).> <Ref. to EN(STI)(diag)-96, List of Diagnostic Trouble Code (DTC).>	Go to step **2**.
2	**CHECK VDCCM&H/U.** 1) Perform the Clear Memory Mode. <Ref. to VDC(diag)-30, Clear Memory Mode.> 2) Perform the Inspection Mode. <Ref. to VDC(diag)-29, Inspection Mode.> 3) Read the DTC. <Ref. to VDC(diag)-28, Read Diagnostic Trouble Code (DTC).>	Is the same DTC displayed?	Replace the VDCCM&H/U. <Ref. to VDC-9, VDC Control Module and Hydraulic Control Unit (VDCCM&H/U).>	Go to step **3**.
3	**CHECK DETECTION OF OTHER DTCS FOR VDC.** <Ref. to VDC(diag)-28, Read Diagnostic Trouble Code (DTC).>	Is any other DTC displayed?	Perform the diagnosis according to DTC. <Ref. to VDC(diag)-55, List of Diagnostic Trouble Code (DTC).>	Currently, it is normal. There may have been a temporary poor contact in the harness and connector or a temporary noise interference.

AA:DTC C1431 AT

DTC DETECTING CONDITION:
A fault is detected if malfunction flag is received from TCM.
TROUBLE SYMPTOM:
- VDC does not operate.
- Hill start assist does not operate. (Models without EyeSight)
- Hill hold does not function. (Models with EyeSight)
- EyeSight does not operate. (Models with EyeSight)

	Step	Check	Yes	No
1	**CHECK TCM.** 1) Start the engine. 2) Read the DTC of the TCM. <Ref. to CVT(diag)-18, Read Diagnostic Trouble Code (DTC).>	Is DTC displayed?	Perform the diagnosis according to DTC. <Ref. to CVT(diag)-36, List of Diagnostic Trouble Code (DTC).>	Go to step **2**.
2	**CHECK VDCCM&H/U.** 1) Turn the ignition switch to OFF. 2) After turning the ignition switch to ON for approx. 10 seconds, turn it to OFF. 3) Turn the ignition switch to ON again. 4) Perform the Clear Memory Mode. <Ref. to VDC(diag)-30, Clear Memory Mode.> 5) Perform the Inspection Mode. <Ref. to VDC(diag)-29, Inspection Mode.> 6) Read the DTC. <Ref. to VDC(diag)-28, Read Diagnostic Trouble Code (DTC).>	Is the same DTC displayed?	Replace the VDCCM&H/U. <Ref. to VDC-9, VDC Control Module and Hydraulic Control Unit (VDCCM&H/U).>	Go to step **3**.
3	**CHECK DETECTION OF OTHER DTCS FOR VDC.** <Ref. to VDC(diag)-28, Read Diagnostic Trouble Code (DTC).>	Is any other DTC displayed?	Perform the diagnosis according to DTC. <Ref. to VDC(diag)-55, List of Diagnostic Trouble Code (DTC).>	Currently, it is normal. There may have been a temporary poor contact in the harness and connector or a temporary noise interference.

AB:DTC C1511 VALVE RELAY

DTC DETECTING CONDITION:

A fault is detected if valve relay drive voltage failure is detected.

TROUBLE SYMPTOM:

- ABS does not operate.
- EBD does not operate.
- VDC does not operate.
- Hill start assist does not operate. (Models without EyeSight)
- Hill hold does not function. (Models with EyeSight)
- EyeSight does not operate. (Models with EyeSight)

WIRING DIAGRAM:

- Models without EyeSight

Vehicle dynamics control system <Ref. to WI-368, WITHOUT EyeSight, WIRING DIAGRAM, Vehicle Dynamics Control System.>

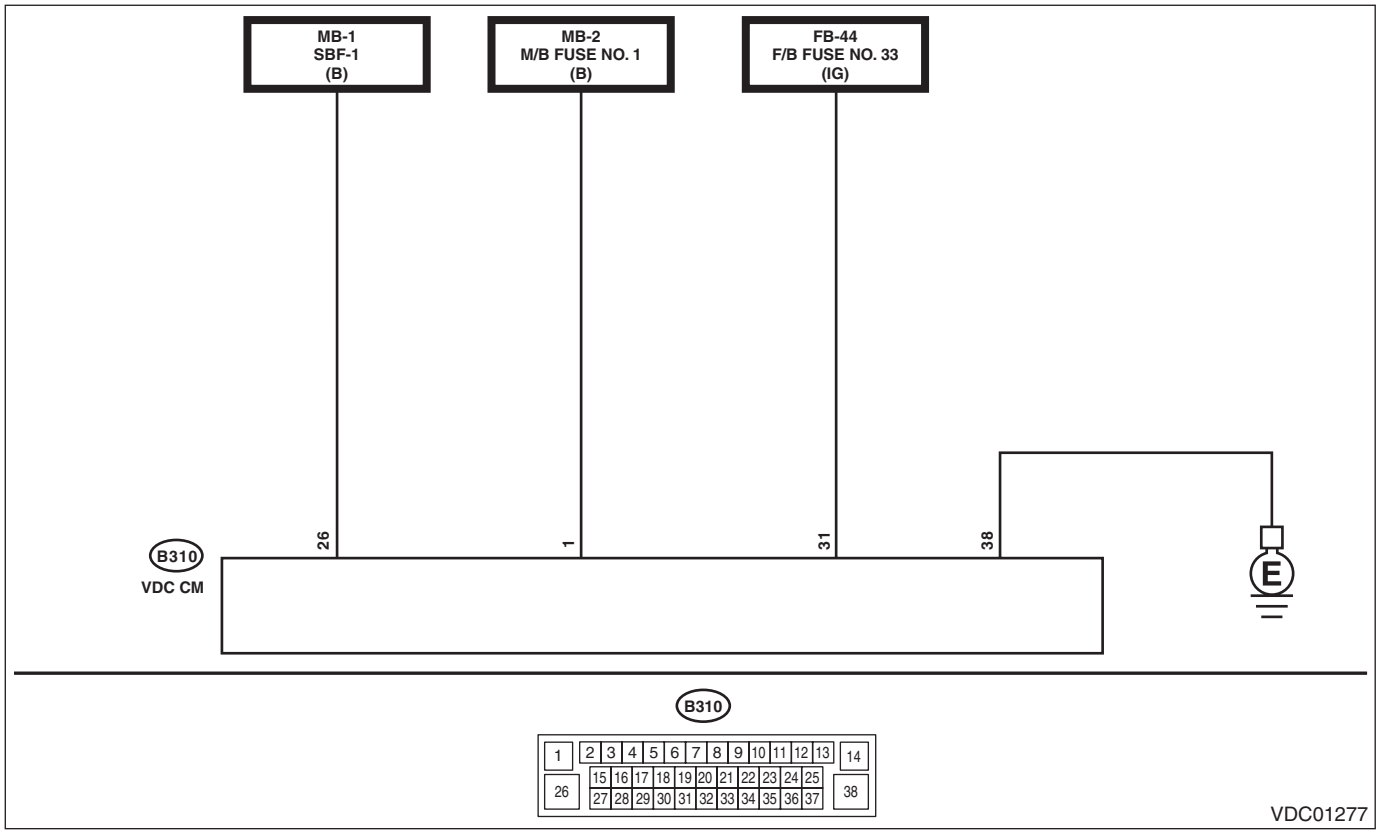

• Models with EyeSight

Vehicle dynamics control system <Ref. to WI-372, WITH EyeSight, WIRING DIAGRAM, Vehicle Dynamics Control System.>

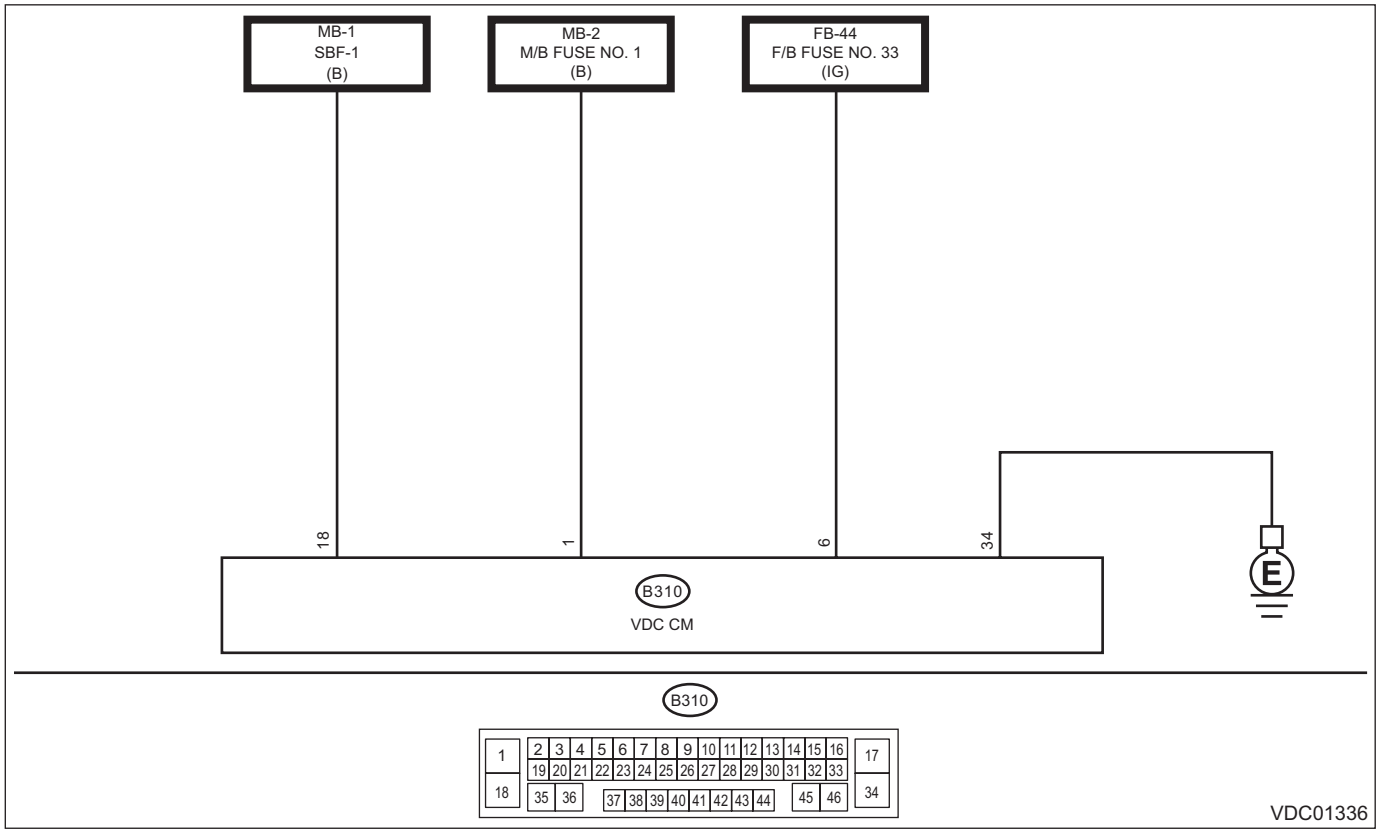

Step		Check	Yes	No
1	**CHECK VDCCM&H/U INPUT VOLTAGE.** 1) Turn the ignition switch to OFF. 2) Disconnect the connector from the VDCCM&H/U. 3) Run the engine at idle. 4) Measure the voltage between VDCCM&H/U connector and chassis ground. ***Connector & terminal*** ***Models without EyeSight*** ***(B310) No. 1 (+) — Chassis ground (–):*** ***(B310) No. 31 (+) — Chassis ground (–):*** ***Models with EyeSight*** ***(B310) No. 1 (+) — Chassis ground (–):*** ***(B310) No. 6 (+) — Chassis ground (–):***	Is the voltage 10 — 15 V?	Go to step **2**.	Repair the power supply circuit.
2	**CHECK VDCCM&H/U INPUT VOLTAGE.** Calculate the voltage difference measured in step 1. • Models without EyeSight A: (B310) No. 1 (+) — Chassis ground (–): B: (B310) No. 31 (+) — Chassis ground (–): • Models with EyeSight A: (B310) No. 1 (+) — Chassis ground (–): B: (B310) No. 6 (+) — Chassis ground (–):	Is the voltage difference between A and B 2 V or more?	Repair the power supply circuit.	Go to step **3**.

	Step	Check	Yes	No
3	**CHECK VDCCM&H/U GROUND CIRCUIT (CHECK FOR OPEN CIRCUIT).** 1) Turn the ignition switch to OFF. 2) Measure the resistance between VDCCM&H/U connector and chassis ground. ***Connector & terminal*** ***Models without EyeSight*** ***(B310) No. 38 — Chassis ground:*** ***Models with EyeSight*** ***(B310) No. 34 — Chassis ground:***	Is the resistance less than 10 Ω?	Go to step **4**.	Repair the VDCCM&H/U ground harness.
4	**CHECK POOR CONTACT OF CONNECTORS.**	Is there poor contact of connector between generator, battery and VDCCM&H/U?	Repair the connector.	Go to step **5**.
5	**CHECK VDCCM&H/U.** 1) Connect all connectors. 2) Perform the Clear Memory Mode. <Ref. to VDC(diag)-30, Clear Memory Mode.> 3) Perform the Inspection Mode. <Ref. to VDC(diag)-29, Inspection Mode.> 4) Read the DTC. <Ref. to VDC(diag)-28, Read Diagnostic Trouble Code (DTC).>	Is the same DTC displayed?	Replace the VDCCM&H/U. <Ref. to VDC-9, VDC Control Module and Hydraulic Control Unit (VDCCM&H/U).>	Go to step **6**.
6	**CHECK DETECTION OF OTHER DTCS FOR VDC.** <Ref. to VDC(diag)-28, Read Diagnostic Trouble Code (DTC).>	Is any other DTC displayed?	Perform the diagnosis according to DTC. <Ref. to VDC(diag)-55, List of Diagnostic Trouble Code (DTC).>	Currently, it is normal. There may have been a temporary poor contact in the harness and connector or a temporary noise interference.

AC:DTC C1521 MOTOR RELAY

DTC DETECTING CONDITION:

A fault is detected if the pump motor supply voltage becomes significantly low when the pump motor is not driven.

TROUBLE SYMPTOM:

- ABS does not operate sometimes.
- VDC does not operate.
- Hill start assist does not operate. (Models without EyeSight)
- Hill hold does not function. (Models with EyeSight)
- EyeSight does not operate. (Models with EyeSight)

WIRING DIAGRAM:

- Models without EyeSight

Vehicle dynamics control system <Ref. to WI-368, WITHOUT EyeSight, WIRING DIAGRAM, Vehicle Dynamics Control System.>

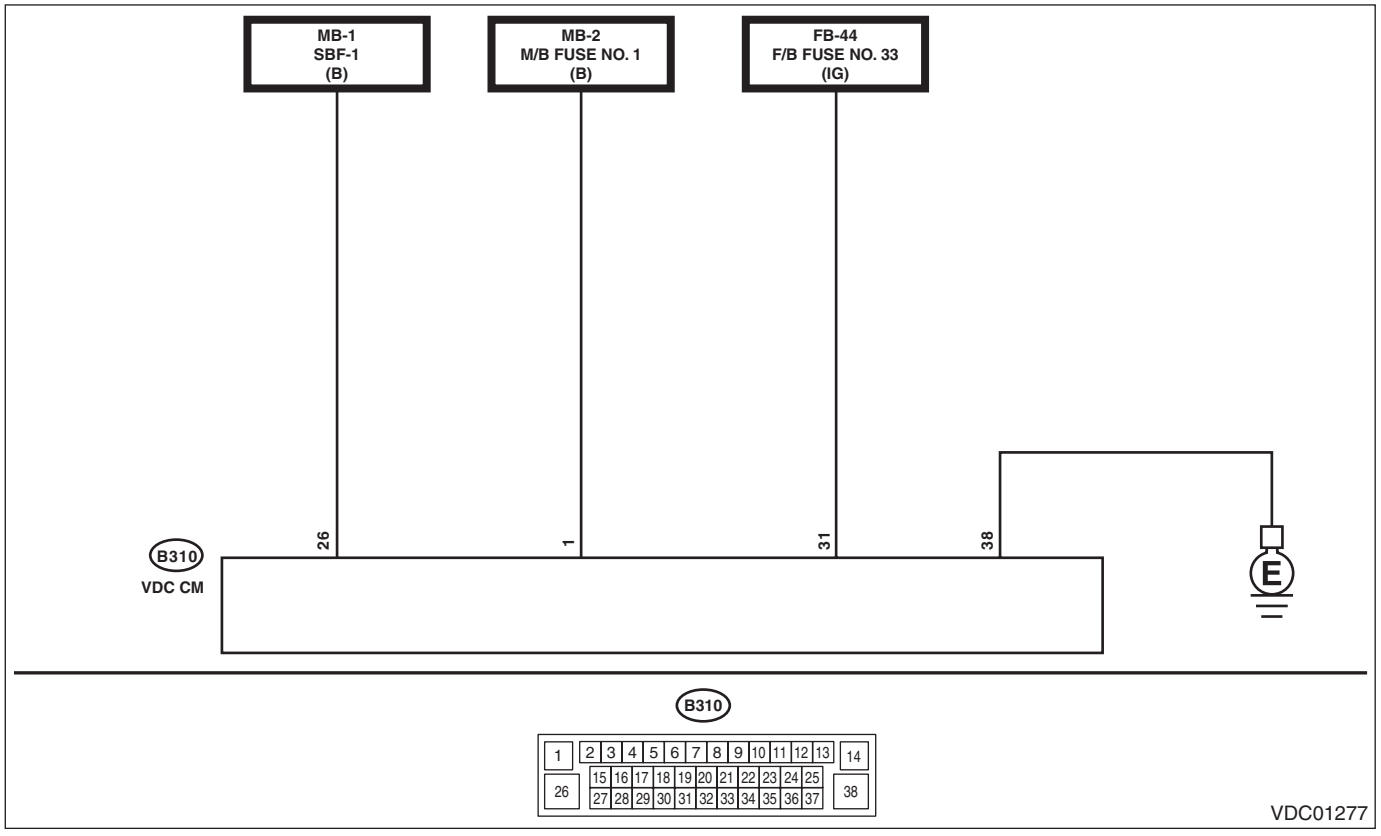

• Models with EyeSight

Vehicle dynamics control system <Ref. to WI-372, WITH EyeSight, WIRING DIAGRAM, Vehicle Dynamics Control System.>

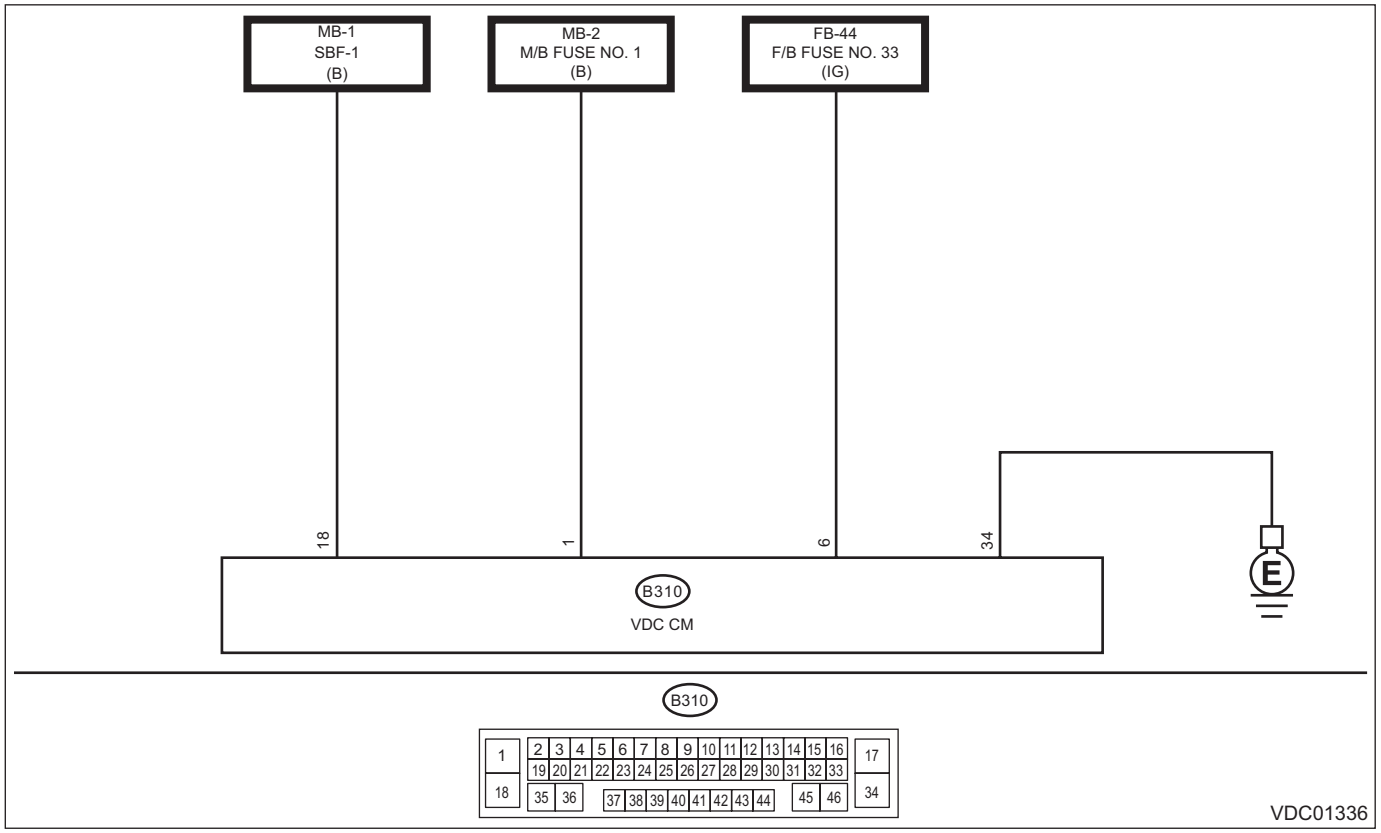

Step		Check	Yes	No
1	**CHECK VDCCM&H/U INPUT VOLTAGE.** 1) Turn the ignition switch to OFF. 2) Disconnect the connector from the VDCCM&H/U. 3) Turn the ignition switch to ON. 4) Measure the voltage between VDCCM&H/U connector and chassis ground. ***Connector & terminal*** ***Models without EyeSight*** ***(B310) No. 26 (+) — Chassis ground (–):*** ***(B310) No. 31 (+) — Chassis ground (–):*** ***Models with EyeSight*** ***(B310) No. 18 (+) — Chassis ground (–):*** ***(B310) No. 6 (+) — Chassis ground (–):***	Is the voltage 10 — 15 V?	Go to step **2**.	Repair the VDCCM&H/U power supply circuit.
2	**CHECK VDCCM&H/U INPUT VOLTAGE.** Calculate the voltage difference measured in step 1. • Models without EyeSight A: (B310) No. 26 (+) — Chassis ground (–): B: (B310) No. 31 (+) — Chassis ground (–): • Models with EyeSight A: (B310) No. 18 (+) — Chassis ground (–): B: (B310) No. 6 (+) — Chassis ground (–):	Is the voltage difference between A and B 2 V or more?	Repair the power supply circuit.	Go to step **3**.
3	**CHECK INSTALLATION OF VDCCM&H/U GROUND.**	Is the VDCCM&H/U ground terminal installation bolt (ground bolt fixing onto the side frame upper face) installed correctly?	Go to step **4**.	Install the VDCCM&H/U ground terminal installation bolt correctly.

	Step	Check	Yes	No
4	**CHECK VDCCM&H/U GROUND CIRCUIT (CHECK FOR OPEN CIRCUIT).** 1) Turn the ignition switch to OFF. 2) Measure the resistance between VDCCM&H/U connector and chassis ground. ***Connector & terminal*** ***Models without EyeSight*** ***(B310) No. 38 — Chassis ground:*** ***Models with EyeSight*** ***(B310) No. 34 — Chassis ground:***	Is the resistance less than 10 Ω?	Go to step **5**.	Repair the VDCCM&H/U ground harness.
5	**CHECK VDCCM&H/U MOTOR RELAY.** Measure the resistance between VDCCM&H/U terminals. ***Terminals*** ***Models without EyeSight*** ***No. 26 — No. 38:*** ***Models with EyeSight*** ***No. 18 — No. 34:***	Is the resistance 1 MΩ or more?	Go to step **6**.	Replace the VDCCM&H/U. <Ref. to VDC-9, VDC Control Module and Hydraulic Control Unit (VDCCM&H/U).>
6	**CHECK POOR CONTACT OF CONNECTORS.** Turn the ignition switch to OFF.	Is there poor contact of connector between generator, battery and VDCCM&H/U?	Repair the connector.	Go to step **7**.
7	**CHECK VDCCM&H/U.** 1) Connect all connectors. 2) Perform the Clear Memory Mode. <Ref. to VDC(diag)-30, Clear Memory Mode.> 3) Perform the Inspection Mode. <Ref. to VDC(diag)-29, Inspection Mode.> 4) Read the DTC. <Ref. to VDC(diag)-28, Read Diagnostic Trouble Code (DTC).>	Is the same DTC displayed?	Replace the VDCCM&H/U. <Ref. to VDC-9, VDC Control Module and Hydraulic Control Unit (VDCCM&H/U).>	Go to step **8**.
8	**CHECK DETECTION OF OTHER DTCS FOR VDC.** <Ref. to VDC(diag)-28, Read Diagnostic Trouble Code (DTC).>	Is any other DTC displayed?	Perform the diagnosis according to DTC. <Ref. to VDC(diag)-55, List of Diagnostic Trouble Code (DTC).>	Currently, it is normal. There may have been a temporary poor contact in the harness and connector or a temporary noise interference.

AD:DTC C1531 BLS OFF STUCK

DTC DETECTING CONDITION:

A fault is detected if stop light switch signal is OFF for a predetermined time or more with the pressure signal of the pressure sensor high.

TROUBLE SYMPTOM:

- VDC does not operate.
- Hill start assist does not operate. (Models without EyeSight)
- Hill hold does not function. (Models with EyeSight)
- EyeSight does not operate. (Models with EyeSight)

1. MODELS WITHOUT EyeSight

WIRING DIAGRAM:

Stop light system <Ref. to WI-351, WIRING DIAGRAM, Stop Light System.>

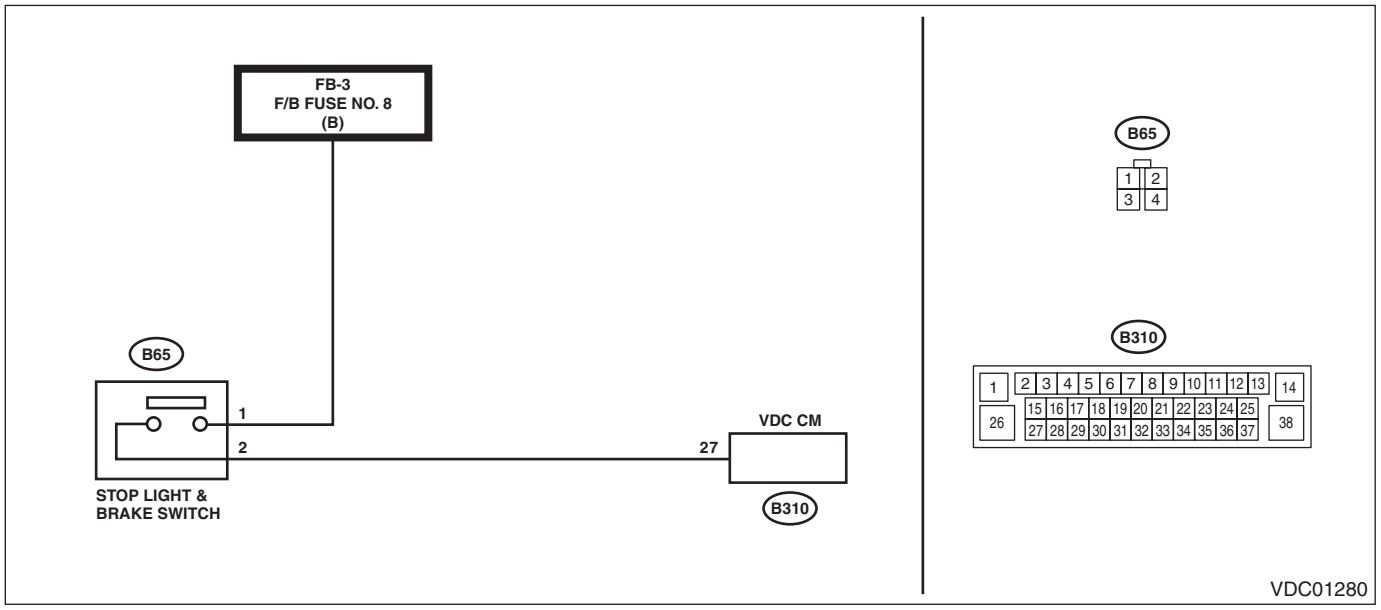

	Step	Check	Yes	No
1	**CHECK STOP LIGHT SWITCH.** Check the installation position of the stop light switch. <Ref. to BR-101, INSTALLATION, Stop Light Switch.>	Is the check result OK?	Go to step **2**.	Adjust the installation position of the stop light switch. <Ref. to BR-101, INSTALLATION, Stop Light Switch.>
2	**CHECK STOP LIGHT SWITCH.** 1) Turn the ignition switch to OFF. 2) Disconnect the stop light switch connector. 3) Measure the resistance of stop light switch terminals. ***Terminals*** ***No. 1 — No. 2:***	Is the resistance 1 Ω or less when the stop light switch is ON (when pedal is depressed)?	Go to step **3**.	Replace the stop light switch. <Ref. to BR-100, Stop Light Switch.>
3	**CHECK STOP LIGHT POWER SUPPLY.** Measure the voltage between stop light switch terminal and chassis ground. ***Connector & terminal*** ***(B65) No. 1 (+) — Chassis ground (–):***	Is the voltage 10 — 15 V?	Go to step **4**.	Repair the stop light power supply circuit.

	Step	Check	Yes	No
4	**CHECK STOP LIGHT SWITCH HARNESS.** 1) Disconnect the connector from the VDCCM&H/U. 2) Measure the resistance between VDCCM&H/U and stop light switch. ***Connector & terminal*** ***(B65) No. 2 — (B310) No. 27:***	Is the resistance less than 1 Ω?	Go to step **5**.	Repair the stop light switch circuit.
5	**CHECK POOR CONTACT OF CONNECTORS.**	Is there poor contact of connector between stop light switch and VDCCM&H/U?	Repair the connector.	Go to step **6**.
6	**CHECK VDCCM&H/U.** 1) Connect all connectors. 2) Perform the Clear Memory Mode. <Ref. to VDC(diag)-30, Clear Memory Mode.> 3) Perform the Inspection Mode. <Ref. to VDC(diag)-29, Inspection Mode.> 4) Read the DTC. <Ref. to VDC(diag)-28, Read Diagnostic Trouble Code (DTC).>	Is the same DTC displayed?	Replace the VDCCM&H/U. <Ref. to VDC-9, VDC Control Module and Hydraulic Control Unit (VDCCM&H/U).>	Go to step **7**.
7	**CHECK DETECTION OF OTHER DTCS FOR VDC.** <Ref. to VDC(diag)-28, Read Diagnostic Trouble Code (DTC).>	Is any other DTC displayed?	Perform the diagnosis according to DTC. <Ref. to VDC(diag)-55, List of Diagnostic Trouble Code (DTC).>	Currently, it is normal. There may have been a temporary poor contact in the harness and connector or a temporary noise interference.

2. MODELS WITH EyeSight

WIRING DIAGRAM:

Stop light system <Ref. to WI-351, WIRING DIAGRAM, Stop Light System.>

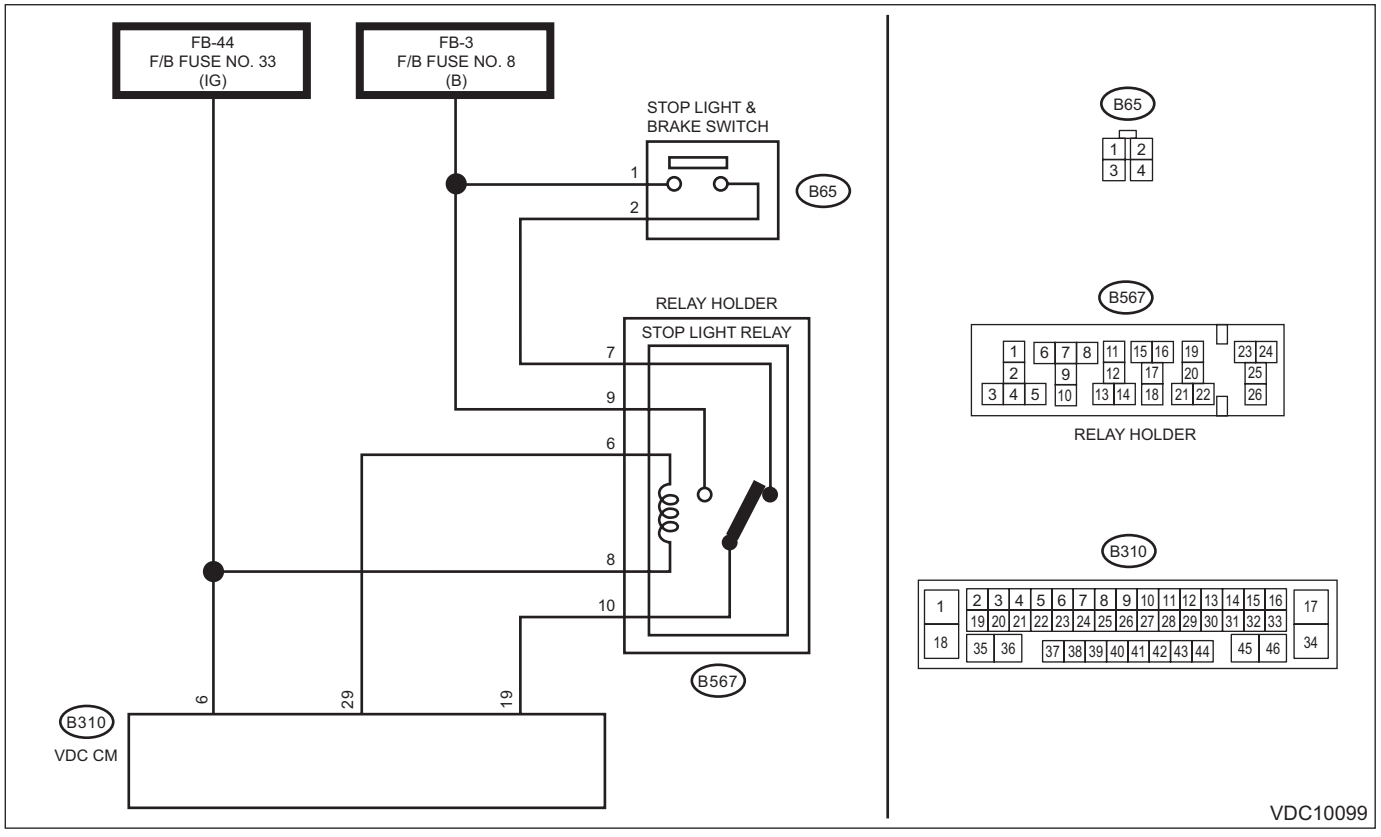

	Step	Check	Yes	No
1	**CHECK STOP LIGHT SWITCH.** Check the installation position of the stop light switch. <Ref. to BR-101, INSTALLATION, Stop Light Switch.>	Is the check result OK?	Go to step **2**.	Adjust the installation position of the stop light switch. <Ref. to BR-101, INSTALLATION, Stop Light Switch.>
2	**CHECK STOP LIGHT SWITCH.** 1) Disconnect the stop light switch connector. 2) Measure the resistance of stop light switch terminals. ***Terminals*** ***No. 1 — No. 2:***	Is the resistance less than 1 Ω when the stop light switch is ON (when pedal is depressed)?	Go to step **3**.	Replace the stop light switch. <Ref. to BR-100, Stop Light Switch.>
3	**CHECK STOP LIGHT RELAY.** Measure the resistance of stop light relay terminals. ***Connector & terminal*** ***No. 7 — No. 10:***	Is the resistance less than 1 Ω?	Go to step **4**.	Replace the stop light relay. <Ref. to VDC-7, Relay and Fuse.>
4	**CHECK VDCCM&H/U CONNECTOR.** Disconnect the connector from the VDCCM&H/U.	Is there poor contact or damage of the VDCCM&H/U connector?	Repair the VDCCM&H/U connector.	Go to step **5**.
5	**CHECK STOP LIGHT SWITCH CIRCUIT (CHECK FOR OPEN CIRCUIT).** Measure the resistance of stop light switch circuit. ***Connector & terminal*** ***(B310) No. 19 — (B567) No. 10:*** ***(B65) No. 2 — (B567) No. 7:*** ***(B65) No. 1 — (F/B fuse) No. 8:***	Is the resistance less than 1 Ω?	Go to step **6**.	Repair the stop light switch circuit.
6	**CHECK STOP LIGHT SWITCH CIRCUIT.** 1) Connect all connectors. 2) Turn the ignition switch to ON. 3) Measure the voltage between stop light relay and chassis ground. ***Connector & terminal*** ***(B567) No. 10 (+) — Chassis ground (–):***	Is the voltage 10 V or more when the stop light switch is ON (when pedal is depressed)?	Go to step **7**.	Repair the stop light switch circuit.
7	**CHECK VDCCM&H/U.** 1) Perform the Clear Memory Mode. <Ref. to VDC(diag)-30, Clear Memory Mode.> 2) Perform the Inspection Mode. <Ref. to VDC(diag)-29, Inspection Mode.> 3) Read the DTC. <Ref. to VDC(diag)-28, Read Diagnostic Trouble Code (DTC).>	Is the same DTC displayed?	Replace the VDCCM&H/U. <Ref. to VDC-9, VDC Control Module and Hydraulic Control Unit (VDCCM&H/U).>	Go to step **8**.
8	**CHECK DETECTION OF OTHER DTCS FOR VDC.** <Ref. to VDC(diag)-28, Read Diagnostic Trouble Code (DTC).>	Is any other DTC displayed?	Perform the diagnosis according to DTC. <Ref. to VDC(diag)-55, List of Diagnostic Trouble Code (DTC).>	Currently, it is normal. There may have been a temporary poor contact in the harness and connector or a temporary noise interference.

AE:DTC C1532 BLS ON STUCK

DTC DETECTING CONDITION:

- A fault is detected if a change of the vehicle speed from high to low occurs for a predetermined number of times or more, while a change of the stop light switch from OFF to ON is not detected.
- A fault is detected if stop light switch ON status continues for long time while the vehicle speed is at the predetermined speed or higher.

TROUBLE SYMPTOM:

- VDC does not operate.
- Hill start assist does not operate. (Models without EyeSight)
- Hill hold does not function. (Models with EyeSight)
- EyeSight does not operate sometimes. (Models with EyeSight)

NOTE:
If the pressure sensor is defective, this DTC may probably be stored in addition to pressure sensor malfunction.

1. MODELS WITHOUT EyeSight

WIRING DIAGRAM:
Stop light system <Ref. to WI-351, WIRING DIAGRAM, Stop Light System.>

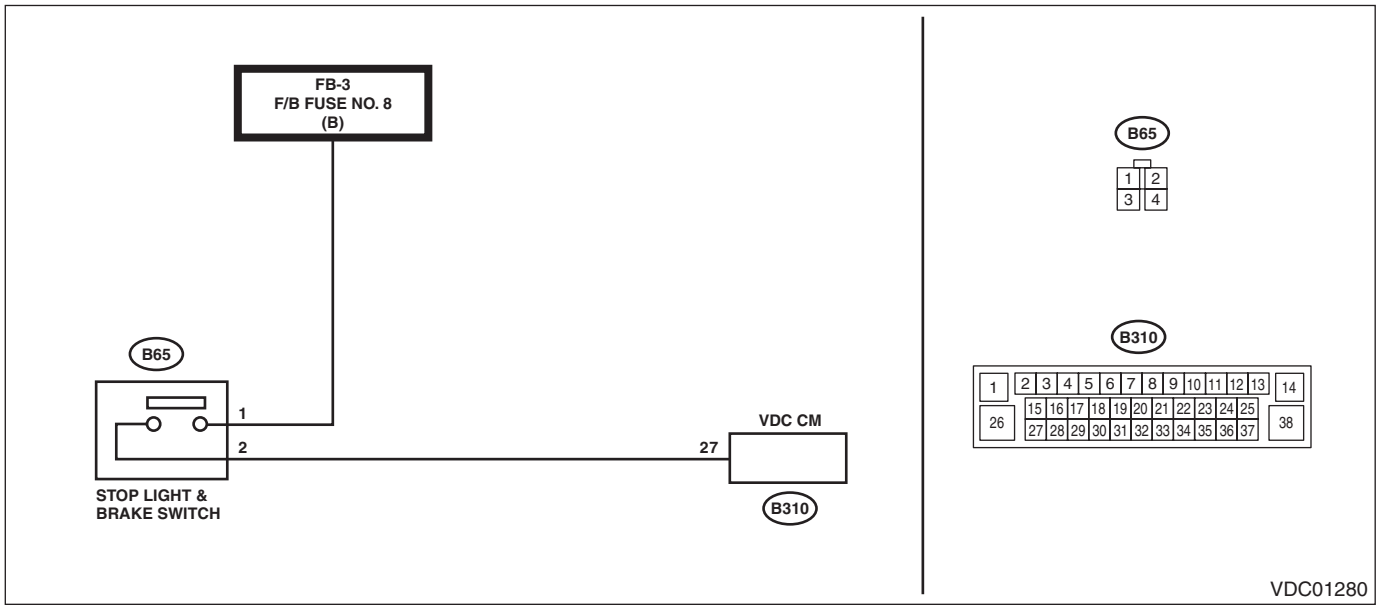

Step		Check	Yes	No
1	**INTERVIEW CUSTOMERS.** Make sure that the operation was performed in which accelerator pedal and brake pedal were depressed simultaneously (with depressing brake pedal with left foot).	Were the acceleration pedal and brake pedal depressed simultaneously?	System is normal. (DTC may be recorded if the brake pedal is always depressed while driving.)	Go to step **2**.
2	**CHECK STOP LIGHT SWITCH.** 1) Turn the ignition switch to OFF. 2) Disconnect the stop light switch connector. 3) Measure the resistance of stop light switch terminals. ***Terminals*** ***No. 1 — No. 2:***	Is the resistance 1 MΩ or more when stop light switch is OFF (when pedal is not depressed)?	Go to step **3**.	Replace the stop light switch. <Ref. to BR-100, Stop Light Switch.>

	Step	Check	Yes	No
3	**CHECK STOP LIGHT SWITCH HARNESS.** 1) Disconnect the connector from the VDCCM&H/U. 2) Measure the resistance between VDCCM&H/U connector and chassis ground. ***Connector & terminal*** ***(B310) No. 27 — Chassis ground:***	Is the resistance less than 1 MΩ?	Go to step **4**.	Repair the stop light switch circuit.
4	**CHECK VDCCM&H/U.** 1) Connect all connectors. 2) Perform the Clear Memory Mode. <Ref. to VDC(diag)-30, Clear Memory Mode.> 3) Perform the Inspection Mode. <Ref. to VDC(diag)-29, Inspection Mode.> 4) Read the DTC. <Ref. to VDC(diag)-28, Read Diagnostic Trouble Code (DTC).>	Is the same DTC displayed?	Replace the VDCCM&H/U. <Ref. to VDC-9, VDC Control Module and Hydraulic Control Unit (VDCCM&H/U).>	Go to step **5**.
5	**CHECK DETECTION OF OTHER DTCS FOR VDC.** <Ref. to VDC(diag)-28, Read Diagnostic Trouble Code (DTC).>	Is any other DTC displayed?	Perform the diagnosis according to DTC. <Ref. to VDC(diag)-55, List of Diagnostic Trouble Code (DTC).>	Currently, it is normal. There may have been a temporary poor contact in the harness and connector or a temporary noise interference.

2. MODELS WITH EyeSight

WIRING DIAGRAM:

Stop light system <Ref. to WI-351, WIRING DIAGRAM, Stop Light System.>

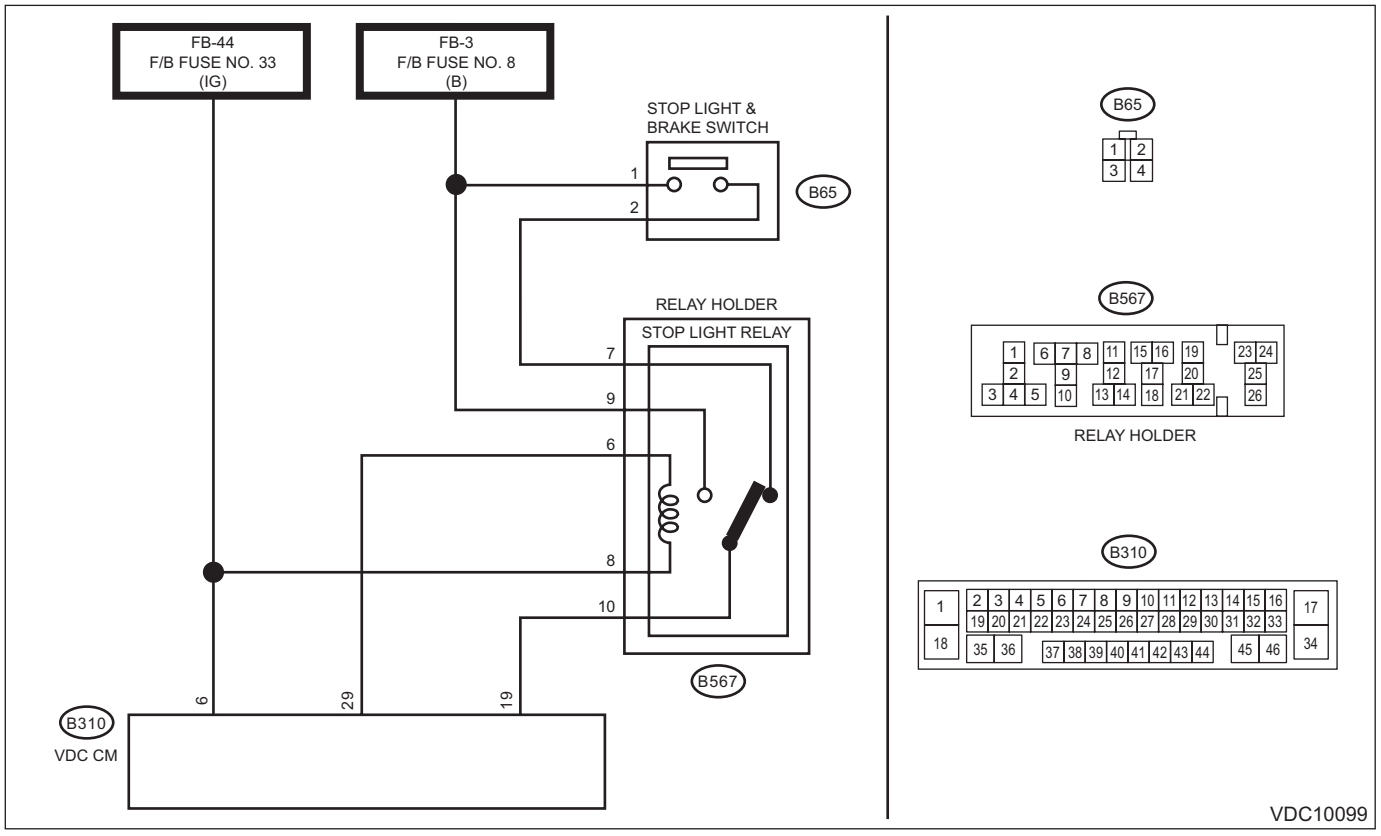

	Step	Check	Yes	No
1	**INTERVIEW CUSTOMERS.** Make sure that the operation was performed in which accelerator pedal and brake pedal were depressed simultaneously (with depressing brake pedal with left foot).	Were the acceleration pedal and brake pedal depressed simultaneously?	System is normal. (DTC may be recorded if the brake pedal is always depressed while driving.)	Go to step **2**.
2	**CHECK STOP LIGHT RELAY.** 1) Turn the ignition switch to OFF. 2) Measure the resistance of stop light relay terminals. ***Terminals*** ***No. 9 — No. 10:***	Is the resistance less than 1 Ω?	Replace the stop light relay. <Ref. to VDC-7, Relay and Fuse.>	Go to step **3**.
3	**CHECK VDCCM&H/U CONNECTOR.** Disconnect the connector from the VDCCM&H/U.	Is there poor contact or damage of the VDCCM&H/U connector?	Repair the VDCCM&H/U connector.	Go to step **4**.
4	**CHECK STOP LIGHT SWITCH CIRCUIT.** 1) Turn the ignition switch to ON. 2) Measure the voltage between stop light relay and chassis ground. ***Connector & terminal*** ***(B567) No. 10 (+) — Chassis ground (–):***	Is the voltage 10 V or more when the stop light switch is OFF (when pedal is not depressed)?	Repair the stop light switch circuit.	Go to step **5**.
5	**CHECK VDCCM&H/U.** 1) Connect all connectors. 2) Perform the Clear Memory Mode. <Ref. to VDC(diag)-30, Clear Memory Mode.> 3) Perform the Inspection Mode. <Ref. to VDC(diag)-29, Inspection Mode.> 4) Read the DTC. <Ref. to VDC(diag)-28, Read Diagnostic Trouble Code (DTC).>	Is the same DTC displayed?	Replace the VDCCM&H/U. <Ref. to VDC-9, VDC Control Module and Hydraulic Control Unit (VDCCM&H/U).>	Go to step **6**.
6	**CHECK DETECTION OF OTHER DTCS FOR VDC.** <Ref. to VDC(diag)-28, Read Diagnostic Trouble Code (DTC).>	Is any other DTC displayed?	Perform the diagnosis according to DTC. <Ref. to VDC(diag)-55, List of Diagnostic Trouble Code (DTC).>	Currently, it is normal. There may have been a temporary poor contact in the harness and connector or a temporary noise interference.

AF:DTC C1571 BRAKE LAMP RELAY OFF STUCK

DTC DETECTING CONDITION:

A fault is detected if the stop light relay operation request were compared with the feedback signal and detected as follows:

- The feedback signal is OFF.
- The stop light relay operation request is ON.

TROUBLE SYMPTOM:

- EyeSight does not operate. (Models with EyeSight)
- Stop lights do not illuminate sometimes.
- Electronic parking brake warning light illuminates.

WIRING DIAGRAM:

Stop light system <Ref. to WI-351, WIRING DIAGRAM, Stop Light System.>

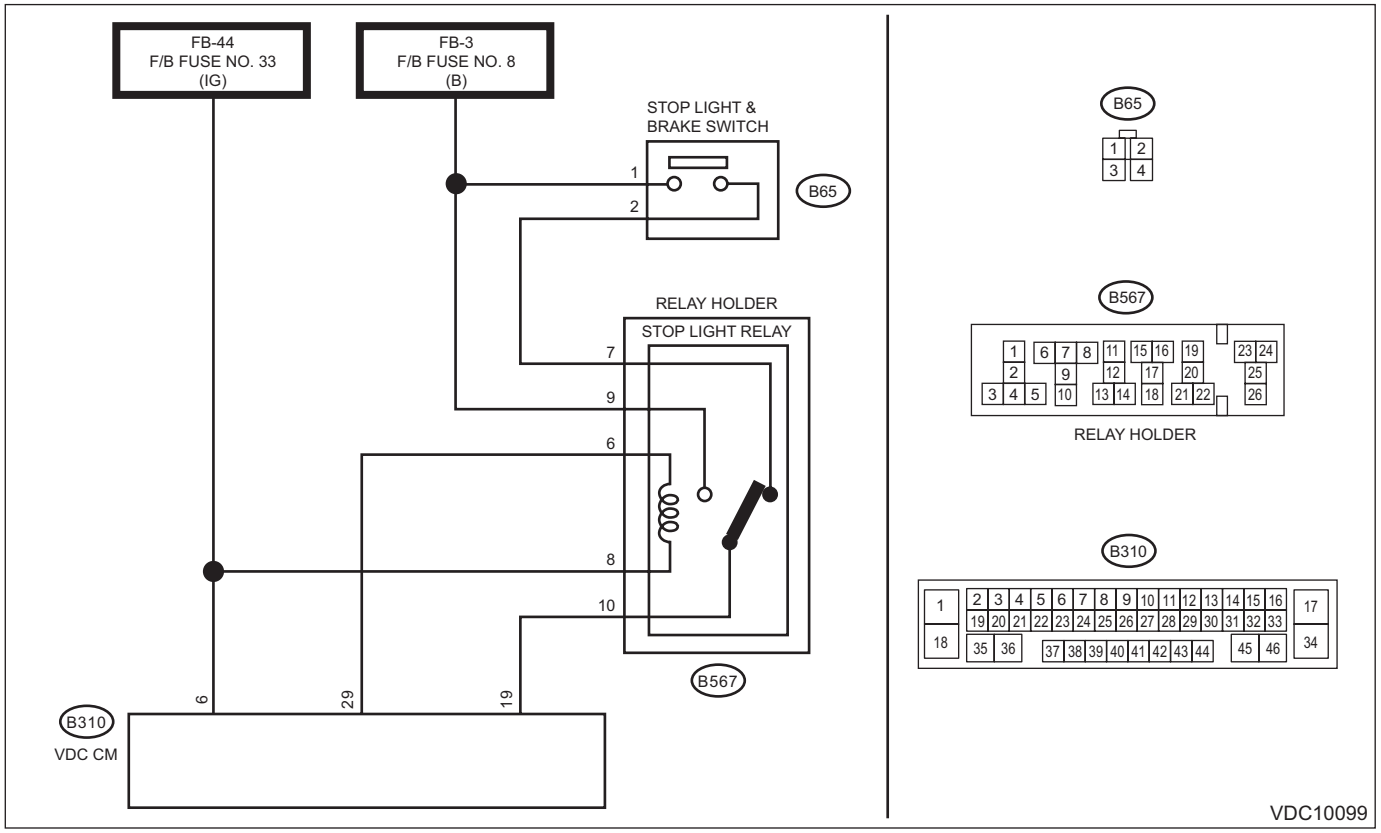

Step		Check	Yes	No
1	**CHECK DTC.** Check the DTC using Subaru Select Monitor. <Ref. to VDC(diag)-28, Read Diagnostic Trouble Code (DTC).>	Are any DTCs related to the stop light switch displayed?	Perform the diagnosis according to DTC. <Ref. to VDC(diag)-55, List of Diagnostic Trouble Code (DTC).>	Go to step **2**.
2	**CHECK STOP LIGHT RELAY.** 1) Turn the ignition switch to OFF. 2) Remove the stop light relay. 3) Measure the resistance between stop light relay terminals No. 8 — No. 6 when the battery voltage is applied. ***Terminals*** ***No. 9 — No. 10:***	Is the resistance less than 1 Ω?	Go to step **3**.	Replace the stop light relay. <Ref. to VDC-7, Relay and Fuse.>
3	**CHECK VDCCM&H/U CONNECTOR.** Disconnect the connector from the VDCCM&H/U.	Is there poor contact or damage of the VDCCM&H/U connector?	Repair the VDCCM&H/U connector.	Go to step **4**.

	Step	Check	Yes	No
4	**CHECK STOP LIGHT SWITCH CIRCUIT.** Measure the resistance between the stop light relay and the fuse. ***Connector & terminal*** ***(B567) No. 9 — (F/B fuse) No. 8:***	Is the resistance less than 1 Ω?	Go to step **5**.	Repair or replace the open circuit in the power supply circuit including the fuse.
5	**CHECK STOP LIGHT SWITCH CIRCUIT.** 1) Connect all connectors. 2) Turn the ignition switch to ON. 3) Measure the voltage between stop light relay and chassis ground. ***Connector & terminal*** ***(B567) No. 9 (+) — Chassis ground (–):***	Is the voltage 10 V or more?	Go to step **6**.	Repair or replace the open circuit in the power supply circuit including the fuse.
6	**CHECK STOP LIGHT RELAY CIRCUIT.** 1) Turn the ignition switch to OFF. 2) Remove the stop light relay. 3) Turn the ignition switch to ON. 4) Measure the voltage between stop light relay and chassis ground. ***Connector & terminal*** ***(B567) No. 6 (+) — Chassis ground (–):***	Is the voltage 10 V or more?	Repair the stop light relay circuit.	Go to step **7**.
7	**CHECK STOP LIGHT RELAY CIRCUIT.** Measure the voltage between stop light relay and chassis ground. ***Connector & terminal*** ***(B567) No. 8 (+) — Chassis ground (–):***	Is the voltage 10 V or more?	Go to step **8**.	Repair the ignition power supply circuit.
8	**CHECK VDCCM&H/U.** 1) Turn the ignition switch to OFF. 2) Connect all connectors and relays. 3) Perform the Clear Memory Mode. <Ref. to VDC(diag)-30, Clear Memory Mode.> 4) Read the DTC. <Ref. to VDC(diag)-28, Read Diagnostic Trouble Code (DTC).>	Is the same DTC displayed?	Replace the VDCCM&H/U. <Ref. to VDC-9, VDC Control Module and Hydraulic Control Unit (VDCCM&H/U).>	Go to step **9**.
9	**CHECK DETECTION OF OTHER DTCS FOR VDC.** <Ref. to VDC(diag)-28, Read Diagnostic Trouble Code (DTC).>	Is any other DTC displayed?	Perform the diagnosis according to DTC. <Ref. to VDC(diag)-55, List of Diagnostic Trouble Code (DTC).>	Currently, it is normal. There may have been a temporary poor contact in the harness and connector or a temporary noise interference.

AG:DTC C1711 STEERING ANGLE SENSOR

DTC DETECTING CONDITION:

- A fault is detected if the sensor signal value is not correct.
- A fault is detected if the yaw rate sensor signal / lateral G sensor signal change while the sensor signal of steering angle sensor indicates a constant value.
- A fault is detected if the communication status of steering angle sensor is abnormal.

TROUBLE SYMPTOM:

- ABS does not operate.
- VDC does not operate.
- Hill start assist does not operate. (Models without EyeSight)
- Hill hold does not function. (Models with EyeSight)
- EyeSight does not operate. (Models with EyeSight)

WIRING DIAGRAM:

- Models without EyeSight

Vehicle dynamics control system <Ref. to WI-368, WITHOUT EyeSight, WIRING DIAGRAM, Vehicle Dynamics Control System.>

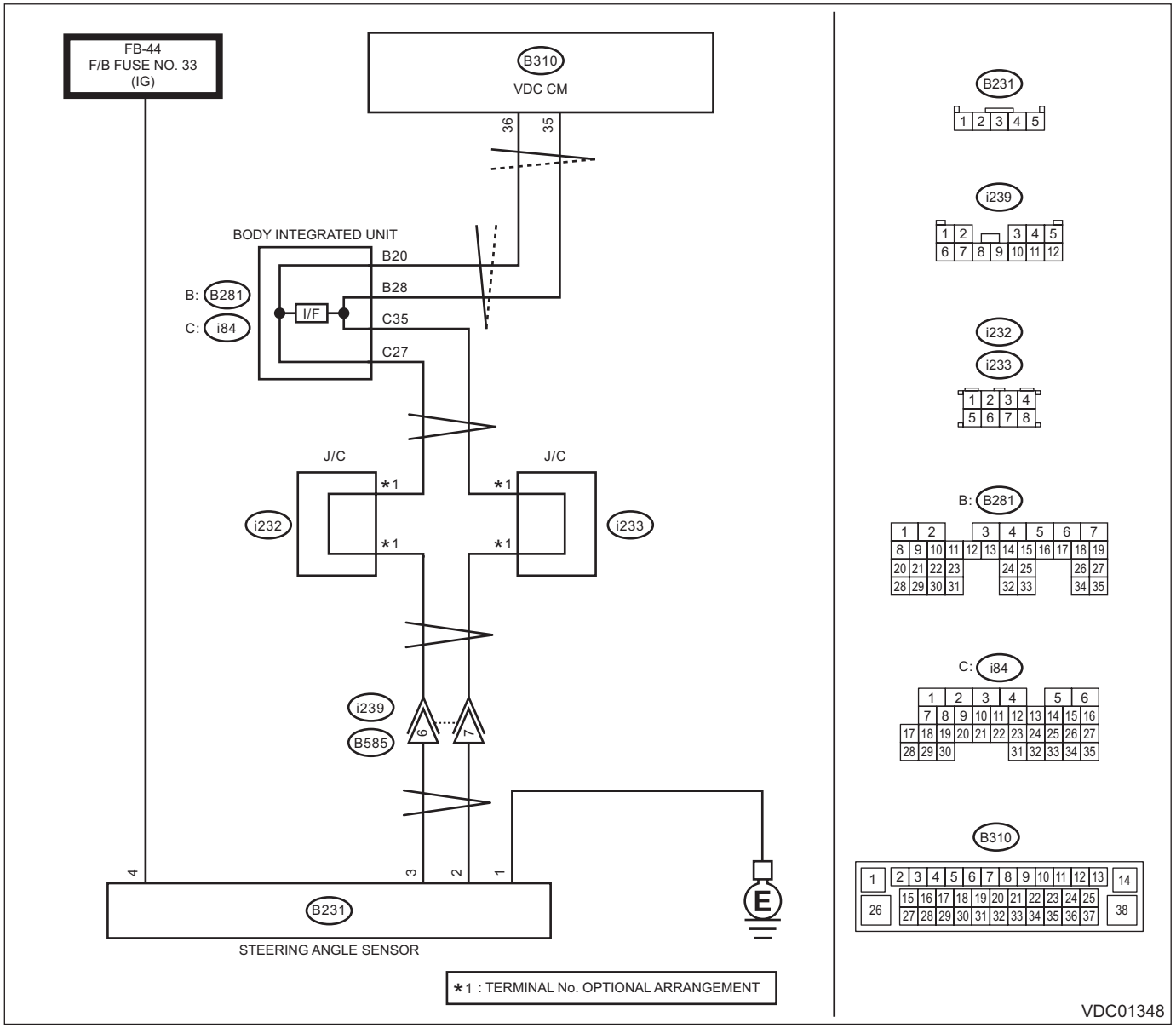

- Models with EyeSight

Vehicle dynamics control system <Ref. to WI-372, WITH EyeSight, WIRING DIAGRAM, Vehicle Dynamics Control System.>

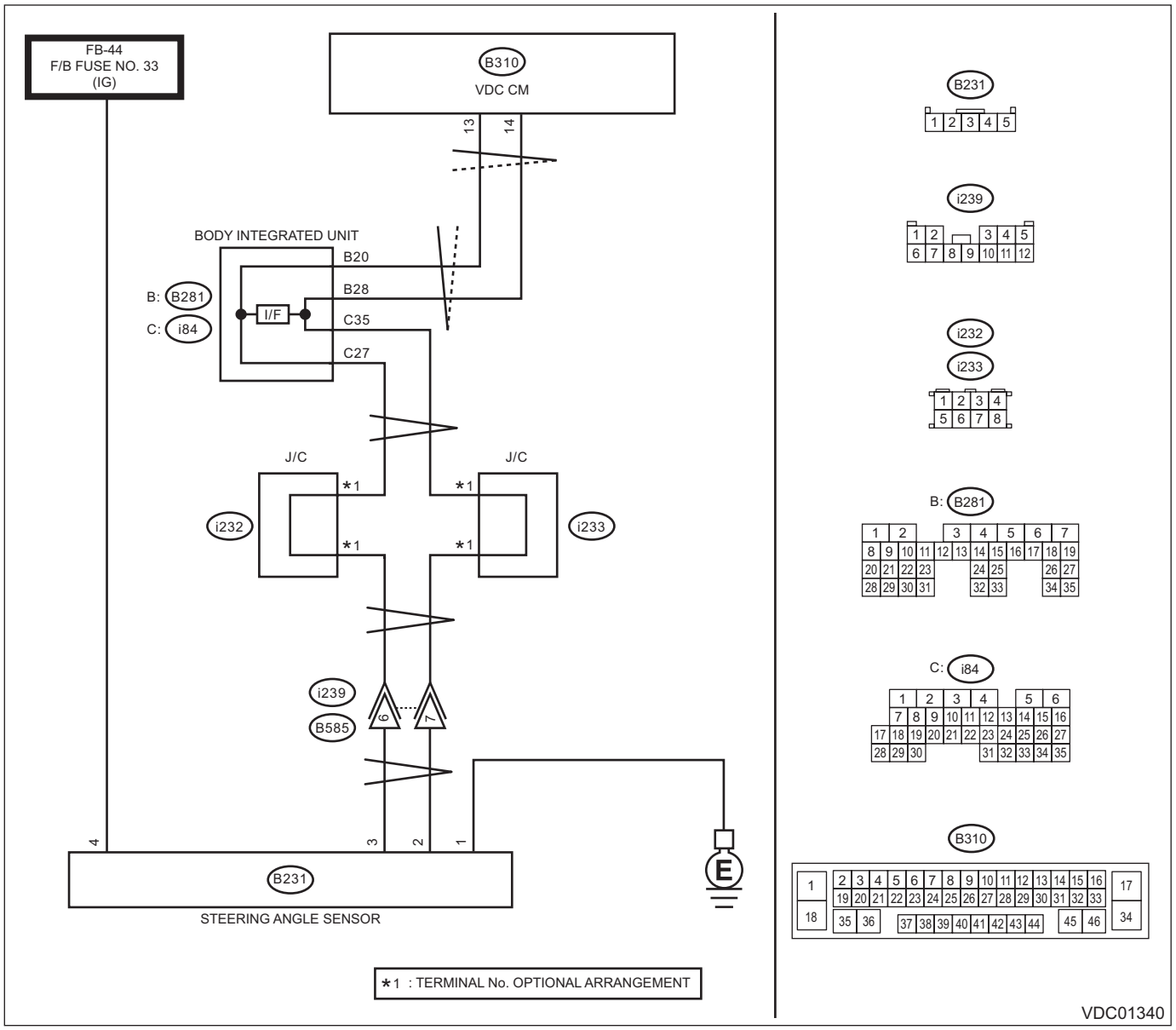

Step		Check	Yes	No
1	**CHECK POWER SUPPLY FOR STEERING ANGLE SENSOR.** 1) Turn the ignition switch to OFF. 2) Disconnect the connector from steering angle sensor. 3) Turn the ignition switch to ON. 4) Measure the voltage between steering angle sensor and chassis ground. ***Connector & terminal*** ***(B231) No. 4 (+) — Chassis ground (–):***	Is the voltage 10 — 15 V?	Go to step **2**.	Repair the steering angle sensor power supply circuit including the fuse.

	Step	Check	Yes	No
2	**CHECK GROUND CIRCUIT OF STEERING ANGLE SENSOR (CHECK FOR OPEN CIRCUIT).** Measure the resistance between steering angle sensor and chassis ground. ***Connector & terminal*** ***(B231) No. 1 — Chassis ground:***	Is the resistance less than 10 Ω?	Go to step **3**.	Repair ground circuit in the steering angle sensor.
3	**CHECK STEERING ANGLE SENSOR HARNESS (CHECK FOR OPEN CIRCUIT).** 1) Disconnect the connector from the VDCCM&H/U. 2) Measure the resistance between VDCCM&H/U and steering angel sensor. ***Connector & terminal*** ***Models without EyeSight*** ***(B231) No. 2 — (B310) No. 35:*** ***(B231) No. 3 — (B310) No. 36:*** ***Models with EyeSight*** ***(B231) No. 2 — (B310) No. 14:*** ***(B231) No. 3 — (B310) No. 13:***	Is the resistance less than 1 Ω?	Go to step **4**.	Repair the harness between the steering angle sensor and VDCCM&H/U.
4	**CHECK GROUND SHORT CIRCUIT OF STEERING ANGLE SENSOR HARNESS.** Measure the resistance between steering angle sensor and chassis ground. ***Connector & terminal*** ***(B231) No. 2 — Chassis ground:*** ***(B231) No. 3 — Chassis ground:***	Is the resistance 10 Ω or more?	Go to step **5**.	Repair the harness between the steering angle sensor and VDCCM&H/U.
5	**CHECK STEERING WHEEL.** 1) Drive the vehicle on a flat road. 2) Park the vehicle straight. 3) Check the steering wheel for deviation from center.	Is the deviation from the center of steering wheel less than 5°?	Go to step **6**.	Perform the centering adjustment of steering wheel, and perform the VDC sensor midpoint setting mode. <Ref. to VDC-17, VDC SENSOR MIDPOINT SETTING MODE, ADJUSTMENT, VDC Control Module and Hydraulic Control Unit (VDCCM&H/U).>
6	**CHECK OUTPUT OF STEERING ANGLE SENSOR USING SUBARU SELECT MONITOR.** 1) Adjust steering wheel to the center position. 2) Using the Subaru Select Monitor, select “Data monitor”. <Ref. to VDC(diag)-20, READ CURRENT DATA, OPERATION, Subaru Select Monitor.> 3) Read the «Steering Angle Sensor» displayed on display.	Is the reading of «Steering Angle Sensor» –10° — 10°?	Perform the VDC sensor midpoint setting mode. <Ref. to VDC-17, VDC SENSOR MIDPOINT SETTING MODE, ADJUSTMENT, VDC Control Module and Hydraulic Control Unit (VDCCM&H/U).> Go to step **7**.	Check the installation of the steering wheel and steering angle sensor.

	Step	Check	Yes	No
7	**CHECK STEERING ANGLE SENSOR USING SUBARU SELECT MONITOR.** 1) Turn the ignition switch to OFF. 2) Connect all connectors. 3) Perform the Clear Memory Mode. <Ref. to VDC(diag)-30, Clear Memory Mode.> 4) Perform the Inspection Mode. <Ref. to VDC(diag)-29, Inspection Mode.> 5) Read the DTC. <Ref. to VDC(diag)-28, Read Diagnostic Trouble Code (DTC).>	Is the same DTC displayed?	Replace the steering angle sensor. <Ref. to VDC-28, Steering Angle Sensor.>	Go to step **8**.
8	**CHECK DETECTION OF OTHER DTCS FOR VDC.** <Ref. to VDC(diag)-28, Read Diagnostic Trouble Code (DTC).>	Is any other DTC displayed?	Perform the diagnosis according to DTC. <Ref. to VDC(diag)-55, List of Diagnostic Trouble Code (DTC).>	Currently, it is normal. There may have been a temporary poor contact in the harness and connector or a temporary noise interference.

AH:DTC C1721 YAW RATE SENSOR

DTC DETECTING CONDITION:

- A fault is detected if the sensor signal value is not correct.
- A fault is detected if the steering angle sensor signal / lateral G sensor signal change while the yaw rate sensor signal indicates a constant value.
- A fault is detected if the communication status of yaw rate sensor is abnormal.

TROUBLE SYMPTOM:

- ABS does not operate.
- VDC does not operate.
- Hill start assist does not operate. (Models without EyeSight)
- Hill hold does not function. (Models with EyeSight)
- EyeSight does not operate. (Models with EyeSight)

	Step	Check	Yes	No
1	**INTERVIEW CUSTOMERS.** Check if the vehicle ran the road with banks or sandy surface (which does not mean a dirt road).	Did the vehicle run the road with banks or sandy surface (which does not mean a dirt road)?	VDCCM&H/U may record DTC when the vehicle ran the road with banks or sandy surface (which does not mean a dirt road).	Go to step **2**.
2	**CHECK INSTALLATION OF VDCCM&H/U.**	Is VDCCM&H/U installed properly without being tilted? Is the bracket deformation-free? Are the VDCCM&H/U installation bolts installed without missing or getting loose?	Go to step **3**.	Repair the defective part. • Install VDCCM&H/U properly. • Replace the bracket if faulty. • Tighten the VDCCM&H/U installation bolt. <Ref. to VDC-4, VDC CONTROL MODULE & HYDRAULIC CONTROL UNIT (VDCCM&H/U), COMPONENT, General Description.> Go to step **3**.
3	**CHECK OUTPUT OF YAW RATE & G SENSOR WITH SUBARU SELECT MONITOR.** 1) Drive the vehicle on a flat road. 2) Park the vehicle straight. 3) Using the Subaru Select Monitor, select “Data monitor”. <Ref. to VDC(diag)-20, READ CURRENT DATA, OPERATION, Subaru Select Monitor.> 4) Read the «Yaw Rate Sensor» displayed on display.	Is the reading of «Yaw Rate Sensor» –4 deg/s — 4 deg/s?	Go to step **4**.	Replace the VDCCM&H/U. <Ref. to VDC-9, VDC Control Module and Hydraulic Control Unit (VDCCM&H/U).>

Step		Check	Yes	No
4	**CHECK OUTPUT OF STEERING ANGLE SENSOR WITH SUBARU SELECT MONITOR.** 1) Drive the vehicle on a flat road. 2) Park the vehicle straight. 3) Using the Subaru Select Monitor, select “Data monitor”. <Ref. to VDC(diag)-20, READ CURRENT DATA, OPERATION, Subaru Select Monitor.> 4) Read the «Steering Angle Sensor» displayed on display.	Is the reading of «Steering Angle Sensor» –10° — 10°?	Go to step **5**.	Perform the centering adjustment of steering wheel.
5	**CHECK VDCCM&H/U.** 1) Turn the ignition switch to OFF. 2) Perform the Clear Memory Mode. <Ref. to VDC(diag)-30, Clear Memory Mode.> 3) Perform the Inspection Mode. <Ref. to VDC(diag)-29, Inspection Mode.> 4) Read the DTC. <Ref. to VDC(diag)-28, Read Diagnostic Trouble Code (DTC).>	Is the same DTC displayed?	Replace the VDCCM&H/U. <Ref. to VDC-9, VDC Control Module and Hydraulic Control Unit (VDCCM&H/U).>	Go to step **6**.
6	**CHECK DETECTION OF OTHER DTCS FOR VDC.** <Ref. to VDC(diag)-28, Read Diagnostic Trouble Code (DTC).>	Is any other DTC displayed?	Perform the diagnosis according to DTC. <Ref. to VDC(diag)-55, List of Diagnostic Trouble Code (DTC).>	Currently, it is normal. There may have been a temporary poor contact in the harness and connector or a temporary noise interference.

AI: DTC C1732 LATERAL G SENSOR

DTC DETECTING CONDITION:

- A fault is detected if the sensor signal value is not correct.
- A fault is detected if the steering angle sensor signal / yaw rate sensor signal change while the lateral G sensor signal indicates a constant value.
- A fault is detected if the communication status of lateral G sensor is abnormal.

TROUBLE SYMPTOM:

- ABS does not operate.
- VDC does not operate.
- Hill start assist does not operate. (Models without EyeSight)
- Hill hold does not function. (Models with EyeSight)
- EyeSight does not operate. (Models with EyeSight)

	Step	Check	Yes	No
1	**CHECK INSTALLATION OF VDCCM&H/U.**	Is VDCCM&H/U installed properly without being tilted? Is the bracket deformation-free? Are the VDCCM&H/U installation bolts installed without missing or getting loose?	Go to step **2**.	Repair the defective part. • Install VDCCM&H/U properly. • Replace the bracket if faulty. • Tighten the VDCCM&H/U installation bolt. <Ref. to VDC-4, VDC CONTROL MODULE & HYDRAULIC CONTROL UNIT (VDCCM&H/U), COMPONENT, General Description.> Go to step **2**.
2	**CHECK OUTPUT OF STEERING ANGLE SENSOR USING SUBARU SELECT MONITOR.** 1) Park the vehicle straight on a level surface. 2) Using the Subaru Select Monitor, select "Data monitor". <Ref. to VDC(diag)-20, READ CURRENT DATA, OPERATION, Subaru Select Monitor.> 3) Read the «Steering Angle Sensor» displayed on display.	Is the reading of «Steering Angle Sensor» –10° — 10°?	Go to step **3**.	Check the installation of steering angle sensor.
3	**CHECK OUTPUT OF LATERAL G SENSOR AND LONGITUDINAL G SENSOR WITH SUBARU SELECT MONITOR.** 1) Park the vehicle straight on a level surface. 2) Using the Subaru Select Monitor, select "Data monitor". <Ref. to VDC(diag)-20, READ CURRENT DATA, OPERATION, Subaru Select Monitor.> 3) Read the «Lateral G Sensor» «Longitudinal G Sensor» displayed on display.	Are the values of «Lateral G Sensor»«Longitudinal G Sensor» –2 — 2 m/s^2?	Go to step **4**.	Recheck from step 1, and if the problem is not solved, Go to step **7**.

	Step	Check	Yes	No
4	**SET 0 POINT OF LATERAL G SENSOR AND LONGITUDINAL G SENSOR WITH SUBARU SELECT MONITOR.** 1) Using the Subaru Select Monitor, select "Work Support". 2) Perform the VDC sensor midpoint setting mode. <Ref. to VDC-17, VDC SENSOR MID-POINT SETTING MODE, ADJUSTMENT, VDC Control Module and Hydraulic Control Unit (VDCCM&H/U).>	Is 0 point setting successful?	Go to step **5**.	Recheck from step 1, and when the 0 point setting is not possible, replace the VDCCM&H/U. <Ref. to VDC-9, VDC Control Module and Hydraulic Control Unit (VDCCM&H/U).>
5	**PERFORM DRIVING TEST.** <Ref. to VDC(diag)-29, Inspection Mode.>	Does the ABS warning light or VDC warning light illuminate during driving? Does ABS or VDC operate abnormally?	Recheck from step 1, and when the warning lights illuminate or improperly operate, replace the VDCCM&H/U. <Ref. to VDC-9, VDC Control Module and Hydraulic Control Unit (VDCCM&H/U).>	Go to step **6**.
6	**CHECK OUTPUT OF LATERAL G SENSOR AND LONGITUDINAL G SENSOR WITH SUBARU SELECT MONITOR.** 1) Park the vehicle on a level surface. 2) Using the Subaru Select Monitor, select "Data monitor". <Ref. to VDC(diag)-20, READ CURRENT DATA, OPERATION, Subaru Select Monitor.> 3) Read the «Lateral G Sensor» «Longitudinal G Sensor» displayed on display.	Are the values of «Lateral G Sensor»«Longitudinal G Sensor» –1.5 — 1.5 m/s^2?	Currently, it is normal. There may have been a temporary poor contact in the harness and connector or a temporary noise interference.	Recheck from step 1, and if the problem is not solved, replace the VDCCM&H/U. <Ref. to VDC-9, VDC Control Module and Hydraulic Control Unit (VDCCM&H/U).>
7	**CHECK OUTPUT OF LATERAL G SENSOR AND LONGITUDINAL G SENSOR WITH SUBARU SELECT MONITOR.** 1) Remove the VDCCM&H/U installation bolt and bracket. 2) Keep VDCCM&H/U in a horizontal position. 3) Using the Subaru Select Monitor, select "Data monitor". <Ref. to VDC(diag)-20, READ CURRENT DATA, OPERATION, Subaru Select Monitor.> 4) Read the «Lateral G Sensor» «Longitudinal G Sensor» displayed on display.	When the VDCCM&H/U is in a horizontal position, are the values of «Lateral G Sensor»«Longitudinal G Sensor» –1.5 m/s^2 — 1.5 m/s^2?	Check the bracket and brake pipe, and install VDCCM&H/U in a horizontal position to the vehicle.	Replace the VDCCM&H/U. <Ref. to VDC-9, VDC Control Module and Hydraulic Control Unit (VDCCM&H/U).>

AJ:DTC C1733 LONGITUDINAL G SENSOR

DTC DETECTING CONDITION:

- A fault is detected if the communication status of longitudinal G sensor is abnormal.
- A fault is detected if malfunction judgment is generated by self-diagnosis test of the longitudinal G sensor.
- A fault is detected if the longitudinal G sensor signal is out of normal range.
- A fault is detected if the longitudinal G sensor compensation value is out of normal range.

TROUBLE SYMPTOM:

- ABS does not operate.
- VDC does not operate.
- Hill start assist does not operate. (Models without EyeSight)
- Hill hold does not function. (Models with EyeSight)
- EyeSight does not operate. (Models with EyeSight)

NOTE:
For the diagnostic procedure, refer to “DTC C1732 LATERAL G SENSOR”. <Ref. to VDC(diag)-105, DTC C1732 LATERAL G SENSOR, Diagnostic Procedure with Diagnostic Trouble Code (DTC).>

AK:DTC C1741 PRESSURE SENSOR

DTC DETECTING CONDITION:

- A fault is detected if two fluid pressure signals in master cylinder are out of normal range.
- A fault is detected if the condition that supply voltage for the fluid pressure sensor is out of normal judgment range continues for predetermined time.
- A fault is detected if the communication status of fluid pressure sensor is abnormal.
- A fault is detected if the data of fluid pressure sensor is abnormal.
- A fault is detected if the offset value of fluid pressure sensor signal exceeds a predetermined judgment value.

TROUBLE SYMPTOM:

- VDC does not operate sometimes.
- Hill start assist does not operate sometimes. (Models without EyeSight)
- The hill hold function may not be operable. (Models with EyeSight)

	Step	Check	Yes	No
1	**CHECK STOP LIGHT SWITCH CIRCUIT AND INSTALLATION CONDITION.** Check the stop light switch circuit and the installation condition.	Is the check result OK?	Go to step **2**.	Repair the stop light switch circuit or correct the installation condition. NOTE: If there is malfunction in the stop light circuit, DTC may be recorded in the memory.
2	**CHECK OUTPUT OF PRESSURE SENSOR USING SUBARU SELECT MONITOR.** 1) Using the Subaru Select Monitor, select “Data monitor”. <Ref. to VDC(diag)-20, READ CURRENT DATA, OPERATION, Subaru Select Monitor.> 2) Read the «Master Cylinder Pressure Sensor» displayed on display.	With the brake pedal released, does the value for «Master Cylinder Pressure Sensor» fall within 0 — 11 bar?	Go to step **3**.	Replace the VDCCM&H/U. <Ref. to VDC-9, VDC Control Module and Hydraulic Control Unit (VDCCM&H/U).>
3	**CHECK OUTPUT OF PRESSURE SENSOR USING SUBARU SELECT MONITOR.** 1) Using the Subaru Select Monitor, select “Data monitor”. <Ref. to VDC(diag)-20, READ CURRENT DATA, OPERATION, Subaru Select Monitor.> 2) Read the «Master Cylinder Pressure Sensor» displayed on display.	When the brake pedal is operated, does the value of «Master Cylinder Pressure Sensor» change in accordance with the brake pedal?	Go to step **4**.	Replace the VDCCM&H/U. <Ref. to VDC-9, VDC Control Module and Hydraulic Control Unit (VDCCM&H/U).>
4	**CHECK VDCCM&H/U.** 1) Perform the Clear Memory Mode. <Ref. to VDC(diag)-30, Clear Memory Mode.> 2) Perform the Inspection Mode. <Ref. to VDC(diag)-29, Inspection Mode.> 3) Read the DTC. <Ref. to VDC(diag)-28, Read Diagnostic Trouble Code (DTC).>	Is the same DTC displayed?	Replace the VDCCM&H/U. <Ref. to VDC-9, VDC Control Module and Hydraulic Control Unit (VDCCM&H/U).>	Go to step **5**.
5	**CHECK DETECTION OF OTHER DTCS FOR VDC.** <Ref. to VDC(diag)-28, Read Diagnostic Trouble Code (DTC).>	Is any other DTC displayed?	Perform the diagnosis according to DTC. <Ref. to VDC(diag)-55, List of Diagnostic Trouble Code (DTC).>	Currently, it is normal. There may have been a temporary poor contact in the harness and connector or a temporary noise interference.

AL:DTC C1742 WHEEL CYLINDER PRESSURE SENSOR

DTC DETECTING CONDITION:

- A fault is detected if the condition that supply voltage for the fluid pressure sensor is out of normal judgment range continues for predetermined time.
- A fault is detected if the communication status of fluid pressure sensor is abnormal.
- A fault is detected if the data of fluid pressure sensor is abnormal.
- A fault is detected if the offset value of fluid pressure sensor signal exceeds a predetermined judgment value.
- A fault is detected if a difference between fluid pressures for the wheels exceeds a predetermined judgment value.
- A fault is detected if master cylinder pressure and fluid pressures for the wheels exceed predetermined judgment values.

TROUBLE SYMPTOM:

EyeSight does not operate. (Models with EyeSight)

	Step	Check	Yes	No
1	**CHECK STOP LIGHT SWITCH CIRCUIT AND INSTALLATION CONDITION.** Check the stop light switch circuit and the installation condition.	Is the check result OK?	Go to step **2**.	Repair the stop light switch circuit or correct the installation condition.
2	**CHECK OUTPUT OF PRESSURE SENSOR USING SUBARU SELECT MONITOR.** 1) Using the Subaru Select Monitor, select “Data monitor”. <Ref. to VDC(diag)-20, READ CURRENT DATA, OPERATION, Subaru Select Monitor.> 2) Read «FL wheel cylinder pressure sensor output» and «FR wheel cylinder pressure sensor output» displayed on the screen.	With the brake pedal released, do the values for «FL wheel cylinder pressure sensor output» and «FR wheel cylinder pressure sensor output» fall within 0 — 11 bar?	Go to step **3**.	Replace the VDCCM&H/U. <Ref. to VDC-9, VDC Control Module and Hydraulic Control Unit (VDCCM&H/U).>
3	**CHECK OUTPUT OF PRESSURE SENSOR USING SUBARU SELECT MONITOR.** 1) Using the Subaru Select Monitor, select “Data monitor”. <Ref. to VDC(diag)-20, READ CURRENT DATA, OPERATION, Subaru Select Monitor.> 2) Read «FL wheel cylinder pressure sensor output» and «FR wheel cylinder pressure sensor output» displayed on the screen.	When the brake pedal is operated, do the values of «FL wheel cylinder pressure sensor output» and «FR wheel cylinder pressure sensor output» change in accordance with the brake pedal operation? At this time, is the difference between «FL wheel cylinder pressure sensor output» and «FR wheel cylinder pressure sensor output» less than 10 bar?	Go to step **4**.	Replace the VDCCM&H/U. <Ref. to VDC-9, VDC Control Module and Hydraulic Control Unit (VDCCM&H/U).>
4	**CHECK VDCCM&H/U.** 1) Perform the Clear Memory Mode. <Ref. to VDC(diag)-30, Clear Memory Mode.> 2) Perform the Inspection Mode. <Ref. to VDC(diag)-29, Inspection Mode.> 3) Read the DTC. <Ref. to VDC(diag)-28, Read Diagnostic Trouble Code (DTC).>	Is the same DTC displayed?	Replace the VDCCM&H/U. <Ref. to VDC-9, VDC Control Module and Hydraulic Control Unit (VDCCM&H/U).>	Go to step **5**.
5	**CHECK DETECTION OF OTHER DTCS FOR VDC.** <Ref. to VDC(diag)-28, Read Diagnostic Trouble Code (DTC).>	Is any other DTC displayed?	Perform the diagnosis according to DTC. <Ref. to VDC(diag)-55, List of Diagnostic Trouble Code (DTC).>	Currently, it is normal. There may have been a temporary poor contact in the harness and connector or a temporary noise interference.

AM:DTC C1811 SYSTEM

DTC DETECTING CONDITION:
A fault is detected if VDC control status continues for 15 seconds or more.
TROUBLE SYMPTOM:
- ABS does not operate.
- VDC does not operate.
- Hill start assist does not operate. (Models without EyeSight)
- Hill hold does not function. (Models with EyeSight)
- EyeSight does not operate. (Models with EyeSight)

	Step	Check	Yes	No
1	**CHECK INSTALLATION OF VDCCM&H/U.**	Is VDCCM&H/U installed properly without being tilted? Is the bracket deformation-free? Are the VDCCM&H/U installation bolts installed without missing or getting loose?	Go to step **2**.	Repair the defective part. • Install VDCCM&H/U properly. • Replace the bracket if faulty. • Tighten the VDCCM&H/U installation bolt. <Ref. to VDC-4, VDC CONTROL MODULE & HYDRAULIC CONTROL UNIT (VDCCM&H/U), COMPONENT, General Description.> Go to step **2**.
2	**CHECK STEERING WHEEL.** 1) Drive the vehicle on a flat road. 2) Park the vehicle straight. 3) Check the steering wheel for deviation from center.	Is the deviation from the center of steering wheel less than 5°?	Go to step **3**.	Perform the centering adjustment of steering wheel, and perform the VDC sensor midpoint setting mode. <Ref. to VDC-17, VDC SENSOR MIDPOINT SETTING MODE, ADJUSTMENT, VDC Control Module and Hydraulic Control Unit (VDCCM&H/U).> Go to step **3**.
3	**CHECK OUTPUT OF STEERING ANGLE SENSOR USING SUBARU SELECT MONITOR.** 1) Adjust steering wheel to the center position. 2) Using the Subaru Select Monitor, select “Data monitor”. <Ref. to VDC(diag)-20, READ CURRENT DATA, OPERATION, Subaru Select Monitor.> 3) Read the «Steering Angle Sensor» displayed on display.	Is the reading of «Steering Angle Sensor» –10° — 10°?	Go to step **4**.	Check the installation of the steering wheel and steering angle sensor, and correct the installation if it is improper. If the installation condition is correct, replace the sensor.

	Step	Check	Yes	No
4	**CHECK OUTPUT OF SENSORS USING SUBARU SELECT MONITOR.** 1) Drive the vehicle on a flat road. 2) Park the vehicle straight. 3) Using the Subaru Select Monitor, select "Data monitor". <Ref. to VDC(diag)-20, READ CURRENT DATA, OPERATION, Subaru Select Monitor.> 4) Read «Lateral G Sensor», «Longitudinal G Sensor», and «Yaw Rate Sensor» displayed on display.	Is the reading of each sensor following value? «Lateral G Sensor»: –2 — 2 m/s^2 «Longitudinal G Sensor»: –2 — 2 m/s^2 «Yaw Rate Sensor»: –4 deg/s — 4 deg/s	Go to step **5**.	Recheck from step 1, and if the problem is not solved, Go to step **8**.
5	**SET 0 POINT SETTING OF LONGITUDINAL G SENSOR USING SUBARU SELECT MONITOR.** 1) Using the Subaru Select Monitor, select "Work Support". 2) Perform the VDC sensor midpoint setting mode. <Ref. to VDC-17, VDC SENSOR MIDPOINT SETTING MODE, ADJUSTMENT, VDC Control Module and Hydraulic Control Unit (VDCCM&H/U).>	Is 0 point setting successful?	Go to step **6**.	Recheck from step 1, and when the 0 point setting is not possible, replace the VDCCM&H/U and steering angle sensor. <Ref. to VDC-9, VDC Control Module and Hydraulic Control Unit (VDCCM&H/U).> <Ref. to VDC-28, Steering Angle Sensor.>
6	**PERFORM DRIVING TEST.** <Ref. to VDC(diag)-29, Inspection Mode.>	Does the ABS warning light or VDC warning light illuminate during driving? Does ABS or VDC operate abnormally?	Recheck from step 1, and when the warning lights illuminate or improperly operate, replace the VDCCM&H/U. <Ref. to VDC-9, VDC Control Module and Hydraulic Control Unit (VDCCM&H/U).>	Go to step **7**.
7	**CHECK OUTPUT OF SENSORS USING SUBARU SELECT MONITOR.** 1) Park the vehicle on a level surface. 2) Using the Subaru Select Monitor, select "Data monitor". <Ref. to VDC(diag)-20, READ CURRENT DATA, OPERATION, Subaru Select Monitor.> 3) Read «Lateral G Sensor», «Longitudinal G Sensor», and «Yaw Rate Sensor» displayed on display.	Is the reading of each sensor following value? «Lateral G Sensor»: –2 — 2 m/s^2 «Longitudinal G Sensor»: –2 — 2 m/s^2 «Yaw Rate Sensor»: –4 deg/s — 4 deg/s	Currently, it is normal. There may have been a temporary poor contact in the harness and connector or a temporary noise interference.	Replace the VDCCM&H/U. <Ref. to VDC-9, VDC Control Module and Hydraulic Control Unit (VDCCM&H/U).>
8	**CHECK OUTPUT OF SENSORS USING SUBARU SELECT MONITOR.** 1) Remove the VDCCM&H/U installation bolt and bracket. 2) Keep VDCCM&H/U in a horizontal position. 3) Using the Subaru Select Monitor, select "Data monitor". <Ref. to VDC(diag)-20, READ CURRENT DATA, OPERATION, Subaru Select Monitor.> 4) Read «Lateral G Sensor», «Longitudinal G Sensor», and «Yaw Rate Sensor» displayed on display.	When VDCCM&H/U is in a horizontal position, is the reading of each sensor following value? «Lateral G Sensor»: –1.5 — 1.5 m/s^2 «Longitudinal G Sensor»: –1.5 — 1.5 m/s^2 «Yaw Rate Sensor»: –4 deg/s — 4 deg/s	Check the bracket and brake pipe, and install VDCCM&H/U in a horizontal position to the vehicle.	Replace the VDCCM&H/U. <Ref. to VDC-9, VDC Control Module and Hydraulic Control Unit (VDCCM&H/U).>

AN:DTC C1921 PARKING POSITION SWITCH CIRCUIT

DTC DETECTING CONDITION:

- A fault is detected if the switch was positioned at lock or release continuously for 90 seconds while the vehicle is stopped.
- A fault is detected if an irregular switch condition continues for a predetermined period of time immediately after the switch position is changed. A fault is also detected if the switch condition is not confirmed afterwards.
- A fault is detected if the switch harness is open or shorted.

TROUBLE SYMPTOM:

Parking brake system does not operate.

WIRING DIAGRAM:

Parking brake / brake fluid level warning light system <Ref. to WI-296, WITH EyeSight, WIRING DIAGRAM, Parking Brake / Brake Fluid Level Warning Light System.>

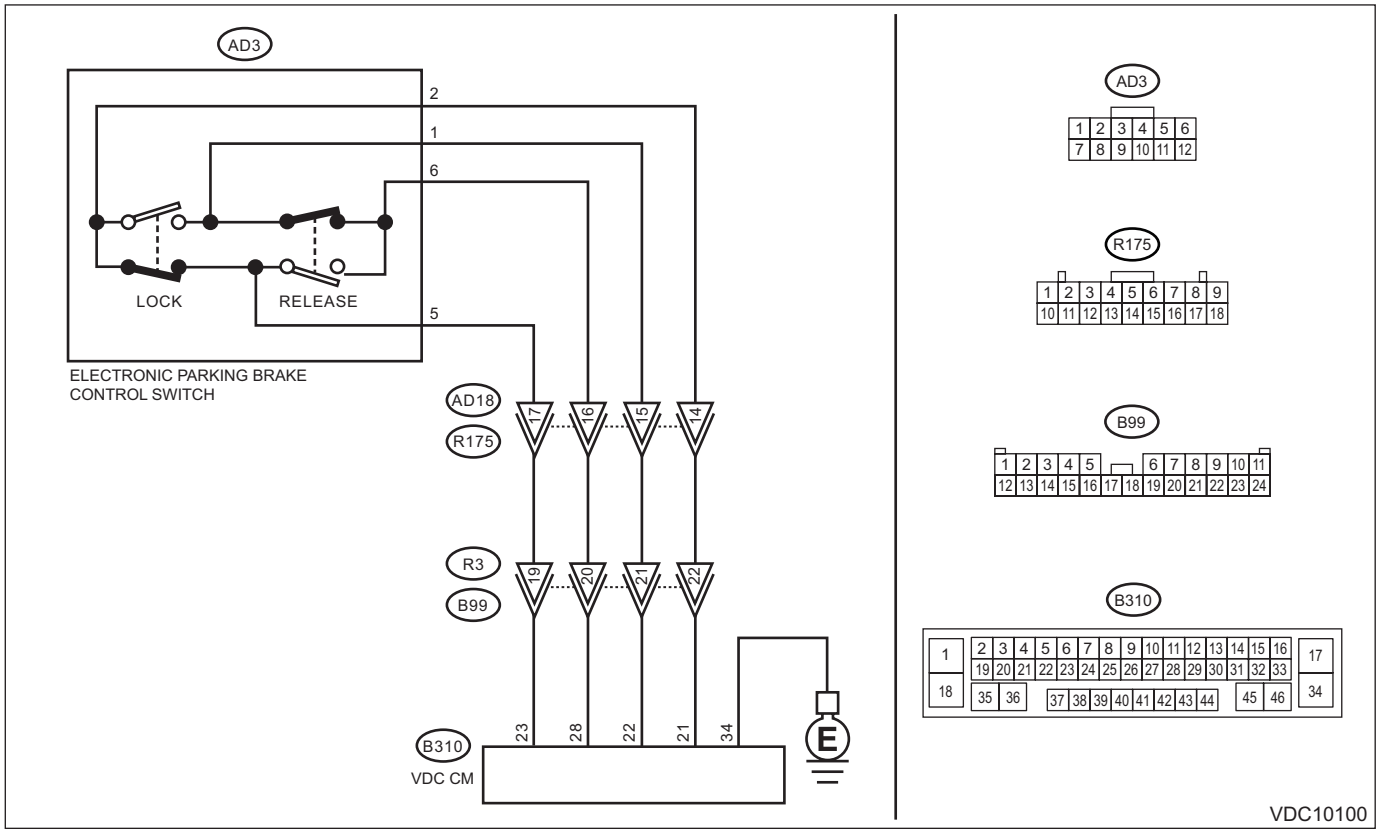

	Step	Check	Yes	No
1	**CHECK OPERATION OF ELECTRONIC PARKING BRAKE.** Operate the parking brake switch.	Does the electronic parking brake operate properly?	Ask the customer whether the following switch operation was performed. • Operated slowly over one second or more. • Repeated ON/OFF operation several times within one second. When the case above is true, the system is normal. When it is normal, a temporary poor contact or noise interference is a possible cause.	Go to step **2**.
2	**CHECK HARNESS (CHECK FOR OPEN CIRCUIT).** 1) Turn the ignition switch to OFF. 2) Disconnect the connectors from the VDCCM&H/U and parking brake switch. 3) Measure the resistance between VDCCM&H/U and parking brake switch connector. ***Connector & terminal*** ***(B310) No. 21 — (AD3) No. 2:*** ***(B310) No. 22 — (AD3) No. 1:*** ***(B310) No. 23 — (AD3) No. 5:*** ***(B310) No. 28 — (AD3) No. 6:***	Is the resistance less than 1 Ω?	Go to step **3**.	Repair harness and connector between VDCCM&H/U and parking brake switch connector.
3	**CHECK HARNESS (CHECK FOR GROUND SHORT CIRCUIT).** Measure the resistance between the parking brake switch connector and chassis ground. ***Connector & terminal*** ***(AD3) No. 2 — Chassis ground:*** ***(AD3) No. 1 — Chassis ground:*** ***(AD3) No. 5 — Chassis ground:*** ***(AD3) No. 6 — Chassis ground:***	Is the resistance 1 MΩ or more?	Go to step **4**.	Repair ground short of harness between VDCCM&H/U and parking brake switch connector.
4	**CHECK HARNESS (CHECK FOR SHORT CIRCUIT TO POWER SUPPLY).** 1) Turn the ignition switch to ON. 2) Measure the voltage between parking brake switch connector and chassis ground. ***Connector & terminal*** ***(AD3) No. 2 (+) — Chassis ground (–):*** ***(AD3) No. 1 (+) — Chassis ground (–):*** ***(AD3) No. 5 (+) — Chassis ground (–):*** ***(AD3) No. 6 (+) — Chassis ground (–):***	Is the voltage less than 1 V?	Go to step **5**.	Repair short to power supply of harness between VDCCM&H/U and parking brake switch connector.
5	**CHECK PARKING BRAKE SWITCH.** Check the parking brake switch. <Ref. to PB-29, INSPECTION, Parking Brake Switch.>	Is the check result OK?	Go to step **6**.	Replace the parking brake switch. <Ref. to PB-28, Parking Brake Switch.>

	Step	Check	Yes	No
6	**CHECK VDCCM&H/U.** 1) Connect all connectors. 2) Perform the Clear Memory Mode. <Ref. to VDC(diag)-30, Clear Memory Mode.> 3) Perform the Inspection Mode. <Ref. to VDC(diag)-29, Inspection Mode.> 4) Read the DTC. <Ref. to VDC(diag)-28, Read Diagnostic Trouble Code (DTC).>	Is the same DTC displayed?	Replace the VDCCM&H/U. <Ref. to VDC-9, VDC Control Module and Hydraulic Control Unit (VDCCM&H/U).>	Go to step **7**.
7	**CHECK DETECTION OF OTHER DTCS FOR VDC.** <Ref. to VDC(diag)-28, Read Diagnostic Trouble Code (DTC).>	Is any other DTC displayed?	Perform the diagnosis according to DTC. <Ref. to VDC(diag)-55, List of Diagnostic Trouble Code (DTC).>	Currently, it is normal. There may have been a temporary poor contact in the harness and connector or a temporary noise interference.

AO:DTC C1922 HILL HOLD SWITCH CIRCUIT

DTC DETECTING CONDITION:
A fault is detected if the hill hold switch is pressed and held for a long period of time.
TROUBLE SYMPTOM:
Hill hold function cannot be set.
WIRING DIAGRAM:
Parking brake / brake fluid level warning light system <Ref. to WI-296, WITH EyeSight, WIRING DIAGRAM, Parking Brake / Brake Fluid Level Warning Light System.>

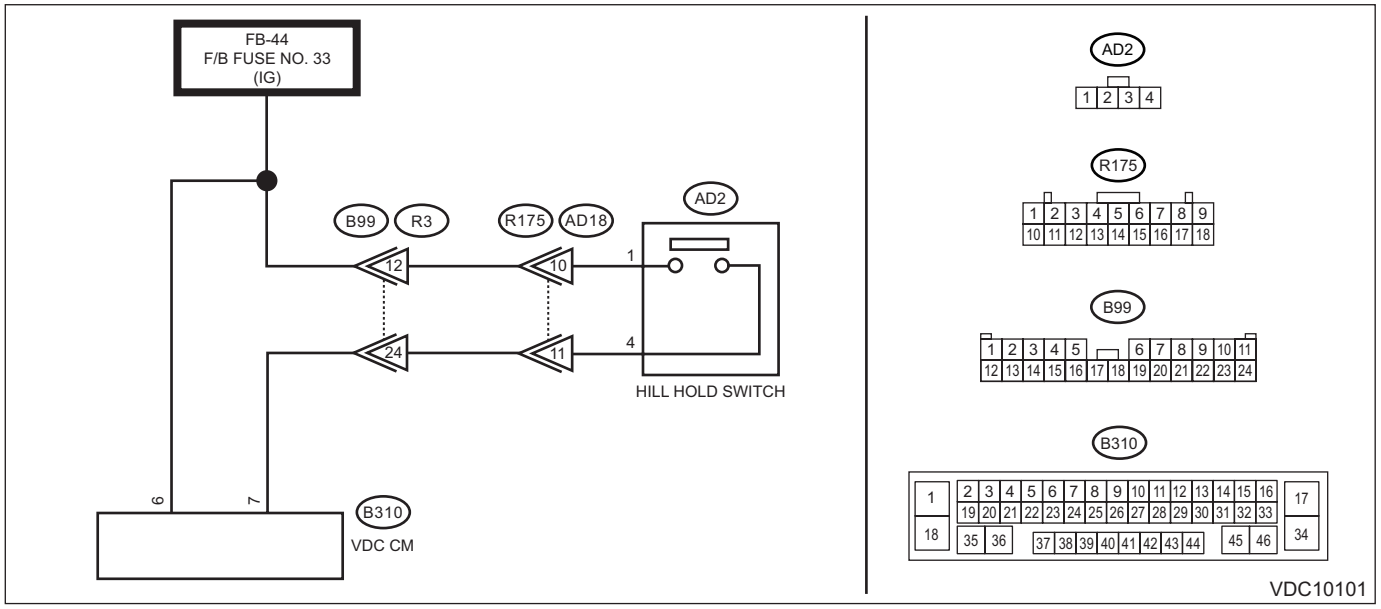

Step		Check	Yes	No
1	**CHECK HILL HOLD SWITCH POWER SUPPLY.** 1) Turn the ignition switch to OFF. 2) Disconnect the connector from hill hold switch. 3) Turn the ignition switch to ON. 4) Measure the voltage between hill hold switch connector and chassis ground. ***Connector & terminal*** ***(AD2) No. 1 (+) — Chassis ground (–):***	Is the voltage 10 — 15 V?	Go to step **2**.	Repair the power supply circuit of hill hold switch.
2	**CHECK HARNESS (CHECK FOR OPEN CIRCUIT).** 1) Turn the ignition switch to OFF. 2) Disconnect the connector from the VDCCM&H/U. 3) Measure the resistance between VDCCM&H/U and hill hold switch connector. ***Connector & terminal*** ***(AD2) No. 4 — (B310) No. 7:***	Is the resistance less than 1 Ω?	Go to step **3**.	Repair harness and connector between VDCCM&H/U and hill hold switch connector.
3	**CHECK HARNESS (CHECK FOR GROUND SHORT CIRCUIT).** Measure the resistance between hill hold switch connector and chassis ground. ***Connector & terminal*** ***(AD2) No. 4 — Chassis ground:***	Is the resistance 1 MΩ or more?	Go to step **4**.	Repair ground short of harness between VDCCM&H/U and hill hold switch connector.

	Step	Check	Yes	No
4	**CHECK HARNESS (CHECK FOR SHORT CIRCUIT TO POWER SUPPLY).** 1) Turn the ignition switch to ON. 2) Measure the voltage between hill hold switch connector and chassis ground. ***Connector & terminal*** ***(AD2) No. 4 (+) — Chassis ground (–):***	Is the voltage less than 1 V?	Go to step **5**.	Repair short to power supply of harness between VDCCM&H/U and hill hold switch connector.
5	**CHECK HILL HOLD SWITCH.** Check the hill hold switch. <Ref. to VDC-43, INSPECTION, Hill Hold Switch.>	Is the check result OK?	Go to step **6**.	Replace the hill hold switch. <Ref. to VDC-42, Hill Hold Switch.>
6	**CHECK VDCCM&H/U.** 1) Connect all connectors. 2) Perform the Clear Memory Mode. <Ref. to VDC(diag)-30, Clear Memory Mode.> 3) Perform the Inspection Mode. <Ref. to VDC(diag)-29, Inspection Mode.> 4) Read the DTC. <Ref. to VDC(diag)-28, Read Diagnostic Trouble Code (DTC).>	Is the same DTC displayed?	Replace the VDCCM&H/U. <Ref. to VDC-9, VDC Control Module and Hydraulic Control Unit (VDCCM&H/U).>	Go to step **7**.
7	**CHECK DETECTION OF OTHER DTCS FOR VDC.** <Ref. to VDC(diag)-28, Read Diagnostic Trouble Code (DTC).>	Is any other DTC displayed?	Perform the diagnosis according to DTC. <Ref. to VDC(diag)-55, List of Diagnostic Trouble Code (DTC).>	Currently, it is normal. There may have been a temporary poor contact in the harness and connector or a temporary noise interference.

AP:DTC C1935 IGNITION SWITCH CIRCUIT

DTC DETECTING CONDITION:

A fault is detected after a predetermined period of time, if the hardware IGN signal and CAN IGN signal were compared and did not match.

TROUBLE SYMPTOM:

Electronic parking brake warning light illuminates.

WIRING DIAGRAM:

Vehicle dynamics control system <Ref. to WI-372, WITH EyeSight, WIRING DIAGRAM, Vehicle Dynamics Control System.>

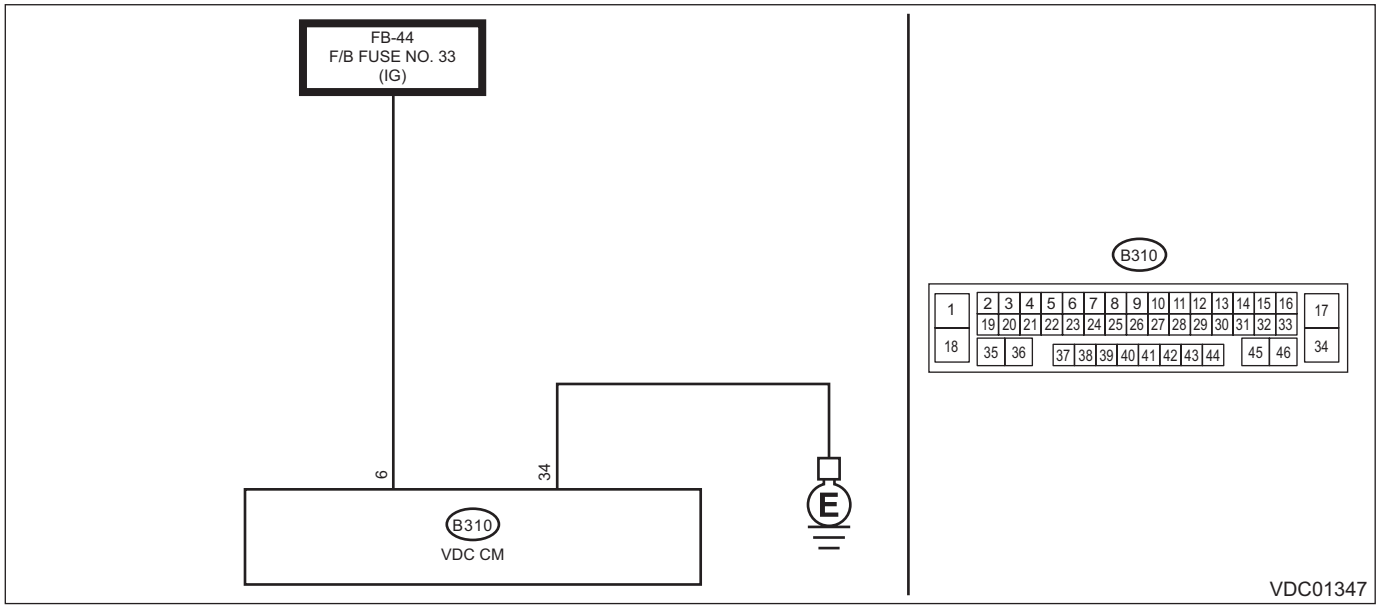

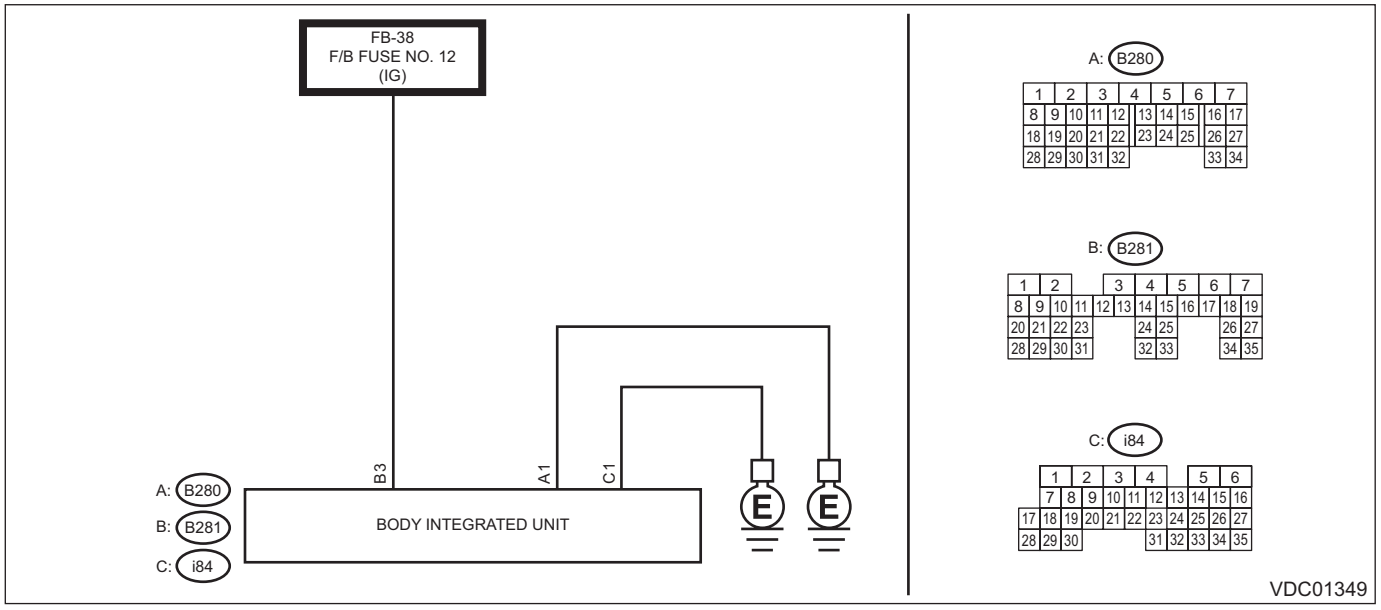

	Step	Check	Yes	No
1	**CHECK VDCCM&H/U INPUT VOLTAGE.** 1) Turn the ignition switch to OFF. 2) Disconnect the connector from the VDCCM&H/U. 3) Turn the ignition switch to ON. 4) Measure the voltage between VDCCM&H/U connector and chassis ground. ***Connector & terminal*** ***(B310) No. 6 (+) — Chassis ground (–):***	Is the voltage 10 — 15 V?	Go to step **2**.	Repair or replace the open circuit in the power supply circuit including the fuse.
2	**CHECK VDCCM&H/U GROUND CIRCUIT (CHECK FOR OPEN CIRCUIT).** 1) Turn the ignition switch to OFF. 2) Measure the resistance between VDCCM&H/U connector and chassis ground. ***Connector & terminal*** ***(B310) No. 34 — Chassis ground:***	Is the resistance less than 10 Ω?	Go to step **3**.	Repair the VDCCM&H/U ground circuit.
3	**CHECK INPUT VOLTAGE OF BODY INTEGRATED UNIT.** 1) Turn the ignition switch to OFF. 2) Disconnect the connector from body integrated unit. 3) Turn the ignition switch to ON. 4) Measure the voltage between body integrated unit connector and chassis ground. ***Connector & terminal*** ***(B281) No. 3 (+) — Chassis ground (–):***	Is the voltage 10 — 15 V?	Go to step **4**.	Repair the power supply circuit of the body integrated unit.
4	**CHECK LAN SYSTEM.** Check the DTC in LAN system. <Ref. to LAN(diag)-36, OPERATION, Read Diagnostic Trouble Code (DTC).>	Is DTC for LAN system displayed?	Perform the diagnosis according to DTC. <Ref. to LAN(diag)-109, List of Diagnostic Trouble Code (DTC).>	Go to step **5**.
5	**CHECK POOR CONTACT OF CONNECTORS.**	Is there poor contact of power supply circuit, ground circuit and VDCCM&H/U connector?	Repair the connector.	Go to step **6**.
6	**CHECK VDCCM&H/U.** 1) Connect all connectors. 2) Perform the Clear Memory Mode. <Ref. to VDC(diag)-30, Clear Memory Mode.> 3) Perform the Inspection Mode. <Ref. to VDC(diag)-29, Inspection Mode.> 4) Read the DTC. <Ref. to VDC(diag)-28, Read Diagnostic Trouble Code (DTC).>	Is the same DTC displayed?	Replace the VDCCM&H/U. <Ref. to VDC-9, VDC Control Module and Hydraulic Control Unit (VDCCM&H/U).>	Go to step **7**.
7	**CHECK DETECTION OF OTHER DTCS FOR VDC.** <Ref. to VDC(diag)-28, Read Diagnostic Trouble Code (DTC).>	Is any other DTC displayed?	Perform the diagnosis according to DTC. <Ref. to VDC(diag)-55, List of Diagnostic Trouble Code (DTC).>	Currently, it is normal. There may have been a temporary poor contact in the harness and connector or a temporary noise interference.

AQ:DTC C1942 POWER SUPPLY VOLTAGE

DTC DETECTING CONDITION:
A fault is detected if low voltage is detected during the electronic parking brake operation.
TROUBLE SYMPTOM:
Parking brake system does not operate sometimes.
WIRING DIAGRAM:
Vehicle dynamics control system <Ref. to WI-372, WITH EyeSight, WIRING DIAGRAM, Vehicle Dynamics Control System.>

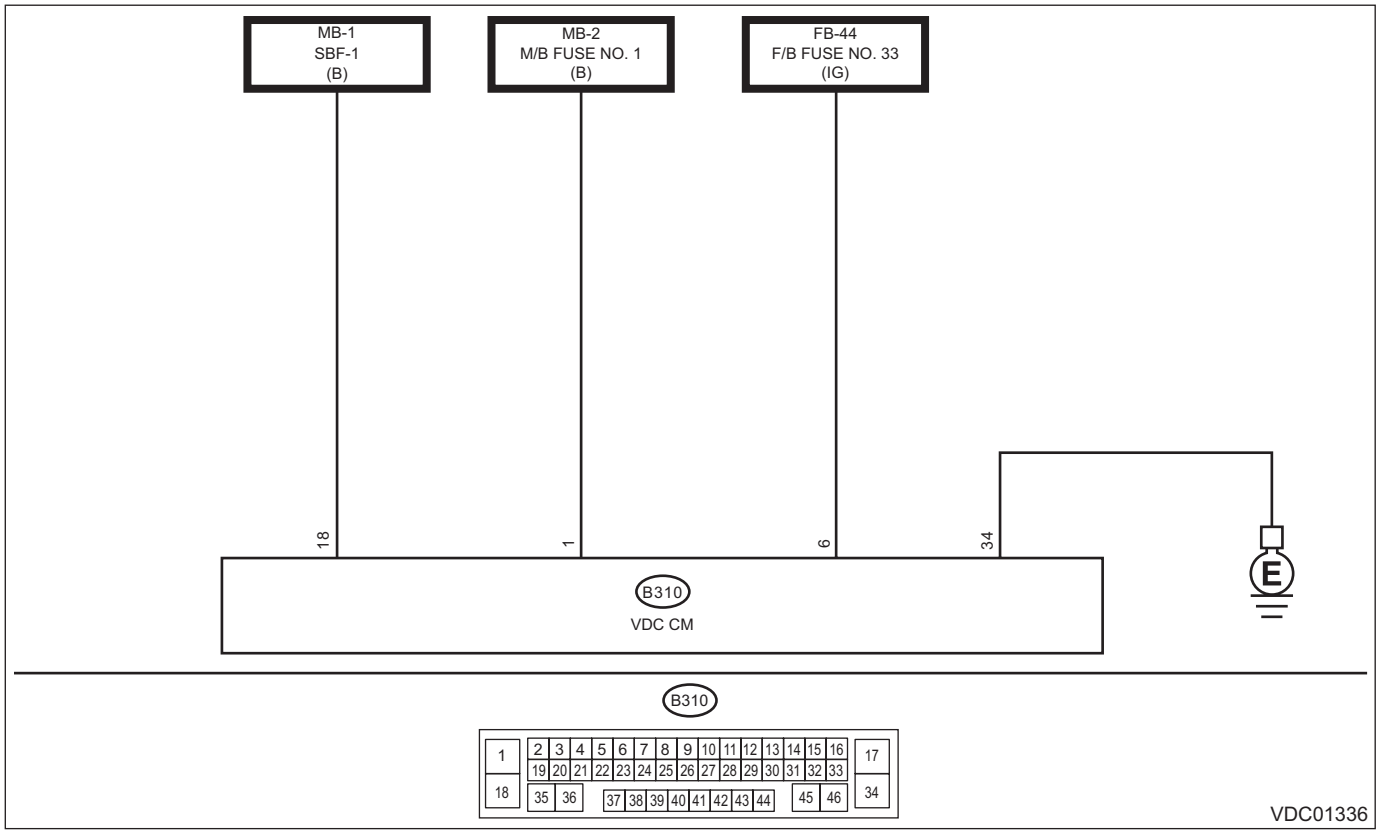

Step		Check	Yes	No
1	**CHECK BATTERY.** 1) Turn the ignition switch to OFF. 2) Check the battery voltage. <Ref. to SC(w/o STI)-51, INSPECTION, Battery.> <Ref. to SC(STI)-24, INSPECTION, Battery.>	Is the voltage 10 — 15 V?	Go to step **2**.	Charge or replace the battery.
2	**CHECK VDCCM&H/U GROUND CIRCUIT (CHECK FOR OPEN CIRCUIT).** 1) Turn the ignition switch to OFF. 2) Disconnect the connector from the VDCCM&H/U. 3) Measure the resistance between VDCCM&H/U connector and chassis ground. ***Connector & terminal*** ***(B310) No. 34 — Chassis ground:***	Is the resistance less than 10 Ω?	Go to step **3**.	Repair the VDCCM&H/U ground circuit.
3	**CHECK POOR CONTACT OF CONNECTORS.**	Is there poor contact of power supply circuit, ground circuit and VDCCM&H/U connector?	Repair the connector.	Go to step **4**.

	Step	Check	Yes	No
4	**CHECK VDCCM&H/U.** 1) Connect all connectors. 2) Perform the Clear Memory Mode. <Ref. to VDC(diag)-30, Clear Memory Mode.> 3) Perform the Inspection Mode. <Ref. to VDC(diag)-29, Inspection Mode.> 4) Read the DTC. <Ref. to VDC(diag)-28, Read Diagnostic Trouble Code (DTC).>	Is the same DTC displayed?	Replace the VDCCM&H/U. <Ref. to VDC-9, VDC Control Module and Hydraulic Control Unit (VDCCM&H/U).>	Go to step **5**.
5	**CHECK DETECTION OF OTHER DTCS FOR VDC.** <Ref. to VDC(diag)-28, Read Diagnostic Trouble Code (DTC).>	Is any other DTC displayed?	Perform the diagnosis according to DTC. <Ref. to VDC(diag)-55, List of Diagnostic Trouble Code (DTC).>	Currently, it is normal. There may have been a temporary poor contact in the harness and connector or a temporary noise interference.

AR:DTC C1951 ACTUATOR

DTC DETECTING CONDITION:
A fault is detected if the electronic parking brake operation status does not match the operation request.
TROUBLE SYMPTOM:
Parking brake system does not operate.
WIRING DIAGRAM:
Parking brake / brake fluid level warning light system <Ref. to WI-296, WITH EyeSight, WIRING DIAGRAM, Parking Brake / Brake Fluid Level Warning Light System.>

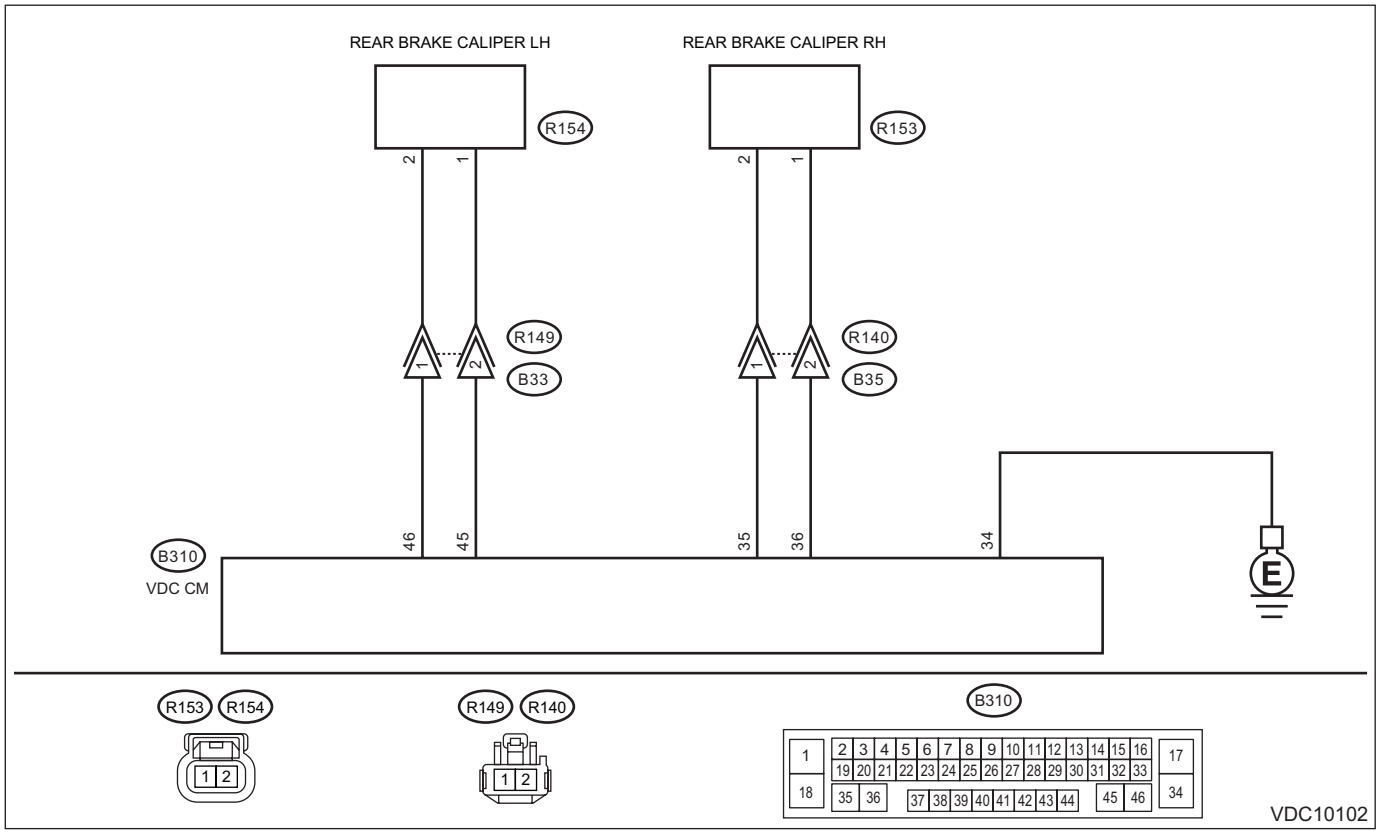

Step		Check	Yes	No
1	**CHECK BATTERY.** 1) Turn the ignition switch to OFF. 2) Check the battery voltage. <Ref. to SC(w/o STI)-51, INSPECTION, Battery.> <Ref. to SC(STI)-24, INSPECTION, Battery.>	Is the voltage 10 — 15 V?	Go to step **2**.	Charge or replace the battery. Check the generator circuit.
2	**CHECK VDCCM&H/U GROUND CIRCUIT (CHECK FOR OPEN CIRCUIT).** 1) Turn the ignition switch to OFF. 2) Disconnect the connector from the VDCCM&H/U. 3) Measure the resistance between VDCCM&H/U connector and chassis ground. ***Connector & terminal*** ***(B310) No. 34 — Chassis ground:***	Is the resistance less than 10 Ω?	Go to step **3**.	Repair the VDCCM&H/U ground circuit.

	Step	Check	Yes	No
3	**CHECK HARNESS (CHECK FOR OPEN CIRCUIT).** 1) Turn the ignition switch to OFF. 2) Disconnect the connectors from rear brake caliper. 3) Measure the resistance between VDCCM&H/U and rear brake caliper connector. ***Connector & terminal*** ***(B310) No. 35 — (R153) No. 2:*** ***(B310) No. 36 — (R153) No. 1:*** ***(B310) No. 45 — (R154) No. 1:*** ***(B310) No. 46 — (R154) No. 2:***	Is the resistance less than 1 Ω?	Go to step **4**.	Repair harness and connector between VDCCM&H/U and rear brake caliper connector.
4	**CHECK POOR CONTACT OF CONNECTORS.**	Is there poor contact of power supply circuit, ground circuit and VDCCM&H/U connector?	Repair the connector.	Go to step **5**.
5	**CHECK DRIVER'S DOOR SWITCH.** Check the driver's door switch. <Ref. to SL-31, CHECK DOOR SWITCH, INSPECTION, Security System.>	Is the check result OK?	Go to step **6**.	Repair the driver's door switch or circuit.
6	**CHECK VDCCM&H/U.** 1) Connect all connectors. 2) Perform the Clear Memory Mode. <Ref. to VDC(diag)-30, Clear Memory Mode.> 3) Set the hill hold function to ON. 4) Read the DTC. <Ref. to VDC(diag)-28, Read Diagnostic Trouble Code (DTC).>	Is the same DTC displayed?	Replace the VDCCM&H/U. <Ref. to VDC-9, VDC Control Module and Hydraulic Control Unit (VDCCM&H/U).>	Go to step **7**.
7	**CHECK DETECTION OF OTHER DTCS FOR VDC.** <Ref. to VDC(diag)-28, Read Diagnostic Trouble Code (DTC).>	Is any other DTC displayed?	Perform the diagnosis according to DTC. <Ref. to VDC(diag)-55, List of Diagnostic Trouble Code (DTC).>	Currently, it is normal. There may have been a temporary poor contact in the harness and connector or a temporary noise interference.

AS:DTC C1954 RH ACTUATOR

DTC DETECTING CONDITION:
A fault is detected if mechanical sticking or abnormal operation of the rear brake caliper RH is detected.
TROUBLE SYMPTOM:
Parking brake system does not operate.
WIRING DIAGRAM:
Parking brake / brake fluid level warning light system <Ref. to WI-296, WITH EyeSight, WIRING DIAGRAM, Parking Brake / Brake Fluid Level Warning Light System.>

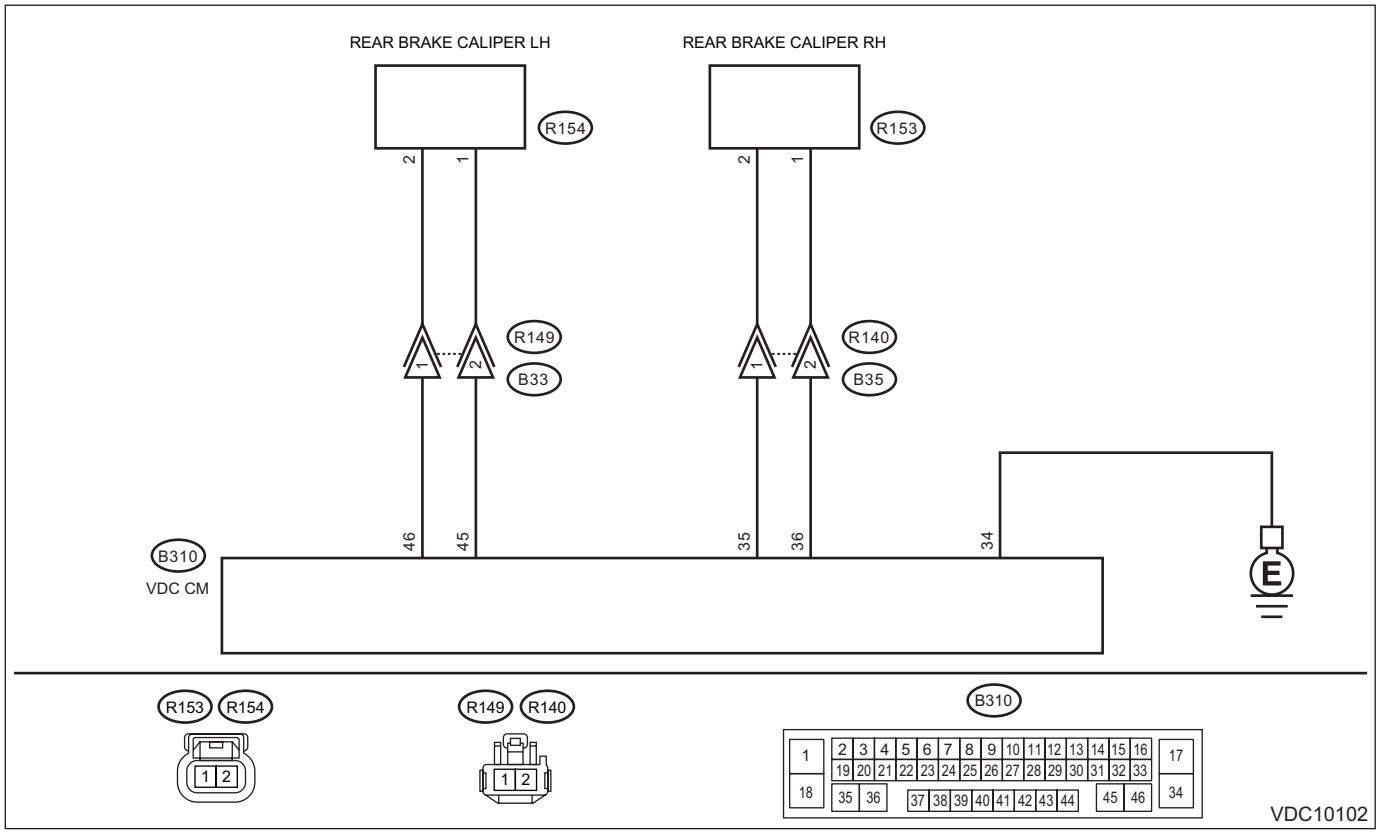

	Step	Check	Yes	No
1	**CHECK HARNESS (CHECK FOR OPEN CIRCUIT).** 1) Turn the ignition switch to OFF. 2) Disconnect the connectors from the VDCCM&H/U and rear brake caliper RH. 3) Measure the resistance between VDCCM&H/U and rear brake caliper RH connector. ***Connector & terminal*** ***(B310) No. 35 — (R153) No. 2:*** ***(B310) No. 36 — (R153) No. 1:***	Is the resistance less than 1 Ω?	Go to step **2**.	Repair harness and connector between VDCCM&H/U and rear brake caliper RH connector.
2	**CHECK HARNESS (CHECK FOR GROUND SHORT CIRCUIT).** Measure the resistance between the rear brake caliper RH connector and chassis ground. ***Connector & terminal*** ***(R153) No. 1 — Chassis ground:*** ***(R153) No. 2 — Chassis ground:***	Is the resistance 1 MΩ or more?	Go to step **3**.	Repair ground short of harness between VDCCM&H/U and rear brake caliper RH connector.

	Step	Check	Yes	No
3	**CHECK HARNESS (CHECK FOR SHORT CIRCUIT TO POWER SUPPLY).** 1) Turn the ignition switch to ON. 2) Measure the voltage between the rear brake caliper RH connector and chassis ground. ***Connector & terminal*** ***(R153) No. 1 (+) — Chassis ground (–):*** ***(R153) No. 2 (+) — Chassis ground (–):***	Is the voltage less than 1 V?	Go to step **4**.	Repair short to power supply of harness between VDCCM&H/U and rear brake caliper RH connector.
4	**CHECK POOR CONTACT OF CONNECTORS.**	Is there poor contact of power supply circuit, ground circuit and VDCCM&H/U connector?	Repair the connector.	Go to step **5**.
5	**CHECK REAR BRAKE CALIPER.** 1) Turn the ignition switch to OFF. 2) Disconnect the connectors from rear brake caliper RH. 3) Measure the resistance between rear brake caliper RH terminals. ***Terminals*** ***No. 1 — No. 2:***	Is the resistance less than 100 Ω?	Replace the VDCCM&H/U. <Ref. to VDC-9, VDC Control Module and Hydraulic Control Unit (VDCCM&H/U).>	Replace the parking brake actuator assembly RH. <Ref. to PB-23, Parking Brake Actuator.>

AT:DTC C1955 LH ACTUATOR

DTC DETECTING CONDITION:
A fault is detected if mechanical sticking or abnormal operation of the rear brake caliper LH is detected.
TROUBLE SYMPTOM:
Parking brake system does not operate.
WIRING DIAGRAM:
Parking brake / brake fluid level warning light system <Ref. to WI-296, WITH EyeSight, WIRING DIAGRAM, Parking Brake / Brake Fluid Level Warning Light System.>

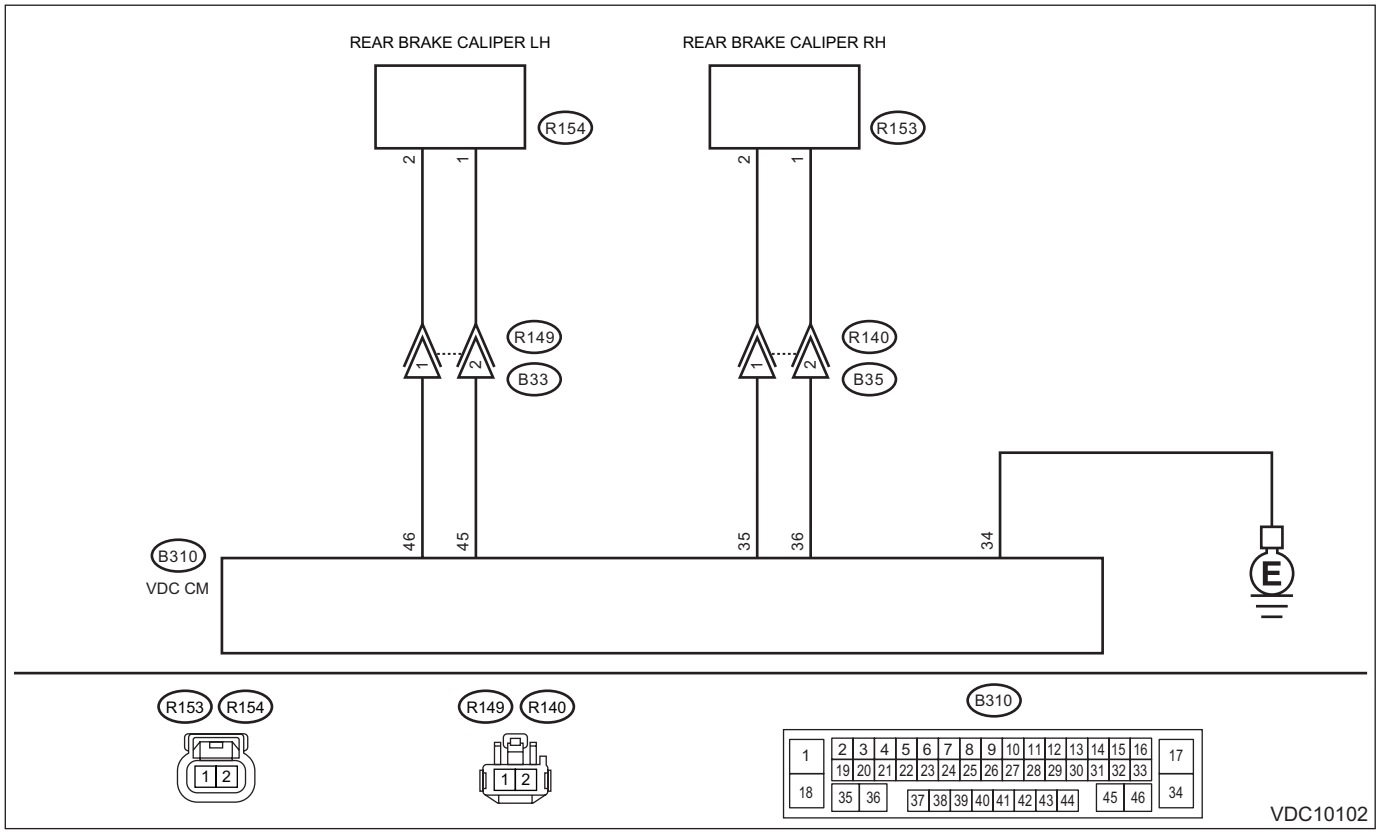

	Step	Check	Yes	No
1	**CHECK HARNESS (CHECK FOR OPEN CIRCUIT).** 1) Turn the ignition switch to OFF. 2) Disconnect the connectors from the VDCCM&H/U and rear brake caliper LH. 3) Measure the resistance between VDCCM&H/U and rear brake caliper LH connector. ***Connector & terminal*** ***(B310) No. 45 — (R154) No. 1:*** ***(B310) No. 46 — (R154) No. 2:***	Is the resistance less than 1 Ω?	Go to step **2**.	Repair harness and connector between VDCCM&H/U and rear brake caliper LH connector.
2	**CHECK HARNESS (CHECK FOR GROUND SHORT CIRCUIT).** Measure the resistance between the rear brake caliper LH connector and chassis ground. ***Connector & terminal*** ***(R154) No. 1 — Chassis ground:*** ***(R154) No. 2 — Chassis ground:***	Is the resistance 1 MΩ or more?	Go to step **3**.	Repair ground short of harness between VDCCM&H/U and rear brake caliper LH connector.

	Step	Check	Yes	No
3	**CHECK HARNESS (CHECK FOR SHORT CIRCUIT TO POWER SUPPLY).** 1) Turn the ignition switch to ON. 2) Measure the voltage between the rear brake caliper LH connector and chassis ground. ***Connector & terminal*** ***(R154) No. 1 (+) — Chassis ground (–):*** ***(R154) No. 2 (+) — Chassis ground (–):***	Is the voltage less than 1 V?	Go to step **4**.	Repair short to power supply of harness between VDCCM&H/U and rear brake caliper LH connector.
4	**CHECK POOR CONTACT OF CONNECTORS.**	Is there poor contact of power supply circuit, ground circuit and VDCCM&H/U connector?	Repair the connector.	Go to step **5**.
5	**CHECK REAR BRAKE CALIPER.** 1) Turn the ignition switch to OFF. 2) Disconnect the connectors from rear brake caliper LH. 3) Measure the resistance between rear brake caliper LH terminals. ***Terminals*** ***No. 1 — No. 2:***	Is the resistance less than 100 Ω?	Replace the VDCCM&H/U. <Ref. to VDC-9, VDC Control Module and Hydraulic Control Unit (VDCCM&H/U).>	Replace the parking brake actuator assembly LH. <Ref. to PB-23, Parking Brake Actuator.>

AU:DTC C1956 RH ACTUATOR CIRCUIT

DTC DETECTING CONDITION:

- A fault is detected, if the motor control mismatch occurs during the motor operation.
- A fault is detected if the motor circuit or harness is open or shorted.

TROUBLE SYMPTOM:

Parking brake system does not operate.

NOTE:

This DTC may be stored when the rear brake caliper connector is disconnected regardless of the ignition switch condition (ON/OFF). Perform the Clear Memory Mode after diagnosis if a DTC is recorded. <Ref. to VDC(diag)-30, Clear Memory Mode.>

WIRING DIAGRAM:

Parking brake / brake fluid level warning light system <Ref. to WI-296, WITH EyeSight, WIRING DIAGRAM, Parking Brake / Brake Fluid Level Warning Light System.>

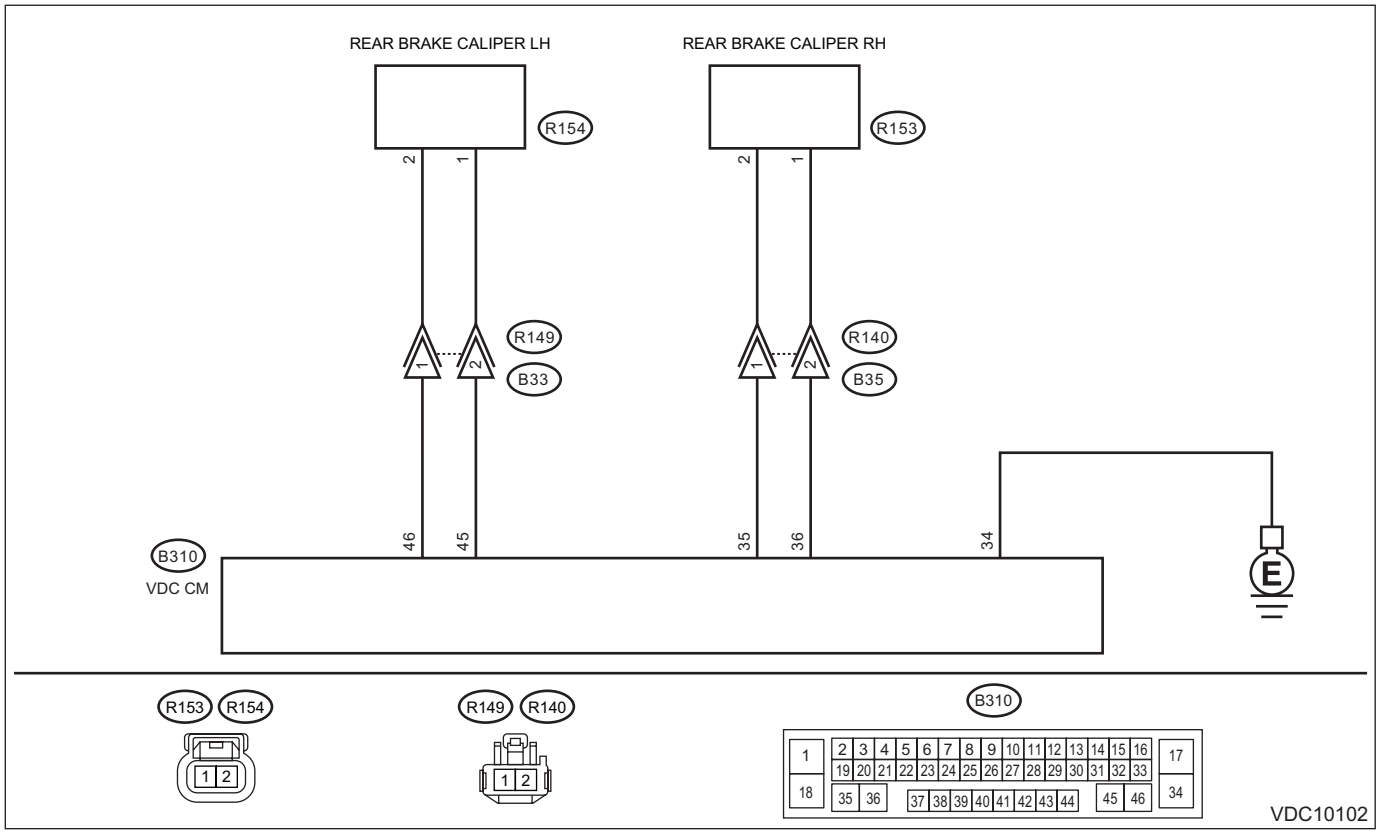

Step		Check	Yes	No
1	**CHECK HARNESS (CHECK FOR OPEN CIRCUIT).** 1) Turn the ignition switch to OFF. 2) Disconnect the connectors from the VDCCM&H/U and rear brake caliper RH. 3) Measure the resistance between VDCCM&H/U and rear brake caliper RH connector. ***Connector & terminal*** ***(B310) No. 35 — (R153) No. 2:*** ***(B310) No. 36 — (R153) No. 1:***	Is the resistance less than 1 Ω?	Go to step **2**.	Repair harness and connector between VDCCM&H/U and rear brake caliper RH connector.

	Step	Check	Yes	No
2	**CHECK HARNESS (CHECK FOR GROUND SHORT CIRCUIT).** Measure the resistance between the rear brake caliper RH connector and chassis ground. ***Connector & terminal*** ***(R153) No. 1 — Chassis ground:*** ***(R153) No. 2 — Chassis ground:***	Is the resistance 1 MΩ or more?	Go to step **3**.	Repair ground short of harness between VDCCM&H/U and rear brake caliper RH connector.
3	**CHECK HARNESS (CHECK FOR SHORT CIRCUIT TO POWER SUPPLY).** 1) Turn the ignition switch to ON. 2) Measure the voltage between the rear brake caliper RH connector and chassis ground. ***Connector & terminal*** ***(R153) No. 1 (+) — Chassis ground (–):*** ***(R153) No. 2 (+) — Chassis ground (–):***	Is the voltage less than 1 V?	Go to step **4**.	Repair short to power supply of harness between VDCCM&H/U and rear brake caliper RH connector.
4	**CHECK POOR CONTACT OF CONNECTORS.**	Is there poor contact of power supply circuit, ground circuit and VDCCM&H/U connector?	Repair the connector.	Go to step **5**.
5	**CHECK REAR BRAKE CALIPER.** 1) Turn the ignition switch to OFF. 2) Disconnect the connectors from rear brake caliper RH. 3) Measure the resistance between rear brake caliper RH terminals. ***Terminals*** ***No. 1 — No. 2:***	Is the resistance less than 100 Ω?	Replace the VDCCM&H/U. <Ref. to VDC-9, VDC Control Module and Hydraulic Control Unit (VDCCM&H/U).>	Replace the parking brake actuator assembly RH. <Ref. to PB-23, Parking Brake Actuator.>

AV:DTC C1957 LH ACTUATOR CIRCUIT

DTC DETECTING CONDITION:

- A fault is detected, if the motor control mismatch occurs during the motor operation.
- A fault is detected if the motor circuit or harness is open or shorted.

TROUBLE SYMPTOM:

Parking brake system does not operate.

NOTE:

This DTC may be stored when the rear brake caliper connector is disconnected regardless of the ignition switch condition (ON/OFF). Perform the Clear Memory Mode after diagnosis if a DTC is recorded. <Ref. to VDC(diag)-30, Clear Memory Mode.>

WIRING DIAGRAM:

Parking brake / brake fluid level warning light system <Ref. to WI-296, WITH EyeSight, WIRING DIAGRAM, Parking Brake / Brake Fluid Level Warning Light System.>

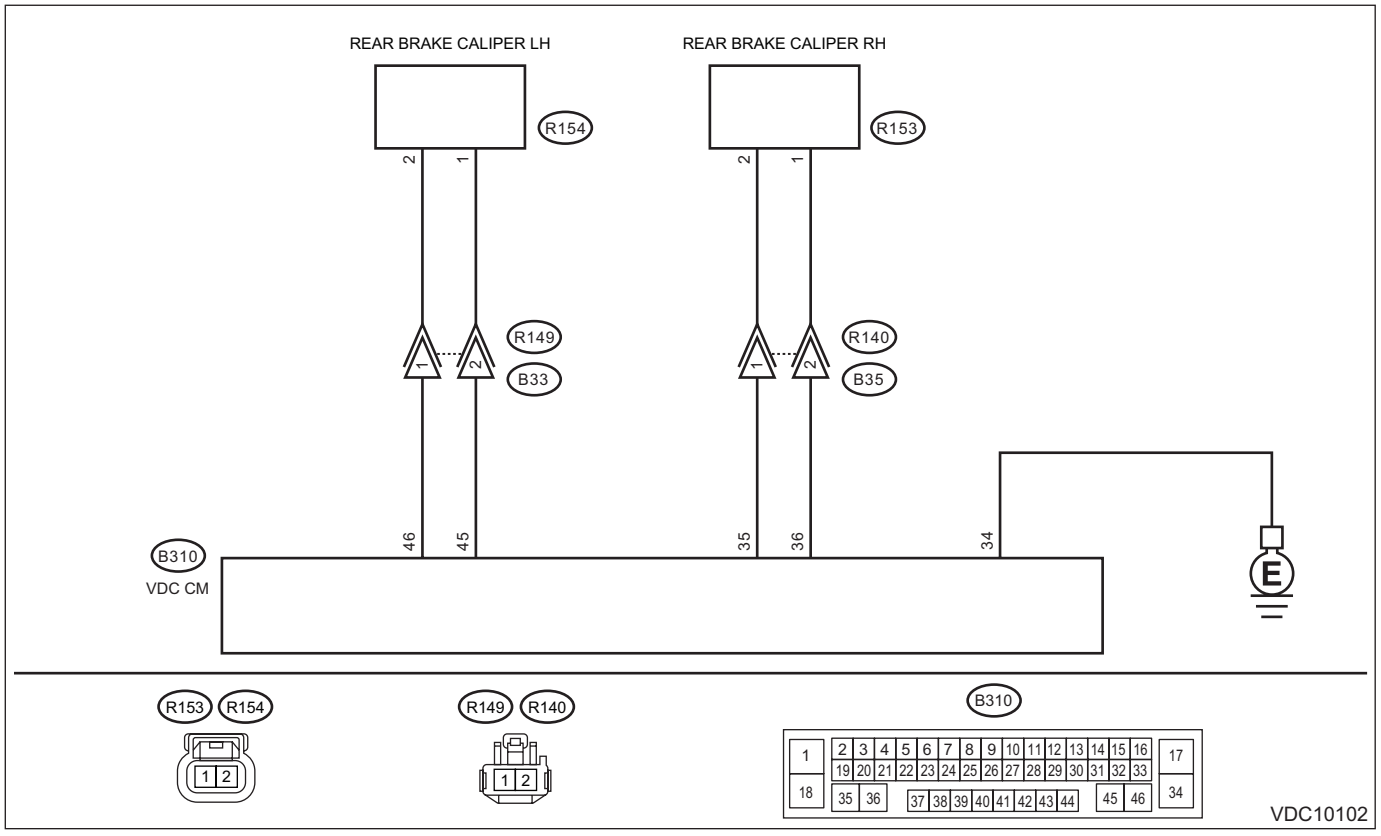

Step		Check	Yes	No
1	**CHECK HARNESS (CHECK FOR OPEN CIRCUIT).** 1) Turn the ignition switch to OFF. 2) Disconnect the connectors from the VDCCM&H/U and rear brake caliper LH. 3) Measure the resistance between VDCCM&H/U and rear brake caliper LH connector. ***Connector & terminal*** ***(B310) No. 45 — (R154) No. 1:*** ***(B310) No. 46 — (R154) No. 2:***	Is the resistance less than 1 Ω?	Go to step **2**.	Repair harness and connector between VDCCM&H/U and rear brake caliper LH connector.

	Step	Check	Yes	No
2	**CHECK HARNESS (CHECK FOR GROUND SHORT CIRCUIT).** Measure the resistance between the rear brake caliper LH connector and chassis ground. ***Connector & terminal*** ***(R154) No. 1 — Chassis ground:*** ***(R154) No. 2 — Chassis ground:***	Is the resistance 1 MΩ or more?	Go to step **3**.	Repair ground short of harness between VDCCM&H/U and rear brake caliper LH connector.
3	**CHECK HARNESS (CHECK FOR SHORT CIRCUIT TO POWER SUPPLY).** 1) Turn the ignition switch to ON. 2) Measure the voltage between the rear brake caliper LH connector and chassis ground. ***Connector & terminal*** ***(R154) No. 1 (+) — Chassis ground (–):*** ***(R154) No. 2 (+) — Chassis ground (–):***	Is the voltage less than 1 V?	Go to step **4**.	Repair short to power supply of harness between VDCCM&H/U and rear brake caliper LH connector.
4	**CHECK POOR CONTACT OF CONNECTORS.**	Is there poor contact of power supply circuit, ground circuit and VDCCM&H/U connector?	Repair the connector.	Go to step **5**.
5	**CHECK REAR BRAKE CALIPER.** 1) Turn the ignition switch to OFF. 2) Disconnect the connectors from rear brake caliper LH. 3) Measure the resistance between rear brake caliper LH terminals. ***Terminals*** ***No. 1 — No. 2:***	Is the resistance less than 100 Ω?	Replace the VDCCM&H/U. <Ref. to VDC-9, VDC Control Module and Hydraulic Control Unit (VDCCM&H/U).>	Replace the parking brake actuator assembly LH. <Ref. to PB-23, Parking Brake Actuator.>

AW:DTC C1983 HIGH FREQUENCY OPERATION

DTC DETECTING CONDITION:

This malfunction is stored if the electronic parking brake is operated with high frequency in a short period of time.

TROUBLE SYMPTOM:

Parking brake system does not operate sometimes.

	Step	Check	Yes	No
1	**CHECK OUTPUT OF AMBIENT SENSOR USING SUBARU SELECT MONITOR.** 1) Using the Subaru Select Monitor, select “Data monitor”. <Ref. to VDC(diag)-20, READ CURRENT DATA, OPERATION, Subaru Select Monitor.> 2) Read the «Ambient Temp Sensor» displayed on the screen.	Is the reading of «Ambient Temp Sensor» within the range of ±10°C to the ambient temperature?	Go to step **2**.	Repair the ambient sensor circuit.
2	**CHECK VDCCM&H/U.** 1) Turn the ignition switch to OFF. 2) Stop the vehicle for approximately one hour. 3) Perform the Clear Memory Mode. <Ref. to VDC(diag)-30, Clear Memory Mode.> 4) Perform the Inspection Mode. <Ref. to VDC(diag)-29, Inspection Mode.> 5) Read the DTC. <Ref. to VDC(diag)-28, Read Diagnostic Trouble Code (DTC).>	Is the same DTC displayed?	Replace the VDCCM&H/U. <Ref. to VDC-9, VDC Control Module and Hydraulic Control Unit (VDCCM&H/U).>	Go to step **3**.
3	**CHECK DETECTION OF OTHER DTCS FOR VDC.** <Ref. to VDC(diag)-28, Read Diagnostic Trouble Code (DTC).>	Is any other DTC displayed?	Perform the diagnosis according to DTC. <Ref. to VDC(diag)-55, List of Diagnostic Trouble Code (DTC).>	Currently, it is normal. There may have been a temporary poor contact in the harness and connector or a temporary noise interference.

AX:DTC C1984 BRAKE MAINTENANCE MODE

DTC DETECTING CONDITION:
This malfunction is stored when the brake maintenance mode is in progress.
TROUBLE SYMPTOM:
Parking brake system does not operate.

	Step	Check	Yes	No
1	**CHECK ELECTRONIC PARKING MODE.**	Is the brake maintenance mode in progress?	Currently, it is normal. Although DTC C1984 is input during the brake maintenance mode, it is normal. <Ref. to VDC-18, BRAKE MAINTENANCE MODE, MAINTENANCE MODE, VDC Control Module and Hydraulic Control Unit (VDCCM&H/U).>	Go to step **2**.
2	**CHECK OPERATION OF ELECTRONIC PARKING BRAKE.** 1) Perform the Clear Memory Mode. <Ref. to VDC(diag)-30, Clear Memory Mode.> 2) Apply the electronic parking brake several times. 3) Read the DTC. <Ref. to VDC(diag)-28, Read Diagnostic Trouble Code (DTC).>	Is DTC stored even though the electronic parking brake operates?	Replace the VDCCM&H/U. <Ref. to VDC-9, VDC Control Module and Hydraulic Control Unit (VDCCM&H/U).>	Go to step **3**.
3	**CHECK DETECTION OF OTHER DTCS FOR VDC.** <Ref. to VDC(diag)-28, Read Diagnostic Trouble Code (DTC).>	Is any other DTC displayed?	Perform the diagnosis according to DTC. <Ref. to VDC(diag)-55, List of Diagnostic Trouble Code (DTC).> Perform the diagnosis from step 1 again, and if the same DTC is stored, replace the VDCCM&H/U. <Ref. to VDC-9, VDC Control Module and Hydraulic Control Unit (VDCCM&H/U).>	Currently, it is normal. There may have been a temporary poor contact in the harness and connector or a temporary noise interference.

AY:DTC C1985 FORBIDDEN STATE OF DYNAMIC ACTUATOR OPERATION

DTC DETECTING CONDITION:
This malfunction is stored if dynamic parking through the electronic parking brake actuator does not operate.
TROUBLE SYMPTOM:
Parking brake system does not operate.

	Step	Check	Yes	No
1	**CHECK DETECTION OF OTHER DTCS FOR VDC.** <Ref. to VDC(diag)-28, Read Diagnostic Trouble Code (DTC).>	Is any other DTC displayed?	Perform the diagnosis according to DTC. <Ref. to VDC(diag)-55, List of Diagnostic Trouble Code (DTC).> NOTE: This DTC is stored for other malfunctions.	Go to step **2**.
2	**CHECK OPERATION OF ELECTRONIC PARKING BRAKE.** 1) Perform the Clear Memory Mode. <Ref. to VDC(diag)-30, Clear Memory Mode.> 2) Perform the Inspection Mode. <Ref. to VDC(diag)-29, Inspection Mode.>	Does it operate properly?	Currently, it is normal. There may have been a temporary poor contact in the harness and connector or a temporary noise interference.	Replace the VDCCM&H/U. <Ref. to VDC-9, VDC Control Module and Hydraulic Control Unit (VDCCM&H/U).>

AZ:DTC U0073 CONTROL MODULE COMMUNICATION BUS OFF

NOTE:
Refer to “LAN SYSTEM (DIAGNOSTICS)” for diagnostic procedure. <Ref. to LAN(diag)-2, Basic Diagnostic Procedure.>

BA:DTC U0100 LOST COMMUNICATION WITH ECM/PCM “A”

NOTE:
Refer to “LAN SYSTEM (DIAGNOSTICS)” for diagnostic procedure. <Ref. to LAN(diag)-2, Basic Diagnostic Procedure.>

BB:DTC U0101 LOST COMMUNICATION WITH TCM

NOTE:
Refer to “LAN SYSTEM (DIAGNOSTICS)” for diagnostic procedure. <Ref. to LAN(diag)-2, Basic Diagnostic Procedure.>

BC:DTC U0126 LOST COMMUNICATION WITH STEERING ANGLE SENSOR MODULE

NOTE:
Refer to “LAN SYSTEM (DIAGNOSTICS)” for diagnostic procedure. <Ref. to LAN(diag)-2, Basic Diagnostic Procedure.>

BD:DTC U0140 LOST COMMUNICATION WITH BODY CONTROL MODULE

NOTE:
Refer to “LAN SYSTEM (DIAGNOSTICS)” for diagnostic procedure. <Ref. to LAN(diag)-2, Basic Diagnostic Procedure.>

BE:DTC U0155 LOST COMMUNICATION WITH INSTRUMENT PANEL CLUSTER (IPC) CONTROL MODULE

NOTE:
Refer to “LAN SYSTEM (DIAGNOSTICS)” for diagnostic procedure. <Ref. to LAN(diag)-2, Basic Diagnostic Procedure.>

BF:DTC U0401 INVALID DATA RECEIVED FROM ECM/PCM “A”

NOTE:
Refer to “LAN SYSTEM (DIAGNOSTICS)” for diagnostic procedure. <Ref. to LAN(diag)-2, Basic Diagnostic Procedure.>

BG:DTC U0402 INVALID DATA RECEIVED FROM TCM

NOTE:
Refer to “LAN SYSTEM (DIAGNOSTICS)” for diagnostic procedure. <Ref. to LAN(diag)-2, Basic Diagnostic Procedure.>

BH:DTC U0422 INVALID DATA RECEIVED FROM BODY CONTROL MODULE

NOTE:
Refer to “LAN SYSTEM (DIAGNOSTICS)” for diagnostic procedure. <Ref. to LAN(diag)-2, Basic Diagnostic Procedure.>

BI: DTC U0423 INVALID DATA RECEIVED FROM INSTRUMENT PANEL CLUSTER CONTROL MODULE

NOTE:
Refer to “LAN SYSTEM (DIAGNOSTICS)” for diagnostic procedure. <Ref. to LAN(diag)-2, Basic Diagnostic Procedure.>

BJ:DTC U0428 INVALID DATA RECEIVED FROM STEERING ANGLE SENSOR MODULE

NOTE:
Refer to “LAN SYSTEM (DIAGNOSTICS)” for diagnostic procedure. <Ref. to LAN(diag)-2, Basic Diagnostic Procedure.>

BK:DTC U1235 LOST COMMUNICATION WITH EyeSight

NOTE:
Refer to “LAN SYSTEM (DIAGNOSTICS)” for diagnostic procedure. <Ref. to LAN(diag)-2, Basic Diagnostic Procedure.>

BL:DTC U1433 INVALID DATA RECEIVED FROM EyeSight

NOTE:
Refer to “LAN SYSTEM (DIAGNOSTICS)” for diagnostic procedure. <Ref. to LAN(diag)-2, Basic Diagnostic Procedure.>

13.General Diagnostic Table

A: INSPECTION

Symptoms		Main probable cause	Other probable cause
Poor brake performance	Long braking/ stopping distance	• VDCCM&H/U • Brake pad • Aeration to brake line • Tire specifications, tire wear and air pressures • Incorrect wiring or piping connections	• Defective ABS wheel speed sensor or sensor gap • Defective steering angle sensor or improper neutral position • Defective yaw rate & G sensor or improper installation of VDCCM&H/U. • Master cylinder • Brake caliper • Disc rotor • Brake pipe • Brake booster
	Wheel lock	• VDCCM&H/U • Defective ABS wheel speed sensor or sensor gap • Incorrect wiring or piping connections	• Defective steering angle sensor or improper neutral position • Defective yaw rate & G sensor or improper installation of VDCCM&H/U. • Brake caliper • Brake pipe
	Brake drag	• VDCCM&H/U • Defective ABS wheel speed sensor or sensor gap • Master cylinder • Brake caliper • Parking brake • Axle and wheels • Brake pedal play	• Defective steering angle sensor or improper neutral position • Defective yaw rate & G sensor or improper installation of VDCCM&H/U. • Brake pad • Brake pipe
	Long brake pedal stroke	• Aeration to brake line • Brake pedal play	• VDCCM&H/U • Master cylinder • Brake caliper • Brake pad • Brake pipe • Brake booster
	Vehicle vertical pitching	• VDCCM&H/U • Road surface (uneven) • Suspension play or fatigue (reduced damping) • Incorrect wiring or piping connections	• Defective ABS wheel speed sensor or sensor gap • Defective steering angle sensor or improper neutral position • Defective yaw rate & G sensor or improper installation of VDCCM&H/U.
Poor brake performance	Unstable or uneven braking	• VDCCM&H/U • Defective ABS wheel speed sensor or sensor gap • Brake caliper • Brake pad • Road surface (uneven) • Tire specifications, tire wear and air pressures • Incorrect wiring or piping connections	• Defective ABS wheel speed sensor or sensor gap • Defective steering angle sensor or improper neutral position • Defective yaw rate & G sensor or improper installation of VDCCM&H/U. • Master cylinder • Disc rotor • Brake pipe • Axle and wheels • Road with crowns or banks • Suspension play or fatigue (reduced damping)

Symptoms		Main probable cause	Other probable cause
Vibration or noise • When braking suddenly • When accelerating suddenly • While driving on a slippery road	Excessive brake pedal vibration	• Road surface (uneven) • Incorrect wiring or piping connections	• VDCCM&H/U • Brake booster • Suspension play or fatigue (reduced damping)
	Noise from VDCCM&H/U	• VDCCM&H/U (mount bushing) • Defective ABS wheel speed sensor or sensor gap • Brake pipe	• VDCCM&H/U • Defective steering angle sensor or improper neutral position • Defective yaw rate & G sensor or improper installation of VDCCM&H/U.
	Noise from the front side of vehicle	• VDCCM&H/U (mount bushing) • Defective ABS wheel speed sensor or sensor gap • Master cylinder • Brake caliper • Brake pad • Disc rotor • Brake pipe • Brake booster • Suspension play or fatigue (reduced damping)	• Axle and wheels • Tire specifications, tire wear and air pressures
	Noise from the rear side of vehicle	• Defective ABS wheel speed sensor or sensor gap • Brake caliper • Brake pad • Disc rotor • Parking brake • Brake pipe • Suspension play or fatigue (reduced damping)	• Axle and wheels • Tire specifications, tire wear and air pressures
Engine does not accelerate or goes into a stall when accelerating suddenly or driving on a slippery surface.		• VDCCM&H/U • Defective ABS wheel speed sensor or sensor gap • Master cylinder • Brake caliper • Parking brake • Incorrect wiring or piping	• Defective steering angle sensor or improper neutral position • Defective yaw rate & G sensor or improper installation of VDCCM&H/U. • Brake pad • Brake pipe
Poor change-direction-operation stability of TCS	Deviation to right or left direction	• VDCCM&H/U • Defective ABS wheel speed sensor or sensor gap • Defective steering angle sensor or improper neutral position • Defective yaw rate & G sensor or improper installation of VDCCM&H/U. • Brake caliper • Brake pad • Wheel alignment • Road surface (uneven) • Road with crowns or banks • Tire specifications, tire wear and air pressures • Incorrect wiring or piping connections	• Disc rotor • Brake pipe • Axle and wheels • Suspension play or fatigue (reduced damping)
	Vehicle spin	• VDCCM&H/U • Defective ABS wheel speed sensor or sensor gap • Defective steering angle sensor or improper neutral position • Defective yaw rate & G sensor or improper installation of VDCCM&H/U. • Brake pad • Tire specifications, tire wear and air pressures • Incorrect wiring or piping connections	• Brake caliper • Brake pipe

Symptoms		Main probable cause	Other probable cause
Steering wheel drag while driving		• VDCCM&H/U • Defective ABS wheel speed sensor or sensor gap • Defective steering angle sensor or improper neutral position • Defective yaw rate & G sensor or improper installation of VDCCM&H/U. • Incorrect wiring or piping connections • Power steering system	• Brake caliper • Brake pad • Disc rotor • Wheel alignment • Road surface (uneven) • Road with crowns or banks • Suspension play or fatigue (reduced damping) • Tire specifications, tire wear and air pressures
VDC operates while driving normally.		• VDCCM&H/U • Defective ABS wheel speed sensor or sensor gap • Defective steering angle sensor or improper neutral position • Defective yaw rate & G sensor or improper installation of VDCCM&H/U. • Wheel alignment • Road surface (uneven) • Road with crowns or banks • Suspension play or fatigue (reduced damping) • Tire specifications, tire wear and air pressures • Incorrect wiring or piping connections • Power steering system	
VDC OFF indicator light does not illuminate when the VDC OFF switch is depressed. NOTE: When pressing VDC OFF switch for 30 seconds or more, VDC OFF indicator light goes off and cannot operate any more. When turning the ignition switch from OFF to ON, the previous status is restored.		• Harness • Combination meter • VDC OFF switch	
Electronic parking brake warning light illuminates.	Parking brake system does not operate.	• Defective parking brake switch • Defective VDCCM&H/U • Defective CAN communication	
	Hill hold function and accelerator interlocking release function do not operate.	• Defective hill hold switch • Faulty signal received from ECM • Faulty signal received from TCM • Faulty signal received from VDC control module • Defective parameter selection for VDCCM&H/U • No CAN signal received from ECM • No CAN signal received from TCM • No CAN signal received from body integrated unit • Defective longitudinal G sensor	
When the hill hold function is set to ON, drugging of brake may occur when the vehicle starts to move.		—	Driver's seat belt is not fastened.

BRAKE

BR

		Page
1.	General Description	2
2.	Front Brake Pad	20
3.	Front Disc Rotor	25
4.	Front Disc Brake Assembly	29
5.	Rear Brake Pad	39
6.	Rear Disc Rotor	46
7.	Rear Disc Brake Assembly	55
8.	Master Cylinder	71
9.	Brake Booster	75
10.	Brake Fluid	85
11.	Air Bleeding	87
12.	Brake Hose	91
13.	Brake Pipe	95
14.	Brake Pedal	96
15.	Stop Light Switch	100
16.	Brake Vacuum Pump	104
17.	Brake Vacuum Sensor	107
18.	General Diagnostic Table	108

1. General Description

A: SPECIFICATION

NOTE:
Refer to “PARKING BRAKE” for parking brake specifications. <Ref. to PB-2, SPECIFICATION, General Description.>

1. FRONT DISC BRAKE

- Except for STI model

Item			Specification
Size			17-inch
Type			Floating 2-POT piston type Ventilated disc
Effective cylinder diameter		mm (in)	42.8 × 2 (1.685 × 2)
Pad size (Length × Width × Thickness)		mm (in)	130 × 53.5 × 11 (5.118 × 2.106 × 0.433)
Pad thickness	mm (in)	Standard	11 (0.43)
		Limit	1.5 (0.059)
Effective disc diameter		mm (in)	261 (10.28)
Rotor size (O.D. × Thickness)		mm (in)	30 × 316 (1.18 × 12.44)
Disc thickness	mm (in)	Standard	30 (1.18)
		Limit	28 (1.1)
Disc runout	mm (in)	Standard	—
		Limit	0.05 (0.002)
Clearance adjustment			Automatic adjustment

- STI model

Item			Specification
Size			17-inch
Type			Opposed 4-POT piston type Ventilated disc (Brembo)
Effective cylinder diameter		mm (in)	40 × 2, 46.0 × 2 (1.575 × 2, 1.811 × 2)
Pad size (Length × Width × Thickness)		mm (in)	131.8 × 60.5 × 8.9 (5.189 × 2.382 × 0.35)
Pad thickness	mm (in)	Standard	8.9 (0.35)
		Limit	1.2 (0.047)
Effective disc diameter		mm (in)	268 (10.55)
Rotor size (O.D. × Thickness)		mm (in)	30 × 326 (1.18 × 12.83)
Disc thickness	mm (in)	Standard	30 (1.18)
		Limit	28 (1.1)
Disc runout	mm (in)	Standard	—
		Limit	0.075 (0.003)
Clearance adjustment			Automatic adjustment

2. REAR DISC BRAKE

- Except for STI model

Item			Specification	
Size			15-inch	17-inch
Type			Floating 1-POT piston type Solid disc	Floating 1-POT piston type (Caliper with electric parking) Ventilated disc
Effective cylinder diameter		mm (in)	38.1 (1.5)	40 (1.57)
Pad dimension (Length × Width × Thickness)		mm (in)	92 × 33 × 9 (3.622 × 1.299 × 0.354)	86.8 × 43.5 × 9 (3.42 × 1.71 × 0.354)
Pad thickness	mm (in)	Standard	9 (0.354)	
		Limit	1.5 (0.059)	
Effective disc diameter		mm (in)	250 (9.84)	255 (10.04)
Rotor dimension (O.D. × Thickness)		mm (in)	10 × 286 (0.79 × 12.44)	17 × 300 (0.67 × 11.81)
Disc thickness	mm (in)	Standard	10 (0.39)	17 (0.67)
		Limit	8.5 (0.335)	15 (0.59)
Disc runout	mm (in)	Standard	—	
		Limit	0.05 (0.002)	
Clearance adjustment			Automatic adjustment	

- STI model

Item			Specification
Size			17-inch
Type			Opposed 2-POT piston type Ventilated disc (Brembo)
Effective cylinder diameter		mm (in)	40 × 2 (1.575 × 2)
Pad size (Length × Width × Thickness)		mm (in)	76.8 × 45 × 9 (3.024 × 1.772 × 0.354)
Pad thickness	mm (in)	Standard	9 (0.354)
		Limit	1.2 (0.047)
Effective disc diameter		mm (in)	268 (10.55)
Rotor size (O.D. × Thickness)		mm (in)	20 × 316 (0.79 × 12.44)
Disc thickness	mm (in)	Standard	20 (0.79)
		Limit	18 (0.71)
Disc runout	mm (in)	Standard	—
		Limit	0.07 (0.0028)
Clearance adjustment			Automatic adjustment

3. MASTER CYLINDER

Item		Specification
Type		Tandem
Effective diameter	mm (in)	25.4 (1)
Reservoir type		Sealed type
Brake fluid reservoir capacity	cm^3 (cu in)	240 (14.64)

4. BRAKE BOOSTER

Item		Specification	
Type		Vacuum suspended	
Effective diameter	mm (in)	208 + 229 (8.19 + 9.02)	
Brake fluid pressure		Brake pedal force N (kgf, lbf)	Fluid pressure kPa (kgf/cm^2, psi)
When engine is stopped		147 (15, 33)	471 (4.8, 68.3)
		294 (30, 66)	1,385 (14.1, 200.8)
When engine is running and vacuum pressure is at 66.7 kPa (500 mmHg, 19.69 inHg)		147 (15, 33)	4,880 (49.8, 707.6)
		294 (30, 66)	9,750 (99.4, 1413.7)

5. BRAKE LINE, BRAKE PEDAL AND BRAKE FLUID

CAUTION:
• Do not let brake fluid come into contact with the painted surface of the vehicle body. Wash away with water immediately and wipe off if it is spilled by accident.
• Avoid mixing brake fluid of different brands or different grades even from the same brand to prevent fluid performance from degrading.
• When refilling brake fluid, do not allow dirt or dust to get into the reservoir tank.
• Always use new SUBARU genuine brake fluid when replacing or refilling the fluid. Do not reuse drained brake fluid.

Item			Specification
Brake line			Dual circuit system
Brake pedal	Type		Suspended type
	Free play	mm (in)	0.5 — 2.7 (0.02 — 0.11) [When pulling the brake pedal upward with a force of less than 10 N (1 kgf, 2 lbf)]
Brake fluid			FMVSS No. 116, DOT3, or DOT4

B: COMPONENT

1. FRONT DISC BRAKE

- Except for STI model

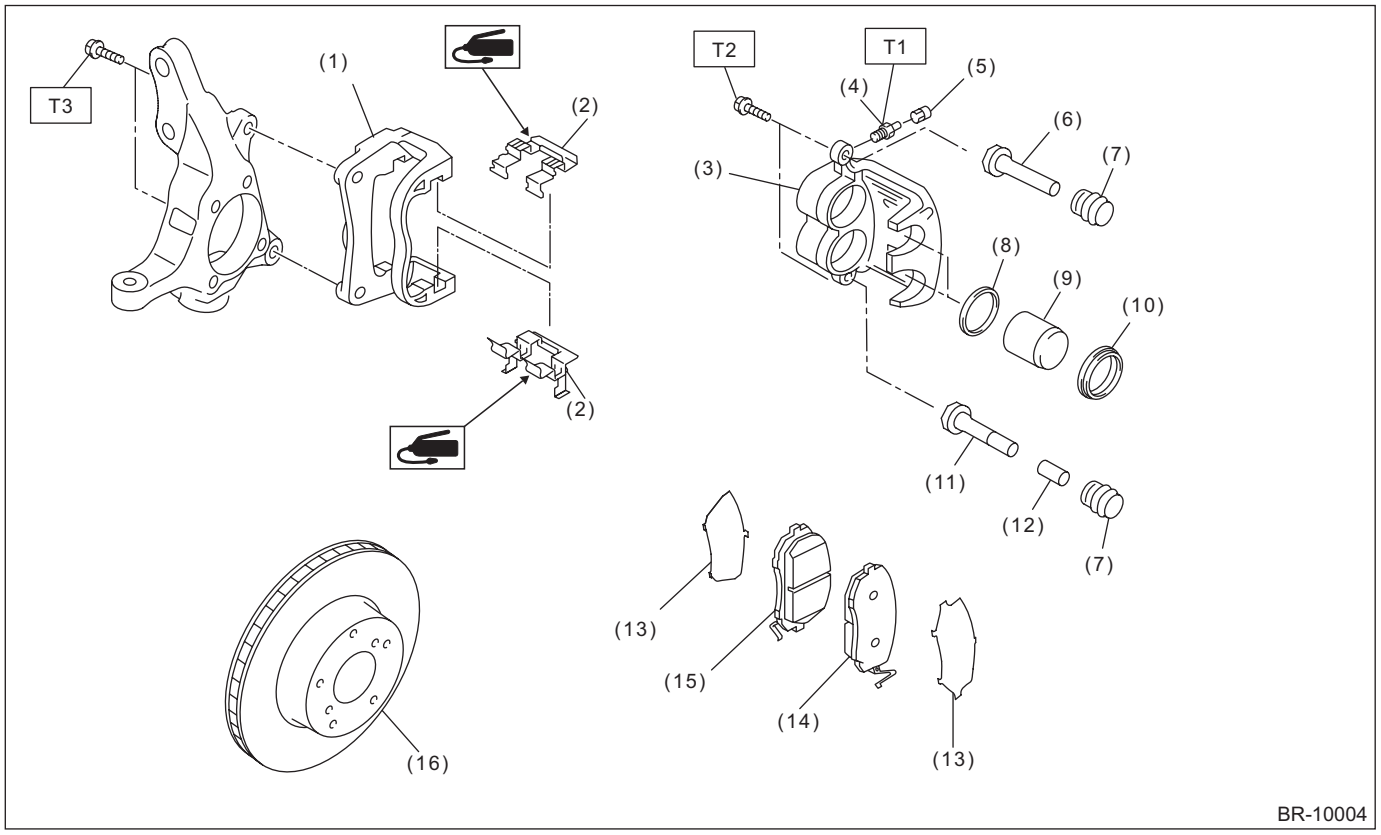

(1)	Support - front disc brake	(8)	Piston seal	(15)	Pad - disc brake front inner
(2)	Pad clip - front brake	(9)	Piston - disc brake	(16)	Disc rotor
(3)	Caliper body	(10)	Piston boot		
(4)	Bleeder - screw	(11)	Lock pin - front brake (silver)	***Tightening torque: N·m (kgf-m, ft-lb)***	
(5)	Cap - bleeder	(12)	Lock pin - bushing	***T1: 8 (0.8, 5.9)***	
(6)	Guide pin - front brake (black)	(13)	Shim - disc brake front	***T2: 27 (2.8, 20.3)***	
(7)	Pin boot	(14)	Pad - disc brake front outer	***T3: 80 (8.2, 59)***	

- STI model

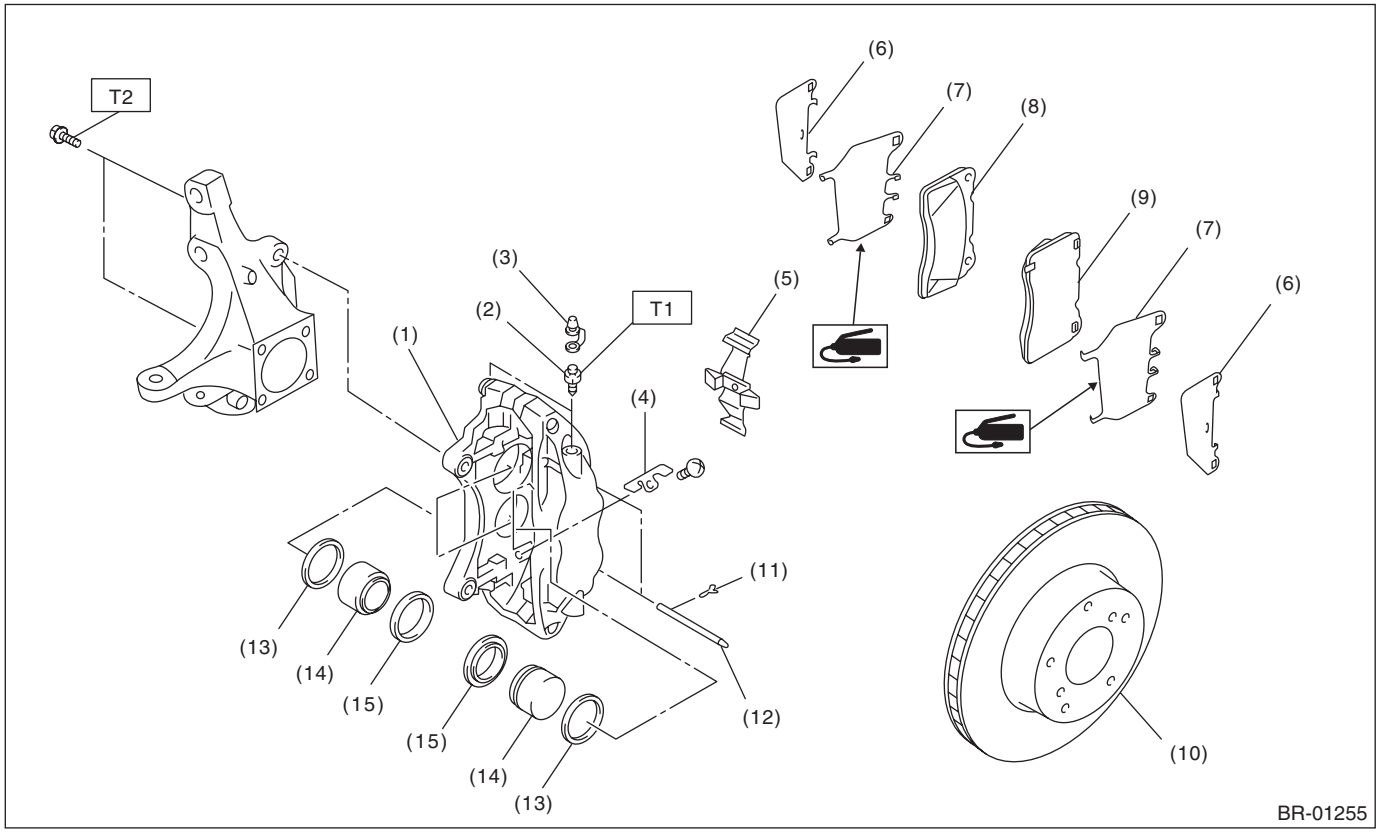

(1) Caliper body
(2) Bleeder - screw
(3) Cap - bleeder
(4) Guide plate
(5) Cross spring
(6) Shim - disc brake front outer
(7) Shim - disc brake front inner
(8) Pad - disc brake front inner
(9) Pad - disc brake front outer
(10) Disc rotor (ventilated type)
(11) Clip - slide pin
(12) Pin - disc brake
(13) Piston seal
(14) Piston - disc brake
(15) Piston boot

Tightening torque: N·m (kgf-m, ft-lb)
T1: 20 (2, 14.8)
T2: 155 (15.8, 114.3)

2. REAR DISC BRAKE (DRUM IN DISC TYPE)

- Except for STI model

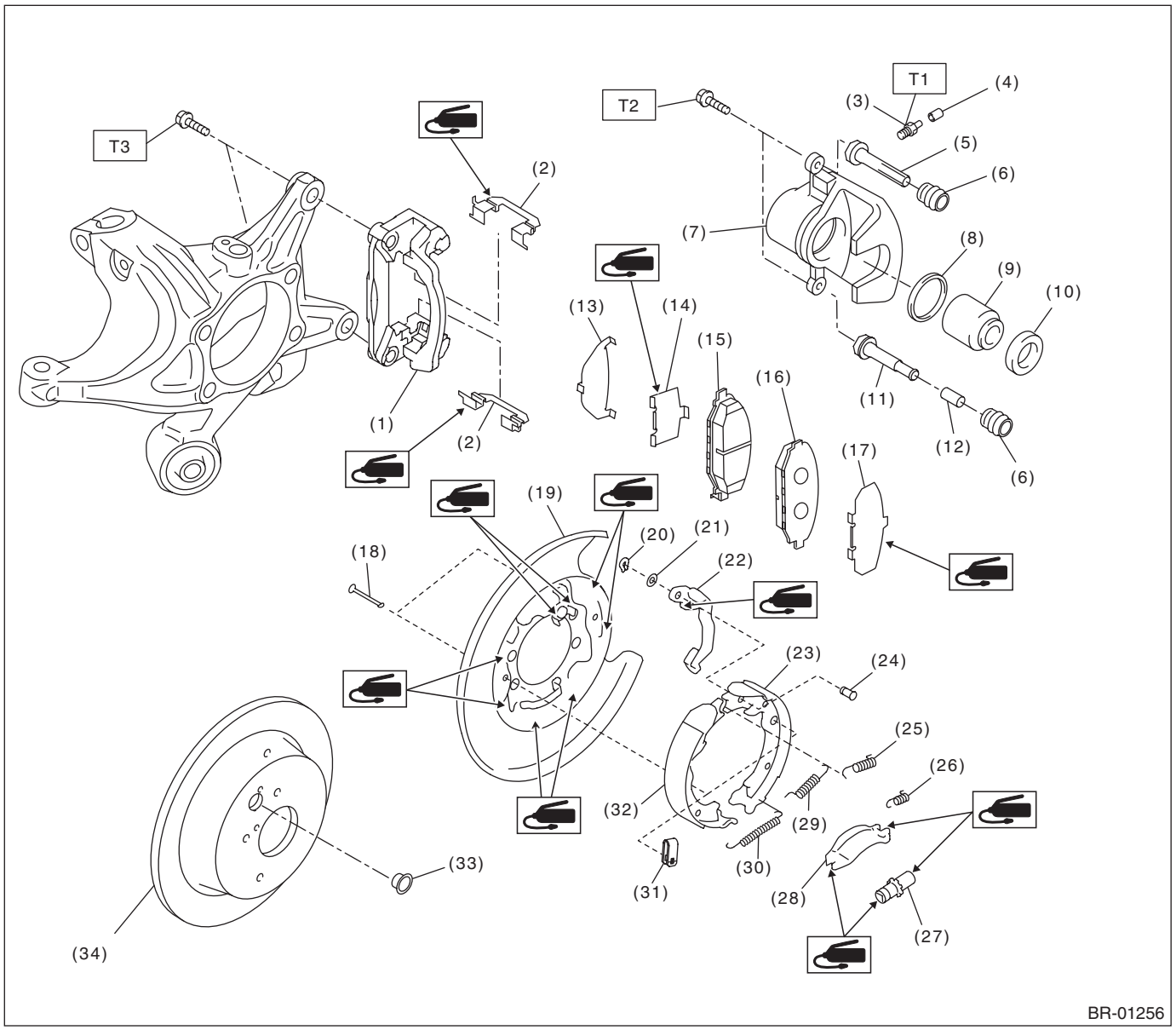

(1) Support - rear disc brake
(2) Pad clip - rear brake
(3) Bleeder - screw
(4) Cap - bleeder
(5) Guide pin - rear brake (black)
(6) Pin boot
(7) Caliper body
(8) Piston seal
(9) Piston - disc brake
(10) Piston boot
(11) Lock pin - rear brake (silver)
(12) Lock pin - bushing
(13) Shim - disc brake rear outer
(14) Shim - disc brake rear inner
(15) Pad - disc brake rear inner
(16) Pad - disc brake rear outer
(17) Shim - disc brake rear outer and inner
(18) Pin - shoe hold-down
(19) Back plate - rear brake
(20) Retainer - rear brake
(21) Spring washer - rear brake
(22) Parking lever - rear
(23) Parking brake shoe (secondary)
(24) Pin - parking lever
(25) Spring - secondary shoe return
(26) Spring - strut
(27) Adjuster ASSY - rear brake
(28) Strut - brake
(29) Spring - primary shoe return
(30) Spring - adjuster
(31) Spring - shoe clamp
(32) Parking brake shoe (primary)
(33) Adjusting hole cover
(34) Disc rotor (solid type)

Tightening torque: N·m (kgf-m, ft-lb)
T1: 8 (0.8, 5.9)
T2: 27 (2.8, 19.9)
T3: 66 (6.7, 48.7)

- STI model

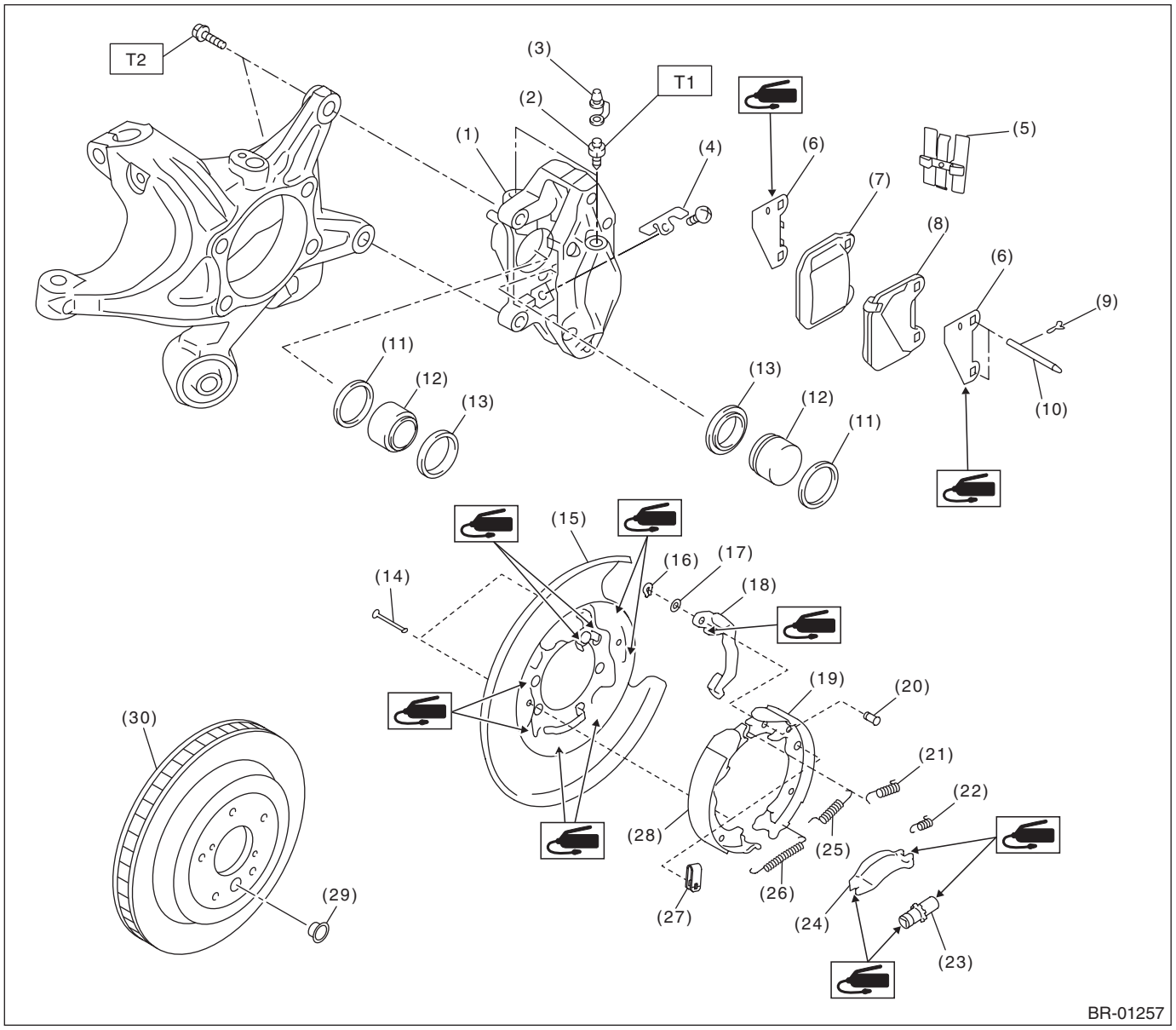

(1) Caliper body
(2) Bleeder - screw
(3) Cap - bleeder
(4) Guide plate
(5) Cross spring
(6) Shim - disc brake rear outer and inner
(7) Pad - disc brake rear inner
(8) Pad - disc brake rear outer
(9) Clip - slide pin
(10) Pin - disc brake
(11) Piston seal
(12) Piston - disc brake
(13) Piston boot
(14) Pin - shoe hold-down
(15) Back plate - rear brake
(16) Retainer - rear brake
(17) Spring washer - rear brake
(18) Parking lever - rear
(19) Parking brake shoe (secondary)
(20) Pin - parking lever
(21) Spring - secondary shoe return
(22) Spring - strut
(23) Adjuster ASSY - rear brake
(24) Spring - strut
(25) Spring - primary shoe return
(26) Spring - adjuster
(27) Spring - shoe clamp
(28) Parking brake shoe (primary)
(29) Adjusting hole cover
(30) Disc rotor (solid type)

Tightening torque: N·m (kgf-m, ft-lb)
T1: 20 (2, 14.8)
T2: 65 (6.6, 47.9)

3. REAR DISC BRAKE (ELECTRONIC PARKING BRAKE TYPE)

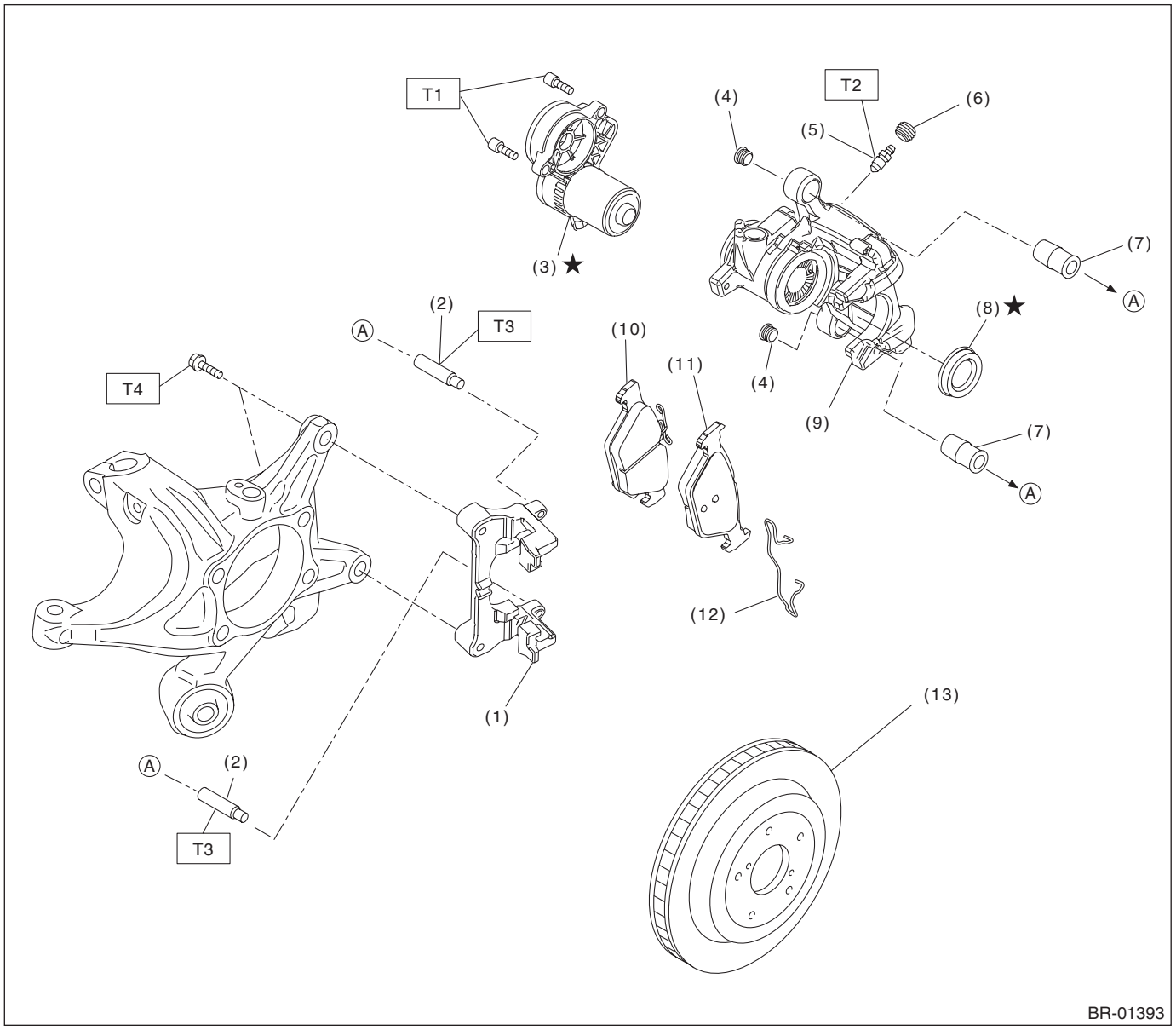

(1) Support - rear disc brake
(2) Guide pin - rear brake
(3) Parking brake actuator
(4) Cap
(5) Bleeder - screw
(6) Cap - bleeder
(7) Pin boot
(8) Piston boot
(9) Caliper body
(10) Pad - disc brake rear inner
(11) Pad - disc brake rear outer
(12) Pad clip
(13) Disc rotor (ventilated type)

Tightening torque: N·m (kgf-m, ft-lb)
T1: 8 (0.8, 5.9)
T2: 17 (1.7, 12.5)
T3: 25 (2.5, 18.4)
T4: 66 (6.7, 48.7)

4. MASTER CYLINDER

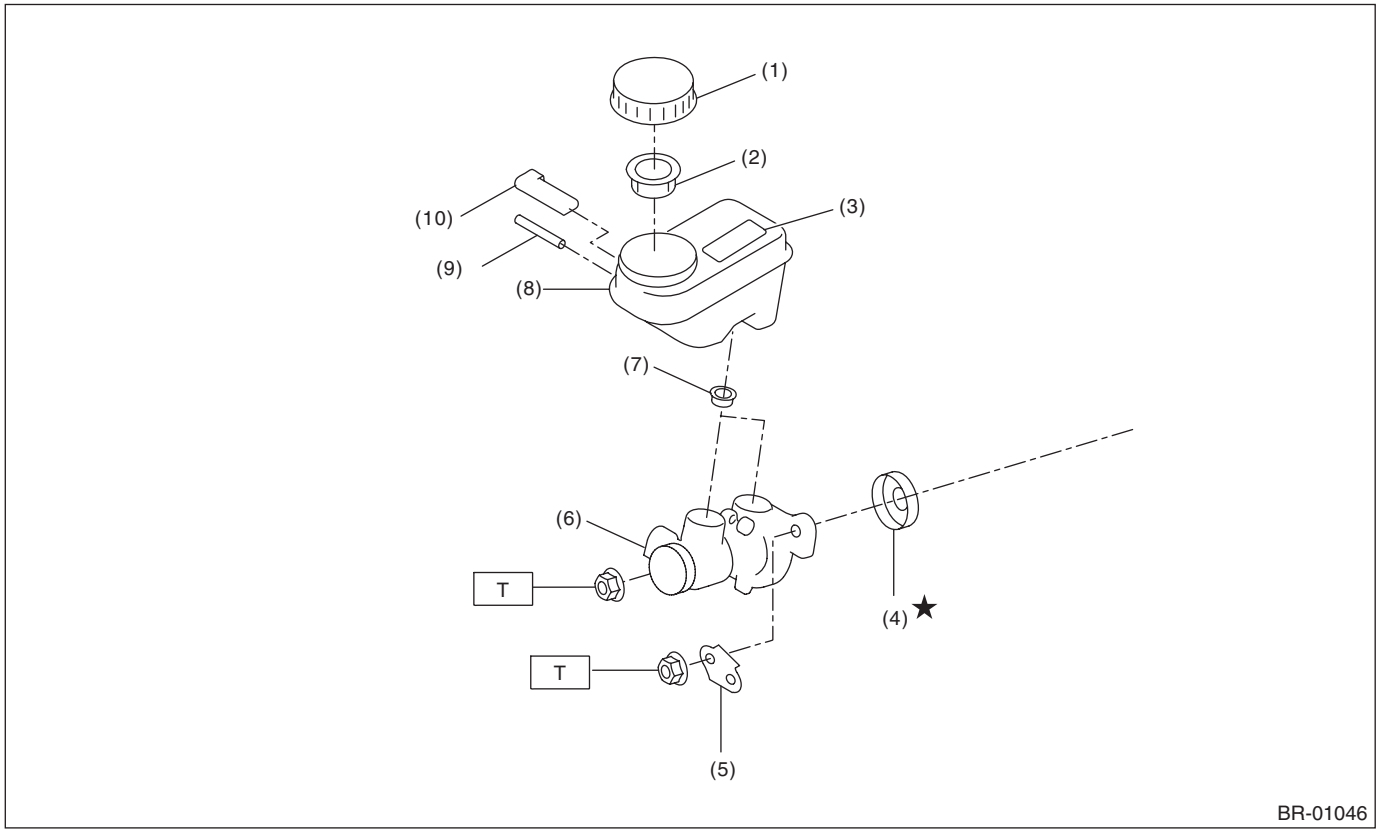

(1)	Cap - reservoir tank	(6)	Cylinder body ASSY
(2)	Filter - master cylinder	(7)	Seal
(3)	Caution label (model with caution label)	(8)	Reservoir tank
(4)	Seal sub ASSY	(9)	Pin
(5)	Bracket - master cylinder	(10)	Level - indicator

Tightening torque: N·m (kgf-m, ft-lb)
T: 13 (1.3, 9.6)

5. FRONT BRAKE PIPES AND HOSES

- Models without EyeSight

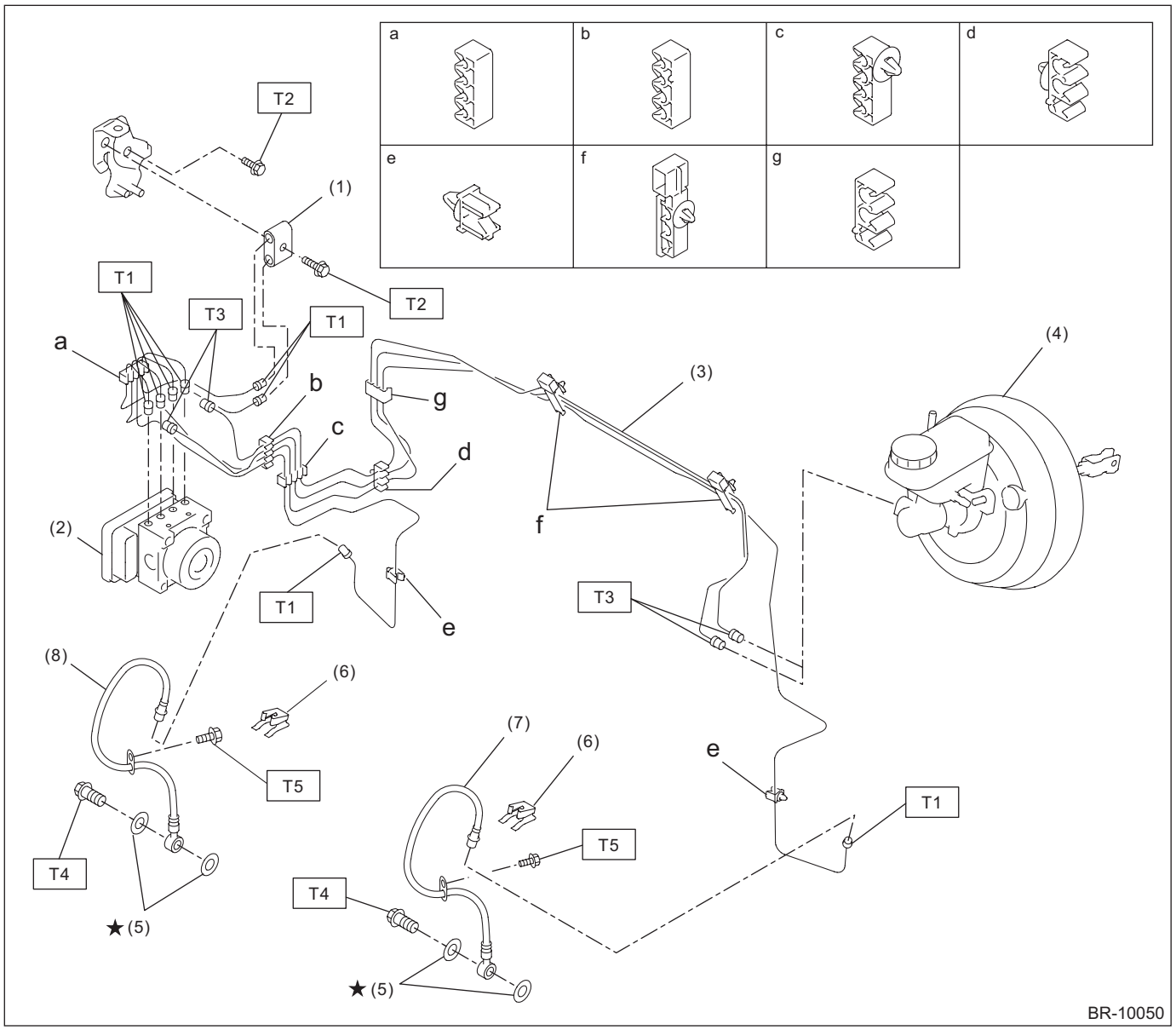

(1)	Connector - two-way	(5)	Gasket
(2)	VDC control module and hydraulic control unit (VDCCM&H/U)	(6)	Clamp
(3)	Front brake pipe ASSY	(7)	Front brake hose LH
(4)	Master cylinder ASSY	(8)	Front brake hose RH

Tightening torque: N·m (kgf-m, ft-lb)

T1: 15 (1.5, 11.1)

T2: 18 (1.8, 13.3)

T3: 19 (1.9, 14)

T4: 26 (2.7, 19.2)

T5: 33 (3.4, 24.3)

- Models with EyeSight

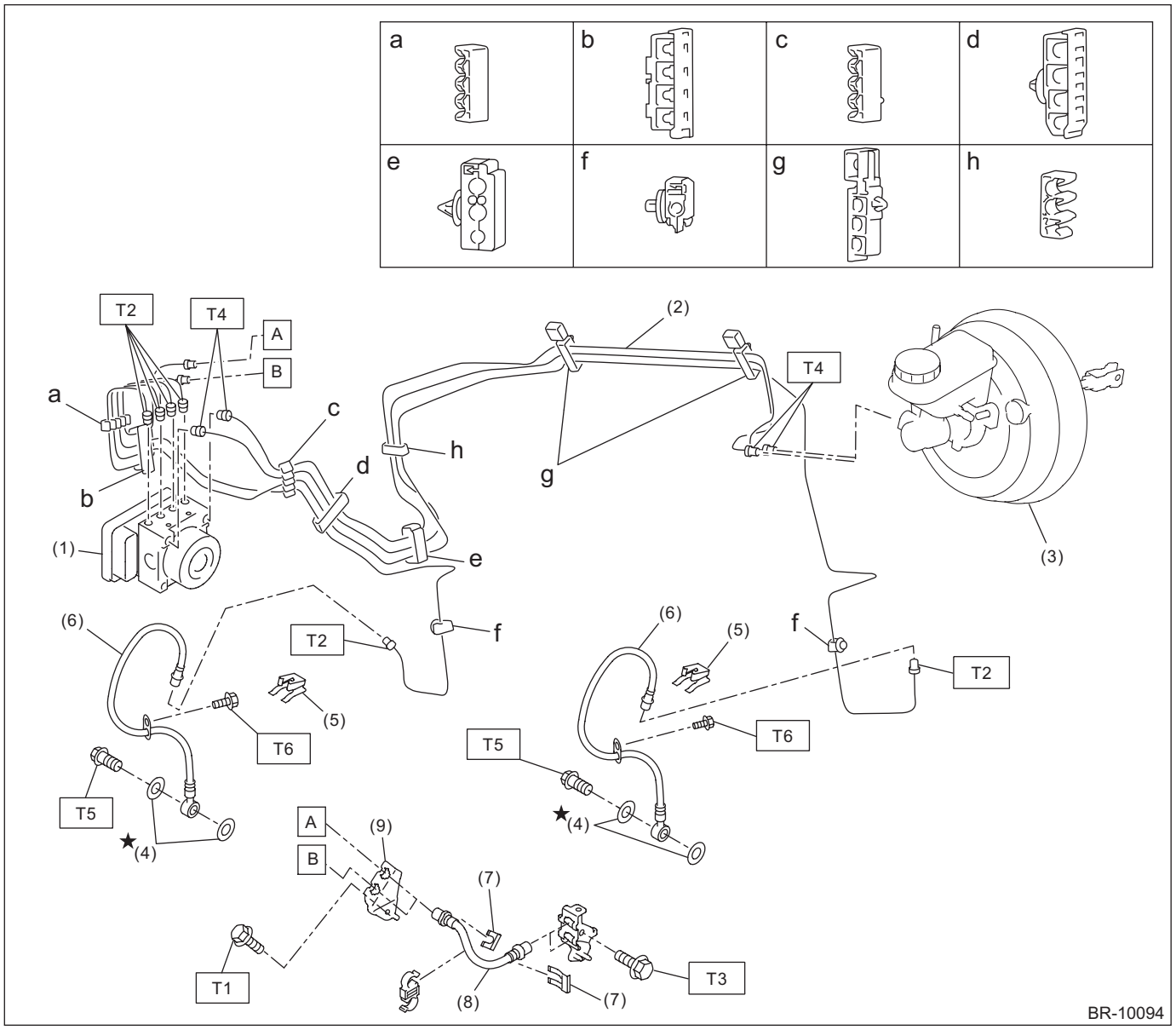

(1)	VDC control module and hydraulic control module	(6)	Front brake hose ASSY RH/LH	***Tightening torque: N·m (kgf-m, ft-lb)***
(2)	Front brake pipe ASSY	(7)	Clamp	***T1: 7.5 (0.8, 5.5)***
(3)	Master cylinder ASSY	(8)	Brake hose ASSY	***T2: 15 (1.5, 11.1)***
(4)	Gasket	(9)	Bracket	***T3: 18 (1.8, 13.3)***
(5)	Clamp			***T4: 19 (1.9, 14)***
				T5: 26 (2.7, 19.2)
				T6: 33 (3.4, 24.3)

6. CENTER AND REAR BRAKE PIPES AND HOSES

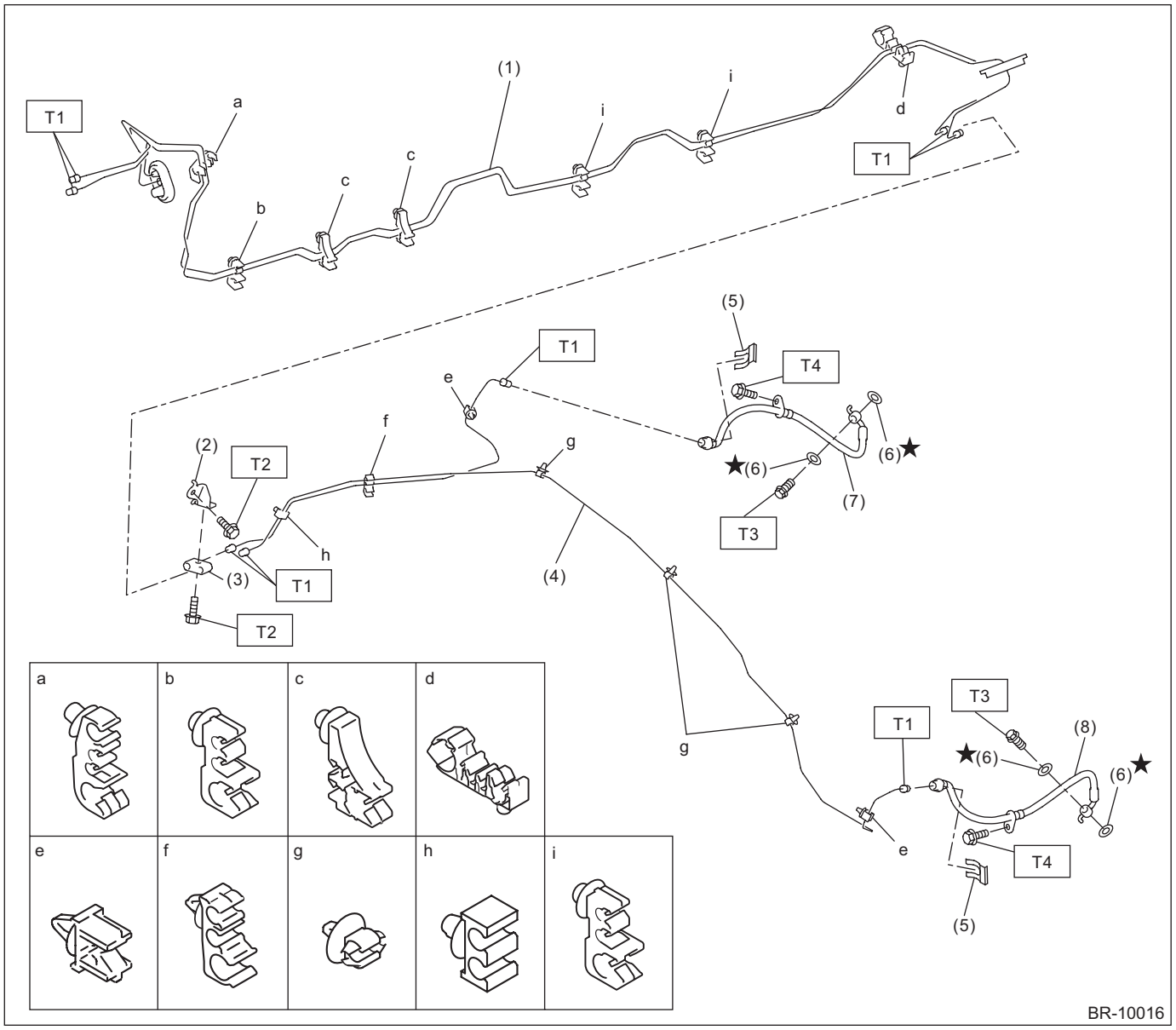

(1) Center brake pipe ASSY
(2) Bracket
(3) Connector
(4) Rear brake pipe ASSY
(5) Clamp
(6) Gasket
(7) Rear brake hose RH
(8) Rear brake hose LH

Tightening torque: N·m (kgf-m, ft-lb)
T1: 15 (1.5, 11.1)
T2: 18 (21.8, 13.3)
T3: 26 (2.7, 19.2)
T4: 33 (3.4, 24.3)

7. BRAKE BOOSTER

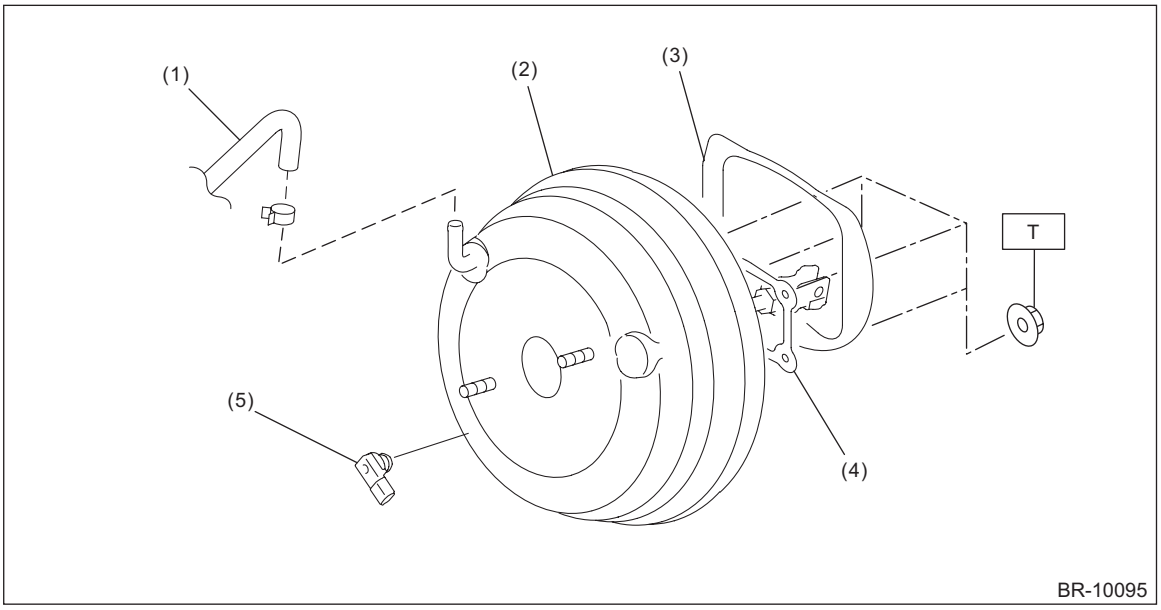

(1) Vacuum hose
(2) Vacuum booster ASSY
(3) Damping seat (model with Eye-Sight)
(4) Gasket
(5) Vacuum sensor

Tightening torque: N·m (kgf-m, ft-lb)
T: 18 (1.8, 13.3)

8. BRAKE PEDAL

- AT model

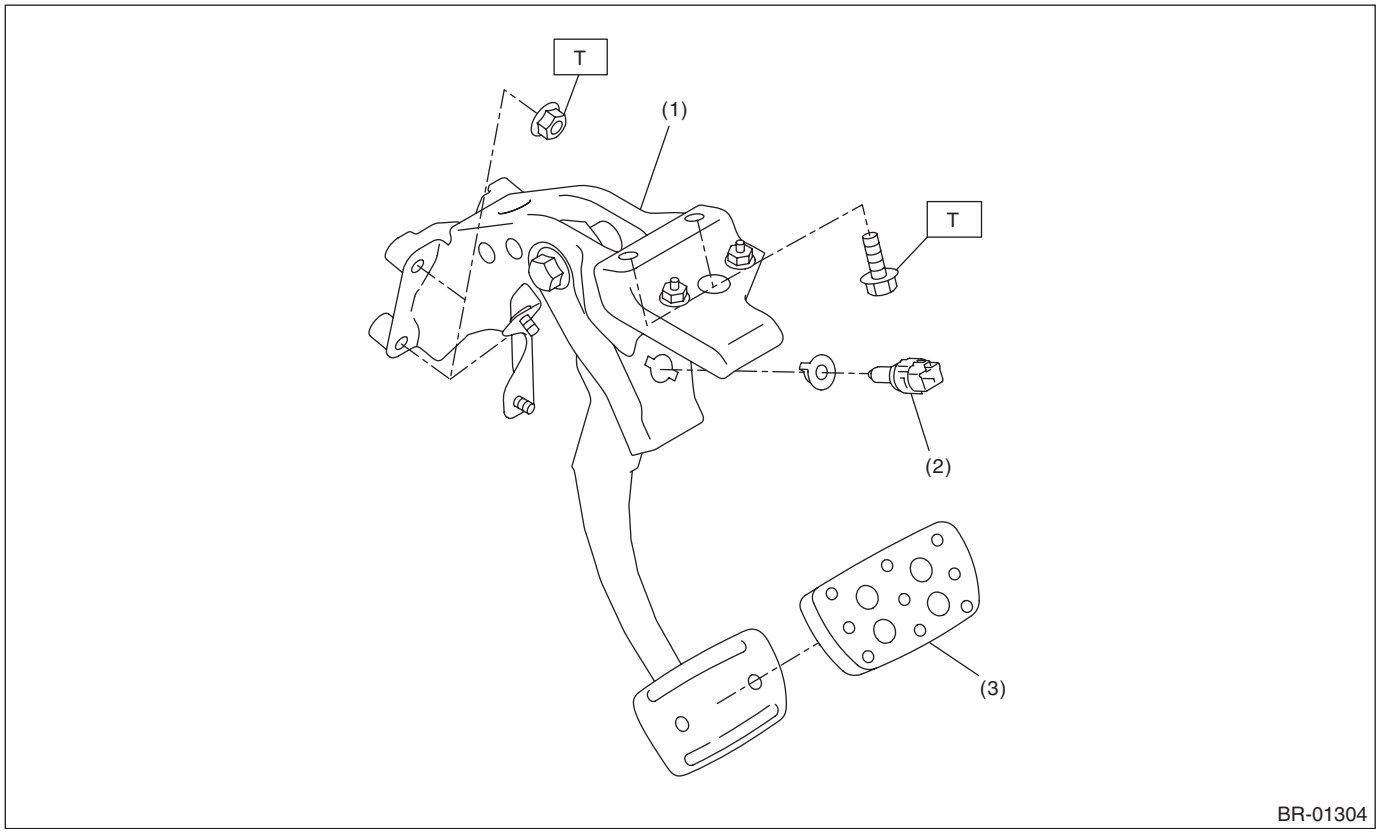

(1) Brake pedal ASSY
(2) Stop light switch
(3) Pad - brake pedal (sport type)

Tightening torque: N·m (kgf-m, ft-lb)
T: 18 (1.8, 13.3)

- MT model

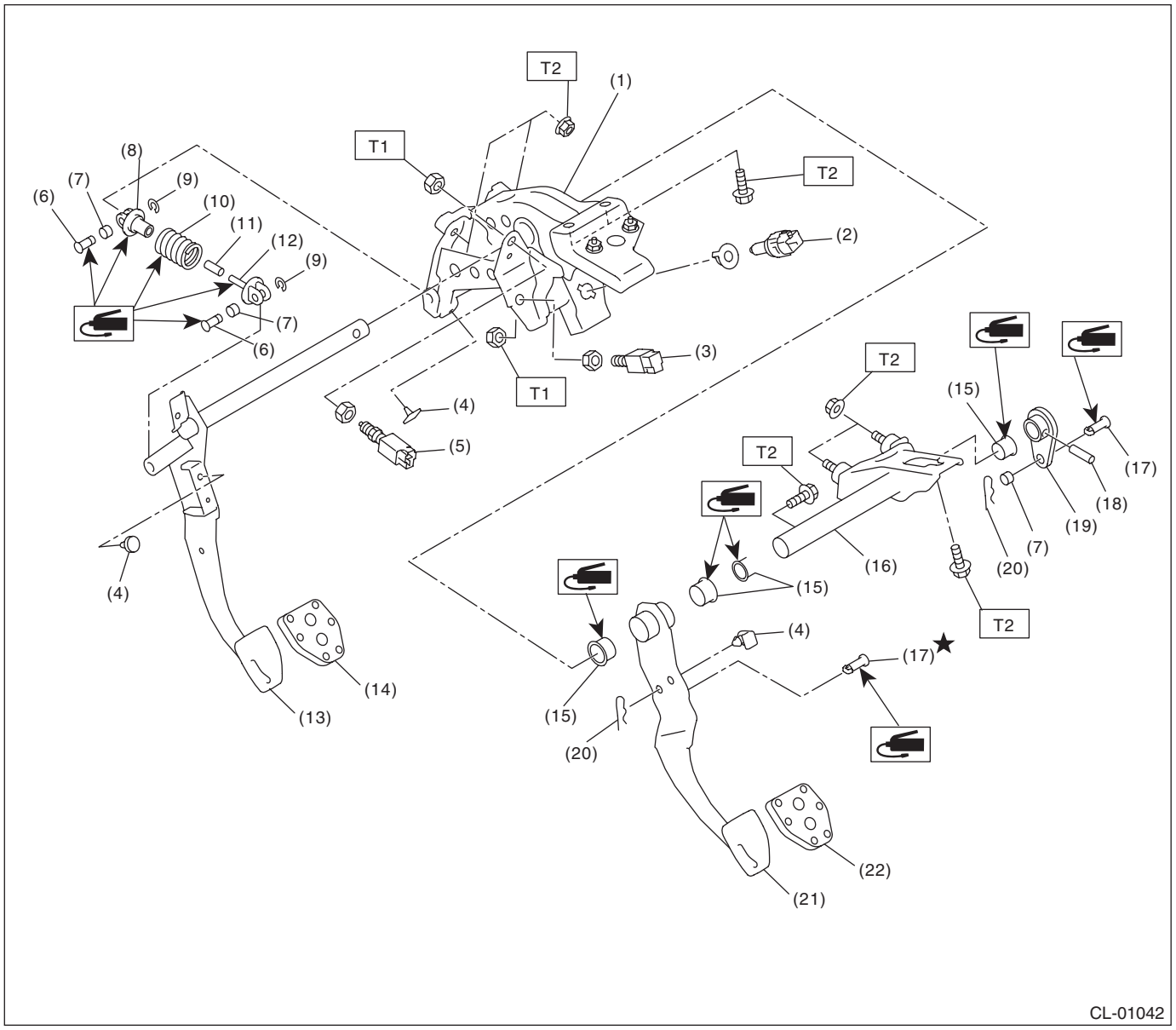

(1) Pedal bracket
(2) Stop light switch
(3) Clutch switch
(4) Stopper
(5) Clutch start switch
(6) Clutch clevis pin
(7) Bushing C
(8) Assist rod B
(9) Clip
(10) Assist spring
(11) Assist bushing
(12) Assist rod A
(13) Clutch pedal
(14) Pad - clutch pedal (sport type)
(15) Bushing
(16) Clutch master cylinder bracket
(17) Clevis pin
(18) Spring pin
(19) Lever
(20) Snap pin
(21) Brake pedal
(22) Pad - brake pedal (sport type)

Tightening torque: N·m (kgf-m, ft-lb)
T1: 8 (0.8, 5.9)
T2: 18 (1.8, 13.3)

9. BRAKE VACUUM PUMP

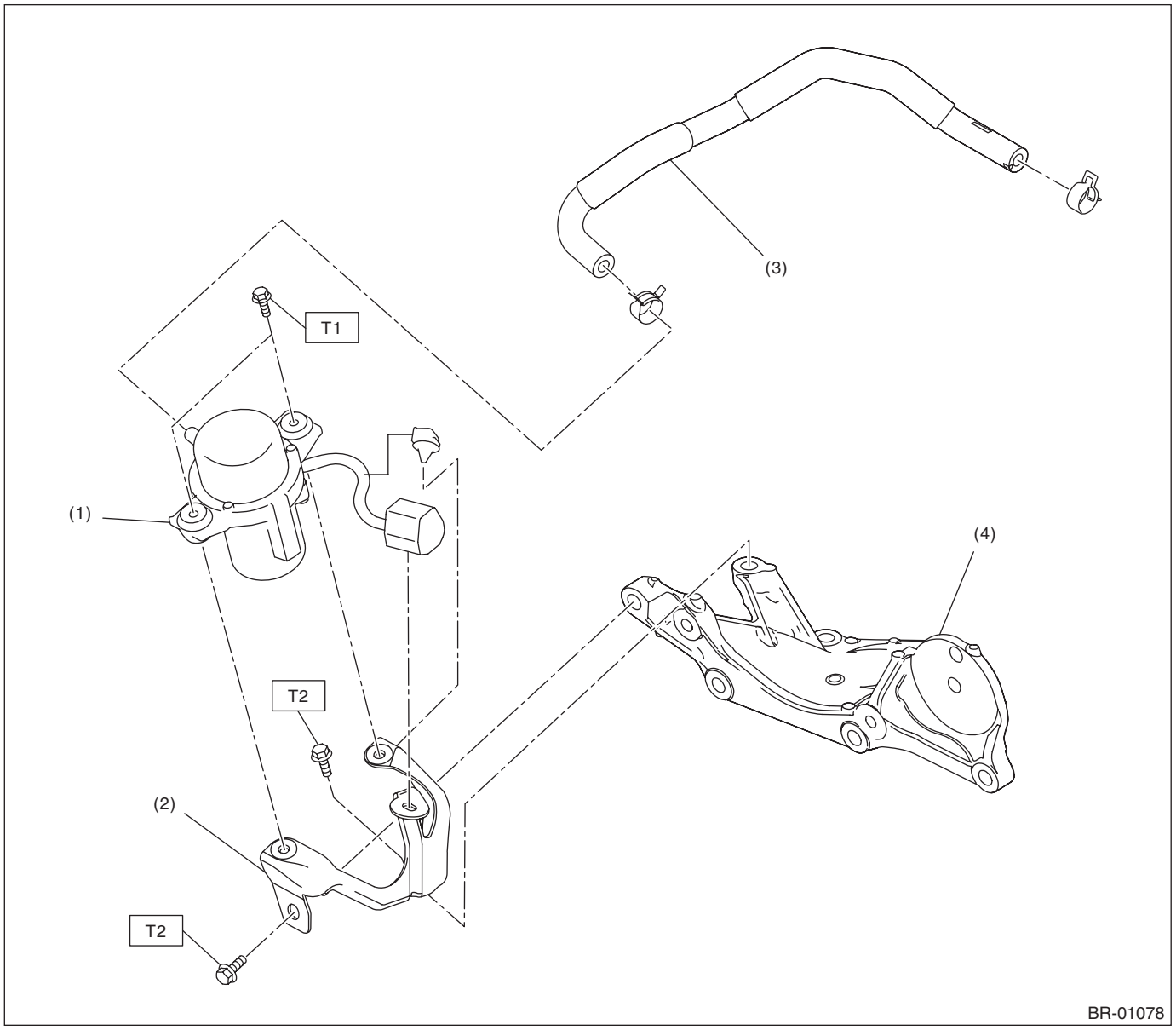

(1) Vacuum pump ASSY
(2) Bracket COMPL - vacuum pump
(3) Vacuum hose COMPL
(4) Bracket - generator

Tightening torque: N·m (kgf-m, ft-lb)
T1: 6.4 (0.7, 4.7)
T2: 19 (1.9, 14)

C: CAUTION

- When performing any work, always wear work clothes, a work cap and protective shoes. Additionally, wear a helmet, protective goggles, etc. if necessary.
- When performing a repair, identify the cause of trouble and avoid unnecessary removal, disassembly and replacement.
- Some vehicle components are extremely hot immediately after driving. Be wary of receiving burns from heated parts.
- Use SUBARU genuine grease, the recommended or equivalent. Do not mix grease etc. of different grades or manufacturers.
- Be sure to tighten fasteners including bolts and nuts to the specified torque.
- Always use the jack-up point when the shop jacks or rigid racks are used to support the vehicle.
- Apply grease onto sliding or revolving surfaces before installation.
- Be sure that the surface of brake disc, brake pad or brake shoe is free from grease or oil.
- Remove contamination including dirt and corrosion before removal, installation, disassembly or assembly.
- Do not secure a part in a vise directly. Place cushioning materials such as wood blocks, aluminum plates, or waste cloth between the part and the vise.

D: PREPARATION TOOL

1. SPECIAL TOOL

ILLUSTRATION	TOOL NUMBER	DESCRIPTION	REMARKS
 STSSM4	—	SUBARU SELECT MONITOR 4	Used for setting of each function and trouble-shooting for electrical system. NOTE: For detailed operation procedures of Subaru Select Monitor 4, refer to “Application help”.
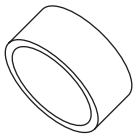 ST99099AL000	99099AL000	PISTON BOOT INSTALLER	Used for installing the piston boot.

2. GENERAL TOOL

TOOL NAME	REMARKS
Circuit tester	Used for measuring resistance, voltage and current.
DST-i	Used together with Subaru Select Monitor 4.
Pressure gauge	Used for measuring the operation and airtightness of the brake booster.
Vacuum gauge	Used for measuring the operation and airtightness of the brake booster.
Dial gauge	Used for measuring brake disc rotor run-out.
Cap	Used for brake hose installing portion of brake disc caliper.
Disc brake piston tool	Used for pushing back the electronic parking brake piston. • KTC disc parking tool rotor • OTC brake caliper tool adapter or equivalent

2. Front Brake Pad

A: REMOVAL

1. EXCEPT FOR STI MODEL

1) Lift up the vehicle, and then remove the front wheels.
2) Remove the pad - disc brake front.
   (1) Remove the caliper bolt on the lower side.
   (2) Raise the caliper body assembly and remove the pad - disc brake front.

NOTE:
Do not disconnect the brake hose from the caliper body assembly.

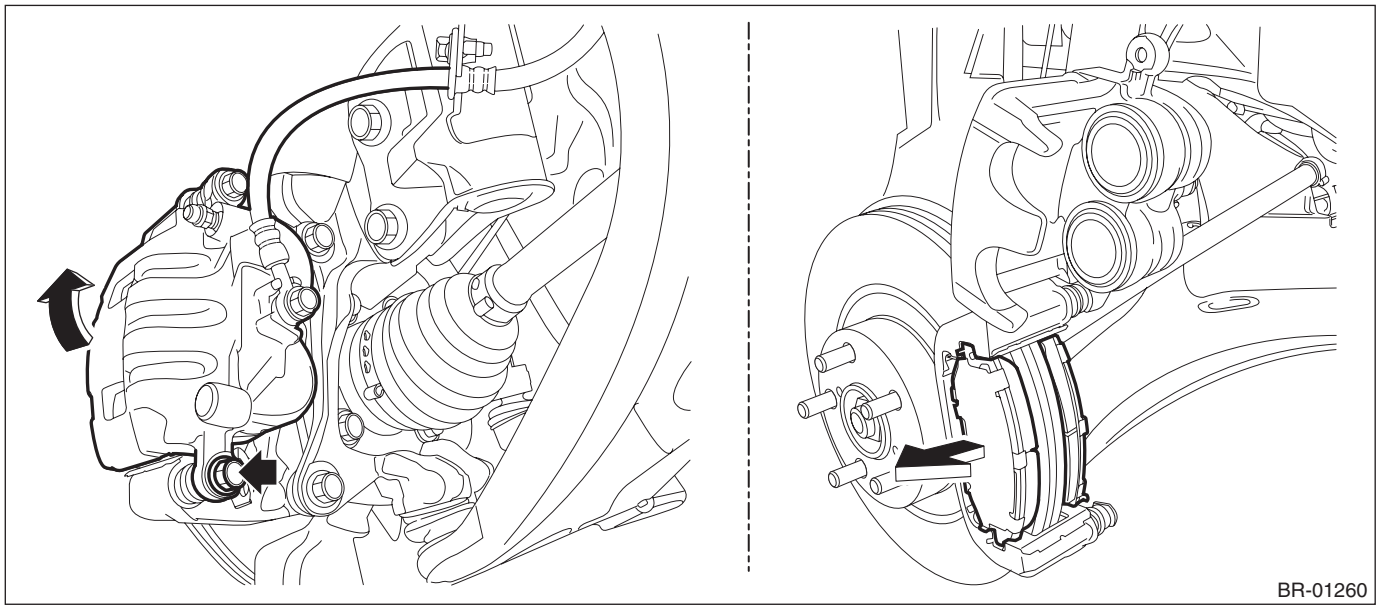

2. STI MODEL

1) Lift up the vehicle, and then remove the front wheels.
2) Remove the pad - disc brake front.
   (1) Remove the clip - slide pin (a), and remove the pin - disc brake (b) and cross spring (c).
   (2) While pushing back the piston with a wrench, remove the pad - disc brake front.

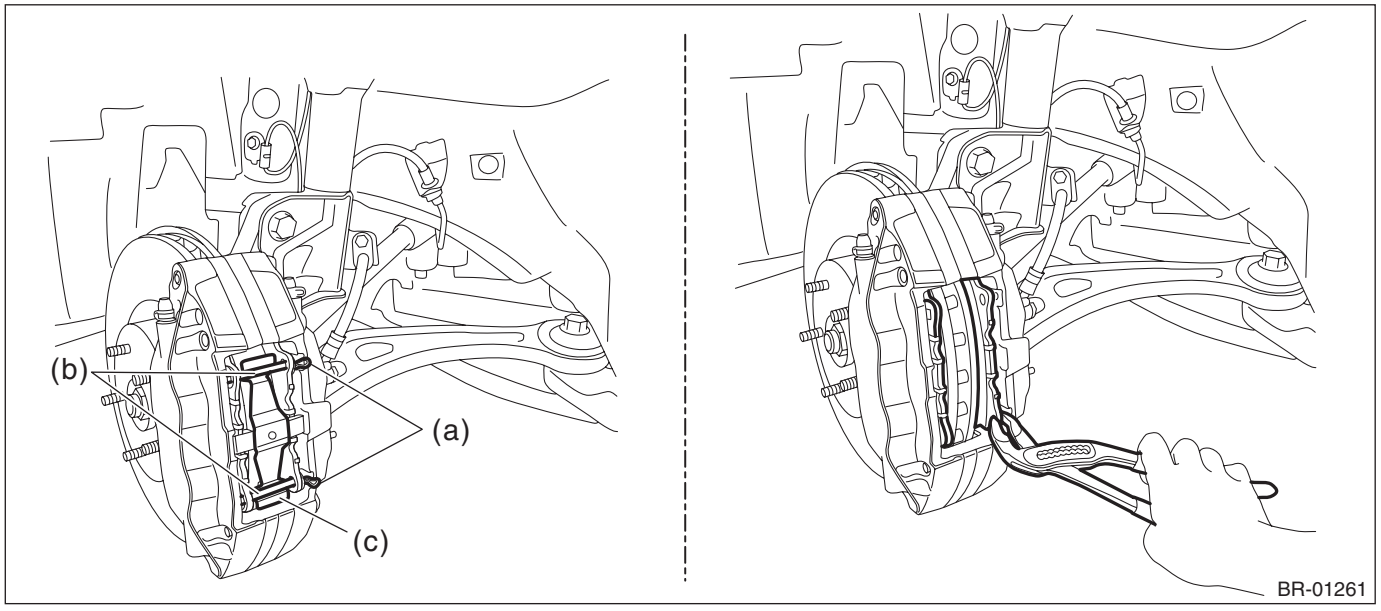

B: INSTALLATION

1. EXCEPT FOR STI MODEL

NOTE:
Before installation, remove mud and foreign matter from the caliper body assembly and support - front disc brake.
1) Check the brake pad. <Ref. to BR-24, INSPECTION, Front Brake Pad.>
2) Apply a thin coat of grease to the pad clip.

Preparation items:
Grease: An item contained in the pad kit or equivalent

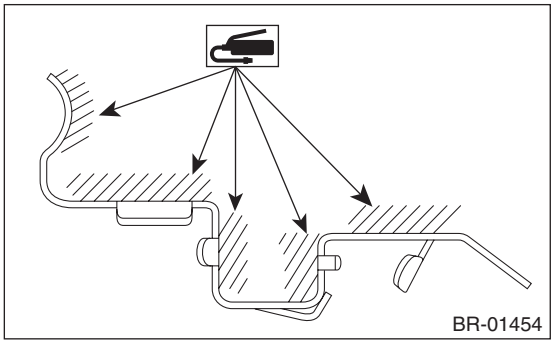

3) Install the pad - disc brake front.

CAUTION:
• Be sure to install so that the pad return spring faces the input side of the direction of disc rotor rotation, as shown in the figure.
• Correctly install the pad return spring to the supporting surface of the pad clip as shown in the figure.
• If the pad return spring is deformed or damaged, replace the pad - disc brake front with a new part.

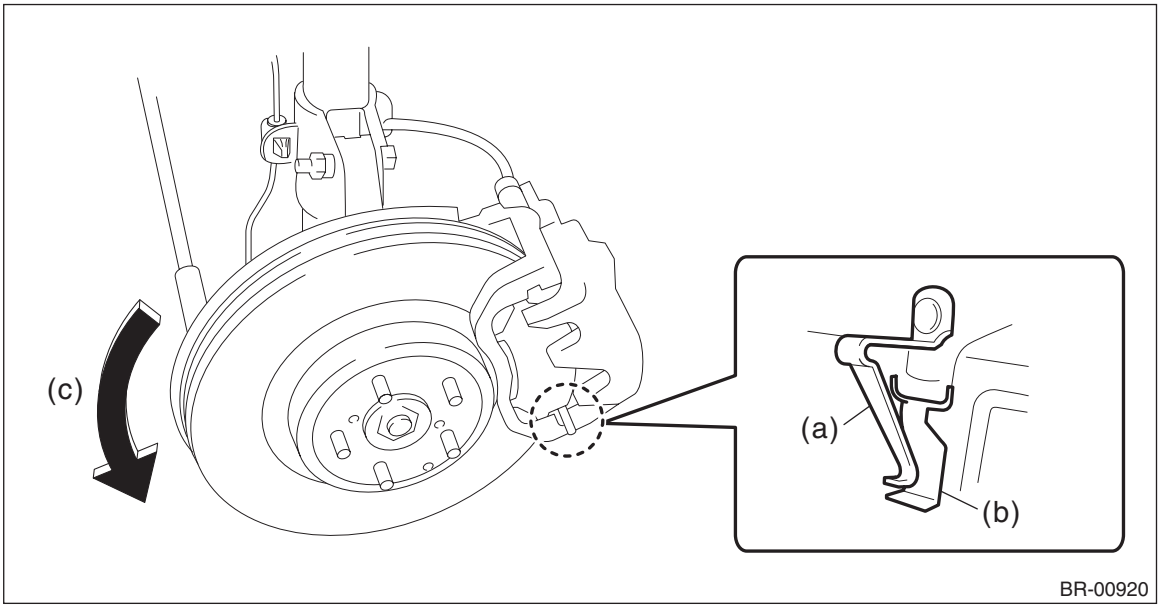

(a) Pad return spring (b) Supporting surface of pad clip (c) Disc rotor rotation direction

NOTE:
Install the pad indicator in proper direction.

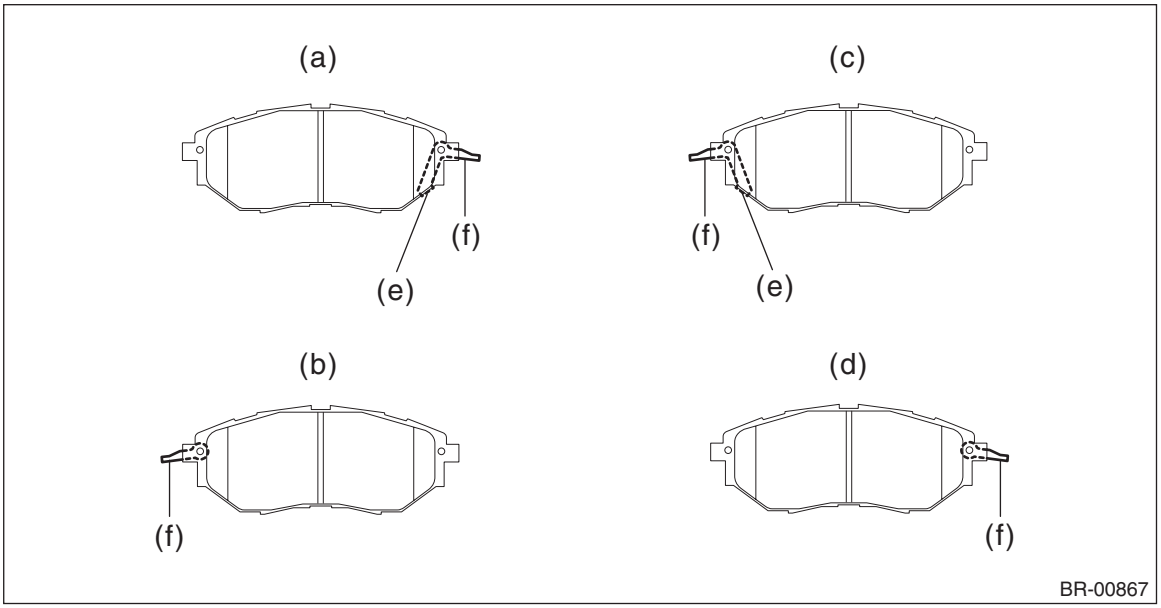

(a) LH — IN
(b) LH — OUT
(c) RH — IN
(d) RH — OUT
(e) Pad indicator
(f) Pad return spring

4) Install the caliper body assembly.

Tightening torque:
27 N·m (2.8 kgf-m, 19.9 ft-lb)

5) Install the front wheels.

Tightening torque:
120 N·m (12.2 kgf-m, 88.5 ft-lb)

2. STI MODEL

NOTE:
Before installation, remove mud and foreign matter from the disc brake assembly.
1) Apply a thin coat of grease to the side of the pad - disc brake front, both sides of the shim - disc brake front inner and the shim mounting surface of the pad - disc brake front.

Preparation items:
Grease (pad side (A)): An item contained in the pad kit or equivalent
Grease (shim and pad (B)): An item contained in the pad kit or Dow Corning Molykote AS880N

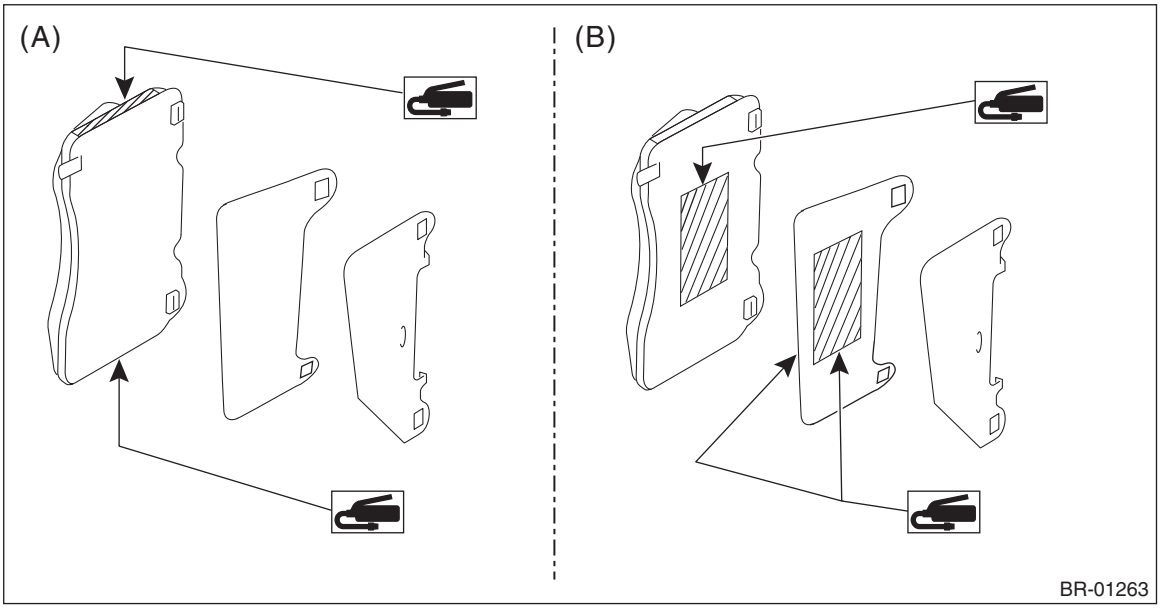

2) Install the pad - disc brake front.

NOTE:
Install so that the arrow (a) faces upward.

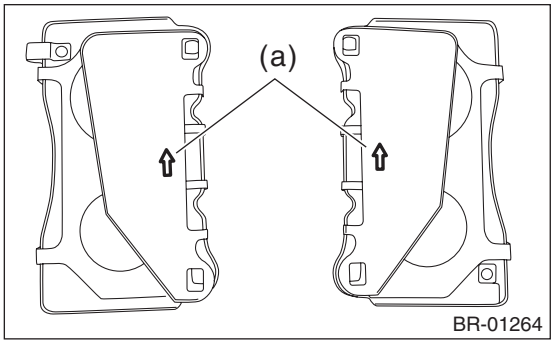

3) Install the cross spring.
4) Install the pin - disc brake.
5) Install the clip - slide pin.
6) Install the front wheels.

Tightening torque:
120 N·m (12.2 kgf-m, 88.5 ft-lb)

C: INSPECTION

1) Check the thickness (A) of the pad - disc brake front.

NOTE:
- Always replace the pads of both wheels and both sides as a set.
- Replace pad clips if they are twisted or worn.
- Replace the pad if there is oil or grease on it.
- Wear indicators are installed on the pad - disc brake front inner and the pad - disc brake front outer, and a squeaking sound is heard if the pad is worn to the limit.

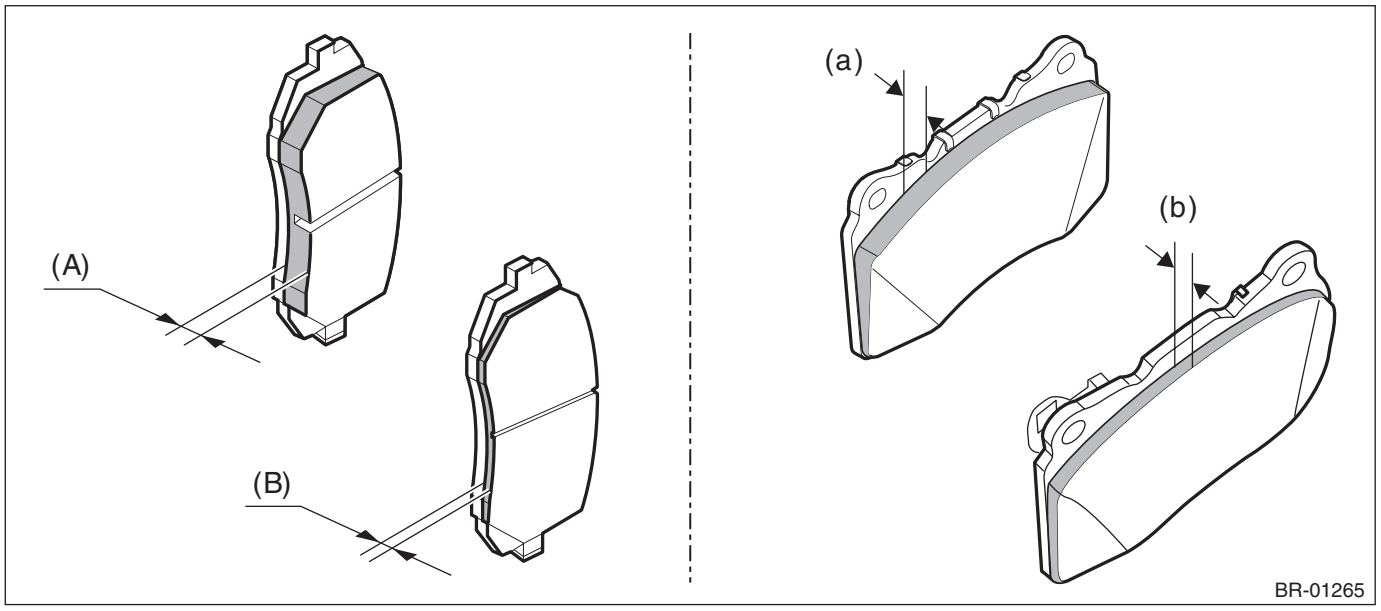

- Except for STI model

	Standard (A)	Wear limit (B)
Pad thickness	11 mm (0.43 in)	1.5 mm (0.059 in)

- STI model

	Standard (a)	Wear limit (b)
Pad thickness	8.9 mm (0.35 in)	1.2 mm (0.047 in)

2) If the wear limit is exceeded in the inspection, replace the pad - disc brake front.

3. Front Disc Rotor

A: REMOVAL

1) Lift up the vehicle, and then remove the front wheels.
2) Remove the disc brake assembly.
   (1) Remove the brake hose bracket.
   (2) Remove the mounting bolt, and remove the disc brake assembly.
   (3) Prepare wiring harnesses etc. to be discarded, and suspend the disc brake assembly from the strut assembly.

CAUTION:
Since the 17-inch (Brembo) caliper body is easily scratched and the paint may be stripped, protect it from being contacted with other parts or tools.

- Except for STI model

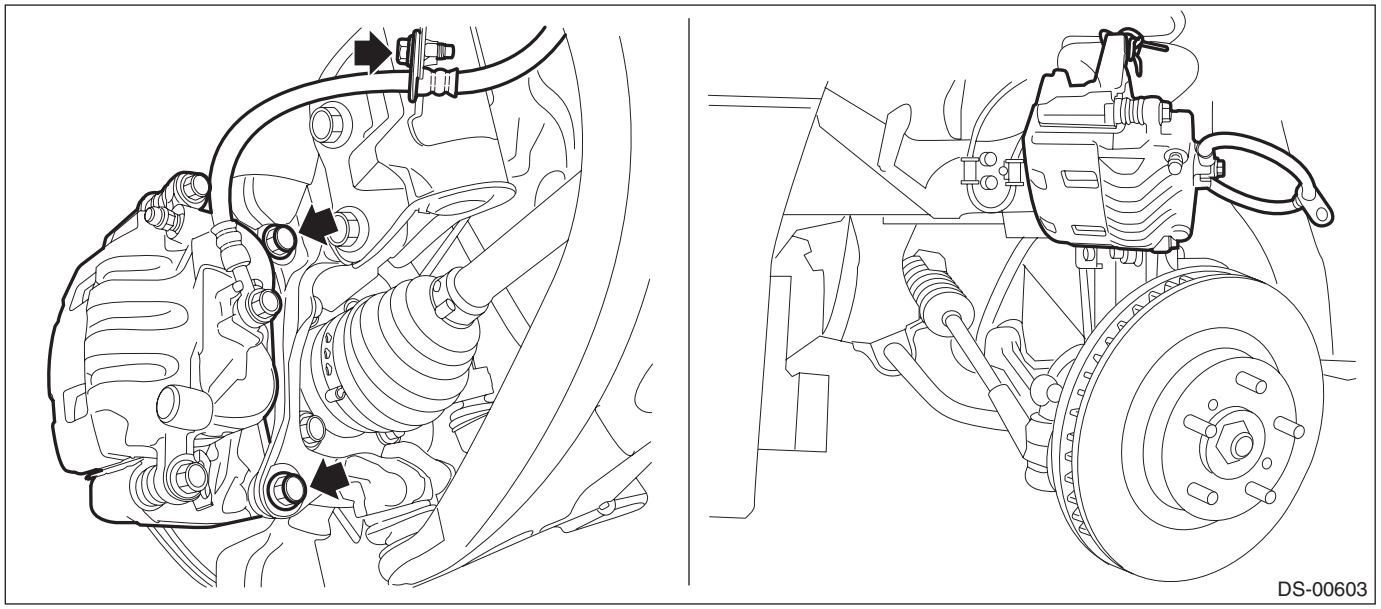

- STI model

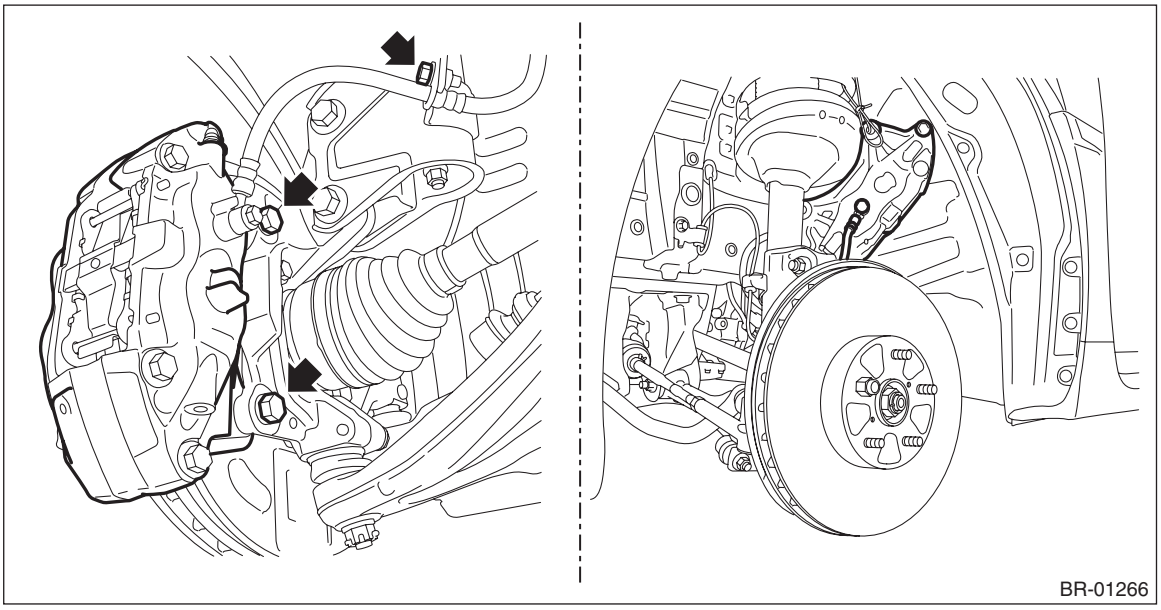

3) Remove the disc rotor.

NOTE:
When the disc rotor is difficult to be removed, screw in 8 mm (0.31 in) bolt to the threaded part of the disc rotor (A), and remove the disc rotor.

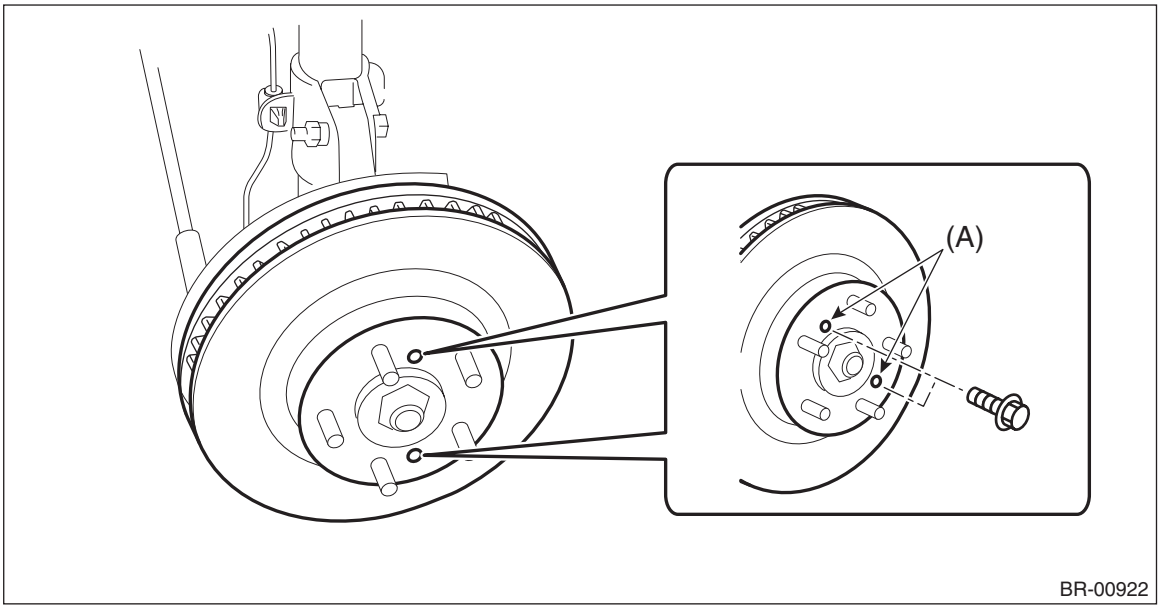

B: INSTALLATION

NOTE:
Before installation, remove mud and foreign matter from the disc brake assembly.
1) Check the front disc rotor. <Ref. to BR-26, INSPECTION, Front Disc Rotor.>
2) Install the disc rotor.
3) Install the disc brake assembly.

Tightening torque:
Mounting bolt (except for STI model): 80 N·m (8.2 kgf-m, 59 ft-lb)
Mounting bolt (STI model): 155 N·m (15.8 kgf-m, 114.3 ft-lb)
Brake hose bracket: 33 N·m (3.4 kgf-m, 24.3 ft-lb)

4) Install the front wheels.

Tightening torque:
120 N·m (12.2 kgf-m, 88.5 ft-lb)

C: INSPECTION

1. DISC ROTOR RUNOUT CHECK

1) Check the hub unit COMPL - front axle for free play and runout before the inspection of disc rotor runout limit. <Ref. to DS-29, INSPECTION, Front Hub Unit Bearing.>
2) Check the disc rotor runout.
(1) Remove the caliper body assembly. <Ref. to BR-25, REMOVAL, Front Disc Rotor.>
(2) Secure the disc rotor by tightening the five wheel nuts.

(3) Set a dial gauge 10 mm (0.39 in) inward from the disc rotor outer circumference, and check the outer disc rotor runout while rotating the disc rotor.

Disc rotor runout limit
Except for STI model: 0.05 mm (0.002 in)
STI model: 0.075 mm (0.003 in)

NOTE:
<Example of magnet stand and dial gauge installation>
The location where the magnet stand is installed varies to stabilize the magnet stand.

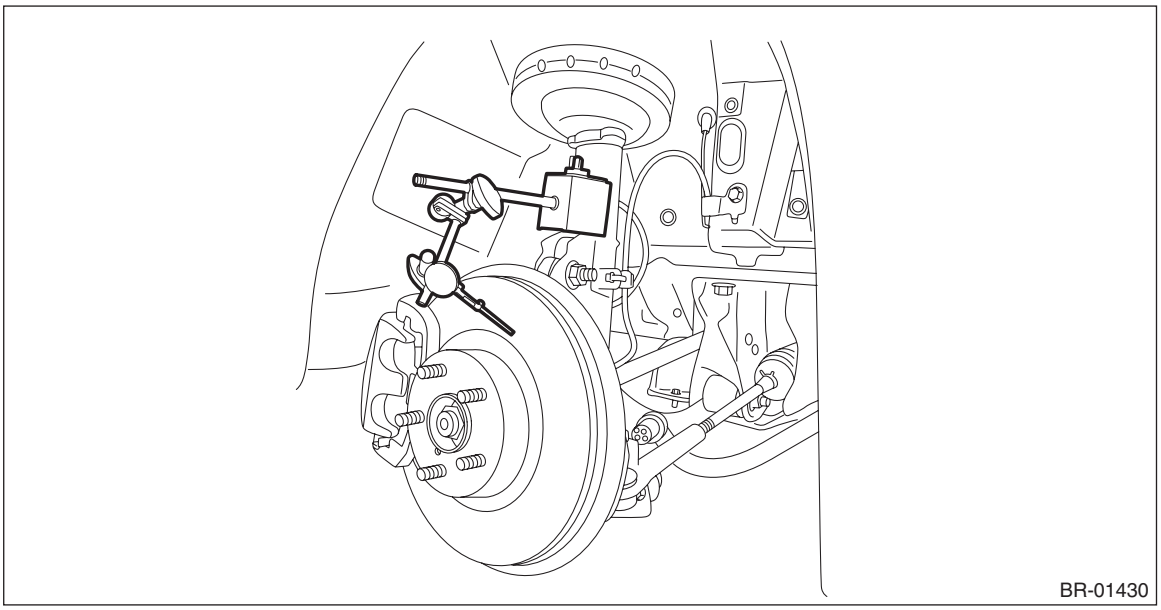
BR-01430

(4) Set a dial gauge 10 mm (0.39 in) inward from the disc rotor outer circumference, and check the inner disc rotor runout while rotating the disc rotor.

Disc rotor runout limit
Except for STI model: 0.05 mm (0.002 in)
STI model: 0.075 mm (0.003 in)

NOTE:
<Example of magnet stand and dial gauge installation>
The location where the magnet stand is installed varies to stabilize the magnet stand.

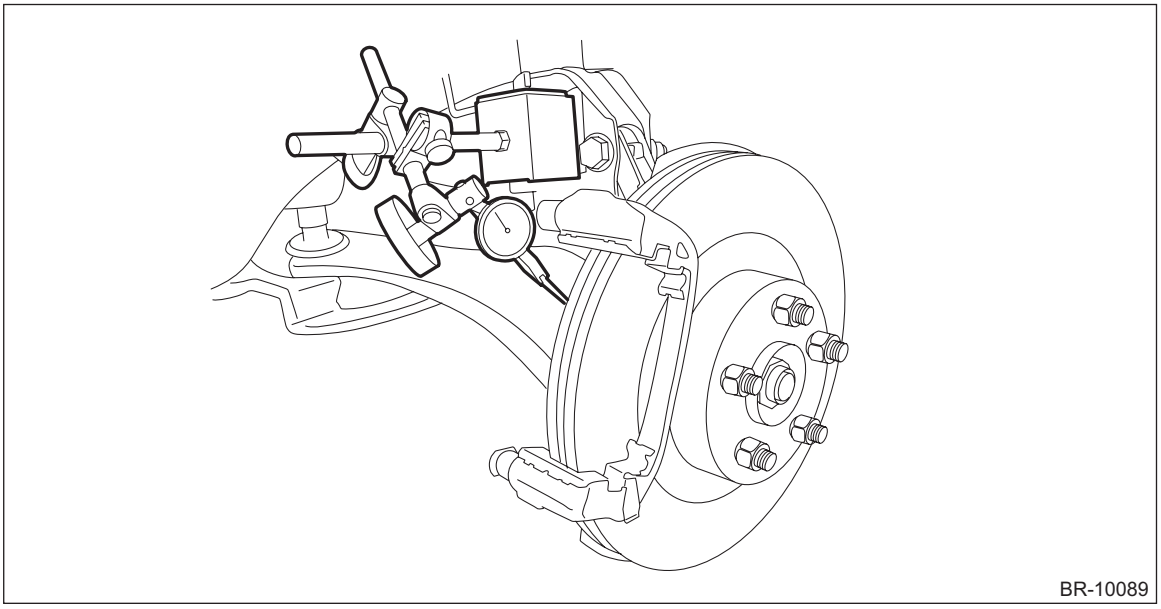
BR-10089

3) If the disc rotor runout exceeds service limit, grind the disc rotor.
4) Check the disc rotor thickness after grinding. <Ref. to BR-28, DISC ROTOR THICKNESS CHECK, INSPECTION, Front Disc Rotor.>

2. DISC ROTOR THICKNESS CHECK

1) Set a micrometer 10 mm (0.39 in) inward from the disc rotor outer perimeter, and then measure the disc rotor thickness (A).

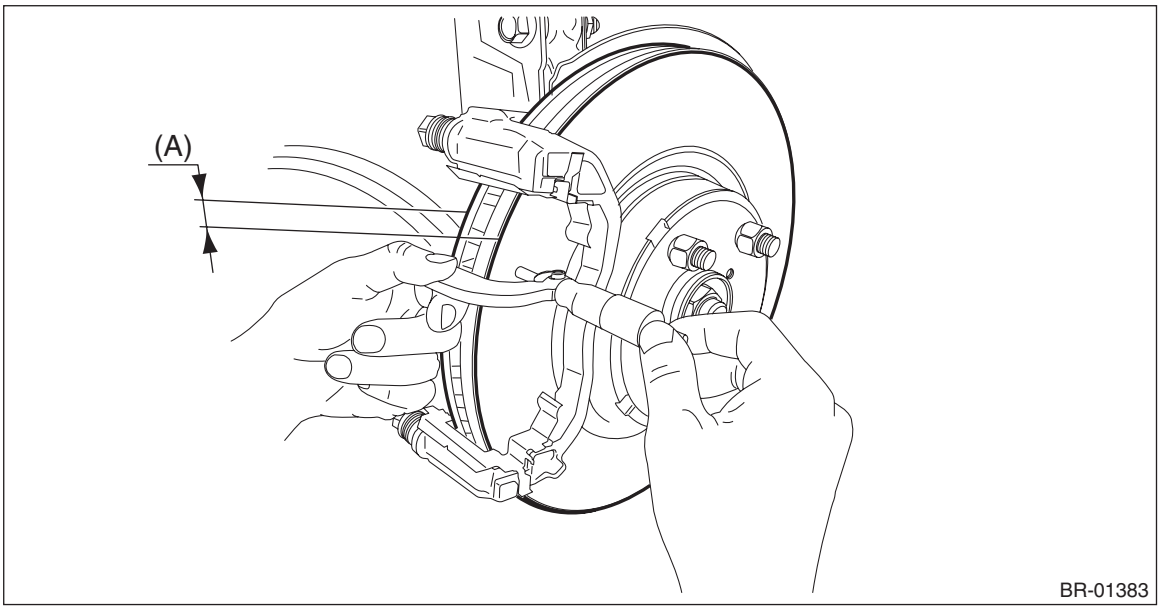

	Size	Standard	Wear limit	Disc rotor outer diameter
Disc rotor thickness (A)	Except for STI model	30 mm (1.18 in)	28 mm (1.1 in)	316 mm (12.44 in)
	STI model	30 mm (1.18 in)	28 mm (1.1 in)	326 mm (12.83 in)

2) If the wear limit is exceeded in the inspection, replace the disc rotor.

4. Front Disc Brake Assembly

A: REMOVAL

1. EXCEPT FOR STI MODEL

1) Lift up the vehicle, and then remove the front wheels.
2) Remove the union bolt and the caliper bolt, and remove the caliper body assembly.

CAUTION:
• Do not allow brake fluid to come in contact with the painted surface of the vehicle body. If it does, wash off with water and wipe away completely.
• Prepare a container to catch grease or oil, etc. If any grease or oil spills, wipe it off and clean immediately to prevent from penetrating into floor or flowing outside.

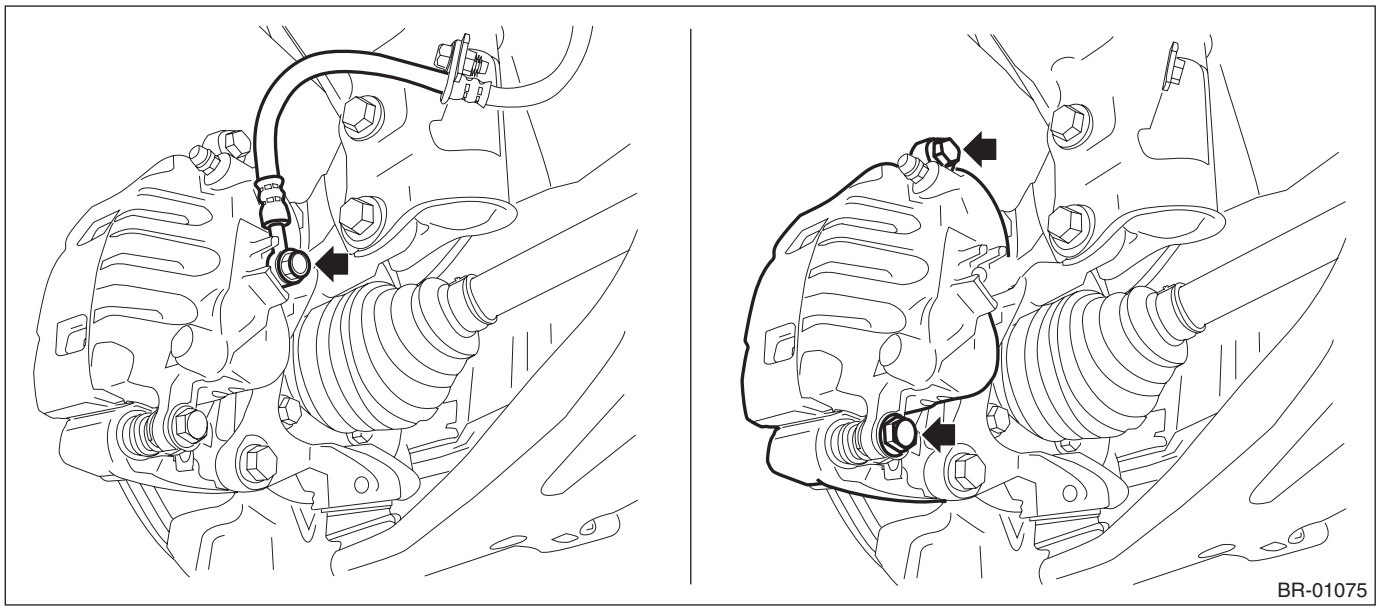
BR-01075

3) Remove the support - front disc brake.
(1) Remove the pad - disc brake front.

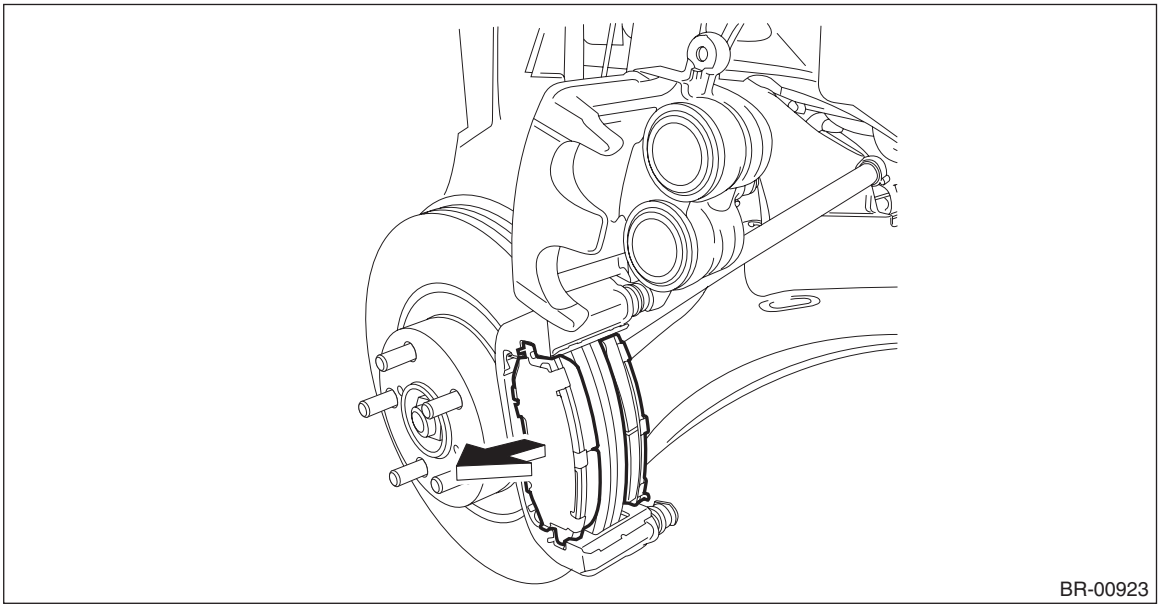
BR-00923

(2) Remove the mounting bolts, and then remove the support - front disc brake.

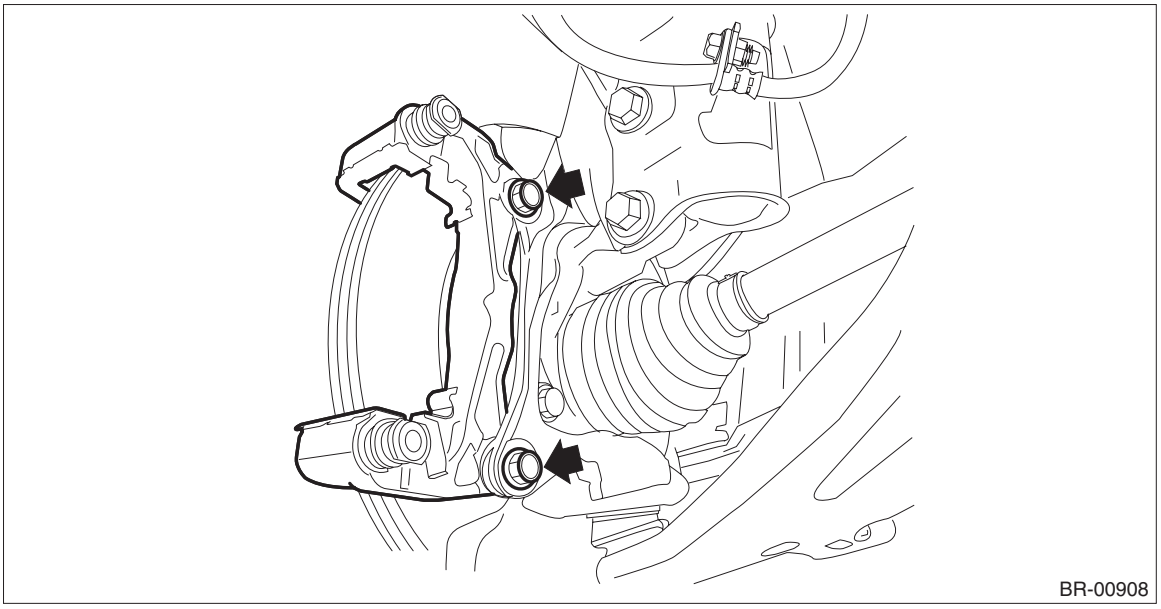

2. STI MODEL

NOTE:
Before installation, remove mud and foreign matter from the disc brake assembly.
1) Lift up the vehicle, and then remove the front wheels.
2) Remove the pad - disc brake front. <Ref. to BR-20, STI MODEL, REMOVAL, Front Brake Pad.>
3) Remove the union bolt and the caliper bolt, and remove the disc brake assembly.

CAUTION:
• Since the 17-inch (Brembo) caliper body is easily scratched and the paint may be stripped, protect it from being contacted with other parts or tools.
• Do not allow brake fluid to come in contact with the painted surface of the vehicle body. If it does, wash off with water and wipe away completely.
• Prepare a container to catch grease or oil, etc. If any grease or oil spills, wipe it off and clean immediately to prevent from penetrating into floor or flowing outside.

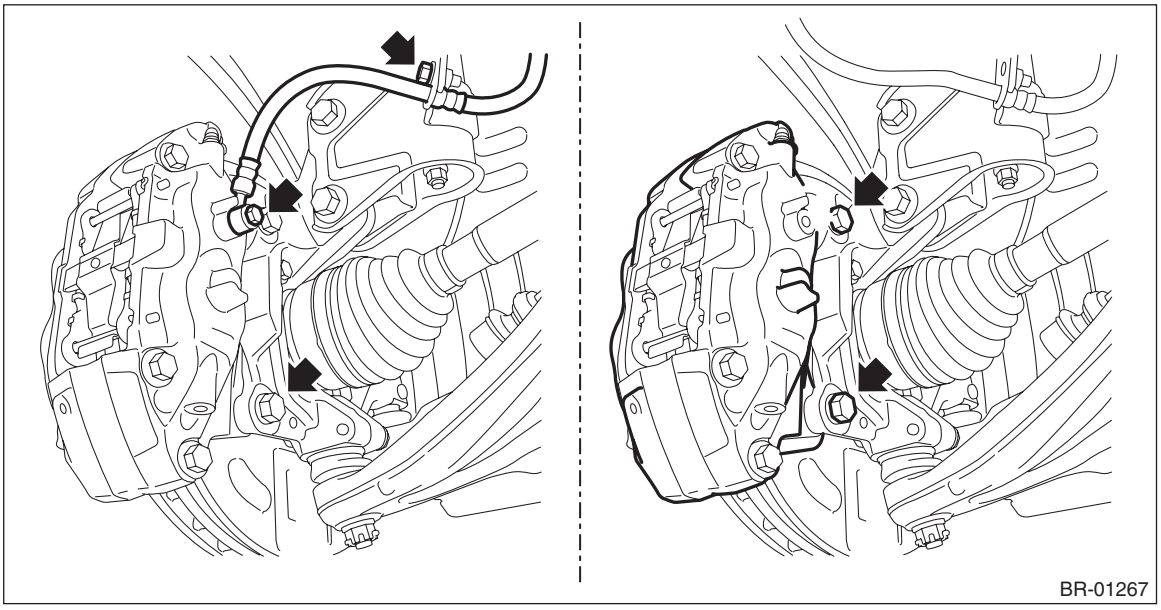

B: INSTALLATION

1. EXCEPT FOR STI MODEL

NOTE:
Before installation, remove mud and foreign matter from the caliper body assembly and support - front disc brake.
1) Check each part. <Ref. to BR-38, INSPECTION, Front Disc Brake Assembly.>
2) Apply a thin coat of grease to the support - front disc brake.

Preparation items:
Grease: An item contained in the pad kit or equivalent

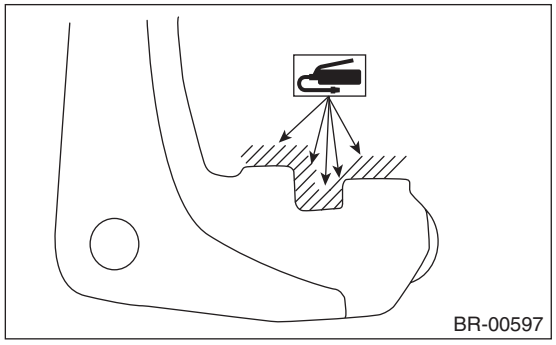

3) Install the support - front disc brake.

Tightening torque:
Mounting bolt: 80 N·m (8.2 kgf-m, 59 ft-lb)
4) Apply a thin coat of grease to the pad clip.

Preparation items:
Grease: An item contained in the pad kit or equivalent

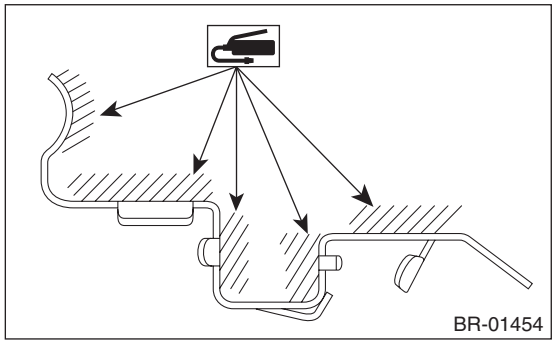

5) Install the brake pad.

CAUTION:
• Be sure to install so that the pad return spring faces the input side of the direction of brake rotor rotation, as shown in the figure.
• Correctly install the pad return spring to the supporting surface of the pad clip as shown in the figure.
• If the pad return spring is deformed or damaged, replace the brake pad with a new part.

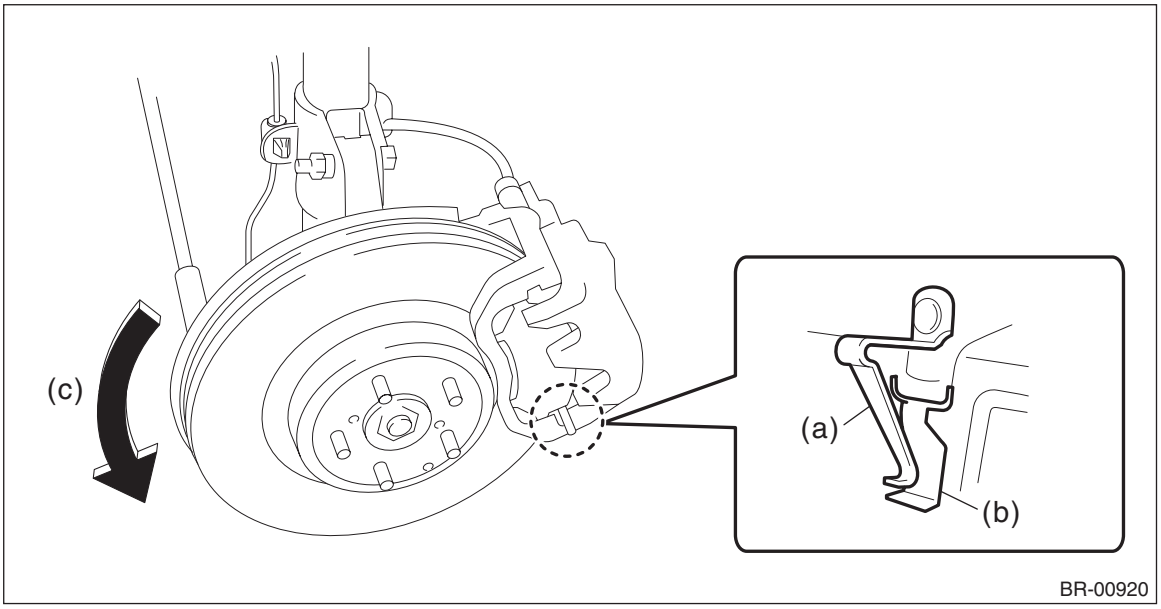

(a) Pad return spring
(b) Supporting surface of pad clip
(c) Direction of brake rotor rotation

NOTE:
Install the brake pad indicator in proper direction.

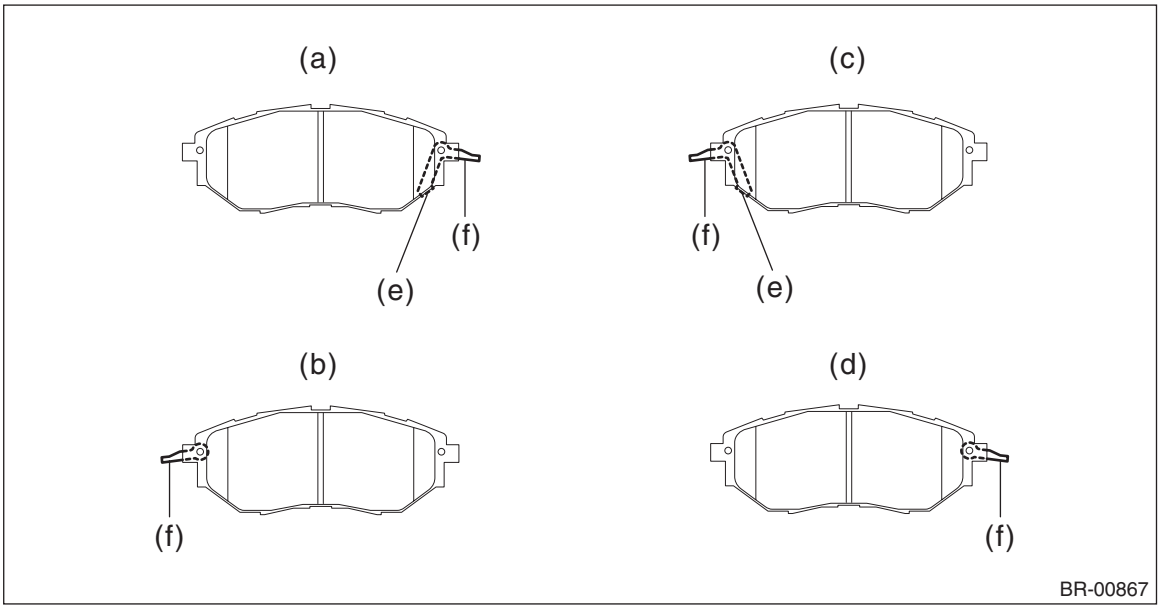

(a) LH — IN
(b) LH — OUT
(c) RH — IN
(d) RH — OUT
(e) Pad indicator
(f) Pad return spring

6) Install the caliper body assembly.

Tightening torque:
27 N·m (2.8 kgf-m, 19.9 ft-lb)
7) Connect the brake hose using a new brake hose gasket.

Tightening torque:
26 N·m (2.7 kgf-m, 19.2 ft-lb)
8) Bleed air from the brake system. <Ref. to BR-89, BRAKE LINE, PROCEDURE, Air Bleeding.>
9) Install the front wheels.

Tightening torque:
120 N·m (12.2 kgf-m, 88.5 ft-lb)

2. STI MODEL

NOTE:
Before installation, remove mud and foreign matter from the disc brake assembly.
1) Check each part. <Ref. to BR-38, INSPECTION, Front Disc Brake Assembly.>
2) Install the disc brake assembly.

Tightening torque:
155 N·m (15.8 kgf-m, 114.3 ft-lb)
3) Connect the brake hose using a new brake hose gasket.

Tightening torque:
26 N·m (2.7 kgf-m, 19.2 ft-lb)
4) Apply a thin coat of grease to the side of the pad - disc brake front, both sides of the shim - disc brake front inner and the shim mounting surface of the pad - disc brake front.

Preparation items:
Grease (pad side (A)): An item contained in the pad kit or equivalent
Grease (shim and pad (B)): An item contained in the pad kit or Dow Corning Molykote AS880N

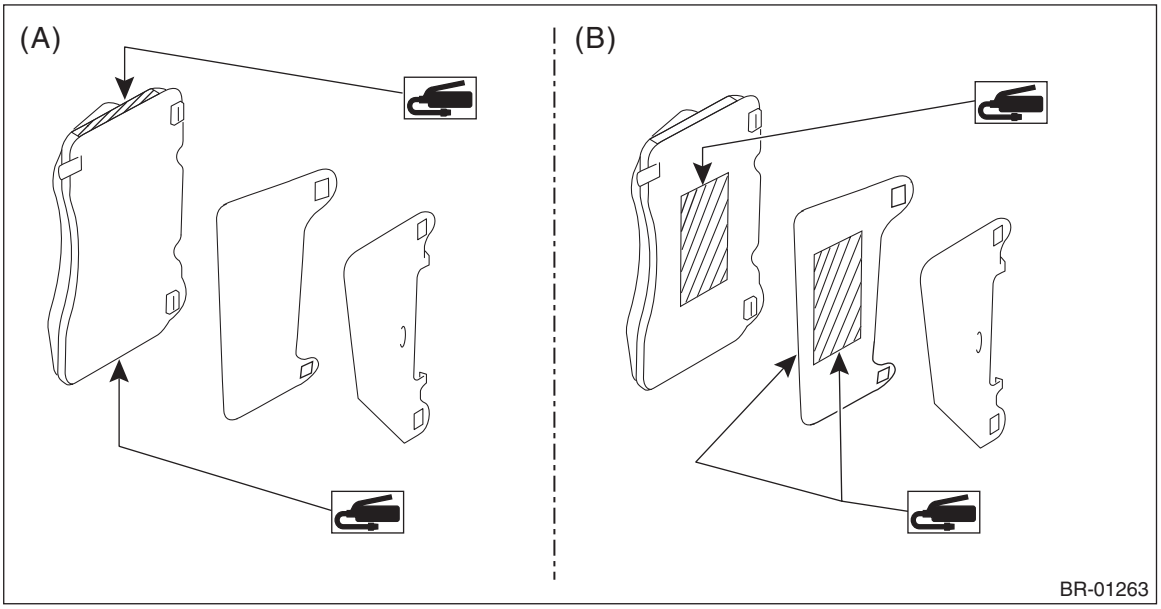

5) Install the pad - disc brake front.

NOTE:
Install so that the arrow (a) faces upward.

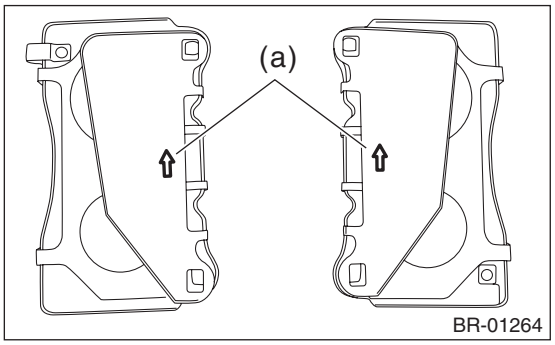

6) Install the cross spring.
7) Install the pin - disc brake.
8) Install the clip - slide pin.
9) Bleed air from the brake system. <Ref. to BR-89, BRAKE LINE, PROCEDURE, Air Bleeding.>
10) Install the front wheels.

Tightening torque:
120 N·m (12.2 kgf-m, 88.5 ft-lb)

C: DISASSEMBLY

CAUTION:
- **Be careful not to allow foreign matter to enter the brake hose connector.**
- **Since the 17-inch (Brembo) caliper body is easily scratched and the paint may be stripped, protect it from being contacted with other parts or tools.**

1) Remove mud and foreign matter from the caliper body assembly.
2) Remove the piston boot.

NOTE:
For STI model, remove the four piston boots.

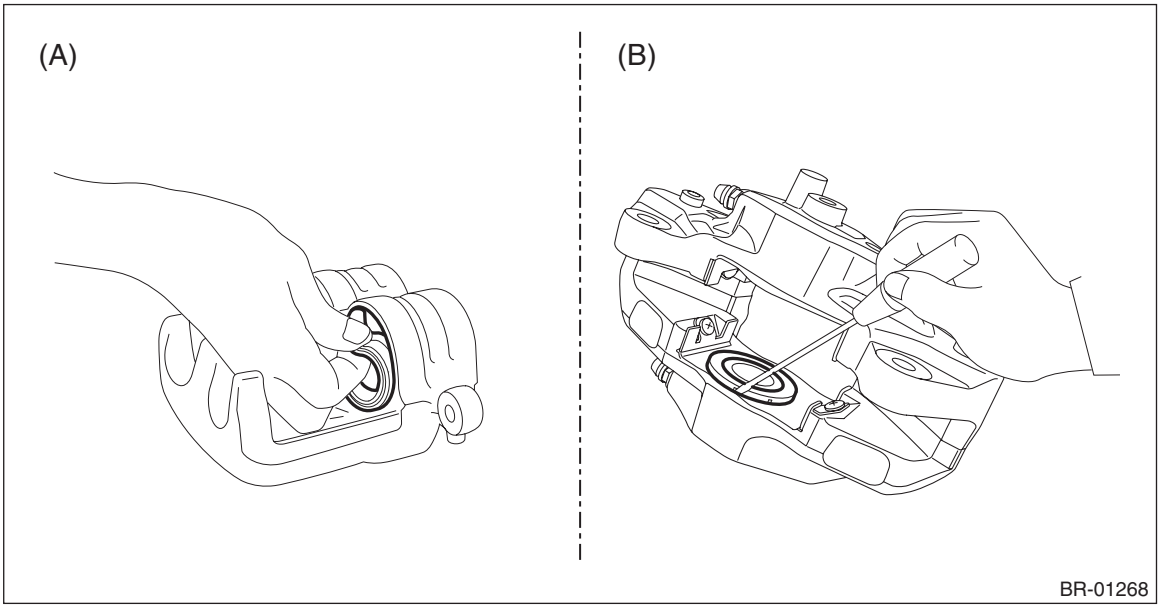

(A) Except for STI model (B) STI model

3) Remove the piston - disc brake.
(1) Place a wooden block in the caliper body as shown in the figure to prevent the piston - disc brake from jumping out and being damaged.
(2) Using an air gun, gradually apply compressed air via the brake hose installation hole to push out the piston - disc brake.

NOTE:
Instead of removing the pistons one by one, remove all pistons at once after adjusting the amount of protrusion evenly using a wooden block.

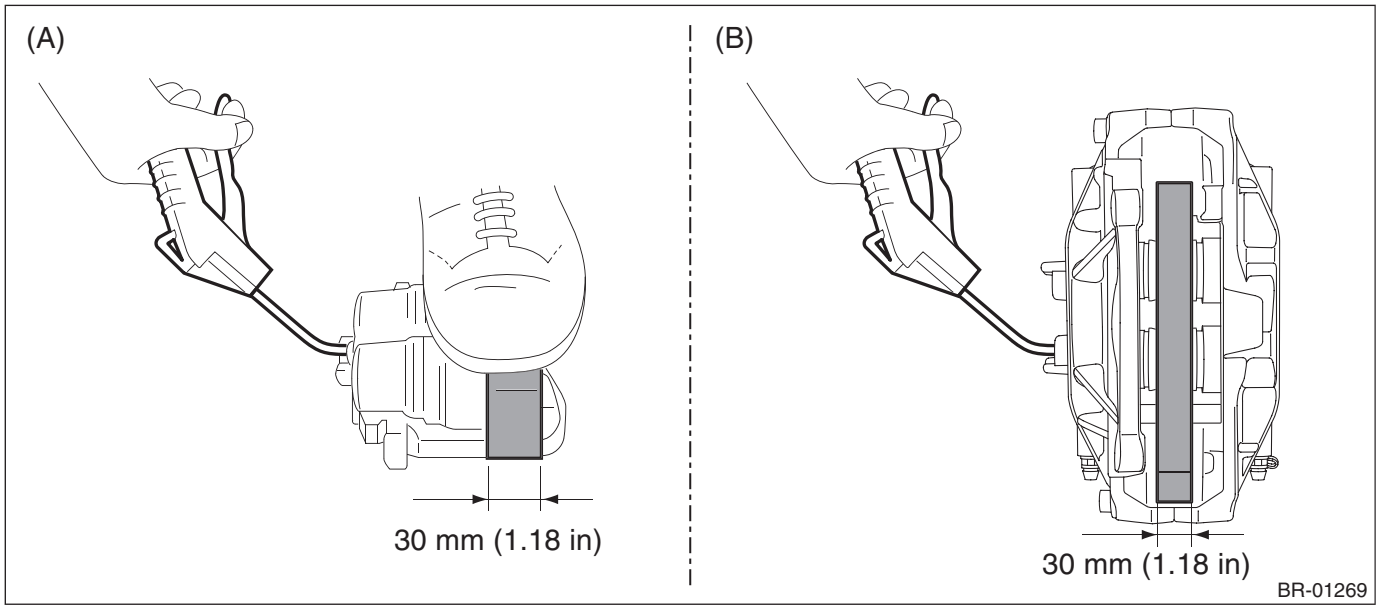

(A) Except for STI model (B) STI model

4) Remove the piston seal (a).

CAUTION:
Do not damage the cylinder and piston seal groove.

NOTE:
For STI model, remove the four piston seals.

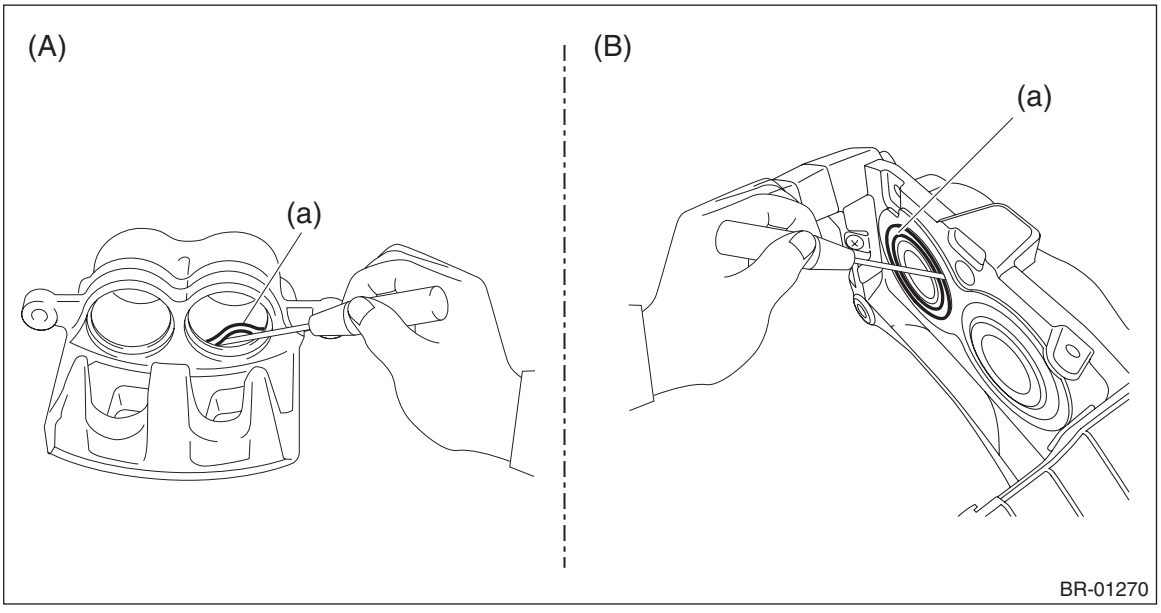

(A) Except for STI model (B) STI model

5) Remove each part from support - front disc brake. (Except for STI model)

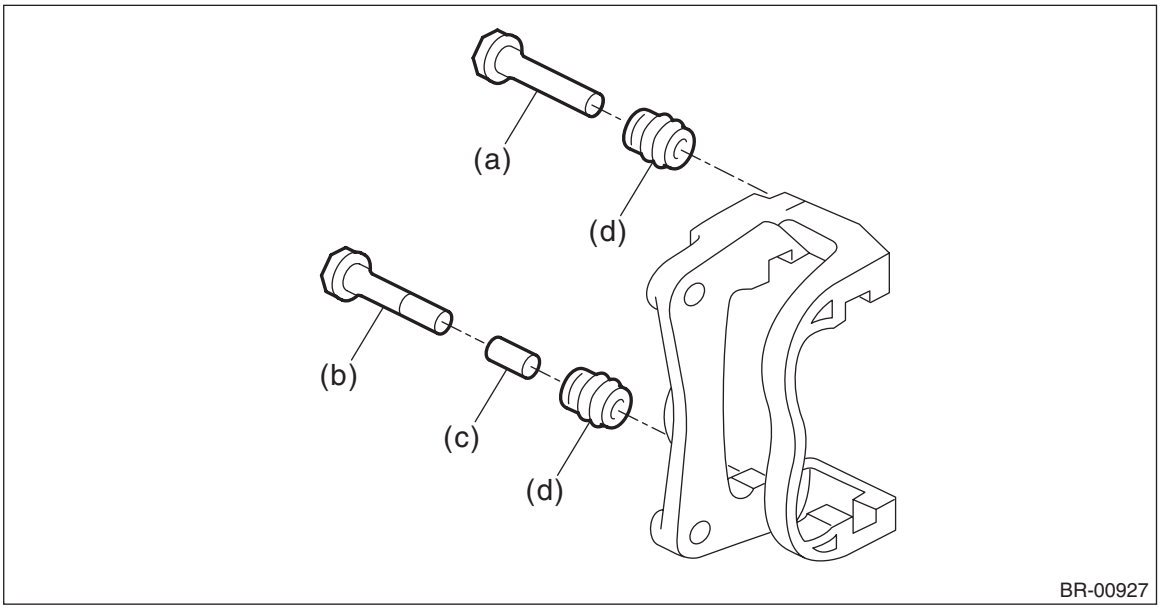

(a) Guide pin - front brake (black)
(b) Lock pin - front brake (silver)
(c) Lock pin - bushing
(d) Pin boot

D: ASSEMBLY

1) Check each part. <Ref. to BR-38, INSPECTION, Front Disc Brake Assembly.>
2) Clean the inside of the caliper body using brake fluid.

Preparation items:
Brake fluid: FMVSS No. 116, DOT3 or DOT4

3) Install the piston seal and the piston - disc brake.
   (1) Apply a coat of brake fluid to piston seal and install the piston seal to the groove inside caliper body.
   (2) Apply a coat of brake fluid to the piston sliding part of caliper body and the entire outer surface of the piston - disc brake.

Preparation items:
Brake fluid: FMVSS No. 116, DOT3 or DOT4

   (3) Apply a coat of grease to the piston boot and fit to the groove on the ends of piston - disc brake.

Preparation items:
Grease: An item contained in the pad kit or Nippon Grease NIGLUBE RX-2

(4) Install the piston - disc brake to the caliper body.

CAUTION:
Do not force the piston - disc brake into the sliding part of caliper body.

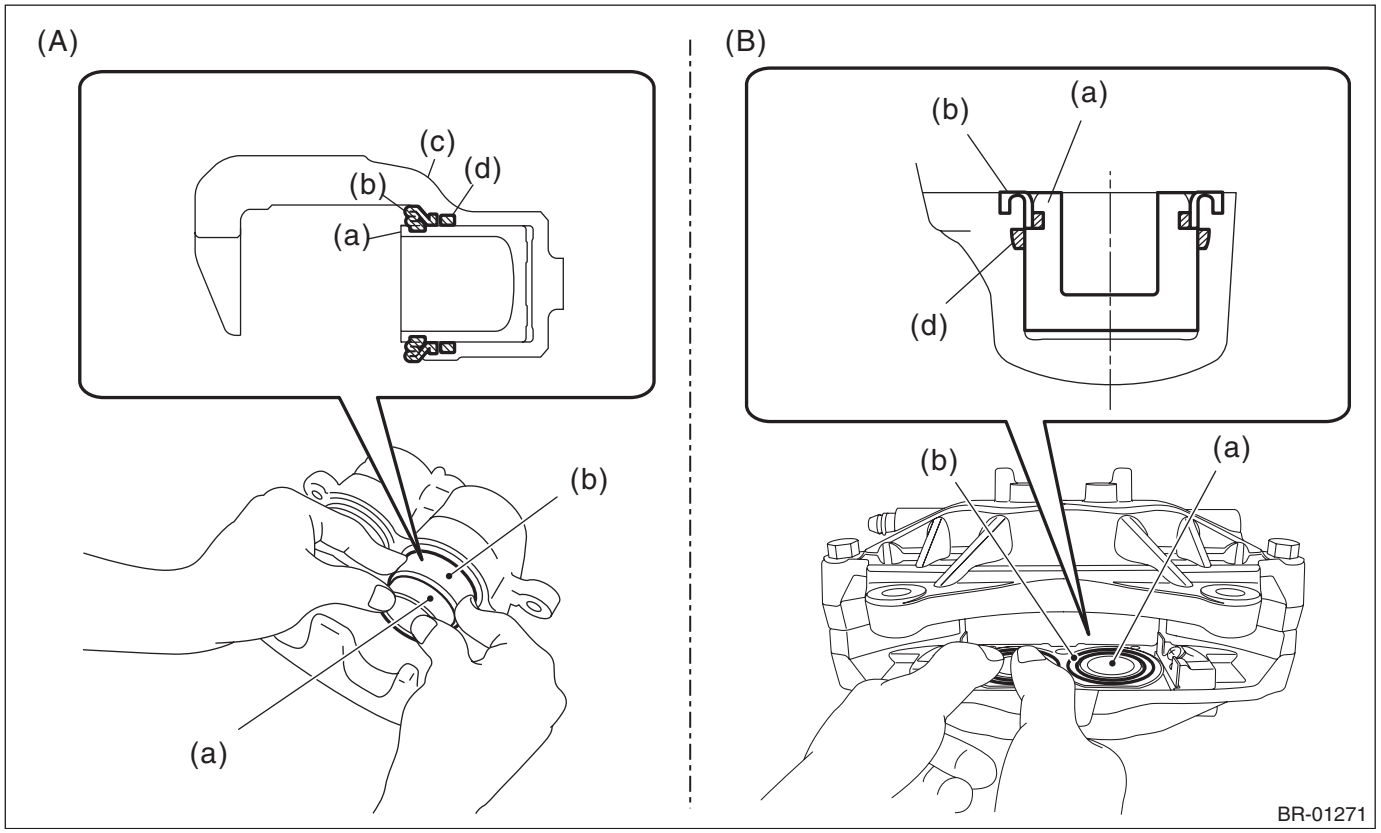

(A) Except for STI model
(B) STI model
(a) Piston - disc brake
(b) Piston boot
(c) Caliper body
(d) Piston seal

4) Apply grease contained in the piston seal kit to the lock pin - front brake, the outer surface of guide pin - front brake, the pin sliding part of the support - front disc brake, and the grooves of pin boot. (Except for STI model)

5) Install the pin boot to the lock pin - front brake and the guide pin - front brake, and insert them into the support - front disc brake. (Except for STI model)

CAUTION:
Insert the lock pin - front brake and guide pin - front brake into specified position, and make sure that they slide and seat properly.

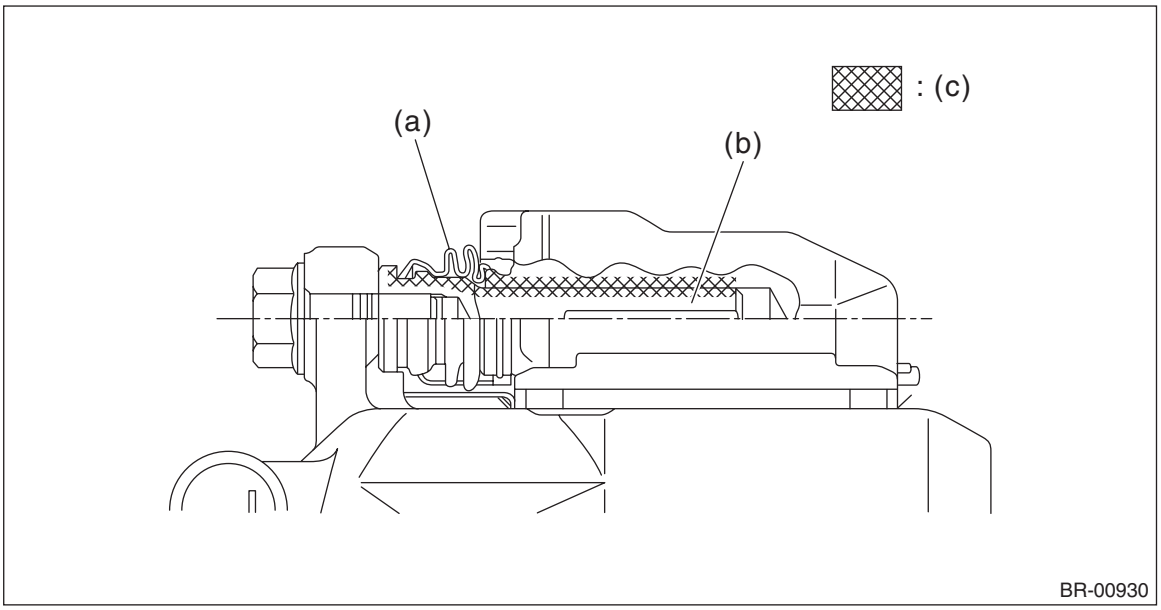

(a) Pin boot
(b) Lock pin - front brake or guide pin - front brake
(c) Grease applied area

E: INSPECTION

1) Check the piston sliding part of caliper body and the piston for uneven wear, damage or rust.
2) Check the rubber parts for damage or deterioration.
3) If faulty is found in the inspection, replace the relevant part.

5. Rear Brake Pad

A: REMOVAL

1. EXCEPT FOR STI MODEL (DRUM IN DISC TYPE)

1) Lift up the vehicle, and then remove the rear wheels.
2) Remove the pad - disc brake rear.
   (1) Remove the brake hose bracket.
   (2) Remove the caliper bolt on the lower side.
   (3) Raise the caliper body assembly and remove the pad - disc brake rear.

NOTE:
Do not disconnect the brake hose from the caliper body assembly.

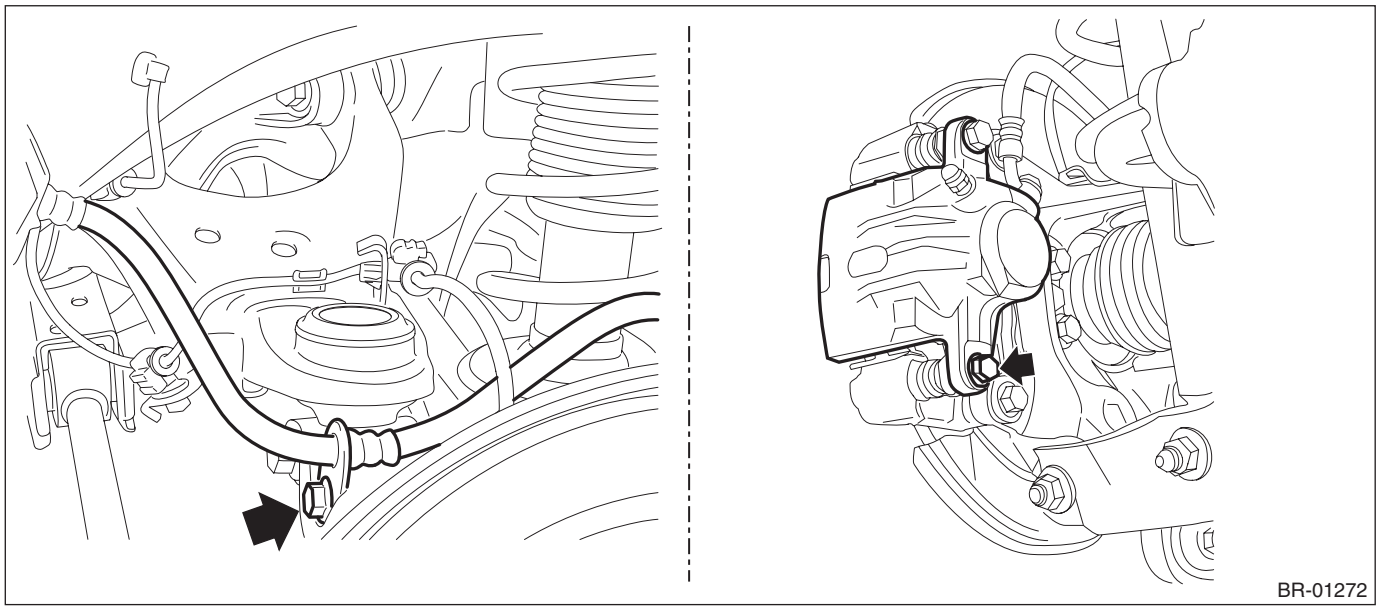

2. EXCEPT FOR STI MODEL (ELECTRONIC PARKING BRAKE TYPE)

1) Release the parking brake.
2) Using the Subaru Select Monitor, go to the brake maintenance mode according to the display screen. <Ref. to PB-21, BRAKE MAINTENANCE MODE, OPERATION, Parking Brake System.>

NOTE:
For detailed operation procedures, refer to “Application help”.

3) Disconnect the ground terminal from battery sensor. <Ref. to NT-6, BATTERY, NOTE, Note.>
4) Lift up the vehicle, and then remove the rear wheels.
5) Remove the pad - disc brake rear.
   (1) Disconnect the connector.
   (2) Remove the pad clip and the brake hose bracket.

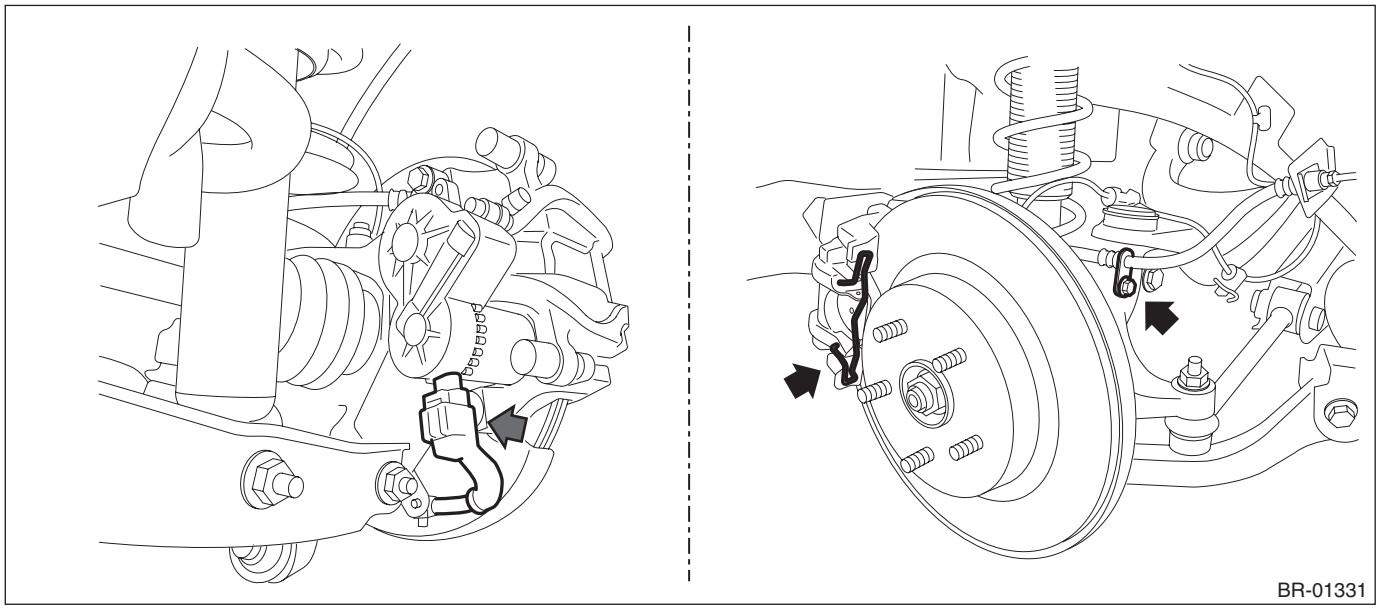
BR-01331

   (3) Remove the cap and the caliper bolt, and remove the caliper body assembly.
   (4) Remove the pad - disc brake rear.

Preparation tool:
Hexagon wrench: 7 mm (0.28 in)

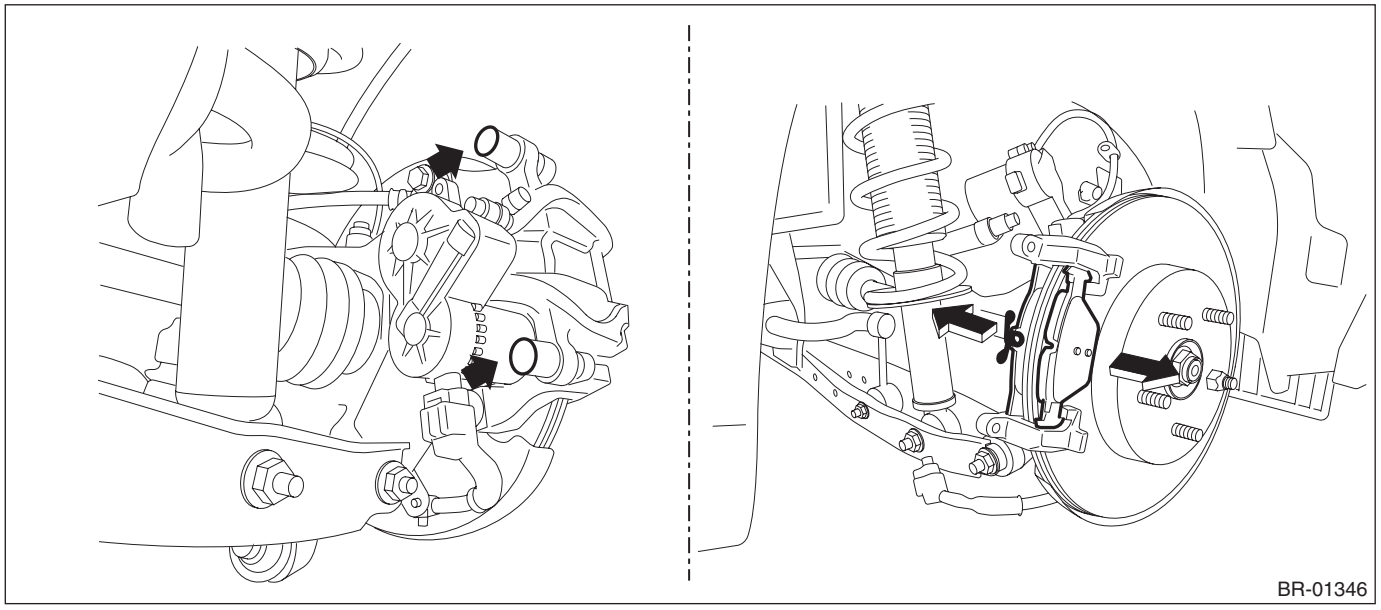
BR-01346

3. STI MODEL

1) Lift up the vehicle, and then remove the rear wheels.
2) Remove the pad - disc brake rear.
   (1) Remove the clip - slide pin (a), and remove the pin - disc brake (b) and cross spring (c).
   (2) While pushing back the piston with a wrench, remove the pad - disc brake rear.

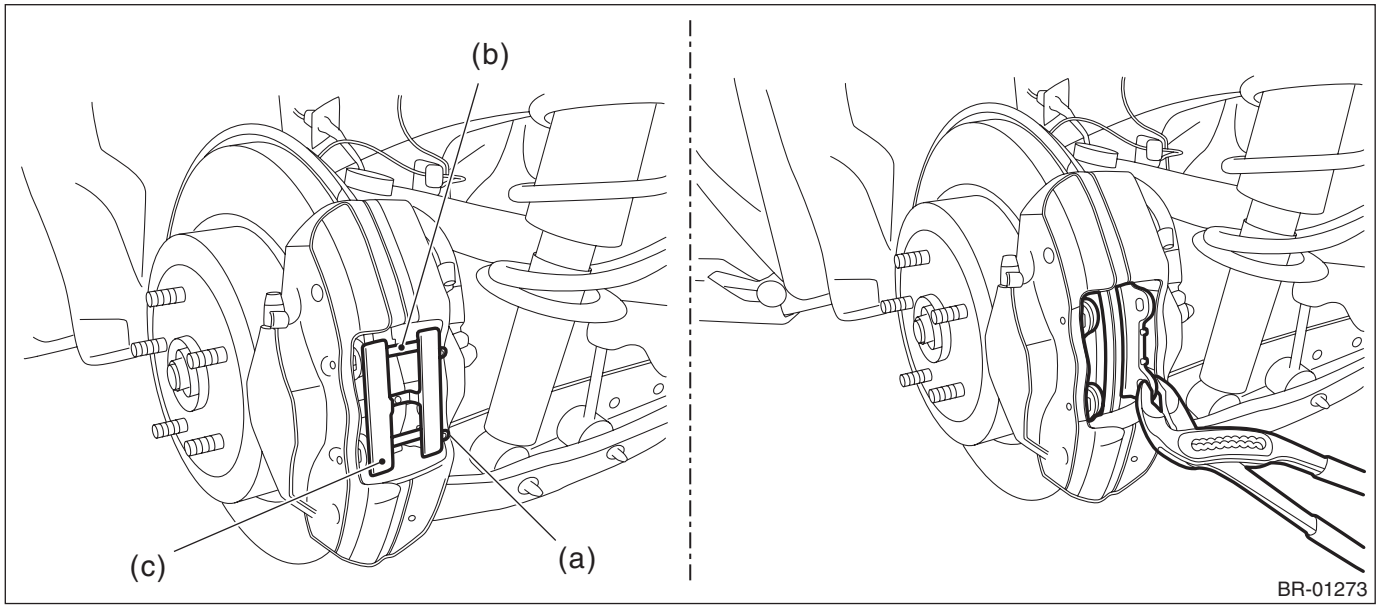

B: INSTALLATION

1. EXCEPT FOR STI MODEL (DRUM IN DISC TYPE)

NOTE:
Before installation, remove mud and foreign matter from the caliper body assembly and support - rear disc brake.
1) Check the brake pad. <Ref. to BR-44, INSPECTION, Rear Brake Pad.>

2) Apply a thin coat of grease to the pad clip, both sides of the shim - disc brake rear inner and the shim mounting surface of the pad - disc brake rear.

Preparation items:
Grease (pad side (A)): An item contained in the pad kit or equivalent
Grease (shim and pad (B)): An item contained in the pad kit or Dow Corning Molykote AS880N

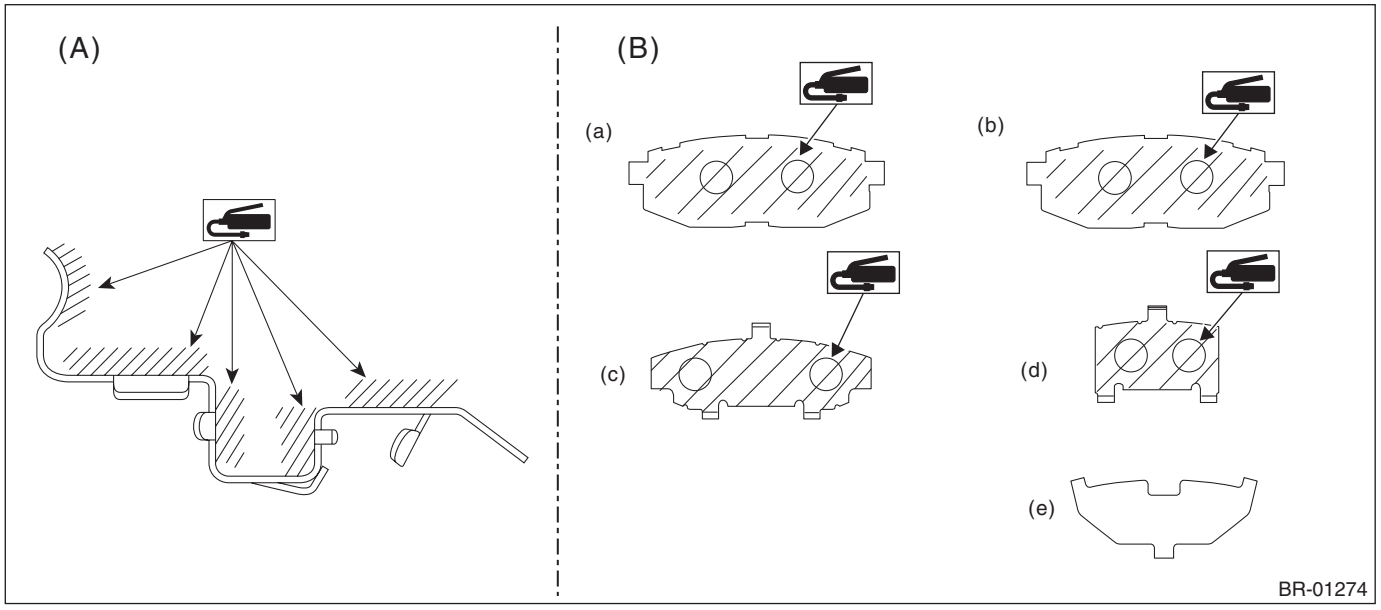

(A)	Pad clip - rear brake	(B)	Pad - disc brake rear and the shim - disc brake rear		
(a)	Pad - disc brake rear outer	(c)	Shim - disc brake rear inner	(e)	Shim - disc brake rear outer
(b)	Pad - disc brake rear inner	(d)	Shim - disc brake rear inner		

3) Install the pad - disc brake rear.

NOTE:
Install the pad indicator in proper direction.
4) Install the caliper body assembly.

Tightening torque:
27 N·m (2.8 kgf-m, 19.9 ft-lb)
5) Install the brake hose bracket.

Tightening torque:
33 N·m (3.4 kgf-m, 24.3 ft-lb)
6) Install the rear wheels.

Tightening torque:
120 N·m (12.2 kgf-m, 88.5 ft-lb)

2. EXCEPT FOR STI MODEL (ELECTRONIC PARKING BRAKE TYPE)

NOTE:
Before installation, remove mud and foreign matter from the disc brake assembly.
1) Install the pad - disc brake rear.
2) Install the caliper body assembly.

Tightening torque:
Caliper bolt: 25 N·m (2.5 kgf-m, 18.4 ft-lb)
Brake hose bracket: 33 N·m (3.4 kgf-m, 24.3 ft-lb)

3) Connect the ground terminal to battery sensor. <Ref. to NT-6, BATTERY, NOTE, Note.>
4) Using the Subaru Select Monitor, exit the brake maintenance mode according to the display screen. <Ref. to PB-21, BRAKE MAINTENANCE MODE, OPERATION, Parking Brake System.>

NOTE:
For detailed operation procedures, refer to “Application help”.
5) After the operation is completed, apply and release the parking brake five times and ensure that the brake operates normally.
6) Install the rear wheels.

Tightening torque:
120 N·m (12.2 kgf-m, 88.5 ft-lb)

3. STI MODEL

NOTE:
Before installation, remove mud and foreign matter from the disc brake assembly.
1) Apply a thin coat of grease to the side of the pad - disc brake rear and the shim mounting surface of the pad - disc brake rear.

Preparation items:
Grease (pad side (A)): An item contained in the pad kit or equivalent
Grease (shim and pad (B)): An item contained in the pad kit or Dow Corning Molykote AS880N

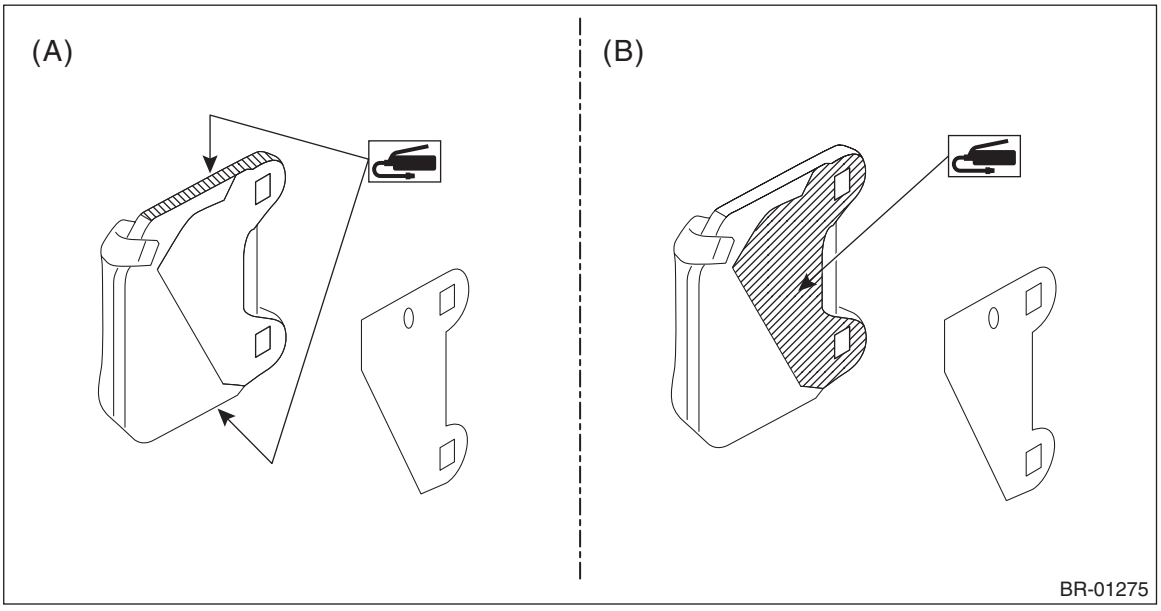

2) Install the pad - disc brake rear.

NOTE:
Install so that the arrow (a) faces upward.

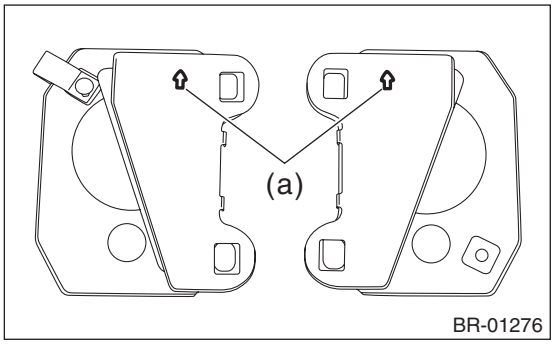

3) Install the cross spring.
4) Install the pin - disc brake.
5) Install the clip - slide pin.
6) Install the rear wheels.

Tightening torque:
120 N·m (12.2 kgf-m, 88.5 ft-lb)

C: INSPECTION

1) Check the thickness of the pad - disc brake rear.

NOTE:
- Always replace the pads of both wheels and both sides as a set.
- Replace pad clips if they are twisted or worn.
- Replace the pad if there is oil or grease on it.
- Wear indicators are installed on the pad - disc brake rear inner, and a squeaking sound is heard if the pad is worn to the limit.

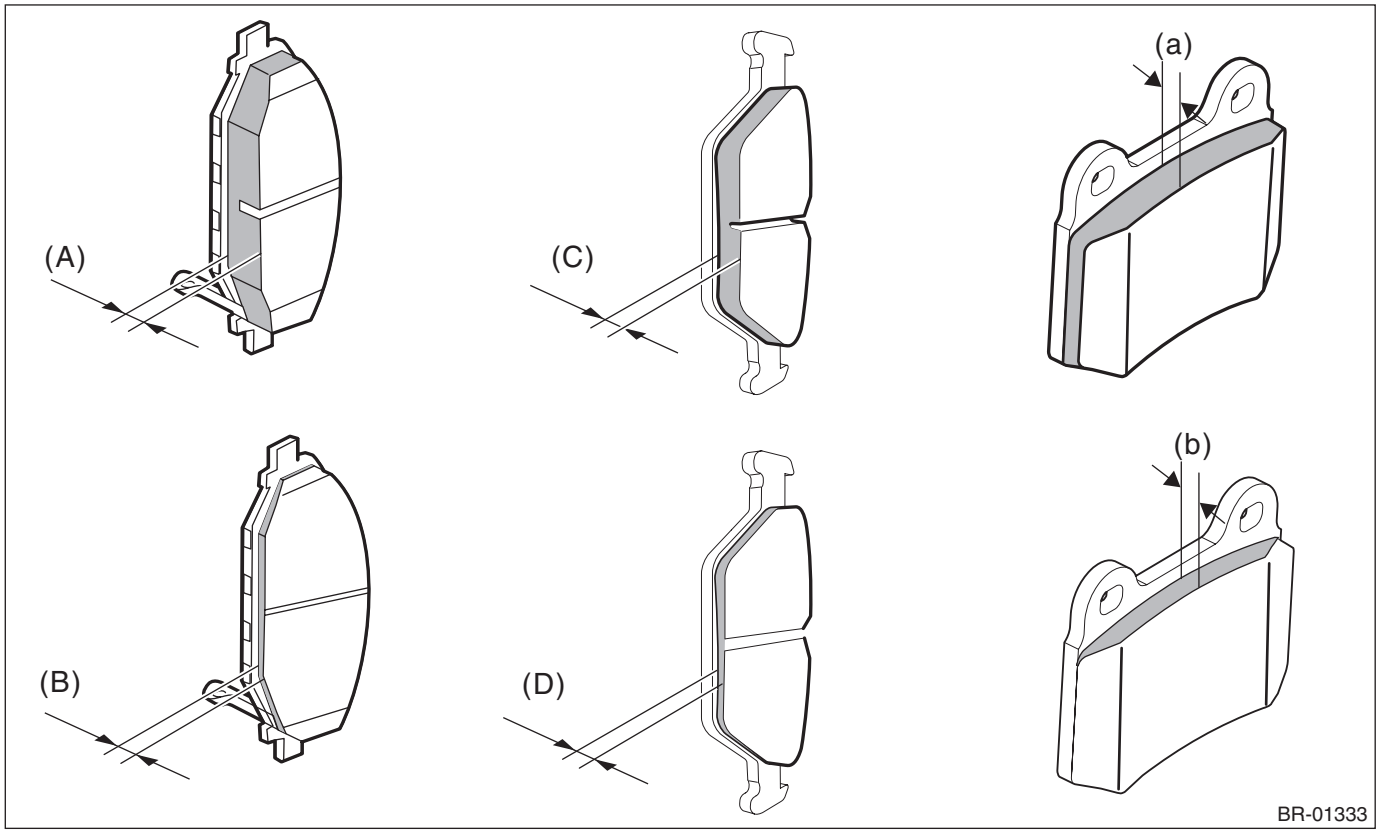

- Except for STI model (drum in disc type)

	Standard (A)	Wear limit (B)
Pad thickness	9 mm (0.354 in)	1.5 mm (0.059 in)

- Except for STI model (electronic parking brake type)

	Standard (A)	Wear limit (B)
Pad thickness	9 mm (0.354 in)	1.5 mm (0.059 in)

- STI model

	Standard (a)	Wear limit (b)
Pad thickness	9 mm (0.354 in)	1.2 mm (0.047 in)

2) If the wear limit is exceeded in the inspection, replace the brake pad.

D: REPLACEMENT

1) Release the parking brake.
2) Using the Subaru Select Monitor, go to the brake maintenance mode according to the display screen. <Ref. to PB-21, BRAKE MAINTENANCE MODE, OPERATION, Parking Brake System.>

NOTE:
For detailed operation procedures, refer to “Application help”.
3) Remove the pad - disc brake rear. <Ref. to BR-39, REMOVAL, Rear Brake Pad.>
4) Push back the piston - disc brake.
5) Install the pad - disc brake rear. <Ref. to BR-41, INSTALLATION, Rear Brake Pad.>
6) Using the Subaru Select Monitor, exit the brake maintenance mode according to the display screen.
7) After the operation is completed, apply and release the parking brake five times and ensure that the brake operates normally.

NOTE:
Perform the following replacement procedure if the Subaru Select Monitor cannot be used.
1. Remove the disc brake assembly and the pad - disc brake rear.
2. Remove the bolt securing the lower side of the support - rear disc brake, loosen the upper side, and then slide the support - rear disc brake upward and hold it.
3. Secure the disc brake assembly as shown in the figure, and push back the piston while rotating it using the tool.

Preparation tool:
Disc brake piston tool: KTC disc parking tool rotor (E•F) ABX104
Disc brake piston tool: OTC brake caliper tool adapter No. 7317A
or equivalent

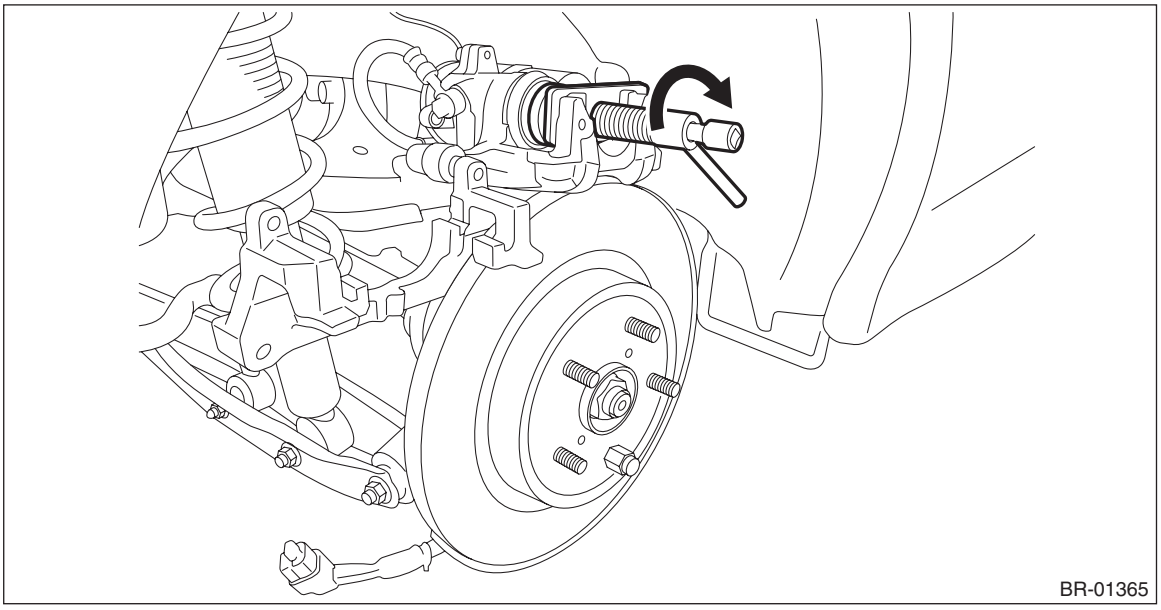

4. Install the support - rear disc brake and the disc brake assembly to the specified tightening torque.

Tightening torque:
Refer to “COMPONENT” of “General Description”. <Ref. to BR-9, REAR DISC BRAKE (ELECTRONIC PARKING BRAKE TYPE), COMPONENT, General Description.>

6. Rear Disc Rotor

A: REMOVAL

1. EXCEPT FOR STI MODEL (DRUM IN DISC TYPE)

1) Lift up the vehicle, and then remove the rear wheels.
2) Release the lever assembly - hand brake.
3) Remove the disc brake assembly.
   (1) Remove the brake hose bracket.
   (2) Remove the mounting bolt, and remove the disc brake assembly.
   (3) Prepare wiring harnesses etc. to be discarded, and suspend the disc brake assembly from the shock absorber assembly.

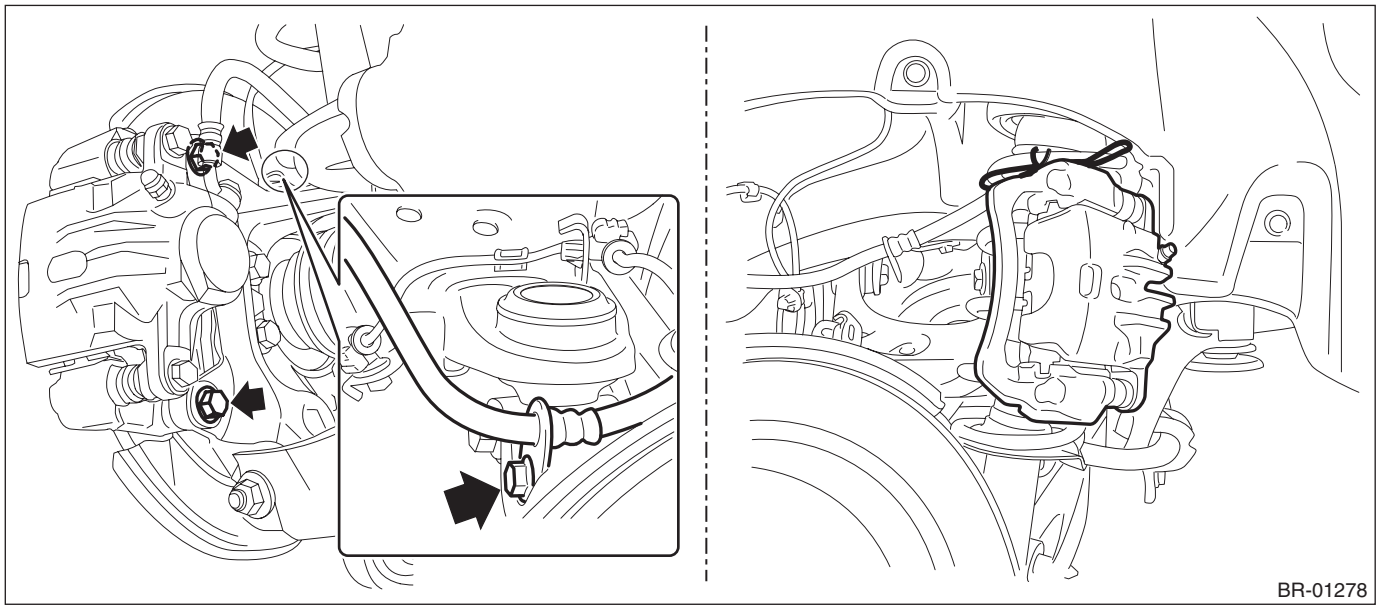

4) Remove the disc rotor.

NOTE:
If it is difficult to remove the disc rotor, perform the following two methods in order.
1. Remove the adjusting hole cover (A), and loosen the adjuster assembly - rear brake by inserting a flat tip screwdriver.

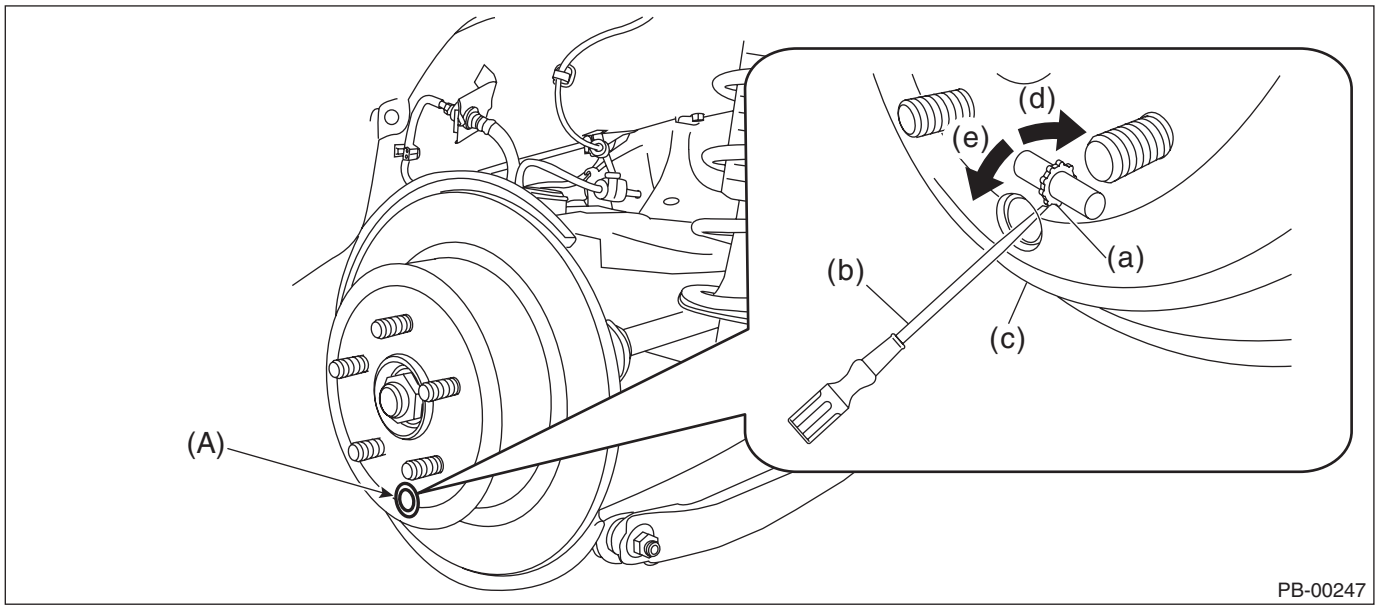

(a)	Adjuster ASSY - rear brake	(c)	Disc rotor	(e)	Shorten the adjuster ASSY - rear brake
(b)	Flat tip screwdriver	(d)	Extend the adjuster ASSY - rear brake		

2. When the disc rotor is difficult to be removed from the hub unit COMPL - rear axle, screw in 8 mm (0.31 in) bolt to the threaded part of the disc rotor (A), and remove the disc rotor.

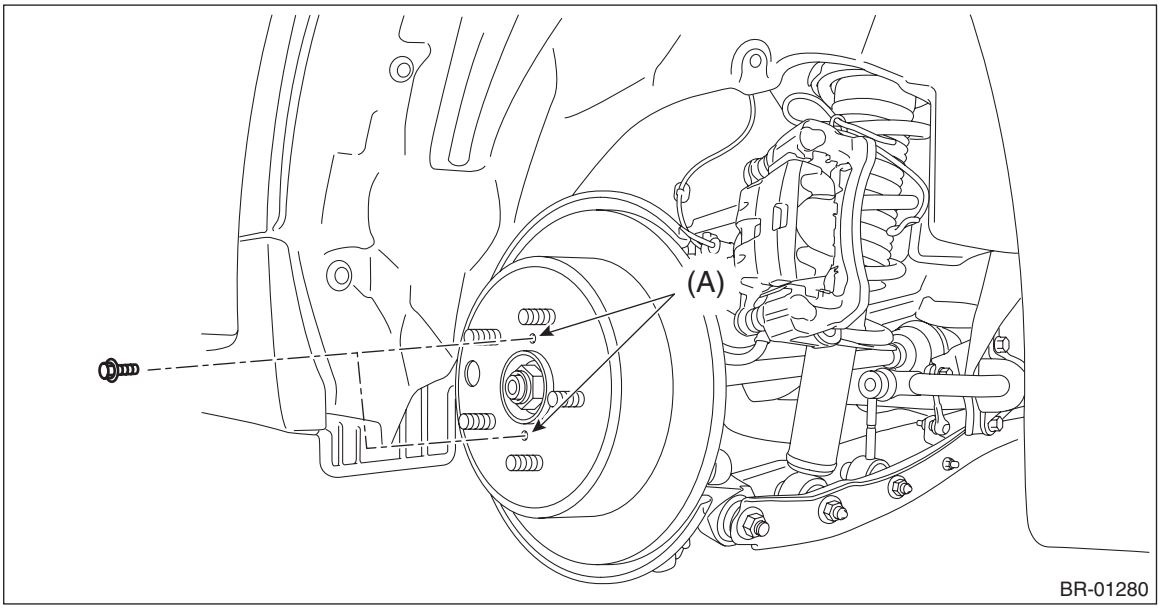

2. EXCEPT FOR STI MODEL (ELECTRONIC PARKING BRAKE TYPE)

1) Release the parking brake.
2) Using the Subaru Select Monitor, go to the brake maintenance mode according to the display screen. <Ref. to PB-21, BRAKE MAINTENANCE MODE, OPERATION, Parking Brake System.>

NOTE:
For detailed operation procedures, refer to “Application help”.

3) Disconnect the ground terminal from battery sensor. <Ref. to NT-6, BATTERY, NOTE, Note.>
4) Lift up the vehicle, and then remove the rear wheels.
5) Remove the disc brake assembly.
   (1) Remove the pad clip, the connector and the brake hose bracket.
   (2) Remove the mounting bolt, and remove the disc brake assembly.
   (3) Prepare wiring harnesses etc. to be discarded, and suspend the disc brake assembly from the shock absorber assembly.

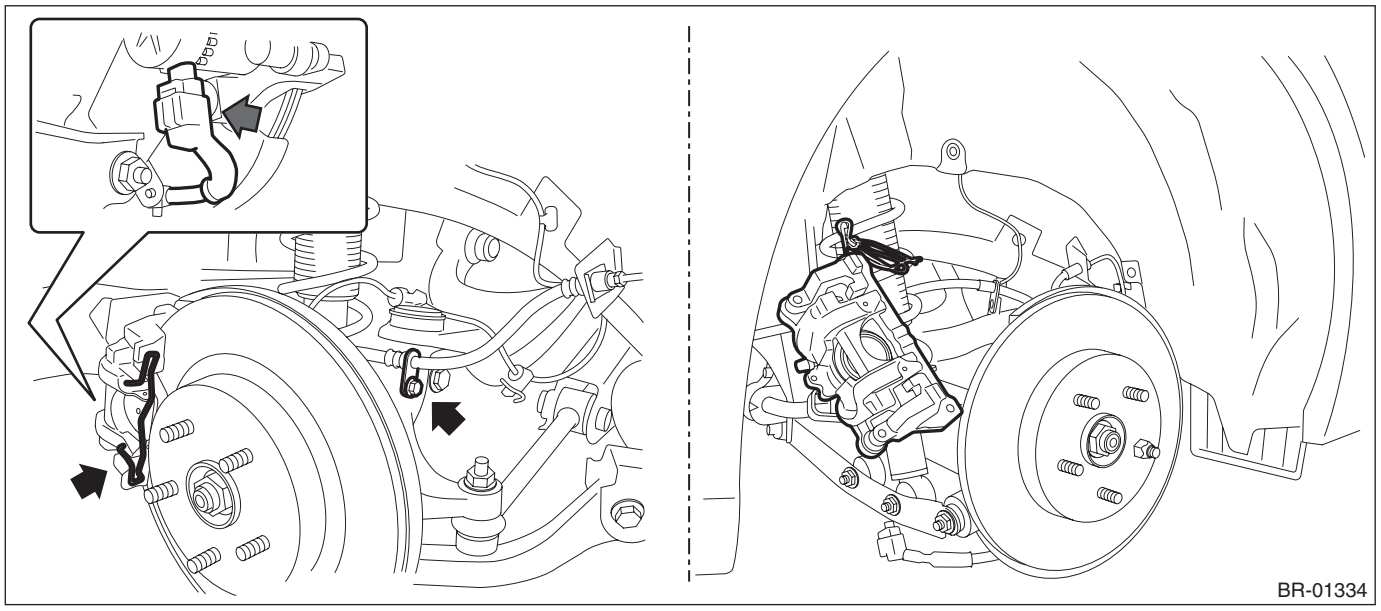

6) Remove the disc rotor.

NOTE:
If the disc rotor is difficult to remove, proceed as follows.
When the disc rotor is difficult to be removed from the hub unit COMPL - rear axle, screw in 8 mm (0.31 in) bolt to the threaded part of the disc rotor (A), and remove the disc rotor.

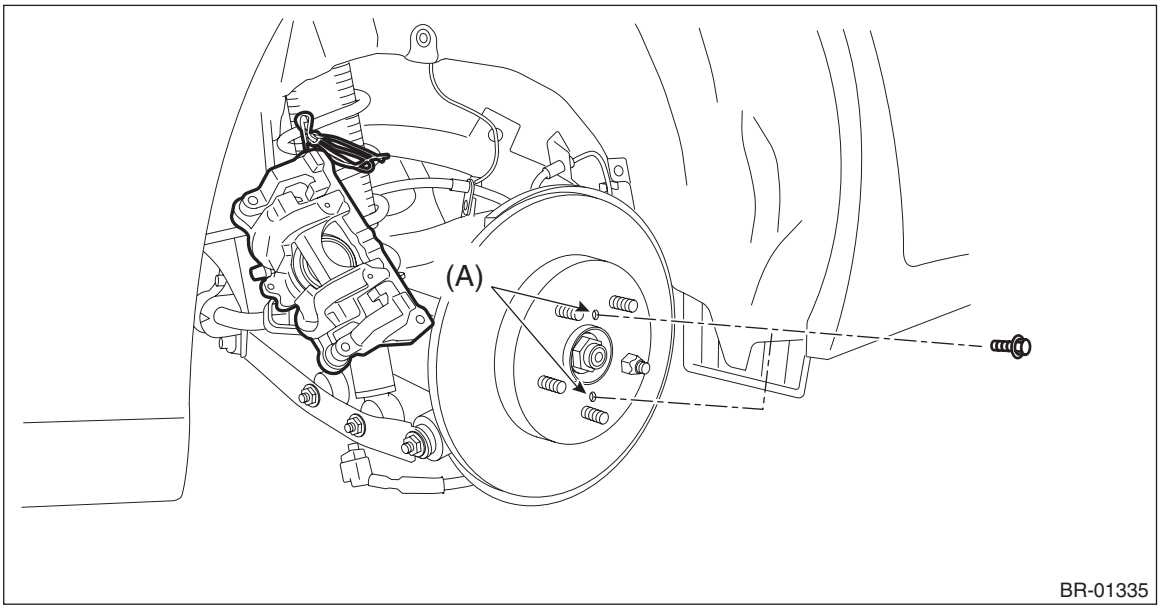

3. STI MODEL

1) Lift up the vehicle, and then remove the rear wheels.
2) Release the lever assembly - hand brake.
3) Remove the disc brake assembly.
   (1) Remove the brake hose bracket.
   (2) Remove the mounting bolt, and remove the disc brake assembly.
   (3) Prepare wiring harnesses etc. to be discarded, and suspend the disc brake assembly from the shock absorber assembly.

CAUTION:
Since the 17-inch (Brembo) caliper body is easily scratched and the paint may be stripped, protect it from being contacted with other parts or tools.

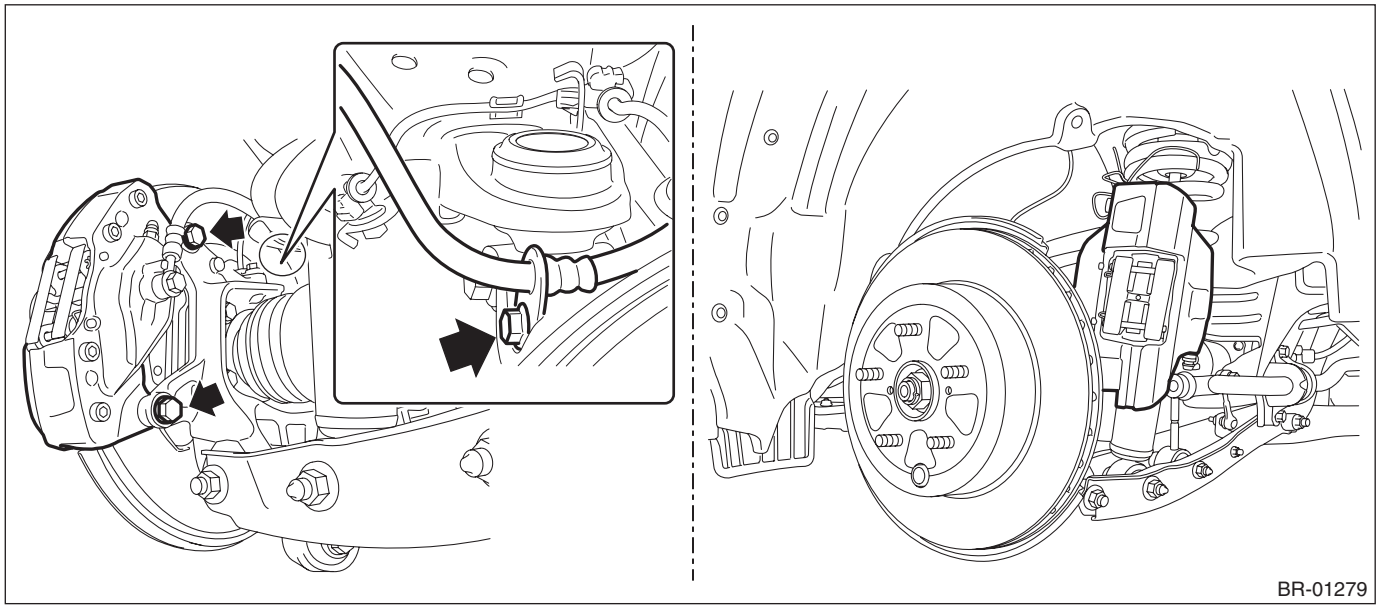

4) Remove the disc rotor.

NOTE:
If it is difficult to remove the disc rotor, perform the following two methods in order.
1. Remove the adjusting hole cover (A), and loosen the adjuster assembly - rear brake by inserting a flat tip screwdriver.

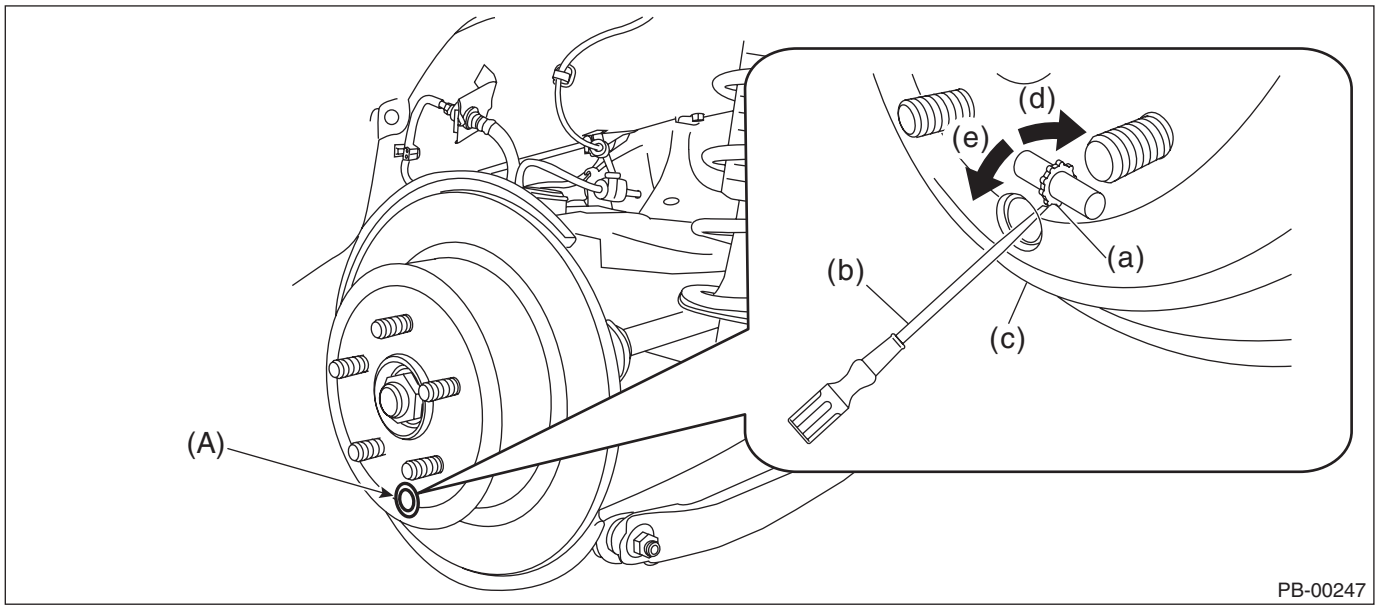

(a)	Adjuster ASSY - rear brake	(c)	Disc rotor	(e)	Shorten the adjuster ASSY - rear brake
(b)	Flat tip screwdriver	(d)	Extend the adjuster ASSY - rear brake		

2. When the disc rotor is difficult to be removed from the hub unit COMPL - rear axle, screw in 8 mm (0.31 in) bolt to the threaded part of the disc rotor (A), and remove the disc rotor.

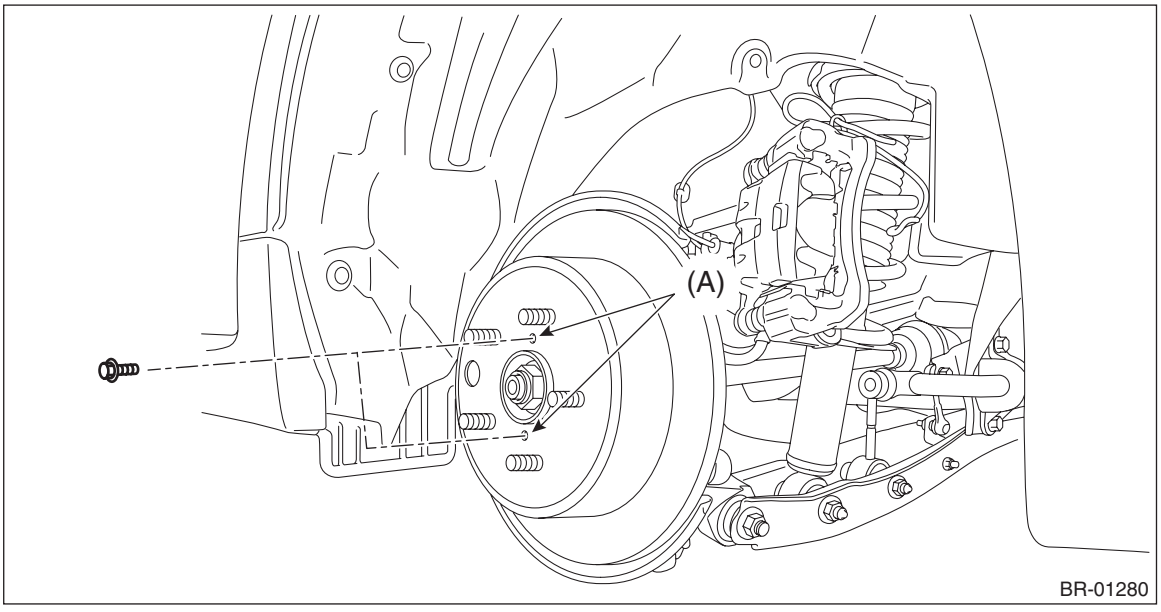

B: INSTALLATION

1. EXCEPT FOR STI MODEL (DRUM IN DISC TYPE)

NOTE:
Before installation, remove mud and foreign matter from the disc brake assembly.
1) Check the rear disc rotor. <Ref. to BR-52, INSPECTION, Rear Disc Rotor.>
2) Install the disc rotor.

NOTE:
When installing the rear disc rotor, match the alignment mark (a) of the rear disc rotor and the alignment mark (b) of the bolt - hub.
3) Adjust the parking brake. <Ref. to PB-19, ADJUSTMENT, Parking Brake Assembly (Rear Disc Brake).>
4) Install the disc brake assembly.

Tightening torque:
Mounting bolt: 66 N·m (6.7 kgf-m, 48.7 ft-lb)
Brake hose bracket: 33 N·m (3.4 kgf-m, 24.3 ft-lb)
5) Install the rear wheels.

Tightening torque:
120 N·m (12.2 kgf-m, 88.5 ft-lb)

2. EXCEPT FOR STI MODEL (ELECTRONIC PARKING BRAKE TYPE)

NOTE:
Before installation, remove mud and foreign matter from the disc brake assembly.
1) Check the rear disc rotor. <Ref. to BR-52, INSPECTION, Rear Disc Rotor.>
2) Install the rear disc rotor.

NOTE:
When installing the rear disc rotor, match the alignment mark (a) of the rear disc rotor and the alignment mark (b) of the bolt - hub.

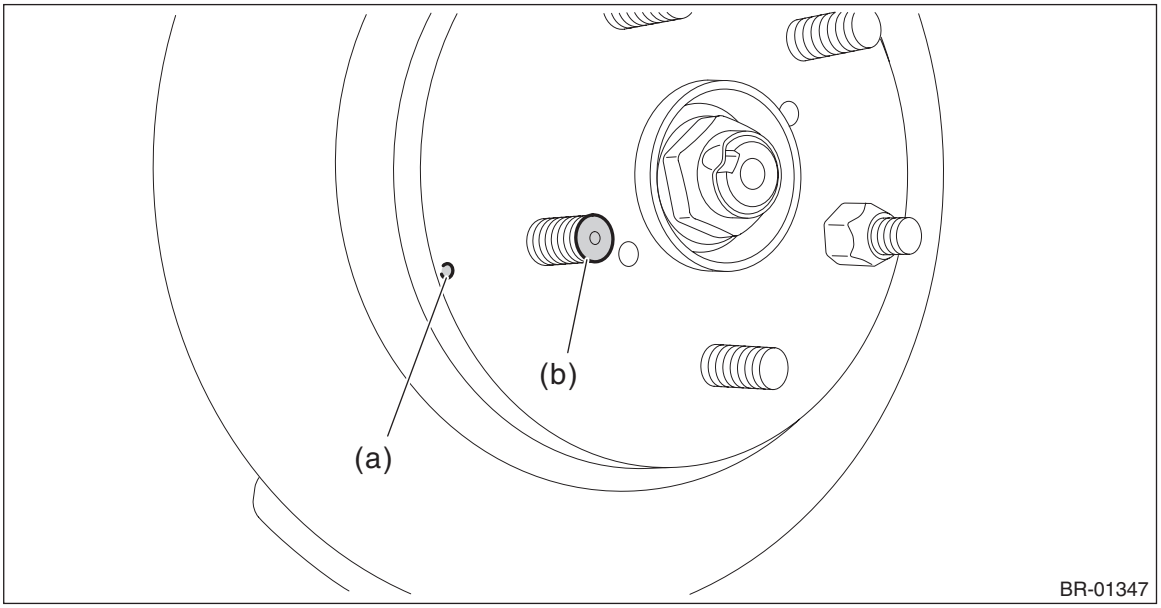

3) Install the disc brake assembly.

Tightening torque:
Mounting bolt: 66 N·m (6.7 kgf-m, 48.7 ft-lb)
Brake hose bracket: 33 N·m (3.4 kgf-m, 24.3 ft-lb)

4) Connect the ground terminal to battery sensor. <Ref. to NT-6, BATTERY, NOTE, Note.>
5) Using the Subaru Select Monitor, exit the brake maintenance mode according to the display screen. <Ref. to PB-21, BRAKE MAINTENANCE MODE, OPERATION, Parking Brake System.>

NOTE:
For detailed operation procedures, refer to “Application help”.

6) After the operation is completed, apply and release the parking brake five times and ensure that the brake operates normally.
7) Install the rear wheels.

Tightening torque:
120 N·m (12.2 kgf-m, 88.5 ft-lb)

3. STI MODEL

NOTE:
Before installation, remove mud and foreign matter from the disc brake assembly.

1) Check the rear disc rotor. <Ref. to BR-52, INSPECTION, Rear Disc Rotor.>
2) Install the disc rotor.

NOTE:
When installing the rear disc rotor, match the alignment mark (a) of the rear disc rotor and the alignment mark (b) of the bolt - hub.

3) Adjust the parking brake. <Ref. to PB-19, ADJUSTMENT, Parking Brake Assembly (Rear Disc Brake).>
4) Install the disc brake assembly.

Tightening torque:
Mounting bolt: 65 N·m (6.6 kgf-m, 47.9 ft-lb)
Brake hose bracket: 33 N·m (3.4 kgf-m, 24.3 ft-lb)

5) Install the rear wheels.

Tightening torque:
120 N·m (12.2 kgf-m, 88.5 ft-lb)

C: INSPECTION

1. DISC ROTOR RUNOUT CHECK

1) Check the hub unit COMPL - rear axle for free play and runout before the inspection of disc rotor runout limit. <Ref. to DS-44, INSPECTION, Rear Hub Unit Bearing.>
2) Check the disc rotor runout.
   (1) Remove the caliper body assembly. <Ref. to BR-55, REMOVAL, Rear Disc Brake Assembly.>
   (2) Secure the disc rotor by tightening the five wheel nuts.
   (3) Set a dial gauge 10 mm (0.39 in) inward from the disc rotor outer circumference, and check the outer disc rotor runout while rotating the disc rotor.

Disc rotor runout limit:
Except for STI model (drum in disc type): 0.05 mm (0.002 in)
Except for STI model (electronic parking brake type): 0.05 mm (0.002 in)
STI model: 0.07 mm (0.0028 in)

NOTE:
<Example of magnet stand and dial gauge installation>
The location where the magnet stand is installed varies to stabilize the magnet stand.

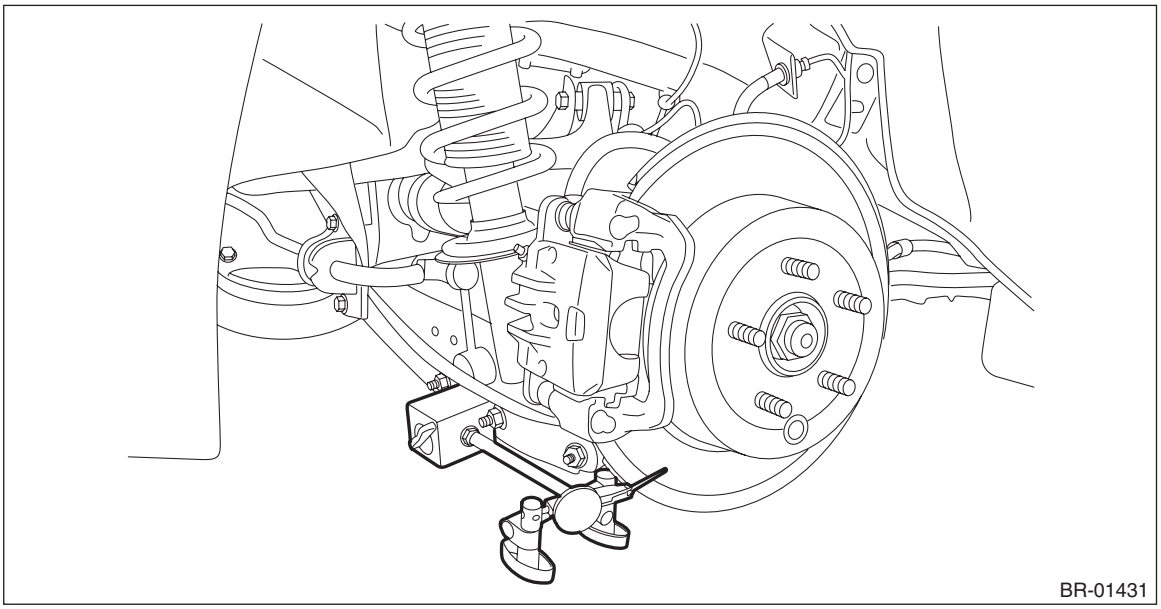

(4) Set a dial gauge 10 mm (0.39 in) inward from the disc rotor outer circumference, and check the inner disc rotor runout while rotating the disc rotor.

Disc rotor runout limit:
Except for STI model (drum in disc type): 0.05 mm (0.002 in)
Except for STI model (electronic parking brake type): 0.05 mm (0.002 in)
STI model: 0.07 mm (0.0028 in)

NOTE:
<Example of magnet stand and dial gauge installation>
The location where the magnet stand is installed varies to stabilize the magnet stand.

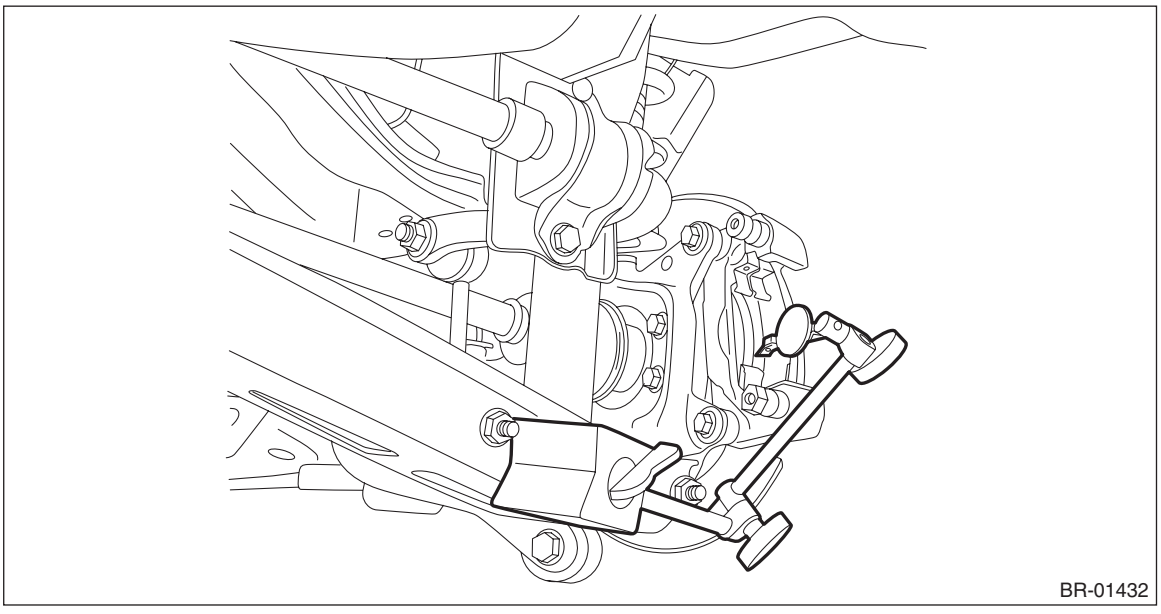

3) If the disc rotor runout exceeds service limit, grind the disc rotor.
4) Check the disc rotor thickness after grinding. <Ref. to BR-54, DISC ROTOR THICKNESS CHECK, INSPECTION, Rear Disc Rotor.>

2. DISC ROTOR THICKNESS CHECK

1) Set a micrometer 10 mm (0.39 in) inward from the disc rotor outer perimeter, and then measure the disc rotor thickness (A).

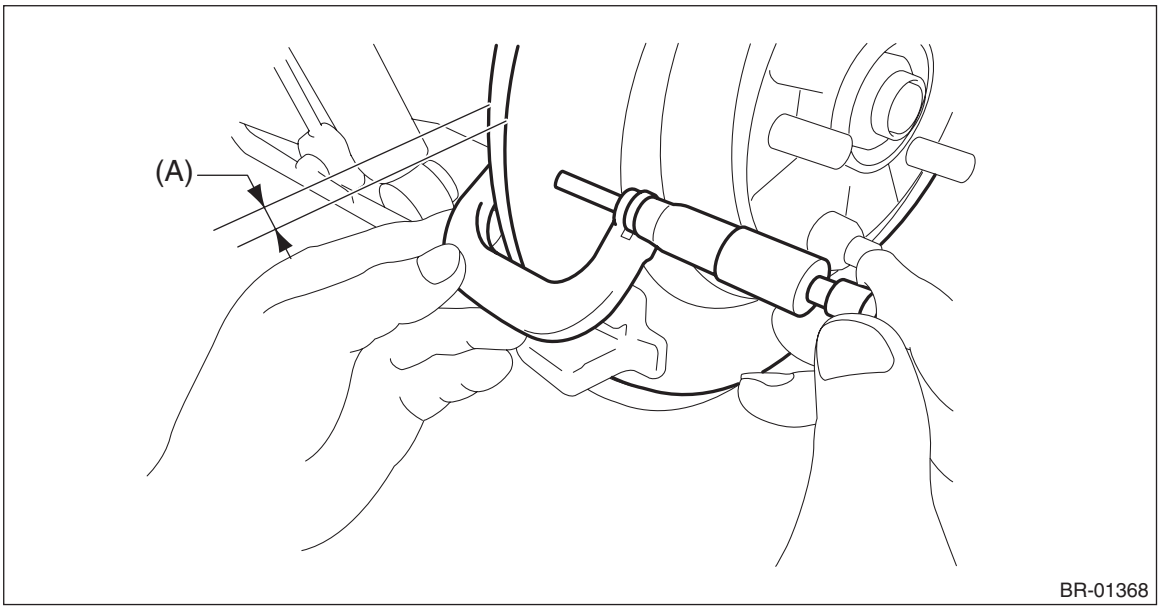

	Size	Standard	Wear limit	Disc rotor outer diameter
Disc rotor thickness (A)	Except for STI model (drum in disc type)	10 mm (0.79 in)	8.5 mm (0.335 in)	286 mm (12.44 in)
	Except for STI model (electronic parking brake type)	17 mm (0.67 in)	15 mm (0.59 in)	300 mm (11.81 in)
	STI model	20 mm (0.79 in)	18 mm (0.71 in)	316 mm (12.44 in)

2) If the wear limit is exceeded in the inspection, replace the disc rotor.

7. Rear Disc Brake Assembly

A: REMOVAL

1. EXCEPT FOR STI MODEL (DRUM IN DISC TYPE)

1) Lift up the vehicle, and then remove the rear wheels.
2) Remove the union bolt and the caliper bolt, and remove the caliper body assembly.

CAUTION:
• Do not allow brake fluid to come in contact with the painted surface of the vehicle body. If it does, wash off with water and wipe away completely.
• Prepare a container to catch grease or oil, etc. If any grease or oil spills, wipe it off and clean immediately to prevent from penetrating into floor or flowing outside.

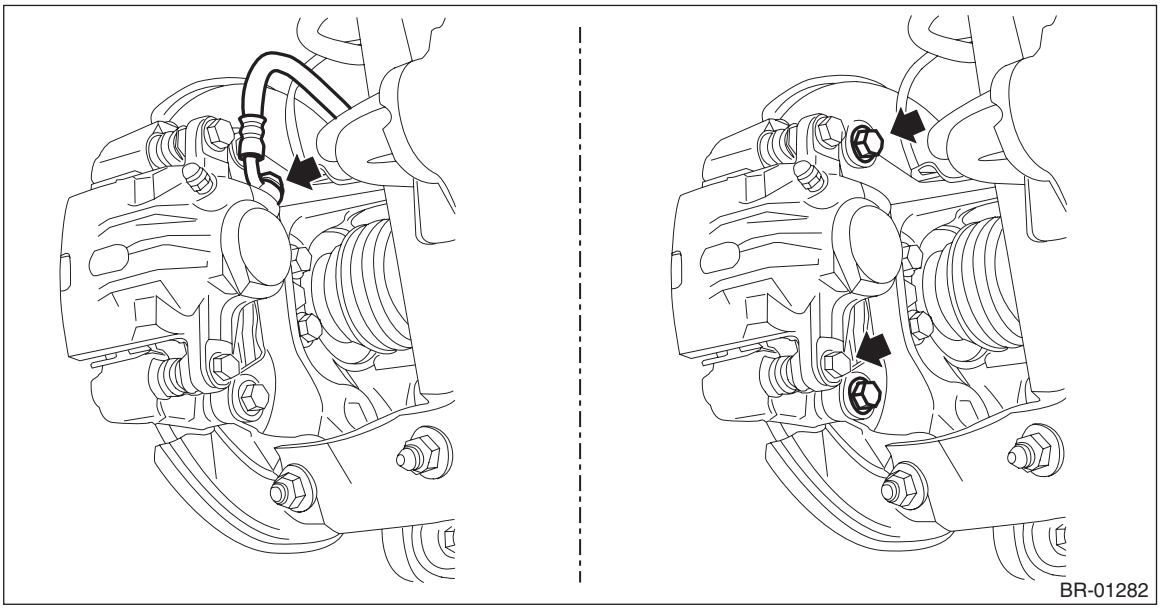
BR-01282

3) Remove the support - rear disc brake.
   (1) Remove the pad - disc brake rear.
   (2) Remove the mounting bolts, and then remove the support - rear disc brake.

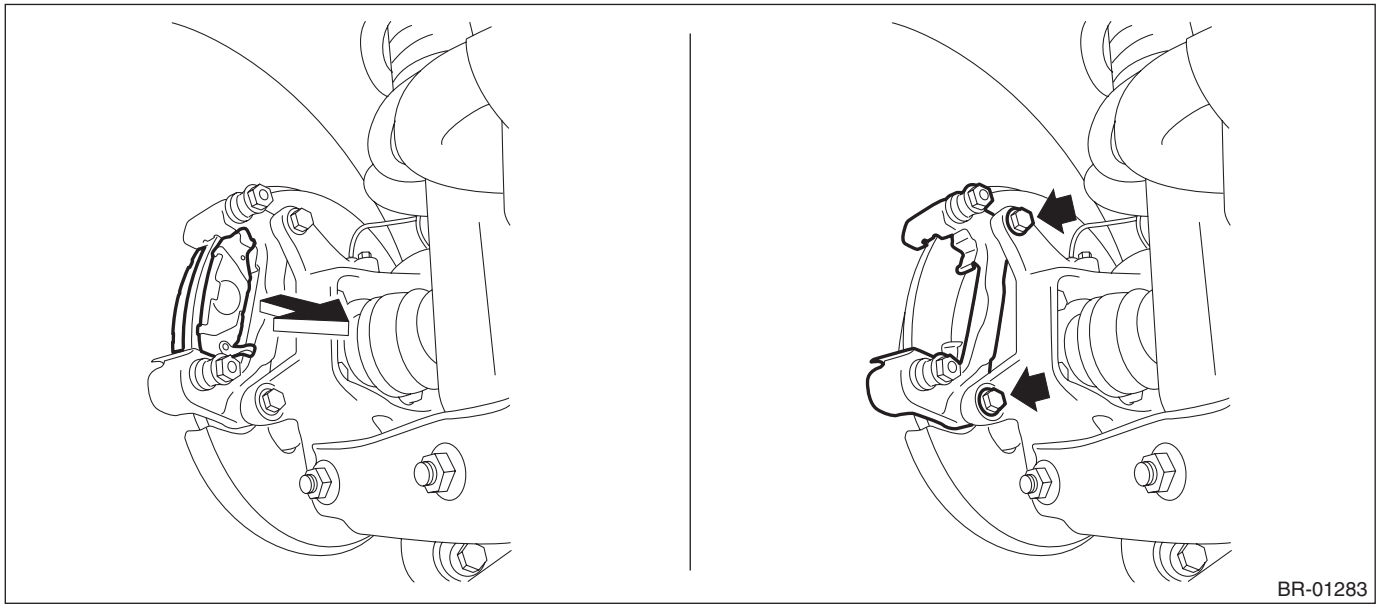
BR-01283

2. EXCEPT FOR STI MODEL (ELECTRONIC PARKING BRAKE TYPE)

CAUTION:
• Do not allow brake fluid to come in contact with the painted surface of the vehicle body. If it does, wash off with water and wipe away completely.
• Prepare a container to catch grease or oil, etc. If any grease or oil spills, wipe it off and clean immediately to prevent from penetrating into floor or flowing outside.
• Do not remove the parking brake actuator assembly except when there are system malfunctions (such as emergency release of parking brake or abnormal actuator) or when the caliper is replaced. When the parking brake actuator assembly is reused, always replace the O-ring with a new part contained in the caliper body assembly.

1) Release the parking brake.
2) Using the Subaru Select Monitor, go to the brake maintenance mode according to the display screen. <Ref. to PB-21, BRAKE MAINTENANCE MODE, OPERATION, Parking Brake System.>

NOTE:
For detailed operation procedures, refer to “Application help”.

3) Lift up the vehicle, and then remove the rear wheels.
4) Disconnect the ground terminal from battery sensor. <Ref. to NT-6, BATTERY, NOTE, Note.>
5) Remove the parking brake actuator. <Ref. to PB-24, PARKING BRAKE ACTUATOR, REMOVAL, Parking Brake Actuator.>
6) Remove the caliper body assembly.

CAUTION:
• Do not detach the brake hose except when replacing the caliper body assembly.
• Install the plug bolt to the caliper body assembly when the brake hose is disconnected.
If air enters or fluid leaks by tilting, replace the caliper body assembly.

(1) Remove the union bolt, and then disconnect the brake hose.
(2) Install the fluid leakage protection plug to the caliper body.

Preparation items:
Part No.: PLUG BOLT (26642AL000)
Part No.: PLUG GASKET (26642AL010)

Tightening torque:
20 N·m (2 kgf-m, 14.8 ft-lb)

(3) Remove the pad clip.

(4) Remove the caliper bolts, and then remove the disc brake assembly.

Preparation tool:
Hexagon wrench: 7 mm (0.28 in)

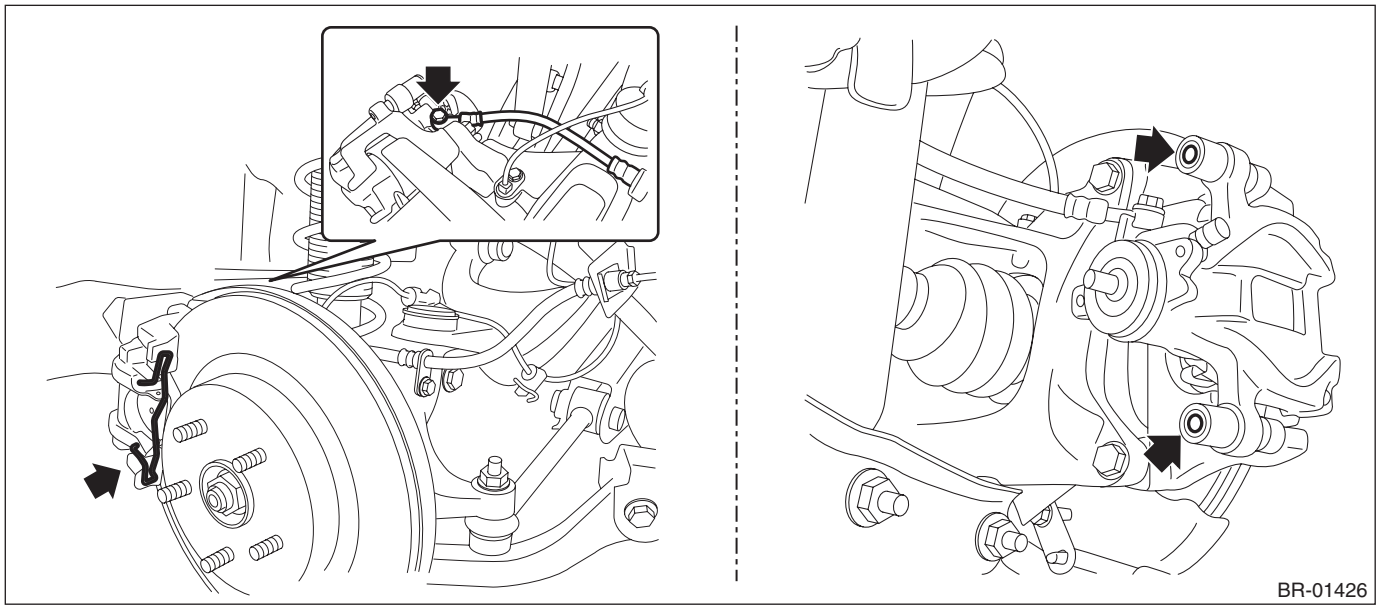

7) Remove the support - rear disc brake.
(1) Remove the pad - disc brake rear.
(2) Remove the mounting bolts, and then remove the support - rear disc brake.

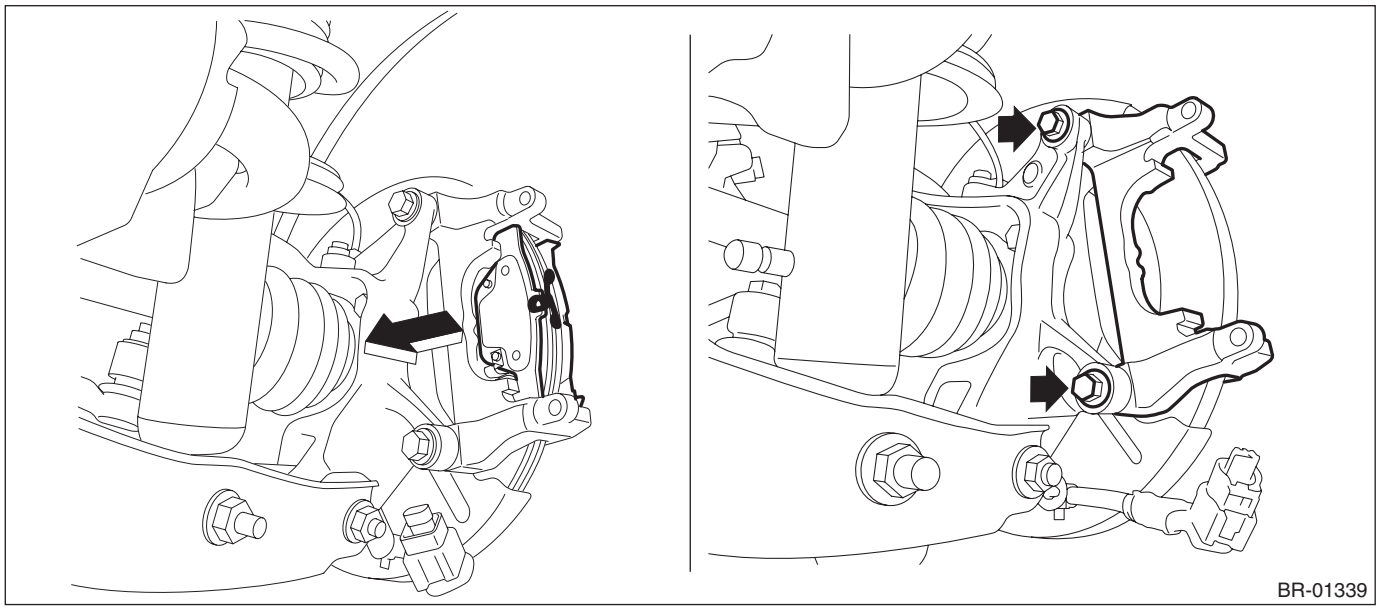

3. STI MODEL

CAUTION:
Do not allow brake fluid to come in contact with the painted surface of the vehicle body. If it does, wash off with water and wipe away completely.

1) Lift up the vehicle, and then remove the rear wheels.
2) Remove the pad - disc brake rear. <Ref. to BR-40, EXCEPT FOR STI MODEL (ELECTRONIC PARKING BRAKE TYPE), REMOVAL, Rear Brake Pad.>
3) Remove the mounting bolts, and then remove the disc brake assembly.

CAUTION:
• Since the 17-inch (Brembo) caliper body is easily scratched and the paint may be stripped, protect it from being contacted with other parts or tools.
• Do not allow brake fluid to come in contact with the painted surface of the vehicle body. If it does, wash off with water and wipe away completely.
• Prepare a container to catch grease or oil, etc. If any grease or oil spills, wipe it off and clean immediately to prevent from penetrating into floor or flowing outside.

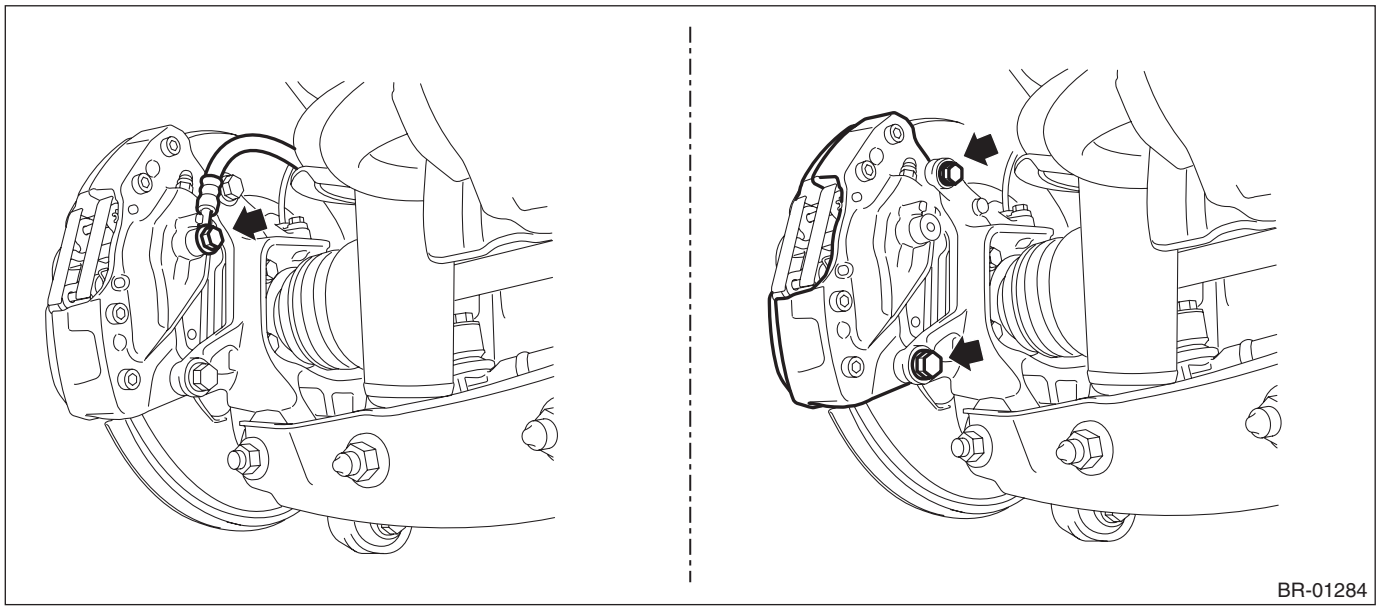
BR-01284

B: INSTALLATION

NOTE:
Before installation, remove mud and foreign matter from the caliper body assembly and support - rear disc brake.

1. EXCEPT FOR STI MODEL (DRUM IN DISC TYPE)

1) Check each part. <Ref. to BR-70, INSPECTION, Rear Disc Brake Assembly.>
2) Apply a thin coat of grease to the support - rear disc brake.

Preparation items:
Grease: An item contained in the pad kit or equivalent

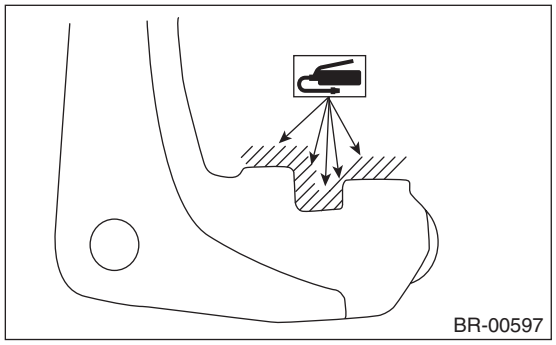

3) Install the support - rear disc brake to the housing assembly - rear axle.

Tightening torque:
66 N·m (6.7 kgf-m, 48.7 ft-lb)

4) Apply a thin coat of grease to the pad clip, both sides of the shim - disc brake rear inner and the shim mounting surface of the pad - disc brake rear.

Preparation items:
Grease (pad clip (A)): An item contained in the pad kit or equivalent
Grease (shim and pad (B)): An item contained in the pad kit or Dow Corning Molykote AS880N

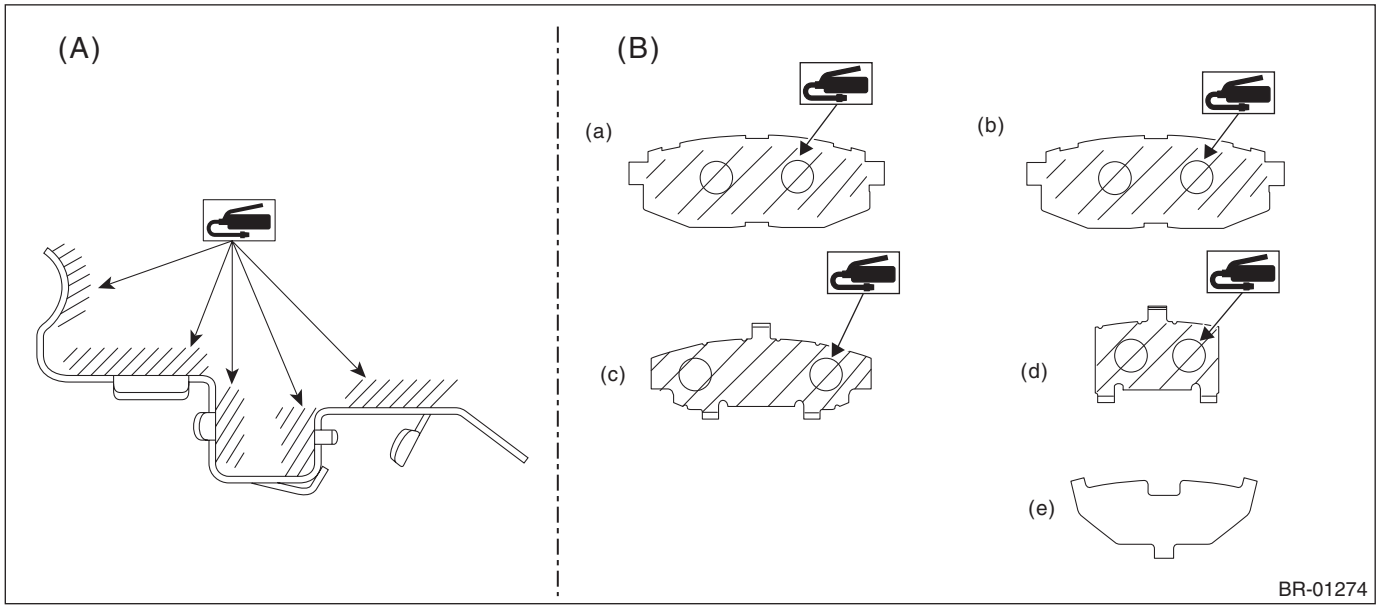

(A) Pad clip - rear brake
(B) Pad - disc brake rear and the shim - disc brake rear
(a) Pad - disc brake rear outer
(b) Pad - disc brake rear inner
(c) Shim - disc brake rear inner
(d) Shim - disc brake rear inner
(e) Shim - disc brake rear outer

5) Install the pad - disc brake rear.

NOTE:
Install the pad indicator in proper direction.
6) Install the caliper body assembly.

Tightening torque:
27 N·m (2.8 kgf-m, 19.9 ft-lb)
7) Install the brake hose bracket.

Tightening torque:
33 N·m (3.4 kgf-m, 24.3 ft-lb)
8) Connect the brake hose using a new brake hose gasket.

Tightening torque:
26 N·m (2.7 kgf-m, 19.2 ft-lb)
9) Bleed air from the brake system. <Ref. to BR-89, BRAKE LINE, PROCEDURE, Air Bleeding.>
10) Install the rear wheels.

Tightening torque:
120 N·m (12.2 kgf-m, 88.5 ft-lb)

2. EXCEPT FOR STI MODEL (ELECTRONIC PARKING BRAKE TYPE)

NOTE:
Before installation, remove mud and foreign matter from the disc brake assembly.
1) Check each part. <Ref. to BR-70, INSPECTION, Rear Disc Brake Assembly.>
2) Install the support - rear disc brake to the housing assembly - rear axle.

Tightening torque:
66 N·m (6.7 kgf-m, 48.7 ft-lb)
3) Install the caliper body assembly.

Tightening torque:
25 N·m (2.5 kgf-m, 18.4 ft-lb)
4) Connect the brake hose using a new brake hose gasket.

Tightening torque:
Union bolt: 26 N·m (2.7 kgf-m, 19.2 ft-lb)
5) Install the parking brake actuator. <Ref. to PB-27, PARKING BRAKE ACTUATOR, INSTALLATION, Parking Brake Actuator.>
6) Bleed air from the brake system. <Ref. to BR-89, BRAKE LINE, PROCEDURE, Air Bleeding.>
7) Connect the ground terminal to battery sensor. <Ref. to NT-6, BATTERY, NOTE, Note.>
8) Using the Subaru Select Monitor, exit the brake maintenance mode according to the display screen. <Ref. to PB-21, BRAKE MAINTENANCE MODE, OPERATION, Parking Brake System.>

NOTE:
For detailed operation procedures, refer to “Application help”.
9) After the operation is completed, apply and release the parking brake five times and ensure that the brake operates normally.
10) Install the rear wheels.

Tightening torque:
120 N·m (12.2 kgf-m, 88.5 ft-lb)

3. STI MODEL

NOTE:
Before installation, remove mud and foreign matter from the disc brake assembly.
1) Check each part. <Ref. to BR-70, INSPECTION, Rear Disc Brake Assembly.>
2) Install the disc brake assembly.

Tightening torque:
66 N·m (6.7 kgf-m, 48.7 ft-lb)

3) Apply a thin coat of grease to the side of the pad - disc brake rear, both sides of the shim - disc brake rear inner and the shim mounting surface of the pad - disc brake rear.

Preparation items:
Grease (pad clip (A)): An item contained in the pad kit or equivalent
Grease (shim and pad (B)): An item contained in the pad kit or Dow Corning Molykote AS880N

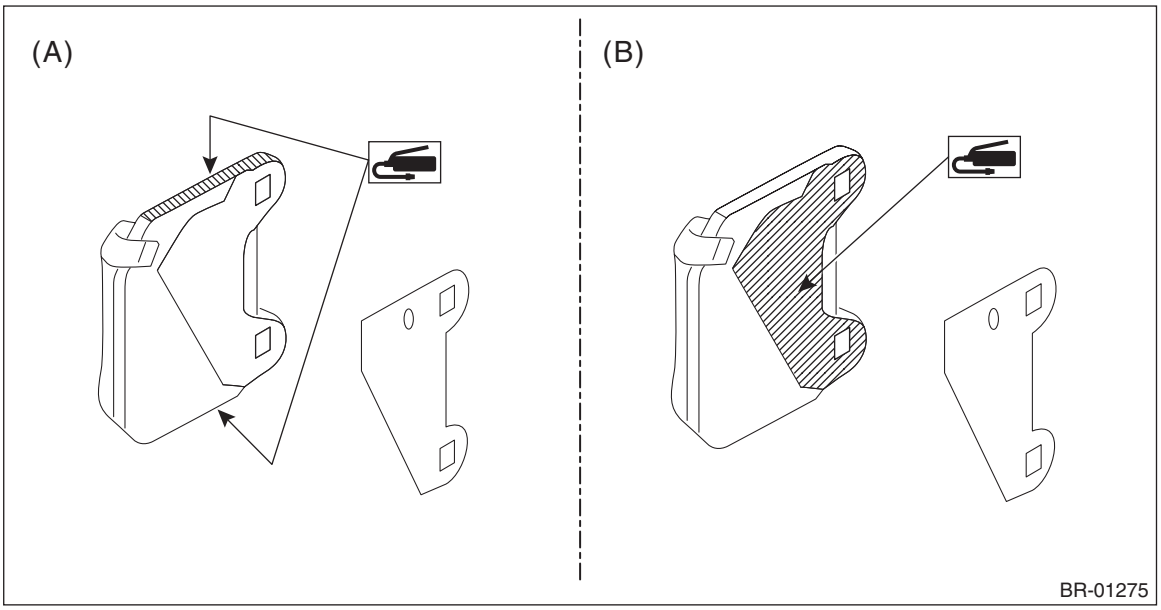

4) Install the pad - disc brake rear.

NOTE:
Install so that the arrow (a) faces upward.

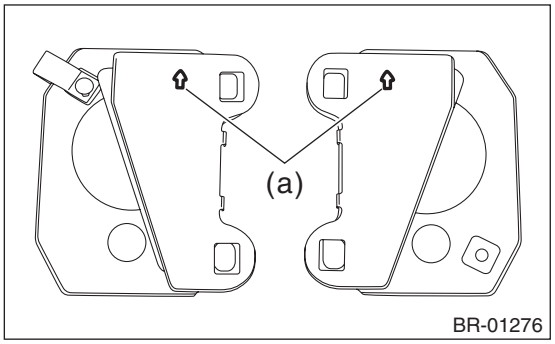

5) Install the cross spring.
6) Install the pin - disc brake.
7) Install the clip - slide pin.
8) Install the brake hose bracket.

Tightening torque:
33 N·m (3.4 kgf-m, 24.3 ft-lb)
9) Connect the brake hose using a new brake hose gasket.

Tightening torque:
26 N·m (2.7 kgf-m, 19.2 ft-lb)
10) Bleed air from the brake system. <Ref. to BR-89, BRAKE LINE, PROCEDURE, Air Bleeding.>
11) Install the rear wheels.

Tightening torque:
120 N·m (12.2 kgf-m, 88.5 ft-lb)

C: DISASSEMBLY

1. EXCEPT FOR STI MODEL (DRUM IN DISC TYPE)

CAUTION:
Be careful not to allow foreign matter to enter the brake hose connector.

1) Remove mud and foreign matter from the caliper body assembly.
2) Remove the piston boot.

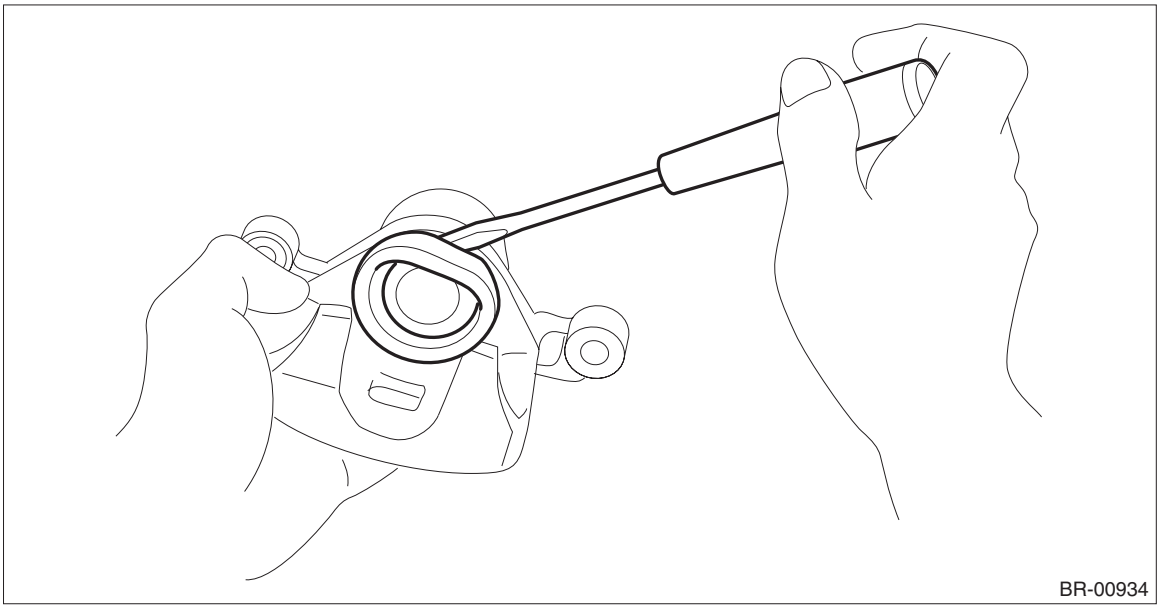

3) Remove the piston - disc brake.
   (1) Place a wooden block in the caliper body assembly as shown in the figure to prevent the piston - disc brake from jumping out and being damaged.
   (2) Using an air gun, gradually apply compressed air via the brake hose installation hole to push out the piston - disc brake.

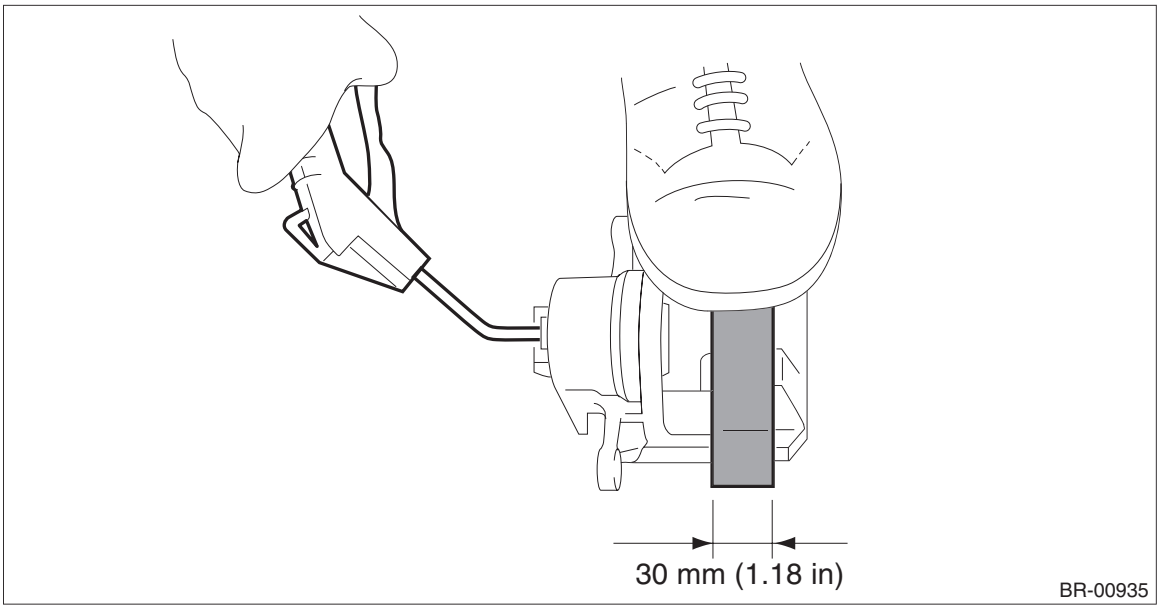

4) Remove the piston seal.

CAUTION:
Do not damage the piston sliding part and the piston seal groove.

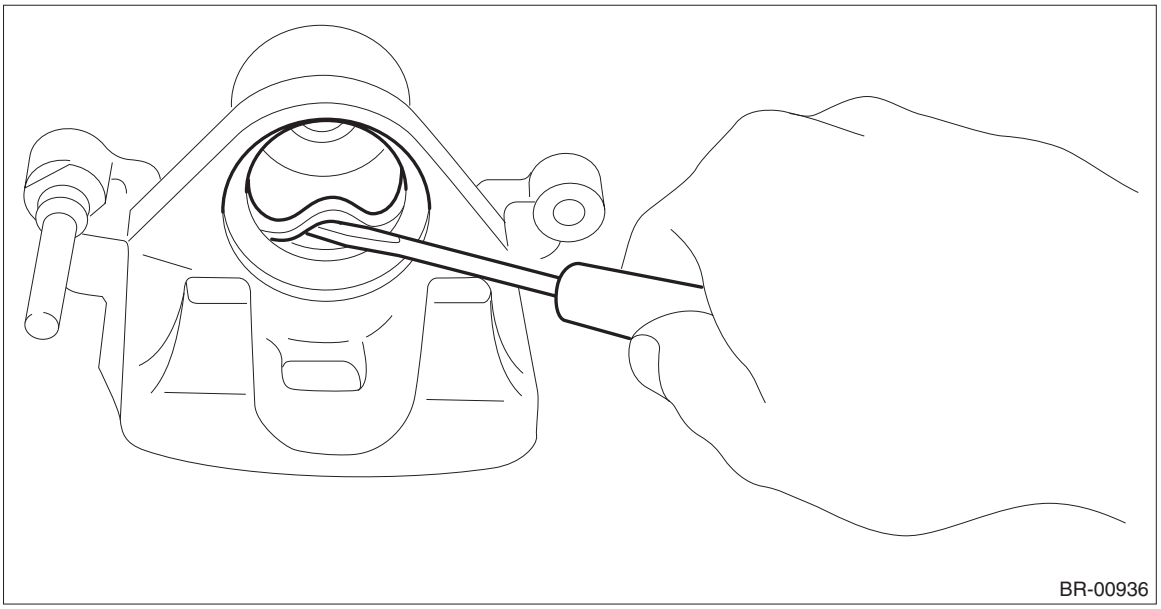

5) Remove each part from support - rear disc brake.

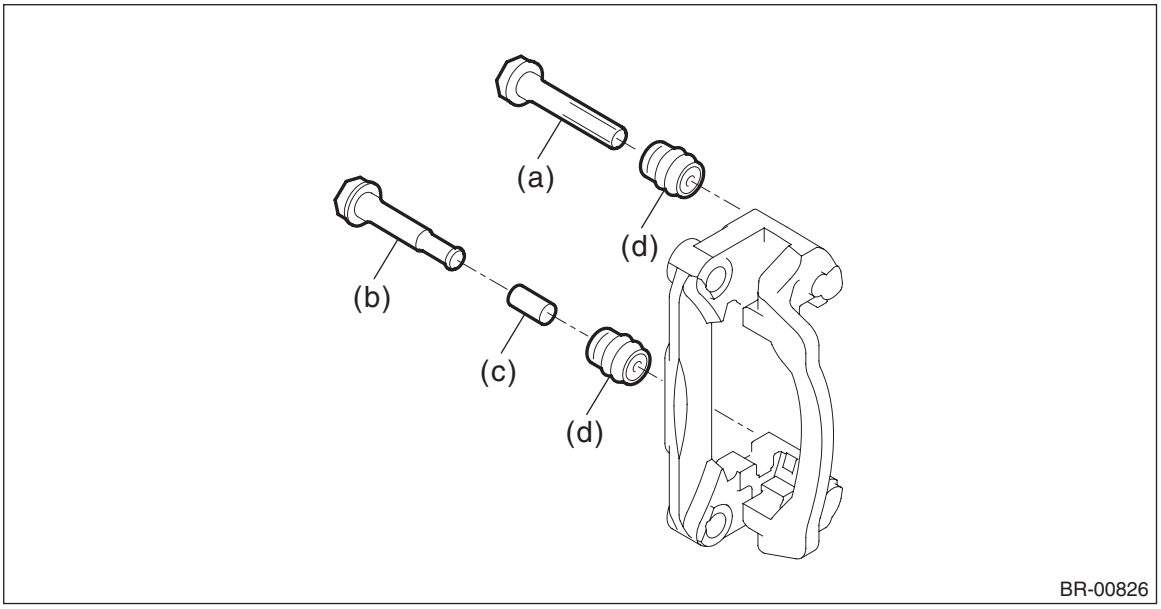

(a) Guide pin - rear brake (black)
(b) Lock pin - rear brake (silver)
(c) Lock pin - bushing
(d) Pin boot

2. EXCEPT FOR STI MODEL (ELECTRONIC PARKING BRAKE TYPE)

CAUTION:
- **The piston cannot be removed from the caliper body assembly.**
- **Do not remove the parking brake actuator assembly except when there are system malfunctions (such as emergency release of parking brake or abnormal actuator) or when the caliper is replaced. When the parking brake actuator assembly is reused, always replace the O-ring with a new part contained in the caliper body assembly.**

1) Remove mud and foreign matter from the caliper body assembly.
2) Remove the piston boot.

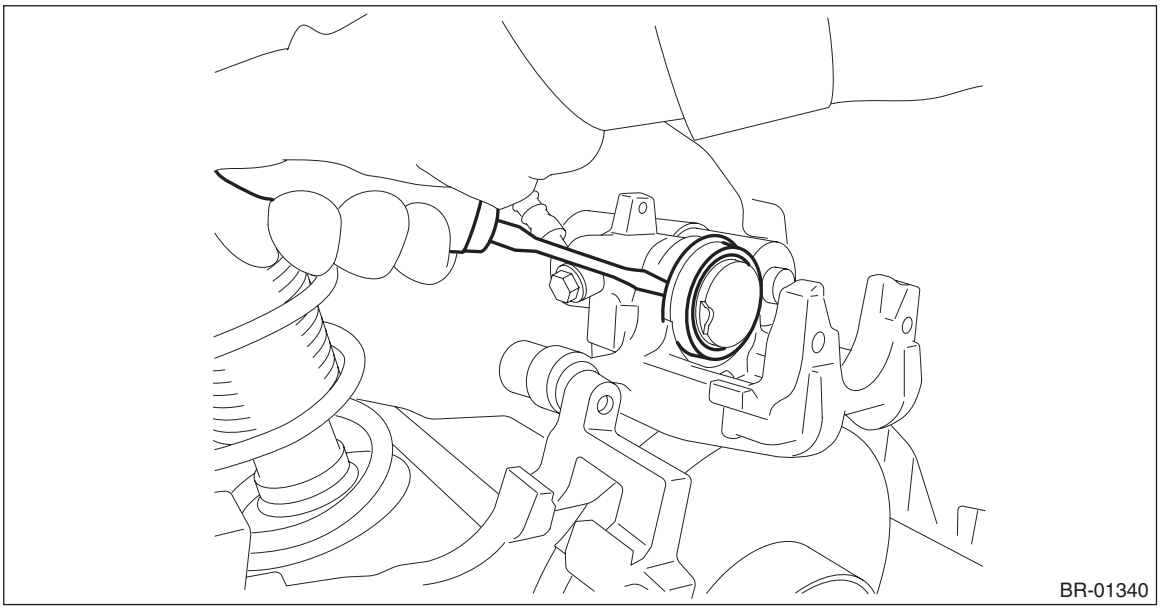

3) Remove the bushing from the support - rear disc brake.

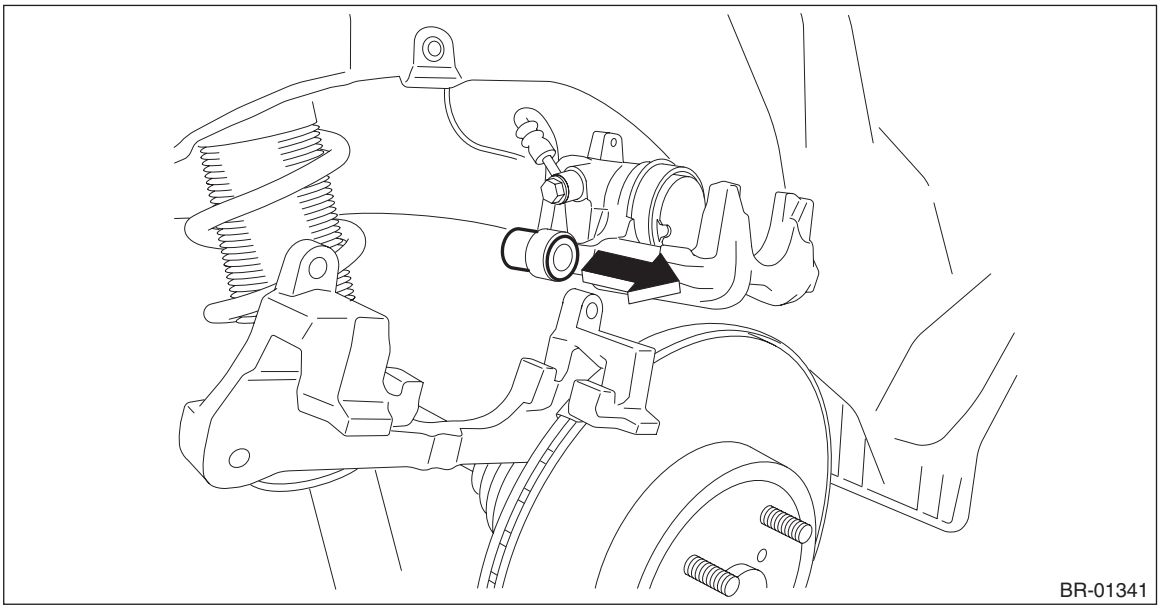

3. STI MODEL

CAUTION:
- **Be careful not to allow foreign matter to enter the brake hose connector.**
- **Since the 17-inch (Brembo) caliper body is easily scratched and the paint may be stripped, protect it from being contacted with other parts or tools.**

1) Remove mud and foreign matter from the caliper body assembly.
2) Remove the piston boot.

NOTE:
Remove two piston boots.

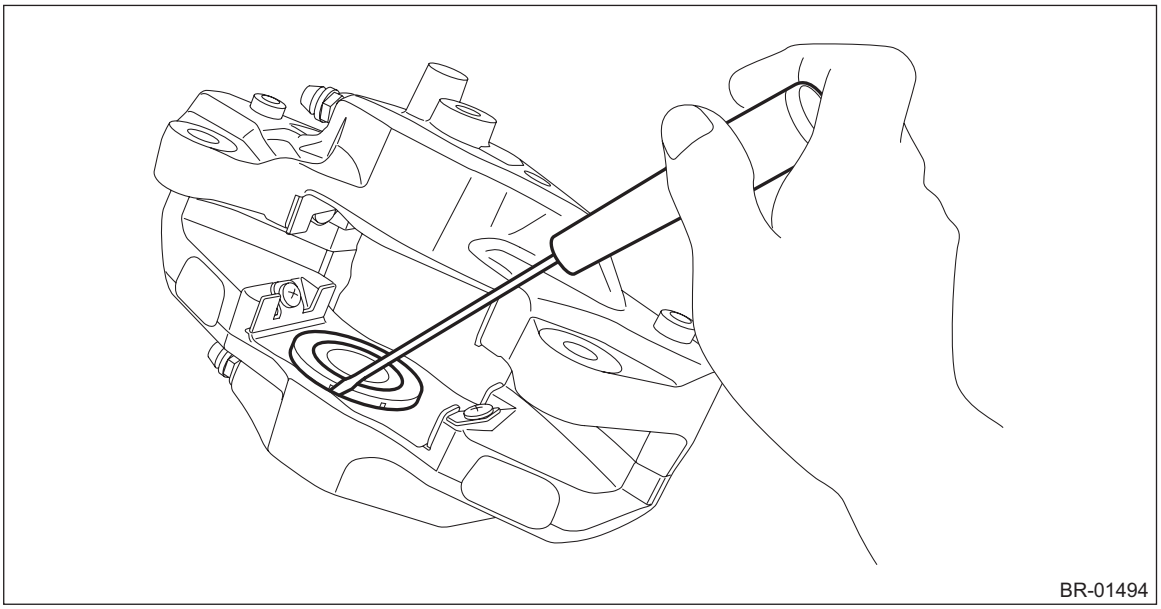

3) Remove the piston - disc brake.
(1) Place a wooden block in the caliper body assembly as shown in the figure to prevent the piston - disc brake from jumping out and being damaged.
(2) Using an air gun, gradually apply compressed air via the brake hose installation hole to push out the piston - disc brake.

NOTE:
Instead of removing the pistons one by one, remove all pistons at once after adjusting the amount of protrusion evenly using a wooden block.

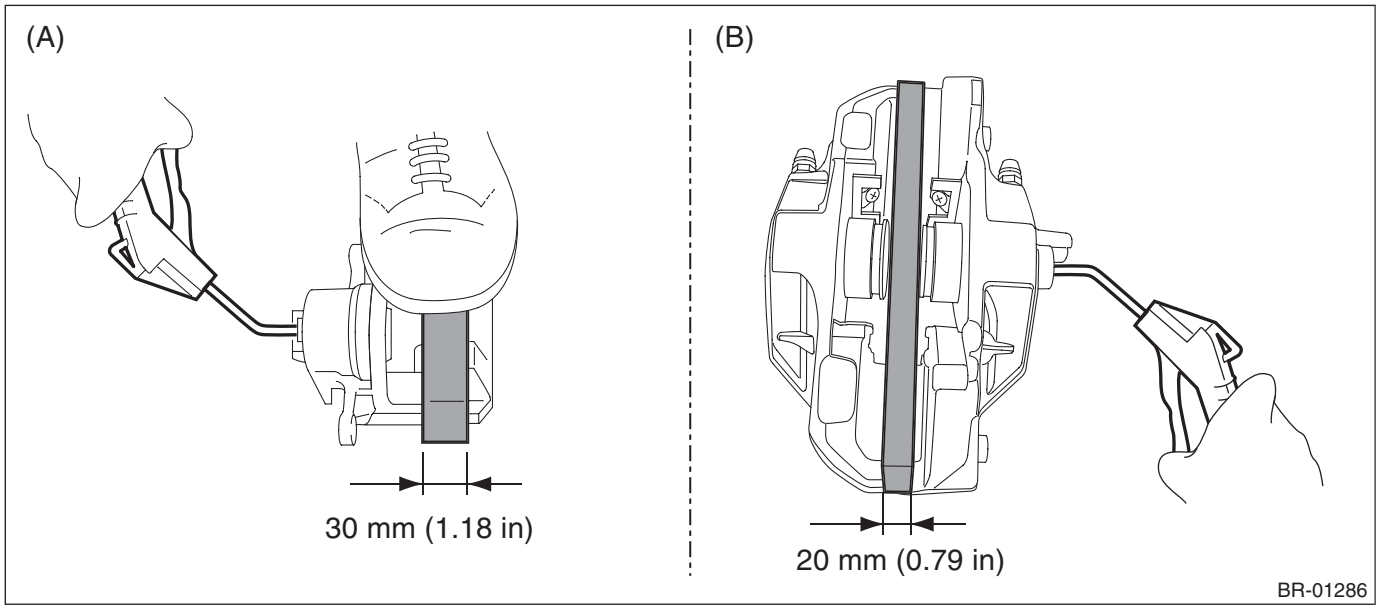

(A) Except for STI model (B) STI model

4) Remove the piston seal.

CAUTION:
Do not damage the piston sliding part and the piston seal groove.

NOTE:
Remove two piston boots.

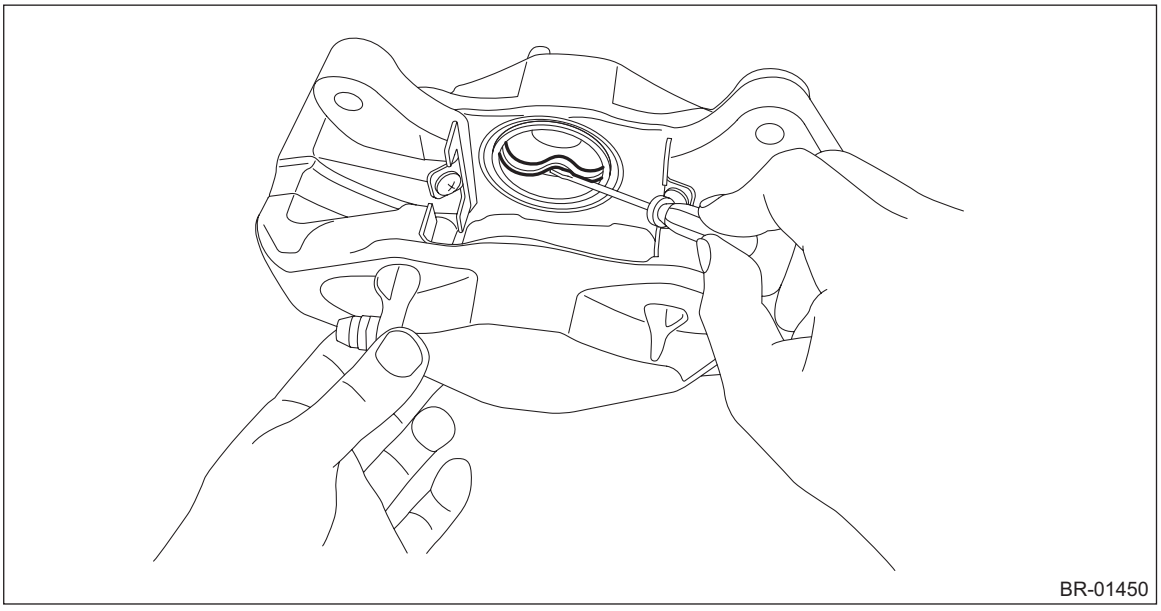

D: ASSEMBLY

1. EXCEPT FOR STI MODEL (DRUM IN DISC TYPE)

1) Check each part. <Ref. to BR-70, INSPECTION, Rear Disc Brake Assembly.>
2) Clean the inside of the caliper body using brake fluid.

Preparation items:
Brake fluid: FMVSS No. 116, DOT3 or DOT4

3) Install the piston seal and the piston - disc brake.
   (1) Apply a coat of brake fluid to piston seal and install the piston seal to the groove inside caliper body.
   (2) Apply a coat of brake fluid to the piston sliding part of caliper body and the entire outer surface of the piston - disc brake.

Preparation items:
Brake fluid: FMVSS No. 116, DOT3 or DOT4

   (3) Apply a coat of grease to the piston boot and fit to the groove on the ends of piston - disc brake.

Preparation items:
Grease: An item contained in the pad kit or Nippon Grease NIGLUBE RX-2

   (4) Install the piston - disc brake to the caliper body.

CAUTION:
Do not force the piston - disc brake into the sliding part of caliper body.

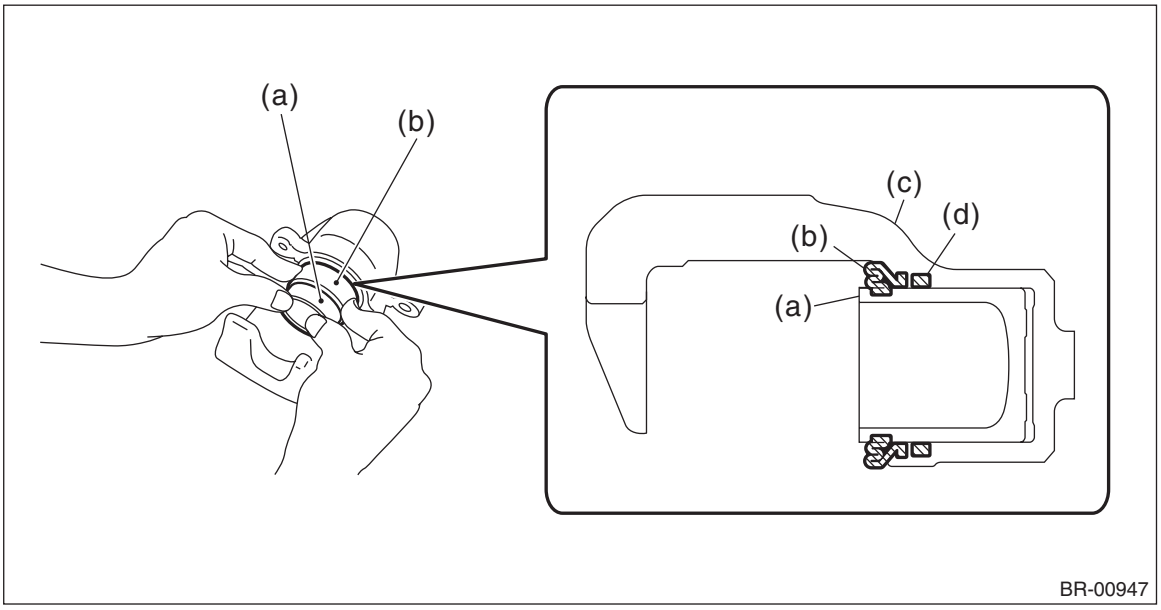

(a) Piston - disc brake
(b) Piston boot
(c) Caliper body
(d) Piston seal

4) Apply grease contained in the piston seal kit to the lock pin - rear brake, the outer surface of guide pin - rear brake, the pin sliding part of the support - front disc brake, and the grooves of pin boot.
5) Install the pin boot to the lock pin - rear brake and guide pin - rear brake, and insert them into the support - rear disc brake.

CAUTION:
Insert the lock pin - rear brake and guide pin - rear brake into specified position, and make sure that they slide and seat properly.

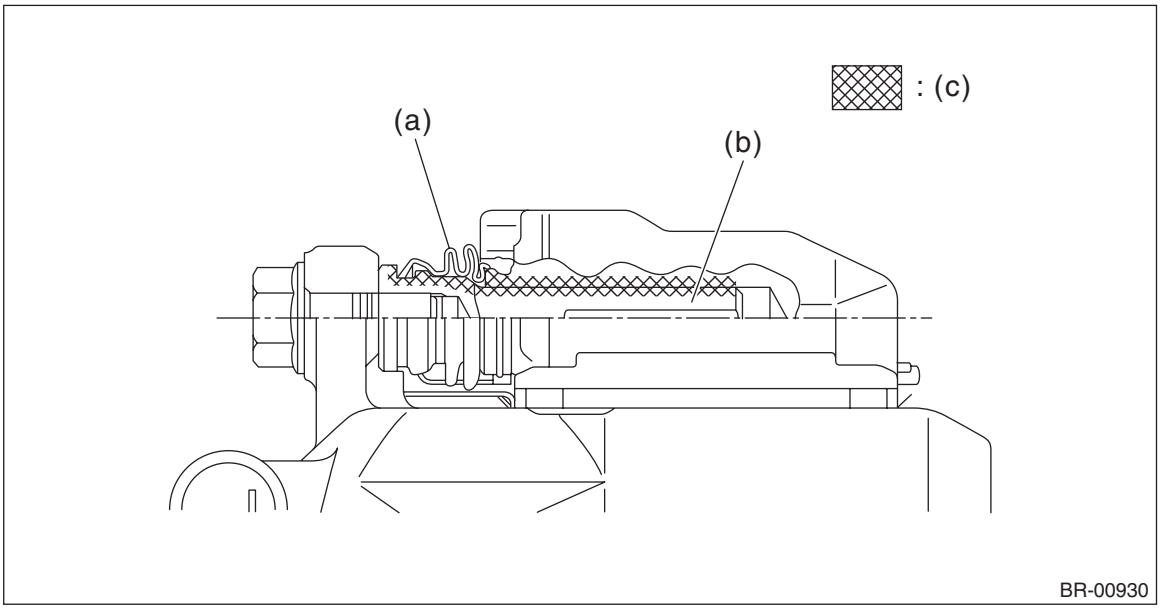

(a) Pin boot
(b) Lock pin - rear brake or guide pin - rear brake
(c) Grease applied area

2. EXCEPT FOR STI MODEL (ELECTRONIC PARKING BRAKE TYPE)

NOTE:
If the brake hose is disconnected, air enters inside. Therefore, this operation should be performed on the vehicle without the brake hose disconnected.

1) Check each part. <Ref. to BR-70, INSPECTION, Rear Disc Brake Assembly.>
2) Install the bushing.
3) Apply a coat of grease to the inside of the new piston boot.

Preparation items:
Grease: Nippon Grease NIGLUBE RX-2 or equivalent

4) Using the ST, install the piston boot.

Preparation tool:
ST: PISTON BOOT INSTALLER (99099AL000)

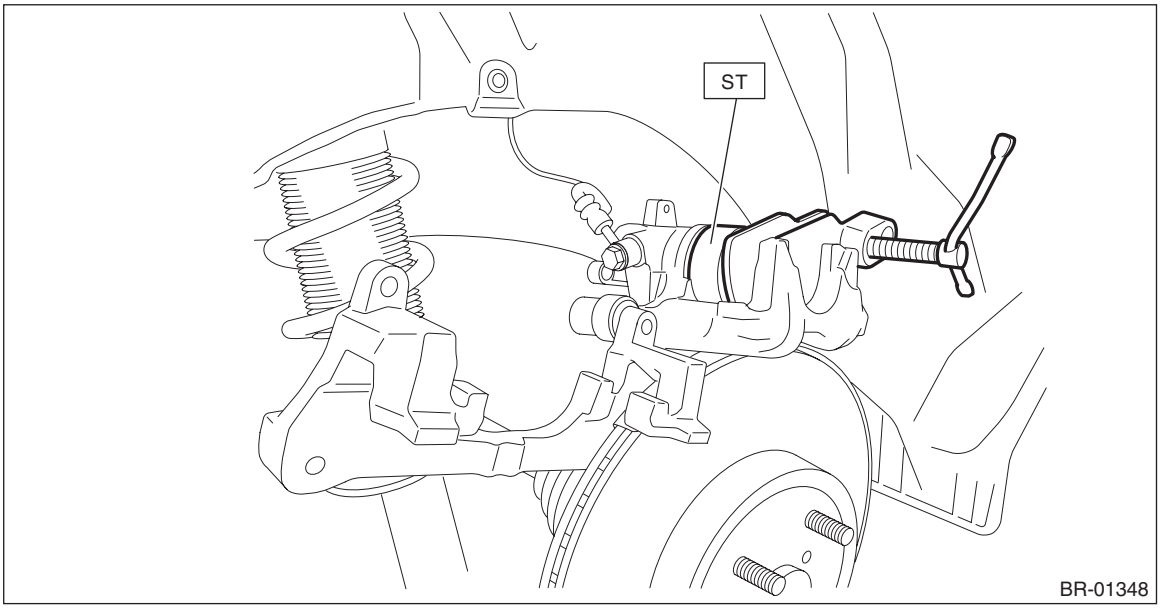

3. STI MODEL

1) Check each part. <Ref. to BR-70, INSPECTION, Rear Disc Brake Assembly.>
2) Clean the inside of the caliper body using brake fluid.

Preparation items:
Brake fluid: FMVSS No. 116, DOT3 or DOT4
3) Install the piston seal and the piston - disc brake.
(1) Apply a coat of brake fluid to piston seal and install the piston seal to the groove inside caliper body.
(2) Apply a coat of brake fluid to the piston sliding part of caliper body and the entire outer surface of the piston - disc brake.

Preparation items:
Brake fluid: FMVSS No. 116, DOT3 or DOT4
(3) Apply a coat of grease to the piston boot and fit to the groove on the ends of piston - disc brake.

Preparation items:
Grease: An item contained in the pad kit or Nippon Grease NIGLUBE RX-2
(4) Install the piston - disc brake to the caliper body.

CAUTION:
Do not force the piston - disc brake into the sliding part of caliper body.

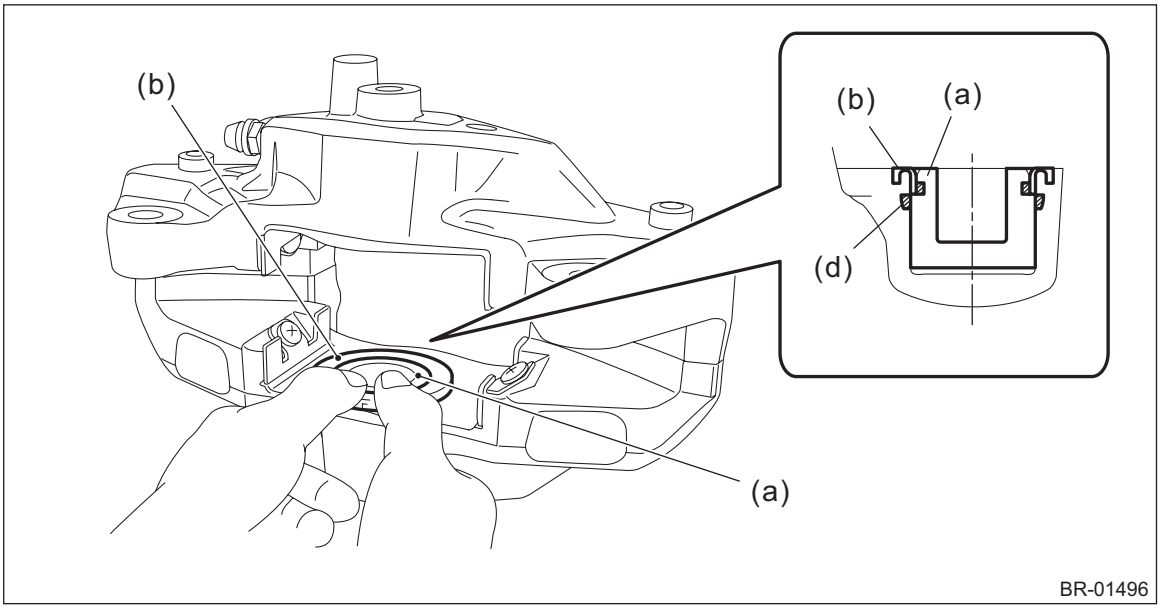

(a) Piston - disc brake
(b) Piston boot
(c) Caliper body
(d) Piston seal

E: INSPECTION

1) Check the piston sliding part of caliper body and the piston - disc brake for uneven wear, damage or rust.
2) Check the rubber parts for damage or deterioration.
3) If faulty is found in the inspection, replace the relevant part.

8. Master Cylinder

A: REMOVAL

CAUTION:
• Do not allow brake fluid to come in contact with the painted surface of the vehicle body. If it does, wash off with water and wipe away completely.
• Prepare a container to catch grease or oil, etc. If any grease or oil spills, wipe it off and clean immediately to prevent from penetrating into floor or flowing outside.
1) Disconnect the ground cable from battery. <Ref. to NT-6, BATTERY, NOTE, Note.>

NOTE:
For model with battery sensor, disconnect the ground terminal from battery sensor.
2) Remove the collector cover. <Ref. to IN(w/o STI)-7, REMOVAL, Collector Cover.>
3) Drain brake fluid from the reservoir tank completely.
4) Remove the master cylinder assembly.
   (1) Disconnect the fluid level gauge connector (a).
   (2) Disconnect the clutch hose (b). (MT model)
   (3) Disconnect the brake pipe (c).
   (4) Remove the nut (d), and slowly remove the master cylinder assembly from the vacuum booster assembly.

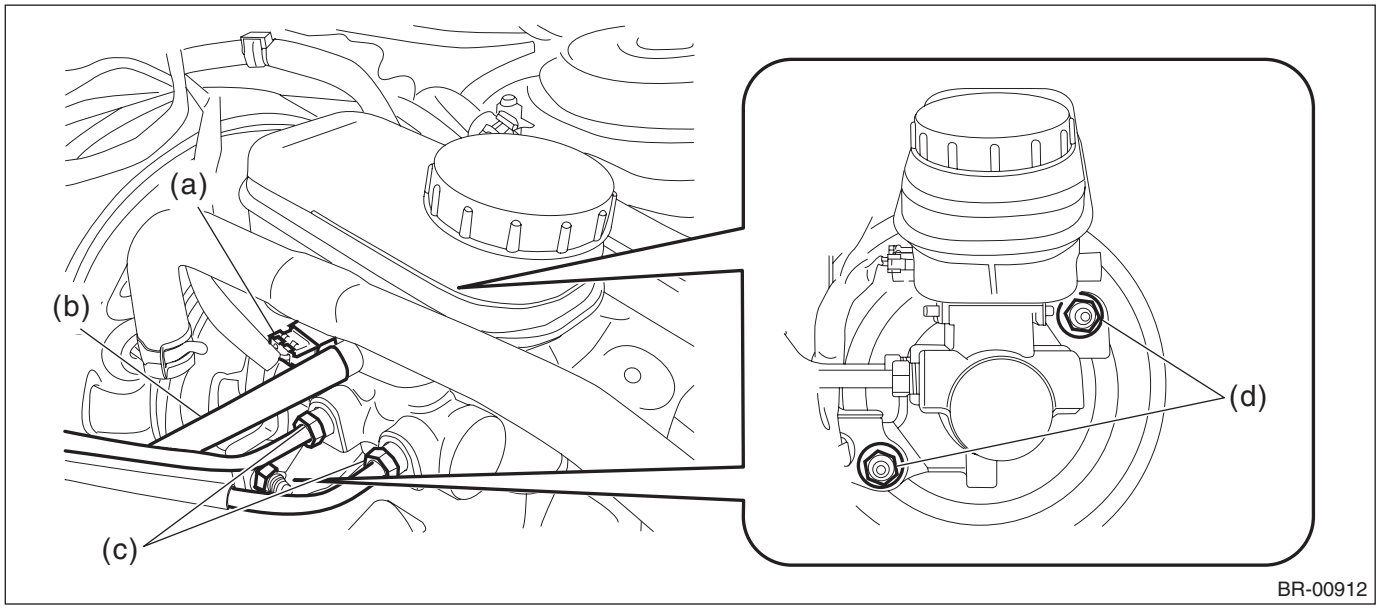

B: INSTALLATION

1) Replace the seal sub assembly for the master cylinder assembly with a new part.

CAUTION:
Be careful not to install the seal sub assembly in the wrong location.

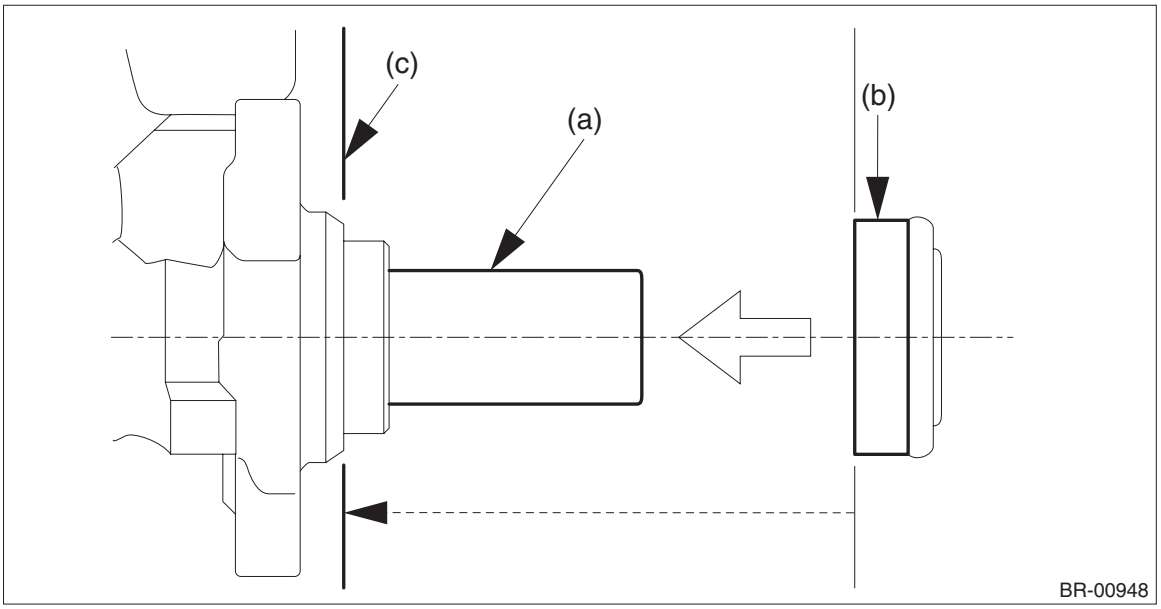

(a) Primary piston
(b) Seal sub ASSY
(c) Install the seal sub ASSY to this surface.

2) Install the master cylinder assembly.

Tightening torque:
13 N·m (1.3 kgf-m, 9.6 ft-lb)

3) Turn and tighten the flare nut (b) by hand while pressing the brake pipe (a) toward the master cylinder assembly side.

CAUTION:
Be careful not to make scratches or other damage to the inside surface of the brake pipe flare.

Tightening torque:
19 N·m (1.9 kgf-m, 14 ft-lb)

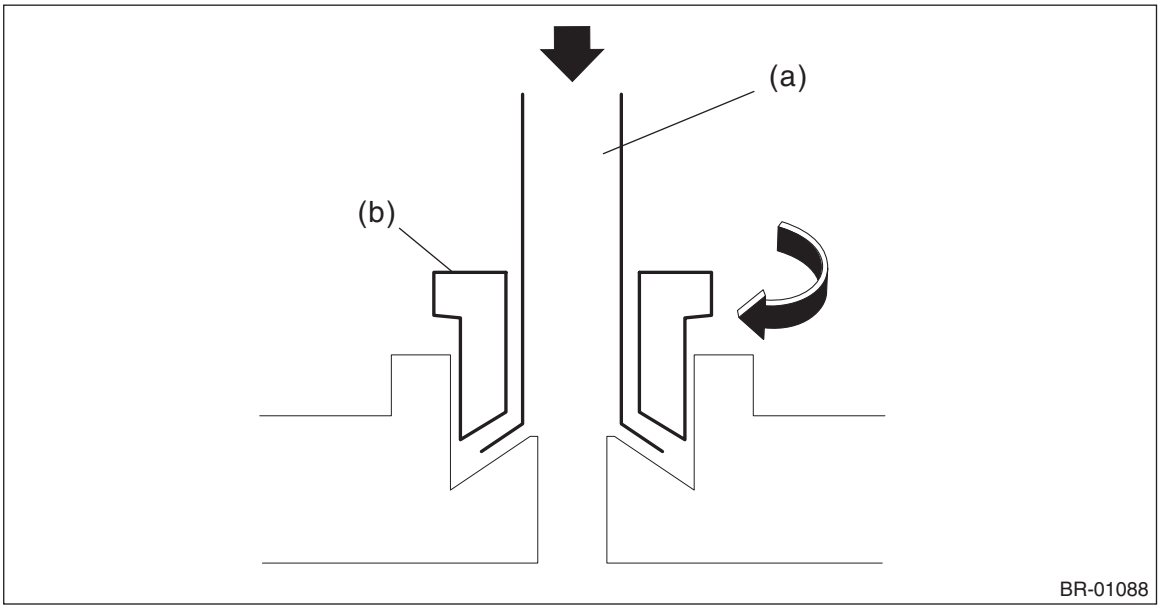

4) Bleed air from the brake system and clutch system (MT model). <Ref. to BR-87, PROCEDURE, Air Bleeding.>
5) Install the collector cover. <Ref. to IN(w/o STI)-10, INSTALLATION, Collector Cover.>
6) Connect the battery ground terminal. <Ref. to NT-6, BATTERY, NOTE, Note.>

C: DISASSEMBLY

1) Remove the reservoir tank.

CAUTION:
Be careful not to tighten a vise excessively.

(1) Place the master cylinder assembly between aluminum plates and fix it on a vise.
(2) Drive out the pin using a punch and a hammer to remove the reservoir tank.

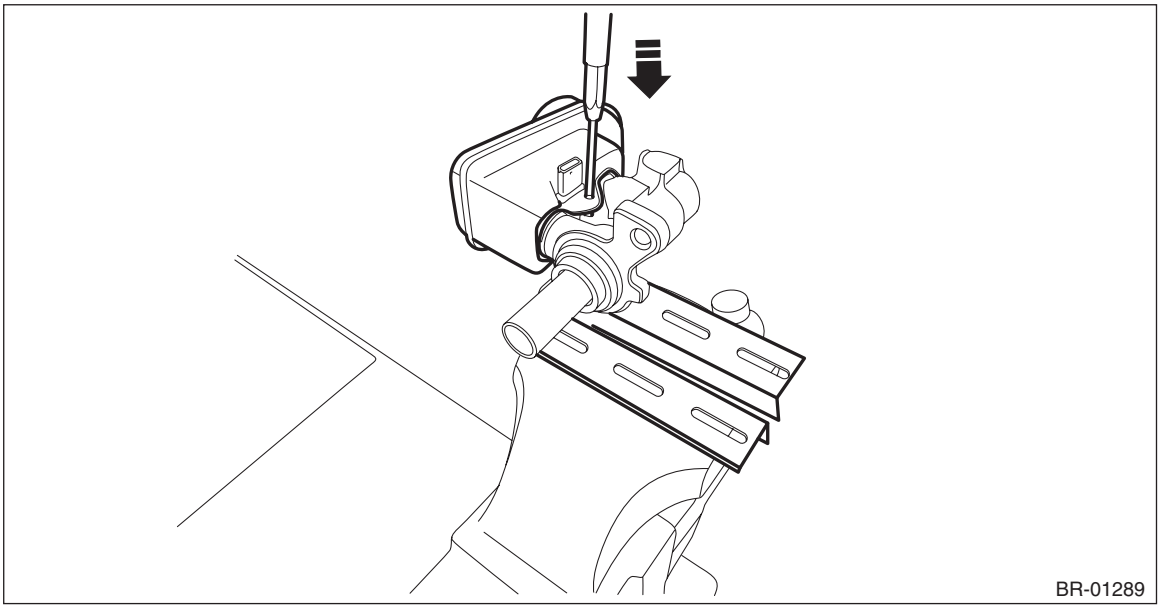

2) Remove the seal from the cylinder body assembly.

D: ASSEMBLY

CAUTION:
When replacing the reservoir tank, adhere the label to the position shown in the figure. (C0 model)

Preparation items:
Part No.: Fluid caution label (25080GA010)

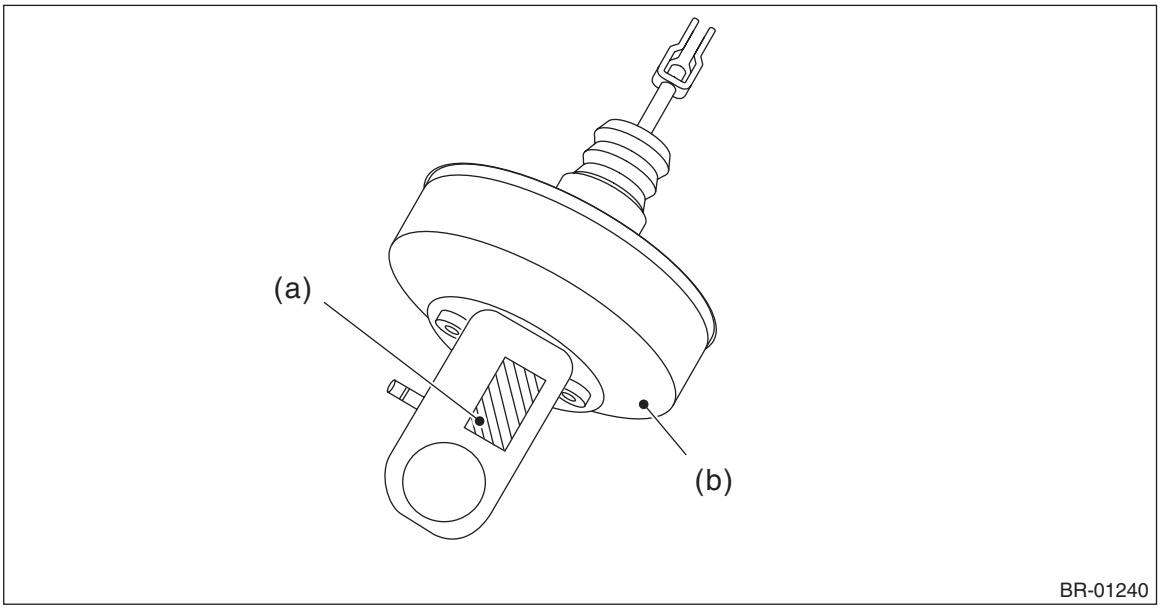

(a) Label (b) Brake booster

1) Install the seal to the cylinder body assembly.
2) Install the reservoir tank.

CAUTION:
Be careful not to tighten a vise excessively.
(1) Place the master cylinder assembly between aluminum plates and fix it on a vise.
(2) Drive the pin using a punch and a hammer to install the reservoir tank.

9. Brake Booster

A: REMOVAL

CAUTION:
• Do not allow brake fluid to come in contact with the painted surface of the vehicle body. If it does, wash off with water and wipe away completely.
• Before performing service on the airbag module, always refer to "CAUTION" of "General Description" in "AIRBAG SYSTEM" section. <Ref. to AB-9, CAUTION, General Description.>
1) Disconnect the ground cable from battery and wait for at least 60 seconds before starting work. <Ref. to NT-6, BATTERY, NOTE, Note.>

NOTE:
For model with battery sensor, disconnect the ground terminal from battery sensor.
2) Remove the collector cover. <Ref. to IN(w/o STI)-7, REMOVAL, Collector Cover.>
3) Remove the intercooler.
- Except for STI model <Ref. to IN(w/o STI)-43, REMOVAL, Intercooler.>
- STI model <Ref. to IN(STI)-13, REMOVAL, Intercooler.>

4) Disconnect the air conditioner pipe. <Ref. to AC-63, REMOVAL, Hose and Pipe.>
5) Remove the power steering control module. (Except for STI model) <Ref. to PS-100, REMOVAL, Power Steering Control Module.>
6) Remove the vacuum hose.
7) Remove the master cylinder assembly. <Ref. to BR-71, REMOVAL, Master Cylinder.>
8) Remove the brake pipe assembly (a).
   (1) Disconnect the starter connector (b) and harness clip (c).
   (2) Remove the brake pipe assembly (a) from the pipe clip (d).

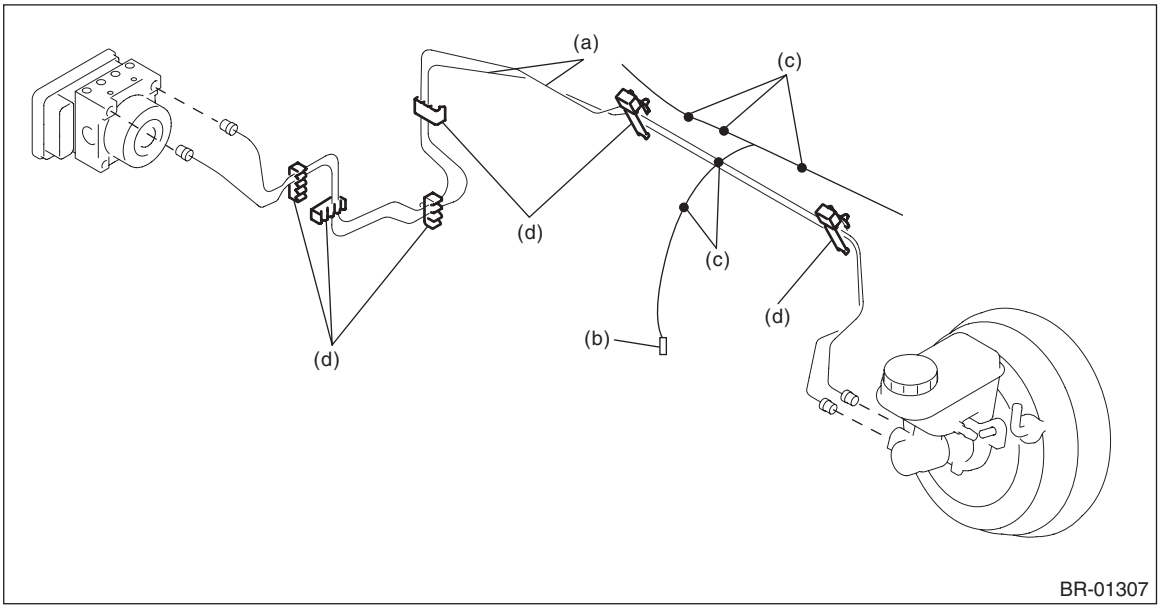

9) Remove the cover assembly - instrument panel LWR driver. <Ref. to EI-62, REMOVAL, Instrument Panel Lower Cover.>
10) Remove the knee airbag module. <Ref. to AB-24, KNEE AIRBAG MODULE, PROCEDURE, Airbag Connector.>
11) Remove the universal joint assembly - steering. <Ref. to PS-21, REMOVAL, Universal Joint.>

CAUTION:
To prevent damage to the universal joint assembly - steering and improper steering effort, make sure to remove the universal joint assembly - steering.
12) Remove the column assembly - steering. <Ref. to PS-25, REMOVAL, Steering Column.>

13) Remove the snap pin (a) and clevis pin (b), and remove the operating rod from the brake pedal.

CAUTION:
• Be careful not to apply excessive force to the operating rod when handling the operating rod. The angle may change by ±3°, and it may result in damage to power piston cylinder.
• Do not change the push rod length.

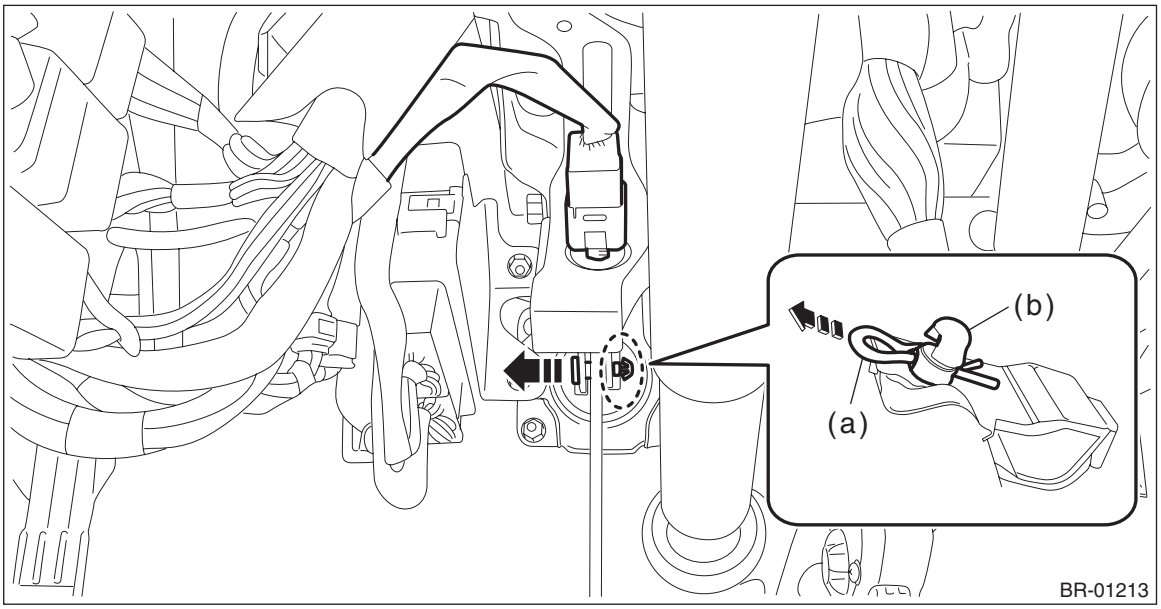

14) Disconnect the vacuum sensor connector. (Except for STI model)

CAUTION:
• Do not remove the vacuum sensor (a). If removed, replace the vacuum booster assembly (b) with a new part.
• Do not rotate the vacuum sensor (a) when disconnecting the connector of vacuum sensor (a). Otherwise the grommet on the mounting location of the vacuum sensor (a) may be damaged.

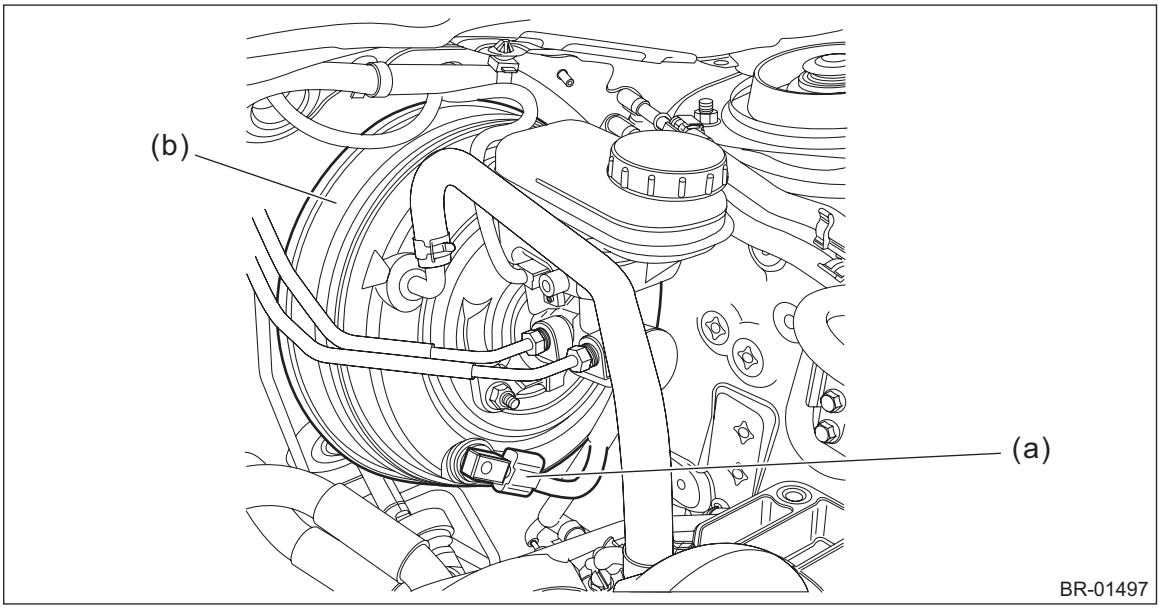

15) Remove the vacuum booster assembly.

CAUTION:
- **Do not disassemble the vacuum booster assembly.**
- **Make sure that the booster shell and vacuum pipe are not subject to strong impacts.**
- **Be careful not to drop the vacuum booster assembly. If the vacuum booster assembly is dropped accidentally, replace it.**
- **Be careful when placing the vacuum booster assembly on floor.**
- **If external force (a) is applied from above when the vacuum booster assembly is placed in this position, the resin portion as indicated by "P" may become damaged.**

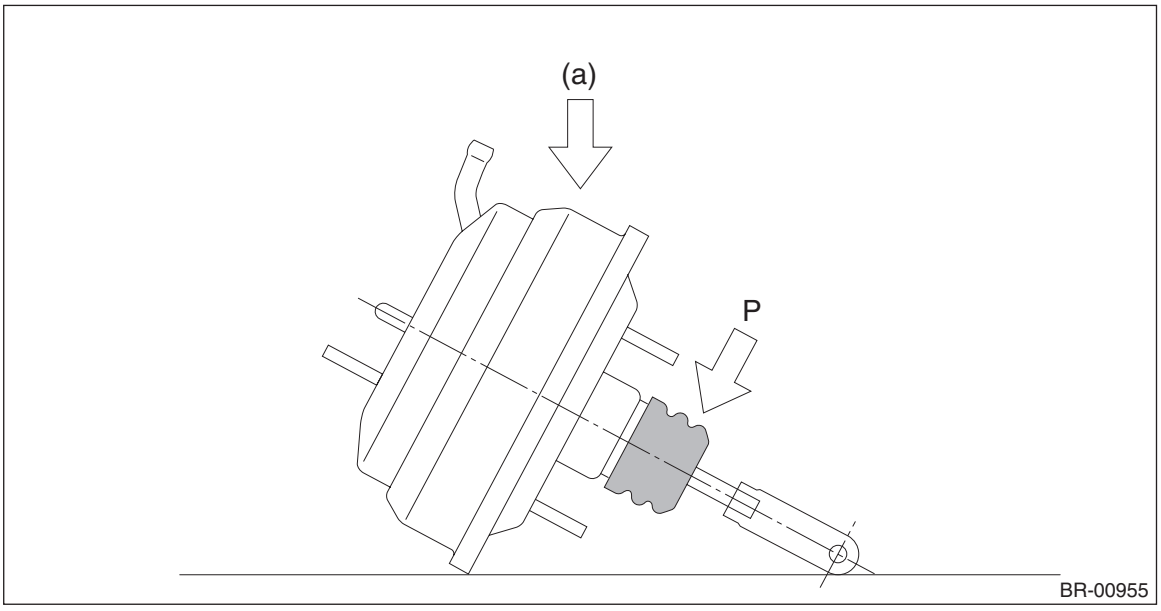

(1) Remove the nuts, and then remove the vacuum booster assembly.

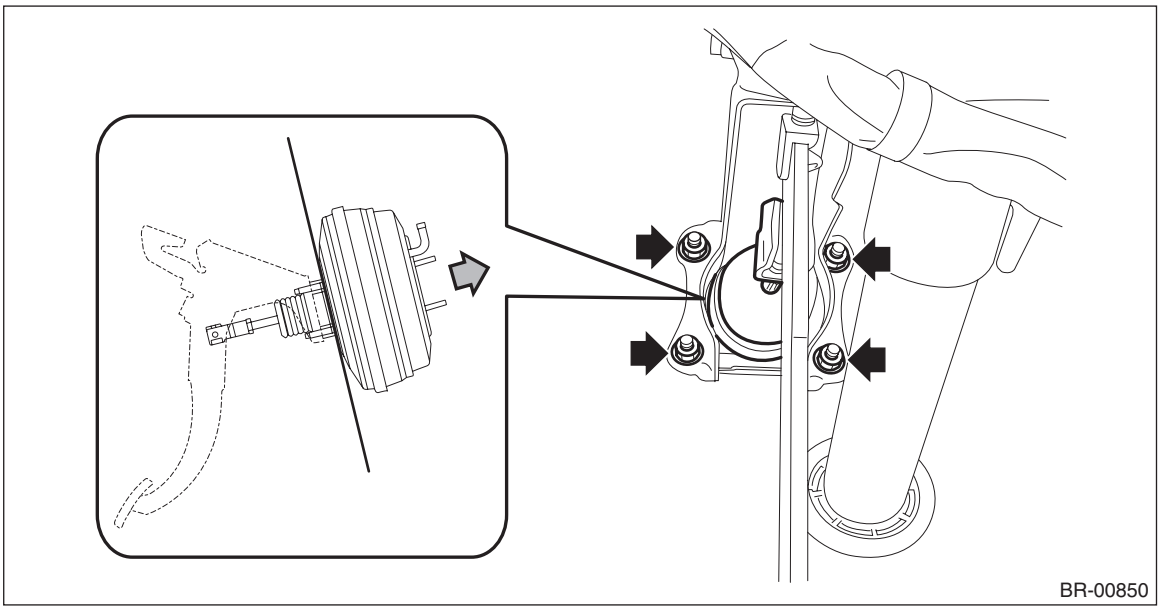

B: INSTALLATION

1) Check and adjust the operating rod of the vacuum booster assembly.
   (1) Measure the length between the vacuum booster assembly mounting surface and clevis pin hole.
   (2) If it is not within the specification, loosen the lock nut, rotate the vacuum booster assembly operating rod to adjust the rod length.

Specification L:
136.3 mm (5.37 in)

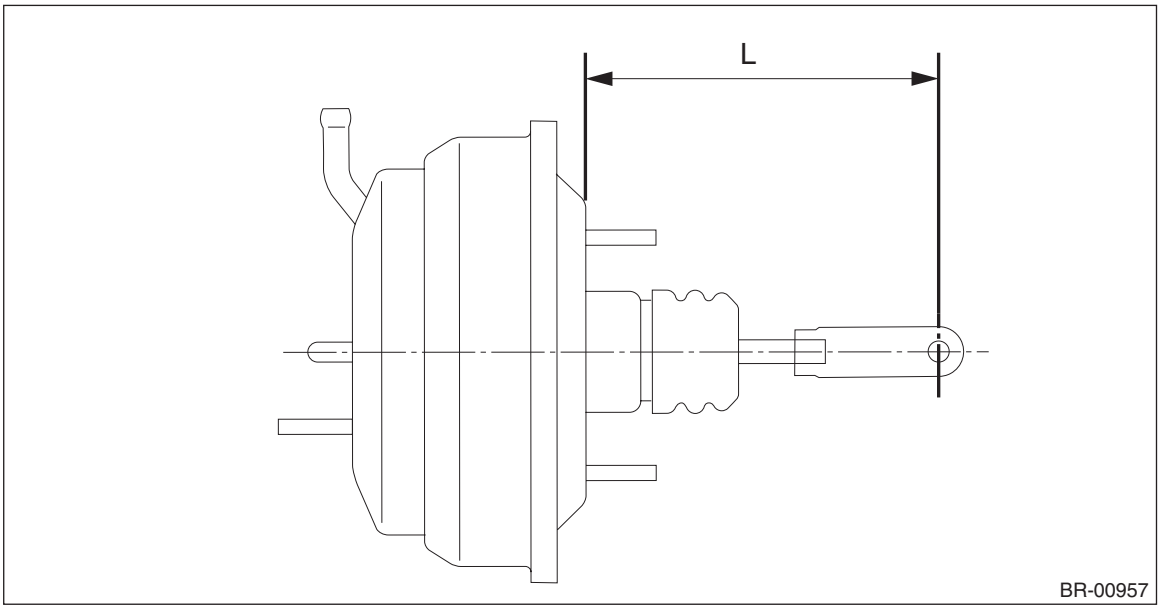

2) Install the vacuum booster assembly.

Tightening torque:
18 N·m (1.8 kgf-m, 13.3 ft-lb)

CAUTION:
• Apply grease to the snap pin to prevent the operating rod from wear.
• Replace the clevis pin with new parts, and apply thin coat of NIGTIGHT LYW No. 2 grease to the clevis pin.
• When installing the master cylinder assembly, replace the seal sub assembly with a new part, and install it to the vacuum booster assembly.

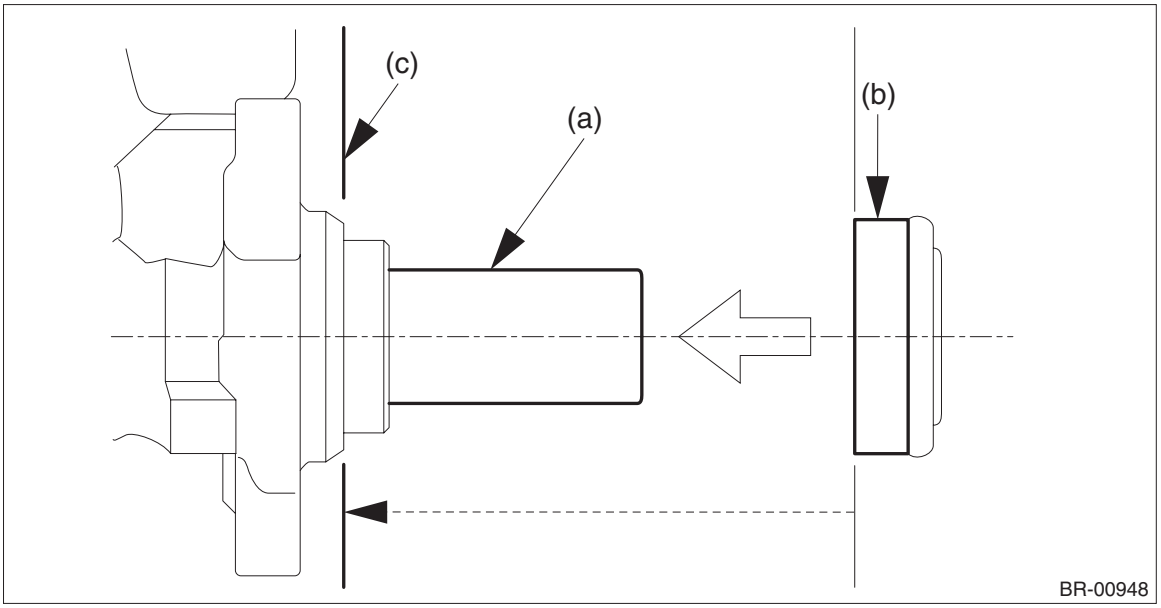

(a) Primary piston
(b) Seal sub ASSY
(c) Install the seal sub ASSY to this surface.

3) Install the column assembly - steering. <Ref. to PS-28, INSTALLATION, Steering Column.>
4) Install the universal joint assembly - steering. <Ref. to PS-22, INSTALLATION, Universal Joint.>

CAUTION:
• Always install the universal joint assembly - steering after installing the steering column to avoid damage to the universal joint assembly - steering.
• Be sure to follow the tightening order and tightening torque of the universal joint assembly - steering to avoid the steering effort from becoming heavy. After confirming that the steering column position is in the neutral position, tighten the universal joint assembly - steering.
• Always place the tilt lever to the lock position after the steering column is adjusted.
5) Install the knee airbag module.

Tightening torque:
7.5 N·m (0.8 kgf-m, 5.5 ft-lb)
6) Install the cover assembly - instrument panel LWR driver.
7) Install the master cylinder assembly. <Ref. to BR-72, INSTALLATION, Master Cylinder.>
8) Install the air conditioner pipe. <Ref. to AC-9, AIR CONDITIONING UNIT, COMPONENT, General Description.>
9) Install the intercooler.
• Except for STI model: <Ref. to IN(w/o STI)-45, INSTALLATION, Intercooler.>
• STI model: <Ref. to IN(STI)-14, INSTALLATION, Intercooler.>
10) Charge refrigerant. <Ref. to AC-27, PROCEDURE, Refrigerant Charging Procedure.>
11) Bleed air from the brake system. <Ref. to BR-87, PROCEDURE, Air Bleeding.>
12) Install the collector cover. <Ref. to IN(w/o STI)-10, INSTALLATION, Collector Cover.>
13) Connect the battery ground terminal. <Ref. to NT-6, BATTERY, NOTE, Note.>
14) Perform a road test to make sure the brakes do not drag.

C: INSPECTION

1. OPERATION CHECK WHEN NOT USING MEASURING DEVICES

CAUTION:
When checking operation, be sure to apply the parking brake securely.
When an operation check is performed with no measuring devices, a faulty part cannot be identified correctly. But it is possible to identify the outline of the defect by performing the check according to the following procedures.

- **Air tightness check**

1) Start the engine, and idle it for 1 to 2 minutes, then turn it OFF.
2) Depress the brake pedal several times applying the normal pedal force.

NOTE:
The pedal stroke should be the longest at the 1st depression, and it should become shorter at each successive depression.
3) If no change occurs in the pedal height when pressed, the vacuum booster assembly is faulty.

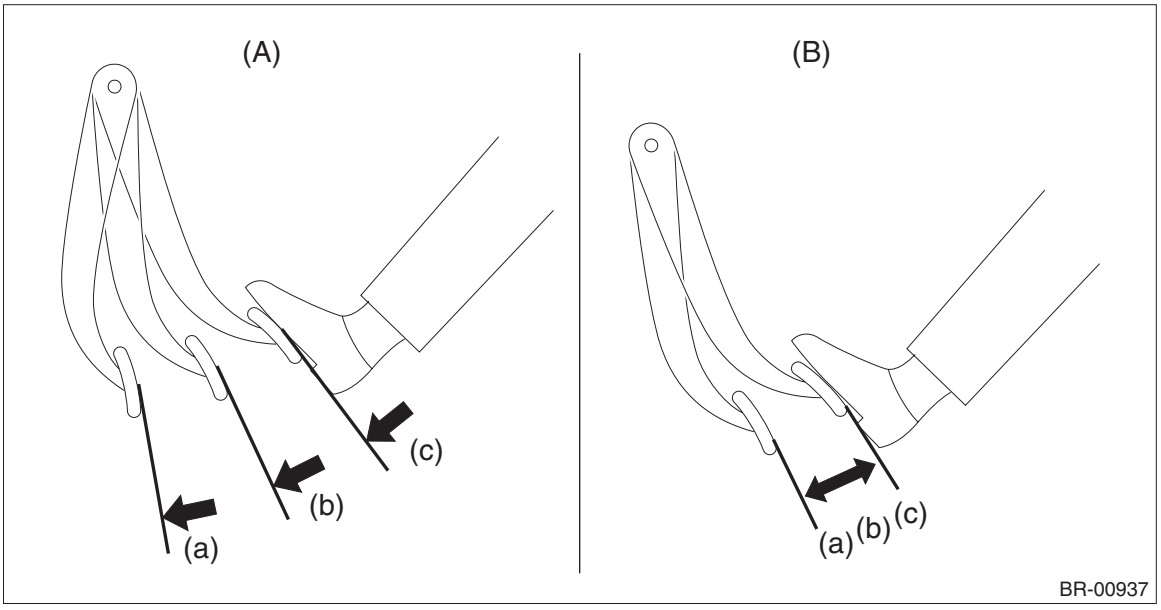

(A) Normal (B) Not OK

(a) 1st (b) 2nd (c) 3rd

NOTE:
- In case of defective operation, inspect the condition of the check valve and vacuum hose as well.
- Replace them if faulty, and perform the test again.
- If no improvement is observed, check precisely with gauges.

- **Check operation**

1) While the engine is OFF, depress the brake pedal several times applying the same pedal force, to check for a change in pedal height.

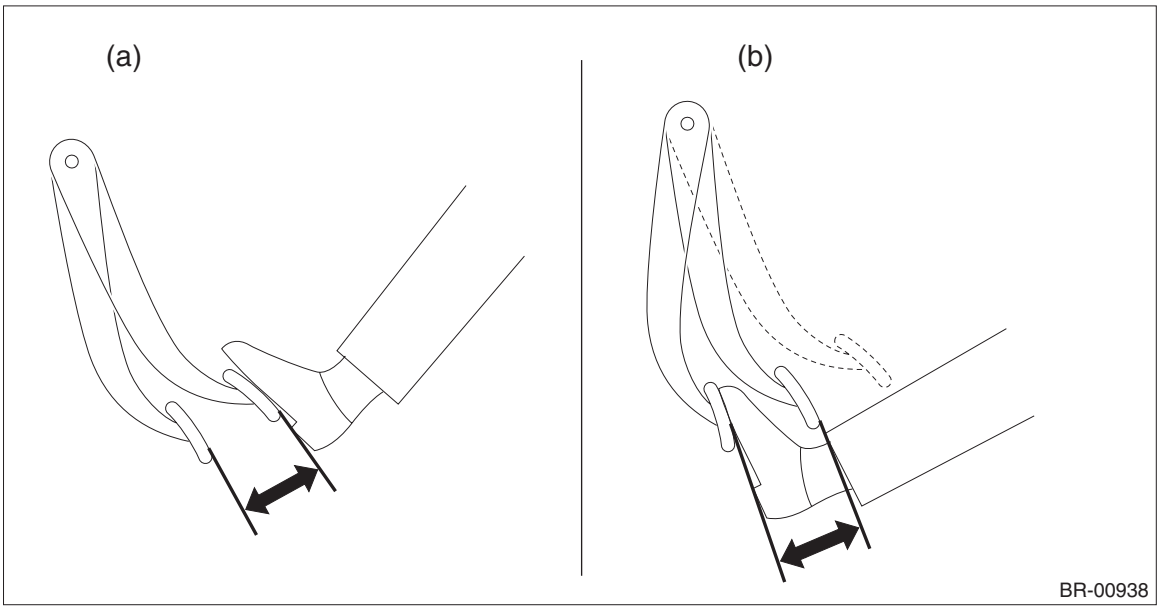

(a) When engine is stopped (b) When engine is started

2) With the brake pedal depressed, start the engine.
3) As the engine starts, the brake pedal should move slowly toward the floor. If the pedal height does not change, the vacuum booster assembly is faulty.

NOTE:
If a faulty part is detected after inspection, check precisely with measuring devices.

- **Loaded air tightness check**

Depress the brake pedal while the engine is running, and turn the engine to OFF while the pedal is depressed.
Keep the pedal depressed for 30 seconds. If the pedal height does not change, the function of vacuum booster assembly is normal. If the pedal height increases, it is faulty.

NOTE:
If a faulty part is detected after inspection, check precisely with measuring devices.

2. OPERATION CHECK WHEN USING MEASURING DEVICES

CAUTION:
When checking operation, be sure to apply the parking brake securely.

- **Check with measuring devices**

Connect a measuring device as shown in the figure. After bleeding air from the pressure gauge, perform each check.

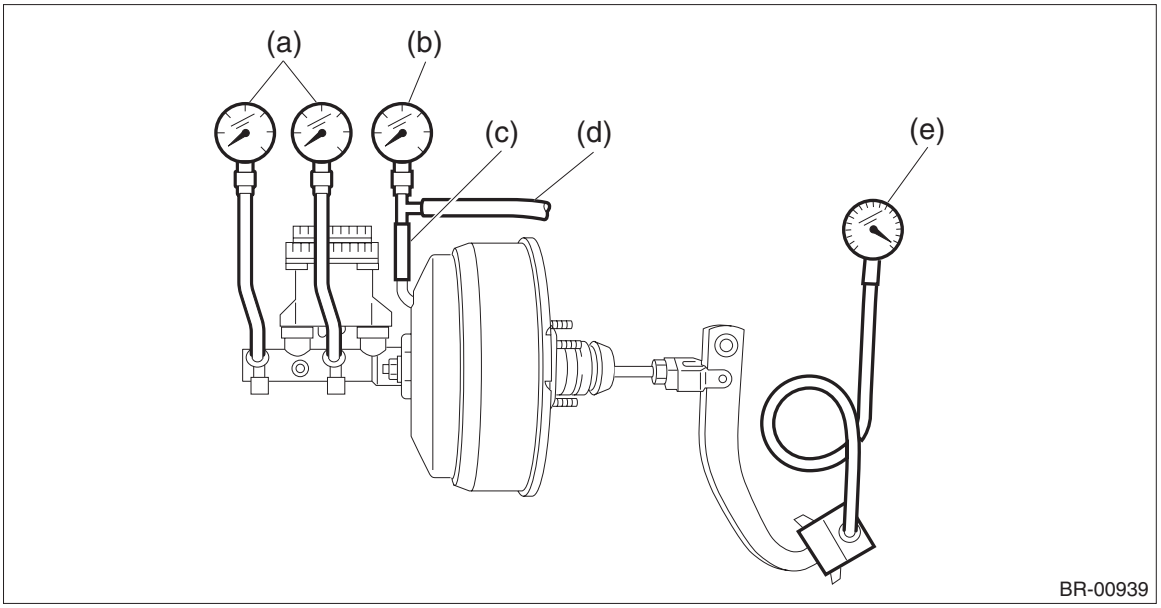

(a) Pressure gauge
(b) Vacuum gauge
(c) Adapter hose
(d) Vacuum hose
(e) Pedal force gauge

- **Air tightness check**

1) Start the engine and keep it running at idle until vacuum pressure indicates 66.7 kPa (500 mmHg, 19.69 inHg) while the brake pedal is not depressed.

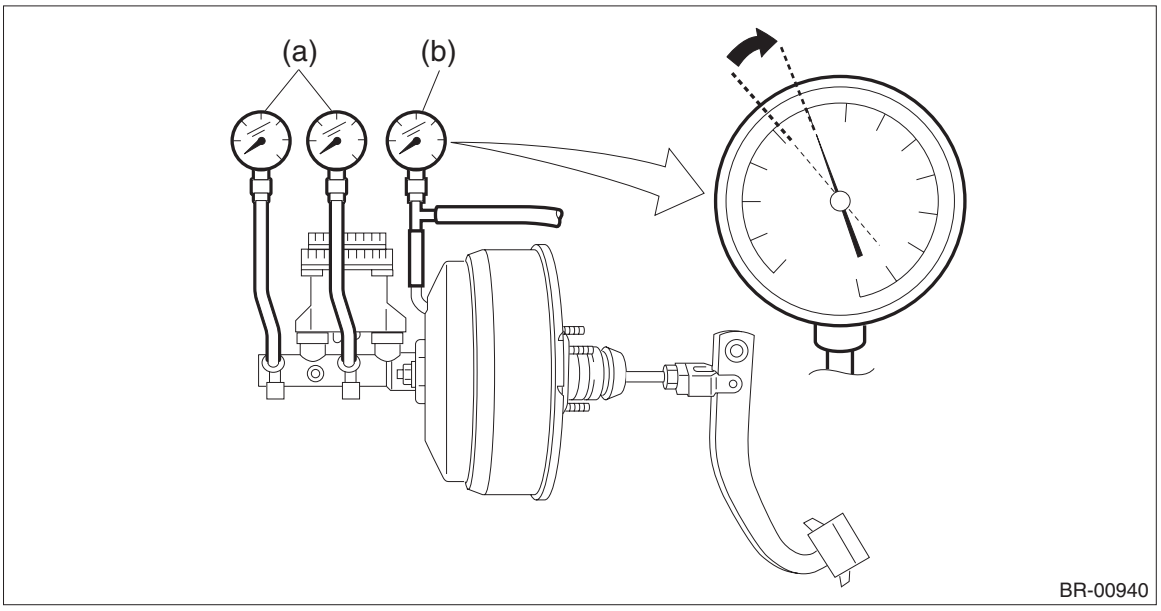

(a) Pressure gauge (b) Vacuum gauge

2) Stop the engine and check the vacuum pressure.
If the value matches the following standard, the vacuum booster assembly function is normal.

Vacuum pressure: standard

The range of vacuum pressure drop within 15 seconds after stopping the engine is 3.3 kPa (25 mmHg, 0.98 inHg) or less.

If a faulty part is detected after inspection, it may results from one of the following causes.

- Check valve malfunction
- Leak from vacuum hose
- Leak from shell joint section or stud bolt welded section
- Damaged diaphragm
- Leak from valve body seal and bearing section
- Leak from plate and seal assembly section
- Leak from poppet valve assembly section

• Loaded air tightness check

1) Start the engine and depress the brake pedal with a pedal force of 196 N (20 kgf, 44 lbf).
2) Keep the engine running at idle and the pedal depressed until vacuum pressure of the vacuum gauge indicates 66.7 kPa (500 mmHg, 19.69 inHg).

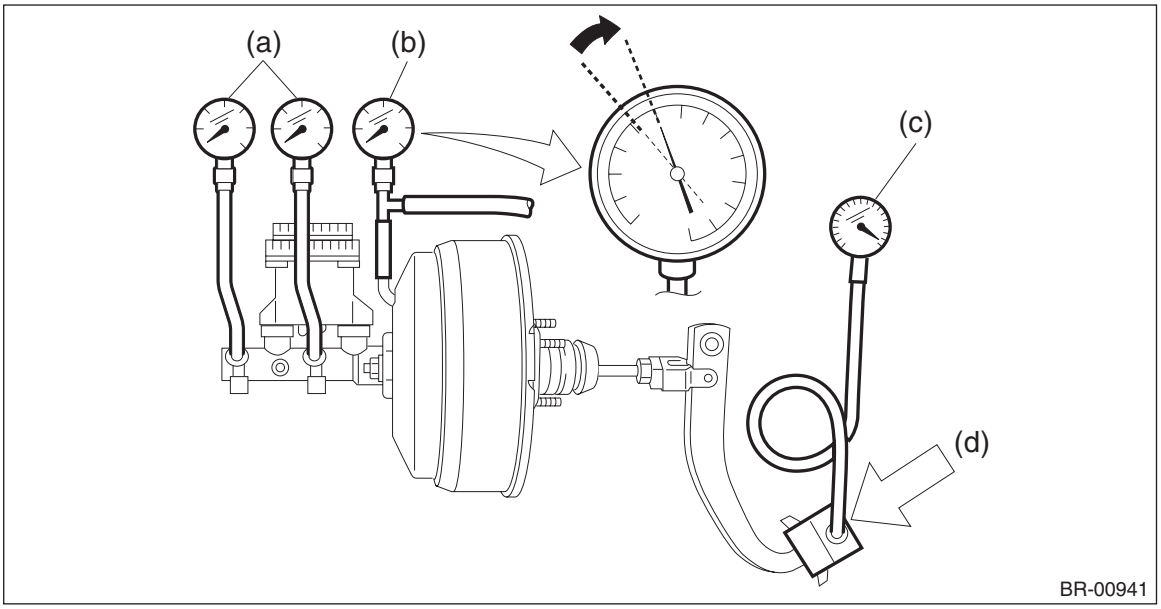

(a) Pressure gauge
(b) Vacuum gauge
(c) Pedal force gauge
(d) Depressed

3) Stop the engine and check the vacuum gauge.
If the value matches the following standard, the vacuum booster function is normal.

Vacuum pressure: standard
The range of vacuum pressure drop within 15 seconds after stopping the engine is 3.3 kPa (25 mmHg, 0.98 inHg) or less.

If a faulty part is detected after inspection, refer to “AIR TIGHTNESS CHECK”.
<Ref. to BR-80, INSPECTION, Brake Booster.>
4) If the vacuum booster assembly is faulty, replace it with a new part.

• Lack of boost action check

1) Turn the engine OFF, and set the value of the vacuum gauge to “0”.
2) Check the fluid pressure when the brake pedal is depressed. The pressure must be greater than the specification listed.

Brake pedal force: N (kgf, lbf)	147 (15, 33)	294 (30, 66)
Fluid pressure: kPa (kgf/cm^2, psi)	471 (4.8, 68.3)	1,385 (14.1, 200.8)

• Boosting action check

1) Set the vacuum gauge reading to 66.7 kPa (500 mmHg, 19.69 inHg) with the engine running.
2) Check the fluid pressure when the brake pedal is depressed. The pressure must be greater than the specification listed.

Brake pedal force: N (kgf, lbf)	147 (15, 33)	294 (30, 66)
Fluid pressure: kPa (kgf/cm^2, psi)	4,880 (49.8, 707.6)	9,750 (99.4, 1413.7)

10.Brake Fluid

A: INSPECTION

CAUTION:
• Do not let brake fluid come into contact with the painted surface of the vehicle body. Wash away with water immediately and wipe off if it is spilled by accident.
• Do not reuse drained brake fluid. When refilling brake fluid, always refill new brake fluid.
• Avoid mixing brake fluid of different brands or different grades even from the same brand to prevent fluid performance from degrading.
• Do not allow dirt or dust to get into the reservoir tank.
1) Check the fluid for discoloration.
2) Check that the amount of brake fluid is between the lines of “MIN” and “MAX” from the front view or from the forward right and left within 90°.

CAUTION:
Always check the level using the specified direction because there is a partition in the reservoir tank.

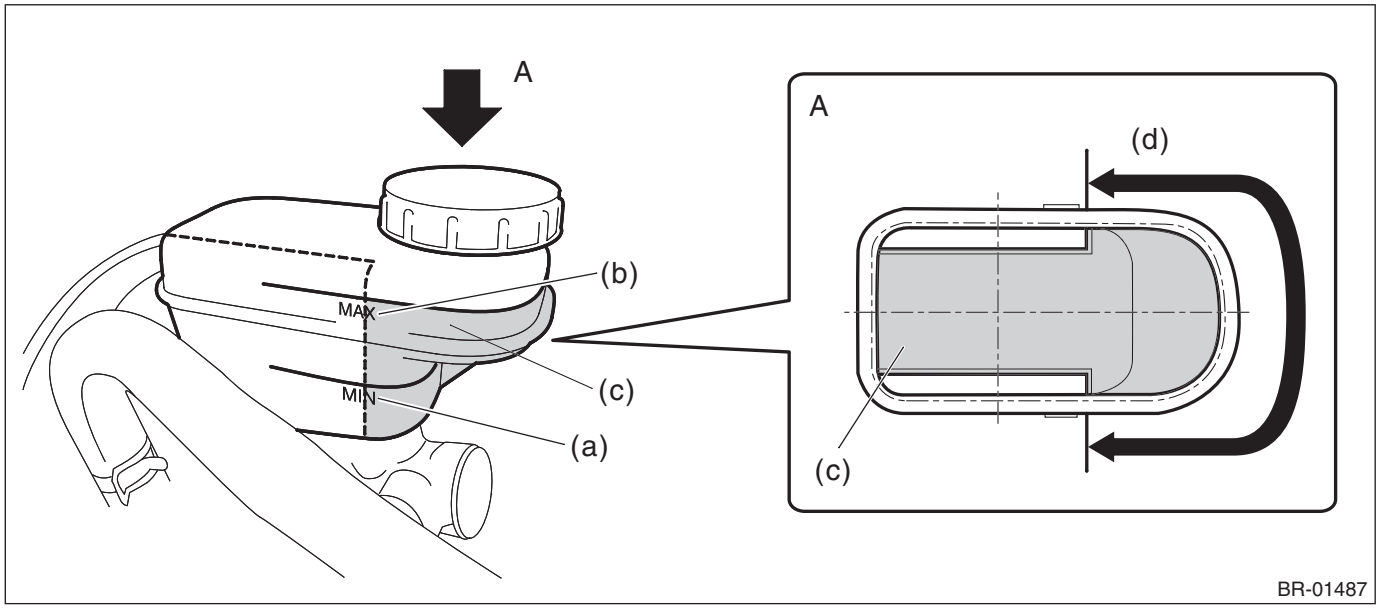

(A) View from upper face

(a) MIN. level
(b) MAX. level
(c) Brake fluid
(d) Brake fluid level check range

3) If the brake fluid level is close to “MIN”, check the brake pipe or brake hose for any leak first. Then, check that the brake fluid level is reduced due to brake pad wear.
4) If the fluid is extremely discolored or the fluid level is less than the specified value after inspection, replenish or replace with the new fluid.

B: REPLACEMENT

CAUTION:
• Do not let brake fluid come into contact with the painted surface of the vehicle body. Wash away with water immediately and wipe off if it is spilled by accident.
• Do not reuse drained brake fluid. When refilling brake fluid, always refill new brake fluid.
• Avoid mixing brake fluid of different brands or different grades even from the same brand to prevent fluid performance from degrading.
• Do not allow dirt or dust to get into the reservoir tank.

NOTE:
• During the operation, keep the reservoir tank filled with brake fluid to prevent entry of air.
• Operate the brake pedal slowly and depress it fully.
• For convenience and safety, perform the work with 2 people.
• The required amount of brake fluid is approximately 500 mL (16.9 US fl oz, 17.6 Imp fl oz) for the entire brake system.
1) Lift up the vehicle.
2) Remove both the front and rear wheels.
3) Drain brake fluid from the reservoir tank.
4) Replenish the reservoir tank with the recommended brake fluid, and perform the same procedure as for bleeding the brake line on each brake caliper. <Ref. to BR-87, PROCEDURE, Air Bleeding.>

Preparation items:
Recommended brake fluid: FMVSS No. 116, DOT3 or DOT4

NOTE:
Repeat the full stroke depressing operation of the brake pedal slowly, until new brake fluid comes out from a transparent vinyl tube. (On each brake caliper, 20 times or more of pedal operations is necessary in order for new brake fluid from the master cylinder to come out from the bleeder - screw.)

11.Air Bleeding

A: PROCEDURE

CAUTION:
• Do not let brake fluid come into contact with the painted surface of the vehicle body. Wash away with water immediately and wipe off if it is spilled by accident.
• Avoid mixing brake fluid of different brands or different grades even from the same brand to prevent fluid performance from degrading.
• Do not reuse drained brake fluid. When refilling brake fluid, always refill new brake fluid.
• Do not allow dirt or dust to get into the reservoir tank.
• For convenience and safety, perform the work with 2 people.
• During the operation, keep the reservoir tank filled with brake fluid at MIN level or higher to prevent entry of air.
• After air bleeding operation, wipe off fluid around each bleeder - screw and the reservoir tank.
For air bleed procedure of each part, refer to the following.
- Master cylinder: <Ref. to BR-87, MASTER CYLINDER, PROCEDURE, Air Bleeding.>
- Brake line: <Ref. to BR-89, BRAKE LINE, PROCEDURE, Air Bleeding.>
- Hydraulic control unit: <Ref. to BR-90, HYDRAULIC CONTROL UNIT, PROCEDURE, Air Bleeding.>
- Caliper: <Ref. to BR-90, CALIPER, PROCEDURE, Air Bleeding.>

1. MASTER CYLINDER

NOTE:
• When the master cylinder assembly is replaced or the reservoir tank is empty, bleed the brake master cylinder and the clutch master cylinder (MT model).
For air bleed procedure of the clutch fluid, refer to “CLUTCH SYSTEM” section. <Ref. to CL-29, PROCEDURE, Clutch Fluid Air Bleeding.>
• If bleeding of the master cylinder assembly is not necessary, omit the following procedures, and perform bleeding of the brake line. <Ref. to BR-89, BRAKE LINE, PROCEDURE, Air Bleeding.>
1) Install the brake pipe to the master cylinder assembly.
(1) Screw and tighten the flare nut (b) so that the end of the nut contacts the back side of the brake pipe flare, while pressing the brake pipe (a) toward the master cylinder assembly side.

CAUTION:
Be careful not to make scratches or other damage to the inside surface of the brake pipe flare.

Tightening torque:
Brake pipe flare nut: 19 N·m (1.9 kgf-m, 14 ft-lb)

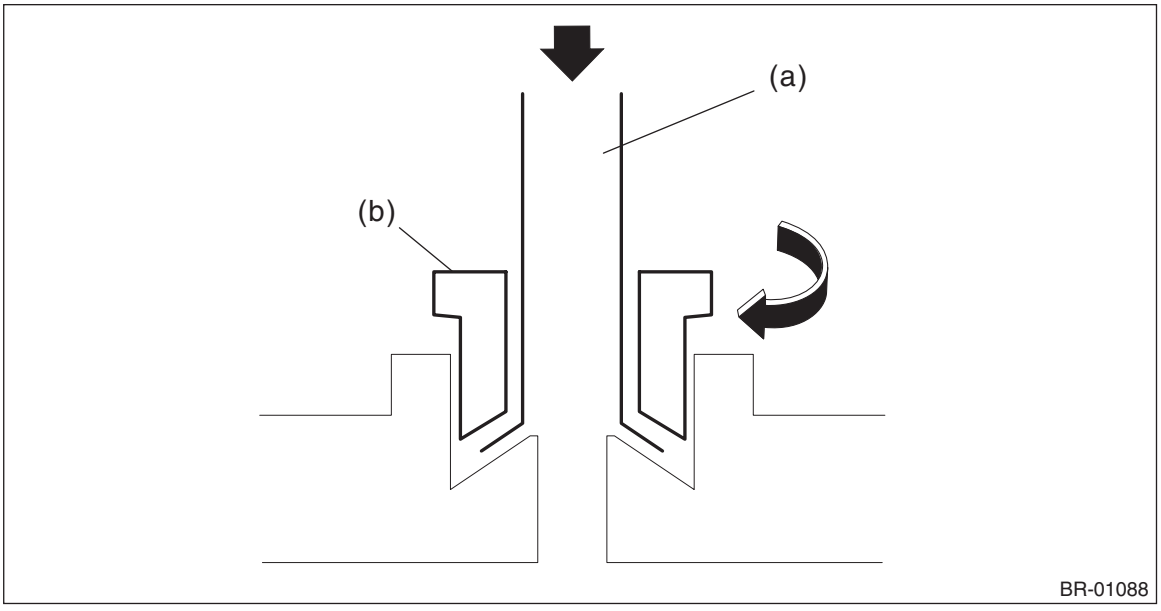

2) Fill the reservoir tank of the master cylinder assembly with brake fluid.

NOTE:
- Replenish brake fluid to the MAX level.
- During the operation, keep the reservoir tank filled with brake fluid at MIN level or higher to prevent entry of air.

3) Attach a transparent vinyl tube to the bleeder - screw of the right front caliper body assembly that is the closest from the VDC control module & hydraulic control unit, and the other end of the vinyl tube to a collection container.
4) Loosen the bleeder - screw, depress the brake pedal slowly and hold it.
5) Tighten the bleeder - screw, and release the brake pedal quickly.
6) Repeat steps 4) and 5) until there are no more air bubbles in the brake fluid in the vinyl tube.

NOTE:
Air bubbles are removed after repeating the procedures six to seven times.

7) Attach a transparent vinyl tube to the bleeder - screw of the left front caliper body assembly, and the other end of the vinyl tube to a brake fluid collection container.
8) Repeat steps 4) and 5) until there are no more air bubbles in the brake fluid in the vinyl tube.

NOTE:
- Air bubbles are removed after repeating the procedures seven to eight times.
- With the procedures so far, bleed is completed for the air that entered in the master cylinder, front brake piping hose passages and front caliper.

Next, perform the following procedures to bleed air that entered in the rear brake piping hose passages and rear caliper from the hydraulic unit.
9) Attach a transparent vinyl tube to the bleeder - screw of the left rear caliper body assembly, and the other end of the vinyl tube to a brake fluid collection container.
10) Loosen the bleeder - screw, and repeat the full stroke depressing operation of the brake pedal slowly, until the brake fluid in the transparent vinyl tube has no more air bubbles, then tighten the bleeder - screw.

NOTE:
By repeating the procedures 15 times or more, air that entered in the rear brake pipe passages from the VDC control module & hydraulic control unit reaches the bleeder - screw of the left rear caliper body assembly and is discharged.

11) Attach a transparent vinyl tube to the bleeder - screw of the right rear caliper body assembly, and the other end of the vinyl tube to a brake fluid collection container.
12) Perform step 10).

NOTE:
- By repeating the procedures 10 times or more, air that entered in the rear brake pipe passages from the VDC control module & hydraulic control unit reaches the bleeder - screw of the right rear caliper body assembly and is discharged.
- With the procedures so far, bleed is completed for the air that entered in the rear brake piping hose passages and rear caliper from the hydraulic unit.

Lastly, perform the following procedures to bleed air that may remain in areas where the brake fluid flow stands.
13) Attach a transparent vinyl tube to the bleeder - screw of the right front caliper body assembly, and the other end of the vinyl tube to a brake fluid collection container.
14) After repeating firmly depressing of the brake pedal quickly five or six times, depress and hold the pedal.
15) Loosen the bleeder - screw to drain brake fluid. When the brake pedal reaches the full stroke position, tighten the bleeder - screw quickly, and release the brake pedal.
16) Repeat steps 14) and 15) until there are no more air bubbles in the transparent vinyl tube.

NOTE:
Repeat the procedures approximately four to five times.

17) Repeat steps 14) to 16) above for each brake caliper.

NOTE:
- Bleed air in the order starting from the front RH → front LH → rear LH → rear RH.
- For brembo type, in the order from inside → outside, bleed air starting from the front RH → front LH → rear LH → rear RH.

18) Tighten the bleeder - screw to the specified torque.

Tightening torque:
Bleeder - screw: 8 N·m (0.82 kgf-m, 5.9 ft-lb)

19) Install the cap - bleeder to each bleeder - screw.

2. BRAKE LINE

1) When the master cylinder assembly is replaced or the reservoir tank is empty, bleed the master cylinder assembly before bleeding the brake line. <Ref. to BR-87, MASTER CYLINDER, PROCEDURE, Air Bleeding.>
2) Fill the reservoir tank of the master cylinder assembly with brake fluid.

NOTE:
While bleeding air, keep the reservoir tank filled with brake fluid to prevent entry of air.

3) Attach one end of a transparent vinyl tube to the bleeder - screw, and the other end to a brake fluid collection container.

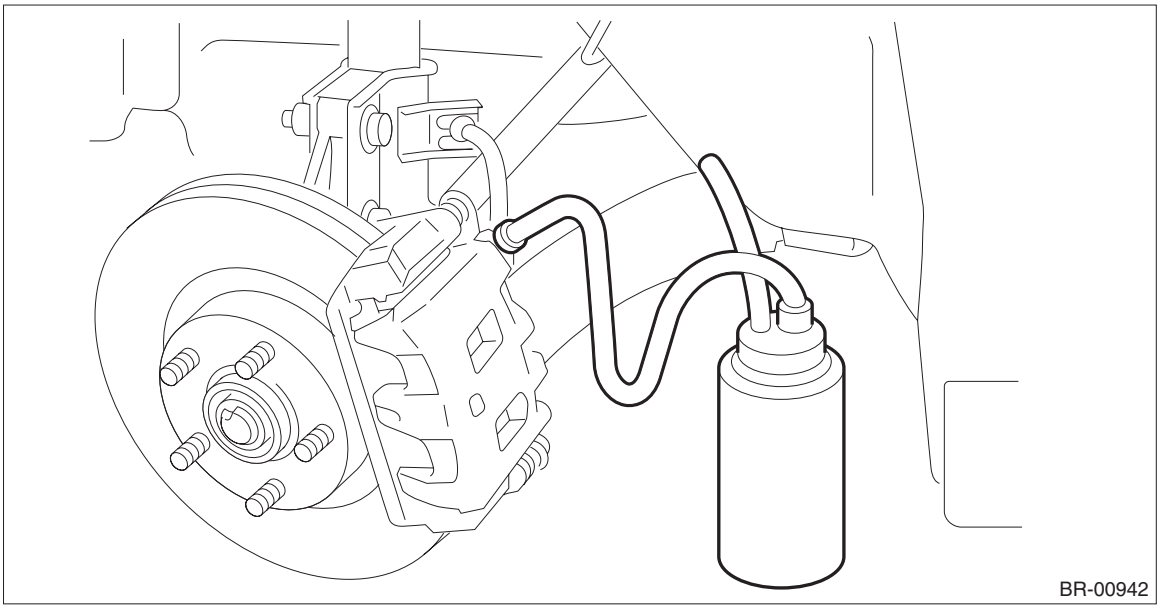

4) Loosen the bleeder - screw, and then repeat the full stroke depressing operation of the brake pedal, until brake fluid in the transparent vinyl tube has no more air bubbles.

NOTE:
Air bubbles are removed after repeating the depressing operation 15 times or more for the front caliper, and 20 times or more for the rear caliper.

5) Perform the steps 2) to 4) above on each brake caliper.

NOTE:
- Perform in the order starting from the front RH → front LH → rear LH → rear RH.
- For brembo type, in the order from inside → outside, bleed air starting from the front RH → front LH → rear LH → rear RH.

6) Tighten the loosened bleeder - screw, repeat firmly depressing of the brake pedal 5 to 6 times, and then depress and hold the brake pedal.
7) Loosen the bleeder - screw to drain the brake fluid. When the brake pedal reaches the full stroke position, immediately tighten the bleeder - screw and return the brake pedal.
8) Repeat steps 6) and 7) until there are no more air bubbles in the transparent vinyl tube.
9) Perform the steps 6) to 8) above on each brake caliper.

NOTE:
• Perform in the order starting from the front RH → front LH → rear LH → rear RH.
• For brembo type, in the order from inside → outside, bleed air starting from the front RH → front LH → rear LH → rear RH.
10) Operate the hydraulic control unit in the sequence control mode for both ABS and VDC systems.

CAUTION:
• If there is a possibility that air enters the pressure control section in the hydraulic control unit, perform steps 11) to 16).
• For normal air bleeding operation, do not operate the sequence control for the hydraulic control unit. (Operating the sequence control may let air in the normal air bleeding passages move to the pressure control section.)

NOTE:
• Normal air bleeding operation does not help bleed air that enters the pressure control section in the hydraulic control unit.
• If there is a possibility that air enters the pressure control section in the hydraulic control unit (if VDC or ABS operates with air contained in the normal air bleeding passage), perform the sequence control mode for both of the ABS and VDC systems.
11) Perform the ABS sequence control mode. <Ref. to VDC-20, ABS Sequence Control.>

CAUTION:
Be sure to perform the ABS sequence control mode first.
12) Perform the air bleeding operation of steps 3) and 4) for the bleeder - screw on each caliper.

NOTE:
• Perform in the order starting from the front RH → front LH → rear LH → rear RH.
• For brembo type, in the order from inside → outside, bleed air starting from the front RH → front LH → rear LH → rear RH.
• As a reference, the number of the full stroke depressing operation is six times.
13) Perform the VDC sequence control mode. <Ref. to VDC-23, VDC Sequence Control.>
14) Perform the air bleeding operation of steps 3) and 4) for the bleeder - screw on each caliper.
15) Repeat from steps 11) to 14) for three cycles.
16) In case air still remains at step 15), repeat steps 11) to 14) again until all air is removed.
17) Fill the reservoir tank with brake fluid up to the “MAX” level.
18) Tighten the bleeder - screw to the specified torque.

Tightening torque:
Bleeder - screw: 8 N·m (0.82 kgf-m, 5.9 ft-lb)
19) Install the cap - bleeder to each bleeder - screw.
20) Check that there are no brake fluid leaks at the flare nut portion or in the entire brake system.
21) After inspection, wipe off fluid around each bleeder - screw and the reservoir tank.
22) Perform a road test and ensure that the brakes operate normally.

3. HYDRAULIC CONTROL UNIT

1) Bleed air from the brake line. <Ref. to BR-89, BRAKE LINE, PROCEDURE, Air Bleeding.>

NOTE:
If there is a possibility that air enters the pressure control section in the hydraulic control unit, perform the sequence control mode for both of the ABS and VDC systems. (Refer to steps 10) to 16) for brake lining.)

4. CALIPER

1) Bleed air from the brake line. <Ref. to BR-89, BRAKE LINE, PROCEDURE, Air Bleeding.>

CAUTION:
• For the caliper with electronic parking actuator, never drain the brake fluid in the caliper.
• When removing the caliper with electronic parking actuator from the vehicle, make sure to apply the brake fluid seal before disconnection.
• Do not remove the brake fluid seal of the caliper with replacement electronic parking actuator, except when the caliper is installed on the vehicle.

12.Brake Hose

A: REMOVAL

1. FRONT BRAKE HOSE

1) Disconnect the brake hose (a) and the brake pipe (b).

Preparation tool:
Flare nut wrench

2) Remove the clamp, strut mounting bolt and union bolt, and remove the front brake hose.

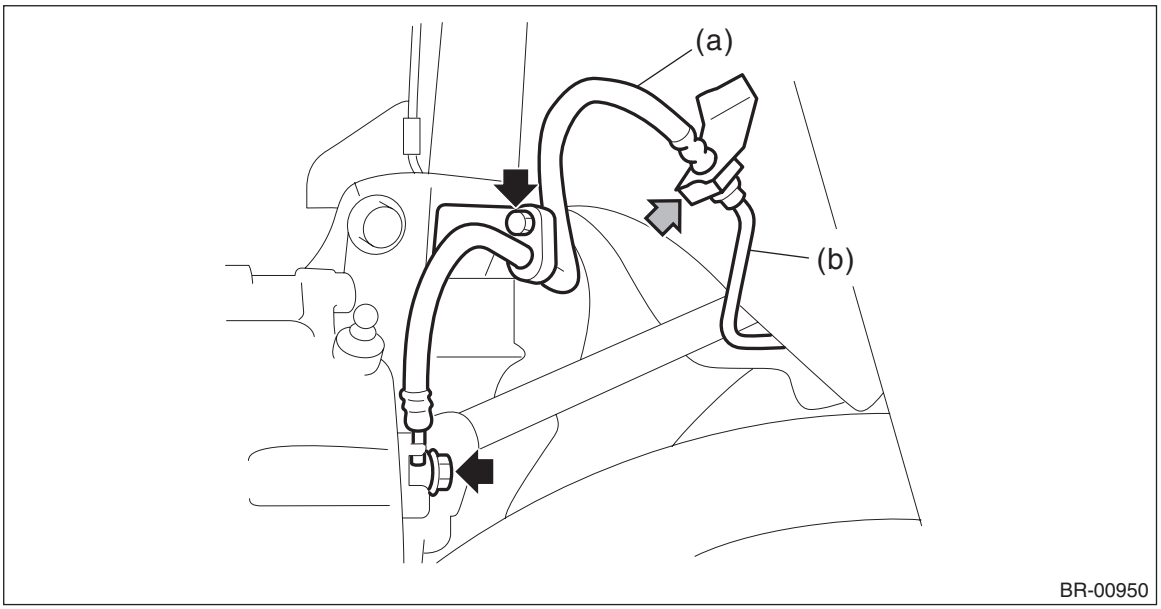

2. REAR BRAKE HOSE

1) Remove the brake hose bracket bolt and union bolt.

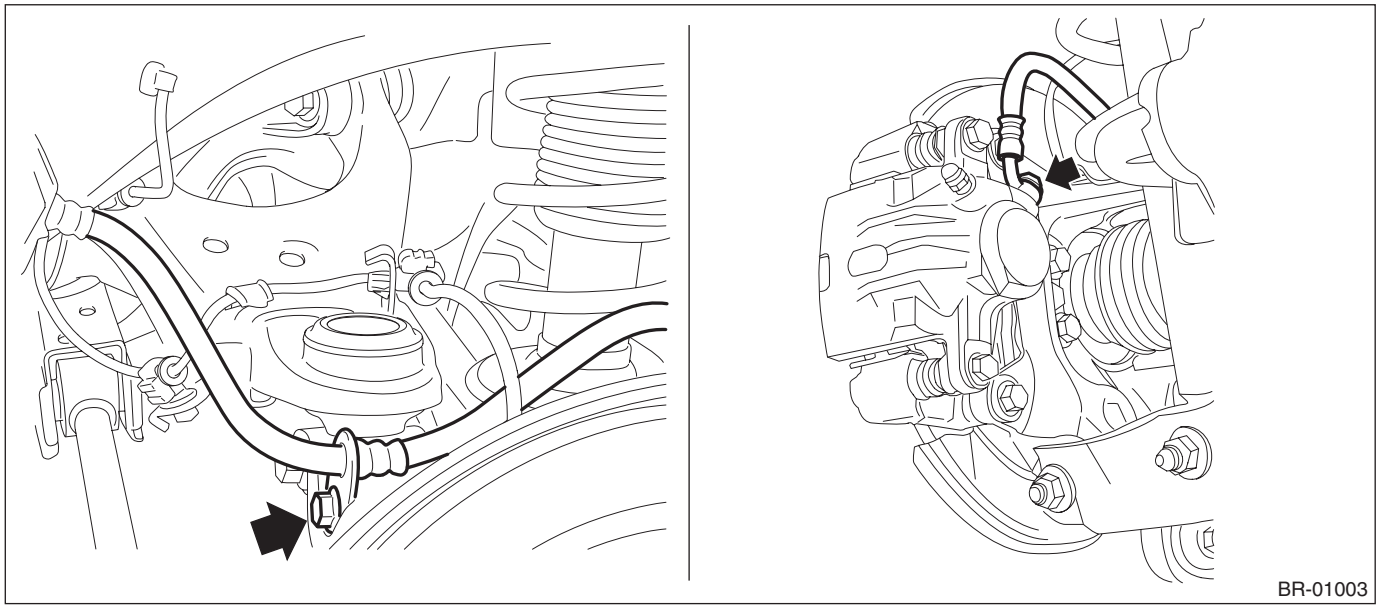

2) Disconnect the brake pipe (a).

Preparation tool:
Flare nut wrench

3) Remove the brake hose clamp (b), and remove the rear brake hose (c).

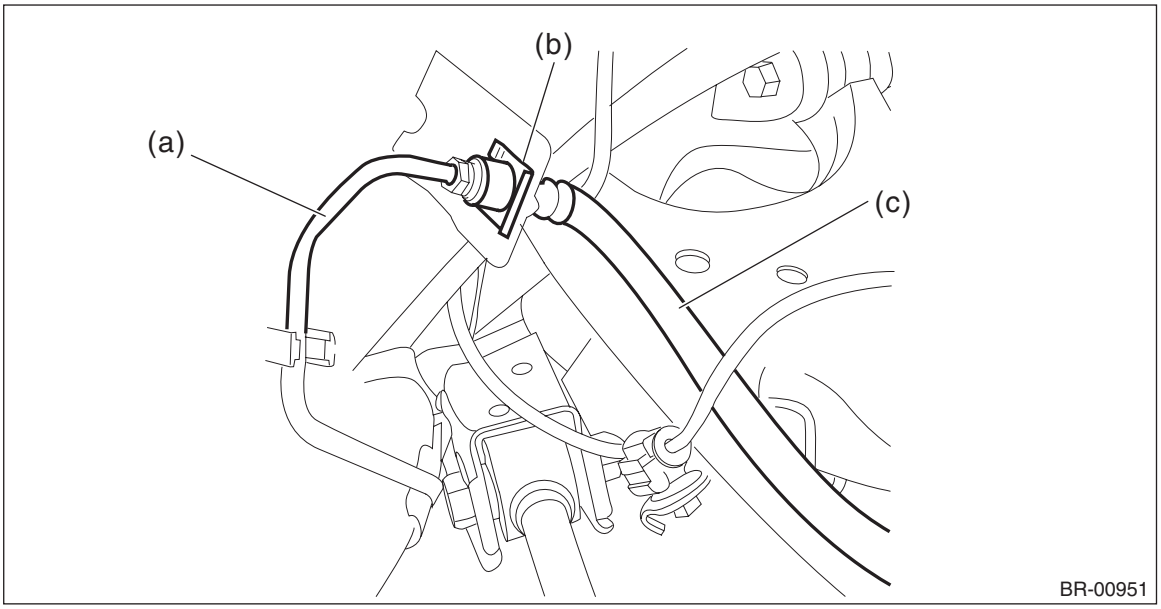

B: INSTALLATION

1. FRONT BRAKE HOSE

1) Secure the brake hose to the brake hose mount part of strut COMPL.

Tightening torque:
Brake hose: 33 N·m (3.4 kgf-m, 24.3 ft-lb)

2) Connect the brake hose to the caliper body assembly using a new gasket.

Tightening torque:
Union bolt: 26 N·m (2.7 kgf-m, 19.2 ft-lb)

3) Position the disc rotor in straight position and route the brake hose through the hole in the bracket on the wheel apron side.

CAUTION:
Do not twist the brake hose.

4) Connect the brake pipe and the hose, then temporarily tighten the flare nut.
5) Secure the brake hose to wheel apron bracket with clamp.

6) Turn and tighten the flare nut (b) by hand while pushing the brake pipe (a) away from yourself.

CAUTION:
Be careful not to make scratches or other damage to the inside surface of the brake pipe flare.

Tightening torque:
Brake pipe flare nut: 15 N·m (1.53 kgf-m, 11.1 ft-lb)

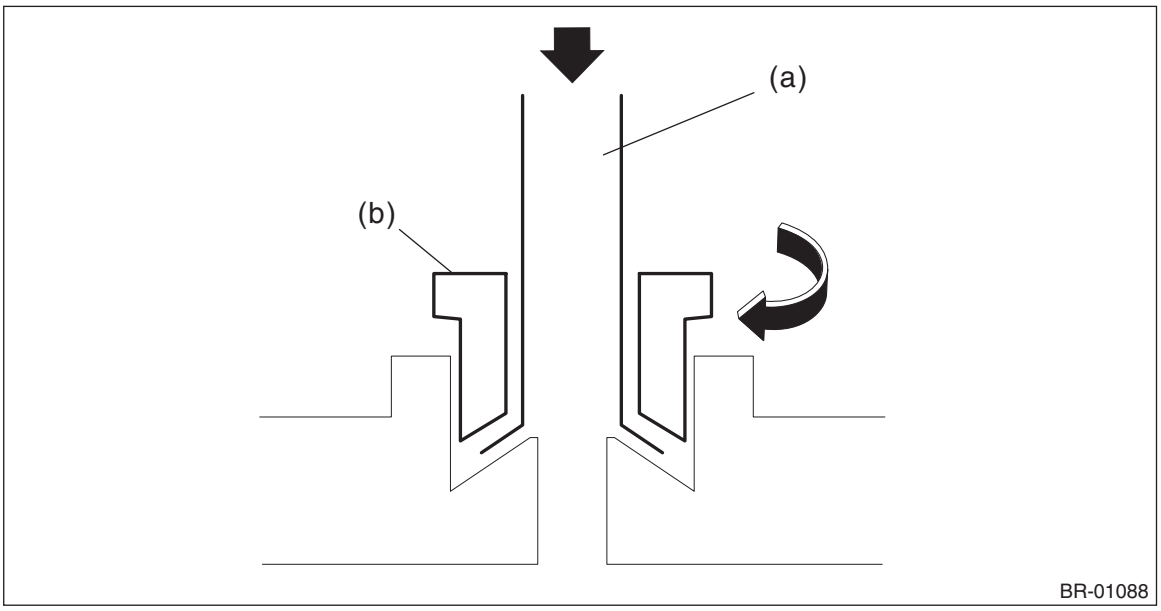

7) Bleed air from the brake system. <Ref. to BR-87, PROCEDURE, Air Bleeding.>

2. REAR BRAKE HOSE

1) Route the brake hose through the hole of bracket, and lightly tighten the flare nut to connect brake pipe.
2) Insert the clamp to secure brake hose.

Tightening torque:
Brake hose bracket: 33 N·m (3.4 kgf-m, 24.3 ft-lb)
3) Install the brake hose to rear caliper body using a new gasket.

Tightening torque:
Union bolt: 26 N·m (2.7 kgf-m, 19.2 ft-lb)

4) Turn and tighten the flare nut (b) by hand while pushing the brake pipe (a) away from yourself.

CAUTION:
Be careful not to make scratches or other damage to the inside surface of the brake pipe flare.

Tightening torque:
Brake pipe flare nut: 15 N·m (1.53 kgf-m, 11.1 ft-lb)

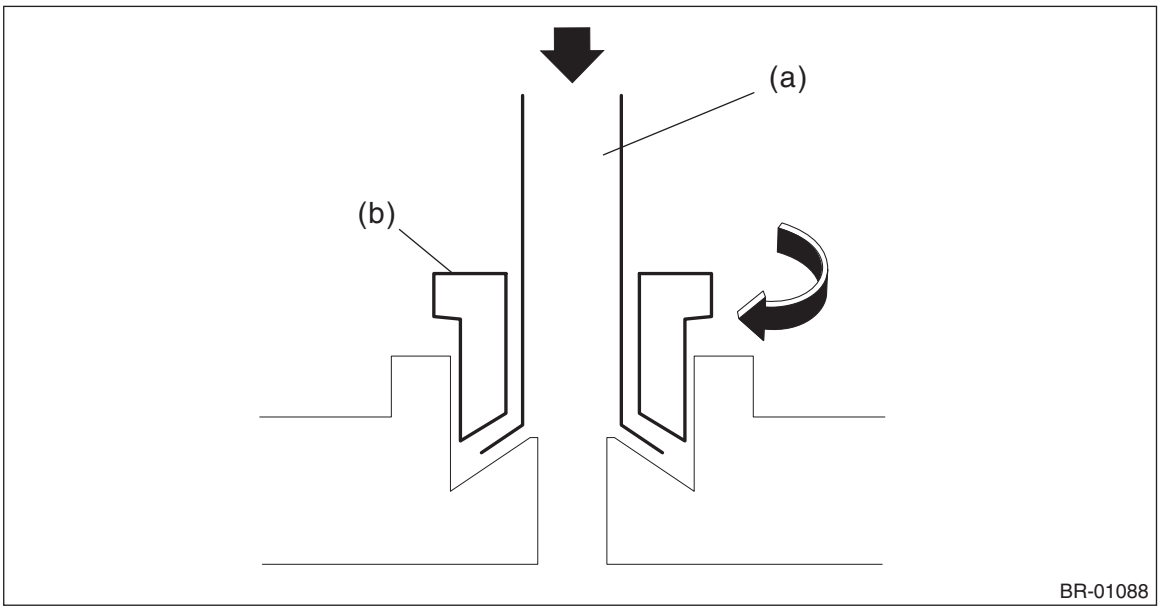

5) Bleed air from the brake system. <Ref. to BR-87, PROCEDURE, Air Bleeding.>

C: INSPECTION

Check the hose for crack, interference with other parts, damage, and fluid leakage on connecting sections. If any faulty is found, repair or replace the relevant part.

13.Brake Pipe

A: REMOVAL

CAUTION:
- **Be careful of the following items. Failure to do so may cause the airbag system malfunction.**
  – Yellow connectors and harnesses with yellow tapes around them are the connectors and harnesses for the airbag system. When using a tester on these circuits, follow the cautions of "AIRBAG SYSTEM". <Ref. to AB-9, CAUTION, General Description.>
  – Be careful not to damage the airbag system wiring harness when servicing the electrical parts around the steering column.
- **Be careful not to damage the airbag system wiring harness when servicing the center brake pipe.**
- **When removing the brake pipe, do not bend.**

NOTE:
The airbag system wiring harness is routed near the center brake pipe.

B: INSTALLATION

CAUTION:
- **Be careful of the following items. Failure to do so may cause the airbag system malfunction.**
  – Yellow connectors and harnesses with yellow tapes around them are the connectors and harnesses for the airbag system. When using a tester on these circuits, follow the cautions of "AIRBAG SYSTEM". <Ref. to AB-9, CAUTION, General Description.>
  – Be careful not to damage the airbag system wiring harness when servicing the electrical parts around the steering column.
- **Be careful not to damage the airbag system wiring harness when servicing the center brake pipe.**
- **When installing the brake pipe, do not bend.**
- **After installing the brake pipe and hose, perform air bleed.**
- **After installing the brake hoses, make sure that they do not contact the tires or suspension assembly, etc.**

NOTE:
The airbag system wiring harness is routed near the center brake pipe.

Tightening torque:
Front brake pipes & hoses: <Ref. to BR-11, FRONT BRAKE PIPES AND HOSES, COMPONENT, General Description.>
Center & rear brake pipes and hoses: <Ref. to BR-13, CENTER AND REAR BRAKE PIPES AND HOSES, COMPONENT, General Description.>

C: INSPECTION

Check the pipe for crack and damage, and also check the connection for fluid leakage. If any faulty is found, repair or replace the relevant part.

NOTE:
Use a mirror when inspecting back sides and other locations which are hard to see.

14.Brake Pedal

A: REMOVAL

1. CVT MODEL

CAUTION:
Before performing service on the airbag module, always refer to "CAUTION" of "General Description" in "AIRBAG SYSTEM" section. <Ref. to AB-9, CAUTION, General Description.>
1) Disconnect the ground terminal from the battery sensor, and wait for at least 60 seconds before starting work. <Ref. to NT-6, BATTERY, NOTE, Note.>
2) Remove the cover assembly - instrument panel LWR driver. <Ref. to EI-62, REMOVAL, Instrument Panel Lower Cover.>
3) Remove the knee airbag module. <Ref. to AB-34, REMOVAL, Knee Airbag Module.>
4) Remove the universal joint assembly - steering. <Ref. to PS-21, REMOVAL, Universal Joint.>

CAUTION:
To prevent damage to the universal joint assembly - steering and improper steering effort, make sure to remove the universal joint assembly - steering.
5) Remove the column assembly - steering. <Ref. to PS-25, REMOVAL, Steering Column.>
6) Remove the brake pedal assembly.
   (1) Disconnect the stop light switch connector.
   (2) Remove the snap pin (a) and clevis pin (b), and remove the operating rod from the brake pedal.

CAUTION:
- **Be careful not to apply excessive force to the operating rod when handling the operating rod. The angle may change by ±3°, and it may result in damage to power piston cylinder.**
- **Do not change the push rod length.**

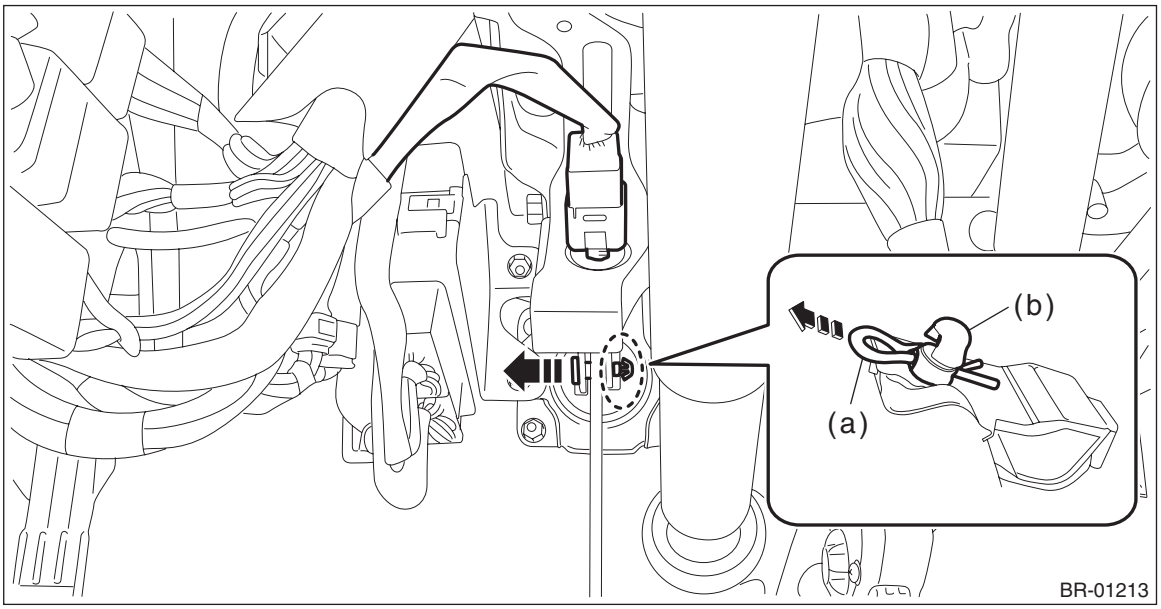

(3) Remove the bolt and nut, and then detach the brake pedal assembly.

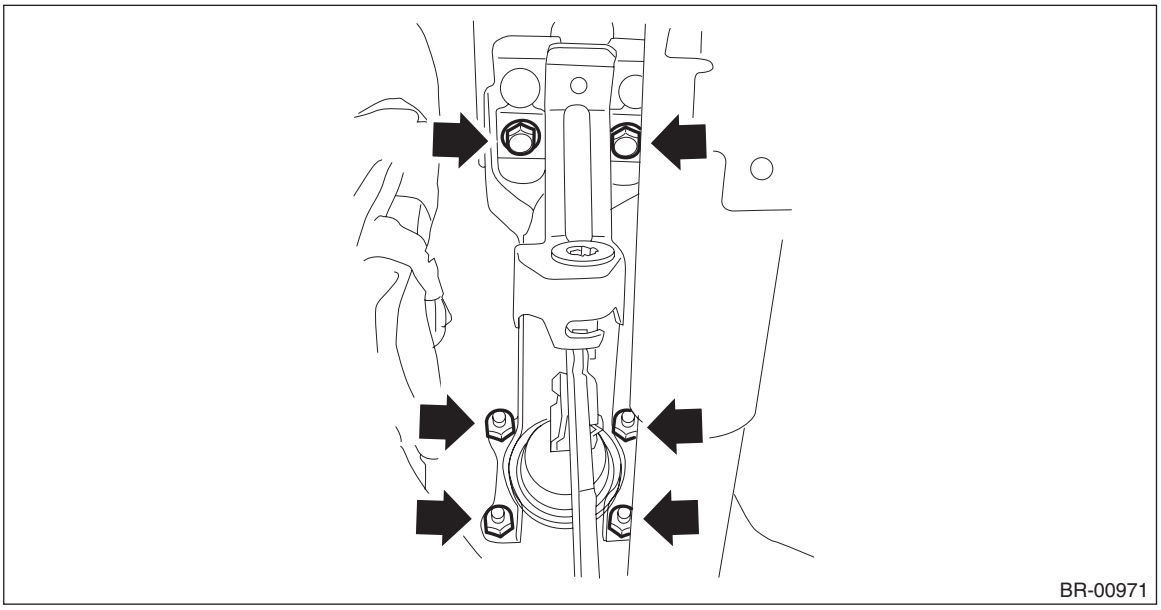

2. MT MODEL

NOTE:
Brake pedal is integrated with the clutch pedal.
For removal procedures of the brake pedal, refer to Clutch section. <Ref. to CL-31, REMOVAL, Clutch Pedal.>

B: INSTALLATION

1. CVT MODEL

CAUTION:
Before handling the airbag system components, always refer to "CAUTION" of "General Description" in "AIRBAG SYSTEM". <Ref. to AB-9, CAUTION, General Description.>
1) Install the brake pedal assembly.

CAUTION:
- **Apply grease to the snap pin to prevent the operating rod from wear.**
- **Replace the clevis pin with new parts, and apply thin coat of NIGTIGHT LYW No. 2 grease to the clevis pin.**

Tightening torque:
Brake pedal: 18 N·m (1.8 kgf-m, 13.3 ft-lb)
2) Install the column assembly - steering. <Ref. to PS-28, INSTALLATION, Steering Column.>
3) Install the universal joint assembly - steering. <Ref. to PS-22, INSTALLATION, Universal Joint.>

CAUTION:
- **Always install the universal joint assembly - steering after installing the steering column to avoid damage to the universal joint assembly - steering.**
- **Be sure to follow the tightening order and tightening torque of the universal joint assembly - steering to avoid the steering effort from becoming heavy. After confirming that the steering column position is in the neutral position, tighten the universal joint assembly - steering.**
- **Always place the tilt lever to the lock position after the steering column is adjusted.**

4) Install the knee airbag module.

Tightening torque:
7.5 N·m (0.8 kgf-m, 5.5 ft-lb)
5) Install the cover assembly - instrument panel LWR driver.
6) Connect the battery ground terminal. <Ref. to NT-6, BATTERY, NOTE, Note.>
7) Check that the brake light operate properly.
8) Check the brake pedal after installation. <Ref. to BR-98, INSPECTION, Brake Pedal.>

2. MT MODEL

NOTE:
Brake pedal is integrated with the clutch pedal.
For installation procedure of the brake pedal, refer to Clutch section. <Ref. to CL-31, INSTALLATION, Clutch Pedal.>

C: INSPECTION

1) Move the pad - brake pedal in a horizontal direction with a force of approx. 10 N (1 kgf, 2 lbf), and check that the pedal deflection is in the range of specifications.

CAUTION:
If excessive deflection is noted, replace with a new bushing.

Deflection of brake pedal:
Wear limit: 5 mm (0.197 in) or less

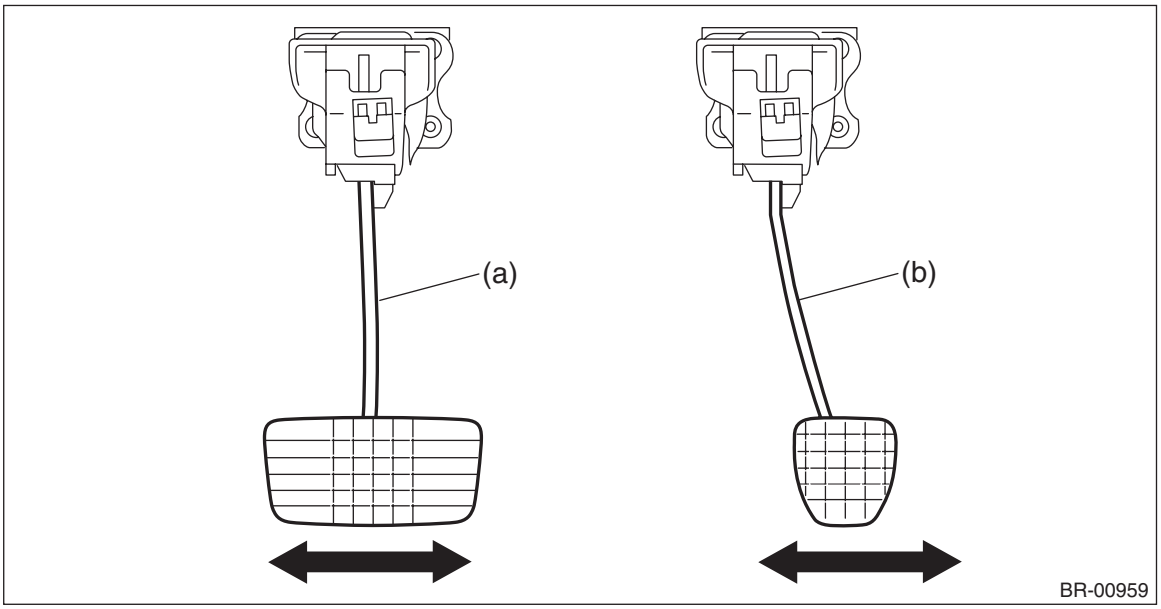

(a) Brake pedal (CVT model) (b) Brake pedal (MT model)

2) Check the position of the pedal pad.

Pedal height L:
140 — 150 mm (5.51 — 5.91 in)

Brake pedal free play A:
0.5 — 2.7 mm (0.02 — 0.11 in) [When pulling the brake pedal upward with a force of less than 10 N (1 kgf, 2 lbf).]

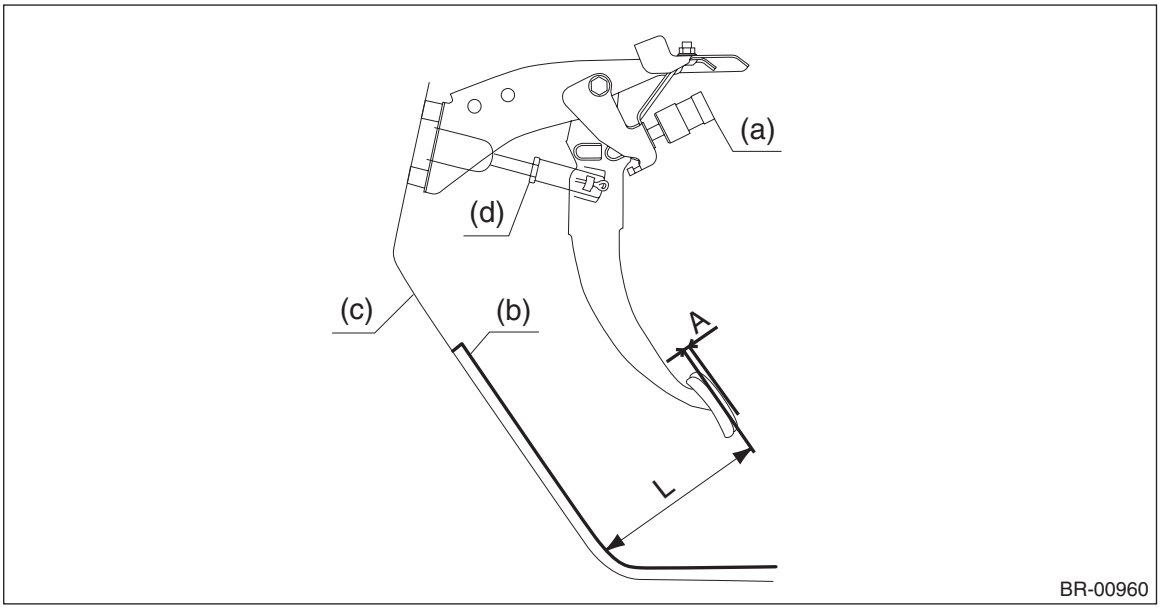

(a) Stop light switch
(b) Mat
(c) Toe board
(d) Brake booster operating rod

3) If it is not within the specification, loosen the lock nuts of vacuum booster operating rod, and rotate the rod to adjust the pedal height L within the specification.
4) Tighten the lock nut.

Tightening torque:
Operating lock nut: 22 N·m (2.2 kgf-m, 16.2 ft-lb)

NOTE:
Check the brake pedal height. When adjusting, also adjust the stop light switch.

15.Stop Light Switch

A: REMOVAL

CAUTION:
Before handling the airbag system components, always refer to "CAUTION" of "General Description" in "AIRBAG SYSTEM". <Ref. to AB-9, CAUTION, General Description.>
1) Disconnect the ground cable from battery and wait for at least 60 seconds before starting work. <Ref. to NT-6, BATTERY, NOTE, Note.>

NOTE:
For model with battery sensor, disconnect the ground terminal from battery sensor.
2) Remove the knee airbag module. <Ref. to AB-34, REMOVAL, Knee Airbag Module.>
3) Remove the cover assembly - instrument panel LWR driver. <Ref. to EI-62, REMOVAL, Instrument Panel Lower Cover.>
4) Remove the stop light switch.
   (1) Disconnect the stop light switch connector.
   (2) Remove the stop light switch by turning it counterclockwise.

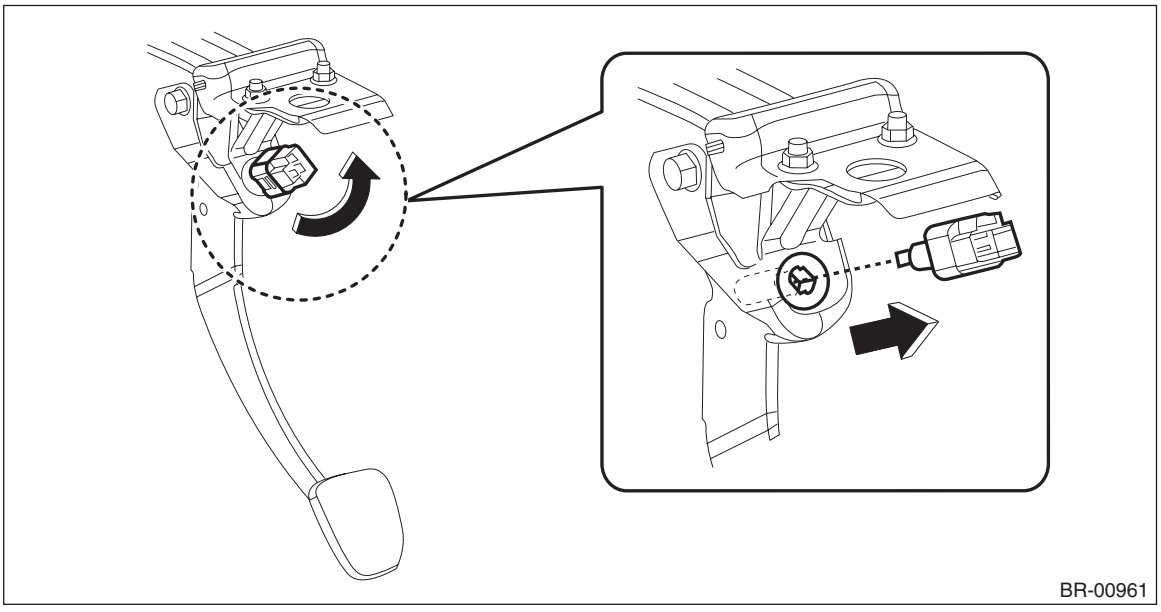

B: INSTALLATION

1) Install the stop light switch.
   (1) Adjust the stop light switch position, and then secure the stop light switch by turning it clockwise. <Ref. to BR-103, ADJUSTMENT, Stop Light Switch.>
   (2) Install the stop light switch connector.
2) Install the knee airbag module.

Tightening torque:
7.5 N·m (0.8 kgf-m, 5.5 ft-lb)
3) Install the cover assembly - instrument panel LWR driver.
4) Connect the battery ground terminal. <Ref. to NT-6, BATTERY, NOTE, Note.>

C: INSPECTION

1. CLEARANCE CHECK

1) Measure the clearance between the end of the stop light switch and the stopper.

Specification:
Clearance (A) of the stop light switch: 1 mm — 2 mm (0.04 in — 0.08 in)

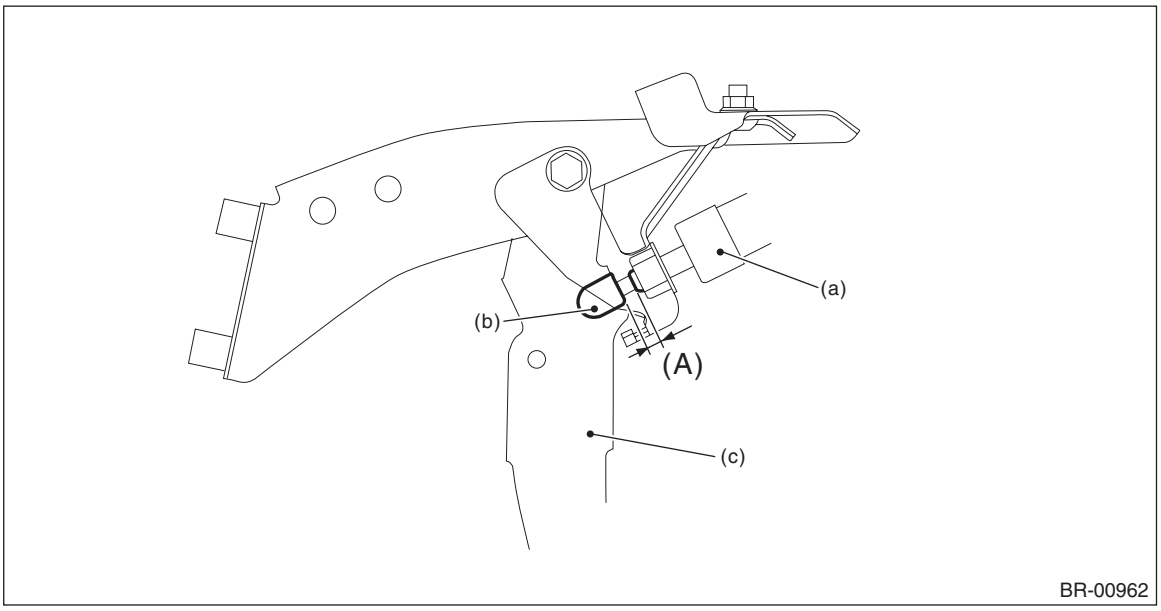

(a) Stop light switch (b) Stopper (c) Brake pedal

2) Adjust the position of the stop light switch if the inspection result is not within the standard value. <Ref. to BR-103, ADJUSTMENT, Stop Light Switch.>

2. INSPECT THE RESISTANCE

1) Disconnect the stop light switch connector.
2) Measure the resistance between the stop light switch connector terminals.

Preparation tool:
Circuit tester

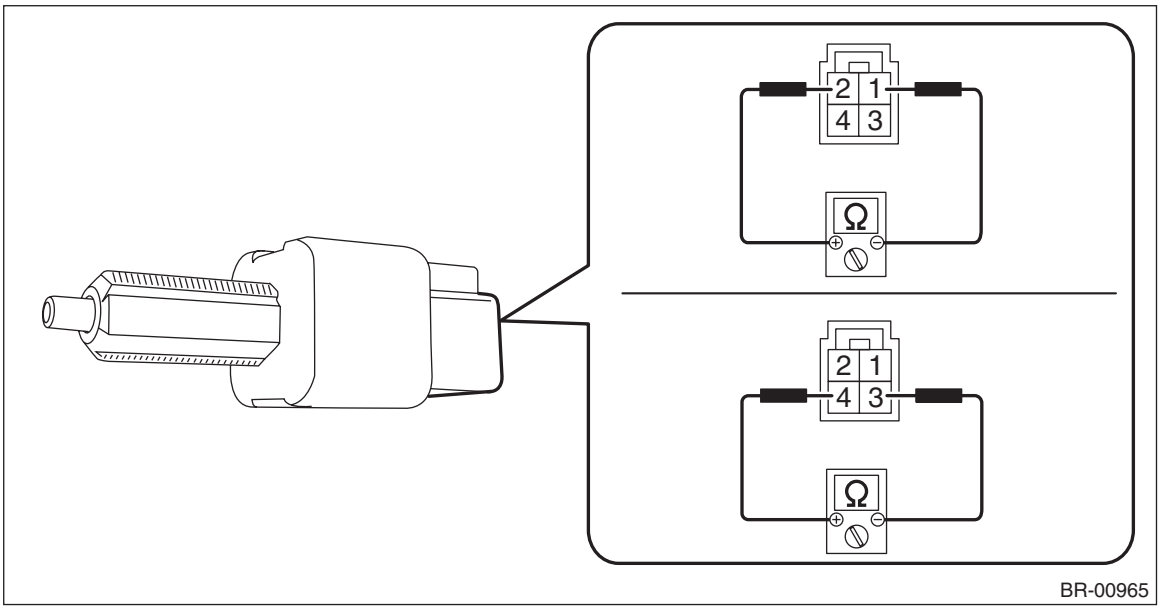

Terminal No.	Inspection conditions	Standard
1 — 2	When brake pedal is depressed	Less than 1 Ω
	When brake pedal is released	1 MΩ or more
3 — 4	When brake pedal is depressed	1 MΩ or more
	When brake pedal is released	Less than 1 Ω

3) Replace the stop light switch if the inspection result is not within the standard value.

D: ADJUSTMENT

1) While pulling up the brake pedal (c) toward you, insert the stop light switch (a) until it reaches the stopper (b).
2) Install the stop light switch by turning it clockwise.

CAUTION:
• Turn the stop light switch clockwise when installing so that it can return backward by approximately 1 mm (0.04 in) and clearance is automatically adjusted.
• When pushing the stop light switch against the brake pedal, do not apply excessive force.
• Tighten the stop light switch with a turning torque of 3 N·m (0.3 kgf-m, 2.2 ft-lb) or less.
(If it is hard to turn, reduce the switch pushing force and turn it again.)
• Insert until it contacts the stopper, and make sure that clearance (A) of the end of stop light switch and the stopper is 1 mm — 2 mm (0.04 in — 0.08 in).

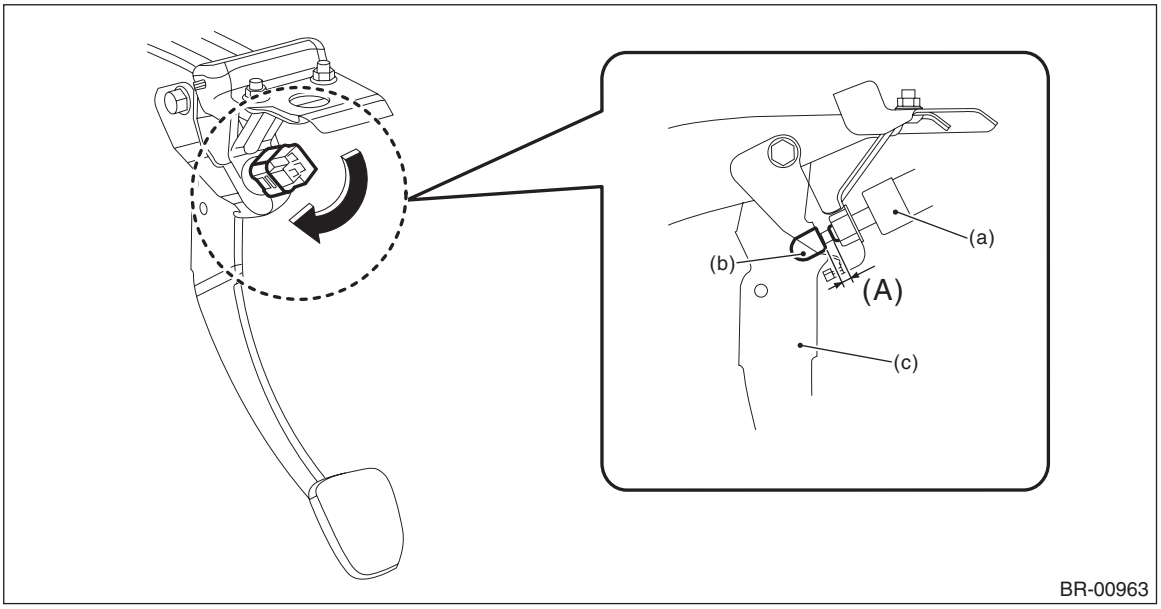

(a) Stop light switch (b) Stopper (c) Brake pedal

16.Brake Vacuum Pump

A: REMOVAL

NOTE:
Only other models than STI are equipped with the brake vacuum pump.
1) Disconnect the ground terminal from battery sensor. <Ref. to NT-6, BATTERY, NOTE, Note.>
2) Remove the collector cover. <Ref. to IN(w/o STI)-7, REMOVAL, Collector Cover.>
3) Remove the vacuum pump assembly.
   (1) Disconnect the connectors of the vacuum pump assembly.
   (2) Remove the vacuum hose COMPL.

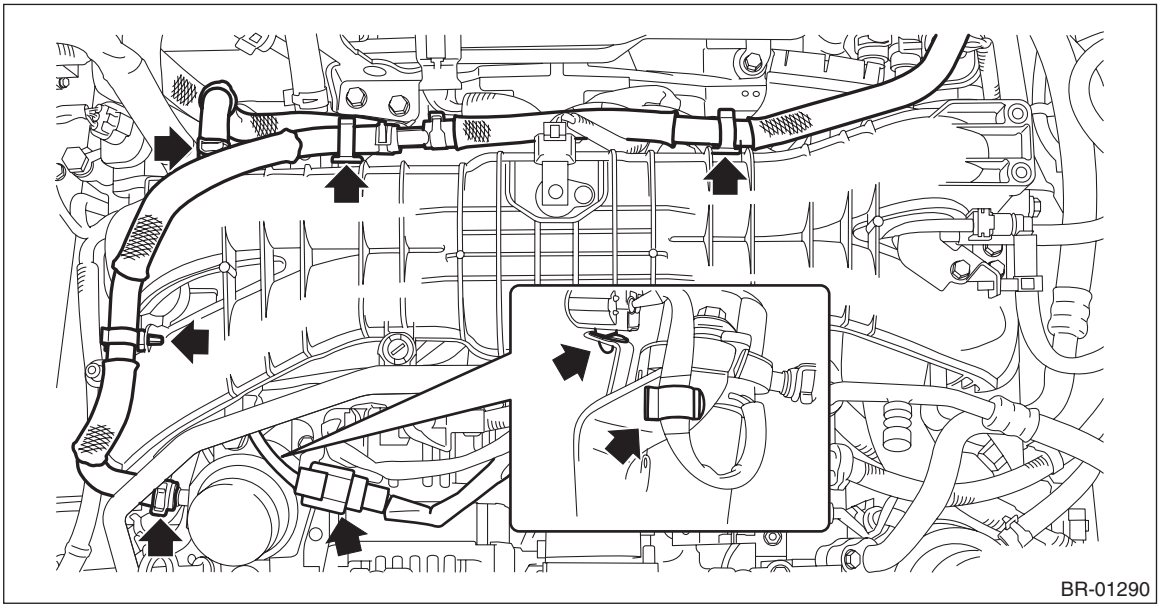
BR-01290

   (3) Remove the bolts, then remove the vacuum pump assembly.

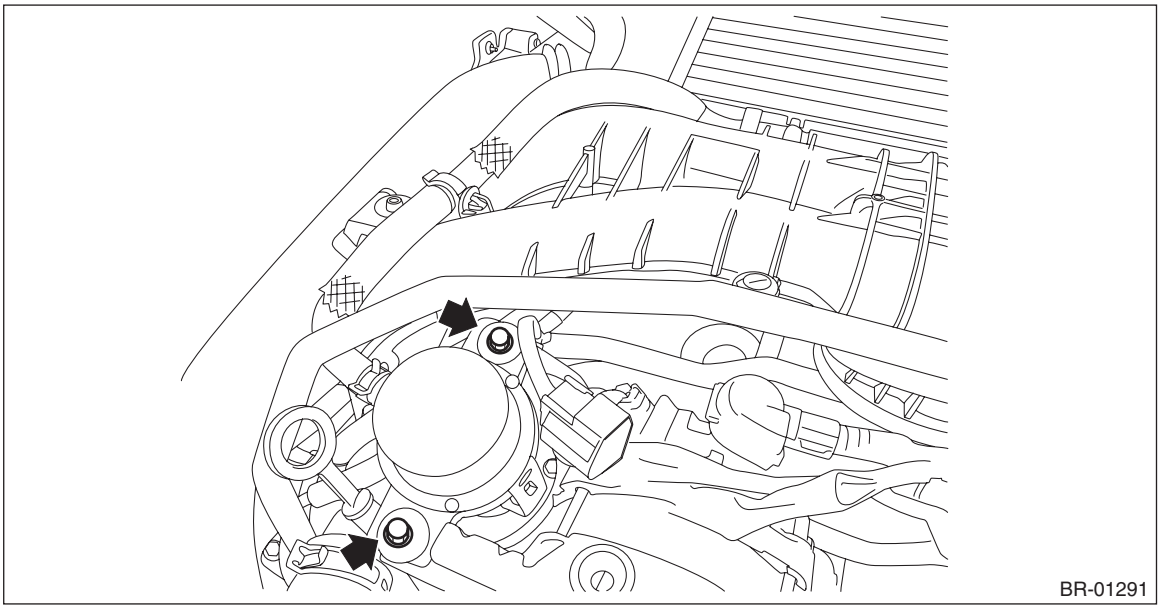
BR-01291

4) Remove the bolts, and then remove the bracket - generator.

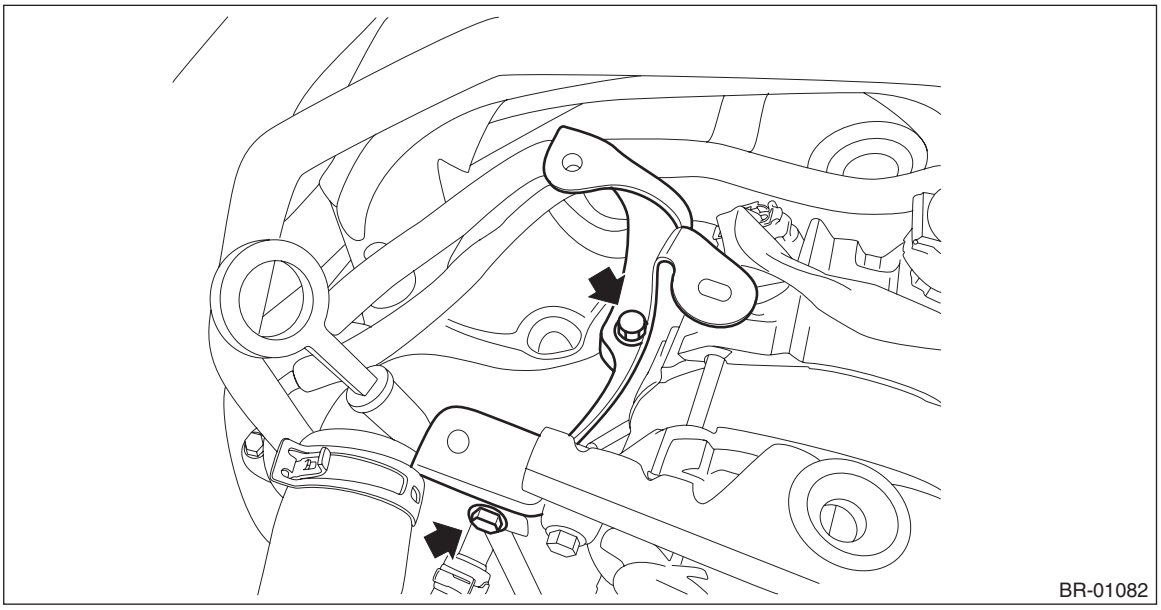

B: INSTALLATION

1) Install the bracket - generator.

Tightening torque:
19 N·m (1.9 kgf-m, 14.0 ft-lb)

2) Install the vacuum pump assembly.

Tightening torque:
6.4 N·m (0.7 kgf-m, 4.7 ft-lb)

3) Install the vacuum hose COMPL.

NOTE:
Install the clip to the position (arrowed) of alignment mark ▼ of intake manifold.

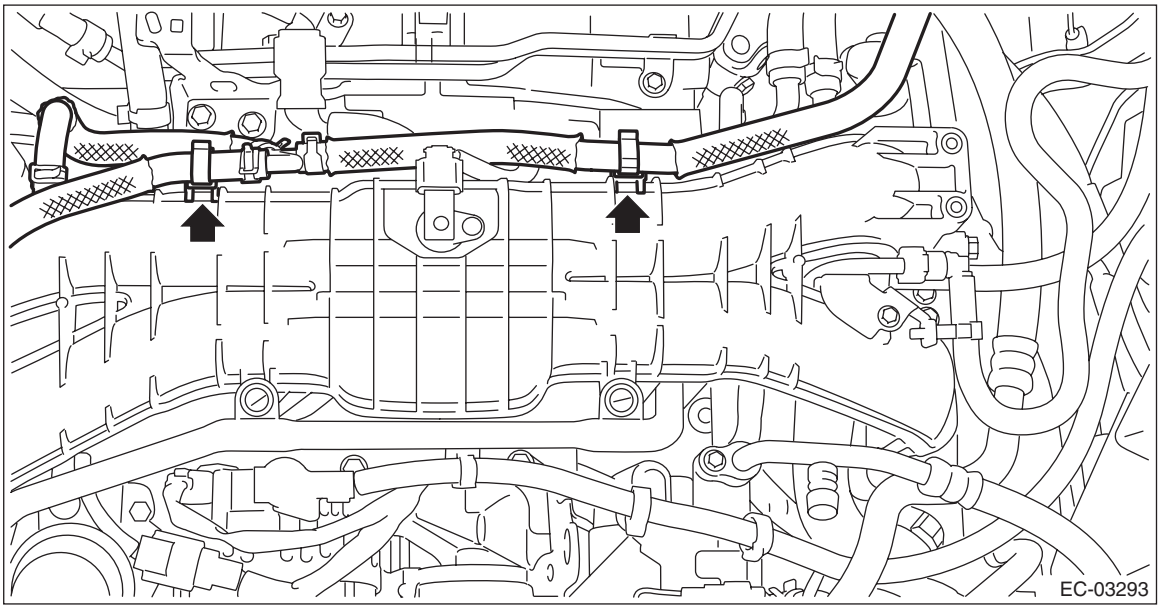

4) Install the collector cover. <Ref. to IN(w/o STI)-10, INSTALLATION, Collector Cover.>
5) Connect the ground terminal to battery sensor. <Ref. to NT-6, BATTERY, NOTE, Note.>

C: INSPECTION

1. BRAKE VACUUM PUMP

Refer to “Read Diagnostic Trouble Code (DTC)” of “BRAKE VACUUM CONTROL”. <Ref. to BVC(diag)-10, OPERATION, Read Diagnostic Trouble Code (DTC).>

2. VACUUM HOSE

Check to see that air only flows in one direction, when air is blown into or sucked from the hose.

17.Brake Vacuum Sensor

A: NOTE

CAUTION:
• Do not remove the vacuum sensor (a). If removed, replace the vacuum booster assembly (b) with a new part.
• Do not rotate the vacuum sensor (a) when disconnecting the connector of vacuum sensor (a). Otherwise the grommet on the mounting location of the vacuum sensor (a) may be damaged.

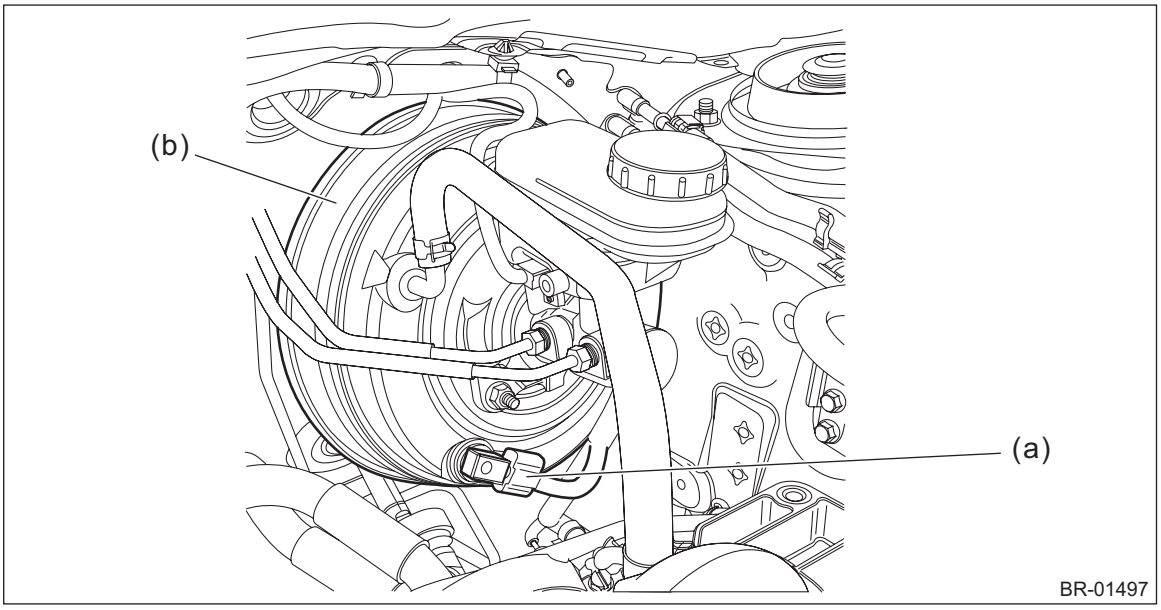

18.General Diagnostic Table

A: INSPECTION

	Trouble and possible cause	Corrective action
1. Insufficient braking	(1) Fluid leakage from the hydraulic mechanism	Repair or replace. (cup, piston seal, piston boot, master cylinder piston kit, pipe or hose)
	(2) Entry of air into the hydraulic mechanism	Bleed air.
	(3) Wear, deteriorated surface material, water or fluid on lining	Replace, grind or clean.
	(4) Improper operation of master cylinder assembly, disc caliper, vacuum booster assembly or check valve	Repair or replace.
2. Unstable or uneven braking	(1) Fluid on lining or rotor	Correct the cause of fluid leakage, and clean or replace.
	(2) Rotor defective	Repair or replace the rotor.
	(3) Improper lining contact, deteriorated surface, deteriorated or worn lining material	Repair by grinding, or replace.
	(4) Deformed back plate	Repair or replace.
	(5) Overinflation of tires	Adjust the air pressure.
	(6) Defective wheel alignment	Adjust alignment.
	(7) Loose back plate or support installation bolt	Tighten to the specified torque.
	(8) Defective hub unit COMPL	Replace.
	(9) Defective hydraulic system	Replace the cylinder, brake pipe or hose.
	(10) Unstable performance of the parking brake	Check, adjust or replace the rear brake and cable system.
3. Excessive pedal stroke	(1) Entry of air into the hydraulic mechanism	Bleed air.
	(2) Excessive play in the master cylinder push rod	Adjust.
	(3) Fluid leakage from the hydraulic mechanism	Repair or replace. (cup, piston seal, piston boot, master cylinder piston kit, pipe or hose)
	(4) Improper lining contact or worn lining	Repair or replace.
4. Brake dragging or improper brake return	(1) Insufficient pedal play	Adjust play.
	(2) Improper master cylinder return	Clean or replace the cylinder.
	(3) Clogged hydraulic system	Replace.
	(4) Improper return or adjustment of parking brake	Repair or adjust.
	(5) Weakened spring tension or breakage of shoe return spring	Replace the spring.
	(6) Improper disc caliper operation	Repair or replace.
	(7) Faulty wheel bearing	Replace.
5. Brake noise (1) (creaking sound)	(1) Hardened or deteriorated brake pad	Replace the pad.
	(2) Worn brake pad	Replace the pad.
	(3) Loose back plate or support installation bolt	Tighten to the specified torque.
	(4) Loose hub unit COMPL	Tighten to the specified torque.
	(5) Dirty rotor	Clean the rotor, or clean and replace brake assembly.
6. Brake noise (2) (hissing sound)	(1) Worn brake pad	Replace the pad.
	(2) Improperly installed pad	Correct or replace the pad.
	(3) Loose or bent rotor	Retighten or replace.
7. Brake noise (3) (click sound)	Excessively worn pad or support	Replace the pad or the support.

BRAKE VACUUM CONTROL (BVC) (DIAGNOSTICS)

BVC(diag)

		Page
1.	Basic Diagnostic Procedure	2
2.	Check List for Interview	3
3.	General Description	5
4.	Electrical Component Location	6
5.	Engine Control Module (ECM) I/O Signal	8
6.	Subaru Select Monitor	9
7.	Read Diagnostic Trouble Code (DTC)	10
8.	Inspection Mode	11
9.	Clear Memory Mode	12
10.	List of Diagnostic Trouble Code (DTC)	13
11.	Diagnostic Procedure with Diagnostic Trouble Code (DTC)	14
12.	General Diagnostic Table	31

1. Basic Diagnostic Procedure

A: PROCEDURE

CAUTION:
• Subaru Select Monitor is required for reading DTC, reading the current data and clearing the memory.
• Remove foreign matter (dust, water, oil, etc.) from the engine control module (ECM) connector when removing or installing.

NOTE:
- To check the harness for open or short circuits, shake problem spot or connector.
- Refer to “Check List for Interview”. <Ref. to BVC(diag)-3, Check List for Interview.>

	Step	Check	Yes	No
1	**CHECK PRE-INSPECTION.** 1) Ask the customer when and how the trouble occurred using the interview check list. <Ref. to BVC(diag)-3, Check List for Interview.> 2) Check the brake vacuum pump warning light.	Does the brake vacuum pump warning light illuminate?	Go to step **3**.	Go to step **2**.
2	**BASIC INSPECTION.** Check the components which might affect the brake vacuum control. <Ref. to BVC(diag)-5, INSPECTION, General Description.>	Is the check result OK?	Go to step **3**.	Repair or replace each component.
3	**CHECK INDICATION OF DTC.** 1) Turn the ignition switch to OFF. 2) Connect the Subaru Select Monitor to data link connector. 3) Turn the ignition switch to ON and run the Subaru Select Monitor. 4) Read the DTC. <Ref. to BVC(diag)-10, OPERATION, Read Diagnostic Trouble Code (DTC).> 5) Record all DTC.	Is DTC displayed?	Record the DTC, time stamp and freeze frame data. Go to step **5**. NOTE: • For the time stamp, refer to LAN section. <Ref. to LAN(diag)-6, TIME STAMP, CAUTION, General Description.> • Depending on DTCs, time stamp may not be stored.	Go to step **4**.
4	**PERFORM GENERAL DIAGNOSTICS.** Perform the inspection by referring to “General Diagnostic Table”. <Ref. to BVC(diag)-31, INSPECTION, General Diagnostic Table.>	Is the check result OK?	Finish the diagnosis.	Go to step **5**.
5	**PERFORM DIAGNOSIS.** 1) Correct the cause of trouble according to the DTC. <Ref. to BVC(diag)-13, LIST, List of Diagnostic Trouble Code (DTC).> 2) Perform the Clear Memory Mode. <Ref. to BVC(diag)-12, OPERATION, Clear Memory Mode.> 3) Perform the Inspection Mode. <Ref. to BVC(diag)-11, PROCEDURE, Inspection Mode.> 4) Read the DTC. <Ref. to BVC(diag)-10, OPERATION, Read Diagnostic Trouble Code (DTC).>	Is DTC displayed?	Repeat step 5 until DTC is not shown.	Finish the diagnosis.

2. Check List for Interview

A: CHECK

Check the following items about the vehicle's state.

1. BRAKE VACUUM PUMP WARNING LIGHT STATUS

The brake vacuum pump warning light illuminates.	❑ Always ❑ Sometimes ❑ Only once ❑ Does not illuminate • When/How long does it illuminate?		
Ignition key position	❑ LOCK ❑ ACC ❑ ON (before starting engine) ❑ START ❑ ON (after starting engine, engine is running) ❑ ON (after starting engine, engine is at a standstill)		
Timing	❑ Immediately after turning the ignition switch to ON ❑ Immediately after turning the ignition switch to START		
	❑ While accelerating	—	km/h
		—	MPH
	❑ While driving at a constant speed	km/h	MPH
	❑ While decelerating	—	km/h
		—	MPH

2. CONDITIONS UNDER WHICH TROUBLE OCCURS

Environment	a) Weather	❑ Fine ❑ Cloudy ❑ Rainy ❑ Snowy ❑ Others:
	b) Ambient temperature	°C (°F)
	c) Altitude	m (ft)
	d) Road	❑ Inner city ❑ Suburbs ❑ Highway ❑ General road ❑ Uphill ❑ Downhill ❑ Paved road ❑ Gravel road ❑ Muddy road ❑ Sandy place ❑ Straight road ❑ Sharp curve ❑ Gentle road ❑ S-curve ❑ Road with a slope on both sides ❑ Others:
Condition	a) Brakes	Deceleration: G ❑ continuous / ❑ Intermittent
	b) Accelerator	Acceleration: G ❑ continuous / ❑ Intermittent
	c) Vehicle speed	km/h MPH ❑ Advancing ❑ Accelerating ❑ Decelerating ❑ Low speed ❑ Turning ❑ Others: ❑ Immediately after starting the engine ❑ Idling, etc.

3. General Description

A: CAUTION

1. SRS AIRBAG SYSTEM

The airbag system wiring harness is routed near the main relay and ECM.

CAUTION:
• Do not use electrical test equipment on wiring harness and connector circuits of the airbag system.
• Be careful not to damage the airbag system wiring harness.

2. ENGINE CONTROL MODULE (ECM)

Refer to “CAUTION” in “General Description” in ENGINE (DIAGNOSTICS). <Ref. to EN(w/o STI)(diag)-6, CAUTION, General Description.>

B: INSPECTION

Before performing diagnosis, check the following items which might affect the brake vacuum control.

1. BATTERY

Check the battery. <Ref. to SC(w/o STI)-51, INSPECTION, Battery.>

2. BRAKE VACUUM HOSE

Make sure that the brake vacuum hose is not cracked or loose.

C: PREPARATION TOOL

1. SPECIAL TOOL

ILLUSTRATION	TOOL NUMBER	DESCRIPTION	REMARKS
 STSSM4	—	SUBARU SELECT MONITOR 4	Used for setting of each function and trouble-shooting for electrical system. NOTE: For detailed operation procedures of Subaru Select Monitor 4, refer to “Application help”.
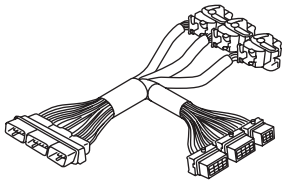 ST18460AA030	18460AA030	CHECK BOARD	Used for measuring voltage and resistance of ECM terminals.

2. GENERAL TOOL

TOOL NAME	REMARKS
Circuit tester	Used for measuring resistance, voltage and current.
Oscilloscope	Used for measuring the sensor.
DST-i	Used together with Subaru Select Monitor 4.

4. Electrical Component Location

A: LOCATION

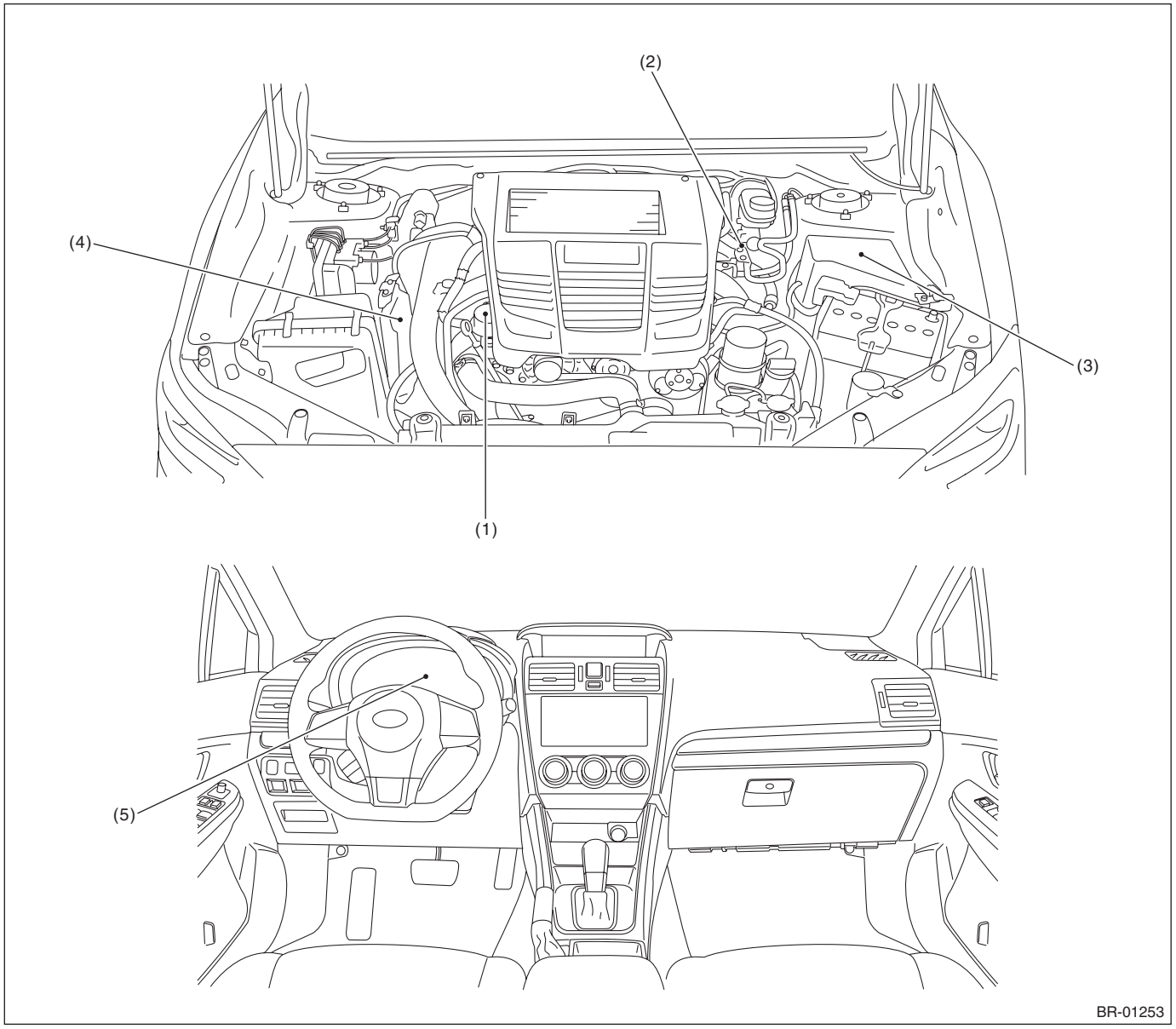

(1) Brake vacuum pump
(2) Brake booster pressure sensor
(3) Brake vacuum pump relay
(4) Engine control module (ECM)
(5) Brake vacuum pump warning light

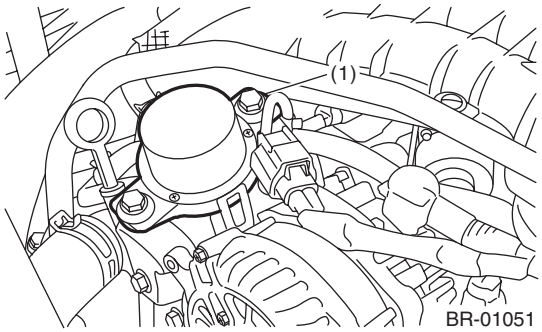

BR-01051

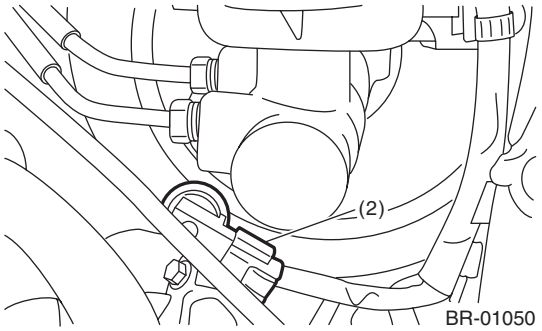

BR-01050

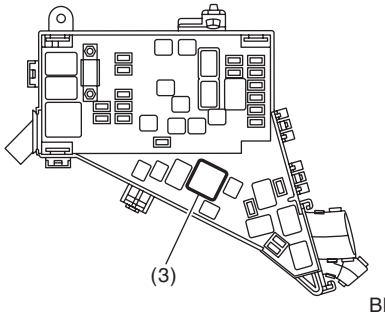

BR-01052

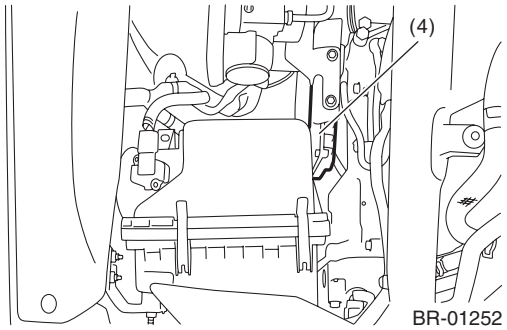

BR-01252

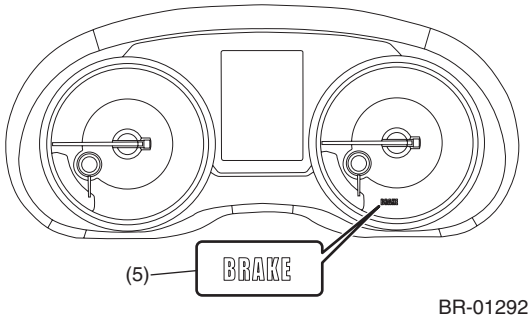

BR-01292

5. Engine Control Module (ECM) I/O Signal

A: ELECTRICAL SPECIFICATION

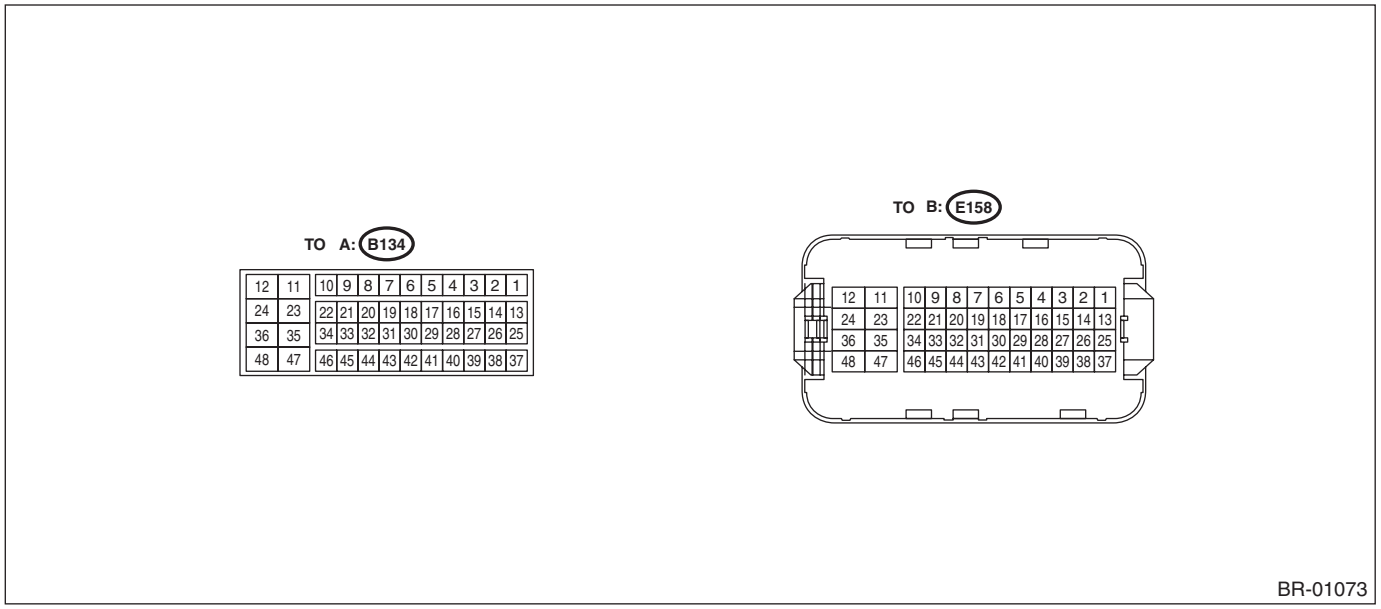

Description		Connector No.	Terminal No.	Signal (V)		Note
				Ignition SW ON (Engine OFF)	Engine ON (Idling)	
Brake booster pressure sensor	Signal	E158	13	1 — 3.8	1 — 3.8	—
	Power supply	B134	18	5	5	—
	Ground	B134	19	0	0	—
Self-shutoff control		B134	38	0	0	—
Brake vacuum pump	Relay drive	E158	37	10 — 13 (When pump is OFF)	12 — 14 (When pump is ON)	—
				0 (When pump is ON)	0 (When pump is ON)	
	Electric load	E158	1	0 (When pump is OFF)	0 (When pump is OFF)	—
				10 — 13 (When pump is ON)	12 — 14 (When pump is ON)	

6. Subaru Select Monitor

A: OPERATION

1. HOW TO USE THE SUBARU SELECT MONITOR

For detailed operation procedures, refer to “Application help”.

2. READ CURRENT DATA

1) On «Start» display, select «Diagnosis».
2) On «Vehicle selection» display, input the vehicle information and select «Confirmed».
3) On «Main Menu» display, select «Each System».
4) On «Select System» display, select «Brake Vacuum Pump».
5) On «Select Function» display, select «Data Monitor».

Display	Contents to be displayed	Unit of measure
Atmospheric Pressure	Atmospheric pressure is displayed.	kPa
Vacuum Pump Motor	Operation status of vacuum pump motor is displayed.	ON or OFF
Vacuum Pump Motor Relay	Operation status of vacuum pump motor relay is displayed.	ON or OFF
Brake Booster Pressure	Brake booster pressure is displayed.	kPa

NOTE:
For detailed operation procedures, refer to “Application help”.

3. SEQUENCE CONTROL MODE

1) Turn the ignition switch to ON (engine OFF) and run the Subaru Select Monitor.
2) On «Start» display, select «Diagnosis».
3) On «Vehicle selection» display, input the vehicle information and select «Confirmed».
4) On «Main Menu» display, select «Each System».
5) On «Select System» display, select «Brake Vacuum Pump».
6) On «Select Function» display, select «Work Support».
7) On the «Work Support» display, select «Function Check Sequence».
8) When «Sequence Control Mode will be started» is shown on the screen, click the [OK] button.
9) When «Depress the brake pedal 5 times.» is shown on the screen, depress the brake pedal 5 times, and click the [OK] button while the brake pedal is not depressed.
10) Click the [OK] button after the “OK” is displayed.

NOTE:
For detailed operation procedures, refer to “Application help”.

7. Read Diagnostic Trouble Code (DTC)

A: OPERATION

1) On «Start» display, select «Diagnosis».
2) On «Vehicle selection» display, input the vehicle information and select «Confirmed».
3) On «Main Menu» display, select «Each System».
4) On «Select System» display, select «Brake Vacuum Pump».
5) On «Select Function» display, select «DTC».

NOTE:
- For details concerning the DTC, refer to “List of Diagnostic Trouble Code (DTC)”. <Ref. to BVC(diag)-13, List of Diagnostic Trouble Code (DTC).>
- For detailed operation procedures, refer to “Application help”.

8. Inspection Mode

A: PROCEDURE

Reproduce the malfunction occurrence condition as much as possible.
Drive the vehicle at least ten minutes.

9. Clear Memory Mode

A: OPERATION

1) On «Start» display, select «Diagnosis».
2) On «Vehicle selection» display, input the vehicle information and select «Confirmed».
3) On «Main Menu» display, select «Each System».
4) On «Select System» display, select «Brake Vacuum Pump».
5) On «Select Function» display, select «DTC».
6) On «DTC» display, select «Clear Memory».

NOTE:
For detailed operation procedures, refer to “Application help”.

10.List of Diagnostic Trouble Code (DTC)

A: LIST

DTC	Item	Content of diagnosis	Reference
11	Sensor Output Out of Range	Brake booster pressure sensor output error	<Ref. to BVC(diag)-14, DTC 11 SENSOR OUTPUT OUT OF RANGE, Diagnostic Procedure with Diagnostic Trouble Code (DTC).>
12	Compare Error in Other Sensor	Brake booster relative pressure comparison error	<Ref. to BVC(diag)-17, DTC 12 COMPARE ERROR IN OTHER SENSOR, Diagnostic Procedure with Diagnostic Trouble Code (DTC).>
13	Pressure Sensor Signal Freeze	Brake booster pressure sensor abnormal stuck	<Ref. to BVC(diag)-20, DTC 13 PRESSURE SENSOR SIGNAL FREEZE, Diagnostic Procedure with Diagnostic Trouble Code (DTC).>
21	Discrepancy in Relays (On)	Unmatched drive of brake vacuum pump relay and brake vacuum pump	<Ref. to BVC(diag)-23, DTC 21 DISCREPANCY IN RELAYS (ON), Diagnostic Procedure with Diagnostic Trouble Code (DTC).>
22	Discrepancy in Relays (Off)	Unmatched drive of brake vacuum pump relay and brake vacuum pump	<Ref. to BVC(diag)-26, DTC 22 DISCREPANCY IN RELAYS (OFF), Diagnostic Procedure with Diagnostic Trouble Code (DTC).>
23	Pump Continuous Work	Continuous drive error of brake vacuum pump	<Ref. to BVC(diag)-29, DTC 23 PUMP CONTINUOUS WORK, Diagnostic Procedure with Diagnostic Trouble Code (DTC).>

11.Diagnostic Procedure with Diagnostic Trouble Code (DTC)

A: DTC 11 SENSOR OUTPUT OUT OF RANGE

DTC DETECTING CONDITION:
Malfunction of brake booster pressure sensor output
TROUBLE SYMPTOM:
Brake vacuum pump does not operate.

CAUTION:
Use the check board when measuring the ECM terminal voltage and resistance.

WIRING DIAGRAM:

Vacuum pump control system <Ref. to WI-366, WIRING DIAGRAM, Vacuum Pump Control System.>

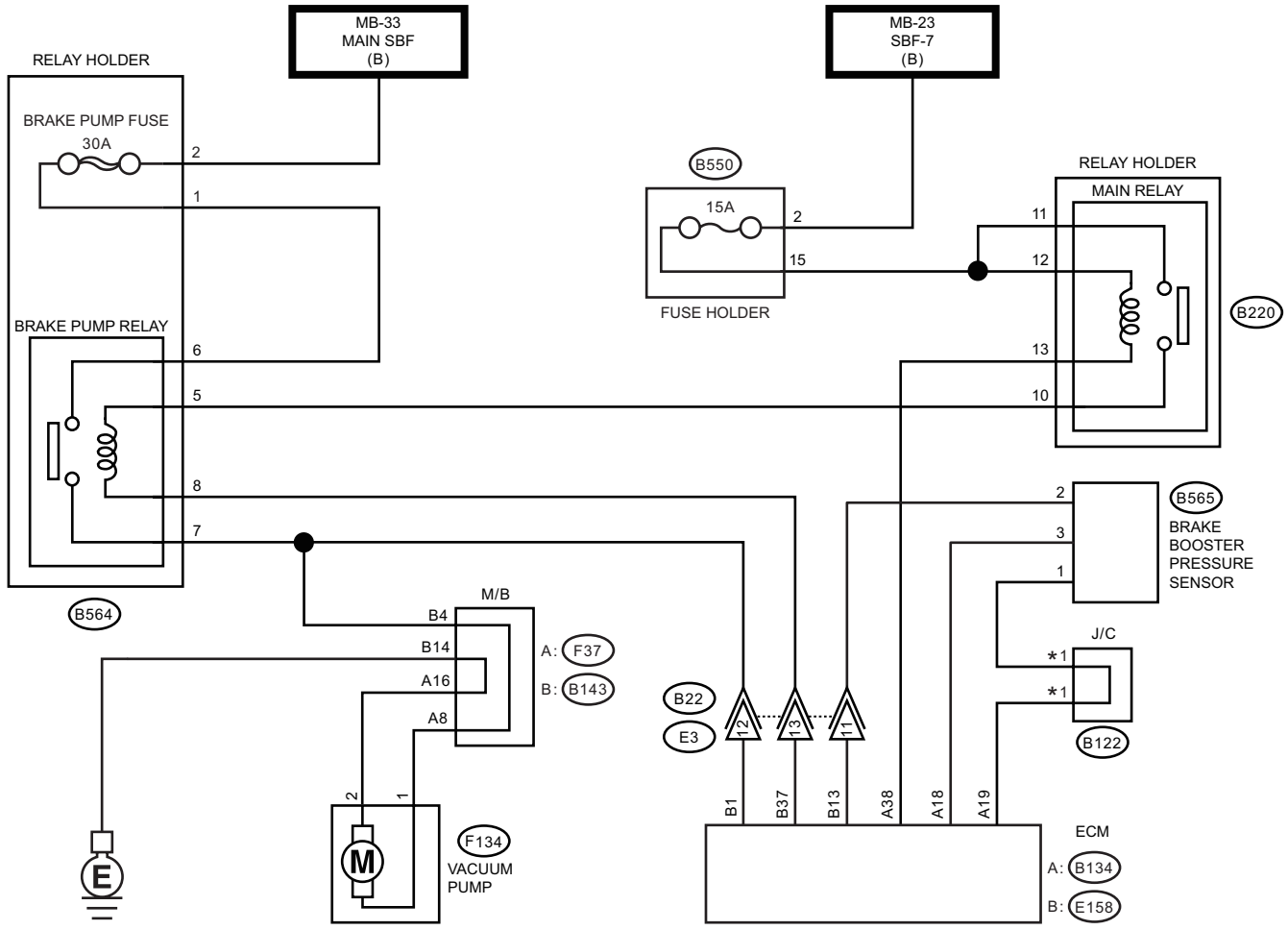

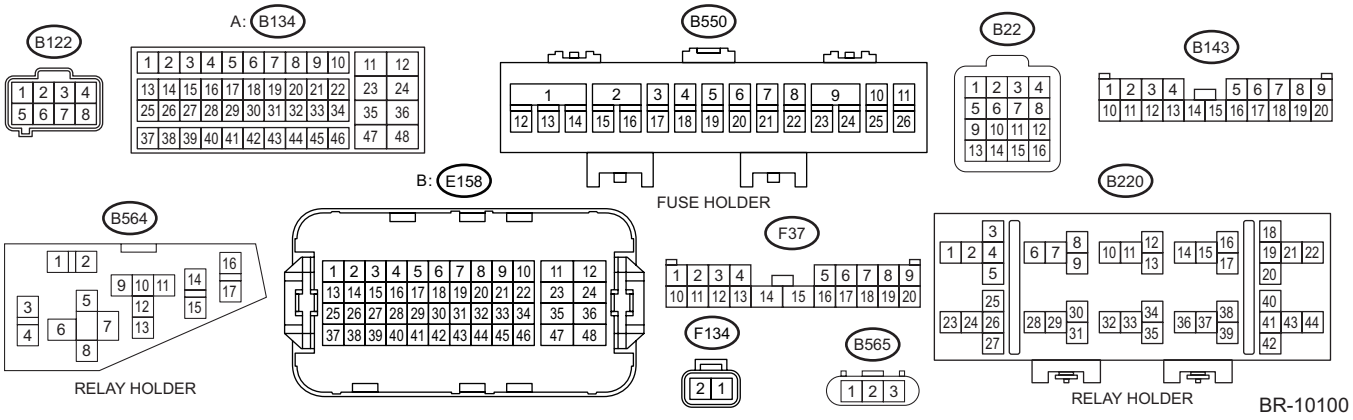

	Step	Check	Yes	No
1	**CHECK BRAKE BOOSTER PRESSURE SENSOR.** 1) Turn the ignition switch to OFF. 2) Disconnect the brake booster pressure sensor connector. 3) Measure the resistance between brake booster pressure sensor terminals. ***Terminals*** ***No. 1 — No. 3:*** ***No. 2 — No. 3:***	Is the resistance 15 kΩ or less?	Go to step **2**.	Replace the brake booster. <Ref. to BR-75, Brake Booster.>
2	**CHECK HARNESS BETWEEN ECM AND BRAKE BOOSTER PRESSURE SENSOR CONNECTOR.** 1) Disconnect the connector from ECM. 2) Measure the resistance of harness between ECM connector and brake booster pressure sensor connector terminal. ***Connector & terminal*** ***(B134) No. 18 — (B565) No. 3:*** ***(B134) No. 19 — (B565) No. 1:*** ***(E158) No. 13 — (B565) No. 2:***	Is the resistance less than 1 Ω?	Go to step **3**.	Repair the open circuit of harness between ECM connector and brake booster pressure sensor connector terminal.
3	**CHECK HARNESS BETWEEN ECM AND BRAKE BOOSTER PRESSURE SENSOR CONNECTOR.** Measure the resistance of harness between ECM connector and chassis ground. ***Connector & terminal*** ***(B134) No. 18 — Chassis ground:*** ***(B134) No. 19 — Chassis ground:*** ***(E158) No. 13 — Chassis ground:***	Is the resistance 1 MΩ or more?	Go to step **4**.	Repair the short circuit to ground in harness between ECM connector and brake booster pressure sensor connector terminal.
4	**CHECK HARNESS BETWEEN ECM AND BRAKE BOOSTER PRESSURE SENSOR CONNECTOR.** Measure the voltage between ECM connector and chassis ground. ***Connector & terminal*** ***(B134) No. 18 (+) — Chassis ground (–):*** ***(B134) No. 19 (+) — Chassis ground (–):*** ***(E158) No. 13 (+) — Chassis ground (–):***	Is the voltage 0.5 V or less?	Go to step **5**.	Repair the short circuit to power supply between the ECM connector and brake booster pressure sensor connector terminal.
5	**CHECK BRAKE BOOSTER PRESSURE SENSOR POWER SUPPLY.** 1) Connect the brake booster pressure sensor connector. 2) Turn the ignition switch to ON. 3) Measure the voltage between ECM connector terminals. ***Connector & terminal*** ***(B134) No. 18 (+) — (B134) No. 19 (–):***	Is the voltage 4.75 — 5.25 V?	Go to step **6**.	Replace the ECM. <Ref. to FU(w/o STI)-124, Engine Control Module (ECM).>
6	**CHECK CURRENT DATA.** 1) Connect the ECM connector. 2) Turn the ignition switch to ON. 3) Depress the brake pedal several times, until the pedal becomes firm. 4) Read the current data of brake vacuum pump system using Subaru Select Monitor. <Ref. to BVC(diag)-9, READ CURRENT DATA, OPERATION, Subaru Select Monitor.>	Is the «Atmosphere Pressure»«Brake Booster Pressure» –1 — +1 kPa?	Temporary poor contact occurs.	Replace the ECM. <Ref. to FU(w/o STI)-124, Engine Control Module (ECM).>

B: DTC 12 COMPARE ERROR IN OTHER SENSOR

DTC DETECTING CONDITION:
Error in comparison with other brake booster relative pressure
TROUBLE SYMPTOM:
Brake vacuum pump does not operate.

CAUTION:
Use the check board when measuring the ECM terminal voltage and resistance.
WIRING DIAGRAM:
Vacuum pump control system <Ref. to WI-366, WIRING DIAGRAM, Vacuum Pump Control System.>

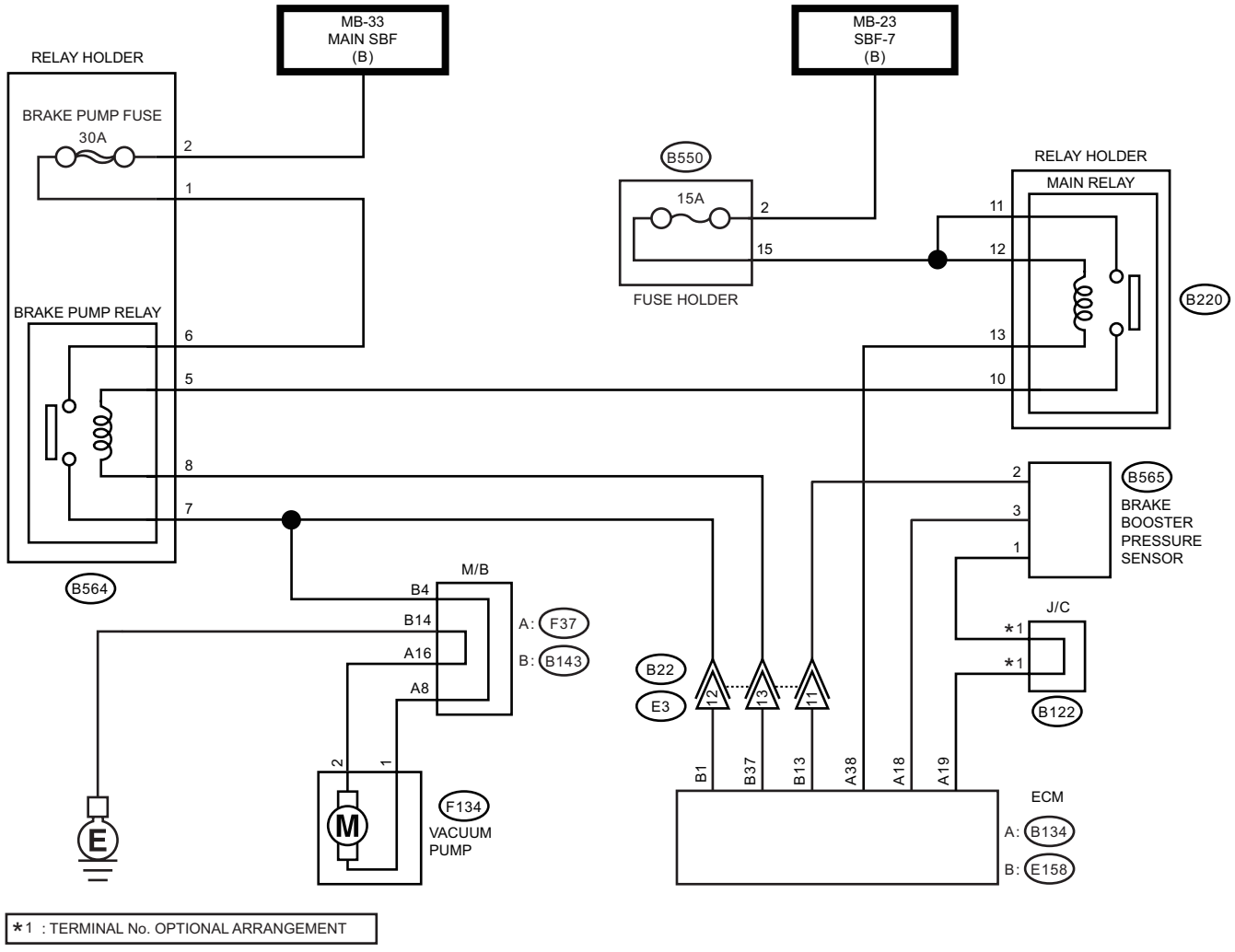

*1 : TERMINAL No. OPTIONAL ARRANGEMENT

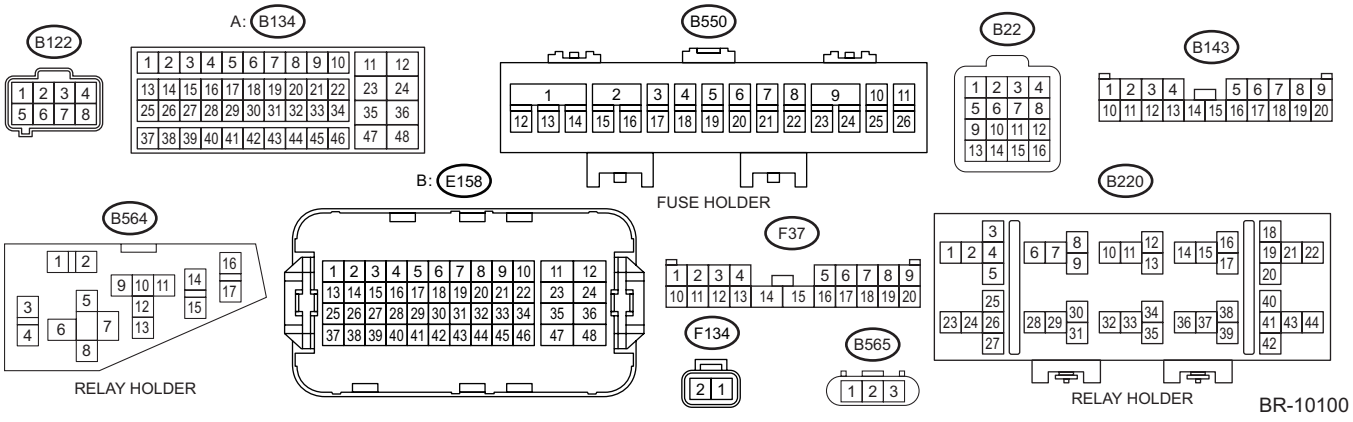

BR-10100

	Step	Check	Yes	No
1	**CHECK BRAKE VACUUM HOSE.** 1) Turn the ignition switch to OFF. 2) Check the status of the brake vacuum hose connection.	Is the brake vacuum hose connected firmly?	Go to step **2**.	Connect the brake vacuum hose.
2	**CHECK BRAKE VACUUM HOSE.** 1) Turn the ignition switch to ON and start engine. 2) Check for leakage from the brake vacuum hose.	Is there a leak from the brake vacuum hose?	Replace the brake vacuum hose.	Go to step **3**.
3	**CHECK BRAKE BOOSTER PRESSURE SENSOR.** 1) Turn the ignition switch to OFF. 2) Disconnect the brake booster pressure sensor connector. 3) Measure the resistance between brake booster pressure sensor terminals. ***Terminals*** ***No. 1 — No. 3:*** ***No. 2 — No. 3:***	Is the resistance 15 kΩ or less?	Go to step **4**.	Replace the brake booster. <Ref. to BR-75, Brake Booster.>
4	**CHECK HARNESS BETWEEN ECM AND BRAKE BOOSTER PRESSURE SENSOR CONNECTOR.** 1) Disconnect the connector from ECM. 2) Measure the resistance of harness between ECM connector and brake booster pressure sensor connector terminal. ***Connector & terminal*** ***(B134) No. 18 — (B565) No. 3:*** ***(B134) No. 19 — (B565) No. 1:*** ***(E158) No. 13 — (B565) No. 2:***	Is the resistance less than 1 Ω?	Go to step **5**.	Repair the open circuit of harness between ECM connector and brake booster pressure sensor connector terminal.
5	**CHECK HARNESS BETWEEN ECM AND BRAKE BOOSTER PRESSURE SENSOR CONNECTOR.** Measure the resistance of harness between ECM connector and chassis ground. ***Connector & terminal*** ***(B134) No. 18 — Chassis ground:*** ***(B134) No. 19 — Chassis ground:*** ***(E158) No. 13 — Chassis ground:***	Is the resistance 1 MΩ or more?	Go to step **6**.	Repair the short circuit to ground between the ECM connector and brake booster pressure sensor connector terminal.
6	**CHECK HARNESS BETWEEN ECM AND BRAKE BOOSTER PRESSURE SENSOR CONNECTOR.** Measure the voltage between ECM connector and chassis ground. ***Connector & terminal*** ***(B134) No. 18 (+) — Chassis ground (–):*** ***(B134) No. 19 (+) — Chassis ground (–):*** ***(E158) No. 13 (+) — Chassis ground (–):***	Is the voltage 0.5 V or less?	Go to step **7**.	Repair the short circuit to power supply in harness between the ECM connector and brake booster pressure sensor connector terminal.
7	**CHECK BRAKE BOOSTER PRESSURE SENSOR POWER SUPPLY.** 1) Connect the brake booster pressure sensor connector. 2) Turn the ignition switch to ON. 3) Measure the voltage between ECM connector terminals. ***Connector & terminal*** ***(B134) No. 18 (+) — (B134) No. 19 (–):***	Is the voltage 4.75 — 5.25 V?	Go to step **8**.	Replace the ECM. <Ref. to FU(w/o STI)-124, Engine Control Module (ECM).>

	Step	Check	Yes	No
8	**CHECK CURRENT DATA.** 1) Connect the ECM connector. 2) Turn the ignition switch to ON. 3) Depress the brake pedal several times, until the pedal becomes firm. 4) Read the current data of brake vacuum pump system using Subaru Select Monitor. <Ref. to BVC(diag)-9, READ CURRENT DATA, OPERATION, Subaru Select Monitor.>	Is the «Atmosphere Pressure»«Brake Booster Pressure» –1 — +1 kPa?	Temporary poor contact occurs.	Replace the ECM. <Ref. to FU(w/o STI)-124, Engine Control Module (ECM).>

C: DTC 13 PRESSURE SENSOR SIGNAL FREEZE

DTC DETECTING CONDITION:
Stuck malfunction of brake booster pressure sensor
TROUBLE SYMPTOM:
Brake vacuum pump does not operate.

CAUTION:
Use the check board when measuring the ECM terminal voltage and resistance.
WIRING DIAGRAM:
Vacuum pump control system <Ref. to WI-366, WIRING DIAGRAM, Vacuum Pump Control System.>

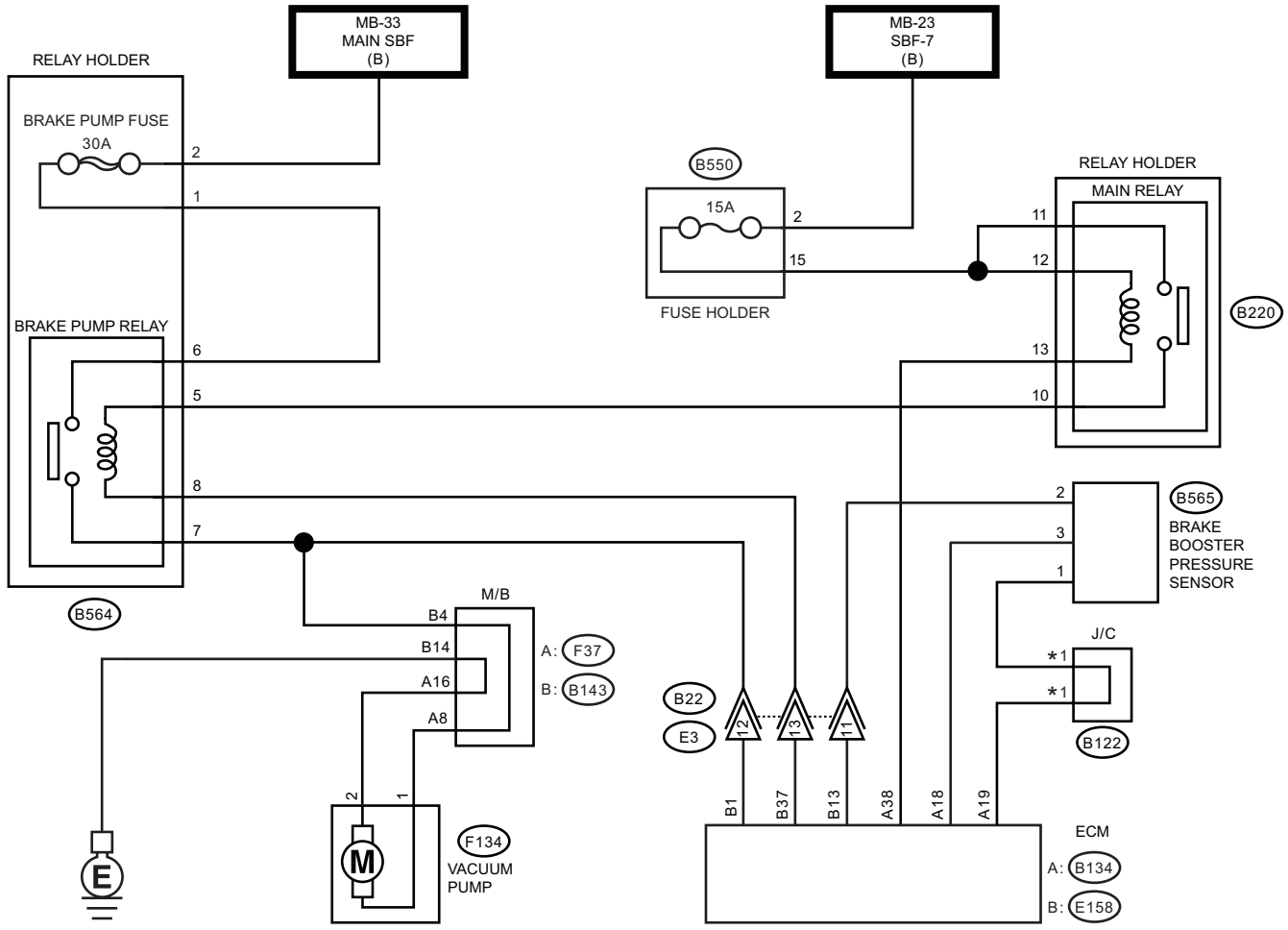

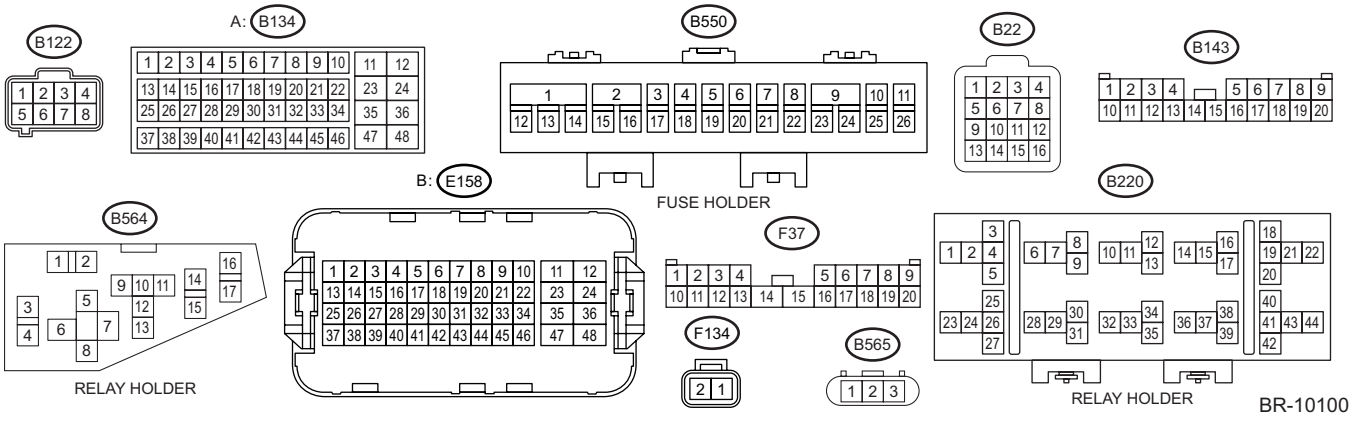

	Step	Check	Yes	No
1	**CHECK BRAKE VACUUM HOSE.** 1) Turn the ignition switch to OFF. 2) Check the status of the brake vacuum hose connection.	Is the brake vacuum hose connected firmly?	Go to step **2**.	Connect the brake vacuum hose.
2	**CHECK BRAKE VACUUM HOSE.** 1) Turn the ignition switch to ON and start engine. 2) Check for leakage from the brake vacuum hose.	Is there a leak from the brake vacuum hose?	Replace the brake vacuum hose.	Go to step **3**.
3	**CHECK BRAKE BOOSTER PRESSURE SENSOR CONNECTOR.** Check the connection of the brake booster pressure sensor connector.	Is the brake booster pressure sensor connector connected firmly?	Go to step **4**.	Connect the brake booster pressure sensor connector.
4	**CHECK BRAKE BOOSTER PRESSURE SENSOR.** 1) Turn the ignition switch to OFF. 2) Disconnect the brake booster pressure sensor connector. 3) Measure the resistance between brake booster pressure sensor terminals. ***Terminals*** ***No. 1 — No. 3:*** ***No. 2 — No. 3:***	Is the resistance 15 kΩ or less?	Go to step **5**.	Replace the brake booster. <Ref. to BR-75, Brake Booster.>
5	**CHECK HARNESS BETWEEN ECM AND BRAKE BOOSTER PRESSURE SENSOR CONNECTOR.** 1) Disconnect the connector from ECM. 2) Measure the resistance of harness between ECM connector and brake booster pressure sensor connector terminal. ***Connector & terminal*** ***(B134) No. 18 — (B565) No. 3:*** ***(B134) No. 19 — (B565) No. 1:*** ***(E158) No. 13 — (B565) No. 2:***	Is the resistance less than 1 Ω?	Go to step **6**.	Repair the open circuit of harness between ECM connector and brake booster pressure sensor connector terminal.
6	**CHECK HARNESS BETWEEN ECM AND BRAKE BOOSTER PRESSURE SENSOR CONNECTOR.** Measure the resistance of harness between ECM connector and chassis ground. ***Connector & terminal*** ***(B134) No. 18 — Chassis ground:*** ***(B134) No. 19 — Chassis ground:*** ***(E158) No. 13 — Chassis ground:***	Is the resistance 1 MΩ or more?	Go to step **7**.	Repair the short circuit to ground in harness between ECM connector and brake booster pressure sensor connector terminal.
7	**CHECK HARNESS BETWEEN ECM AND BRAKE BOOSTER PRESSURE SENSOR CONNECTOR.** Measure the voltage between ECM connector and chassis ground. ***Connector & terminal*** ***(B134) No. 18 (+) — Chassis ground (–):*** ***(B134) No. 19 (+) — Chassis ground (–):*** ***(E158) No. 13 (+) — Chassis ground (–):***	Is the voltage 0.5 V or less?	Go to step **8**.	Repair the short circuit to power supply in harness between the ECM connector and brake booster pressure sensor connector terminal.

	Step	Check	Yes	No
8	**CHECK BRAKE BOOSTER PRESSURE SENSOR POWER SUPPLY.** 1) Connect the brake booster pressure sensor connector. 2) Turn the ignition switch to ON. 3) Measure the voltage between ECM connector terminals. ***Connector & terminal*** ***(B134) No. 18 (+) — (B134) No. 19 (–):***	Is the voltage 4.75 — 5.25 V?	Go to step **9**.	Replace the ECM. <Ref. to FU(w/o STI)-124, Engine Control Module (ECM).>
9	**CHECK CURRENT DATA.** 1) Connect the ECM connector. 2) Turn the ignition switch to ON. 3) Depress the brake pedal several times, until the pedal becomes firm. 4) Read the current data of brake vacuum pump system using Subaru Select Monitor. <Ref. to BVC(diag)-9, READ CURRENT DATA, OPERATION, Subaru Select Monitor.>	Is the «Atmosphere Pressure»«Brake Booster Pressure» –1 — +1 kPa?	Temporary poor contact occurs.	Replace the ECM. <Ref. to FU(w/o STI)-124, Engine Control Module (ECM).>

D: DTC 21 DISCREPANCY IN RELAYS (ON)

DTC DETECTING CONDITION:
Drive does not match between brake vacuum pump relay and brake vacuum pump.
TROUBLE SYMPTOM:
Brake vacuum pump does not operate.

CAUTION:
Use the check board when measuring the ECM terminal voltage and resistance.
WIRING DIAGRAM:
Vacuum pump control system <Ref. to WI-366, WIRING DIAGRAM, Vacuum Pump Control System.>

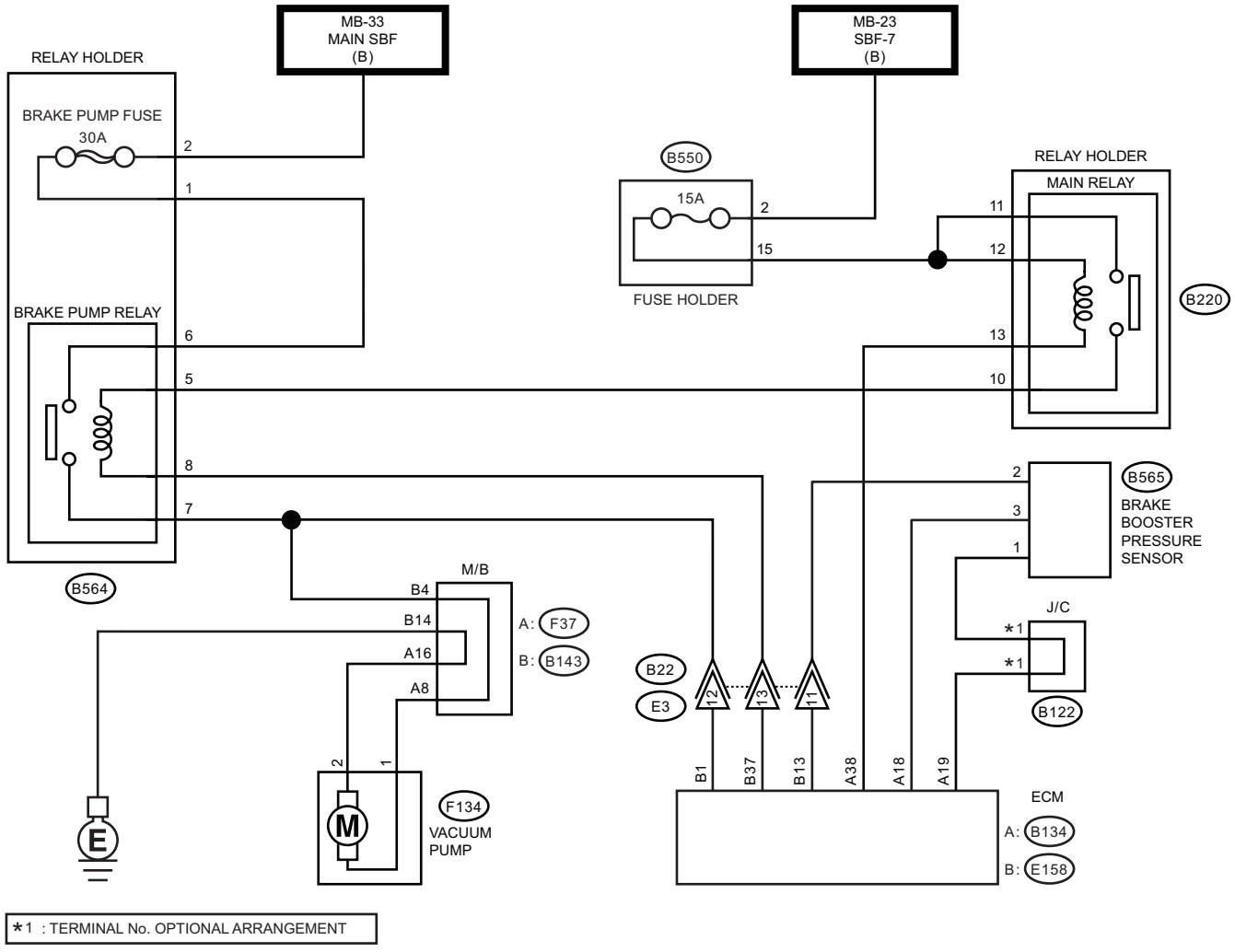

*1 : TERMINAL No. OPTIONAL ARRANGEMENT

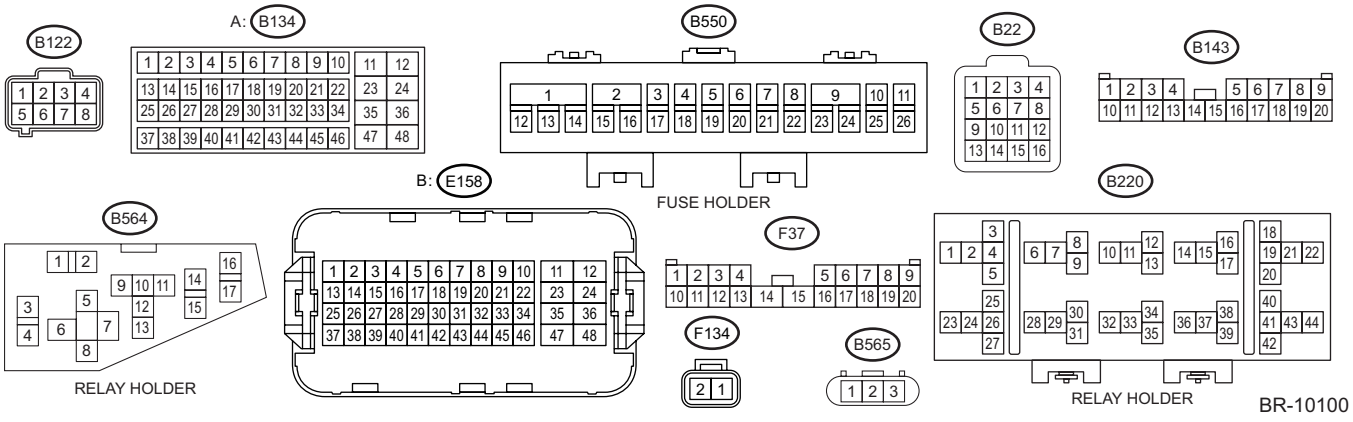

	Step	Check	Yes	No
1	**CHECK CONNECTOR.** Check the connection of the brake booster pressure sensor and brake vacuum pump.	Are the brake booster pressure sensor and brake vacuum pump connected firmly?	Go to step **2**.	Connect the connector.
2	**CHECK FUSE.** 1) Turn the ignition switch to OFF. 2) Remove the brake vacuum pump fuse. 3) Check the condition of fuse.	Is the fuse blown out?	Replace the fuse.	Go to step **3**.
3	**CHECK BRAKE VACUUM PUMP RELAY.** 1) Turn the ignition switch to OFF. 2) Remove the brake vacuum pump relay from relay box. 3) Connect the battery to the brake vacuum pump relay terminals No. 5 and No. 8. 4) Measure the resistance between brake vacuum pump relay terminals. ***Terminals*** ***No. 6 — No. 7:***	Is the resistance less than 1 Ω?	Go to step **4**.	Replace the brake vacuum pump relay.
4	**CHECK BRAKE VACUUM PUMP RELAY POWER SUPPLY.** 1) Turn the ignition switch to ON. 2) Measure the voltage between brake vacuum pump relay connector and chassis ground. ***Connector & terminal*** ***(B564) No. 5 (+) — Chassis ground (–):*** ***(B564) No. 6 (+) — Chassis ground (–):***	Is the voltage 10 V or more?	Go to step **5**.	Repair the open or short to ground in the power supply circuit.
5	**CHECK HARNESS BETWEEN ECM AND BRAKE VACUUM PUMP RELAY CONNECTOR.** 1) Turn the ignition switch to OFF. 2) Disconnect the ECM connector. 3) Measure the resistance of harness between ECM connector and brake vacuum pump relay connector terminal. ***Connector & terminal*** ***(E158) No. 37 — (B564) No. 8:***	Is the resistance less than 1 Ω?	Go to step **6**.	Repair the open circuit of harness between ECM connector and the brake vacuum pump relay connector terminal.
6	**CHECK HARNESS BETWEEN THE BRAKE VACUUM PUMP AND BRAKE VACUUM PUMP RELAY CONNECTOR.** 1) Turn the ignition switch to OFF. 2) Disconnect the brake vacuum pump connector. 3) Measure the resistance of harness between brake vacuum pump connector and brake vacuum pump relay connector terminal. ***Connector & terminal*** ***(B564) No. 7 — (F134) No. 1:***	Is the resistance less than 1 Ω?	Go to step **7**.	Repair the open circuit of harness between brake vacuum pump connector and brake vacuum pump relay connector terminal.
7	**CHECK HARNESS BETWEEN ECM AND BRAKE VACUUM PUMP CONNECTOR.** Measure the resistance of harness between brake vacuum pump connector and chassis ground. ***Connector & terminal*** ***(F134) No. 1 — Chassis ground:***	Is the resistance 1 MΩ or more?	Go to step **8**.	Repair the ground short circuit of harness between ECM connector and brake vacuum pump connector terminal.

	Step	Check	Yes	No
8	**CHECK HARNESS BETWEEN ECM AND BRAKE VACUUM PUMP CONNECTOR.** Measure the voltage between brake vacuum pump connector and chassis ground. ***Connector & terminal*** ***(F134) No. 1 (+) — Chassis ground (–):***	Is the voltage 0.5 V or less?	Go to step **9**.	Repair the short circuit to power supply in harness between the ECM connector and brake vacuum pump connector terminal.
9	**CHECK BRAKE VACUUM PUMP.** 1) Turn the ignition switch to OFF. 2) Remove the brake vacuum pump. <Ref. to BR-104, REMOVAL, Brake Vacuum Pump.> 3) Connect the battery positive terminal to the brake vacuum pump terminal No. 1, and the negative terminal to terminal No. 2.	Does the brake vacuum pump operate?	Go to step **10**.	Replace the brake vacuum pump. <Ref. to BR-104, Brake Vacuum Pump.>
10	**CHECK ECM.** 1) Connect the brake vacuum pump relay. 2) Connect all connectors. 3) Turn the ignition switch to ON. 4) Execute the Function Check Mode of the brake vacuum pump system using the Subaru Select Monitor. <Ref. to BVC(diag)-9, SEQUENCE CONTROL MODE, OPERATION, Subaru Select Monitor.>	Does the brake vacuum pump operate?	Temporary poor contact occurs.	Replace the ECM. <Ref. to FU(w/o STI)-124, Engine Control Module (ECM).>

E: DTC 22 DISCREPANCY IN RELAYS (OFF)

DTC DETECTING CONDITION:
Drive does not match between brake vacuum pump relay and brake vacuum pump.
TROUBLE SYMPTOM:
Vacuum pump does not operate properly.

CAUTION:
Use the check board when measuring the ECM terminal voltage and resistance.
WIRING DIAGRAM:
Vacuum pump control system <Ref. to WI-366, WIRING DIAGRAM, Vacuum Pump Control System.>

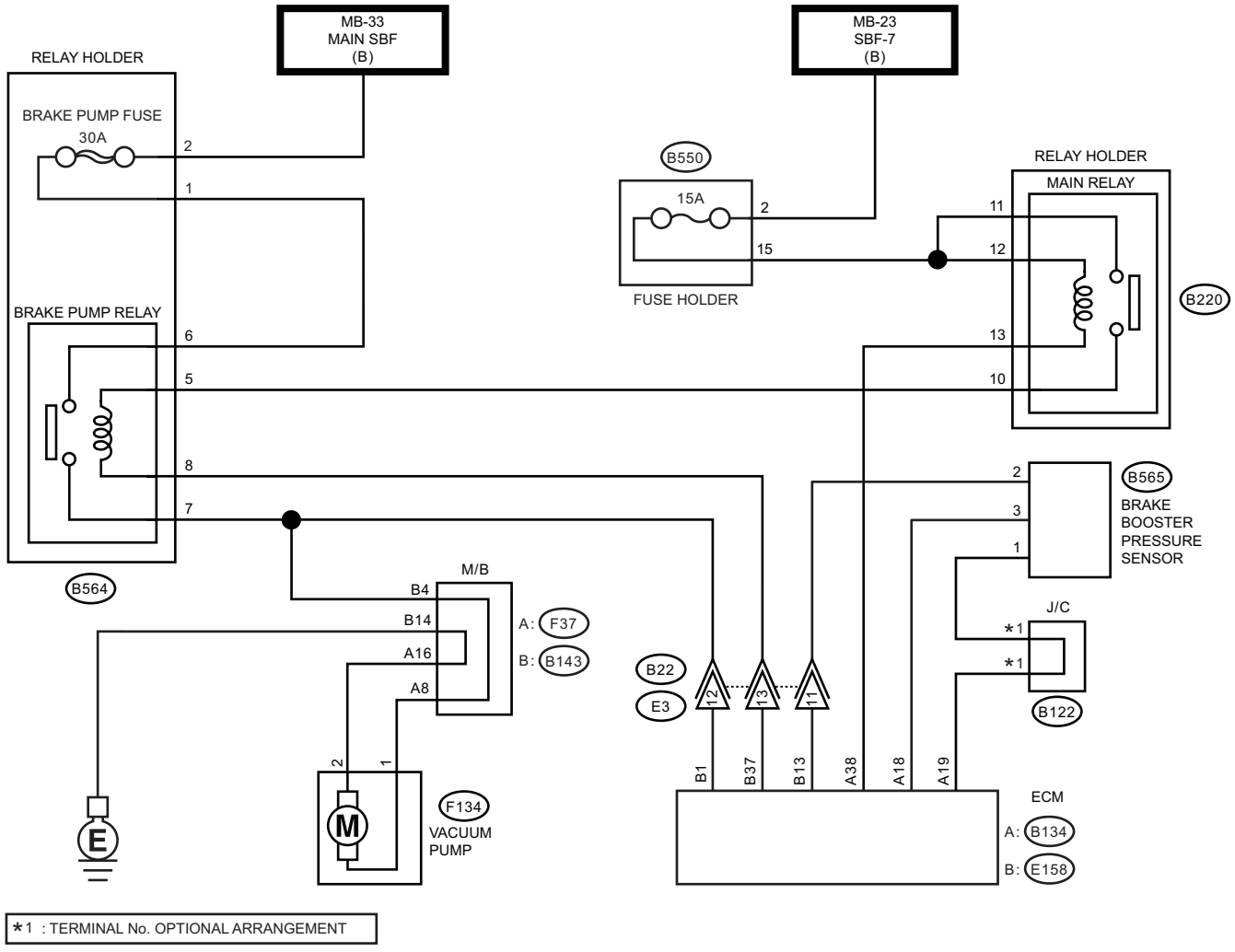

*1 : TERMINAL No. OPTIONAL ARRANGEMENT

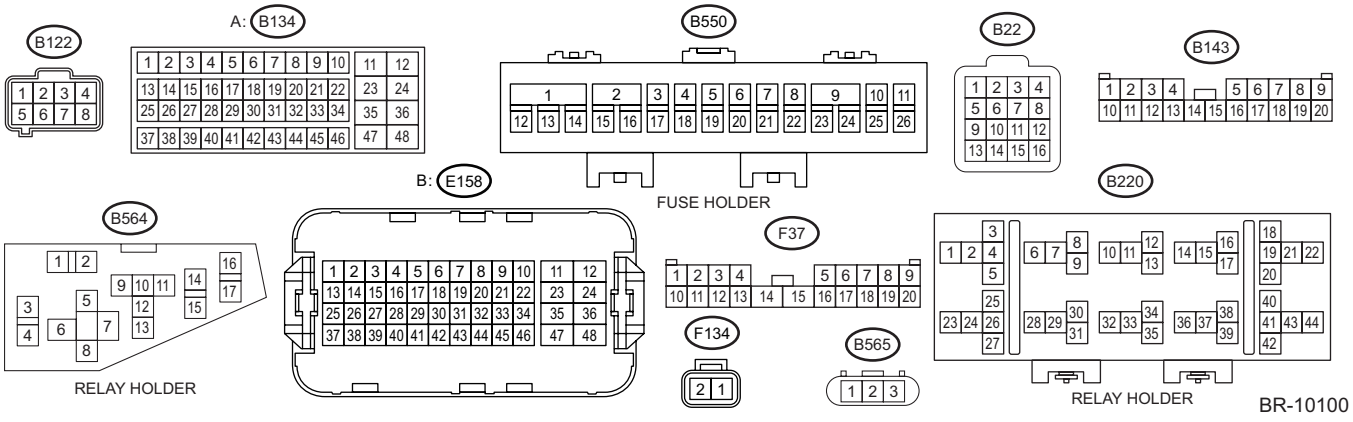

	Step	Check	Yes	No
1	**CHECK BRAKE VACUUM PUMP RELAY.** 1) Turn the ignition switch to OFF. 2) Remove the brake vacuum pump relay from relay box. 3) Connect the battery to the brake vacuum pump relay terminals No. 5 and No. 8. 4) Measure the resistance between brake vacuum pump relay terminals. ***Terminals*** ***No. 6 — No. 7:***	Is the resistance less than 1 Ω?	Go to step **2**.	Replace the brake vacuum pump relay.
2	**CHECK BRAKE VACUUM PUMP RELAY POWER SUPPLY.** 1) Turn the ignition switch to ON. 2) Measure the voltage between brake vacuum pump relay connector and chassis ground. ***Connector & terminal*** ***(B564) No. 5 (+) — Chassis ground (–):*** ***(B564) No. 6 (+) — Chassis ground (–):***	Is the voltage 10 V or more?	Go to step **3**.	Repair the open or short to ground in the power supply circuit.
3	**CHECK HARNESS BETWEEN ECM AND BRAKE VACUUM PUMP RELAY CONNECTOR.** 1) Turn the ignition switch to OFF. 2) Disconnect the ECM connector. 3) Measure the resistance of harness between ECM connector and brake vacuum pump relay connector terminal. ***Connector & terminal*** ***(E158) No. 1 — (B564) No. 7:*** ***(E158) No. 37 — (B564) No. 8:***	Is the resistance less than 1 Ω?	Go to step **4**.	Repair the open circuit of harness between ECM connector and the brake vacuum pump relay connector terminal.
4	**CHECK HARNESS BETWEEN THE BRAKE VACUUM PUMP AND BRAKE VACUUM PUMP RELAY CONNECTOR.** 1) Turn the ignition switch to OFF. 2) Disconnect the brake vacuum pump connector. 3) Measure the resistance of harness between brake vacuum pump connector and brake vacuum pump relay connector terminal. ***Connector & terminal*** ***(B564) No. 7 — (F134) No. 1:***	Is the resistance less than 1 Ω?	Go to step **5**.	Repair the open circuit of harness between brake vacuum pump connector and brake vacuum pump relay connector terminal.
5	**CHECK MOTOR GROUND.** Measure the resistance between brake vacuum pump connector and chassis ground. ***Connector & terminal*** ***(F134) No. 2 — Chassis ground:***	Is the resistance less than 1 Ω?	Go to step **6**.	Repair the ground circuit.
6	**CHECK BRAKE VACUUM PUMP.** 1) Turn the ignition switch to OFF. 2) Remove the brake vacuum pump. <Ref. to BR-104, REMOVAL, Brake Vacuum Pump.> 3) Connect the battery to the brake vacuum pump terminals No. 1 (+) and No. 2 (–).	Does the brake vacuum pump operate?	Go to step **7**.	Replace the brake vacuum pump. <Ref. to BR-104, Brake Vacuum Pump.>

	Step	Check	Yes	No
7	**CHECK ECM.** 1) Connect the brake vacuum pump relay. 2) Connect all connectors. 3) Turn the ignition switch to ON. 4) Execute the Function Check Mode of the brake vacuum pump system using the Subaru Select Monitor. <Ref. to BVC(diag)-9, SEQUENCE CONTROL MODE, OPERATION, Subaru Select Monitor.>	Does the brake vacuum pump operate?	Temporary poor contact occurs.	Replace the ECM. <Ref. to FU(w/o STI)-124, Engine Control Module (ECM).>

F: DTC 23 PUMP CONTINUOUS WORK

DTC DETECTING CONDITION:
Malfunction in brake vacuum pump continuous drive error
TROUBLE SYMPTOM:
Brake vacuum pump operates continuously.

CAUTION:
Use the check board when measuring the ECM terminal voltage and resistance.
WIRING DIAGRAM:
Vacuum pump control system <Ref. to WI-366, WIRING DIAGRAM, Vacuum Pump Control System.>

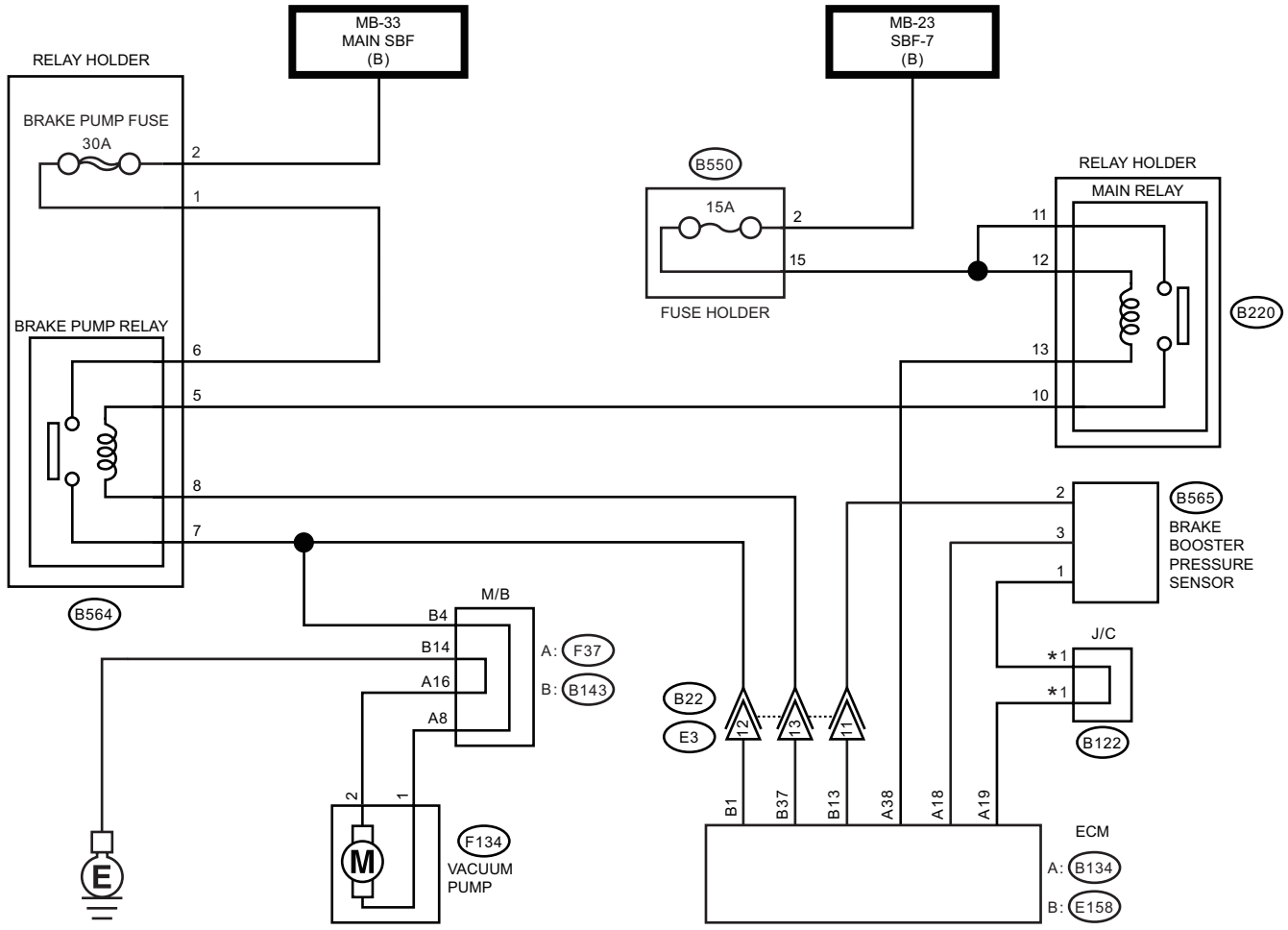

*1 : TERMINAL No. OPTIONAL ARRANGEMENT

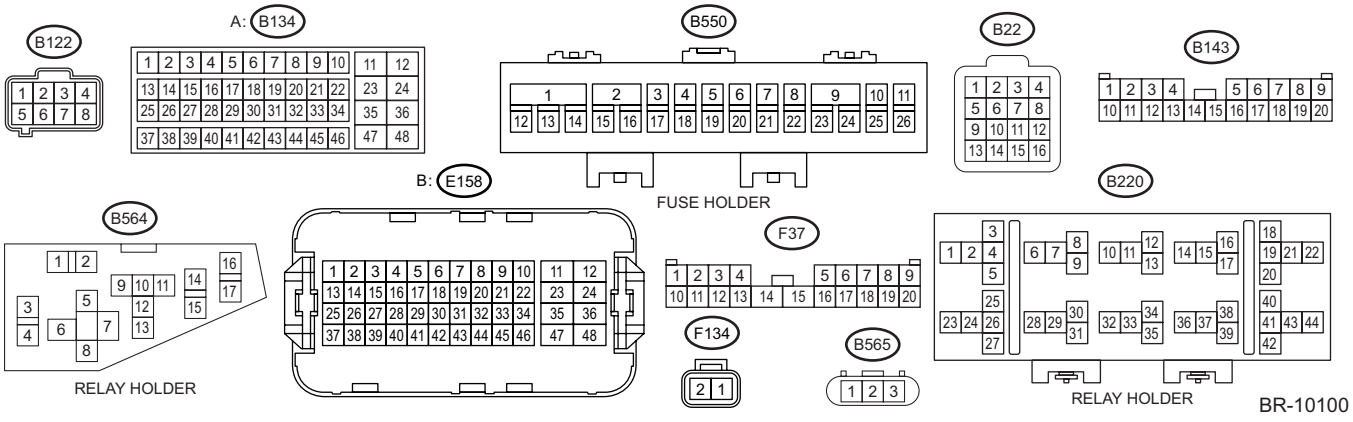

BR-10100

	Step	Check	Yes	No
1	**CHECK BRAKE VACUUM HOSE.** 1) Turn the ignition switch to OFF. 2) Check the status of the brake vacuum hose connection.	Is the brake vacuum hose connected firmly?	Go to step **2**.	Connect the brake vacuum hose.
2	**CHECK BRAKE VACUUM HOSE.** 1) Turn the ignition switch to ON and start engine. 2) Check for leakage from the brake vacuum hose.	Is there a leak from the brake vacuum hose?	Replace the brake vacuum hose.	Go to step **3**.
3	**CHECK BRAKE VACUUM PUMP RELAY.** 1) Turn the ignition switch to OFF. 2) Remove the brake vacuum pump relay from relay box. 3) Connect the battery to the brake vacuum pump relay terminals No. 5 and No. 8. 4) Measure the resistance between brake vacuum pump relay terminals. ***Terminals*** ***No. 6 — No. 7:***	Is the resistance less than 1 Ω?	Go to step **4**.	Replace the brake vacuum pump relay.
4	**CHECK BRAKE VACUUM PUMP RELAY POWER SUPPLY.** 1) Turn the ignition switch to ON. 2) Measure the voltage between brake vacuum pump relay connector and chassis ground. ***Connector & terminal*** ***(B564) No. 5 (+) — Chassis ground (–):*** ***(B564) No. 6 (+) — Chassis ground (–):***	Is the voltage 10 V or more?	Go to step **5**.	Repair the open or short to ground in the power supply circuit.
5	**CHECK HARNESS BETWEEN ECM AND BRAKE VACUUM PUMP RELAY CONNECTOR.** 1) Turn the ignition switch to OFF. 2) Disconnect the ECM connector. 3) Measure the resistance of harness between ECM connector and brake vacuum pump relay connector terminal. ***Connector & terminal*** ***(E158) No. 1 — (B564) No. 7:*** ***(E158) No. 37 — (B564) No. 8:***	Is the resistance less than 1 Ω?	Go to step **6**.	Repair the open circuit of harness between ECM connector and the brake vacuum pump relay connector terminal.
6	**CHECK HARNESS BETWEEN THE BRAKE VACUUM PUMP AND BRAKE VACUUM PUMP RELAY CONNECTOR.** 1) Turn the ignition switch to OFF. 2) Disconnect the brake vacuum pump connector. 3) Measure the resistance of harness between brake vacuum pump connector and brake vacuum pump relay connector terminal. ***Connector & terminal*** ***(B564) No. 7 — (F134) No. 1:***	Is the resistance less than 1 Ω?	Go to step **7**.	Repair the open circuit of harness between brake vacuum pump connector and brake vacuum pump relay connector terminal.
7	**CHECK ECM.** 1) Connect the brake vacuum pump relay. 2) Connect all connectors. 3) Turn the ignition switch to ON. 4) Execute the Function Check Mode of the brake vacuum pump system using the Subaru Select Monitor. <Ref. to BVC(diag)-9, SEQUENCE CONTROL MODE, OPERATION, Subaru Select Monitor.>	Does the brake vacuum pump operate?	Temporary poor contact occurs.	Replace the ECM. <Ref. to FU(w/o STI)-124, Engine Control Module (ECM).>

12.General Diagnostic Table

A: INSPECTION

Symptoms		Main probable cause	Other probable cause
Poor brake performance	Long braking/ stopping distance	• Brake pad • Aeration to brake line • Tire specifications, tire wear and air pressures • Incorrect wiring or piping connections	• Master cylinder • Brake caliper • Disc rotor • Brake pipe • Brake booster
	Long brake pedal stroke	• Aeration to brake line • Brake pedal play	• Master cylinder • Brake caliper • Brake pad • Brake pipe • Brake booster
	Short brake pedal stroke	• Brake vacuum pump • Brake booster pressure sensor • Brake vacuum hose	• Master cylinder • Brake caliper • Brake pad • Brake pipe • Brake booster

PARKING BRAKE

PB

		Page
1.	General Description	2
2.	Parking Brake Lever	8
3.	Parking Brake Cable	11
4.	Parking Brake Assembly (Rear Disc Brake)	15
5.	Parking Brake System	21
6.	Relay and Fuse	22
7.	Parking Brake Actuator	23
8.	Parking Brake Switch	28
9.	Emergency Release of Electronic Parking Brake	31
10.	General Diagnostic Table	34

1. General Description

A: SPECIFICATION

• Drum in disc type model

Item		Specification	
Type		Drum in disc duo servo type	
Effective drum diameter	mm (in)	190 (7.48)	
Lining dimensions (Length × Width × Thickness)	mm (in)	165 × 30 × 3.5 (6.51 × 1.181 × 0.14)	
Inside diameter	mm (in)	Standard	190 (7.48)
		Limit	191 (7.52)
Lining thickness	mm (in)	Standard	3.5 (0.14)
		Limit	1.5 (0.059)
Clearance adjustment		Manual adjustment	
Free play adjusting method		Auto adjuster	
Operation method		Manual lever type	
Lever stroke	Notches/N (kgf, lbf)	7 — 8/200 (20.4, 45)	

• Electronic parking brake model

Item	Specification
Type	Electric type
Clearance adjustment	Automatic adjusting
Operation method	Switch type

B: COMPONENT

1. PARKING BRAKE (DRUM IN DISC TYPE MODEL)

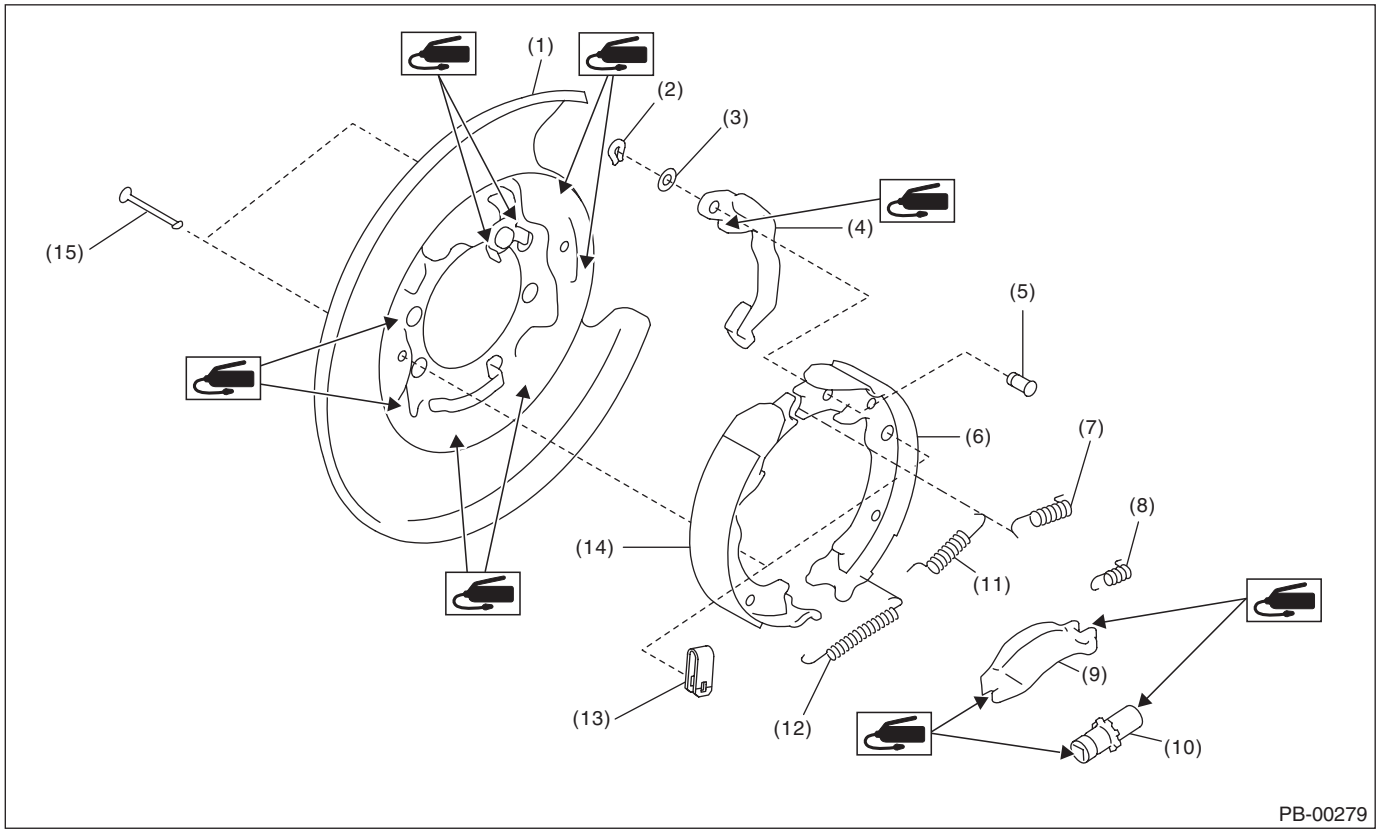

(1)	Back plate - rear brake	(6)	Parking brake shoe (secondary)	(11)	Spring - primary shoe return
(2)	Retainer - rear brake	(7)	Spring - secondary shoe return	(12)	Spring - adjuster
(3)	Spring washer - rear brake	(8)	Spring - strut	(13)	Spring - shoe clamp
(4)	Parking lever - rear	(9)	Strut - brake	(14)	Parking brake shoe (primary)
(5)	Pin - parking lever	(10)	Adjuster ASSY - rear brake	(15)	Pin - shoe hold-down

2. PARKING BRAKE LEVER & CABLE

- Drum in disc type model

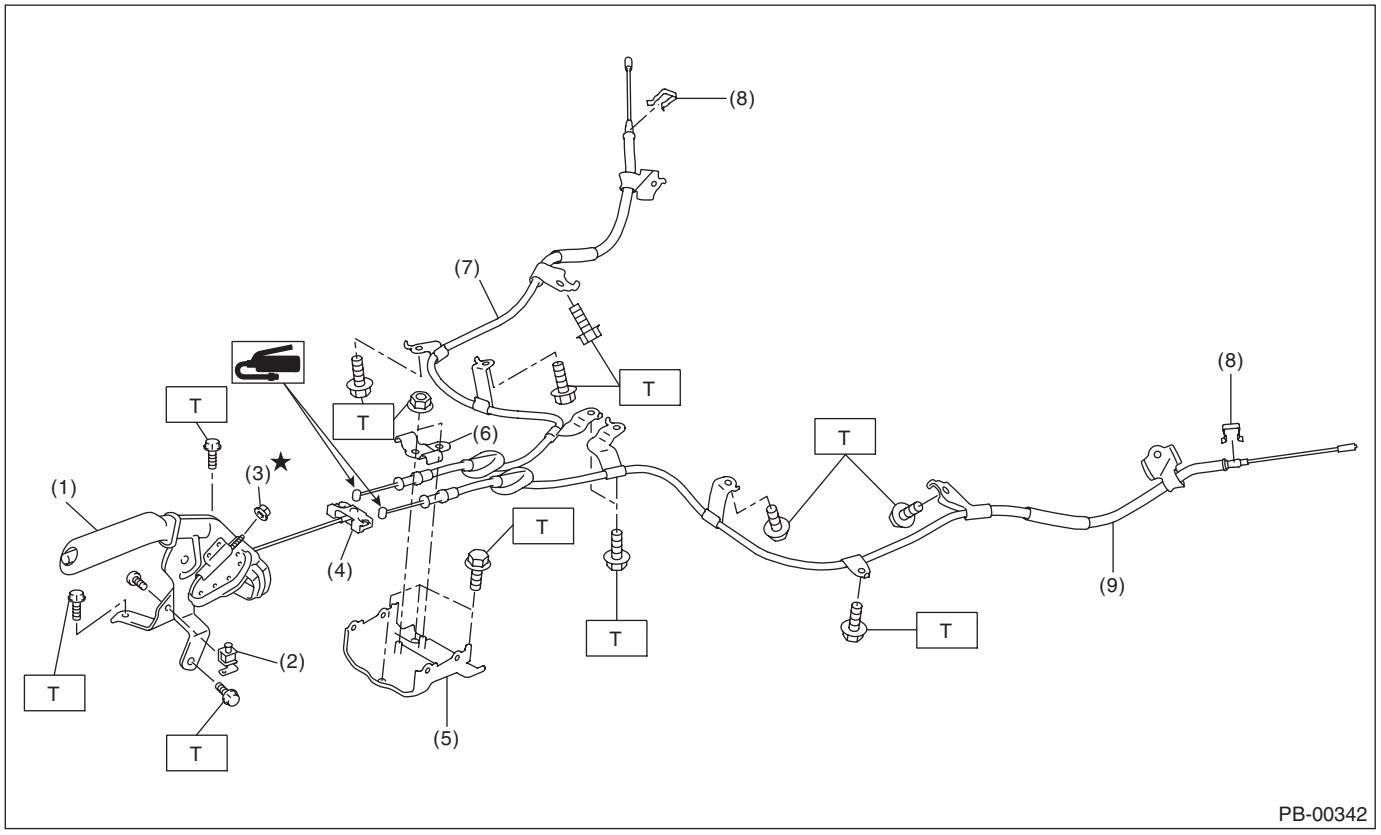

(1) Lever ASSY - hand brake
(2) Switch ASSY - hand brake
(3) Adjusting nut (self-locking nut)
(4) Equalizer
(5) Bracket
(6) Clamp A - hand brake cable
(7) Cable ASSY - parking brake RH
(8) Clamp B - hand brake cable
(9) Cable ASSY - parking brake LH

Tightening torque: N·m (kgf-m, ft-lb)
T: 18 (1.8, 13.3)

- Electronic parking brake model

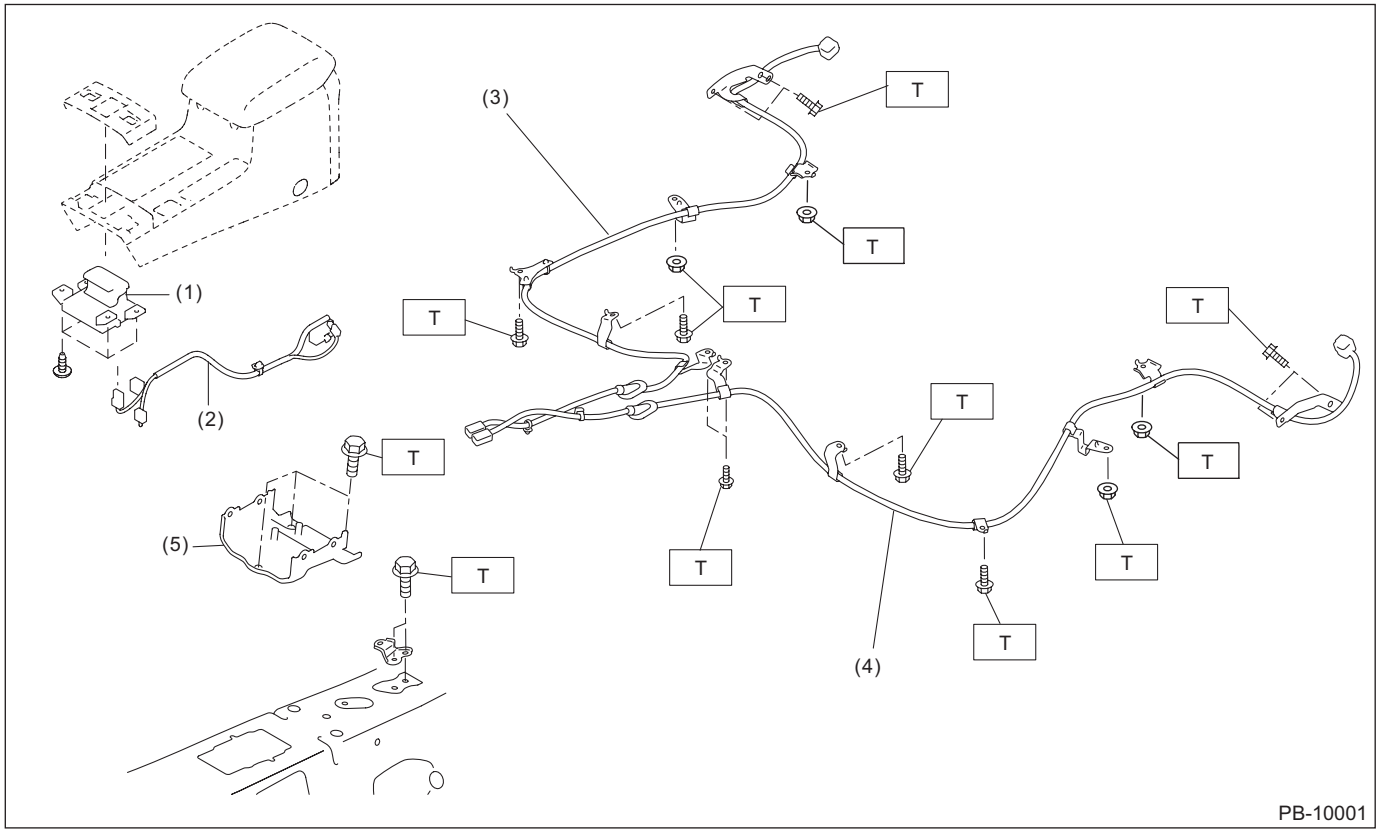

(1)	Switch ASSY - electronic parking brake	(4)	Electronic parking brake harness LH	***Tightening torque: N·m (kgf-m, ft-lb)***
(2)	Console box harness	(5)	Bracket	***T: 18 (1.8, 13.3)***
(3)	Electronic parking brake harness RH			

3. PARKING BRAKE ACTUATOR

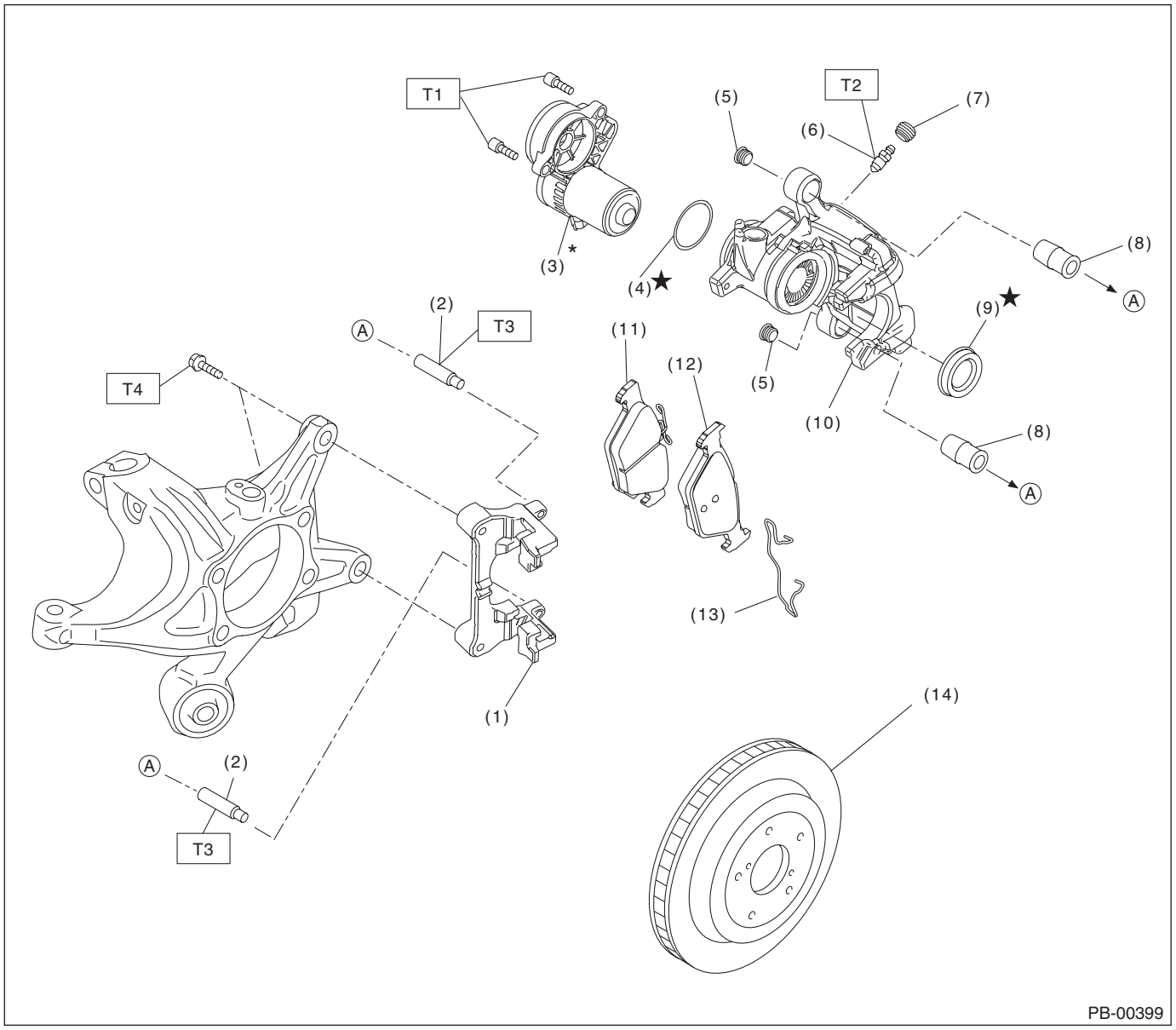

(1)	Support - rear disc brake	(8)	Pin boot
(2)	Guide pin - rear brake	(9)	Piston boot
(3)	Parking brake actuator ASSY	(10)	Caliper body
(4)	O-ring	(11)	Pad - disc brake rear inner
(5)	Cap	(12)	Pad - disc brake rear outer
(6)	Bleeder - screw	(13)	Pat clip
(7)	Cap - bleeder	(14)	Disc rotor (ventilated type)

Tightening torque: N·m (kgf-m, ft-lb)	
T1:	***8 (0.8, 5.9)***
T2:	***17 (1.7, 12.5)***
T3:	***25 (2.5, 18.4)***
T4:	***66 (6.7, 48.7)***

*: The component cannot be reused when the emergency release of parking brake was performed or when the actuator has a malfunction.

C: CAUTION

- When performing any work, always wear work clothes, a work cap and protective shoes. Additionally, wear a helmet, protective goggles, etc. if necessary.
- When performing a repair, identify the cause of trouble and avoid unnecessary removal, disassembly and replacement.
- Some vehicle components are extremely hot immediately after driving. Be wary of receiving burns from heated parts.
- Use SUBARU genuine grease, the recommended or equivalent. Do not mix grease etc. of different grades or manufacturers.
- Be sure to tighten fasteners including bolts and nuts to the specified torque.
- Always use the jack-up point when the shop jacks or rigid racks are used to support the vehicle.
- Apply grease onto sliding or revolving surfaces before installation.
- Be sure that the surface of brake disc, brake pad or brake shoe is free from grease or oil.

D: PREPARATION TOOL

1. SPECIAL TOOL

ILLUSTRATION	TOOL NUMBER	DESCRIPTION	REMARKS
 STSSM4	—	SUBARU SELECT MONITOR 4	Used for setting of each function and trouble-shooting for electrical system. NOTE: For detailed operation procedures of Subaru Select Monitor 4, refer to “Application help”.

2. GENERAL TOOL

TOOL NAME	REMARKS
Circuit tester	Used for measuring resistance, voltage and current.
DST-i	Used together with Subaru Select Monitor 4.

2. Parking Brake Lever

A: REMOVAL

1) Set the wheel stoppers to tires.
2) Disconnect the ground cable from battery. <Ref. to NT-6, BATTERY, NOTE, Note.>

NOTE:
- For model with battery sensor, disconnect the ground terminal from battery sensor.
- On CVT models, shift the select lever into “N” before disconnecting the battery ground cable.
- For the power seat, move the seat to the front-most position before removing the battery ground terminal.

3) Remove the driver’s seat. <Ref. to SE-9, REMOVAL, Front Seat.>
4) Remove the console box assembly. <Ref. to EI-67, REMOVAL, Console Box.>
5) Remove the bracket - console box.

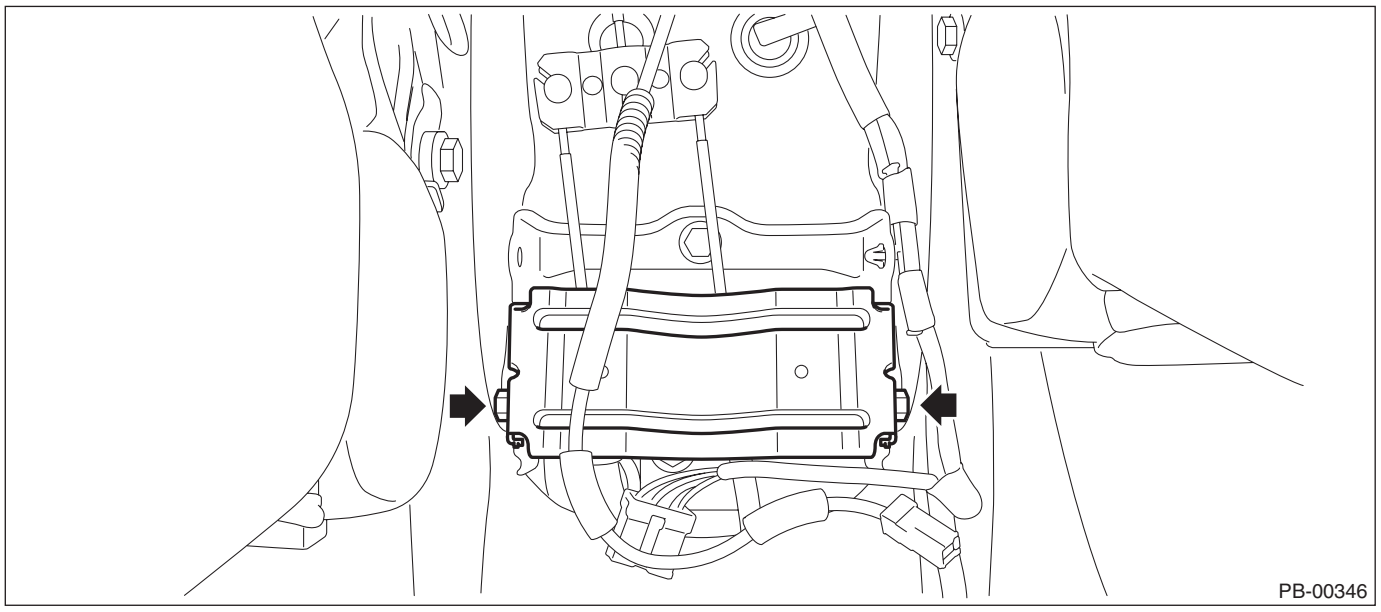

6) Remove the lever assembly - hand brake.
(1) Disconnect the connector (a) of the switch assembly - hand brake.
(2) Remove the adjusting nut (b).

CAUTION:
A self-locking nut is used for the adjusting nut of parking cable. Therefore, replace the self-locking nut with a new one when disassembling.

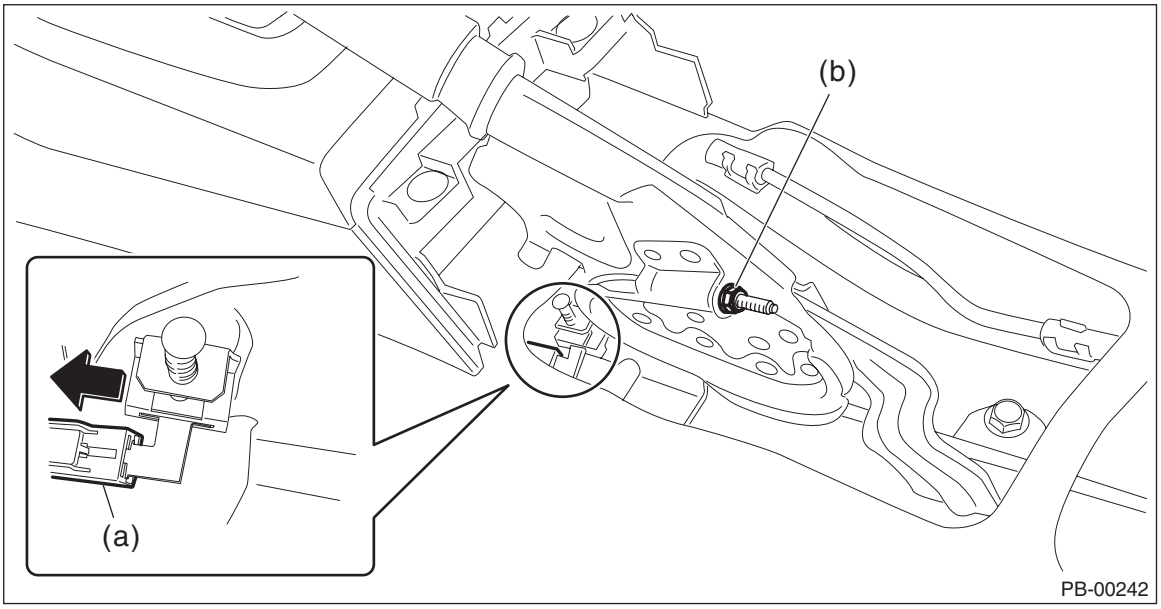

(3) Remove the bolt, and then remove the lever assembly - hand brake.

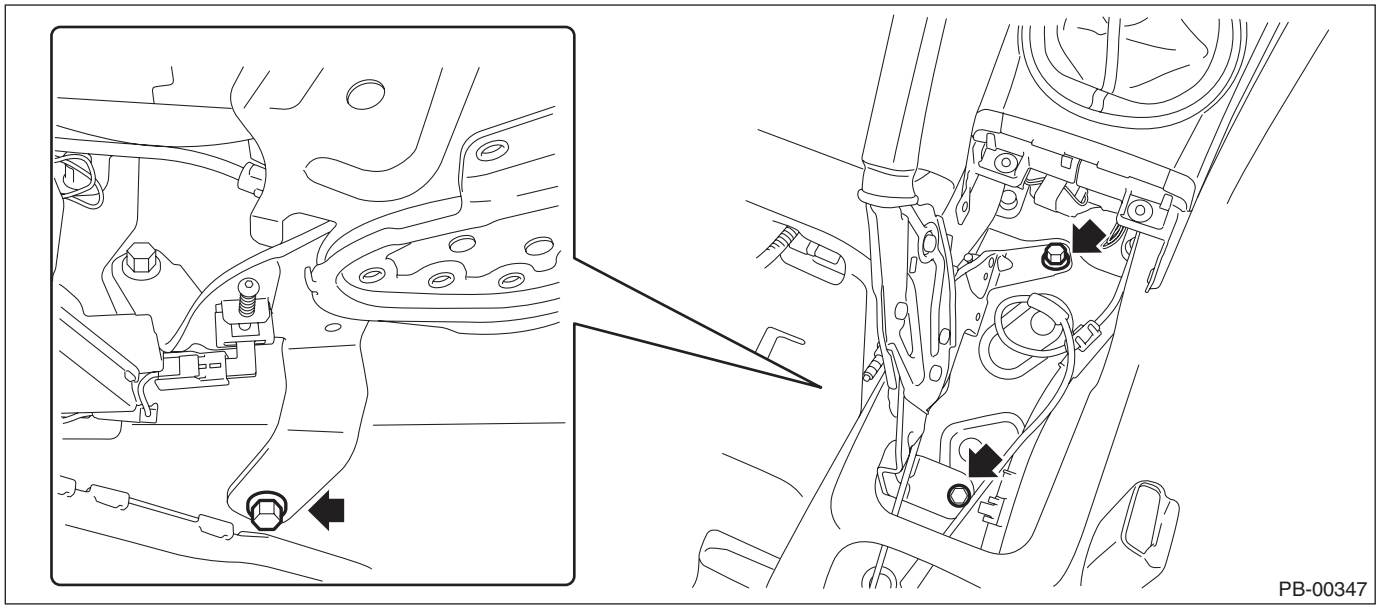

7) Remove the inner cable end (a) from the equalizer (b).

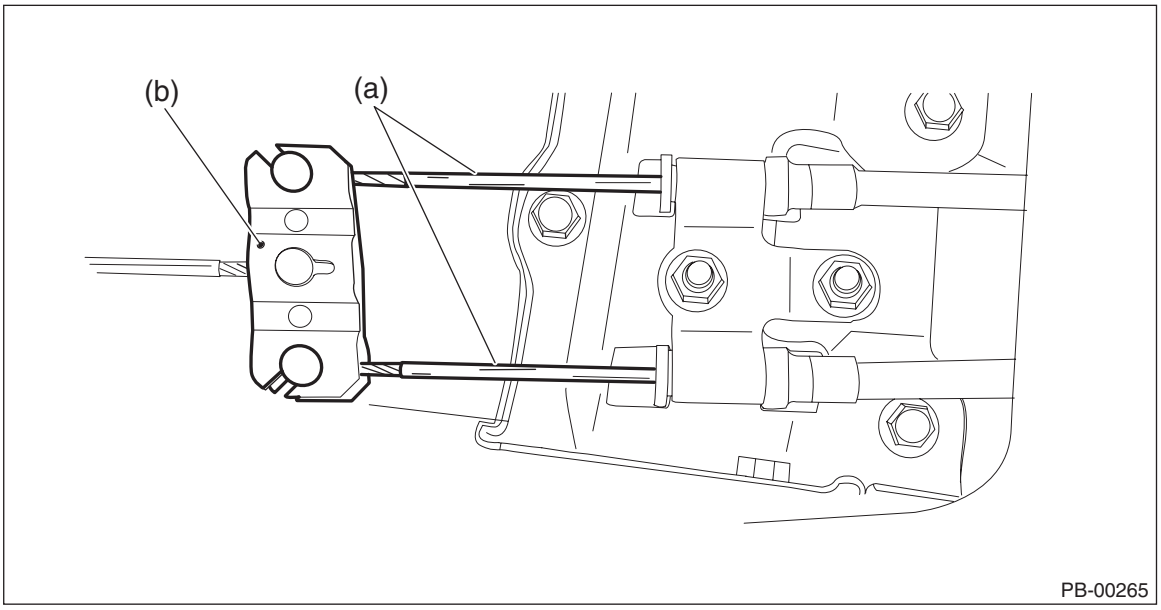

B: INSTALLATION

1) Install the inner cable end to equalizer.
2) Install the bracket - console box.

Tightening torque:
6.5 N·m (0.7 kgf-m, 4.8 ft-lb)
3) Install the lever assembly - hand brake.

Tightening torque:
18 N·m (1.8 kgf-m, 13.3 ft-lb)

CAUTION:
Do not reuse the adjusting nut (self locking nut). Always replace with a new part.
4) Be sure to adjust the lever stroke. <Ref. to PB-10, ADJUSTMENT, Parking Brake Lever.>
5) Install the console box assembly.
6) Install the driver's seat. <Ref. to SE-10, INSTALLATION, Front Seat.>
7) Connect the battery ground terminal. <Ref. to NT-6, BATTERY, NOTE, Note.>

NOTE:
For CVT models, after connecting the battery sensor terminal, place the select lever in the P position.

C: INSPECTION

1. LEVER ASSY

1) Operate the lever assembly - hand brake 3 to 4 times and fully return the lever assembly - hand brake.
2) While slowly pulling up the lever assembly - hand brake, count the notches.

Lever stroke:
7 to 8 notches when pulled with a force of 200 N (20.4 kgf, 45 lbf)
If it is not within the specified value, adjust the parking brake. <Ref. to PB-19, ADJUSTMENT, Parking Brake Assembly (Rear Disc Brake).>

D: ADJUSTMENT

Adjust the parking lever stroke. <Ref. to PB-20, LEVER STROKE, ADJUSTMENT, Parking Brake Assembly (Rear Disc Brake).>

3. Parking Brake Cable

A: REMOVAL

CAUTION:
Airbag system satellite safing sensor is located in the lower of the rear seat cushion center. Before removing the rear seat, refer to "CAUTION" of "General Description" in "AIRBAG SYSTEM" section. <Ref. to AB-9, CAUTION, General Description.>

1) Disconnect the ground cable from battery. <Ref. to NT-6, BATTERY, NOTE, Note.>

NOTE:
- For model with battery sensor, disconnect the ground terminal from battery sensor.
- On CVT models, shift the select lever into "N" before disconnecting the battery ground cable.
- For the power seat, move the seat to the front-most position before removing the battery ground terminal.

2) Remove the console box assembly. <Ref. to EI-67, REMOVAL, Console Box.>
3) Remove the lever assembly - hand brake. <Ref. to PB-8, REMOVAL, Parking Brake Lever.>
4) Remove the nut and remove the clamp A - hand brake cable (a).
5) Remove the inner cable end (c) from the equalizer (b).

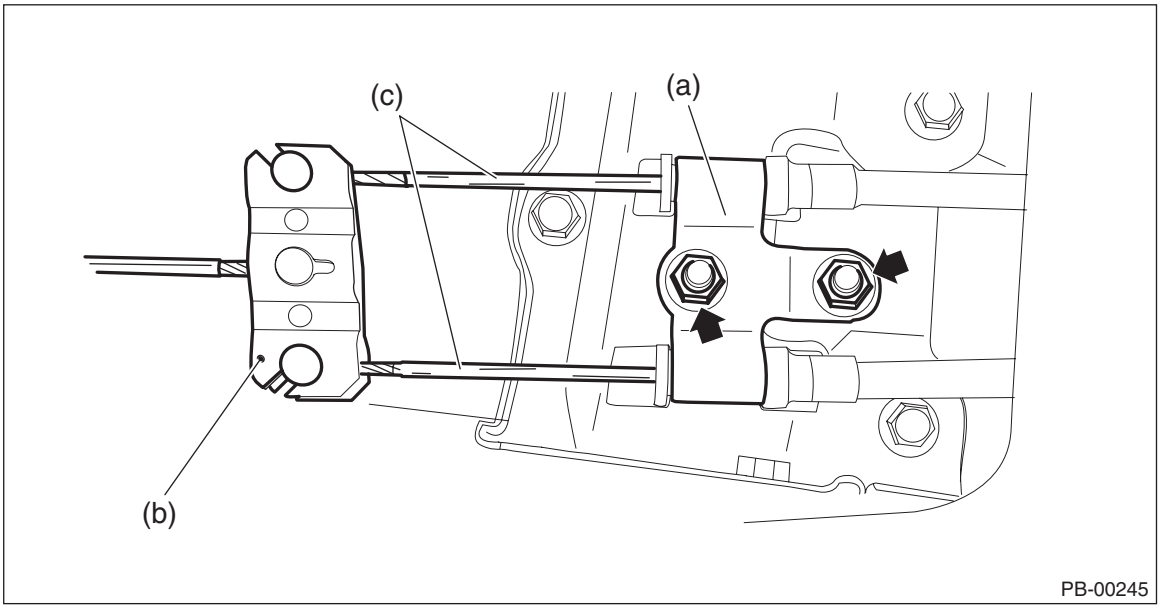

6) Remove the rear seat cushion assembly. <Ref. to SE-30, REMOVAL, Rear Seat.>

7) Release the clips and claws, and remove the side sill covers - rear INN on the left and right sides.

CAUTION:
Do not pull with excessive force. Doing so may damage the claws of the side sill cover - rear INN.

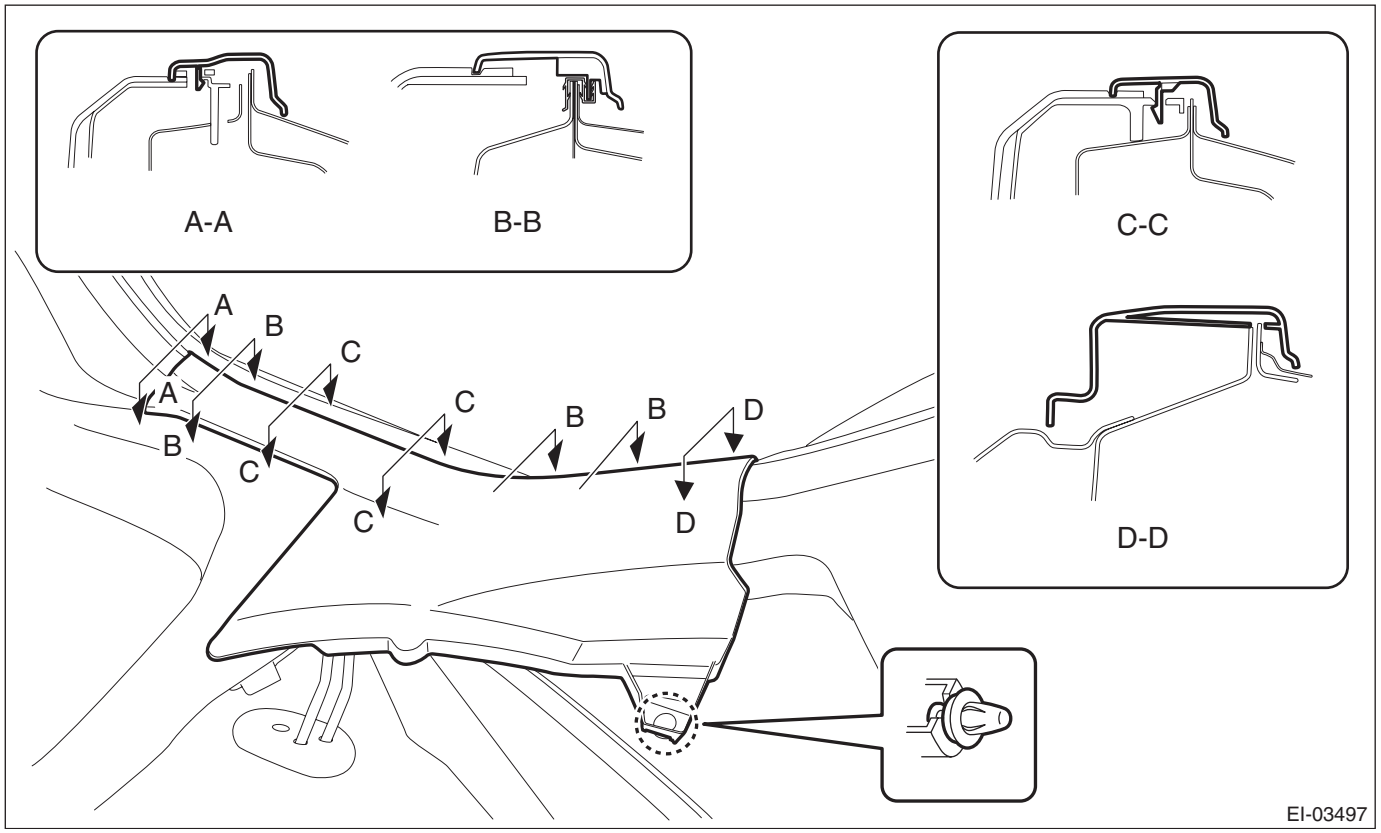

8) Remove the clips and knobs of the hook - seat cushion rear.

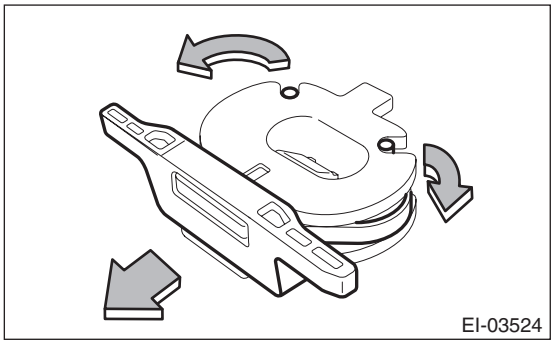

9) Turn over the floor carpet and remove the grommet of the cable assembly - parking brake from the rear floor.
10) Lift up the vehicle, and then remove the rear wheels.
11) Remove the fuel tank protector.
- Except for STI model <Ref. to FU(w/o STI)-144, REMOVAL, Fuel Tank Protector.>
- STI model <Ref. to FU(STI)-66, REMOVAL, Fuel Tank Protector.>

12) Remove the exhaust pipe and muffler.
- Center exhaust pipe & rear exhaust pipe: <Ref. to EX(STI)-12, REMOVAL, Rear Exhaust Pipe.>
- Muffler: <Ref. to EX(STI)-14, REMOVAL, Muffler.>

13) Remove the propeller shaft assembly. <Ref. to DS-12, REMOVAL, Propeller Shaft.>
14) Remove the cable assembly - parking brake from the lever section of parking brake shoe. <Ref. to PB-15, REMOVAL, Parking Brake Assembly (Rear Disc Brake).>

15) Remove the cable assembly - parking brake.
(1) Remove the clamp B - hand brake cable (a) from the back plate - rear brake.
(2) Remove the cable clamp (b) from the lateral link assembly - front.
(3) Remove the cable clamp (c) from the sub frame support.
(4) Remove the cable clamp (d) from the rear floor.

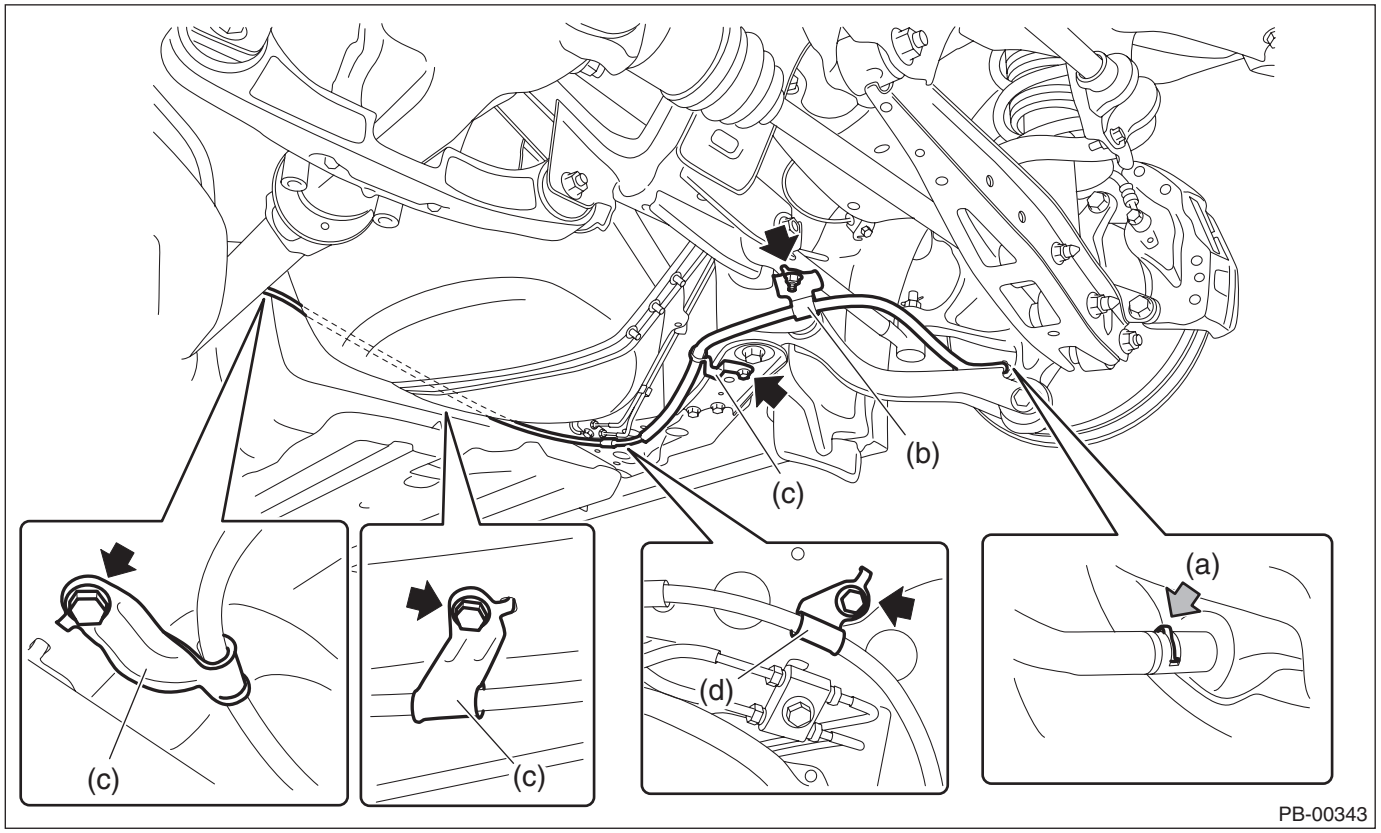

B: INSTALLATION

CAUTION:
- **After installing the backrest assembly, make sure that each seat belt operates normally.**
- **Make sure that they are properly secured on each hook on the vehicle side.**

1) Install the cable assembly - parking brake.

Tightening torque:
Cable clamp: 18 N·m (1.8 kgf-m, 13.3 ft-lb)

2) Install the cable assembly - parking brake to the lever section of parking brake shoe. <Ref. to PB-17, INSTALLATION, Parking Brake Assembly (Rear Disc Brake).>
3) Install the grommet to the rear floor.
4) Install the propeller shaft assembly. <Ref. to DS-14, INSTALLATION, Propeller Shaft.>
5) Install the exhaust pipe and muffler.
- Center exhaust pipe & rear exhaust pipe: <Ref. to EX(STI)-12, INSTALLATION, Rear Exhaust Pipe.>
- Muffler: <Ref. to EX(STI)-15, INSTALLATION, Muffler.>

6) Install the fuel tank protector.
- Except for STI model <Ref. to FU(w/o STI)-144, INSTALLATION, Fuel Tank Protector.>
- STI model <Ref. to FU(STI)-66, INSTALLATION, Fuel Tank Protector.>

7) Place the floor mat to the original position, and then attach the clip and the knob of the hook - seat cushion rear.
8) Install the side sill covers - rear INN on the right and left side.
9) Install the rear seat cushion assembly.
10) Install the inner cable end to equalizer, and install the clamp A - hand brake cable.
11) Install the lever assembly - hand brake.

Tightening torque:
18 N·m (1.8 kgf-m, 13.3 ft-lb)

12) Install the console box assembly.
13) Install the rear wheels.

Tightening torque:
120 N·m (12.2 kgf-m, 88.5 ft-lb)

14) Connect the battery ground terminal. <Ref. to NT-6, BATTERY, NOTE, Note.>

NOTE:
For CVT models, after connecting the battery sensor terminal, place the select lever in the P position.

C: INSPECTION

Check the removed cable and replace if damaged, rusty or malfunctioning.
1) Check the cable for smooth operation.
2) Check the inner cable for damage and rust.
3) Check the outer cable for damage, bends and cracks.

4. Parking Brake Assembly (Rear Disc Brake)

A: REMOVAL

1. DRUM IN DISC TYPE MODEL

1) Release the parking brake.
2) Lift up the vehicle, and then remove the rear wheels.
3) Remove the rear disc rotor. <Ref. to BR-46, REMOVAL, Rear Disc Rotor.>
4) Remove the spring - primary shoe return and the spring - secondary shoe return.

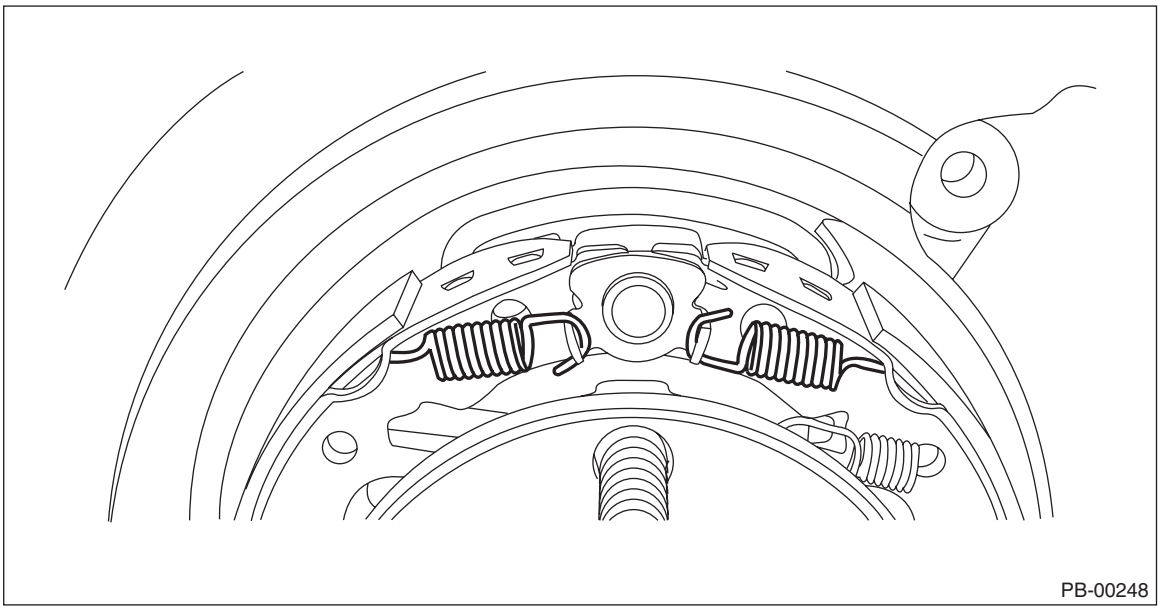

5) Remove the parking brake shoe on the primary side.
   (1) Remove the strut - brake (a) and the spring - strut (b).
   (2) Remove the adjuster assembly - rear brake (c) and the spring - adjuster (d).
   (3) Remove the pin - shoe hold-down (e) and the spring - shoe clamp (f), and remove the parking brake shoe (g).

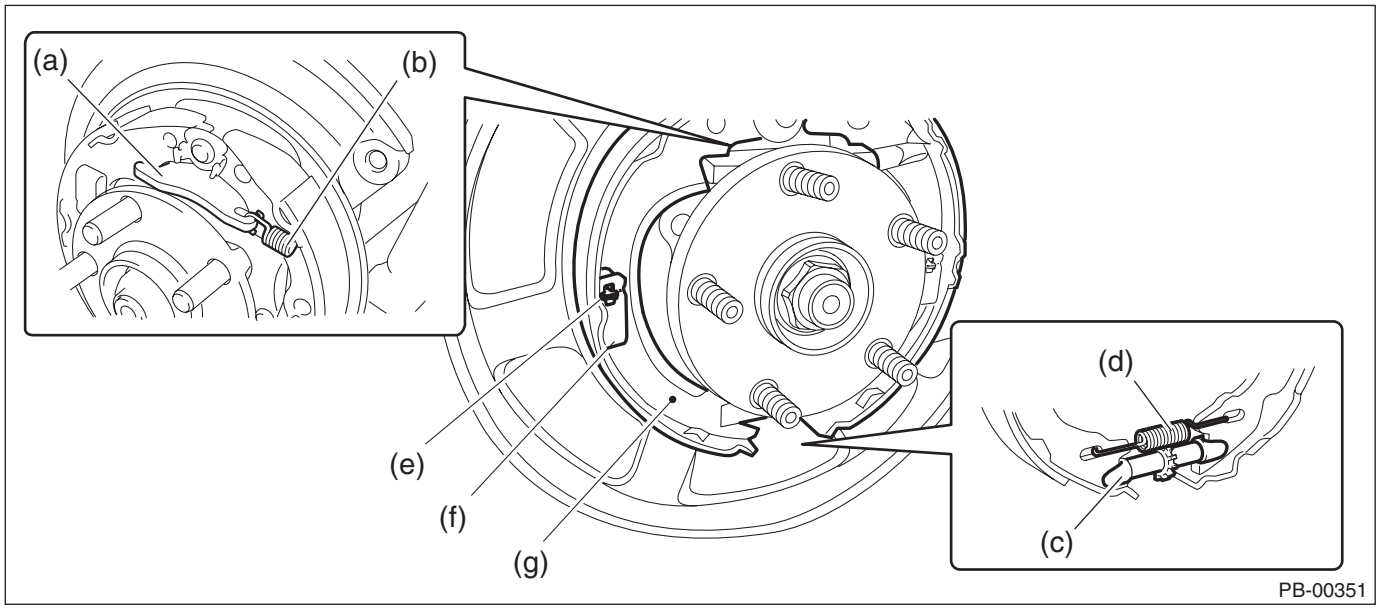

6) Remove the pin - shoe hold-down (a) and the spring - shoe clamp (b), and remove the secondary side parking brake shoe.

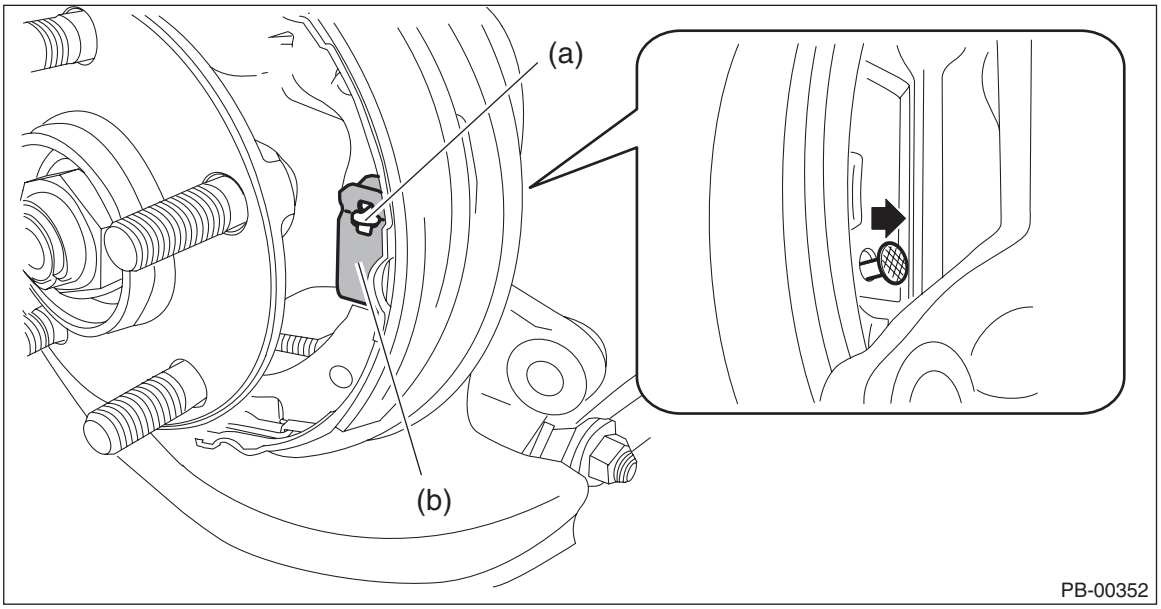

7) Remove the cable assembly - hand brake cable (a) from the parking lever - rear (b).

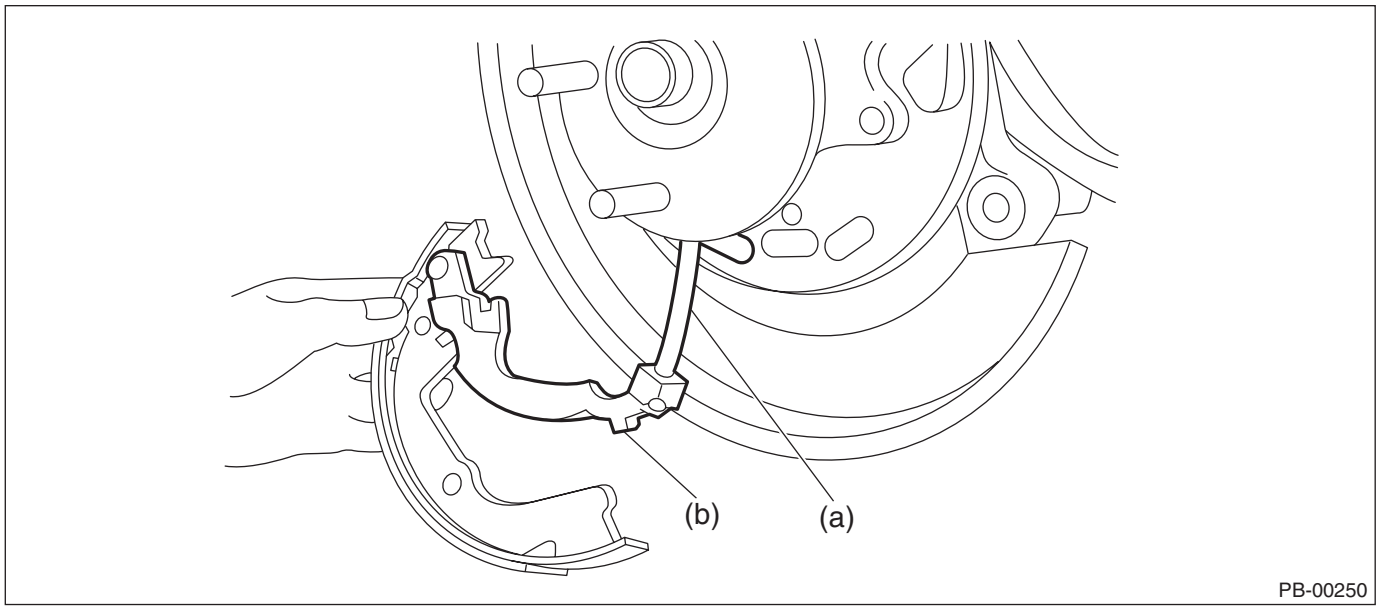

8) Remove the retainer - rear brake and the spring washer - rear brake, and remove the parking lever - rear and the brake shoe.

2. ELECTRONIC PARKING BRAKE MODEL

NOTE:
For parking brake assembly removal and disassembly of electronic parking brake model, refer to “BRAKE” section.

- Removal: <Ref. to BR-56, EXCEPT FOR STI MODEL (ELECTRONIC PARKING BRAKE TYPE), REMOVAL, Rear Disc Brake Assembly.>
- Disassembly: <Ref. to BR-64, EXCEPT FOR STI MODEL (ELECTRONIC PARKING BRAKE TYPE), DISASSEMBLY, Rear Disc Brake Assembly.>

B: INSTALLATION

1. DRUM IN DISC TYPE MODEL

CAUTION:
Be sure the lining surface is free from brake fluid and grease.
1) Apply brake grease to the following locations.

Preparation items:
Brake grease: Dow Corning Molykote 44MA or equivalent
- Six contact surfaces of the parking brake shoe rim and back plate - rear brake
- Contact surface of the parking brake shoe and the anchor pin
- Contact surface of the parking lever assembly - rear and the strut - brake
- Contact surface of the parking brake shoe and the adjuster assembly - rear brake
- Contact surface of the parking brake shoe and the strut - brake
- Contact surface of the parking lever - rear and the parking brake shoe

2) Install the parking lever - rear to the secondary side parking brake shoe.

NOTE:
Install the pin - parking lever and spring washer - rear brake to the parking lever - rear, and swage the retainer - rear brake to secure.
3) Install the cable assembly - parking brake to the parking lever - rear.

NOTE:
Check that the cable assembly - parking brake does not fall from the cable guide.
4) Attach the adjuster assembly - rear brake and the spring - adjuster to the primary side and the secondary side parking brake shoes.

NOTE:
Install the adjuster assembly - rear brake with the screw section facing to the direction shown in the figure below.

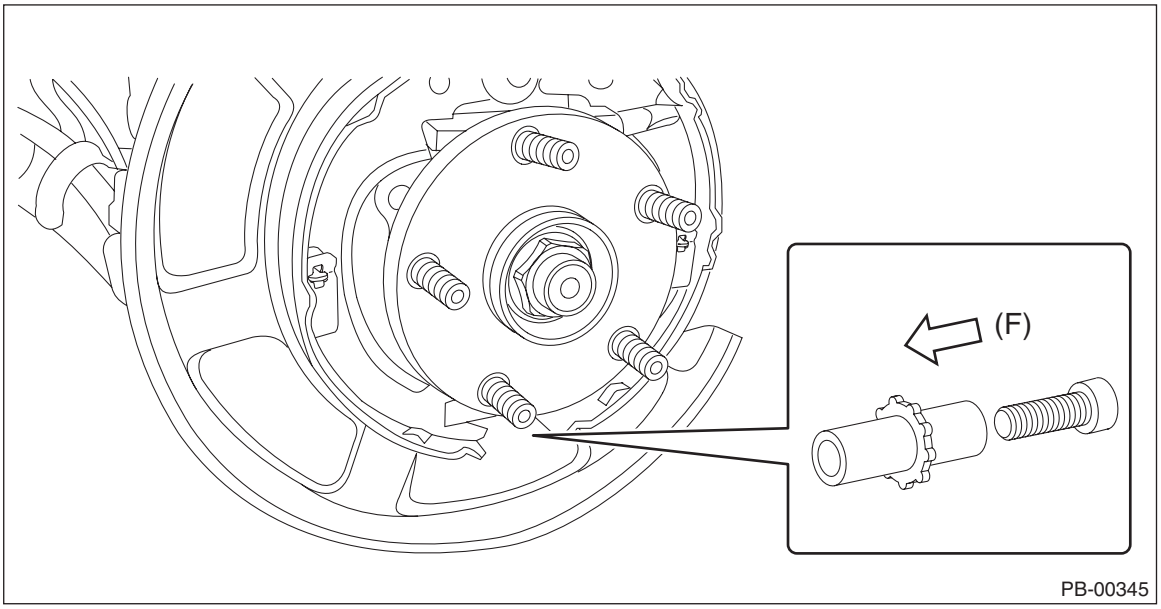

(F) Left wheel: front side of vehicle, right wheel: rear side of vehicle

5) Install the parking brake shoes to the back plate - rear brake with the pins - shoe hold-down and the springs - shoe clamp.
6) Install the strut - brake and the spring - strut to the parking brake shoes.

NOTE:
Install the spring - strut so that it comes towards the front side of the vehicle.
7) Install the return springs on the primary side first, and then the secondary side.

8) Install the disc rotor and the disc brake assembly - rear.

Tightening torque:
STI model: 65 N·m (6.6 kgf-m, 47.9 ft-lb)
Except for STI model: 66 N·m (6.7 kgf-m, 48.7 ft-lb)

9) Adjust the parking brake. <Ref. to PB-19, ADJUSTMENT, Parking Brake Assembly (Rear Disc Brake).>
10) Install the rear wheels.

Tightening torque:
120 N·m (12.2 kgf-m, 88.5 ft-lb)

11) If new parking brake shoes are replaced, drive the vehicle to break-in the parking brake lining.
(1) Drive the vehicle at approximately 35 km/h (22 MPH) or more.
(2) While pressing the button of lever assembly - hand brake, pull the lever assembly - hand brake with a force of 150 N (15.3 kgf, 33.7 lbf).
(3) Drive the vehicle for about 200 m (0.12 mile) in this condition.
(4) Wait 5 to 10 minutes for the parking brake to cool down. Repeat steps (1) through (3) again.
(5) After breaking-in, re-adjust the parking brakes. <Ref. to PB-19, ADJUSTMENT, Parking Brake Assembly (Rear Disc Brake).>

2. ELECTRONIC PARKING BRAKE MODEL

NOTE:
For parking brake assembly installation and assembly of electronic parking brake model, refer to “BRAKE” section.

- Installation: <Ref. to BR-60, EXCEPT FOR STI MODEL (ELECTRONIC PARKING BRAKE TYPE), INSTALLATION, Rear Disc Brake Assembly.>
- Assembly: <Ref. to BR-64, EXCEPT FOR STI MODEL (ELECTRONIC PARKING BRAKE TYPE), DISASSEMBLY, Rear Disc Brake Assembly.>

C: INSPECTION

1) Measure the inner diameter of the rear disc rotor. If scoring or worn is found on the disc, replace the rear disc rotor.

Disc rotor inner diameter:
Specification: 190 mm (7.48 in)
Service limit: 191 mm (7.52 in)

2) Measure the lining thickness. If it exceeds the limit, replace the brake shoe.

Lining thickness:
Specification: 3.5 mm (0.14 in)
Service limit: 1.5 mm (0.059 in)

NOTE:
Replace the right and left parking brake shoe as a set.

D: ADJUSTMENT

1. SHOE CLEARANCE

1) Return the lever assembly - hand brake completely.
2) Loosen the adjusting nut, and make the cable free.
3) Remove the adjusting hole cover (A).
4) Remove the adjusting hole cover (A), and loosen the adjuster assembly - rear brake by inserting a flat tip screwdriver.

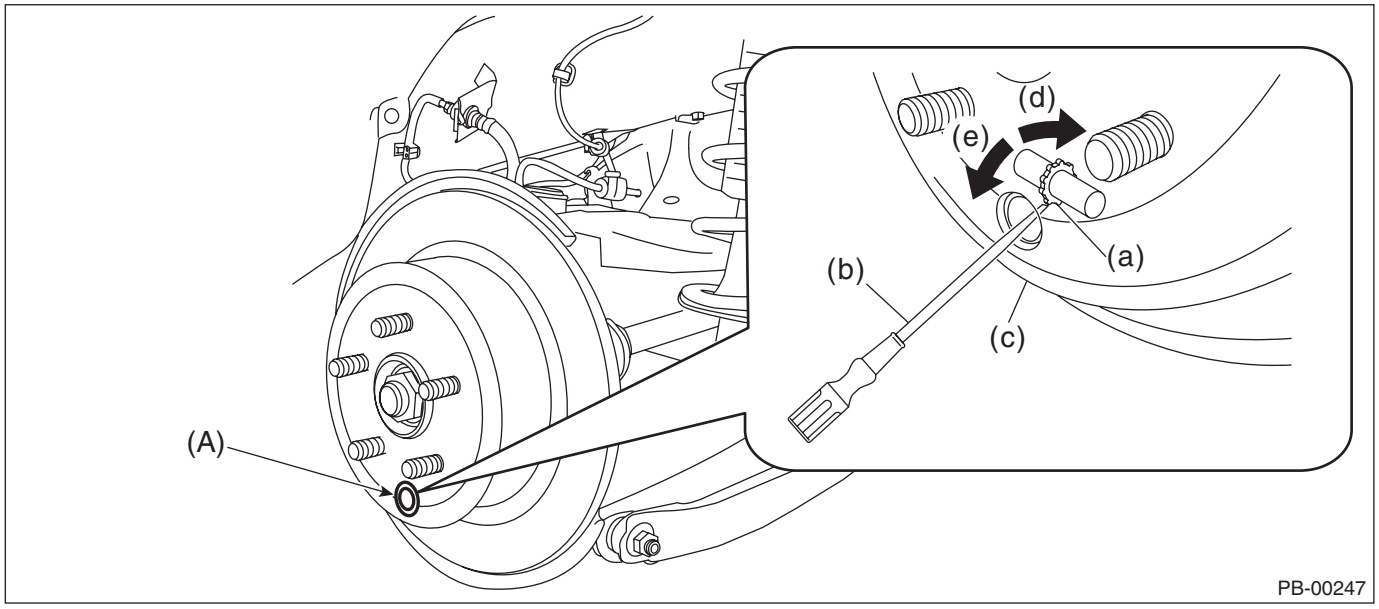

(a)	Adjuster ASSY - rear brake	(c)	Disc rotor	(e)	Shorten the adjuster ASSY - rear brake
(b)	Flat tip screwdriver	(d)	Extend the adjuster ASSY - rear brake		

5) Loosen the adjuster assembly - rear brake by 10 notches in the direction of the arrow (e).

CAUTION:
- **Check there is no brake drag.**
- **Make sure that the adjuster assembly - rear brake is loosened by 10 notches. If it is not loosened sufficiently, dragging may occur.**

6) Install the adjusting hole cover to the disc rotor.
7) Adjust the parking lever stroke. <Ref. to PB-20, LEVER STROKE, ADJUSTMENT, Parking Brake Assembly (Rear Disc Brake).>

2. LEVER STROKE

1) Adjust the shoe clearance before adjusting lever stroke. <Ref. to PB-19, SHOE CLEARANCE, ADJUSTMENT, Parking Brake Assembly (Rear Disc Brake).>
2) Release the claws, and then remove the boot - parking brake.

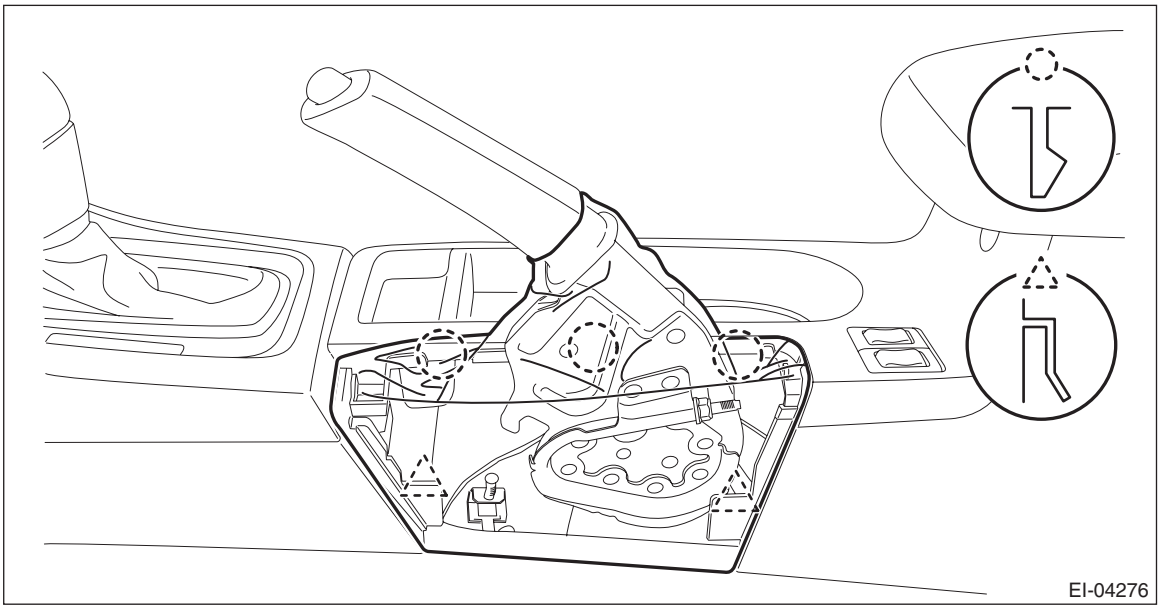

3) Pull the lever assembly - hand brake hard 3 to 5 times.
4) Turn the adjusting nut (a) until the lever stroke is at the specified value.

Lever stroke:
7 to 8 notches when pulled with a force of 200 N (20.4 kgf, 45 lbf)

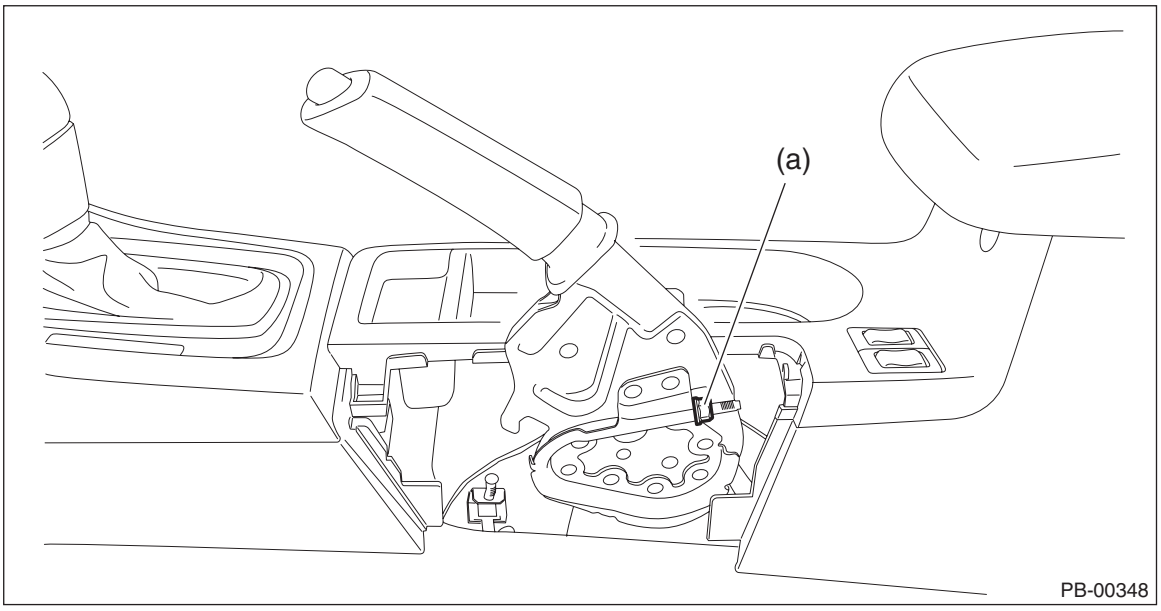

5) Check there is no brake drag.
6) Check that the brake warning light illuminates when the lever assembly - hand brake is operated.

NOTE:
The light must illuminate when the first notch is reached after pulling the lever.
7) Install the boot - parking brake.

5. Parking Brake System

A: WIRING DIAGRAM

Refer to “Parking Brake / Brake Fluid Level Warning Light System” in the wiring diagram. <Ref. to WI-295, WIRING DIAGRAM, Parking Brake / Brake Fluid Level Warning Light System.>

B: ELECTRICAL SPECIFICATION

Refer to the Control Module I/O Signal of “Vehicle Dynamics Control (VDC) (DIAGNOSTICS)”. <Ref. to VDC(diag)-17, ELECTRICAL SPECIFICATION, Control Module I/O Signal.>

C: OPERATION

1. BRAKE MAINTENANCE MODE

CAUTION:

• When the brake maintenance mode is started, DTCs may be recorded. Be sure to clear DTCs after the brake maintenance mode is completed.

• When the brake maintenance mode is completed, the electronic parking brake automatically operates. Check if any other works are not performed in advance. Sufficient safety consideration is required.

NOTE:

• This function is used when inspecting and repairing the rear brake related parts.

• When the brake maintenance mode is performed, the electronic parking brake warning light illuminates, the electronic parking brake operation light illuminates, and DTC: C1984 is stored. If the system returns from the brake maintenance mode to the normal mode, the electronic parking brake warning light goes off, and DTC is cleared.

• During the brake maintenance mode, the electronic parking brake cannot be applied/released.

1) Connect the Subaru Select Monitor.

NOTE:

For detailed operation procedures, refer to “Application help”.

2) Turn the ignition to ON.

3) On «Start» display, select «Diagnosis».

4) On «Vehicle selection» display, input the target vehicle information and select «Confirmed».

5) On «Main Menu» display, select «Each System».

6) On «Select System» display, select «Brake Control System» and select «Enter».

7) On «Select Function» display, select «Work Support».

8) From the work support item list, select «Brake Maintenance Mode». And then, start the operation.

9) After the operation is complete, exit the brake maintenance mode according to the display screen.

D: INSPECTION

Refer to Basic Diagnostic Procedure of “Vehicle Dynamics Control (VDC) (DIAGNOSTICS)”. <Ref. to VDC(diag)-2, Basic Diagnostic Procedure.>

E: NOTE

For procedure of each component in the parking brake system, refer to the respective section.

• Parking brake actuator: <Ref. to PB-23, Parking Brake Actuator.>

• Parking brake switch: <Ref. to PB-28, Parking Brake Switch.>

• Emergency release of electronic parking brake: <Ref. to PB-31, Emergency Release of Electronic Parking Brake.>

6. Relay and Fuse

A: LOCATION

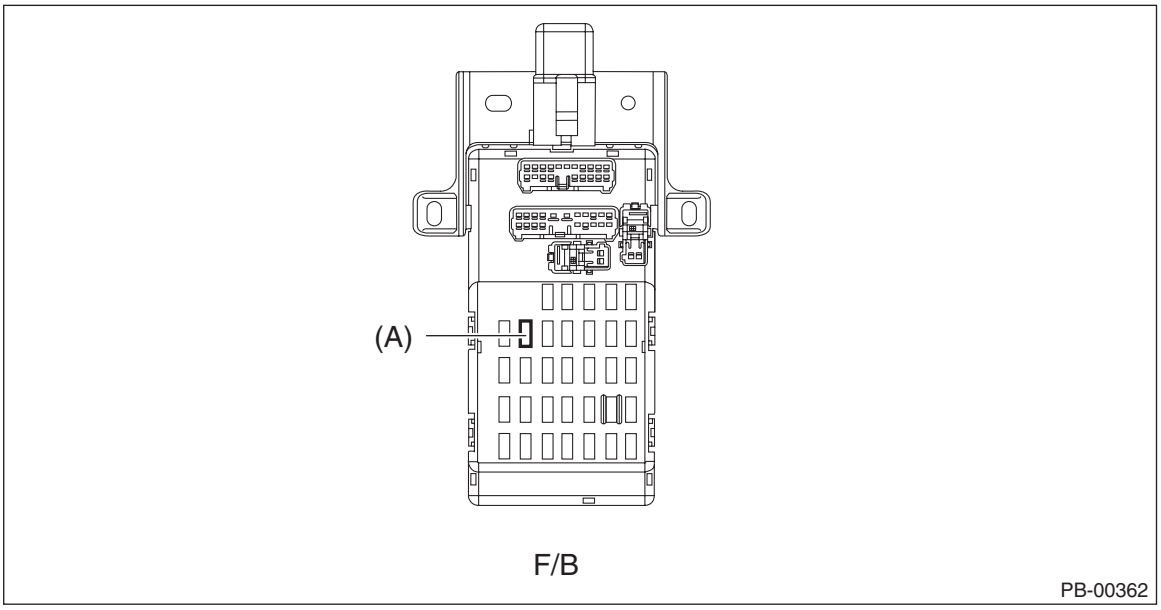

Relay & fuse box	Fuse 10 A (EPB control switch)	(A)

NOTE:
For other related fuses, refer to the wiring diagram. <Ref. to WI-31, Power Supply Circuit.>

B: INSPECTION

1. CHECK FUSE

1) Remove the fuse and inspect visually.
2) If the fuse is blown out, replace the fuse.

7. Parking Brake Actuator

A: REMOVAL

1. PARKING BRAKE HARNESS

1) Disconnect the ground terminal from battery sensor. <Ref. to NT-6, BATTERY, NOTE, Note.>
2) Remove the console box assembly. <Ref. to EI-67, REMOVAL, Console Box.>
3) Remove the connector and clip.

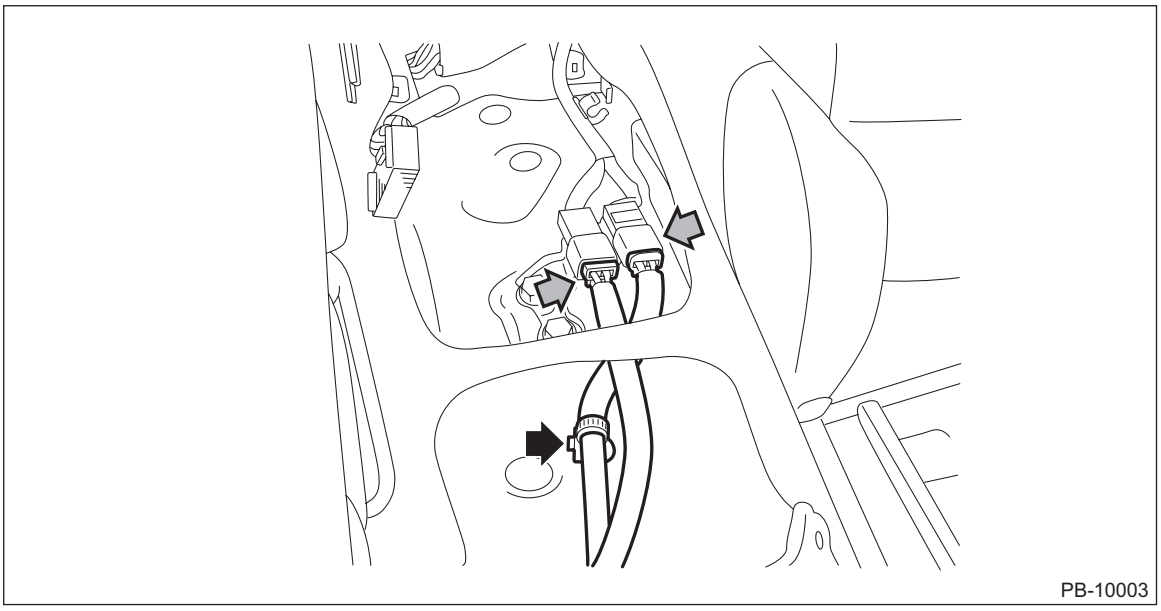

4) Remove the rear seat cushion assembly. <Ref. to SE-30, REMOVAL, Rear Seat.>
5) Lift up the vehicle, and then remove the rear wheels.
6) Remove the bolt and nuts and remove the fuel tank protector.

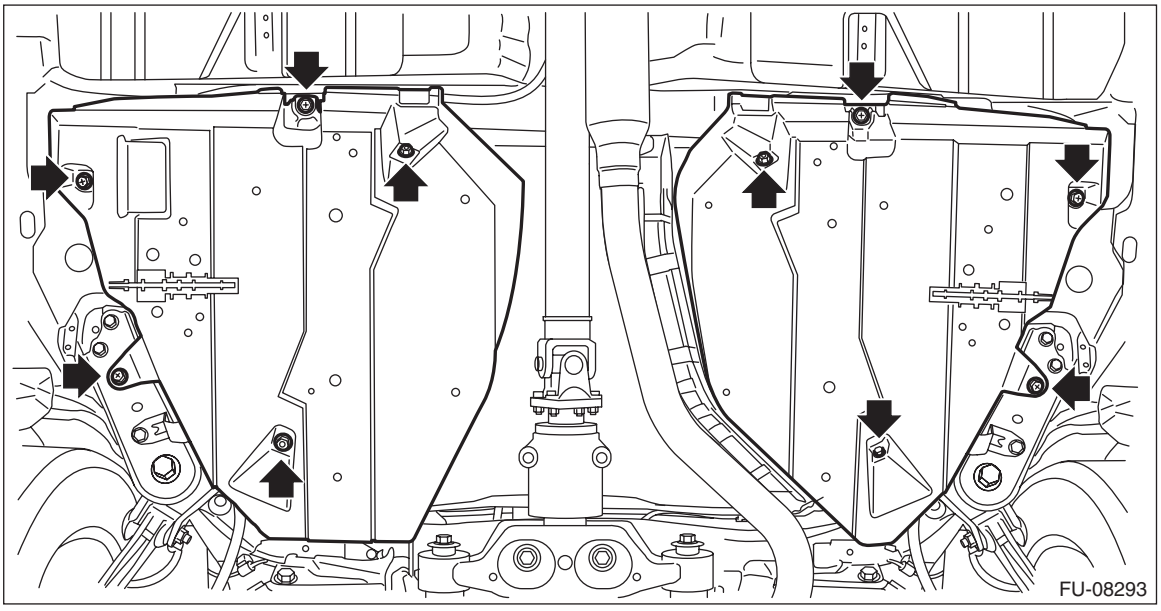

7) Remove the electronic parking brake harness.
(1) Disconnect the connector (a).
(2) Remove the harness clamp (b) from the back plate - rear brake.
(3) Remove the harness clamp (c) from the lateral link.
(4) Remove the harness clamp (d) from the support - sub frame.
(5) Remove the harness clamps (e), (f) and (g) from the rear floor.
(6) Remove the grommet (h) from the rear floor.

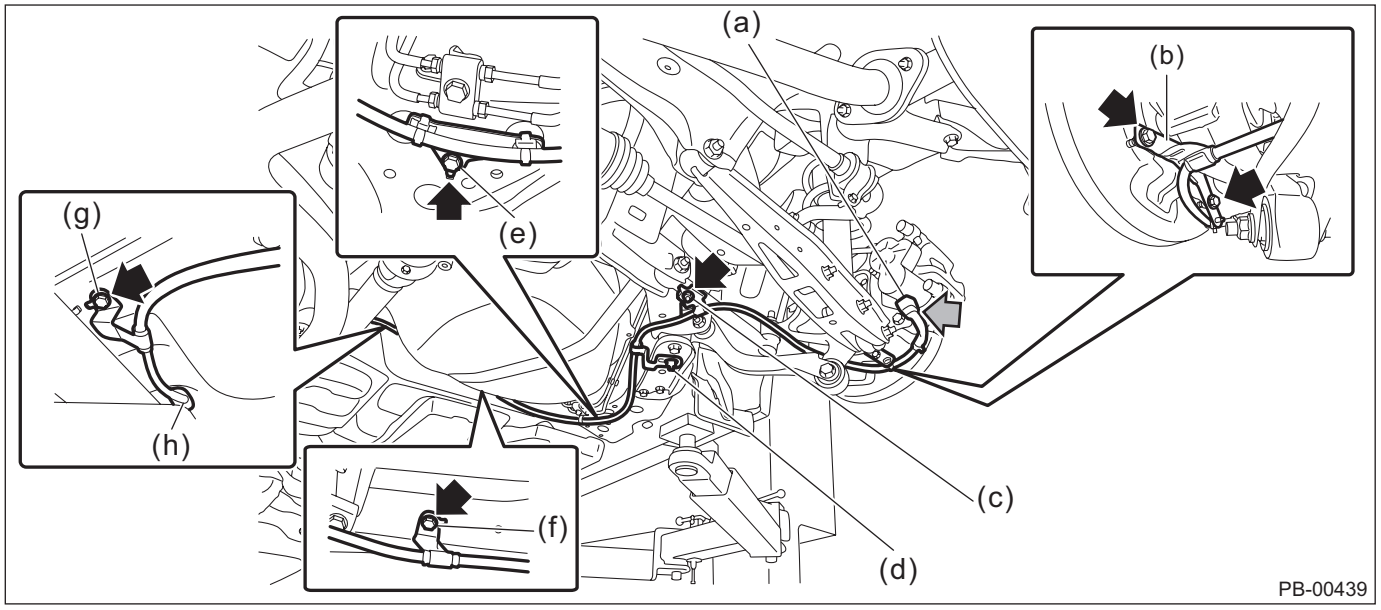

2. PARKING BRAKE ACTUATOR

CAUTION:
• Do not remove the parking brake actuator assembly except when there are system malfunctions (such as emergency release of parking brake or abnormal actuator) or when the caliper is replaced. When the parking brake actuator assembly is reused, always replace the O-ring with a new part contained in the caliper body assembly.
• Do not reuse the parking brake actuator assembly when the emergency release of parking brake was performed or when the actuator has a malfunction. Always replace with a new parking brake actuator assembly.

1) Release the parking brake.
2) Using the Subaru Select Monitor, go to the brake maintenance mode according to the display screen. <Ref. to PB-21, BRAKE MAINTENANCE MODE, OPERATION, Parking Brake System.>

NOTE:
For detailed operation procedures, refer to “Application help”.

3) Disconnect the ground terminal from battery sensor. <Ref. to NT-6, BATTERY, NOTE, Note.>
4) Lift up the vehicle, and then remove the rear wheels.

5) Remove the parking brake actuator assembly.
(1) Disconnect the connector.

CAUTION:
- **Be careful that no water and dust enter inside the connectors.**
- **When removing the parking brake actuator assembly, do not use any tools. Slide it upward and downward by hand to remove.**

(2) Remove the bolts, and remove the parking brake actuator assembly.

Preparation tool:
Hexagon wrench: 5 mm (0.2 in)

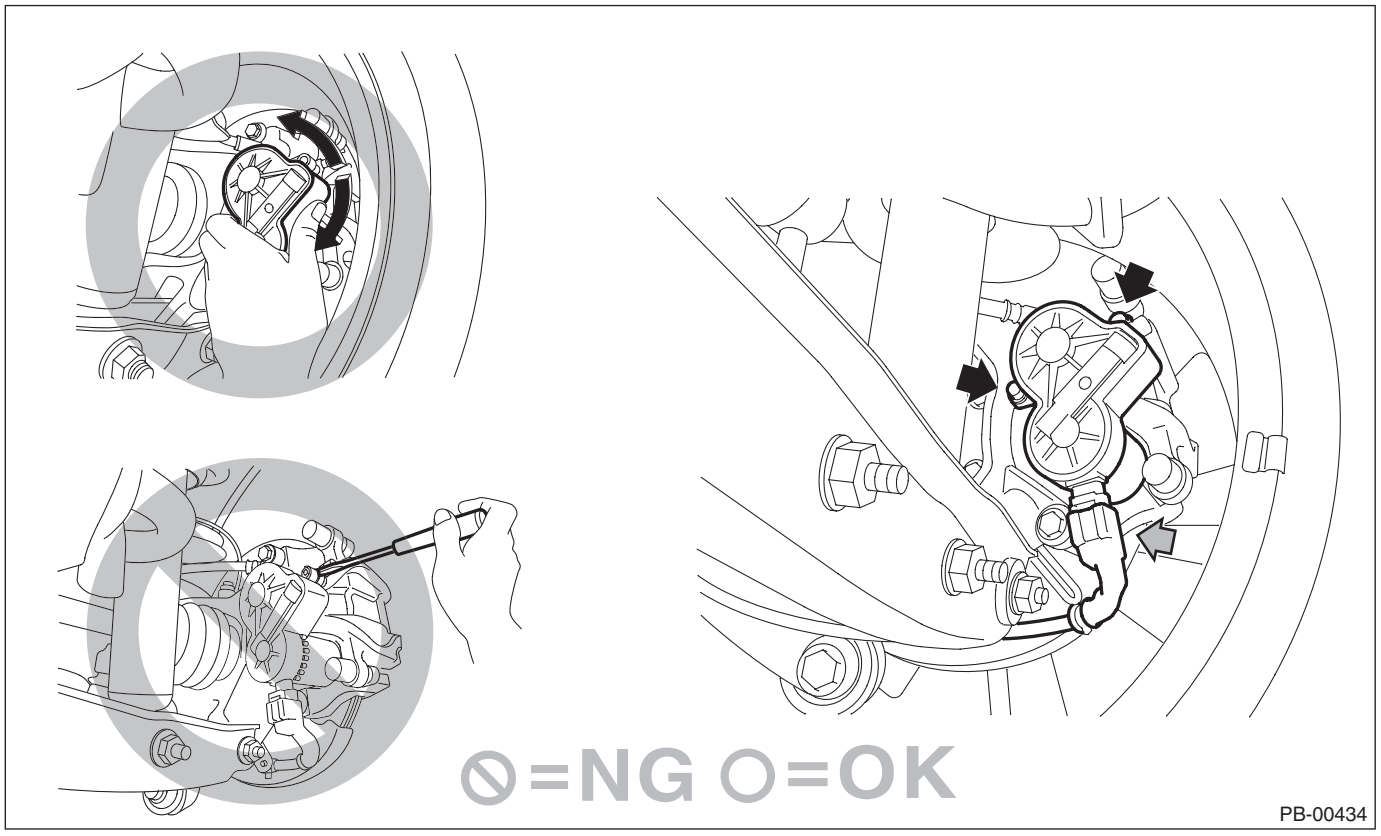

B: INSTALLATION

1. PARKING BRAKE HARNESS

1) Install the electronic parking brake harness.

Tightening torque:
Harness clamp: 18 N·m (1.8 kgf-m, 13.3 ft-lb)

2) Install the fuel tank protector.

NOTE:
Use a new self-locking nut (a).

Tightening torque:
T1: 9 N·m (0.9 kgf-m, 6.6 ft-lb)
T2: 18 N·m (1.8 kgf-m, 13.3 ft-lb)

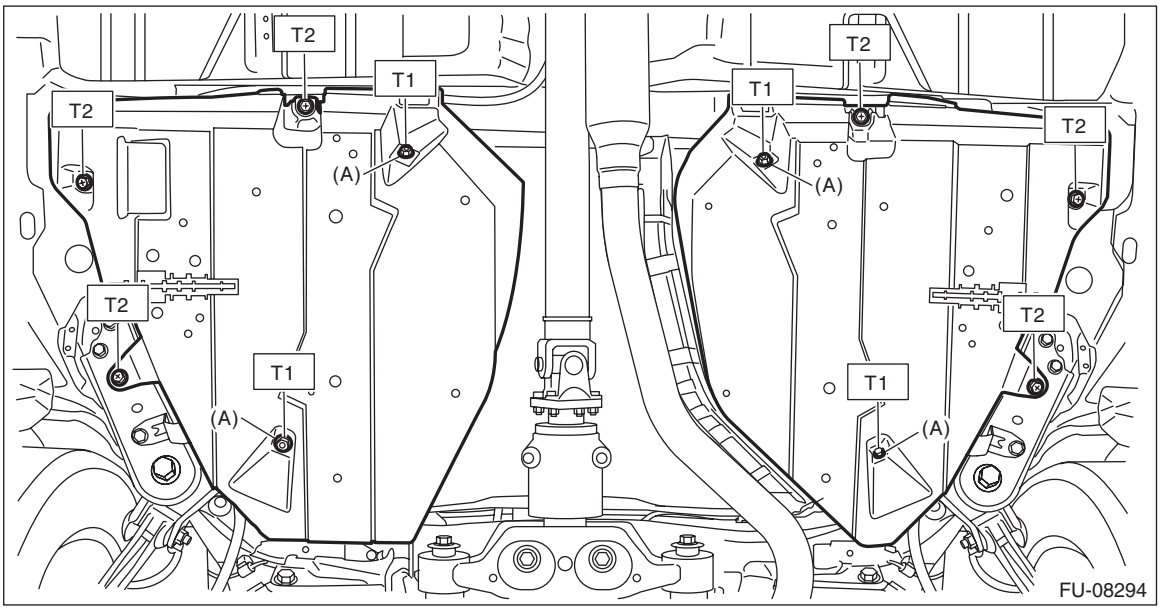

(A) Self-locking nut

3) Install the rear seat cushion assembly. <Ref. to SE-33, INSTALLATION, Rear Seat.>
4) Install the console box assembly. <Ref. to EI-71, INSTALLATION, Console Box.>
5) Connect the ground terminal to battery sensor. <Ref. to NT-6, BATTERY, NOTE, Note.>
6) Install the rear wheels.

Tightening torque:
120 N·m (12.2 kgf-m, 88.5 ft-lb)

2. PARKING BRAKE ACTUATOR

CAUTION:
• Do not remove the parking brake actuator assembly except when there are system malfunctions (such as emergency release of parking brake or abnormal actuator) or when the caliper is replaced. When the parking brake actuator assembly is reused, always replace the O-ring with a new part contained in the caliper body assembly.
• Do not reuse the parking brake actuator assembly when the emergency release of parking brake was performed or when the actuator has a malfunction. Always replace with a new parking brake actuator assembly.
1) Install the parking brake actuator assembly.

Tightening torque:
8 N·m (0.8 kgf-m, 5.9 ft-lb)
2) Connect the ground terminal to battery sensor. <Ref. to NT-6, BATTERY, NOTE, Note.>
3) Using the Subaru Select Monitor, exit the brake maintenance mode according to the display screen. <Ref. to PB-21, BRAKE MAINTENANCE MODE, OPERATION, Parking Brake System.>

NOTE:
For detailed operation procedures, refer to “Application help”.
4) After the operation is completed, apply and release the parking brake five times and ensure that the brake operates normally.
5) Install the rear wheels.

Tightening torque:
120 N·m (12.2 kgf-m, 88.5 ft-lb)

8. Parking Brake Switch

A: REMOVAL

1. DRUM IN DISC TYPE MODEL

1) Set the wheel stoppers to tires.
2) Disconnect the ground cable from battery. <Ref. to NT-6, BATTERY, NOTE, Note.>

NOTE:
- For model with battery sensor, disconnect the ground terminal from battery sensor.
- For CVT models, set the select lever to the “N” position before disconnecting the battery.
- For the power seat, move the seat to the front-most position before removing the battery ground terminal.

3) Remove the driver’s seat. <Ref. to SE-9, REMOVAL, Front Seat.>
4) Remove the console box assembly. <Ref. to EI-67, MODEL WITH PARKING BRAKE LEVER, REMOVAL, Console Box.>
5) Remove the switch assembly - hand brake.

2. ELECTRONIC PARKING BRAKE MODEL

1) Set the wheel stoppers to tires.
2) Disconnect the ground terminal from battery sensor. <Ref. to NT-6, BATTERY, NOTE, Note.>

NOTE:
- For CVT models, set the select lever to the “N” position before disconnecting the battery.
- For the power seat, move the seat to the front-most position before removing the battery ground terminal.

3) Move the front seat to the front-most position.
4) Remove the console box assembly. <Ref. to EI-69, MODEL WITH ELECTRONIC PARKING BRAKE SWITCH, REMOVAL, Console Box.>
5) Remove the screws to remove the switch assembly - electronic parking brake.

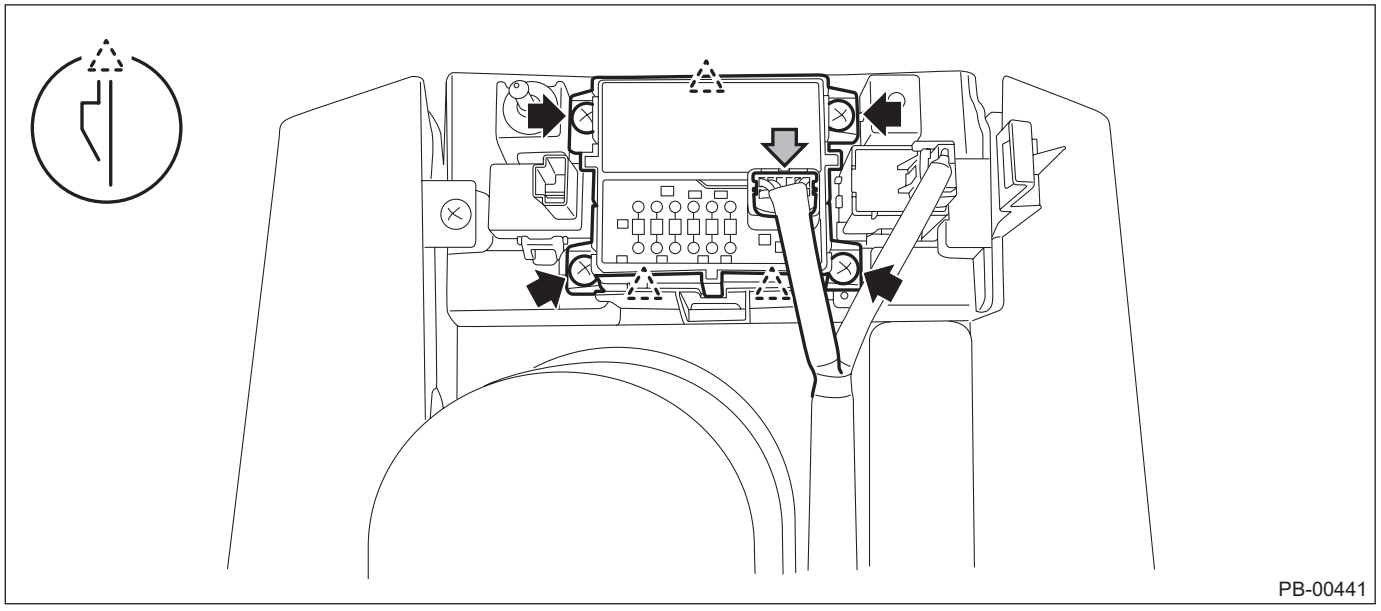

B: INSTALLATION

1. DISC IN DRUM TYPE MODEL

1) Install the switch assembly - hand brake.
2) Install the console box assembly. <Ref. to EI-71, MODEL WITH ELECTRONIC PARKING BRAKE SWITCH, INSTALLATION, Console Box.>
3) Install the driver's seat. <Ref. to SE-10, INSTALLATION, Front Seat.>
4) Connect the battery ground terminal. <Ref. to NT-6, BATTERY, NOTE, Note.>

2. ELECTRONIC PARKING BRAKE MODEL

1) Install the switch assembly - electronic parking brake.
2) Install the console box assembly. <Ref. to EI-71, MODEL WITH ELECTRONIC PARKING BRAKE SWITCH, INSTALLATION, Console Box.>
3) Move the front seat back to the original position.
4) Connect the ground terminal to battery sensor. <Ref. to NT-6, BATTERY, NOTE, Note.>

NOTE:
After connecting the battery sensor terminal, place the select lever in the "P" position.

C: INSPECTION

1. SWITCH ASSY - HAND BRAKE

1) Measure the resistance between the switch assembly - hand brake and chassis ground.

Preparation tool:
Circuit tester

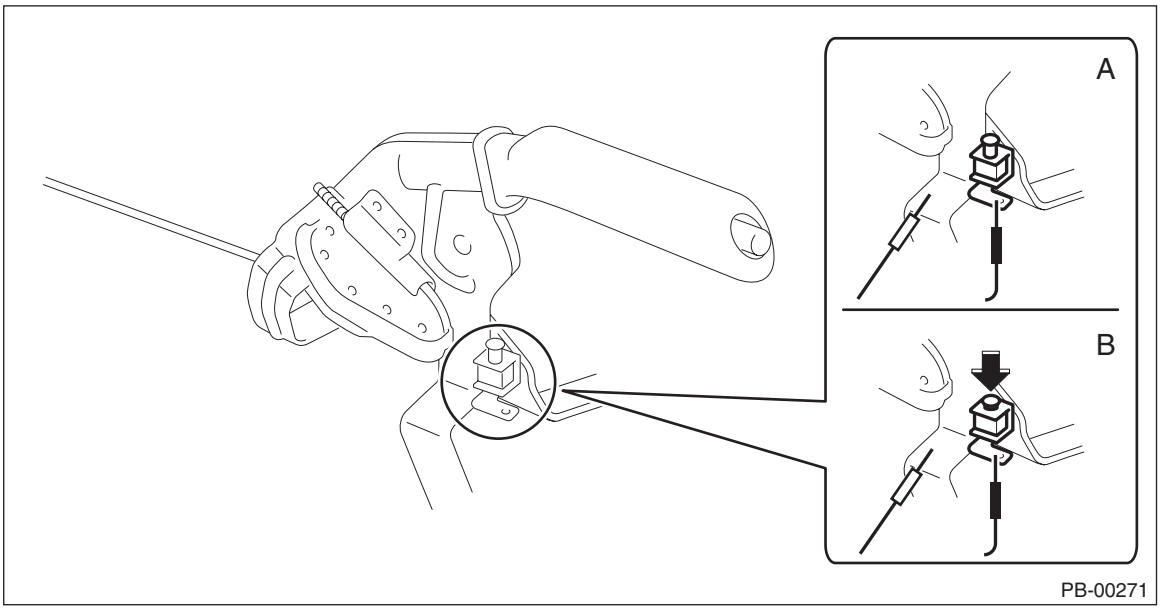

	Switch position	Standard
A	When shaft is free (ON)	Less than 1 Ω
B	When shaft is pressed in (OFF)	10 kΩ or more

If the result of inspection is not within the specified value, replace the switch assembly - hand brake.

2. SWITCH ASSY - ELECTRONIC PARKING BRAKE

Check the resistance between switch assembly - electronic parking brake terminals.

Switch position	Terminal No.	Standard
Press (Release)	6 and 2 6 and 5	Less than 1 Ω
Neutral	6 and 1 2 and 5	Less than 1 Ω
Pull (Lock)	6 and 1 6 and 2	Less than 1 Ω

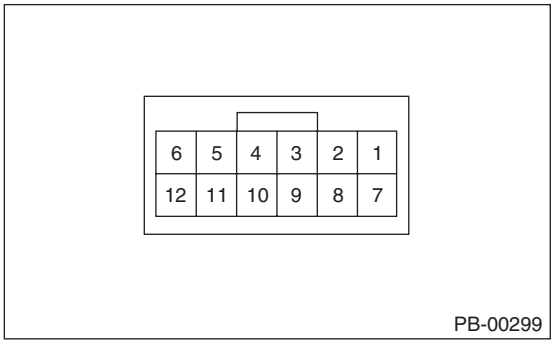

NOTE:
Replace the switch if the inspection result is not within the standard value.

9. Emergency Release of Electronic Parking Brake

A: OPERATION

CAUTION:
• Perform this operation only when the parking brake must be released in emergency situation such as a system malfunction.
• When performing this procedure, be sure to fully confirm safety in the nearby area and park the vehicle on a horizontal ground.
• Always use the jack-up point when the shop jacks or rigid racks are used to support the vehicle.
1) Disconnect the ground terminal from battery sensor. <Ref. to NT-6, BATTERY, NOTE, Note.>
2) Set the wheel stoppers to front tires.
3) Jack-up the rear side of vehicle and support it with rigid racks.
4) Remove the rear wheels.
5) Remove the parking brake actuator assembly.

CAUTION:
• When removing the bolt, the parking brake actuator assembly turns due to reaction force generated by the motor. Be careful not to pinch your hand.
• Wrap the tip of a screwdriver with cloth in order not to damage the caliper body that will be reused.
• Do not insert a tool into the seal surface (a) on the parking brake actuator assembly.
• Always remove the parking brake actuator assembly while holding it by hand because the parking brake actuator assembly falls off during removal.
(1) Disconnect the connector and remove the bolt.

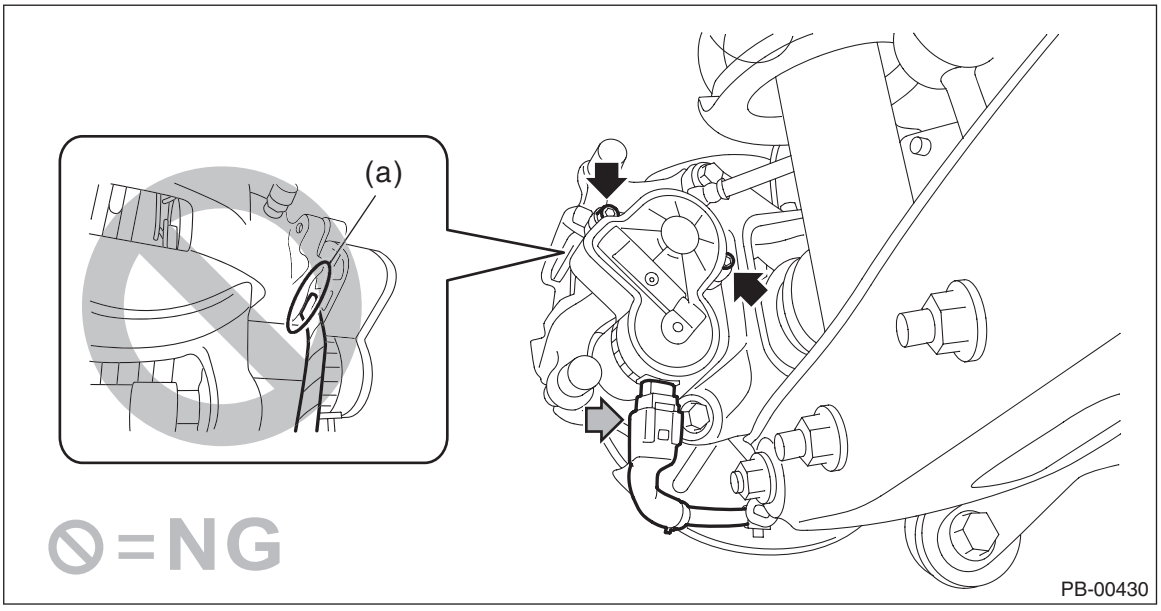

(2) Put a crowbar between the parking brake actuator assembly and the support - rear disc brake (b).
(3) Push out the parking brake actuator assembly toward yourself.
(4) Insert a crowbar into the gap (c) made by pushing the parking brake actuator assembly, and then remove it.

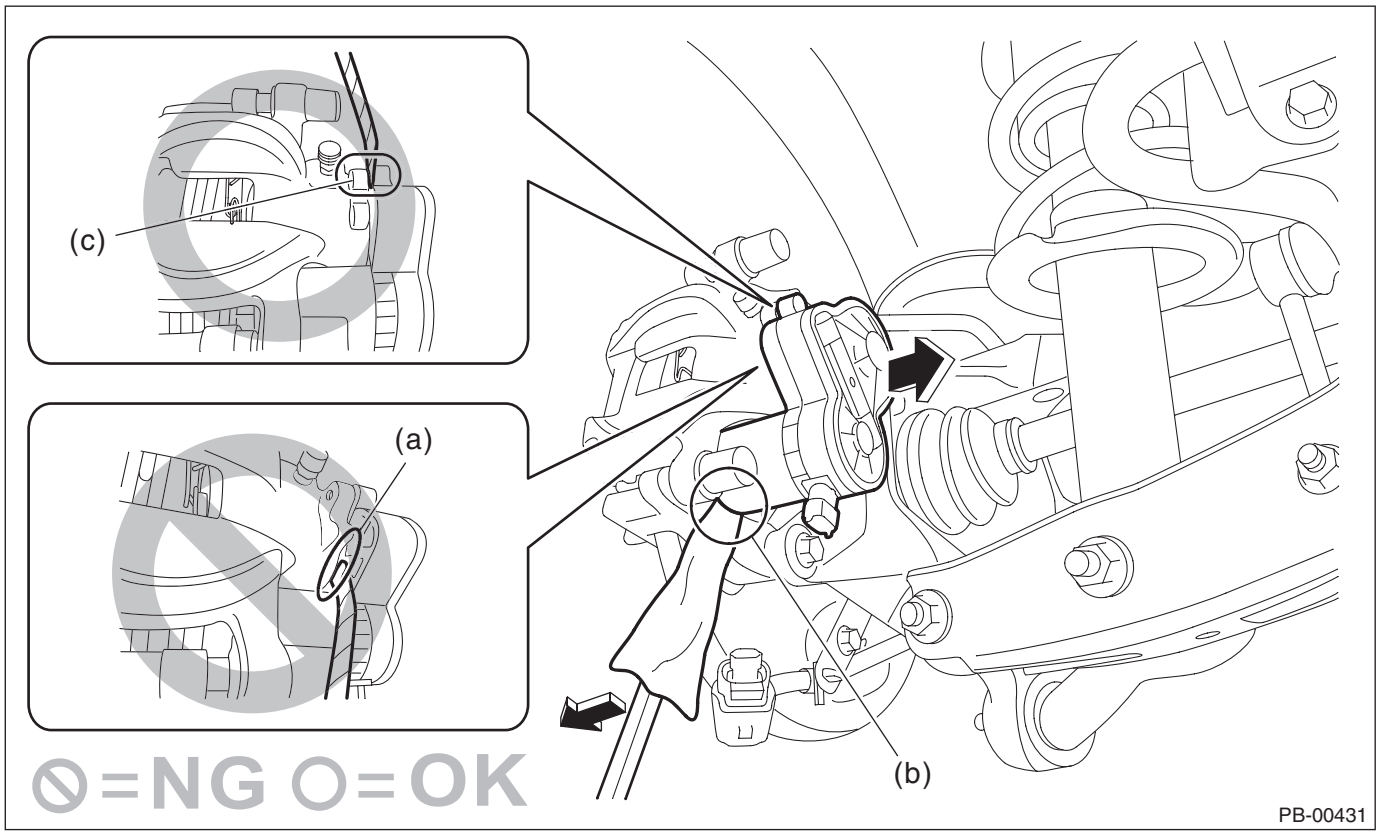

6) Turn the caliper body spindle bolt clockwise by approx. 1 rotation.

NOTE:
Turn both sides of LH and RH clockwise.

Preparation tool:
TORX® E12

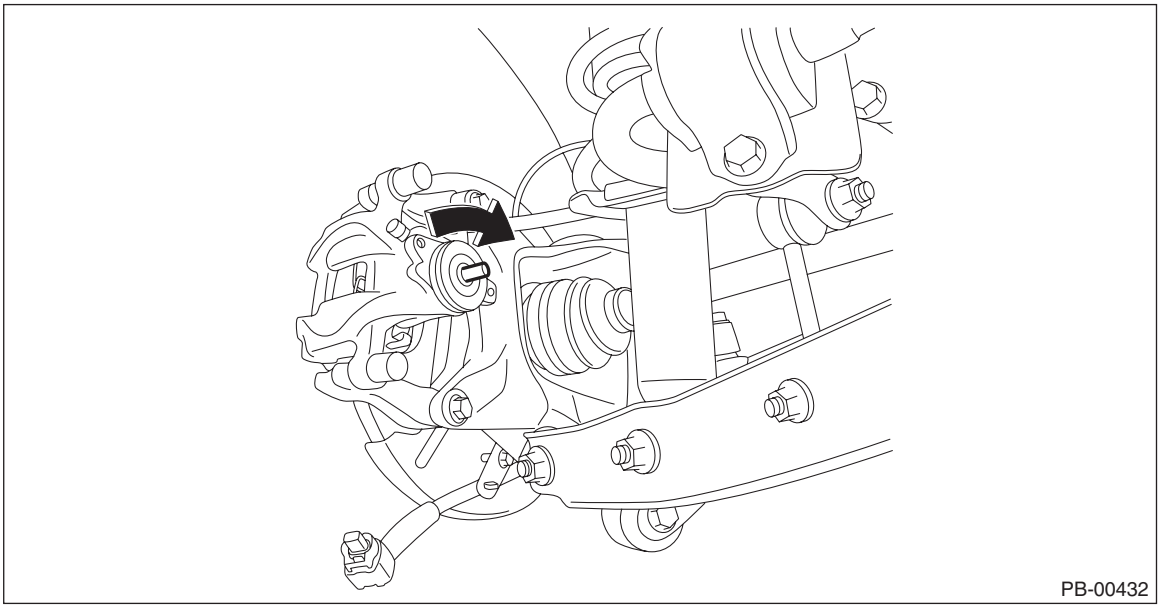

7) Confirm that the parking brake lock is released and the disc rotor rotates.
8) Temporarily install the parking brake actuator assembly.

CAUTION:
• When the emergency release of parking brake was performed, replace the parking brake actuator assembly after the system trouble is resolved.
• Do not connect the actuator connector. It may be locked again due to continuity.
• If the vehicle needs to be moved, cover the actuator connector with vinyl tape to prevent foreign matter from entering, and secure it in an area where no interference occurs.

Tightening torque:
8 N·m (0.8 kgf-m, 5.9 ft-lb)
9) When the emergency release of parking brake was performed, be sure to perform the inspection related to the parking brake system.

NOTE:
For inspection, refer to Basic Diagnostic Procedure of “Vehicle Dynamics Control (VDC) (DIAGNOSTICS)”. <Ref. to VDC(diag)-2, Basic Diagnostic Procedure.>

10.General Diagnostic Table

A: INSPECTION

- Drum in disc type model

Symptoms	Possible cause	Corrective action
Brake drag	Lever assembly - hand brake is maladjusted.	Adjust.
	Parking brake cable does not move.	Repair or replace.
	Parking brake shoe clearance is maladjusted.	Adjust.
	Spring - shoe return is faulty.	Replace.
Noise from brake	Spring - shoe return is faulty.	Replace.
	Spring - shoe clamp is faulty.	Replace.

- Electronic parking brake model

Symptoms	Possible cause	Corrective action
Brake drag	Defective parking brake switch	Replace.
	Defective parking brake harness	Replace.
	Defective parking brake actuator	Replace.
	Loose parking brake actuator and support installation bolt	Tighten to the specified torque.
Noise from brake	Worn or hardened pad	Replace.
	Defective parking brake actuator	Replace.

POWER ASSISTED SYSTEM (POWER STEERING)

PS

		Page
1.	General Description	2
2.	Power Steering System	15
3.	Steering Wheel	16
4.	Universal Joint	21
5.	Steering Column	25
6.	Steering Gearbox	30
7.	Electric Power Steering Gearbox	66
8.	Pipe Assembly	81
9.	Oil Pump	90
10.	Reservoir Tank	98
11.	Power Steering Fluid	99
12.	Power Steering Control Module	100
13.	General Diagnostic Table	103

1. General Description

A: SPECIFICATION

1. HYDRAULIC TYPE

Model			STI model
Whole system	Minimum turning radius: m (ft)		5.5 (18.05)
	Steering angle	Inner wheel	36.3°±1.5°
		Outer wheel	32.0°±1.5°
	Steering wheel diameter: mm (in)		369 (14.53)
	Lock-to-lock revolution number		2.5
Gearbox	Type		Rack & pinion type Integral type
	Backlash		0 (automatic adjusting)
	Valve type		Rotary valve
Power steering pump	Type		Vane pump
	Oil tank		Installed on body
	Specific discharge rate: cm^3 (cu in)/rev.		8.5 (0.519)
	Relief pressure: kPa (kgf/cm^2, psi)		8,300 — 9,000 (85 — 92, 1,203 — 1,305)
	Hydraulic fluid control		Engine speed sensitive
	Operation flow rate: L (US qt, Imp qt)		1,000 r/min: 7.5 (7.9, 6.6) 3,000 r/min: 7.3 (7.7, 6.4)
	Revolution speed range: r/min		560 — 9,600
	Direction of rotation		Clockwise
Power steering fluid	Description		SUBARU ATF or ATF DEXRON III
	Capacity: L (US qt, Imp qt)		Oil tank: 0.2 (0.2, 0.2)
			Whole system: 0.7 (0.7, 0.6)

Steering wheel

Free play:	mm (in)	17 (0.67)

Column assembly - steering

Clearance: Between steering wheel and cover assembly - column	mm (in)	4 — 6 (0.16 — 0.24)

Steering gearbox

Sliding resistance:	N (kgf, lbf)	343 (35, 77) or less Difference between right and left sliding resistance: 20% or less
Rack shaft play in radial direction: mm (in)	Right-turn steering	Both amplitudes: 0.4 (0.016) or less
	Left-turn steering	Play in the horizontal direction: 0.6 (0.024) or less (both amplitudes) Play in the vertical direction: 0.4 (0.016) or less (both amplitudes)
Input shaft play: mm (in)	In radial direction	Both amplitudes: 0.26 (0.0102) or less
	In axial direction	Without play
Rotational resistance:	N (kgf, lbf)	Maximum allowable value: 21 (2.14, 4.7) or less Difference between right and left rotating resistance: 20% or less

Power steering oil pump

Pulley shaft	Lateral play: mm (in)	0.2 (0.008) or less
	Axial play: mm (in)	0.9 (0.035) or less
Pulley	Groove runout: mm (in)	1 (0.039) or less
	Rotational resistance: N (kgf, lbf)	9.22 (0.94, 2.07) or less
Regular pressure (unloaded): kPa (kgf/cm^2, psi)		981 (10, 142) or less

Steering effort (with power steering assist)

At standstill on paved road with engine idling:	N (kgf, lbf)	31 (3.16, 7) or less
At standstill on paved road with engine stalled:	N (kgf, lbf)	294.2 (29.9, 66.2) or less

Recommended power steering fluid

SUBARU ATF or ATF DEXRON III

2. ELECTRIC TYPE

Model			WRX model	
			17-inch wheel	18-inch wheel
Whole system	Minimum turning radius: m (ft)		5.4 (17.72)	5.5 (18.05)
	Steering angle	Inner wheel	37.5°±1.5°	36.4°±1.5°
		Outer wheel	32.9°±1.5°	32.0°±1.5°
	Steering wheel diameter: mm (in)		369 (14.53)	
	Lock-to-lock revolution number		2.8	2.7
Gearbox	Type		Rack & pinion type	
	Backlash		0 (automatic adjusting)	
Motor (Temperature 20°C (68°F))	Rated voltage: V		12	
	Rated torque: N·m (kgf-m, ft-lb)		5.3 (0.54, 3.91)	
	Rated revolution speed: r/min		960	
	Rated current: A		84	
	Rated output: W		537	

Steering wheel

Free play: mm (in)	17 (0.67) or less

Column assembly - steering

Clearance: Between steering wheel and cover assembly - column mm (in)	4 — 6 (0.16 — 0.24)

Steering gearbox

Sliding resistance: N (kgf, lbf)		360 (37, 81) or less Difference between right and left sliding resistance: 20% or less
Rack shaft play in radial direction: mm (in)	Right-turn steering	Both amplitudes: 0.6 (0.024) or less
	Left-turn steering	Both amplitudes: 0.6 (0.024) or less
Input shaft play: mm (in)	In radial direction	Both amplitudes: 0.6 (0.024) or less
	In axial direction	0.27 (0.0106) or less
Rotational resistance: N (kgf, lbf)		Maximum allowable value: 18 (1.8, 4) or less Difference between right and left sliding resistance: 20% or less

Steering effort (with power steering assist)

At standstill on paved road with engine idling:	N (kgf, lbf)	31 (3.2, 7) or less
At standstill on paved road with engine stalled:	N (kgf, lbf)	294.2 (30, 66.2) or less

B: COMPONENT

1. STEERING WHEEL AND COLUMN

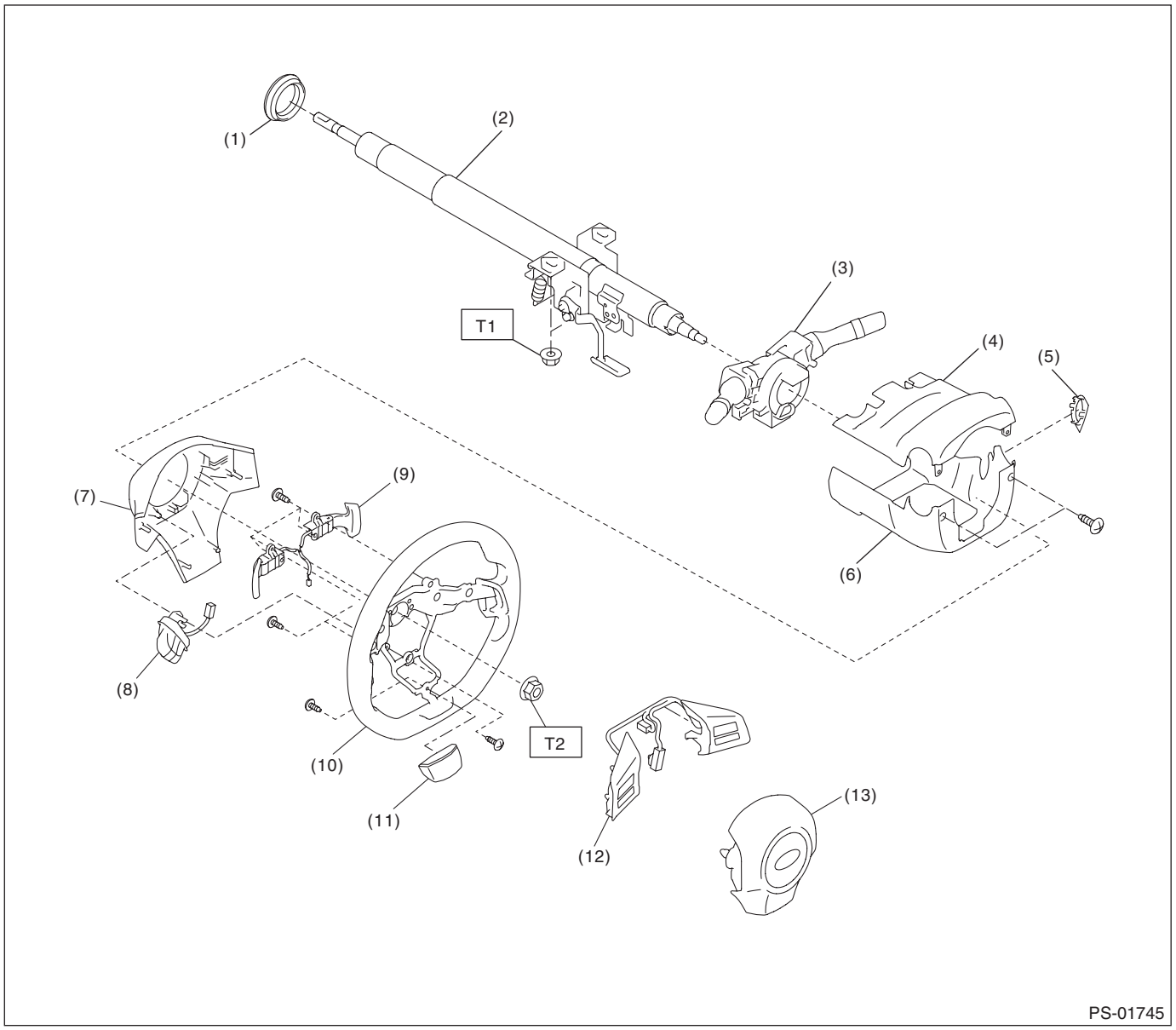

(1)	Bushing	(7)	Cover - steering wheel LWR	(13)	Airbag module
(2)	Column ASSY - steering	(8)	MID switch (multi information display switch)		
(3)	Switch ASSY - combination	(9)	Paddle shift		
(4)	Cover ASSY - column UPR	(10)	Steering wheel		
(5)	Cap - key cylinder (model with keyless access with push button start)	(11)	Cover - spoke		
(6)	Cover ASSY - column LWR	(12)	Satellite switch		

Tightening torque: N·m (kgf-m, ft-lb)

T1: 20 (2, 14.8)

T2: 39 (4, 28.8)

2. HOSE AND TANK

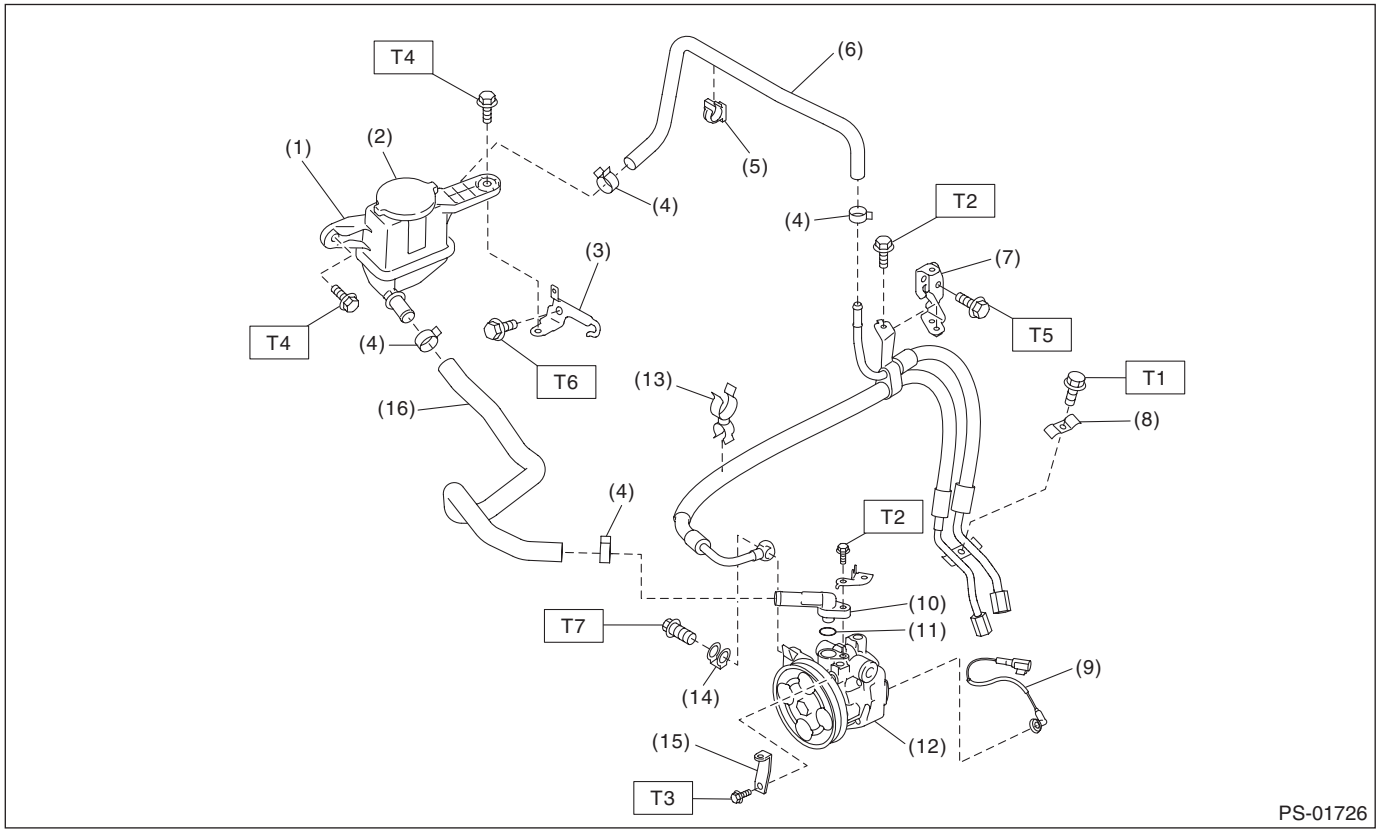

(1) Reservoir tank
(2) Cap
(3) Tank bracket
(4) Clip
(5) Hose clip
(6) Return hose
(7) Bracket - hose
(8) Clamp E
(9) Switch - harness
(10) Suction connector
(11) O-ring
(12) Oil pump
(13) Clip
(14) Eyebolt gasket
(15) Bracket - belt cover
(16) Hose - suction

Tightening torque: N·m (kgf-m, ft-lb)
T1: 7.5 (0.8, 5.5)
T2: 10 (1, 7.4)
T3: 11 (1.1, 8.1)
T4: 13 (1.3, 9.6)
T5: 18 (1.8, 13.3)
T6: 33 (3.4, 24.3)
T7: 40 (4.1, 29.5)

3. STEERING GEARBOX

- Hydraulic type

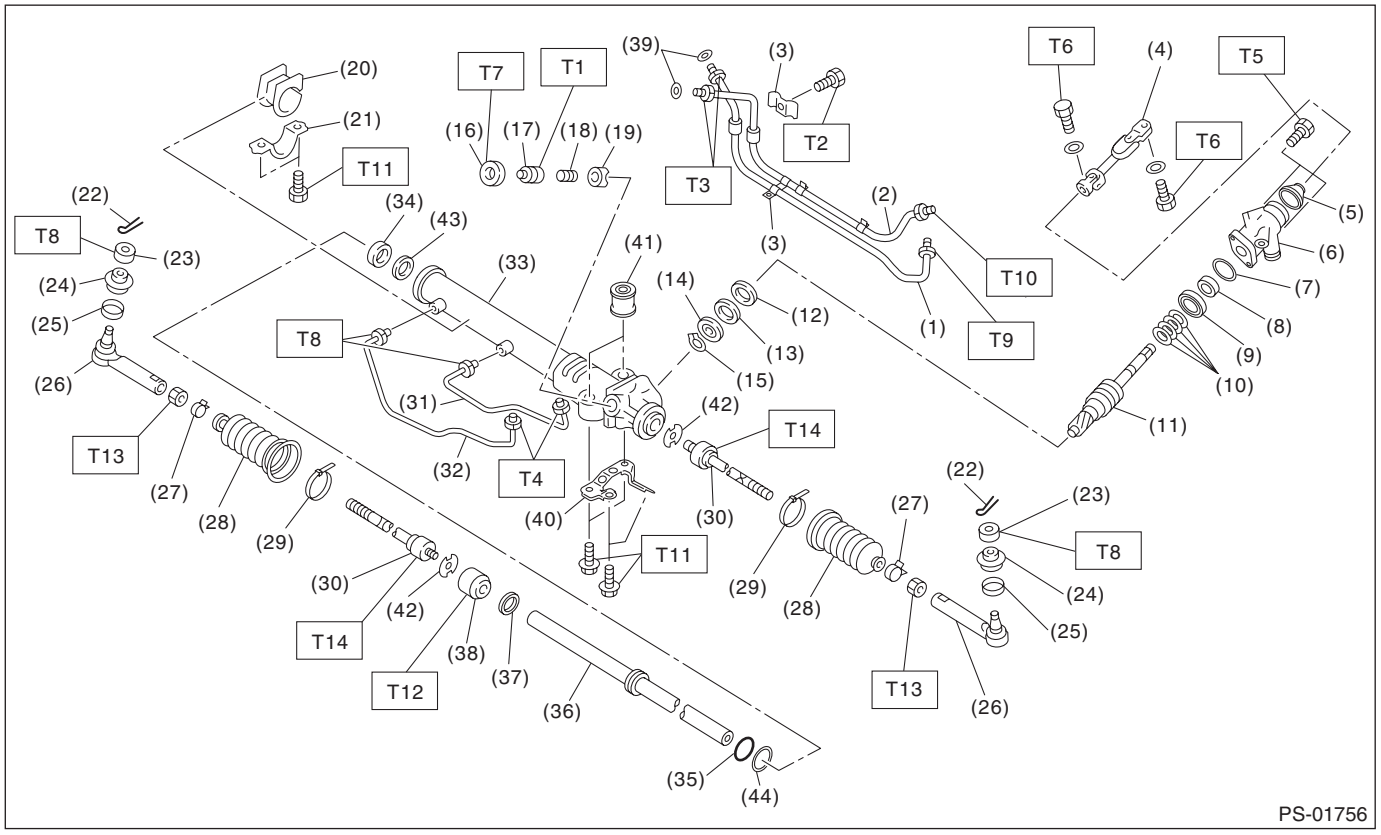

(1)	Feed pipe	(21)	Clamp	(41)	Bushing
(2)	Return pipe	(22)	Cotter pin	(42)	Lock washer
(3)	Clamp plate	(23)	Castle nut	(43)	Back-up ring
(4)	Universal joint	(24)	Dust cover	(44)	O-ring
(5)	Dust seal	(25)	Clip		
(6)	Valve housing	(26)	Tie-rod end		
(7)	O-ring	(27)	Clip		
(8)	Oil seal	(28)	Boot		
(9)	Bushing	(29)	Band		
(10)	Seal ring	(30)	Tie-rod		
(11)	Pinion & valve ASSY	(31)	Pipe B		
(12)	Oil seal	(32)	Pipe A		
(13)	Back-up washer	(33)	Steering body		
(14)	Ball bearing	(34)	Oil seal		
(15)	Snap ring	(35)	Piston seal ring		
(16)	Lock nut	(36)	Rack		
(17)	Adjusting screw	(37)	Oil seal		
(18)	Spring	(38)	Holder		
(19)	Sleeve	(39)	O-ring		
(20)	Adapter	(40)	Stiffener		

Tightening torque: N·m (kgf-m, ft-lb)

T1:	***Tighten to 5.9 (0.6, 4.4), and loosen by 5 degrees.***
T2:	***9 (0.9, 6.6)***
T3:	***15 (1.5, 11.1)***
T4:	***17 (1.7, 12.5)***
T5:	***20 (2, 14.8)***
T6:	***24 (2.4, 17.7)***
T7:	***25 (2.5, 18.4)***
T8:	***27 (2.8, 19.9)***
T9:	***37 (3.8, 27.3)***
T10:	***29 (3, 21.4)***
T11:	***60 (6.1, 44.3)***
T12:	***70 (7.1, 51.6)***
T13:	***85 (8.7, 62.7)***
T14:	***93 (9.5, 68.6)***

- Electric type

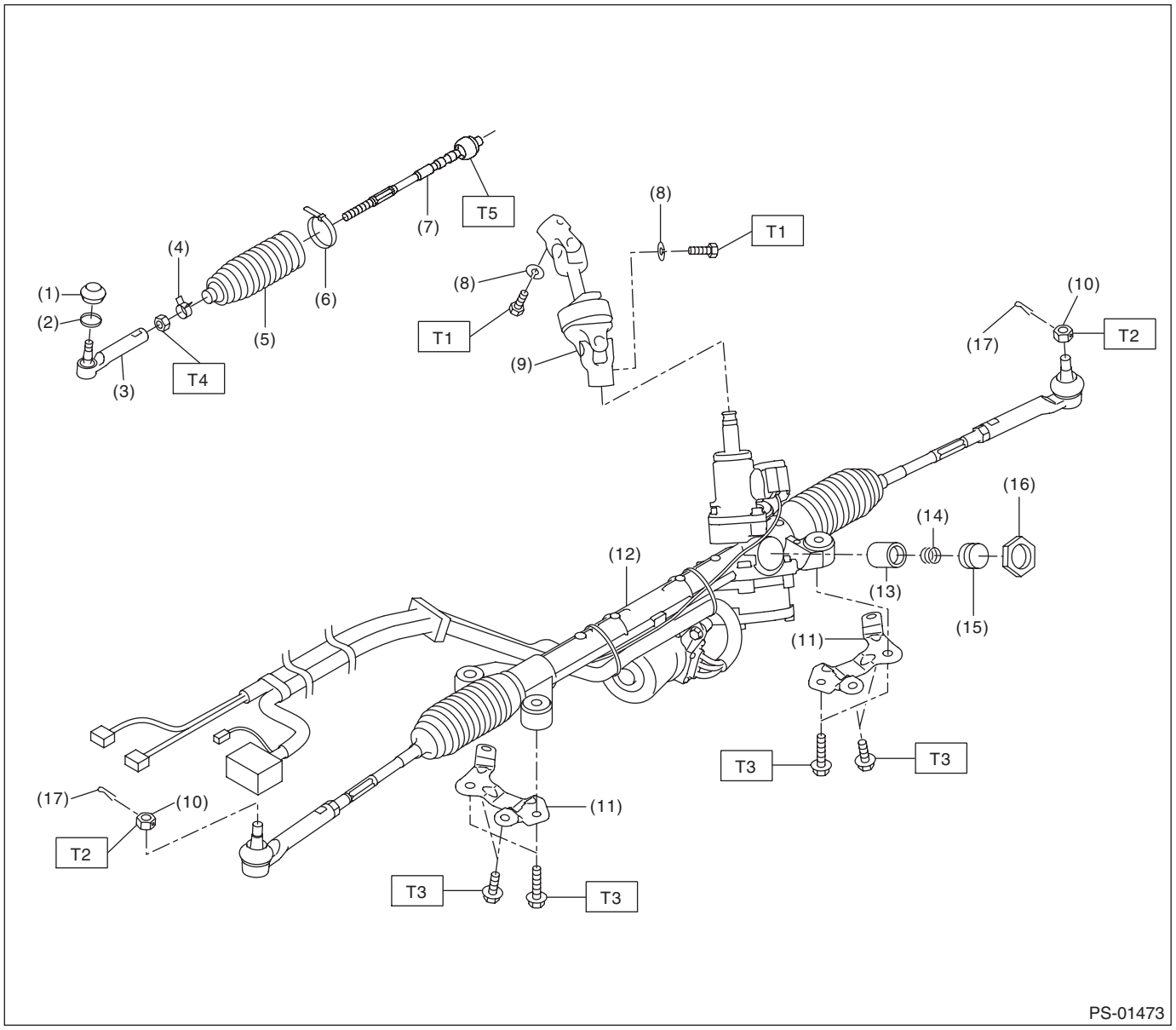

(1)	Dust seal	(9)	Universal joint ASSY - steering	(17)	Cotter pin
(2)	Clip - boot tie-rod end	(10)	Castle nut		
(3)	Tie-rod end	(11)	Stiffener	***Tightening torque: N·m (kgf-m, ft-lb)***	
(4)	Clip - boot tie-rod	(12)	Steering gearbox ASSY	***T1:***	***24 (2.4, 17.7)***
(5)	Boot - steering gearbox	(13)	Pad - pressure	***T2:***	***27 (2.8, 19.9)***
(6)	Band - boot	(14)	Spring - gearbox	***T3:***	***60 (6.1, 44.3)***
(7)	Tie-rod	(15)	Adjusting screw	***T4:***	***85 (8.7, 62.7)***
(8)	Spring washer	(16)	Lock nut	***T5:***	***90 (9.2, 66.4)***

4. OIL PUMP

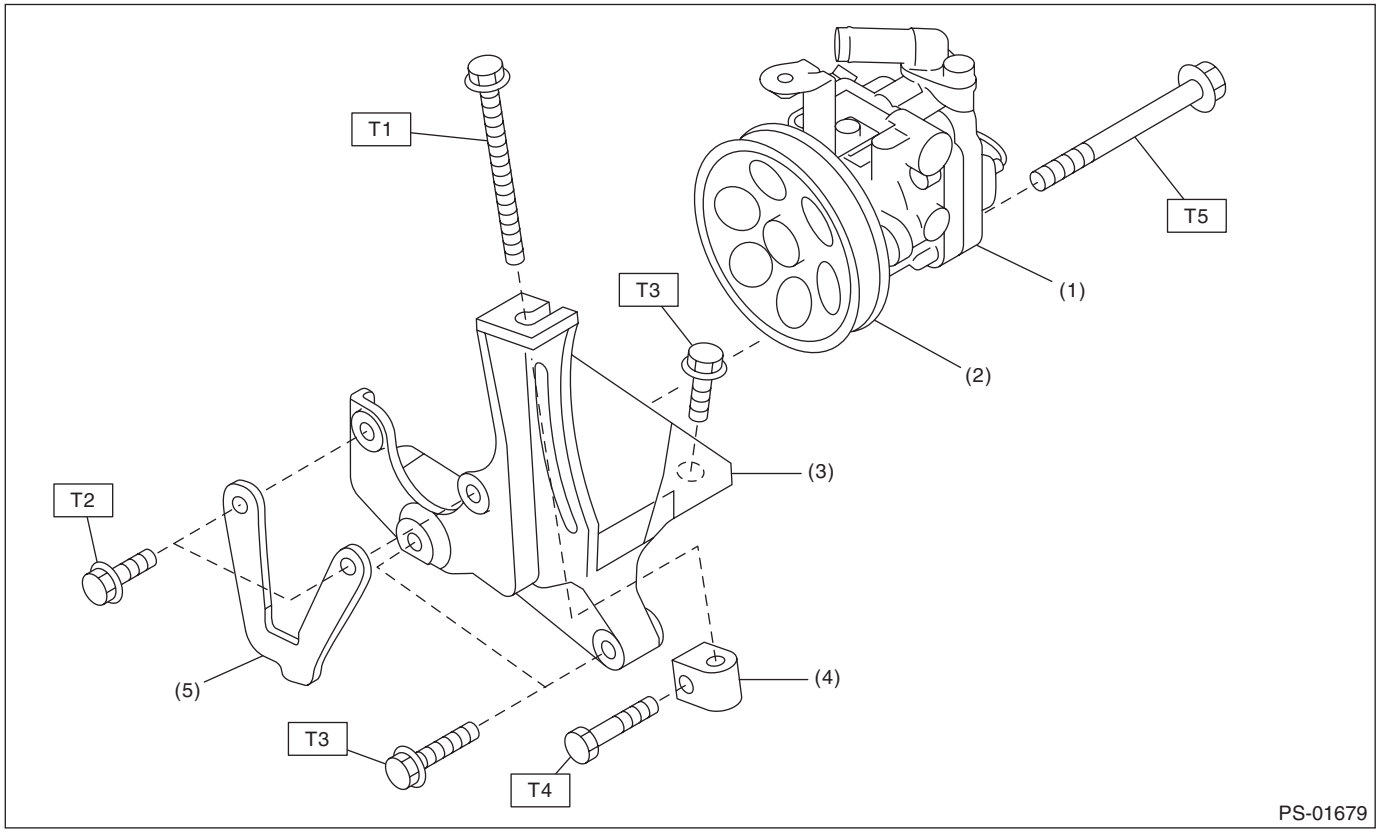

(1) Oil pump
(2) Pulley
(3) Bracket
(4) Belt tension nut
(5) Washer plate

Tightening torque: N·m (kgf-m, ft-lb)
T1: 8 (0.8, 5.9)
T2: 16 (1.6, 11.8)
T3: 22 (2.2, 16.2)
T4: 25 (2.5, 18.4)
T5: 48 (4.9, 35.4)

5. ELECTRIC POWER STEERING CONTROL MODULE

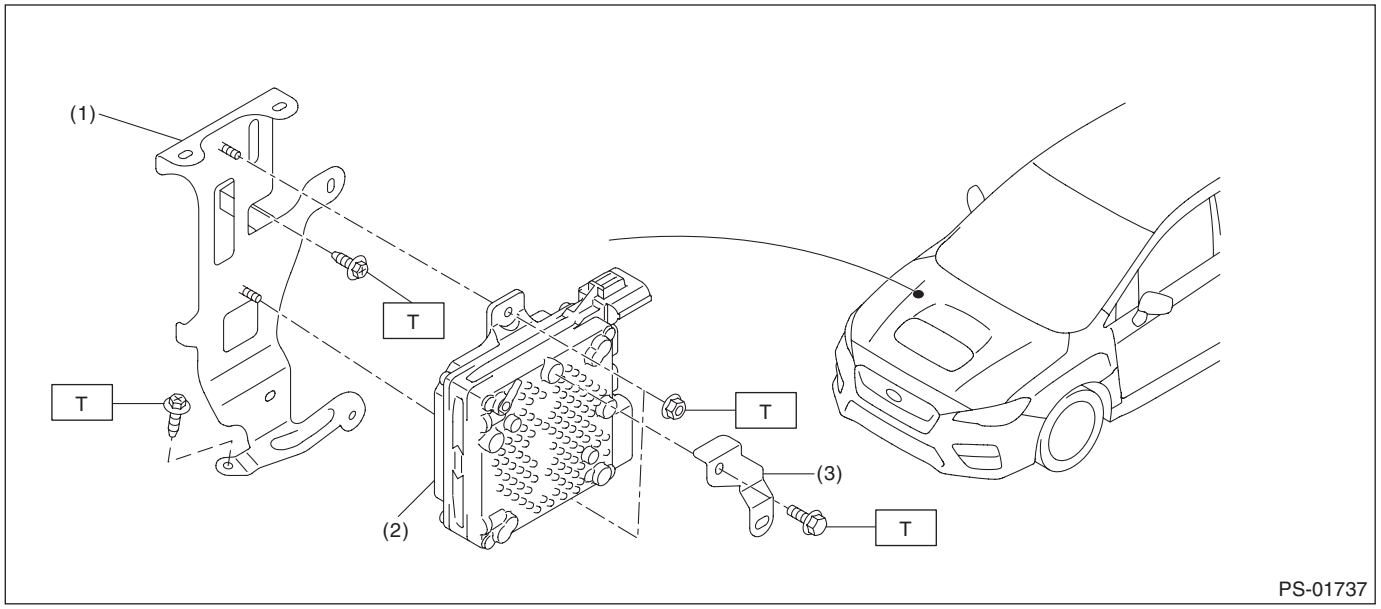

(1) Bracket - control module
(2) Power steering control module
(3) Harness bracket

Tightening torque: N·m (kgf-m, ft-lb)
T: 7.5 (0.8, 5.5)

C: CAUTION

- When performing any work, always wear work clothes, a work cap and protective shoes. Additionally, wear a helmet, protective goggles, etc. if necessary.
- When performing a repair, identify the cause of trouble and avoid unnecessary removal, disassembly and replacement.
- Some vehicle components are extremely hot immediately after driving. Be wary of receiving burns from heated parts.
- Use SUBARU genuine grease, the recommended or equivalent. Do not mix grease etc. of different grades or manufacturers.
- Be sure to tighten fasteners including bolts and nuts to the specified torque.
- Always use the jack-up point when the shop jacks or rigid racks are used to support the vehicle.
- Do not secure a part in a vise directly. Place cushioning materials such as wood blocks, aluminum plates, or waste cloth between the part and the vise.
- When removing, installing or replacing the VDCCM&H/U, VDCCM&H/U bracket, steering wheel or steering angle sensor (steering roll connector), perform “VSC(VDC) Centering Mode” of the VDC. <Ref. to VDC-17, VDC SENSOR MIDPOINT SETTING MODE, ADJUSTMENT, VDC Control Module and Hydraulic Control Unit (VDCCM&H/U).>
- When the wheel alignment has been adjusted, perform the following adjustment.
  – Lane keep assist learning value clear (model with EyeSight): <Ref. to ES(diag)-50, OPERATION, CLEAR ACTIVE LANE KEEP SYSTEM LEARNING VALUE.>
  – VDC sensor midpoint setting mode: <Ref. to VDC-17, ADJUSTMENT, VDC Control Module and Hydraulic Control Unit (VDCCM&H/U).>

D: PREPARATION TOOL

1. SPECIAL TOOL

ILLUSTRATION	TOOL NUMBER	DESCRIPTION	REMARKS
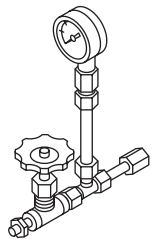 ST-925711000	925711000	PRESSURE GAUGE	Used for measuring oil pressure.
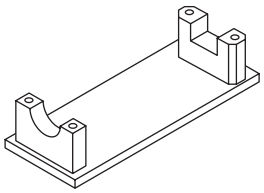 ST-926200000	926200000	STAND	• Used when inspecting characteristic of gear-box assembly and disassembling it. • Used together with BOSS D (34199AG000).
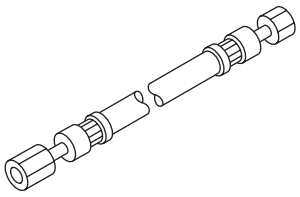 ST34099AC010	34099AC010	ADAPTER HOSE A	Used together with PRESSURE GAUGE (925711000).
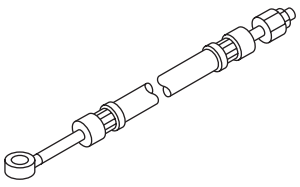 ST34099AC020	34099AC020	ADAPTER HOSE B	Used together with PRESSURE GAUGE (925711000).

ILLUSTRATION	TOOL NUMBER	DESCRIPTION	REMARKS
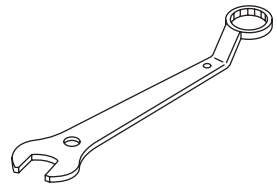 ST-926230000	926230000	SPANNER	For the lock nut when adjusting backlash of gearbox.
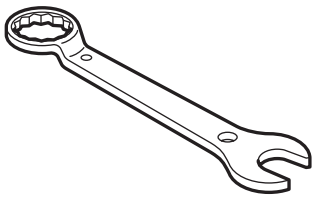 ST34099PA100	34099PA100	SPANNER	Used when measuring the rotational resistance of gearbox assembly.
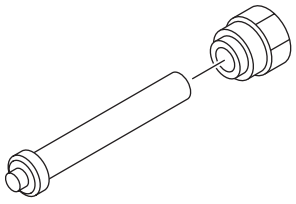 ST-926420000	926420000	PLUG	When fluid leaks from pinion side of gearbox assembly, remove pipe B from valve housing, attach this tool and check fluid leaking points.
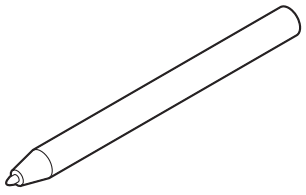 ST34099FA060	34099FA060	PUNCH HOLDER	Used for crimping.
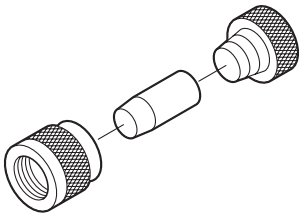 ST34199FE040	34199FE040	INSTALLER A, B, C	• Used for installing the oil seal to the rack assembly. • INSTALLER A: 34199FE070 • INSTALLER B: 34199FE080 • INSTALLER C: 34199FE090

ILLUSTRATION	TOOL NUMBER	DESCRIPTION	REMARKS
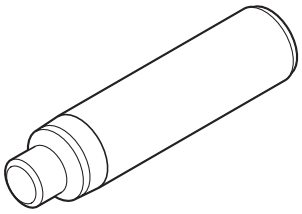 ST34199XA030	34199XA030	INSTALLER & REMOVER	Used for removing and installing the rack oil seal (outer and inner).
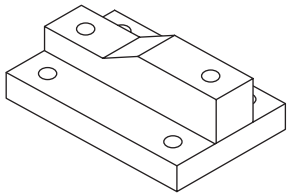 ST34199AG000	34199AG000	BOSS D	• Used when inspecting characteristic of gear-box assembly and disassembling it. • Used together with STAND (926200000).
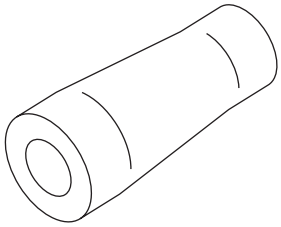 ST34199AG040	34199AG040	GUIDE	Used for installing seal ring of rack.
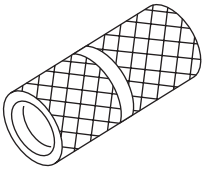 ST34199AG070	34199AG070	FORMER	Used for forming seal ring of pinion.
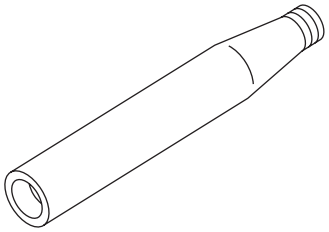 ST34199AG020	34199AG020	GUIDE	Used for installing seal ring of pinion.

ILLUSTRATION	TOOL NUMBER	DESCRIPTION	REMARKS
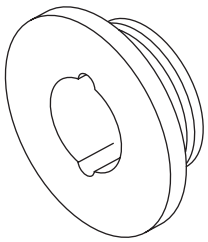 ST34199AG060	34199AG060	GUIDE G (26)	• Used for forming seal ring of rack. • Used together with FORMER PISTON (34199AG080).
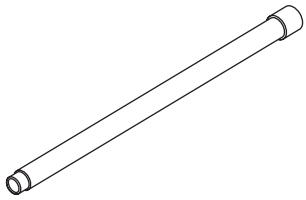 ST34099PA010	34099PA010	OIL SEAL REMOVER	Used for removing oil seal.
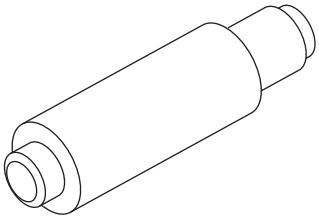 ST34199AG090	34199AG090	INSTALLER & REMOVER	• Used for installing oil seal of valve housing. • Used for installing ball bearing of valve housing. • Used for removing oil seal and ball bearing from valve housing.
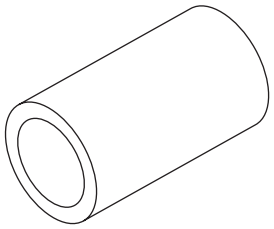 ST34199AG080	34199AG080	FORMER PISTON	• Used for forming seal ring of rack. • Used together with GUIDE G (26) (34199AG060).
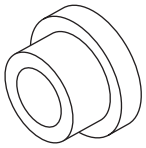 ST34199AG010	34199AG010	INSTALLER	Used for pressing-fit oil seal of gearbox cylinder.

ILLUSTRATION	TOOL NUMBER	DESCRIPTION	REMARKS
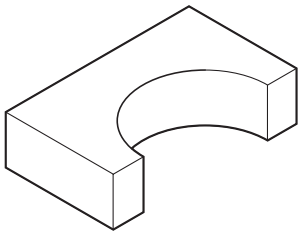 ST34199FE020	34199FE020	BASE	Used for crimping.
 STSSM4	—	SUBARU SELECT MONITOR 4	Used for setting of each function and trouble-shooting for electrical system. NOTE: For detailed operation procedures of Subaru Select Monitor 4, refer to “Application help”.

2. GENERAL TOOL

TOOL NAME	REMARKS
Steering wheel puller	Used for removing the steering wheel.
Circuit tester	Used for measuring voltage, resistance and current.
DST-i	Used together with Subaru Select Monitor 4.
C-clamp	Used when inspecting steering gearbox assembly.

2. Power Steering System

A: WIRING DIAGRAM

Refer to “Electric Power Steering System” in the wiring diagram. <Ref. to WI-368, WIRING DIAGRAM, Vehicle Dynamics Control System.>

B: ELECTRICAL SPECIFICATION

Refer to Control Module I/O Signal of “POWER ASSISTED SYSTEM (POWER STEERING) (DIAGNOSTICS)”. <Ref. to PS(diag)-9, ELECTRICAL SPECIFICATION, Control Module I/O Signal.>

C: INSPECTION

Refer to “POWER ASSISTED SYSTEM (POWER STEERING) (DIAGNOSTICS)”. <Ref. to PS(diag)-2, Basic Diagnostic Procedure.>

D: NOTE

For procedure of each component in the power steering system, refer to the respective section.

- Steering wheel: <Ref. to PS-16, Steering Wheel.>
- Universal joint assembly - steering: <Ref. to PS-21, Universal Joint.>
- Steering column: <Ref. to PS-25, Steering Column.>
- Steering gearbox (hydraulic type): <Ref. to PS-30, Steering Gearbox.>
- Electric power steering gearbox (electric type): <Ref. to PS-66, Electric Power Steering Gearbox.>
- Pipe assembly (hydraulic type): <Ref. to PS-81, Pipe Assembly.>
- Oil pump (hydraulic type): <Ref. to PS-90, Oil Pump.>
- Reservoir tank (hydraulic type): <Ref. to PS-98, Reservoir Tank.>
- Power steering fluid (hydraulic type): <Ref. to PS-99, Power Steering Fluid.>
- Power steering control module (electric type): <Ref. to PS-100, Power Steering Control Module.>

3. Steering Wheel

A: REMOVAL

CAUTION:
Before handling the airbag system components, always refer to "CAUTION" of "General Description" in "AIRBAG SYSTEM". <Ref. to AB-9, CAUTION, General Description.>
1) Disconnect the ground cable from battery and wait for at least 60 seconds before starting work. <Ref. to NT-6, BATTERY, NOTE, Note.>

NOTE:
For model with battery sensor, disconnect the ground terminal from battery sensor.
2) Set the tire to the straight-ahead position.
3) Remove the driver's airbag module. <Ref. to AB-32, REMOVAL, Driver's Airbag Module.>
4) Remove the steering wheel.

CAUTION:
- **Always use the steering wheel puller for removal to avoid deforming the steering wheel.**
- **If the steering wheel has been removed, make sure that the steering roll connector is not turned from the original position.**

(1) Disconnect the connector and remove the nut.
(2) Put alignment marks and remove the steering wheel.

Preparation tool:
Steering wheel puller

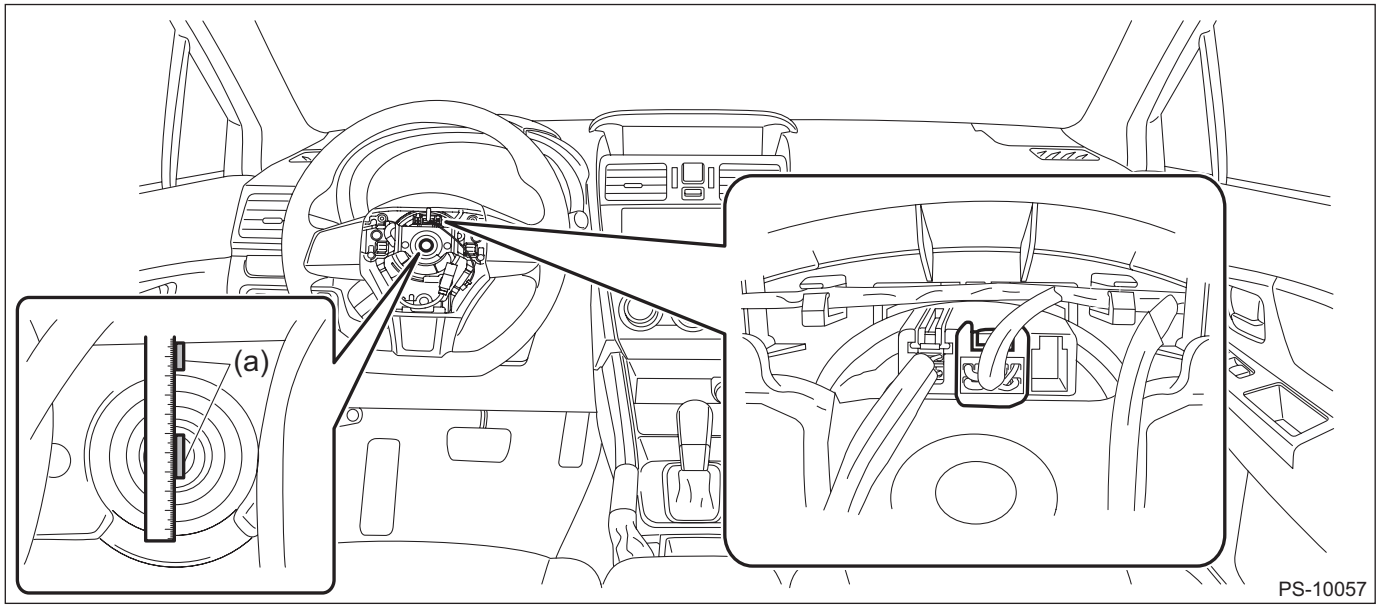

B: INSTALLATION

CAUTION:
• Before handling the airbag system components, refer to "CAUTION" of "General Description" in "AIRBAG SYSTEM". <Ref. to AB-9, CAUTION, General Description.>
• If the steering wheel has been removed, make sure that the steering roll connector is not turned from the original position.
• If the steering wheel and steering angle sensor are removed, perform "VSC(VDC) Centering Mode" of the VDC. <Ref. to VDC-17, VDC SENSOR MIDPOINT SETTING MODE, ADJUSTMENT, VDC Control Module and Hydraulic Control Unit (VDCCM&H/U).>
1) Align the center position of the roll connector. <Ref. to AB-62, ADJUSTMENT, Roll Connector.>
2) Install the steering wheel.

Tightening torque:
Steering wheel: 39 N·m (4 kgf-m, 28.8 ft-lb)

Clearance:
Between cover assembly - column and steering wheel: 4 — 6 mm (0.16 — 0.24 in)
3) Install the driver's airbag module. <Ref. to AB-33, INSTALLATION, Driver's Airbag Module.>
4) Connect the battery ground terminal. <Ref. to NT-6, BATTERY, NOTE, Note.>

C: DISASSEMBLY

1) Remove the screw, disconnect the connector and remove the paddle shift switch. (Model with paddle shift)

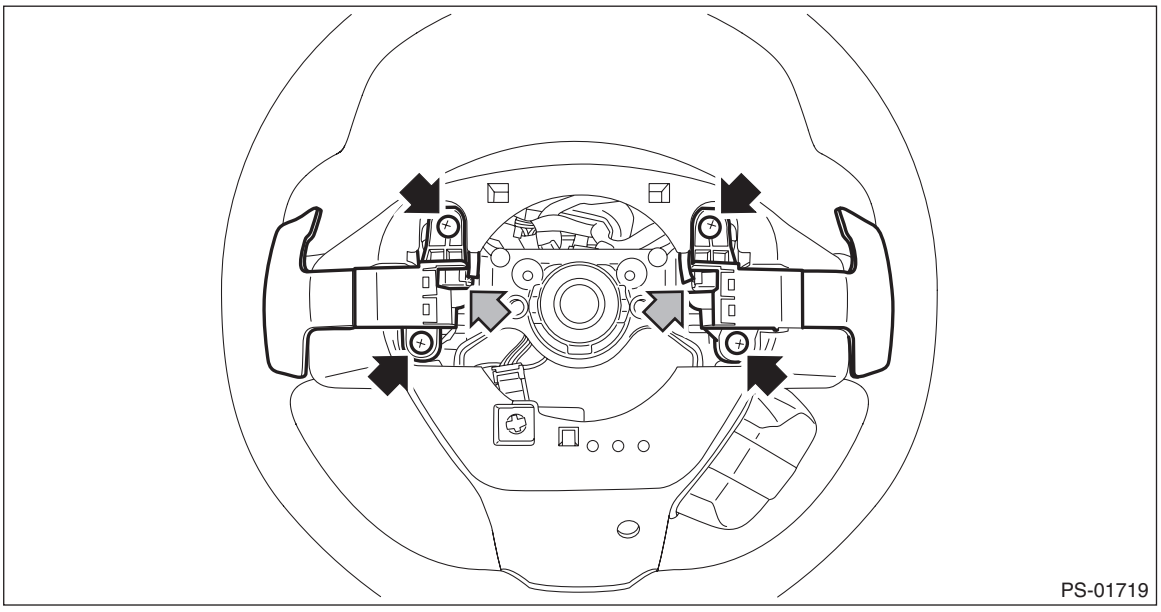

2) Remove the cover - steering wheel LWR.
   (1) Remove the connectors and screws.
   (2) Release the claws and harness clips, detach the cover - steering wheel LWR.

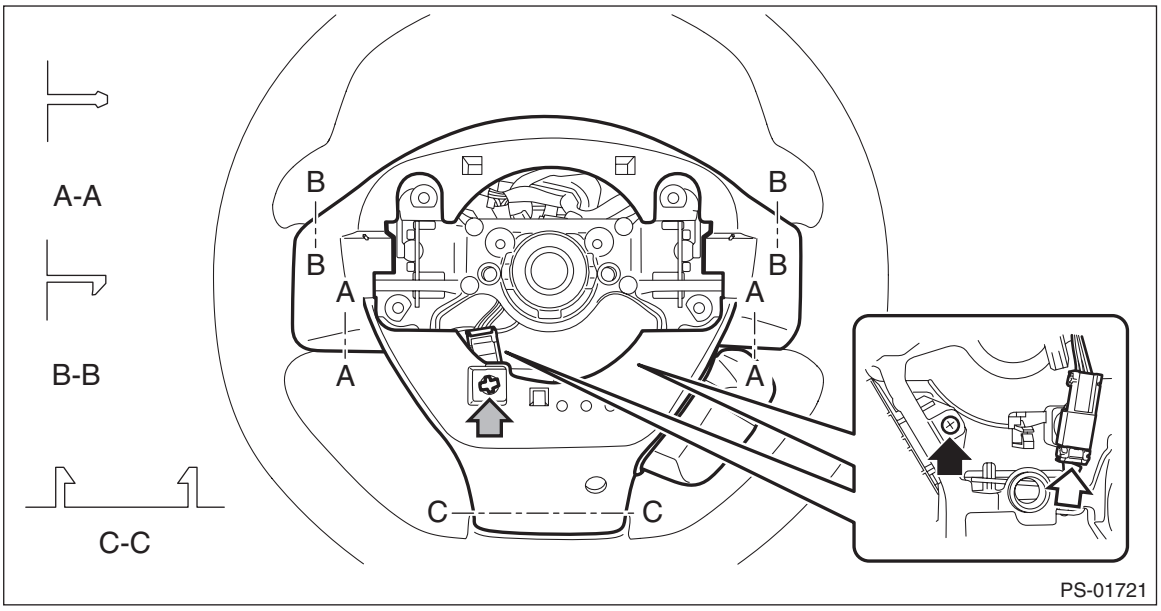

3) Release the claws and remove the screws, then detach the satellite switch.

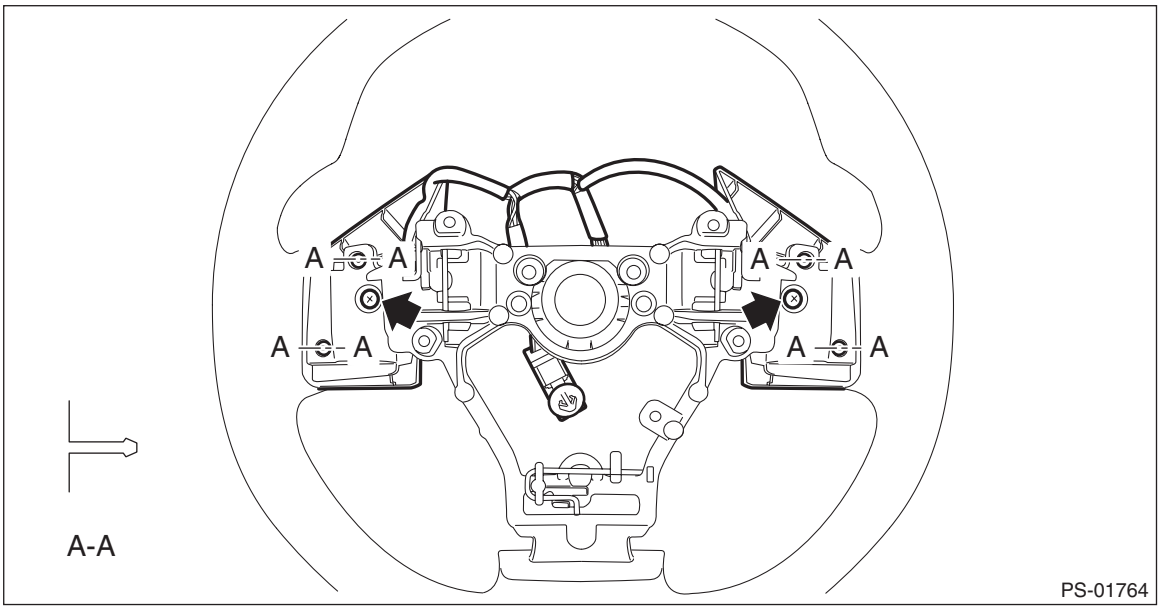

4) Release the claws, and then remove the MID switch.

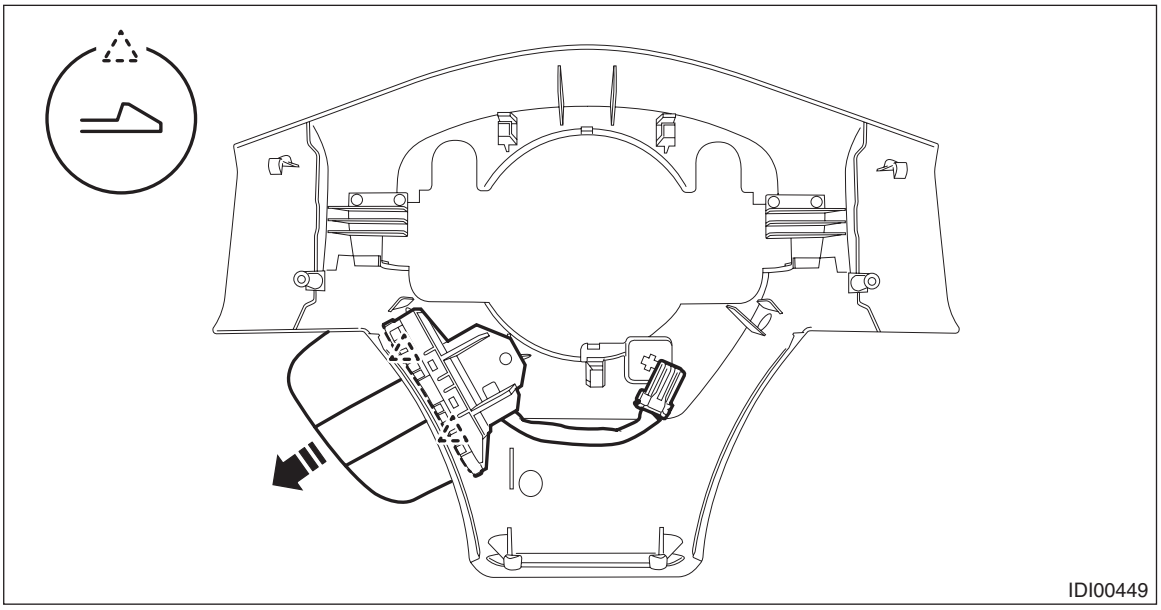

D: ASSEMBLY

CAUTION:
Securely install the switch. Improper insertion of the pin or claw of the switch may cause improper installation.

1) Install the MID switch.
2) Install the satellite switch.
3) Install the cover - steering wheel LWR.
4) Install the paddle shift switch. (Model with paddle shift)

E: INSPECTION

1. PADDLE SHIFT SWITCH

1) Measure the resistance between connector terminals.

Preparation tool:
Circuit tester

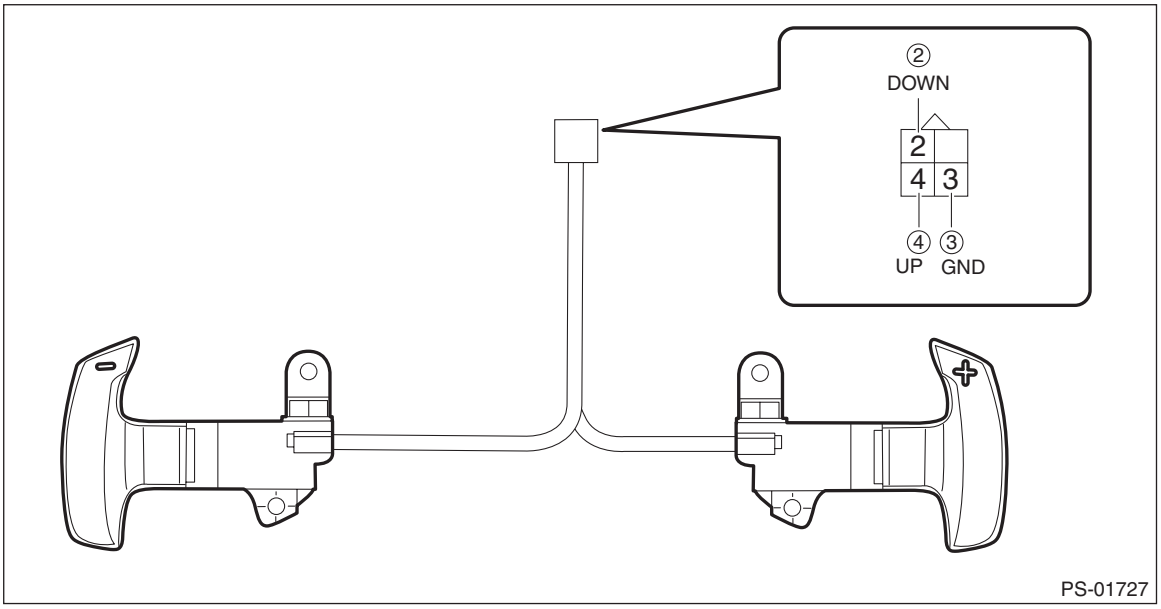

Terminal No.	Inspection conditions	Standard
3 — 4	Operate the + side of paddle shift assembly and hold it.	Less than 10 Ω
2 — 3	Operate the – side of paddle shift assembly and hold it.	Less than 10 Ω
2 — 3 3 — 4	Do not operate the paddle shift assembly.	Is the resistance 1 MΩ or more?

2) Replace the paddle shift switch if the inspection result is not within the standard value.

2. SATELLITE SWITCH ASSEMBLY

• Audio (navigation) switch: <Ref. to ET-47, SATELLITE SWITCH ASSEMBLY, INSPECTION, Switches and Harness.>
• EyeSight steering switch: <Ref. to ES-36, EyeSight STEERING SWITCH, INSPECTION, Switches and Harness.>
• Cruise control command switch: <Ref. to CC-7, INSPECTION, Cruise Control Command Switch.>

3. MID SWITCH

Refer to “Steering Switch” of “INSTRUMENTATION/DRIVER INFO” section. <Ref. to IDI-25, INSPECTION, Steering Switch.>

4. Universal Joint

A: REMOVAL

1) Remove the universal joint assembly - steering.
   (1) Place alignment marks on the universal joint assembly - steering.

NOTE:
Place alignment marks on the following positions.
- Between the column assembly - steering and the universal joint assembly - steering
- Between the steering gearbox assembly and the universal joint assembly - steering

   (2) Remove the bolt, and remove the universal joint assembly - steering.

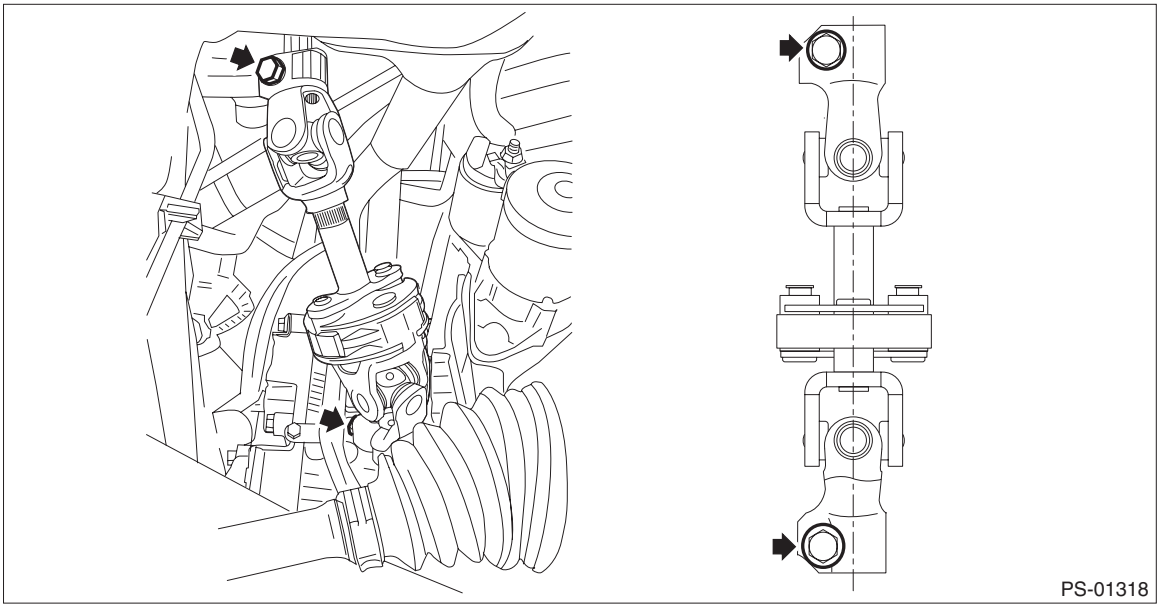

2) Set the steering column and the driver's seat to the neutral position.

CAUTION:
Always place the tilt lever to the lock position after the steering column is adjusted.

3) Prevent the steering wheel from turning using the seat belt.

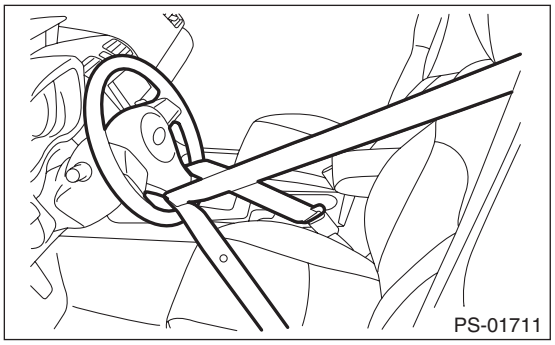

B: INSTALLATION

1) Before installation, check the universal joint assembly - steering. <Ref. to PS-23, INSPECTION, Universal Joint.>
2) Unfasten the seat belt and make the steering wheel turn freely.
3) Install the universal joint assembly - steering to the column shaft.

CAUTION:
• Be sure to align the protrusion section (a) of the column shaft side with the cutout (a) of the serration. If another cutout portions (d) are used for alignment, the bolt of the universal joint assembly - steering cannot be assembled.
• Be sure to follow the tightening order and tightening torque of the universal joint assembly - steering to avoid the steering effort from becoming heavy.
• When tightening the mounting bolts of the universal joint assembly - steering, always tighten the gearbox side bolts first.
• Always place the tilt lever to the lock position after the steering column is adjusted.

(1) Match the alignment marks that have been marked when removing with the column shaft (c) and the cutout portion (a) at the serrations of the yoke (b).
(2) Connect the universal joint assembly - steering with the column shaft.

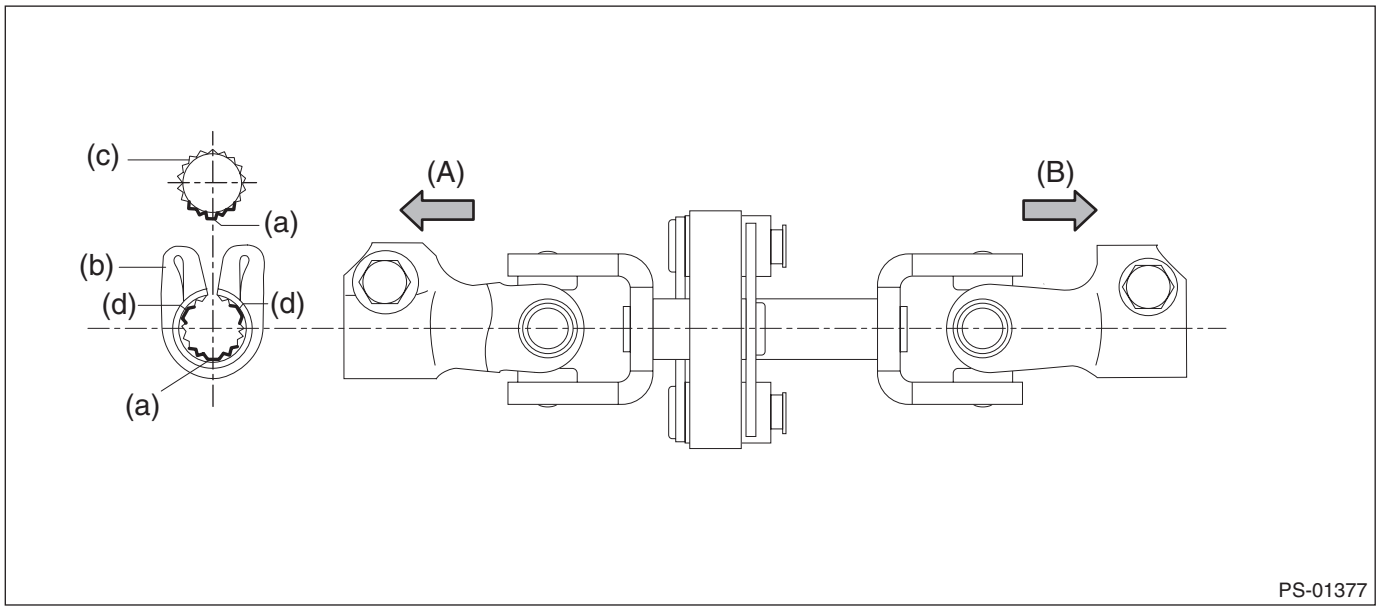

(A) Column shaft side (B) Gearbox side

(3) Install the universal joint assembly - steering to the serrations of the gearbox assembly by matching the alignment marks that have been marked when removing.
(4) Tighten the bolts on the gearbox side first, and then the column shaft side.

Tightening torque:
24 N·m (2.4 kgf-m, 17.7 ft-lb)

Clearance:
Universal joint assembly - steering coupling to adjacent parts: 15 mm (0.59 in) or more

C: INSPECTION

Check for wear, damage or any other faults.
1) Check the universal joint assembly - steering for excessive looseness.

Service limit:
Play of the universal joint assembly - steering: 0 mm (0 in)

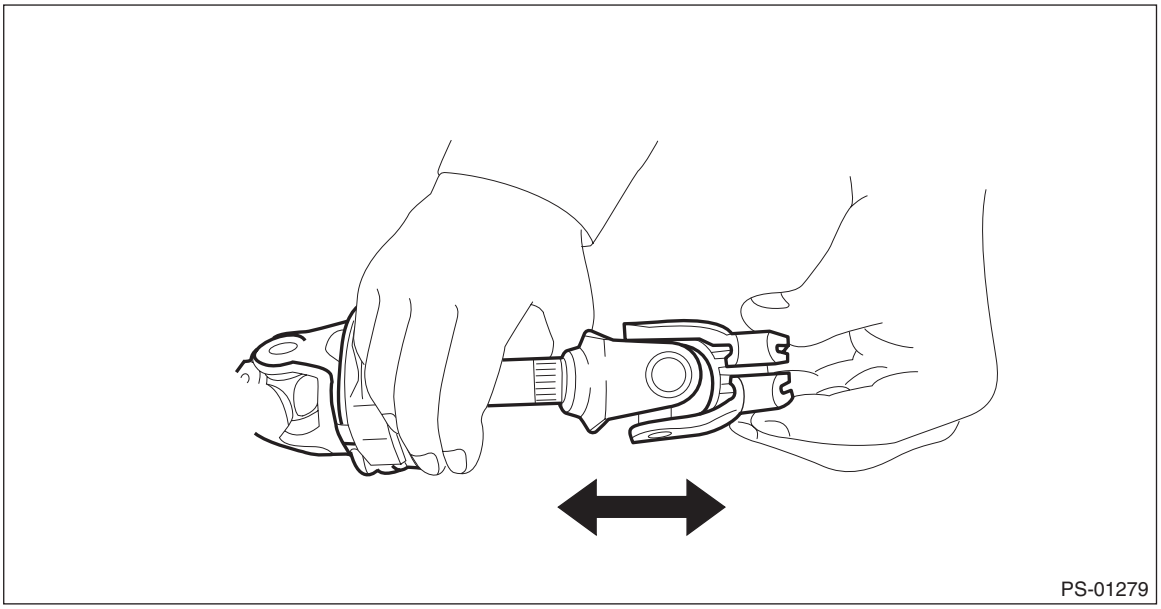

2) Measure the swing torque of the universal joint assembly - steering.
(1) Place the universal joint assembly - steering between wooden blocks and fix it on a vise.
(2) With the yoke (a) of gearbox side facing up, measure the swing torque in two directions.

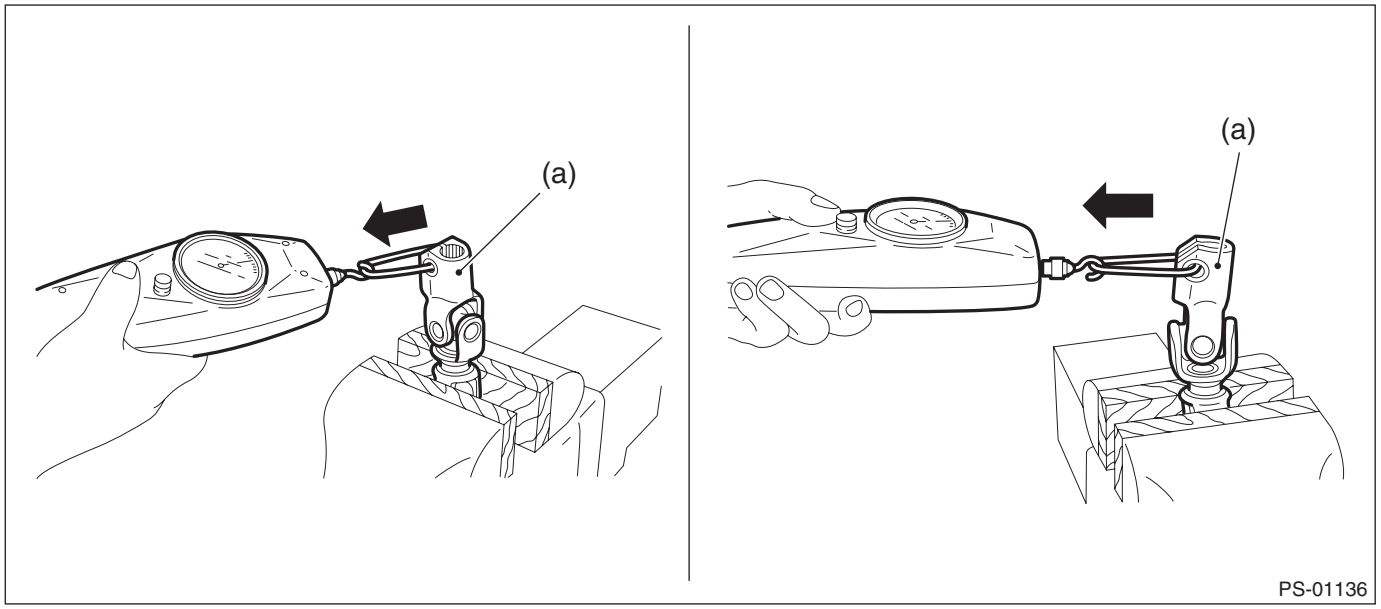

Service limit:
Maximum load: 3.8 N (0.39 kgf, 0.86 lbf) or less

(3) With the yoke (b) of the column assembly - steering side facing up, measure the swing torque in two directions.

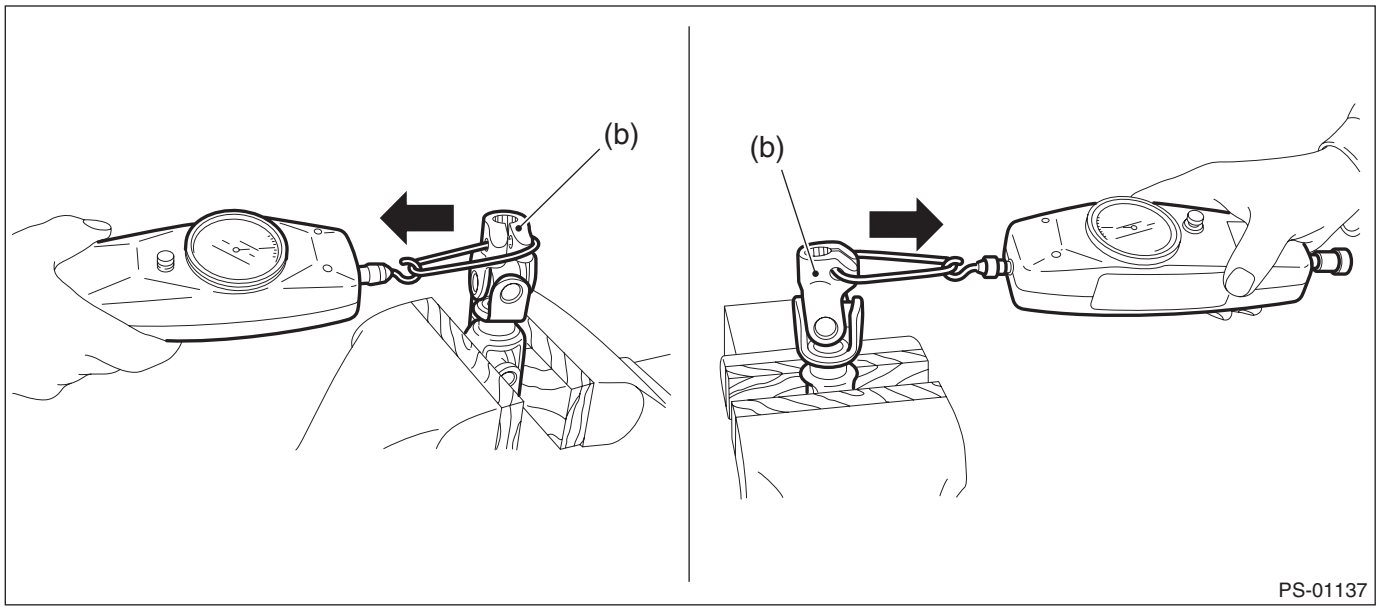

Service limit:

Maximum load: 7.3 N (0.74 kgf, 1.64 lbf) or less

(4) Replace as necessary, if it is found defective.

5. Steering Column

A: REMOVAL

CAUTION:
Before handling the airbag system components, always refer to "CAUTION" of "General Description" in "AIRBAG SYSTEM". <Ref. to AB-9, CAUTION, General Description.>
1) Disconnect the ground cable from battery and wait for at least 60 seconds before starting work. <Ref. to NT-6, BATTERY, NOTE, Note.>

NOTE:
For model with battery sensor, disconnect the ground terminal from battery sensor.
2) Remove the cover assembly - instrument panel LWR driver. <Ref. to EI-62, REMOVAL, Instrument Panel Lower Cover.>
3) Remove the knee airbag module. <Ref. to AB-34, REMOVAL, Knee Airbag Module.>
4) Remove the driver's airbag module. <Ref. to AB-32, REMOVAL, Driver's Airbag Module.>
5) Remove the steering wheel. <Ref. to PS-16, REMOVAL, Steering Wheel.>
6) Remove the cover assembly - column.
(1) Release the clips, and remove the cover assembly - steering UPR.

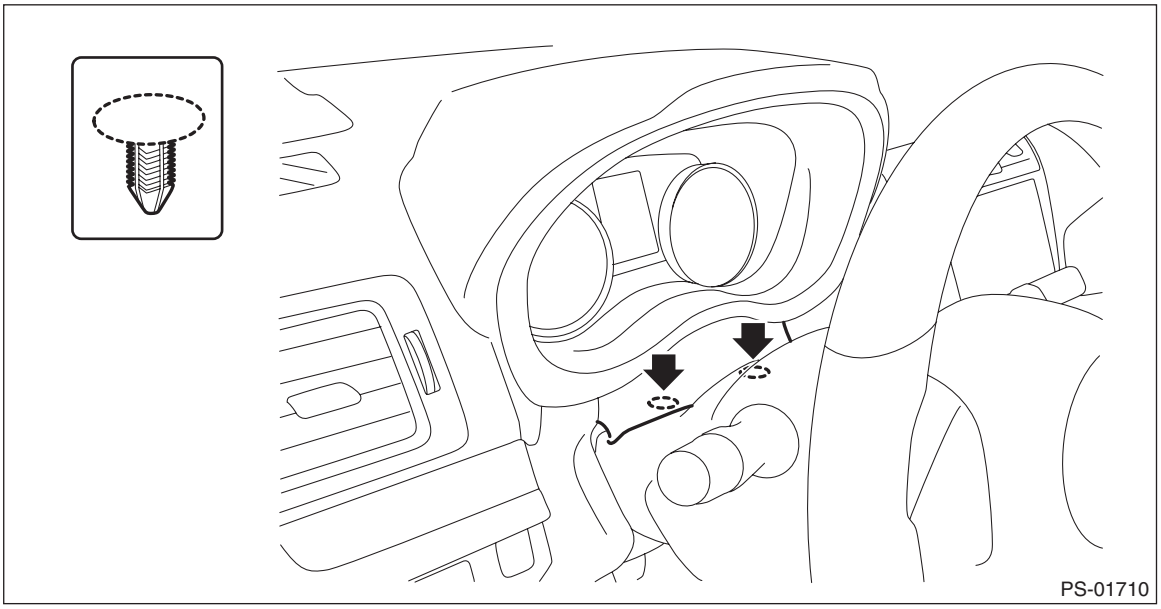

(2) Remove the screws.
(3) Remove the cap - key cylinder (a). (Model with keyless access with push button start)
(4) Release the claw, and remove the cover assembly - column UPR and the cover assembly - column LWR.

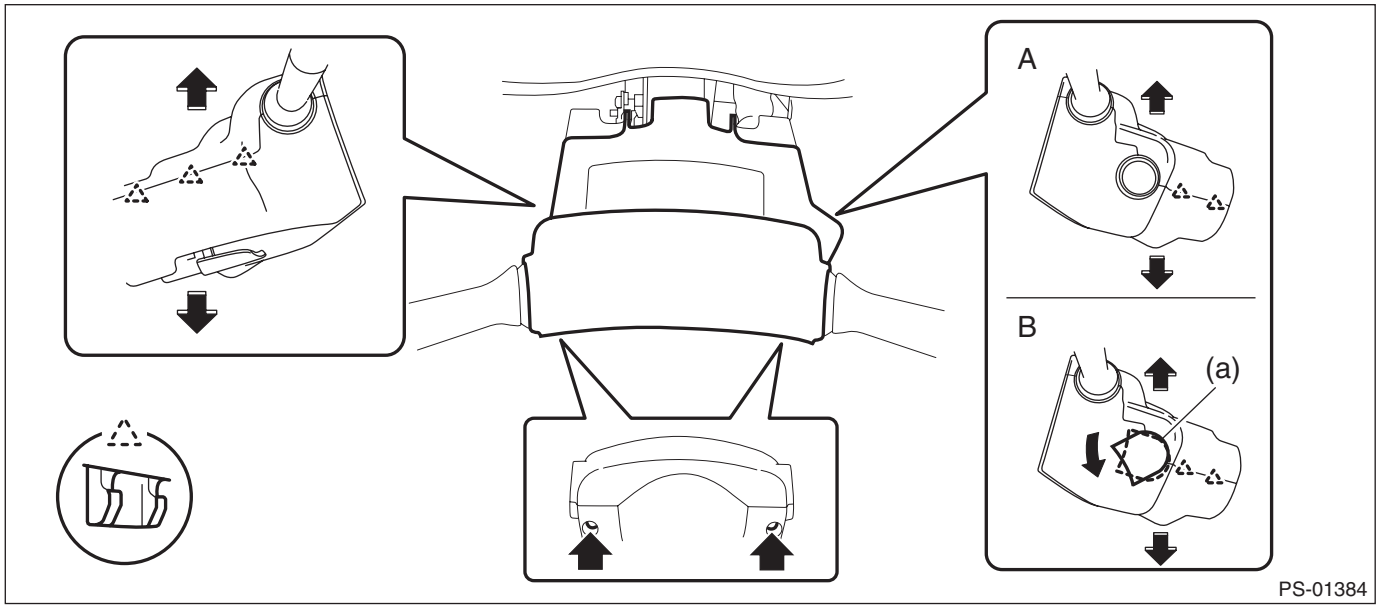

A Model without keyless access with push button start
B Model with keyless access with push button start

7) Remove the switch assembly - combination.
(1) Disconnect the connector, and loosen the clamp to release the claws.
(2) Pull out the switch assembly - combination from the column assembly - steering.

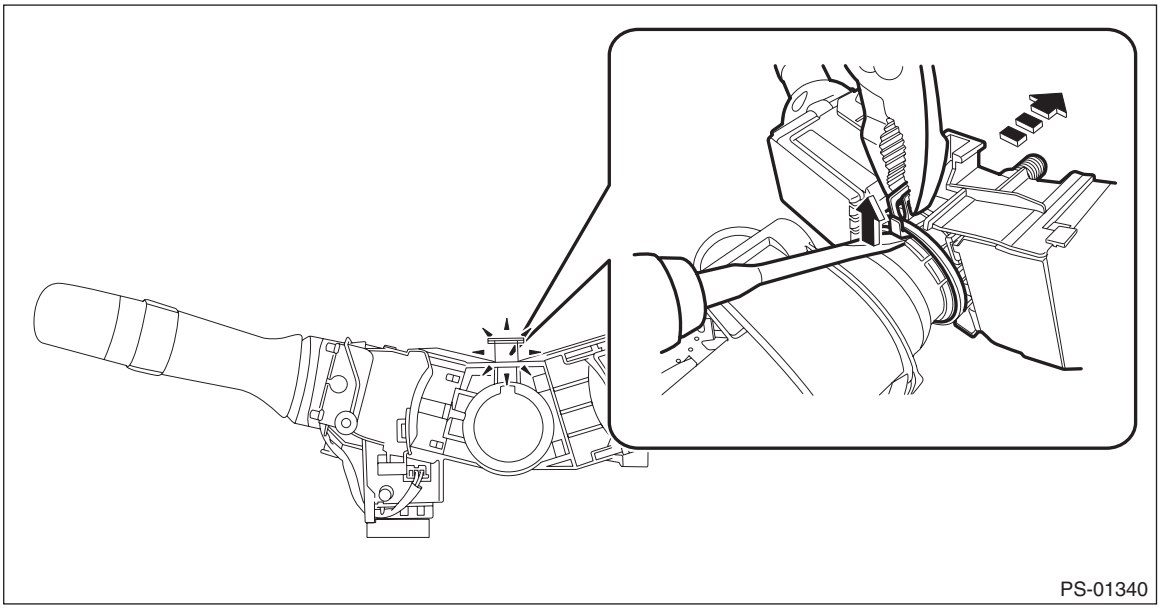

8) Remove all connectors from the column assembly - steering.
9) Remove the universal joint assembly - steering. <Ref. to PS-21, REMOVAL, Universal Joint.>

CAUTION:
To prevent damage to the universal joint assembly - steering and improper steering effort, make sure to remove the universal joint assembly - steering.

10) Remove the nut under the beam COMPL - steering securing the column assembly - steering.

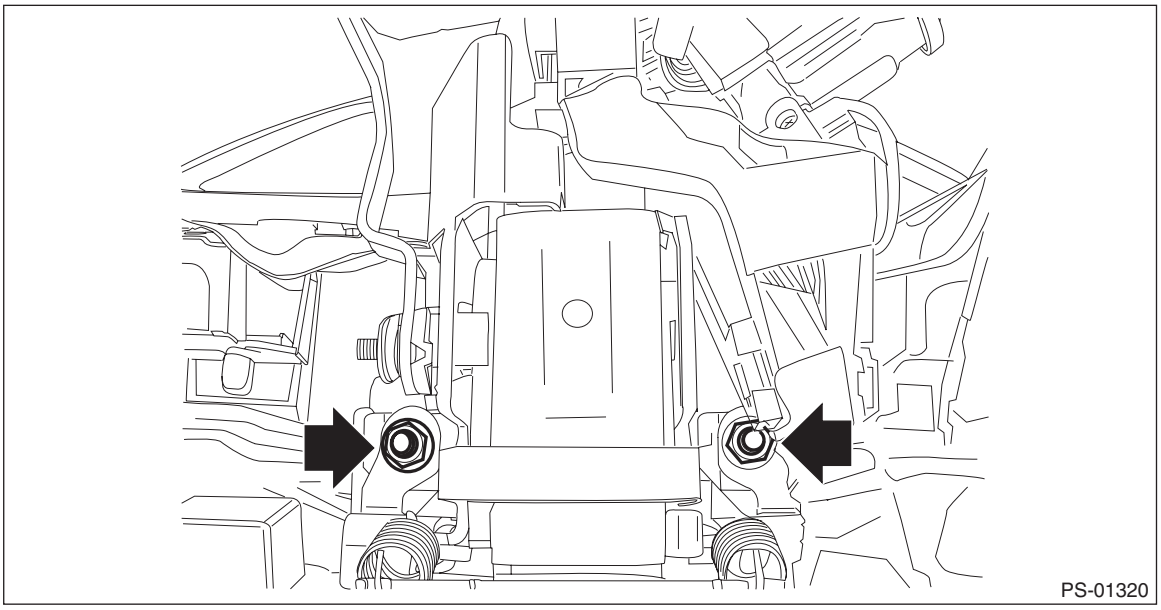

11) Pull out the column assembly - steering from the hole on toe board.

CAUTION:
Do not loosen the tilt lever when the column assembly - steering is not secured to the vehicle.

12) Remove the ignition key lock. <Ref. to SL-64, REPLACEMENT, Ignition Key Lock.>

B: INSTALLATION

CAUTION:
• When removing, installing or replacing the VDCCM&H/U, VDCCM&H/U bracket, steering wheel or steering angle sensor (steering roll connector), perform "VSC(VDC) Centering Mode" of the VDC. <Ref. to VDC-17, VDC SENSOR MIDPOINT SETTING MODE, ADJUSTMENT, VDC Control Module and Hydraulic Control Unit (VDCCM&H/U).>
• Before handling the airbag system components, always refer to "CAUTION" of "General Description" in "AIRBAG SYSTEM". <Ref. to AB-9, CAUTION, General Description.>
1) Install the bushing to the toe board.

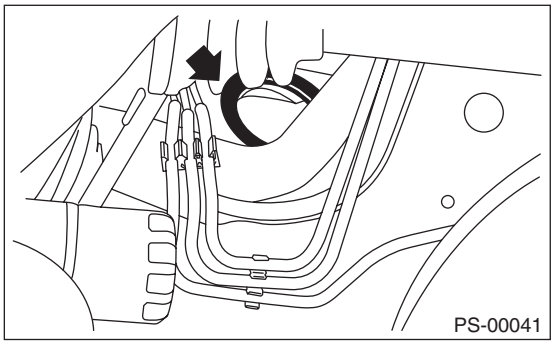

2) Insert the end of the column assembly - steering into the toe board bushing.
3) Tighten the column assembly - steering installation nut located under the beam COMPL - steering with the tilt lever fixed.

Tightening torque:
20 N·m (2 kgf-m, 14.8 ft-lb)
4) Install the ignition key lock. <Ref. to SL-64, REPLACEMENT, Ignition Key Lock.>
5) Install the switch assembly - combination.
6) Connect all the connectors under the instrument panel.
7) Install the universal joint assembly - steering. <Ref. to PS-22, INSTALLATION, Universal Joint.>

CAUTION:
• Always install the universal joint assembly - steering after installing the steering column to avoid damage to the universal joint assembly - steering.
• Be sure to follow the tightening order and tightening torque of the universal joint assembly - steering to avoid the steering effort from becoming heavy.
8) Install the knee airbag module. <Ref. to AB-34, INSTALLATION, Knee Airbag Module.>
9) Install the cover assembly - instrument panel LWR driver.
10) Install the cover assembly - column.
11) Align the center position of the steering roll connector. <Ref. to AB-62, ADJUSTMENT, Roll Connector.>
12) Install the steering wheel.

Tightening torque:
Steering wheel: 39 N·m (4 kgf-m, 28.8 ft-lb)

Clearance:
Between cover assembly - column and steering wheel: 4 — 6 mm (0.16 — 0.24 in)
13) Install the driver's airbag module. <Ref. to AB-33, INSTALLATION, Driver's Airbag Module.>
14) Connect the battery ground terminal. <Ref. to NT-6, BATTERY, NOTE, Note.>

C: INSPECTION

1. UNIT INSPECTION

Check the following items, and if there is anything out of standard value, it is considered to be damaged. If so, replace it with a new part.

- Measure the whole length of the column assembly - steering.

Standard: Overall length L
Tilt and telescopic column (measure while minimized)
$819.7^{+1.5}_{-1.5}$ mm ($32.27^{+0.059}_{-0.059}$ in)

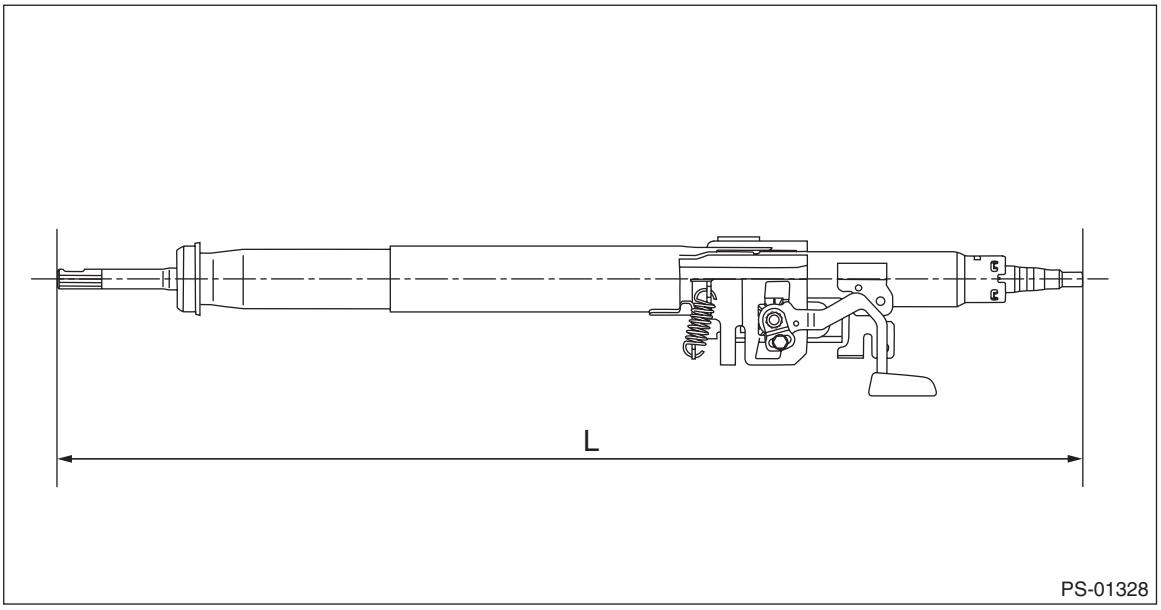

- Check the steering wheel deflection in axial and vertical directions.

Specification:
Axial deflection A (deflection of steering wheel)
Less than 6 mm (0.24 in)

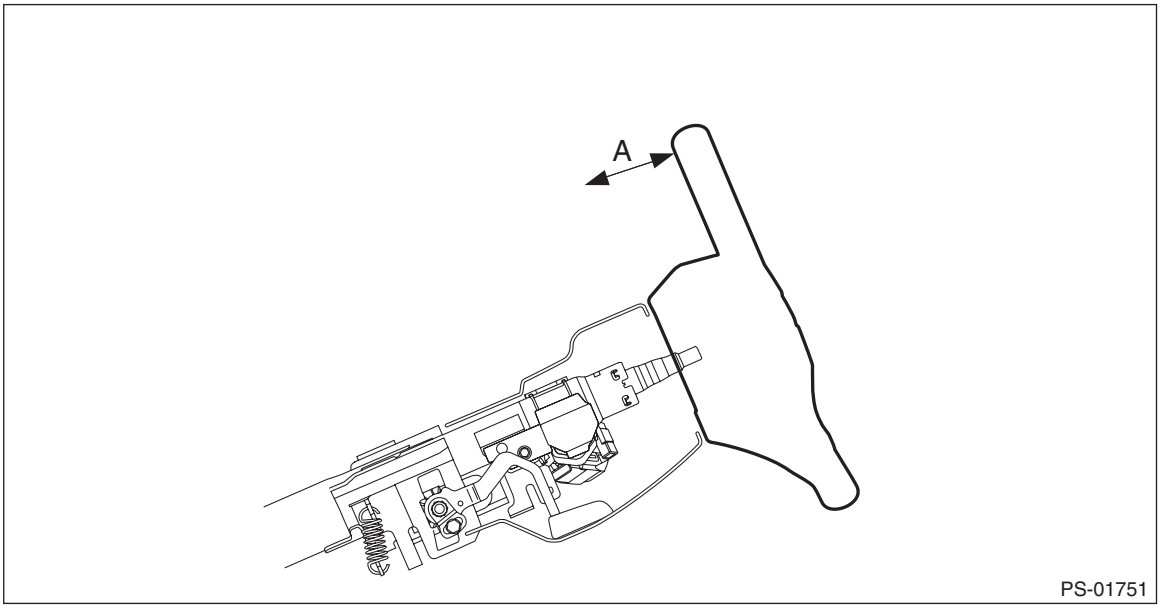

2. INSPECTION OF AIRBAG SYSTEM

Refer to “AIRBAG SYSTEM” section for airbag inspection procedure. <Ref. to AB-33, INSTALLATION, Driver’s Airbag Module.>

6. Steering Gearbox

A: REMOVAL

1) Lift up the vehicle, and then remove the front wheels.
2) Remove the under cover - front. <Ref. to EI-22, REMOVAL, Front Under Cover.>
3) Disconnect the tie-rod end.
   (1) Pull out the cotter pin (a).
   (2) Remove the castle nut (b).
   (3) Using a tie-rod end puller, remove the tie-rod end (c).

CAUTION:
Be careful not to damage the boot of the joint.

Preparation tool:
Tie-rod ball joint puller

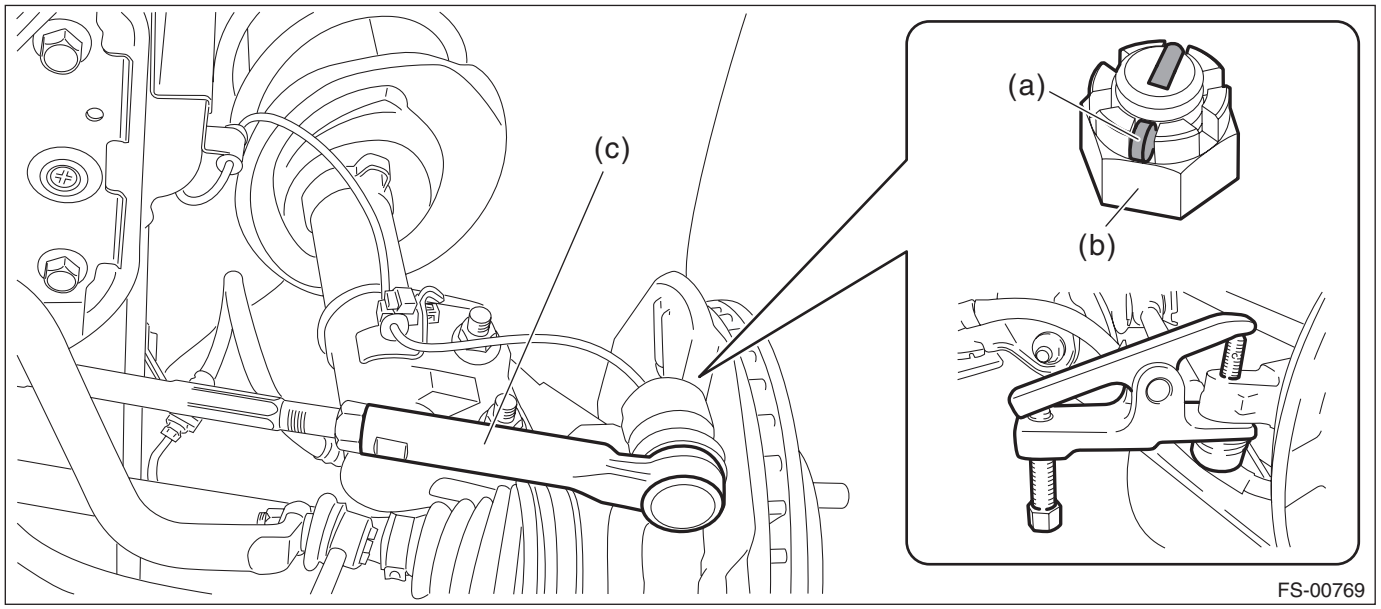

4) Remove the bolt, and remove the front crossmember support.

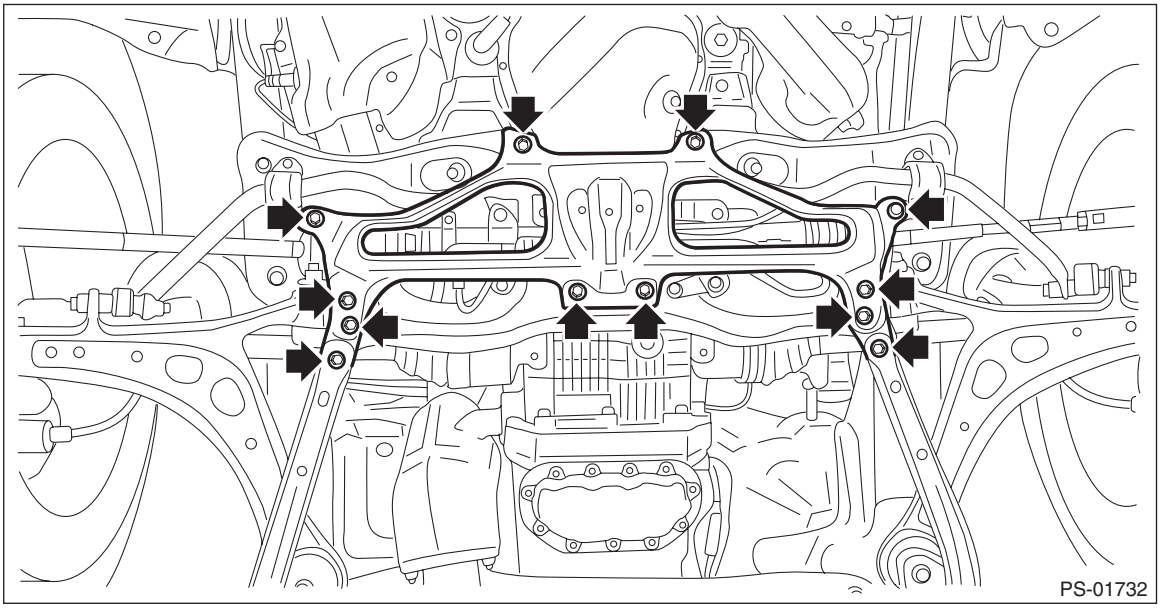

5) Remove the front stabilizer. <Ref. to FS-29, REMOVAL, Front Stabilizer.>

6) Drain the power steering fluid.
(1) Remove the pipe joint of the gearbox, and connect the vinyl hose to the pipe and the joint.

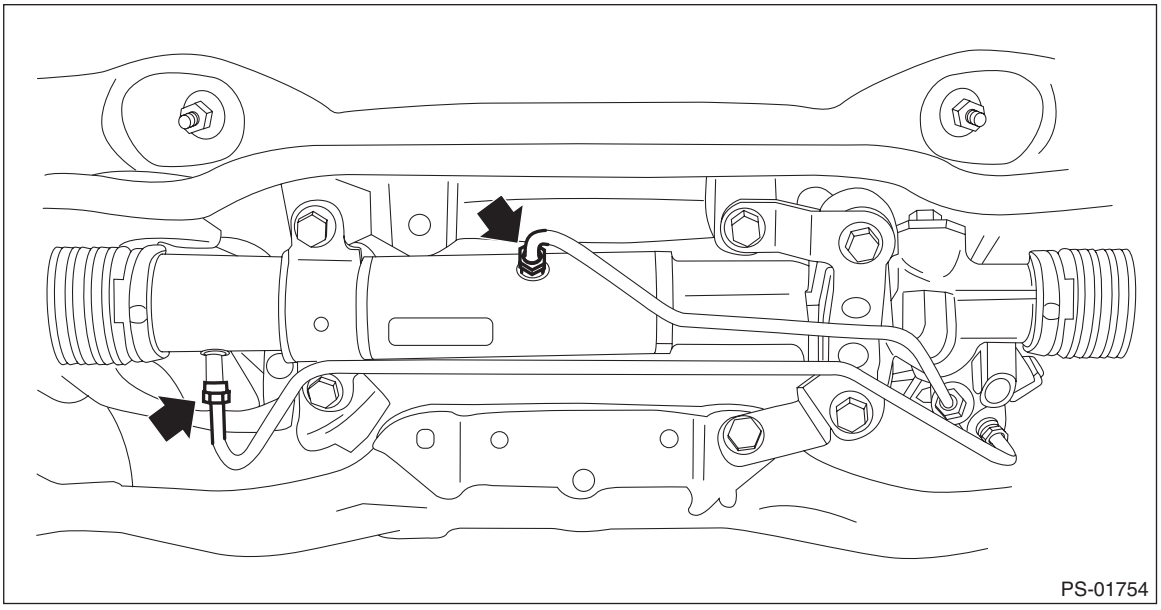

(2) Discharge the fluid by turning the steering wheel fully clockwise and counterclockwise.
(3) Discharge the fluid similarly from other pipes.
7) Remove the universal joint assembly - steering. <Ref. to PS-21, REMOVAL, Universal Joint.>
8) Disconnect the ground cable from battery. <Ref. to NT-6, BATTERY, NOTE, Note.>
9) Disconnect the feed pipe from the pressure hose first, then disconnect the return pipe from the hose - return.

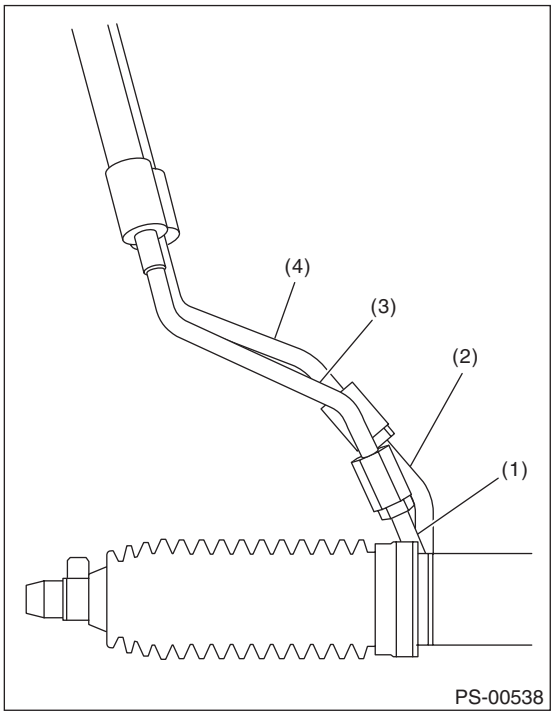

(1) Feed pipe
(2) Return pipe
(3) Pressure hose
(4) Hose - return

10) Remove the bolts securing the gearbox, and remove the stiffener (a), clamp (b) and gearbox (c).

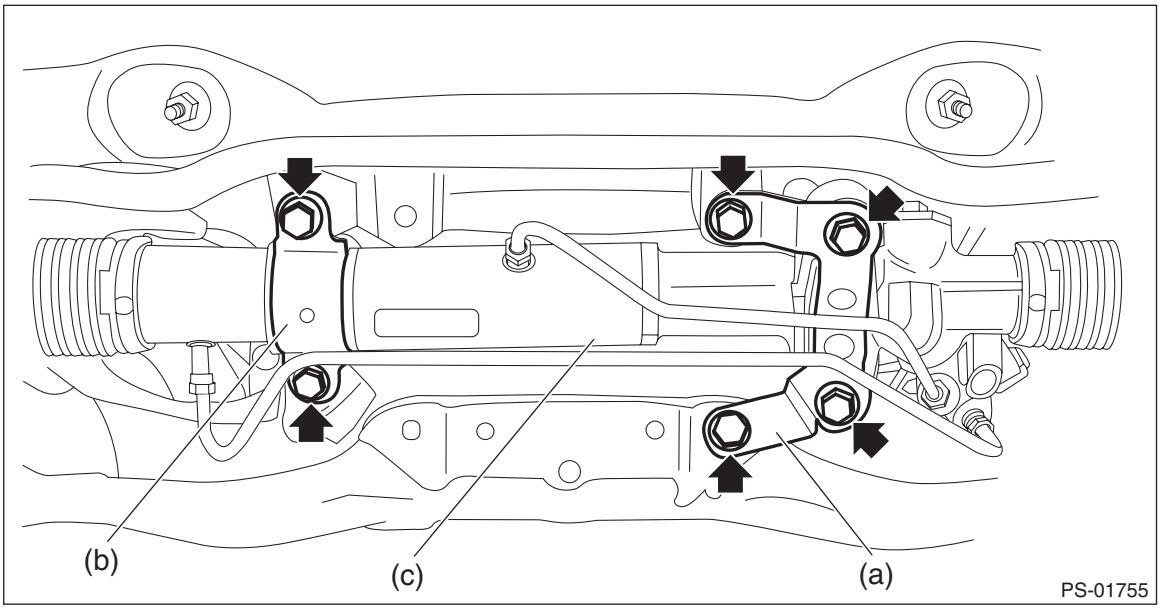

B: INSTALLATION

CAUTION:
Install the under cover - front so that the front end of the under cover (b) comes inside the bumper face - front (a).

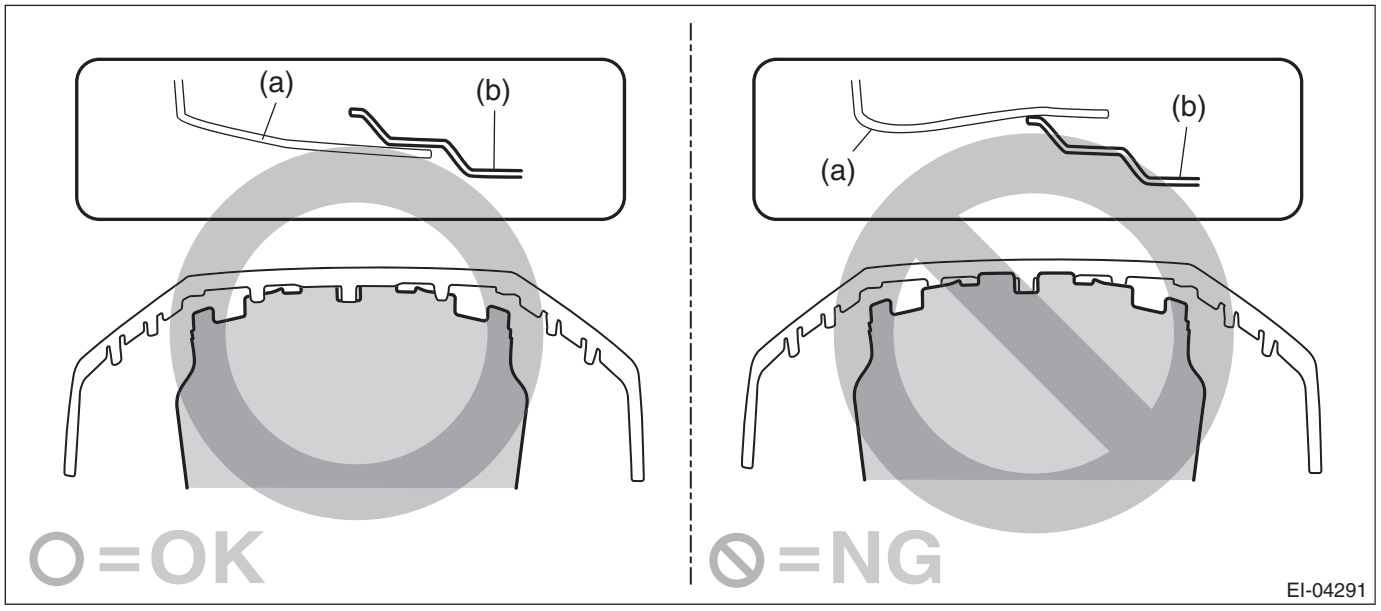

1) Insert the gearbox into crossmember, being careful not to damage gearbox boot.
2) Install the gearbox to the crossmember through the clamp and stiffener.

Tightening torque:
60 N·m (6.1 kgf-m, 44.3 ft-lb)

3) Connect the return pipe to the hose - return and then connect the feed pipe to the pressure hose.

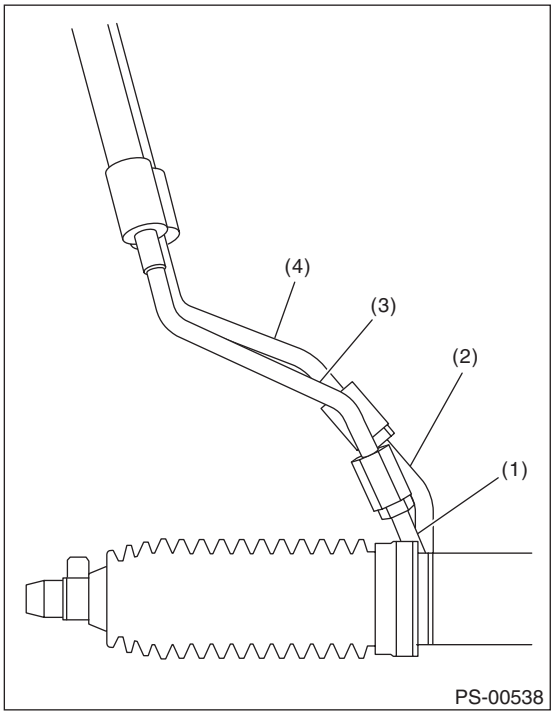

(1) Feed pipe
(2) Return pipe
(3) Pressure hose
(4) Hose - return

Tightening torque:
15 N·m (1.5 kgf-m, 11.1 ft-lb)

4) Install the universal joint assembly - steering. <Ref. to PS-22, INSTALLATION, Universal Joint.>
5) Connect the tie-rod ends.
   (1) Connect the tie-rod end (a) to the housing assembly - front axle.
   (2) Tighten the castle nuts (b) to the specified torque.

CAUTION:
When connecting the tie-rod, do not hit the cap at bottom of tie-rod end with a hammer.

Tightening torque:
27 N·m (2.8 kgf-m, 19.9 ft-lb)

(3) Tighten within the range of 60° so that the cotter pin hole and cutout portion of the castle nut (b) are aligned.
(4) Insert the cotter pin (c), and bend the tip of the pin to fix it.

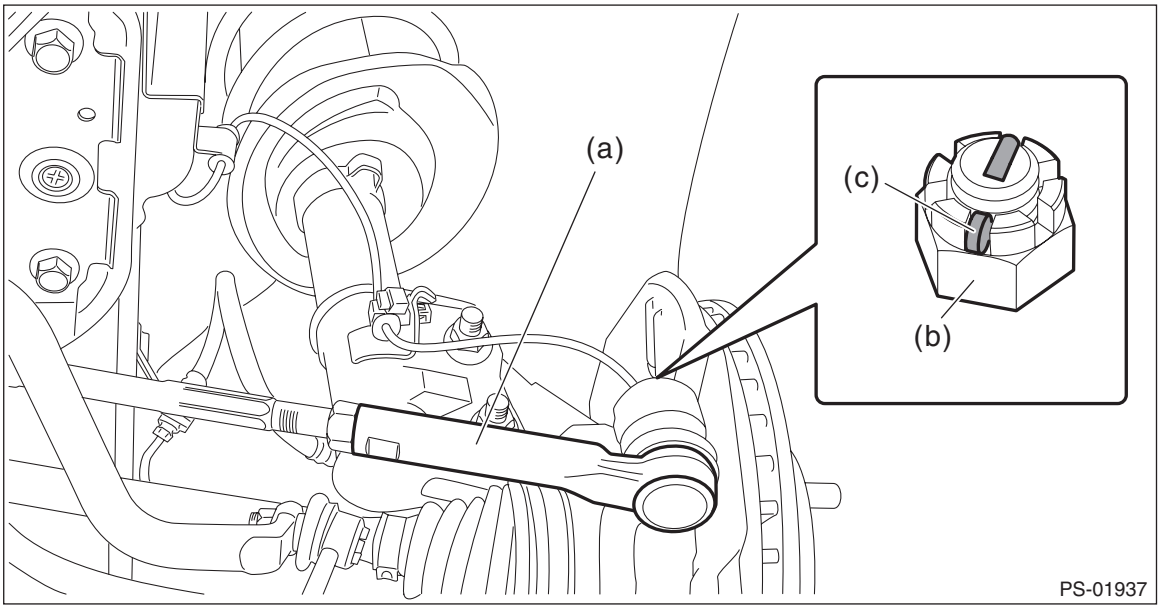

6) Install the front stabilizer. <Ref. to FS-29, INSTALLATION, Front Stabilizer.>
7) Install the front crossmember support.

Tightening torque:
Front suspension parts: <Ref. to FS-4, FRONT SUSPENSION, COMPONENT, General Description.>
8) Install the under cover - front. <Ref. to EI-23, INSTALLATION, Front Under Cover.>
9) Install the front wheels.
10) Lower the vehicle.
11) Tighten the wheel nuts to the specified torque.

Tightening torque:
120 N·m (12.2 kgf-m, 88.5 ft-lb)
12) Connect the battery ground terminal. <Ref. to NT-6, BATTERY, NOTE, Note.>
13) Pour fluid into the oil tank, and bleed air. <Ref. to PS-99, Power Steering Fluid.>
14) Check for fluid leaks.
15) Check the fluid level in oil tank.

16) Adjust the toe-in and steering angle. <Ref. to FS-16, FRONT WHEEL TOE-IN, ADJUSTMENT, Wheel Alignment.>

NOTE:
When adjusting toe-in, hold the boot as shown to prevent it from being rotated or twisted. If it becomes twisted, straighten it.

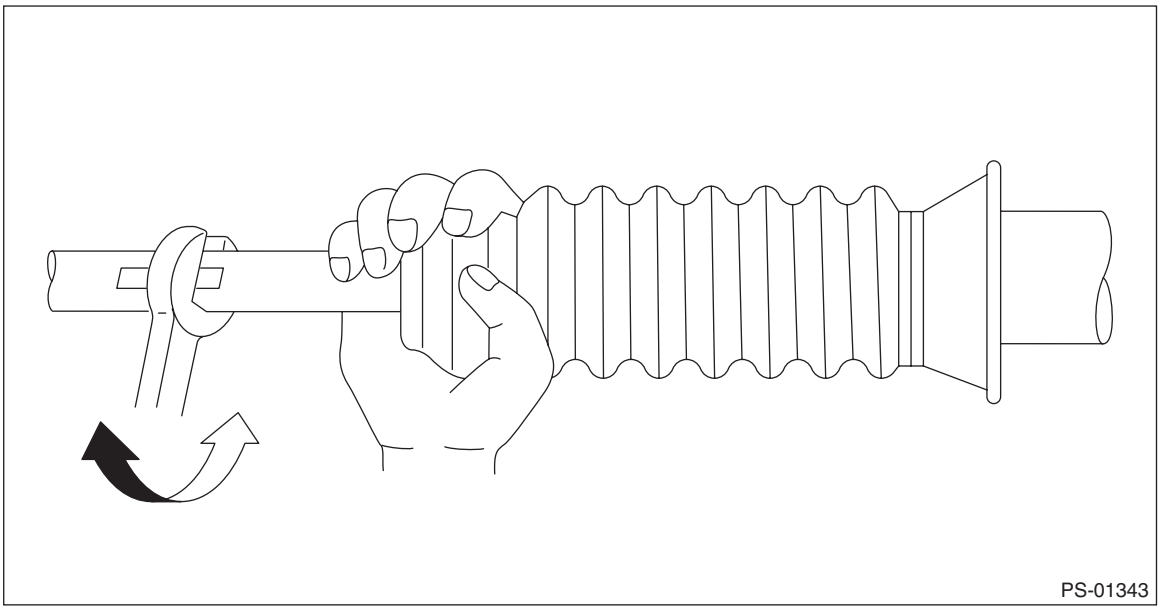

17) Tighten the tie-rod end lock nut.

Tightening torque:
85 N·m (8.7 kgf-m, 62.7 ft-lb)

C: DISASSEMBLY

1. RACK HOUSING ASSEMBLY

1) Disconnect the four pipes from gearbox.

NOTE:
Remove the pipes C and D, which are fixed to clamp plate, as a unit.
2) Secure the gearbox removed from vehicle in a vise using ST.

CAUTION:
Using the ST, secure the gearbox assembly in a vise as shown in the figure. Do not secure the gearbox without this ST.

Preparation tool:
ST1: STAND (926200000)
ST2: BOSS D (34199AG000)

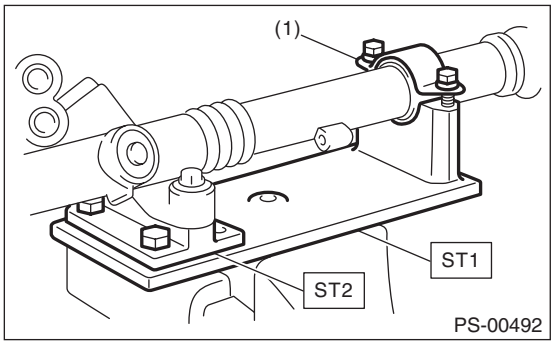

(1) Clamp

3) Remove the tie-rod end and lock nut from gearbox.
4) Remove the small clip from the boot using pliers, and then move the boot to tie-rod end side.

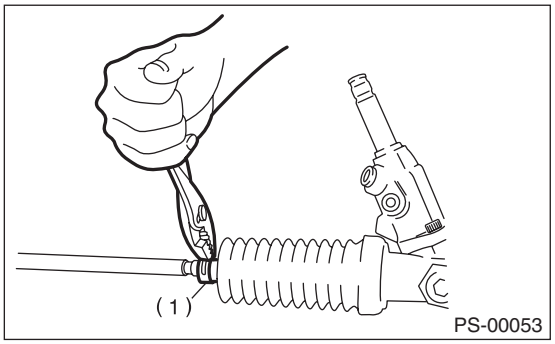

(1) Clip

5) Using a flat tip screwdriver, remove the band from boot.

NOTE:
Replace the boot if there is damage, cracks or deterioration.

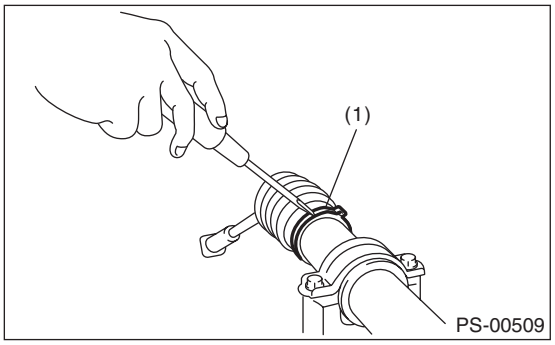

(1) Band

6) Using the ST, loosen the lock nut.

Preparation tool:
ST: SPANNER (926230000)

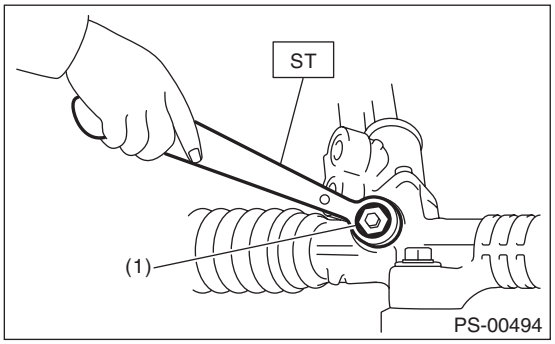

(1) Lock nut

7) Tighten the adjusting screw until it can no longer be tightened.

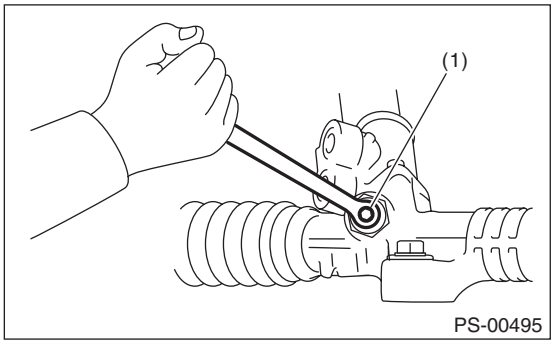

(1) Adjusting screw

8) Remove the tie-rod.
9) Loosen the adjusting screw, and remove the spring and sleeve.
10) Remove the two bolts securing valve assembly.

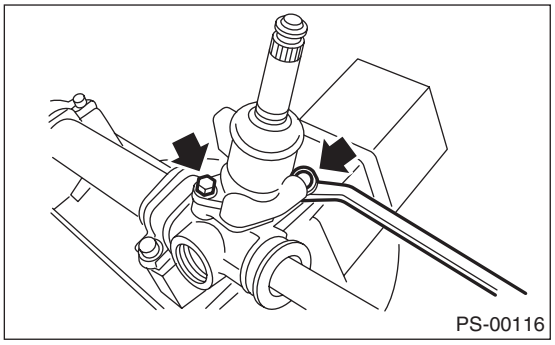

11) Carefully draw out the input shaft and remove the valve assembly.

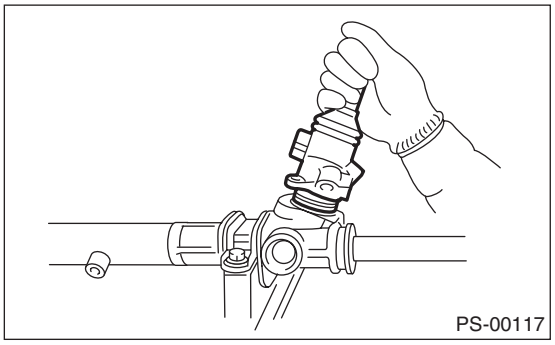

12) Using a drill, release the crimping of holder.

CAUTION:
Make a hole of 2 mm (0.08 in) depth using a drill with 3 mm (0.12 in) diameter.

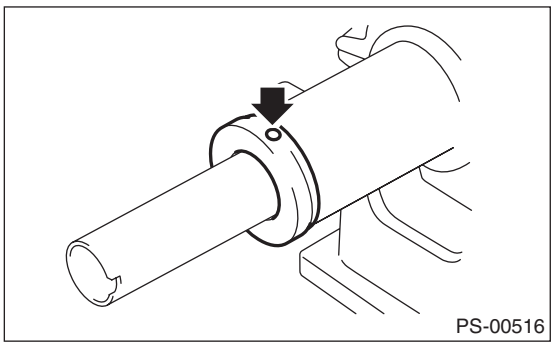

13) Remove the holder.

14) Attach the ST on the valve side of rack, and press out the rack together with the outer side oil seal while taking care that the rack and the steering body inner surface do not come into contact with each other.

Preparation tool:
ST: INSTALLER & REMOVER (34199XA030)

NOTE:
Block the pipe connection of steering body to prevent fluid from flowing out.

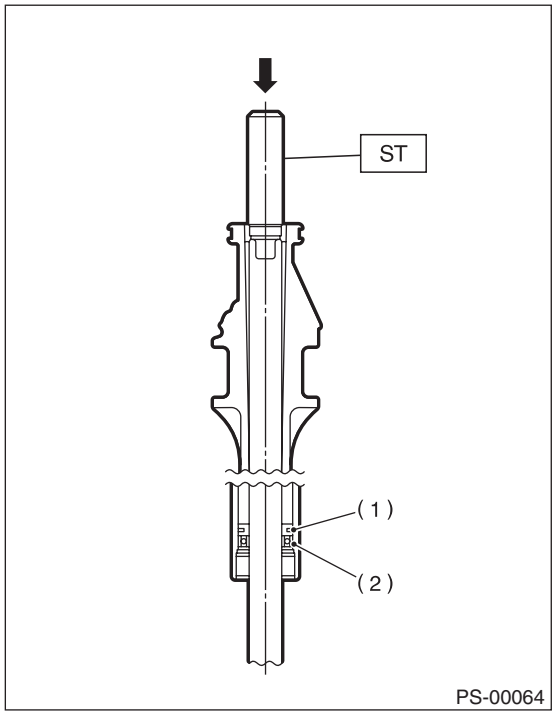

(1) Rack piston
(2) Outer side oil seal

15) Insert the ST from pinion housing side and remove the oil seal and back-up ring using a press.

Preparation tool:
ST: OIL SEAL REMOVER (34099PA010)

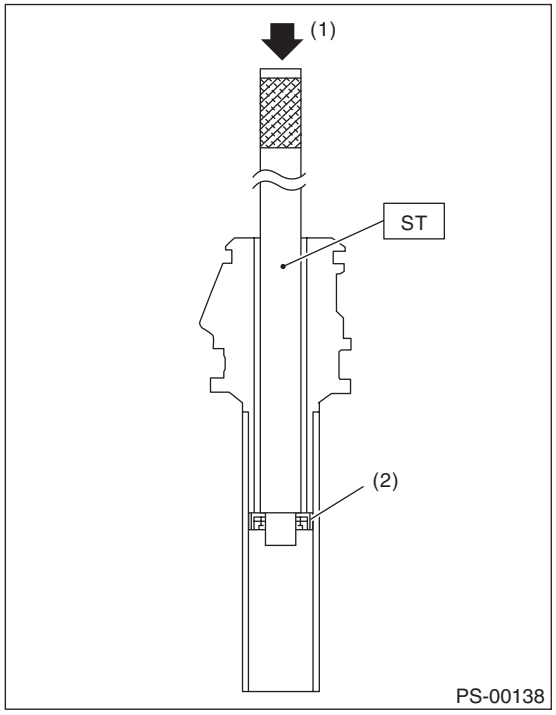

(1) Press
(2) Oil seal

16) Using a press, remove the bushing of gearbox installation portion.

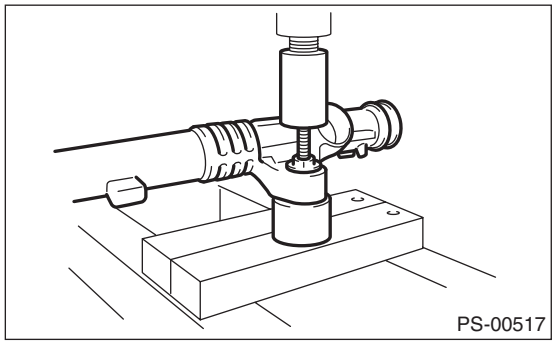

2. CONTROL VALVE

1) Disconnect the four pipes from gearbox.
2) Secure the gearbox removed from vehicle in a vise using ST.

CAUTION:
Using the ST, secure the gearbox assembly in a vise as shown in the figure. Do not secure the gearbox without this ST.

Preparation tool:
ST1: STAND (926200000)
ST2: BOSS D (34199AG000)

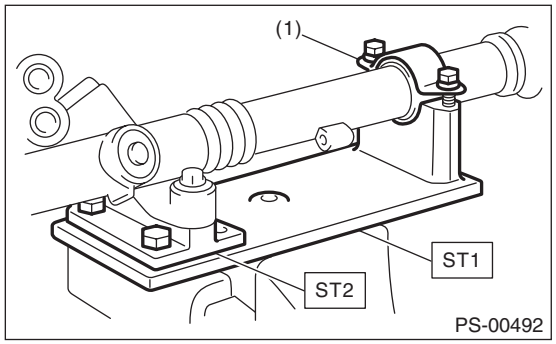

(1) Clamp

3) Using the ST, loosen the lock nut.

Preparation tool:
ST: SPANNER (926230000)

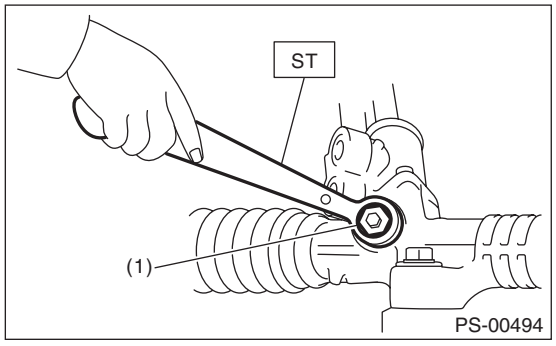

(1) Lock nut

4) Loosen the adjusting screw, and remove the spring and sleeve.
5) Remove the two bolts securing valve assembly.

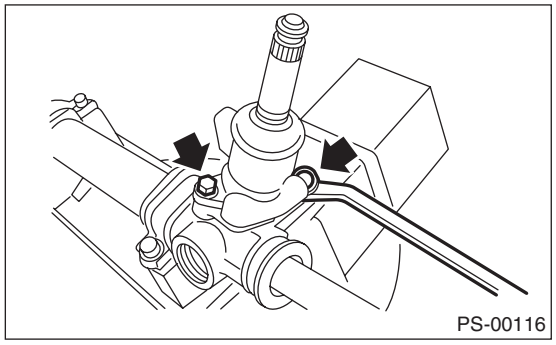

6) Carefully draw out the input shaft and remove the valve assembly.

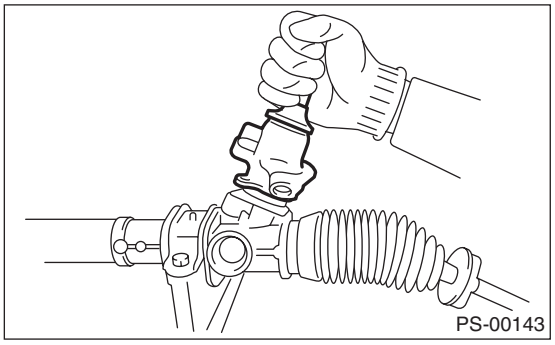

7) Put a vinyl tape around the spline portion, and slide the dust cover to remove.

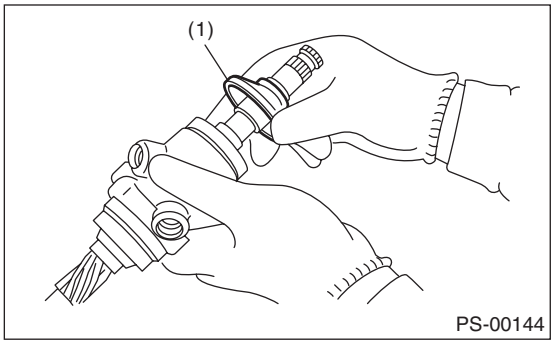

(1) Dust cover

8) Using a press, remove the pinion & valve assembly from valve housing.

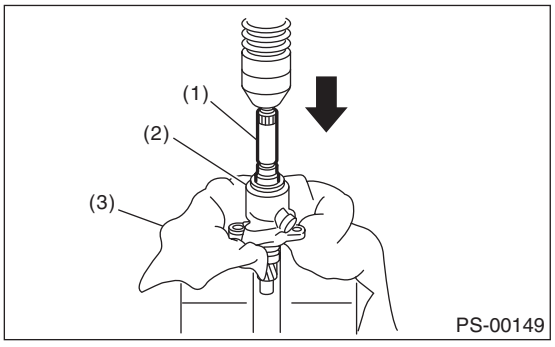

(1) Pinion & valve ASSY
(2) Valve housing
(3) Cloth

9) Using the ST and a press, remove the bushing and oil seal from the valve housing.

CAUTION:
- **Do not apply a force to the end surface of valve housing.**
- **Do not reuse the oil seal after removal.**

Preparation tool:
ST: INSTALLER & REMOVER (34199AG090)

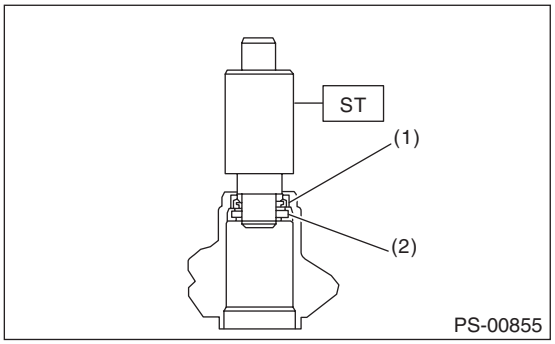

(1) Oil seal
(2) Bushing

10) Using a snap ring pliers, remove the snap ring, valve, oil seal and back-up washer.

CAUTION:
Be careful not to scratch the pinion and valve assembly.

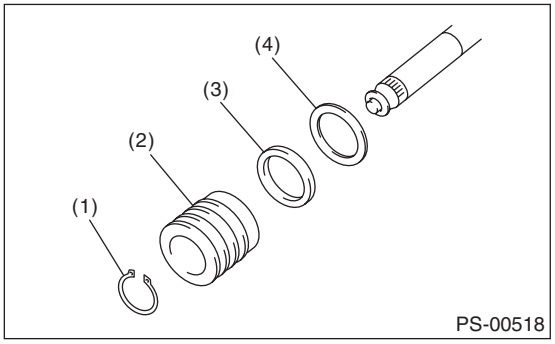

(1) Snap ring
(2) Valve
(3) Oil seal
(4) Back-up ring

D: ASSEMBLY

1. RACK HOUSING ASSEMBLY

1) Using a press, install the bushing to gearbox installation portion.

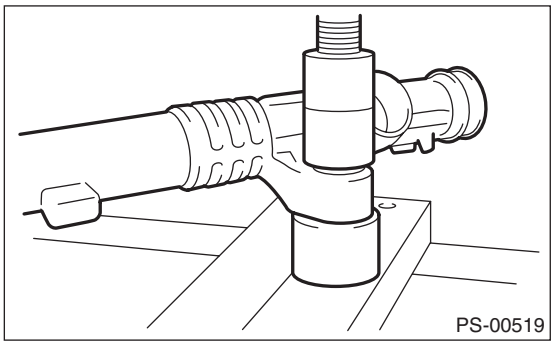

2) Insert the ST to rack.

Preparation tool:
ST: GUIDE (34199AG040)

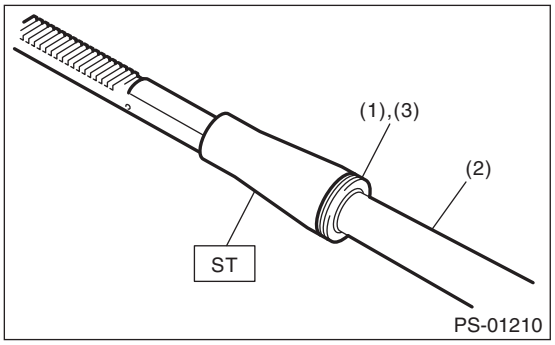

(1) Seal ring
(2) Rack
(3) O-ring

3) Install the seal ring and O-ring to piston portion of rack.
4) Using the ST, form the seal ring properly.

Preparation tool:
ST1: FORMER PISTON (34199AG080)
ST1: GUIDE G (26) (34199AG060)

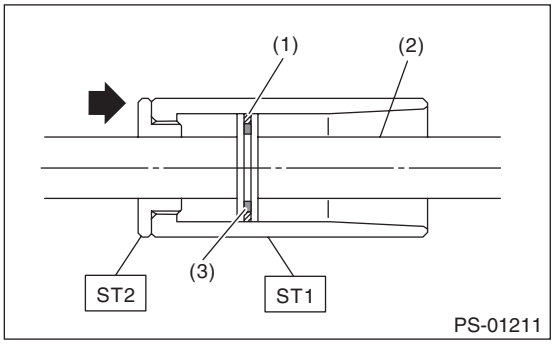

(1) Seal ring
(2) Rack
(3) O-ring

5) Using the ST-A and ST-B, attach the oil seal to ST-C.

Preparation tool:
ST-A: INSTALLER A (34199FE070)
ST-B: INSTALLER B (34199FE080)
ST-C: INSTALLER C (34199FE090)

NOTE:
Face the oil seal in the direction as shown in the figure.

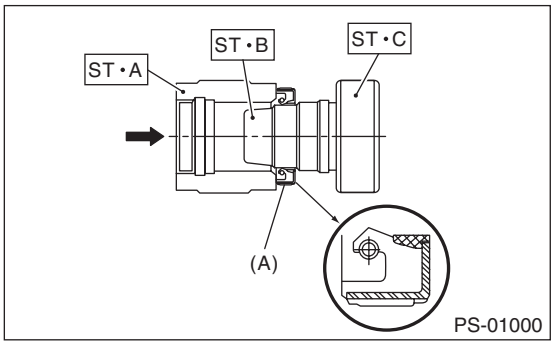

(A) Oil seal

6) Insert the ST-C with oil seal assembled from the gear side of rack. Remove the oil seal from ST-C near piston, and then remove the ST-C from rack.

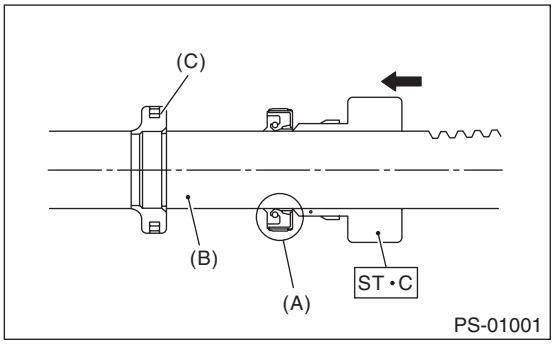

(A) Oil seal
(B) Rack
(C) Piston

7) Install the back-up ring from the gear side of rack.

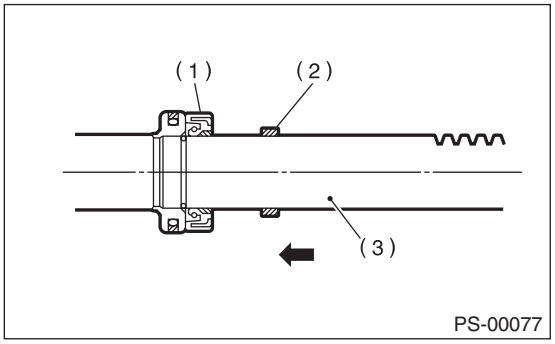

(1) Oil seal
(2) Back-up ring
(3) Rack

8) Check the threaded end of holder and gearbox cylinder end for burrs, damage, etc. Correct if faulty.
9) Apply a coat of grease to the grooves in rack, sliding surface of sleeve and sealing surface of piston. Then insert the rack into steering body from cylinder side.
10) Temporarily tighten a new holder to the gearbox cylinder.
11) Put a mark at the specified position measured from the end surface of ST as shown in the figure.

Specified position:
15 mm (0.59 in)

Preparation tool:
ST: INSTALLER & REMOVER (34199XA030)

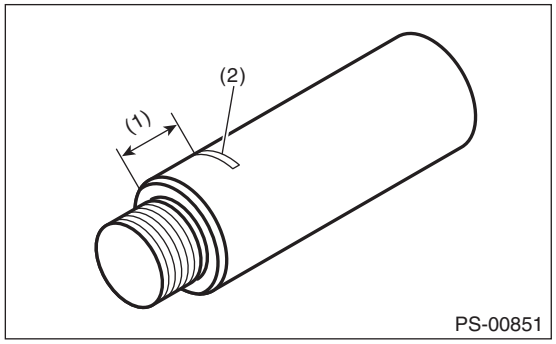

(1) 15 mm (0.59 in)
(2) Place a mark

12) Set the ST to the end of rack.

Preparation tool:
ST: INSTALLER & REMOVER (34199XA030)
13) Using a press, press-fit until the mark on the ST is aligned with the end surface of the holder.

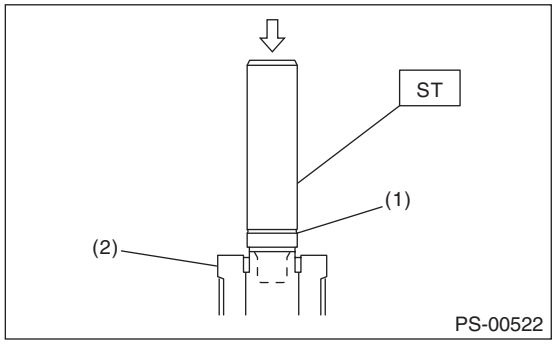

(1) Mark
(2) Holder

14) Remove the ST and holder.
15) Insert the outer side oil seal into the rack using the same procedure as steps 5) and 6).

Preparation tool:
ST-A: INSTALLER A (34199FE070)
ST-B: INSTALLER B (34199FE080)
ST-C: INSTALLER C (34199FE090)

16) Put the ST and pipe through the rack, and press-fit the outer side oil seal using a press.

Preparation tool:
ST: INSTALLER (34199AG010)

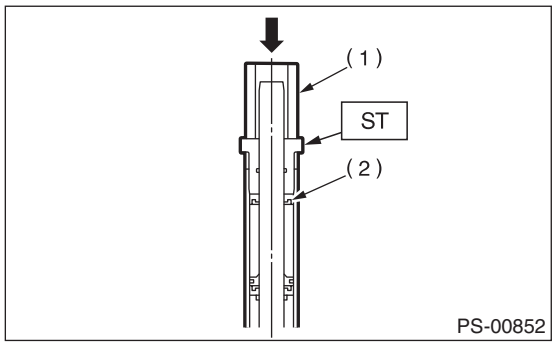

(1) Pipe
(2) Outer side oil seal

17) Secure the gearbox in a vise using ST.

Preparation tool:
ST1: STAND (926200000)
ST2: BOSS D (34199AG000)

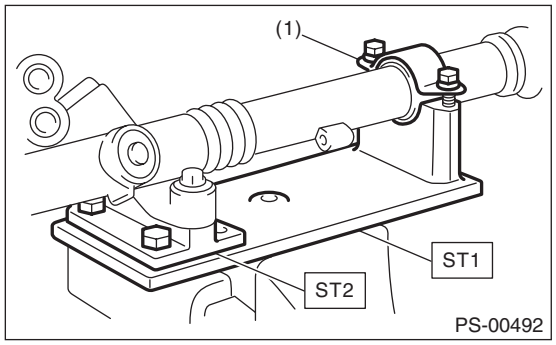

(1) Clamp

18) Tighten the holder.

Tightening torque:
70 N·m (7.1 kgf-m, 51.6 ft-lb)

19) Using the ST, crimp so that the diameter of punch hole is 2 — 2.5 mm (0.08 — 0.10 in) and is aligned to the position of 2 mm (0.08 in) from gearbox cylinder end surface.

Preparation tool:
ST1: PUNCH HOLDER (34099FA060)
ST2: BASE (34199FE020)

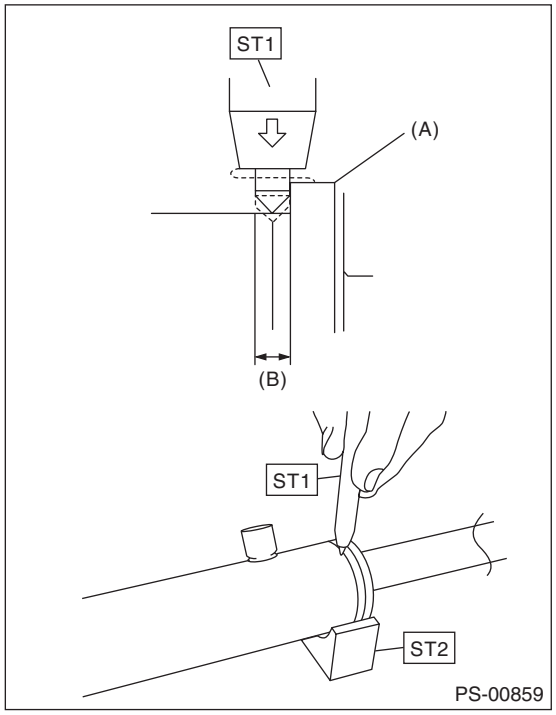

(A) Holder
(B) 2 mm (0.08 in)

20) Put a vinyl tape around the spline portion and apply genuine grease to the dust cover and fill it to the clearance between pinion shaft and housing, then install the valve assembly.

CAUTION:
Be sure to install the dust cover to groove of shaft.

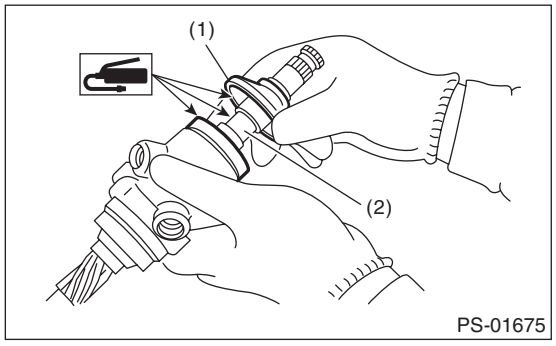

(1) Dust cover
(2) Groove

21) Apply the genuine grease to the edge and body of pinion gear and bearing of valve assembly.

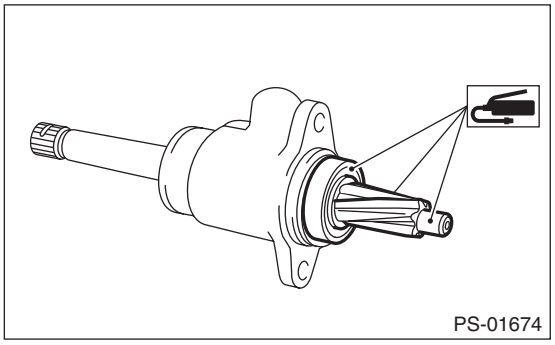

22) Apply grease to a new O-ring and attach it to the valve assembly. Insert the valve assembly into the given place while facing the rack teeth toward pinion.

CAUTION:
Check that the needle bearing is not damaged. Replace with a new steering gearbox if damage is found.

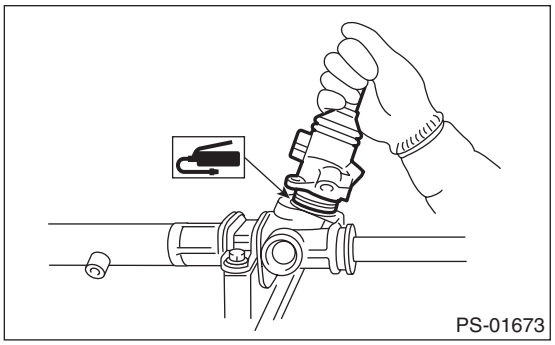

23) Tighten the bolts alternately to secure the valve assembly.

CAUTION:
Be sure to alternately tighten the bolts.

Tightening torque:
20 N·m (2 kgf-m, 14.8 ft-lb)

24) Temporarily tighten the tie-rod to the rack end, and then operate the rack from lock to lock for two or three times to make it fit in.

CAUTION:
Operating the rack from lock to lock without installing tie-rods may damage the oil seal. Always install the left and right tie-rods.

25) Apply liquid gasket to 1/3 or more of entire perimeter of adjusting screw thread.

Liquid gasket:
THREE BOND 1102

26) Apply a coat of grease to the sliding surface of sleeve and seating surface of spring, and then insert the sleeve into steering body.
Charge the adjusting screw with grease, and then insert the spring into adjusting screw. Then install on the steering body.

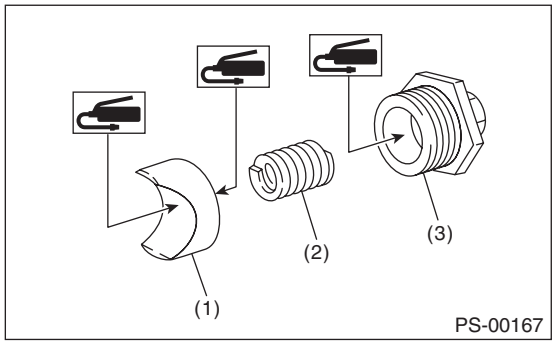

(1) Sleeve
(2) Spring
(3) Adjusting screw

27) Tighten the adjusting screw to the specified torque, then loosen it.

Tightening torque:
25 N·m (2.5 kgf-m, 18.4 ft-lb)
28) Tighten the adjusting screw to the specified torque, then loosen it 5°.

Tightening torque:
5.9 N·m (0.6 kgf-m, 4.4 ft-lb)
29) Remove the tie-rod.
30) Adjust the turning resistance of gearbox so that it is within specification using adjusting screw. <Ref. to PS-60, LIMIT, INSPECTION, Steering Gearbox.>
31) Attach the lock nut into adjusting screw, and while holding the adjusting screw with wrench, tighten the lock nut using ST.

Preparation tool:
ST: SPANNER (926230000)

Tightening torque:
25 N·m (2.5 kgf-m, 18.4 ft-lb)

NOTE:
Hold the adjusting screw with a wrench to prevent it from turning while tightening lock nut.
32) Extend the rack approx. 40 mm (1.57 in) from steering body.
33) Install the tie-rod and new lock washer into rack.

Tightening torque:
93 N·m (9.5 kgf-m, 68.6 ft-lb)

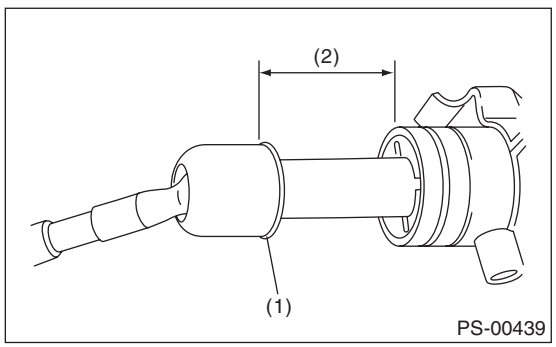

(1) Lock washer
(2) Approx. 40 mm (1.57 in)

34) Bend the lock washer and crimp it.

CAUTION:
Be careful not to scratch the rack when crimping lock washer.

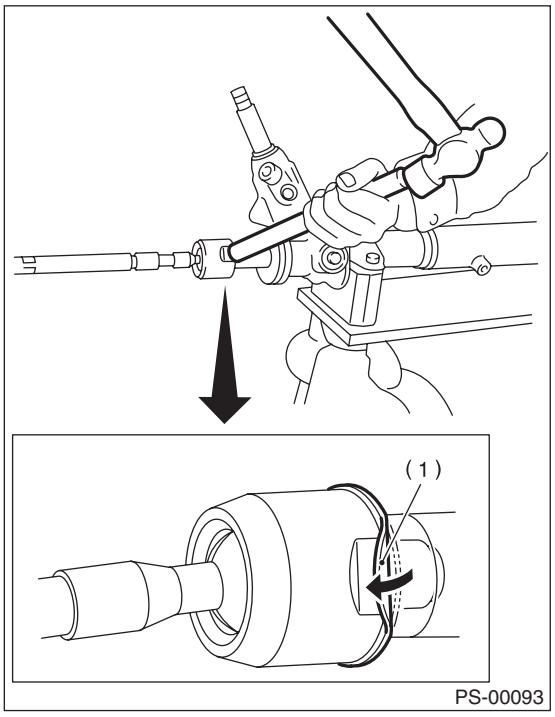

(1) Lock washer

35) Apply a coat of grease to the tie-rod groove, and then install the boot to the housing.

CAUTION:
Right side boot has groove for identification, be sure to install the right and left of boot.

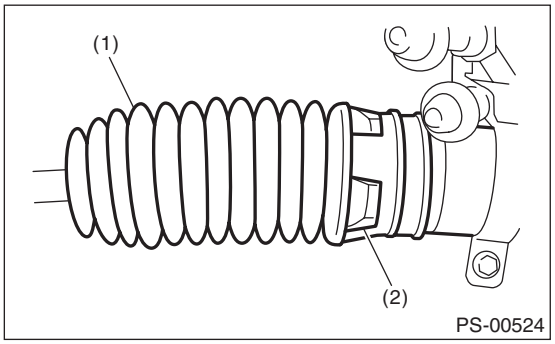

(1) Right side boot
(2) Groove for identification

NOTE:
Make sure that the boot is installed without unusual inflation or deflation.

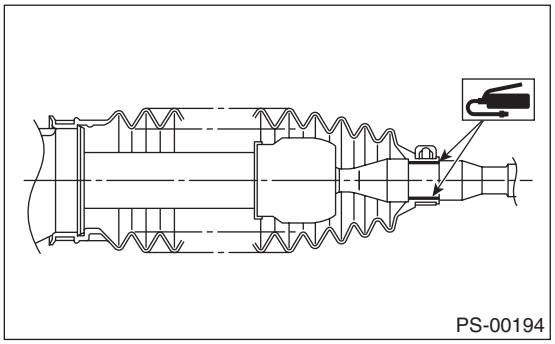

36) Install a new boot band. Using band clamp pliers, crimp it so that the clearance of crimping portion becomes 2 mm (0.079 in) or less.

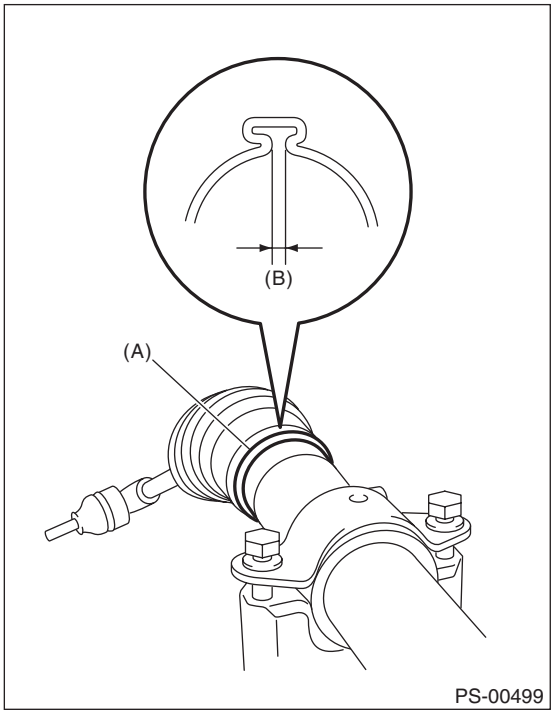

(A) Boot band
(B) 2 mm (0.079 in) or less

37) Fix the boot end with small clip.

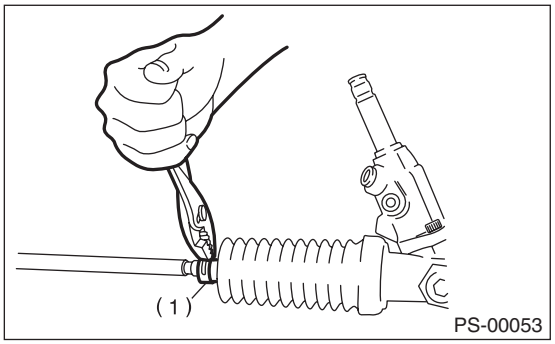

(1) Clip

38) After installing, check that the boot end is installed to the groove of the tie-rod.
39) If the tie-rod end has been removed, screw in lock nut and tie-rod end to the screwed portion of tie-rod, and tighten the lock nut temporarily in a position as shown in the figure.

Installed tie-rod length L:
28 mm (1.1 in)

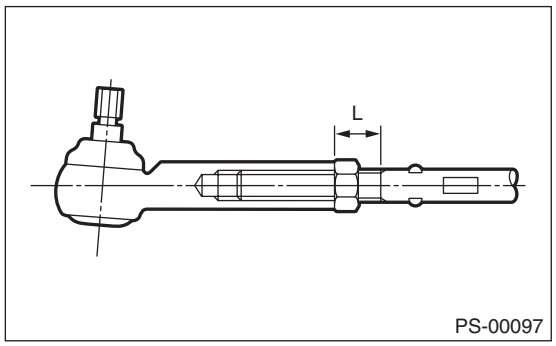

40) Inspect the gearbox as follows:
"A" Holding the tie-rod end, repeat lock to lock several times as quickly as possible.
"B" Holding the tie-rod end, turn it slowly at a radius several times as large as possible.
Finally, make sure that the boot is installed in the specified position without inflating.

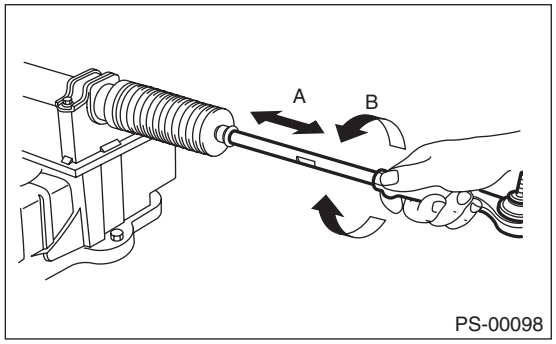

41) Remove the gearbox from ST.

Preparation tool:
ST1: STAND (926200000)
ST2: BOSS D (34199AG000)

42) Install the four pipes on gearbox.
(1) Connect the pipes A and B to the four pipe joints of gearbox.

Tightening torque:
Cylinder side: 27 N·m (2.8 kgf-m, 19.9 ft-lb)
Gear housing side: 17 N·m (1.7 kgf-m, 12.5 ft-lb)

(2) Connect the feed pipe and return pipe to the gearbox.

Tightening torque:
Feed pipe: 37 N·m (3.8 kgf-m, 27.3 ft-lb)
Return pipe: 29 N·m (3 kgf-m, 21.4 ft-lb)

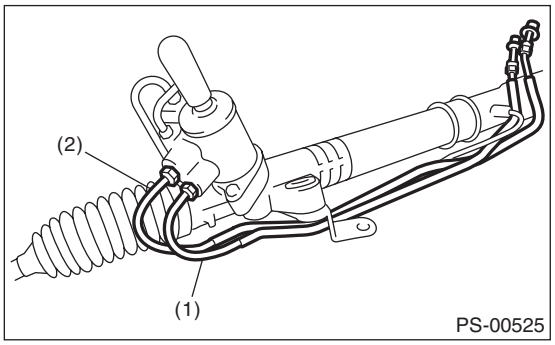

(1) Feed pipe
(2) Return pipe

2. CONTROL VALVE ASSEMBLY

Specified steering grease:
VALIANT GREASE M2

1) Clean all parts and tools before reassembling.
2) Apply a coat of specified power steering fluid to the inner wall of valve housing.

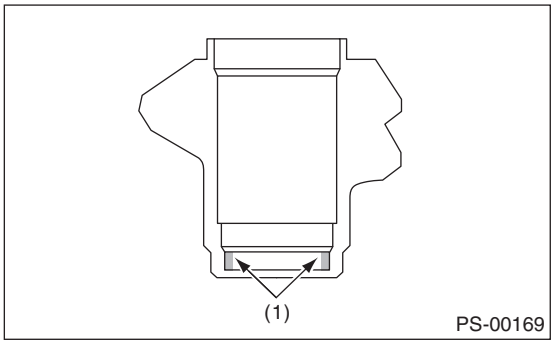

(1) Apply fluid.

3) Apply grease to the oil seal.
4) Verify the direction of oil seal.
5) Using the ST and a press, install the oil seal and the bushing in valve housing.

Preparation tool:
ST: INSTALLER & REMOVER (34199AG090)

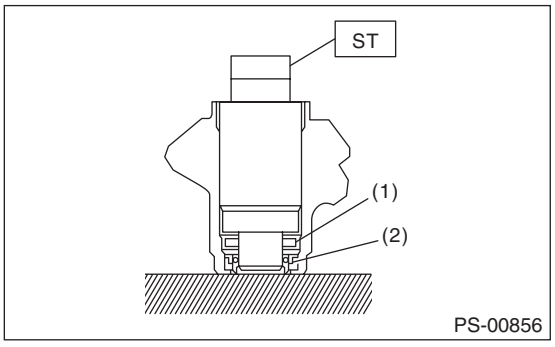

(1) Bushing
(2) Oil seal

6) Apply vinyl tape to the groove of pinion.
7) Install the wave washer and oil seal to pinion, and then remove the vinyl tape.

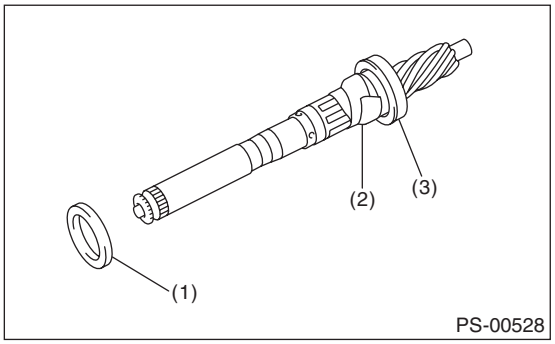

(1) Oil seal
(2) Vinyl tape
(3) Wave washer

8) Attach the ST to pinion, and install the seal ring and O-ring.

Preparation tool:
ST: GUIDE (34199AG020)

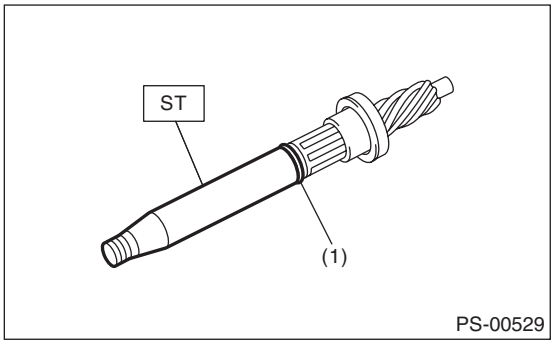

(1) Seal ring and O-ring

9) Remove the ST GUIDE, and form the seal ring properly using ST FORMER.

Preparation tool:
ST: FORMER (34199AG070)

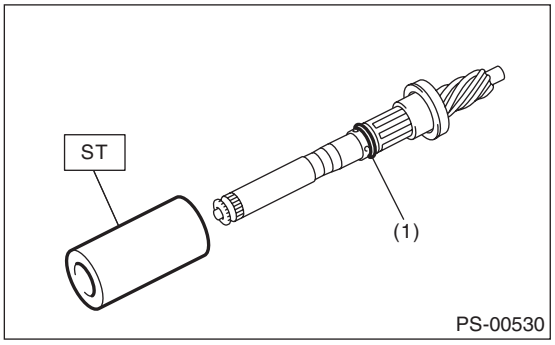

(1) Seal ring

10) Put vinyl tape around pinion shaft spline to protect oil seal from damage.

11) Install the valve to pinion, and install the snap ring.

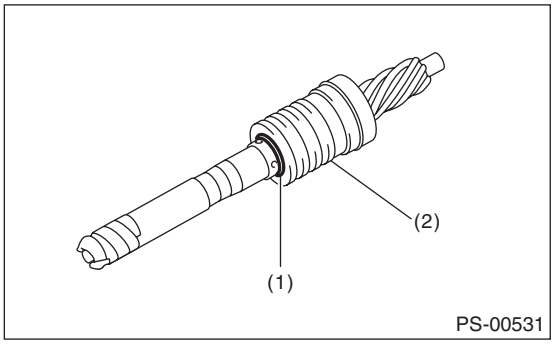

(1) Snap ring
(2) Valve

12) Attach the pinion & valve assembly into the valve housing.

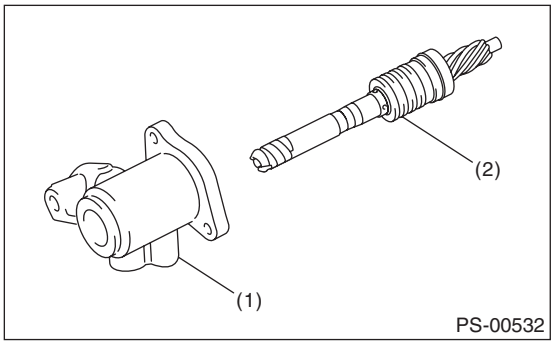

(1) Valve housing
(2) Pinion & valve ASSY

13) Using a press, push the outer race of bearing and press-fit the pinion & valve assembly into housing.

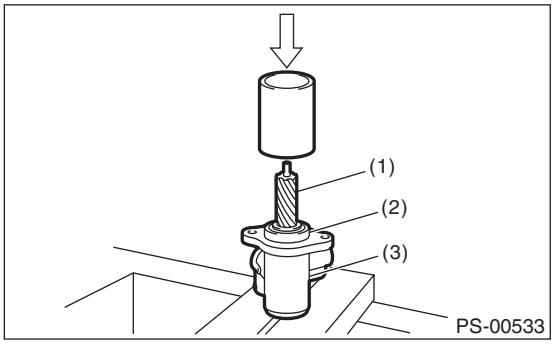

(1) Pinion & valve ASSY
(2) Bearing
(3) Housing

14) Apply the specified grease to the dust cover and fill it to the clearance between pinion shaft and housing.
15) Install the dust cover on valve assembly.

CAUTION:
Be sure to install the dust cover to groove of shaft.

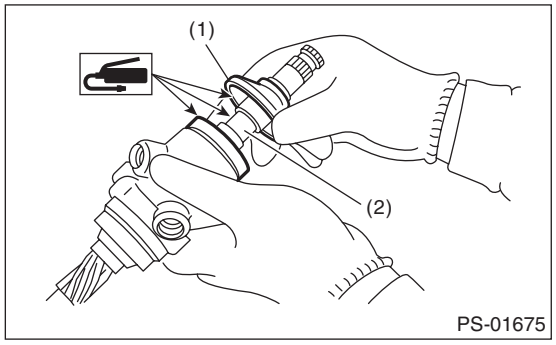

(1) Dust cover
(2) Groove

16) Apply the genuine grease to the edge and body of pinion gear and bearing of valve assembly.

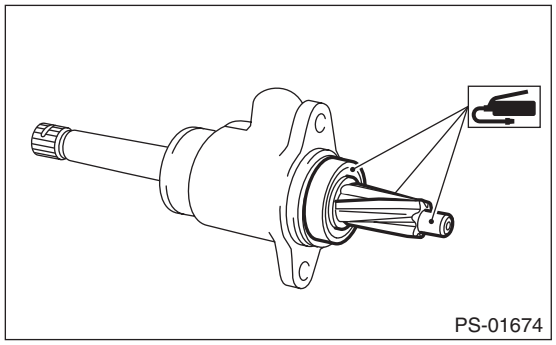

17) Apply grease to a new O-ring and attach it to the valve assembly.

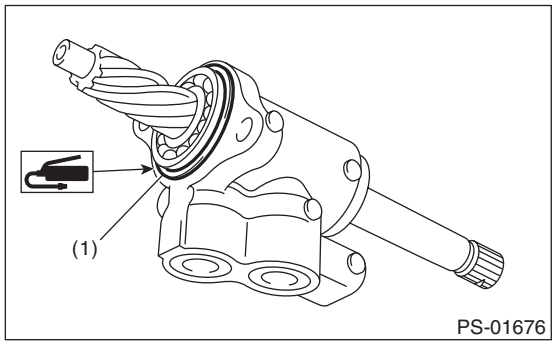

(1) O-ring

18) Insert the valve assembly into the given place while facing the rack teeth toward pinion.

CAUTION:
Check that the needle bearing is not damaged. Replace with a new steering gearbox if damage is found.

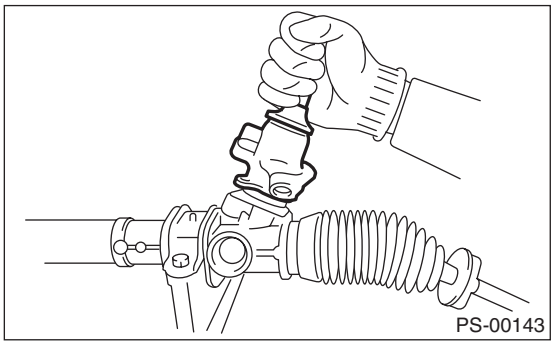

19) Tighten the bolts alternately to secure the valve assembly.

CAUTION:
Be sure to alternately tighten the bolts.

Tightening torque:
20 N·m (2 kgf-m, 14.8 ft-lb)

20) Apply liquid gasket to 1/3 or more of entire perimeter of adjusting screw thread.

Liquid gasket:
THREE BOND 1102

21) Apply a coat of grease to the sliding surface of sleeve and seating surface of spring, and then insert the sleeve into steering body.
Charge the adjusting screw with grease, and then insert the spring into adjusting screw. Then install on the steering body.

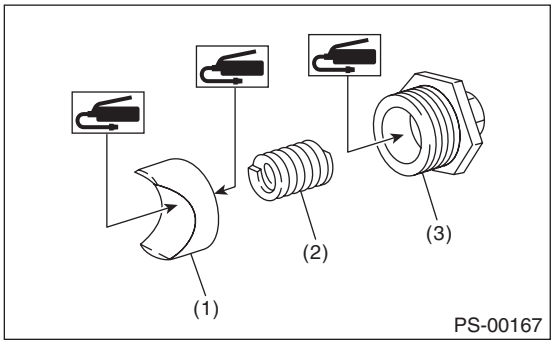

(1) Sleeve
(2) Spring
(3) Adjusting screw

22) Tighten the adjusting screw to the specified torque, then loosen it.

Tightening torque:
25 N·m (2.5 kgf-m, 18.4 ft-lb)

23) Tighten the adjusting screw to the specified torque, then loosen it 5°.

Tightening torque:
5.9 N·m (0.6 kgf-m, 4.4 ft-lb)

24) Adjust the turning resistance of gearbox so that it is within specification using adjusting screw. <Ref. to PS-60, LIMIT, INSPECTION, Steering Gearbox.>
25) Attach the lock nut into adjusting screw, and while holding the adjusting screw with wrench, tighten the lock nut using ST.

Preparation tool:
ST: SPANNER (926230000)

Tightening torque (lock nut):
25 N·m (2.5 kgf-m, 18.4 ft-lb)

NOTE:
Hold the adjusting screw with a wrench to prevent it from turning while tightening lock nut.
26) Remove the gearbox from ST.

Preparation tool:
ST1: STAND (926200000)
ST2: BOSS D (34199AG000)
27) Install the four pipes on gearbox.
(1) Connect the pipes A and B to gearbox.

Tightening torque:
Cylinder side: 27 N·m (2.8 kgf-m, 19.9 ft-lb)
Gear housing side: 17 N·m (1.7 kgf-m, 12.5 ft-lb)
(2) Connect the feed pipe and return pipe to the gearbox.

Tightening torque:
Feed pipe: 37 N·m (3.8 kgf-m, 27.3 ft-lb)
Return pipe: 29 N·m (3 kgf-m, 21.4 ft-lb)

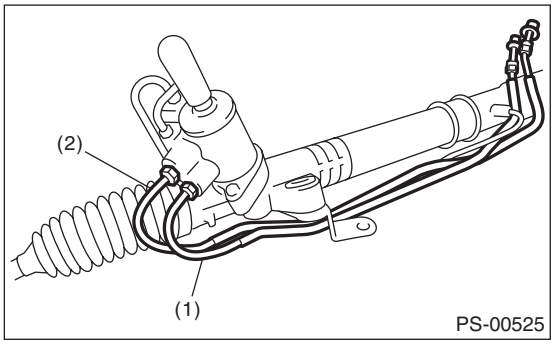

(1) Feed pipe
(2) Return pipe

E: INSPECTION

1. BASIC INSPECTION

1) Clean all the disassembled parts, and check for wear, damage or any other faults, then repair or replace as necessary.
2) When disassembling, check the inside of gearbox for water. If any water is found, carefully check the boot for damage, input shaft dust seal, adjusting screw and boot clips for poor sealing. If faulty, replace with new parts.

No.	Parts	Inspection	Corrective action
1	Input shaft	(1) Bent input shaft (2) Damage on serration	If the bend or damage is excessive, replace the entire gearbox.
2	Dust seal	(1) Crack or damage (2) Wear	If the outer wall slips, the lip is worn out or damage is found, replace it with a new part.
3	Rack and pinion	Poor mating of rack with pinion	(1) Adjust the backlash properly. By measuring the turning torque of the gearbox and sliding resistance of rack, check if the rack & pinion engage uniformly and smoothly with each other. (Refer to “Service limit”.) (2) Pull out the entire rack to allow viewing of the teeth, and check for damage. When abnormality is found in either (1) or (2), replace the entire gearbox.
4	Gearbox unit	(1) Bending of the rack shaft (2) Bending of the cylinder portion (3) Crack or damage on the aluminum portion	Replace the gearbox with a new part.
		(4) Wear or damage on rack bushing	If the free play of rack shaft in radial direction is out of the specified range, replace the gearbox with new part. (Refer to “Service limit”.)
		(5) Wear on input shaft bearing	If the free play of input shaft in radial and axial direction is out of the specified range, replace the gearbox with a new part. (Refer to “Service limit”.)
5	Boot	Crack, damage or deterioration	Replace.
6	Tie-rod	(1) Looseness of ball joint (2) Bend of tie-rod	Replace.
7	Tie-rod end	Damage or deterioration of dust seal	Replace.
8	Adjusting screw spring	Deterioration	Replace.
9	Boot clip	Deterioration	Replace.
10	Sleeve	Damage	Replace.
11	Pipe	(1) Damage to flared surface (2) Damage to flare nut (3) Damage to pipe	Replace.

2. LIMIT

Make a measurements as follows. If it exceeds the specified service limits, adjust or replace.

CAUTION:
- **When making a measurement, secure the gearbox in a vise using ST.**
- **When fixing the gearbox in a vise, apply a wooden piece on the flange portion.**

Preparation tool:
ST1: STAND (926200000)
ST2: BOSS D (34199AG000)

Rack shaft sliding resistance

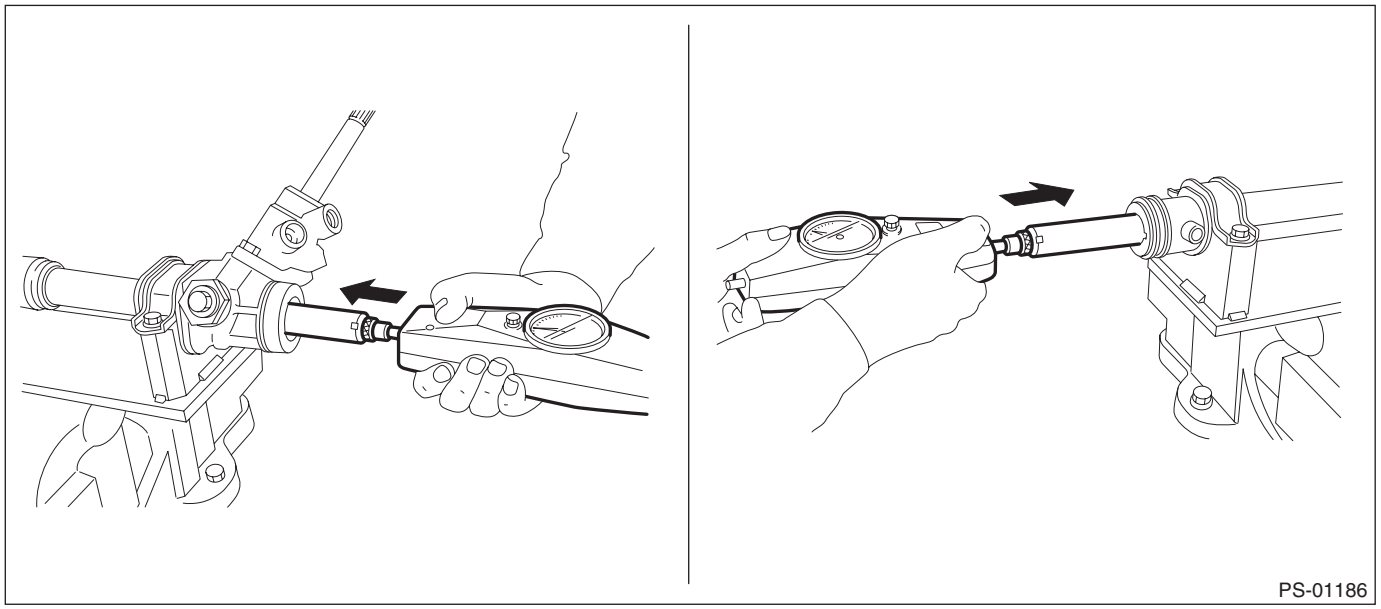

Limit: 343 N (35.0 kgf, 77 lbf) or less

Left/right differential of sliding resistance: 20% or less

Rack shaft play in the radial direction

- **Right-turn steering**

Limit
Both amplitudes: 0.4 mm (0.016 in) or less

Condition
Weighting point
L1: 10 mm (0.39 in) from rack shaft end
Rack shaft end P: 98 N (10 kgf, 22 lb)
Measuring point
L2: 5 mm (0.2 in) from dust cover

NOTE:
<Example of magnet stand and dial gauge installation>
The location where the magnet stand is installed varies to stabilize the magnet stand.

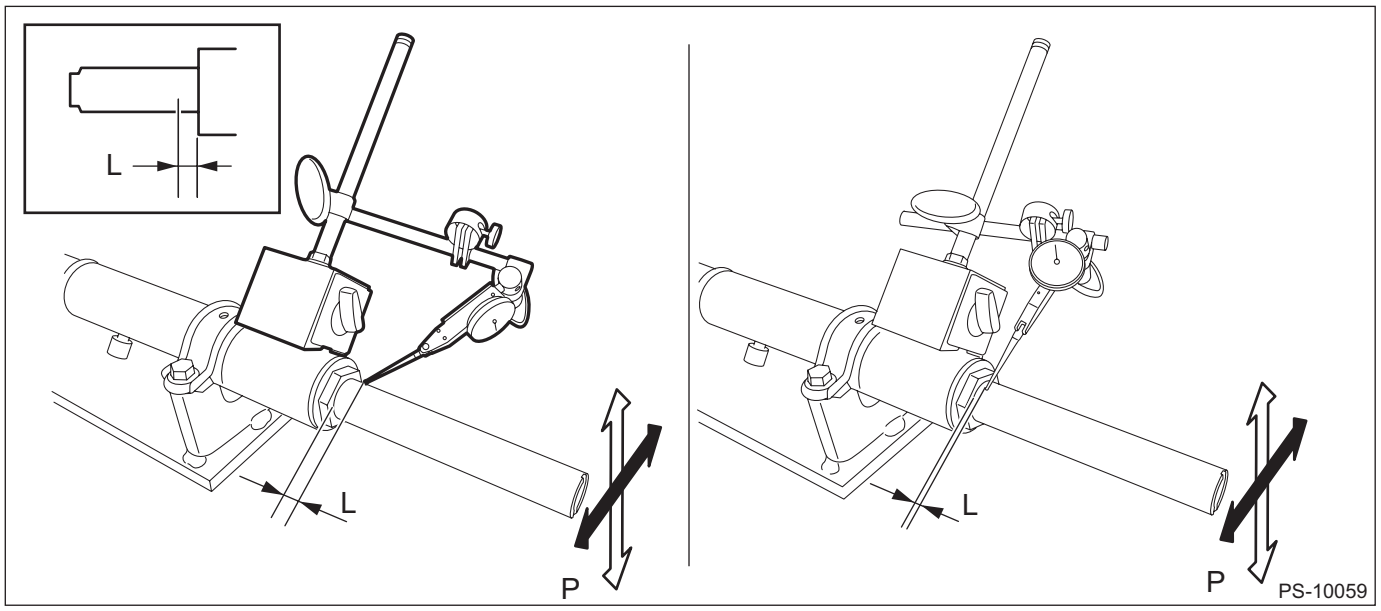

- **Left-turn steering**

Limit

Both amplitudes: Direction ⬅ ➡: 0.6 mm (0.024 in) or less
Both amplitudes: Direction ⇦ ⇨: 0.4 mm (0.016 in) or less

Condition

L: 5 mm (0.2 in) from dust cover
Rack shaft end P: 98 N (10 kgf, 22 lbf)

NOTE:
<Example of magnet stand and dial gauge installation>
The location where the magnet stand is installed varies to stabilize the magnet stand.

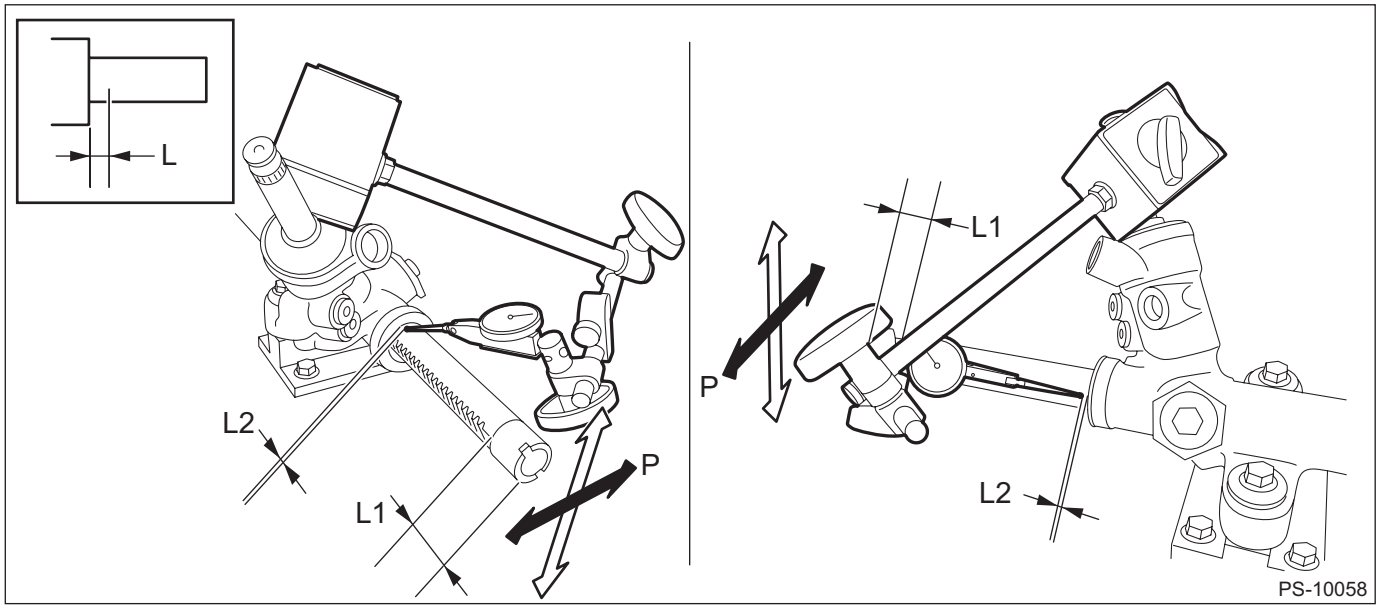

Input shaft play

- **In radial direction**

Condition

L: 5 mm (0.2 in) from dust cover
Input shaft tip P: 98 N (10 kgf, 22 lbf)

Limit

Both amplitudes: 0.26 mm (0.0102 in) or less

NOTE:
<Example of magnet stand and dial gauge installation>
The location where the magnet stand is installed varies to stabilize the magnet stand.

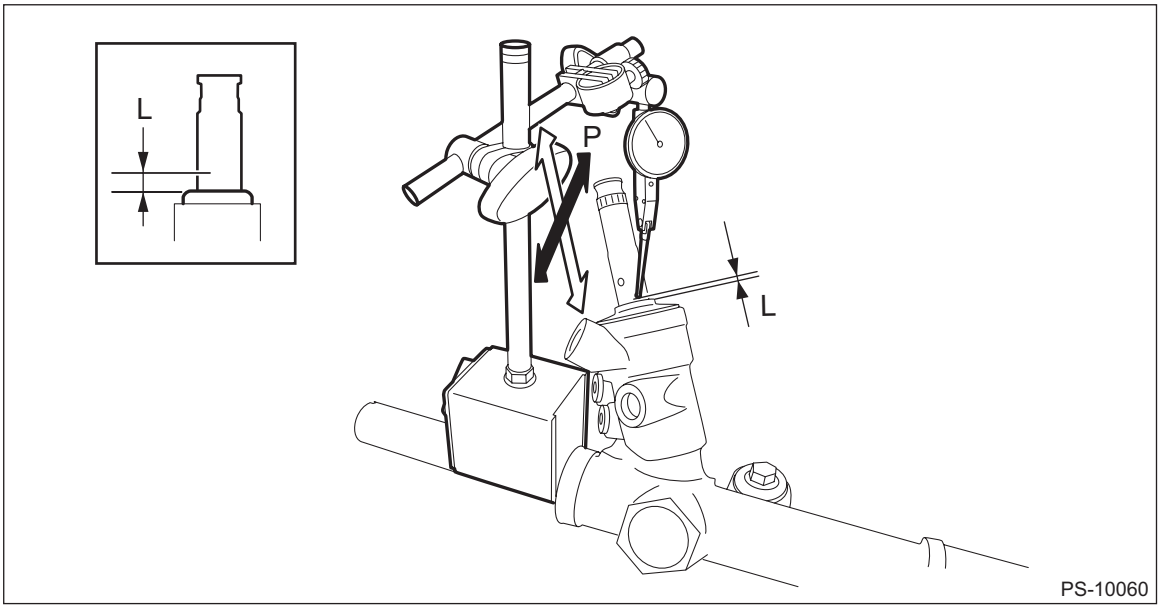

- **In axial direction**

Limit

Without play

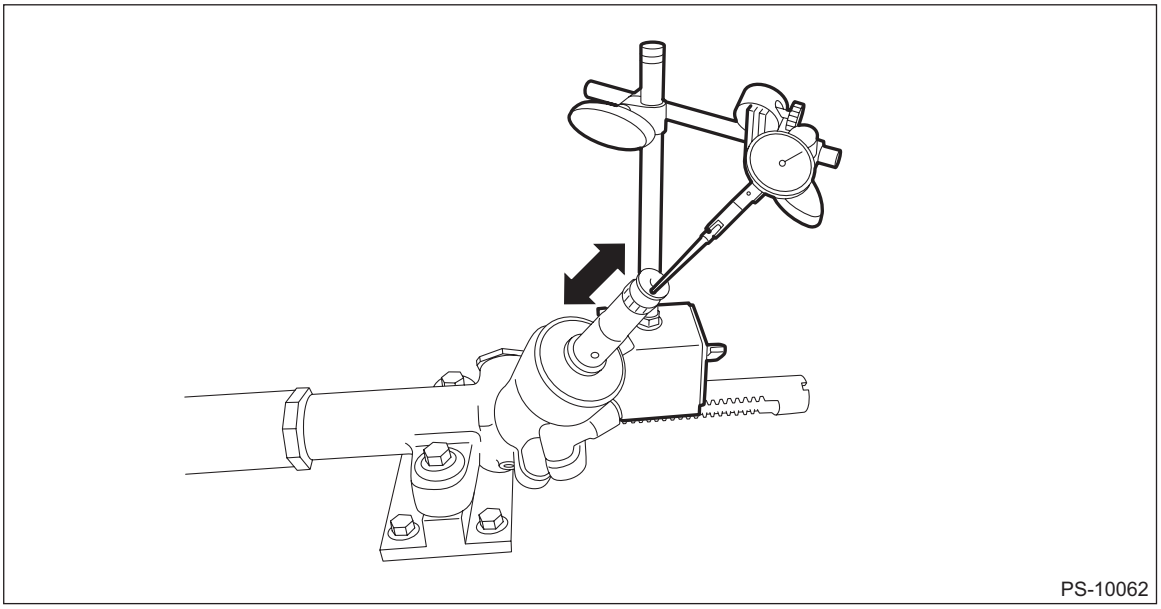

Rotational resistance of gearbox

Using the ST, measure the gearbox turning resistance.

Preparation tool:
ST: SPANNER (34099PA100)

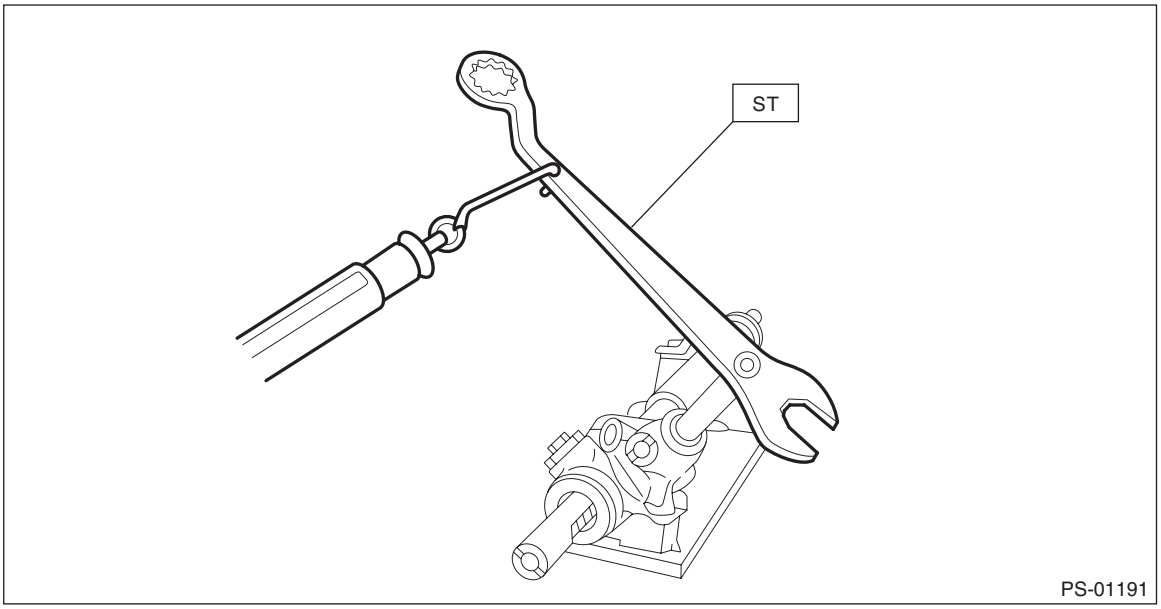

Service limit:
Maximum allowable resistance: 21 N (2.14 kgf, 4.7 lbf) or less
Difference between right and left rotational resistance: 20% or less

3. FLUID LEAKAGE

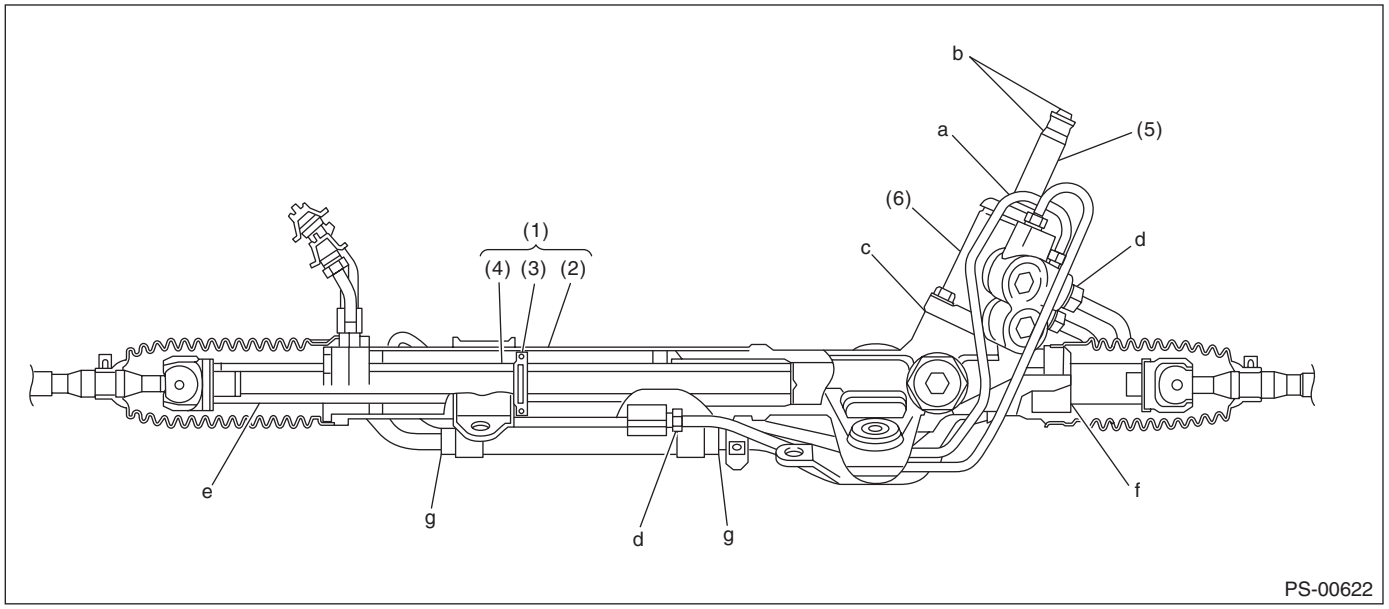

(1)	Power cylinder	(3)	Rack piston	(5)	Input shaft
(2)	Cylinder	(4)	Rack axle	(6)	Valve housing

1) Lift up the vehicle.
2) If a fluid leak is found, clean the fluid completely from the suspect area, and turn the steering wheel 30 to 40 times to the left and right from lock to lock, with the engine running, and check again for leaks immediately, and also after a few hours have passed.
3) Cause and solution for oil leakage from “a”
The oil seal is damaged. Replace the valve assembly or valve housing side oil seal assembly with a new part.
4) Cause and solution for oil leakage from “b”
The torsion bar O-ring is damaged. Replace the valve assembly with a new part.
5) Cause and solution for oil leakage from “c”
The oil seal is damaged. Replace the valve assembly or pinion side oil seal with a new part.
6) Cause and solution for oil leakage from “d”
The pipe is damaged. Replace the faulty pipe or O-ring.
7) Cause and solution for oil leakage from “g”
The hose is damaged. Replace the hose with a new part.
8) If leak is other than a, b, c, d or g, or if oil is leaking from gearbox, move the right and left boots toward tie-rod end side, respectively, with the gearbox mounted to the vehicle, and remove fluid from surrounding portions. Then, turn the steering wheel from lock to lock about 30 to 40 times with the engine running, then re-inspect the leaking area immediately after and several hours after this operation.

(1) Leakage from “e”
The cylinder seal is damaged. Replace the oil seal.

(2) Leakage from “f”
There are two possible causes. Perform the following step first. Remove the pipe assembly B from the valve housing, and close the circuit using ST.

Preparation tool:
ST: PLUG (926420000)

Turn the steering wheel from lock to lock approx. 30 to 40 times with the engine running, then inspect the leaked portion immediately after and several hours after this operation.

- If leakage from “f” is noted again:

The oil seal of pinion and valve assembly is damaged. Replace the pinion & valve assembly with a new part. Or, replace the oil seal.

- If oil stops leaking from “f”:

The oil seal of rack housing is damaged. Replace the oil seal and back-up ring.

F: ADJUSTMENT

1) Adjust the front toe.
<Ref. to FS-13, FRONT WHEEL TOE-IN, INSPECTION, Wheel Alignment.>

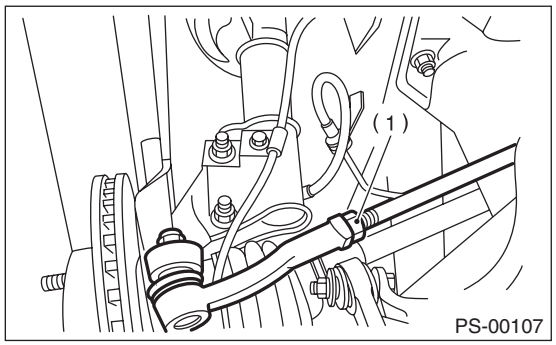

(1) Lock nut

2) Check the steering angle of the wheels.

Standard of steering angle:

Inner wheel	Outer wheel
36.3°±1.5°	32.0°±1.5°

3) If the steering wheel spokes are not horizontal when wheels are set in the straight ahead position, or error is more than 5° on the periphery of the steering wheel, correctly re-install the steering wheel.

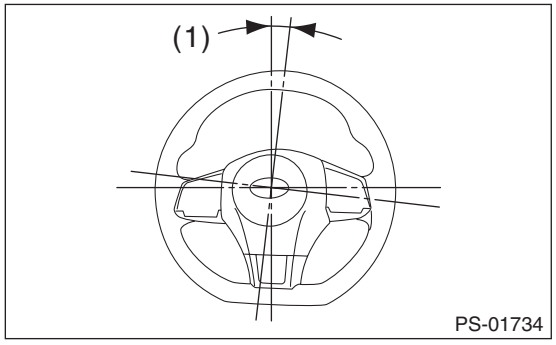

(1) 5° or less

4) If the steering wheel spokes are not horizontal with vehicle set in the straight ahead position after this adjustment, correct it by turning the right and left tie-rods in the opposite direction from each other by the same angle.

7. Electric Power Steering Gearbox

A: REMOVAL

CAUTION:
For electric power steering model, be careful of the following items.
• The power steering control module continues to operate after the engine stops and calculates the temperature in the control module. Therefore, before starting service of the power steering system which requires disconnection of the connector, stop the engine and allow approx. 30 minutes until the control module becomes cold.
• Be careful not to let any foreign matter (dust, water, oil, etc.) enter into the power steering control module connector when removing or installing. If a foreign matter enters, completely remove it.
1) Lift up the vehicle, and then remove the front wheels.
2) Remove the under cover - front. <Ref. to EI-22, REMOVAL, Front Under Cover.>
3) Remove the universal joint assembly - steering. <Ref. to PS-21, REMOVAL, Universal Joint.>
4) Disconnect the ground terminal from battery sensor. <Ref. to NT-6, BATTERY, NOTE, Note.>
5) Disconnect the connector and harness clamp from power steering control module.
6) Disconnect the tie-rod end.
   (1) Pull out the cotter pin (a).
   (2) Remove the castle nut (b).
   (3) Using a tie-rod ball joint puller, remove the tie-rod end (c).

Preparation tool:
Tie-rod ball joint puller

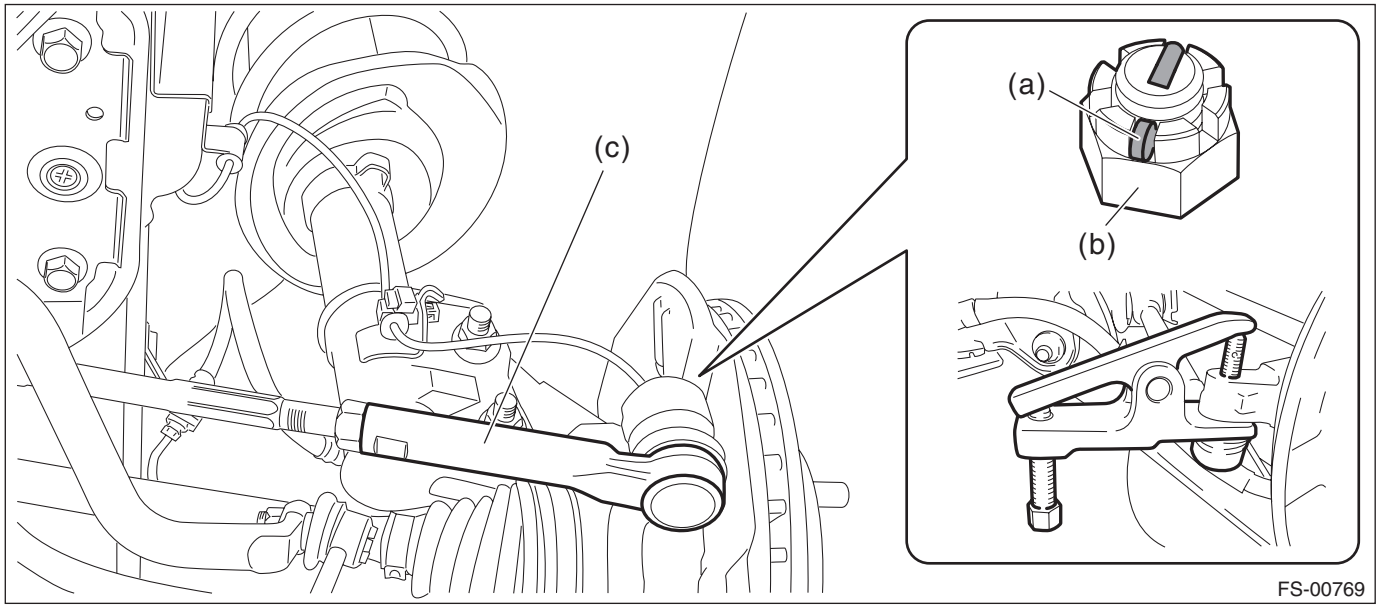

7) Remove the front crossmember support.

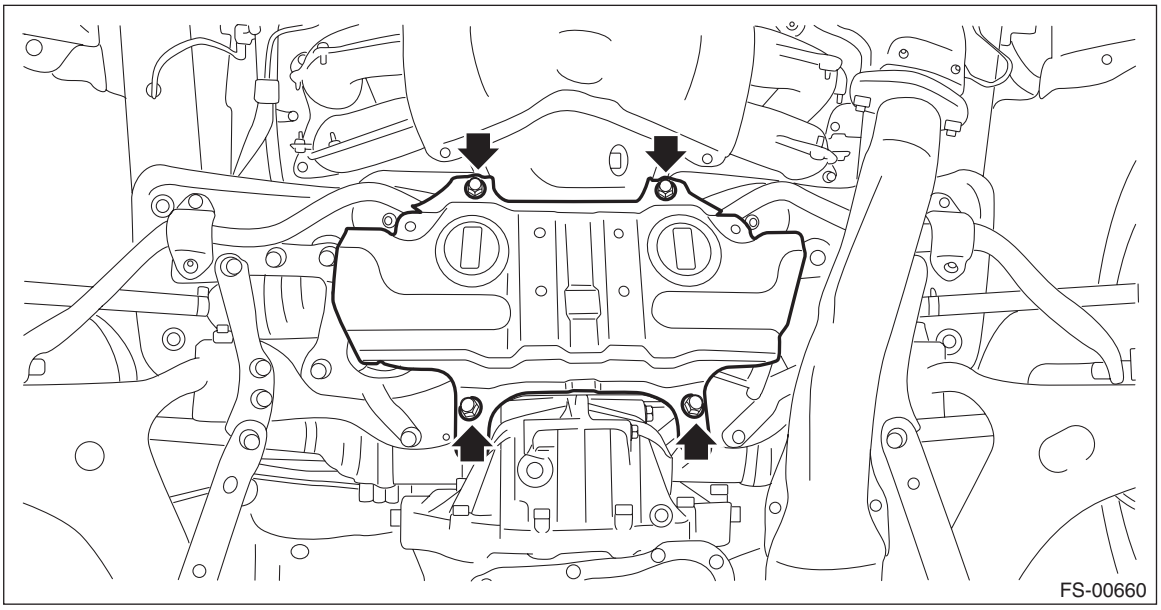

8) Remove the front exhaust pipe. <Ref. to EX(w/o STI)-9, REMOVAL, Front Exhaust Pipe.>
9) Remove the support plate - front crossmember (a).

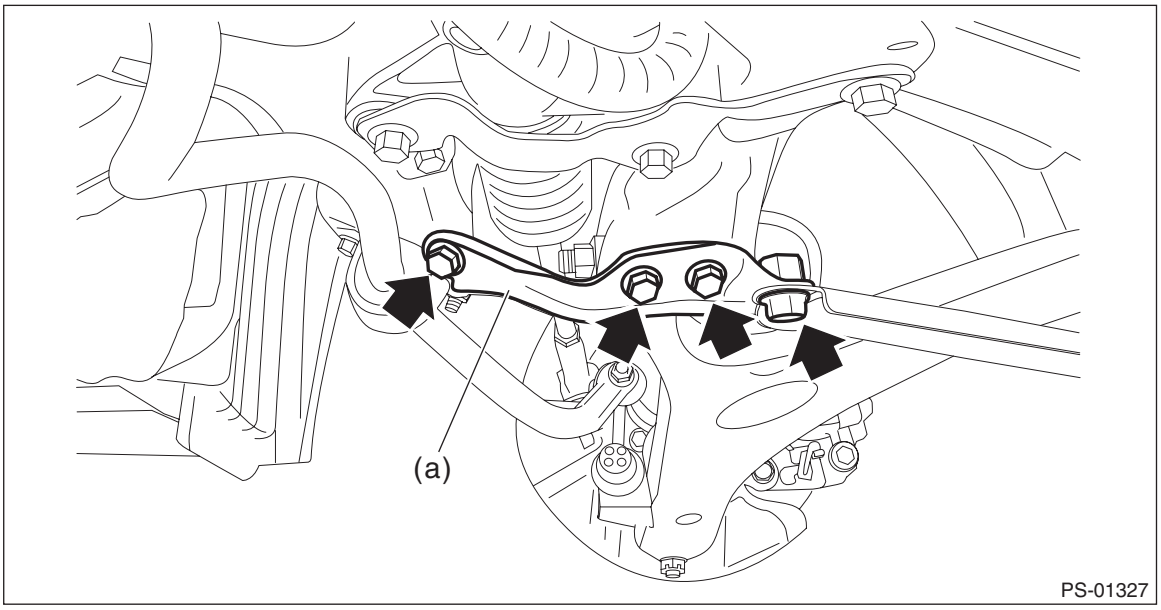

10) Remove the bolts securing the steering gearbox assembly, and remove the stiffener (a) and steering gearbox assembly.

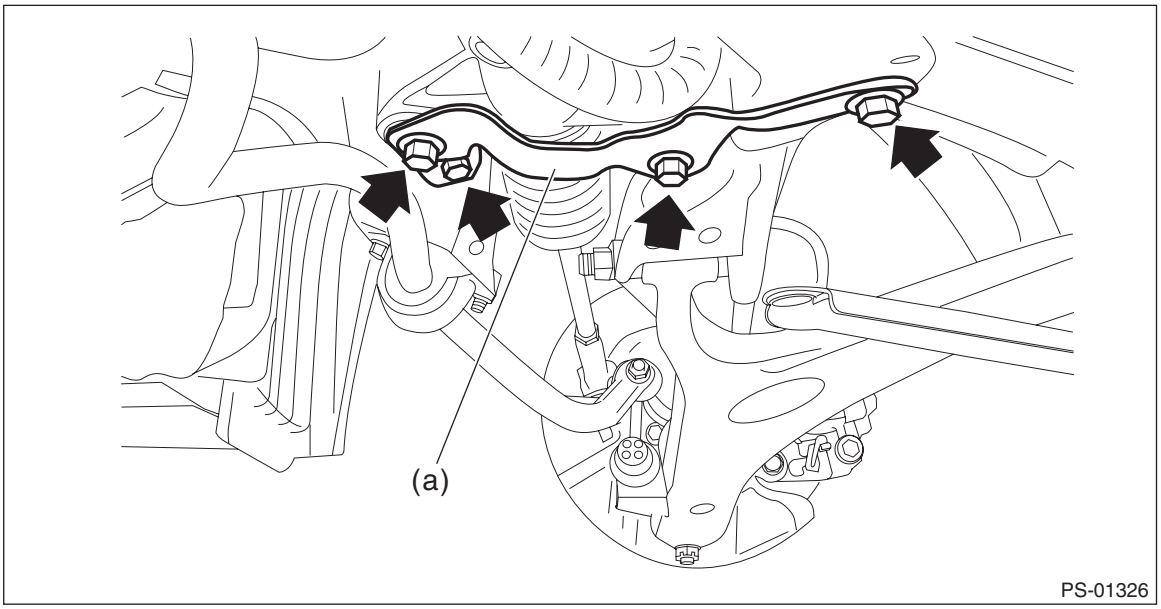

B: INSTALLATION

CAUTION:
Install the under cover - front so that the front end of the under cover (b) comes inside the bumper face - front (a).

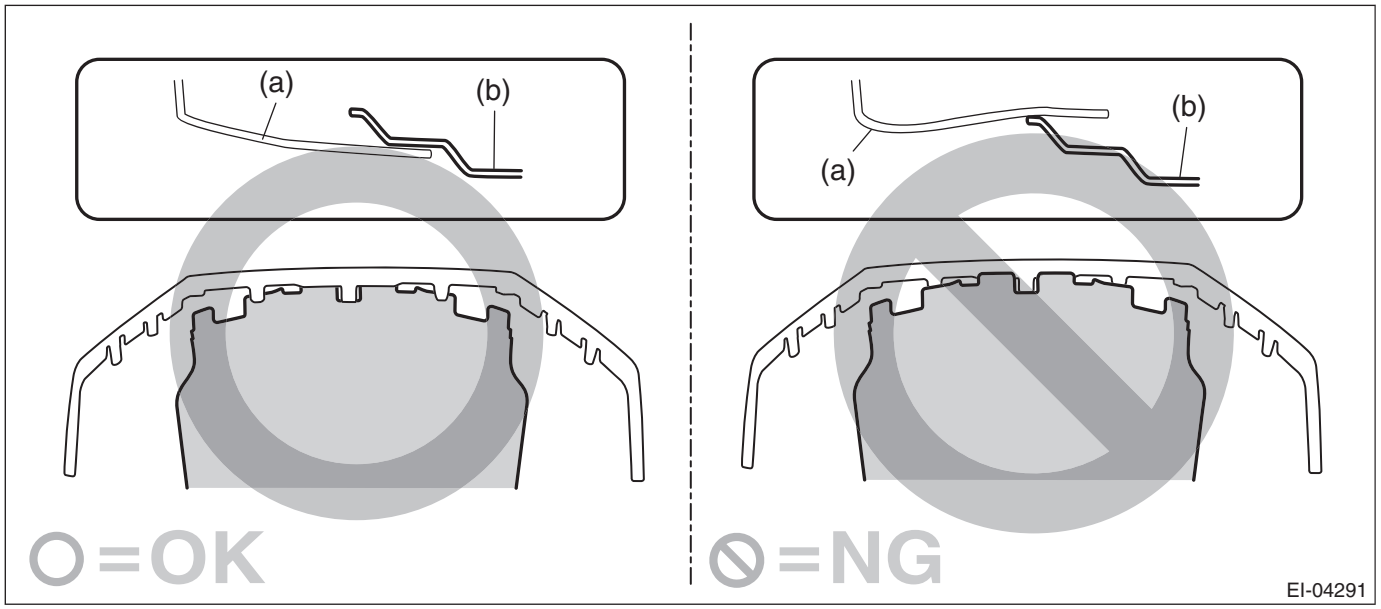

1) Insert the steering gearbox assembly into crossmember, being careful not to damage the boot of the steering gearbox assembly.
2) Install the steering gearbox assembly to the crossmember by tightening the bolts through the stiffener (a) to the specified torque.

Tightening torque:
60 N·m (6.1 kgf-m, 44.3 ft-lb)

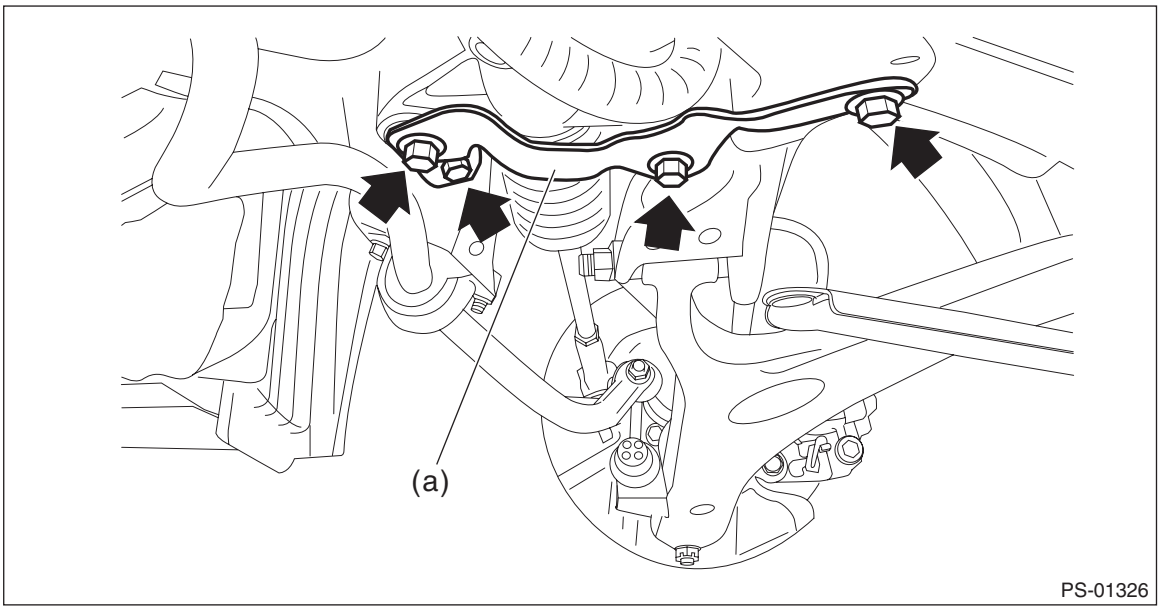

3) Install the universal joint assembly - steering. <Ref. to PS-22, INSTALLATION, Universal Joint.>

CAUTION:
Tighten the bolts of the universal joint assembly - steering in the order of steering gearbox side and column shaft side.
4) Install the support plate - front crossmember (a).

Tightening torque:
Support plate - front crossmember: 60 N·m (6.1 kgf-m, 44.3 ft-lb)
Front support: 100 N·m (10.2 kgf-m, 73.8 ft-lb)

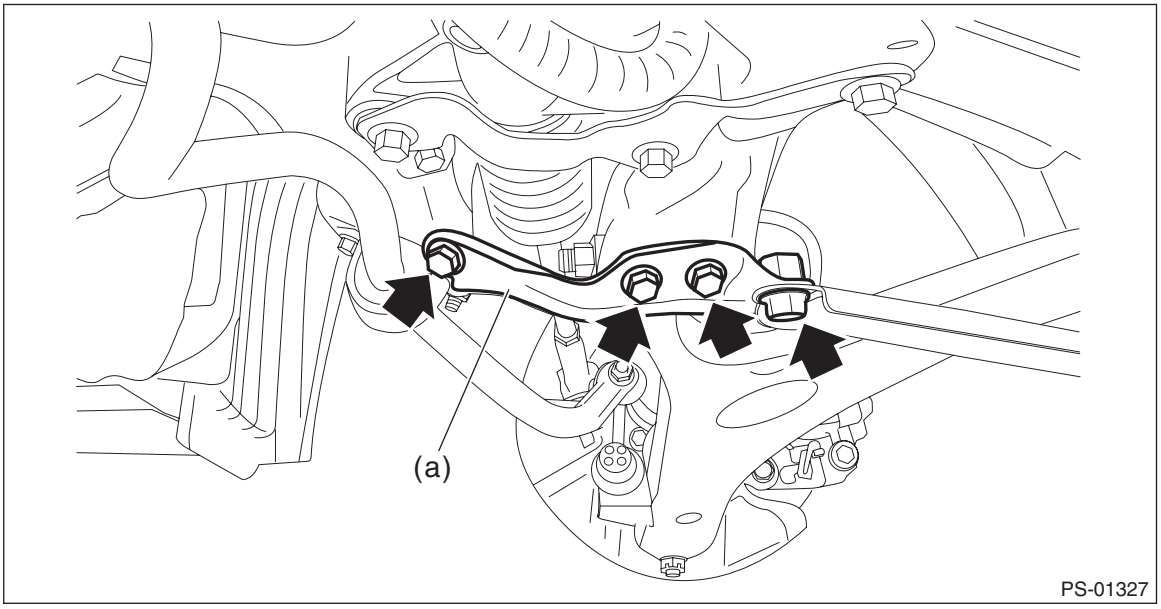

5) Connect the tie-rod ends and knuckle arm.
(1) Connect the tie-rod end (a) to the housing assembly - front axle.
(2) Tighten the castle nuts (b) to the specified torque.

CAUTION:
During connection, do not hit the cap at bottom of tie-rod end with a hammer.

Castle nut tightening torque:
27 N·m (2.8 kgf-m, 19.9 ft-lb)

(3) Tighten within the range of 60° so that the cotter pin hole and cutout portion of the castle nut (b) are aligned.
(4) Insert the cotter pin (c), and bend the tip of the pin to fix it.

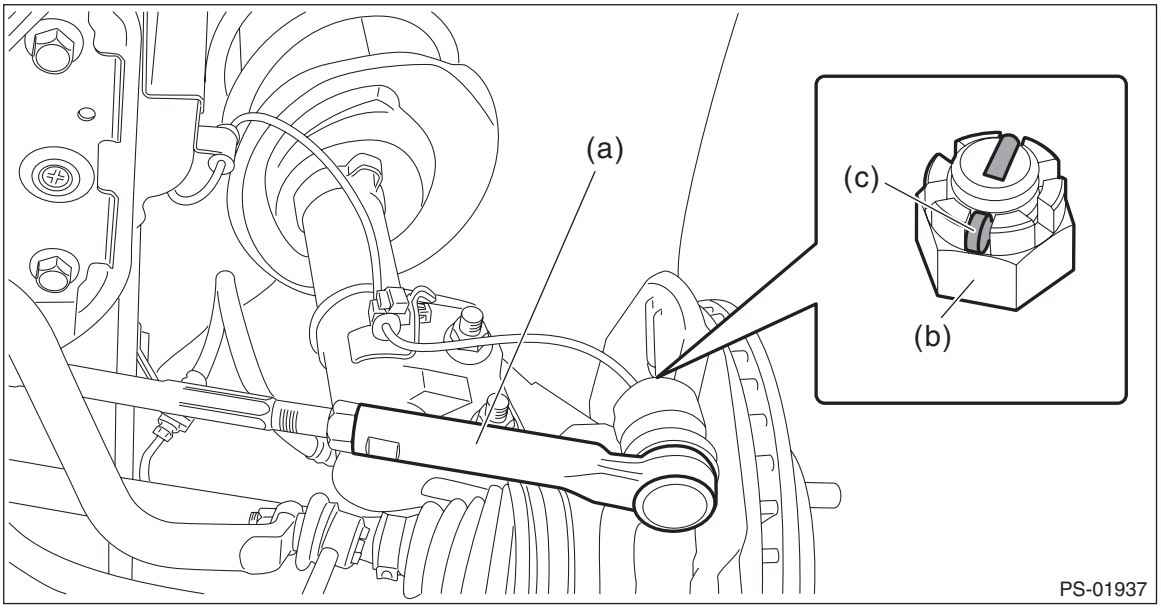

6) Install the front crossmember - support.

Tightening torque:
60 N·m (6.1 kgf-m, 44.3 ft-lb)

7) Install the front exhaust pipe. <Ref. to EX(w/o STI)-17, INSTALLATION, Front Exhaust Pipe.>
8) Install the under cover - front. <Ref. to EI-23, INSTALLATION, Front Under Cover.>
9) Install the front wheels.
10) Lower the vehicle.
11) Tighten the wheel nuts to the specified torque.

Tightening torque:
120 N·m (12.2 kgf-m, 88.5 ft-lb)

12) Connect the power steering control module harness connector.
13) Connect the ground terminal to the battery sensor. <Ref. to NT-6, BATTERY, NOTE, Note.>

14) After adjusting toe-in and steering angle, tighten the lock nut on tie-rod end.

CAUTION:
When the wheel alignment has been adjusted, perform the following adjustment.
– Lane keep assist learning value clear (model with EyeSight): <Ref. to ES(diag)-50, OPERATION, CLEAR ACTIVE LANE KEEP SYSTEM LEARNING VALUE.>
– Steering angle sensor adjustment: <Ref. to VDC-17, ADJUSTMENT, VDC Control Module and Hydraulic Control Unit (VDCCM&H/U).>

Tightening torque:
85 N·m (8.7 kgf-m, 62.7 ft-lb)

NOTE:
When adjusting toe-in, hold the boot - steering gearbox as shown to prevent it from being rotated or twisted. If it becomes twisted, straighten it.

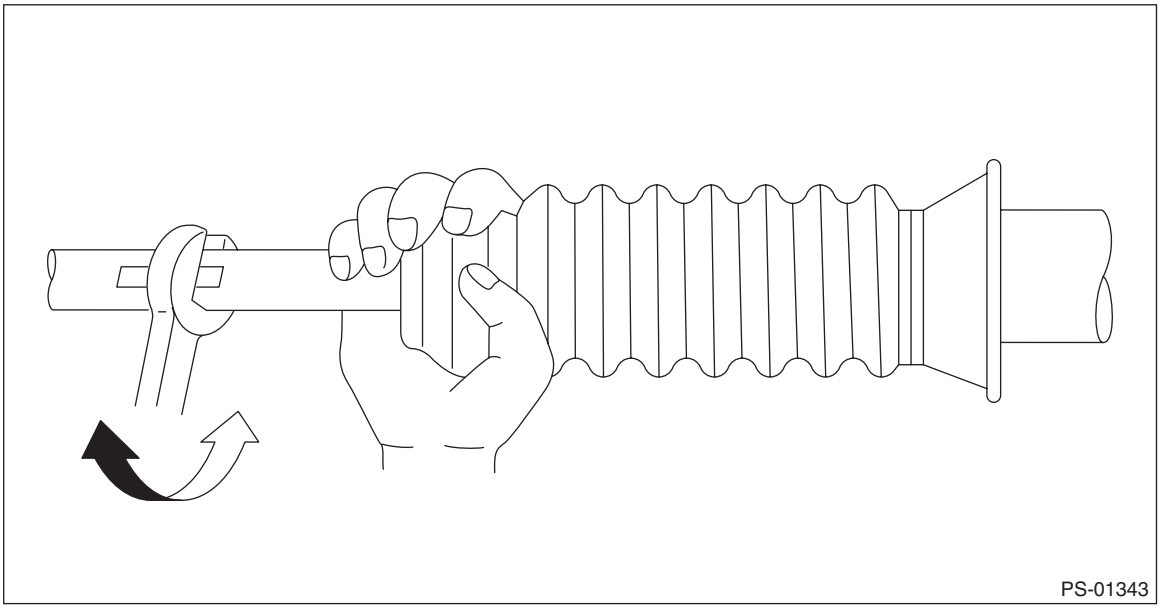

C: DISASSEMBLY

CAUTION:
• Nut for fixing the rack is on the driver's side only. When removing the tie-rod on the passenger's side, turn over the boot - steering gearbox on the driver's side, and fix the rack during operation.
• When fixing the steering gearbox assembly in a vise, apply a wooden piece on the flange portion.
1) Remove the tie-rod end (a) and lock nut (b) from the steering gearbox assembly.
2) Remove the clip - boot tie-rod (c) located outside the boot - steering gearbox using the pliers, and then slide the boot - steering gearbox to the tie-rod end side.

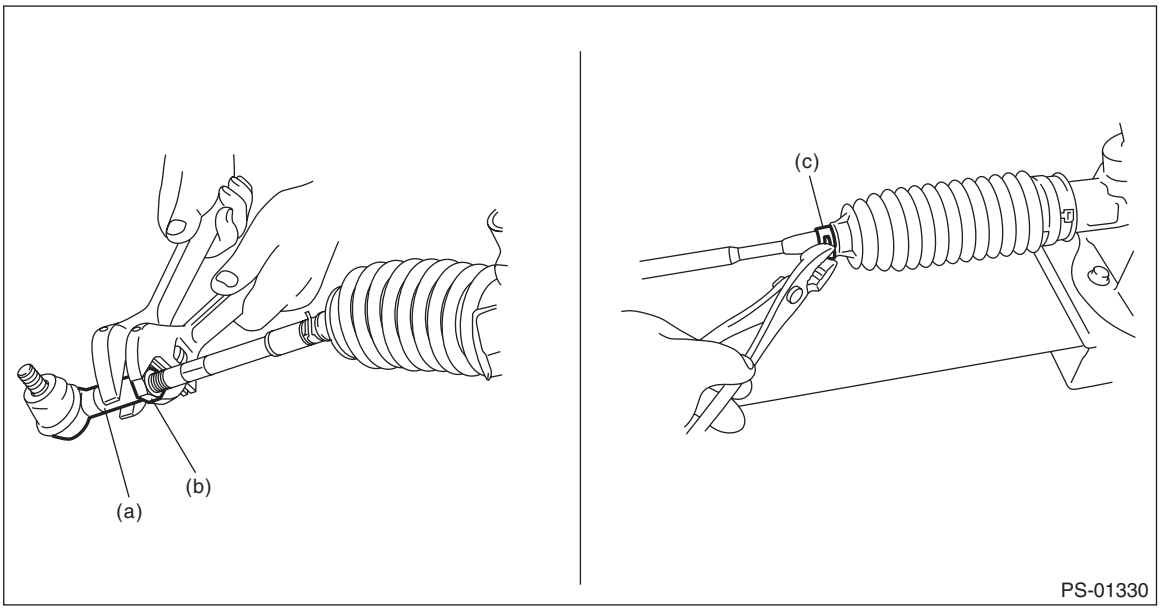

3) Remove the tie-rod (b) from the gearbox assembly.
(1) Using a flat tip screwdriver, remove the band - boot (a) from the boot - steering gearbox.

NOTE:
Replace the boot - steering gearbox or the band - boot (a) if there is damage, cracks or deterioration.
(2) Remove the tie-rod (b).

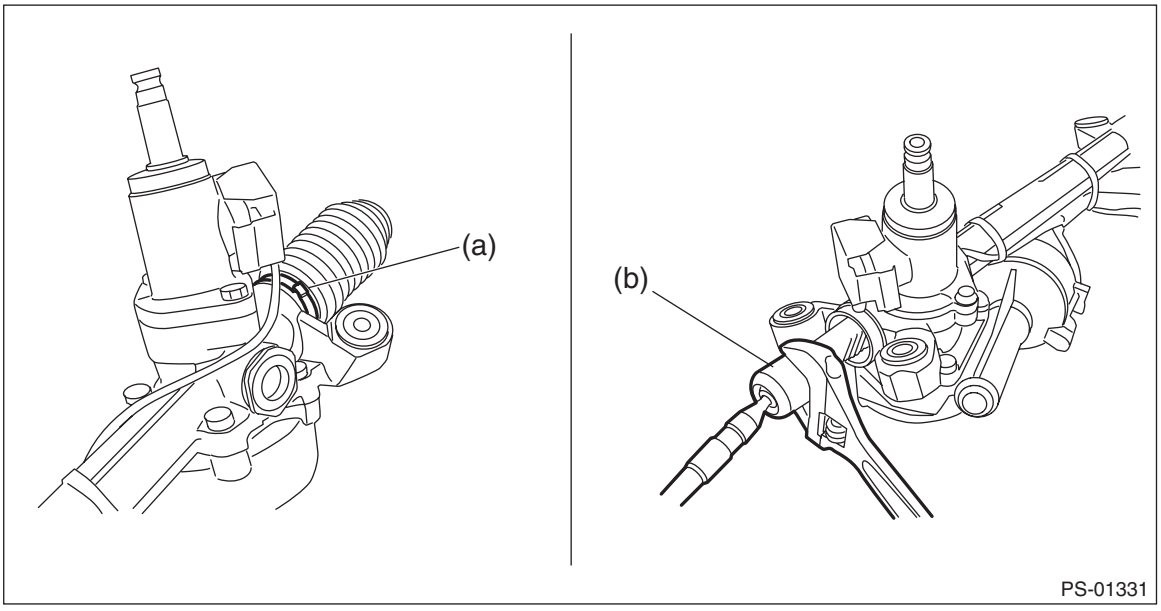

D: ASSEMBLY

1) Install the tie-rod into rack.

Tightening torque:
90 N·m (9.2 kgf-m, 66.4 ft-lb)

NOTE:
Check the mating face of rack and tie-rod for foreign matter such as dust etc.
2) Apply a coat of grease to the tie-rod groove, and then install the boot - steering gearbox to the housing.

NOTE:
Make sure that the boot - steering gearbox is installed without unusual inflation or deflation.

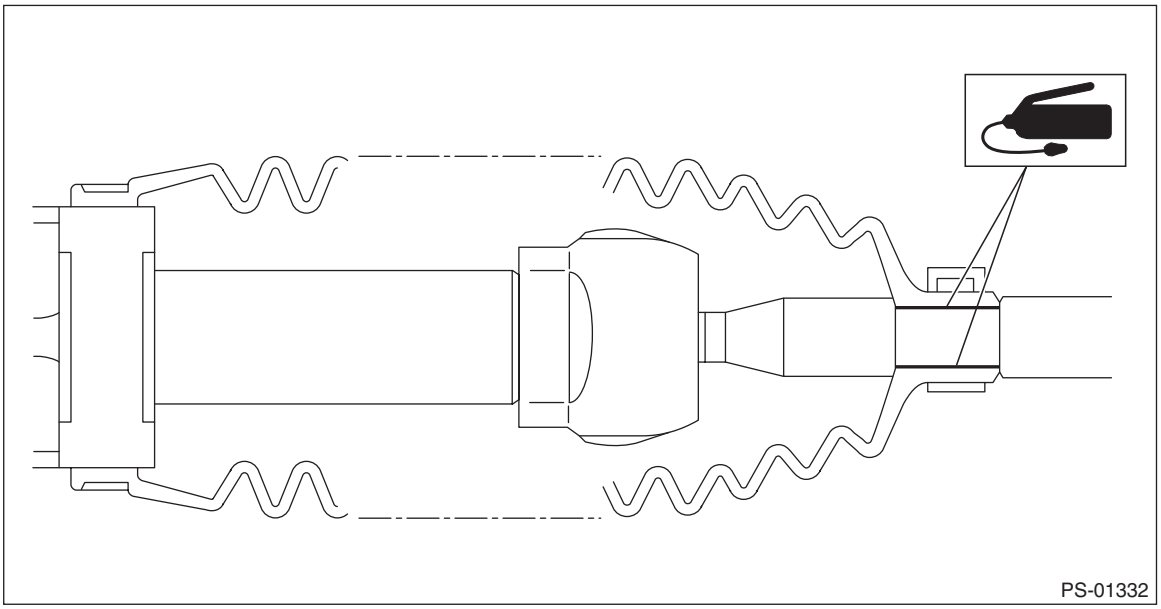

3) Using the boot clamp pliers, crimp the boot so that the clearance (b) of the band - boot (a) crimp portion becomes 2 mm (0.08 in) or less.

NOTE:
Use a new band - boot.

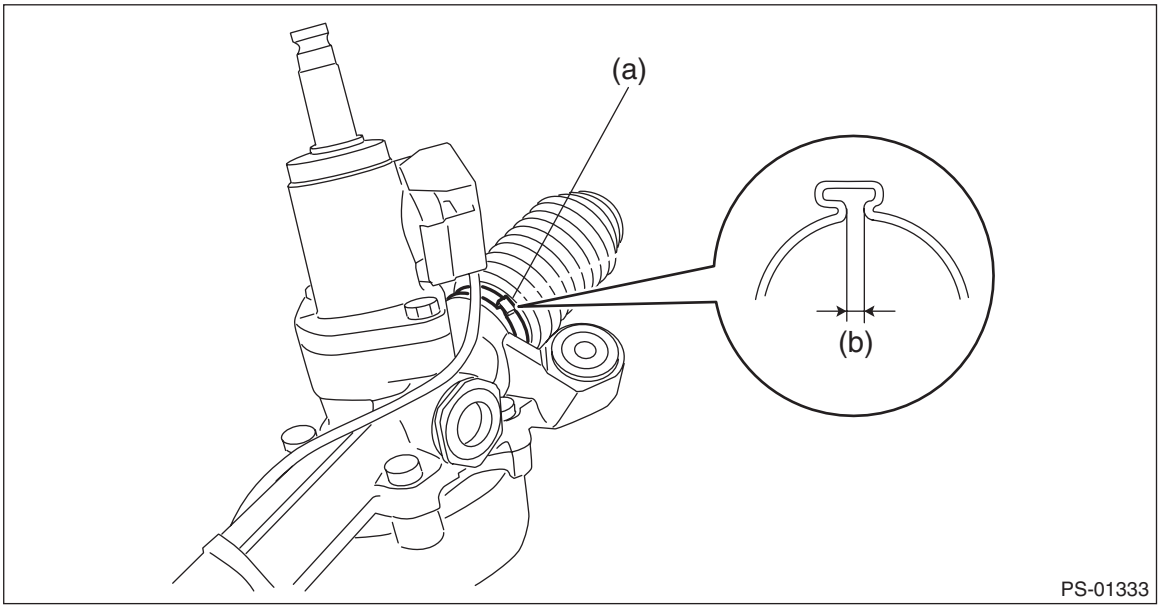

4) Fix the end of the boot - steering gearbox with clip - boot tie-rod (a).

5) After installation, check that the end of the boot - steering gearbox is installed to the groove (b) of the tie-rod.

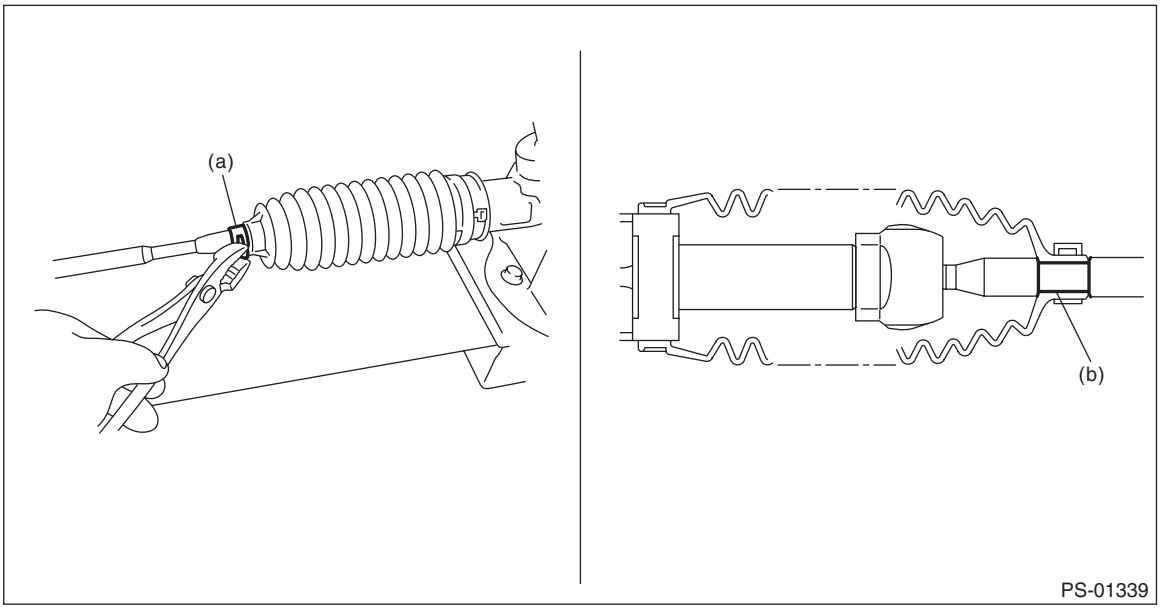

6) If the tie-rod end has been removed, screw in lock nut and tie-rod end to the threaded portion of tie-rod, and tighten the lock nut temporarily in a position as shown in the figure.

Installed tie-rod length L:
29 mm (1.14 in)

7) Inspect the steering gearbox assembly as follows:
1. "A" Holding the tie-rod end, repeat lock to lock several times as quickly as possible.
2. "B" Holding the tie-rod end, turn it slowly at a radius several times as large as possible.
3. Finally, make sure that the boot - steering gearbox is installed in the specified position without inflating.

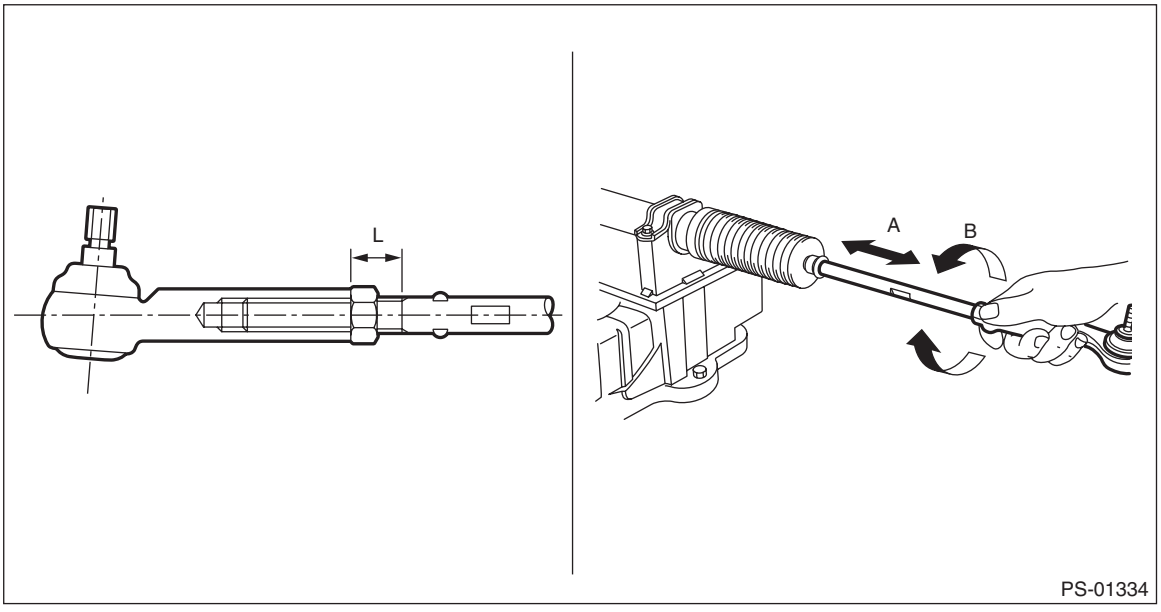

8) Remove the steering gearbox assembly from ST.

E: INSPECTION

1. UNIT INSPECTION

Check components for wear, damage or other faults. Adjust or replace if necessary.

2. LIMIT

Make a measurements as follows. If it exceeds the specified service limits, adjust or replace.

NOTE:
When fixing the steering gearbox assembly in a vise, apply a wooden piece on the flange portion.

Rack shaft sliding resistance:
Limit: 360 N (37 kgf, 81 lbf) or less
Left/right differential of sliding resistance: 20% or less

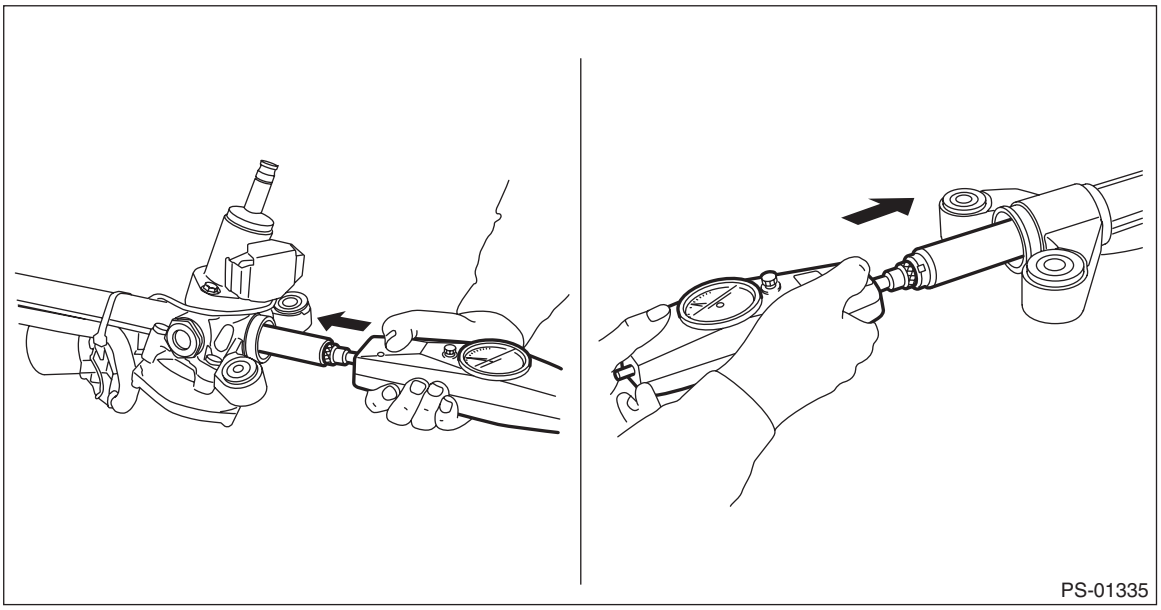

3. RACK SHAFT PLAY IN THE RADIAL DIRECTION

NOTE:
- When fixing the steering gearbox assembly in a vise, apply a wooden piece on the flange portion.
- When fixing the magnet stand in the steering gearbox assembly, perform the following procedure.
  – Fix the iron plate on the flange portion using a c-clamp, and place the magnet stand on the iron plate.
  – Use bolts and nuts to fix directly on the flange portion of the steering gearbox assembly. (Secure the gauge firmly on the gearbox body. (Avoid the input shaft and the rack shaft.))

Right-turn steering:
Service limit:
Both amplitudes: 0.6 mm (0.024 in) or less

Left-turn steering:
Service limit:
Both amplitudes: 0.6 mm (0.024 in) or less

Condition:
L: 5 mm (0.20 in) from dust cover
Rack shaft end P: 98 N (10 kgf, 22 lbf)

NOTE:
<Example of magnet stand and dial gauge installation>
The location where the magnet stand is installed varies to stabilize the magnet stand.

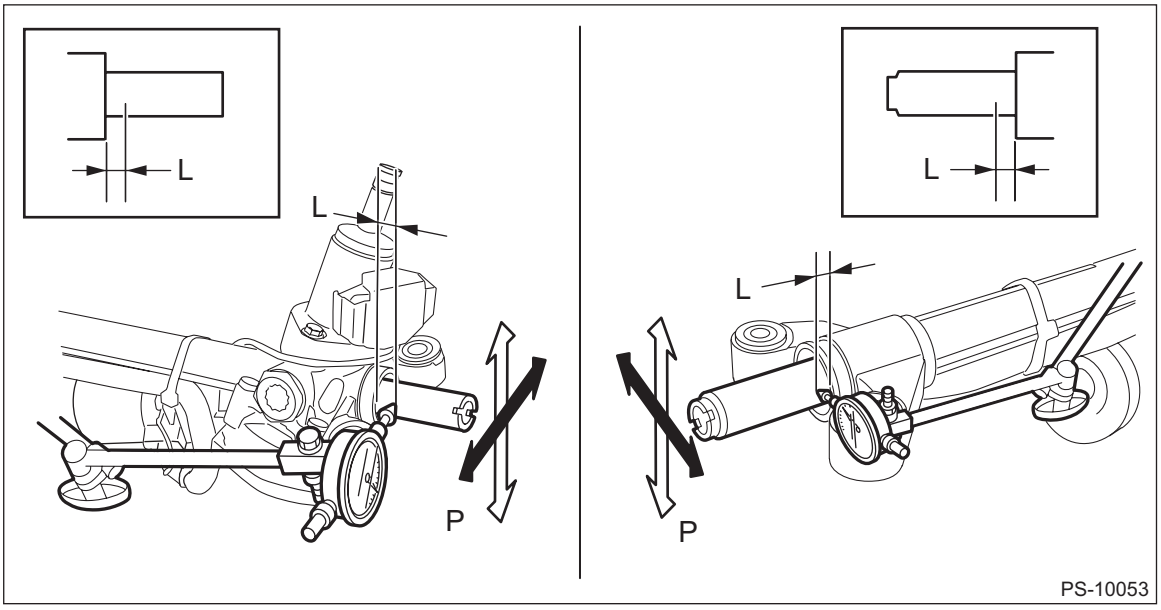

4. INPUT SHAFT PLAY

NOTE:
- When fixing the steering gearbox assembly in a vise, apply a wooden piece on the flange portion.
- When fixing the magnet stand in the steering gearbox assembly, perform the following procedure.
  – Fix the iron plate on the flange portion using a c-clamp, and place the magnet stand on the iron plate.
  – Use bolts and nuts to fix directly on the flange portion of the steering gearbox assembly. (Secure the gauge firmly on the gearbox body. (Avoid the input shaft and the rack shaft.))

In radial direction:
Limit: Both amplitudes: 0.6 mm (0.024 in) or less
Condition: Input shaft tip P = 98 N (10 kgf, 22 lbf)

In axial direction:
Wear limit: 0.27 mm (0.0106 in) or less
Condition: Input shaft tip P = 20 — 49 N (2 — 5 kgf, 4 — 11 lbf)

NOTE:
<Example of magnet stand and dial gauge installation>
The location where the magnet stand is installed varies to stabilize the magnet stand.

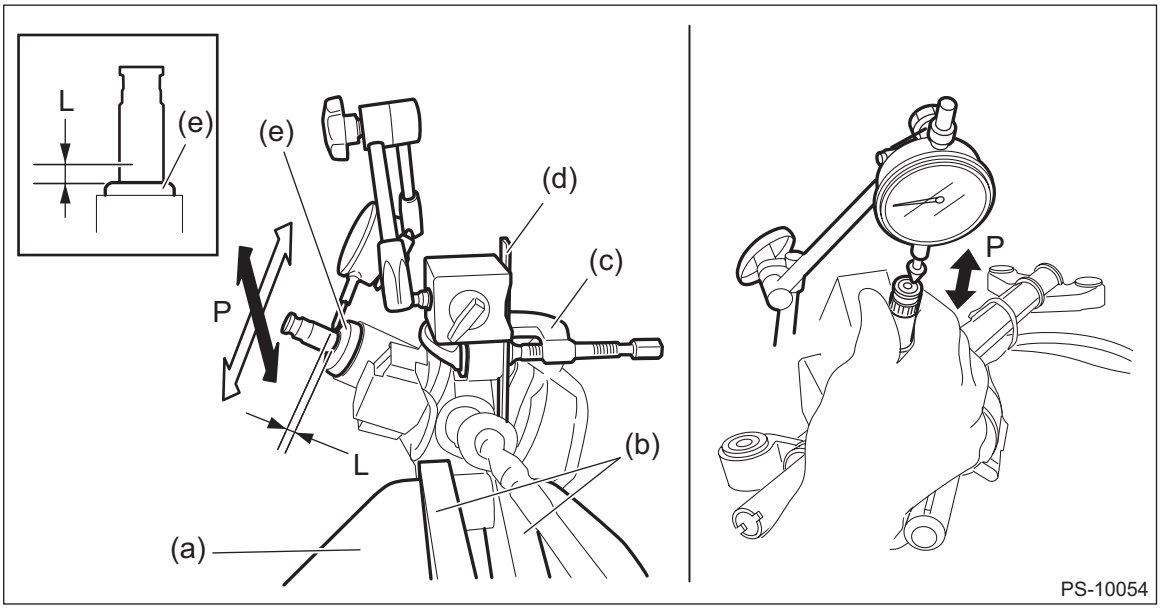

(a) Vise
(b) Wooden block
(c) C-clamp
(d) Iron plate
(e) Dust cover

5. TURNING RESISTANCE OF GEARBOX

1) Using the ST, measure the rotational resistance of the steering gearbox assembly.

Preparation tool:
ST: SPANNER (34099PA100)

Service limit:
Maximum allowable resistance: 18 N (1.8 kgf, 4 lbf) or less
Difference between right and left rotational resistance: 20% or less

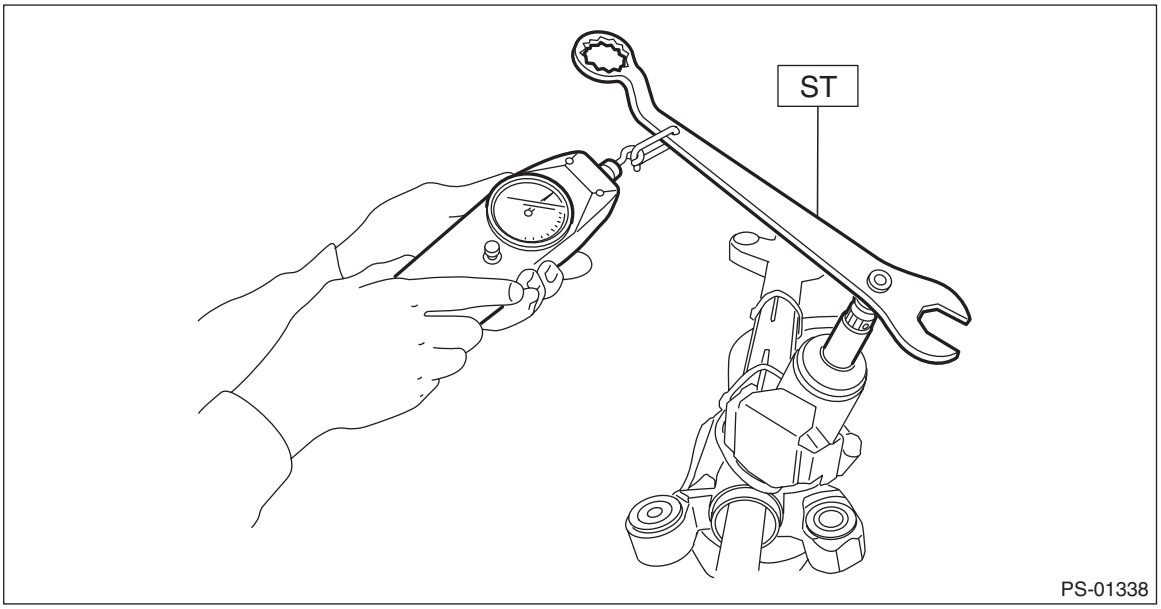

F: ADJUSTMENT

1. GEARBOX BACKLASH ADJUSTMENT

1) Remove the steering gearbox assembly. <Ref. to PS-66, REMOVAL, Electric Power Steering Gearbox.>
2) Loosen the lock nut and adjusting screw.
3) Apply a coat of grease to the sliding surface (B) of the pad - pressure (a) and seating surface (C) of spring - gearbox (b), and then insert the pad - pressure (a) into steering body.
4) Charge the adjusting screw (c) with grease (D), and then insert the spring - gearbox (b) into adjusting screw. Then install on the steering body.

Grease:
Molywhite LS-G

5) Apply liquid gasket to 1/3 or more (A) of entire perimeter of adjusting screw thread (c).

Liquid gasket:
THREE BOND 1102

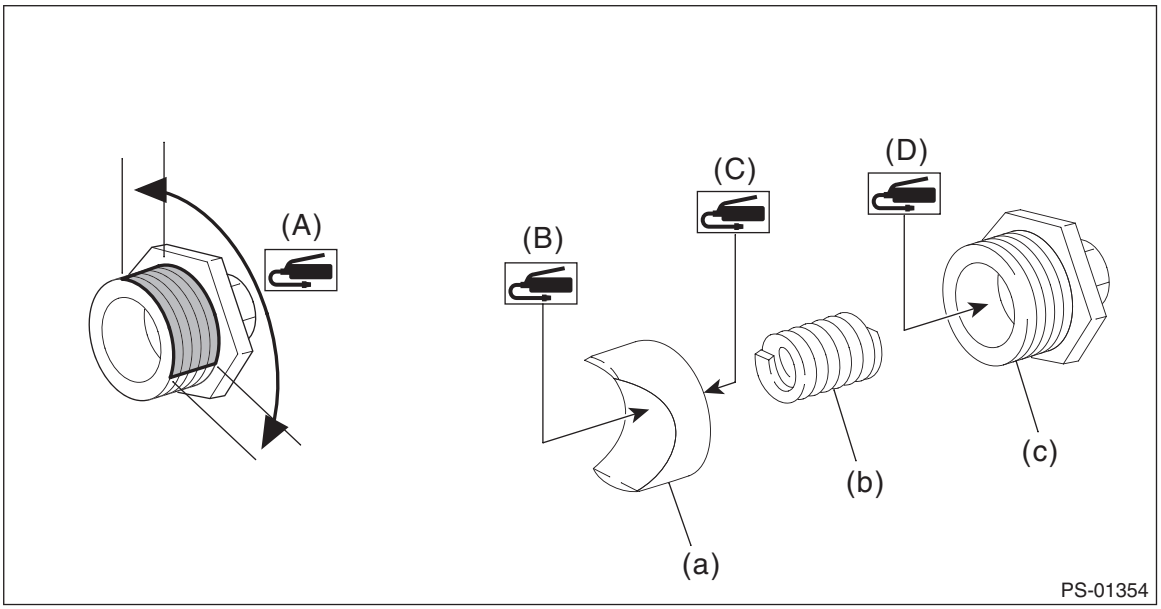

6) Tighten the adjusting screw to 20 N·m (2 kgf-m, 14.8 ft-lb), then loosen it.
7) Tighten the adjusting screw to 20 N·m (2 kgf-m, 14.8 ft-lb), then loosen it.
8) Tighten the adjusting screw to 20 N·m (2 kgf-m, 14.8 ft-lb), then loosen it by 30°.
9) While fixing the adjusting screw, tighten the lock nuts.

Tightening torque:
45 N·m (4.6 kgf-m, 33.2 ft-lb)

2. FRONT WHEEL ALIGNMENT ADJUSTMENT

1) Adjust the front toe. <Ref. to FS-16, FRONT WHEEL TOE-IN, ADJUSTMENT, Wheel Alignment.>
2) Check the steering angle of the wheels.

Standard of steering angle:

Wheel size	17-inch	18-inch
Inner wheel	37.5°±1.5°	36.4°±1.5°
Outer wheel	32.9°±1.5°	32.0°±1.5°

3) When the steering wheel is in the following condition, perform the steering wheel installation over again.
- When wheels are set in the straight ahead position, the steering wheel spokes are not horizontal.
- Error is more than 5° on the periphery of the steering wheel.

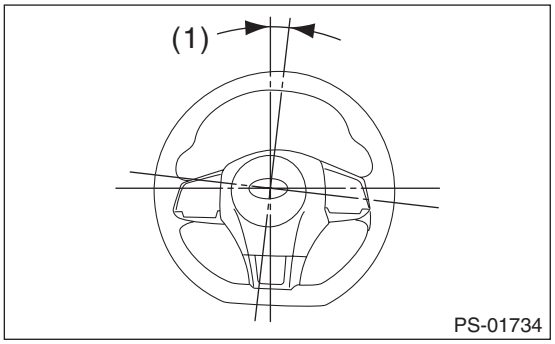

(1) 5° or less

4) If the steering wheel spokes are not horizontal with vehicle set in the straight ahead position after this adjustment, correct it by turning the right and left tie-rods in the opposite direction from each other by the same angle. Also check that there are no abnormal steering effort, failure of the steering wheel to return or other faults.

8. Pipe Assembly

A: REMOVAL

1) Disconnect the ground cable from battery.
2) Remove the under cover. <Ref. to EI-22, REMOVAL, Front Under Cover.>
3) Lift up the vehicle, and remove the front crossmember support plate.

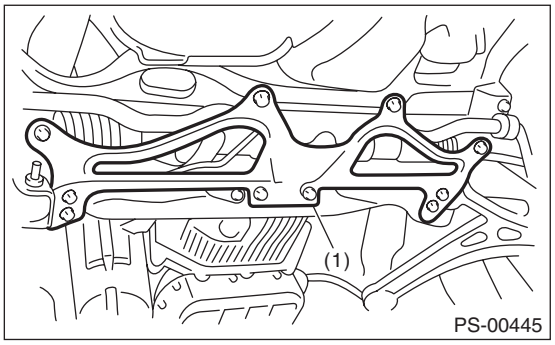

(1) Front crossmember support plate

4) Remove the one pipe joint at the center of the gearbox, and connect the vinyl hose to the pipe and the joint. Discharge the fluid by turning the steering wheel fully clockwise and counterclockwise. Discharge the fluid similarly from other pipes.

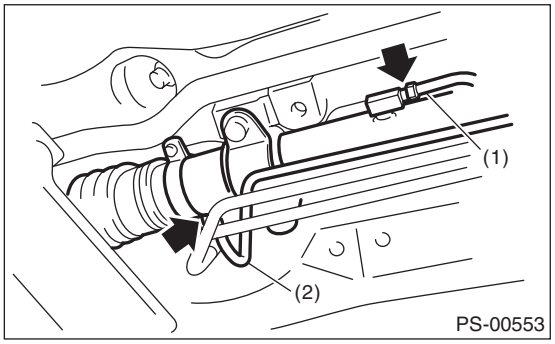

(1) Pipe A
(2) Pipe B

5) Remove the clamp E from return hose and pressure hose.

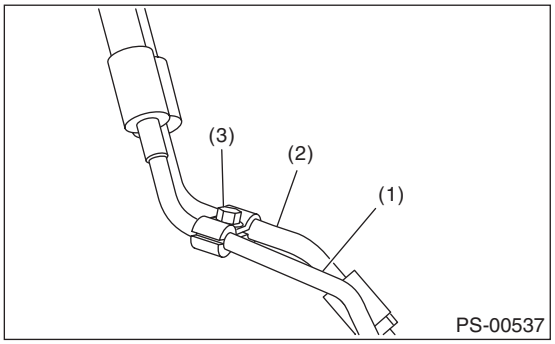

(1) Pressure hose
(2) Return hose
(3) Clamp E

6) Disconnect the return hose from return pipe and disconnect the pressure hose from feed pipe.

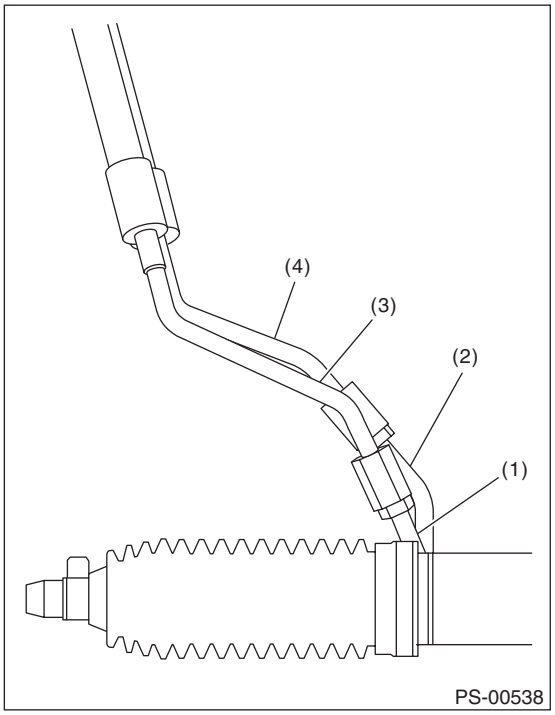

(1) Feed pipe
(2) Return pipe
(3) Pressure hose
(4) Return hose

7) Remove the air intake duct. <Ref. to IN(STI)-11, REMOVAL, Air Intake Duct.>
8) Disconnect the suction hose and pressure hose from oil pump.

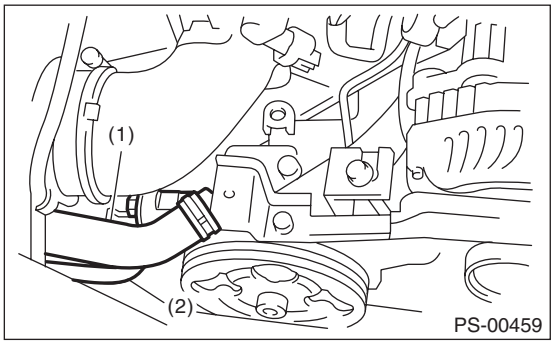

(1) Suction hose
(2) Pressure hose

9) Disconnect the suction hose and return hose from the reservoir tank.

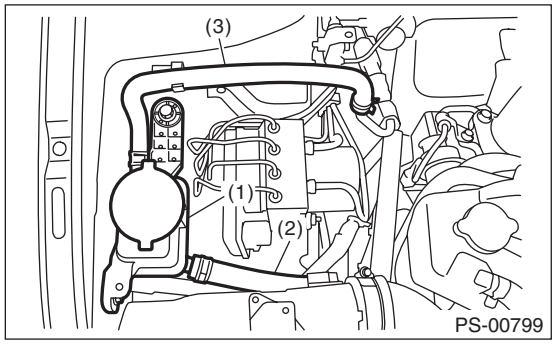

(1) Reservoir tank
(2) Suction hose
(3) Return hose

10) Remove the hose bracket and take out the hose assembly from vehicle.

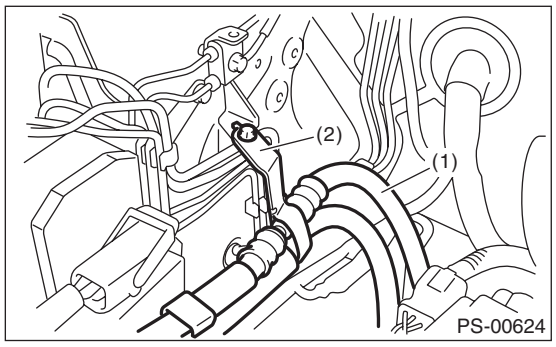

(1) Hose ASSY
(2) Hose bracket

B: INSTALLATION

CAUTION:
Install the under cover - front so that the front end of the under cover (b) comes inside the bumper face - front (a).

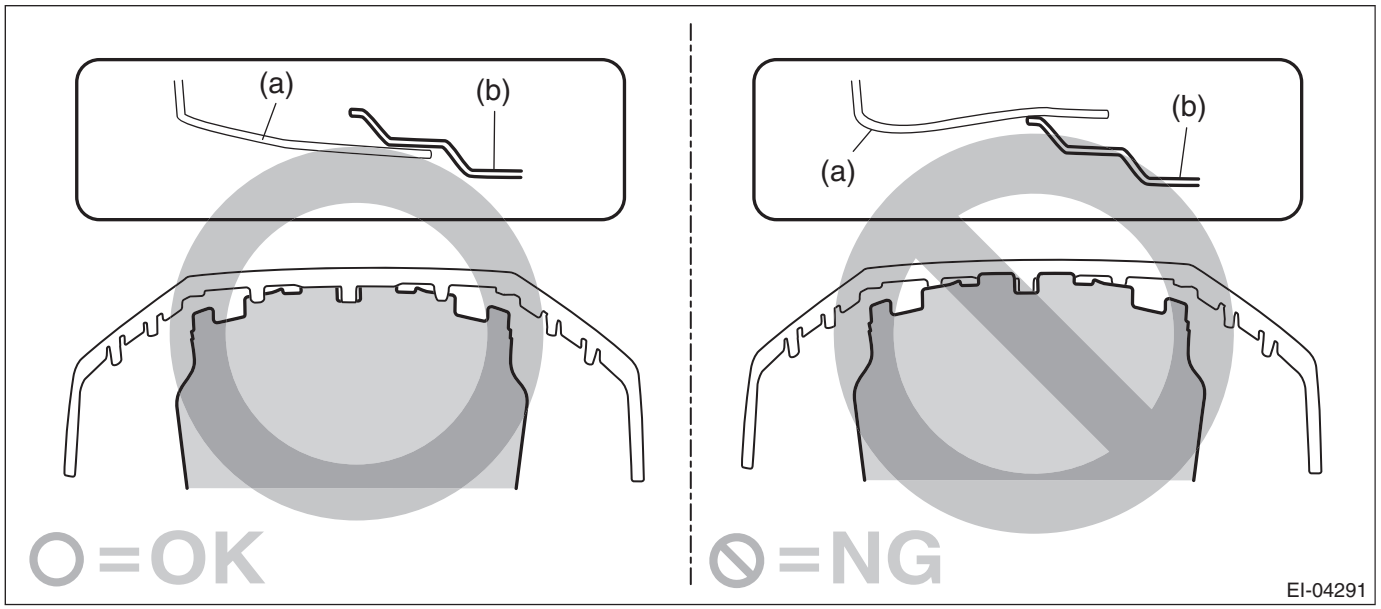

1) Temporarily tighten the hose bracket bolt.

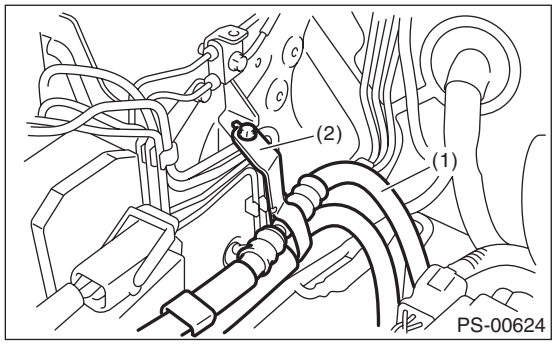

(1) Hose ASSY
(2) Hose bracket

2) Install the plastic clip to the pressure hose and suction hose.

CAUTION:
Align the installation position of the plastic clip with the protector edge of the suction hose.

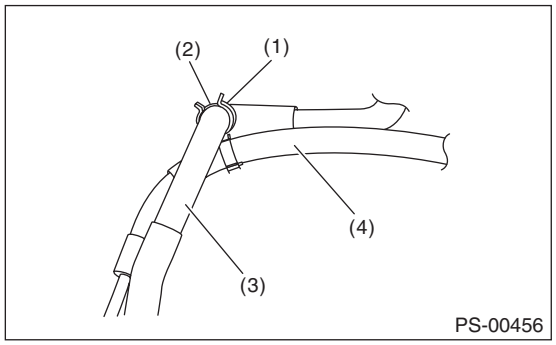

(1) Plastic clip
(2) Protector
(3) Suction hose
(4) Pressure hose

3) Connect the suction hose and return hose to the reservoir tank.

CAUTION:
Firmly insert the plastic clip of return hose to the bracket.

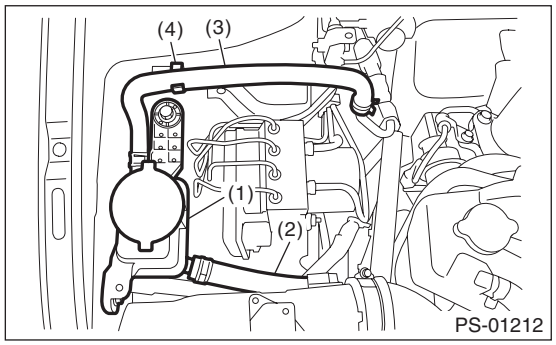

(1) Reservoir tank
(2) Suction hose
(3) Return hose
(4) Plastic clip

4) Connect the suction hose and pressure hose to the oil pump. Tighten the eyebolt of pressure hose.

Tightening torque:
40 N·m (4.1 kgf-m, 29.5 ft-lb)

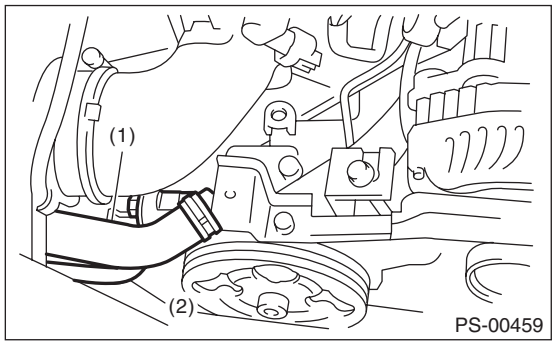

(1) Suction hose
(2) Pressure hose

5) Temporarily connect the pressure hose to feed pipe and return hose to return pipe. Temporarily tighten the bolt of clamp E.

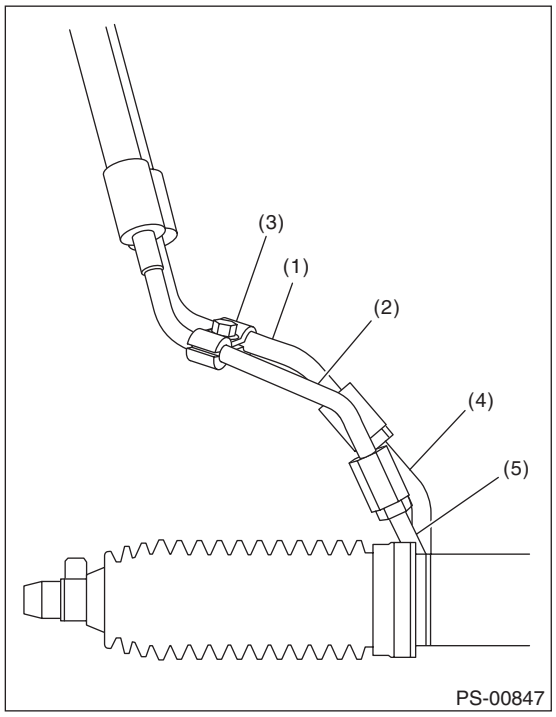

(1) Return hose
(2) Pressure hose
(3) Clamp E
(4) Return pipe
(5) Feed pipe

NOTE:
Make sure that the character “8” on each clamp is positioned on the opposite side, as shown in the figure.

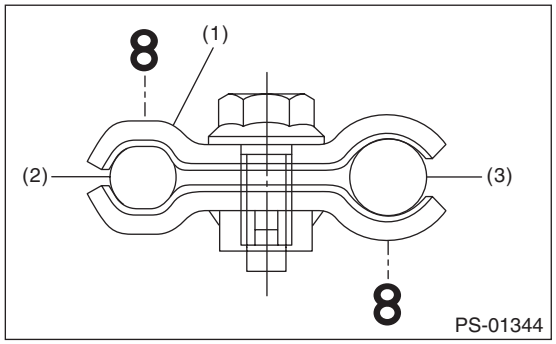

(1) Clamp E
(2) Pressure hose
(3) Return hose

6) Tighten clamp E.

Tightening torque:
7.5 N·m (0.8 kgf-m, 5.5 ft-lb)

7) Tighten the pressure hose to feed pipe and return hose to return pipe.

Tightening torque:
15 N·m (1.5 kgf-m, 11.1 ft-lb)

8) Connect pipes A and B to the four pipe joints of the gearbox.

Tightening torque:
Cylinder side: 27 N·m (2.8 kgf-m, 19.9 ft-lb)
Gear housing side: 17 N·m (1.7 kgf-m, 12.5 ft-lb)

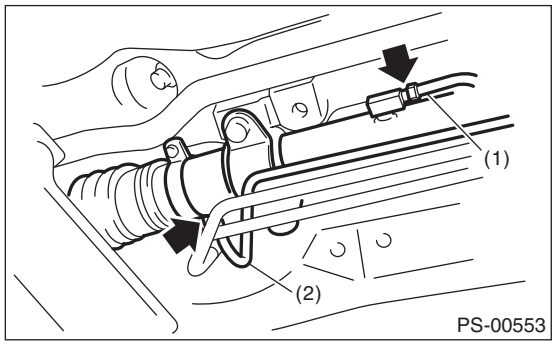

(1) Pipe A
(2) Pipe B

9) Install the front crossmember support plate and jack-up plate.
10) Install the under cover. <Ref. to EI-23, INSTALLATION, Front Under Cover.>
11) Lower the vehicle.
12) Tighten the bolts which hold the hose bracket.

Tightening torque:
10 N·m (1 kgf-m, 7.4 ft-lb)

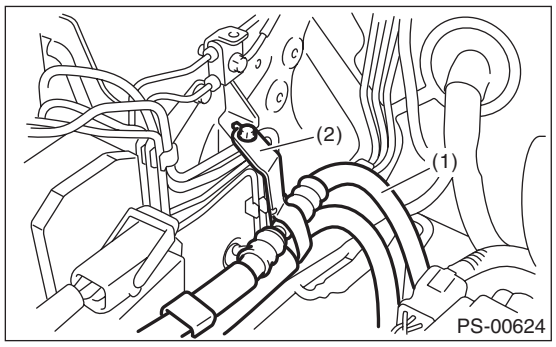

(1) Hose ASSY
(2) Hose bracket

13) Install the air intake duct. <Ref. to IN(STI)-11, INSTALLATION, Air Intake Duct.>
14) Connect the battery ground terminal.
15) Fill with the specified fluid.

CAUTION:
Never start the engine before filling with fluid; otherwise the vane pump may become seized.
16) Finally, check the clearance between pipes or hoses as shown in the figure indicated in “General Diagnostic Table”. <Ref. to PS-111, CLEARANCE CHECK (HYDRAULIC TYPE), INSPECTION, General Diagnostic Table.>

C: INSPECTION

Check all disassembled parts for wear, damage or other problems. Repair or replace the defective parts as necessary.

Part	Maintenance parts	Corrective action
Pipe	• O-ring fitting surface damage • Nut damage • Pipe damage	Replace with a new part.
Hose	• Flare surface damage • Flare nut damage • Outer surface cracks • Outer surface wear • Clip damage • End coupling or adapter deformation	Replace with a new part.

CAUTION:
Although the surface layer materials of rubber hoses have excellent weathering resistance, heat resistance and resistance for low temperature brittleness, they are likely to be damaged chemically by brake fluid, battery electrolyte, engine oil and automatic transmission fluid and their service lives are to be very shortened. Wipe off hoses immediately if any of these come into contact with the hoses.
Since resistances for heat or low temperature brittleness are gradually declining according to time accumulation of hot or cold conditions for the hoses and their service lives are shortening accordingly, it is necessary to perform careful inspection frequently when the vehicle is used in hot weather areas, cold weather areas and a driving condition in which many steering operations are required in short time.
Continuous discharge of the relief valve for 5 seconds or more will reduce the service lives of hoses, oil pump, fluid, etc., due to over heating.

Trouble	Possible cause	Corrective action
Pressure hose burst	Excessive holding time of relief status	Instruct customers.
	Malfunction of the relief valve	Replace the oil pump.
	Poor cold characteristic of fluid	Replace fluid.
Disconnection of the return hose	Improper connection	Repair.
	Loosening of the clip	Replace the hose and clip.
	Poor cold characteristic of fluid	Replace fluid.
Fluid slightly leaking out of hose	Wrong layout, tensioned	Replace the hose.
	Excessive play of engine due to deterioration of engine mounting rubber	Replace the parts if defective.
	Improper stop position of pitching stopper	Replace the parts if defective.
Crack on hose	Excessive holding time of relief status	Replace. Instruct customers.
	Power steering fluid, engine oil, electrolyte adhere on the hose surface	Replace. Be careful during service work.

NOTE:
There are conditions in which a fluid leak is diagnosed, but is not actually leaking. This is because the fluid spilt during the last maintenance was not completely wiped off. Be sure to wipe off spilt fluid thoroughly after maintenance.

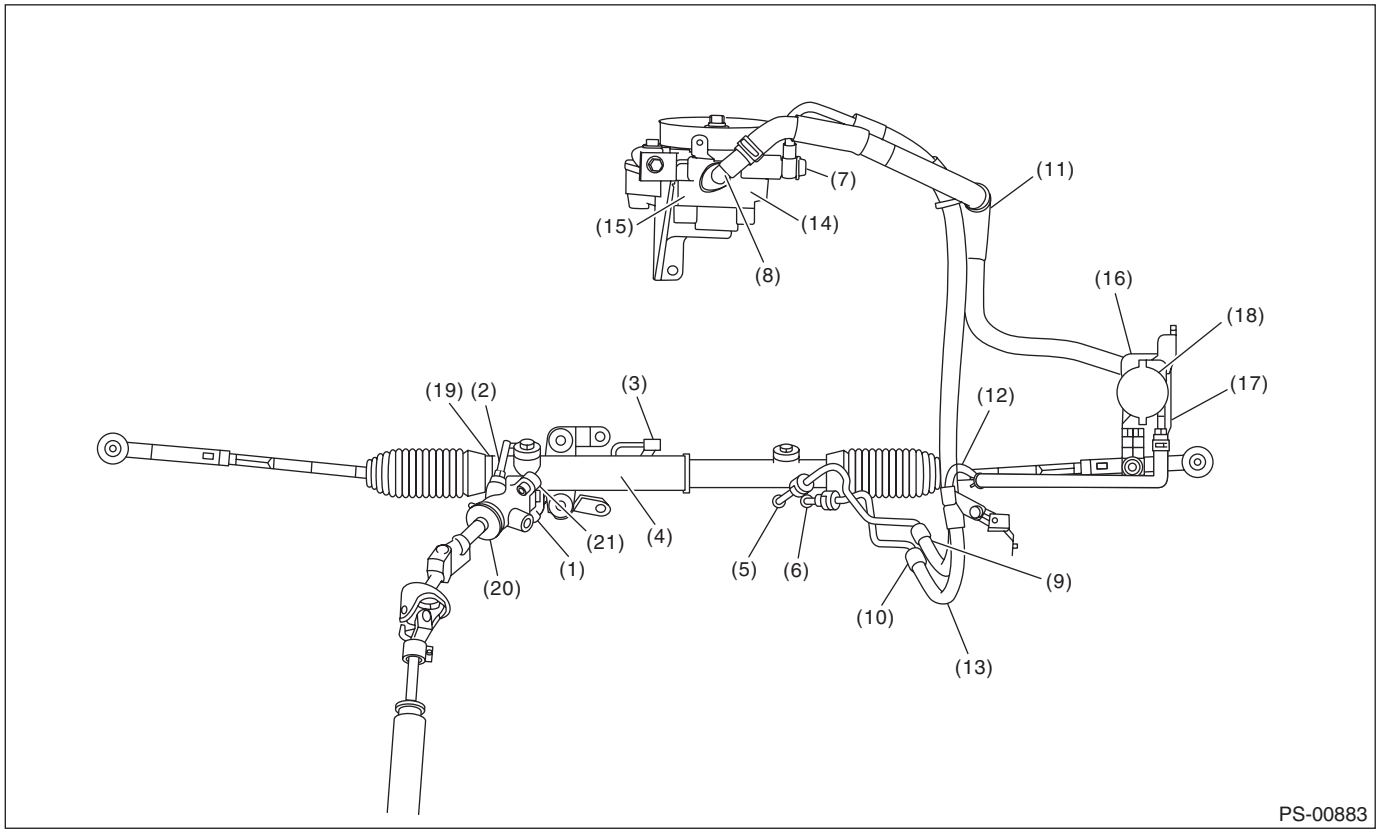

Fluid leaking area	Possible cause	Corrective action
Leakage from the connections of pipes and hoses, numbered (1) through (8) in the figure	Insufficient tightening of flare nut, adhesion of dirt, damage to flare or flare nut or eyebolt	Loosen and retighten. Replace if ineffective.
	Improper installation of hose or clamp	Replace.
	Damaged O-ring or gasket	Replace the O-ring, gasket pipe or hose with new part, if still no improvement, replace the gearbox or oil pump as well.
Leakage from hose (9) through (13) in the figure	Crack or damage in hose	Replace with a new part.
	Crack or damage in hose hardware	Replace with a new part.
Leakage from surrounding of aluminum portion of oil pump, (14) and (15) in the figure	Damaged O-ring	Replace the oil pump.
	Damaged gasket	Replace the oil pump.
Leakage from oil tank, (16) and (17) in the figure	Crack in oil tank	Replace the oil tank.
Leakage from filler neck of (18)	Damaged cap packing	Replace the cap.
	Crack in root of filler neck	Replace the oil tank.
	Fluid level too high	Adjust the fluid level.
Leakage from power cylinder of gearbox area (19) in the figure	Damaged oil seal	Replace the oil seal.
Leakage from (20), (21) in the figure and control valve of gearbox	Damaged packing or oil seal	Replace the faulty parts.
	Damage in control valve	Replace the control valve.

9. Oil Pump

A: REMOVAL

1) Disconnect the ground cable from battery.
2) Remove the V-belts (front side belt). <Ref. to ME(STI)-41, REMOVAL, V-belt.>
3) Disconnect the connector from power steering pump switch.
4) Disconnect the pressure hose and suction hose from the oil pump.

CAUTION:
- **Do not allow fluid to come into contact with the pulley belt.**
- **To prevent foreign matter from entering the hose and pipe, cover the open ends with clean cloth.**

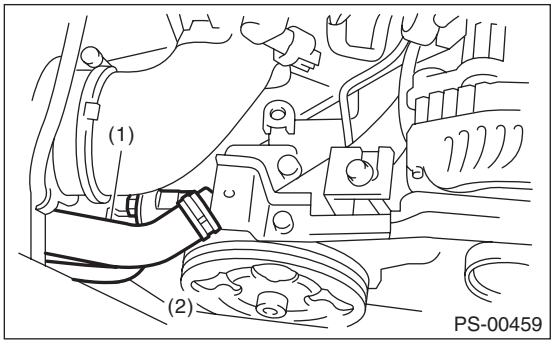

(1) Suction hose
(2) Pressure hose

5) Remove the installation bolt of the power steering pump bracket.

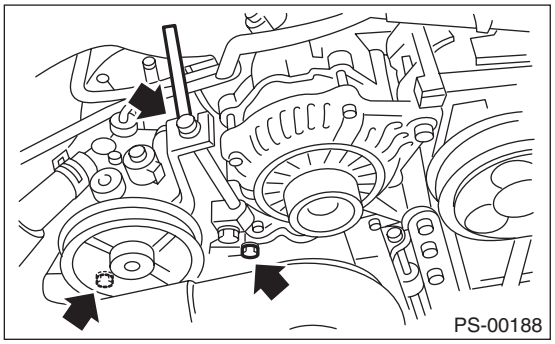

6) Place the oil pump bracket in a vise, and remove the two bolts from the front side of the oil pump.

CAUTION:
When securing the oil pump bracket in a vice, hold the oil pump bracket with the least possible force between two pieces of wood.

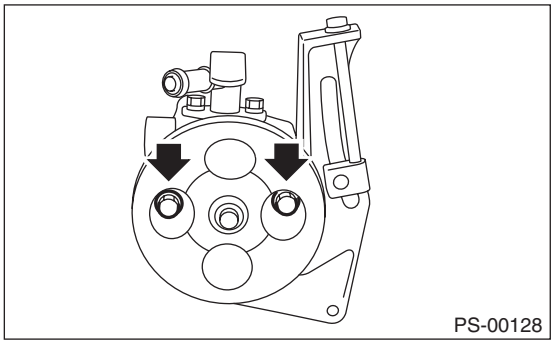

7) Remove the bolt from the rear side of oil pump.

8) Disassemble the oil pump and bracket by inserting a flat tip screwdriver as shown in the figure.

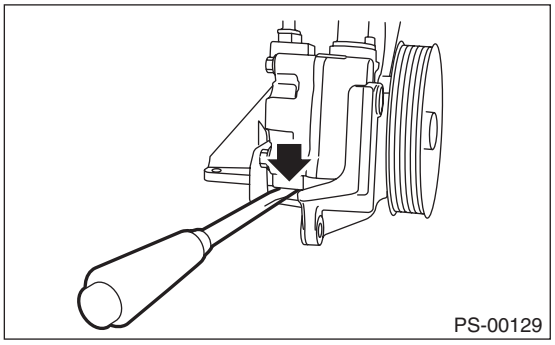

B: INSTALLATION

1) Install the oil pump to bracket.
2) Tighten the bolts which hold the oil pump to the bracket.

Tightening torque:
16 N·m (1.6 kgf-m, 11.8 ft-lb)

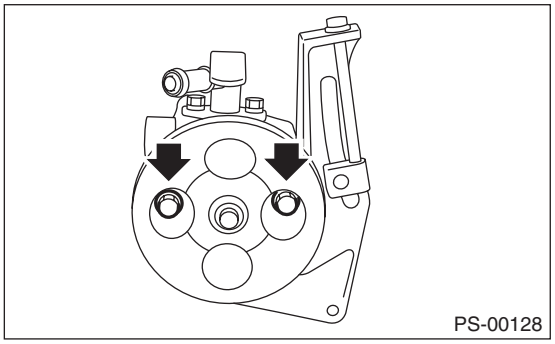

Tightening torque:
48 N·m (4.9 kgf-m, 35.4 ft-lb)

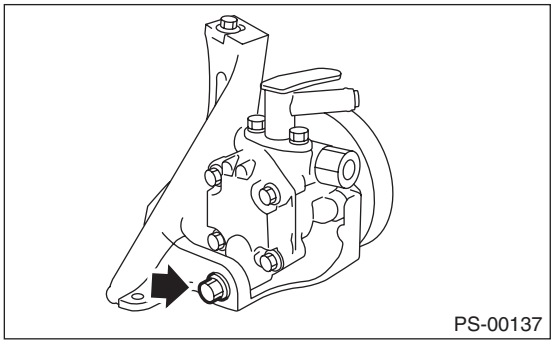

3) Attach the installation bolts of the power steering pump bracket.

Tightening torque:
Refer to "COMPONENT" of "General Description". <Ref. to PS-8, OIL PUMP, COMPONENT, General Description.>

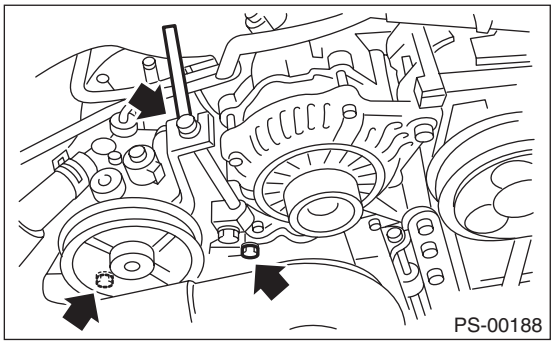

4) Connect the pressure hose and suction hose.

CAUTION:
Be careful when installing; If the hose is twisted it may come into contact with other parts.

Tightening torque:
Eyebolt
40 N·m (4.1 kgf-m, 29.5 ft-lb)

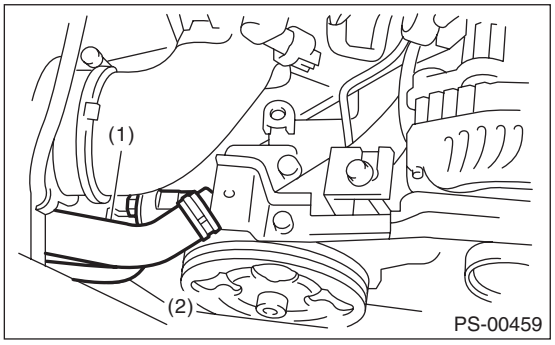

(1) Suction hose
(2) Pressure hose

5) Connect the power steering pump switch to the connector.
6) After installing the oil pump, fill the oil pump with fluid while rotating the pulley by hand and bleed the air from the oil pump.

CAUTION:
Always fill the oil pump with the fluid to prevent abnormal noise and seizure of the oil pump.
7) Install the V-belts (front side belt). <Ref. to ME(STI)-41, INSTALLATION, V-belt.>
8) Connect the battery ground terminal.
9) Fill with the specified power steering fluid. <Ref. to PS-99, Power Steering Fluid.>

CAUTION:
Never start the engine before filling with fluid; otherwise the vane pump may become seized.

C: INSPECTION

1. BASIC INSPECTION

Perform the following inspection procedures and replace faulty parts.

No.	Parts	Inspection	Corrective action
1	Oil pump (exterior)	(1) Crack, damage or oil leakage	Replace the oil pump with a new part.
		(2) Play of pulley shaft	Measure the radial play and axial play. If any of these exceeds the service limit, replace the oil pump with a new part.
2	Pulley	(1) Damage	Replace the oil pump with a new part.
		(2) Bend	Measure the V groove deflection. If it exceeds the service limit, replace the oil pump with a new part.
3	Oil pump (interior)	(1) Faulty or seized of vane pump	Check the rotating resistance of pulley. If it exceeds the service limit, replace the oil pump with a new part.
		(2) Bend in the shaft or damage to bearing	If the a string is wrapped on the pulley and rotated, and the oil pump emits a noise that is markedly different in tone and loudness from a sound of a new oil pump, replace the oil pump with a new part.
4	O-ring	Cracking or deterioration	Replace with a new part.
5	Bracket	Cracks	Replace with a new part.

2. SERVICE LIMIT

Make a measurements as follows. If it exceeds the service limit, replace with a new part.

CAUTION:
• When securing the oil pump in a vice, hold the oil pump with the least possible force between two pieces of wood.
• Do not set the outside of flow control valve or pulley on a vise; otherwise outside or pulley might be deformed. Select properly sized wood pieces.

1) Play of the pulley shaft

Condition:
P: When applying a force of 9.8 N (1 kgf, 2.2 lbf)

Service limit:
Play in the radial direction (direction ⬅ ➡)
0.2 mm (0.008 in) or less

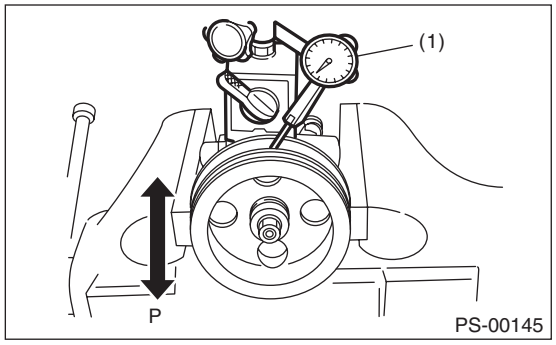

(1) Dial gauge

Axial play (direction ⇦ ⇨)
0.9 mm (0.035 in) or less

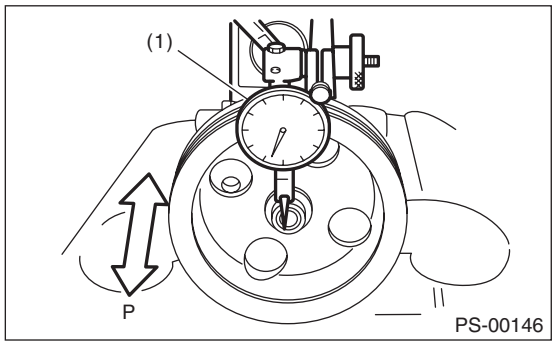

(1) Dial gauge

2) Deflection of the pulley groove

Service limit:
1 mm (0.039 in) or less

NOTE:
Read the value on one surface of V groove, set the dial gauge on the other surface, and read the value of the dial gauge.

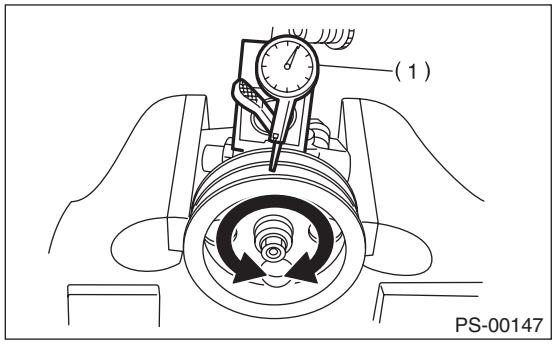

(1) Dial gauge

3) Rotating resistance of pulley

Service limit:
Maximum load: 9.22 N (0.94 kgf, 2.07 lbf) or less

NOTE:
- A rather higher value may be indicated when pulley starts turning.
- Measure the load during rotation to make a judgment.

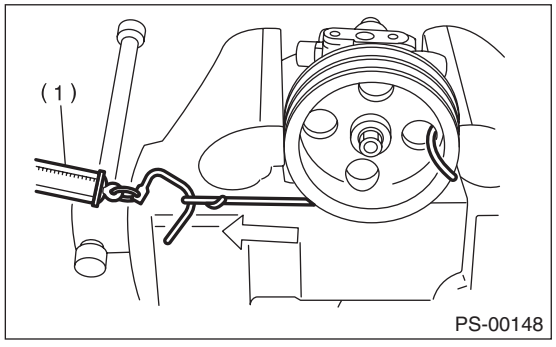

(1) Spring scale

3. HYDRAULIC PRESSURE

NOTE:
- To measure hydraulic pressure correctly, be sure to complete all the items in “INSPECTION”, prior to performing the measurement. <Ref. to PS-103, INSPECTION, General Diagnostic Table.>
- Do not leave the valve of pressure gauge closed or hold the steering wheel at lock for 5 seconds or more in any case, this can damage the oil pump.
- Before attaching a pressure gauge, place cloth at locations where fluid is expected to spill. Wipe off any spilt fluid completely after the measurement.

1) Regular pressure measurement
(1) Connect the ST.

Preparation tool:
ST1: PRESSURE GAUGE (925711000)
ST2: ADAPTER HOSE B (34099AC020)
ST3: ADAPTER HOSE A (34099AC010)

(2) Remove the air intake duct. <Ref. to IN(STI)-11, REMOVAL, Air Intake Duct.>
(3) Disconnect the pressure hose from the pump.
(4) Using the gasket and bolt, install the ST2 to the pump instead of the pressure hose.

Preparation items:
Genuine part: Gasket (34621AC021)
Genuine part: Bolt (34620AC010)

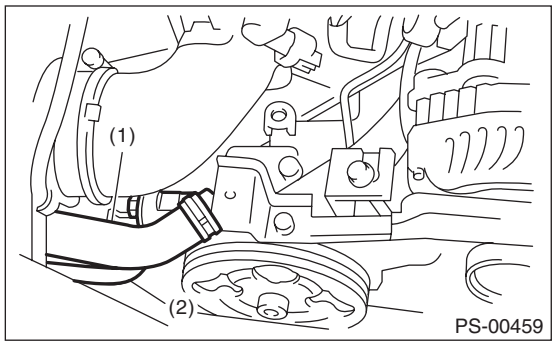

(1) Suction hose
(2) Pressure hose

(5) Attach the ST3 to the end of pressure hose which is removed from pump.
(6) Replenish power steering fluid up to the specified level.
(7) Open the valve, and start the engine.
(8) Measure the regular pressure.

Preparation tool:
ST1: PRESSURE GAUGE (925711000)
ST2: ADAPTER HOSE B (34099AC020)
ST3: ADAPTER HOSE A (34099AC010)

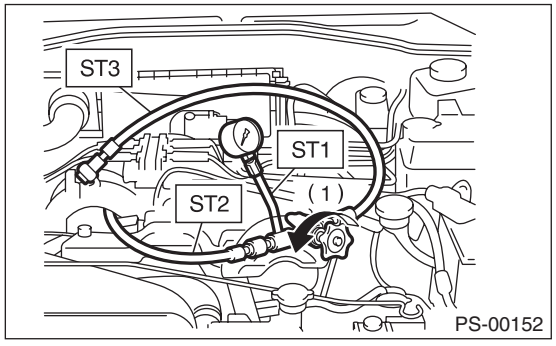

(1) Valve

Service limit:
981 kPa (10 kgf/cm^2, 142 psi) or less

(9) If it is not within the specification, replace the faulty part for the following problems. (Pipe or hose clogged, leaks from fluid line, and mixture of foreign matter in fluid line)

2) Measure the relief pressure.
(1) Using the ST, measure the relief pressure.
(2) Close the valve.
(3) Measure the relief pressure.

Preparation tool:
ST1: PRESSURE GAUGE (925711000)
ST2: ADAPTER HOSE B (34099AC020)
ST3: ADAPTER HOSE A (34099AC010)

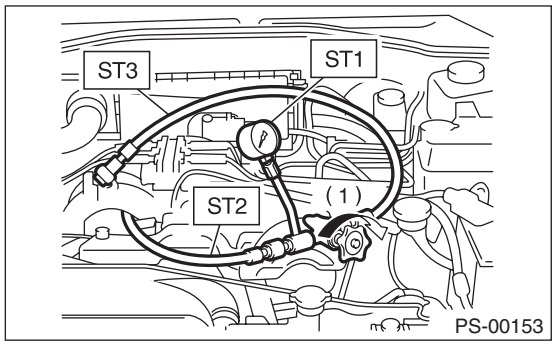

(1) Valve

Service limit:
8,300 — 9,000 kPa (85 — 92 kgf/cm^2, 1,203 — 1,305 psi)
(4) If the torque is not within specified range, replace the oil pump.

3) Measure the operating pressure.
(1) Using the ST, measure the operating pressure.
(2) Open the valve.
(3) Measure the operating pressure of control valve by turning steering wheel from stop to stop.

Preparation tool:
ST1: PRESSURE GAUGE (925711000)
ST2: ADAPTER HOSE B (34099AC020)
ST3: ADAPTER HOSE A (34099AC010)

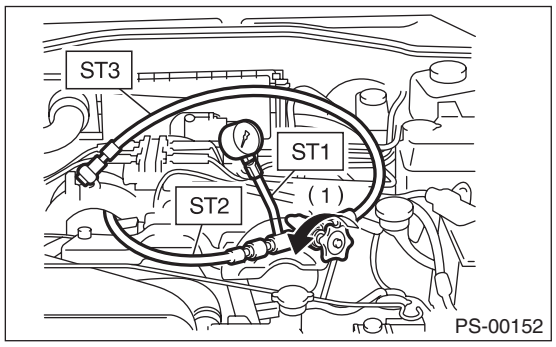

(1) Valve

Service limit:
8,300 — 9,000 kPa (85 — 92 kgf/cm^2, 1,203 — 1,305 psi)
(4) If it is out of specification, measure the steering effort. <Ref. to PS-107, MEASUREMENT OF STEERING EFFORT (HYDRAULIC TYPE), INSPECTION, General Diagnostic Table.>
If it is not within specification, replace the control valve itself or control valve and pinion as a single unit, using new parts.

10.Reservoir Tank

A: REMOVAL

1) Drain the power steering fluid.
2) Disconnect the hose - suction and the hose - return.

CAUTION:
Plug the ends of the hose and pipe to prevent foreign matter from entering.
3) Remove the bolt and remove the reservoir - tank assembly.

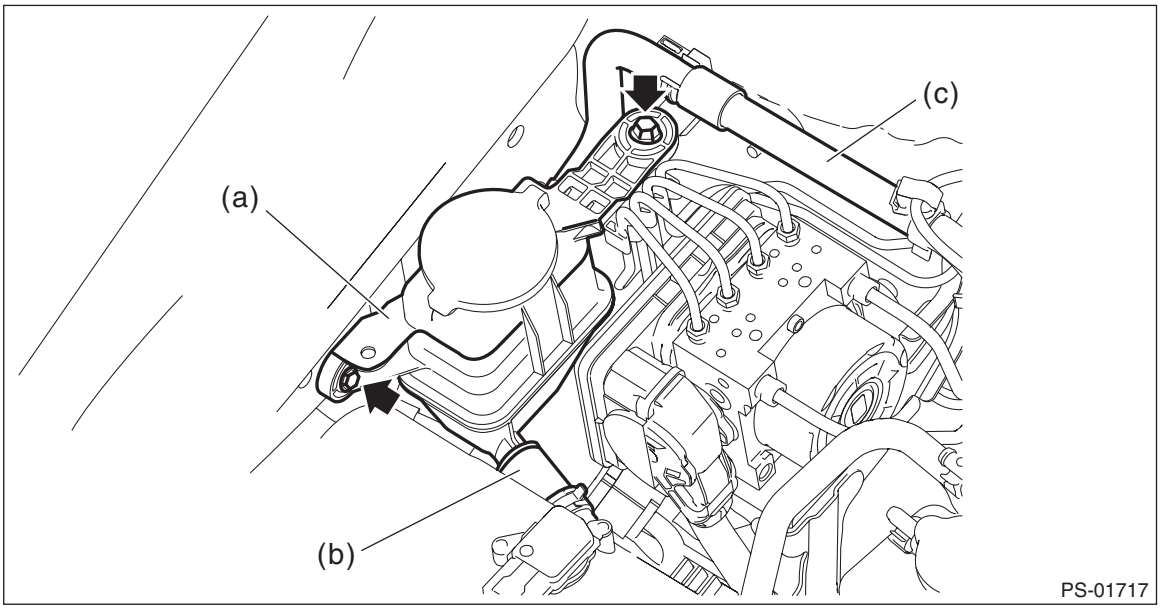

(a) Reservoir - tank ASSY (b) Hose - suction (c) Hose - return

B: INSTALLATION

1) Install the reservoir - tank assembly.

Tightening torque:
13 N·m (1.3 kgf-m, 9.6 ft-lb)
2) Connect the hose - suction and the hose - return to the reservoir - tank assembly.
3) Replenish power steering fluid up to the specified level. <Ref. to PS-99, INSPECTION, Power Steering Fluid.>

C: INSPECTION

Check the reservoir - tank assembly for cracks, breakage or damage. If a failure is found, replace the reservoir - tank assembly.

11.Power Steering Fluid

A: SPECIFICATION

Recommended power steering fluid:
SUBARU ATF or ATF DEXRON III

B: INSPECTION

1) Check the power steering fluid for deterioration or contamination. If the fluid is highly deteriorated or contaminated, drain it and refill with new fluid.
2) Check the joints and units for oil leakage. If any oil leaks are found, repair or replace the applicable part.
3) Inspect the fluid level of the reservoir - tank assembly with vehicle on level surface and engine stopped. If the level is at “MIN.” point or below, add fluid to keep the level in the specified range of the indicator. If at “MAX.” point or above, drain fluid by using a syringe or the like.
   (1) When the power steering fluid temperature is 20°C (68°F), check the fluid level on the “COLD” side.
   (2) When the power steering fluid temperature is 80°C (176°F), check the fluid level on the “HOT” side.

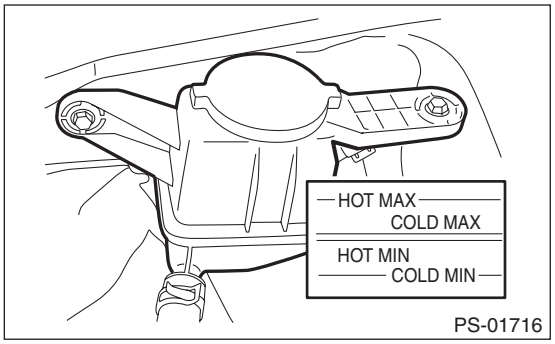

C: REPLACEMENT

1) Lift up the vehicle.
2) Drain the power steering fluid.
   (1) Remove the pipe joint of the gearbox, and connect the vinyl hose to the pipe and the joint.
   (2) Discharge the fluid by turning the steering wheel fully clockwise and counterclockwise.
3) Add the specified fluid to the reservoir - tank assembly at “MAX” level.
4) Continue to turn the steering wheel slowly from lock to lock until the bubbles stop appearing on oil surface while keeping the fluid at the level in the step 3).
5) If the steering wheel is turned in a low fluid level condition, air will be sucked into the pipe. If air has entered, leave it for about half an hour and then repeat step 4) again.
6) Start the engine and let it idle.
7) Continue to turn the steering wheel slowly from lock to lock again until the bubbles stop appearing on oil surface, while keeping the fluid at the level in step 3).
Normally bubbles will stop appearing after turning the steering wheel from lock to lock three times.
8) In case bubbles do not stop appearing in the tank, leave it for about half an hour and then repeat from step 3) again.
9) Lower the vehicle, and then idle the engine.
10) Continue to turn the steering wheel from lock to lock until the bubbles stop appearing and change of the fluid level is within 3 mm (0.12 in).
11) In case the following happens, leave it about half an hour and then perform step 7) to 10) again.
   (1) The fluid level changes by 3 mm (0.12 in) or more.
   (2) Bubbles remain on the upper surface of the fluid.
   (3) Grinding noise is generated from oil pump.
12) Check the fluid leakage after turning steering wheel from lock to lock with engine running.

12.Power Steering Control Module

A: REMOVAL

1) Disconnect the ground terminal from battery sensor. <Ref. to NT-6, BATTERY, NOTE, Note.>
2) Remove the power steering control module.
   (1) Disconnect the connector of the power steering control module.
   (2) Remove the nuts, and remove the power steering control module.
   (3) Remove the bracket - control module.

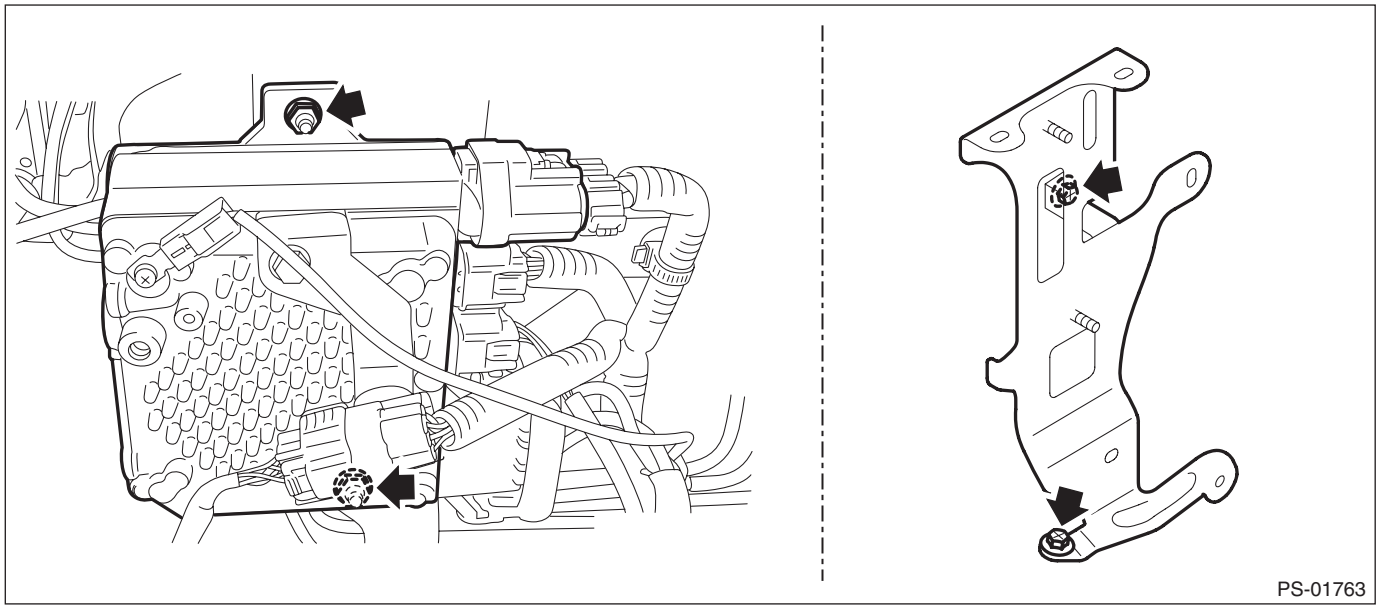

B: INSTALLATION

1) Attach the bracket - control module.

Tightening torque:
7.5 N·m (0.8 kgf-m, 5.5 ft-lb)
2) Install the power steering control module.

Tightening torque:
7.5 N·m (0.8 kgf-m, 5.5 ft-lb)
3) Connect the harness connector.

CAUTION:
Make sure that the connector is securely locked.
4) Connect the ground terminal to the battery sensor. <Ref. to NT-6, BATTERY, NOTE, Note.>

C: INSPECTION

1. CHECK MOTOR UNIT

1) Turn the ignition switch to OFF.
2) Disconnect the connector from power steering unit.
3) Using a tester and test harness, check the internal resistance of the harness terminals.

Preparation tool:
Circuit tester

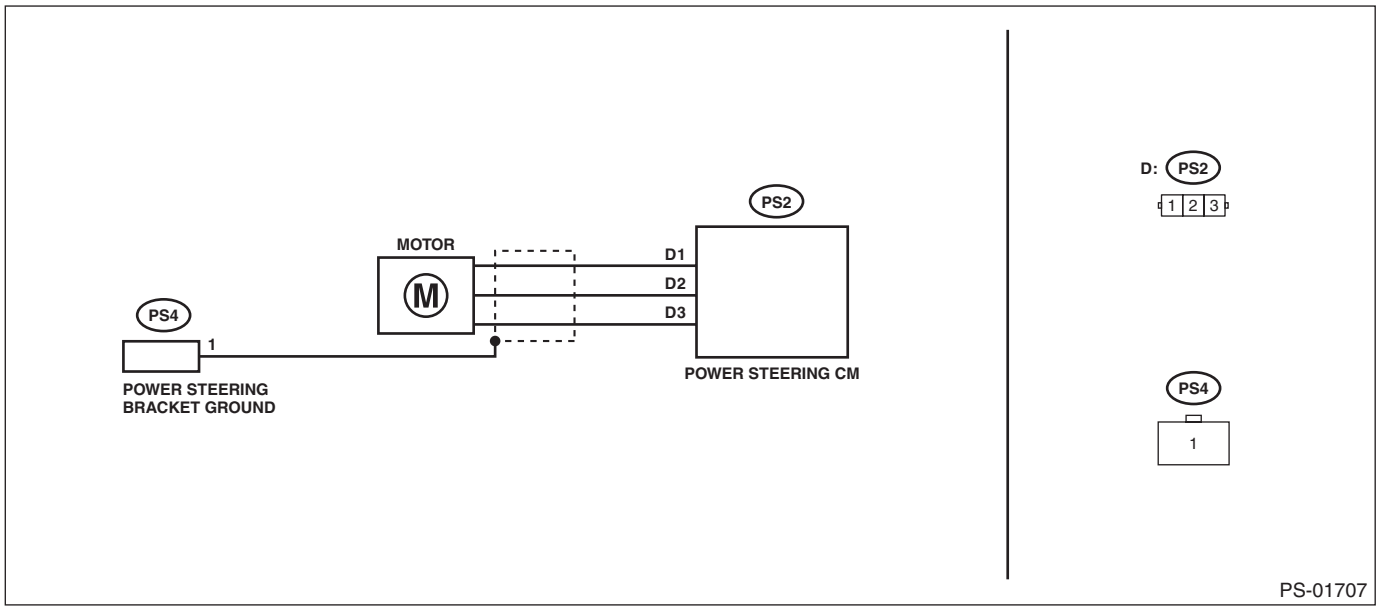

Between connector and terminal	Standard
(PS2) No. 1 — No. 2 (PS2) No. 1 — No. 3 (PS2) No. 2 — No. 3	Less than 10 Ω
(PS2) No. 1 — Steering gearbox body (PS2) No. 2 — Steering gearbox body (PS2) No. 3 — Steering gearbox body	1 MΩ or more

2. PERFORM UNIT CHECK OF RESOLVER SENSOR

1) Turn the ignition switch to OFF.
2) Disconnect the connector from power steering unit.
3) Using a tester and test harness, check the internal resistance of the harness terminals.

Preparation tool:
Circuit tester

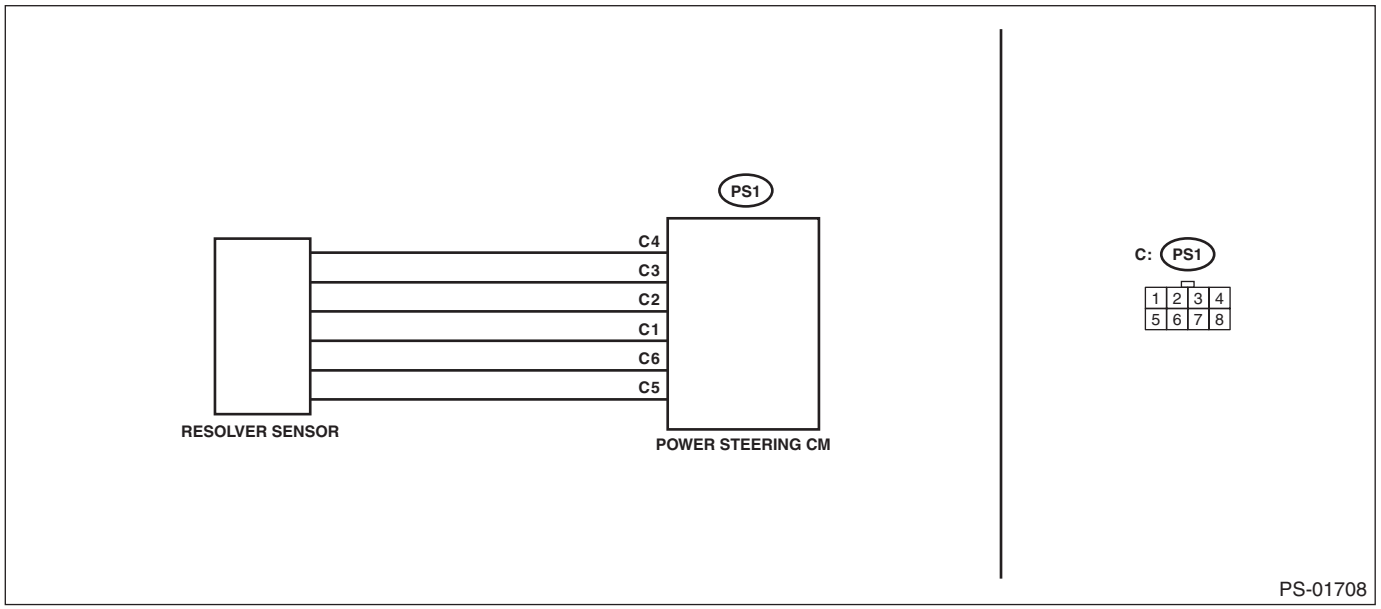

Between connector and terminal	Standard
(PS1) No. 1 — No. 2 (PS1) No. 3 — No. 4 (PS1) No. 5 — No. 6	Less than 10 Ω
(PS1) No. 1 — Steering gearbox body (PS1) No. 2 — Steering gearbox body (PS1) No. 3 — Steering gearbox body (PS1) No. 4 — Steering gearbox body (PS1) No. 5 — Steering gearbox body (PS1) No. 6 — Steering gearbox body	1 MΩ or more

13.General Diagnostic Table

A: INSPECTION

- Hydraulic type

Trouble	Possible cause	Corrective action
• Steering effort is heavy in all ranges. • Steering effort is heavy at stand still. • Steering wheel vibrates when turning.	1. Pulley belt • Unequal length of pulley belts • Contact with oil or grease • Looseness or damage of the pulley belt • Poor uniformity of the pulley belt cross section • Pulley belt touches to pulley bottom • Poor revolution of pulleys (except oil pump pulley) • Poor revolution of oil pump pulley	Adjust or replace the faulty parts.
	2. Tire and wheel • Improper tire out of specifications*1 • Improper wheel out of specifications*1 • Tires not properly inflated	Replace or reinflate the tire and wheel. Instruct customers.
	3. Fluid • Low fluid level • Air entry in fluid • Dust entry in fluid • Fluid deterioration • Inadequate warm up of fluid*2	Refill the fluid, bleed air, replace or instruct customer.
	4. Idle speed • Lower idle speed • Excessive drop of idle speed at start or when turning the steering wheel*3	Adjust the idle speed or instruct customer.
	5. Measure the hydraulic pressure. <Ref. to PS-93, INSPECTION, Oil Pump.>	Replace the faulty parts.
	6. Measure the steering wheel effort. <Ref. to PS-107, MEASUREMENT OF STEERING EFFORT (HYDRAULIC TYPE), INSPECTION, General Diagnostic Table.>	Adjust or replace.
	7. Fluid line • Fluid leakage from fluid line	Repair or replace.
• Vehicle leads to one side or the other. • Returning force of steering wheel to center is poor. • Steering wheel vibrates when turning.	1. Tire and wheel • Flat tire • Mixed use of different tires • Mixed use of different wheels • Abnormal wear of tire • Unequal tread remaining • Unequal pressure of tire	Adjust, repair or replace the tire and wheel.
	2. Front alignment • Improper or unequal caster • Improper or unequal toe-in • Loose suspension connections	Adjust or retighten.
	3. Others • Damaged joint assembly • Unbalance of ground clearance • Unbalance of load	Replace or adjust the faulty parts, or instruct customer.
	4. Measure the steering wheel effort. <Ref. to PS-107, MEASUREMENT OF STEERING EFFORT (HYDRAULIC TYPE), INSPECTION, General Diagnostic Table.>	Adjust or replace the faulty parts.

*1 If the tires or wheels are wider than standard, the load to power steering system is increased. Accordingly, in a condition, for example before fluid warms-up, relief valve may work before reaching maximum turning angle. In this situation, steering effort may become relatively heavy. When the measured hydraulic pressure is normal, there is no abnormal thing.
*2 In cold weather, steering effort may be heavy due to increased flow resistance of cold fluid. After warming-up engine, turn the steering wheel from stop to stop several times to warm up fluid. If steering effort reduces normally, function is normal.
*3 In cold weather or with insufficient warm up of the engine, steering effort may be heavy due to excessive drop of idling when turning the steering wheel. Start the vehicle with increasing engine speed than usual. If the steering effort returns to normal, the function operates normally.

- Electric type

Trouble	Possible cause	Corrective action
• Steering effort is heavy in all ranges. • Steering effort is heavy at stand still. • Steering wheel vibrates when turning.	1. Tire and wheel • Improper tire out of specifications • Improper wheel out of specification • Tires not properly inflated	Replace or reinflate the tire and wheel.
	2. Measure the steering wheel effort. <Ref. to PS-108, MEASUREMENT OF STEERING EFFORT (ELECTRIC TYPE), INSPECTION, General Diagnostic Table.>	Adjust or replace the faulty parts.
• Vehicle leads to one side or the other. • Returning force of steering wheel to center is poor. • Steering wheel vibrates when turning.	1. Tire and wheel • Flat tire • Mixed use of different tires • Mixed use of different wheels • Abnormal wear of tire • Unequal tread remaining • Unequal pressure of tire	Adjust, repair or replace the tire and wheel.
	2. Front wheel alignment • Improper or unequal caster • Improper or unequal toe-in • Loose suspension connections	Adjust or retighten.
	3. Measure the steering wheel effort. <Ref. to PS-108, MEASUREMENT OF STEERING EFFORT (ELECTRIC TYPE), INSPECTION, General Diagnostic Table.>	Adjust or replace the faulty parts.

NOTE:
When performing repeated steering operation with the vehicle at standstill, the steering effort may be temporarily heavy because the heat generated in the system activates the power steering protection control. This is not a malfunction caused by the steering system. After a while, it will return to normal steering effort. (In this case, the STEERING warning light will not come on and there will be no DTC.)

1. NOISE & VIBRATION (HYDRAULIC TYPE)

CAUTION:
Do not keep the relief valve operated for five seconds or more at any time or inner parts of the oil pump may be damaged due to rapid increase of fluid temperature.

NOTE:
• A grinding noise may be heard immediately after the engine start in extremely cold conditions. In this case, if the noise goes off during warm up there is no abnormal function in the system. This is due to the fluid characteristics in extremely cold condition.
• The oil pump normally makes a small whining noise due to its mechanism. Even if a noise is heard when steering wheel is turned at stand still, there is no abnormal function in the system provided that the noise eliminates when the vehicle is driving.
• When turning the steering wheel with the brake applied when the vehicle is parked, a screeching noise may be generated by the brake disc and pads. This is not a fault in the steering system.
• There may be a small vibration around the steering devices when turning the steering wheel at standstill, even though the component parts are operating properly.
Hydraulic systems are likely to generate this kind of vibration as well as working noise and fluid noise because of combined conditions, i.e., road surface and tire surface, engine speed and turning speed of steering wheel, fluid temperature and braking condition.
These conditions do not indicate a problem in the system.
Confirm vibration by applying the parking brake on a concrete surface and turning the steering wheel from slowly to rapidly, in steps.

Trouble	Possible cause	Corrective action
Hiss noise (continuous) While engine is running.	Relief valve emits operating sound when steering wheel is completely turned in either direction. (Do not keep this condition for 5 seconds or more.)	Normal
	Relief valve emits operating sound when steering wheel is not turned. This means that the relief valve is defective.	Replace the oil pump.
Rattling noise (intermittent) While engine is running.	Interference with adjacent parts	Check the clearance. Correct if necessary. <Ref. to PS-88, INSPECTION, Pipe Assembly.>
	Looseness of the installation of oil pump, oil tank, pump bracket, gearbox or crossmember	Retighten.
	Looseness of oil pump pulley or other pulley(s)	Retighten.
	Looseness of linkage, play of steering, improper tightening (looseness) of suspension joint or steering column	Retighten or replace.
	Sound generates from the inside of gearbox or oil pump.	Replace faulty parts in the gearbox or oil pump.
Knocking When turning steering wheel in both directions with small angle repeatedly at engine ON or OFF.	Excessive backlash Loosened lock nut for adjusting backlash	Adjust and retighten.
	Insufficient tightening or play in the tie-rod or tie-rod end	Retighten or replace.
Grinding noise (continuous) While engine is running.	Air in vane pump	Inspect and retighten the fluid line connection. Refill the fluid and vent air.
	Vane pump seizing	Replace the oil pump.
	Oil pump pulley bearing seized	Replace the oil pump.
	Folded hose, flattened pipe	Replace.
Squeal, squeak (intermittent or continuous) While engine is running.	Improper adjustment of pulley belt Damaged or over tensioned pulley belt Unequal length of pulley belts	Adjust or replace. (Replace two belts as a set.)
	Runout or dirty V-groove surface of oil pump pulley	Clean or replace.

Trouble	Possible cause	Corrective action
Sizzling noise (continuous) While engine is running.	Fluid aeration	Fix the faulty part causing aeration. Replace the fluid and vent air.
	Damaged pipe of gearbox	Replace the pipe.
	Faulty inside of hose or pipe Flattened hose or pipe	Repair or replace.
	Abnormal inside of oil tank	Replace.
	Removed oil tank cap	Install cap.
Whistle (continuous) While engine is running.	Faulty pipe of gearbox or faulty hose	Replace the faulty parts of the gearbox or the hose.
Whine or growl (intermittent or continuous) While engine is running (with/ without steering turned).	Looseness of oil pump, oil pump bracket attachment	Retighten.
	Fault inside of oil pump or hose	Replace the oil pump or hose, if the noise can be heard when vehicle is running as well as being stopped.
	Torque converter growl, air conditioner compression growl	Remove the power steering pulley belt and check.
Grinding noise (intermittent) While engine is running (with the steering turned).	Fault inside of gearbox	Replace the faulty parts of gearbox.
	Faulty bearing of the column assembly - steering	Apply grease or replace.
	Occurs when turning the steering wheel with brakes (service or parking) applied.	If the noise goes off when brake is released, it is normal.
Vibration While engine is running (with/ without steering turned).	Engine speed is too low.	Adjust, and notify customer.
	Air in vane pump	Repair faulty part. Vent air.
	Damaged valve in oil pump or gearbox	Replace the faulty parts in gearbox and oil pump.
	Excessive play in steering, looseness of suspension parts	Retighten.

2. NOISE & VIBRATION (ELECTRIC TYPE)

NOTE:

- When turning the steering wheel with the brake applied when the vehicle is parked, a screeching noise may be generated by the brake disc and pads. This is not a fault in the steering system.
- There may be a small vibration around the steering devices when turning the steering wheel at standstill, even though the component parts are operating properly.

Trouble	Possible cause	Corrective action
Rattling noise (intermittent) While engine is running.	Interference with adjacent parts	Check the clearance. Correct if necessary.
	Looseness of linkage, play of steering, improper tightening (looseness) of suspension joint or steering column	Retighten or replace.
	Noise emitted from inside of the gearbox	Replace the gearbox assembly.
Knocking When turning steering wheel in both directions with small angle repeatedly at engine ON or OFF.	Excessive backlash Loosened lock nut for adjusting backlash	Adjust the backlash. When the noise remains after adjustment, replace the gearbox assembly.
	Insufficient tightening or play in the tie-rod or tie-rod end	Retighten or replace.
Grinding noise (intermittent) While engine is running. (While operating the steering.)	Fault inside of gearbox	Replace the gearbox assembly.
	Faulty bearing of the column assembly - steering	Apply grease or replace.
	Occurs when turning the steering wheel with brakes (service or parking) applied.	If the noise goes off when brake is released, it is normal.
Vibration While engine is running. (with/ without steering turned)	Excessive play in steering, looseness of suspension parts	Retighten.

3. MEASUREMENT OF STEERING EFFORT (HYDRAULIC TYPE)

	Step	Check	Yes	No
1	**CHECK STEERING EFFORT.** 1) Stop the vehicle on paved road. 2) Start the engine. 3) Run the engine at idle. 4) Install a spring scale on the steering wheel. 5) Pull the spring scale at a right angle to the steering wheel, and measure both right and left steering wheel efforts. 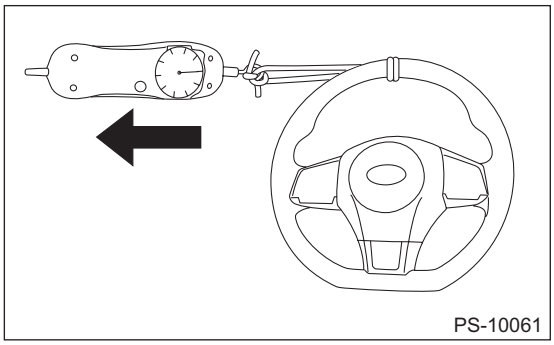 PS-10061 NOTE: When turning the steering more quickly than necessary from a direction to the other direction at an engine speed of 2,000 r/min or higher, steering effort may be heavy. This is caused by flow characteristic of the fluid in the oil pump and is not a defect.	Is the steering effort less than 31 N (3.2 kgf, 7 lbf)?	Steering effort is normal.	Go to step **2**.
2	**CHECK STEERING EFFORT.** 1) Stop the engine and lift up the vehicle. 2) Pull the spring scale at a right angle to the steering wheel, and measure both right and left steering wheel efforts.	Is the steering effort less than 15 N (1.53 kgf, 3.4 lbf)?	Go to step **3**.	Perform the backlash adjustment.
3	**CHECK STEERING WHEEL EFFORT.** 1) Remove the universal joint assembly - steering. 2) Measure the steering wheel effort.	Is the steering effort less than 2.26 N (0.23 kgf, 0.51 lbf)?	Go to step **4**.	Replace the column assembly - steering.
4	**CHECK STEERING WHEEL EFFORT.** Measure the steering wheel effort.	Is the difference of steering effort between right and left less than 20%?	Go to step **5**.	Replace the column assembly - steering.
5	**CHECK UNIVERSAL JOINT ASSEMBLY - STEERING.** Measure the swing torque of the joint (yoke on the column assembly - steering side). <Ref. to PS-23, INSPECTION, Universal Joint.>	Is the swing torque of the universal joint assembly - steering less than 7.3 N (0.74 kgf, 1.64 lbf)?	Go to step **6**.	Replace the universal joint assembly - steering.
6	**CHECK UNIVERSAL JOINT ASSEMBLY - STEERING.** Measure the swing torque of the joint (yoke of gearbox side). <Ref. to PS-23, INSPECTION, Universal Joint.>	Is the swing torque of the universal joint assembly - steering less than 3.8 N (0.39 kgf, 0.86 lbf)?	Go to step **7**.	Replace the universal joint assembly - steering.
7	**CHECK FRONT WHEEL.** Check the front wheels.	Does the front wheels have unsteady revolution or rattling, or does the brake drag?	Inspect, readjust and replace if necessary.	Go to step **8**.
8	**CHECK TIE-ROD ENDS.** Remove the tie-rod ends from housing.	Does the tie-rod ends have unsteady revolution or rattling?	Inspect and replace if necessary.	Go to step **9**.

	Step	Check	Yes	No
9	**CHECK GEARBOX.** Measure the rotating of gearbox. <Ref. to PS-60, LIMIT, INSPECTION, Steering Gearbox.>	Is the rotating resistance of steering gearbox less than 21 N (2.1 kgf, 4.7 lbf)? Is the difference between clockwise and counterclockwise less than 20%?	Go to step **10**.	Readjust the backlash, and if ineffective, replace the faulty parts.
10	**CHECK GEARBOX.** Measure the sliding of gearbox. <Ref. to PS-60, LIMIT, INSPECTION, Steering Gearbox.>	Is the sliding resistance of the steering gearbox less than 343 N (35 kgf, 77 lbf)? Is the difference between the right and left sliding resistances less than 20%?	Steering effort is normal. Check the suspension.	Readjust the backlash, and if ineffective, replace the faulty parts.

4. MEASUREMENT OF STEERING EFFORT (ELECTRIC TYPE)

	Step	Check	Yes	No
1	**CHECK STEERING WARNING LIGHT.**	Does the STEERING warning light illuminate?	Using Subaru Select Monitor, read the DTC and inspect according to it. For detailed operation procedures, refer to “Application help”.	Go to step **2**.
2	**CHECK STEERING WARNING LIGHT.** 1) Display the data of «EPS operating condition» using Subaru Select Monitor. 2) Connect the Subaru Select Monitor, and turn the steering wheel. (One lock to lock)	Is the «EPS operating condition» normal without displaying any DTC code?	Go to step **3**.	If the «EPS operating condition» is “Assist limitation”, stop the engine for approx. 30 minutes and perform the procedures from step 1 again.
3	**CHECK STEERING EFFORT.** 1) Stop the vehicle on paved road. 2) Set the tire air pressure to the specification. 3) Start the engine. 4) Run the engine at idle. 5) Install a spring scale on the steering wheel. 6) Pull the spring scale at a right angle to the steering wheel, and measure both right and left steering wheel efforts. 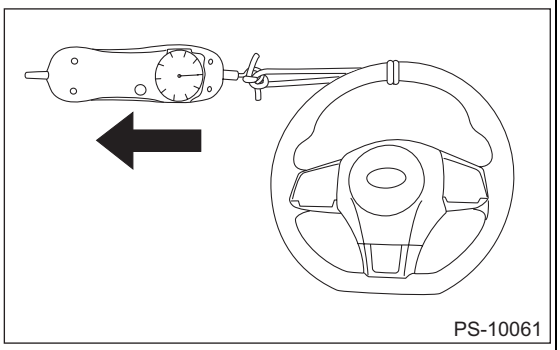 PS-10061	Is the steering effort less than 31 N (3.2 kgf, 7.0 lbf)?	Go to step **4**.	Go to step **8**.
4	**CHECK STEERING EFFORT.** 1) Stop the engine. 2) Pull the spring scale at a right angle to the steering wheel, and measure both right and left steering wheel efforts.	Is the steering effort less than 294.2 N (30 kgf, 66.2 lbf)?	Go to step **5**.	Perform the inspection or adjustment around the suspension part.

	Step	Check	Yes	No
5	**CHECK TORQUE SENSOR OUTPUT VALUE.** 1) Using Subaru Select Monitor, display the data of «Torque sensor main output» and «Torque sensor sub output». 2) Read the voltage value of torque sensor. NOTE: When measuring, place the steering wheel at the center position.	Is the voltage 2.425 — 2.575 V?	Go to step **6**.	Replace the gearbox assembly. <Ref. to PS-66, Electric Power Steering Gearbox.>
6	**CHECK TORQUE SENSOR OUTPUT VALUE.** 1) Remove the universal joint assembly - steering. 2) Using Subaru Select Monitor, display the data of «Torque sensor main output» and «Torque sensor sub output». 3) Read the voltage value of torque sensor.	Is the voltage 2.425 — 2.575 V?	Go to step **7**.	Replace the gearbox assembly. <Ref. to PS-66, Electric Power Steering Gearbox.>
7	**CHECK TORQUE SENSOR OUTPUT VALUE.** 1) Remove the universal joint assembly - steering. NOTE: Check that the universal joint assembly - steering moves up and down smoothly without installing the bolt. Then tighten the bolts first on the gearbox side and then on the column shaft side. 2) Using Subaru Select Monitor, display the data of «Torque sensor main output» and «Torque sensor sub output». 3) Read the voltage value of torque sensor.	Is the voltage 2.425 — 2.575 V?	Go to step **8**.	Check the universal joint assembly - steering. <Ref. to PS-66, Electric Power Steering Gearbox.>
8	**CHECK STEERING WHEEL EFFORT.** 1) Remove the universal joint assembly - steering. 2) Measure the steering wheel effort.	Is the steering effort less than 2.26 N (0.23 kgf, 0.51 lbf)?	Go to step **9**.	Replace the column assembly - steering. <Ref. to PS-66, Electric Power Steering Gearbox.>
9	**CHECK STEERING WHEEL EFFORT.** Measure the steering wheel effort.	Is the difference of steering effort between right and left less than 20%?	Go to step **10**.	Replace the column assembly - steering. <Ref. to PS-25, Steering Column.>
10	**CHECK UNIVERSAL JOINT ASSEMBLY - STEERING.** Measure the swing torque of joint. (Yoke of column assembly - steering side) <Ref. to PS-23, INSPECTION, Universal Joint.>	Is the swing torque of the universal joint assembly - steering less than 8.1 N (0.81 kgf, 1.84 lbf)?	Go to step **11**.	Replace the universal joint assembly - steering with a new part. <Ref. to PS-21, Universal Joint.>
11	**CHECK UNIVERSAL JOINT ASSEMBLY - STEERING.** Measure the swing torque of joint. (Yoke of gearbox side) <Ref. to PS-23, INSPECTION, Universal Joint.>	Is the swing torque of the universal joint assembly - steering less than 6.8 N (0.68 kgf, 1.54 lbf)?	Go to step **12**.	Replace the universal joint assembly - steering with a new part. <Ref. to PS-21, Universal Joint.>
12	**CHECK FRONT WHEEL.** Check the front wheels.	Does the front wheels have unsteady revolution or rattling, or does the brake drag?	Inspect, readjust and replace if necessary.	Go to step **13**.
13	**CHECK TIE-ROD ENDS.** Remove the tie-rod ends.	Does the tie-rod ends of suspension have unsteady revolution or rattling?	Inspect and replace if necessary.	Go to step **14**.

Step		Check	Yes	No
14	**CHECK BALL JOINT.** Remove the ball joint.	Does the ball joints of suspension have unsteady revolution or rattling?	Inspect and replace if necessary.	Go to step **15**.
15	**CHECK GEARBOX.** Measure the rotating of gearbox. <Ref. to PS-75, LIMIT, INSPECTION, Electric Power Steering Gearbox.>	Is the rotating resistance of steering gearbox less than 18 N (1.8 kgf, 4.0 lbf)? Is the difference between clockwise and counterclockwise less than 20%?	Go to step **16**.	Replace the gearbox assembly. <Ref. to PS-66, Electric Power Steering Gearbox.>
16	**CHECK GEARBOX.** Measure the sliding of gearbox.	Is the sliding resistance of the steering gearbox less than 360 N (36.7 kgf, 80.9 lbf)? Is the difference between the right and left sliding resistances less than 20%?	Steering effort is normal.	Replace the gearbox assembly. <Ref. to PS-66, Electric Power Steering Gearbox.>

5. CLEARANCE CHECK (HYDRAULIC TYPE)

This table lists various clearances that must be correctly adjusted to ensure the normal vehicle driving without interfering noise, or any other faults.

Location	Minimum allowance mm (in)
(1) Crossmember to hose ASSY	3 (0.12)
(2) Front exhaust pipe to hose ASSY	15 (0.59)
(3) Front frame side to hose ASSY	10 (0.39)
(4) Master cylinder to return hose	10 (0.39)
(5) Master cylinder to hose clip	10 (0.39)
(6) VDC H/U to hose ASSY	5 (0.20)
(7) Air cleaner to hose ASSY	5 (0.20)
(8) Air boot to hose ASSY	10 (0.39)
(9) Air cleaner hose to hose ASSY	10 (0.39)
(10) Brake pipe to return hose	10 (0.39)
(11) Front suspension bracket to return hose	5 (0.20)
(12) Front wheel apron to return hose	5 (0.20)
(13) VDC H/U bracket to suction hose	5 (0.20)
(14) Air cleaner case to suction hose	5 (0.20)
(15) Air intake duct to suction hose	10 (0.39)
(16) Air duct to suction hose	10 (0.39)
(17) Front wheel apron to reservoir tank	5 (0.20)
(18) VDC H/U to reserve tank	5 (0.20)
(19) Valve housing to DOJ (MT model)	12 (0.47)
(20) Valve housing to crossmember (hole)	1 (0.04)
(21) Cannon mount to crossmember	There must be no contact
(22) Pipe to crossmember	5 (0.20)
(23) Pipe to stabilizer	15 (0.59)
(24) Pipe to exhaust pipe	18 (0.71)
(25) Tie-rod end to brake dust cover	2.5 (0.10)
(26) Universal joint column side yoke to master cylinder (closest point of approach when the universal joint turns by 360°)	5 (0.20)

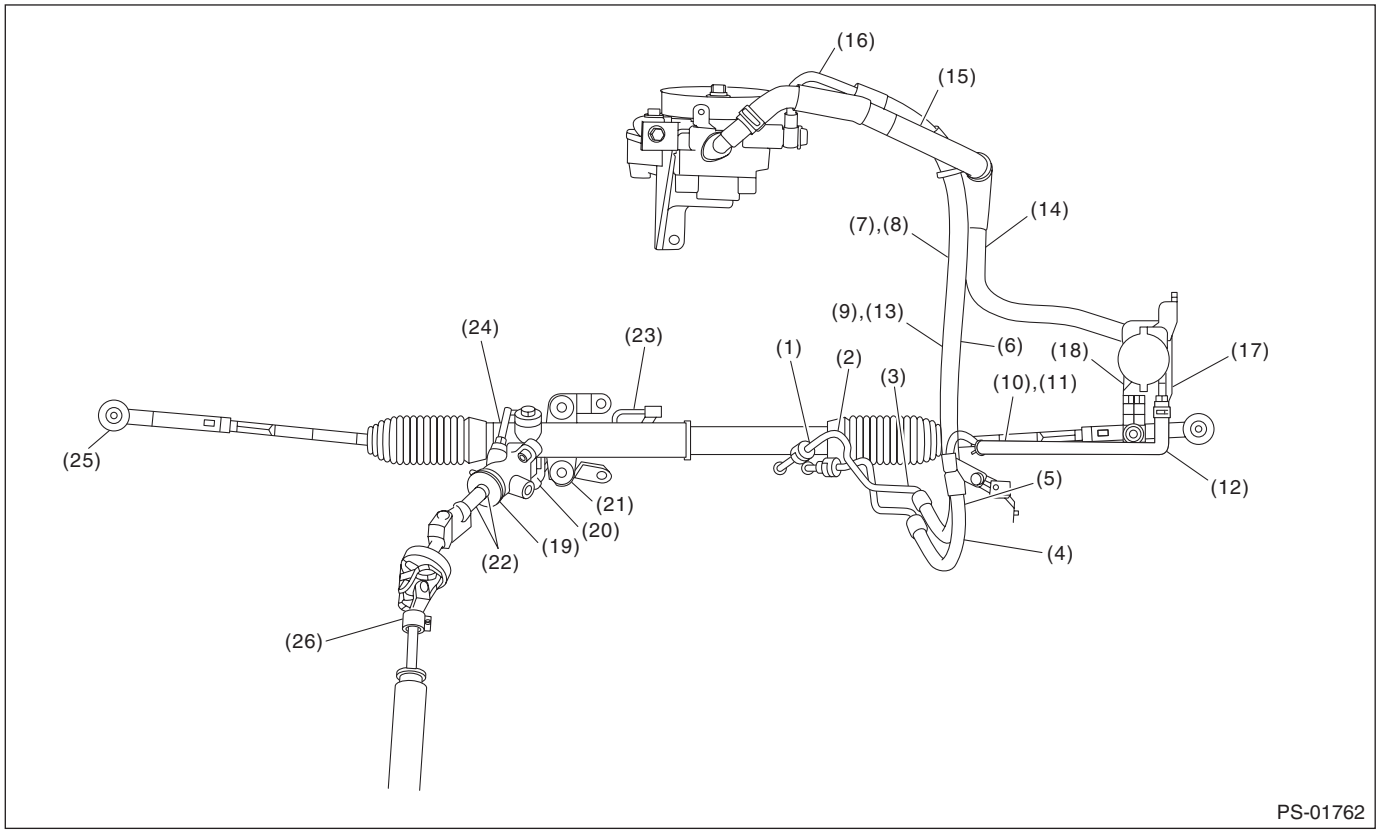

6. CLEARANCE CHECK (ELECTRIC TYPE)

This table lists various clearances that must be correctly adjusted to ensure the normal vehicle driving without interfering noise, or any other faults.

Location	Minimum allowance mm (in)
(1) Stub housing to DOJ (MT model)	15 (0.59)
(2) Torque sensor to crossmember	5 (0.20)
(3) Cannon mount to crossmember	There must be no contact
(4) Cannon mount to crossmember	3 (0.12)
(5) Stub housing to engine mount	15 (0.59)
(6) Canon mount to exhaust pipe	15 (0.59)
(7) Universal joint column side yoke to master cylinder (closest point of approach when the universal joint turns by 360°)	5 (0.20)
(8) Wheel housing to exhaust pipe	13 (0.51)

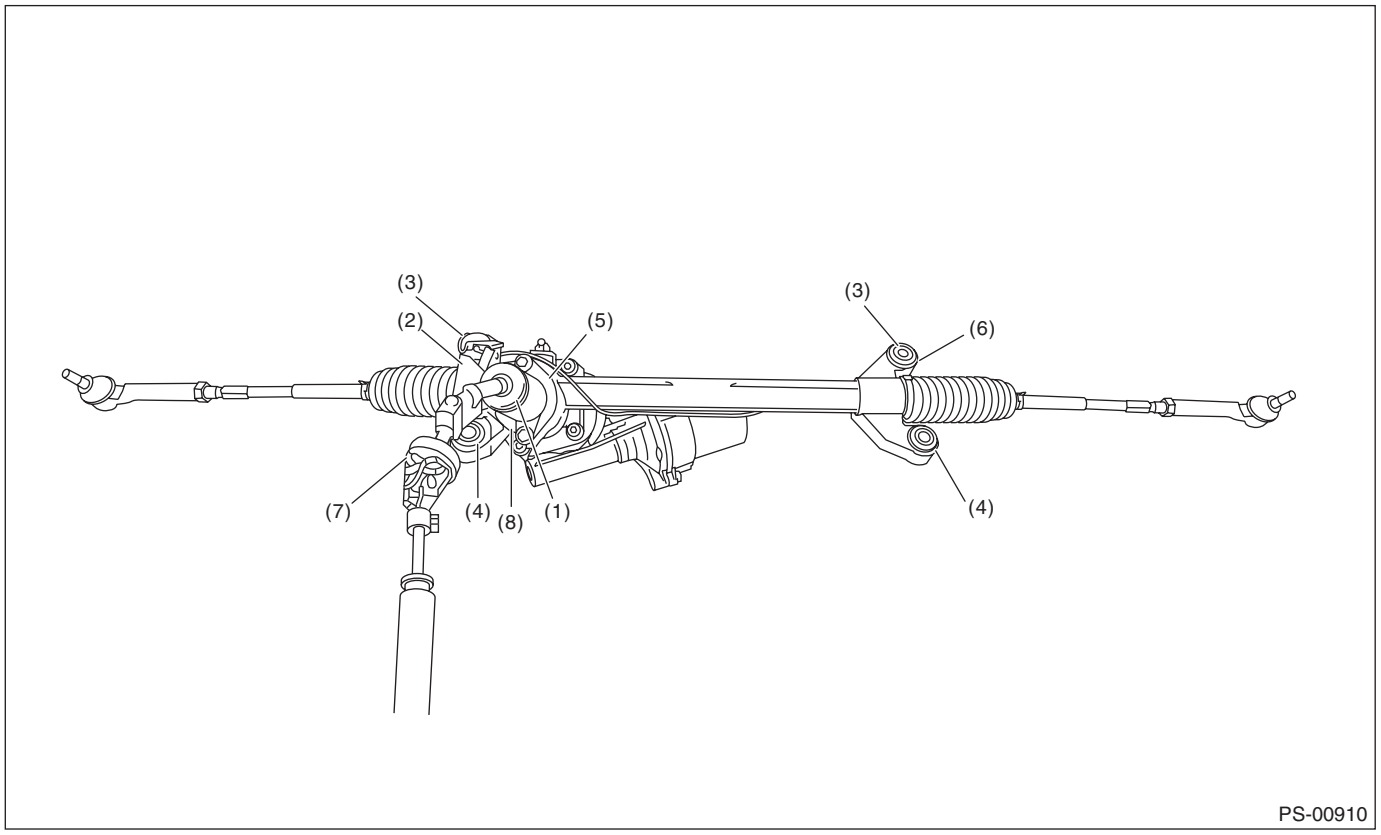

POWER ASSISTED SYSTEM (POWER STEERING) (DIAGNOSTICS)

PS(diag)

		Page
1.	Basic Diagnostic Procedure	2
2.	Check List for Interview	4
3.	General Description	7
4.	Electrical Component Location	8
5.	Control Module I/O Signal	9
6.	Subaru Select Monitor	11
7.	Read Diagnostic Trouble Code (DTC)	16
8.	Inspection Mode	17
9.	Clear Memory Mode	18
10.	STEERING Warning Light	19
11.	List of Diagnostic Trouble Code (DTC)	22
12.	Diagnostic Procedure with Diagnostic Trouble Code (DTC)	24

1. Basic Diagnostic Procedure

A: PROCEDURE

CAUTION:
• The power steering control module continues to operate after the engine stops and calculate the temperature in the control module. Therefore, before starting service of the power steering system which requires disconnection of the connector, stop the engine and allow approx. 30 minutes until the control module becomes cold.
• Before removal or installation, be sure to remove any foreign matter (dust, moisture, oil, etc.) from the power steering control module connector.

NOTE:
• Shake the connector at the suspected trouble location to check for open or short circuits of the harness.
• Refer to “Check List for Interview”. <Ref. to PS(diag)-4, Check List for Interview.>

	Step	Check	Yes	No
1	**CHECK PRE-INSPECTION.** 1) Ask the customer when and how the trouble occurred using the interview check list. <Ref. to PS(diag)-4, Check List for Interview.> 2) Check the illumination status of the STEERING warning light while the engine is running. 3) Before performing diagnostics, check components which might affect power steering problems. <Ref. to PS(diag)-7, INSPECTION, General Description.> 4) Save the data of «Overheating protection intervention history», «IG Count after ECU Overheat Protection(latest)», «IG Count after ECU Overheat Protection(Previous)», «IG Count after ECU Overheat Protection(Before Previous)», and «Assist limited(Low voltage)» using Subaru Select Monitor. <Ref. to PS(diag)-11, READ CURRENT DATA, OPERATION, Subaru Select Monitor.>	Is the check result OK?	Go to step **2**.	Repair or replace each component.
2	**CHECK INDICATION OF DTC.** 1) Turn the ignition switch to OFF. 2) Connect the Subaru Select Monitor to data link connector. 3) Turn the ignition switch to ON and run the Subaru Select Monitor. 4) Read the DTC using the Subaru Select Monitor. <Ref. to PS(diag)-16, OPERATION, Read Diagnostic Trouble Code (DTC).> NOTE: If the communication function of the Subaru Select Monitor cannot be executed properly, check the communication circuit. <Ref. to PS(diag)-13, COMMUNICATION FOR INITIALIZING IMPOSSIBLE, INSPECTION, Subaru Select Monitor.>	Are DTC, time stamp and freeze frame data displayed?	Record the DTC, time stamp and freeze frame data. Go to step **4**. NOTE: • For the time stamp, refer to LAN section. <Ref. to LAN(diag)-6, TIME STAMP, CAUTION, General Description.> • Depending on DTCs, time stamp may not be stored.	Go to step **3**.

	Step	Check	Yes	No
3	**PERFORM GENERAL DIAGNOSTICS.** 1) If the STEERING warning light is illuminated while the engine is running, perform the Clear Memory Mode. <Ref. to PS(diag)-18, OPERATION, Clear Memory Mode.> 2) Perform the Inspection Mode. <Ref. to PS(diag)-17, Inspection Mode.> 3) Read the DTC. <Ref. to PS(diag)-16, OPERATION, Read Diagnostic Trouble Code (DTC).> 4) Check that the DTC is not displayed.	Does the STEERING warning light illuminate at ignition switch ON, and turn off two seconds after the engine is started?	Finish the diagnosis.	<Ref. to PS(diag)-15, WITHOUT DTC, INSPECTION, Subaru Select Monitor.>
4	**PERFORM DIAGNOSIS.** 1) Refer to “List of Diagnostic Trouble Code (DTC)”. <Ref. to PS(diag)-22, LIST, List of Diagnostic Trouble Code (DTC).> 2) Correct the cause of trouble. 3) Check the illumination status of the STEERING warning light while the engine is running, and if the warning light is lit, perform Clear Memory Mode. <Ref. to PS(diag)-18, OPERATION, Clear Memory Mode.> 4) Perform the Inspection Mode. <Ref. to PS(diag)-17, Inspection Mode.> 5) Read the DTC. <Ref. to PS(diag)-16, OPERATION, Read Diagnostic Trouble Code (DTC).>	Is DTC displayed?	Repeat step 4 until DTC is not shown.	Finish the diagnosis.

2. Check List for Interview

A: CHECK

Check the following items regarding condition of the vehicle.

1. TROUBLE STATUS

Phenomenon of the vehicle	❑ Steering is heavy ❑ Steering is not smooth ❑ Steering is unstable (wondering) ❑ Steering does not return to center ❑ Steering is not straight
	❑ Steering force required is not the same for right and left turn ❑ Steering force required is not even ❑ Steering is too light
	❑ Noise ❑ Vibration ❑ STEERING warning light illuminates ❑ Other
Frequency	❑ Always ❑ Sometimes ❑ Immediately after starting the engine ❑ Only once ❑ Other
	❑ Recovers after leaving it for minutes
Steering wheel operation	❑ Dry steering ❑ When turning ❑ Quick steering ❑ Slow steering ❑ Returning the steering wheel
	❑ Releasing the steering wheel ❑ Only supporting the steering wheel by hand ❑ Repetitive dry steering
Steering wheel status / direction	❑ Around center position ❑ Near end of lock to lock
	❑ When turning the steering to right ❑ When turning the steering to left ❑ Both to right and to left ❑ (1) Steering angle: degrees ❑ (2) Maneuvering time: minutes
	❑ Slow steering ❑ Quick steering ❑ While holding the steering ❑ When repeating the dry wheel operation
Vehicle speed	❑ Stall 0 km/h (0 MPH) ❑ Very low speed — 20 km/h (— 12 MPH) ❑ Low speed — 40 km/h (— 25 MPH) ❑ Medium speed — 80 km/h (— 50 MPH) ❑ High speed — 80 km/h or more (— 50 MPH or more)
	❑ At starting ❑ While accelerating ❑ While decelerating ❑ When accelerating rapidly ❑ When decelerating rapidly
	❑ Other
Engine speed	❑ Idling ❑ (1) Around rpm ❑ (2) rpm — rpm ❑ (3) rpm or more / or less

2. STATE OF STEERING WARNING LIGHT

STEERING warning light illuminates	❑ Always ❑ Sometimes ❑ Only once ❑ Does not illuminate ❑ Other
Ignition key position	❑ LOCK ❑ ACC ❑ ON (when starting engine) ❑ START ❑ ON (when starting engine, while engine is running) ❑ ON (when starting engine, when engine is at a standstill)
Timing	❑ Immediately after turning the ignition ON ❑ Immediately after turning the ignition to START
	❑ Idling ❑ While accelerating ❑ While decelerating ❑ When cruising at — km/h (MPH)
	❑ When other electrical parts are operating (parts name: operating condition:)

3. ENVIRONMENT

a) Weather	❑ Fine ❑ Cloudy ❑ Rainy ❑ Snowy ❑ Others:
b) Outside temperature	❑ °C (°F)
c) Road	❑ Inner city ❑ Suburbs ❑ Highway ❑ Local street ❑ Alley way ❑ Private road ❑ Parking lot ❑ Mountain road ❑ Paved road ❑ Unpaved road ❑ Gravel road ❑ Sandy place ❑ Muddy road ❑ Concrete road ❑ Stone pavement ❑ Racetrack ❑ Others:
d) Road surface	❑ Dry ❑ Wet ❑ Covered with fresh snow ❑ Covered with hardened snow ❑ Others:
e) Tire	❑ Tire chain ❑ Studless tire ❑ T-type tire (front RH, front LH, rear RH, rear LH)
f) Tire inflation pressure	Front RH: kPa Front LH: kPa Rear RH: kPa Rear LH: kPa
g) Degree of wear	Front RH: mm (in) Front LH: mm (in) Rear RH: mm (in) Rear LH: mm (in)
h) Genuine part	❑ Yes ❑ No Record after-market parts if any. (Steering wheel, audio, tires, and similar parts)
i) Condition of suspension alignment	
j) Electrical load conditions	❑ Audio ❑ Air conditioner ❑ Other
k) Loaded state	Condition:
l) Repair parts	❑ None ❑ Provided Contents:
m) Others	

3. General Description

A: CAUTION

1. SRS AIRBAG SYSTEM

The airbag system wiring harness is routed near the power steering control module.

CAUTION:
• Do not use the electrical test equipment on the airbag system wiring harnesses or connector circuits.
• Be careful not to damage the airbag system wiring harness during maintenance of the power steering control module.

B: INSPECTION

Before performing diagnosis, check the following items which might be affecting the power steering problem.

1. BATTERY

Check the battery. <Ref. to SC(w/o STI)-51, INSPECTION, Battery.> <Ref. to SC(STI)-24, INSPECTION, Battery.>

2. TIRES

Check the tire specifications, tire wear and air pressure. <Ref. to WT-2, SPECIFICATION, General Description.>

C: PREPARATION TOOL

1. SPECIAL TOOL

ILLUSTRATION	TOOL NUMBER	DESCRIPTION	REMARKS
 STSSM4	—	SUBARU SELECT MONITOR 4	Used for setting of each function and troubleshooting for electrical system. NOTE: For detailed operation procedures of Subaru Select Monitor 4, refer to “Application help”.
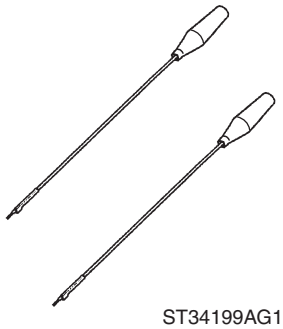 ST34199AG100	34199AG100	SPECIAL TOOL HARNESS	Used for troubleshooting the electrical system.

2. GENERAL TOOL

TOOL NAME	REMARKS
Circuit tester	Used for measuring resistance, voltage and current.
Oscilloscope	Used for measuring the sensor.
DST-i	Used together with Subaru Select Monitor 4.

4. Electrical Component Location

A: LOCATION

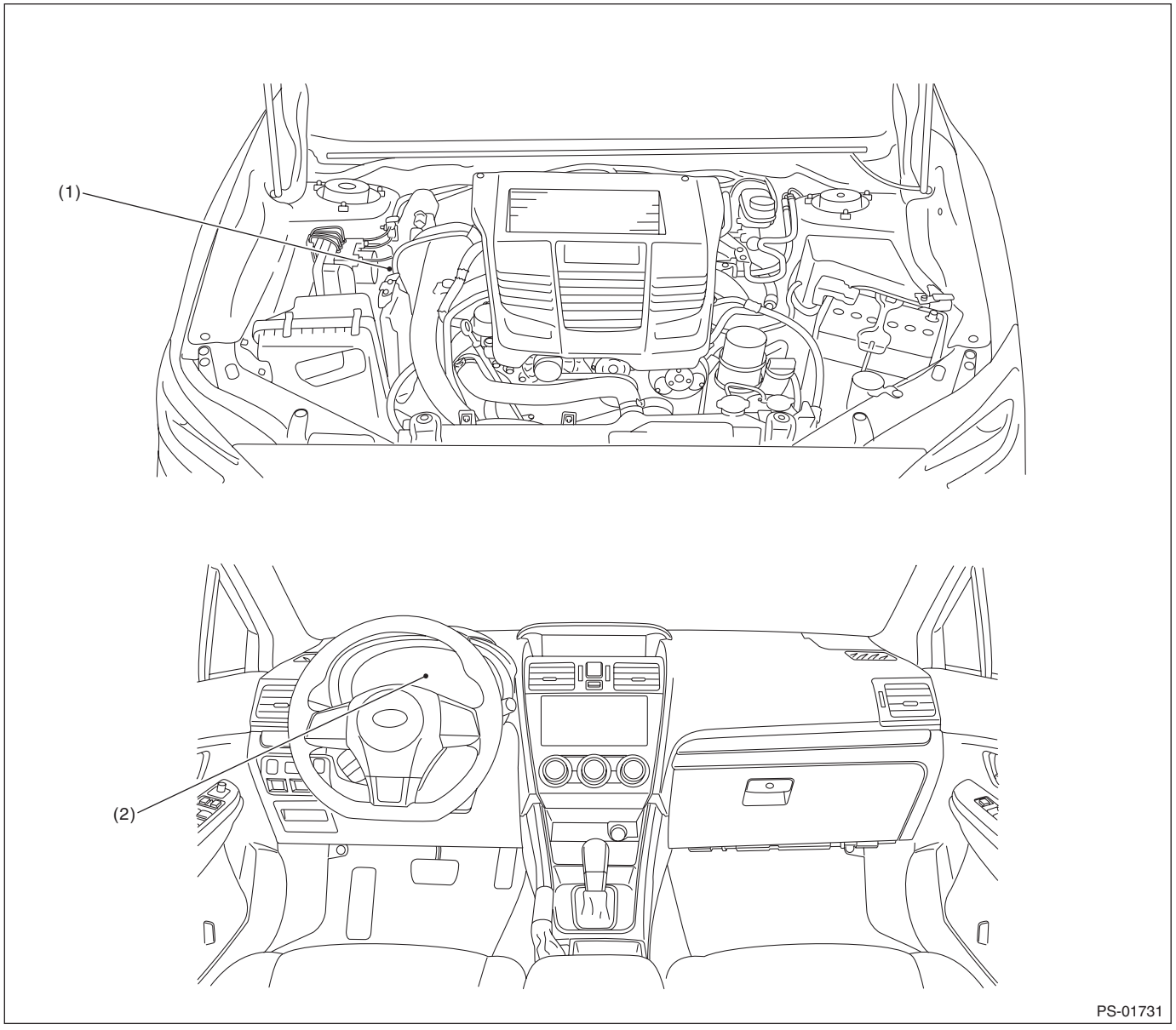

(1) Power steering control module (2) STEERING warning light

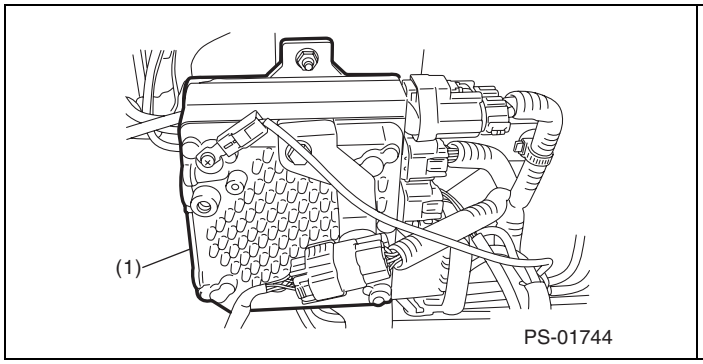

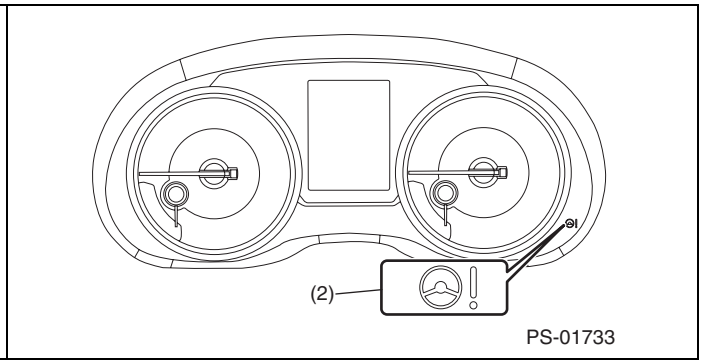

5. Control Module I/O Signal

A: ELECTRICAL SPECIFICATION

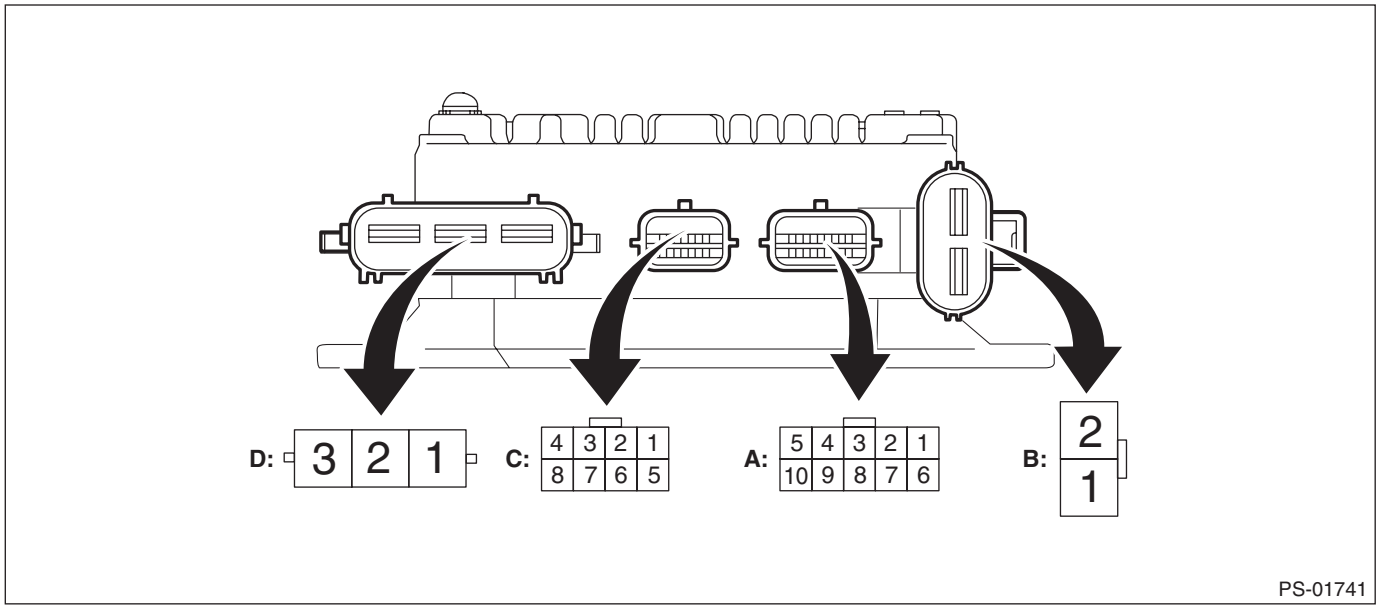

NOTE:
The terminal numbers of the power steering control module connectors are as indicated in the figure.

Contents	Terminal No.	Input/output signal
		Measured value and measuring conditions
Power supply (IG SW)	A1	Battery voltage is detected with the ignition switch ON when measuring between A1 — B1.
Shield GND	A3	0 V is constantly detected.
Main torque sensor	A4	The voltage changes when the steering is operated to the right or left with the ignition switch ON.
Sub torque sensor	A5	The voltage changes when the steering is operated to the right or left with the ignition switch ON.
CAN communication	A6	Digital signal; can not be measured
CAN communication	A7	Digital signal; can not be measured
Torque sensor ground	A9	0 V is constantly detected.
Torque sensor power supply	A10	Approximately 5 V is detected with ignition switch ON.
Ground	B1	Battery voltage is constantly detected when measuring between B1 — B2.
Power supply	B2	
Resolver S1	C1	Varies depending on the operational status of the motor.
Resolver S3	C2	
Resolver S2	C3	
Resolver S4	C4	
Resolver R1	C5	
Resolver R2	C6	
Motor W phase	D1	Varies depending on the motor output.
Motor V phase	D2	
Motor U phase	D3	

B: WIRING DIAGRAM

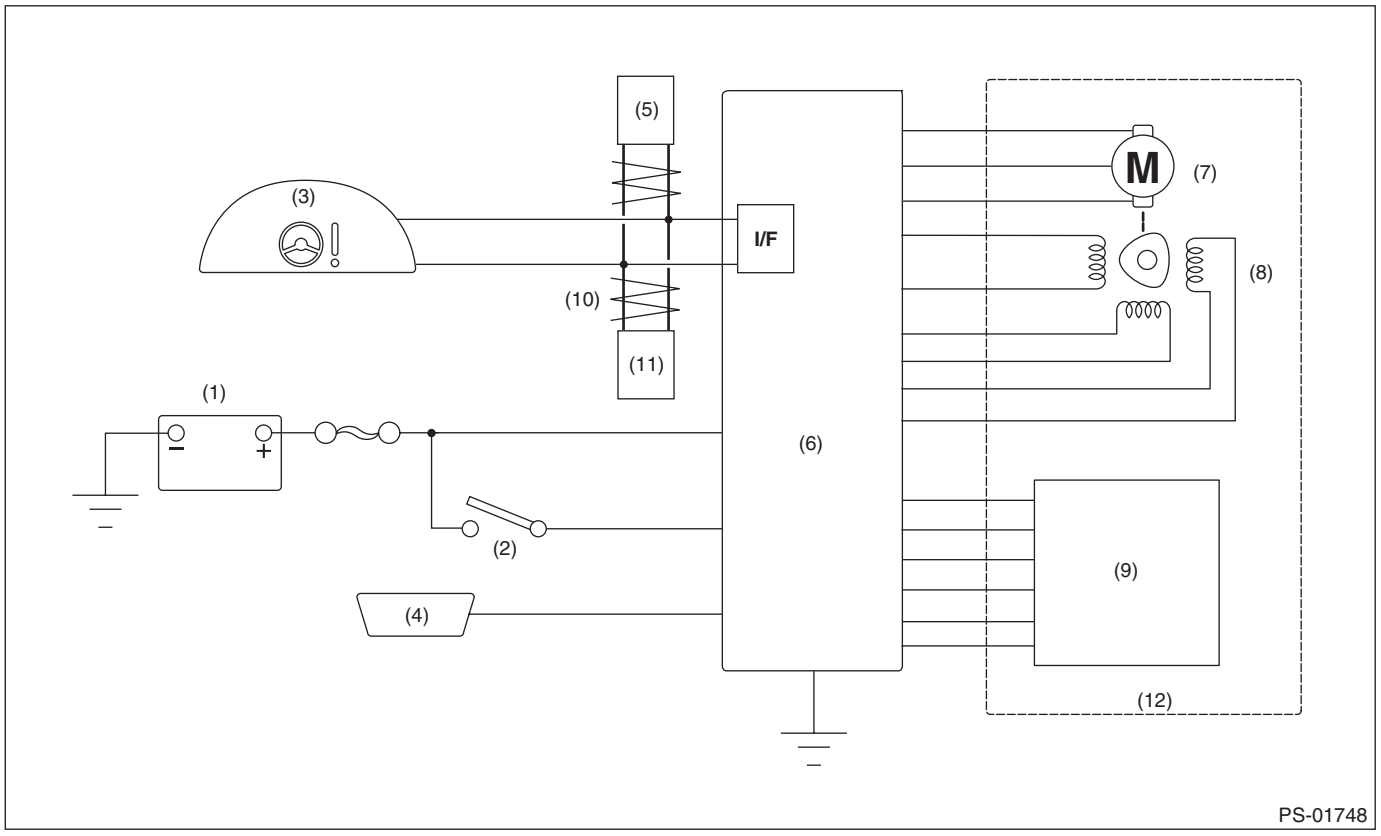

(1)	Battery	(5)	Engine control module (ECM)	(9)	Torque sensor (main & sub)
(2)	Ignition switch	(6)	Power steering control module	(10)	CAN communication
(3)	STEERING warning light (combination meter)	(7)	Motor	(11)	VDC CM
(4)	Data link connector (for Subaru Select Monitor)	(8)	Resolver sensor	(12)	Steering gearbox

6. Subaru Select Monitor

A: OPERATION

1. HOW TO USE SUBARU SELECT MONITOR

For detailed operation procedures, refer to “Application help”.

2. READ CURRENT DATA

1) On «Start» display, select «Diagnosis».
2) On «Vehicle selection» display, input the vehicle information and select «Confirmed».
3) On «Main Menu» display, select «Each System».
4) On «Select System» display, select «Power Steering».
5) On «Select Function» display, select «Data Monitor».

Display	Contents to be displayed	Range	Unit
Torque sensor main output	Main torque sensor output voltage is displayed.	0 — 5	V
Torque sensor sub output	Sub torque sensor output voltage is displayed.	0 — 5	V
Vehicle Speed	Vehicle speed is displayed. (CAN communication data)	0 — 255	km/h
Engine Speed	Engine speed is displayed. (CAN communication data)	0 — 12750	rpm
CU Sensing Current(q)	The current flowing to the motor relay is displayed.	–128 — 127	A
3-phase motor current (U-phase)	The U phase actual current value as calculated by the microcomputer from the torque sensor input is displayed.	–128 — 127	A
3-phase motor current (V-phase)	The V phase actual current value as calculated by the microcomputer from the torque sensor input is displayed.	–128 — 127	A
Motor angular speed	Data from the resolver sensor is displayed.	–4096 — 4064	rpm
CU Temperature	The thermistor temperature of the steering control module is displayed.	–50 — 205	°C
Power supply voltage	Battery voltage is displayed.	0 — 25.5	V
Torque sensor power supply voltage	The power supply voltage output to the torque sensor is displayed.	0 — 10.2	V
IG Voltage	The power supply voltage supplied to the ECM is displayed.	0 — 25.5	V
CAN Bus Status	Either Active/Passive/Bus Off is displayed.	—	—
EPS operating condition	Either Normal/Assist Stop/Assist Limitation is displayed.	—	—
CU Target current(q)	The motor target current value required for assist is displayed.	–128 — 127	A
Steering Angle	Steering angle of steering wheel is displayed.	–640 — 635	deg
Overheating protection intervention history	Number of interventions to the overheat protection control (assist limitation for protecting the power steering from overheating)*1	0 — 250	times
IG Count after ECU Overheat Protection(latest)	Number of times the ignition switch is ON from the intervention to overheat protection control (most recent) until now*2	0 — 65000	times
IG Count after ECU Overheat Protection(Previous)	Number of times the ignition switch is ON from the intervention to overheat protection control (previous) until now*2	0 — 65000	times
IG Count after ECU Overheat Protection(Before Previous)	Number of times the ignition switch is ON from the intervention to overheat protection control (before previous) until now*2	0 — 65000	times
Assist limited(Low voltage)	Number of intervention to assist limit when the power supply voltage is low or high*1	0 — 250	times
Torque Sensor Amplifier	Torque sensor control voltage is displayed.	0 — 5	V
Motor Current	The current flowing to the motor relay is displayed.	–128 — 127	Arms
Assist Map Number	Either Not Selected/MAP1/MAP2/MAP3/MAP4/MAP5 is displayed.	—	—
Assist Map Number Discord	Recorded number of the assist MAP number discordance	0 — 250	times

NOTE:
- *1 When the value exceeds the maximum of 250 times, 250 is displayed.
- *2 When there is no intervention of the overheating protection control, “65535” is displayed. If an error such as control unit memory error, etc. occurs, “65534” is displayed.
- For detailed operation procedures, refer to “Application help”.

3. READ FREEZE FRAME DATA

1) On «Start» display, select «Diagnosis».
2) On «Vehicle selection» display, input the vehicle information and select «Confirmed».
3) On «Main Menu» display, select «Each System».
4) On «Select System» display, select «Power Steering».
5) On «Select Function» display, select «DTC».
6) On «DTC» display, select «FFD».

Display	Contents to be displayed	Range	Unit
Torque sensor main output	Main torque sensor output voltage is displayed.	0 — 5	V
Torque sensor sub output	Sub torque sensor output voltage is displayed.	0 — 5	V
Vehicle Speed	Vehicle speed is displayed. (CAN communication data)	0 — 255	km/h
Engine Speed	Engine speed is displayed. (CAN communication data)	0 — 12750	rpm
CU Sensing Current(q)	The current flowing to the motor relay is displayed.	–128 — 127	A
3-phase motor current (U-phase)	The U phase actual current value as calculated by the micro-computer from the torque sensor input is displayed.	–128 — 127	A
3-phase motor current (V-phase)	The V phase actual current value as calculated by the micro-computer from the torque sensor input is displayed.	–128 — 127	A
Motor angular speed	Data from the resolver sensor is displayed.	–4096 — 4064	rpm
CU Temperature	The thermistor temperature of the steering control module is displayed.	–50 — 205	°C
Power supply voltage	Battery voltage is displayed.	0 — 25.5	V
Torque sensor power supply voltage	The power supply voltage output to the torque sensor is displayed.	0 — 10.2	V
IG Voltage	The power supply voltage supplied to the ECM is displayed.	0 — 25.5	V
CAN Bus Status	Either Active/Passive/Bus Off is displayed.	—	—
EPS operating condition	Either Normal/Assist Stop/Assist Limitation is displayed.	—	—
CU Target current(q)	The motor target current value required for assist is displayed.	–128 — 127	A
Steering Angle	Steering angle of steering wheel is displayed.	–640 — 635	deg
Overheating protection intervention history	Number of interventions to the overheat protection control (assist limitation for protecting the power steering from overheating)*1	0 — 250	times
IG Count after ECU Overheat Protection(latest)	Number of times the ignition switch is ON from the intervention to overheat protection control (most recent) until now*2	0 — 65000	times
IG Count after ECU Overheat Protection(Previous)	Number of times the ignition switch is ON from the intervention to overheat protection control (previous) until now*2	0 — 65000	times
IG Count after ECU Overheat Protection(Before Previous)	Number of times the ignition switch is ON from the intervention to overheat protection control (before previous) until now*2	0 — 65000	times
Assist limited(Low voltage)	Number of intervention to assist limit when the power supply voltage is low or high*1	0 — 250	times
Torque Sensor Amplifier	Torque sensor control voltage is displayed.	0 — 5	V
Motor Current	The current flowing to the motor relay is displayed.	–128 — 127	Arms
Assist Map Number	Either Not Selected/MAP1/MAP2/MAP3/MAP4/MAP5 is displayed.	—	—
Assist Map Number Discord	Recorded number of the assist MAP number discordance	0 — 250	times

NOTE:
- *1 When the value exceeds the maximum of 250 times, 250 is displayed.
- *2 When there is no intervention of the overheating protection control, “65535” is displayed. If an error such as control unit memory error, etc. occurs, “65534” is displayed.
- Freeze frame data stored at the time of trouble occurrence is shown on the display.
- Data of the first trouble occurrence is stored as the freeze frame data in memory.
- Three freeze frame data are stored.
- For detailed operation procedures, refer to “Application help”.

B: INSPECTION

1. COMMUNICATION FOR INITIALIZING IMPOSSIBLE

DETECTING CONDITION:

- Defective harness connector
- Defective power steering control module

TROUBLE SYMPTOM:

- Communication is impossible between the power steering control module and Subaru Select Monitor.
- After starting the engine, the STEERING warning light does not illuminate but steering effort is heavy.

WIRING DIAGRAM:

Electric power steering system <Ref. to WI-153, Electric Power Steering System.>

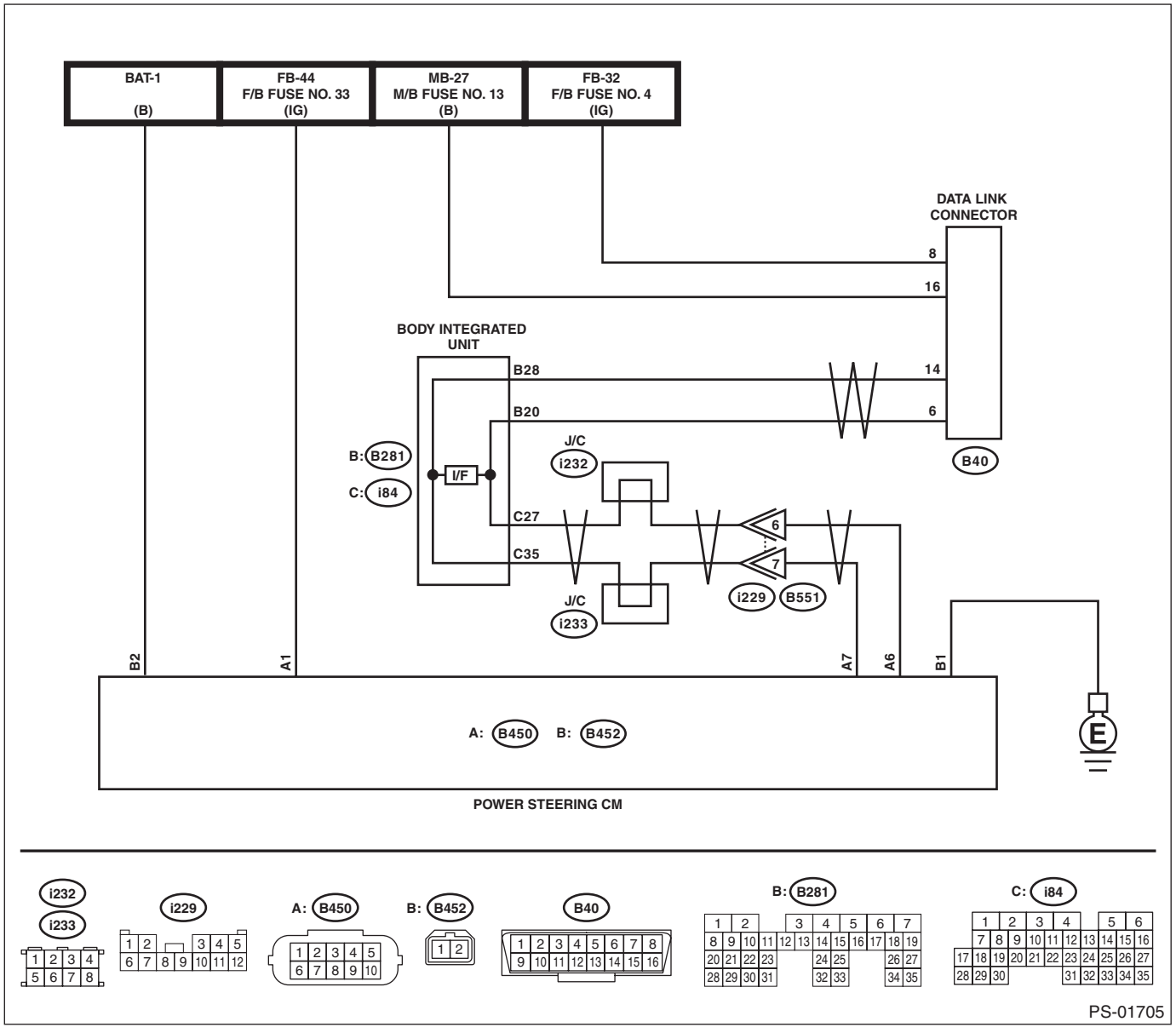

Step		Check	Yes	No
1	**CHECK IGNITION SWITCH.**	Is the ignition switch ON?	Go to step **2**.	Turn the ignition switch to ON, and select the power steering using the Subaru Select Monitor.

	Step	Check	Yes	No
2	**CHECK BATTERY.** 1) Turn the ignition switch to OFF. 2) Measure the battery voltage.	Is the voltage 11 V or more?	Go to step **3**.	Charge or replace the battery.
3	**CHECK BATTERY TERMINAL.**	Is there poor contact at battery terminal?	Repair or tighten the battery terminal.	Go to step **4**.
4	**CHECK POWER STEERING CONTROL MODULE CONNECTOR INSTALLATION.** Turn the ignition switch to OFF.	Is the power steering control module connector inserted into the power steering control module until the clamp locks?	Go to step **5**.	Insert the power steering control module connector into the power steering control module.
5	**CHECK LAN SYSTEM.** Perform the diagnosis for LAN system. <Ref. to LAN(diag)-2, Basic Diagnostic Procedure.>	Is there any fault in LAN system?	Perform the diagnosis according to DTC for LAN system. <Ref. to LAN(diag)-109, List of Diagnostic Trouble Code (DTC).>	Go to step **6**.
6	**CHECK SUBARU SELECT MONITOR COMMUNICATION.** 1) Turn the ignition switch to ON. 2) Check whether communication to power steering system can be executed normally.	Is «Select Function» displayed?	Check DTC of electric power steering system. <Ref. to PS(diag)-16, Read Diagnostic Trouble Code (DTC).>	Go to step **7**.
7	**CHECK SUBARU SELECT MONITOR COMMUNICATION.** Connect the Subaru Select Monitor to another vehicle to check whether the communication for initializing can be executed normally.	Does the Subaru Select Monitor communicate normally?	Go to step **8**.	Repair or replace the Subaru Select Monitor.
8	**CHECK POWER SUPPLY CIRCUIT.** 1) Turn the ignition switch to ON. (Engine OFF) 2) Measure the ignition power supply voltage between the power steering control module connector and chassis ground. ***Connector & terminal*** ***(B450) No. 1 (+) — Chassis ground (–):*** ***(B452) No. 2 (+) — Chassis ground (–):***	Is the voltage 10 — 15 V?	Go to step **9**.	Repair the open circuit in the harness between the power steering control module and the battery.
9	**CHECK HARNESS CONNECTOR BETWEEN POWER STEERING CONTROL MODULE AND CHASSIS GROUND.** 1) Turn the ignition switch to OFF. 2) Disconnect the connector from the power steering control module. 3) Measure the resistance of harness between power steering control module connector and chassis ground. ***Connector & terminal*** ***(B452) No. 1 — Chassis ground:***	Is the resistance less than 10 Ω?	Go to step **10**.	Repair the open circuit of the power steering control module ground circuit and the poor contact of connector.
10	**CHECK POOR CONTACT OF CONNECTOR.**	Is there poor contact of power steering control module power supply, ground circuit and data link connector?	Repair the connector.	Replace the power steering control module. <Ref. to PS-100, Power Steering Control Module.>

2. WITHOUT DTC

DETECTING CONDITION:

- Defective combination meter
- Open circuit of harness

TROUBLE SYMPTOM:

- The STEERING warning light will not turn off.
- «No Diagnostic Code Present» will be displayed on Subaru Select Monitor.

NOTE:
When the STEERING warning light is OFF and «No Diagnostic Code Present» is displayed on Subaru Select Monitor when all DTCs are read, the system is operating properly.

	Step	Check	Yes	No
1	**CHECK LAN SYSTEM.** Perform the diagnosis for LAN system using the Subaru Select Monitor. <Ref. to LAN(diag)-2, Basic Diagnostic Procedure.>	Is DTC U0131 detected?	Perform the diagnosis according to DTC for LAN system. <Ref. to LAN(diag)-109, List of Diagnostic Trouble Code (DTC).>	Go to step **2**.
2	**CHECK COMBINATION METER.** Check the STEERING warning light when the ignition is turned from OFF to ON.	Does the STEERING warning light illuminate at ignition switch ON, and turn off two seconds after the engine is started?	Finish the diagnosis.	Replace the combination meter. <Ref. to IDI-13, Combination Meter.>

7. Read Diagnostic Trouble Code (DTC)

A: OPERATION

1) On «Start» display, select «Diagnosis».
2) On «Vehicle selection» display, input the vehicle information and select «Confirmed».
3) On «Main Menu» display, select «Each System».
4) On «Select System» display, select «Power Steering».
5) On «Select Function» display, select «DTC».

NOTE:
- For details concerning the DTC, refer to “List of Diagnostic Trouble Code (DTC)”. <Ref. to PS(diag)-22, List of Diagnostic Trouble Code (DTC).>
- For detailed operation procedures, refer to “Application help”.

8. Inspection Mode

A: PROCEDURE

1) Start the engine.
2) Idle the engine for five seconds or more.
3) Operate the steering wheel from side to side.
4) Reproduce the malfunction occurrence condition as much as possible.

9. Clear Memory Mode

A: OPERATION

1) On «Start» display, select «Diagnosis».
2) On «Vehicle selection» display, input the vehicle information and select «Confirmed».
3) On «Main Menu» display, select «Each System».
4) On «Select System» display, select «Power Steering».
5) On «Select Function» display, select «DTC».
6) On «DTC» display, select «Clear Memory».

NOTE:

- Before performing memory clear, check the current data, and if there are any data of DTC, trouble status information, overheating protection intervention history, IGN count from overheating protection and assist limit history, save them.
- For detailed operation procedures, refer to “Application help”.

10.STEERING Warning Light

A: STEERING WARNING LIGHT DOES NOT COME ON

1. POWER STEERING ASSIST ENABLED

DETECTING CONDITION:

- Defective combination meter
- Defective harness

TROUBLE SYMPTOM:

When the ignition switch is turned to ON (engine OFF), the STEERING warning light does not illuminate.

NOTE:
It is operating normally if the warning light illuminates when the ignition switch is turned to ON (engine OFF), and turns off approximately two seconds after engine start.

	Step	Check	Yes	No
1	**CHECK ILLUMINATION OF OTHER LIGHTS.** Turn the ignition switch to ON. (Engine OFF)	Do other warning lights illuminate?	Go to step **2**.	Check the combination meter. <Ref. to IDI-9, INSPECTION, Combination Meter System.>
2	**CHECK LAN SYSTEM.** Perform the diagnosis for LAN system using the Subaru Select Monitor. <Ref. to LAN(diag)-2, Basic Diagnostic Procedure.>	Is a DTC related to CAN communication detected?	Perform the diagnosis according to DTC. <Ref. to LAN(diag)-109, List of Diagnostic Trouble Code (DTC).>	Go to step **3**.
3	**CHECK COMBINATION METER.** Check the combination meter. <Ref. to IDI-6, SELF-DIAGNOSIS DISPLAY MODE, OPERATION, Combination Meter System.>	Is the check result OK?	Current condition is normal.	Replace the combination meter. <Ref. to IDI-13, Combination Meter.>

2. POWER STEERING ASSIST DISABLED

DETECTING CONDITION:

CAN communication error (engine rpm signal not received)

TROUBLE SYMPTOM:

- Not assisted due to power supply voltage failure.
- The STEERING warning light is normal but there is no power steering assist (steering feels heavy).

	Step	Check	Yes	No
1	**CHECK BATTERY.** Check the battery. <Ref. to SC(w/o STI)-51, INSPECTION, Battery.> <Ref. to SC(STI)-24, INSPECTION, Battery.>	Is the check result OK?	Go to step **2**.	Charge or replace the battery.
2	**CHECK BATTERY TERMINALS AND FUSE.** Check the battery terminals and the fuse.	Is the check result OK?	Go to step **3**.	Repair or replace faulty parts.
3	**CHECK DTC.** Using the Subaru Select Monitor, read all DTCs.	Is DTC related to VDC system or ignition power supply system displayed?	Perform the diagnosis according to DTC. <Ref. to VDC(diag)-55, List of Diagnostic Trouble Code (DTC).>	Go to step **4**.

	Step	Check	Yes	No
4	**CHECK CURRENT DATA.** 1) Start the engine. 2) Display the current data «Engine Speed» of the power steering control module using the Subaru Select Monitor.	Is «Engine Speed» the same as that in the combination meter?	Go to step **5**.	Check the CAN communication. <Ref. to LAN(diag)-2, Basic Diagnostic Procedure.>
5	**CHECK CURRENT DATA.** Display the current data «EPS Status» of the power steering control module using the Subaru Select Monitor.	Is «Assist limitation» displayed?	It is possible that temporary assist limitation has occurred due to overheat protection. Stop the engine for approx. 30 minutes, and check again.	Go to step **6**.
6	**CHECK CURRENT DATA.** 1) Display the current data «Torque sensor main output» and «Torque sensor sub output» of the power steering control module using the Subaru Select Monitor. 2) Move the steering wheel to the left and right.	Do the values of «Torque sensor main output» and «Torque sensor sub output» change according to the operations?	Go to step **7**.	Check the installation status of torque sensor, and check again.
7	**CHECK CURRENT DATA.** Display the current data «IG Voltage» of the power steering control module using the Subaru Select Monitor.	Is the value of «IG Voltage» steady? (While shaking the harness)	Go to step **8**.	Check the ignition switch and IG voltage harness, and repair the defective part.
8	**CHECK CONNECTOR.** 1) Turn the ignition switch to OFF. 2) Disconnect the connector (B450).	Are there any damages to terminal or other parts either on the power steering control module side or on the connector side?	Repair the terminal.	Replace the power steering control module. <Ref. to PS-100, Power Steering Control Module.>

NOTE:
• During driving, the assist system will not be activated when the ignition voltage drops.
• Power steering assist is not started unless both of the ignition switch ON signal and the engine speed signal are input.
• In any of the following cases, the power steering assist is limited and steering wheel operation may become heavy.
If the steering wheel is held to an end for a long time, or the steering wheel turning to right and left at slow speed is repeated during parking, the assist limitation (overheat protection control) may operate to prevent failures by overheat.
In this case, by stopping the engine for approx. 30 minutes for cooling, the assist will start operating. While assist limitation (overheat protection control) is in active, “Assist limitation” is displayed in the «EPS operating condition» in the Subaru Select Monitor “Data Monitor”.
• History can be confirmed on «Overheating protection intervention history» or «IGN count from overheating protection» of “Data monitor”.
• The overheat protection control system is normal operation, therefore, the STEERING warning light will not come on and there will be no DTC displayed.
• If the power steering system connector is disconnected while cooling under the overheat protection control, different DTC may be recorded. If there is no DTC and assist limitation is in active, stop the engine for approx. 30 minutes for cooling.

B: STEERING WARNING LIGHT DOES NOT GO OFF

DETECTING CONDITION:

- Defective combination meter
- Open circuit of harness

TROUBLE SYMPTOM:

When starting the engine, the STEERING warning light continues to illuminate.

	Step	Check	Yes	No
1	**CHECK DTC.** Read the DTC of the power steering control module using the Subaru Select Monitor. <Ref. to PS(diag)-16, Read Diagnostic Trouble Code (DTC).>	Is DTC detected?	Perform the diagnosis according to DTC. <Ref. to PS(diag)-22, List of Diagnostic Trouble Code (DTC).>	Go to step **2**.
2	**CHECK LAN SYSTEM.** Perform the diagnosis for LAN system using the Subaru Select Monitor. <Ref. to LAN(diag)-2, Basic Diagnostic Procedure.>	Is a DTC related to CAN communication detected?	Perform the diagnosis according to DTC. <Ref. to LAN(diag)-109, List of Diagnostic Trouble Code (DTC).>	Check the combination meter. <Ref. to IDI-9, INSPECTION, Combination Meter System.>

11.List of Diagnostic Trouble Code (DTC)

A: LIST

DTC	Item	Content of diagnosis	Note
None	Without DTC	Normal	<Ref. to PS(diag)-15, WITHOUT DTC, INSPECTION, Subaru Select Monitor.>
	“Assist limitation” is displayed in the current data «EPS operating condition».	Assist limitation is performed due to overheat protection control.	<Ref. to PS(diag)-19, POWER STEERING ASSIST DISABLED, STEERING WARNING LIGHT DOES NOT COME ON, STEERING Warning Light.>
	“Overheating protection intervention history” in current data display shows 1 or more.	There are previous records of intervention to overheat protection control.	<Ref. to PS(diag)-19, POWER STEERING ASSIST DISABLED, STEERING WARNING LIGHT DOES NOT COME ON, STEERING Warning Light.>
C2511	Torque Sensor Main	• Poor connector contact • Forgot to connect connector • Faulty torque sensor section circuit • Faulty torque sensor coil	<Ref. to PS(diag)-24, DTC C2511 TORQUE SENSOR MAIN, Diagnostic Procedure with Diagnostic Trouble Code (DTC).>
C2512	Torque Sensor Sub		<Ref. to PS(diag)-25, DTC C2512 TORQUE SENSOR SUB, Diagnostic Procedure with Diagnostic Trouble Code (DTC).>
C2513	Torque Sensor Much Tolerance		<Ref. to PS(diag)-25, DTC C2513 TORQUE SENSOR MUCH TOLERANCE, Diagnostic Procedure with Diagnostic Trouble Code (DTC).>
C2514	Torque Sensor Power Supply		<Ref. to PS(diag)-26, DTC C2514 TORQUE SENSOR POWER SUPPLY, Diagnostic Procedure with Diagnostic Trouble Code (DTC).>
C2521	Motor Malfunction	• Poor connector contact • Forgot to connect connector • Harness open/short circuit • Motor open circuit • Power transistor shorted/open • Terminal power supply or ground short	<Ref. to PS(diag)-27, DTC C2521 MOTOR MALFUNCTION, Diagnostic Procedure with Diagnostic Trouble Code (DTC).>
C2522	Resolver Sensor		<Ref. to PS(diag)-28, DTC C2522 RESOLVER SENSOR, Diagnostic Procedure with Diagnostic Trouble Code (DTC).>
C2531	Control Module CPU	Faulty main unit of power steering control module	<Ref. to PS(diag)-29, DTC C2531 CONTROL MODULE CPU, Diagnostic Procedure with Diagnostic Trouble Code (DTC).>
C2532	Control Module Peripheral Circuit	Faulty main unit of power steering control module	<Ref. to PS(diag)-29, DTC C2532 CONTROL MODULE PERIPHERAL CIRCUIT, Diagnostic Procedure with Diagnostic Trouble Code (DTC).>
C2533	Control Module Board Temperature Sensor	Faulty main unit of power steering control module	<Ref. to PS(diag)-29, DTC C2533 CONTROL MODULE BOARD TEMPERATURE SENSOR, Diagnostic Procedure with Diagnostic Trouble Code (DTC).>
C2541	Vehicle Dynamics Control Module Vehicle Speed Sensor	• Poor connector contact • Forgot to connect connector • Harness open/short circuit • VDC system failure	<Ref. to PS(diag)-30, DTC C2541 VEHICLE DYNAMICS CONTROL MODULE VEHICLE SPEED SENSOR, Diagnostic Procedure with Diagnostic Trouble Code (DTC).>
C2543	Error Passive	Defective CAN communication	<Ref. to PS(diag)-31, DTC C2543 ERROR PASSIVE, Diagnostic Procedure with Diagnostic Trouble Code (DTC).>
C2545	EyeSight System	EyeSight system failure	<Ref. to PS(diag)-32, DTC C2545 EyeSight SYSTEM , Diagnostic Procedure with Diagnostic Trouble Code (DTC).>

DTC	Item	Content of diagnosis	Note
C2546	EyeSight Value	EyeSight system failure	<Ref. to PS(diag)-32, DTC C2546 EyeSight VALUE , Diagnostic Procedure with Diagnostic Trouble Code (DTC).>
C2547	EyeSight Check Sum	• EyeSight system failure • Defective CAN communication	<Ref. to PS(diag)-33, DTC C2547 EyeSight CHECK SUM , Diagnostic Procedure with Diagnostic Trouble Code (DTC).>
C2548	Vehicle Dynamics Control Module System	VDC system failure	<Ref. to PS(diag)-34, DTC C2548 VEHICLE DYNAMICS CONTROL MODULE SYSTEM, Diagnostic Procedure with Diagnostic Trouble Code (DTC).>
C2549	Assist MAP Selection	• Faulty main unit of power steering control module • Defective CAN communication	<Ref. to PS(diag)-35, DTC C2549 ASSIST MAP SELECTION, Diagnostic Procedure with Diagnostic Trouble Code (DTC).>
C2551	Power Supply Relay	• Power supply voltage malfunction • Faulty relay contact	<Ref. to PS(diag)-36, DTC C2551 POWER SUPPLY RELAY, Diagnostic Procedure with Diagnostic Trouble Code (DTC).>
U0073	Control Module Communication Bus Off	Defective CAN communication	<Ref. to PS(diag)-38, DTC U0073 CONTROL MODULE COMMUNICATION BUS OFF, Diagnostic Procedure with Diagnostic Trouble Code (DTC).>
U0100	Lost Communication With ECM/PCM “A”	Defective CAN communication	<Ref. to PS(diag)-38, DTC U0100 LOST COMMUNICATION WITH ECM/PCM “A”, Diagnostic Procedure with Diagnostic Trouble Code (DTC).>
U0122	Lost Communication With Vehicle Dynamics Control Module	Defective CAN communication	<Ref. to PS(diag)-38, DTC U0122 LOST COMMUNICATION WITH VEHICLE DYNAMICS CONTROL MODULE, Diagnostic Procedure with Diagnostic Trouble Code (DTC).>
U0126	Lost Communication With Steering Angle Sensor Module	Defective CAN communication	<Ref. to PS(diag)-38, DTC U0126 LOST COMMUNICATION WITH STEERING ANGLE SENSOR MODULE, Diagnostic Procedure with Diagnostic Trouble Code (DTC).>
U0155	Lost Communication With Instrument Panel Cluster (IPC) Control Module	Defective CAN communication	<Ref. to PS(diag)-38, DTC U0155 LOST COMMUNICATION WITH INSTRUMENT PANEL CLUSTER (IPC) CONTROL MODULE, Diagnostic Procedure with Diagnostic Trouble Code (DTC).>
U0401	Invalid Data Received From ECM/PCM “A”	Defective CAN communication	<Ref. to PS(diag)-38, DTC U0401 INVALID DATA RECEIVED FROM ECM/PCM “A”, Diagnostic Procedure with Diagnostic Trouble Code (DTC).>
U0416	Invalid Data Received From Vehicle Dynamics Control Module	Defective CAN communication	<Ref. to PS(diag)-38, DTC U0416 INVALID DATA RECEIVED FROM VEHICLE DYNAMICS CONTROL MODULE, Diagnostic Procedure with Diagnostic Trouble Code (DTC).>
U1235	Lost Communication With EyeSight	Defective CAN communication	<Ref. to PS(diag)-38, DTC U1235 LOST COMMUNICATION WITH EyeSight, Diagnostic Procedure with Diagnostic Trouble Code (DTC).>
U1433	Invalid Data Received From EyeSight	Defective CAN communication	<Ref. to PS(diag)-38, DTC U1433 INVALID DATA RECEIVED FROM EyeSight, Diagnostic Procedure with Diagnostic Trouble Code (DTC).>

12.Diagnostic Procedure with Diagnostic Trouble Code (DTC)

A: DTC C2511 TORQUE SENSOR MAIN

DTC DETECTING CONDITION:

When torque sensor main output voltage failure is detected after the ignition switch is ON.

TROUBLE SYMPTOM:

- The steering wheel operation feels heavy.
- STEERING warning light illuminates.
- EyeSight steering support function does not operate. (Models with EyeSight)

WIRING DIAGRAM:

Electric power steering system <Ref. to WI-153, Electric Power Steering System.>

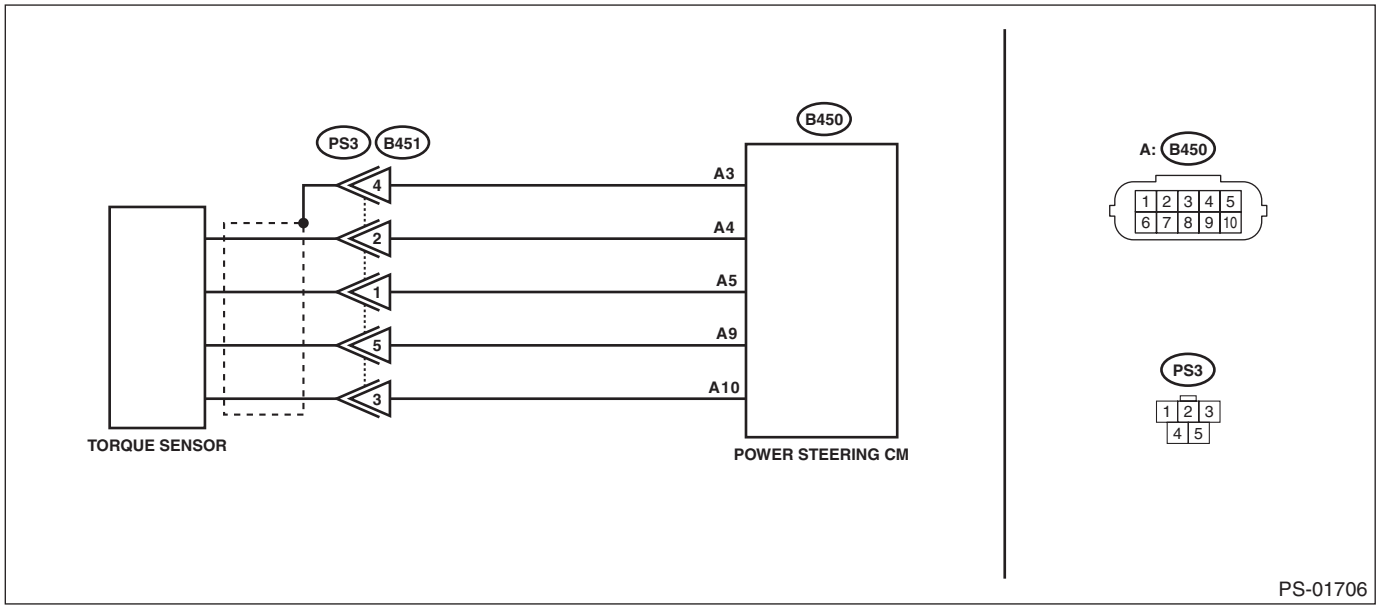

Step		Check	Yes	No
1	**CHECK TORQUE SENSOR SIGNAL.** 1) Display the current data of the power steering control module using the Subaru Select Monitor. 2) Check the voltage of «Torque sensor main output», «Torque sensor sub output» and «Torque sensor power supply voltage».	Are the voltage of «Torque sensor main output» and «Torque sensor sub output» 2.5±0.1 V? Is the voltage of «Torque sensor power supply voltage» 5±0.3 V?	Check for poor contact of the connector, and check the conditions again. If the condition recur, go to the next step. Go to step **2**. If it does not recur, complete the inspection.	Go to step **2**.
2	**CHECK HARNESS.** 1) Turn the ignition switch to OFF. 2) Disconnect the connectors (B450, B451). 3) Using a tester and test harness, check the internal resistance of the harness terminals. ***Connector & terminal*** ***(B450) No. 4 — (B451) No. 2:*** ***(B450) No. 5 — (B451) No. 1:*** ***(B450) No. 9 — (B451) No. 5:*** ***(B450) No. 10 — (B451) No. 3:***	Is the resistance less than 10 Ω?	Go to step **3**.	Repair or replace the harness.

	Step	Check	Yes	No
3	**CHECK POWER STEERING CONTROL MODULE.** 1) Connect the connector (B450) to the power steering control module. 2) Turn the ignition switch to ON. 3) Short the circuit between connector (B451) terminals. ***Terminals*** ***No. 3 — No. 1:*** ***No. 3 — No. 2:*** 4) Using the Subaru Select Monitor, check the voltages of «Torque sensor main output» and «Torque sensor sub output».	Is the voltage of «Torque sensor main output» 2.5±0.3 V, and the voltage of «Torque sensor sub output» 0±0.1 V before the circuit is shorted? Are the voltages of «Torque sensor main output» and «Torque sensor sub output» after you short the circuit 5±0.3 V?	Replace the steering gearbox. <Ref. to PS-66, Electric Power Steering Gearbox.>	Replace the power steering control module. <Ref. to PS-100, Power Steering Control Module.>

B: DTC C2512 TORQUE SENSOR SUB

DTC DETECTING CONDITION:

When torque sensor sub output voltage failure is detected after the ignition switch is ON.

TROUBLE SYMPTOM:

- The steering wheel operation feels heavy.
- STEERING warning light illuminates.
- EyeSight steering support function does not operate. (Models with EyeSight)

NOTE:

Refer to “DTC C2511 TORQUE SENSOR MAIN” for diagnostic procedure. <Ref. to PS(diag)-24, DTC C2511 TORQUE SENSOR MAIN, Diagnostic Procedure with Diagnostic Trouble Code (DTC).>

C: DTC C2513 TORQUE SENSOR MUCH TOLERANCE

DTC DETECTING CONDITION:

When torque sensor main/sub output voltage failure is detected after the ignition switch is ON.

TROUBLE SYMPTOM:

- The steering wheel operation feels heavy.
- STEERING warning light illuminates.
- EyeSight steering support function does not operate. (Models with EyeSight)

NOTE:

Refer to “DTC C2511 TORQUE SENSOR MAIN” for diagnostic procedure. <Ref. to PS(diag)-24, DTC C2511 TORQUE SENSOR MAIN, Diagnostic Procedure with Diagnostic Trouble Code (DTC).>

D: DTC C2514 TORQUE SENSOR POWER SUPPLY

DTC DETECTING CONDITION:
When torque sensor power supply voltage failure is detected after the ignition switch is ON.
TROUBLE SYMPTOM:
- The steering wheel operation feels heavy.
- STEERING warning light illuminates.
- EyeSight steering support function does not operate. (Models with EyeSight)

WIRING DIAGRAM:
Electric power steering system <Ref. to WI-153, Electric Power Steering System.>

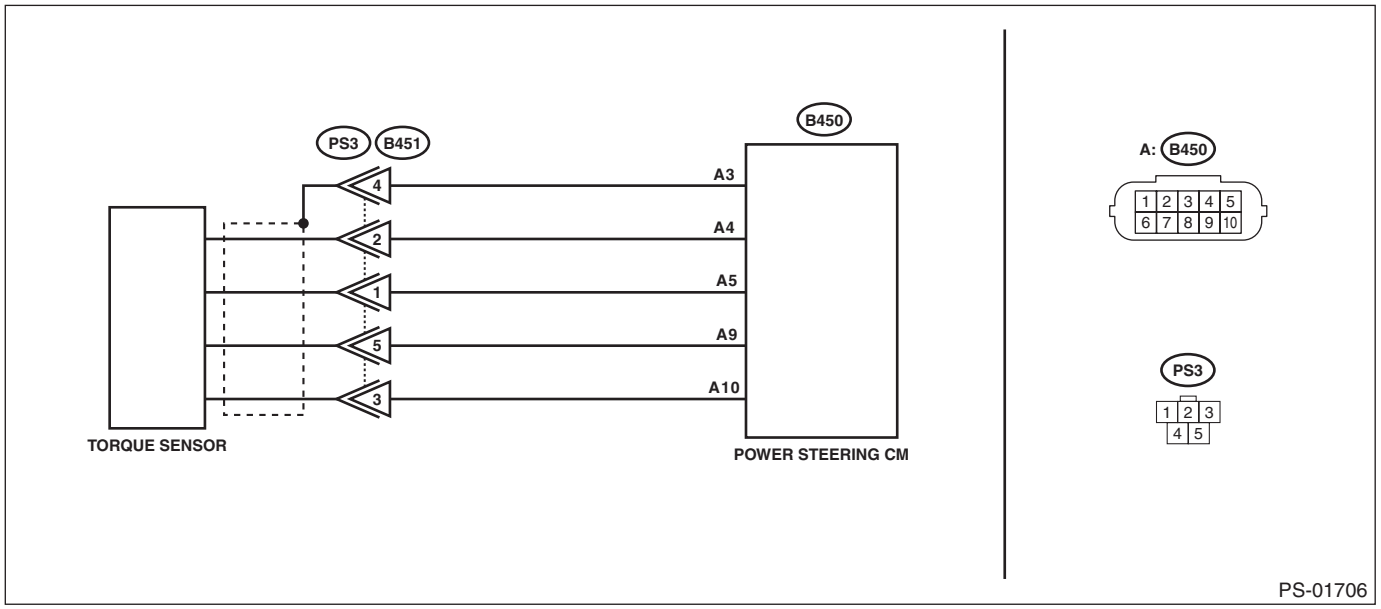

Step		Check	Yes	No
1	**CHECK TORQUE SENSOR SIGNAL.** 1) Display the current data of the power steering control module using the Subaru Select Monitor. 2) Check the voltage of «Torque sensor main output», «Torque sensor sub output» and «Torque sensor power supply voltage».	Are the voltage of «Torque sensor main output» and «Torque sensor sub output» 2.5±0.1 V? Is the voltage of «Torque sensor power supply voltage» 5±0.3 V?	Check for poor contact of the connector, and check the conditions again. If the condition recur, go to the next step. Go to step **2**. If it does not recur, complete the inspection.	Go to step **2**.
2	**CHECK HARNESS.** 1) Turn the ignition switch to OFF. 2) Disconnect the connector (B451). 3) Using a tester and test harness, check the internal resistance of the harness terminals. ***Connector & terminal*** ***(B450) No. 4 — (B451) No. 2:*** ***(B450) No. 5 — (B451) No. 1:*** ***(B450) No. 9 — (B451) No. 5:*** ***(B450) No. 10 — (B451) No. 3:***	Is the resistance less than 10 Ω?	Replace the power steering control module. <Ref. to PS-100, Power Steering Control Module.>	Repair or replace the harness.

E: DTC C2521 MOTOR MALFUNCTION

DTC DETECTING CONDITION:

- When motor driving element malfunction is detected after assist starts with 500 rpm engine speed reception.
- When motor current failure is detected after assist starts with 500 rpm engine speed reception.
- When motor voltage failure is detected after assist starts with 500 rpm engine speed reception.

TROUBLE SYMPTOM:

- The steering wheel operation feels heavy.
- STEERING warning light illuminates.
- EyeSight steering support function does not operate. (Models with EyeSight)

WIRING DIAGRAM:

Electric power steering system <Ref. to WI-153, Electric Power Steering System.>

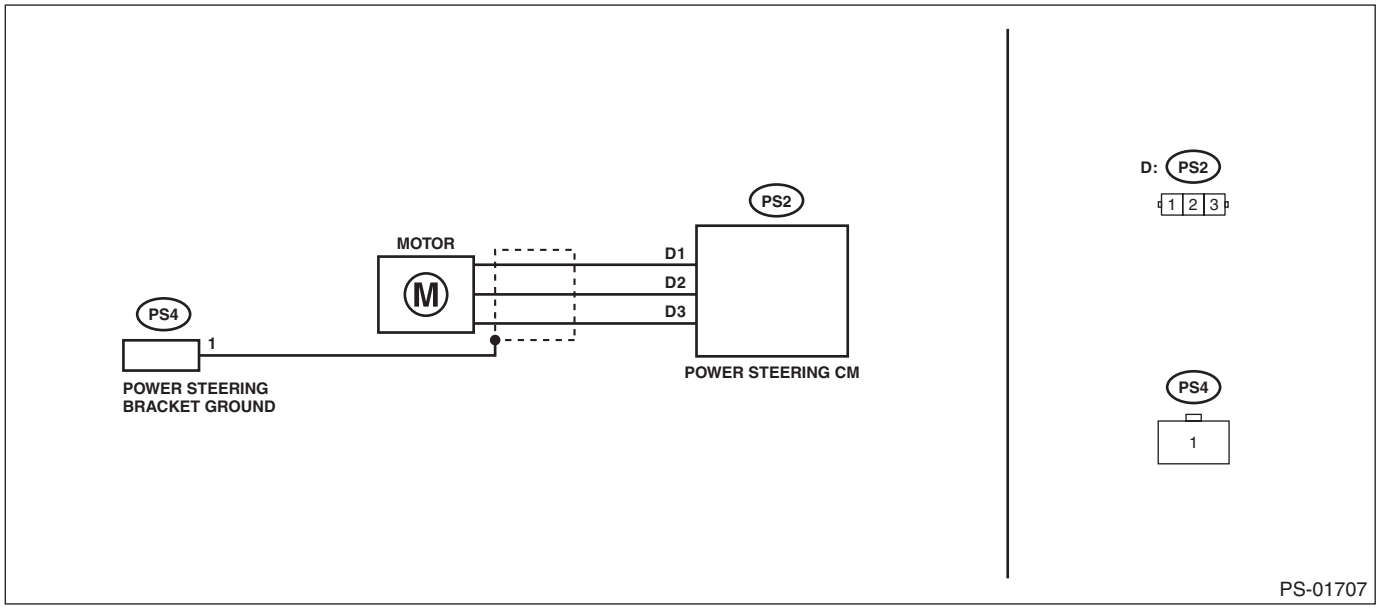

Step		Check	Yes	No
1	**CHECK HARNESS AND CONNECTOR.** Check the connection status of the power steering control module and motor harness (PS2).	Are the harness and connector firmly installed?	Go to step **2**.	Check the connection of connectors/terminals/harnesses and perform inspection again.
2	**CHECK MOTOR UNIT.** 1) Turn the ignition switch to OFF. 2) Disconnect the connector (PS2) from the power steering control module. 3) Use a tester to check for continuity in the motor. ***Connector & terminal*** ***(PS2) No. 1 — No. 2:*** ***(PS2) No. 1 — No. 3:*** ***(PS2) No. 2 — No. 3:***	Is there continuity?	Go to step **3**.	Replace the steering gearbox. <Ref. to PS-66, Electric Power Steering Gearbox.>
3	**CHECK MOTOR INSULATION.** Use a tester to check for short circuits in the motor. ***Connector & terminal*** ***(PS2) No. 1 — Steering gearbox body:*** ***(PS2) No. 2 — Steering gearbox body:*** ***(PS2) No. 3 — Steering gearbox body:***	Is the resistance 1 MΩ or more?	Replace the power steering control module. <Ref. to PS-100, Power Steering Control Module.>	Replace the steering gearbox. <Ref. to PS-66, Electric Power Steering Gearbox.>

F: DTC C2522 RESOLVER SENSOR

DTC DETECTING CONDITION:

When resolver signal output voltage failure is detected after assist starts with 500 rpm engine speed reception.

TROUBLE SYMPTOM:

- The steering wheel operation feels heavy.
- STEERING warning light illuminates.
- EyeSight steering support function does not operate. (Models with EyeSight)

WIRING DIAGRAM:

Electric power steering system <Ref. to WI-153, Electric Power Steering System.>

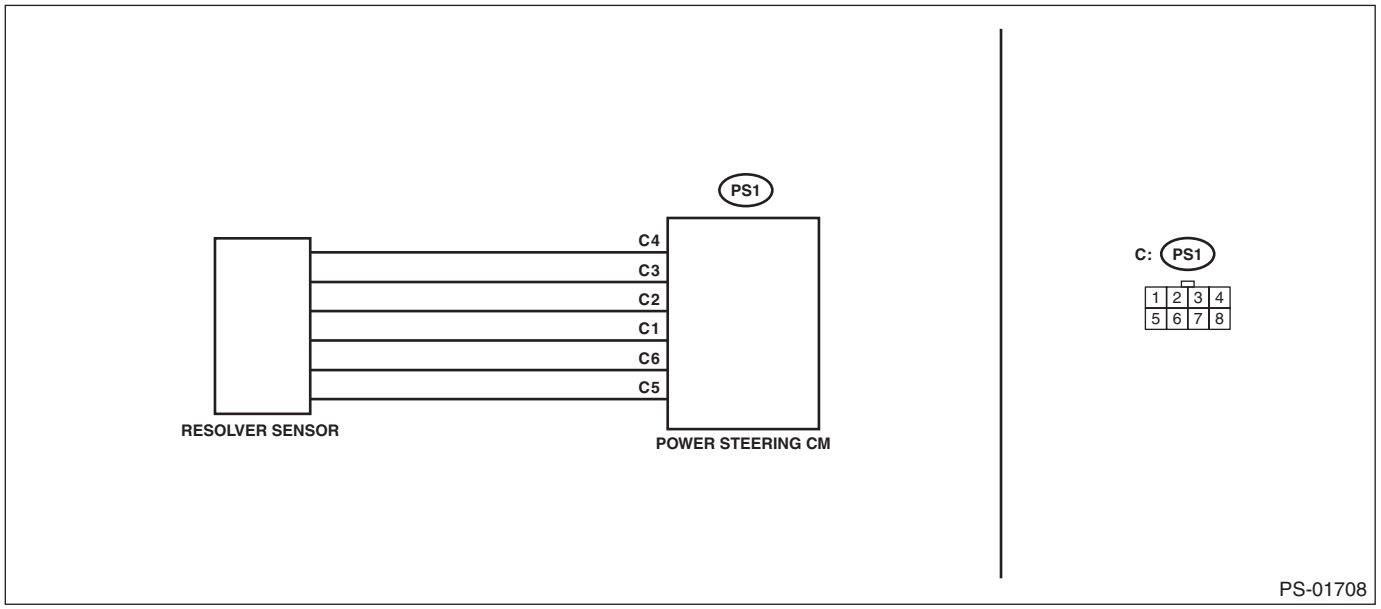

	Step	Check	Yes	No
1	**CHECK HARNESS AND CONNECTOR.** Check the connection status of the power steering control module and resolver sensor harness (PS1).	Are the harness and connector firmly installed?	Go to step **2**.	Check the connection of connectors/terminals/harnesses and perform inspection again.
2	**PERFORM UNIT CHECK OF RESOLVER SENSOR.** 1) Turn the ignition switch to OFF. 2) Disconnect the connector (PS1) from the power steering control module. 3) Use a tester to check for continuity in the resolver sensor. ***Connector & terminal*** ***(PS1) No. 1 — No. 2 :*** ***(PS1) No. 3 — No. 4 :*** ***(PS1) No. 5 — No. 6 :***	Is there continuity?	Go to step **3**.	Replace the steering gearbox. <Ref. to PS-66, Electric Power Steering Gearbox.>
3	**CHECK RESOLVER SENSOR INSULATION.** Using a tester, check for short circuits in the resolver sensor. ***Connector & terminal*** ***(PS1) No. 1 — Steering gearbox body:*** ***(PS1) No. 2 — Steering gearbox body:*** ***(PS1) No. 3 — Steering gearbox body:*** ***(PS1) No. 4 — Steering gearbox body:*** ***(PS1) No. 5 — Steering gearbox body:*** ***(PS1) No. 6 — Steering gearbox body:***	Is the resistance 1 MΩ or more?	Replace the power steering control module. <Ref. to PS-100, Power Steering Control Module.>	Replace the steering gearbox. <Ref. to PS-66, Electric Power Steering Gearbox.>

G: DTC C2531 CONTROL MODULE CPU

DTC DETECTING CONDITION:
When microcomputer malfunction is detected after the ignition switch is ON.
TROUBLE SYMPTOM:
- The steering wheel operation feels heavy.
- STEERING warning light illuminates.
- EyeSight steering support function does not operate. (Models with EyeSight)

NOTE:
When this code is displayed, replace the power steering control module with new parts. <Ref. to PS-100, Power Steering Control Module.>

H: DTC C2532 CONTROL MODULE PERIPHERAL CIRCUIT

DTC DETECTING CONDITION:
- When torque sensor peripheral circuit malfunction inside the power steering control module is detected after assist starts with 500 rpm engine speed reception.
- When storage medium IC malfunction inside the power steering control module is detected at initial check.
- When motor drive circuit malfunction is detected after assist starts with 500 rpm engine speed reception.
- When motor driving element driver malfunction is detected after the ignition switch is ON.
- When intercommunication error of the power steering control module is detected after the ignition switch is ON.

TROUBLE SYMPTOM:
- The steering wheel operation feels heavy.
- STEERING warning light illuminates.
- EyeSight steering support function does not operate. (Models with EyeSight)

NOTE:
When this code is displayed, replace the power steering control module with new parts. <Ref. to PS-100, Power Steering Control Module.>

I: DTC C2533 CONTROL MODULE BOARD TEMPERATURE SENSOR

DTC DETECTING CONDITION:
When thermistor malfunction is detected after the ignition switch is ON.
TROUBLE SYMPTOM:
The steering wheel operation feels heavy.

NOTE:
When this code is displayed, replace the power steering control module with new parts. <Ref. to PS-100, Power Steering Control Module.>

J: DTC C2541 VEHICLE DYNAMICS CONTROL MODULE VEHICLE SPEED SENSOR

DTC DETECTING CONDITION:
When VDCCM reception failure (related to vehicle speed sensor) is detected after the ignition switch is ON.
TROUBLE SYMPTOM:
The steering wheel operation feels heavy.

	Step	Check	Yes	No
1	**CHECK DTC.** Read the DTC of VDC system using the Subaru Select Monitor.	Is a DTC related to VDC system or vehicle speed signal system detected?	Perform the diagnosis according to the DTC. <Ref. to VDC(diag)-55, List of Diagnostic Trouble Code (DTC).>	Go to step **2**.
2	**CHECK LAN SYSTEM.** Perform the diagnosis for LAN system using the Subaru Select Monitor. <Ref. to LAN(diag)-2, Basic Diagnostic Procedure.>	Is a DTC related to CAN communication detected?	Perform the diagnosis according to the DTC. <Ref. to LAN(diag)-109, List of Diagnostic Trouble Code (DTC).>	Go to step **3**.
3	**CHECK VEHICLE SPEED SIGNAL.** 1) Display the current data «Vehicle Speed» of the power steering control module using the Subaru Select Monitor. 2) Lift up the vehicle (so that the wheels turn freely), start the engine, and raise engine speed in gear. **CAUTION:** **Be careful that no one is near the spinning tires and nothing gets caught in them.** 3) Check for whether the data changes according to vehicle speed.	Is the data in sync with the vehicle speed?	It is possible that temporary poor communication occurs. Perform the Clear Memory Mode. <Ref. to PS(diag)-18, Clear Memory Mode.>	Replace the power steering control module. <Ref. to PS-100, Power Steering Control Module.>

K: DTC C2543 ERROR PASSIVE

DTC DETECTING CONDITION:
When send/receive failure of CAN communication is detected after the ignition switch is ON.
TROUBLE SYMPTOM:
- The steering wheel operation feels heavy.
- EyeSight steering support function does not operate. (Models with EyeSight)

	Step	Check	Yes	No
1	**CHECK PERIPHERALS.** Check the data link connector.	Is any other electrical part connected to the data link connector or harness?	Disconnect the connection of electrical parts and perform inspection again.	Go to step **2**.
2	**CHECK LAN SYSTEM.** Perform the diagnosis for LAN system using the Subaru Select Monitor. <Ref. to LAN(diag)-2, Basic Diagnostic Procedure.>	Is a DTC related to CAN communication detected?	Perform the diagnosis according to the DTC. <Ref. to LAN(diag)-109, List of Diagnostic Trouble Code (DTC).>	Go to step **3**.
3	**CHECK DTC.** Read the DTC of the power steering control module using the Subaru Select Monitor. <Ref. to PS(diag)-16, Read Diagnostic Trouble Code (DTC).>	Is DTC C2543 a current malfunction?	Go to step **4**.	System is normal. Temporary interference from noise is a possible cause.
4	**CHECK CONNECTOR.** Check the connecting condition of connector.	Is the connector firmly installed?	Go to step **5**.	Install the connector, and check again.
5	**CHECK CONNECTOR.** 1) Turn the ignition switch to OFF. 2) Disconnect the connector (B450).	Is there crimped or spread portion in connector terminal on vehicle harness side and power steering control module side?	Repair or replace faulty parts.	Go to step **6**.
6	**CHECK HARNESS.** Check the harness related to CAN communication system.	Is there any fault in the harness?	Repair or replace the harness.	Replace the power steering control module. <Ref. to PS-100, Power Steering Control Module.>

L: DTC C2545 EyeSight SYSTEM

DTC DETECTING CONDITION:
When the EyeSight system fail flag from stereo camera is received after the ignition switch is ON.
TROUBLE SYMPTOM:
EyeSight steering support function does not operate.

	Step	Check	Yes	No
1	**CHECK POOR CONTACT OF CONNECTOR.**	Is there poor contact of the stereo camera connector?	Repair the poor contact of connector.	Go to step **2**.
2	**CHECK DTC.** Using the Subaru Select Monitor, read all DTCs.	Is DTC of EyeSight system detected?	Perform the diagnosis according to the DTC.	Go to step **3**.
3	**CHECK LAN SYSTEM.** Perform the diagnosis for LAN system using the Subaru Select Monitor. <Ref. to LAN(diag)-2, Basic Diagnostic Procedure.>	Is a DTC related to CAN communication detected?	Perform the diagnosis according to DTC. <Ref. to LAN(diag)-109, List of Diagnostic Trouble Code (DTC).>	Go to step **4**.
4	**CHECK POWER STEERING CONTROL MODULE.** 1) Connect all connectors. 2) Perform the Clear Memory Mode. <Ref. to PS(diag)-18, Clear Memory Mode.> 3) Perform the Inspection Mode. <Ref. to PS(diag)-17, Inspection Mode.> 4) Read the DTC.	Is DTC C2545 detected?	Replace the power steering control module. <Ref. to PS-100, Power Steering Control Module.>	It results from a temporary noise interference.

M: DTC C2546 EyeSight VALUE

DTC DETECTING CONDITION:
When the steering support indication value from stereo camera is out of range after the ignition switch is ON.
TROUBLE SYMPTOM:
EyeSight steering support function does not operate.

	Step	Check	Yes	No
1	**CHECK POOR CONTACT OF CONNECTOR.**	Is there poor contact of the stereo camera connector?	Repair the poor contact of connector.	Go to step **2**.
2	**CHECK DTC.** Using the Subaru Select Monitor, read all DTCs.	Is DTC of EyeSight system detected?	Perform the diagnosis according to the DTC.	Go to step **3**.
3	**CHECK LAN SYSTEM.** Perform the diagnosis for LAN system using the Subaru Select Monitor. <Ref. to LAN(diag)-2, Basic Diagnostic Procedure.>	Is a DTC related to CAN communication detected?	Perform the diagnosis according to DTC. <Ref. to LAN(diag)-109, List of Diagnostic Trouble Code (DTC).>	Go to step **4**.
4	**CHECK POWER STEERING CONTROL MODULE.** 1) Connect all connectors. 2) Perform the Clear Memory Mode. <Ref. to PS(diag)-18, Clear Memory Mode.> 3) Perform the Inspection Mode. <Ref. to PS(diag)-17, Inspection Mode.> 4) Read the DTC.	Is DTC C2546 detected?	Replace the power steering control module. <Ref. to PS-100, Power Steering Control Module.>	It results from a temporary noise interference.

N: DTC C2547 EyeSight CHECK SUM

DTC DETECTING CONDITION:

When check sum error of EyeSight transmission data is detected after the ignition switch is ON.

TROUBLE SYMPTOM:

EyeSight steering support function does not operate.

	Step	Check	Yes	No
1	**CHECK POOR CONTACT OF CONNECTOR.**	Is there poor contact of the stereo camera connector?	Repair the poor contact of connector.	Go to step **2**.
2	**CHECK DTC.** Using the Subaru Select Monitor, read all DTCs.	Is DTC of EyeSight system detected?	Perform the diagnosis according to the DTC.	Go to step **3**.
3	**CHECK LAN SYSTEM.** Perform the diagnosis for LAN system using the Subaru Select Monitor. <Ref. to LAN(diag)-2, Basic Diagnostic Procedure.>	Is a DTC related to CAN communication detected?	Perform the diagnosis according to DTC. <Ref. to LAN(diag)-109, List of Diagnostic Trouble Code (DTC).>	Go to step **4**.
4	**CHECK POWER STEERING CONTROL MODULE.** 1) Connect all connectors. 2) Perform the Clear Memory Mode. <Ref. to PS(diag)-18, Clear Memory Mode.> 3) Perform the Inspection Mode. <Ref. to PS(diag)-17, Inspection Mode.> 4) Read the DTC.	Is DTC C2547 detected?	Replace the power steering control module. <Ref. to PS-100, Power Steering Control Module.>	It results from a temporary noise interference.

O: DTC C2548 VEHICLE DYNAMICS CONTROL MODULE SYSTEM

DTC DETECTING CONDITION:

When error flag from VDCCM is detected for 2 seconds after the ignition switch is ON.

	Step	Check	Yes	No
1	**CHECK DTC.** Read the DTC of VDC system using the Subaru Select Monitor.	Is a DTC related to VDC system (sensors) detected?	Perform the diagnosis according to the DTC. <Ref. to VDC(diag)-55, List of Diagnostic Trouble Code (DTC).>	Go to step **2**.
2	**CHECK DTC.** Using the Subaru Select Monitor, read all DTCs.	Is a DTC related to CAN communication detected?	Perform the diagnosis according to the DTC. <Ref. to LAN(diag)-109, List of Diagnostic Trouble Code (DTC).>	Replace the power steering control module. <Ref. to PS-100, Power Steering Control Module.>

P: DTC C2549 ASSIST MAP SELECTION

DTC DETECTING CONDITION:

- When CAN communication error is received after the ignition switch is ON.
- When the vehicle CAN information cannot be received after the ignition switch is ON.

TROUBLE SYMPTOM:

The steering wheel operation feels heavy.

	Step	Check	Yes	No
1	**CHECK POOR CONTACT OF CONNECTORS.**	Is there any poor contact in the connector of combination meter, body integrated unit or engine control module?	Repair the poor contact of connector.	Go to step **2**.
2	**CHECK DTC.** Using the Subaru Select Monitor, read all DTCs.	Are there any DTCs detected for combination meter, body integrated unit or engine control module as well as DTC C2532?	Perform the diagnosis according to the DTC.	Go to step **3**.
3	**CHECK LAN SYSTEM.** Perform the diagnosis for LAN system using the Subaru Select Monitor. <Ref. to LAN(diag)-2, Basic Diagnostic Procedure.>	Is a DTC related to CAN communication detected?	Perform the diagnosis according to DTC. <Ref. to LAN(diag)-109, List of Diagnostic Trouble Code (DTC).>	Go to step **4**.
4	**CHECK POWER STEERING CONTROL MODULE.** 1) Connect all connectors. 2) Perform the Clear Memory Mode. <Ref. to PS(diag)-18, Clear Memory Mode.> 3) Perform the Inspection Mode. <Ref. to PS(diag)-17, Inspection Mode.> 4) Read the DTC.	Is DTC C2549 detected?	Replace the power steering control module. <Ref. to PS-100, Power Steering Control Module.>	It results from a temporary noise interference.

Q: DTC C2551 POWER SUPPLY RELAY

DTC DETECTING CONDITION:

- When contact deposit malfunction of power supply relay is detected at initial check.
- When power supply voltage failure is detected after the ignition switch is ON.
- When power supply voltage drop is detected with 500 rpm engine speed reception.

TROUBLE SYMPTOM:

- The steering wheel operation feels heavy.
- STEERING warning light illuminates.
- EyeSight steering support function does not operate. (Models with EyeSight)

NOTE:
If power supply voltage failure exists at the vehicle side, the warning light goes off if the normal voltage returns.

WIRING DIAGRAM:
Electric power steering system <Ref. to WI-153, Electric Power Steering System.>

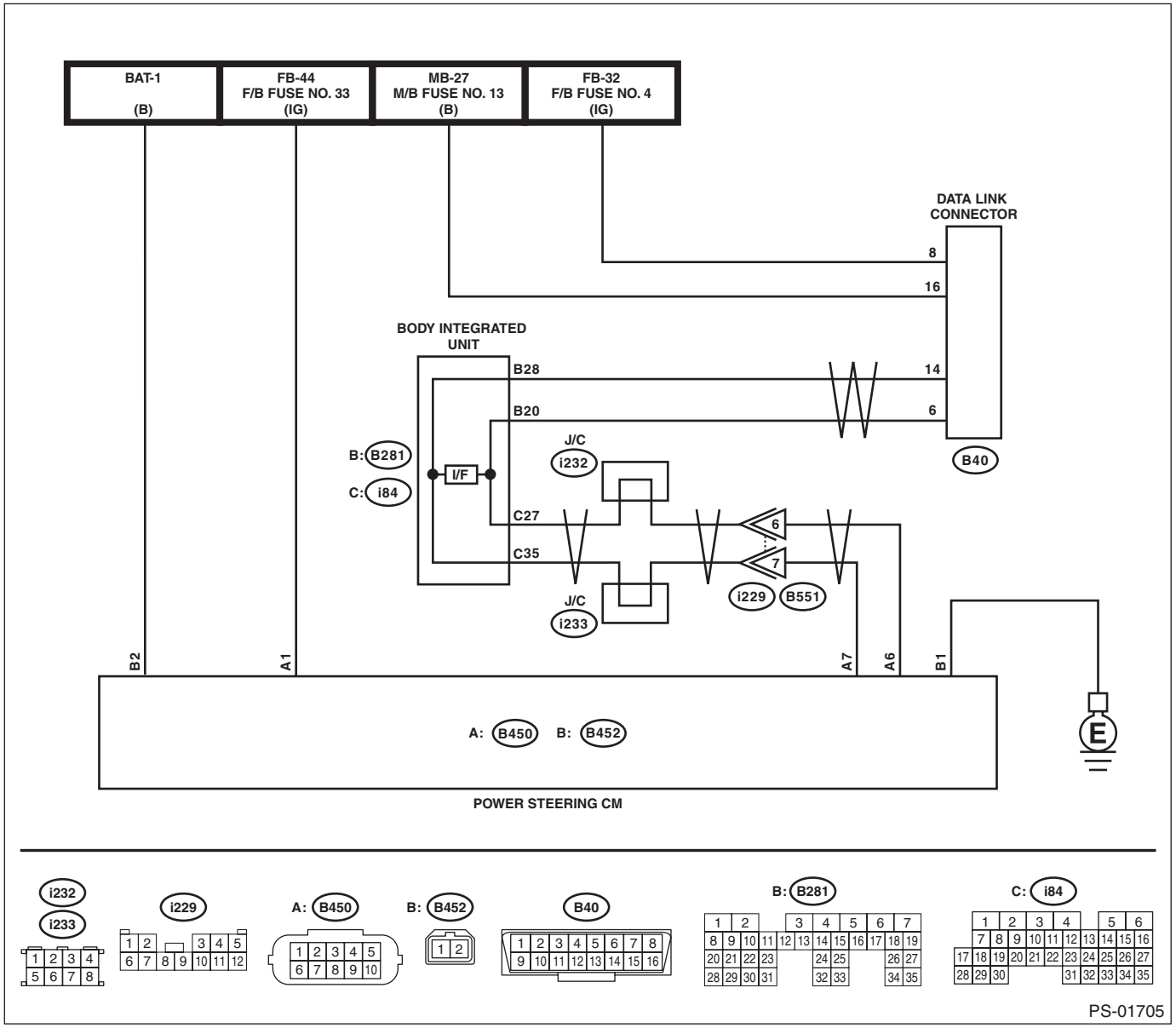

	Step	Check	Yes	No
1	**CHECK BATTERY.** Check the battery. <Ref. to SC(w/o STI)-51, INSPECTION, Battery.> <Ref. to SC(STI)-24, INSPECTION, Battery.>	Is the check result OK?	Go to step **2**.	Charge or replace the battery.
2	**CHECK BATTERY TERMINALS AND FUSE.** Check the battery terminals and the fuse.	Is the check result OK?	Go to step **3**.	Repair or replace faulty parts.
3	**CHECK WIRING HARNESS.** 1) Disconnect the connector of the power steering control module. 2) Turn the ignition switch to ON. 3) Using a tester and test harness, check the voltage between terminals. ***Connector & terminal*** ***(B452) No. 2 (+) — Chassis ground (–):***	Is the voltage 12 V or more?	Go to step **4**.	Repair the open circuit of harness or the poor contact of connector between the power steering control module and the battery.
4	**CHECK GROUND CIRCUIT.** 1) Turn the ignition switch to OFF. 2) Using a tester and test harness, check the resistance between terminals. ***Connector & terminal*** ***(B452) No. 1 — Chassis ground:***	Is the resistance less than 1 Ω?	Check for poor contact of terminals in the power steering control module, and if there are no malfunctions, replace the power steering control module. <Ref. to PS-100, Power Steering Control Module.>	Repair the open circuit or poor contact of the harness between the power steering control module and chassis ground.

R: DTC U0073 CONTROL MODULE COMMUNICATION BUS OFF

NOTE:
Refer to “LAN SYSTEM (DIAGNOSTICS)” for diagnostic procedure. <Ref. to LAN(diag)-2, Basic Diagnostic Procedure.>

S: DTC U0100 LOST COMMUNICATION WITH ECM/PCM “A”

NOTE:
Refer to “LAN SYSTEM (DIAGNOSTICS)” for diagnostic procedure. <Ref. to LAN(diag)-2, Basic Diagnostic Procedure.>

T: DTC U0122 LOST COMMUNICATION WITH VEHICLE DYNAMICS CONTROL MODULE

NOTE:
Refer to “LAN SYSTEM (DIAGNOSTICS)” for diagnostic procedures. <Ref. to LAN(diag)-2, Basic Diagnostic Procedure.>

U: DTC U0126 LOST COMMUNICATION WITH STEERING ANGLE SENSOR MODULE

NOTE:
Refer to “LAN SYSTEM (DIAGNOSTICS)” for diagnostic procedure. <Ref. to LAN(diag)-2, Basic Diagnostic Procedure.>

V: DTC U0155 LOST COMMUNICATION WITH INSTRUMENT PANEL CLUSTER (IPC) CONTROL MODULE

NOTE:
Refer to “LAN SYSTEM (DIAGNOSTICS)” for diagnostic procedure. <Ref. to LAN(diag)-2, Basic Diagnostic Procedure.>

W: DTC U0401 INVALID DATA RECEIVED FROM ECM/PCM “A”

NOTE:
Refer to “LAN SYSTEM (DIAGNOSTICS)” for diagnostic procedure. <Ref. to LAN(diag)-2, Basic Diagnostic Procedure.>

X: DTC U0416 INVALID DATA RECEIVED FROM VEHICLE DYNAMICS CONTROL MODULE

NOTE:
Refer to “LAN SYSTEM (DIAGNOSTICS)” for diagnostic procedures. <Ref. to LAN(diag)-2, Basic Diagnostic Procedure.>

Y: DTC U1235 LOST COMMUNICATION WITH EyeSight

NOTE:
Refer to “LAN SYSTEM (DIAGNOSTICS)” for diagnostic procedure. <Ref. to LAN(diag)-2, Basic Diagnostic Procedure.>

Z: DTC U1433 INVALID DATA RECEIVED FROM EyeSight

NOTE:
Refer to “LAN SYSTEM (DIAGNOSTICS)” for diagnostic procedure. <Ref. to LAN(diag)-2, Basic Diagnostic Procedure.>

BODY SECTION

This service manual has been prepared to provide SUBARU service personnel with the necessary information and data for the correct maintenance and repair of SUBARU vehicles.
This manual includes the procedures for maintenance, disassembling, reassembling, inspection and adjustment of components and diagnostics for guidance of experienced mechanics.
Please peruse and utilize this manual fully to ensure complete repair work for satisfying our customers by keeping their vehicle in optimum condition. When replacement of parts during repair work is needed, be sure to use SUBARU genuine parts.

All information, illustration and specifications contained in this manual are based on the latest product information available at the time of publication approval.

HVAC SYSTEM (HEATER, VENTILATOR AND A/C)	AC
HVAC SYSTEM (AUTO A/C) (DIAGNOSTICS)	AC(diag)
AIRBAG SYSTEM	AB
AIRBAG SYSTEM (DIAGNOSTICS)	AB(diag)
OCCUPANT DETECTION SYSTEM (DIAGNOSTICS)	OD(diag)
SEAT BELT SYSTEM	SB
LIGHTING SYSTEM	LI
AUTO HEADLIGHT BEAM LEVELER SYSTEM (DIAGNOSTICS)	AL(diag)
WIPER AND WASHER SYSTEMS	WW
ENTERTAINMENT	ET
COMMUNICATION SYSTEM	COM
GLASS/WINDOWS/MIRRORS	GW
BODY STRUCTURE	BS
INSTRUMENTATION/DRIVER INFO	IDI
INSTRUMENTATION/DRIVER INFO (DIAGNOSTICS)	IDI(diag)
SEATS	SE
SECURITY AND LOCKS	SL

BODY SECTION

SUNROOF/T-TOP/CONVERTIBLE TOP (SUNROOF)	SR
EXTERIOR/INTERIOR TRIM	EI
EXTERIOR BODY PANELS	EB
CRUISE CONTROL SYSTEM	CC
CRUISE CONTROL SYSTEM (DIAGNOSTICS)	CC(diag)
IMMOBILIZER (DIAGNOSTICS)	IM(diag)
LAN SYSTEM (DIAGNOSTICS)	LAN(diag)
EyeSight	ES
EyeSight (DIAGNOSTICS)	ES(diag)
Blind Spot Detection/Rear Cross Traffic Alert	RVD
Blind Spot Detection/Rear Cross Traffic Alert (DIAGNOSTICS)	RVD(diag)
Reverse Automatic Braking	RAB
Reverse Automatic Braking (DIAGNOSTICS)	RAB(diag)
KEYLESS ACCESS WITH PUSH BUTTON START SYSTEM (DIAGNOSTICS)	KPS(diag)
BODY CONTROL SYSTEM (DIAGNOSTICS)	BC(diag)
TELEMATICS SYSTEM (DIAGNOSTICS)	TEL(diag)

HVAC SYSTEM (HEATER, VENTILATOR AND A/C)

AC

		Page
1.	General Description	2
2.	Air Conditioning System	21
3.	Refrigerant Pressure with Manifold Gauge Set	22
4.	Refrigerant Recovery Procedure	26
5.	Refrigerant Charging Procedure	27
6.	Refrigerant Leak Check	30
7.	Relay and Fuse	32
8.	Compressor Oil	34
9.	Blower Motor Unit Assembly	35
10.	Blower Motor	37
11.	Power Transistor (Auto A/C Model)	38
12.	Heater Core	40
13.	Control Panel	43
14.	Compressor	45
15.	Condenser	50
16.	Heater and Cooling Unit	54
17.	Evaporator	57
18.	Expansion Valve	61
19.	Hose and Pipe	63
20.	Pressure Switch (Triple Pressure Switch)	70
21.	Ambient Sensor	71
22.	Sunload Sensor (Auto A/C Model)	74
23.	In-Vehicle Sensor (Auto A/C Model)	76
24.	Evaporator Sensor	80
25.	FRESH/RECIRC Door Actuator	84
26.	Mode Door Actuator	86
27.	Air Mix Door Actuator	88
28.	Air Vent Grille	91
29.	Heater Duct	94
30.	Heater Vent Duct	95
31.	A/C Filter	96
32.	Diagnostics with Phenomenon	97

1. General Description

A: SPECIFICATION

1. HEATER SYSTEM

Item	Specifications		Condition
Heating capacity	5 kW (4,299 kcal/h, 17,059 BTU/h) or more		• Air flow control dial or switch: FOOT • Temperature control dial: HI (MAX HOT) • Temperature difference between hot water and inlet air: 65°C (149°F) • Hot water flow rate: 360 L (95.1 US gal, 79.2 Imp gal)/h
Air flow rate	290 m^3 (10,243 cu ft)/h		FOOT mode (FRESH), MAX HOT at 12.5 V
Max air flow rate	480 m^3 (16,954 cu ft)/h		• Temperature control dial: LO (MAX COOL) • Fan dial: HI (MAX): 7th position • FRESH/RECIRC switch: RECIRC
Heater core	Size (W × H × T)	257.5 × 118.5 × 27 mm (10.1 × 4.67 × 1.06 in)	—
Blower motor	Type	Magnet motor 300 W or less	12 V
	Fan type	Sirocco fan type	—
	Size (diameter × width)	150 × 75 mm (5.91 × 2.95 in)	—

2. A/C SYSTEM

Item		Specifications
Type of air conditioner		Reheat air-mix type
Cooling capacity		5 kW (4,299 kcal/h, 17,059 BTU/h)
Refrigerant		HFC-134a (CH_2FCF_3) [0.475±0.025 kg (1.05±0.06 lb)]
Compressor	Type	Rotary fixed capacity
	Type	Except for STI model: DKV-10Z STI model: DKV-10R
	Discharge	105 cc (6.41 cu in)/rev
	Max. permissible speed	7,700 r/min
Magnet clutch	Type	Dry, single-disc type
	Power consumption	Except for STI model: 45 W STI model: 38.8 W
	Type of belt	Except for STI model: V-belt 6 PK STI model: V-belt 4 PK
	Pulley dia. (effective dia.)	Except for STI model: 110 mm (4.33 in) STI model: 100 mm (3.94 in)
	Pulley ratio	Except for STI model: 1.3 STI model: 1.32
Condenser	Type	Sub cool type
	Core face area	0.188 m^2 (2.002 sq ft)
	Core thickness	16 mm (0.63 in)
	Radiation area	4.5 m^2 (48.44 sq ft)
Expansion valve	Type	Block
Evaporator	Type	Dual-tank
	Size (W × H × T)	290.1 × 172 × 39 mm (11.42 × 6.77 × 1.54 in)
Blower fan	Fan type	Sirocco fan
	Outer diameter × Width	150 × 75 mm (5.91 × 2.95 in)
	Power consumption	280 W

Item			Specifications
Condenser fan (sub fan)		Motor type	Magnet
		Power consumption	Except for STI model: 120 W STI model: 160 W
		Fan outer diameter	320 mm (12.6 in)
Radiator fan (main fan)		Motor type	Magnet
		Power consumption	Except for STI model: 120 W STI model: 160 W
		Fan outer diameter	320 mm (12.6 in)
Idle speed		No load	700±100 r/min
		A/C ON	Except for STI model: 700 — 865±50 r/min STI model: 750±100 r/min
Triple switch (Pressure switch)	Low-pressure switch operating pressure	ON → OFF	196±25 kPa (2±0.25 kgf/cm^2, 28.4±3.6 psi)
		OFF → ON	225±30 kPa (2.29±0.31 kgf/cm^2, 32.6±4.3 psi)
	High-pressure switch operating pressure	ON → OFF	2,940±200 kPa (29.98±2.04 kgf/cm^2, 426.3±29 psi)
		OFF → ON	2,350±200 kPa (24±2.04 kgf/cm^2, 340.7±29 psi)
	Middle-pressure switch operating pressure	ON → OFF	1,470±120 kPa (14.99±1.22 kgf/cm^2, 213.15±17.4 psi)
		OFF → ON	1,770±100 kPa (18.05±1.02 kgf/cm^2, 256.65±14.5 psi)
Thermo-control amplifier working temperature			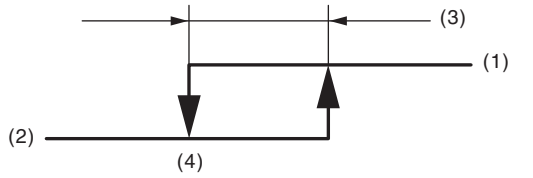 AC-00601 (1) ON (2) OFF (3) 1.5±0.3°C (34.7±0.5°F) (4) 1±0.5°C (33.8±0.9°F)

3. BASIC OPERATION

The cooling system cools down the compartment by using the pipes connecting parts and cycling the evaporable liquid (refrigerant) within the sealed system in a repeated process of “vaporization — liquefaction — re-vaporization”.

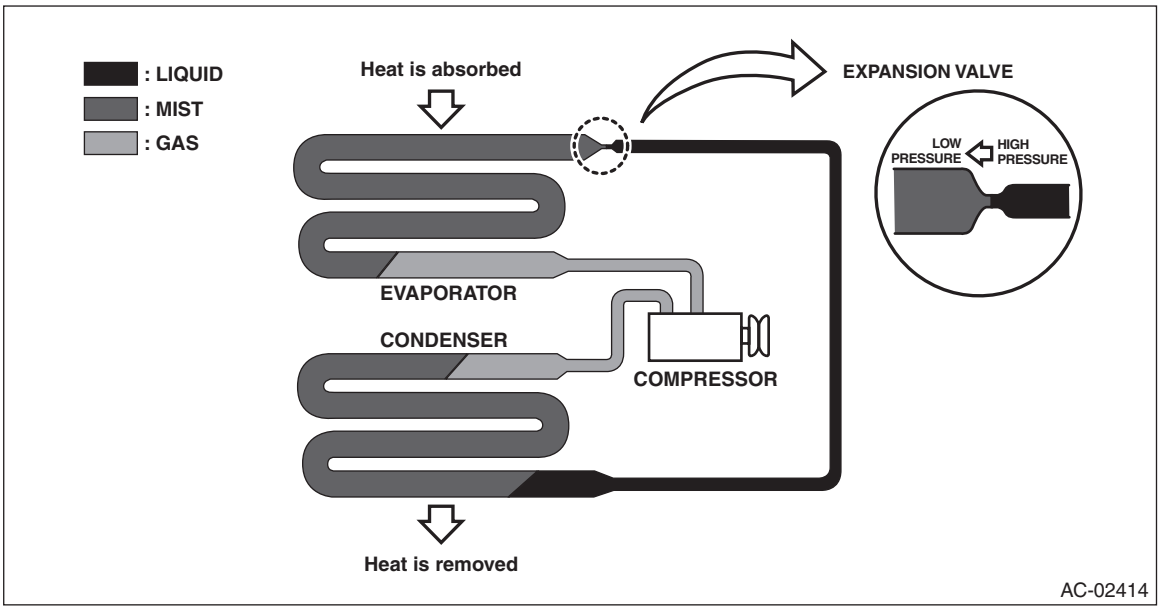

Item	Operation
Compressor	Sucks and pressurizes the low temperature, low pressure refrigerant gas that was vaporized at the evaporator by absorbing heat from the compartment, and sends the high temperature, high pressure refrigerant gas to the condenser.
Condenser	Cools the high temperature, high pressure refrigerant gas sent from the compressor for condense and liquefaction.
Expansion valve	• Sprays the high temperature, high pressure liquid refrigerant from the small hole in order to let the refrigerant expand rapidly to turn it into low temperature, low pressure mist. • The refrigerant amount is adjusted according to the refrigerant vaporization condition in the evaporator.
Evaporator	The evaporator turns into a low temperature condition when the mist refrigerant that was turned into a low temperature, low pressure condition at the expansion valve is vaporized in large quantity in the evaporator. Passing air flow through the low temperature evaporator emits cold air.

B: LOCATION

Refer to “Electrical Component Location” for “HVAC SYSTEM (AUTO A/C) (DIAGNOSTICS)” section. <Ref. to AC(diag)-4, Electrical Component Location.>

C: COMPONENT

1. HEATER AND COOLING UNIT

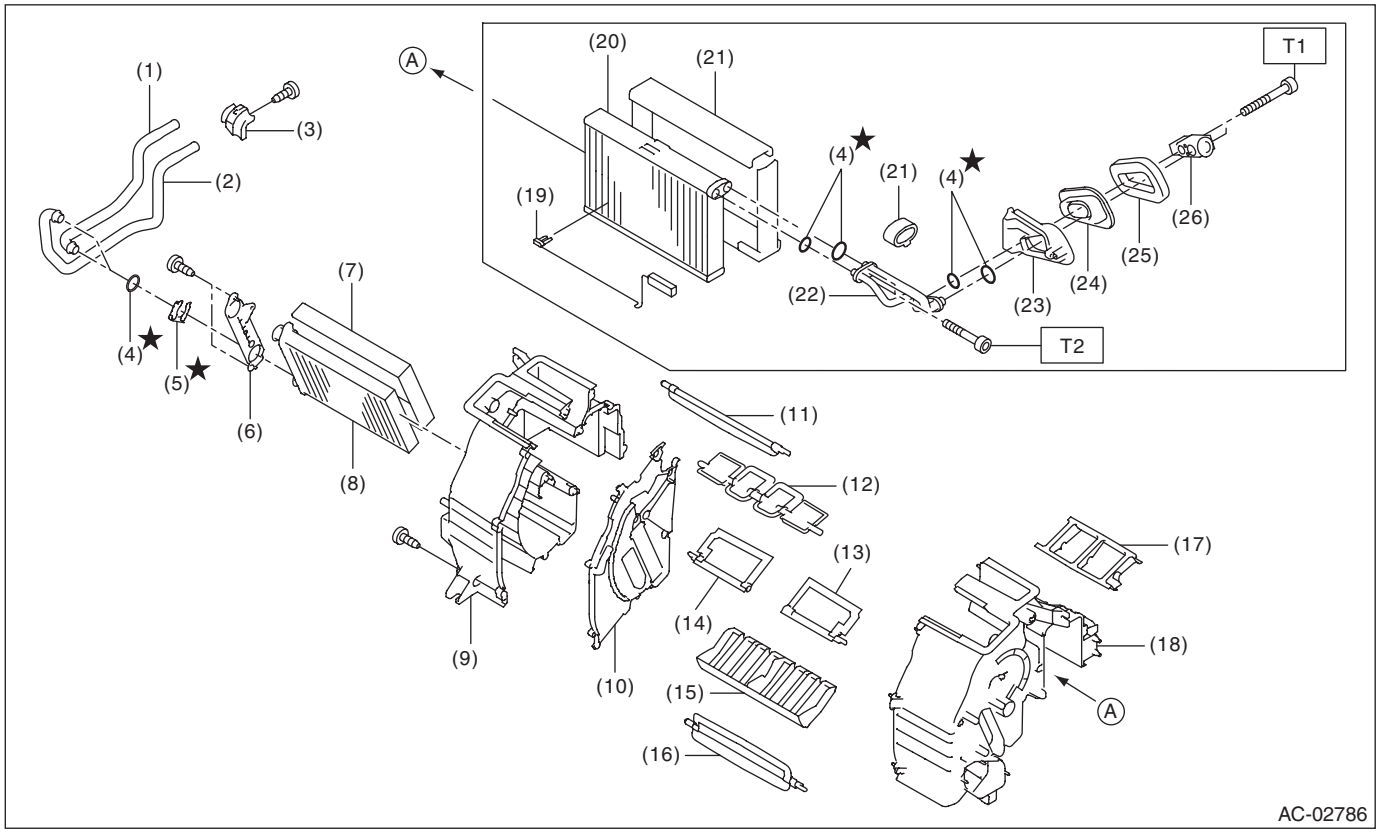

(1) Pipe - inlet
(2) Pipe - outlet
(3) Clamp - pipe
(4) Seal O-ring
(5) Clamp
(6) Plate - heater core
(7) Packing - heater core
(8) Heater core
(9) Case - heater unit UPR LH
(10) Plate CTR
(11) Shutter - defroster
(12) Shutter - vent
(13) Shutter - air mix RH
(14) Shutter - air mix LH
(15) Guide - heater unit
(16) Shutter - foot
(17) Case - vent duct
(18) Case - heater unit UPR RH
(19) Thermostat - cooling
(20) Evaporator ASSY - cooling
(21) Packing - evaporator core
(22) Pipe - evaporator core
(23) Case - expansion valve
(24) Seal - cooling
(25) Packing - heater unit
(26) Expansion valve - cooling

Tightening torque: N·m (kgf-m, ft-lb)
T1: 5 (0.5, 3.7)
T2: 6.7 (0.7, 4.9)

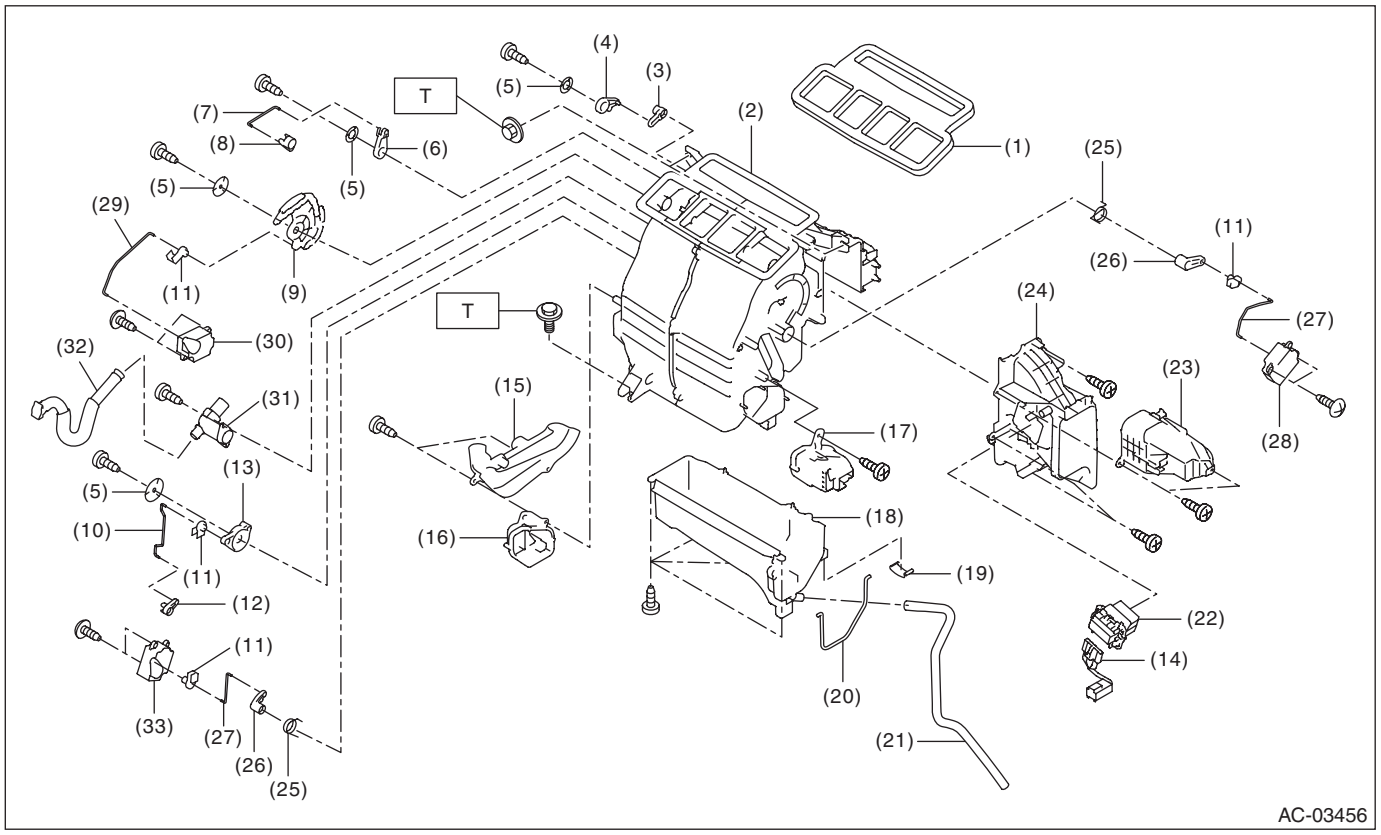

(1) Packing - heater unit
(2) Case - heater unit
(3) Lever - defroster
(4) Lever - defroster sub
(5) Washer - heater
(6) Lever - ventilator sub
(7) Rod - ventilator
(8) Lever - ventilator door
(9) Lever - mode
(10) Rod - foot
(11) Clip
(12) Lever - foot
(13) Lever - foot sub
(14) Harness - heater unit
(15) Cover - heater pipe
(16) Duct - foot LH
(17) Duct - foot RH
(18) Case - heater LWR
(19) Clip - case
(20) Packing - evaporator cover
(21) Hose - drain
(22) Power transistor
(23) Cover
(24) Cover - heater unit
(25) Spring - heater unit
(26) Lever - air mix
(27) Rod - air mix
(28) Motor - actuator mix RH
(29) Rod - mode
(30) Motor - actuator mode
(31) Aspirator - heater unit
(32) Aspirator hose
(33) Motor - actuator mix LH (dual A/C model)

Tightening torque: N·m (kgf-m, ft-lb)
T: 7.5 (0.8, 5.5)

2. BLOWER MOTOR UNIT

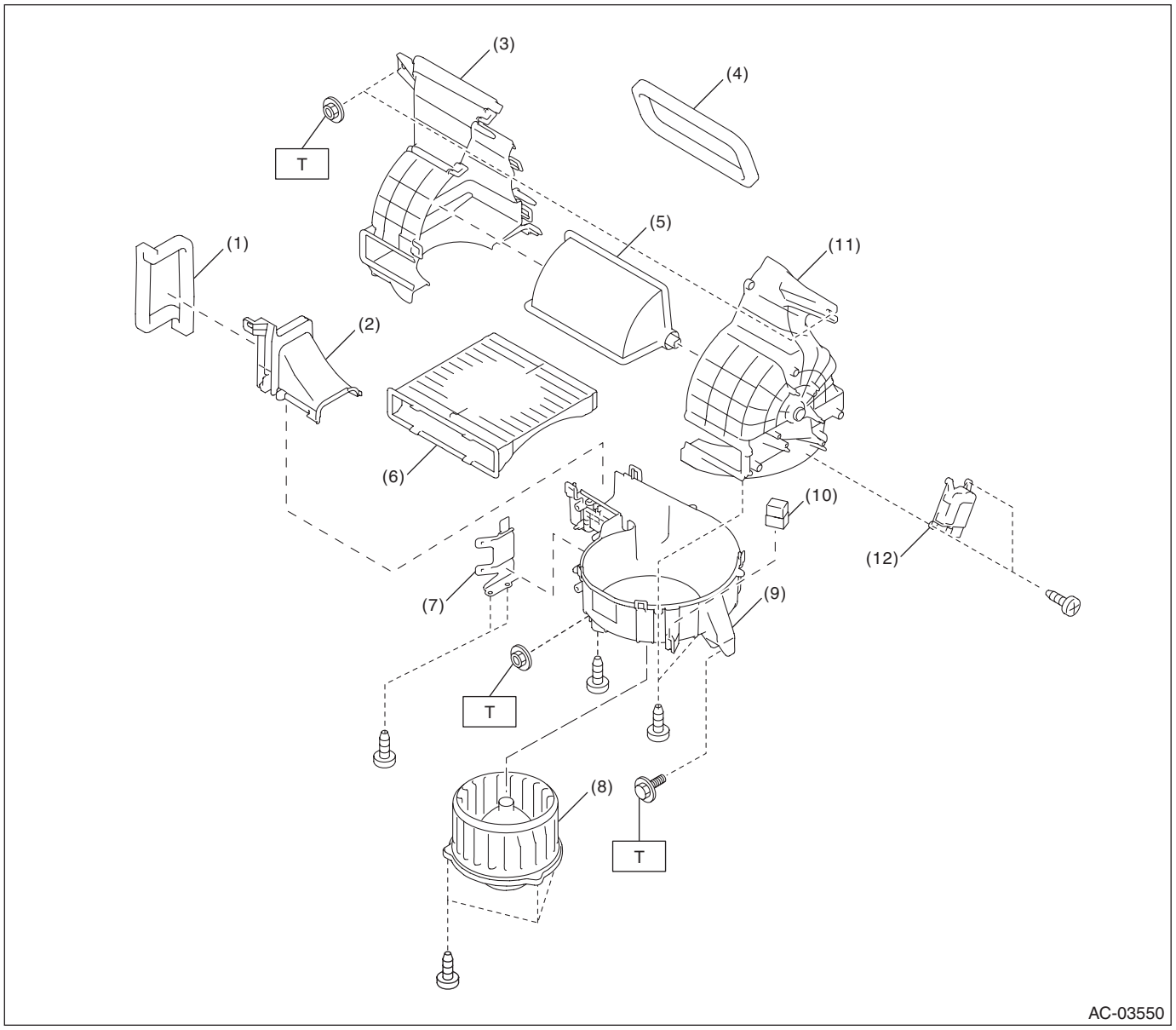

(1) Packing
(2) Case upper - blower
(3) Case - blower intake LH
(4) Packing - blower
(5) Shutter - blower
(6) Filter kit
(7) Bracket
(8) Blower - motor
(9) Case lower - blower
(10) Blower motor relay
(11) Case - blower intake RH
(12) Motor - actuator blower

Tightening torque: N·m (kgf-m, ft-lb)
T: 7.5 (0.8, 5.5)

3. CONTROL PANEL

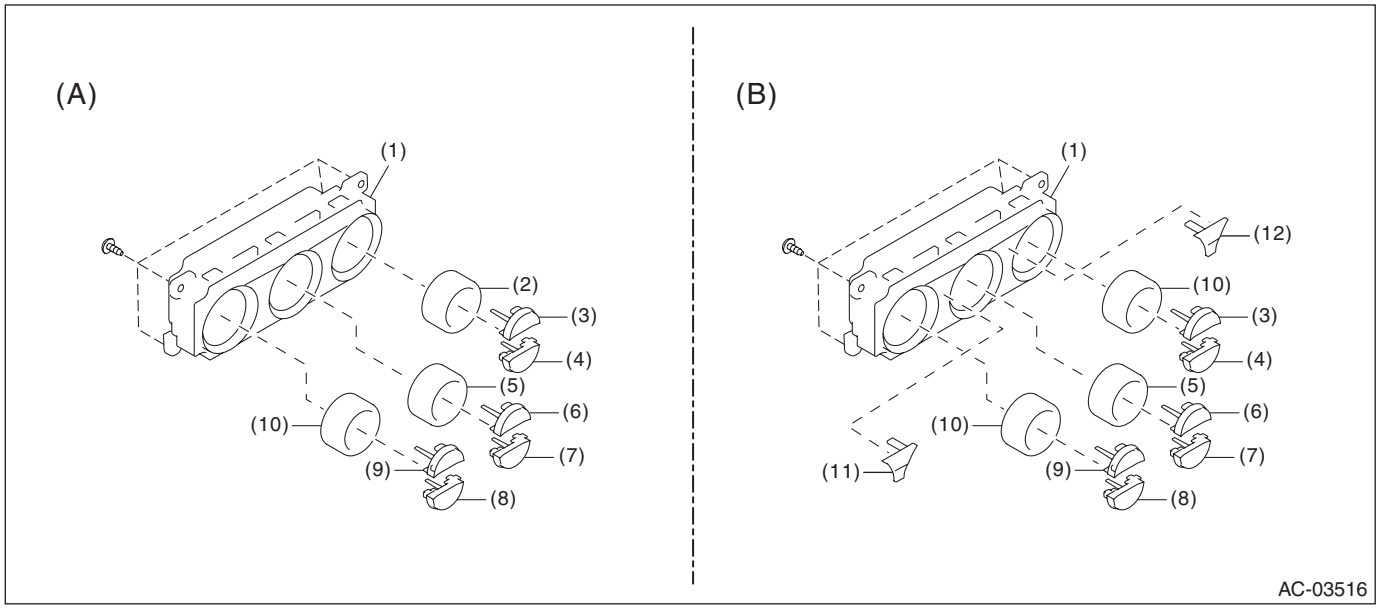

(A) Single A/C model
(B) Dual A/C model

(1) Control case
(2) Air flow control dial
(3) Defroster switch
(4) Rear window defogger switch
(5) Fan dial
(6) A/C switch
(7) FRESH/RECIRC switch
(8) OFF switch
(9) AUTO switch
(10) Temperature adjustment dial
(11) Air flow control switch
(12) Dual switch

4. AIR CONDITIONING UNIT

- Except for STI model

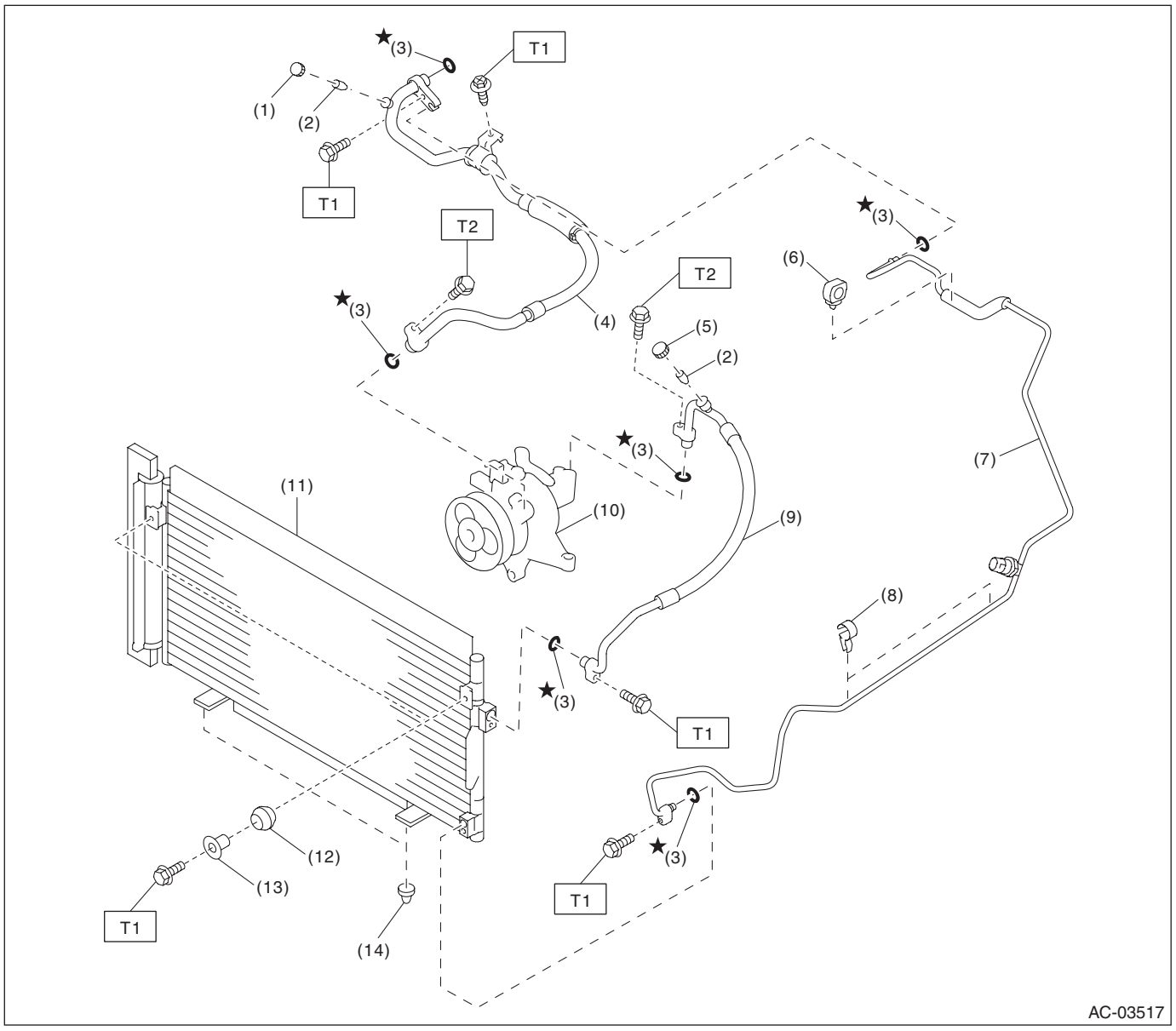

(1)	Cap - hose pressure suction	(7)	Pipe - evaporator cooling	(13)	Spacer
(2)	Valve - hose pressure	(8)	Clip - pipe	(14)	Bushing - condenser
(3)	Seal O-ring	(9)	Hose - pressure discharge		
(4)	Hose - pressure suction	(10)	Compressor ASSY	***Tightening torque: N·m (kgf-m, ft-lb)***	
(5)	Cap - hose pressure discharge	(11)	Condenser ASSY - air conditioner	***T1:***	***7.5 (0.8, 5.5)***
(6)	Clip	(12)	Grommet	***T2:***	***10 (1, 7.4)***

- STI model

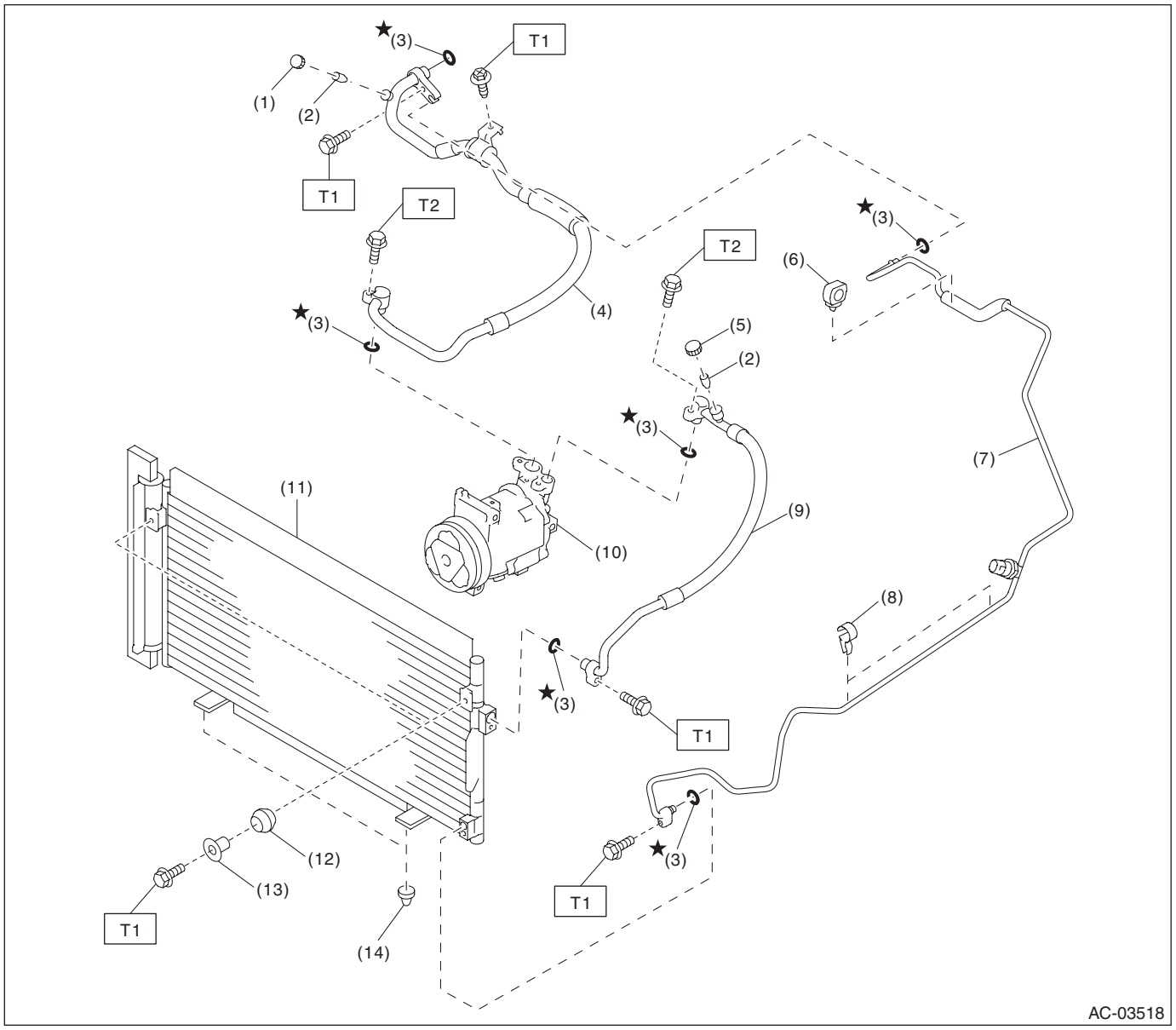

(1) Cap - hose pressure suction
(2) Valve - hose pressure
(3) Seal O-ring
(4) Hose - pressure suction
(5) Cap - hose pressure discharge
(6) Clip
(7) Pipe - evaporator cooling
(8) Clip - pipe
(9) Hose - pressure discharge
(10) Compressor ASSY
(11) Condenser ASSY - air conditioner
(12) Grommet
(13) Spacer
(14) Bushing - condenser

Tightening torque: N·m (kgf-m, ft-lb)
T1: 7.5 (0.8, 5.5)
T2: 10 (1, 7.4)

5. HEATER HOSE

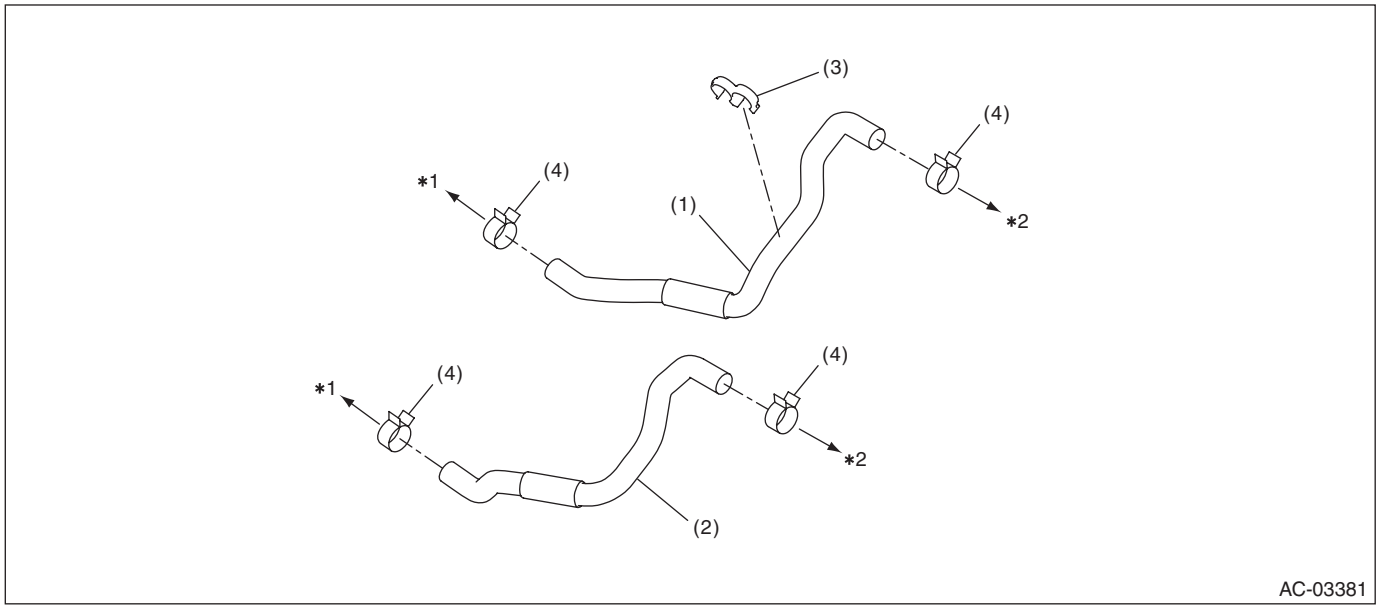

(1) Hose - heater outlet
(2) Hose - heater inlet
(3) Clip
(4) Clamp

*1: Engine side
*2: Heater core side

6. COMPRESSOR

- Except for STI model

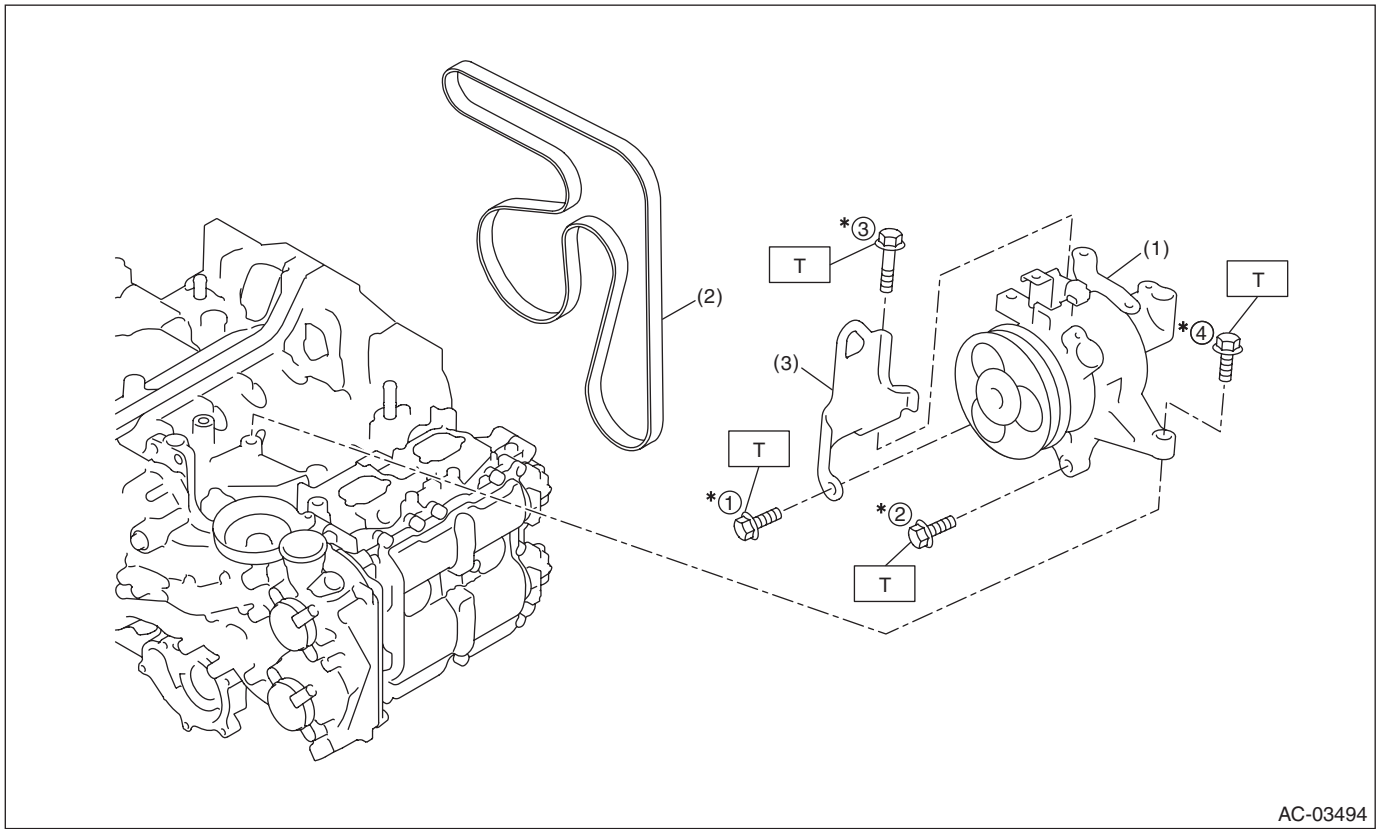

(1) Compressor ASSY
(2) V-belt (6 PK)
(3) Hanger - engine front

Tightening torque: N·m (kgf-m, ft-lb)
T: 36 (3.7, 26.6)

* Tighten the compressor in the numerical order as shown in the figure.

- STI model

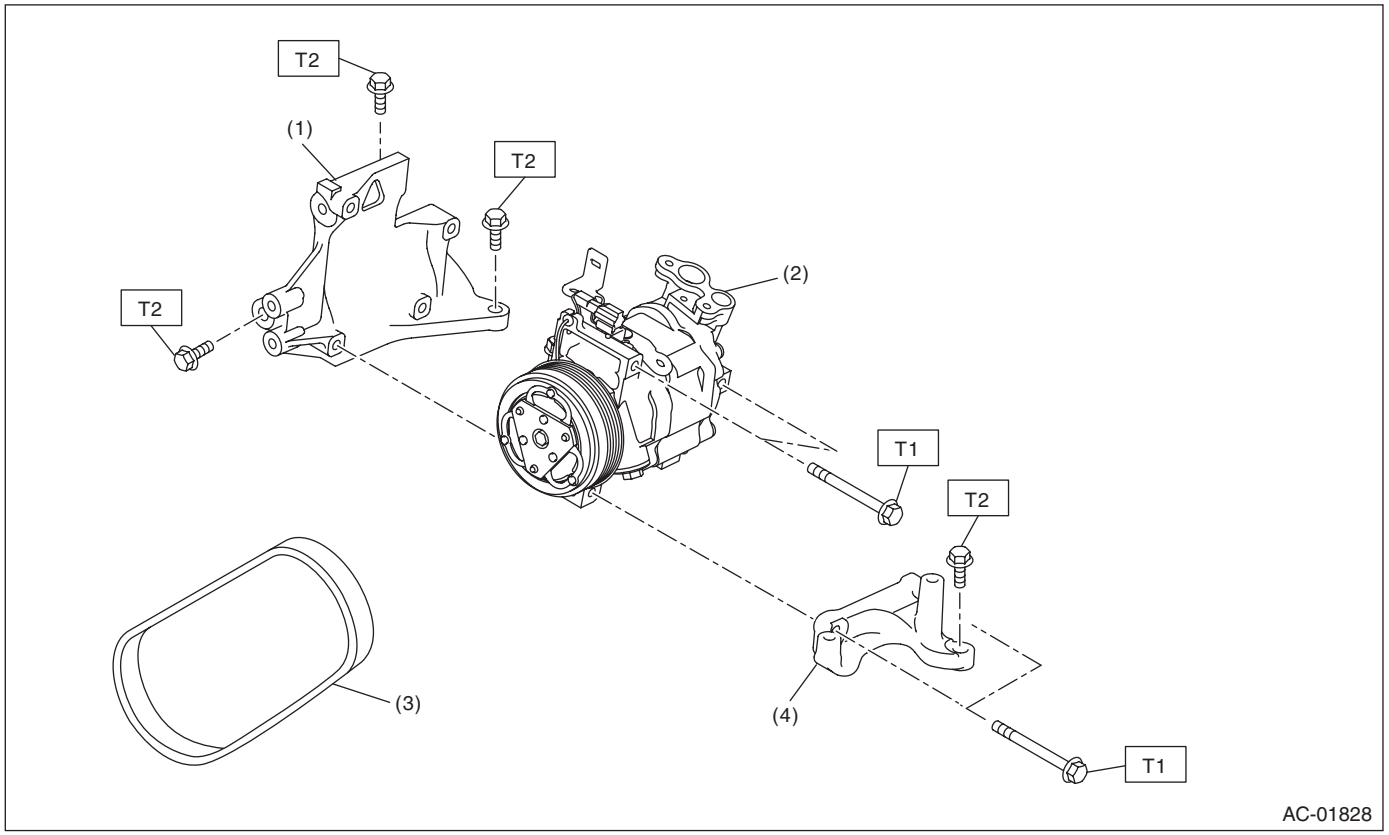

(1) Bracket ASSY - compressor
(2) Compressor ASSY
(3) V-belt
(4) Bracket - air conditioner

Tightening torque: N·m (kgf-m, ft-lb)
T1: 26.5 (2.7, 19.5)
T2: 36 (3.7, 26.6)

7. HEATER DUCT

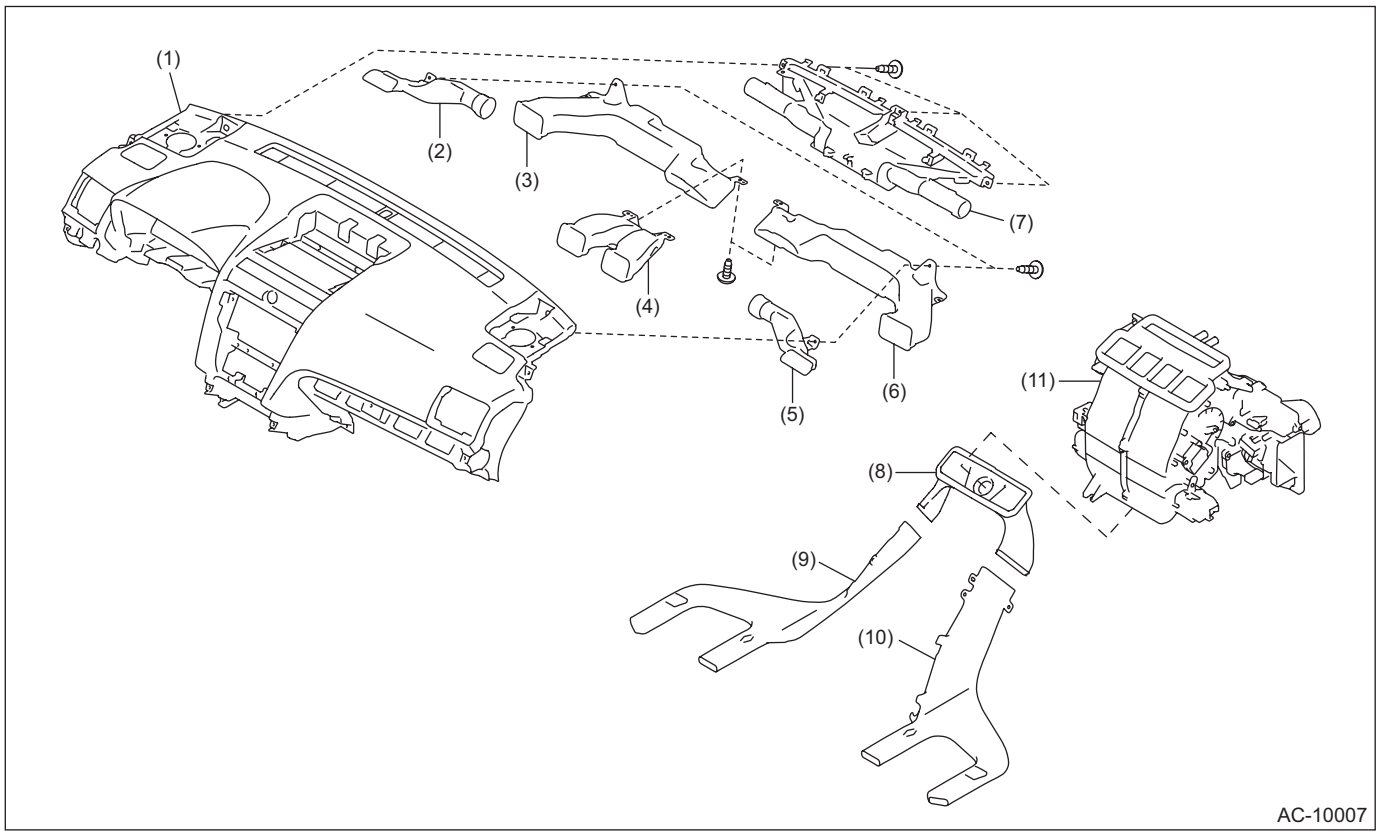

(1) Panel COMPL - instrument
(2) Duct - side defroster LH
(3) Duct - side ventilation LH
(4) Duct - center vent
(5) Duct - side defroster RH
(6) Duct - side ventilation RH
(7) Nozzle - front defroster
(8) Duct - rear heater CTR
(9) Duct - rear heater LH
(10) Duct - rear heater RH
(11) Heater and cooling unit ASSY

D: CAUTION

Before disconnecting connectors of sensors or units, be sure to disconnect the ground cable from battery. When replacing the audio and MFD parts provided with memory functions, record the memory contents before disconnecting the battery ground cable.

1. HFC-134A A/C SYSTEM

- The cooling system components for the HFC-134a system using such as the refrigerant and compressor oil are different from the conventional CFC-12 system components and they are incompatible with each other.
- Vehicles with the HFC-134a system can be identified by the label (A) attached to the vehicle.

Before maintenance, check A/C system which is installed to the vehicle.

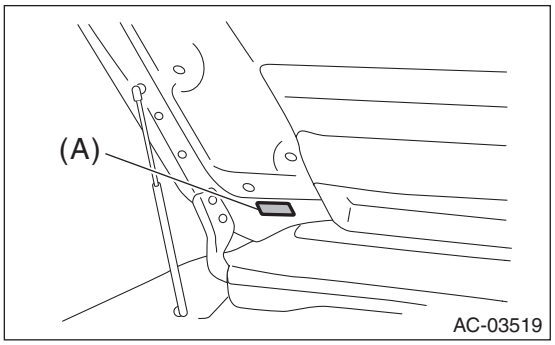

2. COMPRESSOR OIL

- HFC-134a compressor oil has no compatibility with that of CFC-12 system.
- Use only the manufacturer-authorized compressor oil for the HFC-134a system; only use DH-PR (ZXL200PG).
- Do not mix multiple compressor oils.

If CFC-12 compressor oil is used in the HFC-134a A/C system, the compressor may become stuck due to poor lubrication, or the refrigerant may leak due to swelling of rubber parts.
On the other hand, if HFC-134a compressor oil is used in a CFC-12 A/C system, the durability of the A/C system will be lowered.

- HFC-134a compressor oil is very hygroscopic. When replacing or installing/removing A/C parts, immediately isolate the oil from atmosphere using a plug or tape. In order to avoid moisture, store the oil in a container with its cap tightly closed.

3. REFRIGERANT

- CFC-12 refrigerant cannot be used in a HFC-134a A/C system. HFC-134a refrigerant, also cannot be used in a CFC-12 A/C system.
- If an incorrect or no refrigerant is used, it will result in poor lubrication and the compressor itself may be damaged.

4. HANDLING OF REFRIGERANT

• The refrigerant boils at approx. –30°C (–22°F). When handling it, be sure to wear protective goggles and protective gloves. Direct contact of the refrigerant with skin may cause frostbite.
If the refrigerant gets into your eye, avoid rubbing your eyes with your hands. Wash your eye with plenty of water, and receive medical treatment from an eye doctor.
• Do not heat a service can. If a service can is directly heated, or put into boiling water, the inside pressure will become extremely high. This may cause the can to explode. If a service can must be warmed up, use warm water of 40°C (104°F) or less.
• Do not drop or impact a service can. (Observe the precautions and operation procedure described on the refrigerant can.)
• When the engine is running, do not open the high-pressure valve of manifold gauge. The high-pressure gas will back-flow resulting in an explosion of the can.
• Provide good ventilation and do not work in a closed area.
• In order to prevent global warming, avoid releasing HFC-134a into the atmosphere. Using a refrigerant recovery system, discharge and recycle the gas.

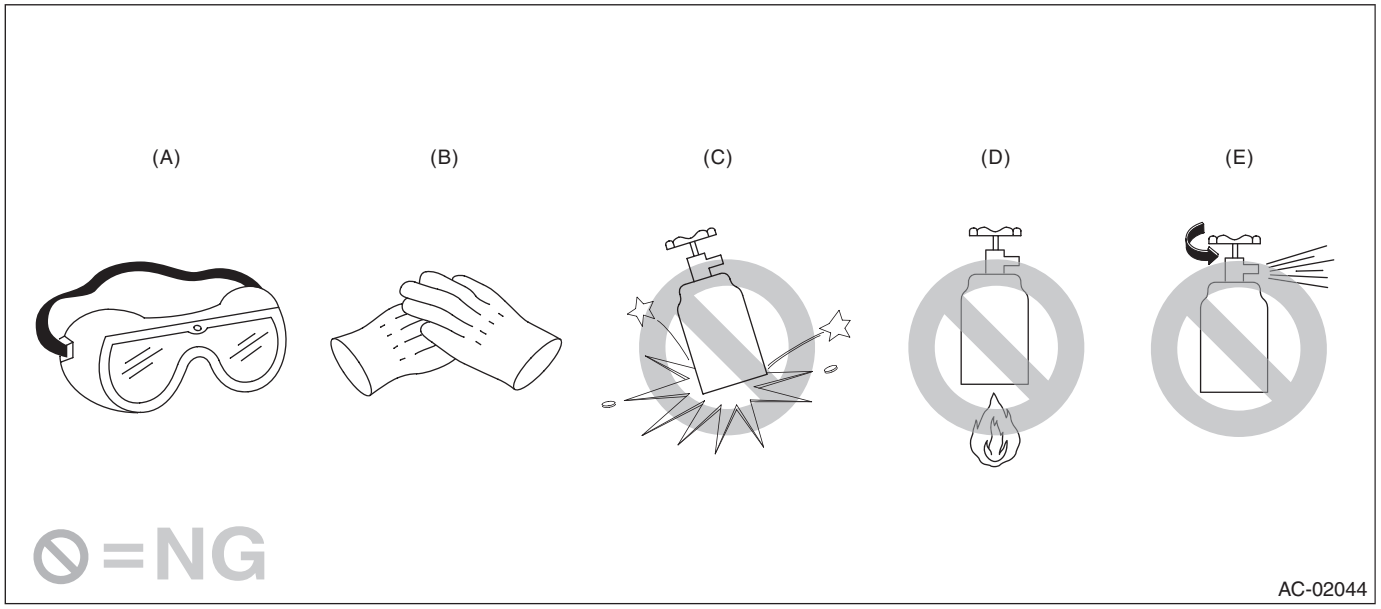

(A) Goggles
(B) Gloves
(C) Do not apply impact.
(D) No direct heat on container
(E) Do not discharge

5. O-RING CONNECTIONS

• Always use a new O-ring.
• In order to keep the O-rings free of lint which will cause a refrigerant gas leak, perform work without using gloves or waste cloths.
• Apply compressor oil to O-rings to avoid sticking, before installation.
• Use a torque wrench to tighten the O-ring fittings. Over-tightening will result in damage of the O-ring and deformation of the pipe end.
• If the work is interrupted before completing pipe connections, recap the pipes, components and fittings with a plug or tape to prevent foreign matter from entering.
• Visually check the surfaces and mating surfaces of O-rings, threads and connecting points. If a failure is found, replace the applicable parts.

- Install the O-rings straight against the pipe groove.

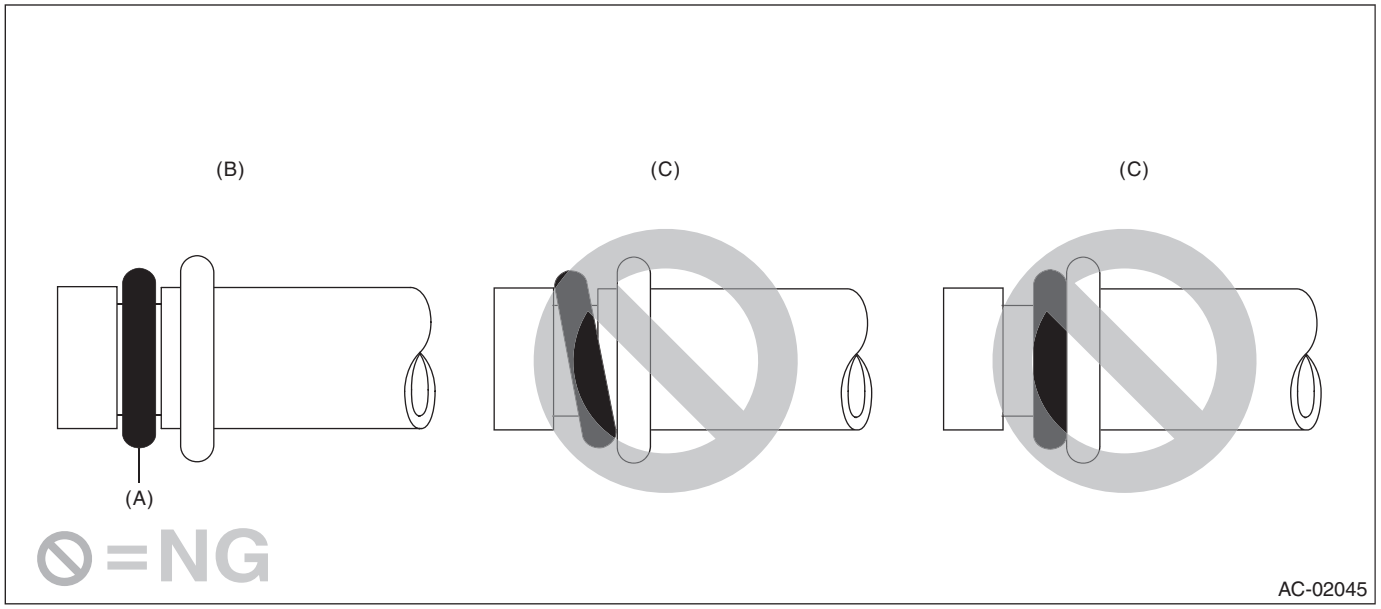

(A) O-ring (B) OK (C) NG

- Use compressor oil specified in the service manual to lubricate the O-rings.

Apply oil to the top and sides of O-rings before installation.
Apply compressor oil to the pipe grooves.

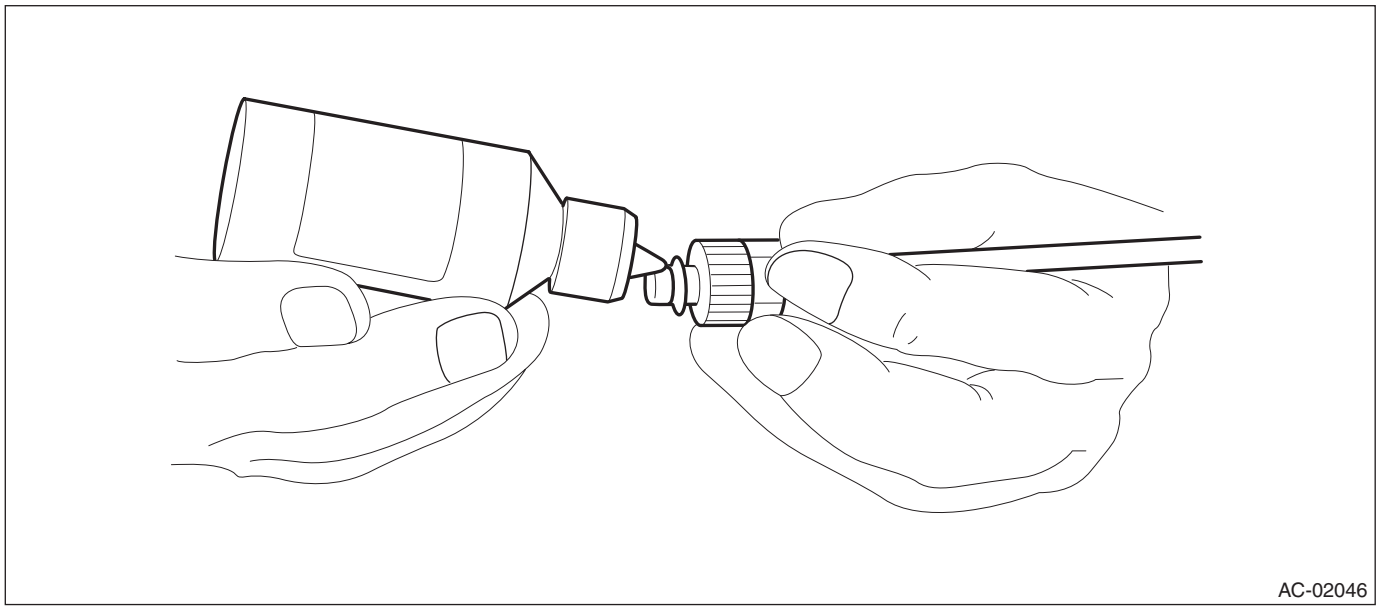

- After tightening, use a clean cloth to remove excess compressor oil from the connections and any oil which may have run on the vehicle body or other parts.
- If any leakage is suspected after tightening, do not tighten the connections further, but disconnect the connections, remove the O-rings, and check the O-rings, threads, and connections.

E: PREPARATION TOOL

1. SPECIAL TOOL

ILLUSTRATION	TOOL NUMBER	DESCRIPTION	REMARKS
 STSSM4	—	SUBARU SELECT MONITOR 4	Used for setting of each function and trouble-shooting for electrical system. NOTE: For detailed operation procedures of Subaru Select Monitor 4, refer to “Application help”.

2. GENERAL TOOL

CAUTION:
When working on vehicles with a HFC-134a system, only use HFC-134a specified tools and parts. Do not mix CFC-12 tools and parts. If HFC-134a and CFC-12 refrigerant or compressor oil is mixed, it will result in poor lubrication and the compressor itself may be damaged.
In order to prevent the mixture of HFC-134a and CFC-12 parts and liquid, the type of tool and screw, and the replacement valves used are different. The gas leak detectors for the HFC-134a and CFC-12 systems must also not be interchanged.

	HFC-134a	CFC-12
Tool and screw type	Millimeter size	Inch size
Valve type	Quick joint type	Screw-in type

TOOL NAME/ILLUSTRATION	REMARKS
Circuit tester	Used for measuring resistance and voltage.
DST-i	Used together with Subaru Select Monitor 4.
Wrench 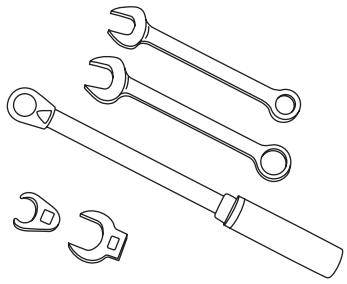 AC-00213	Various **WRENCHES** will be required to service any A/C system.7 — 40 N·m (0.7 to 4.1 kgf-m, 5 to 30 ft-lb) torque wrench and various crow-foot wrenches will be needed. Open end or flare nut wrenches will be needed to affix the pipe and hose fittings.
Applicator bottle 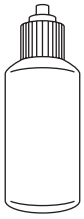 AC-00012	A small **APPLICATOR BOTTLE** is recommended to apply compressor oil to the various parts. It can be available at a hardware store.

TOOL NAME/ILLUSTRATION	REMARKS
Manifold gauge set 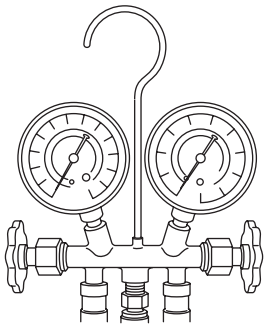 AC-00013	A **MANIFOLD GAUGE SET** (with hoses) is available at either a refrigerant supplier or an automotive equipment supplier.
Refrigerant recovery system 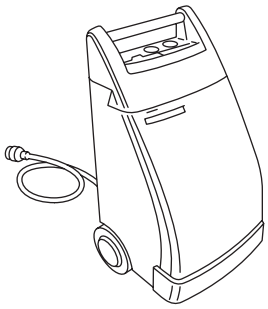 AC-00014	A **REFRIGERANT RECOVERY SYSTEM** is used for the recovery and recycling of A/C system refrigerant after contaminants and moisture have been removed from the refrigerant.
Syringe 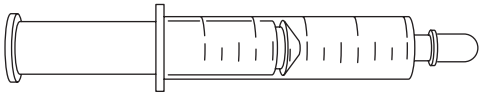 AC-00015	A graduated plastic **SYRINGE** will be needed to add oil into the system again. A syringe can be available at a pharmacy or drug store.
Vacuum pump 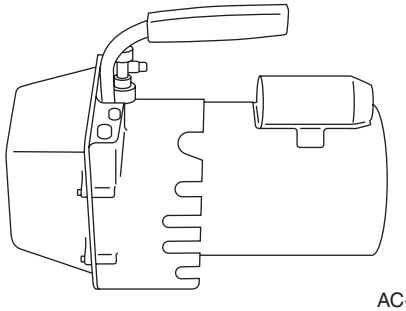 AC-00016	A **VACUUM PUMP** is necessary (for a good working condition), and may be available at either a refrigerant supplier or an automotive equipment supplier.

TOOL NAME/ILLUSTRATION	REMARKS
Can tap 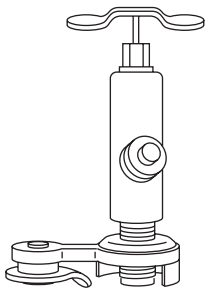 AC-00017	A **CAN TAP** for the 397 g (14 oz) can is available at an automotive equipment supplier.
Thermometer/hygrometer 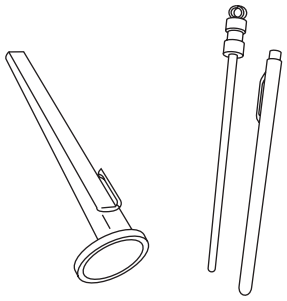 AC-00018	A Pocket **THERMOMETER/HYGROMETER** is available at either a industrial hardware store or a refrigerant supplier.
Electronic leak detector 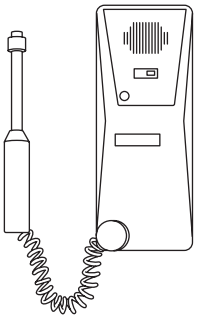 AC-00019	An **ELECTRONIC LEAK DETECTOR** can be available at either a specialty tool supplier or an A/C equipment supplier.
Weight scale 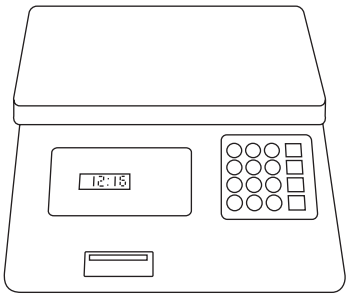 AC-00020	A **WEIGHT SCALE** such as an electronic charging scale or a bathroom scale with digital display will be needed, if a 13.6 kg (30 lb) refrigerant container is used.

2. Air Conditioning System

A: WIRING DIAGRAM

Refer to “Air Conditioning System” in the wiring diagram. <Ref. to WI-74, WIRING DIAGRAM, Air Conditioning System.>

B: ELECTRICAL SPECIFICATION

Refer to “Auto A/C Control Module I/O Signal” of “HVAC SYSTEM (AUTO A/C) (DIAGNOSTICS)” section. <Ref. to AC(diag)-6, ELECTRICAL SPECIFICATION, Auto A/C Control Module I/O Signal.>

C: INSPECTION

Refer to “Basic Diagnostic Procedure” for “HVAC SYSTEM (AUTO A/C) (DIAGNOSTICS)” section. <Ref. to AC(diag)-2, Basic Diagnostic Procedure.>

D: NOTE

For procedure of each component in the air conditioning system, refer to the respective section.

- Blower motor unit assembly: <Ref. to AC-35, Blower Motor Unit Assembly.>
- Blower motor: <Ref. to AC-37, Blower Motor.>
- Power transistor (auto A/C model): <Ref. to AC-38, Power Transistor (Auto A/C Model).>
- Control panel: <Ref. to AC-43, Control Panel.>
- Compressor: <Ref. to AC-45, Compressor.>
- Condenser: <Ref. to AC-50, Condenser.>
- Heater and cooling unit: <Ref. to AC-54, Heater and Cooling Unit.>
- Evaporator: <Ref. to AC-57, Evaporator.>
- Expansion valve: <Ref. to AC-61, Expansion Valve.>
- Hose & pipe: <Ref. to AC-63, Hose and Pipe.>
- Ambient sensor: <Ref. to AC-71, Ambient Sensor.>
- Sunload sensor (auto A/C model): <Ref. to AC-74, Sunload Sensor (Auto A/C Model).>
- In-vehicle sensor (auto A/C model): <Ref. to AC-76, In-Vehicle Sensor (Auto A/C Model).>
- Evaporator sensor: <Ref. to AC-80, Evaporator Sensor.>
- Intake door actuator: <Ref. to AC-84, FRESH/RECIRC Door Actuator.>
- Mode door actuator: <Ref. to AC-86, Mode Door Actuator.>
- Air mix door actuator: <Ref. to AC-88, Air Mix Door Actuator.>

3. Refrigerant Pressure with Manifold Gauge Set

A: PROCEDURE

1. REFRIGERANT GAS PRESSURE INSPECTION

1) Prepare the vehicle.

NOTE:
Check that the ambient temperature is 25 — 40°C (77 — 104°F) and that the humidity is 30% — 80%.
- Place the vehicle in the shade and windless condition, and open the front hood.
- Open the front windows and close all doors.

2) Check the refrigerant pressure.

Preparation tool:
Manifold gauge set

(1) Connect the manifold gauge set, and start the engine.
(2) Set the vehicle to the following conditions.

Item	Condition
Engine	Warmed up (Engine coolant temperature indicator light: OFF)
Air vent grille	Shutter is fully open.
A/C switch	ON
Temperature adjustment dial	LO (MAX COOL)
FRESH/RECIRC switch	RECIRC
Air flow control dial or switch	VENT
Fan dial	5/7 level

(3) In the condition of step (2), idle the engine for 30 minutes.
(4) Read the gauge values on both high pressure side and low pressure side for manifold gauge.

3) Measure the air vent grille outlet opening temperature, ambient temperature and humidity.

Preparation tool:
Thermometer and hygrometer

NOTE:
For outlet opening temperature, measure the average temperature of center grille assembly and side grille assembly.

4) Check that the high and low pressures and outlet opening temperature for ambient temperature and humidity is within the standard value described in the chart below.

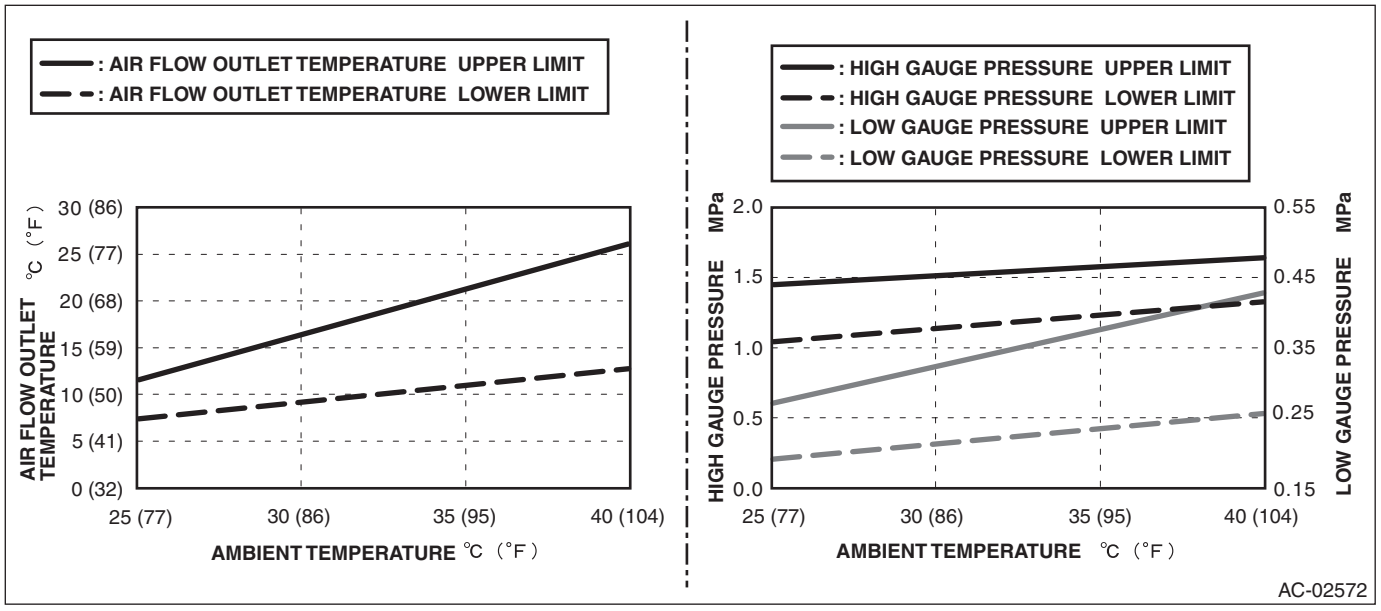

5) Refer to “DIAGNOSIS WITH SYMPTOM” if the inspection result is not within the standard value. <Ref. to AC-23, INSPECTION WITH PRESSURE SYMPTOMS, INSPECTION, Refrigerant Pressure with Manifold Gauge Set.>

B: INSPECTION

1. INSPECTION WITH PRESSURE SYMPTOMS

Symptoms	Reference
Both high and low pressure sides are low.	<Ref. to AC-23, BOTH HIGH AND LOW PRESSURE SIDES ARE LOW, INSPECTION, Refrigerant Pressure with Manifold Gauge Set.>
Both high and low pressure sides are high.	<Ref. to AC-23, BOTH HIGH AND LOW PRESSURE SIDES ARE HIGH, INSPECTION, Refrigerant Pressure with Manifold Gauge Set.>
Both high and low pressure sides are equal, or high-pressure side is low.	<Ref. to AC-24, BOTH HIGH AND LOW PRESSURE SIDES ARE EQUAL, OR HIGH-PRESSURE SIDE IS LOW, INSPECTION, Refrigerant Pressure with Manifold Gauge Set.>
High-pressure side is high.	<Ref. to AC-24, HIGH-PRESSURE SIDE IS HIGH, INSPECTION, Refrigerant Pressure with Manifold Gauge Set.>
Low-pressure side is low.	<Ref. to AC-25, LOW-PRESSURE SIDE IS LOW, INSPECTION, Refrigerant Pressure with Manifold Gauge Set.>
Low-pressure side is high.	<Ref. to AC-25, LOW-PRESSURE SIDE IS HIGH, INSPECTION, Refrigerant Pressure with Manifold Gauge Set.>

2. BOTH HIGH AND LOW PRESSURE SIDES ARE LOW

	Step	Check	Yes	No
1	**CHECK REFRIGERANT LEAKAGE.** Check the refrigerant for leakage. <Ref. to AC-30, INSPECTION, Refrigerant Leak Check.> NOTE: When the pressure on the high-pressure side is less than 0.69 Mpa: Go to Step 2.	Are there any refrigerant leakage?	Repair the refrigerant leakage.	Go to step **2**.
2	**FILL PROPER AMOUNT OF REFRIGERANT.** Drain the refrigerant completely, and then refill the proper amount of refrigerant. • Recovery: <Ref. to AC-26, PROCEDURE, Refrigerant Recovery Procedure.> • Refill: <Ref. to AC-27, PROCEDURE, Refrigerant Charging Procedure.>	Is the refrigerant pressure within the specified range?	Refrigerant pressure is normal.	Perform appropriate inspection with pressure symptoms.

3. BOTH HIGH AND LOW PRESSURE SIDES ARE HIGH

	Step	Check	Yes	No
1	**FILL PROPER AMOUNT OF REFRIGERANT.** Drain the refrigerant completely, and then refill the proper amount of refrigerant. • Recovery: <Ref. to AC-26, PROCEDURE, Refrigerant Recovery Procedure.> • Refill: <Ref. to AC-27, PROCEDURE, Refrigerant Charging Procedure.>	Is the refrigerant pressure within the specified range?	Refrigerant pressure is normal.	Perform appropriate inspection with pressure symptoms.

4. BOTH HIGH AND LOW PRESSURE SIDES ARE EQUAL, OR HIGH-PRESSURE SIDE IS LOW

	Step	Check	Yes	No
1	**CHECK REFRIGERANT LEAKAGE.** Check the refrigerant for leakage. <Ref. to AC-30, INSPECTION, Refrigerant Leak Check.> NOTE: When the pressure on the high-pressure side is less than 0.69 Mpa: Go to Step 2.	Are there any refrigerant leakage?	Repair the refrigerant leakage.	Go to step **2**.
2	**FILL PROPER AMOUNT OF REFRIGERANT.** Drain the refrigerant completely, and then refill the proper amount of refrigerant. • Recovery: <Ref. to AC-26, PROCEDURE, Refrigerant Recovery Procedure.> • Refill: <Ref. to AC-27, PROCEDURE, Refrigerant Charging Procedure.>	Is the refrigerant pressure within the specified range?	Refrigerant pressure is normal.	Inspect the compressor. <Ref. to AC(diag)-34, COOL AIR DOES NOT COME OUT WHEN PRESSING THE A/C SWITCH. FOG CANNOT BE CLEARED. (COMPRESSOR DOES NOT OPERATE.), DIAGNOSTIC PROCEDURE WITH PHENOMENON, Diagnostics with Phenomenon.>

5. HIGH-PRESSURE SIDE IS HIGH

	Step	Check	Yes	No
1	**CHECK CONDENSER.** Check the condenser. <Ref. to AC-53, INSPECTION, Condenser.>	Is condenser OK?	Go to step **2**.	Clean or replace the condenser.
2	**CHECK RADIATOR FAN.** Check the radiator fan system. • Except for STI model: <Ref. to CO(w/o STI)-8, Radiator Fan System.> • STI model: <Ref. to CO(STI)-7, Radiator Fan System.>	Is radiator fan system normal?	Go to step **3**.	Repair the radiator fan system or replace the faulty parts.
3	**FILL PROPER AMOUNT OF REFRIGERANT.** Drain all refrigerant, and refill proper amount of refrigerant. • Recovery: <Ref. to AC-26, PROCEDURE, Refrigerant Recovery Procedure.> • Fill: <Ref. to AC-27, PROCEDURE, Refrigerant Charging Procedure.>	Is refrigerant pressure within the standard value?	Refrigerant pressure is normal.	Check the high-pressure hose and condenser for kinks or clogging, and replace if defective.

6. LOW-PRESSURE SIDE IS LOW

	Step	Check	Yes	No
1	**CHECK REFRIGERANT LEAKAGE.** Check the refrigerant for leakage. <Ref. to AC-30, INSPECTION, Refrigerant Leak Check.> NOTE: When the pressure on the high-pressure side is less than 0.69 Mpa: Go to Step 2.	Are there any refrigerant leakage?	Repair the refrigerant leakage.	Go to step **2**.
2	**FILL PROPER AMOUNT OF REFRIGERANT.** Drain the refrigerant completely, and then refill the proper amount of refrigerant. • Recovery: <Ref. to AC-26, PROCEDURE, Refrigerant Recovery Procedure.> • Refill: <Ref. to AC-27, PROCEDURE, Refrigerant Charging Procedure.>	Is the refrigerant pressure within the specified range?	Refrigerant pressure is normal.	Go to step **3**.
3	**REPLACE EXPANSION VALVE.** Replace the expansion valve. <Ref. to AC-61, REMOVAL, Expansion Valve.>	Is the refrigerant pressure within the specified range?	Refrigerant pressure is normal.	Inspect the compressor. <Ref. to AC(diag)-34, COOL AIR DOES NOT COME OUT WHEN PRESSING THE A/C SWITCH. FOG CANNOT BE CLEARED. (COMPRESSOR DOES NOT OPERATE.), DIAGNOSTIC PROCEDURE WITH PHENOMENON, Diagnostics with Phenomenon.>

7. LOW-PRESSURE SIDE IS HIGH

	Step	Check	Yes	No
1	**FILL PROPER AMOUNT OF REFRIGERANT.** Drain the refrigerant completely, and then refill the proper amount of refrigerant. • Recovery: <Ref. to AC-26, PROCEDURE, Refrigerant Recovery Procedure.> • Refill: <Ref. to AC-27, PROCEDURE, Refrigerant Charging Procedure.>	Is the refrigerant pressure within the specified range?	Refrigerant pressure is normal.	Go to step **2**.
2	**REPLACE EXPANSION VALVE.** Replace the expansion valve. <Ref. to AC-61, REMOVAL, Expansion Valve.>	Is the refrigerant pressure within the specified range?	Refrigerant pressure is normal.	Replace the evaporator. <Ref. to AC-57, REMOVAL, Evaporator.>

4. Refrigerant Recovery Procedure

A: PROCEDURE

CAUTION:
• During operation, be sure to wear protective goggles and protective gloves.
• Connect the refrigerant recovery system with the manifold gauge set to discharge the refrigerant from the A/C system and recycle the gas.
• When recycling the discharged refrigerant, keep service cans on hand. Because the recovery rate with the recovery system is approx. 90%, service cans are necessary to charge the refrigerant.
• Follow the detailed operation procedure described in the operation manual attached to the refrigerant recovery system.

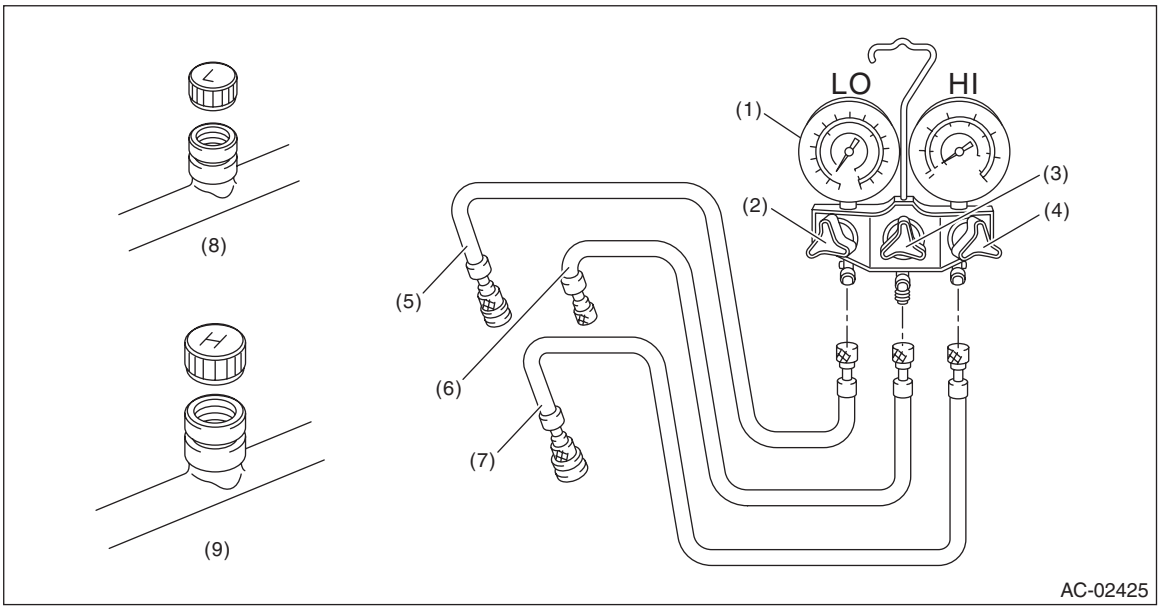

(1)	Manifold gauge	(4)	High pressure valve	(7)	High-pressure hose
(2)	Low pressure valve	(5)	Low-pressure hose	(8)	Low-pressure side service port
(3)	Center valve	(6)	Center manifold hose (vacuum pump and charge)	(9)	High-pressure side service port

1) Perform compressor oil return operation. <Ref. to AC-34, PROCEDURE, Compressor Oil.>
2) Turn the ignition switch to OFF.
3) Remove the collector cover. (Except for STI model) <Ref. to IN(w/o STI)-7, REMOVAL, Collector Cover.>
4) Attach the manifold gauge set.

Preparation tool:
Manifold gauge set
(1) Check that all valves are fully closed.
(2) Install the low/high pressure hoses to the service ports on the low/high pressure sides of the vehicle respectively.

CAUTION:
Confirm that the connections are secure.
(3) Connect the center hose to the refrigerant recovery system.

Preparation tool:
Refrigerant recovery system
5) Follow the operation manual attached to the refrigerant recovery system to collect the refrigerant.

5. Refrigerant Charging Procedure

A: PROCEDURE

CAUTION:
- **While working, be sure to wear protective goggles and protective gloves.**
- **Air in the cycle can cause insufficient air conditioning, and water in the cycle can cause clogging in the cycle (icing) and rust. To remove this air and water content, use a vacuum pump to perform evacuation before filling with refrigerant. By making the inside of the cycle a vacuum, the water content will evaporate even at normal temperatures, and can be removed.**

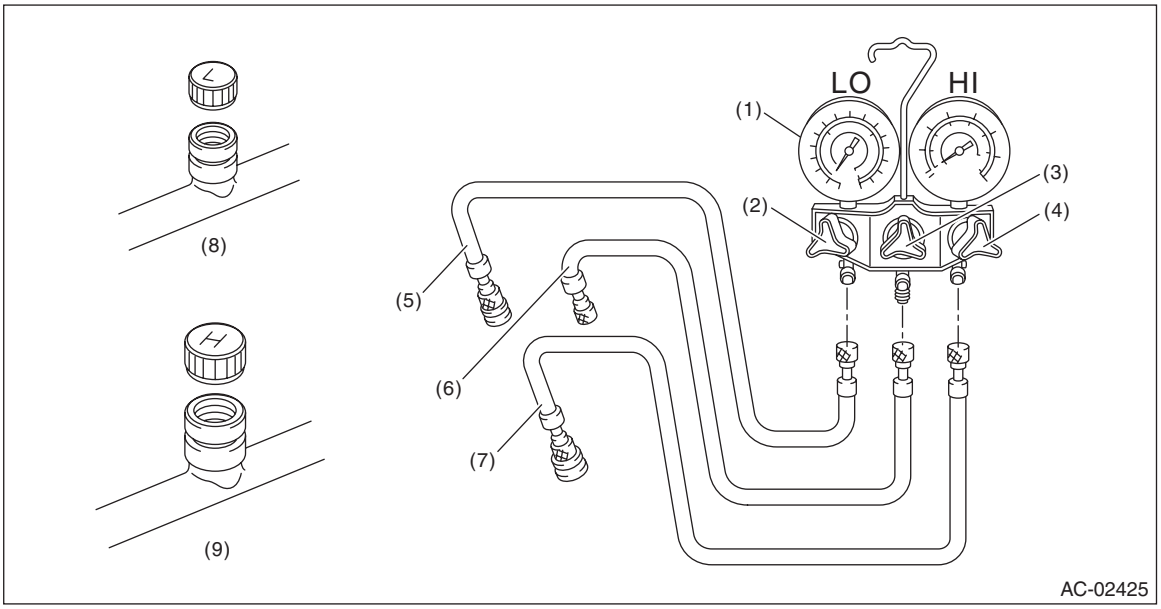

(1)	Manifold gauge	(4)	High pressure valve	(7)	High-pressure hose
(2)	Low pressure valve	(5)	Low-pressure hose	(8)	Low-pressure side service port
(3)	Center valve	(6)	Center manifold hose (vacuum pump and charge)	(9)	High-pressure side service port

1) Attach the manifold gauge set.

Preparation tool:
Manifold gauge set

(1) Check that all valves are fully closed.

(2) Install the low/high pressure hoses to the service ports on the low/high pressure sides of the vehicle respectively.

CAUTION:
Confirm that the connections are secure.

(3) Connect the center manifold hose of the manifold gauge to the vacuum pump.

Preparation tool:
Vacuum pump

2) Perform evacuation.

CAUTION:
Make sure to perform evacuation using a vacuum pump.

(1) Open the low-pressure valve, high-pressure valve and center valve.
(2) Operate the vacuum pump.
(3) Perform evacuation for 5 minutes or more, and when the low pressure gauge needle reaches –0.1 MPa (–1 kgf/cm^2, –14 psi), close the center manifold hose valve, and stop the vacuum pump.
(4) Leave alone for 5 to 10 minutes after closing the low pressure valve and high pressure valve, and check whether there is any change in the low pressure gauge needle indication.
If the needle position changes, this indicates a leak. Check the pipe and hose connections, and repair the location with the problem.
After repair, retry charging the refrigerant from the step 1).
(5) If there is no leakage, continue evacuation for additional 20 — 30 minutes, close all valves and then stop the vacuum pump.

3) Charge refrigerant.

(1) Follow the can tap operation manual to attach it to the refrigerant can.

Preparation tool:
Can tap

(2) Disconnect the center manifold hose from the vacuum pump, and connect the hose to the tap valve.

Preparation tool:
Weight scale

NOTE:
When 13.6 kg (30 lb) refrigerant container (1) is used, measure the amount of refrigerant with a refrigerant charging scale (2), and connect with the center manifold hose.

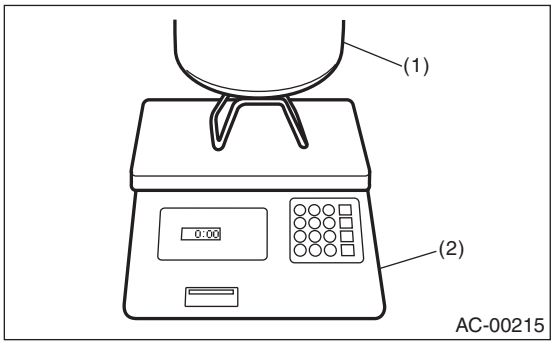

(3) Open the tap valve of HFC-134a supply container (refrigerant can or refrigerant container).
(4) Loosen the center manifold hose connection on the manifold gauge for a few seconds (if there is a purge valve on the manifold gauge, push this instead) to allow the air in the center manifold hose to be bled by the refrigerant pressure.
(5) Open the low pressure valve and high pressure valve of the manifold gauge to fill with refrigerant.

NOTE:
If the HFC-134a supply container is empty, close all manifold gauge valves and the tap valve of HFC-134a supply container, and replace the empty supply container with a new one. After replacing with a new HFC-134a supply container, perform air purge, and resume the filling operation.

(6) If the low pressure gauge indicates approximately 0.2 MPa (2 kgf/cm^2, 29 psi) or refrigerant filling efficiency drops, close the low pressure and high pressure valves.
(7) Check that the low pressure valve and high pressure valve are closed, turn off the A/C switch and start the engine.

CAUTION:
When filling operation is performed with the engine running, do not open the high pressure valve. Always fill from the low pressure valve.

(8) To prevent damage to the compressor, push the A/C switch ON-OFF quickly a few times.

(9) Set the vehicle to the following conditions.

Item	Condition
Engine speed	1,500 r/min
A/C switch	ON
Temperature adjustment dial	LO (MAX COOL)
Fan dial	HI (MAX)
FRESH/RECIRC switch	RECIRC
Air flow control dial or switch	VENT
Window	OPEN

(10) Open the low pressure valve, check the refrigerant pressure with a manifold gauge and fill with refrigerant up to the specified amount. <Ref. to AC-23, INSPECTION WITH PRESSURE SYMPTOMS, INSPECTION, Refrigerant Pressure with Manifold Gauge Set.>

4) Using an electronic leak detector (leak tester), check for refrigerant leaks in the system. <Ref. to AC-30, INSPECTION, Refrigerant Leak Check.>

5) After filling with refrigerant, close all valves and remove the manifold gauge set.

6) Attach cap to the service port of the low pressure side and high pressure side.

6. Refrigerant Leak Check

A: INSPECTION

1) Attach the manifold gauge set.

Preparation tool:

Manifold gauge set

(1) Check that all valves are fully closed.

(2) Install the low/high pressure hoses to the service ports on the low/high pressure sides of the vehicle respectively.

CAUTION:

Confirm that the connections are secure.

(3) Start the engine, operate the A/C system for approx. 10 minutes, and check that the high-pressure side indicates 0.69 MPa (7 kgf/cm^2, 100 psi) or more.

2) Turn the ignition switch to OFF to start the leak test.

Preparation tool:
Electronic leak detector (leak tester)

Items	Condition	Corrective action
Pipe	Check the connections of pipe and expansion valve.	Check the O-ring at connection and tightening torque. If necessary, replace each part.
	Check the connection between pressure switch or pressure sensor and high-pressure pipe.	Replace the pressure switch or pressure sensor.
	Check the connection between pipe and condenser.	Check the O-ring at connection and tightening torque. If necessary, replace each part.
Condenser	Check the welded part of condenser and core.	Replace the condenser.
Hose (high-pressure)	Check the connection between hose (high-pressure) and compressor.	Check the O-ring at connection and tightening torque. If necessary, replace each part.
	Check the connection between hose (high-pressure) and condenser.	Check the O-ring at connection and tightening torque. If necessary, replace each part.
	Check the rubber part of the flexible hose and pipe seam. **CAUTION:** **Carefully check the external surface of flexible hoses and pipes at approx. 25 mm (0.98 in) per second.**	Replace the hose (high pressure).
	Check the valve and cap in the service port.	Check the rubber seal of the valve and cap. If necessary, replace valve or cap.
Compressor	Check the compressor pulley and vicinity of shaft seal. **CAUTION:** **Some shaft seals will show a slight amount of leakage, about 3 g (0.1 oz) per year. This is not a problem.**	Replace the compressor.
Hose (low-pressure)	Check the connection between hose (low pressure) and expansion valve.	Check the O-ring at connection and tightening torque. If necessary, replace each part.
	Check the connection between hose (low pressure) and compressor.	Check the O-ring at connection and tightening torque. If necessary, replace each part.
	Check the rubber part of the flexible hose and pipe seam. **CAUTION:** **Carefully check the external surface of flexible hoses and pipes at approx. 25 mm (0.98 in) per second.**	Replace the hose (low pressure).
	Check the valve and cap in the service port.	Check the rubber seal of the valve and cap. If necessary, replace valve or cap.
Evaporator	Remove the drain hose from the heater case, and check the end part for 10 seconds or more.	Replace the evaporator.
	Check the air vent grille. NOTE: Turn the ignition switch to ON, and run the blower at high speed for approx. 1 minute. Stop the blower to check the air vent grille on the instrument panel. While moving the tester closer to the grille, run the blower for 1 or 2 seconds, then stop it. Check the grille at that position for at least 10 seconds.	Replace the evaporator.

7. Relay and Fuse

A: LOCATION

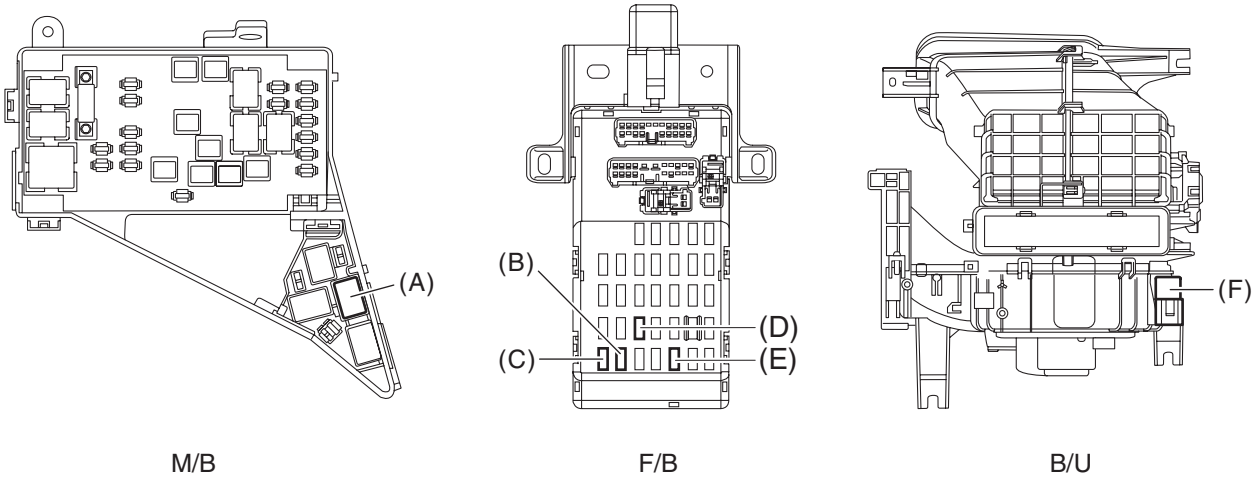

Main fuse box	A/C relay	(A)
Relay & fuse box	Fuse 15 A (blower motor relay)	(B)
	Fuse 15 A (blower motor relay)	(C)
	Fuse 7.5 A (A/C control panel, A/C relay, sub fan relay, pressure switch and blower motor relay)	(D)
	Fuse 7.5 A (A/C control panel)	(E)
Blower motor unit	Blower motor relay	(F)

NOTE:
For other related fuses, refer to the wiring diagram. <Ref. to WI-31, Power Supply Circuit.>

B: INSPECTION

1. CHECK FUSE

1) Remove the fuse and inspect visually.
2) If the fuse is blown out, replace the fuse.

NOTE:
If the fuse is blown again, check the system wiring harness.

2. CHECK RELAY

1) Measure the resistance between relay terminals.
- A/C relay

Terminal No.	Inspection conditions	Standard	Circuit
1 — 2	Always	1 MΩ or more	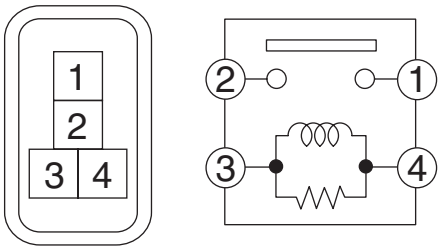 LI-01273
1 — 2	Apply battery voltage between terminals 4 and 3.	Less than 1 Ω	

- Blower motor relay

Terminal No.	Inspection conditions	Standard	Circuit
1 — 4	Always	1 MΩ or more	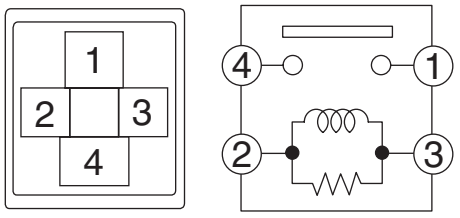 AC-02796
1 — 4	Apply battery voltage between terminals 2 and 3.	Less than 1 Ω	

2) Replace the relay if the inspection result is not within the standard value.

8. Compressor Oil

A: PROCEDURE

NOTE:
Before making repairs, perform the oil return operation to return the compressor oil in circulation with the refrigerant to the compressor assembly.
1) Increase the engine speed to 1,500 r/min.
2) Turn the A/C switch to ON.
3) Turn the temperature control dial to LO (MAX COOL).
4) Turn the FRESH/RECIRC switch to RECIRC position.
5) Turn the fan dial to HI (MAX).
6) Leave in this condition for 10 minutes.

B: ADJUSTMENT

- If a component has been replaced, add an appropriate amount of compressor oil (same as the amount of remaining oil in removed component).
- When replacing the compressor assembly, the new compressor assembly will already have the specified amount of oil in it. Adjust the oil amount (so that the amount remains the same as that of the removed compressor assembly) and install the new compressor assembly.

NOTE:
Since the hygroscopicity of compressor oil is high, perform this series of works quickly.

9. Blower Motor Unit Assembly

A: REMOVAL

CAUTION:
Before handling the airbag system components, refer to "CAUTION" of "General Description" in "AIRBAG SYSTEM". <Ref. to AB-9, CAUTION, General Description.>
1) Disconnect the ground cable from battery and wait for at least 60 seconds before starting work. <Ref. to NT-6, BATTERY, NOTE, Note.>

NOTE:
For model with battery sensor, disconnect the ground terminal from battery sensor.
2) Remove the glove box. <Ref. to EI-64, REMOVAL, Glove Box.>
3) Remove the engine control module (ECM). (STI model) <Ref. to FU(STI)-56, REMOVAL, Engine Control Module (ECM).>
4) Remove the blower motor unit assembly.
(1) Release the claws, and then remove the grille assembly - ventilation RH.
(2) Disconnect the blower motor relay and each connector.

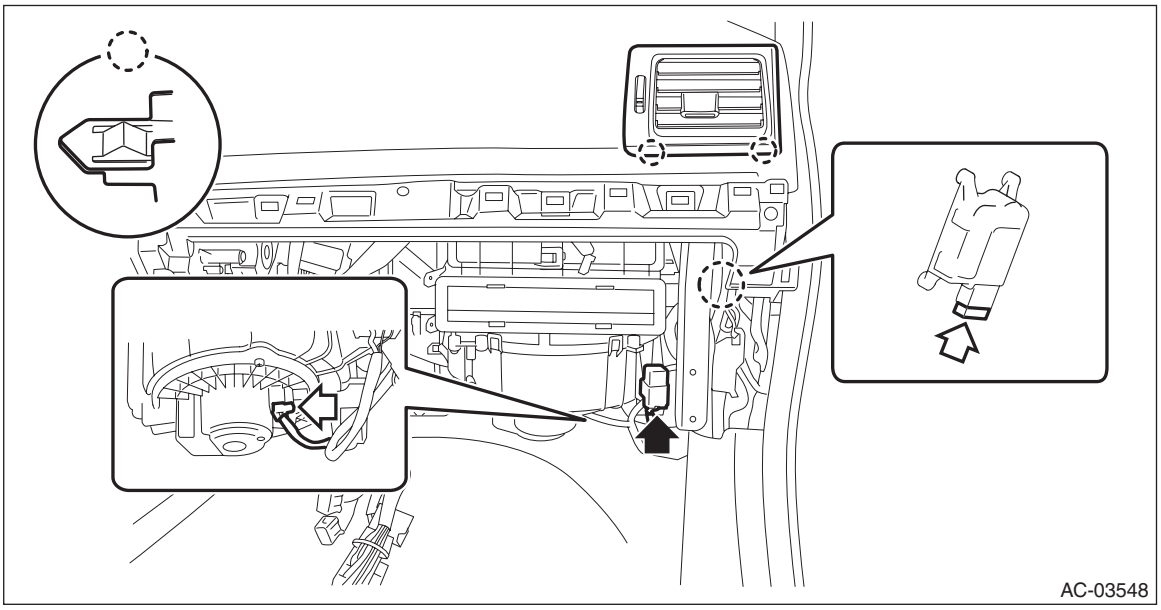

(3) Remove the bolts and nuts to remove blower motor unit assembly.

NOTE:
Remove the RH upper nut from the mounting portion of the grille assembly - ventilation RH.

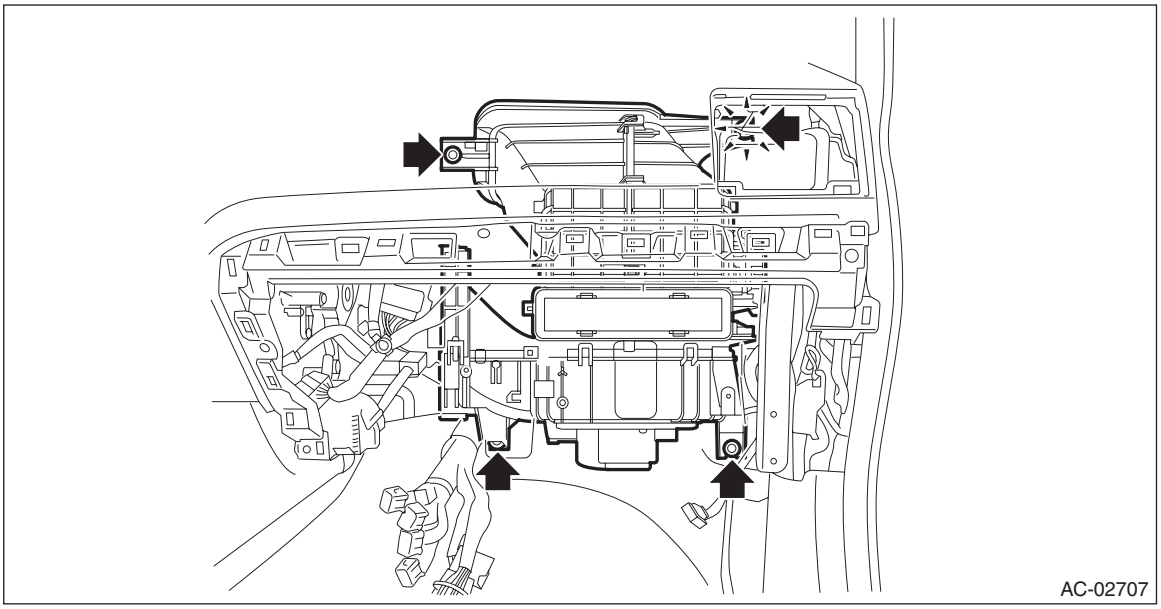

B: INSTALLATION

CAUTION:
• Before handling the airbag system components, refer to "CAUTION" of "General Description" in "AIRBAG SYSTEM". <Ref. to AB-9, CAUTION, General Description.>
• After installing the grille assembly - ventilation RH, check that the air vent grille of the grille assembly - ventilation RH is inserted correctly into the air vent duct.
1) Install the blower motor unit assembly.

Tightening torque:
7.5 N·m (0.8 kgf-m, 5.5 ft-lb)
2) Install the grille assembly - ventilation RH.
3) Install the engine control module (ECM). (STI model) <Ref. to FU(STI)-56, INSTALLATION, Engine Control Module (ECM).>
4) Install the glove box.
5) Connect the battery ground terminal. <Ref. to NT-6, BATTERY, NOTE, Note.>

10.Blower Motor

A: REMOVAL

1) Disconnect the ground cable from battery. <Ref. to NT-6, BATTERY, NOTE, Note.>

NOTE:
For model with battery sensor, disconnect the ground terminal from battery sensor.

2) Remove the blower - motor.
   (1) Disconnect the connector.
   (2) Remove the screws and detach the blower - motor.

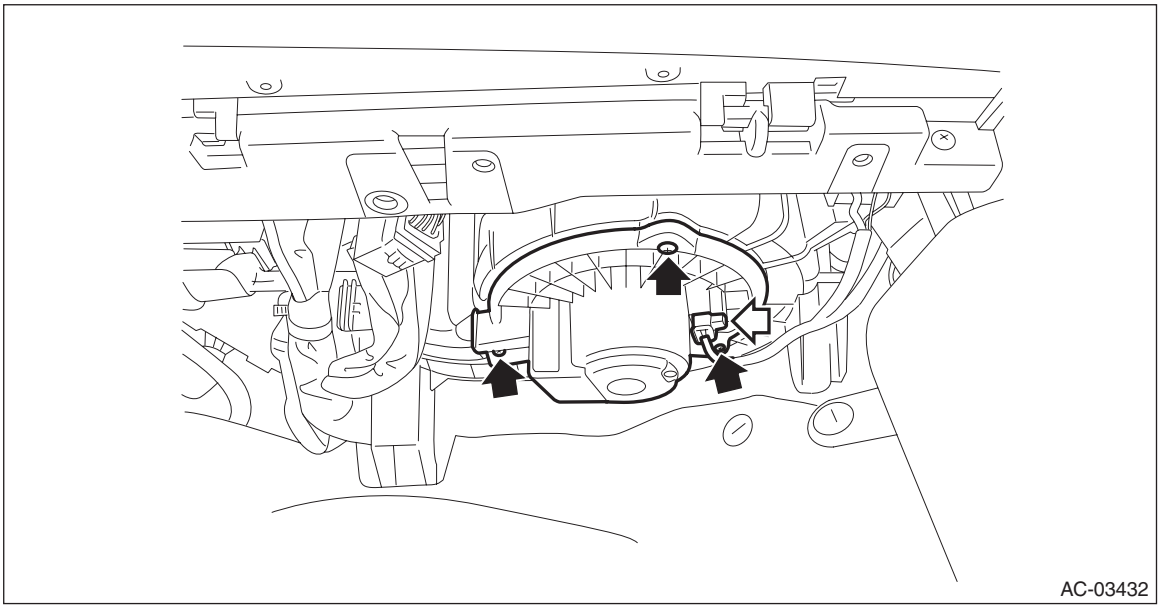

B: INSTALLATION

1) Install the blower - motor.
2) Connect the battery ground terminal. <Ref. to NT-6, BATTERY, NOTE, Note.>

C: INSPECTION

1) Check the motor operation when battery voltage is applied between the connector terminals.

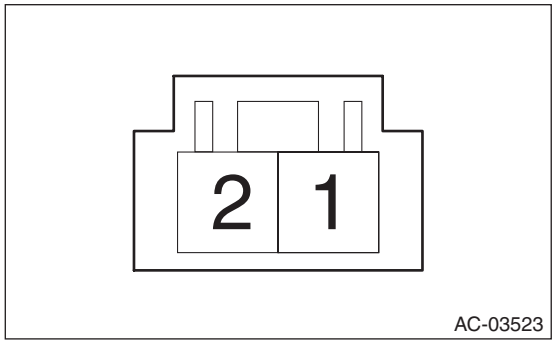

Terminal No.	Inspection conditions	Specification
2 (+) — 1 (–)	Apply battery voltage.	Rotation

2) If it does not operate normally, replace the blower - motor.

11.Power Transistor (Auto A/C Model)

A: REMOVAL

1) Disconnect the ground cable from battery. <Ref. to NT-6, BATTERY, NOTE, Note.>

NOTE:
For model with battery sensor, disconnect the ground terminal from battery sensor.

2) Remove the glove box. <Ref. to EI-64, REMOVAL, Glove Box.>
3) Remove the screws and remove the duct - foot RH.

NOTE:
Remove the connector and harness clip of the motor - actuator mix RH, and move the harness aside.

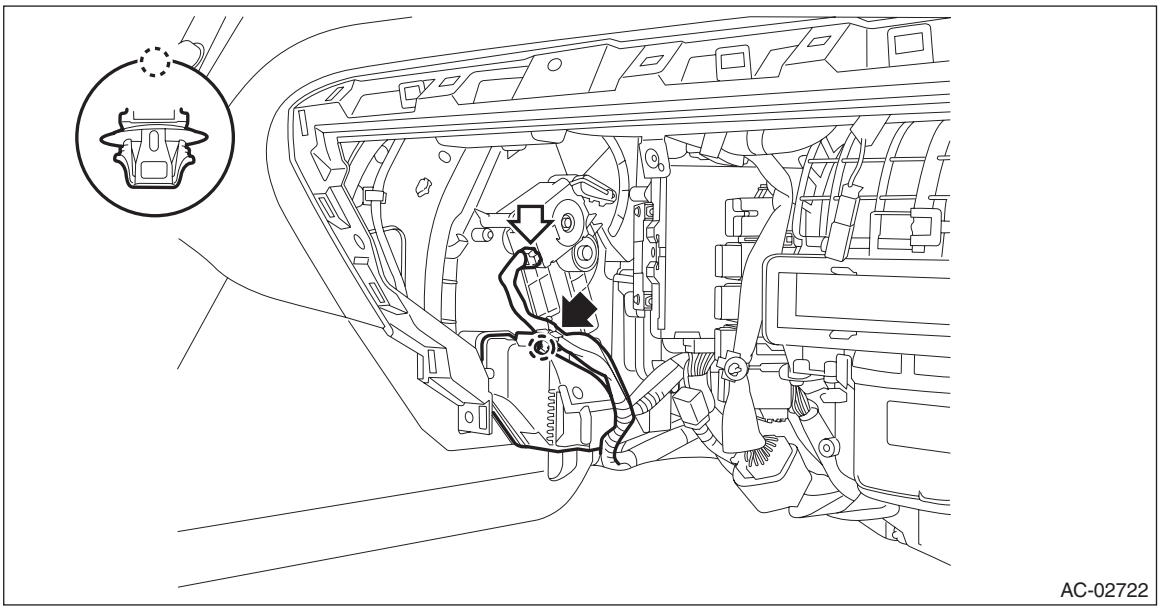

4) Remove the power transistor.
   (1) Disconnect the connector.
   (2) Remove the power transistor while pressing the power transistor claw part and sliding it.

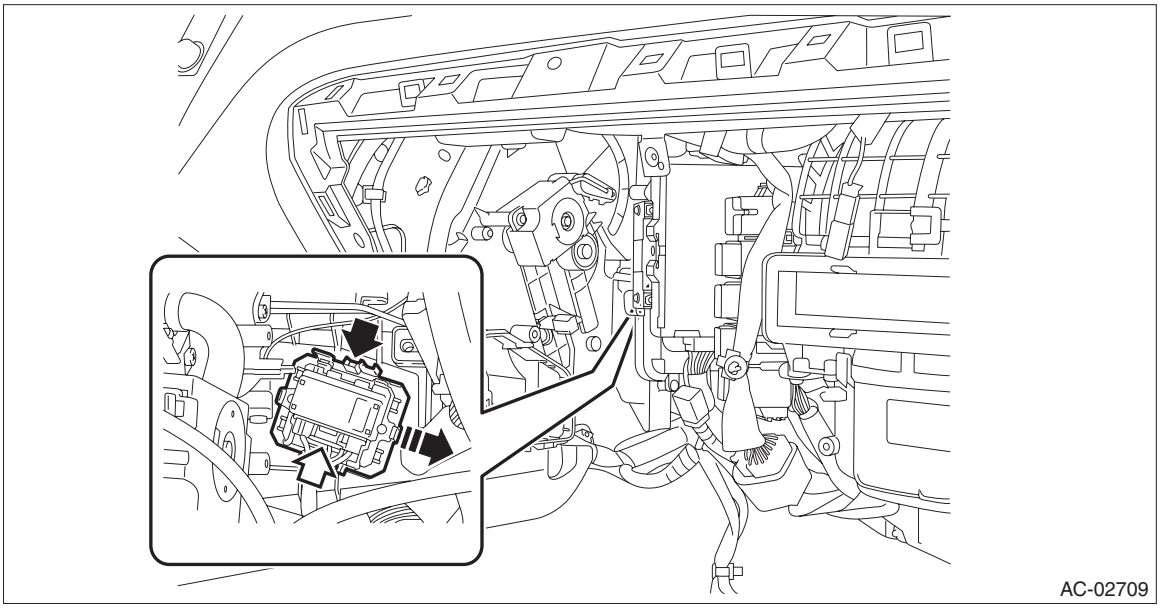

B: INSTALLATION

1) Install the power transistor.
2) Install the duct - foot RH.
3) Install the glove box.
4) Connect the battery ground terminal. <Ref. to NT-6, BATTERY, NOTE, Note.>

12.Heater Core

A: REMOVAL

CAUTION:
Before handling the airbag system components, refer to "CAUTION" of "General Description" in "AIRBAG SYSTEM". <Ref. to AB-9, CAUTION, General Description.>
1) Using the refrigerant recovery system, discharge refrigerant. <Ref. to AC-26, PROCEDURE, Refrigerant Recovery Procedure.>
2) Disconnect the battery ground cable and wait for at least 60 seconds before starting work. <Ref. to NT-6, BATTERY, NOTE, Note.>

NOTE:
For model with battery sensor, disconnect the ground terminal from battery sensor.
3) Drain engine coolant.
• Except for STI model: <Ref. to CO(w/o STI)-13, DRAINING OF ENGINE COOLANT, REPLACEMENT, Engine Coolant.>
• STI model: <Ref. to CO(STI)-12, DRAINING OF ENGINE COOLANT, REPLACEMENT, Engine Coolant.>
4) Remove the heater and cooling unit assembly. <Ref. to AC-54, REMOVAL, Heater and Cooling Unit.>
5) Remove the heater core.
(1) Remove the screw and detach the clamp - pipe.

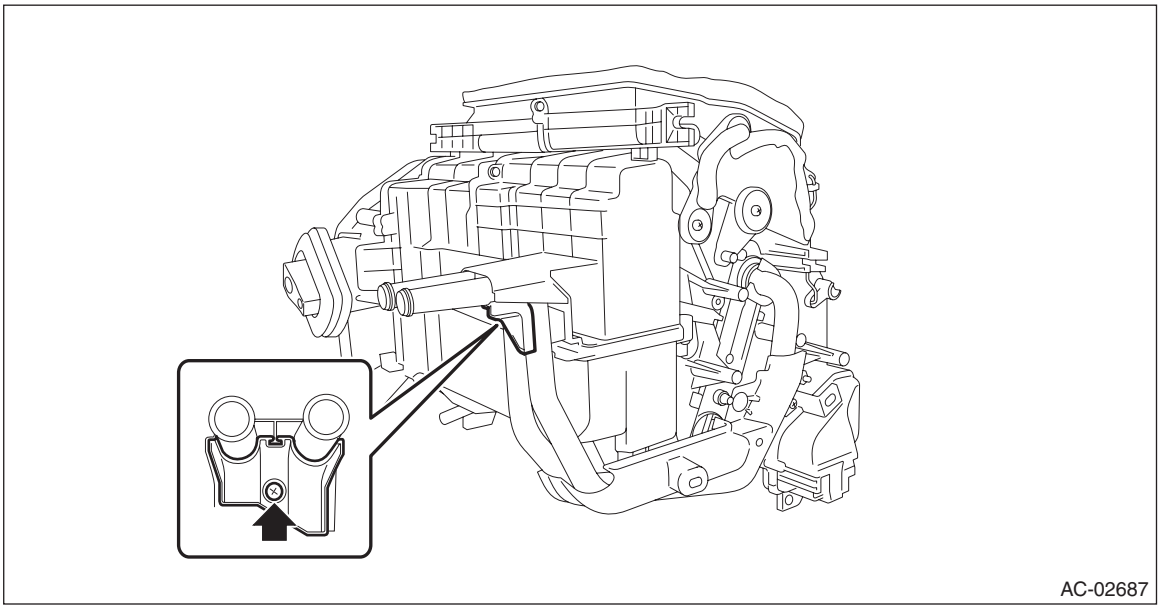
AC-02687

(2) Remove the screws and detach the cover - heater pipe.

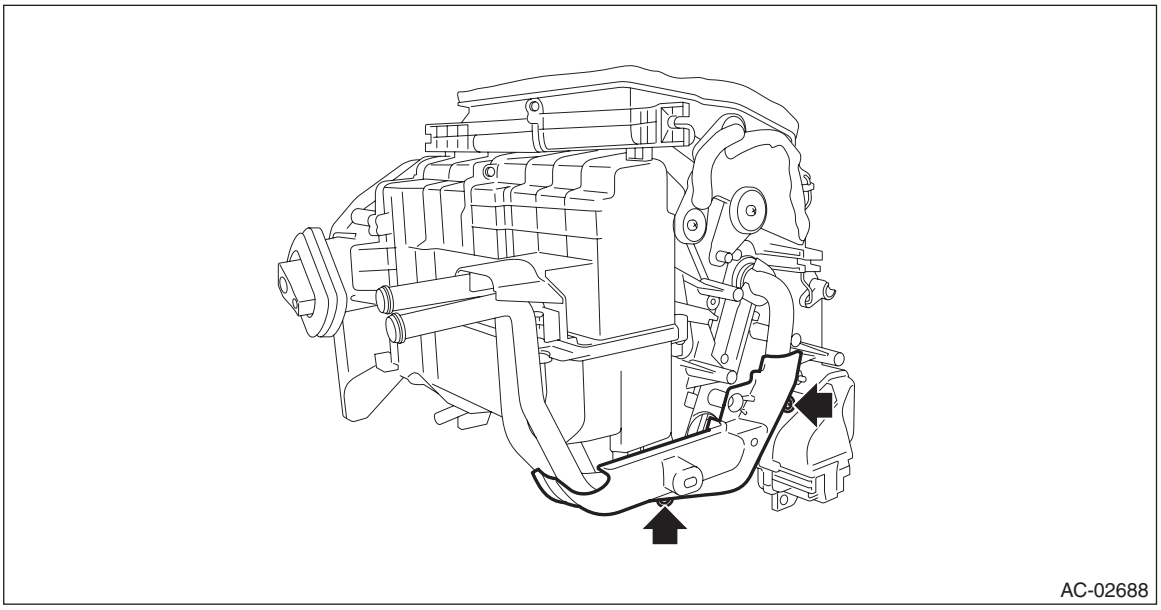

AC-02688

(3) Remove the clamp, and remove the pipe - inlet and outlet.

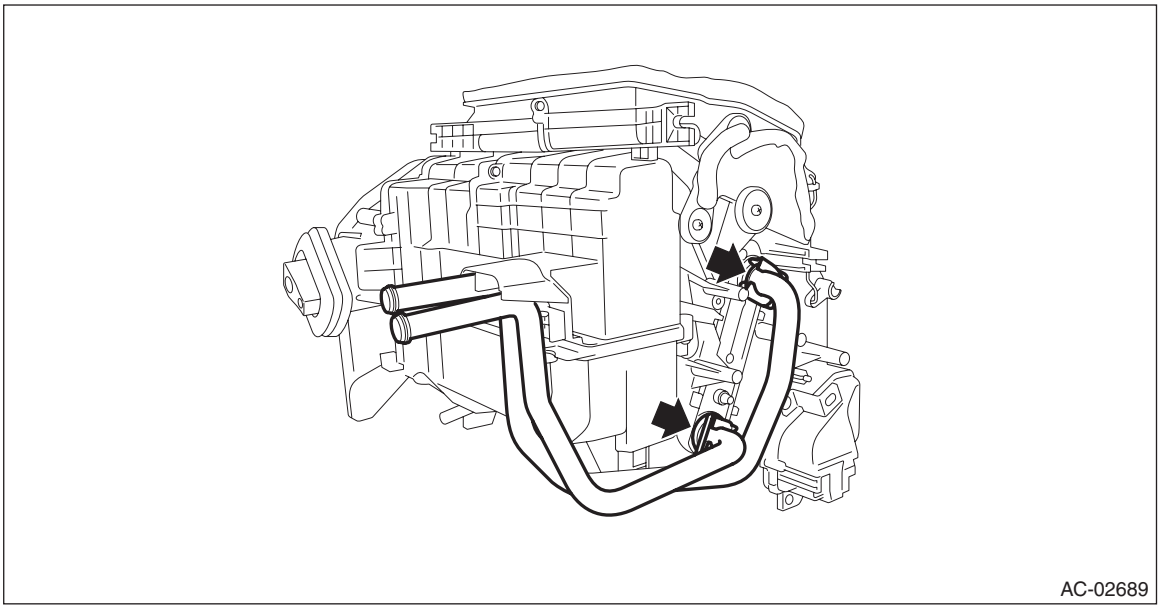

AC-02689

(4) Remove the screws and detach the plate - heater core.

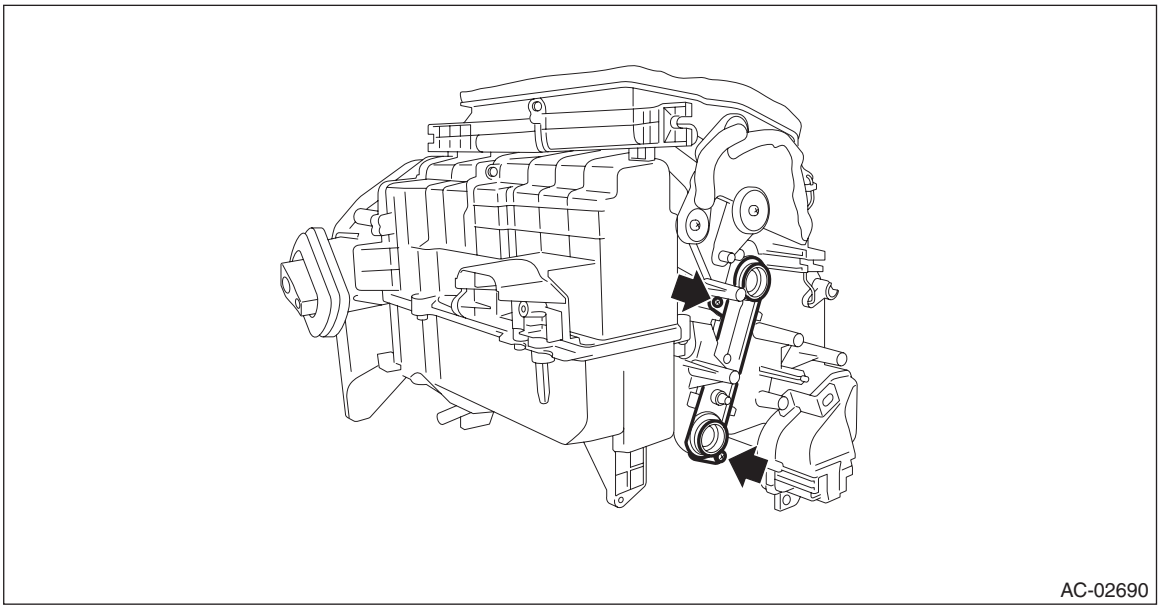
AC-02690

(5) Remove the heater core.

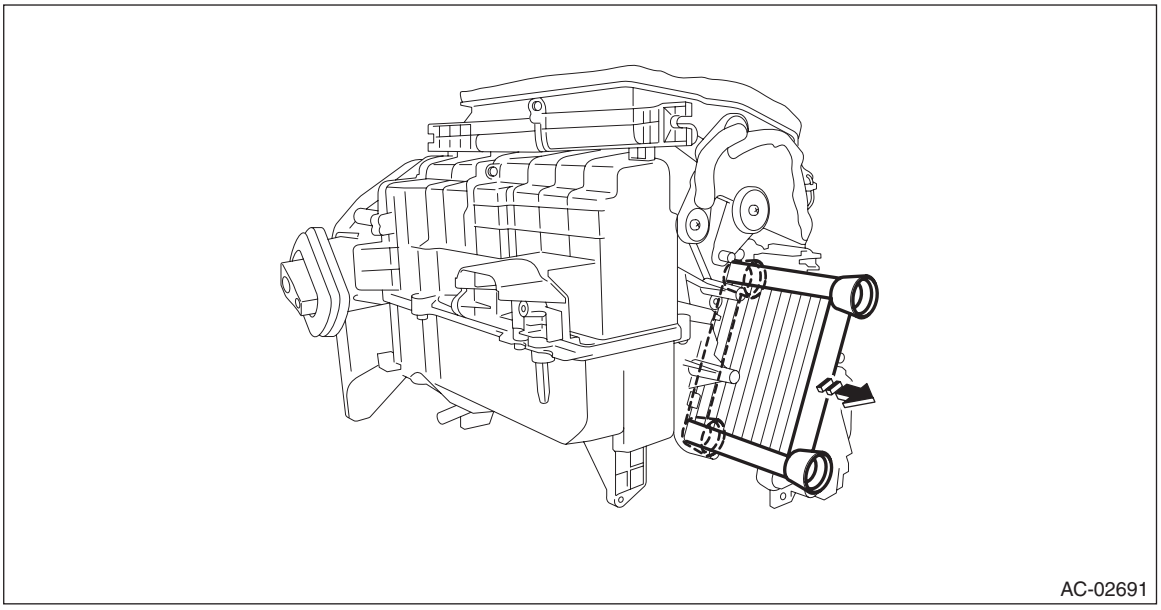
AC-02691

B: INSTALLATION

CAUTION:
- **Replace O-rings and clamps with new parts and install securely.**
- **Before handling the airbag system components, refer to "CAUTION" of "General Description" in "AIRBAG SYSTEM". <Ref. to AB-9, CAUTION, General Description.>**

1) Attach the heater core.
2) Install the heater and cooling unit assembly. <Ref. to AC-56, INSTALLATION, Heater and Cooling Unit.>
3) Connect the battery ground terminal. <Ref. to NT-6, BATTERY, NOTE, Note.>
4) Fill engine coolant.
- Except for STI model: <Ref. to CO(w/o STI)-14, FILLING OF ENGINE COOLANT, REPLACEMENT, Engine Coolant.>
- STI model: <Ref. to CO(STI)-12, FILLING OF ENGINE COOLANT, REPLACEMENT, Engine Coolant.>

5) Charge refrigerant. <Ref. to AC-27, PROCEDURE, Refrigerant Charging Procedure.>

13.Control Panel

A: REMOVAL

CAUTION:
Before handling the airbag system components, refer to "CAUTION" of "General Description" in "AIRBAG SYSTEM". <Ref. to AB-9, CAUTION, General Description.>
1) Disconnect the ground cable from battery and wait for at least 60 seconds before starting work. <Ref. to NT-6, BATTERY, NOTE, Note.>

NOTE:
For model with battery sensor, disconnect the ground terminal from battery sensor.
2) Remove the cover assembly - instrument panel LWR driver. <Ref. to EI-62, REMOVAL, Instrument Panel Lower Cover.>
3) Remove the knee airbag module. <Ref. to AB-34, REMOVAL, Knee Airbag Module.>
4) Remove the glove box. <Ref. to EI-64, REMOVAL, Glove Box.>
5) Remove the center grille assembly. <Ref. to AC-91, REMOVAL, Air Vent Grille.>
6) Remove the audio assembly or navigation assembly. <Ref. to ET-35, REMOVAL, Audio.>
7) Remove the screws to remove the heater control assembly.

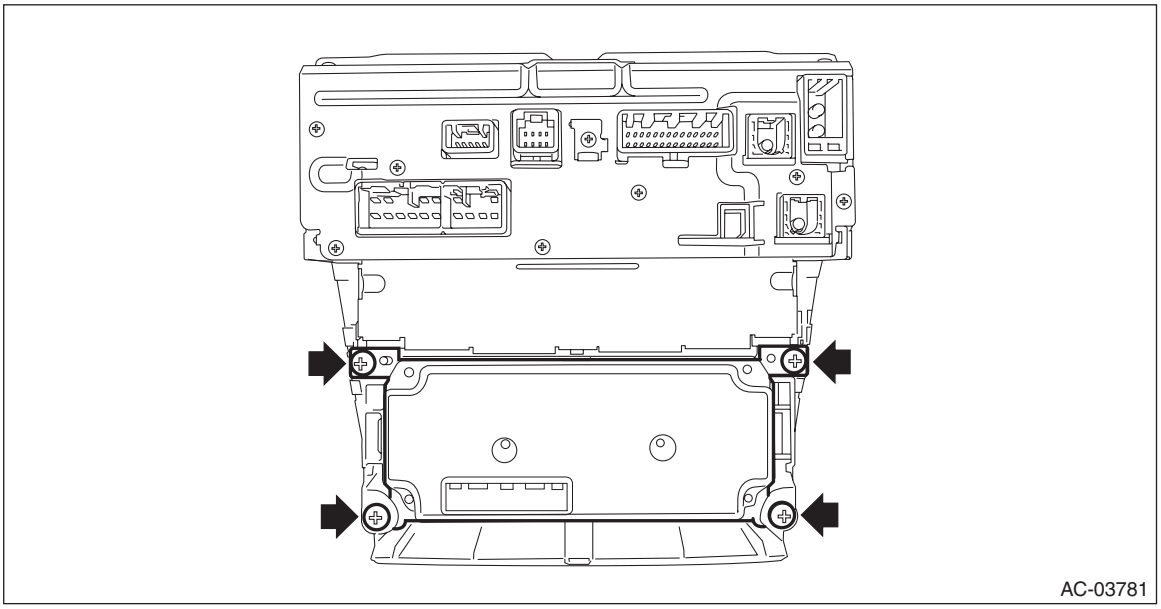

B: INSTALLATION

CAUTION:
• Before handling the airbag system components, refer to "CAUTION" of "General Description" in "AIRBAG SYSTEM". <Ref. to AB-9, CAUTION, General Description.>
• After installing the center grille assembly, check that the air vent grille of the center grille assembly is inserted correctly into the air vent duct.
1) Install the heater control assembly.
2) Install the audio assembly or navigation assembly.

Tightening torque:
7.5 N·m (0.8 kgf-m, 5.5 ft-lb)
3) Install the center grille assembly.
4) Install the glove box.
5) Install the knee airbag module. <Ref. to AB-34, INSTALLATION, Knee Airbag Module.>
6) Install the cover assembly - instrument panel LWR driver.
7) Connect the battery ground terminal. <Ref. to NT-6, BATTERY, NOTE, Note.>

C: INSPECTION

1) Check the illumination operation when battery voltage is applied between the connector terminals.

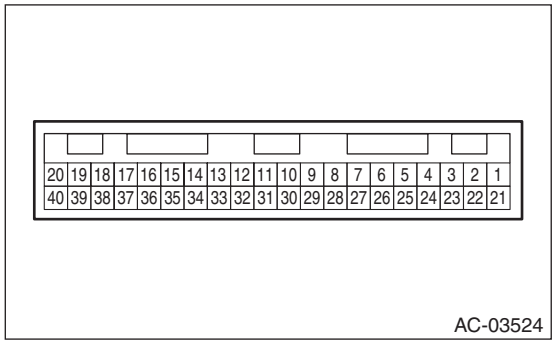

Terminal No.	Inspection conditions	Specification
37 (+) — 35 (–)	Apply battery voltage.	Light ON

2) If it does not operate normally, replace the heater control assembly.

14.Compressor

A: REMOVAL

1. EXCEPT FOR STI MODEL

1) Perform compressor oil return operation. <Ref. to AC-34, PROCEDURE, Compressor Oil.>
2) Using the refrigerant recovery system, discharge refrigerant. <Ref. to AC-26, PROCEDURE, Refrigerant Recovery Procedure.>
3) Disconnect the ground cable from battery. <Ref. to NT-6, BATTERY, NOTE, Note.>

NOTE:
For model with battery sensor, disconnect the ground terminal from battery sensor.
4) Remove the V-belts. <Ref. to ME(w/o STI)-75, REMOVAL, V-belt.>
5) Remove the bolts and remove the V-belt cover bracket.

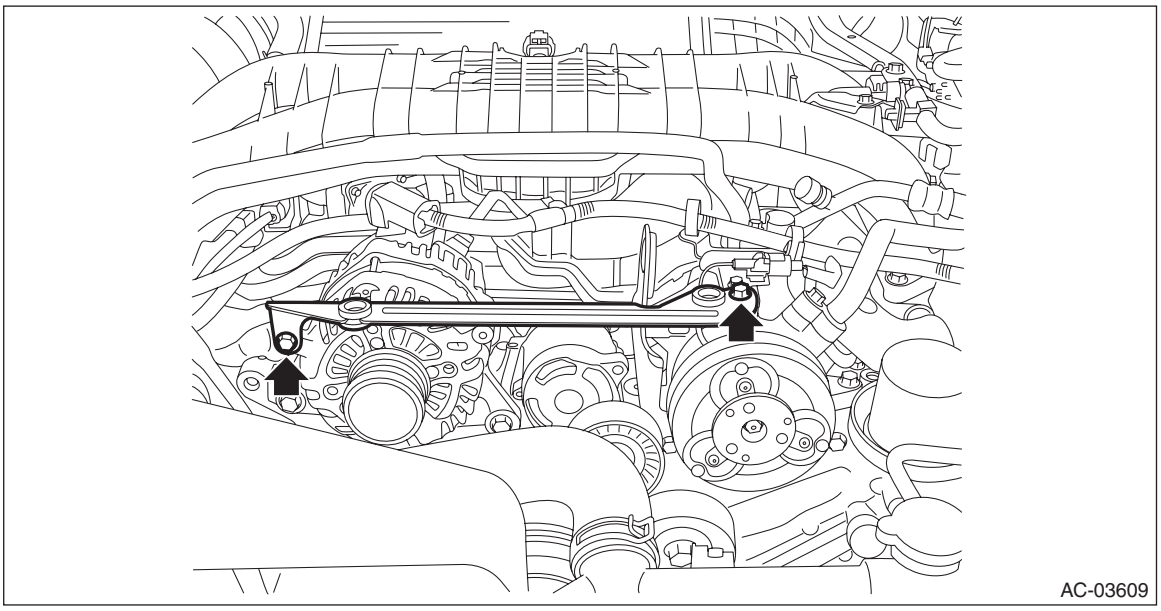
AC-03609

6) Remove the bolt, and detach the hose - pressure suction and the hose - pressure discharge.

CAUTION:
Seal the disconnected hose and engaging part of compressor with a plug or vinyl tape to prevent foreign matter from entering.

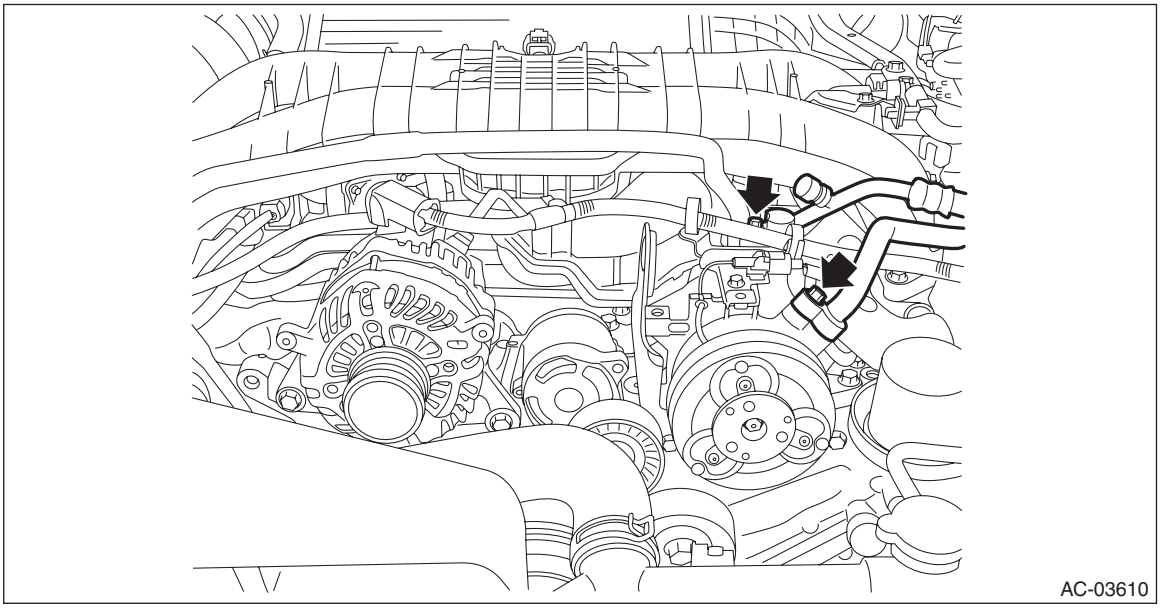
AC-03610

7) Remove the compressor assembly.
   (1) Remove the harness clamp and connector.
   (2) Remove the bolts and remove the compressor assembly.

NOTE:
Tighten the engine hanger together with the compressor assembly.

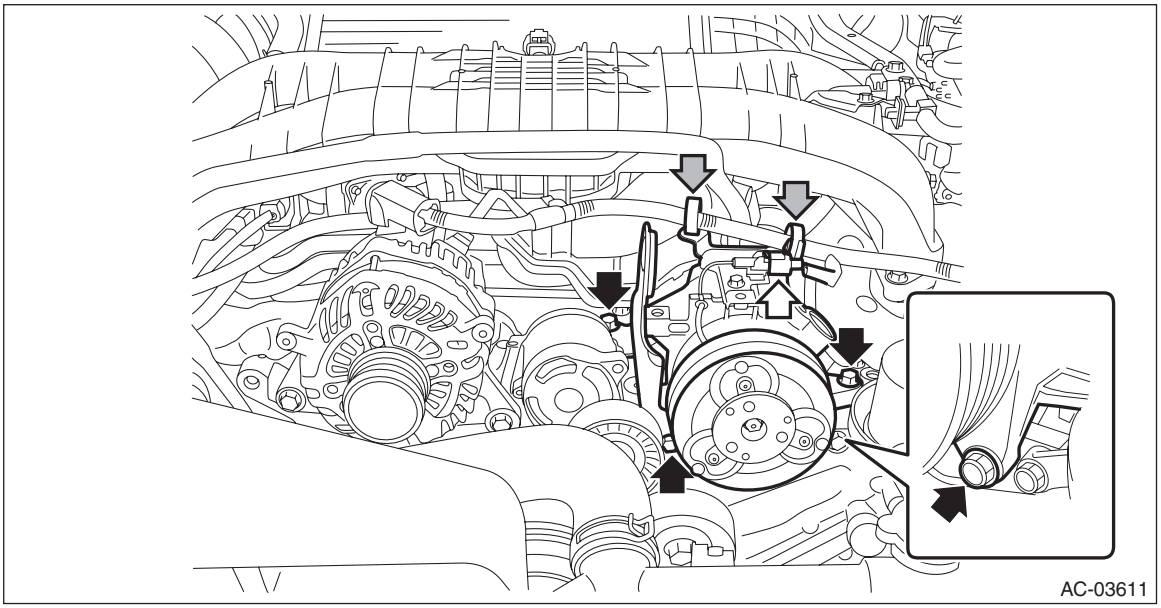

2. STI MODEL

1) Perform compressor oil return operation. <Ref. to AC-34, PROCEDURE, Compressor Oil.>
2) Using the refrigerant recovery system, discharge refrigerant. <Ref. to AC-26, PROCEDURE, Refrigerant Recovery Procedure.>
3) Disconnect the ground cable from battery.

NOTE:
For model with battery sensor, disconnect the ground terminal from battery sensor.
4) Remove the V-belts. <Ref. to ME(STI)-41, REMOVAL, V-belt.>
5) Remove the generator. <Ref. to SC(STI)-18, REMOVAL, Generator.>
6) Remove the secondary air pump. <Ref. to EC(STI)-55, REMOVAL, Secondary Air Pump.>

7) Remove the bolt, and detach the hose - pressure suction and the hose - pressure discharge.

CAUTION:
Seal the disconnected hose and engaging part of compressor with a plug or vinyl tape to prevent foreign matter from entering.

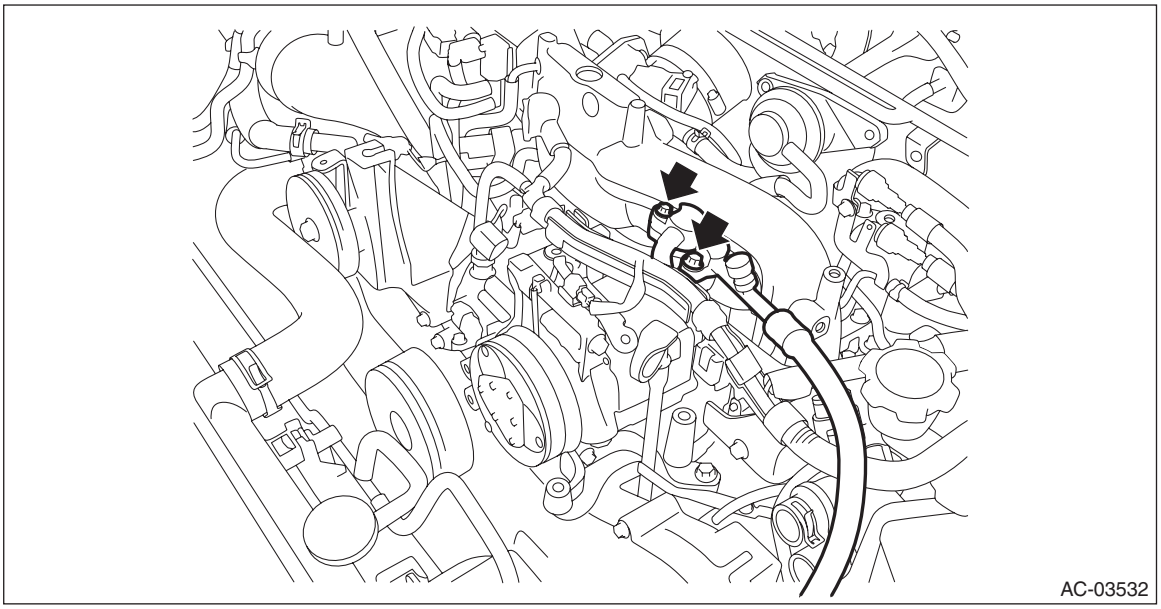
AC-03532

8) Remove the compressor assembly.
(1) Detach the harness clamp and each connector.

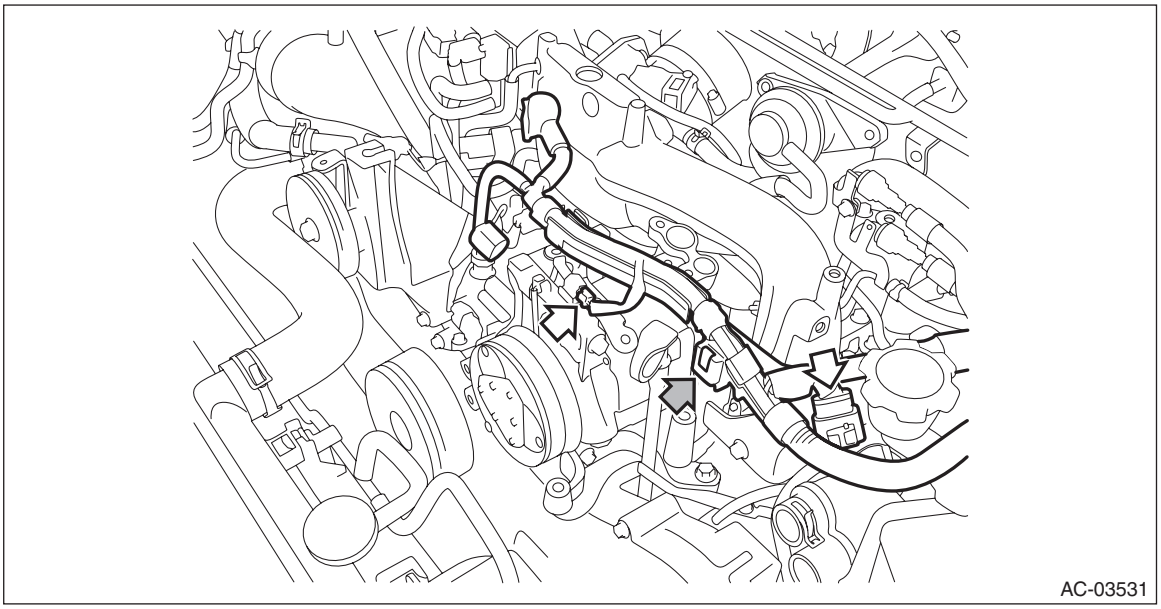
AC-03531

(2) Remove the bolts and remove the compressor assembly.

NOTE:
Since the compressor cannot be removed by itself, remove the compressor bracket as a unit.

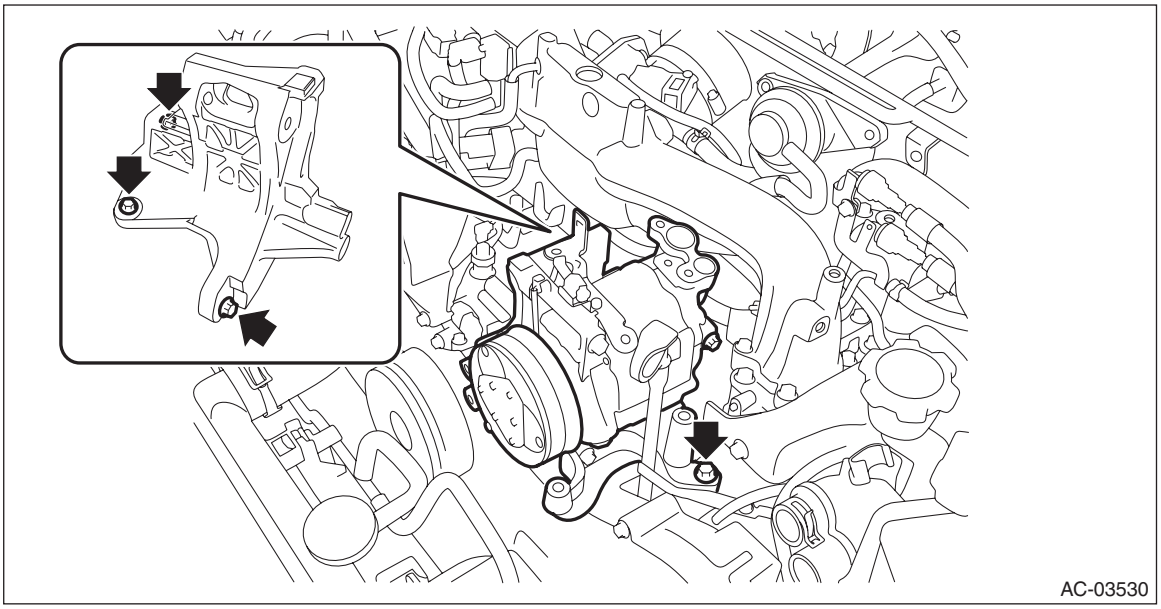

(3) Remove the bracket assembly - compressor and the bracket - air conditioner.

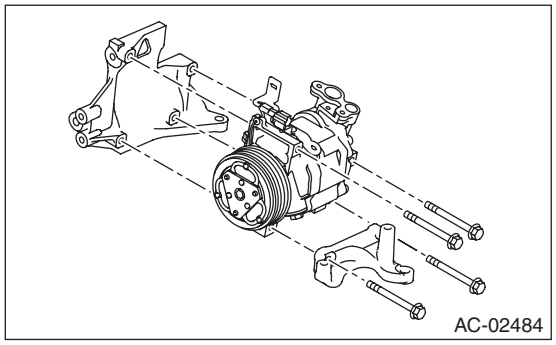

B: INSTALLATION

1. EXCEPT FOR STI MODEL

CAUTION:
• Replace the O-rings on the hose - pressure suction and discharge with new parts, and then apply compressor oil.
• After replacing the compressor assembly, adjust the amount of the compressor oil. <Ref. to AC-34, ADJUSTMENT, Compressor Oil.>

1) Install the compressor assembly.

Tightening torque:
36 N·m (3.7 kgf-m, 26.6 ft-lb)

2) Install the hose - pressure suction and the hose - pressure discharge.

Tightening torque:
10 N·m (1 kgf-m, 7.4 ft-lb)

3) Install the V-belt cover bracket.

Tightening torque:
6.4 N·m (0.7 kgf-m, 4.7 ft-lb)

4) Install the V-belts. <Ref. to ME(w/o STI)-77, INSTALLATION, V-belt.>
5) Connect the battery ground terminal. <Ref. to NT-6, BATTERY, NOTE, Note.>
6) Charge refrigerant. <Ref. to AC-27, PROCEDURE, Refrigerant Charging Procedure.>

2. STI MODEL

CAUTION:
• Replace the O-rings on the hose - pressure suction and discharge with new parts, and then apply compressor oil.
• After replacing the compressor assembly, adjust the amount of the compressor oil. <Ref. to AC-34, ADJUSTMENT, Compressor Oil.>

1) Install the bracket assembly - compressor and the bracket - air conditioner.

Tightening torque:
26.5 N·m (2.7 kgf-m, 19.5 ft-lb)

2) Install the compressor assembly.

Tightening torque:
36 N·m (3.7 kgf-m, 26.6 ft-lb)

3) Install the hose - pressure suction and the hose - pressure discharge.

Tightening torque:
10 N·m (1 kgf-m, 7.4 ft-lb)

4) Install the secondary air pump. <Ref. to EC(STI)-55, INSTALLATION, Secondary Air Pump.>
5) Install the generator. <Ref. to SC(STI)-18, INSTALLATION, Generator.>
6) Install the V-belts. <Ref. to ME(STI)-41, INSTALLATION, V-belt.>
7) Connect the battery ground terminal.
8) Charge refrigerant. <Ref. to AC-27, PROCEDURE, Refrigerant Charging Procedure.>

C: INSPECTION

1. MAGNET CLUTCH CLEARANCE INSPECTION

1) Check the clearance of entire circumference around the drive plate and pulley.

Specification:
0.3 — 0.6 mm (0.0118 — 0.0236 in)

2) Replace the compressor assembly if the inspection result is not within the standard.

2. MAGNET CLUTCH OPERATION INSPECTION

1) Check the magnet clutch operation when battery voltage is applied to the connector terminal.

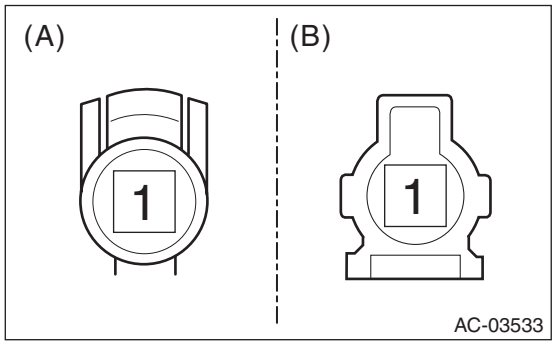

(A) Except for STI model
(B) STI model

Terminal No.	Inspection conditions	Specification
1 (+) — Chassis ground (–)	Apply battery voltage.	Engaged

2) If it does not operate normally, replace the compressor assembly.

15.Condenser

A: REMOVAL

1) Using the refrigerant recovery system, discharge refrigerant. <Ref. to AC-26, PROCEDURE, Refrigerant Recovery Procedure.>
2) Disconnect the ground cable from battery. <Ref. to NT-6, BATTERY, NOTE, Note.>

NOTE:
For model with battery sensor, disconnect the ground terminal from battery sensor.

3) Remove the air intake duct.
- Except for STI model: <Ref. to IN(w/o STI)-26, REMOVAL, Air Intake Duct.>
- STI model: <Ref. to IN(STI)-11, REMOVAL, Air Intake Duct.>

4) Remove the reservoir tank.
- Except for STI model: <Ref. to CO(w/o STI)-50, REMOVAL, Reservoir Tank.>
- STI model: <Ref. to CO(STI)-26, REMOVAL, Reservoir Tank.>

5) Lift up the vehicle.
6) Remove the under cover - front. <Ref. to EI-22, REMOVAL, Front Under Cover.>
7) Remove the bracket – front center LWR.
   (1) Remove the screw and clips, and turn over the mud guard - front.
   (2) Remove the bolts and clips, and remove the bracket – front center LWR.

NOTE:
While entirely pushing the bracket – front center LWR forward, remove the two hooks (a) on the left and right.

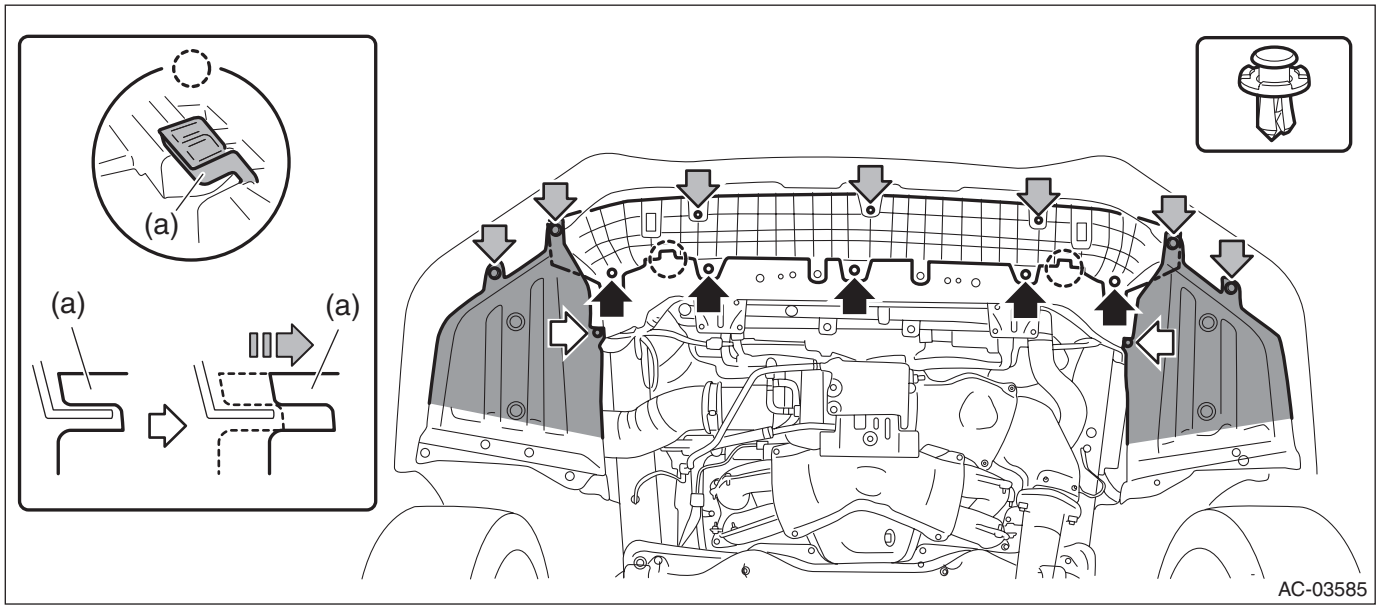

8) Remove the bolt, and detach the hose - pressure discharge and the pipe - evaporator cooling.

CAUTION:
Seal the disconnected hose, pipe and engaging part of condenser assembly with a plug or vinyl tape to prevent foreign matter from entering.

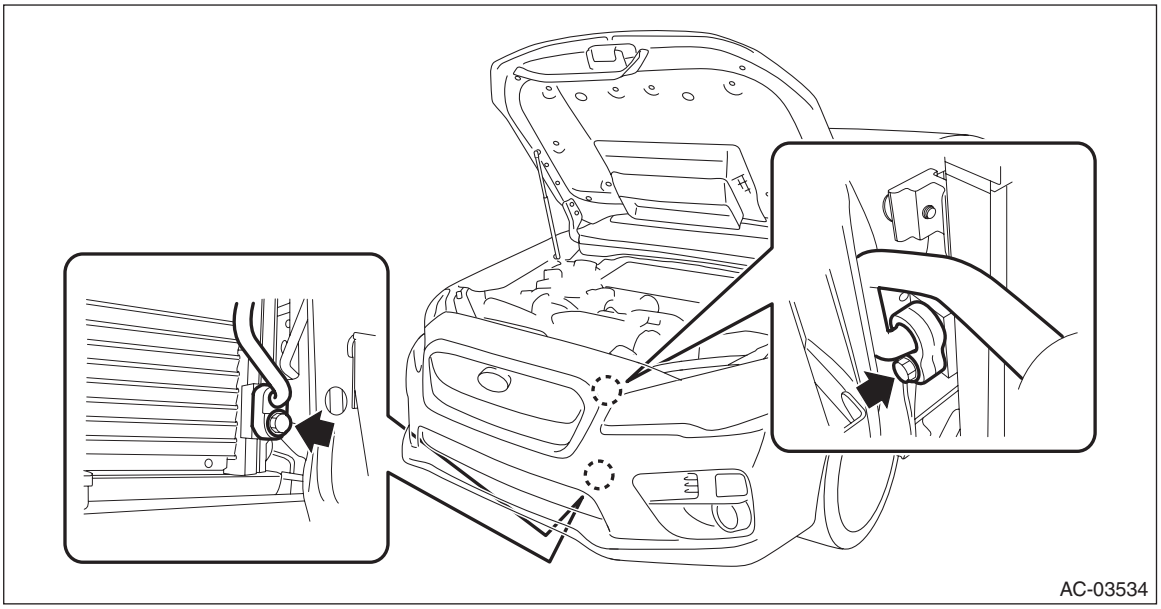

9) Remove the bolts of the over flow pipe. (STI model)

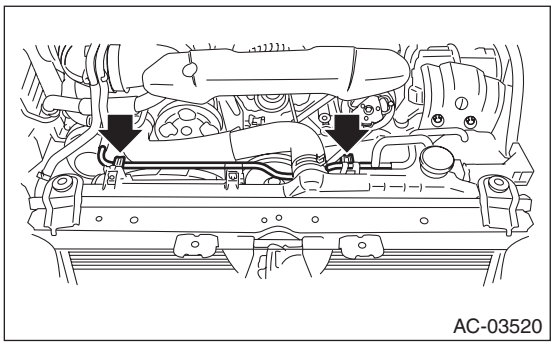

10) Remove the bolts and remove the radiator upper bracket.

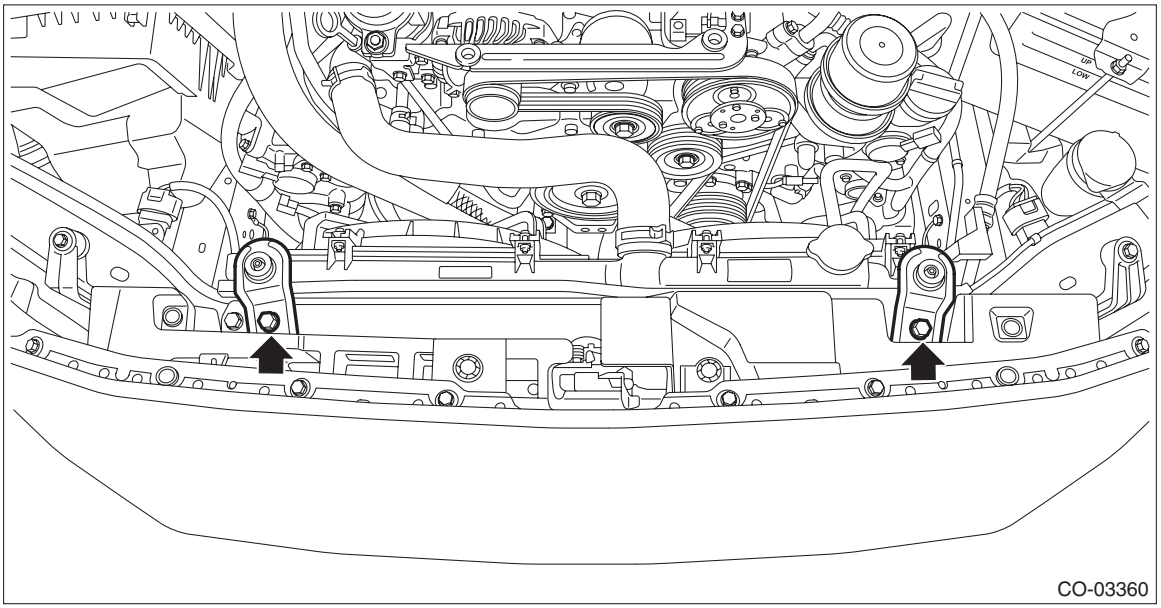

11) Remove the condenser assembly - air conditioner.
(1) Remove the bolt.
(2) Remove the lower guide, and remove the condenser assembly - air conditioner.

CAUTION:
• Push the radiator to the engine side, and pull it out through the space between the radiator and the radiator panel.
• Be careful not to damage the condenser and radiator fin. If a damaged fin is found, repair it using a thin screwdriver.

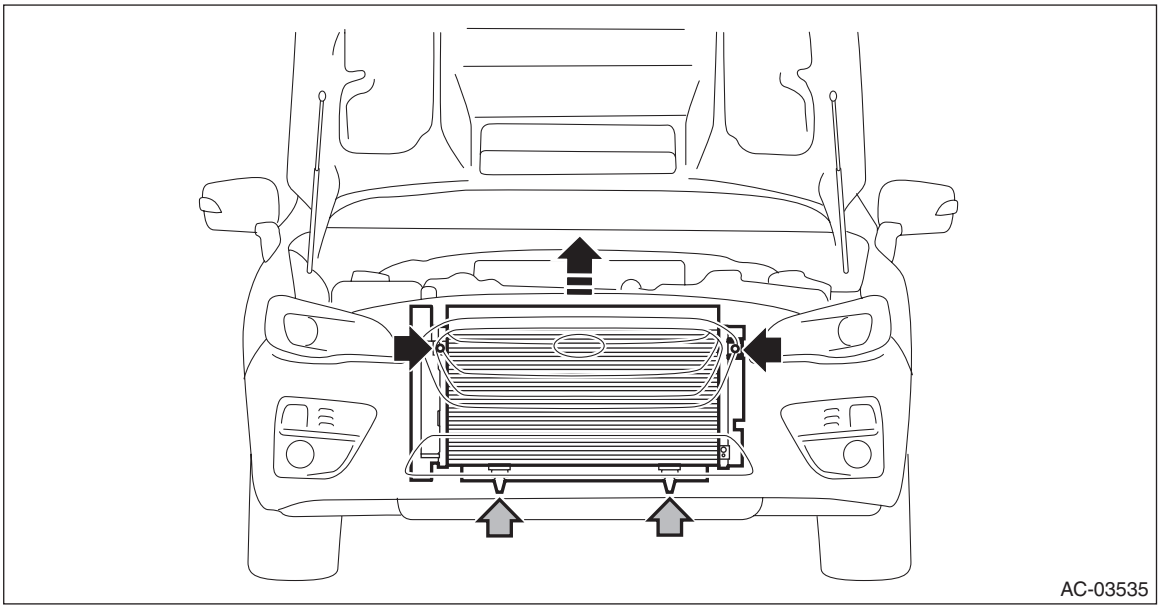

B: INSTALLATION

CAUTION:
• If the condenser assembly - air conditioner has been replaced, add an appropriate amount of compressor oil. <Ref. to AC-34, ADJUSTMENT, Compressor Oil.>
• Replace the O-rings with new parts, and then apply compressor oil.
• Confirm that the lower guide of condenser assembly - air conditioner fits into the holes on radiator panel.
• Install so that the front end of the under cover (b) comes inside the bumper face - front (a), and the front end of the mud guard (c) comes outside the bumper face - front (a).

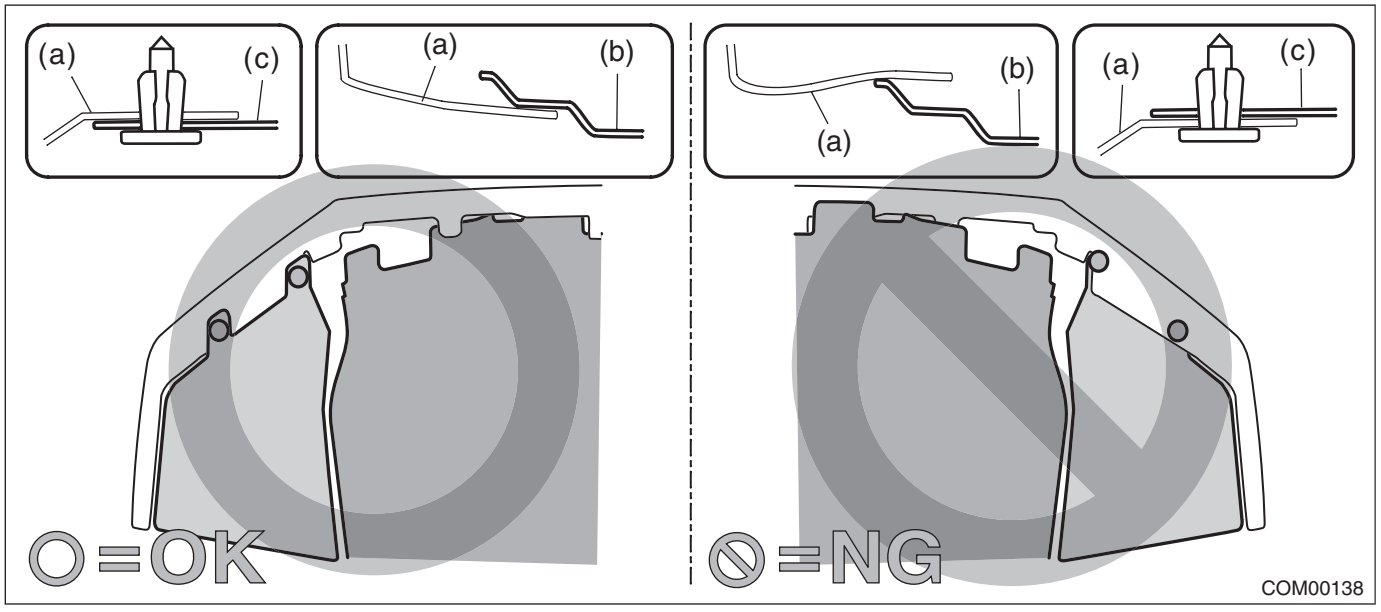

1) Install the condenser assembly - air conditioner.

Tightening torque:
7.5 N·m (0.8 kgf-m, 5.5 ft-lb)
2) Install the radiator upper brackets.

Tightening torque:
12 N·m (1.2 kgf-m, 8.9 ft-lb)
3) Install the over flow pipe. (STI model)

Tightening torque:
7.5 N·m (0.8 kgf-m, 5.5 ft-lb)
4) Install the hose - pressure discharge and the pipe - evaporator cooling.

Tightening torque:
7.5 N·m (0.8 kgf-m, 5.5 ft-lb)
5) Install the bracket – front center LWR.

Tightening torque:
7.5 N·m (0.8 kgf-m, 5.5 ft-lb)
6) Install the under cover - front.

Tightening torque:
18 N·m (1.8 kgf-m, 13.3 ft-lb)
7) Lower the vehicle.
8) Install the reservoir tank.
9) Install the air intake duct.
10) Connect the battery ground terminal. <Ref. to NT-6, BATTERY, NOTE, Note.>
11) Charge refrigerant. <Ref. to AC-27, PROCEDURE, Refrigerant Charging Procedure.>

C: INSPECTION

1) Check to see that the condenser fins are not clogged with debris or insects. Blow with compressed air or flush fins with water as needed.
2) If any oil leak is found, replace the condenser assembly - air conditioner.

16.Heater and Cooling Unit

A: REMOVAL

CAUTION:
Before handling the airbag system components, refer to "CAUTION" of "General Description" in "AIRBAG SYSTEM". <Ref. to AB-9, CAUTION, General Description.>
1) Disconnect the battery ground cable and wait for at least 60 seconds before starting work. <Ref. to NT-6, BATTERY, NOTE, Note.>

NOTE:
For model with battery sensor, disconnect the ground terminal from battery sensor.
2) Using the refrigerant recovery system, discharge refrigerant. <Ref. to AC-26, PROCEDURE, Refrigerant Recovery Procedure.>
3) Drain engine coolant.
- Except for STI model: <Ref. to CO(w/o STI)-13, DRAINING OF ENGINE COOLANT, REPLACEMENT, Engine Coolant.>
- STI model: <Ref. to CO(STI)-12, DRAINING OF ENGINE COOLANT, REPLACEMENT, Engine Coolant.>

4) Remove the intercooler.
- Except for STI model: <Ref. to IN(w/o STI)-43, REMOVAL, Intercooler.>
- STI model: <Ref. to IN(STI)-13, REMOVAL, Intercooler.>

5) Detach the clips and bolts, and detach the hose - pressure suction and the pipe - evaporator cooling.

CAUTION:
Seal the disconnected hose, pipe and engaging part of expansion valve with a plug or vinyl tape to prevent foreign matter from entering.
6) Loosen the heater hose clamps and detach the hoses.

NOTE:
Put alignment marks to hoses, clamps, etc.

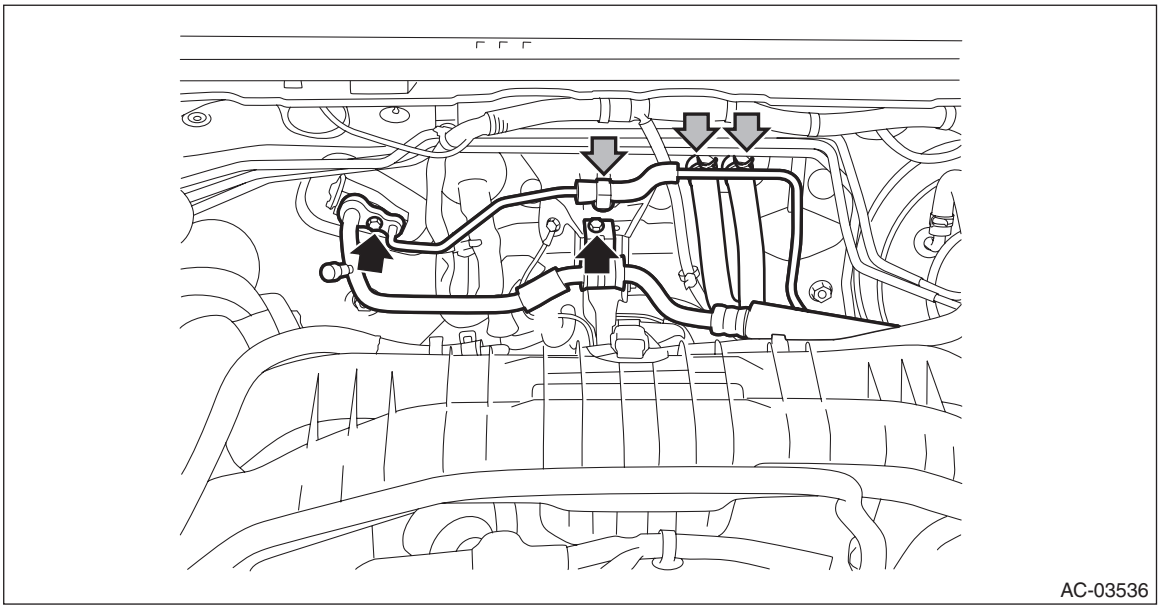

7) Remove the instrument panel assembly. <Ref. to EI-72, REMOVAL, Instrument Panel Assembly.>
8) Remove the engine control module (ECM). (STI model) <Ref. to FU(STI)-56, REMOVAL, Engine Control Module (ECM).>
9) Remove the blower motor unit assembly. <Ref. to AC-35, REMOVAL, Blower Motor Unit Assembly.>
10) Remove the heater and cooling unit assembly.
(1) Disconnect each connector and the hose - drain.

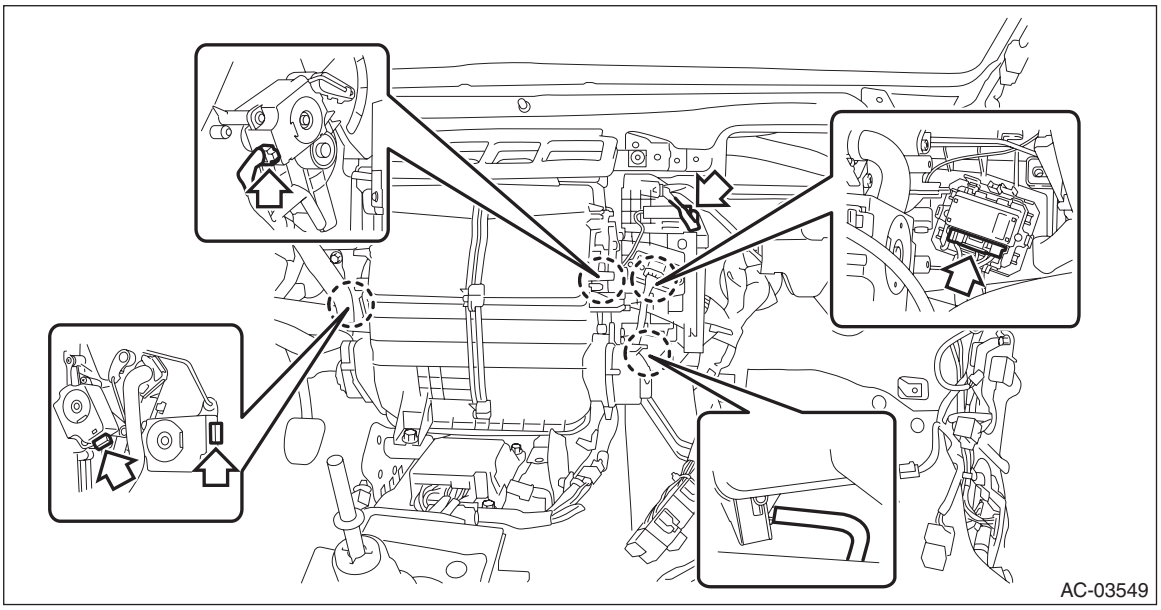
AC-03549

(2) Remove the bolt and nuts, and remove the heater & cooling unit assembly.

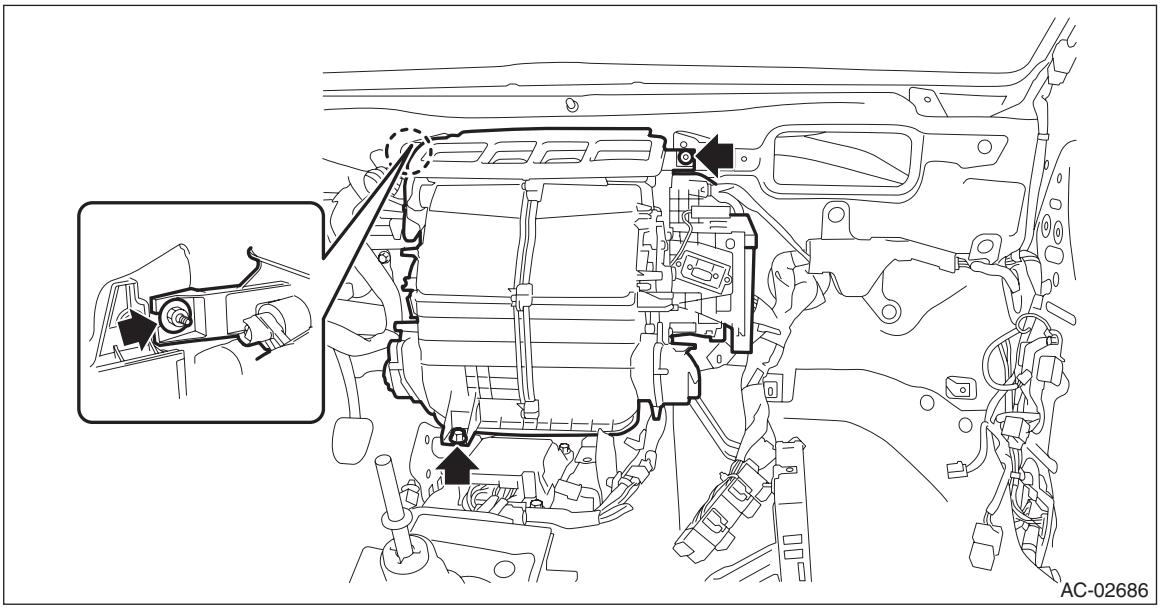
AC-02686

B: INSTALLATION

CAUTION:
- **Replace O-rings with new parts and install securely.**
- **Before handling the airbag system components, refer to "CAUTION" of "General Description" in "AIRBAG SYSTEM". <Ref. to AB-9, CAUTION, General Description.>**

1) Install the heater and cooling unit assembly.

Tightening torque:
7.5 N·m (0.8 kgf-m, 5.5 ft-lb)

2) Install the blower motor unit assembly.

Tightening torque:
7.5 N·m (0.8 kgf-m, 5.5 ft-lb)

3) Install the engine control module (ECM). (STI model) <Ref. to FU(STI)-56, INSTALLATION, Engine Control Module (ECM).>
4) Install the instrument panel assembly. <Ref. to EI-80, INSTALLATION, Instrument Panel Assembly.>
5) Attach the heater hose.
6) Install the hose - pressure suction and the pipe - evaporator cooling.

Tightening torque:
7.5 N·m (0.8 kgf-m, 5.5 ft-lb)

7) Install the intercooler.
- Except for STI model: <Ref. to IN(w/o STI)-45, INSTALLATION, Intercooler.>
- STI model: <Ref. to IN(STI)-14, INSTALLATION, Intercooler.>

8) Connect the battery ground terminal. <Ref. to NT-6, BATTERY, NOTE, Note.>
9) Fill engine coolant.
- Except for STI model: <Ref. to CO(w/o STI)-14, FILLING OF ENGINE COOLANT, REPLACEMENT, Engine Coolant.>
- STI model: <Ref. to CO(STI)-12, FILLING OF ENGINE COOLANT, REPLACEMENT, Engine Coolant.>

10) Charge refrigerant. <Ref. to AC-27, PROCEDURE, Refrigerant Charging Procedure.>

17.Evaporator

A: REMOVAL

CAUTION:
Before handling the airbag system components, refer to "CAUTION" of "General Description" in "AIRBAG SYSTEM". <Ref. to AB-9, CAUTION, General Description.>
1) Disconnect the ground cable from battery and wait for at least 60 seconds before starting work. <Ref. to NT-6, BATTERY, NOTE, Note.>

NOTE:
For model with battery sensor, disconnect the ground terminal from battery sensor.
2) Using the refrigerant recovery system, discharge refrigerant. <Ref. to AC-26, PROCEDURE, Refrigerant Recovery Procedure.>
3) Remove the intercooler.
- Except for STI model: <Ref. to IN(w/o STI)-43, REMOVAL, Intercooler.>
- STI model: <Ref. to IN(STI)-13, REMOVAL, Intercooler.>

4) Remove the expansion valve - cooling. <Ref. to AC-61, REMOVAL, Expansion Valve.>
5) Remove the glove box. <Ref. to EI-64, REMOVAL, Glove Box.>
6) Remove the engine control module (ECM). (STI model) <Ref. to FU(STI)-56, REMOVAL, Engine Control Module (ECM).>
7) Remove the blower motor unit assembly. <Ref. to AC-35, REMOVAL, Blower Motor Unit Assembly.>
8) Remove the evaporator assembly - cooling.
   (1) Disconnect the connector and lock of the thermostat - cooling.
   (2) Remove the screws and detach the cover.

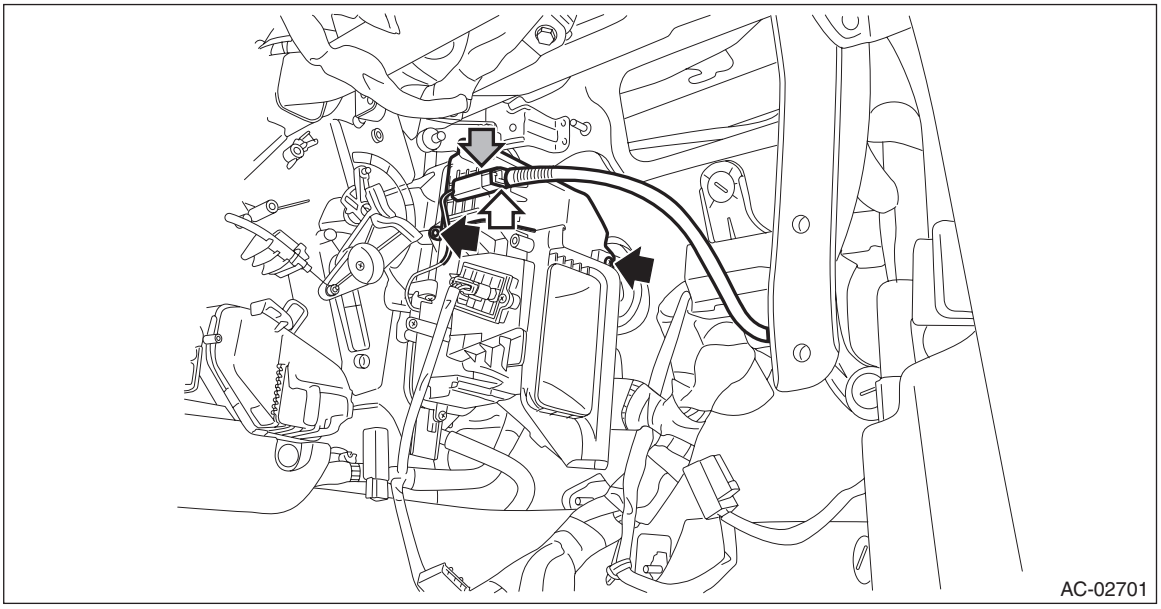

(3) Remove the cover - heater unit.
1. Disconnect the power transistor connector.
2. Remove the screws and clips to remove the cover - heater unit.

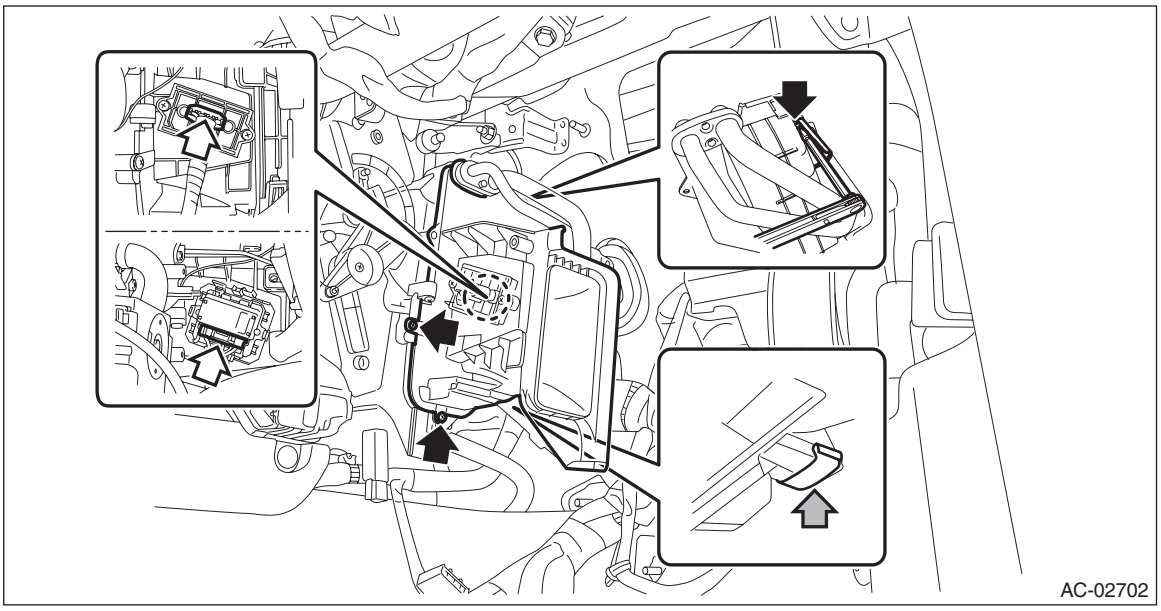

(4) Remove the bolt, and detach the pipe - evaporator core.

CAUTION:
Seal the disconnected pipe and engaging part of evaporator assembly with a plug or vinyl tape to prevent foreign matter from entering.

Preparation tool:
Hexagon wrench: 4 mm (0.16 in)

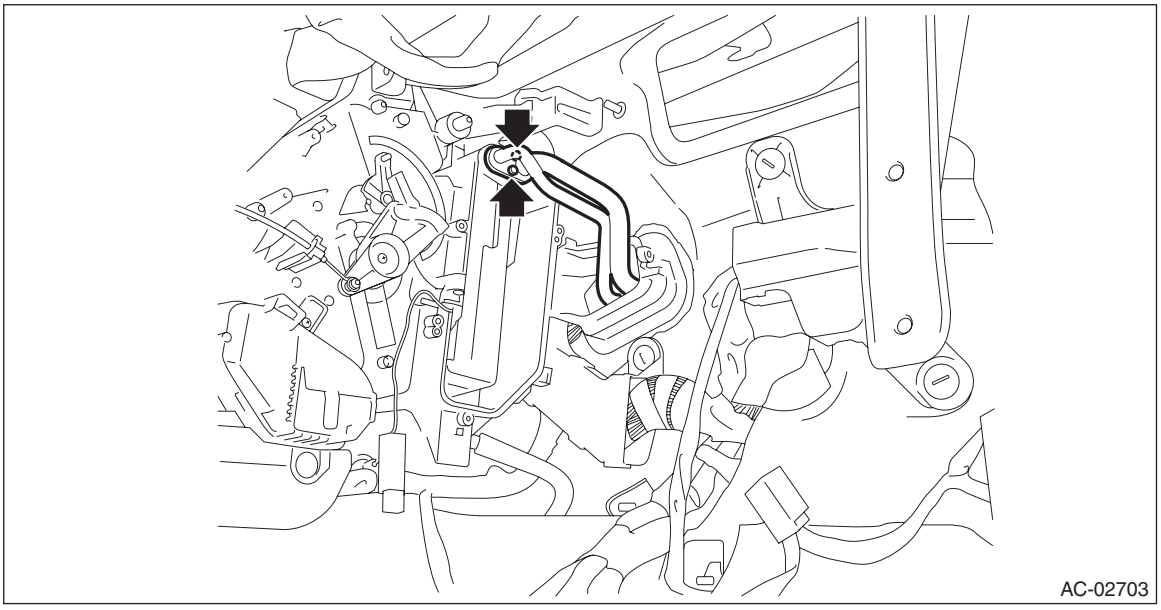

(5) Remove the evaporator assembly - cooling.

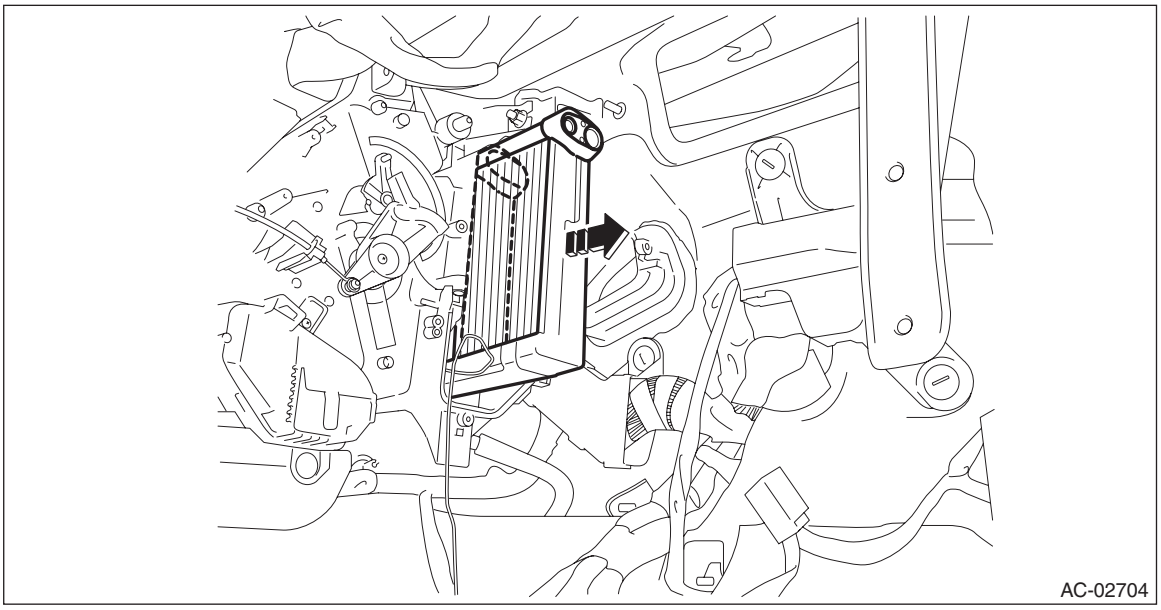

(6) Remove the thermostat - cooling.

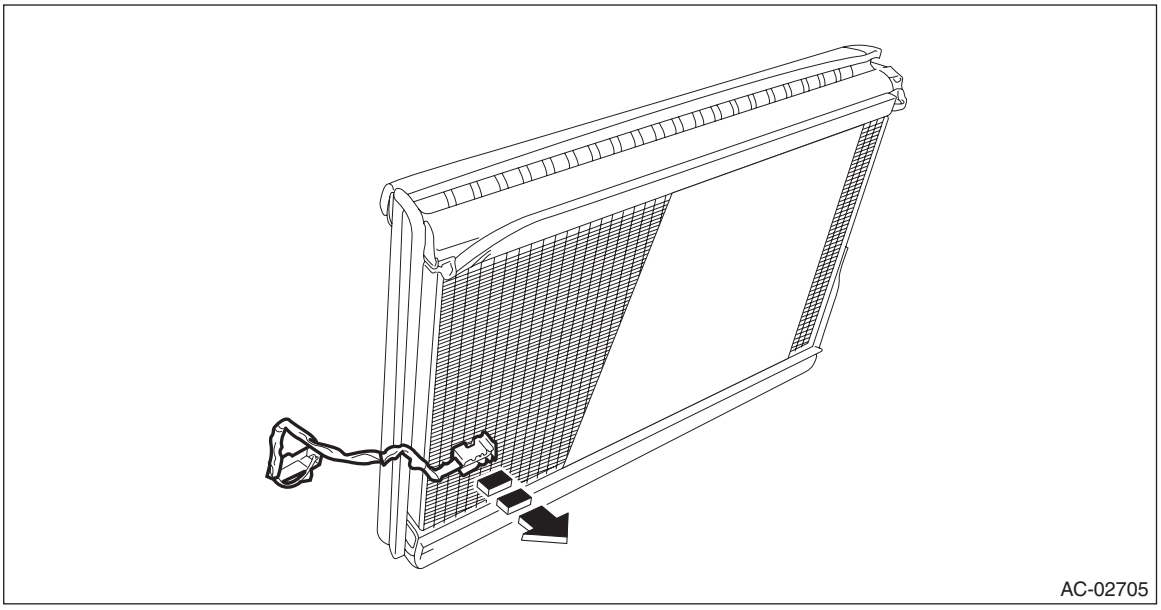

B: INSTALLATION

CAUTION:
• If the evaporator assembly - cooling has been replaced, add an appropriate amount of compressor oil. <Ref. to AC-34, ADJUSTMENT, Compressor Oil.>
• When the evaporator assembly - cooling has been replaced, replace the packing of the expansion valve - cooling with a new one, and then apply compressor oil.
• Make sure that the water seal packing on the cover attachment area is securely attached.
• Replace the O-rings with new parts, and then apply compressor oil.
• Before handling the airbag system components, refer to "CAUTION" of "General Description" in "AIRBAG SYSTEM". <Ref. to AB-9, CAUTION, General Description.>
1) Install the thermostat - cooling. <Ref. to AC-81, INSTALLATION, Evaporator Sensor.>
2) Install the evaporator assembly - cooling.
3) Install the blower motor unit assembly.

Tightening torque:
7.5 N·m (0.8 kgf-m, 5.5 ft-lb)
4) Install the engine control module (ECM). (STI model) <Ref. to FU(STI)-56, INSTALLATION, Engine Control Module (ECM).>
5) Install the glove box.
6) Install the expansion valve. <Ref. to AC-62, INSTALLATION, Expansion Valve.>
7) Install the intercooler.
• Except for STI model: <Ref. to IN(w/o STI)-45, INSTALLATION, Intercooler.>
• STI model: <Ref. to IN(STI)-14, INSTALLATION, Intercooler.>
8) Connect the battery ground terminal. <Ref. to NT-6, BATTERY, NOTE, Note.>
9) Charge refrigerant. <Ref. to AC-27, PROCEDURE, Refrigerant Charging Procedure.>

C: INSPECTION

1) Check the evaporator fin for dust. Blow with compressed air or flush fins with water as needed.
2) If any oil leak is found, replace the evaporator assembly - cooling.

18.Expansion Valve

A: REMOVAL

1) Disconnect the ground cable from battery. <Ref. to NT-6, BATTERY, NOTE, Note.>

NOTE:
For model with battery sensor, disconnect the ground terminal from battery sensor.
2) Using the refrigerant recovery system, discharge refrigerant. <Ref. to AC-26, PROCEDURE, Refrigerant Recovery Procedure.>
3) Remove the intercooler.
- Except for STI model: <Ref. to IN(w/o STI)-43, REMOVAL, Intercooler.>
- STI model: <Ref. to IN(STI)-13, REMOVAL, Intercooler.>

4) Detach the clips and bolts, and detach the hose - pressure suction and the pipe - evaporator cooling.

CAUTION:
Seal the disconnected hose, pipe and engaging part of expansion valve with a plug or vinyl tape to prevent foreign matter from entering.

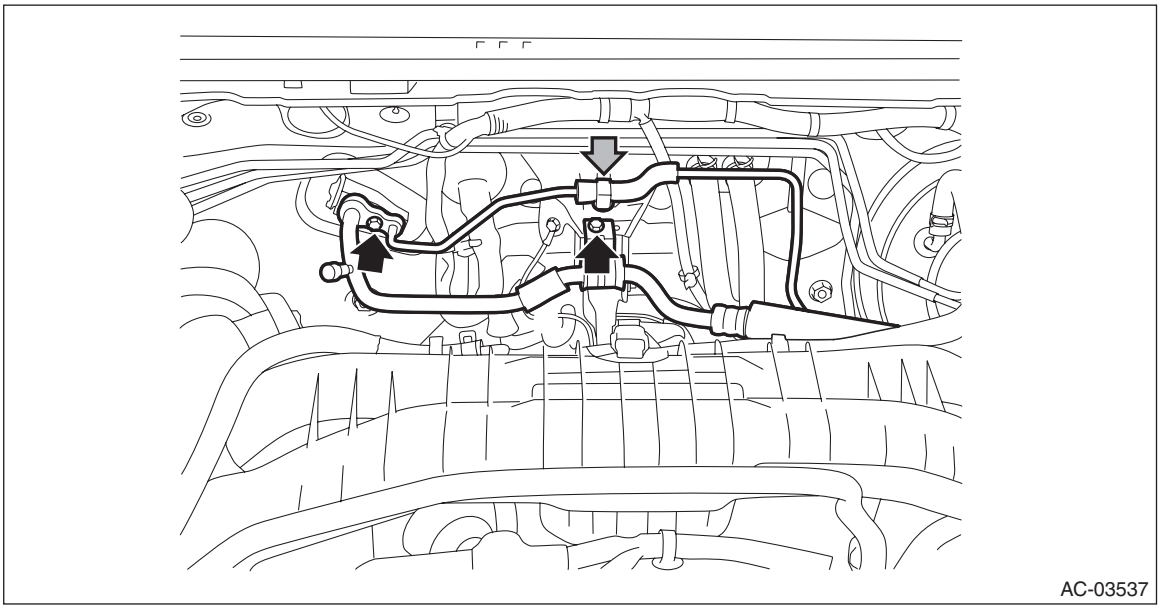

5) Remove the bolt, and remove the expansion valve - cooling.

CAUTION:
Seal the pipe and engaging part of expansion valve with a plug or vinyl tape to prevent foreign matter from entering.

Preparation tool:
Hexagon wrench: 4 mm (0.16 in)

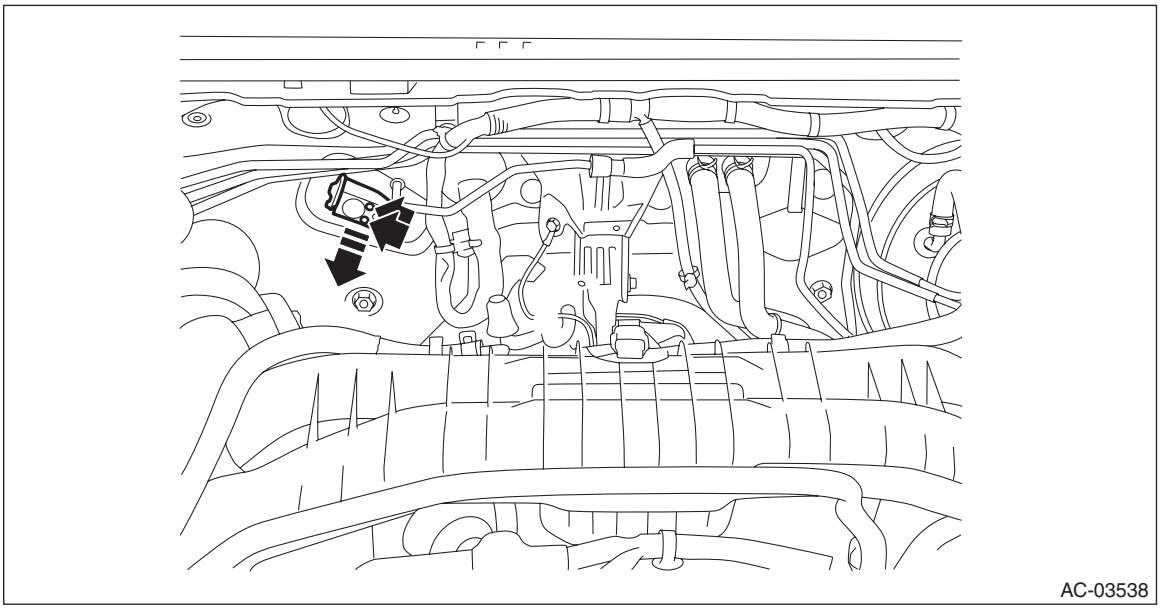

B: INSTALLATION

CAUTION:
Replace the O-rings with new parts, and then apply compressor oil.
1) Install the expansion valve.

Tightening torque:
5 N·m (0.5 kgf-m, 3.7 ft-lb)
2) Install the hose - pressure suction and the pipe - evaporator cooling.

Tightening torque:
7.5 N·m (0.8 kgf-m, 5.5 ft-lb)
3) Install the intercooler.
- Except for STI model: <Ref. to IN(w/o STI)-45, INSTALLATION, Intercooler.>
- STI model: <Ref. to IN(STI)-14, INSTALLATION, Intercooler.>

4) Connect the battery ground terminal. <Ref. to NT-6, BATTERY, NOTE, Note.>
5) Charge refrigerant. <Ref. to AC-27, PROCEDURE, Refrigerant Charging Procedure.>

19.Hose and Pipe

A: REMOVAL

1. LOW-PRESSURE HOSE

1) Using the refrigerant recovery system, discharge refrigerant. <Ref. to AC-26, PROCEDURE, Refrigerant Recovery Procedure.>
2) Remove the intercooler.
- Except for STI model: <Ref. to IN(w/o STI)-43, REMOVAL, Intercooler.>
- STI model: <Ref. to IN(STI)-13, REMOVAL, Intercooler.>

3) Remove the bolts and detach the hose - pressure discharge on the compressor side. (STI model)
4) Remove the bolts and remove the hose - pressure suction.

CAUTION:
- **Do not apply excessive force to the hose.**
- **Seal the disconnected hose, compressor and engaging part of expansion valve with a plug or vinyl tape to prevent foreign matter from entering.**
- **When disconnecting the hose for the model with oil cooler, be careful not to allow the hose to interfere with the oil cooler.**

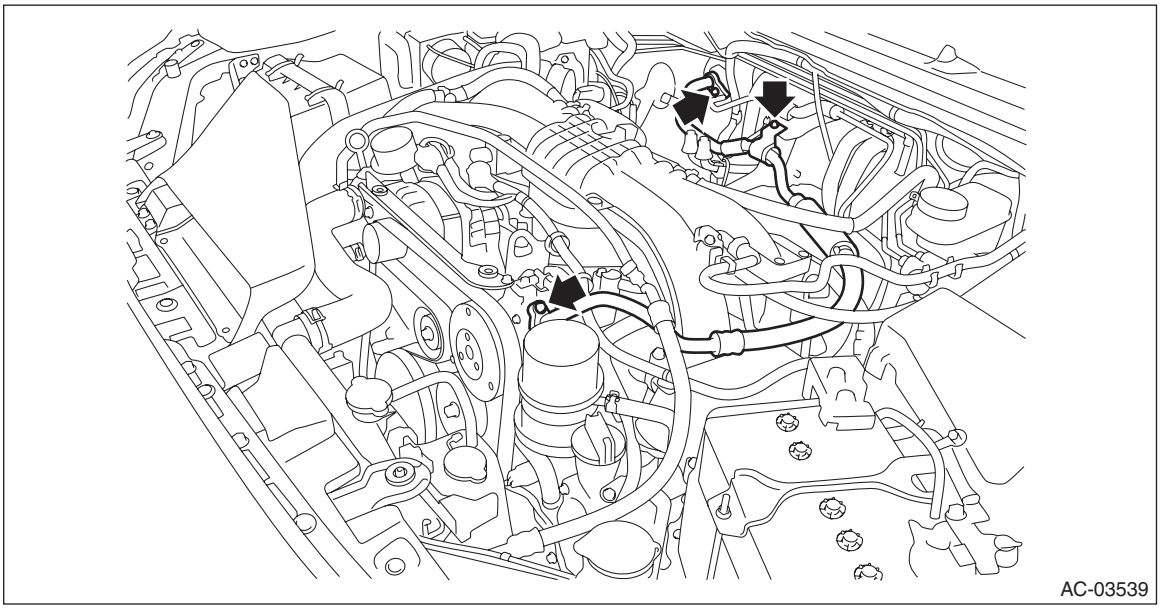

2. HIGH-PRESSURE HOSE

1) Using the refrigerant recovery system, discharge refrigerant. <Ref. to AC-26, PROCEDURE, Refrigerant Recovery Procedure.>
2) Remove the reservoir tank.
- Except for STI model: <Ref. to CO(w/o STI)-50, REMOVAL, Reservoir Tank.>
- STI model: <Ref. to CO(STI)-26, REMOVAL, Reservoir Tank.>

3) Lift up the vehicle.
4) Remove the under cover - front. <Ref. to EI-22, REMOVAL, Front Under Cover.>

5) Remove the bracket – front center LWR.
(1) Remove the screw and clips, and turn over the mud guard - front.
(2) Remove the bolts and clips, and remove the bracket – front center LWR.

NOTE:
While entirely pushing the bracket – front center LWR forward, remove the two hooks (a) on the left and right.

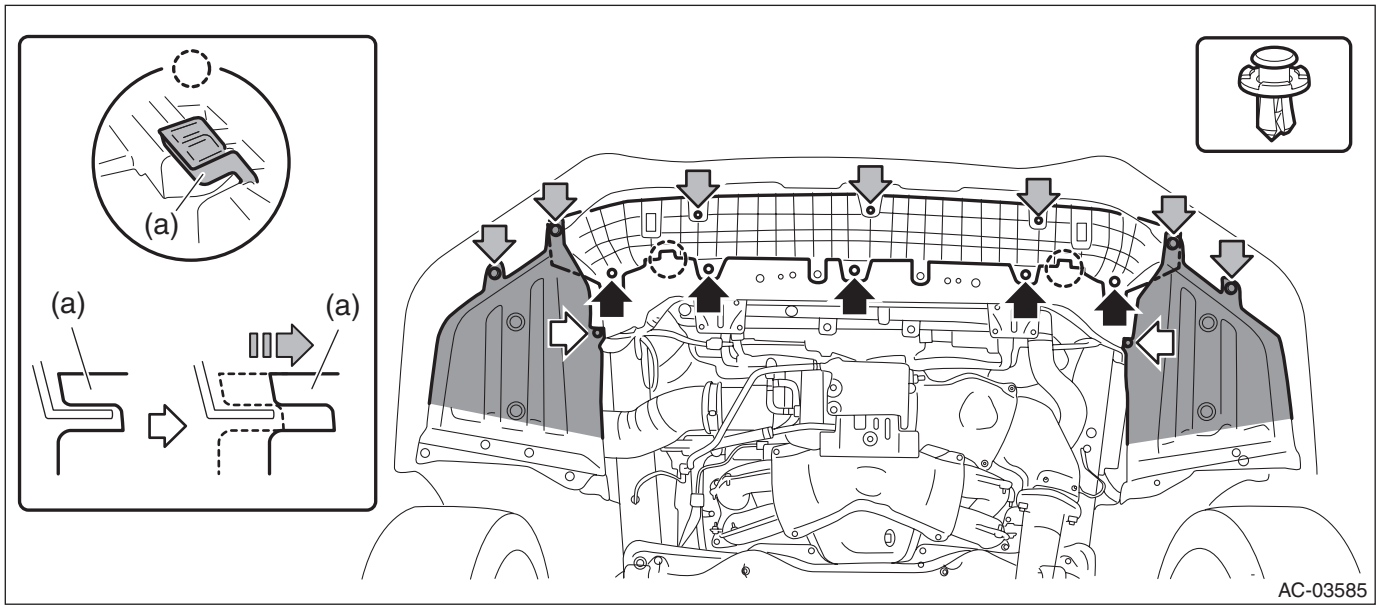

6) Remove the bolts, and remove the hose - pressure discharge.

CAUTION:
- **Do not apply excessive force to the hose.**
- **Seal the disconnected hose, compressor and engaging part of compressor with a plug or vinyl tape to prevent foreign matter from entering.**

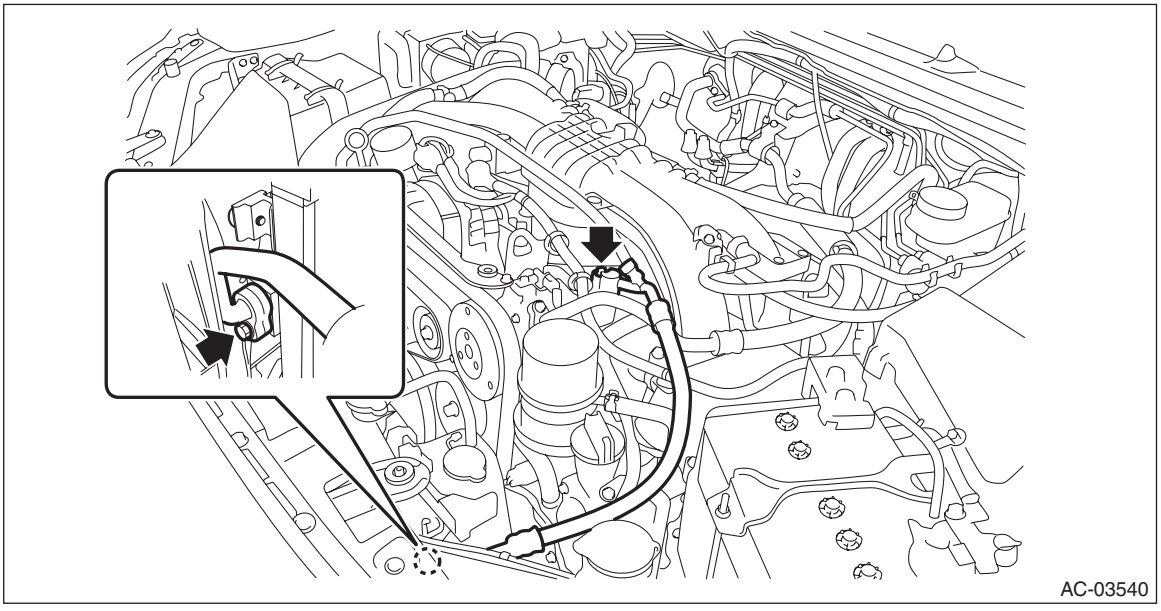

3. A/C PIPE

1) Using the refrigerant recovery system, discharge refrigerant. <Ref. to AC-26, PROCEDURE, Refrigerant Recovery Procedure.>
2) Remove the battery.
- Except for STI model: <Ref. to SC(w/o STI)-50, REMOVAL, Battery.>
- STI model: <Ref. to SC(STI)-24, REMOVAL, Battery.>

3) Remove the intercooler.
- Except for STI model: <Ref. to IN(w/o STI)-43, REMOVAL, Intercooler.>
- STI model: <Ref. to IN(STI)-13, REMOVAL, Intercooler.>

4) Remove the secondary air pump. (STI model) <Ref. to EC(STI)-55, REMOVAL, Secondary Air Pump.>
5) Remove the reservoir tank.
- Except for STI model: <Ref. to CO(w/o STI)-50, REMOVAL, Reservoir Tank.>
- STI model: <Ref. to CO(STI)-26, REMOVAL, Reservoir Tank.>

6) Lift up the vehicle.
7) Remove the under cover - front. <Ref. to EI-22, REMOVAL, Front Under Cover.>
8) Remove the bracket – front center LWR.
   (1) Remove the screw and clips, and turn over the mud guard - front.
   (2) Remove the bolts and clips, and remove the bracket – front center LWR.

NOTE:
While entirely pushing the bracket – front center LWR forward, remove the two hooks (a) on the left and right.

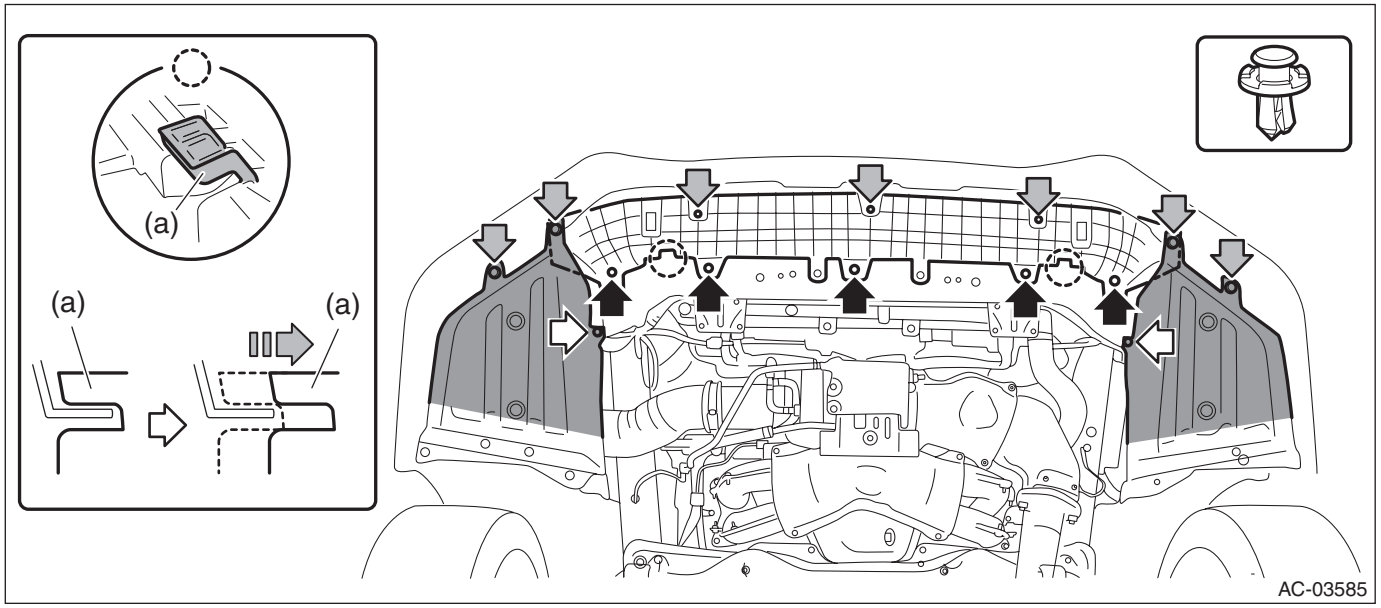

9) Remove the bolts and detach the hose - pressure suction.

CAUTION:
Seal the disconnected hose and engaging part of expansion valve with a plug or vinyl tape to prevent foreign matter from entering.

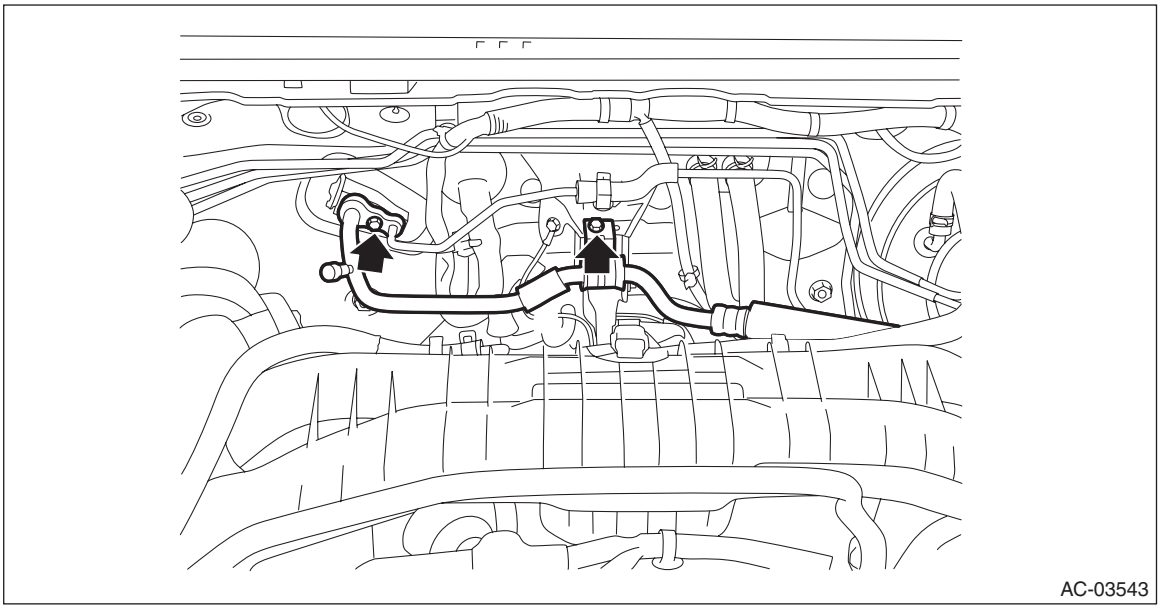

10) Remove the pipe - evaporator cooling.
(1) Release the lock and remove the cable clamp.
(2) Release the harness clip, and disconnect the starter connector.
(3) Disconnect the battery sensor harness from the main fuse box. (Except for STI model)
(4) Disconnect the pressure switch connector.
(5) Remove the bolt, and detach the pipe - evaporator cooling.

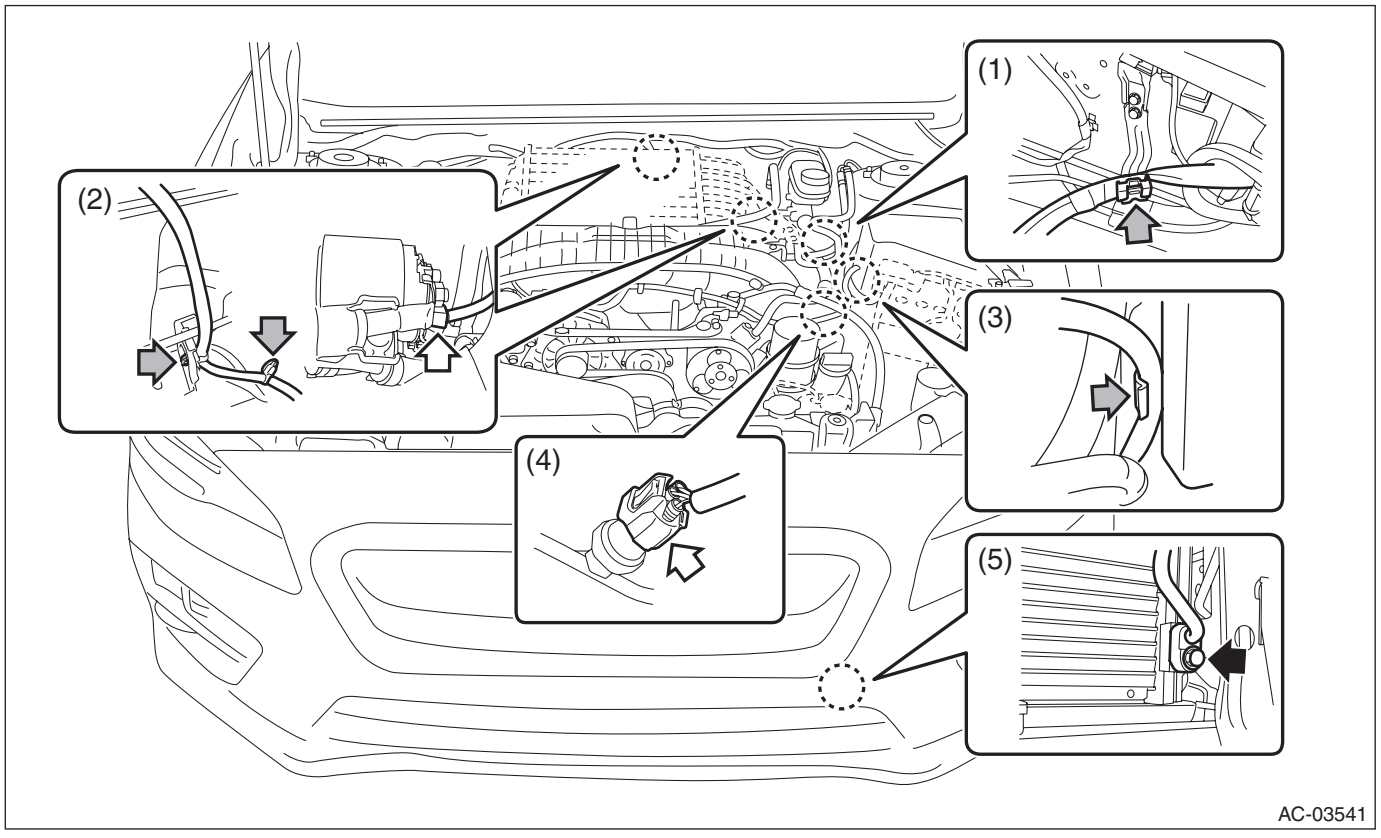

(6) Remove the clip - pipe and the clip, and remove the pipe - evaporator cooling in numerical order as shown in the figure.

CAUTION:
• Do not apply excessive force to the pipe.
• Seal the disconnected pipe, expansion valve and engaging part of condenser with a plug or vinyl tape to prevent foreign matter from entering.
• Do not pull the harness and cable forcibly.

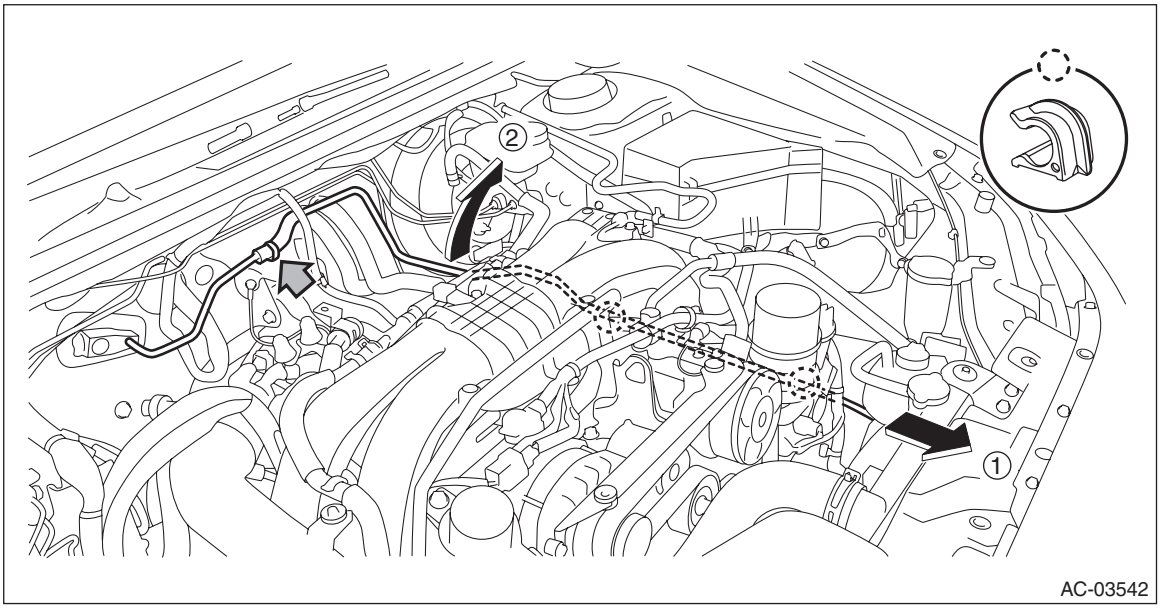

B: INSTALLATION

1. LOW-PRESSURE HOSE

CAUTION:
• If the hose has been replaced, add an appropriate amount of compressor oil to the compressor. <Ref. to AC-34, ADJUSTMENT, Compressor Oil.>
• Replace the O-rings with new parts, and then apply compressor oil.
• When connecting hoses, do not apply an excessive force to them. After installing, check that no torsion or excessive tension applied to the hoses.

1) Install the hose - pressure suction.

Tightening torque:
Air conditioning unit: <Ref. to AC-9, AIR CONDITIONING UNIT, COMPONENT, General Description.>

2) Install the hose - pressure suction discharge. (STI model)

Tightening torque:
10 N·m (1 kgf-m, 7.4 ft-lb)

3) Install the intercooler.
- Except for STI model: <Ref. to IN(w/o STI)-45, INSTALLATION, Intercooler.>
- STI model: <Ref. to IN(STI)-14, INSTALLATION, Intercooler.>

4) Charge refrigerant. <Ref. to AC-27, PROCEDURE, Refrigerant Charging Procedure.>

2. HIGH-PRESSURE HOSE

CAUTION:
• If the hose has been replaced, add an appropriate amount of compressor oil to the compressor. <Ref. to AC-34, ADJUSTMENT, Compressor Oil.>
• Replace the O-rings with new parts, and then apply compressor oil.
• When connecting hoses, do not apply an excessive force to them. After installing, check that no torsion or excessive tension applied to the hoses.
• Install so that the front end of the under cover (b) comes inside the bumper face - front (a), and the front end of the mud guard (c) comes outside the bumper face - front (a).

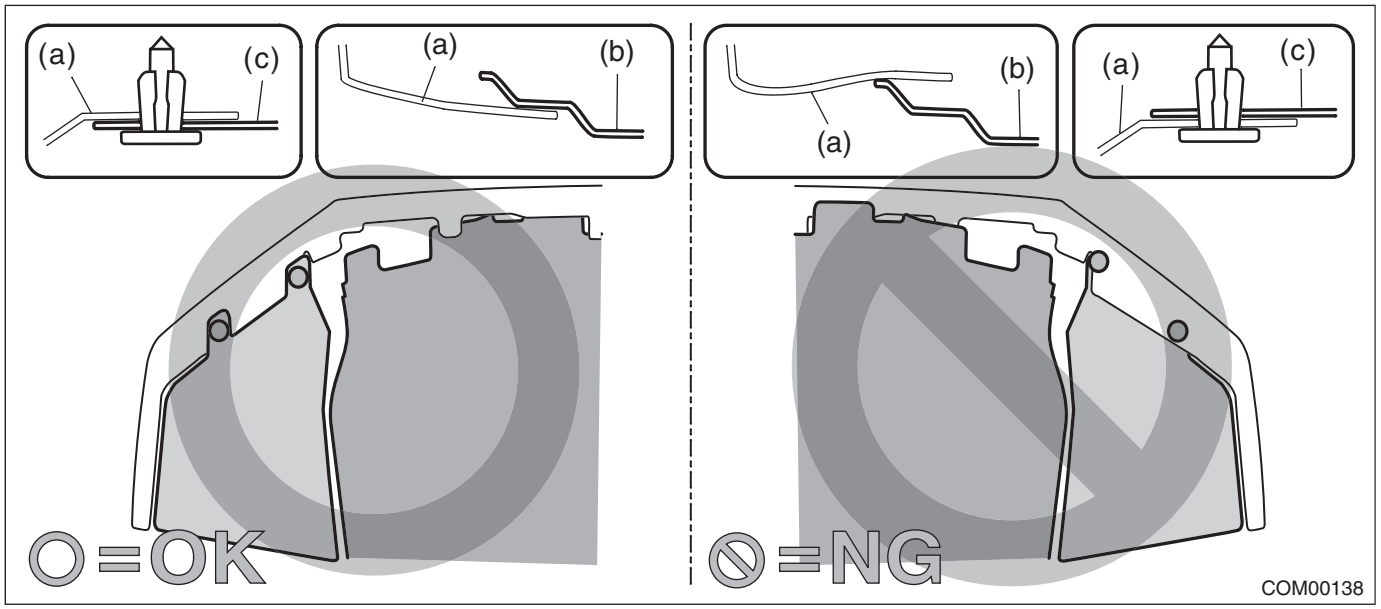

1) Install the hose - pressure suction discharge.

Tightening torque:
Air conditioning unit: <Ref. to AC-9, AIR CONDITIONING UNIT, COMPONENT, General Description.>
2) Install the bracket - front center LWR.

Tightening torque:
7.5 N·m (0.8 kgf-m, 5.5 ft-lb)
3) Install the under cover - front.

Tightening torque:
7.5 N·m (0.8 kgf-m, 5.5 ft-lb)
4) Lower the vehicle.
5) Install the reservoir tank.
• Except for STI model: <Ref. to CO(w/o STI)-50, INSTALLATION, Reservoir Tank.>
• STI model: <Ref. to CO(STI)-26, INSTALLATION, Reservoir Tank.>
6) Charge refrigerant. <Ref. to AC-27, PROCEDURE, Refrigerant Charging Procedure.>

3. A/C PIPE

CAUTION:
• If the hose and pipe have been replaced, add an appropriate amount of compressor oil to the compressor. <Ref. to AC-34, ADJUSTMENT, Compressor Oil.>
• Replace the O-rings with new parts, and then apply compressor oil.
• When connecting hoses and pipes, do not apply excessive force. After installing, check that no torsion or excessive tension applied to the hoses.

• Install so that the front end of the under cover (b) comes inside the bumper face - front (a), and the front end of the mud guard (c) comes outside the bumper face - front (a).

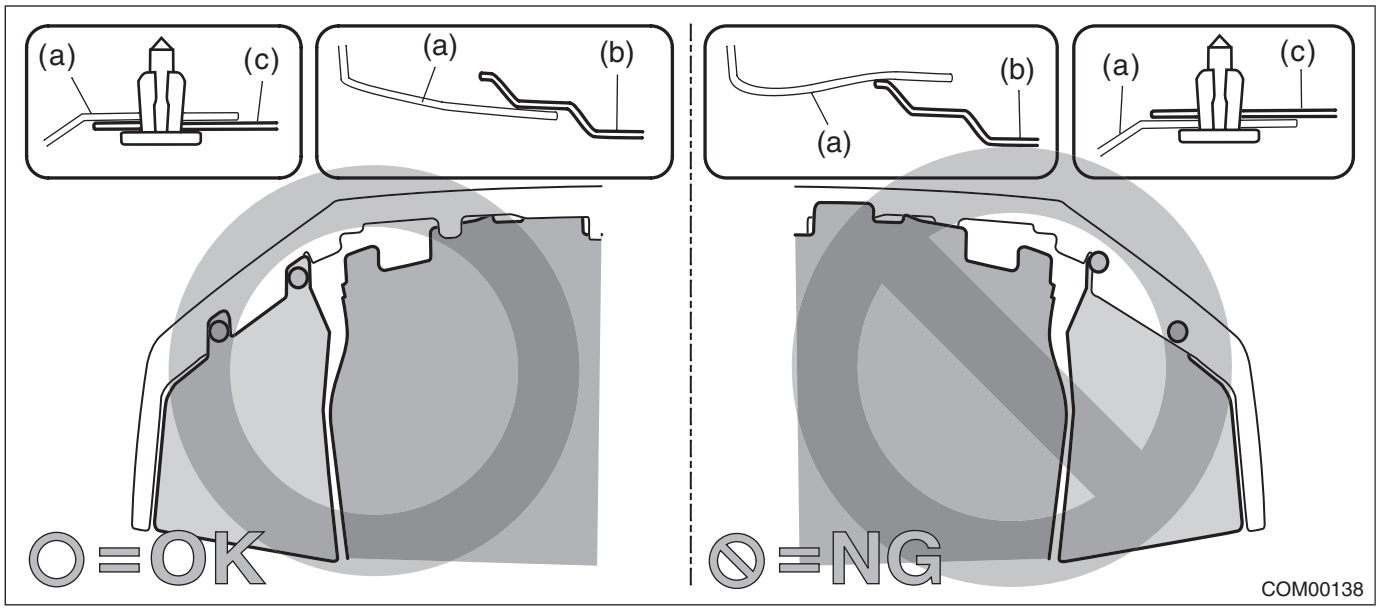

1) Install the pipe - evaporator cooling.

Tightening torque:
7.5 N·m (0.8 kgf-m, 5.5 ft-lb)

2) Install the hose - pressure suction.

Tightening torque:
7.5 N·m (0.8 kgf-m, 5.5 ft-lb)

3) Install the bracket - front center LWR.

Tightening torque:
7.5 N·m (0.8 kgf-m, 5.5 ft-lb)

4) Install the under cover - front.

Tightening torque:
18 N·m (1.8 kgf-m, 13.3 ft-lb)

5) Lower the vehicle.
6) Install the reservoir tank.
- Except for STI model: <Ref. to CO(w/o STI)-50, INSTALLATION, Reservoir Tank.>
- STI model: <Ref. to CO(STI)-26, INSTALLATION, Reservoir Tank.>

7) Install the secondary air pump. (STI model) <Ref. to EC(STI)-55, INSTALLATION, Secondary Air Pump.>
8) Install the intercooler.
- Except for STI model: <Ref. to IN(w/o STI)-45, INSTALLATION, Intercooler.>
- STI model: <Ref. to IN(STI)-14, INSTALLATION, Intercooler.>

9) Install the battery.
- Except for STI model: <Ref. to SC(w/o STI)-50, INSTALLATION, Battery.>
- STI model: <Ref. to SC(STI)-24, INSTALLATION, Battery.>

10) Charge refrigerant. <Ref. to AC-27, PROCEDURE, Refrigerant Charging Procedure.>

C: INSPECTION

1) Check the hoses for cracks, damage and expansion. Replace the hose if faulty.
2) Check the pipes for crack or damage. Replace the pipe if faulty.

20.Pressure Switch (Triple Pressure Switch)

A: INSPECTION

1) Connect the manifold gauge to the service valve on the high-pressure side.
2) Disconnect the connector.
3) Start the air conditioner, and check the operating pressure of switch by turning the compressor assembly (magnet clutch) to ON/OFF. Operation of each switch is as follows.

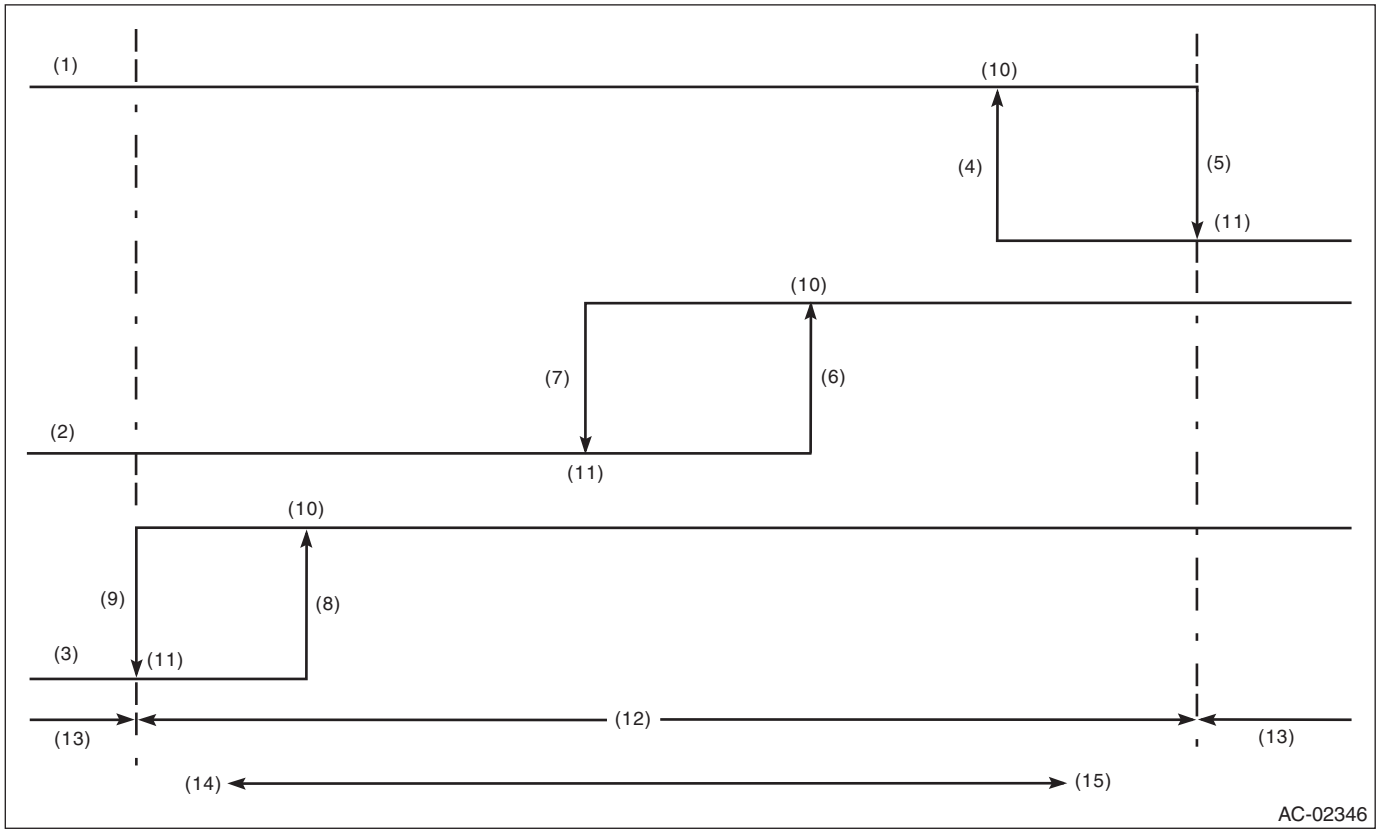

(1)	High pressure switch	(6)	1,770±100 kPa (18.05±1.02 kg/cm^2, 256.65±14.5 psi)	(11)	OFF
(2)	Middle pressure switch	(7)	1,470±120 kPa (14.99±1.22 kg/cm^2, 213.15±17.4 psi)	(12)	Operative range of compressor ASSY
(3)	Low pressure switch	(8)	225±30 kPa (2.29±0.31 kg/cm^2, 32.6±4.3 psi)	(13)	Inoperative range of compressor ASSY
(4)	2,350±200 kPa (24±2.04 kg/cm^2, 340.7±29 psi)	(9)	196±25 kPa (2±0.25 kg/cm^2, 28.4±3.6 psi)	(14)	Low pressure
(5)	2940±200 kPa (29.98±2.04 kg/cm^2, 426.3±29 psi)	(10)	ON	(15)	High pressure

NOTE:
• High pressure switch turns the compressor assembly (magnet clutch) to OFF when the refrigerant pressure becomes extremely high to prevent the evaporator, air conditioner piping and expansion valve from getting damaged or frozen, etc.
• The middle pressure switch is used to effectively control the radiator fan output by judging high load/low load in normal pressure range.
• The low pressure switch detects a refrigerant shortage and deactivates the compressor assembly (magnet clutch) if the refrigerant pressure is abnormally low. (Because any further compressor assembly operation in such a state may lead to compressor seizure)

21.Ambient Sensor

A: REMOVAL

1) Disconnect the ground cable from battery. <Ref. to NT-6, BATTERY, NOTE, Note.>

NOTE:
For model with battery sensor, disconnect the ground terminal from battery sensor.

2) Lift up the vehicle.
3) Remove the under cover - front. <Ref. to EI-22, REMOVAL, Front Under Cover.>
4) Remove the bracket – front center LWR.
   (1) Remove the screw and clips, and turn over the mud guard - front.
   (2) Remove the bolts and clips, and remove the bracket – front center LWR.

NOTE:
While entirely pushing the bracket – front center LWR forward, remove the two hooks (a) on the left and right.

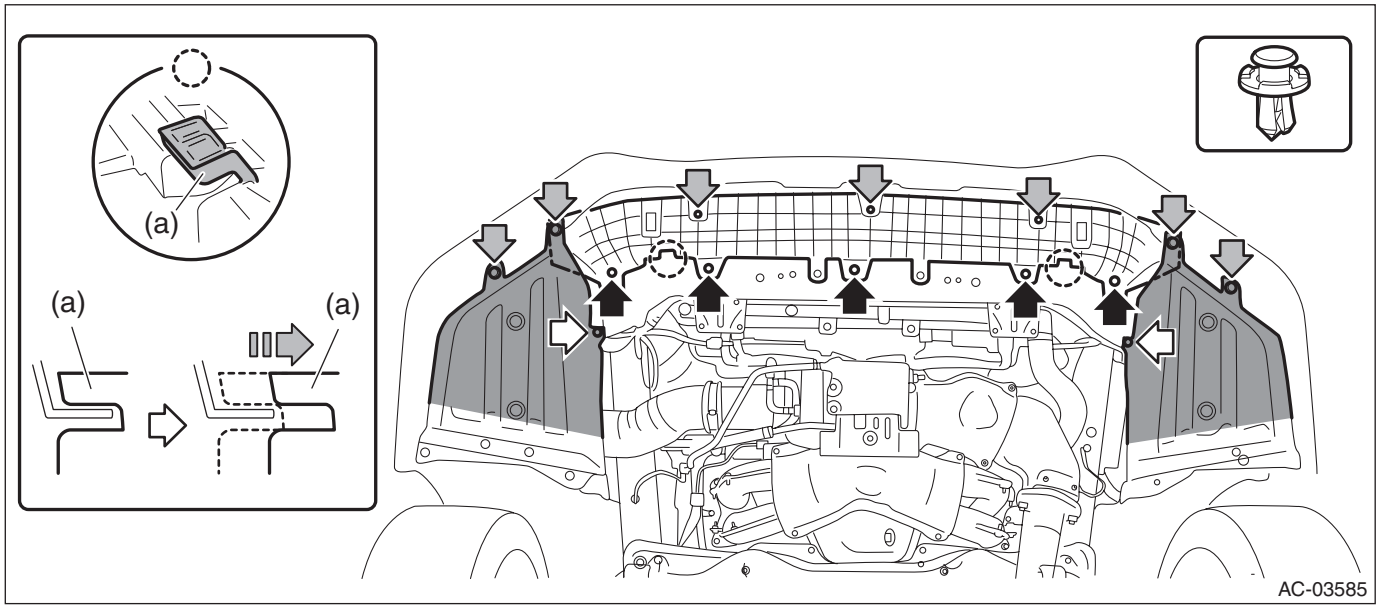

5) Remove the ambient sensor.
   (1) Disconnect the connector.
   (2) Release the claws and remove the ambient sensor.

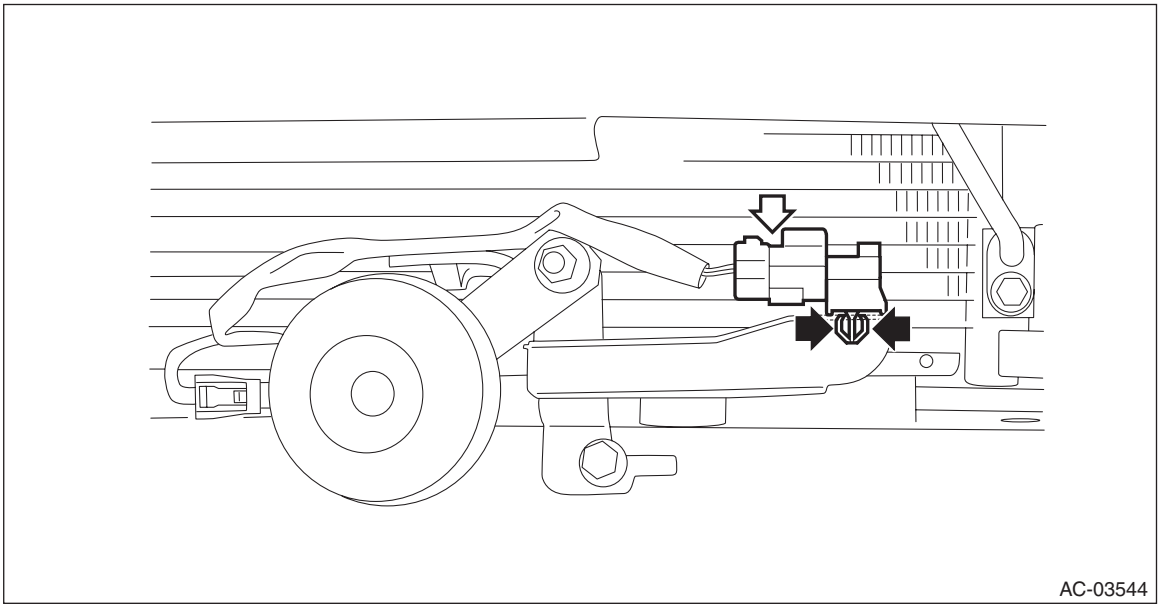

B: INSTALLATION

CAUTION:
Install so that the front end of the under cover (b) comes inside the bumper face - front (a), and the front end of the mud guard (c) comes outside the bumper face - front (a).

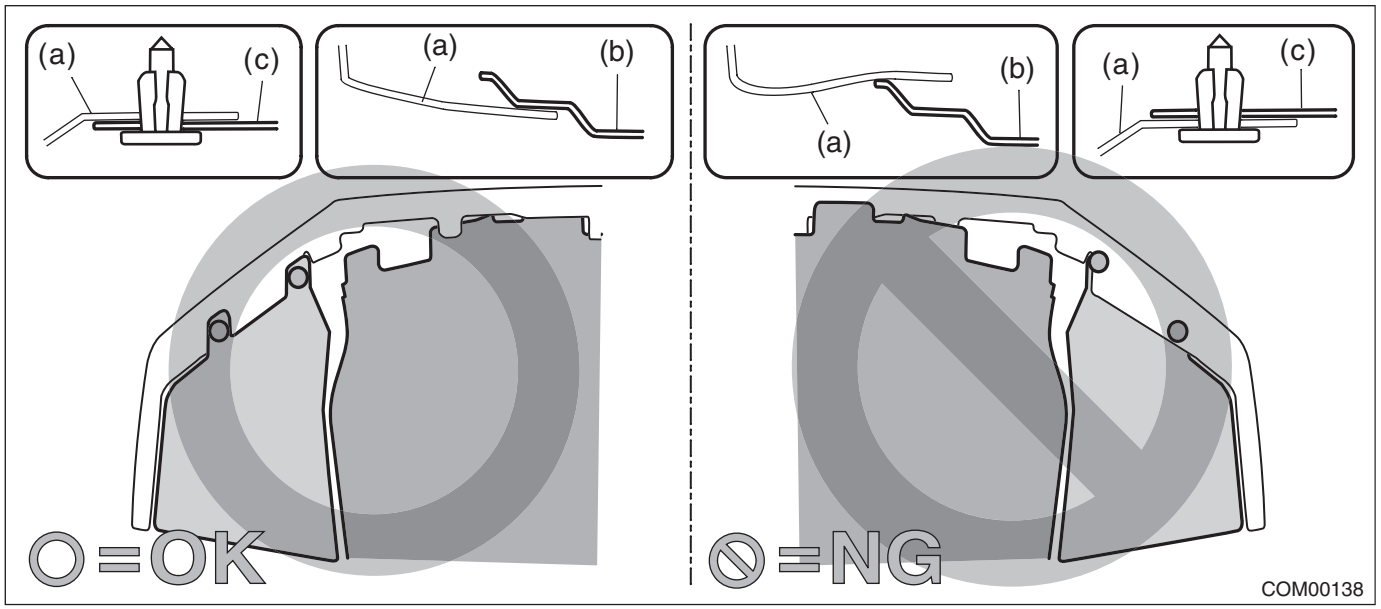

1) Install the ambient sensor.
2) Install the bracket – front center LWR.

Tightening torque:
7.5 N·m (0.8 kgf-m, 5.5 ft-lb)
3) Install the under cover - front.

Tightening torque:
18 N·m (1.8 kgf-m, 13.3 ft-lb)
4) Lower the vehicle.
5) Connect the battery ground terminal. <Ref. to NT-6, BATTERY, NOTE, Note.>

C: INSPECTION

1) Visually check the ambient sensor for dirt or damage, and clean or replace as necessary.
2) Measure the resistance between connector terminals.

CAUTION:
During inspection, be careful not to touch the sensor end in order to avoid misjudgment due to body temperature.

Preparation tool:
Circuit tester

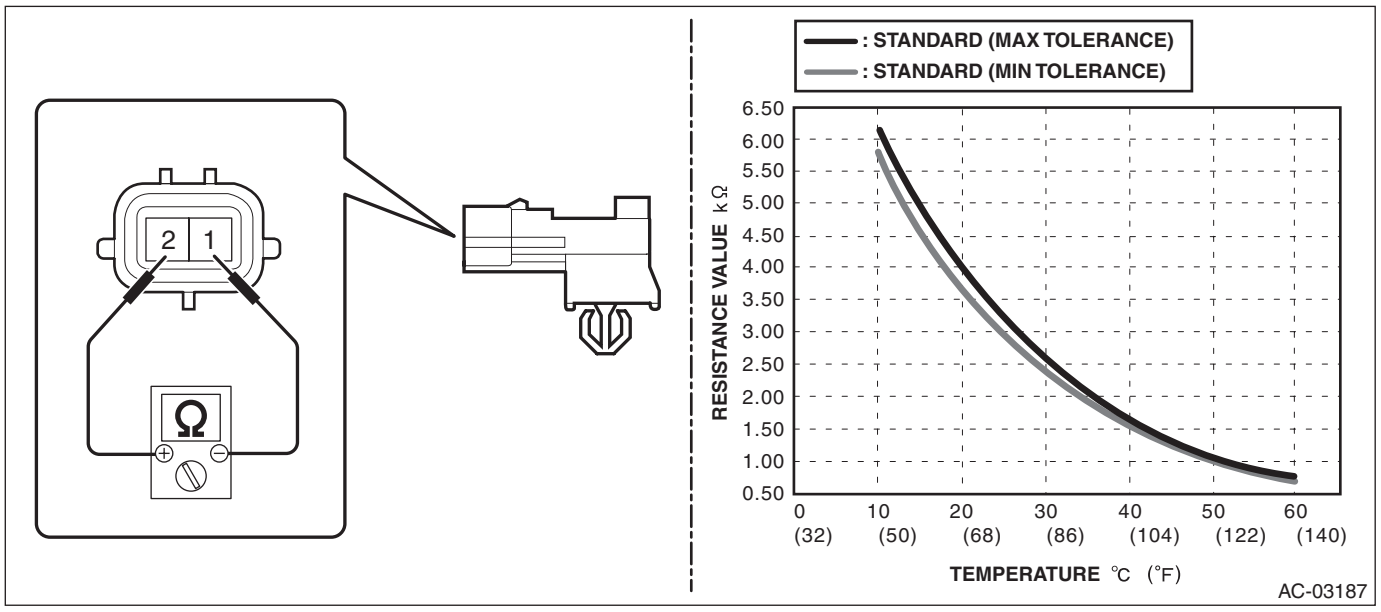

Terminal No.	Inspection conditions	Standard
1 — 2	10°C	5.82 — 6.18 kΩ
	15°C	4.58 — 4.87 kΩ
	20°C	3.64 — 3.86 kΩ
	25°C	2.91 — 3.09 kΩ
	30°C	2.35 — 2.49 kΩ
	35°C	1.9 — 2.02 kΩ
	40°C	1.56 — 1.65 kΩ
	45°C	1.28 — 1.36 kΩ
	50°C	1.06 — 1.12 kΩ
	55°C	0.88 — 0.93 kΩ
	60°C	0.74 — 0.78 kΩ

3) Replace the ambient sensor if the inspection result is not within the standard value.

22.Sunload Sensor (Auto A/C Model)

A: REMOVAL

1) Disconnect the ground cable from battery. <Ref. to NT-6, BATTERY, NOTE, Note.>

NOTE:
For model with battery sensor, disconnect the ground terminal from battery sensor.

2) Remove the grille - front defroster.
   (1) Release the claws.
   (2) Disconnect the connector and remove the grille - front defroster.

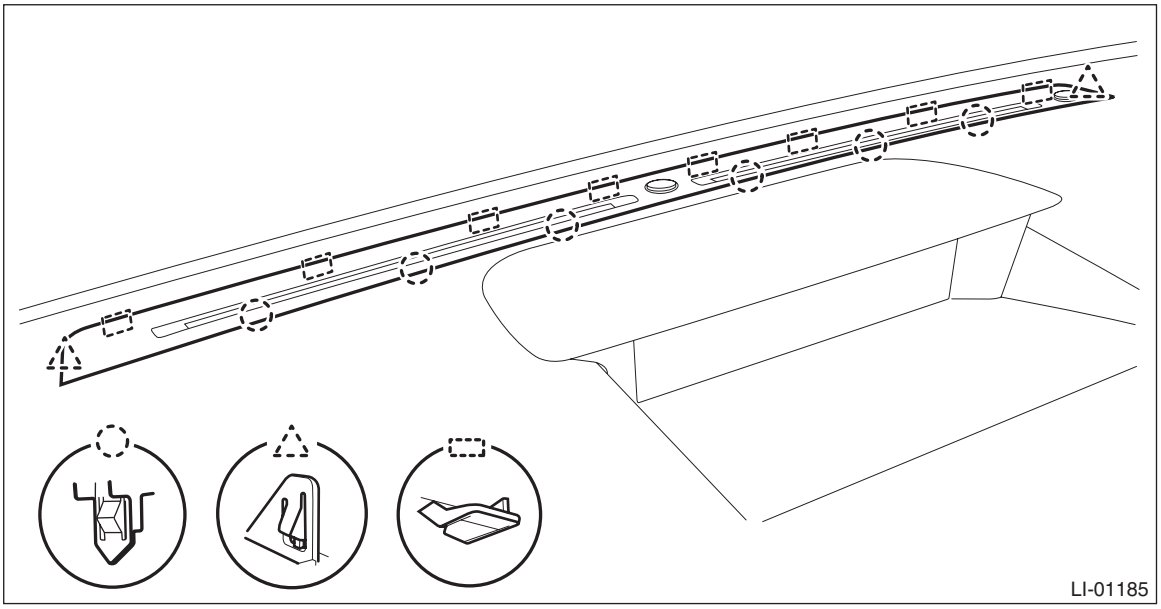

3) Release the claws and remove the sunload sensor.

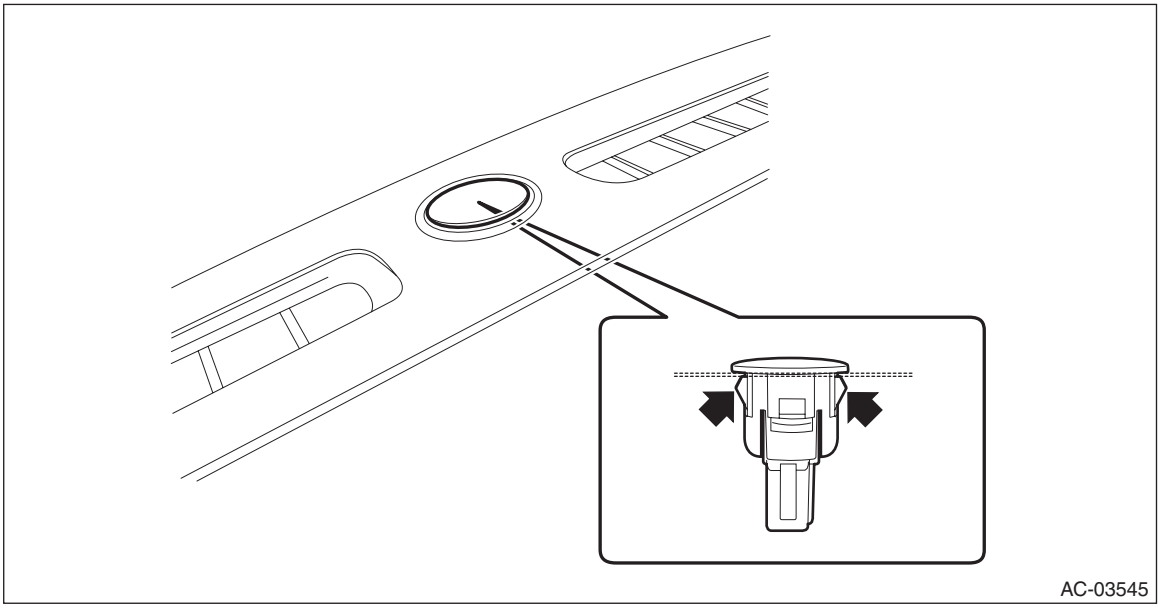

B: INSTALLATION

1) Install the sunload sensor.
2) Install the grille - front defroster.
3) Connect the battery ground terminal. <Ref. to NT-6, BATTERY, NOTE, Note.>

C: INSPECTION

1) Check if there is anything that affects sensing, around the sunload sensor.
   (1) Is the sunload sensor free from any object that disturbs sensing?
   (2) Is the windshield glass free from any object such as sticker or film that disturbs sensing?
   - **Yes** → Go to step 2).
   - **No** → Remove everything that affects sensing.
2) Using the Subaru Select Monitor, check quantity of sunload.

NOTE:
For detailed operation procedures, refer to “Application help”.
   (1) On «Start» display, select «Diagnosis».
   (2) On «Vehicle selection» display, enter vehicle information and select «Confirmed».
   (3) On «Main Menu» display, select «Each System».
   (4) On «Select System» display, select «Air Conditioner» and select «Enter».
   (5) On «Select Function» display, select «Data Monitor».
   (6) From the data monitor item list, select «Quantity of Sunload».
   (7) Cover the sunload sensor with cloth.
   (8) Does the «Quantity of Sunload» indicate 0 W/m^2 when the direct sunlight is shielded?
   - **Yes** → Go to step 3).
   - **No** Replace the sunload sensor.
3) From step 2), expose the sunload sensor to light.
   (1) Place intense light such as incandescent light at 300 mm (11.81 in) or less from the sunload sensor.
   (2) Does «Quantity of Sunload» indicate 2,000 W/m^2 or less?

CAUTION:
The value changes depending on the angle of light.
   - **Yes** → The sunload sensor is normal.
   - **No** → Replace the sunload sensor.

23.In-Vehicle Sensor (Auto A/C Model)

A: REMOVAL

1) Disconnect the battery ground cable and wait for at least 60 seconds before starting work. <Ref. to NT-6, BATTERY, NOTE, Note.>

NOTE:
For model with battery sensor, disconnect the ground terminal from battery sensor.
2) Remove the cover assembly - instrument panel LWR driver INN. <Ref. to EI-62, REMOVAL, Instrument Panel Lower Cover.>
3) Remove the cover switch - starter. (Model with keyless access with push button start)
(1) Disconnect the connector, and remove the aspirator hose.

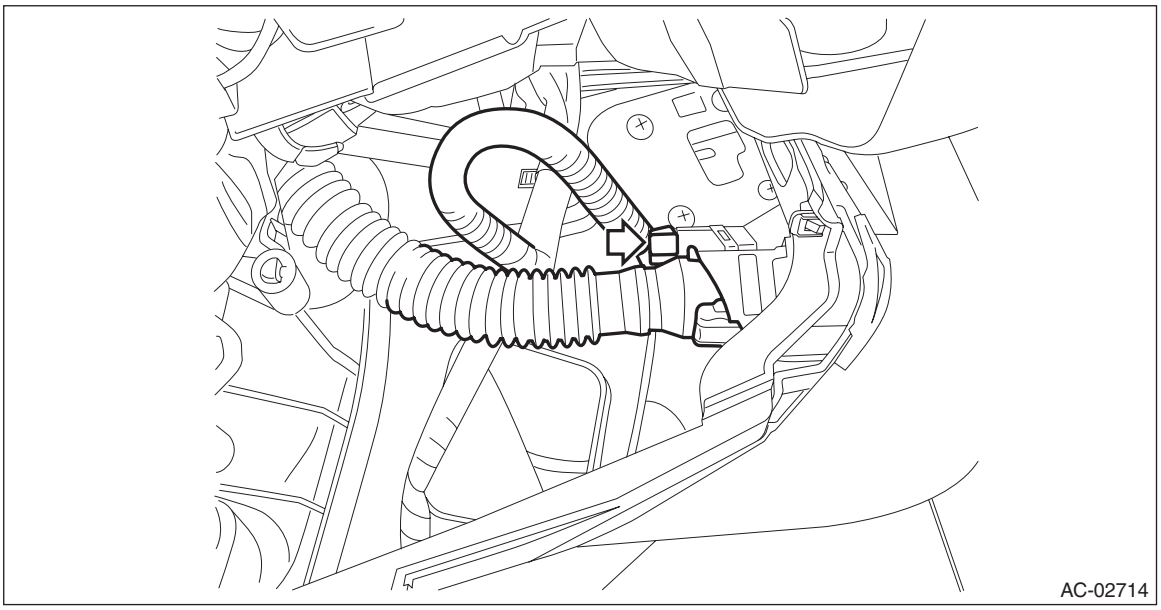
AC-02714

(2) Release the claws and remove the cover switch - starter.

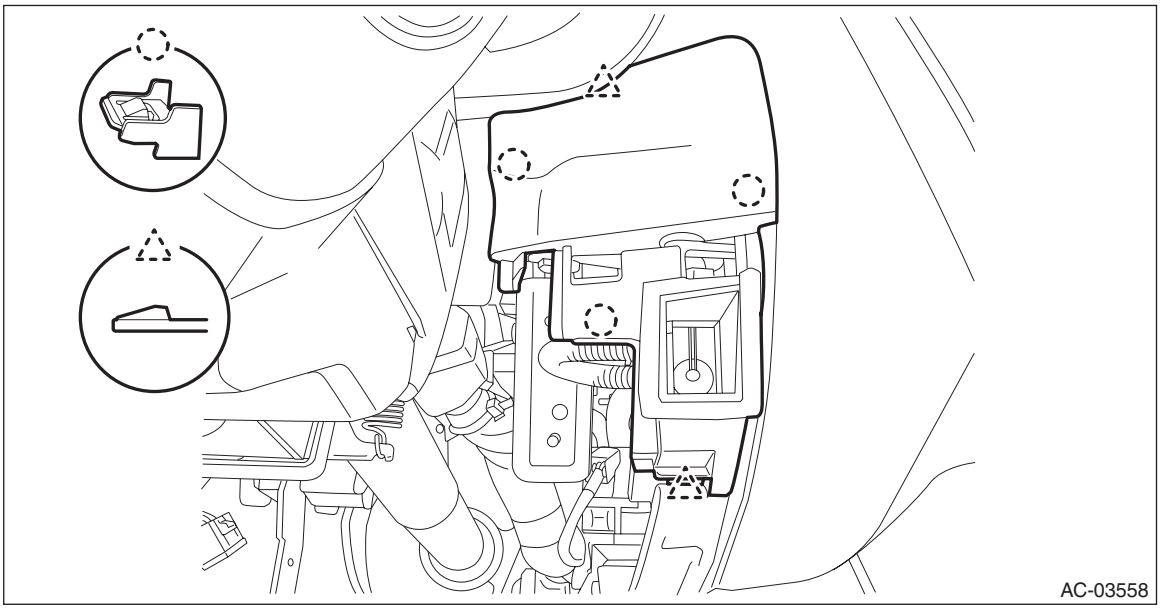
AC-03558

4) Remove the screws, and then remove the in-vehicle sensor.

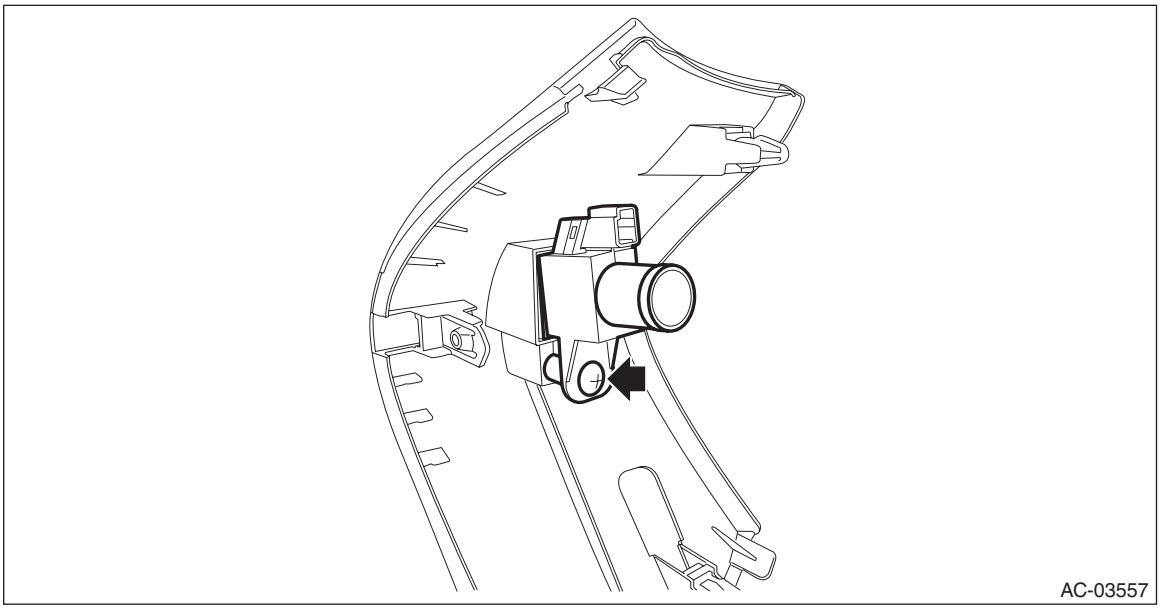

B: INSTALLATION

1) Install the in-vehicle sensor.
2) Install the cover switch - starter. (Model with keyless access with push button start)
3) Install the cover assembly - instrument panel LWR driver INN.
4) Connect the battery ground terminal. <Ref. to NT-6, BATTERY, NOTE, Note.>

C: INSPECTION

1) Set the vehicle to the following conditions.

Item	Condition
Ignition switch	ON
A/C switch	ON
Temperature adjustment dial	HI (MAX HOT)
Air flow control dial or switch	DEF
Fan dial	HI (MAX)

2) Check the suction port (A) for in-vehicle sensor of the cover assembly - instrument panel LWR driver INN.

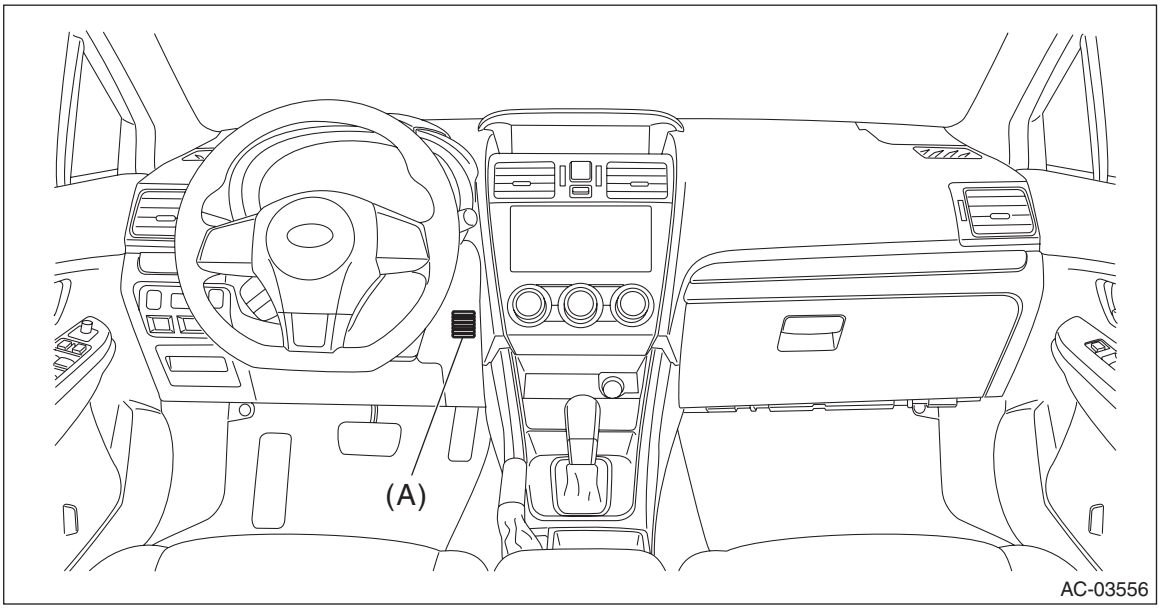

(1) Put a strip of paper close to the front side of the suction port (A).
(2) Can you see the paper moving towards the port and the air being sucked into the port?

CAUTION:
Be careful not to let the paper get sucked into the port.

- **Yes** → Go to step 5).
- **No** → Go to step 3).

3) Remove the cover assembly - instrument panel LWR driver INN, and check the aspirator hose (A).

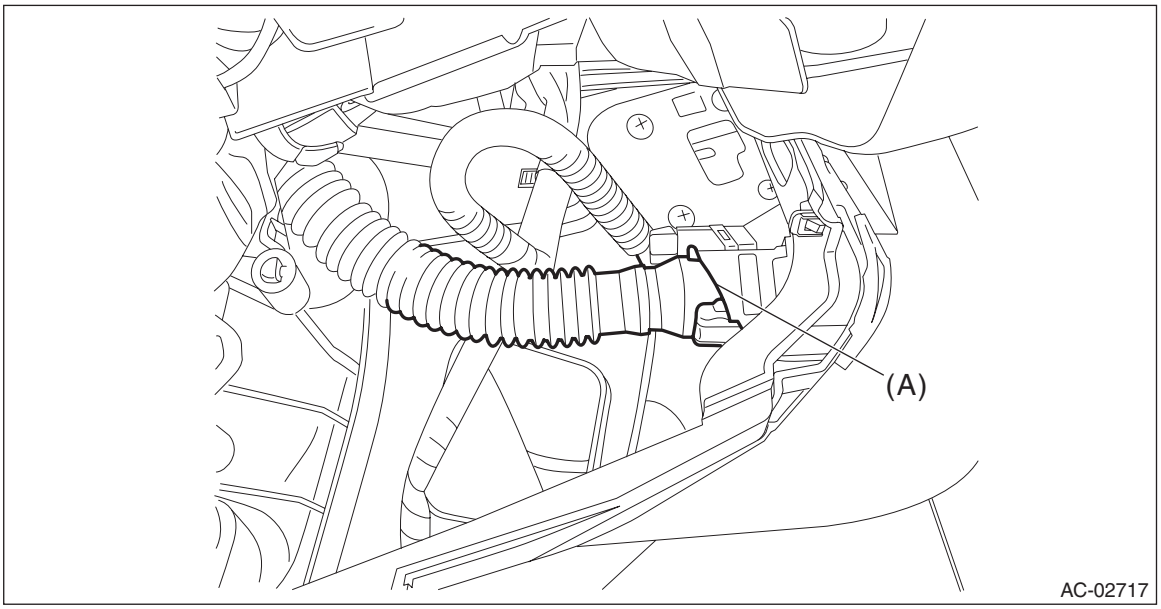

(1) Are the aspirator hoses on both sides of the case and sensor connected securely?
(2) Is the aspirator hose free from any kinks or cracks?

- **Yes** → Go to step 4).
- **No** → Repair or replace the aspirator hose if necessary.

4) Check if there is anything that affects sensing, around the in-vehicle sensor.
(1) Is the in-vehicle sensor hole free from clogging?
(2) Is the peripheral area of in-vehicle sensor free from any heat-producing parts (such as audio, navigation system etc.)?

- **Yes** → Go to step 5).
- **No** → Remove everything that affects sensing.

5) Check in-vehicle sensor.
(1) Disconnect the connector.
(2) Measure the resistance between connector terminals.

CAUTION:
During inspection, be careful not to touch the sensor end in order to avoid misjudgment due to body temperature.

Preparation tool:
Circuit tester

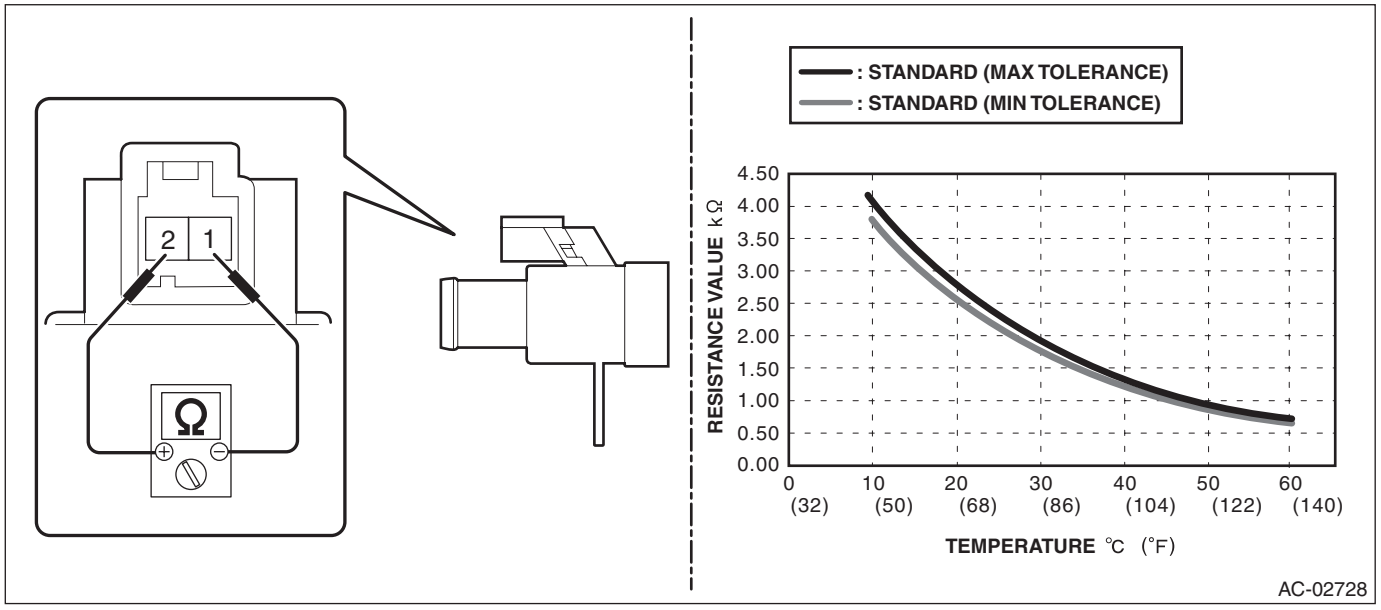

Terminal No.	Inspection conditions	Standard
1 — 2	10°C	3.772 — 4.101 kΩ
	15°C	3.096 — 3.338 kΩ
	20°C	2.556 — 2.734 kΩ
	25°C	2.121 — 2.251 kΩ
	30°C	1.756 — 1.878 kΩ
	35°C	1.462 — 1.574 kΩ
	40°C	1.223 — 1.326 kΩ
	45°C	1.028 — 1.122 kΩ
	50°C	0.868 — 0.9542 kΩ
	55°C	0.7363 — 0.8147 kΩ
	60°C	0.6273 — 0.6984 kΩ

(3) Replace the in-vehicle sensor if the inspection result is not within the standard value.

24.Evaporator Sensor

A: REMOVAL

CAUTION:
Before handling the airbag system components, refer to "CAUTION" of "General Description" in "AIRBAG SYSTEM". <Ref. to AB-9, CAUTION, General Description.>
1) Using the refrigerant recovery system, discharge refrigerant. <Ref. to AC-26, PROCEDURE, Refrigerant Recovery Procedure.>
2) Disconnect the ground cable from battery and wait for at least 60 seconds before starting work. <Ref. to NT-6, BATTERY, NOTE, Note.>

NOTE:
For model with battery sensor, disconnect the ground terminal from battery sensor.
3) Remove the evaporator assembly - cooling. <Ref. to AC-57, REMOVAL, Evaporator.>
4) Remove the thermostat - cooling.

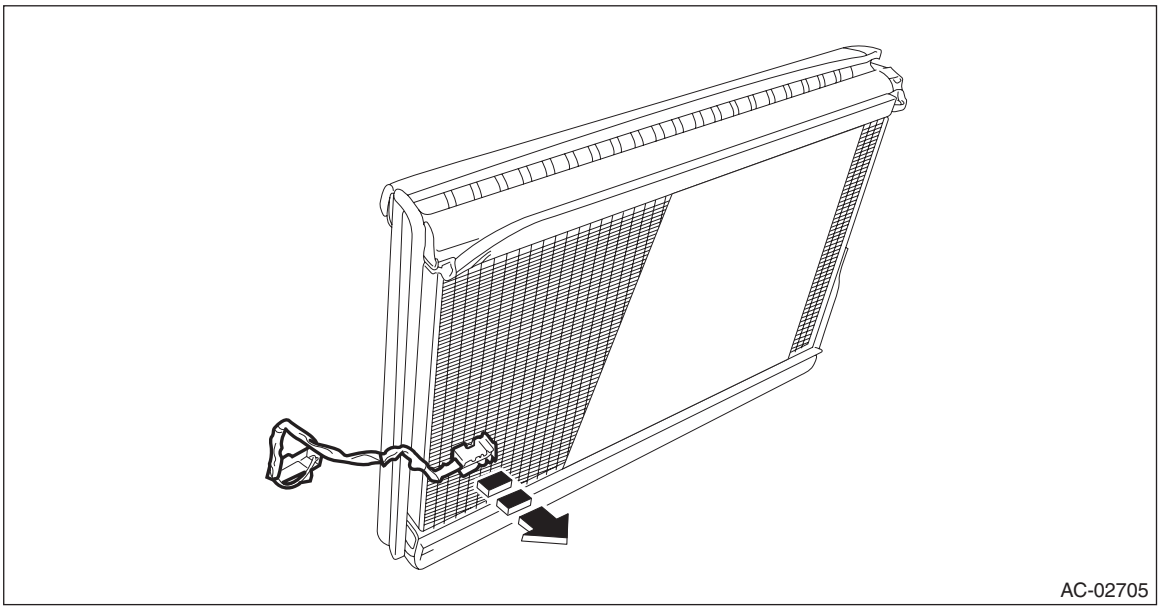
AC-02705

B: INSTALLATION

CAUTION:
- **Make sure that the water seal packing on the cover attachment area is securely attached.**
- **Replace the O-rings with new parts, and then apply compressor oil.**
- **Before handling the airbag system components, refer to "CAUTION" of "General Description" in "AIRBAG SYSTEM". <Ref. to AB-9, CAUTION, General Description.>**

1) Install the thermostat - cooling at the position shown in the figure below.

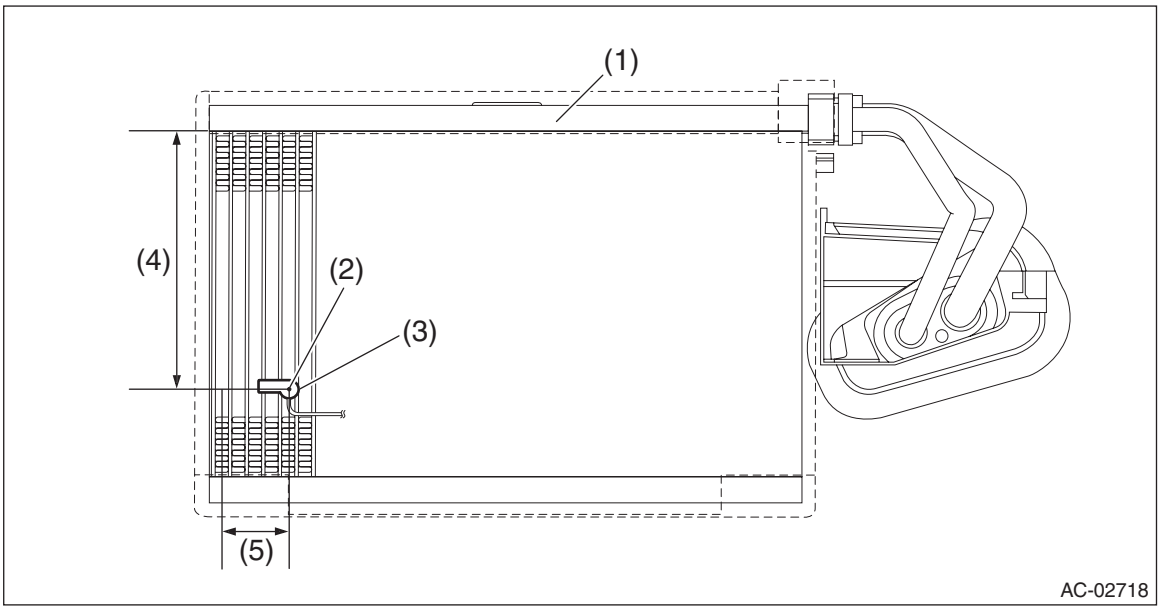

(1) Evaporator ASSY - cooling
(2) Center
(3) Thermostat - cooling
(4) 130 mm (5.12 in) from the upper end of the fins
(5) Fifth row fin from the left end

2) Install the evaporator assembly - cooling. <Ref. to AC-60, INSTALLATION, Evaporator.>
3) Connect the battery ground terminal. <Ref. to NT-6, BATTERY, NOTE, Note.>
4) Charge refrigerant. <Ref. to AC-27, PROCEDURE, Refrigerant Charging Procedure.>

C: INSPECTION

1) Prepare the vehicle.

NOTE:
Check that the ambient temperature is 25 — 40°C (77 — 104°F) and that the humidity is 30% — 80%.
- Place the vehicle in the workshop or in the shade and windless condition.
- Open all windows.

2) Set the vehicle to the following conditions.

Item	Condition
Engine	Idling
Air vent grille	Shutter is fully open.
A/C switch	OFF
Temperature adjustment dial	LO (MAX COOL)
FRESH/RECIRC switch	RECIRC
Air flow control dial or switch	VENT
Fan dial	5/7 level

3) Using the Subaru Select Monitor, check evaporator temperature.

NOTE:
For detailed operation procedures, refer to “Application help”.
(1) On «Start» display, select «Diagnosis».
(2) On «Vehicle selection» display, enter vehicle information and select «Confirmed».
(3) On «Main Menu» display, select «Each System».
(4) On «Select System» display, select «Air Conditioner» and select «Enter».
(5) On «Select Function» display, select «Data Monitor».
(6) From the data monitor item list, select «Evaporator Temperature».
(7) Idle the engine for 15 minutes, and then compare the air flow outlet temperature with «Evaporator Temperature».

Preparation tool:
Thermometer and hygrometer

NOTE:
For outlet opening temperature, measure the average temperature of center grille assembly and side grille assembly.
(8) Do the air flow outlet temperature and «Evaporator Temperature» differ by 3°C (5.4°F) or more?
- **Yes** → Go to step 4).
- **No** → Evaporator sensor is normal.

4) Check the evaporator sensor.
(1) Disconnect the connector.
(2) Measure the resistance between connector terminals.

CAUTION:
During inspection, be careful not to touch the sensor end in order to avoid misjudgment due to body temperature.

Preparation tool:
Circuit tester

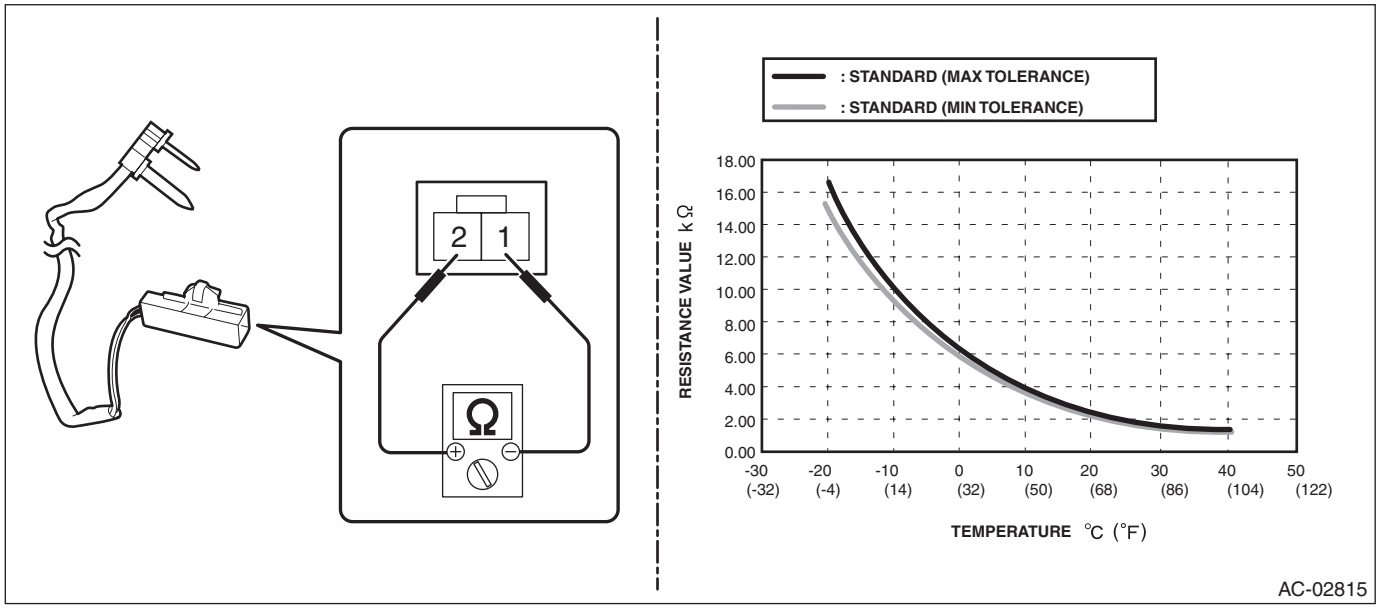

Terminal No.	Inspection conditions	Standard
1 — 2	–20°C	15.37 — 16.62 kΩ
	–15°C	12.09 — 12.87 kΩ
	–10°C	9.576 — 10.05 kΩ
	–5°C	7.636 — 7.899 kΩ
	0°C	6.132 — 6.256 kΩ
	5°C	4.891 — 5.057 kΩ
	10°C	3.928 — 4.113 kΩ
	15°C	3.174 — 3.366 kΩ
	20°C	2.581 — 2.77 kΩ
	25°C	2.111 — 2.292 kΩ
	30°C	1.737 — 1.907 kΩ
	35°C	1.437 — 1.595 kΩ
	40°C	1.195 — 1.34 kΩ

(3) Replace the evaporator sensor if the inspection result is not within the standard value.

25.FRESH/RECIRC Door Actuator

A: REMOVAL

CAUTION:
Before handling the airbag system components, refer to "CAUTION" of "General Description" in "AIRBAG SYSTEM". <Ref. to AB-9, CAUTION, General Description.>
1) Disconnect the ground cable from battery and wait for at least 60 seconds before starting work. <Ref. to NT-6, BATTERY, NOTE, Note.>

NOTE:
For model with battery sensor, disconnect the ground terminal from battery sensor.
2) Remove the glove box. <Ref. to EI-64, REMOVAL, Glove Box.>
3) Remove the engine control module (ECM). (STI model) <Ref. to FU(STI)-56, REMOVAL, Engine Control Module (ECM).>
4) Remove the blower motor unit assembly. <Ref. to AC-35, REMOVAL, Blower Motor Unit Assembly.>
5) Remove the screws and detach the motor - actuator blower.

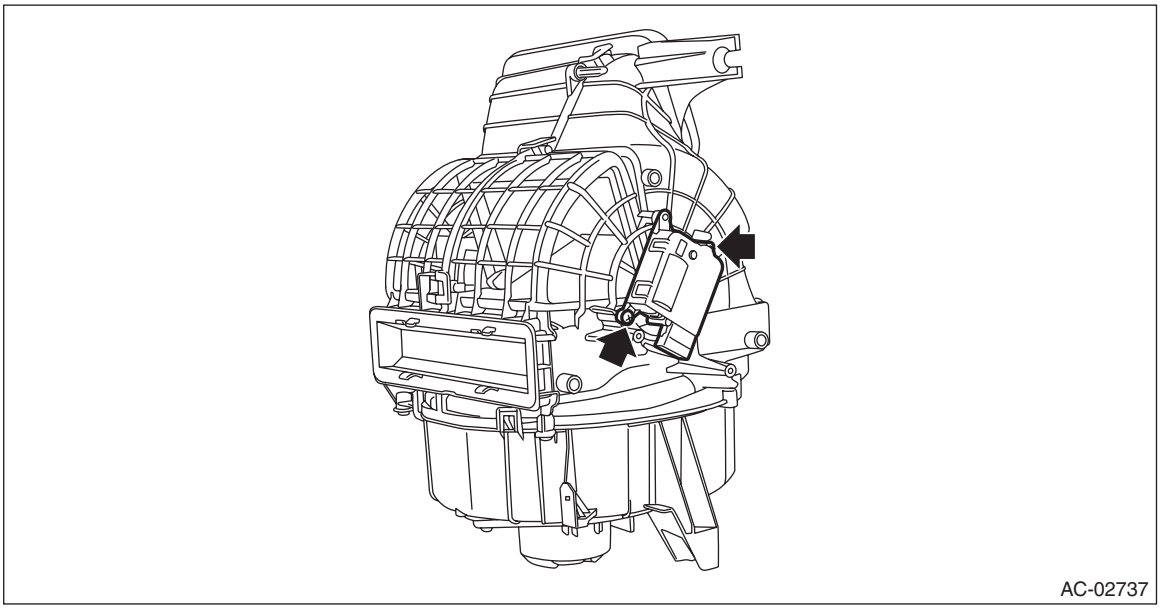
AC-02737

B: INSTALLATION

CAUTION:
• After installing the grille assembly - ventilation RH, check that the air vent grille of the grille assembly - ventilation RH is inserted correctly into the air vent duct.
• Before handling the airbag system components, refer to "CAUTION" of "General Description" in "AIRBAG SYSTEM". <Ref. to AB-9, CAUTION, General Description.>
1) Install the motor - actuator blower.
2) Install the blower motor unit assembly.

Tightening torque:
7.5 N·m (0.8 kgf-m, 5.5 ft-lb)
3) Install the engine control module (ECM). (STI model) <Ref. to FU(STI)-56, INSTALLATION, Engine Control Module (ECM).>
4) Install the glove box.
5) Connect the battery ground terminal. <Ref. to NT-6, BATTERY, NOTE, Note.>

C: INSPECTION

1. CHECK LINK

1) Visually check the operation range of the link, and remove the foreign material if any.
2) Operate the FRESH/RECIRC switch to check that the link operates normally.
3) If it does not operate normally as the result of inspection, check the motor - actuator blower.

2. CHECK ACTUATOR

1) Check the actuator operation when battery voltage is applied between the connector terminals.

CAUTION:
Disconnect the battery immediately after the actuator stops operation. Otherwise, the motor may be damaged.

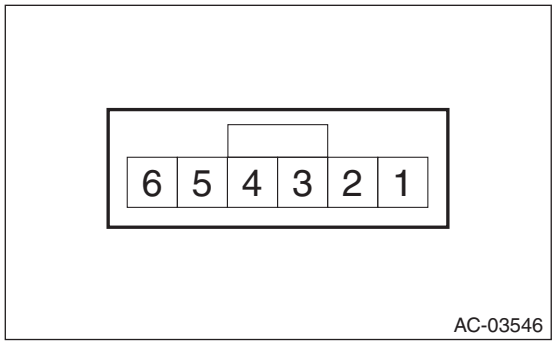

Terminal No.	Inspection conditions	Operating position
1 (+) — 2 (–)	Apply battery voltage.	RECIRC
2 (+) — 1 (–)		FRESH

2) If it does not operate normally as the result of inspection, replace the motor - actuator blower.

26.Mode Door Actuator

A: REMOVAL

CAUTION:
Before handling the airbag system components, refer to "CAUTION" of "General Description" in "AIRBAG SYSTEM". <Ref. to AB-9, CAUTION, General Description.>
1) Disconnect the battery ground cable and wait for at least 60 seconds before starting work. <Ref. to NT-6, BATTERY, NOTE, Note.>

NOTE:
For model with battery sensor, disconnect the ground terminal from battery sensor.
2) Remove the cover assembly - instrument panel LWR driver. <Ref. to EI-62, REMOVAL, Instrument Panel Lower Cover.>
3) Remove the knee airbag module. <Ref. to AB-34, REMOVAL, Knee Airbag Module.>
4) Remove the motor - actuator mode.
   (1) Disconnect the connector, and remove the rod from the rod clamp.
   (2) Remove the screws and detach the motor - actuator mode.

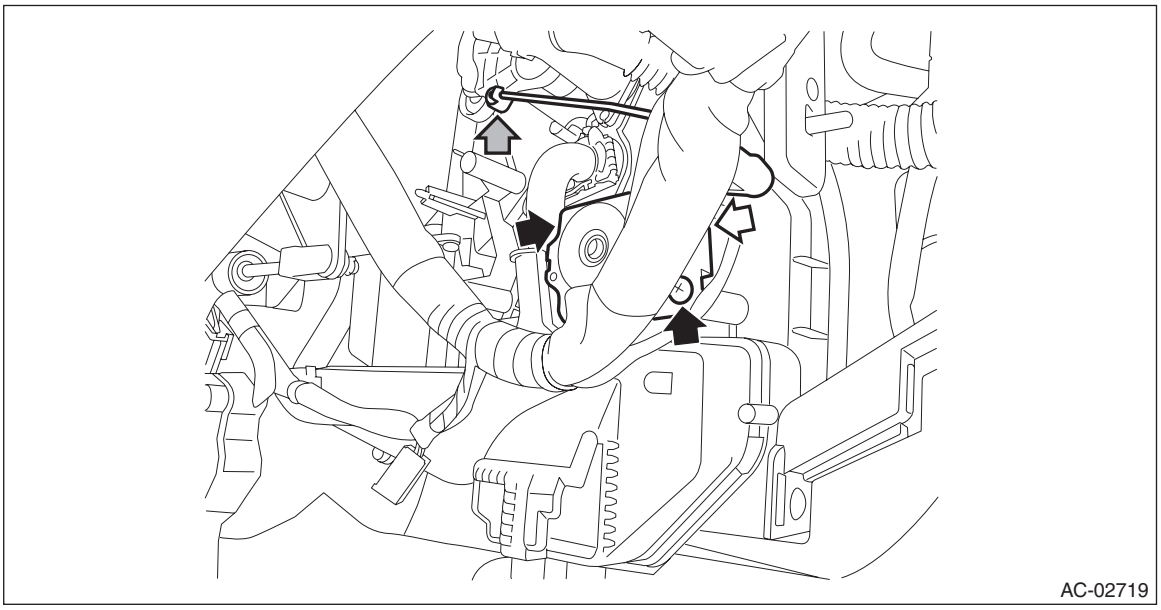

B: INSTALLATION

CAUTION:
Before handling the airbag system components, refer to "CAUTION" of "General Description" in "AIRBAG SYSTEM". <Ref. to AB-9, CAUTION, General Description.>
1) Install the motor - actuator mode.
2) Install the knee airbag module.

Tightening torque:
7.5 N·m (0.8 kgf-m, 5.5 ft-lb)
3) Install the cover assembly - instrument panel LWR driver.
4) Connect the battery ground terminal. <Ref. to NT-6, BATTERY, NOTE, Note.>

C: INSPECTION

1. CHECK LINK

1) Visually check the operation range of the link, and remove the foreign material if any.
2) Operate the air flow control dial or switch to check that the link operates normally.
3) If it does not operate normally as the result of inspection, check the motor - actuator mode.

2. CHECK ACTUATOR

1) Measure the resistance between connector terminals.

Preparation tool:
Circuit tester

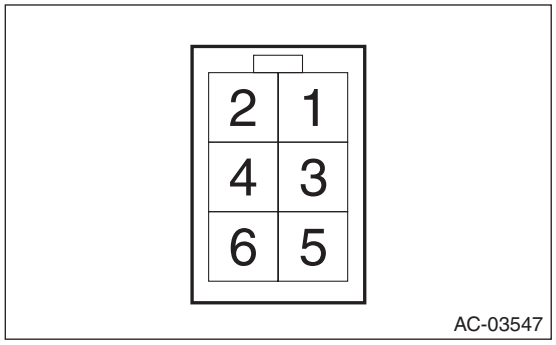

Terminal No.	Inspection conditions	Standard
3 — 1	Always	80 — 100 Ω
3 — 2		
3 — 5		
3 — 6		

2) Replace the motor - actuator mode if the inspection result is not within the standard value.

27.Air Mix Door Actuator

A: REMOVAL

1. DRIVER'S SIDE

CAUTION:
Before handling the airbag system components, refer to "CAUTION" of "General Description" in "AIRBAG SYSTEM". <Ref. to AB-9, CAUTION, General Description.>
1) Disconnect the battery ground cable and wait for at least 60 seconds before starting work. <Ref. to NT-6, BATTERY, NOTE, Note.>

NOTE:
For model with battery sensor, disconnect the ground terminal from battery sensor.
2) Remove the cover assembly - instrument panel LWR driver. <Ref. to EI-62, REMOVAL, Instrument Panel Lower Cover.>
3) Remove the knee airbag module. <Ref. to AB-34, REMOVAL, Knee Airbag Module.>
4) Remove the motor - actuator mix.
(1) Disconnect the connector, and remove the rod from the rod clamp.
(2) Remove the screws and detach the motor - actuator mix.

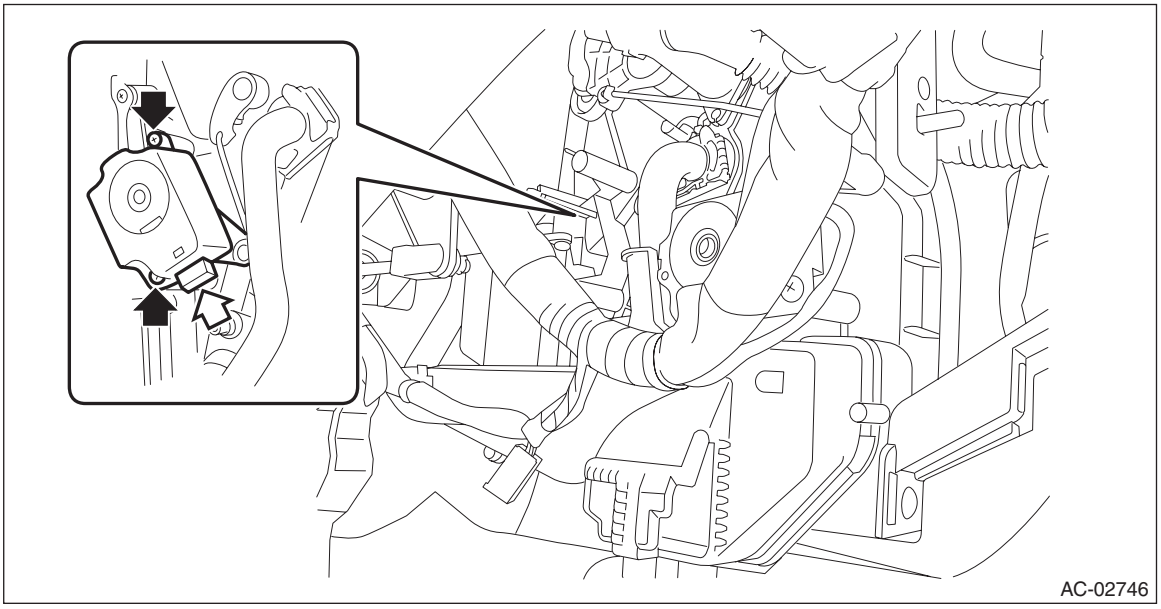

2. PASSENGER'S SIDE

1) Disconnect the ground cable from battery. <Ref. to NT-6, BATTERY, NOTE, Note.>

NOTE:
For model with battery sensor, disconnect the ground terminal from battery sensor.

2) Remove the glove box. <Ref. to EI-64, REMOVAL, Glove Box.>
3) Remove the motor - actuator mix.
   (1) Disconnect the connector, and remove the rod from the rod clamp.
   (2) Remove the screws and detach the motor - actuator mix.

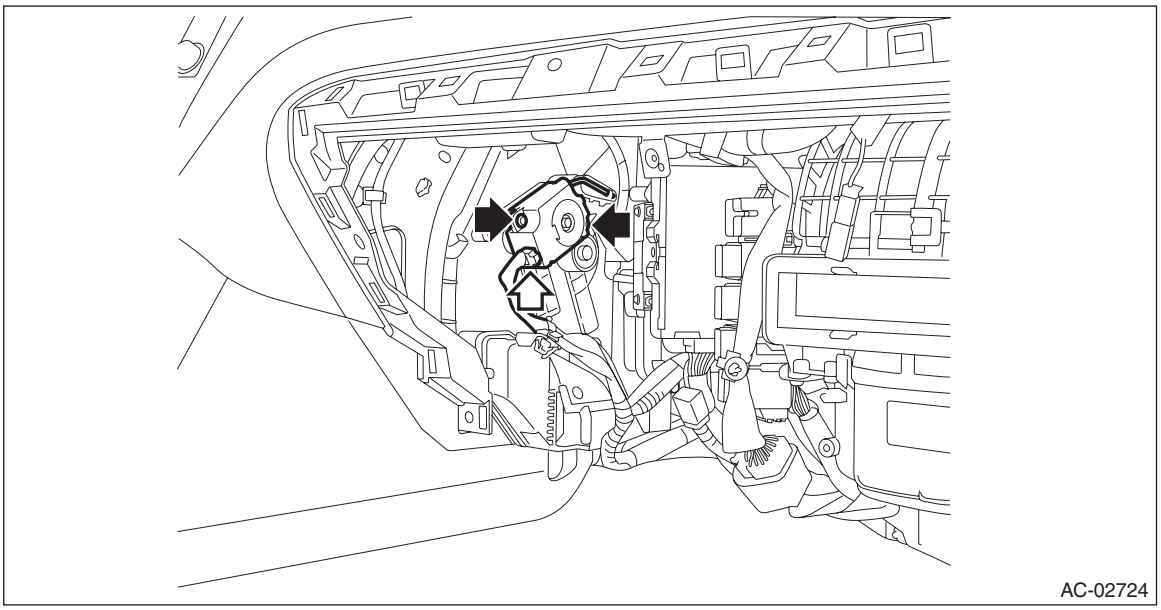

B: INSTALLATION

1. DRIVER'S SIDE

CAUTION:
Before handling the airbag system components, refer to "CAUTION" of "General Description" in "AIRBAG SYSTEM". <Ref. to AB-9, CAUTION, General Description.>

1) Install the motor - actuator mix.
2) Install the knee airbag module.

Tightening torque:
7.5 N·m (0.8 kgf-m, 5.5 ft-lb)

3) Install the cover assembly - instrument panel LWR driver.
4) Connect the battery ground terminal. <Ref. to NT-6, BATTERY, NOTE, Note.>

2. PASSENGER'S SIDE

1) Install the motor - actuator mix.
2) Install the glove box.
3) Connect the battery ground terminal. <Ref. to NT-6, BATTERY, NOTE, Note.>

C: INSPECTION

1. CHECK LINK

1) Visually check the operation range of the link, and remove the foreign material if any.
2) Operate the temperature control dial to check that the link operates normally.
3) If it does not operate normally as the result of inspection, check the motor - actuator mix.

2. CHECK ACTUATOR

1) Measure the resistance between connector terminals.

Preparation tool:
Circuit tester

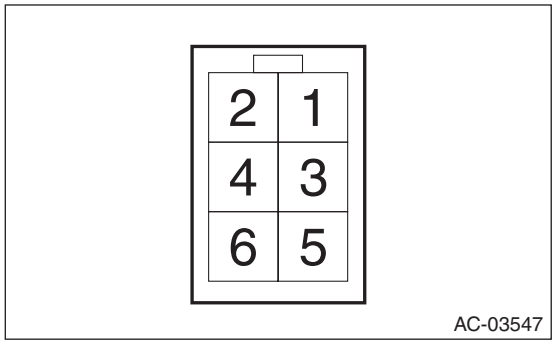

Terminal No.	Inspection conditions	Standard
3 — 1	Always	80 — 100 Ω
3 — 2		
3 — 5		
3 — 6		

2) Replace the motor - actuator mix if the inspection result is not within the standard value.

28.Air Vent Grille

A: REMOVAL

1. CENTER GRILLE ASSEMBLY

CAUTION:
- **Do not put your finger on the fin of the air vent grille. Doing so may damage the fin.**
- **Always pull the center grille assembly toward you slowly. If attempting to remove by turning it upward, the claws and connectors may be damaged.**

1) Disconnect the ground cable from battery. <Ref. to NT-6, BATTERY, NOTE, Note.>

NOTE:
For model with battery sensor, disconnect the ground terminal from battery sensor.

2) Remove the center grille assembly.
   (1) Attach the protective tape (a) to the instrument panel assembly.
   (2) Release the claw by using a clip remover wrapped with protective tape.
   (3) Disconnect the connector and remove the center grille assembly.

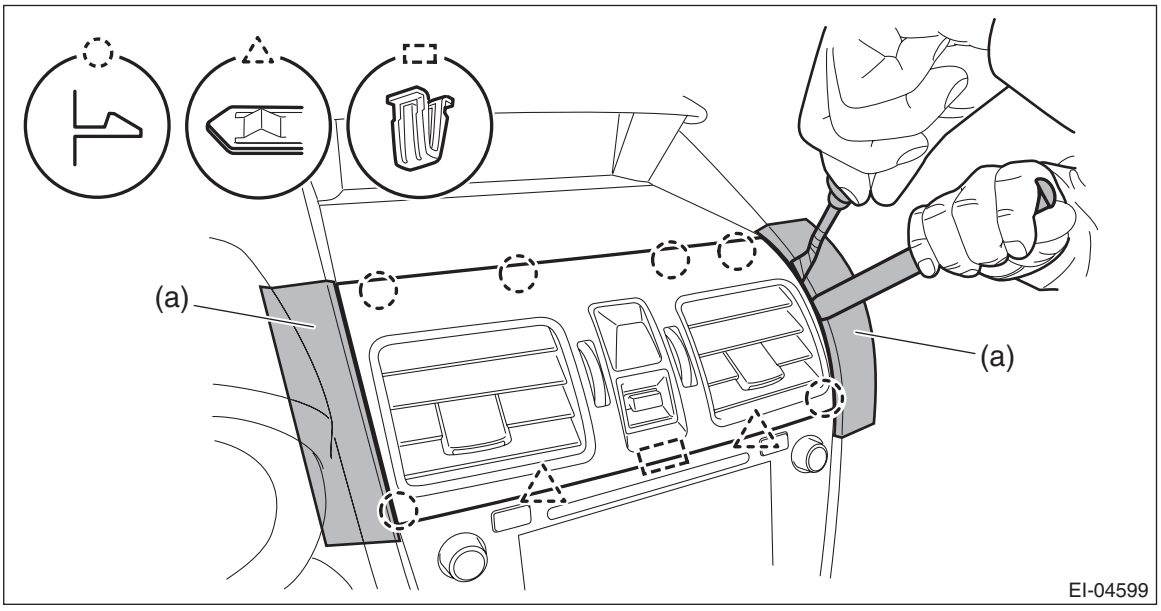

3) Release the claws, and then remove the grille assembly - CTR ventilation from the center grille assembly.

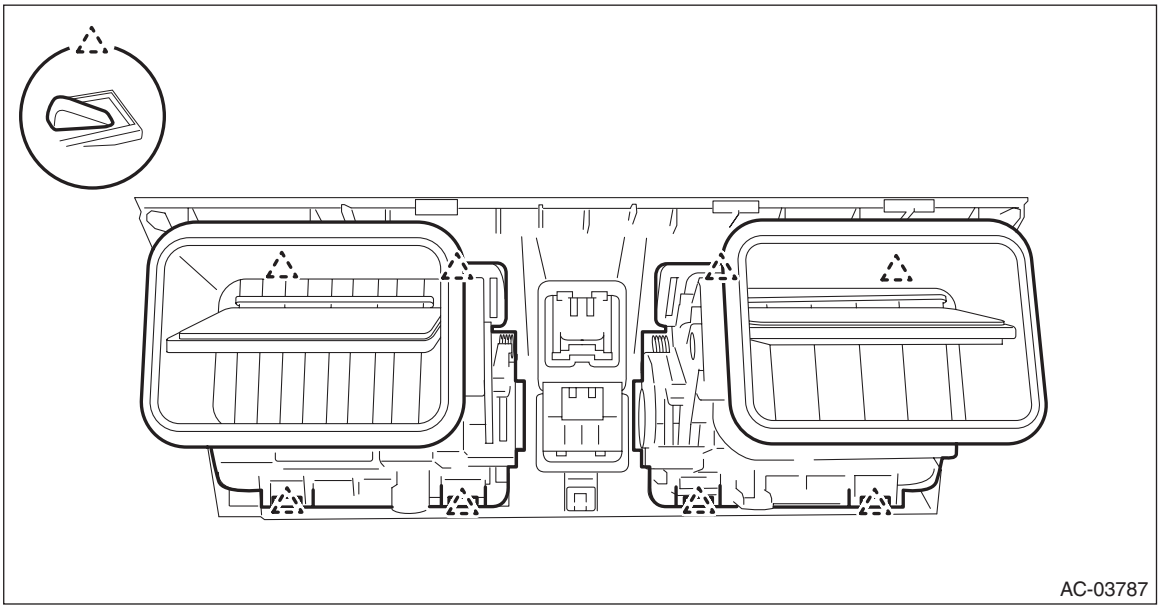

2. SIDE GRILLE ASSEMBLY

Driver's side

1) Disconnect the ground cable from battery. <Ref. to NT-6, BATTERY, NOTE, Note.>

NOTE:
For model with battery sensor, disconnect the ground terminal from battery sensor.
2) Remove the cover assembly - instrument panel LWR driver OUT. <Ref. to EI-62, REMOVAL, Instrument Panel Lower Cover.>
3) Remove the grille assembly - ventilation LH.

CAUTION:
• When using a flat tip screwdriver, apply protective tape or cloth and be careful not to cause damage.
• Do not pull the grille assembly - ventilation forcibly. Doing so may cause deformation or damage.
(1) Push the claw (a) on the outlet dial side upward from the back of the instrument panel assembly.
(2) While pushing, pull the grille assembly - ventilation toward you to release the claw.
(3) Release the other claw (b) in the same manner, then remove the grille assembly - ventilation LH.

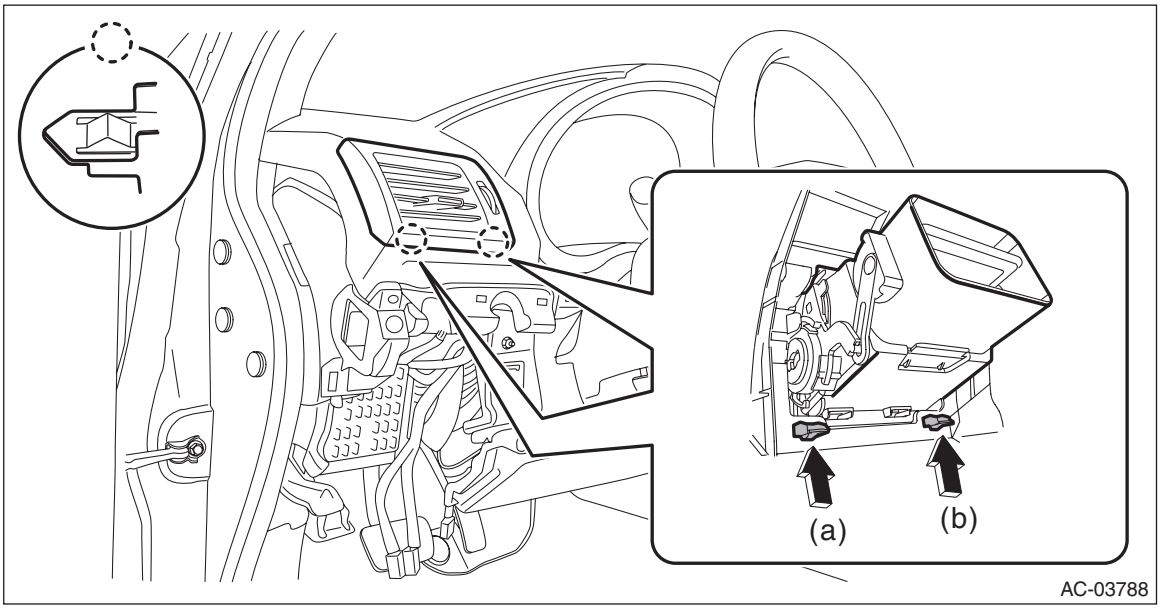

Passenger's side

1) Disconnect the ground cable from battery. <Ref. to NT-6, BATTERY, NOTE, Note.>

NOTE:
For model with battery sensor, disconnect the ground terminal from battery sensor.
2) Remove the pocket assembly and the back panel - pocket. <Ref. to EI-64, REMOVAL, Glove Box.>
3) Remove the grille assembly - ventilation RH.

CAUTION:
• When using a flat tip screwdriver, apply protective tape or cloth and be careful not to cause damage.
• Do not pull the grille assembly - ventilation forcibly. Doing so may cause deformation or damage.

(1) Push the claw (a) on the outlet dial side upward from the back of the instrument panel assembly.
(2) While pushing, pull the grille assembly - ventilation toward you to release the claw.
(3) Release the other claw (b) in the same manner, then remove the grille assembly - ventilation RH.

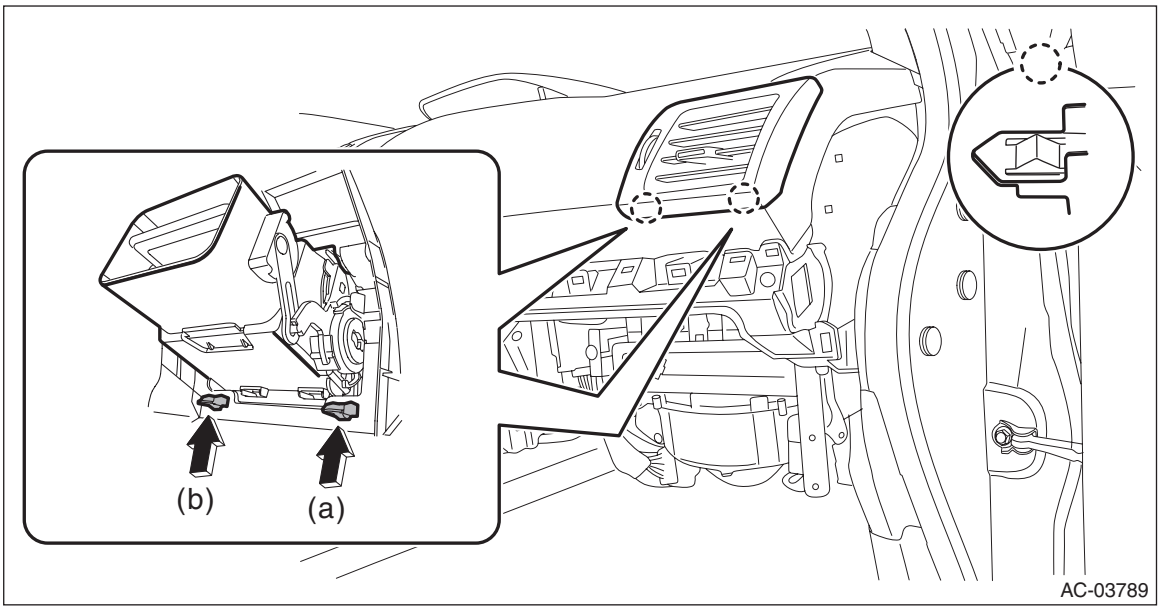

B: INSTALLATION

1. CENTER GRILLE ASSEMBLY

CAUTION:
After installing the center grille assembly, check that the air vent grille is inserted correctly into the air vent duct.
1) Install the grille assembly - CTR ventilation.
2) Install the center grille assembly.
3) Connect the battery ground terminal. <Ref. to NT-6, BATTERY, NOTE, Note.>

2. SIDE GRILLE ASSEMBLY

CAUTION:
After installing the grille assembly - ventilation, check that the air vent grille is inserted correctly into the air vent duct.
1) Install the grille assembly - ventilation.
2) Install the cover assembly - instrument panel LWR driver OUT. (Driver's side)
3) Install the pocket assembly and the back panel - pocket. (Passenger's side)
4) Connect the battery ground terminal. <Ref. to NT-6, BATTERY, NOTE, Note.>

C: INSPECTION

1) Check that the direction and amount of air can be adjusted smoothly. Replace the grille assembly - ventilation if faulty.
2) Check that the adjustment can be maintained in each position. Replace the grille assembly - ventilation if faulty.

29.Heater Duct

A: REMOVAL

CAUTION:
Before handling the airbag system components, refer to "CAUTION" of "General Description" in "AIRBAG SYSTEM". <Ref. to AB-9, CAUTION, General Description.>
1) Disconnect the battery ground cable and wait for at least 60 seconds before starting work. <Ref. to NT-6, BATTERY, NOTE, Note.>

NOTE:
For model with battery sensor, disconnect the ground terminal from battery sensor.
2) Remove the front seats. <Ref. to SE-9, REMOVAL, Front Seat.>
3) Remove the heater and cooling unit assembly. <Ref. to AC-54, REMOVAL, Heater and Cooling Unit.>
4) Remove the duct - rear heater.
   (1) Lift the floor carpet.
   (2) Remove the clips, and remove the duct - rear heater CTR (A).
   (3) Release the claws, and remove the duct - rear heater (B) on LH and RH sides.

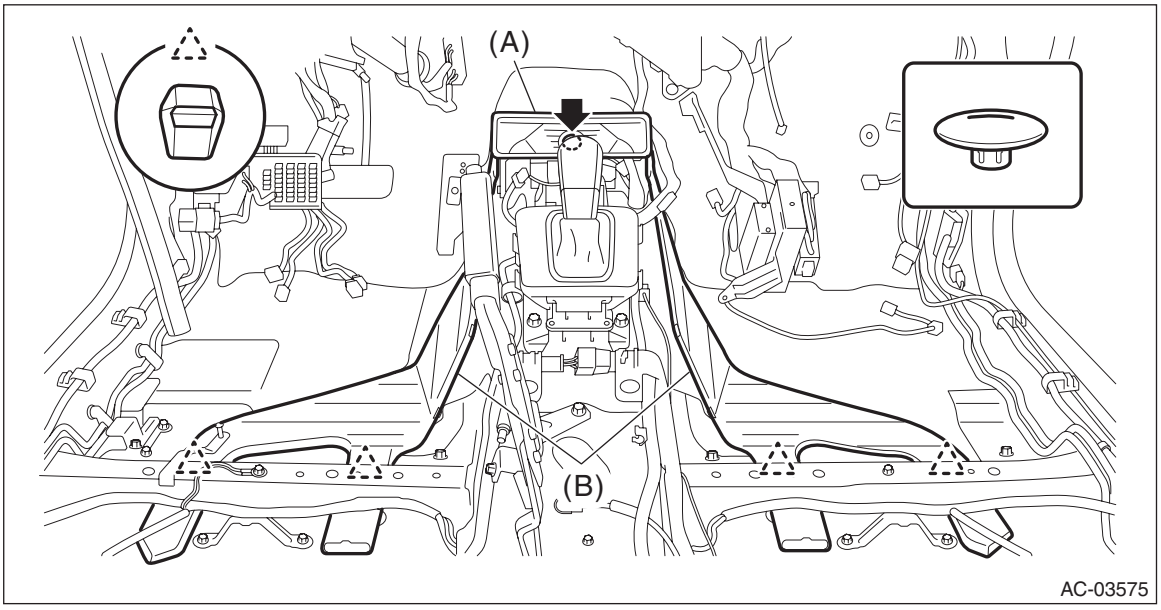

B: INSTALLATION

CAUTION:
Before handling the airbag system components, refer to "CAUTION" of "General Description" in "AIRBAG SYSTEM". <Ref. to AB-9, CAUTION, General Description.>
1) Install the duct - rear heater.
2) Install the heater and cooling unit assembly. <Ref. to AC-56, INSTALLATION, Heater and Cooling Unit.>
3) Install the front seat. <Ref. to SE-10, INSTALLATION, Front Seat.>
4) Connect the battery ground terminal. <Ref. to NT-6, BATTERY, NOTE, Note.>

30.Heater Vent Duct

A: REMOVAL

CAUTION:
Before handling the airbag system components, refer to "CAUTION" of "General Description" in "AIRBAG SYSTEM". <Ref. to AB-9, CAUTION, General Description.>
1) Disconnect the battery ground cable and wait for at least 60 seconds before starting work. <Ref. to NT-6, BATTERY, NOTE, Note.>

NOTE:
For model with battery sensor, disconnect the ground terminal from battery sensor.
2) Remove the instrument panel assembly. <Ref. to EI-72, REMOVAL, Instrument Panel Assembly.>
3) Remove the screws and remove the duct - center vent (A) and the duct - side ventilation (B) on LH and RH sides.

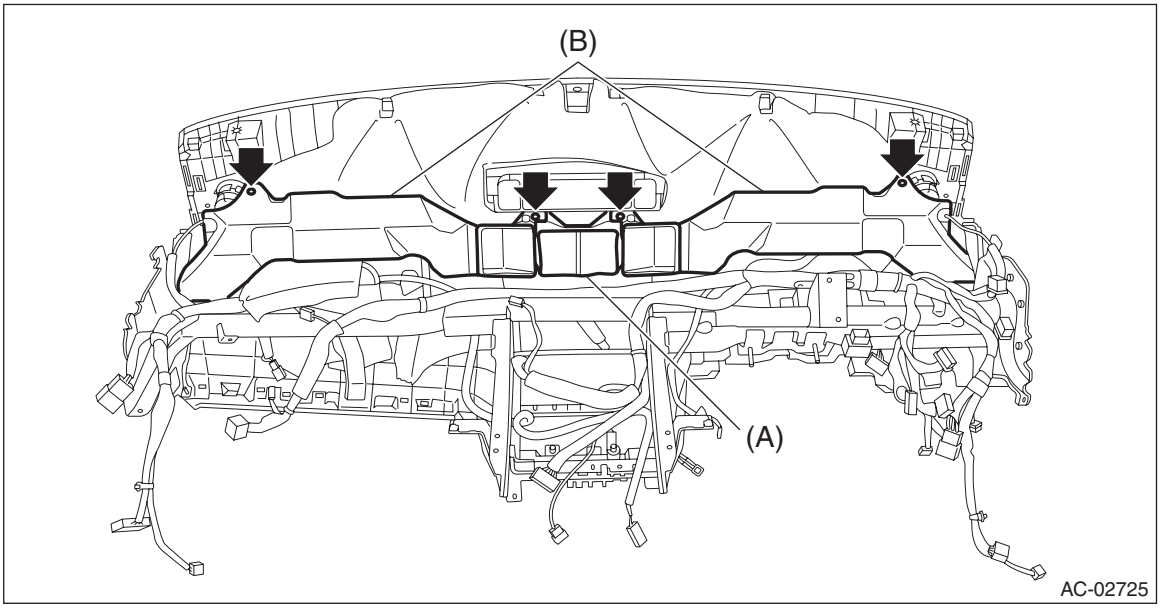

B: INSTALLATION

CAUTION:
Before handling the airbag system components, refer to "CAUTION" of "General Description" in "AIRBAG SYSTEM". <Ref. to AB-9, CAUTION, General Description.>
1) Install the heater vent duct.
2) Install the instrument panel assembly. <Ref. to EI-80, INSTALLATION, Instrument Panel Assembly.>
3) Connect the battery ground terminal. <Ref. to NT-6, BATTERY, NOTE, Note.>

31.A/C Filter

A: REPLACEMENT

1) Remove the pocket assembly. <Ref. to EI-64, REMOVAL, Glove Box.>
2) Pinch the tabs to release the lock, and remove the filter kit.

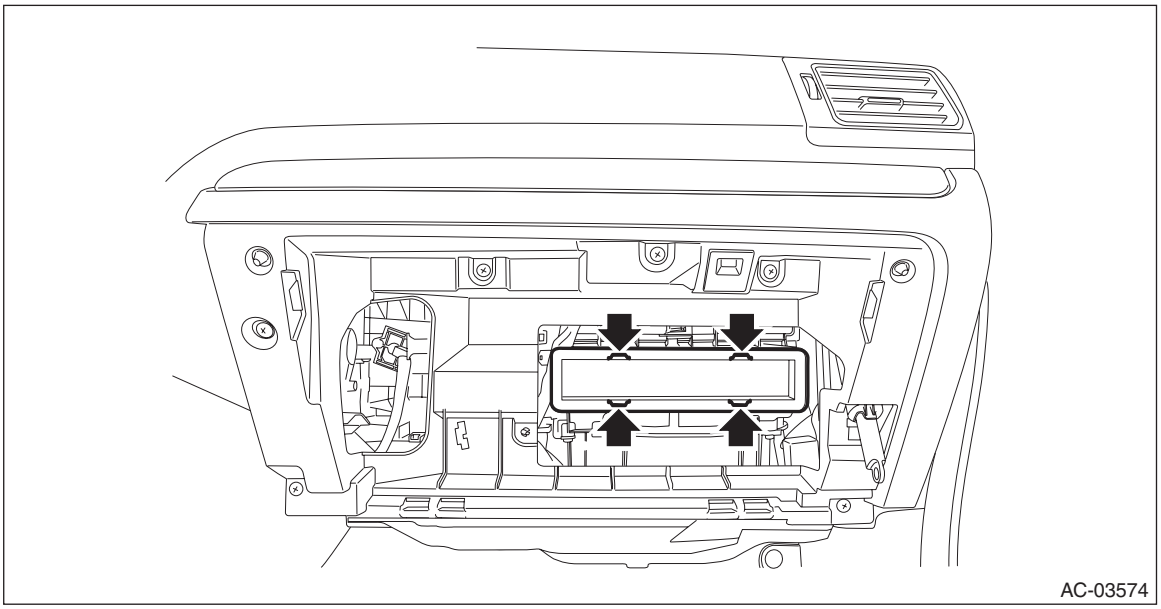

NOTE:
Pull out while tilting the front side of the filter downward to prevent dirt or dust from falling inside the case.
3) Install a new filter kit.
4) Install the pocket assembly.

32.Diagnostics with Phenomenon

A: INSPECTION

Refer to “Diagnostics with Phenomenon” for “HVAC SYSTEM (AUTO A/C) (DIAGNOSTICS)” section. <Ref. to AC(diag)-8, Diagnostics with Phenomenon.>

HVAC SYSTEM (AUTO A/C) (DIAGNOSTICS)

AC(diag)

Page

1. Basic Diagnostic Procedure 2
2. General Description 3
3. Electrical Component Location 4
4. Auto A/C Control Module I/O Signal 6
5. Diagnostics with Phenomenon 8
6. Subaru Select Monitor 42
7. Read Diagnostic Trouble Code (DTC) 43
8. Clear Memory Mode 44
9. Inspection Mode 45
10. Read Current Data 47
11. System Operation Check Mode 49
12. Diagnostic Procedure for Subaru Select Monitor Communication 50
13. List of Diagnostic Trouble Code (DTC) 52
14. Diagnostic Procedure with Diagnostic Trouble Code (DTC) 54

1. Basic Diagnostic Procedure

A: PROCEDURE

NOTE:
When the sunload sensor check is performed indoors or in the shade, it could be diagnosed as sensor having an open circuit. Always perform the inspection in direct sunlight.

	Step	Check	Yes	No
1	**START INSPECTIONS.** 1) Prepare the tools. <Ref. to AC-18, PREPARATION TOOL, General Description.> 2) Perform the pre-inspection. <Ref. to AC(diag)-3, INSPECTION, General Description.>	Is the check result OK?	Go to step **2**.	Fix the malfunction found in pre-inspection, and go to the next inspection step. Go to step **2**.
2	**CHECK DTC.** 1) Under the failure condition, leave the vehicle for one minute or more. 2) Read the DTC using Subaru Select Monitor. <Ref. to AC(diag)-43, Read Diagnostic Trouble Code (DTC).> NOTE: • If the communication function of the Subaru Select Monitor cannot be executed properly, check the communication circuit. <Ref. to AC(diag)-50, COMMUNICATION FOR INITIALIZING IMPOSSIBLE, Diagnostic Procedure for Subaru Select Monitor Communication.> • Record the time stamp and the freeze frame data recorded together with the DTC. For time stamp, refer to “LAN SYSTEM”. <Ref. to LAN(diag)-6, TIME STAMP, CAUTION, General Description.>	Is DTC displayed?	Perform the diagnosis for the displayed DTCs. <Ref. to AC(diag)-52, LIST, List of Diagnostic Trouble Code (DTC).> After diagnosis, Go to step **3**.	Refer to Diagnostics with Phenomenon. <Ref. to AC(diag)-8, INSPECTION, Diagnostics with Phenomenon.>
3	**PERFORM DIAGNOSIS.** 1) Perform the Clear Memory Mode. 2) Perform the Inspection Mode. <Ref. to AC(diag)-45, Inspection Mode.>	Is DTC displayed?	Perform the diagnosis for the displayed DTCs.	Finish the diagnosis.

2. General Description

A: CAUTION

1) Never connect the battery in reverse polarity.
• Doing so may immediately damage the A/C control panel.
2) Do not disconnect the battery terminals while the engine is running.
• A large counter electromotive force will be generated in the generator, and this voltage may damage electronic parts such as A/C control panel etc.
3) Before disconnecting the connectors of sensors and the A/C control panel, be sure to turn off the ignition switch.
• A/C control panel may be damaged.
4) Every A/C-related part is a precision part. Do not drop them.
5) Airbag system harness is routed near the A/C control panel and junction box.

CAUTION:
• Do not use electrical test equipment on the airbag system harness and connector.
• Be careful not to damage the airbag system harness when servicing the A/C control panel and junction box.

B: INSPECTION

Before performing diagnosis, check the following items which might affect the A/C system problems.

1. BATTERY

Check the battery. <Ref. to SC(STI)-24, INSPECTION, Battery.> <Ref. to SC(w/o STI)-51, INSPECTION, Battery.>

NOTE:
If the battery voltage does not reach the specified value, recharge or replace the battery.

C: PREPARATION TOOL

1. SPECIAL TOOL

ILLUSTRATION	TOOL NUMBER	DESCRIPTION	REMARKS
 STSSM4	—	SUBARU SELECT MONITOR 4	Used for setting of each function and troubleshooting for electrical system. NOTE: For detailed operation procedures of Subaru Select Monitor 4, refer to “Application help”.

2. GENERAL TOOL

TOOL NAME	REMARKS
Circuit tester	Used for measuring resistance, voltage and current.
DST-i	Used together with Subaru Select Monitor 4.

3. Electrical Component Location

A: LOCATION

1. OUTSIDE VEHICLE

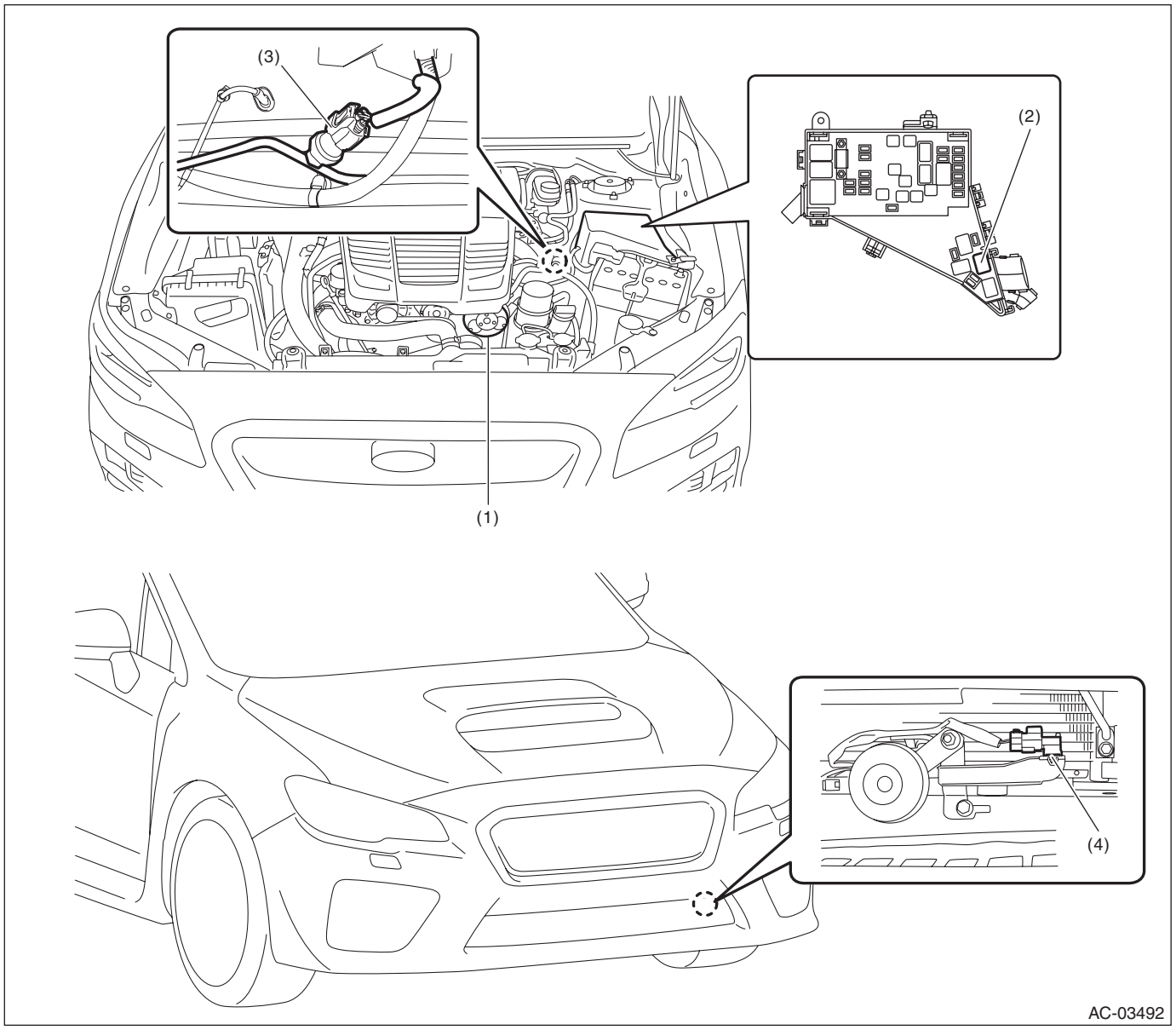

(1) A/C compressor
(2) A/C relay
(3) Pressure switch
(4) Ambient sensor

2. COMPARTMENT

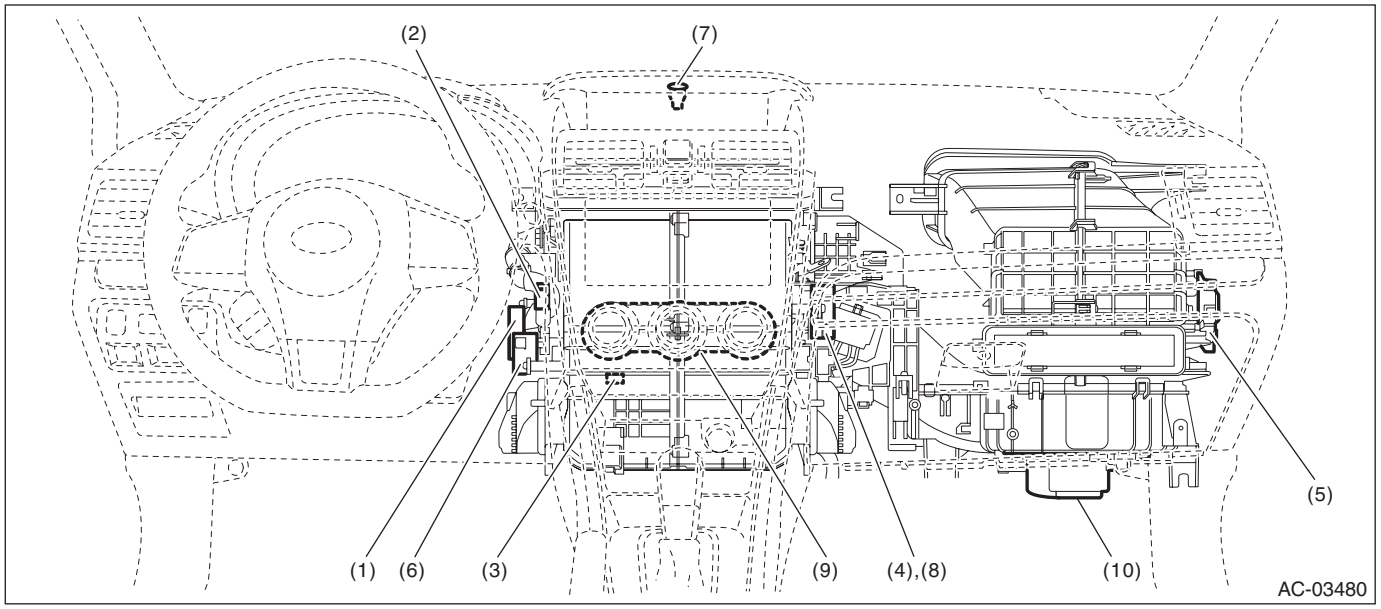

(1) Air mix door actuator LH*2
(2) In-vehicle sensor
(3) Evaporator sensor
(4) Air mix door actuator RH*2
(5) Intake door actuator
(6) Mode door actuator
(7) Sunload sensor
(8) Air mix door actuator*1
(9) A/C control panel
(10) Blower motor

*1: Without left/right independent air conditioning function
*2: With left/right independent air conditioning function

4. Auto A/C Control Module I/O Signal

A: ELECTRICAL SPECIFICATION

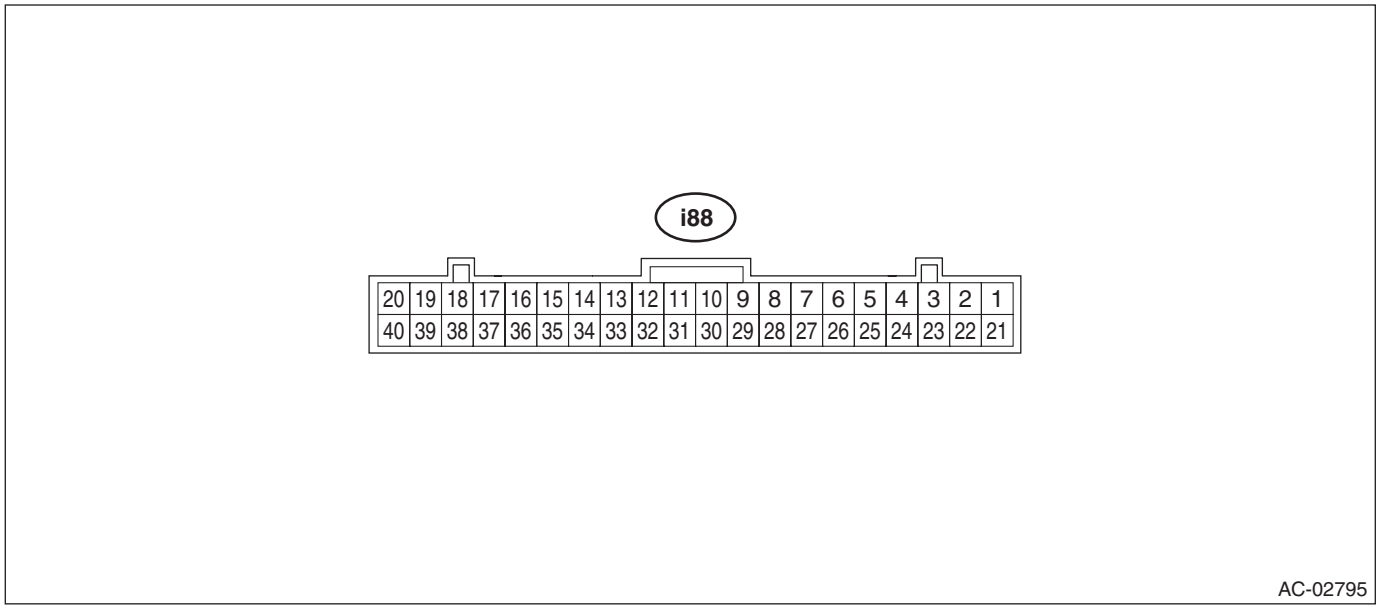

Terminal No.	Contents	Measuring condition	Standard
1	Mode door actuator #4	Digital signal; can not be measured	—
2	Mode door actuator #3	Digital signal; can not be measured	—
3	Mode door actuator #2	Digital signal; can not be measured	—
4	Mode door actuator #1	Digital signal; can not be measured	—
6	Intake door actuator (FRESH)	FRESH mode	8 V or more
8	Intake door actuator (RECIRC)	RECIRC mode	8 V or more
9	Blower fan ON signal	Blower fan is ON	1 V or less
10	Intake door potentiometer power supply	Ignition switch ON	5 V
11	A/C cut-off signal	A/C is cut off	1 V or less
12	Intake door potentiometer signal	Ignition switch ON	0 — 5 V
14	GND for sensors	Always	1 V or less
15	ACC power supply	ACC ON	Battery voltage
16	Sunload sensor	Sunlight is contacting sensor	1 — 4 V
17	RECIRC sensor	Ignition switch ON	25°C: 2.5 V
18	Post evaporator sensor	Depends on temperature after the evaporator.	1 — 4.5 V
19	CAN Lo	Digital signal; can not be measured	—
20	CAN Hi	Digital signal; can not be measured	—
21	Air mix door actuator LH #4*2	Digital signal; can not be measured	—
22	Air mix door actuator LH #3*2	Digital signal; can not be measured	—
23	Air mix door actuator LH #2*2	Digital signal; can not be measured	—
24	Air mix door actuator LH #1*2	Digital signal; can not be measured	—
25	Air mix door actuator #4 *1 or air mix door actuator RH #4 *2	Digital signal; can not be measured	—
26	Air mix door actuator #3 *1 or air mix door actuator RH #3 *2	Digital signal; can not be measured	—
27	Air mix door actuator #2 *1 or air mix door actuator RH #2 *2	Digital signal; can not be measured	—
28	Air mix door actuator #1 *1 or air mix door actuator RH #1 *2	Digital signal; can not be measured	—

Terminal No.	Contents	Measuring condition		Standard
31	BATT	Always		Battery voltage
32	IGN	Ignition ON		Battery voltage
34	GND	Always		1 V or less
35	ILL–	Illumination ON (measure between 37 — 35)		Battery voltage
37	ILL+			
40	Fan control signal	Ignition switch: ON, Blower switch: ON	1st	Approx. 9 V
			2nd	Approx. 8 V
			3rd	Approx. 7 V
			4th	Approx. 6 V
			5th	Approx. 5 V
			6th	Approx. 3.5 V
			7th	Approx. 0.5 V

*1: Without left/right independent air conditioning function
*2: With left/right independent air conditioning function

B: WIRING DIAGRAM

1. AIR CONDITIONER AUTO A/C MODEL

Refer to “Air Conditioning System” in the wiring diagram. <Ref. to WI-74, WIRING DIAGRAM, Air Conditioning System.>

5. Diagnostics with Phenomenon

A: INSPECTION

1. Perform the diagnosis according to the diagnostic procedure of the corresponding symptom that is shown in the symptom list.
2. If there are multiple symptoms, perform the diagnosis in the symptom sequence (1 → 2 → ... → 13).

1. SYMPTOM LIST

Symptoms		Diagnostic procedure
1	Nothing is displayed on the screen. No illumination appears on the indicator.	<Ref. to AC(diag)-9, NOTHING IS DISPLAYED ON THE SCREEN. NO ILLUMINATION APPEARS ON THE INDICATOR, DIAGNOSTIC PROCEDURE WITH PHENOMENON, Diagnostics with Phenomenon.>
2	Air conditioner does not stop when pressing the OFF switch.	<Ref. to AC(diag)-10, AIR CONDITIONER DOES NOT STOP WHEN PRESSING THE OFF SWITCH, DIAGNOSTIC PROCEDURE WITH PHENOMENON, Diagnostics with Phenomenon.>
3	Windshield glass does not clear when pressing the DEF switch.	<Ref. to AC(diag)-11, WINDSHIELD GLASS DOES NOT CLEAR WHEN PRESSING THE DEF SWITCH, DIAGNOSTIC PROCEDURE WITH PHENOMENON, Diagnostics with Phenomenon.>
4	Cold air not emitted.	<Ref. to AC(diag)-13, COLD AIR NOT EMITTED, DIAGNOSTIC PROCEDURE WITH PHENOMENON, Diagnostics with Phenomenon.>
5	Warm air not emitted.	<Ref. to AC(diag)-17, WARM AIR NOT EMITTED, DIAGNOSTIC PROCEDURE WITH PHENOMENON, Diagnostics with Phenomenon.>
6	Compartment temperature is lower than setting temperature.	<Ref. to AC(diag)-21, COMPARTMENT TEMPERATURE IS LOWER THAN SETTING TEMPERATURE, DIAGNOSTIC PROCEDURE WITH PHENOMENON, Diagnostics with Phenomenon.>
7	Compartment temperature is higher than setting temperature.	<Ref. to AC(diag)-25, COMPARTMENT TEMPERATURE IS HIGHER THAN SETTING TEMPERATURE, DIAGNOSTIC PROCEDURE WITH PHENOMENON, Diagnostics with Phenomenon.>
8	Air does not come out. Airflow is low. (Blower motor does not rotate.)	<Ref. to AC(diag)-29, AIR DOES NOT COME OUT. AIRFLOW IS LOW, DIAGNOSTIC PROCEDURE WITH PHENOMENON, Diagnostics with Phenomenon.>
9	Airflow cannot be adjusted. (Blower motor turns at a high speed.)	<Ref. to AC(diag)-32, AIR CANNOT BE CONTROLLED, DIAGNOSTIC PROCEDURE WITH PHENOMENON, Diagnostics with Phenomenon.>
10	Cool air does not come out when pressing the A/C switch. Fog cannot be cleared. (Compressor does not operate.)	<Ref. to AC(diag)-34, COOL AIR DOES NOT COME OUT WHEN PRESSING THE A/C SWITCH. FOG CANNOT BE CLEARED. (COMPRESSOR DOES NOT OPERATE.), DIAGNOSTIC PROCEDURE WITH PHENOMENON, Diagnostics with Phenomenon.>
11	Unable to switch suction vents.	<Ref. to AC(diag)-37, UNABLE TO SWITCH SUCTION VENTS, DIAGNOSTIC PROCEDURE WITH PHENOMENON, Diagnostics with Phenomenon.>
12	Unable to switch blow vents.	<Ref. to AC(diag)-38, UNABLE TO SWITCH VENTS, DIAGNOSTIC PROCEDURE WITH PHENOMENON, Diagnostics with Phenomenon.>
13	Illumination does not illuminate or cannot be dimmed.	<Ref. to AC(diag)-40, ILLUMINATION DOES NOT ILLUMINATE OR CANNOT BE DIMMED, DIAGNOSTIC PROCEDURE WITH PHENOMENON, Diagnostics with Phenomenon.>

B: DIAGNOSTIC PROCEDURE WITH PHENOMENON

1. NOTHING IS DISPLAYED ON THE SCREEN. NO ILLUMINATION APPEARS ON THE INDICATOR

TROUBLE SYMPTOM:

- When the AUTO button is pressed with IGN ON, nothing is displayed on the screen or indicators do not illuminate.
- Self diagnosis using A/C control panel does not operate.

TROUBLE CAUSES:

- A/C control panel power supply circuit failure
- CAN communication failure

WIRING DIAGRAM:

Air conditioning system <Ref. to WI-74, WIRING DIAGRAM, Air Conditioning System.>

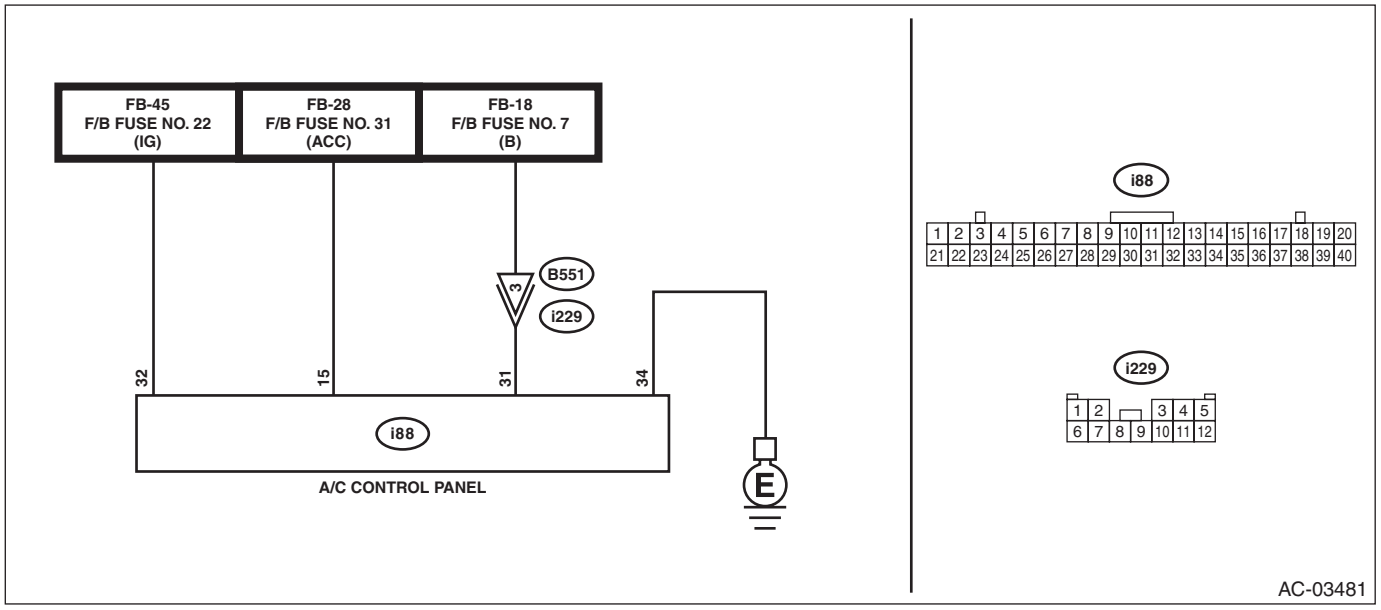

	Step	Check	Yes	No
1	**CHECK FUSE.** 1) Turn the ignition switch to OFF. 2) Remove a fuse from fuse & relay box. 3) Check the condition of fuse.	Is the check result OK?	Go to step **2**.	Replace the fuse. If the replaced fuse blows out easily, repair the ground short circuit in harness between the fuse — A/C control panel.
2	**CHECK CONNECTOR.** Check for poor contact of connector.	Is the check result OK?	Go to step **3**.	Repair the connector.
3	**CHECK A/C CONTROL PANEL POWER SUPPLY CIRCUIT (OPEN).** 1) Remove the A/C control panel. 2) Disconnect the A/C control panel connector. 3) Measure the voltage between A/C control panel connector terminal and chassis ground after turning the ignition switch to ON. ***Connector & terminal*** ***(i88) No. 15 (+) — Chassis ground (–):*** ***(i88) No. 31 (+) — Chassis ground (–):*** ***(i88) No. 32 (+) — Chassis ground (–):***	Is the voltage 10 V or more?	Go to step **4**.	Check for open or short circuit in the harness between A/C control panel and fuse.

	Step	Check	Yes	No
4	**CHECK A/C CONTROL PANEL GROUND CIRCUIT (OPEN).** Measure the resistance of harness between A/C control panel and chassis ground after turning the ignition switch to OFF. ***Connector & terminal*** ***(i88) No. 34 — Chassis ground:***	Is the resistance less than 10 Ω?	Go to step **5**.	Repair the harness for ground line.
5	**CHECK FOR POOR CONTACT.** Check poor contact of A/C control panel connector.	Is the check result OK?	Replace the A/C control panel. <Ref. to AC-43, REMOVAL, Control Panel.>	Repair the connector.

2. AIR CONDITIONER DOES NOT STOP WHEN PRESSING THE OFF SWITCH

TROUBLE SYMPTOM:

Even when the OFF switch is pressed, the blower fan does not turn off, the inlet opening remains in FRESH mode, and the compressor does not turn off.

TROUBLE CAUSES:

- CAN communication failure
- A/C control panel failure
- Blower motor failure
- Intake door actuator failure
- Compressor failure

	Step	Check	Yes	No
1	**CHECK A/C CONTROL PANEL.** 1) Turn the ignition switch to ON. 2) Press the OFF switch of the A/C control panel. 3) Using Subaru Select Monitor, check the following data in “Read Current Data”. <Ref. to AC(diag)-47, Read Current Data.> • Blower fan level • Fresh/Recircle Air Door Actuator Position Target	Does “Blower Fan Level” indicate 0 and “Fresh/Recircle Air Door Actuator Position Target” indicate 100%?	Go to step **2**.	Replace the A/C control panel. <Ref. to AC-43, REMOVAL, Control Panel.>
2	**CHECK BLOWER MOTOR.** With the OFF switch pressed, check the blower motor operation.	Is the blower motor stopped?	Go to step **3**.	<Ref. to AC(diag)-32, AIR CANNOT BE CONTROLLED, DIAGNOSTIC PROCEDURE WITH PHENOMENON, Diagnostics with Phenomenon.>
3	**CHECK INTAKE DOOR ACTUATOR.** With the OFF switch pressed, check the FRESH/RECIRC door operation.	Does the FRESH/RECIRC door set to FRESH?	Go to step **4**.	<Ref. to AC(diag)-37, UNABLE TO SWITCH SUCTION VENTS, DIAGNOSTIC PROCEDURE WITH PHENOMENON, Diagnostics with Phenomenon.>

	Step	Check	Yes	No
4	**CHECK COMPRESSOR.** With the OFF switch pressed, check the compressor operation.	Is the compressor stopped?	The circuit has returned to a normal condition at this time. Reproduce the failure, and then perform the diagnosis again. NOTE: In this case, temporary poor contact of connector, temporary open or short circuit of harness may be the cause.	<Ref. to AC(diag)-34, COOL AIR DOES NOT COME OUT WHEN PRESSING THE A/C SWITCH. FOG CANNOT BE CLEARED. (COMPRESSOR DOES NOT OPERATE.), DIAGNOSTIC PROCEDURE WITH PHENOMENON, Diagnostics with Phenomenon.>

3. WINDSHIELD GLASS DOES NOT CLEAR WHEN PRESSING THE DEF SWITCH

TROUBLE SYMPTOM:

Defroster indicator does not illuminate, outlet opening does not switch to DEF, compressor does not switch to ON, and inlet opening does not switch to FRESH, when pressing the DEF switch.

TROUBLE CAUSES:

- CAN communication failure
- A/C control panel failure
- Mode door actuator failure
- Compressor failure
- Intake door actuator failure

	Step	Check	Yes	No
1	**CHECK A/C CONTROL PANEL.** 1) Turn the ignition switch to ON. 2) Press the DEF switch of the A/C control panel. 3) Using Subaru Select Monitor, check the following data in “Read Current Data”. <Ref. to AC(diag)-47, Read Current Data.> • Mode Door Actuator Position Target • Fresh/Recircle Air Door Actuator Position Target	Does “Mode Door Actuator Position Target” indicate 100% and “Fresh/Recircle Air Door Actuator Position Target” indicate 100%?	Go to step **2**.	Replace the A/C control panel. <Ref. to AC-43, REMOVAL, Control Panel.>
2	**CHECK MODE DOOR ACTUATOR.** With the DEF switch ON, check the mode door operation.	Does the air come out from the DEF outlet opening?	Go to step **3**.	<Ref. to AC(diag)-38, UNABLE TO SWITCH VENTS, DIAGNOSTIC PROCEDURE WITH PHENOMENON, Diagnostics with Phenomenon.>
3	**CHECK INTAKE DOOR ACTUATOR.** With the DEF switch ON, check the FRESH/RECIRC door operation.	Is FRESH/RECIRC switch turned to “FRESH”?	Go to step **4**.	<Ref. to AC(diag)-37, UNABLE TO SWITCH SUCTION VENTS, DIAGNOSTIC PROCEDURE WITH PHENOMENON, Diagnostics with Phenomenon.>

	Step	Check	Yes	No
4	**CHECK COMPRESSOR.** With the DEF switch ON, check the compressor operation.	Does the compressor operate?	The circuit has returned to a normal condition at this time. Reproduce the failure, and then perform the diagnosis again. NOTE: In this case, temporary poor contact of connector, temporary open or short circuit of harness may be the cause.	<Ref. to AC(diag)-34, COOL AIR DOES NOT COME OUT WHEN PRESSING THE A/C SWITCH. FOG CANNOT BE CLEARED. (COMPRESSOR DOES NOT OPERATE.), DIAGNOSTIC PROCEDURE WITH PHENOMENON, Diagnostics with Phenomenon.>

4. COLD AIR NOT EMITTED

TROUBLE SYMPTOM:
Cold air not emitted.
TROUBLE CAUSES:
- Airflow capacity failure
- Refrigerant pressure failure
- CAN communication failure
- A/C control panel failure
- Air mix actuator RH failure
- Air mix actuator LH failure (only with left/right independent air conditioning function)
- Intake door actuator failure
- Evaporator sensor failure
- In-vehicle sensor failure
- Ambient sensor failure
- Sunload sensor failure

	Step	Check	Yes	No
1	**CHECK MAX COOL.** Set the A/C control panel dials as follows. Temperature control dial: MAX COOL FRESH/RECIRC switch: RECIRC Mode switch or mode dial: VENT A/C switch: ON	Does it fail to blow the cold air?	Go to step **2**.	Go to step **4**.
2	**CHECK AIRFLOW CAPACITY.** Check the airflow capacity. <Ref. to AC(diag)-29, AIR DOES NOT COME OUT. AIRFLOW IS LOW, DIAGNOSTIC PROCEDURE WITH PHENOMENON, Diagnostics with Phenomenon.>	Is the check result OK?	Go to step **3**.	Perform repair according to inspection procedure.
3	**CHECK AMOUNT OF REFRIGERANT PRESSURE.** Check the refrigerant pressure. <Ref. to AC-22, REFRIGERANT GAS PRESSURE INSPECTION, PROCEDURE, Refrigerant Pressure with Manifold Gauge Set.>	Is the check result OK?	Go to step **4**.	Perform repair according to refrigerant pressure inspection.
4	**CHECK A/C CONTROL PANEL.** 1) Turn the temperature control dials (driver's side) and (passenger's side) to MAX COOL. 2) Using Subaru Select Monitor, display the following data in "Read Current Data". <Ref. to AC(diag)-47, Read Current Data.> • Heater Control Panel Setting Value (driver's) • Heater Control Panel Setting Value (passenger's)	Do "Heater Control Panel Setting Value (Driver's)" and "Heater Control Panel Setting Value (Passenger's)" indicate "60"*1?	Go to step **5**.	Replace the A/C control panel. <Ref. to AC-43, REMOVAL, Control Panel.>
5	**CHECK A/C CONTROL PANEL.** 1) Turn the temperature control dials (driver's side) and (passenger's side) to MAX HOT. 2) Using Subaru Select Monitor, display the following data in "Read Current Data". <Ref. to AC(diag)-47, Read Current Data.> • Heater Control Panel Setting Value (driver's) • Heater Control Panel Setting Value (passenger's)	Do "Heater Control Panel Setting Value (Driver's)" and "Heater Control Panel Setting Value (Passenger's)" indicate "90"*2?	Go to step **6**.	Replace the A/C control panel. <Ref. to AC-43, REMOVAL, Control Panel.>

Step		Check	Yes	No
6	**CHECK DTC.** 1) Turn the ignition switch to ON. 2) Turn the temperature control dial at MAX COOL and leave for 16 seconds or more. (For vehicles with left/right independent air conditioner, perform setting on both sides.) 3) Read the DTC using Subaru Select Monitor. <Ref. to AC(diag)-43, Read Diagnostic Trouble Code (DTC).>	Is DTC B14E1, B14E2, B14E3 or B14E4 displayed?	Perform the diagnosis for the displayed DTC B14E1, B14E2, B14E3 or B14E4. <Ref. to AC(diag)-70, DTC B14E1 AIR MIX DOOR ACTUATOR STEPPING MOTOR CIRCUIT OPEN (DRIVER), Diagnostic Procedure with Diagnostic Trouble Code (DTC).> <Ref. to AC(diag)-72, DTC B14E2 AIR MIX DOOR ACTUATOR STEPPING MOTOR CIRCUIT SHORT-CIRCUIT (DRIVER), Diagnostic Procedure with Diagnostic Trouble Code (DTC).> <Ref. to AC(diag)-74, DTC B14E3 AIR MIX DOOR ACTUATOR STEPPING MOTOR CIRCUIT OPEN (PASSENGER), Diagnostic Procedure with Diagnostic Trouble Code (DTC).> <Ref. to AC(diag)-76, DTC B14E4 AIR MIX DOOR ACTUATOR STEPPING MOTOR CIRCUIT SHORT-CIRCUIT (PASSENGER), Diagnostic Procedure with Diagnostic Trouble Code (DTC).>	Go to step **7**.

	Step	Check	Yes	No
7	**CHECK DTC.** 1) Turn the ignition switch to ON. 2) Turn the temperature control dial at MAX HOT and leave for 16 seconds or more. (For vehicles with left/right independent air conditioner, perform setting on both sides.) 3) Read the DTC using Subaru Select Monitor. <Ref. to AC(diag)-43, Read Diagnostic Trouble Code (DTC).>	Is DTC B14E1, B14E2, B14E3 or B14E4 displayed?	Perform the diagnosis for the displayed DTC B14E1, B14E2, B14E3 or B14E4. <Ref. to AC(diag)-70, DTC B14E1 AIR MIX DOOR ACTUATOR STEPPING MOTOR CIRCUIT OPEN (DRIVER), Diagnostic Procedure with Diagnostic Trouble Code (DTC).> <Ref. to AC(diag)-72, DTC B14E2 AIR MIX DOOR ACTUATOR STEPPING MOTOR CIRCUIT SHORT-CIRCUIT (DRIVER), Diagnostic Procedure with Diagnostic Trouble Code (DTC).> <Ref. to AC(diag)-74, DTC B14E3 AIR MIX DOOR ACTUATOR STEPPING MOTOR CIRCUIT OPEN (PASSENGER), Diagnostic Procedure with Diagnostic Trouble Code (DTC).> <Ref. to AC(diag)-76, DTC B14E4 AIR MIX DOOR ACTUATOR STEPPING MOTOR CIRCUIT SHORT-CIRCUIT (PASSENGER), Diagnostic Procedure with Diagnostic Trouble Code (DTC).>	Go to step **8**.
8	**CHECK INTAKE DOOR ACTUATOR.** Visually check the intake door actuator operation.	Is the check result OK?	Go to step **9**.	Check the intake door actuator. <Ref. to AC(diag)-37, UNABLE TO SWITCH SUCTION VENTS, DIAGNOSTIC PROCEDURE WITH PHENOMENON, Diagnostics with Phenomenon.>

	Step	Check	Yes	No
9	**CHECK EVAPORATOR SENSOR UNIT.** Perform the inspection of evaporator sensor unit. <Ref. to AC-82, INSPECTION, Evaporator Sensor.>	Is the check result OK?	Go to step **10**.	Replace the evaporator sensor. <Ref. to AC-80, REMOVAL, Evaporator Sensor.>
10	**CHECK IN-VEHICLE SENSOR UNIT.** Check in-vehicle sensor. <Ref. to AC-77, INSPECTION, In-Vehicle Sensor (Auto A/C Model).>	Is the check result OK?	Go to step **11**.	Replace the in-vehicle sensor. <Ref. to AC-76, REMOVAL, In-Vehicle Sensor (Auto A/C Model).>
11	**CHECK AMBIENT SENSOR UNIT.** Check the ambient sensor. <Ref. to AC-73, INSPECTION, Ambient Sensor.>	Is the check result OK?	Go to step **12**.	Replace the ambient sensor. <Ref. to AC-71, REMOVAL, Ambient Sensor.>
12	**CHECK SUNLOAD SENSOR UNIT.** Check the sunload sensor unit. <Ref. to AC-75, INSPECTION, Sunload Sensor (Auto A/C Model).>	Is the check result OK?	The circuit has returned to a normal condition at this time. Reproduce the failure, and then perform the diagnosis again. NOTE: In this case, temporary poor contact of connector, temporary open or short circuit of harness may be the cause.	Replace the sunload sensor. <Ref. to AC-74, REMOVAL, Sunload Sensor (Auto A/C Model).>

*1: For the 75°F center specification. For the 25°C center specification, the value is 18.
*2: For the 75°F center specification. For the 25°C center specification, the value is 32.

5. WARM AIR NOT EMITTED

TROUBLE SYMPTOM:
Warm air not emitted.
TROUBLE CAUSES:
- Airflow capacity failure
- Coolant level failure
- CAN communication failure
- A/C control panel failure
- Air mix actuator RH failure
- Air mix actuator LH failure (only with left/right independent air conditioning function)
- Intake door actuator failure
- Evaporator sensor failure
- In-vehicle sensor failure
- Ambient sensor failure
- Sunload sensor failure

	Step	Check	Yes	No
1	**CHECK MAX HOT.** Set the A/C control panel dials as follows. Temperature control dial: MAX HOT FRESH/RECIRC switch: FRESH Mode switch or mode dial: HEAT A/C switch: OFF	Does it fail to blow the hot air?	Go to step **2**.	Go to step **4**.
2	**CHECK AIRFLOW CAPACITY.** Check the airflow capacity. <Ref. to AC(diag)-29, AIR DOES NOT COME OUT. AIRFLOW IS LOW, DIAGNOSTIC PROCEDURE WITH PHENOMENON, Diagnostics with Phenomenon.>	Is the check result OK?	Go to step **3**.	Perform repair according to inspection procedure.
3	**CHECK ENGINE COOLANT.** Check engine coolant amount.	Is the engine coolant level within the specification?	Go to step **4**.	Fill engine coolant. If there is coolant leakage, repair the leaks according to Engine Cooling System Trouble in General. <Ref. to CO(w/o STI)-51, Engine Cooling System Trouble in General.> <Ref. to CO(STI)-28, Engine Cooling System Trouble in General.>
4	**CHECK A/C CONTROL PANEL.** 1) Turn the temperature control dials (driver's side) and (passenger's side) to MAX COOL. 2) Using Subaru Select Monitor, display the following data in "Read Current Data". <Ref. to AC(diag)-47, Read Current Data.> • Heater Control Panel Setting Value (driver's) • Heater Control Panel Setting Value (passenger's)	Do "Heater Control Panel Setting Value (Driver's)" and "Heater Control Panel Setting Value (Passenger's)" indicate "60"*1?	Go to step **5**.	Replace the A/C control panel. <Ref. to AC-43, REMOVAL, Control Panel.>

	Step	Check	Yes	No
5	**CHECK A/C CONTROL PANEL.** 1) Turn the temperature control dials (driver's side) and (passenger's side) to MAX HOT. 2) Using Subaru Select Monitor, display the following data in "Read Current Data". <Ref. to AC(diag)-47, Read Current Data.> • Heater Control Panel Setting Value (driver's) • Heater Control Panel Setting Value (passenger's)	Do "Heater Control Panel Setting Value (Driver's)" and "Heater Control Panel Setting Value (Passenger's)" indicate "90"*2?	Go to step **6**.	Replace the A/C control panel. <Ref. to AC-43, REMOVAL, Control Panel.>
6	**CHECK DTC.** 1) Turn the ignition switch to ON. 2) Turn the temperature control dial at MAX COOL and leave for 16 seconds or more. (For vehicles with left/right independent air conditioner, perform setting on both sides.) 3) Read the DTC using Subaru Select Monitor. <Ref. to AC(diag)-43, Read Diagnostic Trouble Code (DTC).>	Is DTC B14E1, B14E2, B14E3 or B14E4 displayed?	Perform the diagnosis for the displayed DTC B14E1, B14E2, B14E3 or B14E4. <Ref. to AC(diag)-70, DTC B14E1 AIR MIX DOOR ACTUATOR STEPPING MOTOR CIRCUIT OPEN (DRIVER), Diagnostic Procedure with Diagnostic Trouble Code (DTC).> <Ref. to AC(diag)-72, DTC B14E2 AIR MIX DOOR ACTUATOR STEPPING MOTOR CIRCUIT SHORT-CIRCUIT (DRIVER), Diagnostic Procedure with Diagnostic Trouble Code (DTC).> <Ref. to AC(diag)-74, DTC B14E3 AIR MIX DOOR ACTUATOR STEPPING MOTOR CIRCUIT OPEN (PASSENGER), Diagnostic Procedure with Diagnostic Trouble Code (DTC).> <Ref. to AC(diag)-76, DTC B14E4 AIR MIX DOOR ACTUATOR STEPPING MOTOR CIRCUIT SHORT-CIRCUIT (PASSENGER), Diagnostic Procedure with Diagnostic Trouble Code (DTC).>	Go to step **7**.

	Step	Check	Yes	No
7	**CHECK DTC.** 1) Turn the ignition switch to ON. 2) Turn the temperature control dial at MAX HOT and leave for 16 seconds or more. (For vehicles with left/right independent air conditioner, perform setting on both sides.) 3) Read the DTC using Subaru Select Monitor. <Ref. to AC(diag)-43, Read Diagnostic Trouble Code (DTC).>	Is DTC B14E1, B14E2, B14E3 or B14E4 displayed?	Perform the diagnosis for the displayed DTC B14E1, B14E2, B14E3 or B14E4. <Ref. to AC(diag)-70, DTC B14E1 AIR MIX DOOR ACTUATOR STEPPING MOTOR CIRCUIT OPEN (DRIVER), Diagnostic Procedure with Diagnostic Trouble Code (DTC).> <Ref. to AC(diag)-72, DTC B14E2 AIR MIX DOOR ACTUATOR STEPPING MOTOR CIRCUIT SHORT-CIRCUIT (DRIVER), Diagnostic Procedure with Diagnostic Trouble Code (DTC).> <Ref. to AC(diag)-74, DTC B14E3 AIR MIX DOOR ACTUATOR STEPPING MOTOR CIRCUIT OPEN (PASSENGER), Diagnostic Procedure with Diagnostic Trouble Code (DTC).> <Ref. to AC(diag)-76, DTC B14E4 AIR MIX DOOR ACTUATOR STEPPING MOTOR CIRCUIT SHORT-CIRCUIT (PASSENGER), Diagnostic Procedure with Diagnostic Trouble Code (DTC).>	Go to step **8**.
8	**CHECK INTAKE DOOR ACTUATOR.** Visually check the intake door actuator operation.	Is the check result OK?	Go to step **9**.	Check the intake door actuator. <Ref. to AC(diag)-37, UNABLE TO SWITCH SUCTION VENTS, DIAGNOSTIC PROCEDURE WITH PHENOMENON, Diagnostics with Phenomenon.>

	Step	Check	Yes	No
9	**CHECK EVAPORATOR SENSOR UNIT.** Perform the inspection of evaporator sensor unit. <Ref. to AC-82, INSPECTION, Evaporator Sensor.>	Is the check result OK?	Go to step **10**.	Replace the evaporator sensor. <Ref. to AC-80, REMOVAL, Evaporator Sensor.>
10	**CHECK IN-VEHICLE SENSOR UNIT.** Check in-vehicle sensor circuit. <Ref. to AC-77, INSPECTION, In-Vehicle Sensor (Auto A/C Model).>	Is the check result OK?	Go to step **11**.	Replace the in-vehicle sensor. <Ref. to AC-76, REMOVAL, In-Vehicle Sensor (Auto A/C Model).>
11	**CHECK AMBIENT SENSOR UNIT.** Check the ambient sensor. <Ref. to AC-73, INSPECTION, Ambient Sensor.>	Is the check result OK?	Go to step **12**.	Replace the ambient sensor. <Ref. to AC-71, REMOVAL, Ambient Sensor.>
12	**CHECK SUNLOAD SENSOR UNIT.** Check the sunload sensor unit. <Ref. to AC-75, INSPECTION, Sunload Sensor (Auto A/C Model).>	Is the check result OK?	The circuit has returned to a normal condition at this time. Reproduce the failure, and then perform the diagnosis again. NOTE: In this case, temporary poor contact of connector, temporary open or short circuit of harness may be the cause.	Replace the sunload sensor. <Ref. to AC-74, REMOVAL, Sunload Sensor (Auto A/C Model).>

*1: For the 75°F center specification. For the 25°C center specification, the value is 18.
*2: For the 75°F center specification. For the 25°C center specification, the value is 32.

6. COMPARTMENT TEMPERATURE IS LOWER THAN SETTING TEMPERATURE

TROUBLE SYMPTOM:

Compartment temperature is excessively lower than setting temperature.

TROUBLE CAUSES:

- Large airflow capacity
- Refrigerant pressure failure
- CAN communication failure
- A/C control panel failure
- Air mix actuator RH failure
- Air mix actuator LH failure (only with left/right independent air conditioning function)
- Evaporator sensor failure
- In-vehicle sensor failure
- Ambient sensor failure
- Sunload sensor failure

	Step	Check	Yes	No
1	**CHECK AIRFLOW CAPACITY.** Check the airflow capacity. <Ref. to AC(diag)-32, AIR CANNOT BE CONTROLLED, DIAGNOSTIC PROCEDURE WITH PHENOMENON, Diagnostics with Phenomenon.>	Is the check result OK?	Go to step **2**.	Perform repair according to inspection procedure.
2	**CHECK AMOUNT OF REFRIGERANT PRESSURE.** Check the refrigerant pressure. <Ref. to AC-22, REFRIGERANT GAS PRESSURE INSPECTION, PROCEDURE, Refrigerant Pressure with Manifold Gauge Set.>	Is the check result OK?	Go to step **3**.	Perform repair according to refrigerant pressure inspection.
3	**CHECK A/C CONTROL PANEL.** 1) Turn the temperature control dials (driver's side) and (passenger's side) to MAX COOL. 2) Using Subaru Select Monitor, display the following data in "Read Current Data". <Ref. to AC(diag)-47, Read Current Data.> • Heater Control Panel Setting Value (driver's) • Heater Control Panel Setting Value (passenger's)	Do "Heater Control Panel Setting Value (Driver's)" and "Heater Control Panel Setting Value (Passenger's)" indicate "60"*1?	Go to step **4**.	Replace the A/C control panel. <Ref. to AC-43, REMOVAL, Control Panel.>
4	**CHECK A/C CONTROL PANEL.** 1) Turn the temperature control dials (driver's side) and (passenger's side) to MAX HOT. 2) Using Subaru Select Monitor, display the following data in "Read Current Data". <Ref. to AC(diag)-47, Read Current Data.> • Heater Control Panel Setting Value (driver's) • Heater Control Panel Setting Value (passenger's)	Do "Heater Control Panel Setting Value (Driver's)" and "Heater Control Panel Setting Value (Passenger's)" indicate "90"*2?	Go to step **5**.	Replace the A/C control panel. <Ref. to AC-43, REMOVAL, Control Panel.>

Step		Check	Yes	No
5	**CHECK DTC.** 1) Turn the ignition switch to ON. 2) Turn the temperature control dial at MAX COOL and leave for 16 seconds or more. (For vehicles with left/right independent air conditioner, perform setting on both sides.) 3) Read the DTC using Subaru Select Monitor. <Ref. to AC(diag)-43, Read Diagnostic Trouble Code (DTC).>	Is DTC B14E1, B14E2, B14E3 or B14E4 displayed?	Perform the diagnosis for the displayed DTC B14E1, B14E2, B14E3 or B14E4. <Ref. to AC(diag)-70, DTC B14E1 AIR MIX DOOR ACTUATOR STEPPING MOTOR CIRCUIT OPEN (DRIVER), Diagnostic Procedure with Diagnostic Trouble Code (DTC).> <Ref. to AC(diag)-72, DTC B14E2 AIR MIX DOOR ACTUATOR STEPPING MOTOR CIRCUIT SHORT-CIRCUIT (DRIVER), Diagnostic Procedure with Diagnostic Trouble Code (DTC).> <Ref. to AC(diag)-74, DTC B14E3 AIR MIX DOOR ACTUATOR STEPPING MOTOR CIRCUIT OPEN (PASSENGER), Diagnostic Procedure with Diagnostic Trouble Code (DTC).> <Ref. to AC(diag)-76, DTC B14E4 AIR MIX DOOR ACTUATOR STEPPING MOTOR CIRCUIT SHORT-CIRCUIT (PASSENGER), Diagnostic Procedure with Diagnostic Trouble Code (DTC).>	Go to step **6**.

Step		Check	Yes	No
6	**CHECK DTC.** 1) Turn the ignition switch to ON. 2) Turn the temperature control dial at MAX HOT and leave for 16 seconds or more. (For vehicles with left/right independent air conditioner, perform setting on both sides.) 3) Read the DTC using Subaru Select Monitor. <Ref. to AC(diag)-43, Read Diagnostic Trouble Code (DTC).>	Is DTC B14E1, B14E2, B14E3 or B14E4 displayed?	Perform the diagnosis for the displayed DTC B14E1, B14E2, B14E3 or B14E4. <Ref. to AC(diag)-70, DTC B14E1 AIR MIX DOOR ACTUATOR STEPPING MOTOR CIRCUIT OPEN (DRIVER), Diagnostic Procedure with Diagnostic Trouble Code (DTC).> <Ref. to AC(diag)-72, DTC B14E2 AIR MIX DOOR ACTUATOR STEPPING MOTOR CIRCUIT SHORT-CIRCUIT (DRIVER), Diagnostic Procedure with Diagnostic Trouble Code (DTC).> <Ref. to AC(diag)-74, DTC B14E3 AIR MIX DOOR ACTUATOR STEPPING MOTOR CIRCUIT OPEN (PASSENGER), Diagnostic Procedure with Diagnostic Trouble Code (DTC).> <Ref. to AC(diag)-76, DTC B14E4 AIR MIX DOOR ACTUATOR STEPPING MOTOR CIRCUIT SHORT-CIRCUIT (PASSENGER), Diagnostic Procedure with Diagnostic Trouble Code (DTC).>	Go to step **7**.
7	**CHECK EVAPORATOR SENSOR UNIT.** Perform the inspection of evaporator sensor unit. <Ref. to AC-82, INSPECTION, Evaporator Sensor.>	Is the check result OK?	Go to step **8**.	Replace the evaporator sensor. <Ref. to AC-80, REMOVAL, Evaporator Sensor.>
8	**CHECK IN-VEHICLE SENSOR UNIT.** Check in-vehicle sensor circuit. <Ref. to AC-77, INSPECTION, In-Vehicle Sensor (Auto A/C Model).>	Is the check result OK?	Go to step **9**.	Replace the in-vehicle sensor. <Ref. to AC-76, REMOVAL, In-Vehicle Sensor (Auto A/C Model).>

	Step	Check	Yes	No
9	**CHECK AMBIENT SENSOR UNIT.** Check the ambient sensor. <Ref. to AC-73, INSPECTION, Ambient Sensor.>	Is the check result OK?	Go to step **10**.	Replace the ambient sensor. <Ref. to AC-71, REMOVAL, Ambient Sensor.>
10	**CHECK SUNLOAD SENSOR UNIT.** Check the sunload sensor unit. <Ref. to AC-75, INSPECTION, Sunload Sensor (Auto A/C Model).>	Is the check result OK?	The circuit has returned to a normal condition at this time. Reproduce the failure, and then perform the diagnosis again. NOTE: In this case, temporary poor contact of connector, temporary open or short circuit of harness may be the cause.	Replace the sunload sensor. <Ref. to AC-74, REMOVAL, Sunload Sensor (Auto A/C Model).>

*1: For the 75°F center specification. For the 25°C center specification, the value is 18.
*2: For the 75°F center specification. For the 25°C center specification, the value is 32.

7. COMPARTMENT TEMPERATURE IS HIGHER THAN SETTING TEMPERATURE

TROUBLE SYMPTOM:

Compartment temperature is excessively higher than setting temperature.

TROUBLE CAUSES:

- Large airflow capacity
- CAN communication failure
- A/C control panel failure
- Air mix actuator RH failure
- Air mix actuator LH failure (only with left/right independent air conditioning function)
- Intake door actuator failure
- Evaporator sensor failure
- In-vehicle sensor failure
- Ambient sensor failure
- Sunload sensor failure

	Step	Check	Yes	No
1	**CHECK AIRFLOW CAPACITY.** Check the airflow capacity. <Ref. to AC(diag)-32, AIR CANNOT BE CONTROLLED, DIAGNOSTIC PROCEDURE WITH PHENOMENON, Diagnostics with Phenomenon.>	Is the check result OK?	Go to step **2**.	Perform repair according to inspection procedure.
2	**CHECK A/C CONTROL PANEL.** 1) Turn the temperature control dials (driver's side) and (passenger's side) to MAX COOL. 2) Using Subaru Select Monitor, display the following data in "Read Current Data". <Ref. to AC(diag)-47, Read Current Data.> • Heater Control Panel Setting Value (driver's) • Heater Control Panel Setting Value (passenger's)	Do "Heater Control Panel Setting Value (Driver's)" and "Heater Control Panel Setting Value (Passenger's)" indicate "60"*1?	Go to step **3**.	Replace the A/C control panel. <Ref. to AC-43, REMOVAL, Control Panel.>
3	**CHECK A/C CONTROL PANEL.** 1) Turn the temperature control dials (driver's side) and (passenger's side) to MAX HOT. 2) Using Subaru Select Monitor, display the following data in "Read Current Data". <Ref. to AC(diag)-47, Read Current Data.> • Heater Control Panel Setting Value (driver's) • Heater Control Panel Setting Value (passenger's)	Do "Heater Control Panel Setting Value (Driver's)" and "Heater Control Panel Setting Value (Passenger's)" indicate "90"*2?	Go to step **4**.	Replace the A/C control panel. <Ref. to AC-43, REMOVAL, Control Panel.>

Step		Check	Yes	No
4	**CHECK DTC.** 1) Turn the ignition switch to ON. 2) Turn the temperature control dial at MAX COOL and leave for 16 seconds or more. (For vehicles with left/right independent air conditioner, perform setting on both sides.) 3) Read the DTC using Subaru Select Monitor. <Ref. to AC(diag)-43, Read Diagnostic Trouble Code (DTC).>	Is DTC B14E1, B14E2, B14E3 or B14E4 displayed?	Perform the diagnosis for the displayed DTC B14E1, B14E2, B14E3 or B14E4. <Ref. to AC(diag)-70, DTC B14E1 AIR MIX DOOR ACTUATOR STEPPING MOTOR CIRCUIT OPEN (DRIVER), Diagnostic Procedure with Diagnostic Trouble Code (DTC).> <Ref. to AC(diag)-72, DTC B14E2 AIR MIX DOOR ACTUATOR STEPPING MOTOR CIRCUIT SHORT-CIRCUIT (DRIVER), Diagnostic Procedure with Diagnostic Trouble Code (DTC).> <Ref. to AC(diag)-74, DTC B14E3 AIR MIX DOOR ACTUATOR STEPPING MOTOR CIRCUIT OPEN (PASSENGER), Diagnostic Procedure with Diagnostic Trouble Code (DTC).> <Ref. to AC(diag)-76, DTC B14E4 AIR MIX DOOR ACTUATOR STEPPING MOTOR CIRCUIT SHORT-CIRCUIT (PASSENGER), Diagnostic Procedure with Diagnostic Trouble Code (DTC).>	Go to step **5**.

	Step	Check	Yes	No
5	**CHECK DTC.** 1) Turn the ignition switch to ON. 2) Turn the temperature control dial at MAX HOT and leave for 16 seconds or more. (For vehicles with left/right independent air conditioner, perform setting on both sides.) 3) Read the DTC using Subaru Select Monitor. <Ref. to AC(diag)-43, Read Diagnostic Trouble Code (DTC).>	Is DTC B14E1, B14E2, B14E3 or B14E4 displayed?	Perform the diagnosis for the displayed DTC B14E1, B14E2, B14E3 or B14E4. <Ref. to AC(diag)-70, DTC B14E1 AIR MIX DOOR ACTUATOR STEPPING MOTOR CIRCUIT OPEN (DRIVER), Diagnostic Procedure with Diagnostic Trouble Code (DTC).> <Ref. to AC(diag)-72, DTC B14E2 AIR MIX DOOR ACTUATOR STEPPING MOTOR CIRCUIT SHORT-CIRCUIT (DRIVER), Diagnostic Procedure with Diagnostic Trouble Code (DTC).> <Ref. to AC(diag)-74, DTC B14E3 AIR MIX DOOR ACTUATOR STEPPING MOTOR CIRCUIT OPEN (PASSENGER), Diagnostic Procedure with Diagnostic Trouble Code (DTC).> <Ref. to AC(diag)-76, DTC B14E4 AIR MIX DOOR ACTUATOR STEPPING MOTOR CIRCUIT SHORT-CIRCUIT (PASSENGER), Diagnostic Procedure with Diagnostic Trouble Code (DTC).>	Go to step **6**.
6	**CHECK INTAKE DOOR ACTUATOR.** Visually check the intake door actuator operation.	Is the check result OK?	Go to step **7**.	Check the intake door actuator. <Ref. to AC(diag)-37, UNABLE TO SWITCH SUCTION VENTS, DIAGNOSTIC PROCEDURE WITH PHENOMENON, Diagnostics with Phenomenon.>

	Step	Check	Yes	No
7	**CHECK EVAPORATOR SENSOR UNIT.** Perform the inspection of evaporator sensor unit. <Ref. to AC-82, INSPECTION, Evaporator Sensor.>	Is the check result OK?	Go to step **8**.	Replace the evaporator sensor. <Ref. to AC-80, REMOVAL, Evaporator Sensor.>
8	**CHECK IN-VEHICLE SENSOR UNIT.** Check in-vehicle sensor circuit. <Ref. to AC-77, INSPECTION, In-Vehicle Sensor (Auto A/C Model).>	Is the check result OK?	Go to step **9**.	Replace the in-vehicle sensor. <Ref. to AC-76, REMOVAL, In-Vehicle Sensor (Auto A/C Model).>
9	**CHECK AMBIENT SENSOR UNIT.** Check the ambient sensor. <Ref. to AC-73, INSPECTION, Ambient Sensor.>	Is the check result OK?	Go to step **10**.	Replace the ambient sensor. <Ref. to AC-71, REMOVAL, Ambient Sensor.>
10	**CHECK SUNLOAD SENSOR UNIT.** Check the sunload sensor unit. <Ref. to AC-75, INSPECTION, Sunload Sensor (Auto A/C Model).>	Is the check result OK?	The circuit has returned to a normal condition at this time. Reproduce the failure, and then perform the diagnosis again. NOTE: In this case, temporary poor contact of connector, temporary open or short circuit of harness may be the cause.	Replace the sunload sensor. <Ref. to AC-74, REMOVAL, Sunload Sensor (Auto A/C Model).>

*1: For the 75°F center specification. For the 25°C center specification, the value is 18.
*2: For the 75°F center specification. For the 25°C center specification, the value is 32.

8. AIR DOES NOT COME OUT. AIRFLOW IS LOW

TROUBLE SYMPTOM:

- Airflow capacity is insufficient.
- Air does not come out when operating the fan dial.

TROUBLE CAUSES:

- Airflow capacity failure
- CAN communication failure
- A/C control panel failure
- Blower motor failure

WIRING DIAGRAM:

Air conditioning system <Ref. to WI-74, WIRING DIAGRAM, Air Conditioning System.>

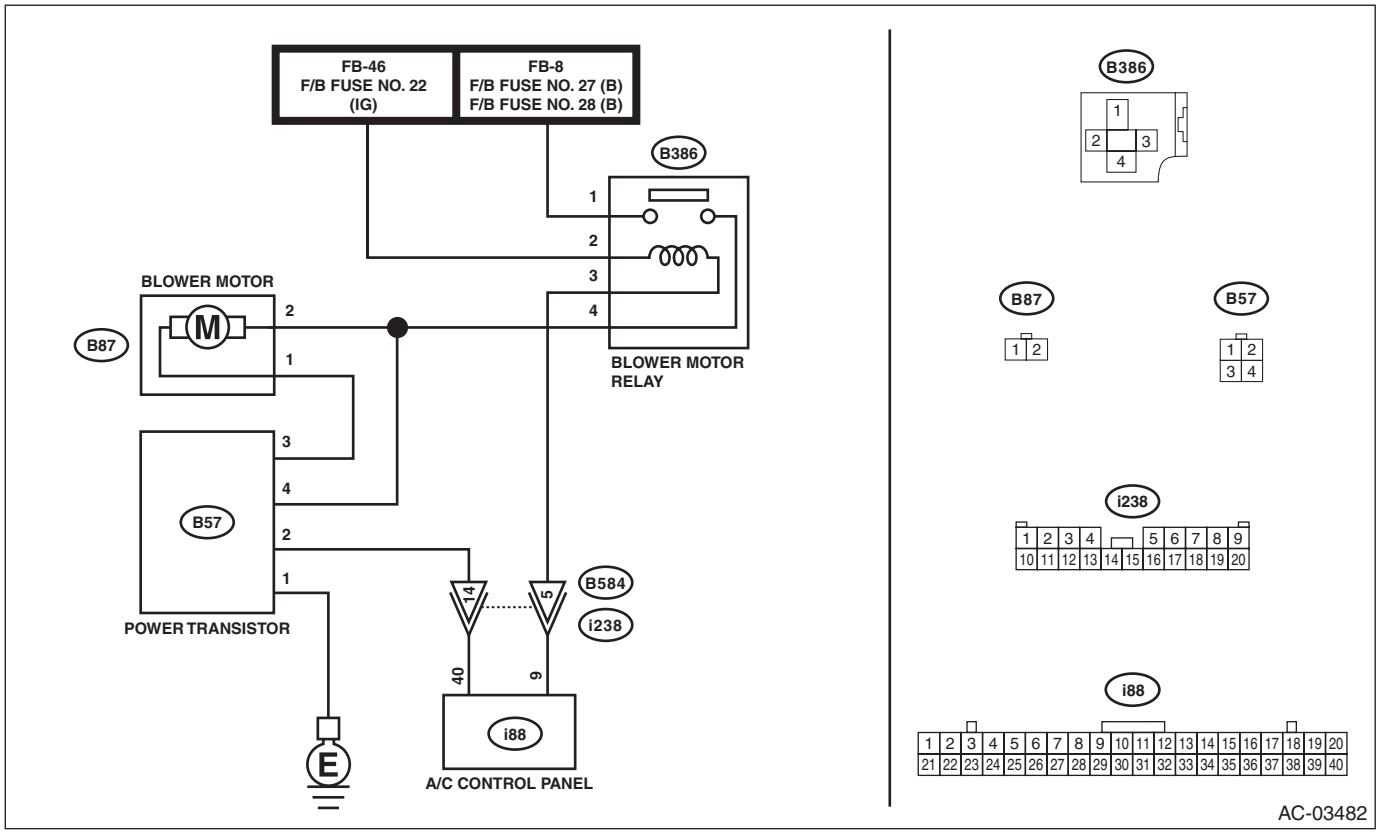

Step		Check	Yes	No
1	**CHECK A/C CONTROL PANEL.** 1) Using Subaru Select Monitor, display the following data in "Read Current Data". <Ref. to AC(diag)-47, Read Current Data.> • Air mix door actuator position (driver's side) • Air mix door actuator position (passenger's) • Blower fan level 2) Turn the temperature control dial at MAX COOL and increase and decrease the A/C control panel fan dial. (For vehicles with left/right independent air conditioner, perform setting on both sides.)	Do "Air mix door actuator position (driver's side)" and "Air mix door actuator position (passenger's side)" indicate "0%"? Also, does the value of "Blower Fan Level" increase or decrease in conjunction with the fan dial operation?	Go to step **2**.	Go to step **5**.

	Step	Check	Yes	No
2	**CHECK AIRFLOW CAPACITY.** Turn the temperature control dial to LO (both dials for the models equipped with left/right independent air conditioning function), A/C control panel fan dial to MAX and FRESH/RECIRC switch to RECIRC.	Is the airflow capacity insufficient for the same model?	Go to step **3**.	The circuit has returned to a normal condition at this time. Reproduce the failure, and then perform the diagnosis again. NOTE: In this case, temporary poor contact of connector, temporary open or short circuit of harness may be the cause.
3	**CHECK A/C FILTER.** Check the A/C filter.	Is the check result OK?	Go to step **4**.	Clean or replace the A/C filter.
4	**CHECK EACH DUCT.** Check each duct joint for disconnection or clogging.	Is the check result OK?	Go to step **5**.	Repair the faulty duct.
5	**CHECK A/C CONTROL PANEL.** 1) Turn the ignition switch to ON. 2) Turn the fan dial to the maximum position. 3) Using the Subaru Select Monitor, check "Blower Fan Level" of the current data from the A/C diagnosis. <Ref. to AC(diag)-47, Read Current Data.>	Does "Blower Fan Level" indicate "7"?	Go to step **6**.	Replace the A/C control panel. <Ref. to AC-43, REMOVAL, Control Panel.>
6	**CHECK A/C CONTROL PANEL.** 1) Turn the fan dial to the minimum position. 2) Using the Subaru Select Monitor, check "Blower Fan Level" of the current data from the A/C diagnosis. <Ref. to AC(diag)-47, Read Current Data.>	Does "Blower Fan Level" indicate "1"?	Go to step **7**.	Replace the A/C control panel. <Ref. to AC-43, REMOVAL, Control Panel.>
7	**CHECK CONNECTOR.** Check for poor contact of connector.	Is the check result OK?	Go to step **8**.	Repair the connector.
8	**CHECK FUSE.** 1) Remove a fuse in the fuse & relay box. 2) Check the condition of fuse.	Is the check result OK?	Go to step **9**.	Replace the fuse. If the replaced fuse blows out easily, repair the ground short circuit in harness between the pressure switch and fuse.
9	**CHECK BLOWER MOTOR RELAY ON SIGNAL.** 1) Stop the engine. 2) Turn the fan dial OFF. 3) Turn the ignition switch to ON. 4) Using a tester, measure the voltage between the A/C control panel connector (i88) and chassis ground. ***Connector & terminal*** ***(i88) No. 9 (+) — Chassis ground (–):***	Is the voltage 10 V or more?	Go to step **10**.	• Check for open or short circuit in the harness between fuse and ECM. • Check the blower relay connector and relay unit. <Ref. to AC-33, CHECK RELAY, INSPECTION, Relay and Fuse.>

	Step	Check	Yes	No
10	**CHECK BLOWER MOTOR RELAY ON SIGNAL.** 1) Start the engine. 2) Turn the fan dial to ON. 3) Using a tester, measure the voltage between the A/C control panel connector (i88) and chassis ground. ***Connector & terminal*** ***(i88) No. 9 (+) — Chassis ground (–):***	Is the voltage 0 V?	Go to step **11**.	Replace the A/C control panel. <Ref. to AC-43, REMOVAL, Control Panel.>
11	**CHECK BLOWER MOTOR POWER SUPPLY CIRCUIT.** 1) Turn the ignition switch to ON. 2) Turn the fan dial to ON. 3) Use a tester to measure the voltage between the blower motor connector (B87) and chassis ground. ***Connector & terminal*** ***(B87) No. 2 (+) — Chassis ground (–):***	Is the voltage 10 V or more?	Go to step **12**.	• Check the blower motor power supply line harness for open circuit or connector disconnection. • Check the blower relay connector and relay unit. <Ref. to AC-33, CHECK RELAY, INSPECTION, Relay and Fuse.>
12	**CHECK BLOWER MOTOR UNIT.** Check the blower motor. <Ref. to AC-37, INSPECTION, Blower Motor.>	Is the check result of the blower motor OK?	Go to step **13**.	Replace the blower motor. <Ref. to AC-37, REMOVAL, Blower Motor.>
13	**CHECK HARNESS (OPEN CIRCUIT).** 1) Disconnect the power transistor and A/C control panel connector. 2) Using a tester, measure the resistance between harness terminals. ***Connector & terminal*** ***(B386) No. 4 — (B57) No. 4:*** ***(B87) No. 1 — (B57) No. 3:*** ***(B57) No. 2 — (i88) No. 40:*** ***(B57) No. 1 — Chassis ground:***	Is the resistance less than 1 Ω?	Go to step **14**.	Repair or replace the open circuit of harness.
14	**CHECK HARNESS (GROUND SHORT CIRCUIT).** Use a tester to measure the harness resistance between the power transistor connector and chassis ground. ***Connector & terminal*** ***(B57) No. 2 — Chassis ground:***	Is the resistance less than 1 Ω?	Repair or replace the short circuit of the harness.	Go to step **15**.
15	**CHECK POWER TRANSISTOR.** Replace the power transistor with a properly functioning part.	Does the blower motor rotate?	Replace the power transistor. <Ref. to AC-38, REMOVAL, Power Transistor (Auto A/C Model).>	Replace the A/C control panel. <Ref. to AC-43, REMOVAL, Control Panel.>

9. AIR CANNOT BE CONTROLLED

TROUBLE SYMPTOM:

- The blower rotates even though the blower switch is not turned on.
- The blower motor continues to rotate at high speed. (Not adjustable.)

Trouble causes:

- Airflow capacity failure
- CAN communication failure
- A/C control panel failure
- Blower motor failure

WIRING DIAGRAM:

Air conditioning system <Ref. to WI-74, WIRING DIAGRAM, Air Conditioning System.>

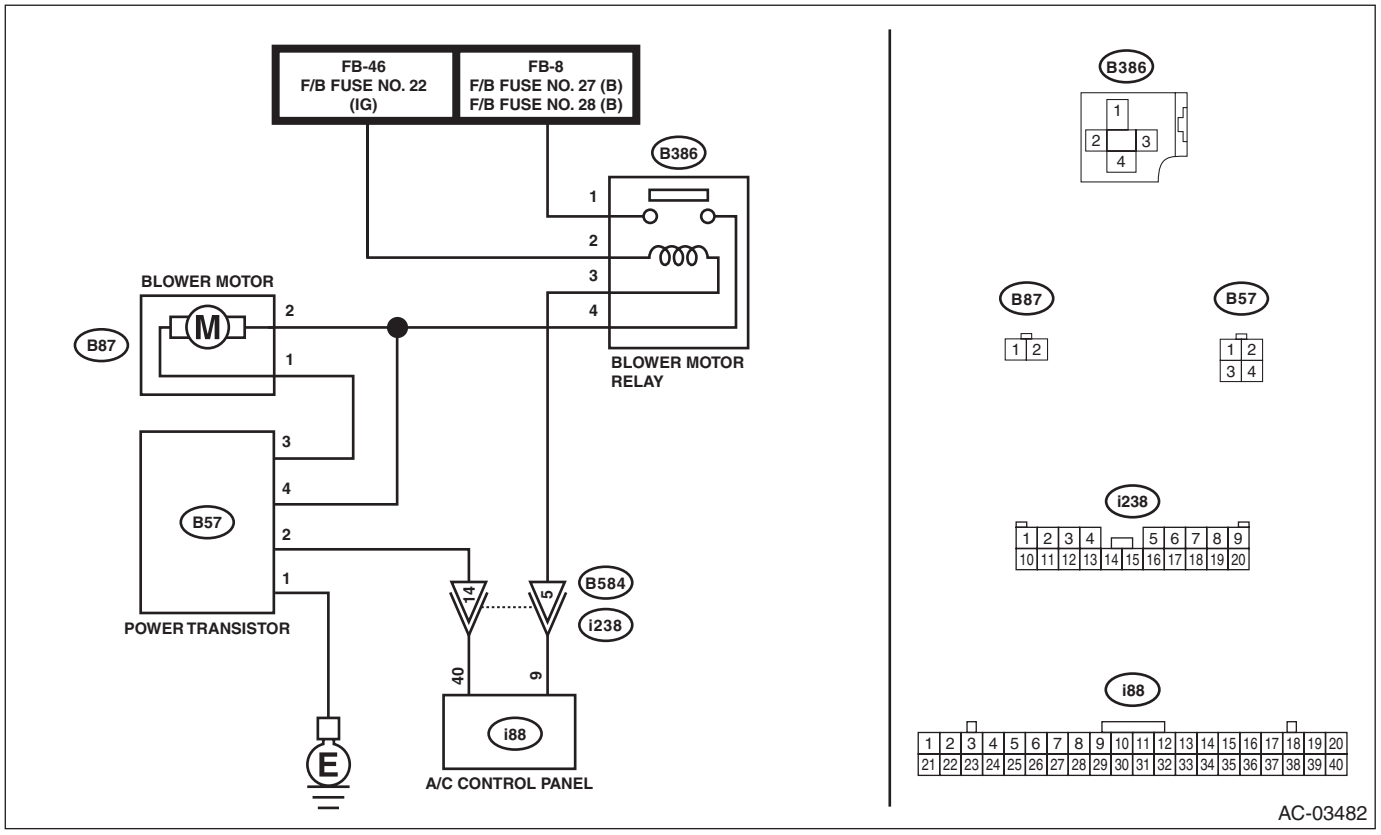

Step		Check	Yes	No
1	**CHECK A/C CONTROL PANEL.** 1) Turn the ignition switch to ON. 2) Turn the fan dial to the maximum position. 3) Using the Subaru Select Monitor, check "Blower Fan Level" of the current data from the A/C diagnosis. <Ref. to AC(diag)-47, Read Current Data.>	Does "Blower Fan Level" indicate "7"?	Go to step **2**.	Replace the A/C control panel. <Ref. to AC-43, REMOVAL, Control Panel.>
2	**CHECK A/C CONTROL PANEL.** 1) Turn the fan dial to the minimum position. 2) Using the Subaru Select Monitor, check "Blower Fan Level" of the current data from the A/C diagnosis. <Ref. to AC(diag)-47, Read Current Data.>	Does "Blower Fan Level" indicate "1"?	Go to step **3**.	Replace the A/C control panel. <Ref. to AC-43, REMOVAL, Control Panel.>

	Step	Check	Yes	No
3	**CHECK HARNESS.** 1) Turn the ignition switch to OFF. 2) Disconnect the power transistor connector. 3) Use a tester to measure the resistance between the power transistor connector and chassis ground. ***Connector & terminal*** ***(B57) No. 4 — Chassis ground:***	Is the resistance less than 1 Ω?	Repair or replace the short circuit of the harness between blower motor and power transistor.	Go to step **4**.
4	**CHECK HARNESS.** 1) Remove the A/C control panel. 2) Turn the ignition switch to ON. 3) Use a tester to measure the resistance between the power transistor connector and chassis ground. ***Connector & terminal*** ***(B57) No. 2 — Chassis ground:***	Is the resistance less than 1 Ω?	Repair or replace the short circuit of the harness between A/C control panel and power transistor.	Go to step **5**.
5	**CHECK HARNESS.** 1) Connect the disconnected connectors. 2) Turn the ignition switch to ON. 3) Use a tester to measure the voltage between the power transistor connector and chassis ground. ***Connector & terminal*** ***(B57) No. 2 (+) — Chassis ground (–):***	Is the voltage approx. 9 V when fan dial in 1st, and approx. 3.5 V when fan dial in 6th?	Replace the power transistor. <Ref. to AC-38, REMOVAL, Power Transistor (Auto A/C Model).>	Go to step **6**.
6	**CHECK A/C CONTROL PANEL.** 1) Turn the fan dial OFF. 2) Disconnect the power transistor connector. 3) Use a tester to measure the resistance between the power transistor connector and chassis ground. ***Connector & terminal*** ***(B57) No. 2 — Chassis ground:***	When the fan dial is OFF and other than OFF, does the resistance change?	Replace the power transistor. <Ref. to AC-38, REMOVAL, Power Transistor (Auto A/C Model).>	Replace the A/C control panel. <Ref. to AC-43, REMOVAL, Control Panel.>

10.COOL AIR DOES NOT COME OUT WHEN PRESSING THE A/C SWITCH. FOG CANNOT BE CLEARED. (COMPRESSOR DOES NOT OPERATE.)

TROUBLE SYMPTOM:
Compressor does not operate after turning the A/C switch to ON and fan dial between LO and HI.
TROUBLE CAUSES:
Compressor failure
WIRING DIAGRAM:
Air conditioning system <Ref. to WI-74, WIRING DIAGRAM, Air Conditioning System.>

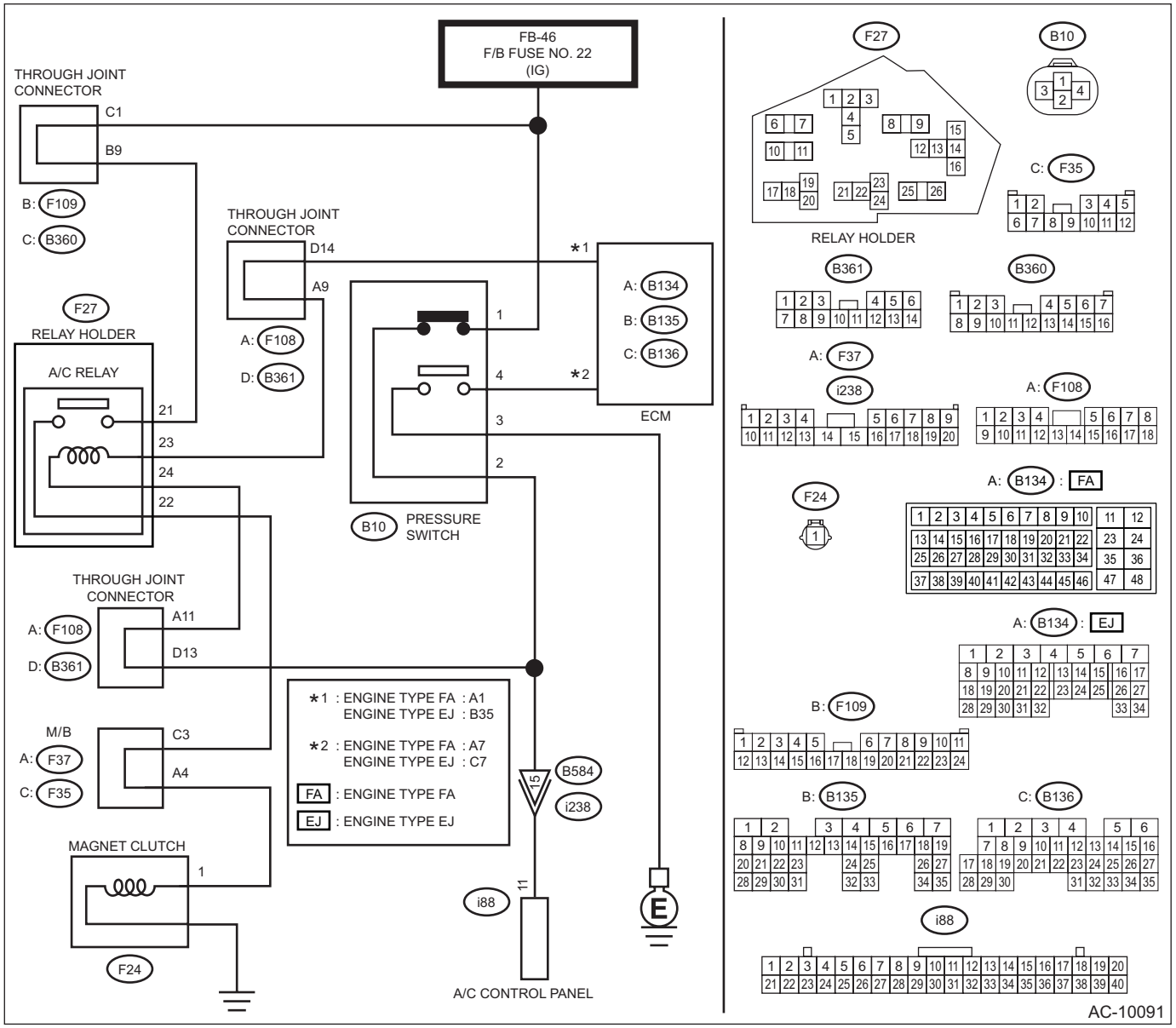

Step		Check	Yes	No
1	**CHECK A/C CONTROL PANEL.** 1) Leave the vehicle under the condition at ambient temperature of 15°C (59°F) or more. 2) Turn the ignition switch to ON. 3) Turn the fan dial to the maximum position. 4) Press the A/C switch.	Is “A/C” displayed on the A/C control panel?	Go to step **2**.	Replace the A/C control panel. <Ref. to AC-43, REMOVAL, Control Panel.>

	Step	Check	Yes	No
2	**CHECK EVAPORATOR SENSOR.** Using the Subaru Select Monitor, check "Evaporator Temperature" of the current data from the A/C diagnosis. <Ref. to AC(diag)-47, Read Current Data.>	Does the data indicate –0.5 degrees or more?	Go to step **4**.	Go to step **3**.
3	**CHECK EVAPORATOR SENSOR.** Check the evaporator sensor. <Ref. to AC-82, INSPECTION, Evaporator Sensor.>	Is the check result OK?	Go to step **4**.	Replace the evaporator sensor. <Ref. to AC-80, REMOVAL, Evaporator Sensor.>
4	**CHECK PRESSURE SWITCH.** Check the pressure switch connection.	Is the check result OK?	Go to step **5**.	Repair the connector.
5	**CHECK PRESSURE SWITCH.** Using the Subaru Select Monitor, check "A/C Pressure Switch" of the current data from Air Conditioning Diagnosis. <Ref. to AC(diag)-47, Read Current Data.>	Does the data indicate normal?	Go to step **10**.	Go to step **6**.
6	**CHECK AMOUNT OF REFRIGERANT PRESSURE.** Check the refrigerant pressure. <Ref. to AC-22, REFRIGERANT GAS PRESSURE INSPECTION, PROCEDURE, Refrigerant Pressure with Manifold Gauge Set.>	Is the check result OK?	Go to step **7**.	Perform repair according to refrigerant pressure inspection.
7	**CHECK CONNECTOR.** Check poor contact of A/C control panel connector.	Is the check result OK?	Go to step **8**.	Repair the connector.
8	**CHECK FUSE.** 1) Turn the ignition switch to ON. 2) Remove a fuse in the fuse & relay box. 3) Check the fuse.	Is the check result OK?	Go to step **9**.	Replace the fuse. If the replaced fuse blows out easily, repair the ground short circuit in harness between the pressure switch and fuse.
9	**CHECK PRESSURE SWITCH SIGNAL.** 1) Turn the ignition switch to OFF. 2) Disconnect the A/C control panel connector. 3) Turn the ignition switch to ON. 4) Measure the voltage between A/C control panel connector terminal and chassis ground. ***Connector & terminal*** ***(i88) No. 11 (+) — Chassis ground (–):***	Is the voltage 10 V or more?	Replace the A/C control panel. <Ref. to AC-43, REMOVAL, Control Panel.>	• Check for open or short circuit in the harness between fuse and A/C control panel. • Check for poor contact of pressure switch connector.
10	**CHECK CAN COMMUNICATION CIRCUIT.** Using the Subaru Select Monitor, check "A/C Switch" of the current data from Engine Diagnosis. <Ref. to AC(diag)-47, Read Current Data.>	Does the data indicate ON?	Go to step **12**.	Go to step **11**.
11	**CHECK CAN COMMUNICATION CIRCUIT.** Perform the diagnosis for LAN system. <Ref. to LAN(diag)-2, PROCEDURE, Basic Diagnostic Procedure.>	Is the check result of the LAN system OK?	Replace the A/C control panel. <Ref. to AC-43, REMOVAL, Control Panel.>	Repair it according to DTC of LAN system.

	Step	Check	Yes	No
12	**CHECK A/C RELAY ON SIGNAL.** 1) Turn the ignition switch to ON. 2) Measure the voltage between ECM connector terminal and chassis ground. ***Connector & terminal*** ***Engine type: FA*** ***(B134) No. 1 (+) — Chassis ground (–):*** ***Engine type: EJ*** ***(B135) No. 35 (+) — Chassis ground (–):***	Is the voltage 10 V or more?	Go to step **13**.	• Check for open or short in the harness between pressure switch and ECM. • Check poor contact of A/C relay connector. • Check the A/C relay. <Ref. to AC-33, INSPECTION, Relay and Fuse.>
13	**CHECK A/C RELAY ON SIGNAL.** 1) Start the engine. 2) Turn the A/C switch to ON. 3) Turn the temperature control dial at maximum cool position. 4) Measure the voltage between ECM connector terminal and chassis ground. ***Connector & terminal*** ***Engine type: FA*** ***(B134) No. 1 (+) — Chassis ground (–):*** ***Engine type: EJ*** ***(B135) No. 35 (+) — Chassis ground (–):***	Is the voltage 0 V?	Go to step **14**.	Replace the ECM.
14	**CHECK MAGNET CLUTCH POWER SUPPLY CIRCUIT.** 1) Stop the engine. 2) Disconnect the magnet clutch connector. 3) Start the engine. 4) Turn the A/C switch to ON. 5) Turn the temperature control dial at maximum cool position. 6) Measure the voltage between magnet clutch connector terminal and chassis ground. ***Connector & terminal*** ***(F24) No. 1 (+) — Chassis ground (–):***	Is the voltage 10 V or more?	Check the magnet clutch. <Ref. to AC-49, INSPECTION, Compressor.>	• Check for open or short circuit in the harness between fuse and magnet clutch. • Check poor contact of A/C relay connector. • Check the A/C relay. <Ref. to AC-33, INSPECTION, Relay and Fuse.>

11.UNABLE TO SWITCH SUCTION VENTS

TROUBLE SYMPTOM:

Even when the FRESH/RECIRC switch is pressed, the inlet opening does not switch to RECIRC → FRESH or FRESH → RECIRC.

TROUBLE CAUSES:

Intake door actuator failure

	Step	Check	Yes	No
1	**VISUALLY CHECK FRESH/RECIRC DOOR OPERATION.** 1) Remove the glove box. <Ref. to EI-64, REMOVAL, Glove Box.> 2) Operate the FRESH/RECIRC switch, and visually check the intake door operation.	Does the intake door operate normally? Is the portion between intake door and intake door case sealed completely?	The circuit has returned to a normal condition at this time. Reproduce the failure, and then perform the diagnosis again. NOTE: In this case, temporary poor contact of connector, temporary open or short circuit of harness may be the cause.	Go to step **2**.
2	**CHECK A/C CONTROL PANEL.** 1) Turn the ignition switch to ON. 2) Using the Subaru Select Monitor, check "Fresh/Recircle Air Door Actuator Position Target" of the current data from the A/C diagnosis. <Ref. to AC(diag)-47, Read Current Data.> 3) Operate the FRESH/RECIRC switch.	Does "Fresh/Recircle Air Door Actuator Position Target" indicate 0 ←→ 100?	Go to step **3**.	Replace the A/C control panel. <Ref. to AC-43, REMOVAL, Control Panel.>
3	**CHECK DTC.** 1) Turn the FRESH/RECIRC switch to RECIRC, and leave for 16 seconds or more. 2) Read the DTC using Subaru Select Monitor. <Ref. to AC(diag)-43, Read Diagnostic Trouble Code (DTC).>	Is DTC B14E9, B14EA or B14EB displayed?	Perform the diagnosis for the displayed DTC B14E9, B14EA, or B14EB. <Ref. to AC(diag)-82, DTC B14E9 INTAKE DOOR ACTUATOR CIRCUIT OPEN, Diagnostic Procedure with Diagnostic Trouble Code (DTC).> <Ref. to AC(diag)-84, DTC B14EA INTAKE DOOR ACTUATOR CIRCUIT SHORT-CIRCUIT, Diagnostic Procedure with Diagnostic Trouble Code (DTC).> <Ref. to AC(diag)-86, DTC B14EB INTAKE DOOR ACTUATOR STUCK, Diagnostic Procedure with Diagnostic Trouble Code (DTC).>	Go to step **4**.

	Step	Check	Yes	No
4	**CHECK DTC.** 1) Turn the FRESH/RECIRC switch to FRESH, and leave for 16 seconds or more. 2) Read the DTC using Subaru Select Monitor. <Ref. to AC(diag)-43, Read Diagnostic Trouble Code (DTC).>	Is DTC B14E9, B14EA or B14EB displayed?	Perform the diagnosis for the displayed DTC B14E9, B14EA, or B14EB. <Ref. to AC(diag)-82, DTC B14E9 INTAKE DOOR ACTUATOR CIRCUIT OPEN, Diagnostic Procedure with Diagnostic Trouble Code (DTC).> <Ref. to AC(diag)-84, DTC B14EA INTAKE DOOR ACTUATOR CIRCUIT SHORT-CIRCUIT, Diagnostic Procedure with Diagnostic Trouble Code (DTC).> <Ref. to AC(diag)-86, DTC B14EB INTAKE DOOR ACTUATOR STUCK, Diagnostic Procedure with Diagnostic Trouble Code (DTC).>	The circuit has returned to a normal condition at this time. Reproduce the failure, and then perform the diagnosis again. NOTE: In this case, temporary poor contact of connector, temporary open or short circuit of harness may be the cause.

12.UNABLE TO SWITCH VENTS

TROUBLE SYMPTOM:

- Unable to switch blow vents.
- Outlet opening does not switch in the sequence of FACE → B/L → FOOT → F/D after operating the mode switch or mode dial.

TROUBLE CAUSES:

Mode door actuator failure

	Step	Check	Yes	No
1	**CHECK A/C CONTROL PANEL.** 1) Turn the ignition switch to ON. 2) Using the Subaru Select Monitor, check "Mode Door Actuator Position Target" of the current data from the A/C diagnosis. <Ref. to AC(diag)-47, Read Current Data.> 3) Operate the mode change switch.	Does the value for "Mode Door Actuator Position Target" change?	Go to step **2**.	Replace the A/C control panel. <Ref. to AC-43, REMOVAL, Control Panel.>

Step		Check	Yes	No
2	**CHECK DTC.** 1) Set the mode change switch to DEF, and wait for 16 seconds or more. 2) Read the DTC using Subaru Select Monitor. <Ref. to AC(diag)-43, Read Diagnostic Trouble Code (DTC).>	Is DTC B14E5 or B14E6 displayed?	Perform the diagnosis for the displayed DTC B14E5 or B14E6. <Ref. to AC(diag)-78, DTC B14E5 MODE DOOR ACTUATOR STEPPING MOTOR CIRCUIT OPEN, Diagnostic Procedure with Diagnostic Trouble Code (DTC).> <Ref. to AC(diag)-80, DTC B14E6 MODE DOOR ACTUATOR STEPPING MOTOR CIRCUIT SHORT-CIRCUIT, Diagnostic Procedure with Diagnostic Trouble Code (DTC).>	Go to step **3**.
3	**CHECK DTC.** 1) Set the mode change switch to VENT, and wait for 16 seconds or more. 2) Using the Subaru Select Monitor, read DTC of A/C control panel. <Ref. to AC(diag)-43, Read Diagnostic Trouble Code (DTC).>	Is DTC B14E5 or B14E6 displayed?	Perform the diagnosis for the displayed DTC B14E5 or B14E6. <Ref. to AC(diag)-78, DTC B14E5 MODE DOOR ACTUATOR STEPPING MOTOR CIRCUIT OPEN, Diagnostic Procedure with Diagnostic Trouble Code (DTC).> <Ref. to AC(diag)-80, DTC B14E6 MODE DOOR ACTUATOR STEPPING MOTOR CIRCUIT SHORT-CIRCUIT, Diagnostic Procedure with Diagnostic Trouble Code (DTC).>	The circuit has returned to a normal condition at this time. Reproduce the failure, and then perform the diagnosis again. NOTE: In this case, temporary poor contact of connector, temporary open or short circuit of harness may be the cause.

13.ILLUMINATION DOES NOT ILLUMINATE OR CANNOT BE DIMMED

TROUBLE SYMPTOM:

Even when the lighting switch is operated, the illumination does not come on. Even when the illumination control is operated, the illumination does not dim.

TROUBLE SYMPTOM:

Open circuit in illumination circuit

WIRING DIAGRAM:

Clearance Light and Illumination Light System <Ref. to WI-117, WIRING DIAGRAM, Clearance Light and Illumination Light System.>

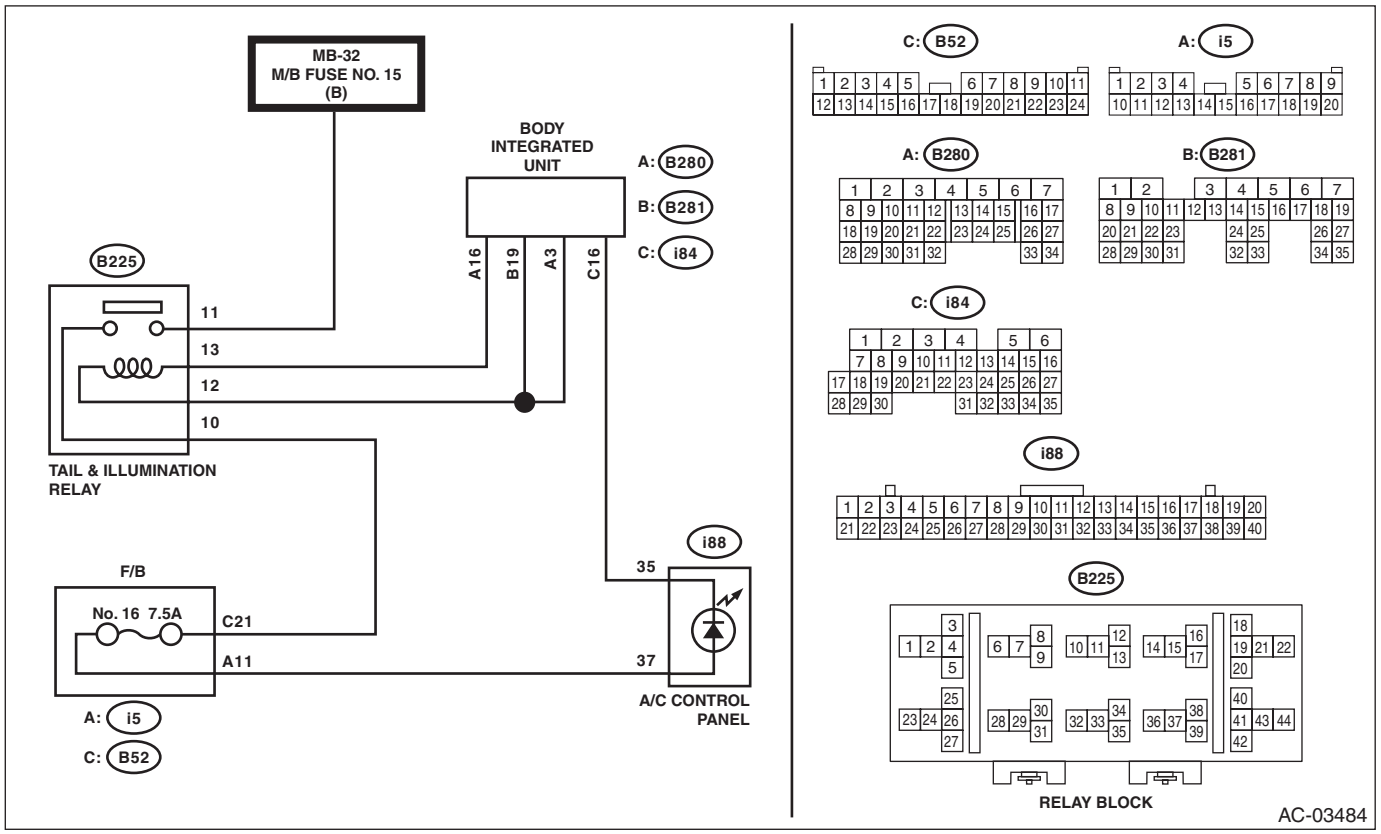

Step		Check	Yes	No
1	**CHECK ILLUMINATION.** Make sure that all illuminations except A/C come on.	Do other illuminations come on?	Go to step **2**.	Check the illumination circuit. <Ref. to LI-11, INSPECTION, Clearance Light and Illumination Light System.>
2	**CHECK CONNECTOR.** Check for poor contact of connector.	Is the check result OK?	Go to step **3**.	Repair the connector.
3	**CHECK HARNESS (OPEN CIRCUIT).** 1) Turn the lighting switch to ON. 2) Using a tester, measure the voltage between the A/C control panel connector and chassis ground. ***Connector & terminal*** ***(i88) No. 37 (+) — Chassis ground (–):***	Is the voltage 10 V or more?	Go to step **4**.	Repair or replace the open circuit of harness.

	Step	Check	Yes	No
4	**CHECK HARNESS (OPEN CIRCUIT).** 1) Turn the lighting switch to OFF. 2) Measure the resistance between A/C control panel connector and body integrated unit connector. ***Connector & terminal*** ***(i88) No. 35 — (i84) No. 16:***	Is the resistance less than 10 Ω?	Go to step **5**.	Repair or replace the open circuit of harness.
5	**CHECK A/C CONTROL PANEL UNIT.** Check the A/C control panel. <Ref. to AC-43, REMOVAL, Control Panel.>	Is the check result of the A/C control panel OK?	A/C control panel illumination circuit is normal.	Replace the A/C control panel. <Ref. to AC-43, REMOVAL, Control Panel.>

6. Subaru Select Monitor

A: OPERATION

For details of basic operations, refer to “Application help”.

NOTE:
When initialization communication using Select Monitor is impossible, perform diagnosis according to “Diagnostic Procedure Used When Abnormal Communication with Subaru Select Monitor Occurs”.

7. Read Diagnostic Trouble Code (DTC)

A: OPERATION

1) On «Start» display, select «Diagnosis».
2) On «Vehicle selection» display, input the target vehicle information and select «Confirmed».
3) On «Main Menu» display, select «Each System».
4) On «Select System» display, select «Air Conditioner» and select «Enter».
5) On «Select Function» display, select «DTC».

NOTE:
- For detailed operation procedures, refer to “Application help”.
- For details concerning DTC, refer to “List of Diagnostic Trouble Code (DTC)”. <Ref. to AC(diag)-52, List of Diagnostic Trouble Code (DTC).>

8. Clear Memory Mode

A: OPERATION

1) On «Start» display, select «Diagnosis».
2) On «Vehicle selection» display, input the target vehicle information and select «Confirmed».
3) On «Main Menu» display, select «Each System».
4) On «Select System» display, select «Air Conditioner» and select «Enter».
5) On «Select Function» display, select «DTC».
6) On «DTC» display, select «Clear Memory».

NOTE:
For detailed operation procedures, refer to “Application help”.

9. Inspection Mode

A: PROCEDURE

It is possible to diagnose the DTC by performing the indicated inspection mode. After correcting the DTC, perform a necessary inspection mode and make sure that the function is resumed correctly and the DTC is recorded.

1. INSPECTION MODE 1

DTC	Item	Note
B1430	IN-VEHICLE (POST EVAPORATOR) TEMPERATURE SENSOR CIRCUIT OPEN	—
B1431	IN-VEHICLE (POST EVAPORATOR) TEMPERATURE SENSOR CIRCUIT SHORT-CIRCUIT	—
B1432	AMBIENT TEMPERATURE SENSOR CIRCUIT OPEN (AIR-CONDITIONER)	—
B1433	AMBIENT TEMPERATURE SENSOR CIRCUIT SHORT-CIRCUIT (AIR-CONDITIONER)	—
B1434	EVAPORATOR TEMPERATURE SENSOR CIRCUIT OPEN	—
B1435	EVAPORATOR TEMPERATURE SENSOR CIRCUIT SHORT-CIRCUIT	—
B14E1	AIR MIX DOOR ACTUATOR STEPPING MOTOR CIRCUIT OPEN (DRIVER)	—
B14E2	AIR MIX DOOR ACTUATOR STEPPING MOTOR CIRCUIT SHORT-CIRCUIT (DRIVER)	—
B14E3	AIR MIX DOOR ACTUATOR STEPPING MOTOR CIRCUIT OPEN (PASSENGER)	—
B14E4	AIR MIX DOOR ACTUATOR STEPPING MOTOR CIRCUIT SHORT-CIRCUIT (PASSENGER)	—
B14E5	MODE DOOR ACTUATOR STEPPING MOTOR CIRCUIT OPEN	—
B14E6	MODE DOOR ACTUATOR STEPPING MOTOR CIRCUIT SHORT-CIRCUIT	—
B14E9	INTAKE DOOR ACTUATOR CIRCUIT OPEN	—
B14EA	INTAKE DOOR ACTUATOR CIRCUIT SHORT-CIRCUIT	—
B14EB	INTAKE DOOR ACTUATOR STUCK	—
U0073	CONTROL MODULE COMMUNICATION BUS OFF	—
U0100	LOST COMMUNICATION WITH ECM/PCM “A”	—
U0101	LOST COMMUNICATION WITH TCM	—
U0122	LOST COMMUNICATION WITH VEHICLE DYNAMICS CONTROL MODULE	—
U0140	LOST COMMUNICATION WITH BODY CONTROL MODULE	—
U0155	LOST COMMUNICATION WITH INSTRUMENT PANEL CLUSTER (IPC) CONTROL MODULE	—
U0401	INVALID DATA RECEIVED FROM ECM/PCM “A”	—
U0402	INVALID DATA RECEIVED FROM TCM	—
U0416	INVALID DATA RECEIVED FROM VEHICLE DYNAMICS CONTROL MODULE	—
U0422	INVALID DATA RECEIVED FROM BODY CONTROL MODULE	—
U0423	INVALID DATA RECEIVED FROM INSTRUMENT PANEL CLUSTER CONTROL MODULE	—

Diagnostic procedure:
1) Perform the Clear Memory Mode. <Ref. to AC(diag)-44, Clear Memory Mode.>
2) Read the DTC and check that the DTC is not displayed. <Ref. to AC(diag)-43, Read Diagnostic Trouble Code (DTC).>

NOTE:
If the DTC is displayed on the screen, the trouble is still present. Perform the diagnosis for the displayed DTCs. After solving the DTC, repeat from step 1).
3) Turn the ignition switch to ON and then leave it for 1 second or more.
4) Read the DTC and check that the DTC is not displayed.

NOTE:
If the DTC is displayed on the screen, the trouble is still present. Perform the diagnosis for the displayed DTCs.

2. INSPECTION MODE 2

DTC	Item	Note
B14A1	SUNLOAD SENSOR CIRCUIT LOW/OPEN	—
B14A2	SUNLOAD SENSOR CIRCUIT SHORT-CIRCUIT	—

Diagnostic procedure:
1) Perform the Clear Memory Mode. <Ref. to AC(diag)-44, Clear Memory Mode.>
2) Read the DTC and check that the DTC is not displayed. <Ref. to AC(diag)-43, Read Diagnostic Trouble Code (DTC).>

NOTE:
If the DTC is displayed on the screen, the trouble is still present. Perform the diagnosis for the displayed DTCs. After solving the DTC, repeat from step 1).
3) Park the vehicle in the place subjected to direct sunlight.
4) Turn the ignition switch to ON and then leave it for 1 second or more.
5) Read the DTC and check that the DTC is not displayed.

NOTE:
If the DTC is displayed on the screen, the trouble is still present. Perform the diagnosis for the displayed DTCs.

10.Read Current Data

A: OPERATION

1) On «Start» display, select «Diagnosis».
2) On «Vehicle selection» display, input the target vehicle information and select «Confirmed».
3) On «Main Menu» display, select «Each System».
4) On «Select System» display, select «Air Conditioner» and select «Enter».
5) On «Select Function» display, select «Data Monitor».

NOTE:
For detailed operation procedures, refer to “Application help”.

B: LIST

Items to be displayed	Unit of measure	Content	Note
In-vehicle Sensor Temperature	°C (°F)	A/C control panel input value	—
Quantity of Sunload	W/m^2	A/C control panel input value	—
A/C Pressure Switch	ON/OFF	A/C control panel input value	—
Heater Water Temperature	°C (°F)	Data value received by CAN	—
Heater Control Panel Setting Value (Driver’s)	LO: 18°C (60°F) HI: 32°C (90°F)	Control panel display value	—
Heater Control Panel Setting Value (Passenger’s)	LO: 18°C (60°F) HI: 32°C (90°F)	Control panel display value	For models with left/right independent air conditioning function only
Blower outlet request temperature (Driver’s)	°C (°F)	A/C control panel internal setting value	For models with left/right independent air conditioning function only
Blower outlet request temperature (Passenger’s)	°C (°F)	A/C control panel internal setting value	For models with left/right independent air conditioning function only
Air mix door actuator position (driver’s side)	%	A/C control panel input value	—
Air mix door actuator position (passenger’s side)	%	A/C control panel input value	For models with left/right independent air conditioning function only
Mode Door Actuator Position	%	A/C control panel input value	—
Fresh/Recircle Air Door Actuator Position	%	A/C control panel input value	—
Target air mix door actuator position (driver’s side)	%	A/C control panel input value	—
Target air mix door actuator position (passenger’s side)	%	A/C control panel input value	—
Mode Door Actuator Position Target	%	A/C control panel input value	—
Fresh/Recircle Air Door Actuator Position Target	%	A/C control panel input value	—
Blower Fan Level	Level	A/C control panel internal output value	—
Ambient Air Temperature	°C (°F)	Data value received by CAN	—
Compressor operation status	OFF/AUTO	A/C control panel input value	—

Items to be displayed	Unit of measure	Content	Note
Blower Fan Operating Condition	MANU/AUTO	A/C control panel input value	—
A/C Operating Condition	MANU/AUTO	A/C control panel input value	—
Fresh/Recircle Air Operating Condition	MANU/AUTO	A/C control panel input value	—
Mode Operating Condition	MANU/AUTO	A/C control panel input value	—
Rear Defogger	ON/OFF	A/C control panel input value	—
Engine Speed	rpm	Data value received by CAN	—
Vehicle speed	km/h	Data value received by CAN	—
Evaporator Temperature	°C (°F)	A/C control panel input value	—
Evaporator Temperature Target	°C (°F)	A/C control panel input value	—
Blower outlet Door Request Temperature	°C (°F)	A/C control panel internal setting value	—
PTC permitted number	0 — 3	A/C control panel input value	Not supported
PTC operation steps	0 — 3	A/C control panel input value	Not supported
PTC Heater 1	Inoperative/Operate	A/C control panel input value	Not supported
PTC Heater 2	Inoperative/Operate	A/C control panel input value	Not supported
PTC Heater 3	Inoperative/Operate	A/C control panel input value	Not supported
Request engine speed	0: Without Request 1: Cooler H 2: Heater H 3: Cooler L 4: Heater L	A/C control panel internal output value	—
Heater core Temp.	°C (°F)	A/C control panel input value	Not supported

11.System Operation Check Mode

A: OPERATION

1) On «Start» display, select «Diagnosis».
2) On «Vehicle selection» display, input the target vehicle information and select «Confirmed».
3) On «Main Menu» display, select «Each System».
4) On «Select System» display, select «Air Conditioner» and select «Enter».
5) On «Select Function» display, select «Active Test».

NOTE:
For detailed operation procedures, refer to “Application help”.

B: LIST

NOTE:
If not equipped (based on area or condition), some items are not displayed.

System operation check mode item	Display	Unit	Note
In-vehicle Air Temperature setting	–72.47 — 193.82	°C	—
Ambient Air Temperature Setting	–40 — 80	°C	—
Quantity of Sunload Setting	0 — 4448	W/m^2	—
Heater Water Temperature Setting	–40 — 215	°C	—
AUTO SW setting	—	—	—
Air mix door actuator target open (driver’s side)	–32.68 — 133.33	%	—
Air mix door actuator target open (passenger’s side)	–32.68 — 133.33	%	—
Fresh/Rec Air Dr Act Trgt Open Angle	REC/FRS	—	—
Mode Door Actuator Opening Angle Target	–32.68 — 133.33	%	—
Blower Fan Level Setting	1 — 7	—	—
Rear Defogger Setting	ON/OFF	—	—
PTC steps	—	—	—
A/C Change Setting	—	—	—
Actuator Origin Reset	—	—	—
Heater core temperature setting	–40 — 215	°C	—

12.Diagnostic Procedure for Subaru Select Monitor Communication

A: COMMUNICATION FOR INITIALIZING IMPOSSIBLE

DIAGNOSIS:
Defective CAN communication circuit
TROUBLE SYMPTOM:
- LAN system is abnormal.
- Communication failure between Subaru Select Monitor and A/C control panel

WIRING DIAGRAM:
Air conditioning system <Ref. to WI-74, WIRING DIAGRAM, Air Conditioning System.>

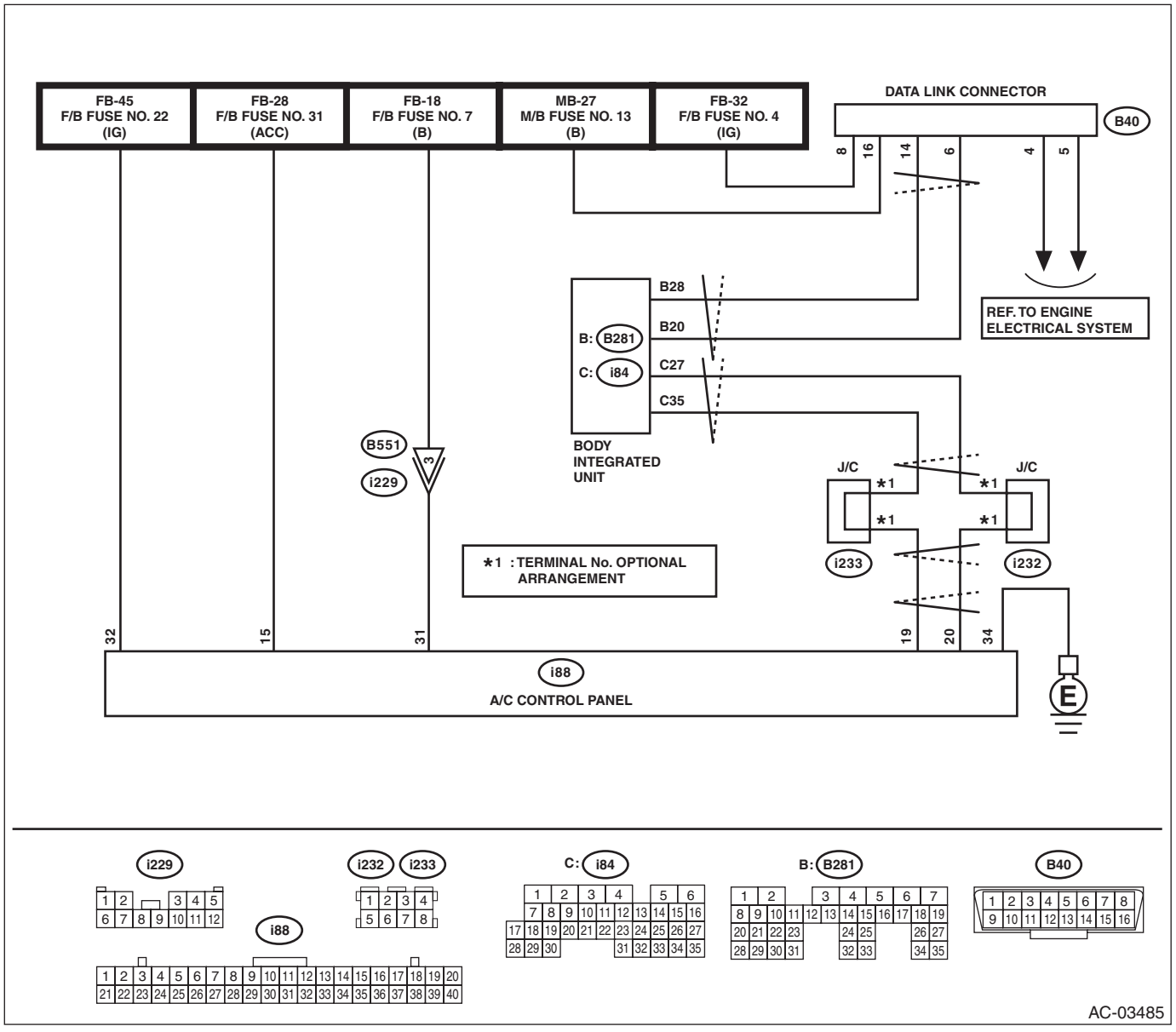

Step		Check	Yes	No
1	**CHECK POWER SUPPLY CIRCUIT.** Connect DST-i to data link connector.	Does DST-i turn ON?	Go to step **4**.	Go to step **2**.

	Step	Check	Yes	No
2	**CHECK POWER SUPPLY CIRCUIT.** Measure the voltage between data link connector and chassis ground. ***Connector & terminal*** ***(B40) No. 16 (+) — Chassis ground (–):***	Is the voltage 10 V or more?	Go to step **3**.	Repair the power supply circuit. NOTE: In this case, repair the following item: • Open or ground short circuit of harness between battery and data link connector • Blown out of fuse (M/B No. 12)
3	**CHECK HARNESS BETWEEN DATA LINK CONNECTOR AND CHASSIS GROUND (OPEN).** 1) Turn the ignition switch to OFF. 2) Measure the resistance of harness between data link connector and chassis ground. ***Connector & terminal*** ***(B40) No. 4 — Chassis ground:*** ***(B40) No. 5 — Chassis ground:***	Is the resistance less than 5 Ω?	Check for poor contact of the data link connector, and repair a fault, if any. When no fault is found, Go to step **4**.	repair the harness and connector.
4	**CHECK SUBARU SELECT MONITOR.** 1) Connect the Subaru Select Monitor to a normal vehicle. 2) Start the engine and perform communication between the Subaru Select Monitor and vehicle.	Is communication possible?	Go to step **5**.	Use another Subaru Select Monitor because the CAN communication circuit of the Subaru Select Monitor is faulty.
5	**CHECK LAN SYSTEM.** Check the LAN system. <Ref. to LAN(diag)-2, PROCEDURE, Basic Diagnostic Procedure.>	Is the check result of the LAN system OK?	Go to step **6**.	Repair it according to the diagnosis for LAN system.
6	**CHECK CONNECTOR.** Check for poor contact of power supply circuit connector.	Is the check result OK?	Go to step **7**.	Repair the connector.
7	**CHECK FUSE.** 1) Turn the ignition switch to OFF. 2) Remove a fuse from the fuse box. 3) Check the fuse.	Is the check result OK?	Go to step **8**.	Replace the fuse. If the replaced fuse blows out easily, repair the ground short circuit in harness between the A/C control panel — fuse.
8	**CHECK A/C CONTROL PANEL POWER SUPPLY CIRCUIT (OPEN).** 1) Disconnect the A/C control panel connector. 2) Measure the voltage between A/C control panel connector terminal and chassis ground after turning the ignition switch to ON. ***Connector & terminal*** ***(i88) No. 15 (+) — Chassis ground (–):*** ***(i88) No. 31 (+) — Chassis ground (–):*** ***(i88) No. 32 (+) — Chassis ground (–):***	Is the voltage 10 V or more?	Go to step **9**.	Check for open or short circuit in the harness between A/C control panel and fuse.
9	**CHECK A/C CONTROL PANEL GROUND CIRCUIT (OPEN).** Measure the resistance of harness between A/C control panel and chassis ground. ***Connector & terminal*** ***(i88) No. 34 — Chassis ground:***	Is the resistance less than 5 Ω?	Recheck the poor contact between the data link connector and select monitor.	Repair the harness for ground line.

13.List of Diagnostic Trouble Code (DTC)

A: LIST

DTC	Item	Note
B1430	In-Vehicle (Post Evaporator) Temperature Sensor Circuit Open	<Ref. to AC(diag)-54, DTC B1430 IN-VEHICLE (POST EVAPORATOR) TEMPERATURE SENSOR CIRCUIT OPEN, Diagnostic Procedure with Diagnostic Trouble Code (DTC).>
B1431	In-Vehicle (Post Evaporator) Temperature Sensor Circuit Short-Circuit	<Ref. to AC(diag)-56, DTC B1431 IN-VEHICLE (POST EVAPORATOR) TEMPERATURE SENSOR CIRCUIT SHORT-CIRCUIT, Diagnostic Procedure with Diagnostic Trouble Code (DTC).>
B1432	Ambient Temperature Sensor Circuit Open (Air-Conditioner)	<Ref. to AC(diag)-58, DTC B1432 AMBIENT TEMPERATURE SENSOR CIRCUIT OPEN (AIR-CONDITIONER), Diagnostic Procedure with Diagnostic Trouble Code (DTC).>
B1433	Ambient Temperature Sensor Circuit Short-Circuit (Air-Conditioner)	<Ref. to AC(diag)-60, DTC B1433 AMBIENT TEMPERATURE SENSOR CIRCUIT SHORT-CIRCUIT (AIR-CONDITIONER), Diagnostic Procedure with Diagnostic Trouble Code (DTC).>
B1434	Evaporator Temperature Sensor Circuit Open	<Ref. to AC(diag)-62, DTC B1434 EVAPORATOR TEMPERATURE SENSOR CIRCUIT OPEN, Diagnostic Procedure with Diagnostic Trouble Code (DTC).>
B1435	Evaporator Temperature Sensor Circuit Short-Circuit	<Ref. to AC(diag)-64, DTC B1435 EVAPORATOR TEMPERATURE SENSOR CIRCUIT SHORT-CIRCUIT, Diagnostic Procedure with Diagnostic Trouble Code (DTC).>
B14A1	Sunload Sensor Circuit Low/Open	<Ref. to AC(diag)-66, DTC B14A1 SUNLOAD SENSOR CIRCUIT LOW/OPEN, Diagnostic Procedure with Diagnostic Trouble Code (DTC).>
B14A2	Sunload Sensor Circuit Short-Circuit	<Ref. to AC(diag)-68, DTC B14A2 SUNLOAD SENSOR CIRCUIT SHORT-CIRCUIT, Diagnostic Procedure with Diagnostic Trouble Code (DTC).>
B14E1	Air Mix Door Actuator Stepping Motor Circuit Open (Driver)	<Ref. to AC(diag)-70, DTC B14E1 AIR MIX DOOR ACTUATOR STEPPING MOTOR CIRCUIT OPEN (DRIVER), Diagnostic Procedure with Diagnostic Trouble Code (DTC).>
B14E2	Air Mix Door Actuator Stepping Motor Circuit Short-Circuit (Driver)	<Ref. to AC(diag)-72, DTC B14E2 AIR MIX DOOR ACTUATOR STEPPING MOTOR CIRCUIT SHORT-CIRCUIT (DRIVER), Diagnostic Procedure with Diagnostic Trouble Code (DTC).>
B14E3	Air Mix Door Actuator Stepping Motor Circuit Open (Passenger)	<Ref. to AC(diag)-74, DTC B14E3 AIR MIX DOOR ACTUATOR STEPPING MOTOR CIRCUIT OPEN (PASSENGER), Diagnostic Procedure with Diagnostic Trouble Code (DTC).>
B14E4	Air Mix Door Actuator Stepping Motor Circuit Short-Circuit (Passenger)	<Ref. to AC(diag)-76, DTC B14E4 AIR MIX DOOR ACTUATOR STEPPING MOTOR CIRCUIT SHORT-CIRCUIT (PASSENGER), Diagnostic Procedure with Diagnostic Trouble Code (DTC).>
B14E5	Mode Door Actuator Stepping Motor Circuit Open	<Ref. to AC(diag)-78, DTC B14E5 MODE DOOR ACTUATOR STEPPING MOTOR CIRCUIT OPEN, Diagnostic Procedure with Diagnostic Trouble Code (DTC).>
B14E6	Mode Door Actuator Stepping Motor Circuit Short-Circuit	<Ref. to AC(diag)-80, DTC B14E6 MODE DOOR ACTUATOR STEPPING MOTOR CIRCUIT SHORT-CIRCUIT, Diagnostic Procedure with Diagnostic Trouble Code (DTC).>
B14E9	Intake Door Actuator Circuit Open	<Ref. to AC(diag)-82, DTC B14E9 INTAKE DOOR ACTUATOR CIRCUIT OPEN, Diagnostic Procedure with Diagnostic Trouble Code (DTC).>
B14EA	Intake Door Actuator Circuit Short-Circuit	<Ref. to AC(diag)-84, DTC B14EA INTAKE DOOR ACTUATOR CIRCUIT SHORT-CIRCUIT, Diagnostic Procedure with Diagnostic Trouble Code (DTC).>
B14EB	Intake Door Actuator Stuck	<Ref. to AC(diag)-86, DTC B14EB INTAKE DOOR ACTUATOR STUCK, Diagnostic Procedure with Diagnostic Trouble Code (DTC).>
U0073	Control Module Communication Bus Off	<Ref. to AC(diag)-87, DTC U0073 CONTROL MODULE COMMUNICATION BUS OFF, Diagnostic Procedure with Diagnostic Trouble Code (DTC).>
U0100	Lost Communication With ECM/PCM “A”	<Ref. to AC(diag)-87, DTC U0100 LOST COMMUNICATION WITH ECM/PCM “A”, Diagnostic Procedure with Diagnostic Trouble Code (DTC).>

DTC	Item	Note
U0101	Lost Communication With TCM	<Ref. to AC(diag)-87, DTC U0101 LOST COMMUNICATION WITH TCM, Diagnostic Procedure with Diagnostic Trouble Code (DTC).>
U0122	Lost Communication With Vehicle Dynamics Control Module	<Ref. to AC(diag)-87, DTC U0122 LOST COMMUNICATION WITH VEHICLE DYNAMICS CONTROL MODULE, Diagnostic Procedure with Diagnostic Trouble Code (DTC).>
U0140	Lost Communication With Body Control Module	<Ref. to AC(diag)-87, DTC U0140 LOST COMMUNICATION WITH BODY CONTROL MODULE, Diagnostic Procedure with Diagnostic Trouble Code (DTC).>
U0155	Lost Communication With Instrument Panel Cluster (IPC) Control Module	<Ref. to AC(diag)-87, DTC U0155 LOST COMMUNICATION WITH INSTRUMENT PANEL CLUSTER (IPC) CONTROL MODULE, Diagnostic Procedure with Diagnostic Trouble Code (DTC).>
U0401	Invalid Data Received From ECM/PCM “A”	<Ref. to AC(diag)-88, DTC U0401 INVALID DATA RECEIVED FROM ECM/PCM “A”, Diagnostic Procedure with Diagnostic Trouble Code (DTC).>
U0402	Invalid Data Received From TCM	<Ref. to AC(diag)-88, DTC U0402 INVALID DATA RECEIVED FROM TCM, Diagnostic Procedure with Diagnostic Trouble Code (DTC).>
U0416	Invalid Data Received From Vehicle Dynamics Control Module	<Ref. to AC(diag)-88, DTC U0416 INVALID DATA RECEIVED FROM VEHICLE DYNAMICS CONTROL MODULE, Diagnostic Procedure with Diagnostic Trouble Code (DTC).>
U0422	Invalid Data Received From Body Control Module	<Ref. to AC(diag)-88, DTC U0422 INVALID DATA RECEIVED FROM BODY CONTROL MODULE, Diagnostic Procedure with Diagnostic Trouble Code (DTC).>
U0423	Invalid Data Received From Instrument Panel Cluster Control Module	<Ref. to AC(diag)-88, DTC U0423 INVALID DATA RECEIVED FROM INSTRUMENT PANEL CLUSTER CONTROL MODULE, Diagnostic Procedure with Diagnostic Trouble Code (DTC).>

14.Diagnostic Procedure with Diagnostic Trouble Code (DTC)

A: DTC B1430 IN-VEHICLE (POST EVAPORATOR) TEMPERATURE SENSOR CIRCUIT OPEN

DTC DETECTING CONDITION:
Open circuit in the in-vehicle sensor is detected for 3 seconds or more.
TROUBLE SYMPTOM:
In-vehicle air temperature is falsely recognized as 25°C (77°F), and the compartment temperature is adjusted.
WIRING DIAGRAM:
Air conditioning system <Ref. to WI-74, WIRING DIAGRAM, Air Conditioning System.>

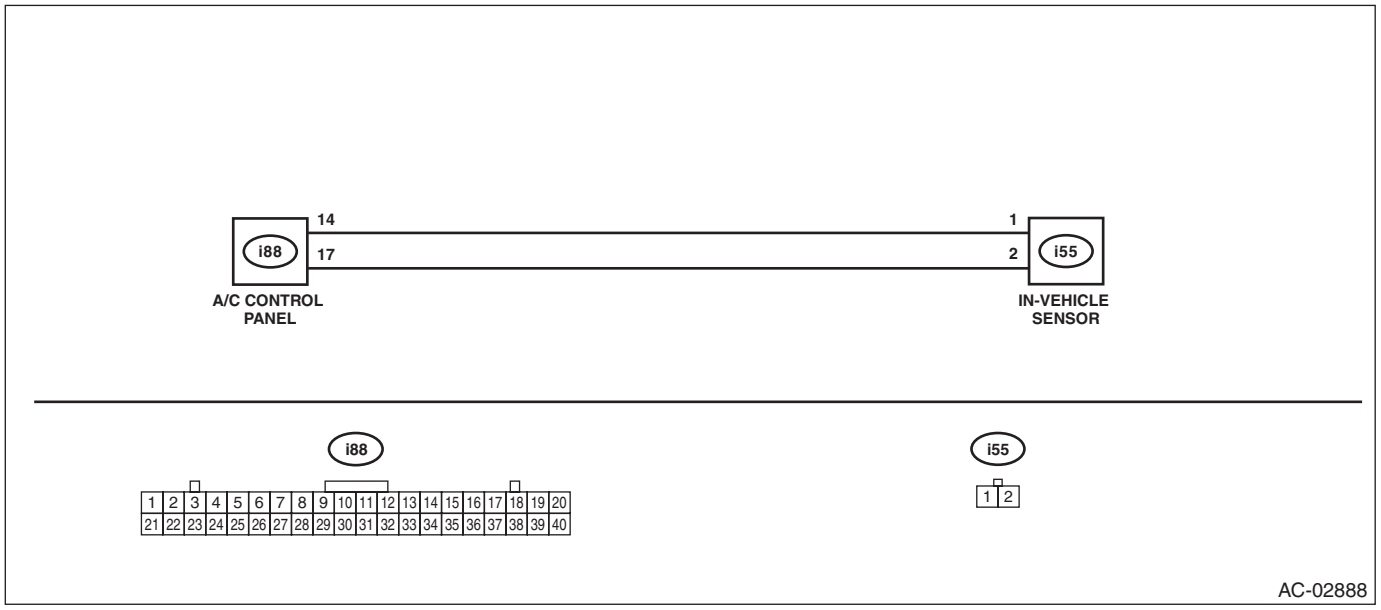

	Step	Check	Yes	No
1	**CHECK CONNECTOR.** 1) Check the condition of connector connection. 2) Read the DTC using Subaru Select Monitor. <Ref. to AC(diag)-43, Read Diagnostic Trouble Code (DTC).>	Is DTC B1430 displayed?	Go to step **2**.	Even if DTC is displayed, the circuit has returned to a normal condition at this time. Reproduce the failure, and then perform the diagnosis again. NOTE: In this case, temporary poor contact of connector, temporary open or short circuit of harness may be the cause.
2	**CHECK IN-VEHICLE SENSOR.** 1) Disconnect the in-vehicle sensor. 2) Short the connector. 3) Read the DTC using Subaru Select Monitor. <Ref. to AC(diag)-43, Read Diagnostic Trouble Code (DTC).>	Is DTC B1431 displayed?	Replace the in-vehicle sensor. <Ref. to AC-76, REMOVAL, In-Vehicle Sensor (Auto A/C Model).>	Go to step **3**.

	Step	Check	Yes	No
3	**CHECK HARNESS.** 1) Restore the temporary shorted lines made in step 2. 2) Turn the ignition switch to ON. 3) Using the tester, measure the voltage between terminals. ***Connector & terminal*** ***(i55) No. 2 (+) — No. 1 (–):***	Is the voltage 4.5 — 5.0 V?	Go to step **4**.	Repair or replace the open circuit of harness.
4	**CHECK HARNESS.** 1) Disconnect the connector from the A/C control panel. 2) Using a tester, check continuity between terminals. ***Connector & terminal*** ***(i55) No. 1 — (i88) No. 14:*** ***(i55) No. 2 — (i88) No. 17:***	Is there continuity?	Replace the A/C control panel. <Ref. to AC-43, REMOVAL, Control Panel.>	Repair or replace the open circuit of harness.

B: DTC B1431 IN-VEHICLE (POST EVAPORATOR) TEMPERATURE SENSOR CIRCUIT SHORT-CIRCUIT

DTC DETECTING CONDITION:
Short circuit in the in-vehicle sensor is detected for 3 seconds or more.
TROUBLE SYMPTOM:
In-vehicle air temperature is falsely recognized as 25°C (77°F), and the compartment temperature is adjusted.
WIRING DIAGRAM:
Air conditioning system <Ref. to WI-74, WIRING DIAGRAM, Air Conditioning System.>

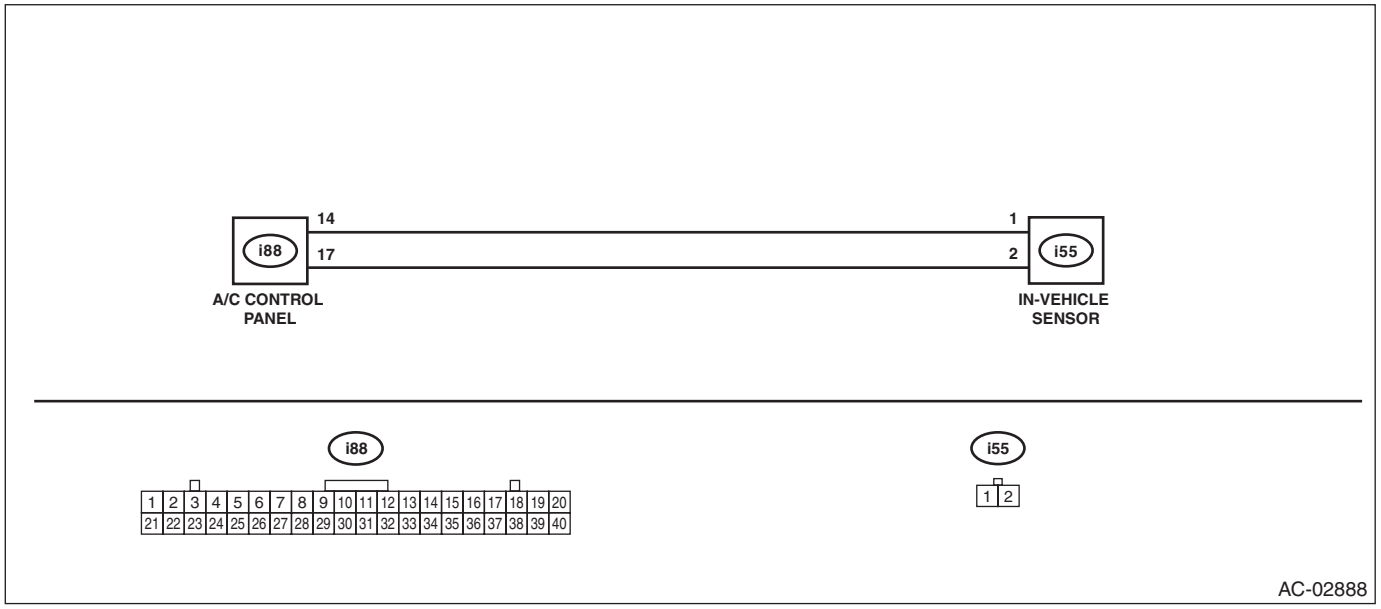

	Step	Check	Yes	No
1	**CHECK CONNECTOR.** 1) Check the condition of connector connection. 2) Read the DTC using Subaru Select Monitor. <Ref. to AC(diag)-43, Read Diagnostic Trouble Code (DTC).>	Is DTC B1431 displayed?	Go to step **2**.	Even if DTC is displayed, the circuit has returned to a normal condition at this time. Reproduce the failure, and then perform the diagnosis again. NOTE: In this case, temporary poor contact of connector, temporary open or short circuit of harness may be the cause.
2	**CHECK IN-VEHICLE SENSOR.** 1) Disconnect the in-vehicle sensor. <Ref. to AC-76, REMOVAL, In-Vehicle Sensor (Auto A/C Model).> 2) Read the DTC using Subaru Select Monitor. <Ref. to AC(diag)-43, Read Diagnostic Trouble Code (DTC).>	Is DTC B1430 displayed?	Replace the in-vehicle sensor. <Ref. to AC-76, REMOVAL, In-Vehicle Sensor (Auto A/C Model).>	Go to step **3**.

	Step	Check	Yes	No
3	**CHECK HARNESS.** 1) Turn the ignition switch to ON. 2) Using the tester, measure the voltage between terminals. ***Connector & terminal*** ***(i55) No. 2 (+) — No. 1 (–):***	Is the voltage 4.5 — 5.0 V?	Even if DTC is displayed, the circuit has returned to a normal condition at this time. Reproduce the failure, and then perform the diagnosis again. NOTE: In this case, temporary poor contact of connector, temporary open or short circuit of harness may be the cause.	Go to step **4**.
4	**CHECK HARNESS (SHORTED BETWEEN LINES).** 1) Disconnect the connector from the A/C control panel. 2) Using a tester, check continuity between terminals. ***Connector & terminal*** ***(i55) No. 1 — No. 2:***	Is there continuity?	Repair or replace the short circuit of the harness.	Replace the A/C control panel. <Ref. to AC-43, REMOVAL, Control Panel.>

C: DTC B1432 AMBIENT TEMPERATURE SENSOR CIRCUIT OPEN (AIR-CONDITIONER)

DTC DETECTING CONDITION:
Open circuit in the ambient sensor (CAN data) is detected for 3 seconds or more.
TROUBLE SYMPTOM:
Ambient temperature is falsely recognized, and the compartment temperature is adjusted.
WIRING DIAGRAM:
Air conditioning system <Ref. to WI-74, WIRING DIAGRAM, Air Conditioning System.>

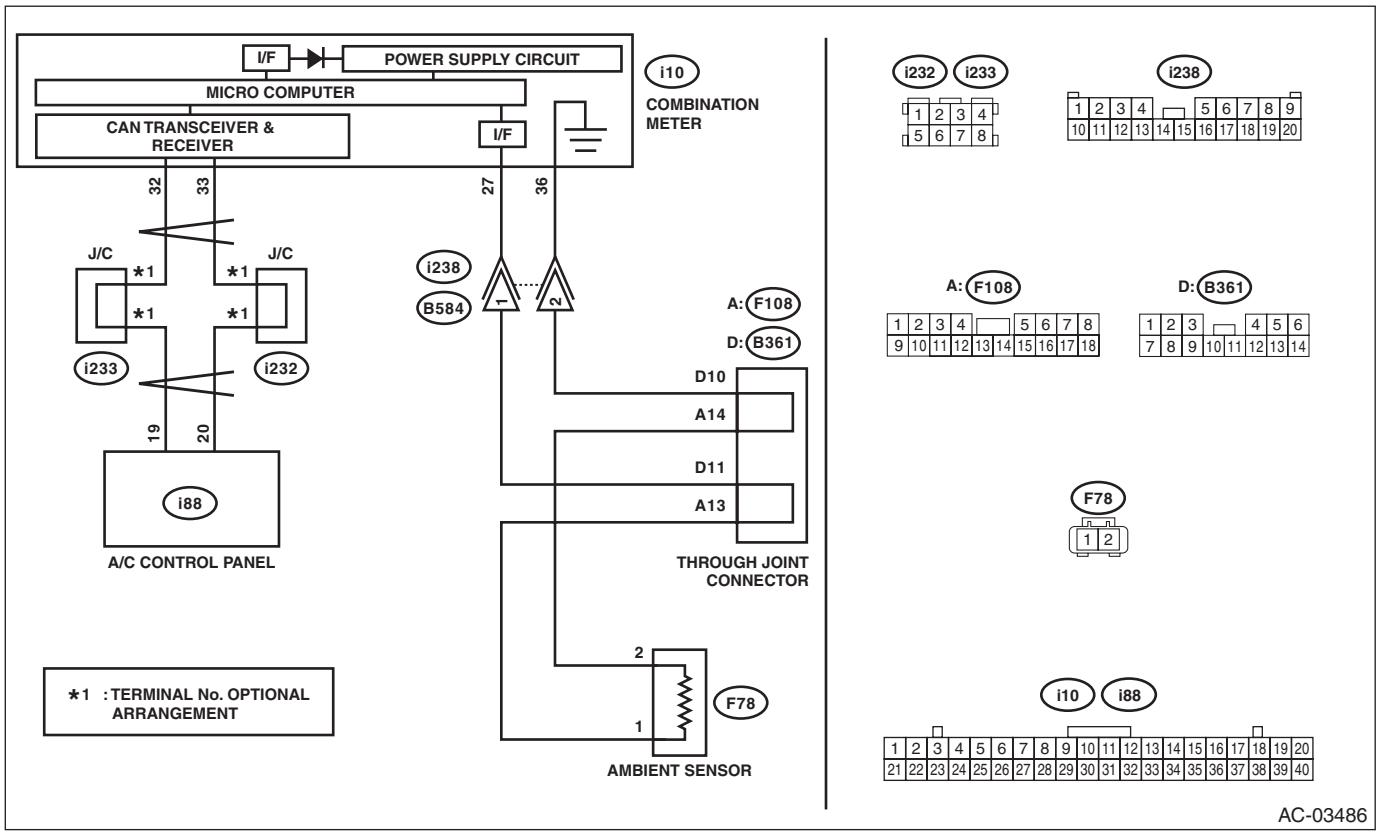

Step		Check	Yes	No
1	**CHECK CONNECTOR.** 1) Check the connecting conditions of combination meter connector and ambient sensor connector. 2) Read the DTC using Subaru Select Monitor. <Ref. to AC(diag)-43, Read Diagnostic Trouble Code (DTC).>	Is DTC B1432 displayed?	Go to step **2**.	Even if DTC is displayed, the circuit has returned to a normal condition at this time. Reproduce the failure, and then perform the diagnosis again. NOTE: In this case, temporary poor contact of connector, temporary open or short circuit of harness may be the cause.

	Step	Check	Yes	No
2	**CHECK AMBIENT SENSOR.** 1) Disconnect the ambient sensor. 2) Short the connector F78. 3) Read the DTC using Subaru Select Monitor. <Ref. to AC(diag)-43, Read Diagnostic Trouble Code (DTC).>	Is DTC B1433 displayed?	Replace the ambient sensor. <Ref. to AC-71, REMOVAL, Ambient Sensor.>	Go to step **3**.
3	**CHECK HARNESS.** 1) Restore the temporary shorted lines made in step 2. 2) Turn the ignition switch to ON. 3) Using the tester, measure the voltage between terminals. ***Connector & terminal*** ***(F78) No. 1 (+) — No. 2 (–):***	Is the voltage 4.5 — 5.0 V?	Go to step **4**.	Repair or replace the open circuit of harness.
4	**CHECK HARNESS (OPEN CIRCUIT).** 1) Disconnect the connector from the combination meter. 2) Using a tester, check continuity between terminals. ***Connector & terminal*** ***(F78) No. 2 — (i10) No. 36:*** ***(F78) No. 1 — (i10) No. 27:***	Is there continuity?	Replace the combination meter. <Ref. to IDI-13, REMOVAL, Combination Meter.>	Repair or replace the open circuit of harness.

D: DTC B1433 AMBIENT TEMPERATURE SENSOR CIRCUIT SHORT-CIRCUIT (AIR-CONDITIONER)

DTC DETECTING CONDITION:
Short circuit in the ambient sensor (CAN data) is detected for 3 seconds or more.
TROUBLE SYMPTOM:
Ambient temperature is falsely recognized, and the compartment temperature is adjusted.
WIRING DIAGRAM:
Air conditioning system <Ref. to WI-74, WIRING DIAGRAM, Air Conditioning System.>

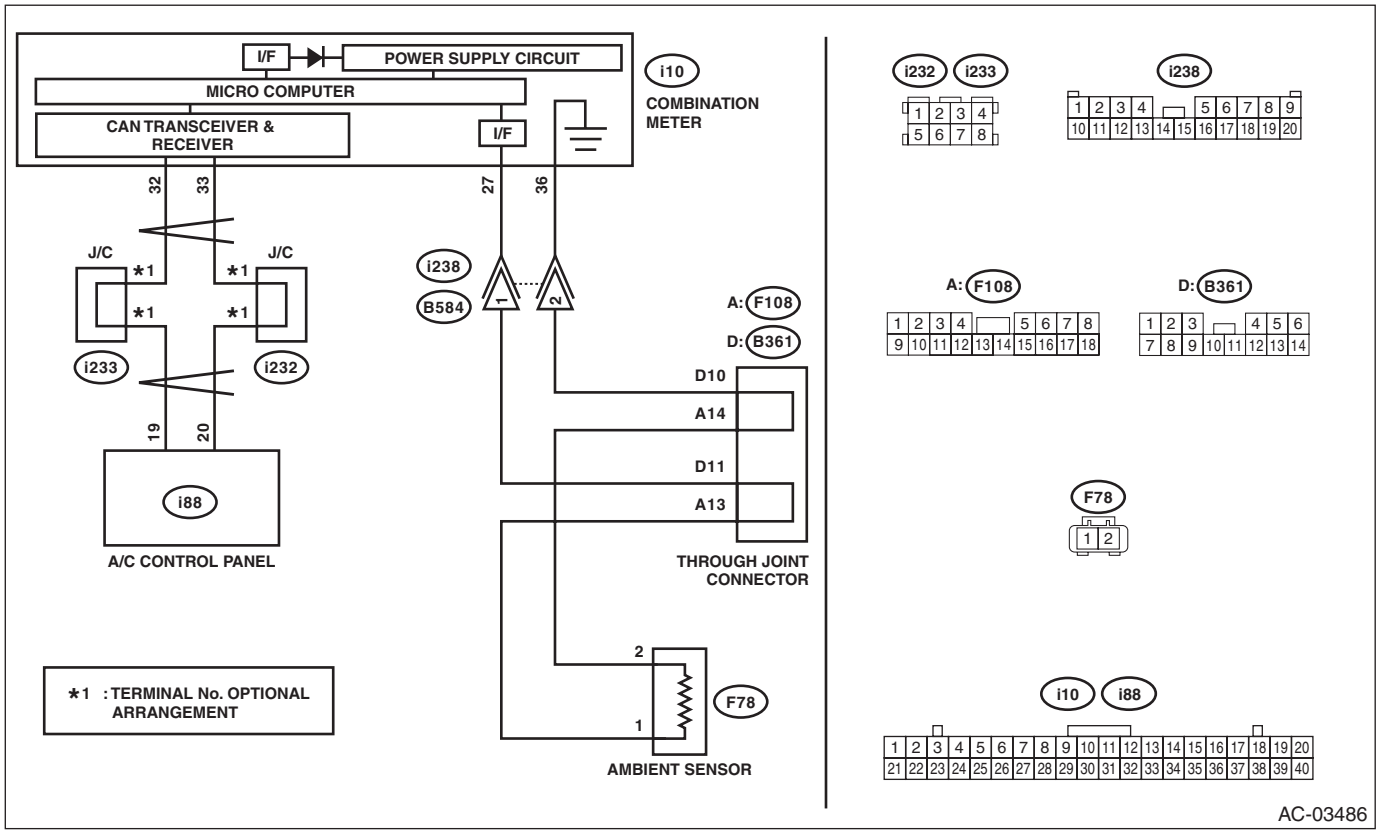

Step		Check	Yes	No
1	**CHECK CONNECTOR.** 1) Check the connecting conditions of combination meter connector and ambient sensor connector. 2) Read the DTC using Subaru Select Monitor. <Ref. to AC(diag)-43, Read Diagnostic Trouble Code (DTC).>	Is DTC B1433 displayed?	Go to step **2**.	Even if DTC is displayed, the circuit has returned to a normal condition at this time. Reproduce the failure, and then perform the diagnosis again. NOTE: In this case, temporary poor contact of connector, temporary open or short circuit of harness may be the cause.

	Step	Check	Yes	No
2	**CHECK AMBIENT SENSOR.** 1) Disconnect the ambient sensor. <Ref. to AC-71, REMOVAL, Ambient Sensor.> 2) Read the DTC using Subaru Select Monitor. <Ref. to AC(diag)-43, Read Diagnostic Trouble Code (DTC).>	Is DTC B1432 displayed?	Replace the ambient sensor. <Ref. to AC-71, REMOVAL, Ambient Sensor.>	Go to step **3**.
3	**CHECK HARNESS.** 1) Turn the ignition switch to ON. 2) Using the tester, measure the voltage between terminals. ***Connector & terminal*** ***(F78) No. 1 (+) — No. 2 (–):***	Is the voltage 4.5 — 5.0 V?	Even if DTC is displayed, the circuit has returned to a normal condition at this time. Reproduce the failure, and then perform the diagnosis again. NOTE: In this case, temporary poor contact of connector, temporary open or short circuit of harness may be the cause.	Go to step **4**.
4	**CHECK HARNESS (SHORTED BETWEEN LINES).** 1) Disconnect the connector from the combination meter. 2) Using a tester, check continuity between terminals. ***Connector & terminal*** ***(F78) No. 2 — No. 1:***	Is there continuity?	Repair or replace the short circuit of the harness.	Replace the combination meter. <Ref. to IDI-13, REMOVAL, Combination Meter.>

E: DTC B1434 EVAPORATOR TEMPERATURE SENSOR CIRCUIT OPEN

DTC DETECTING CONDITION:
Open circuit in the evaporator sensor is detected for 3 seconds or more.
TROUBLE SYMPTOM:
Evaporator temperature is falsely recognized as low, and the compartment temperature is adjusted.
WIRING DIAGRAM:
Air conditioning system <Ref. to WI-74, WIRING DIAGRAM, Air Conditioning System.>

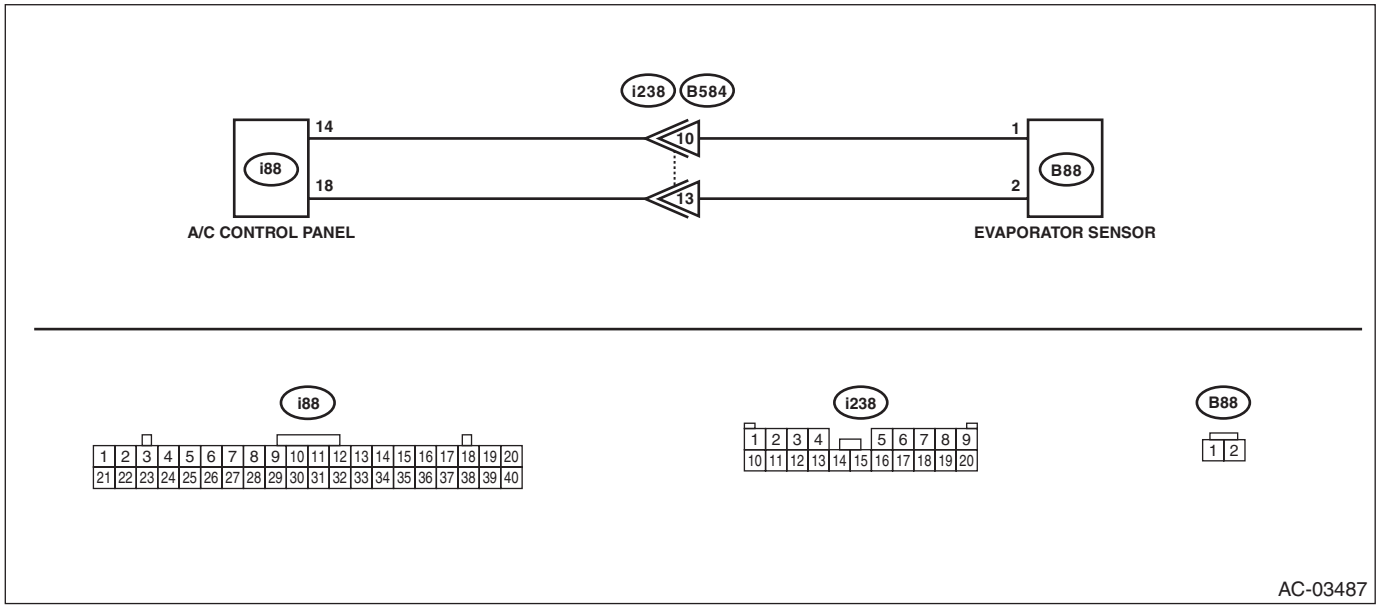

	Step	Check	Yes	No
1	**CHECK CONNECTOR.** 1) Check the condition of connector connection. 2) Read the DTC using Subaru Select Monitor. <Ref. to AC(diag)-43, Read Diagnostic Trouble Code (DTC).>	Is DTC B1434 displayed?	Go to step **2**.	Even if DTC is displayed, the circuit has returned to a normal condition at this time. Reproduce the failure, and then perform the diagnosis again. NOTE: In this case, temporary poor contact of connector, temporary open or short circuit of harness may be the cause.
2	**CHECK EVAPORATOR SENSOR.** 1) Disconnect the evaporator sensor. 2) Short the evaporator sensor connector (B88). 3) Read the DTC using Subaru Select Monitor. <Ref. to AC(diag)-43, Read Diagnostic Trouble Code (DTC).>	Is DTC B1435 displayed?	Replace the evaporator sensor. <Ref. to AC-57, REMOVAL, Evaporator.>	Go to step **3**.

	Step	Check	Yes	No
3	**CHECK HARNESS.** 1) Restore the temporary shorted lines made in step 2. 2) Turn the ignition switch to ON. 3) Using the tester, measure the voltage between terminals. ***Connector & terminal*** ***(B88) No. 2 (+) — No. 1 (–):***	Is the voltage 4.5 — 5.0 V?	Go to step **4**.	Repair or replace the open circuit of harness.
4	**CHECK HARNESS (OPEN CIRCUIT).** 1) Disconnect the connector from the A/C control panel. 2) Using a tester, check continuity between terminals. ***Connector & terminal*** ***(B88) No. 1 — (i88) No. 14:*** ***(B88) No. 2 — (i88) No. 18:***	Is there continuity?	Replace the A/C control panel. <Ref. to AC-43, REMOVAL, Control Panel.>	Repair or replace the open circuit of harness.

F: DTC B1435 EVAPORATOR TEMPERATURE SENSOR CIRCUIT SHORT-CIRCUIT

DTC DETECTING CONDITION:
Short circuit in the evaporator sensor is detected for 3 seconds or more.
TROUBLE SYMPTOM:
Evaporator temperature is falsely recognized as high, and the compartment temperature is adjusted.
WIRING DIAGRAM:
Air conditioning system <Ref. to WI-74, WIRING DIAGRAM, Air Conditioning System.>

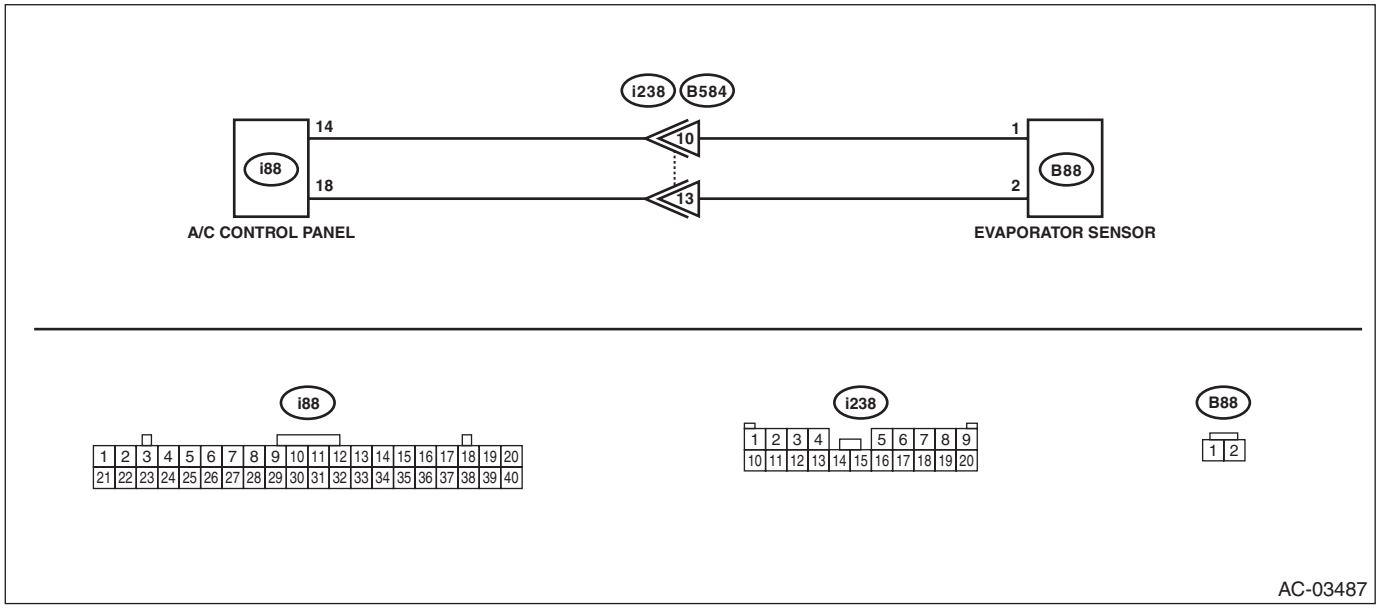

Step		Check	Yes	No
1	**CHECK CONNECTOR.** 1) Check the condition of connector connection. 2) Read the DTC using Subaru Select Monitor. <Ref. to AC(diag)-43, Read Diagnostic Trouble Code (DTC).>	Is DTC B1435 displayed?	Go to step **2**.	Even if DTC is displayed, the circuit has returned to a normal condition at this time. Reproduce the failure, and then perform the diagnosis again. NOTE: In this case, temporary poor contact of connector, temporary open or short circuit of harness may be the cause.
2	**CHECK EVAPORATOR SENSOR.** 1) Disconnect the evaporator sensor. 2) Read the DTC using Subaru Select Monitor. <Ref. to AC(diag)-43, Read Diagnostic Trouble Code (DTC).>	Is DTC B1434 displayed?	Replace the evaporator sensor. <Ref. to AC-57, REMOVAL, Evaporator.>	Go to step **3**.

	Step	Check	Yes	No
3	**CHECK HARNESS.** 1) Turn the ignition switch to ON. 2) Using the tester, measure the voltage between terminals. ***Connector & terminal*** ***(B88) No. 2 (+) — No. 1 (–):***	Is the voltage 4.5 — 5.0 V?	Even if DTC is displayed, the circuit has returned to a normal condition at this time. Reproduce the failure, and then perform the diagnosis again. NOTE: In this case, temporary poor contact of connector, temporary open or short circuit of harness may be the cause.	Go to step **4**.
4	**CHECK HARNESS (SHORTED BETWEEN LINES).** 1) Disconnect the connector from the A/C control panel. 2) Using a tester, check continuity between terminals. ***Connector & terminal*** ***(B88) No. 1 — No. 2:***	Is there continuity?	Repair or replace the short circuit of the harness.	Replace the A/C control panel. <Ref. to AC-43, REMOVAL, Control Panel.>

G: DTC B14A1 SUNLOAD SENSOR CIRCUIT LOW/OPEN

DTC DETECTING CONDITION:

Open circuit in the sunload sensor is detected for 3 seconds or more. (Displayed for current malfunction)

NOTE:
When the sunload sensor check is performed indoors or in the shade, it could be diagnosed as having an open circuit. Always check the sunload sensor in direct sunlight.

TROUBLE SYMPTOM:

Operation is performed as no sunload.

WIRING DIAGRAM:

Air conditioning system <Ref. to WI-74, WIRING DIAGRAM, Air Conditioning System.>

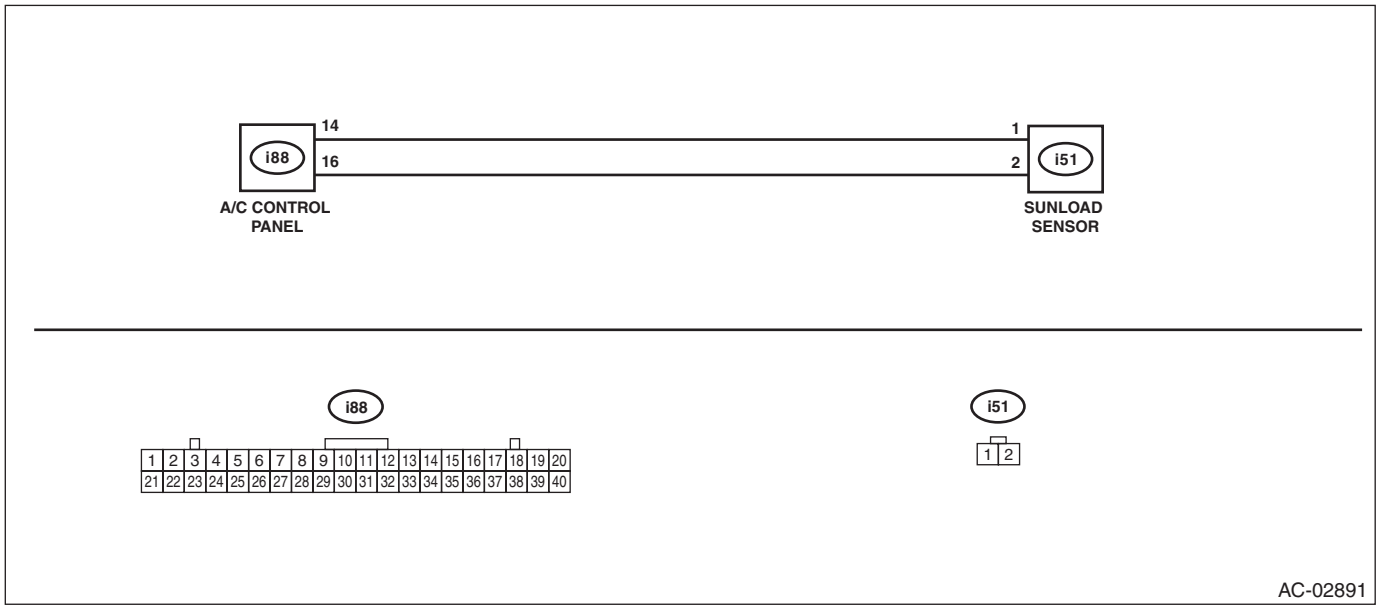

Step		Check	Yes	No
1	**CHECK CONNECTOR.** 1) Check the condition of connector connection. 2) Read the DTC using Subaru Select Monitor. <Ref. to AC(diag)-43, Read Diagnostic Trouble Code (DTC).>	Is DTC B14A1 displayed?	Go to step **2**.	Even if DTC is displayed, the circuit has returned to a normal condition at this time. Reproduce the failure, and then perform the diagnosis again. NOTE: In this case, temporary poor contact of connector, temporary open or short circuit of harness may be the cause.
2	**CHECK SUNLOAD SENSOR.** 1) Disconnect the sunload sensor. 2) Short the connector. 3) Read the DTC using Subaru Select Monitor. <Ref. to AC(diag)-43, Read Diagnostic Trouble Code (DTC).>	Is DTC B14A2 displayed?	Replace the sunload sensor. <Ref. to AC-74, REMOVAL, Sunload Sensor (Auto A/C Model).>	Go to step **3**.

	Step	Check	Yes	No
3	**CHECK HARNESS.** 1) Restore the temporary shorted lines made in step 2. 2) Turn the ignition switch to ON. 3) Using the tester, measure the voltage between terminals. ***Connector & terminal*** ***(i51) No. 2 (+) — No. 1 (–):***	Is the voltage 4.5 — 5.0 V?	Go to step **4**.	Repair or replace the open circuit of harness.
4	**CHECK HARNESS (OPEN CIRCUIT).** 1) Disconnect the connector from the A/C control panel. 2) Using a tester, check continuity between terminals. ***Connector & terminal*** ***(i51) No. 1 — (i88) No. 14:*** ***(i51) No. 2 — (i88) No. 16:***	Is there continuity?	Replace the A/C control panel. <Ref. to AC-43, REMOVAL, Control Panel.>	Repair or replace the open circuit of harness.

H: DTC B14A2 SUNLOAD SENSOR CIRCUIT SHORT-CIRCUIT

DTC DETECTING CONDITION:
Short circuit in the sunload sensor is detected for 3 seconds or more.
TROUBLE SYMPTOM:
Operation is performed as no sunload.
WIRING DIAGRAM:
Air conditioning system <Ref. to WI-74, WIRING DIAGRAM, Air Conditioning System.>

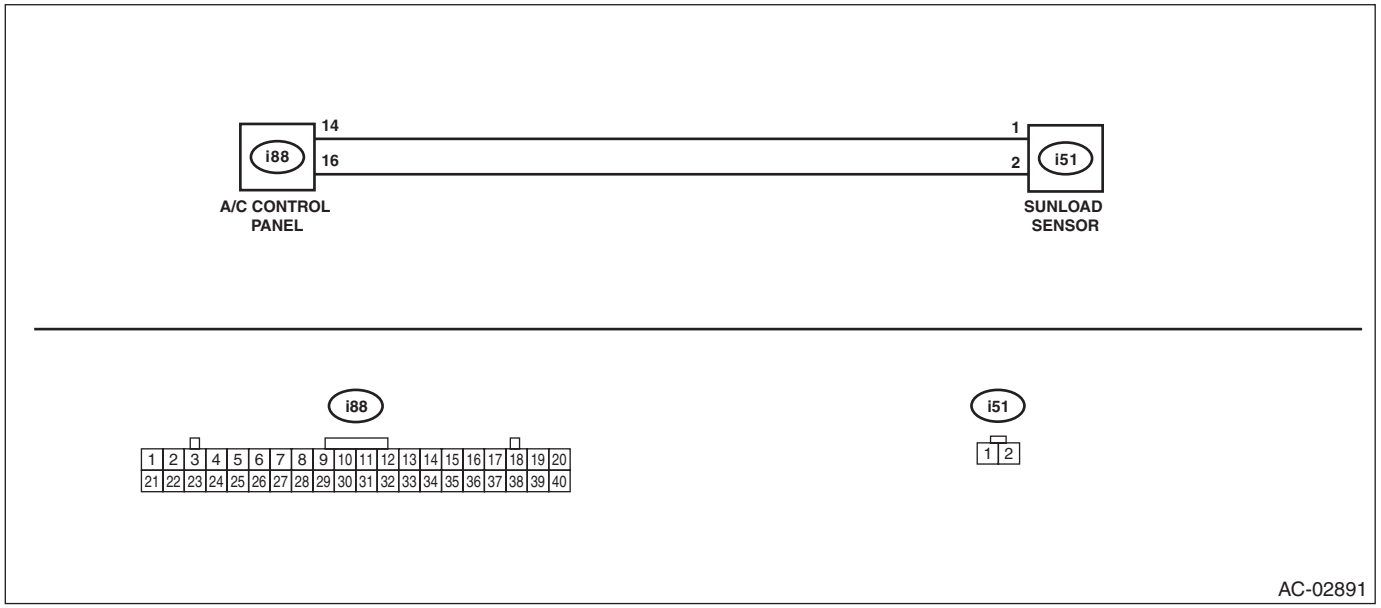

	Step	Check	Yes	No
1	**CHECK CONNECTOR.** 1) Check the condition of connector connection. 2) Read the DTC using Subaru Select Monitor. <Ref. to AC(diag)-43, Read Diagnostic Trouble Code (DTC).>	Is DTC B14A2 displayed?	Go to step **2**.	Even if DTC is displayed, the circuit has returned to a normal condition at this time. Reproduce the failure, and then perform the diagnosis again. NOTE: In this case, temporary poor contact of connector, temporary open or short circuit of harness may be the cause.
2	**CHECK SUNLOAD SENSOR.** 1) Disconnect the sunload sensor. 2) Read the DTC using Subaru Select Monitor. <Ref. to AC(diag)-43, Read Diagnostic Trouble Code (DTC).>	Is DTC B14A1 displayed?	Replace the sunload sensor. <Ref. to AC-74, REMOVAL, Sunload Sensor (Auto A/C Model).>	Go to step **3**.
3	**CHECK HARNESS.** 1) Turn the ignition switch to ON. 2) Using the tester, measure the voltage between terminals. ***Connector & terminal*** ***(i51) No. 2 (+) — No. 1 (–):***	Is the voltage 4.5 — 5.0 V?	Check the connection of the sunload sensor circuit.	Go to step **4**.

	Step	Check	Yes	No
4	**CHECK HARNESS (SHORTED BETWEEN LINES).** 1) Disconnect the connector from the A/C control panel. 2) Using a tester, check continuity between terminals. ***Connector & terminal*** ***(i51) No. 1 — No. 2:***	Is there continuity?	Repair or replace the short circuit of the harness.	Replace the A/C control panel. <Ref. to AC-43, REMOVAL, Control Panel.>

I: DTC B14E1 AIR MIX DOOR ACTUATOR STEPPING MOTOR CIRCUIT OPEN (DRIVER)

DTC DETECTING CONDITION:
Open circuit in the air mix door actuator stepping motor circuit is detected for 3 seconds or more.
TROUBLE SYMPTOM:
Temperature cannot be adjusted.
WIRING DIAGRAM:
Air conditioning system <Ref. to WI-74, WIRING DIAGRAM, Air Conditioning System.>

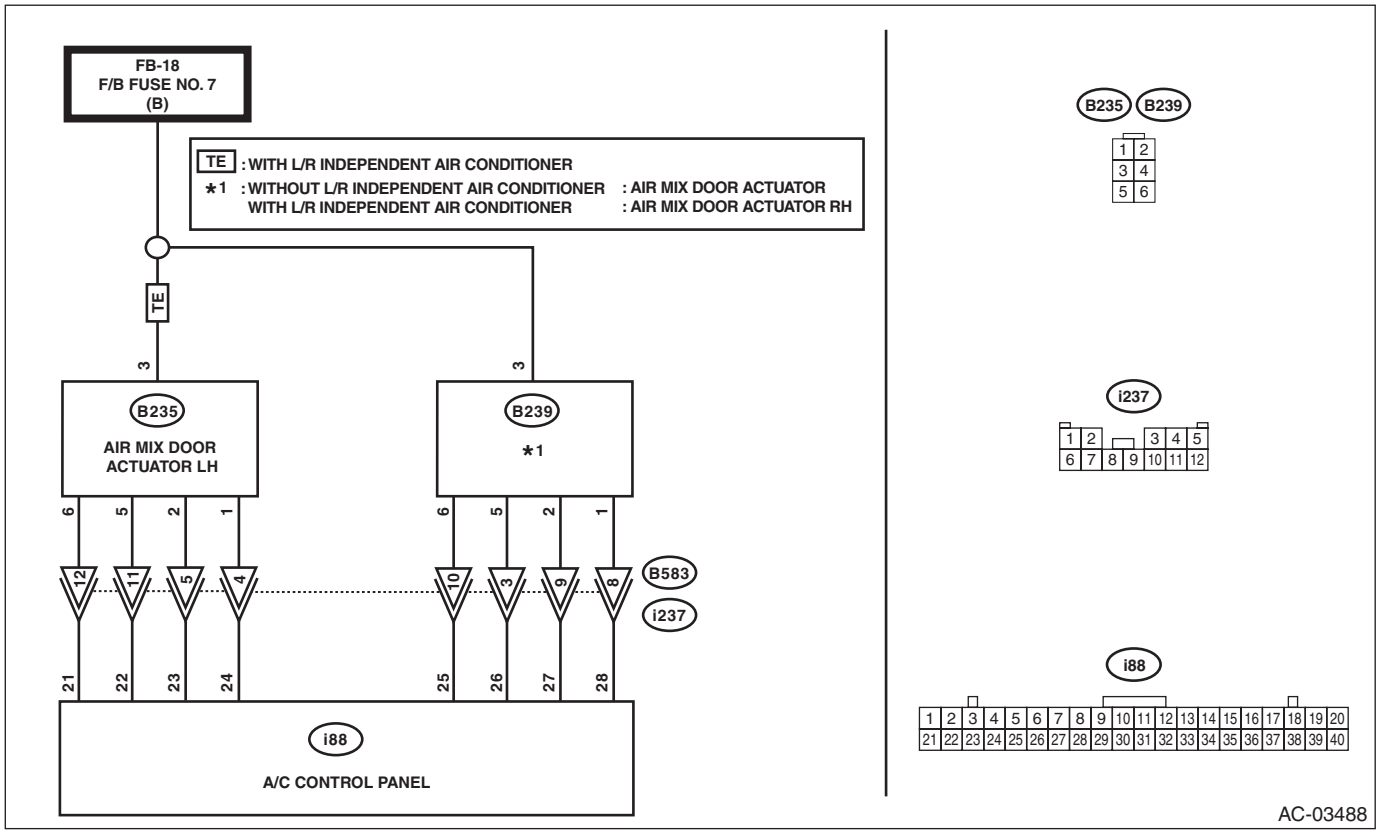

Step		Check	Yes	No
1	**CHECK CONNECTOR.** 1) Check the condition of connector connection. 2) Read the DTC using Subaru Select Monitor. <Ref. to AC(diag)-43, Read Diagnostic Trouble Code (DTC).>	Is DTC B14E1 displayed?	Go to step **2**.	Even if DTC is displayed, the circuit has returned to a normal condition at this time. Reproduce the failure, and then perform the diagnosis again. NOTE: In this case, temporary poor contact of connector, temporary open or short circuit of harness may be the cause.

	Step	Check	Yes	No
2	**CHECK ACTUATOR.** 1) Turn the ignition switch to OFF. 2) Disconnect the air mix door actuator connector. 3) Turn the ignition switch to ON. 4) Measure the voltage between the air mix door actuator connector terminal and chassis ground. ***Connector & terminal*** ***Without left/right independent air conditioning function*** ***(B239) No. 3 (+) — Chassis ground (–):*** ***With left/right independent air conditioning function*** ***(B235) No. 3 (+) — Chassis ground (–):***	Is the voltage approx. 10 V or more?	Go to step **3**.	Check the DC power supply circuit.
3	**CHECK AIR MIX DOOR ACTUATOR.** 1) Turn the ignition switch to OFF. 2) Measure the internal resistance of the air mix door actuator using a tester. ***Terminals*** ***Without left/right independent air conditioning function*** ***Air mix door actuator*** ***No. 3 — No. 1:*** ***No. 3 — No. 2:*** ***No. 3 — No. 5:*** ***No. 3 — No. 6:*** ***With left/right independent air conditioning function*** ***Air mix door actuator LH*** ***No. 3 — No. 1:*** ***No. 3 — No. 2:*** ***No. 3 — No. 5:*** ***No. 3 — No. 6:***	Is the resistance 80 — 100 Ω?	Go to step **4**.	Replace the actuator. <Ref. to AC-88, REMOVAL, Air Mix Door Actuator.>
4	**CHECK HARNESS BETWEEN A/C CONTROL PANEL AND AIR MIX DOOR ACTUATOR (OPEN).** 1) Disconnect the A/C control panel connector. 2) Measure the resistance between A/C control panel and air mix door actuator connector. ***Connector & terminal*** ***Without left/right independent air conditioning function*** ***(B239) No. 1 — (i88) No. 28:*** ***(B239) No. 2 — (i88) No. 27:*** ***(B239) No. 5 — (i88) No. 26:*** ***(B239) No. 6 — (i88) No. 25:*** ***With left/right independent air conditioning function*** ***(B235) No. 1 — (i88) No. 24:*** ***(B235) No. 2 — (i88) No. 23:*** ***(B235) No. 5 — (i88) No. 22:*** ***(B235) No. 6 — (i88) No. 21:***	Is there continuity?	Replace the A/C control panel. <Ref. to AC-43, REMOVAL, Control Panel.>	Repair or replace the open circuit of harness.

J: DTC B14E2 AIR MIX DOOR ACTUATOR STEPPING MOTOR CIRCUIT SHORT-CIRCUIT (DRIVER)

DTC DETECTING CONDITION:

Short circuit in the air mix door actuator stepping motor circuit (short circuit to motor coil power supply) is detected for 3 seconds or more.

TROUBLE SYMPTOM:

Temperature cannot be adjusted.

WIRING DIAGRAM:

Air conditioning system <Ref. to WI-74, WIRING DIAGRAM, Air Conditioning System.>

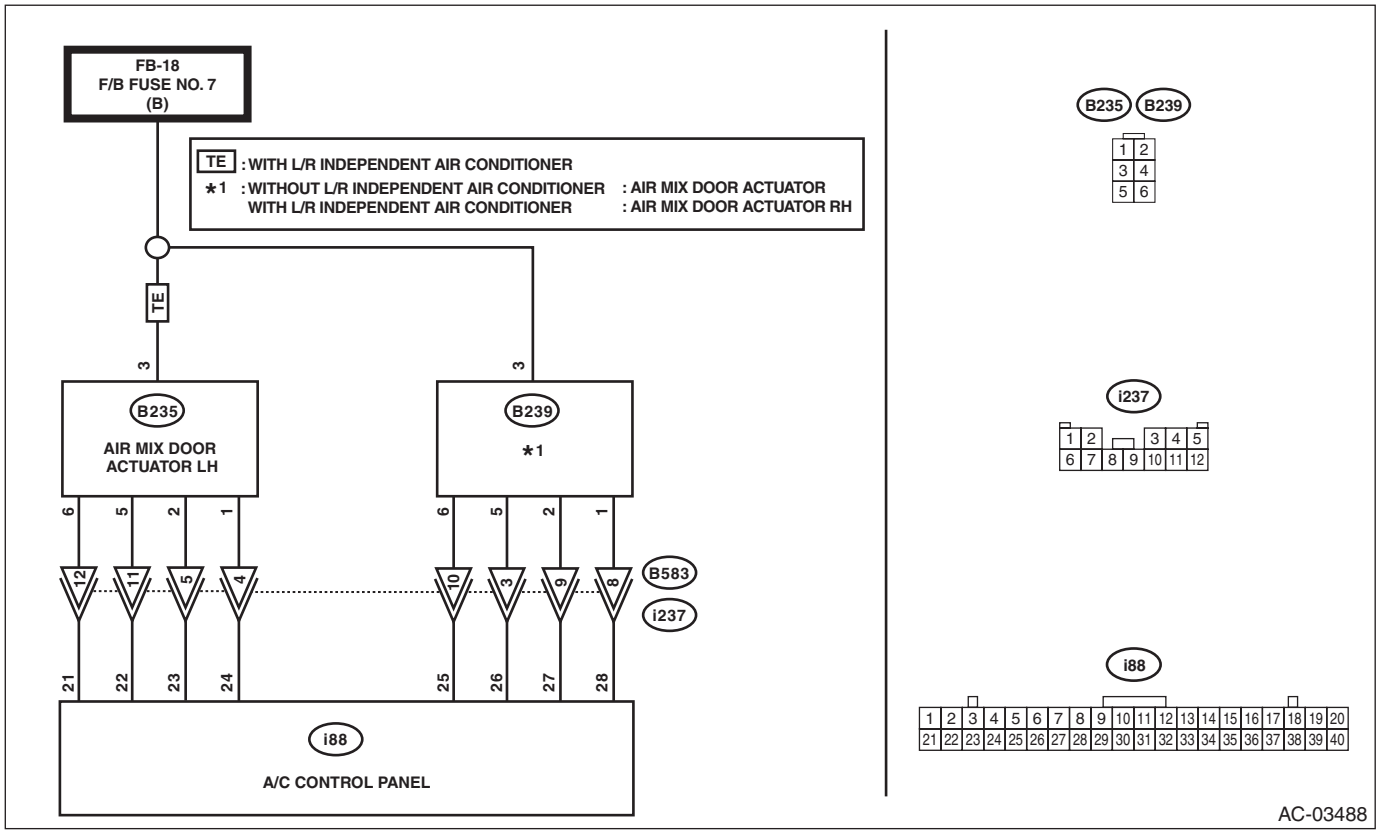

Step		Check	Yes	No
1	**CHECK CONNECTOR.** 1) Check the condition of connector connection. 2) Read the DTC using Subaru Select Monitor. <Ref. to AC(diag)-43, Read Diagnostic Trouble Code (DTC).>	Is DTC B14E2 displayed?	Go to step **2**.	Even if DTC is displayed, the circuit has returned to a normal condition at this time. Reproduce the failure, and then perform the diagnosis again. NOTE: In this case, temporary poor contact of connector, temporary open or short circuit of harness may be the cause.

	Step	Check	Yes	No
2	**CHECK POWER SUPPLY OF AIR MIX DOOR ACTUATOR.** 1) Turn the ignition switch to OFF. 2) Disconnect the air mix door actuator connector. 3) Turn the ignition switch to ON. 4) Measure the voltage between the air mix door actuator connector terminal and chassis ground. ***Connector & terminal*** ***Without left/right independent air conditioning function*** ***(B239) No. 3 (+) — Chassis ground (–):*** ***With left/right independent air conditioning function*** ***(B235) No. 3 (+) — Chassis ground (–):***	Is the voltage approx. 10 V or more?	Go to step **3**.	Check the DC power supply circuit.
3	**CHECK AIR MIX DOOR ACTUATOR.** 1) Turn the ignition switch to OFF. 2) Measure the internal resistance of the air mix door actuator using a tester. ***Terminals*** ***Without left/right independent air conditioning function*** ***Air mix door actuator*** ***No. 3 — No. 1:*** ***No. 3 — No. 2:*** ***No. 3 — No. 5:*** ***No. 3 — No. 6:*** ***With left/right independent air conditioning function*** ***Air mix door actuator LH*** ***No. 3 — No. 1:*** ***No. 3 — No. 2:*** ***No. 3 — No. 5:*** ***No. 3 — No. 6:***	Is the resistance 80 — 100 Ω?	Go to step **4**.	Replace the actuator. <Ref. to AC-88, REMOVAL, Air Mix Door Actuator.>
4	**CHECK HARNESS BETWEEN A/C CONTROL PANEL AND AIR MIX DOOR ACTUATOR (SHORTED TO POWER SUPPLY).** 1) Disconnect the A/C control panel connector. 2) Measure the voltage between air mix door actuator connector and chassis ground. ***Connector & terminal*** ***Without left/right independent air conditioning function*** ***(B239) No. 1 (+) — Chassis ground (–):*** ***(B239) No. 2 (+) — Chassis ground (–):*** ***(B239) No. 5 (+) — Chassis ground (–):*** ***(B239) No. 6 (+) — Chassis ground (–):*** ***With left/right independent air conditioning function*** ***(B235) No. 1 (+) — Chassis ground (–):*** ***(B235) No. 2 (+) — Chassis ground (–):*** ***(B235) No. 5 (+) — Chassis ground (–):*** ***(B235) No. 6 (+) — Chassis ground (–):***	Is there any voltage?	Repair or replace the short circuit of the harness.	Replace the A/C control panel. <Ref. to AC-43, REMOVAL, Control Panel.>

K: DTC B14E3 AIR MIX DOOR ACTUATOR STEPPING MOTOR CIRCUIT OPEN (PASSENGER)

DTC DETECTING CONDITION:
Open circuit in the air mix door actuator stepping motor circuit is detected for 3 seconds or more.
TROUBLE SYMPTOM:
Temperature cannot be adjusted.
WIRING DIAGRAM:
Air conditioning system <Ref. to WI-74, WIRING DIAGRAM, Air Conditioning System.>

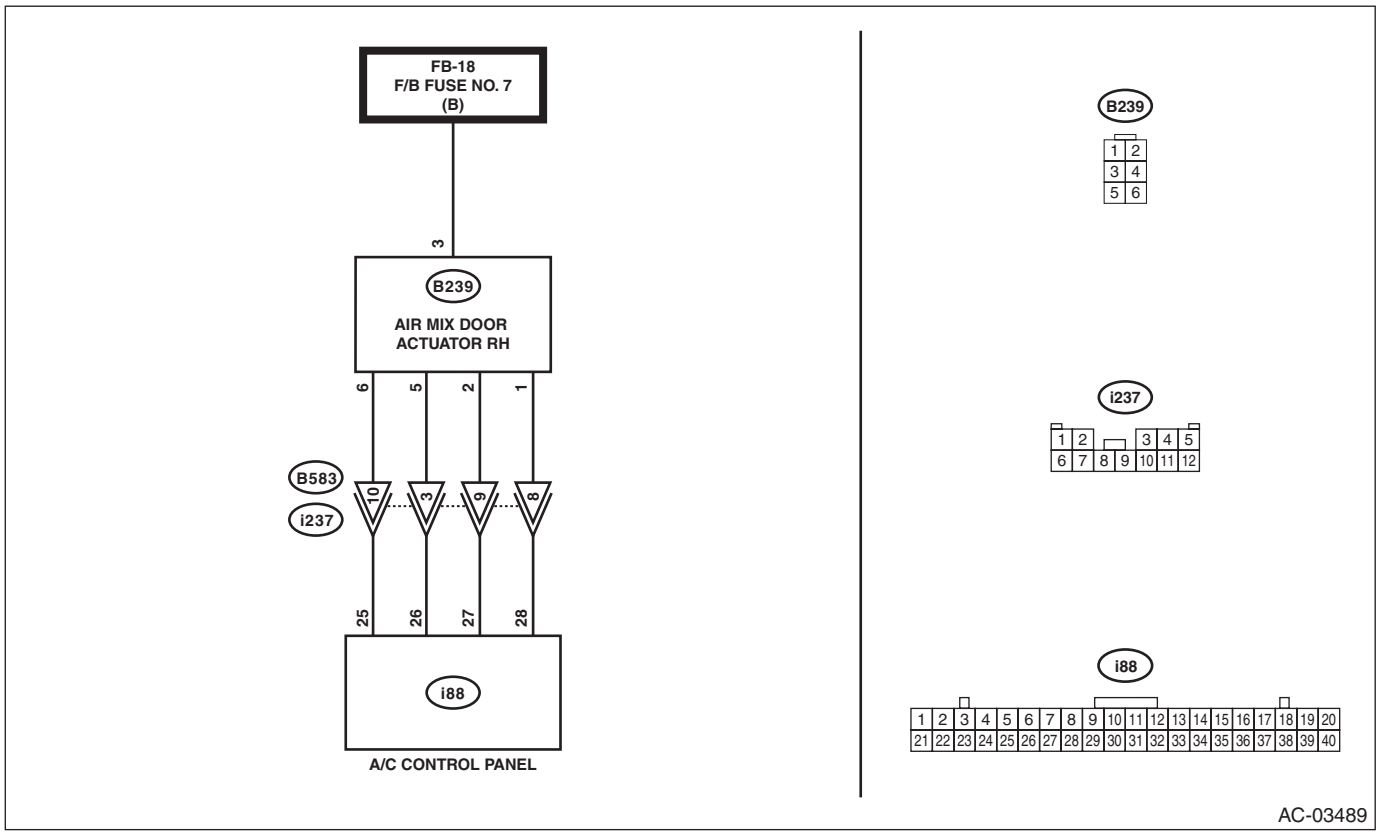

Step		Check	Yes	No
1	**CHECK CONNECTOR.** 1) Check the condition of connector connection. 2) Read the DTC using Subaru Select Monitor. <Ref. to AC(diag)-43, Read Diagnostic Trouble Code (DTC).>	Is DTC B14E3 displayed?	Go to step **2**.	Even if DTC is displayed, the circuit has returned to a normal condition at this time. Reproduce the failure, and then perform the diagnosis again. NOTE: In this case, temporary poor contact of connector, temporary open or short circuit of harness may be the cause.

	Step	Check	Yes	No
2	**CHECK ACTUATOR.** 1) Turn the ignition switch to OFF. 2) Disconnect the air mix door actuator connector. 3) Turn the ignition switch to ON. 4) Measure the voltage between the air mix door actuator connector terminal and chassis ground. ***Connector & terminal*** ***(B239) No. 3 (+) — Chassis ground (–):***	Is the voltage approx. 10 V or more?	Go to step **3**.	Check the DC power supply circuit.
3	**CHECK AIR MIX DOOR ACTUATOR.** 1) Turn the ignition switch to OFF. 2) Measure the internal resistance of the air mix door actuator using a tester. ***Terminals*** ***Air mix door actuator RH*** ***No. 3 — No. 1:*** ***No. 3 — No. 2:*** ***No. 3 — No. 5:*** ***No. 3 — No. 6:***	Is the resistance 80 — 100 Ω?	Go to step **4**.	Replace the actuator. <Ref. to AC-88, REMOVAL, Air Mix Door Actuator.>
4	**CHECK HARNESS BETWEEN A/C CONTROL PANEL AND AIR MIX DOOR ACTUATOR (OPEN).** 1) Disconnect the A/C control panel connector. 2) Measure the resistance between A/C control panel and air mix door actuator connector. ***Connector & terminal*** ***(B239) No. 1 — (i88) No. 28:*** ***(B239) No. 2 — (i88) No. 27:*** ***(B239) No. 5 — (i88) No. 26:*** ***(B239) No. 6 — (i88) No. 25:***	Is there continuity?	Replace the A/C control panel. <Ref. to AC-43, REMOVAL, Control Panel.>	Repair or replace the open circuit of harness.

L: DTC B14E4 AIR MIX DOOR ACTUATOR STEPPING MOTOR CIRCUIT SHORT-CIRCUIT (PASSENGER)

DTC DETECTING CONDITION:
Short circuit in the air mix door actuator stepping motor circuit (short circuit to motor coil power supply) is detected for 3 seconds or more.

TROUBLE SYMPTOM:
Temperature cannot be adjusted.

WIRING DIAGRAM:
Air conditioning system <Ref. to WI-74, WIRING DIAGRAM, Air Conditioning System.>

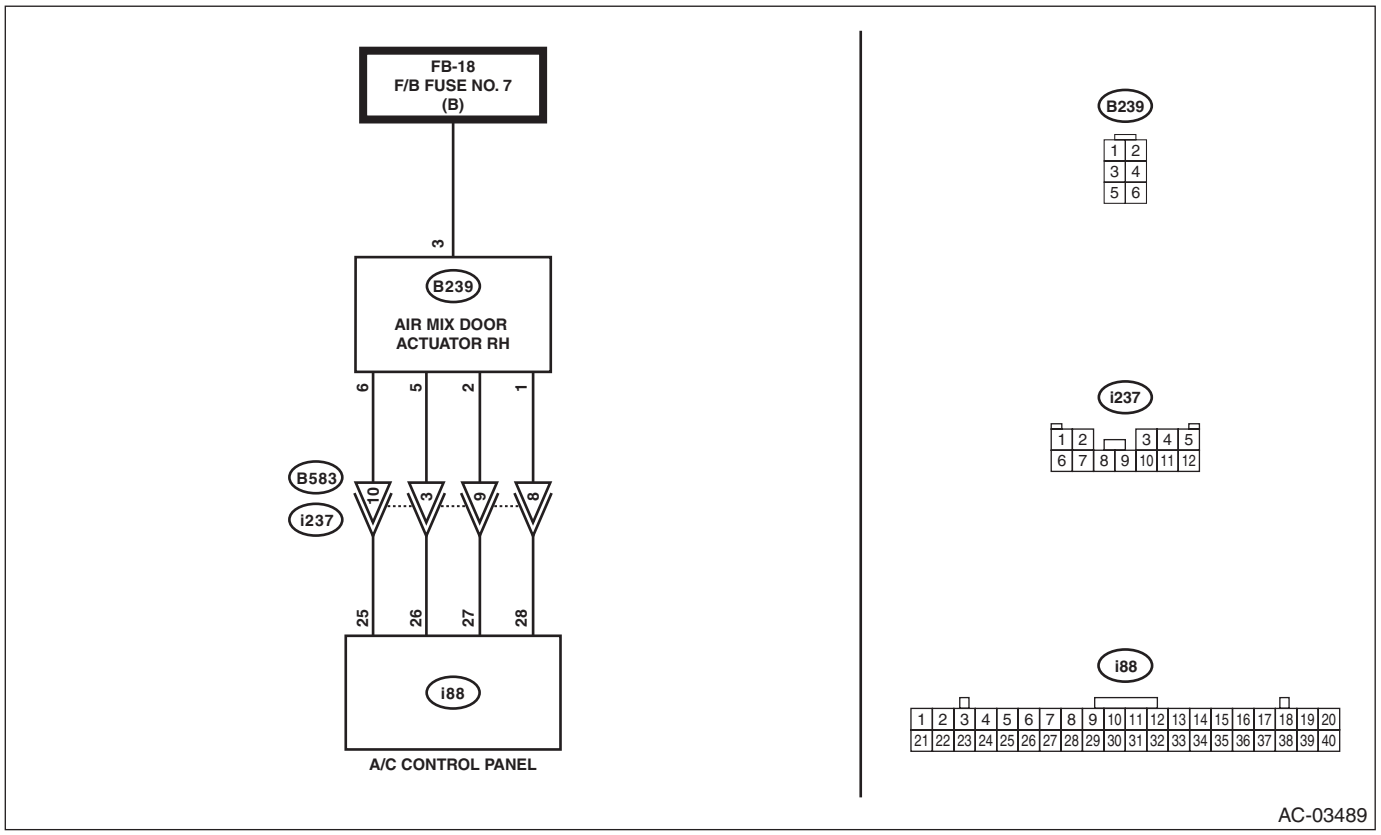

Step		Check	Yes	No
1	**CHECK CONNECTOR.** 1) Check the condition of connector connection. 2) Read the DTC using Subaru Select Monitor. <Ref. to AC(diag)-43, Read Diagnostic Trouble Code (DTC).>	Is DTC B14E4 displayed?	Go to step **2**.	Even if DTC is displayed, the circuit has returned to a normal condition at this time. Reproduce the failure, and then perform the diagnosis again. NOTE: In this case, temporary poor contact of connector, temporary open or short circuit of harness may be the cause.

	Step	Check	Yes	No
2	**CHECK POWER SUPPLY OF AIR MIX DOOR ACTUATOR.** 1) Turn the ignition switch to OFF. 2) Disconnect the air mix door actuator connector. 3) Turn the ignition switch to ON. 4) Measure the voltage between the air mix door actuator connector terminal and chassis ground. ***Connector & terminal*** ***(B239) No. 3 (+) — Chassis ground (–):***	Is the voltage approx. 10 V or more?	Go to step **3**.	Check the DC power supply circuit.
3	**CHECK AIR MIX DOOR ACTUATOR.** 1) Turn the ignition switch to OFF. 2) Measure the internal resistance of the air mix door actuator using a tester. ***Terminals*** ***Air mix door actuator RH*** ***No. 3 — No. 1:*** ***No. 3 — No. 2:*** ***No. 3 — No. 5:*** ***No. 3 — No. 6:***	Is the resistance 80 — 100 Ω?	Go to step **4**.	Replace the actuator. <Ref. to AC-88, REMOVAL, Air Mix Door Actuator.>
4	**CHECK HARNESS BETWEEN A/C CONTROL PANEL AND AIR MIX DOOR ACTUATOR (SHORTED TO POWER SUPPLY).** 1) Disconnect the A/C control panel connector. 2) Measure the voltage between air mix door actuator connector and chassis ground. ***Connector & terminal*** ***(B239) No. 1 (+) — Chassis ground (–):*** ***(B239) No. 2 (+) — Chassis ground (–):*** ***(B239) No. 5 (+) — Chassis ground (–):*** ***(B239) No. 6 (+) — Chassis ground (–):***	Is there any voltage?	Repair or replace the short circuit of the harness.	Replace the A/C control panel. <Ref. to AC-43, REMOVAL, Control Panel.>

M: DTC B14E5 MODE DOOR ACTUATOR STEPPING MOTOR CIRCUIT OPEN

DTC DETECTING CONDITION:
Open circuit in the mode door actuator stepping motor circuit is detected for 3 seconds or more.
TROUBLE SYMPTOM:
Vent does not change.
WIRING DIAGRAM:
Air conditioning system <Ref. to WI-74, WIRING DIAGRAM, Air Conditioning System.>

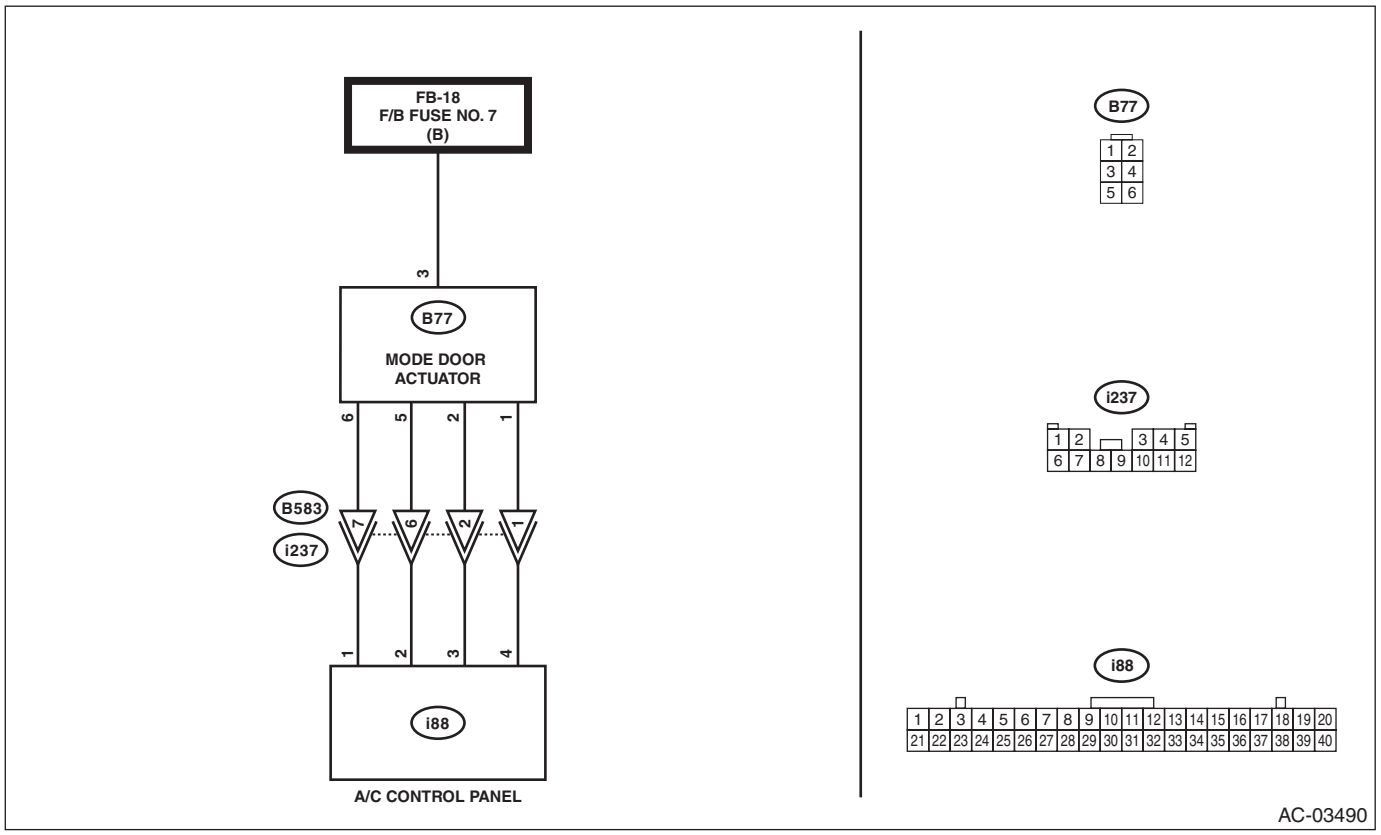

Step		Check	Yes	No
1	**CHECK CONNECTOR.** 1) Check the condition of connector connection. 2) Read the DTC using Subaru Select Monitor. <Ref. to AC(diag)-43, Read Diagnostic Trouble Code (DTC).>	Is DTC B14E5 displayed?	Go to step **2**.	Even if DTC is displayed, the circuit has returned to a normal condition at this time. Reproduce the failure, and then perform the diagnosis again. NOTE: In this case, temporary poor contact of connector, temporary open or short circuit of harness may be the cause.

	Step	Check	Yes	No
2	**CHECK ACTUATOR.** 1) Turn the ignition switch to OFF. 2) Disconnect the mode door actuator connector. 3) Turn the ignition switch to ON. 4) Measure the voltage between the mode door actuator connector terminal and chassis ground. ***Connector & terminal*** ***(B77) No. 3 (+) — Chassis ground (–):***	Is the voltage approx. 10 V or more?	Go to step **3**.	Check the DC power supply circuit.
3	**CHECK MODE DOOR ACTUATOR.** 1) Turn the ignition switch to OFF. 2) Measure the internal resistance of the mode door actuator using a tester. ***Terminals*** ***Mode door actuator*** ***No. 3 — No. 1:*** ***No. 3 — No. 2:*** ***No. 3 — No. 5:*** ***No. 3 — No. 6:***	Is the resistance 80 — 100 Ω?	Go to step **4**.	Replace the actuator. <Ref. to AC-86, REMOVAL, Mode Door Actuator.>
4	**CHECK HARNESS BETWEEN A/C CONTROL PANEL AND MODE DOOR ACTUATOR (OPEN).** 1) Disconnect the A/C control panel connector. 2) Measure the resistance between A/C control panel and mode door actuator connector. ***Connector & terminal*** ***(B77) No. 1 — (i88) No. 4:*** ***(B77) No. 2 — (i88) No. 3:*** ***(B77) No. 5 — (i88) No. 2:*** ***(B77) No. 6 — (i88) No. 1:***	Is there continuity?	Replace the A/C control panel. <Ref. to AC-43, REMOVAL, Control Panel.>	Repair or replace the open circuit of harness.

N: DTC B14E6 MODE DOOR ACTUATOR STEPPING MOTOR CIRCUIT SHORT-CIRCUIT

DTC DETECTING CONDITION:
Short circuit in the mode door actuator stepping motor circuit (short circuit to motor coil power supply) is detected for 3 seconds or more.

TROUBLE SYMPTOM:
Vent does not change.

WIRING DIAGRAM:
Air conditioning system <Ref. to WI-74, WIRING DIAGRAM, Air Conditioning System.>

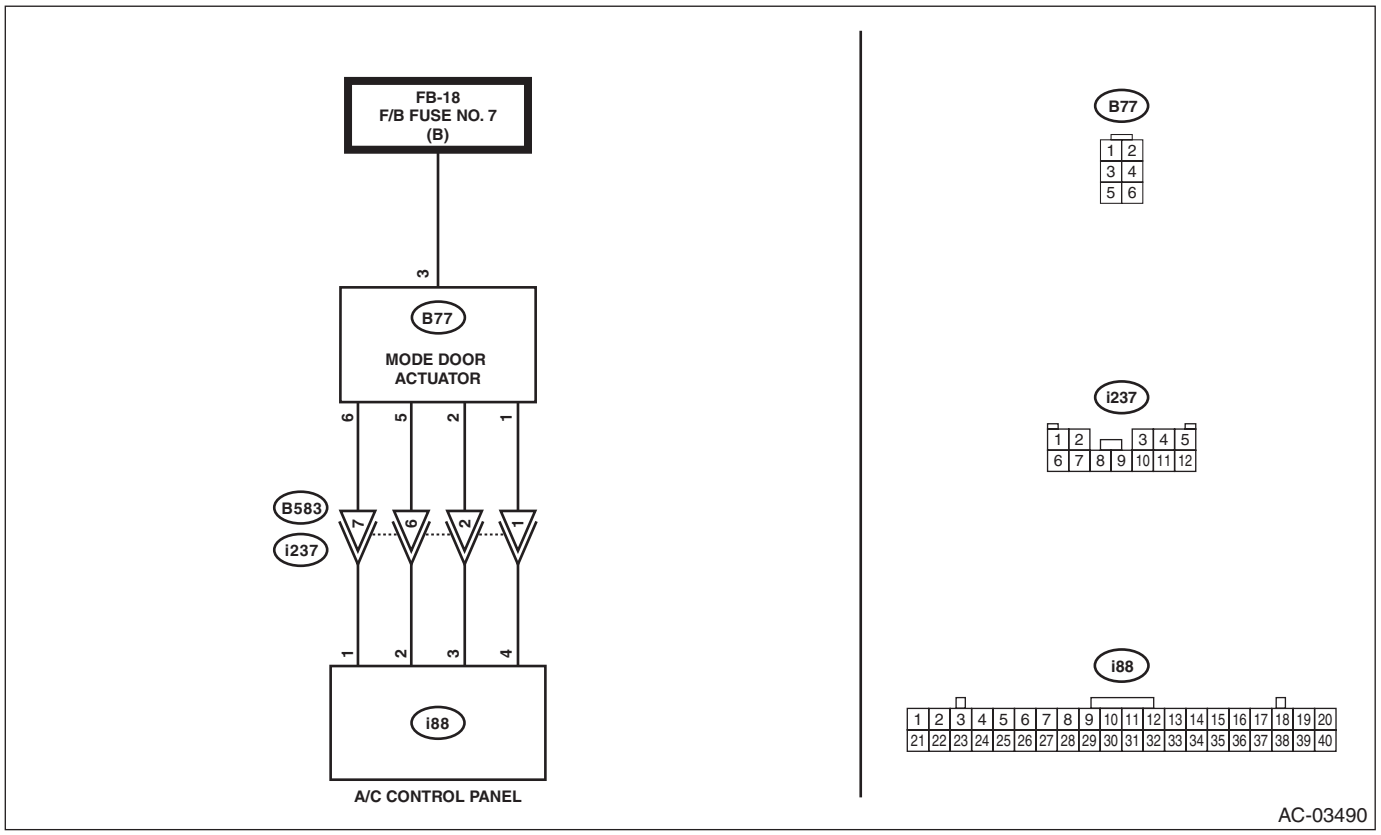

Step		Check	Yes	No
1	**CHECK CONNECTOR.** 1) Check the condition of connector connection. 2) Read the DTC using Subaru Select Monitor. <Ref. to AC(diag)-43, Read Diagnostic Trouble Code (DTC).>	Is DTC B14E6 displayed?	Go to step **2**.	Even if DTC is displayed, the circuit has returned to a normal condition at this time. Reproduce the failure, and then perform the diagnosis again. NOTE: In this case, temporary poor contact of connector, temporary open or short circuit of harness may be the cause.

	Step	Check	Yes	No
2	**CHECK POWER SUPPLY FOR MODE DOOR ACTUATOR.** 1) Turn the ignition switch to OFF. 2) Disconnect the mode door actuator connector. 3) Turn the ignition switch to ON. 4) Measure the voltage between the mode door actuator connector terminal and chassis ground. ***Connector & terminal*** ***(B77) No. 3 (+) — Chassis ground (–):***	Is the voltage approx. 10 V or more?	Go to step **3**.	Check the DC power supply circuit.
3	**CHECK MODE DOOR ACTUATOR.** 1) Turn the ignition switch to OFF. 2) Measure the internal resistance of the mode door actuator using a tester. ***Terminals*** ***Mode door actuator*** ***No. 3 — No. 1:*** ***No. 3 — No. 2:*** ***No. 3 — No. 5:*** ***No. 3 — No. 6:***	Is the resistance 80 — 100 Ω?	Go to step **4**.	Replace the actuator. <Ref. to AC-86, REMOVAL, Mode Door Actuator.>
4	**CHECK HARNESS BETWEEN A/C CONTROL PANEL AND MODE DOOR ACTUATOR (SHORTED TO POWER SUPPLY).** 1) Disconnect the A/C control panel connector. 2) Measure the voltage between mode door actuator connector and chassis ground. ***Connector & terminal*** ***(B77) No. 1 (+) — Chassis ground (–):*** ***(B77) No. 2 (+) — Chassis ground (–):*** ***(B77) No. 5 (+) — Chassis ground (–):*** ***(B77) No. 6 (+) — Chassis ground (–):***	Is there any voltage?	Repair or replace the short circuit of the harness.	Replace the A/C control panel. <Ref. to AC-43, REMOVAL, Control Panel.>

O: DTC B14E9 INTAKE DOOR ACTUATOR CIRCUIT OPEN

DTC DETECTING CONDITION:

Open circuit in the intake door actuator potentiometer circuit (open circuit in potentiometer signal line) is detected for 3 seconds or more.

TROUBLE SYMPTOM:

FRESH/RECIRC does not operate.

WIRING DIAGRAM:

Air conditioning system <Ref. to WI-74, WIRING DIAGRAM, Air Conditioning System.>

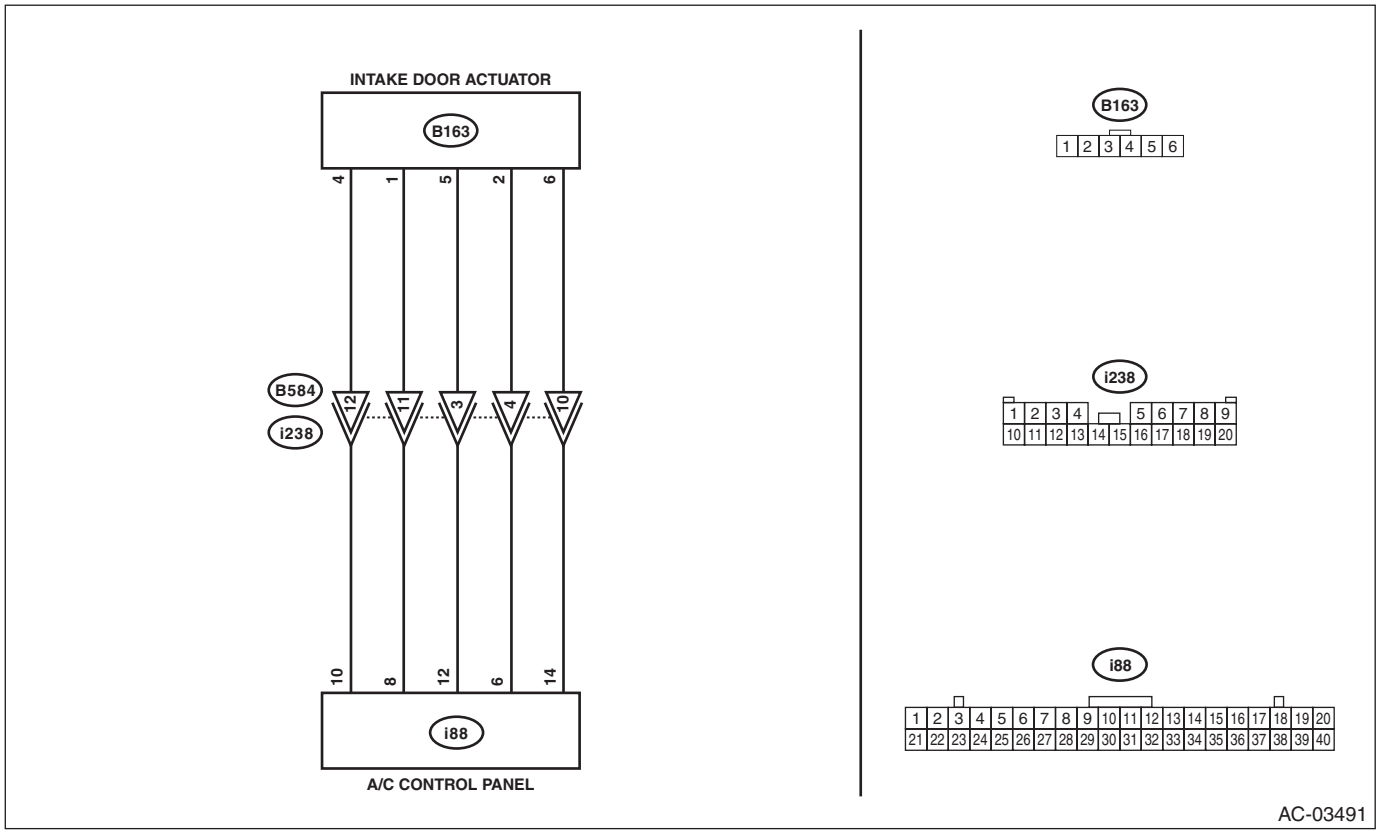

Step		Check	Yes	No
1	**CHECK CONNECTOR.** 1) Check the condition of connector connection. 2) Read the DTC using Subaru Select Monitor. <Ref. to AC(diag)-43, Read Diagnostic Trouble Code (DTC).>	Is DTC B14E9 displayed?	Go to step **2**.	Even if DTC is displayed, the circuit has returned to a normal condition at this time. Reproduce the failure, and then perform the diagnosis again. NOTE: In this case, temporary poor contact of connector, temporary open or short circuit of harness may be the cause.

	Step	Check	Yes	No
2	**CHECK HARNESS.** 1) Turn the ignition switch to ON. 2) Using the tester, measure the voltage between terminals. ***Connector & terminal*** ***(B163) No. 4 (+) — No. 6 (–):***	Is the voltage 4.5 — 5.0 V?	Go to step **3**.	Repair or replace the open circuit of harness.
3	**CHECK HARNESS (OPEN CIRCUIT).** 1) Turn the ignition switch to OFF. 2) Using a tester, check continuity between terminals. ***Connector & terminal*** ***(B163) No. 1 — (i88) No. 8:*** ***(B163) No. 2 — (i88) No. 6:*** ***(B163) No. 4 — (i88) No. 10:*** ***(B163) No. 5 — (i88) No. 12:*** ***(B163) No. 6 — (i88) No. 14:***	Is there continuity?	Go to step **4**.	Repair or replace the open circuit of harness.
4	**CHECK ACTUATOR.** 1) Turn the ignition switch to ON. 2) Using the tester, measure the voltage between terminals. ***Connector & terminal*** ***(B163) No. 5 (+) — No. 6 (–):***	Is the voltage 0.5 — 4.5 V?	Replace the A/C control panel. <Ref. to AC-43, REMOVAL, Control Panel.>	Go to step **5**.
5	**CHECK HARNESS (SHORTED BETWEEN LINES).** 1) Turn the ignition switch to OFF. 2) Using the tester, measure the resistance between terminals. ***Connector & terminal*** ***(B163) No. 4 — No. 5:***	Is the resistance less than 1 Ω?	Repair or replace the short circuit of the harness.	Replace the actuator. <Ref. to AC-84, REMOVAL, FRESH/RECIRC Door Actuator.>

P: DTC B14EA INTAKE DOOR ACTUATOR CIRCUIT SHORT-CIRCUIT

DTC DETECTING CONDITION:

Short circuit in the intake door actuator potentiometer circuit (short circuit to ground in potentiometer signal line) is detected for 3 seconds or more.

TROUBLE SYMPTOM:

FRESH/RECIRC does not operate.

WIRING DIAGRAM:

Air conditioning system <Ref. to WI-74, WIRING DIAGRAM, Air Conditioning System.>

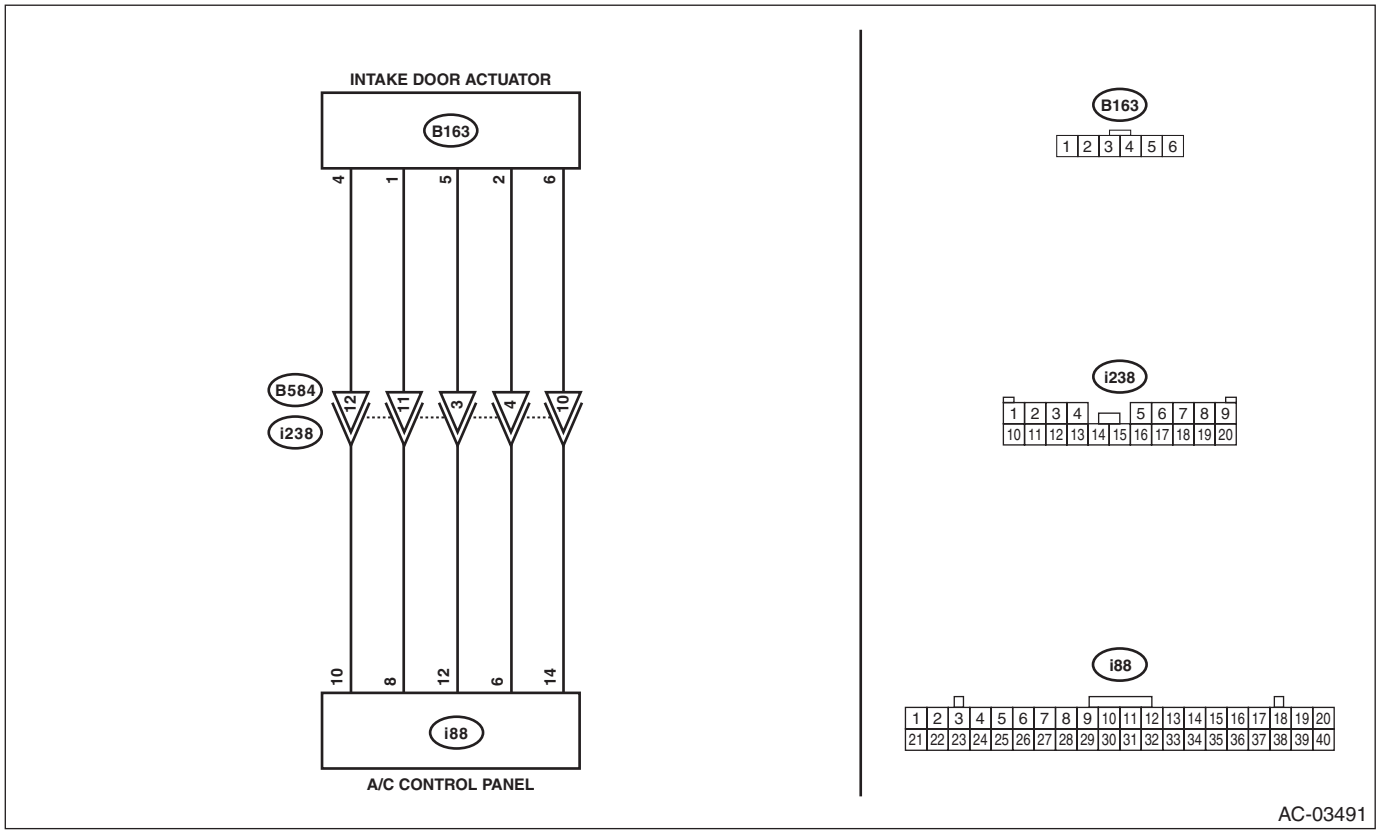

Step		Check	Yes	No
1	**CHECK CONNECTOR.** 1) Check the condition of connector connection. 2) Read the DTC using Subaru Select Monitor. <Ref. to AC(diag)-43, Read Diagnostic Trouble Code (DTC).>	Is DTC B14EA displayed?	Go to step **2**.	Even if DTC is displayed, the circuit has returned to a normal condition at this time. Reproduce the failure, and then perform the diagnosis again. NOTE: In this case, temporary poor contact of connector, temporary open or short circuit of harness may be the cause.

	Step	Check	Yes	No
2	**CHECK ACTUATOR.** 1) Turn the ignition switch to ON. 2) Using the tester, measure the voltage between terminals. ***Connector & terminal*** ***(B163) No. 4 (+) — No. 6 (–):***	Is the voltage 4.5 — 5.0 V?	Go to step **3**.	Repair or replace the open circuit of harness.
3	**CHECK HARNESS (OPEN CIRCUIT).** 1) Turn the ignition switch to OFF. 2) Using a tester, check continuity between terminals. ***Connector & terminal*** ***(B163) No. 4 — (i88) No. 10:*** ***(B163) No. 5 — (i88) No. 12:*** ***(B163) No. 6 — (i88) No. 14:***	Is there continuity?	Go to step **4**.	Repair or replace the open circuit of harness.
4	**CHECK ACTUATOR.** 1) Turn the ignition switch to ON. 2) Using the tester, measure the voltage between terminals. ***Connector & terminal*** ***(B163) No. 5 (+) — No. 6 (–):***	Is the voltage 0.5 — 4.5 V?	Replace the A/C control panel. <Ref. to AC-43, REMOVAL, Control Panel.>	Go to step **5**.
5	**CHECK HARNESS (SHORTED BETWEEN LINES).** 1) Turn the ignition switch to OFF. 2) Using the tester, measure the resistance between terminals. ***Connector & terminal*** ***(B163) No. 5 — No. 6:***	Is the resistance less than 1 Ω?	Repair or replace the short circuit of the harness.	Replace the actuator. <Ref. to AC-84, REMOVAL, FRESH/RECIRC Door Actuator.>

Q: DTC B14EB INTAKE DOOR ACTUATOR STUCK

DTC DETECTING CONDITION:
Lock condition is detected for 3 seconds or more during intake door actuator operation.
TROUBLE SYMPTOM:
FRESH/RECIRC does not operate.
WIRING DIAGRAM:
Air conditioning system <Ref. to WI-74, WIRING DIAGRAM, Air Conditioning System.>

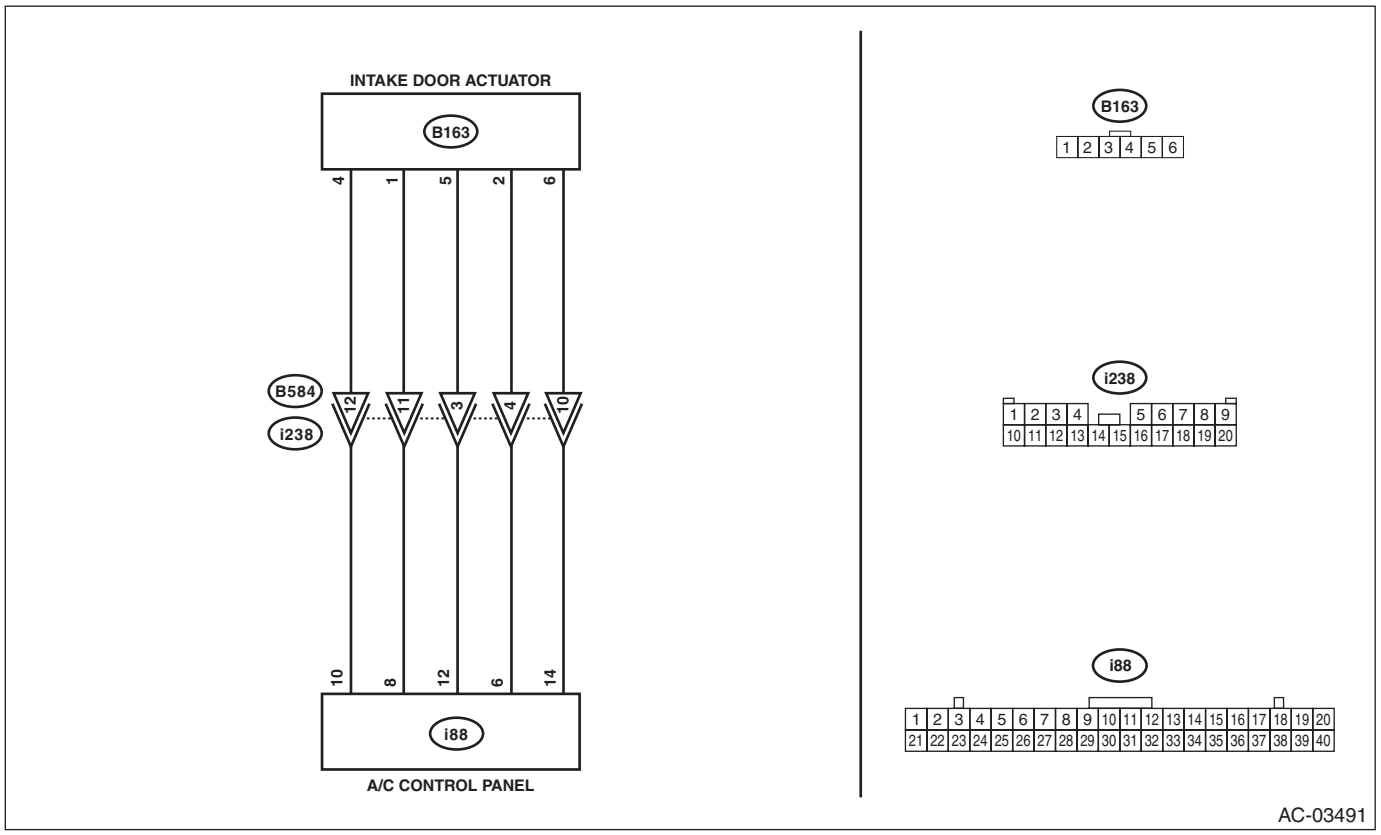

	Step	Check	Yes	No
1	**CHECK CONNECTOR.** 1) Check the condition of connector connection. 2) Read the DTC using Subaru Select Monitor. <Ref. to AC(diag)-43, Read Diagnostic Trouble Code (DTC).>	Is DTC B14EB displayed?	Go to step **2**.	Even if DTC is displayed, the circuit has returned to a normal condition at this time. Reproduce the failure, and then perform the diagnosis again. NOTE: In this case, temporary poor contact of connector, temporary open or short circuit of harness may be the cause.
2	**CHECK CURRENT DATA.** Using the Subaru Select Monitor, change and perform the setting of “Fresh/Rec Air Dr Act Trgt Open Angle” in the system operation check mode from Air Conditioning Diagnosis. <Ref. to AC(diag)-49, System Operation Check Mode.>	Did the actuator move to the specified target opening angle?	Intake door actuator circuit is normal.	Go to step **3**.

	Step	Check	Yes	No
3	**CHECK HARNESS (OPEN CIRCUIT).** 1) Turn the ignition switch to ON. 2) Using the tester, measure the voltage between terminals. ***Connector & terminal*** ***(i163) No. 4 (+) — No. 6 (–):***	Is the voltage 4.5 — 5.0 V?	Go to step **4**.	Repair or replace the open circuit of harness.
4	**CHECK HARNESS (OPEN CIRCUIT).** 1) Disconnect the connector from the A/C control panel. 2) Using a tester, check continuity between terminals. ***Connector & terminal*** ***(i163) No. 1 — (i88) No. 8:*** ***(i163) No. 2 — (i88) No. 6:*** ***(i163) No. 4 — (i88) No. 10:*** ***(i163) No. 5 — (i88) No. 12:*** ***(i163) No. 6 — (i88) No. 14:***	Is there continuity?	Go to step **5**.	Repair or replace the open circuit of harness.
5	**CHECK INTAKE DOOR ACTUATOR.** Check the intake door actuator parts.	Is the check result of the actuator OK?	Replace the A/C control panel. <Ref. to AC-43, REMOVAL, Control Panel.>	Replace the actuator. <Ref. to AC-84, REMOVAL, FRESH/RECIRC Door Actuator.>

R: DTC U0073 CONTROL MODULE COMMUNICATION BUS OFF

Detected when CAN line abnormality is detected.

NOTE:
Perform the diagnosis for LAN system. <Ref. to LAN(diag)-2, PROCEDURE, Basic Diagnostic Procedure.>

S: DTC U0100 LOST COMMUNICATION WITH ECM/PCM “A”

Detected when CAN data is not received from engine control module (ECM).

NOTE:
Perform the diagnosis for LAN system. <Ref. to LAN(diag)-2, PROCEDURE, Basic Diagnostic Procedure.>

T: DTC U0101 LOST COMMUNICATION WITH TCM

Detected when CAN data is not received from TCM.

NOTE:
Perform the diagnosis for LAN system. <Ref. to LAN(diag)-2, PROCEDURE, Basic Diagnostic Procedure.>

U: DTC U0122 LOST COMMUNICATION WITH VEHICLE DYNAMICS CONTROL MODULE

Detected when CAN data is not received from VDC.

NOTE:
Perform the diagnosis for LAN system. <Ref. to LAN(diag)-2, PROCEDURE, Basic Diagnostic Procedure.>

V: DTC U0140 LOST COMMUNICATION WITH BODY CONTROL MODULE

This is detected when CAN signal is not received from BIU.

NOTE:
Perform the diagnosis for LAN system. <Ref. to LAN(diag)-2, PROCEDURE, Basic Diagnostic Procedure.>

W: DTC U0155 LOST COMMUNICATION WITH INSTRUMENT PANEL CLUSTER (IPC) CONTROL MODULE

This is detected when CAN signal is not received from meter.

NOTE:
Perform the diagnosis for LAN system. <Ref. to LAN(diag)-2, PROCEDURE, Basic Diagnostic Procedure.>

X: DTC U0401 INVALID DATA RECEIVED FROM ECM/PCM "A"

This is detected when CAN data from engine control module (ECM) is abnormal.

NOTE:
Perform the diagnosis for LAN system. <Ref. to LAN(diag)-2, PROCEDURE, Basic Diagnostic Procedure.>

Y: DTC U0402 INVALID DATA RECEIVED FROM TCM

This is detected when CAN data from TCM is abnormal.

NOTE:
Perform the diagnosis for LAN system. <Ref. to LAN(diag)-2, PROCEDURE, Basic Diagnostic Procedure.>

Z: DTC U0416 INVALID DATA RECEIVED FROM VEHICLE DYNAMICS CONTROL MODULE

This is detected when CAN data from VDC is abnormal.

NOTE:
Perform the diagnosis for LAN system. <Ref. to LAN(diag)-2, PROCEDURE, Basic Diagnostic Procedure.>

AA:DTC U0422 INVALID DATA RECEIVED FROM BODY CONTROL MODULE

This is detected when CAN data from BIU is abnormal.

NOTE:
Perform the diagnosis for LAN system. <Ref. to LAN(diag)-2, PROCEDURE, Basic Diagnostic Procedure.>

AB:DTC U0423 INVALID DATA RECEIVED FROM INSTRUMENT PANEL CLUSTER CONTROL MODULE

This is detected when CAN data from meter is abnormal.

NOTE:
Perform the diagnosis for LAN system. <Ref. to LAN(diag)-2, PROCEDURE, Basic Diagnostic Procedure.>

AIRBAG SYSTEM

AB

		Page
1.	General Description	2
2.	Airbag Connector	16
3.	Inspection Locations after a Collision	25
4.	Driver's Airbag Module	32
5.	Knee Airbag Module	34
6.	Passenger's Airbag Module	35
7.	Side Airbag Module	42
8.	Curtain Airbag Module	45
9.	Airbag Control Module	47
10.	Front Sub Sensor	49
11.	Front Door Impact Sensor	51
12.	Side Airbag Sensor	53
13.	Curtain Airbag Sensor	56
14.	Satellite Safing Sensor	57
15.	Roll Connector	58
16.	Airbag Module Disposal (Deployment Processing on Vehicle)	63

1. General Description

A: COMPONENT

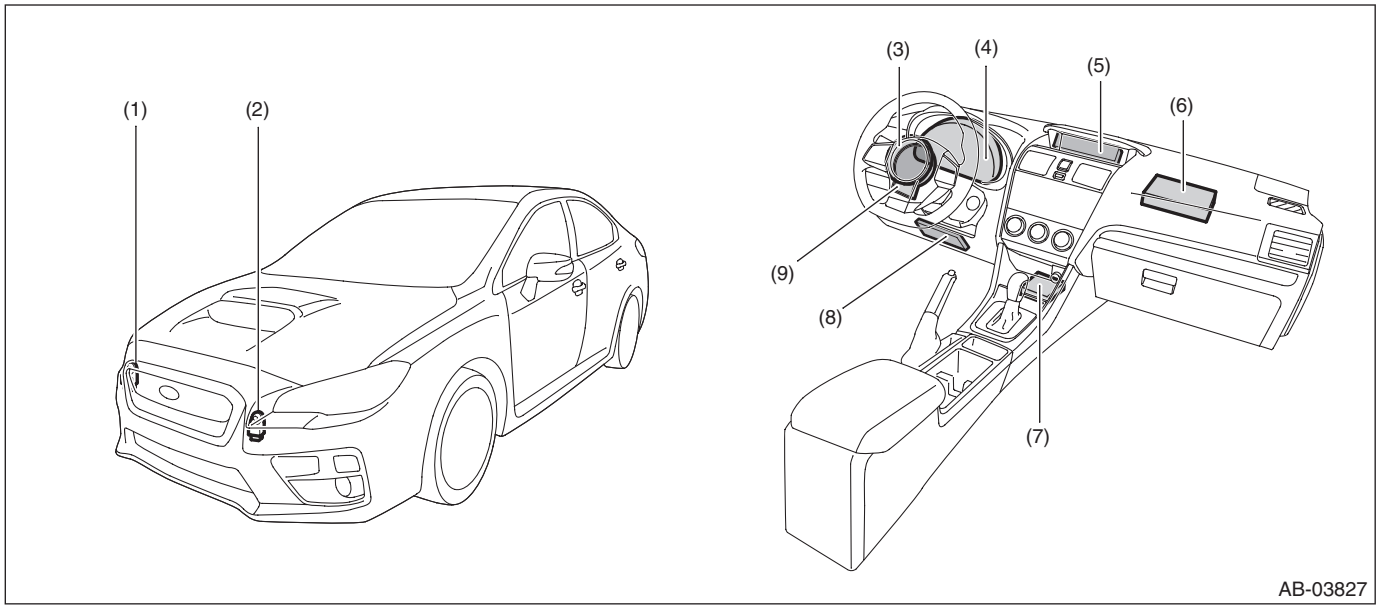

(1)	Front sub sensor RH	(4)	Airbag warning light (in combination meter)	(7)	Airbag control module
(2)	Front sub sensor LH	(5)	Airbag ON/OFF indicator light (MFD)	(8)	Knee airbag module
(3)	Driver's airbag module	(6)	Passenger's airbag module	(9)	Steering roll connector

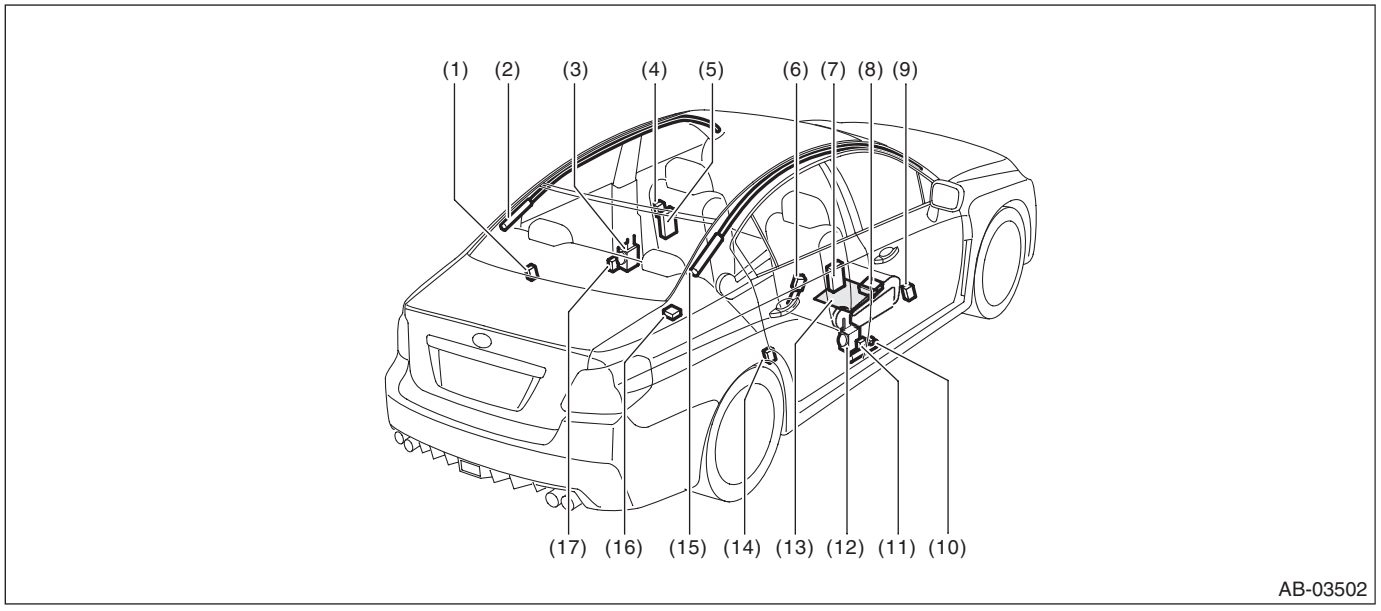

(1)	Curtain airbag sensor LH	(7)	Side airbag module RH	(13)	Occupant detection sensor
(2)	Curtain airbag module LH	(8)	Occupant detection control module	(14)	Curtain airbag sensor RH
(3)	Seat belt pretensioner LH	(9)	Front door impact sensor RH	(15)	Curtain airbag module RH
(4)	Front door impact sensor LH	(10)	Lap seat belt pretensioner RH	(16)	Satellite safing sensor
(5)	Side airbag module LH	(11)	Side airbag sensor RH	(17)	Side airbag sensor LH
(6)	Buckle switch RH	(12)	Seat belt pretensioner RH		

1. DRIVER'S AIRBAG MODULE

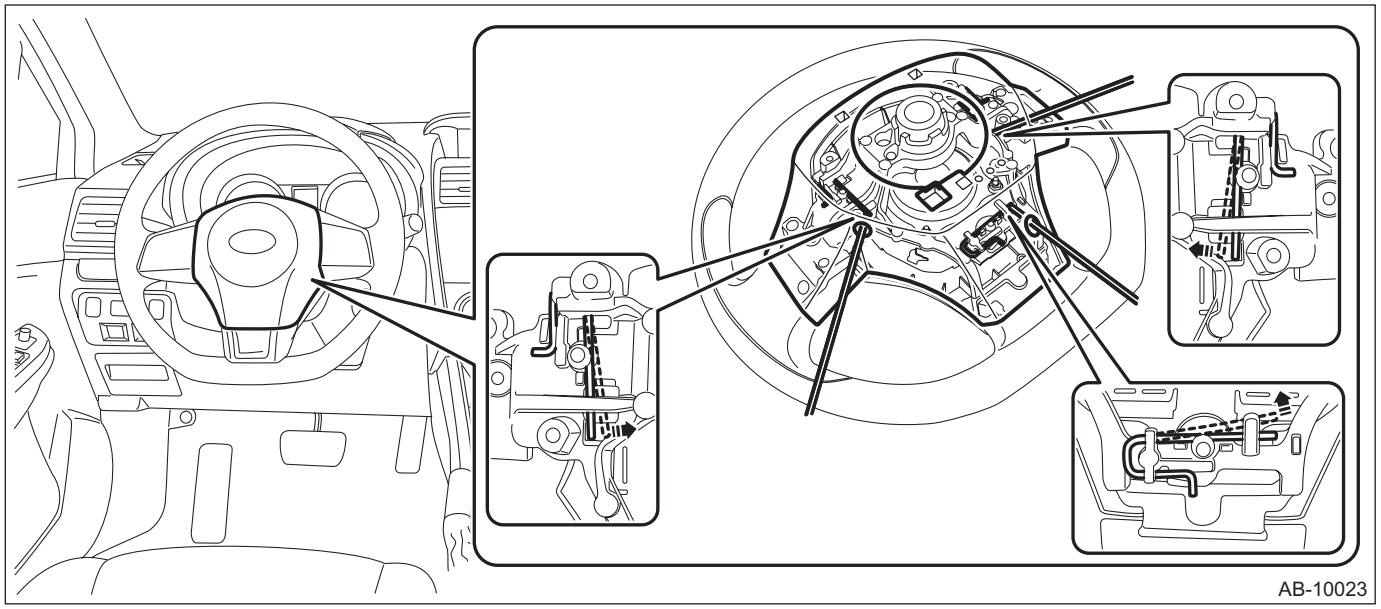

2. KNEE AIRBAG MODULE

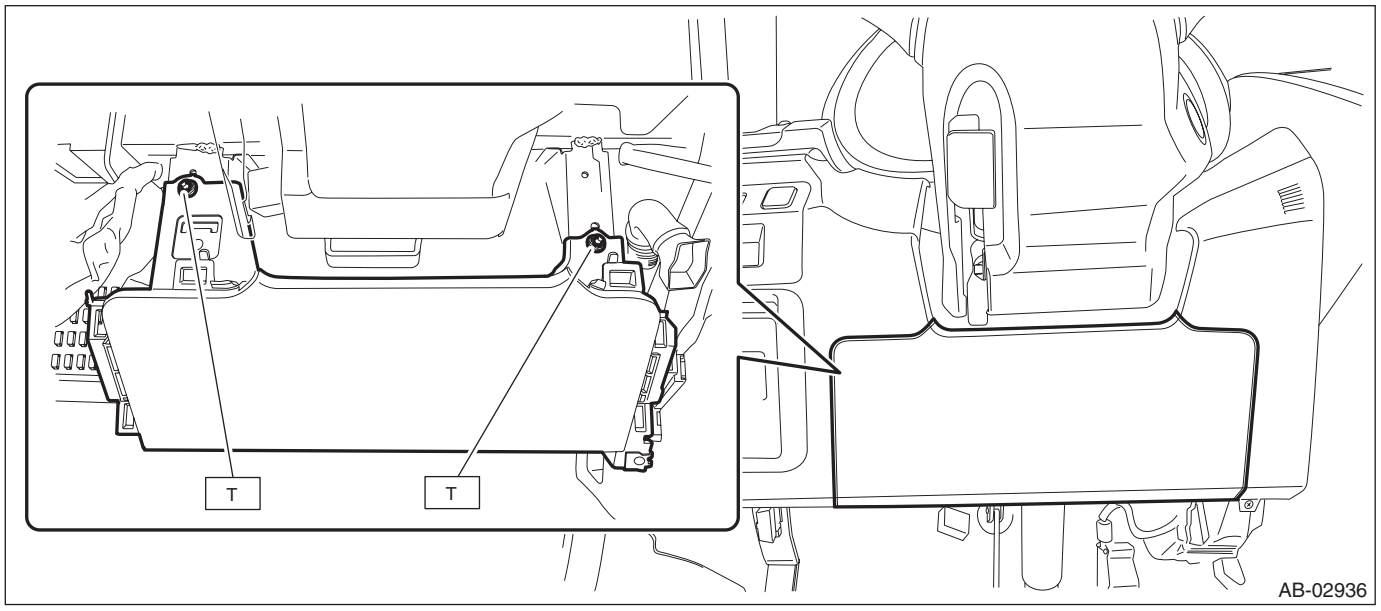

Tightening torque: N·m (kgf-m, ft-lb)
T: 7.5 (0.8, 5.5)

3. PASSENGER'S AIRBAG MODULE

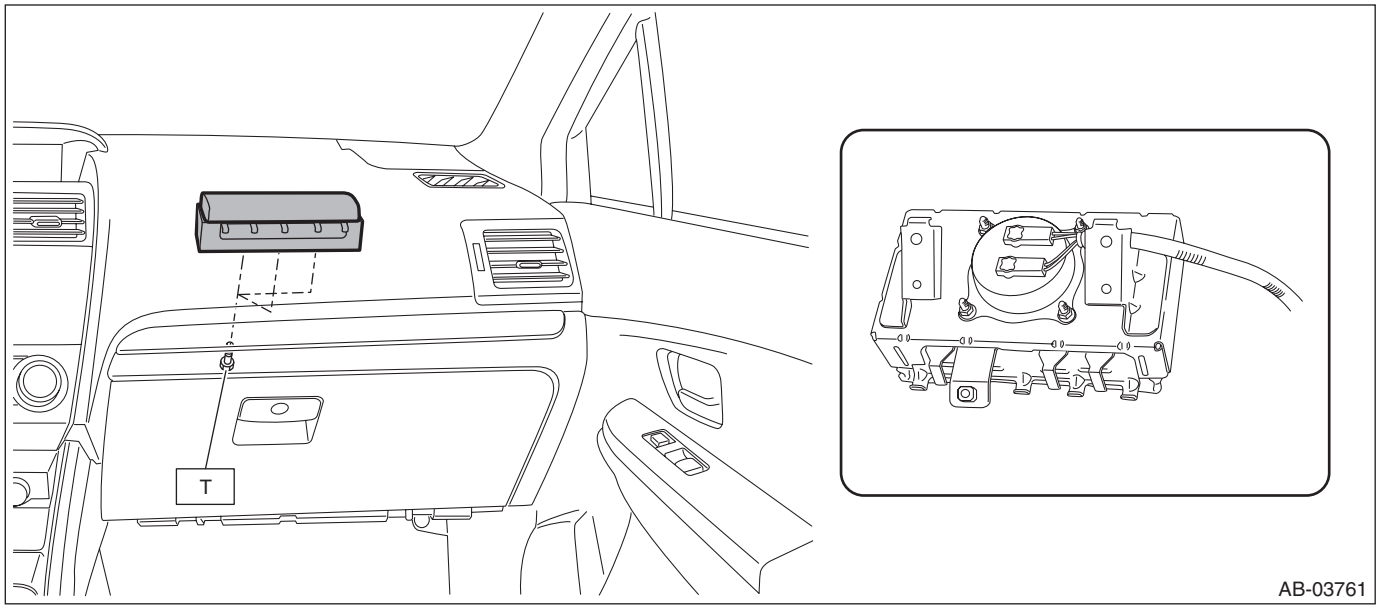

Tightening torque: N·m (kgf-m, ft-lb)
T: 7.5 (0.8, 5.5)

4. SIDE AIRBAG MODULE

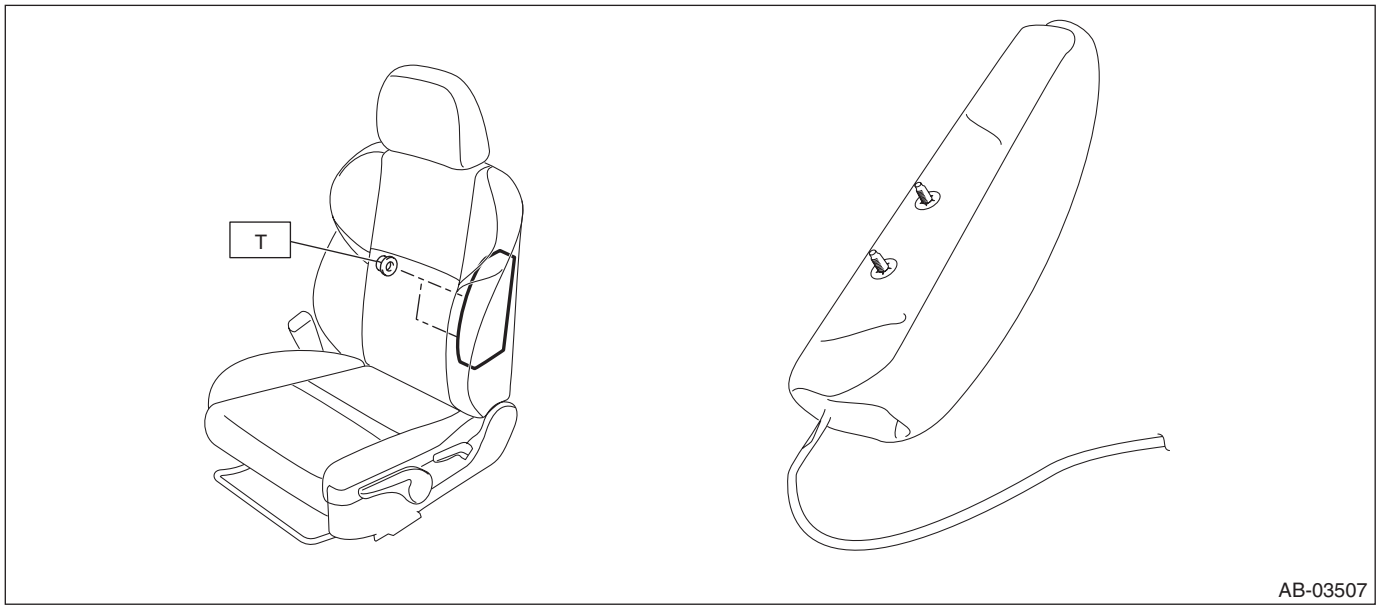

Tightening torque: N·m (kgf-m, ft-lb)
T: 6 (0.6, 4.4)

5. CURTAIN AIRBAG MODULE

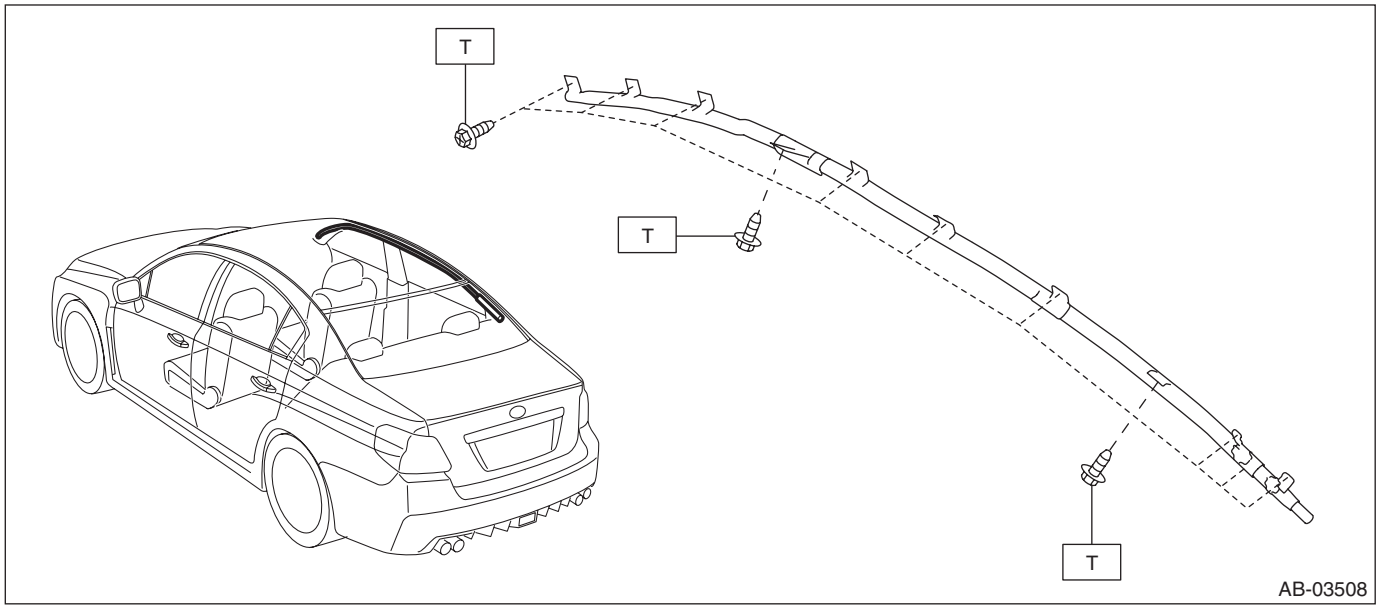

Tightening torque: N·m (kgf-m, ft-lb)
T: 7.5 (0.8, 5.5)

6. AIRBAG CONTROL MODULE

CAUTION:
Do not reuse mounting bolts and nuts.

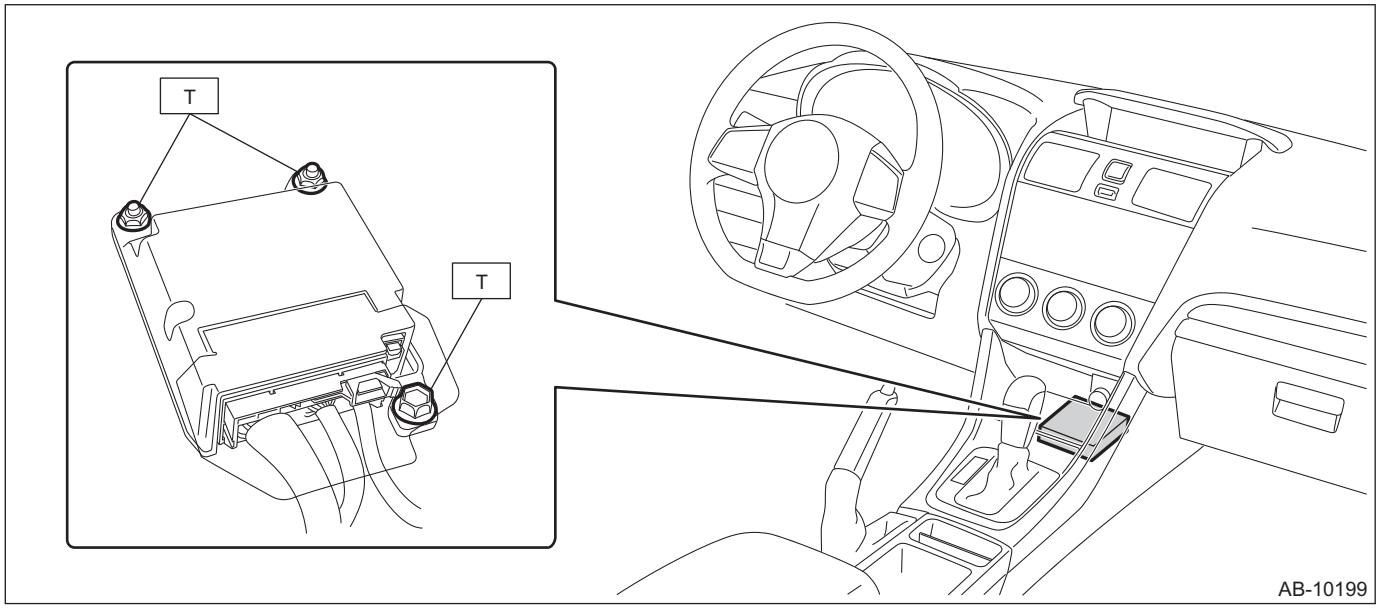

Tightening torque: N·m (kgf-m, ft-lb)
T: 25 (2.5, 18.4)

7. FRONT SUB SENSOR

CAUTION:
Do not reuse mounting bolts and nuts.

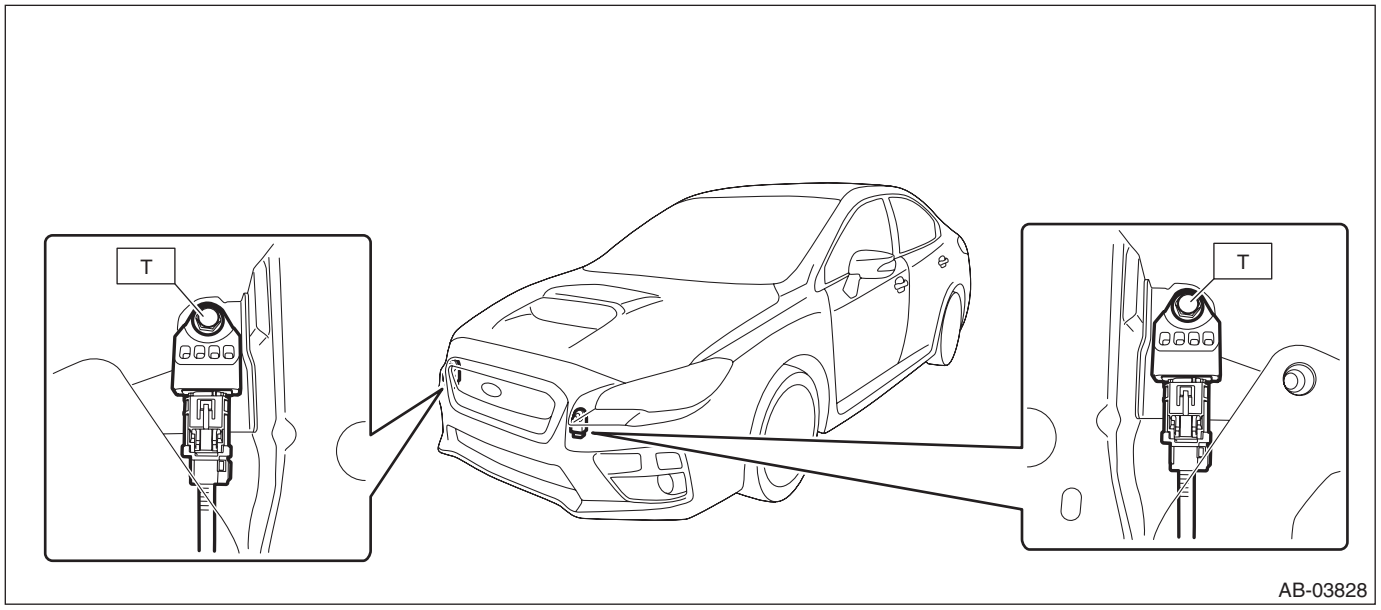

Tightening torque: N·m (kgf-m, ft-lb)
T: 13 (1.3, 9.6)

8. FRONT DOOR IMPACT SENSOR

CAUTION:
Do not reuse mounting bolts and nuts.

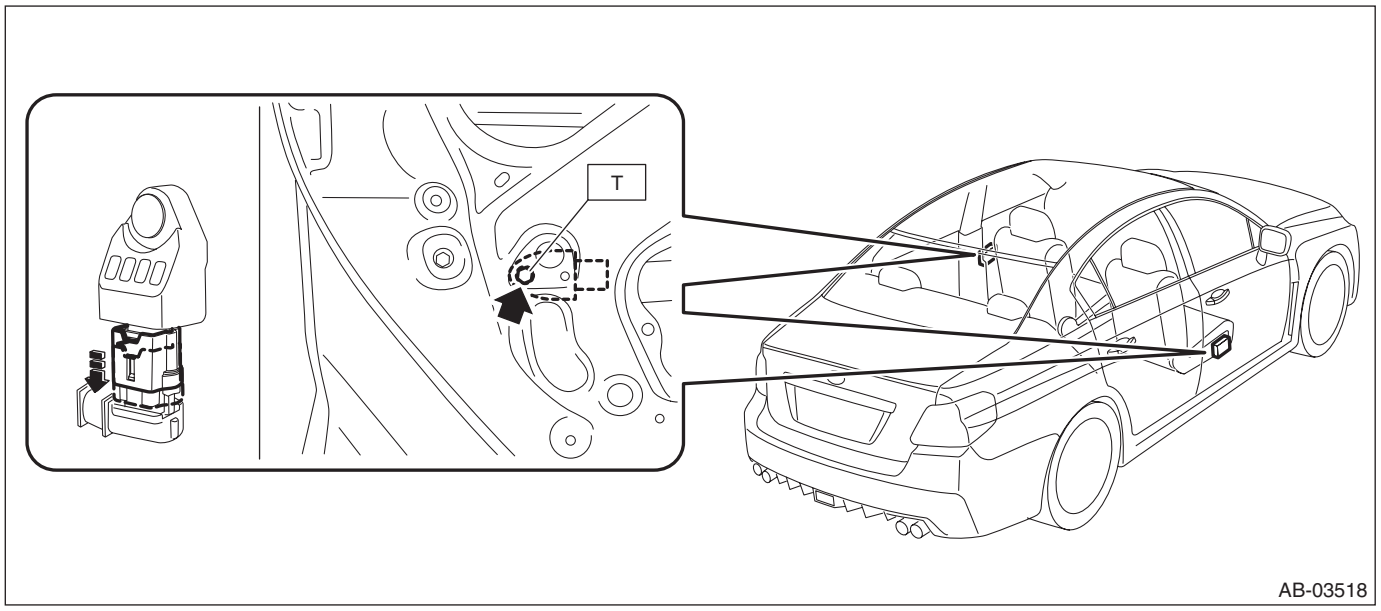

Tightening torque: N·m (kgf-m, ft-lb)
T: 7.5 (0.8, 5.5)

9. SIDE AIRBAG SENSOR

CAUTION:
Do not reuse mounting bolts and nuts.

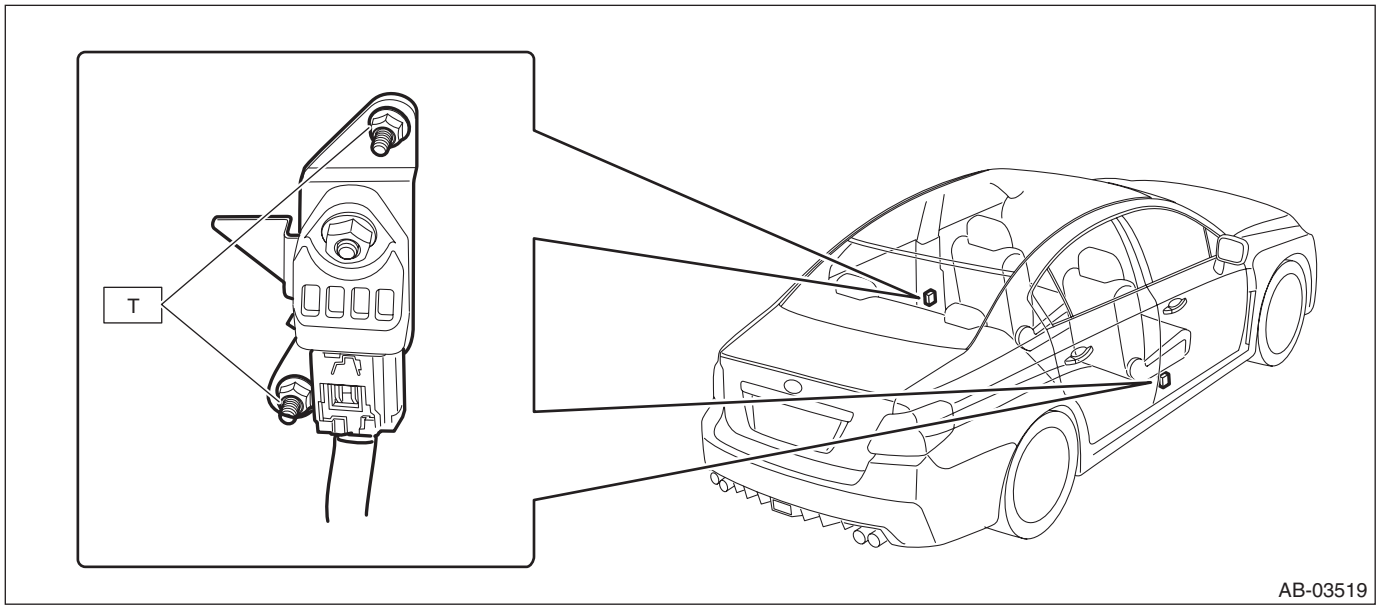

Tightening torque: N·m (kgf-m, ft-lb)
T: 7.5 (0.8, 5.5)

10.CURTAIN AIRBAG SENSOR

CAUTION:
Do not reuse mounting bolts and nuts.

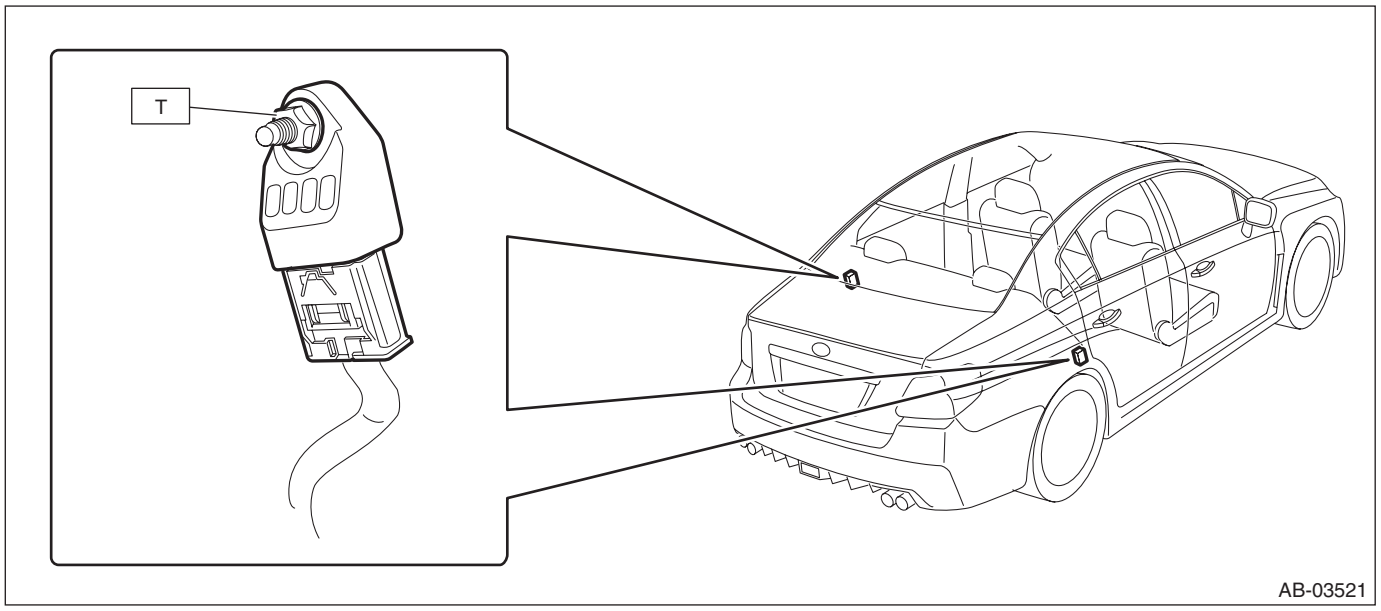

Tightening torque: N·m (kgf-m, ft-lb)
T: 7.5 (0.8, 5.5)

11.SATELLITE SAFING SENSOR

CAUTION:
Do not reuse mounting bolts and nuts.

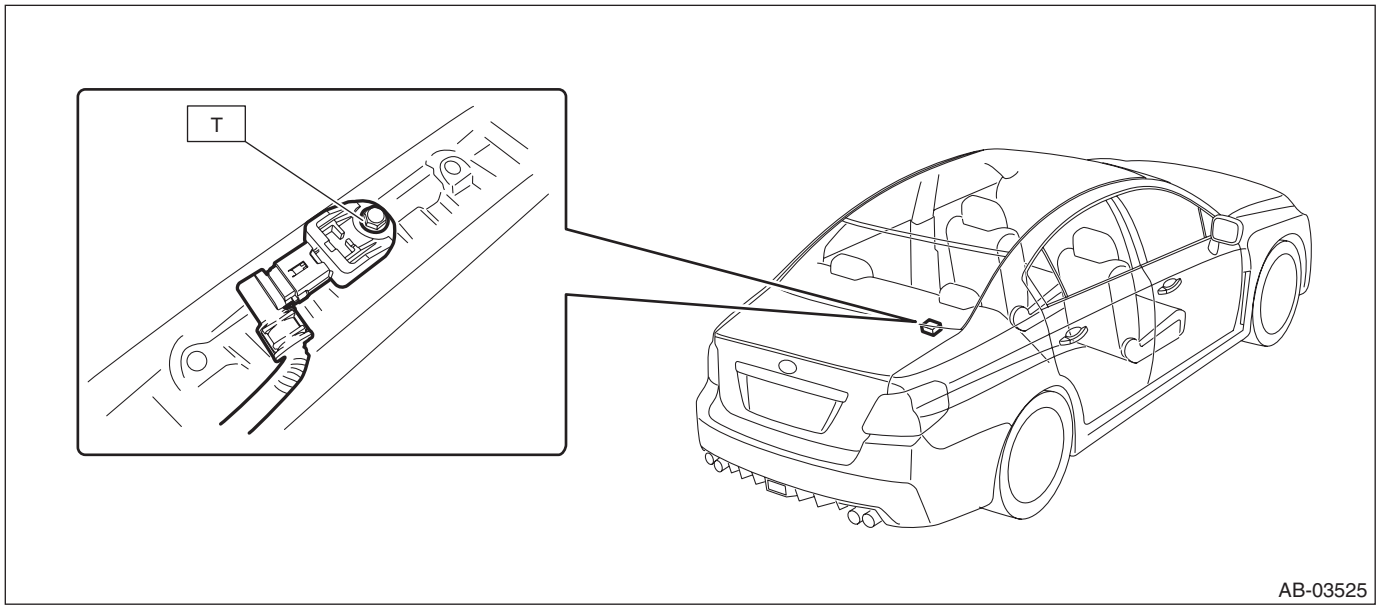

Tightening torque: N·m (kgf-m, ft-lb)
T: 7.5 (0.8, 5.5)

12.STEERING ROLL CONNECTOR

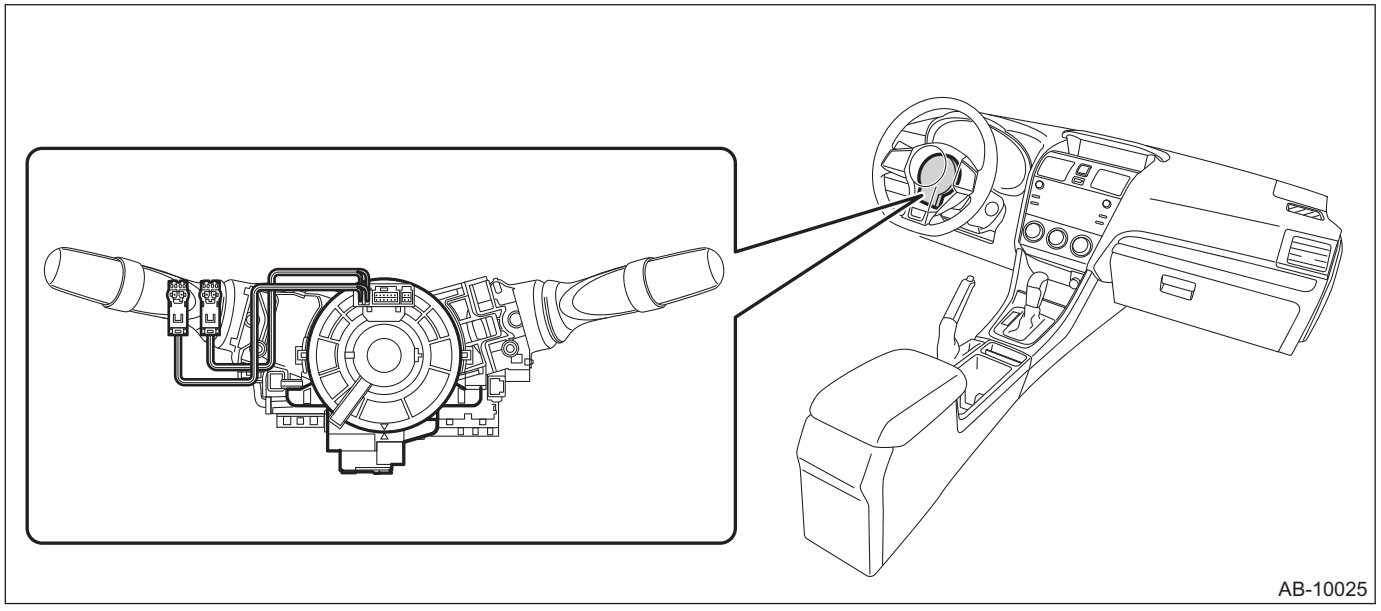

B: CAUTION

1. BEFORE STARTING ALL WORKS

• Before performing vehicle maintenance, turn the ignition switch to OFF and wait for 60 seconds or more after disconnecting the negative terminal from battery. <Ref. to NT-6, BATTERY, NOTE, Note.>
  – For model with battery sensor, disconnect the ground terminal from battery sensor.
• The airbag system (including pretensioner) is fitted with a backup power supply. After disconnecting the battery ground cable, the airbag may operate if you do not wait for 60 seconds or more before starting the service of airbag system.
• When performing an operation with the airbag system parts including pretensioners exposed, do not apply any impact to airbag modules and sensors.
• If the airbag warning light illuminates, check or repair the vehicle immediately to prevent it from airbag system malfunction.
• Do not allow water or oil to come in contact with the connector terminals. Also, do not touch the connector terminals directly.

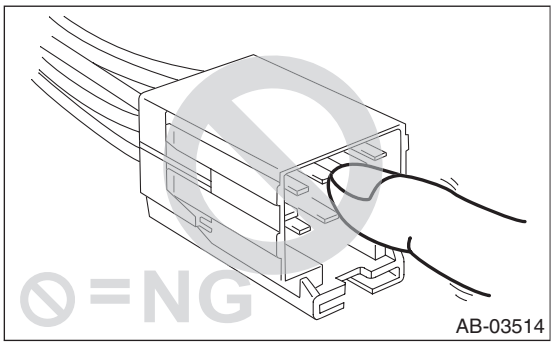

• If damage, open circuit or rust is found on airbag system wiring harness, do not repair the harness. Always replace the faulty harness with a new genuine part.

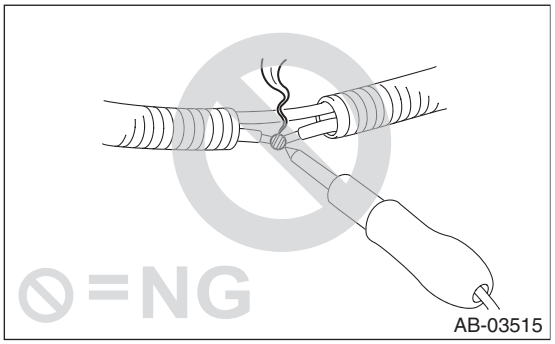

• When painting or performing sheet metal work on the vehicle, remove the following parts. Performing the work without removing the parts may cause secondary malfunction.

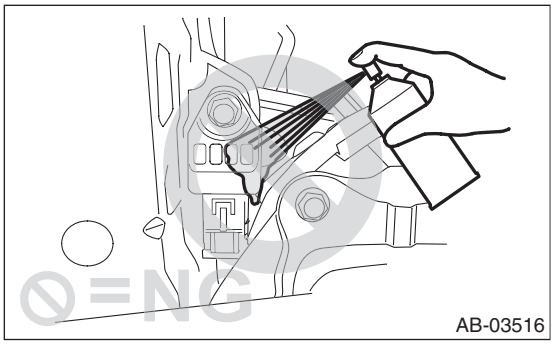

  – Front part of the vehicle including the front wheel apron, front fender and radiator panel side
    • Front sub sensor of airbag system
    • Wiring harness

– Side or its vicinity of the vehicle including the side sill, center pillar and front and rear doors
  • Side airbag sensor
  • Curtain airbag sensor
  • Satellite safing sensor
  • Wiring harness

• When attaching the steering wheel and steering roll connector, be sure to adjust the steering roll connector.

2. BEFORE STARTING PARTS REPLACEMENT

• If the following parts are deformed or damaged, replace with new parts.
  – Airbag sensors and brackets
  – Airbag modules and brackets
  – Airbag control modules and brackets
  – Pretensioners and brackets
  – Harnesses
  – Cover - satellite safing
• Install the wiring harness securely with the specified clips to avoid interference or tangled with other parts.

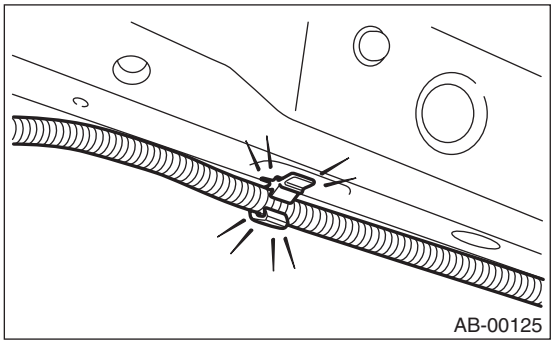
AB-00125

• Do not use the airbag or pretensioner parts from other vehicles. Always replace the defective parts with new parts.
• Never reuse any activated airbag module and pretensioner.
• Do not discard undeployed airbag or pretensioner. For the disposal procedures, refer to “Airbag Module Disposal”.
• Do not reuse the bolts and nuts when the following parts are removed. Always replace with the specified new bolts and nuts.
  – Airbag control module
  – Front door impact sensor
  – Front sub sensor
  – Side airbag sensor
  – Curtain airbag sensor
  – Satellite safing sensor
• When attaching the steering wheel and steering roll connector, be sure to adjust the steering roll connector.
• After removing each parts of the airbag system, keep them with the pad side facing upward on a dry, clean and flat surface away from heat, light sources, moisture and dust.

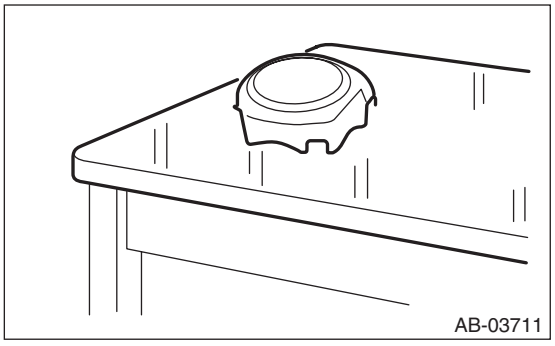
AB-03711

• Observe the following; the airbag system component or the internal parts of seat belt pretensioner may be damaged or the reliability may be greatly lowered.
  – Do not drop or otherwise apply impact.
  – Do not store it under high temperature environment at 85°C (185°F) or more, or do not near it to open flames.
  – Do not allow water, oil or grease to come in contact.

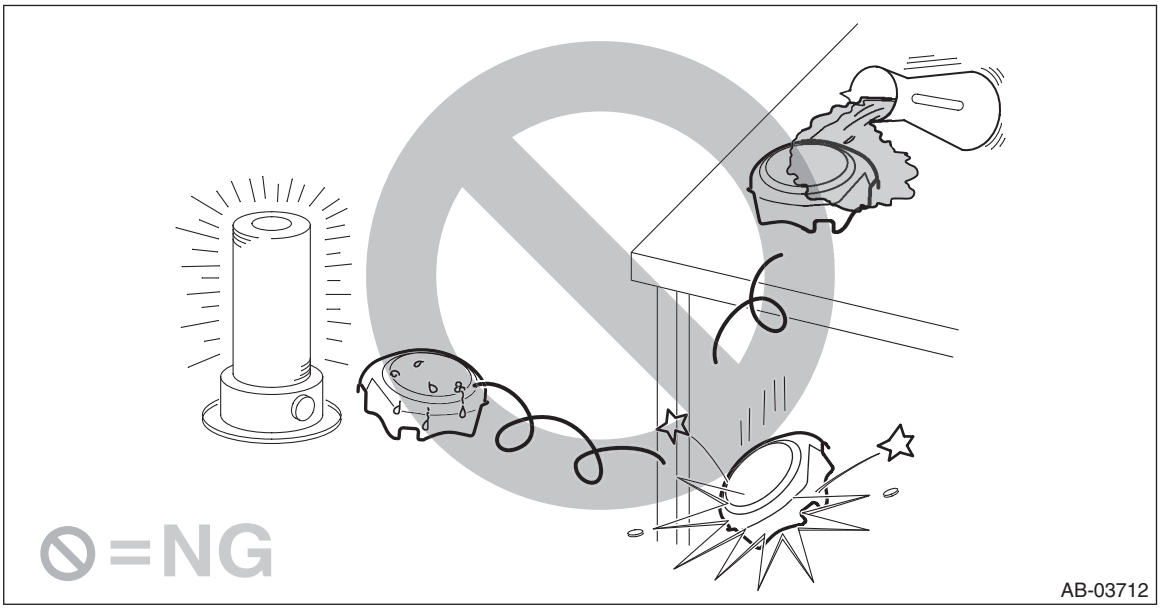

• When storing a removed airbag module, observe the following items. If the pad of the airbag module is in contact with other objects, it may cause a serious accident if the airbag accidentally operates.
  – Do not place the airbag module with the pad side facing downward.
  – Do not place any objects on the airbag module.
  – Do not pile up the airbag module.
  • Driver's airbag module

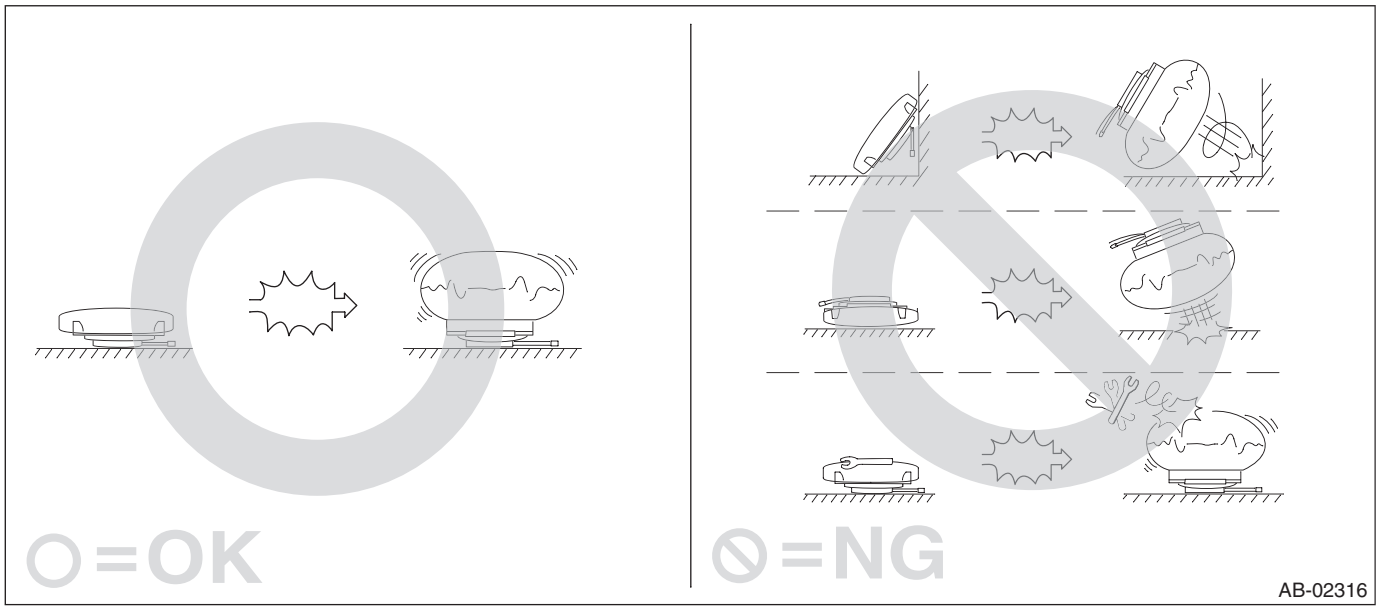

- Passenger's airbag module and side airbag module

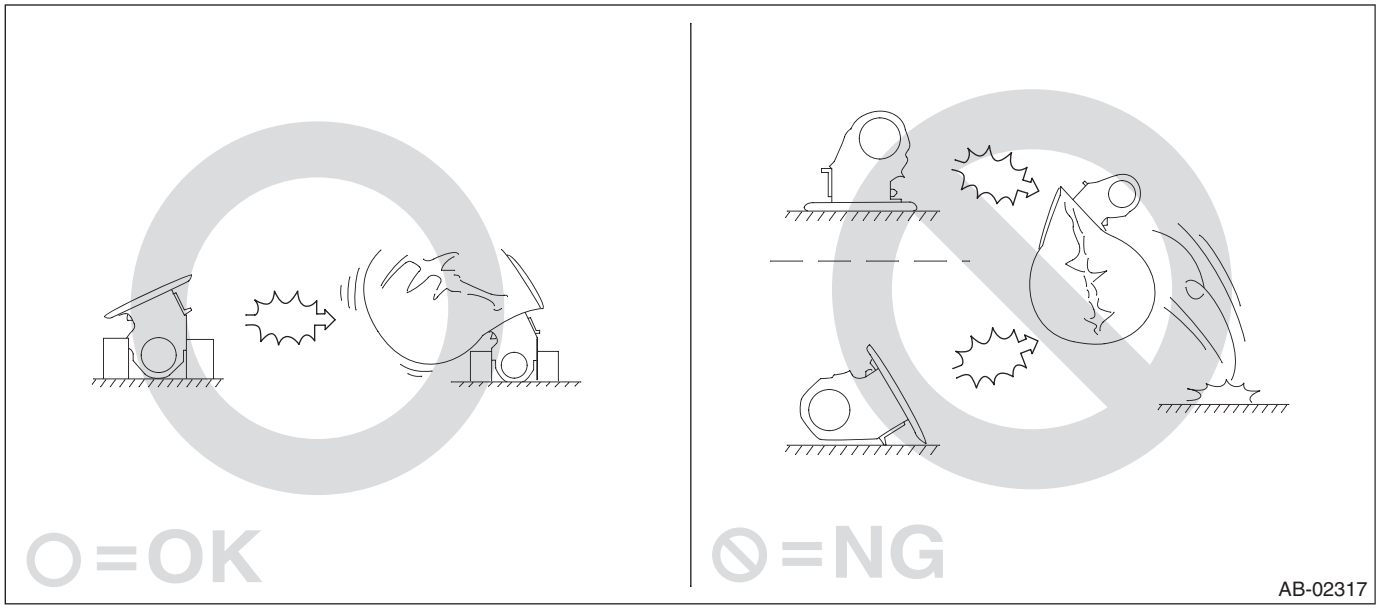

- Do not disassemble the airbag modules and pretensioners.

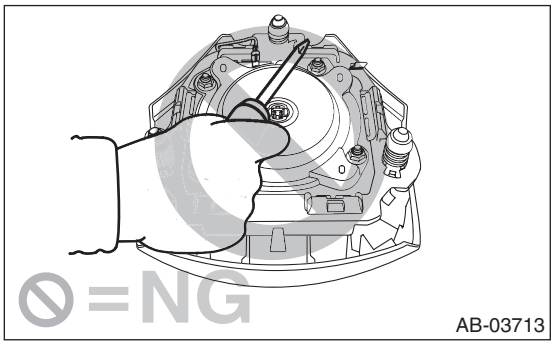

- The removed front seat with airbag module must be kept at least 200 mm (8 in) away from walls and other objects.

3. BEFORE STARTING TROUBLESHOOTING

- Even if any part must be replaced as the result of troubleshooting, do not use an airbag part or pretensioner part from other vehicles. Always replace the defective parts with new parts.
- When checking the airbag system, be sure to use a digital circuit tester. Use of an analog circuit tester may cause the airbag to activate erroneously due to a minimal current inside tester.

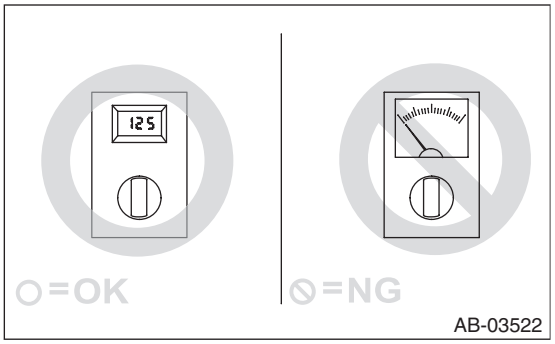

• Do not allow water or oil to come in contact with the connector terminals. Also, do not touch the connector terminals directly.

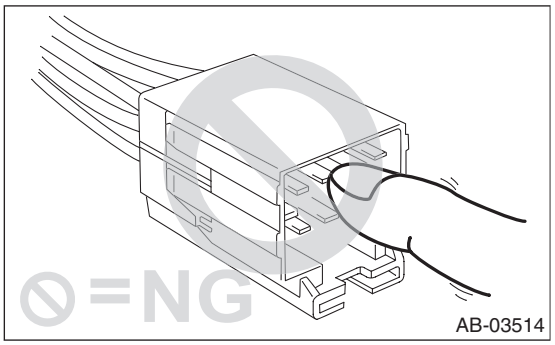

• When checking, use a test harness (1). Damage to connector terminal causes malfunction. Do not directly put the tester probe on airbag connector terminal.

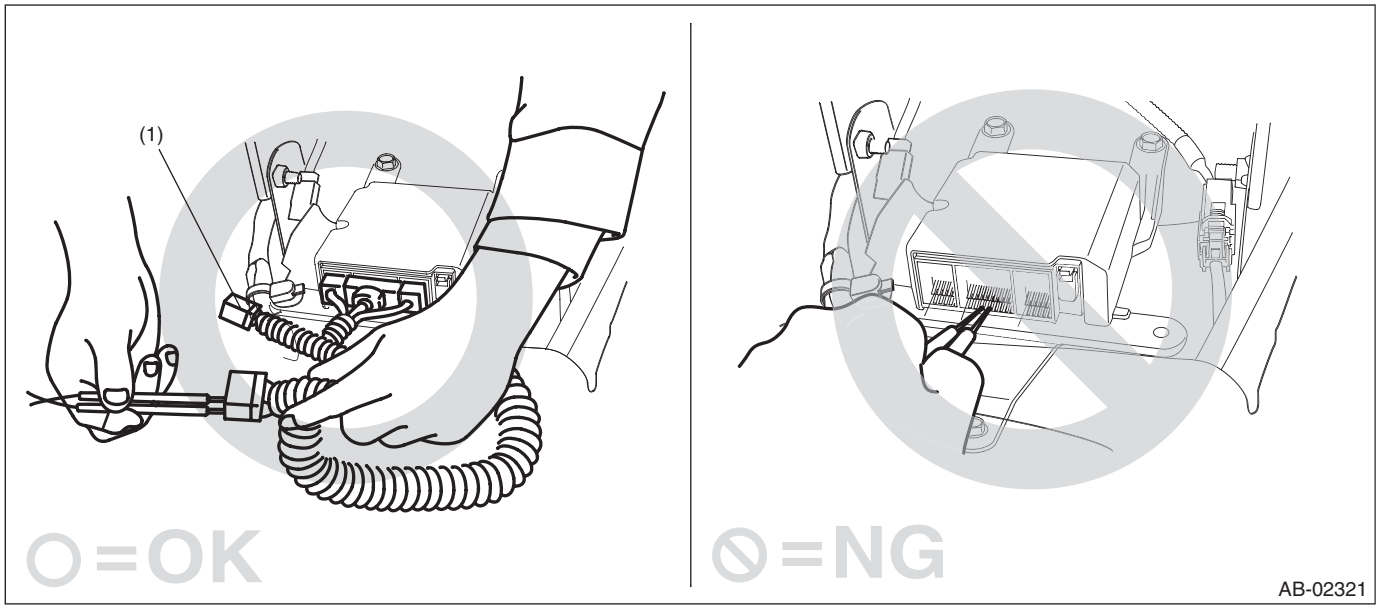

• Do not check the continuity of airbag modules and pretensioners.

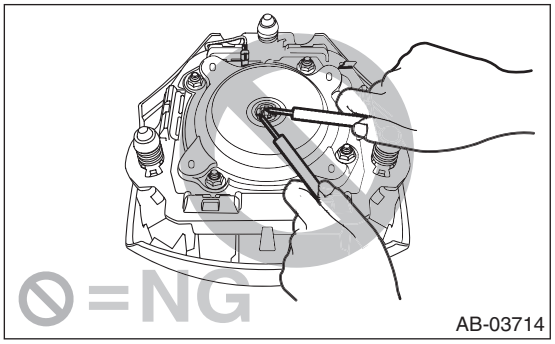

C: PREPARATION TOOL

1. SPECIAL TOOL

• TEST HARNESS N

ILLUSTRATION	TOOL NUMBER	DESCRIPTION	REMARKS
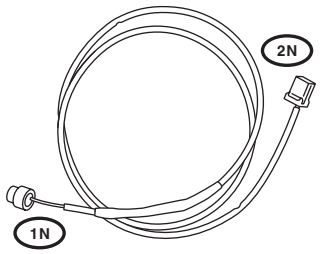 ST98299SA000	98299SA000	TEST HARNESS N	Used for unit inspection of steering roll connector.

• TEST HARNESS Q

ILLUSTRATION	TOOL NUMBER	DESCRIPTION	REMARKS
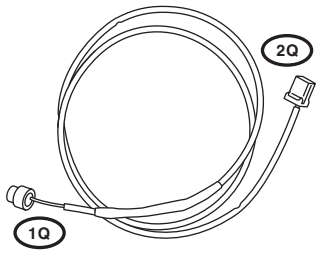 ST98299SA040	98299SA040	TEST HARNESS Q	Used for unit inspection of steering roll connector.

• TEST HARNESS ADAPTER D

ILLUSTRATION	TOOL NUMBER	DESCRIPTION	REMARKS
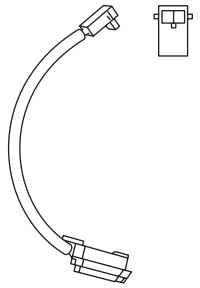 ST98299SA010	98299SA010	TEST HARNESS ADAPTER D	• Used for operation process of knee airbag module. • Used for operation process of curtain airbag module. • Used together with AIRBAG DEPLOYMENT TOOL. (98299PA030)

• TEST HARNESS ADAPTER AM

ILLUSTRATION	TOOL NUMBER	DESCRIPTION	REMARKS
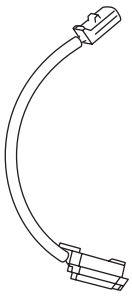 ST98299FJ000	98299FJ000	TEST HARNESS ADAPTER AM	• Used for operation process of passenger's airbag module. • Used together with AIRBAG DEPLOYMENT TOOL. (98299PA030)

• TEST HARNESS ADAPTER K

ILLUSTRATION	TOOL NUMBER	DESCRIPTION	REMARKS
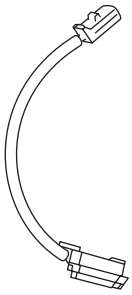 ST98299FG010	98299FG010	TEST HARNESS ADAPTER K	• Used for operation process of side airbag module. • Used together with AIRBAG DEPLOYMENT TOOL. (98299PA030)

• AIRBAG DEPLOYMENT TOOL

ILLUSTRATION	TOOL NUMBER	DESCRIPTION	REMARKS
 ST98299PA030	98299PA030	AIRBAG DEPLOYMENT TOOL	• Used for operation process of airbag module. • Used together with each test harness adapter.

2. GENERAL TOOL

TOOL NAME	REMARKS
Steering wheel puller	Used for removing and installing the steering wheel.
TORX® T40	Used for removing and installing the beam COMPL - steering.
Circuit tester	Used for measuring resistance, voltage and current.

2. Airbag Connector

A: PROCEDURE

1. POWER SUPPLY

1) How to disconnect:

CAUTION:
When pulling the slide lock or disconnecting connector, be sure to hold the connector, not the harness.

(1) Push the lock (a).
(2) While holding down the lock (a), disconnect the connector.

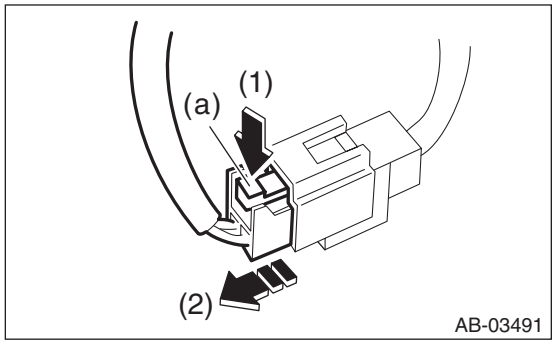

2) How to connect:

CAUTION:
Be sure to insert the connector in until it is locked. Then pull it gently to make sure that it is locked.
Holding the connector, push it in securely until a clicking sound is heard.

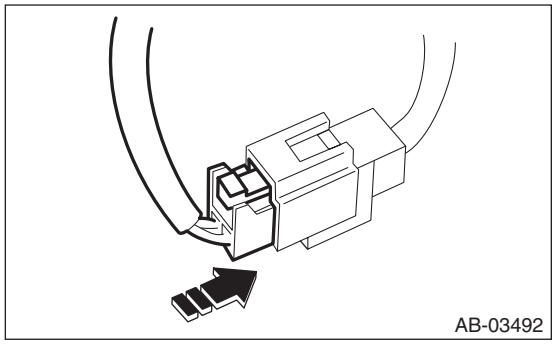

2. AIRBAG CONTROL MODULE

1) How to disconnect:
(1) Push the lock lever plate (a).
(2) While holding down the lock lever plate (a), pull the lever toward you.

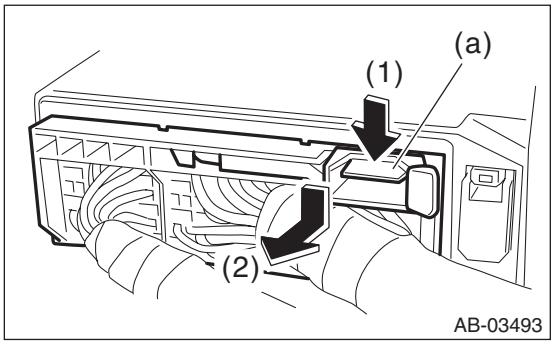

2) How to connect:

CAUTION:
Be sure to insert the connector in until it is locked. Then pull it gently to make sure that it is locked.
Insert the connector and push the lock lever in securely.

3. DRIVER'S AIRBAG MODULE (ROLL CONNECTOR)

1) How to disconnect:

CAUTION:
When pulling the slide lock or disconnecting connector, be sure to hold the connector, not the harness.
(1) Pull the slide lock (a) in the direction of arrow.
(2) With the slide lock pulled, disconnect the connector.

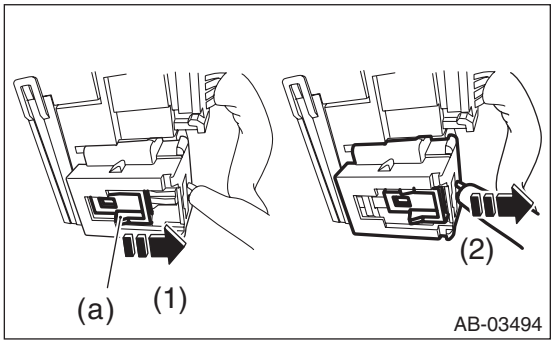

2) How to connect:

CAUTION:
Be sure to insert the connector in until it is locked. Then pull it gently to make sure that it is locked.
Holding the connector, push it in securely until a clicking sound is heard.

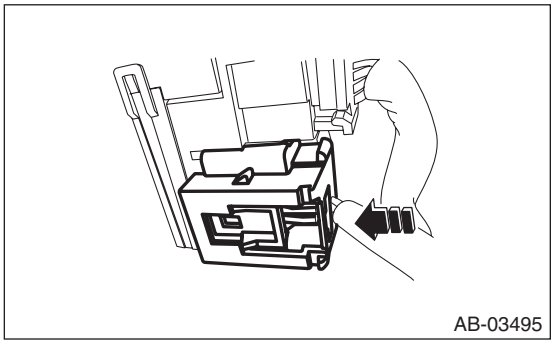

4. PASSENGER'S AIRBAG MODULE

1) How to disconnect:

CAUTION:
When pulling the slide lock or disconnecting connector, be sure to hold the connector, not the harness.

(1) Pull the slide lock (a) in the direction of arrow.
(2) With the slide lock pulled, disconnect the connector.

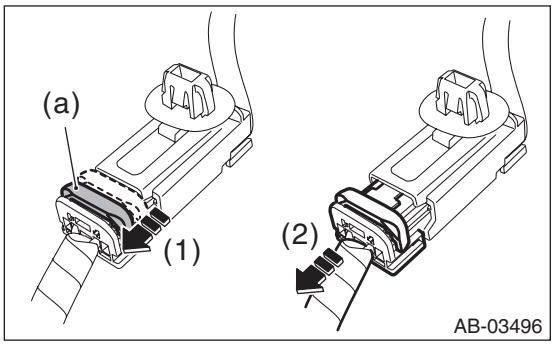

2) How to connect:

CAUTION:
Be sure to insert the connector in until it is locked. Then pull it gently to make sure that it is locked.
Holding the connector, push it in securely until a clicking sound is heard.

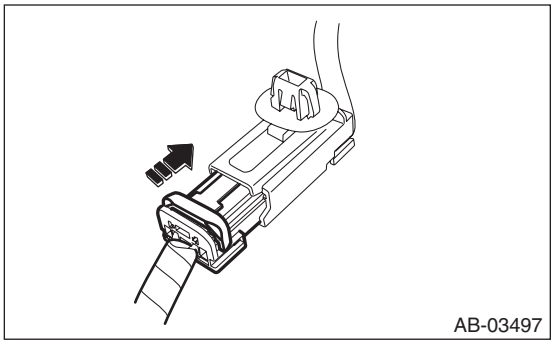

5. DRIVER'S AIRBAG MODULE, CURTAIN AIRBAG MODULE & PRETENSIONER

1) How to disconnect:

(1) Using a flat tip screwdriver, pry the push lock upward to unlock.
(2) Pull the connector to disconnect from the airbag module assembly or the retractor assembly.

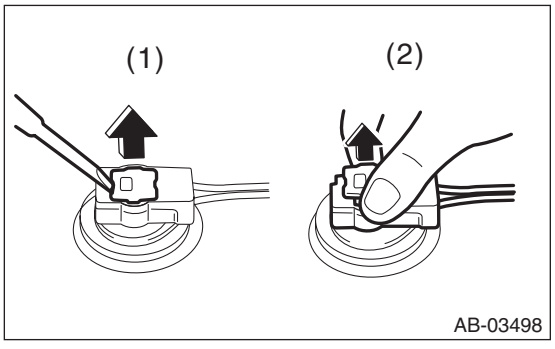

2) How to connect:

CAUTION:
- **Be sure to insert the connector in until it is locked.**
- **Press in the push lock securely. Then pull it gently to make sure that it is locked.**

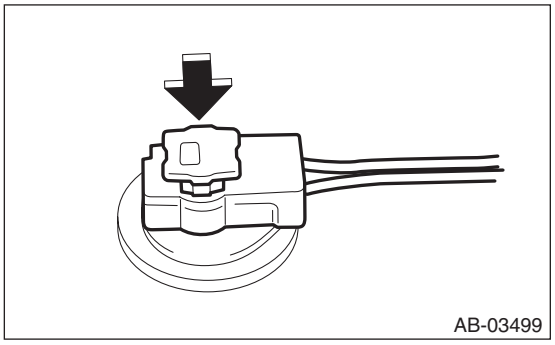

Connect the connector in the reverse order of disconnecting. At this time, be sure to insert until a clicking sound is heard.

6. FRONT SUB SENSOR

1) How to disconnect:

CAUTION:
When pulling the slide lock or disconnecting connector, be sure to hold the connector, not the harness.

(1) Push the lock arm.
(2) Holding outer part, pull it one step in the direction of arrow.

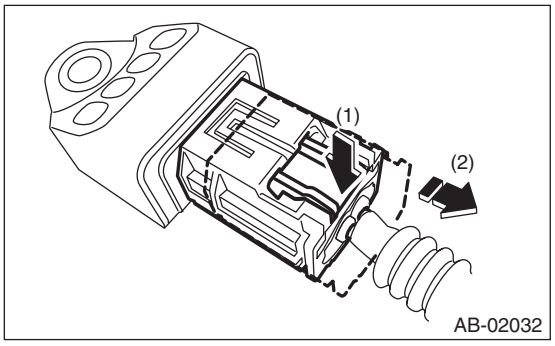

(3) Push the lock arm again.
(4) Holding outer part, pull it in the direction of arrow to disconnect the connector.

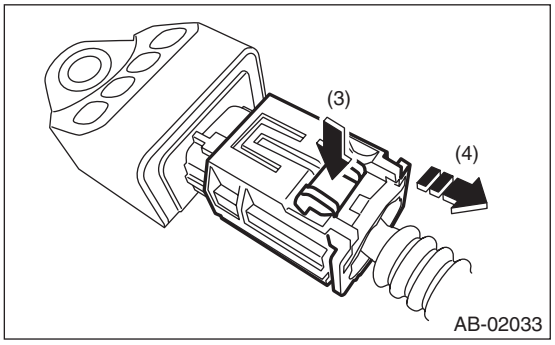

2) How to connect:

CAUTION:
Be sure to insert the connector in until it is locked. Then pull it gently to make sure that it is locked.
Holding the connector, push it in securely until a clicking sound is heard.

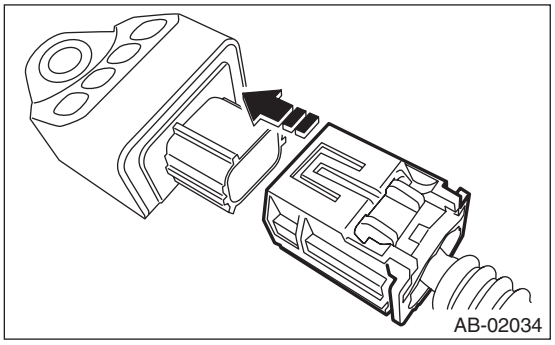

7. FRONT DOOR IMPACT SENSOR AND SATELLITE SAFING SENSOR

1) How to disconnect:

CAUTION:
When pulling the slide lock or disconnecting connector, be sure to hold the connector, not the harness.
Holding outer part (a), pull it in the direction of arrow.

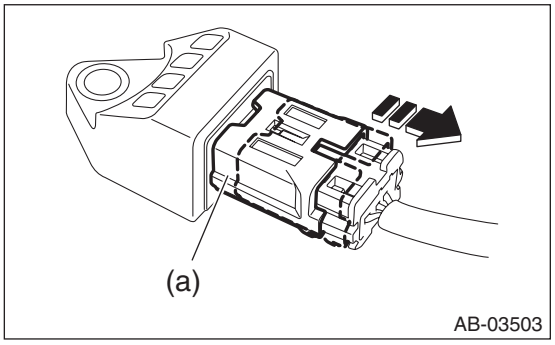

2) How to connect:

CAUTION:
- **The outer part (a) returns to the original position. Therefore do not touch the outer part.**
- **Be sure to insert the connector in until it is locked. Then pull it gently to make sure that it is locked.**

Holding the connector, push it in securely until a clicking sound is heard.

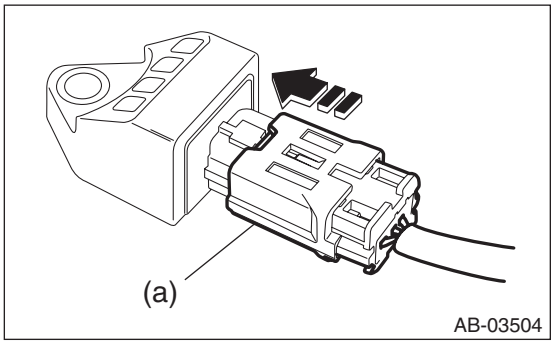

8. FRONT DOOR IMPACT SENSOR (BETWEEN AIRBAG REAR HARNESS AND DOOR HARNESS)

1) How to disconnect:

CAUTION:
When pulling the slide lock or disconnecting connector, be sure to hold the connector, not the harness.

(1) Pull the slide lock (a) in the direction of arrow.
(2) With the slide lock pulled, disconnect the connector.

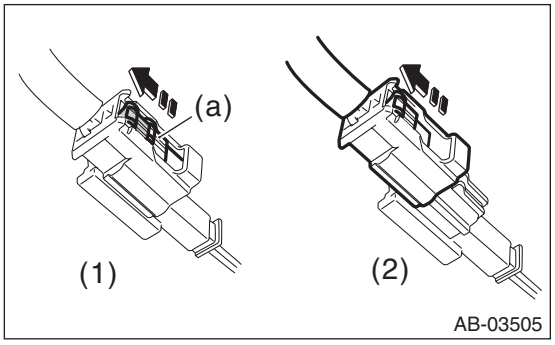

2) How to connect:

CAUTION:
- **The outer part (a) returns to the original position. Therefore do not touch the outer part.**
- **Be sure to insert the connector in until it is locked. Then pull it gently to make sure that it is locked.**

Holding the connector, push it in securely until a clicking sound is heard.

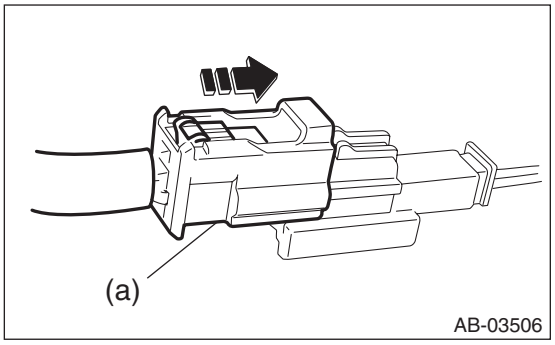

9. SIDE AIRBAG SENSOR AND CURTAIN AIRBAG SENSOR

1) How to disconnect:

CAUTION:
When pulling the slide lock or disconnecting connector, be sure to hold the connector, not the harness.

(1) Push the lock arm.
(2) Holding outer part, pull it one step in the direction of arrow.

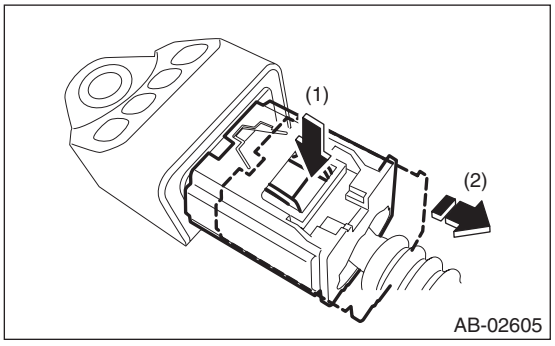

(3) Push the lock arm again.
(4) Holding outer part, pull it in the direction of arrow to disconnect the connector.

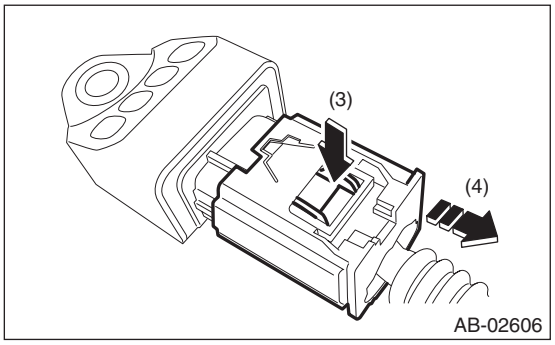

2) How to connect:

CAUTION:
Be sure to insert the connector in until it is locked. Then pull it gently to make sure that it is locked.
Holding the connector, push it in securely until a clicking sound is heard.

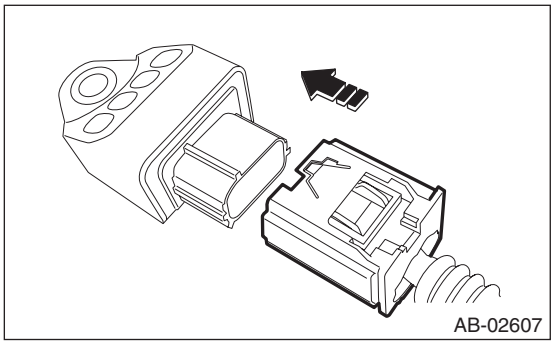

10.SIDE AIRBAG MODULE

1) How to disconnect:

CAUTION:
When pulling the slide lock or disconnecting connector, be sure to hold the connector, not the harness.

(1) Move the slide lock (a) in the direction of arrow and hold it.
(2) While holding the slide lock (a), pull the connector (b) in the direction of arrow.

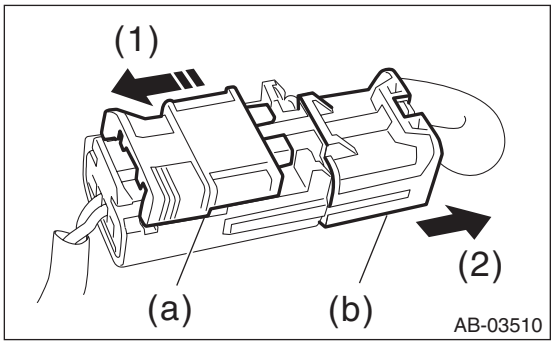

2) How to connect:

CAUTION:
Be sure to insert the connector in until it is locked. Then pull it gently to make sure that it is locked.
Holding the connector, push it in securely until a clicking sound is heard.

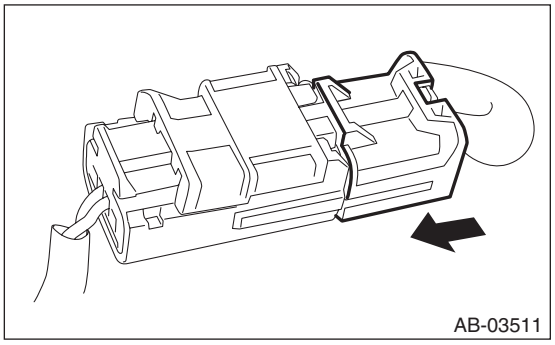

11.BUCKLE SWITCH RH

1) How to disconnect:

CAUTION:
When pulling the slide lock or disconnecting connector, be sure to hold the connector, not the harness.

(1) Move the slide lock (A) in the direction of arrow and hold it.
(2) While holding the slide lock (A), pull the connector (B) in the direction of arrow.

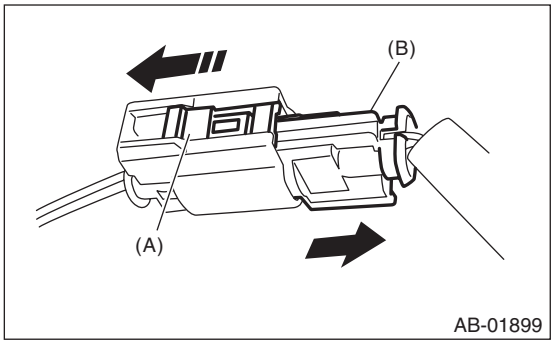

2) How to connect:

CAUTION:
Be sure to insert the connector in until it is locked. Then pull it gently to make sure that it is locked.
Holding the connector, push it in securely until a clicking sound is heard.

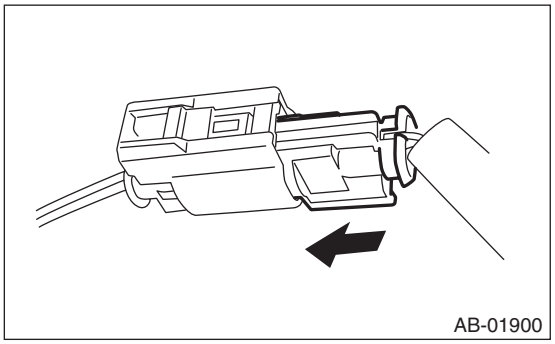

12.OCCUPANT DETECTION SYSTEM (BETWEEN AIRBAG REAR HARNESS AND SEAT HARNESS)

Refer to “OCCUPANT DETECTION SYSTEM” section. <Ref. to OD(diag)-13, OCCUPANT DETECTION SYSTEM (BETWEEN AIRBAG REAR HARNESS AND SEAT HARNESS), PROCEDURE, Airbag Connector.>

13.KNEE AIRBAG MODULE

1) How to disconnect:
   (1) Using a flat tip screwdriver, pry the push lock upward to unlock.
   (2) Pull the connector to disconnect from the airbag module assembly.

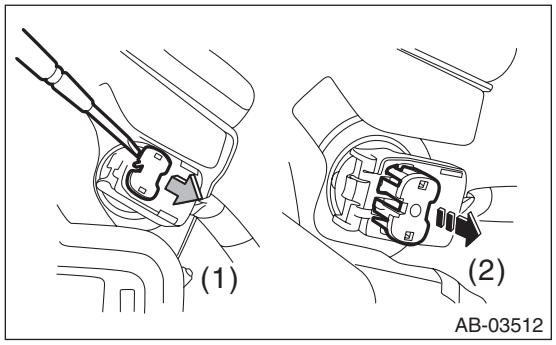

2) How to connect:

CAUTION:
- **Be sure to insert the connector in until it is locked.**
- **Press in the push lock securely. Then pull it gently to make sure that it is locked.**

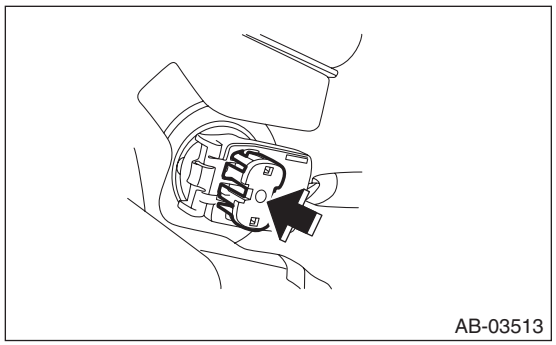

Connect the connector in the reverse order of disconnecting. At this time, be sure to insert until a clicking sound is heard.

3. Inspection Locations after a Collision

A: INSPECTION

If the vehicle is involved in a collision, even if it is a slight collision, be sure to check the following systems.

1. DRIVER'S AIRBAG MODULE ASSEMBLY

1) Frontal collision (driver's airbag module assembly activated)

1. Replace the following parts with new ones.
   - Airbag control module
   - Driver's airbag module
   - Knee airbag module
   - Passenger's airbag module (if deployed)
   - Side airbag module (if deployed)
   - Curtain airbag module (right and left / if deployed)
   - Seat belt pretensioner (right and left)
   - Lap seat belt pretensioner (passenger's side only)
   - Front sub sensor (right and left)
   - Instrument panel assembly (because it is integrated with passenger's airbag module) (if passenger's airbag module is deployed)
   - Steering wheel
   - Column assembly - steering
   - Roll connector
   - Pad assembly - front seat backrest (if the side airbag is deployed)
   - Frame assembly - front seat cushion (if the side airbag is deployed)
   - Frame assembly - front seat backrest (if the side airbag is deployed)
   - Cover COMPL - front seat backrest (if the side airbag is deployed)
   - Trim panel - roof assembly (if the curtain airbag is deployed)
   - Trim panel of each pillar (if the curtain airbag is deployed)
2. Visually inspect the following items and replace any damaged part with a new one.
   - Universal joint ASSY - steering
   - Steering gearbox
   - Beam COMPL - steering
   - Harnesses and connectors on body side that are linked to the replaced parts

2) Frontal collision (driver's airbag module not activated)

Visually inspect the following items and replace any damaged or cracked part with a new one.
Specially inspect the damage of airbag module body, mounting bracket and harness connector.

- Driver's airbag module
- Knee airbag module
- Passenger's airbag module
- Seat belt pretensioner (right and left)
- Lap seat belt pretensioner (passenger's side only)
- Front sub sensor (right and left)
- Instrument panel assembly (because it is integrated with passenger's airbag module)

3) No frontal collision

Visually inspect the airbag modules for damage or contamination and replace any faulty part with a new one.

2. KNEE AIRBAG MODULE

1) Frontal collision (knee airbag module activated)

1. Replace the following parts with new ones.
   - Airbag control module
   - Driver's airbag module
   - Knee airbag module
   - Passenger's airbag module (if deployed)
   - Side airbag module (if deployed)
   - Curtain airbag module (right and left / if deployed)
   - Seat belt pretensioner (right and left)
   - Lap seat belt pretensioner (passenger's side only)
   - Front sub sensor (right and left)
   - Instrument panel assembly (because it is integrated with passenger's airbag module) (if passenger's airbag module is deployed)
   - Steering wheel
   - Column assembly - steering
   - Roll connector
   - Pad assembly - front seat backrest (if the side airbag is deployed)
   - Frame assembly - front seat cushion (if the side airbag is deployed)
   - Frame assembly - front seat backrest (if the side airbag is deployed)
   - Cover COMPL - front seat backrest (if the side airbag is deployed)
   - Trim panel - roof assembly (if the curtain airbag is deployed)
   - Trim panel of each pillar (if the curtain airbag is deployed)
2. Visually inspect the following items and replace any damaged part with a new one.
   - Universal joint ASSY - steering
   - Steering gearbox
   - Beam COMPL - steering
   - Harnesses and connectors on body side that are linked to the replaced parts

2) Frontal collision (knee airbag module not activated)

Visually inspect the following items and replace any damaged or cracked part with a new one.
Specially inspect the damage of airbag module body, mounting bracket and harness connector.

- Driver's airbag module
- Knee airbag module
- Passenger's airbag module
- Seat belt pretensioner (right and left)
- Lap seat belt pretensioner (passenger's side only)
- Front sub sensor (right and left)
- Instrument panel assembly (because it is integrated with passenger's airbag module)

3) No frontal collision

Visually inspect the airbag modules for damage or contamination and replace any faulty part with a new one.

3. PASSENGER'S AIRBAG MODULE

1) Frontal collision (passenger's airbag module activated)

1. Replace the following parts with new ones.
   - Airbag control module
   - Driver's airbag module
   - Knee airbag module
   - Passenger's airbag module
   - Side airbag module (if deployed)
   - Curtain airbag module (right and left / if deployed)
   - Seat belt pretensioner (right and left)
   - Lap seat belt pretensioner (passenger's side only)
   - Front sub sensor (right and left)
   - Instrument panel assembly (because it is integrated with passenger's airbag module)
   - Steering wheel
   - Column assembly - steering
   - Roll connector
   - Pad assembly - front seat backrest (if the side airbag is deployed)
   - Frame assembly - front seat cushion (if the side airbag is deployed)
   - Frame assembly - front seat backrest (if the side airbag is deployed)
   - Cover COMPL - front seat backrest (if the side airbag is deployed)
   - Trim panel - roof assembly (if the curtain airbag is deployed)
   - Trim panel of each pillar (if the curtain airbag is deployed)
2. Visually inspect the following items and replace any damaged part with a new one.
   - Universal joint ASSY - steering
   - Steering gearbox
   - Beam COMPL - steering
   - Harnesses and connectors on body side that are linked to the replaced parts

2) Frontal collision (passenger's airbag module not activated)

Visually inspect the following items and replace any damaged or cracked part with a new one.
Specially inspect the damage of airbag module body, mounting bracket and harness connector.

- Driver's airbag module
- Knee airbag module
- Passenger's airbag module
- Seat belt pretensioner (right and left)
- Lap seat belt pretensioner (passenger's side only)
- Front sub sensor (right and left)
- Instrument panel assembly (because it is integrated with passenger's airbag module)

3) No frontal collision

Visually inspect the airbag modules for damage or contamination and replace any faulty part with a new one.

4. SIDE AIRBAG MODULE

1) Side impact (side airbag module activated)

1. Replace the following parts with new ones.
   - Airbag control module
   - Satellite safing sensor
   - Cover - satellite safing
   - Front door impact sensor
   - Seat belt pretensioner (collision side / if deployed)
   - Side airbag module (collision side)
   - Side airbag sensor (collision side)
   - Curtain airbag module (collision side)
   - Curtain airbag sensor (collision side)
   - Pad assembly - front seat backrest (collision side)
   - Frame assembly - front seat cushion (collision side)
   - Frame assembly - front backrest (collision side)
   - Cover COMPL - front backrest (collision side)
   - Trim panel - roof assembly (collision side)
   - Trim panel for each pillar (collision side)
2. Visually inspect the following items and replace any damaged part (collision side) with a new one.
   - Headrest assembly
   - Bushing - lock headrest
   - Slide rail assembly - OUT
   - Slide rail assembly - INN
   - Cover - hinge front seat
   - Knob - lifter
   - Lever - reclining
   - Harnesses and connectors on body side that are linked to the replaced parts

2) Side impact (side airbag module not activated)

Visually inspect the following items and replace any damaged or cracked part (collision side) with a new one.
Specially inspect the damage of airbag module body, mounting bracket and harness connector.

- Pad assembly - front seat backrest
- Frame assembly - front backrest
- Cover COMPL - front backrest
- Satellite safing sensor
- Cover - satellite safing
- Front door impact sensor
- Side airbag module
- Side airbag sensor
- Curtain airbag module
- Curtain airbag sensor

3) No side impact

Visually inspect the airbag modules for contamination and replace any faulty part with a new one.

5. CURTAIN AIRBAG MODULE

1) Side impact or roll over (curtain airbag module activated)

1. Replace the following parts with new ones.
   - Airbag control module
   - Satellite safing sensor
   - Cover - satellite safing
   - Side airbag module (collision side)
   - Curtain airbag module (collision side)
   - Seat belt pretensioner (if deployed)
   - Front door impact sensor (collision side)
   - Side airbag sensor (collision side)
   - Curtain airbag sensor (collision side)
   - Pad assembly - front seat backrest (collision side)
   - Frame assembly - front seat cushion (collision side)
   - Frame assembly - front backrest (collision side)
   - Cover COMPL - front backrest (collision side)
   - Trim panel - roof assembly (collision side)
   - Trim panel for each pillar (collision side)
   - Airbag bracket (model with sunroof) (collision side)
2. Visually inspect the following items and replace any damaged part (collision side) with a new one.
   - Assist rail - front and rear
   - Bracket - assist rail front and rear
   - Harnesses and connectors on body side that are linked to the replaced parts

2) Side impact (curtain airbag module not activated)

Visually inspect the following items and replace any damaged or cracked part (collision side) with a new one.
Specially inspect the damage of airbag module body, mounting bracket and harness connector.

- Trim panel - roof assembly
- Trim panel for each pillar
- Curtain airbag module
- Satellite safing sensor
- Cover - satellite safing
- Front door impact sensor
- Side airbag sensor
- Curtain airbag sensor

3) No side impact

Visually inspect the airbag covers for damage or contamination and replace any faulty part with a new one.

6. AIRBAG CONTROL MODULE

Check for the following, and replace the damaged parts with new parts.

- Control module is cracked or deformed.
- Mounting bracket is cracked or deformed.
- Connector is scratched, cracked or deformed.
- Driver's airbag module has been activated.
- Knee airbag module has been activated.
- Passenger's airbag module has been activated.
- Side airbag module has been activated.
- Curtain airbag module has been activated.
- Seat belt pretensioner has been activated.
- Lap seat belt pretensioner has been activated.

7. FRONT SUB SENSOR

If the section of vehicle as shown in the figure is damaged, check the following items and replace the damaged parts with new parts.

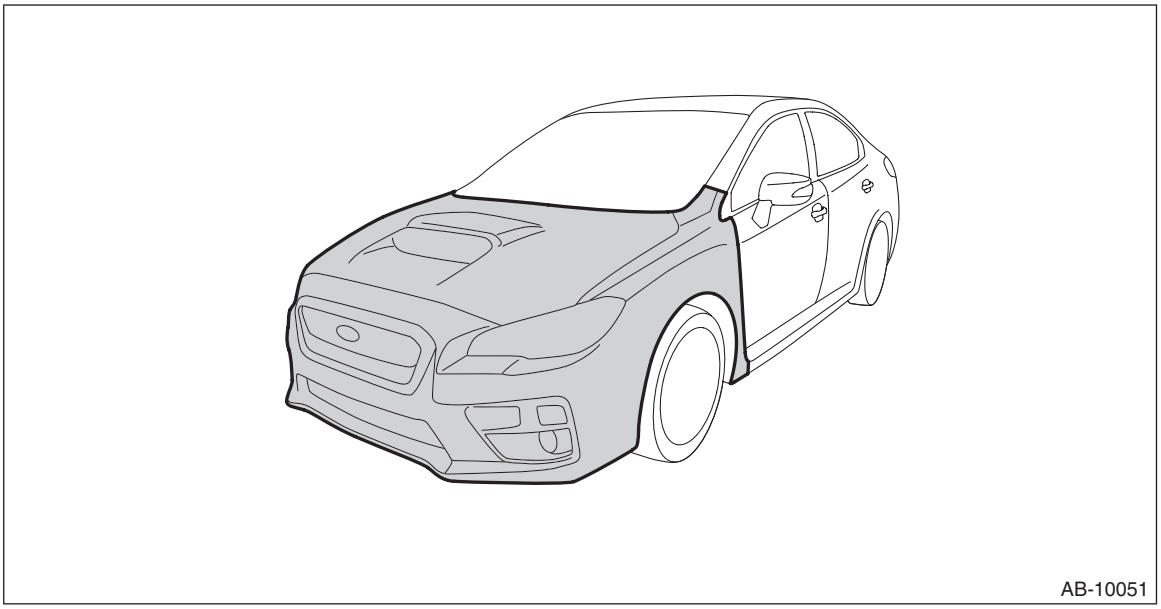

- Front sub sensor is cracked or deformed.
- Connector is scratched, cracked or deformed.
- Driver's airbag module, knee airbag module or passenger's airbag module has been activated.

8. FRONT DOOR IMPACT SENSOR, SATELLITE SAFING SENSOR, SIDE AIRBAG SENSOR AND CURTAIN AIRBAG SENSOR

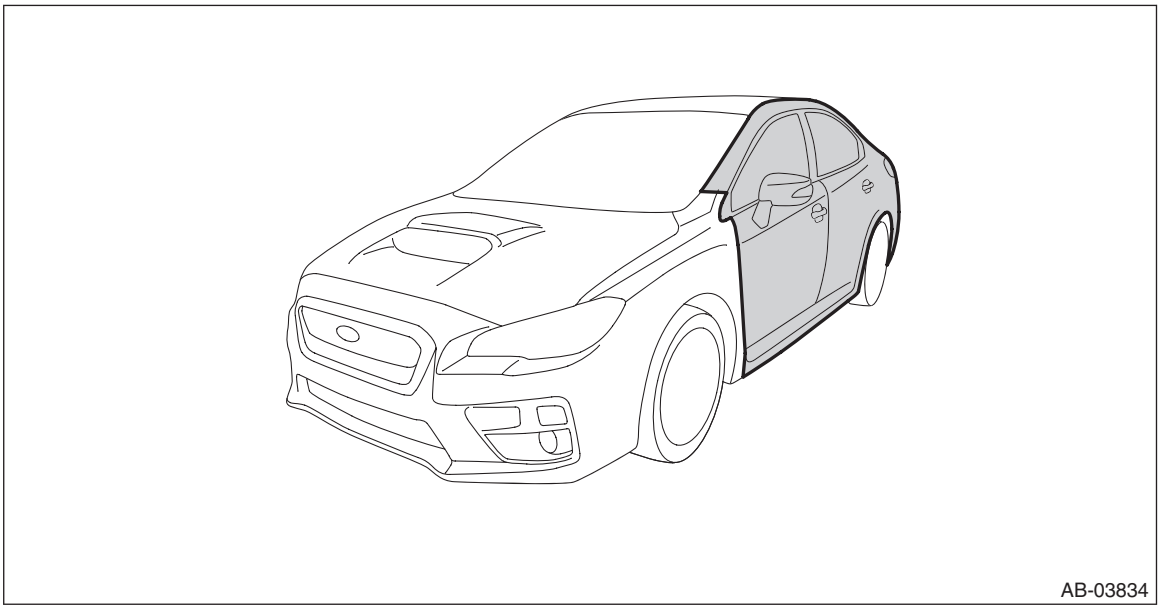

- Front door impact sensor, side airbag sensor, satellite safing sensor, sensor cover and curtain airbag sensor are cracked or deformed.
- Mounting bracket is cracked or deformed.
- Connector is scratched, cracked or deformed.
- Side airbag module or curtain airbag module has been activated. (Operating side)

9. ROLL CONNECTOR

Check the following items and replace any damaged, cracked, or deformed parts with new parts.
- Combination switch
- Steering roll connector

10.CHECK STEERING SYSTEM

For steering wheel, column assembly - steering, universal joint assembly - steering, and steering gearbox, check the following items, and if there is anything out of standard value, it is considered to be damaged. If so, replace it with a new part.
- Check the following items for the column assembly - steering. <Ref. to PS-29, INSPECTION, Steering Column.>
  – Mounting conditions and deflection of front and rear, upward and downward directions of the steering wheel and column assembly - steering.
  – Deflection of front and rear, upward and downward directions, and mounting condition to vehicle body of the column assembly - steering. (After a collision, absorbing part of the column assembly - steering may have been operated.)
- Check for deflection and the swing load of the universal joint assembly - steering. <Ref. to PS-23, INSPECTION, Universal Joint.>
- Check the following items for the steering gearbox. <Ref. to PS-75, INSPECTION, Electric Power Steering Gearbox.>
  – Rack sliding resistance and deflection
  – Input shaft play
  – Rotational resistance of gearbox

11.PASSENGER'S SEAT

CAUTION:
If any of the following applies, replace the pad assembly - front seat cushion & frame assembly - front cushion as a unit. Do not disassemble.
- **The frame assembly - front cushion or the pad assembly - front seat cushion is cracked or deformed.**
- **Scratches, cracks, or deformation found on the occupant detection system sensor mat or occupant detection control module, or attachment brackets of the control module.**
- **Harness and/or connector is cracked, deformed or open. Harness wire is exposed.**

1) Check for the following, and replace the damaged parts with new parts.
- Body or bracket of the seat belt inner - front is scratched, cracked or deformed.
- Frame assembly - front backrest is cracked or deformed.
- Headrest assembly for deformation or play
- If the cover - front cushion and the cover COMPL - front backrest is damaged or frayed, replace the cover with a new part.
- If the cover - front cushion and the seat heater are replaced, replace the cover hang wire with a new part.

2) When the passenger's seat cover COMPL - front seat has been removed or replaced, make sure that the occupant detection system operates normally.
3) Use the Subaru Select Monitor to check whether the passenger's seat belt buckle switch is operating normally.

12.INSPECTION OF OTHER PARTS

Check for the following parts, and replace the damaged parts with new parts.
1) Check the following parts equipped with the direct type connector for damage, and also check each harness for pinch and connector damage. Replace the main harness as a unit if damage is found.
- Driver's airbag module
- Knee airbag module
- Curtain airbag module
- Pretensioner

2) Check the seat cushion, backrest, slide rail and headrest for installation condition and looseness.
3) If any break or fray is found in the cover COMPL - front backrest of the driver's seat or passenger's seat, the side airbag system may not operate normally. In this case, replace the cover COMPL - front backrest with a new part.

4. Driver's Airbag Module

A: REMOVAL

CAUTION:
Before handling the airbag system components, refer to "CAUTION" of "General Description" in "AIRBAG SYSTEM". <Ref. to AB-9, CAUTION, General Description.>

1) Position the front wheels straight ahead.
2) Turn the ignition switch to OFF.
3) Disconnect the ground cable from battery and wait for at least 60 seconds before starting work. <Ref. to NT-6, BATTERY, NOTE, Note.>

NOTE:
For model with battery sensor, disconnect the ground terminal from battery sensor.

4) Remove the driver's airbag module.
   (1) Using a hexagon wrench etc. wrapped by protective tape, insert the snap pins and release the locks (three locations).

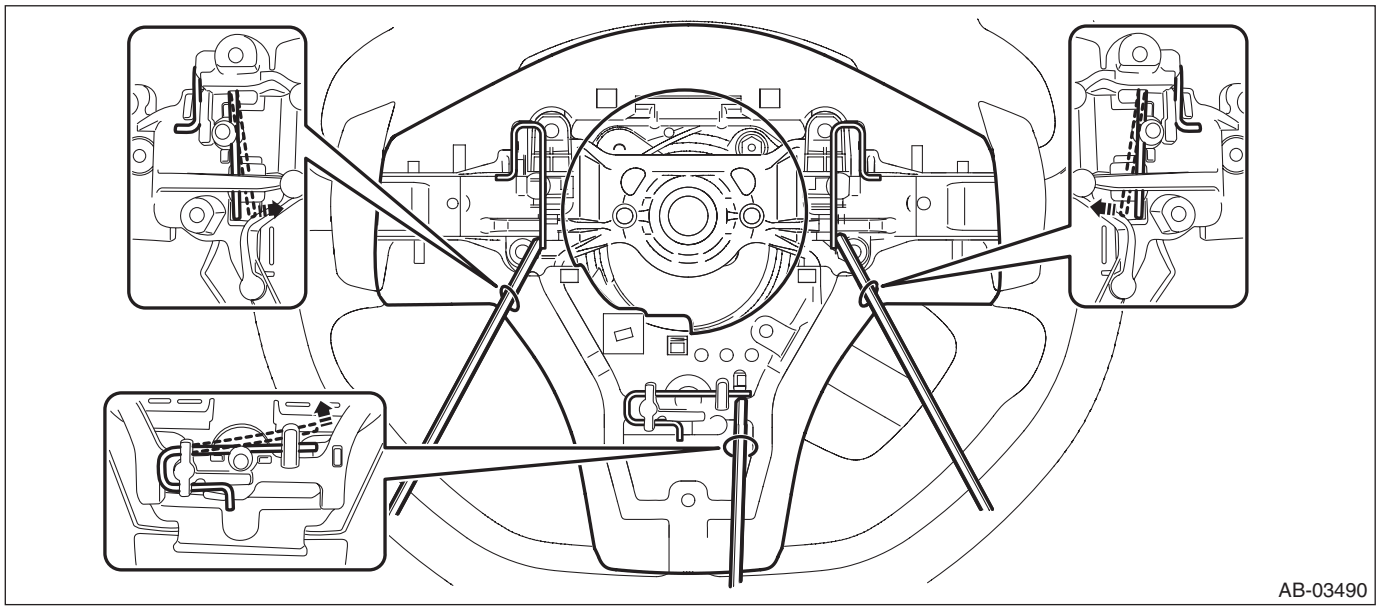
AB-03490

   (2) Disconnect the horn harness and airbag connector, and remove the driver's airbag module. <Ref. to AB-18, DRIVER'S AIRBAG MODULE, CURTAIN AIRBAG MODULE & PRETENSIONER, PROCEDURE, Airbag Connector.>

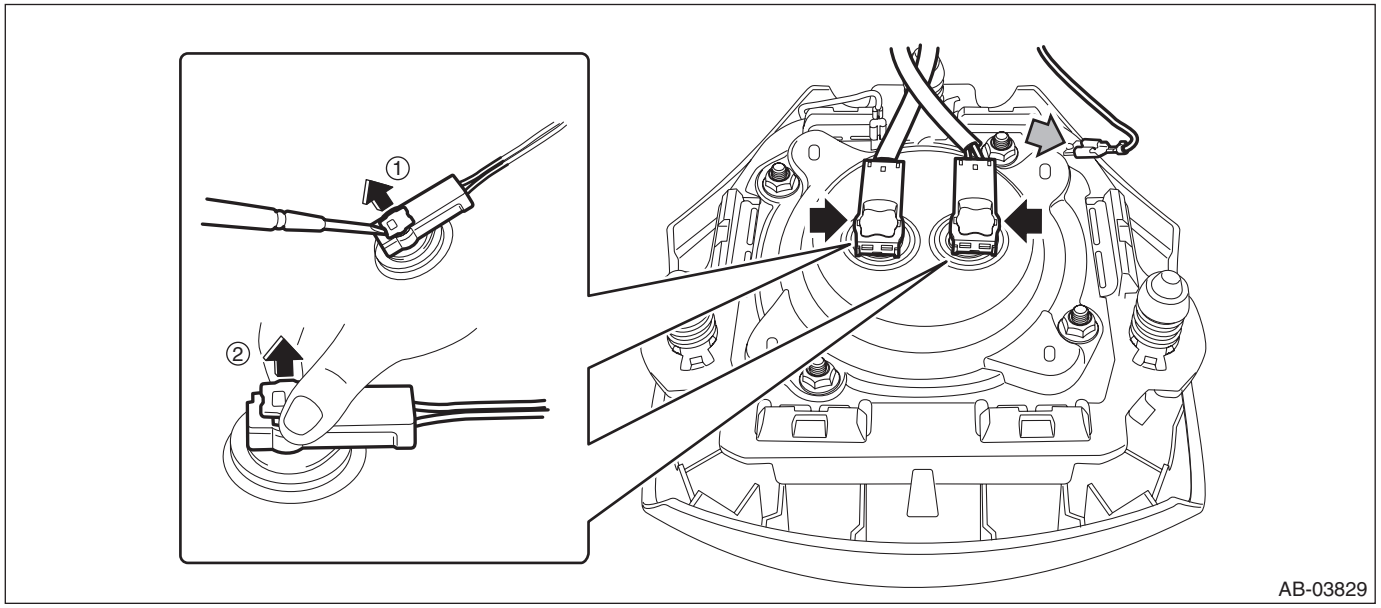

AB-03829

B: INSTALLATION

CAUTION:
• Before handling the airbag system components, refer to "CAUTION" of "General Description" in "AIRBAG SYSTEM". <Ref. to AB-9, CAUTION, General Description.>
• Do not allow harness and connectors to interfere or get tangled up with other parts.
1) Before installation, inspect the following items and replace any faulty part with a new one.
- Airbag module is cracked or deformed.
- Harness and/or connector is cracked, deformed or open.
- Harness wire is exposed.
- The steering wheel is in the way, making it difficult to install the airbag module.
- The clearance between the driver's airbag module and steering wheel is not constant.

2) Install the driver's airbag module.

CAUTION:
• Make sure that the snap pin is securely placed inside the guide before installing the airbag module.
• Be sure to insert the connector in completely until it is locked.
• Press in the push lock of the direct type connector securely. Then pull it gently to make sure that it is locked.
• After the airbag module is installed, make sure that the airbag module locks (three positions) are securely locked.
(1) Connect the airbag connector to the airbag module securely.
(2) Connect the horn harness.
(3) Press in the locks (three positions) to install the airbag module.

3) Connect the battery ground terminal. <Ref. to NT-6, BATTERY, NOTE, Note.>

5. Knee Airbag Module

A: REMOVAL

CAUTION:
• Before handling the airbag system components, refer to "CAUTION" of "General Description" in "AIRBAG SYSTEM". <Ref. to AB-9, CAUTION, General Description.>
• Do not allow harness and connectors to interfere or get tangled up with other parts.
1) Turn the ignition switch to OFF.
2) Disconnect the ground cable from battery and wait for at least 60 seconds before starting work. <Ref. to NT-6, BATTERY, NOTE, Note.>

NOTE:
For model with battery sensor, disconnect the ground terminal from battery sensor.
3) Remove the cover assembly - instrument panel LWR driver. <Ref. to EI-62, REMOVAL, Instrument Panel Lower Cover.>
4) Remove the nuts to remove the knee airbag module and disconnect the harness connector. <Ref. to AB-24, KNEE AIRBAG MODULE, PROCEDURE, Airbag Connector.>

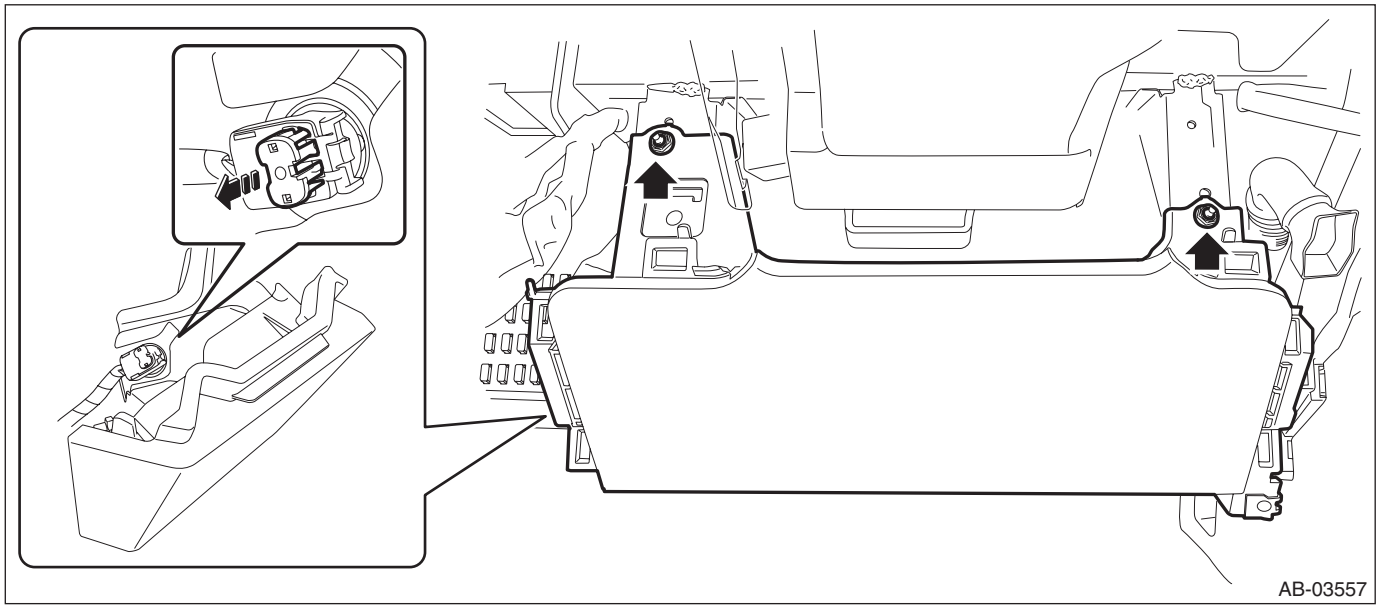

B: INSTALLATION

CAUTION:
• Before handling the airbag system components, refer to "CAUTION" of "General Description" in "AIRBAG SYSTEM". <Ref. to AB-9, CAUTION, General Description.>
• Do not allow harness and connectors to interfere or get tangled up with other parts.
1) Before installation, inspect the following items and replace any faulty part with a new one.
- Airbag module is cracked or deformed.
- Knee airbag module bracket is cracked or deformed.
- Harness and/or connector is cracked, deformed or open.
- Harness wire is exposed.
- Depending on the condition of the beam COMPL - steering, installation of the knee airbag module is difficult.

2) Install the knee airbag module.

CAUTION:
• Be sure to insert the connector in completely until it is locked.
• Press in the push lock of the direct type connector securely. Then pull it gently to make sure that it is locked.

Tightening torque:
7.5 N·m (0.8 kgf-m, 5.5 ft-lb)
3) Connect the battery ground terminal. <Ref. to NT-6, BATTERY, NOTE, Note.>

6. Passenger's Airbag Module

A: REMOVAL

CAUTION:
Before handling the airbag system components, refer to "CAUTION" of "General Description" in "AIRBAG SYSTEM". <Ref. to AB-9, CAUTION, General Description.>

1) Turn the ignition switch to OFF.
2) Disconnect the ground cable from battery and wait for at least 60 seconds before starting work. <Ref. to NT-6, BATTERY, NOTE, Note.>

NOTE:
- For model with battery sensor, disconnect the ground terminal from battery sensor.
- On CVT models, shift the select lever into "N" before disconnecting the battery ground cable.
- For the power seat, remove the console box before removing the battery ground terminal.

3) Remove the console box assembly, the cover - shift lever and the panel center LWR on the RH and LH sides. <Ref. to EI-67, REMOVAL, Console Box.>
4) Remove the cover assembly - instrument panel LWR driver. <Ref. to EI-62, REMOVAL, Instrument Panel Lower Cover.>
5) Remove the cover switch - starter. (Models without the keyless access with push button start)
   (1) Release the claws and remove the cover switch - starter.
   (2) Disconnect the connector and aspirator hose.

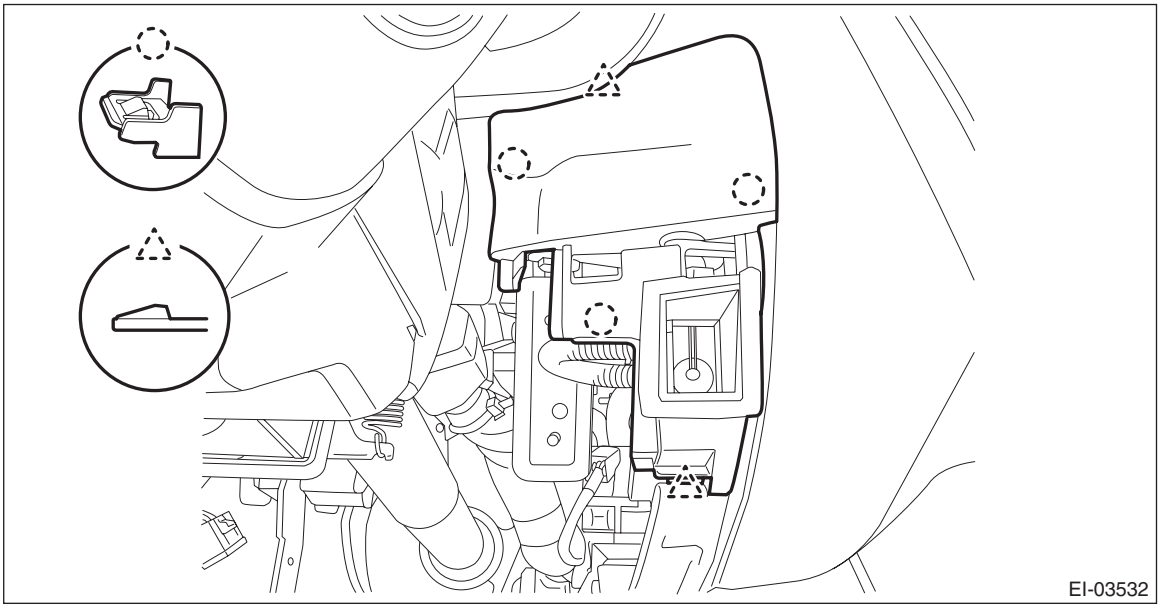

6) Remove the panel - switch. (Model with keyless access with push button start)
   (1) Release the claw of the switch - push button start, and disconnect the connector.
   (2) Release the claws, and then remove the panel - switch.
   (3) Disconnect the connector and aspirator hose.

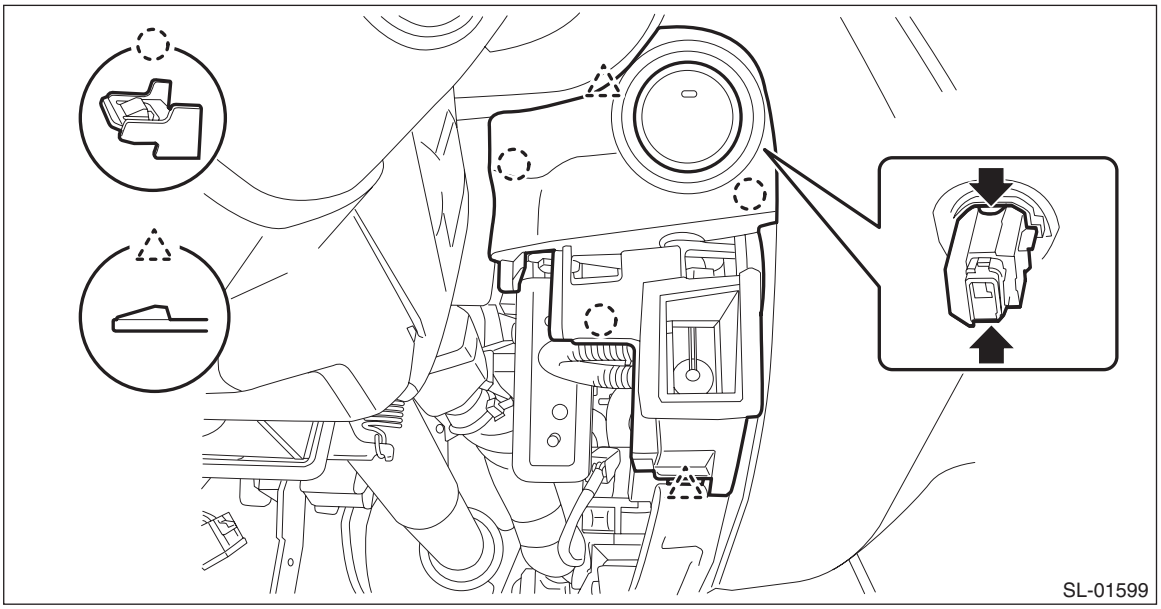

7) Remove the knee airbag module. <Ref. to AB-34, REMOVAL, Knee Airbag Module.>
8) Release the clips and claws, then detach the left and right grille speaker side.

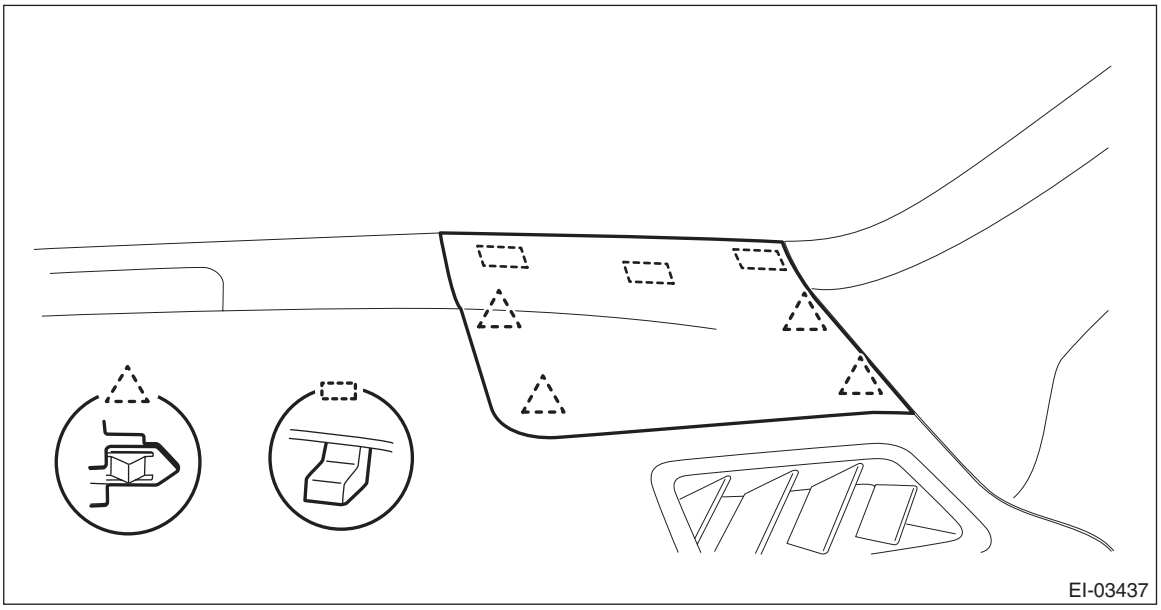

NOTE:
Remove the grille speaker side by using a plastic remover.
9) Remove the trim panel - front pillar UPR on the left and right sides. <Ref. to EI-88, REMOVAL, Upper Inner Trim.>
10) Remove the glove box assembly. <Ref. to EI-64, REMOVAL, Glove Box.>
11) Remove the center grille assembly. <Ref. to AC-91, REMOVAL, Air Vent Grille.>
12) Remove the audio assembly or navigation assembly. <Ref. to ET-35, REMOVAL, Audio.>
13) Remove the multi-function display assembly. <Ref. to IDI-20, REMOVAL, Multi-function Display (MFD).>
14) Remove the combination meter assembly. <Ref. to IDI-13, REMOVAL, Combination Meter.>

15) Disconnect the passenger's airbag module connector. <Ref. to AB-18, PASSENGER'S AIRBAG MODULE, PROCEDURE, Airbag Connector.>

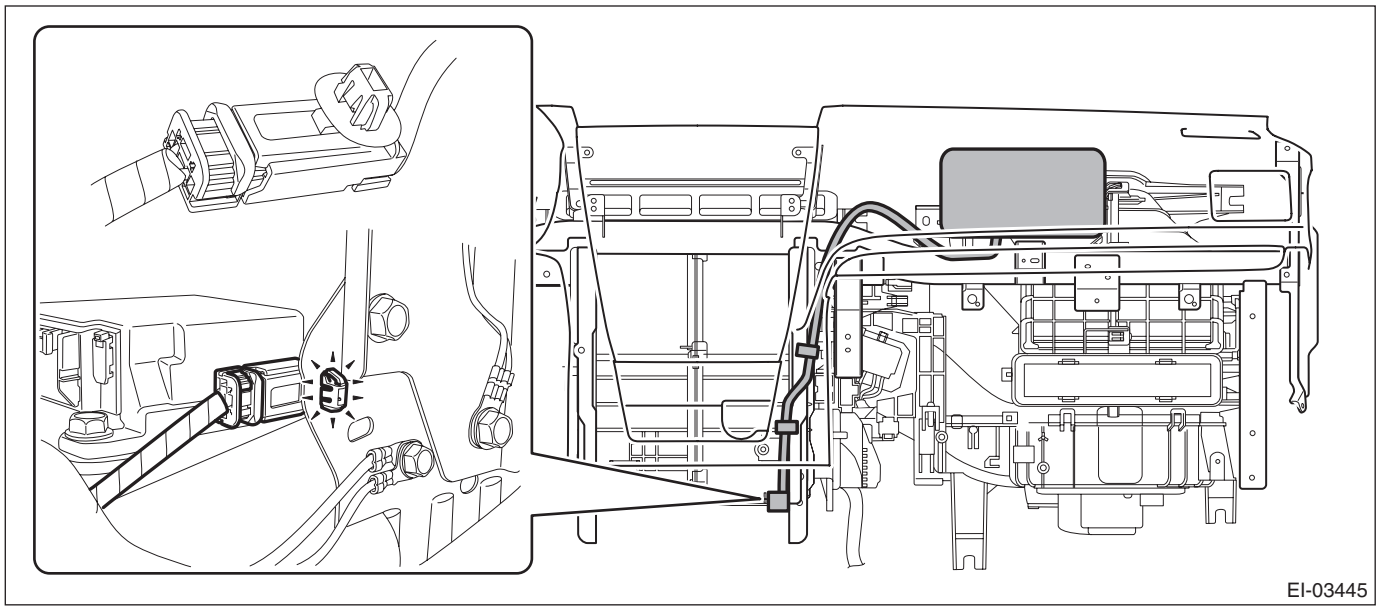
EI-03445

16) Remove the universal joint assembly - steering. <Ref. to PS-21, REMOVAL, Universal Joint.>
17) Remove the column assembly - steering. <Ref. to PS-25, REMOVAL, Steering Column.>
18) Remove the cover side sill - front INN and cover side sill - front on the RH and LH side. <Ref. to EI-84, REMOVAL, Lower Inner Trim.>
19) Remove the body side weather strip - flange front.
20) Remove the instrument panel assembly and the beam COMPL - steering as a unit. <Ref. to EI-72, REMOVAL, Instrument Panel Assembly.>
21) Remove the screws and remove the front (A) and side vent duct (B) LH, RH.

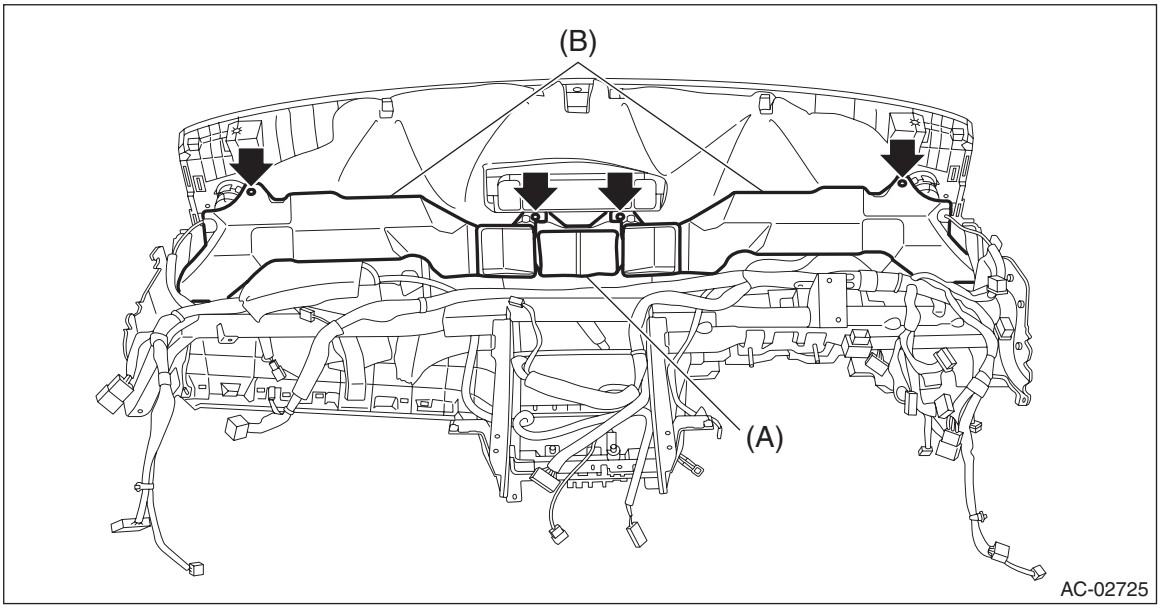

AC-02725

22) Separate the panel COMPL - instrument and the beam COMPL - steering.
(1) Remove the clamps and bolts of the passenger's airbag module harness.

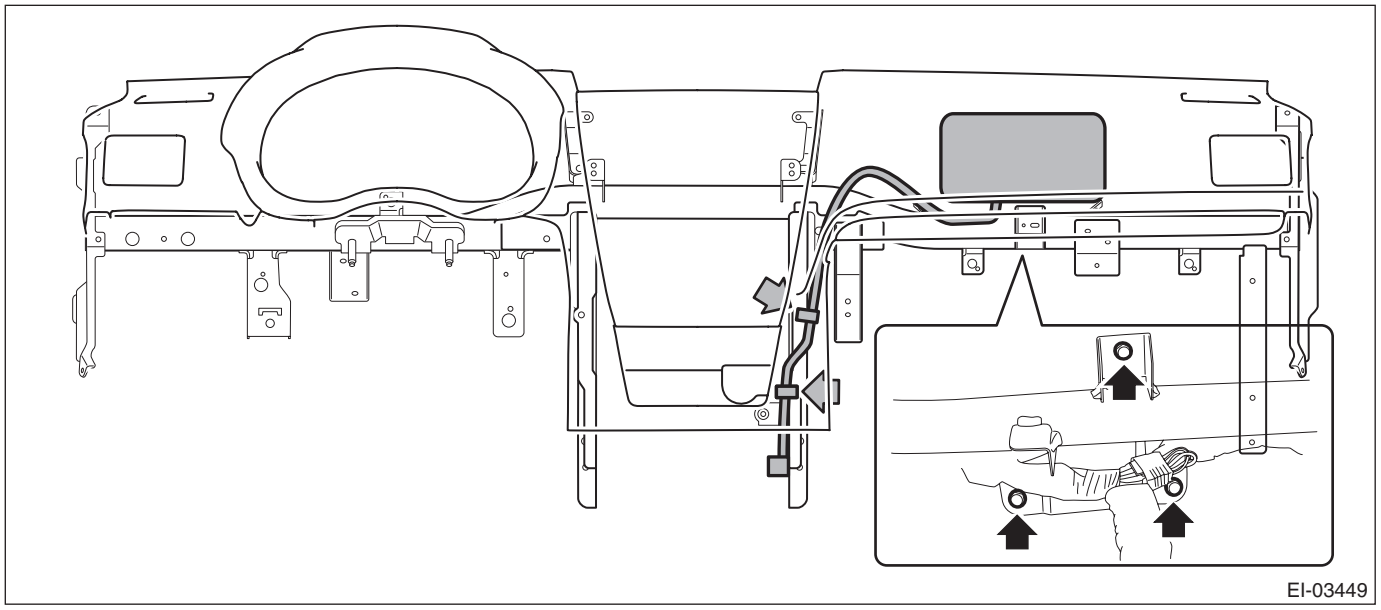

(2) Disconnect the connectors of the left and right speakers and the sunload sensor.

NOTE:
Detach the harness clamp together.

(3) Disconnect the front accessory socket connector.
(4) Remove the nut (a) and screws (b), (c), (d), (e), (f), (g) and (h).
(5) While being careful with the harness, separate the panel COMPL - instrument and the beam COMPL - steering.

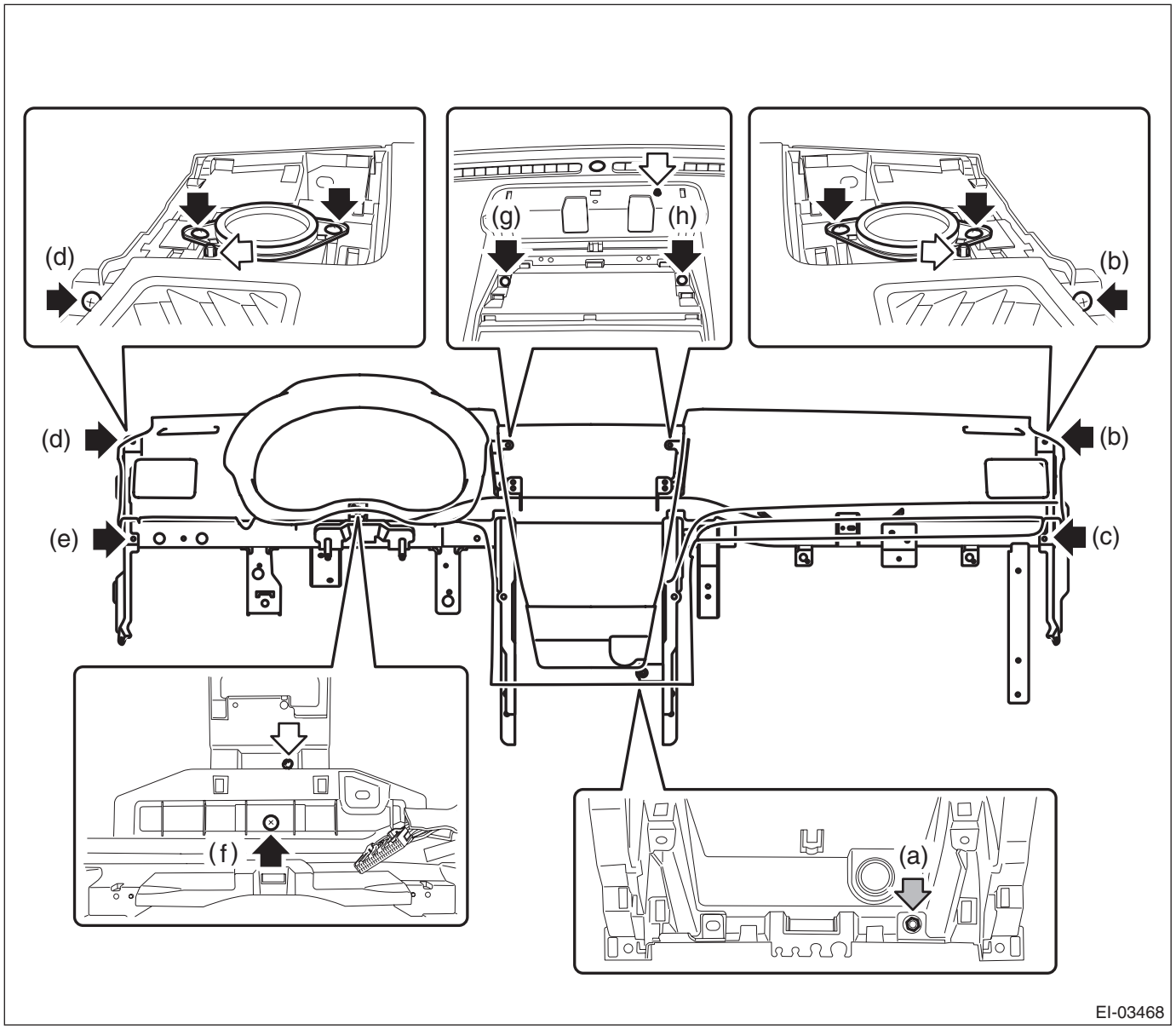

23) Remove the claws, and remove the passenger's airbag module.

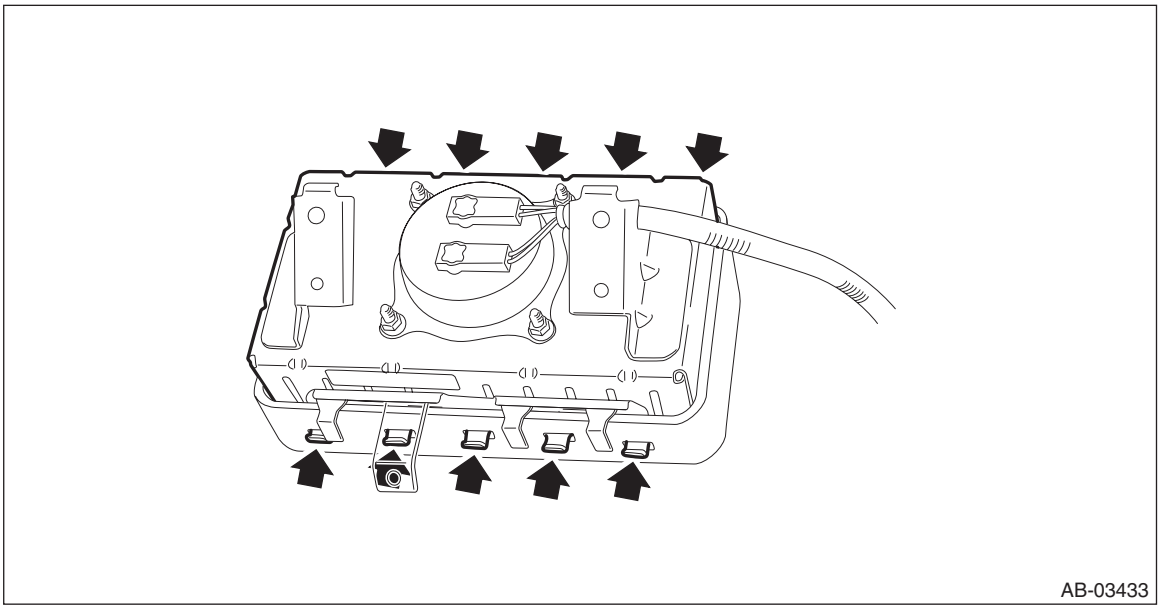

24) For handling of the removed airbag module, refer to "CAUTION". <Ref. to AB-9, CAUTION, General Description.>

B: INSTALLATION

CAUTION:
• Before handling the airbag system components, refer to "CAUTION" of "General Description" in "AIRBAG SYSTEM". <Ref. to AB-9, CAUTION, General Description.>
• Do not allow harness and connectors to interfere or get tangled up with other parts.
• When reusing the tether clip on the upper part of the trim panel - front pillar UPR, check that there is no damage to the tether clip. If the tether clip is damaged, always replace it with a new tether clip. If the tether clip is damaged, its holding force is reduced and the trim panel - front pillar UPR may come off.

1) Before installation, inspect the following items and replace any faulty part with a new one.
- Passenger's airbag lid (instrument panel surface) is cracked or deformed.
- Airbag module is cracked or deformed.
- Harness and/or connector is cracked, deformed or open.
- Harness wire is exposed.
- Mounting bracket is cracked or deformed.

2) Install the instrument panel assembly. <Ref. to EI-80, INSTALLATION, Instrument Panel Assembly.>
3) Install the cover side sill - front on the RH and LH sides.
4) Install the cover side sill - front INN on the RH and LH sides.
5) Install the column assembly - steering. <Ref. to PS-28, INSTALLATION, Steering Column.>
6) Install the universal joint assembly - steering. <Ref. to PS-22, INSTALLATION, Universal Joint.>

CAUTION:
• Always install the universal joint assembly - steering after installing the steering column to avoid damage to the universal joint assembly - steering.
• Be sure to follow the tightening order and tightening torque of the universal joint assembly - steering to avoid the steering effort from becoming heavy. After confirming that the steering column position is in the neutral position, tighten the universal joint assembly - steering.
• Always place the tilt lever to the lock position after the steering column is adjusted.

7) Install the combination meter assembly.
8) Install the multi-function display assembly.
9) Install the audio assembly or navigation assembly.
10) Install the center grille assembly.
11) Install the glove box assembly.

12) Install the trim panel - front pillar UPR on the RH and LH sides. <Ref. to EI-90, INSTALLATION, Upper Inner Trim.>
13) Install the grille speaker side on the RH and LH sides.
14) Install the knee airbag module.

Tightening torque:
7.5 N·m (0.8 kgf-m, 5.5 ft-lb)

15) Install the panel - switch. (Model with keyless access with push button start)
16) Install the cover switch - starter. (Models without the keyless access with push button start)
17) Install the cover assembly - instrument panel LWR driver.
18) Install the panel center LWR on the RH and LH sides.
19) Install the cover - shift lever and the console box assembly.
20) Connect the battery ground terminal. <Ref. to NT-6, BATTERY, NOTE, Note.>

NOTE:
After connecting the battery sensor terminal, place the select lever in the "P" position.

7. Side Airbag Module

A: REMOVAL

CAUTION:
Before handling the airbag system components, refer to "CAUTION" of "General Description" in "AIRBAG SYSTEM". <Ref. to AB-9, CAUTION, General Description.>
1) Turn the ignition switch to OFF.
2) Disconnect the ground cable from battery and wait for at least 60 seconds before starting work. <Ref. to NT-6, BATTERY, NOTE, Note.>

NOTE:
- For model with battery sensor, disconnect the ground terminal from battery sensor.
- For model with the power seat, move the seat to the front-most position before removing the battery ground terminal.

3) Remove the front seats. <Ref. to SE-9, REMOVAL, Front Seat.>
4) Separate the backrest assembly and the seat cushion assembly. <Ref. to SE-11, DISASSEMBLY, Front Seat.>
5) Remove the side airbag module.

CAUTION:
Do not open the protective cover of the side airbag module. If any damage is present in the protective cover or the cloth of side airbag module comes out from the protective cover slit, replace the side airbag module with a new part.
(1) Remove the plastic fastener at the back side (bottom) of backrest assembly.
(2) Open the fastener at the rear side of backrest assembly.

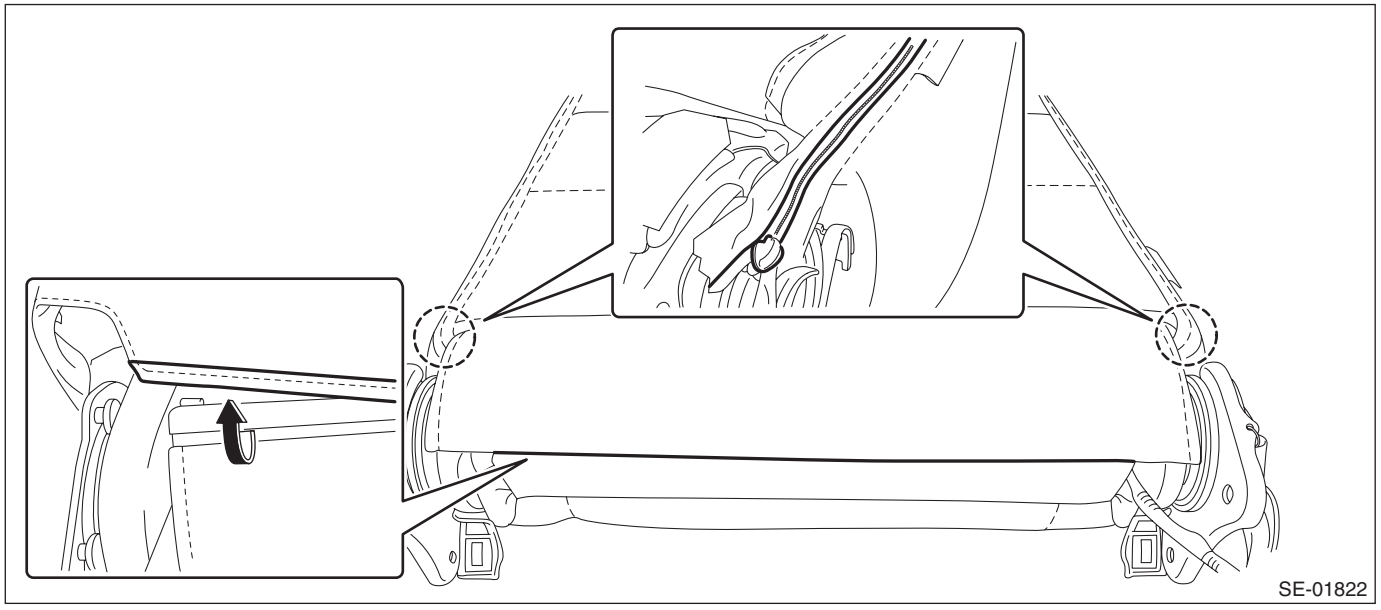
SE-01822

NOTE:
If it is hard to open, use a metal clip, etc.
(3) Remove the hexagon cap nut and nuts.

(4) While taking care not to damage the airbag protective cover, remove the side airbag module.

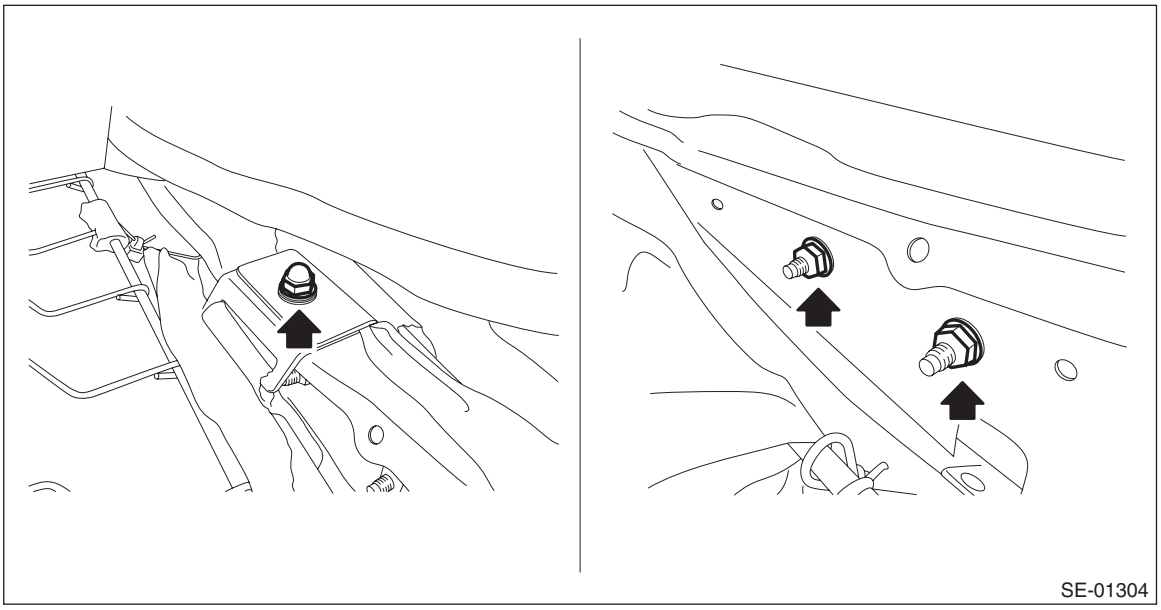

B: INSTALLATION

CAUTION:

- **Before handling the airbag system components, refer to "CAUTION" of "General Description" in "AIRBAG SYSTEM". <Ref. to AB-9, CAUTION, General Description.>**
- **Make sure that the side airbag module is installed as shown in the figure.**

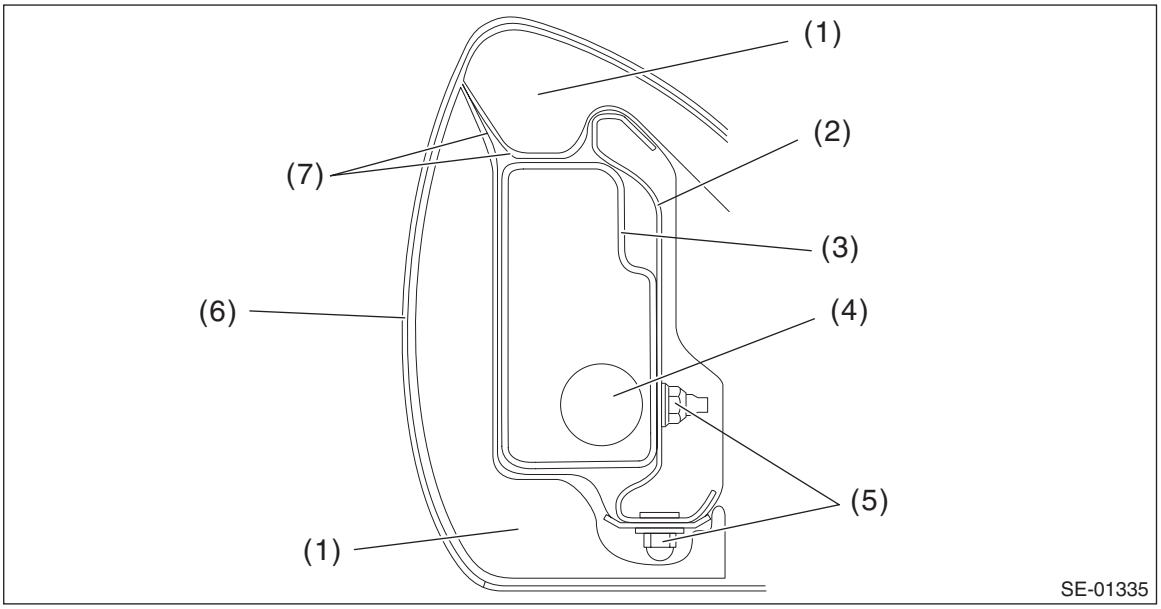

(1)	Pad ASSY - front seat backrest	(4)	Side airbag module inflator	(7)	Side airbag guide cloth
(2)	Frame ASSY - front backrest	(5)	Nut		
(3)	Side airbag module protective cover	(6)	Cover COMPL - front backrest		

- **Be careful not to stain or damage the cover COMPL - front backrest during assembly.**
- **Do not reuse hog rings.**
- **Secure the hog ring using hog ring pliers.**
- **Install the hog rings to the specified points securely and make sure that there is no wrinkle or twisting on the cover COMPL - front backrest.**

1) Before installation, inspect the following items and replace any faulty part with a new one.
- Make sure that there is no foreign matter on side airbag module.
- Front seat, airbag module and mounting bracket are damaged or deformed.
- Harness and/or connector is cracked, deformed or open.
- Harness wire is exposed.

2) Install the side airbag module to the frame assembly - front backrest.

Tightening torque:
6 N·m (0.6 kgf-m, 4.4 ft-lb)

3) Assemble the front seat. <Ref. to SE-23, ASSEMBLY, Front Seat.>

CAUTION:
After restoring the seat, operate the reclining and sliding mechanisms to check that the side airbag harness is not caught.

4) Install the front seat assembly to the body. <Ref. to SE-10, INSTALLATION, Front Seat.>
5) Connect the battery ground terminal. <Ref. to NT-6, BATTERY, NOTE, Note.>

8. Curtain Airbag Module

A: REMOVAL

CAUTION:
Before handling the airbag system components, refer to "CAUTION" of "General Description" in "AIRBAG SYSTEM". <Ref. to AB-9, CAUTION, General Description.>
1) Turn the ignition switch to OFF.
2) Disconnect the ground cable from battery and wait for at least 60 seconds before starting work. <Ref. to NT-6, BATTERY, NOTE, Note.>

NOTE:
- For model with battery sensor, disconnect the ground terminal from battery sensor.
- On CVT models, shift the select lever into "N" before disconnecting the battery ground cable.
- For model with the power seat, move the seat to the front-most position before removing the battery ground terminal.

3) Remove the trim panel - roof assembly. <Ref. to EI-102, REMOVAL, Roof Trim.>
4) Remove the curtain airbag module.

CAUTION:
- **Be careful not to damage the curtain airbag module during removal.**
- **Never open the curtain airbag module before activation. Never reuse the deployed curtain airbag module.**
- **Remove the modules in order starting from the vehicle front.**

(1) Remove all the bolts and clips, and remove the curtain airbag module.

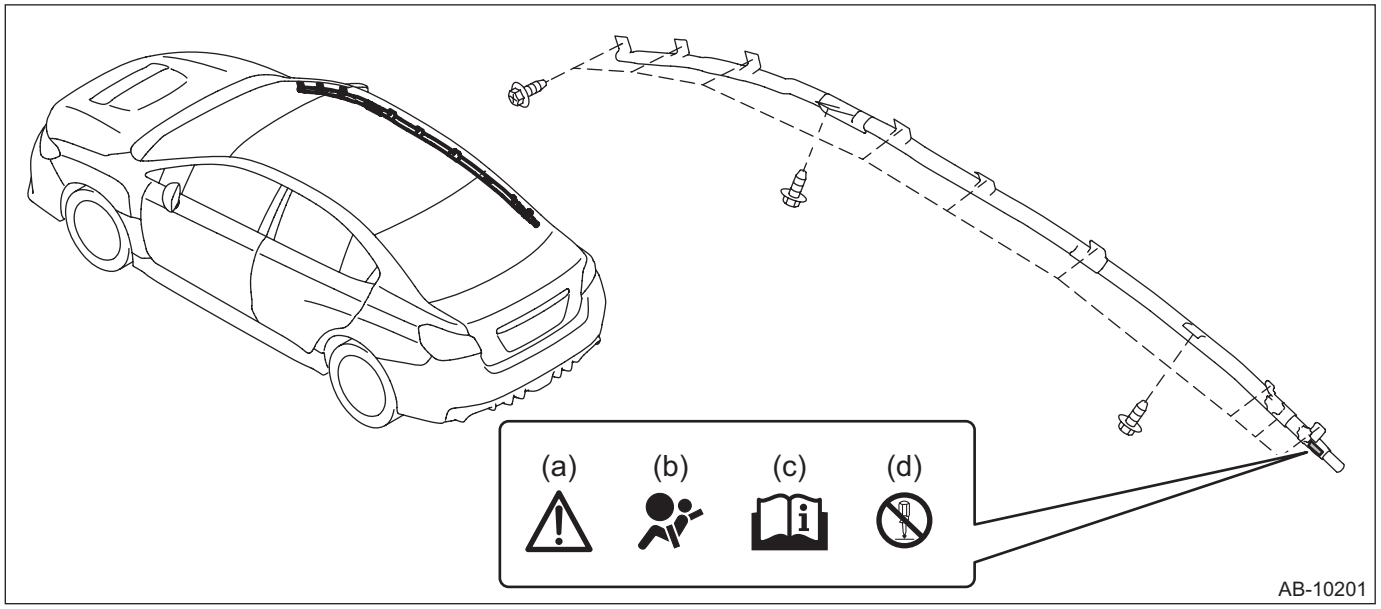

*1 Meaning of pictograms indicated on the label

(a) Flammable explosive substance encapsulated parts; be careful of handling.
(b) Indicates that this part is an airbag module.
(c) Before handling, always refer to "CAUTION" of "General Description" in "AIRBAG SYSTEM" in the service manual. For the disposal procedures of the airbag modules, refer to "Airbag Module Disposal".
(d) Do not disassemble the airbag module.

(2) Disconnect the curtain airbag module connector. <Ref. to AB-18, DRIVER'S AIRBAG MODULE, CURTAIN AIRBAG MODULE & PRETENSIONER, PROCEDURE, Airbag Connector.>

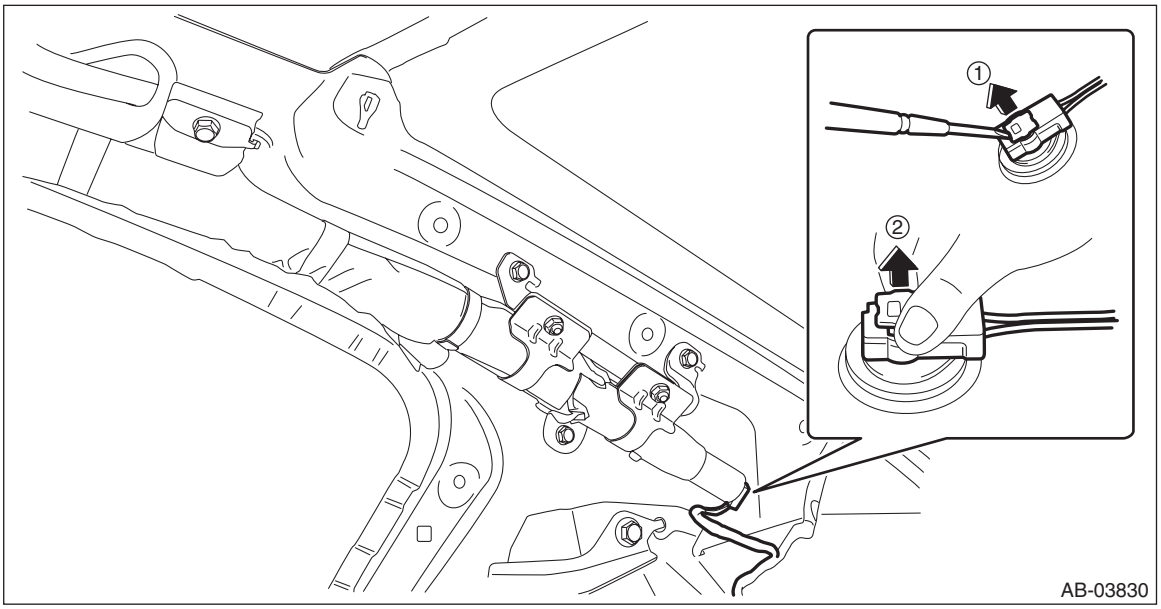

B: INSTALLATION

CAUTION:
• Before handling the airbag system components, refer to "CAUTION" of "General Description" in "AIRBAG SYSTEM". <Ref. to AB-9, CAUTION, General Description.>
• When installing the curtain airbag module, install a specified part at specified place.
• Be careful not to damage the curtain airbag module during installation.
• Never open the curtain airbag module before activation. Never reuse the deployed curtain airbag module.
• Make sure that there are no foreign matter on airbag module.
• When reusing the tether clip on the upper part of the trim panel - front pillar UPR, check that there is no damage to the tether clip. If the tether clip is damaged, always replace it with a new tether clip. If the tether clip is damaged, its holding force is reduced and the trim panel - front pillar UPR may come off.
• For installation of the stereo camera cover assembly, refer to "INSTALLATION", "Stereo Camera" in the "EyeSight" section and observe the precautions for installation. <Ref. to ES-11, INSTALLATION, Stereo Camera.>
1) Before installation, inspect the following items and replace any faulty part with a new one.
• Airbag cover is scratched or torn.
• Harness and/or connector is cracked, deformed or open.
• Harness wire is exposed.
• Mounting bracket and securing clip are cracked or deformed.
2) Install the curtain airbag module.

CAUTION:
• Be sure to insert the connector in completely until it is locked.
• Press in the push lock of the direct type connector securely. Then pull it gently to make sure that it is locked.

Tightening torque:
7.5 N·m (0.8 kgf-m, 5.5 ft-lb)
3) Install the trim panel - roof assembly. <Ref. to EI-104, INSTALLATION, Roof Trim.>
4) Connect the battery ground terminal. <Ref. to NT-6, BATTERY, NOTE, Note.>

NOTE:
After connecting the battery sensor terminal, place the select lever in the "P" position.

9. Airbag Control Module

A: REMOVAL

CAUTION:
• Before handling the airbag system components, refer to "CAUTION" of "General Description" in "AIRBAG SYSTEM". <Ref. to AB-9, CAUTION, General Description.>
• Do not disassemble the airbag control module.
• If the airbag control module is deformed or if there is any trace of water on the module, replace the airbag control module with a new one.
• Do not drop the airbag control module.
• After removal, keep the airbag control module on a dry, clean surface away from moisture, heat and dust.

1) Turn the ignition switch to OFF.
2) Disconnect the ground cable from battery and wait for at least 60 seconds before starting work. <Ref. to NT-6, BATTERY, NOTE, Note.>

NOTE:
• For model with battery sensor, disconnect the ground terminal from battery sensor.
• On CVT models, shift the select lever into "N" before disconnecting the battery ground cable.

3) Remove the console box assembly and the cover - shift lever. <Ref. to EI-67, REMOVAL, Console Box.>
4) Remove the center grille assembly. <Ref. to AC-91, REMOVAL, Air Vent Grille.>
5) Remove the audio assembly or navigation assembly. <Ref. to ET-35, REMOVAL, Audio.>
6) Remove the airbag control module.
   (1) Disconnect the connector from airbag control module. <Ref. to AB-17, AIRBAG CONTROL MODULE, PROCEDURE, Airbag Connector.>
   (2) Remove the bolt and nuts and remove the airbag control module.

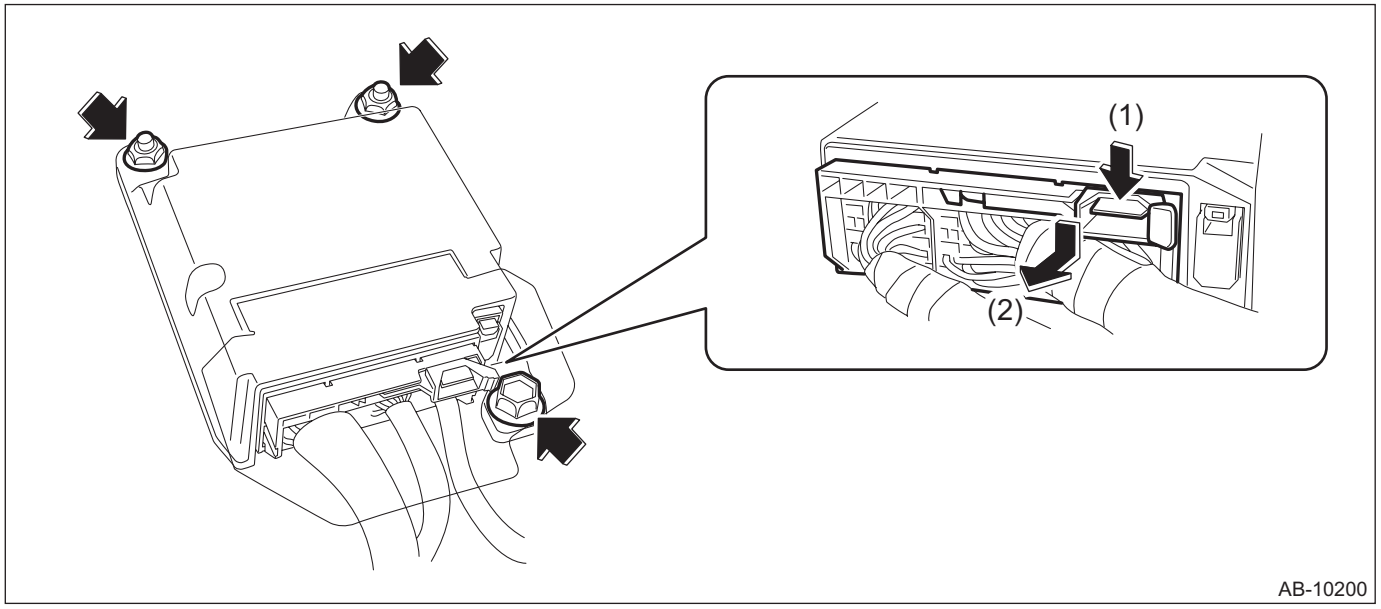

B: INSTALLATION

1) Before installation, inspect the following items and replace any faulty part with a new part.
- Control module is deformed.
- Control module connector is damaged.
- Control module mounting bracket is damaged.

2) Install the airbag control module.

CAUTION:
Do not reuse the bolt and nut.
Always replace with the specified new bolts and nuts.

Tightening torque:
25 N·m (2.5 kgf-m, 18.4 ft-lb)

3) Install the audio assembly or navigation assembly.
4) Install the center grille assembly.
5) Install the cover - shift lever and the console box assembly.
6) Connect the battery ground terminal. <Ref. to NT-6, BATTERY, NOTE, Note.>

NOTE:
After connecting the battery sensor terminal, place the select lever in the “P” position.

10.Front Sub Sensor

A: REMOVAL

CAUTION:
Before handling the airbag system components, refer to "CAUTION" of "General Description" in "AIRBAG SYSTEM". <Ref. to AB-9, CAUTION, General Description.>
1) Turn the ignition switch to OFF.
2) Disconnect the ground cable from battery and wait for at least 60 seconds before starting work. <Ref. to NT-6, BATTERY, NOTE, Note.>

NOTE:
For model with battery sensor, disconnect the ground terminal from battery sensor.
3) Remove the bumper face - front and the bumper beam COMPL - front. <Ref. to EI-31, REMOVAL, Front Bumper.>
4) Remove the bolt, and then detach the front sub sensor. <Ref. to AB-19, FRONT SUB SENSOR, PROCEDURE, Airbag Connector.>

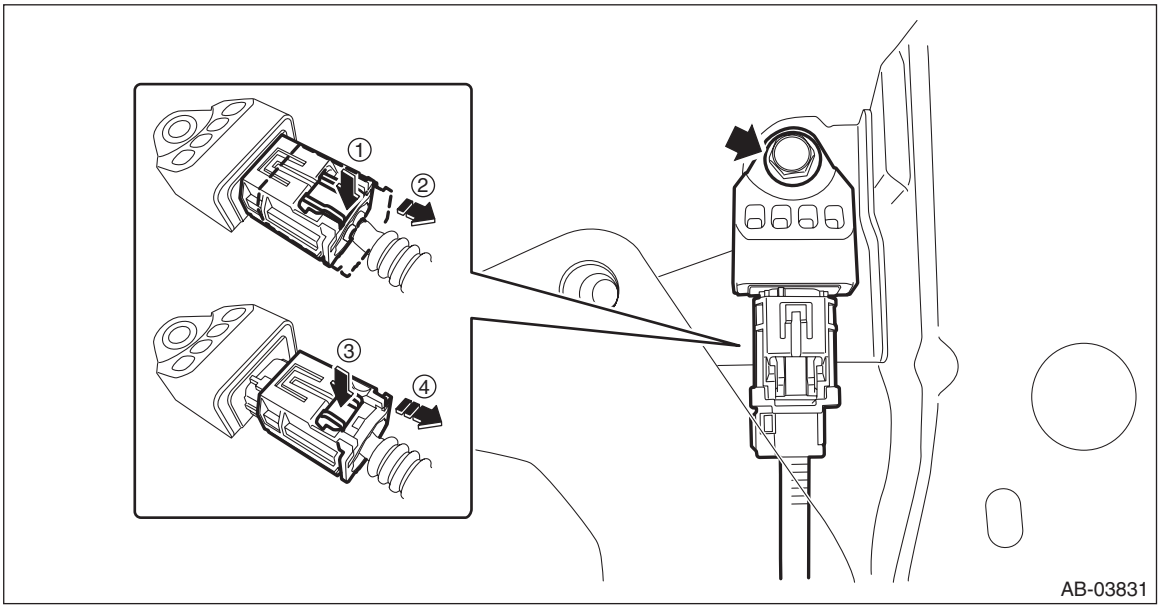

B: INSTALLATION

CAUTION:
- **If the airbag has been activated, replace the front sub sensor with a new part.**
- **Install the bumper face - front so that the front end of the under cover (b) comes inside the bumper face - front (a), and the front end of the mud guard (c) comes outside the bumper face - front (a).**

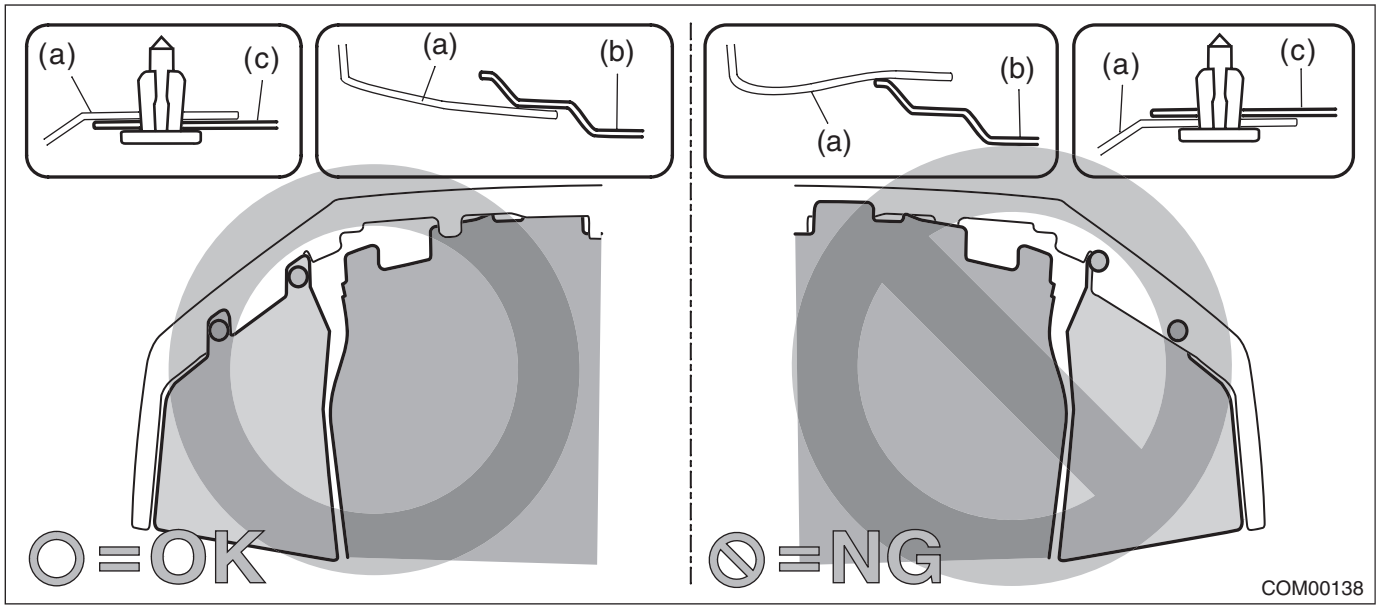

- **Before installing the bumper face, match the claws on the bracket - front bumper with the engaging position of flange section on the bumper face side. If the engaging position is not correct, the flange section may be broken or the clearance between fender panel and bumper face may not be uniform.**

1) Before installation, inspect the following items and replace any faulty part with a new part.
- Front sub sensor damage
- Connector damage

2) Install the front sub sensor.

CAUTION:
- **Do not reuse the bolt and nut.**

Always replace with the specified new bolts and nuts.
- **When installing the sensor, insert the set pin on the backside of the sensor into the hole on the body side securely.**

Tightening torque:
13 N·m (1.3 kgf-m, 9.6 ft-lb)

3) Install the bumper beam COMPL - front and the bumper face - front. <Ref. to EI-34, INSTALLATION, Front Bumper.>
4) Connect the battery ground terminal. <Ref. to NT-6, BATTERY, NOTE, Note.>
5) Adjust the fog light beam. (Model with fog light) <Ref. to LI-45, FOG LIGHT AIMING, ADJUSTMENT, Front Fog Light Assembly.>

11.Front Door Impact Sensor

A: REMOVAL

CAUTION:
Before handling the airbag system components, refer to "CAUTION" of "General Description" in "AIRBAG SYSTEM". <Ref. to AB-9, CAUTION, General Description.>
1) Operate the power window switch to close the front door glass.
2) Turn the ignition switch to OFF.
3) Disconnect the ground cable from battery and wait for at least 60 seconds before starting work. <Ref. to NT-6, BATTERY, NOTE, Note.>

NOTE:
For model with battery sensor, disconnect the ground terminal from battery sensor.
4) Remove the trim panel - front door. <Ref. to EI-57, FRONT DOOR, REMOVAL, Door Trim.>
5) Remove the sealing cover. <Ref. to EB-30, REMOVAL, Front Sealing Cover.>
6) Remove the front door impact sensor.
   (1) Remove the front door inner pad (a).

CAUTION:
If the clip is damaged, replace it with a new part because the panel assembly - front door may be deformed.
   (2) Remove the nuts and then remove the front door impact sensor.
   (3) Disconnect the airbag connector and remove the front door impact sensor. <Ref. to AB-20, FRONT DOOR IMPACT SENSOR AND SATELLITE SAFING SENSOR, PROCEDURE, Airbag Connector.>

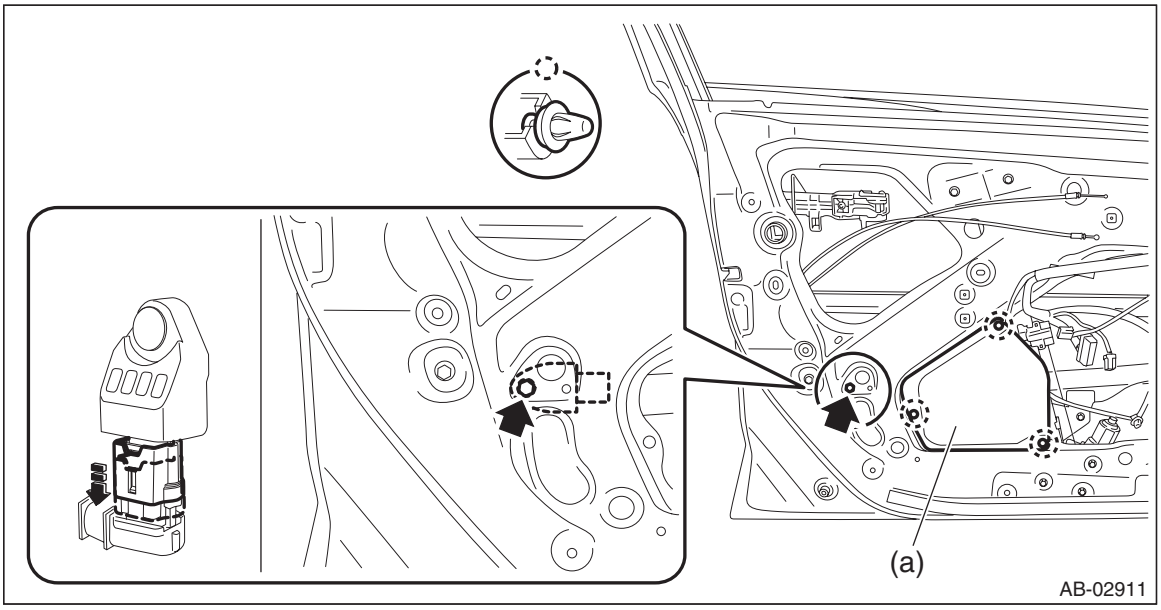

B: INSTALLATION

1) Before installation, inspect the following items and replace any faulty part with a new part.
- The front door impact sensor or connector is damaged.
- Inner panel area of the panel assembly - front door is deformed.
- Side airbag module has been activated.

2) Install the front door impact sensor.

CAUTION:
Do not reuse the bolt and nut.
Always replace with the specified new bolts and nuts.

Tightening torque:
7.5 N·m (0.8 kgf-m, 5.5 ft-lb)

3) Install the sealing cover.
4) Install the trim panel - front door.
5) Connect the battery ground terminal. <Ref. to NT-6, BATTERY, NOTE, Note.>

12.Side Airbag Sensor

A: REMOVAL

CAUTION:
• Before handling the airbag system components, refer to "CAUTION" of "General Description" in "AIRBAG SYSTEM". <Ref. to AB-9, CAUTION, General Description.>
• Airbag system satellite safing sensor is located in the lower of the rear seat cushion center. Be careful not to apply strong impact to the sensor when working with the rear seat cushion removed.
1) Move the seat all the way forward, from which the side airbag sensor is to be removed.

NOTE:
This is to remove the seat belt retractor assembly.
2) Turn the ignition switch to OFF.
3) Disconnect the ground cable from battery and wait for at least 60 seconds before starting work. <Ref. to NT-6, BATTERY, NOTE, Note.>

NOTE:
• For model with battery sensor, disconnect the ground terminal from battery sensor.
• For model with the power seat, move the seat to the front-most position before removing the battery ground terminal.
4) Remove the cover side sill - front INN, cover side sill - rear INN, and trim panel - center pillar LWR. <Ref. to EI-84, REMOVAL, Lower Inner Trim.>
5) Remove the rear seat cushion assembly. <Ref. to SE-30, REMOVAL, Rear Seat.>
6) Remove the seat belt retractor. (On the side where the side airbag sensor is removed)
(1) Turn over the floor mat to disconnect the belt tension sensor connector. <Ref. to AB-18, DRIVER'S AIRBAG MODULE, CURTAIN AIRBAG MODULE & PRETENSIONER, PROCEDURE, Airbag Connector.>

NOTE:
Also disconnect the connector of the passenger's lap seat belt pretensioner.
(2) Remove the bolt to remove the seat belt retractor.

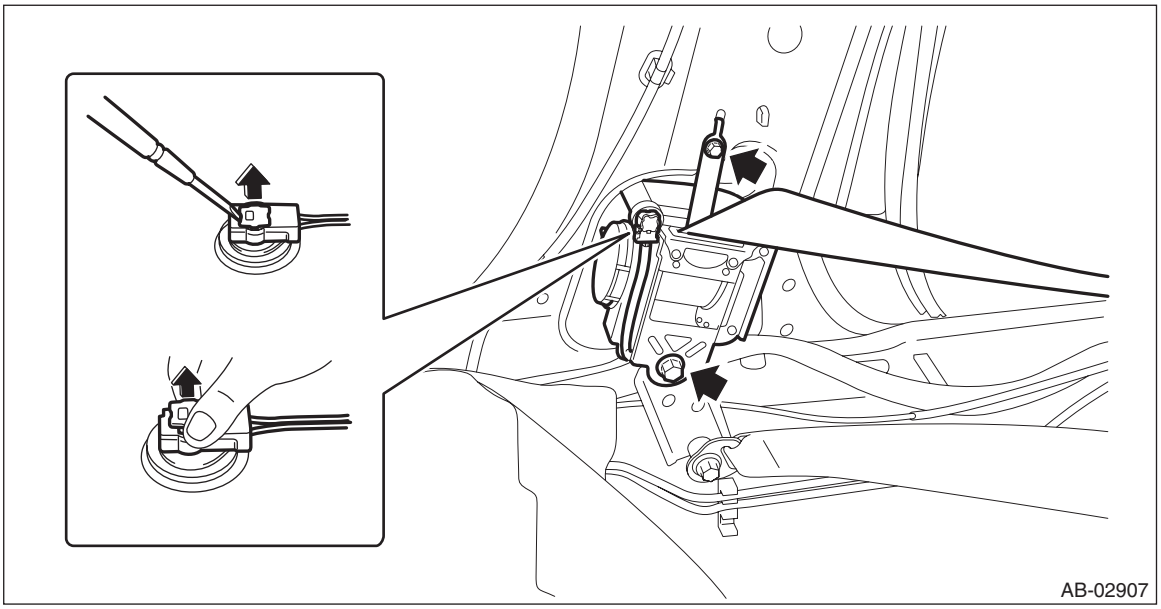

7) Remove the nuts and then remove the side airbag sensor. <Ref. to AB-21, SIDE AIRBAG SENSOR AND CURTAIN AIRBAG SENSOR, PROCEDURE, Airbag Connector.>

CAUTION:
- **Do not separate the side airbag sensor and bracket. It causes the airbag system malfunction.**
- **If the sensor is removed from the bracket, be sure to replace with a new part.**

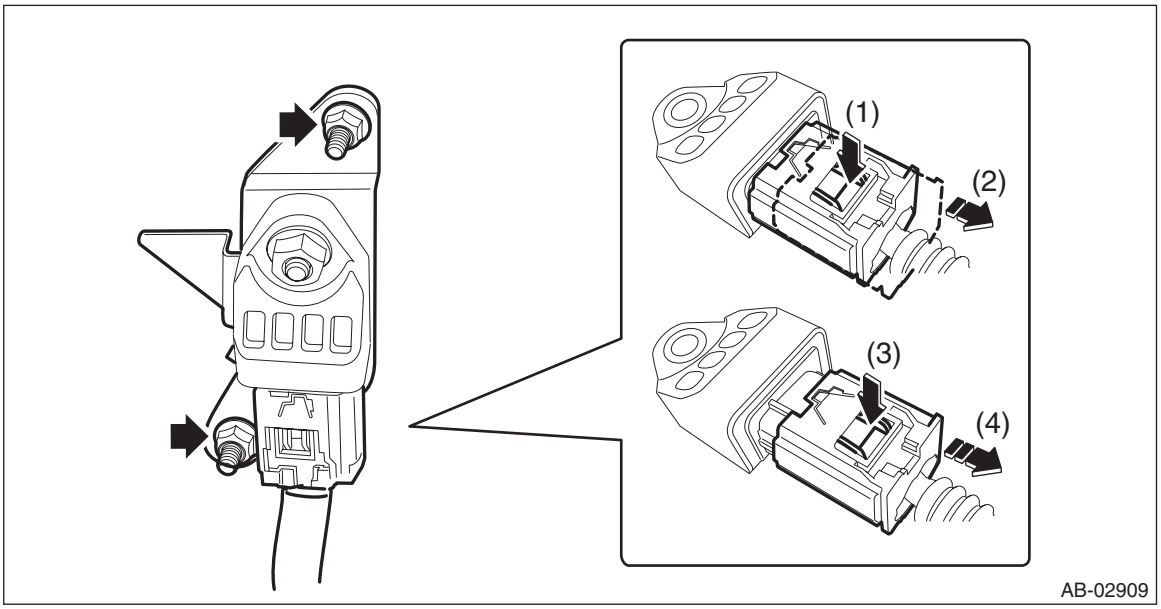

B: INSTALLATION

1) Before installation, inspect the following items and replace any faulty part with a new part.
- The side airbag sensor, sensor bracket, or connector are damaged.
- Side airbag module has been activated.

2) Install the side airbag sensor.

CAUTION:
Do not reuse the bolt and nut.
Always replace with the specified new bolts and nuts.

Tightening torque:
7.5 N·m (0.8 kgf-m, 5.5 ft-lb)

3) Install the seat belt retractor.

Tightening torque:
Front seat belt: <Ref. to SB-2, FRONT SEAT BELT, COMPONENT, General Description.>

4) Install the cover side sill - front INN, cover side sill - rear INN, and trim panel - center pillar LWR.

NOTE:
Assemble the trim panel - center pillar LWR to the trim panel - center pillar UPR securely.

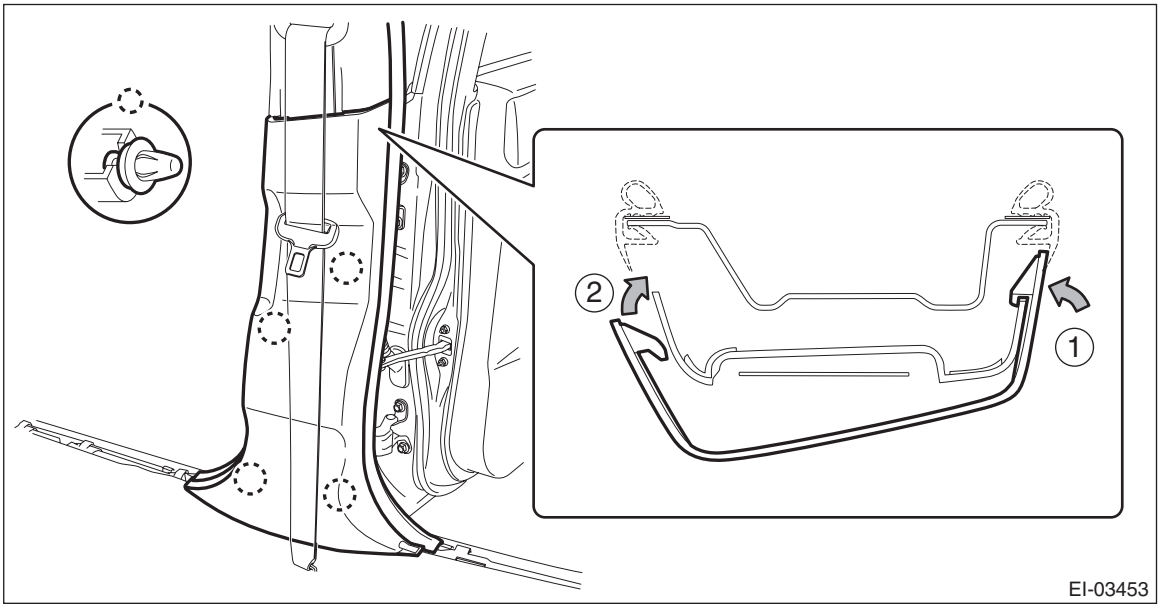

5) Connect the battery ground terminal. <Ref. to NT-6, BATTERY, NOTE, Note.>

13.Curtain Airbag Sensor

A: REMOVAL

CAUTION:
• Before handling the airbag system components, refer to "CAUTION" of "General Description" in "AIRBAG SYSTEM". <Ref. to AB-9, CAUTION, General Description.>
• Airbag system satellite safing sensor is located in the lower of the rear seat cushion center. Be careful not to apply strong impact to the sensor when working with the rear seat cushion removed.
1) Turn the ignition switch to OFF.
2) Disconnect the ground cable from battery and wait for at least 60 seconds before starting work. <Ref. to NT-6, BATTERY, NOTE, Note.>

NOTE:
For model with battery sensor, disconnect the ground terminal from battery sensor.
3) Remove the rear seat cushion assembly. <Ref. to SE-30, REMOVAL, Rear Seat.>
4) Remove the cover side sill - rear INN and the trim panel - rear pillar LWR. <Ref. to EI-92, REMOVAL, Rear Quarter Trim.>
5) Remove the nuts and then remove the curtain airbag sensor. <Ref. to AB-21, SIDE AIRBAG SENSOR AND CURTAIN AIRBAG SENSOR, PROCEDURE, Airbag Connector.>

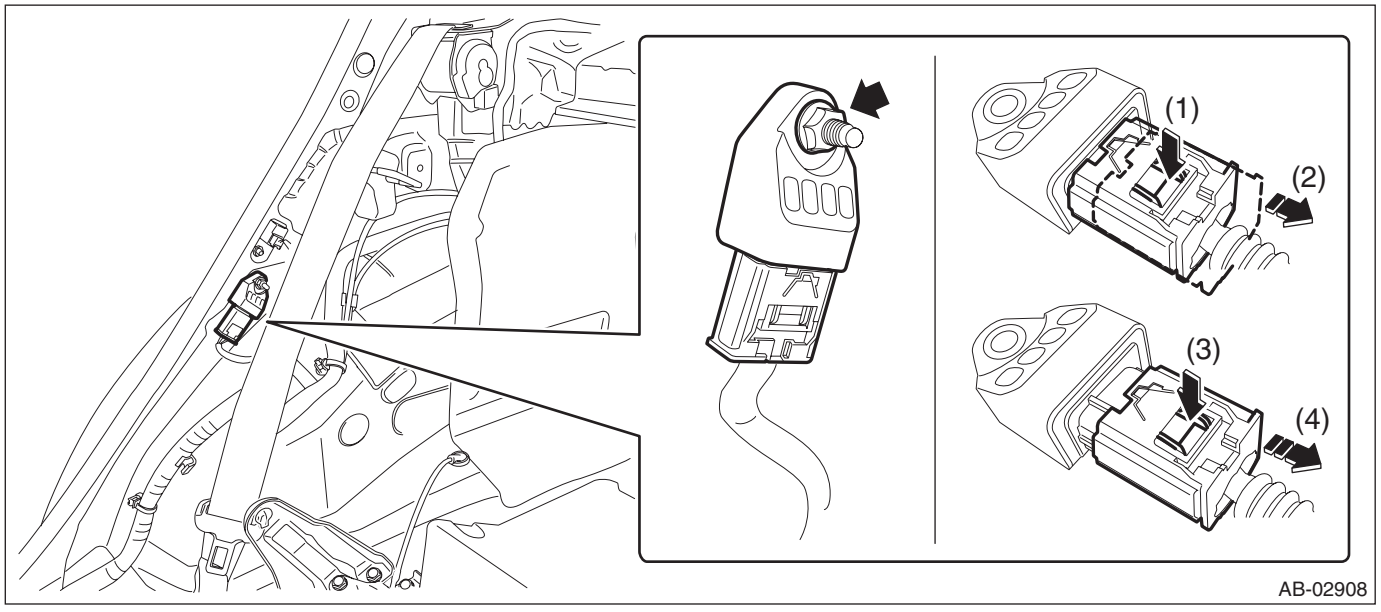

B: INSTALLATION

1) Before installation, inspect the following items and replace any faulty part with a new one.
- Curtain airbag sensor or connector is damaged.
- Curtain airbag module has been activated.

2) Install the side airbag sensor.

CAUTION:
• Do not reuse the bolt and nut.
Always replace with the specified new bolts and nuts.
• When installing the sensor, insert the set pin on the backside of the sensor into the hole on the body side securely.

Tightening torque:
7.5 N·m (0.8 kgf-m, 5.5 ft-lb)

3) Install the cover side sill - rear INN and the trim panel - rear pillar LWR.
4) Install the rear seat cushion assembly.
5) Connect the battery ground terminal. <Ref. to NT-6, BATTERY, NOTE, Note.>

14.Satellite Safing Sensor

A: REMOVAL

CAUTION:
Before handling the airbag system components, refer to "CAUTION" of "General Description" in "AIRBAG SYSTEM". <Ref. to AB-9, CAUTION, General Description.>
1) Turn the ignition switch to OFF.
2) Disconnect the ground cable from battery and wait for at least 60 seconds before starting work. <Ref. to NT-6, BATTERY, NOTE, Note.>

NOTE:
For model with battery sensor, disconnect the ground terminal from battery sensor.
3) Remove the rear seat cushion assembly. <Ref. to SE-30, REMOVAL, Rear Seat.>
4) Remove the satellite safing sensor.
   (1) Remove the clip, and remove the cover - satellite safing.
   (2) Remove the bolts and then remove the satellite safing sensor. <Ref. to AB-20, FRONT DOOR IMPACT SENSOR AND SATELLITE SAFING SENSOR, PROCEDURE, Airbag Connector.>

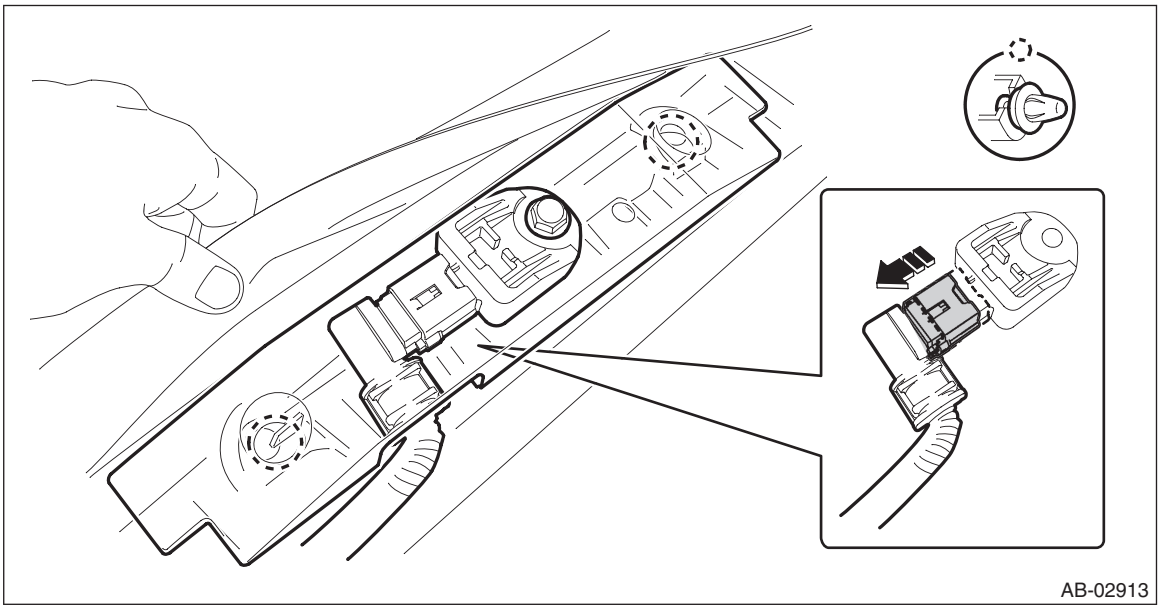
AB-02913

B: INSTALLATION

1) Before installation, inspect the following items and replace any faulty part with a new part.
- The satellite safing sensor connector is damaged.
- The cover - satellite safing is damaged.
- Side airbag or curtain airbag has been activated.

2) Install the satellite safing sensor.

CAUTION:
- **Do not reuse the bolt and nut.**

Always replace with the specified new bolts and nuts.
- **When installing the cover - satellite safing, push the cover securely until it contacts the floor panel.**
- **If the cover - satellite safing is too loose at its mounting portion to remove easily, replace with a new cover - satellite safing.**
- **After installing the cover - satellite safing, make sure that the sensor harness does not get caught.**

Tightening torque:
7.5 N·m (0.8 kgf-m, 5.5 ft-lb)

3) Install the rear seat cushion assembly.
4) Connect the battery ground terminal. <Ref. to NT-6, BATTERY, NOTE, Note.>

15.Roll Connector

A: REMOVAL

CAUTION:
Before handling the airbag system components, refer to "CAUTION" of "General Description" in "AIRBAG SYSTEM". <Ref. to AB-9, CAUTION, General Description.>

1) Position the front wheels straight ahead.
2) Turn the ignition switch to OFF.
3) Disconnect the ground cable from battery and wait for at least 60 seconds before starting work. <Ref. to NT-6, BATTERY, NOTE, Note.>

NOTE:
For model with battery sensor, disconnect the ground terminal from battery sensor.

4) Remove the driver's airbag module. <Ref. to AB-32, REMOVAL, Driver's Airbag Module.>
5) Remove the steering wheel. <Ref. to PS-16, REMOVAL, Steering Wheel.>
6) Remove the cover assembly - column.
   (1) Release the clips, and remove the cover assembly - steering UPR.

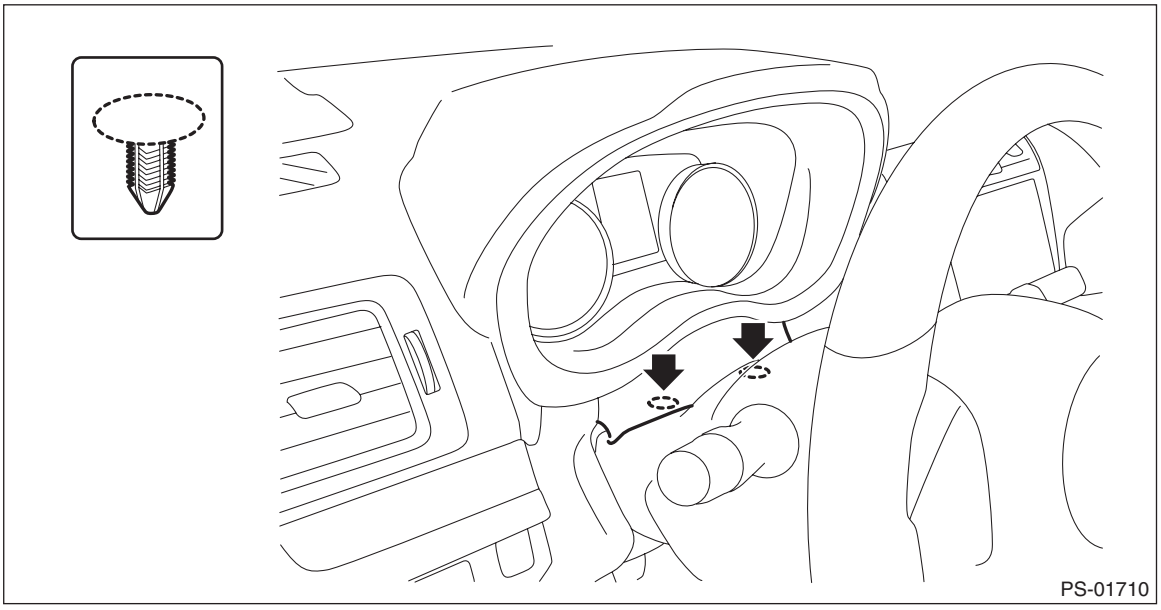

(2) Remove the screws.
(3) Remove the cap - key cylinder (a). (Model with keyless access with push button start)
(4) Release the claw, and remove the cover assembly - column UPR and the cover assembly - column LWR.

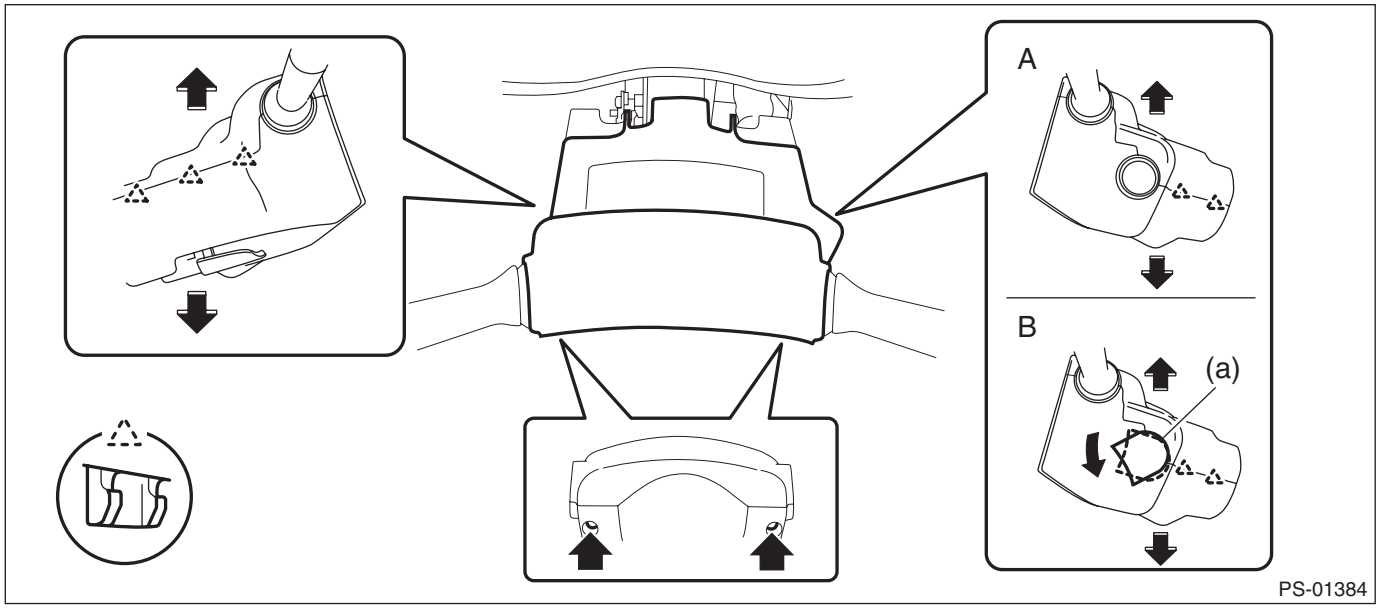

A Model without keyless access with push button start
B Model with keyless access with push button start

7) Remove the roll connector.

CAUTION:
Make sure that the roll connector is not turned from the original position.

(1) Disconnect the connector under the roll connector.
(2) Release the claws and remove the roll connector.

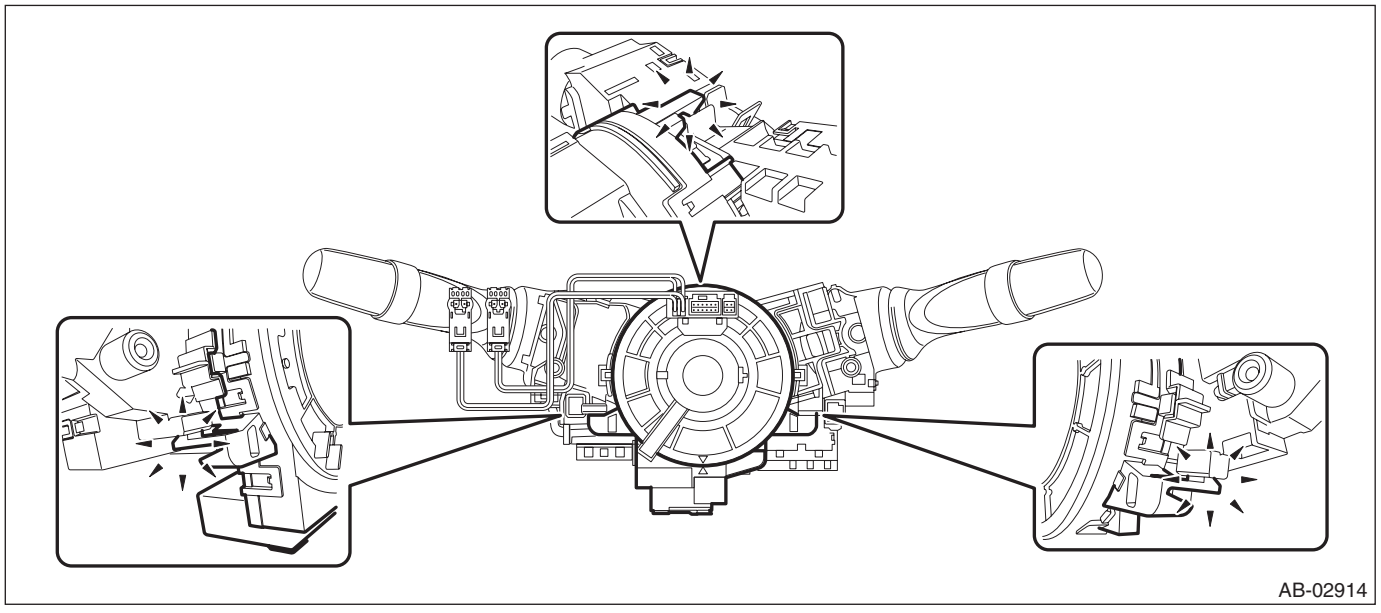

(3) Release the claws and separate the roll connector (a) and steering angle sensor (b).

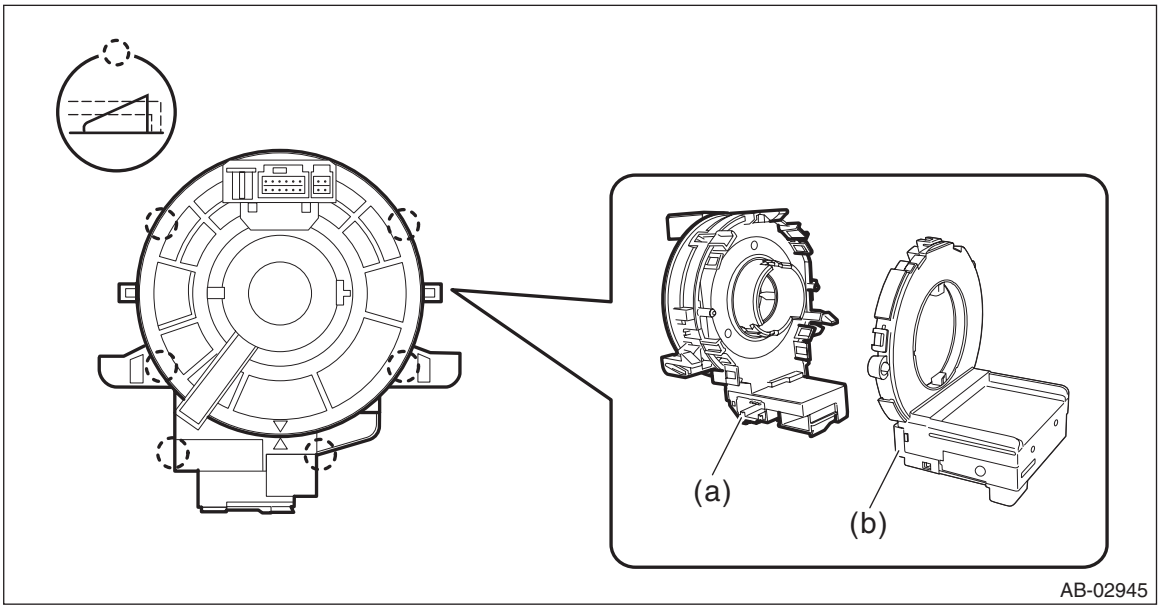

B: INSTALLATION

CAUTION:
If the steering wheel and steering angle sensor (steering roll connector) are removed, be sure to perform the following operations.
- **Align the center position of the steering roll connector.**
- **Perform the neutral position setting of the steering angle sensor.**

1) Before attaching a new roll connector, apply a thin coat of grease contained in the connector onto the areas shown by the arrows.

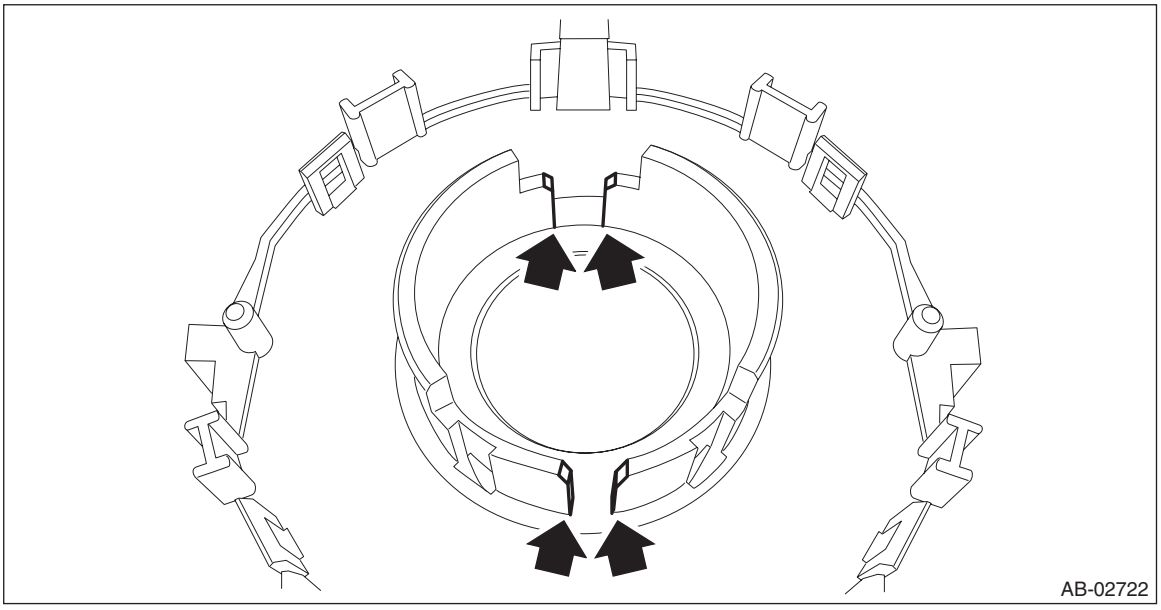

2) Install the roll connector.
3) Align the center position of the steering roll connector. <Ref. to AB-62, ADJUSTMENT, Roll Connector.>
4) Install the cover assembly - column.
5) Install the steering wheel.

Tightening torque:
Steering wheel: 39 N·m (4 kgf-m, 28.8 ft-lb)

Clearance:
Between cover assembly - column and steering wheel: 4 — 6 mm (0.16 — 0.24 in)

6) Install the driver's airbag module. <Ref. to AB-33, INSTALLATION, Driver's Airbag Module.>
7) Connect the battery ground terminal. <Ref. to NT-6, BATTERY, NOTE, Note.>
8) Perform the neutral position setting of the steering angle sensor. <Ref. to VDC-17, VDC SENSOR MID-POINT SETTING MODE, ADJUSTMENT, VDC Control Module and Hydraulic Control Unit (VDCCM&H/U).>

C: INSPECTION

1. VISUAL INSPECTION

Check for the following, and replace the damaged parts with new parts.
- Combination switch is cracked or deformed.
- Roll connector is cracked or deformed.

2. UNIT INSPECTION OF ROLL CONNECTOR

CAUTION:
• Do not rotate the roll connector to more than the specified number of turns. Otherwise, the roll connector internal wire may be broken.
• When determining the end stop, rotate the connector slowly without applying excessive force. Applying excessive force at the end stop may break the internal wire.
1) Adjust the roll connector. <Ref. to AB-62, ADJUSTMENT, Roll Connector.>
2) Set the roll connector to the central position.
3) Connect the test harness to the connector E and connector F.

Preparation tool:
Test harness N (98299SA000)
Test harness Q (98299SA040)
- Connector E — Test harness N (1N)
- Connector F — Test harness Q (1Q)

4) With the following conditions, check the resistance between the test harness connector terminals.
- Perform the check with the roll connector centered (front wheels direct straightforward).
- Rotate the roll connector counterclockwise from the center (front wheels direct straightforward) to an end stop. Then, perform the check while rotating it clockwise to approximately 4.5 turns.

Preparation tool:
Circuit tester

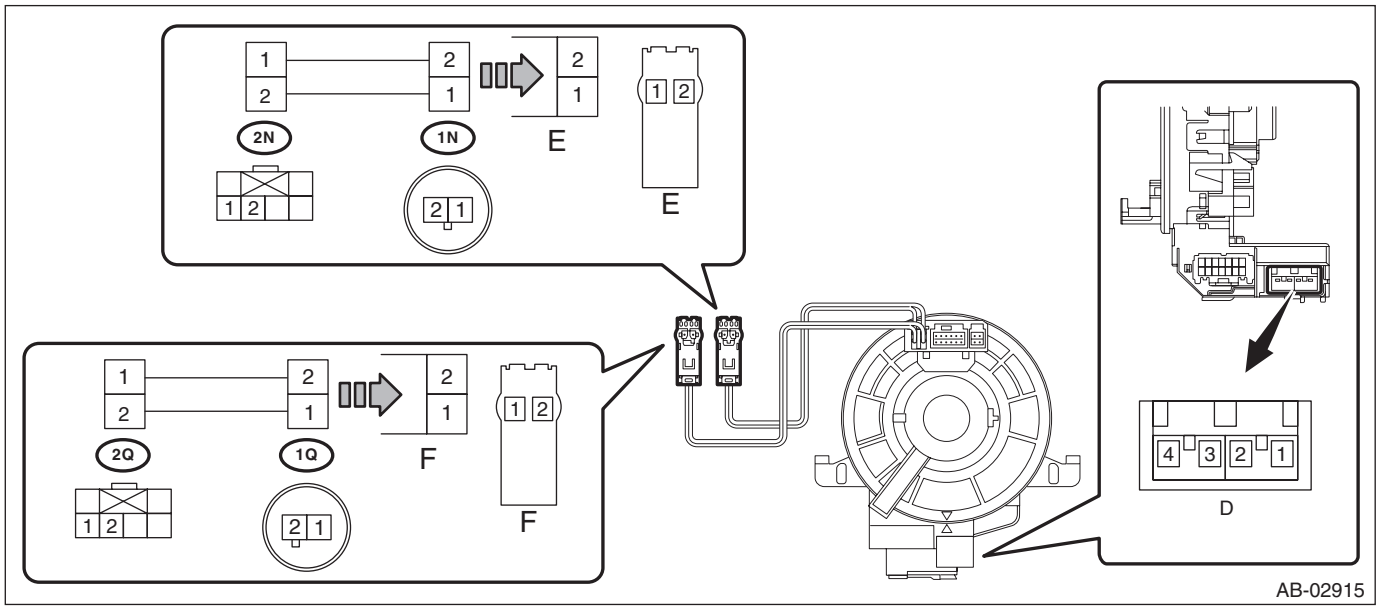

Terminal No.	Inspection conditions	Standard
(2N) No. 1 — (2N) No. 2	Always	Less than 1 Ω
(2Q) No. 1 — (2Q) No. 2	Always	Less than 1 Ω

NOTE:
The connector D is designed to short the terminals D1/D2 and D3/D4 when disconnected.
5) Replace the roll connector with a new part if the inspection result is not within the standard value.

D: ADJUSTMENT

CAUTION:
• Do not rotate the roll connector to more than the specified number of turns. Otherwise, the roll connector internal wire may be broken.
• When determining the end stop, rotate the connector slowly without applying excessive force. Applying excessive force at the end stop may break the internal wire.
1) Check that front wheels are positioned in straight ahead direction.
2) Rotate the roll connector counterclockwise until it stops.
3) Rotate the roll connector clockwise approx. 2.5 turns until "▲" marks are aligned.

NOTE:
When the roll connector comes to the center position, the orange roller (b) can be seen from the sight glass (a).

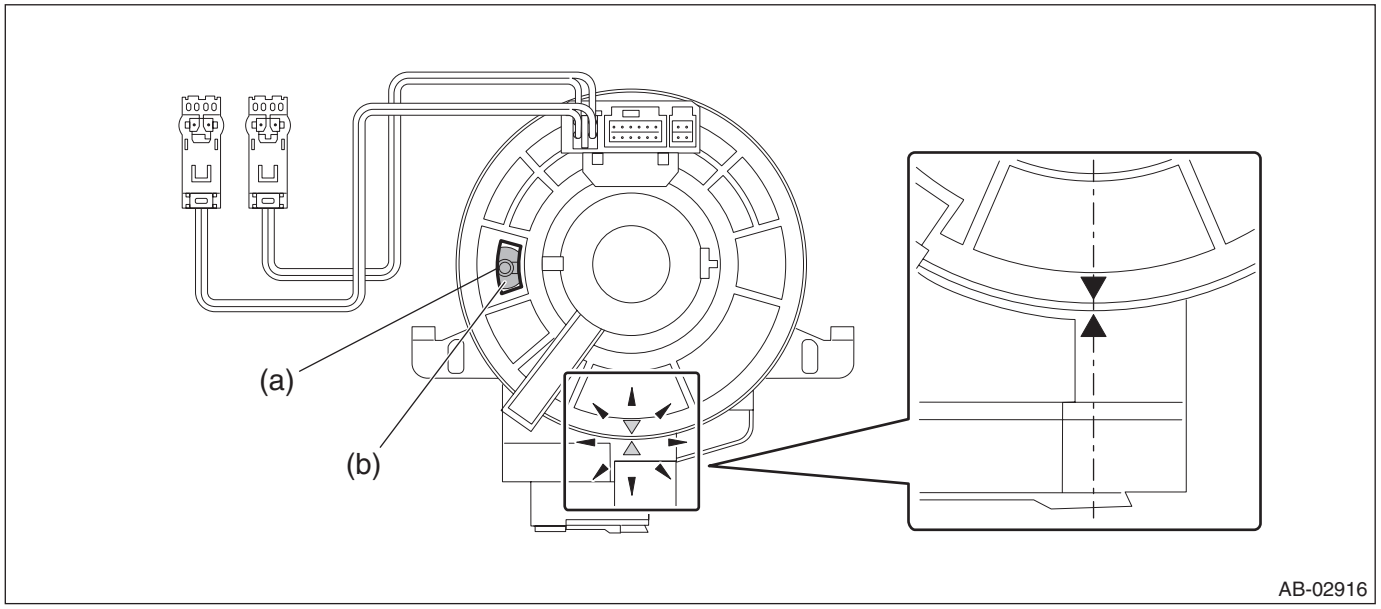

16.Airbag Module Disposal (Deployment Processing on Vehicle)

A: PROCEDURE

WARNING:
Make sure to follow the instructions below. Otherwise, personal injuries may occur.
• Before discarding an airbag module, always perform an operation process to prevent any false activation.
• Wear protective gloves, safety goggles and earplugs during this operation. Wash your hands afterwards.
• Do not touch the airbag module just after activation because it is very hot. Before handling it for disposal, wait for 40 minutes.

CAUTION:
• Airbag module operation process should be performed on a flat place in safety area. Do not perform the process outdoors when there is rain or strong wind.
• Activating an airbag module causes a high explosive noise, be sure to warn people in the area, and do not allow anyone within 5 m (16 ft) radius of the disposal site.
• After activating the airbag module, smoke may arise. Therefore, it must be activated in a well-ventilated place with no smoke detector nearby.
• Do not expose the activated airbag module to water.
• Wrap the activated airbag module in a sealed vinyl bag when discarding.
• If it is impossible to perform an airbag module operation process due to some situational reasons, consult SUBARU dealership or one of the authorized workshops.

1. DRIVER'S AIRBAG MODULE

1) Turn the ignition switch to OFF.
2) Disconnect the ground cable from battery and wait for at least 60 seconds before starting work. <Ref. to NT-6, BATTERY, NOTE, Note.>

NOTE:
For model with battery sensor, disconnect the ground terminal from battery sensor.
3) Remove the cover assembly - column.
(1) Release the clips, and remove the cover assembly - steering UPR.

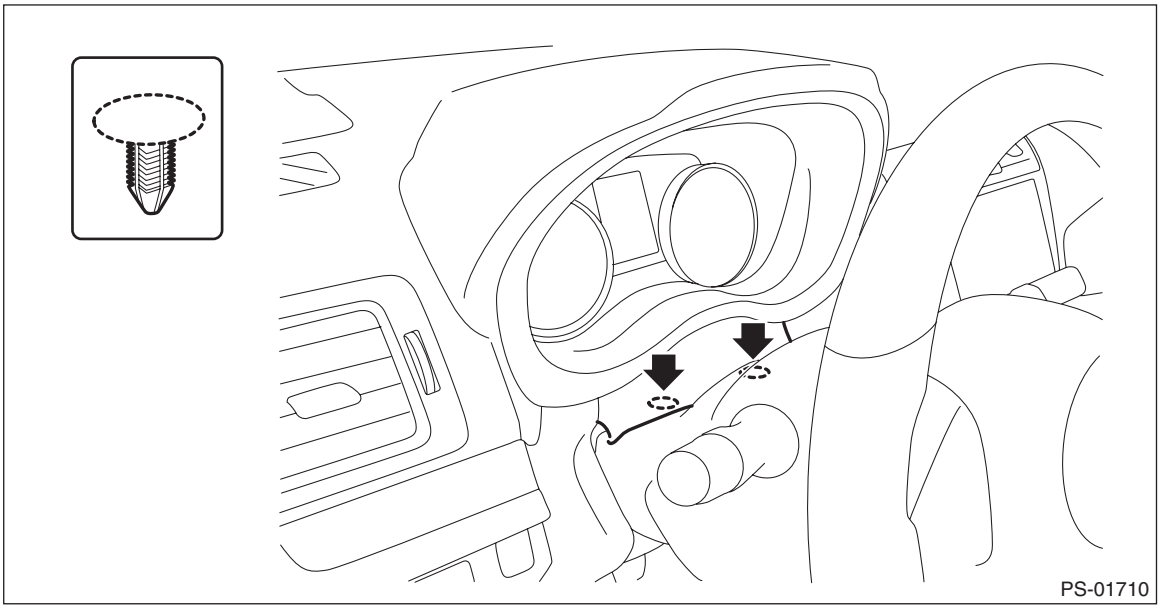

(2) Remove the screws.
(3) Remove the cap - key cylinder (a). (Model with keyless access with push button start)
(4) Release the claw, and remove the cover assembly - column UPR and the cover assembly - column LWR.

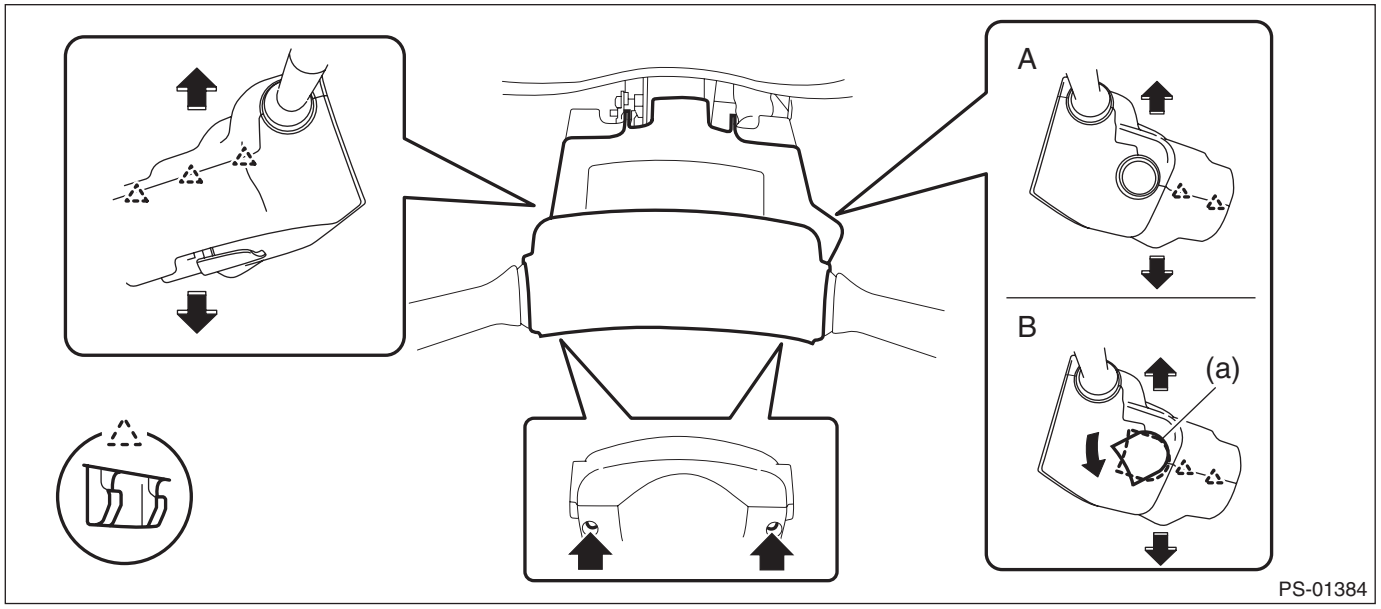

A Model without keyless access with push button start
B Model with keyless access with push button start

4) Disconnect the driver's airbag module connector.

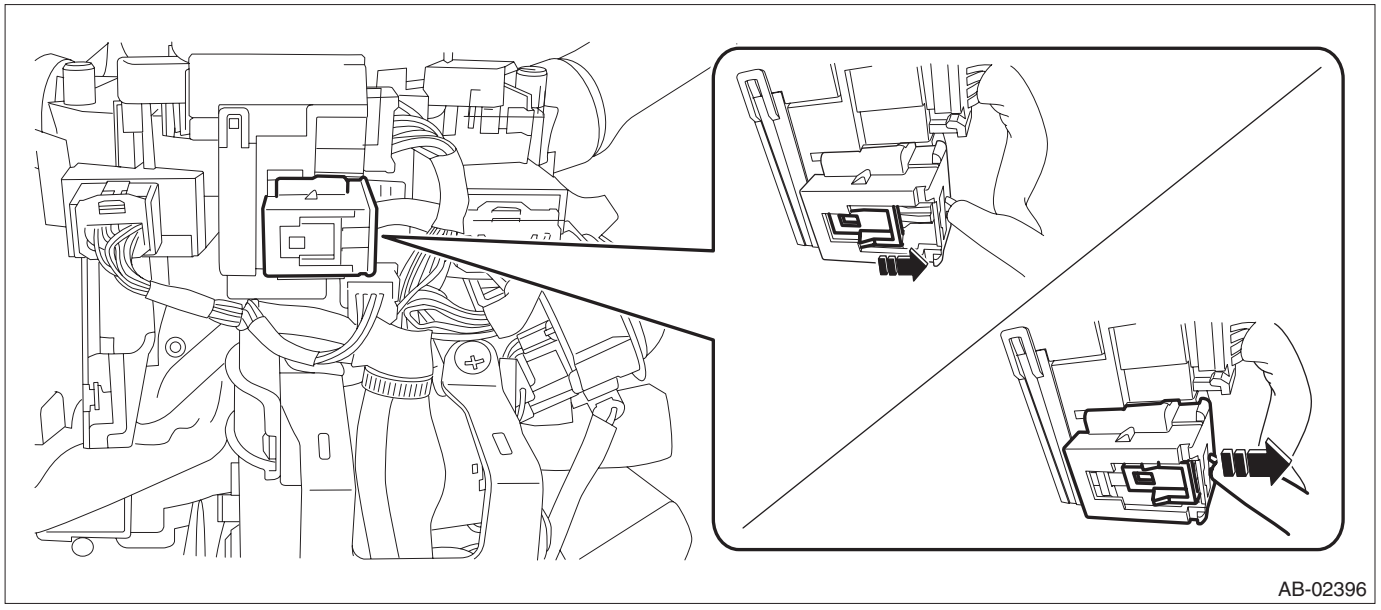

5) Cut off the harness on the body side of the removed connector approx. 70 mm (2.76 in) from the edge of the connector.

Preparation tool:
Nippers

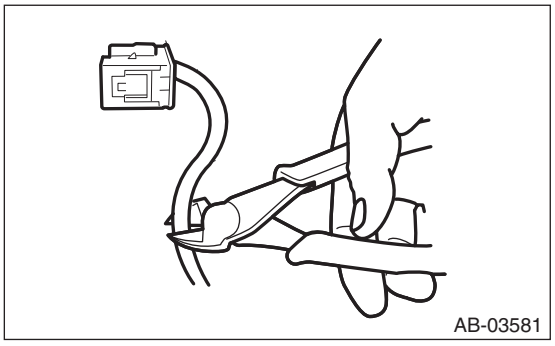

6) Peel off the shield approx. 20 mm (0.79 in) from the four harnesses of the removed body side connector.

Preparation tool:
Wire stripper

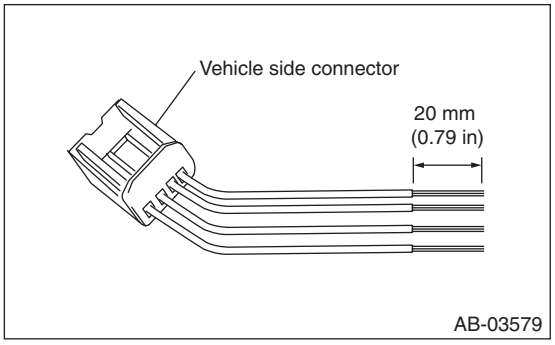

7) Twist the end of harness as shown in the figure.

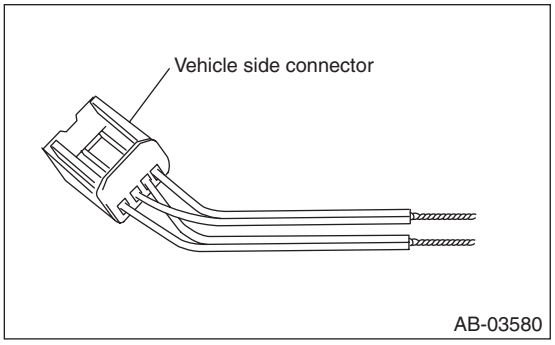

8) Prepare two vinyl-shielded parallel wires of 6 m (19 ft) long. Peel off the shield of both ends approx. 20 mm (0.79 in) and twist one end together into shorted condition.
9) The other end, not shorted, will be connected to harnesses of repaired body connector as shown in the figure, and insulated with vinyl tape.

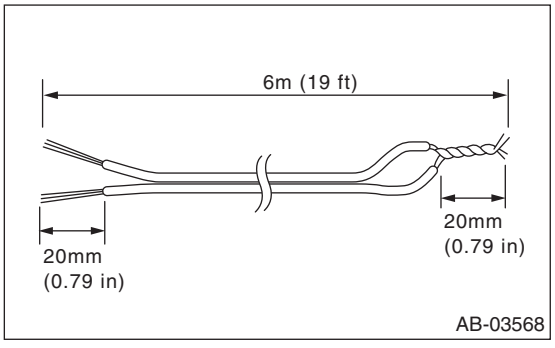

NOTE:
No concern about polarity.
10) After completing the connecting work, connect the body side connector to the connector of the airbag connector lower side again.

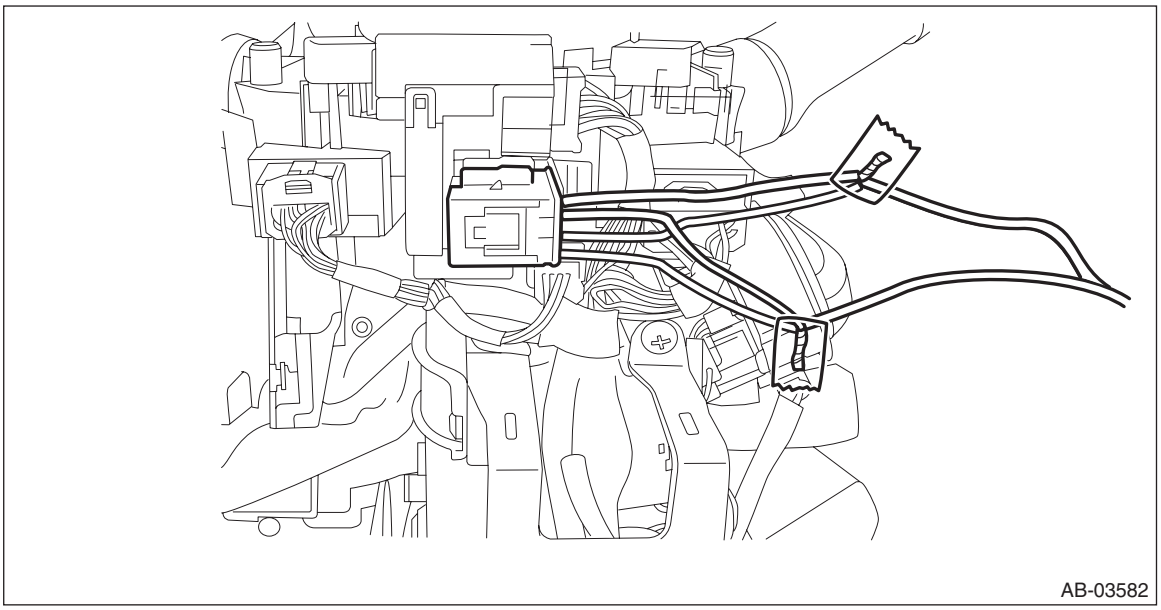

11) Bring the vinyl wire for operation out of the vehicle and make sure there is no person in the vehicle.
12) Extend the wiring of airbag deployment tool to the limit, and close all the windows and sunroof completely.

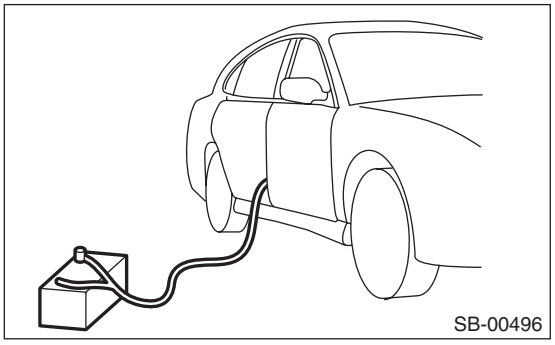

13) Move the battery at least 5 m (16 ft) from the vehicle, and confirm safety in the area.
14) Connect the airbag deployment tool alligator clip to the battery negative (–) terminal.
15) Connect the other cable of airbag deployment tool to the battery positive (+) terminal, and activate the airbag module.

CAUTION:
• After activation, the airbag module will be extremely hot. Let it cool down for at least 40 minutes in an area with no one around.
• Do not expose the activated airbag module to water.

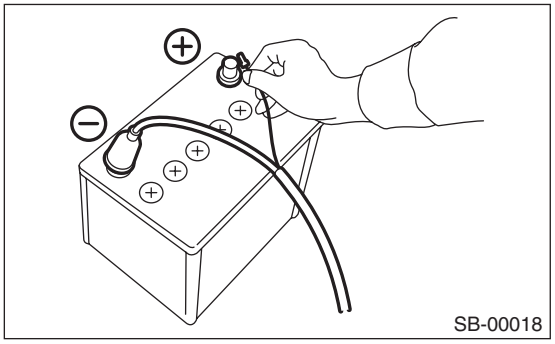

16) Remove the driver's airbag module. <Ref. to AB-32, REMOVAL, Driver's Airbag Module.>
17) Place the activated airbag module in a sealed vinyl bag, then discard.

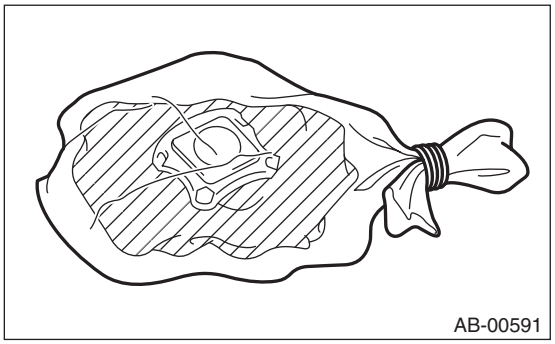

2. KNEE AIRBAG MODULE

1) Turn the ignition switch to OFF.
2) Disconnect the ground cable from battery and wait for at least 60 seconds before starting work. <Ref. to NT-6, BATTERY, NOTE, Note.>

NOTE:
For model with battery sensor, disconnect the ground terminal from battery sensor.
3) Remove the cover assembly - instrument panel LWR driver. <Ref. to EI-62, REMOVAL, Instrument Panel Lower Cover.>
4) Remove the nuts to remove the knee airbag module and disconnect the harness connector. <Ref. to AB-24, KNEE AIRBAG MODULE, PROCEDURE, Airbag Connector.>

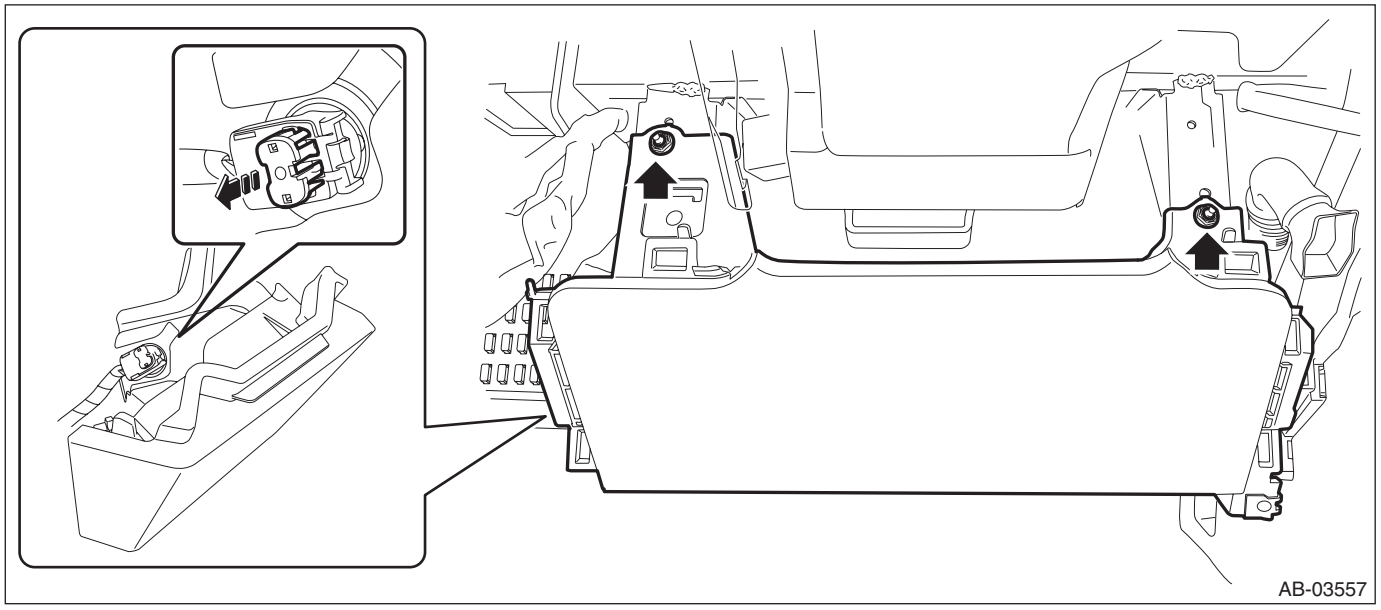

5) Short the terminal to the alligator clip furnished as airbag deployment tool.

CAUTION:
The airbag deployment tool should be kept shorted on the terminals until just before activation of airbag module.

Preparation tool:
ST: AIRBAG DEPLOYMENT TOOL (98299PA030)

6) Connect the airbag deployment tool (A) and test harness adapter D (B).

Preparation tool:
ST: TEST HARNESS ADAPTER D (98299SA010)

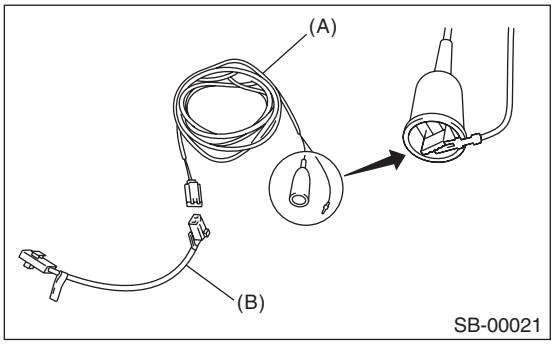

7) Connect the test harness adapter D to the knee airbag module and install the knee airbag module to the vehicle again.

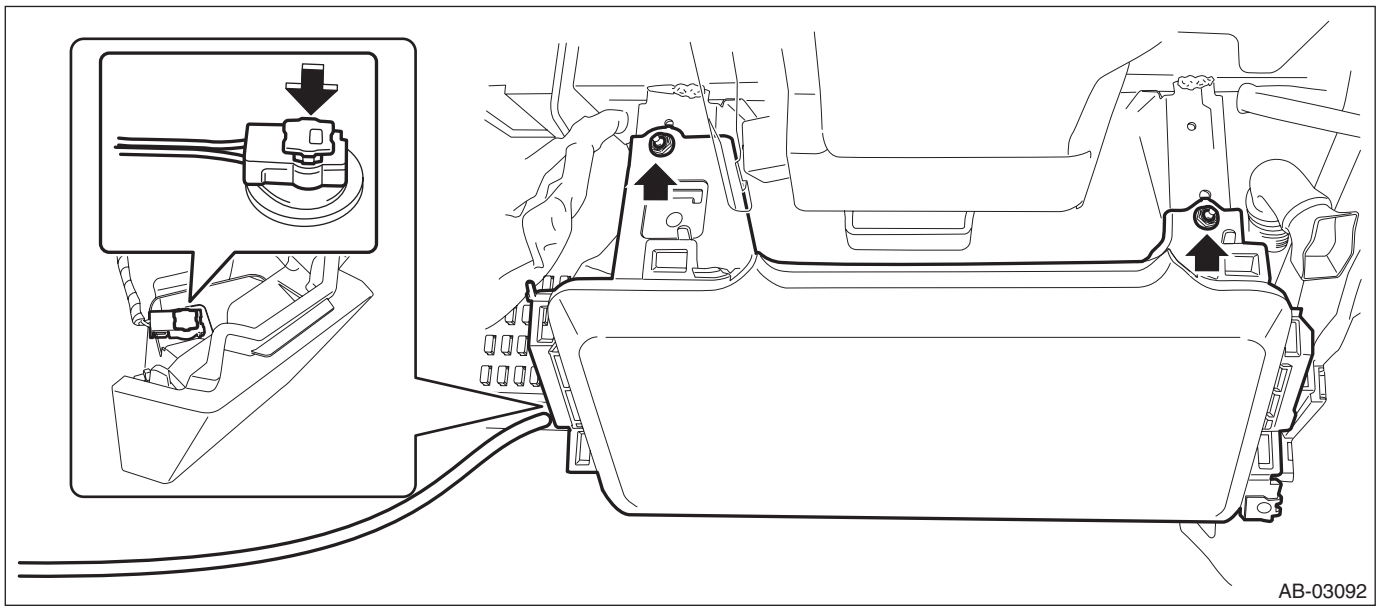

Tightening torque:
7.5 N·m (0.8 kgf-m, 5.5 ft-lb)

8) Make sure there is no one inside the vehicle.
9) Extend the wiring of airbag deployment tool to the limit, and close all the windows and sunroof completely.

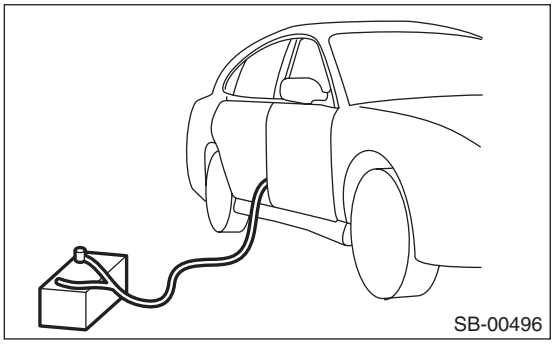

10) Move the battery at least 5 m (16 ft) from the vehicle, and confirm safety in the area.
11) Connect the airbag deployment tool alligator clip to the battery negative (–) terminal.
12) Connect the other cable of airbag deployment tool to the battery positive (+) terminal, and activate the airbag module.

CAUTION:
• After activation, the airbag module will be extremely hot. Let it cool down for at least 40 minutes in an area with no one around.
• Do not expose the activated airbag module to water.

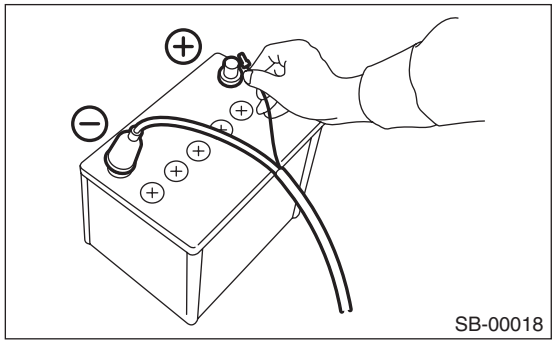
SB-00018

13) Remove the bolts and remove knee airbag module.
14) Place the activated airbag module in a sealed vinyl bag, then discard.

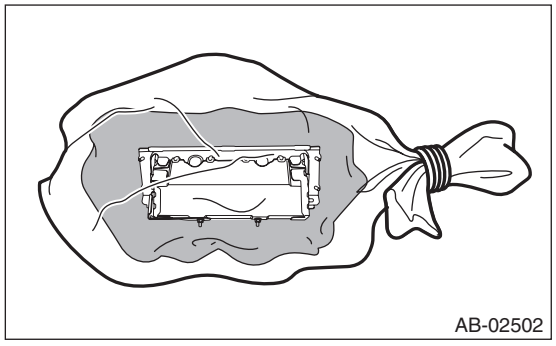
AB-02502

NOTE:
When necessary, fold the fabric part of airbag into three or four sections, rope and seal in a vinyl bag.

3. PASSENGER'S AIRBAG MODULE

1) Turn the ignition switch to OFF.
2) Disconnect the ground cable from battery and wait for at least 60 seconds before starting work. <Ref. to NT-6, BATTERY, NOTE, Note.>

NOTE:
For model with battery sensor, disconnect the ground terminal from battery sensor.
3) Remove the cover - shift lever, the panel center LWR RH, and the console box assembly. <Ref. to EI-67, REMOVAL, Console Box.>
4) Disconnect the passenger's airbag module connector. <Ref. to AB-18, PASSENGER'S AIRBAG MODULE, PROCEDURE, Airbag Connector.>

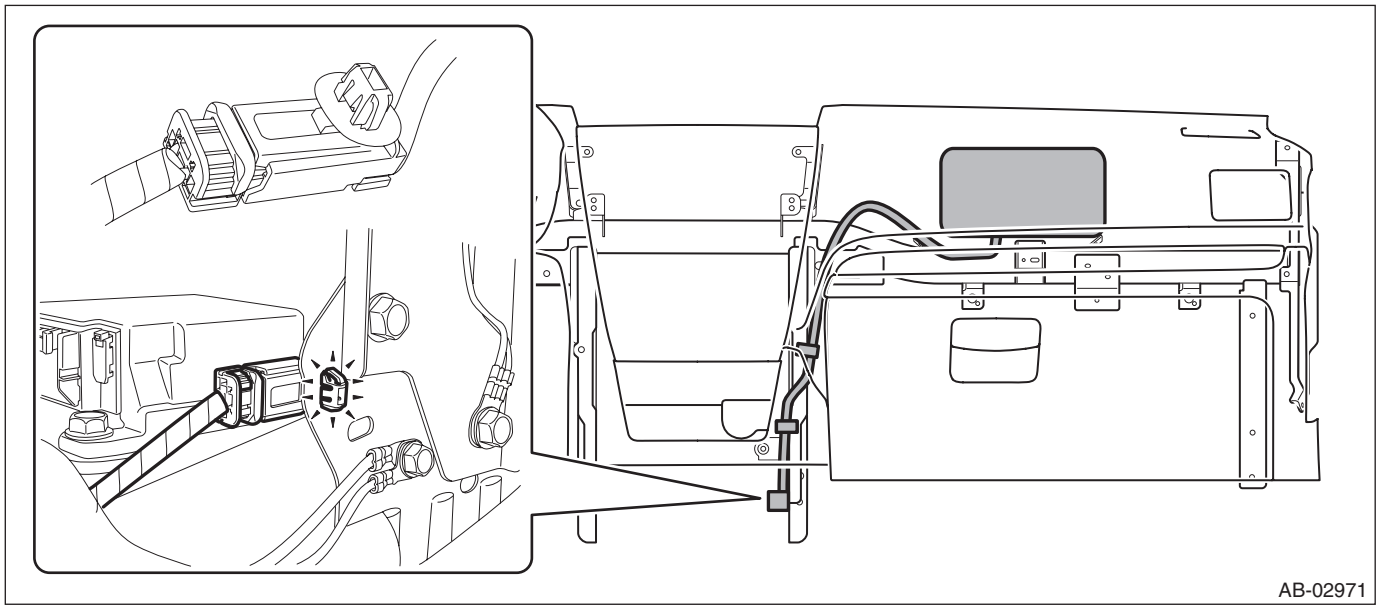
AB-02971

5) Short the terminal to the alligator clip furnished as airbag deployment tool.

CAUTION:
The airbag deployment tool should be kept shorted on the terminals until just before activation of airbag module.

Preparation tool:
ST: AIRBAG DEPLOYMENT TOOL (98299PA030)
6) Connect airbag deployment tool (A) and test harness adapter AM (B).

Preparation tool:
ST: TEST HARNESS ADAPTER AM (98299FJ000)

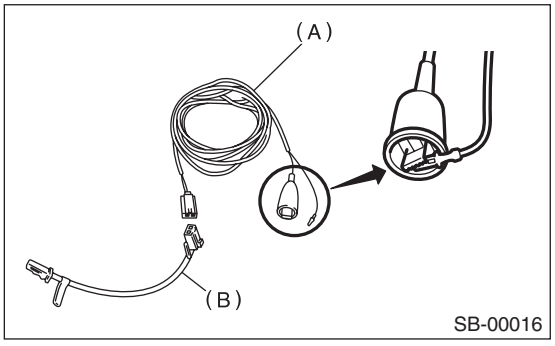

SB-00016

7) Connect test harness adapter AM to airbag connector.

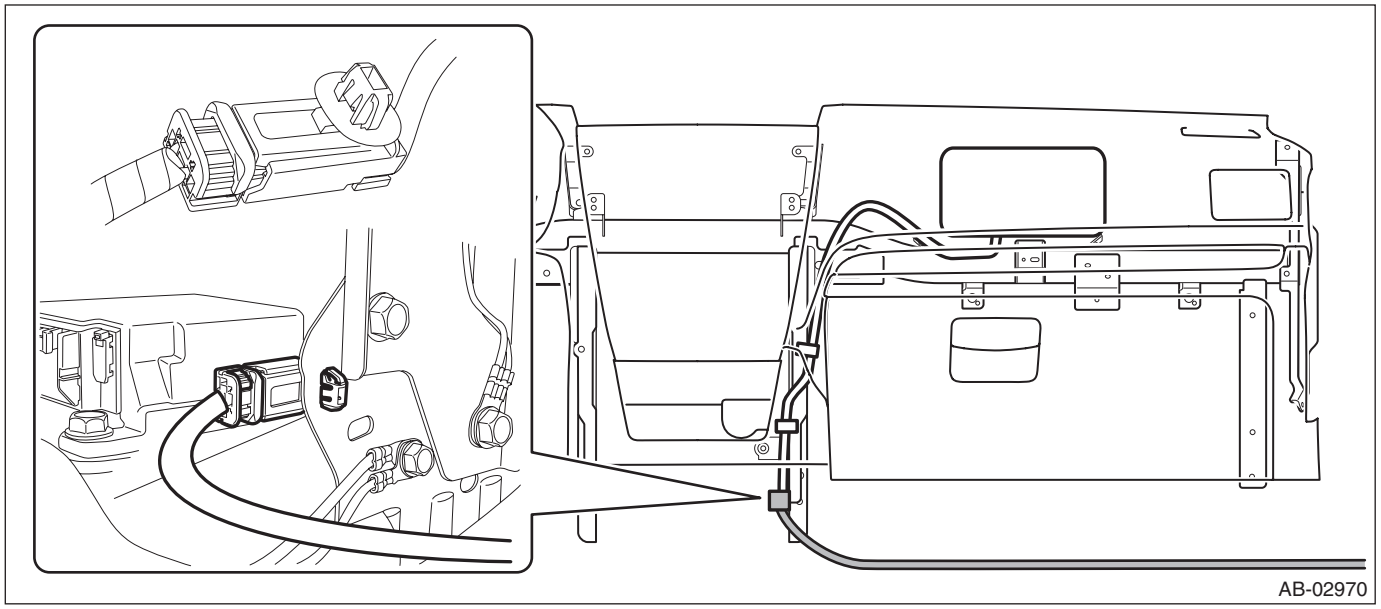

8) Make sure there is no one inside the vehicle.
9) Extend the wiring of airbag deployment tool to the limit, and close all the windows and sunroof completely.

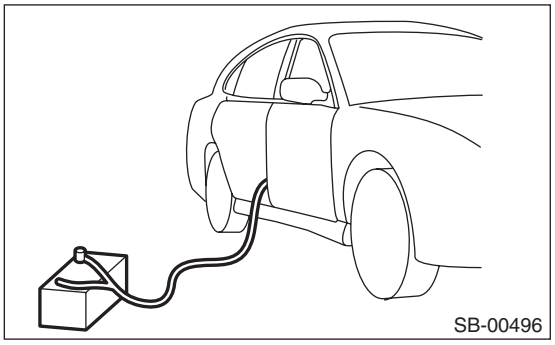

10) Move the battery at least 5 m (16 ft) from the vehicle, and confirm safety in the area.
11) Connect the airbag deployment tool alligator clip to the battery negative (–) terminal.
12) Connect the other cable of airbag deployment tool to the battery positive (+) terminal, and activate the airbag module.

CAUTION:
• After activation, the airbag module will be extremely hot. Let it cool down for at least 40 minutes in an area with no one around.
• Do not expose the activated airbag module to water.

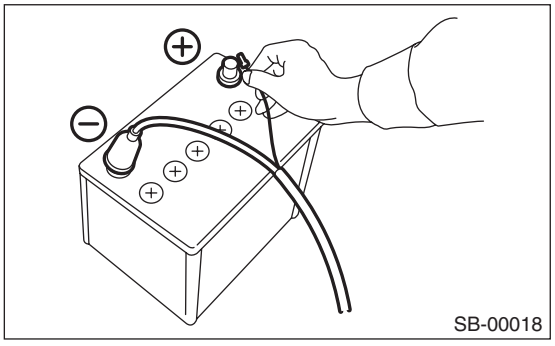

13) Remove the passenger's airbag module. <Ref. to AB-35, REMOVAL, Passenger's Airbag Module.>

14) Place the activated airbag module in a sealed vinyl bag, then discard.

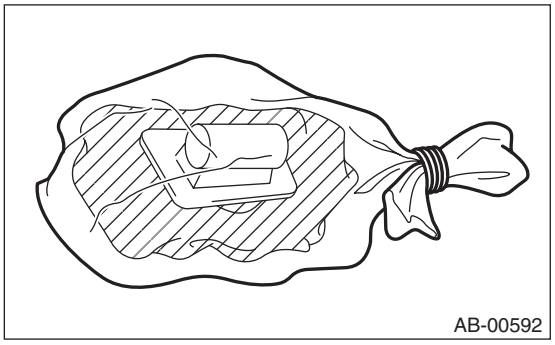

4. SIDE AIRBAG MODULE

1) Turn the ignition switch to OFF.
2) Disconnect the ground cable from battery and wait for at least 60 seconds before starting work. <Ref. to NT-6, BATTERY, NOTE, Note.>

NOTE:
For model with battery sensor, disconnect the ground terminal from battery sensor.
3) Disconnect the side airbag module connector under the front seat cushion. <Ref. to AB-22, SIDE AIRBAG MODULE, PROCEDURE, Airbag Connector.>
4) Adjust both the front seat and front seat backrest to the center positions.
5) Short the terminal to the alligator clip furnished as airbag deployment tool.

CAUTION:
The airbag deployment tool should be kept shorted on the terminals until just before activation of airbag module.

Preparation tool:
ST: AIRBAG DEPLOYMENT TOOL (98299PA030)
6) Connect the airbag deployment tool (A) and test harness adapter K (B).

Preparation tool:
ST: TEST HARNESS ADAPTER K (98299FG010)

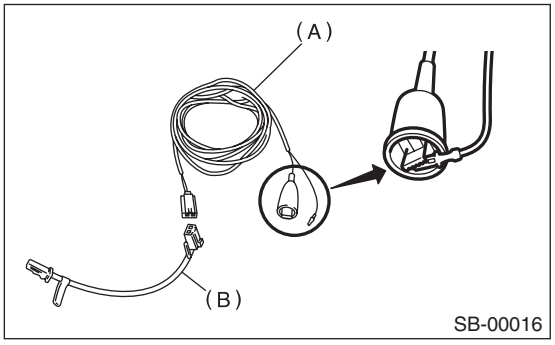

7) Connect the test harness adapter K to side airbag module connector (yellow).

CAUTION:
Do not place any object on front seat.
8) Make sure there is no one inside the vehicle.

9) Extend the wiring of airbag deployment tool to the limit, and close all the windows and sunroof completely.

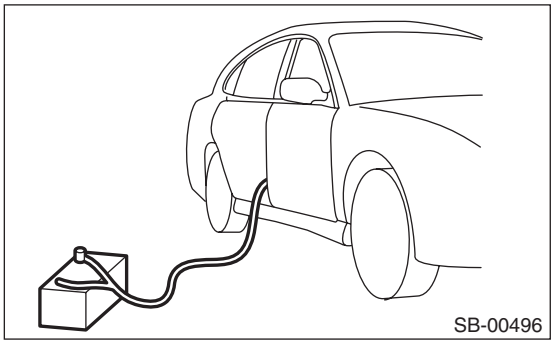

10) Move the battery at least 5 m (16 ft) from the vehicle, and confirm safety in the area.
11) Connect the airbag deployment tool alligator clip to the battery negative (–) terminal.
12) Connect the other cable of airbag deployment tool to the battery positive (+) terminal, and activate the airbag module.

CAUTION:
• After activation, the airbag module will be extremely hot. Let it cool down for at least 40 minutes in an area with no one around.
• Do not expose the activated airbag module to water.

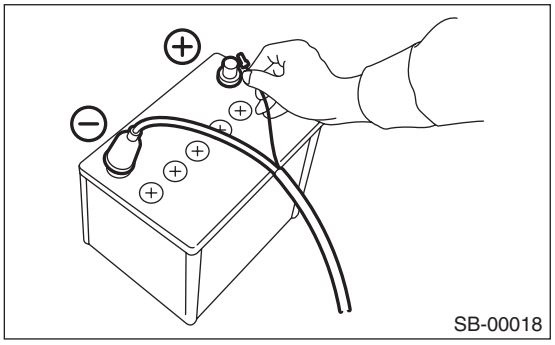

13) Remove the side airbag module. <Ref. to AB-42, REMOVAL, Side Airbag Module.>
14) Place the activated airbag module in a sealed vinyl bag, then discard.

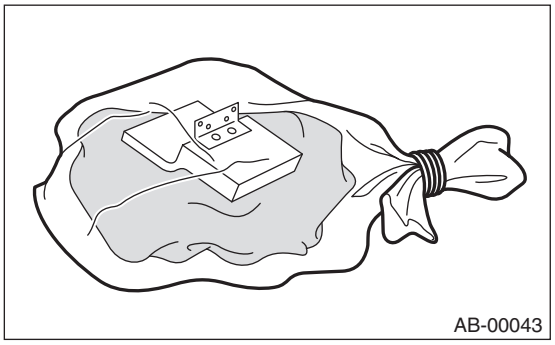

5. CURTAIN AIRBAG MODULE

1) Turn the ignition switch to OFF.
2) Disconnect the ground cable from battery and wait for at least 60 seconds before starting work. <Ref. to NT-6, BATTERY, NOTE, Note.>

NOTE:
For model with battery sensor, disconnect the ground terminal from battery sensor.
3) Remove the roof trim. <Ref. to EI-102, REMOVAL, Roof Trim.>
4) Disconnect the curtain airbag harness. <Ref. to AB-16, PROCEDURE, Airbag Connector.>

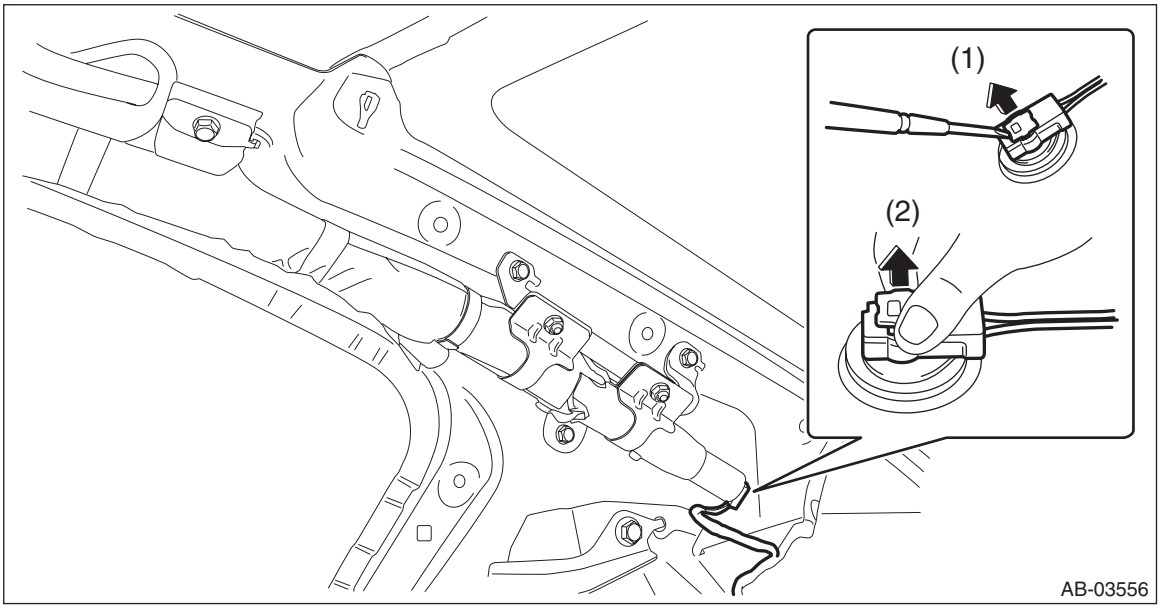

5) Short the terminal to the alligator clip furnished as airbag deployment tool.

CAUTION:
The airbag deployment tool should be kept shorted on the terminals until just before activation of airbag module.

Preparation tool:
ST: AIRBAG DEPLOYMENT TOOL (98299PA030)
6) Connect the airbag deployment tool (A) and test harness adapter D (B).

Preparation tool:
ST: TEST HARNESS ADAPTER D (98299SA010)

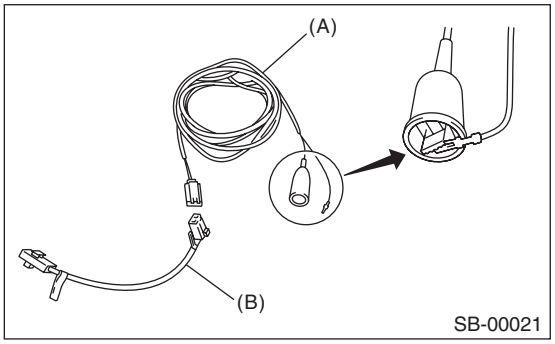

7) Connect the test harness adapter D to the curtain airbag module.

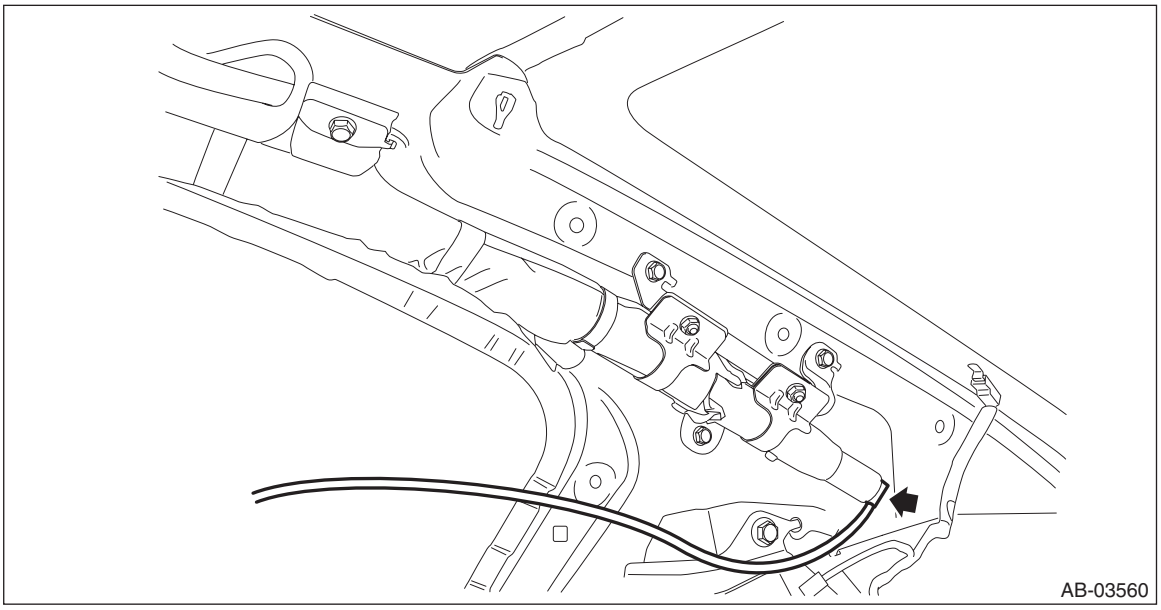

8) Make sure there is no one inside the vehicle.
9) Extend the wiring of airbag deployment tool to the limit, and close all the windows and sunroof completely.

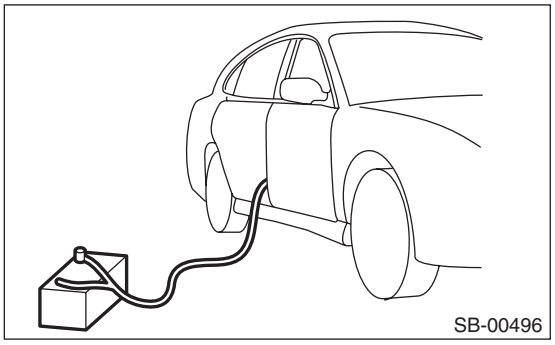

10) Move the battery at least 5 m (16 ft) from the vehicle, and confirm safety in the area.
11) Connect the airbag deployment tool alligator clip to the battery negative (–) terminal.
12) Connect the other cable of airbag deployment tool to the battery positive (+) terminal, and activate the airbag module.

CAUTION:
• After activation, the airbag module will be extremely hot. Let it cool down for at least 40 minutes in an area with no one around.
• Do not expose the activated airbag module to water.

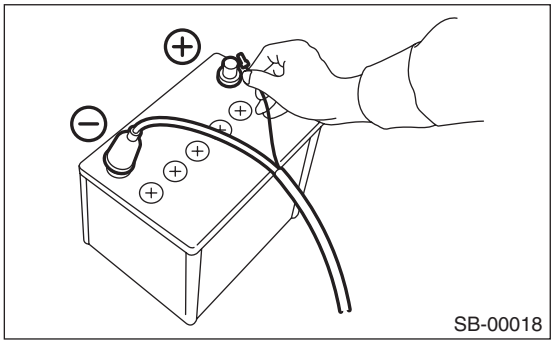

13) Remove the bolts and clips, and remove the curtain airbag module.

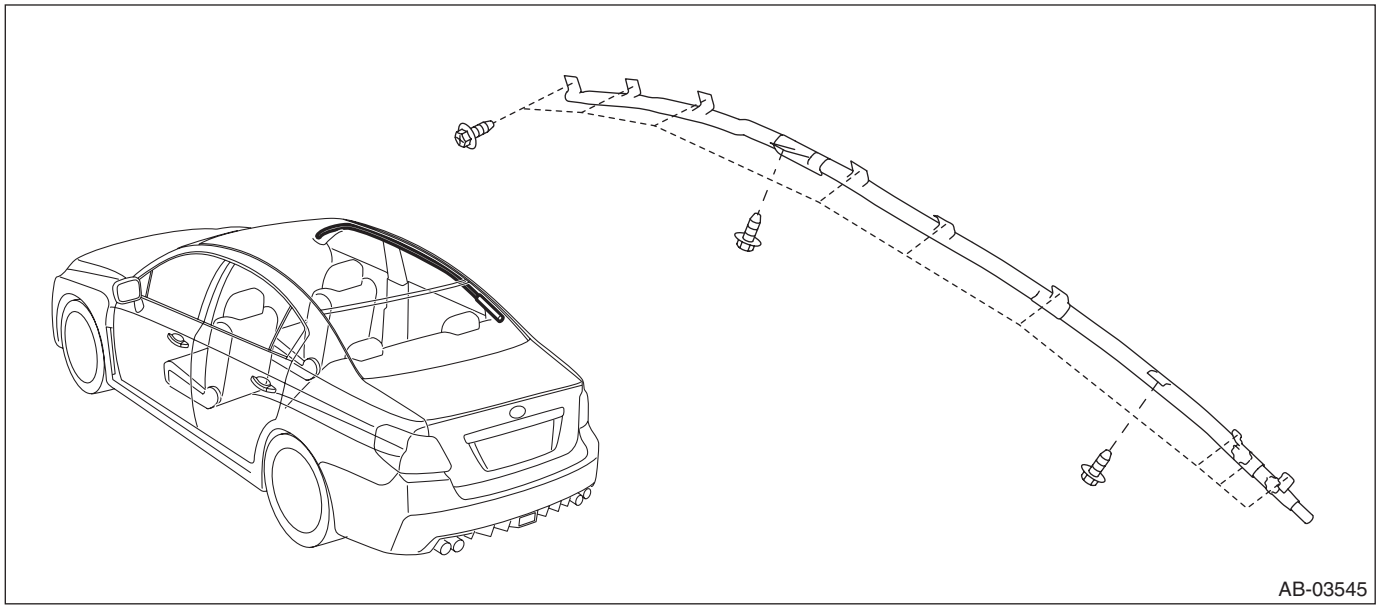

14) Place the activated airbag module in a sealed vinyl bag, then discard.

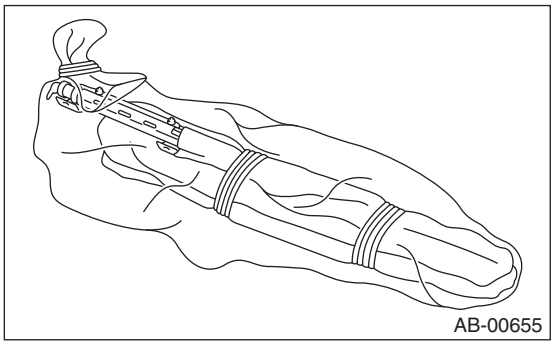

NOTE:
When necessary, fold the fabric part of airbag into three or four sections, rope and seal in a vinyl bag.

AIRBAG SYSTEM (DIAGNOSTICS)

AB(diag)

		Page
1.	Basic Diagnostic Procedure	2
2.	Check List for Interview	3
3.	General Description	4
4.	Electrical Component Location	14
5.	Airbag Connector	16
6.	Airbag Control Module I/O Signal	17
7.	Subaru Select Monitor	19
8.	Read Diagnostic Trouble Code (DTC)	22
9.	Inspection Mode	23
10.	Clear Memory Mode	24
11.	Read Current Data	25
12.	Event Record Data	26
13.	Batch save of Event record data	27
14.	Airbag Warning Light Illumination Pattern	28
15.	Airbag Warning Light Failure	29
16.	List of Diagnostic Trouble Code (DTC)	30
17.	Diagnostic Chart with Trouble Code	39

1. Basic Diagnostic Procedure

A: PROCEDURE

	Step	Check	Yes	No
1	**CHECK WARNING LIGHT.** Check whether the airbag warning light in the combination meter is lit.	Does the airbag warning light illuminate?	Go to step **2**.	Perform the diagnosis according to phenomenon of the problem.
2	**READ DTC.** 1) Turn the ignition switch to OFF. 2) Connect the Subaru Select Monitor to data link connector. 3) Turn the ignition switch to ON and run the Subaru Select Monitor. 4) Read the DTC. (Current malfunction) <Ref. to AB(diag)-22, OPERATION, Read Diagnostic Trouble Code (DTC).> NOTE: If the communication function of the Subaru Select Monitor cannot be executed properly, check the communication circuit. <Ref. to AB(diag)-19, COMMUNICATION FOR INITIALIZING IMPOSSIBLE, INSPECTION, Subaru Select Monitor.> 5) Record all DTCs, time stamp and freeze frame data. NOTE: For time stamp, refer to “LAN SYSTEM”. <Ref. to LAN(diag)-6, TIME STAMP, CAUTION, General Description.>	Is DTC displayed?	Go to step **3**.	Go to “Airbag Warning Light Failure” <Ref. to AB(diag)-29, Airbag Warning Light Failure.>.
3	**PERFORM DIAGNOSIS.** 1) Determine the possible cause from “List of Diagnostic Trouble Code (DTC)” <Ref. to AB(diag)-30, List of Diagnostic Trouble Code (DTC).>. 2) Inspect the DTC using “List of Diagnostic Trouble Code (DTC)”. 3) Repair the trouble cause. 4) Perform the Clear Memory Mode. <Ref. to AB(diag)-24, Clear Memory Mode.> 5) Perform the Inspection Mode. <Ref. to AB(diag)-23, Inspection Mode.> 6) Read any other DTCs displayed. <Ref. to AB(diag)-22, Read Diagnostic Trouble Code (DTC).>	Is DTC displayed?	Perform the procedure 1) to 5) in step 3.	Finish the diagnosis.

2. Check List for Interview

A: CHECK

Customer's Name		Inspector's Name	
Date Vehicle Brought in	/ /	Registration No.	
Odometer Reading	km miles	V.I.N.	
Date Problem Occurred	/ /	Registration Year	/ /
Weather	❑ Fine ❑ Cloudy ❑ Rainy ❑ Snowy ❑ Others:		
Temperature	°C (°F)		
Road Condition	❑ Flat road ❑ Uphill ❑ Downhill ❑ Gravel road ❑ Others:		
Vehicle Operation	❑ Starting ❑ Idling ❑ Driving ❑ Constant speed ❑ Accelerating ❑ Decelerating ❑ Turning ❑ Others:		
Details of Problem			
Airbag Warning Light Operation	❑ Normal (After turning the ignition switch to ON, lit for approximately 6 seconds and goes off.) ❑ Remains ON ❑ Remains OFF		
DTC output	❑ OK code ❑ DTC: (Code:)		

3. General Description

A: CAUTION

Refer to “CAUTION” in “General Description” in Airbag System. <Ref. to AB-9, CAUTION, General Description.>

B: INSPECTION

Check the battery. <Ref. to SC(STI)-24, INSPECTION, Battery.> <Ref. to SC(w/o STI)-51, INSPECTION, Battery.>

C: PREPARATION TOOL

CAUTION:
To measure the voltage and resistance of airbag system component, be sure to use the specified test harness.

1. SPECIAL TOOL

- SUBARU SELECT MONITOR

ILLUSTRATION	TOOL NUMBER	DESCRIPTION	REMARKS
 STSSM4	—	SUBARU SELECT MONITOR 4	Used for setting of each function and trouble-shooting for electrical system. NOTE: For detailed operation procedures of Subaru Select Monitor 4, refer to “Application help”.

- TEST HARNESS H

ILLUSTRATION	TOOL NUMBER	DESCRIPTION	REMARKS
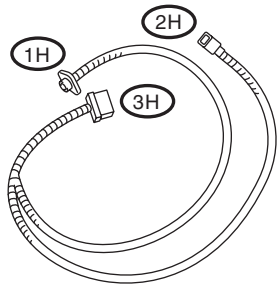 ST98299FA030	98299FA030	TEST HARNESS H	Used when measuring voltage and resistance of front sub sensor and front door impact sensor.

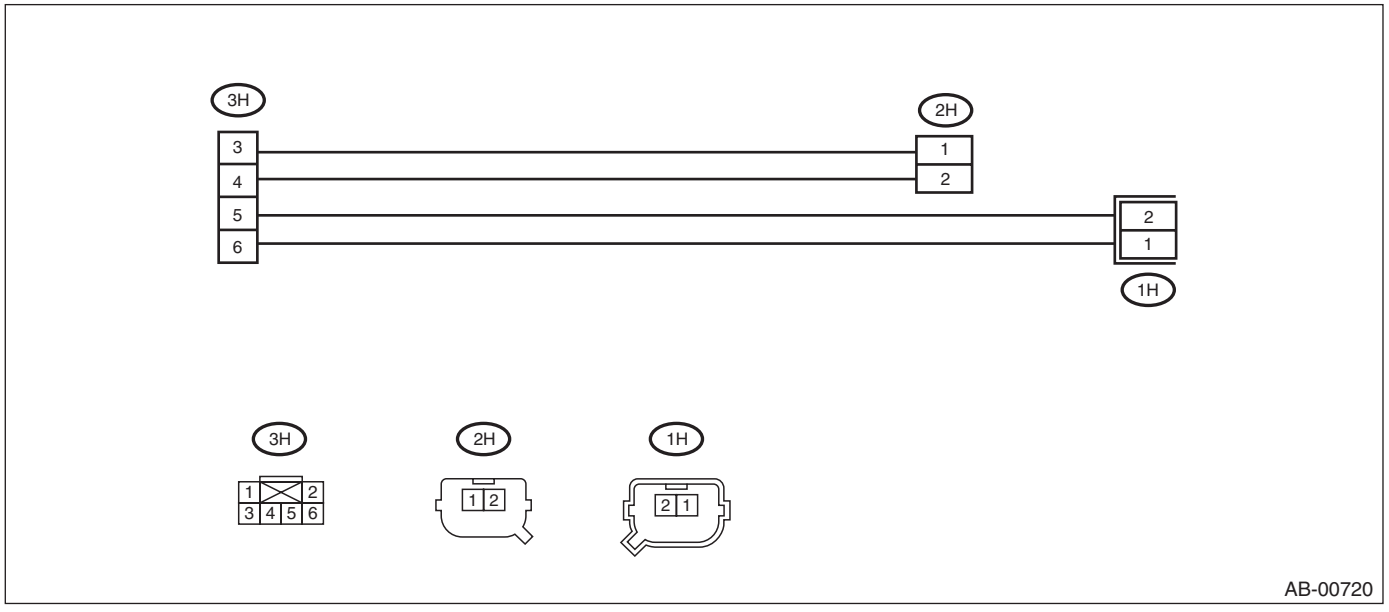

- TEST HARNESS N

ILLUSTRATION	TOOL NUMBER	DESCRIPTION	REMARKS
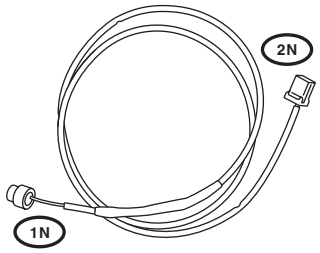 ST98299SA000	98299SA000	TEST HARNESS N	Used when measuring voltage and resistance of driver's airbag module, seat belt pretensioner and curtain airbag module.

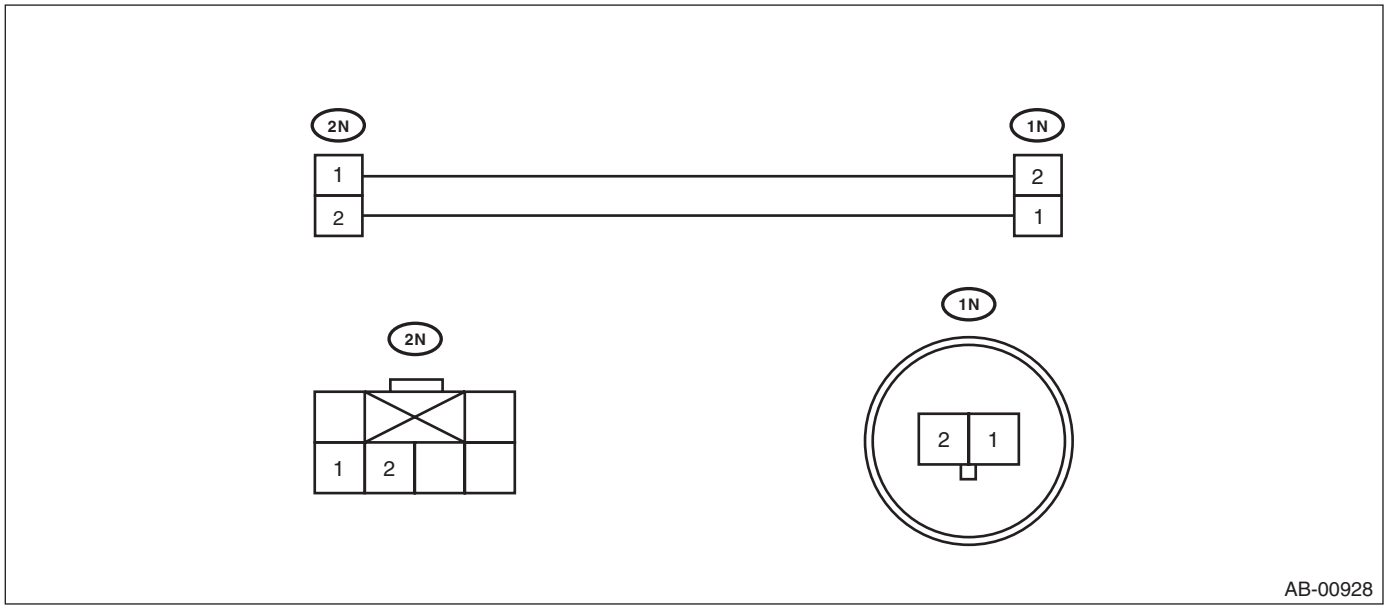

AB-00928

- TEST HARNESS Q

ILLUSTRATION	TOOL NUMBER	DESCRIPTION	REMARKS
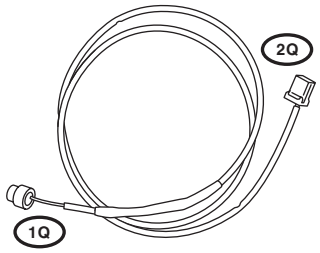 ST98299SA040	98299SA040	TEST HARNESS Q	Used when measuring voltage and resistance of driver's airbag module.

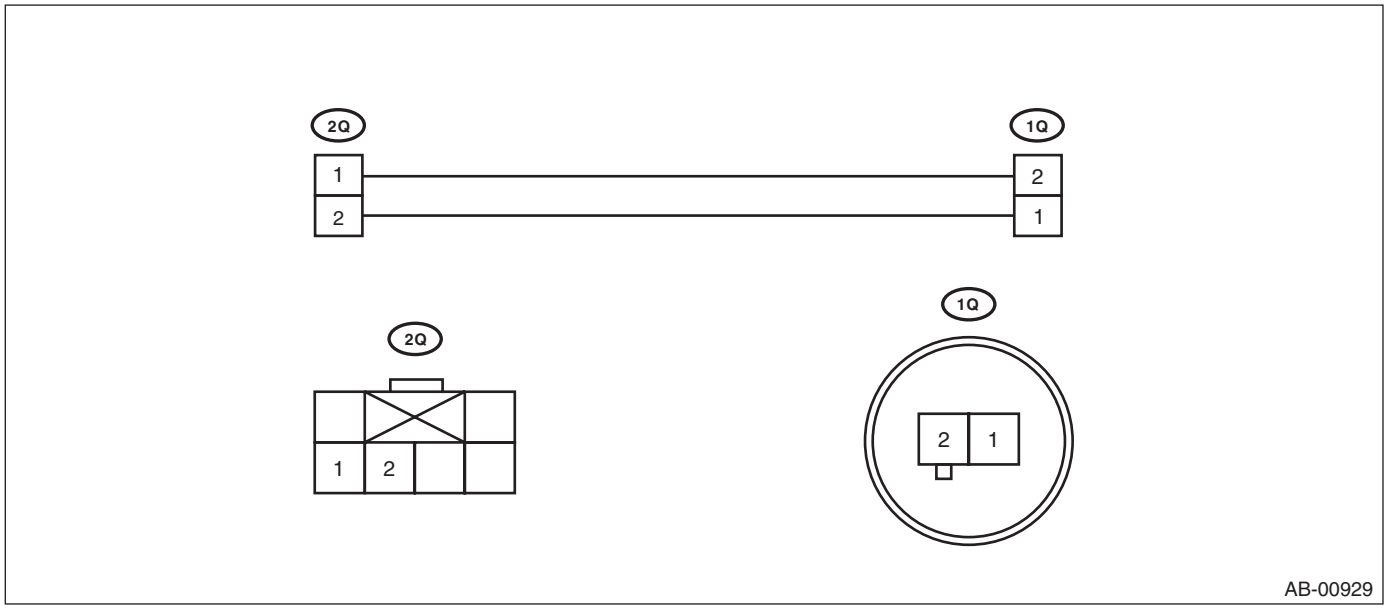

AB-00929

- TEST HARNESS AG

ILLUSTRATION	TOOL NUMBER	DESCRIPTION	REMARKS
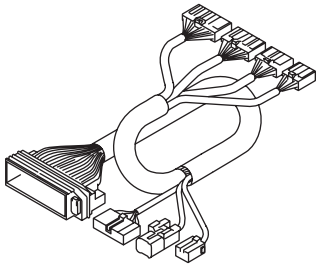 ST98299AG070	98299AG070	TEST HARNESS AG	Used when measuring voltage and resistance of airbag control module.

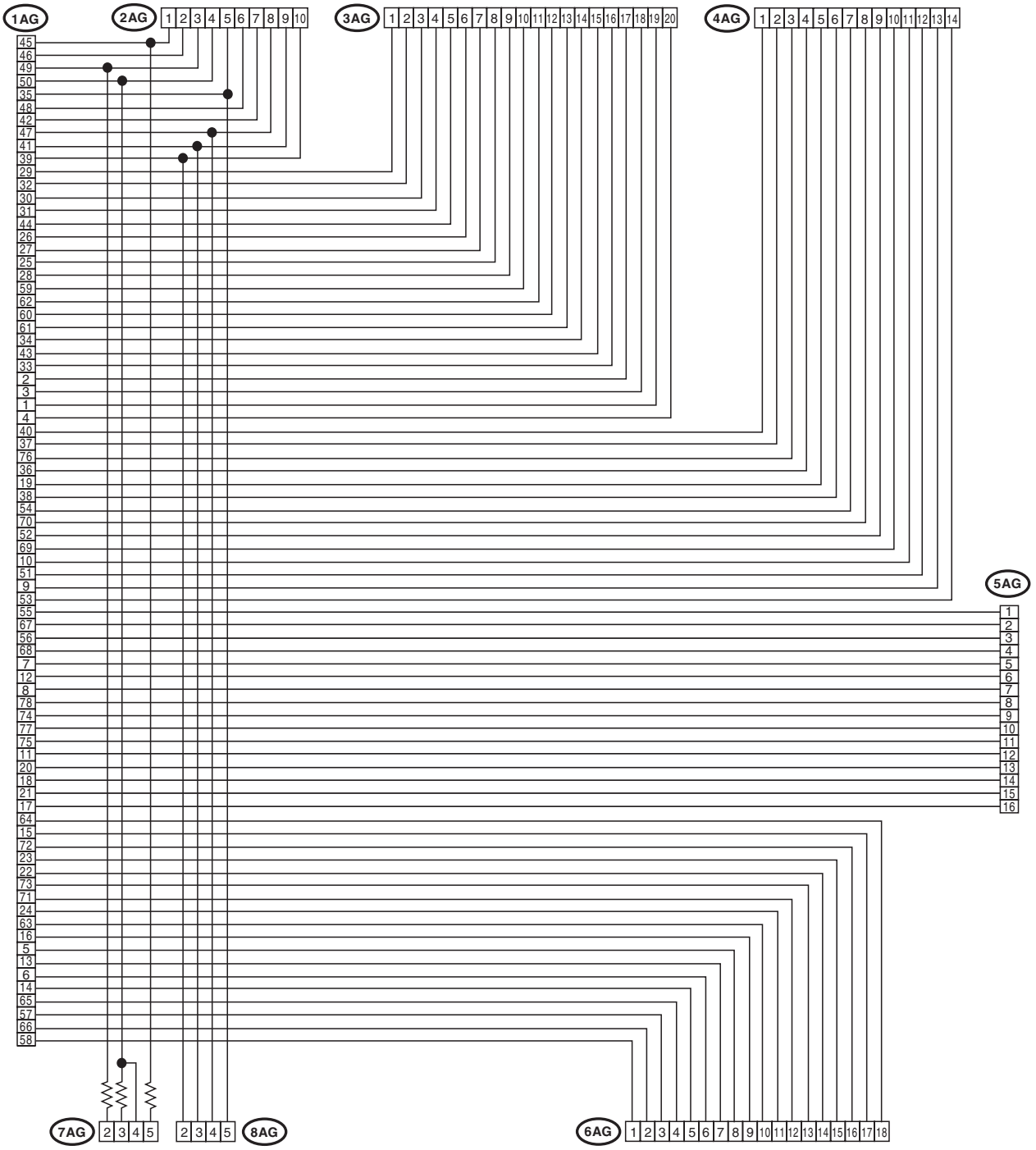

AB-01902

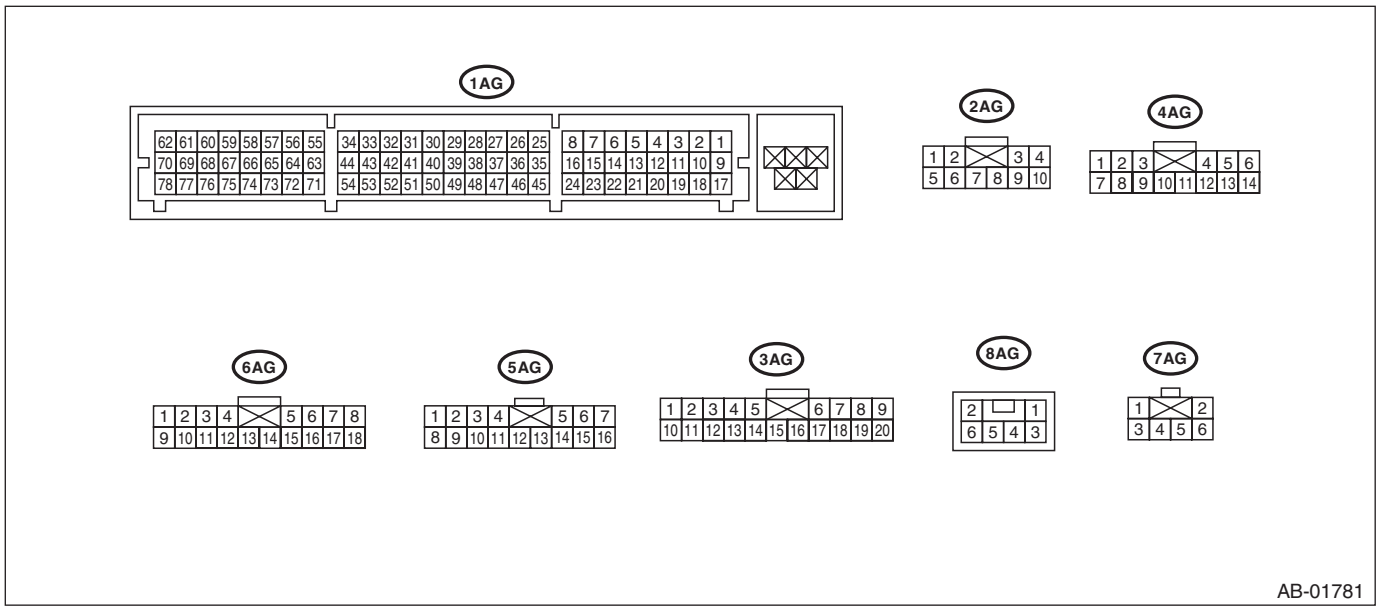

- TEST HARNESS V

ILLUSTRATION	TOOL NUMBER	DESCRIPTION	REMARKS
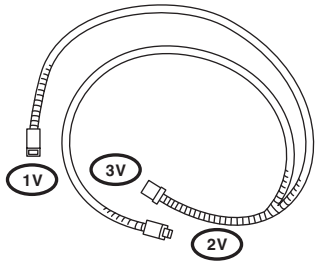 ST98299AG010	98299AG010	TEST HARNESS V	Used when measuring voltage and resistance of side airbag sensor and curtain airbag sensor.

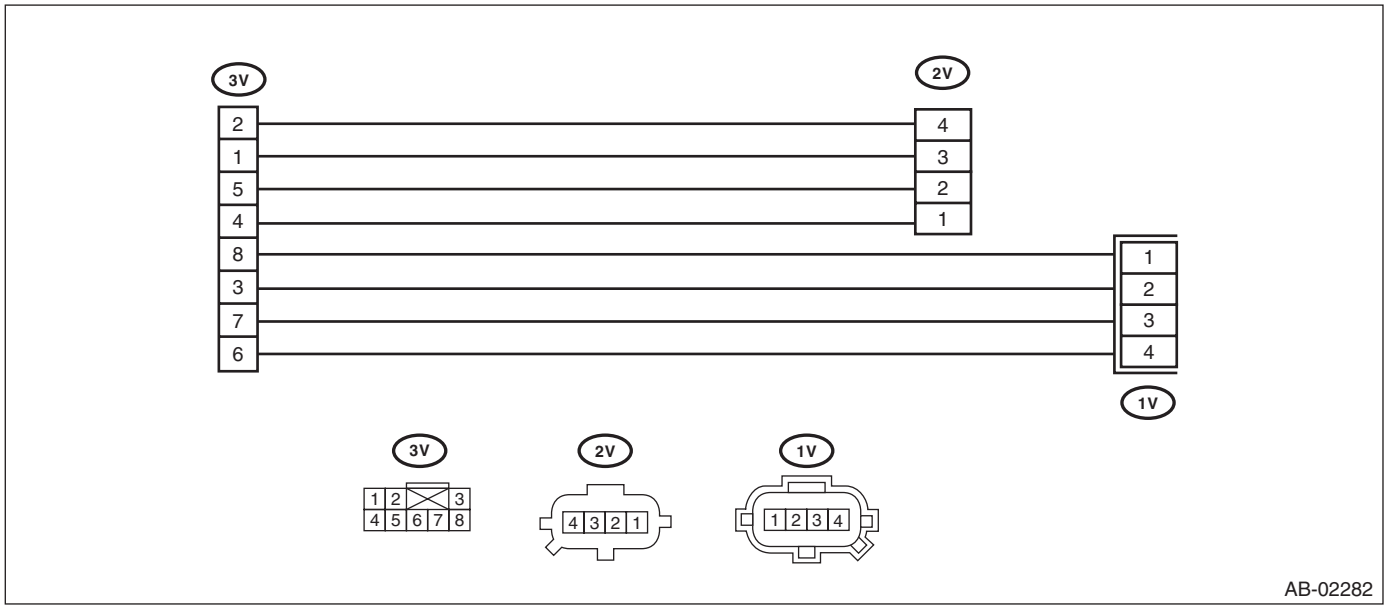

- AIRBAG RESISTOR

ILLUSTRATION	TOOL NUMBER	DESCRIPTION	REMARKS
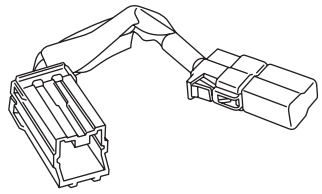 ST98299PA040	98299PA040	AIRBAG RESISTOR	Used in replacement of airbag module for which resistance value is same as airbag module. Two STs are required for diagnosis of two-stage inflator type airbag module.

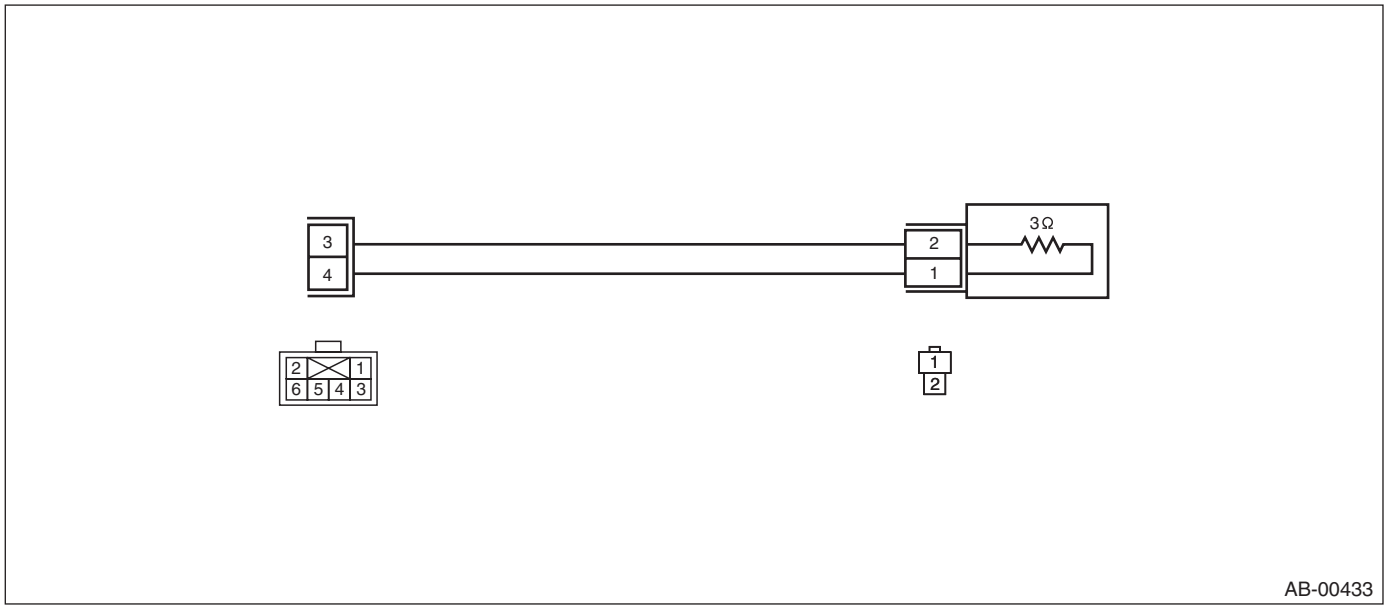

- TEST HARNESS AJ

ILLUSTRATION	TOOL NUMBER	DESCRIPTION	REMARKS
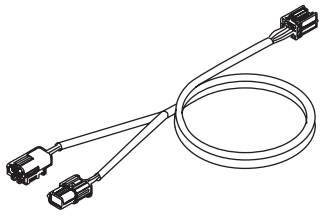 ST98299FG000	98299FG000	TEST HARNESS AJ	Used when measuring power supply and resistance of side airbag harness.

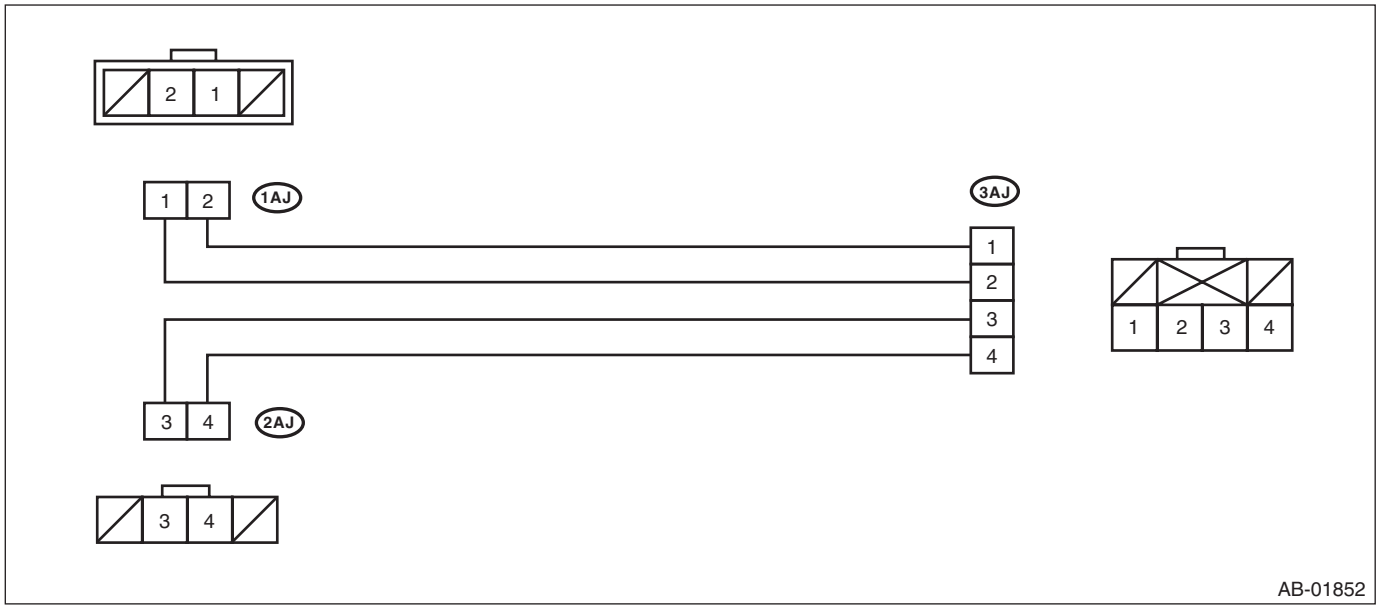

- TEST HARNESS AI

ILLUSTRATION	TOOL NUMBER	DESCRIPTION	REMARKS
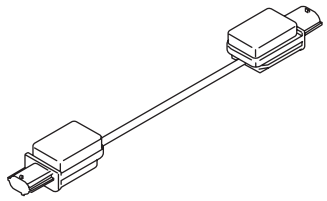 ST98299AG090	98299AG090	TEST HARNESS AI	• Used for diagnoses of side airbag sensor and curtain airbag sensor. • Used together with test harness V.

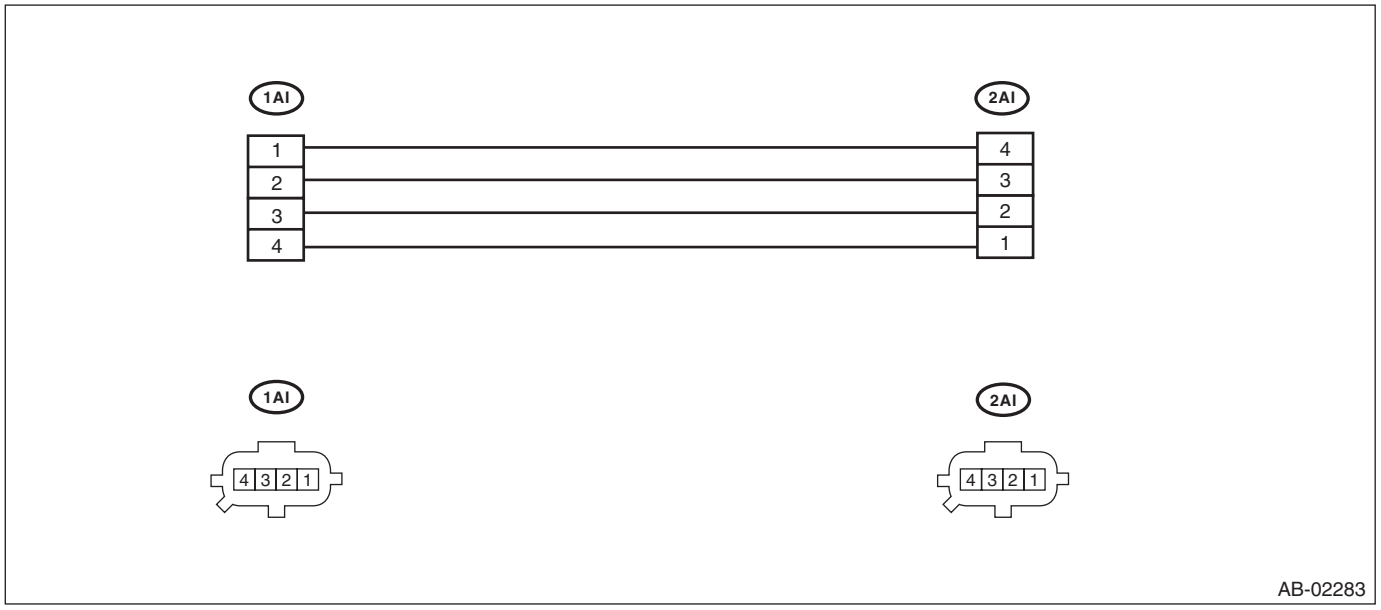

2. GENERAL TOOL

TOOL NAME	REMARKS
Circuit tester	Used for measuring resistance, voltage and current.
Probe	Used when measuring voltage and resistance of passenger's airbag module.
DST-i	Used together with Subaru Select Monitor 4.

3. HOW TO USE PROBE

Insert the probe into the harness hole, and contact it with the terminal.

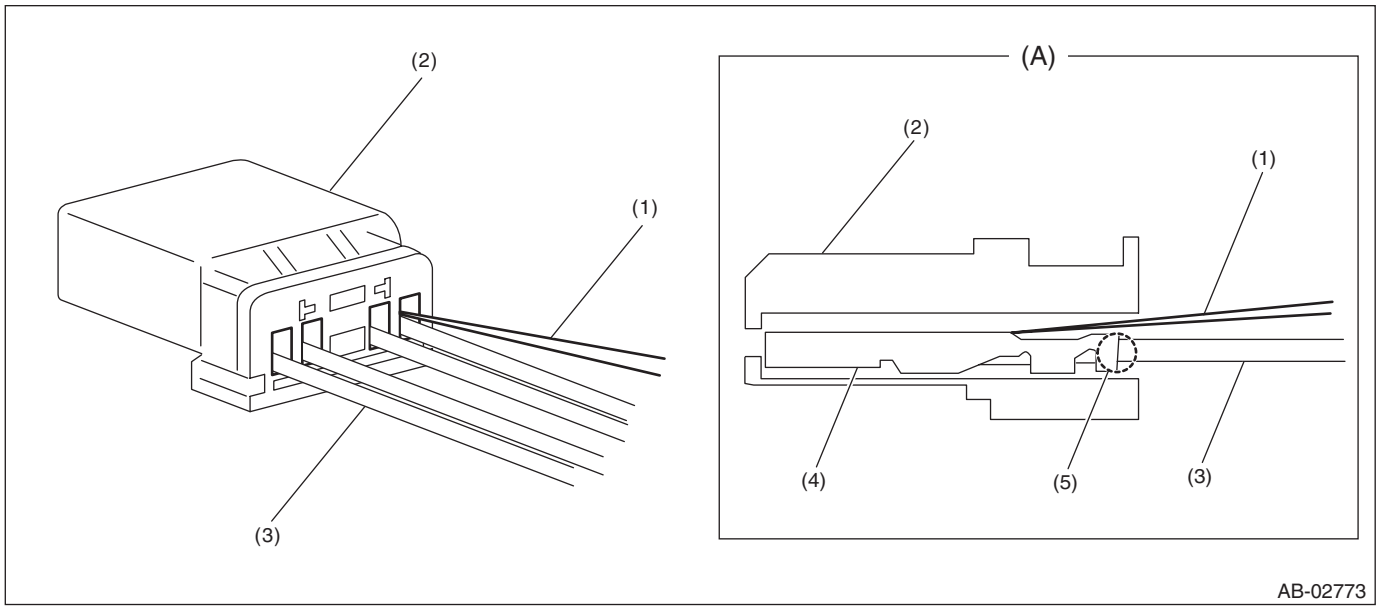

(A) Cross section

(1) Probe
(2) Connector (housing)
(3) Harness
(4) Terminal
(5) Connection

CAUTION:
- **Do not insert the probe forcibly.**
- **Be careful not to contact it to the connection (5) between the terminal and harness. (Harness will come off easily from connector if doing so.)**

4. Electrical Component Location

A: LOCATION

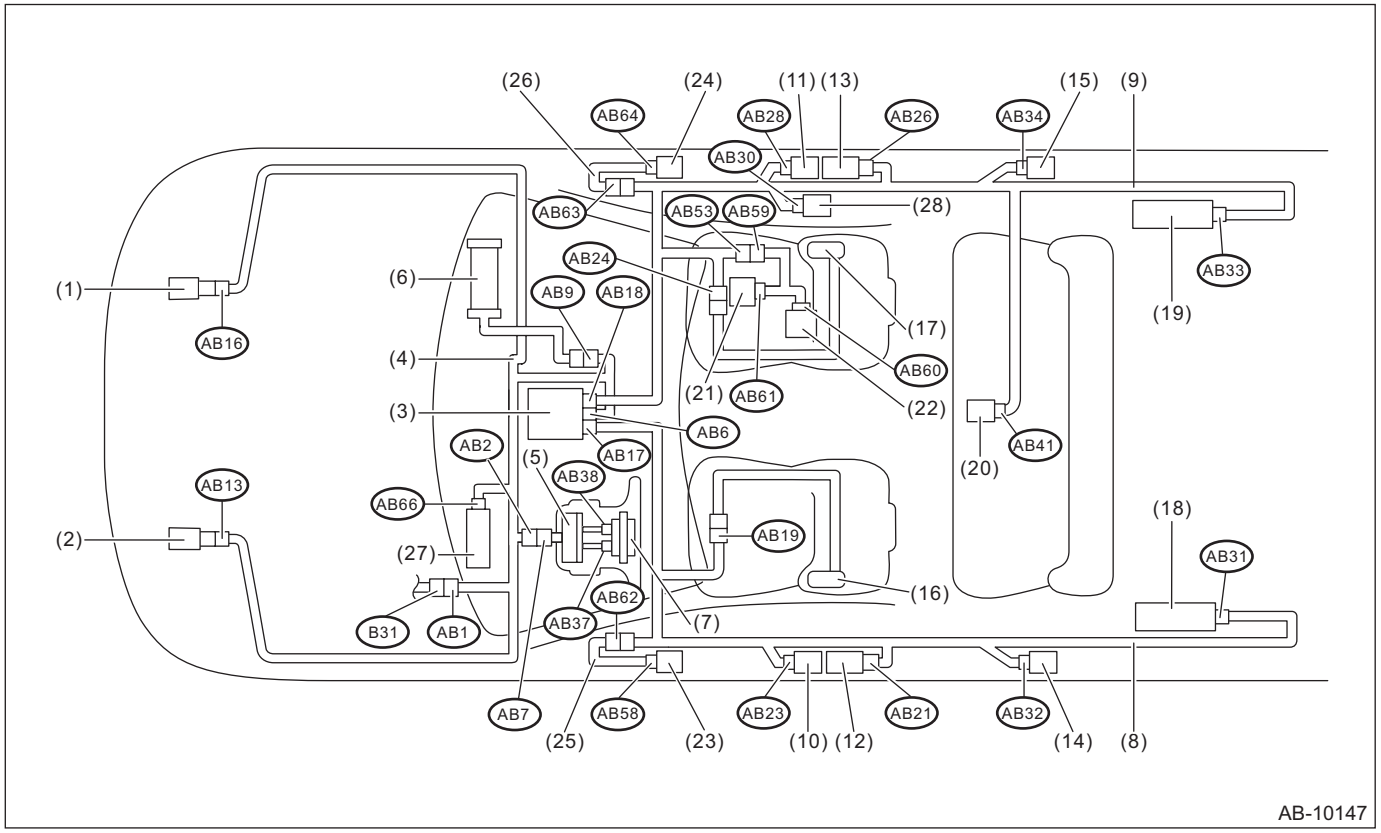

(1) Front sub sensor RH
(2) Front sub sensor LH
(3) Airbag control module
(4) Airbag main harness
(5) Roll connector
(6) Passenger's airbag inflator
(7) Driver's airbag inflator
(8) Airbag rear harness LH
(9) Airbag rear harness RH
(10) Side airbag sensor LH
(11) Side airbag sensor RH
(12) Seat belt pretensioner LH
(13) Seat belt pretensioner RH
(14) Curtain airbag sensor LH
(15) Curtain airbag sensor RH
(16) Side airbag inflator LH
(17) Side airbag inflator RH
(18) Curtain airbag inflator LH
(19) Curtain airbag inflator RH
(20) Satellite safing sensor
(21) Occupant detection control module
(22) Buckle switch RH
(23) Front door impact sensor LH
(24) Front door impact sensor RH
(25) Door harness LH
(26) Door harness RH
(27) Knee airbag inflator
(28) Lap seat belt pretensioner RH

Connector No.	(AB1)	(AB2)	(AB6)	(AB7)	(AB9)	(AB13)	(AB16)	(AB17)	(AB18)	(AB19)	(AB21)	(AB23)
Pin	10	4	30	4	4	2	2	24	24	4	2	4
Color	Gray	Yellow	Yellow	Yellow	Yellow	Yellow	Yellow	Yellow	Yellow	Yellow	Black	Yellow
Male/Female	Female	Female	Female	Male	Female	Female	Female	Female	Female	Female	Female	Female
Connector No.	(AB24)	(AB26)	(AB28)	(AB30)	(AB31)	(AB32)	(AB33)	(AB34)	(AB37)	(AB38)	(AB41)	(AB53)
Pin	4	2	4	2	2	4	2	4	2	2	2	3
Color	Yellow	Black	Yellow	Yellow	Black	Yellow	Black	Yellow	Orange	Black	Yellow	Brown
Male/Female	Female	Female	Female	Female	Female	Female	Female	Female	Female	Female	Female	Female
Connector No.	(AB58)	(AB59)	(AB60)	(AB61)	(AB62)	(AB63)	(AB64)	(AB66)				
Pin	2	3	2	10	2	2	2	2				
Color	Yellow	Brown	Yellow	Black	Yellow	Yellow	Yellow	Black				
Male/Female	Female	Male	Male	Female	Female	Female	Female	Female				

5. Airbag Connector

A: PROCEDURE

For operation procedures, refer to “Airbag Connector” of Airbag System. <Ref. to AB-16, Airbag Connector.>

6. Airbag Control Module I/O Signal

A: ELECTRICAL SPECIFICATION

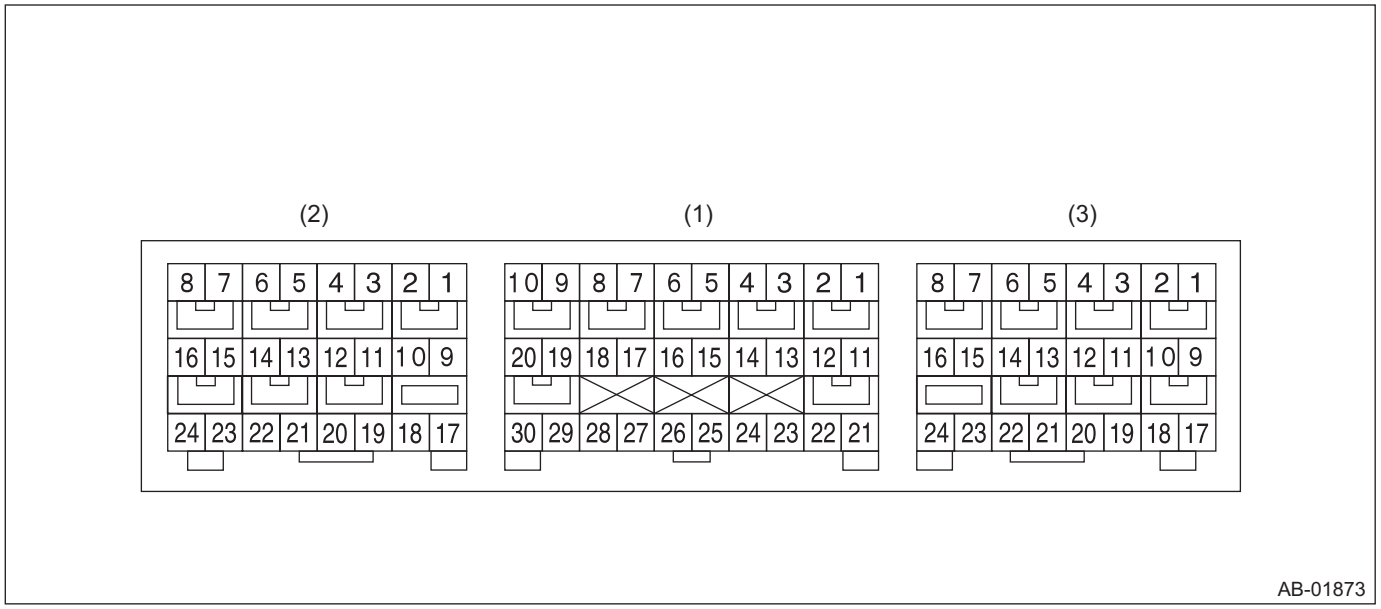

- Terminal numbers in airbag control module connector are shown in the figure.
- The airbag warning light illuminates when the connector is removed from the airbag control module.

Item		Control module terminal No.
Ignition power supply	Dedicated fuse	(1) — 21
Passenger's airbag module level one	+	(1) — 4
	–	(1) — 3
Passenger's airbag module level two	+	(1) — 1
	–	(1) — 2
Driver's airbag module level one	+	(1) — 5
	–	(1) — 6
Driver's airbag module level two	+	(1) — 8
	–	(1) — 7
Driver's knee airbag module	+	(1) — 9
	–	(1) — 10
CAN-H		(1) — 13
CAN-L		(1) — 22
Front sub sensor LH	+	(1) — 30
	–	(1) — 28
Front sub sensor RH	+	(1) — 29
	–	(1) — 27
Ground line (GND)		(1) — 25
		(1) — 26
Passenger's airbag OFF indicator		(1) — 17
Passenger's airbag ON indicator		(1) — 23
Passenger's seat belt warning		(1) — 15
Side airbag sensor LH	+	(2) — 24
Curtain airbag sensor LH Front door impact sensor LH	–	(2) — 23
Side airbag module LH	+	(2) — 1
	–	(2) — 2

Item		Control module terminal No.
Curtain airbag module LH	+	(2) — 4
	–	(2) — 3
Seat belt pretensioner LH	+	(2) — 5
	–	(2) — 6
Satellite safing sensor	+	(3) — 21
	–	(3) — 22
Seat belt pretensioner RH	+	(3) — 4
	–	(3) — 3
Lap seat belt pretensioner RH	+	(3) — 1
	–	(3) — 2
Side airbag sensor RH Curtain airbag sensor RH Front door impact sensor RH	+	(3) — 17
	–	(3) — 18
Side airbag module RH	+	(3) — 8
	–	(3) — 7
Curtain airbag module RH	+	(3) — 5
	–	(3) — 6
Occupant detection control module	+	(3) — 16
	–	(3) — 24

B: WIRING DIAGRAM

Refer to “Airbag System” in WI section. <Ref. to WI-69, WIRING DIAGRAM, Airbag System.>

7. Subaru Select Monitor

A: OPERATION

For detailed operation procedures, refer to “Application help”.

B: INSPECTION

1. COMMUNICATION FOR INITIALIZING IMPOSSIBLE

DTC DETECTING CONDITION:
Defective harness connector
TROUBLE SYMPTOM:
Communication is impossible between the airbag control module and the Subaru Select Monitor.

CAUTION:
Before performing diagnosis, refer to “CAUTION” in “General Description”. <Ref. to AB(diag)-4, CAUTION, General Description.>
WIRING DIAGRAM:
Airbag system <Ref. to WI-69, WIRING DIAGRAM, Airbag System.>

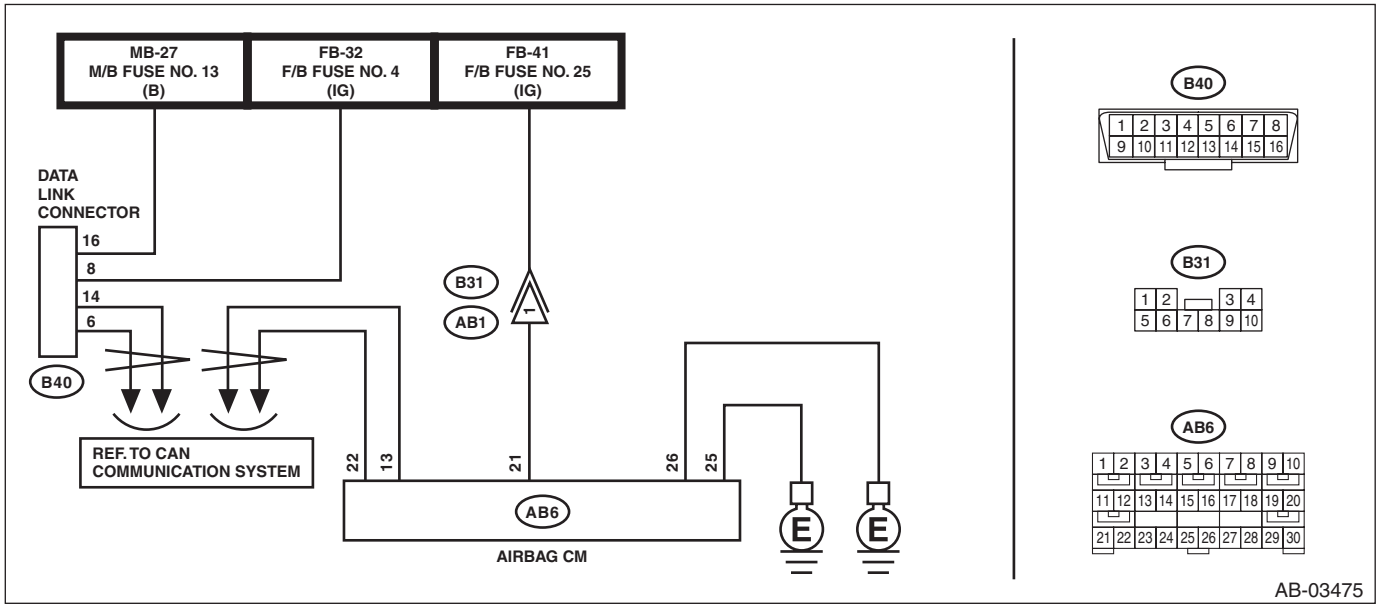

	Step	Check	Yes	No
1	**CHECK IGNITION SWITCH.**	Is the ignition switch ON?	Go to step **2**.	Turn the ignition switch to ON, and select the airbag mode using the Subaru Select Monitor.
2	**CHECK BATTERY.** 1) Turn the ignition switch to OFF. 2) Measure the battery voltage.	Is the voltage 11 V or more?	Go to step **3**.	Charge or replace the battery.
3	**CHECK BATTERY TERMINAL.**	Is there poor contact at battery terminal?	Repair or tighten the battery terminal.	Go to step **4**.
4	**CHECK SUBARU SELECT MONITOR COMMUNICATION.** 1) Turn the ignition switch to ON. 2) Using the Subaru Select Monitor, check whether communication to other systems can be executed normally.	Is the system name displayed on Subaru Select Monitor?	Go to step **9**.	Go to step **5**.
5	**CHECK SUBARU SELECT MONITOR.**	Is Subaru Select Monitor powered on?	Go to step **7**.	Go to step **6**.

	Step	Check	Yes	No
6	**CHECK FUSE.** Remove a fuse in the data link connector and visually check the fuse.	Is the fuse OK?	Repair the harness between the battery and the data link connector.	Replace the fuse. If the fuse is blown out again, check the power supply circuit.
7	**CHECK AIRBAG CONTROL MODULE CONNECTOR.** 1) Turn the ignition switch to OFF, disconnect the battery ground cable, and wait for 60 seconds or more. 2) Confirm that the connectors of airbag control module (AB6, AB17, AB18) are securely connected.	Is the connector of the airbag control module securely connected?	Go to step **8**.	Connect the connector of the airbag control module.
8	**CHECK SUBARU SELECT MONITOR COMMUNICATION.** 1) Disconnect the airbag control module connector. 2) Connect the battery ground terminal. 3) Turn the ignition switch to ON. 4) Check whether communication to other systems can be executed normally.	Is the system name displayed on Subaru Select Monitor?	Replace the airbag control module. <Ref. to AB-47, Airbag Control Module.>	Go to step **9**.
9	**CHECK FUSE.** Remove fuse No. 25 from the fuse & relay box, and perform visual inspection.	Is the fuse OK?	Go to step **10**.	Replace the fuse. If the fuse is blown out again, check the power supply circuit.
10	**CHECK AIRBAG CONTROL MODULE CONNECTOR.** 1) Turn the ignition switch to OFF, disconnect the battery ground cable, and wait for 60 seconds or more. 2) Confirm that the connectors of airbag control module (AB6, AB17, AB18) are securely connected.	Is the connector of the airbag control module securely connected?	Go to step **11**.	Connect the connector of the airbag control module.
11	**CHECK CAN COMMUNICATION.** Inspect LAN system. <Ref. to LAN(diag)-2, PROCEDURE, Basic Diagnostic Procedure.>	Is there any fault?	Repair it according to the diagnosis for LAN system.	Go to step **12**.
12	**CHECK POWER SUPPLY CIRCUIT.** 1) Disconnect the connectors (AB6, AB17, AB18) from airbag control module. 2) Connect the connector (1AH) in the test harness AH to the connectors (AB6, AB17, AB18). 3) Connect the connector (2AH) in the test harness AH and the connector (1AG) in the test harness AG. 4) Turn the ignition switch to ON. 5) Measure the voltage between connector (2AG) in the test harness AG and chassis ground. ***Connector & terminal*** ***(2AG) No. 1 (+) — Chassis ground (–):***	Is the voltage 10 V or more?	Go to step **13**.	Repair the harness between the airbag control module and the battery. Or replace the airbag main harness along with the bulkhead harness.
13	**CHECK BETWEEN AIRBAG CONTROL MODULE AND CHASSIS GROUND.** 1) Turn the ignition switch to OFF. 2) Measure the resistance between connector (2AG) in the test harness AG and chassis ground. ***Connector & terminal*** ***(2AG) No. 4 — Chassis ground:*** ***(2AG) No. 3 — Chassis ground:***	Is the resistance less than 10 Ω?	Go to step **14**.	Repair the harness between the airbag control module and the chassis ground. Or replace the airbag main harness along with the bulkhead harness.

Step		Check	Yes	No
14	CHECK POOR CONTACT OF CONNECTOR.	Is there poor contact of the control module power supply, ground circuit and data link connector?	Repair the connector. (Replace the harness without repairing the airbag system connector.)	Replace the airbag control module. <Ref. to AB-47, REMOVAL, Airbag Control Module.>

8. Read Diagnostic Trouble Code (DTC)

A: OPERATION

1) On «Start» display, select «Diagnosis».
2) On «Vehicle selection» display, input the target vehicle information and select «Confirmed».
3) On «Main Menu» display, select «Each System».
4) On «Select System» display, select «Airbag» and select «Enter».
5) On «Airbag» display, select «DTC».

NOTE:
- For detailed operation procedures, refer to “Application help”.
- For details concerning DTC, refer to List of Diagnostic Trouble Code (DTC) in AIRBAG SYSTEM. <Ref. to AB(diag)-30, List of Diagnostic Trouble Code (DTC).>

9. Inspection Mode

A: PROCEDURE

Recreate the circumstance by referring to the conditions described in the checklist.

10.Clear Memory Mode

A: OPERATION

1) On «Start» display, select «Diagnosis».
2) On «Vehicle selection» display, input the target vehicle information and select «Confirmed».
3) On «Main Menu» display, select «Each System».
4) On «Select System» display, select «Airbag» and select «Enter».
5) On «Airbag» display, select «DTC».
6) On «DTC» display, select «Clear Memory».

NOTE:
- For detailed operation procedures, refer to “Application help”.
- Clear the DTC stored in the airbag control module after repairing the airbag system.

11.Read Current Data

A: OPERATION

Check the operating condition of each sensor in the event of malfunction in the seat belt buckle switch, or when the seat belt buckle switch has been replaced.
1) On «Start» display, select «Diagnosis».
2) On «Vehicle selection» display, input the target vehicle information and select «Confirmed».
3) On «Main Menu» display, select «Each System».
4) On «Select System» display, select «Airbag» and select «Enter».
5) On «Select Function» display, select «Data Monitor».

NOTE:
For detailed operation procedures, refer to “Application help”.

B: LIST

Item	Display	Note
Trip Count	—	—
Count	—	—
Time Count	—	—
Belt Buckle Switch RH	Unbelted/Belted	“Belted” when passenger’s seat belt is fastened “Unbelted” when passenger’s seat belt is not fastened
Passenger Occupant Status	Occupied/Empty or CRS	“Occupied” when the occupant is present “Empty or CRS” when the seat is unoccupied or when child restraint seat is installed **CAUTION:** **When checking the operating status, be careful of the followings.** **• When the seat is unoccupied: Do not place anything on the seat.** **• Child restraint seat: Install the seat according to its instruction manual.** **• When the seat is occupied: Someone who weighs at least approx. 70 kg (155 lb) must be seated during the check.**
Passenger Airbag Status	ON/OFF	“ON” when the passenger occupant status is “Occupied” “OFF” when the status is “Empty or CRS”

12.Event Record Data

A: OPERATION

1) On «Start» display, select «Diagnosis».
2) On «Vehicle selection» display, input the target vehicle information and select «Confirmed».
3) On «Main Menu» display, select «Each System».
4) On «Select System» display, select «Airbag» and select «Enter».
5) On «Airbag» display, select «Work Support».
6) On «Work Support» display, select «Event Record Data». After selection, «IMPORTANT NOTICE» screen is displayed.
7) After checking the content of «IMPORTANT NOTICE», click the checkbox for “Yes”.
8) If the applicable law is not violated, click the «Yes» button to display the EDR data.

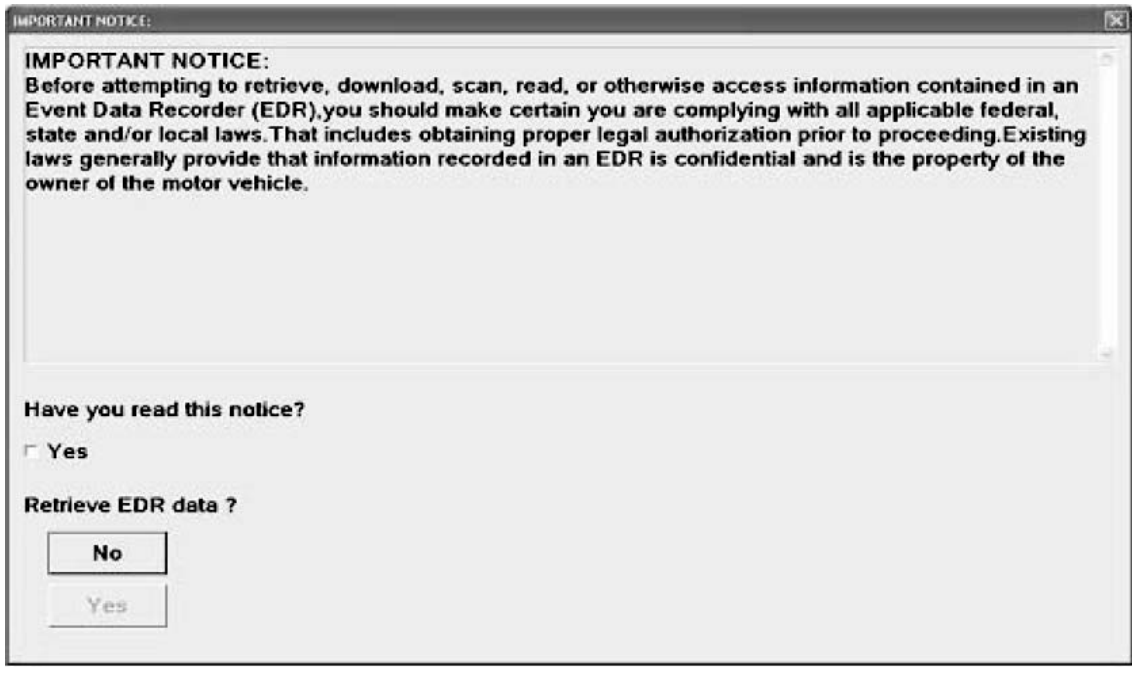

AB-02847

9) Select the items to be checked from each event record data.
10) Select the record data to be checked from each record data.
11) The selected record data is displayed. If there is no data recorded, «Event record data are not recorded» is displayed.
12) Select [Exit] to return to each event record data screen.

13.Batch save of Event record data

A: OPERATION

1) On «Start» display, select «Diagnosis».
2) On «Vehicle selection» display, input the target vehicle information and select «Confirmed».
3) On «Main Menu» display, select «Each System».
4) On «Select System» display, select «Airbag» and select «Enter».
5) On «Airbag» display, select «Work Support».
6) On «Work Support» display, select «Batch save of Event record data». After selection, «IMPORTANT NOTICE» screen is displayed.
7) After checking the content of «IMPORTANT NOTICE», click the checkbox for “Yes”.
8) If the applicable law is not violated, click the «Yes» button to display the EDR data.

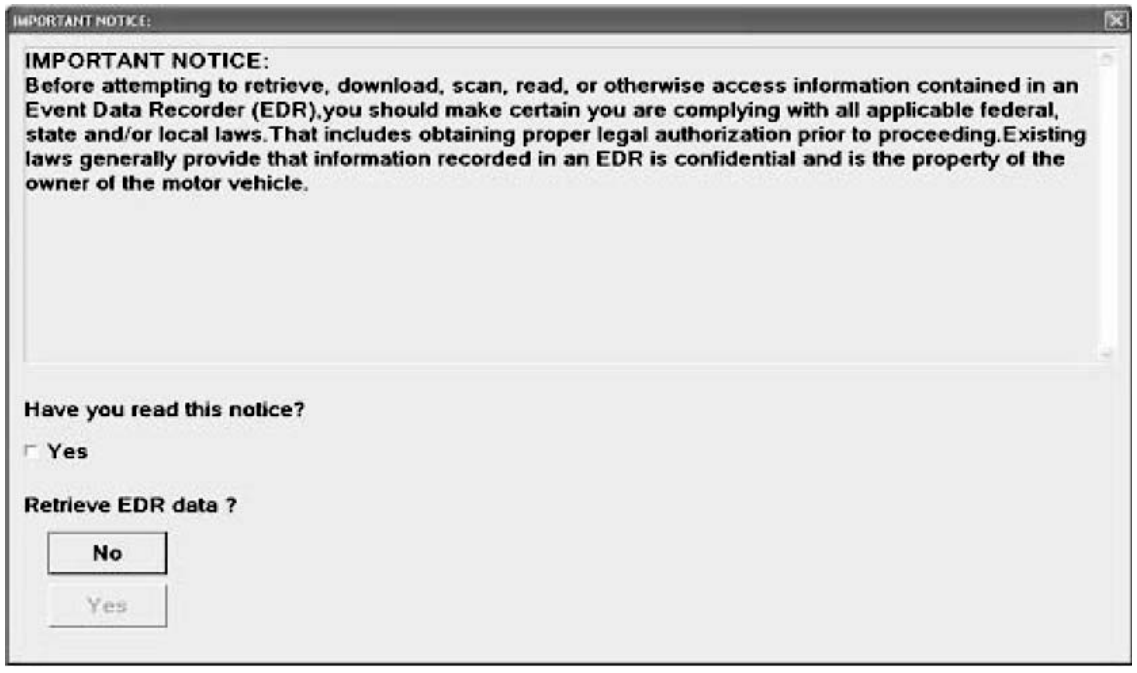

AB-02847

9) Specify the destination for the event record data to save the data there.
10) After saving the file, click the «OK» button to return the menu screen.

14.Airbag Warning Light Illumination Pattern

A: INSPECTION

Turn the ignition switch to ON, and confirm that the airbag warning light remains on for approx. 6 seconds then turns off afterwards.

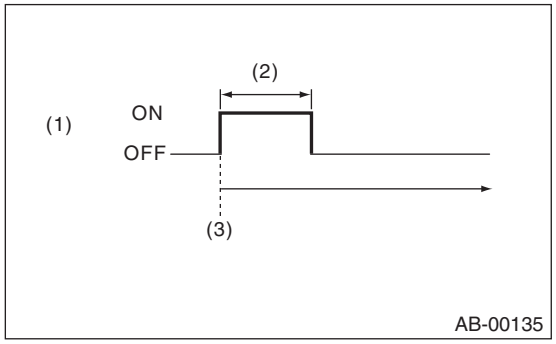

(1) Airbag warning light
(2) Approx. 6 seconds
(3) Ignition switch ON

15.Airbag Warning Light Failure

A: AIRBAG WARNING LIGHT REMAINS ON

DETECTING CONDITION:

- Airbag warning light is faulty.
- Airbag control module to combination meter circuit is shorted or open.
- Grounding circuit is faulty.
- Airbag control module is faulty.
- Connector connection is improper.
- Connections of (AB6, AB17, AB18) to airbag control module are improper.

CAUTION:
Before performing diagnosis, refer to "CAUTION" in "General Description". <Ref. to AB(diag)-4, CAUTION, General Description.>

	Step	Check	Yes	No
1	**CHECK CAN COMMUNICATION.** Inspect LAN system. <Ref. to LAN(diag)-2, PROCEDURE, Basic Diagnostic Procedure.>	Is there any fault?	Repair it according to diagnosis of LAN system.	Go to step **2**.
2	**CHECK DTC.** 1) Turn the ignition switch to OFF, disconnect the battery ground cable, and wait for 60 seconds or more. 2) Check the connection status of airbag CM connector.	Is there poor contact of connector?	Reconnect the connector. Or repair the connector.	Go to step **3**.
3	**CHECK FOR POOR CONTACT.** Check the combination meter. <Ref. to IDI(diag)-2, PROCEDURE, Basic Diagnostic Procedure.>	Is there any fault?	Repair it according to INSTRUMENTATION/DRIVER INFO (DIAGNOSTICS).	Replace the airbag CM. <Ref. to AB-47, REMOVAL, Airbag Control Module.>

B: AIRBAG WARNING LIGHT REMAINS OFF

NOTE:
For the diagnostic procedure, refer to "AIRBAG WARNING LIGHT REMAINS ON". <Ref. to AB(diag)-29, AIRBAG WARNING LIGHT REMAINS ON, Airbag Warning Light Failure.>

16.List of Diagnostic Trouble Code (DTC)

A: LIST

DTC	Item	Content of diagnosis	Reference
U0073	CONTROL MODULE COMMUNICATION BUS OFF	CAN communication error occurred.	<Ref. to AB(diag)-39, DTC U0073 CONTROL MODULE COMMUNICATION BUS OFF, Diagnostic Chart with Trouble Code.>
B1000	AIRBAG ECU MALFUNCTION	Airbag control module is faulty.	<Ref. to AB(diag)-40, DTC B1000 AIRBAG ECU MALFUNCTION, Diagnostic Chart with Trouble Code.>
B1003	AIRBAG ECU MALFUNCTION	Airbag control module is faulty.	<Ref. to AB(diag)-40, DTC B1003 AIRBAG ECU MALFUNCTION, Diagnostic Chart with Trouble Code.>
B1105	AIRBAG ECU MALFUNCTION	Airbag control module is faulty.	<Ref. to AB(diag)-40, DTC B1105 AIRBAG ECU MALFUNCTION, Diagnostic Chart with Trouble Code.>
B1106	AIRBAG ECU MALFUNCTION	Airbag control module is faulty.	<Ref. to AB(diag)-40, DTC B1106 AIRBAG ECU MALFUNCTION, Diagnostic Chart with Trouble Code.>
B1115	AIRBAG ECU MALFUNCTION	Airbag control module is faulty.	<Ref. to AB(diag)-40, DTC B1115 AIRBAG ECU MALFUNCTION, Diagnostic Chart with Trouble Code.>
B1116	AIRBAG ECU MALFUNCTION	Airbag control module is faulty.	<Ref. to AB(diag)-40, DTC B1116 AIRBAG ECU MALFUNCTION, Diagnostic Chart with Trouble Code.>
B1120	AIRBAG ECU MALFUNCTION	Airbag control module is faulty.	<Ref. to AB(diag)-40, DTC B1120 AIRBAG ECU MALFUNCTION, Diagnostic Chart with Trouble Code.>
B1121	AIRBAG ECU MALFUNCTION	Airbag control module is faulty.	<Ref. to AB(diag)-40, DTC B1121 AIRBAG ECU MALFUNCTION, Diagnostic Chart with Trouble Code.>
B1125	AIRBAG ECU MALFUNCTION	Airbag control module is faulty.	<Ref. to AB(diag)-40, DTC B1125 AIRBAG ECU MALFUNCTION, Diagnostic Chart with Trouble Code.>
B1126	AIRBAG ECU MALFUNCTION	Airbag control module is faulty.	<Ref. to AB(diag)-41, DTC B1126 AIRBAG ECU MALFUNCTION, Diagnostic Chart with Trouble Code.>
B1135	AIRBAG ECU MALFUNCTION	Airbag control module is faulty.	<Ref. to AB(diag)-41, DTC B1135 AIRBAG ECU MALFUNCTION, Diagnostic Chart with Trouble Code.>
B1136	AIRBAG ECU MALFUNCTION	Airbag control module is faulty.	<Ref. to AB(diag)-41, DTC B1136 AIRBAG ECU MALFUNCTION, Diagnostic Chart with Trouble Code.>
B1145	AIRBAG ECU MALFUNCTION	Airbag control module is faulty.	<Ref. to AB(diag)-41, DTC B1145 AIRBAG ECU MALFUNCTION, Diagnostic Chart with Trouble Code.>
B1146	AIRBAG ECU MALFUNCTION	Airbag control module is faulty.	<Ref. to AB(diag)-41, DTC B1146 AIRBAG ECU MALFUNCTION, Diagnostic Chart with Trouble Code.>
B1170	AIRBAG ECU MALFUNCTION	Airbag control module is faulty.	<Ref. to AB(diag)-41, DTC B1170 AIRBAG ECU MALFUNCTION, Diagnostic Chart with Trouble Code.>
B1185	AIRBAG ECU MALFUNCTION	Airbag control module is faulty.	<Ref. to AB(diag)-41, DTC B1185 AIRBAG ECU MALFUNCTION, Diagnostic Chart with Trouble Code.>

DTC	Item	Content of diagnosis	Reference
B1195	AIRBAG ECU MALFUNCTION	Airbag control module is faulty.	<Ref. to AB(diag)-41, DTC B1195 AIRBAG ECU MALFUNCTION, Diagnostic Chart with Trouble Code.>
B1196	AIRBAG ECU MALFUNCTION	Airbag control module is faulty.	<Ref. to AB(diag)-41, DTC B1196 AIRBAG ECU MALFUNCTION, Diagnostic Chart with Trouble Code.>
B1199	AIRBAG ECU MALFUNCTION	Airbag control module is faulty.	<Ref. to AB(diag)-41, DTC B1199 AIRBAG ECU MALFUNCTION, Diagnostic Chart with Trouble Code.>
B11F3	FRONT IMPACT DEPLOYMENT	Front airbag module and seat belt pretensioner (LH/RH) are inflated.	<Ref. to AB(diag)-42, DTC B11F3 FRONT IMPACT DEPLOYMENT, Diagnostic Chart with Trouble Code.>
B11F4	FRONT IMPACT DEPLOYMENT	Front airbag module and seat belt pretensioner (LH/RH) are inflated.	<Ref. to AB(diag)-42, DTC B11F4 FRONT IMPACT DEPLOYMENT, Diagnostic Chart with Trouble Code.>
B11F5	FRONT IMPACT DEPLOYMENT	Front airbag module and seat belt pretensioner (LH/RH) are inflated.	<Ref. to AB(diag)-42, DTC B11F5 FRONT IMPACT DEPLOYMENT, Diagnostic Chart with Trouble Code.>
B11F7	SIDE IMPACT DEPLOYMENT	• Side airbag module and curtain airbag module are deployed. • Curtain airbag module is deployed.	<Ref. to AB(diag)-42, DTC B11F7 SIDE IMPACT DEPLOYMENT, Diagnostic Chart with Trouble Code.>
B11F8	SIDE IMPACT DEPLOYMENT	• Side airbag module and curtain airbag module are deployed. • Curtain airbag module is deployed.	<Ref. to AB(diag)-42, DTC B11F8 SIDE IMPACT DEPLOYMENT, Diagnostic Chart with Trouble Code.>
B11F9	SIDE IMPACT DEPLOYMENT	• Side airbag module and curtain airbag module are deployed. • Curtain airbag module is deployed.	<Ref. to AB(diag)-42, DTC B11F9 SIDE IMPACT DEPLOYMENT, Diagnostic Chart with Trouble Code.>
B11FA	SIDE IMPACT DEPLOYMENT	• Side airbag module and curtain airbag module are deployed. • Curtain airbag module is deployed.	<Ref. to AB(diag)-43, DTC B11FA SIDE IMPACT DEPLOYMENT, Diagnostic Chart with Trouble Code.>
B11FB	SIDE IMPACT DEPLOYMENT	• Side airbag module and curtain airbag module are deployed. • Curtain airbag module is deployed.	<Ref. to AB(diag)-43, DTC B11FB SIDE IMPACT DEPLOYMENT, Diagnostic Chart with Trouble Code.>
B11FC	SIDE IMPACT DEPLOYMENT	• Side airbag module and curtain airbag module are deployed. • Curtain airbag module is deployed.	<Ref. to AB(diag)-43, DTC B11FC SIDE IMPACT DEPLOYMENT, Diagnostic Chart with Trouble Code.>
B1610	FRONT SUB SENSOR RH FAILURE	Front sub sensor RH is faulty	<Ref. to AB(diag)-43, DTC B1610 FRONT SUB SENSOR RH FAILURE, Diagnostic Chart with Trouble Code.>
B1612	FRONT SUB SENSOR RH LOST COMMUNICATION	• Open or short circuit in harness RH between airbag control module and front sub sensor. • Front sub sensor RH is faulty. • Airbag control module is faulty.	<Ref. to AB(diag)-43, DTC B1612 FRONT SUB SENSOR RH LOST COMMUNICATION, Diagnostic Chart with Trouble Code.>
B1613	FRONT SUB SENSOR RH INITIALIZATION ERROR		<Ref. to AB(diag)-44, DTC B1613 FRONT SUB SENSOR RH INITIALIZATION ERROR, Diagnostic Chart with Trouble Code.>
B1615	FRONT SUB SENSOR LH FAILURE	Front sub sensor LH is faulty.	<Ref. to AB(diag)-46, DTC B1615 FRONT SUB SENSOR LH FAILURE, Diagnostic Chart with Trouble Code.>
B1617	FRONT SUB SENSOR LH LOST COMMUNICATION	• Open or short circuit in harness LH between airbag control module and front sub sensor. • Front sub sensor LH is faulty. • Airbag control module is faulty.	<Ref. to AB(diag)-46, DTC B1617 FRONT SUB SENSOR LH LOST COMMUNICATION, Diagnostic Chart with Trouble Code.>
B1618	FRONT SUB SENSOR LH INITIALIZATION ERROR		<Ref. to AB(diag)-47, DTC B1618 FRONT SUB SENSOR LH INITIALIZATION ERROR, Diagnostic Chart with Trouble Code.>

DTC	Item	Content of diagnosis	Reference
B16F2	FRONT SUB SENSOR RH RECOGNITION ERROR	• Front sensor RH is misinstalled. • Airbag control module is faulty.	<Ref. to AB(diag)-49, DTC B16F2 FRONT SUB SENSOR RH RECOGNITION ERROR, Diagnostic Chart with Trouble Code.>
B16F3	FRONT SUB SENSOR LH RECOGNITION ERROR	• Front sensor LH is misinstalled. • Airbag control module is faulty.	<Ref. to AB(diag)-49, DTC B16F3 FRONT SUB SENSOR LH RECOGNITION ERROR, Diagnostic Chart with Trouble Code.>
B1620	SIDE AIRBAG SENSOR RH FAILURE	Side airbag sensor RH is faulty.	<Ref. to AB(diag)-49, DTC B1620 SIDE AIRBAG SENSOR RH FAILURE, Diagnostic Chart with Trouble Code.>
B1622	SIDE AIRBAG SENSOR RH LOST COMMUNICATION	• Open or short circuit in harness RH between airbag control module and side airbag sensor. • Side airbag sensor RH is faulty. • Airbag control module is faulty.	<Ref. to AB(diag)-50, DTC B1622 SIDE AIRBAG SENSOR RH LOST COMMUNICATION, Diagnostic Chart with Trouble Code.>
B1623	SIDE AIRBAG SENSOR RH INITIALIZATION ERROR		<Ref. to AB(diag)-50, DTC B1623 SIDE AIRBAG SENSOR RH INITIALIZATION ERROR, Diagnostic Chart with Trouble Code.>
B1625	SIDE AIRBAG SENSOR LH FAILURE	Side airbag sensor LH is faulty.	<Ref. to AB(diag)-52, DTC B1625 SIDE AIRBAG SENSOR LH FAILURE, Diagnostic Chart with Trouble Code.>
B1627	SIDE AIRBAG SENSOR LH LOST COMMUNICATION	• Open or short circuit in harness LH between airbag control module and side airbag sensor. • Side airbag sensor LH is faulty. • Airbag control module is faulty.	<Ref. to AB(diag)-52, DTC B1627 SIDE AIRBAG SENSOR LH LOST COMMUNICATION, Diagnostic Chart with Trouble Code.>
B1628	SIDE AIRBAG SENSOR LH INITIALIZATION ERROR		<Ref. to AB(diag)-53, DTC B1628 SIDE AIRBAG SENSOR LH INITIALIZATION ERROR, Diagnostic Chart with Trouble Code.>
B1630	CURTAIN AIRBAG SENSOR RH FAILURE	Curtain airbag sensor RH is faulty.	<Ref. to AB(diag)-55, DTC B1630 CURTAIN AIRBAG SENSOR RH FAILURE, Diagnostic Chart with Trouble Code.>
B1632	CURTAIN AIRBAG SENSOR RH LOST COMMUNICATION	• Open or short circuit in harness RH between airbag control module and curtain airbag sensor. • Side airbag sensor RH is faulty. • Curtain airbag sensor RH is faulty. • Airbag control module is faulty.	<Ref. to AB(diag)-55, DTC B1632 CURTAIN AIRBAG SENSOR RH LOST COMMUNICATION, Diagnostic Chart with Trouble Code.>
B1633	CURTAIN AIRBAG SENSOR RH INITIALIZATION ERROR		<Ref. to AB(diag)-56, DTC B1633 CURTAIN AIRBAG SENSOR RH INITIALIZATION ERROR, Diagnostic Chart with Trouble Code.>
B1635	CURTAIN AIRBAG SENSOR LH FAILURE	Curtain airbag sensor LH is faulty.	<Ref. to AB(diag)-58, DTC B1635 CURTAIN AIRBAG SENSOR LH FAILURE, Diagnostic Chart with Trouble Code.>
B1637	CURTAIN AIRBAG SENSOR LH LOST COMMUNICATION	• Open or short circuit in harness LH between airbag control module and curtain airbag sensor. • Side airbag sensor LH is faulty. • Curtain airbag sensor LH is faulty. • Airbag control module is faulty.	<Ref. to AB(diag)-58, DTC B1637 CURTAIN AIRBAG SENSOR LH LOST COMMUNICATION, Diagnostic Chart with Trouble Code.>
B1638	CURTAIN AIRBAG SENSOR LH INITIALIZATION ERROR		<Ref. to AB(diag)-59, DTC B1638 CURTAIN AIRBAG SENSOR LH INITIALIZATION ERROR, Diagnostic Chart with Trouble Code.>
B16F4	SIDE AIRBAG SENSOR RH RECOGNITION ERROR	• Side airbag sensor RH is misinstalled. • Airbag control module is faulty.	<Ref. to AB(diag)-62, DTC B16F4 SIDE AIRBAG SENSOR RH RECOGNITION ERROR, Diagnostic Chart with Trouble Code.>
B16F5	SIDE AIRBAG SENSOR LH RECOGNITION ERROR	• Side airbag sensor LH is misinstalled. • Airbag control module is faulty.	<Ref. to AB(diag)-62, DTC B16F5 SIDE AIRBAG SENSOR LH RECOGNITION ERROR, Diagnostic Chart with Trouble Code.>
B16F6	CURTAIN AIRBAG SENSOR RH RECOGNITION ERROR	• Curtain airbag sensor RH is misinstalled. • Airbag control module is faulty.	<Ref. to AB(diag)-63, DTC B16F6 CURTAIN AIRBAG SENSOR RH RECOGNITION ERROR, Diagnostic Chart with Trouble Code.>
B16F7	CURTAIN AIRBAG SENSOR LH RECOGNITION ERROR	• Curtain airbag sensor LH is misinstalled. • Airbag control module is faulty.	<Ref. to AB(diag)-63, DTC B16F7 CURTAIN AIRBAG SENSOR LH RECOGNITION ERROR, Diagnostic Chart with Trouble Code.>

DTC	Item	Content of diagnosis	Reference
B1642	SIDE SATELLITE SENSOR BUS RH LOST COMMUNICATION	• Open or short circuit in harness RH between airbag control module and front door impact sensor. • Side airbag sensor RH is faulty. • Curtain airbag sensor RH is faulty. • Front door impact sensor RH is faulty. • Airbag control module is faulty.	<Ref. to AB(diag)-64, DTC B1642 SIDE SATELLITE SENSOR BUS RH LOST COMMUNICATION, Diagnostic Chart with Trouble Code.>
B1647	SIDE SATELLITE SENSOR BUS LH LOST COMMUNICATION	• Open or short circuit in harness LH between airbag control module and front door impact sensor. • Side airbag sensor LH is faulty. • Curtain airbag sensor LH is faulty. • Front door impact sensor LH is faulty. • Airbag control module is faulty.	<Ref. to AB(diag)-69, DTC B1647 SIDE SATELLITE SENSOR BUS LH LOST COMMUNICATION, Diagnostic Chart with Trouble Code.>
B1650	OCCUPANT DETECTION SYSTEM MALFUNCTION	• Occupant detection sensor is faulty. • Occupant detection control module is faulty. • Occupant detection harness is faulty. • Rear airbag harness RH is faulty. • Fuse No. 25 is blown.	<Ref. to AB(diag)-73, DTC B1650 OCCUPANT DETECTION SYSTEM MALFUNCTION, Diagnostic Chart with Trouble Code.>
B1655	FRONT BUCKLE SWITCH RH FAILURE	• Buckle switch RH circuit is open, shorted or shorted to ground. • Occupant detection system is faulty. • Occupant detection harness is faulty.	<Ref. to AB(diag)-73, DTC B1655 FRONT BUCKLE SWITCH RH FAILURE, Diagnostic Chart with Trouble Code.>
B1660	PASSENGER'S AIRBAG ON INDICATOR FAILURE	• Passenger's airbag indicator is faulty. • Airbag control module is faulty. • Airbag main harness circuit is open, shorted or shorted to ground. • Body harness circuit is open.	<Ref. to AB(diag)-74, DTC B1660 PASSENGER'S AIRBAG ON INDICATOR FAILURE, Diagnostic Chart with Trouble Code.>
B1675	SATELLITE SAFING SENSOR FAILURE	Satellite safing sensor is faulty.	<Ref. to AB(diag)-76, DTC B1675 SATELLITE SAFING SENSOR FAILURE, Diagnostic Chart with Trouble Code.>
B16F8	SATELLITE SAFING SENSOR RECOGNITION ERROR	• Satellite safing sensor is misinstalled. • Airbag control module is faulty.	<Ref. to AB(diag)-76, DTC B16F8 SATELLITE SAFING SENSOR RECOGNITION ERROR, Diagnostic Chart with Trouble Code.>
B16F9	DOOR SENSOR RH RECOGNITION ERROR	• Front door impact sensor RH is misinstalled. • Airbag control module is faulty.	<Ref. to AB(diag)-76, DTC B16F9 DOOR SENSOR RH RECOGNITION ERROR, Diagnostic Chart with Trouble Code.>
B1690	DOOR SENSOR RH FAILURE	Front door impact sensor RH is faulty.	<Ref. to AB(diag)-77, DTC B1690 DOOR SENSOR RH FAILURE, Diagnostic Chart with Trouble Code.>
B1692	LOST COMMUNICATION WITH DOOR SENSOR RH	• Open or short circuit in harness between curtain airbag sensor and front door impact sensor. • Front door impact sensor RH is faulty. • Curtain airbag sensor RH is faulty. • Airbag control module is faulty.	<Ref. to AB(diag)-77, DTC B1692 LOST COMMUNICATION WITH DOOR SENSOR RH, Diagnostic Chart with Trouble Code.>
B1693	DOOR SENSOR RH INITIALIZATION INCOMPLETE		<Ref. to AB(diag)-78, DTC B1693 DOOR SENSOR RH INITIALIZATION INCOMPLETE, Diagnostic Chart with Trouble Code.>
B16FA	DOOR SENSOR LH RECOGNITION ERROR	• Front door impact sensor LH is misinstalled. • Airbag control module is faulty.	<Ref. to AB(diag)-82, DTC B16FA DOOR SENSOR LH RECOGNITION ERROR, Diagnostic Chart with Trouble Code.>
B1695	DOOR SENSOR LH FAILURE	Front door impact sensor LH is faulty.	<Ref. to AB(diag)-82, DTC B1695 DOOR SENSOR LH FAILURE, Diagnostic Chart with Trouble Code.>

DTC	Item	Content of diagnosis	Reference
B1697	LOST COMMUNICATION WITH DOOR SENSOR LH	• Open or short circuit in harness between curtain airbag sensor and front door impact sensor. • Front door impact sensor LH is faulty. • Curtain airbag sensor LH is faulty. • Airbag control module is faulty.	<Ref. to AB(diag)-82, DTC B1697 LOST COMMUNICATION WITH DOOR SENSOR LH, Diagnostic Chart with Trouble Code.>
B1698	DOOR SENSOR LH INITIALIZATION INCOMPLETE		<Ref. to AB(diag)-83, DTC B1698 DOOR SENSOR LH INITIALIZATION INCOMPLETE, Diagnostic Chart with Trouble Code.>
B161A	LOST COMMUNICATION WITH FRONT SATELLITE SENSOR BUS	• Open or short circuit in harness between airbag control module and front sub sensor. • Front sub sensor is faulty. • Airbag control module is faulty.	<Ref. to AB(diag)-87, DTC B161A LOST COMMUNICATION WITH FRONT SATELLITE SENSOR BUS, Diagnostic Chart with Trouble Code.>
B16F1	PASSENGER'S SEAT BELT WARNING FAILURE	• Airbag control module is faulty. • Meter is faulty. • Harness circuits between meter and airbag control module are open, shorted or shorted to ground.	<Ref. to AB(diag)-90, DTC B16F1 PASSENGER'S SEAT BELT WARNING FAILURE, Diagnostic Chart with Trouble Code.>
B16F0	PASSENGER'S AIRBAG OFF INDICATOR FAILURE	• Passenger's airbag indicator is faulty. • Airbag control module is faulty. • Airbag main harness circuit is open or shorted. • Body harness circuit is open.	<Ref. to AB(diag)-91, DTC B16F0 PASSENGER'S AIRBAG OFF INDICATOR FAILURE, Diagnostic Chart with Trouble Code.>
B1760	OCCUPANT DETECTION SENSOR MAT	• Occupant detection sensor is open, shorted between terminals, shorted to power supply or shorted to ground. • Seat heater is open. • Occupant detection control module is faulty.	<Ref. to AB(diag)-91, DTC B1760 OCCUPANT DETECTION SENSOR MAT, Diagnostic Chart with Trouble Code.>
B1761	OCCUPANT DETECTION SENSOR MAT LIQUID COATING	• Detected that the occupant detection sensor is spattered with fluid. • Occupant detection sensor is faulty. • Occupant detection control module is faulty.	<Ref. to AB(diag)-91, DTC B1761 OCCUPANT DETECTION SENSOR MAT LIQUID COATING, Diagnostic Chart with Trouble Code.>
B1771	BUCKLE SWITCH	• Passenger's buckle switch circuit is open, shorted or shorted to ground. • Occupant detection system is faulty. • Occupant detection harness is faulty.	<Ref. to AB(diag)-91, DTC B1771 BUCKLE SWITCH, Diagnostic Chart with Trouble Code.>
B1795	OCCUPANT DETECTION MODULE INTERNAL CIRCUIT	Occupant detection control module is faulty.	<Ref. to AB(diag)-91, DTC B1795 OCCUPANT DETECTION MODULE INTERNAL CIRCUIT, Diagnostic Chart with Trouble Code.>
B1800	SHORT IN DRIVER'S AIRBAG	• Airbag main harness circuit is shorted. • Airbag module harness (driver's side) circuit is shorted. • Roll connector circuit is shorted. • Driver's airbag module is faulty. • Airbag control module is faulty.	<Ref. to AB(diag)-92, DTC B1800 SHORT IN DRIVER'S AIRBAG, Diagnostic Chart with Trouble Code.>
B1801	OPEN IN DRIVER'S AIRBAG	• Airbag main harness circuit is open. • Airbag module harness circuit (driver's side) is open. • Roll connector circuit is open. • Driver's airbag module is faulty. • Airbag control module is faulty.	<Ref. to AB(diag)-94, DTC B1801 OPEN IN DRIVER'S AIRBAG, Diagnostic Chart with Trouble Code.>
B1802	SHORT IN DRIVER'S AIRBAG (TO GROUND)	• Airbag main harness circuit is shorted to ground. • Airbag module harness (driver's side) circuit is shorted to ground. • Roll connector circuit is shorted to ground. • Driver's airbag module is faulty. • Airbag control module is faulty.	<Ref. to AB(diag)-96, DTC B1802 SHORT IN DRIVER'S AIRBAG (TO GROUND), Diagnostic Chart with Trouble Code.>

DTC	Item	Content of diagnosis	Reference
B1803	SHORT IN DRIVER'S AIRBAG (TO +B)	• Airbag main harness circuit is shorted to power supply. • Airbag module harness circuit (driver's side) is shorted to power supply. • Roll connector circuit is shorted to power supply. • Airbag module is faulty. • Airbag control module is faulty.	<Ref. to AB(diag)-98, DTC B1803 SHORT IN DRIVER'S AIRBAG (TO +B), Diagnostic Chart with Trouble Code.>
B1805	SHORT IN PASSENGER'S AIRBAG	• Airbag main harness circuit is shorted. • Airbag module harness circuit (passenger's side) is shorted. • Passenger's airbag module is faulty. • Airbag control module is faulty.	<Ref. to AB(diag)-100, DTC B1805 SHORT IN PASSENGER'S AIRBAG, Diagnostic Chart with Trouble Code.>
B1806	OPEN IN PASSENGER'S AIRBAG	• Airbag main harness circuit is open. • Airbag module harness circuit (passenger's side) is open. • Passenger's airbag module is faulty. • Airbag control module is faulty.	<Ref. to AB(diag)-103, DTC B1806 OPEN IN PASSENGER'S AIRBAG, Diagnostic Chart with Trouble Code.>
B1807	SHORT IN PASSENGER'S AIRBAG (TO GROUND)	• Airbag main harness circuit is shorted to ground. • Airbag module harness (passenger's side) circuit is shorted to ground. • Passenger's airbag module is faulty. • Airbag control module is faulty.	<Ref. to AB(diag)-106, DTC B1807 SHORT IN PASSENGER'S AIRBAG (TO GROUND), Diagnostic Chart with Trouble Code.>
B1808	SHORT IN PASSENGER'S AIRBAG (TO +B)	• Airbag main harness circuit is shorted to power supply. • Airbag module harness (passenger's side) circuit is shorted to power supply. • Passenger's airbag module is faulty. • Airbag control module is faulty.	<Ref. to AB(diag)-109, DTC B1808 SHORT IN PASSENGER'S AIRBAG (TO +B), Diagnostic Chart with Trouble Code.>
B1810	SHORT IN DRIVER'S AIRBAG DUAL STAGE - 2ND STEP	• Airbag main harness circuit is shorted. • Airbag module harness (driver's side) circuit is shorted. • Roll connector circuit is shorted. • Driver's airbag module is faulty. • Airbag control module is faulty.	<Ref. to AB(diag)-112, DTC B1810 SHORT IN DRIVER'S AIRBAG DUAL STAGE - 2ND STEP, Diagnostic Chart with Trouble Code.>
B1811	OPEN IN DRIVER'S AIRBAG DUAL STAGE - 2ND STEP	• Airbag main harness circuit is open. • Airbag module harness circuit (driver's side) is open. • Roll connector circuit is open. • Driver's airbag module is faulty. • Airbag control module is faulty.	<Ref. to AB(diag)-114, DTC B1811 OPEN IN DRIVER'S AIRBAG DUAL STAGE - 2ND STEP, Diagnostic Chart with Trouble Code.>
B1812	SHORT IN DRIVER'S AIRBAG DUAL STAGE - 2ND STEP (TO GROUND)	• Airbag main harness circuit is shorted to ground. • Airbag module harness (driver's side) circuit is shorted to ground. • Roll connector circuit is shorted to ground. • Driver's airbag module is faulty. • Airbag control module is faulty.	<Ref. to AB(diag)-116, DTC B1812 SHORT IN DRIVER'S AIRBAG DUAL STAGE - 2ND STEP (TO GROUND), Diagnostic Chart with Trouble Code.>
B1813	SHORT IN DRIVER'S AIRBAG DUAL STAGE - 2ND STEP CIRCUIT (TO +B)	• Airbag main harness circuit is shorted to power supply. • Airbag module harness circuit (driver's side) is shorted to power supply. • Roll connector circuit is shorted to power supply. • Airbag module is faulty. • Airbag control module is faulty.	<Ref. to AB(diag)-119, DTC B1813 SHORT IN DRIVER'S AIRBAG DUAL STAGE - 2ND STEP CIRCUIT (TO +B), Diagnostic Chart with Trouble Code.>

DTC	Item	Content of diagnosis	Reference
B1815	SHORT IN PASSENGER'S AIRBAG DUAL STAGE - 2ND STEP	• Airbag main harness circuit is shorted. • Airbag module harness circuit (passenger's side) is shorted. • Passenger's airbag module is faulty. • Airbag control module is faulty.	<Ref. to AB(diag)-122, DTC B1815 SHORT IN PASSENGER'S AIRBAG DUAL STAGE - 2ND STEP, Diagnostic Chart with Trouble Code.>
B1816	OPEN IN PASSENGER'S AIRBAG DUAL STAGE - 2ND STEP	• Airbag main harness circuit is open. • Airbag module harness circuit (passenger's side) is open. • Passenger's airbag module is faulty. • Airbag control module is faulty.	<Ref. to AB(diag)-125, DTC B1816 OPEN IN PASSENGER'S AIRBAG DUAL STAGE - 2ND STEP, Diagnostic Chart with Trouble Code.>
B1817	SHORT IN PASSENGER'S AIRBAG DUAL STAGE - 2ND STEP (TO GROUND)	• Airbag main harness circuit is shorted to ground. • Airbag module harness (passenger's side) circuit is shorted to ground. • Passenger's airbag module is faulty. • Airbag control module is faulty.	<Ref. to AB(diag)-128, DTC B1817 SHORT IN PASSENGER'S AIRBAG DUAL STAGE - 2ND STEP (TO GROUND), Diagnostic Chart with Trouble Code.>
B1818	SHORT IN PASSENGER'S AIRBAG DUAL STAGE - 2ND STEP CIRCUIT (TO +B)	• Airbag main harness circuit is shorted to power supply. • Airbag module harness (passenger's side) circuit is shorted to power supply. • Passenger's airbag module is faulty. • Airbag control module is faulty.	<Ref. to AB(diag)-131, DTC B1818 SHORT IN PASSENGER'S AIRBAG DUAL STAGE - 2ND STEP CIRCUIT (TO +B), Diagnostic Chart with Trouble Code.>
B1820	SHORT IN SIDE AIRBAG RH	• Side airbag harness RH circuit is shorted. • Side airbag module RH is faulty. • Airbag control module is faulty.	<Ref. to AB(diag)-134, DTC B1820 SHORT IN SIDE AIRBAG RH, Diagnostic Chart with Trouble Code.>
B1821	OPEN IN SIDE AIRBAG RH	• Side airbag harness RH circuit is open. • Side airbag module RH is faulty. • Airbag control module is faulty.	<Ref. to AB(diag)-136, DTC B1821 OPEN IN SIDE AIRBAG RH, Diagnostic Chart with Trouble Code.>
B1822	SHORT IN SIDE AIRBAG RH (TO GROUND)	• Side airbag harness RH circuit is shorted to ground. • Side airbag module RH is faulty. • Airbag control module is faulty.	<Ref. to AB(diag)-138, DTC B1822 SHORT IN SIDE AIRBAG RH (TO GROUND), Diagnostic Chart with Trouble Code.>
B1823	SHORT IN SIDE AIRBAG RH (TO +B)	• Side airbag harness RH circuit is shorted to power supply. • Side airbag module RH is faulty. • Airbag control module is faulty.	<Ref. to AB(diag)-140, DTC B1823 SHORT IN SIDE AIRBAG RH (TO +B), Diagnostic Chart with Trouble Code.>
B1825	SHORT IN SIDE AIRBAG LH	• Side airbag harness LH circuit is shorted. • Side airbag module LH is faulty. • Airbag control module is faulty.	<Ref. to AB(diag)-142, DTC B1825 SHORT IN SIDE AIRBAG LH, Diagnostic Chart with Trouble Code.>
B1826	OPEN IN SIDE AIRBAG LH	• Side airbag harness LH circuit is open. • Side airbag module LH is faulty. • Airbag control module is faulty.	<Ref. to AB(diag)-144, DTC B1826 OPEN IN SIDE AIRBAG LH, Diagnostic Chart with Trouble Code.>
B1827	SHORT IN SIDE AIRBAG LH (TO GROUND)	• Side airbag harness LH circuit is shorted to ground. • Side airbag module LH is faulty. • Airbag control module is faulty.	<Ref. to AB(diag)-146, DTC B1827 SHORT IN SIDE AIRBAG LH (TO GROUND), Diagnostic Chart with Trouble Code.>
B1828	SHORT IN SIDE AIRBAG LH (TO +B)	• Side airbag harness LH circuit is shorted to power supply. • Side airbag module LH is faulty. • Airbag control module is faulty.	<Ref. to AB(diag)-148, DTC B1828 SHORT IN SIDE AIRBAG LH (TO +B), Diagnostic Chart with Trouble Code.>
B1830	SHORT IN CURTAIN AIRBAG RH SQUIB CIRCUIT	• Curtain airbag harness RH circuit is shorted. • Curtain airbag module RH is faulty. • Airbag control module is faulty.	<Ref. to AB(diag)-150, DTC B1830 SHORT IN CURTAIN AIRBAG RH SQUIB CIRCUIT, Diagnostic Chart with Trouble Code.>
B1831	OPEN IN CURTAIN AIRBAG RH SQUIB CIRCUIT	• Curtain airbag harness RH circuit is open. • Curtain airbag module RH is faulty. • Airbag control module is faulty.	<Ref. to AB(diag)-152, DTC B1831 OPEN IN CURTAIN AIRBAG RH SQUIB CIRCUIT, Diagnostic Chart with Trouble Code.>

DTC	Item	Content of diagnosis	Reference
B1832	SHORT IN CURTAIN AIRBAG RH SQUIB CIRCUIT (TO GROUND)	• Curtain airbag harness RH circuit is shorted to ground. • Curtain airbag module RH is faulty. • Airbag control module is faulty.	<Ref. to AB(diag)-154, DTC B1832 SHORT IN CURTAIN AIRBAG RH SQUIB CIRCUIT (TO GROUND), Diagnostic Chart with Trouble Code.>
B1833	SHORT IN CURTAIN SHIELD AIRBAG RH SQUIB CIRCUIT (TO +B)	• Curtain airbag harness RH is shorted to power supply. • Curtain airbag module RH is faulty. • Airbag control module is faulty.	<Ref. to AB(diag)-156, DTC B1833 SHORT IN CURTAIN SHIELD AIRBAG RH SQUIB CIRCUIT (TO +B), Diagnostic Chart with Trouble Code.>
B1835	SHORT IN CURTAIN AIRBAG LH SQUIB CIRCUIT	• Curtain airbag harness LH circuit is shorted. • Curtain airbag module LH is faulty. • Airbag control module is faulty.	<Ref. to AB(diag)-158, DTC B1835 SHORT IN CURTAIN AIRBAG LH SQUIB CIRCUIT, Diagnostic Chart with Trouble Code.>
B1836	OPEN IN CURTAIN AIRBAG LH SQUIB CIRCUIT	• Curtain airbag harness LH circuit is open. • Curtain airbag module LH is faulty. • Airbag control module is faulty.	<Ref. to AB(diag)-160, DTC B1836 OPEN IN CURTAIN AIRBAG LH SQUIB CIRCUIT, Diagnostic Chart with Trouble Code.>
B1837	SHORT IN CURTAIN AIRBAG LH SQUIB CIRCUIT (TO GROUND)	• Curtain airbag harness LH circuit is shorted to ground. • Curtain airbag module LH is faulty. • Airbag control module is faulty.	<Ref. to AB(diag)-162, DTC B1837 SHORT IN CURTAIN AIRBAG LH SQUIB CIRCUIT (TO GROUND), Diagnostic Chart with Trouble Code.>
B1838	SHORT IN CURTAIN SHIELD AIRBAG LH SQUIB CIRCUIT (TO +B)	• Curtain airbag harness LH is shorted to power supply. • Curtain airbag module LH is faulty. • Airbag control module is faulty.	<Ref. to AB(diag)-164, DTC B1838 SHORT IN CURTAIN SHIELD AIRBAG LH SQUIB CIRCUIT (TO +B), Diagnostic Chart with Trouble Code.>
B1860	SHORT IN DRIVER'S KNEE AIRBAG	• Airbag main harness circuit is shorted. • Knee airbag module harness circuit is shorted. • Knee airbag module is faulty. • Airbag control module is faulty.	<Ref. to AB(diag)-166, DTC B1860 SHORT IN DRIVER'S KNEE AIRBAG, Diagnostic Chart with Trouble Code.>
B1861	OPEN IN DRIVER'S KNEE AIRBAG	• Airbag main harness circuit is open. • Knee airbag module harness circuit is open. • Knee airbag module is faulty. • Airbag control module is faulty.	<Ref. to AB(diag)-168, DTC B1861 OPEN IN DRIVER'S KNEE AIRBAG, Diagnostic Chart with Trouble Code.>
B1862	SHORT IN DRIVER'S KNEE AIRBAG (TO GROUND)	• Airbag main harness circuit is shorted to ground. • Knee airbag module harness circuit is shorted to ground. • Knee airbag module is faulty. • Airbag control module is faulty.	<Ref. to AB(diag)-170, DTC B1862 SHORT IN DRIVER'S KNEE AIRBAG (TO GROUND), Diagnostic Chart with Trouble Code.>
B1863	SHORT IN DRIVER'S KNEE AIRBAG (TO +B)	• Airbag main harness circuit is shorted to power supply. • Knee airbag module harness circuit is shorted to power supply. • Knee airbag module is faulty. • Airbag control module is faulty.	<Ref. to AB(diag)-172, DTC B1863 SHORT IN DRIVER'S KNEE AIRBAG (TO +B), Diagnostic Chart with Trouble Code.>
B1900	SHORT IN FRONT P/T RH	• Seat belt pretensioner RH circuit is shorted. • Pretensioner RH is faulty. • Pretensioner harness RH is shorted. • Airbag control module is faulty.	<Ref. to AB(diag)-174, DTC B1900 SHORT IN FRONT P/T RH, Diagnostic Chart with Trouble Code.>
B1901	OPEN IN FRONT P/T RH	• Seat belt pretensioner RH circuit is open. • Pretensioner RH is faulty. • Pretensioner harness RH is shorted. • Airbag control module is faulty.	<Ref. to AB(diag)-176, DTC B1901 OPEN IN FRONT P/T RH, Diagnostic Chart with Trouble Code.>

DTC	Item	Content of diagnosis	Reference
B1902	SHORT IN FRONT P/T RH (TO GROUND)	• Seat belt pretensioner RH circuit is shorted to ground. • Pretensioner RH is faulty. • Pretensioner harness RH is shorted. • Airbag control module is faulty.	<Ref. to AB(diag)-178, DTC B1902 SHORT IN FRONT P/T RH (TO GROUND), Diagnostic Chart with Trouble Code.>
B1903	SHORT IN FRONT P/T RH (TO +B)	• Seat belt pretensioner RH circuit is shorted to power supply. • Pretensioner RH is faulty. • Pretensioner harness RH is shorted. • Airbag control module is faulty.	<Ref. to AB(diag)-180, DTC B1903 SHORT IN FRONT P/T RH (TO +B), Diagnostic Chart with Trouble Code.>
B1905	SHORT IN FRONT P/T LH	• Seat belt pretensioner LH circuit is shorted. • Pretensioner LH is faulty. • Pretensioner harness LH is shorted. • Airbag control module is faulty.	<Ref. to AB(diag)-182, DTC B1905 SHORT IN FRONT P/T LH, Diagnostic Chart with Trouble Code.>
B1906	OPEN IN FRONT P/T LH	• Seat belt pretensioner LH circuit is open. • Pretensioner LH is faulty. • Pretensioner harness LH is shorted. • Airbag control module is faulty.	<Ref. to AB(diag)-184, DTC B1906 OPEN IN FRONT P/T LH, Diagnostic Chart with Trouble Code.>
B1907	SHORT IN FRONT P/T LH (TO GROUND)	• Seat belt pretensioner LH circuit is shorted to ground. • Pretensioner LH is faulty. • Pretensioner harness LH is shorted. • Airbag control module is faulty.	<Ref. to AB(diag)-186, DTC B1907 SHORT IN FRONT P/T LH (TO GROUND), Diagnostic Chart with Trouble Code.>
B1908	SHORT IN FRONT P/T LH (TO +B)	• Seat belt pretensioner LH circuit is shorted to power supply. • Pretensioner LH is faulty. • Pretensioner harness LH is shorted. • Airbag control module is faulty.	<Ref. to AB(diag)-188, DTC B1908 SHORT IN FRONT P/T LH (TO +B), Diagnostic Chart with Trouble Code.>
B19F0	SHORT IN FRONT P/T 2 RH	• Lap seat belt pretensioner RH circuit is shorted. • Lap seat belt pretensioner RH is faulty. • Lap seat belt pretensioner harness RH is shorted. • Airbag control module is faulty.	<Ref. to AB(diag)-190, DTC B19F0 SHORT IN FRONT P/T 2 RH, Diagnostic Chart with Trouble Code.>
B19F1	OPEN IN FRONT P/T 2 RH	• Lap seat belt pretensioner RH circuit is open. • Lap seat belt pretensioner RH is faulty. • Lap seat belt pretensioner harness RH is open. • Airbag control module is faulty.	<Ref. to AB(diag)-192, DTC B19F1 OPEN IN FRONT P/T 2 RH, Diagnostic Chart with Trouble Code.>
B19F2	SHORT IN FRONT P/T 2 RH (TO GROUND)	• Lap seat belt pretensioner RH circuit is shorted to ground. • Lap seat belt pretensioner RH is faulty. • Lap seat belt pretensioner harness RH is shorted to ground. • Airbag control module is faulty.	<Ref. to AB(diag)-194, DTC B19F2 SHORT IN FRONT P/T 2 RH (TO GROUND), Diagnostic Chart with Trouble Code.>
B19F3	SHORT IN FRONT P/T 2 RH (TO +B)	• Lap seat belt pretensioner RH circuit is shorted to power supply. • Lap seat belt pretensioner RH is faulty. • Lap seat belt pretensioner harness RH is shorted to power supply. • Airbag control module is faulty.	<Ref. to AB(diag)-196, DTC B19F3 SHORT IN FRONT P/T 2 RH (TO +B), Diagnostic Chart with Trouble Code.>

17.Diagnostic Chart with Trouble Code

A: DTC U0073 CONTROL MODULE COMMUNICATION BUS OFF

DIAGNOSIS START CONDITION:
Ignition voltage remains at 10 V or more for 1 second.
DTC DETECTING CONDITION:
This is detected when a CAN line malfunction occurs.

NOTE:
Perform the diagnosis for LAN system. <Ref. to LAN(diag)-2, PROCEDURE, Basic Diagnostic Procedure.>

B: DTC B1000 AIRBAG ECU MALFUNCTION

DIAGNOSIS START CONDITION:
Ignition voltage is 10 V to 16 V.
DTC DETECTING CONDITION:
Airbag control module is faulty.

CAUTION:
Before performing diagnosis, refer to "CAUTION" in "General Description". <Ref. to AB(diag)-4, CAUTION, General Description.>

	Step	Check	Yes	No
1	**CHECK DTC.** Read the DTC. (Current malfunction) <Ref. to AB(diag)-22, Read Diagnostic Trouble Code (DTC).>	Is any of B1000, B1003, B1105, B1106, B1115, B1116, B1170, B1185, B1195, B1196 or B1199 displayed?	Replace the airbag control module. <Ref. to AB-47, Airbag Control Module.>	Perform the Clear Memory Mode. <Ref. to AB(diag)-24, Clear Memory Mode.>

C: DTC B1003 AIRBAG ECU MALFUNCTION

NOTE:
Refer to DTC B1103 for details on DTC B1000. <Ref. to AB(diag)-40, DTC B1000 AIRBAG ECU MALFUNCTION, Diagnostic Chart with Trouble Code.>

D: DTC B1105 AIRBAG ECU MALFUNCTION

NOTE:
Refer to DTC B1105 for details on DTC B1000. <Ref. to AB(diag)-40, DTC B1000 AIRBAG ECU MALFUNCTION, Diagnostic Chart with Trouble Code.>

E: DTC B1106 AIRBAG ECU MALFUNCTION

NOTE:
Refer to DTC B1106 for details on DTC B1000. <Ref. to AB(diag)-40, DTC B1000 AIRBAG ECU MALFUNCTION, Diagnostic Chart with Trouble Code.>

F: DTC B1115 AIRBAG ECU MALFUNCTION

NOTE:
Refer to DTC B1115 for details on DTC B1000. <Ref. to AB(diag)-40, DTC B1000 AIRBAG ECU MALFUNCTION, Diagnostic Chart with Trouble Code.>

G: DTC B1116 AIRBAG ECU MALFUNCTION

NOTE:
Refer to DTC B1116 for details on DTC B1000. <Ref. to AB(diag)-40, DTC B1000 AIRBAG ECU MALFUNCTION, Diagnostic Chart with Trouble Code.>

H: DTC B1120 AIRBAG ECU MALFUNCTION

NOTE:
For details on DTC B1120, refer to DTC B1000. <Ref. to AB(diag)-40, DTC B1000 AIRBAG ECU MALFUNCTION, Diagnostic Chart with Trouble Code.>

I: DTC B1121 AIRBAG ECU MALFUNCTION

NOTE:
For details on DTC B1121, refer to DTC B1000. <Ref. to AB(diag)-40, DTC B1000 AIRBAG ECU MALFUNCTION, Diagnostic Chart with Trouble Code.>

J: DTC B1125 AIRBAG ECU MALFUNCTION

NOTE:
For details on DTC B1125, refer to DTC B1000. <Ref. to AB(diag)-40, DTC B1000 AIRBAG ECU MALFUNCTION, Diagnostic Chart with Trouble Code.>

K: DTC B1126 AIRBAG ECU MALFUNCTION

NOTE:
For details on DTC B1126, refer to DTC B1000. <Ref. to AB(diag)-40, DTC B1000 AIRBAG ECU MALFUNCTION, Diagnostic Chart with Trouble Code.>

L: DTC B1135 AIRBAG ECU MALFUNCTION

NOTE:
For details on DTC B1135, refer to DTC B1000. <Ref. to AB(diag)-40, DTC B1000 AIRBAG ECU MALFUNCTION, Diagnostic Chart with Trouble Code.>

M: DTC B1136 AIRBAG ECU MALFUNCTION

NOTE:
For details on DTC B1136, refer to DTC B1000. <Ref. to AB(diag)-40, DTC B1000 AIRBAG ECU MALFUNCTION, Diagnostic Chart with Trouble Code.>

N: DTC B1145 AIRBAG ECU MALFUNCTION

NOTE:
For details on DTC B1145, refer to DTC B1000. <Ref. to AB(diag)-40, DTC B1000 AIRBAG ECU MALFUNCTION, Diagnostic Chart with Trouble Code.>

O: DTC B1146 AIRBAG ECU MALFUNCTION

NOTE:
For details on DTC B1146, refer to DTC B1000. <Ref. to AB(diag)-40, DTC B1000 AIRBAG ECU MALFUNCTION, Diagnostic Chart with Trouble Code.>

P: DTC B1170 AIRBAG ECU MALFUNCTION

NOTE:
Refer to DTC B1170 for details on DTC B1000. <Ref. to AB(diag)-40, DTC B1000 AIRBAG ECU MALFUNCTION, Diagnostic Chart with Trouble Code.>

Q: DTC B1185 AIRBAG ECU MALFUNCTION

NOTE:
Refer to DTC B1185 for details on DTC B1000. <Ref. to AB(diag)-40, DTC B1000 AIRBAG ECU MALFUNCTION, Diagnostic Chart with Trouble Code.>

R: DTC B1195 AIRBAG ECU MALFUNCTION

NOTE:
Refer to DTC B1195 for details on DTC B1000. <Ref. to AB(diag)-40, DTC B1000 AIRBAG ECU MALFUNCTION, Diagnostic Chart with Trouble Code.>

S: DTC B1196 AIRBAG ECU MALFUNCTION

NOTE:
Refer to DTC B1196 for details on DTC B1000. <Ref. to AB(diag)-40, DTC B1000 AIRBAG ECU MALFUNCTION, Diagnostic Chart with Trouble Code.>

T: DTC B1199 AIRBAG ECU MALFUNCTION

NOTE:
Refer to DTC B1199 for details on DTC B1000. <Ref. to AB(diag)-40, DTC B1000 AIRBAG ECU MALFUNCTION, Diagnostic Chart with Trouble Code.>

U: DTC B11F3 FRONT IMPACT DEPLOYMENT

DIAGNOSIS START CONDITION:
Ignition voltage is 10 V to 16 V.
DTC DETECTING CONDITION:
This DTC is indicated when the front airbag module and the pretensioner are deployed.
Once this DTC is displayed, the memory cannot be cleared. Therefore replace the following parts.

- Airbag control module <Ref. to AB-47, Airbag Control Module.>
- Driver's airbag module <Ref. to AB-32, Driver's Airbag Module.>
- Passenger's airbag module <Ref. to AB-35, Passenger's Airbag Module.>
- Driver's knee airbag module <Ref. to AB-34, Knee Airbag Module.>
- Front sub sensor of both sides <Ref. to AB-49, Front Sub Sensor.>
- Front outer seat belt with pretensioner of both sides <Ref. to SB-15, Front Seat Belt.>
- Steering roll connector <Ref. to AB-58, Roll Connector.>
- Occupant detection system (passenger's seat cushion & frame assembly) <Ref. to SE-9, Front Seat.>
- Curtain airbag module on both sides (when activated) <Ref. to AB-45, Curtain Airbag Module.>

V: DTC B11F4 FRONT IMPACT DEPLOYMENT

NOTE:
For details on DTC B11F4, refer to DTC B11F3. <Ref. to AB(diag)-42, DTC B11F3 FRONT IMPACT DEPLOYMENT, Diagnostic Chart with Trouble Code.>

W: DTC B11F5 FRONT IMPACT DEPLOYMENT

NOTE:
For details on DTC B11F5, refer to DTC B11F3. <Ref. to AB(diag)-42, DTC B11F3 FRONT IMPACT DEPLOYMENT, Diagnostic Chart with Trouble Code.>

X: DTC B11F7 SIDE IMPACT DEPLOYMENT

DIAGNOSIS START CONDITION:
Ignition voltage is 10 V to 16 V.
DTC DETECTING CONDITION:
This DTC is displayed when the side airbag module and curtain airbag module are deployed.
Once this DTC is displayed, the memory cannot be cleared. Replace the following parts.

- Airbag control module <Ref. to AB-47, Airbag Control Module.>
- Side airbag module (operating side) <Ref. to AB-42, Side Airbag Module.>
- Side airbag sensor (operating side) <Ref. to AB-53, Side Airbag Sensor.>
- Curtain airbag module (operating side) <Ref. to AB-45, Curtain Airbag Module.>
- Curtain airbag sensor (operating side) <Ref. to AB-56, Curtain Airbag Sensor.>
- Satellite safing sensor <Ref. to AB-57, Satellite Safing Sensor.>
- Front door impact sensor (operating side) <Ref. to AB-51, Front Door Impact Sensor.>
- Front outer seat belt with pretensioner on the collision side (when activated) <Ref. to SB-15, Front Seat Belt.>

Y: DTC B11F8 SIDE IMPACT DEPLOYMENT

NOTE:
For details on DTC B11F8. refer to DTC B11F7. <Ref. to AB(diag)-42, DTC B11F7 SIDE IMPACT DEPLOYMENT, Diagnostic Chart with Trouble Code.>

Z: DTC B11F9 SIDE IMPACT DEPLOYMENT

NOTE:
For details on DTC B11F9, refer to DTC B11F7. <Ref. to AB(diag)-42, DTC B11F7 SIDE IMPACT DEPLOYMENT, Diagnostic Chart with Trouble Code.>

AA:DTC B11FA SIDE IMPACT DEPLOYMENT

NOTE:
For details on DTC B11FA, refer to DTC B11F7. <Ref. to AB(diag)-42, DTC B11F7 SIDE IMPACT DEPLOYMENT, Diagnostic Chart with Trouble Code.>

AB:DTC B11FB SIDE IMPACT DEPLOYMENT

NOTE:
For details on DTC B11FB, refer to DTC B11F7. <Ref. to AB(diag)-42, DTC B11F7 SIDE IMPACT DEPLOYMENT, Diagnostic Chart with Trouble Code.>

AC:DTC B11FC SIDE IMPACT DEPLOYMENT

NOTE:
For details on DTC B11FC, refer to DTC B11F7. <Ref. to AB(diag)-42, DTC B11F7 SIDE IMPACT DEPLOYMENT, Diagnostic Chart with Trouble Code.>

AD:DTC B1610 FRONT SUB SENSOR RH FAILURE

DIAGNOSIS START CONDITION:
Ignition voltage is 10 V to 16 V.
DTC DETECTING CONDITION:
Front sub sensor RH is faulty.
If DTC B1610 is displayed, the circuit within the front sub sensor RH is faulty.
Replace the front sub sensor RH. <Ref. to AB-49, Front Sub Sensor.>

AE:DTC B1612 FRONT SUB SENSOR RH LOST COMMUNICATION

NOTE:
For details on DTC B1612, refer to DTC B1613. <Ref. to AB(diag)-44, DTC B1613 FRONT SUB SENSOR RH INITIALIZATION ERROR, Diagnostic Chart with Trouble Code.>

AF:DTC B1613 FRONT SUB SENSOR RH INITIALIZATION ERROR

DIAGNOSIS START CONDITION:
Ignition voltage is 10 V to 16 V.
DTC DETECTING CONDITION:

- Open or short circuit in harness of front sensor bus RH
- Front sub sensor RH is faulty.
- Airbag control module is faulty.

CAUTION:
Before performing diagnosis, refer to "CAUTION" in "General Description". <Ref. to AB(diag)-4, CAUTION, General Description.>
WIRING DIAGRAM:
Airbag system <Ref. to WI-69, WIRING DIAGRAM, Airbag System.>

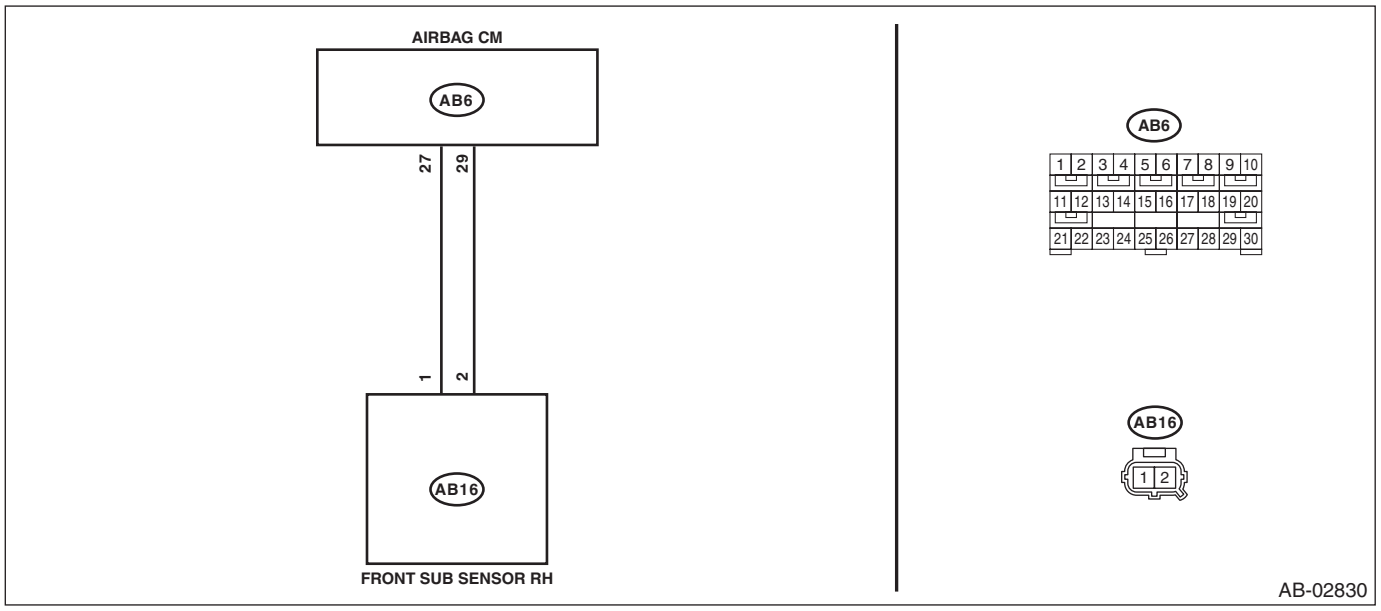

	Step	Check	Yes	No
1	**CHECK POOR CONTACT OF CONNECTORS.** Check for poor contact of the connectors (AB6, AB16) between the airbag control module and the front sub sensor RH.	Is there poor contact?	Replace the airbag main harness along with body harness.	Go to step **2**.

	Step	Check	Yes	No
2	**CHECK AIRBAG MAIN HARNESS (FRONT SENSOR BUS RH).** 1) Turn the ignition switch to OFF, disconnect the battery ground cable, and wait for 60 seconds or more. 2) Remove the instrument panel lower cover and column cover, and disconnect the connectors (AB7) and (AB2). 3) Remove the console front panel and disconnect the connector (AB9). 4) Disconnect the connector (AB66) from knee airbag module. 5) Disconnect the connectors (AB6, AB17, AB18) from airbag control module. 6) Connect the connector (1AG) in the test harness AG to the connectors (AB6, AB17, AB18). 7) Disconnect the connector (AB16) from the front sub sensor RH, and then connect the connector (1H) in the test harness H to connector (AB16). 8) Measure the resistance between connector (4AG) in the test harness AG and connector (3H) in the test harness H. ***Connector & terminal*** ***(4AG) No. 14 — (3H) No. 5:*** ***(4AG) No. 12 — (3H) No. 6:***	Is the resistance less than 10 Ω?	Go to step **3**.	Replace the airbag main harness along with body harness.
3	**CHECK AIRBAG MAIN HARNESS (FRONT SENSOR BUS RH).** Measure the resistance between connector (4AG) in the test harness AG and chassis ground, and the resistance between connector (4AG) terminals in the test harness AG. ***Connector & terminal*** ***(4AG) No. 12 — Chassis ground:*** ***(4AG) No. 14 — Chassis ground:*** ***(4AG) No. 12 — (4AG) No. 14:***	Is the resistance 1 MΩ or more?	Go to step **4**.	Replace the airbag main harness along with body harness.
4	**CHECK AIRBAG CONTROL MODULE.** 1) Connect all connectors. 2) Clear the memory. <Ref. to AB(diag)-24, Clear Memory Mode.> 3) Perform the Inspection Mode. <Ref. to AB(diag)-23, Inspection Mode.> 4) Read the DTC. (Current malfunction) <Ref. to AB(diag)-22, Read Diagnostic Trouble Code (DTC).>	Is DTC B1613 displayed?	Replace the front sub sensor RH. <Ref. to AB-49, REMOVAL, Front Sub Sensor.> Replace the airbag control module if not operating normally even after replacing the sensor. <Ref. to AB-47, REMOVAL, Airbag Control Module.>	Go to step **5**.
5	**CHECK FOR ANY OTHER DTC ON DISPLAY.** Read the DTC. (Current malfunction) <Ref. to AB(diag)-22, Read Diagnostic Trouble Code (DTC).>	Is any other DTC displayed?	Perform the diagnosis for other displayed DTCs. <Ref. to AB(diag)-30, List of Diagnostic Trouble Code (DTC).>	Finish the diagnosis.

AG:DTC B1615 FRONT SUB SENSOR LH FAILURE

DIAGNOSIS START CONDITION:
Ignition voltage is 10 V to 16 V.
DTC DETECTING CONDITION:
Front sub sensor LH is faulty.
If DTC B1615 is displayed, the circuit within the front sub sensor LH is faulty.
Replace the front sub sensor LH. <Ref. to AB-49, Front Sub Sensor.>

AH:DTC B1617 FRONT SUB SENSOR LH LOST COMMUNICATION

NOTE:
For details on DTC B1617, refer to DTC B1618. <Ref. to AB(diag)-47, DTC B1618 FRONT SUB SENSOR LH INITIALIZATION ERROR, Diagnostic Chart with Trouble Code.>

AI: DTC B1618 FRONT SUB SENSOR LH INITIALIZATION ERROR

DIAGNOSIS START CONDITION:
Ignition voltage is 10 V to 16 V.
DTC DETECTING CONDITION:

- Open or short circuit in harness of front sensor bus LH
- Front sub sensor LH is faulty.
- Airbag control module is faulty.

CAUTION:
Before performing diagnosis, refer to "CAUTION" in "General Description". <Ref. to AB(diag)-4, CAUTION, General Description.>
WIRING DIAGRAM:
Airbag system <Ref. to WI-69, WIRING DIAGRAM, Airbag System.>

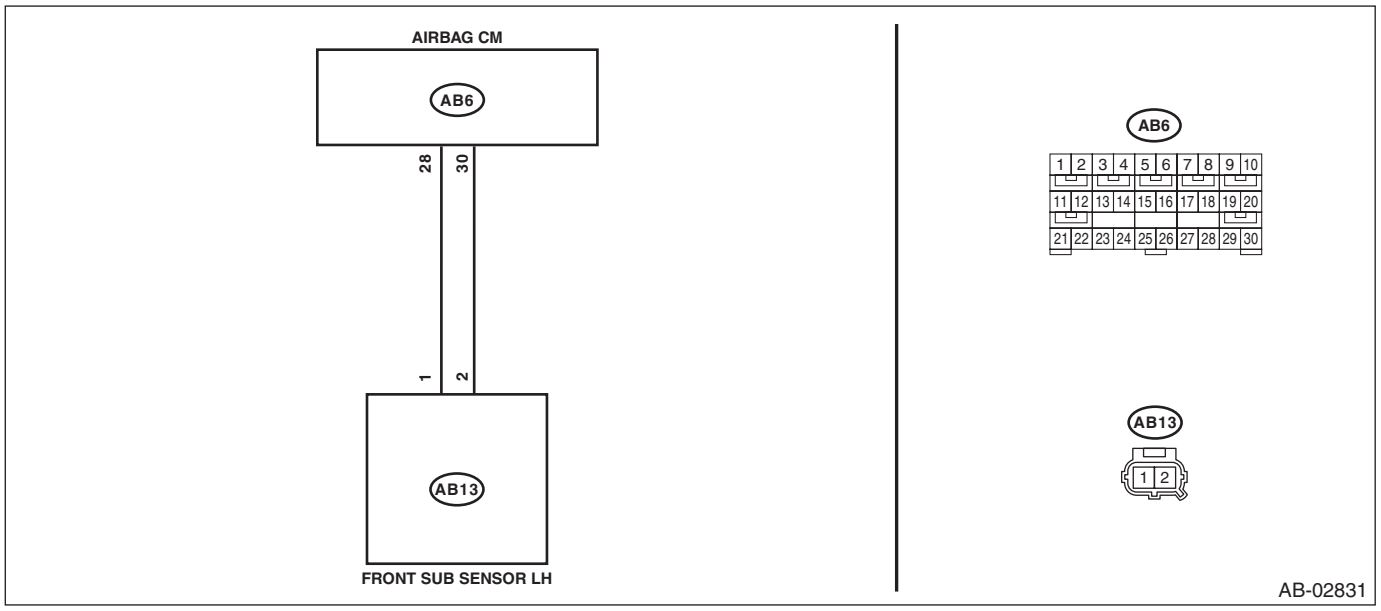

	Step	Check	Yes	No
1	**CHECK POOR CONTACT OF CONNECTORS.** Check for poor contact of the connectors (AB6, AB13) between the airbag control module and the front sub sensor LH.	Is there poor contact?	Replace the airbag main harness along with body harness.	Go to step **2**.

	Step	Check	Yes	No
2	**CHECK AIRBAG MAIN HARNESS (FRONT SENSOR BUS LH).** 1) Turn the ignition switch to OFF, disconnect the battery ground cable, and wait for 60 seconds or more. 2) Remove the instrument panel lower cover and column cover, and disconnect the connectors (AB7) and (AB2). 3) Remove the console front panel and disconnect the connector (AB9). 4) Disconnect the connector (AB66) from knee airbag module. 5) Disconnect the connectors (AB6, AB17, AB18) from airbag control module. 6) Connect the connector (1AG) in the test harness AG to the connectors (AB6, AB17, AB18). 7) Disconnect the connector (AB13) from the front sub sensor LH, and then connect the connector (1H) in the test harness H to connector (AB13). 8) Measure the resistance between connector (4AG) in the test harness AG and connector (3H) in the test harness H. ***Connector & terminal*** ***(4AG) No. 7 — (3H) No. 5:*** ***(4AG) No. 9 — (3H) No. 6:***	Is the resistance less than 10 Ω?	Go to step **3**.	Replace the airbag main harness along with body harness.
3	**CHECK AIRBAG MAIN HARNESS (FRONT SENSOR BUS LH).** Measure the resistance between connector (4AG) in the test harness AG and chassis ground, and the resistance between connector (4AG) terminals in the test harness AG. ***Connector & terminal*** ***(4AG) No. 7 — Chassis ground:*** ***(4AG) No. 9 — Chassis ground:*** ***(4AG) No. 7 — (4AG) No. 9:***	Is the resistance 1 MΩ or more?	Go to step **4**.	Replace the airbag main harness along with body harness.
4	**CHECK AIRBAG CONTROL MODULE.** 1) Connect all connectors. 2) Clear the memory. <Ref. to AB(diag)-24, Clear Memory Mode.> 3) Perform the Inspection Mode. <Ref. to AB(diag)-23, Inspection Mode.> 4) Read the DTC. (Current malfunction) <Ref. to AB(diag)-22, Read Diagnostic Trouble Code (DTC).>	Is DTC B1618 displayed?	Replace the front sub sensor LH. <Ref. to AB-49, REMOVAL, Front Sub Sensor.> Replace the airbag control module if not operating normally even after replacing the sensor. <Ref. to AB-47, REMOVAL, Airbag Control Module.>	Go to step **5**.
5	**CHECK FOR ANY OTHER DTC ON DISPLAY.** Read the DTC. (Current malfunction) <Ref. to AB(diag)-22, Read Diagnostic Trouble Code (DTC).>	Is any other DTC displayed?	Perform the diagnosis for other displayed DTCs. <Ref. to AB(diag)-30, List of Diagnostic Trouble Code (DTC).>	Finish the diagnosis.

AJ:DTC B16F2 FRONT SUB SENSOR RH RECOGNITION ERROR

DIAGNOSIS START CONDITION:
Ignition voltage is 10 V to 16 V.
DTC DETECTING CONDITION:
Front sub sensor RH is wrongly installed.

CAUTION:
Before performing diagnosis, refer to "CAUTION" in "General Description". <Ref. to AB(diag)-4, CAUTION, General Description.>

	Step	Check	Yes	No
1	**REPLACE FRONT SUB SENSOR.** 1) Turn the ignition switch to OFF, disconnect the battery ground cable, and wait for 60 seconds or more. 2) Replace the front sub sensor RH with a genuine sensor. <Ref. to AB-49, REMOVAL, Front Sub Sensor.>	Does the warning light go off?	Finish the diagnosis.	Replace the airbag control module. <Ref. to AB-47, REMOVAL, Airbag Control Module.>

AK:DTC B16F3 FRONT SUB SENSOR LH RECOGNITION ERROR

DIAGNOSIS START CONDITION:
Ignition voltage is 10 V to 16 V.
DTC DETECTING CONDITION:
Front sub sensor LH is wrongly installed.

CAUTION:
Before performing diagnosis, refer to "CAUTION" in "General Description". <Ref. to AB(diag)-4, CAUTION, General Description.>

	Step	Check	Yes	No
1	**REPLACE FRONT SUB SENSOR.** 1) Turn the ignition switch to OFF, disconnect the battery ground cable, and wait for 60 seconds or more. 2) Replace the front sub sensor LH with a genuine sensor. <Ref. to AB-49, REMOVAL, Front Sub Sensor.>	Does the warning light go off?	Finish the diagnosis.	Replace the airbag control module. <Ref. to AB-47, REMOVAL, Airbag Control Module.>

AL:DTC B1620 SIDE AIRBAG SENSOR RH FAILURE

DIAGNOSIS START CONDITION:
Ignition voltage is 10 V to 16 V.
DTC DETECTING CONDITION:
Side airbag sensor RH is faulty.
When DTC B1620 is displayed, the circuit within the side airbag sensor RH is faulty.
Replace the side airbag sensor RH. <Ref. to AB-53, Side Airbag Sensor.>

AM:DTC B1622 SIDE AIRBAG SENSOR RH LOST COMMUNICATION

NOTE:
For details on DTC B1622, refer to DTC B1623. <Ref. to AB(diag)-50, DTC B1623 SIDE AIRBAG SENSOR RH INITIALIZATION ERROR, Diagnostic Chart with Trouble Code.>

AN:DTC B1623 SIDE AIRBAG SENSOR RH INITIALIZATION ERROR

DIAGNOSIS START CONDITION:
Ignition voltage is 10 V to 16 V.
DTC DETECTING CONDITION:

- Open or short circuit in harness of side sensor bus RH.
- Side airbag sensor RH and curtain airbag sensor RH are faulty.
- Airbag control module is faulty.

CAUTION:
Before performing diagnosis, refer to "CAUTION" in "General Description". <Ref. to AB(diag)-4, CAUTION, General Description.>
WIRING DIAGRAM:
Airbag system <Ref. to WI-69, WIRING DIAGRAM, Airbag System.>

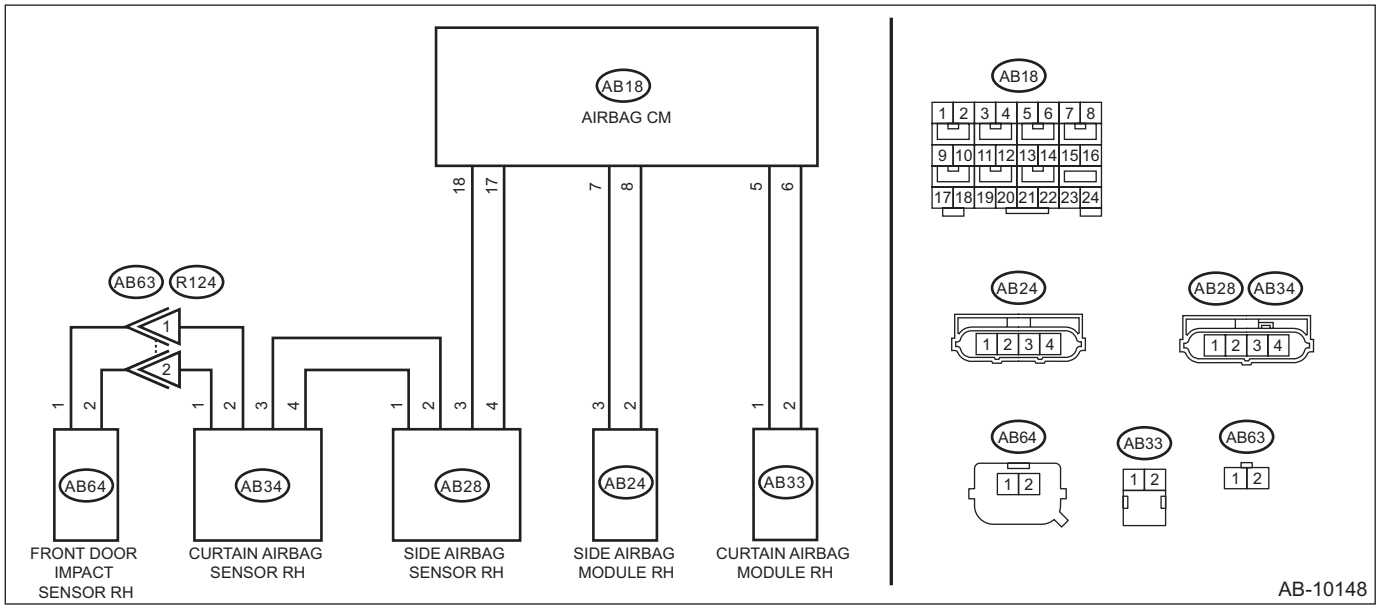

Step		Check	Yes	No
1	**CHECK POOR CONTACT OF CONNECTORS.** Check for poor contact of the connectors between the airbag control module and the side airbag sensor RH.	Is there poor contact?	Replace the airbag rear harness along with body harness.	Go to step **2**.

	Step	Check	Yes	No
2	**CHECK AIRBAG REAR HARNESS (BETWEEN AIRBAG CONTROL MODULE AND SIDE AIRBAG SENSOR RH).** 1) Turn the ignition switch to OFF, disconnect the battery ground cable, and wait for 60 seconds or more. 2) Disconnect the connector (AB26) from seat belt pretensioner RH. 3) Disconnect the connector (AB30) from the lap seat belt pretensioner RH. 4) Disconnect the connector (AB33) from curtain airbag module RH. 5) Disconnect the connector (AB24) of side airbag module RH. 6) Disconnect the connectors (AB6, AB17, AB18) from airbag control module. 7) Connect the connector (1AG) in the test harness AG to the connectors (AB6, AB17, AB18). 8) Disconnect the connector (AB28) from side airbag sensor RH, and connect the connector (2V) in test harness V to connector (AB28). 9) Measure the resistance between connector (5AG) in the test harness AG and connector (3V) in the test harness V. ***Connector & terminal*** ***(5AG) No. 14 — (3V) No. 1:*** ***(5AG) No. 16 — (3V) No. 2:***	Is the resistance less than 10 Ω?	Go to step **3**.	Replace the airbag rear harness along with body harness.
3	**CHECK AIRBAG REAR HARNESS (BETWEEN AIRBAG CONTROL MODULE AND SIDE AIRBAG SENSOR RH).** Measure the resistance between connector (5AG) in the test harness AG and chassis ground, and the resistance between connector (5AG) terminals in the test harness AG. ***Connector & terminal*** ***(3V) No. 1 — Chassis ground:*** ***(3V) No. 2 — Chassis ground:*** ***(3V) No. 1 — (3V) No. 2:***	Is the resistance 1 MΩ or more?	Go to step **4**.	Replace the airbag rear harness along with body harness.
4	**CHECK AIRBAG CONTROL MODULE.** 1) Connect all connectors. 2) Clear the memory. <Ref. to AB(diag)-24, Clear Memory Mode.> 3) Perform the Inspection Mode. <Ref. to AB(diag)-23, Inspection Mode.> 4) Read the DTC. (Current malfunction) <Ref. to AB(diag)-22, Read Diagnostic Trouble Code (DTC).>	Is DTC B1623 displayed?	Go to step **5**.	Go to step **6**.

	Step	Check	Yes	No
5	**REPLACE SIDE AIRBAG SENSOR RH AND CHECK AIRBAG CONTROL MODULE AFTER REPLACEMENT.** 1) Turn the ignition switch to OFF, disconnect the battery ground cable, and wait for 60 seconds or more. 2) Replace the side airbag sensor RH. <Ref. to AB-53, REMOVAL, Side Airbag Sensor.> 3) Connect all connectors. 4) Clear the memory. <Ref. to AB(diag)-24, Clear Memory Mode.> 5) Perform the Inspection Mode. <Ref. to AB(diag)-23, Inspection Mode.> 6) Read the DTC. (Current malfunction) <Ref. to AB(diag)-22, Read Diagnostic Trouble Code (DTC).>	Is the system normal?	Go to step **6**.	Replace the curtain airbag sensor RH. <Ref. to AB-56, REMOVAL, Curtain Airbag Sensor.> Replace the airbag control module if not operating normally even after replacing the sensor. <Ref. to AB-47, REMOVAL, Airbag Control Module.>
6	**CHECK FOR ANY OTHER DTC ON DISPLAY.** Read the DTC. (Current malfunction) <Ref. to AB(diag)-22, Read Diagnostic Trouble Code (DTC).>	Is any other DTC displayed?	Perform the diagnosis for other displayed DTCs. <Ref. to AB(diag)-30, List of Diagnostic Trouble Code (DTC).>	Finish the diagnosis.

AO:DTC B1625 SIDE AIRBAG SENSOR LH FAILURE

DIAGNOSIS START CONDITION:
Ignition voltage is 10 V to 16 V.
DTC DETECTING CONDITION:
Side airbag sensor LH is faulty.
When DTC B1625 is displayed, the circuit within the side airbag sensor LH is faulty.
Replace the side airbag sensor LH. <Ref. to AB-53, Side Airbag Sensor.>

AP:DTC B1627 SIDE AIRBAG SENSOR LH LOST COMMUNICATION

NOTE:
Refer to DTC B1627 for details on DTC B1628. <Ref. to AB(diag)-53, DTC B1628 SIDE AIRBAG SENSOR LH INITIALIZATION ERROR, Diagnostic Chart with Trouble Code.>

AQ:DTC B1628 SIDE AIRBAG SENSOR LH INITIALIZATION ERROR

DIAGNOSIS START CONDITION:
Ignition voltage is 10 V to 16 V.
DTC DETECTING CONDITION:

- Open or short circuit in harness of side sensor bus LH.
- Side airbag sensor LH and curtain airbag sensor LH are faulty.
- Airbag control module is faulty.

CAUTION:
Before performing diagnosis, refer to "CAUTION" in "General Description". <Ref. to AB(diag)-4, CAUTION, General Description.>
WIRING DIAGRAM:
Airbag system <Ref. to WI-69, WIRING DIAGRAM, Airbag System.>

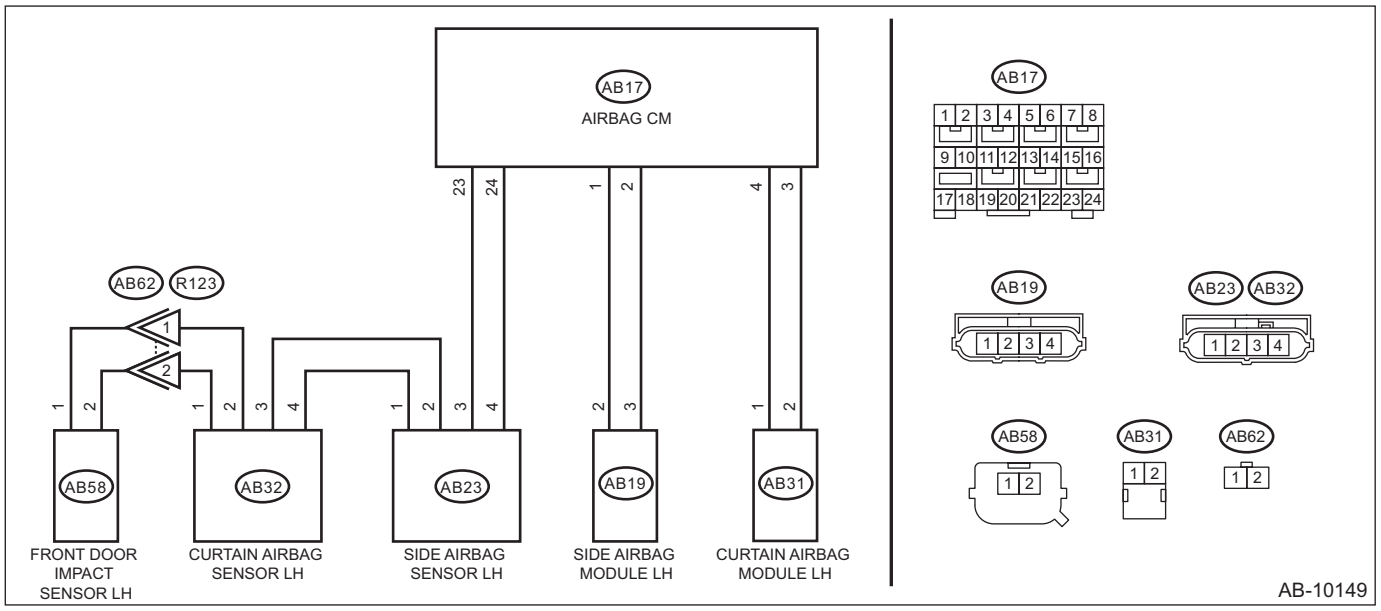

Step		Check	Yes	No
1	**CHECK POOR CONTACT OF CONNECTORS.** Check for poor contact of the connectors between the airbag control module and the side airbag sensor LH.	Is there poor contact?	Replace the airbag rear harness along with body harness.	Go to step **2**.

	Step	Check	Yes	No
2	**CHECK AIRBAG REAR HARNESS (BETWEEN AIRBAG CONTROL MODULE AND SIDE AIRBAG SENSOR LH).** 1) Turn the ignition switch to OFF, disconnect the battery ground cable, and wait for 60 seconds or more. 2) Disconnect the connector (AB21) from seat belt pretensioner LH. 3) Disconnect the connector (AB31) from curtain airbag module LH. 4) Disconnect the connector (AB19) of the side airbag module LH. 5) Disconnect the connectors (AB6, AB17, AB18) from airbag control module. 6) Connect the connector (1AG) in the test harness AG to the connectors (AB6, AB17, AB18). 7) Disconnect the connector (AB23) from side airbag sensor LH, and connect the connector (2V) in test harness V to connector (AB23). 8) Measure the resistance between connector (5AG) in the test harness AG and connector (3V) in the test harness V. ***Connector & terminal*** ***(5AG) No. 8 — (3V) No. 2:*** ***(5AG) No. 10 — (3V) No. 1:***	Is the resistance less than 10 Ω?	Go to step **3**.	Replace the airbag rear harness along with body harness.
3	**CHECK AIRBAG REAR HARNESS (BETWEEN AIRBAG CONTROL MODULE AND SIDE AIRBAG SENSOR LH).** Measure the resistance between connector (5AG) in the test harness AG and chassis ground, and the resistance between connector (5AG) terminals in the test harness AG. ***Connector & terminal*** ***(3V) No. 1 — Chassis ground:*** ***(3V) No. 2 — Chassis ground:*** ***(3V) No. 1 — (3V) No. 2:***	Is the resistance 1 MΩ or more?	Go to step **4**.	Replace the airbag rear harness along with body harness.
4	**CHECK AIRBAG CONTROL MODULE.** 1) Connect all connectors. 2) Clear the memory. <Ref. to AB(diag)-24, Clear Memory Mode.> 3) Perform the Inspection Mode. <Ref. to AB(diag)-23, Inspection Mode.> 4) Read the DTC. (Current malfunction) <Ref. to AB(diag)-22, Read Diagnostic Trouble Code (DTC).>	Is DTC B1628 displayed?	Go to step **5**.	Go to step **6**.

	Step	Check	Yes	No
5	**REPLACE SIDE AIRBAG SENSOR LH AND CHECK AIRBAG CONTROL MODULE AFTER REPLACEMENT.** 1) Turn the ignition switch to OFF, disconnect the battery ground cable, and wait for 60 seconds or more. 2) Replace the side airbag sensor LH. <Ref. to AB-53, REMOVAL, Side Airbag Sensor.> 3) Connect all connectors. 4) Clear the memory. <Ref. to AB(diag)-24, Clear Memory Mode.> 5) Perform the Inspection Mode. <Ref. to AB(diag)-23, Inspection Mode.> 6) Read the DTC. (Current malfunction) <Ref. to AB(diag)-22, Read Diagnostic Trouble Code (DTC).>	Is the system normal?	Go to step **6**.	Replace the curtain airbag sensor LH. <Ref. to AB-56, REMOVAL, Curtain Airbag Sensor.> Replace the airbag control module if not operating normally even after replacing the sensor. <Ref. to AB-47, REMOVAL, Airbag Control Module.>
6	**CHECK FOR ANY OTHER DTC ON DISPLAY.** Read the DTC. (Current malfunction) <Ref. to AB(diag)-22, Read Diagnostic Trouble Code (DTC).>	Is any other DTC displayed?	Perform the diagnosis for other displayed DTCs. <Ref. to AB(diag)-30, List of Diagnostic Trouble Code (DTC).>	Finish the diagnosis.

AR:DTC B1630 CURTAIN AIRBAG SENSOR RH FAILURE

DIAGNOSIS START CONDITION:
Ignition voltage is 10 V to 16 V.
DTC DETECTING CONDITION:
Curtain airbag sensor RH is faulty.
If DTC B1630 is displayed, the circuit within the curtain airbag sensor RH is faulty.
Replace the curtain airbag sensor RH. <Ref. to AB-56, Curtain Airbag Sensor.>

AS:DTC B1632 CURTAIN AIRBAG SENSOR RH LOST COMMUNICATION

NOTE:
Refer to DTC B1632 for details on DTC B1633. <Ref. to AB(diag)-56, DTC B1633 CURTAIN AIRBAG SENSOR RH INITIALIZATION ERROR, Diagnostic Chart with Trouble Code.>

AT:DTC B1633 CURTAIN AIRBAG SENSOR RH INITIALIZATION ERROR

DIAGNOSIS START CONDITION:
Ignition voltage is 10 V to 16 V.
DTC DETECTING CONDITION:

- Open or short circuit in harness of side sensor bus RH.
- Side airbag sensor RH and curtain airbag sensor RH are faulty.
- Airbag control module is faulty.

CAUTION:
Before performing diagnosis, refer to "CAUTION" in "General Description". <Ref. to AB(diag)-4, CAUTION, General Description.>
WIRING DIAGRAM:
Airbag system <Ref. to WI-69, WIRING DIAGRAM, Airbag System.>

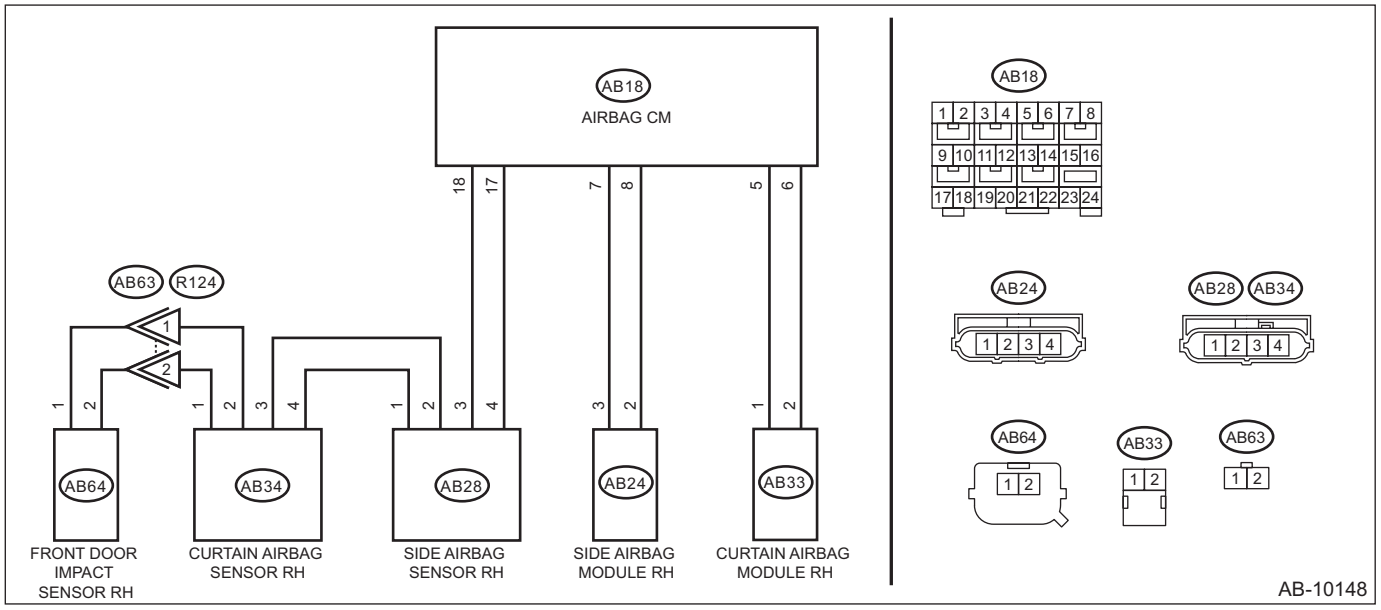

Step		Check	Yes	No
1	**CHECK DTC.** Read the DTC. (Current malfunction) <Ref. to AB(diag)-22, Read Diagnostic Trouble Code (DTC).>	Is DTC B1622 or B1623 displayed?	Perform the diagnosis for the displayed DTC B1622 or B1623. <Ref. to AB(diag)-50, DTC B1622 SIDE AIRBAG SENSOR RH LOST COMMUNICATION, Diagnostic Chart with Trouble Code.> <Ref. to AB(diag)-50, DTC B1623 SIDE AIRBAG SENSOR RH INITIALIZATION ERROR, Diagnostic Chart with Trouble Code.>	Go to step **2**.
2	**CHECK POOR CONTACT OF CONNECTORS.** Check for poor contact of the connectors between the airbag control module and the door sensor RH.	Is there poor contact?	Replace the airbag rear harness and the door harness.	Go to step **3**.

	Step	Check	Yes	No
3	**CHECK AIRBAG REAR HARNESS (BETWEEN SIDE AIRBAG SENSOR RH AND CURTAIN AIRBAG SENSOR RH).** 1) Turn the ignition switch to OFF, disconnect the battery ground cable, and wait for 60 seconds or more. 2) Disconnect the connector (AB26) from seat belt pretensioner RH. 3) Disconnect the connector (AB30) from the lap seat belt pretensioner RH. 4) Disconnect the connector (AB33) from curtain airbag module RH. 5) Disconnect the connector (AB24) of side airbag module RH. 6) Disconnect the connector (AB28) of side airbag sensor RH. 7) Connect the connector (AB28) of side airbag sensor RH and the connector (1AI) in the test harness AI. 8) Connect the connector (2AI) in the test harness AI and the connector (1V) in the test harness V. 9) Disconnect the connector (AB34) from curtain airbag sensor (RH), and connect the connector (2V) in test harness V to connector (AB34). 10) Measure the resistance between connector (3V) terminals in the test harness V. ***Connector & terminal*** ***(3V) No. 2 — (3V) No. 6:*** ***(3V) No. 1 — (3V) No. 7:***	Is the resistance less than 10 Ω?	Go to step **4**.	Replace the airbag rear harness along with body harness.
4	**CHECK AIRBAG REAR HARNESS (BETWEEN SIDE AIRBAG SENSOR AND CURTAIN AIRBAG SENSOR RH).** Measure the resistance between connector (3V) in test harness V and chassis ground, and the resistance between connector (3V) in test harness V. ***Connector & terminal*** ***(3V) No. 2 — Chassis ground:*** ***(3V) No. 1 — Chassis ground:*** ***(3V) No. 2 — (3V) No. 1:***	Is the resistance 1 MΩ or more?	Go to step **5**.	Replace the airbag rear harness along with body harness.
5	**CHECK AIRBAG CONTROL MODULE.** 1) Connect all connectors. 2) Clear the memory. <Ref. to AB(diag)-24, Clear Memory Mode.> 3) Perform the Inspection Mode. <Ref. to AB(diag)-23, Inspection Mode.> 4) Read the DTC. (Current malfunction) <Ref. to AB(diag)-22, Read Diagnostic Trouble Code (DTC).>	Is DTC B1633 displayed?	Go to step **6**.	Go to step **7**.

	Step	Check	Yes	No
6	**REPLACE CURTAIN AIRBAG SENSOR RH AND CHECK AIRBAG CONTROL MODULE AFTER REPLACEMENT.** 1) Turn the ignition switch to OFF, disconnect the battery ground cable, and wait for 60 seconds or more. 2) Replace the curtain airbag sensor RH. <Ref. to AB-56, REMOVAL, Curtain Airbag Sensor.> 3) Connect all connectors. 4) Clear the memory. <Ref. to AB(diag)-24, Clear Memory Mode.> 5) Perform the Inspection Mode. <Ref. to AB(diag)-23, Inspection Mode.> 6) Read the DTC. (Current malfunction) <Ref. to AB(diag)-22, Read Diagnostic Trouble Code (DTC).>	Is DTC B1633 displayed?	Go to step **7**.	Go to step **8**.
7	**REPLACE SIDE AIRBAG SENSOR RH AND CHECK AIRBAG CONTROL MODULE AFTER REPLACEMENT.** 1) Turn the ignition switch to OFF, disconnect the battery ground cable, and wait for 60 seconds or more. 2) Replace the side airbag sensor RH. <Ref. to AB-53, REMOVAL, Side Airbag Sensor.> 3) Connect all connectors. 4) Clear the memory. <Ref. to AB(diag)-24, Clear Memory Mode.> 5) Perform the Inspection Mode. <Ref. to AB(diag)-23, Inspection Mode.> 6) Read the DTC. (Current malfunction) <Ref. to AB(diag)-22, Read Diagnostic Trouble Code (DTC).>	Is DTC B1633 displayed?	Replace the airbag control module. <Ref. to AB-47, REMOVAL, Airbag Control Module.>	Go to step **8**.
8	**CHECK FOR ANY OTHER DTC ON DISPLAY.** Read the DTC. (Current malfunction) <Ref. to AB(diag)-22, Read Diagnostic Trouble Code (DTC).>	Is any other DTC displayed?	Perform the diagnosis for other displayed DTCs. <Ref. to AB(diag)-30, List of Diagnostic Trouble Code (DTC).>	Finish the diagnosis.

AU:DTC B1635 CURTAIN AIRBAG SENSOR LH FAILURE

DIAGNOSIS START CONDITION:
Ignition voltage is 10 V to 16 V.
DTC DETECTING CONDITION:
Curtain airbag sensor LH is faulty.
If DTC B1635 is displayed, the circuit within the curtain airbag sensor LH is faulty.
Replace the curtain airbag sensor LH. <Ref. to AB-56, Curtain Airbag Sensor.>

AV:DTC B1637 CURTAIN AIRBAG SENSOR LH LOST COMMUNICATION

NOTE:
Refer to DTC B1637 for details on DTC B1638. <Ref. to AB(diag)-59, DTC B1638 CURTAIN AIRBAG SENSOR LH INITIALIZATION ERROR, Diagnostic Chart with Trouble Code.>

AW:DTC B1638 CURTAIN AIRBAG SENSOR LH INITIALIZATION ERROR

DIAGNOSIS START CONDITION:
Ignition voltage is 10 V to 16 V.
DTC DETECTING CONDITION:

- Open or short circuit in harness of side sensor bus LH.
- Side airbag sensor LH and curtain airbag sensor LH are faulty.
- Airbag control module is faulty.

CAUTION:
Before performing diagnosis, refer to "CAUTION" in "General Description". <Ref. to AB(diag)-4, CAUTION, General Description.>
WIRING DIAGRAM:
Airbag system <Ref. to WI-69, WIRING DIAGRAM, Airbag System.>

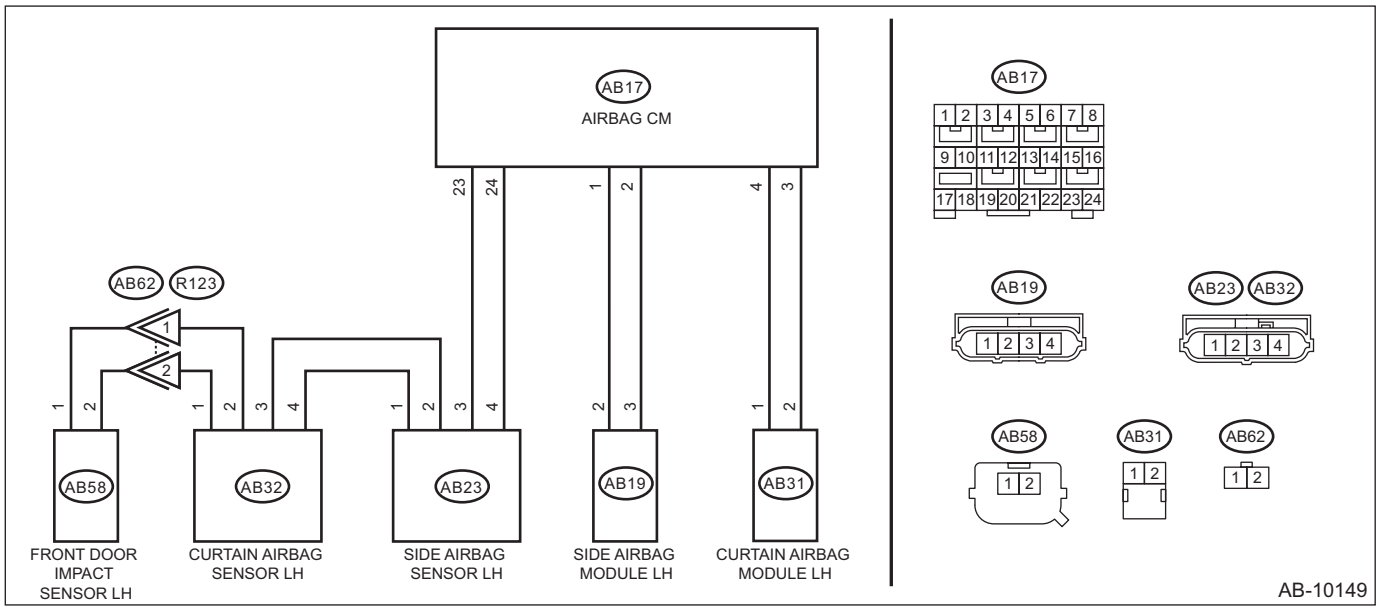

Step		Check	Yes	No
1	**CHECK DTC.** Read the DTC. (Current malfunction) <Ref. to AB(diag)-22, Read Diagnostic Trouble Code (DTC).>	Is DTC B1627 or B1628 displayed?	Perform the diagnosis for the displayed DTC B1627 or B1628. <Ref. to AB(diag)-52, DTC B1627 SIDE AIRBAG SENSOR LH LOST COMMUNICATION, Diagnostic Chart with Trouble Code.> <Ref. to AB(diag)-53, DTC B1628 SIDE AIRBAG SENSOR LH INITIALIZATION ERROR, Diagnostic Chart with Trouble Code.>	Go to step **2**.
2	**CHECK POOR CONTACT OF CONNECTORS.** Check for poor contact of the connectors between the airbag control module and the door sensor LH.	Is there poor contact?	Replace the airbag rear harness and the door harness.	Go to step **3**.

	Step	Check	Yes	No
3	**CHECK AIRBAG REAR HARNESS (BETWEEN SIDE AIRBAG SENSOR LH AND CURTAIN AIRBAG SENSOR LH).** 1) Turn the ignition switch to OFF, disconnect the battery ground cable, and wait for 60 seconds or more. 2) Disconnect the connector (AB21) from seat belt pretensioner LH. 3) Disconnect the connector (AB31) from curtain airbag module LH. 4) Disconnect the connector (AB19) of the side airbag module LH. 5) Disconnect the connector (AB23) in the side airbag sensor LH. 6) Connect the connector (AB23) of side airbag sensor LH and the connector (1AI) in the test harness AI. 7) Connect the connector (2AI) in the test harness AI and the connector (1V) in the test harness V. 8) Disconnect the connector (AB32) from curtain airbag sensor LH, and connect it to the connector (2V) in test harness V. 9) Measure the resistance between connector (3V) terminals in the test harness V. ***Connector & terminal*** ***(3V) No. 2 — (3V) No. 6:*** ***(3V) No. 1 — (3V) No. 7:***	Is the resistance less than 10 Ω?	Go to step **4**.	Replace the airbag rear harness along with body harness.
4	**CHECK AIRBAG REAR HARNESS (BETWEEN SIDE AIRBAG SENSOR AND CURTAIN AIRBAG SENSOR LH).** Measure the resistance between connector (3V) in test harness V and chassis ground, and the resistance between connector (3V) in test harness V. ***Connector & terminal*** ***(3V) No. 1 — Chassis ground:*** ***(3V) No. 2 — Chassis ground:*** ***(3V) No. 1 — (3V) No. 2:***	Is the resistance 1 MΩ or more?	Go to step **5**.	Replace the airbag rear harness along with body harness.
5	**CHECK AIRBAG CONTROL MODULE.** 1) Connect all connectors. 2) Clear the memory. <Ref. to AB(diag)-24, Clear Memory Mode.> 3) Perform the Inspection Mode. <Ref. to AB(diag)-23, Inspection Mode.> 4) Read the DTC. (Current malfunction) <Ref. to AB(diag)-22, Read Diagnostic Trouble Code (DTC).>	Is DTC B1638 displayed?	Go to step **6**.	Go to step **8**.

Step		Check	Yes	No
6	**REPLACE CURTAIN AIRBAG SENSOR LH AND CHECK AIRBAG CONTROL MODULE AFTER REPLACEMENT.** 1) Turn the ignition switch to OFF, disconnect the battery ground cable, and wait for 60 seconds or more. 2) Replace the curtain airbag sensor LH. <Ref. to AB-56, REMOVAL, Curtain Airbag Sensor.> 3) Connect all connectors. 4) Clear the memory. <Ref. to AB(diag)-24, Clear Memory Mode.> 5) Perform the Inspection Mode. <Ref. to AB(diag)-23, Inspection Mode.> 6) Read the DTC. (Current malfunction) <Ref. to AB(diag)-22, Read Diagnostic Trouble Code (DTC).>	Is DTC B1638 displayed?	Go to step **7**.	Go to step **8**.
7	**REPLACE SIDE AIRBAG SENSOR LH AND CHECK AIRBAG CONTROL MODULE AFTER REPLACEMENT.** 1) Turn the ignition switch to OFF, disconnect the battery ground cable, and wait for 60 seconds or more. 2) Replace the side airbag sensor LH. <Ref. to AB-53, REMOVAL, Side Airbag Sensor.> 3) Connect all connectors. 4) Clear the memory. <Ref. to AB(diag)-24, Clear Memory Mode.> 5) Perform the Inspection Mode. <Ref. to AB(diag)-23, Inspection Mode.> 6) Read the DTC. (Current malfunction) <Ref. to AB(diag)-22, Read Diagnostic Trouble Code (DTC).>	Is DTC B1638 displayed?	Replace the airbag control module. <Ref. to AB-47, REMOVAL, Airbag Control Module.>	Go to step **8**.
8	**CHECK FOR ANY OTHER DTC ON DISPLAY.** Read the DTC. (Current malfunction) <Ref. to AB(diag)-22, Read Diagnostic Trouble Code (DTC).>	Is any other DTC displayed?	Perform the diagnosis for other displayed DTCs. <Ref. to AB(diag)-30, List of Diagnostic Trouble Code (DTC).>	Finish the diagnosis.

AX:DTC B16F4 SIDE AIRBAG SENSOR RH RECOGNITION ERROR

DIAGNOSIS START CONDITION:
Ignition voltage is 10 V to 16 V.
DTC DETECTING CONDITION:
- Side airbag sensor RH is misinstalled.
- Airbag CM is faulty.

CAUTION:
Before performing diagnosis, refer to "CAUTION" in "General Description". <Ref. to AB(diag)-4, CAUTION, General Description.>

	Step	Check	Yes	No
1	**REPLACE SIDE AIRBAG SENSOR RH.** 1) Turn the ignition switch to OFF, disconnect the battery ground cable, and wait for 60 seconds or more. 2) Replace the side airbag sensor RH with a genuine sensor. <Ref. to AB-53, REMOVAL, Side Airbag Sensor.>	Does the warning light go off?	Finish the diagnosis.	Replace the airbag control module. <Ref. to AB-47, REMOVAL, Airbag Control Module.>

AY:DTC B16F5 SIDE AIRBAG SENSOR LH RECOGNITION ERROR

DIAGNOSIS START CONDITION:
Ignition voltage is 10 V to 16 V.
DTC DETECTING CONDITION:
- Side airbag sensor LH is misinstalled.
- Airbag CM is faulty.

CAUTION:
Before performing diagnosis, refer to "CAUTION" in "General Description". <Ref. to AB(diag)-4, CAUTION, General Description.>

	Step	Check	Yes	No
1	**REPLACE SIDE AIRBAG SENSOR LH.** 1) Turn the ignition switch to OFF, disconnect the battery ground cable, and wait for 60 seconds or more. 2) Replace the side airbag sensor LH with a genuine sensor. <Ref. to AB-53, REMOVAL, Side Airbag Sensor.>	Does the warning light go off?	Finish the diagnosis.	Replace the airbag control module. <Ref. to AB-47, REMOVAL, Airbag Control Module.>

AZ:DTC B16F6 CURTAIN AIRBAG SENSOR RH RECOGNITION ERROR

DIAGNOSIS START CONDITION:
Ignition voltage is 10 V to 16 V.
DTC DETECTING CONDITION:
- Curtain airbag sensor RH is misinstalled.
- Airbag CM is faulty.

CAUTION:
Before performing diagnosis, refer to "CAUTION" in "General Description". <Ref. to AB(diag)-4, CAUTION, General Description.>

	Step	Check	Yes	No
1	**REPLACE CURTAIN AIRBAG SENSOR RH.** 1) Turn the ignition switch to OFF, disconnect the battery ground cable, and wait for 60 seconds or more. 2) Replace the curtain airbag sensor RH with a genuine sensor. <Ref. to AB-56, REMOVAL, Curtain Airbag Sensor.>	Does the warning light go off?	Finish the diagnosis.	Replace the airbag control module. <Ref. to AB-47, REMOVAL, Airbag Control Module.>

BA:DTC B16F7 CURTAIN AIRBAG SENSOR LH RECOGNITION ERROR

DIAGNOSIS START CONDITION:
Ignition voltage is 10 V to 16 V.
DTC DETECTING CONDITION:
- Curtain airbag sensor LH is misinstalled.
- Airbag CM is faulty.

CAUTION:
Before performing diagnosis, refer to "CAUTION" in "General Description". <Ref. to AB(diag)-4, CAUTION, General Description.>

	Step	Check	Yes	No
1	**REPLACE CURTAIN AIRBAG SENSOR LH.** 1) Turn the ignition switch to OFF, disconnect the battery ground cable, and wait for 60 seconds or more. 2) Replace the curtain airbag sensor LH with a genuine sensor. <Ref. to AB-56, REMOVAL, Curtain Airbag Sensor.>	Does the warning light go off?	Finish the diagnosis.	Replace the airbag control module. <Ref. to AB-47, REMOVAL, Airbag Control Module.>

BB:DTC B1642 SIDE SATELLITE SENSOR BUS RH LOST COMMUNICATION

DIAGNOSIS START CONDITION:
Ignition voltage is 10 V to 16 V.
DTC DETECTING CONDITION:

- Open or short circuit in harness of side sensor bus RH.
- Side airbag sensor RH is faulty.
- Curtain airbag sensor RH is faulty.
- Front door impact sensor RH is faulty.
- Airbag control module is faulty.

CAUTION:
Before performing diagnosis, refer to "CAUTION" in "General Description". <Ref. to AB(diag)-4, CAUTION, General Description.>
WIRING DIAGRAM:
Airbag system <Ref. to WI-69, WIRING DIAGRAM, Airbag System.>

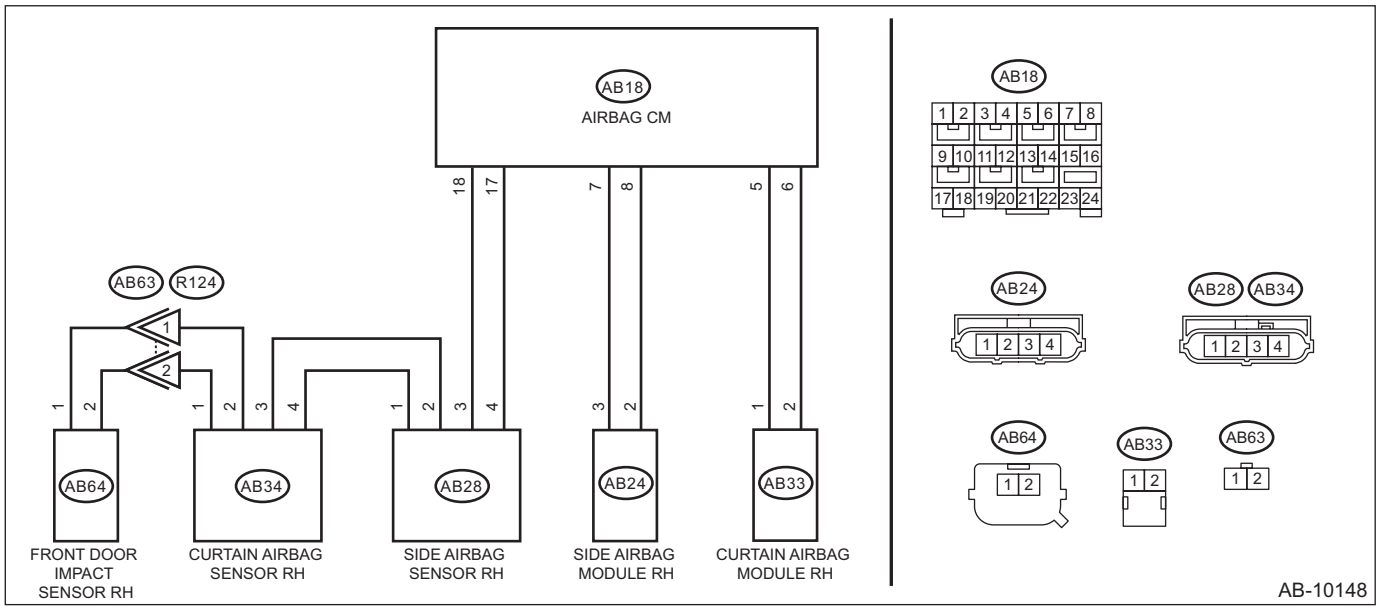

Step		Check	Yes	No
1	**CHECK DTC.** Read the DTC. (Current malfunction) <Ref. to AB(diag)-22, Read Diagnostic Trouble Code (DTC).>	Is DTC B1622 or B1623 displayed?	Perform the diagnosis for the displayed DTC B1622 or B1623. <Ref. to AB(diag)-50, DTC B1622 SIDE AIRBAG SENSOR RH LOST COMMUNICATION, Diagnostic Chart with Trouble Code.> <Ref. to AB(diag)-50, DTC B1623 SIDE AIRBAG SENSOR RH INITIALIZATION ERROR, Diagnostic Chart with Trouble Code.>	Go to step **2**.

	Step	Check	Yes	No
2	**CHECK DTC.** Read the DTC. (Current malfunction) <Ref. to AB(diag)-22, Read Diagnostic Trouble Code (DTC).>	Is DTC B1632 or B1633 displayed?	Perform the diagnosis for the displayed DTC B1632 or B1633. <Ref. to AB(diag)-55, DTC B1632 CURTAIN AIRBAG SENSOR RH LOST COMMUNICATION, Diagnostic Chart with Trouble Code.> <Ref. to AB(diag)-56, DTC B1633 CURTAIN AIRBAG SENSOR RH INITIALIZATION ERROR, Diagnostic Chart with Trouble Code.>	Go to step **3**.
3	**CHECK DTC.** Read the DTC. (Current malfunction) <Ref. to AB(diag)-22, Read Diagnostic Trouble Code (DTC).>	Is DTC B1692 or B1693 displayed?	Perform the diagnosis for the displayed DTC B1692 or B1693. <Ref. to AB(diag)-77, DTC B1692 LOST COMMUNICATION WITH DOOR SENSOR RH, Diagnostic Chart with Trouble Code.> <Ref. to AB(diag)-78, DTC B1693 DOOR SENSOR RH INITIALIZATION INCOMPLETE, Diagnostic Chart with Trouble Code.>	Go to step **4**.
4	**CHECK POOR CONTACT OF CONNECTORS.** Check for poor contact of the connectors between the airbag control module and the front door impact sensor RH.	Is there poor contact?	Replace the airbag rear harness and the door harness.	Go to step **5**.

	Step	Check	Yes	No
5	**CHECK AIRBAG REAR HARNESS (BETWEEN AIRBAG CONTROL MODULE AND SIDE AIRBAG SENSOR RH).** 1) Turn the ignition switch to OFF, disconnect the battery ground cable, and wait for 60 seconds or more. 2) Disconnect the connector (AB26) from seat belt pretensioner RH. 3) Disconnect the connector (AB30) from the lap seat belt pretensioner RH. 4) Disconnect the connector (AB33) from curtain airbag module RH. 5) Disconnect the connector (AB24) of side airbag module RH. 6) Disconnect the connectors (AB6, AB17, AB18) from airbag control module. 7) Connect the connector (1AG) in the test harness AG to the connectors (AB6, AB17, AB18). 8) Disconnect the connector (AB28) from side airbag sensor RH. 9) Connect the connector (2V) in the test harness V to the connector (AB28). 10) Measure the resistance between connector (5AG) in the test harness AG and connector (3V) in the test harness V. ***Connector & terminal*** ***(5AG) No. 14 — (3V) No. 1:*** ***(5AG) No. 16 — (3V) No. 2:***	Is the resistance less than 10 Ω?	Go to step **6**.	Replace the airbag rear harness along with body harness.
6	**CHECK AIRBAG REAR HARNESS (BETWEEN AIRBAG CONTROL MODULE AND SIDE AIRBAG SENSOR RH).** Measure the resistance between connector (3V) in test harness V and chassis ground, and the resistance between connector (3V) terminals. ***Connector & terminal*** ***(3V) No. 1 — Chassis ground:*** ***(3V) No. 2 — Chassis ground:*** ***(3V) No. 1 — (3V) No. 2:***	Is the resistance 1 MΩ or more?	Go to step **7**.	Replace the airbag rear harness along with body harness.
7	**CHECK AIRBAG REAR HARNESS (BETWEEN SIDE AIRBAG SENSOR AND CURTAIN AIRBAG SENSOR RH).** 1) Disconnect the connector (2V) in the test harness V from the connector (AB28) of side airbag sensor RH. 2) Connect the connector (AB28) of side airbag sensor RH and the connector (1AI) in the test harness AI. 3) Connect the connector (2AI) in the test harness AI and the connector (1V) in the test harness V. 4) Disconnect the connector (AB34) from curtain airbag sensor (RH), and connect the connector (2V) in test harness V to connector (AB34). 5) Measure the resistance between connector (3V) terminals in the test harness V. ***Connector & terminal*** ***(3V) No. 2 — (3V) No. 6:*** ***(3V) No. 1 — (3V) No. 7:***	Is the resistance less than 10 Ω?	Go to step **8**.	Replace the airbag rear harness along with body harness.

	Step	Check	Yes	No
8	**CHECK AIRBAG REAR HARNESS (BETWEEN SIDE AIRBAG SENSOR AND CURTAIN AIRBAG SENSOR RH).** Measure the resistance between connector (3V) in test harness V and chassis ground, and the resistance between connector (3V) terminals in test harness V. ***Connector & terminal*** ***(3V) No. 2 — Chassis ground:*** ***(3V) No. 1 — Chassis ground:*** ***(3V) No. 1 — (3V) No. 2:***	Is the resistance 1 MΩ or more?	Go to step **9**.	Replace the airbag rear harness along with body harness.
9	**CHECK AIRBAG REAR HARNESS AND DOOR HARNESS (BETWEEN CURTAIN AIRBAG SENSOR RH AND DOOR SENSOR RH).** 1) Disconnect the connector (AB64) from the front door impact sensor RH, and connect the connector (1H) in the test harness H to connector (AB64). 2) Measure the resistance between connector (3V) in the test harness V and connector (3H) in the test harness H. ***Connector & terminal*** ***(3V) No. 4 — (3H) No. 5:*** ***(3V) No. 5 — (3H) No. 6:***	Is the resistance less than 10 Ω?	Go to step **10**.	Check the door harness, and if any fault is found, replace the harness. If there is no fault, replace the airbag rear harness together with body harness.
10	**CHECK AIRBAG REAR HARNESS AND DOOR HARNESS (BETWEEN CURTAIN AIRBAG SENSOR RH AND FRONT DOOR IMPACT SENSOR RH).** Measure the resistance between connector (3V) in test harness V and chassis ground, and the resistance between connector (3V) terminals in test harness V. ***Connector & terminal*** ***(3V) No. 4 — Chassis ground:*** ***(3V) No. 5 — Chassis ground:*** ***(3V) No. 4 — (3V) No. 5:***	Is the resistance 1 MΩ or more?	Go to step **11**.	Check the door harness, and if any fault is found, replace the harness. If there is no fault, replace the airbag rear harness together with body harness.
11	**CHECK AIRBAG CONTROL MODULE.** 1) Connect all connectors. 2) Clear the memory. <Ref. to AB(diag)-24, Clear Memory Mode.> 3) Perform the Inspection Mode. <Ref. to AB(diag)-23, Inspection Mode.> 4) Read the DTC. (Current malfunction) <Ref. to AB(diag)-22, Read Diagnostic Trouble Code (DTC).>	Is DTC B1642 displayed?	Go to step **12**.	Go to step **15**.

	Step	Check	Yes	No
12	**REPLACE SIDE AIRBAG SENSOR RH AND CHECK AIRBAG CONTROL MODULE AFTER REPLACEMENT.** 1) Turn the ignition switch to OFF, disconnect the battery ground cable, and wait for 60 seconds or more. 2) Replace the side airbag sensor RH. <Ref. to AB-53, REMOVAL, Side Airbag Sensor.> 3) Connect all connectors. 4) Clear the memory. <Ref. to AB(diag)-24, Clear Memory Mode.> 5) Perform the Inspection Mode. <Ref. to AB(diag)-23, Inspection Mode.> 6) Read the DTC. (Current malfunction) <Ref. to AB(diag)-22, Read Diagnostic Trouble Code (DTC).>	Is DTC B1642 displayed?	Go to step **13**.	Go to step **15**.
13	**REPLACE CURTAIN AIRBAG SENSOR RH AND CHECK AIRBAG CONTROL MODULE AFTER REPLACEMENT.** 1) Turn the ignition switch to OFF, disconnect the battery ground cable, and wait for 60 seconds or more. 2) Replace the curtain airbag sensor RH. <Ref. to AB-56, REMOVAL, Curtain Airbag Sensor.> 3) Connect all connectors. 4) Clear the memory. <Ref. to AB(diag)-24, Clear Memory Mode.> 5) Perform the Inspection Mode. <Ref. to AB(diag)-23, Inspection Mode.> 6) Read the DTC. (Current malfunction) <Ref. to AB(diag)-22, Read Diagnostic Trouble Code (DTC).>	Is DTC B1642 displayed?	Go to step **14**.	Go to step **15**.
14	**REPLACE FRONT DOOR IMPACT SENSOR RH AND CHECK AIRBAG CONTROL MODULE AFTER REPLACEMENT.** 1) Turn the ignition switch to OFF, disconnect the battery ground cable, and wait for 60 seconds or more. 2) Replace the front door impact sensor RH. <Ref. to AB-51, REMOVAL, Front Door Impact Sensor.> 3) Connect all connectors. 4) Clear the memory. <Ref. to AB(diag)-24, Clear Memory Mode.> 5) Perform the Inspection Mode. <Ref. to AB(diag)-23, Inspection Mode.> 6) Read the DTC. (Current malfunction) <Ref. to AB(diag)-22, Read Diagnostic Trouble Code (DTC).>	Is DTC B1642 displayed?	Replace the airbag control module. <Ref. to AB-47, REMOVAL, Airbag Control Module.>	Go to step **15**.
15	**CHECK FOR ANY OTHER DTC ON DISPLAY.** Read the DTC. (Current malfunction) <Ref. to AB(diag)-22, Read Diagnostic Trouble Code (DTC).>	Is any other DTC displayed?	Perform the diagnosis for other displayed DTCs. <Ref. to AB(diag)-30, List of Diagnostic Trouble Code (DTC).>	Finish the diagnosis.

BC:DTC B1647 SIDE SATELLITE SENSOR BUS LH LOST COMMUNICATION

DIAGNOSIS START CONDITION:
Ignition voltage is 10 V to 16 V.
DTC DETECTING CONDITION:

- Open or short circuit in harness of side sensor bus LH.
- Side airbag sensor LH is faulty.
- Curtain airbag sensor LH is faulty.
- Front door impact sensor LH is faulty.
- Airbag control module is faulty.

CAUTION:
Before performing diagnosis, refer to "CAUTION" in "General Description". <Ref. to AB(diag)-4, CAUTION, General Description.>
WIRING DIAGRAM:
Airbag system <Ref. to WI-69, WIRING DIAGRAM, Airbag System.>

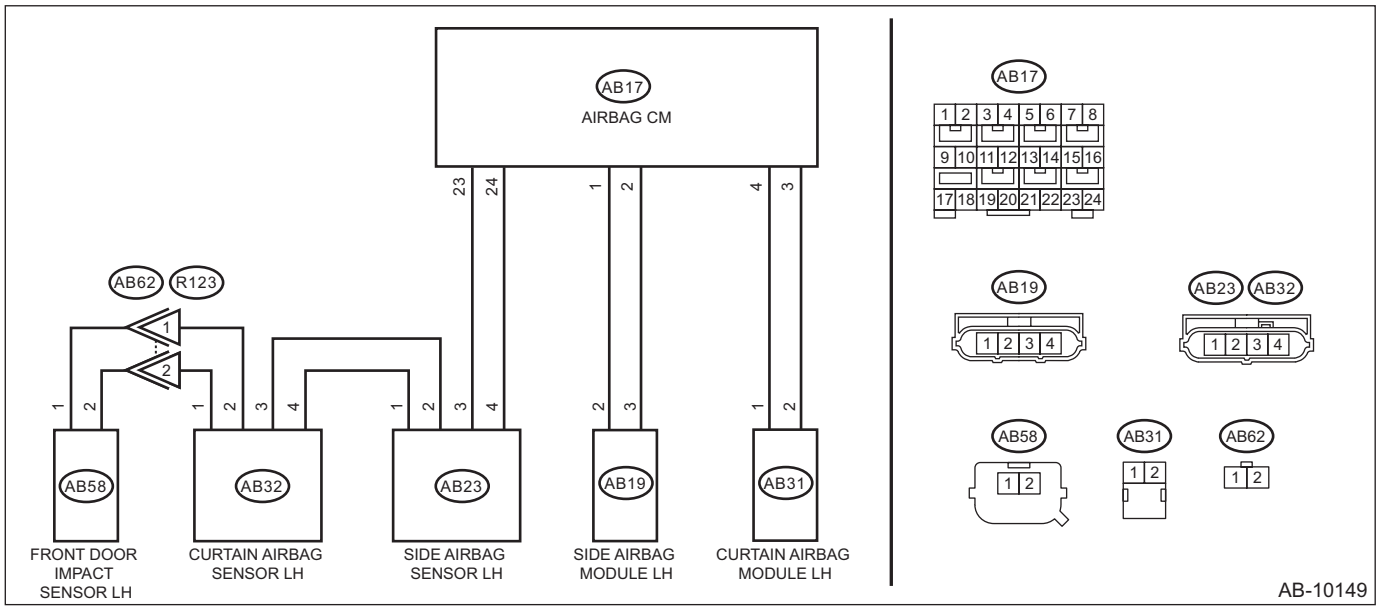

Step		Check	Yes	No
1	**CHECK DTC.** Read the DTC. (Current malfunction) <Ref. to AB(diag)-22, Read Diagnostic Trouble Code (DTC).>	Is DTC B1627 or B1628 displayed?	Perform the diagnosis for the displayed DTC B1627 or B1628. <Ref. to AB(diag)-52, DTC B1627 SIDE AIRBAG SENSOR LH LOST COMMUNICATION, Diagnostic Chart with Trouble Code.> <Ref. to AB(diag)-53, DTC B1628 SIDE AIRBAG SENSOR LH INITIALIZATION ERROR, Diagnostic Chart with Trouble Code.>	Go to step **2**.

	Step	Check	Yes	No
2	**CHECK DTC.** Read the DTC. (Current malfunction) <Ref. to AB(diag)-22, Read Diagnostic Trouble Code (DTC).>	Is DTC B1637 or B1638 displayed?	Perform the diagnosis for the displayed DTC B1637 or B1638. <Ref. to AB(diag)-58, DTC B1637 CURTAIN AIRBAG SENSOR LH LOST COMMUNICATION, Diagnostic Chart with Trouble Code.> <Ref. to AB(diag)-59, DTC B1638 CURTAIN AIRBAG SENSOR LH INITIALIZATION ERROR, Diagnostic Chart with Trouble Code.>	Go to step **3**.
3	**CHECK DTC.** Read the DTC. (Current malfunction) <Ref. to AB(diag)-22, Read Diagnostic Trouble Code (DTC).>	Is DTC B1697 or B1698 displayed?	Perform the diagnosis for the displayed DTC B1697 or B1698. <Ref. to AB(diag)-82, DTC B1697 LOST COMMUNICATION WITH DOOR SENSOR LH, Diagnostic Chart with Trouble Code.> <Ref. to AB(diag)-83, DTC B1698 DOOR SENSOR LH INITIALIZATION INCOMPLETE, Diagnostic Chart with Trouble Code.>	Go to step **4**.
4	**CHECK POOR CONTACT OF CONNECTORS.** Check for poor contact of the connectors between the airbag control module and the front door impact sensor LH.	Is there poor contact?	Replace the airbag rear harness and the door harness.	Go to step **5**.

	Step	Check	Yes	No
5	**CHECK AIRBAG REAR HARNESS (BETWEEN AIRBAG CONTROL MODULE AND SIDE AIRBAG SENSOR LH).** 1) Turn the ignition switch to OFF, disconnect the battery ground cable, and wait for 60 seconds or more. 2) Disconnect the connector (AB21) from seat belt pretensioner LH. 3) Disconnect the connector (AB31) from curtain airbag module LH. 4) Disconnect the connector (AB19) of the side airbag module LH. 5) Disconnect the connectors (AB6, AB17, AB18) from airbag control module. 6) Connect the connector (1AG) in the test harness AG to the connectors (AB6, AB17, AB18). 7) Disconnect the connector (AB23) from the side airbag sensor LH. 8) Connect the connector (2V) in the test harness V to the connector (AB23). 9) Measure the resistance between connector (5AG) in the test harness AG and connector (3V) in the test harness V. ***Connector & terminal*** ***(5AG) No. 10 — (3V) No. 1:*** ***(5AG) No. 8 — (3V) No. 2:***	Is the resistance less than 10 Ω?	Go to step **6**.	Replace the airbag rear harness along with body harness.
6	**CHECK AIRBAG REAR HARNESS (BETWEEN AIRBAG CONTROL MODULE AND SIDE AIRBAG SENSOR LH).** Measure the resistance between connector (3V) in test harness V and chassis ground, and the resistance between connector (3V) terminals. ***Connector & terminal*** ***(3V) No. 1 — Chassis ground:*** ***(3V) No. 2 — Chassis ground:*** ***(3V) No. 1 — (3V) No. 2:***	Is the resistance 1 MΩ or more?	Go to step **7**.	Replace the airbag rear harness along with body harness.
7	**CHECK AIRBAG REAR HARNESS (BETWEEN SIDE AIRBAG SENSOR AND CURTAIN AIRBAG SENSOR LH).** 1) Disconnect the connector (2V) in the test harness V from the connector (AB23) of side airbag sensor LH. 2) Connect the connector (AB23) of side airbag sensor LH and the connector (1AI) in the test harness AI. 3) Connect the connector (2AI) in the test harness AI and the connector (1V) in the test harness V. 4) Disconnect the connector (AB32) from curtain airbag sensor LH, and connect the connector (2V) in test harness V to connector (AB32). 5) Measure the resistance between connector (3V) terminals in the test harness V. ***Connector & terminal*** ***(3V) No. 2 — (3V) No. 6:*** ***(3V) No. 1 — (3V) No. 7:***	Is the resistance less than 10 Ω?	Go to step **8**.	Replace the airbag rear harness along with body harness.

	Step	Check	Yes	No
8	**CHECK AIRBAG REAR HARNESS (BETWEEN SIDE AIRBAG SENSOR AND CURTAIN AIRBAG SENSOR LH).** Measure the resistance between connector (3V) in test harness V and chassis ground, and the resistance between connector (3V) terminals in test harness V. ***Connector & terminal*** ***(3V) No. 2 — Chassis ground:*** ***(3V) No. 1 — Chassis ground:*** ***(3V) No. 1 — (3V) No. 2:***	Is the resistance 1 MΩ or more?	Go to step **9**.	Replace the airbag rear harness along with body harness.
9	**CHECK AIRBAG REAR HARNESS AND DOOR HARNESS (BETWEEN CURTAIN AIRBAG SENSOR LH AND DOOR SENSOR LH).** 1) Disconnect the connector (AB58) from the front door impact sensor LH, and connect the connector (1H) in the test harness H to connector (AB58). 2) Measure the resistance between connector (3V) in the test harness V and connector (3H) in the test harness H. ***Connector & terminal*** ***(3V) No. 4 — (3H) No. 5:*** ***(3V) No. 5 — (3H) No. 6:***	Is the resistance less than 10 Ω?	Go to step **10**.	Check the door harness, and if any fault is found, replace the harness. If there is no fault, replace the airbag rear harness together with body harness.
10	**CHECK AIRBAG REAR HARNESS AND DOOR HARNESS (BETWEEN CURTAIN AIRBAG SENSOR LH AND DOOR SENSOR LH).** Measure the resistance between connector (3V) in test harness V and chassis ground, and the resistance between connector (3V) terminals in test harness V. ***Connector & terminal*** ***(3V) No. 4 — Chassis ground:*** ***(3V) No. 5 — Chassis ground:*** ***(3V) No. 4 — (3V) No. 5:***	Is the resistance 1 MΩ or more?	Go to step **11**.	Check the door harness, and if any fault is found, replace the harness. If there is no fault, replace the airbag rear harness together with body harness.
11	**CHECK AIRBAG CONTROL MODULE.** 1) Connect all connectors. 2) Clear the memory. <Ref. to AB(diag)-24, Clear Memory Mode.> 3) Perform the Inspection Mode. <Ref. to AB(diag)-23, Inspection Mode.> 4) Read the DTC. (Current malfunction) <Ref. to AB(diag)-22, Read Diagnostic Trouble Code (DTC).>	Is DTC B1647 displayed?	Go to step **12**.	Go to step **15**.
12	**REPLACE SIDE AIRBAG SENSOR LH AND CHECK AIRBAG CONTROL MODULE AFTER REPLACEMENT.** 1) Turn the ignition switch to OFF, disconnect the battery ground cable, and wait for 60 seconds or more. 2) Replace the side airbag sensor LH. <Ref. to AB-53, REMOVAL, Side Airbag Sensor.> 3) Connect all connectors. 4) Clear the memory. <Ref. to AB(diag)-24, Clear Memory Mode.> 5) Perform the Inspection Mode. <Ref. to AB(diag)-23, Inspection Mode.> 6) Read the DTC. (Current malfunction) <Ref. to AB(diag)-22, Read Diagnostic Trouble Code (DTC).>	Is DTC B1647 displayed?	Go to step **13**.	Go to step **15**.

	Step	Check	Yes	No
13	**REPLACE CURTAIN AIRBAG SENSOR LH AND CHECK AIRBAG CONTROL MODULE AFTER REPLACEMENT.** 1) Turn the ignition switch to OFF, disconnect the battery ground cable, and wait for 60 seconds or more. 2) Replace the curtain airbag sensor LH. <Ref. to AB-56, REMOVAL, Curtain Airbag Sensor.> 3) Connect all connectors. 4) Clear the memory. <Ref. to AB(diag)-24, Clear Memory Mode.> 5) Perform the Inspection Mode. <Ref. to AB(diag)-23, Inspection Mode.> 6) Read the DTC. (Current malfunction) <Ref. to AB(diag)-22, Read Diagnostic Trouble Code (DTC).>	Is DTC B1647 displayed?	Go to step **14**.	Go to step **15**.
14	**REPLACE FRONT DOOR IMPACT SENSOR LH AND CHECK AIRBAG CONTROL MODULE AFTER REPLACEMENT.** 1) Turn the ignition switch to OFF, disconnect the battery ground cable, and wait for 60 seconds or more. 2) Replace the front door impact sensor LH. <Ref. to AB-51, REMOVAL, Front Door Impact Sensor.> 3) Connect all connectors. 4) Clear the memory. <Ref. to AB(diag)-24, Clear Memory Mode.> 5) Perform the Inspection Mode. <Ref. to AB(diag)-23, Inspection Mode.> 6) Read the DTC. (Current malfunction) <Ref. to AB(diag)-22, Read Diagnostic Trouble Code (DTC).>	Is DTC B1647 displayed?	Replace the airbag control module. <Ref. to AB-47, REMOVAL, Airbag Control Module.>	Go to step **15**.
15	**CHECK FOR ANY OTHER DTC ON DISPLAY.** Read the DTC. (Current malfunction) <Ref. to AB(diag)-22, Read Diagnostic Trouble Code (DTC).>	Is any other DTC displayed?	Perform the diagnosis for other displayed DTCs. <Ref. to AB(diag)-30, List of Diagnostic Trouble Code (DTC).>	Finish the diagnosis.

BD:DTC B1650 OCCUPANT DETECTION SYSTEM MALFUNCTION

NOTE:
Refer to “Occupant Detection System” for details on DTC B1650. <Ref. to OD(diag)-23, DTC B1650 OCCUPANT DETECTION SYSTEM MALFUNCTION, Diagnostic Procedure with Diagnostic Trouble Code (DTC).>

BE:DTC B1655 FRONT BUCKLE SWITCH RH FAILURE

NOTE:
Refer to “Occupant Detection System” for details on DTC B1655. <Ref. to OD(diag)-25, DTC B1655 FRONT BUCKLE SWITCH RH FAILURE, Diagnostic Procedure with Diagnostic Trouble Code (DTC).>

BF:DTC B1660 PASSENGER'S AIRBAG ON INDICATOR FAILURE

DIAGNOSIS START CONDITION:
Ignition voltage is 10 V to 16 V.
DTC DETECTING CONDITION:

- Passenger's airbag indicator is faulty.
- Airbag control module is faulty.
- Airbag main harness circuit is open or shorted.
- Body harness circuit is open.

CAUTION:
Before performing diagnosis, refer to "CAUTION" in "General Description". <Ref. to AB(diag)-4, CAUTION, General Description.>
WIRING DIAGRAM:
Airbag system <Ref. to WI-69, WIRING DIAGRAM, Airbag System.>

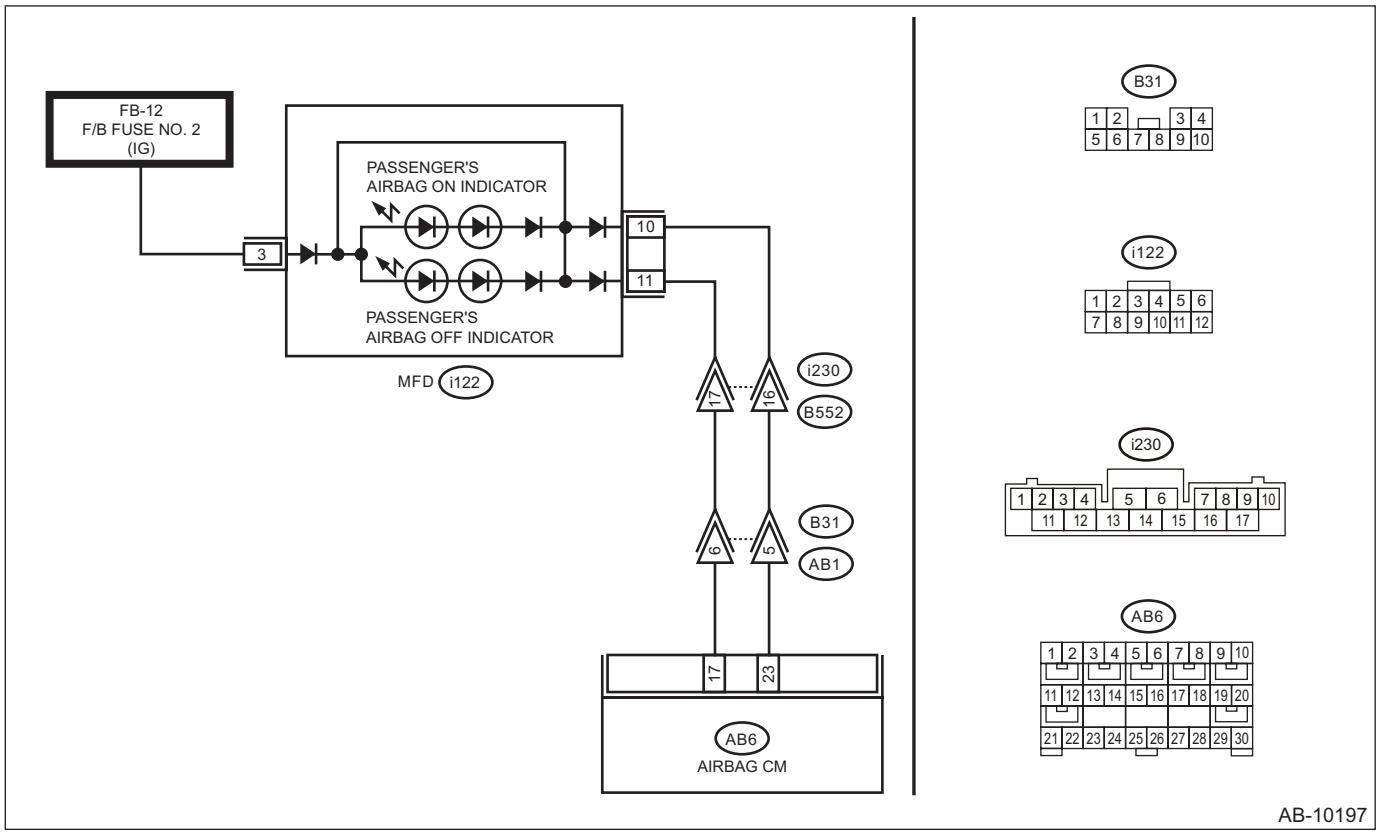

Step		Check	Yes	No
1	**CHECK FOR POOR CONTACT.** 1) Turn the ignition switch to OFF, disconnect the battery ground cable, and wait for 60 seconds or more. 2) Check that the connector between the airbag control module and MFD is securely connected.	Is there poor contact of any connector?	Repair the bulkhead harness. Or replace the airbag main harness along with body harness.	Go to step **2**.
2	**CHECK AIRBAG MAIN HARNESS.** 1) Disconnect the connectors (AB6, AB17, AB18) from airbag control module. 2) Connect the battery ground terminal and turn the ignition switch to ON. NOTE: Neither of ON/OFF illuminates when it is normal.	Does the passenger's airbag indicator illuminate?	Go to step **3**.	Go to step **4**.

	Step	Check	Yes	No
3	**CHECK AIRBAG MAIN HARNESS.** 1) Turn the ignition switch to OFF, disconnect the battery ground cable, and wait for 60 seconds or more. 2) Remove the MFD and disconnect the connector (i122). 3) Disconnect the connectors (AB6, AB17, AB18) from airbag control module. 4) Connect the connector (1AG) in the test harness AG to the connectors (AB6, AB17, AB18). 5) Measure the resistance between connector (2AG) in the test harness AG and chassis ground. ***Connector & terminal*** ***(2AG) No. 9 — (2AG) No. 8:*** ***(2AG) No. 9 — Chassis ground:*** ***(2AG) No. 8 — Chassis ground:***	Is the resistance 1 MΩ or more?	Replace the MFD. <Ref. to IDI-20, REMOVAL, Multi-function Display (MFD).>	Repair the bulkhead harness. Or replace the airbag main harness along with body harness.
4	**CHECK AIRBAG MAIN HARNESS.** 1) Turn the ignition switch to OFF, disconnect the battery ground cable, and wait for 60 seconds or more. 2) Disconnect the connectors (AB6, AB17, AB18) from airbag control module. 3) Connect the connector (1AG) in the test harness AG to the connectors (AB6, AB17, AB18). 4) Connect the connectors (7AG) and (8AG) in the test harness AG. 5) Connect the battery ground terminal and turn the ignition switch to ON.	Does the passenger's airbag indicator illuminate?	Replace the airbag control module. <Ref. to AB-47, Airbag Control Module.>	Go to step **5**.
5	**CHECK AIRBAG MAIN HARNESS.** 1) Turn the ignition switch to OFF, disconnect the battery ground cable, and wait for 60 seconds or more. 2) Remove the MFD and disconnect the connector (i122). 3) Measure the resistance between connector (2AG) in the test harness AG and connector (i122). ***Connector & terminal*** ***(2AG) No. 9 — (i122) No. 11:*** ***(2AG) No. 8 — (i122) No. 10:***	Is the resistance less than 10 Ω?	Go to step **6**.	Repair the bulkhead harness. Or replace the airbag main harness along with body harness.
6	**CHECK BODY HARNESS.** 1) Turn the ignition switch to ON. 2) Measure the voltage between connector (i122) and chassis ground. ***Connector & terminal*** ***(i122) No. 3 (+) — Chassis ground (–):***	Is the voltage 10 V or more?	Replace the MFD. <Ref. to IDI-20, REMOVAL, Multi-function Display (MFD).>	Check the power supply circuit of MFD.

BG:DTC B1675 SATELLITE SAFING SENSOR FAILURE

DIAGNOSIS START CONDITION:
Ignition voltage is 10 V to 16 V.
DTC DETECTING CONDITION:
- Satellite safing sensor is faulty.
- Airbag control module is faulty.

CAUTION:
Before performing diagnosis, refer to "CAUTION" in "General Description". <Ref. to AB(diag)-4, CAUTION, General Description.>

	Step	Check	Yes	No
1	**REPLACE SATELLITE SAFING SENSOR.** 1) Turn the ignition switch to OFF, disconnect the battery ground cable, and wait for 60 seconds or more. 2) Replace the satellite safing sensor with a genuine sensor. <Ref. to AB-57, REMOVAL, Satellite Safing Sensor.>	Does the warning light go off?	Finish the diagnosis.	Replace the airbag control module. <Ref. to AB-47, REMOVAL, Airbag Control Module.>

BH:DTC B16F8 SATELLITE SAFING SENSOR RECOGNITION ERROR

DIAGNOSIS START CONDITION:
Ignition voltage is 10 V to 16 V.
DTC DETECTING CONDITION:
- Satellite safing sensor is misinstalled.
- Airbag control module is faulty.

	Step	Check	Yes	No
1	**REPLACE SATELLITE SAFING SENSOR.** 1) Turn the ignition switch to OFF, disconnect the battery ground cable, and wait for 60 seconds or more. 2) Replace the satellite safing sensor with a genuine sensor. <Ref. to AB-57, REMOVAL, Satellite Safing Sensor.>	Does the warning light go off?	Finish the diagnosis.	Replace the airbag control module. <Ref. to AB-47, REMOVAL, Airbag Control Module.>

BI: DTC B16F9 DOOR SENSOR RH RECOGNITION ERROR

DIAGNOSIS START CONDITION:
Ignition voltage is 10 V to 16 V.
DTC DETECTING CONDITION:
- Front door impact sensor RH is misinstalled.
- Airbag control module is faulty.

CAUTION:
Before performing diagnosis, refer to "CAUTION" in "General Description". <Ref. to AB(diag)-4, CAUTION, General Description.>

	Step	Check	Yes	No
1	**REPLACE FRONT DOOR IMPACT SENSOR RH.** 1) Turn the ignition switch to OFF, disconnect the battery ground cable, and wait for 60 seconds or more. 2) Replace the front door impact sensor RH with a genuine sensor. <Ref. to AB-51, REMOVAL, Front Door Impact Sensor.>	Does the warning light go off?	Finish the diagnosis.	Replace the airbag control module. <Ref. to AB-47, REMOVAL, Airbag Control Module.>

BJ:DTC B1690 DOOR SENSOR RH FAILURE

DIAGNOSIS START CONDITION:
Ignition voltage is 10 V to 16 V.
DTC DETECTING CONDITION:
Front door impact sensor RH is faulty.
If DTC B1690 is displayed, the circuit within the front door impact sensor RH is faulty.
Replace the front door impact sensor RH. <Ref. to AB-51, REMOVAL, Front Door Impact Sensor.>

BK:DTC B1692 LOST COMMUNICATION WITH DOOR SENSOR RH

NOTE:
For details on DTC B1692, refer to DTC B1693. <Ref. to AB(diag)-78, DTC B1693 DOOR SENSOR RH INITIALIZATION INCOMPLETE, Diagnostic Chart with Trouble Code.>

BL:DTC B1693 DOOR SENSOR RH INITIALIZATION INCOMPLETE

DIAGNOSIS START CONDITION:
Ignition voltage is 10 V to 16 V.
DTC DETECTING CONDITION:

- Open or short circuit in harness of side sensor bus RH.
- Front door impact sensor RH is faulty.
- Curtain airbag sensor RH is faulty.
- Airbag control module is faulty.

CAUTION:
Before performing diagnosis, refer to "CAUTION" in "General Description". <Ref. to AB(diag)-4, CAUTION, General Description.>
WIRING DIAGRAM:
Airbag system <Ref. to WI-69, WIRING DIAGRAM, Airbag System.>

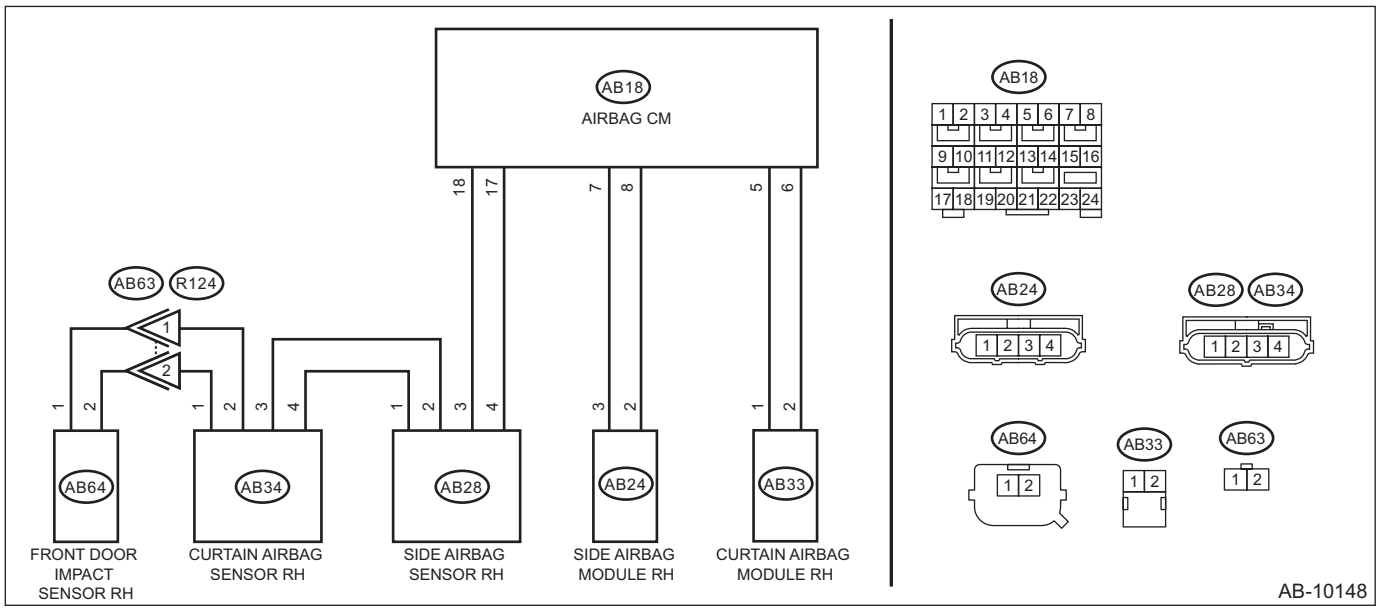

Step		Check	Yes	No
1	**CHECK DTC.** Read the DTC. (Current malfunction) <Ref. to AB(diag)-22, Read Diagnostic Trouble Code (DTC).>	Is DTC B1622 or B1623 displayed?	Perform the diagnosis for the displayed DTC B1622 or B1623. <Ref. to AB(diag)-50, DTC B1622 SIDE AIRBAG SENSOR RH LOST COMMUNICATION, Diagnostic Chart with Trouble Code.> <Ref. to AB(diag)-50, DTC B1623 SIDE AIRBAG SENSOR RH INITIALIZATION ERROR, Diagnostic Chart with Trouble Code.>	Go to step **2**.

	Step	Check	Yes	No
2	**CHECK DTC.** Read the DTC. (Current malfunction) <Ref. to AB(diag)-22, Read Diagnostic Trouble Code (DTC).>	Is DTC B1632 or B1633 displayed?	Perform the diagnosis for the displayed DTC B1632 or B1633. <Ref. to AB(diag)-55, DTC B1632 CURTAIN AIRBAG SENSOR RH LOST COMMUNICATION, Diagnostic Chart with Trouble Code.> <Ref. to AB(diag)-56, DTC B1633 CURTAIN AIRBAG SENSOR RH INITIALIZATION ERROR, Diagnostic Chart with Trouble Code.>	Go to step **3**.
3	**CHECK POOR CONTACT OF CONNECTORS.** Check for poor contact of the connectors between the airbag control module and the front door impact sensor RH.	Is there poor contact?	Replace the airbag rear harness and the door harness.	Go to step **4**.
4	**CHECK AIRBAG REAR HARNESS AND DOOR HARNESS (BETWEEN CURTAIN AIRBAG SENSOR RH AND DOOR SENSOR RH).** 1) Turn the ignition switch to OFF, disconnect the battery ground cable, and wait for 60 seconds or more. 2) Disconnect the connector (AB26) from seat belt pretensioner RH. 3) Disconnect the connector (AB30) from the lap seat belt pretensioner RH. 4) Disconnect the connector (AB33) from curtain airbag module RH. 5) Disconnect the connector (AB24) from side airbag module RH. 6) Disconnect the connector (AB34) from curtain airbag sensor (RH), and connect the connector (2V) in test harness V to connector (AB34). 7) Disconnect the connector (AB64) from the front door impact sensor RH, and connect the connector (1H) in the test harness H to connector (AB64). 8) Measure the resistance between connector (3V) in the test harness V and connector (3H) in the test harness H. ***Connector & terminal*** ***(3V) No. 4 — (3H) No. 5:*** ***(3V) No. 5 — (3H) No. 6:***	Is the resistance less than 10 Ω?	Go to step **5**.	Check the door harness, and if any fault is found, replace the harness. If there is no fault, replace the airbag rear harness together with body harness.

	Step	Check	Yes	No
5	**CHECK AIRBAG REAR HARNESS AND DOOR HARNESS (BETWEEN CURTAIN AIRBAG SENSOR RH AND DOOR SENSOR RH).** Measure the resistance between connector (3V) in test harness V and chassis ground, and the resistance between connector (3V) terminals in test harness V. ***Connector & terminal*** ***(3V) No. 4 — Chassis ground:*** ***(3V) No. 5 — Chassis ground:*** ***(3V) No. 4 — (3V) No. 5:***	Is the resistance 1 MΩ or more?	Go to step **6**.	Check the door harness, and if any fault is found, replace the harness. If there is no fault, replace the airbag rear harness together with body harness.
6	**CHECK AIRBAG CONTROL MODULE.** 1) Connect all connectors. 2) Clear the memory. <Ref. to AB(diag)-24, Clear Memory Mode.> 3) Perform the Inspection Mode. <Ref. to AB(diag)-23, Inspection Mode.> 4) Read the DTC. (Current malfunction) <Ref. to AB(diag)-22, Read Diagnostic Trouble Code (DTC).>	Is DTC B1693 displayed?	Go to step **7**.	Go to step **9**.
7	**REPLACE FRONT DOOR IMPACT SENSOR RH AND CHECK AIRBAG CONTROL MODULE AFTER REPLACEMENT.** 1) Turn the ignition switch to OFF, disconnect the battery ground cable, and wait for 60 seconds or more. 2) Replace the front door impact sensor RH. <Ref. to AB-51, REMOVAL, Front Door Impact Sensor.> 3) Connect all connectors. 4) Clear the memory. <Ref. to AB(diag)-24, Clear Memory Mode.> 5) Perform the Inspection Mode. <Ref. to AB(diag)-23, Inspection Mode.> 6) Read the DTC. (Current malfunction) <Ref. to AB(diag)-22, Read Diagnostic Trouble Code (DTC).>	Is DTC B1693 displayed?	Go to step **8**.	Go to step **9**.
8	**REPLACE CURTAIN AIRBAG SENSOR RH AND CHECK AIRBAG CONTROL MODULE AFTER REPLACEMENT.** 1) Turn the ignition switch to OFF, disconnect the battery ground cable, and wait for 60 seconds or more. 2) Replace the curtain airbag sensor RH. <Ref. to AB-56, REMOVAL, Curtain Airbag Sensor.> 3) Connect all connectors. 4) Clear the memory. <Ref. to AB(diag)-24, Clear Memory Mode.> 5) Perform the Inspection Mode. <Ref. to AB(diag)-23, Inspection Mode.> 6) Read the DTC. (Current malfunction) <Ref. to AB(diag)-22, Read Diagnostic Trouble Code (DTC).>	Is DTC B1693 displayed?	Replace the airbag control module. <Ref. to AB-47, REMOVAL, Airbag Control Module.>	Go to step **9**.

	Step	Check	Yes	No
9	**CHECK FOR ANY OTHER DTC ON DISPLAY.** Read the DTC. (Current malfunction) <Ref. to AB(diag)-22, Read Diagnostic Trouble Code (DTC).>	Is any other DTC displayed?	Perform the diagnosis for other displayed DTCs. <Ref. to AB(diag)-30, List of Diagnostic Trouble Code (DTC).>	Finish the diagnosis.

BM:DTC B16FA DOOR SENSOR LH RECOGNITION ERROR

DIAGNOSIS START CONDITION:
Ignition voltage is 10 V to 16 V.
DTC DETECTING CONDITION:
- Front door impact sensor LH is misinstalled.
- Airbag control module is faulty.

CAUTION:
Before performing diagnosis, refer to "CAUTION" in "General Description". <Ref. to AB(diag)-4, CAUTION, General Description.>

	Step	Check	Yes	No
1	**REPLACE FRONT DOOR IMPACT SENSOR LH.** 1) Turn the ignition switch to OFF, disconnect the battery ground cable, and wait for 60 seconds or more. 2) Replace the front door impact sensor LH with a genuine sensor. <Ref. to AB-51, REMOVAL, Front Door Impact Sensor.>	Does the warning light go off?	Finish the diagnosis.	Replace the airbag control module. <Ref. to AB-47, REMOVAL, Airbag Control Module.>

BN:DTC B1695 DOOR SENSOR LH FAILURE

DIAGNOSIS START CONDITION:
Ignition voltage is 10 V to 16 V.
DTC DETECTING CONDITION:
Front door impact sensor LH is faulty.
If DTC B1695 is displayed, the circuit within the front door impact sensor LH is faulty.
Replace the front door impact sensor LH. <Ref. to AB-51, REMOVAL, Front Door Impact Sensor.>

BO:DTC B1697 LOST COMMUNICATION WITH DOOR SENSOR LH

NOTE:
Refer to DTC B1697 for details on DTC B1698. <Ref. to AB(diag)-83, DTC B1698 DOOR SENSOR LH INITIALIZATION INCOMPLETE, Diagnostic Chart with Trouble Code.>

BP:DTC B1698 DOOR SENSOR LH INITIALIZATION INCOMPLETE

DIAGNOSIS START CONDITION:
Ignition voltage is 10 V to 16 V.
DTC DETECTING CONDITION:

- Open or short circuit in harness of side sensor bus LH.
- Front door impact sensor LH is faulty.
- Curtain airbag sensor LH is faulty.
- Airbag control module is faulty.

CAUTION:
Before performing diagnosis, refer to "CAUTION" in "General Description". <Ref. to AB(diag)-4, CAUTION, General Description.>
WIRING DIAGRAM:
Airbag system <Ref. to WI-69, WIRING DIAGRAM, Airbag System.>

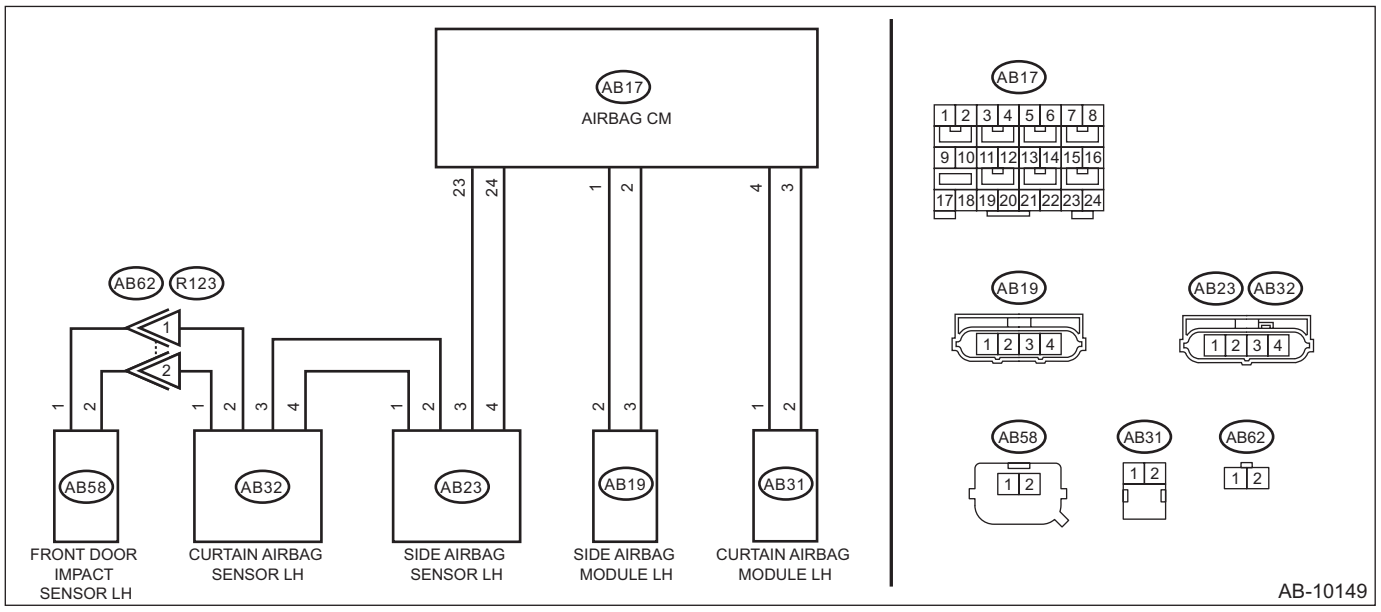

Step		Check	Yes	No
1	**CHECK DTC.** Read the DTC. (Current malfunction) <Ref. to AB(diag)-22, Read Diagnostic Trouble Code (DTC).>	Is DTC B1627 or B1628 displayed?	Perform the diagnosis for the displayed DTC B1627 or B1628. <Ref. to AB(diag)-52, DTC B1627 SIDE AIRBAG SENSOR LH LOST COMMUNICATION, Diagnostic Chart with Trouble Code.> <Ref. to AB(diag)-53, DTC B1628 SIDE AIRBAG SENSOR LH INITIALIZATION ERROR, Diagnostic Chart with Trouble Code.>	Go to step **2**.

	Step	Check	Yes	No
2	**CHECK DTC.** Read the DTC. (Current malfunction) <Ref. to AB(diag)-22, Read Diagnostic Trouble Code (DTC).>	Is DTC B1637 or B1638 displayed?	Perform the diagnosis for the displayed DTC B1637 or B1638. <Ref. to AB(diag)-58, DTC B1637 CURTAIN AIRBAG SENSOR LH LOST COMMUNICATION, Diagnostic Chart with Trouble Code.> <Ref. to AB(diag)-59, DTC B1638 CURTAIN AIRBAG SENSOR LH INITIALIZATION ERROR, Diagnostic Chart with Trouble Code.>	Go to step **3**.
3	**CHECK POOR CONTACT OF CONNECTORS.** Check for poor contact of the connectors between the airbag control module and the front door impact sensor LH.	Is there poor contact?	Replace the airbag rear harness and the door harness.	Go to step **4**.
4	**CHECK AIRBAG REAR HARNESS AND DOOR HARNESS (BETWEEN CURTAIN AIRBAG SENSOR LH AND FRONT DOOR IMPACT SENSOR LH).** 1) Turn the ignition switch to OFF, disconnect the battery ground cable, and wait for 60 seconds or more. 2) Disconnect the connector (AB21) from seat belt pretensioner LH. 3) Disconnect the connector (AB31) from curtain airbag module LH. 4) Disconnect the connector (AB19) from side airbag module LH. 5) Disconnect the connector (AB32) from curtain airbag sensor LH, and connect the connector (2V) in test harness V to connector (AB32). 6) Disconnect the connector (AB58) from the front door impact sensor LH, and connect the connector (1H) in the test harness H to connector (AB58). 7) Measure the resistance between connector (3V) in the test harness V and connector (3H) in the test harness H. ***Connector & terminal*** ***(3V) No. 4 — (3H) No. 5:*** ***(3V) No. 5 — (3H) No. 6:***	Is the resistance less than 10 Ω?	Go to step **5**.	Check the door harness, and if any fault is found, replace the harness. If there is no fault, replace the airbag rear harness together with body harness.

	Step	Check	Yes	No
5	**CHECK AIRBAG REAR HARNESS AND DOOR HARNESS (BETWEEN CURTAIN AIRBAG SENSOR LH AND FRONT DOOR IMPACT SENSOR LH).** Measure the resistance between connector (3V) in test harness V and chassis ground, and the resistance between connector (3V) terminals in test harness V. ***Connector & terminal*** ***(3V) No. 4 — Chassis ground:*** ***(3V) No. 5 — Chassis ground:*** ***(3V) No. 4 — (3V) No. 5:***	Is the resistance 1 MΩ or more?	Go to step **6**.	Check the door harness, and if any fault is found, replace the harness. If there is no fault, replace the airbag rear harness together with body harness.
6	**CHECK AIRBAG CONTROL MODULE.** 1) Connect all connectors. 2) Clear the memory. <Ref. to AB(diag)-24, Clear Memory Mode.> 3) Perform the Inspection Mode. <Ref. to AB(diag)-23, Inspection Mode.> 4) Read the DTC. (Current malfunction) <Ref. to AB(diag)-22, Read Diagnostic Trouble Code (DTC).>	Is DTC B1698 displayed?	Go to step **7**.	Go to step **9**.
7	**REPLACE FRONT DOOR IMPACT SENSOR LH AND CHECK AIRBAG CONTROL MODULE AFTER REPLACEMENT.** 1) Turn the ignition switch to OFF, disconnect the battery ground cable, and wait for 60 seconds or more. 2) Replace the front door impact sensor LH. <Ref. to AB-51, REMOVAL, Front Door Impact Sensor.> 3) Connect all connectors. 4) Clear the memory. <Ref. to AB(diag)-24, Clear Memory Mode.> 5) Perform the Inspection Mode. <Ref. to AB(diag)-23, Inspection Mode.> 6) Read the DTC. (Current malfunction) <Ref. to AB(diag)-22, Read Diagnostic Trouble Code (DTC).>	Is DTC B1698 displayed?	Go to step **8**.	Go to step **9**.
8	**REPLACE CURTAIN AIRBAG SENSOR LH AND CHECK AIRBAG CONTROL MODULE AFTER REPLACEMENT.** 1) Turn the ignition switch to OFF, disconnect the battery ground cable, and wait for 60 seconds or more. 2) Replace the curtain airbag sensor LH. <Ref. to AB-56, REMOVAL, Curtain Airbag Sensor.> 3) Connect all connectors. 4) Clear the memory. <Ref. to AB(diag)-24, Clear Memory Mode.> 5) Perform the Inspection Mode. <Ref. to AB(diag)-23, Inspection Mode.> 6) Read the DTC. (Current malfunction) <Ref. to AB(diag)-22, Read Diagnostic Trouble Code (DTC).>	Is DTC B1698 displayed?	Replace the airbag control module. <Ref. to AB-47, REMOVAL, Airbag Control Module.>	Go to step **9**.

	Step	Check	Yes	No
9	**CHECK FOR ANY OTHER DTC ON DISPLAY.** Read the DTC. (Current malfunction) <Ref. to AB(diag)-22, Read Diagnostic Trouble Code (DTC).>	Is any other DTC displayed?	Perform the diagnosis for other displayed DTCs. <Ref. to AB(diag)-30, List of Diagnostic Trouble Code (DTC).>	Finish the diagnosis.

BQ:DTC B161A LOST COMMUNICATION WITH FRONT SATELLITE SENSOR BUS

DIAGNOSIS START CONDITION:
Ignition voltage is 10 V to 16 V.
DTC DETECTING CONDITION:

- Harness between airbag control module and front sub sensor is open or shorted.
- Front sub sensor is faulty.
- Airbag control module is faulty.

CAUTION:
Before performing diagnosis, refer to "CAUTION" in "General Description". <Ref. to AB(diag)-4, CAUTION, General Description.>
WIRING DIAGRAM:
Airbag system <Ref. to WI-69, WIRING DIAGRAM, Airbag System.>

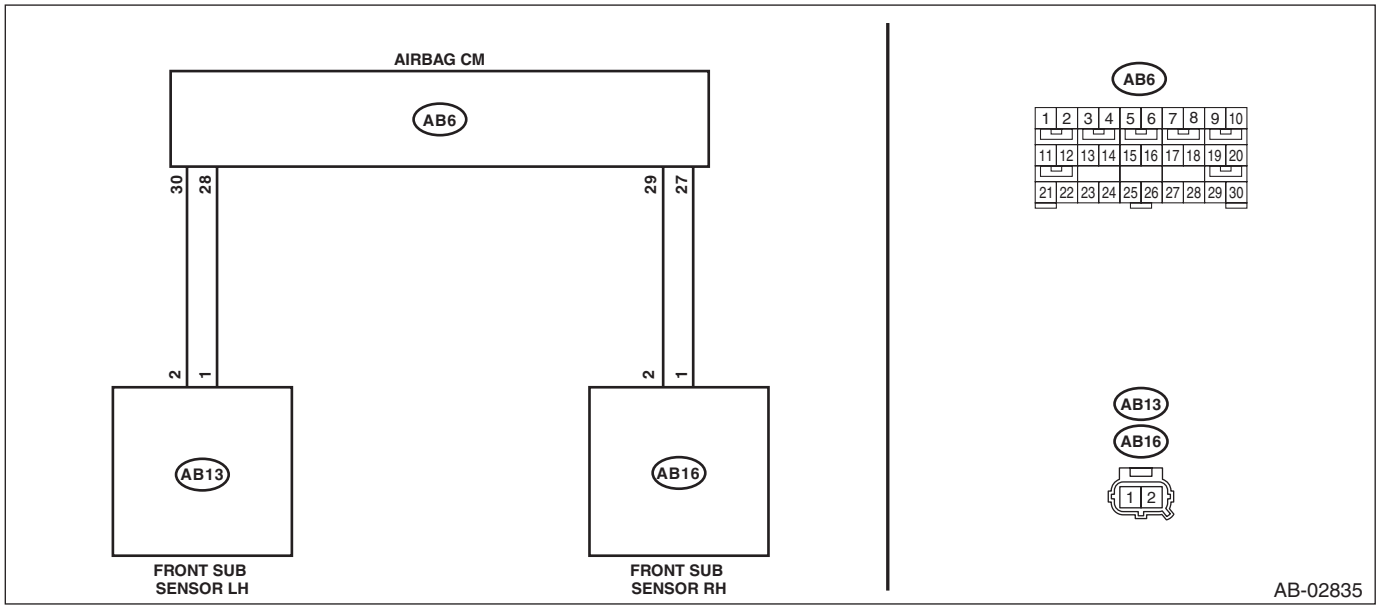

	Step	Check	Yes	No
1	**CHECK POOR CONTACT OF CONNECTORS.** Check for poor contact of the connectors between the airbag control module and the front sub sensor.	Is there poor contact?	Replace the airbag main harness along with body harness.	Go to step **2**.

	Step	Check	Yes	No
2	**CHECK AIRBAG MAIN HARNESS (FRONT SENSOR BUS LH).** 1) Turn the ignition switch to OFF, disconnect the battery ground cable, and wait for 60 seconds or more. 2) Remove the instrument panel lower cover and column cover, and disconnect the connectors (AB7) and (AB2). 3) Remove the console front panel and disconnect the connector (AB9). 4) Disconnect the connector (AB66) from knee airbag module. 5) Disconnect the connectors (AB6, AB17, AB18) from airbag control module. 6) Connect the connector (1AG) in the test harness AG to the connectors (AB6, AB17, AB18). 7) Disconnect the connector (AB13) from the front sub sensor LH, and then connect the connector (1H) in the test harness H to connector (AB13). 8) Measure the resistance between connector (4AG) in the test harness AG and connector (3H) in the test harness H. ***Connector & terminal*** ***(4AG) No. 7 — (3H) No. 5:*** ***(4AG) No. 9 — (3H) No. 6:***	Is the resistance less than 10 Ω?	Go to step **3**.	Replace the airbag main harness along with body harness.
3	**CHECK AIRBAG MAIN HARNESS (FRONT SENSOR BUS LH).** Measure the resistance between connector (4AG) in the test harness AG and chassis ground, and the resistance between connector (4AG) terminals in the test harness AG. ***Connector & terminal*** ***(4AG) No. 7 — Chassis ground:*** ***(4AG) No. 9 — Chassis ground:*** ***(4AG) No. 7 — (4AG) No. 9:***	Is the resistance 1 MΩ or more?	Go to step **4**.	Replace the airbag rear harness along with body harness.
4	**CHECK AIRBAG MAIN HARNESS (FRONT SENSOR BUS RH).** 1) Disconnect the connector (AB16) from the front sub sensor RH, and then connect the connector (1H) in the test harness H to connector (AB16). 2) Measure the resistance between connector (4AG) in the test harness AG and connector (3H) in the test harness H. ***Connector & terminal*** ***(4AG) No. 14 — (3H) No. 5:*** ***(4AG) No. 12 — (3H) No. 6:***	Is the resistance less than 10 Ω?	Go to step **5**.	Replace the airbag main harness along with body harness.
5	**CHECK AIRBAG MAIN HARNESS (FRONT SENSOR BUS RH).** Measure the resistance between connector (4AG) in the test harness AG and chassis ground, and the resistance between connector (4AG) terminals in the test harness AG. ***Connector & terminal*** ***(4AG) No. 12 — Chassis ground:*** ***(4AG) No. 14 — Chassis ground:*** ***(4AG) No. 12 — (4AG) No. 14:***	Is the resistance 1 MΩ or more?	Go to step **6**.	Replace the airbag rear harness along with body harness.

	Step	Check	Yes	No
6	**CHECK AIRBAG CONTROL MODULE.** 1) Connect all connectors. 2) Clear the memory. <Ref. to AB(diag)-24, Clear Memory Mode.> 3) Perform the Inspection Mode. <Ref. to AB(diag)-23, Inspection Mode.> 4) Read the DTC. (Current malfunction) <Ref. to AB(diag)-22, Read Diagnostic Trouble Code (DTC).>	Is DTC B161A displayed?	Replace the front sub sensor LH and front sub sensor RH. <Ref. to AB-49, REMOVAL, Front Sub Sensor.> Replace the airbag control module if not operating normally even after replacing the sensor. <Ref. to AB-47, REMOVAL, Airbag Control Module.>	Go to step **7**.
7	**CHECK FOR ANY OTHER DTC ON DISPLAY.** Read the DTC. (Current malfunction) <Ref. to AB(diag)-22, Read Diagnostic Trouble Code (DTC).>	Is any other DTC displayed?	Perform the diagnosis for other displayed DTCs. <Ref. to AB(diag)-30, List of Diagnostic Trouble Code (DTC).>	Finish the diagnosis.

BR:DTC B16F1 PASSENGER'S SEAT BELT WARNING FAILURE

DIAGNOSIS START CONDITION:
Ignition voltage is 10 V to 16 V.
DTC DETECTING CONDITION:

- Airbag control module is faulty.
- Meter is faulty.
- Harness circuits between meter and airbag control module are open, shorted or shorted to ground.

CAUTION:
Before performing diagnosis, refer to "CAUTION" in "General Description". <Ref. to AB(diag)-4, CAUTION, General Description.>
WIRING DIAGRAM:
Airbag system <Ref. to WI-69, WIRING DIAGRAM, Airbag System.>

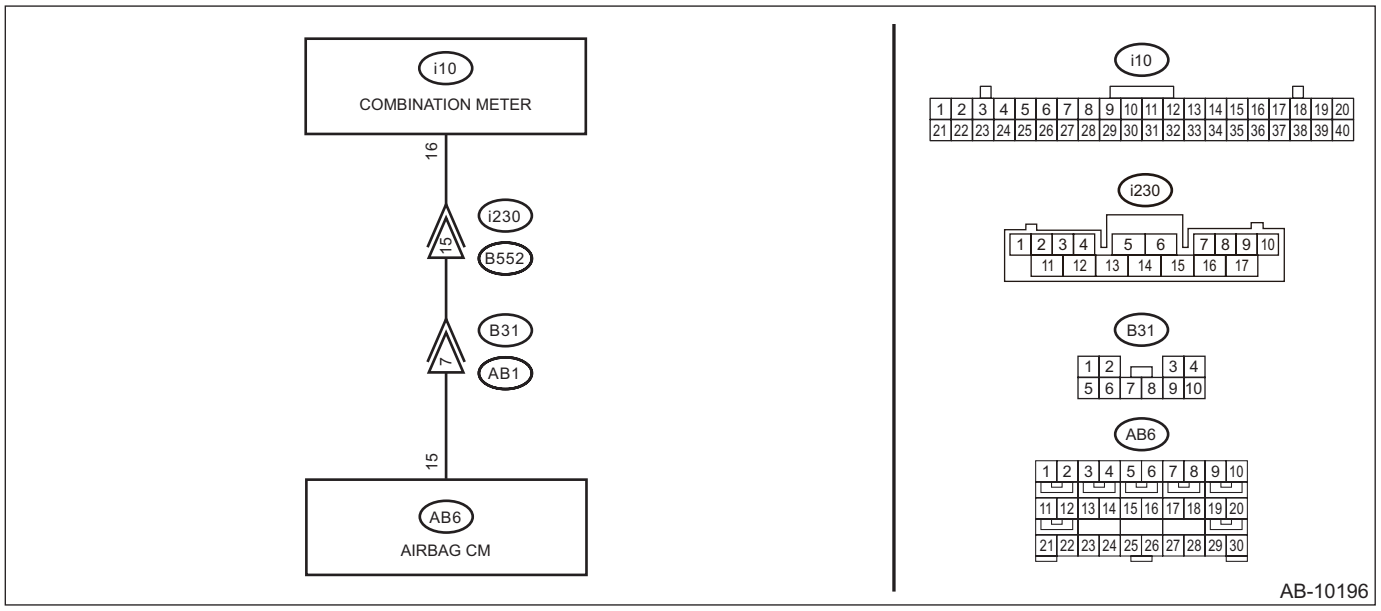

	Step	Check	Yes	No
1	**CHECK AIRBAG HARNESS.** 1) Turn the ignition switch to OFF, disconnect the battery ground cable, and wait for 60 seconds or more. 2) Disconnect the connectors (AB6, AB17, AB18) from airbag control module. 3) Connect the battery ground terminal and turn the ignition switch to ON.	Does the passenger's seat belt warning light blink for 6 seconds and go off?	Go to step **3**.	Go to step **2**.
2	**CHECK AIRBAG HARNESS.** 1) Turn the ignition switch to OFF. 2) Connect the connector (1AG) in the test harness AG to the connectors (AB6, AB17, AB18). 3) Measure the resistance between connector (2AG) in the test harness AG and chassis ground. ***Connector & terminal*** ***(2AG) No. 10 — Chassis ground:***	Is the resistance 1 MΩ or more?	Replace the meter. <Ref. to IDI-13, REMOVAL, Combination Meter.>	Repair the bulkhead harness and instrument panel harness. Or replace the airbag main harness along with body harness.
3	**CHECK AIRBAG HARNESS.** 1) Turn the ignition switch to OFF. 2) Connect the connector (1AG) in the test harness AG to the connectors (AB6, AB17, AB18). 3) Connect the connectors (7AG) and (8AG) in the test harness AG. 4) Turn the ignition switch to ON.	Does the passenger's seat belt warning light blink for 6 seconds, then repeatedly light and go off?	Replace the airbag control module. <Ref. to AB-47, Airbag Control Module.>	Go to step **4**.

	Step	Check	Yes	No
4	**CHECK AIRBAG HARNESS.** 1) Turn the ignition switch to OFF. 2) Disconnect the connectors (7AG) and (8AG) in the test harness AG in the condition of step 3. 3) Disconnect the connector (i10) from meter. 4) Measure the resistance between connector (2AG) in the test harness AG and connector (i10). ***Connector & terminal*** ***(2AG) No. 10 — (i10) No. 16:***	Is the resistance less than 10 Ω?	Replace the meter. <Ref. to IDI-13, REMOVAL, Combination Meter.>	Repair the bulkhead harness and instrument panel harness. Or replace the airbag main harness along with body harness.

BS:DTC B16F0 PASSENGER'S AIRBAG OFF INDICATOR FAILURE

NOTE:
For details on DTC B16F0, refer to DTC B1660. <Ref. to AB(diag)-74, DTC B1660 PASSENGER'S AIRBAG ON INDICATOR FAILURE, Diagnostic Chart with Trouble Code.>

BT:DTC B1760 OCCUPANT DETECTION SENSOR MAT

NOTE:
Refer to "Occupant Detection System" for details on DTC B1760. <Ref. to OD(diag)-26, DTC B1760 OCCUPANT DETECTION SENSOR MAT, Diagnostic Procedure with Diagnostic Trouble Code (DTC).>

BU:DTC B1761 OCCUPANT DETECTION SENSOR MAT LIQUID COATING

NOTE:
Refer to "Occupant Detection System" for details on DTC B1761. <Ref. to OD(diag)-27, DTC B1761 OCCUPANT DETECTION SENSOR MAT LIQUID COATING, Diagnostic Procedure with Diagnostic Trouble Code (DTC).>

BV:DTC B1771 BUCKLE SWITCH

NOTE:
Refer to "Occupant Detection System" for details on DTC B1771. <Ref. to OD(diag)-27, DTC B1771 BUCKLE SWITCH, Diagnostic Procedure with Diagnostic Trouble Code (DTC).>

BW:DTC B1795 OCCUPANT DETECTION MODULE INTERNAL CIRCUIT

NOTE:
Refer to "Occupant Detection System" for details on DTC B1795. <Ref. to OD(diag)-27, DTC B1795 OCCUPANT DETECTION MODULE INTERNAL CIRCUIT, Diagnostic Procedure with Diagnostic Trouble Code (DTC).>

BX:DTC B1800 SHORT IN DRIVER'S AIRBAG

DIAGNOSIS START CONDITION:
Ignition voltage is 10 V to 16 V.
DTC DETECTING CONDITION:

- Airbag main harness circuit is shorted.
- Airbag module harness (driver's side) circuit is shorted.
- Roll connector circuit is shorted.
- Driver's airbag module is faulty.
- Airbag control module is faulty.

CAUTION:
Before performing diagnosis, refer to "CAUTION" in "General Description". <Ref. to AB(diag)-4, CAUTION, General Description.>

NOTE:
Prior to starting work, prepare two AIRBAG RESISTORs (98299PA040).
WIRING DIAGRAM:
Airbag system <Ref. to WI-69, WIRING DIAGRAM, Airbag System.>

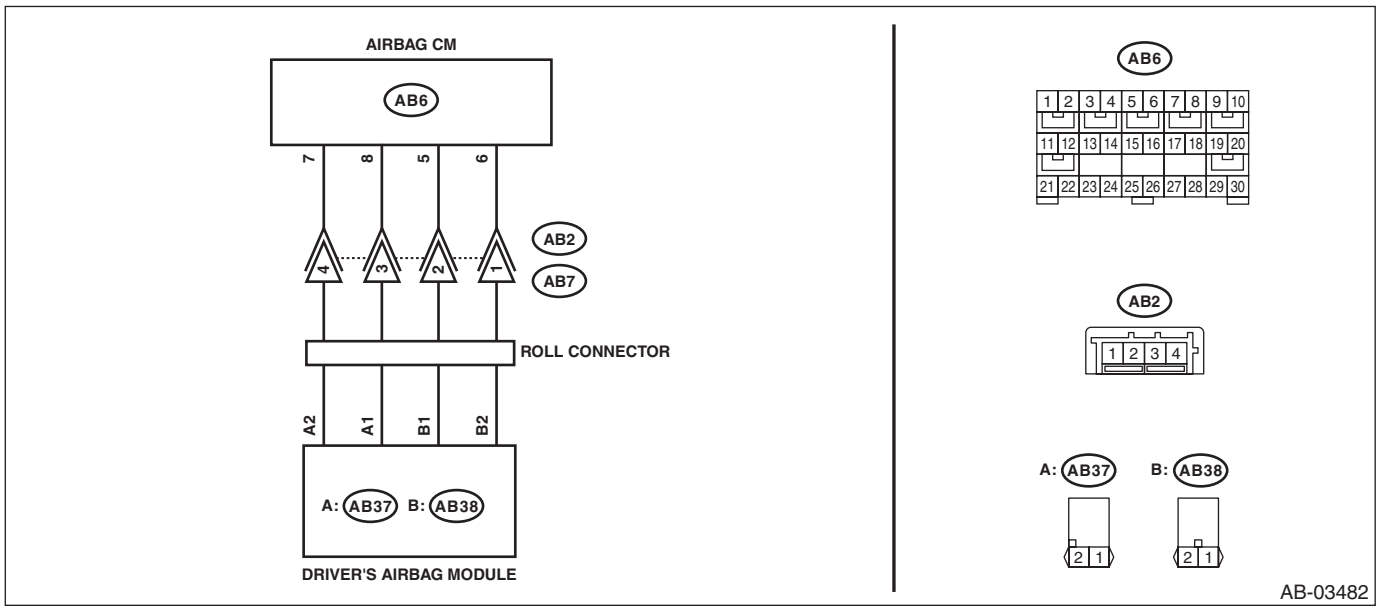

	Step	Check	Yes	No
1	**CHECK POOR CONTACT OF CONNECTORS.** Check for poor contact of the connectors between the airbag control module and the driver's airbag module.	Is there poor contact?	Replace the airbag harness.	Go to step **2**.
2	**CHECK DRIVER'S AIRBAG MODULE.** 1) Turn the ignition switch to OFF, disconnect the battery ground cable, and wait for 60 seconds or more. 2) Remove the driver's airbag module. 3) Connect the connector (1N) in the test harness N to the connector (AB38). 4) Connect the airbag resistor to the connector (2N) of test harness N. 5) Connect the connector (1Q) in the test harness Q to connector (AB37). 6) Connect the airbag resistor to the connector (2Q) in the test harness Q. 7) Connect the battery ground terminal and turn the ignition switch to ON.	Does the airbag warning light illuminate for six seconds and go off?	Replace the driver's airbag module. <Ref. to AB-32, Driver's Airbag Module.>	Go to step **3**.

	Step	Check	Yes	No
3	**CHECK ROLL CONNECTOR AND AIRBAG MAIN HARNESS (DRIVER'S AIRBAG HARNESS).** 1) Turn the ignition switch to OFF, disconnect the battery ground cable, and wait for 60 seconds or more. 2) Remove the console front panel and disconnect the connector (AB9). 3) Disconnect the driver's knee airbag module connector (AB66). 4) Disconnect the airbag resistor from the connector (2N) in test harness N and from the connector (2Q) in test harness Q. 5) Disconnect the connectors (AB6, AB17, AB18) from airbag control module. 6) Connect the connector (1AG) in the test harness AG to the connectors (AB6, AB17, AB18). 7) Measure the resistance between connector (2Q) terminals in test harness Q. ***Connector & terminal (2Q) No. 1 — (2Q) No. 2:***	Is the resistance 1 MΩ or more?	Go to step **5**.	Go to step **4**.
4	**CHECK AIRBAG MAIN HARNESS (DRIVER'S AIRBAG HARNESS).** 1) Remove the instrument panel lower cover and column cover, and disconnect the connector (AB7) from (AB2). 2) Measure the resistance between connector (3AG) terminals in test harness AG. ***Connector & terminal (3AG) No. 1 — (3AG) No. 3:***	Is the resistance 1 MΩ or more?	Replace the roll connector. <Ref. to AB-58, Roll Connector.>	Replace the airbag main harness along with body harness.
5	**CHECK AIRBAG CONTROL MODULE.** 1) Connect all connectors. 2) Clear the memory. <Ref. to AB(diag)-24, Clear Memory Mode.> 3) Perform the Inspection Mode. <Ref. to AB(diag)-23, Inspection Mode.> 4) Read the DTC. (Current malfunction) <Ref. to AB(diag)-22, Read Diagnostic Trouble Code (DTC).>	Is DTC B1800 displayed?	Replace the airbag control module. <Ref. to AB-47, Airbag Control Module.>	Go to step **6**.
6	**CHECK FOR ANY OTHER DTC ON DISPLAY.** Read the DTC. (Current malfunction) <Ref. to AB(diag)-22, Read Diagnostic Trouble Code (DTC).>	Is any other DTC displayed?	Perform the diagnosis for other displayed DTCs. <Ref. to AB(diag)-30, List of Diagnostic Trouble Code (DTC).>	Finish the diagnosis.

BY:DTC B1801 OPEN IN DRIVER'S AIRBAG

DIAGNOSIS START CONDITION:
Ignition voltage is 10 V to 16 V.
DTC DETECTING CONDITION:

- Airbag main harness circuit is open.
- Airbag module harness (driver's side) circuit is open.
- Roll connector is open.
- Driver's airbag module is faulty.
- Airbag control module is faulty.

CAUTION:
Before performing diagnosis, refer to "CAUTION" in "General Description". <Ref. to AB(diag)-4, CAUTION, General Description.>

NOTE:
Prior to starting work, prepare two AIRBAG RESISTORs (98299PA040).
WIRING DIAGRAM:
Airbag system <Ref. to WI-69, WIRING DIAGRAM, Airbag System.>

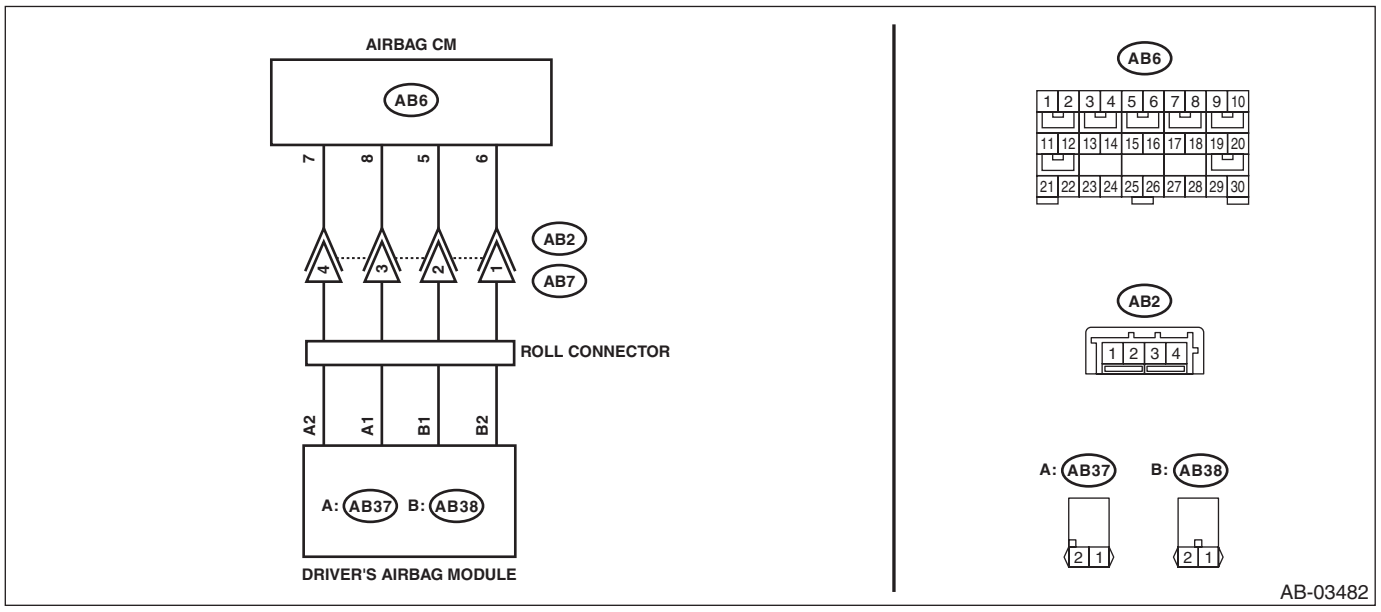

	Step	Check	Yes	No
1	**CHECK POOR CONTACT OF CONNECTORS.** Check for poor contact of the connectors between the airbag control module and the driver's airbag module.	Is there poor contact?	Replace the airbag harness.	Go to step **2**.
2	**CHECK DRIVER'S AIRBAG MODULE.** 1) Turn the ignition switch to OFF, disconnect the battery ground cable, and wait for 60 seconds or more. 2) Remove the driver's airbag module. 3) Connect the connector (1N) in the test harness N to the connector (AB38). 4) Connect the airbag resistor to the connector (2N) of test harness N. 5) Connect the connector (1Q) in the test harness Q to connector (AB37). 6) Connect the airbag resistor to the connector (2Q) in the test harness Q. 7) Connect the battery ground terminal and turn the ignition switch to ON.	Does the airbag warning light illuminate for six seconds and go off?	Replace the driver's airbag module. <Ref. to AB-32, Driver's Airbag Module.>	Go to step **3**.

	Step	Check	Yes	No
3	**CHECK ROLL CONNECTOR AND AIRBAG MAIN HARNESS (DRIVER'S AIRBAG HARNESS).** 1) Turn the ignition switch to OFF, disconnect the battery ground cable, and wait for 60 seconds or more. 2) Remove the console front panel and disconnect the connector (AB9). 3) Disconnect the driver's knee airbag module connector (AB66). 4) Disconnect the airbag resistor from the connector (2N) in test harness N. 5) Disconnect the airbag resistor from the connector (2Q) of test harness Q. 6) Disconnect the connectors (AB6, AB17, AB18) from airbag control module. 7) Measure the resistance between connector (2Q) terminals in test harness Q. ***Connector & terminal*** ***(2Q) No. 1 — (2Q) No. 2:***	Is the resistance less than 10 Ω?	Go to step **5**.	Go to step **4**.
4	**CHECK ROLL CONNECTOR.** 1) Remove the instrument panel lower cover and column cover, and disconnect the connector (AB7) from (AB2). 2) Measure the resistance between connector (2Q) terminals in test harness Q. ***Connector & terminal*** ***(2Q) No. 1 — (2Q) No. 2:***	Is the resistance less than 10 Ω?	Replace the airbag main harness along with body harness.	Replace the roll connector. <Ref. to AB-58, Roll Connector.>
5	**CHECK AIRBAG CONTROL MODULE.** 1) Connect all connectors. 2) Clear the memory. <Ref. to AB(diag)-24, Clear Memory Mode.> 3) Perform the Inspection Mode. <Ref. to AB(diag)-23, Inspection Mode.> 4) Read the DTC. (Current malfunction) <Ref. to AB(diag)-22, Read Diagnostic Trouble Code (DTC).>	Is DTC B1801 displayed?	Replace the airbag control module. <Ref. to AB-47, Airbag Control Module.>	Go to step **6**.
6	**CHECK FOR ANY OTHER DTC ON DISPLAY.** Read the DTC. (Current malfunction) <Ref. to AB(diag)-22, Read Diagnostic Trouble Code (DTC).>	Is any other DTC displayed?	Perform the diagnosis for other displayed DTCs. <Ref. to AB(diag)-30, List of Diagnostic Trouble Code (DTC).>	Finish the diagnosis.

BZ:DTC B1802 SHORT IN DRIVER'S AIRBAG (TO GROUND)

DIAGNOSIS START CONDITION:
Ignition voltage is 10 V to 16 V.
DTC DETECTING CONDITION:

- Airbag main harness circuit is shorted to ground.
- Airbag module harness (driver's side) circuit is shorted to ground.
- Roll connector circuit is shorted to ground.
- Driver's airbag module is faulty.
- Airbag control module is faulty.

CAUTION:
Before performing diagnosis, refer to "CAUTION" in "General Description". <Ref. to AB(diag)-4, CAUTION, General Description.>

NOTE:
Prior to starting work, prepare two AIRBAG RESISTORs (98299PA040).
WIRING DIAGRAM:
Airbag system <Ref. to WI-69, WIRING DIAGRAM, Airbag System.>

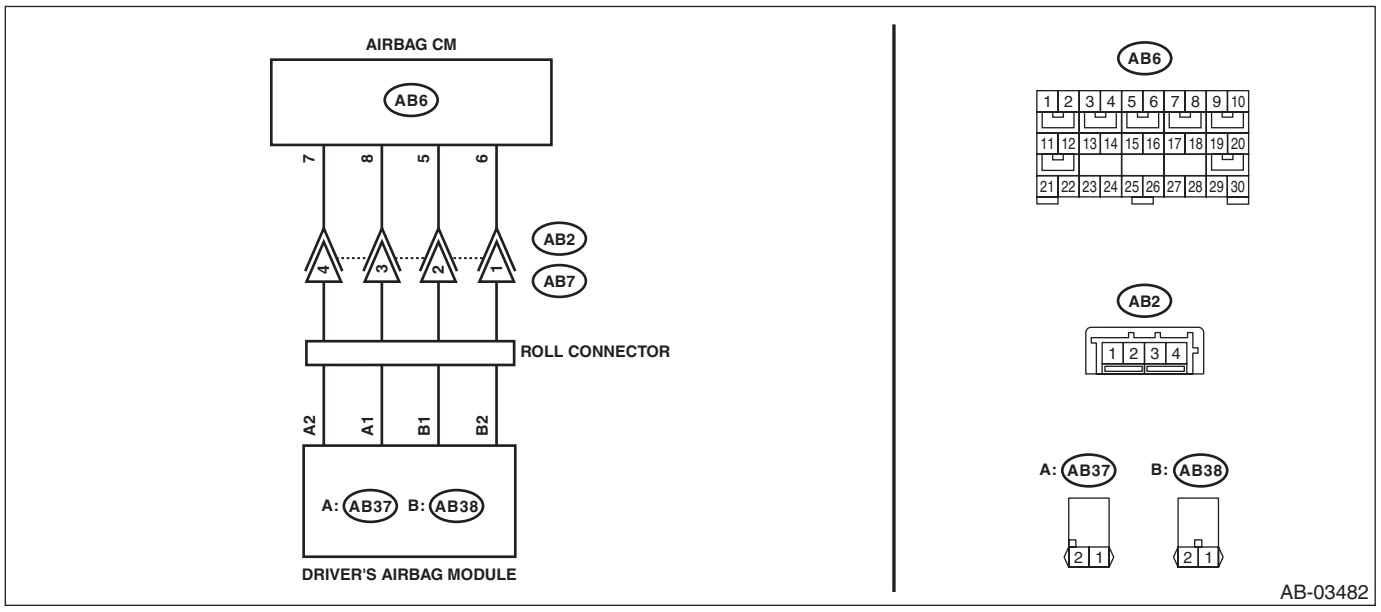

	Step	Check	Yes	No
1	**CHECK POOR CONTACT OF CONNECTORS.** Check for poor contact of the connectors between the airbag control module and the driver's airbag module.	Is there poor contact?	Replace the airbag harness.	Go to step **2**.
2	**CHECK DRIVER'S AIRBAG MODULE.** 1) Turn the ignition switch to OFF, disconnect the battery ground cable, and wait for 60 seconds or more. 2) Remove the driver's airbag module. 3) Connect the connector (1N) in the test harness N to the connector (AB38). 4) Connect the airbag resistor to the connector (2N) of test harness N. 5) Connect the connector (1Q) in the test harness Q to connector (AB37). 6) Connect the airbag resistor to the connector (2Q) in the test harness Q. 7) Connect the battery ground terminal and turn the ignition switch to ON.	Does the airbag warning light illuminate for six seconds and go off?	Replace the driver's airbag module. <Ref. to AB-32, Driver's Airbag Module.>	Go to step **3**.

	Step	Check	Yes	No
3	**CHECK ROLL CONNECTOR.** 1) Turn the ignition switch to OFF, disconnect the battery ground cable, and wait for 60 seconds or more. 2) Remove the instrument panel lower cover and column cover, and disconnect the connector (AB7) from (AB2). 3) Disconnect the driver's knee airbag module connector (AB66). 4) Disconnect the airbag resistor from the connector (2N) in test harness N and from the connector (2Q) in test harness Q. 5) Measure the resistance between connector (2Q) in the test harness Q and chassis ground. ***Connector & terminal*** ***(2Q) No. 1 — Chassis ground:*** ***(2Q) No. 2 — Chassis ground:***	Is the resistance 1 MΩ or more?	Go to step **4**.	Replace the roll connector. <Ref. to AB-58, Roll Connector.>
4	**CHECK AIRBAG MAIN HARNESS (DRIVER'S AIRBAG HARNESS).** 1) Disconnect the test harness N from connector (AB38). 2) Disconnect the test harness Q from connector (AB37). 3) Remove the console front panel and disconnect the connector (AB9). 4) Disconnect the connectors (AB6, AB17, AB18) from airbag control module. 5) Connect the connector (1AG) in the test harness AG to the connectors (AB6, AB17, AB18). 6) Measure the resistance between connector (3AG) in the test harness AG and chassis ground. ***Connector & terminal*** ***(3AG) No. 1 — Chassis ground:*** ***(3AG) No. 3 — Chassis ground:***	Is the resistance 1 MΩ or more?	Go to step **5**.	Replace the airbag main harness along with body harness.
5	**CHECK AIRBAG CONTROL MODULE.** 1) Connect all connectors. 2) Clear the memory. <Ref. to AB(diag)-24, Clear Memory Mode.> 3) Perform the Inspection Mode. <Ref. to AB(diag)-23, Inspection Mode.> 4) Read the DTC. (Current malfunction) <Ref. to AB(diag)-22, Read Diagnostic Trouble Code (DTC).>	Is DTC B1802 displayed?	Replace the airbag control module. <Ref. to AB-47, Airbag Control Module.>	Go to step **6**.
6	**CHECK FOR ANY OTHER DTC ON DISPLAY.** Read the DTC. (Current malfunction) <Ref. to AB(diag)-22, Read Diagnostic Trouble Code (DTC).>	Is any other DTC displayed?	Perform the diagnosis for other displayed DTCs. <Ref. to AB(diag)-30, List of Diagnostic Trouble Code (DTC).>	Finish the diagnosis.

CA:DTC B1803 SHORT IN DRIVER'S AIRBAG (TO +B)

DIAGNOSIS START CONDITION:
Ignition voltage is 10 V to 16 V.
DTC DETECTING CONDITION:

- Airbag main harness circuit is shorted to power supply.
- Airbag module harness (driver's side) circuit is shorted to power supply.
- Roll connector circuit is shorted to power supply.
- Driver's airbag module is faulty.
- Airbag control module is faulty.

CAUTION:
Before performing diagnosis, refer to "CAUTION" in "General Description". <Ref. to AB(diag)-4, CAUTION, General Description.>

NOTE:
Prior to starting work, prepare two AIRBAG RESISTORs (98299PA040).
WIRING DIAGRAM:
Airbag system <Ref. to WI-69, WIRING DIAGRAM, Airbag System.>

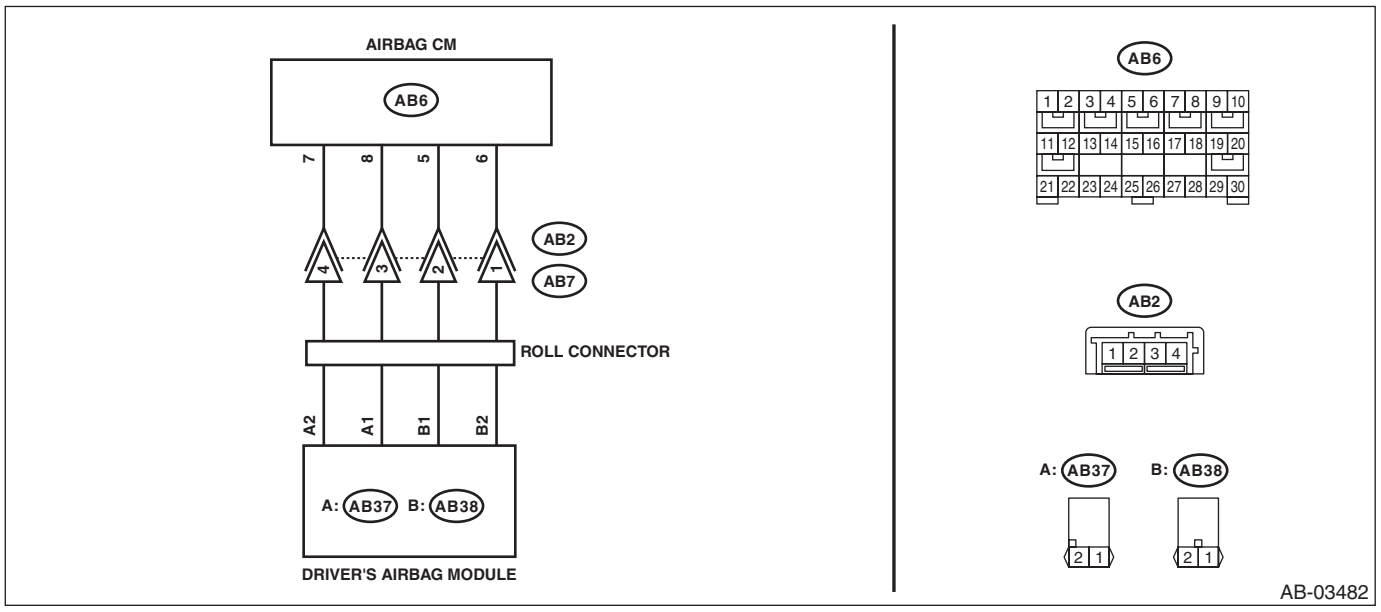

	Step	Check	Yes	No
1	**CHECK POOR CONTACT OF CONNECTORS.** Check for poor contact of the connectors between the airbag control module and the driver's airbag module.	Is there poor contact?	Replace the airbag harness.	Go to step **2**.
2	**CHECK DRIVER'S AIRBAG MODULE.** 1) Turn the ignition switch to OFF, disconnect the battery ground cable, and wait for 60 seconds or more. 2) Remove the driver's airbag module. 3) Connect the connector (1N) in the test harness N to the connector (AB38). 4) Connect the airbag resistor to the connector (2N) of test harness N. 5) Connect the connector (1Q) in the test harness Q to connector (AB37). 6) Connect the airbag resistor to the connector (2Q) in the test harness Q. 7) Connect the battery ground terminal and turn the ignition switch to ON.	Does the airbag warning light illuminate for six seconds and go off?	Replace the driver's airbag module. <Ref. to AB-32, Driver's Airbag Module.>	Go to step **3**.

	Step	Check	Yes	No
3	**CHECK ROLL CONNECTOR.** 1) Turn the ignition switch to OFF, disconnect the battery ground cable, and wait for 60 seconds or more. 2) Remove the instrument panel lower cover and column cover, and disconnect the connector (AB7) from (AB2). 3) Disconnect the driver's knee airbag module connector (AB66). 4) Disconnect the airbag resistor from the connector (2N) in test harness N and from the connector (2Q) in test harness Q. 5) Measure the voltage between connector (2Q) in the test harness Q and chassis ground. ***Connector & terminal*** ***(2Q) No. 1 (+) — Chassis ground (–):*** ***(2Q) No. 2 (+) — Chassis ground (–):***	Is the voltage less than 1 V?	Go to step **4**.	Replace the roll connector. <Ref. to AB-58, Roll Connector.>
4	**CHECK AIRBAG MAIN HARNESS (DRIVER'S AIRBAG HARNESS).** 1) Disconnect the test harness N from connector (AB38). 2) Disconnect the test harness Q from connector (AB37). 3) Remove the console front panel and disconnect the connector (AB9). 4) Disconnect the connectors (AB6, AB17, AB18) from airbag control module. 5) Connect the connector (1AG) in the test harness AG to the connectors (AB6, AB17, AB18). 6) Connect the battery ground terminal and turn the ignition switch to ON. 7) Measure the voltage between connector (3AG) in the test harness AG and chassis ground. ***Connector & terminal*** ***(3AG) No. 1 (+) — Chassis ground (–):*** ***(3AG) No. 3 (+) — Chassis ground (–):***	Is the voltage less than 1 V?	Go to step **5**.	Replace the airbag main harness along with body harness.
5	**CHECK AIRBAG CONTROL MODULE.** 1) Connect all connectors. 2) Clear the memory. <Ref. to AB(diag)-24, Clear Memory Mode.> 3) Perform the Inspection Mode. <Ref. to AB(diag)-23, Inspection Mode.> 4) Read the DTC. (Current malfunction) <Ref. to AB(diag)-22, Read Diagnostic Trouble Code (DTC).>	Is DTC B1803 displayed?	Replace the airbag control module. <Ref. to AB-47, Airbag Control Module.>	Go to step **6**.
6	**CHECK FOR ANY OTHER DTC ON DISPLAY.** Read the DTC. (Current malfunction) <Ref. to AB(diag)-22, Read Diagnostic Trouble Code (DTC).>	Is any other DTC displayed?	Perform the diagnosis for other displayed DTCs. <Ref. to AB(diag)-30, List of Diagnostic Trouble Code (DTC).>	Finish the diagnosis.

CB:DTC B1805 SHORT IN PASSENGER'S AIRBAG

DIAGNOSIS START CONDITION:
Ignition voltage is 10 V to 16 V.
DTC DETECTING CONDITION:

- Airbag main harness circuit is shorted.
- Airbag module harness circuit (passenger's side) is shorted.
- Passenger's airbag module is faulty.
- Airbag control module is faulty.

CAUTION:
Before performing diagnosis, refer to "CAUTION" in "General Description". <Ref. to AB(diag)-4, CAUTION, General Description.>
WIRING DIAGRAM:
Airbag system <Ref. to WI-69, WIRING DIAGRAM, Airbag System.>

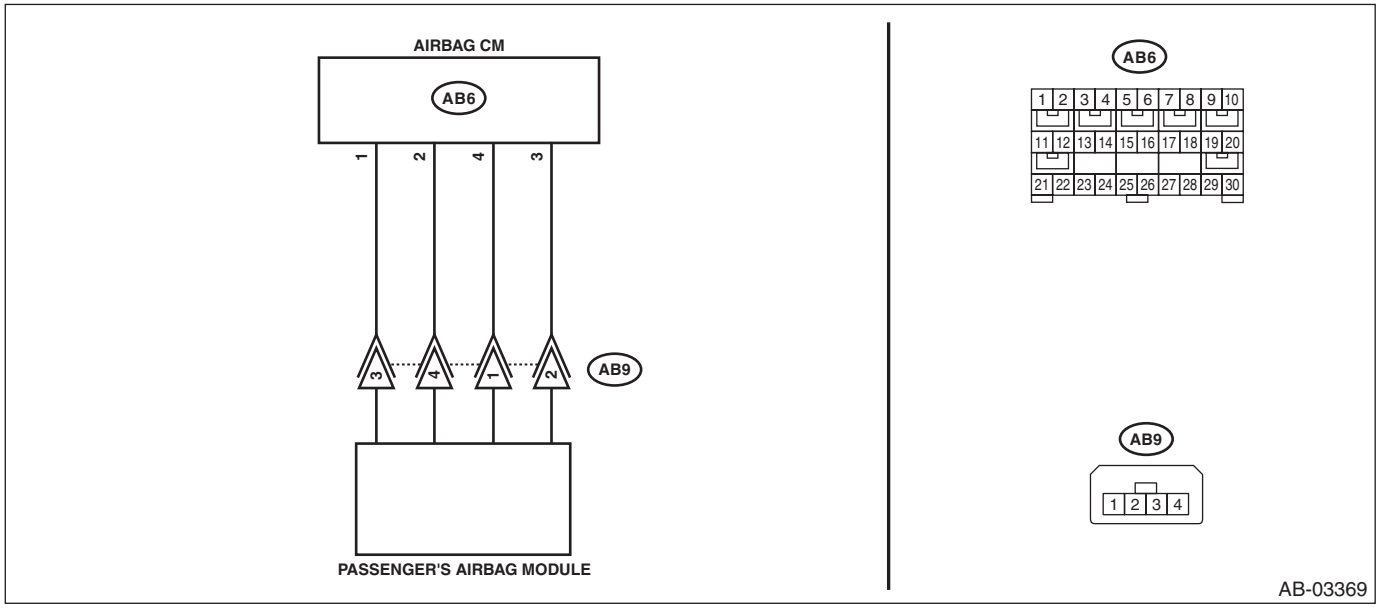

Step		Check	Yes	No
1	**CHECK POOR CONTACT OF CONNECTORS.** Check for poor contact of the connectors between the airbag control module and the passenger's airbag module.	Is there poor contact?	Replace the airbag harness.	Go to step **2**.

	Step	Check	Yes	No
2	**CHECK AIRBAG MAIN HARNESS (PASSENGER'S AIRBAG HARNESS).** 1) Turn the ignition switch to OFF, disconnect the battery ground cable, and wait for 60 seconds or more. 2) Disconnect the connectors (AB7) and (AB2). 3) Disconnect the connector (AB66) from the driver's knee airbag module. 4) Disconnect the connectors (AB6, AB17, AB18) from the airbag control module, connect the connector (1AG) in the test harness AG, and release the short mechanism of the connectors (AB6, AB17, AB18). 5) Disconnect the passenger's airbag module connector (AB9). 6) Using a probe, measure the resistance between the terminals of connector (AB9). <Ref. to AB(diag)-13, HOW TO USE PROBE, PREPARATION TOOL, General Description.> **CAUTION:** **When measuring the resistance, make sure that the probe is inserted from the back side (harness side) of the connector. Also, do not insert the probe forcibly.** ***Connector & terminal*** ***(AB9) No. 1 — (AB9) No. 2:***	Is the resistance 1 MΩ or more?	Go to step **3**.	Replace the airbag main harness along with body harness.
3	**CHECK AIRBAG CONTROL MODULE.** 1) Disconnect the test harness AG from the connectors (AB6, AB17, AB18). 2) Connect the connectors (AB6, AB17, AB18) and the airbag control module. 3) Connect the connectors (AB7) and (AB2). 4) Connect the connector (AB66) to the driver's knee airbag module. 5) Connect the battery ground terminal and turn the ignition switch to ON. 6) Perform the Inspection Mode. <Ref. to AB(diag)-23, Inspection Mode.> 7) Read the DTC. (Current malfunction) <Ref. to AB(diag)-22, Read Diagnostic Trouble Code (DTC).>	Is DTC B1805 displayed?	Replace the airbag control module. <Ref. to AB-47, REMOVAL, Airbag Control Module.>	Go to step **4**.
4	**CHECK PASSENGER'S AIRBAG MODULE.** 1) Turn the ignition switch to OFF, disconnect the battery ground cable, and wait for 60 seconds or more. 2) Connect the passenger's airbag module connector (AB9). 3) Connect the battery ground terminal and turn the ignition switch to ON. 4) Perform the Inspection Mode. <Ref. to AB(diag)-23, Inspection Mode.> 5) Read the DTC. (Current malfunction) <Ref. to AB(diag)-22, Read Diagnostic Trouble Code (DTC).>	Is DTC B1805 displayed?	Replace the passenger's airbag module. <Ref. to AB-35, REMOVAL, Passenger's Airbag Module.>	Go to step **5**.

Step		Check	Yes	No
5	**CHECK FOR ANY OTHER DTC ON DISPLAY.** Read the DTC. (Current malfunction) <Ref. to AB(diag)-22, Read Diagnostic Trouble Code (DTC).>	Is any other DTC displayed?	Perform the diagnosis for other displayed DTCs. <Ref. to AB(diag)-30, List of Diagnostic Trouble Code (DTC).>	Finish the diagnosis.

CC:DTC B1806 OPEN IN PASSENGER'S AIRBAG

DIAGNOSIS START CONDITION:
Ignition voltage is 10 V to 16 V.
DTC DETECTING CONDITION:

- Airbag main harness circuit is open.
- Airbag module harness (passenger's side) circuit is open.
- Passenger's airbag module is faulty.
- Airbag control module is faulty.

CAUTION:
Before performing diagnosis, refer to "CAUTION" in "General Description". <Ref. to AB(diag)-4, CAUTION, General Description.>
WIRING DIAGRAM:
Airbag system <Ref. to WI-69, WIRING DIAGRAM, Airbag System.>

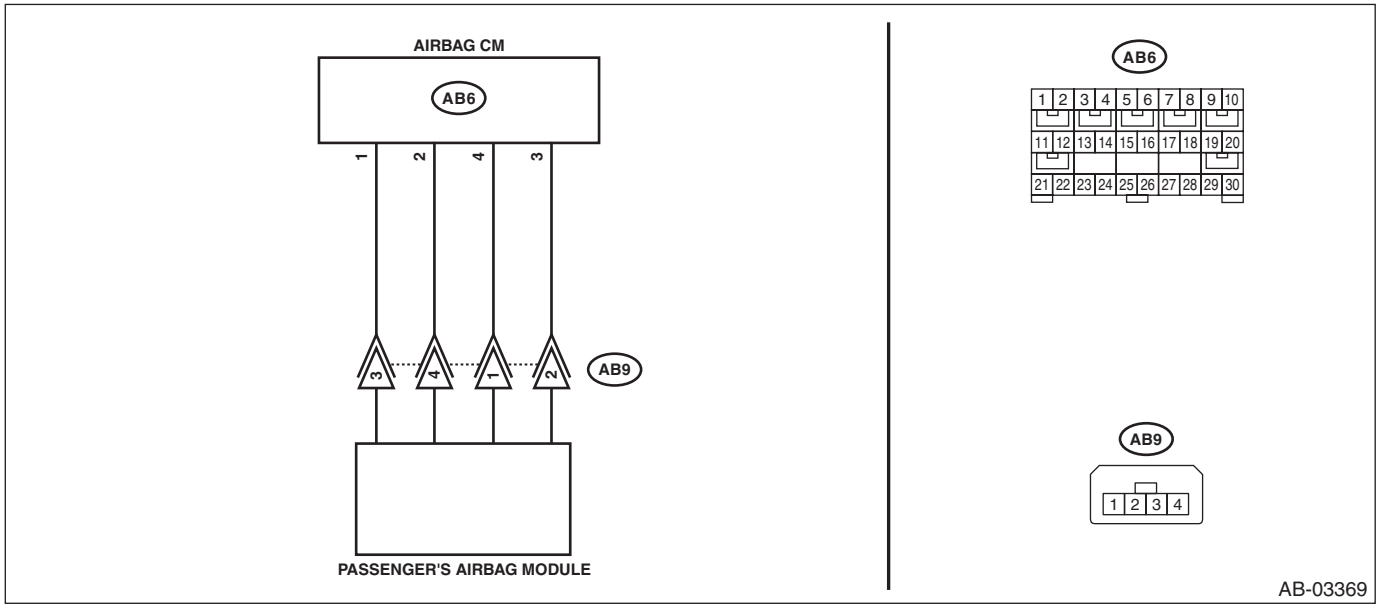

	Step	Check	Yes	No
1	**CHECK POOR CONTACT OF CONNECTORS.** Check for poor contact of the connectors between the airbag control module and the passenger's airbag module.	Is there poor contact?	Replace the airbag harness.	Go to step **2**.

	Step	Check	Yes	No
2	**CHECK AIRBAG MAIN HARNESS (PASSENGER'S AIRBAG HARNESS).** 1) Turn the ignition switch to OFF, disconnect the battery ground cable, and wait for 60 seconds or more. 2) Disconnect the connectors (AB7) and (AB2). 3) Disconnect the connector (AB66) from the driver's knee airbag module. 4) Disconnect the connectors (AB6, AB17, AB18) from airbag control module. 5) Disconnect the passenger's airbag module connector (AB9). 6) Using a probe, measure the resistance between the terminals of connector (AB9). <Ref. to AB(diag)-13, HOW TO USE PROBE, PREPARATION TOOL, General Description.> **CAUTION:** **When measuring the resistance, make sure that the probe is inserted from the back side (harness side) of the connector. Also, do not insert the probe forcibly.** ***Connector & terminal*** ***(AB9) No. 1 — (AB9) No. 2:***	Is the resistance less than 10 Ω?	Go to step **3**.	Replace the airbag main harness along with body harness.
3	**CHECK AIRBAG CONTROL MODULE.** 1) Connect the connectors (AB6, AB17, AB18) and the airbag control module. 2) Connect the connectors (AB7) and (AB2). 3) Connect the connector (AB66) to the driver's knee airbag module. 4) Using a probe, short the terminals No. 1 and No. 2 of connector (AB9). <Ref. to AB(diag)-13, HOW TO USE PROBE, PREPARATION TOOL, General Description.> **CAUTION:** **When shorting the terminals, make sure that the probe is inserted from the back side (harness side) of the connector. Also, do not insert the probe forcibly.** ***Connector & terminal*** ***(AB9) No. 1 — (AB9) No. 2:*** 5) Connect the battery ground terminal and turn the ignition switch to ON. 6) Perform the Inspection Mode. <Ref. to AB(diag)-23, Inspection Mode.> 7) Read the DTC. (Current malfunction) <Ref. to AB(diag)-22, Read Diagnostic Trouble Code (DTC).>	Is DTC B1806 displayed?	Replace the airbag control module. <Ref. to AB-47, REMOVAL, Airbag Control Module.>	Go to step **4**.

	Step	Check	Yes	No
4	**CHECK PASSENGER'S AIRBAG MODULE.** 1) Turn the ignition switch to OFF, disconnect the battery ground cable, and wait for 60 seconds or more. 2) Connect the passenger's airbag module connector (AB9). 3) Connect the battery negative terminal, and clear the memory. <Ref. to AB(diag)-24, Clear Memory Mode.> 4) Perform the Inspection Mode. <Ref. to AB(diag)-23, Inspection Mode.> 5) Read the DTC. (Current malfunction) <Ref. to AB(diag)-22, Read Diagnostic Trouble Code (DTC).>	Is DTC B1806 displayed?	Replace the passenger's airbag module. <Ref. to AB-35, REMOVAL, Passenger's Airbag Module.>	Go to step **5**.
5	**CHECK FOR ANY OTHER DTC ON DISPLAY.** Read the DTC. (Current malfunction) <Ref. to AB(diag)-22, Read Diagnostic Trouble Code (DTC).>	Is any other DTC displayed?	Perform the diagnosis for other displayed DTCs. <Ref. to AB(diag)-30, List of Diagnostic Trouble Code (DTC).>	Finish the diagnosis.

CD:DTC B1807 SHORT IN PASSENGER'S AIRBAG (TO GROUND)

DIAGNOSIS START CONDITION:
Ignition voltage is 10 V to 16 V.
DTC DETECTING CONDITION:

- Airbag main harness circuit is shorted to ground.
- Airbag module harness (passenger's side) circuit is shorted to ground.
- Passenger's airbag module is faulty.
- Airbag control module is faulty.

CAUTION:
Before performing diagnosis, refer to "CAUTION" in "General Description". <Ref. to AB(diag)-4, CAUTION, General Description.>
WIRING DIAGRAM:
Airbag system <Ref. to WI-69, WIRING DIAGRAM, Airbag System.>

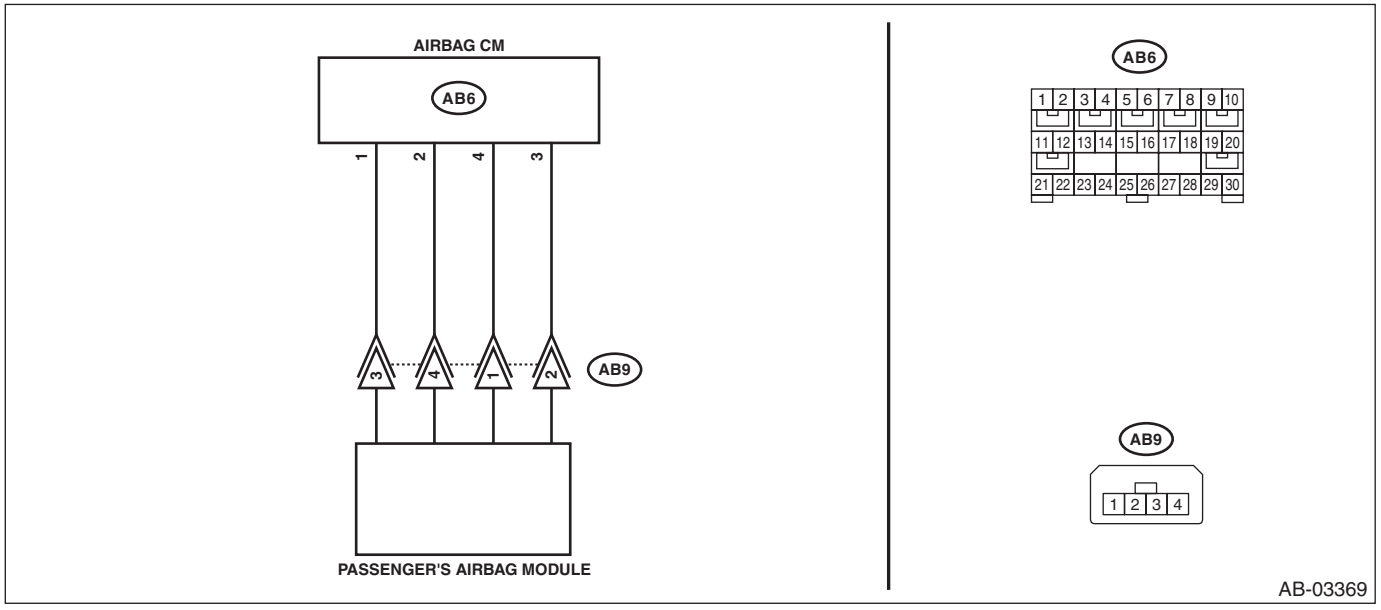

Step		Check	Yes	No
1	**CHECK POOR CONTACT OF CONNECTORS.** Check for poor contact of the connectors between the airbag control module and the passenger's airbag module.	Is there poor contact?	Replace the airbag harness.	Go to step **2**.

	Step	Check	Yes	No
2	**CHECK AIRBAG MAIN HARNESS (PASSENGER'S AIRBAG HARNESS).** 1) Turn the ignition switch to OFF, disconnect the battery ground cable, and wait for 60 seconds or more. 2) Disconnect the connectors (AB7) and (AB2). 3) Disconnect the connector (AB66) from the driver's knee airbag module. 4) Disconnect the connectors (AB6, AB17, AB18) from airbag control module. 5) Disconnect the passenger's airbag module connector (AB9). 6) Using a probe, measure the resistance between the connector (AB9) and chassis ground. <Ref. to AB(diag)-13, HOW TO USE PROBE, PREPARATION TOOL, General Description.> **CAUTION:** **When measuring the resistance, make sure that the probe is inserted from the back side (harness side) of the connector. Also, do not insert the probe forcibly.** ***Connector & terminal*** ***(AB9) No. 1 — Chassis ground:*** ***(AB9) No. 2 — Chassis ground:***	Is the resistance 1 MΩ or more?	Go to step **3**.	Replace the airbag main harness along with body harness.
3	**CHECK AIRBAG CONTROL MODULE.** 1) Connect the connectors (AB6, AB17, AB18) and the airbag control module. 2) Using a probe, short the terminals No. 1 and No. 2 of connector (AB9). <Ref. to AB(diag)-13, HOW TO USE PROBE, PREPARATION TOOL, General Description.> **CAUTION:** **When shorting the terminals, make sure that the probe is inserted from the back side (harness side) of the connector. Also, do not insert the probe forcibly.** ***Connector & terminal*** ***(AB9) No. 1 — (AB9) No. 2:*** 3) Connect the battery ground terminal and turn the ignition switch to ON. 4) Perform the Inspection Mode. <Ref. to AB(diag)-23, Inspection Mode.> 5) Read the DTC. (Current malfunction) <Ref. to AB(diag)-22, Read Diagnostic Trouble Code (DTC).>	Is DTC B1807 displayed?	Replace the airbag control module. <Ref. to AB-47, REMOVAL, Airbag Control Module.>	Go to step **4**.

	Step	Check	Yes	No
4	**CHECK PASSENGER'S AIRBAG MODULE.** 1) Turn the ignition switch to OFF, disconnect the battery ground cable, and wait for 60 seconds or more. 2) Release the short circuit of connector (AB9). 3) Connect the passenger's airbag module connector (AB9). 4) Connect the connectors (AB7) and (AB2). 5) Connect the connector (AB66) to the driver's knee airbag module. 6) Connect the battery ground terminal and turn the ignition switch to ON. 7) Perform the Inspection Mode. <Ref. to AB(diag)-23, Inspection Mode.> 8) Read the DTC. (Current malfunction) <Ref. to AB(diag)-22, Read Diagnostic Trouble Code (DTC).>	Is DTC B1807 displayed?	Replace the passenger's airbag module. <Ref. to AB-35, REMOVAL, Passenger's Airbag Module.>	Go to step **5**.
5	**CHECK FOR ANY OTHER DTC ON DISPLAY.** Read the DTC. (Current malfunction) <Ref. to AB(diag)-22, Read Diagnostic Trouble Code (DTC).>	Is any other DTC displayed?	Perform the diagnosis for other displayed DTCs. <Ref. to AB(diag)-30, List of Diagnostic Trouble Code (DTC).>	Finish the diagnosis.

CE:DTC B1808 SHORT IN PASSENGER'S AIRBAG (TO +B)

DIAGNOSIS START CONDITION:
Ignition voltage is 10 V to 16 V.
DTC DETECTING CONDITION:

- Airbag main harness circuit is shorted to power supply.
- Airbag module harness (passenger's side) circuit is shorted to power supply.
- Passenger's airbag module is faulty.
- Airbag control module is faulty.

CAUTION:
Before performing diagnosis, refer to "CAUTION" in "General Description". <Ref. to AB(diag)-4, CAUTION, General Description.>
WIRING DIAGRAM:
Airbag system <Ref. to WI-69, WIRING DIAGRAM, Airbag System.>

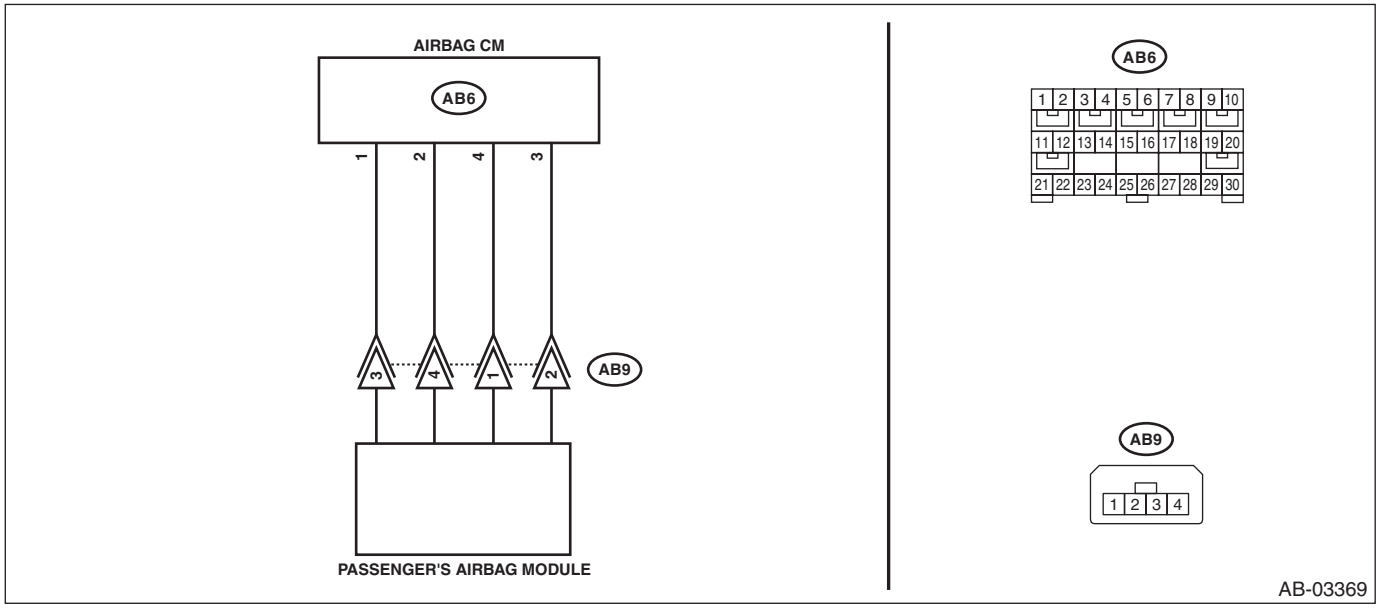

	Step	Check	Yes	No
1	**CHECK POOR CONTACT OF CONNECTORS.** Check for poor contact of the connectors between the airbag control module and the passenger's airbag module.	Is there poor contact?	Replace the airbag harness.	Go to step **2**.

	Step	Check	Yes	No
2	**CHECK AIRBAG MAIN HARNESS (PASSENGER'S AIRBAG HARNESS).** 1) Turn the ignition switch to OFF, disconnect the battery ground cable, and wait for 60 seconds or more. 2) Disconnect the connectors (AB7) and (AB2). 3) Disconnect the connector (AB66) from the driver's knee airbag module. 4) Disconnect the connectors (AB6, AB17, AB18) from airbag control module. 5) Disconnect the passenger's airbag module connector (AB9). 6) Using a probe, measure the voltage between the connector (AB9) and chassis ground. <Ref. to AB(diag)-13, HOW TO USE PROBE, PREPARATION TOOL, General Description.> **CAUTION:** **When measuring the voltage, make sure that the probe is inserted from the back side (harness side) of the connector. Also, do not insert the probe forcibly.** ***Connector & terminal*** ***(AB9) No. 1 (+) — Chassis ground (–):*** ***(AB9) No. 2 (+) — Chassis ground (–):***	Is the voltage less than 1 V?	Go to step **3**.	Replace the airbag main harness along with body harness.
3	**CHECK AIRBAG CONTROL MODULE.** 1) Turn the ignition switch to OFF, disconnect the battery ground cable, and wait for 60 seconds or more. 2) Connect the connectors (AB6, AB17, AB18) and the airbag control module. 3) Using a probe, short the terminals No. 1 and No. 2 of connector (AB9). <Ref. to AB(diag)-13, HOW TO USE PROBE, PREPARATION TOOL, General Description.> **CAUTION:** **When shorting the terminals, make sure that the probe is inserted from the back side (harness side) of the connector. Also, do not insert the probe forcibly.** ***Connector & terminal*** ***(AB9) No. 1 — (AB9) No. 2:*** 4) Connect the battery ground terminal and turn the ignition switch to ON. 5) Perform the Inspection Mode. <Ref. to AB(diag)-23, Inspection Mode.> 6) Read the DTC. (Current malfunction) <Ref. to AB(diag)-22, Read Diagnostic Trouble Code (DTC).>	Is DTC B1808 displayed?	Replace the airbag control module. <Ref. to AB-47, REMOVAL, Airbag Control Module.>	Go to step **4**.

	Step	Check	Yes	No
4	**CHECK PASSENGER'S AIRBAG MODULE.** 1) Turn the ignition switch to OFF, disconnect the battery ground cable, and wait for 60 seconds or more. 2) Release the short circuit of connector (AB9). 3) Connect the passenger's airbag module connector (AB9). 4) Connect the connectors (AB7) and (AB2). 5) Connect the connector (AB66) to the driver's knee airbag module. 6) Connect the battery ground terminal and turn the ignition switch to ON. 7) Perform the Inspection Mode. <Ref. to AB(diag)-23, Inspection Mode.> 8) Read the DTC. (Current malfunction) <Ref. to AB(diag)-22, Read Diagnostic Trouble Code (DTC).>	Is DTC B1808 displayed?	Replace the passenger's airbag module. <Ref. to AB-35, REMOVAL, Passenger's Airbag Module.>	Go to step **5**.
5	**CHECK FOR ANY OTHER DTC ON DISPLAY.** Read the DTC. (Current malfunction) <Ref. to AB(diag)-22, Read Diagnostic Trouble Code (DTC).>	Is any other DTC displayed?	Perform the diagnosis for other displayed DTCs. <Ref. to AB(diag)-30, List of Diagnostic Trouble Code (DTC).>	Finish the diagnosis.

CF:DTC B1810 SHORT IN DRIVER'S AIRBAG DUAL STAGE - 2ND STEP

DIAGNOSIS START CONDITION:
Ignition voltage is 10 V to 16 V.
DTC DETECTING CONDITION:

- Airbag main harness circuit is shorted.
- Airbag module harness (driver's side) circuit is shorted.
- Roll connector circuit is shorted.
- Driver's airbag module is faulty.
- Airbag control module is faulty.

CAUTION:
Before performing diagnosis, refer to "CAUTION" in "General Description". <Ref. to AB(diag)-4, CAUTION, General Description.>

NOTE:
Prior to starting work, prepare two AIRBAG RESISTORs (98299PA040).
WIRING DIAGRAM:
Airbag system <Ref. to WI-69, WIRING DIAGRAM, Airbag System.>

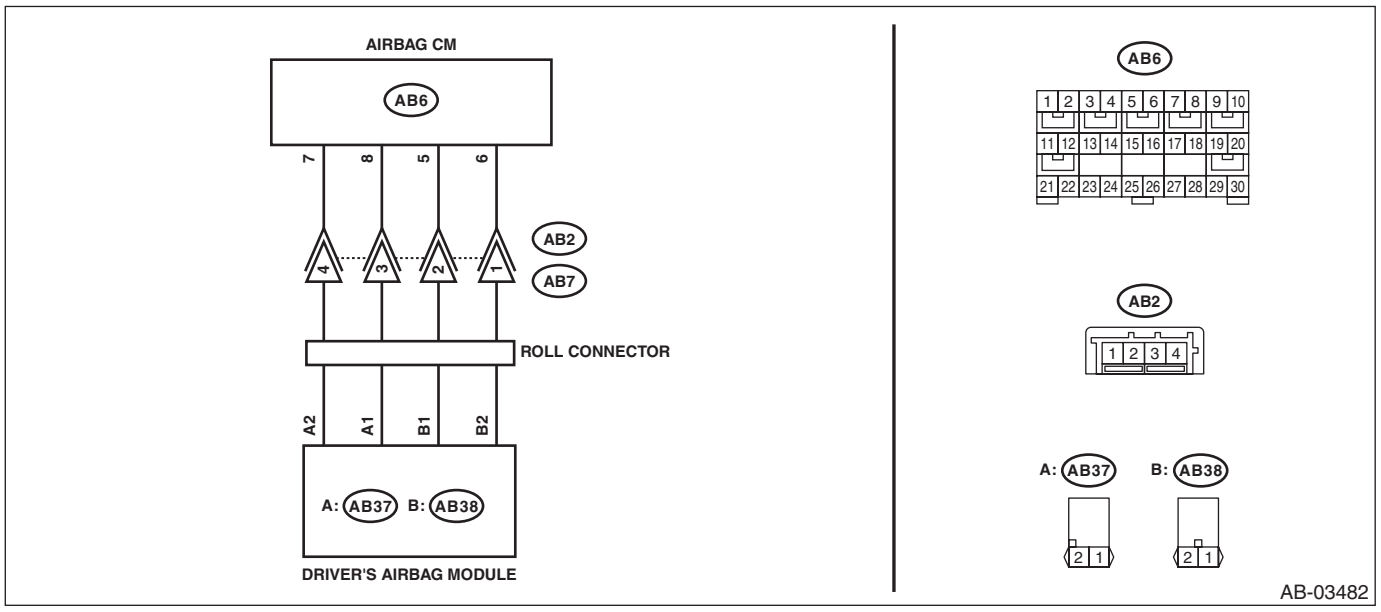

	Step	Check	Yes	No
1	**CHECK POOR CONTACT OF CONNECTORS.** Check for poor contact of the connectors between the airbag control module and the driver's airbag module.	Is there poor contact?	Replace the airbag harness.	Go to step **2**.
2	**CHECK DRIVER'S AIRBAG MODULE.** 1) Turn the ignition switch to OFF, disconnect the battery ground cable, and wait for 60 seconds or more. 2) Remove the driver's airbag module. 3) Connect the connector (1N) in the test harness N to the connector (AB38). 4) Connect the airbag resistor to the connector (2N) of test harness N. 5) Connect the connector (1Q) in the test harness Q to connector (AB37). 6) Connect the airbag resistor to the connector (2Q) in the test harness Q. 7) Connect the battery ground terminal and turn the ignition switch to ON.	Does the airbag warning light illuminate for six seconds and go off?	Replace the driver's airbag module. <Ref. to AB-32, Driver's Airbag Module.>	Go to step **3**.

	Step	Check	Yes	No
3	**CHECK ROLL CONNECTOR AND AIRBAG MAIN HARNESS (DRIVER'S AIRBAG HARNESS).** 1) Turn the ignition switch to OFF, disconnect the battery ground cable, and wait for 60 seconds or more. 2) Remove the console front panel and disconnect the connector (AB9). 3) Disconnect the connector (AB66) from the driver's knee airbag module. 4) Disconnect the airbag resistor from the connector (2N) in test harness N and from the connector (2Q) in test harness Q. 5) Disconnect the connectors (AB6, AB17, AB18) from airbag control module. 6) Connect the connector (1AG) in the test harness AG to the connectors (AB6, AB17, AB18). 7) Measure the resistance between connector (2N) terminals in test harness N. ***Connector & terminal (2N) No. 1 — (2N) No. 2:***	Is the resistance 1 MΩ or more?	Go to step **5**.	Go to step **4**.
4	**CHECK AIRBAG MAIN HARNESS (DRIVER'S AIRBAG HARNESS).** 1) Remove the instrument panel lower cover and column cover, and disconnect the connector (AB7) from (AB2). 2) Disconnect the test harness Q from connector (AB37). 3) Measure the resistance between connector (3AG) terminals in test harness AG. ***Connector & terminal (3AG) No. 2 — (3AG) No. 4:***	Is the resistance 1 MΩ or more?	Replace the roll connector. <Ref. to AB-58, Roll Connector.>	Replace the airbag main harness along with body harness.
5	**CHECK AIRBAG CONTROL MODULE.** 1) Connect all connectors. 2) Clear the memory. <Ref. to AB(diag)-24, Clear Memory Mode.> 3) Perform the Inspection Mode. <Ref. to AB(diag)-23, Inspection Mode.> 4) Read the DTC. (Current malfunction) <Ref. to AB(diag)-22, Read Diagnostic Trouble Code (DTC).>	Is DTC B1810 displayed?	Replace the airbag control module. <Ref. to AB-47, Airbag Control Module.>	Go to step **6**.
6	**CHECK FOR ANY OTHER DTC ON DISPLAY.** Read the DTC. (Current malfunction) <Ref. to AB(diag)-22, Read Diagnostic Trouble Code (DTC).>	Is any other DTC displayed?	Perform the diagnosis for other displayed DTCs. <Ref. to AB(diag)-30, List of Diagnostic Trouble Code (DTC).>	Finish the diagnosis.

CG:DTC B1811 OPEN IN DRIVER'S AIRBAG DUAL STAGE - 2ND STEP

DIAGNOSIS START CONDITION:
Ignition voltage is 10 V to 16 V.
DTC DETECTING CONDITION:

- Airbag main harness circuit is open.
- Airbag module harness (driver's side) circuit is open.
- Roll connector circuit is open.
- Driver's airbag module is faulty.
- Airbag control module is faulty.

CAUTION:
Before performing diagnosis, refer to "CAUTION" in "General Description". <Ref. to AB(diag)-4, CAUTION, General Description.>

NOTE:
Prior to starting work, prepare two AIRBAG RESISTORs (98299PA040).
WIRING DIAGRAM:
Airbag system <Ref. to WI-69, WIRING DIAGRAM, Airbag System.>

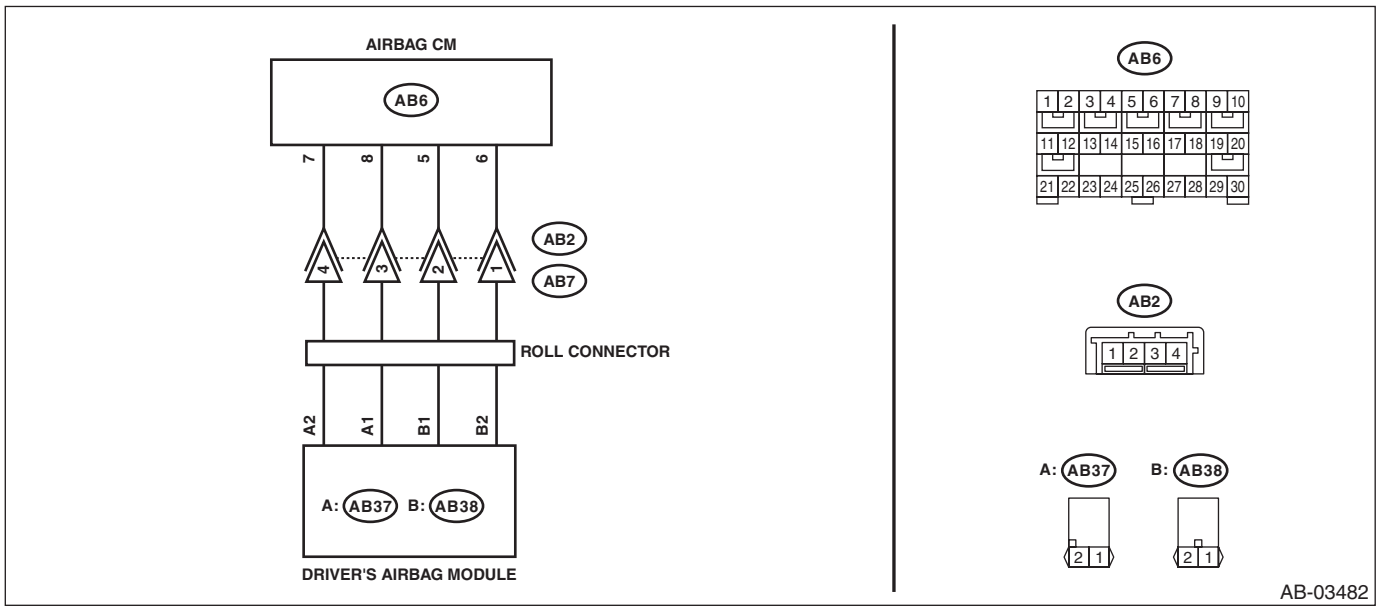

	Step	Check	Yes	No
1	**CHECK POOR CONTACT OF CONNECTORS.** Check for poor contact of the connectors between the airbag control module and the driver's airbag module.	Is there poor contact?	Replace the airbag harness.	Go to step **2**.
2	**CHECK DRIVER'S AIRBAG MODULE.** 1) Turn the ignition switch to OFF, disconnect the battery ground cable, and wait for 60 seconds or more. 2) Remove the driver's airbag module. 3) Connect the connector (1N) in the test harness N to the connector (AB38). 4) Connect the airbag resistor to the connector (2N) of test harness N. 5) Connect the connector (1Q) in the test harness Q to connector (AB37). 6) Connect the airbag resistor to the connector (2Q) in the test harness Q. 7) Connect the battery ground terminal and turn the ignition switch to ON.	Does the airbag warning light illuminate for six seconds and go off?	Replace the driver's airbag module. <Ref. to AB-32, Driver's Airbag Module.>	Go to step **3**.

	Step	Check	Yes	No
3	**CHECK ROLL CONNECTOR AND AIRBAG MAIN HARNESS (DRIVER'S AIRBAG HARNESS).** 1) Turn the ignition switch to OFF, disconnect the battery ground cable, and wait for 60 seconds or more. 2) Remove the console front panel and disconnect the connector (AB9). 3) Disconnect the connector (AB66) from the driver's knee airbag module. 4) Disconnect the airbag resistor from the connector (2N) in test harness N. 5) Disconnect the airbag resistor from the connector (2Q) of test harness Q. 6) Disconnect the connectors (AB6, AB17, AB18) from airbag control module. 7) Measure the resistance between connector (2N) terminals in test harness N. ***Connector & terminal*** ***(2N) No. 1 — (2N) No. 2:***	Is the resistance less than 10 Ω?	Go to step **5**.	Go to step **4**.
4	**CHECK ROLL CONNECTOR.** 1) Remove the instrument panel lower cover and column cover, and disconnect the connector (AB7) from (AB2). 2) Measure the resistance between connector (2N) terminals in test harness N. ***Connector & terminal*** ***(2N) No. 1 — (2N) No. 2:***	Is the resistance less than 10 Ω?	Replace the airbag main harness along with body harness.	Replace the roll connector. <Ref. to AB-58, Roll Connector.>
5	**CHECK AIRBAG CONTROL MODULE.** 1) Connect all connectors. 2) Clear the memory. <Ref. to AB(diag)-24, Clear Memory Mode.> 3) Perform the Inspection Mode. <Ref. to AB(diag)-23, Inspection Mode.> 4) Read the DTC. (Current malfunction) <Ref. to AB(diag)-22, Read Diagnostic Trouble Code (DTC).>	Is DTC B1811 displayed?	Replace the airbag control module. <Ref. to AB-47, Airbag Control Module.>	Go to step **6**.
6	**CHECK FOR ANY OTHER DTC ON DISPLAY.** Read the DTC. (Current malfunction) <Ref. to AB(diag)-22, Read Diagnostic Trouble Code (DTC).>	Is any other DTC displayed?	Perform the diagnosis for other displayed DTCs. <Ref. to AB(diag)-30, List of Diagnostic Trouble Code (DTC).>	Finish the diagnosis.

CH:DTC B1812 SHORT IN DRIVER'S AIRBAG DUAL STAGE - 2ND STEP (TO GROUND)

DIAGNOSIS START CONDITION:
Ignition voltage is 10 V to 16 V.
DTC DETECTING CONDITION:

- Airbag main harness circuit is shorted to ground.
- Airbag module harness (driver's side) circuit is shorted to ground.
- Roll connector circuit is shorted to ground.
- Driver's airbag module is faulty.
- Airbag control module is faulty.

CAUTION:
Before performing diagnosis, refer to "CAUTION" in "General Description". <Ref. to AB(diag)-4, CAUTION, General Description.>

NOTE:
Prior to starting work, prepare two AIRBAG RESISTORs (98299PA040).
WIRING DIAGRAM:
Airbag system <Ref. to WI-69, WIRING DIAGRAM, Airbag System.>

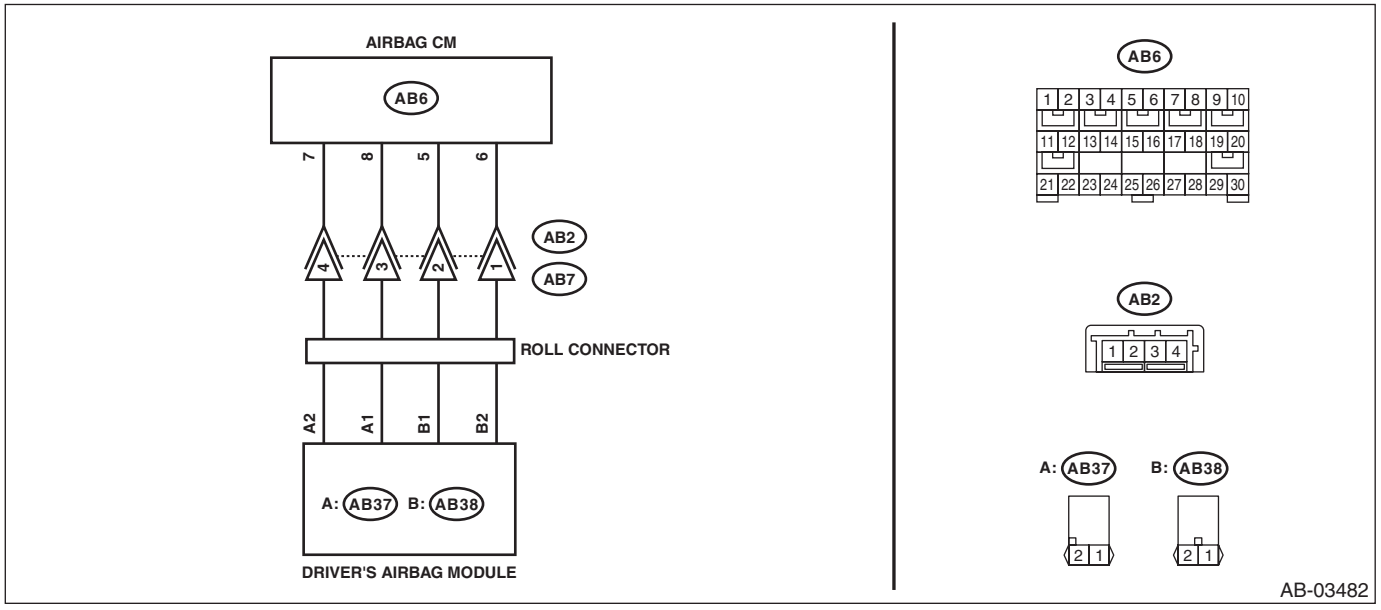

Step		Check	Yes	No
1	**CHECK POOR CONTACT OF CONNECTORS.** Check for poor contact of the connectors between the airbag control module and the driver's airbag module.	Is there poor contact?	Replace the airbag harness.	Go to step **2**.

	Step	Check	Yes	No
2	**CHECK DRIVER'S AIRBAG MODULE.** 1) Turn the ignition switch to OFF, disconnect the battery ground cable, and wait for 60 seconds or more. 2) Remove the driver's airbag module. 3) Connect the connector (1N) in the test harness N to the connector (AB38). 4) Connect the airbag resistor to the connector (2N) of test harness N. 5) Connect the connector (1Q) in the test harness Q to connector (AB37). 6) Connect the airbag resistor to the connector (2Q) in the test harness Q. 7) Connect the battery ground terminal and turn the ignition switch to ON.	Does the airbag warning light illuminate for six seconds and go off?	Replace the driver's airbag module. <Ref. to AB-32, Driver's Airbag Module.>	Go to step **3**.
3	**CHECK ROLL CONNECTOR.** 1) Turn the ignition switch to OFF, disconnect the battery ground cable, and wait for 60 seconds or more. 2) Remove the instrument panel lower cover and column cover, and disconnect the connector (AB7) from (AB2). 3) Disconnect the connector (AB66) from the driver's knee airbag module. 4) Disconnect the airbag resistor from the connector (2N) in test harness N and from the connector (2Q) in test harness Q. 5) Measure the resistance between connector (2N) in the test harness N and chassis ground. ***Connector & terminal*** ***(2N) No. 1 — Chassis ground:*** ***(2N) No. 2 — Chassis ground:***	Is the resistance 1 MΩ or more?	Go to step **4**.	Replace the roll connector. <Ref. to AB-58, Roll Connector.>
4	**CHECK AIRBAG MAIN HARNESS (DRIVER'S AIRBAG HARNESS).** 1) Disconnect the test harness N from connector (AB38). 2) Disconnect the test harness Q from connector (AB37). 3) Remove the console front panel and disconnect the connector (AB9). 4) Disconnect the connectors (AB6, AB17, AB18) from airbag control module. 5) Connect the connector (1AG) in the test harness AG to the connectors (AB6, AB17, AB18). 6) Measure the resistance between connector (3AG) in the test harness AG and chassis ground. ***Connector & terminal*** ***(3AG) No. 2 — Chassis ground:*** ***(3AG) No. 4 — Chassis ground:***	Is the resistance 1 MΩ or more?	Go to step **5**.	Replace the airbag main harness along with body harness.
5	**CHECK AIRBAG CONTROL MODULE.** 1) Connect all connectors. 2) Clear the memory. <Ref. to AB(diag)-24, Clear Memory Mode.> 3) Perform the Inspection Mode. <Ref. to AB(diag)-23, Inspection Mode.> 4) Read the DTC. (Current malfunction) <Ref. to AB(diag)-22, Read Diagnostic Trouble Code (DTC).>	Is DTC B1812 displayed?	Replace the airbag control module. <Ref. to AB-47, Airbag Control Module.>	Go to step **6**.

	Step	Check	Yes	No
6	**CHECK FOR ANY OTHER DTC ON DISPLAY.** Read the DTC. (Current malfunction) <Ref. to AB(diag)-22, Read Diagnostic Trouble Code (DTC).>	Is any other DTC displayed?	Perform the diagnosis for other displayed DTCs. <Ref. to AB(diag)-30, List of Diagnostic Trouble Code (DTC).>	Finish the diagnosis.

CI: DTC B1813 SHORT IN DRIVER'S AIRBAG DUAL STAGE - 2ND STEP CIRCUIT (TO +B)

DIAGNOSIS START CONDITION:
Ignition voltage is 10 V to 16 V.
DTC DETECTING CONDITION:

- Airbag main harness circuit is shorted to power supply.
- Airbag module harness (driver's side) circuit is shorted to power supply.
- Roll connector is shorted to power supply.
- Driver's airbag module is faulty.
- Airbag control module is faulty.

CAUTION:
Before performing diagnosis, refer to "CAUTION" in "General Description". <Ref. to AB(diag)-4, CAUTION, General Description.>

NOTE:
Prior to starting work, prepare two AIRBAG RESISTORs (98299PA040).
WIRING DIAGRAM:
Airbag system <Ref. to WI-69, WIRING DIAGRAM, Airbag System.>

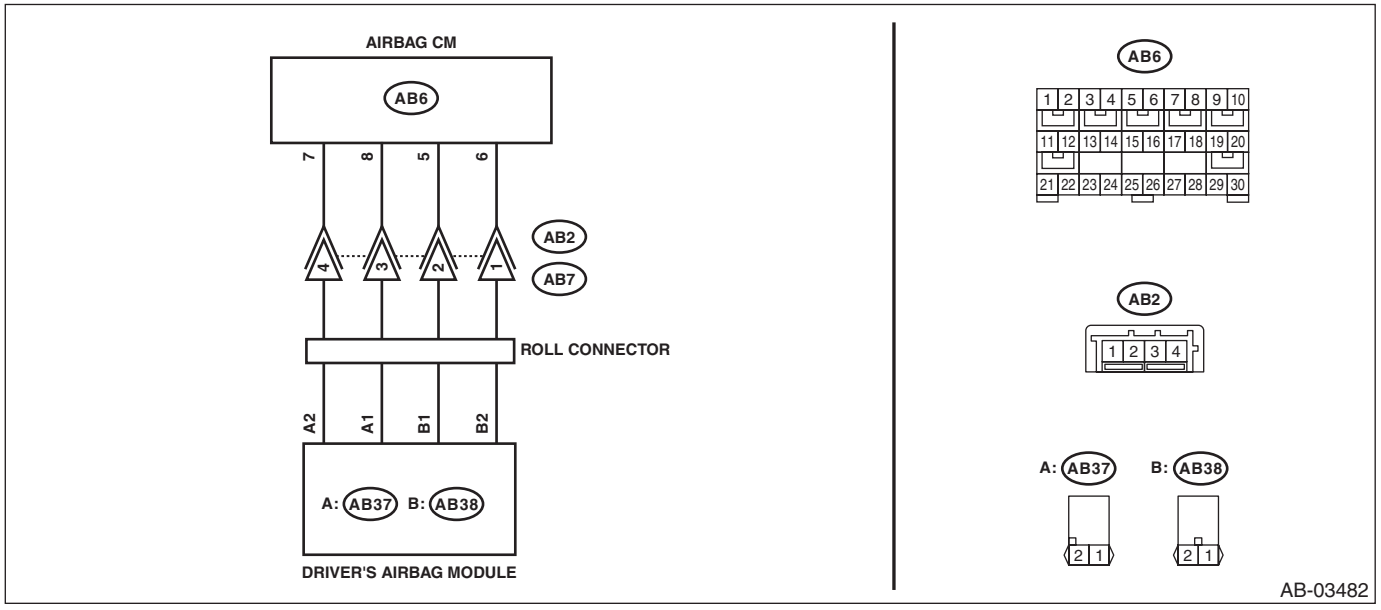

Step		Check	Yes	No
1	**CHECK POOR CONTACT OF CONNECTORS.** Check for poor contact of the connectors between the airbag control module and the driver's airbag module.	Is there poor contact?	Replace the airbag harness.	Go to step **2**.

	Step	Check	Yes	No
2	**CHECK DRIVER'S AIRBAG MODULE.** 1) Turn the ignition switch to OFF, disconnect the battery ground cable, and wait for 60 seconds or more. 2) Remove the driver's airbag module. 3) Connect the connector (1N) in the test harness N to the connector (AB38). 4) Connect the airbag resistor to the connector (2N) of test harness N. 5) Connect the connector (1Q) in the test harness Q to connector (AB37). 6) Connect the airbag resistor to the connector (2Q) in the test harness Q. 7) Connect the battery ground terminal and turn the ignition switch to ON.	Does the airbag warning light illuminate for six seconds and go off?	Replace the driver's airbag module. <Ref. to AB-32, Driver's Airbag Module.>	Go to step **3**.
3	**CHECK ROLL CONNECTOR.** 1) Turn the ignition switch to OFF, disconnect the battery ground cable, and wait for 60 seconds or more. 2) Remove the instrument panel lower cover and column cover, and disconnect the connector (AB7) from (AB2). 3) Disconnect the connector (AB66) from the driver's knee airbag module. 4) Disconnect the airbag resistor from the connector (2N) in test harness N and from the connector (2Q) in test harness Q. 5) Measure the voltage between connector (2N) in the test harness N and chassis ground. ***Connector & terminal*** ***(2N) No. 1 (+) — Chassis ground (–):*** ***(2N) No. 2 (+) — Chassis ground (–):***	Is the voltage less than 1 V?	Go to step **4**.	Replace the roll connector. <Ref. to AB-58, Roll Connector.>
4	**CHECK AIRBAG MAIN HARNESS (DRIVER'S AIRBAG HARNESS).** 1) Disconnect the test harness N from connector (AB38). 2) Disconnect the test harness Q from connector (AB37). 3) Remove the console front panel and disconnect the connector (AB9). 4) Disconnect the connectors (AB6, AB17, AB18) from airbag control module. 5) Connect the connector (1AG) in the test harness AG to the connectors (AB6, AB17, AB18). 6) Measure the voltage between connector (3AG) in the test harness AG and chassis ground. ***Connector & terminal*** ***(3AG) No. 2 (+) — Chassis ground (–):*** ***(3AG) No. 4 (+) — Chassis ground (–):***	Is the voltage less than 1 V?	Go to step **5**.	Replace the airbag main harness along with body harness.
5	**CHECK AIRBAG CONTROL MODULE.** 1) Connect all connectors. 2) Clear the memory. <Ref. to AB(diag)-24, Clear Memory Mode.> 3) Perform the Inspection Mode. <Ref. to AB(diag)-23, Inspection Mode.> 4) Read the DTC. (Current malfunction) <Ref. to AB(diag)-22, Read Diagnostic Trouble Code (DTC).>	Is DTC B1813 displayed?	Replace the airbag control module. <Ref. to AB-47, Airbag Control Module.>	Go to step **6**.

	Step	Check	Yes	No
6	**CHECK FOR ANY OTHER DTC ON DISPLAY.** Read the DTC. (Current malfunction) <Ref. to AB(diag)-22, Read Diagnostic Trouble Code (DTC).>	Is any other DTC displayed?	Perform the diagnosis for other displayed DTCs. <Ref. to AB(diag)-30, List of Diagnostic Trouble Code (DTC).>	Finish the diagnosis.

CJ:DTC B1815 SHORT IN PASSENGER'S AIRBAG DUAL STAGE - 2ND STEP

DIAGNOSIS START CONDITION:
Ignition voltage is 10 V to 16 V.
DTC DETECTING CONDITION:

- Airbag main harness circuit is shorted.
- Airbag module harness circuit (passenger's side) is shorted.
- Passenger's airbag module is faulty.
- Airbag control module is faulty.

CAUTION:
Before performing diagnosis, refer to "CAUTION" in "General Description". <Ref. to AB(diag)-4, CAUTION, General Description.>
WIRING DIAGRAM:
Airbag system <Ref. to WI-69, WIRING DIAGRAM, Airbag System.>

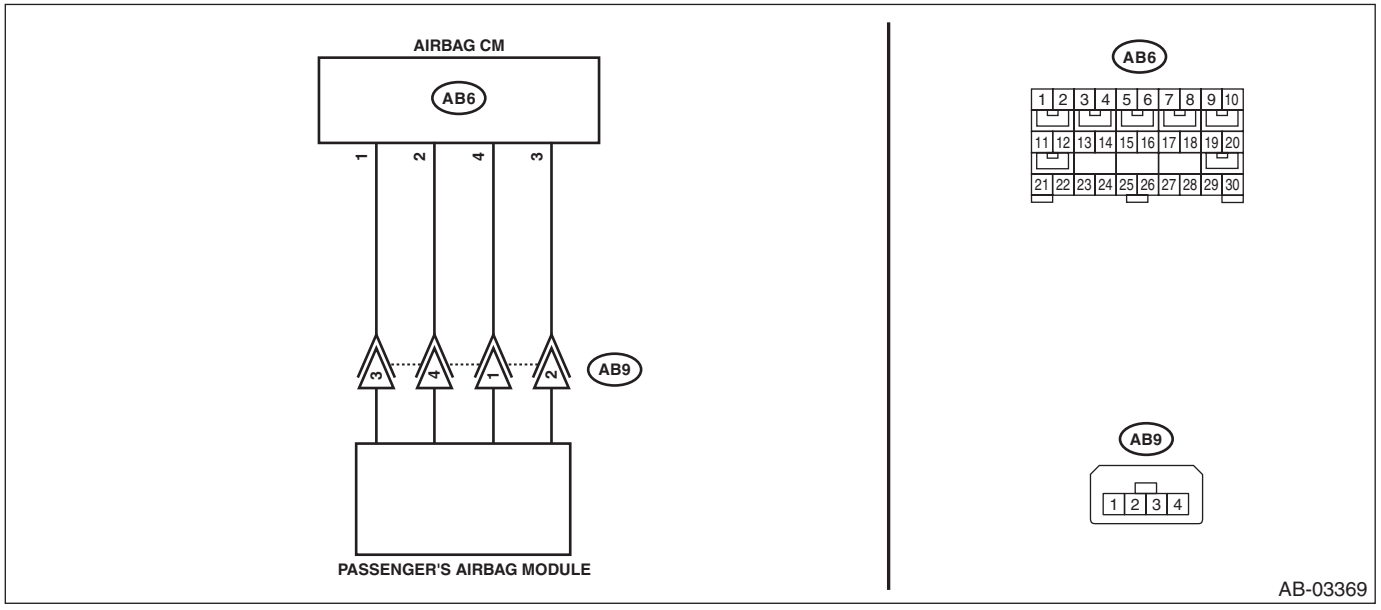

Step		Check	Yes	No
1	**CHECK POOR CONTACT OF CONNECTORS.** Check for poor contact of the connectors between the airbag control module and the passenger's airbag module.	Is there poor contact?	Replace the airbag harness.	Go to step **2**.

	Step	Check	Yes	No
2	**CHECK AIRBAG MAIN HARNESS (PASSENGER'S AIRBAG HARNESS).** 1) Turn the ignition switch to OFF, disconnect the battery ground cable, and wait for 60 seconds or more. 2) Disconnect the connectors (AB7) and (AB2). 3) Disconnect the connector (AB66) from the driver's knee airbag module. 4) Disconnect the connectors (AB6, AB17, AB18) from the airbag control module, connect the connector (1AG) in the test harness AG, and release the short mechanism of the connectors (AB6, AB17, AB18). 5) Disconnect the passenger's airbag module connector (AB9). 6) Using a probe, measure the resistance between the terminals of connector (AB9). <Ref. to AB(diag)-13, HOW TO USE PROBE, PREPARATION TOOL, General Description.> **CAUTION:** **When measuring the resistance, make sure that the probe is inserted from the back side (harness side) of the connector. Also, do not insert the probe forcibly.** ***Connector & terminal*** ***(AB9) No. 3 — (AB9) No. 4:***	Is the resistance 1 MΩ or more?	Go to step **3**.	Replace the airbag main harness along with body harness.
3	**CHECK AIRBAG CONTROL MODULE.** 1) Disconnect the test harness AG from the connectors (AB6, AB17, AB18). 2) Connect the connectors (AB6, AB17, AB18) and the airbag control module. 3) Connect the connectors (AB7) and (AB2). 4) Connect the connector (AB66) to the driver's knee airbag module. 5) Connect the battery ground terminal and turn the ignition switch to ON. 6) Perform the Inspection Mode. <Ref. to AB(diag)-23, Inspection Mode.> 7) Read the DTC. (Current malfunction) <Ref. to AB(diag)-22, Read Diagnostic Trouble Code (DTC).>	Is DTC B1815 displayed?	Replace the airbag control module. <Ref. to AB-47, REMOVAL, Airbag Control Module.>	Go to step **4**.
4	**CHECK PASSENGER'S AIRBAG MODULE.** 1) Turn the ignition switch to OFF, disconnect the battery ground cable, and wait for 60 seconds or more. 2) Connect the passenger's airbag module connector (AB9). 3) Connect the battery ground terminal and turn the ignition switch to ON. 4) Perform the Inspection Mode. <Ref. to AB(diag)-23, Inspection Mode.> 5) Read the DTC. (Current malfunction) <Ref. to AB(diag)-22, Read Diagnostic Trouble Code (DTC).>	Is DTC B1815 displayed?	Replace the passenger's airbag module. <Ref. to AB-35, REMOVAL, Passenger's Airbag Module.>	Go to step **5**.

	Step	Check	Yes	No
5	**CHECK FOR ANY OTHER DTC ON DISPLAY.** Read the DTC. (Current malfunction) <Ref. to AB(diag)-22, Read Diagnostic Trouble Code (DTC).>	Is any other DTC displayed?	Perform the diagnosis for other displayed DTCs. <Ref. to AB(diag)-30, List of Diagnostic Trouble Code (DTC).>	Finish the diagnosis.

CK:DTC B1816 OPEN IN PASSENGER'S AIRBAG DUAL STAGE - 2ND STEP

DIAGNOSIS START CONDITION:
Ignition voltage is 10 V to 16 V.
DTC DETECTING CONDITION:

- Airbag main harness circuit is open.
- Airbag module harness (passenger's side) circuit is open.
- Passenger's airbag module is faulty.
- Airbag control module is faulty.

CAUTION:
Before performing diagnosis, refer to "CAUTION" in "General Description". <Ref. to AB(diag)-4, CAUTION, General Description.>
WIRING DIAGRAM:
Airbag system <Ref. to WI-69, WIRING DIAGRAM, Airbag System.>

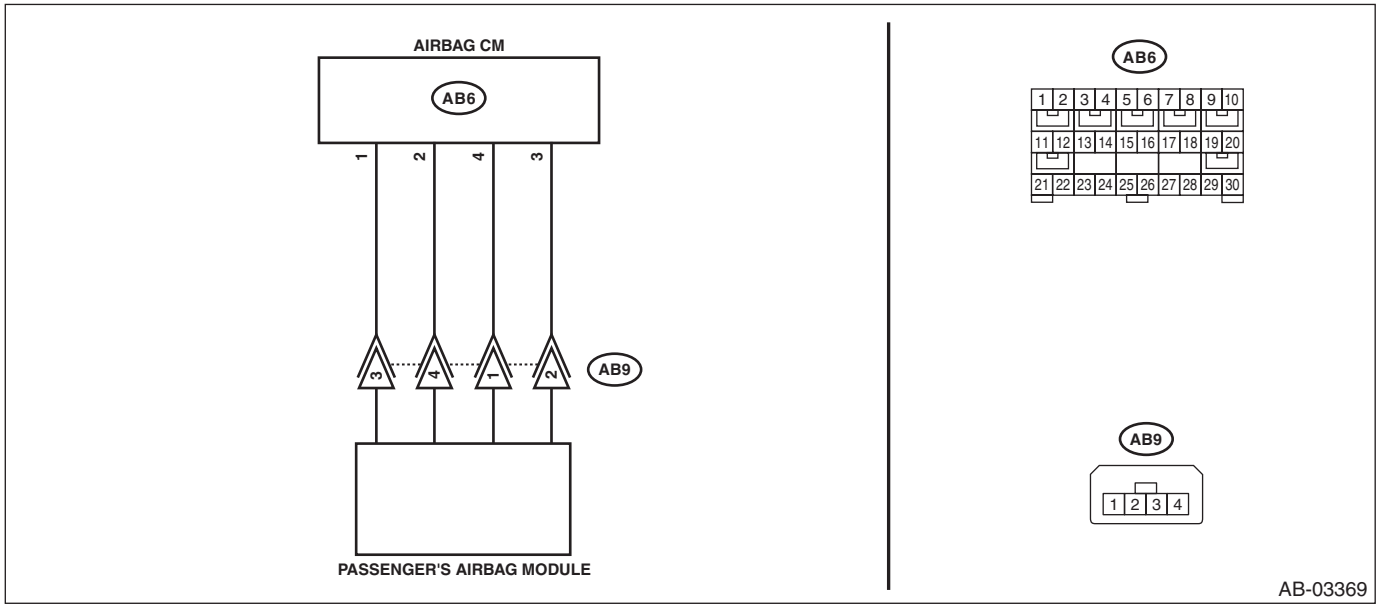

Step		Check	Yes	No
1	**CHECK POOR CONTACT OF CONNECTORS.** Check for poor contact of the connectors between the airbag control module and the passenger's airbag module.	Is there poor contact?	Replace the airbag harness.	Go to step **2**.

	Step	Check	Yes	No
2	**CHECK AIRBAG MAIN HARNESS (PASSENGER'S AIRBAG HARNESS).** 1) Turn the ignition switch to OFF, disconnect the battery ground cable, and wait for 60 seconds or more. 2) Disconnect the connectors (AB7) and (AB2). 3) Disconnect the connector (AB66) from the driver's knee airbag module. 4) Disconnect the connectors (AB6, AB17, AB18) from airbag control module. 5) Disconnect the passenger's airbag module connector (AB9). 6) Using a probe, measure the resistance between the terminals of connector (AB9). <Ref. to AB(diag)-13, HOW TO USE PROBE, PREPARATION TOOL, General Description.> **CAUTION:** **When measuring the resistance, make sure that the probe is inserted from the back side (harness side) of the connector. Also, do not insert the probe forcibly.** ***Connector & terminal*** ***(AB9) No. 3 — (AB9) No. 4:***	Is the resistance less than 10 Ω?	Go to step **3**.	Replace the airbag main harness along with body harness.
3	**CHECK AIRBAG CONTROL MODULE.** 1) Connect the connectors (AB6, AB17, AB18) and the airbag control module. 2) Connect the connectors (AB7) and (AB2). 3) Connect the connector (AB66) to the driver's knee airbag module. 4) Using a probe, short the terminals No. 3 and No. 4 of connector (AB9). <Ref. to AB(diag)-13, HOW TO USE PROBE, PREPARATION TOOL, General Description.> **CAUTION:** **When shorting the terminals, make sure that the probe is inserted from the back side (harness side) of the connector. Also, do not insert the probe forcibly.** ***Connector & terminal*** ***(AB9) No. 3 — (AB9) No. 4:*** 5) Connect the battery ground terminal and turn the ignition switch to ON. 6) Perform the Inspection Mode. <Ref. to AB(diag)-23, Inspection Mode.> 7) Read the DTC. (Current malfunction) <Ref. to AB(diag)-22, Read Diagnostic Trouble Code (DTC).>	Is DTC B1816 displayed?	Replace the airbag control module. <Ref. to AB-47, REMOVAL, Airbag Control Module.>	Go to step **4**.

	Step	Check	Yes	No
4	**CHECK PASSENGER'S AIRBAG MODULE.** 1) Turn the ignition switch to OFF, disconnect the battery ground cable, and wait for 60 seconds or more. 2) Connect the passenger's airbag module connector (AB9). 3) Connect the battery ground terminal and turn the ignition switch to ON. 4) Perform the Inspection Mode. <Ref. to AB(diag)-23, Inspection Mode.> 5) Read the DTC. (Current malfunction) <Ref. to AB(diag)-22, Read Diagnostic Trouble Code (DTC).>	Is DTC B1816 displayed?	Replace the passenger's airbag module. <Ref. to AB-35, REMOVAL, Passenger's Airbag Module.>	Go to step **5**.
5	**CHECK FOR ANY OTHER DTC ON DISPLAY.** Read the DTC. (Current malfunction) <Ref. to AB(diag)-22, Read Diagnostic Trouble Code (DTC).>	Is any other DTC displayed?	Perform the diagnosis for other displayed DTCs. <Ref. to AB(diag)-30, List of Diagnostic Trouble Code (DTC).>	Finish the diagnosis.

CL:DTC B1817 SHORT IN PASSENGER'S AIRBAG DUAL STAGE - 2ND STEP (TO GROUND)

DIAGNOSIS START CONDITION:
Ignition voltage is 10 V to 16 V.
DTC DETECTING CONDITION:

- Airbag main harness circuit is shorted to ground.
- Airbag module harness (passenger's side) circuit is shorted to ground.
- Passenger's airbag module is faulty.
- Airbag control module is faulty.

CAUTION:
Before performing diagnosis, refer to "CAUTION" in "General Description". <Ref. to AB(diag)-4, CAUTION, General Description.>
WIRING DIAGRAM:
Airbag system <Ref. to WI-69, WIRING DIAGRAM, Airbag System.>

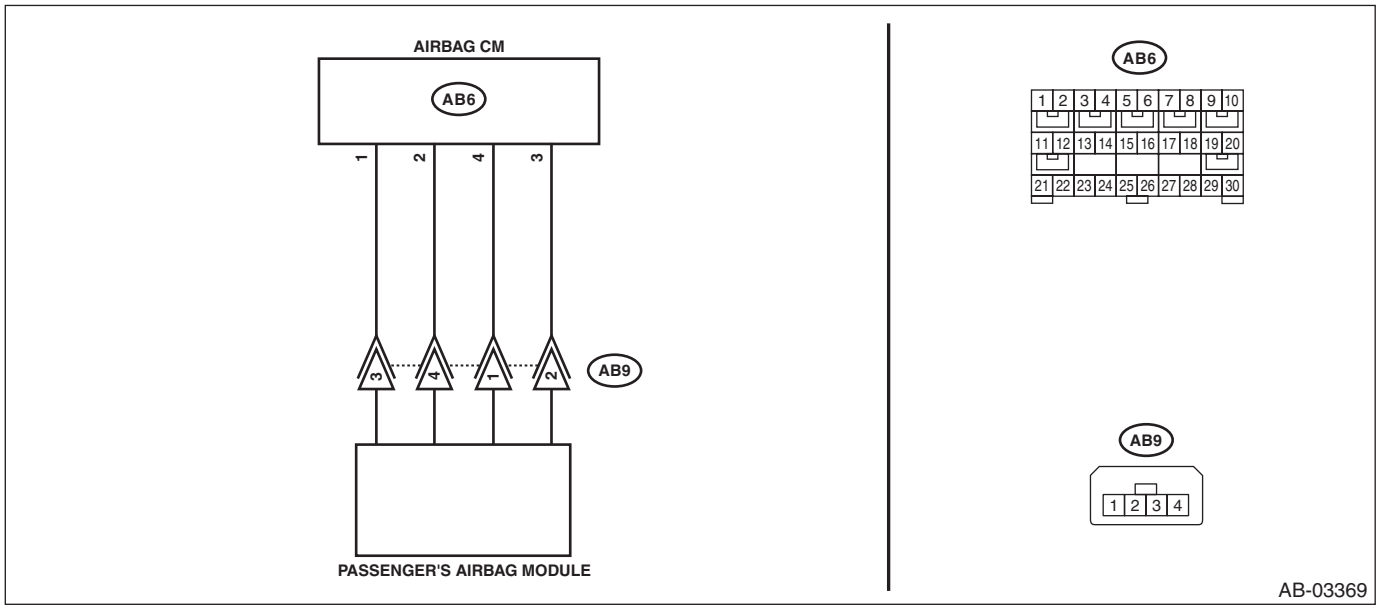

Step		Check	Yes	No
1	**CHECK POOR CONTACT OF CONNECTORS.** Check for poor contact of the connectors between the airbag control module and the passenger's airbag module.	Is there poor contact?	Replace the airbag harness.	Go to step **2**.

	Step	Check	Yes	No
2	**CHECK AIRBAG MAIN HARNESS (PASSENGER'S AIRBAG HARNESS).** 1) Turn the ignition switch to OFF, disconnect the battery ground cable, and wait for 60 seconds or more. 2) Disconnect the connectors (AB7) and (AB2). 3) Disconnect the connector (AB66) from the driver's knee airbag module. 4) Disconnect the connectors (AB6, AB17, AB18) from airbag control module. 5) Disconnect the passenger's airbag module connector (AB9). 6) Using a probe, measure the resistance between the connector (AB9) and chassis ground. <Ref. to AB(diag)-13, HOW TO USE PROBE, PREPARATION TOOL, General Description.> **CAUTION:** **When measuring the resistance, make sure that the probe is inserted from the back side (harness side) of the connector. Also, do not insert the probe forcibly.** ***Connector & terminal*** ***(AB9) No. 3 — Chassis ground:*** ***(AB9) No. 4 — Chassis ground:***	Is the resistance 1 MΩ or more?	Go to step **3**.	Replace the airbag main harness along with body harness.
3	**CHECK AIRBAG CONTROL MODULE.** 1) Connect the connectors (AB6, AB17, AB18) and the airbag control module. 2) Using a probe, short the terminals No. 3 and No. 4 of connector (AB9). <Ref. to AB(diag)-13, HOW TO USE PROBE, PREPARATION TOOL, General Description.> **CAUTION:** **When shorting the terminals, make sure that the probe is inserted from the back side (harness side) of the connector. Also, do not insert the probe forcibly.** ***Connector & terminal*** ***(AB9) No. 3 — (AB9) No. 4:*** 3) Connect the battery ground terminal and turn the ignition switch to ON. 4) Perform the Inspection Mode. <Ref. to AB(diag)-23, Inspection Mode.> 5) Read the DTC. (Current malfunction) <Ref. to AB(diag)-22, Read Diagnostic Trouble Code (DTC).>	Is DTC B1817 displayed?	Replace the airbag control module. <Ref. to AB-47, REMOVAL, Airbag Control Module.>	Go to step **4**.

	Step	Check	Yes	No
4	**CHECK PASSENGER'S AIRBAG MODULE.** 1) Turn the ignition switch to OFF, disconnect the battery ground cable, and wait for 60 seconds or more. 2) Release the short circuit of connector (AB9). 3) Connect the passenger's airbag module connector (AB9). 4) Connect the connectors (AB7) and (AB2). 5) Connect the connector (AB66) to the driver's knee airbag module. 6) Connect the battery ground terminal and turn the ignition switch to ON. 7) Perform the Inspection Mode. <Ref. to AB(diag)-23, Inspection Mode.> 8) Read the DTC. (Current malfunction) <Ref. to AB(diag)-22, Read Diagnostic Trouble Code (DTC).>	Is DTC B1817 displayed?	Replace the passenger's airbag module. <Ref. to AB-35, REMOVAL, Passenger's Airbag Module.>	Go to step **5**.
5	**CHECK FOR ANY OTHER DTC ON DISPLAY.** Read the DTC. (Current malfunction) <Ref. to AB(diag)-22, Read Diagnostic Trouble Code (DTC).>	Is any other DTC displayed?	Perform the diagnosis for other displayed DTCs. <Ref. to AB(diag)-30, List of Diagnostic Trouble Code (DTC).>	Finish the diagnosis.

CM:DTC B1818 SHORT IN PASSENGER'S AIRBAG DUAL STAGE - 2ND STEP CIRCUIT (TO +B)

DIAGNOSIS START CONDITION:
Ignition voltage is 10 V to 16 V.
DTC DETECTING CONDITION:

- Airbag main harness circuit is shorted to power supply.
- Airbag module harness (passenger's side) circuit is shorted to power supply.
- Passenger's airbag module is faulty.
- Airbag control module is faulty.

CAUTION:
Before performing diagnosis, refer to "CAUTION" in "General Description". <Ref. to AB(diag)-4, CAUTION, General Description.>
WIRING DIAGRAM:
Airbag system <Ref. to WI-69, WIRING DIAGRAM, Airbag System.>

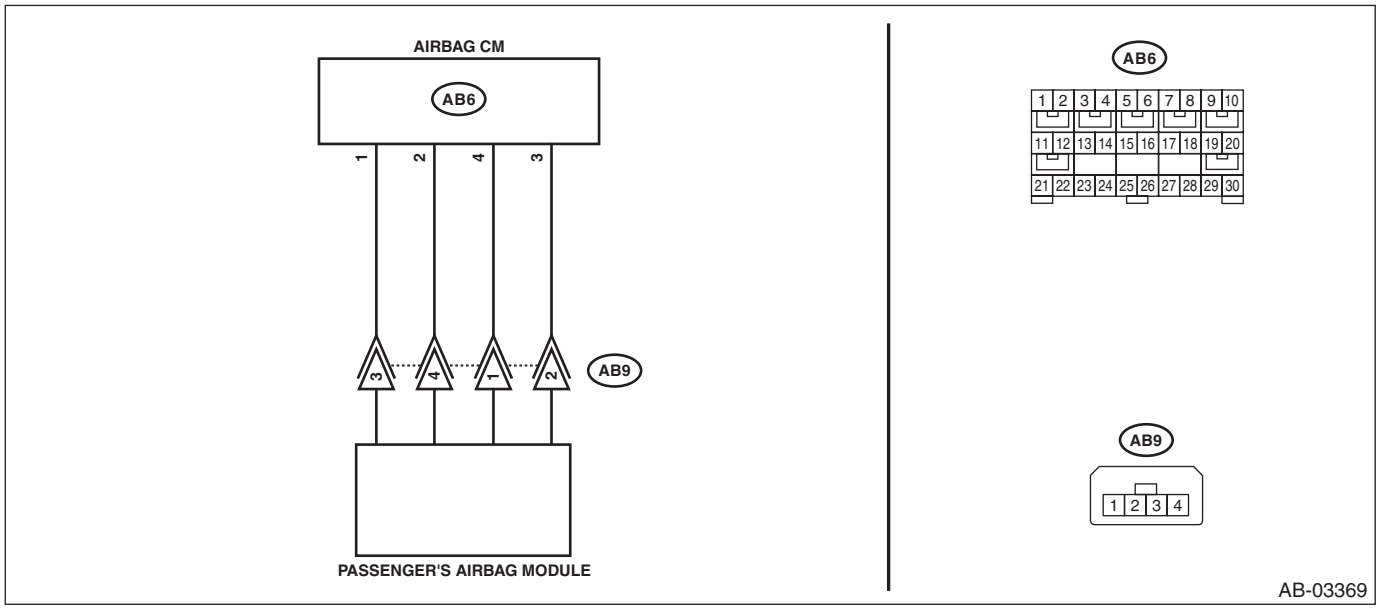

Step		Check	Yes	No
1	**CHECK POOR CONTACT OF CONNECTORS.** Check for poor contact of the connectors between the airbag control module and the passenger's airbag module.	Is there poor contact?	Replace the airbag harness.	Go to step **2**.

	Step	Check	Yes	No
2	**CHECK AIRBAG MAIN HARNESS (PASSENGER'S AIRBAG HARNESS).** 1) Turn the ignition switch to OFF, disconnect the battery ground cable, and wait for 60 seconds or more. 2) Disconnect the connectors (AB7) and (AB2). 3) Disconnect the connector (AB66) from the driver's knee airbag module. 4) Disconnect the connectors (AB6, AB17, AB18) from airbag control module. 5) Disconnect the passenger's airbag module connector (AB9). 6) Using a probe, measure the voltage between the connector (AB9) and chassis ground. <Ref. to AB(diag)-13, HOW TO USE PROBE, PREPARATION TOOL, General Description.> **CAUTION:** **When measuring the voltage, make sure that the probe is inserted from the back side (harness side) of the connector. Also, do not insert the probe forcibly.** ***Connector & terminal*** ***(AB9) No. 3 (+) — Chassis ground (–):*** ***(AB9) No. 4 (+) — Chassis ground (–):***	Is the voltage less than 1 V?	Go to step **3**.	Replace the airbag main harness along with body harness.
3	**CHECK AIRBAG CONTROL MODULE.** 1) Turn the ignition switch to OFF, disconnect the battery ground cable, and wait for 60 seconds or more. 2) Connect the connectors (AB6, AB17, AB18) and the airbag control module. 3) Using a probe, short the terminals No. 3 and No. 4 of connector (AB9). <Ref. to AB(diag)-13, HOW TO USE PROBE, PREPARATION TOOL, General Description.> **CAUTION:** **When shorting the terminals, make sure that the probe is inserted from the back side (harness side) of the connector. Also, do not insert the probe forcibly.** ***Connector & terminal*** ***(AB9) No. 3 — (AB9) No. 4:*** 4) Connect the battery ground terminal and turn the ignition switch to ON. 5) Perform the Inspection Mode. <Ref. to AB(diag)-23, Inspection Mode.> 6) Read the DTC. (Current malfunction) <Ref. to AB(diag)-22, Read Diagnostic Trouble Code (DTC).>	Is DTC B1818 displayed?	Replace the airbag control module. <Ref. to AB-47, REMOVAL, Airbag Control Module.>	Go to step **4**.

	Step	Check	Yes	No
4	**CHECK PASSENGER'S AIRBAG MODULE.** 1) Turn the ignition switch to OFF, disconnect the battery ground cable, and wait for 60 seconds or more. 2) Release the short circuit of connector (AB9). 3) Connect the passenger's airbag module connector (AB9). 4) Connect the connectors (AB7) and (AB2). 5) Connect the connector (AB66) to the driver's knee airbag module. 6) Connect the battery ground terminal and turn the ignition switch to ON. 7) Perform the Inspection Mode. <Ref. to AB(diag)-23, Inspection Mode.> 8) Read the DTC. (Current malfunction) <Ref. to AB(diag)-22, Read Diagnostic Trouble Code (DTC).>	Is DTC B1818 displayed?	Replace the passenger's airbag module. <Ref. to AB-35, REMOVAL, Passenger's Airbag Module.>	Go to step **5**.
5	**CHECK FOR ANY OTHER DTC ON DISPLAY.** Read the DTC. (Current malfunction) <Ref. to AB(diag)-22, Read Diagnostic Trouble Code (DTC).>	Is any other DTC displayed?	Perform the diagnosis for other displayed DTCs. <Ref. to AB(diag)-30, List of Diagnostic Trouble Code (DTC).>	Finish the diagnosis.

CN:DTC B1820 SHORT IN SIDE AIRBAG RH

DIAGNOSIS START CONDITION:
Ignition voltage is 10 V to 16 V.
DTC DETECTING CONDITION:

- Side airbag harness RH circuit is shorted.
- Side airbag module RH is faulty.
- Airbag control module is faulty.

CAUTION:
Before performing diagnosis, refer to "CAUTION" in "General Description". <Ref. to AB(diag)-4, CAUTION, General Description.>
WIRING DIAGRAM:
Airbag system <Ref. to WI-69, WIRING DIAGRAM, Airbag System.>

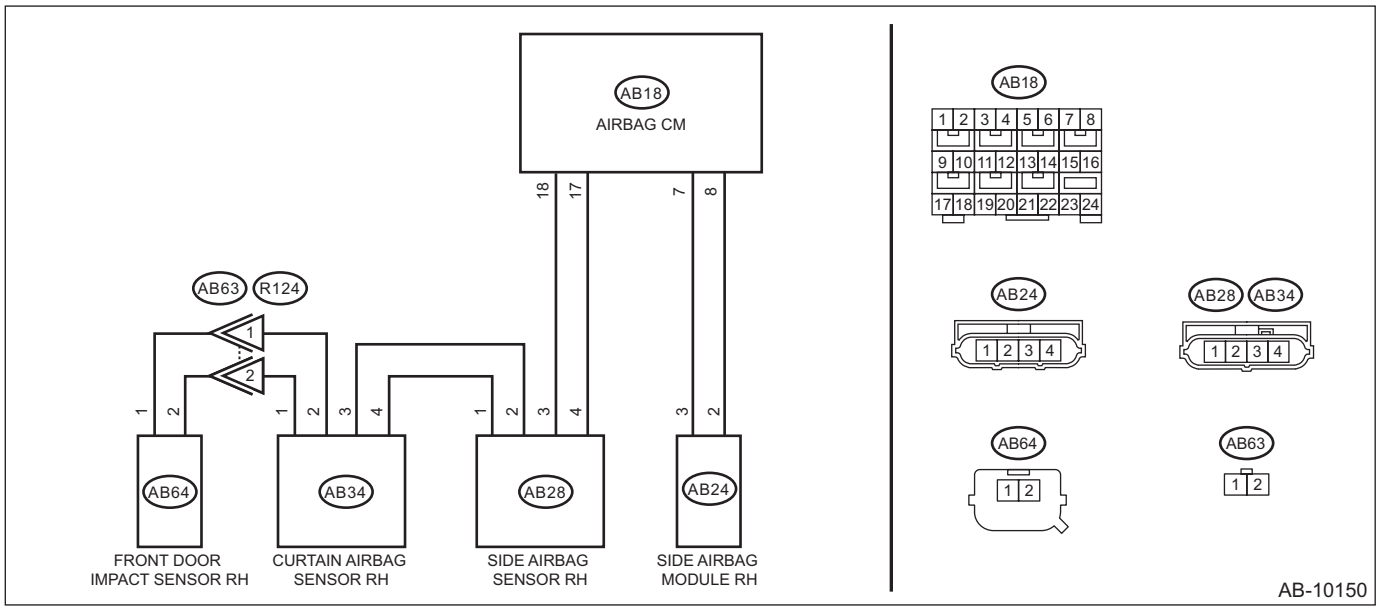

	Step	Check	Yes	No
1	**CHECK POOR CONTACT OF CONNECTORS.** Check for poor contact of the connectors between the airbag control module, side airbag module RH and the side airbag sensor RH.	Is there poor contact?	Replace the airbag rear harness along with body harness.	Go to step **2**.
2	**CHECK SIDE AIRBAG MODULE.** 1) Turn the ignition switch to OFF, disconnect the battery ground cable, and wait for 60 seconds or more. 2) Disconnect the connector (AB24) from the side airbag module RH, and connect the connector (1AJ) in the test harness AJ to connector (AB24). 3) Connect the airbag resistor to the test harness AJ connector (3AJ). 4) Connect the battery ground terminal and turn the ignition switch to ON.	Does the airbag warning light illuminate for 6 seconds and go off?	Replace the side airbag module RH. <Ref. to AB-42, REMOVAL, Side Airbag Module.>	Go to step **3**.

	Step	Check	Yes	No
3	**CHECK AIRBAG REAR HARNESS (SIDE AIRBAG MODULE HARNESS RH).** 1) Turn the ignition switch to OFF, disconnect the battery ground cable, and wait for 60 seconds or more. 2) Disconnect the connector (AB26) from seat belt pretensioner RH. 3) Disconnect the connector (AB30) from the lap seat belt pretensioner RH. 4) Disconnect the connector (AB33) from curtain airbag module RH. 5) Disconnect the airbag resistor from test harness AJ. 6) Disconnect the connectors (AB6, AB17, AB18) from airbag control module. 7) Connect the connector (1AG) in the test harness AG to the connectors (AB6, AB17, AB18). 8) Measure the resistance between connector (5AG) terminals in test harness AG. ***Connector & terminal (5AG) No. 5 — (5AG) No. 7:***	Is the resistance 1 MΩ or more?	Go to step **4**.	Replace the airbag rear harness along with body harness.
4	**CHECK AIRBAG CONTROL MODULE.** 1) Connect all connectors. 2) Clear the memory. <Ref. to AB(diag)-24, Clear Memory Mode.> 3) Perform the Inspection Mode. <Ref. to AB(diag)-23, Inspection Mode.> 4) Read the DTC. (Current malfunction) <Ref. to AB(diag)-22, Read Diagnostic Trouble Code (DTC).>	Is DTC B1820 displayed?	Replace the airbag control module. <Ref. to AB-47, Airbag Control Module.>	Go to step **5**.
5	**CHECK FOR ANY OTHER DTC ON DISPLAY.** Read the DTC. (Current malfunction) <Ref. to AB(diag)-22, Read Diagnostic Trouble Code (DTC).>	Is any other DTC displayed?	Perform the diagnosis for other displayed DTCs. <Ref. to AB(diag)-30, List of Diagnostic Trouble Code (DTC).>	Finish the diagnosis.

CO:DTC B1821 OPEN IN SIDE AIRBAG RH

DIAGNOSIS START CONDITION:
Ignition voltage is 10 V to 16 V.
DTC DETECTING CONDITION:

- Side airbag harness RH circuit is open.
- Side airbag module RH is faulty.
- Airbag control module is faulty.

CAUTION:
Before performing diagnosis, refer to "CAUTION" in "General Description". <Ref. to AB(diag)-4, CAUTION, General Description.>
WIRING DIAGRAM:
Airbag system <Ref. to WI-69, WIRING DIAGRAM, Airbag System.>

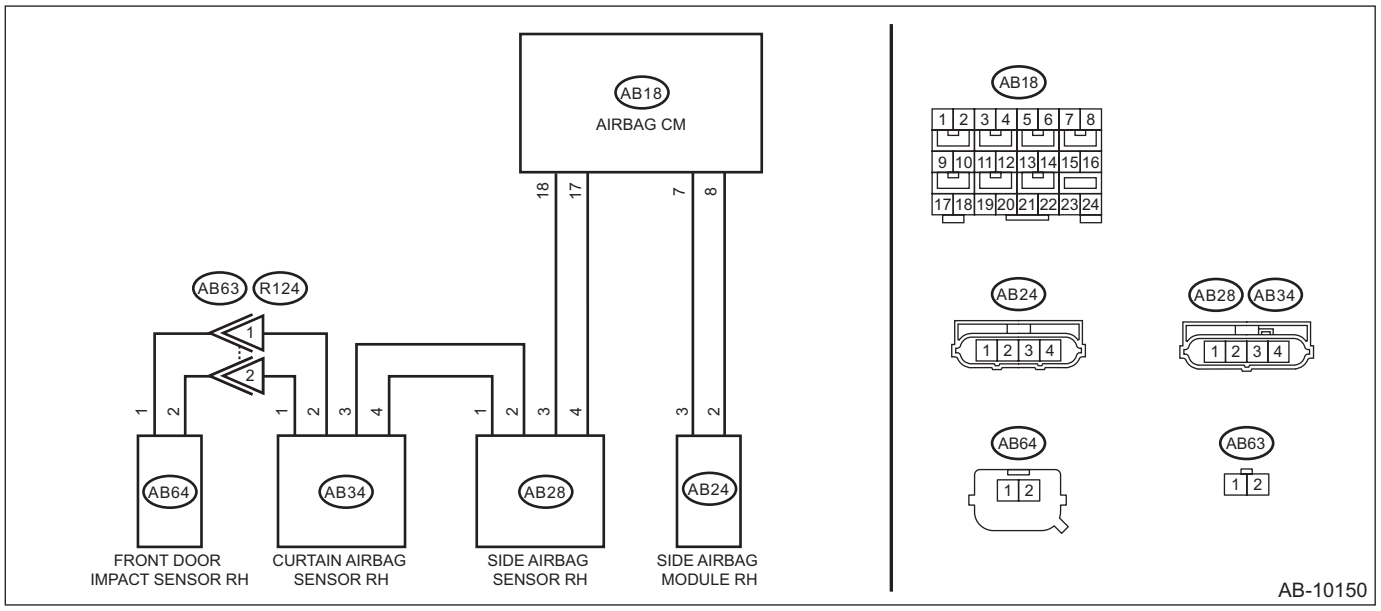

Step		Check	Yes	No
1	**CHECK POOR CONTACT OF CONNECTORS.** Check for poor contact of the connectors between the airbag control module, side airbag module RH and the side airbag sensor RH.	Is there poor contact?	Replace the airbag rear harness along with body harness.	Go to step **2**.
2	**CHECK SIDE AIRBAG MODULE.** 1) Turn the ignition switch to OFF, disconnect the battery ground cable, and wait for 60 seconds or more. 2) Disconnect the connector (AB24) from the side airbag module RH, and connect the connector (1AJ) in the test harness AJ to connector (AB24). 3) Connect the airbag resistor to the test harness AJ connector (3AJ). 4) Connect the battery ground terminal and turn the ignition switch to ON.	Does the airbag warning light illuminate for 6 seconds and go off?	Replace the side airbag module RH. <Ref. to AB-42, REMOVAL, Side Airbag Module.>	Go to step **3**.

	Step	Check	Yes	No
3	**CHECK AIRBAG REAR HARNESS (SIDE AIRBAG MODULE HARNESS RH).** 1) Turn the ignition switch to OFF, disconnect the battery ground cable, and wait for 60 seconds or more. 2) Disconnect the connector (AB26) from seat belt pretensioner RH. 3) Disconnect the connector (AB30) from the lap seat belt pretensioner RH. 4) Disconnect the connector (AB33) from curtain airbag module RH. 5) Disconnect the airbag resistor from test harness AJ. 6) Disconnect the connectors (AB6, AB17, AB18) from airbag control module. 7) Connect the connector (1AG) in the test harness AG to the connectors (AB6, AB17, AB18). 8) Measure the resistance between the test harness AG connector (5AG) and the test harness AJ connector (3AJ). ***Connector & terminal*** ***(5AG) No. 5 — (3AJ) No. 1:*** ***(5AG) No. 7 — (3AJ) No. 2:***	Is the resistance less than 10 Ω?	Go to step **4**.	Replace the airbag rear harness along with body harness.
4	**CHECK AIRBAG CONTROL MODULE.** 1) Connect all connectors. 2) Clear the memory. <Ref. to AB(diag)-24, Clear Memory Mode.> 3) Perform the Inspection Mode. <Ref. to AB(diag)-23, Inspection Mode.> 4) Read the DTC. (Current malfunction) <Ref. to AB(diag)-22, Read Diagnostic Trouble Code (DTC).>	Is DTC B1821 displayed?	Replace the airbag control module. <Ref. to AB-47, Airbag Control Module.>	Go to step **5**.
5	**CHECK FOR ANY OTHER DTC ON DISPLAY.** Read the DTC. (Current malfunction) <Ref. to AB(diag)-22, Read Diagnostic Trouble Code (DTC).>	Is any other DTC displayed?	Perform the diagnosis for other displayed DTCs. <Ref. to AB(diag)-30, List of Diagnostic Trouble Code (DTC).>	Finish the diagnosis.

CP:DTC B1822 SHORT IN SIDE AIRBAG RH (TO GROUND)

DIAGNOSIS START CONDITION:
Ignition voltage is 10 V to 16 V.
DTC DETECTING CONDITION:

- Side airbag harness RH circuit is shorted to ground.
- Side airbag module RH is faulty.
- Airbag control module is faulty.

CAUTION:
Before performing diagnosis, refer to "CAUTION" in "General Description". <Ref. to AB(diag)-4, CAUTION, General Description.>
WIRING DIAGRAM:
Airbag system <Ref. to WI-69, WIRING DIAGRAM, Airbag System.>

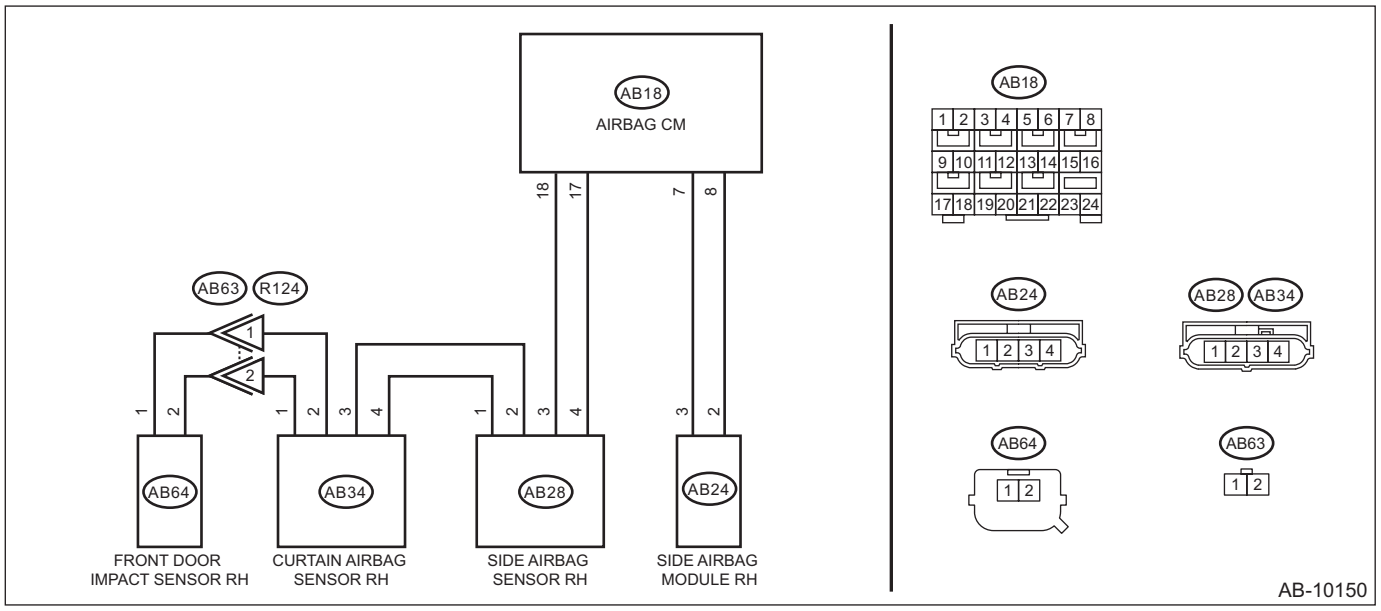

Step		Check	Yes	No
1	**CHECK POOR CONTACT OF CONNECTORS.** Check for poor contact of the connectors between the airbag control module, side airbag module RH and the side airbag sensor RH.	Is there poor contact?	Replace the airbag rear harness along with body harness.	Go to step **2**.
2	**CHECK SIDE AIRBAG MODULE.** 1) Turn the ignition switch to OFF, disconnect the battery ground cable, and wait for 60 seconds or more. 2) Disconnect the connector (AB24), and connect the connector (1AJ) in test harness AJ to connector (AB24). 3) Connect the airbag resistor to the test harness AJ connector (3AJ). 4) Connect the battery ground terminal and turn the ignition switch to ON.	Does the airbag warning light illuminate for six seconds and go off?	Replace the side airbag module RH. <Ref. to AB-42, REMOVAL, Side Airbag Module.>	Go to step **3**.

	Step	Check	Yes	No
3	**CHECK AIRBAG REAR HARNESS (SIDE AIRBAG MODULE HARNESS RH).** 1) Turn the ignition switch to OFF, disconnect the battery ground cable, and wait for 60 seconds or more. 2) Disconnect the connector (AB26) from seat belt pretensioner RH. 3) Disconnect the connector (AB30) from the lap seat belt pretensioner RH. 4) Disconnect the connector (AB33) from curtain airbag module RH. 5) Disconnect the airbag resistor from test harness AJ. 6) Disconnect the connectors (AB6, AB17, AB18) from airbag control module. 7) Connect the connector (1AG) in the test harness AG to the connectors (AB6, AB17, AB18). 8) Measure the resistance between connector (5AG) in the test harness AG and chassis ground. ***Connector & terminal*** ***(5AG) No. 5 — Chassis ground:*** ***(5AG) No. 7 — Chassis ground:***	Is the resistance 1 MΩ or more?	Go to step **4**.	Replace the airbag rear harness along with body harness.
4	**CHECK AIRBAG CONTROL MODULE.** 1) Connect all connectors. 2) Clear the memory. <Ref. to AB(diag)-24, Clear Memory Mode.> 3) Perform the Inspection Mode. <Ref. to AB(diag)-23, Inspection Mode.> 4) Read the DTC. (Current malfunction) <Ref. to AB(diag)-22, Read Diagnostic Trouble Code (DTC).>	Is DTC B1822 displayed?	Replace the airbag control module. <Ref. to AB-47, Airbag Control Module.>	Go to step **5**.
5	**CHECK FOR ANY OTHER DTC ON DISPLAY.** Read the DTC. (Current malfunction) <Ref. to AB(diag)-22, Read Diagnostic Trouble Code (DTC).>	Is any other DTC displayed?	Perform the diagnosis for other displayed DTCs. <Ref. to AB(diag)-30, List of Diagnostic Trouble Code (DTC).>	Finish the diagnosis.

CQ:DTC B1823 SHORT IN SIDE AIRBAG RH (TO +B)

DIAGNOSIS START CONDITION:
Ignition voltage is 10 V to 16 V.
DTC DETECTING CONDITION:

- Side airbag harness RH is shorted to power supply.
- Side airbag module RH is faulty.
- Airbag control module is faulty.

CAUTION:
Before performing diagnosis, refer to "CAUTION" in "General Description". <Ref. to AB(diag)-4, CAUTION, General Description.>
WIRING DIAGRAM:
Airbag system <Ref. to WI-69, WIRING DIAGRAM, Airbag System.>

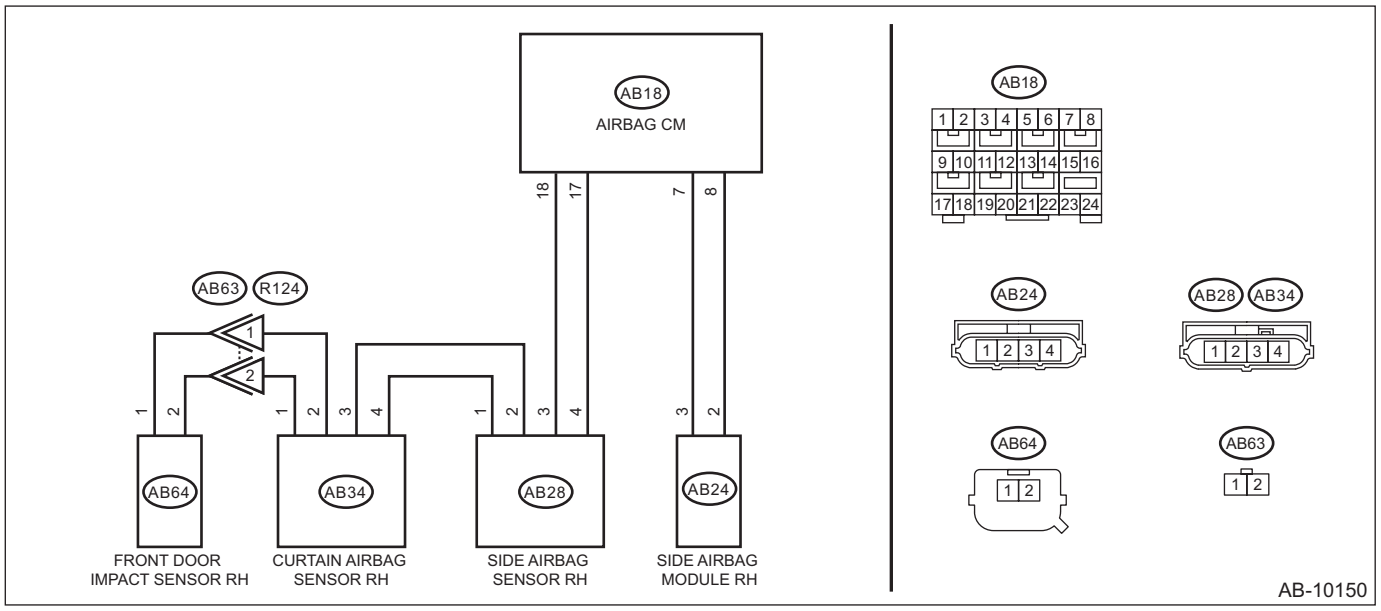

Step		Check	Yes	No
1	**CHECK POOR CONTACT OF CONNECTORS.** Check for poor contact of the connectors between the airbag control module, side airbag module RH and the side airbag sensor RH.	Is there poor contact?	Replace the airbag rear harness along with body harness.	Go to step **2**.
2	**CHECK SIDE AIRBAG MODULE.** 1) Turn the ignition switch to OFF, disconnect the battery ground cable, and wait for 60 seconds or more. 2) Disconnect the connector (AB24), and connect the connector (1AJ) in test harness AJ to connector (AB24). 3) Connect the airbag resistor to the test harness AJ connector (3AJ). 4) Connect the battery ground terminal and turn the ignition switch to ON.	Does the airbag warning light illuminate for six seconds and go off?	Replace the side airbag module RH. <Ref. to AB-42, REMOVAL, Side Airbag Module.>	Go to step **3**.

	Step	Check	Yes	No
3	**CHECK AIRBAG REAR HARNESS (SIDE AIRBAG MODULE HARNESS RH).** 1) Turn the ignition switch to OFF, disconnect the battery ground cable, and wait for 60 seconds or more. 2) Disconnect the connector (AB26) from seat belt pretensioner RH. 3) Disconnect the connector (AB30) from the lap seat belt pretensioner RH. 4) Disconnect the connector (AB33) from curtain airbag module RH. 5) Disconnect the airbag resistor from test harness. 6) Disconnect the connectors (AB6, AB17, AB18) from airbag control module. 7) Connect the connector (1AG) in the test harness AG to the connectors (AB6, AB17, AB18). 8) Connect the battery ground terminal and turn the ignition switch to ON. 9) Measure the voltage between connector (5AG) in the test harness AG and chassis ground. ***Connector & terminal*** ***(5AG) No. 5 (+) — Chassis ground (–):*** ***(5AG) No. 7 (+) — Chassis ground (–):***	Is the voltage less than 1 V?	Go to step **4**.	Replace the airbag rear harness along with body harness.
4	**CHECK AIRBAG CONTROL MODULE.** 1) Connect all connectors. 2) Clear the memory. <Ref. to AB(diag)-24, Clear Memory Mode.> 3) Perform the Inspection Mode. <Ref. to AB(diag)-23, Inspection Mode.> 4) Read the DTC. (Current malfunction) <Ref. to AB(diag)-22, Read Diagnostic Trouble Code (DTC).>	Is DTC B1823 displayed?	Replace the airbag control module. <Ref. to AB-47, Airbag Control Module.>	Go to step **5**.
5	**CHECK FOR ANY OTHER DTC ON DISPLAY.** Read the DTC. (Current malfunction) <Ref. to AB(diag)-22, Read Diagnostic Trouble Code (DTC).>	Is any other DTC displayed?	Perform the diagnosis for other displayed DTCs. <Ref. to AB(diag)-30, List of Diagnostic Trouble Code (DTC).>	Finish the diagnosis.

CR:DTC B1825 SHORT IN SIDE AIRBAG LH

DIAGNOSIS START CONDITION:
Ignition voltage is 10 V to 16 V.
DTC DETECTING CONDITION:

- Side airbag harness LH circuit is shorted.
- Side airbag module LH is faulty.
- Airbag control module is faulty.

CAUTION:
Before performing diagnosis, refer to "CAUTION" in "General Description". <Ref. to AB(diag)-4, CAUTION, General Description.>
WIRING DIAGRAM:
Airbag system <Ref. to WI-69, WIRING DIAGRAM, Airbag System.>

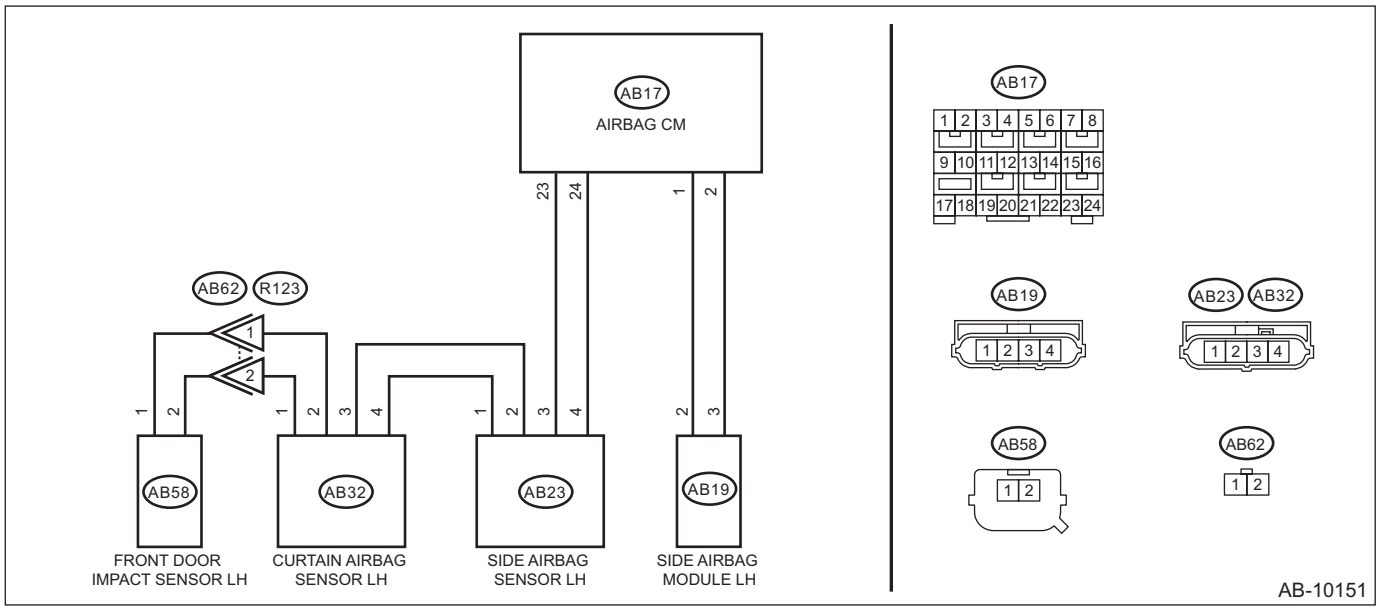

Step		Check	Yes	No
1	**CHECK POOR CONTACT OF CONNECTORS.** Check for poor contact of the connectors between the airbag control module, side airbag module LH and the side airbag sensor LH.	Is there poor contact?	Replace the airbag rear harness along with body harness.	Go to step **2**.
2	**CHECK SIDE AIRBAG MODULE.** 1) Turn the ignition switch to OFF, disconnect the battery ground cable, and wait for 60 seconds or more. 2) Disconnect the connector (AB19) from the side airbag module LH, and connect the connector (1AJ) in test harness AJ to the connector (AB19). 3) Connect the airbag resistor to the test harness AJ connector (3AJ). 4) Connect the battery ground terminal and turn the ignition switch to ON.	Does the airbag warning light illuminate for 6 seconds and go off?	Replace the side airbag module LH. <Ref. to AB-42, REMOVAL, Side Airbag Module.>	Go to step **3**.

	Step	Check	Yes	No
3	**CHECK AIRBAG REAR HARNESS (SIDE AIRBAG MODULE HARNESS LH).** 1) Turn the ignition switch to OFF, disconnect the battery ground cable, and wait for 60 seconds or more. 2) Disconnect the connector (AB21) from seat belt pretensioner LH. 3) Disconnect the connector (AB31) from curtain airbag module LH. 4) Disconnect the airbag resistor from test harness AJ. 5) Disconnect the connectors (AB6, AB17, AB18) from airbag control module. 6) Connect the connector (1AG) in the test harness AG to the connectors (AB6, AB17, AB18). 7) Measure the resistance between connector (5AG) terminals in test harness AG. ***Connector & terminal (5AG) No. 1 — (5AG) No. 3:***	Is the resistance 1 MΩ or more?	Go to step **4**.	Replace the airbag rear harness along with body harness.
4	**CHECK AIRBAG CONTROL MODULE.** 1) Connect all connectors. 2) Clear the memory. <Ref. to AB(diag)-24, Clear Memory Mode.> 3) Perform the Inspection Mode. <Ref. to AB(diag)-23, Inspection Mode.> 4) Read the DTC. (Current malfunction) <Ref. to AB(diag)-22, Read Diagnostic Trouble Code (DTC).>	Is DTC B1825 displayed?	Replace the airbag control module. <Ref. to AB-47, Airbag Control Module.>	Go to step **5**.
5	**CHECK FOR ANY OTHER DTC ON DISPLAY.** Read the DTC. (Current malfunction) <Ref. to AB(diag)-22, Read Diagnostic Trouble Code (DTC).>	Is any other DTC displayed?	Perform the diagnosis for other displayed DTCs. <Ref. to AB(diag)-30, List of Diagnostic Trouble Code (DTC).>	Finish the diagnosis.

CS:DTC B1826 OPEN IN SIDE AIRBAG LH

DIAGNOSIS START CONDITION:
Ignition voltage is 10 V to 16 V.
DTC DETECTING CONDITION:
- Side airbag harness LH circuit is open.
- Side airbag module LH is faulty.
- Airbag control module is faulty.

CAUTION:
Before performing diagnosis, refer to "CAUTION" in "General Description". <Ref. to AB(diag)-4, CAUTION, General Description.>
WIRING DIAGRAM:
Airbag system <Ref. to WI-69, WIRING DIAGRAM, Airbag System.>

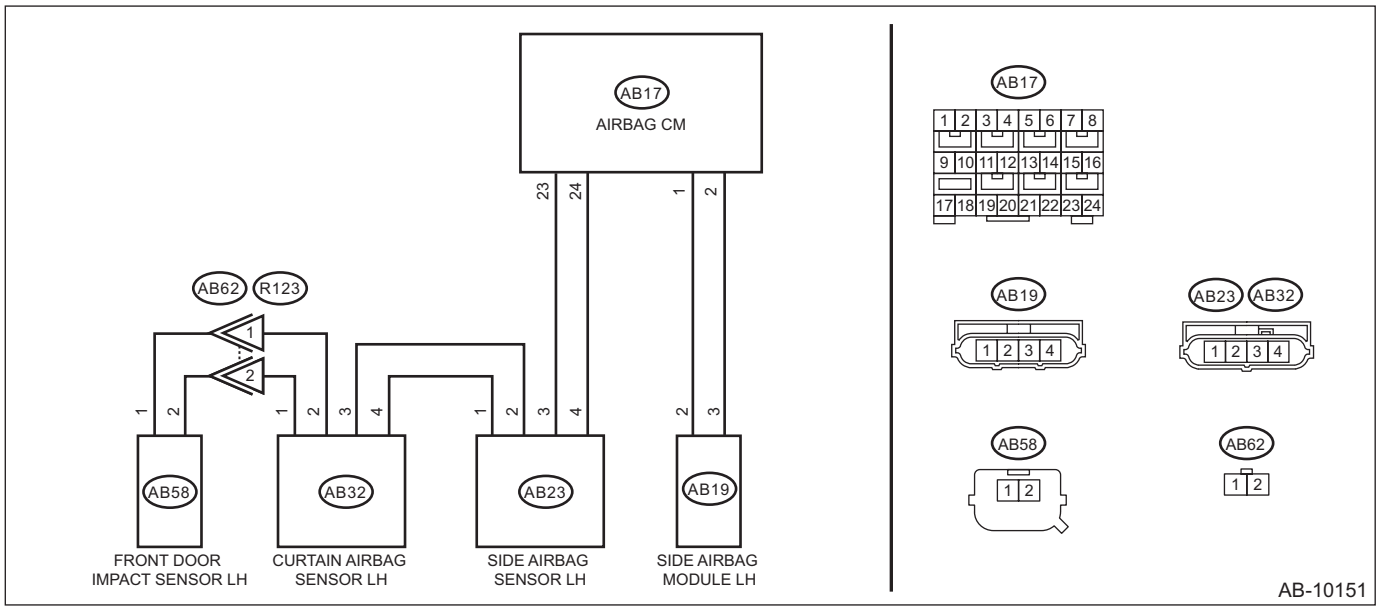

	Step	Check	Yes	No
1	**CHECK POOR CONTACT OF CONNECTORS.** Check for poor contact of the connectors between the airbag control module, side airbag module LH and the side airbag sensor LH.	Is there poor contact?	Replace the airbag rear harness along with body harness.	Go to step **2**.
2	**CHECK SIDE AIRBAG MODULE.** 1) Turn the ignition switch to OFF, disconnect the battery ground cable, and wait for 60 seconds or more. 2) Disconnect the connector (AB19) from the side airbag module LH, and connect the connector (1AJ) in test harness AJ to the connector (AB19). 3) Connect the airbag resistor to the test harness AJ connector (3AJ). 4) Connect the battery ground terminal and turn the ignition switch to ON.	Does the airbag warning light illuminate for 6 seconds and go off?	Replace the side airbag module LH. <Ref. to AB-42, REMOVAL, Side Airbag Module.>	Go to step **3**.

	Step	Check	Yes	No
3	**CHECK AIRBAG REAR HARNESS (SIDE AIRBAG MODULE HARNESS LH).** 1) Turn the ignition switch to OFF, disconnect the battery ground cable, and wait for 60 seconds or more. 2) Disconnect the connector (AB21) from seat belt pretensioner LH. 3) Disconnect the connector (AB31) from curtain airbag module LH. 4) Disconnect the airbag resistor from test harness AJ. 5) Disconnect the connectors (AB6, AB17, AB18) from airbag control module. 6) Connect the connector (1AG) in the test harness AG to the connectors (AB6, AB17, AB18). 7) Measure the resistance between the test harness AG connector (5AG) and the test harness AJ connector (3AJ). ***Connector & terminal*** ***(5AG) No. 1 — (3AJ) No. 2:*** ***(5AG) No. 3 — (3AJ) No. 1:***	Is the resistance less than 10 Ω?	Go to step **4**.	Replace the airbag rear harness along with body harness.
4	**CHECK AIRBAG CONTROL MODULE.** 1) Connect all connectors. 2) Clear the memory. <Ref. to AB(diag)-24, Clear Memory Mode.> 3) Perform the Inspection Mode. <Ref. to AB(diag)-23, Inspection Mode.> 4) Read the DTC. (Current malfunction) <Ref. to AB(diag)-22, Read Diagnostic Trouble Code (DTC).>	Is DTC B1826 displayed?	Replace the airbag control module. <Ref. to AB-47, Airbag Control Module.>	Go to step **5**.
5	**CHECK FOR ANY OTHER DTC ON DISPLAY.** Read the DTC. (Current malfunction) <Ref. to AB(diag)-22, Read Diagnostic Trouble Code (DTC).>	Is any other DTC displayed?	Perform the diagnosis for other displayed DTCs. <Ref. to AB(diag)-30, List of Diagnostic Trouble Code (DTC).>	Finish the diagnosis.

CT:DTC B1827 SHORT IN SIDE AIRBAG LH (TO GROUND)

DIAGNOSIS START CONDITION:
Ignition voltage is 10 V to 16 V.
DTC DETECTING CONDITION:

- Side airbag harness LH circuit is shorted to ground.
- Side airbag module LH is faulty.
- Airbag control module is faulty.

CAUTION:
Before performing diagnosis, refer to "CAUTION" in "General Description". <Ref. to AB(diag)-4, CAUTION, General Description.>
WIRING DIAGRAM:
Airbag system <Ref. to WI-69, WIRING DIAGRAM, Airbag System.>

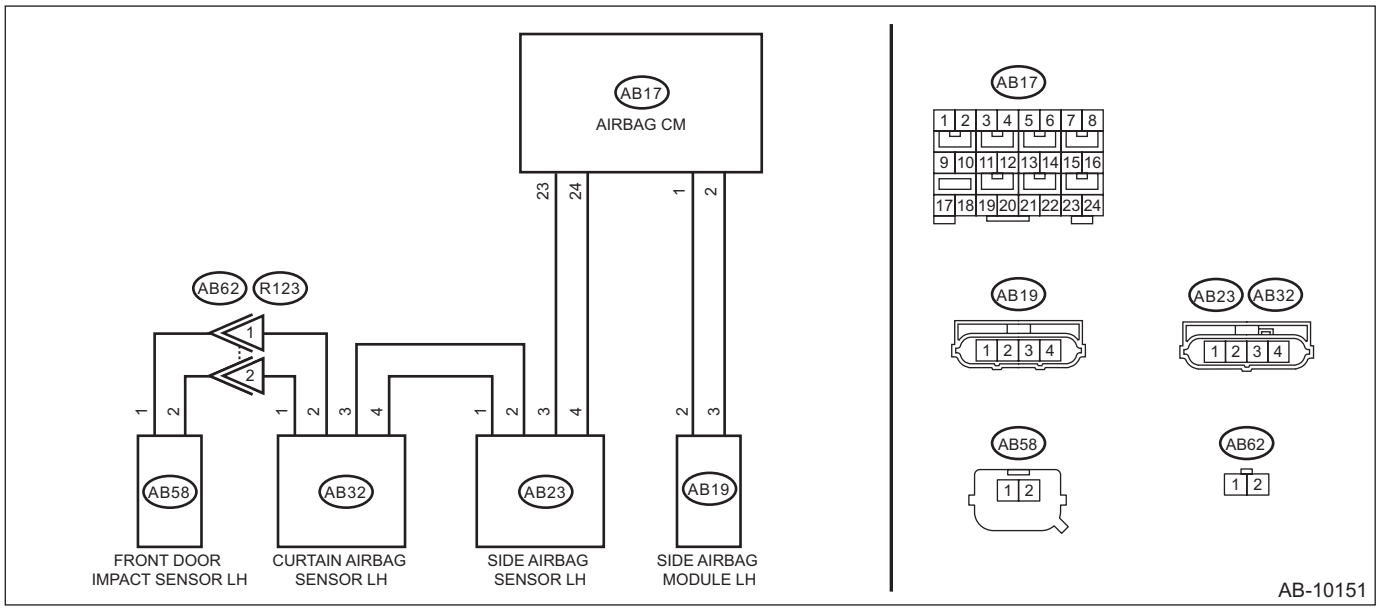

Step		Check	Yes	No
1	**CHECK POOR CONTACT OF CONNECTORS.** Check for poor contact of the connectors between the airbag control module, side airbag module LH and the side airbag sensor LH.	Is there poor contact?	Replace the airbag rear harness along with body harness.	Go to step **2**.
2	**CHECK SIDE AIRBAG MODULE.** 1) Turn the ignition switch to OFF, disconnect the battery ground cable, and wait for 60 seconds or more. 2) Disconnect the connector (AB19), and connect the connector (1AJ) in test harness AJ to connector (AB19). 3) Connect the airbag resistor to the test harness AJ connector (3AJ). 4) Connect the battery ground terminal and turn the ignition switch to ON.	Does the airbag warning light illuminate for six seconds and go off?	Replace the side airbag module LH. <Ref. to AB-42, REMOVAL, Side Airbag Module.>	Go to step **3**.

	Step	Check	Yes	No
3	**CHECK AIRBAG REAR HARNESS (SIDE AIRBAG MODULE HARNESS LH).** 1) Turn the ignition switch to OFF, disconnect the battery ground cable, and wait for 60 seconds or more. 2) Disconnect the connector (AB21) from seat belt pretensioner LH. 3) Disconnect the connector (AB31) from curtain airbag module LH. 4) Disconnect the airbag resistor from test harness. 5) Disconnect the connectors (AB6, AB17, AB18) from airbag control module. 6) Connect the connector (1AG) in the test harness AG to the connectors (AB6, AB17, AB18). 7) Measure the resistance between connector (5AG) in the test harness AG and chassis ground. ***Connector & terminal*** ***(5AG) No. 1 — Chassis ground:*** ***(5AG) No. 3 — Chassis ground:***	Is the resistance 1 MΩ or more?	Go to step **4**.	Replace the airbag rear harness along with body harness.
4	**CHECK AIRBAG CONTROL MODULE.** 1) Connect all connectors. 2) Clear the memory. <Ref. to AB(diag)-24, Clear Memory Mode.> 3) Perform the Inspection Mode. <Ref. to AB(diag)-23, Inspection Mode.> 4) Read the DTC. (Current malfunction) <Ref. to AB(diag)-22, Read Diagnostic Trouble Code (DTC).>	Is DTC B1827 displayed?	Replace the airbag control module. <Ref. to AB-47, Airbag Control Module.>	Go to step **5**.
5	**CHECK FOR ANY OTHER DTC ON DISPLAY.** Read the DTC. (Current malfunction) <Ref. to AB(diag)-22, Read Diagnostic Trouble Code (DTC).>	Is any other DTC displayed?	Perform the diagnosis for other displayed DTCs. <Ref. to AB(diag)-30, List of Diagnostic Trouble Code (DTC).>	Finish the diagnosis.

CU:DTC B1828 SHORT IN SIDE AIRBAG LH (TO +B)

DIAGNOSIS START CONDITION:
Ignition voltage is 10 V to 16 V.
DTC DETECTING CONDITION:

- Side airbag harness LH is shorted to power supply.
- Side airbag module LH is faulty.
- Airbag control module is faulty.

CAUTION:
Before performing diagnosis, refer to "CAUTION" in "General Description". <Ref. to AB(diag)-4, CAUTION, General Description.>
WIRING DIAGRAM:
Airbag system <Ref. to WI-69, WIRING DIAGRAM, Airbag System.>

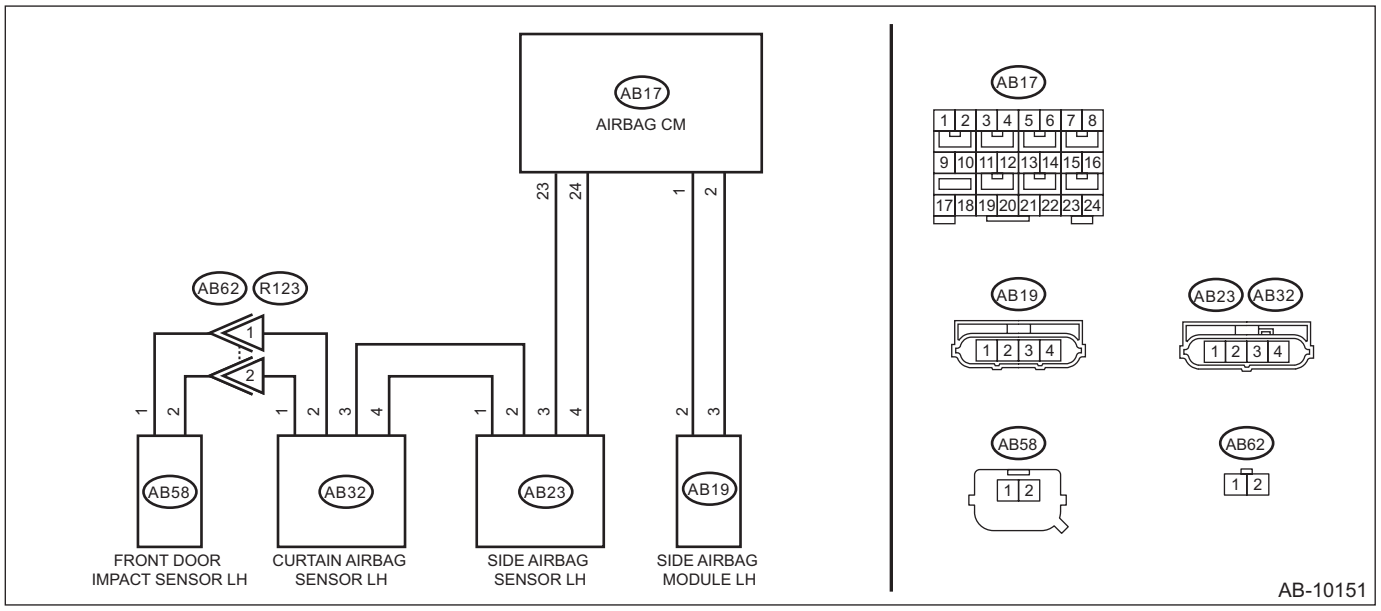

Step		Check	Yes	No
1	**CHECK POOR CONTACT OF CONNECTORS.** Check for poor contact of the connectors between the airbag control module, side airbag module LH and the side airbag sensor LH.	Is there poor contact?	Replace the airbag rear harness along with body harness.	Go to step **2**.
2	**CHECK SIDE AIRBAG MODULE.** 1) Turn the ignition switch to OFF, disconnect the battery ground cable, and wait for 60 seconds or more. 2) Disconnect the connector (AB19), and connect the connector (1AJ) in test harness AJ to connector (AB19). 3) Connect the airbag resistor to the test harness AJ connector (3AJ). 4) Connect the battery ground terminal and turn the ignition switch to ON.	Does the airbag warning light illuminate for six seconds and go off?	Replace the side airbag module LH. <Ref. to AB-42, REMOVAL, Side Airbag Module.>	Go to step **3**.

	Step	Check	Yes	No
3	**CHECK AIRBAG REAR HARNESS (SIDE AIRBAG MODULE HARNESS LH).** 1) Turn the ignition switch to OFF, disconnect the battery ground cable, and wait for 60 seconds or more. 2) Disconnect the connector (AB21) from seat belt pretensioner LH. 3) Disconnect the connector (AB31) from curtain airbag module LH. 4) Disconnect the airbag resistor from test harness. 5) Disconnect the connectors (AB6, AB17, AB18) from airbag control module. 6) Connect the connector (1AG) in the test harness AG to the connectors (AB6, AB17, AB18). 7) Connect the battery ground terminal and turn the ignition switch to ON. 8) Measure the voltage between connector (5AG) in the test harness AG and chassis ground. ***Connector & terminal*** ***(5AG) No. 1 (+) — Chassis ground (–):*** ***(5AG) No. 3 (+) — Chassis ground (–):***	Is the voltage less than 1 V?	Go to step **4**.	Replace the airbag rear harness along with body harness.
4	**CHECK AIRBAG CONTROL MODULE.** 1) Connect all connectors. 2) Clear the memory. <Ref. to AB(diag)-24, Clear Memory Mode.> 3) Perform the Inspection Mode. <Ref. to AB(diag)-23, Inspection Mode.> 4) Read the DTC. (Current malfunction) <Ref. to AB(diag)-22, Read Diagnostic Trouble Code (DTC).>	Is DTC B1828 displayed?	Replace the airbag control module. <Ref. to AB-47, Airbag Control Module.>	Go to step **5**.
5	**CHECK FOR ANY OTHER DTC ON DISPLAY.** Read the DTC. (Current malfunction) <Ref. to AB(diag)-22, Read Diagnostic Trouble Code (DTC).>	Is any other DTC displayed?	Perform the diagnosis for other displayed DTCs. <Ref. to AB(diag)-30, List of Diagnostic Trouble Code (DTC).>	Finish the diagnosis.

CV:DTC B1830 SHORT IN CURTAIN AIRBAG RH SQUIB CIRCUIT

DIAGNOSIS START CONDITION:
Ignition voltage is 10 V to 16 V.
DTC DETECTING CONDITION:

- Curtain airbag harness RH circuit is shorted.
- Curtain airbag module RH is faulty.
- Airbag control module is faulty.

CAUTION:
Before performing diagnosis, refer to "CAUTION" in "General Description". <Ref. to AB(diag)-4, CAUTION, General Description.>
WIRING DIAGRAM:
Airbag system <Ref. to WI-69, WIRING DIAGRAM, Airbag System.>

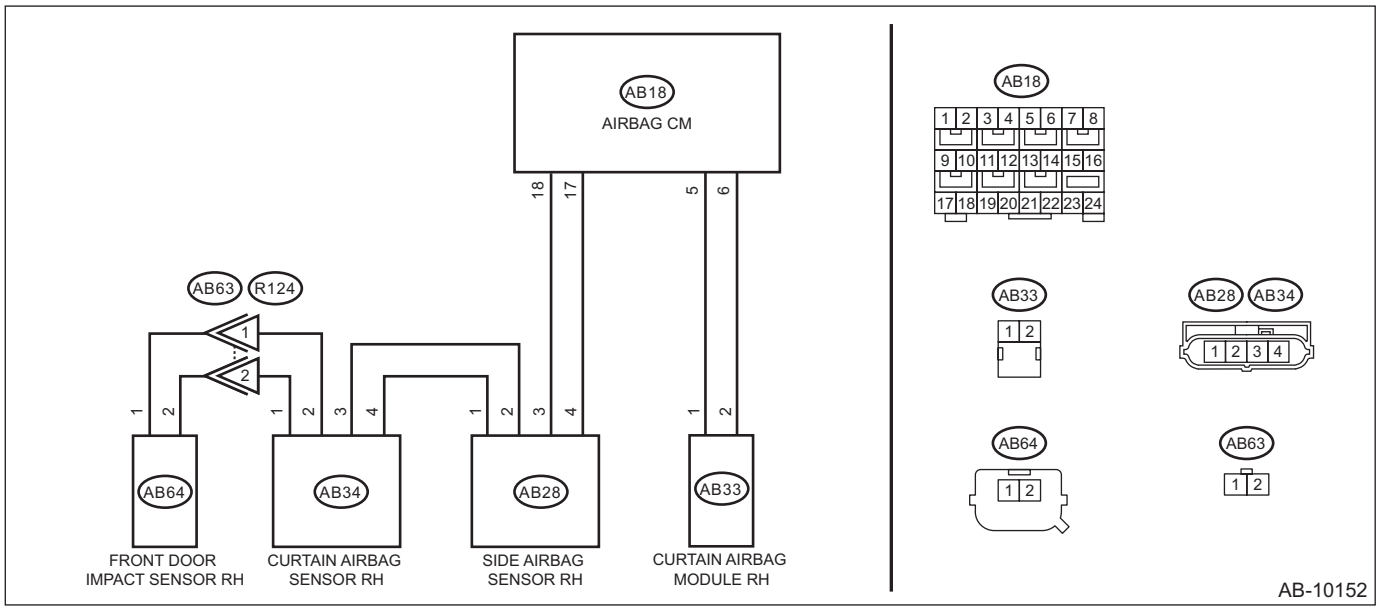

Step		Check	Yes	No
1	**CHECK POOR CONTACT OF CONNECTORS.** Check for poor contact of the connectors between the airbag control module, curtain airbag module RH and the curtain airbag sensor RH.	Is there poor contact?	Replace the airbag rear harness along with body harness.	Go to step **2**.
2	**CHECK CURTAIN AIRBAG MODULE.** 1) Turn the ignition switch to OFF, disconnect the battery ground cable, and wait for 60 seconds or more. 2) Disconnect the connector (AB33) from curtain airbag module RH. 3) Connect the connector (1N) in the test harness N to the connector (AB33). 4) Connect the airbag resistor to the connector (2N) of test harness N. 5) Connect the battery ground terminal and turn the ignition switch to ON.	Does the airbag warning light illuminate for 6 seconds and go off?	Replace the curtain airbag module RH. <Ref. to AB-45, Curtain Airbag Module.>	Go to step **3**.

	Step	Check	Yes	No
3	**CHECK AIRBAG REAR HARNESS (CURTAIN AIRBAG MODULE HARNESS RH).** 1) Turn the ignition switch to OFF, disconnect the battery ground cable, and wait for 60 seconds or more. 2) Disconnect the connector (AB26) from seat belt pretensioner RH. 3) Disconnect the connector (AB30) from the lap seat belt pretensioner RH. 4) Disconnect the connector (AB24) from side airbag module RH. 5) Disconnect the airbag resistor from test harness N. 6) Disconnect the connectors (AB6, AB17, AB18) from airbag control module. 7) Connect the connector (1AG) in the test harness AG to the connectors (AB6, AB17, AB18). 8) Measure the resistance between connector (6AG) terminals in test harness AG. ***Connector & terminal (6AG) No. 6 — (6AG) No. 8:***	Is the resistance 1 MΩ or more?	Go to step **4**.	Replace the airbag rear harness along with body harness.
4	**CHECK AIRBAG CONTROL MODULE.** 1) Connect all connectors. 2) Clear the memory. <Ref. to AB(diag)-24, Clear Memory Mode.> 3) Perform the Inspection Mode. <Ref. to AB(diag)-23, Inspection Mode.> 4) Read the DTC. (Current malfunction) <Ref. to AB(diag)-22, Read Diagnostic Trouble Code (DTC).>	Is DTC B1830 displayed?	Replace the airbag control module. <Ref. to AB-47, Airbag Control Module.>	Go to step **5**.
5	**CHECK FOR ANY OTHER DTC ON DISPLAY.** Read the DTC. (Current malfunction) <Ref. to AB(diag)-22, Read Diagnostic Trouble Code (DTC).>	Is any other DTC displayed?	Perform the diagnosis for other displayed DTCs. <Ref. to AB(diag)-30, List of Diagnostic Trouble Code (DTC).>	Finish the diagnosis.

CW:DTC B1831 OPEN IN CURTAIN AIRBAG RH SQUIB CIRCUIT

DIAGNOSIS START CONDITION:
Ignition voltage is 10 V to 16 V.
DTC DETECTING CONDITION:

- Curtain airbag harness RH circuit is open.
- Curtain airbag module RH is faulty.
- Airbag control module is faulty.

CAUTION:
Before performing diagnosis, refer to "CAUTION" in "General Description". <Ref. to AB(diag)-4, CAUTION, General Description.>
WIRING DIAGRAM:
Airbag system <Ref. to WI-69, WIRING DIAGRAM, Airbag System.>

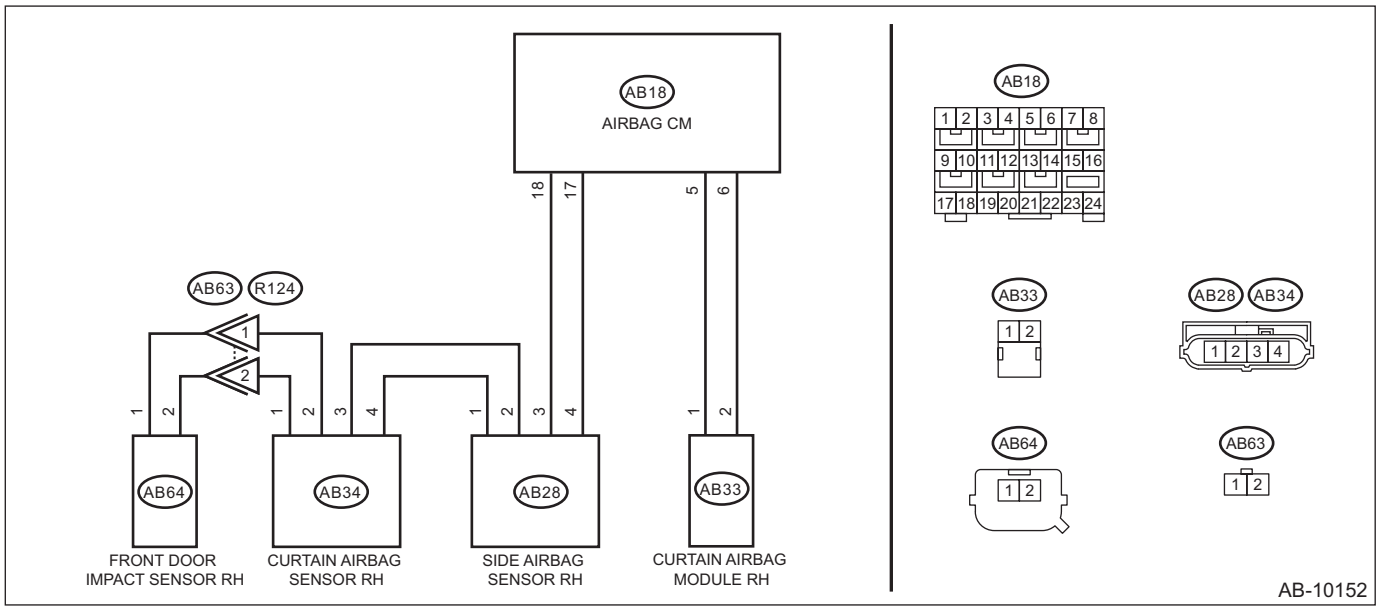

Step		Check	Yes	No
1	**CHECK POOR CONTACT OF CONNECTORS.** Check for poor contact of the connectors between the airbag control module, curtain airbag module RH and the curtain airbag sensor RH.	Is there poor contact?	Replace the airbag rear harness along with body harness.	Go to step **2**.
2	**CHECK CURTAIN AIRBAG MODULE.** 1) Turn the ignition switch to OFF, disconnect the battery ground cable, and wait for 60 seconds or more. 2) Disconnect the connector (AB33) from curtain airbag module RH. 3) Connect the connector (1N) in the test harness N to the connector (AB33). 4) Connect the airbag resistor to the connector (2N) of test harness N. 5) Connect the battery ground terminal and turn the ignition switch to ON.	Does the airbag warning light illuminate for 6 seconds and go off?	Replace the curtain airbag module RH. <Ref. to AB-45, Curtain Airbag Module.>	Go to step **3**.

	Step	Check	Yes	No
3	**CHECK AIRBAG REAR HARNESS (CURTAIN AIRBAG MODULE HARNESS RH).** 1) Turn the ignition switch to OFF, disconnect the battery ground cable, and wait for 60 seconds or more. 2) Disconnect the connector (AB26) from seat belt pretensioner RH. 3) Disconnect the connector (AB30) from the lap seat belt pretensioner RH. 4) Disconnect the connector (AB24) from side airbag module RH. 5) Disconnect the airbag resistor from test harness N. 6) Disconnect the connectors (AB6, AB17, AB18) from airbag control module. 7) Connect the connector (1AG) in the test harness AG to the connectors (AB6, AB17, AB18). 8) Measure the resistance between connector (6AG) in the test harness AG and connector (2N) in the test harness N. ***Connector & terminal*** ***(6AG) No. 8 — (2N) No. 2:*** ***(6AG) No. 6 — (2N) No. 1:***	Is the resistance less than 10 Ω?	Go to step **4**.	Replace the airbag rear harness along with body harness.
4	**CHECK AIRBAG CONTROL MODULE.** 1) Connect all connectors. 2) Clear the memory. <Ref. to AB(diag)-24, Clear Memory Mode.> 3) Perform the Inspection Mode. <Ref. to AB(diag)-23, Inspection Mode.> 4) Read the DTC. (Current malfunction) <Ref. to AB(diag)-22, Read Diagnostic Trouble Code (DTC).>	Is DTC B1831 displayed?	Replace the airbag control module. <Ref. to AB-47, Airbag Control Module.>	Go to step **5**.
5	**CHECK FOR ANY OTHER DTC ON DISPLAY.** Read the DTC. (Current malfunction) <Ref. to AB(diag)-22, Read Diagnostic Trouble Code (DTC).>	Is any other DTC displayed?	Perform the diagnosis for other displayed DTCs. <Ref. to AB(diag)-30, List of Diagnostic Trouble Code (DTC).>	Finish the diagnosis.

CX:DTC B1832 SHORT IN CURTAIN AIRBAG RH SQUIB CIRCUIT (TO GROUND)

DIAGNOSIS START CONDITION:
Ignition voltage is 10 V to 16 V.
DTC DETECTING CONDITION:

- Curtain airbag harness RH circuit is shorted to ground.
- Curtain airbag module RH is faulty.
- Airbag control module is faulty.

CAUTION:
Before performing diagnosis, refer to "CAUTION" in "General Description". <Ref. to AB(diag)-4, CAUTION, General Description.>
WIRING DIAGRAM:
Airbag system <Ref. to WI-69, WIRING DIAGRAM, Airbag System.>

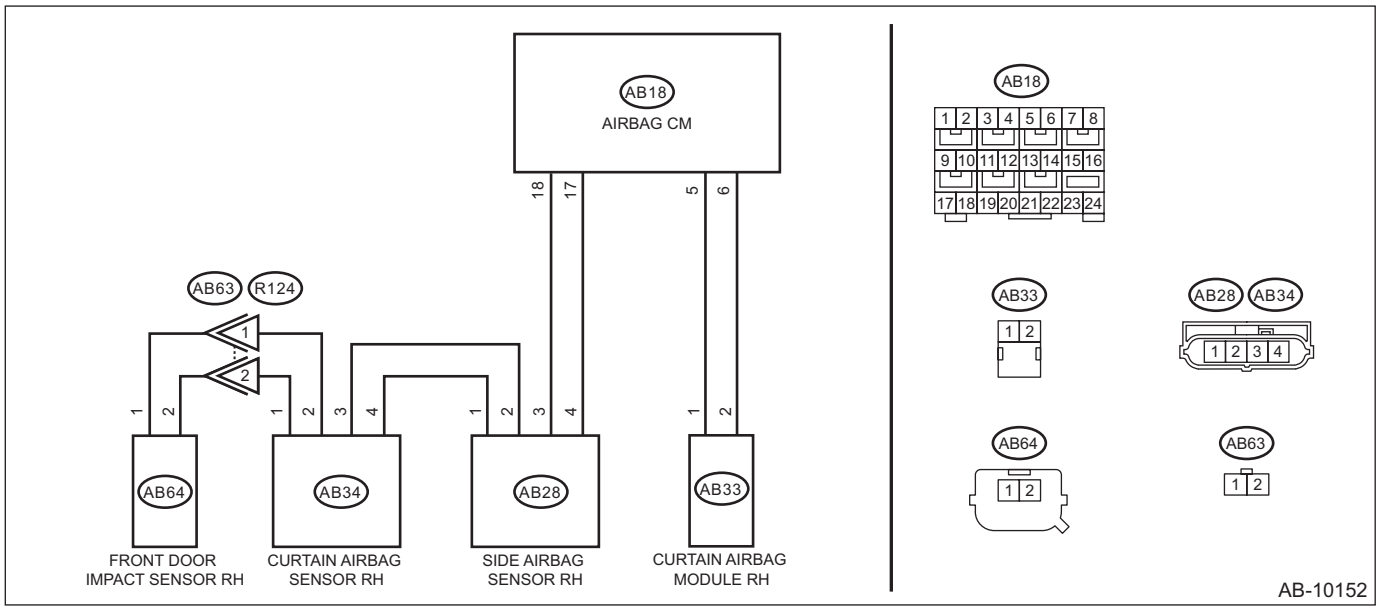

	Step	Check	Yes	No
1	**CHECK POOR CONTACT OF CONNECTORS.** Check for poor contact of the connectors between the airbag control module, curtain airbag module RH and the curtain airbag sensor RH.	Is there poor contact?	Replace the airbag rear harness along with body harness.	Go to step **2**.
2	**CHECK CURTAIN AIRBAG MODULE.** 1) Turn the ignition switch to OFF, disconnect the battery ground cable, and wait for 60 seconds or more. 2) Disconnect the connector (AB33), and connect the connector (1N) in test harness N to connector (AB33). 3) Connect the airbag resistor to the connector (2N) of test harness N. 4) Connect the battery ground terminal and turn the ignition switch to ON.	Does the airbag warning light illuminate for six seconds and go off?	Replace the curtain airbag module RH. <Ref. to AB-45, Curtain Airbag Module.>	Go to step **3**.

	Step	Check	Yes	No
3	**CHECK AIRBAG REAR HARNESS (CURTAIN AIRBAG MODULE HARNESS RH).** 1) Turn the ignition switch to OFF, disconnect the battery ground cable, and wait for 60 seconds or more. 2) Disconnect the connector (AB26) from seat belt pretensioner RH. 3) Disconnect the connector (AB30) from the lap seat belt pretensioner RH. 4) Disconnect the connector (AB24) from side airbag module RH. 5) Disconnect the airbag resistor from test harness N. 6) Disconnect the connectors (AB6, AB17, AB18) from airbag control module. 7) Connect the connector (1AG) in the test harness AG to the connectors (AB6, AB17, AB18). 8) Measure the resistance between connector (6AG) in the test harness AG and chassis ground. ***Connector & terminal*** ***(6AG) No. 8 — Chassis ground:*** ***(6AG) No. 6 — Chassis ground:***	Is the resistance 1 MΩ or more?	Go to step **4**.	Replace the airbag rear harness along with body harness.
4	**CHECK AIRBAG CONTROL MODULE.** 1) Connect all connectors. 2) Clear the memory. <Ref. to AB(diag)-24, Clear Memory Mode.> 3) Perform the Inspection Mode. <Ref. to AB(diag)-23, Inspection Mode.> 4) Read the DTC. (Current malfunction) <Ref. to AB(diag)-22, Read Diagnostic Trouble Code (DTC).>	Is DTC B1832 displayed?	Replace the airbag control module. <Ref. to AB-47, Airbag Control Module.>	Go to step **5**.
5	**CHECK FOR ANY OTHER DTC ON DISPLAY.** Read the DTC. (Current malfunction) <Ref. to AB(diag)-22, Read Diagnostic Trouble Code (DTC).>	Is any other DTC displayed?	Perform the diagnosis for other displayed DTCs. <Ref. to AB(diag)-30, List of Diagnostic Trouble Code (DTC).>	Finish the diagnosis.

CY:DTC B1833 SHORT IN CURTAIN SHIELD AIRBAG RH SQUIB CIRCUIT (TO +B)

DIAGNOSIS START CONDITION:
Ignition voltage is 10 V to 16 V.
DTC DETECTING CONDITION:
- Curtain airbag harness RH is shorted to power supply.
- Curtain airbag module RH is faulty.
- Airbag control module is faulty.

CAUTION:
Before performing diagnosis, refer to "CAUTION" in "General Description". <Ref. to AB(diag)-4, CAUTION, General Description.>
WIRING DIAGRAM:
Airbag system <Ref. to WI-69, WIRING DIAGRAM, Airbag System.>

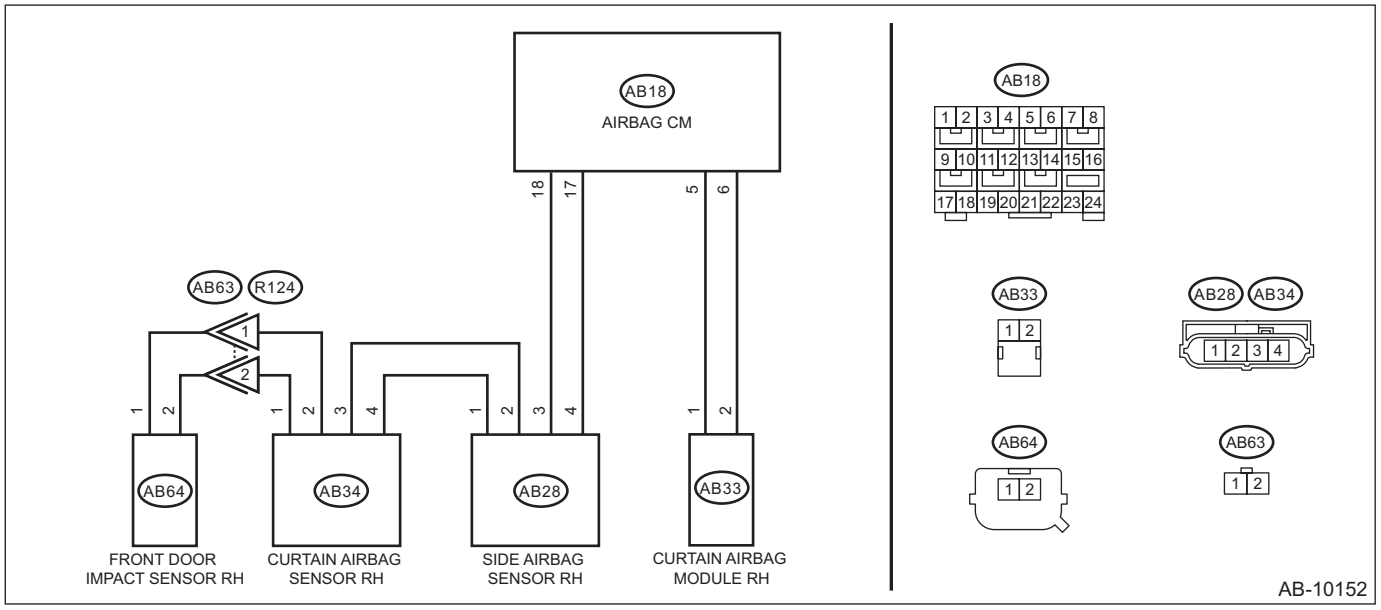

Step		Check	Yes	No
1	**CHECK POOR CONTACT OF CONNECTORS.** Check for poor contact of the connectors between the airbag control module, curtain airbag module RH and the curtain airbag sensor RH.	Is there poor contact?	Replace the airbag rear harness along with body harness.	Go to step **2**.
2	**CHECK CURTAIN AIRBAG MODULE.** 1) Turn the ignition switch to OFF, disconnect the battery ground cable, and wait for 60 seconds or more. 2) Disconnect the connector (AB33), and connect the connector (1N) in test harness N to connector (AB33). 3) Connect the airbag resistor to the connector (2N) of test harness N. 4) Connect the battery ground terminal and turn the ignition switch to ON.	Does the airbag warning light illuminate for six seconds and go off?	Replace the curtain airbag module RH. <Ref. to AB-45, Curtain Airbag Module.>	Go to step **3**.

	Step	Check	Yes	No
3	**CHECK AIRBAG REAR HARNESS (CURTAIN AIRBAG MODULE HARNESS RH).** 1) Turn the ignition switch to OFF, disconnect the battery ground cable, and wait for 60 seconds or more. 2) Disconnect the connector (AB26) from seat belt pretensioner RH. 3) Disconnect the connector (AB30) from the lap seat belt pretensioner RH. 4) Disconnect the connector (AB24) from side airbag module RH. 5) Disconnect the airbag resistor from test harness N. 6) Disconnect the connectors (AB6, AB17, AB18) from airbag control module. 7) Connect the connector (1AG) in the test harness AG to the connectors (AB6, AB17, AB18). 8) Connect the battery ground terminal and turn the ignition switch to ON. 9) Measure the voltage between connector (6AG) in the test harness AG and chassis ground. ***Connector & terminal*** ***(6AG) No. 8 (+) — Chassis ground (–):*** ***(6AG) No. 6 (+) — Chassis ground (–):***	Is the voltage less than 1 V?	Go to step **4**.	Replace the airbag rear harness along with body harness.
4	**CHECK AIRBAG CONTROL MODULE.** 1) Connect all connectors. 2) Clear the memory. <Ref. to AB(diag)-24, Clear Memory Mode.> 3) Perform the Inspection Mode. <Ref. to AB(diag)-23, Inspection Mode.> 4) Read the DTC. (Current malfunction) <Ref. to AB(diag)-22, Read Diagnostic Trouble Code (DTC).>	Is DTC B1833 displayed?	Replace the airbag control module. <Ref. to AB-47, Airbag Control Module.>	Go to step **5**.
5	**CHECK FOR ANY OTHER DTC ON DISPLAY.** Read the DTC. (Current malfunction) <Ref. to AB(diag)-22, Read Diagnostic Trouble Code (DTC).>	Is any other DTC displayed?	Perform the diagnosis for other displayed DTCs. <Ref. to AB(diag)-30, List of Diagnostic Trouble Code (DTC).>	Finish the diagnosis.

CZ:DTC B1835 SHORT IN CURTAIN AIRBAG LH SQUIB CIRCUIT

DIAGNOSIS START CONDITION:
Ignition voltage is 10 V to 16 V.
DTC DETECTING CONDITION:

- Curtain airbag harness LH circuit is shorted.
- Curtain airbag module LH is faulty.
- Airbag control module is faulty.

CAUTION:
Before performing diagnosis, refer to "CAUTION" in "General Description". <Ref. to AB(diag)-4, CAUTION, General Description.>
WIRING DIAGRAM:
Airbag system <Ref. to WI-69, WIRING DIAGRAM, Airbag System.>

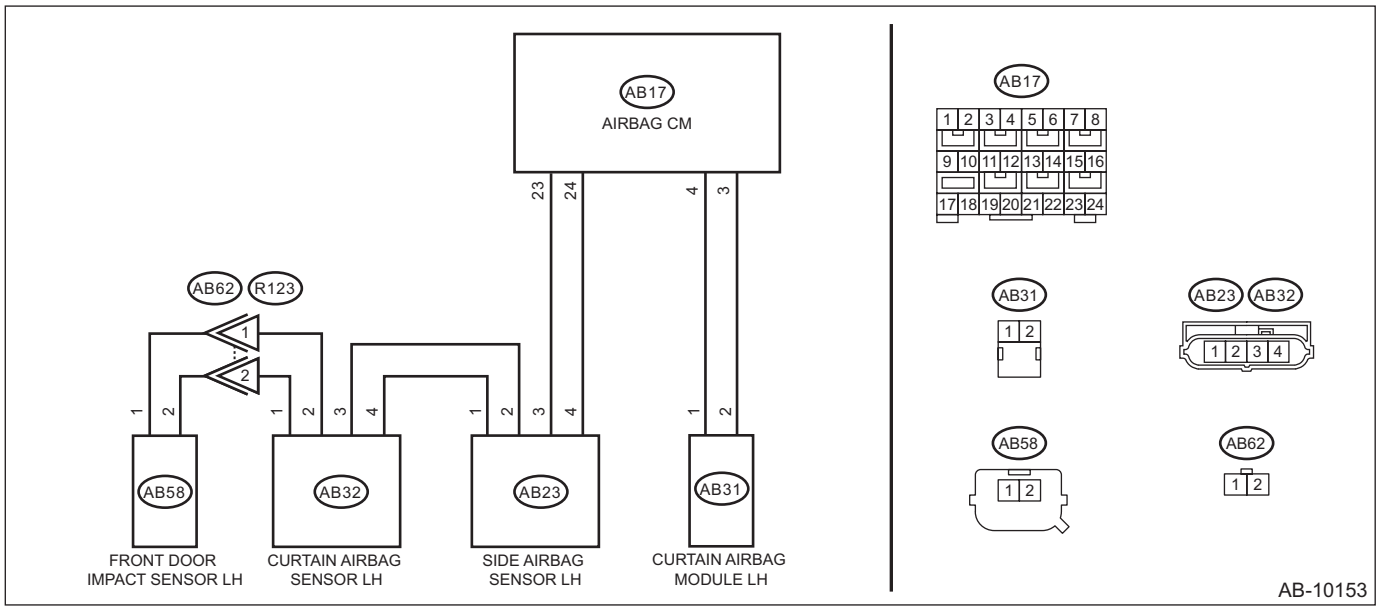

Step		Check	Yes	No
1	**CHECK POOR CONTACT OF CONNECTORS.** Check for poor contact of the connectors between the airbag control module, curtain airbag module LH and the curtain airbag sensor LH.	Is there poor contact?	Replace the airbag rear harness along with body harness.	Go to step **2**.
2	**CHECK CURTAIN AIRBAG MODULE.** 1) Turn the ignition switch to OFF, disconnect the battery ground cable, and wait for 60 seconds or more. 2) Disconnect the connector (AB31) from curtain airbag module LH. 3) Connect the connector (1N) in the test harness N to the connector (AB31). 4) Connect the airbag resistor to the connector (2N) of test harness N. 5) Connect the battery ground terminal and turn the ignition switch to ON.	Does the airbag warning light illuminate for 6 seconds and go off?	Replace the curtain airbag module LH. <Ref. to AB-45, Curtain Airbag Module.>	Go to step **3**.

	Step	Check	Yes	No
3	**CHECK AIRBAG REAR HARNESS (CURTAIN AIRBAG MODULE HARNESS LH).** 1) Turn the ignition switch to OFF, disconnect the battery ground cable, and wait for 60 seconds or more. 2) Disconnect the connector (AB21) from seat belt pretensioner LH. 3) Disconnect the connector (AB19) from side airbag module LH. 4) Disconnect the airbag resistor from test harness N. 5) Disconnect the connectors (AB6, AB17, AB18) from airbag control module. 6) Connect the connector (1AG) in the test harness AG to the connectors (AB6, AB17, AB18). 7) Measure the resistance between connector (6AG) terminals in test harness AG. ***Connector & terminal (6AG) No. 1 — (6AG) No. 3:***	Is the resistance 1 MΩ or more?	Go to step **4**.	Replace the airbag rear harness along with body harness.
4	**CHECK AIRBAG CONTROL MODULE.** 1) Connect all connectors. 2) Clear the memory. <Ref. to AB(diag)-24, Clear Memory Mode.> 3) Perform the Inspection Mode. <Ref. to AB(diag)-23, Inspection Mode.> 4) Read the DTC. (Current malfunction) <Ref. to AB(diag)-22, Read Diagnostic Trouble Code (DTC).>	Is DTC B1835 displayed?	Replace the airbag control module. <Ref. to AB-47, Airbag Control Module.>	Go to step **5**.
5	**CHECK FOR ANY OTHER DTC ON DISPLAY.** Read the DTC. (Current malfunction) <Ref. to AB(diag)-22, Read Diagnostic Trouble Code (DTC).>	Is any other DTC displayed?	Perform the diagnosis for other displayed DTCs. <Ref. to AB(diag)-30, List of Diagnostic Trouble Code (DTC).>	Finish the diagnosis.

DA:DTC B1836 OPEN IN CURTAIN AIRBAG LH SQUIB CIRCUIT

DIAGNOSIS START CONDITION:
Ignition voltage is 10 V to 16 V.
DTC DETECTING CONDITION:

- Curtain airbag harness LH circuit is open.
- Curtain airbag module LH is faulty.
- Airbag control module is faulty.

CAUTION:
Before performing diagnosis, refer to "CAUTION" in "General Description". <Ref. to AB(diag)-4, CAUTION, General Description.>
WIRING DIAGRAM:
Airbag system <Ref. to WI-69, WIRING DIAGRAM, Airbag System.>

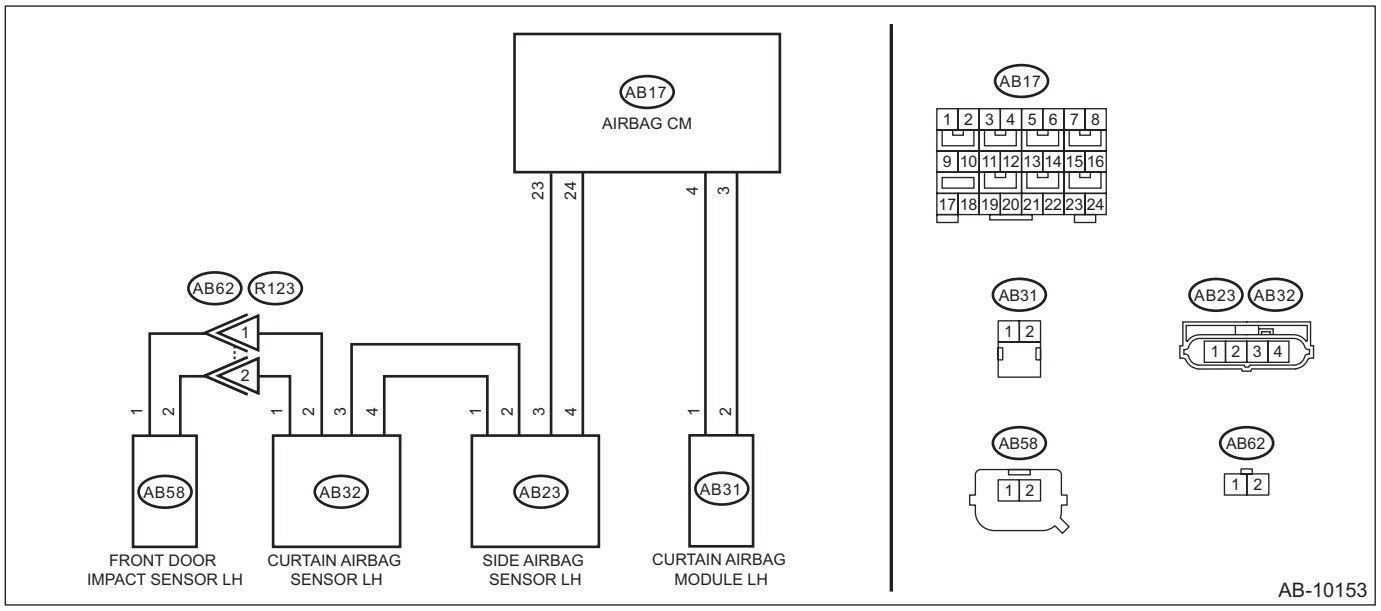

Step		Check	Yes	No
1	**CHECK POOR CONTACT OF CONNECTORS.** Check for poor contact of the connectors between the airbag control module, curtain airbag module LH and the curtain airbag sensor LH.	Is there poor contact?	Replace the airbag rear harness along with body harness.	Go to step **2**.
2	**CHECK CURTAIN AIRBAG MODULE.** 1) Turn the ignition switch to OFF, disconnect the battery ground cable, and wait for 60 seconds or more. 2) Disconnect the connector (AB31) from curtain airbag module LH. 3) Connect the connector (1N) in the test harness N to the connector (AB31). 4) Connect the airbag resistor to the connector (2N) of test harness N. 5) Connect the battery ground terminal and turn the ignition switch to ON.	Does the airbag warning light illuminate for 6 seconds and go off?	Replace the curtain airbag module LH. <Ref. to AB-45, Curtain Airbag Module.>	Go to step **3**.

	Step	Check	Yes	No
3	**CHECK AIRBAG REAR HARNESS (CURTAIN AIRBAG MODULE HARNESS LH).** 1) Turn the ignition switch to OFF, disconnect the battery ground cable, and wait for 60 seconds or more. 2) Disconnect the connector (AB21) from seat belt pretensioner LH. 3) Disconnect the connector (AB19) from side airbag module LH. 4) Disconnect the airbag resistor from test harness N. 5) Disconnect the connectors (AB6, AB17, AB18) from airbag control module. 6) Connect the connector (1AG) in the test harness AG to the connectors (AB6, AB17, AB18). 7) Measure the resistance between connector (6AG) in the test harness AG and connector (2N) in the test harness N. ***Connector & terminal*** ***(6AG) No. 1 — (2N) No. 2:*** ***(6AG) No. 3 — (2N) No. 1:***	Is the resistance less than 10 Ω?	Go to step **4**.	Replace the airbag rear harness along with body harness.
4	**CHECK AIRBAG CONTROL MODULE.** 1) Connect all connectors. 2) Clear the memory. <Ref. to AB(diag)-24, Clear Memory Mode.> 3) Perform the Inspection Mode. <Ref. to AB(diag)-23, Inspection Mode.> 4) Read the DTC. (Current malfunction) <Ref. to AB(diag)-22, Read Diagnostic Trouble Code (DTC).>	Is DTC B1836 displayed?	Replace the airbag control module. <Ref. to AB-47, Airbag Control Module.>	Go to step **5**.
5	**CHECK FOR ANY OTHER DTC ON DISPLAY.** Read the DTC. (Current malfunction) <Ref. to AB(diag)-22, Read Diagnostic Trouble Code (DTC).>	Is any other DTC displayed?	Perform the diagnosis for other displayed DTCs. <Ref. to AB(diag)-30, List of Diagnostic Trouble Code (DTC).>	Finish the diagnosis.

DB:DTC B1837 SHORT IN CURTAIN AIRBAG LH SQUIB CIRCUIT (TO GROUND)

DIAGNOSIS START CONDITION:
Ignition voltage is 10 V to 16 V.
DTC DETECTING CONDITION:
- Curtain airbag harness LH circuit is shorted to ground.
- Curtain airbag module LH is faulty.
- Airbag control module is faulty.

CAUTION:
Before performing diagnosis, refer to "CAUTION" in "General Description". <Ref. to AB(diag)-4, CAUTION, General Description.>
WIRING DIAGRAM:
Airbag system <Ref. to WI-69, WIRING DIAGRAM, Airbag System.>

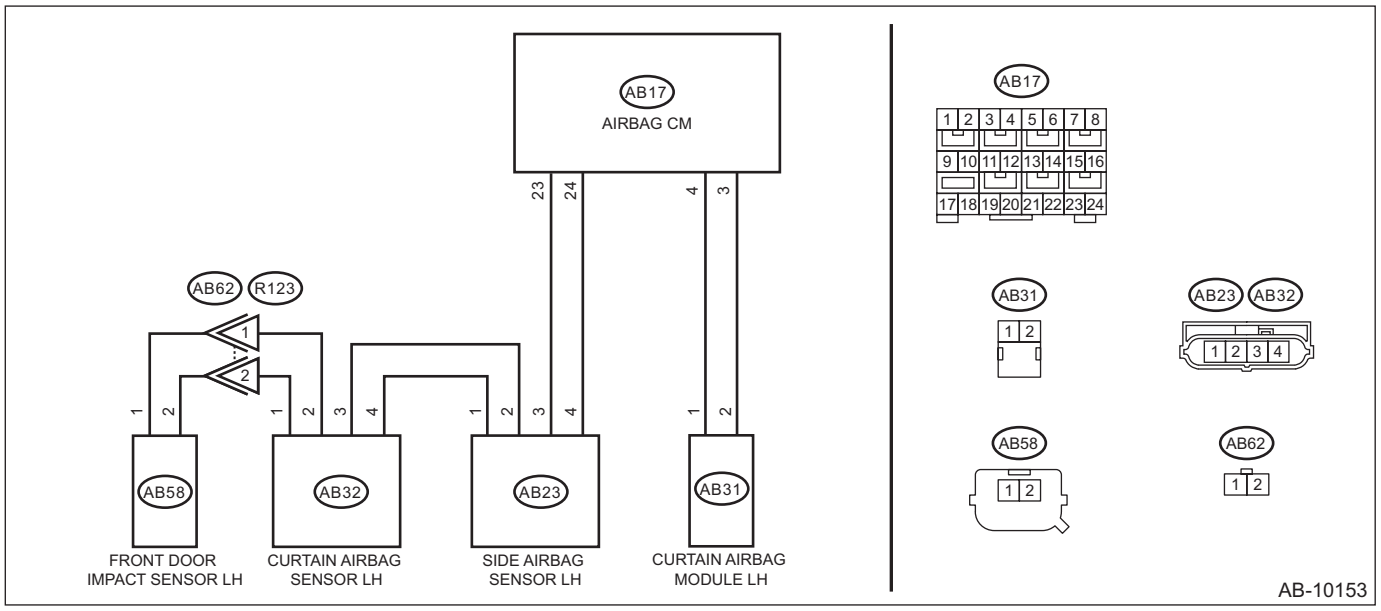

Step		Check	Yes	No
1	**CHECK POOR CONTACT OF CONNECTORS.** Check for poor contact of the connectors between the airbag control module, curtain airbag module LH and the curtain airbag sensor LH.	Is there poor contact?	Replace the airbag rear harness along with body harness.	Go to step **2**.
2	**CHECK CURTAIN AIRBAG MODULE.** 1) Turn the ignition switch to OFF, disconnect the battery ground cable, and wait for 60 seconds or more. 2) Disconnect the connector (AB31), and connect the connector (1N) in test harness N to connector (AB31). 3) Connect the airbag resistor to the connector (2N) of test harness N. 4) Connect the battery ground terminal and turn the ignition switch to ON.	Does the airbag warning light illuminate for six seconds and go off?	Replace the curtain airbag module LH. <Ref. to AB-45, Curtain Airbag Module.>	Go to step **3**.

	Step	Check	Yes	No
3	**CHECK AIRBAG REAR HARNESS (CURTAIN AIRBAG MODULE HARNESS LH).** 1) Turn the ignition switch to OFF, disconnect the battery ground cable, and wait for 60 seconds or more. 2) Disconnect the connector (AB21) from seat belt pretensioner LH. 3) Disconnect the connector (AB19) from side airbag module LH. 4) Disconnect the airbag resistor from test harness N. 5) Disconnect the connectors (AB6, AB17, AB18) from airbag control module. 6) Connect the connector (1AG) in the test harness AG to the connectors (AB6, AB17, AB18). 7) Measure the resistance between connector (6AG) in the test harness AG and chassis ground. ***Connector & terminal*** ***(6AG) No. 1 — Chassis ground:*** ***(6AG) No. 3 — Chassis ground:***	Is the resistance 1 MΩ or more?	Go to step **4**.	Replace the airbag rear harness along with body harness.
4	**CHECK AIRBAG CONTROL MODULE.** 1) Connect all connectors. 2) Clear the memory. <Ref. to AB(diag)-24, Clear Memory Mode.> 3) Perform the Inspection Mode. <Ref. to AB(diag)-23, Inspection Mode.> 4) Read the DTC. (Current malfunction) <Ref. to AB(diag)-22, Read Diagnostic Trouble Code (DTC).>	Is DTC B1837 displayed?	Replace the airbag control module. <Ref. to AB-47, Airbag Control Module.>	Go to step **5**.
5	**CHECK FOR ANY OTHER DTC ON DISPLAY.** Read the DTC. (Current malfunction) <Ref. to AB(diag)-22, Read Diagnostic Trouble Code (DTC).>	Is any other DTC displayed?	Perform the diagnosis for other displayed DTCs. <Ref. to AB(diag)-30, List of Diagnostic Trouble Code (DTC).>	Finish the diagnosis.

DC:DTC B1838 SHORT IN CURTAIN SHIELD AIRBAG LH SQUIB CIRCUIT (TO +B)

DIAGNOSIS START CONDITION:
Ignition voltage is 10 V to 16 V.
DTC DETECTING CONDITION:

- Curtain airbag harness LH is shorted to power supply.
- Curtain airbag module LH is faulty.
- Airbag control module is faulty.

CAUTION:
Before performing diagnosis, refer to "CAUTION" in "General Description". <Ref. to AB(diag)-4, CAUTION, General Description.>
WIRING DIAGRAM:
Airbag system <Ref. to WI-69, WIRING DIAGRAM, Airbag System.>

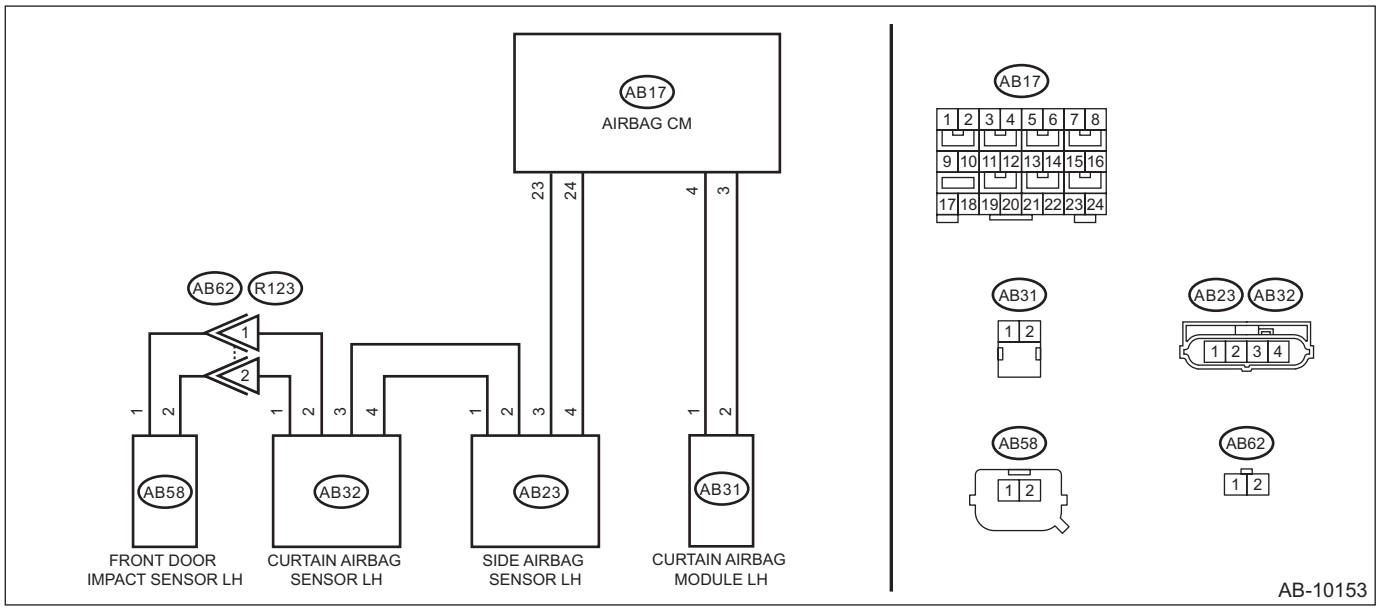

	Step	Check	Yes	No
1	**CHECK POOR CONTACT OF CONNECTORS.** Check for poor contact of the connectors between the airbag control module, curtain airbag module LH and the curtain airbag sensor LH.	Is there poor contact?	Replace the airbag rear harness along with body harness.	Go to step **2**.
2	**CHECK CURTAIN AIRBAG MODULE.** 1) Turn the ignition switch to OFF, disconnect the battery ground cable, and wait for 60 seconds or more. 2) Disconnect the connector (AB31), and connect the connector (1N) in test harness N to connector (AB31). 3) Connect the airbag resistor to the connector (2N) of test harness N. 4) Connect the battery ground terminal and turn the ignition switch to ON.	Does the airbag warning light illuminate for six seconds and go off?	Replace the curtain airbag module LH. <Ref. to AB-45, Curtain Airbag Module.>	Go to step **3**.

	Step	Check	Yes	No
3	**CHECK AIRBAG REAR HARNESS (CURTAIN AIRBAG MODULE HARNESS LH).** 1) Turn the ignition switch to OFF, disconnect the battery ground cable, and wait for 60 seconds or more. 2) Disconnect the connector (AB21) from seat belt pretensioner LH. 3) Disconnect the connector (AB19) from side airbag module LH. 4) Disconnect the airbag resistor from test harness N. 5) Disconnect the connectors (AB6, AB17, AB18) from airbag control module. 6) Connect the connector (1AG) in the test harness AG to the connectors (AB6, AB17, AB18). 7) Connect the battery ground terminal and turn the ignition switch to ON. 8) Measure the voltage between connector (6AG) in the test harness AG and chassis ground. ***Connector & terminal*** ***(6AG) No. 1 (+) — Chassis ground (–):*** ***(6AG) No. 3 (+) — Chassis ground (–):***	Is the voltage less than 1 V?	Go to step **4**.	Replace the airbag rear harness along with body harness.
4	**CHECK AIRBAG CONTROL MODULE.** 1) Connect all connectors. 2) Clear the memory. <Ref. to AB(diag)-24, Clear Memory Mode.> 3) Perform the Inspection Mode. <Ref. to AB(diag)-23, Inspection Mode.> 4) Read the DTC. (Current malfunction) <Ref. to AB(diag)-22, Read Diagnostic Trouble Code (DTC).>	Is DTC B1838 displayed?	Replace the airbag control module. <Ref. to AB-47, Airbag Control Module.>	Go to step **5**.
5	**CHECK FOR ANY OTHER DTC ON DISPLAY.** Read the DTC. (Current malfunction) <Ref. to AB(diag)-22, Read Diagnostic Trouble Code (DTC).>	Is any other DTC displayed?	Perform the diagnosis for other displayed DTCs. <Ref. to AB(diag)-30, List of Diagnostic Trouble Code (DTC).>	Finish the diagnosis.

DD:DTC B1860 SHORT IN DRIVER'S KNEE AIRBAG

DIAGNOSIS START CONDITION:
Ignition voltage is 10 V to 16 V.
DTC DETECTING CONDITION:

- Airbag main harness circuit is shorted.
- Knee airbag module harness circuit is shorted.
- Knee airbag module is faulty.
- Airbag control module is faulty.

CAUTION:
Before performing diagnosis, refer to "CAUTION" in "General Description". <Ref. to AB(diag)-4, CAUTION, General Description.>
WIRING DIAGRAM:
Airbag system <Ref. to WI-69, WIRING DIAGRAM, Airbag System.>

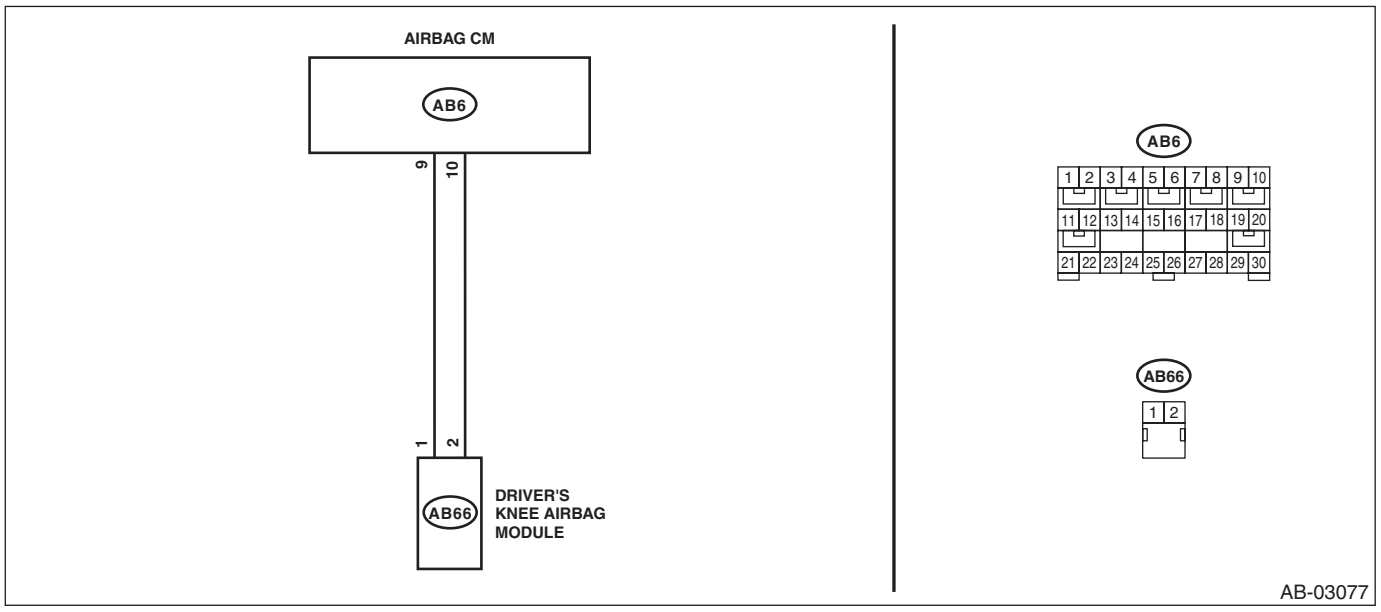

	Step	Check	Yes	No
1	**CHECK POOR CONTACT OF CONNECTORS.** Check for poor contact of the connectors between the airbag control module and the knee airbag module.	Is there poor contact?	Replace the airbag harness.	Go to step **2**.
2	**CHECK KNEE AIRBAG MODULE.** 1) Turn the ignition switch to OFF, disconnect the battery ground cable, and wait for 60 seconds or more. 2) Disconnect the connector (AB66) from knee airbag module. 3) Connect the connector (1N) in the test harness N to the connector (AB66). 4) Connect the airbag resistor to the connector (2N) of test harness N. 5) Connect the battery ground terminal and turn the ignition switch to ON.	Does the airbag warning light illuminate for six seconds and go off?	Replace the knee airbag module. <Ref. to AB-34, REMOVAL, Knee Airbag Module.>	Go to step **3**.

	Step	Check	Yes	No
3	**CHECK AIRBAG MAIN HARNESS (KNEE AIRBAG HARNESS).** 1) Turn the ignition switch to OFF, disconnect the battery ground cable, and wait for 60 seconds or more. 2) Disconnect the airbag resistor from test harness N. 3) Remove the instrument panel lower cover and column cover, and disconnect the connector (AB7) from (AB2). 4) Remove the console front panel and disconnect the connector (AB9). 5) Disconnect the connectors (AB6, AB17, AB18) from airbag control module. 6) Connect the connector (1AG) in the test harness AG to the connectors (AB6, AB17, AB18). 7) Measure the resistance between connector (3AG) terminals in test harness AG. ***Connector & terminal (3AG) No. 14 — (3AG) No. 16:***	Is the resistance 1 MΩ or more?	Go to step **4**.	Replace the airbag main harness along with body harness.
4	**CHECK AIRBAG CONTROL MODULE.** 1) Connect all connectors. 2) Clear the memory. <Ref. to AB(diag)-24, Clear Memory Mode.> 3) Perform the Inspection Mode. <Ref. to AB(diag)-23, Inspection Mode.> 4) Read the DTC. (Current malfunction) <Ref. to AB(diag)-22, Read Diagnostic Trouble Code (DTC).>	Is DTC B1860 displayed?	Replace the airbag control module. <Ref. to AB-47, Airbag Control Module.>	Go to step **5**.
5	**CHECK FOR ANY OTHER DTC ON DISPLAY.** Read the DTC. (Current malfunction) <Ref. to AB(diag)-22, Read Diagnostic Trouble Code (DTC).>	Is any other DTC displayed?	Perform the diagnosis for other displayed DTCs. <Ref. to AB(diag)-30, List of Diagnostic Trouble Code (DTC).>	Finish the diagnosis.

DE:DTC B1861 OPEN IN DRIVER'S KNEE AIRBAG

DIAGNOSIS START CONDITION:
Ignition voltage is 10 V to 16 V.
DTC DETECTING CONDITION:

- Airbag main harness circuit is open.
- Knee airbag module harness circuit is open.
- Knee airbag module is faulty.
- Airbag control module is faulty.

CAUTION:
Before performing diagnosis, refer to "CAUTION" in "General Description". <Ref. to AB(diag)-4, CAUTION, General Description.>
WIRING DIAGRAM:
Airbag system <Ref. to WI-69, WIRING DIAGRAM, Airbag System.>

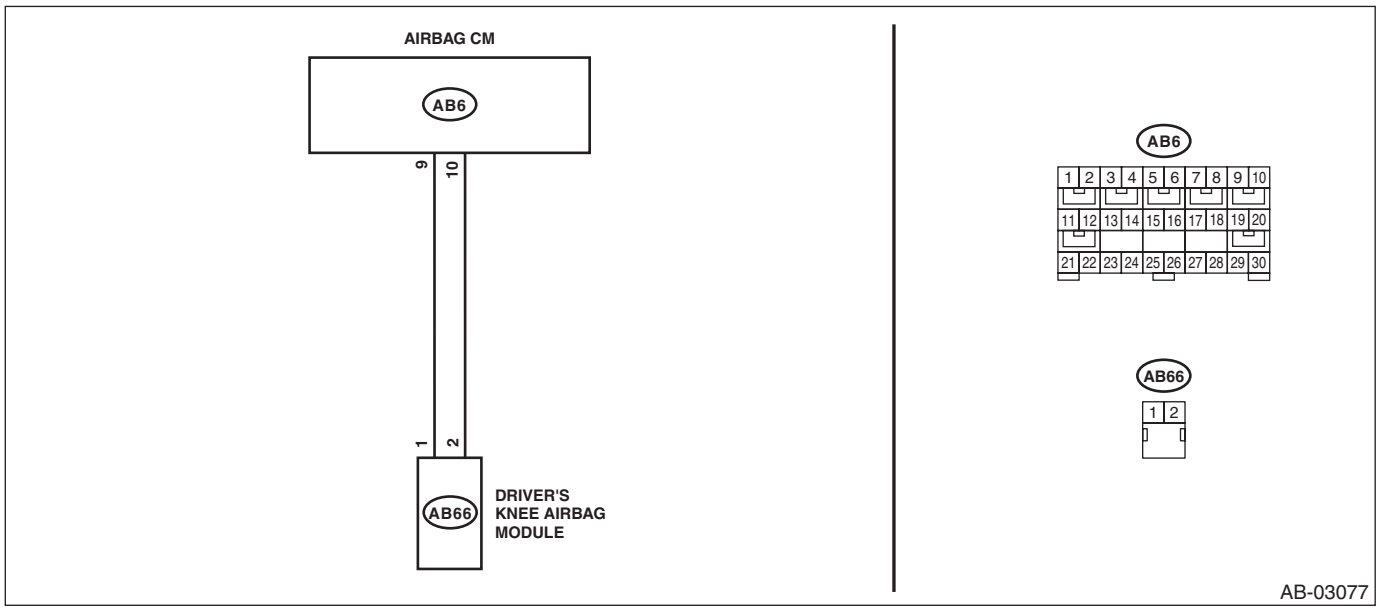

	Step	Check	Yes	No
1	**CHECK POOR CONTACT OF CONNECTORS.** Check for poor contact of the connectors between the airbag control module and the knee airbag module.	Is there poor contact?	Replace the airbag harness.	Go to step **2**.
2	**CHECK KNEE AIRBAG MODULE.** 1) Turn the ignition switch to OFF, disconnect the battery ground cable, and wait for 60 seconds or more. 2) Disconnect the connector (AB66) from knee airbag module. 3) Connect the connector (1N) in the test harness N to the connector (AB66). 4) Connect the airbag resistor to the connector (2N) of test harness N. 5) Connect the battery ground terminal and turn the ignition switch to ON.	Does the airbag warning light illuminate for six seconds and go off?	Replace the knee airbag module. <Ref. to AB-34, REMOVAL, Knee Airbag Module.>	Go to step **3**.

	Step	Check	Yes	No
3	**CHECK AIRBAG MAIN HARNESS (KNEE AIRBAG HARNESS).** 1) Turn the ignition switch to OFF, disconnect the battery ground cable, and wait for 60 seconds or more. 2) Disconnect the airbag resistor from test harness N. 3) Remove the instrument panel lower cover and column cover, and disconnect the connector (AB7) from (AB2). 4) Remove the console front panel and disconnect the connector (AB9). 5) Disconnect the connectors (AB6, AB17, AB18) from airbag control module. 6) Connect the connector (1AG) in the test harness AG to the connectors (AB6, AB17, AB18). 7) Measure the resistance between connector (3AG) in the test harness AG and connector (2N) in the test harness N. ***Connector & terminal*** ***(3AG) No. 14 — (2N) No. 1:*** ***(3AG) No. 16 — (2N) No. 2:***	Is the resistance less than 10 Ω?	Go to step **4**.	Replace the airbag main harness along with body harness.
4	**CHECK AIRBAG CONTROL MODULE.** 1) Connect all connectors. 2) Clear the memory. <Ref. to AB(diag)-24, Clear Memory Mode.> 3) Perform the Inspection Mode. <Ref. to AB(diag)-23, Inspection Mode.> 4) Read the DTC. (Current malfunction) <Ref. to AB(diag)-22, Read Diagnostic Trouble Code (DTC).>	Is DTC B1861 displayed?	Replace the airbag control module. <Ref. to AB-47, Airbag Control Module.>	Go to step **5**.
5	**CHECK FOR ANY OTHER DTC ON DISPLAY.** Read the DTC. (Current malfunction) <Ref. to AB(diag)-22, Read Diagnostic Trouble Code (DTC).>	Is any other DTC displayed?	Perform the diagnosis for other displayed DTCs. <Ref. to AB(diag)-30, List of Diagnostic Trouble Code (DTC).>	Finish the diagnosis.

DF:DTC B1862 SHORT IN DRIVER'S KNEE AIRBAG (TO GROUND)

DIAGNOSIS START CONDITION:
Ignition voltage is 10 V to 16 V.
DTC DETECTING CONDITION:

- Airbag main harness circuit is shorted to ground.
- Knee airbag module harness circuit is shorted to ground.
- Knee airbag module is faulty.
- Airbag control module is faulty.

CAUTION:
Before performing diagnosis, refer to "CAUTION" in "General Description". <Ref. to AB(diag)-4, CAUTION, General Description.>
WIRING DIAGRAM:
Airbag system <Ref. to WI-69, WIRING DIAGRAM, Airbag System.>

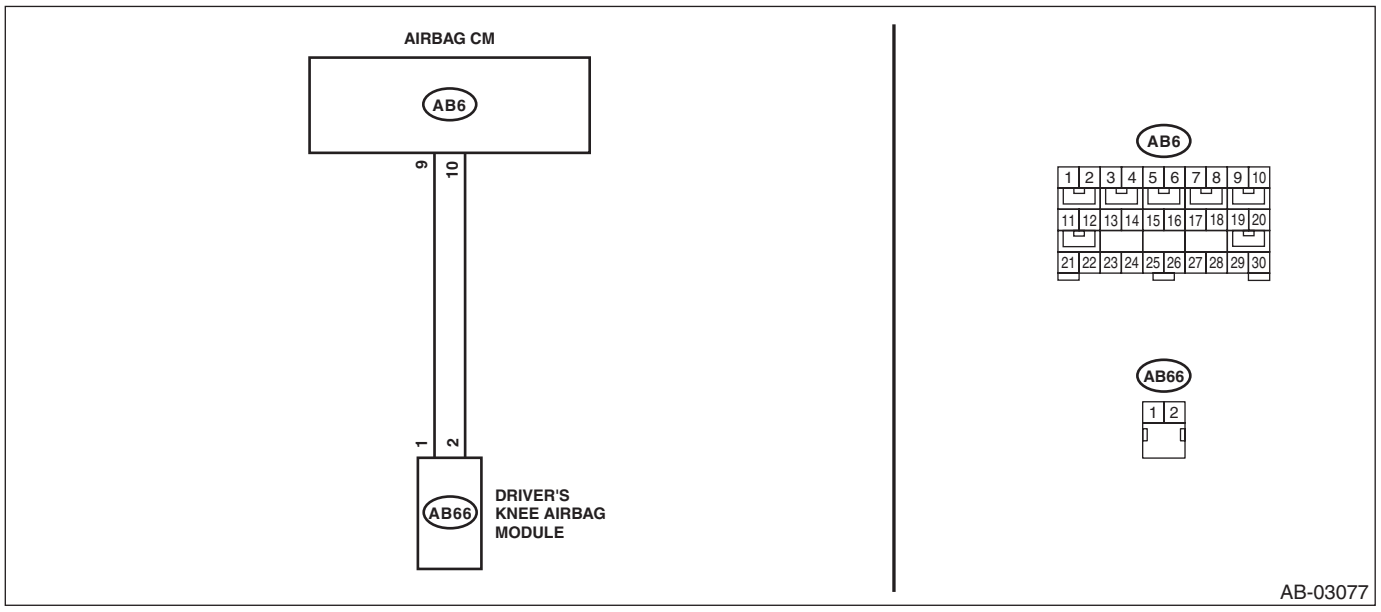

	Step	Check	Yes	No
1	**CHECK POOR CONTACT OF CONNECTORS.** Check for poor contact of the connectors between the airbag control module and the knee airbag module.	Is there poor contact?	Replace the airbag harness.	Go to step **2**.
2	**CHECK KNEE AIRBAG MODULE.** 1) Turn the ignition switch to OFF, disconnect the battery ground cable, and wait for 60 seconds or more. 2) Disconnect the connector (AB66) from knee airbag module. 3) Connect the connector (1N) in the test harness N to the connector (AB66). 4) Connect the airbag resistor to the connector (2N) of test harness N. 5) Connect the battery ground terminal and turn the ignition switch to ON.	Does the airbag warning light illuminate for six seconds and go off?	Replace the knee airbag module. <Ref. to AB-34, REMOVAL, Knee Airbag Module.>	Go to step **3**.

	Step	Check	Yes	No
3	**CHECK AIRBAG MAIN HARNESS (KNEE AIRBAG HARNESS).** 1) Turn the ignition switch to OFF, disconnect the battery ground cable, and wait for 60 seconds or more. 2) Disconnect the airbag resistor from test harness N. 3) Remove the instrument panel lower cover and column cover, and disconnect the connector (AB7) from (AB2). 4) Remove the console front panel and disconnect the connector (AB9). 5) Disconnect the connectors (AB6, AB17, AB18) from airbag control module. 6) Connect the connector (1AG) in the test harness AG to the connectors (AB6, AB17, AB18). 7) Measure the resistance between connector (3AG) in the test harness AG and chassis ground. ***Connector & terminal*** ***(3AG) No. 14 — Chassis ground:*** ***(3AG) No. 16 — Chassis ground:***	Is the resistance 1 MΩ or more?	Go to step **4**.	Replace the airbag main harness along with body harness.
4	**CHECK AIRBAG CONTROL MODULE.** 1) Connect all connectors. 2) Clear the memory. <Ref. to AB(diag)-24, Clear Memory Mode.> 3) Perform the Inspection Mode. <Ref. to AB(diag)-23, Inspection Mode.> 4) Read the DTC. (Current malfunction) <Ref. to AB(diag)-22, Read Diagnostic Trouble Code (DTC).>	Is DTC B1862 displayed?	Replace the airbag control module. <Ref. to AB-47, Airbag Control Module.>	Go to step **5**.
5	**CHECK FOR ANY OTHER DTC ON DISPLAY.** Read the DTC. (Current malfunction) <Ref. to AB(diag)-22, Read Diagnostic Trouble Code (DTC).>	Is any other DTC displayed?	Perform the diagnosis for other displayed DTCs. <Ref. to AB(diag)-30, List of Diagnostic Trouble Code (DTC).>	Finish the diagnosis.

DG:DTC B1863 SHORT IN DRIVER'S KNEE AIRBAG (TO +B)

DIAGNOSIS START CONDITION:
Ignition voltage is 10 V to 16 V.
DTC DETECTING CONDITION:

- Airbag main harness circuit is shorted to power supply.
- Knee airbag module harness circuit is shorted to power supply.
- Knee airbag module is faulty.
- Airbag control module is faulty.

CAUTION:
Before performing diagnosis, refer to "CAUTION" in "General Description". <Ref. to AB(diag)-4, CAUTION, General Description.>
WIRING DIAGRAM:
Airbag system <Ref. to WI-69, WIRING DIAGRAM, Airbag System.>

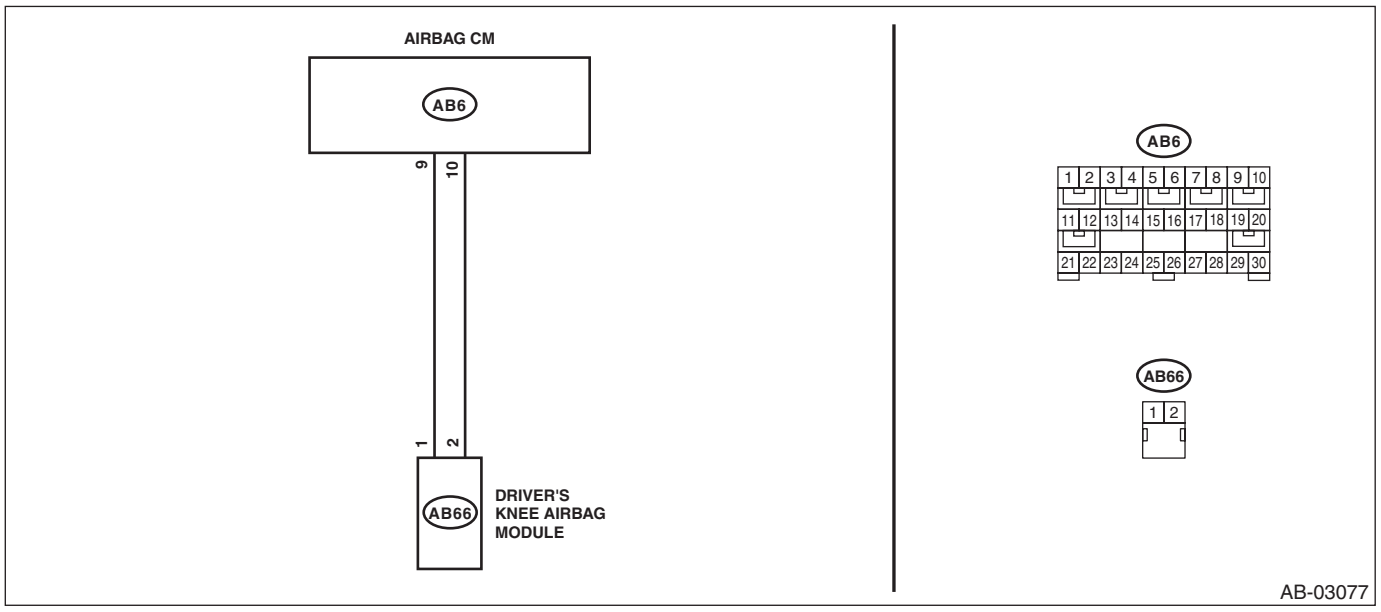

	Step	Check	Yes	No
1	**CHECK POOR CONTACT OF CONNECTORS.** Check for poor contact of the connectors between the airbag control module and the knee airbag module.	Is there poor contact?	Replace the airbag harness.	Go to step **2**.
2	**CHECK KNEE AIRBAG MODULE.** 1) Turn the ignition switch to OFF, disconnect the battery ground cable, and wait for 60 seconds or more. 2) Disconnect the connector (AB66) from knee airbag module. 3) Connect the connector (1N) in the test harness N to the connector (AB66). 4) Connect the airbag resistor to the connector (2N) of test harness N. 5) Connect the battery ground terminal and turn the ignition switch to ON.	Does the airbag warning light illuminate for six seconds and go off?	Replace the knee airbag module. <Ref. to AB-34, REMOVAL, Knee Airbag Module.>	Go to step **3**.

	Step	Check	Yes	No
3	**CHECK AIRBAG MAIN HARNESS (KNEE AIRBAG HARNESS).** 1) Turn the ignition switch to OFF, disconnect the battery ground cable, and wait for 60 seconds or more. 2) Disconnect the airbag resistor from test harness N. 3) Remove the instrument panel lower cover and column cover, and disconnect the connector (AB7) from (AB2). 4) Remove the console front panel and disconnect the connector (AB9). 5) Disconnect the connectors (AB6, AB17, AB18) from airbag control module. 6) Connect the connector (1AG) in the test harness AG to the connectors (AB6, AB17, AB18). 7) Connect the battery ground terminal and turn the ignition switch to ON. 8) Measure the voltage between connector (3AG) in the test harness AG and chassis ground. ***Connector & terminal*** ***(3AG) No. 14 (+) — Chassis ground (–):*** ***(3AG) No. 16 (+) — Chassis ground (–):***	Is the voltage less than 1 V?	Go to step **4**.	Replace the airbag main harness along with body harness.
4	**CHECK AIRBAG CONTROL MODULE.** 1) Connect all connectors. 2) Clear the memory. <Ref. to AB(diag)-24, Clear Memory Mode.> 3) Perform the Inspection Mode. <Ref. to AB(diag)-23, Inspection Mode.> 4) Read the DTC. (Current malfunction) <Ref. to AB(diag)-22, Read Diagnostic Trouble Code (DTC).>	Is DTC B1863 displayed?	Replace the airbag control module. <Ref. to AB-47, Airbag Control Module.>	Go to step **5**.
5	**CHECK FOR ANY OTHER DTC ON DISPLAY.** Read the DTC. (Current malfunction) <Ref. to AB(diag)-22, Read Diagnostic Trouble Code (DTC).>	Is any other DTC displayed?	Perform the diagnosis for other displayed DTCs. <Ref. to AB(diag)-30, List of Diagnostic Trouble Code (DTC).>	Finish the diagnosis.

DH:DTC B1900 SHORT IN FRONT P/T RH

DIAGNOSIS START CONDITION:
Ignition voltage is 10 V to 16 V.
DTC DETECTING CONDITION:

- Seat belt pretensioner RH circuit is shorted.
- Pretensioner RH is faulty.
- Pretensioner harness RH is faulty.
- Airbag control module is faulty.

CAUTION:
Before performing diagnosis, refer to "CAUTION" in "General Description". <Ref. to AB(diag)-4, CAUTION, General Description.>
WIRING DIAGRAM:
Airbag system <Ref. to WI-69, WIRING DIAGRAM, Airbag System.>

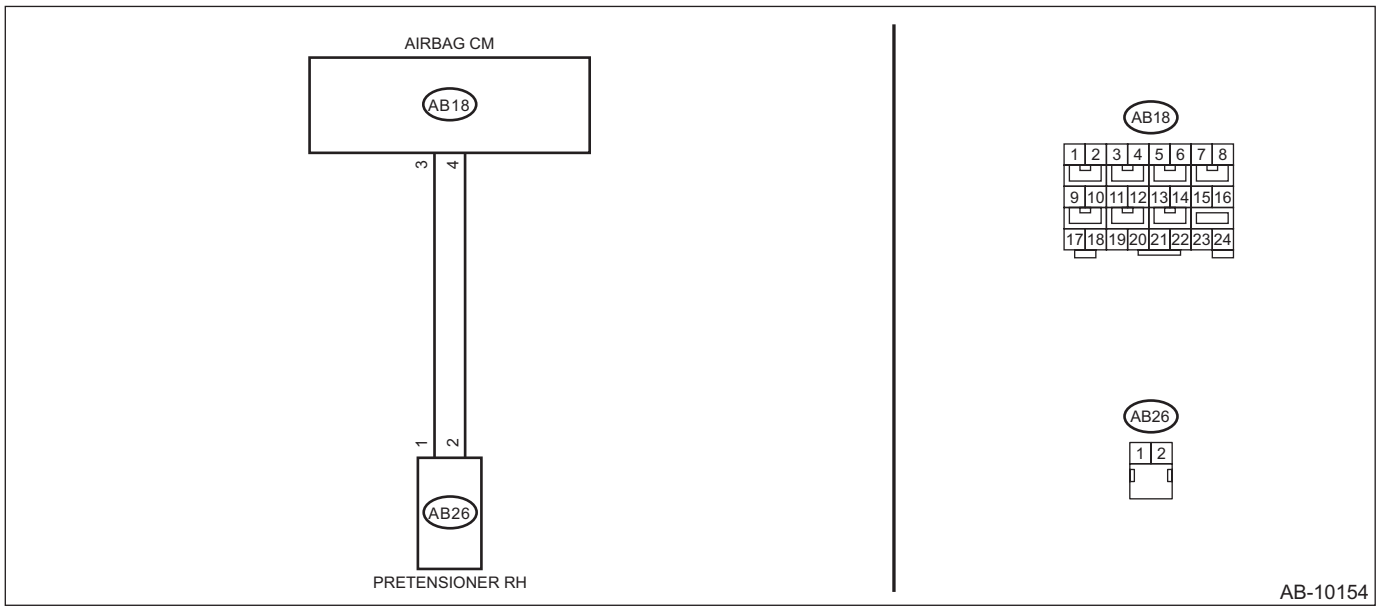

	Step	Check	Yes	No
1	**CHECK POOR CONTACT OF CONNECTORS.** Check for poor contact of the connectors between the airbag control module and the seat belt pretensioner RH.	Is there poor contact?	Replace the airbag rear harness along with body harness.	Go to step **2**.
2	**CHECK SEAT BELT PRETENSIONER.** 1) Turn the ignition switch to OFF, disconnect the battery ground cable, and wait for 60 seconds or more. 2) Disconnect the connector (AB26) from seat belt pretensioner RH. 3) Connect the connector (1N) in the test harness N to the connector (AB26). 4) Connect the airbag resistor to the connector (2N) of test harness N. 5) Connect the battery ground terminal and turn the ignition switch to ON.	Does the airbag warning light illuminate for 6 seconds and go off?	Replace the seat belt pretensioner RH. <Ref. to SB-15, Front Seat Belt.>	Go to step **3**.

	Step	Check	Yes	No
3	**CHECK AIRBAG REAR HARNESS (PRETENSIONER HARNESS RH).** 1) Turn the ignition switch to OFF, disconnect the battery ground cable, and wait for 60 seconds or more. 2) Disconnect the airbag resistor from test harness N. 3) Disconnect the connector (AB30) from the lap seat belt pretensioner RH. 4) Disconnect the connector (AB24) from side airbag module RH. 5) Disconnect the connector (AB33) from curtain airbag module RH. 6) Disconnect the connectors (AB6, AB17, AB18) from airbag control module. 7) Connect the connector (1AG) in the test harness AG to the connectors (AB6, AB17, AB18). 8) Measure the resistance between connector (3AG) terminals in test harness AG. ***Connector & terminal (3AG) No. 18 — (3AG) No. 20:***	Is the resistance 1 MΩ or more?	Go to step **4**.	Replace the airbag rear harness along with body harness.
4	**CHECK AIRBAG CONTROL MODULE.** 1) Connect all connectors. 2) Clear the memory. <Ref. to AB(diag)-24, Clear Memory Mode.> 3) Perform the Inspection Mode. <Ref. to AB(diag)-23, Inspection Mode.> 4) Read the DTC. (Current malfunction) <Ref. to AB(diag)-22, Read Diagnostic Trouble Code (DTC).>	Is DTC B1900 displayed?	Replace the airbag control module. <Ref. to AB-47, Airbag Control Module.>	Go to step **5**.
5	**CHECK FOR ANY OTHER DTC ON DISPLAY.** Read the DTC. (Current malfunction) <Ref. to AB(diag)-22, Read Diagnostic Trouble Code (DTC).>	Is any other DTC displayed?	Perform the diagnosis for other displayed DTCs. <Ref. to AB(diag)-30, List of Diagnostic Trouble Code (DTC).>	Finish the diagnosis.

DI: DTC B1901 OPEN IN FRONT P/T RH

DIAGNOSIS START CONDITION:
Ignition voltage is 10 V to 16 V.
DTC DETECTING CONDITION:

- Seat belt pretensioner RH circuit is open.
- Pretensioner RH is faulty.
- Pretensioner harness RH is faulty.
- Airbag control module is faulty.

CAUTION:
Before performing diagnosis, refer to "CAUTION" in "General Description". <Ref. to AB(diag)-4, CAUTION, General Description.>
WIRING DIAGRAM:
Airbag system <Ref. to WI-69, WIRING DIAGRAM, Airbag System.>

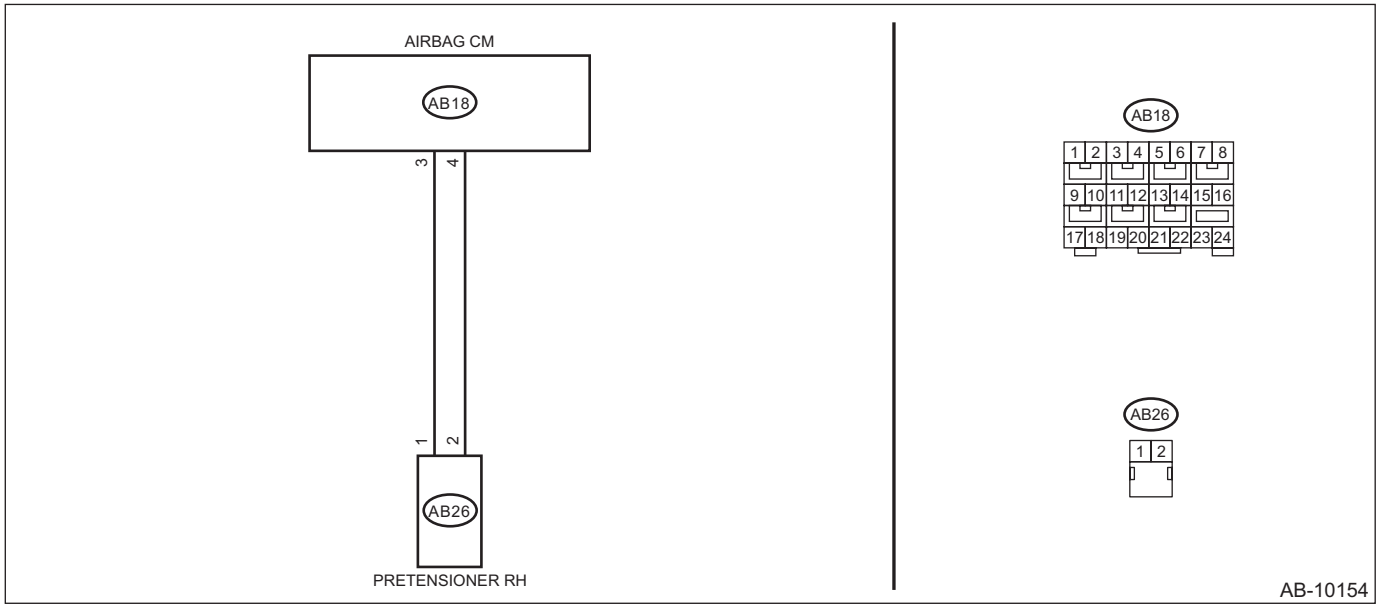

	Step	Check	Yes	No
1	**CHECK POOR CONTACT OF CONNECTORS.** Check for poor contact of the connectors between the airbag control module and the seat belt pretensioner RH.	Is there poor contact?	Replace the airbag rear harness along with body harness.	Go to step **2**.
2	**CHECK SEAT BELT PRETENSIONER.** 1) Turn the ignition switch to OFF, disconnect the battery ground cable, and wait for 60 seconds or more. 2) Disconnect the connector (AB26) from seat belt pretensioner RH. 3) Connect the connector (1N) in the test harness N to the connector (AB26). 4) Connect the airbag resistor to the connector (2N) of test harness N. 5) Connect the battery ground terminal and turn the ignition switch to ON.	Does the airbag warning light illuminate for 6 seconds and go off?	Replace the seat belt pretensioner RH. <Ref. to SB-15, Front Seat Belt.>	Go to step **3**.

	Step	Check	Yes	No
3	**CHECK AIRBAG REAR HARNESS (PRETENSIONER HARNESS RH).** 1) Turn the ignition switch to OFF, disconnect the battery ground cable, and wait for 60 seconds or more. 2) Disconnect the airbag resistor from the connector (2N) of test harness N. 3) Disconnect the connector (AB30) from the lap seat belt pretensioner RH. 4) Disconnect the connector (AB24) from side airbag module RH. 5) Disconnect the connector (AB33) from curtain airbag module RH. 6) Disconnect the connectors (AB6, AB17, AB18) from airbag control module. 7) Connect the connector (1AG) in the test harness AG to the connectors (AB6, AB17, AB18). 8) Measure the resistance between connector (3AG) in the test harness AG and connector (2N) in the test harness N. ***Connector & terminal*** ***(3AG) No. 18 — (2N) No. 2:*** ***(3AG) No. 20 — (2N) No. 1:***	Is the resistance less than 10 Ω?	Go to step **4**.	Replace the airbag rear harness along with body harness.
4	**CHECK AIRBAG CONTROL MODULE.** 1) Connect all connectors. 2) Clear the memory. <Ref. to AB(diag)-24, Clear Memory Mode.> 3) Perform the Inspection Mode. <Ref. to AB(diag)-23, Inspection Mode.> 4) Read the DTC. (Current malfunction) <Ref. to AB(diag)-22, Read Diagnostic Trouble Code (DTC).>	Is DTC B1901 displayed?	Replace the airbag control module. <Ref. to AB-47, Airbag Control Module.>	Go to step **5**.
5	**CHECK FOR ANY OTHER DTC ON DISPLAY.** Read the DTC. (Current malfunction) <Ref. to AB(diag)-22, Read Diagnostic Trouble Code (DTC).>	Is any other DTC displayed?	Perform the diagnosis for other displayed DTCs. <Ref. to AB(diag)-30, List of Diagnostic Trouble Code (DTC).>	Finish the diagnosis.

DJ:DTC B1902 SHORT IN FRONT P/T RH (TO GROUND)

DIAGNOSIS START CONDITION:
Ignition voltage is 10 V to 16 V.
DTC DETECTING CONDITION:

- Seat belt pretensioner RH circuit is shorted to ground.
- Pretensioner RH is faulty.
- Pretensioner harness RH is faulty.
- Airbag control module is faulty.

CAUTION:
Before performing diagnosis, refer to "CAUTION" in "General Description". <Ref. to AB(diag)-4, CAUTION, General Description.>
WIRING DIAGRAM:
Airbag system <Ref. to WI-69, WIRING DIAGRAM, Airbag System.>

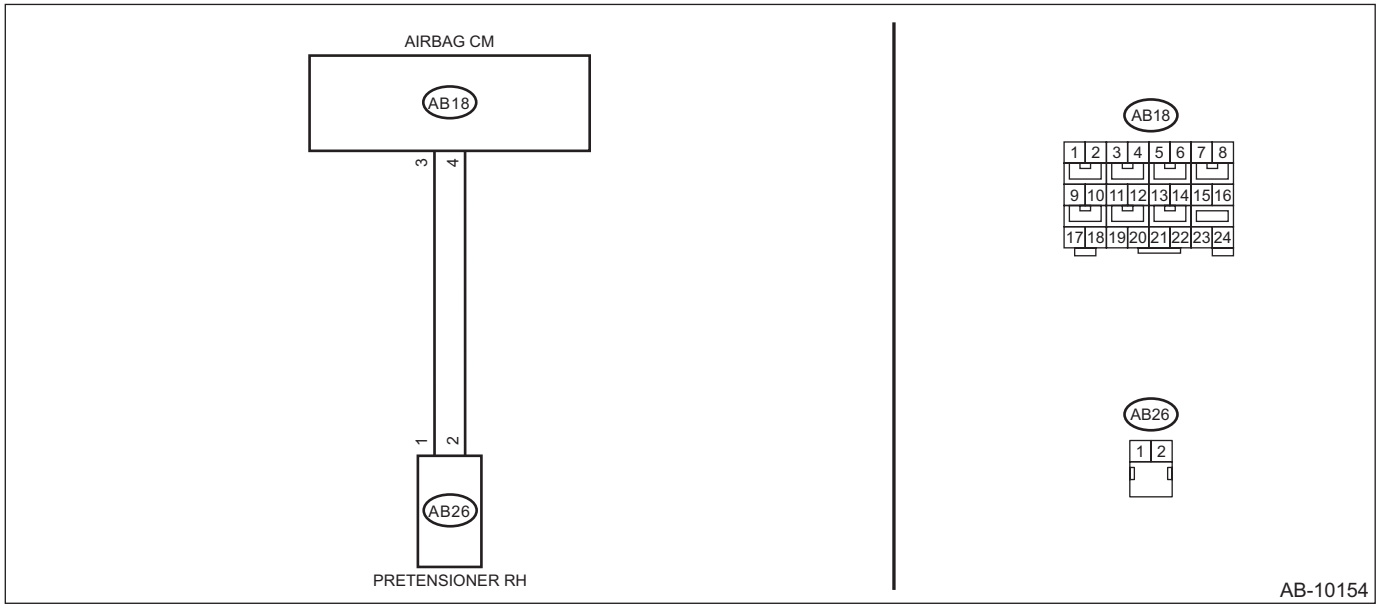

	Step	Check	Yes	No
1	**CHECK POOR CONTACT OF CONNECTORS.** Check for poor contact of the connectors between the airbag control module and the seat belt pretensioner RH.	Is there poor contact?	Replace the airbag rear harness along with body harness.	Go to step **2**.
2	**CHECK SEAT BELT PRETENSIONER.** 1) Turn the ignition switch to OFF, disconnect the battery ground cable, and wait for 60 seconds or more. 2) Disconnect the connector (AB26) from seat belt pretensioner RH. 3) Connect the connector (1N) in the test harness N to the connector (AB26). 4) Connect the airbag resistor to the connector (2N) of test harness N. 5) Connect the battery ground terminal and turn the ignition switch to ON.	Does the airbag warning light illuminate for six seconds and go off?	Replace the seat belt pretensioner RH. <Ref. to SB-15, Front Seat Belt.>	Go to step **3**.

	Step	Check	Yes	No
3	**CHECK AIRBAG REAR HARNESS (PRETENSIONER HARNESS RH).** 1) Turn the ignition switch to OFF, disconnect the battery ground cable, and wait for 60 seconds or more. 2) Disconnect the airbag resistor from the connector (2N) of test harness N. 3) Disconnect the connector (AB30) from the lap seat belt pretensioner RH. 4) Disconnect the connector (AB24) from side airbag module RH. 5) Disconnect the connector (AB33) from curtain airbag module RH. 6) Disconnect the connectors (AB6, AB17, AB18) from airbag control module. 7) Connect the connector (1AG) in the test harness AG to the connectors (AB6, AB17, AB18). 8) Measure the resistance between connector (3AG) in the test harness AG and chassis ground. ***Connector & terminal*** ***(3AG) No. 18 — Chassis ground:*** ***(3AG) No. 20 — Chassis ground:***	Is the resistance 1 MΩ or more?	Go to step **4**.	Replace the airbag rear harness along with body harness.
4	**CHECK AIRBAG CONTROL MODULE.** 1) Connect all connectors. 2) Clear the memory. <Ref. to AB(diag)-24, Clear Memory Mode.> 3) Perform the Inspection Mode. <Ref. to AB(diag)-23, Inspection Mode.> 4) Read the DTC. (Current malfunction) <Ref. to AB(diag)-22, Read Diagnostic Trouble Code (DTC).>	Is DTC B1902 displayed?	Replace the airbag control module. <Ref. to AB-47, Airbag Control Module.>	Go to step **5**.
5	**CHECK FOR ANY OTHER DTC ON DISPLAY.** Read the DTC. (Current malfunction) <Ref. to AB(diag)-22, Read Diagnostic Trouble Code (DTC).>	Is any other DTC displayed?	Perform the diagnosis for other displayed DTCs. <Ref. to AB(diag)-30, List of Diagnostic Trouble Code (DTC).>	Finish the diagnosis.

DK:DTC B1903 SHORT IN FRONT P/T RH (TO +B)

DIAGNOSIS START CONDITION:
Ignition voltage is 10 V to 16 V.
DTC DETECTING CONDITION:

- Seat belt pretensioner RH circuit is shorted to power supply.
- Pretensioner RH is faulty.
- Pretensioner harness RH is faulty.
- Airbag control module is faulty.

CAUTION:
Before performing diagnosis, refer to "CAUTION" in "General Description". <Ref. to AB(diag)-4, CAUTION, General Description.>
WIRING DIAGRAM:
Airbag system <Ref. to WI-69, WIRING DIAGRAM, Airbag System.>

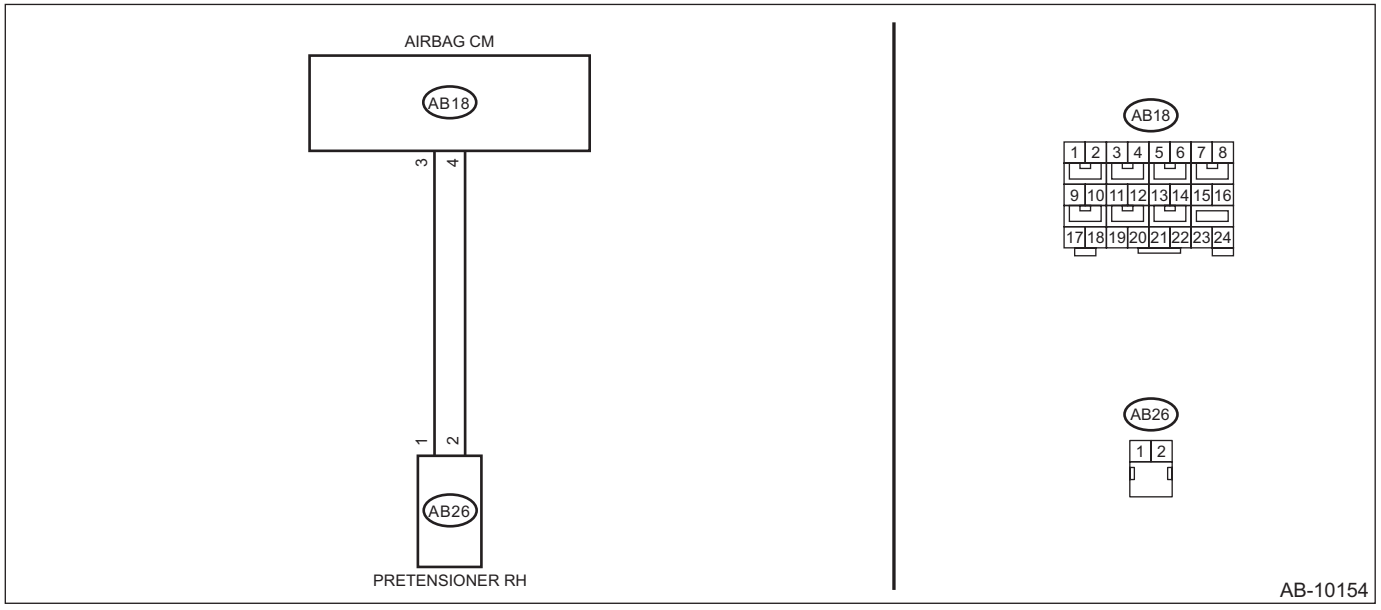

	Step	Check	Yes	No
1	**CHECK POOR CONTACT OF CONNECTORS.** Check for poor contact of the connectors between the airbag control module and the seat belt pretensioner RH.	Is there poor contact?	Replace the airbag rear harness along with body harness.	Go to step **2**.
2	**CHECK SEAT BELT PRETENSIONER.** 1) Turn the ignition switch to OFF, disconnect the battery ground cable, and wait for 60 seconds or more. 2) Disconnect the connector (AB26) from seat belt pretensioner RH. 3) Connect the connector (1N) in the test harness N to the connector (AB26). 4) Connect the airbag resistor to the connector (2N) of test harness N. 5) Connect the battery ground terminal and turn the ignition switch to ON.	Does the airbag warning light illuminate for six seconds and go off?	Replace the seat belt pretensioner RH. <Ref. to SB-15, Front Seat Belt.>	Go to step **3**.

	Step	Check	Yes	No
3	**CHECK AIRBAG REAR HARNESS (PRETENSIONER HARNESS RH).** 1) Turn the ignition switch to OFF, disconnect the battery ground cable, and wait for 60 seconds or more. 2) Disconnect the airbag resistor from the connector (2N) of test harness N. 3) Disconnect the connector (AB30) from the lap seat belt pretensioner RH. 4) Disconnect the connector (AB24) from side airbag module RH. 5) Disconnect the connector (AB33) from curtain airbag module RH. 6) Disconnect the connectors (AB6, AB17, AB18) from airbag control module. 7) Connect the connector (1AG) in the test harness AG to the connectors (AB6, AB17, AB18). 8) Connect the battery ground terminal and turn the ignition switch to ON. 9) Measure the voltage between connector (3AG) in the test harness AG and chassis ground. ***Connector & terminal*** ***(3AG) No. 20 (+) — Chassis ground (–):*** ***(3AG) No. 18 (+) — Chassis ground (–):***	Is the voltage less than 1 V?	Go to step **4**.	Replace the airbag rear harness along with body harness.
4	**CHECK AIRBAG CONTROL MODULE.** 1) Connect all connectors. 2) Clear the memory. <Ref. to AB(diag)-24, Clear Memory Mode.> 3) Perform the Inspection Mode. <Ref. to AB(diag)-23, Inspection Mode.> 4) Read the DTC. (Current malfunction) <Ref. to AB(diag)-22, Read Diagnostic Trouble Code (DTC).>	Is DTC B1903 displayed?	Replace the airbag control module. <Ref. to AB-47, Airbag Control Module.>	Go to step **5**.
5	**CHECK FOR ANY OTHER DTC ON DISPLAY.** Read the DTC. (Current malfunction) <Ref. to AB(diag)-22, Read Diagnostic Trouble Code (DTC).>	Is any other DTC displayed?	Perform the diagnosis for other displayed DTCs. <Ref. to AB(diag)-30, List of Diagnostic Trouble Code (DTC).>	Finish the diagnosis.

DL:DTC B1905 SHORT IN FRONT P/T LH

DIAGNOSIS START CONDITION:
Ignition voltage is 10 V to 16 V.
DTC DETECTING CONDITION:

- Seat belt pretensioner LH circuit is shorted.
- Pretensioner LH is faulty.
- Pretensioner harness LH is faulty.
- Airbag control module is faulty.

CAUTION:
Before performing diagnosis, refer to "CAUTION" in "General Description". <Ref. to AB(diag)-4, CAUTION, General Description.>
WIRING DIAGRAM:
Airbag system <Ref. to WI-69, WIRING DIAGRAM, Airbag System.>

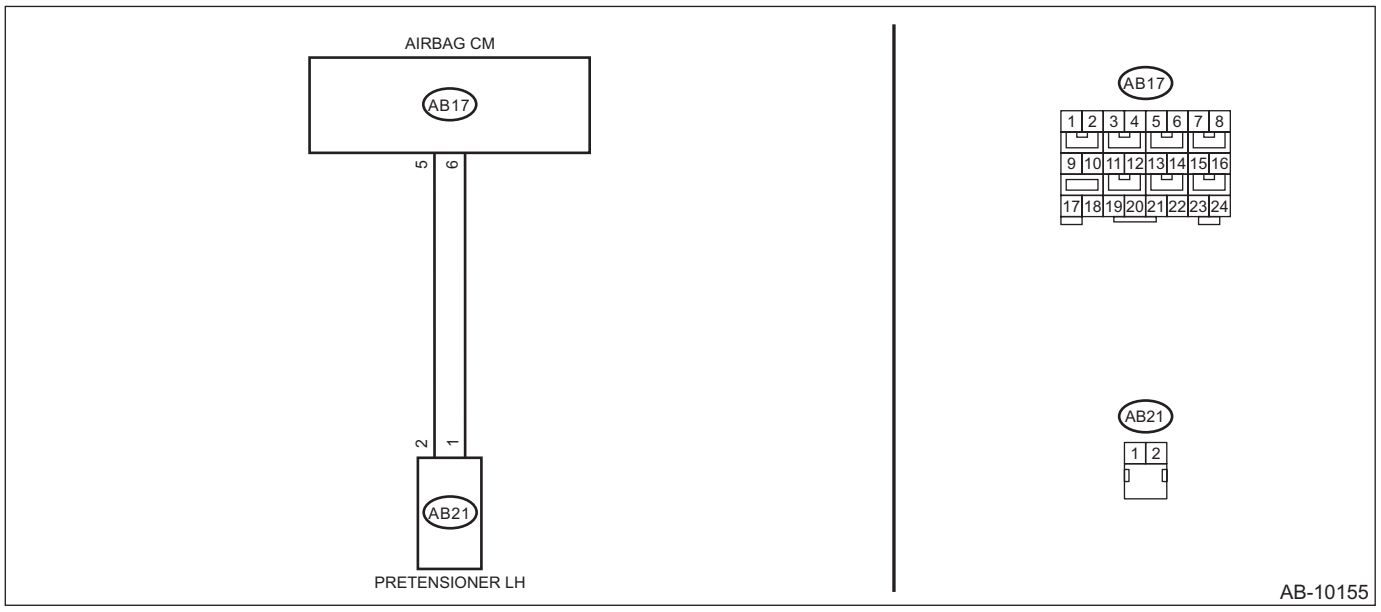

	Step	Check	Yes	No
1	**CHECK POOR CONTACT OF CONNECTORS.** Check for poor contact of the connectors between the airbag control module and the seat belt pretensioner LH.	Is there poor contact?	Replace the airbag rear harness along with body harness.	Go to step **2**.
2	**CHECK SEAT BELT PRETENSIONER.** 1) Turn the ignition switch to OFF, disconnect the battery ground cable, and wait for 60 seconds or more. 2) Disconnect the connector (AB21) from seat belt pretensioner LH. 3) Connect the connector (1N) in the test harness N to the connector (AB21). 4) Connect the airbag resistor to the connector (2N) of test harness N. 5) Connect the battery ground terminal and turn the ignition switch to ON.	Does the airbag warning light illuminate for 6 seconds and go off?	Replace the seat belt pretensioner LH. <Ref. to SB-15, Front Seat Belt.>	Go to step **3**.

	Step	Check	Yes	No
3	**CHECK AIRBAG REAR HARNESS (PRETENSIONER HARNESS LH).** 1) Turn the ignition switch to OFF, disconnect the battery ground cable, and wait for 60 seconds or more. 2) Disconnect the airbag resistor from the connector (2N) of test harness N. 3) Disconnect the connector (AB19) from side airbag module LH. 4) Disconnect the connector (AB31) from curtain airbag module LH. 5) Disconnect the connectors (AB6, AB17, AB18) from airbag control module. 6) Connect the connector (1AG) in the test harness AG to the connectors (AB6, AB17, AB18). 7) Measure the resistance between connector (3AG) terminals in test harness AG. ***Connector & terminal (3AG) No. 10 — (3AG) No. 12:***	Is the resistance 1 MΩ or more?	Go to step **4**.	Replace the airbag rear harness along with body harness.
4	**CHECK AIRBAG CONTROL MODULE.** 1) Connect all connectors. 2) Clear the memory. <Ref. to AB(diag)-24, Clear Memory Mode.> 3) Perform the Inspection Mode. <Ref. to AB(diag)-23, Inspection Mode.> 4) Read the DTC. (Current malfunction) <Ref. to AB(diag)-22, Read Diagnostic Trouble Code (DTC).>	Is DTC B1905 displayed?	Replace the airbag control module. <Ref. to AB-47, Airbag Control Module.>	Go to step **5**.
5	**CHECK FOR ANY OTHER DTC ON DISPLAY.** Read the DTC. (Current malfunction) <Ref. to AB(diag)-22, Read Diagnostic Trouble Code (DTC).>	Is any other DTC displayed?	Perform the diagnosis for other displayed DTCs. <Ref. to AB(diag)-30, List of Diagnostic Trouble Code (DTC).>	Finish the diagnosis.

DM:DTC B1906 OPEN IN FRONT P/T LH

DIAGNOSIS START CONDITION:
Ignition voltage is 10 V to 16 V.
DTC DETECTING CONDITION:

- Seat belt pretensioner LH circuit is open.
- Pretensioner LH is faulty.
- Pretensioner harness LH is faulty.
- Airbag control module is faulty.

CAUTION:
Before performing diagnosis, refer to "CAUTION" in "General Description". <Ref. to AB(diag)-4, CAUTION, General Description.>
WIRING DIAGRAM:
Airbag system <Ref. to WI-69, WIRING DIAGRAM, Airbag System.>

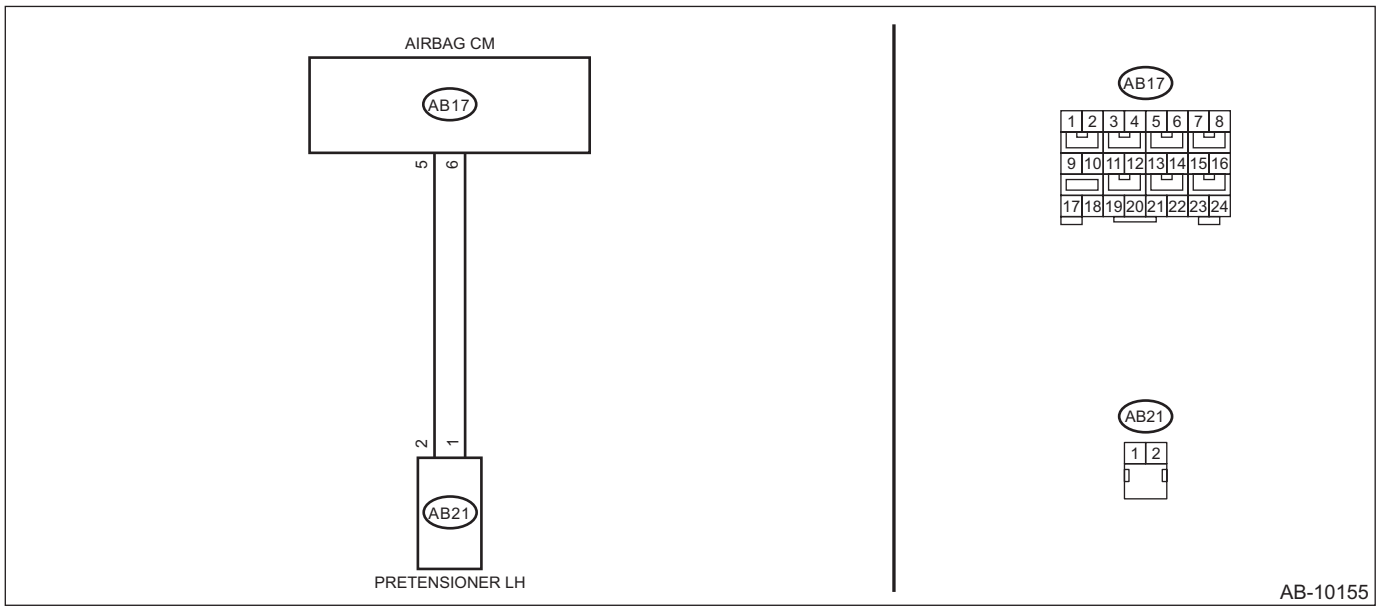

	Step	Check	Yes	No
1	**CHECK POOR CONTACT OF CONNECTORS.** Check for poor contact of the connectors between the airbag control module and the seat belt pretensioner LH.	Is there poor contact?	Replace the airbag rear harness along with body harness.	Go to step **2**.
2	**CHECK SEAT BELT PRETENSIONER.** 1) Turn the ignition switch to OFF, disconnect the battery ground cable, and wait for 60 seconds or more. 2) Disconnect the connector (AB21) from seat belt pretensioner LH. 3) Connect the connector (1N) in the test harness N to the connector (AB21). 4) Connect the airbag resistor to the connector (2N) of test harness N. 5) Connect the battery ground terminal and turn the ignition switch to ON.	Does the airbag warning light illuminate for 6 seconds and go off?	Replace the seat belt pretensioner LH. <Ref. to SB-15, Front Seat Belt.>	Go to step **3**.

	Step	Check	Yes	No
3	**CHECK AIRBAG REAR HARNESS (PRETENSIONER HARNESS LH).** 1) Turn the ignition switch to OFF, disconnect the battery ground cable, and wait for 60 seconds or more. 2) Disconnect the airbag resistor from the connector (2N) of test harness N. 3) Disconnect the connector (AB19) from side airbag module LH. 4) Disconnect the connector (AB31) from curtain airbag module LH. 5) Disconnect the connectors (AB6, AB17, AB18) from airbag control module. 6) Connect the connector (1AG) in the test harness AG to the connectors (AB6, AB17, AB18). 7) Measure the resistance between connector (3AG) in the test harness AG and connector (2N) in the test harness N. ***Connector & terminal*** ***(3AG) No. 10 — (2N) No. 1:*** ***(3AG) No. 12 — (2N) No. 2:***	Is the resistance less than 10 Ω?	Go to step **4**.	Replace the airbag rear harness along with body harness.
4	**CHECK AIRBAG CONTROL MODULE.** 1) Connect all connectors. 2) Clear the memory. <Ref. to AB(diag)-24, Clear Memory Mode.> 3) Perform the Inspection Mode. <Ref. to AB(diag)-23, Inspection Mode.> 4) Read the DTC. (Current malfunction) <Ref. to AB(diag)-22, Read Diagnostic Trouble Code (DTC).>	Is DTC B1906 displayed?	Replace the airbag control module. <Ref. to AB-47, Airbag Control Module.>	Go to step **5**.
5	**CHECK FOR ANY OTHER DTC ON DISPLAY.** Read the DTC. (Current malfunction) <Ref. to AB(diag)-22, Read Diagnostic Trouble Code (DTC).>	Is any other DTC displayed?	Perform the diagnosis for other displayed DTCs. <Ref. to AB(diag)-30, List of Diagnostic Trouble Code (DTC).>	Finish the diagnosis.

DN:DTC B1907 SHORT IN FRONT P/T LH (TO GROUND)

DIAGNOSIS START CONDITION:
Ignition voltage is 10 V to 16 V.
DTC DETECTING CONDITION:

- Seat belt pretensioner LH circuit is shorted to ground.
- Pretensioner LH is faulty.
- Pretensioner harness LH is faulty.
- Airbag control module is faulty.

CAUTION:
Before performing diagnosis, refer to "CAUTION" in "General Description". <Ref. to AB(diag)-4, CAUTION, General Description.>
WIRING DIAGRAM:
Airbag system <Ref. to WI-69, WIRING DIAGRAM, Airbag System.>

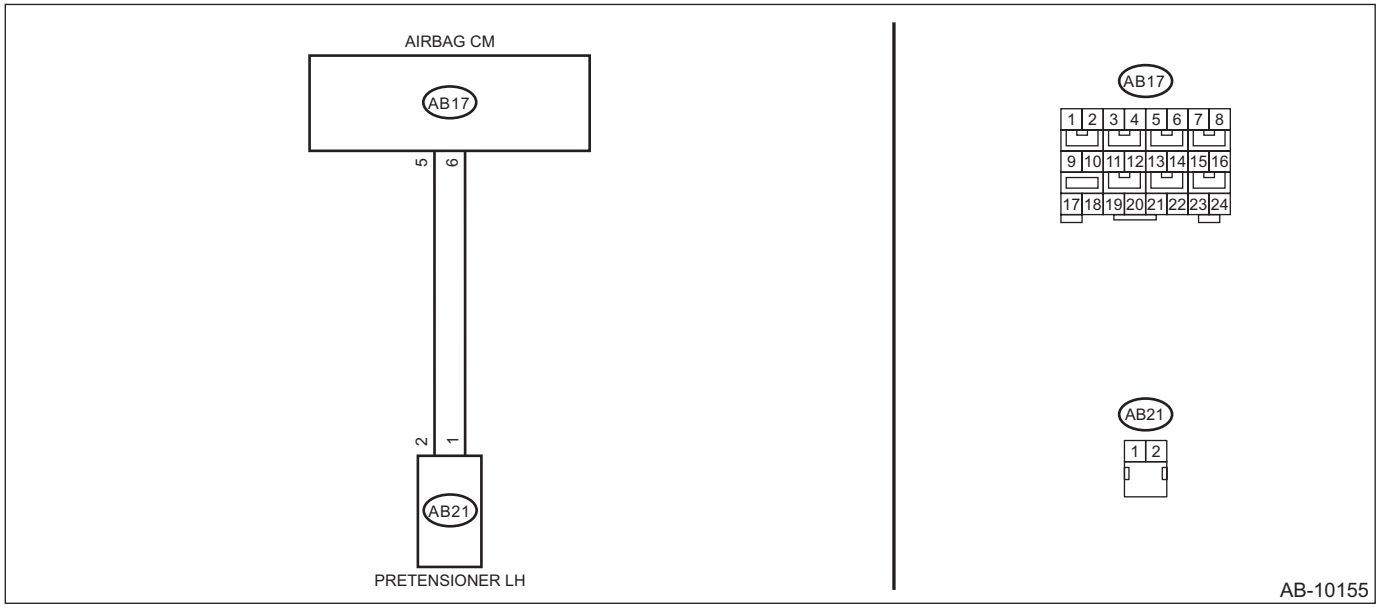

	Step	Check	Yes	No
1	**CHECK POOR CONTACT OF CONNECTORS.** Check for poor contact of the connectors between the airbag control module and the seat belt pretensioner LH.	Is there poor contact?	Replace the airbag rear harness along with body harness.	Go to step **2**.
2	**CHECK SEAT BELT PRETENSIONER.** 1) Turn the ignition switch to OFF, disconnect the battery ground cable, and wait for 60 seconds or more. 2) Disconnect the connector (AB21) from seat belt pretensioner LH. 3) Connect the connector (1N) in the test harness N to the connector (AB21). 4) Connect the airbag resistor to the connector (2N) of test harness N. 5) Connect the battery ground terminal and turn the ignition switch to ON.	Does the airbag warning light illuminate for six seconds and go off?	Replace the seat belt pretensioner LH. <Ref. to SB-15, Front Seat Belt.>	Go to step **3**.

	Step	Check	Yes	No
3	**CHECK AIRBAG REAR HARNESS (PRETENSIONER HARNESS LH).** 1) Turn the ignition switch to OFF, disconnect the battery ground cable, and wait for 60 seconds or more. 2) Disconnect the airbag resistor from the connector (2N) of test harness N. 3) Disconnect the connector (AB19) from side airbag module LH. 4) Disconnect the connector (AB31) from curtain airbag module LH. 5) Disconnect the connectors (AB6, AB17, AB18) from airbag control module. 6) Connect the connector (1AG) in the test harness AG to the connectors (AB6, AB17, AB18). 7) Measure the resistance between connector (3AG) in the test harness AG and chassis ground. ***Connector & terminal*** ***(3AG) No. 10 — Chassis ground:*** ***(3AG) No. 12 — Chassis ground:***	Is the resistance 1 MΩ or more?	Go to step **4**.	Replace the airbag rear harness along with body harness.
4	**CHECK AIRBAG CONTROL MODULE.** 1) Connect all connectors. 2) Clear the memory. <Ref. to AB(diag)-24, Clear Memory Mode.> 3) Perform the Inspection Mode. <Ref. to AB(diag)-23, Inspection Mode.> 4) Read the DTC. (Current malfunction) <Ref. to AB(diag)-22, Read Diagnostic Trouble Code (DTC).>	Is DTC B1907 displayed?	Replace the airbag control module. <Ref. to AB-47, Airbag Control Module.>	Go to step **5**.
5	**CHECK FOR ANY OTHER DTC ON DISPLAY.** Read the DTC. (Current malfunction) <Ref. to AB(diag)-22, Read Diagnostic Trouble Code (DTC).>	Is any other DTC displayed?	Perform the diagnosis for other displayed DTCs. <Ref. to AB(diag)-30, List of Diagnostic Trouble Code (DTC).>	Finish the diagnosis.

DO:DTC B1908 SHORT IN FRONT P/T LH (TO +B)

DIAGNOSIS START CONDITION:
Ignition voltage is 10 V to 16 V.
DTC DETECTING CONDITION:

- Seat belt pretensioner LH circuit is shorted to power supply.
- Pretensioner LH is faulty.
- Pretensioner harness LH is faulty.
- Airbag control module is faulty.

CAUTION:
Before performing diagnosis, refer to "CAUTION" in "General Description". <Ref. to AB(diag)-4, CAUTION, General Description.>
WIRING DIAGRAM:
Airbag system <Ref. to WI-69, WIRING DIAGRAM, Airbag System.>

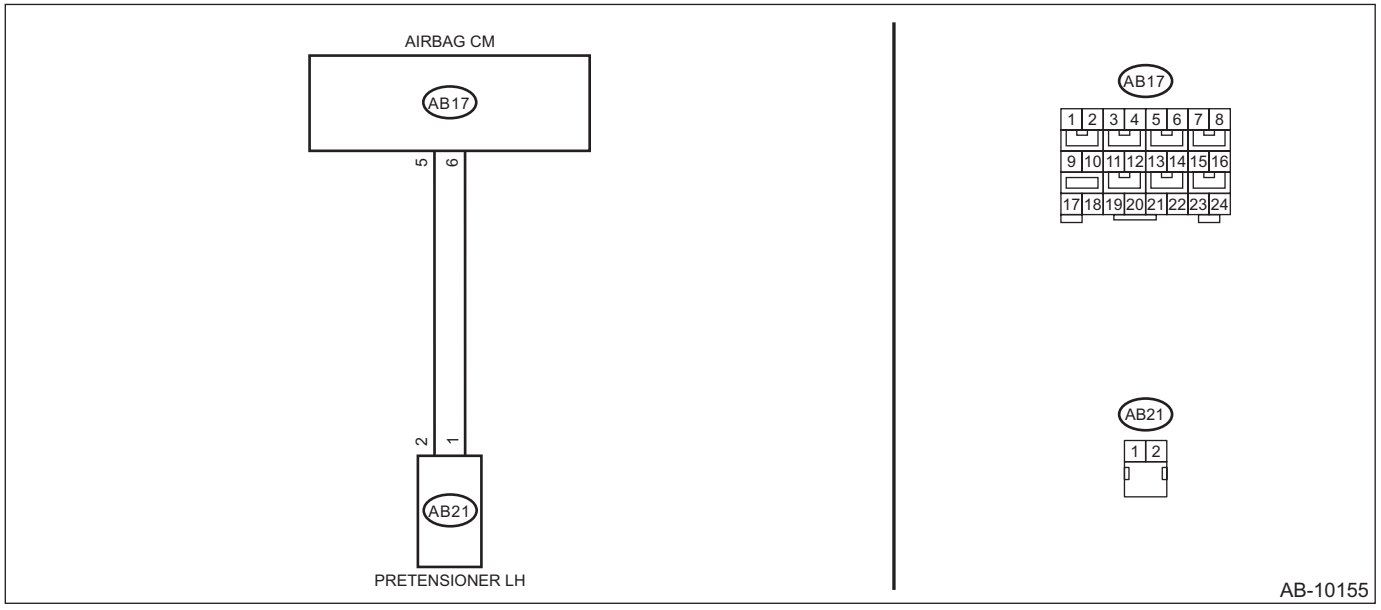

	Step	Check	Yes	No
1	**CHECK POOR CONTACT OF CONNECTORS.** Check for poor contact of the connectors between the airbag control module and the seat belt pretensioner LH.	Is there poor contact?	Replace the airbag rear harness along with body harness.	Go to step **2**.
2	**CHECK SEAT BELT PRETENSIONER.** 1) Turn the ignition switch to OFF, disconnect the battery ground cable, and wait for 60 seconds or more. 2) Disconnect the connector (AB21) from seat belt pretensioner LH. 3) Connect the connector (1N) in the test harness N to the connector (AB21). 4) Connect the airbag resistor to the connector (2N) of test harness N. 5) Connect the battery ground terminal and turn the ignition switch to ON.	Does the airbag warning light illuminate for six seconds and go off?	Replace the seat belt pretensioner LH. <Ref. to SB-15, Front Seat Belt.>	Go to step **3**.

	Step	Check	Yes	No
3	**CHECK AIRBAG REAR HARNESS (PRETENSIONER HARNESS LH).** 1) Turn the ignition switch to OFF, disconnect the battery ground cable, and wait for 60 seconds or more. 2) Disconnect the airbag resistor from the connector (2N) of test harness N. 3) Disconnect the connector (AB19) from side airbag module LH. 4) Disconnect the connector (AB31) from curtain airbag module LH. 5) Disconnect the connectors (AB6, AB17, AB18) from airbag control module. 6) Connect the connector (1AG) in the test harness AG to the connectors (AB6, AB17, AB18). 7) Connect the battery ground terminal and turn the ignition switch to ON. 8) Measure the voltage between connector (3AG) in the test harness AG and chassis ground. ***Connector & terminal*** ***(3AG) No. 10 (+) — Chassis ground (–):*** ***(3AG) No. 12 (+) — Chassis ground (–):***	Is the voltage less than 1 V?	Go to step **4**.	Replace the airbag rear harness along with body harness.
4	**CHECK AIRBAG CONTROL MODULE.** 1) Connect all connectors. 2) Clear the memory. <Ref. to AB(diag)-24, Clear Memory Mode.> 3) Perform the Inspection Mode. <Ref. to AB(diag)-23, Inspection Mode.> 4) Read the DTC. (Current malfunction) <Ref. to AB(diag)-22, Read Diagnostic Trouble Code (DTC).>	Is DTC B1908 displayed?	Replace the airbag control module. <Ref. to AB-47, Airbag Control Module.>	Go to step **5**.
5	**CHECK FOR ANY OTHER DTC ON DISPLAY.** Read the DTC. (Current malfunction) <Ref. to AB(diag)-22, Read Diagnostic Trouble Code (DTC).>	Is any other DTC displayed?	Perform the diagnosis for other displayed DTCs. <Ref. to AB(diag)-30, List of Diagnostic Trouble Code (DTC).>	Finish the diagnosis.

DP:DTC B19F0 SHORT IN FRONT P/T 2 RH

DIAGNOSIS START CONDITION:
Ignition voltage is 10 V to 16 V.
DTC DETECTING CONDITION:

- Lap seat belt pretensioner RH circuit is shorted.
- Lap seat belt pretensioner RH is faulty.
- Lap seat belt pretensioner harness RH is shorted.
- Airbag control module is faulty.

CAUTION:
Before performing diagnosis, refer to "CAUTION" in "General Description". <Ref. to AB(diag)-4, CAUTION, General Description.>
WIRING DIAGRAM:
Airbag system <Ref. to WI-69, WIRING DIAGRAM, Airbag System.>

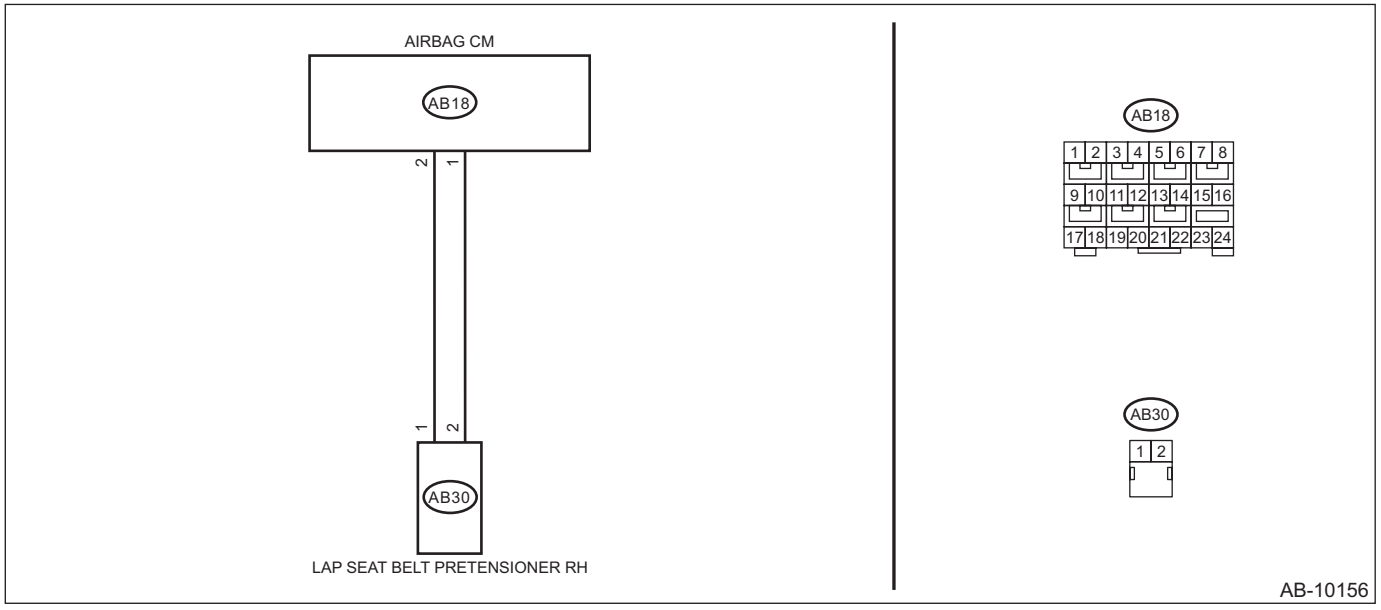

	Step	Check	Yes	No
1	**CHECK POOR CONTACT OF CONNECTORS.** Check for poor contact of the connectors between the airbag control module and the lap seat belt pretensioner RH.	Is there poor contact?	Replace the airbag rear harness along with body harness.	Go to step **2**.
2	**CHECK LAP SEAT BELT PRETENSIONER.** 1) Turn the ignition switch to OFF, disconnect the battery ground cable, and wait for 60 seconds or more. 2) Disconnect the connector (AB30) from the lap seat belt pretensioner RH. 3) Connect the connector (1N) in the test harness N to the connector (AB30). 4) Connect the airbag resistor to the connector (2N) of test harness N. 5) Connect the battery ground terminal and turn the ignition switch to ON.	Does the airbag warning light illuminate for 6 seconds and go off?	Replace the lap seat belt pretensioner RH. <Ref. to SB-17, SEAT BELT INNER - FRONT, REMOVAL, Front Seat Belt.>	Go to step **3**.

	Step	Check	Yes	No
3	**CHECK AIRBAG REAR HARNESS (LAP SEAT BELT PRETENSIONER HARNESS RH).** 1) Turn the ignition switch to OFF, disconnect the battery ground cable, and wait for 60 seconds or more. 2) Disconnect the airbag resistor from test harness N. 3) Disconnect the connector (AB33) from curtain airbag module RH. 4) Disconnect the connector (AB24) from side airbag module RH. 5) Disconnect the connector (AB26) from seat belt pretensioner. 6) Disconnect the connectors (AB6, AB17, AB18) from airbag control module. 7) Connect the connector (1AG) in the test harness AG to the connectors (AB6, AB17, AB18). 8) Measure the resistance between connector (3AG) terminals in test harness AG. ***Connector & terminal (3AG) No. 17 — (3AG) No. 19:***	Is the resistance 1 MΩ or more?	Go to step **4**.	Replace the airbag rear harness along with body harness.
4	**CHECK AIRBAG CONTROL MODULE.** 1) Connect all connectors. 2) Clear the memory. <Ref. to AB(diag)-24, Clear Memory Mode.> 3) Perform the Inspection Mode. <Ref. to AB(diag)-23, Inspection Mode.> 4) Read the DTC. (Current malfunction) <Ref. to AB(diag)-22, Read Diagnostic Trouble Code (DTC).>	Is DTC B19F0 displayed?	Replace the airbag control module. <Ref. to AB-47, Airbag Control Module.>	Go to step **5**.
5	**CHECK FOR ANY OTHER DTC ON DISPLAY.** Read the DTC. (Current malfunction) <Ref. to AB(diag)-22, Read Diagnostic Trouble Code (DTC).>	Is any other DTC displayed?	Perform the diagnosis for other displayed DTCs. <Ref. to AB(diag)-30, List of Diagnostic Trouble Code (DTC).>	Finish the diagnosis.

DQ:DTC B19F1 OPEN IN FRONT P/T 2 RH

DIAGNOSIS START CONDITION:
Ignition voltage is 10 V to 16 V.
DTC DETECTING CONDITION:

- Lap seat belt pretensioner RH circuit is open.
- Lap seat belt pretensioner RH is faulty.
- Lap seat belt pretensioner harness RH is open.
- Airbag control module is faulty.

CAUTION:
Before performing diagnosis, refer to "CAUTION" in "General Description". <Ref. to AB(diag)-4, CAUTION, General Description.>
WIRING DIAGRAM:
Airbag system <Ref. to WI-69, WIRING DIAGRAM, Airbag System.>

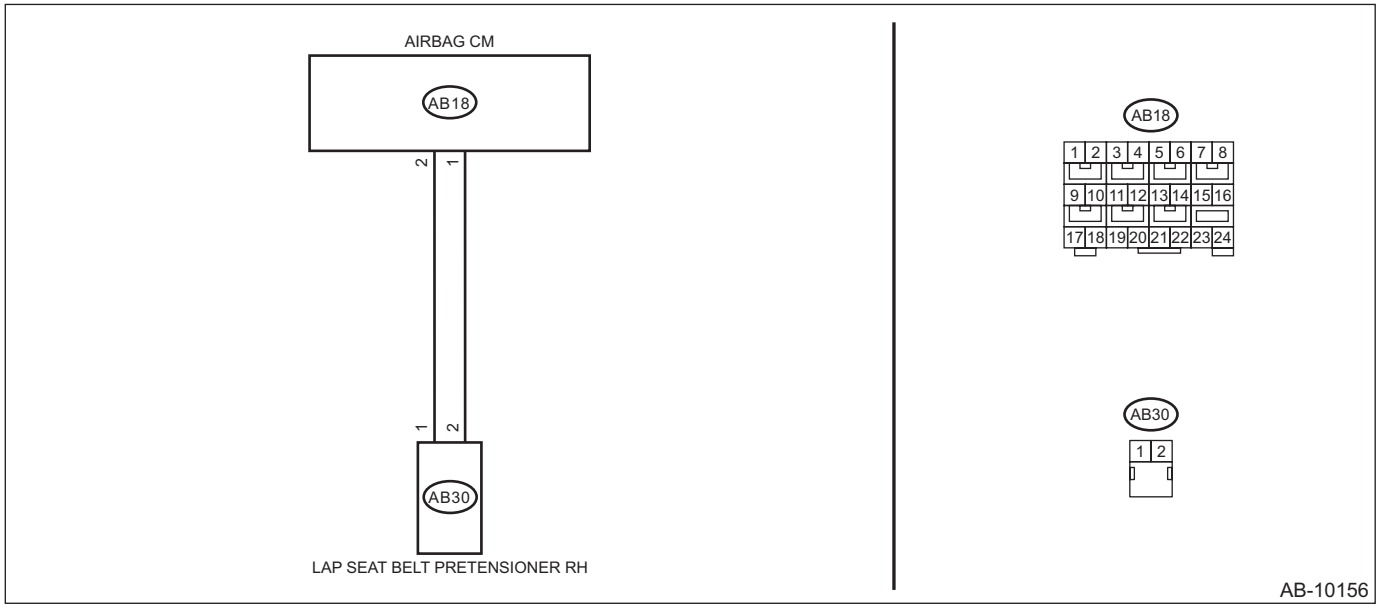

Step		Check	Yes	No
1	**CHECK POOR CONTACT OF CONNECTORS.** Check for poor contact of the connectors between the airbag control module and the lap seat belt pretensioner RH.	Is there poor contact?	Replace the airbag rear harness along with body harness.	Go to step **2**.
2	**CHECK LAP SEAT BELT PRETENSIONER.** 1) Turn the ignition switch to OFF, disconnect the battery ground cable, and wait for 60 seconds or more. 2) Disconnect the connector (AB30) from the lap seat belt pretensioner RH. 3) Connect the connector (1N) in the test harness N to the connector (AB30). 4) Connect the airbag resistor to the connector (2N) of test harness N. 5) Connect the battery ground terminal and turn the ignition switch to ON.	Does the airbag warning light illuminate for 6 seconds and go off?	Replace the lap seat belt pretensioner RH. <Ref. to SB-17, SEAT BELT INNER - FRONT, REMOVAL, Front Seat Belt.>	Go to step **3**.

	Step	Check	Yes	No
3	**CHECK AIRBAG REAR HARNESS (SIDE AIRBAG HARNESS RH).** 1) Turn the ignition switch to OFF, disconnect the battery ground cable, and wait for 60 seconds or more. 2) Disconnect the airbag resistor from test harness N. 3) Disconnect the connector (AB33) from curtain airbag module RH. 4) Disconnect the connector (AB24) from side airbag module RH. 5) Disconnect the connector (AB26) from seat belt pretensioner. 6) Disconnect the connectors (AB6, AB17, AB18) from airbag control module. 7) Connect the connector (1AG) in the test harness AG to the connectors (AB6, AB17, AB18). 8) Measure the resistance between connector (3AG) in the test harness AG and connector (2N) in the test harness N. ***Connector & terminal*** ***(3AG) No. 17 — (2N) No. 2:*** ***(3AG) No. 19 — (2N) No. 1:***	Is the resistance less than 10 Ω?	Go to step **4**.	Replace the airbag rear harness along with body harness.
4	**CHECK AIRBAG CONTROL MODULE.** 1) Connect all connectors. 2) Clear the memory. <Ref. to AB(diag)-24, Clear Memory Mode.> 3) Perform the Inspection Mode. <Ref. to AB(diag)-23, Inspection Mode.> 4) Read the DTC. (Current malfunction) <Ref. to AB(diag)-22, Read Diagnostic Trouble Code (DTC).>	Is DTC B19F1 displayed?	Replace the airbag control module. <Ref. to AB-47, Airbag Control Module.>	Go to step **5**.
5	**CHECK FOR ANY OTHER DTC ON DISPLAY.** Read the DTC. (Current malfunction) <Ref. to AB(diag)-22, Read Diagnostic Trouble Code (DTC).>	Is any other DTC displayed?	Perform the diagnosis for other displayed DTCs. <Ref. to AB(diag)-30, List of Diagnostic Trouble Code (DTC).>	Finish the diagnosis.

DR:DTC B19F2 SHORT IN FRONT P/T 2 RH (TO GROUND)

DIAGNOSIS START CONDITION:
Ignition voltage is 10 V to 16 V.
DTC DETECTING CONDITION:

- Lap seat belt pretensioner RH circuit is shorted to ground.
- Lap seat belt pretensioner RH is faulty.
- Lap seat belt pretensioner harness RH is shorted to ground.
- Airbag control module is faulty.

CAUTION:
Before performing diagnosis, refer to "CAUTION" in "General Description". <Ref. to AB(diag)-4, CAUTION, General Description.>
WIRING DIAGRAM:
Airbag system <Ref. to WI-69, WIRING DIAGRAM, Airbag System.>

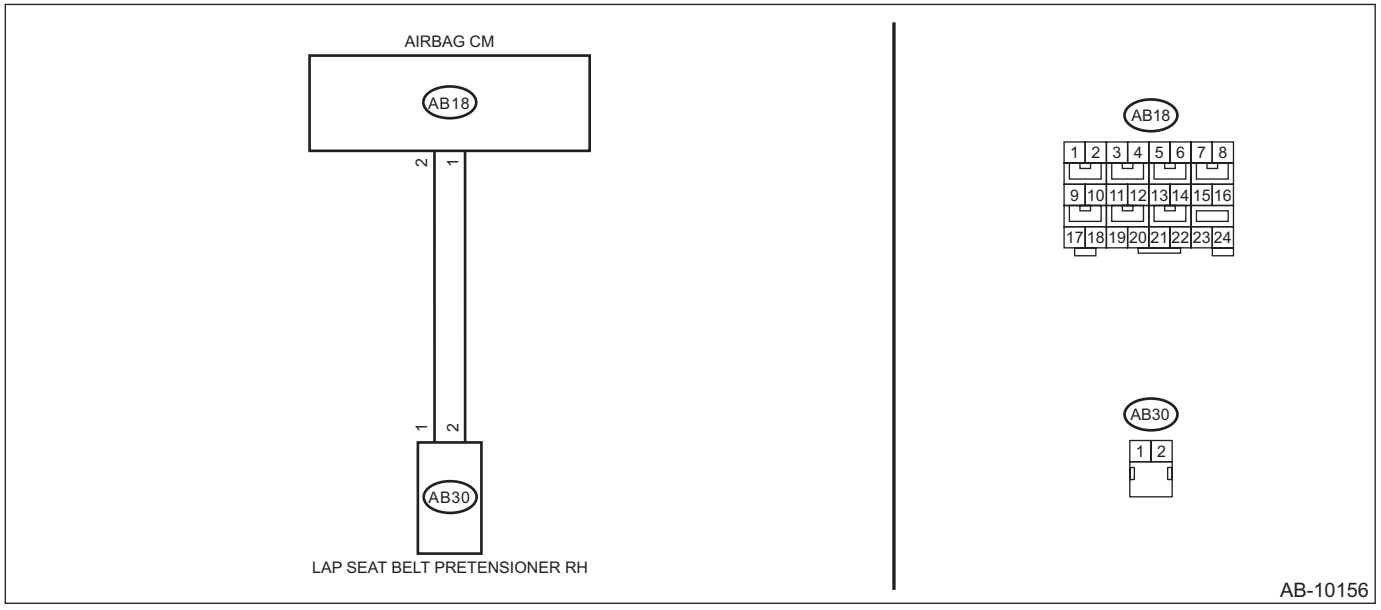

	Step	Check	Yes	No
1	**CHECK POOR CONTACT OF CONNECTORS.** Check for poor contact of the connectors between the airbag control module and the lap seat belt pretensioner RH.	Is there poor contact?	Replace the airbag rear harness along with body harness.	Go to step **2**.
2	**CHECK LAP SEAT BELT PRETENSIONER.** 1) Turn the ignition switch to OFF, disconnect the battery ground cable, and wait for 60 seconds or more. 2) Disconnect the connector (AB30) from the lap seat belt pretensioner RH. 3) Connect the connector (1N) in the test harness N to the connector (AB30). 4) Connect the airbag resistor to the connector (2N) of test harness N. 5) Connect the battery ground terminal and turn the ignition switch to ON.	Does the airbag warning light illuminate for 6 seconds and go off?	Replace the lap seat belt pretensioner RH. <Ref. to SB-17, SEAT BELT INNER - FRONT, REMOVAL, Front Seat Belt.>	Go to step **3**.

	Step	Check	Yes	No
3	**CHECK AIRBAG REAR HARNESS (LAP SEAT BELT PRETENSIONER HARNESS RH).** 1) Turn the ignition switch to OFF, disconnect the battery ground cable, and wait for 60 seconds or more. 2) Disconnect the airbag resistor from test harness N. 3) Disconnect the connector (AB33) from curtain airbag module RH. 4) Disconnect the connector (AB24) from side airbag module RH. 5) Disconnect the connector (AB26) from seat belt pretensioner. 6) Disconnect the connectors (AB6, AB17, AB18) from airbag control module. 7) Connect the connector (1AG) in the test harness AG to the connectors (AB6, AB17, AB18). 8) Measure the resistance between connector (3AG) in the test harness AG and chassis ground. ***Connector & terminal*** ***(3AG) No. 17 — Chassis ground:*** ***(3AG) No. 19 — Chassis ground:***	Is the resistance 1 MΩ or more?	Go to step **4**.	Replace the airbag rear harness along with body harness.
4	**CHECK AIRBAG CONTROL MODULE.** 1) Connect all connectors. 2) Clear the memory. <Ref. to AB(diag)-24, Clear Memory Mode.> 3) Perform the Inspection Mode. <Ref. to AB(diag)-23, Inspection Mode.> 4) Read the DTC. (Current malfunction) <Ref. to AB(diag)-22, Read Diagnostic Trouble Code (DTC).>	Is DTC B19F2 displayed?	Replace the airbag control module. <Ref. to AB-47, Airbag Control Module.>	Go to step **5**.
5	**CHECK FOR ANY OTHER DTC ON DISPLAY.** Read the DTC. (Current malfunction) <Ref. to AB(diag)-22, Read Diagnostic Trouble Code (DTC).>	Is any other DTC displayed?	Perform the diagnosis for other displayed DTCs. <Ref. to AB(diag)-30, List of Diagnostic Trouble Code (DTC).>	Finish the diagnosis.

DS:DTC B19F3 SHORT IN FRONT P/T 2 RH (TO +B)

DIAGNOSIS START CONDITION:
Ignition voltage is 10 V to 16 V.
DTC DETECTING CONDITION:

- Lap seat belt pretensioner RH circuit is shorted to power supply.
- Lap seat belt pretensioner RH is faulty.
- Lap seat belt pretensioner harness RH is shorted to power supply.
- Airbag control module is faulty.

CAUTION:
Before performing diagnosis, refer to "CAUTION" in "General Description". <Ref. to AB(diag)-4, CAUTION, General Description.>
WIRING DIAGRAM:
Airbag system <Ref. to WI-69, WIRING DIAGRAM, Airbag System.>

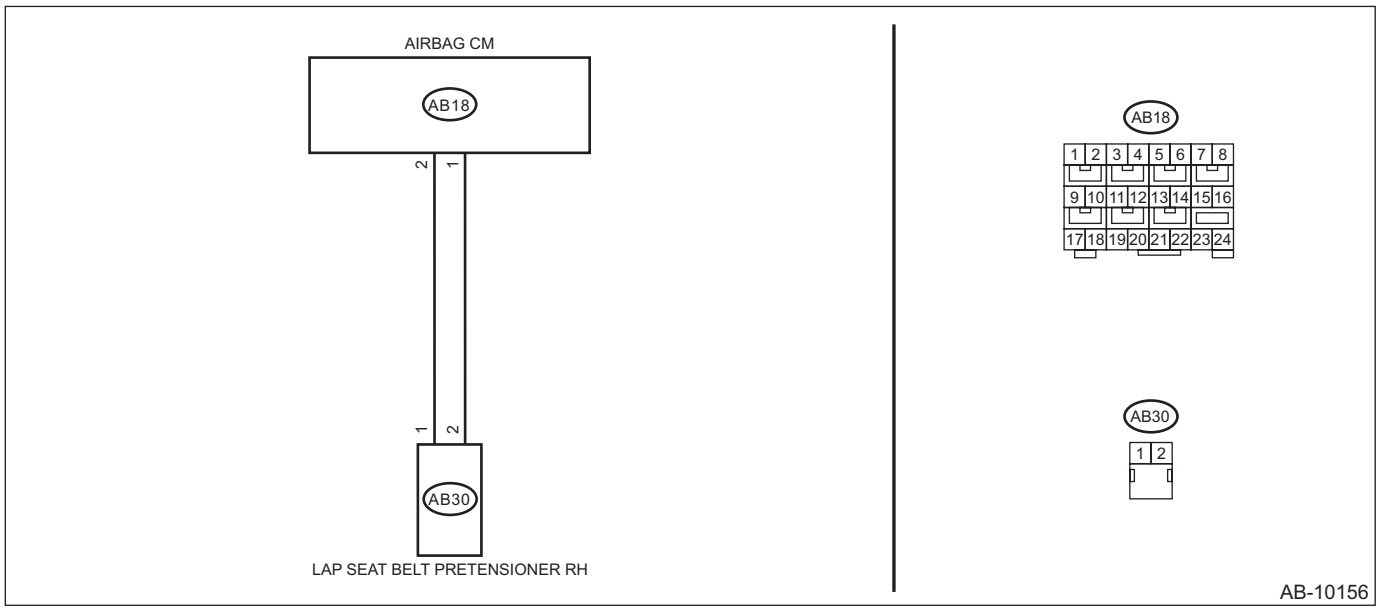

Step		Check	Yes	No
1	**CHECK POOR CONTACT OF CONNECTORS.** Check for poor contact of the connectors between the airbag control module and the lap seat belt pretensioner RH.	Is there poor contact?	Replace the airbag rear harness along with body harness.	Go to step **2**.
2	**CHECK LAP SEAT BELT PRETENSIONER.** 1) Turn the ignition switch to OFF, disconnect the battery ground cable, and wait for 60 seconds or more. 2) Disconnect the connector (AB30) from the lap seat belt pretensioner RH. 3) Connect the connector (1N) in the test harness N to the connector (AB30). 4) Connect the airbag resistor to the connector (2N) of test harness N. 5) Connect the battery ground terminal and turn the ignition switch to ON.	Does the airbag warning light illuminate for 6 seconds and go off?	Replace the lap seat belt pretensioner RH. <Ref. to SB-17, SEAT BELT INNER - FRONT, REMOVAL, Front Seat Belt.>	Go to step **3**.

	Step	Check	Yes	No
3	**CHECK AIRBAG REAR HARNESS (LAP SEAT BELT PRETENSIONER HARNESS RH).** 1) Turn the ignition switch to OFF, disconnect the battery ground cable, and wait for 60 seconds or more. 2) Disconnect the airbag resistor from test harness N. 3) Disconnect the connector (AB33) from curtain airbag module RH. 4) Disconnect the connector (AB24) from side airbag module RH. 5) Disconnect the connector (AB26) from seat belt pretensioner. 6) Disconnect the connectors (AB6, AB17, AB18) from airbag control module. 7) Connect the connector (1AG) in the test harness AG to the connectors (AB6, AB17, AB18). 8) Connect the battery ground terminal and turn the ignition switch to ON. 9) Measure the voltage between connector (3AG) in the test harness AG and chassis ground. ***Connector & terminal*** ***(3AG) No. 17 (+) — Chassis ground (–):*** ***(3AG) No. 19 (+) — Chassis ground (–):***	Is the voltage less than 1 V?	Go to step **4**.	Replace the airbag rear harness along with body harness.
4	**CHECK AIRBAG CONTROL MODULE.** 1) Connect all connectors. 2) Clear the memory. <Ref. to AB(diag)-24, Clear Memory Mode.> 3) Perform the Inspection Mode. <Ref. to AB(diag)-23, Inspection Mode.> 4) Read the DTC. (Current malfunction) <Ref. to AB(diag)-22, Read Diagnostic Trouble Code (DTC).>	Is DTC B19F3 displayed?	Replace the airbag control module. <Ref. to AB-47, Airbag Control Module.>	Go to step **5**.
5	**CHECK FOR ANY OTHER DTC ON DISPLAY.** Read the DTC. (Current malfunction) <Ref. to AB(diag)-22, Read Diagnostic Trouble Code (DTC).>	Is any other DTC displayed?	Perform the diagnosis for other displayed DTCs. <Ref. to AB(diag)-30, List of Diagnostic Trouble Code (DTC).>	Finish the diagnosis.

OCCUPANT DETECTION SYSTEM (DIAGNOSTICS)

OD(diag)

		Page
1.	Basic Diagnostic Procedure	2
2.	Check List for Interview	3
3.	General Description	8
4.	Electrical Component Location	12
5.	Airbag Connector	13
6.	Control Module I/O Signal	14
7.	Subaru Select Monitor	15
8.	Read Diagnostic Trouble Code (DTC)	16
9.	Inspection Mode	17
10.	Clear Memory Mode	18
11.	Read Current Data	19
12.	Airbag Warning Light Illumination Pattern	20
13.	Passenger's Airbag ON/OFF Indicator Light Illumination Pattern	21
14.	List of Diagnostic Trouble Code (DTC)	22
15.	Diagnostic Procedure with Diagnostic Trouble Code (DTC)	23

1. Basic Diagnostic Procedure

A: PROCEDURE

Step		Check	Yes	No
1	**CHECK WARNING LIGHT.** Check whether the airbag warning light in the combination meter is lit.	Does the airbag warning light illuminate?	Go to step **2**.	Perform the diagnosis according to phenomenon of the problem.
2	**READ DTC.** 1) Turn the ignition switch to OFF. 2) Connect the Subaru Select Monitor to data link connector. 3) Turn the ignition switch to ON and run the Subaru Select Monitor. 4) Read the DTC. <Ref. to OD(diag)-16, OPERATION, Read Diagnostic Trouble Code (DTC).> NOTE: If the communication function of the Subaru Select Monitor cannot be executed properly, check the communication circuit. <Ref. to OD(diag)-15, INSPECTION, Subaru Select Monitor.> 5) Record all DTCs and freeze frame data.	Is DTC displayed?	Go to step **3**.	Go to "Airbag Warning Light Failure" <Ref. to AB(diag)-29, Airbag Warning Light Failure.>.
3	**PERFORM DIAGNOSIS.** 1) Determine the possible cause from "List of Diagnostic Trouble Code (DTC)" <Ref. to OD(diag)-22, List of Diagnostic Trouble Code (DTC).>. 2) Inspect the DTC using "List of Diagnostic Trouble Code (DTC)". 3) Repair the trouble cause. 4) Perform the Clear Memory Mode. <Ref. to OD(diag)-18, Clear Memory Mode.> 5) Perform the Inspection Mode. <Ref. to OD(diag)-17, Inspection Mode.> 6) Read any other DTCs displayed.	Is DTC displayed?	Perform the procedure 1) to 5) in step 3.	Finish the diagnosis.

2. Check List for Interview

A: CHECK

1. CONDITIONS OF MALFUNCTION

Customer's Name		Inspector's Name	
Date Vehicle Brought in	/ /	Registration No.	
Odometer reading	km miles	V.I.N.	
Date Problem Occurred	/ /	Registration Year	/ /
Occupant detection sensor mat serial No.		Occupant detection control module serial No.	
Weather	❑ Fine ❑ Cloudy ❑ Rainy ❑ Snowy ❑ Others:		
Location where problem occurred			
Temperature	°C (°F)		
Humidity	% RH		
A/C operation	❑ None ❑ On (°C)		
Road Condition	❑ Flat road ❑ Uphill ❑ Downhill ❑ Gravel road ❑ Stone pavement ❑ Others:		
Vehicle Operation	❑ Starting ❑ Idling ❑ Driving ❑ Constant speed ❑ Accelerating ❑ Decelerating ❑ Turning ❑ Others:		
Time the seat is occupied	❑ Time length from when you started driving to when the warning light illuminated:		
Details of Problem			
Status of airbag warning light at dealer inspection Refer to "Indicator light illumination pattern". <Ref. to OD(diag)-6, INDICATOR LIGHT ILLUMINATION PATTERN, CHECK, Check List for Interview.>	❑ Remains ON ❑ Remains OFF ❑ Illuminated, but goes off after the ignition switch is turned to OFF and then to ON		
Status of airbag warning light at malfunction occurrence Refer to "Indicator light illumination pattern". <Ref. to OD(diag)-6, INDICATOR LIGHT ILLUMINATION PATTERN, CHECK, Check List for Interview.>	❑ Remains ON ❑ Remains OFF ❑ Illuminated, but goes off after the ignition switch is turned to OFF and then to ON		

Check List for Interview

Status of passenger's airbag ON/OFF indicator light at dealer inspection Refer to "Indicator light illumination pattern". <Ref. to OD(diag)-6, INDICATOR LIGHT ILLUMINATION PATTERN, CHECK, Check List for Interview.>	❑ ON light illuminates ❑ Airbag ON indicator illuminates when CRS is installed or when the seat is not occupied. ❑ OFF light illuminates ❑ Airbag OFF indicator illuminates when an adult occupies the seat. ❑ Both remain ON ❑ Both remain OFF
Status of passenger's airbag ON/OFF indicator at malfunction occurrence Refer to "Indicator light illumination pattern". <Ref. to OD(diag)-6, INDICATOR LIGHT ILLUMINATION PATTERN, CHECK, Check List for Interview.>	❑ ON light illuminates ❑ Airbag ON indicator illuminates when CRS is installed or when the seat is not occupied. ❑ OFF light illuminates ❑ Airbag OFF indicator illuminates when an adult occupies the seat. ❑ Both remain ON ❑ Both remain OFF
DTC output	❑ OK code ❑ Airbag CM current malfunction code: (Code:) ❑ Airbag CM past malfunction code: (Code:) ❑ Occupant detection CM current malfunction code: (Code:) ❑ Occupant detection CM past malfunction code: (Code:)
Seat specification (With/without seat heater)	❑ Without seat heater ❑ With seat heater ❑ Seat heater was ON when fault was detected. ❑ Seat heater was OFF when fault was detected. ❑ Heater circuit is open.
Seat occupant status at malfunction occurrence	❑ With passenger Refer to "No. 1 in STATUS OF PASSENGER'S SEAT". <Ref. to OD(diag)-5, STATUS OF PASSENGER'S SEAT, CHECK, Check List for Interview.> ❑ With CRS installation Refer to "No. 2 in STATUS OF PASSENGER'S SEAT". <Ref. to OD(diag)-5, STATUS OF PASSENGER'S SEAT, CHECK, Check List for Interview.> ❑ Without passenger and without CRS installation Refer to "No. 3 in STATUS OF PASSENGER'S SEAT". <Ref. to OD(diag)-5, STATUS OF PASSENGER'S SEAT, CHECK, Check List for Interview.>

2. STATUS OF PASSENGER'S SEAT

No. 1	When the passenger's seat was occupied	❑ Height: ❑ Weight: ❑ With ski wear, coat, or other thick lower garments such as snowsuit worn ❑ Without ski wear, coat, or other thick lower garments such as snowsuit worn ❑ Seat belt fastened ❑ Seat belt not fastened ❑ Seat slide position (position from the full forward position) ❑ Seat backrest reclining angle (position from the fully upright position) ❑ Posture (normally seated, reached for items on the rear seat, moved the seat slide, lied down on the fully flattened seat, legs placed on the instrument panel, or other:) ❑ Seat got wet due to rain, spill of drink, etc. ❑ Seat accessory (refer to No. 4 below) attached between the passenger and seat ❑ Items (shoe placement item, other:) placed between the passenger and floor carpet ❑ Metal parts inside the vehicle contacted upon fault detection (towel bar, seat frame, vehicle body, cigarette socket, other:) ❑ Electronic components (refer to No. 5 below) used ••• When yes, go to No. 5. ❑ Electronic components not used ❑ With an item installed under the passenger's seat: Installed item ( )
No. 2	When the CRS was installed on the passenger's seat	❑ A child occupied the seat ••• When yes, go to No. 1. ❑ No child occupied the seat ❑ Seat belt fastened (Appropriately? Yes / No) ❑ Seat belt not fastened ❑ Type of the CRS (infant car seat, rear facing installation, forward facing installation, booster seat, other) ❑ CRS manufacturer, model ❑ Seat got wet due to rain, spill of drink, etc. ❑ Seat accessory (refer to No. 4 below) attached between the passenger and seat ❑ Electronic components (refer to No. 6 below) installed ••• When yes, go to No. 6. ❑ Without any installation item other than the CRS ❑ With an item installed under the passenger's seat: Installed item ( )
No. 3	Without a passenger on the passenger's seat, and without CRS installation	❑ Seat got wet due to rain, spill of drink, etc. ❑ Seat accessory (refer to No. 4 below) attached ••• When yes, go to No. 4. ❑ With other goods (bag, luggage, beverage bottle, other:) ❑ Electronic components (refer to No. 6 below) installed ••• When yes, go to No. 6. ❑ Without any goods ❑ With an item installed under the passenger's seat: Installed item ( )
No. 4	When accessories are installed on the passenger's seat	❑ With seat accessory installed (retrofitted seat heater, seat cooler, cushion mat, seat cover, other:)
No. 5	When the passenger on the passenger's seat was using electronic components.	❑ Electronic components used (personal computer, tablet device, mobile phone, smartphone, portable music player, portable game device, portable radio, portable navigation, other:) ❑ Above-listed device used while being connected to power supply inside the vehicle such as a cigarette lighter socket ❑ Above-listed device used without being connected to power supply inside the vehicle such as a cigarette lighter socket ❑ Above-listed device used while being connected to other power supply
No. 6	When the electronic components were placed on the passenger's seat (no occupant on the seat)	❑ Electronic components placed (personal computer, tablet device, mobile phone, smartphone, portable music player, portable game device, portable radio, portable navigation, other:) ❑ Above-listed device connected to power supply inside the vehicle such as a cigarette lighter socket ❑ Above-listed device not connected to power supply inside the vehicle such as a cigarette lighter socket ❑ Above-listed device connected to other power supply

3. INDICATOR LIGHT ILLUMINATION PATTERN

❑ When all the systems are normal.

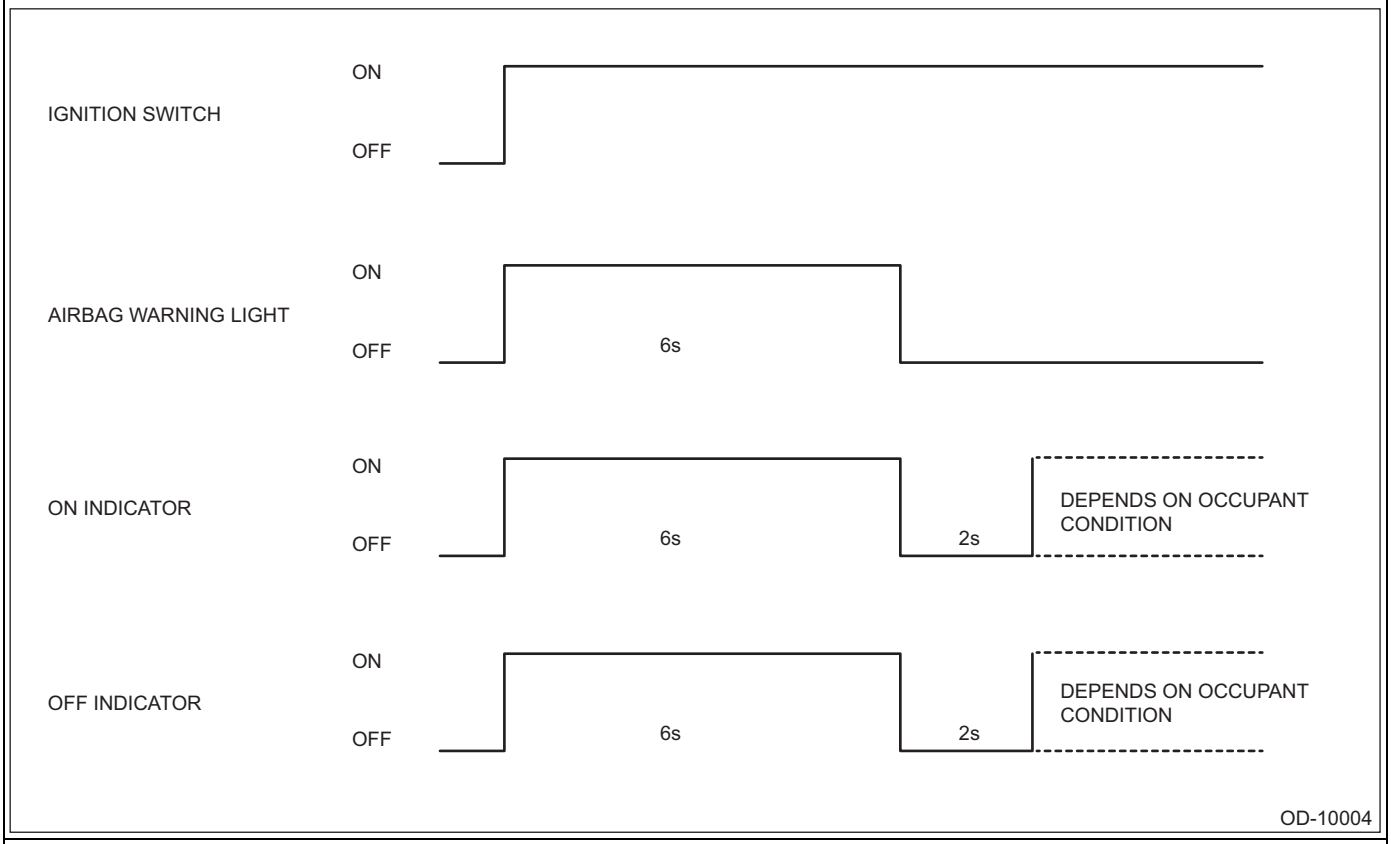

❑ When there has been a failure on the occupant detection control module since the ignition switch was turned ON.

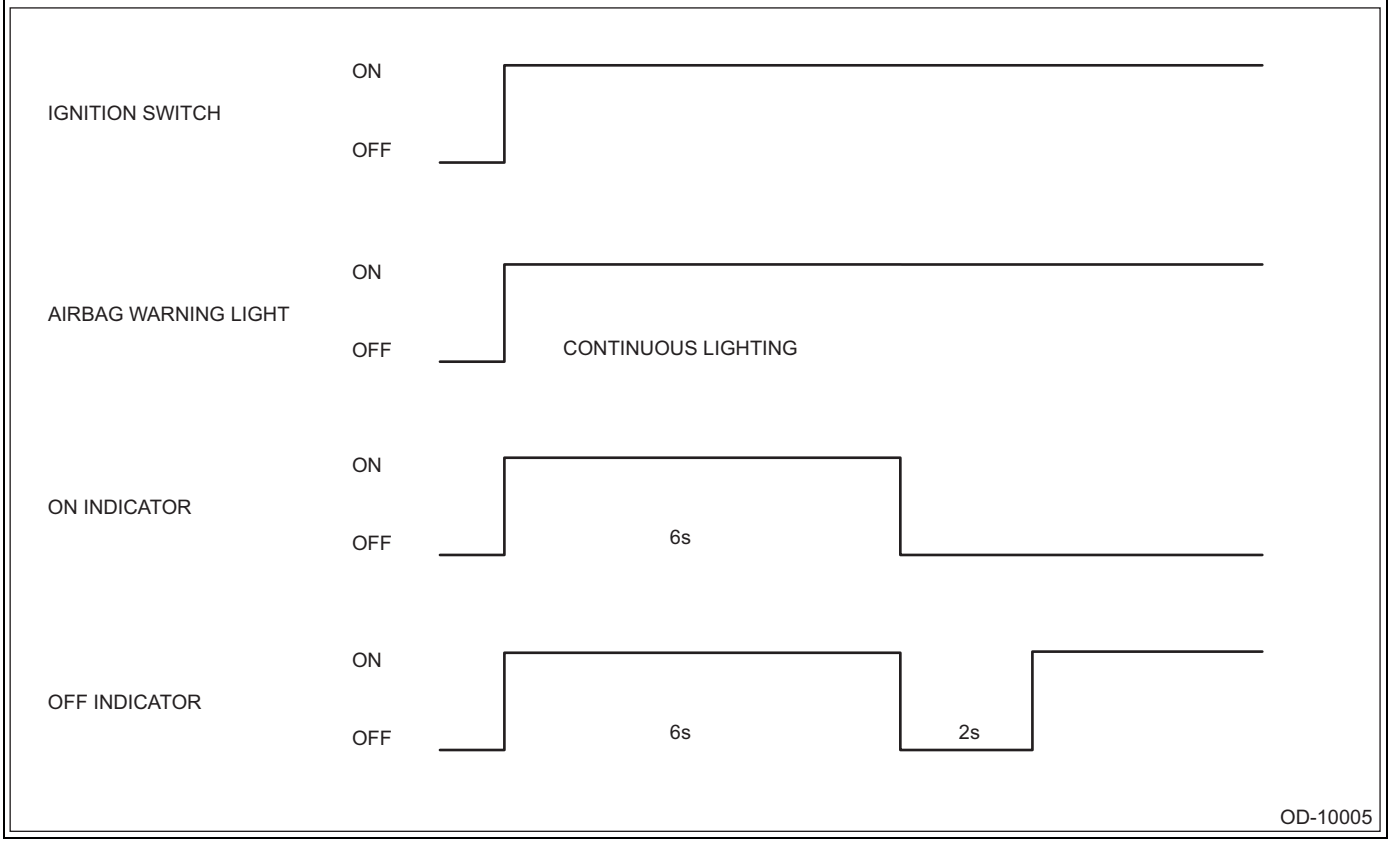

❑ Arbitrary length of time has elapsed after the ignition switch was turned ON → A failure occurred on the occupant detection control module.

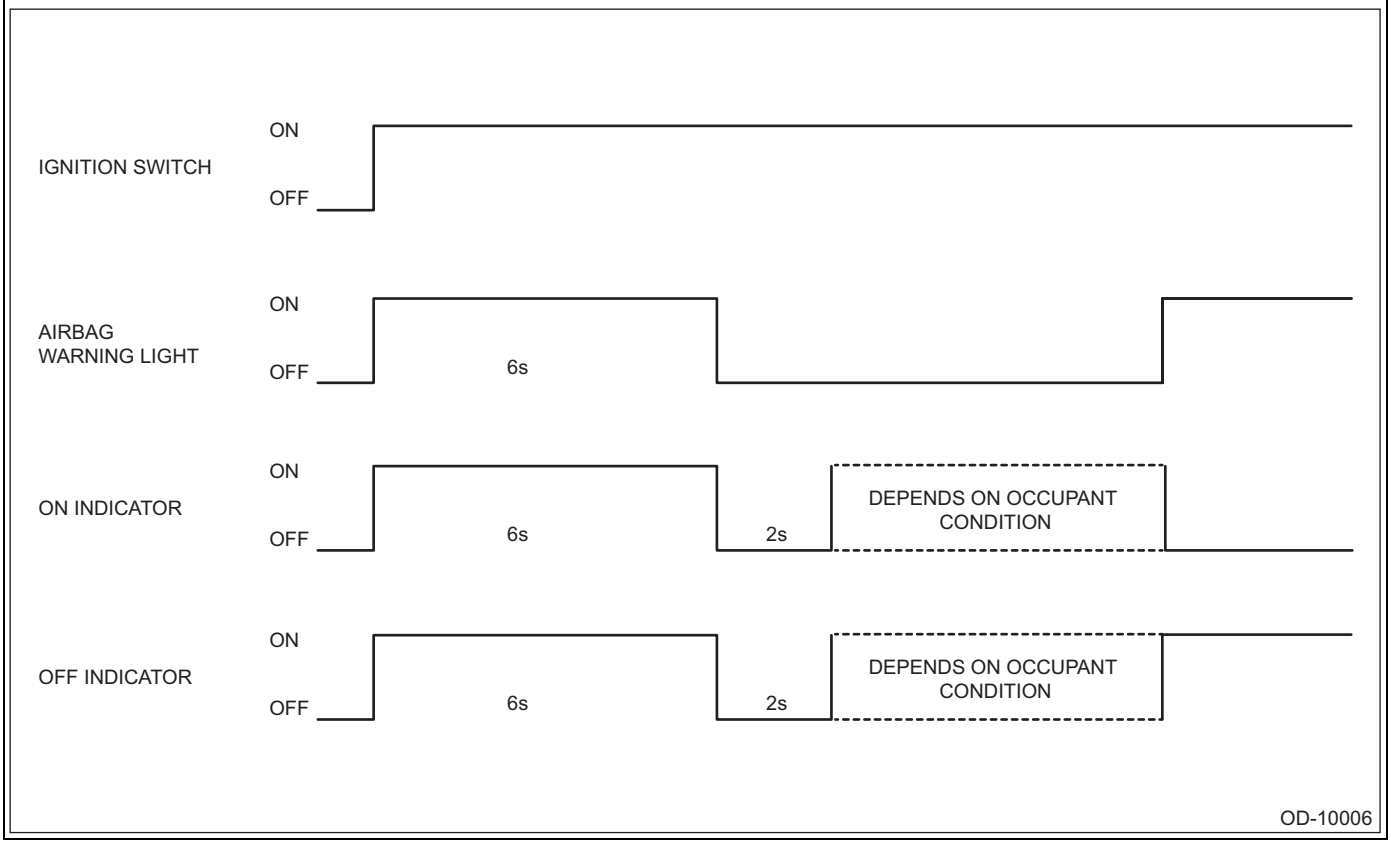

3. General Description

A: CAUTION

1) The occupant detection system (passenger seat only) control module and the occupant detection sensor are fixed to the seat cushion frame. Never remove the occupant detection control module or the occupant detection sensor from the seat cushion frame.
2) Do not replace the seat cushion pad by itself. Always replace the seat cushion pad and frame assembly as a set. The seat cushion pad and cushion frame are adjusted as a set at the time of manufacture. If cushion pads and cushion frames are combined from those of other vehicles or other sets, the occupant detection system may not operate properly.
3) If the seat cushion cover is removed, make sure to replace the hang wire on the seat cushion side with a new wire.
4) Never connect the battery in reverse polarity. Occupant detection system may be destroyed instantly.
5) Do not disconnect the battery terminals while the engine is running. A large counter electromotive force will be generated in the generator, and this voltage may damage electronic parts such as occupant detection control module.
6) Before disconnecting the connectors of each sensor and control module, be sure to turn the ignition switch to OFF and wait for 60 seconds or more. Occupant detection control module may be damaged.
7) Every occupant detection system-related part is a precision part. Do not drop them.

CAUTION:
• Do not use electrical test equipment on wiring harness and connector circuits of the airbag system.
• Be careful not to damage the airbag system wiring harness when servicing the occupant detection system.
• Refer to CAUTION in Airbag System when repairing the occupant detection system. <Ref. to AB-9, CAUTION, General Description.>

B: INSPECTION

Check the battery. <Ref. to SC(w/o STI)-51, INSPECTION, Battery.> <Ref. to SC(STI)-24, INSPECTION, Battery.>

C: PREPARATION TOOL

CAUTION:
To measure the voltage and resistance of airbag system and occupant detection system components, be sure to use the specified test harness.

1. SPECIAL TOOL

ILLUSTRATION	TOOL NUMBER	DESCRIPTION	REMARKS
 STSSM4	—	SUBARU SELECT MONITOR 4	Used for setting of each function and troubleshooting for electrical system. NOTE: For detailed operation procedures of Subaru Select Monitor 4, refer to “Application help”.

- TEST HARNESS Y

ILLUSTRATION	TOOL NUMBER	DESCRIPTION	REMARKS
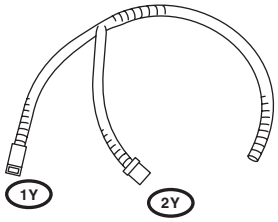 ST98299AG040	98299AG040	TEST HARNESS Y	Used for troubleshooting seat belt buckle switch.

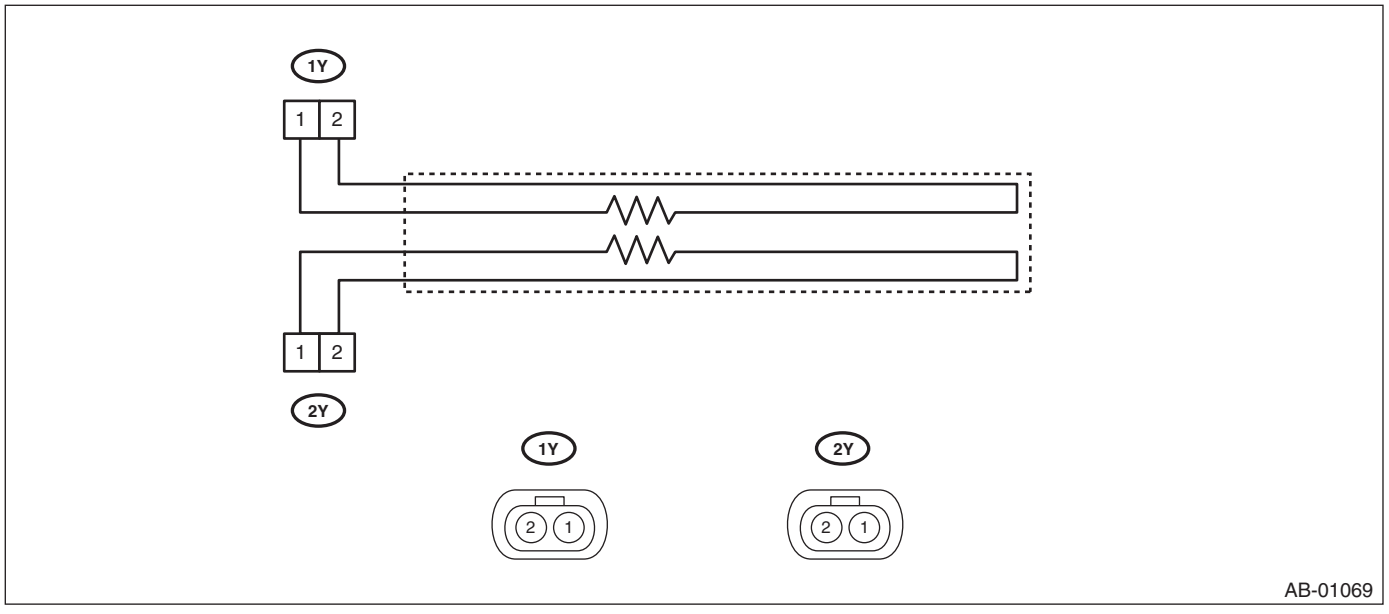

AB-01069

- TEST HARNESS AE

ILLUSTRATION	TOOL NUMBER	DESCRIPTION	REMARKS
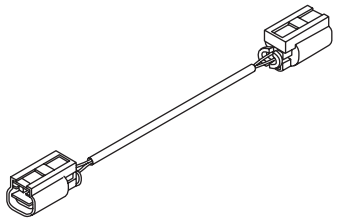 ST98299XA030	98299XA030	TEST HARNESS AE	TEST HARNESS Y adapter harness. Used for troubleshooting seat belt buckle switch.

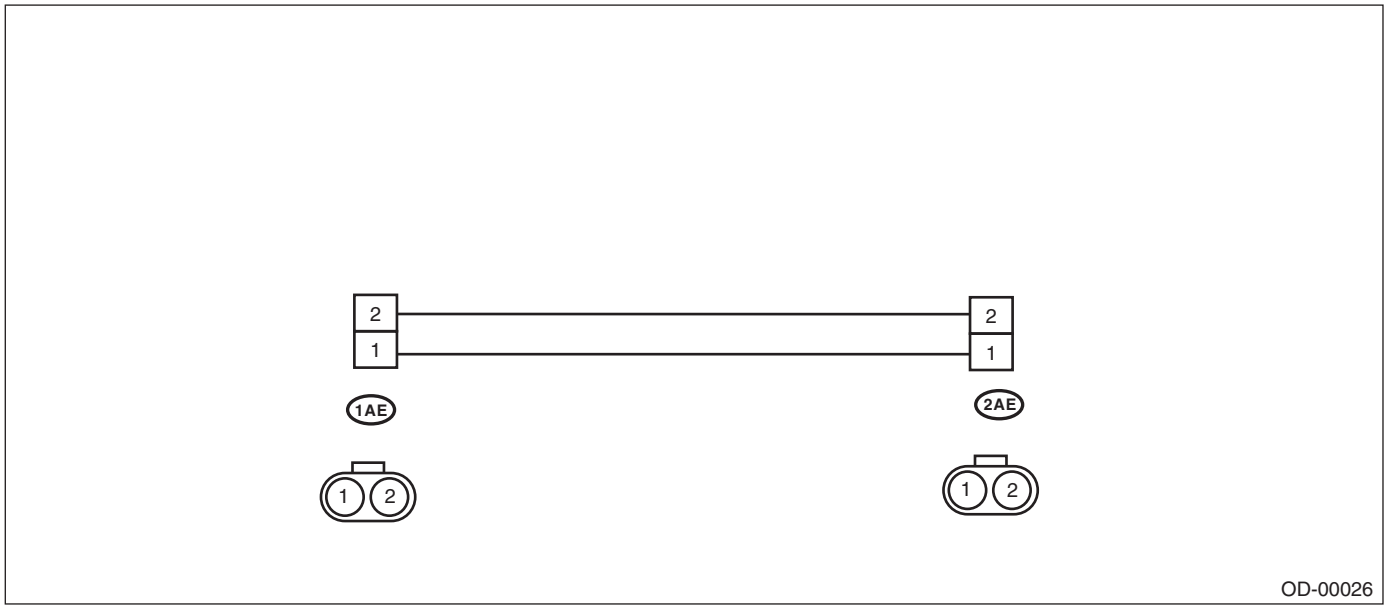

- TEST HARNESS AP

ILLUSTRATION	TOOL NUMBER	DESCRIPTION	REMARKS
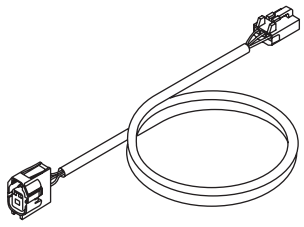 ST98299FJ030	98299FJ030	TEST HARNESS AP	Used when measuring voltage and resistance of occupant detection system.

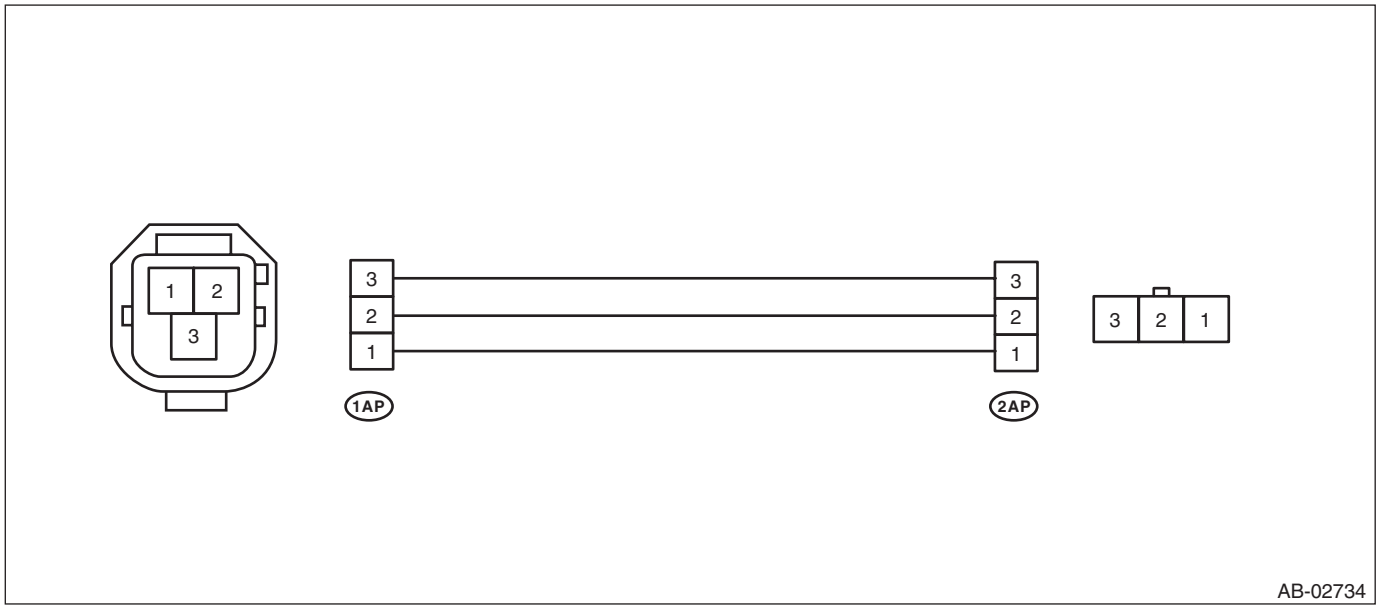

AB-02734

2. GENERAL TOOL

TOOL NAME	REMARKS
Circuit tester	Used for measuring resistance, voltage and current.
DST-i	Used together with Subaru Select Monitor 4.

4. Electrical Component Location

A: LOCATION

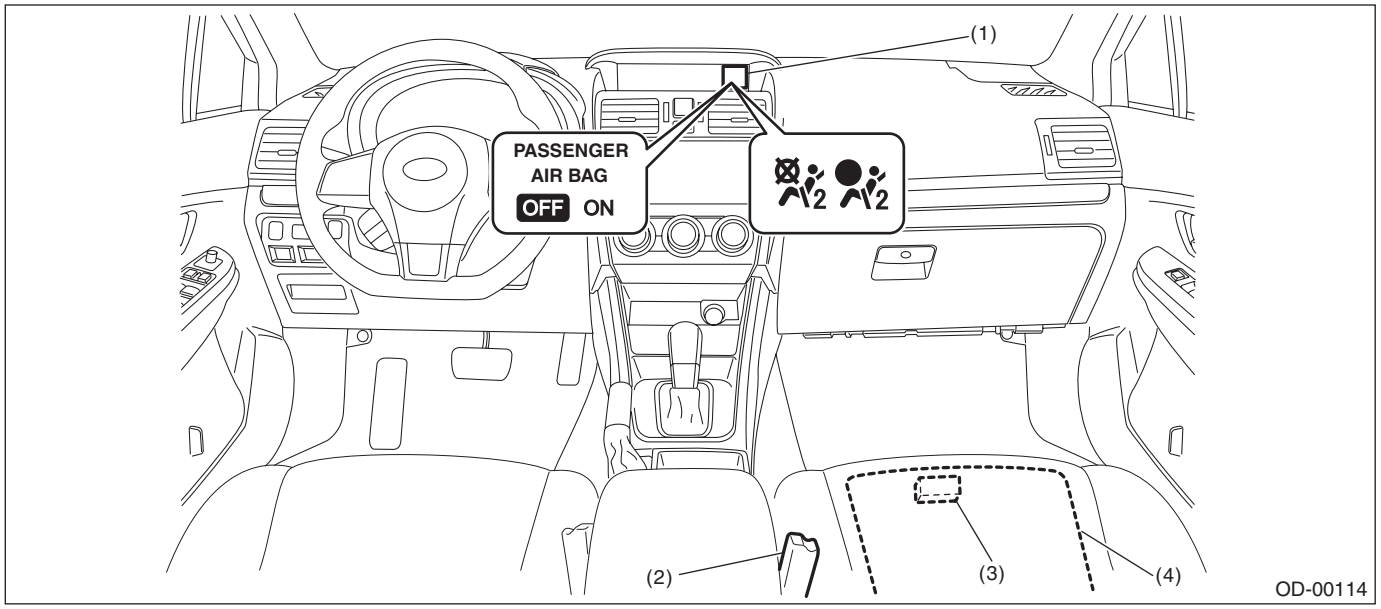

(1) Airbag ON/OFF indicator light
(2) Buckle switch (passenger's seat)
(3) Occupant detection control module
(4) Occupant detection sensor

5. Airbag Connector

A: PROCEDURE

1. OCCUPANT DETECTION SYSTEM (BETWEEN AIRBAG REAR HARNESS AND SEAT HARNESS)

1) How to disconnect:
Press the lock arm (A) and disconnect the connector.

CAUTION:
When pulling the slide lock or disconnecting connector, be sure to hold the connector, not the harness.

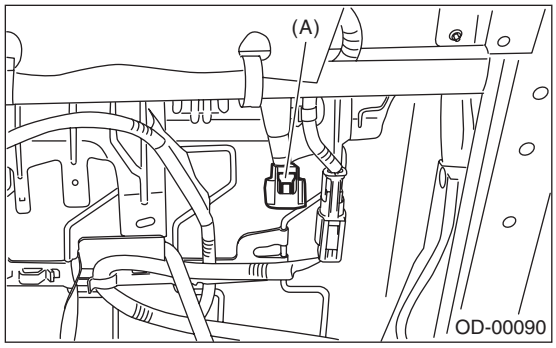

2) How to connect:
Holding the connector, push it in securely until a clicking sound is heard.

CAUTION:
Be sure to insert the connector in until it is locked. Then pull it gently to make sure that it is locked.

2. AIRBAG CONTROL MODULE

Refer to the airbag system section. <Ref. to AB-17, AIRBAG CONTROL MODULE, PROCEDURE, Airbag Connector.>

3. BUCKLE SWITCH RH

Refer to the airbag system section. <Ref. to AB-23, BUCKLE SWITCH RH, PROCEDURE, Airbag Connector.>

6. Control Module I/O Signal

A: ELECTRICAL SPECIFICATION

CAUTION:
Never remove the occupant detection control module, occupant detection sensor or seat frame because they are integrated into one unit.

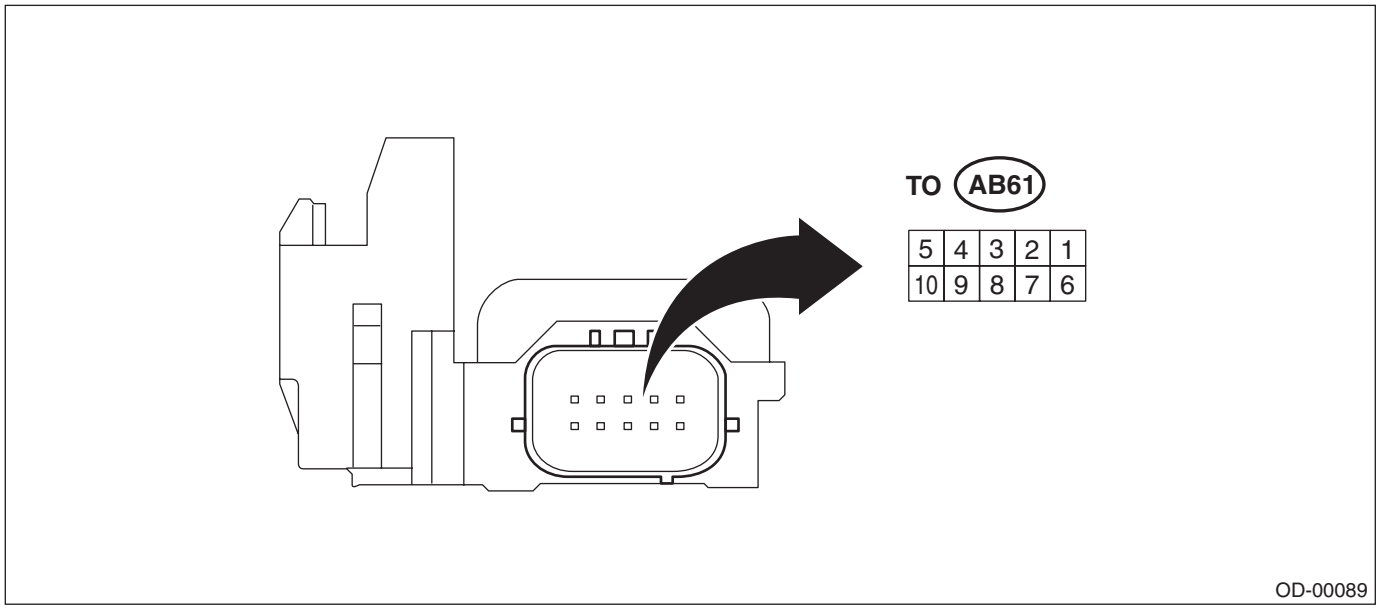

Terminal No.	Terminal name	Input/Output value	Note
1	Airbag CM communication (FSR+)	—	Communication line
2	Not used	—	—
3	Not used	—	—
4	Buckle switch – (BER–)	0 V	Switch ground
5	Not used	—	—
6	IG power supply (IG)	8 — 16 V	When ignition SW is ON
7	Not used	—	—
8	Buckle switch + (BER+)	0 — IG voltage	Ignition voltage when the switch is ON
9	Airbag CM communication (FSR–)	0 V	GND
10	Not used	—	—

B: WIRING DIAGRAM

Refer to “Occupant Detection System” in the wiring diagram. <Ref. to WI-292, WIRING DIAGRAM, Occupant Detection System.>

7. Subaru Select Monitor

A: OPERATION

For detailed operation procedures, refer to “Application help”.

B: INSPECTION

1. COMMUNICATION FOR INITIALIZING THE AIRBAG SYSTEM IS IMPOSSIBLE

DETECTING CONDITION:
Defective harness connector
TROUBLE SYMPTOM:
Communication is impossible between the airbag control module and the Subaru Select Monitor.

NOTE:
Refer to “Communication for Initializing Impossible” in AIRBAG SYSTEM (DIAGNOSTICS). <Ref. to AB(diag)-19, COMMUNICATION FOR INITIALIZING IMPOSSIBLE, INSPECTION, Subaru Select Monitor.>

2. COMMUNICATION FOR INITIALIZING ONLY THE OCCUPANT DETECTION SYSTEM IS IMPOSSIBLE

NOTE:
The occupant detection system communicates with the Subaru Select Monitor via the airbag control module.
DETECTING CONDITION:
Defective harness connector between airbag control module and occupant detection control module
TROUBLE SYMPTOM:
Communication is impossible between the airbag control module and the occupant detection control module.
Perform the diagnosis from step 2 in “DTC B1650 OCCUPANT DETECTION SYSTEM MALFUNCTION”. <Ref. to OD(diag)-23, DTC B1650 OCCUPANT DETECTION SYSTEM MALFUNCTION, Diagnostic Procedure with Diagnostic Trouble Code (DTC).>

8. Read Diagnostic Trouble Code (DTC)

A: OPERATION

Read out DTCs stored in the airbag system and the occupant detection system.

1. AIRBAG SYSTEM

1) On «Start» display, select «Diagnosis».
2) On «Vehicle selection» display, input the target vehicle information and select «Confirmed».
3) On «Main Menu» display, select «Each System».
4) On «Select System» display, select «Airbag» and select «Enter».
5) On «Airbag» display, select «DTC».

NOTE:
- For detailed operation procedures, refer to “Application help”.
- For details concerning DTC, refer to List of Diagnostic Trouble Code (DTC) in AIRBAG SYSTEM. <Ref. to AB(diag)-30, List of Diagnostic Trouble Code (DTC).>

2. OCCUPANT DETECTION SYSTEM

1) On «Start» display, select «Diagnosis».
2) On «Vehicle selection» display, input the target vehicle information and select «Confirmed».
3) On «Main Menu» display, select «Each System».
4) On «Select System» display, select «Occupant Detection» and then select «Enter».
5) On «Occupant Detection» display, select «DTC».

NOTE:
- For detailed operation procedures, refer to “Application help”.
- For details concerning DTC, refer to “List of Diagnostic Trouble Code (DTC)”. <Ref. to OD(diag)-22, List of Diagnostic Trouble Code (DTC).>

9. Inspection Mode

A: PROCEDURE

Recreate the circumstance by referring to the conditions described in the checklist.

10.Clear Memory Mode

A: OPERATION

After repairing the occupant detection system, clear the DTCs stored in the airbag control module and the occupant detection control module.

1. AIRBAG SYSTEM

1) On «Start» display, select «Diagnosis».
2) On «Vehicle selection» display, input the target vehicle information and select «Confirmed».
3) On «Main Menu» display, select «Each System».
4) On «Select System» display, select «Airbag» and select «Enter».
5) On «Airbag» display, select «DTC».
6) On «DTC» display, select «Clear Memory».

NOTE:
For detailed operation procedures, refer to “Application help”.

2. OCCUPANT DETECTION SYSTEM

1) On «Start» display, select «Diagnosis».
2) On «Vehicle selection» display, input the target vehicle information and select «Confirmed».
3) On «Main Menu» display, select «Each System».
4) On «Select System» display, select «Occupant Detection» and then select «Enter».
5) On «Occupant Detection» display, select «DTC».
6) On «DTC» display, select «Clear Memory».

NOTE:
For detailed operation procedures, refer to “Application help”.

11.Read Current Data

A: OPERATION

Check the operating condition of each sensor in the event of malfunction in the seat belt buckle switch, or when the seat belt buckle switch has been replaced.

NOTE:
For detailed operation procedures, refer to “Application help”.
1) On «Start» display, select «Diagnosis».
2) On «Vehicle selection» display, input the target vehicle information and select «Confirmed».
3) On «Main Menu» display, select «Each System».
4) On «Select System» display, select «Occupant Detection».
5) On «Occupant Detection» display, select «Data Monitor».
The following table is for support data.

Item	Display	Note
Front Passenger Seat Status	Empty or Child/Adult or Child	“Adult or Child” when the seat is occupied “Empty or Child” when the seat is unoccupied or when child restraint seat is installed **CAUTION:** **When checking the operating status, be careful of the followings.** **• When the seat is unoccupied: Do not place anything on the seat.** **• Child restraint seat: Install the seat according to its instruction manual.** **• When the seat is occupied: Someone who weighs at least approx. 70 kg (155 lb) must be seated during the check.**

12.Airbag Warning Light Illumination Pattern

A: INSPECTION

Turn the ignition switch to ON, and confirm that the airbag warning light remains on for approx. 6 seconds then turns off afterwards.

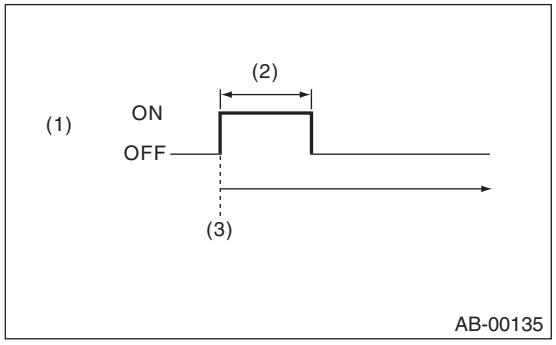

(1) Airbag warning light
(2) Approx. 6 seconds
(3) Ignition switch ON

13.Passenger's Airbag ON/OFF Indicator Light Illumination Pattern

A: INSPECTION

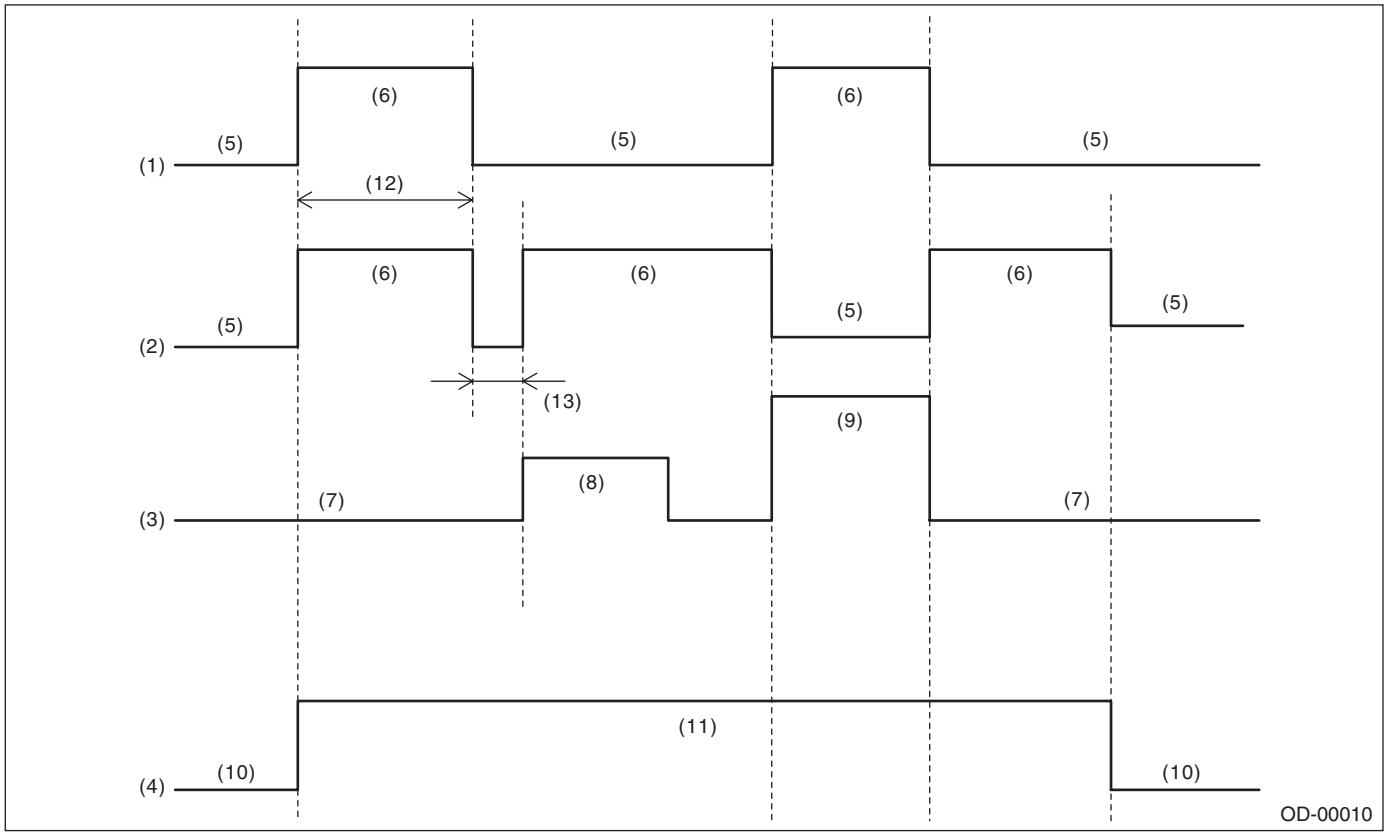

(1)	Passenger's airbag ON indicator light	(6)	Light ON	(10)	OFF
(2)	Passenger's airbag OFF indicator light	(7)	Empty	(11)	ON
(3)	Occupant seating	(8)	Child	(12)	Approx. 6 sec.
(4)	Ignition switch	(9)	Adult	(13)	Approx. 2 sec.
(5)	Light OFF				

14.List of Diagnostic Trouble Code (DTC)

A: LIST

DTC	Item	Content of diagnosis	Reference
B1650	Occupant Detection System Malfunction	• Occupant detection sensor is faulty. • Occupant detection control module is faulty. • Occupant detection harness is faulty. • Fuse No. 25 is blown. • Rear airbag harness is faulty.	<Ref. to OD(diag)-23, DTC B1650 OCCUPANT DETECTION SYSTEM MALFUNCTION, Diagnostic Procedure with Diagnostic Trouble Code (DTC).>
B1655	Front Buckle Switch RH Failure	• Passenger's buckle switch circuit is open, shorted or shorted to ground. • Occupant detection system is faulty. • Occupant detection harness is faulty.	<Ref. to OD(diag)-25, DTC B1655 FRONT BUCKLE SWITCH RH FAILURE, Diagnostic Procedure with Diagnostic Trouble Code (DTC).>
B1760	Occupant Detection Sensor Mat	• Occupant detection sensor is faulty. • Occupant detection sensor is open, shorted between terminals, shorted to power supply or shorted to ground. • Seat heater is open. • Occupant detection control module is faulty.	<Ref. to OD(diag)-26, DTC B1760 OCCUPANT DETECTION SENSOR MAT, Diagnostic Procedure with Diagnostic Trouble Code (DTC).>
B1761	Occupant Detection Sensor Mat Liquid Coating	• Detected that the occupant detection sensor is spattered with fluid. • Occupant detection sensor is faulty. • Occupant detection control module is faulty.	<Ref. to OD(diag)-27, DTC B1761 OCCUPANT DETECTION SENSOR MAT LIQUID COATING, Diagnostic Procedure with Diagnostic Trouble Code (DTC).>
B1771	Buckle Switch	• Passenger's buckle switch is faulty. • Passenger's buckle switch circuit is open, shorted or shorted to ground. • Occupant detection system is faulty. • Occupant detection harness is faulty.	<Ref. to OD(diag)-27, DTC B1771 BUCKLE SWITCH, Diagnostic Procedure with Diagnostic Trouble Code (DTC).>
B1795	Occupant Detection Module Internal Circuit	Occupant detection control module is faulty.	<Ref. to OD(diag)-27, DTC B1795 OCCUPANT DETECTION MODULE INTERNAL CIRCUIT, Diagnostic Procedure with Diagnostic Trouble Code (DTC).>

15.Diagnostic Procedure with Diagnostic Trouble Code (DTC)

A: DTC B1650 OCCUPANT DETECTION SYSTEM MALFUNCTION

DIAGNOSIS START CONDITION:
Ignition voltage is 8 V to 16 V.
DTC DETECTING CONDITION:

- Occupant detection sensor is faulty.
- Occupant detection control module is faulty.
- Occupant detection harness is faulty.
- Fuse No. 25 is blown out.
- Rear airbag harness is faulty.

CAUTION:
Before performing diagnosis, refer to "CAUTION" in "General Description". <Ref. to AB(diag)-4, CAUTION, General Description.>
WIRING DIAGRAM:
Occupant detection system <Ref. to WI-292, WIRING DIAGRAM, Occupant Detection System.>

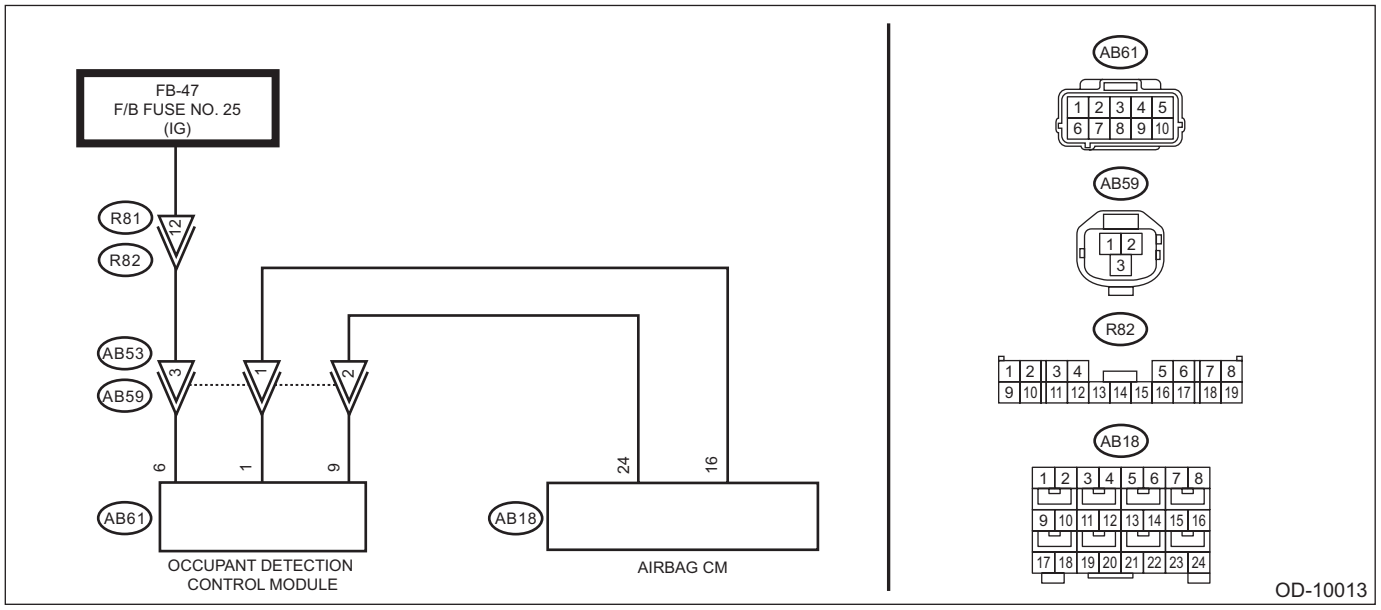

Step		Check	Yes	No
1	**CHECK DTC.** Read the DTC of the occupant detection system. <Ref. to OD(diag)-16, OCCUPANT DETECTION SYSTEM, OPERATION, Read Diagnostic Trouble Code (DTC).>	Is DTC B1760, B1761, B1771 or B1795 displayed?	Perform the diagnosis for the displayed DTC B1760, B1761, B1771 or B1795.	Go to step **2**.
2	**CHECK POOR CONTACT OF CONNECTORS.** Check for poor contact of the connectors between the occupant detection control module and airbag control module.	Is there poor contact?	When the connector is not fully connected, reconnect the connector correctly. Replace the faulty harness if the connector is faulty. (Replace the airbag rear harness along with body harness. Or replace the occupant detection harness (seat harness).)	Go to step **3**.

	Step	Check	Yes	No
3	**CHECK AIRBAG REAR HARNESS.** 1) Turn the ignition switch to OFF, disconnect the battery ground cable, and wait for 60 seconds or more. 2) Disconnect the connectors (AB59) and (AB53) under the passenger's seat. 3) Disconnect the connectors (AB6, AB17, AB18) from airbag control module. 4) Connect the connector (1AG) in the test harness AG to the connectors (AB6, AB17, AB18). 5) Connect the connector (1AP) in the test harness AP to the connector (AB53). 6) Measure the resistance between connector (5AG) in the test harness AG and connector (2AP) in the test harness AP. ***Connector & terminal*** ***(5AG) No. 9 — (2AP) No. 1:*** ***(5AG) No. 11 — (2AP) No. 2:***	Is the resistance less than 10 Ω?	Go to step **4**.	Replace the airbag rear harness along with body harness.
4	**CHECK AIRBAG REAR HARNESS.** Measure the resistance between connector (5AG) in the test harness AG and chassis ground. ***Connector & terminal*** ***(5AG) No. 9 — Chassis ground:*** ***(5AG) No. 11 — Chassis ground:*** ***(5AG) No. 9 — (5AG) No. 11:***	Is the resistance 1 MΩ or more?	Go to step **5**.	Replace the airbag rear harness along with body harness.
5	**CHECK OCCUPANT DETECTION HARNESS.** 1) Turn the ignition switch to ON. 2) Measure the voltage between connector (2AP) in the test harness AP and chassis ground. ***Connector & terminal*** ***(2AP) No. 3 (+) — Chassis ground (–):***	Is the voltage 10 V or more?	Replace the occupant detection harness (seat harness). If defective is not improved, replace the occupant detection system (seat cushion & frame assembly), and then the airbag control module in this order. <Ref. to SE-23, PASSENGER'S SEAT, DISASSEMBLY, Front Seat.>	Check the battery voltage and fuse. If there is no fault, replace the airbag rear harness together with body harness.

B: DTC B1655 FRONT BUCKLE SWITCH RH FAILURE

DIAGNOSIS START CONDITION:
Ignition voltage is 8 V to 16 V.

DTC DETECTING CONDITION:
- Passenger's buckle switch circuit is open, shorted or shorted to ground.
- Occupant detection system is faulty.
- Occupant detection harness is faulty.

WIRING DIAGRAM:
Occupant detection system <Ref. to WI-292, WIRING DIAGRAM, Occupant Detection System.>

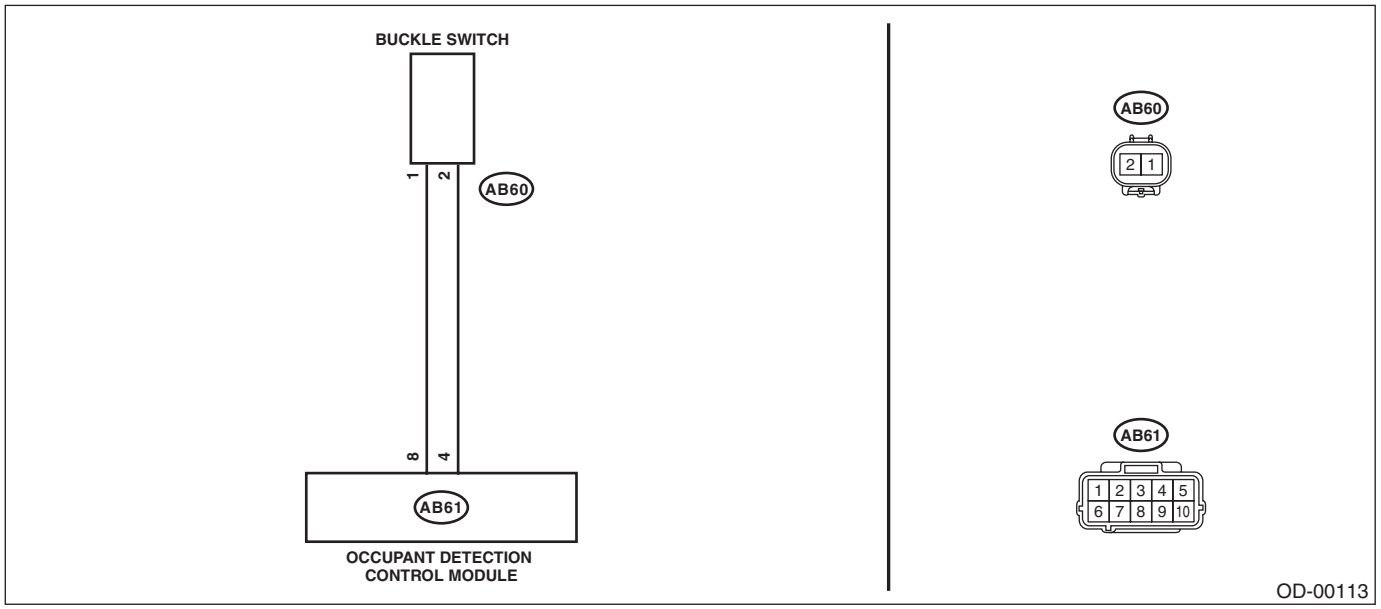

	Step	Check	Yes	No
1	**CHECK DTC.** Read the DTC of the occupant detection system. <Ref. to OD(diag)-16, OCCUPANT DETECTION SYSTEM, OPERATION, Read Diagnostic Trouble Code (DTC).>	Is DTC B1760, B1761, B1771 or B1795 displayed?	Perform the diagnosis for the displayed DTC B1760, B1761, B1771 or B1795.	Go to step **2**.
2	**CHECK POOR CONTACT OF CONNECTORS.** Check for poor contact of the connectors between the occupant detection control module and buckle switch.	Is there poor contact?	When the connector is not fully connected, reconnect the connector correctly. Replace the airbag harness if the connector is faulty.	Go to step **3**.
3	**CHECK BUCKLE SWITCH.** 1) Turn the ignition switch to OFF, disconnect the battery ground terminal, and wait for 60 seconds. 2) Disconnect the buckle switch connector (AB60). 3) Connect the test harness AE and test harness connector Y to buckle switch connector (AB60). 4) Connect the battery ground terminal and turn the ignition switch to ON.	Does the airbag warning light illuminate for 6 seconds and go off?	Replace the buckle switch. <Ref. to SB-15, SEAT BELT OUTER - FRONT, REMOVAL, Front Seat Belt.>	Check the seat harness, and if any fault is found, replace the seat harness. If the fault is not fixed, replace the occupant detection system. <Ref. to SE-23, PASSENGER'S SEAT, DISASSEMBLY, Front Seat.>

C: DTC B1760 OCCUPANT DETECTION SENSOR MAT

DIAGNOSIS START CONDITION:
Ignition voltage is 8 V to 16 V.
DTC DETECTING CONDITION:
- Occupant detection sensor is faulty.
- Occupant detection sensor circuit is open, shorted between terminals, shorted to power supply or shorted to ground.
- Seat heater circuit is open.
- Occupant detection control module is faulty.

	Step	Check	Yes	No
1	**CHECK POOR CONTACT OF CONNECTORS.** Check for poor contact of connectors between the occupant detection control module and the occupant detection sensor.	Is there poor contact of connector?	When the connector is not fully connected, reconnect the connector correctly. Replace the faulty harness if the connector is faulty. (Replace the occupant detection harness or replace the occupant detection system (passenger's & frame assembly)). <Ref. to SE-23, PASSENGER'S SEAT, DISASSEMBLY, Front Seat.>	Replace the occupant detection system (passenger's & frame assembly). <Ref. to SE-23, PASSENGER'S SEAT, DISASSEMBLY, Front Seat.>

D: DTC B1761 OCCUPANT DETECTION SENSOR MAT LIQUID COATING

DIAGNOSIS START CONDITION:
Ignition voltage is 8 V to 16 V.
DTC DETECTING CONDITION:
- Occupant detection sensor is spattered with fluid.
- Occupant detection sensor is faulty.
- Occupant detection control module is faulty.

	Step	Check	Yes	No
1	**CHECK AIRBAG WARNING LIGHT.** Check whether or not the airbag warning light illuminate.	Does it Illuminate?	Go to step **2**.	Read the DTC, and if DTC 1761 is recorded as a past malfunction, Go to step **3**.
2	**CHECK STATUS OF PASSENGER'S SEAT.** Check if the passenger's seat cushion is wet.	Is it wet?	Go to step **3**.	Go to step **4**.
3	**DRY PASSENGER'S SEAT.** Dry the passenger's seat well naturally.	Is it dry?	Go to step **4**.	After drying well, Go to step **4**.
4	**CHECK DTC.** Read the DTC of the occupant detection system. <Ref. to OD(diag)-16, OCCUPANT DETECTION SYSTEM, OPERATION, Read Diagnostic Trouble Code (DTC).>	Is DTC displayed?	When DTC B1761 is displayed again, replace the occupant detection system (passenger's & frame assembly). <Ref. to SE-23, PASSENGER'S SEAT, DISASSEMBLY, Front Seat.> When any other DTC is displayed, perform the diagnosis for the displayed DTC.	Clear the memory. <Ref. to OD(diag)-18, OCCUPANT DETECTION SYSTEM, OPERATION, Clear Memory Mode.>

E: DTC B1771 BUCKLE SWITCH

DIAGNOSIS START CONDITION:
Ignition voltage is 8 V to 16 V.
DTC DETECTING CONDITION:
- Passenger's seat buckle switch is faulty.
- Passenger's buckle switch circuit is open, shorted or shorted to ground.
- Occupant detection system is faulty.
- Occupant detection harness is faulty.

Perform the diagnosis from step 2 in "DTC B1655 FRONT BUCKLE SWITCH RH FAILURE". <Ref. to OD(diag)-25, DTC B1655 FRONT BUCKLE SWITCH RH FAILURE, Diagnostic Procedure with Diagnostic Trouble Code (DTC).>

F: DTC B1795 OCCUPANT DETECTION MODULE INTERNAL CIRCUIT

DIAGNOSIS START CONDITION:
Ignition voltage is 8 V to 16 V.
DTC DETECTING CONDITION:
Occupant detection control module is faulty.
When "DTC B1795 OCCUPANT DETECTION MODULE INTERNAL CIRCUIT" is displayed, the occupant detection control module is faulty. Replace the occupant detection system (passenger's & frame assembly). <Ref. to SE-23, PASSENGER'S SEAT, DISASSEMBLY, Front Seat.>

SEAT BELT SYSTEM

SB

Page

1. General Description 2
2. Pretensioner Connector 10
3. Inspection Locations after a Collision 11
4. Seat Belt Warning System 12
5. Front Seat Belt 15
6. Rear Seat Belt 22
7. Disposal of Pretensioner 27

1. General Description

A: COMPONENT

1. FRONT SEAT BELT

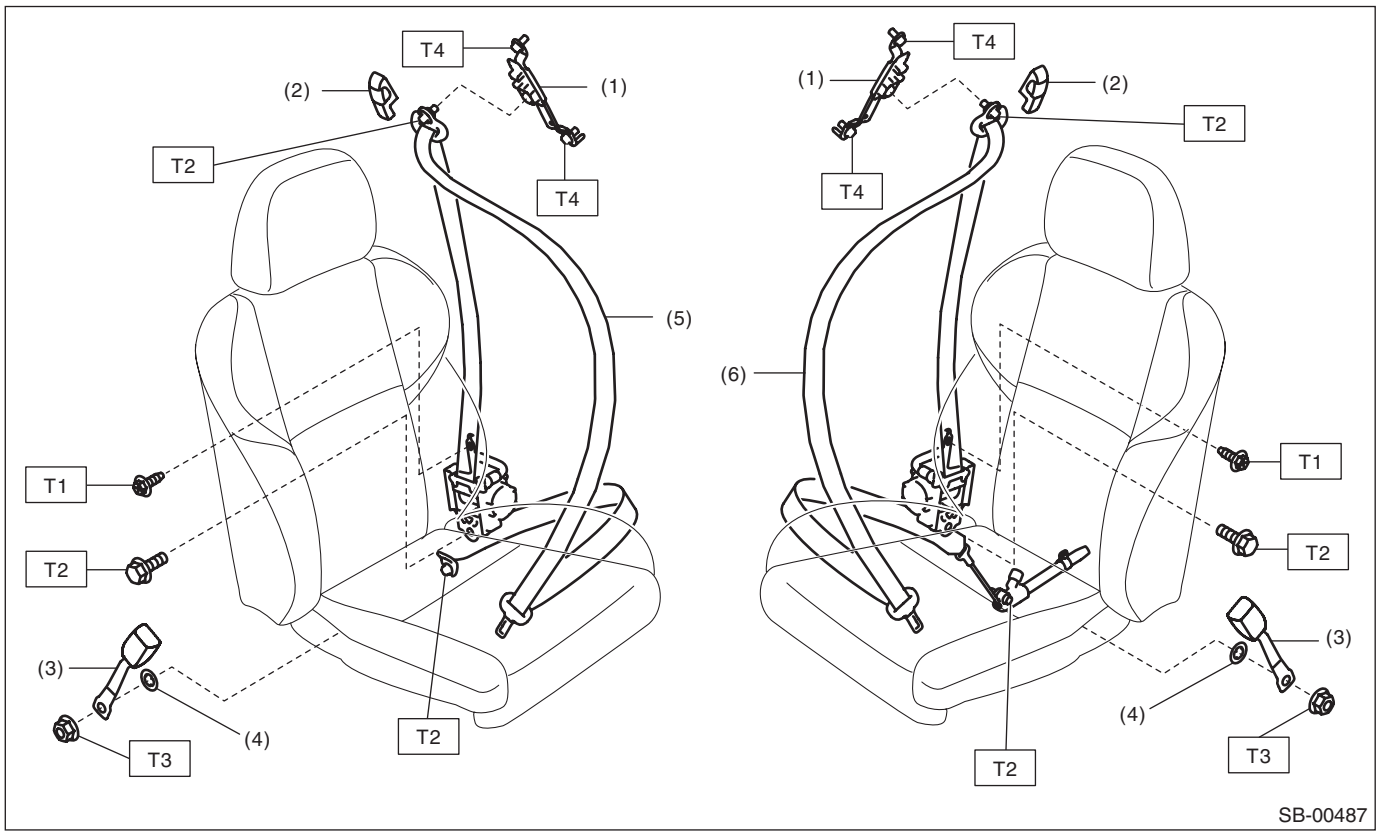

(1) Adjuster ASSY - seat belt
(2) Cover through
(3) Seat belt inner - front
(4) Wave washer
(5) Seat belt outer - front
(6) Seat belt outer - front (only on passenger's side with lap seat belt pretensioner)

Tightening torque: N·m (kgf-m, ft-lb)
T1: 7.5 (0.8, 5.5)
T2: 30 (3.1, 22.1)
T3: 38 (3.9, 28)
T4: 53 (5.4, 39.1)

2. REAR SEAT BELT

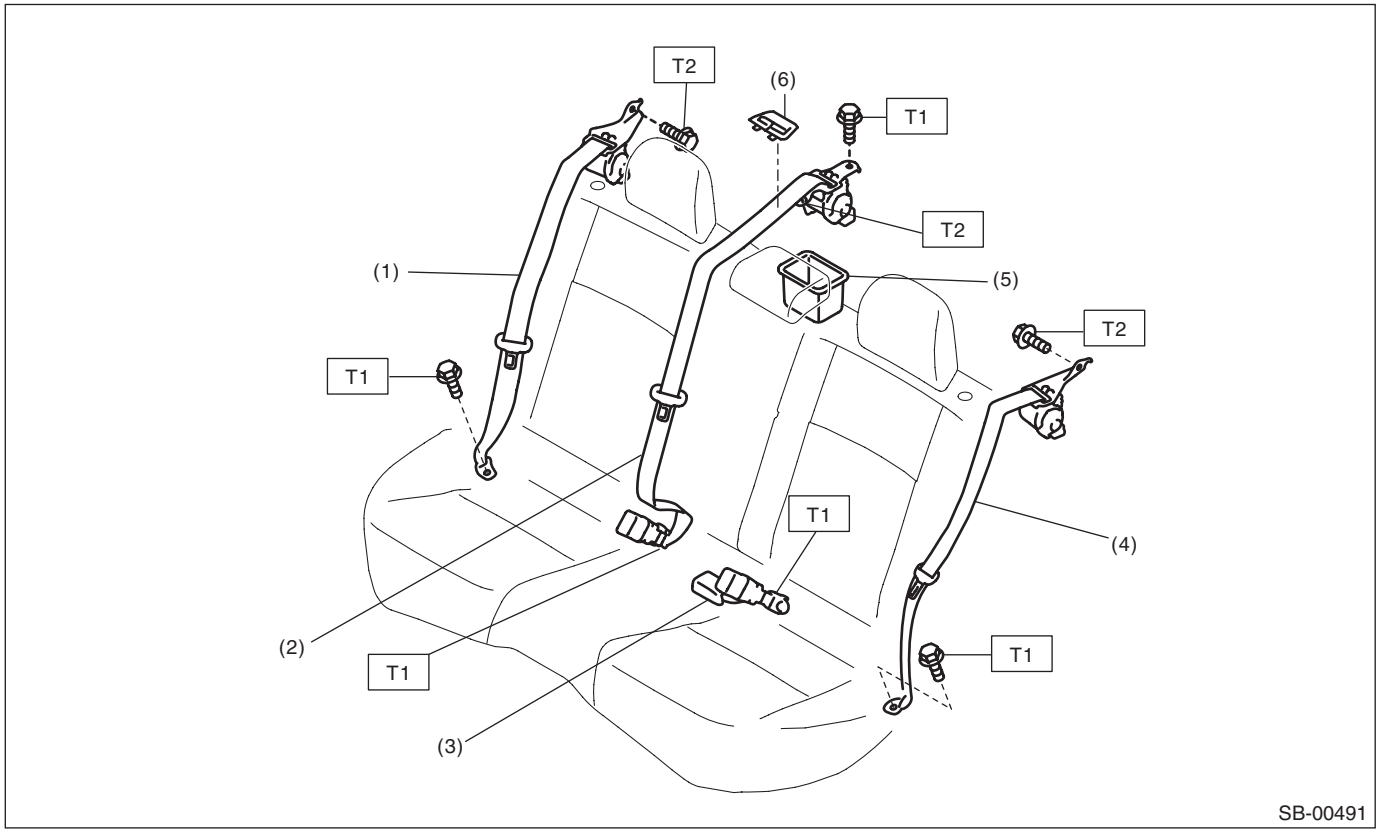

(1)	Seat belt outer - rear RH	(4)	Seat belt outer - rear LH	***Tightening torque: N·m (kgf-m, ft-lb)***
(2)	Seat belt - rear shoulder CTR	(5)	Cover - ELR	***T1: 30 (3.1, 22.1)***
(3)	Seat belt - CTR LH	(6)	Cover - belt rear	***T2: 53 (5.4, 39.1)***

B: CAUTION

For details of the following precautions for seat belt pretensioner, refer to “AIRBAG SYSTEM” section. <Ref. to AB-9, CAUTION, General Description.>

- Before performing vehicle maintenance, turn the ignition switch to OFF and wait for 60 seconds or more after disconnecting the negative terminal from battery. <Ref. to NT-6, BATTERY, NOTE, Note.>
  - For model with battery sensor, disconnect the ground terminal from battery sensor.
- Do not drop or apply any impact to the pretensioner.
- Do not allow oil, grease or water to come in contact with the pretensioner.
- Do not expose the pretensioner to high temperature or flame.
- Do not allow current to flow through or voltage to reach the pretensioner. Do not use a circuit tester to check resistance of the pretensioner.
- Do not disassemble or attempt to repair the pretensioner. If it is dented, cracked or deformed, replace it with a new genuine part.
- Do not use the airbag or pretensioner parts from other vehicles. Always replace parts with new genuine parts.
- When handling a seat belt with deployed pretensioner, wear gloves and goggles. Wash your hands afterwards.
- Do not reuse a seat belt with deployed pretensioner.
- Before disposal, make sure to perform an operation process to the pretensioners. <Ref. to SB-27, PROCEDURE, Disposal of Pretensioner.>
- If material from the pretensioner enters the eyes or contacts skin during operation process, wash it away with clean water, and then consult a doctor.

C: PREPARATION TOOL

1. SPECIAL TOOL

- SUBARU SELECT MONITOR

ILLUSTRATION	TOOL NUMBER	DESCRIPTION	REMARKS
 STSSM4	—	SUBARU SELECT MONITOR 4	Used for setting of each function and trouble-shooting for electrical system. NOTE: For detailed operation procedures of Subaru Select Monitor 4, refer to “Application help”.

- TEST HARNESS AP

ILLUSTRATION	TOOL NUMBER	DESCRIPTION	REMARKS
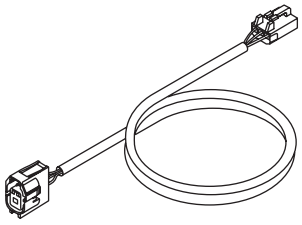 ST98299FJ030	98299FJ030	TEST HARNESS AP	Used when measuring voltage and resistance of occupant detection system.

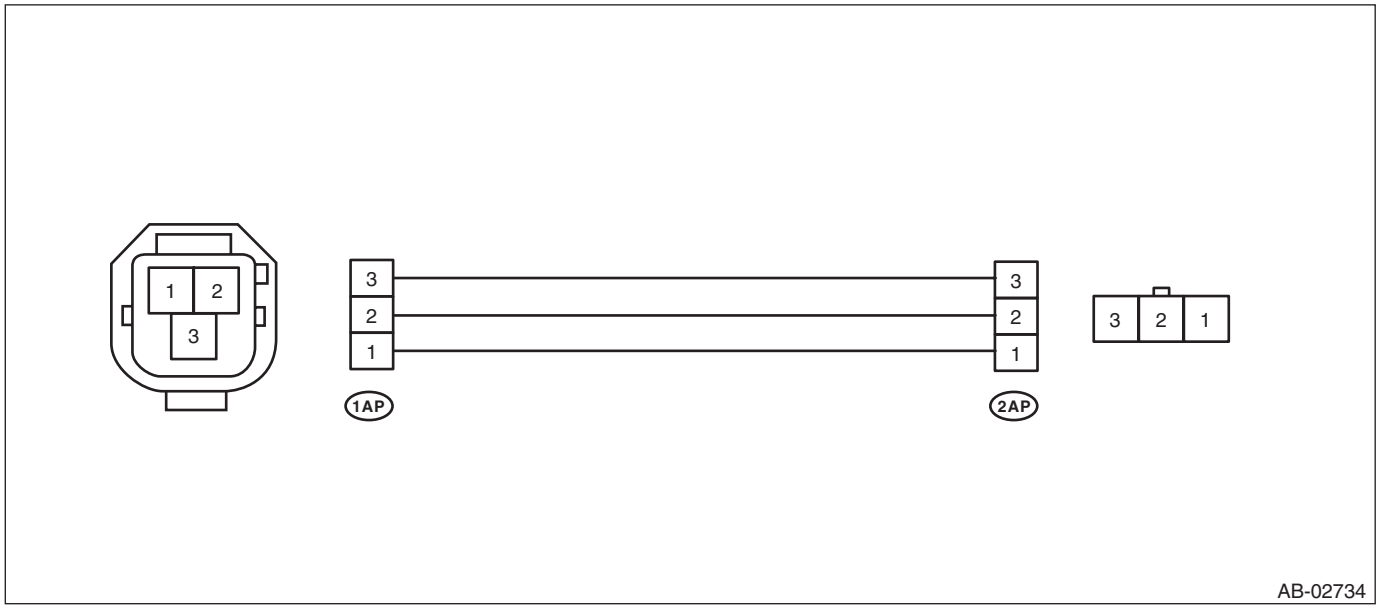

- TEST HARNESS AG

ILLUSTRATION	TOOL NUMBER	DESCRIPTION	REMARKS
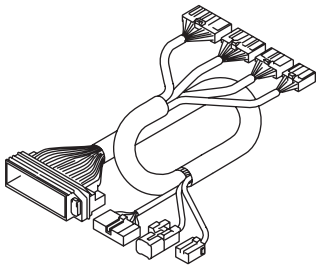 ST98299AG070	98299AG070	TEST HARNESS AG	Used when measuring voltage and resistance of airbag control module.

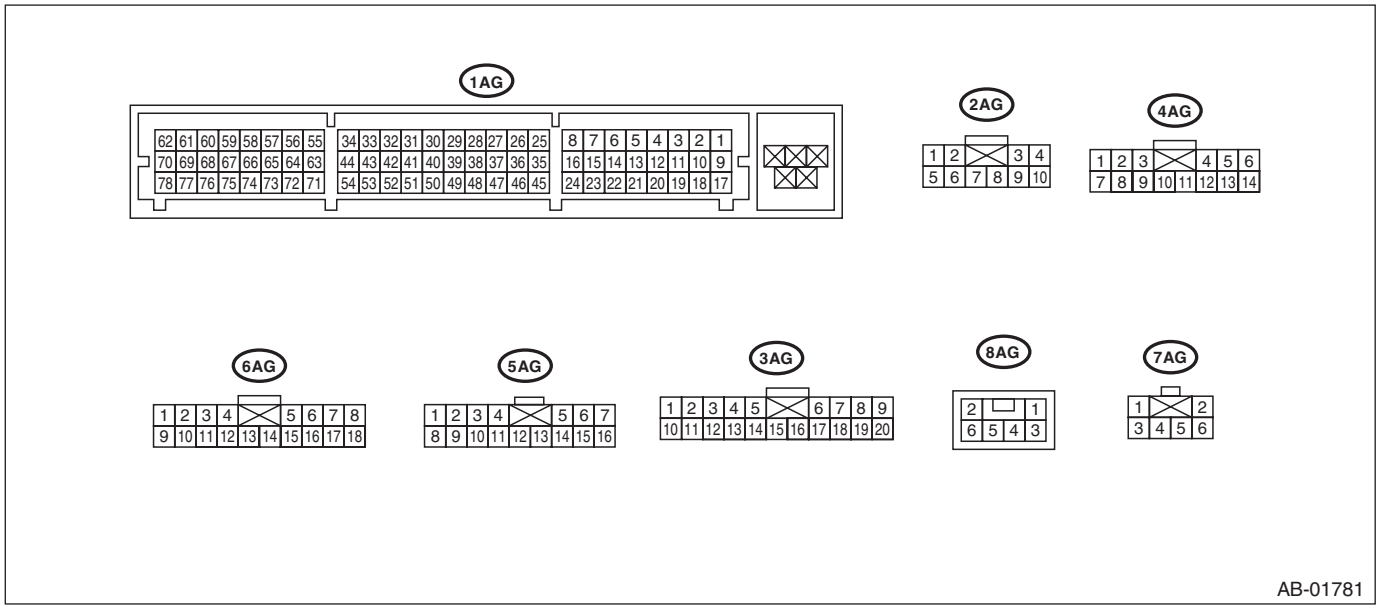

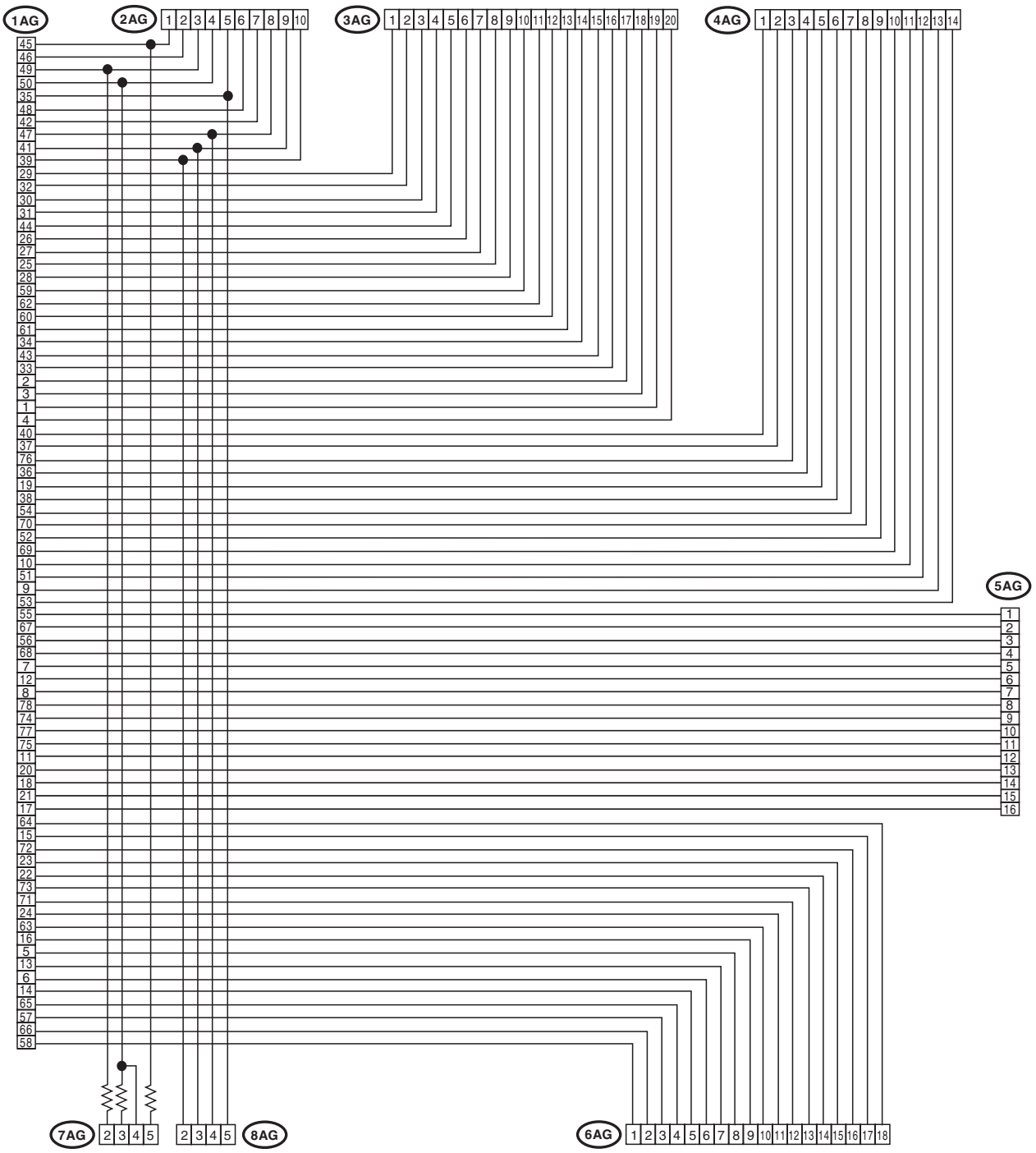
1AG
2AG
1 2 3 4 5 6 7 8 9 10
3AG
1 2 3 4 5 6 7 8 9 10 11 12 13 14 15 16 17 18 19 20
4AG
1 2 3 4 5 6 7 8 9 10 11 12 13 14
5AG
1 2 3 4 5 6 7 8 9 10 11 12 13 14 15 16
45 46 49 50 35 48 42 47 41 39 29 32 30 31 44 26 27 25 28 59 62 60 61 34 43 33 2 3 1 4 40 37 76 36 19 38 54 70 52 69 10 51 9 53 55 67 56 68 7 12 8 78 74 77 75 11 20 18 21 17 64 15 72 23 22 73 71 24 63 16 5 13 6 14 65 57 66 58
7AG
2 3 4 5
2 3 4 5
8AG
6AG
1 2 3 4 5 6 7 8 9 10 11 12 13 14 15 16 17 18

AB-01902

- TEST HARNESS Y

ILLUSTRATION	TOOL NUMBER	DESCRIPTION	REMARKS
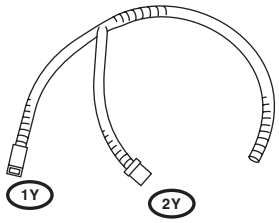 ST98299AG040	98299AG040	TEST HARNESS Y	Used for troubleshooting seat belt buckle switch.

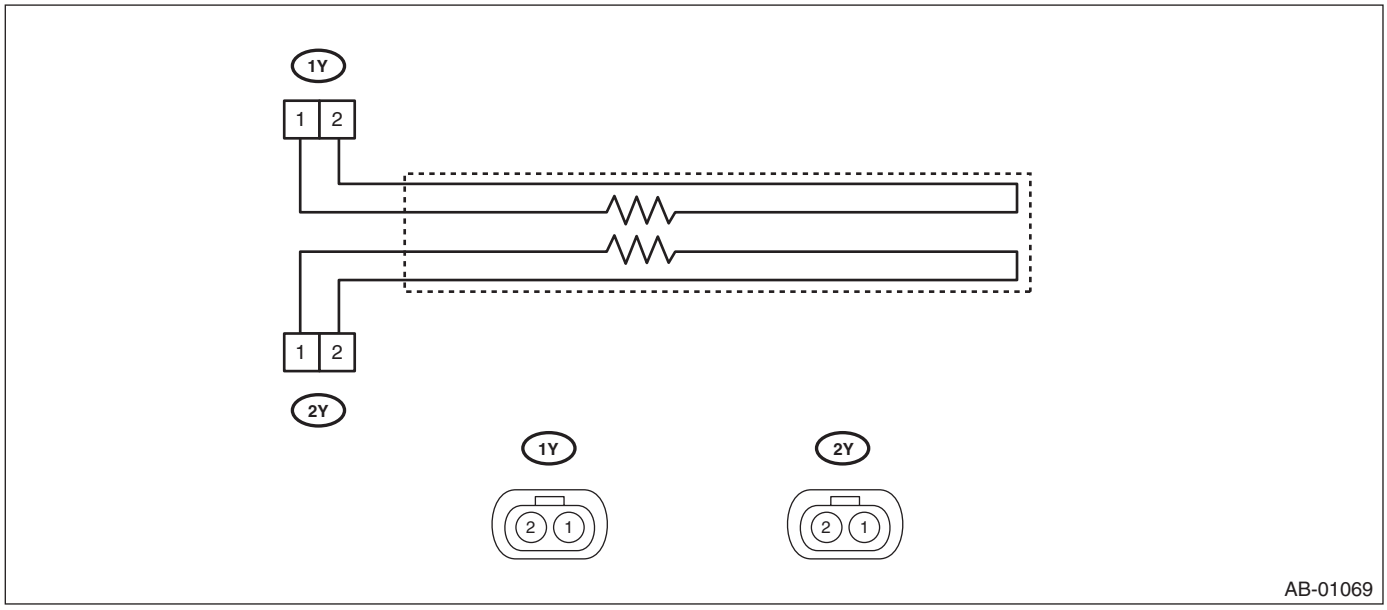

AB-01069

- AIRBAG RESISTOR

ILLUSTRATION	TOOL NUMBER	DESCRIPTION	REMARKS
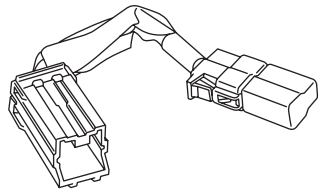 ST98299PA040	98299PA040	AIRBAG RESISTOR	Used in replacement of airbag module for which resistance value is same as airbag module.

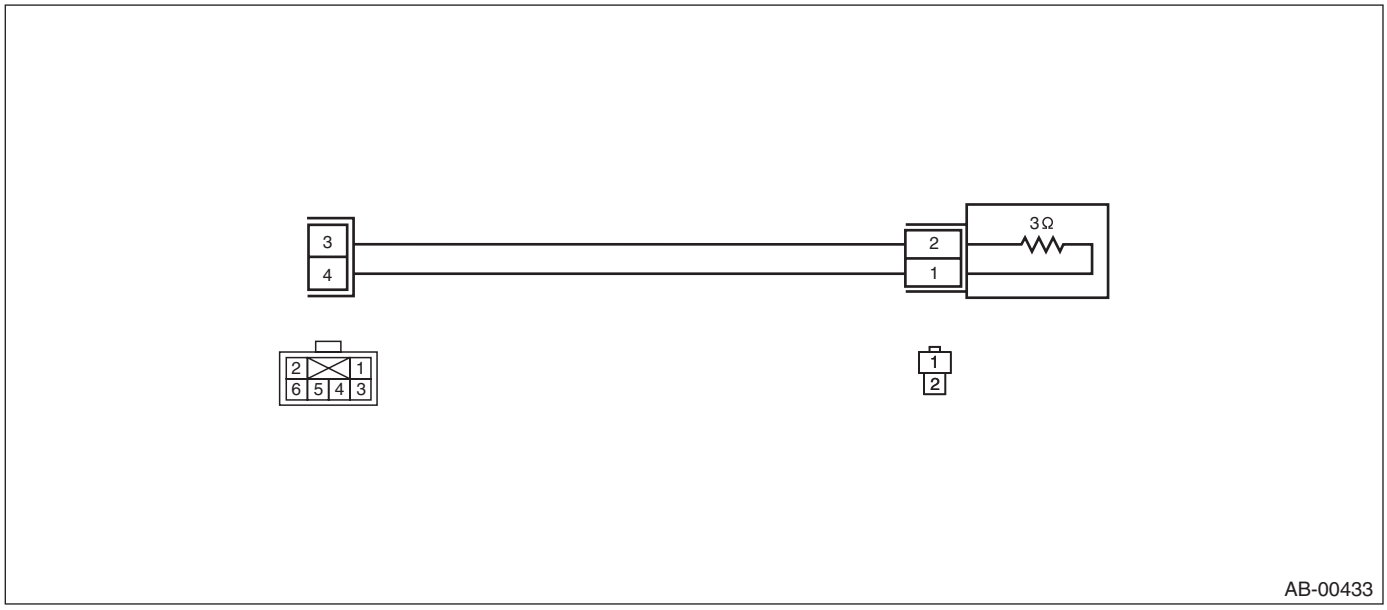

- TEST HARNESS ADAPTER D

ILLUSTRATION	TOOL NUMBER	DESCRIPTION	REMARKS
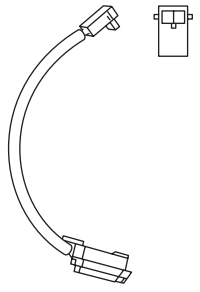 ST98299SA010	98299SA010	TEST HARNESS ADAPTER D	• Used for operation process of pretensioner. • Used together with AIRBAG DEPLOYMENT TOOL. (98299PA030)

- AIRBAG DEPLOYMENT TOOL

ILLUSTRATION	TOOL NUMBER	DESCRIPTION	REMARKS
 ST98299PA030	98299PA030	AIRBAG DEPLOYMENT TOOL	• Used for operation process of pretensioner. • Used together with each test harness adapter.

2. GENERAL TOOL

TOOL NAME	REMARKS
Circuit tester	Used for measuring resistance, voltage and current.
DST-i	Used together with Subaru Select Monitor 4.

2. Pretensioner Connector

A: PROCEDURE

For connectors of seat belt pretensioner, lap seat belt pretensioner and buckle switch RH, refer to “Airbag Connector” of “AIRBAG SYSTEM” section or “OCCUPANT DETECTION SYSTEM” section.

- Airbag system: <Ref. to AB-16, PROCEDURE, Airbag Connector.>
- Occupant detection system: <Ref. to OD(diag)-13, PROCEDURE, Airbag Connector.>

3. Inspection Locations after a Collision

A: INSPECTION

Refer to “Inspection Locations after a Collision” of “AIRBAG SYSTEM” section. <Ref. to AB-25, Inspection Locations after a Collision.>

4. Seat Belt Warning System

A: WIRING DIAGRAM

Refer to “Seat Belt Warning System” in the wiring diagram. <Ref. to WI-331, WIRING DIAGRAM, Seat Belt Warning System.>

B: INSPECTION

CAUTION:
• Before handling the airbag system components, refer to “CAUTION” of “General Description” in “AIRBAG SYSTEM”. <Ref. to AB-9, CAUTION, General Description.>
• When inspecting the airbag main harness, disconnect the connectors of the driver’s airbag module, passenger’s airbag module and knee airbag module for safety reasons.
• When inspecting the airbag rear harness, disconnect the side airbag module connector, curtain airbag module connector and seat belt pretensioner connector for safety reasons.
TROUBLE SYMPTOM:
- Driver’s side seat belt warning light does not illuminate or it remains illuminating.
- Warning buzzer does not beep.

	Step	Check	Yes	No
1	**CHECK FUNCTION.** 1) Sit on the driver’s seat and passenger’s seat and disconnect the seat belts of the both. 2) Turn the ignition switch to ON (engine OFF). 3) Check the illumination of the driver’s seat belt warning light in the combination meter, and the passenger’s seat belt warning light in the MFD, and the sounding of the buzzer.	Do the driver’s warning light and passenger’s warning light blink and the buzzer sound while blinking?	Go to step **2**.	Go to step **12**.
2	**CHECK FUNCTION.** 1) Wait until the buzzer sound stops in step 1. (For approximately six seconds after starting sounding) 2) Connect and disconnect the seat belts of the driver’s and passenger’s. 3) Check the illumination of the driver’s seat belt warning light in the combination meter and the passenger’s seat belt warning light in the MFD.	Do the seat belts warning light illuminate ←→ go off according to the operation?	Go to step **3**.	Go to step **8**.
3	**CHECK FUNCTION.** 1) Wait until the buzzer sound stops in step 2. (For approximately six seconds after starting sounding) 2) Start the engine, and set the vehicle speed at 20 km/h (12 MPH) or more. 3) Check the seat belt warning lights of the driver’s and the passenger’s, and if the warning buzzer sounds.	Do the driver’s warning light and passenger’s warning light blink and the buzzer sound while blinking?	Go to step **4**.	Go to step **14**.
4	**CHECK HARNESS.** 1) Disconnect the negative terminal from the battery, and wait for 60 seconds or more. NOTE: For model with battery sensor, disconnect the ground terminal from battery sensor. 2) Disconnect the connectors of the combination meter and the seat belt buckle switch LH. 3) Check for short circuit to battery, open circuit and short circuit to ground between the combination meter and the seat belt buckle switch LH. ***Connector & terminal*** ***(i10) No. 15 — (R107) No. 2:***	Is the harness normal?	Go to step **5**.	Repair or replace the harness.

	Step	Check	Yes	No
5	**CHECK HARNESS.** Measure the resistance between the seat belt buckle switch LH and chassis ground. ***Connector & terminal*** ***(R107) No. 1 — Chassis ground:***	Is the resistance less than 10 Ω?	Go to step **6**.	Repair or replace the harness.
6	**CHECK SEAT BELT BUCKLE SWITCH LH.** Measure the resistance between the connector terminals of the driver's seat belt switch when the driver's seat belt is fastened and detached. ***Connector & terminal*** ***(R107) No. 2 — (R107) No. 1:***	Is the resistance when the belt is fastened 1 MΩ or more, and less than 10 Ω when the belt is detached?	Go to step **7**.	Replace the seat belt inner - front LH. <Ref. to SB-15, SEAT BELT OUTER - FRONT, REMOVAL, Front Seat Belt.>
7	**CHECK COMBINATION METER.** Perform the self-diagnosis of combination meter. <Ref. to IDI-6, SELF-DIAGNOSIS DISPLAY MODE, OPERATION, Combination Meter System.>	At the start of combination meter self diagnosis, did the buzzer sound and the seat belt warning light illuminate?	Replace the combination meter. There may be a reception failure of the combination meter.	Replace the combination meter. <Ref. to IDI-13, REMOVAL, Combination Meter.>
8	**CHECK DATA MONITOR.** 1) Sit in the passenger's seat. 2) Using the Subaru Select Monitor, select «Data monitor» to display data of «Passenger seat seat-belt wearing state». NOTE: For detailed operation procedures, refer to "Application help". 3) Fasten and detach the passenger's side seat belt buckle, and read the data of the seat belt switch. <Ref. to IDI(diag)-16, LIST, Read Current Data.>	Does the seat belt switch display turn ON ←→ OFF according to the operation of the seat belt buckle?	Go to step **12**.	Go to step **9**.
9	**CHECK AIRBAG SYSTEM AND OCCUPANT DETECTION SYSTEM.** Perform the check in accordance with the diagnostic procedure DTC B1650 of the airbag system. <Ref. to OD(diag)-23, DTC B1650 OCCUPANT DETECTION SYSTEM MALFUNCTION, Diagnostic Procedure with Diagnostic Trouble Code (DTC).>	Is the inspection result normal?	Go to step **10**.	Repair or replace with new parts according to DTC B1650.
10	**CHECK BUCKLE SWITCH RH.** Perform the check in accordance with the diagnostic procedure DTC B1655 of the occupant detection system. <Ref. to OD(diag)-25, DTC B1655 FRONT BUCKLE SWITCH RH FAILURE, Diagnostic Procedure with Diagnostic Trouble Code (DTC).>	Is the inspection result normal?	Go to step **11**.	Repair or replace with new parts according to DTC B1655.
11	**CHECK AIRBAG CONTROL MODULE AND COMBINATION METER.** Check the airbag control module, occupant detection sensor and seat belt buckle switch RH. Perform the check in accordance with the diagnostic procedure DTC B16F1 of the airbag system. <Ref. to AB(diag)-90, DTC B16F1 PASSENGER'S SEAT BELT WARNING FAILURE, Diagnostic Chart with Trouble Code.>	Is the inspection result normal?	Replace the combination meter. <Ref. to IDI-13, REMOVAL, Combination Meter.>	Repair or replace with new parts according to DTC B16F1.

	Step	Check	Yes	No
12	**CHECK MFD POWER SUPPLY VOLTAGE.** 1) Disconnect the MFD connector. 2) Turn the ignition switch to ON. 3) Measure the voltage between the ignition power supply and the MFD. ***Connector & terminal*** ***(i122) No. 3 (+) — Chassis ground (–):***	Is the voltage 10 V or more?	Go to step **13**.	Check the harness for open or short between the fuse and MFD.
13	**CHECK MFD GROUND CIRCUIT.** 1) Turn the ignition switch to OFF. 2) Measure the resistance between MFD and chassis ground. ***Connector & terminal*** ***(i122) No. 2 — Chassis ground:***	Is the resistance less than 10 Ω?	Go to step **14**.	Repair or replace the harness.
14	**CHECK HARNESS BETWEEN MFD AND COMBINATION METER.** 1) Disconnect the harness of the MFD and the combination meter. 2) Measure the resistance between MFD and combination meter. ***Connector & terminal*** ***(i122) No. 9 — (i10) No. 28:***	Is the resistance less than 10 Ω?	Go to step **15**.	Repair or replace the harness.
15	**CHECK COMMUNICATION STATUS BETWEEN MFD AND COMBINATION METER.** 1) Remove the MFD, and install a properly operating MFD (new MFD). 2) Connect the connector and then turn the ignition switch to ON. ***Connector & terminal*** ***(i122) No. 9 — (i10) No. 28:***	Is the MFD properly displayed?	Replace the MFD.	Replace the combination meter case assembly.

5. Front Seat Belt

A: REMOVAL

1. SEAT BELT OUTER - FRONT

CAUTION:
• Before handling the airbag system components, refer to "CAUTION" of "General Description" in "AIRBAG SYSTEM". <Ref. to AB-9, CAUTION, General Description.>
• Airbag system satellite safing sensor is located in the lower of the rear seat cushion center. Be careful not to apply strong impact to the sensor when working with the rear seat cushion removed.
• Do not drop or subject the pretensioner to any impact.
• Since the pretensioner and bracket are integrated as a unit, do not disassemble them.

1) Turn the ignition switch to OFF.
2) Disconnect the ground cable from battery and wait for at least 60 seconds before starting work. <Ref. to NT-6, BATTERY, NOTE, Note.>

NOTE:
• For model with battery sensor, disconnect the ground terminal from battery sensor.
• For model with the power seat, move the seat to the front-most position before removing the battery ground terminal.

3) Tilt the front seat backrest assembly forward, and move the front seat all the way forward.

CAUTION:
For the power seat, move the seat, disconnect the battery ground cable, and then wait for 60 seconds or more before starting work.

4) Remove the rear seat cushion assembly. <Ref. to SE-30, REMOVAL, Rear Seat.>
5) Remove the cover side sill - front INN, cover side sill - rear INN, and trim panel - center pillar LWR. (On the side where seat belt assembly is removed) <Ref. to EI-84, REMOVAL, Lower Inner Trim.>
6) Remove the trim panel - center pillar UPR. (On the side where seat belt assembly is removed)
   (1) Remove the cover through (a), and remove the seat belt anchor bolt.
   (2) Remove the bolt on the lower side of the trim panel - center pillar UPR.
   (3) Remove the clip by pulling the upper part of the trim toward you, and while lowering the entire trim, remove the trim panel - center pillar UPR.

CAUTION:
Do not reuse the upper clips of the trim panel - center pillar UPR. Once the clip is removed, its holding force is reduced. Be sure to replace it with a new clip.

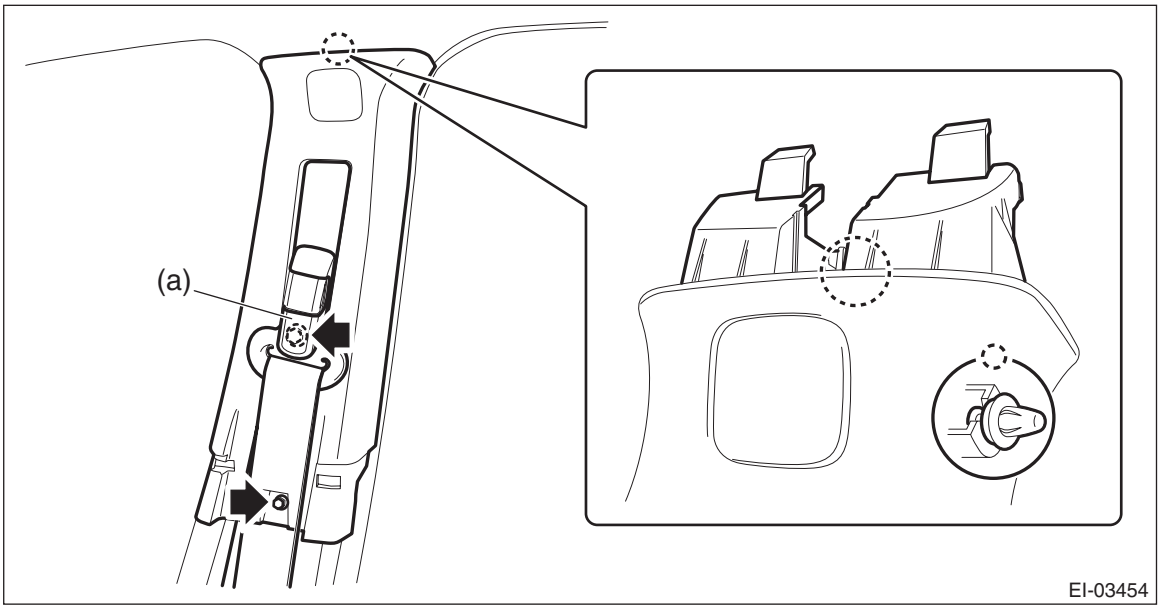

7) Remove the seat belt outer - front.
(1) Turn over the floor mat to disconnect the belt tension sensor connector. <Ref. to AB-18, DRIVER'S AIRBAG MODULE, CURTAIN AIRBAG MODULE & PRETENSIONER, PROCEDURE, Airbag Connector.>

NOTE:
Also disconnect the connector of the passenger's lap seat belt pretensioner.
(2) Remove the bolt to remove the seat belt retractor.
(3) Remove the lower anchor bolt, and remove the seat belt outer - front.
- Driver's side

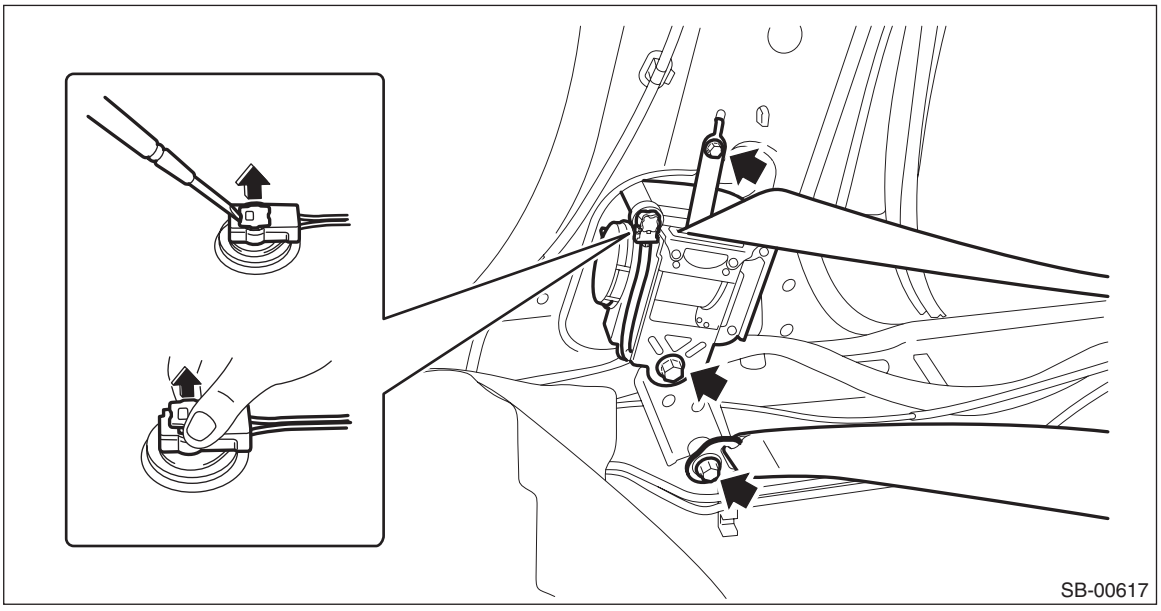

- Passenger's side

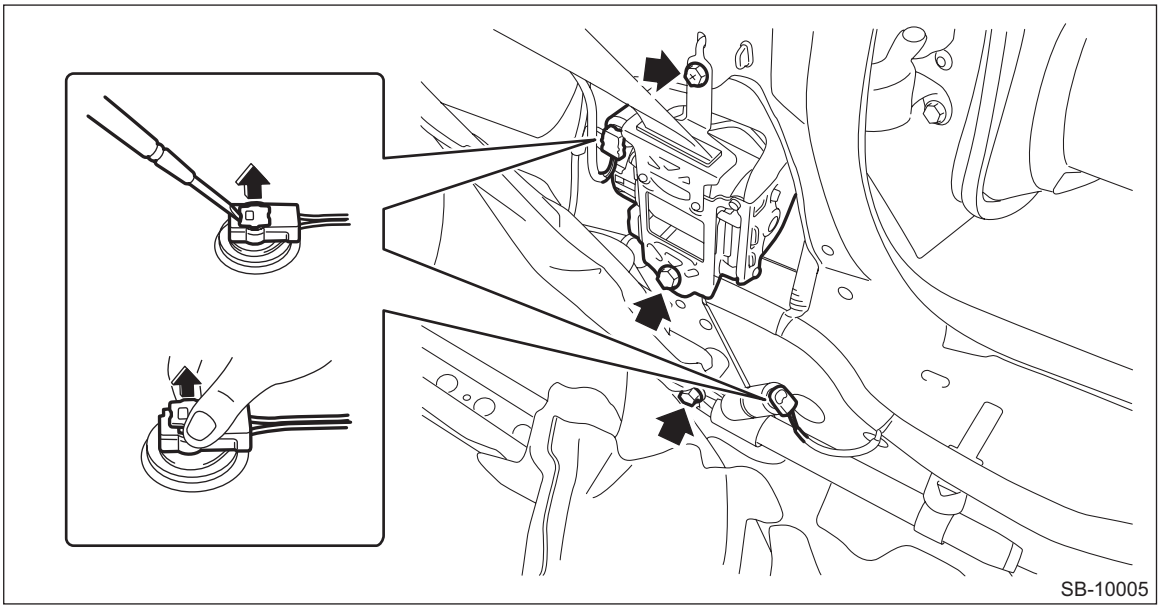

8) Remove the bolts, and then remove the adjuster assembly - seat belt.

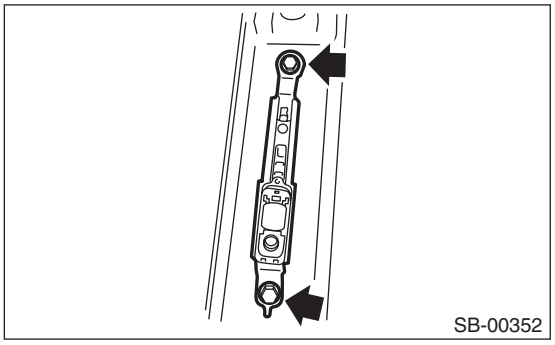

2. SEAT BELT INNER - FRONT

CAUTION:
Before handling the airbag system components, refer to "CAUTION" of "General Description" in "AIRBAG SYSTEM". <Ref. to AB-9, CAUTION, General Description.>

1) Turn the ignition switch to OFF.
2) Disconnect the ground cable from battery and wait for at least 60 seconds before starting work. <Ref. to NT-6, BATTERY, NOTE, Note.>

NOTE:
- For model with battery sensor, disconnect the ground terminal from battery sensor.
- For model with the power seat, move the seat to the front-most position before removing the battery ground terminal.

3) Remove the front seats. <Ref. to SE-9, REMOVAL, Front Seat.>
4) Remove the seat belt inner - front.
   (1) Remove the nut, and remove the seat belt inner - front.
   (2) Remove the clip for the inner seat belt harness located under the seat cushion.

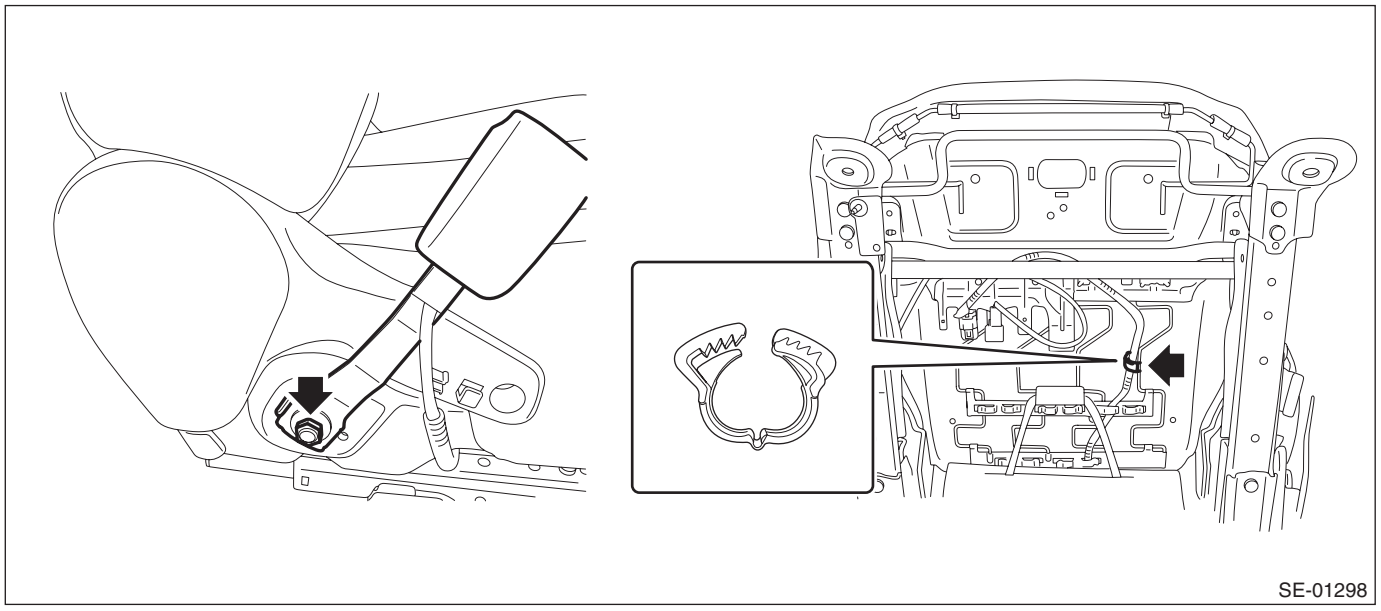

B: INSTALLATION

1. SEAT BELT OUTER - FRONT

CAUTION:
• Before handling the airbag system components, refer to "CAUTION" of "General Description" in "AIRBAG SYSTEM". <Ref. to AB-9, CAUTION, General Description.>
• The parts of the driver and passenger sides are not the same. Before installation, make sure that the correct part is used.
• During installation, make sure that the seat belts are not twisted.
• After installation, make sure that the seat belt can be pulled out and retracted smoothly.
• Make sure that the seat belt harness is not caught anywhere. Wrong harness rooting may cause the harness short from pinch.
• Do not reuse the upper clips of the trim panel - center pillar UPR. Once the clip is removed, its holding force is reduced. Be sure to replace it with a new clip.
1) Before installation, perform a unit inspection of retractor. <Ref. to SB-20, INSPECTION, Front Seat Belt.>
2) Install the adjuster assembly - seat belt and the seat belt outer - front.

Tightening torque:
Front seat belt: <Ref. to SB-2, FRONT SEAT BELT, COMPONENT, General Description.>
3) Install the trim panel - rear pillar UPR.

Tightening torque:
Trim panel - center pillar UPR: 7.5 N·m (0.8 kgf-m, 5.5 ft-lb)
4) Install the trim panel - center pillar LWR.

NOTE:
Assemble the trim panel - center pillar LWR to the trim panel - center pillar UPR securely.

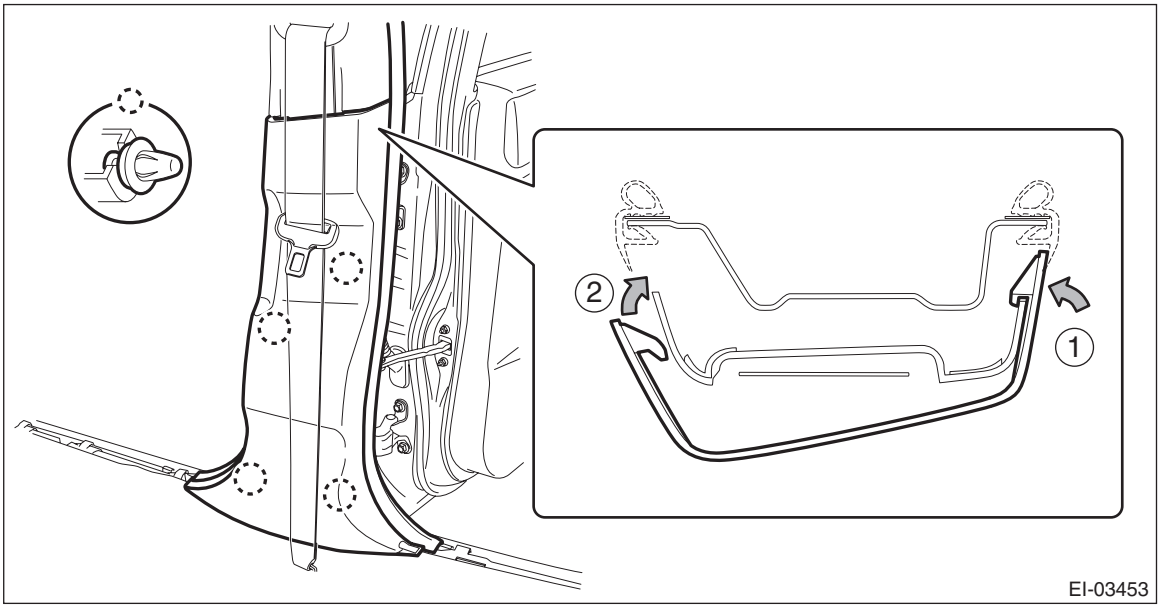

5) Install the trim panel - center pillar LWR, cover side sill - front INN, and cover side sill - rear INN.
6) Install the rear seat cushion assembly.
7) Connect the battery ground terminal. <Ref. to NT-6, BATTERY, NOTE, Note.>
8) After installation, check the following points.
• The seat belt is not twisted.
• The seat belt can be pulled out and retracted smoothly.
• The adjuster assembly - seat belt can be moved smoothly.
• Check that the airbag warning light lights up for approximately 6 seconds and then turns off when connecting the battery ground cable and turning the ignition switch to ON.

2. SEAT BELT INNER - FRONT

CAUTION:
- **Before installation, make sure that the correct part is used.**
- **During installation, make sure that the seat belts are not twisted.**
- **Check that there is no pinching of the seat belt harness. Wrong harness rooting may cause the harness short from pinch.**
- **Do not forget the wave washer, when installing front seat inner belt assembly.**

1) Install the seat belt inner - front.

Tightening torque:
53 N·m (5.4 kgf-m, 39.1 ft-lb)

2) Locate the seat belt harness and retain it with a harness clip.

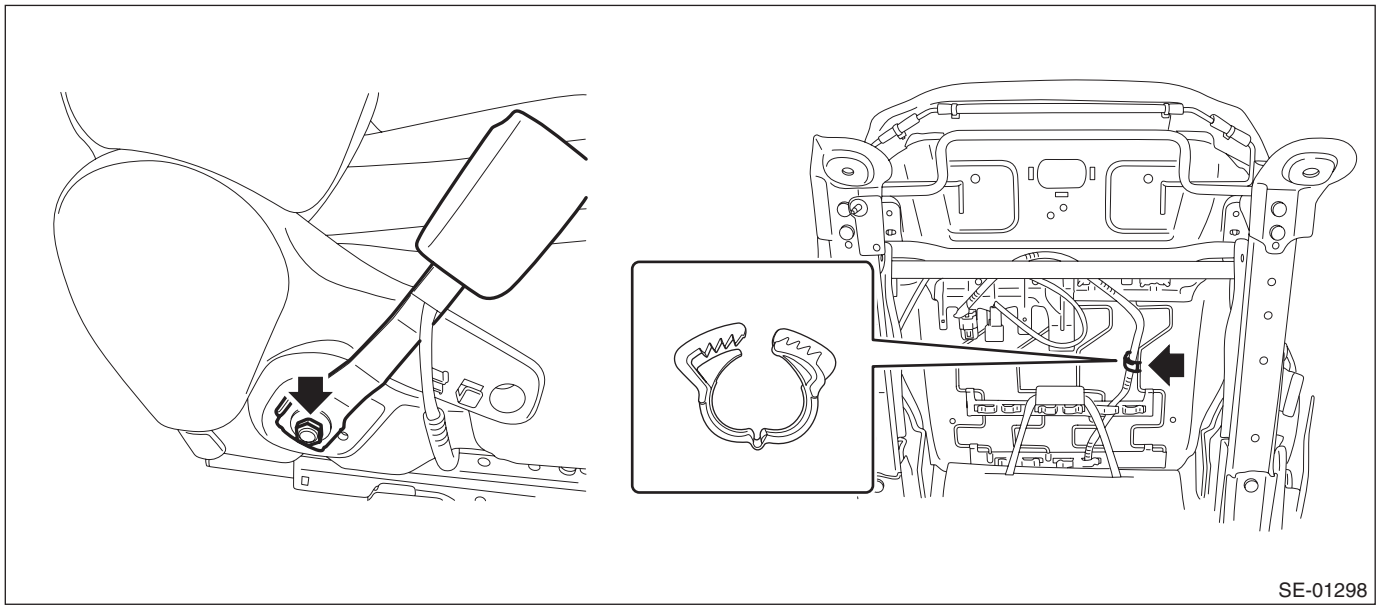

3) Install the seat assembly to the body. <Ref. to SE-10, INSTALLATION, Front Seat.>
4) Connect the battery ground terminal. <Ref. to NT-6, BATTERY, NOTE, Note.>

C: INSPECTION

1. VISUAL INSPECTION

Check for the following, and replace with new parts if necessary.
- Pretensioner is cracked or deformed.
- Adjuster assembly - seat belt is cracked or deformed.
- Seat belt is slackened, bent or worn.
- Seat belt is abnormally wound or extended.
- Seat belt inner - front is deformed or damaged.
- Seat belt buckle cannot be engaged properly.

2. ELR LOCK MECHANISM INSPECTION

1) Hold the retractor upright (as installed in the vehicle) and check the ELR lock mechanism.
2) Tilt the retractor from the upright posture and check the following points.
- It does not lock if the inclination angle is 15° or less.

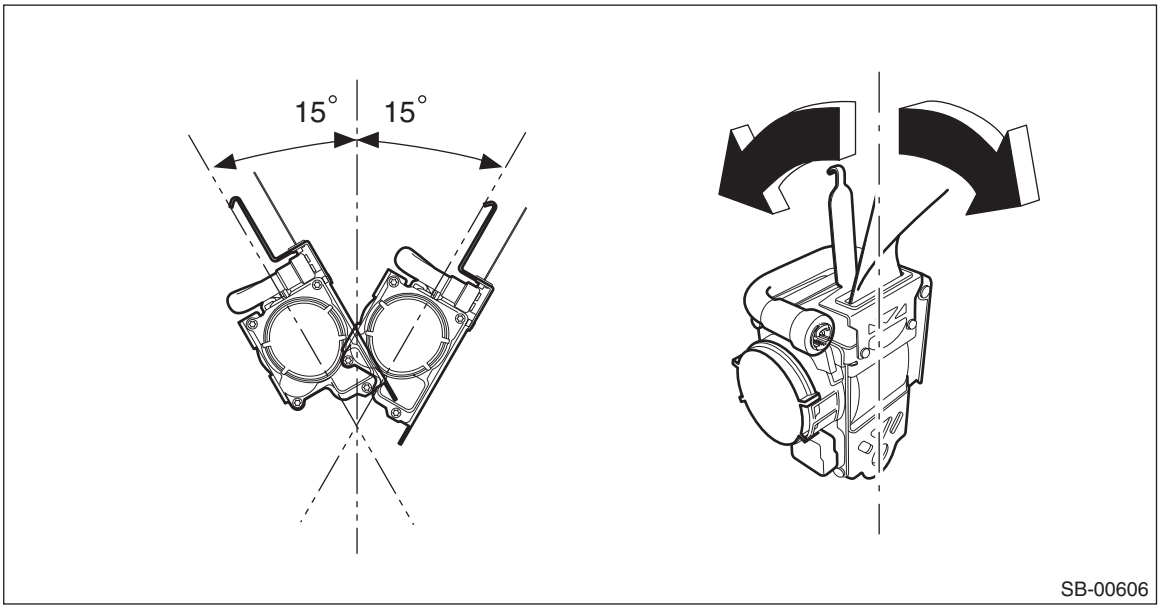

- It remains locked if the inclination angle is 27° or more.

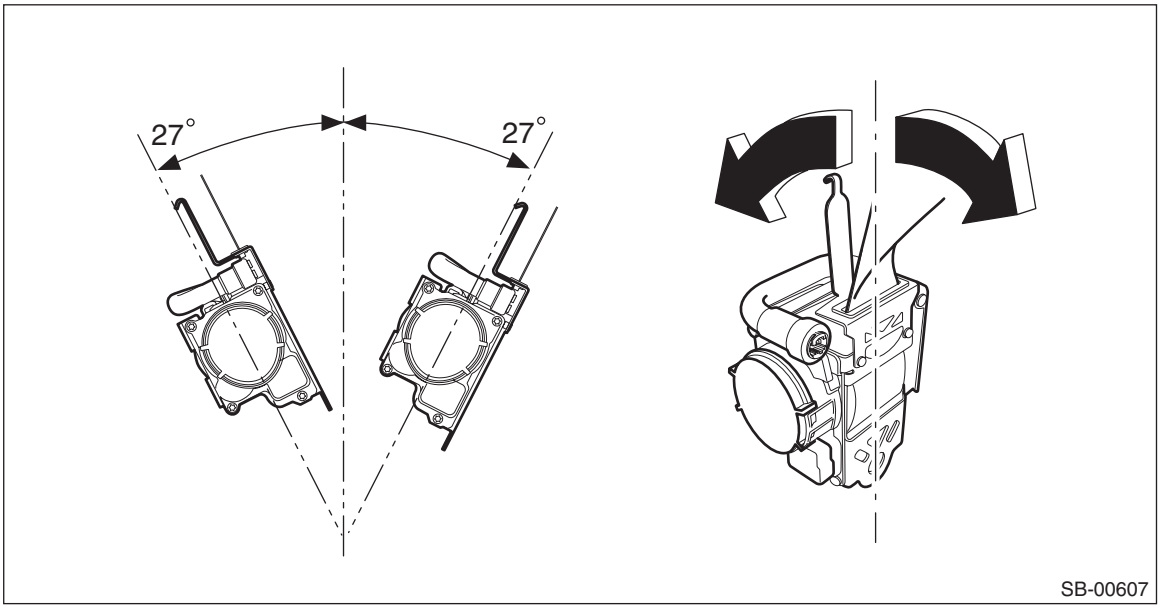

3) If the ELR lock mechanism does not operate properly, replace the seat belt outer - front with a new part.

3. SEAT BELT SWITCH INSPECTION

Preparation tool:
Circuit tester

- Driver's seat

Measure the resistance between the terminals when the seat belt inner - front is in each of the following operation conditions.

Terminal No.	Inspection conditions	Standard	Circuit
2 — 1	Tongue plate inserted	1 MΩ or more	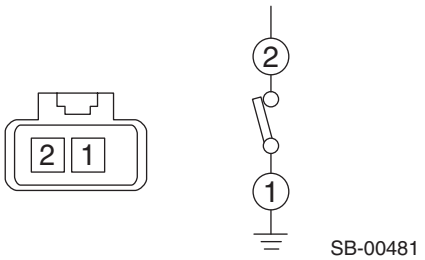 SB-00481
2 — 1	Tongue plate detached	1 Ω or less	

Replace the seat belt inner - front if the inspection result is not within the standard.

- Passenger's seat

Measure the current value between the terminals when the seat belt inner - front is in each of the following operation conditions.

Terminal No.	Inspection conditions	Standard	Circuit
1 — 2	Tongue plate inserted	12 — 18 mA	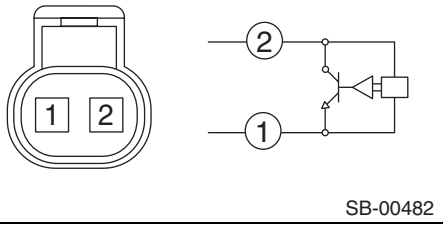 SB-00482
1 — 2	Tongue plate detached	4 — 7 mA	

Replace the seat belt inner - front if the inspection result is not within the standard.

6. Rear Seat Belt

A: REMOVAL

1. SEAT BELT OUTER - REAR RH & LH

CAUTION:
• Before handling the airbag system components, refer to "CAUTION" of "General Description" in "AIRBAG SYSTEM". <Ref. to AB-9, CAUTION, General Description.>
• Airbag system satellite safing sensor is located in the lower of the rear seat cushion center. Be careful not to apply strong impact to the sensor when working with the rear seat cushion removed.
1) Turn the ignition switch to OFF.
2) Disconnect the ground cable from battery and wait for at least 60 seconds before starting work. <Ref. to NT-6, BATTERY, NOTE, Note.>

NOTE:
For model with battery sensor, disconnect the ground terminal from battery sensor.
3) Remove the rear seat cushion assembly. <Ref. to SE-30, REMOVAL, Rear Seat.>
4) Remove the cover side sill - rear INN and the trim panel - center pillar LWR. (On the side where seat belt assembly is removed) <Ref. to EI-84, REMOVAL, Lower Inner Trim.>
5) Remove the bolts, and remove the seat belt outer - rear.

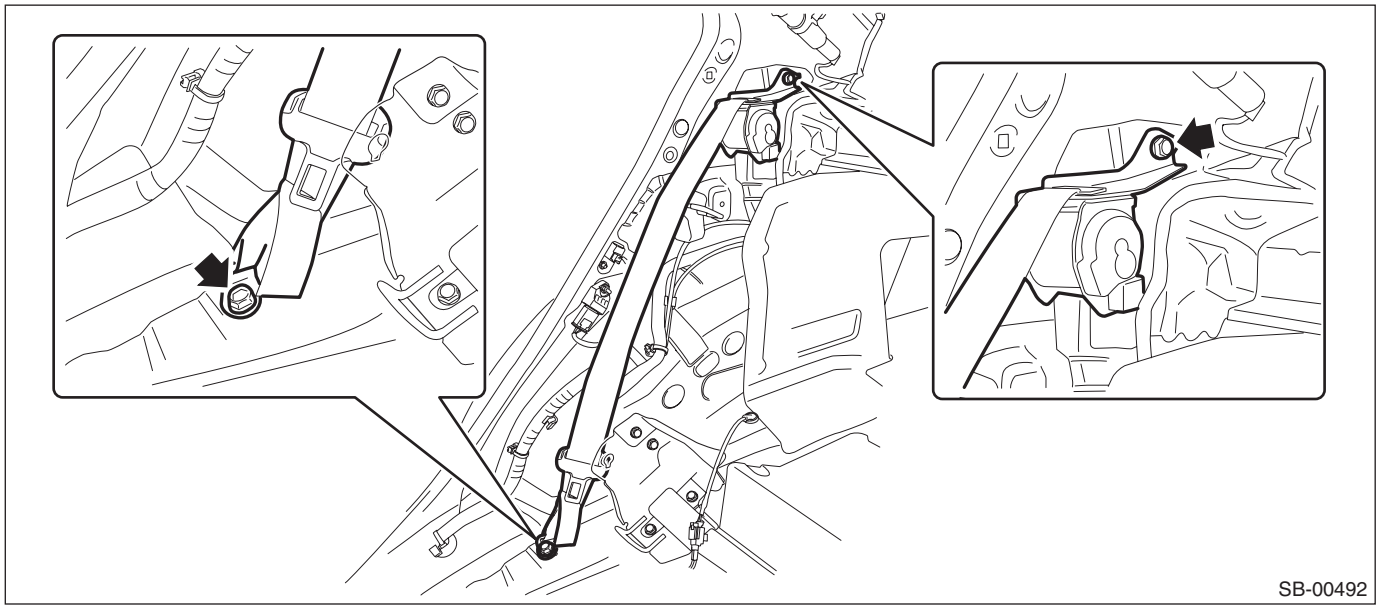

2. SEAT BELT - REAR SHOULDER CTR

CAUTION:
• Before handling the airbag system components, refer to "CAUTION" of "General Description" in "AIRBAG SYSTEM". <Ref. to AB-9, CAUTION, General Description.>
• Airbag system satellite safing sensor is located in the lower of the rear seat cushion center. Be careful not to apply strong impact to the sensor when working with the rear seat cushion removed.
1) Turn the ignition switch to OFF.
2) Disconnect the ground cable from battery and wait for at least 60 seconds before starting work. <Ref. to NT-6, BATTERY, NOTE, Note.>

NOTE:
For model with battery sensor, disconnect the ground terminal from battery sensor.
3) Remove the rear seat cushion assembly. <Ref. to SE-30, REMOVAL, Rear Seat.>
4) Remove the side sill cover - rear INN, trim panel - rear pillar UPR, and trim panel - rear pillar LWR on the RH and LH sides. <Ref. to EI-92, REMOVAL, Rear Quarter Trim.>
5) Remove the bolts, and remove the lower anchor of the seat belt - rear shoulder CTR.

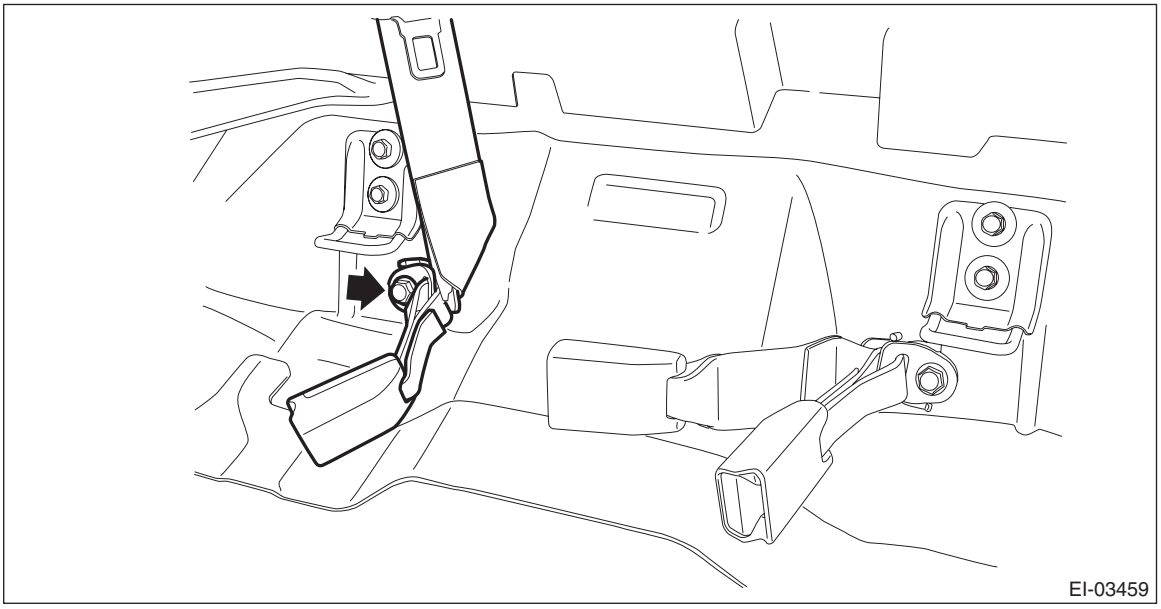
EI-03459

6) Remove the high-mounted stop light. <Ref. to LI-59, REMOVAL, High-mounted Stop Light.>
7) Remove the trim panel - rear shelf assembly. <Ref. to EI-95, REMOVAL, Rear Shelf Trim.>

8) Remove the bolts, and remove the seat belt - rear shoulder CTR.

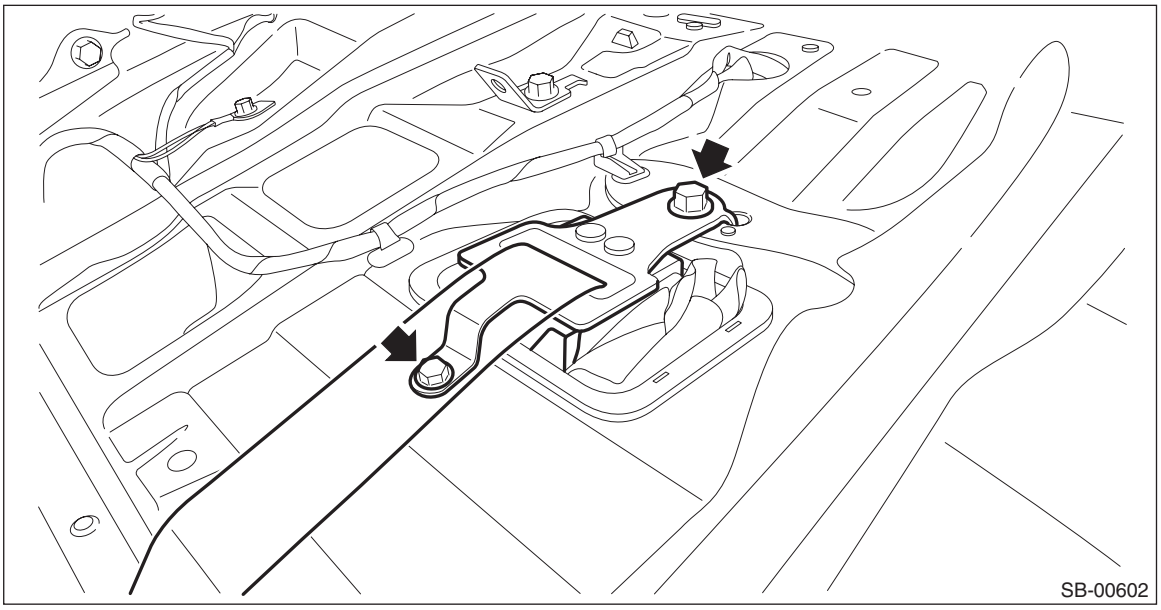

3. SEAT BELT - CTR RH AND LH

CAUTION:

• Before handling the airbag system components, refer to "CAUTION" of "General Description" in "AIRBAG SYSTEM". <Ref. to AB-9, CAUTION, General Description.>

• Airbag system satellite safing sensor is located in the lower of the rear seat cushion center. Be careful not to apply strong impact to the sensor when working with the rear seat cushion removed.

1) Turn the ignition switch to OFF.

2) Disconnect the ground cable from battery and wait for at least 60 seconds before starting work. <Ref. to NT-6, BATTERY, NOTE, Note.>

NOTE:
For model with battery sensor, disconnect the ground terminal from battery sensor.

3) Remove the rear seat cushion assembly. <Ref. to SE-30, REMOVAL, Rear Seat.>

4) Remove the bolts, and remove the seat belt - CTR RH and LH.

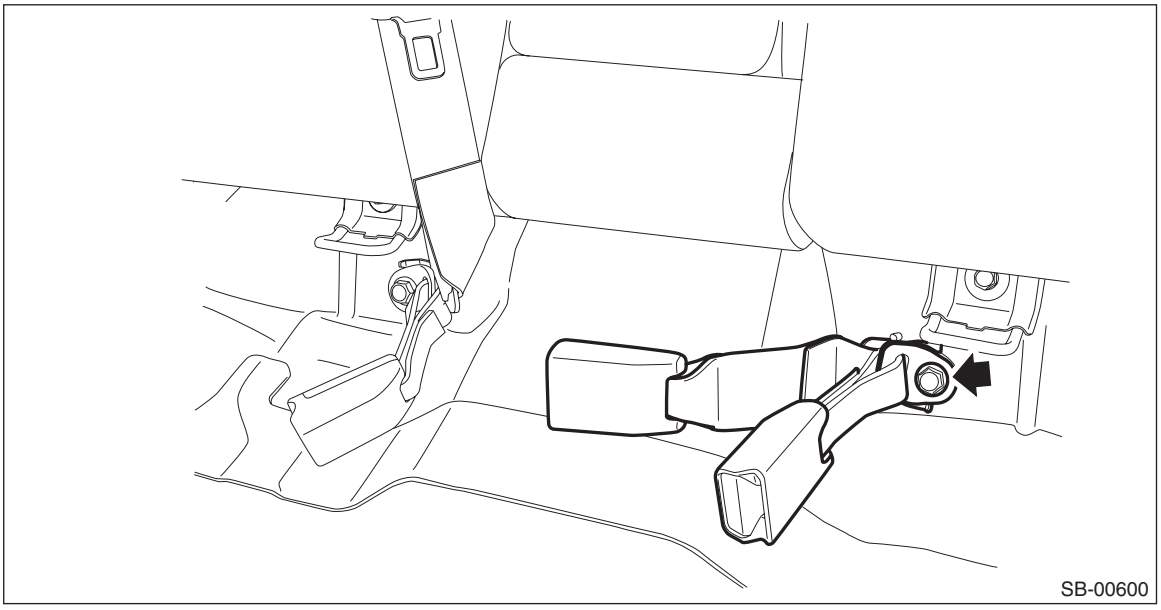

B: INSTALLATION

1. SEAT BELT OUTER - REAR RH & LH

1) Before installation, perform a unit inspection of retractor. <Ref. to SB-26, INSPECTION, Rear Seat Belt.>
2) Install the seat belt outer - rear.

CAUTION:
- **During installation, make sure that the seat belts are not twisted.**
- **After installation, make sure that the seat belts are smoothly extended and wound.**

Tightening torque:
Refer to "COMPONENT" of "General Description" for the tightening torque.: <Ref. to SB-3, REAR SEAT BELT, COMPONENT, General Description.>

3) Install the trim panel - rear pillar LWR, trim panel - rear pillar UPR, and cover side sill - rear INN.
4) Install the rear seat cushion assembly.
5) Connect the battery ground terminal. <Ref. to NT-6, BATTERY, NOTE, Note.>
6) After installation, check the following points.
- The seat belt is not twisted.
- The seat belt can be pulled out and retracted smoothly.

2. SEAT BELT - REAR SHOULDER CTR

1) Install the retractor of seat belt - rear shoulder CTR.

Tightening torque:
Refer to "COMPONENT" of "General Description" for the tightening torque.: <Ref. to SB-3, REAR SEAT BELT, COMPONENT, General Description.>

2) Install the trim panel assembly - rear shelf.
3) Install the high-mounted stop light.
4) Install the lower anchor of seat belt - rear shoulder CTR.

CAUTION:
- **During installation, make sure that the seat belts are not twisted.**
- **After installation, make sure that the seat belts are smoothly extended and wound.**

Tightening torque:
30 N·m (3.1 kgf-m, 22.1 ft-lb)

5) Install the trim panel - rear pillar LWR, trim panel - rear pillar UPR, and cover side sill - rear INN.
6) Install the rear seat cushion assembly.
7) Connect the battery ground terminal. <Ref. to NT-6, BATTERY, NOTE, Note.>
8) After installation, check the following points.
- The seat belt is not twisted.
- The seat belt can be pulled out and retracted smoothly.

3. SEAT BELT - CTR RH AND LH

1) Install the seat belt - CTR RH/LH.

Tightening torque:
30 N·m (3.1 kgf-m, 22.1 ft-lb)

2) Install the rear seat cushion assembly.
3) Connect the battery ground terminal. <Ref. to NT-6, BATTERY, NOTE, Note.>
4) After installation, check the following points.
- The seat belt is not twisted.
- The seat belt buckle is pulled out properly, and seat belt engagement can be performed smoothly.

C: INSPECTION

1. VISUAL INSPECTION

Check for the following, and replace with new parts if necessary.
- Seat belt is slackened, bent or worn.
- Seat belt is abnormally wound or extended.
- Seat belt inner - rear is deformed or damaged.
- Seat belt buckle cannot be engaged properly.

2. ELR LOCK MECHANISM INSPECTION

1) Hold the retractor upright (as installed in the vehicle) and check the ELR lock mechanism.
2) Tilt the retractor from the upright posture and check the following points.
- It does not lock if the inclination angle is 15° or less.

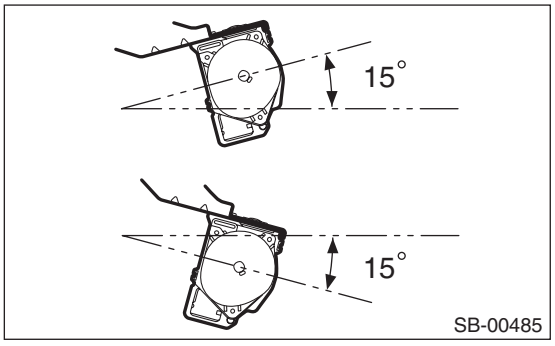

- It remains locked if the inclination angle is 27° or more.

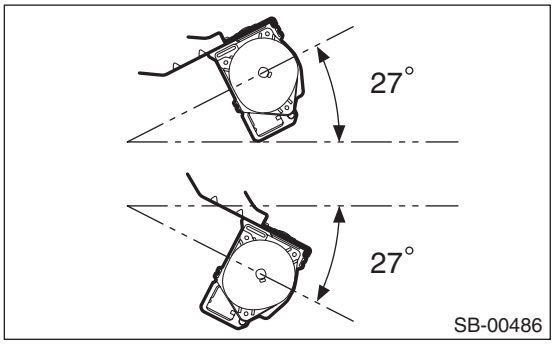

3) If the ELR lock mechanism does not operate properly, replace the seat belt outer - rear with a new part.

7. Disposal of Pretensioner

A: PROCEDURE

WARNING:
Make sure to follow the instructions below. Otherwise, personal injuries may occur.
• Before discarding a pretensioner, always perform an activation process to prevent any false activation.
• Wear protective gloves, safety goggles and earplugs during this operation. Wash your hands afterwards.
• Do not touch the pretensioner just after activation because it is very hot. Before handling it for disposal, wait for 40 minutes.

CAUTION:
• Perform a pretensioner operation process in a safe, level place. Do not perform the process outdoors when there is a strong rain or wind.
• Do not drop or damage the pretensioner.
• A large explosive noise will occur when the pretensioner is deployed. Warn persons in the area, and do not allow anyone to approach a radius of 5 m (16 ft) from the discard location.
• After activating the pretensioner, smoke may arise. Therefore, always perform an operation process in a well-ventilated place without any smoke sensor.
• Do not expose the activated pretensioner to water.
• Wrap the activated pretensioner in a sealed vinyl bag when discarding.
• If it is impossible to perform a pretensioner activation process due to some situational reasons, consult SUBARU dealership or one of the authorized workshops.

1) Fold the backrest all the way forward, and move the front seat all the way forward.
2) Turn the ignition switch to OFF.
3) Disconnect the ground cable from battery and wait for at least 60 seconds before starting work. <Ref. to NT-6, BATTERY, NOTE, Note.>

NOTE:
For model with battery sensor, disconnect the ground terminal from battery sensor.
4) Disconnect connector (a) of the pretensioner.

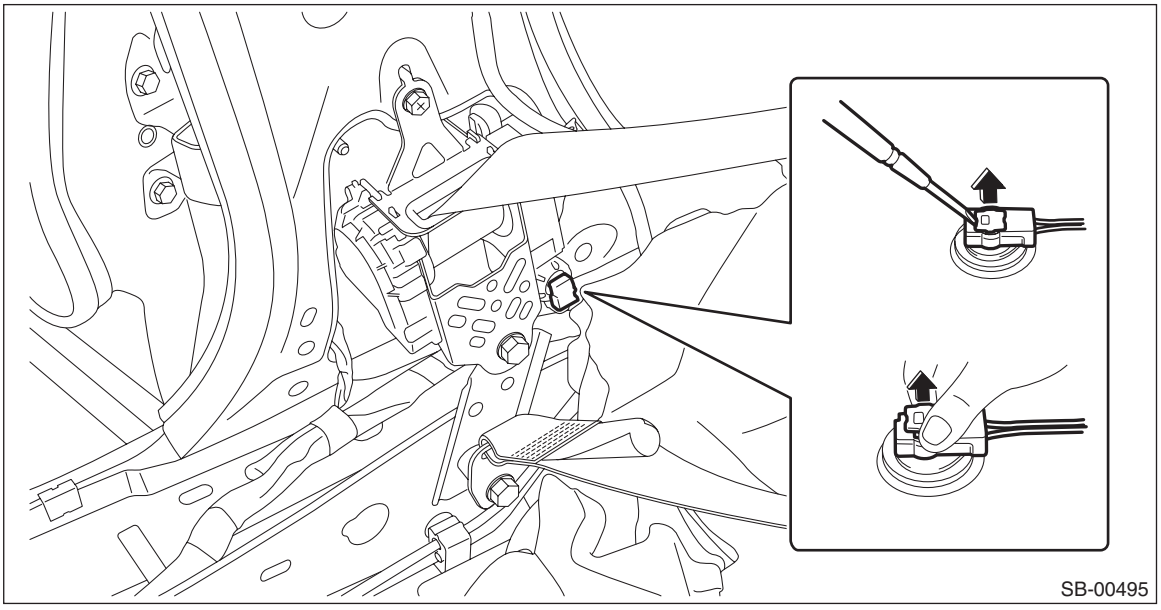

5) Short the alligator clip and terminal of the airbag deployment tool together.

CAUTION:
Short the airbag deployment tool terminals until just before the pretensioner operation process.

Preparation tool:
ST: AIRBAG DEPLOYMENT TOOL (98299PA030)

6) Connect the airbag deployment tool (A) and test harness adapter D (B).

Preparation tool:
ST: TEST HARNESS ADAPTER D (98299SA010)

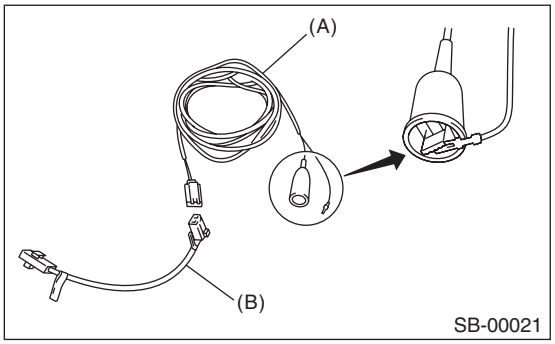

7) Connect the test harness adapter D connector to the pretensioner.
8) Make sure there is no one inside the vehicle.
9) Extend the wiring of the airbag deployment tool to its limit, and completely close all the windows and sunroof.

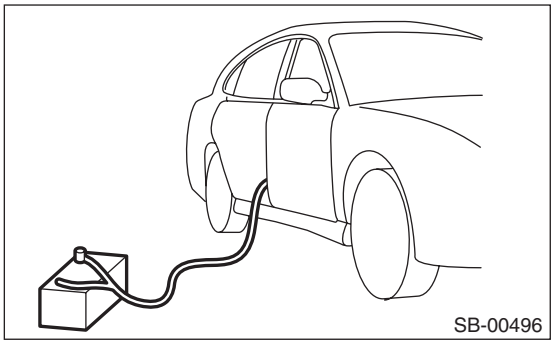

10) Move the battery 5 m (16 ft) or more from the vehicle, and affix nearby.
11) Connect the airbag deployment tool alligator clip to the battery negative (–) terminal.
12) Connect the other cable of airbag deployment tool to the battery positive (+) terminal, and activate the pretensioner.

CAUTION:
• After activation, the pretensioner will be extremely hot. Let it cool down for at least 40 minutes in an area with no one around.
• Do not expose the activated pretensioner to water.

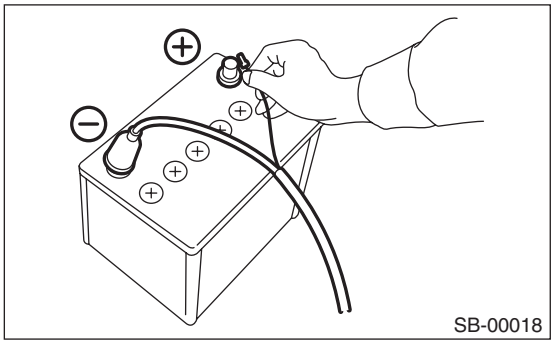

13) Perform operation process of lap seat belt pretensioner from steps 14) to 22) for the passenger's side.
14) Disconnect the connector from the lap seat belt pretensioner.
15) Short the alligator clip and terminal of the airbag deployment tool together.

CAUTION:
Short the airbag deployment tool terminals until just before the pretensioner operation process.

Preparation tool:
ST: AIRBAG DEPLOYMENT TOOL (98299PA030)

16) Connect the airbag deployment tool (A) and test harness adapter D (B).

Preparation tool:
ST: TEST HARNESS ADAPTER D (98299SA010)

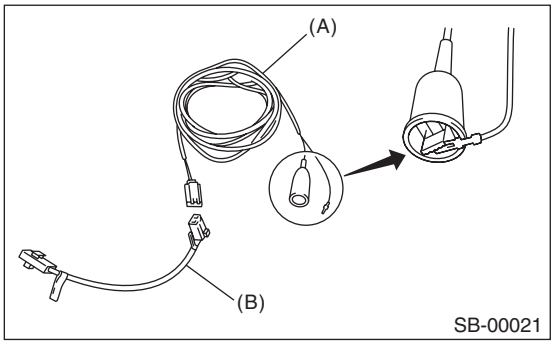

17) Connect the test harness adapter D connector to the lap seat belt pretensioner.
18) Make sure there is no one inside the vehicle.
19) Extend the wiring of airbag deployment tool to the limit, and close all the windows and sunroof completely.

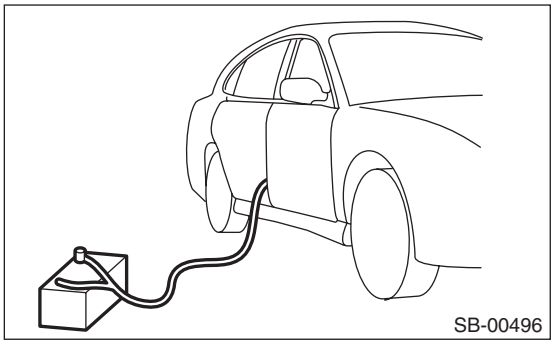

20) Move the battery 5 m (16 ft) or more from the vehicle, and affix nearby.
21) Connect the airbag deployment tool alligator clip to the battery negative (–) terminal.
22) Connect the other cable of airbag deployment tool to the battery positive (+) terminal, and activate the pretensioner.

CAUTION:
• After activation, the pretensioner will be extremely hot. Let it cool down for at least 40 minutes in an area with no one around.
• Do not expose the activated pretensioner to water.

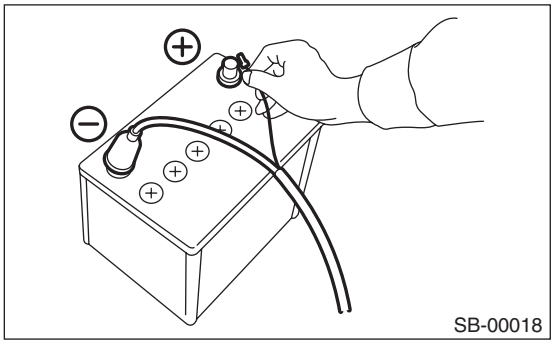

23) Remove the seat belt outer - front. <Ref. to SB-15, REMOVAL, Front Seat Belt.>

24) Cut the seat belt at a position as close as possible to the seat belt retractor.

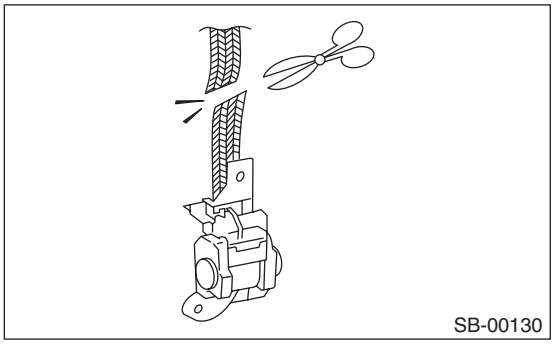

25) Cut the seat belt at a position as close as possible to the lap seat belt pretensioner.

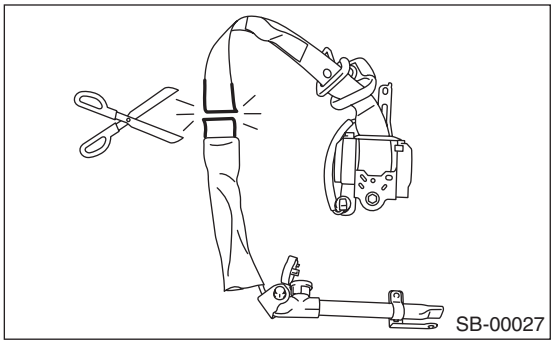

26) Place the activated pretensioner in a sealed vinyl bag, then discard.

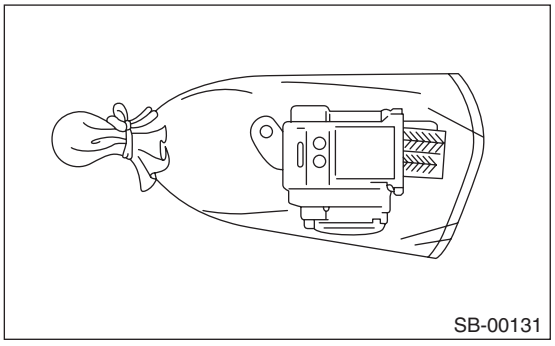

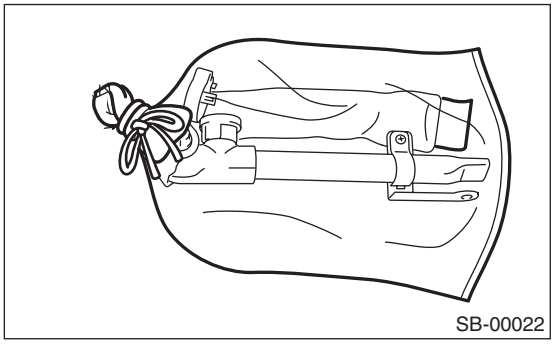

LIGHTING SYSTEM

LI

		Page
1.	General Description	2
2.	Relay and Fuse	4
3.	Headlight System	6
4.	Day Time Running Light System	10
5.	Clearance Light and Illumination Light System	11
6.	Front Fog Light System	12
7.	Turn Signal Light and Hazard Light System	13
8.	Back-up Light System	15
9.	Stop Light System	16
10.	Interior Light System	17
11.	Auto Headlight Beam Leveler System	18
12.	Combination Switch (Light)	20
13.	Light Control Sensor	23
14.	Headlight Assembly	25
15.	Headlight Bulb	31
16.	Hazard Switch	33
17.	Turn Signal Light & Hazard Light Unit	35
18.	Front Turn Signal Light Assembly	37
19.	Front Turn Signal Light Bulb	40
20.	Clearance/Parking Light Bulb	41
21.	Front Side Marker Light Bulb	42
22.	Front Fog Light Assembly	43
23.	Front Fog Light Bulb	48
24.	Side Turn Signal Light Assembly	49
25.	Rear Combination Light Assembly	50
26.	Tail/Stop Light Bulb	53
27.	Rear Turn Signal Light Bulb	54
28.	Rear Side Marker Light Bulb	55
29.	Back-up Light Bulb	56
30.	License Plate Light	57
31.	High-mounted Stop Light	59
32.	Spot Map Light	61
33.	Room Light	65
34.	Trunk Room Light	67
35.	LED Illumination Light	69
36.	Vanity Mirror Light	71
37.	Ignition Switch Illumination	72
38.	Auto Headlight Beam Leveler Control Module	74
39.	Rear Height Sensor	77
40.	Day Time Running Resistor	79
41.	Door Switch	81
42.	SRF OFF Switch	82

1. General Description

A: SPECIFICATION

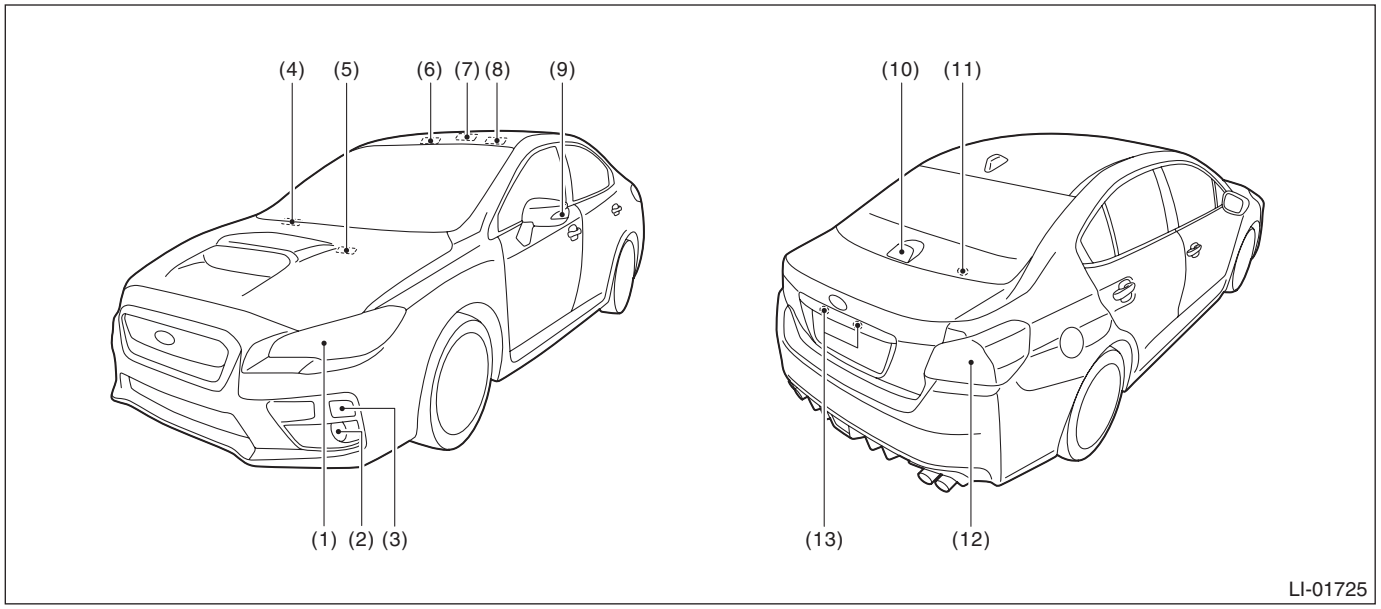

No.	Description		Capacity and wattage	Type
(1)	Headlight	Low beam (halogen type)	12 V — 55 W	H11
		Low beam (LED type)	12 V — 21.6 W	*
		High beam	12 V — 60 W	HB3
		Parking light (halogen type)	12 V — 5 W	W5W
		Parking light (LED type)	12 V — 1.5 W (LED)	*
		Side marker light	12 V — 5 W	W5W
(2)	Front fog light	Model without SRF	12 V — 19 W	H16
		Model with SRF	12 V — 55 W	H11
(3)	Front turn signal light		12 V — 21 W	WY21W
(4)	Glove box light		12 V — 1.4 W (LED)	*
(5)	Pocket light		12 V — 1.4 W (LED)	*
(6)	Spot map light		12 V — 8 W	—
(7)	Room light		12 V — 8 W	—
(8)	Vanity mirror light		12 V — 2 W	—
(9)	Side turn signal light		12 V — 1.1 W (LED)	*
(10)	High-mounted stop light		12 V — 0.7 W (LED)	*
(11)	Trunk room light		12 V — 5 W	W5W
(12)	Rear combination light	Tail & stop light	12 V — 0.3/3.5 W (LED)	*
		Back-up light	12 V — 16 W	W16W
		Turn signal light	12 V — 21 W	WY21W
		Side marker light	12 V — 5 W	W5W
(13)	License plate light		12 V — 5 W	W5W

*: Non-disassembly type

B: CAUTION

• Before disconnecting connectors of sensors or units, be sure to disconnect the ground cable from battery. When replacing the audio and MFD parts provided with memory functions, record the memory contents before disconnecting the battery ground cable.
• Be careful of the following items. Failing to do so may cause the airbag system malfunction.
  – Yellow connectors and harnesses with yellow tapes around them are the connectors and harnesses for the airbag system. When using a tester on these circuits, follow the cautions of “AIRBAG SYSTEM”. <Ref. to AB-9, CAUTION, General Description.>
  – Be careful not to damage the airbag system wiring harness when servicing the electrical parts around the steering column.
• When removing, installing or replacing the VDCCM&H/U, VDCCM&H/U bracket, steering wheel or steering angle sensor (steering roll connector), perform “VDC sensor midpoint setting mode” of the VDC. <Ref. to VDC-17, VDC SENSOR MIDPOINT SETTING MODE, ADJUSTMENT, VDC Control Module and Hydraulic Control Unit (VDCCM&H/U).>
• Use a dry clean cloth so that no grease or water adheres to the glass portion of the bulb.
• Always replace with a bulb that is the same model and wattage as those of the old one.

C: PREPARATION TOOL

1. SPECIAL TOOL

ILLUSTRATION	TOOL NUMBER	DESCRIPTION	REMARKS
 STSSM4	—	SUBARU SELECT MONITOR 4	Used for setting of each function and trouble-shooting for electrical system. NOTE: For detailed operation procedures of Subaru Select Monitor 4, refer to “Application help”.

2. GENERAL TOOL

TOOL NAME	REMARKS
Circuit tester	Used for measuring resistance, voltage and current.
DST-i	Used together with Subaru Select Monitor 4.

2. Relay and Fuse

A: LOCATION

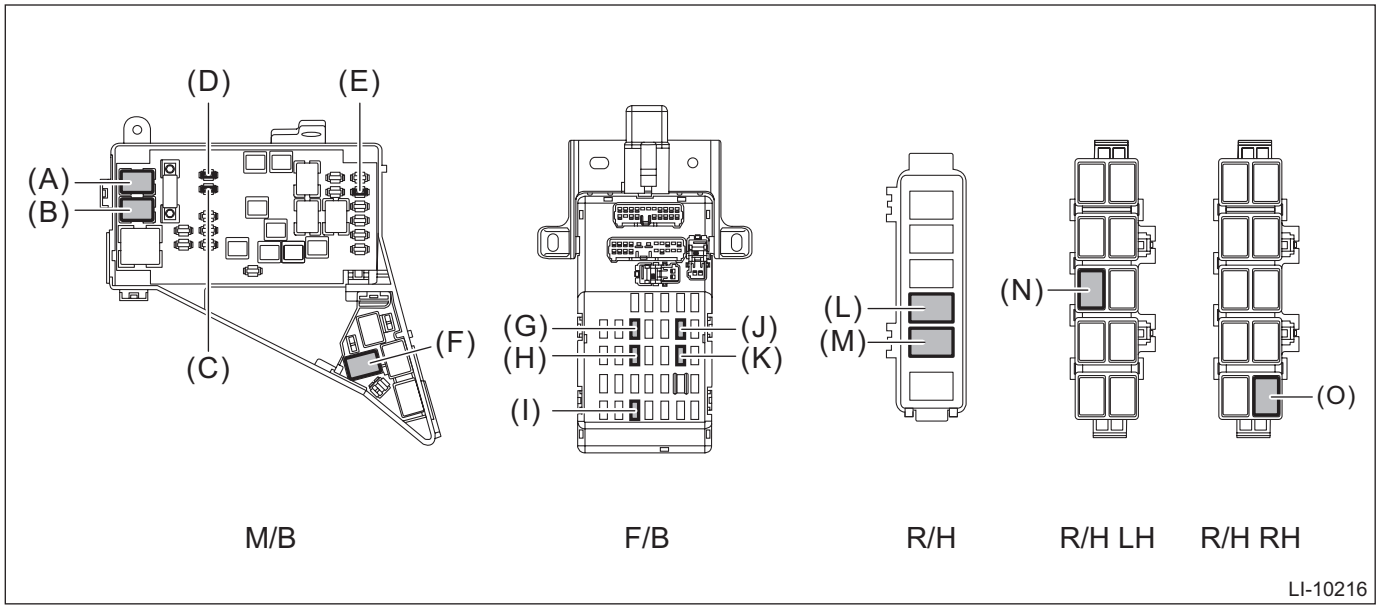

Main fuse box	Headlight relay (HI)	(A)
	Headlight relay (LO)	(B)
	Fuse 30 A (daytime running light relay)	(C)
	Fuse 15 A (combination light LH/RH)	(D)
	Fuse 15A (tail and illumination relay, daytime running light relay)	(E)
	Daytime running light relay	(F)
Relay & fuse box	Fuse 7.5 A (stop light and brake switch)	(G)
	Fuse 10A (trunk room light)	(H)
	Fuse 15A (front fog light relay*1, front fog light relay LH/RH*2)	(I)
	Fuse 7.5 A (turn signal & hazard unit)	(J)
	Fuse 10A (inhibitor switch, back-up light switch, auto headlight beam leveler CM)	(K)
Relay holder*3	Front fog light relay RH*2	(L)
	Front fog light relay LH*2	(M)
Relay holder LH*4	Tail & illumination relay	(N)
Relay holder RH*4	Front fog light relay*1	(O)

*1: Model without SRF
*2: Model with SRF
*3: Engine compartment side
*4: Passenger room side

NOTE:
For other related fuses, refer to the wiring diagram. <Ref. to WI-31, Power Supply Circuit.>

B: INSPECTION

1. CHECK FUSE

1) Remove the fuse and inspect visually.
2) If the fuse is blown out, replace the fuse.

NOTE:
If the fuse is blown again, check the system wiring harness.

2. CHECK RELAY

1) Measure the resistance between relay terminals.

Terminal No.	Inspection conditions	Standard	Circuit
1 — 2	Always	1 MΩ or more	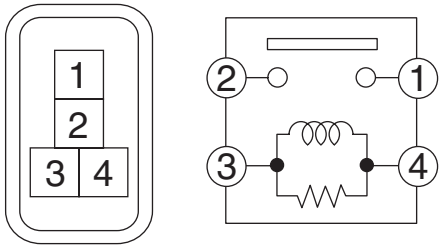 LI-01273
1 — 2	Apply battery voltage between terminals 4 and 3.	Less than 1 Ω	

Terminal No.	Inspection conditions	Standard	Circuit
1 — 2	Always	1 MΩ or more	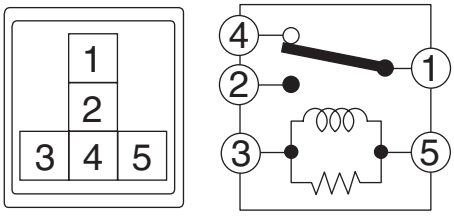 LI-01274
1 — 4	Always	Less than 1 Ω	
1 — 2	Apply battery voltage between terminals 3 and 5.	Less than 1 Ω	

2) Replace the relay if the inspection result is not within the standard value.

3. Headlight System

A: WIRING DIAGRAM

Refer to “Headlight System” in the wiring diagram. <Ref. to WI-240, WIRING DIAGRAM, Headlight System.>

B: INSPECTION

1. AUTO HEADLIGHT SYSTEM CHECK

	Step	Check	Yes	No
1	**CHECK HEADLIGHT ILLUMINATION.** Set the lighting switch to the switch 1 (TAIL/PARKING) and switch 2 (HEAD).	Do the parking light and headlight illuminate?	Go to step **2**.	Check the combination switch (light) and headlight bulb.
2	**CHECK CURRENT DATA.** Using the Subaru Select Monitor, display the data of «Lighting AUTO input». NOTE: For detailed operation procedures, refer to “Application help”.	Does the display switch between OFF ←→ ON when the lighting switch is moved to AUTO position?	Go to step **3**.	Go to step **8**.
3	**CHECK CURRENT DATA.** 1) Using the Subaru Select Monitor, display the data of «Illumination Sensor Output». 2) Measure the voltage when the area around the light control sensor, which was dark, becomes bright. ***Illumination sensor output*** ***Dark condition: Approx. 0.6 V or less*** ***Bright condition: Approx. 3 V or more***	Is the voltage output according to the brightness?	Check and replace the body integrated unit. • Inspection: <Ref. to BC(diag)-2, Basic Diagnostic Procedure.> • Replacement: <Ref. to SL-81, Body Integrated Unit.>	Go to step **4**.
4	**CHECK HARNESS.** 1) Disconnect the connectors from body integrated unit and light control sensor. 2) Check the harness between body integrated unit and light control sensor. ***Connector & terminal*** ***(B280) No. 19 — (i89) No. 2:*** ***(B280) No. 29 — (i89) No. 1:*** ***(B281) No. 1 — (i89) No. 3:***	Is harness normal?	Go to step **5**.	Repair or replace the harness.
5	**CHECK HARNESS.** 1) Connect the connector of body integrated unit. 2) Turn the ignition switch to ON. 3) Measure the voltage between light control sensor connector and chassis ground. ***Connector & terminal*** ***(i89) No. 3 (+) — Chassis ground (–):***	Is the voltage 4.5 — 5.5 V?	Go to step **6**.	Replace the body integrated unit. <Ref. to SL-81, Body Integrated Unit.>
6	**CHECK BODY INTEGRATED UNIT.** Measure the resistance between the body integrated unit and chassis ground. ***Connector & terminal*** ***(B280) No. 29 — Chassis ground:***	Is the resistance less than 10 Ω?	Go to step **7**.	Replace the body integrated unit. <Ref. to SL-81, Body Integrated Unit.>
7	**CHECK LIGHT CONTROL SENSOR.** 1) Connect the light control sensor connector. 2) Check the light control sensor. <Ref. to LI-24, INSPECTION, Light Control Sensor.>	Is the light control sensor normal?	Go to step **8**.	Replace the light control sensor.
8	**CHECK COMBINATION SWITCH (LIGHT).** Check the combination switch (light). <Ref. to LI-22, INSPECTION, Combination Switch (Light).>	Is the combination switch (light) normal?	Go to step **9**.	Replace the combination switch (light).

	Step	Check	Yes	No
9	**CHECK HARNESS.** 1) Disconnect the connectors of body integrated unit and combination switch (light). 2) Check the harness between body integrated unit and combination switch (light). ***Connector & terminal*** ***(B71) No. 19 — (B281) No. 16:***	Is harness normal?	Check and replace the body integrated unit. • Inspection: <Ref. to BC(diag)-2, Basic Diagnostic Procedure.> • Replacement: <Ref. to SL-81, Body Integrated Unit.>	Repair or replace the harness.

2. CHECK OF WELCOME LIGHTING SYSTEM

TROUBLE SYMPTOM:

Welcome lighting does not illuminate.

	Step	Check	Yes	No
1	**CHECK BODY INTEGRATED UNIT SETTING.** Display the data of «Welcome Light Off Delay Time(Approaching)» or «Welcome Light Off Delay Time(Exiting)» using the Subaru Select Monitor. NOTE: For detailed operation procedures, refer to "Application help".	Is it turned to the setting other than OFF?	Go to step **2**.	Turn to the setting other than OFF.
2	**CHECK BODY INTEGRATED UNIT SETTING.** Display the data of «Illumination Sensor Setting» using Subaru Select Monitor.	Is the setting "ON"?	Go to step **3**.	Turn the setting to "ON".
3	**CHECK AUTO HEADLIGHT.** 1) Set the lighting switch to AUTO position. 2) Make the light control sensor vicinity dark. 3) Turn the ignition switch to ON.	Do the parking light, tail and headlight illuminate?	Go to step **4**.	Check the auto headlight system. <Ref. to LI-6, AUTO HEADLIGHT SYSTEM CHECK, INSPECTION, Headlight System.>
4	**CHECK DOOR LOCK.** Operate the door lock using the keyless transmitter or the access key.	Do the lock and unlock operate properly?	Go to step **5**.	• Check keyless entry system. <Ref. to SL-17, INSPECTION, Keyless Entry System.> • Check the keyless access with push button start system. <Ref. to KPS(diag)-2, Basic Diagnostic Procedure.>
5	**CHECK BODY INTEGRATED UNIT.** 1) Display the data of «Voltage of IGN» using Subaru Select Monitor. 2) Turn the ignition switch to ON.	Is the voltage 10 — 15 V?	Replace the body integrated unit. <Ref. to SL-81, Body Integrated Unit.>	Repair or replace the harness.

3. CHECK OF WELCOME LIGHTING SYSTEM

TROUBLE SYMPTOM:

Welcome lighting does not go off.

	Step	Check	Yes	No
1	**CHECK BODY INTEGRATED UNIT SETTING.** Display the data of «Welcome Light Off Delay Time(Approaching)» or «Welcome Light Off Delay Time(Exiting)» using the Subaru Select Monitor. NOTE: For detailed operation procedures, refer to "Application help".	Is the illumination time setting correct?	Go to step **2**.	Set the illumination time.
2	**CHECK THE LIGHTS.** Set the lighting switch to the switch 1 (TAIL/PARKING) and switch 2 (HEAD).	Do the parking light, tail light and headlight illuminate?	Go to step **3**.	Check the combination switch (light) and each light circuit.
3	**CHECK BODY INTEGRATED UNIT.** Using the Subaru Select Monitor, display the data of «Driver's door SW input».	Does the display switch between OFF ←→ ON when driver's door is opened/closed?	Go to step **4**.	Check the door switch. <Ref. to SL-20, CHECK DOOR SWITCH, INSPECTION, Keyless Entry System.>
4	**CHECK DOOR LOCK.** Operate the door lock using the keyless transmitter or the access key.	Do the lock and unlock operate properly?	Replace the body integrated unit. <Ref. to SL-81, Body Integrated Unit.>	• Check keyless entry system. <Ref. to SL-17, INSPECTION, Keyless Entry System.> • Check the keyless access with push button start system. <Ref. to KPS(diag)-2, Basic Diagnostic Procedure.>

4. CHECK LED HEADLIGHT

TROUBLE SYMPTOM:

Headlight (low beam) does not illuminate.

	Step	Check	Yes	No
1	**CHECK CONNECTOR CONNECTION.** Check that the headlight connector is connected.	Is the connector connected?	Go to step **2**.	Connect the connector. When it does not illuminate even though the switch is turned to ON: Go to step **2**.
2	**CHECK HEADLIGHT.** 1) Disconnect the headlight connector. 2) Apply battery voltage between headlight unit connector terminals. ***Terminals*** ***No. 8 (+) — No. 7 (–):***	Does the low beam come on?	Go to step **3**.	Replace the headlight.
3	**CHECK HARNESS.** 1) Disconnect the connectors of body integrated unit and combination switch (light). 2) Check the harness for body integrated unit and combination switch (light). ***Connector & terminal*** ***(B281) No. 16 — (B71) No. 19:***	Is harness normal?	Check the lighting switch. <Ref. to LI-22, INSPECTION, Combination Switch (Light).>	Repair or replace the harness.

5. CHECK LIGHTING SWITCH

Refer to “Combination Switch (Light)”. <Ref. to LI-22, INSPECTION, Combination Switch (Light).>

6. CHECK DIMMER & PASSING SWITCH

Refer to “Combination Switch (Light)”. <Ref. to LI-22, INSPECTION, Combination Switch (Light).>

C: NOTE

For operation procedures of each component of the headlight system, refer to the respective section.

- Headlight Assembly: <Ref. to LI-25, Headlight Assembly.>
- Headlight bulb: <Ref. to LI-31, Headlight Bulb.>
- Combination switch (light): <Ref. to LI-20, Combination Switch (Light).>
- Light control sensor: <Ref. to LI-23, Light Control Sensor.>

4. Day Time Running Light System

A: WIRING DIAGRAM

Refer to “Headlight System” in the wiring diagram. <Ref. to WI-240, WIRING DIAGRAM, Headlight System.>

B: INSPECTION

1. DAYTIME RUNNING LIGHT SYSTEM CHECK

	Step	Check	Yes	No
1	**CHECK FUSE.** 1) Turn the ignition switch to OFF. 2) Check the headlight HI fuse.	Is the fuse OK?	Go to step **2**.	Replace the fuse.
2	**CHECK RELAY.** Check the daytime running light relay and headlight HI relay.	Is the relay OK?	Go to step **3**.	Replace the relay.
3	**CHECK BODY INTEGRATED UNIT.** Read the DTC of body integrated unit using Subaru Select Monitor. <Ref. to BC(diag)-11, Read Diagnostic Trouble Code (DTC).>	Is DTC displayed?	Perform the diagnosis according to DTC.	Go to step **4**.
4	**CHECK CURRENT DATA.** Display the following items using Subaru Select Monitor. NOTE: For detailed operation procedures, refer to “Application help”. • «Parking Brake Switch Input» • «EPB Operating status» (model with EPB) • «Shift position» • «Lighting II Switch Input»	Is the input signal normal?	Go to step **5**.	Check the defective part.
5	**CHECK HEADLIGHT ILLUMINATION.** 1) Turn the ignition switch to ON. 2) Turn the lighting switch to the switch II (HEAD) position. 3) Turn the dimmer & passing switch to the switch UP position.	Does the headlight (high beam) illuminate?	Go to step **6**.	Check the combination switch (light) and headlight bulb.
6	**CHECK DAYTIME RUNNING LIGHT RESISTOR.** 1) Turn the ignition switch to OFF. 2) Check the daytime running light resistor. <Ref. to LI-80, INSPECTION, Day Time Running Resistor.>	Does the daytime running light resistor normal?	Go to step **7**.	Replace the daytime running light resistor.
7	**CHECK HARNESS.** 1) Disconnect the connectors of body integrated unit, daytime running light relay, daytime running light resistor, and headlight. 2) Check each harness.	Is harness normal?	Replace the body integrated unit. <Ref. to SL-81, Body Integrated Unit.>	Repair or replace the harness.

C: NOTE

For operation procedures of each component of the daytime running light system, refer to the respective section.

- Headlight Assembly: <Ref. to LI-25, Headlight Assembly.>
- Headlight bulb: <Ref. to LI-31, Headlight Bulb.>
- Combination switch (light): <Ref. to LI-20, Combination Switch (Light).>
- Daytime running resistor: <Ref. to LI-79, Day Time Running Resistor.>

5. Clearance Light and Illumination Light System

A: WIRING DIAGRAM

Refer to “Clearance Light and Illumination Light System” in the wiring diagram.
- ENGINE TYPE FA: <Ref. to WI-117, ENGINE TYPE FA, WIRING DIAGRAM, Clearance Light and Illumination Light System.>
- ENGINE TYPE EJ: <Ref. to WI-122, ENGINE TYPE EJ, WIRING DIAGRAM, Clearance Light and Illumination Light System.>

B: INSPECTION

1. CHECK LIGHTING SWITCH

Refer to “Combination Switch (Light)”. <Ref. to LI-22, INSPECTION, Combination Switch (Light).>

C: NOTE

For operation procedures of each component of the clearance light & illumination light system, refer to the respective sections.
- Headlight assembly: <Ref. to LI-25, Headlight Assembly.>
- Combination switch (light): <Ref. to LI-20, Combination Switch (Light).>
- Parking light bulb: <Ref. to LI-41, Clearance/Parking Light Bulb.>
- Front side marker light bulb: <Ref. to LI-42, Front Side Marker Light Bulb.>
- Rear combination light assembly: <Ref. to LI-50, Rear Combination Light Assembly.>
- Tail light/stop light bulb: <Ref. to LI-53, Tail/Stop Light Bulb.>
- Rear side marker light bulb: <Ref. to LI-55, Rear Side Marker Light Bulb.>
- License plate light: <Ref. to LI-57, License Plate Light.>
- LED illumination light: <Ref. to LI-69, LED Illumination Light.>
- Ignition switch illumination: <Ref. to LI-72, Ignition Switch Illumination.>

6. Front Fog Light System

A: WIRING DIAGRAM

Refer to “Front Fog Light System” in the wiring diagram.
- Model without SRF: <Ref. to WI-228, WITHOUT SRF, WIRING DIAGRAM, Front Fog Light System.>
- Model with SRF: <Ref. to WI-230, WITH SRF, WIRING DIAGRAM, Front Fog Light System.>

B: INSPECTION

1. CHECK FRONT FOG LIGHT SWITCH

Refer to “Combination Switch (Light)”. <Ref. to LI-22, INSPECTION, Combination Switch (Light).>

C: NOTE

For operation procedures of each component of the front fog light system, refer to the respective section.
- Combination switch (light): <Ref. to LI-20, Combination Switch (Light).>
- Front fog light assembly: <Ref. to LI-43, Front Fog Light Assembly.>
- Front fog light bulb: <Ref. to LI-48, Front Fog Light Bulb.>

7. Turn Signal Light and Hazard Light System

A: WIRING DIAGRAM

Refer to “Turn Signal Light and Hazard Light System” in the wiring diagram. <Ref. to WI-364, WIRING DIAGRAM, Turn Signal Light and Hazard Light System.>

B: INSPECTION

1. CHECK TURN SIGNAL SWITCH

Refer to “Combination Switch (Light)”. <Ref. to LI-22, INSPECTION, Combination Switch (Light).>

2. CHECK HAZARD SWITCH

Refer to “Hazard Switch”. <Ref. to LI-34, INSPECTION, Hazard Switch.>

3. CHECK TURN SIGNAL & HAZARD UNIT

Refer to “Turn Signal Light & Hazard Light Unit”. <Ref. to LI-36, INSPECTION, Turn Signal Light & Hazard Light Unit.>

4. CHECK OF LANE CHANGE SIGNAL

TROUBLE SYMPTOM:
Lane change signal function does not operate.

	Step	Check	Yes	No
1	**CHECK CUSTOMIZATION.** Display the data of «Lane change signal setting» and «One-touch Turn Signal System Setup» using Subaru Select Monitor. NOTE: For detailed operation procedures, refer to “Application help”.	Is the setting “Support” and “ON”?	Go to step **2**.	Change the setting to “Support” and “ON”.
2	**CHECK CURRENT DATA.** 1) Turn the ignition switch to ON. 2) Display the data of «Left turn signal input» and «Right turn signal input» using Subaru Select Monitor.	Does the display change to OFF ←→ ON, when the combination switch is operated?	Replace the body integrated unit. <Ref. to SL-81, Body Integrated Unit.>	Go to step **3**.
3	**CHECK HARNESS.** 1) Turn the ignition switch to OFF. 2) Disconnect the connectors of the body integrated unit and turn signal & hazard unit. 3) Check the harness between body integrated unit and turn signal & hazard unit. ***Connector & terminal*** ***(i171) No. 18 — (B32) No. 8:***	Is the resistance less than 1 Ω?	Go to step **4**.	Repair or replace the harness.
4	**CHECK HARNESS.** Measure the resistance between the body integrated unit connector and chassis ground. ***Connector & terminal*** ***(i171) No. 8 — Chassis ground:*** NOTE: Check with the combination switch in the OFF position.	Is the resistance 1 MΩ or more?	Go to step **5**.	Repair or replace the harness.
5	**CHECK HARNESS.** 1) Disconnect the connector of the combination switch. 2) Measure the resistance between the combination switch connector and chassis ground. ***Connector & terminal*** ***(B71) No. 12 — Chassis ground:***	Is the resistance less than 1 Ω?	Replace the body integrated unit. <Ref. to SL-81, Body Integrated Unit.>	Repair or replace the harness.

C: NOTE

For operation procedures of each component of the turn signal and hazard light system, refer to the respective sections.

- Combination switch (light): <Ref. to LI-20, Combination Switch (Light).>
- Front turn signal light assembly: <Ref. to LI-37, Front Turn Signal Light Assembly.>
- Front turn signal light bulb: <Ref. to LI-40, Front Turn Signal Light Bulb.>
- Side turn signal light assembly: <Ref. to LI-49, Side Turn Signal Light Assembly.>
- Rear combination light assembly: <Ref. to LI-50, Rear Combination Light Assembly.>
- Rear turn signal light bulb: <Ref. to LI-54, Rear Turn Signal Light Bulb.>
- Hazard switch: <Ref. to LI-33, Hazard Switch.>
- Turn signal & hazard unit: <Ref. to LI-35, Turn Signal Light & Hazard Light Unit.>

8. Back-up Light System

A: WIRING DIAGRAM

Refer to “Back-up Light System” in the wiring diagram.

- ENGINE TYPE FA: <Ref. to WI-106, ENGINE TYPE FA, WIRING DIAGRAM, Back-up Light System.>
- ENGINE TYPE EJ: <Ref. to WI-108, ENGINE TYPE EJ, WIRING DIAGRAM, Back-up Light System.>

B: INSPECTION

1. CHECK BACK-UP LIGHT SWITCH (MT MODEL)

Refer to “MANUAL TRANSMISSION AND DIFFERENTIAL” section.

- Except for STI model: <Ref. to 6MT(TY75)-48, BACK-UP LIGHT SWITCH, INSPECTION, Switches and Harness.>
- STI model: <Ref. to 6MT(TY85)-41, INSPECTION, Back-up Light Switch.>

2. CHECK INHIBITOR SWITCH (CVT MODEL)

Refer to “Inhibitor Switch” in “CONTINUOUSLY VARIABLE TRANSMISSION” section. <Ref. to CVT(TR690)-93, INSPECTION, Inhibitor Switch.>

C: NOTE

For operation procedures of each component of the back-up light system, refer to the respective section.

- Rear combination light assembly: <Ref. to LI-50, Rear Combination Light Assembly.>
- Back-up light bulb: <Ref. to LI-56, Back-up Light Bulb.>

9. Stop Light System

A: WIRING DIAGRAM

Refer to “Stop Light System” in the wiring diagram.

- ENGINE TYPE FA
  – Model without EyeSight: <Ref. to WI-351, ENGINE TYPE FA (WITHOUT EyeSight), WIRING DIAGRAM, Stop Light System.>
  – Model with EyeSight: <Ref. to WI-352, ENGINE TYPE FA (WITH EyeSight), WIRING DIAGRAM, Stop Light System.>
- ENGINE TYPE EJ: <Ref. to WI-354, ENGINE TYPE EJ, WIRING DIAGRAM, Stop Light System.>

B: INSPECTION

1. CHECK STOP LIGHT SWITCH

Refer to “Stop Light Switch” in “BRAKE” section. <Ref. to BR-101, INSPECTION, Stop Light Switch.>

C: NOTE

For operation procedures of each component of the stop light system, refer to the respective section.

- Rear combination light assembly: <Ref. to LI-50, Rear Combination Light Assembly.>
- Tail light/stop light bulb: <Ref. to LI-53, Tail/Stop Light Bulb.>
- High-mounted stop light: <Ref. to LI-59, High-mounted Stop Light.>

10.Interior Light System

A: WIRING DIAGRAM

Refer to “Interior Light System” in the wiring diagram. <Ref. to WI-252, WIRING DIAGRAM, Interior Light System.>

B: INSPECTION

1. CHECK DOOR SWITCH

Refer to “Door Switch”. <Ref. to LI-81, INSPECTION, Door Switch.>

2. CHECK TRUNK LID LATCH SWITCH

Refer to “Trunk Lid Latch and Actuator Assembly” in “SECURITY AND LOCKS” section. <Ref. to SL-50, ACTUATOR, INSPECTION, Trunk Lid Latch and Actuator Assembly.>

C: NOTE

For operation procedures of each component of the interior light system, refer to the respective section.

- Spot map light: <Ref. to LI-61, Spot Map Light.>
- Room light: <Ref. to LI-65, Room Light.>
- Trunk room light: <Ref. to LI-67, Trunk Room Light.>
- LED illumination light: <Ref. to LI-69, LED Illumination Light.>
- Door switch: <Ref. to LI-81, Door Switch.>

11.Auto Headlight Beam Leveler System

A: WIRING DIAGRAM

Refer to “Headlight Beam Leveler System” in the wiring diagram. <Ref. to WI-238, WIRING DIAGRAM, Headlight Beam Leveler System.>

B: ELECTRICAL SPECIFICATION

1. AUTO HEADLIGHT BEAM LEVELER CM

Refer to “Control Module I/O Signal” of “AUTO HEADLIGHT BEAM LEVELER SYSTEM (DIAGNOSTICS)” section. <Ref. to AL(diag)-6, ELECTRICAL SPECIFICATION, Control Module I/O Signal.>

C: INSPECTION

Refer to “Basic Diagnostic Procedure” of “AUTO HEADLIGHT BEAM LEVELER SYSTEM (DIAGNOSTICS)” section. <Ref. to AL(diag)-2, Basic Diagnostic Procedure.>

D: PROCEDURE

When parts related to the auto headlight beam leveler system are removed or replaced, perform the following procedures to initialize or reinitialize.

NOTE:
Before performing initialization or reinitialization, check the following:
- The vehicle is parked on a level surface.
- The inflation pressure of tires is correct.
- The vehicle does not have load.
- Vehicle’s fuel tank is fully filled.
- Refer to the following chart to determine whether to initialize or reinitialize.

Initialization	When the auto headlight beam leveler CM was replaced with a new module.
Reinitialization	• When the auto headlight beam leveler CM was replaced with a part from another vehicle. • When suspension parts have been removed or replaced. (Crossmember, front arm, sub frame, lateral link, housing, strut etc.) • When the vehicle height sensor has been replaced or removed.

CAUTION:
If the indicator does not flash three times or the headlight beam does not operate, it can be assumed that there is an open circuit or faulty wiring in the harness of the auto headlight beam leveler CM, vehicle height sensors or headlight assembly. Perform inspection and repair according to the inspection results, then perform initialization/reinitialization again.
- **Initialization: <Ref. to LI-18, INITIALIZATION, PROCEDURE, Auto Headlight Beam Leveler System.>**
- **Reinitialization: <Ref. to LI-19, REINITIALIZATION, PROCEDURE, Auto Headlight Beam Leveler System.>**

1. INITIALIZATION

1) Check that the indicator in the meter is flashing twice repeatedly.
2) Bounce the vehicle several times to normalize the suspension.
3) Make certain that someone is seated in the driver’s seat.
4) Turn the ignition switch to ON, and, within 1.5 — 20 seconds, turn the headlight switch OFF → ON three times.
5) Make sure that the indicator in the meter flashes three times and then turns OFF, indicating that initialization has been successfully completed. (At this time, the headlight beam drops once, and then returns to the original position.)
6) Perform beam adjustment for the headlight. <Ref. to LI-29, ADJUSTMENT, Headlight Assembly.>

2. REINITIALIZATION

1) Bounce the vehicle several times to normalize the suspension.
2) Make certain that someone is seated in the driver's seat.
3) Turn the ignition switch to ON, and, within 1.5 — 10 seconds, turn the headlight switch OFF → ON five or more successive times.
4) Check that the headlight beam drops once, then returns to normal.
5) After confirming 4), turn the ignition switch to OFF (ACC OFF) within 30 seconds.
6) Turn the ignition switch to ON again, and, within 1.5 — 10 seconds, turn the headlight switch OFF → ON five or more successive times.
7) Make sure that the indicator in the meter flashes three times and then turns OFF, indicating that reinitialization has been successfully completed. (At this time, the headlight beam drops once, and then returns to the original position.)
8) Perform beam adjustment for the headlight. <Ref. to LI-29, ADJUSTMENT, Headlight Assembly.>

E: NOTE

For operation procedures of each component of the auto headlight beam leveler system, refer to the respective section.

- Auto headlight beam leveler CM: <Ref. to LI-74, Auto Headlight Beam Leveler Control Module.>
- Vehicle height sensor: <Ref. to LI-77, Rear Height Sensor.>

12.Combination Switch (Light)

A: REMOVAL

CAUTION:
Before handling the airbag system components, refer to "CAUTION" of "General Description" in "AIRBAG SYSTEM". <Ref. to AB-9, CAUTION, General Description.>

1) Set the tire to the straight-ahead position.
2) Disconnect the ground cable from battery and wait for at least 60 seconds before starting work. <Ref. to NT-6, BATTERY, NOTE, Note.>

NOTE:
For model with battery sensor, disconnect the ground terminal from battery sensor.

3) Remove the driver's airbag module. <Ref. to AB-32, REMOVAL, Driver's Airbag Module.>
4) Remove the steering wheel. <Ref. to PS-16, REMOVAL, Steering Wheel.>
5) Remove the cover assembly - column.
   (1) Release the clips, and remove the cover assembly - steering UPR.
   (2) Remove the screws.
   (3) Remove the cap - key cylinder (a).
   (4) Release the claw, and remove the cover assembly - column UPR and the cover assembly - column LWR.

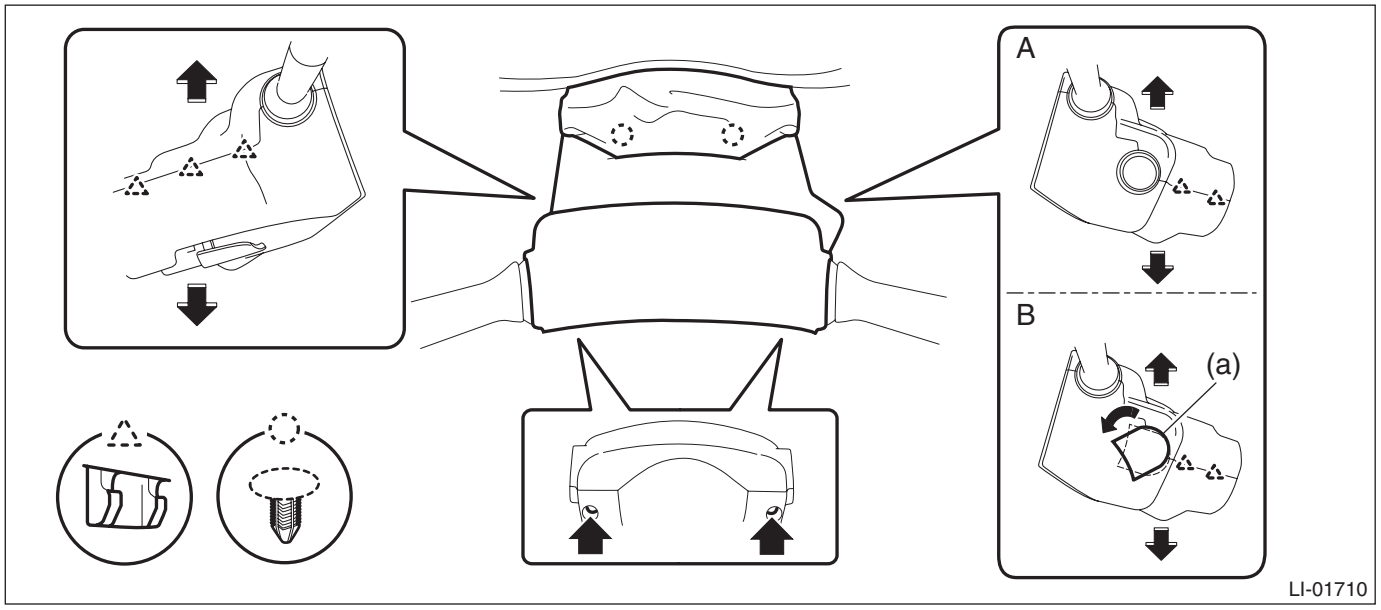

A Model without keyless access with push button start
B Model with keyless access with push button start

6) Remove the steering roll connector. <Ref. to AB-58, REMOVAL, Roll Connector.>
7) Remove the switch assembly - combination wiper select. <Ref. to WW-10, REMOVAL, Combination Switch (Wiper).>

8) Remove the switch assembly - combination turn dimmer.
(1) Disconnect the connector.
(2) Using pliers, loosen the clamp.
(3) With the clamp loosened, release the claw using a flat tip screwdriver, and remove the switch assembly - combination turn dimmer.

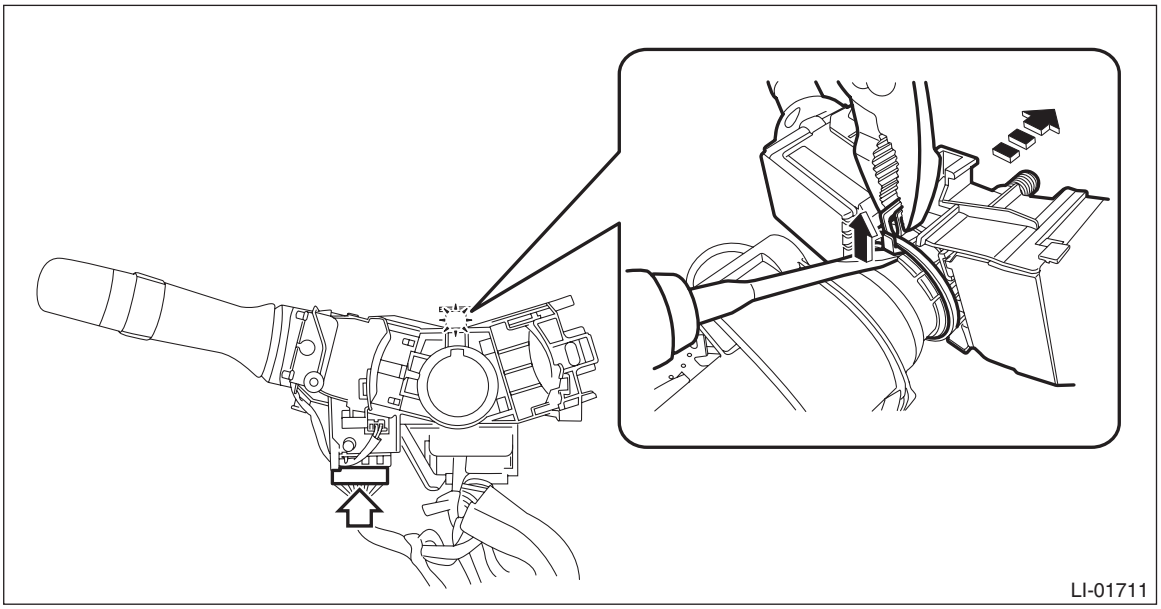

B: INSTALLATION

CAUTION:
• Before handling the airbag system components, refer to "CAUTION" of "General Description" in "AIRBAG SYSTEM". <Ref. to AB-9, CAUTION, General Description.>
• Do not allow harness and connectors to interfere or get tangled up with other parts.
• If the steering wheel has been removed, make sure that the steering roll connector is not turned from the original position.
• If the steering wheel and steering angle sensor (steering roll connector) are removed, perform "VSC(VDC) Centering Mode" of the VDC. <Ref. to VDC-17, VDC SENSOR MIDPOINT SETTING MODE, ADJUSTMENT, VDC Control Module and Hydraulic Control Unit (VDCCM&H/U).>
1) Install the switch assembly - combination turn dimmer.
2) Install the switch assembly - combination wiper select.
3) Install the steering roll connector. <Ref. to AB-60, INSTALLATION, Roll Connector.>
4) Install the cover assembly - column.
5) Install the steering wheel.

Tightening torque:
39 N·m (4 kgf-m, 28.8 ft-lb)

Clearance:
Between cover assembly - column and steering wheel: 4 — 6 mm (0.16 — 0.24 in)
6) Install the driver's airbag module. <Ref. to AB-33, INSTALLATION, Driver's Airbag Module.>
7) Connect the battery ground terminal. <Ref. to NT-6, BATTERY, NOTE, Note.>

C: INSPECTION

1) Measure the resistance between connector terminals.

Preparation tool:
Circuit tester

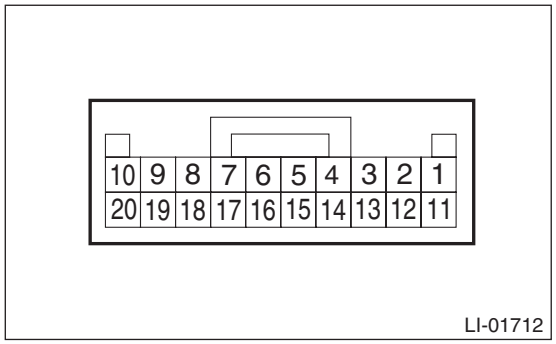

- Lighting switch

Terminal No.	Inspection conditions	Standard
18 — 12 19 — 12 20 — 12	Switch OFF	1 MΩ or more
19 — 12	Switch AUTO	Less than 1 Ω
18 — 12	Switch 1 (TAIL/PARKING)	Less than 1 Ω
18 — 12 20 — 12	Switch 2 (HEAD)	Less than 1 Ω

- Dimmer & passing switch

Terminal No.	Inspection conditions	Standard
11 — 12 17 — 12	Switch PASS	Less than 1 Ω
11 — 12	Switch UP	Less than 1 Ω

- Turn signal switch

Terminal No.	Inspection conditions	Standard
13 — 12	Switch TURN (RH)	Less than 1 Ω
15 — 12	Switch TURN (LH)	Less than 1 Ω

- Front fog light switch

Terminal No.	Inspection conditions	Standard
4 — 3	Switch OFF	1 MΩ or more
	Switch ON	Less than 1 Ω

2) Replace the switch assembly - combination turn dimmer if the inspection result is not within the standard value.

13.Light Control Sensor

A: REMOVAL

1) Disconnect the ground cable from battery. <Ref. to NT-6, BATTERY, NOTE, Note.>

NOTE:
For model with battery sensor, disconnect the ground terminal from battery sensor.

2) Remove the grille - front defroster.
   (1) Release the claws.
   (2) Disconnect the connector and remove the grille - front defroster.

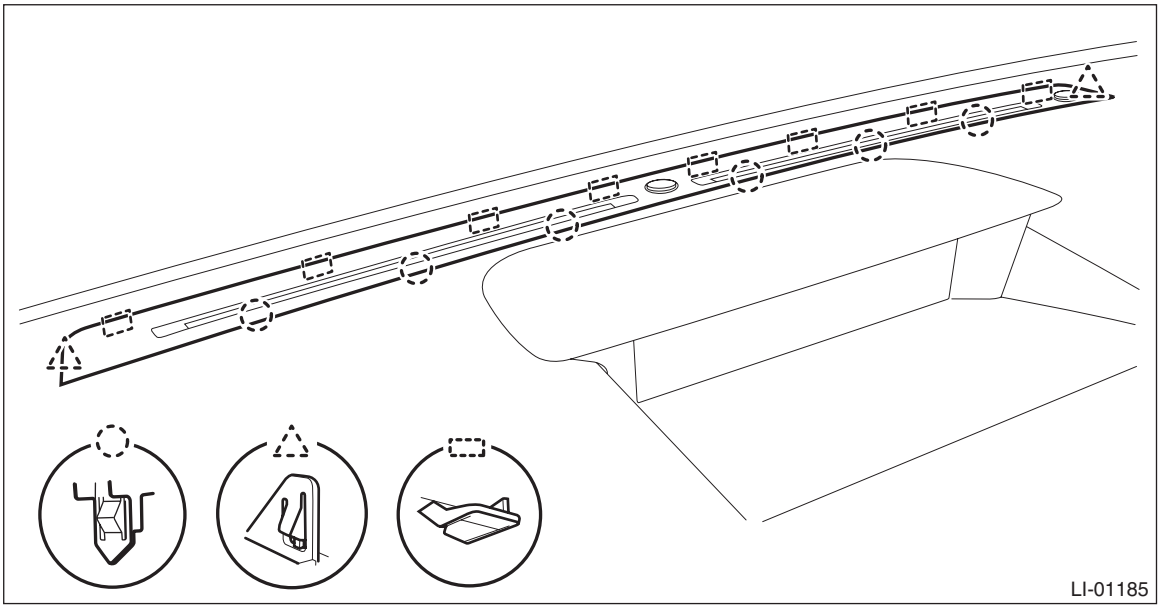

3) Release the claws, and then remove the sensor - automatic light.

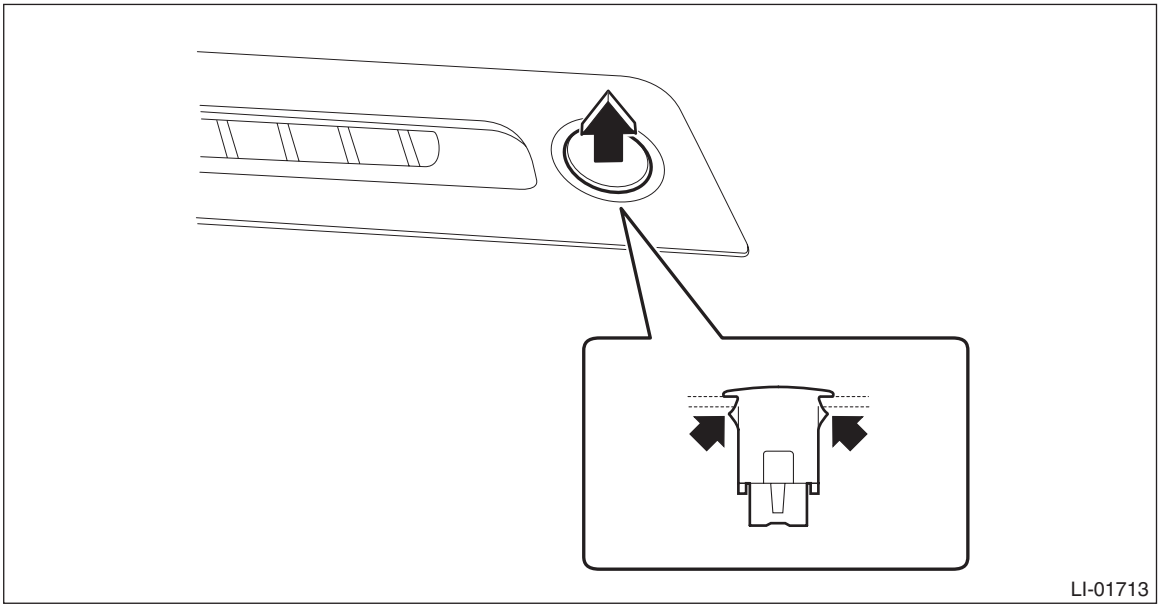

B: INSTALLATION

1) Install the sensor - automatic light.
2) Install the grille - front defroster.
3) Connect the battery ground terminal. <Ref. to NT-6, BATTERY, NOTE, Note.>

C: INSPECTION

1) Connect the connector and then turn the ignition switch to ON.
2) Set the lighting switch to AUTO position.
3) Measure the voltage between connector terminals.

Preparation tool:
Circuit tester

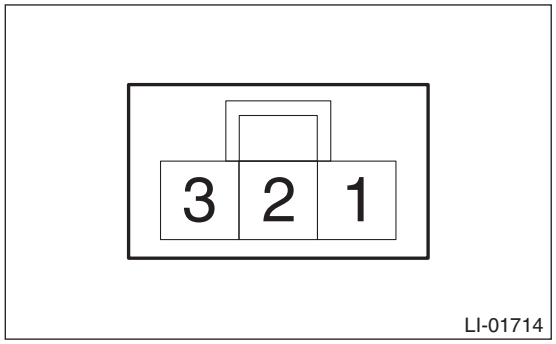

Terminal No.	Inspection conditions	Standard
2 (+) — 1 (–)	Measure the voltage when the area around the sensor - automatic light, which was dark, becomes bright.	Dark condition: Approx. 0.6 V or less
		Bright condition: Approx. 3 V or more

4) Replace the sensor - automatic light if the inspection result is not within the standard value.

14.Headlight Assembly

A: REMOVAL

CAUTION:
Do not perform work with wet hands, because there is a possibility of electrical shock.
1) Disconnect the ground cable from battery. <Ref. to NT-6, BATTERY, NOTE, Note.>

NOTE:
For model with battery sensor, disconnect the ground terminal from battery sensor.
2) Remove the clips and remove the air intake duct. (When removing the headlight RH)
- Except for STI model: <Ref. to IN(w/o STI)-26, REMOVAL, Air Intake Duct.>
- STI model: <Ref. to IN(STI)-11, REMOVAL, Air Intake Duct.>

3) Remove the bumper face - front. <Ref. to EI-31, REMOVAL, Front Bumper.>
4) Remove the bolts and clips, and remove the bracket - front bumper corner.

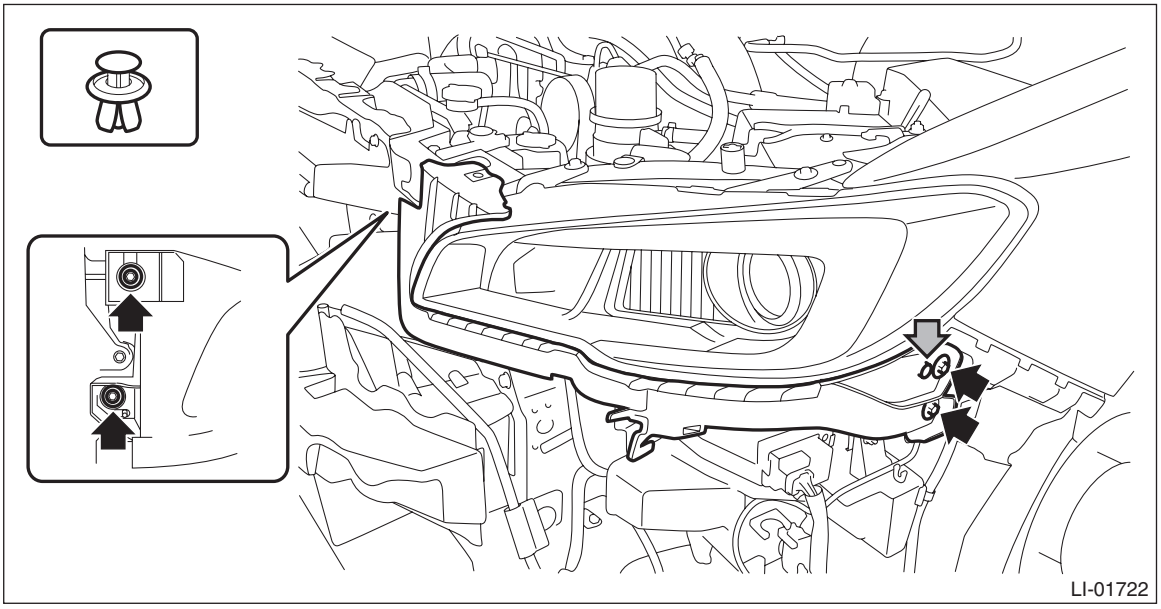

5) Remove the light assembly - head.

CAUTION:
Be careful not to damage the light assembly - head and the fender COMPL - front.

(1) Disconnect the connector.
(2) Remove the bolts and clips, and remove the light assembly - head.

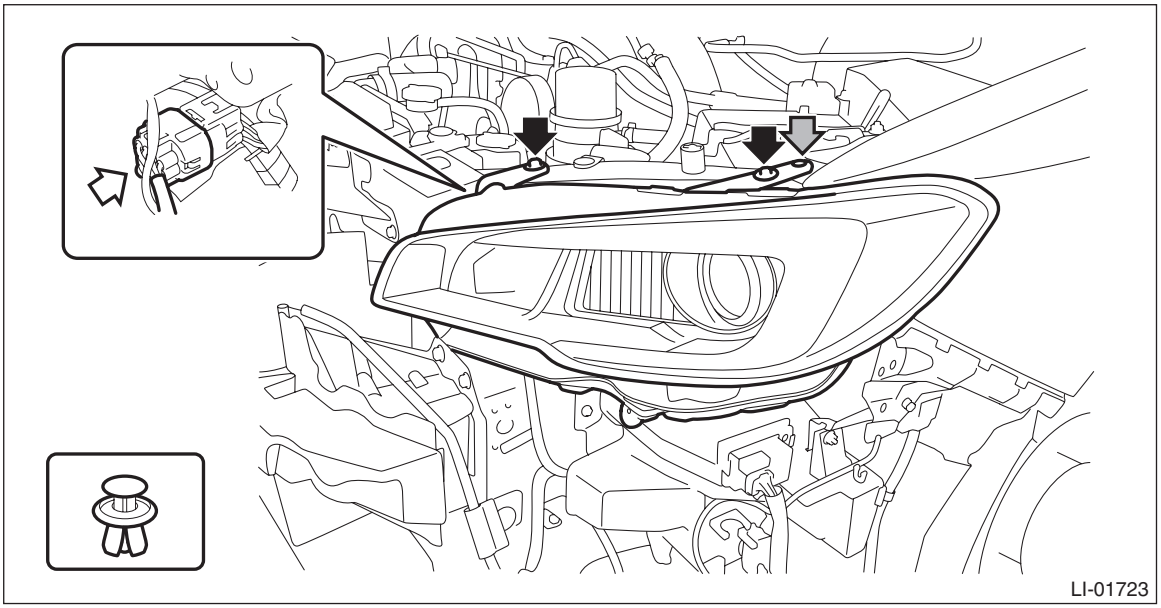

B: INSTALLATION

CAUTION:
• Install the bumper face - front so that the front end of the under cover (b) comes inside the bumper face - front (a), and the front end of the mud guard (c) comes outside the bumper face - front (a).

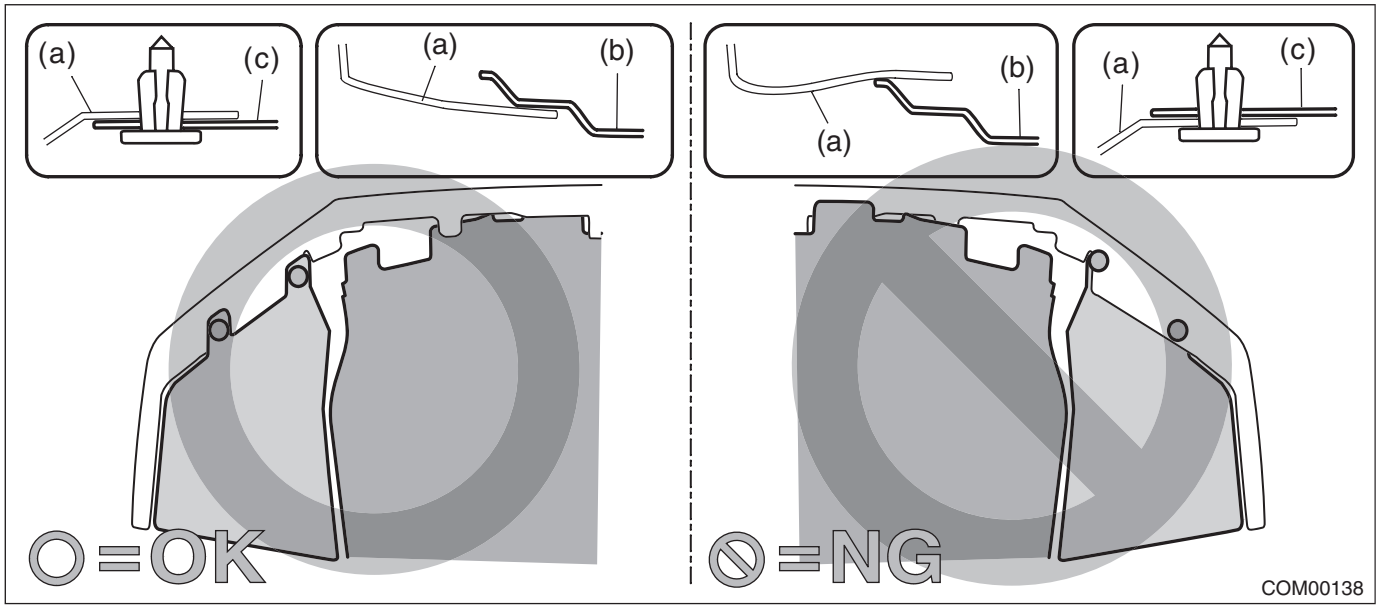

• Before installing the bumper face, match the claws on the bracket - front bumper with the engaging position of flange section on the bumper face side. If the engaging position is not correct, the flange section may be broken or the clearance between fender panel and bumper face may not be uniform.

1) Install the light assembly - head.

Tightening torque:
7.5 N·m (0.8 kgf-m, 5.5 ft-lb)

2) Install the bracket - front bumper corner.

Tightening torque:
7.5 N·m (0.8 kgf-m, 5.5 ft-lb)

3) Install the bumper face - front. <Ref. to EI-34, INSTALLATION, Front Bumper.>
4) Install the air intake duct. (When the headlight RH was removed)
5) Check and adjust the clearance between the hood COMPL - front and the light assembly - head. <Ref. to EB-16, ADJUSTMENT, Front Hood.>
6) Connect the battery ground terminal. <Ref. to NT-6, BATTERY, NOTE, Note.>
7) Adjust the headlight beam and fog light beam.

- Adjust the headlight beam. <Ref. to LI-29, HEADLIGHT BEAM ADJUSTMENT, ADJUSTMENT, Headlight Assembly.>
- Adjust the fog light beam. (Model with fog light) <Ref. to LI-45, FOG LIGHT AIMING, ADJUSTMENT, Front Fog Light Assembly.>

C: DISASSEMBLY

CAUTION:
Use a dry clean cloth so that no grease or water adheres to the glass portion of the bulb.

NOTE:
Since the LED type is a non-disassembled part, it cannot be removed. Replace the light assembly - head if faulty.

1. HIGH BEAM BULB

1) Disconnect the connector.
2) Rotate in the direction of arrow shown in the figure to remove the high beam bulb.

CAUTION:
For the high beam bulb on the RH side, rotate in the opposite direction of arrow shown in the figure.

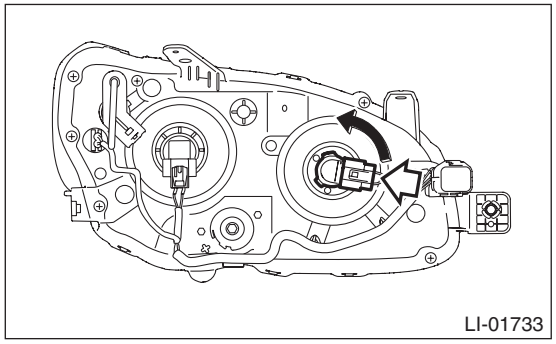
LI-01733

2. LOW BEAM BULB

1) Disconnect the connector.
2) Rotate in the direction of arrow shown in the figure to remove the low beam bulb.

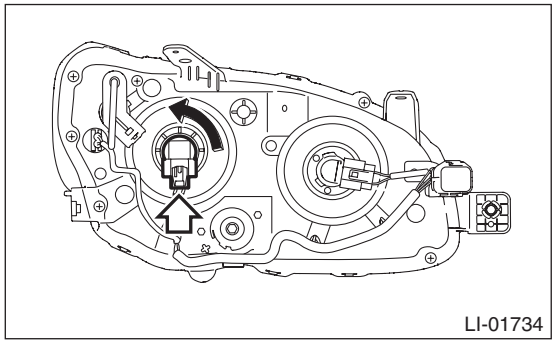
LI-01734

3. PARKING LIGHT BULB

Rotate the bulb socket in the direction of arrow shown in the figure to remove the parking light bulb.

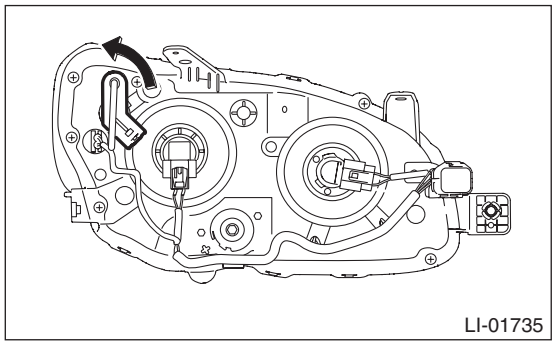

4. SIDE MARKER LIGHT BULB

Rotate the bulb socket in the direction of arrow shown in the figure to remove the side marker light bulb.

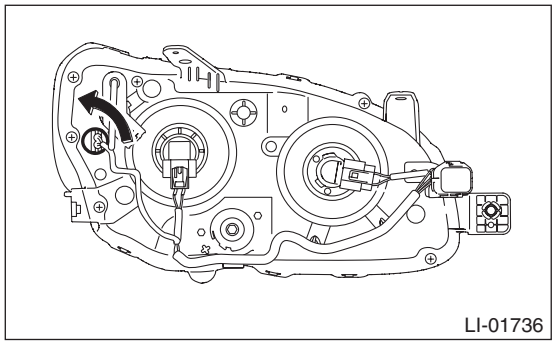

D: ASSEMBLY

CAUTION:
Use a dry clean cloth so that no grease or water adheres to the glass portion of the bulb.

1. HIGH BEAM BULB

1) Install the high beam bulb.
2) Connect the connector.

2. LOW BEAM BULB

1) Install the low beam bulb.
2) Connect the connector.

3. PARKING LIGHT BULB

1) Install the parking light bulb.
2) Install the bulb socket.

4. SIDE MARKER LIGHT BULB

1) Install the side marker light bulb.
2) Install the bulb socket.

E: ADJUSTMENT

1. HEADLIGHT BEAM ADJUSTMENT

CAUTION:
• Turn off the light before adjusting the headlight beam level. If it is necessary to inspect the beam level, do not keep the light on for two minutes or more.
• When blocking the light emitted from the headlight, use a light shield or equivalent.
Do not apply the tape on the lens or place the cloth over it. It may raise the temperature in the light and cause deformation/bubble formations of the plastic lens.

1) Before checking the headlight beam level, be sure of the following:
- Check the area around the headlight for any scratches, damage or other type of deformation.
- The vehicle is parked on a level surface.
- The inflation pressure of tires is correct.
- The vehicle does not have load.
- Vehicle's fuel tank is fully filled.

2) Set the headlight beam leveler switch to "0" position. (Model with manual leveler)
3) Bounce the vehicle several times to normalize the suspension.
4) Make certain that someone is seated in the driver's seat.
5) Measure the distance of the light source centers and the height of the light source centers for the low beam.

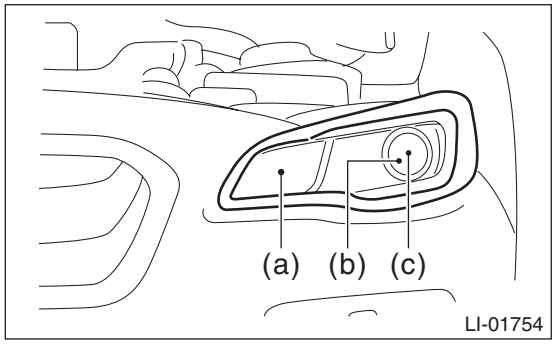

(a) High beam
(b) Low beam (LED type)
(c) Low beam (halogen type)

6) Adjust the headlight beam.
(1) Place the vehicle with the front end facing to the measurement panel, open the front hood, and then illuminate the low beam.

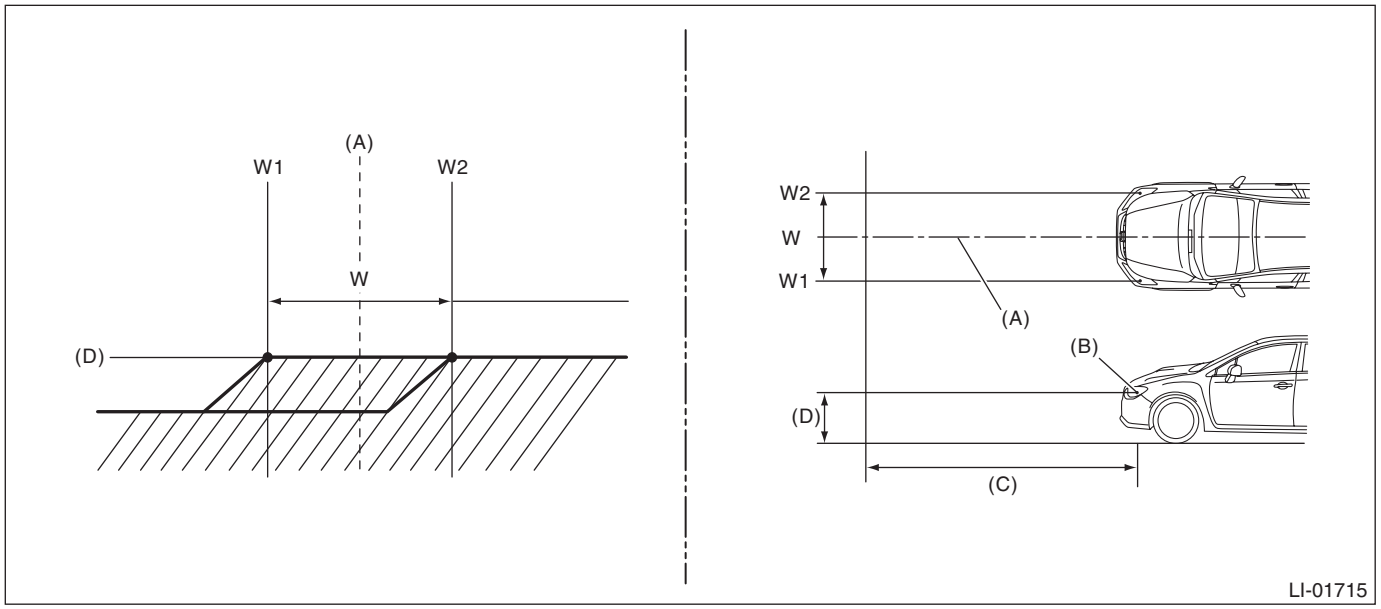

(A) Vehicle center
(B) Bulb center marking
(C) 3 m (10 ft)
(D) Height of headlight center

W mm (in)
Halogen type: 1,426 (56.14)
LED type: 1,470 (57.87)

(2) Adjust the beam level by turning the aiming screw.

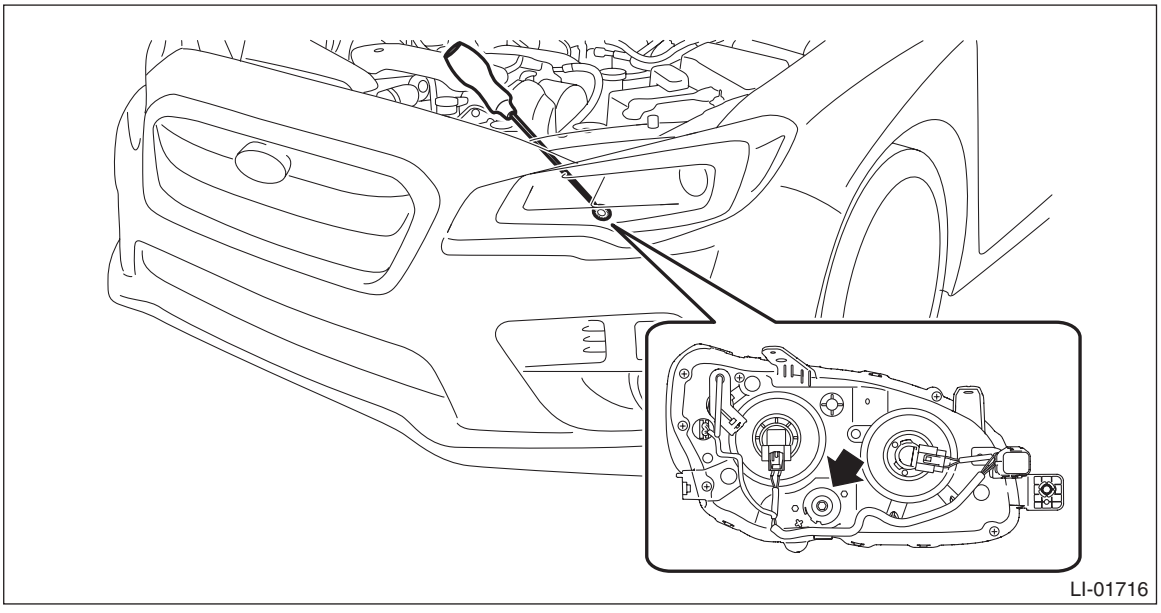

15.Headlight Bulb

A: REMOVAL

1. HIGH BEAM

CAUTION:
- **Do not perform work with wet hands, because there is a possibility of electrical shock.**
- **Do not leave the light assembly - head without the bulb for a long time. Dust, moisture, etc. entering the light may affect its performance.**

1) Disconnect the ground cable from battery. <Ref. to NT-6, BATTERY, NOTE, Note.>

NOTE:
For model with battery sensor, disconnect the ground terminal from battery sensor.

2) Remove the clips and remove the air intake duct. (When removing the high beam bulb RH)
- Except for STI model: <Ref. to IN(w/o STI)-26, REMOVAL, Air Intake Duct.>
- STI model: <Ref. to IN(STI)-11, REMOVAL, Air Intake Duct.>

3) Disconnect the connector and remove the high beam bulb. <Ref. to LI-27, HIGH BEAM BULB, DISASSEMBLY, Headlight Assembly.>

2. LOW BEAM

CAUTION:
- **Do not perform work with wet hands, because there is a possibility of electrical shock.**
- **Do not leave the light assembly - head without the bulb for a long time. Dust, moisture, etc. entering the light may affect its performance.**

NOTE:
Since the LED type low beam bulb is integrated into the light assembly - head, it cannot be removed.

1) Disconnect the ground cable from battery. <Ref. to NT-6, BATTERY, NOTE, Note.>

NOTE:
For model with battery sensor, disconnect the ground terminal from battery sensor.

2) Turn the steering wheel in the opposite direction from the parts to be removed. Then remove the screws and clips, and turn over the mud guard - front.

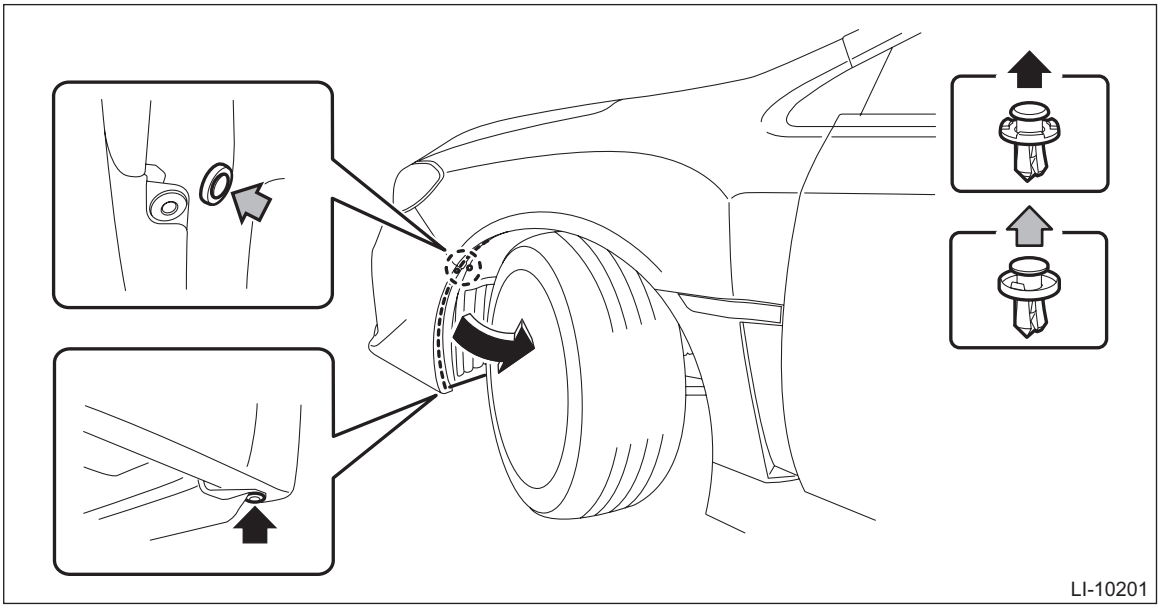

3) Disconnect the connector and remove the low beam bulb. <Ref. to LI-27, LOW BEAM BULB, DISASSEMBLY, Headlight Assembly.>

B: INSTALLATION

1. HIGH BEAM

1) Install the high beam bulb. <Ref. to LI-28, HIGH BEAM BULB, ASSEMBLY, Headlight Assembly.>
2) Install the air intake duct. (When the high beam bulb RH was removed)
3) Connect the battery ground terminal. <Ref. to NT-6, BATTERY, NOTE, Note.>

2. LOW BEAM

1) Install the low beam bulb. <Ref. to LI-28, LOW BEAM BULB, ASSEMBLY, Headlight Assembly.>
2) Install the mud guard - front.
3) Connect the battery ground terminal. <Ref. to NT-6, BATTERY, NOTE, Note.>

16.Hazard Switch

A: REMOVAL

1) Disconnect the ground cable from battery. <Ref. to NT-6, BATTERY, NOTE, Note.>

NOTE:
For model with battery sensor, disconnect the ground terminal from battery sensor.
2) Remove the center grille assembly. <Ref. to AC-91, CENTER GRILLE ASSEMBLY, REMOVAL, Air Vent Grille.>
3) Release the claws, and then remove the switch - hazard.

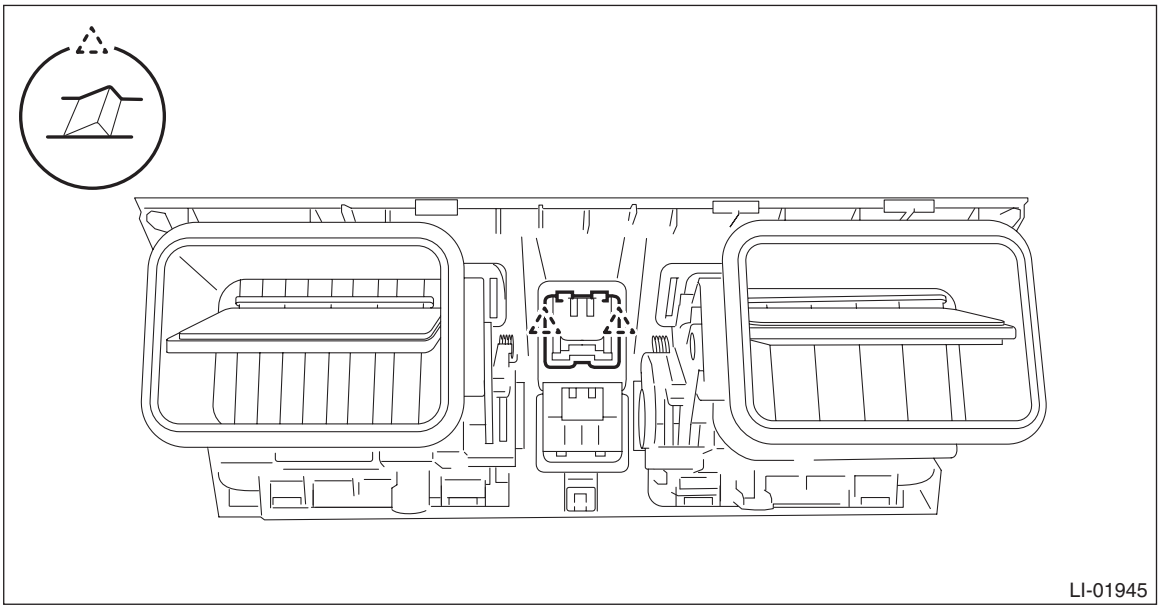

B: INSTALLATION

CAUTION:
After installing the center grille assembly, check that the air vent grille of the center grille assembly is inserted correctly into the air vent duct.
1) Install the switch - hazard.
2) Install the center grille assembly.
3) Connect the battery ground terminal. <Ref. to NT-6, BATTERY, NOTE, Note.>

C: INSPECTION

1) Measure the resistance between connector terminals.

Preparation tool:
Circuit tester

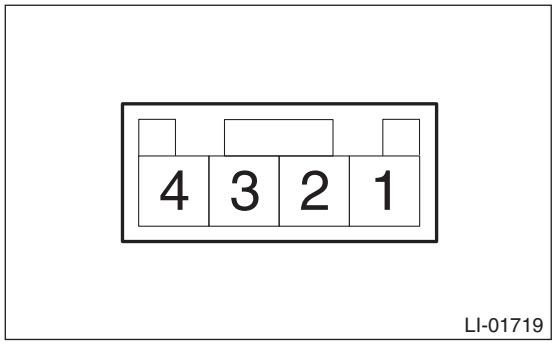

Terminal No.	Inspection conditions	Standard
2 — 3	Switch OFF	1 MΩ or more
	Switch ON	Less than 1 Ω

2) Apply battery voltage between the connector terminals to check the lighting condition of the light.

Terminal No.	Inspection conditions	Specification
4 (+) — 1 (–)	Apply battery voltage.	Light ON

3) Replace the switch - hazard if it is found defective.

17.Turn Signal Light & Hazard Light Unit

A: REMOVAL

CAUTION:
Before handling the airbag system components, refer to "CAUTION" of "General Description" in "AIRBAG SYSTEM". <Ref. to AB-9, CAUTION, General Description.>
1) Disconnect the battery ground cable and wait for at least 60 seconds before starting work. <Ref. to NT-6, BATTERY, NOTE, Note.>

NOTE:
For model with battery sensor, disconnect the ground terminal from battery sensor.
2) Remove the cover assembly - instrument panel LWR driver. <Ref. to EI-62, REMOVAL, Instrument Panel Lower Cover.>
3) Remove the knee airbag module. <Ref. to AB-34, REMOVAL, Knee Airbag Module.>
4) Remove the turn signal & hazard unit.
   (1) Disconnect the connector.
   (2) Release the claws, and then remove the turn signal & hazard unit.

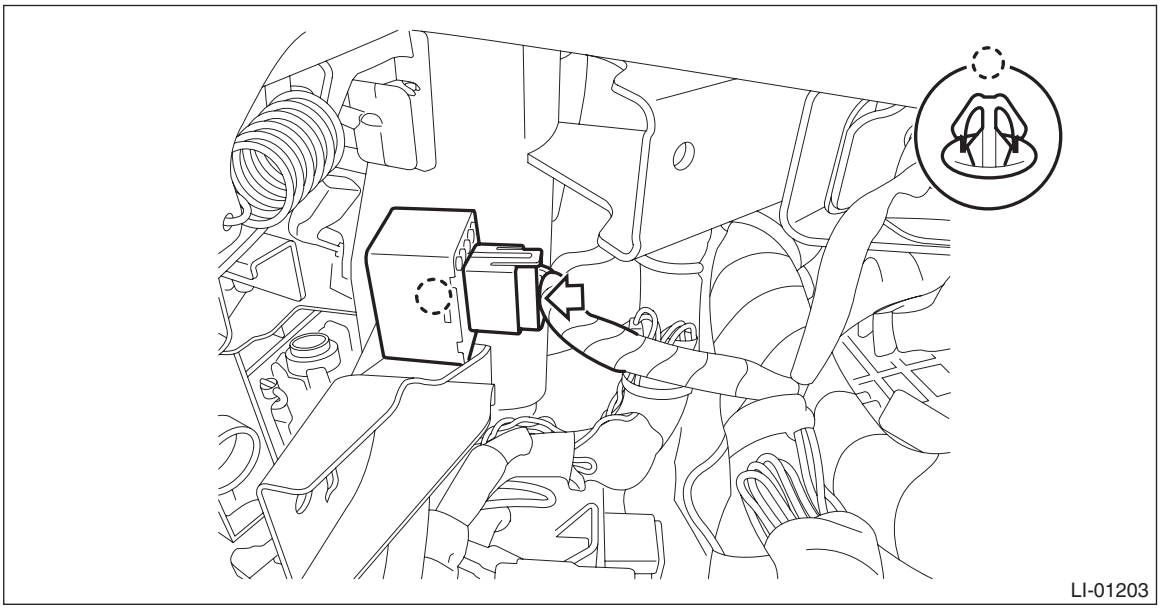

B: INSTALLATION

CAUTION:
Before handling the airbag system components, refer to "CAUTION" of "General Description" in "AIRBAG SYSTEM". <Ref. to AB-9, CAUTION, General Description.>
1) Install the turn signal & hazard unit.
2) Install the knee airbag module. <Ref. to AB-34, INSTALLATION, Knee Airbag Module.>

Tightening torque:
7.5 N·m (0.8 kgf-m, 5.5 ft-lb)
3) Install the cover assembly - instrument panel LWR driver.
4) Connect the battery ground terminal. <Ref. to NT-6, BATTERY, NOTE, Note.>

C: INSPECTION

1) Measure the voltage between connector terminal and chassis ground.

Preparation tool:
Circuit tester

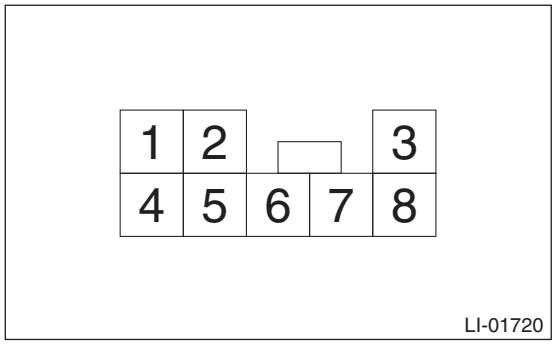

Terminal No.	Inspection conditions	Standard
4 (+) — Chassis ground (–)	Always	10 — 14 V
1 (+) — Chassis ground (–)	IG OFF → ON	Less than 1 V → 10 — 14 V

Repair or replace the harness if the inspection result is not within the standard value.
2) Measure the resistance between connector terminal and chassis ground.

Terminal No.	Inspection conditions	Standard
7 — Chassis ground	Always	Less than 1 Ω

Repair or replace the harness if the inspection result is not within the standard value.
3) Connect the connector.
4) Measure the voltage between connector terminal and chassis ground.

Terminal No.	Input/Output	Inspection conditions	Standard
6 (+) — Chassis ground (–)	Input	Turn signal switch (right) OFF → ON	9 V or more → less than 1 V
5 (+) — Chassis ground (–)	Input	Turn signal switch (left) OFF → ON	9 V or more → less than 1 V
8 (+) — Chassis ground (–)	Input	Hazard switch OFF → ON	9 V or more → less than 1 V
2 (+) — Chassis ground (–)	Output	Turn signal switch (right) OFF → ON	Repeat less than 1 V → less than 1 V ←→ more than 9 V at 60 to 120 times per minute.
3 (+) — Chassis ground (–)	Output	Turn signal switch (left) OFF → ON	Repeat less than 1 V → less than 1 V ←→ more than 9 V at 60 to 120 times per minute.
2 (+) — Chassis ground (–)	Output	Hazard switch OFF → ON	Repeat less than 1 V → less than 1 V ←→ more than 9 V at 60 to 120 times per minute.
3 (+) — Chassis ground (–)	Output	Hazard switch OFF → ON	Repeat less than 1 V → less than 1 V ←→ more than 9 V at 60 to 120 times per minute.

Replace the turn signal & hazard unit if the inspection result is not within the standard value.

18.Front Turn Signal Light Assembly

A: REMOVAL

1) Disconnect the ground cable from battery. <Ref. to NT-6, BATTERY, NOTE, Note.>

NOTE:
For model with battery sensor, disconnect the ground terminal from battery sensor.
2) Release the claws, and then remove the cover - fog light.

NOTE:
If it is hard to remove, push the claw from the back.

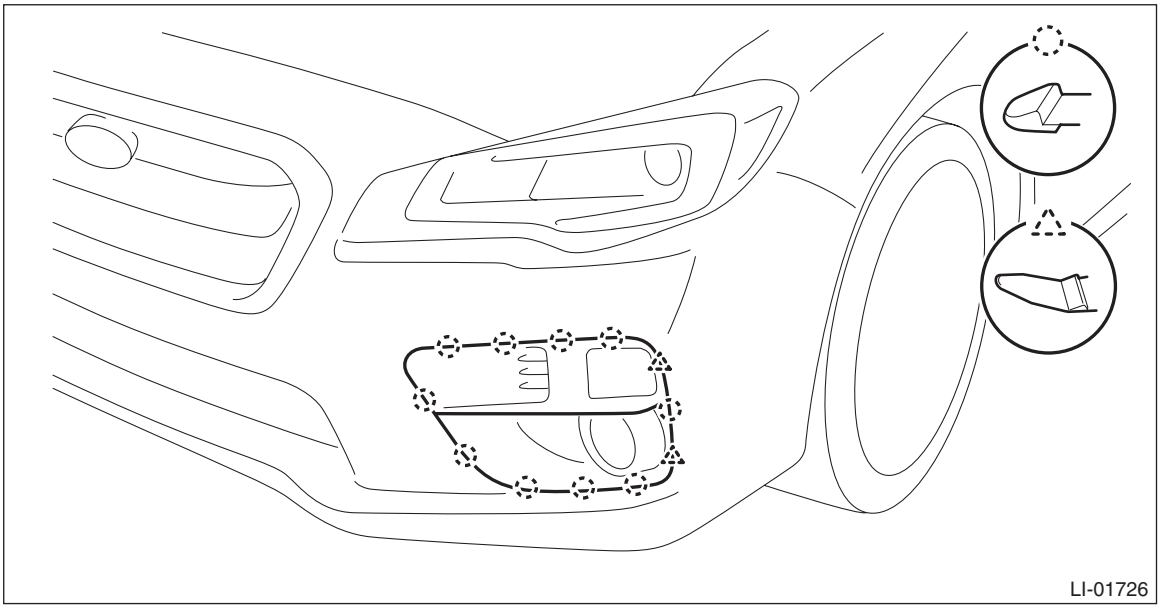

3) Lift up the vehicle.
4) Remove the screw and clips, and turn over the front side of the mud guard - front.

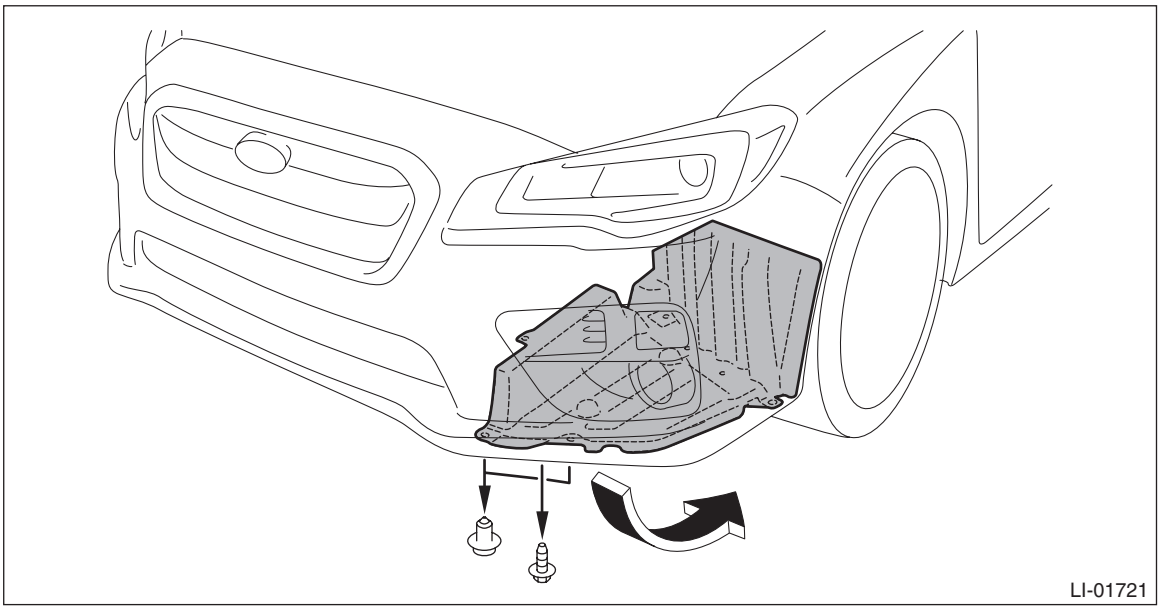

5) Remove the turn signal light assembly - front.
   (1) Disconnect the connector.
   (2) Release the nuts and claws, then remove the turn signal light assembly - front.

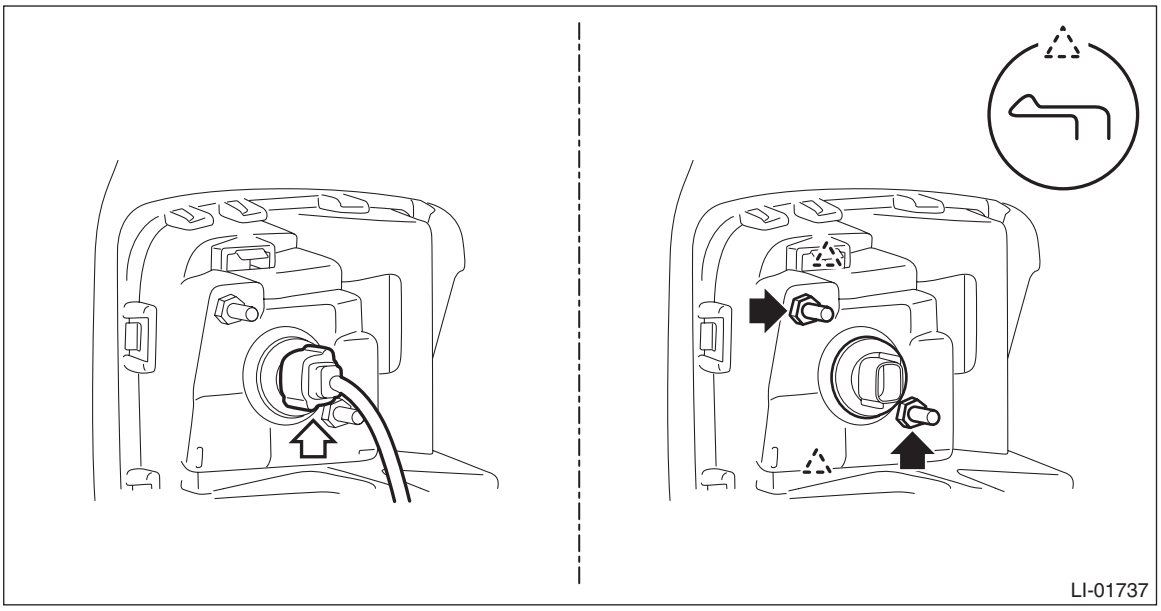

B: INSTALLATION

CAUTION:
Install the mud guard - front so that the front end of the mud guard (b) comes outside the bumper face - front (a).

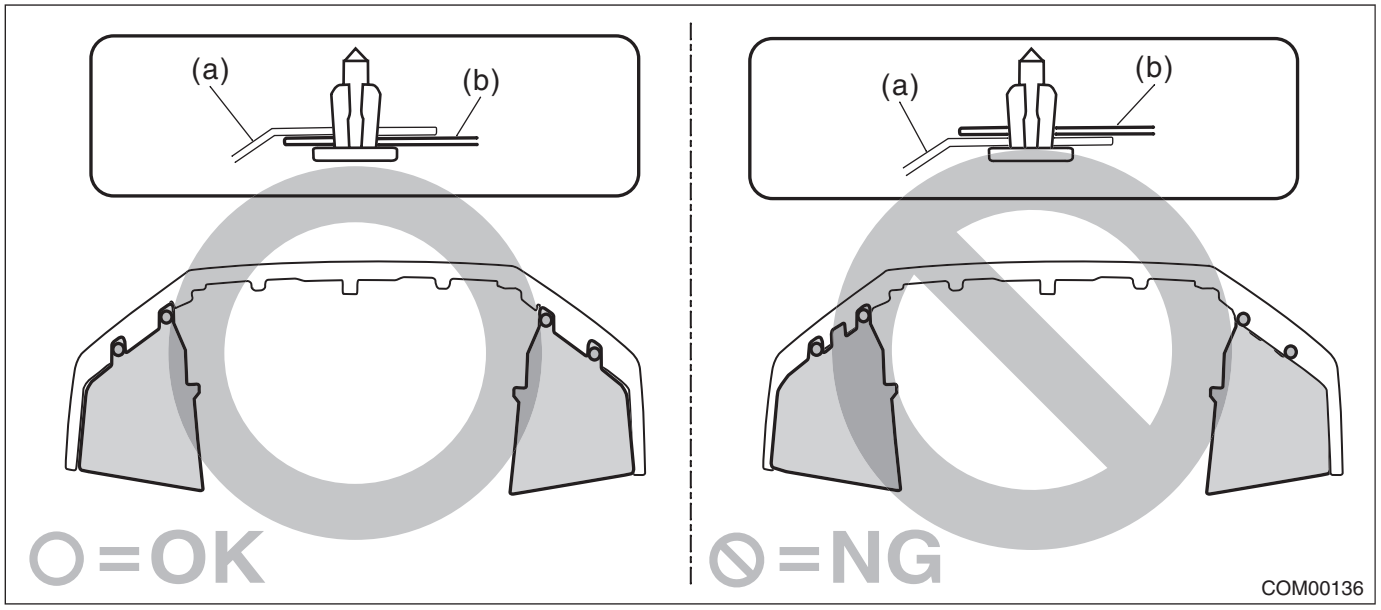

1) Install the turn signal light assembly - front.

Tightening torque:
7.5 N·m (0.8 kgf-m, 5.5 ft-lb)
2) Install the mud guard - front.
3) Lower the vehicle.
4) Install the cover - fog light.
5) Connect the battery ground terminal. <Ref. to NT-6, BATTERY, NOTE, Note.>

C: DISASSEMBLY

Rotate the bulb socket in the direction of arrow shown in the figure to remove the front turn signal light bulb.

CAUTION:
Use a dry clean cloth so that no grease or water adheres to the glass portion of the bulb.

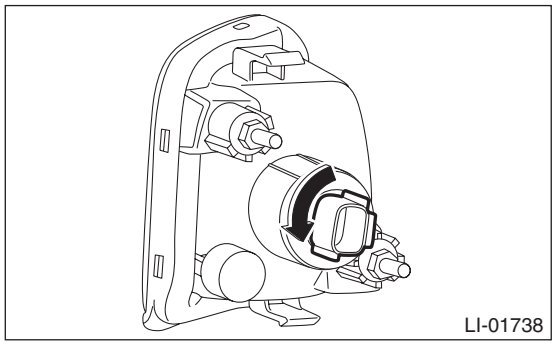

D: ASSEMBLY

1) Install the front turn signal light bulb.

CAUTION:
Use a dry clean cloth so that no grease or water adheres to the glass portion of the bulb.
2) Install the bulb socket.

19.Front Turn Signal Light Bulb

A: REMOVAL

1) Disconnect the ground cable from battery. <Ref. to NT-6, BATTERY, NOTE, Note.>

NOTE:
For model with battery sensor, disconnect the ground terminal from battery sensor.
2) Turn the steering wheel in the opposite direction from the parts to be removed. Then remove the clips and turn over the mud guard - front.

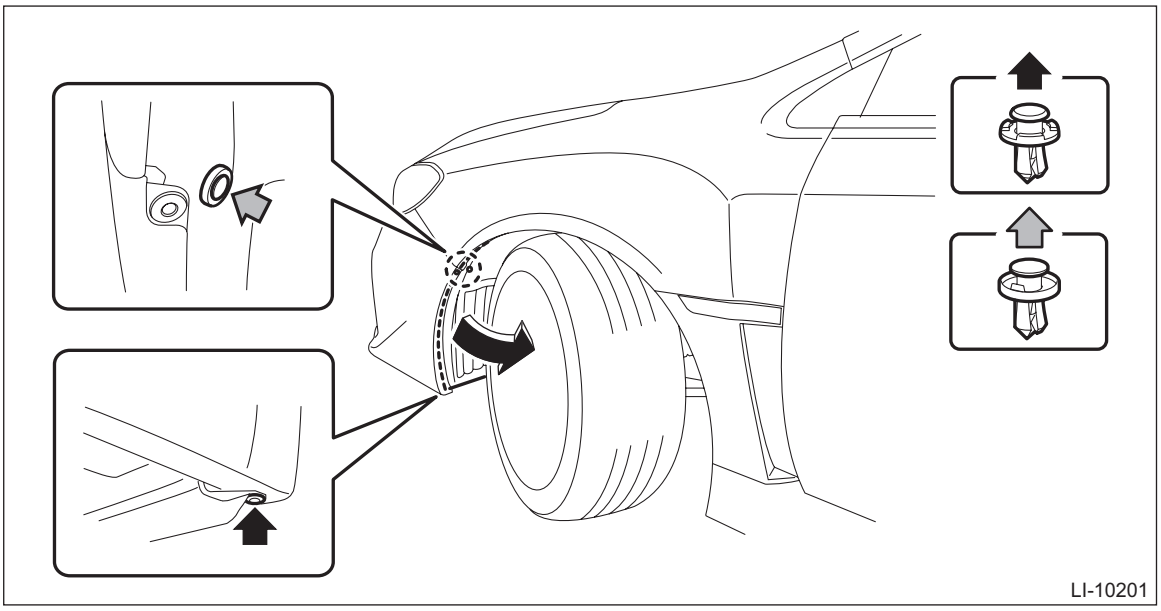

3) Disconnect the connector and remove the front turn signal light bulb. <Ref. to LI-39, DISASSEMBLY, Front Turn Signal Light Assembly.>

B: INSTALLATION

1) Install the front turn signal light bulb. <Ref. to LI-39, ASSEMBLY, Front Turn Signal Light Assembly.>
2) Install the mud guard - front.
3) Connect the battery ground terminal. <Ref. to NT-6, BATTERY, NOTE, Note.>

20.Clearance/Parking Light Bulb

A: REMOVAL

NOTE:
Since the LED type parking light bulb is integrated into the headlight assembly, it cannot be removed.
1) Disconnect the ground cable from battery. <Ref. to NT-6, BATTERY, NOTE, Note.>

NOTE:
For model with battery sensor, disconnect the ground terminal from battery sensor.
2) Turn the steering wheel in the opposite direction from the parts to be removed. Then remove the clips and turn over the mud guard - front.

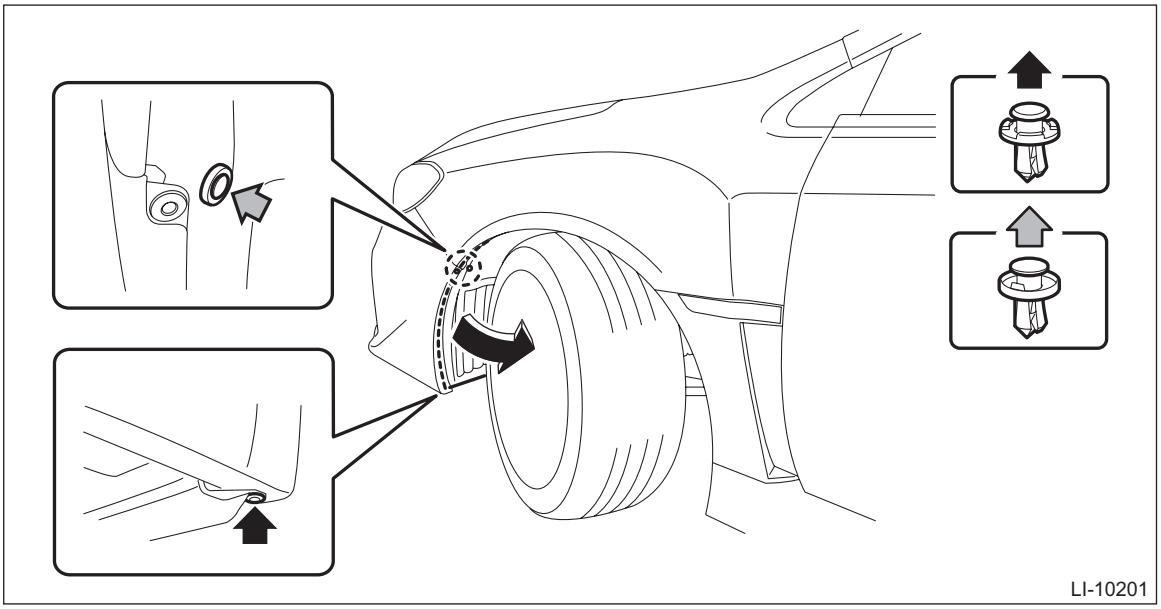

3) Remove the parking light bulb. <Ref. to LI-28, PARKING LIGHT BULB, DISASSEMBLY, Headlight Assembly.>

B: INSTALLATION

1) Install the parking light bulb. <Ref. to LI-28, PARKING LIGHT BULB, ASSEMBLY, Headlight Assembly.>
2) Install the mud guard - front.
3) Connect the battery ground terminal. <Ref. to NT-6, BATTERY, NOTE, Note.>

21.Front Side Marker Light Bulb

A: REMOVAL

1) Disconnect the ground cable from battery. <Ref. to NT-6, BATTERY, NOTE, Note.>

NOTE:
For model with battery sensor, disconnect the ground terminal from battery sensor.
2) Remove the battery. (When removing the side marker light bulb LH)
- Except for STI model: <Ref. to SC(w/o STI)-50, REMOVAL, Battery.>
- STI model: <Ref. to SC(STI)-24, REMOVAL, Battery.>

3) Remove the air cleaner case (front). (When removing the side marker light bulb RH)
- Except for STI model: <Ref. to IN(w/o STI)-13, REMOVAL, Air Cleaner Case.>
- STI model: <Ref. to IN(STI)-8, REMOVAL, Air Cleaner Case.>

4) Disconnect the connector and remove the front side marker light bulb. <Ref. to LI-28, SIDE MARKER LIGHT BULB, DISASSEMBLY, Headlight Assembly.>

B: INSTALLATION

1) Install the front side marker light bulb. <Ref. to LI-28, SIDE MARKER LIGHT BULB, ASSEMBLY, Headlight Assembly.>
2) Install the air cleaner case (front). (When the side marker light bulb RH is removed)
- Except for STI model: <Ref. to IN(w/o STI)-16, INSTALLATION, Air Cleaner Case.>
- STI model: <Ref. to IN(STI)-8, INSTALLATION, Air Cleaner Case.>

3) Remove the battery. (When the side marker light bulb LH is removed)
- Except for STI model: <Ref. to SC(w/o STI)-50, INSTALLATION, Battery.>
- STI model: <Ref. to SC(STI)-24, INSTALLATION, Battery.>

4) Connect the battery ground terminal. <Ref. to NT-6, BATTERY, NOTE, Note.>

22.Front Fog Light Assembly

A: REMOVAL

1) Disconnect the ground cable from battery. <Ref. to NT-6, BATTERY, NOTE, Note.>

NOTE:
For model with battery sensor, disconnect the ground terminal from battery sensor.

2) Lift up the vehicle.
3) Remove the screw and clips, and turn over the mud guard - front.

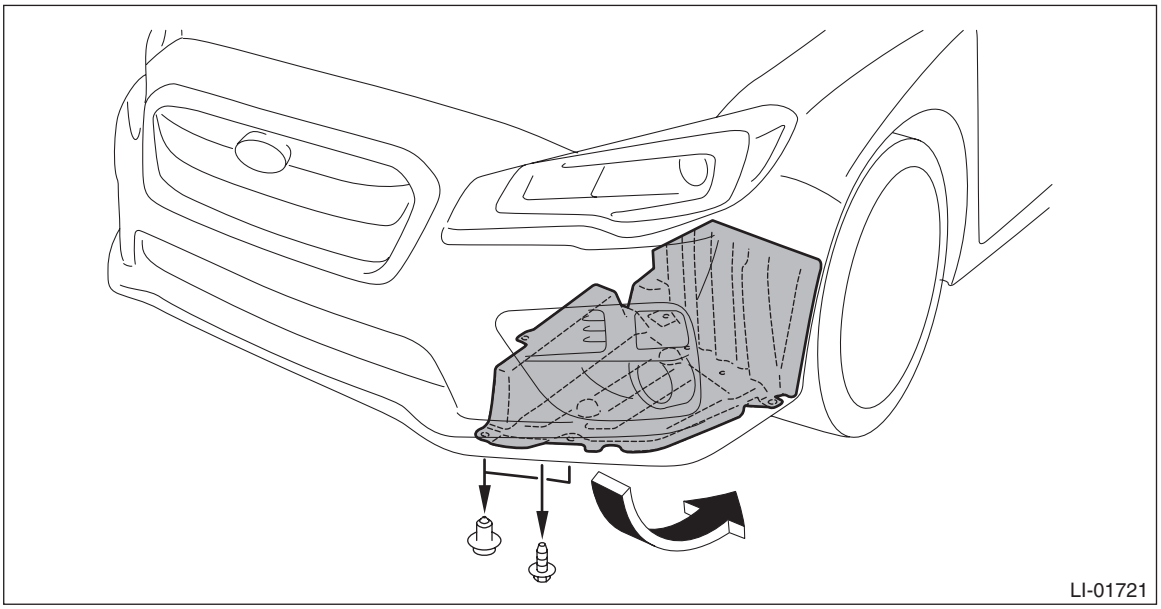

4) Remove the fog light assembly - front.
   (1) Disconnect the connector.
   (2) Remove the screws and guide, and remove the fog light assembly - front.

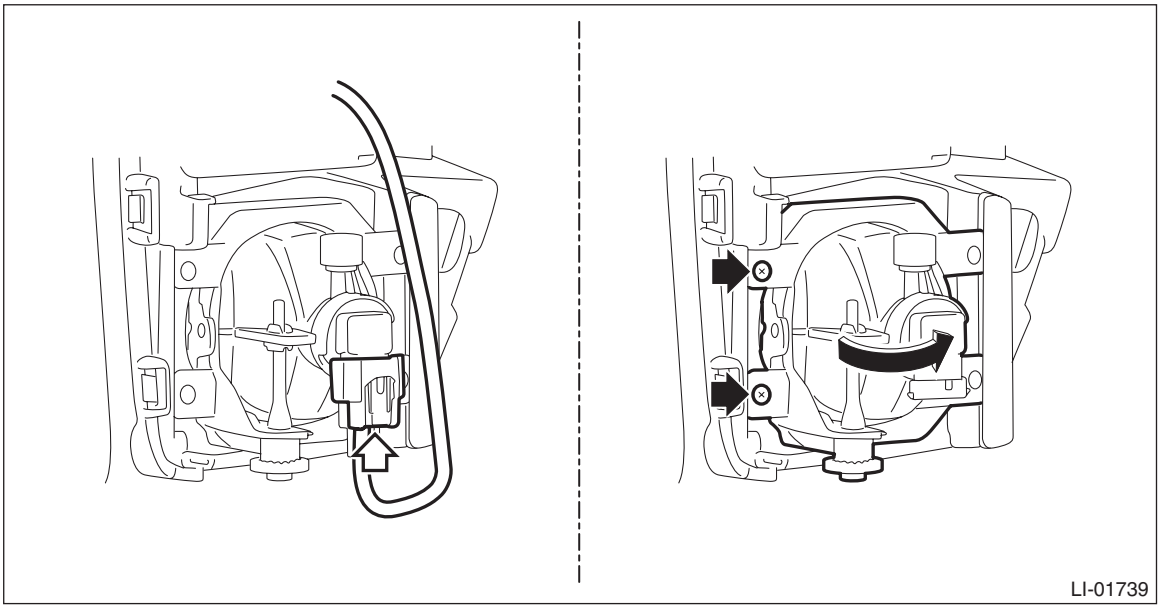

B: INSTALLATION

CAUTION:
Install the mud guard - front so that the front end of the mud guard (b) comes outside the bumper face - front (a).

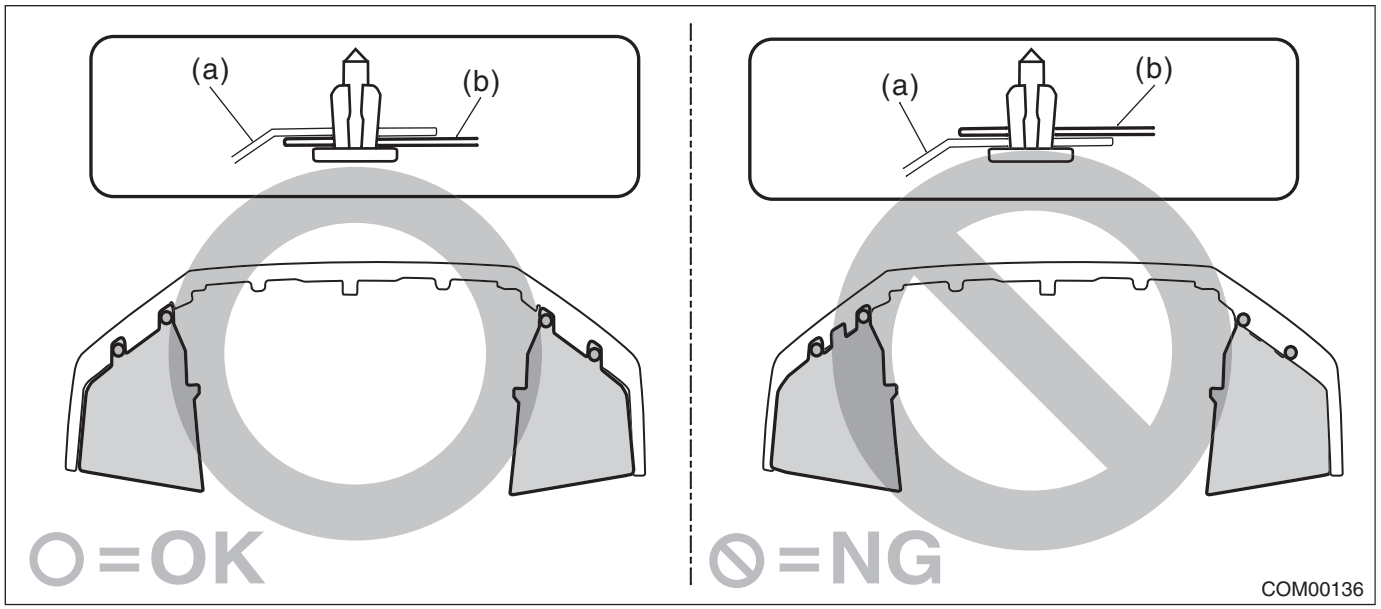

1) Install the fog light assembly - front.
2) Install the mud guard - front.
3) Lower the vehicle.
4) Connect the battery ground terminal. <Ref. to NT-6, BATTERY, NOTE, Note.>
5) Adjust the fog light beam. <Ref. to LI-45, FOG LIGHT AIMING, ADJUSTMENT, Front Fog Light Assembly.>

C: DISASSEMBLY

Rotate in the direction of arrow shown in the figure to remove the front fog light bulb.

CAUTION:
Use a dry clean cloth so that no grease or water adheres to the glass portion of the bulb.

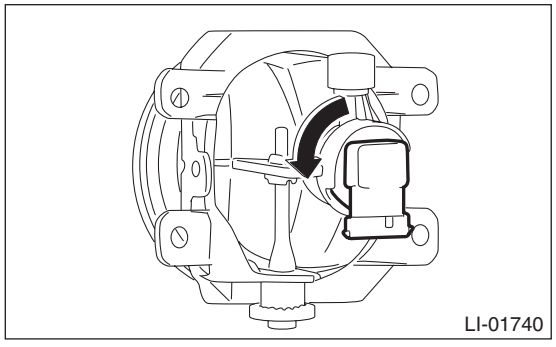

D: ASSEMBLY

Install the front fog light bulb.

CAUTION:
Use a dry clean cloth so that no grease or water adheres to the glass portion of the bulb.

E: ADJUSTMENT

1. FOG LIGHT AIMING

1) Before checking the fog light beam level, be sure of the following:
- Check the area around the fog light for any scratches, damage or other type of deformation.
- The vehicle is parked on a level surface.
- The inflation pressure of tires is correct.
- The vehicle does not have load.
- Vehicle's fuel tank is fully filled.

2) Bounce the vehicle several times to normalize the suspension.
3) Make certain that someone is seated in the driver's seat.
4) Place the vehicle with the front end facing to the measurement panel.

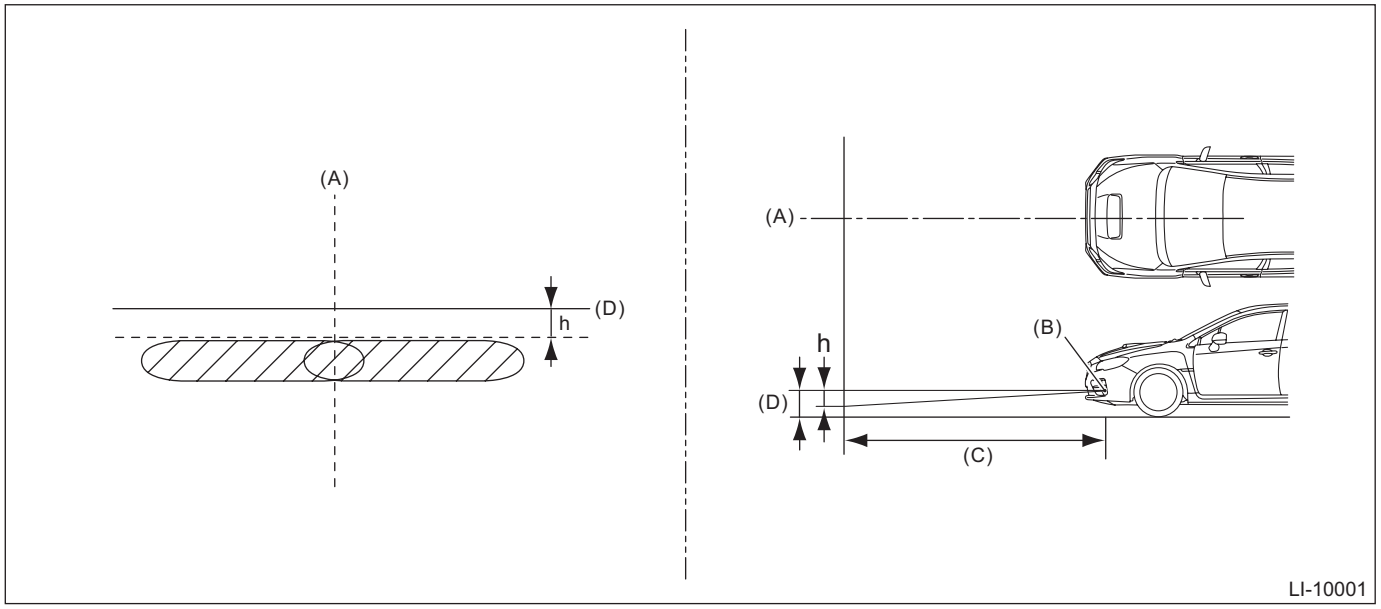

(A) Vehicle center
(B) Bulb center marking
(C) 3 m (10 ft)
(D) Height of fog light center

h mm (in) at 3 m (10 ft)
40 (1.58)

5) Adjust the fog light beam.
(1) Remove the clips, and turn over the mud guard - front.

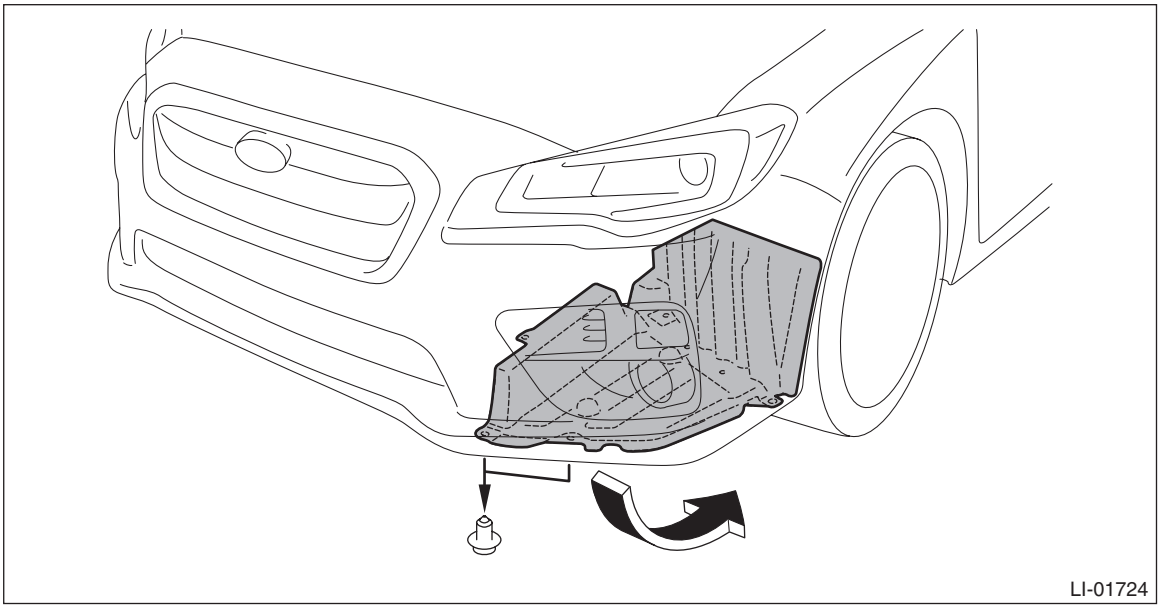

(2) Adjust the beam level by turning the aiming screw.

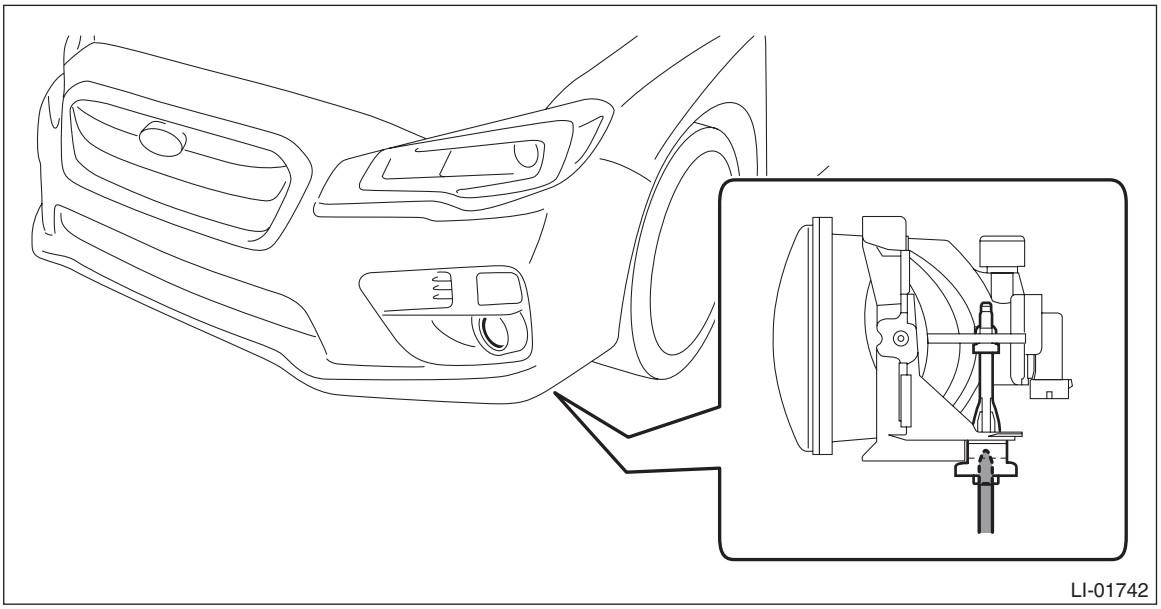

(3) Install the mud guard - front.

CAUTION:
Install the mud guard - front so that the front end of the mud guard (b) comes outside the bumper face - front (a).

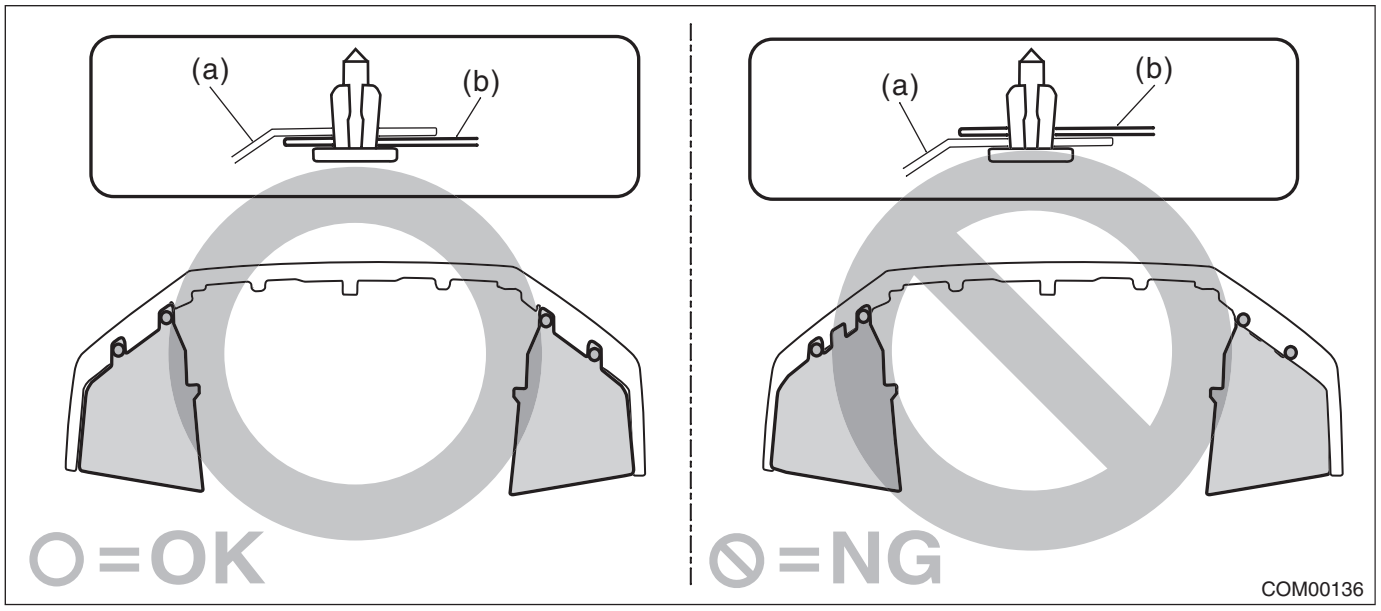

23.Front Fog Light Bulb

A: REMOVAL

1) Disconnect the ground cable from battery. <Ref. to NT-6, BATTERY, NOTE, Note.>

NOTE:
For model with battery sensor, disconnect the ground terminal from battery sensor.

2) Remove the clips, and turn over the mud guard - front.

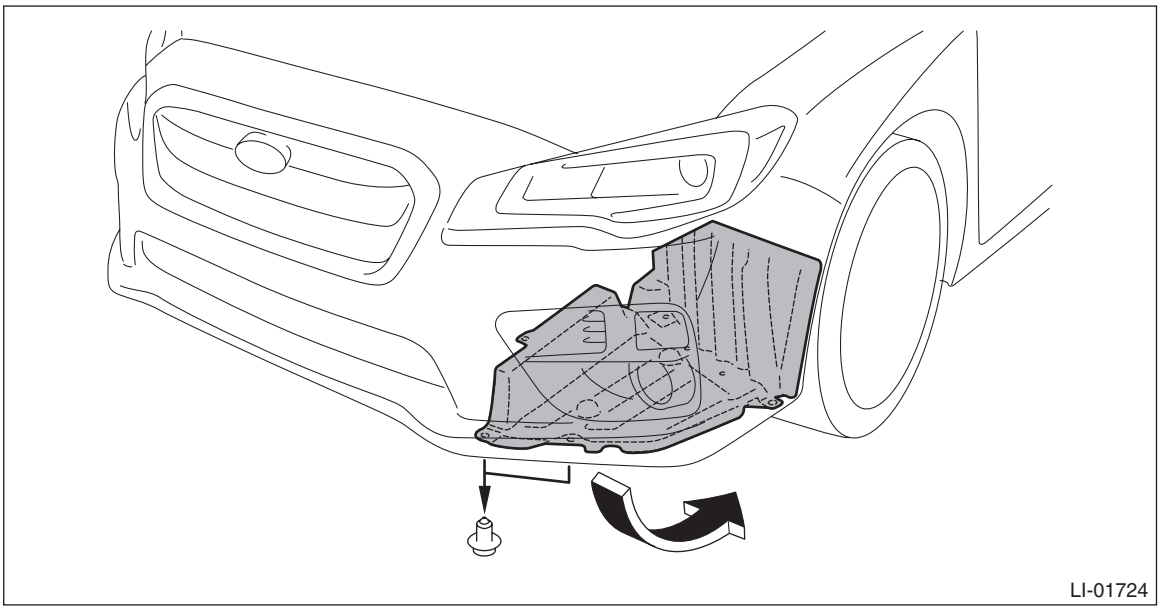

3) Disconnect the connector and remove the front fog light bulb. <Ref. to LI-44, DISASSEMBLY, Front Fog Light Assembly.>

B: INSTALLATION

CAUTION:

- **Install the mud guard - front so that the front end of the mud guard (b) comes outside the bumper face - front (a).**

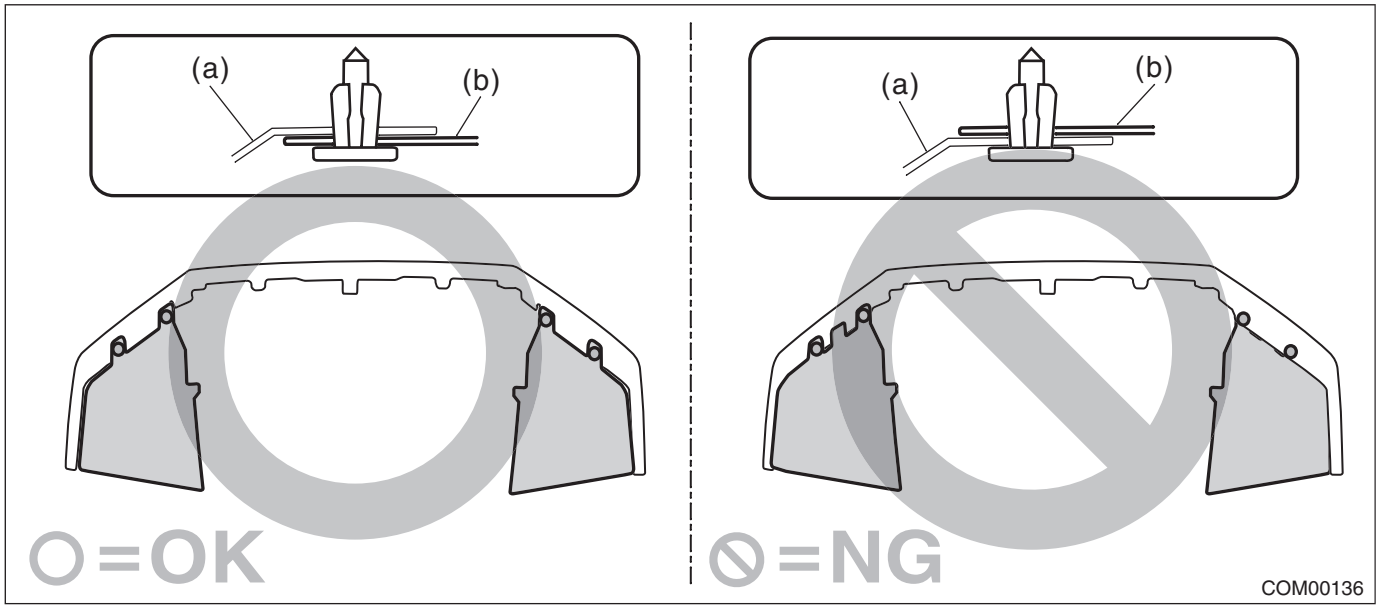

- **After connecting the connector, make sure that the bulb is locked securely.**

1) Install the front fog light bulb. <Ref. to LI-44, ASSEMBLY, Front Fog Light Assembly.>
2) Install the mud guard - front.
3) Connect the battery ground terminal. <Ref. to NT-6, BATTERY, NOTE, Note.>

24.Side Turn Signal Light Assembly

A: REMOVAL

1) Disconnect the ground cable from battery. <Ref. to NT-6, BATTERY, NOTE, Note.>

NOTE:
For model with battery sensor, disconnect the ground terminal from battery sensor.
2) Remove the side turn signal light assembly. <Ref. to GW-28, DISASSEMBLY, Outer Mirror Assembly.>

B: INSTALLATION

1) Install the side turn signal light assembly. <Ref. to GW-30, ASSEMBLY, Outer Mirror Assembly.>
2) Connect the battery ground terminal. <Ref. to NT-6, BATTERY, NOTE, Note.>

25.Rear Combination Light Assembly

A: REMOVAL

1) Disconnect the ground cable from battery. <Ref. to NT-6, BATTERY, NOTE, Note.>

NOTE:
For model with battery sensor, disconnect the ground terminal from battery sensor.
2) Remove the trunk room trim. <Ref. to EI-98, REMOVAL, Trunk Room Trim.>
3) Remove the light assembly - rear combination.

CAUTION:
Be careful not to damage the clips.
(1) Remove the harness clip and connector.
(2) Release the nuts and clips, then remove the light assembly - rear combination.

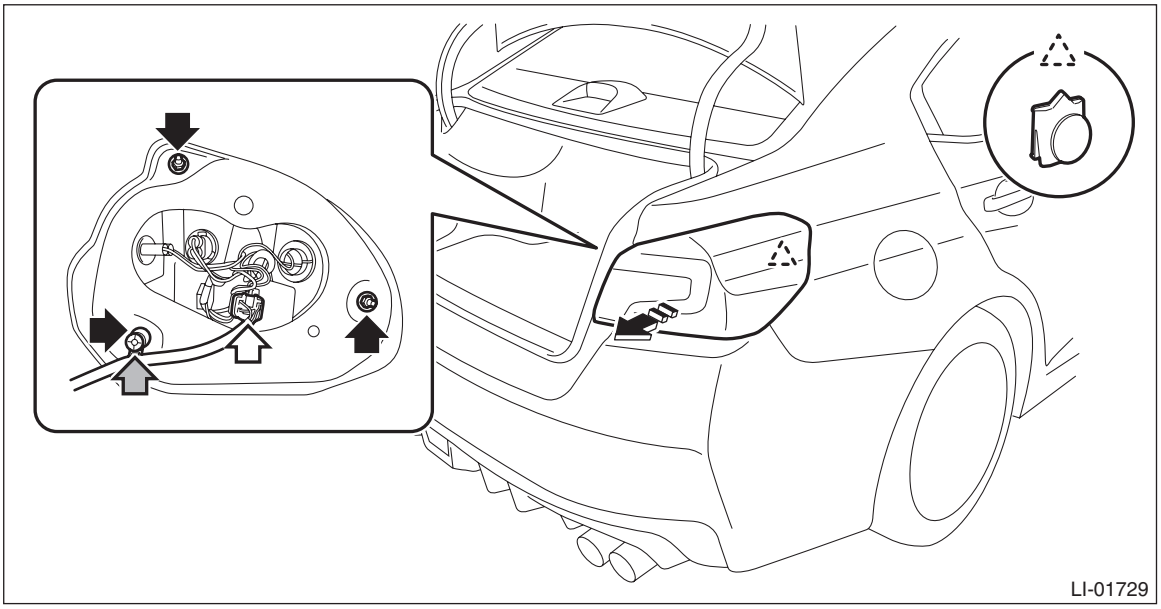

B: INSTALLATION

1) Install the light assembly - rear combination.

CAUTION:
• Always replace the gasket - rear combination with a new part. If a gasket is reused, water leakage may occur.
• Be careful not to catch the harness in between the parts.

Tightening torque:
4.5 N·m (0.5 kgf-m, 3.3 ft-lb)
2) Install the trunk room trim.
3) Connect the battery ground terminal. <Ref. to NT-6, BATTERY, NOTE, Note.>

C: DISASSEMBLY

CAUTION:
Use a dry clean cloth so that no grease or water adheres to the glass portion of the bulb.

NOTE:
Since the LED type is a non-disassembled part, it cannot be removed.

1. TURN SIGNAL LIGHT BULB

Rotate the bulb socket in the direction of arrow shown in the figure to remove the turn signal light bulb.

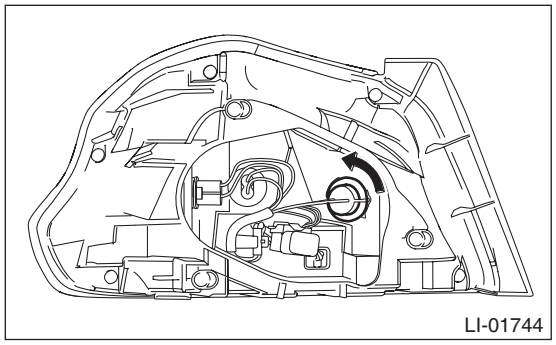
LI-01744

2. BACK-UP LIGHT BULB

Rotate the bulb socket in the direction of arrow shown in the figure to remove the back-up light bulb.

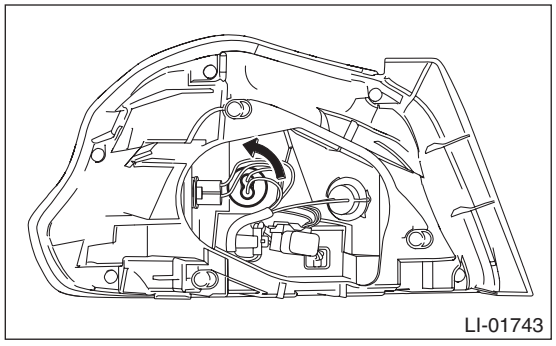
LI-01743

3. SIDE MARKER LIGHT BULB

1) Remove the back-up light bulb socket. <Ref. to LI-51, BACK-UP LIGHT BULB, DISASSEMBLY, Rear Combination Light Assembly.>
2) Rotate the bulb socket in the direction of arrow shown in the figure to remove the side marker light bulb.

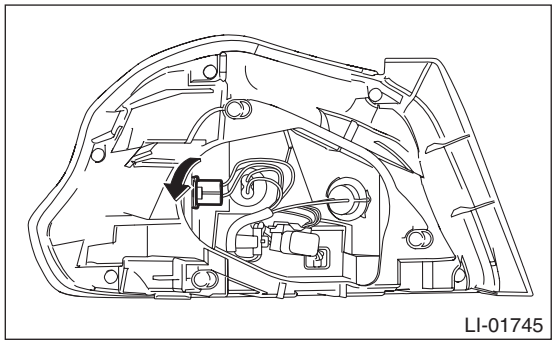
LI-01745

D: ASSEMBLY

CAUTION:
Use a dry clean cloth so that no grease or water adheres to the glass portion of the bulb.

1. TURN SIGNAL LIGHT BULB

1) Install the turn signal light bulb.
2) Install the bulb socket.

2. BACK-UP LIGHT BULB

1) Install the back-up light bulb.
2) Install the bulb socket.

3. SIDE MARKER LIGHT BULB

1) Install the side marker light bulb.
2) Install the bulb socket.
3) Install the back-up light bulb socket. <Ref. to LI-52, BACK-UP LIGHT BULB, ASSEMBLY, Rear Combination Light Assembly.>

E: INSPECTION

1) Apply battery voltage between the connector terminals to check the lighting condition of the light.

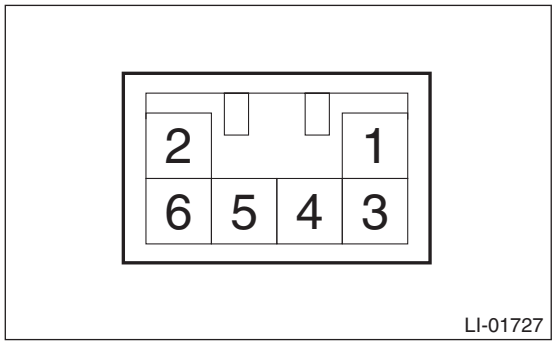

Terminal No.	Inspection conditions	Specification
6 (+) — 2 (–)	Apply battery voltage.	Stop light on
4 (+) — 2 (–)		Tail / side marker light on
3 (+) — 2 (–)		Turn signal light on
1 (+) — 2 (–)		Back-up light on

2) Replace the harness and bulb if it is found defective.

NOTE:
Since LED (Light Emitting Diode) is used for the tail & stop light bulb, replace the light assembly - rear combination.

26.Tail/Stop Light Bulb

A: NOTE

Since the LED type tail light/stop light bulb is integrated into the light assembly - rear combination, it cannot be removed.

27.Rear Turn Signal Light Bulb

A: REMOVAL

1) Disconnect the ground cable from battery. <Ref. to NT-6, BATTERY, NOTE, Note.>

NOTE:
For model with battery sensor, disconnect the ground terminal from battery sensor.
2) Remove the trunk room trim. <Ref. to EI-98, REMOVAL, Trunk Room Trim.>
3) Remove the rear turn signal light bulb. <Ref. to LI-51, TURN SIGNAL LIGHT BULB, DISASSEMBLY, Rear Combination Light Assembly.>

B: INSTALLATION

1) Install the rear turn signal light bulb. <Ref. to LI-52, TURN SIGNAL LIGHT BULB, ASSEMBLY, Rear Combination Light Assembly.>
2) Install the trunk room trim.
3) Connect the battery ground terminal. <Ref. to NT-6, BATTERY, NOTE, Note.>

28.Rear Side Marker Light Bulb

A: REMOVAL

1) Disconnect the ground cable from battery. <Ref. to NT-6, BATTERY, NOTE, Note.>

NOTE:
For model with battery sensor, disconnect the ground terminal from battery sensor.
2) Remove the trunk room trim. <Ref. to EI-98, REMOVAL, Trunk Room Trim.>
3) Remove the rear side marker light bulb. <Ref. to LI-51, SIDE MARKER LIGHT BULB, DISASSEMBLY, Rear Combination Light Assembly.>

B: INSTALLATION

1) Install the rear side marker light bulb. <Ref. to LI-52, SIDE MARKER LIGHT BULB, ASSEMBLY, Rear Combination Light Assembly.>
2) Install the trunk room trim.
3) Connect the battery ground terminal. <Ref. to NT-6, BATTERY, NOTE, Note.>

29.Back-up Light Bulb

A: REMOVAL

1) Disconnect the ground cable from battery. <Ref. to NT-6, BATTERY, NOTE, Note.>

NOTE:
For model with battery sensor, disconnect the ground terminal from battery sensor.
2) Remove the trunk room trim. <Ref. to EI-98, REMOVAL, Trunk Room Trim.>
3) Remove the back-up light bulb. <Ref. to LI-51, BACK-UP LIGHT BULB, DISASSEMBLY, Rear Combination Light Assembly.>

B: INSTALLATION

1) Install the back-up light bulb. <Ref. to LI-52, BACK-UP LIGHT BULB, ASSEMBLY, Rear Combination Light Assembly.>
2) Install the trunk room trim.
3) Connect the battery ground terminal. <Ref. to NT-6, BATTERY, NOTE, Note.>

30.License Plate Light

A: REMOVAL

1) Disconnect the ground cable from battery. <Ref. to NT-6, BATTERY, NOTE, Note.>

NOTE:
For model with battery sensor, disconnect the ground terminal from battery sensor.

2) Remove the trim panel - trunk lid. <Ref. to EI-98, REMOVAL, Trunk Room Trim.>
3) Remove the garnish - trunk. <Ref. to EI-52, REMOVAL, Trunk Lid Garnish.>
4) Remove the license plate light.
   (1) Release the claws and pull out the license plate light.
   (2) Disconnect the connector, and remove the license plate light.

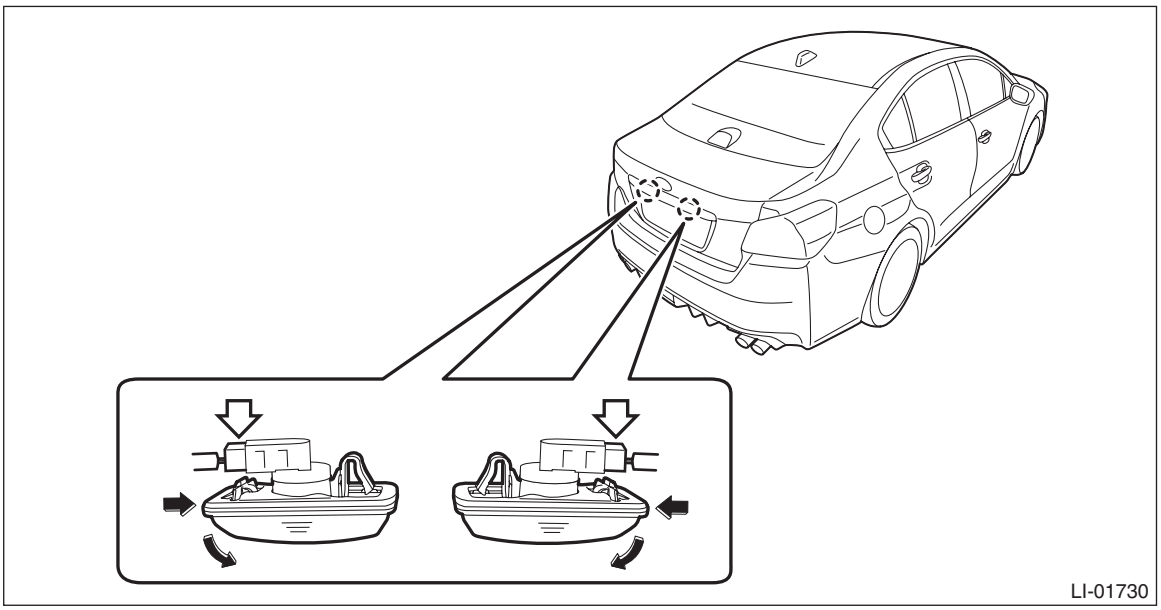
LI-01730

5) Rotate the bulb socket in the direction of arrow shown in the figure to remove the license plate light bulb.

CAUTION:
Use a dry clean cloth so that no grease or water adheres to the glass portion of the bulb.

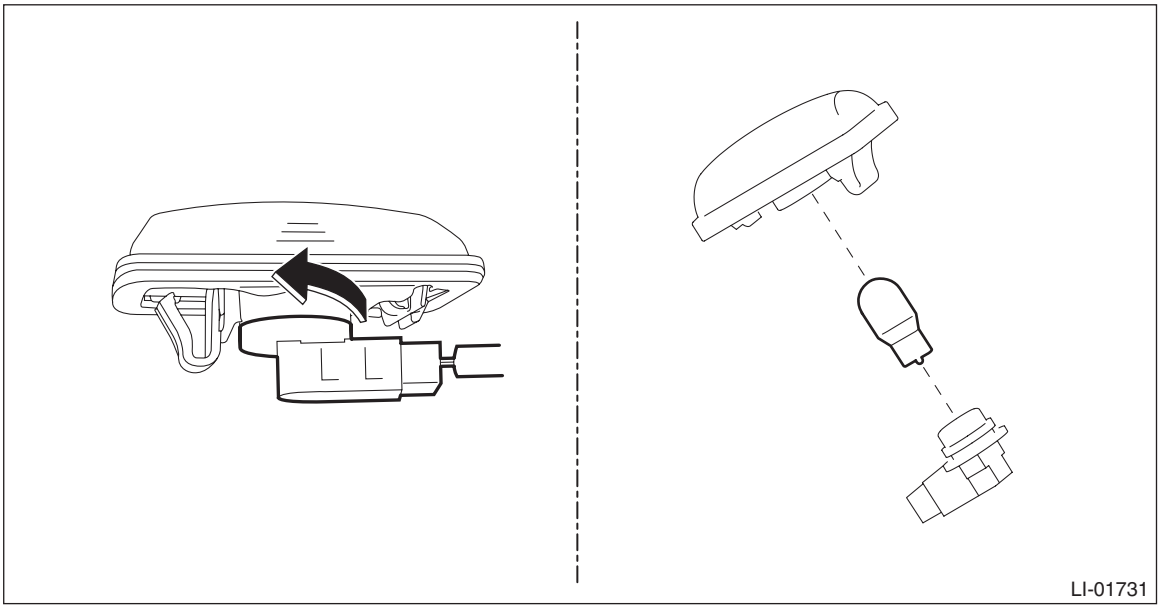
LI-01731

NOTE:
When removing the bulb only, remove the trim panel - trunk lid halfway, then remove the bulb socket and the bulb.

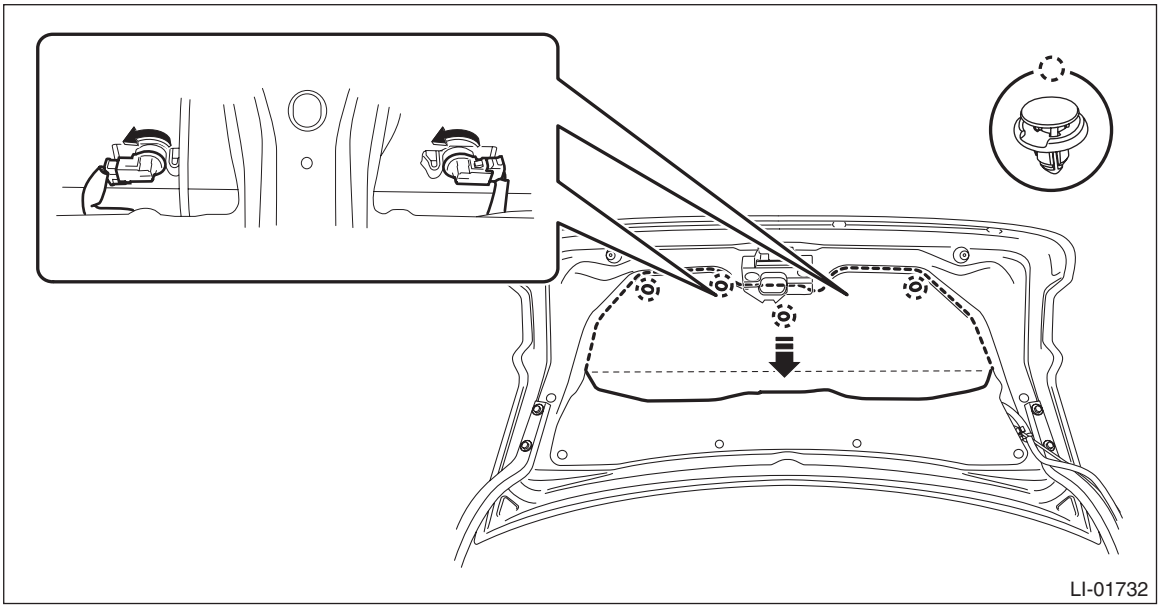

B: INSTALLATION

1) Install the license plate light bulb.

CAUTION:
Use a dry clean cloth so that no grease or water adheres to the glass portion of the bulb.
2) Install the license plate light.
3) Install the garnish - trunk. <Ref. to EI-52, INSTALLATION, Trunk Lid Garnish.>

Tightening torque:
4.5 N·m (0.5 kgf-m, 3.3 ft-lb)
4) Install the trim panel - trunk lid.
5) Connect the battery ground terminal. <Ref. to NT-6, BATTERY, NOTE, Note.>

31.High-mounted Stop Light

A: REMOVAL

1) Disconnect the ground cable from battery. <Ref. to NT-6, BATTERY, NOTE, Note.>

NOTE:
For model with battery sensor, disconnect the ground terminal from battery sensor.

2) Remove the light assembly - high-mounted.
   (1) Disconnect the connector.

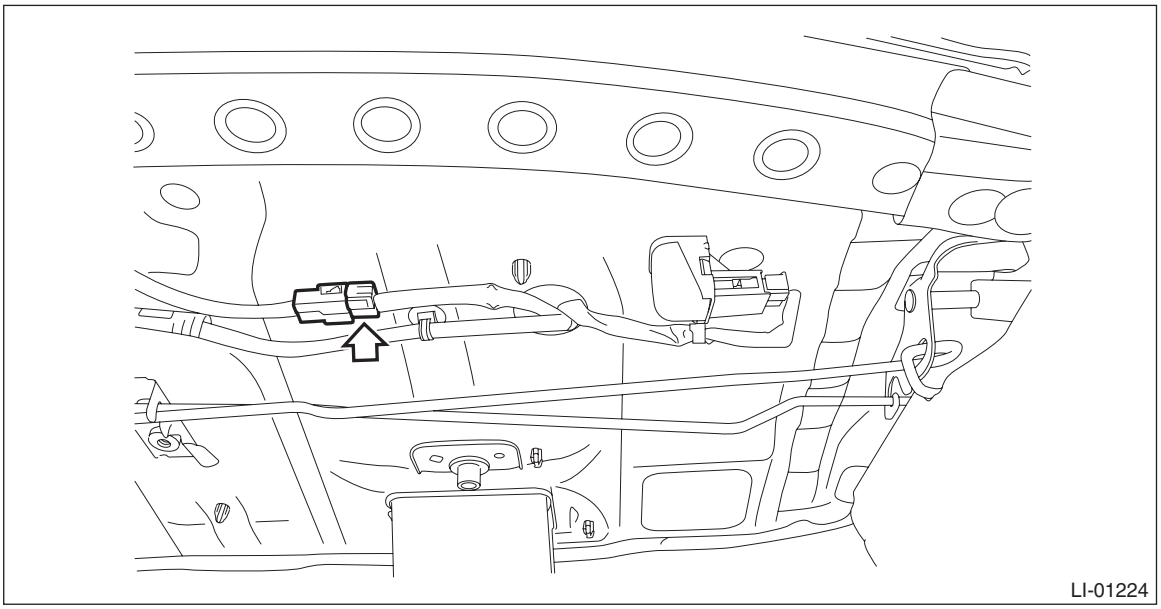

   (2) Release the claws and hooks, and remove the light assembly - high-mounted.

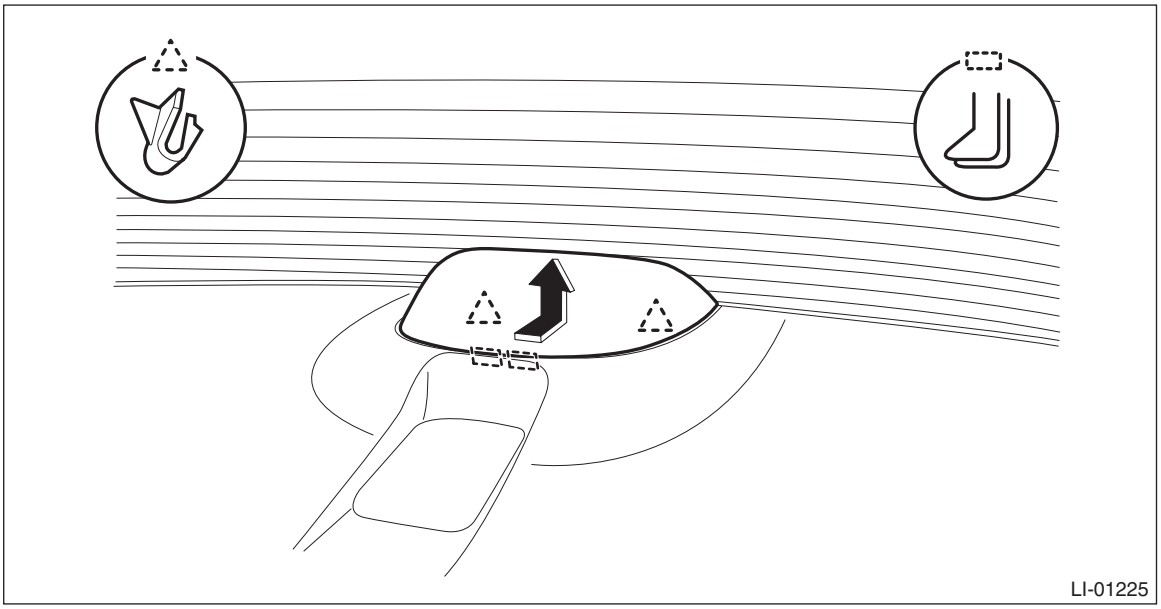

B: INSTALLATION

1) Install the light assembly - high-mounted.
2) Connect the battery ground terminal. <Ref. to NT-6, BATTERY, NOTE, Note.>

C: INSPECTION

1) Apply battery voltage between the connector terminals to check the lighting condition of the light.

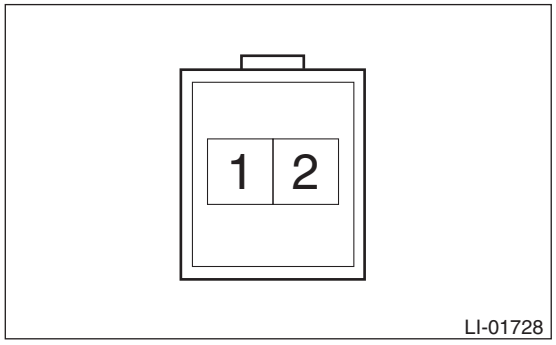

Terminal No.	Inspection conditions	Specification
1 (+) — 2 (–)	Apply battery voltage.	Light ON

2) Replace the light assembly - high-mounted if faulty is found in the inspection.

NOTE:
Since LED (Light Emitting Diode) is used for the high-mounted stop light, replace the light assembly - high-mounted.

32.Spot Map Light

A: REMOVAL

1. MODELS WITHOUT EyeSight

NOTE:
Do not remove the spot map light if removing the bulb only.
1) Disconnect the ground cable from battery. <Ref. to NT-6, BATTERY, NOTE, Note.>

NOTE:
For model with battery sensor, disconnect the ground terminal from battery sensor.

2) Remove the light assembly - map.

CAUTION:
When using a flat tip screwdriver, use an appropriate sized tool for the insertion opening, apply protective tape or cloth around the tool, and be careful not to cause damage.

(1) Release the claws and remove the lens.
(2) Remove the screws.

- Model without sunroof

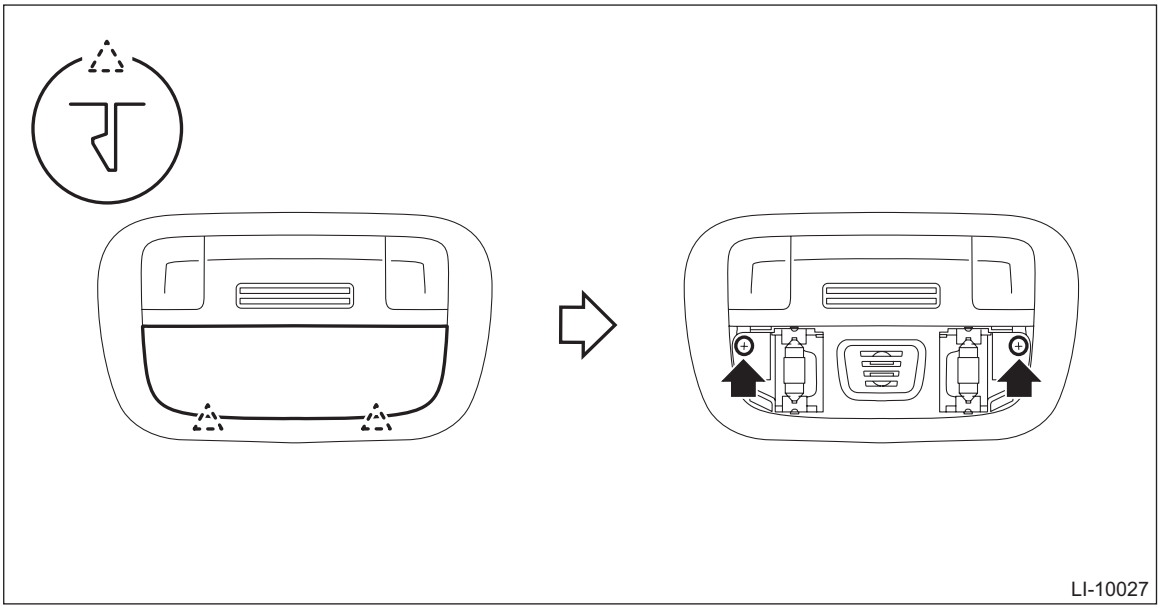

- Model with sunroof

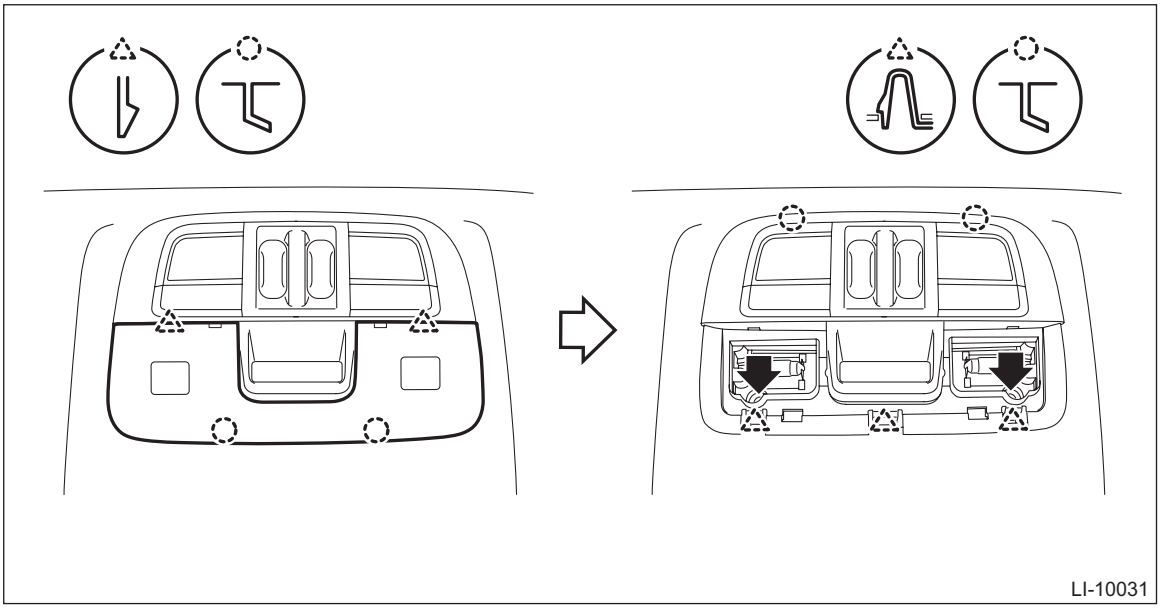

(3) Disconnect the connector and remove the light assembly - map and the map light bulb.

CAUTION:
Use a dry clean cloth so that no grease or water adheres to the glass portion of the bulb.

2. MODELS WITH EyeSight

NOTE:
• The spot map light is a single unit with the stereo camera cover. If defective, replace the stereo camera cover. <Ref. to ES-8, Stereo Camera.>
• Do not remove the stereo camera cover if removing the bulb only.

1) Disconnect the ground cable from battery. <Ref. to NT-6, BATTERY, NOTE, Note.>

NOTE:
For model with battery sensor, disconnect the ground terminal from battery sensor.

2) Remove the map light bulb.

CAUTION:
When using a flat tip screwdriver, use an appropriate sized tool for the insertion opening, apply protective tape or cloth around the tool, and be careful not to cause damage.

(1) Release the claws and remove the lens.
(2) Remove the map light bulb.

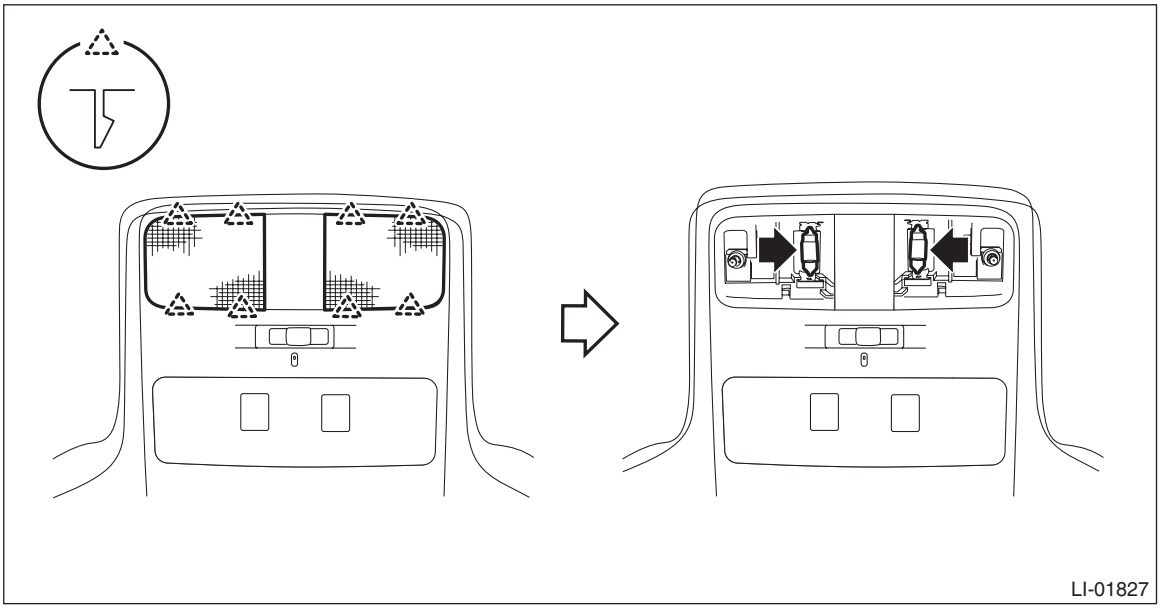

B: INSTALLATION

1. MODELS WITHOUT EyeSight

1) Install the map light bulb and light assembly - map.

CAUTION:
Use a dry clean cloth so that no grease or water adheres to the glass portion of the bulb.

2) Install the lens.
3) Connect the battery ground terminal. <Ref. to NT-6, BATTERY, NOTE, Note.>

2. MODELS WITH EyeSight

1) Install the map light bulb and lens.

CAUTION:
Use a dry clean cloth so that no grease or water adheres to the glass portion of the bulb.

2) Connect the battery ground terminal. <Ref. to NT-6, BATTERY, NOTE, Note.>

C: INSPECTION

1) Measure the resistance between connector terminals.

Preparation tool:
Circuit tester

- Models without EyeSight
  – Model without sunroof

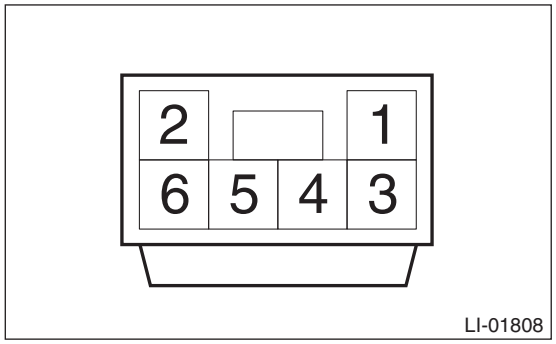

Terminal No.	Inspection conditions	Standard
1 — 2	Switch OFF	1 MΩ or more
	Switch ON	Approx. 18 Ω

  – Model with sunroof

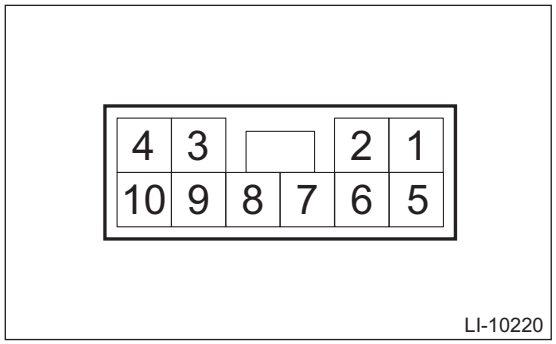

Terminal No.	Inspection conditions	Standard
1 — 4	Switch OFF	1 MΩ or more
	Switch ON	Approx. 18 Ω

- Models with EyeSight

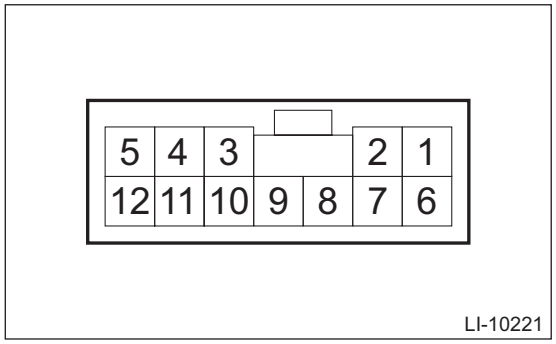

Terminal No.	Inspection conditions	Standard
11 — 12	Switch OFF	1 MΩ or more
	Switch ON	Approx. 18 Ω

2) Replace the light assembly - map if the inspection result is not within the standard value.

33.Room Light

A: REMOVAL

NOTE:
Do not remove the room light if removing the bulb only.
1) Disconnect the ground cable from battery. <Ref. to NT-6, BATTERY, NOTE, Note.>

NOTE:
For model with battery sensor, disconnect the ground terminal from battery sensor.
2) Remove the light assembly - room.

CAUTION:
When using a flat tip screwdriver, use an appropriate sized tool for the insertion opening, apply protective tape or cloth around the tool, and be careful not to cause damage.

(1) Release the claws and remove the lens.
(2) Remove the screws.

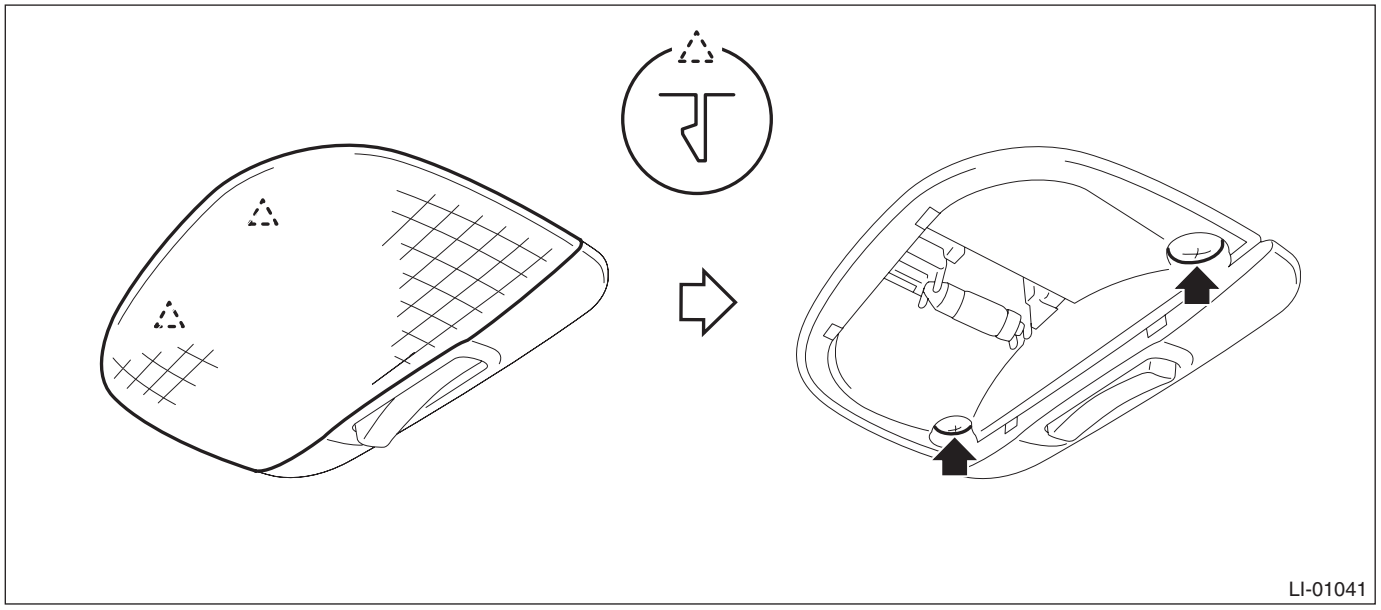

(3) Disconnect the connector and remove the light assembly - room and the room light bulb.

CAUTION:
Use a dry clean cloth so that no grease or water adheres to the glass portion of the bulb.

B: INSTALLATION

1) Install the room light bulb and light assembly - room.

CAUTION:
Use a dry clean cloth so that no grease or water adheres to the glass portion of the bulb.
2) Install the lens.
3) Connect the battery ground terminal. <Ref. to NT-6, BATTERY, NOTE, Note.>

C: INSPECTION

1) Measure the resistance between connector terminals.

Preparation tool:
Circuit tester

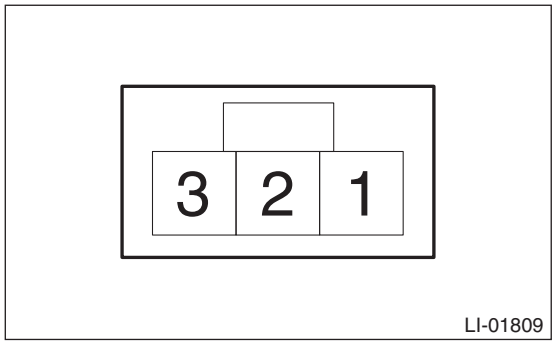

Terminal No.	Inspection conditions	Standard
1 — 3	Switch OFF	1 MΩ or more
	Switch ON	Less than 1 Ω
2 — 3	Switch door	Less than 1 Ω

2) Apply battery voltage between the connector terminals to check the lighting condition of the light.

Terminal No.	Inspection conditions	Specification
3 (+) — 1 (–) 3 (+) — 2 (–)	Switch OFF	Light OFF
	Switch ON	Light ON
	Switch door	Light ON

3) Replace the light assembly - room if faulty is found in the inspection.

34.Trunk Room Light

A: REMOVAL

NOTE:
Do not remove the trunk room light if removing the bulb only.
1) Disconnect the ground cable from battery. <Ref. to NT-6, BATTERY, NOTE, Note.>

NOTE:
For model with battery sensor, disconnect the ground terminal from battery sensor.
2) Remove the light assembly - trunk room.

CAUTION:
When using a flat tip screwdriver, use an appropriate sized tool for the insertion opening, apply protective tape or cloth around the tool, and be careful not to cause damage.

(1) Disconnect the connector.
(2) Turn the light assembly - trunk room counterclockwise to 60° and remove the light.

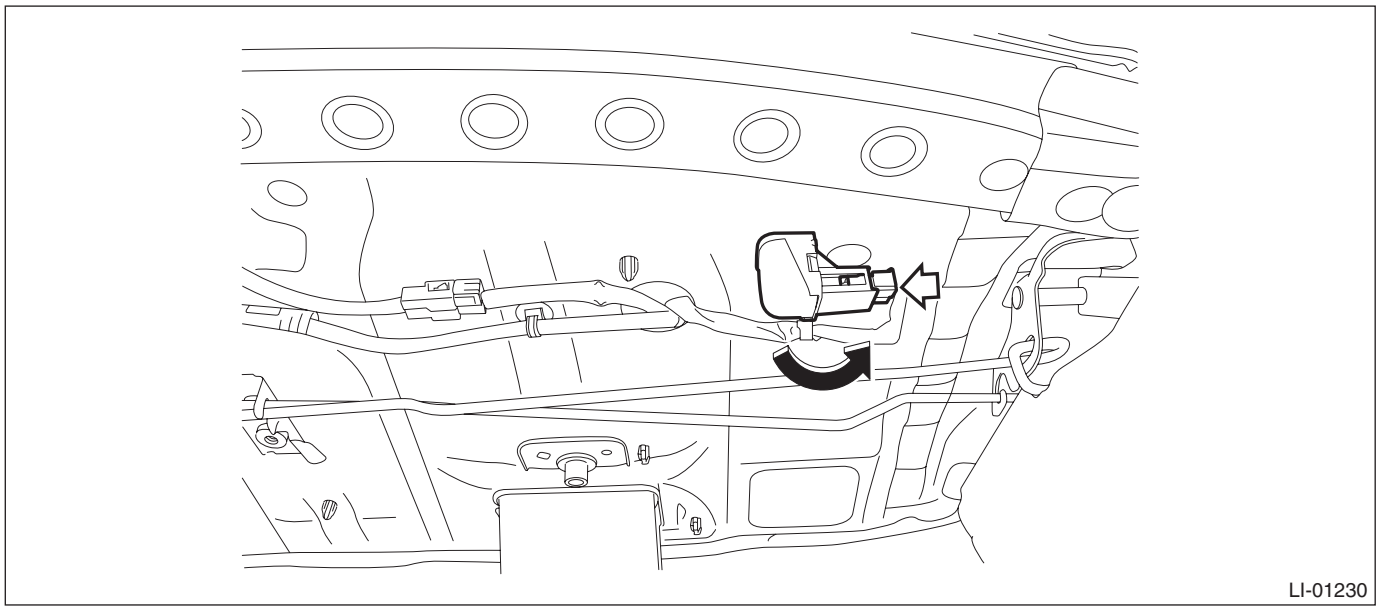

3) Release the claws and remove the lens and trunk room light bulb.

CAUTION:
Use a dry clean cloth so that no grease or water adheres to the glass portion of the bulb.

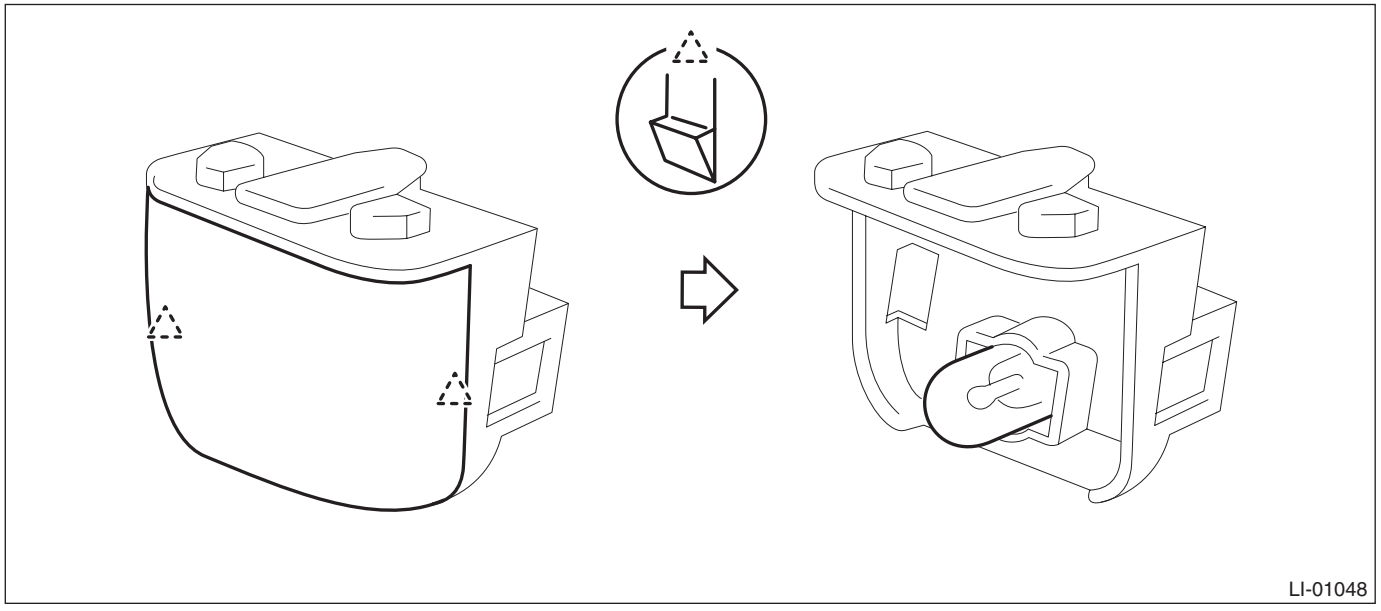

B: INSTALLATION

1) Install the trunk room light bulb and lens.

CAUTION:
Use a dry clean cloth so that no grease or water adheres to the glass portion of the bulb.
2) Install the light assembly - trunk room.
3) Connect the battery ground terminal. <Ref. to NT-6, BATTERY, NOTE, Note.>

35.LED Illumination Light

A: REMOVAL

1. GLOVE BOX LIGHT

1) Disconnect the ground cable from battery. <Ref. to NT-6, BATTERY, NOTE, Note.>

NOTE:
For model with battery sensor, disconnect the ground terminal from battery sensor.
2) Remove the pocket assembly. <Ref. to EI-64, REMOVAL, Glove Box.>
3) Remove the light - pocket cover.

CAUTION:
When using a flat tip screwdriver, use an appropriate sized tool for the insertion opening, apply protective tape or cloth around the tool, and be careful not to cause damage.

(1) Release the claws.
(2) Disconnect the connector, and remove the light - pocket cover.

4) Release the claws, and remove the light - pocket.

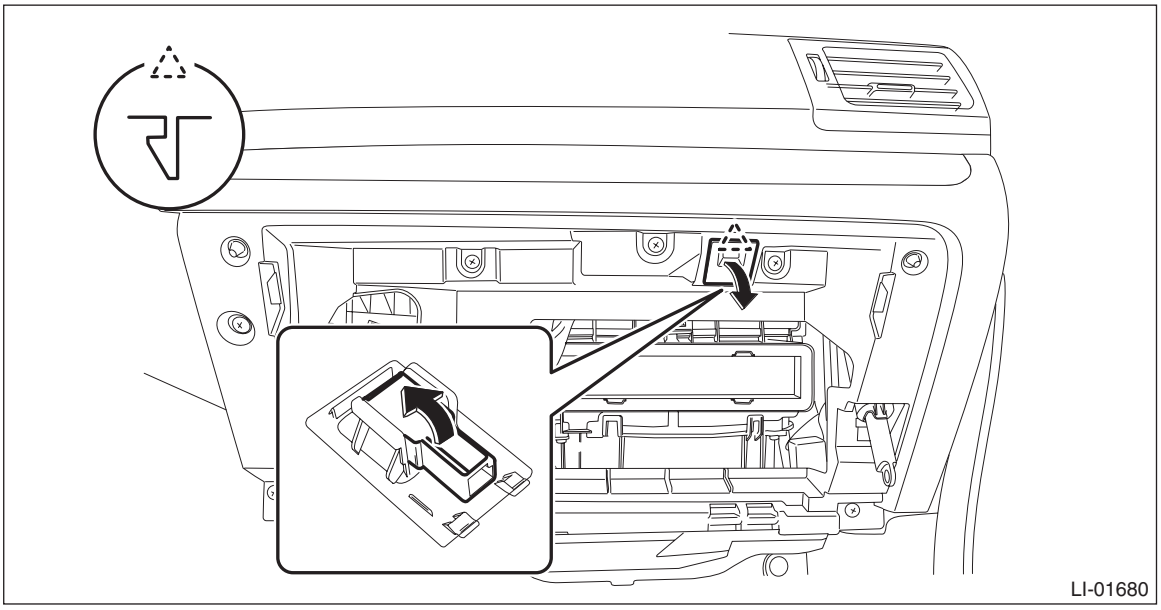

2. POCKET LIGHT

1) Disconnect the ground cable from battery. <Ref. to NT-6, BATTERY, NOTE, Note.>

NOTE:
For model with battery sensor, disconnect the ground terminal from battery sensor.
2) Remove the panel center assembly. <Ref. to EI-66, REMOVAL, Center Console.>
3) Remove the light - pocket.

CAUTION:
When using a flat tip screwdriver, use an appropriate sized tool for the insertion opening, apply protective tape or cloth around the tool, and be careful not to cause damage.

(1) Disconnect the connector.
(2) Release the claws, and remove the light - pocket.

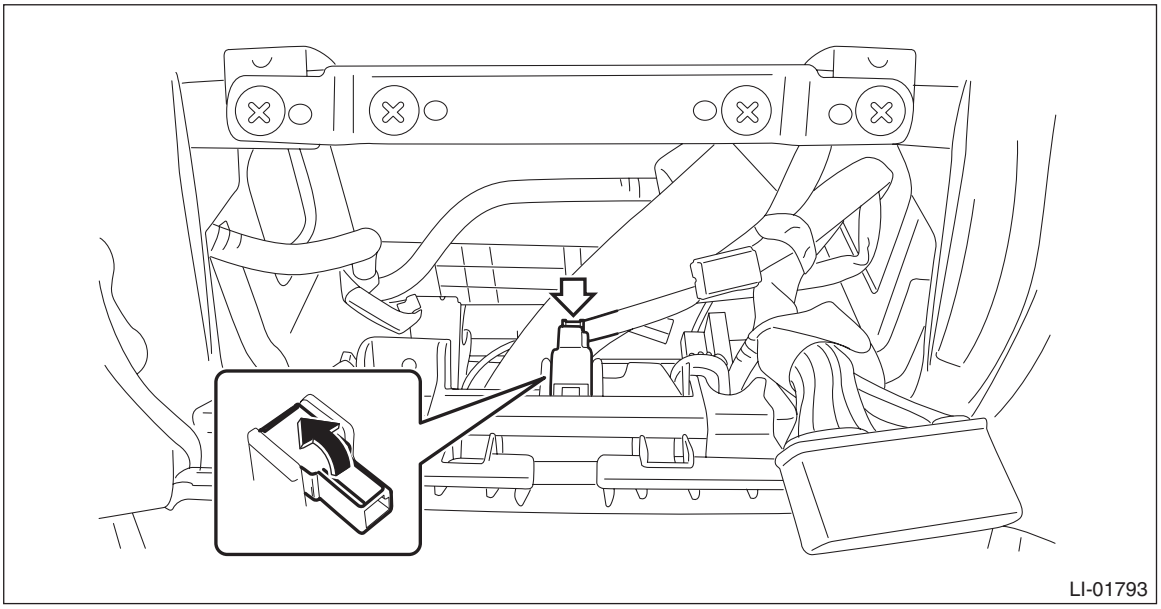

B: INSTALLATION

1. GLOVE BOX LIGHT

1) Install the light - pocket.
2) Install the light - pocket cover.
3) Install the pocket assembly.
4) Connect the battery ground terminal. <Ref. to NT-6, BATTERY, NOTE, Note.>

2. POCKET LIGHT

1) Install the light - pocket.
2) Install the panel center assembly.
3) Connect the battery ground terminal. <Ref. to NT-6, BATTERY, NOTE, Note.>

36.Vanity Mirror Light

A: REMOVAL

NOTE:
• The vanity mirror light is integrated into the sun visor assembly. Replace the sun visor assembly if faulty. <Ref. to EI-100, REMOVAL, Sun Visor.>
• Do not remove the sun visor assembly if removing the bulb only.
1) Disconnect the ground cable from battery. <Ref. to NT-6, BATTERY, NOTE, Note.>

NOTE:
For model with battery sensor, disconnect the ground terminal from battery sensor.
2) Remove the sun visor assembly. <Ref. to EI-100, REMOVAL, Sun Visor.>
3) Release the claws and remove the lens and vanity mirror light bulb.

CAUTION:
• Use a dry clean cloth so that no grease or water adheres to the glass portion of the bulb.
• When using a flat tip screwdriver, use an appropriate sized tool for the insertion opening, apply protective tape or cloth around the tool, and be careful not to cause damage.

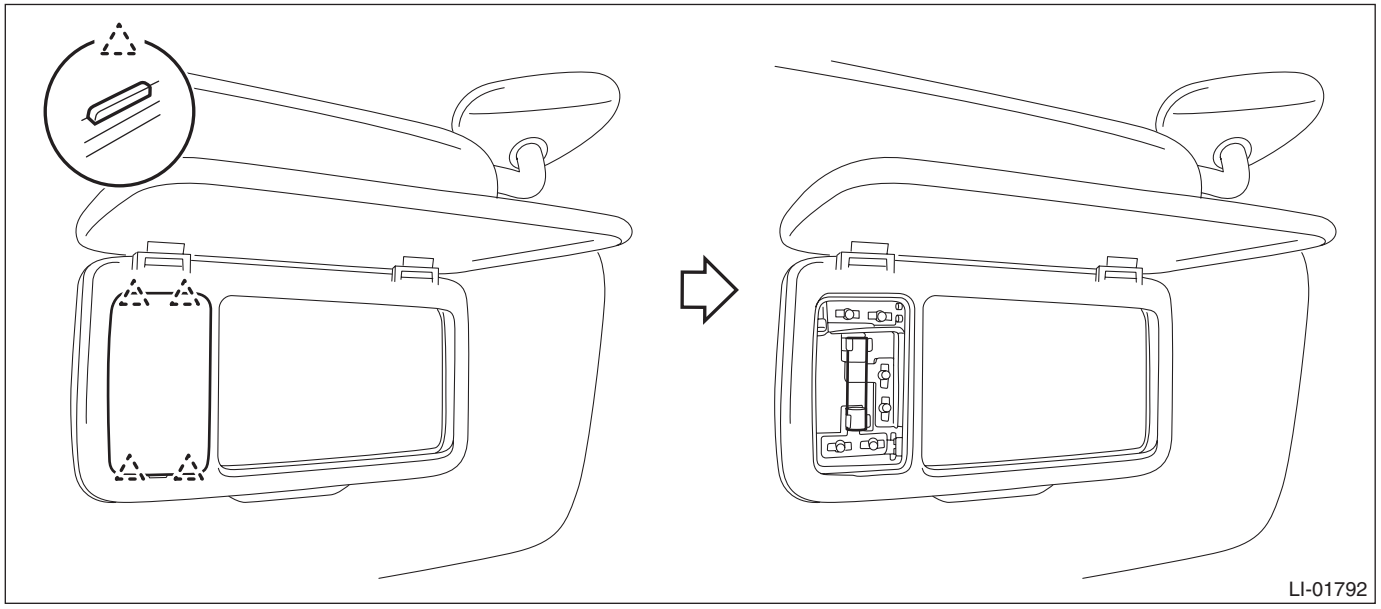

B: INSTALLATION

1) Install the vanity mirror light bulb and lens.

CAUTION:
Use a dry clean cloth so that no grease or water adheres to the glass portion of the bulb.
2) Install the sun visor assembly.
3) Connect the battery ground terminal. <Ref. to NT-6, BATTERY, NOTE, Note.>

37.Ignition Switch Illumination

A: REMOVAL

NOTE:
The ignition switch illumination is integrated into the immobilizer antenna assembly.
1) Disconnect the ground cable from battery. <Ref. to NT-6, BATTERY, NOTE, Note.>

NOTE:
For model with battery sensor, disconnect the ground terminal from battery sensor.
2) Remove the cover assembly - column.
   (1) Remove the screws by turning the steering wheel to right and left.
   (2) Release the clips, and remove the cover assembly - steering UPR.
   (3) Release the claw, and remove the cover assembly - column UPR and the cover assembly - column LWR.

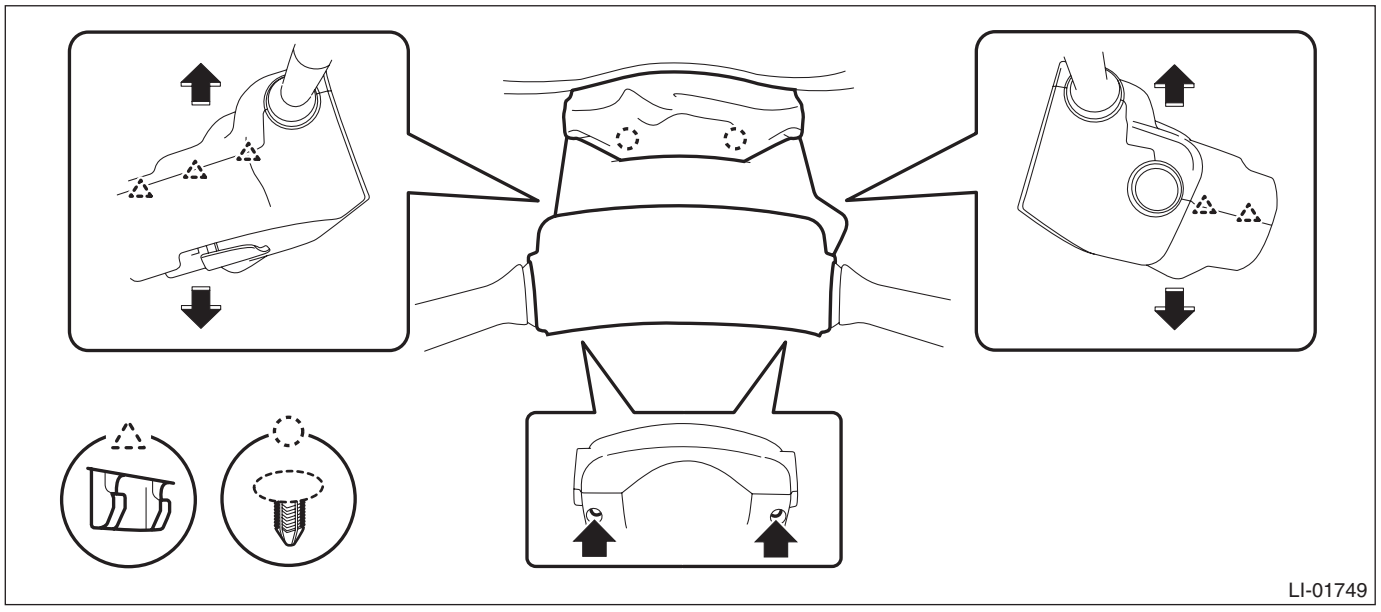

3) Remove the ignition switch illumination.
   (1) Disconnect the connector.
   (2) Release the claw using a flat tip screwdriver or similar tool wrapped with a protection tape, and remove the ignition switch illumination.

CAUTION:
Do not apply excessive force to remove the ignition switch illumination lock. Otherwise they may be broken because those parts are the products made of a plastic.

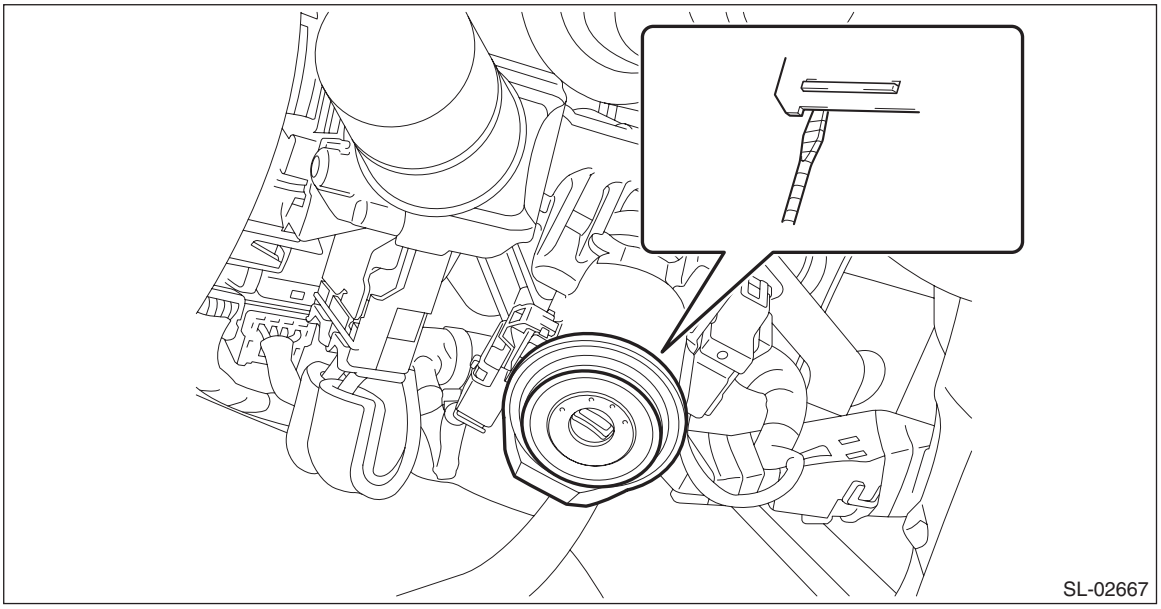

B: INSTALLATION

1) Install the ignition switch illumination.
2) Install the cover assembly - column.
3) Connect the battery ground terminal. <Ref. to NT-6, BATTERY, NOTE, Note.>

C: INSPECTION

Step		Check	Yes	No
1	**CHECK THE IGNITION SWITCH ILLUMINATION.** Make sure the ignition switch illumination illuminates when driver's side door is open.	Does the ignition switch illumination illuminate?	Ignition switch illumination is normal.	Go to step **2**.
2	**CHECK THE IGNITION SWITCH ILLUMINATION.** Make sure the ignition switch illumination blinks when the ignition switch is turned to ON.	Does the ignition switch illumination blink?	Check the function setting of body integrated unit. <Ref. to BC(diag)-2, Basic Diagnostic Procedure.>	Check the ignition switch illumination circuit. <Ref. to SL-24, CHECK IGNITION SWITCH ILLUMINATION, INSPECTION, Keyless Entry System.>

38.Auto Headlight Beam Leveler Control Module

A: REMOVAL

CAUTION:
Before handling the airbag system components, refer to "CAUTION" of "General Description" in "AIRBAG SYSTEM". <Ref. to AB-9, CAUTION, General Description.>
1) Disconnect the battery ground cable and wait for at least 60 seconds before starting work. <Ref. to NT-6, BATTERY, NOTE, Note.>

NOTE:
For model with battery sensor, disconnect the ground terminal from battery sensor.
2) Remove the cover assembly - instrument panel LWR driver. <Ref. to EI-62, REMOVAL, Instrument Panel Lower Cover.>
3) Remove the knee airbag module. <Ref. to AB-34, REMOVAL, Knee Airbag Module.>
4) Release the lock and remove the fuse holder.

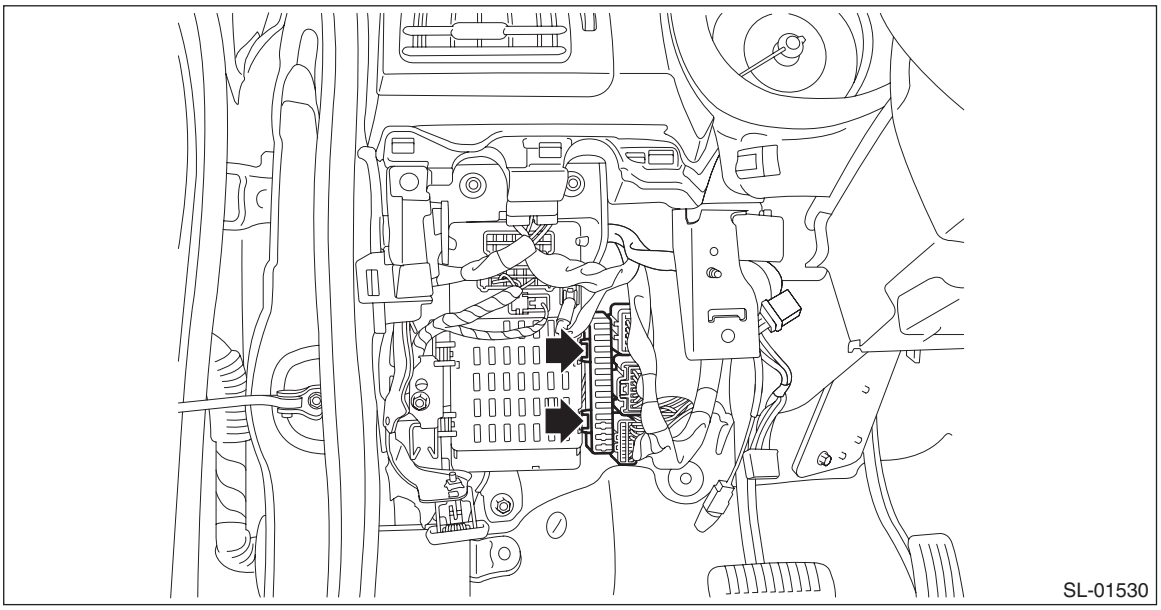
SL-01530

5) Remove the relay & fuse box.
(1) Disconnect the connector.
(2) Remove the bolts and nuts, and remove the relay & fuse box.

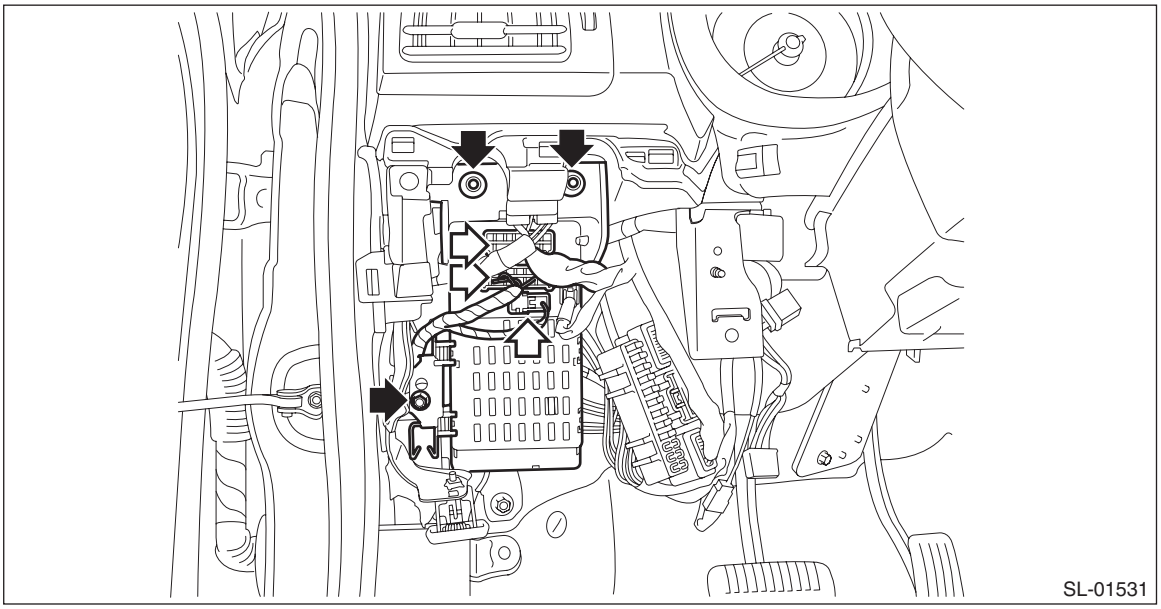
SL-01531

6) Disconnect the connector of body integrated unit.

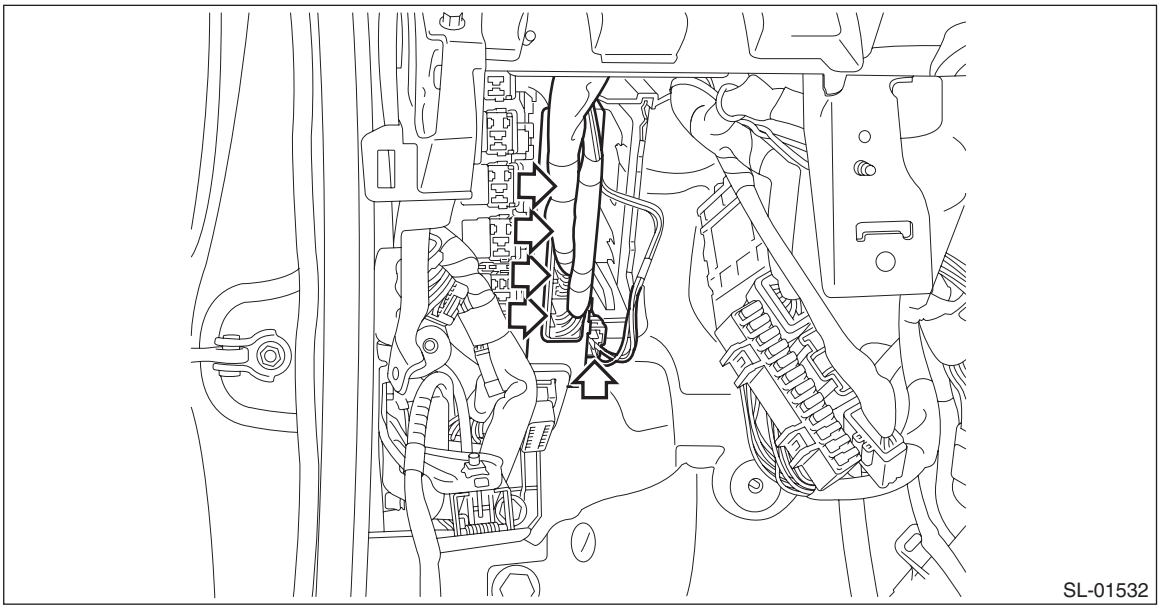

7) Remove the auto headlight beam leveler CM.
   (1) Disconnect the connector.
   (2) Release the claws and pull out the auto headlight beam leveler CM.

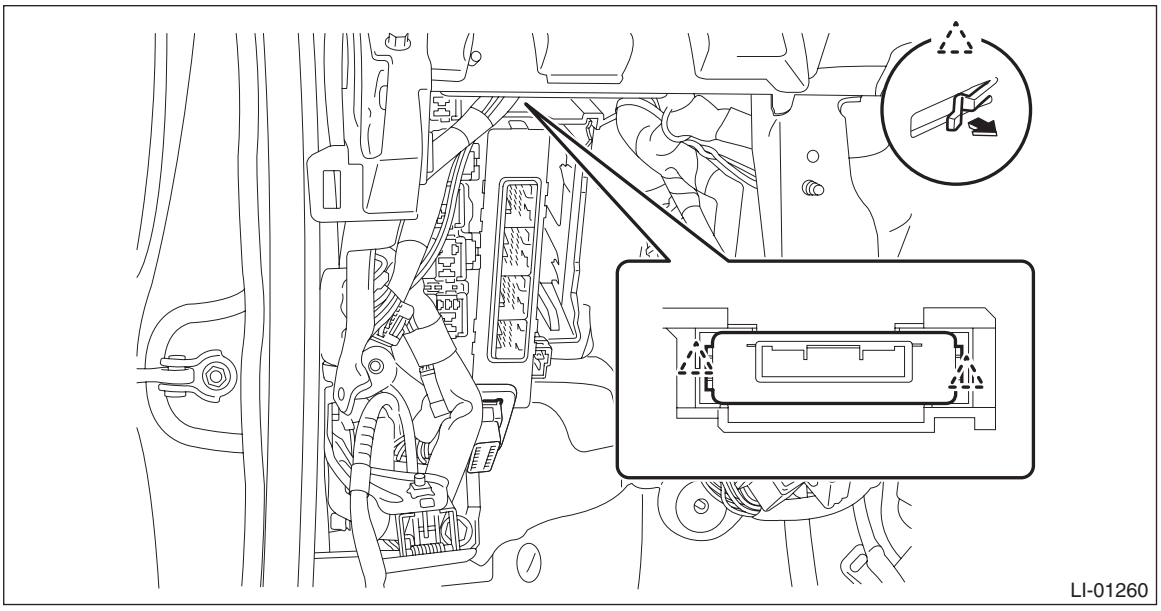

B: INSTALLATION

CAUTION:
Before handling the airbag system components, refer to "CAUTION" of "General Description" in "AIRBAG SYSTEM". <Ref. to AB-9, CAUTION, General Description.>

1) Install the auto headlight beam leveler CM.
2) Install the relay & fuse box.

Tightening torque:
7.5 N·m (0.8 kgf-m, 5.5 ft-lb)

3) Install the fuse holder.
4) Install the knee airbag module. <Ref. to AB-34, INSTALLATION, Knee Airbag Module.>

Tightening torque:
7.5 N·m (0.8 kgf-m, 5.5 ft-lb)

5) Install the cover assembly - instrument panel LWR driver.
6) Connect the battery ground terminal. <Ref. to NT-6, BATTERY, NOTE, Note.>
7) Perform initialization and reinitialization of the auto headlight beam leveler system. <Ref. to LI-18, PROCEDURE, Auto Headlight Beam Leveler System.>

39.Rear Height Sensor

A: REMOVAL

CAUTION:
Always remove the sensor assembly - headlight beam leveler before removing any parts related to the suspension.
Do not apply impact to the sensor assembly - headlight beam leveler or forcibly move the arm. Doing so may cause sensor damage and malfunction.
1) Disconnect the ground cable from battery. <Ref. to NT-6, BATTERY, NOTE, Note.>

NOTE:
For model with battery sensor, disconnect the ground terminal from battery sensor.
2) Lift up the vehicle.
3) Remove the rear wheel on the left side.
4) Remove the sensor assembly - headlight beam leveler.

CAUTION:
Do not disassemble the sensor and lever.
(1) Disconnect the connector.
(2) Remove the nuts, and remove the sensor assembly - headlight beam leveler.

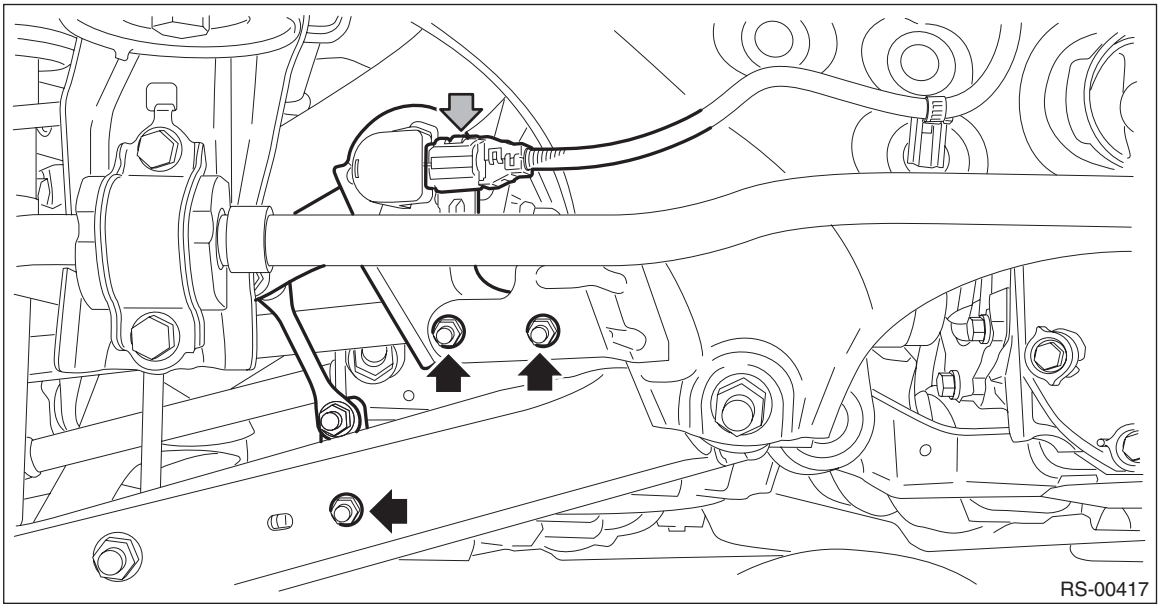

B: INSTALLATION

CAUTION:
Do not apply impact to the sensor assembly - headlight beam leveler or forcibly move the arm. Doing so may cause sensor damage and malfunction.
1) Install the sensor assembly - headlight beam leveler.

Tightening torque:
7.5 N·m (0.8 kgf-m, 5.5 ft-lb)
2) Install the rear wheels.

Tightening torque:
120 N·m (12.2 kgf-m, 88.5 ft-lb)
3) Lower the vehicle.
4) Connect the battery ground terminal. <Ref. to NT-6, BATTERY, NOTE, Note.>

5) Perform reinitialization of the auto headlight beam leveler system. <Ref. to LI-19, REINITIALIZATION, PROCEDURE, Auto Headlight Beam Leveler System.>

NOTE:
When replacing the rear vehicle height sensor with a new part, perform the initialization. <Ref. to LI-18, INITIALIZATION, PROCEDURE, Auto Headlight Beam Leveler System.>

C: INSPECTION

1) Connect three dry cell batteries (1.5 V) in series.

NOTE:
- Use new dry-cell batteries.
- Using a circuit tester, check that the initial voltage of each dry-cell battery is 1.6 V or more. And also check that the voltage of three batteries in series is between 4.8 V and 5.2 V.
- For power supply, 5 V DC constant voltage power source can also be used.

2) Connect the cell battery positive terminal to the connector terminal No. 3, and the cell battery negative terminal to the connector terminal No. 1.
3) With voltage applied, measure the voltage between connector terminals when the sensor link is moved slowly up and down.

Preparation tool:
Circuit tester

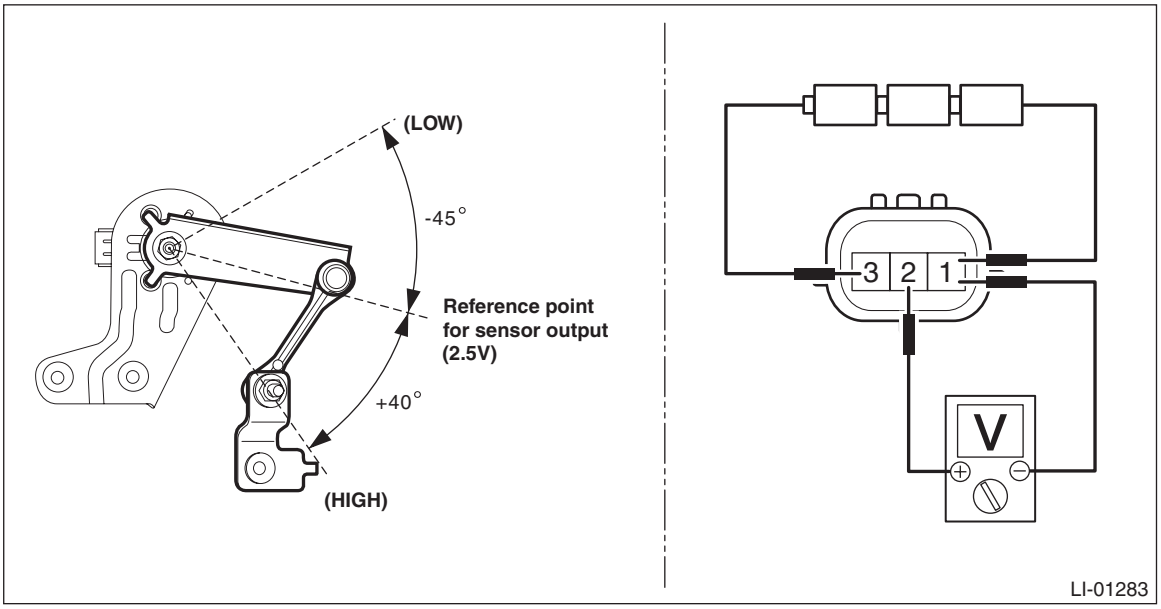

Terminal No.	Inspection conditions	Standard
2 (+) — 1 (–)	Move the link within the operation range.	Approx. 0.5 — 4.1 V

NOTE:
When the link is moved upward from the standard output position, the sensor output varies to the 0.5 V side. When the link is moved downward, the sensor output varies to the 4.1 V side.

4) Replace the sensor assembly - headlight beam leveler if the inspection result is not within the standard value.

40.Day Time Running Resistor

A: REMOVAL

1) Disconnect the ground cable from battery. <Ref. to NT-6, BATTERY, NOTE, Note.>

NOTE:
For model with battery sensor, disconnect the ground terminal from battery sensor.
2) Lift up the vehicle.
3) Remove the screw and clips, and turn over the front side of the mud guard - front.

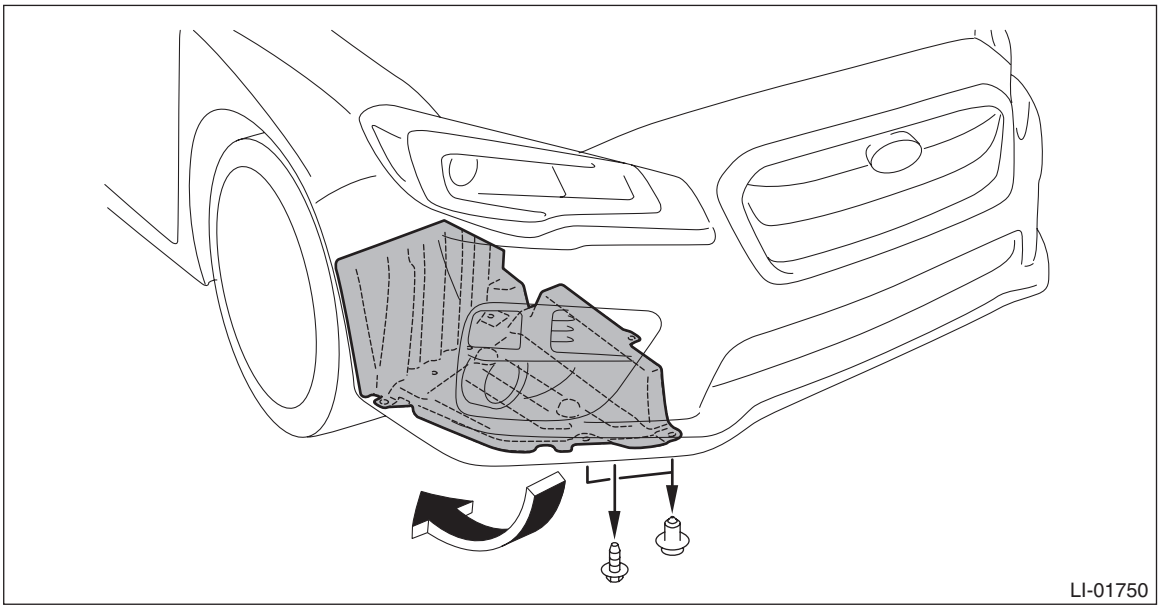

4) Remove the resistor assembly - daytime running light.

CAUTION:
The resistor may become hot. Be careful not to burn yourself when removing it.

(1) Disconnect the connector.
(2) Remove the bolts, then remove the resistor assembly - daytime running light.

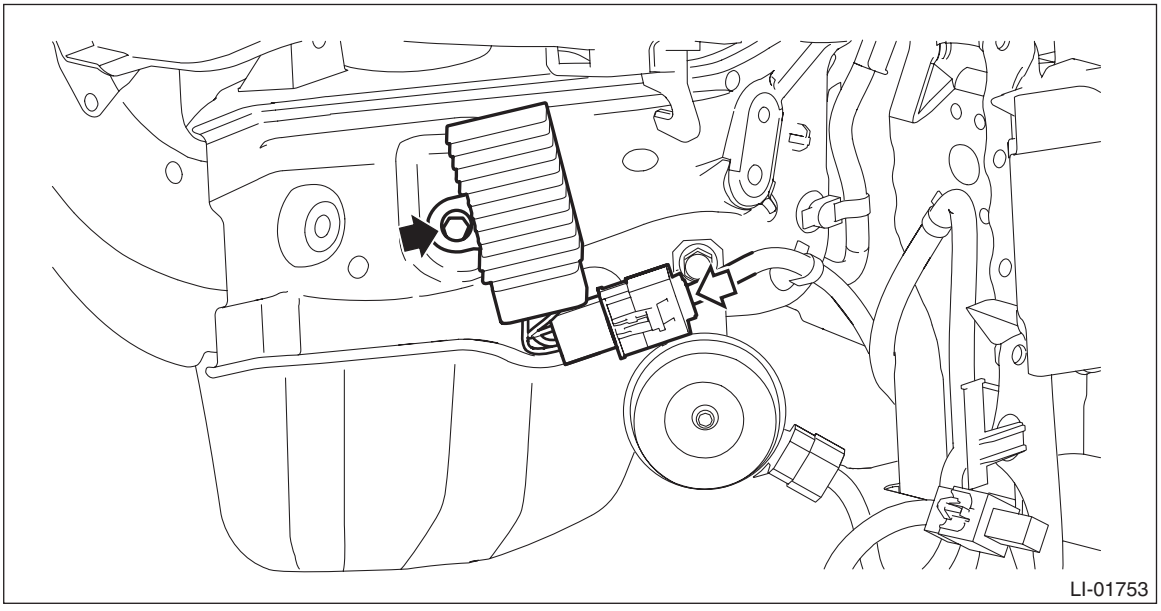

B: INSTALLATION

CAUTION:
Install the mud guard - front so that the front end of the mud guard (b) comes outside the bumper face - front (a).

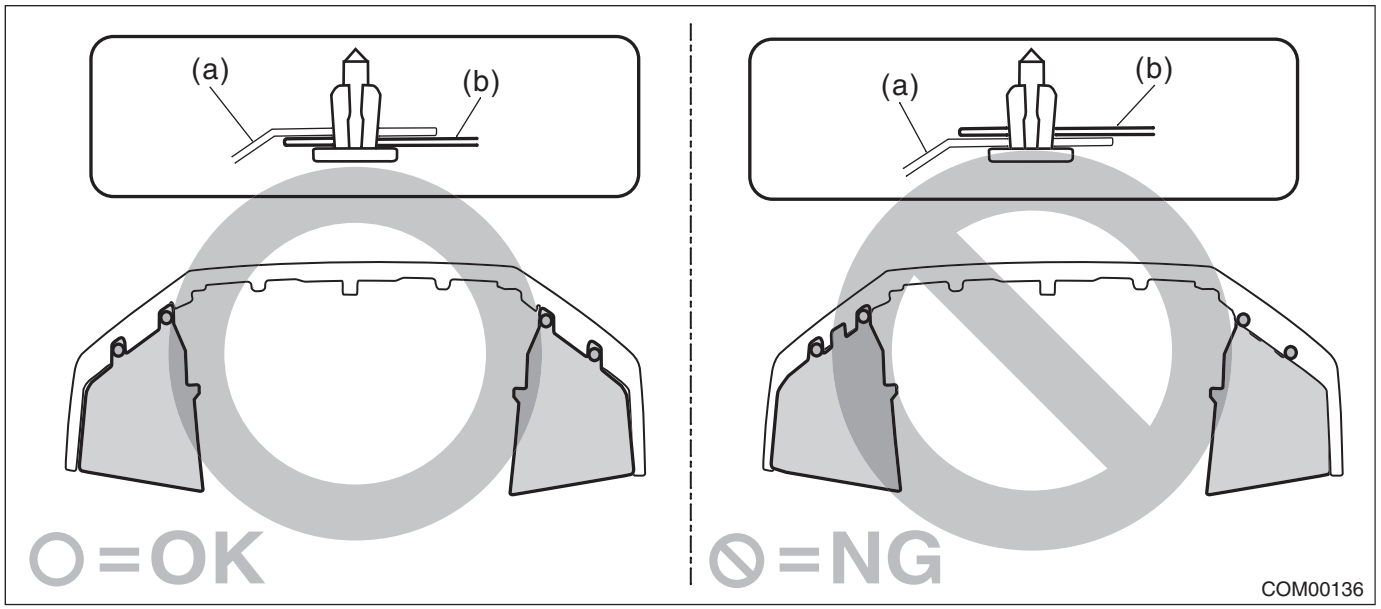

1) Install the resistor assembly - daytime running light.

Tightening torque:
7.5 N·m (0.8 kgf-m, 5.5 ft-lb)
2) Install the mud guard - front.
3) Lower the vehicle.
4) Connect the battery ground terminal. <Ref. to NT-6, BATTERY, NOTE, Note.>

C: INSPECTION

1) Measure the resistance between connector terminals.

Preparation tool:
Circuit tester

Terminal No.	Inspection conditions	Specification	Connection diagram
1 — 2	Always	0.83±0.03 Ω	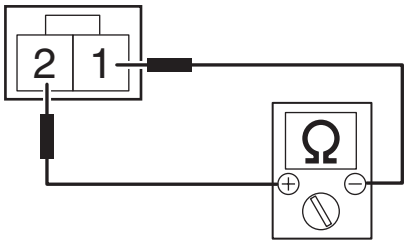

2) Replace the resistor assembly - daytime running light if the inspection result is not within the standard.

41.Door Switch

A: REMOVAL

1) Disconnect the ground cable from battery. <Ref. to NT-6, BATTERY, NOTE, Note.>

NOTE:
For model with battery sensor, disconnect the ground terminal from battery sensor.

2) Remove the switch assembly - door.
   (1) Remove the screws, and pull out the switch assembly - door toward you.
   (2) Disconnect the connector and remove the switch assembly - door.

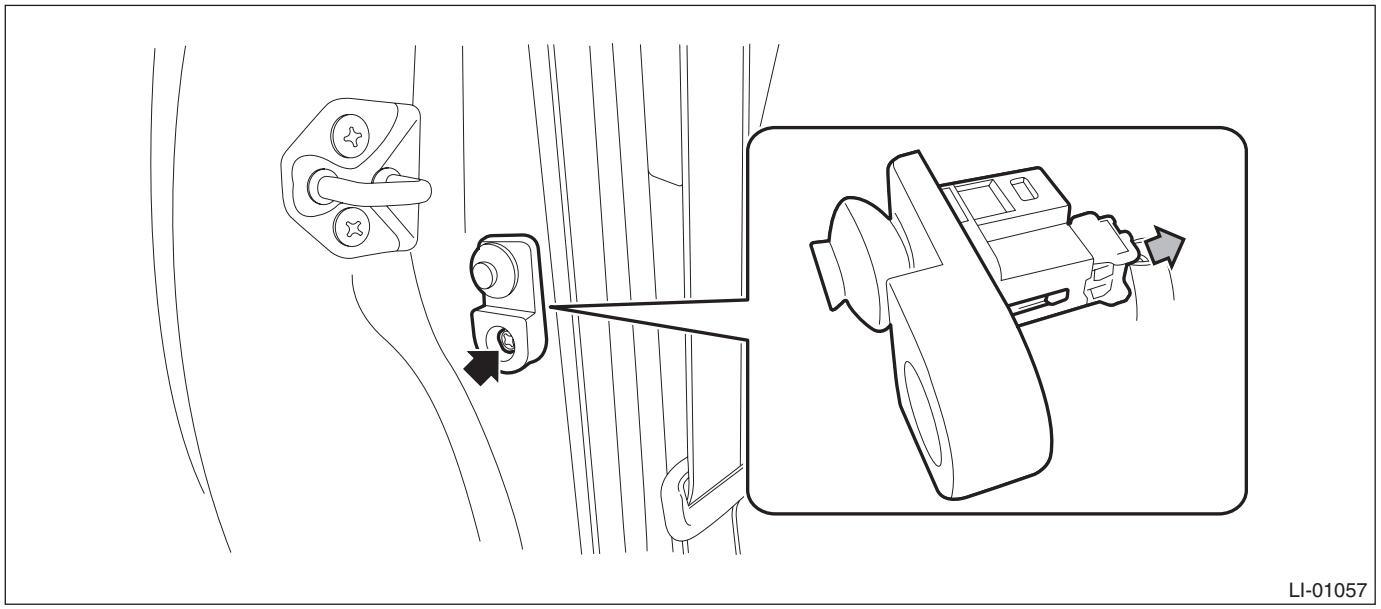

B: INSTALLATION

1) Install the switch assembly - door.
2) Connect the battery ground terminal. <Ref. to NT-6, BATTERY, NOTE, Note.>

C: INSPECTION

1) Measure the resistance between connector terminals.

Preparation tool:
Circuit tester

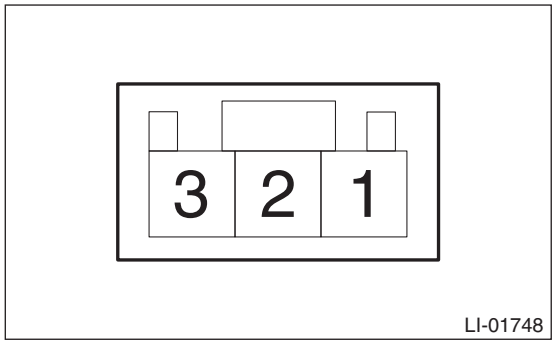

Terminal No.	Inspection conditions	Standard
1 — 3	When the switch is not pressed	Less than 1 Ω
	When the switch is pressed	1 MΩ or more

2) Replace the switch assembly - door if the inspection result is not within the standard value.

42.SRF OFF Switch

A: NOTE

The SRF OFF switch is integrated with the VDC OFF switch. For operation procedures, refer to “VEHICLE DYNAMICS CONTROL (VDC)” section. <Ref. to VDC-40, VDC OFF Switch.>

B: INSPECTION

1) Measure the resistance between connector terminals.

Preparation tool:
Circuit tester

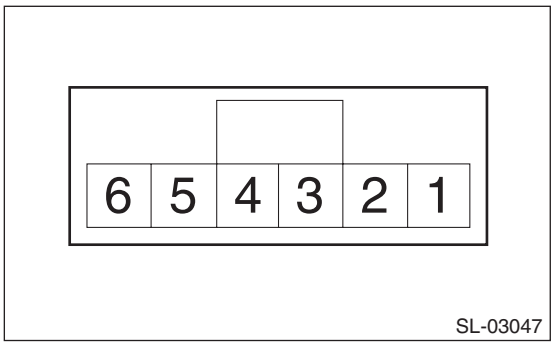

Terminal No.	Inspection conditions	Standard
2 — 1	OFF	1 MΩ or more
	ON	Less than 1 Ω

2) Apply battery voltage between the connector terminals to check lighting condition of illumination inside the switch.

Terminal No.	Inspection conditions	Specification
4 (+) — 3 (–)	Apply battery voltage.	Light ON

3) Replace the SRF OFF switch if it is found defective.

AUTO HEADLIGHT BEAM LEVELER SYSTEM (DIAGNOSTICS)

AL(diag)

		Page
1.	Basic Diagnostic Procedure	2
2.	Check List for Interview	3
3.	General Description	4
4.	Electrical Component Location	5
5.	Control Module I/O Signal	6
6.	Subaru Select Monitor	7
7.	Read Diagnostic Trouble Code (DTC)	10
8.	Clear Memory Mode	11
9.	Inspection Mode	12
10.	Read Current Data	13
11.	List of Diagnostic Trouble Code (DTC)	14
12.	Diagnostic Procedure with Diagnostic Trouble Code (DTC)	15
13.	Diagnostics with Phenomenon	25

1. Basic Diagnostic Procedure

A: PROCEDURE

	Step	Check	Yes	No
1	**PERFORM CUSTOMER INTERVIEW.** Using the Check List for Interview, ask the customer the condition of how the trouble occurred. <Ref. to AL(diag)-3, CHECK, Check List for Interview.>	Did you interview the customer?	Go to step **2**.	Interview the customer. <Ref. to AL(diag)-3, CHECK, Check List for Interview.>
2	**CHECK LAN SYSTEM.** Inspect LAN system. <Ref. to LAN(diag)-2, PROCEDURE, Basic Diagnostic Procedure.>	Is the check result OK?	Go to step **3**.	Perform the inspection according to the diagnosis for LAN system. <Ref. to LAN(diag)-2, PROCEDURE, Basic Diagnostic Procedure.>
3	**CHECK AUTO HEADLIGHT BEAM LEVELER SYSTEM.** Using the Subaru Select Monitor, read DTC of the auto headlight beam leveler system inspection. <Ref. to AL(diag)-10, OPERATION, Read Diagnostic Trouble Code (DTC).> NOTE: If the communication function of the Subaru Select Monitor cannot be executed properly, check the communication circuit. <Ref. to AL(diag)-8, COMMUNICATION FOR INITIALIZING IMPOSSIBLE, INSPECTION, Subaru Select Monitor.>	Is DTC displayed?	Record the DTCs and time stamps, and perform the diagnosis for the displayed DTCs. <Ref. to AL(diag)-14, LIST, List of Diagnostic Trouble Code (DTC).> For time stamp, refer to “LAN SYSTEM”. <Ref. to LAN(diag)-6, TIME STAMP, CAUTION, General Description.> After diagnosis is completed, Go to step **6**.	Go to step **4**.
4	**CHECK DIAGNOSTICS WITH PHENOMENON.** Check “Diagnostics with Phenomenon”. <Ref. to AL(diag)-25, Diagnostics with Phenomenon.>	Does the symptom apply?	Perform diagnosis according to the procedures in the diagnostics with phenomenon.	Go to step **5**.
5	**CHECK TROUBLE PHENOMENON.** 1) Perform the basic inspection and function check. <Ref. to AL(diag)-4, INSPECTION, General Description.> 2) Check the auto headlight beam leveler CM. <Ref. to AL(diag)-6, Control Module I/O Signal.> 3) Perform check of current data. <Ref. to AL(diag)-13, Read Current Data.> 4) Perform a unit check.	Was the trouble cause found?	Repair or replace the cause of trouble.	System is normal.
6	**PERFORM DIAGNOSIS.** 1) Perform the Clear Memory Mode. 2) Perform the Inspection Mode. <Ref. to AL(diag)-12, Inspection Mode.>	Is DTC displayed?	Perform the diagnosis for the displayed DTCs. <Ref. to AL(diag)-14, LIST, List of Diagnostic Trouble Code (DTC).>	Finish the diagnosis.

2. Check List for Interview

A: CHECK

- Inspect the following items regarding the vehicle's state.
- Print out this page for interviewing customers.

<table>
<tr><td colspan="4">Auto Headlight Beam Leveler System Check List for Interview
Date the Vehicle is Received Year Month Day</td></tr>
<tr><td colspan="2" rowspan="2">Customer's name</td><td>Registration No.</td><td>Initial year of registration
Year Month Date</td></tr>
<tr><td>Vehicle model</td><td>Frame number</td></tr>
<tr><td>Interviewer</td><td>Inspector</td><td>Engine type</td><td>Odometer reading</td></tr>
<tr><td colspan="4">Customer specified content
•
•
•</td></tr>
<tr><td>Date and time when the trouble occurred</td><td></td><td>Frequency of trouble occurrence</td><td>Always occurs
Sometimes occurs
(times per day, times per month)</td></tr>
<tr><td rowspan="2">Condition of trouble occurrence (How the trouble occurs)</td><td rowspan="2"></td><td>Weather</td><td>Fine • Cloudy • Rainy • Snowy • Others ( )</td></tr>
<tr><td>Temperature</td><td>°C (°F) — °C (°F)</td></tr>
<tr><td>Road conditions</td><td></td><td>Occurrence location</td><td></td></tr>
<tr><td>Accessory installation condition</td><td colspan="3"></td></tr>
<tr><td>Confirmation of trouble condition</td><td colspan="3"></td></tr>
<tr><td>❑ Diagnostic code</td><td colspan="3"></td></tr>
</table>

3. General Description

A: CAUTION

1. AIRBAG SYSTEM

CAUTION:
• Do not use the electrical test equipment on the airbag system wiring harnesses and connector circuits.
• Be careful not to damage the airbag system wiring harness.

B: INSPECTION

1. BASIC INSPECTION

Before performing the diagnosis, check the following items which may cause problems relating the wiper or light.
1) Check the battery. <Ref. to SC(w/o STI)-51, INSPECTION, Battery.> <Ref. to SC(STI)-24, INSPECTION, Battery.>
2) Check the relay and fuse condition. <Ref. to LI-4, Relay and Fuse.>
3) Check the connecting condition of harness and harness connector.

2. FUNCTION CHECK

• AUTO HEADLIGHT BEAM LEVELER SYSTEM
With the ignition switch ON and the lighting switch set at 2 (HEAD), change the vehicle posture while the vehicle is stopped. Check that the beam moves, when the vehicle condition is kept for three seconds or more.
• LED headlight system
1. Set the ignition switch to ON and the lighting switch to 2 (HEAD).
2. Check that the headlight (Lo) beam illuminates.
3. Check that the LED headlight indicator on the combination meter does not illuminate.

C: PREPARATION TOOL

1. SPECIAL TOOL

ILLUSTRATION	TOOL NUMBER	DESCRIPTION	REMARKS
 STSSM4	—	SUBARU SELECT MONITOR 4	Used for setting of each function and trouble-shooting for electrical system. NOTE: For detailed operation procedures of Subaru Select Monitor 4, refer to “Application help”.

2. GENERAL TOOL

TOOL NAME	REMARKS
Circuit tester	Used for measuring resistance, voltage and current.
DST-i	Used together with Subaru Select Monitor 4.

4. Electrical Component Location

A: LOCATION

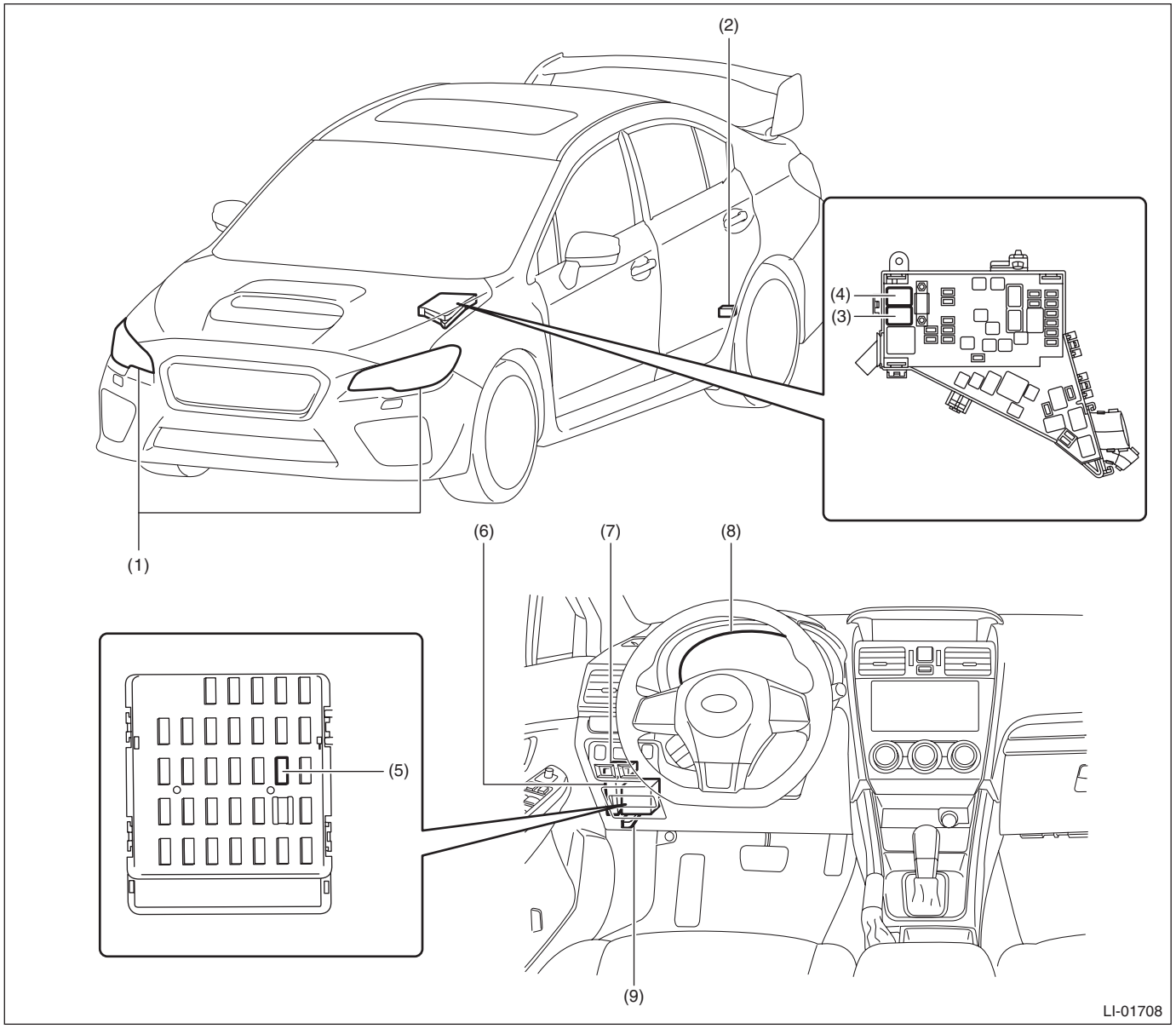

(1)	Headlight ASSY – Headlight beam leveler actuator	(4)	Headlight relay (Hi)	(7)	Auto headlight beam leveler CM
(2)	Rear vehicle height sensor	(5)	Fuse 10A (auto headlight beam leveler CM)	(8)	Combination meter
(3)	Headlight relay (Lo)	(6)	Body integrated unit	(9)	Data link connector

5. Control Module I/O Signal

A: ELECTRICAL SPECIFICATION

1. AUTO HEADLIGHT BEAM LEVELER CM

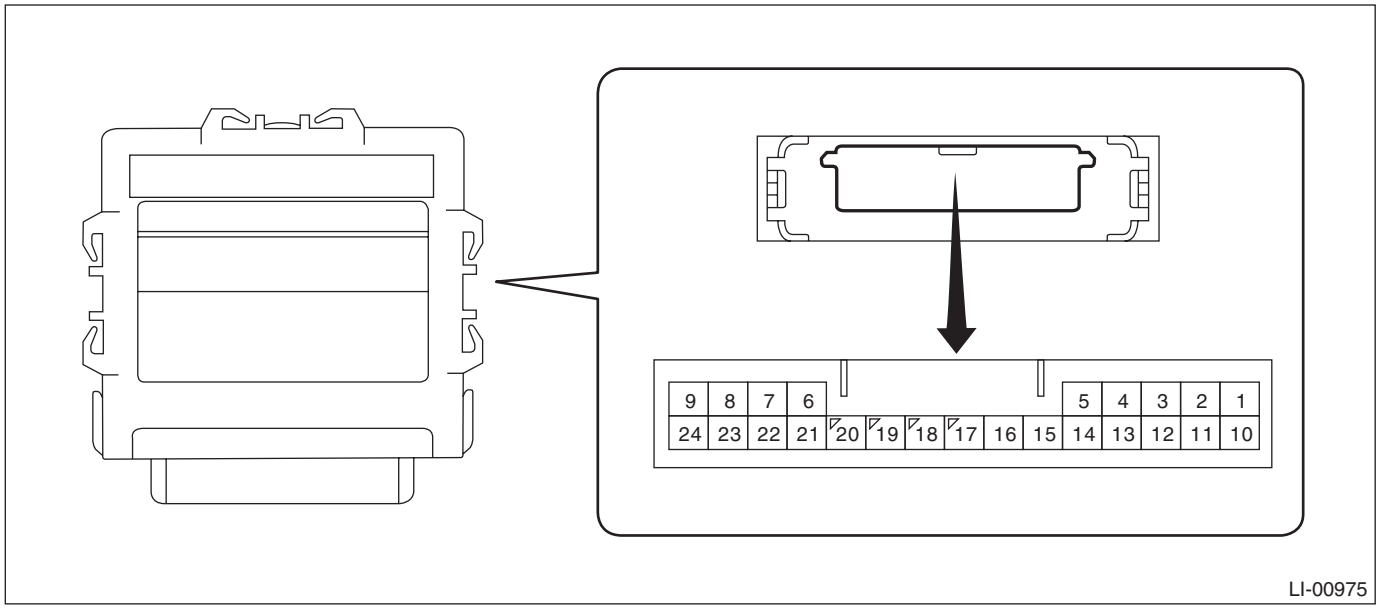

Contents	Terminal No.	Measuring condition	Standard
IG power supply	1 ←→ Chassis ground	Ignition switch ON	8 — 16 V
GND	2 ←→ Chassis ground	Always	Less than 1 Ω
Rr vehicle height sensor GND	3 ←→ Chassis ground	Always	Less than 1 Ω
RH headlight malfunction signal	5 ←→ Chassis ground	Always	1 MΩ or more
Leveling actuator power supply	10 ←→ Chassis ground	Ignition switch ON	10 — 16 V
Leveling actuator GND	11 ←→ Chassis ground	Always	Less than 1 Ω
Rr vehicle height sensor power supply	12 ←→ 3	Ignition switch ON	4.75 — 5.25 V
LH headlight malfunction signal	16 ←→ Chassis ground	Always	1 MΩ or more
Leveling actuator signal	17 ←→ Chassis ground	Headlight off → on	Less than 1 V → 1.0 — 14.4 V (for 17 seconds)
		Headlight on, no vehicle height change → change and hold vehicle height for 3 seconds or more	
Rr sensor signal	19 ←→ Chassis ground	IG ON (with no passenger, no load and vehicle stopped)	Approx. 2.5 V (changes according to vehicle condition)
CAN-H	23	Cannot be measured (CAN communication line)	—
CAN-L	24	Cannot be measured (CAN communication line)	—

B: WIRING DIAGRAM

Refer to “Headlight Beam Leveler System” in the wiring diagram. <Ref. to WI-238, WIRING DIAGRAM, Headlight Beam Leveler System.>

6. Subaru Select Monitor

A: OPERATION

- For operation procedures, refer to “Application help”.
- If the auto headlight beam leveler CM can not communicate with Subaru Select Monitor, perform “COMMUNICATION FOR INITIALIZING IMPOSSIBLE”. <Ref. to AL(diag)-8, INSPECTION, Subaru Select Monitor.>

B: INSPECTION

1. COMMUNICATION FOR INITIALIZING IMPOSSIBLE

Communication error with auto headlight beam leveler CM

DETECTING CONDITION:

- Defective harness connector
- Power supply circuit malfunction
- Defective auto headlight beam leveler CM
- Defective CAN communication circuit
- Defective Subaru Select Monitor

TROUBLE SYMPTOM:

Communication is impossible between auto headlight beam leveler CM and Subaru Select Monitor.

CAUTION:

Initialization is required after replacing the auto headlight beam leveler CM.

WIRING DIAGRAM:

Headlight beam leveler system <Ref. to WI-238, WIRING DIAGRAM, Headlight Beam Leveler System.>

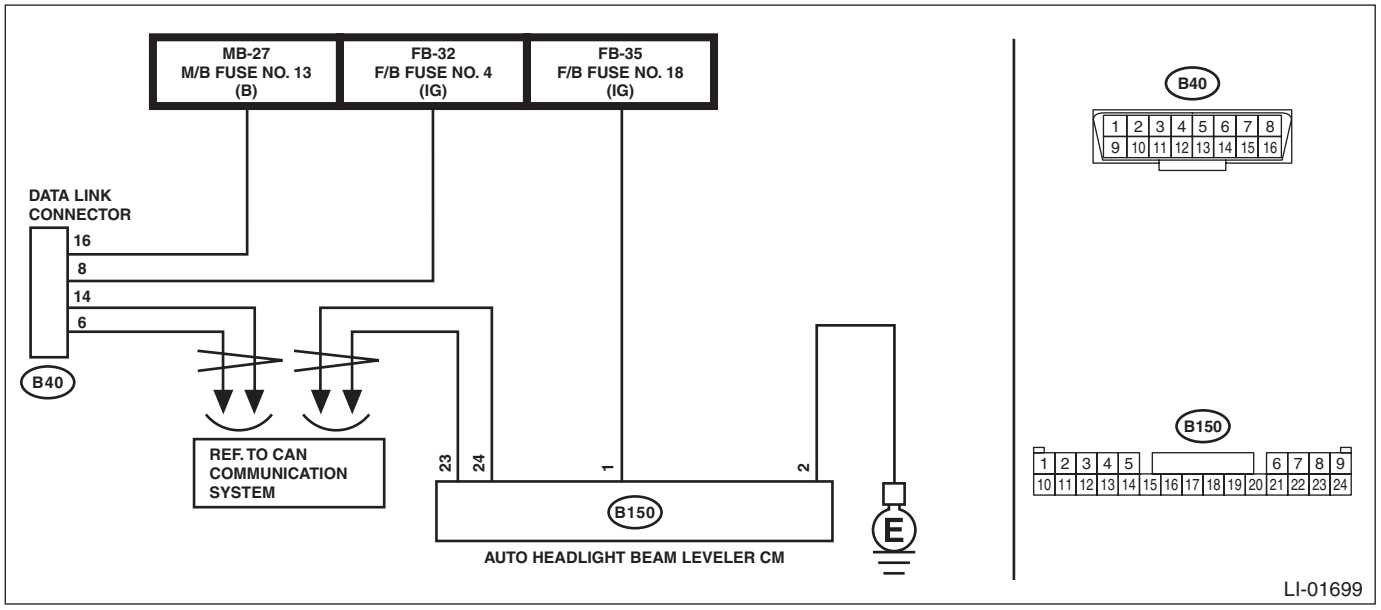

Step		Check	Yes	No
1	**CHECK OTHER COMMUNICATION.** Communicate with the system other than the auto headlight beam leveler CM using the Subaru Select Monitor.	Is the communication to other control module possible?	Go to step **2**.	Perform the "Communication for Initializing Impossible" of LAN system. <Ref. to LAN(diag)-12, COMMUNICATION FOR INITIALIZING IMPOSSIBLE, Subaru Select Monitor.>
2	**CHECK LAN SYSTEM.** Inspect LAN system. <Ref. to LAN(diag)-2, PROCEDURE, Basic Diagnostic Procedure.>	Is the check result OK?	Go to step **3**.	Perform the inspection according to the diagnosis for LAN system.

	Step	Check	Yes	No
3	**CHECK FOR POOR CONTACT.** 1) Turn the ignition switch to OFF. 2) Disconnect the auto headlight beam leveler CM connector. 3) Connect the disconnected connectors. 4) Communicate with the auto headlight beam leveler CM using the Subaru Select Monitor.	Is communication possible?	It is possible that temporary poor communication occurs.	Replace the auto headlight beam leveler CM. <Ref. to LI-74, Auto Headlight Beam Leveler Control Module.>

7. Read Diagnostic Trouble Code (DTC)

A: OPERATION

1) On «Start» display, select «Diagnosis».
2) On «Vehicle selection» display, input the target vehicle information and select «Confirmed».
3) On «Main Menu» display, select «Each System».
4) On «Select System» display, select «Headlight / Foglight» and then select «Enter».
5) On «Select Function» display, select «DTC».

NOTE:
- For detailed operation procedures, refer to “Application help”.
- For details concerning DTC, refer to “List of Diagnostic Trouble Code (DTC)”. <Ref. to AL(diag)-14, List of Diagnostic Trouble Code (DTC).>

8. Clear Memory Mode

A: OPERATION

1) On «Start» display, select «Diagnosis».
2) On «Vehicle selection» display, input the target vehicle information and select «Confirmed».
3) On «Main Menu» display, select «Each System».
4) On «Select System» display, select «Headlight / Foglight» and then select «Enter».
5) On «Select Function» display, select «DTC».
6) On «DTC» display, select «Clear Memory».

NOTE:
For detailed operation procedures, refer to “Application help”.

9. Inspection Mode

A: PROCEDURE

1) Turn the ignition switch to ON and wait for 10 seconds or more with the lighting switch in 2 (HEAD).
2) Read the DTC and check that the DTC is not displayed. <Ref. to AL(diag)-10, Read Diagnostic Trouble Code (DTC).>

NOTE:
If the DTC is displayed on the screen, the trouble is still present. Perform the diagnosis for the displayed DTCs. <Ref. to AL(diag)-14, List of Diagnostic Trouble Code (DTC).>

10.Read Current Data

A: OPERATION

1) On «Start» display, select «Diagnosis».
2) On «Vehicle selection» display, input the target vehicle information and select «Confirmed».
3) On «Main Menu» display, select «Each System».
4) On «Select System» display, select «Headlight / Foglight» and then select «Enter».
5) On «Select Function» display, select «Data Monitor».

NOTE:
For detailed operation procedures, refer to “Application help”.

B: LIST

Item Name	Content	Standard	Note
Trip Count	Time stamp information, trip counter	—	—
Count	Time stamp information, original counter identification information	—	—
Time Count	Time stamp information, time counter	—	—
F Sensor Signal	Output voltage value from front vehicle height sensor Display range: 0.00 — 5.00 V	5 V	Fixed at 5 V because front vehicle height sensor is not equipped.
R Sensor Signal	Output voltage value from rear vehicle height sensor Display range: 0.00 — 5.00 V	Approx. 2.5 V	Changes according to vehicle condition.
Actuator Signal	Power supply voltage value to headlight beam leveler actuator Display range: 0% — 100%	Not in operation: 0% In operation: 10 — 90% (17 seconds)	Changes according to vehicle condition.
ECU ACC	IG voltage condition of auto headlight beam leveler CM Display range: 0.00 — 25.76 V	8 — 16 V	—
Indicator Signal	Meter indicator condition Display range: Light off / Light up / Blink three times at 2 Hz / Blink twice at 2 Hz / Valve check	Light off: Normal Light up: Abnormal Blinks 3 times at 2 Hz.: Blinks 2 times at 2 Hz.: Check Bulb:	—
Vehicle Speed Signal	Vehicle speed condition Display range: 0.00 — 3686.34 km/h	Show vehicle speed	—
H/L Lo Signal	Headlight lighting condition Display range: Light off/Light up	Light off: light switch OFF Light up: light switch HEAD or light switch AUTO with light sensor operated	—
LED HEADLAMP(LH) error Signal	Open circuit detection signal status Display range: Light off/Light up	OFF: Open circuit not detected ON: Open circuit detected	—
LED HEADLAMP(RH) error Signal	Open circuit detection signal status Display range: Light off/Light up	OFF: Open circuit not detected ON: Open circuit detected	—

11.List of Diagnostic Trouble Code (DTC)

A: LIST

DTC	Item	Content of diagnosis	Reference
U0073	CONTROL MODULE COMMUNICATION BUS OFF	Detected when CAN line abnormality is detected.	<Ref. to AL(diag)-15, DTC U0073 CONTROL MODULE COMMUNICATION BUS OFF, Diagnostic Procedure with Diagnostic Trouble Code (DTC).>
U0122	LOST COMMUNICATION WITH VEHICLE DYNAMICS CONTROL MODULE	Detected when CAN data from VDC (vehicle speed signal) does not arrive.	<Ref. to AL(diag)-15, DTC U0122 LOST COMMUNICATION WITH VEHICLE DYNAMICS CONTROL MODULE, Diagnostic Procedure with Diagnostic Trouble Code (DTC).>
U0140	LOST COMMUNICATION WITH BODY CONTROL MODULE	Detected when CAN data from body integrated unit (headlight ON signal) does not arrive.	<Ref. to AL(diag)-15, DTC U0140 LOST COMMUNICATION WITH BODY CONTROL MODULE, Diagnostic Procedure with Diagnostic Trouble Code (DTC).>
U0416	INVALID DATA RECEIVED FROM VEHICLE DYNAMICS CONTROL MODULE	Detected when data from VDC (vehicle speed signal) is abnormal.	<Ref. to AL(diag)-15, DTC U0416 INVALID DATA RECEIVED FROM VEHICLE DYNAMICS CONTROL MODULE, Diagnostic Procedure with Diagnostic Trouble Code (DTC).>
U0422	INVALID DATA RECEIVED FROM BODY CONTROL MODULE	Detected when CAN data from body integrated unit (headlight ON signal) is abnormal.	<Ref. to AL(diag)-15, DTC U0422 INVALID DATA RECEIVED FROM BODY CONTROL MODULE, Diagnostic Procedure with Diagnostic Trouble Code (DTC).>
B2900	AHL CONTROL	Detected when an error occurred in auto headlight beam leveler CM.	<Ref. to AL(diag)-16, DTC B2900 AHL CONTROL, Diagnostic Procedure with Diagnostic Trouble Code (DTC).>
B2902	REAR HEIGHT SENSOR CIRCUIT	Detected when an error occurred in rear vehicle height sensor.	<Ref. to AL(diag)-17, DTC B2902 REAR HEIGHT SENSOR CIRCUIT, Diagnostic Procedure with Diagnostic Trouble Code (DTC).>
B2904	LED HEADLIGHT CIRCUIT RH	Detected when malfunction is found in LED headlight (right side) trouble signal line.	<Ref. to AL(diag)-19, DTC B2904 LED HEADLIGHT CIRCUIT RH, Diagnostic Procedure with Diagnostic Trouble Code (DTC).>
B2905	LED HEAD LIGHT CIRCUIT LH	Detected when malfunction is found in LED headlight (left side) trouble signal line.	<Ref. to AL(diag)-22, DTC B2905 LED HEAD LIGHT CIRCUIT LH, Diagnostic Procedure with Diagnostic Trouble Code (DTC).>

12.Diagnostic Procedure with Diagnostic Trouble Code (DTC)

A: DTC U0073 CONTROL MODULE COMMUNICATION BUS OFF

Detected when CAN line abnormality is detected.

NOTE:
Perform the diagnosis for LAN system. <Ref. to LAN(diag)-2, PROCEDURE, Basic Diagnostic Procedure.>

B: DTC U0122 LOST COMMUNICATION WITH VEHICLE DYNAMICS CONTROL MODULE

Detected when CAN data (vehicle speed signal) is not received from VDC.

NOTE:
Perform the diagnosis for LAN system. <Ref. to LAN(diag)-2, PROCEDURE, Basic Diagnostic Procedure.>

C: DTC U0140 LOST COMMUNICATION WITH BODY CONTROL MODULE

Detected when CAN data (headlights ON signal) is not received from the body integrated unit.

NOTE:
Perform the diagnosis for LAN system. <Ref. to LAN(diag)-2, PROCEDURE, Basic Diagnostic Procedure.>

D: DTC U0416 INVALID DATA RECEIVED FROM VEHICLE DYNAMICS CONTROL MODULE

DTC DETECTING CONDITION:
Detected when data (vehicle speed signal) from VDC CM is abnormal.
TROUBLE SYMPTOM:
The auto headlight beam leveler does not operate.

NOTE:
Perform the diagnosis for VDC. <Ref. to VDC(diag)-2, PROCEDURE, Basic Diagnostic Procedure.>

E: DTC U0422 INVALID DATA RECEIVED FROM BODY CONTROL MODULE

Detected when CAN data (headlights ON signal) is invalid.

NOTE:
Perform the diagnosis for LAN system. <Ref. to LAN(diag)-2, PROCEDURE, Basic Diagnostic Procedure.>

F: DTC B2900 AHL CONTROL

DTC DETECTING CONDITION:
Detected when internal malfunction occurs in the auto headlight beam leveler CM.
TROUBLE SYMPTOM:
The auto headlight beam leveler does not operate.

CAUTION:
Initialization is required after replacing the auto headlight beam leveler CM.

Step		Check	Yes	No
1	**CHECK DTC.** 1) Turn the ignition switch OFF → ON. 2) Turn on the headlight low beam. 3) Using the Subaru Select Monitor, clear the auto headlight beam leveler system memory. <Ref. to AL(diag)-11, Clear Memory Mode.> 4) Turn the ignition switch to OFF → ON. 5) Read the DTC using Subaru Select Monitor. <Ref. to AL(diag)-10, Read Diagnostic Trouble Code (DTC).>	Is DTC B2900 displayed? (Current malfunction)	Replace the auto headlight beam leveler CM. <Ref. to LI-74, Auto Headlight Beam Leveler Control Module.>	Even if DTC is displayed, the circuit has returned to a normal condition at this time. Reproduce the failure, and then perform the diagnosis again. NOTE: In this case, temporary poor contact of connector, temporary open or short circuit of harness may be the cause.

G: DTC B2902 REAR HEIGHT SENSOR CIRCUIT

DTC DETECTING CONDITION:
Detected when error occurs in the rear height sensor.
TROUBLE SYMPTOM:
The auto headlight beam leveler does not operate.

CAUTION:
Initialization is required after replacing the auto headlight beam leveler CM.
WIRING DIAGRAM:
Headlight beam leveler system <Ref. to WI-238, WIRING DIAGRAM, Headlight Beam Leveler System.>

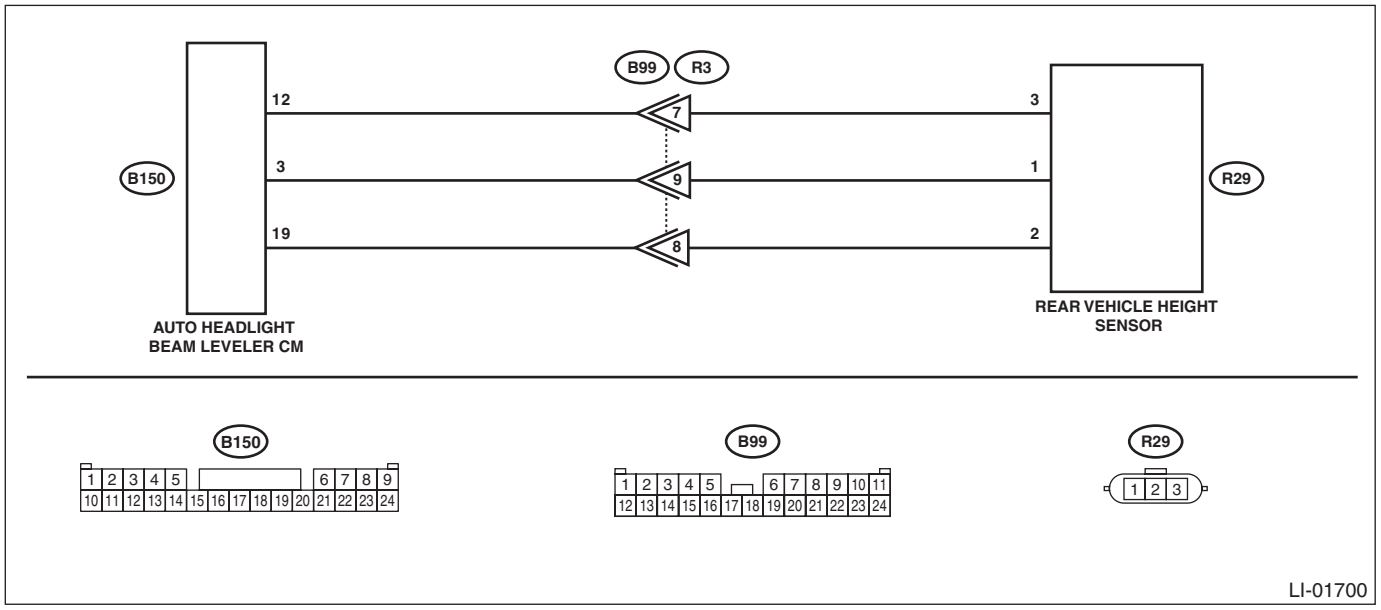

Step		Check	Yes	No
1	**CHECK DTC.** 1) Turn the ignition switch OFF → ON. 2) Turn on the headlight low beam. 3) Using the Subaru Select Monitor, clear the auto headlight beam leveler system memory. <Ref. to AL(diag)-11, Clear Memory Mode.> 4) Turn the ignition switch to OFF → ON. 5) Read the DTC using Subaru Select Monitor. <Ref. to AL(diag)-10, Read Diagnostic Trouble Code (DTC).>	Is DTC B2902 displayed? (Current malfunction)	Go to step **2**.	Even if DTC is displayed, the circuit has returned to a normal condition at this time. Reproduce the failure, and then perform the diagnosis again. NOTE: In this case, temporary poor contact of connector, temporary open or short circuit of harness may be the cause.
2	**CHECK CURRENT DATA.** Display «R Sensor Signal» using Subaru Select Monitor. <Ref. to AL(diag)-13, Read Current Data.>	Does the data indicate the standard value (approx. 2.5 V when on a level road with one person in the vehicle)?	Replace the auto headlight beam leveler CM. <Ref. to LI-74, Auto Headlight Beam Leveler Control Module.>	Go to step **3**.

	Step	Check	Yes	No
3	**CHECK CURRENT DATA.** 1) Display «R Sensor Signal» using Subaru Select Monitor. <Ref. to AL(diag)-13, Read Current Data.> 2) Change the vehicle posture.	Does the data change?	Go to step **6**.	Go to step **4**.
4	**CHECK OUTPUT VOLTAGE BETWEEN AUTO HEADLIGHT BEAM LEVELER CM AND VEHICLE HEIGHT SENSOR.** 1) Disconnect the vehicle height sensor connector. 2) Turn the ignition switch to ON. 3) Measure the voltage between the vehicle height sensor connector and chassis ground. ***Connector & terminal*** ***(R29) No. 3 (+) — Chassis ground (–):***	Is the voltage 5±0.25 V?	Go to step **5**.	Replace the auto headlight beam leveler CM. <Ref. to LI-74, Auto Headlight Beam Leveler Control Module.>
5	**CHECK REAR HEIGHT SENSOR.** 1) Remove the rear vehicle height sensor. 2) Perform the inspection of rear height sensor unit. <Ref. to LI-78, INSPECTION, Rear Height Sensor.>	Is the check result OK?	Go to step **6**.	Replace the rear height sensor. <Ref. to LI-77, Rear Height Sensor.>
6	**CHECK HARNESS (OPEN CIRCUIT).** 1) Disconnect the auto headlight beam leveler CM connector. 2) Using a tester, measure the resistance between the auto headlight beam leveler CM connector and rear height sensor connector. ***Connector & terminal*** ***(B150) No. 3 — (R29) No. 1:*** ***(B150) No. 19 — (R29) No. 2:*** ***(B150) No. 12 — (R29) No. 3:***	Is there continuity?	Go to step **7**.	Repair or replace the open circuit of harness.
7	**CHECK HARNESS (GROUND SHORT CIRCUIT).** Using a tester, measure the resistance between the auto headlight beam leveler CM connector and chassis ground. ***Connector & terminal*** ***(B150) No. 3 — Chassis ground:*** ***(B150) No. 19 — Chassis ground:*** ***(B150) No. 12 — Chassis ground:***	Is the resistance 10 kΩ or more?	Replace the auto headlight beam leveler CM. <Ref. to LI-74, Auto Headlight Beam Leveler Control Module.>	Repair or replace the short circuit of the harness.

H: DTC B2904 LED HEADLIGHT CIRCUIT RH

DTC DETECTING CONDITION:

LED headlight (RH) malfunction signal line error is detected for 2 seconds or more.

TROUBLE SYMPTOM:

LED headlight malfunction, LED headlight indicator illuminates.

CAUTION:

- **Initialization is required after replacing the auto headlight beam leveler CM.**
- **After replacing the headlight assembly, headlight beam adjustment is required.**

WIRING DIAGRAM:

- Headlight beam leveler system <Ref. to WI-238, WIRING DIAGRAM, Headlight Beam Leveler System.>
- Headlight system <Ref. to WI-240, WIRING DIAGRAM, Headlight System.>

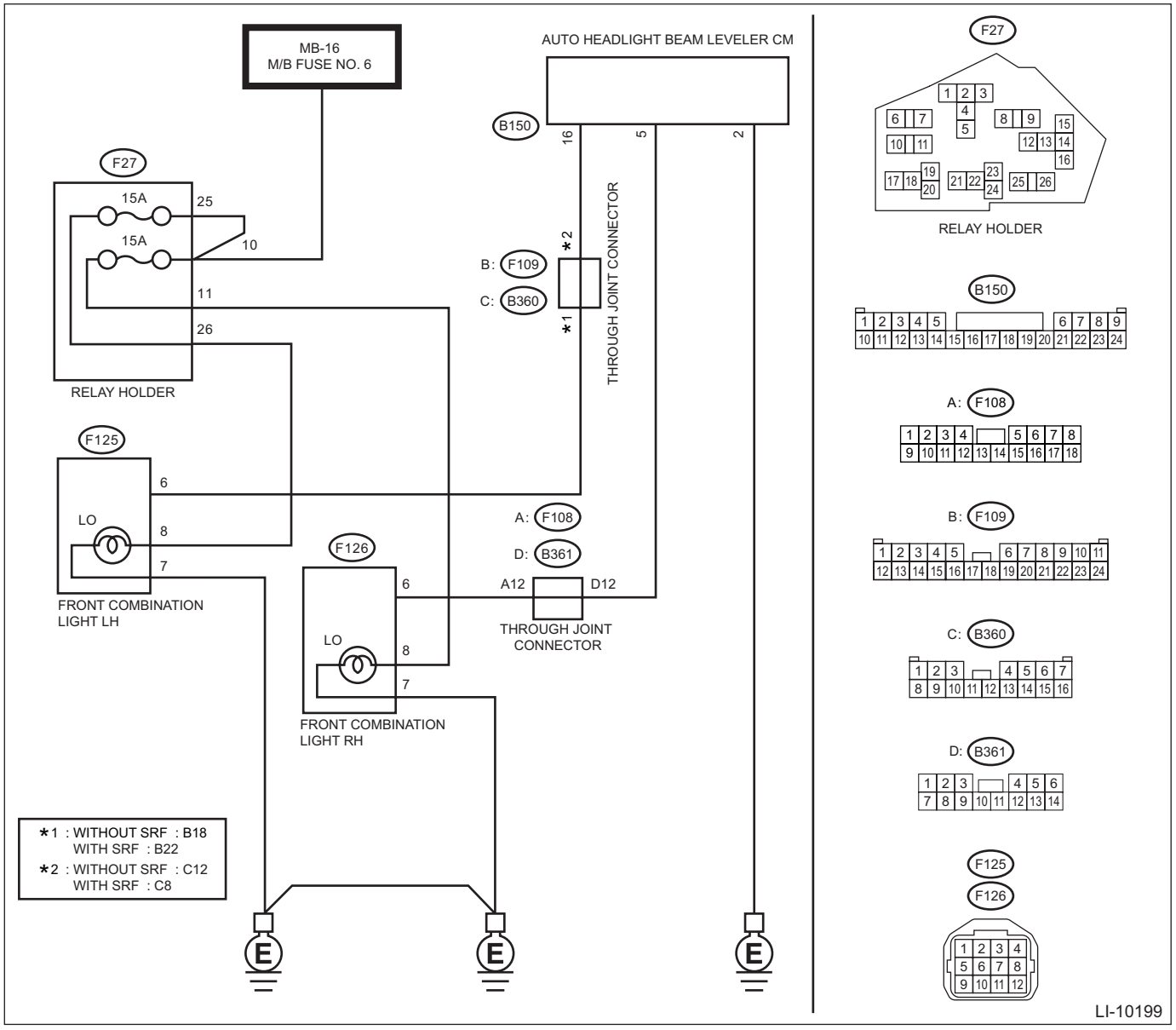

	Step	Check	Yes	No
1	**CHECK DTC.** 1) Turn the ignition switch to OFF. 2) Using the Subaru Select Monitor, clear the auto headlight beam leveler system memory. <Ref. to AL(diag)-11, Clear Memory Mode.> 3) Turn the ignition switch to OFF → ON. 4) Turn the lighting switch to 2 (HEAD). 5) Read the DTC using Subaru Select Monitor. <Ref. to AL(diag)-10, Read Diagnostic Trouble Code (DTC).>	Is DTC B2904 displayed? (Current malfunction)	Go to step **2**.	Even if DTC is displayed, the circuit has returned to a normal condition at this time. Reproduce the failure, and then perform the diagnosis again. NOTE: In this case, temporary poor contact of connector, temporary open or short circuit of harness may be the cause.
2	**CHECK CURRENT DATA.** Display «LED HEADLAMP(RH) error Signal» using Subaru Select Monitor. <Ref. to AL(diag)-13, Read Current Data.>	Does the data indicate «Light off»?	Replace the auto headlight beam leveler CM. <Ref. to LI-74, Auto Headlight Beam Leveler Control Module.>	Go to step **3**.
3	**CHECK THE HEADLIGHT SYSTEM POWER SUPPLY CIRCUIT.** 1) Disconnect the headlight assembly RH connector. 2) Turn the ignition switch to OFF → ON. 3) Turn the lighting switch to 2 (HEAD). 4) Using a tester, measure the voltage between headlight assembly LH connector and chassis ground. ***Connector & terminal*** ***(F126) No. 8 (+) — Chassis ground (–):***	Is the voltage 10 — 13 V?	Go to step **4**.	Repair the headlight system.
4	**CHECK HARNESS (OPEN CIRCUIT).** Using a tester, measure the resistance between headlight assembly RH connector and chassis ground. ***Connector & terminal*** ***(F126) No. 7 — Chassis ground:***	Is the resistance less than 10 Ω?	Go to step **5**.	Repair or replace the open circuit of harness.
5	**CHECK HEADLIGHT SYSTEM.** 1) Connect the headlight assembly RH connector. 2) Turn the ignition switch to OFF → ON. 3) Turn the lighting switch to 2 (HEAD).	Does the headlight come on?	Go to step **6**.	Replace the headlight. <Ref. to LI-25, Headlight Assembly.>
6	**CHECK HARNESS (OPEN CIRCUIT).** 1) Disconnect the auto headlight beam leveler CM connector. 2) Using a tester, measure the resistance between auto headlight beam leveler CM connector and headlight assembly RH connector. ***Connector & terminal*** ***(B150) No. 5 — (F126) No. 6:***	Is the resistance less than 10 Ω?	Go to step **7**.	Repair or replace the open circuit of harness.

	Step	Check	Yes	No
7	**CHECK HARNESS (OPEN CIRCUIT).** Using a tester, measure the resistance between the auto headlight beam leveler CM connector and chassis ground. ***Connector & terminal*** ***(B150) No. 2 — Chassis ground:***	Is the resistance less than 10 Ω?	Replace the auto headlight beam leveler CM. <Ref. to LI-74, Auto Headlight Beam Leveler Control Module.>	Repair or replace the open circuit of harness.

I: DTC B2905 LED HEAD LIGHT CIRCUIT LH

DTC DETECTING CONDITION:
LED headlight (LH) malfunction signal line error is detected for 2 seconds or more.
TROUBLE SYMPTOM:
LED headlight malfunction, LED headlight indicator illuminates.

CAUTION:
- **Initialization is required after replacing the auto headlight beam leveler CM.**
- **After replacing the headlight assembly, headlight beam adjustment is required.**

WIRING DIAGRAM:
- Headlight beam leveler system <Ref. to WI-238, WIRING DIAGRAM, Headlight Beam Leveler System.>
- Headlight system <Ref. to WI-240, WIRING DIAGRAM, Headlight System.>

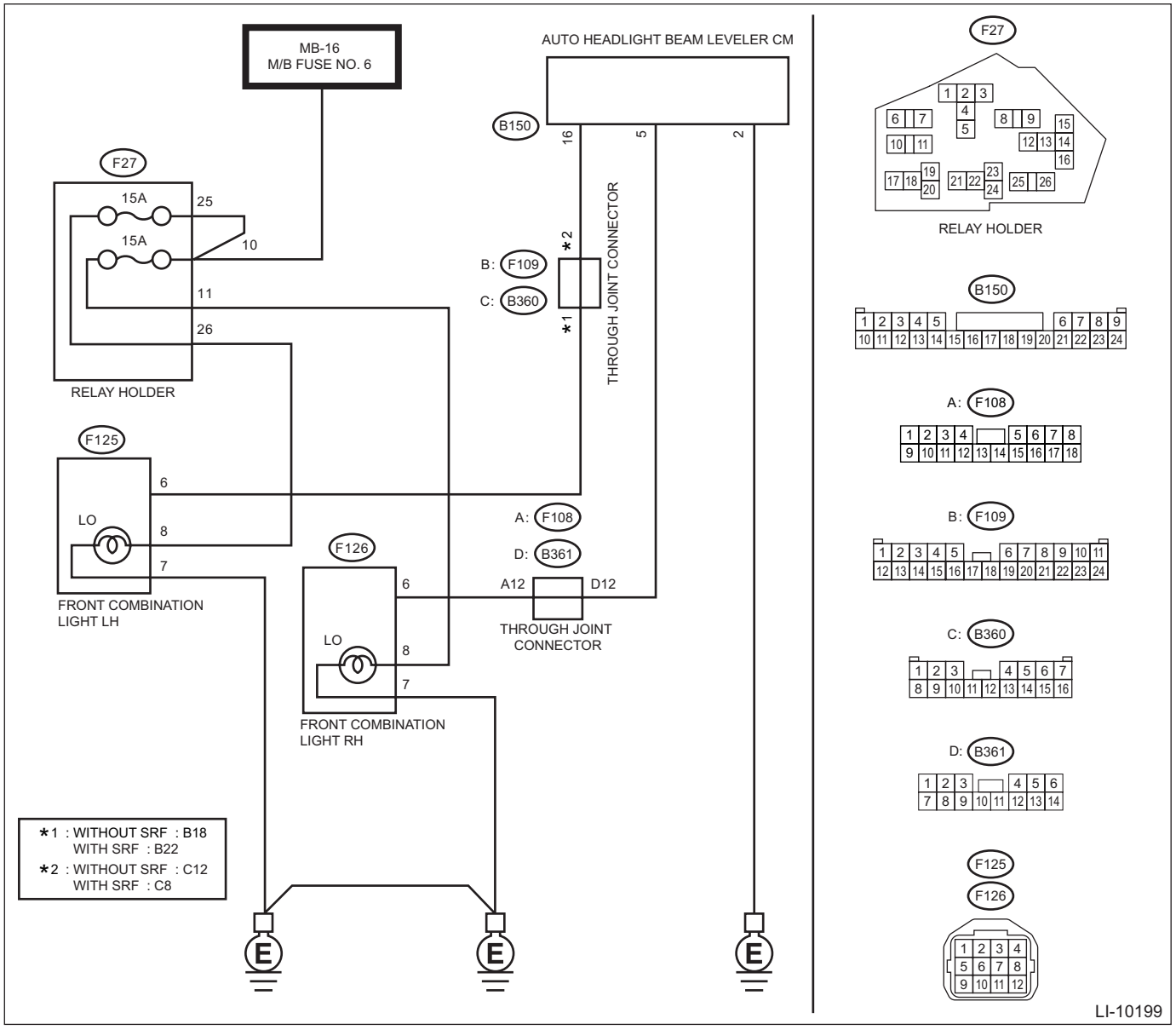

	Step	Check	Yes	No
1	**CHECK DTC.** 1) Turn the ignition switch to OFF. 2) Using the Subaru Select Monitor, clear the auto headlight beam leveler system memory. <Ref. to AL(diag)-11, Clear Memory Mode.> 3) Turn the ignition switch to OFF → ON. 4) Turn the lighting switch to 2 (HEAD). 5) Read the DTC using Subaru Select Monitor. <Ref. to AL(diag)-10, Read Diagnostic Trouble Code (DTC).>	Is DTC B2905 displayed? (Current malfunction)	Go to step **2**.	Even if DTC is displayed, the circuit has returned to a normal condition at this time. Reproduce the failure, and then perform the diagnosis again. NOTE: In this case, temporary poor contact of connector, temporary open or short circuit of harness may be the cause.
2	**CHECK CURRENT DATA.** Display «LED HEADLAMP(LH) error Signal» using Subaru Select Monitor. <Ref. to AL(diag)-13, Read Current Data.>	Does the data indicate «Light off»?	Replace the auto headlight beam leveler CM. <Ref. to LI-74, Auto Headlight Beam Leveler Control Module.>	Go to step **3**.
3	**CHECK THE HEADLIGHT SYSTEM POWER SUPPLY CIRCUIT.** 1) Disconnect the headlight assembly LH connector. 2) Turn the ignition switch to OFF → ON. 3) Turn the lighting switch to 2 (HEAD). 4) Using a tester, measure the voltage between headlight assembly LH connector and chassis ground. ***Connector & terminal*** ***(F125) No. 8 (+) — Chassis ground (–):***	Is the voltage 10 — 13 V?	Go to step **4**.	Repair the headlight system.
4	**CHECK HARNESS (OPEN CIRCUIT).** Using a tester, measure the resistance between headlight assembly LH connector and chassis ground. ***Connector & terminal*** ***(F125) No. 7 — Chassis ground:***	Is the resistance less than 10 Ω?	Go to step **5**.	Repair or replace the open circuit of harness.
5	**CHECK HEADLIGHT SYSTEM.** 1) Connect the headlight assembly LH connector. 2) Turn the ignition switch to OFF → ON. 3) Turn the lighting switch to 2 (HEAD).	Does the headlight come on?	Go to step **6**.	Replace the headlight. <Ref. to LI-25, Headlight Assembly.>
6	**CHECK HARNESS (OPEN CIRCUIT).** 1) Disconnect the auto headlight beam leveler CM connector. 2) Using a tester, measure the resistance between auto headlight beam leveler CM connector and headlight assembly LH connector. ***Connector & terminal*** ***(B150) No. 16 — (F125) No. 6:***	Is the resistance less than 10 Ω?	Go to step **7**.	Repair or replace the open circuit of harness.

	Step	Check	Yes	No
7	**CHECK HARNESS (OPEN CIRCUIT).** Using a tester, measure the resistance between the auto headlight beam leveler CM connector and chassis ground. ***Connector & terminal*** ***(B150) No. 2 — Chassis ground:***	Is the resistance less than 10 Ω?	Replace the auto headlight beam leveler CM. <Ref. to LI-74, Auto Headlight Beam Leveler Control Module.>	Repair or replace the open circuit of harness.

13.Diagnostics with Phenomenon

A: INSPECTION

1. BEAM LEVEL CONTROL DOES NOT FUNCTION

CAUTION:
- **Before performing diagnosis, check the fuse in this circuit.**
- **Initialization is required after replacing the auto headlight beam leveler CM.**

WIRING DIAGRAM:
Headlight beam leveler system <Ref. to WI-238, WIRING DIAGRAM, Headlight Beam Leveler System.>

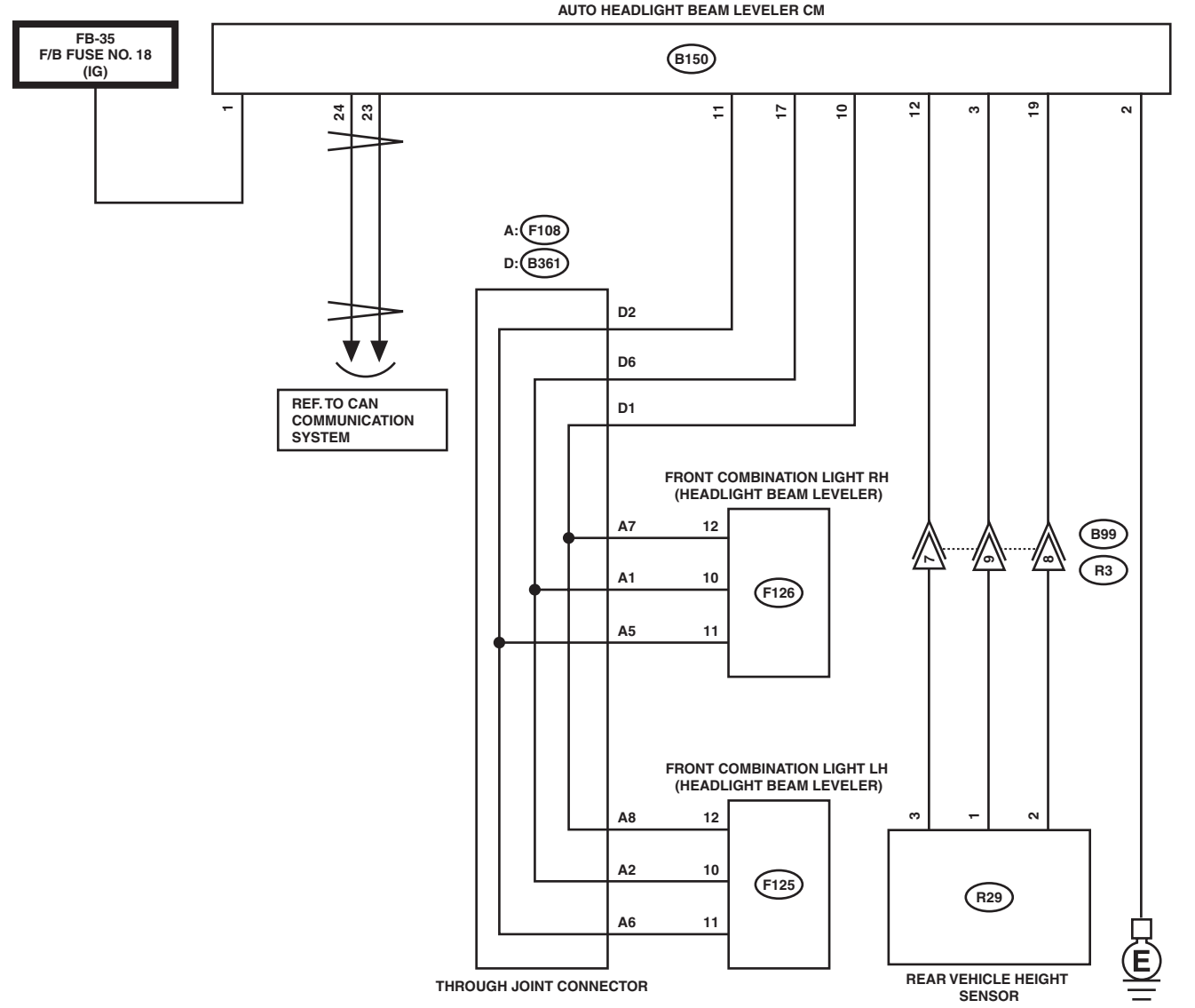

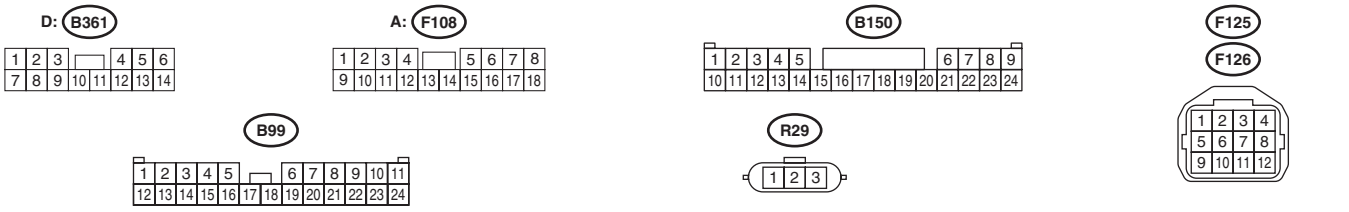

LI-01701

Step		Check	Yes	No
1	**CHECK CURRENT DATA.** Display «Control module voltage» using Subaru Select Monitor. <Ref. to AL(diag)-13, Read Current Data.>	Does the current data indicate the standard value?	Go to step **3**.	Go to step **2**.

	Step	Check	Yes	No
2	**CHECK HARNESS BETWEEN POWER SUPPLY — AUTO HEADLIGHT BEAM LEVELER CM.** 1) Disconnect the auto headlight beam leveler CM connector. 2) Turn the ignition switch to ON. 3) Measure the voltage between the auto headlight beam leveler CM connector and chassis ground. ***Connector & terminal*** ***(B150) No. 1 (+) — Chassis ground (–):***	Is the voltage 8 — 16 V?	Replace the auto headlight beam leveler CM. <Ref. to LI-74, Auto Headlight Beam Leveler Control Module.>	Repair or replace the harness.
3	**CHECK INDICATOR OUTPUT.** Turn the ignition switch to ON.	Does the warning indicator turn on for three seconds?	Go to step **5**.	Go to step **4**.
4	**CHECK CURRENT DATA.** 1) Display «Indicator Signal» using Subaru Select Monitor. <Ref. to AL(diag)-13, Read Current Data.> 2) Turn the ignition switch to ON.	Is it set as ON for 3 seconds?	Check the combination meter. <Ref. to IDI(diag)-2, Basic Diagnostic Procedure.>	Replace the auto headlight beam leveler CM. <Ref. to LI-74, Auto Headlight Beam Leveler Control Module.>
5	**CHECK INDICATOR OUTPUT.** Leave the ignition switch to ON for 10 seconds.	Does the warning indicator light go off?	Go to step **6**.	Go to step **10**.
6	**CHECK HEADLIGHT ASSEMBLY (ACTUATOR) DRIVE.** 1) Connect the auto headlight beam leveler CM connector. 2) Turn the ignition switch to ON, and within 10 seconds, repeat the OFF → 2 (HEAD) operation of headlight switch 5 times. 3) Check that the headlight beam drops once, then returns to normal. 4) Then, after waiting for 30 seconds or more with the ignition ON, turn the ignition switch to OFF.	Does the headlight beam drop down once, and then return?	Replace the auto headlight beam leveler CM. <Ref. to LI-74, Auto Headlight Beam Leveler Control Module.>	Go to step **7**.
7	**CHECK HEADLIGHT ASSEMBLY (ACTUATOR) OUTPUT.** 1) Display «Actuator Signal» using Subaru Select Monitor. <Ref. to AL(diag)-13, Read Current Data.> 2) Turn the ignition switch to ON, and within 10 seconds, repeat the OFF → 2 (HEAD) operation of headlight switch 5 times. 3) Check that the headlight beam drops once, then returns to normal. 4) Then, after waiting for 30 seconds or more with the ignition ON, turn the ignition switch to OFF.	Does the current data indicate the standard value? (Does the value change at 10 — 90%?)	Go to step **8**.	Replace the auto headlight beam leveler CM. <Ref. to LI-74, Auto Headlight Beam Leveler Control Module.>
8	**CHECK OUTPUT VOLTAGE BETWEEN HEADLIGHT ASSEMBLY (ACTUATOR).** 1) Disconnect the auto headlight beam leveler CM connector. 2) Turn the ignition switch to ON. 3) Measure the voltage between the auto headlight beam leveler CM connector and chassis ground. ***Connector & terminal*** ***(B150) No. 10 (+) — Chassis ground (–):***	Is the voltage 8 — 16 V?	Replace the headlight assembly. <Ref. to LI-25, Headlight Assembly.>	Go to step **9**.

	Step	Check	Yes	No
9	**CHECK HARNESS BETWEEN AUTO HEADLIGHT BEAM LEVELER CM AND HEADLIGHT ASSEMBLY (ACTUATOR) (OPEN CIRCUIT).** 1) Disconnect the connector of headlight assembly. 2) Measure the continuity between the auto headlight beam leveler CM connector and headlight assembly (actuator) connector. ***Connector & terminal*** ***• Headlight beam leveler RH*** ***(B150) No. 10 — (F126) No. 12:*** ***(B150) No. 17 — (F126) No. 10:*** ***(B150) No. 11 — (F126) No. 11:*** ***• Headlight beam leveler LH*** ***(B150) No. 10 — (F125) No. 12:*** ***(B150) No. 17 — (F125) No. 10:*** ***(B150) No. 11 — (F125) No. 11:***	Is there continuity?	Replace the auto headlight beam leveler CM. <Ref. to LI-74, Auto Headlight Beam Leveler Control Module.>	Repair the open circuit or poor contact of the connector in the harness between headlight assembly and auto headlight beam leveler CM.
10	**CHECK DTC.** Read the DTC using Subaru Select Monitor. <Ref. to AL(diag)-10, Read Diagnostic Trouble Code (DTC).>	Is DTC displayed?	Perform the diagnosis for the displayed DTCs. <Ref. to AL(diag)-14, LIST, List of Diagnostic Trouble Code (DTC).>	Replace the auto headlight beam leveler CM. <Ref. to LI-74, Auto Headlight Beam Leveler Control Module.>

WIPER AND WASHER SYSTEMS

WW

		Page
1.	General Description	2
2.	Relay and Fuse	7
3.	Wiper and Washer System	9
4.	Combination Switch (Wiper)	10
5.	Wiper Blade	14
6.	Washer Tank and Motor	16
7.	Front Wiper Arm	21
8.	Front Wiper Motor and Link	25
9.	Front Washer Nozzle and Hose	30

1. General Description

A: SPECIFICATION

Front wiper motor	Input	12 V — 72 W or less
Front washer motor	Pump type	Centrifugal
	Input	12 V — 60 W or less

B: COMPONENT

1. FRONT WIPER

- Models without EyeSight

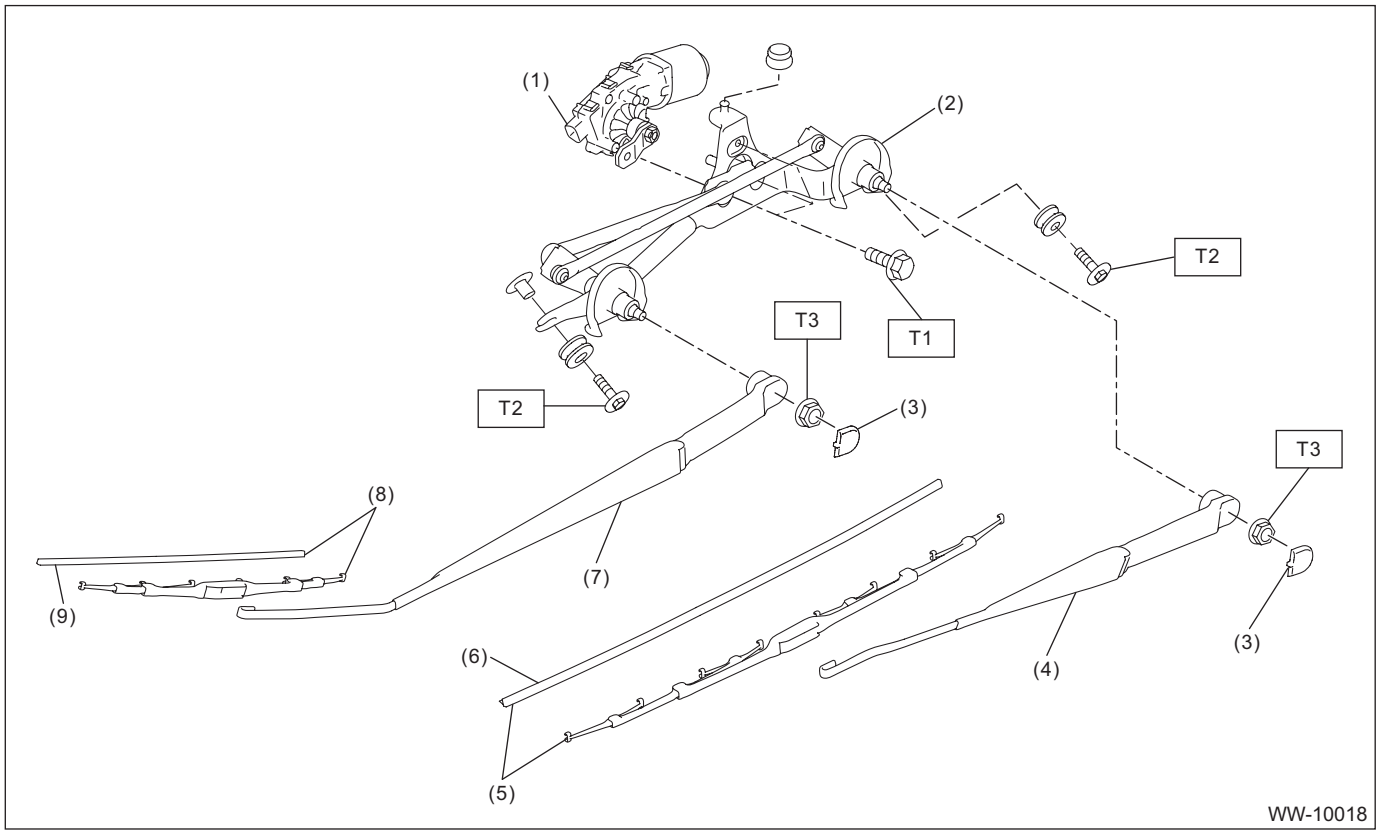

(1) Motor ASSY - windshield wiper
(2) Link ASSY - windshield wiper
(3) Cover - windshield wiper arm
(4) Arm ASSY - windshield wiper driver
(5) Blade ASSY - windshield wiper driver
(6) Rubber ASSY - windshield wiper driver
(7) Arm ASSY - windshield wiper assistor
(8) Blade ASSY - windshield wiper assistor
(9) Rubber ASSY - windshield wiper assistor

Tightening torque: N·m (kgf-m, ft-lb)

T1: 5.5 (0.6, 4.1)
T2: 6 (0.6, 4.4)
T3: 26 (2.7, 19.2)

- Models with EyeSight

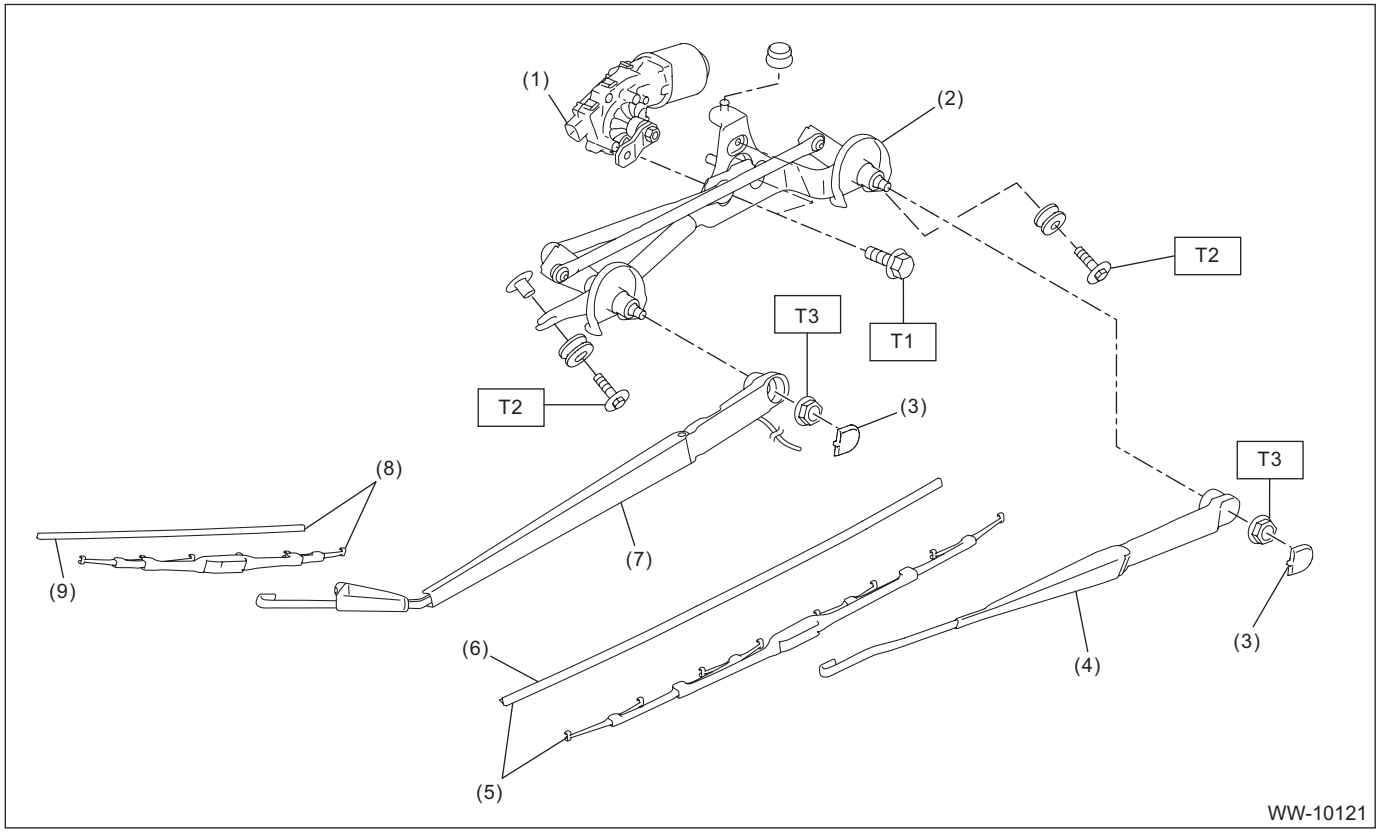

(1)	Motor ASSY - windshield wiper	(6)	Rubber ASSY - windshield wiper driver	***Tightening torque: N·m (kgf-m, ft-lb)***
(2)	Link ASSY - windshield wiper	(7)	Arm ASSY - windshield wiper assistor	***T1: 5.5 (0.6, 4.1)***
(3)	Cover - windshield wiper arm	(8)	Blade ASSY - windshield wiper assistor	***T2: 6 (0.6, 4.4)***
(4)	Arm ASSY - windshield wiper driver	(9)	Rubber ASSY - windshield wiper assistor	***T3: 26 (2.7, 19.2)***
(5)	Blade ASSY - windshield wiper driver			

2. WASHER TANK

- Models without EyeSight

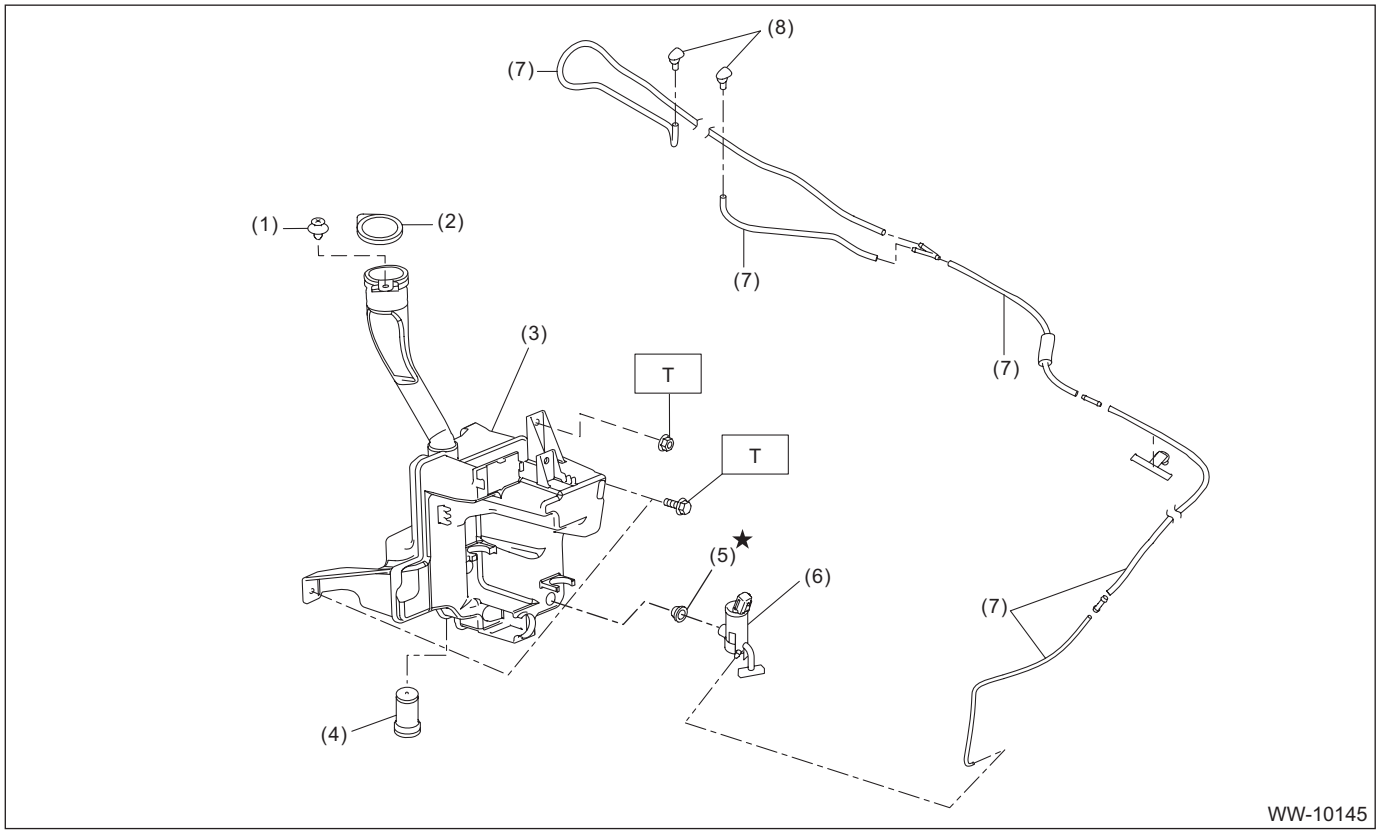

(1)	Clip	(5)	Packing - washer motor
(2)	Holder - windshield washer tank	(6)	Motor pump ASSY - washer front
(3)	Tank - washer	(7)	Hose - windshield washer
(4)	Sensor - washer tank	(8)	Nozzle - windshield washer

Tightening torque: N·m (kgf-m, ft-lb)
T: 6 (0.6, 4.4)

- Models with EyeSight

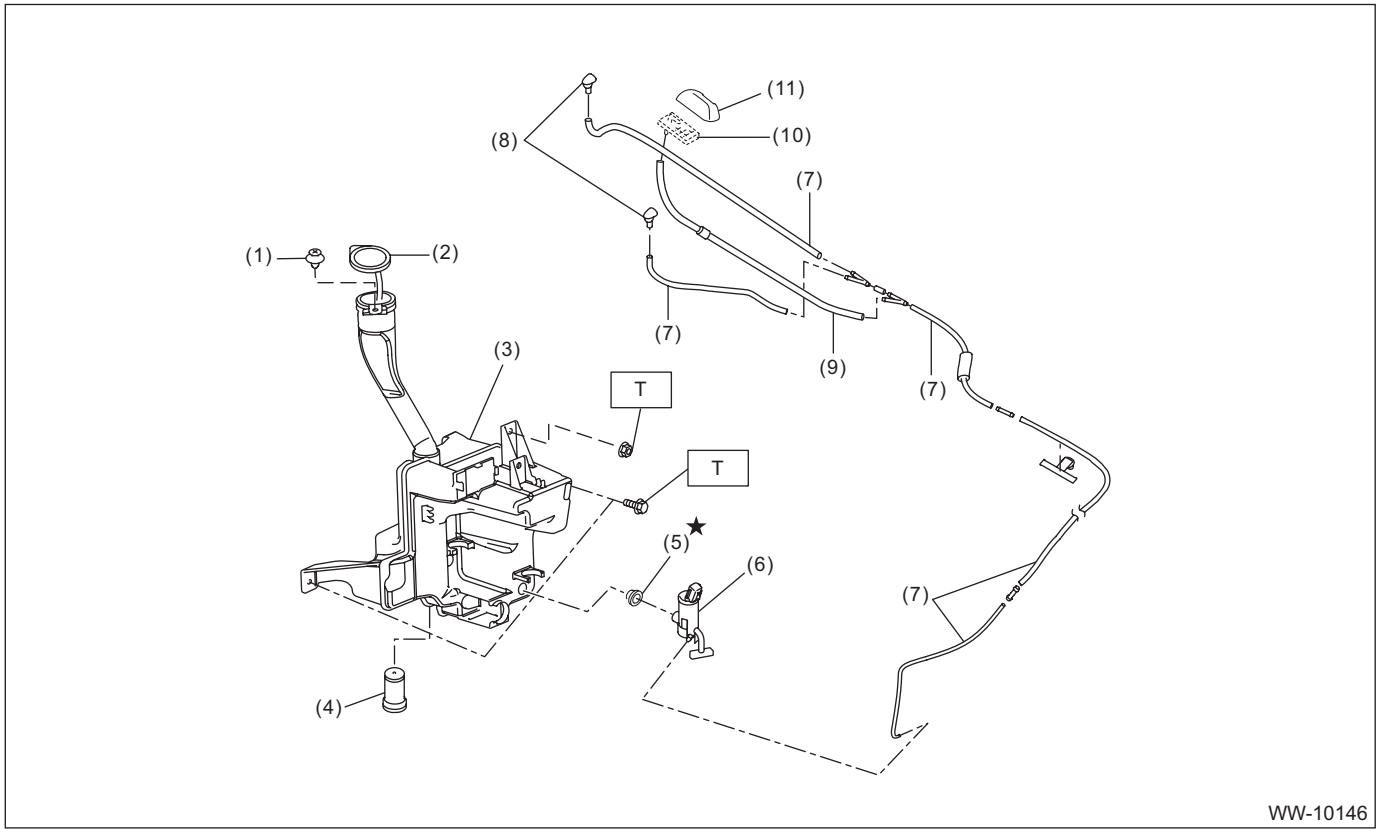

(1) Clip
(2) Holder - windshield washer tank
(3) Tank - washer
(4) Sensor - washer tank
(5) Packing - washer motor
(6) Motor pump ASSY - washer front
(7) Hose - windshield washer
(8) Nozzle - windshield washer
(9) Hose - wiper arm washer
(10) Joint - washer hose
(11) Cover - joint

Tightening torque: N·m (kgf-m, ft-lb)
T: 6 (0.6, 4.4)

C: CAUTION

- Before performing vehicle maintenance, turn the ignition switch to OFF and disconnect the negative terminal from battery. <Ref. to NT-6, BATTERY, NOTE, Note.>
  - For model with battery sensor, disconnect the ground terminal from battery sensor.
- Be careful of the following items. Failing to do so may cause the airbag system malfunction.
  - Yellow connectors and harnesses with yellow tapes around them are the connectors and harnesses for the airbag system. When using a tester on these circuits, follow the cautions of “AIRBAG SYSTEM”. <Ref. to AB-9, CAUTION, General Description.>
  - Be careful not to damage the airbag system wiring harness when servicing the electrical parts around the steering column.
- When connecting the pipe hoses, be careful not to cause bend or blockage.
- If even a small amount of silicon oil or grease enters the tank - washer and the washer fluid passages, an oil film will be formed on the glass and will cause the wiper to chatter and judder. Make sure that no oil comes into contact with the system.

D: PREPARATION TOOL

1. SPECIAL TOOL

ILLUSTRATION	TOOL NUMBER	DESCRIPTION	REMARKS
 STSSM4	—	SUBARU SELECT MONITOR 4	Used for setting of each function and trouble-shooting for electrical system. NOTE: For detailed operation procedures of Subaru Select Monitor 4, refer to “Application help”.

2. GENERAL TOOL

TOOL NAME	REMARKS
Circuit tester	Used for measuring resistance, voltage and current.
DST-i	Used together with Subaru Select Monitor 4.

2. Relay and Fuse

A: LOCATION

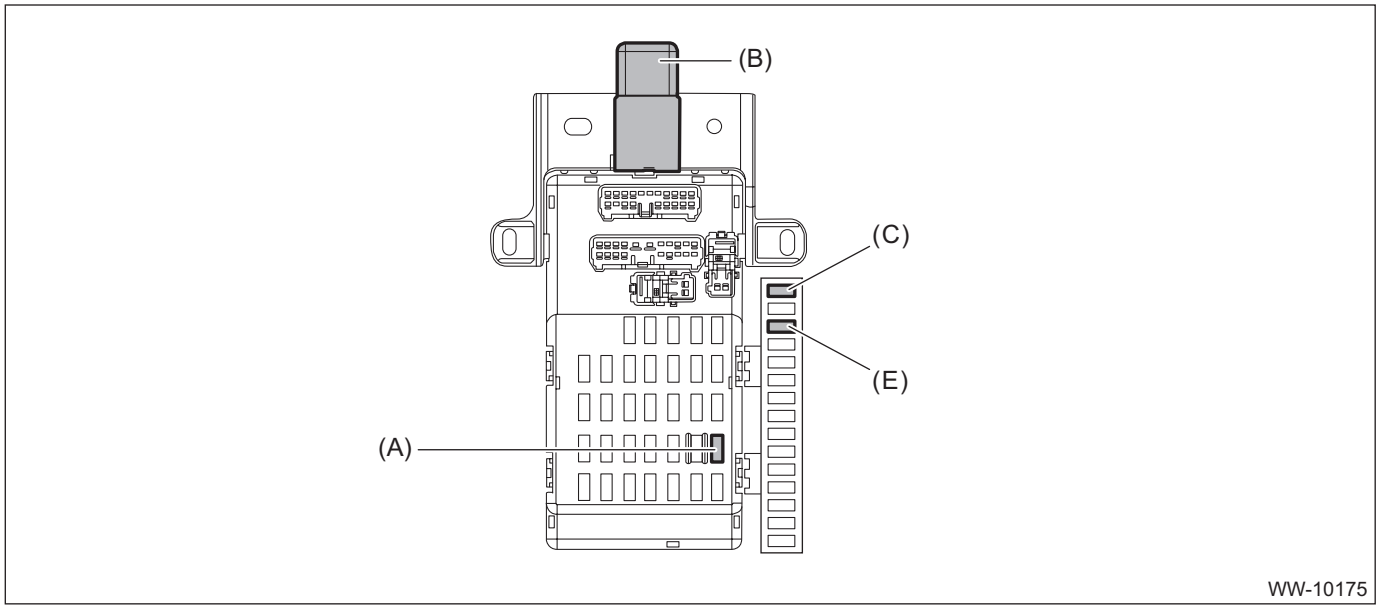

Relay & fuse box	Fuse 7.5 A (wiper)	(A)
Relay holder	Wiper relay	(B)
Fuse holder	Fuse 30 A (front wiper)	(C)
	Fuse 15 A (front washer)	(D)

NOTE:
For other related fuses, refer to the wiring diagram. <Ref. to WI-31, Power Supply Circuit.>

B: INSPECTION

1. CHECK FUSE

1) Remove the fuse and inspect visually.
2) If the fuse is blown out, replace the fuse.

2. CHECK RELAY

1) Measure the resistance between relay terminals.

Terminal No.	Inspection conditions	Standard	Circuit
1 — 2	Always	1 MΩ or more	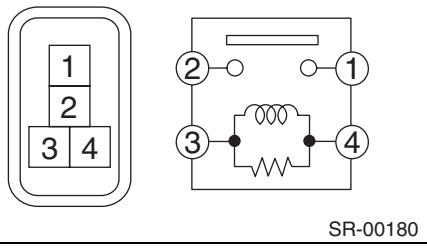 SR-00180
1 — 2	Apply battery voltage between terminals 4 and 3.	Less than 1 Ω	

Terminal No.	Inspection conditions	Standard	Circuit
1 — 2	Always	1 MΩ or more	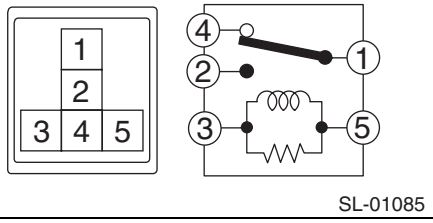 SL-01085
1 — 4	Always	Less than 1 Ω	
1 — 2	Apply battery voltage between terminals 3 and 5.	Less than 1 Ω	

2) Replace the relay if the inspection result is not within the standard value.

3. Wiper and Washer System

A: WIRING DIAGRAM

1. WIPER AND WASHER (FRONT)

Refer to “Front Wiper and Washer System” in the wiring diagram. <Ref. to WI-233, WIRING DIAGRAM, Front Wiper and Washer System.>

B: INSPECTION

Symptoms	Repair order
Wiper and washers do not operate.	1. Wiper fuse 2. Combination switch 3. Motor assembly - wiper 4. Wiring harness
Wipers do not operate in LO or HI.	1. Combination switch 2. Motor assembly - wiper 3. Wiring harness
Wipers do not operate in INT.	1. Combination switch 2. Motor assembly - wiper 3. Wiring harness
Washer motor does not operate.	1. Combination switch 2. Motor pump assembly - washer 3. Wiring harness
Wipers do not operate when washer switch is ON.	1. Motor assembly - wiper 2. Wiring harness
Washer fluid spray does not operate properly.	1. Motor pump assembly - washer 2. Hose assembly - washer 3. Nozzle - washer
Wiper chatters or judders during operation.	1. Oil film and dirt on the glass 2. Arm assembly - windshield wiper 3. Motor assembly - wiper

C: NOTE

For procedure of each component of the wiper and washer system, refer to the respective sections.

- Combination switch (wiper): <Ref. to WW-10, Combination Switch (Wiper).>
- Wiper blade: <Ref. to WW-14, Wiper Blade.>
- Front wiper arm: <Ref. to WW-21, Front Wiper Arm.>
- Front wiper motor and link: <Ref. to WW-25, Front Wiper Motor and Link.>
- Washer tank and motor: <Ref. to WW-16, Washer Tank and Motor.>
- Front washer nozzle & hose: <Ref. to WW-30, Front Washer Nozzle and Hose.>

4. Combination Switch (Wiper)

A: REMOVAL

1) Disconnect the ground cable from battery. <Ref. to NT-6, BATTERY, NOTE, Note.>

NOTE:
For model with battery sensor, disconnect the ground terminal from battery sensor.

2) Remove the cover assembly - column.
   (1) Release the clips, and remove the cover assembly - steering UPR.

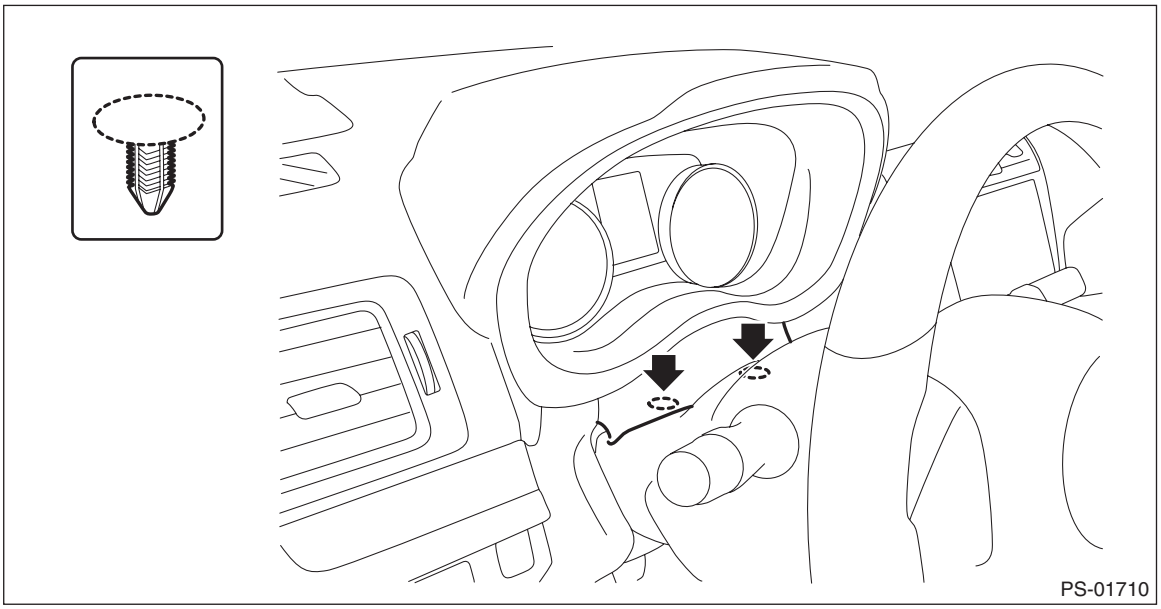

   (2) Remove the screws by turning the steering wheel to right and left.
   (3) Remove the cap - key cylinder (a). (Model with keyless access with push button start)
   (4) Release the claw, and remove the cover assembly - column UPR and the cover assembly - column LWR.

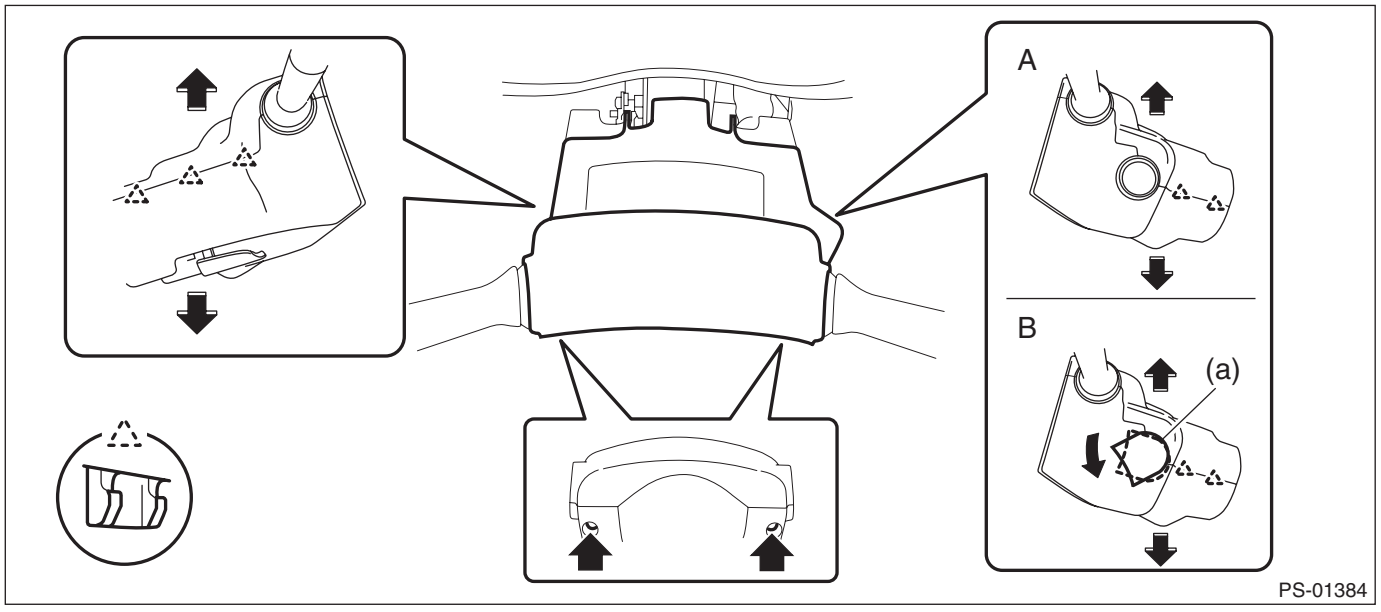

A Model without keyless access with push button start
B Model with keyless access with push button start

3) Remove the switch assembly - combination wiper select.
   (1) Disconnect the connector.
   (2) Release the claws, and pull out the switch assembly - combination wiper select.

CAUTION:
Do not press the claws with excessive force. They may be damaged.

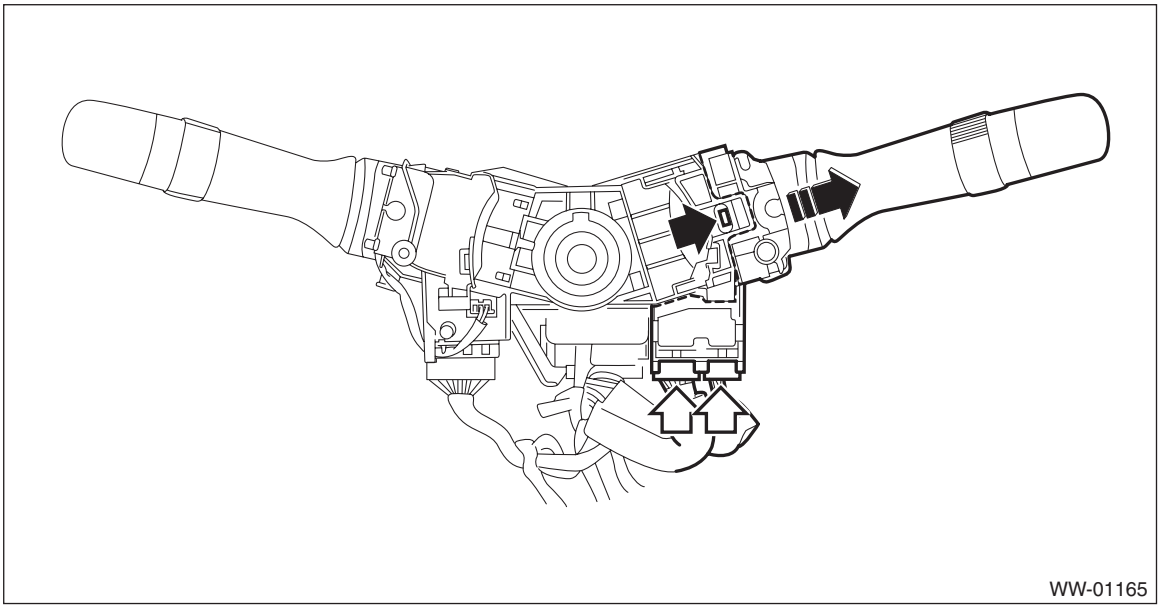

B: INSTALLATION

1) Install the switch assembly - combination wiper select.
2) Install the cover assembly - column.
3) Connect the battery ground terminal. <Ref. to NT-6, BATTERY, NOTE, Note.>

C: INSPECTION

1. INSPECTION OF SWITCH UNIT

1) Operate the switches to check the continuity between terminals.

Preparation tool:
Circuit tester

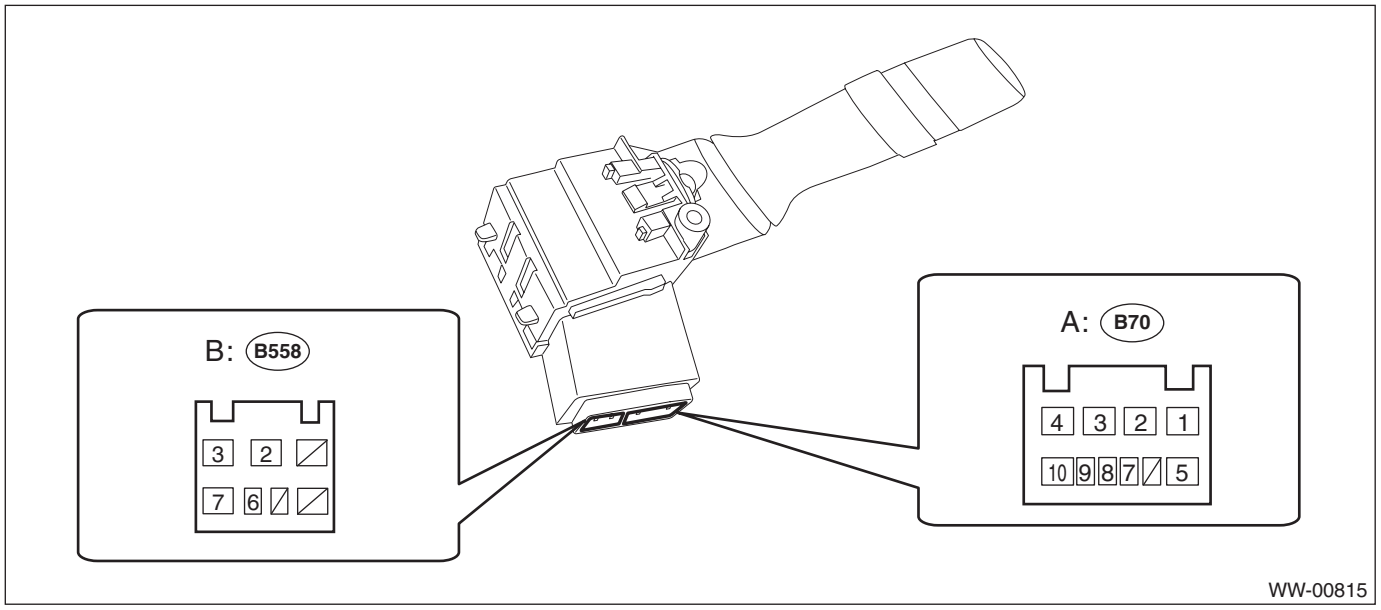

Switch position	Terminal No.	Standard
OFF	A1 and A3	Less than 1 Ω
INT	A1 and A3	Less than 1 Ω
LO	A2 and A3	Less than 1 Ω
HI	A2 and A4	Less than 1 Ω
Washer ON	B3 and B2	Less than 1 Ω

2) Replace the switch if the inspection result is not within the standard value.
3) Install the switch assembly - combination wiper select. <Ref. to WW-11, INSTALLATION, Combination Switch (Wiper).>

2. FRONT WIPER

1) Check with Subaru Select Monitor

NOTE:
For detailed operation procedures, refer to “Application help”.

(1) Check the input signal when the switch assembly - combination wiper select is turned to LO or HI, using the «Data monitor» display.
(2) Does the input signal change corresponding to the switch operation?

- **Yes** → Finish the diagnosis.
- **No** → Check the harness.

2) Check the intermittent operation (inspection of the wiper switch alone)

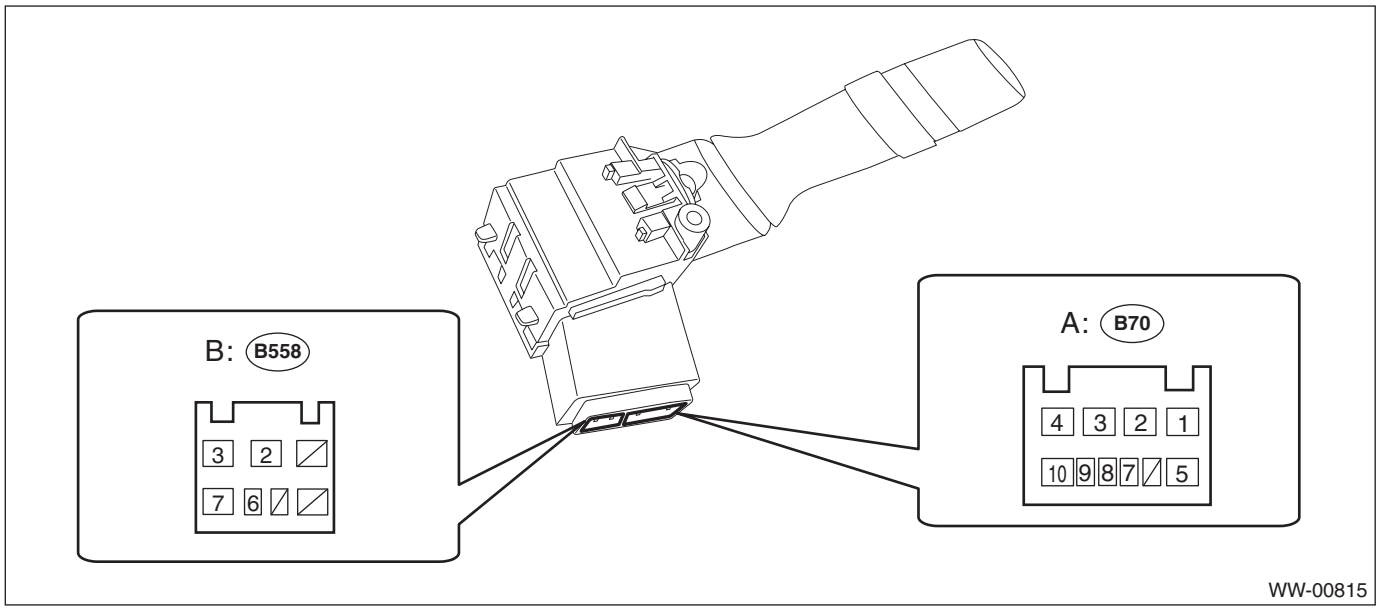

(1) Set the voltmeter between terminals No. A2 (+) and No. B2 (–).
(2) Connect the battery to connector. (Terminal No. A2 (+), terminal No. B2 & A3 (–))
(3) Turn the switch assembly - combination wiper select to INT.
(4) Connect the battery (+) to the terminal No. A2 for 5 seconds.
(5) Connect the battery (–) to the terminal No. B2, and check the voltage between terminals No. A2 and No. A3 during intermittent operation.
(6) Perform step (1) to (5) above when intermittent control switch is in MIN or MAX, and replace the switch if the operation is not as specified.

Intermittent stationary time
MIN: Approx. 2 seconds
MAX: Approx. 16 seconds

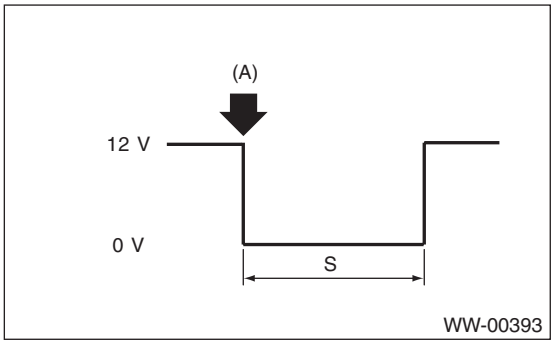

(A): Connect the battery (–) to the terminal No. B2.
S: Intermittent downtime (sec.)

5. Wiper Blade

A: REMOVAL

While pushing the locking clip (A) up, pull out the blade assembly - windshield wiper in the direction of the arrow, and remove it from the arm assembly - windshield wiper.

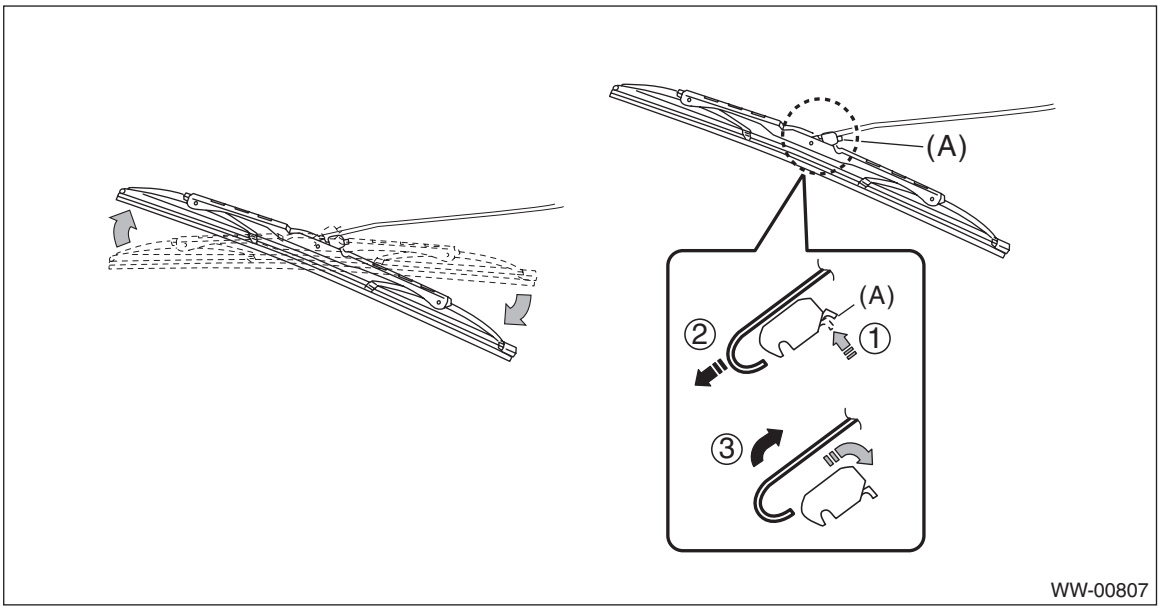

B: INSTALLATION

Install each part in the reverse order of removal.

CAUTION:
Make sure the locking clip is secured.

C: DISASSEMBLY

Pull side (a) of the wiper rubber stopper and remove the rubber assembly - windshield wiper.

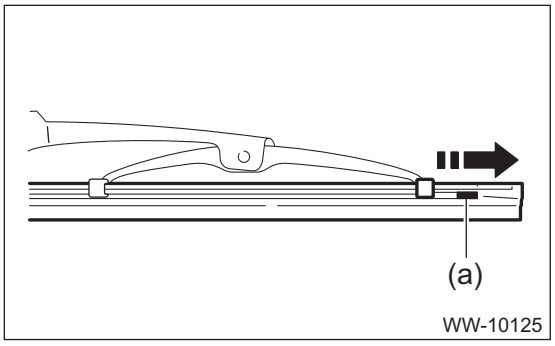

D: ASSEMBLY

1) Insert the rubber assembly - windshield wiper onto the blade - windshield wiper so that the stopper is in the position shown in the figure.

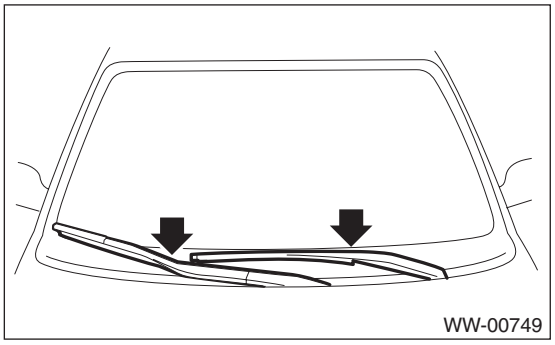

2) Make sure the rubber assembly - windshield wiper is securely fastened to the pull stopper (a).

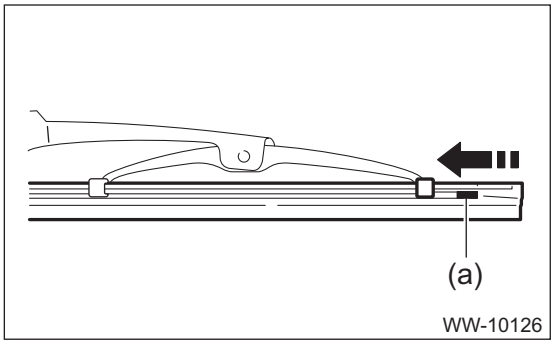

E: INSPECTION

1) Check and clean the rubber assembly - wiper.

CAUTION:
• Do not use organic solvent-based cleaner when cleaning rubber parts in order to avoid rubber part deterioration.
• Clean rubber parts using a soft cloth or paper towel dampened with windshield washer fluid or mild synthetic detergent.

Replace the rubber assembly - wiper if rubber part hardening, deformation or damage is found.
2) Operate the washer system to check if a chattering sound or insufficient wiping occurs.
3) If a chattering sound or insufficient wiping occurs, perform the following procedures.
(1) Make sure that the blade assembly - wiper is not deformed and the movable part moves smoothly.
(2) Remove oil film and dirt from the glass.

CAUTION:
• When powder-type glass cleaner is used, use after having been dissolved in water sufficiently. If it is used in less water, the glass surface may be damaged.
• Clean the glass surface using a soft cloth or sponge with glass cleaner.

(3) Operate the windshield wiper again. If a chattering sound or insufficient wiping occurs, perform the procedures again.
4) If defective is not improved after performing step 1) to step 3), replace the rubber assembly - wiper with a new part.

6. Washer Tank and Motor

A: REMOVAL

1. WASHER TANK

1) Disconnect the ground cable from battery. <Ref. to NT-6, BATTERY, NOTE, Note.>

NOTE:
For model with battery sensor, disconnect the ground terminal from battery sensor.

2) Remove the bumper face - front. <Ref. to EI-31, REMOVAL, Front Bumper.>
3) Remove the tank - washer assembly.
   (1) Remove the clip of the holder - windshield washer tank.

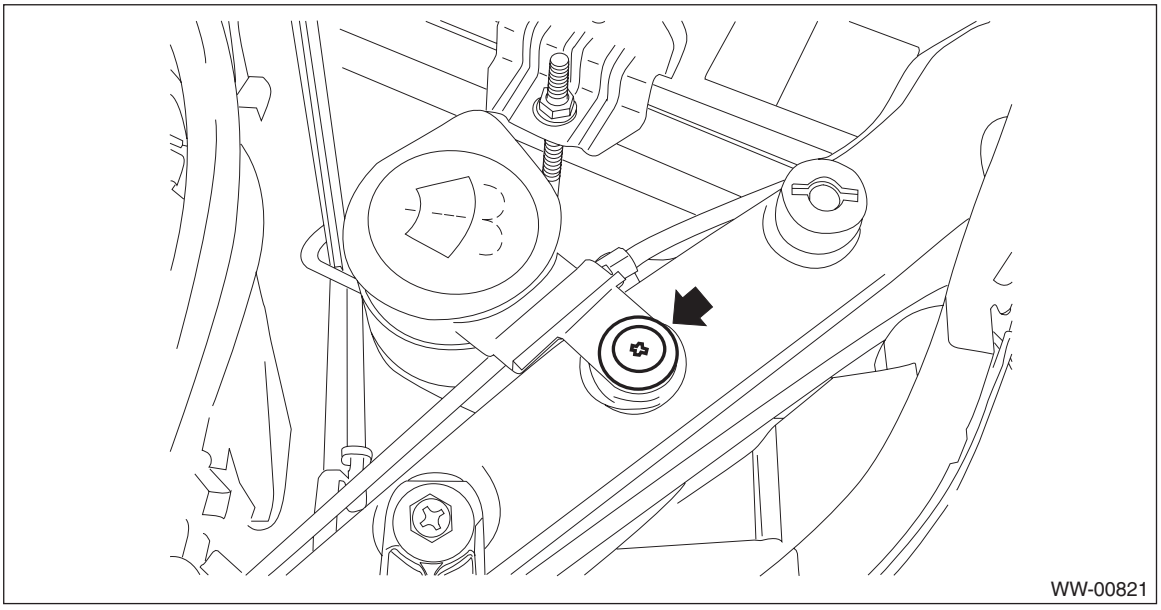

   (2) Disconnect the connector from the motor pump assembly - washer and the sensor - washer tank, and then remove the harness clip.
   (3) Prepare a container before disconnecting the hose - washer, and drain all washer fluid in the tank - washer.
   (4) Remove the bolt and nuts and remove the tank - washer assembly.

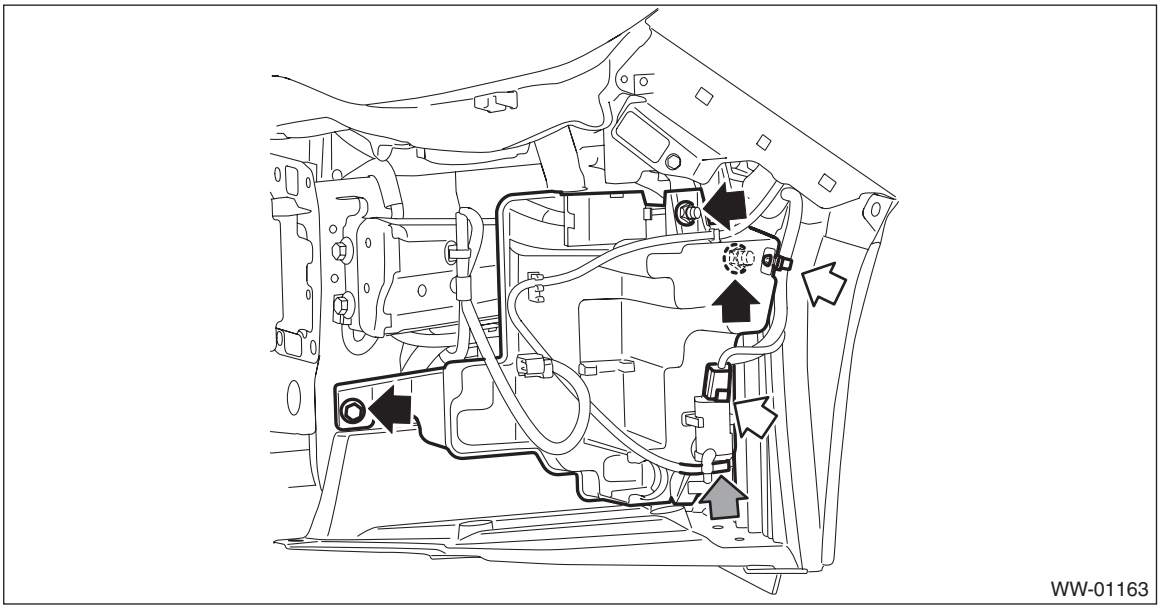

2. WASHER MOTOR

1) Disconnect the ground cable from battery. <Ref. to NT-6, BATTERY, NOTE, Note.>

NOTE:
For model with battery sensor, disconnect the ground terminal from battery sensor.

2) Remove the clips and screws, and turn over the mud guard - front LH.

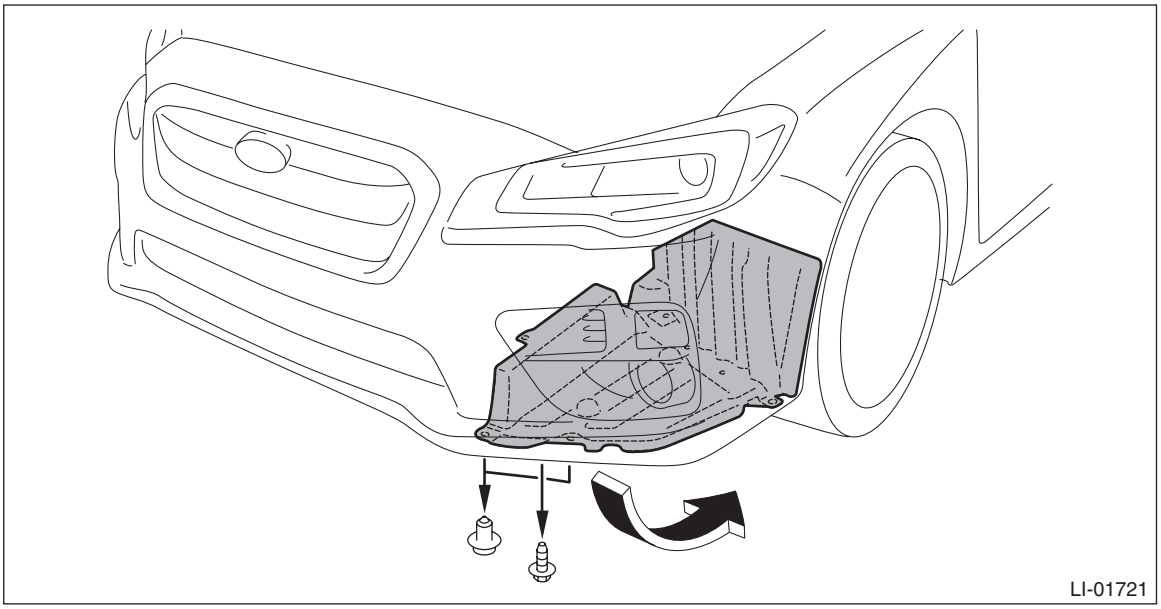

3) Disconnect the connector from the motor pump assembly - washer and remove the harness clip.
4) Prepare a container before disconnecting the hose - washer, and drain all washer fluid in the tank - washer.
5) Remove the motor pump assembly - washer.

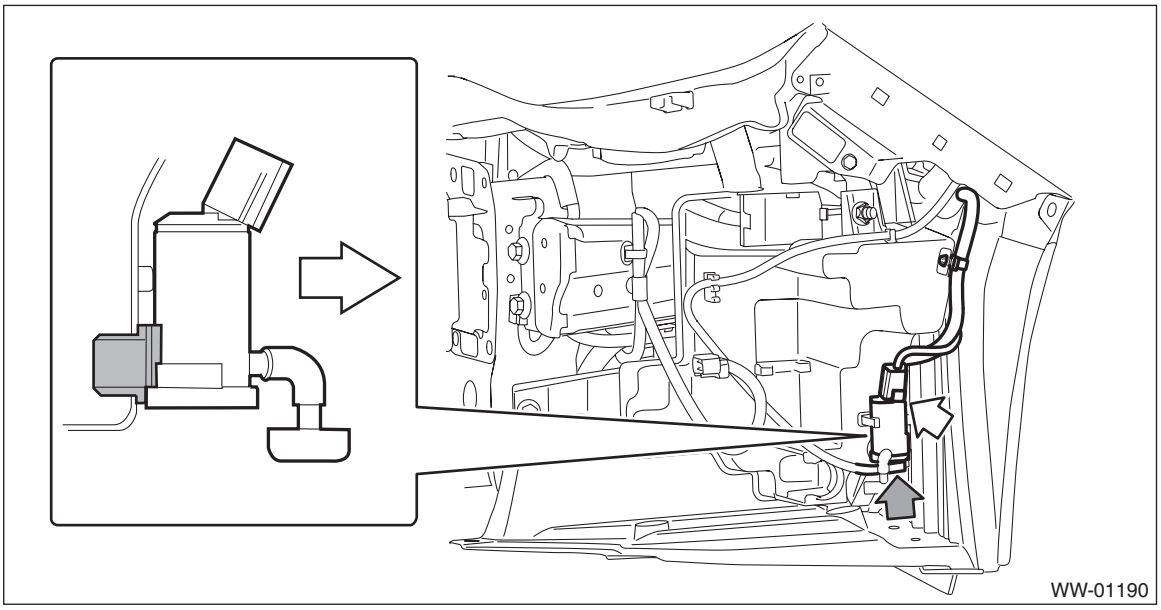

B: INSTALLATION

1. WASHER TANK

CAUTION:
• Install so that the front end of the under cover (b) comes inside the bumper face - front (a), and the front end of the mud guard (c) comes outside the bumper face - front (a).

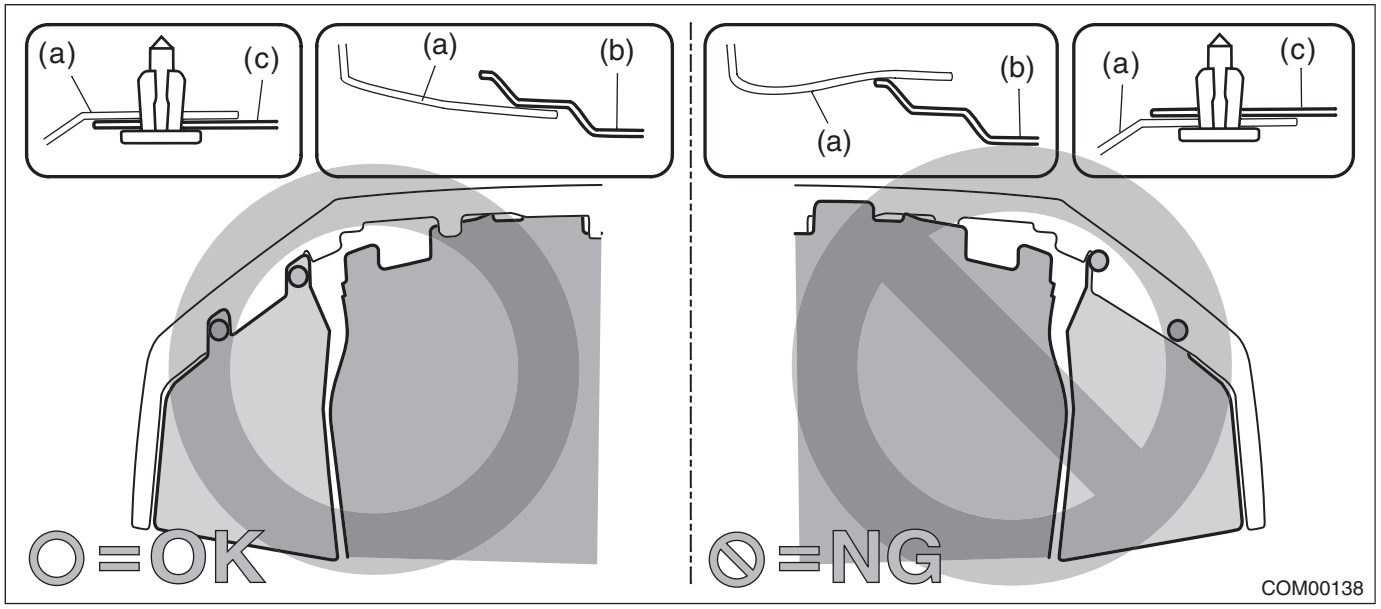

• Before installing the bumper face, match the claws on the bracket - front bumper with the engaging position of flange section on the bumper face side. If the engaging position is not correct, the flange section may be broken or the clearance between fender panel and bumper face may not be uniform.
1) Install the tank - washer assembly.

Tightening torque:
6 N·m (0.6 kgf-m, 4.4 ft-lb)
2) Connect the hose - washer.
3) Connect each connector and install the harness clip.
4) Install the mud guard - front.
5) Install the bumper face - front. <Ref. to EI-34, INSTALLATION, Front Bumper.>
6) Connect the battery ground terminal. <Ref. to NT-6, BATTERY, NOTE, Note.>
7) Add new washer fluid.
8) Adjust the fog light beam. (Model with fog light) <Ref. to LI-45, FOG LIGHT AIMING, ADJUSTMENT, Front Fog Light Assembly.>

2. WASHER MOTOR

CAUTION:
Install the mud guard - front so that the front end of the mud guard (b) comes outside the bumper face - front (a).

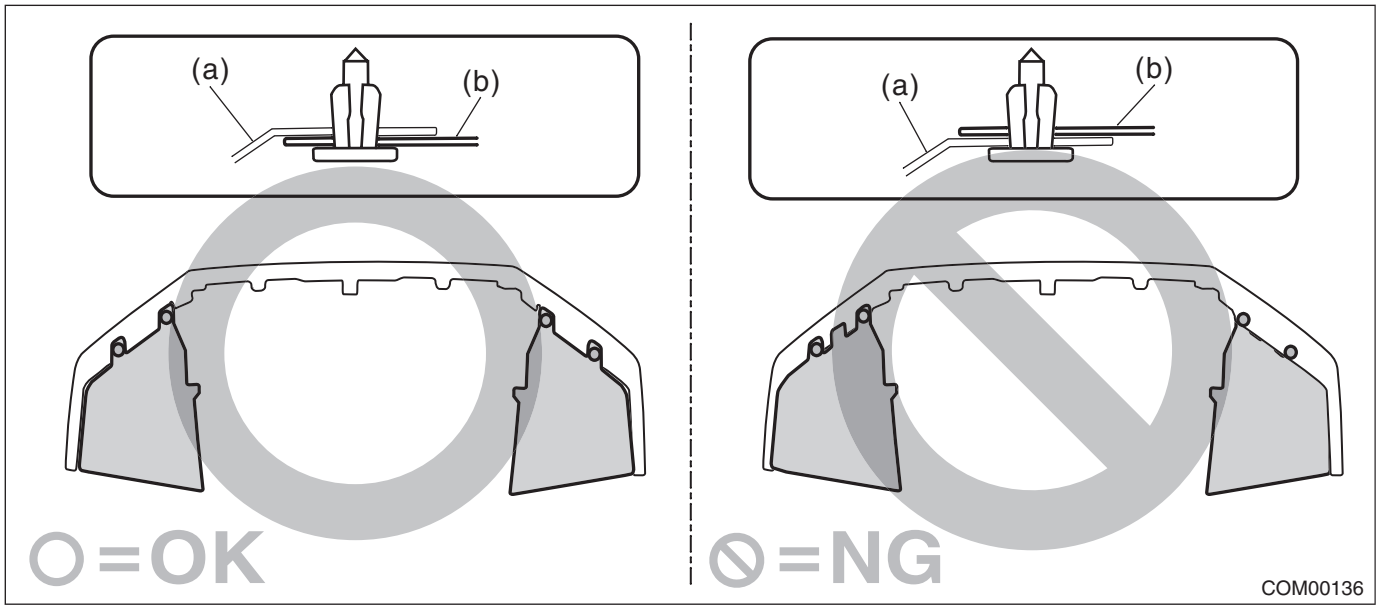

1) Install the motor pump assembly - washer to the tank - washer.
2) Connect the hose - washer.
3) Connect each connector and install the harness clip.
4) Install the mud guard - front LH.
5) Add new washer fluid.
6) Connect the battery ground terminal. <Ref. to NT-6, BATTERY, NOTE, Note.>
7) Adjust the fog light beam. (Model with fog light) <Ref. to LI-45, FOG LIGHT AIMING, ADJUSTMENT, Front Fog Light Assembly.>

C: INSPECTION

1. WASHER PUMP

Apply battery voltage to the connector terminal of the motor pump assembly - washer, and make sure that the motor operates.

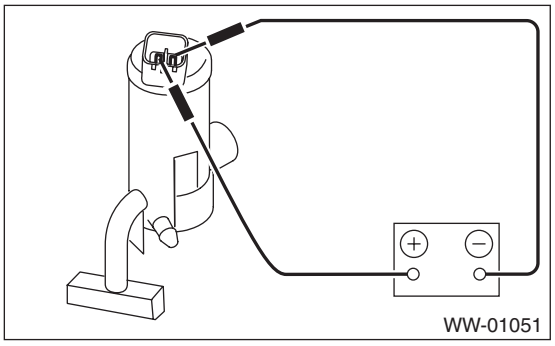

2. WASHER FLUID LEVEL SENSOR

1) Check the connection status of washer fluid level sensor connector.
2) Does the low washer fluid warning light illuminate after draining the washer fluid? And does the low washer fluid warning light go off after refilling the washer fluid?
- **Yes → Normal operation.**
- **No → Perform step 3.**

3) Using a tester, measure the voltage of the washer fluid level sensor connector.
   (1) Is the voltage approx. 8.5 V or more?
   - **Yes → Perform step 4.**
   - **No → Check meter, and replace if necessary.**

4) Does the meter indicator illuminate if you short the washer fluid level sensor connector?
- **Yes → Perform step 5.**
- **No → Check harness and meter, and replace if necessary.**

5) Using a tester, measure the resistance of the washer fluid level sensor.
   (1) Turn over the mud guard.
   (2) Measure the resistance of the washer fluid level sensor.

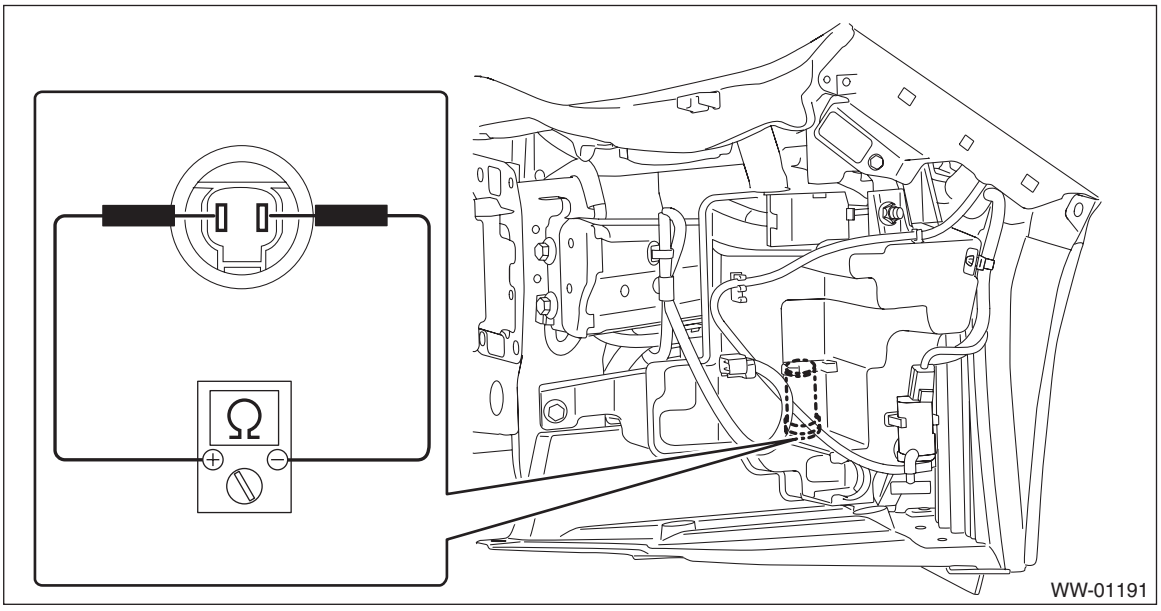

Amount of washer fluid in the tank	Standard
No remaining quantity (ON)	Less than 10 Ω
There is remaining quantity (OFF)	1 MΩ or more

   (3) Is the resistance within the standard?
   - **Yes → Normal operation.**
   - **No → Replace the washer fluid level sensor along with the washer tank.**

7. Front Wiper Arm

A: REMOVAL

1. MODELS WITHOUT EyeSight

NOTE:
Since the arm assembly - windshield wiper LH and RH can interfere with each other, remove the driver's side first.
1) Remove the cover - windshield wiper arm.
2) Remove the nuts, and remove the arm assembly - windshield wiper.

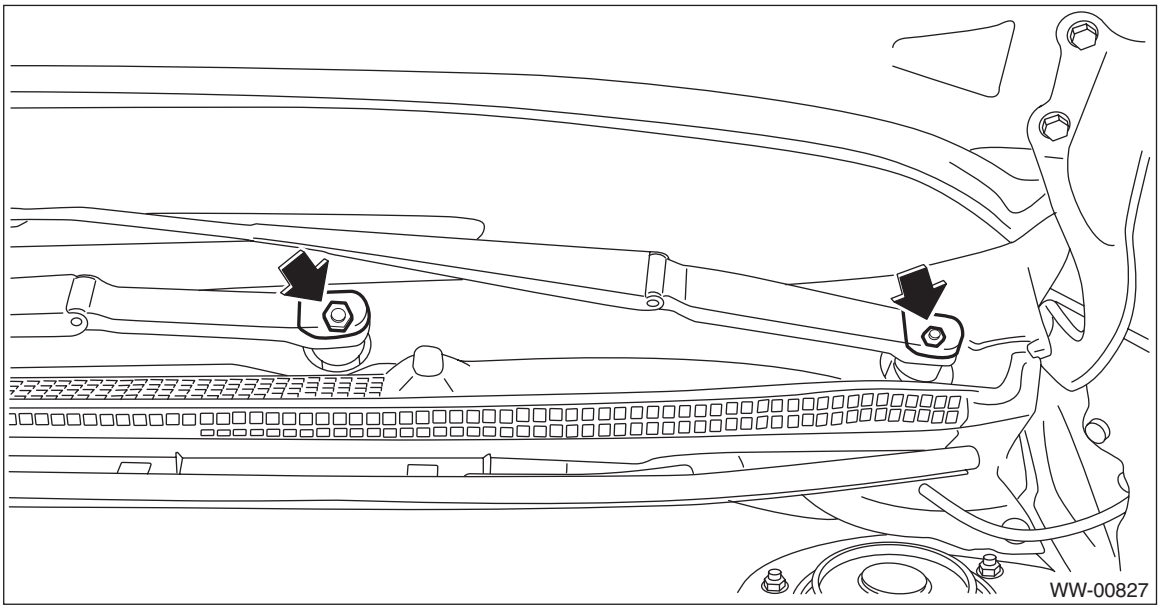

2. MODELS WITH EyeSight

NOTE:
Since the arm assembly - windshield wiper LH and RH can interfere with each other, remove the driver's side first.
1) Remove the cover - windshield wiper arm.
2) Remove the arm assembly - windshield wiper.
   (1) Remove the nuts, and remove the arm assembly - windshield wiper.

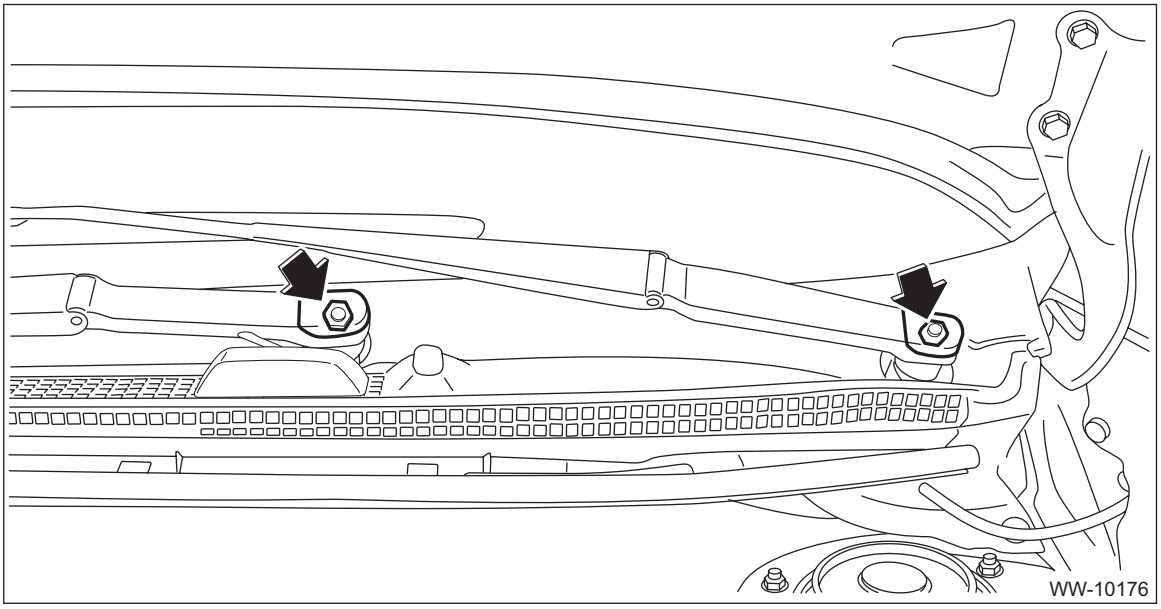

(2) Add alignment marks (a) on two places, and remove the hose from the arm assembly - windshield wiper assistor.

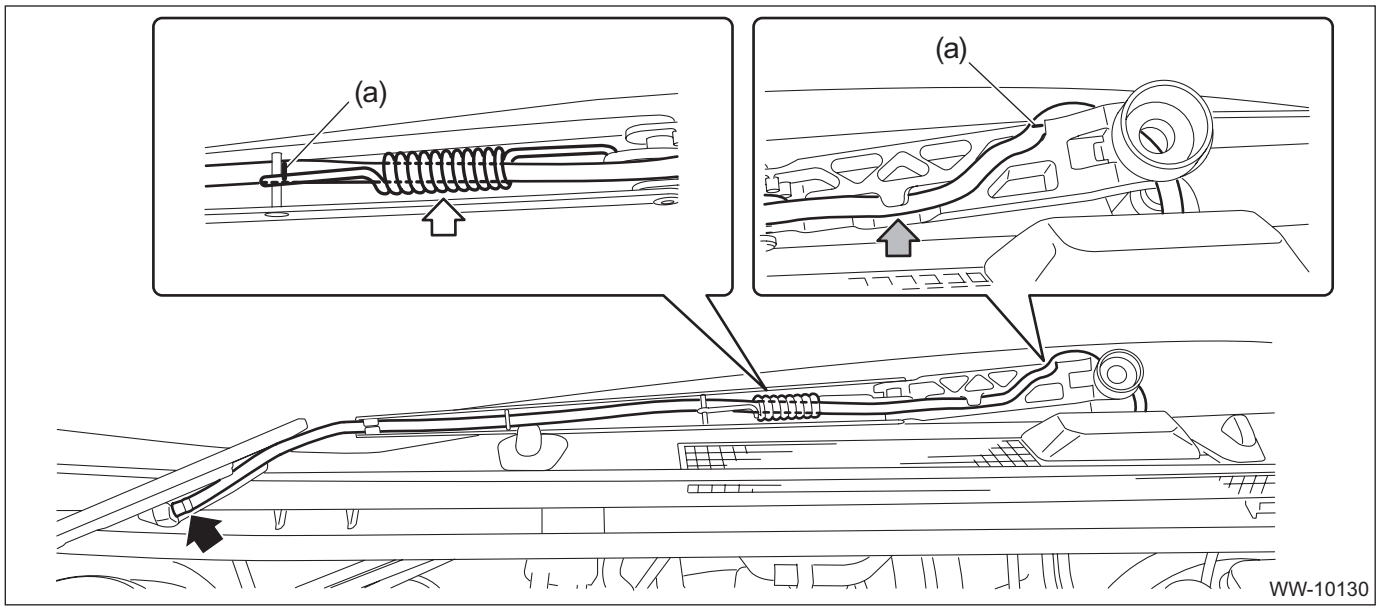

3) When removing the hose from the joint - washer hose, refer to the removal of “Nozzle - wiper arm washer & hose”. <Ref. to WW-31, NOZZLE - WIPER ARM WASHER & HOSE (MODEL WITH EyeSight), REMOVAL, Front Washer Nozzle and Hose.>

CAUTION:
Do not remove the nozzle - wiper arm washer from the arm assembly - windshield wiper assistor. If nozzle replacement is required, replace the arm assembly - windshield wiper assistor as a unit.

B: INSTALLATION

1. MODELS WITHOUT EyeSight

NOTE:
Since the arm assembly - windshield wiper LH and RH can interfere with each other, install the passenger’s side first.

1) Install the arm assembly - windshield wiper.
(1) Assemble the arm assembly - windshield wiper so that the blade assembly - windshield wiper is aligned to the ceramic print point mark of the windshield glass.

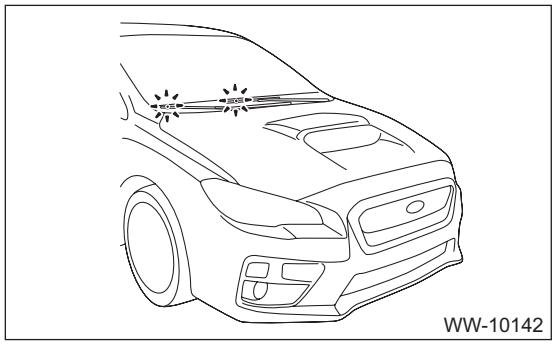

(2) Tighten the arm assembly - windshield wiper to specified torque and install the cap.

Tightening torque:
26 N·m (2.7 kgf-m, 19.2 ft-lb)

2) Operate the windshield wiper to check that the stop position is aligned with the point mark.
If it is not aligned with the point mark, perform the removal and installation of the windshield wiper over again. <Ref. to WW-21, REMOVAL, Front Wiper Arm.>

2. MODELS WITH EyeSight

CAUTION:
Install firmly so that the hose is not bent, compressed or flattened.

NOTE:
Since the arm assembly - windshield wiper LH and RH can interfere with each other, install the passenger's side first.

1) When the hose is removed from the joint - washer hose, refer to "Installation" of "Front washer nozzle & hose". <Ref. to WW-32, INSTALLATION, Front Washer Nozzle and Hose.>

2) Install the arm assembly - windshield wiper.

(1) Align the alignment mark (a), and install the hose to the arm assembly - windshield wiper assistor.

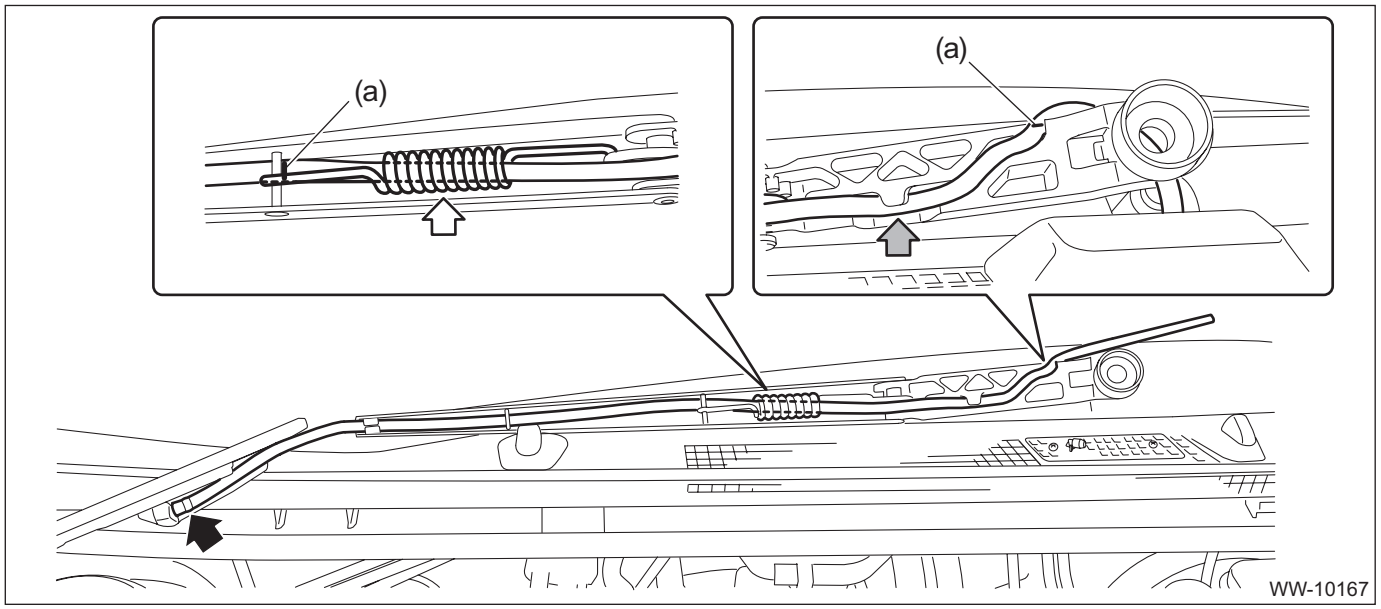

(2) Assemble the arm assembly - windshield wiper so that the blade assembly - windshield wiper is aligned to the ceramic print point mark of the windshield glass.

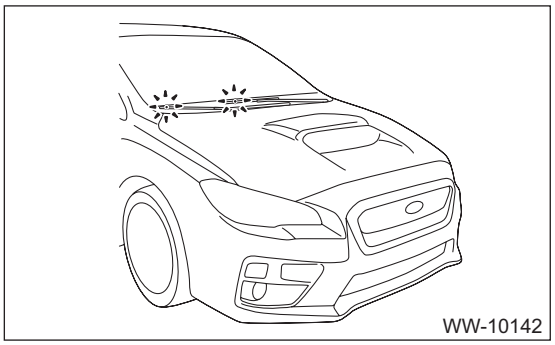

(3) Tighten the arm assembly - windshield wiper to specified torque and install the cap.

Tightening torque:
26 N·m (2.7 kgf-m, 19.2 ft-lb)

3) Operate the windshield wiper to check that the stop position is aligned with the point mark.
If it is not aligned with the point mark, perform the removal and installation of the windshield wiper over again. <Ref. to WW-21, REMOVAL, Front Wiper Arm.>
4) Make sure that there is a gap of 1 mm (0.04 in) or more between the hose and the cover - joint and between the hose and the joint - washer hose during windshield wiper operation.

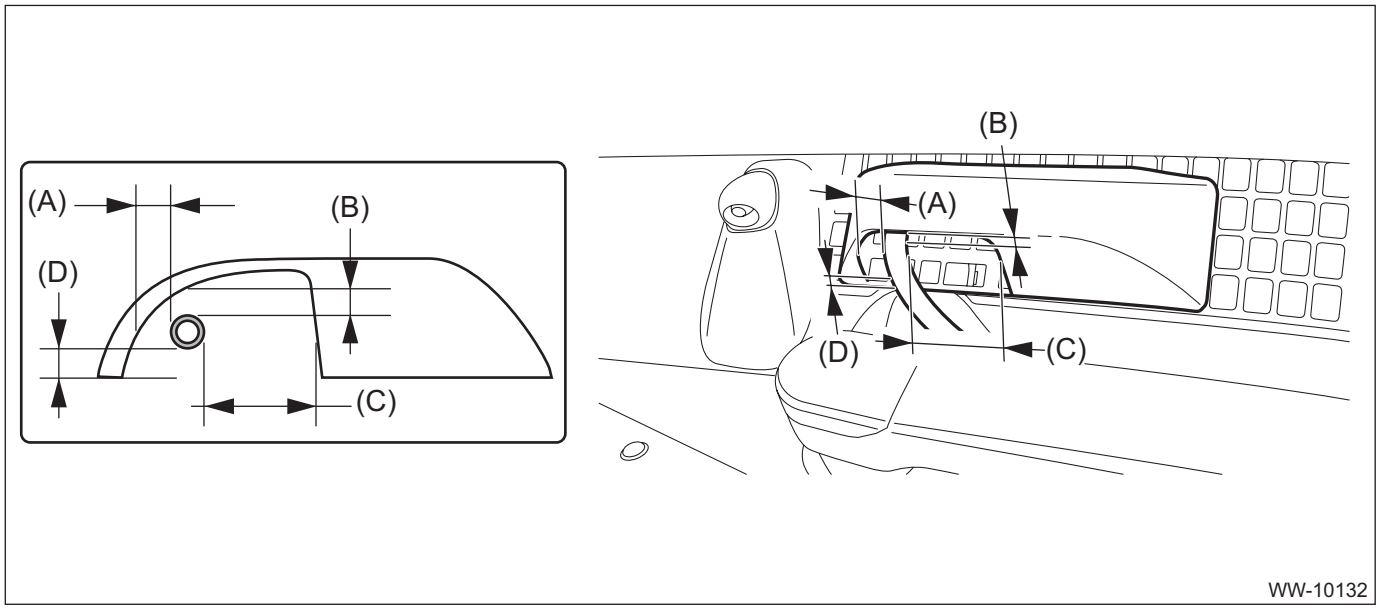

(A) Gap between hose and cover - joint outer side
(B) Gap between hose and cover - joint upper side
(C) Gap between hose and cover - joint inner side
(D) Gap between hose and cover - joint lower side

8. Front Wiper Motor and Link

A: REMOVAL

1) Disconnect the ground cable from battery. <Ref. to NT-6, BATTERY, NOTE, Note.>

NOTE:
For model with battery sensor, disconnect the ground terminal from battery sensor.
2) Remove the arm assembly - windshield wiper. <Ref. to WW-21, REMOVAL, Front Wiper Arm.>
3) Remove the cowl panel - side and the cowl panel assembly. <Ref. to EI-45, REMOVAL, Cowl Panel.>

CAUTION:
Before removing the cowl panel, use an air blower and nylon brush to sweep gravel from the lower area of the front side of the glass.
4) Remove the link assembly - windshield wiper.
   (1) Disconnect the connector of the motor assembly - windshield wiper.
   (2) Remove the bolts and harness clips, and remove the link assembly - windshield wiper.

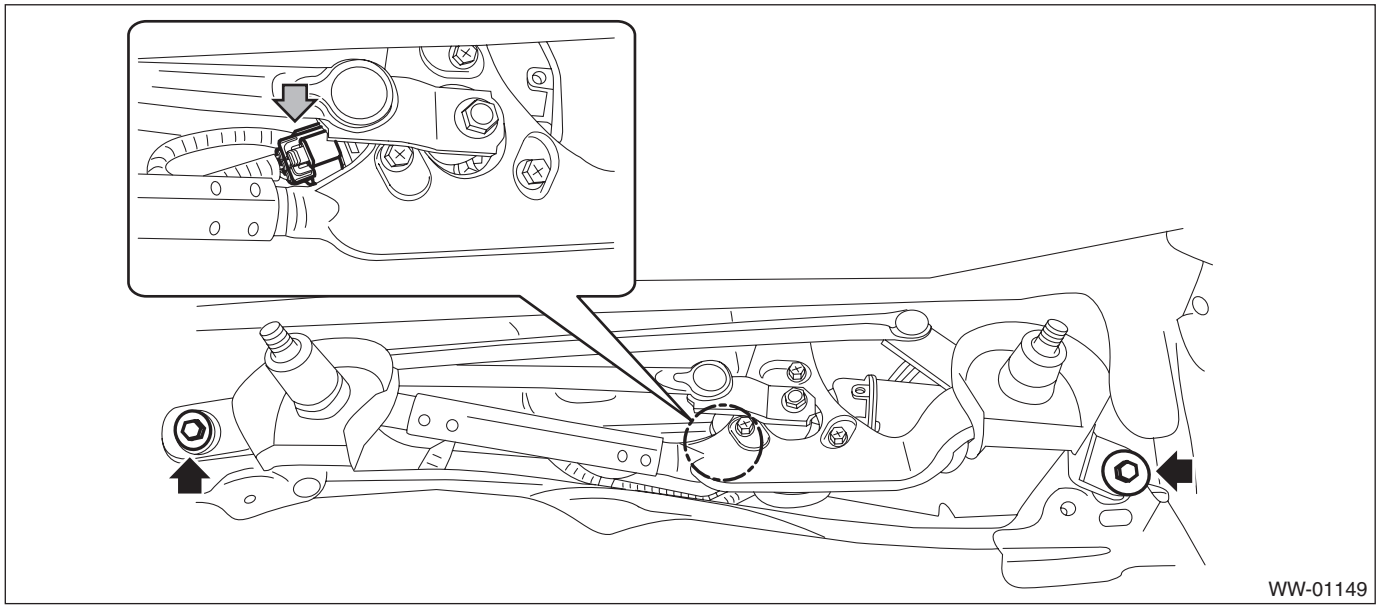

5) Remove the motor assembly - windshield wiper.
   (1) Using a crowbar wrapped with protective tape, disconnect the link assembly - windshield wiper from the link plate.
   (2) Remove the bolts, and remove the motor assembly - windshield wiper.

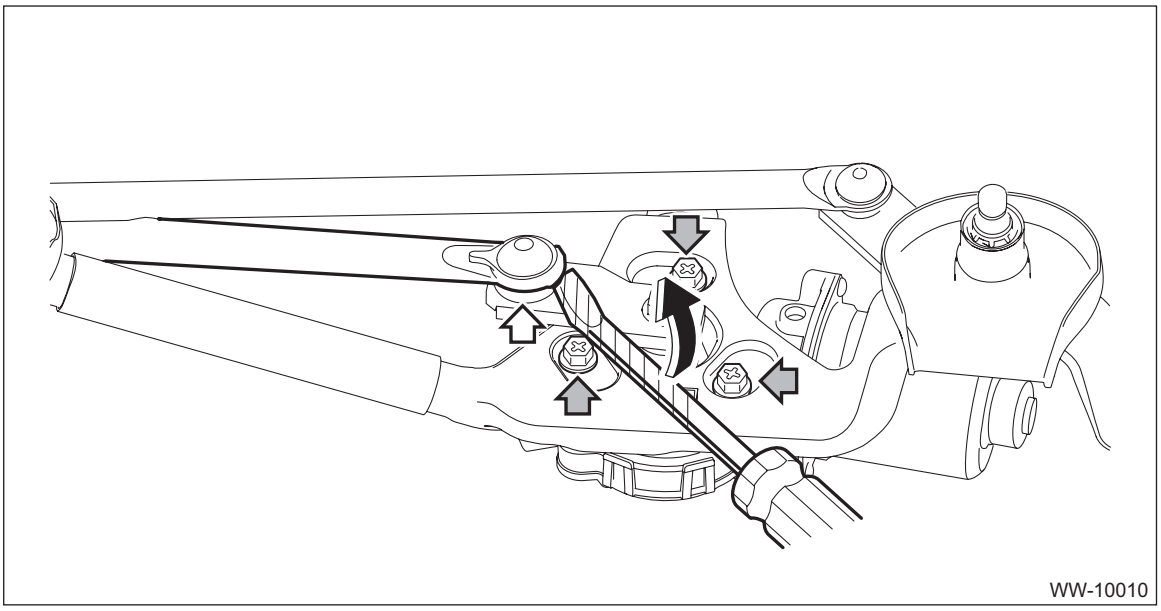

B: INSTALLATION

CAUTION:
• If the cowl panel assembly cannot be installed properly, do not hit or set it forcibly. The claws of the cowl panel or the windshield glass may be damaged.
• Before installing the windshield glass and cowl panel, make sure there are no gravel in the installing area.

1) Connect the battery ground terminal. <Ref. to NT-6, BATTERY, NOTE, Note.>
2) Check that the motor assembly - windshield wiper is at the auto stop position.

CAUTION:
During motor operation, do not touch the movable part.
   (1) Connect the harness of front wiper to the motor assembly - windshield wiper.
   (2) Switch the wiper switch to ON/OFF once.
3) Disconnect the ground cable from battery again. <Ref. to NT-6, BATTERY, NOTE, Note.>

NOTE:
For model with battery sensor, disconnect the ground terminal from battery sensor.

4) Install the motor assembly - windshield wiper.
(1) Align the link plate position.

CAUTION:
Install the motor assembly - windshield wiper at the position where the rod (B) and link plate (A) are aligned in a straight line.

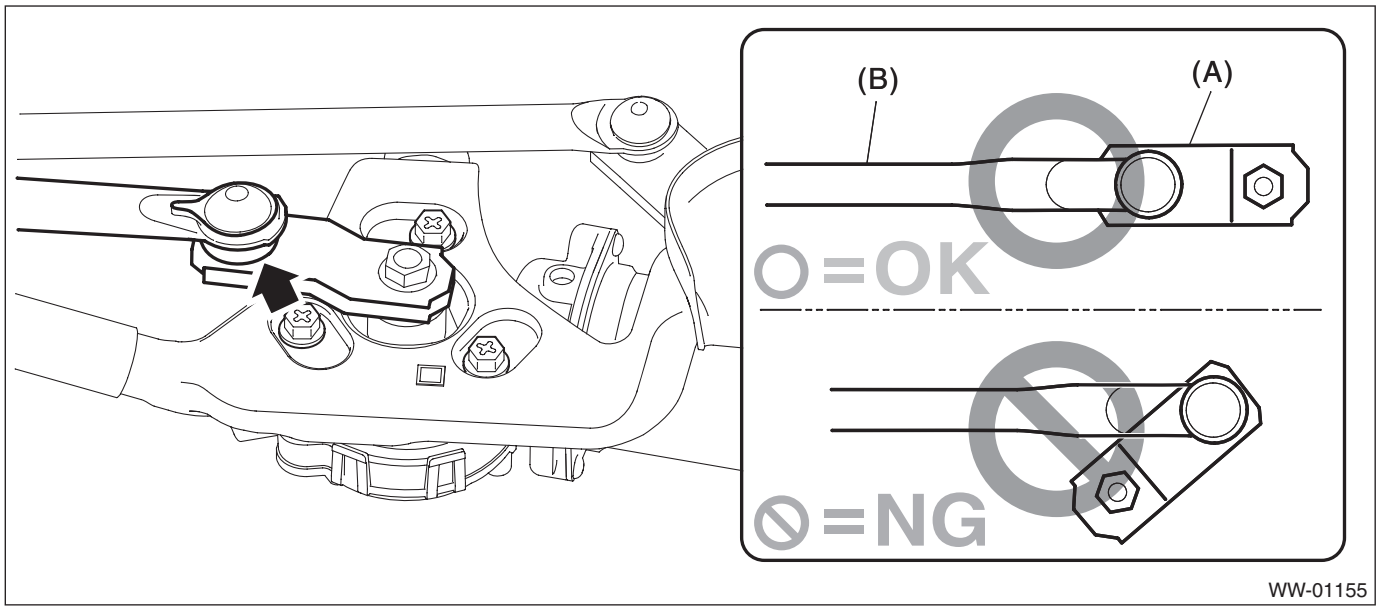

(2) Install the motor assembly - windshield wiper.

Tightening torque:
5.5 N·m (0.6 kgf-m, 4.1 ft-lb)

5) Install the link assembly - windshield wiper.

Tightening torque:
6 N·m (0.6 kgf-m, 4.4 ft-lb)

6) Install the cowl panel - side and the cowl panel assembly. <Ref. to EI-47, INSTALLATION, Cowl Panel.>
7) Install the arm assembly - windshield wiper. <Ref. to WW-22, INSTALLATION, Front Wiper Arm.>
8) Connect the battery ground terminal. <Ref. to NT-6, BATTERY, NOTE, Note.>
9) Operate the windshield wiper to check that the stop position is aligned with the point mark.
If it is not aligned with the point mark, perform the removal and installation of the windshield wiper over again. <Ref. to WW-21, REMOVAL, Front Wiper Arm.>

10) Make sure that there is a gap of 1 mm (0.04 in) or more between the hose and the cover - joint and between the hose and the joint - washer hose during windshield wiper operation. (Models with EyeSight)

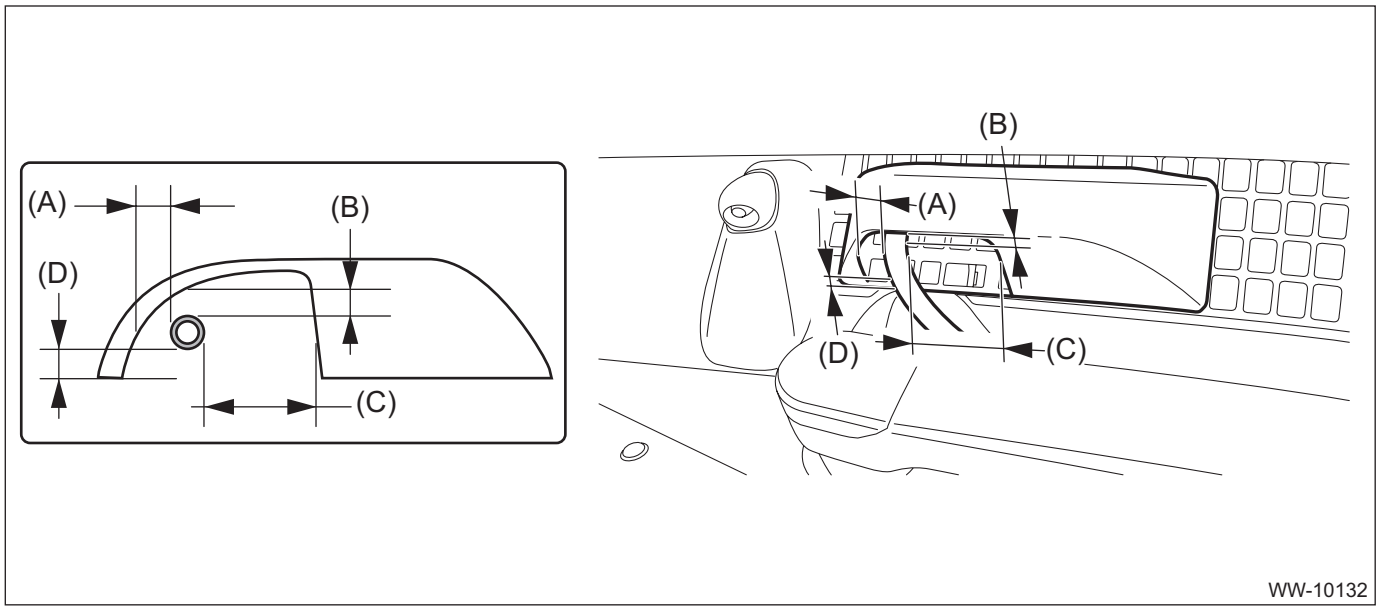

(A) Gap between hose and cover - joint outer side
(B) Gap between hose and cover - joint upper side
(C) Gap between hose and cover - joint inner side
(D) Gap between hose and cover - joint lower side

C: INSPECTION

1) Check that the following operations perform normally.

CAUTION:
Fix the motor to prevent the motor from being shorted by moving during operation.

(1) When the battery is connected to the terminal of connectors, confirm that the motor operates at low speed.
(2) When the battery is connected to the terminal of connectors, confirm that the motor operates at high speed.
(3) Connect the battery to terminals of the connector, and remove the terminal connection with motor rotating at low speed, and stop the motor assembly - windshield wiper in mid-operation.
(4) Connect the battery and check that the motor stops at the automatic stop position after the motor operates at low speed again.

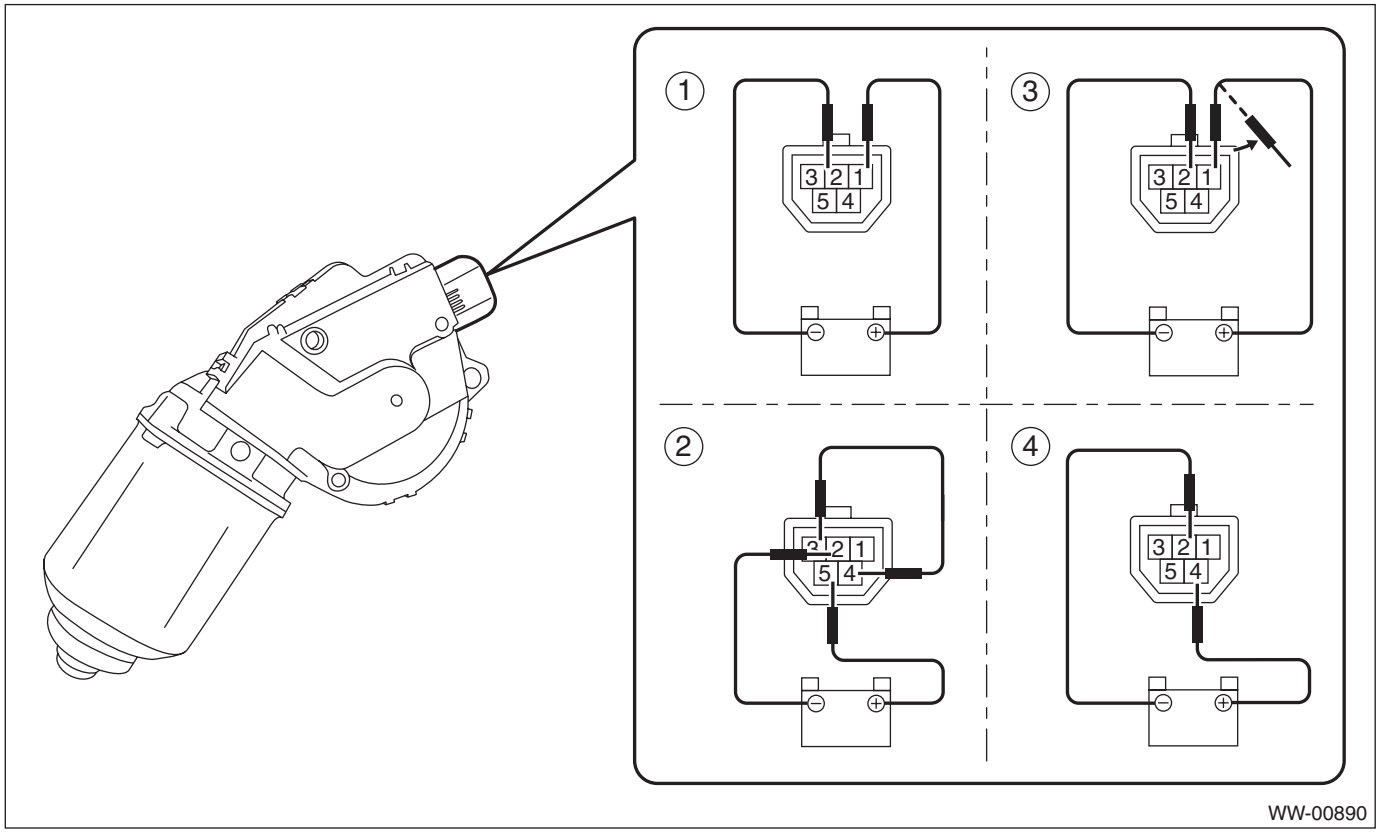

NOTE:
Replace the motor assembly - windshield wiper if the inspection result is not within the standard.
2) Install the motor assembly - windshield wiper. <Ref. to WW-26, INSTALLATION, Front Wiper Motor and Link.>

9. Front Washer Nozzle and Hose

A: REMOVAL

1. NOZZLE - WINDSHIELD WASHER & HOSE

1) Remove the arm assembly - windshield wiper. <Ref. to WW-21, REMOVAL, Front Wiper Arm.>
2) Remove the cowl panel - side and the cowl panel assembly. <Ref. to EI-45, REMOVAL, Cowl Panel.>

CAUTION:
Before removing the cowl panel, use an air blower and nylon brush to sweep gravel from the lower area of the front side of the glass.

3) Remove the nozzle - windshield washer.
   (1) Push the claw using a flat tip screwdriver, etc.
   (2) When the nozzle - windshield washer lifts up, pull out the nozzle - windshield washer using a clip remover, etc.
   (3) Disconnect the hose - windshield washer, and remove the nozzle - windshield washer.

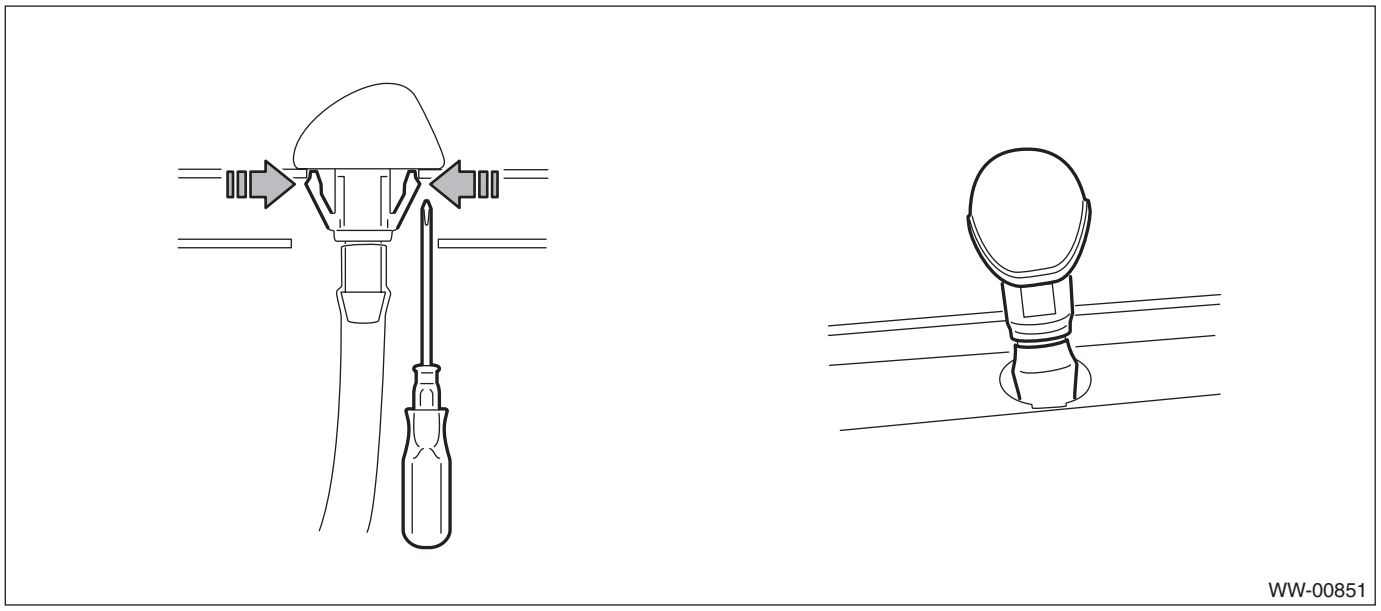

4) Disconnect the hose - windshield washer as necessary.

- Models without EyeSight

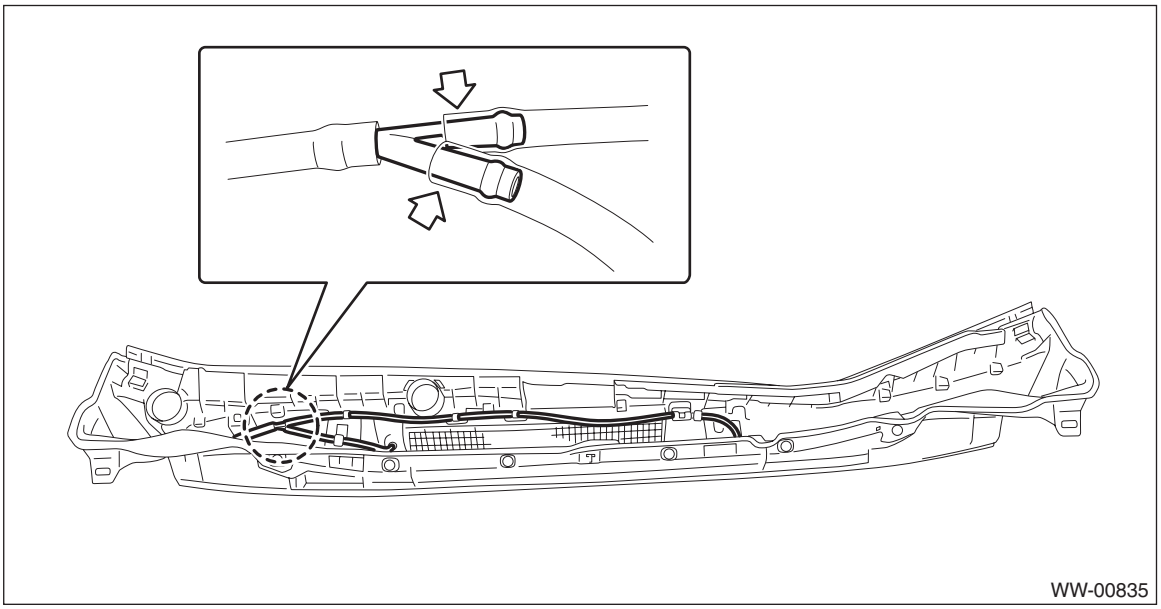

- Models with EyeSight

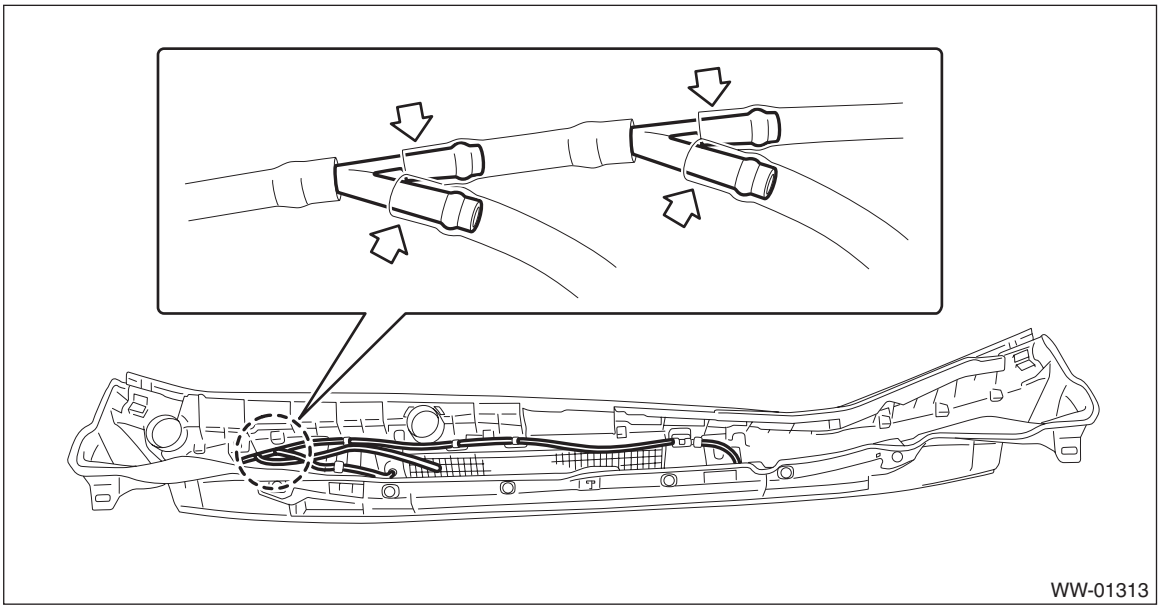

2. NOZZLE - WIPER ARM WASHER & HOSE (MODEL WITH EyeSight)

CAUTION:
Do not remove the nozzle - wiper arm washer from the arm assembly - windshield wiper assistor. If nozzle replacement is required, replace the arm assembly - windshield wiper assistor as a unit.

1) Remove the arm assembly - windshield wiper. <Ref. to WW-21, REMOVAL, Front Wiper Arm.>
2) Remove the cowl panel - side and the cowl panel assembly. <Ref. to EI-45, REMOVAL, Cowl Panel.>

CAUTION:
Before removing the cowl panel, use an air blower and nylon brush to sweep gravel from the lower area of the front side of the glass.

3) Release the claws, and remove the cover - joint from cowl panel assembly.

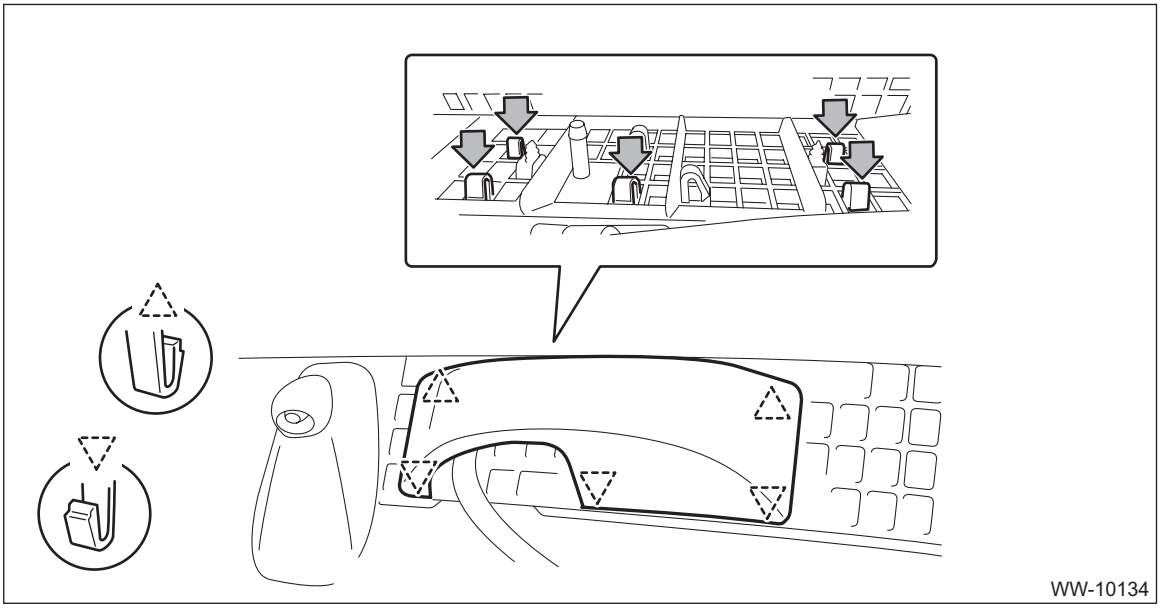

4) Remove the hose - wiper arm washer.

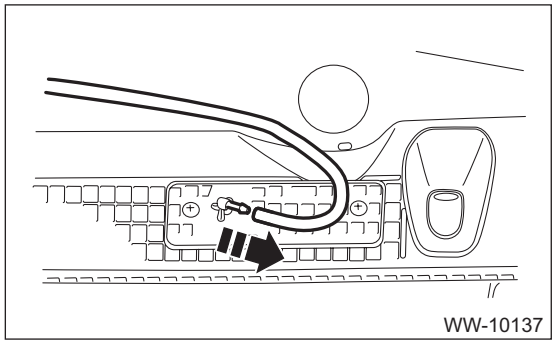
WW-10137

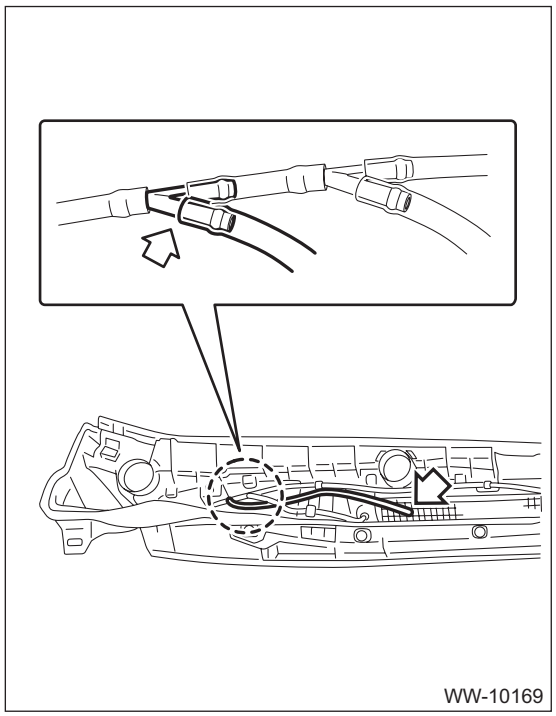
WW-10169

B: INSTALLATION

CAUTION:
Before installing the windshield glass and cowl panel, make sure there are no gravel in the installing area.

1) Install the nozzle - windshield washer.
   (1) Install the nozzle - windshield washer.
   (2) Install the hose - windshield washer.
2) Install the cowl panel - side and the cowl panel assembly. <Ref. to EI-47, INSTALLATION, Cowl Panel.>
3) Install the arm assembly - windshield wiper. <Ref. to WW-22, INSTALLATION, Front Wiper Arm.>
4) Install the hose to the joint - washer hose. (Models with EyeSight)

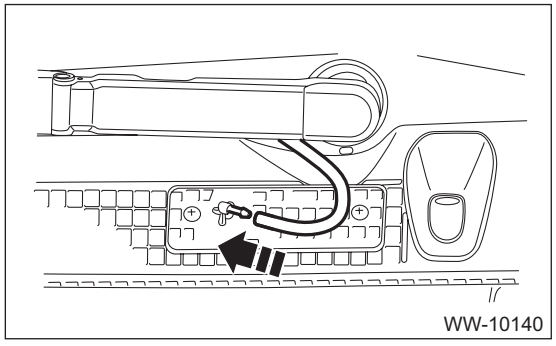
WW-10140

5) Install the cover - joint to the cowl panel assembly. (Models with EyeSight)
6) Adjust the position of the nozzle - windshield washer. <Ref. to WW-34, ADJUSTMENT, Front Washer Nozzle and Hose.>
7) Operate the windshield wiper to check that the stop position is aligned with the point mark.
If it is not aligned with the point mark, perform the removal and installation of the windshield wiper over again. <Ref. to WW-21, REMOVAL, Front Wiper Arm.>
8) Make sure that there is a gap of 1 mm (0.04 in) or more between the hose and the cover - joint and between the hose and the joint - washer hose during windshield wiper operation. (Models with EyeSight)

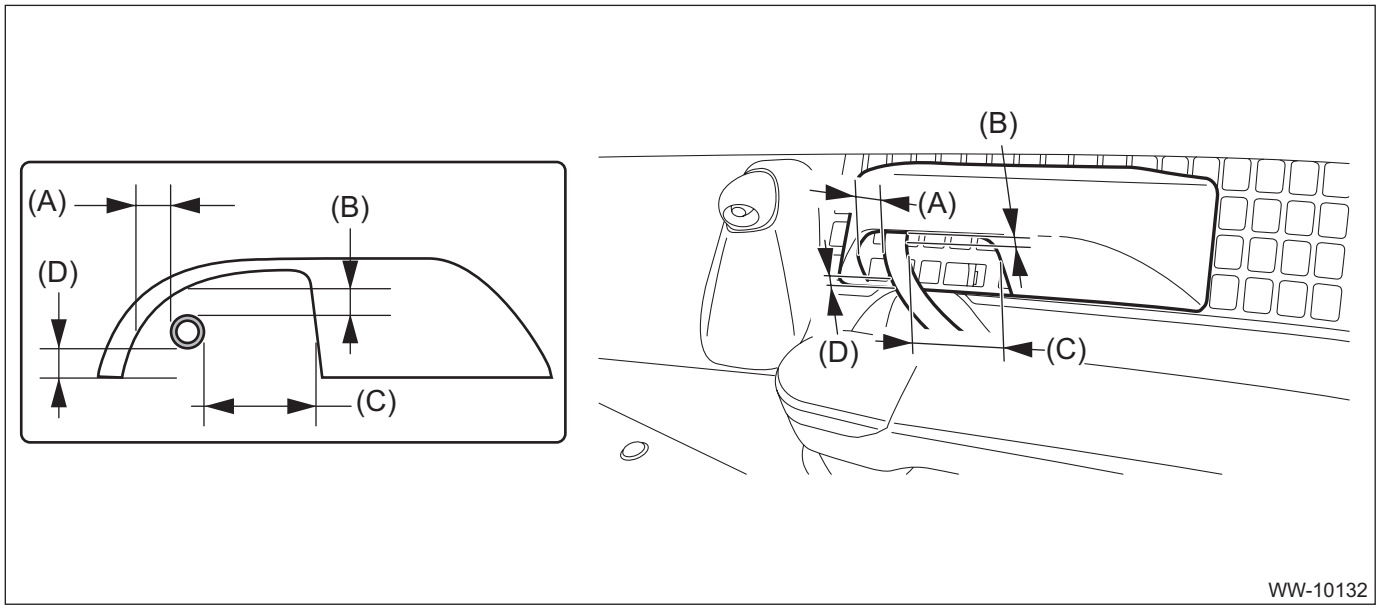

(A) Gap between hose and cover - joint outer side
(B) Gap between hose and cover - joint upper side
(C) Gap between hose and cover - joint inner side
(D) Gap between hose and cover - joint lower side

C: INSPECTION

- Make sure the nozzle - windshield washer and the hose - windshield washer are not clogged.
- Make sure the hose - windshield washer is not bent.
- Check the position of the nozzle - windshield washer. <Ref. to WW-34, ADJUSTMENT, Front Washer Nozzle and Hose.>

D: ADJUSTMENT

1. NOZZLE - WINDSHIELD WASHER

1) Turn the wiper switch to OFF position.
2) While the vehicle is at a standstill, insert a precision screwdriver (A) or equivalent wrapped with protective tape into the clearance on the upper/lower side or the right/left side of the nozzle - windshield washer to perform necessary adjustment.

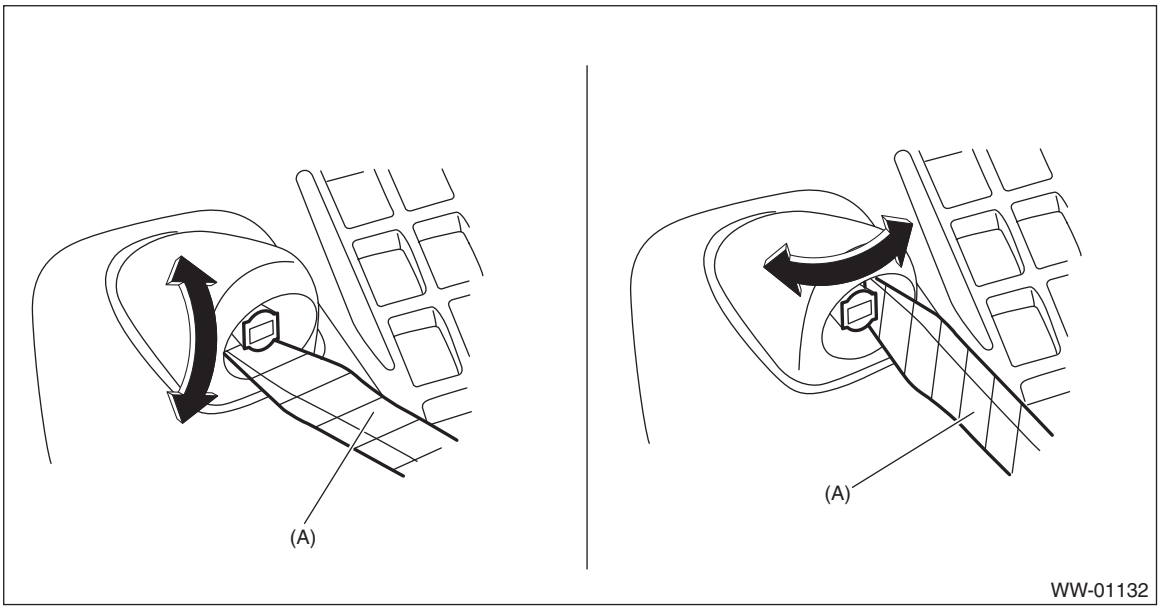

CAUTION:
• The nozzle - windshield washer is made of resin. If precision screwdriver (A) or equivalent is inserted into discharge port for adjustment, the discharge port can be deformed, and washer fluid cannot be sprayed.
• Do not rotate the discharge port of the nozzle - windshield washer, otherwise it may be damaged.

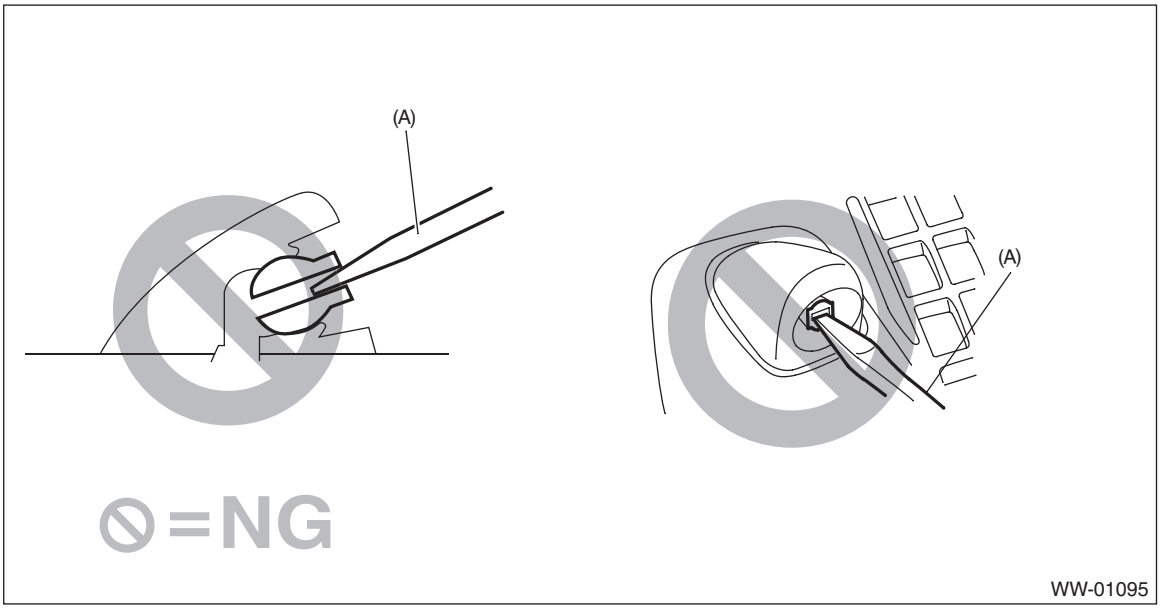

3) Adjust the washer injection position as shown in the figure.

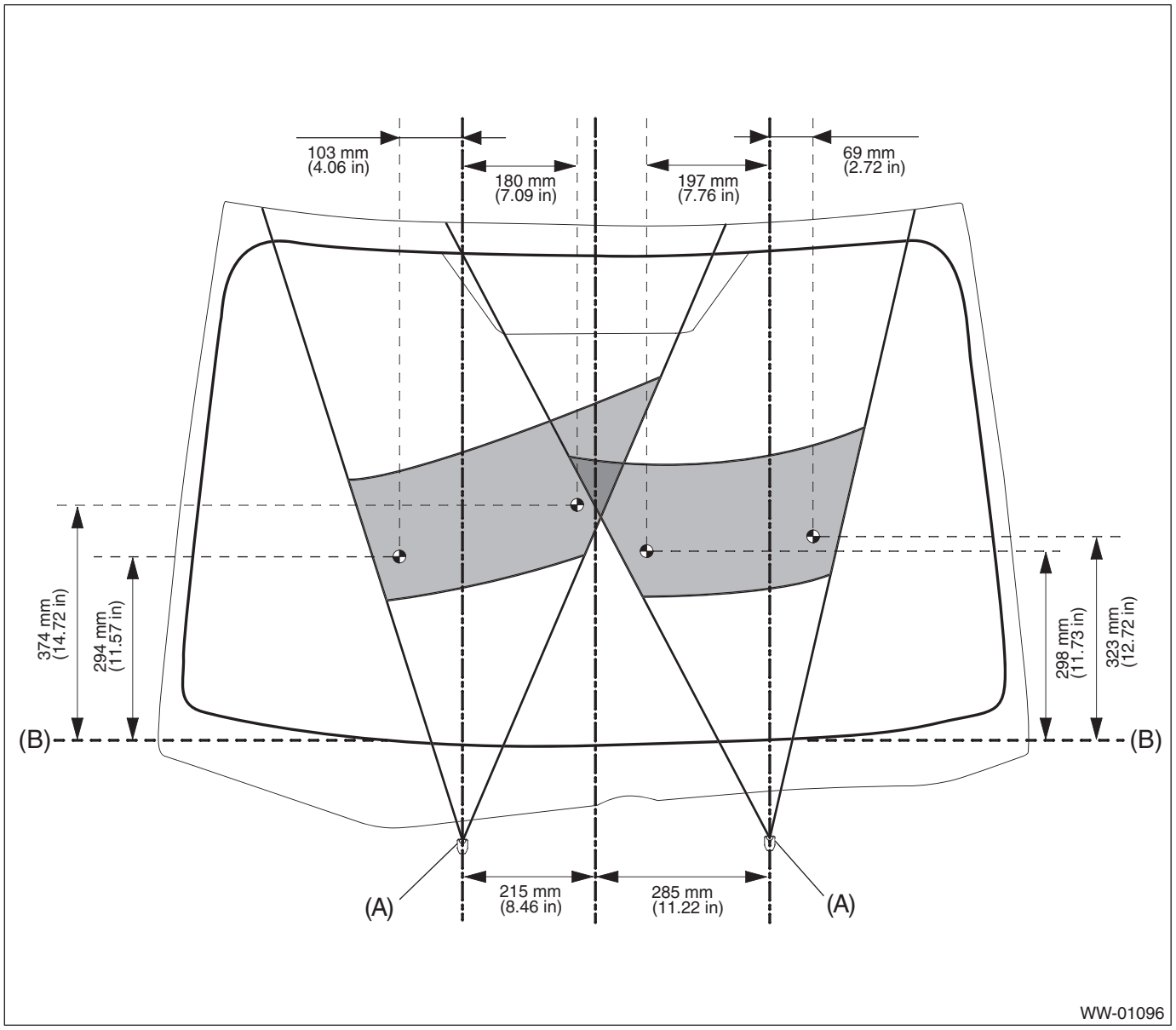

(A) Nozzle - windshield washer (B) Ceramic line

2. NOZZLE - WIPER ARM WASHER (MODEL WITH EyeSight)

CAUTION:
Check and adjust the spray position of the nozzle - wiper arm at the position where the wiper arm stops.

1) Turn the wiper switch to OFF position.
2) While the vehicle is stopped, check that the washer spray position is as shown in the figure.
3) After inspection, if the spray position is really out of the specified range, replace with a new arm assembly - windshield wiper assistor.

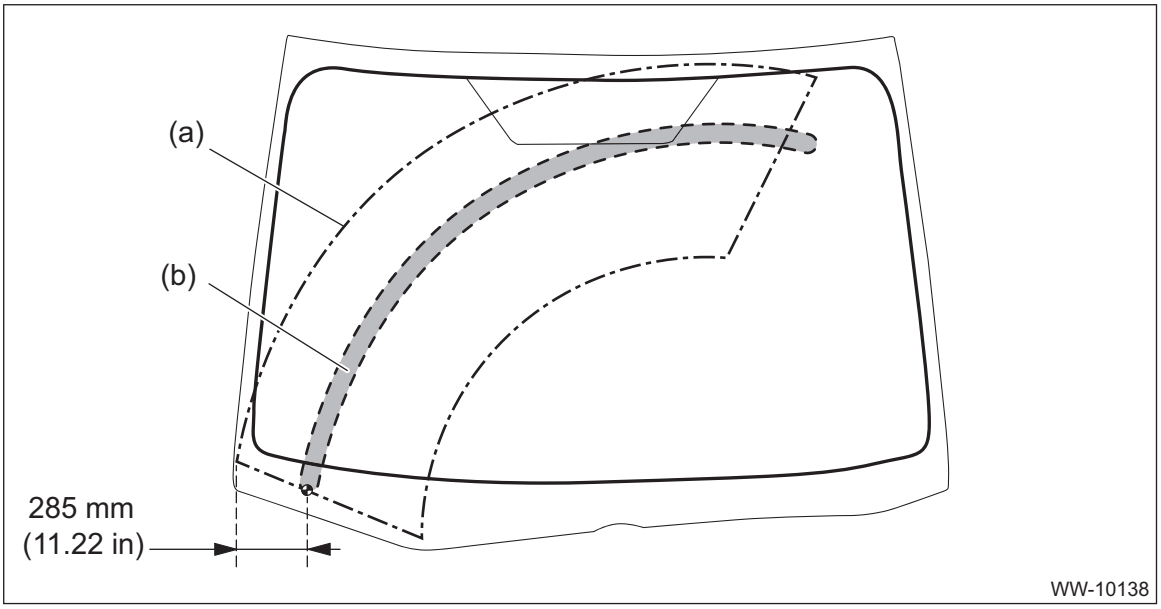

(a) Wiping area of arm ASSY - windshield wiper assistor
(b) Spray area

ENTERTAINMENT

ET

		Page
1.	General Description	2
2.	Check List for Interview	6
3.	Relay and Fuse	10
4.	Audio System	11
5.	Navigation System	22
6.	Telematics System	34
7.	Audio	35
8.	Front Speaker	38
9.	Rear Speaker	40
10.	Woofer	41
11.	Power Amplifier	42
12.	Antenna	43
13.	Switches and Harness	46
14.	Microphone	49
15.	Navigation Body	50
16.	GPS Antenna	51
17.	Data Communication Module	53
18.	Rearview Camera System	56
19.	Front Accessory Power Supply Socket	58
20.	Rear Accessory Power Supply Socket	60
21.	External Connection Terminal	62
22.	Diagnostics with Phenomenon	63
23.	Service Diagnostics Mode	81

1. General Description

A: LOCATION

1. AUDIO AND NAVIGATION SYSTEM

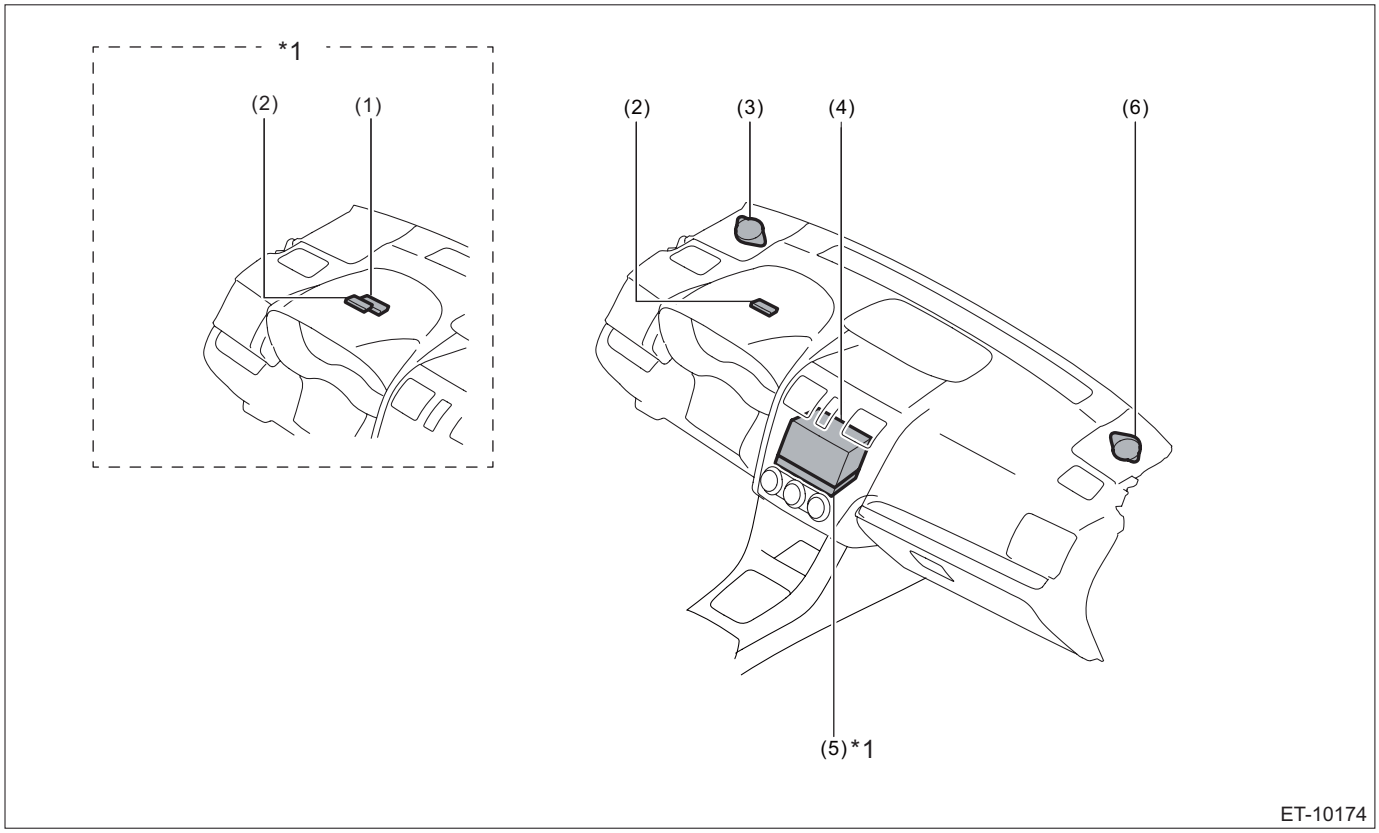

(1) Telematics sub antenna
(2) GPS antenna ASSY
(3) Speaker ASSY - tweeter LH
(4) Audio ASSY or navigation ASSY
(5) Data communication module
(6) Speaker ASSY - tweeter RH

*1: Model with telematics

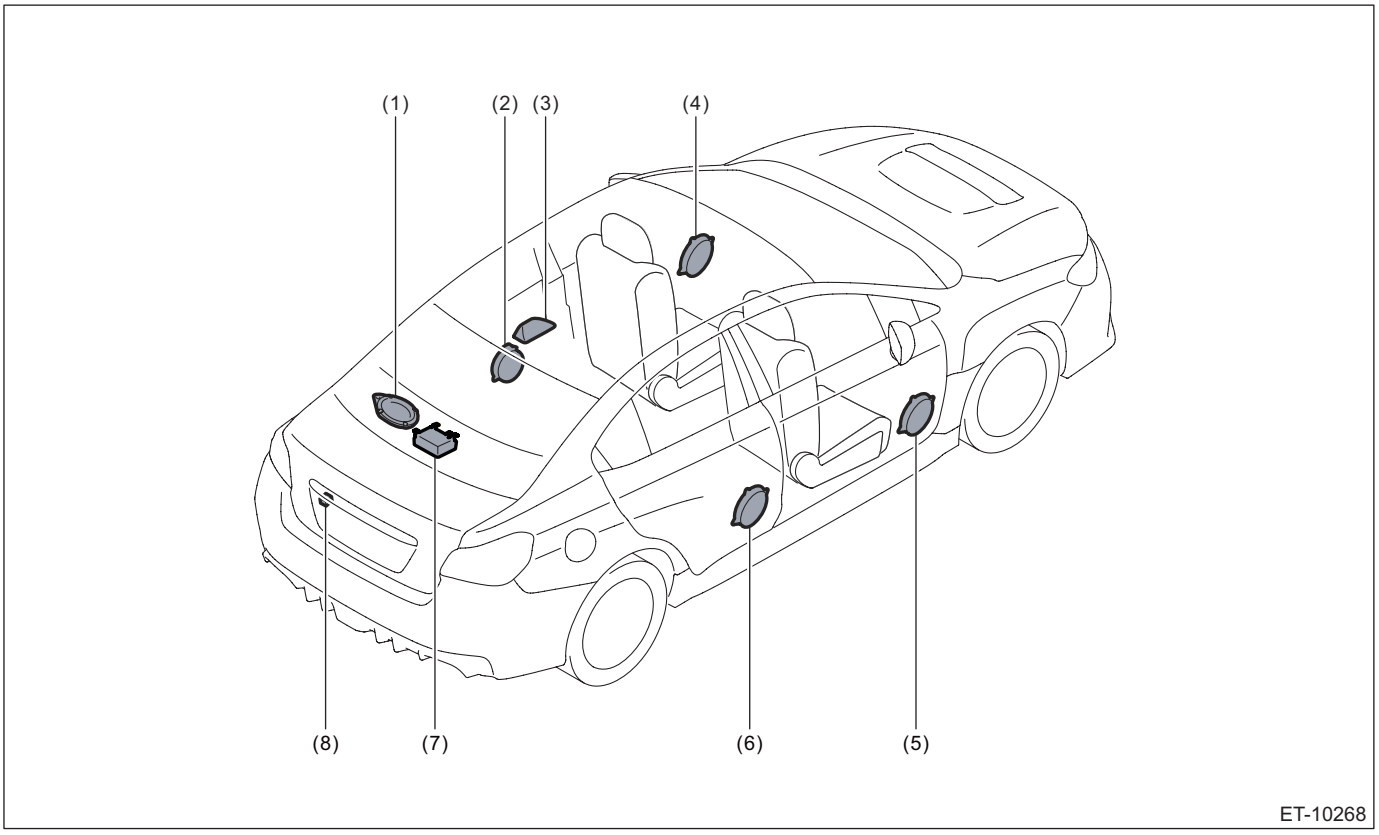

(1) Speaker ASSY - woofer
(2) Speaker ASSY - rear LH
(3) Antenna ASSY - roof or telematics antenna*1
(4) Speaker ASSY - front LH
(5) Speaker ASSY - front RH
(6) Speaker ASSY - rear RH
(7) Power amplifier ASSY
(8) Rearview camera ASSY

*1: Model with telematics

2. TELEMATICS SYSTEM

Refer to “LOCATION” of “TELEMATICS SYSTEM (DIAGNOSTICS)” section. <Ref. to TEL(diag)-6, LOCATION, Electrical Component Location.>

B: COMPONENT

1. DATA COMMUNICATION MODULE

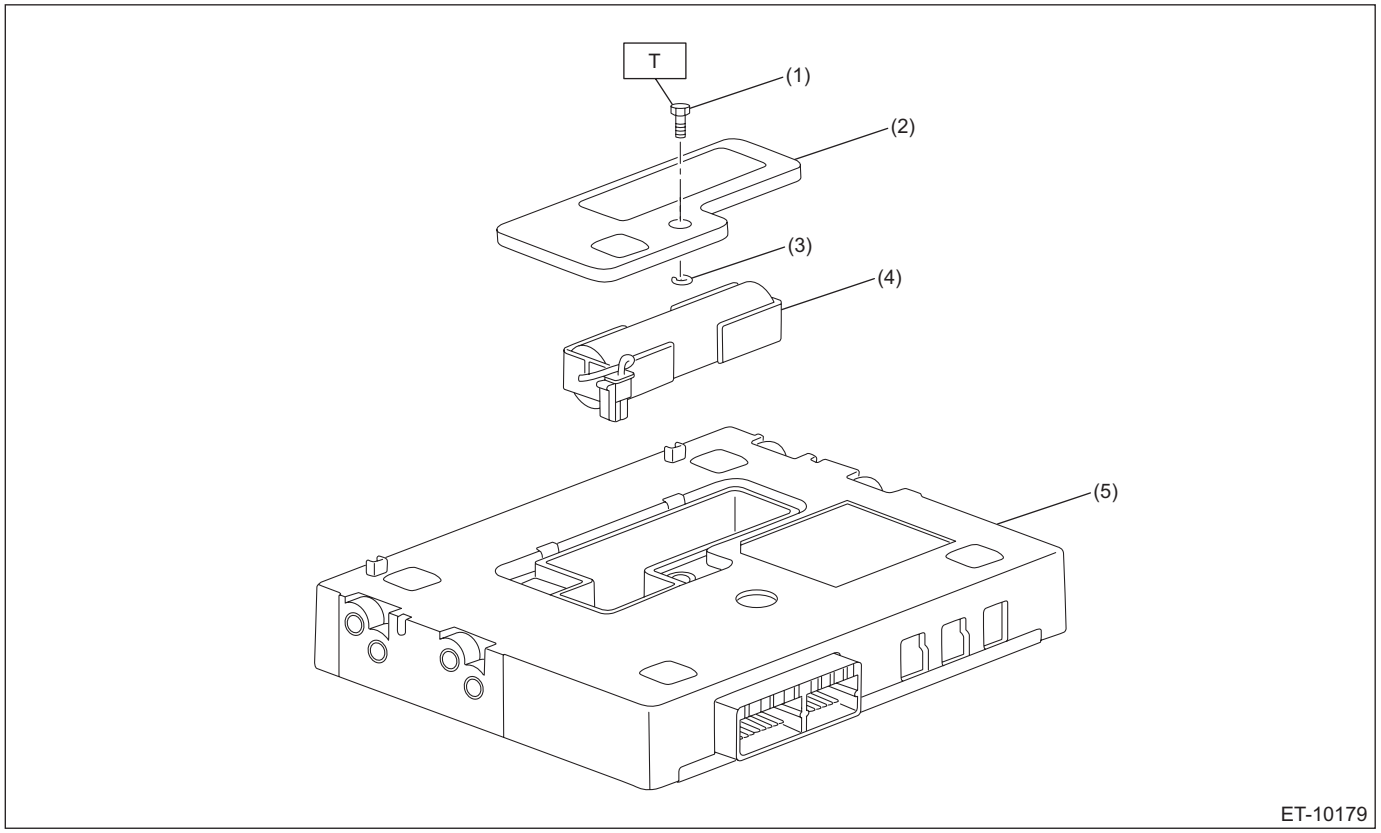

(1) Cap screw
(2) Backup battery cover
(3) Circlip
(4) Backup battery
(5) Data communication module

Tightening torque: N·m (kgf-m, ft-lb)
T: 0.3 (0.03, 0.2)

C: CAUTION

• Before disconnecting connectors of sensors or units, be sure to disconnect the ground cable from battery. When replacing the audio and MFD parts provided with memory functions, record the memory contents before disconnecting the battery ground cable.
• Be careful of the following items. Failing to do so may cause the airbag system malfunction.
  – Yellow connectors and harnesses with yellow tapes around them are the connectors and harnesses for the airbag system. When using a tester on these circuits, follow the cautions of “AIRBAG SYSTEM”. <Ref. to AB-9, CAUTION, General Description.>
  – Be careful not to damage the airbag system wiring harness when servicing the electrical parts around the steering column.
• When removing, installing or replacing the VDCCM&H/U, VDCCM&H/U bracket, steering wheel or steering angle sensor (steering roll connector), perform “VDC sensor midpoint setting mode” of the VDC. <Ref. to VDC-17, VDC SENSOR MIDPOINT SETTING MODE, ADJUSTMENT, VDC Control Module and Hydraulic Control Unit (VDCCM&H/U).>

D: PREPARATION TOOL

1. SPECIAL TOOL

ILLUSTRATION	TOOL NUMBER	DESCRIPTION	REMARKS
 STSSM4	—	SUBARU SELECT MONITOR 4	Used for setting of each function and troubleshooting for electrical system. NOTE: For detailed operation procedures of Subaru Select Monitor 4, refer to “Application help”.

2. GENERAL TOOL

TOOL NAME	REMARKS
Circuit tester	Used for measuring resistance, voltage and current.
DST-i	Used together with Subaru Select Monitor 4.

2. Check List for Interview

A: CHECK

- Inspect the following items regarding the vehicle's state.
- Print out this page for interviewing customers.

1. MODEL WITH 6.2 INCH DISPLAY

<table>
<tr><td colspan="2">Check List for Interview</td><td colspan="2">Date of Vehicle Bring-in
Year Month Date</td></tr>
<tr><td colspan="2" rowspan="2">Customer's name</td><td>Registration No.</td><td>Initial year of registration
Year Month Date</td></tr>
<tr><td>Vehicle model</td><td>Frame number</td></tr>
<tr><td>Interviewer</td><td>Inspector</td><td>Engine type</td><td>Odometer reading</td></tr>
<tr><td colspan="4">Customer specified content
•
•
•
•</td></tr>
<tr><td rowspan="3">Product information</td><td>Part No.</td><td>Manufacturer model number</td><td>Serial No.</td></tr>
<tr><td colspan="3">Software version*1</td></tr>
<tr><td colspan="3">Connected device (example: iPod connected via USB cable)</td></tr>
<tr><td>SUBARU STARLINK connection ID*1</td><td colspan="3"></td></tr>
<tr><td>SUBARU STARLINK app version</td><td colspan="3"></td></tr>
<tr><td rowspan="3">Mobile phone</td><td colspan="3">Mobile phone carrier (example: AT&T)</td></tr>
<tr><td colspan="3">Mobile phone model (example: Apple iPhone 6)</td></tr>
<tr><td colspan="3">Mobile phone OS version (example: software version information)</td></tr>
<tr><td>Date when problem occurred</td><td colspan="3">Year Month Date</td></tr>
<tr><td rowspan="3">Conditions at event</td><td colspan="3">Weather
❑ Fine ❑ Cloudy ❑ Rainy ❑ Snowy ❑ Others ( )</td></tr>
<tr><td colspan="3">Temperature
°C (°F)</td></tr>
<tr><td colspan="3">How often
❑ Always (Check here if reproduced.)❑ Once in the past
❑ Sometimes (times a day / times a week / times a month)</td></tr>
<tr><td>When</td><td colspan="3">Example: It occurs about 30 minutes after driving.</td></tr>
<tr><td>Occurrence condition 1 (In what situations did it occur?)</td><td colspan="3">❑ Fast Driving ❑ Rough Roads ❑ Parked ❑ Unknown ❑ Others</td></tr>
<tr><td>Occurrence condition 2 (In what operations did it occur?)</td><td colspan="3">❑ ACC On ❑ Insert Disc ❑ Press Specific Button ❑ Press Specific Mode
❑ Unknown ❑ Others</td></tr>
<tr><td>Recovering condition (What helped the status return to normal?)</td><td colspan="3">❑ Recover on its own ❑ ACC Off and On ❑ Does not recover ❑ Others</td></tr>
</table>

Occurrence location	❑ Unknown ❑ Any Place ❑ Driving around open areas like in the country ❑ Driving around hills or mountains ❑ Driving around cities with large buildings ❑ Driving around residential areas or no large buildings ❑ Driving around areas with power
Error message content (error message displayed)	
Display trouble	❑ Black screen ❑ White screen ❑ Blue screen ❑ Dim ❑ Vertical/horizontal noise (lines) ❑ Poor color tone ❑ Unclear ❑ Display corruption ❑ No picture ❑ Others
Occurrence conditions (screen display related problems)	❑ CD ❑ Radio ❑ External devices ❑ Others ( )
Operating problems	❑ Display does not switch ❑ Display changes unexpectedly ❑ Response is dull/slow ❑ Does not respond to key entry ❑ Does not respond to steering switch entry ❑ Does not change to night mode screen ❑ Discs cannot be inserted or ejected ❑ Others
Display/touch switch malfunction	❑ Brightness / Contrast ❑ Discoloration ❑ No rear camera ❑ Partial Display ❑ Lines in screen ❑ No Audio Control Screen ❑ No Navi Map on Screen ❑ Others
Voice recognition malfunction	❑ Voice recognition is not ready ❑ Not recognize commands ❑ Others
BEEP on operation entry	❑ Present ❑ None
Radio malfunction	❑ AM: Station (Hz)❑ FM: Station (Hz) ❑ SXM: Station (channel) (only for North America) ❑ HD: Station (channel) (only for North America)❑ No Sound ❑ No / Poor Sound ❑ Noise / Static ❑ Sound cuts in / out ❑ Others
SW color change at operation	❑ Present ❑ None
Audio malfunction	❑ Does not sound ❑ Front (❑ R ❑ L) ❑ Rear (❑ R ❑ L) ❑ Others ( ) ❑ Operation related problems ❑ Cannot adjust volume level❑ Cannot use tone control or adjust tone range ❑ Cannot record ❑ Sound skipping ❑ CD ❑ DVD ❑ Others ( ) • Specific mode/disc ( )
CD/USB/SD/iPod malfunction	❑ Will not accept ❑ Will not eject (CD) ❑ Will not play ❑ Skips / Jump Chapter ❑ No Sound ❑ Noise / Static❑ Sound cuts in / out ❑ Shows Error ❑ Others
Bluetooth Audio related malfunction	❑ Will Not Pair ❑ Will Not Play ❑ No Sound ❑ Noise / Static ❑ Disconnect on its own ❑ Others
Bluetooth handsfree related malfunction	❑ Will Not Pair ❑ Cannot Hear (Receiver) ❑ Cannot Hear (Caller) ❑ Sounds Garbled ❑ Address Book Will Not Transfer ❑ Disconnect on its own
SUBARU STARLINK malfunction	❑ Bluetooth connection not established ❑ SUBARU STARLINK app disabled ❑ SUBARU STARLINK app disabled ❑ Communication gets out of service ❑ Pandora disabled ❑ MirrorLink disabled ❑ AHA disabled ❑ USB connection not established ❑ Others
Check result	Reproductivity ❑ Reproduced ❑ Always ❑ Sometimes ❑ Cannot be reproduced ❑ Others
	Condition ❑ Cold ❑ Warm ❑ At starting ❑ Immediately after starting ❑ During warm-up ❑ At idling ❑ When start driving ❑ While driving ❑ At acceleration ❑ At deceleration ❑ When applying brake

*1: For confirmation procedure, refer to Audio System. <Ref. to ET-11, OPERATION, Audio System.>

2. MODEL WITH 7 INCH DISPLAY (AUDIO)

Refer to model with 6.2 inch display. <Ref. to ET-6, MODEL WITH 6.2 INCH DISPLAY, CHECK, Check List for Interview.>

Check List for Interview

3. MODEL WITH 7 INCH DISPLAY (NAVIGATION)

Check List for Interview		Date of Vehicle Bring-in Year Month Date	
Customer's name		Registration No.	Initial year of registration Year Month Date
		Vehicle model	Frame number
Interviewer	Inspector	Engine type	Odometer reading
Customer specified content • • • •			
Product information	Part No.	Manufacturer model number	Serial No.
	Software version*1		
	Connected device (example: iPod connected via USB cable)		
SUBARU STARLINK connection ID*1			
SUBARU STARLINK app version			
Mobile phone	Mobile phone carrier (example: AT&T)		
	Mobile phone model (example: Apple iPhone 6)		
	Mobile phone OS version (example: software version information)		
Date when problem occurred	Year Month Date		
Conditions at event	Weather ❑ Fine ❑ Cloudy ❑ Rainy ❑ Snowy ❑ Others ( )		
	Temperature °C (°F)		
	How often ❑ Always (Check here if reproduced.) ❑ Once in the past ❑ Sometimes (times a day / times a week / times a month)		
When	Example: It occurs about 30 minutes after driving.		
Occurrence condition 1 (In what situations did it occur?)	❑ Fast Driving ❑ Rough Roads ❑ Parked ❑ Unknown ❑ Others		
Occurrence condition 2 (In what operations did it occur?)	❑ ACC On ❑ Insert Disc ❑ Press Specific Button ❑ Press Specific Mode ❑ Unknown ❑ Others		
Recovering condition (What helped the status return to normal?)	❑ Recover on its own ❑ ACC Off and On ❑ Does not recover ❑ Others		
Occurrence location	❑ Unknown ❑ Any Place ❑ Driving around open areas like in the country ❑ Driving around hills or mountains ❑ Driving around cities with large buildings ❑ Driving around residential areas or no large buildings ❑ Driving around areas with power		

Check List for Interview

Error message content (error message displayed)	
Display trouble	❑ Black screen ❑ White screen ❑ Blue screen ❑ Dim ❑ Vertical/horizontal noise (lines) ❑ Poor color tone ❑ Unclear ❑ Display corruption ❑ No picture ❑ Others
Occurrence conditions (screen display related problems)	❑ Navigation ❑ CD ❑ Radio ❑ External devices ❑ Others ( )
Operating problems	❑ Display does not switch ❑ Display changes unexpectedly ❑ Response is dull/slow ❑ Does not respond to key entry ❑ Does not respond to steering switch entry ❑ Does not change to night mode screen ❑ Discs cannot be inserted or ejected ❑ Others
Display/touch switch malfunction	❑ Brightness / Contrast ❑ Discoloration ❑No rear camera ❑ Partial Display ❑ Lines in screen ❑ No Audio Control Screen ❑No Navi Map on Screen ❑Others
Voice recognition malfunction	❑ Voice recognition is not ready ❑ Not recognize commands ❑ Others
BEEP on operation entry	❑ Present ❑ None
Radio malfunction	❑ AM: Station (Hz)❑ FM: Station (Hz) ❑ SXM: Station (channel) (only for North America) ❑ HD: Station (channel) (only for North America)❑ No Sound ❑ No / Poor Sound ❑ Noise / Static ❑ Sound cuts in / out ❑ Others
SW color change at operation	❑ Present ❑ None
Audio malfunction	❑ Does not sound ❑ Front (❑ R ❑ L) ❑ Rear (❑ R ❑ L) ❑ Others ( ) ❑ Operation related problems ❑ Cannot adjust volume level❑ Cannot use tone control or adjust tone range ❑ Cannot record ❑ Sound skipping ❑ CD ❑ DVD ❑ Others ( ) • Specific mode/disc ( )
CD/USB/SD/iPod malfunction	❑ Will not accept ❑ Will not eject (CD) ❑ Will not play ❑ Skips / Jump Chapter ❑ No Sound ❑ Noise / Static❑ Sound cuts in / out ❑ Shows Error ❑ Others
Navigation failure	❑ Cursor or map rotating ❑ Wrong location of vehicle ❑ Cursor hopping during driving ❑ Map image incomplete ❑ No GPS marks displayed ❑ Incorrect time display ❑ Guide not initiated ❑ No route search ❑ Caution remains on navigation screen ❑ Unexpected return back to opening screen ❑ No Voice Guidance ❑ Guidance Volume too Low ❑ Will Not Read Data ❑ Will Not Update ❑ Destination / Route Problem ❑ Display Does Not Change (Frozen) ❑ Overall Navi Operation Slow ❑ No GPS reception ❑ Others
Bluetooth Audio related malfunction	❑ Will Not Pair ❑ Will Not Play ❑ No Sound ❑ Noise / Static ❑ Disconnect on its own ❑ Others
Bluetooth handsfree related malfunction	❑ Will Not Pair ❑ Cannot Hear (Receiver) ❑ Cannot Hear (Caller) ❑ Sounds Garbled ❑ Address Book Will Not Transfer ❑ Disconnect on its own
SUBARU STARLINK malfunction	❑ Bluetooth connection not established ❑ SUBARU STARLINK app disabled ❑ SUBARU STARLINK app disabled ❑ Communication gets out of service ❑ Pandora disabled ❑ MirrorLink disabled ❑ AHA disabled ❑ USB connection not established ❑ Others
Check result	Reproductivity ❑ Reproduced ❑ Always ❑ Sometimes ❑ Cannot be reproduced ❑ Others
	Condition ❑ Cold ❑ Warm ❑ At starting ❑ Immediately after starting ❑ During warm-up ❑ At idling ❑ When start driving ❑ While driving ❑ At acceleration ❑ At deceleration ❑ When applying brake

*1: For confirmation procedure, refer to Navigation System. <Ref. to ET-22, OPERATION, Navigation System.>

3. Relay and Fuse

A: LOCATION

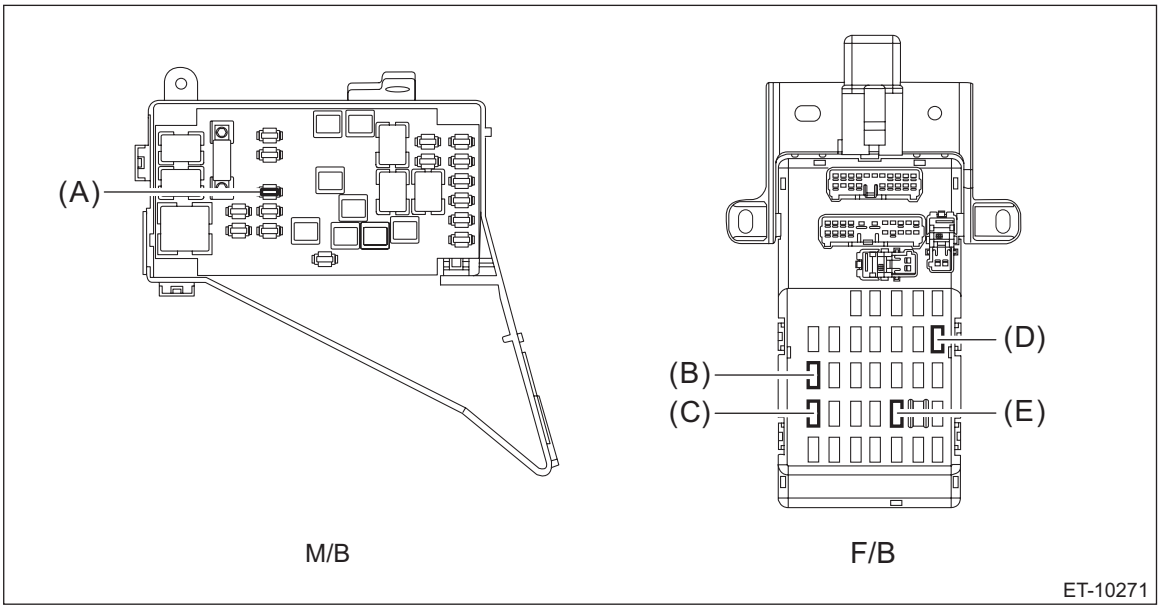

Main fuse box	Fuse 25 A (audio amplifier)	(A)
Relay & fuse box	Fuse 20 A (rear accessory power supply socket)	(B)
	Fuse 10 A (front accessory power supply socket)	(C)
	Fuse 15 A (data communication module*1)	(D)
	Fuse 10 A (audio, navigation unit, external connection terminal, audio amplifier, data communication module*1)	(E)

*1: Model with telematics

NOTE:
For other related fuses, refer to the wiring diagram. <Ref. to WI-31, Power Supply Circuit.>

B: INSPECTION

1. CHECK FUSE

1) Remove the fuse and inspect visually.
2) If the fuse is blown out, replace the fuse.

NOTE:
If the fuse is blown again, check the system wiring harness.

4. Audio System

A: WIRING DIAGRAM

Refer to “Audio System” in the wiring diagram.

- 6.2 INCH DISPLAY: <Ref. to WI-78, 6.2 INCH DISPLAY, WIRING DIAGRAM, Audio System.>
- 7 INCH DISPLAY
  – Model without amplifier and without telematics: <Ref. to WI-83, 7 INCH DISPLAY (WITHOUT AUDIO AMPLIFIER, WITHOUT TELEMATICS), WIRING DIAGRAM, Audio System.>
  – Model without amplifier and with telematics: <Ref. to WI-87, 7 INCH DISPLAY (WITHOUT AUDIO AMPLIFIER, WITH TELEMATICS), WIRING DIAGRAM, Audio System.>
  – Model with amplifier and without telematics: <Ref. to WI-93, 7 INCH DISPLAY (WITH AUDIO AMPLIFIER, WITHOUT TELEMATICS), WIRING DIAGRAM, Audio System.>
  – Model with amplifier and telematics: <Ref. to WI-99, 7 INCH DISPLAY (WITH AUDIO AMPLIFIER, WITH TELEMATICS), WIRING DIAGRAM, Audio System.>

B: OPERATION

1. SUBARU STARLINK CONNECTION ID DISPLAY

Model with 6.2 inch display

1) Turn the ignition switch to ACC.
2) Press the HOME button (a) to display the {HOME} screen.
3) Touch the {SETTINGS} (b) to display the {SETTINGS} screen.
4) Touch the {Settings General} (c) to display the {Settings General} screen.
5) Touch the {Version} (d) in {System Software}.

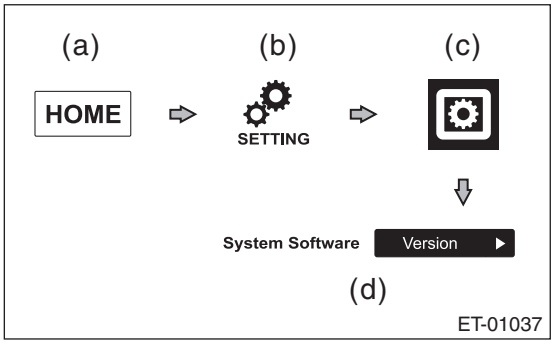

6) Confirm the Serial Number (8 digits).

Model with 7 inch display

Operation is the same as that of navigation assembly, therefore, refer to “Navigation System”. <Ref. to ET-22, SUBARU STARLINK CONNECTION ID DISPLAY, OPERATION, Navigation System.>

2. SOFTWARE VERSION DISPLAY

Model with 6.2 inch display

1) Perform the same procedure as for the SUBARU STARLINK connection ID display. <Ref. to ET-11, SUBARU STARLINK CONNECTION ID DISPLAY, OPERATION, Audio System.>
2) Confirm the Software Ver.

Model with 7 inch display

Operation is the same as that of navigation assembly, therefore, refer to “Navigation System”. <Ref. to ET-22, SOFTWARE VERSION DISPLAY, OPERATION, Navigation System.>

3. INITIALIZATION (FACTORY DEFAULT)

Model with 6.2 inch display

1) Turn the ignition switch to ACC.
2) Press the HOME button (a) to display the {HOME} screen.
3) Touch the {SETTINGS} (b) to display the {SETTINGS} screen.
4) Touch the {Settings General} (c) to display the {Settings General} screen.
5) Touch the {Restore} (d) in {Reset to Factory Settings}.

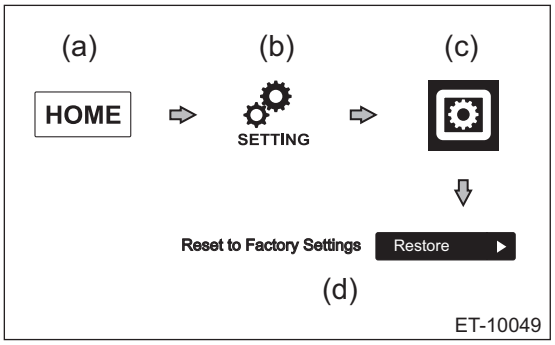

6) Touch {OK} after {Are you sure you want to delete All Data?} is displayed.
7) {DO NOT OPERATE. Initializing now.} is displayed, and all data deletion is initiated.
8) When all data is deleted, {All date has been deleted. Start up the engine to reboot.} is displayed.

Model with 7 inch display

Operation is the same as that of navigation assembly, therefore, refer to “Navigation System”. <Ref. to ET-23, INITIALIZATION (FACTORY DEFAULT), OPERATION, Navigation System.>

4. CHECK CONNECTIONS WITH LINE DIAG MODE

Model with 6.2 inch display

1) Turn the ignition switch to ACC.
2) Press the button (a) to display the Audio OFF screen.
3) Touch the screen in order from (b) to (e).

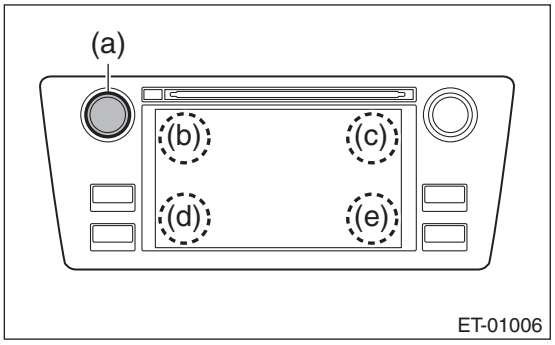

NOTE:
Pressing the button (a) or turning the ignition switch from the OFF to ACC position can exit the Line Diag mode.
4) {Line Diag} screen is displayed.
5) Check the connection status with the {Connectivity Check} in the {Line Diag} screen.

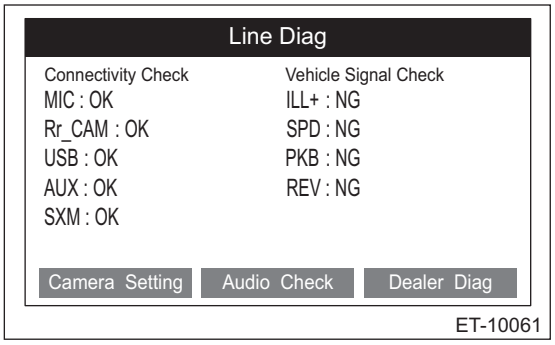

OK: Each connection device is connected properly.
NG: No connection or abnormal connection is detected.

NOTE:
Check the external connection terminals (USB 1, 2 and AUX) by connecting a memory for check or a pin jack.

Model with 7 inch display

Operation is the same as that of navigation assembly, therefore, refer to “Navigation System”. <Ref. to ET-23, CHECK CONNECTIONS WITH LINE DIAG MODE, OPERATION, Navigation System.>

5. CHECK VEHICLE SIGNALS WITH LINE DIAG MODE

Model with 6.2 inch display

1) Turn the ignition switch to ACC.
2) Press the button (a) to display the Audio OFF screen.
3) Touch the screen in order from (b) to (e).

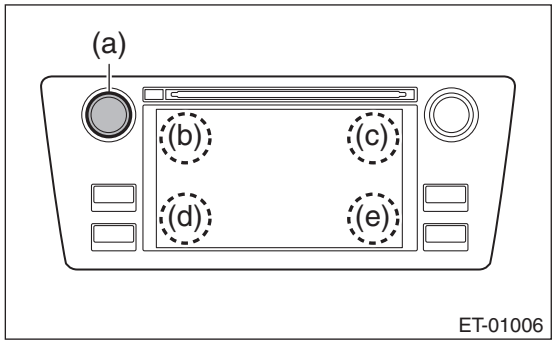

NOTE:
Pressing the button (a) or turning the ignition switch from the OFF to ACC position can exit the diagnostic mode.
4) {Line Diag} screen is displayed.
5) Check the connection status with the {Vehicle Signal Check} in the {Line Diag} screen.

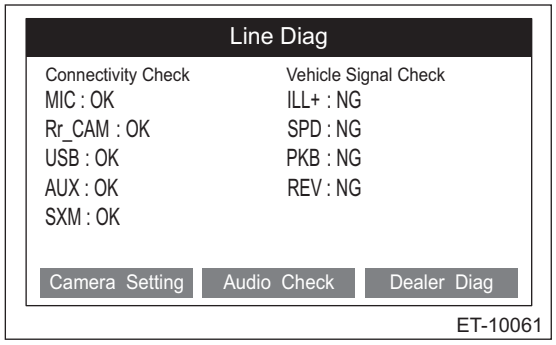

- Check illumination

NOTE:
Make sure that the bright switch is not ON.
1. Set the lighting switch to the parking position.
2. Make sure that {OK} lights in ILL+ and then the screen becomes dim.

OK: Normal.
NG: Abnormal. Check the signal line connector. If there are no problems, the unit could be faulty.

- Check speed sensor

NOTE:
– Before starting inspections, check the safety around the vehicle.
– Lift up the vehicle as necessary.
– When the diagnostic trouble code is input in the VDC CM, perform the Clear Memory Mode.

1. Drive the vehicle at 8 km/h (5 MPH) or more.
2. Check that {OK} is displayed in SPD.

OK: Normal.
NG: Vehicle speed is less than 8 km/h (5 MPH), or malfunction is detected in the signal line. Check the signal line connector. If there are no problems, the unit could be faulty.

- Check parking brake signal
  1. Pull the parking brake lever or switch.
  2. Check that {OK} is displayed in PKB.
  OK: Normal.
  NG: Abnormal. Check the signal line connector. If there are no problems, the unit could be faulty.
- Check back sensor

NOTE:
Before starting inspections, check the safety behind the vehicle.

1. Turn the ignition to ON.
2. Pull the parking brake lever or switch. Depress the brake pedal and place the select lever or gear shift lever in reverse.
3. Make sure that {OK} is displayed in REV.

OK: Normal.
NG: Abnormal. Check the signal line connector. If there are no problems, the unit could be faulty.

Model with 7 inch display

Operation is the same as that of navigation assembly, therefore, refer to “Navigation System”. <Ref. to ET-24, CHECK VEHICLE SIGNALS WITH LINE DIAG MODE, OPERATION, Navigation System.>

6. CHECK SPEAKER OUTPUT WITH LINE DIAG MODE

Model with 6.2 inch display

1) Turn the ignition switch to ACC.
2) Press the button (a) to display the Audio OFF screen.
3) Touch the screen in order from (b) to (e).

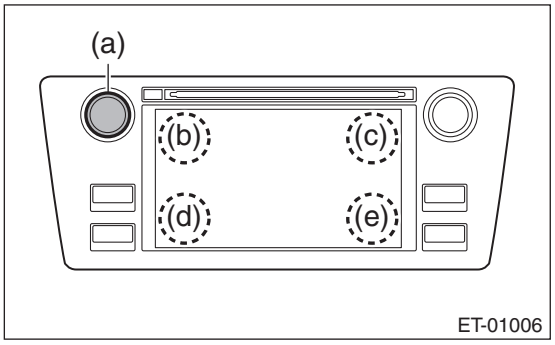

NOTE:
Pressing the button (a) or turning the ignition switch from the OFF to ACC position can exit the Line Diag mode.
4) {Line Diag} screen is displayed.

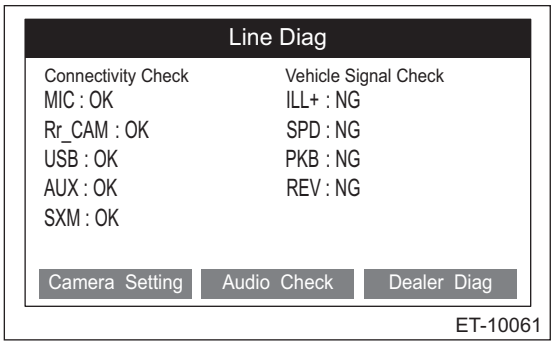

5) Touch {Audio Check} on the {Line Diag} screen.
6) {Audio Check} screen is displayed.

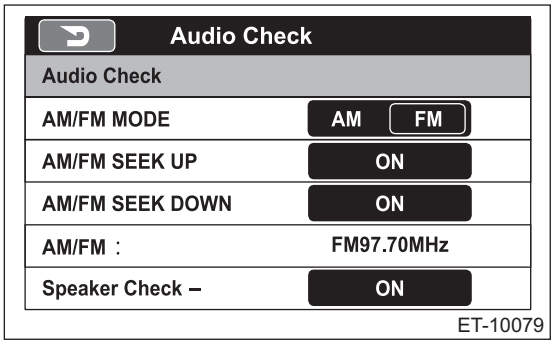

7) Touch the {ON} key of {Speaker Check} to check speaker output.

NOTE:
- The speaker front left → front right → rear right → rear left will sound in order for 2 seconds each.
- The speaker sounds at the maximum volume during speaker check.
- Press the {BACK} key to return to the {Line Diag} screen.

Model with 7 inch display

Operation is the same as that of navigation assembly, therefore, refer to “Navigation System”. <Ref. to ET-25, CHECK SPEAKER OUTPUT WITH LINE DIAG MODE, OPERATION, Navigation System.>

7. CHECK RADIO FREQUENCY RANGE SWITCH-OVER

NOTE:
- Displayed only for model with 6.2 inch display.
- Some items are not displayed according to destination.

1) Turn the ignition switch to ACC.
2) Press the button (a) to display the Audio OFF screen.
3) Touch the screen in order from (b) to (e).

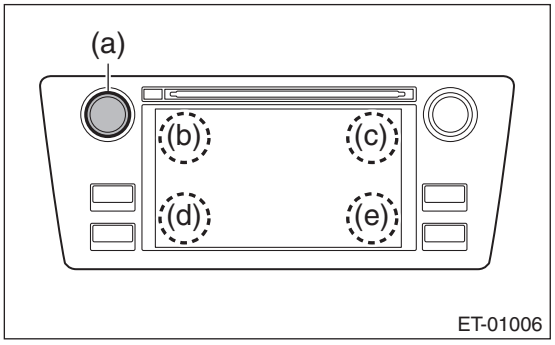

NOTE:
Pressing the button (a) or turning the ignition switch from the OFF to ACC position can exit the Line Diag mode.

4) {Line Diag} screen is displayed.

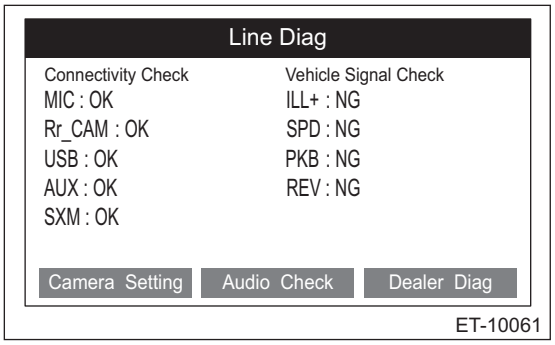

5) Touch {Dealer Diag} on the {Line Diag} screen.
6) The {Dealer Diag} screen is displayed.

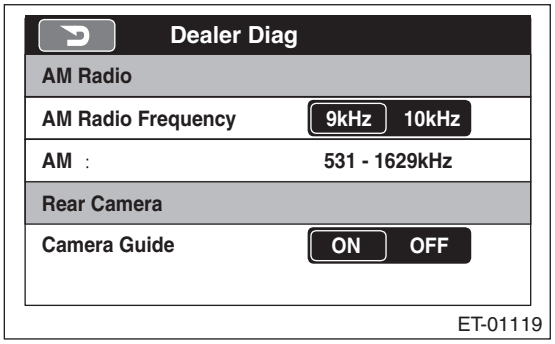

7) Touch the {9kHz} or {10kHz} key to switch the AM radio frequency range.

Display key	Frequency range
9 kHz	Set the AM frequency range to 531 — 1629 kHz.
10 kHz	Set the AM frequency range to 530 — 1710 kHz.

NOTE:
- When the setting is changed, reboot confirmation for frequency switch-over is displayed. Select {OK} to re-boot. When {cancel} is pressed, the {Dealer Diag} screen is displayed.
- The initial settings is at 9 kHz.

C: INSPECTION

1. BASIC INSPECTION

Model with 6.2 inch display

1) Using the Check List for Interview, ask the customer the condition of how the trouble occurred. <Ref. to ET-6, MODEL WITH 6.2 INCH DISPLAY, CHECK, Check List for Interview.>
2) Check the battery.
- Except for STI model: <Ref. to SC(w/o STI)-51, INSPECTION, Battery.>
- STI model: <Ref. to SC(STI)-24, INSPECTION, Battery.>

3) Check the list of Diagnostics with Phenomenon, and perform diagnosis according to the procedures. <Ref. to ET-63, AUDIO SYSTEM, LIST, Diagnostics with Phenomenon.>

Model with 7 inch display

Refer to “BASIC INSPECTION” in “Navigation System”. <Ref. to ET-26, BASIC INSPECTION, INSPECTION, Navigation System.>

2. SYSTEM BLOCK DIAGRAM

Model with 6.2 inch display

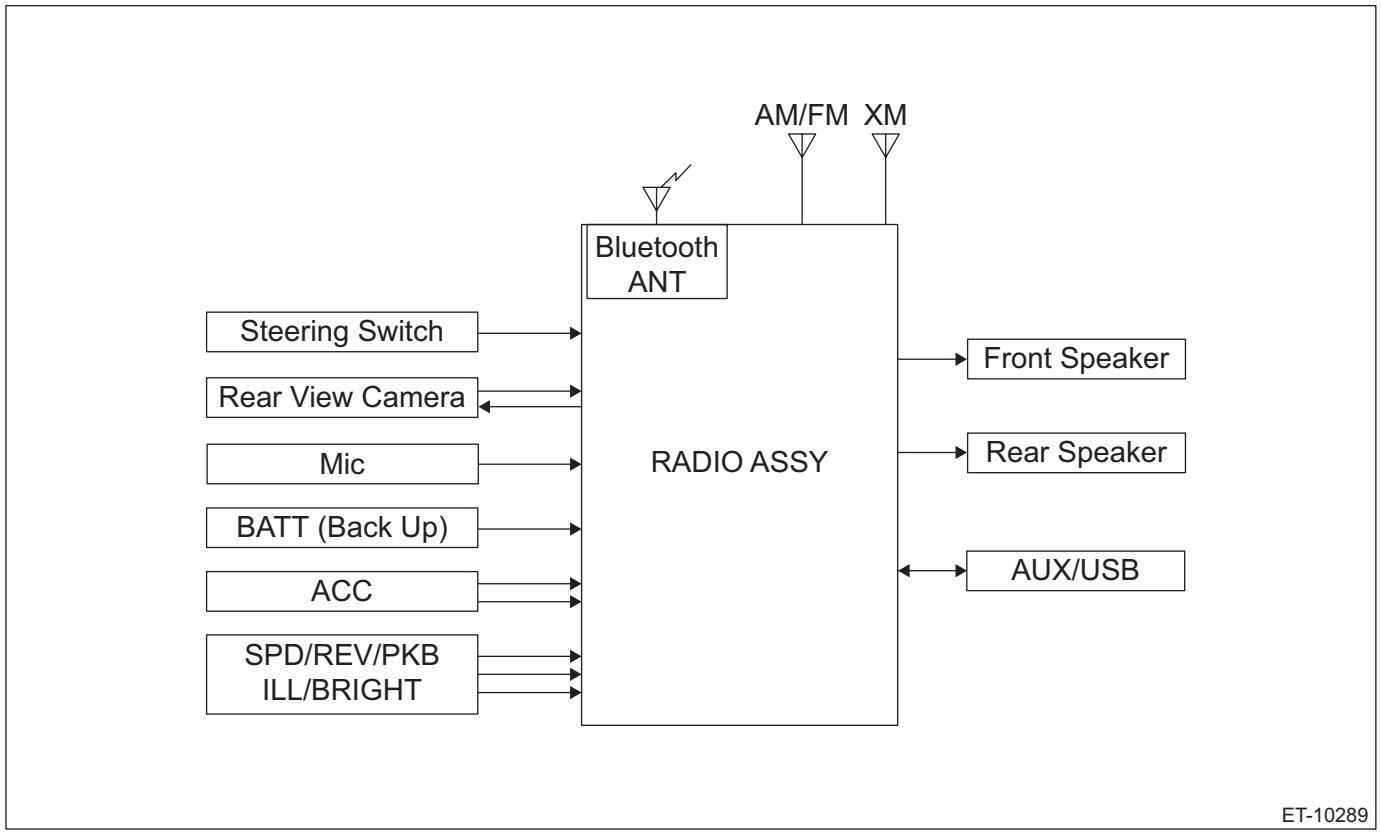

Model with 7 inch display

Refer to “System Block Diagram” in “Navigation System”. <Ref. to ET-27, SYSTEM BLOCK DIAGRAM, INSPECTION, Navigation System.>

3. MODULE I/O SIGNAL

Model with 6.2 inch display

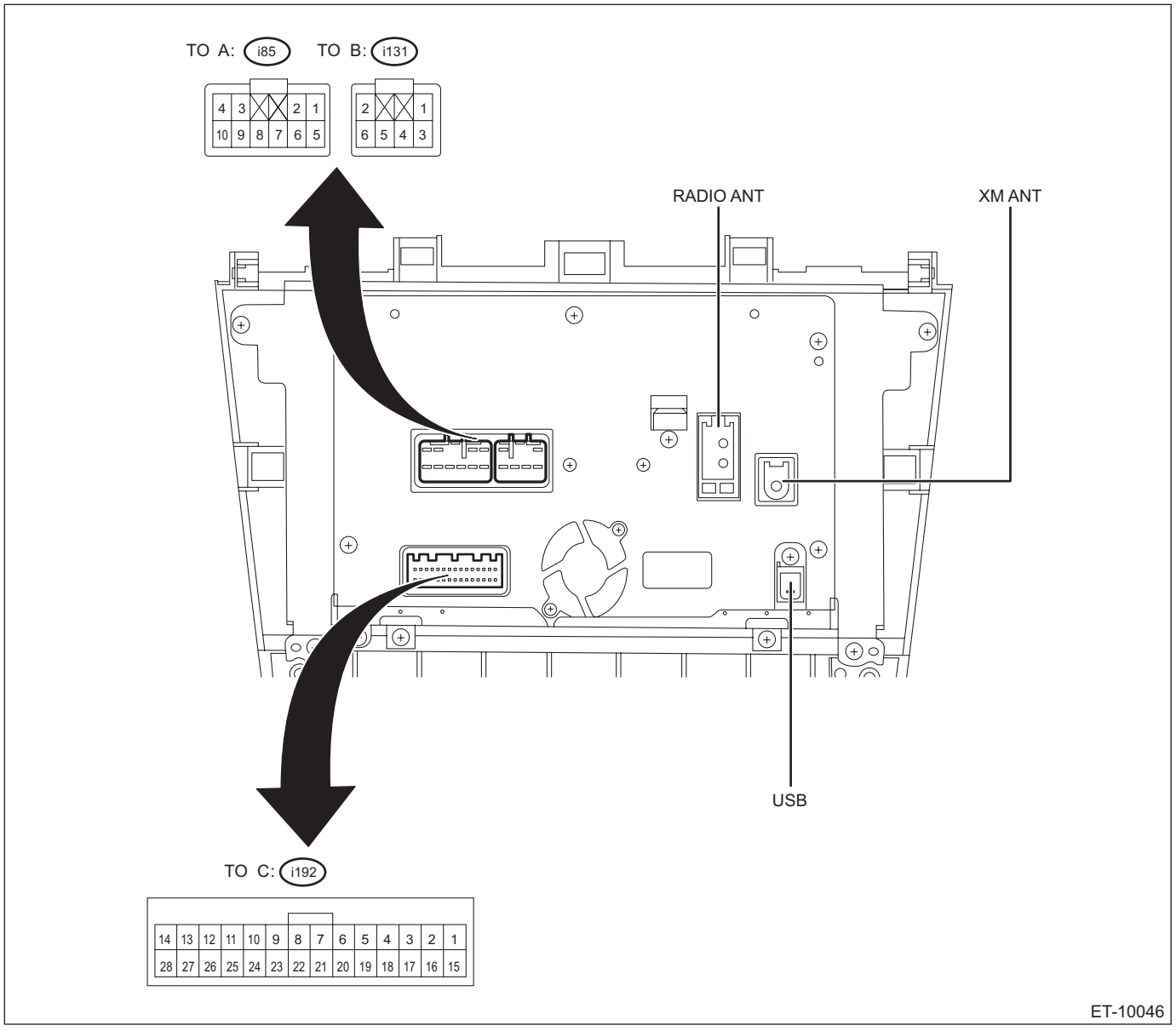

- Power supply and speaker output terminal

Terminal No.	Contents	Measuring condition	Measurement value	Note
(i85) No. 1	FRONT-RH (+)	—	—	—
(i85) No. 2	FRONT-LH (+)	—	—	—
(i85) No. 3 ←→ Chassis ground	ACC	ACC ON	11 — 15 V	—
(i85) No. 4 ←→ Chassis ground	+B	Always	11 — 15 V	—
(i85) No. 5	FRONT-RH (–)	—	—	—
(i85) No. 6	FRONT-LH (–)	—	—	—
(i85) No. 7 ←→ Chassis ground	GND	Always	0 V	—
(i85) No. 8	ANTENNA-ON	—	—	—
(i85) No. 9	N.C.	—	—	—
(i85) No. 10	ILLUMI (+)	—	—	—
(i131) No. 1	REAR-RH (+)	—	—	—
(i131) No. 2	REAR-LH (+)	—	—	—
(i131) No. 3	REAR-RH (–)	—	—	—
(i131) No. 4	N.C.	—	—	—
(i131) No. 5	ILLUMI (–)	—	—	—
(i131) No. 6	REAR-LH (–)	—	—	—

- Steering switch and AUX input terminal for microphone etc.

Terminal No.	Contents	Measuring condition	Measurement value	Note
(i192) No. 1	N.C.	—	—	—
(i192) No. 2	REV	—	—	—
(i192) No. 3	BRIGHT	—	—	—
(i192) No. 4	MIC+B	—	—	—
(i192) No. 5	MIC (+)	—	—	—
(i192) No. 6	MIC-DET	—	—	—
(i192) No. 7	N.C.	—	—	—
(i192) No. 8	N.C.	—	—	—
(i192) No. 9	N.C.	—	—	—
(i192) No. 10	N.C.	—	—	—
(i192) No. 11	CAM + 6 V	—	—	—
(i192) No. 12	CV (+)	—	—	—
(i192) No. 13	CV (–) (SHIELD)	—	—	—
(i192) No. 14	SHIELD-GND (AUX)	—	—	—
(i192) No. 15 ←→ Chassis ground	PKB	At parking ON	1 V or less	—
(i192) No. 16	N.C.	—	—	—
(i192) No. 17 ←→ Chassis ground	SPD	When the tire is rotating	Pulse signal	—
(i192) No. 18	SHIELD-GND (MIC)	—	—	—
(i192) No. 19	MIC (–)	—	—	—
(i192) No. 20	GND (CAMERA)	—	—	—
(i192) No. 21	SW1 (+)	—	—	—
(i192) No. 22	SW2 (+)	—	—	—
(i192) No. 23	SW-GND	—	—	—
(i192) No. 24	N.C.	—	—	—
(i192) No. 25	AUX-ON	—	—	—
(i192) No. 26	AUX-R (+)	—	—	—
(i192) No. 27	AUX-LR (–)	—	—	—
(i192) No. 28	AUX-L (+)	—	—	—

Model with 7 inch display

Refer to “Control Module I/O Signal” in “Navigation System”. <Ref. to ET-28, MODULE I/O SIGNAL, INSPECTION, Navigation System.>

D: NOTE

For procedure of each component in the audio system, refer to the respective sections.

- Audio unit: <Ref. to ET-35, Audio.>
- Power amplifier: <Ref. to ET-42, Power Amplifier.>
- Woofer: <Ref. to ET-41, Woofer.>
- Front speaker
  - Tweeter (instrument panel): <Ref. to ET-38, TWEETER, REMOVAL, Front Speaker.>
  - Door speaker: <Ref. to ET-39, DOOR SPEAKER, REMOVAL, Front Speaker.>
- Rear speaker: <Ref. to ET-40, Rear Speaker.>
- Antenna: <Ref. to ET-43, Antenna.>
- Switches and harness: <Ref. to ET-46, Switches and Harness.>
- External connection terminal: <Ref. to ET-62, External Connection Terminal.>
- Rearview camera: <Ref. to ET-56, Rearview Camera System.>

5. Navigation System

A: WIRING DIAGRAM

Refer to “Navigation System” in the wiring diagram.

- Model without telematics: <Ref. to WI-277, WITHOUT TELEMATICS, WIRING DIAGRAM, Navigation System.>
- Model with telematics: <Ref. to WI-284, WITH TELEMATICS, WIRING DIAGRAM, Navigation System.>

B: OPERATION

1. SUBARU STARLINK CONNECTION ID DISPLAY

1) Turn the ignition switch to ACC.
2) Press the AUDIO/TUNE knob (b) five times with the HOME button (a) pressed to display the {Service Menu} screen.
3) Touch the {Product Information} (c) to display the {Product Information} screen.

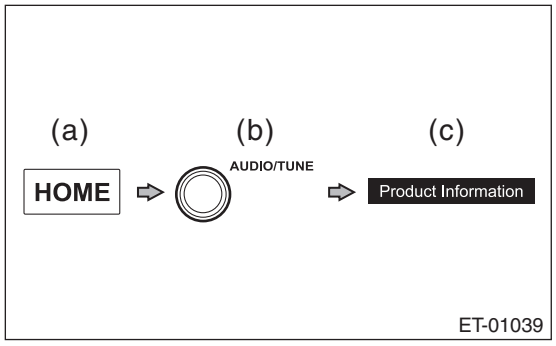

4) Confirm the connectivity ID (16 digits).

2. SOFTWARE VERSION DISPLAY

1) Turn the ignition switch to ACC.
2) Press the AUDIO/TUNE knob (b) five times with the HOME button (a) pressed to display the {Service Menu} screen.
3) Touch the {Service Information} (c).
4) Touch the {Version Information} (d) to display the {Version Information} screen.
5) Touch the {AVN or DA} (e) to display the {Unit Version Information} screen.

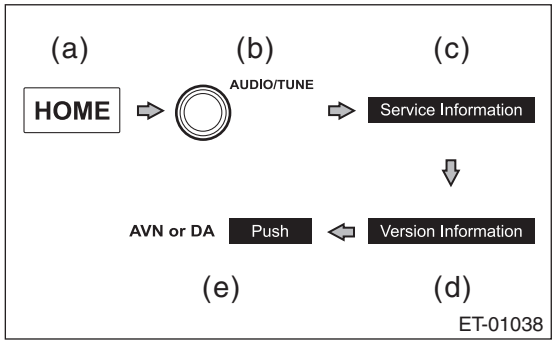

6) Confirm the version.

3. INITIALIZATION (FACTORY DEFAULT)

1) Turn the ignition switch to ACC.
2) Press the HOME button to display the {HOME} screen.
3) Touch the {SETTINGS} to display the {SETTINGS} screen.
4) Touch the {General} to display the {General Setting} screen.
5) Touch the {Delete Personal Data}, and touch the {Delete}.
6) {Deleting personal date. Please do not turn the vehicle off.} is displayed, and all data deletion is initiated.
7) When all data is deleted, {Initialization Complete.} is displayed.

4. CHECK CONNECTIONS WITH LINE DIAG MODE

1) Turn the ignition switch to ACC.
2) Press the button (b) twice with the button (a) pressed.

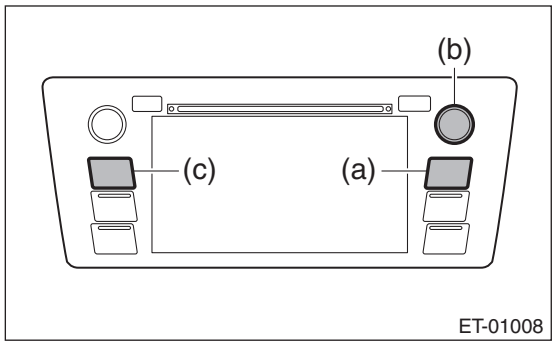

NOTE:
Pressing the button (c) for 3 seconds or more, or turning the ignition switch from the OFF to ACC position can exit the diagnostic mode.
3) {Line Diag} screen is displayed.
4) Check the connection status with the {Connectivity Check} in the {Line Diag} screen.

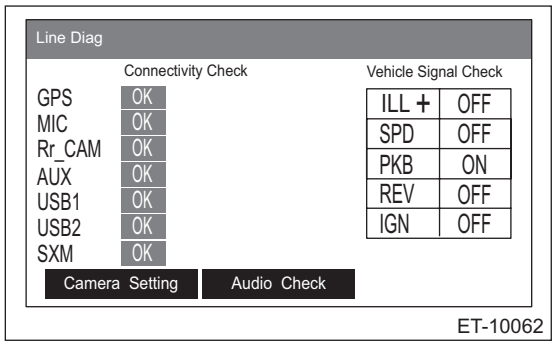

NOTE:
GPS is displayed only for the navigation system.
OK: Each connection device is connected properly.
NG: No connection or abnormal connection is detected.

NOTE:
Check the external connection terminals (USB 1, 2 and AUX) by connecting a memory for check or a pin jack.

5. CHECK VEHICLE SIGNALS WITH LINE DIAG MODE

1) Turn the ignition switch to ACC.
2) Press the button (b) twice with the button (a) pressed.

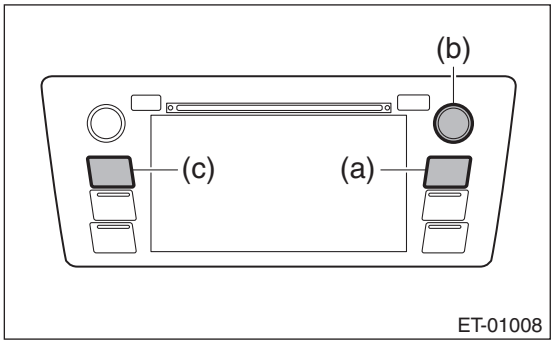

NOTE:
Pressing the button (c) for 3 seconds or more, or turning the ignition switch from the OFF to ACC position can exit the diagnostic mode.
3) {Line Diag} screen is displayed.
4) Check the connection status with the {Vehicle Signal Check} in the {Line Diag} screen.

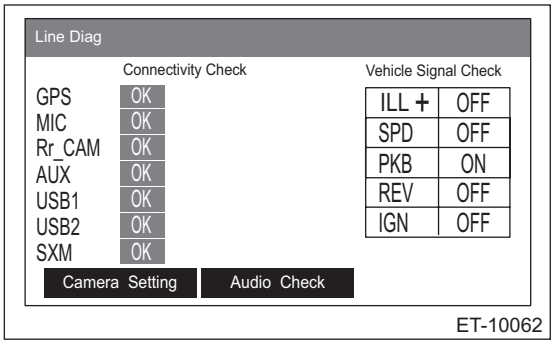

NOTE:
GPS is displayed only for the navigation system.

- Check illumination

NOTE:
Make sure that the bright switch is not ON.

1. Turn the ignition to ON.
2. Set the lighting switch to the parking position.
3. Make sure that {ON} lights in ILL+ and then the screen becomes dim.

ON: Normal.
OFF: Abnormal. Check the signal line connector. If there are no problems, the unit could be faulty.

- Check speed sensor

NOTE:

– Before starting inspections, check the safety around the vehicle.
– Lift up the vehicle as necessary.
– When the diagnostic trouble code is input in the VDC CM, perform the Clear Memory Mode.

1. Drive the vehicle at 9 km/h (6 MPH) or more.
2. Check that {ON} is displayed in SPD.

ON: Normal.
OFF: Vehicle speed is less than 7 km/h (4 MPH), or malfunction is detected in the signal line. Check the signal line connector. If there are no problems, the unit could be faulty.

- Check parking brake signal
  1. Pull the parking brake lever or switch.
  2. Check that {ON} is displayed in PKB.
  ON: Normal.
  OFF: Abnormal. Check the signal line connector. If there are no problems, the unit could be faulty.
- Check back sensor

NOTE:
Before starting inspections, check the safety behind the vehicle.
  1. Turn the ignition to ON.
  2. Pull the parking brake lever or switch. Depress the brake pedal and place the select lever or gear shift lever in reverse.
  3. Make sure that {OK} is displayed in REV.
  ON: Normal.
  OFF: Abnormal. Check the signal line connector. If there are no problems, the unit could be faulty.

6. CHECK SPEAKER OUTPUT WITH LINE DIAG MODE

1) Turn the ignition switch to ACC.
2) Press the button (b) twice with the button (a) pressed.

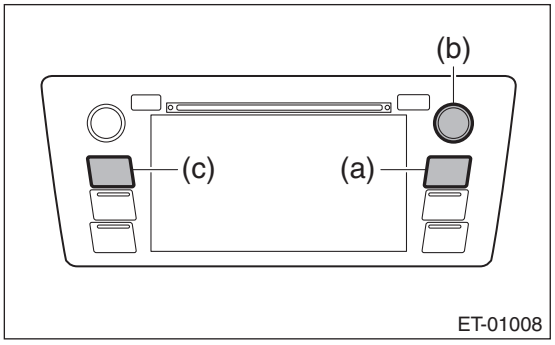

NOTE:
Pressing the button (c) for 3 seconds or more, or turning the ignition switch from the OFF to ACC position can exit the diagnostic mode.
3) {Line Diag} screen is displayed.

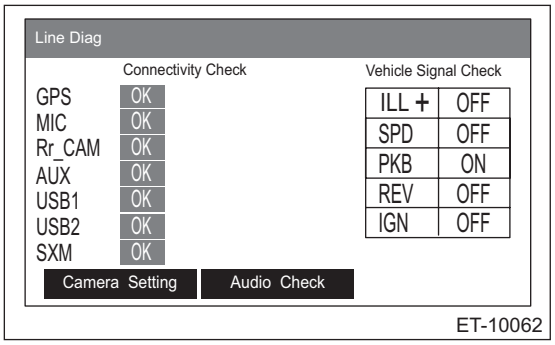

4) Touch {Audio Check} on the {Line Diag} screen.

5) {Audio Check} screen is displayed.

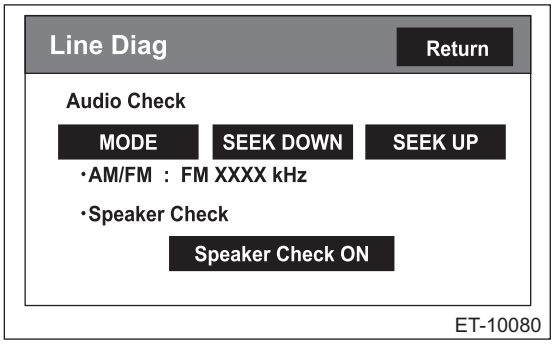

6) Touch the {ON} key of {Speaker Check} to check speaker output.

NOTE:
- The speaker front left → front right → rear right → rear left will sound in order for 2 seconds each.
- The speaker sounds at the maximum volume during speaker check.
- Press the {BACK} key to return to the {Line Diag} screen.

C: INSPECTION

1. BASIC INSPECTION

1) Using the Check List for Interview, ask the customer the condition of how the trouble occurred. <Ref. to ET-8, MODEL WITH 7 INCH DISPLAY (NAVIGATION), CHECK, Check List for Interview.>
2) Check the battery.
- Except for STI model: <Ref. to SC(w/o STI)-51, INSPECTION, Battery.>
- STI model: <Ref. to SC(STI)-24, INSPECTION, Battery.>

3) Check the list of Diagnostics with Phenomenon, and perform diagnosis according to the procedures. <Ref. to ET-63, NAVIGATION SYSTEM, LIST, Diagnostics with Phenomenon.>

2. SYSTEM BLOCK DIAGRAM

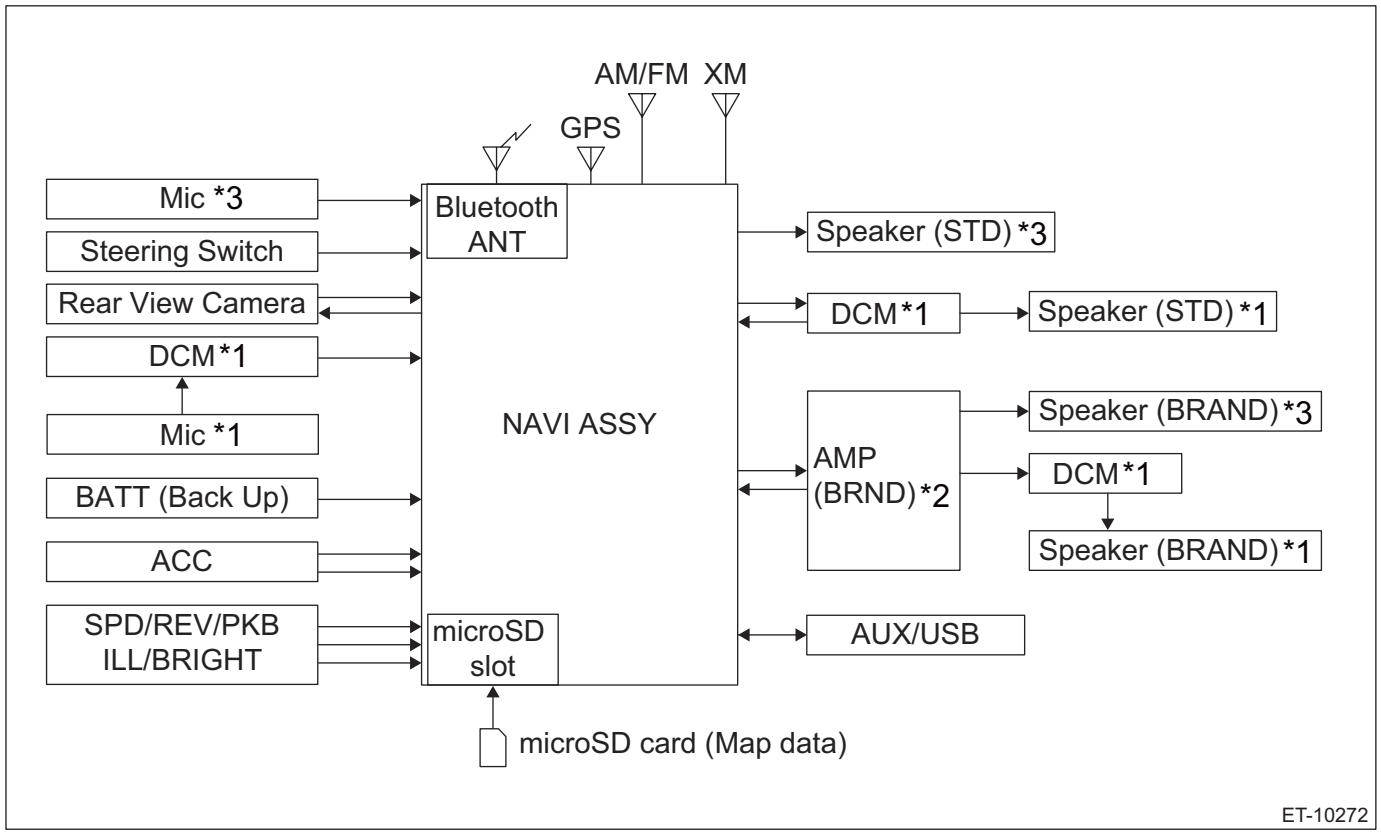

*1: Model with telematics
*2: Model with power amplifier
*3: Model without telematics

3. MODULE I/O SIGNAL

Unit body

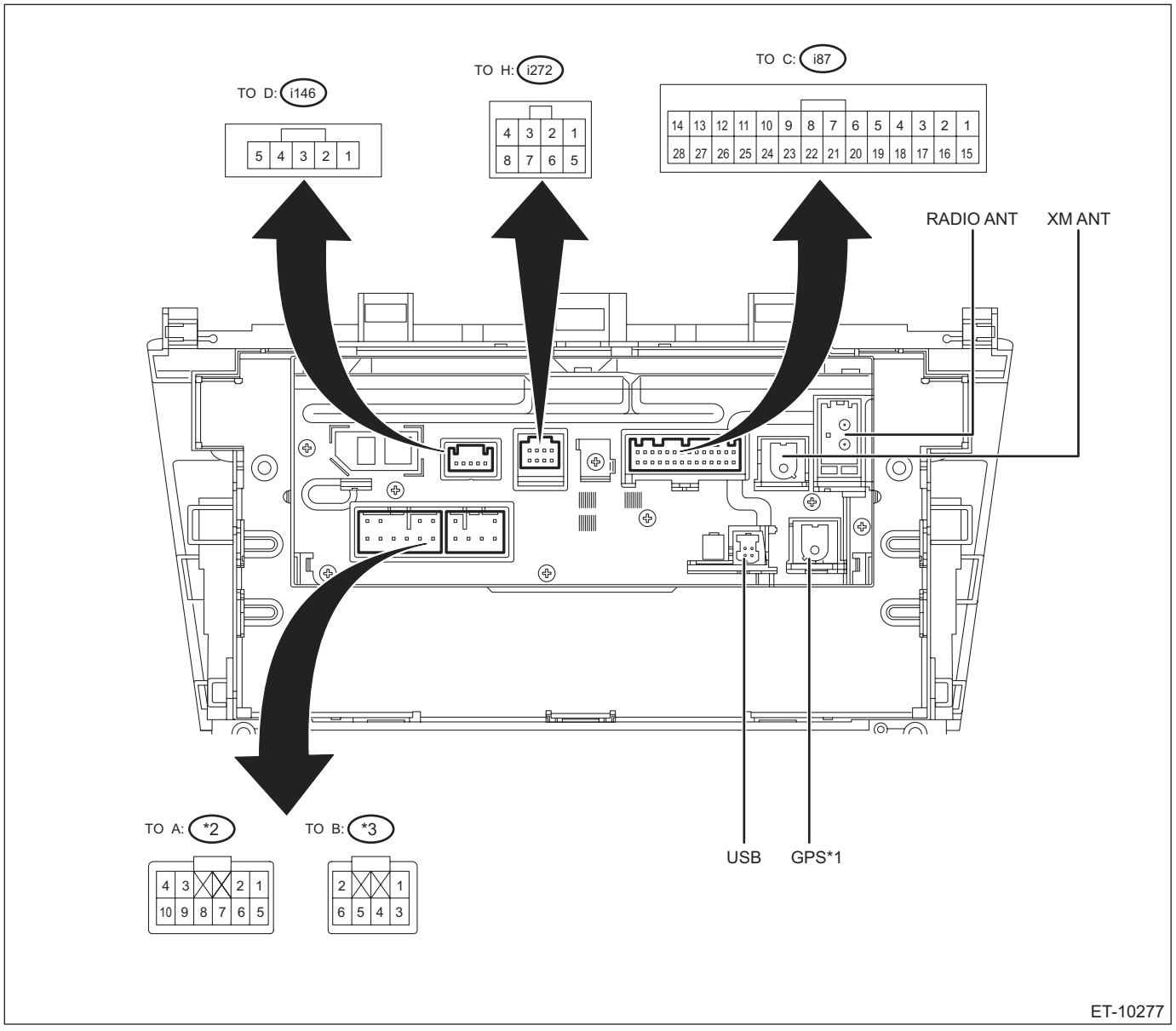

*1: Only model with navigation system
*2: Model without power amplifier: i85
Model with power amplifier: i35
*3: Model without power amplifier: i131
Model with power amplifier: i36

- Power supply and speaker output terminal
  - Model without power amplifier

Terminal No.	Contents	Measuring condition	Measurement value	Note
(i85) No. 1	FRONT-RH (+)	—	—	—
(i85) No. 2	FRONT-LH (+)	—	—	—
(i85) No. 3 ←→ Chassis ground	ACC	ACC ON	11 — 15 V	—
(i85) No. 4 ←→ Chassis ground	+B	Always	11 — 15 V	—
(i85) No. 5	FRONT-RH (–)	—	—	—
(i85) No. 6	FRONT-LH (–)	—	—	—
(i85) No. 7 ←→ Chassis ground	GND	Always	0 V	—
(i85) No. 8	ANTENNA-ON	—	—	—
(i85) No. 9	N.C.	—	—	—
(i85) No. 10	ILLUMI (+)	—	—	—
(i131) No. 1	REAR-RH (+)	—	—	—
(i131) No. 2	REAR-LH (+)	—	—	—
(i131) No. 3	REAR-RH (–)	—	—	—
(i131) No. 4	N.C.	—	—	—
(i131) No. 5	ILLUMI (–)	—	—	—
(i131) No. 6	REAR-LH (–)	—	—	—

  - Model with power amplifier

Terminal No.	Contents	Measuring condition	Measurement value	Note
(i35) No. 1	FRONT-RH (+)	—	—	—
(i35) No. 2	FRONT-LH (+)	—	—	—
(i35) No. 3 ←→ Chassis ground	ACC	ACC ON	11 — 15 V	—
(i35) No. 4 ←→ Chassis ground	+B	Always	11 — 15 V	—
(i35) No. 5	FRONT-RH (–)	—	—	—
(i35) No. 6	FRONT-LH (–)	—	—	—
(i35) No. 7 ←→ Chassis ground	GND	Always	0 V	—
(i35) No. 8	ANTENNA-ON	—	—	—
(i35) No. 9	N.C.	—	—	—
(i35) No. 10	ILLUMI (+)	—	—	—
(i36) No. 1	REAR-RH (+) / N.C.	—	—	—
(i36) No. 2	REAR-LH (+) / INT+	—	—	—
(i36) No. 3	REAR-RH (–) / N.C.	—	—	—
(i36) No. 4	N.C. / SLD2	—	—	—
(i36) No. 5	ILLUMI (–)	—	—	—
(i36) No. 6	REAR-LH (–) / INT (–)	—	—	—

- Steering switch and AUX input terminal for microphone etc.

Terminal No.	Contents	Measuring condition	Measurement value	Note
(i87) No. 1 ←→ Chassis ground	N.C.	—	—	—
(i87) No. 2	REV	—	—	—
(i87) No. 3	BRIGHT	—	—	—
(i87) No. 4	MACC	—	—	—
(i87) No. 5	MIC+	—	—	—
(i87) No. 6	MIC-DET	—	—	—
(i87) No. 7	N.C./TX1+ (for AMP communication)*1	—	—	—
(i87) No. 8	N.C. /TX1– (for AMP communication)*1	—	—	—
(i87) No. 9	N.C.	—	—	—
(i87) No. 10	N.C.	—	—	—
(i87) No. 11	N.C.	—	—	—
(i87) No. 12	N.C.	—	—	—
(i87) No. 13	N.C.	—	—	—
(i87) No. 14	N.C.	—	—	—
(i87) No. 15 ←→ Chassis ground	PKB	At parking ON	1 V or less	—
(i87) No. 16	N.C./MUTE*1	—	—	—
(i87) No. 17 ←→ Chassis ground	SPD	When the tire is rotating	Pulse signal	—
(i87) No. 18	N.C.	—	—	—
(i87) No. 19	MIC–	—	—	—
(i87) No. 20	N.C.	—	—	—
(i87) No. 21	SW1	—	—	—
(i87) No. 22	SW2	—	—	—
(i87) No. 23	SWG	—	—	—
(i87) No. 24	N.C.	—	—	—
(i87) No. 25	AUX-DET	—	—	—
(i87) No. 26	AUX-R (+)	—	—	—
(i87) No. 27	AUX-LR (–)	—	—	—
(i87) No. 28	AUX-L (+)	—	—	—

*1: Model with power amplifier

- Rearview camera

Terminal No.	Contents	Measuring condition	Measurement value	Note
(i146) No. 1 ←→ Chassis ground	CGND	Always	0 V	—
(i146) No. 2	CB+	—	—	—
(i146) No. 3	CV+	—	—	—
(i146) No. 4	CV–	—	—	—
(i146) No. 5	N.C.	—	—	—

- RSE

Terminal No.	Contents	Measuring condition	Measurement value	Note
(i272) No. 1	N.C.	—	—	—
(i272) No. 2	N.C.	—	—	—
(i272) No. 3	N.C.	—	—	—
(i272) No. 4	N.C.	—	—	—
(i272) No. 5	N.C.	—	—	—
(i272) No. 6	N.C.	—	—	—
(i272) No. 7	N.C.	—	—	—
(i272) No. 8	N.C./MUTE*1	—	—	—

*1: Model with telematics

Power amplifier

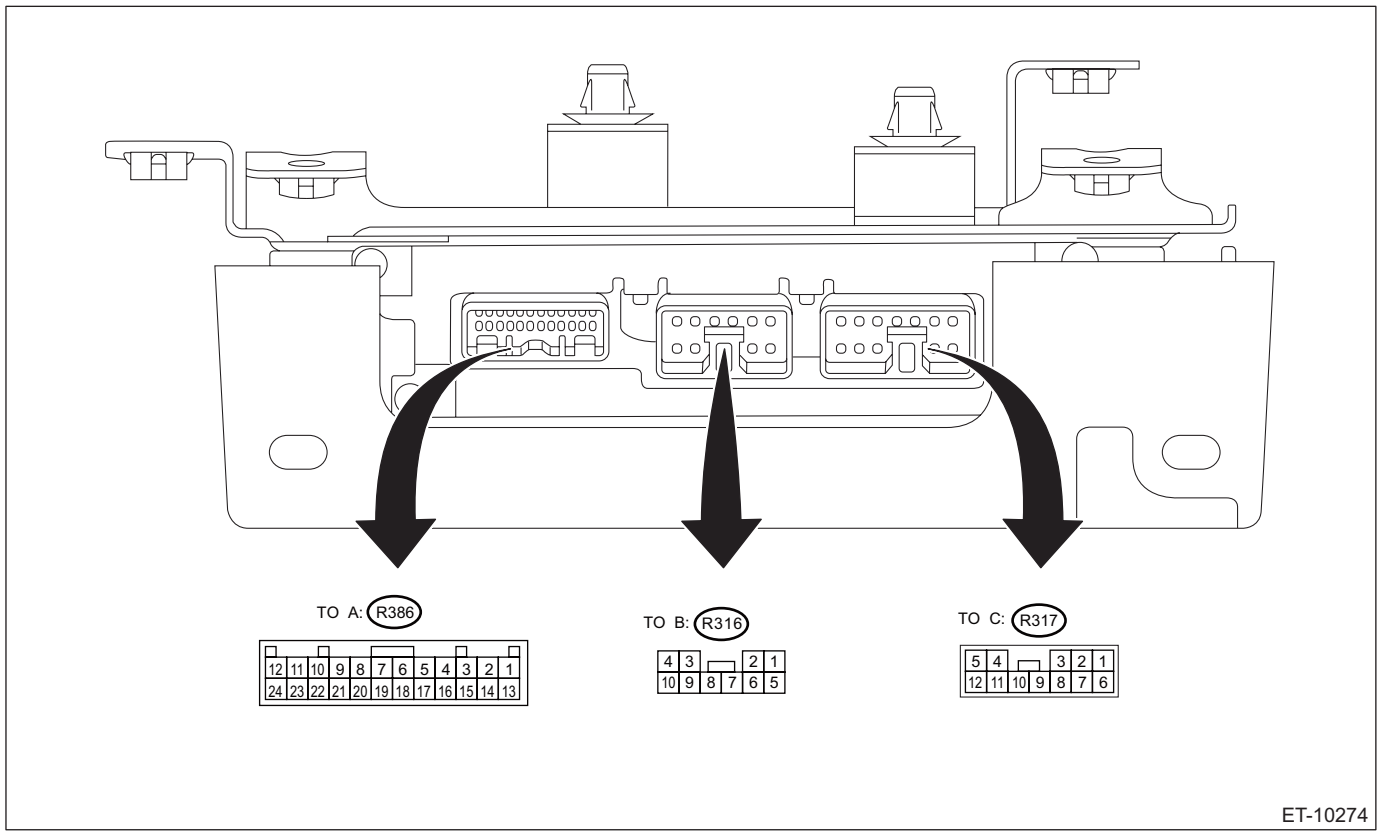

Terminal No.	Contents	Details
(R386) No. 1	NOT USED	Not used
(R386) No. 2	L– IN	Left channel negative input
(R386) No. 3	L+ IN	Left channel positive input
(R386) No. 4	R– IN	Right channel negative input
(R386) No. 5	R+ IN	Right channel positive input
(R386) No. 6	S-GND	Shield ground
(R386) No. 7	NOT USED	Not used
(R386) No. 8	NOT USED	Not used
(R386) No. 9	NOT USED	Not used
(R386) No. 10	EQ SEL	Equalizer select
(R386) No. 11	SPEED	Vehicle speed pulse
(R386) No. 12	ACC	ACC power supply
(R386) No. 13	NOT USED	Not used
(R386) No. 14	NOT USED	Not used
(R386) No. 15	NOT USED	Not used
(R386) No. 16	NOT USED	Not used
(R386) No. 17	NOT USED	Not used
(R386) No. 18	NOT USED	Not used
(R386) No. 19	NOT USED	Not used
(R386) No. 20	NOT USED	Not used
(R386) No. 21	NOT USED	Not used
(R386) No. 22	II1–	Interrupt information negative
(R386) No. 23	II1+	Interrupt information positive
(R386) No. 24	NOT USED	Not used
(R316) No. 1	+B	Battery power supply
(R316) No. 2	REAR (25+100 mm (0.79+3.15 in)) L+	Left side rear door speaker (25+100 mm (0.79+3.15 in)) positive
(R316) No. 3	FRONT (160 mm (6.30 in)) R+	Right side front door speaker (160 mm (6.30 in)) positive
(R316) No. 4	FRONT (160 mm (6.30 in)) L–	Left side front door speaker (160 mm (6.30 in)) negative
(R316) No. 5	+B	Battery power supply
(R316) No. 6	REAR (25+100 mm (0.79+3.15 in)) L–	Left side rear door speaker (25+100 mm (0.79+3.15 in)) negative
(R316) No. 7	REAR (25+100 mm (0.79+3.15 in)) R–	Right side rear door speaker (25+100 mm (0.79+3.15 in)) negative
(R316) No. 8	REAR (25+100 mm (0.79+3.15 in)) R+	Right side rear door speaker (25+100 mm (0.79+3.15 in)) positive
(R316) No. 9	FRONT (160 mm (6.30 in)) R–	Right side front door speaker (160 mm (6.30 in)) negative
(R316) No. 10	FRONT (160 mm (6.30 in)) L+	Left side front door speaker (160 mm (6.30 in)) positive
(R317) No. 1	IN-PANE (80 mm (3.15 in)) R–	Instrument panel right side speaker (80 mm (3.15 in)) negative
(R317) No. 2	IN-PANE (80 mm (3.15 in)) R+	Instrument panel right side speaker (80 mm (3.15 in)) positive
(R317) No. 3	IN-PANE (80 mm (3.15 in)) L–	Instrument panel left side speaker (80 mm (3.15 in)) negative
(R317) No. 4	SUB WOOFER (200 mm (7.87 in)) 1+	Sub woofer (200 mm (7.87 in)) 1 positive
(R317) No. 5	SUB WOOFER (200 mm (7.87 in)) 2+	Sub woofer (200 mm (7.87 in)) 2 positive
(R317) No. 6	GND	Ground
(R317) No. 7	GND2	Ground
(R317) No. 8	NOT USED	Not used
(R317) No. 9	IN-PANE (80 mm (3.15 in)) L+	Instrument panel left side speaker (80 mm (3.15 in)) positive
(R317) No. 10	SUB WOOFER (200 mm (7.87 in)) 1–	Sub woofer (200 mm (7.87 in)) 1 negative
(R317) No. 11	NOT USED	Not used
(R317) No. 12	SUB WOOFER (200 mm (7.87 in)) 2–	Sub woofer (200 mm (7.87 in)) 2 negative

D: NOTE

For procedure of each component in the navigation system, refer to the respective section.

- Navigation unit: <Ref. to ET-50, Navigation Body.>
- GPS antenna: <Ref. to ET-51, GPS Antenna.>

6. Telematics System

A: WIRING DIAGRAM

Refer to “Telematics System” in the wiring diagram.

- Without audio amplifier: <Ref. to WI-356, WITHOUT AUDIO AMPLIFIER, WIRING DIAGRAM, Telematics System.>
- With audio amplifier: <Ref. to WI-359, WITH AUDIO AMPLIFIER, WIRING DIAGRAM, Telematics System.>

B: OPERATION

1. REGISTRATION (COMM CHECK)

CAUTION:
Do not press and hold the i-button for more than two seconds during communication check, or settings will return to factory mode in poor radio wave environment. If the settings has returned to factory mode, perform the communication check again. To check the mode status, see “Subscription Status” in the current data display on SSM.

1) Replace the data communication module with a new part.
2) Check the LED of overhead console or stereo camera cover assembly illuminates in green.
3) Press and hold the i-button for 2 seconds or more.

NOTE:
When the subscription is completed, the telematics system will automatically activate.

C: INSPECTION

Refer to “Basic Diagnostic Procedure” in “TELEMATICS SYSTEM (DIAGNOSTICS)”. <Ref. to TEL(diag)-2, Basic Diagnostic Procedure.>

D: NOTE

For procedure of each component in the telematics system, refer to the respective section.

- Data communication module: <Ref. to ET-53, DATA COMMUNICATION MODULE.>
- Antenna: <Ref. to ET-43, Antenna.>
- GPS antenna: <Ref. to ET-51, GPS Antenna.>
- Switches and harness: <Ref. to ET-46, Switches and Harness.>

7. Audio

A: REMOVAL

CAUTION:
Before handling the airbag system components, refer to "CAUTION" of "General Description" in "AIRBAG SYSTEM". <Ref. to AB-9, CAUTION, General Description.>
1) Disconnect the ground cable from battery and wait for at least 60 seconds before starting work. <Ref. to NT-6, BATTERY, NOTE, Note.>

NOTE:
For model with battery sensor, disconnect the ground terminal from battery sensor.
2) Remove the cover assembly - instrument panel LWR driver. <Ref. to EI-62, REMOVAL, Instrument Panel Lower Cover.>
3) Remove the knee airbag module. <Ref. to AB-34, REMOVAL, Knee Airbag Module.>
4) Remove the glove box. <Ref. to EI-64, REMOVAL, Glove Box.>
5) Remove the center grille assembly. <Ref. to AC-91, CENTER GRILLE ASSEMBLY, REMOVAL, Air Vent Grille.>
6) Remove the audio assembly.
(1) Attach the protective tape (a) to the cover - shift lever.
(2) Remove the screws and bolts, release the claws, and partially pull out the audio assembly.

NOTE:
• Release the claw by using a clip remover wrapped with protective tape.
• If the antenna cable interferes with the removal operation of the side attachment bolts (for model with telematics), move the antenna cable aside before service as necessary.
(3) Disconnect the connectors, and remove the audio assembly.

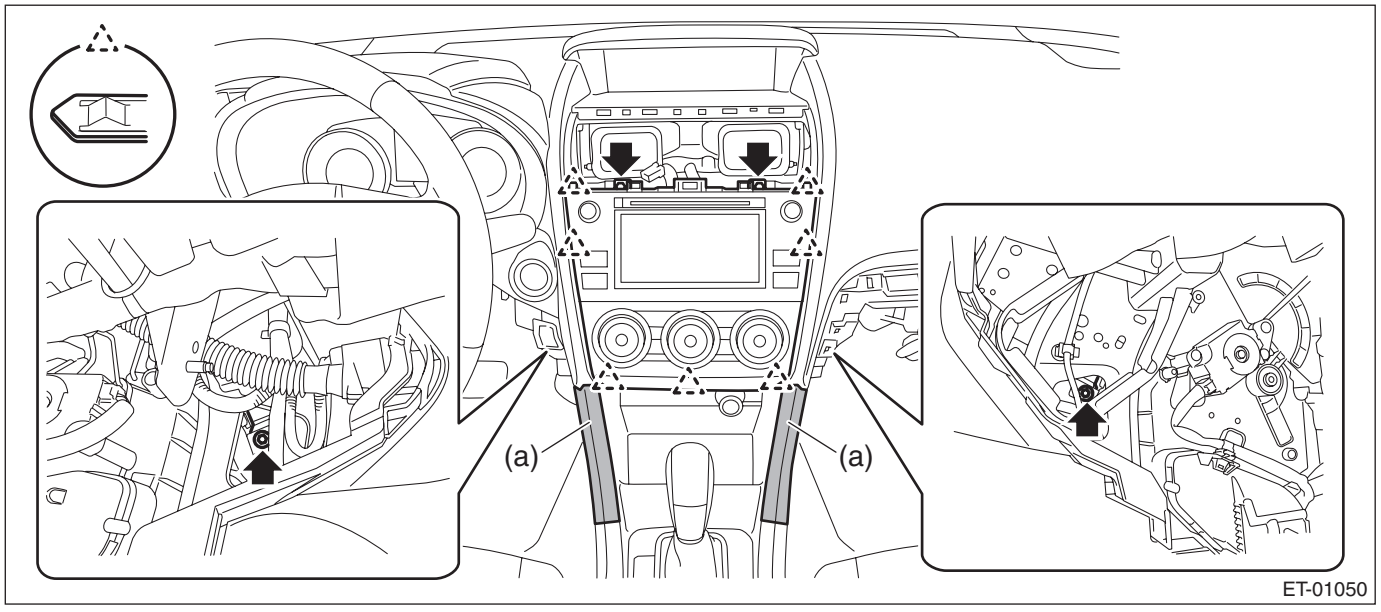

7) Remove the screws, and then remove the audio bracket.

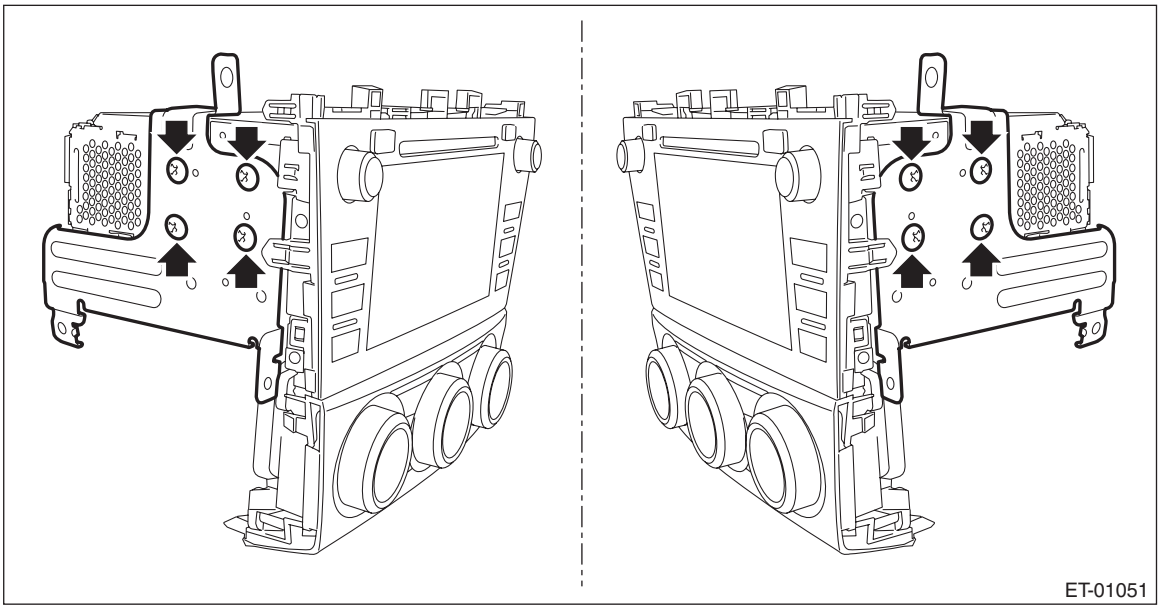

NOTE:
- The model with telematics is equipped with the data communication module under the audio assembly.
- When sending the audio for repair, remove the audio bracket and heater control assembly, and install on the vehicle as shown in the figure below. <Ref. to AC-43, REMOVAL, Control Panel.>

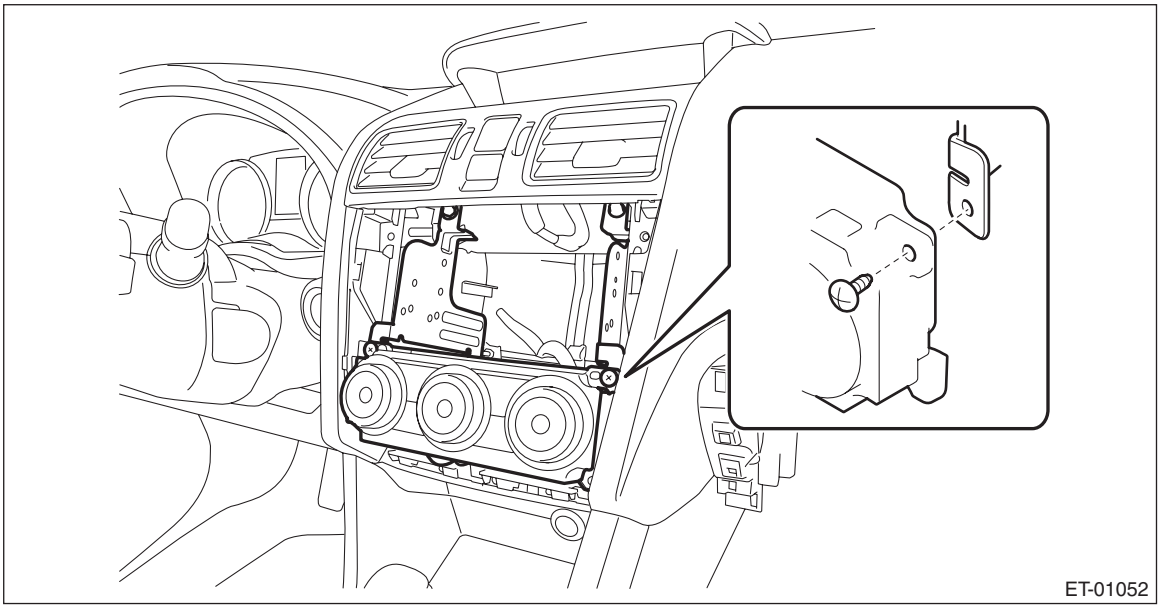

B: INSTALLATION

CAUTION:
• Before handling the airbag system components, refer to "CAUTION" of "General Description" in "AIRBAG SYSTEM". <Ref. to AB-9, CAUTION, General Description.>
• After installing the center grille assembly, check that the air vent grille of the center grille assembly is inserted correctly into the air vent duct.
• Do not allow harness and cables to interfere with or get caught by other parts.
1) Install the audio bracket.
2) Install the audio assembly.

Tightening torque:
7.5 N·m (0.8 kgf-m, 5.5 ft-lb)
3) Install the center grille assembly.
4) Install the glove box.
5) Install the knee airbag module. <Ref. to AB-34, INSTALLATION, Knee Airbag Module.>
6) Install the cover assembly - instrument panel LWR driver.
7) Connect the battery ground terminal. <Ref. to NT-6, BATTERY, NOTE, Note.>

8. Front Speaker

A: REMOVAL

1. TWEETER

1) Disconnect the ground cable from battery. <Ref. to NT-6, BATTERY, NOTE, Note.>

NOTE:
For model with battery sensor, disconnect the ground terminal from battery sensor.

2) Remove the speaker assembly - tweeter.
   (1) Release the clips and claws, then detach the grille speaker side.

NOTE:
Remove the grille speaker side by using a plastic remover.

   (2) Remove the screws.

Preparation tool:
Stubby screwdriver

   (3) Disconnect the connector and remove the speaker assembly - tweeter.

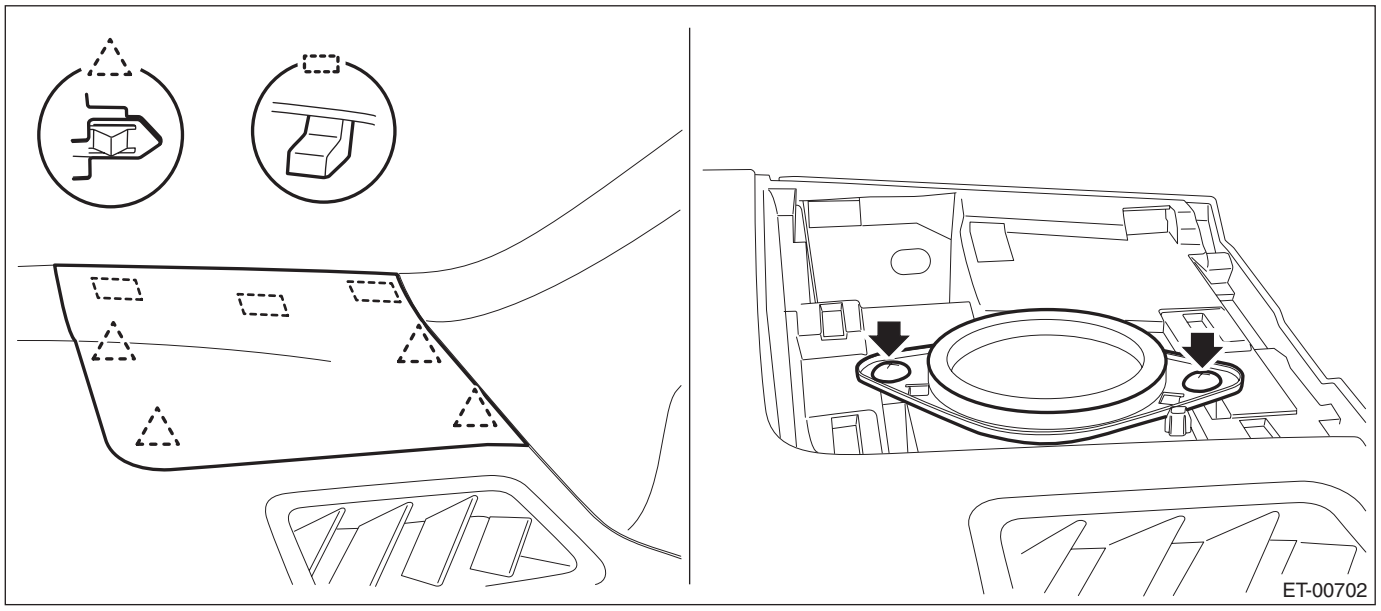

2. DOOR SPEAKER

1) Disconnect the ground cable from battery and wait for at least 60 seconds before starting work. <Ref. to NT-6, BATTERY, NOTE, Note.>

NOTE:
For model with battery sensor, disconnect the ground terminal from battery sensor.

2) Remove the trim panel - front door. <Ref. to EI-57, FRONT DOOR, REMOVAL, Door Trim.>
3) Remove the speaker assembly - front.
   (1) Disconnect the connector.
   (2) Remove the screws and remove the speaker assembly - front.

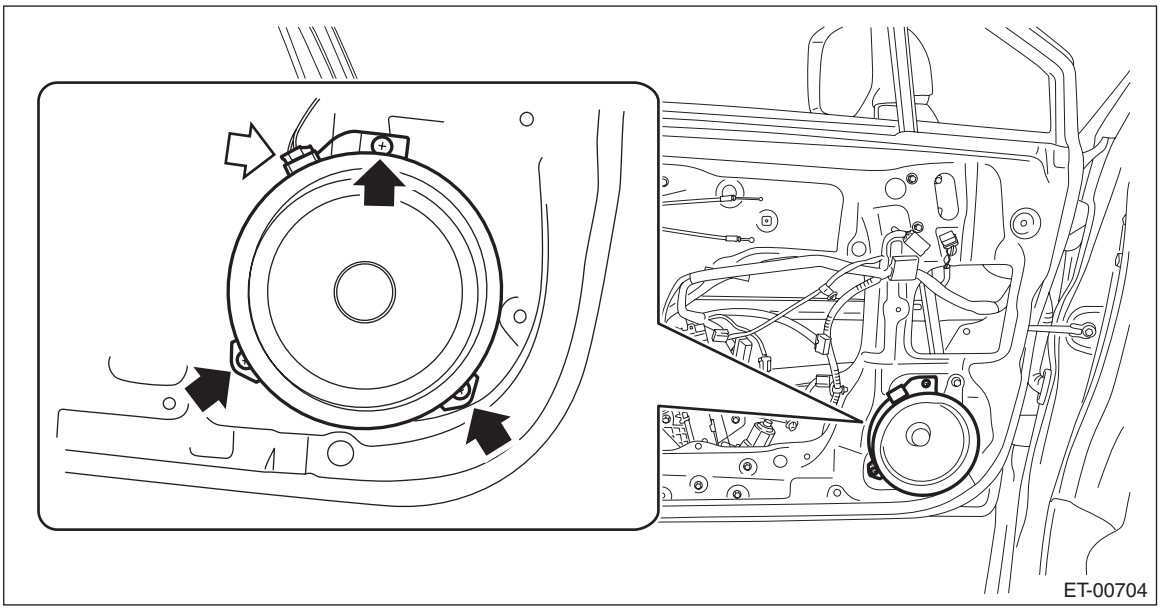

B: INSTALLATION

1. TWEETER

1) Install the speaker assembly - tweeter.
2) Install the grille speaker side.
3) Connect the battery ground terminal. <Ref. to NT-6, BATTERY, NOTE, Note.>

2. DOOR SPEAKER

1) Install the speaker assembly - front.
2) Install the trim panel - front door.
3) Connect the battery ground terminal. <Ref. to NT-6, BATTERY, NOTE, Note.>

9. Rear Speaker

A: REMOVAL

1) Disconnect the ground cable from battery. <Ref. to NT-6, BATTERY, NOTE, Note.>

NOTE:
For model with battery sensor, disconnect the ground terminal from battery sensor.

2) Remove the trim panel - rear door. <Ref. to EI-58, REAR DOOR, REMOVAL, Door Trim.>
3) Remove the speaker assembly - rear.
   (1) Remove the screws.
   (2) Disconnect the connector behind the speaker and remove the speaker assembly - rear.

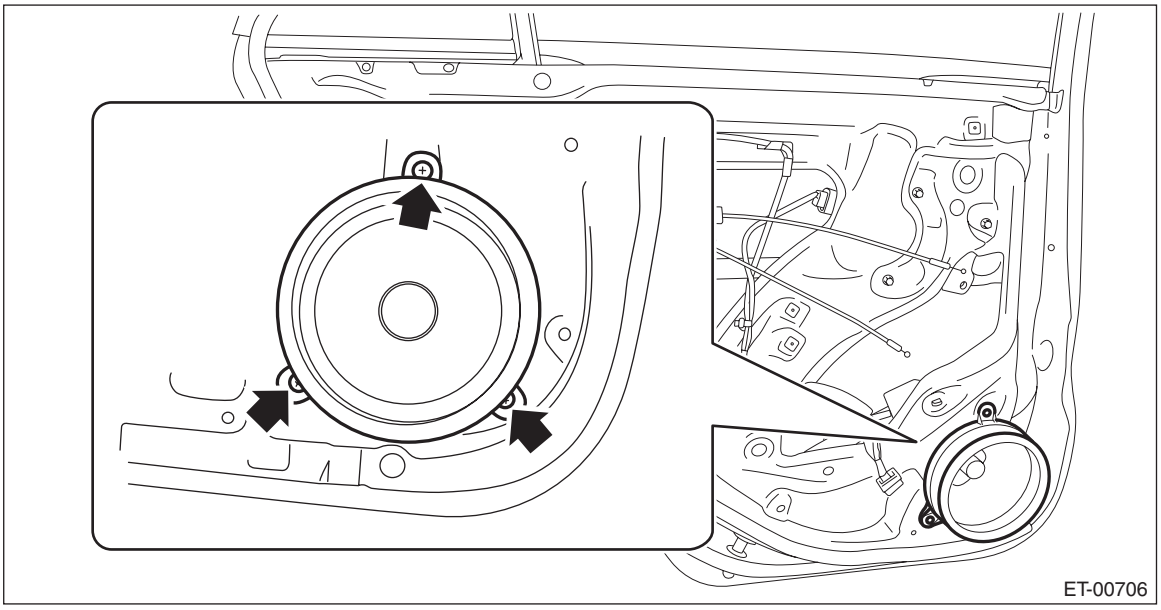

B: INSTALLATION

1) Install the speaker assembly - rear.
2) Install the trim panel - rear door.
3) Connect the battery ground terminal. <Ref. to NT-6, BATTERY, NOTE, Note.>

10.Woofer

A: REMOVAL

1) Disconnect the ground cable from battery and wait for at least 60 seconds before starting work. <Ref. to NT-6, BATTERY, NOTE, Note.>

NOTE:
For model with battery sensor, disconnect the ground terminal from battery sensor.
2) Remove the rear seat cushion assembly. <Ref. to SE-30, REMOVAL, Rear Seat.>
3) Remove the trim panel - rear pillar UPR and the trim panel - rear pillar LWR. <Ref. to EI-92, REMOVAL, Rear Quarter Trim.>
4) Remove the trim panel assembly - rear shelf. <Ref. to EI-95, REMOVAL, Rear Shelf Trim.>
5) Remove the speaker assembly - woofer.
   (1) Disconnect the connector.
   (2) Remove the bolts and remove the speaker assembly - woofer.

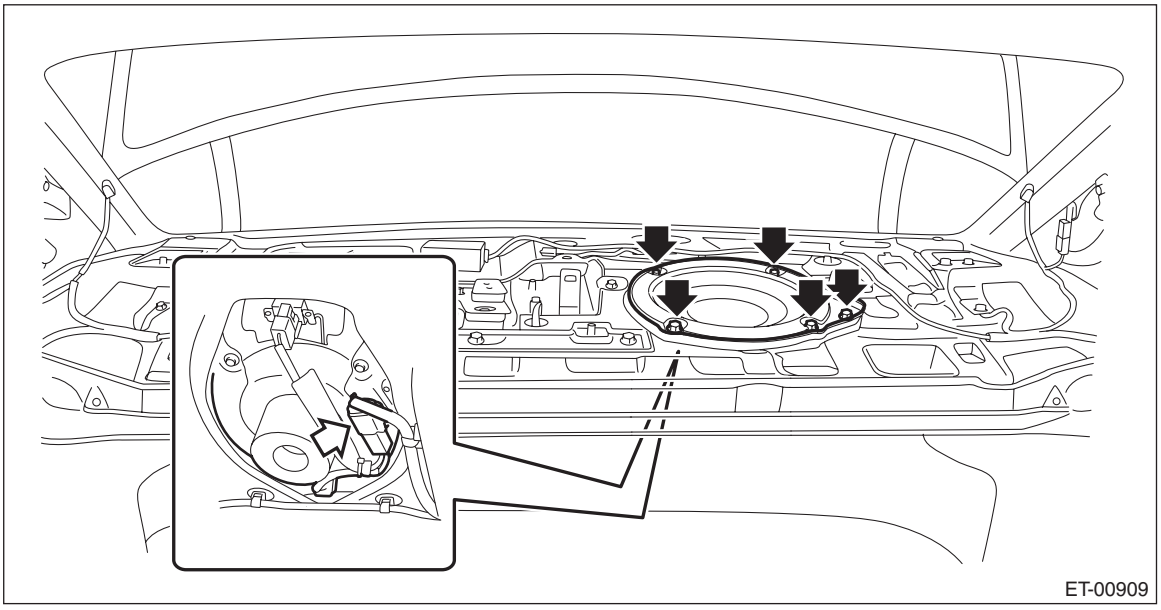

B: INSTALLATION

1) Install the speaker assembly - woofer.

Tightening torque:
7.5 N·m (0.8 kgf-m, 5.5 ft-lb)
2) Install the trim panel assembly - rear shelf. <Ref. to EI-97, INSTALLATION, Rear Shelf Trim.>
3) Install the trim panel - rear pillar UPR and the trim panel - rear pillar LWR.
4) Install the rear seat cushion assembly.
5) Connect the battery ground terminal. <Ref. to NT-6, BATTERY, NOTE, Note.>

11.Power Amplifier

A: REMOVAL

1) Disconnect the ground cable from battery and wait for at least 60 seconds before starting work. <Ref. to NT-6, BATTERY, NOTE, Note.>

NOTE:
For model with battery sensor, disconnect the ground terminal from battery sensor.
2) Remove the rear seat cushion assembly. <Ref. to SE-30, REMOVAL, Rear Seat.>
3) Remove the trim panel - rear pillar UPR and the trim panel - rear pillar LWR. <Ref. to EI-92, REMOVAL, Rear Quarter Trim.>
4) Remove the trim panel assembly - rear shelf. <Ref. to EI-95, REMOVAL, Rear Shelf Trim.>
5) Remove the power amplifier assembly.
   (1) Release the harness clips, and disconnect each connector.
   (2) Remove the bolts, release the clips, and then remove the power amplifier assembly.

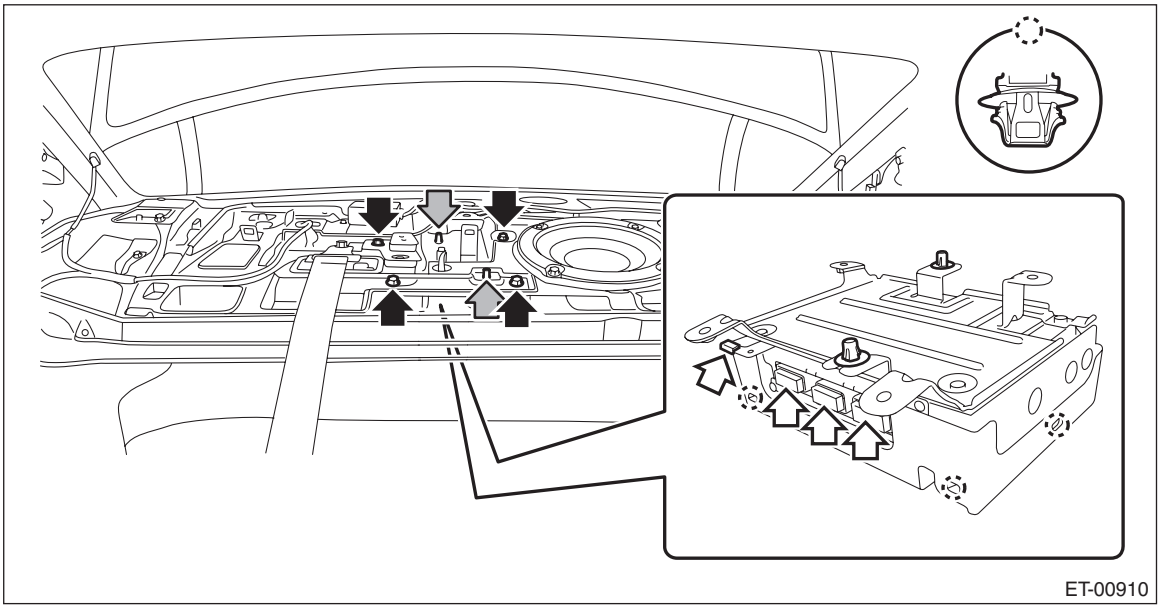

B: INSTALLATION

1) Install the power amplifier assembly.

Tightening torque:
7.5 N·m (0.8 kgf-m, 5.5 ft-lb)
2) Install the trim panel assembly - rear shelf. <Ref. to EI-97, INSTALLATION, Rear Shelf Trim.>
3) Install the trim panel - rear pillar UPR and the trim panel - rear pillar LWR.
4) Install the rear seat cushion assembly.
5) Connect the battery ground terminal. <Ref. to NT-6, BATTERY, NOTE, Note.>

12.Antenna

A: REMOVAL

1. ROOF ANTENNA/TELEMATICS ANTENNA

1) Disconnect the ground cable from battery and wait for at least 60 seconds before starting work. <Ref. to NT-6, BATTERY, NOTE, Note.>

NOTE:
For model with battery sensor, disconnect the ground terminal from battery sensor.
2) Lower the trim panel - roof assembly. <Ref. to EI-102, REMOVAL, Roof Trim.>

NOTE:
Procedures for the trim panel - roof assembly is performed inside the vehicle.
3) Remove the antenna assembly - radio or telematics.
(1) Disconnect the connector, and detach the connector clip.
(2) Remove the nut, and remove the antenna assembly - radio or telematics.

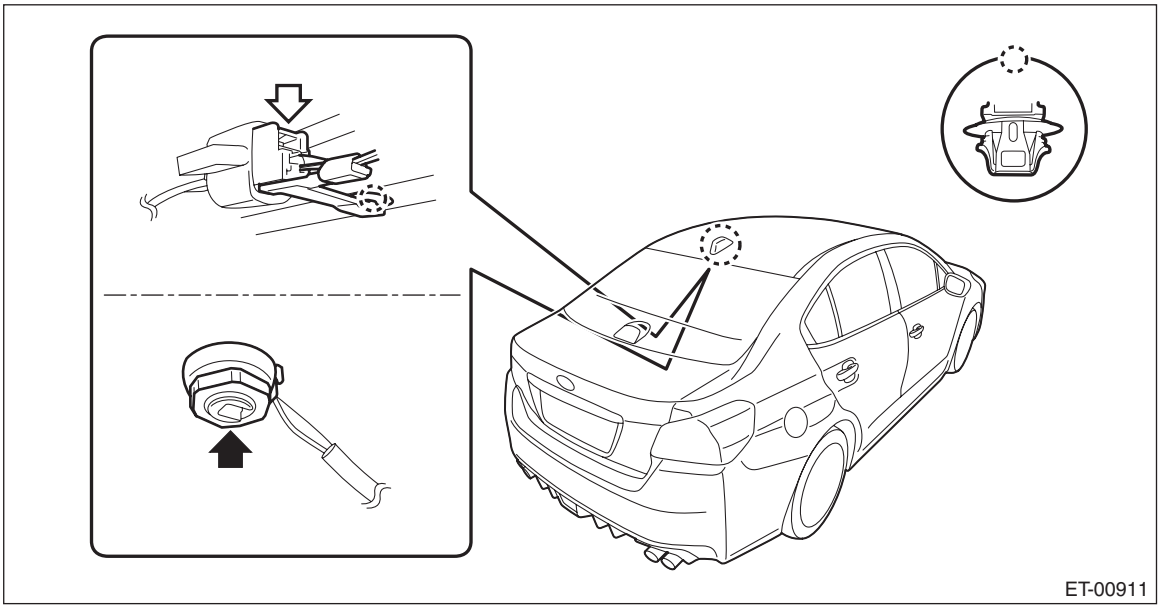

2. ANTENNA FEEDER CORD

CAUTION:
Before handling the airbag system components, refer to "CAUTION" of "General Description" in "AIRBAG SYSTEM". <Ref. to AB-9, CAUTION, General Description.>
1) Disconnect the ground cable from battery and wait for at least 60 seconds before starting work. <Ref. to NT-6, BATTERY, NOTE, Note.>

NOTE:
For model with battery sensor, disconnect the ground terminal from battery sensor.
2) Remove the cover assembly - instrument panel LWR driver. <Ref. to EI-62, REMOVAL, Instrument Panel Lower Cover.>
3) Remove the knee airbag module. <Ref. to AB-34, REMOVAL, Knee Airbag Module.>
4) Remove the glove box. <Ref. to EI-64, REMOVAL, Glove Box.>
5) Remove the center grille assembly. <Ref. to AC-91, CENTER GRILLE ASSEMBLY, REMOVAL, Air Vent Grille.>
6) Remove the audio assembly or navigation assembly. <Ref. to ET-35, REMOVAL, Audio.>
7) Remove the panel center LWR LH. <Ref. to EI-67, REMOVAL, Console Box.>

8) Remove the cover side sill - front and the cover side sill - front INN. <Ref. to EI-84, REMOVAL, Lower Inner Trim.>
9) Lower the trim panel - roof assembly in the same manner as the removal procedure of the antenna assembly - radio or telematics. <Ref. to EI-102, REMOVAL, Roof Trim.>
10) Turn over the floor mat, and remove the cord assembly - antenna feeder.

3. TELEMATICS SUB ANTENNA

CAUTION:
Before handling the airbag system components, refer to "CAUTION" of "General Description" in "AIRBAG SYSTEM". <Ref. to AB-9, CAUTION, General Description.>
1) Disconnect the ground cable from battery and wait for at least 60 seconds before starting work. <Ref. to NT-6, BATTERY, NOTE, Note.>

NOTE:
For model with battery sensor, disconnect the ground terminal from battery sensor.
2) Remove the cover assembly - instrument panel LWR driver. <Ref. to EI-62, REMOVAL, Instrument Panel Lower Cover.>
3) Remove the knee airbag module. <Ref. to AB-34, REMOVAL, Knee Airbag Module.>
4) Remove the glove box. <Ref. to EI-64, REMOVAL, Glove Box.>
5) Remove the center grille assembly. <Ref. to AC-91, CENTER GRILLE ASSEMBLY, REMOVAL, Air Vent Grille.>
6) Remove the audio assembly or navigation assembly. <Ref. to ET-35, REMOVAL, Audio.>
7) Remove the combination meter assembly. <Ref. to IDI-13, REMOVAL, Combination Meter.>
8) Remove the GPS antenna. <Ref. to ET-51, REMOVAL, GPS Antenna.>

NOTE:
Remove the antenna only. Do not pull the cord.
9) Remove the telematics sub antenna.
(1) Tie a string to the telematics sub antenna connector on the data communication module main body side.

NOTE:
A string makes operation easier during installation.
(2) Remove the screw and harness clamp, and pull out the telematics sub antenna from the combination meter side.

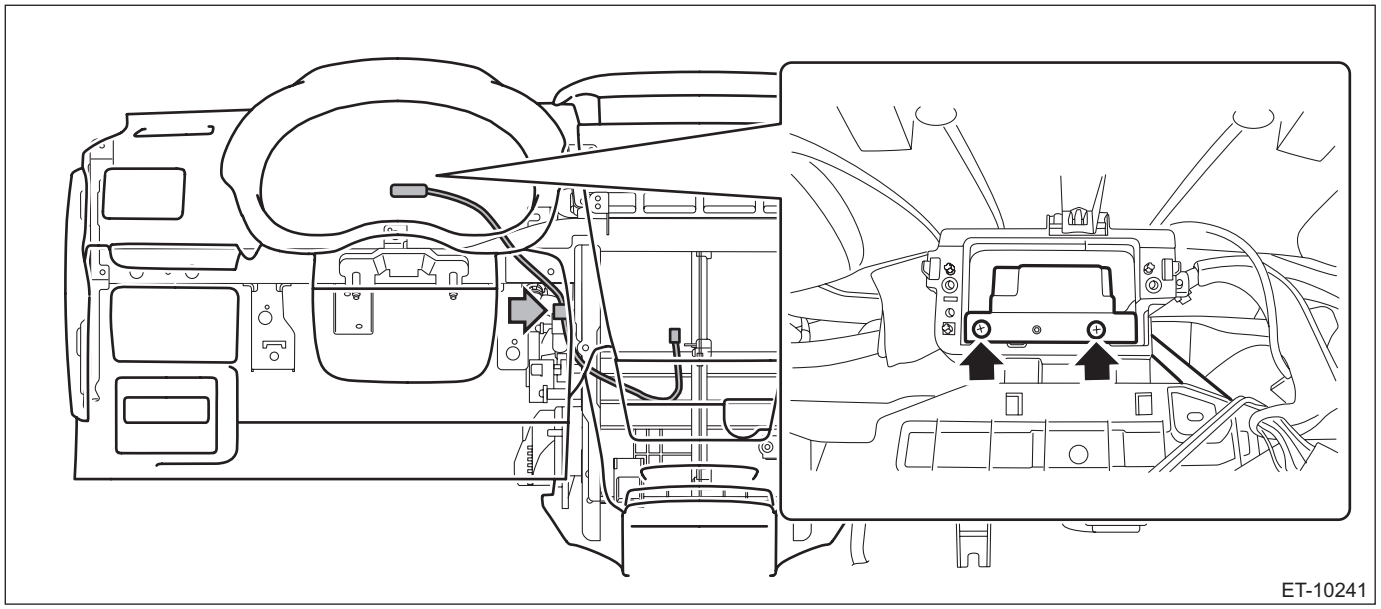

(3) After the telematics sub antenna has been pulled out, remove the string attached to the connector in step (1).

B: INSTALLATION

1. ROOF ANTENNA/TELEMATICS ANTENNA

1) Install the antenna assembly - radio or telematics.

Tightening torque:
4.5 N·m (0.5 kgf-m, 3.3 ft-lb)

2) Install the trim panel - roof assembly. <Ref. to EI-104, INSTALLATION, Roof Trim.>
3) Connect the battery ground terminal. <Ref. to NT-6, BATTERY, NOTE, Note.>

2. ANTENNA FEEDER CORD

CAUTION:
Before handling the airbag system components, refer to "CAUTION" of "General Description" in "AIRBAG SYSTEM". <Ref. to AB-9, CAUTION, General Description.>

1) Install the cord assembly - antenna feeder and the trim panel - roof assembly. <Ref. to EI-104, INSTALLATION, Roof Trim.>
2) Install the floor mat.
3) Install the cover side sill - front INN and cover side sill - front.
4) Install the panel center LWR LH. <Ref. to EI-71, INSTALLATION, Console Box.>
5) Install the audio assembly or navigation assembly. <Ref. to ET-37, INSTALLATION, Audio.>
6) Install the center grille assembly.
7) Install the glove box.
8) Install the knee airbag module. <Ref. to AB-34, INSTALLATION, Knee Airbag Module.>
9) Install the cover assembly - instrument panel LWR driver.
10) Connect the battery ground terminal. <Ref. to NT-6, BATTERY, NOTE, Note.>

3. TELEMATICS SUB ANTENNA

CAUTION:
Before handling the airbag system components, refer to "CAUTION" of "General Description" in "AIRBAG SYSTEM". <Ref. to AB-9, CAUTION, General Description.>

1) Install the telematics sub antenna.
2) Install the GPS antenna assembly.
3) Install the combination meter assembly.
4) Install the audio assembly or navigation assembly. <Ref. to ET-37, INSTALLATION, Audio.>
5) Install the center grille assembly.
6) Install the glove box.
7) Install the knee airbag module. <Ref. to AB-34, INSTALLATION, Knee Airbag Module.>
8) Install the cover assembly - instrument panel LWR driver.
9) Connect the battery ground terminal. <Ref. to NT-6, BATTERY, NOTE, Note.>

13.Switches and Harness

A: REMOVAL

1. SATELLITE SWITCH ASSEMBLY

CAUTION:
Before handling the airbag system components, refer to "CAUTION" of "General Description" in "AIRBAG SYSTEM". <Ref. to AB-9, CAUTION, General Description.>
1) Set the tire to the straight-ahead position.
2) Disconnect the ground cable from battery and wait for at least 60 seconds before starting work. <Ref. to NT-6, BATTERY, NOTE, Note.>

NOTE:
For model with battery sensor, disconnect the ground terminal from battery sensor.
3) Remove the driver's airbag module. <Ref. to AB-32, REMOVAL, Driver's Airbag Module.>
4) Remove the steering wheel. <Ref. to PS-16, REMOVAL, Steering Wheel.>
5) Remove the satellite switch assembly. <Ref. to PS-17, DISASSEMBLY, Steering Wheel.>

2. TELEMATICS BUTTON

The telematics button is a single unit with the spot map light or the stereo camera cover assembly. For operation procedures, refer to "LIGHTING SYSTEM" section. <Ref. to LI-61, Spot Map Light.>

B: INSTALLATION

1. SATELLITE SWITCH ASSEMBLY

CAUTION:
• Before handling the airbag system components, refer to "CAUTION" of "General Description" in "AIRBAG SYSTEM". <Ref. to AB-9, CAUTION, General Description.>
• Do not allow harness and connectors to interfere or get tangled up with other parts.
• If the steering wheel has been removed, make sure that the steering roll connector is not turned from the original position.
• If the steering wheel and steering angle sensor (steering roll connector) are removed, perform "VSC(VDC) Centering Mode" of the VDC. <Ref. to VDC-17, VDC SENSOR MIDPOINT SETTING MODE, ADJUSTMENT, VDC Control Module and Hydraulic Control Unit (VDCCM&H/U).>
• Securely install the switch. Improper insertion of the pin or claw of the switch may cause improper installation.
1) Install the satellite switch assembly. <Ref. to PS-17, DISASSEMBLY, Steering Wheel.>
2) Align the center position of the steering roll connector. <Ref. to AB-62, ADJUSTMENT, Roll Connector.>
3) Install the steering wheel.

Tightening torque:
39 N·m (4 kgf-m, 28.8 ft-lb)

Clearance:
Between cover assembly - column and steering wheel: 4 — 6 mm (0.16 — 0.24 in)
4) Install the driver's airbag module. <Ref. to AB-33, INSTALLATION, Driver's Airbag Module.>
5) Connect the battery ground terminal. <Ref. to NT-6, BATTERY, NOTE, Note.>

2. TELEMATICS BUTTON

The telematics button is a single unit with the spot map light or the stereo camera cover assembly. For operation procedures, refer to "LIGHTING SYSTEM" section. <Ref. to LI-61, Spot Map Light.>

C: INSPECTION

1. SATELLITE SWITCH ASSEMBLY

1) Measure the resistance between connector terminals.

Preparation tool:
Circuit tester

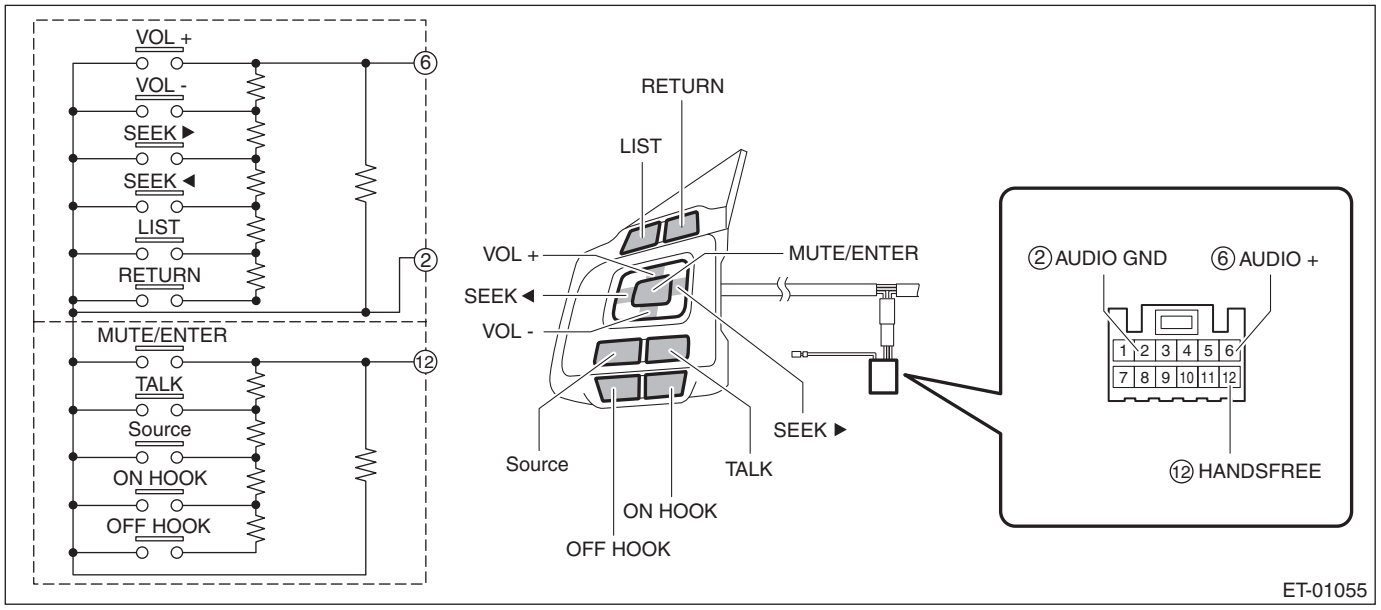

Terminal No.	Inspection conditions		Standard
6 — 2	VOL (+) VOL (–) SEEK (›) SEEK (‹) LIST RETURN	A circuit is all OFF.	Approx. 100 kΩ
	VOL (+)	ON	Less than 1 Ω
	VOL (–)	ON	Approx. 50 Ω
	SEEK (›)	ON	Approx. 120 Ω
	SEEK (‹)	ON	Approx. 230 Ω
	LIST	ON	Approx. 430 Ω
	RETURN	ON	Approx. 1,000 Ω
12 — 2	MUTE/ENTER TALK Source ON HOOK OFF HOOK	B circuit is all OFF.	Approx. 100 kΩ
	MUTE/ENTER	ON	Less than 1 Ω
	TALK	ON	Approx. 50 Ω
	Source	ON	Approx. 120 Ω
	ON HOOK	ON	Approx. 230 Ω
	OFF HOOK	ON	Approx. 430 Ω

2) Apply battery voltage between the connector terminals to check lighting condition of illumination inside the switch.

Terminal No.	Inspection conditions	Standard
10 (+) — 11 (–)	Apply battery voltage.	Light ON

3) If it is found to be defective as a result of the measurement, replace the satellite switch assembly.

2. TELEMATICS BUTTON

1) Check the button.
(1) Measure the resistance between connector terminals.

Preparation tool:
Circuit tester

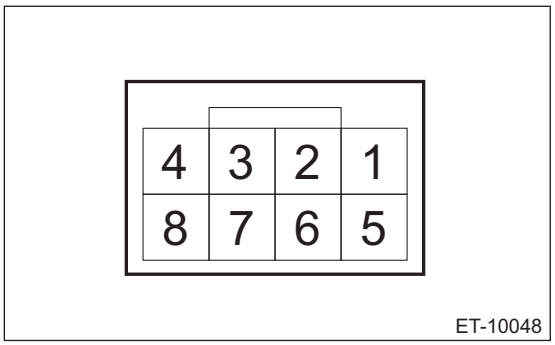

- SOS button

Terminal No.	Inspection conditions	Standard
6 — 1	OFF	Approx. 1.6 kΩ
	ON	Less than 1 Ω

- i-button

Terminal No.	Inspection conditions	Standard
3 — 1	OFF	Approx. 1.6 kΩ
	ON	Less than 1 Ω

(2) Apply battery voltage between the connector terminals to check lighting condition of illumination inside the switch.

Terminal No.	Inspection conditions	Specification
8 (+) — 2 (–)	Apply battery voltage.	Light ON

2) Check the indicator.
(1) Check the continuity between the connector terminals.

Terminal No.	Indicator	Specification
4 — 1	Green	Continuity exists
7 — 1	Red	Continuity exists

3) If it is found to be defective as a result of the inspection, replace the spot map light or stereo camera cover assembly.

14.Microphone

A: NOTE

The microphone is integrated in the spot map light or stereo camera cover.
For operation procedures, refer to “LIGHTING SYSTEM” section. <Ref. to LI-61, Spot Map Light.>

15.Navigation Body

A: NOTE

For the operation procedures for navigation assembly, refer to “Audio” section. <Ref. to ET-35, Audio.>

16.GPS Antenna

A: REMOVAL

CAUTION:
Before handling the airbag system components, refer to "CAUTION" of "General Description" in "AIRBAG SYSTEM". <Ref. to AB-9, CAUTION, General Description.>
1) Disconnect the ground cable from battery. <Ref. to NT-6, BATTERY, NOTE, Note.>

NOTE:
For model with battery sensor, disconnect the ground terminal from battery sensor.
2) Remove the cover assembly - instrument panel LWR driver. <Ref. to EI-62, REMOVAL, Instrument Panel Lower Cover.>
3) Remove the knee airbag module. <Ref. to AB-34, REMOVAL, Knee Airbag Module.>
4) Remove the glove box. <Ref. to EI-64, REMOVAL, Glove Box.>
5) Remove the center grille assembly. <Ref. to AC-91, CENTER GRILLE ASSEMBLY, REMOVAL, Air Vent Grille.>
6) Remove the navigation assembly in the same manner as the removal procedure of the audio assembly. <Ref. to ET-35, REMOVAL, Audio.>
7) Remove the combination meter assembly. <Ref. to IDI-13, REMOVAL, Combination Meter.>
8) Remove the GPS antenna assembly.
(1) Tie a string to the GPS antenna assembly connector on the navigation unit side.

NOTE:
- A string makes operation easier during installation.
- For the model with telematics, also tie a string to the connector on the data communication module side.

(2) Remove the screw and harness clamp, and pull out the GPS antenna assembly harness from the combination meter side.
- Model without telematics

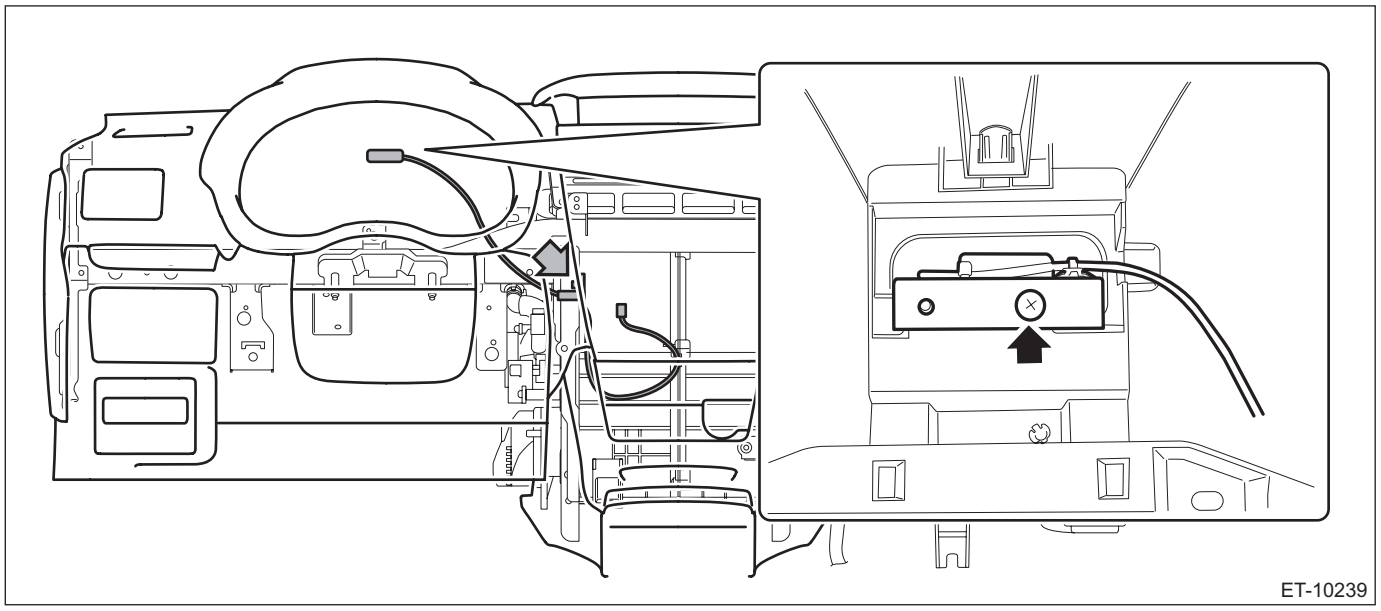

- Model with telematics

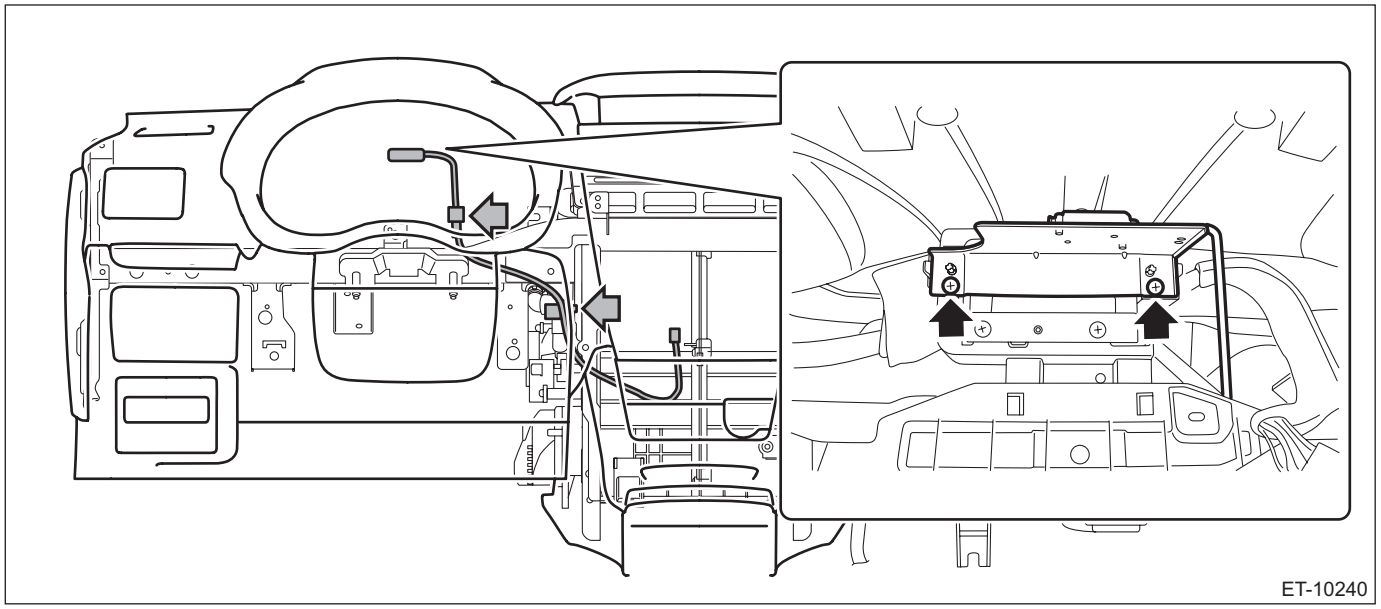

(3) When the GPS antenna assembly is pulled out, remove the string attached to the connector in step (1).

B: INSTALLATION

CAUTION:
Before handling the airbag system components, refer to "CAUTION" of "General Description" in "AIRBAG SYSTEM". <Ref. to AB-9, CAUTION, General Description.>

1) Install the GPS antenna assembly.
2) Install the combination meter assembly.
3) Install the navigation assembly. <Ref. to ET-37, INSTALLATION, Audio.>
4) Install the center grille assembly.
5) Install the glove box.
6) Install the knee airbag module. <Ref. to AB-34, INSTALLATION, Knee Airbag Module.>
7) Install the cover assembly - instrument panel LWR driver.
8) Connect the battery ground terminal. <Ref. to NT-6, BATTERY, NOTE, Note.>

17.Data Communication Module

A: REMOVAL

1. DATA COMMUNICATION MODULE

CAUTION:
Before handling the airbag system components, refer to "CAUTION" of "General Description" in "AIRBAG SYSTEM". <Ref. to AB-9, CAUTION, General Description.>
1) Disconnect the ground cable from battery and wait for at least 60 seconds before starting work. <Ref. to NT-6, BATTERY, NOTE, Note.>

NOTE:
For model with battery sensor, disconnect the ground terminal from battery sensor.
2) Remove the cover assembly - instrument panel LWR driver. <Ref. to EI-62, REMOVAL, Instrument Panel Lower Cover.>
3) Remove the knee airbag module. <Ref. to AB-34, REMOVAL, Knee Airbag Module.>
4) Remove the glove box. <Ref. to EI-64, REMOVAL, Glove Box.>
5) Remove the center grille assembly. <Ref. to AC-91, CENTER GRILLE ASSEMBLY, REMOVAL, Air Vent Grille.>
6) Remove the audio assembly or navigation assembly. <Ref. to ET-35, REMOVAL, Audio.>
7) Remove the data communication module.
(1) Remove the screws.
(2) Remove the audio bracket or navigation bracket, and then remove the data communication module.

CAUTION:
Do not drop or apply any impact to the data communication module.

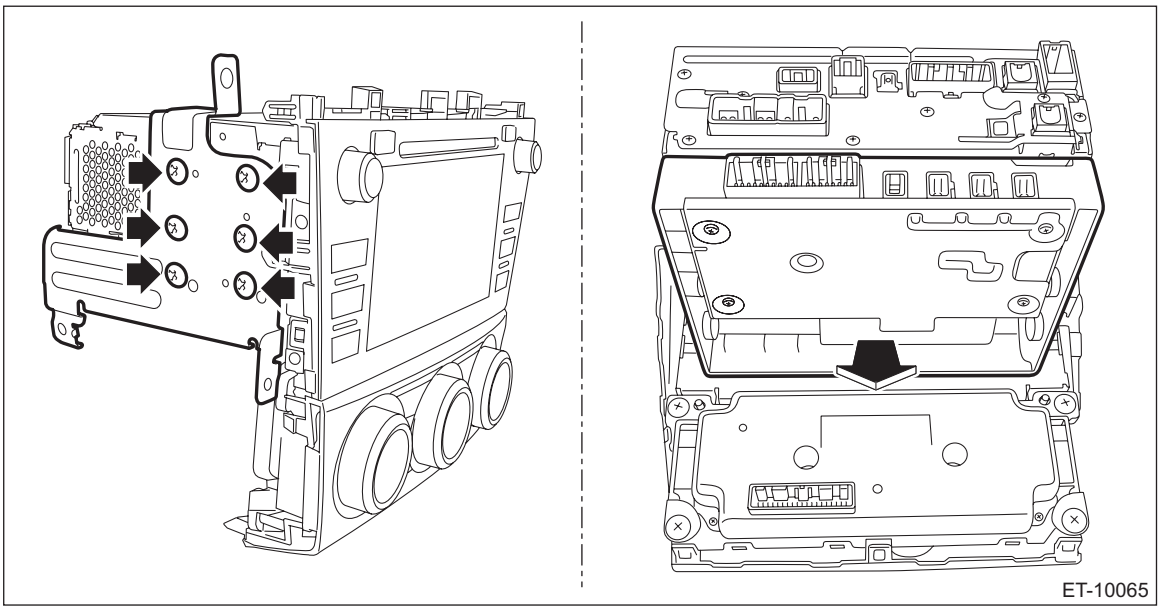

2. BACKUP BATTERY

CAUTION:
Before handling the airbag system components, refer to "CAUTION" of "General Description" in "AIRBAG SYSTEM". <Ref. to AB-9, CAUTION, General Description.>
1) Disconnect the ground cable from battery and wait for at least 60 seconds before starting work. <Ref. to NT-6, BATTERY, NOTE, Note.>

NOTE:
For model with battery sensor, disconnect the ground terminal from battery sensor.
2) Remove the data communication module. <Ref. to ET-53, DATA COMMUNICATION MODULE, REMOVAL, DATA COMMUNICATION MODULE.>

3) Remove the backup battery.
(1) Remove the screws, and then remove the battery cover.

Preparation tool:
TORX® T10

(2) Disconnect the connector and remove the backup battery.

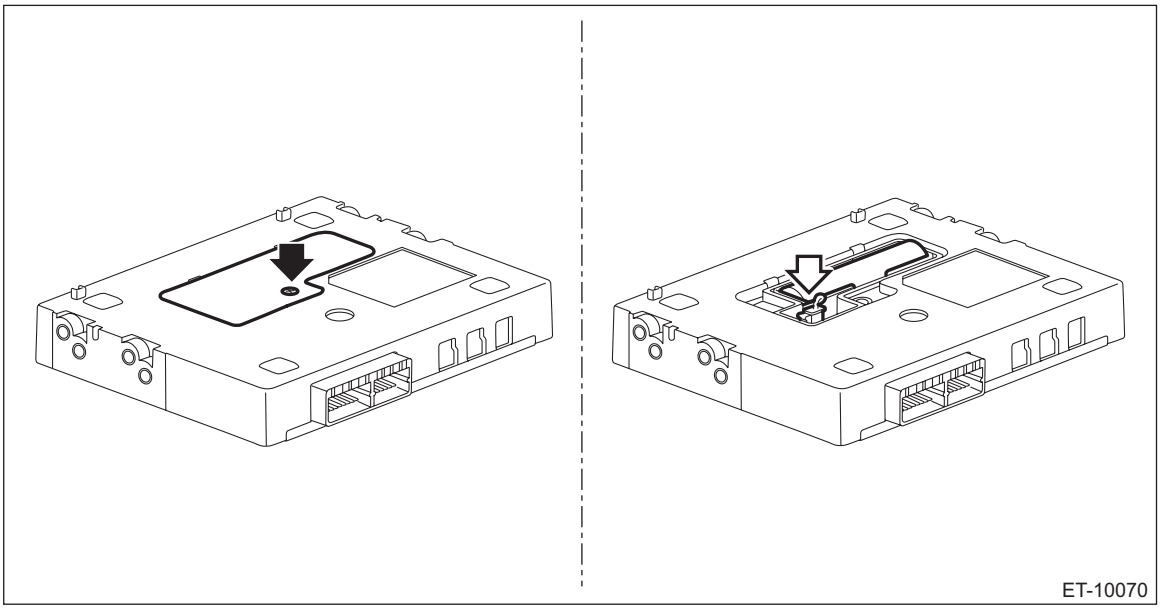

B: INSTALLATION

1. DATA COMMUNICATION MODULE

CAUTION:
Before handling the airbag system components, refer to "CAUTION" of "General Description" in "AIRBAG SYSTEM". <Ref. to AB-9, CAUTION, General Description.>

1) Install the data communication module.

NOTE:
Align the positioning pin (a) of the data communication module with the positioning hole of the audio assembly or navigation assembly.

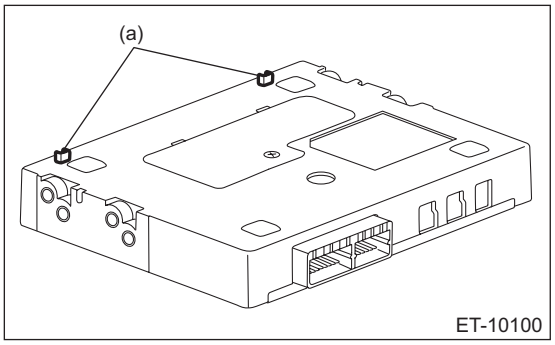

2) Install the audio assembly or navigation assembly. <Ref. to ET-37, INSTALLATION, Audio.>
3) Install the center grille assembly.
4) Install the glove box.
5) Install the knee airbag module. <Ref. to AB-34, INSTALLATION, Knee Airbag Module.>
6) Install the cover assembly - instrument panel LWR driver.
7) Connect the battery ground terminal. <Ref. to NT-6, BATTERY, NOTE, Note.>
8) Perform the registration if the data communication module is replaced with a new part. <Ref. to ET-34, OPERATION, TELEMATICS SYSTEM.>
9) Check LED lighting status of spot map light or stereo camera cover assembly. <Ref. to TEL(diag)-4, LED ILLUMINATION STATUS LIST, CHECK, Check List for Interview.>

2. BACKUP BATTERY

CAUTION:
Before handling the airbag system components, refer to "CAUTION" of "General Description" in "AIRBAG SYSTEM". <Ref. to AB-9, CAUTION, General Description.>
1) Install the backup battery.
2) Install the battery cover.

Tightening torque:
0.3 N·m (0.03 kgf-m, 0.2 ft-lb)
3) Install the data communication module. <Ref. to ET-54, DATA COMMUNICATION MODULE, INSTALLATION, DATA COMMUNICATION MODULE.>
4) Connect the battery ground terminal. <Ref. to NT-6, BATTERY, NOTE, Note.>

C: INSPECTION

1. BACKUP BATTERY

1) Measure the voltage between connector terminals.

Preparation tool:
Circuit tester

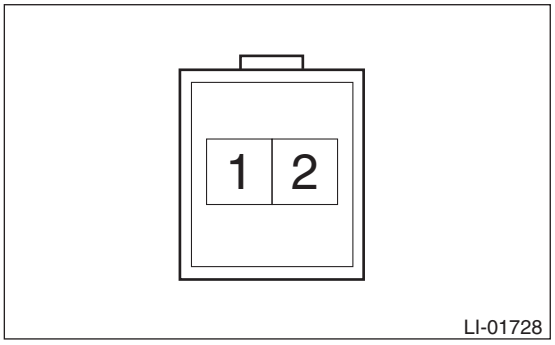

Terminal No.	Standard
1 (+) — 2 (–)	2 V or more

2) Replace the backup battery if the inspection result is not within the standard value.

18.Rearview Camera System

A: WIRING DIAGRAM

Refer to “Rearview Camera System” in the wiring diagram.

- 6.2 INCH DISPLAY: <Ref. to WI-318, 6.2 INCH DISPLAY, WIRING DIAGRAM, Rearview Camera System.>
- 7 INCH DISPLAY: <Ref. to WI-319, 7 INCH DISPLAY, WIRING DIAGRAM, Rearview Camera System.>

B: REMOVAL

1) Disconnect the ground cable from battery. <Ref. to NT-6, BATTERY, NOTE, Note.>

NOTE:
For model with battery sensor, disconnect the ground terminal from battery sensor.

2) Remove the trim panel - trunk lid. <Ref. to EI-98, REMOVAL, Trunk Room Trim.>
3) Remove the garnish - trunk. <Ref. to EI-52, REMOVAL, Trunk Lid Garnish.>
4) Remove the rearview camera assembly.

CAUTION:
Do not drop or apply any impact to the rearview camera because it is a precision equipment.

(1) Disconnect the connector.
(2) Release the claw and hook, and then remove the rearview camera assembly.

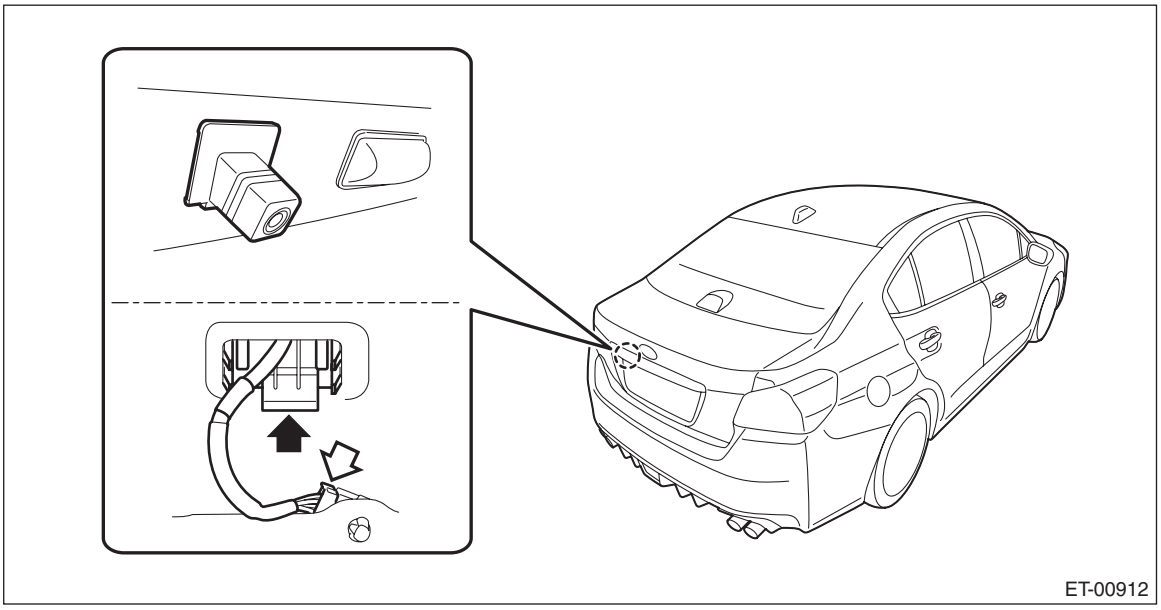

C: INSTALLATION

1) Install the rearview camera assembly.
2) Install the garnish - trunk.

Tightening torque:
4.5 N·m (0.5 kgf-m, 3.3 ft-lb)

3) Install the trim panel - trunk lid.
4) Connect the battery ground terminal. <Ref. to NT-6, BATTERY, NOTE, Note.>
5) Confirm the marker position. <Ref. to ET-57, INSPECTION, Rearview Camera System.>

D: INSPECTION

1) Park the vehicle at the level place where there are enough area at the rear of the vehicle.
2) Attach the tape as the target point for standard at the floor rearward of the vehicle as shown in the figure below.

NOTE:
Standard tape width is about 30 — 50 mm (1.18 — 1.97 in) and brilliant color shall be used.

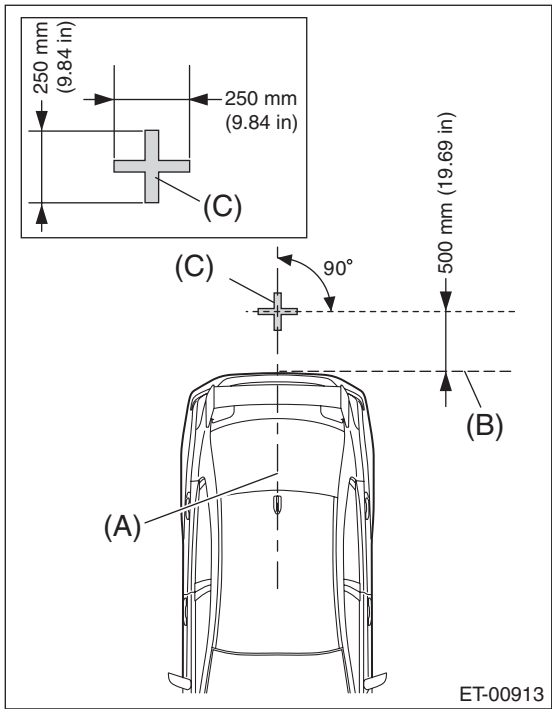

(A) Vehicle body center line
(B) Rear edge of bumper
(C) Target point

3) Confirm the following before checking the corresponding items.
(1) Rearview camera image is not displayed. (Audio and navigation screens are displayed normally.)
1. Check the connecting condition of the back sensor.
• Audio system: <Ref. to ET-14, CHECK VEHICLE SIGNALS WITH LINE DIAG MODE, OPERATION, Audio System.>
• Navigation system: <Ref. to ET-24, CHECK VEHICLE SIGNALS WITH LINE DIAG MODE, OPERATION, Navigation System.>
2. Check the rear view camera connection status.
• Audio system: <Ref. to ET-13, CHECK CONNECTIONS WITH LINE DIAG MODE, OPERATION, Audio System.>
• Navigation system: <Ref. to ET-23, CHECK CONNECTIONS WITH LINE DIAG MODE, OPERATION, Navigation System.>
(2) Marker position is not aligned or displayed.
The rearview camera or its installation location on the vehicle may be deformed. Check the rearview camera and its installation location on the vehicle, and repair or replace if necessary.

19.Front Accessory Power Supply Socket

A: WIRING DIAGRAM

Refer to “Front Accessory Power Supply Socket System” in the wiring diagram. <Ref. to WI-227, WIRING DIAGRAM, Front Accessory Power Supply Socket System.>

B: REMOVAL

CAUTION:
Before handling the airbag system components, refer to “CAUTION” of “General Description” in “AIRBAG SYSTEM”. <Ref. to AB-9, CAUTION, General Description.>

1) Disconnect the ground cable from battery and wait for at least 60 seconds before starting work. <Ref. to NT-6, BATTERY, NOTE, Note.>

NOTE:
For model with battery sensor, disconnect the ground terminal from battery sensor.

2) Remove the cover assembly - instrument panel LWR driver. <Ref. to EI-62, REMOVAL, Instrument Panel Lower Cover.>
3) Remove the knee airbag module. <Ref. to AB-34, REMOVAL, Knee Airbag Module.>
4) Remove the glove box. <Ref. to EI-64, REMOVAL, Glove Box.>
5) Remove the center grille assembly. <Ref. to AC-91, CENTER GRILLE ASSEMBLY, REMOVAL, Air Vent Grille.>
6) Remove the audio assembly or navigation assembly. <Ref. to ET-35, REMOVAL, Audio.>
7) Remove the socket assembly.
   (1) Disconnect the connector.
   (2) While releasing the claw inside, press it in from the rear to remove the socket assembly.

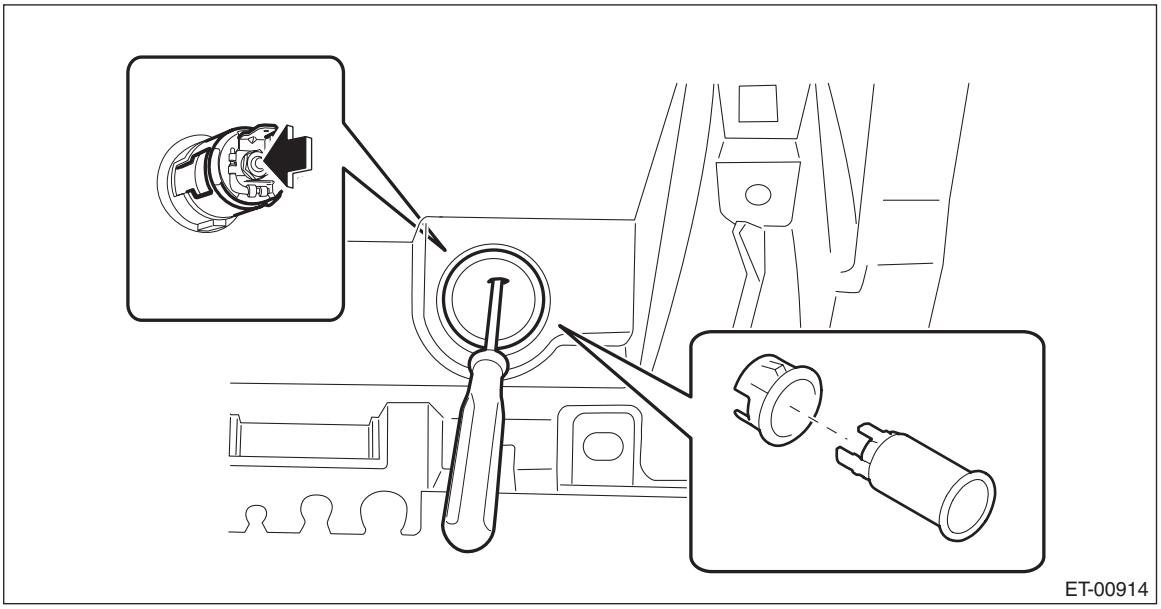

   (3) Remove the clip - socket.

C: INSTALLATION

CAUTION:
Before handling the airbag system components, refer to "CAUTION" of "General Description" in "AIRBAG SYSTEM". <Ref. to AB-9, CAUTION, General Description.>

1) Install the clip - socket.
2) Install the socket assembly.

NOTE:
Align the groove of the clip - socket with the claw of the socket assembly.

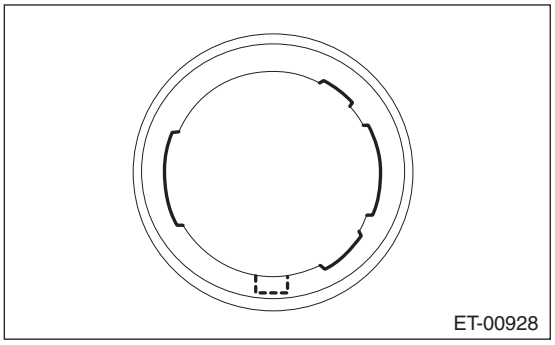

3) Install the audio assembly or navigation assembly. <Ref. to ET-37, INSTALLATION, Audio.>
4) Install the center grille assembly.
5) Install the glove box.
6) Install the knee airbag module. <Ref. to AB-34, INSTALLATION, Knee Airbag Module.>
7) Install the cover assembly - instrument panel LWR driver.
8) Connect the battery ground terminal. <Ref. to NT-6, BATTERY, NOTE, Note.>

20.Rear Accessory Power Supply Socket

A: WIRING DIAGRAM

Refer to “Rear Accessory Power Supply Socket System” in the wiring diagram.
- ENGINE TYPE FA: <Ref. to WI-314, ENGINE TYPE FA, WIRING DIAGRAM, Rear Accessory Power Supply Socket System.>
- ENGINE TYPE EJ: <Ref. to WI-315, ENGINE TYPE EJ, WIRING DIAGRAM, Rear Accessory Power Supply Socket System.>

B: REMOVAL

1) Disconnect the ground cable from battery. <Ref. to NT-6, BATTERY, NOTE, Note.>

NOTE:
For model with battery sensor, disconnect the ground terminal from battery sensor.
2) Remove the console box assembly. <Ref. to EI-67, REMOVAL, Console Box.>
3) Remove the socket assembly.
   (1) Disconnect the connector. (STI model)
   (2) While releasing the claw inside, press it in from the rear to remove the socket assembly.
   - Except for STI model

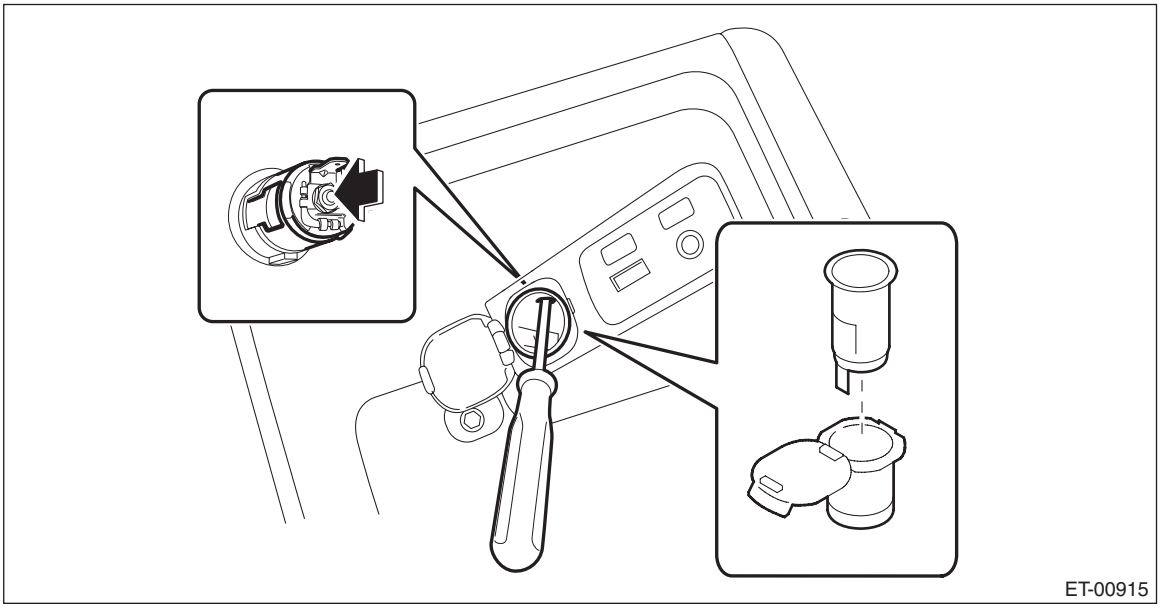

- STI model

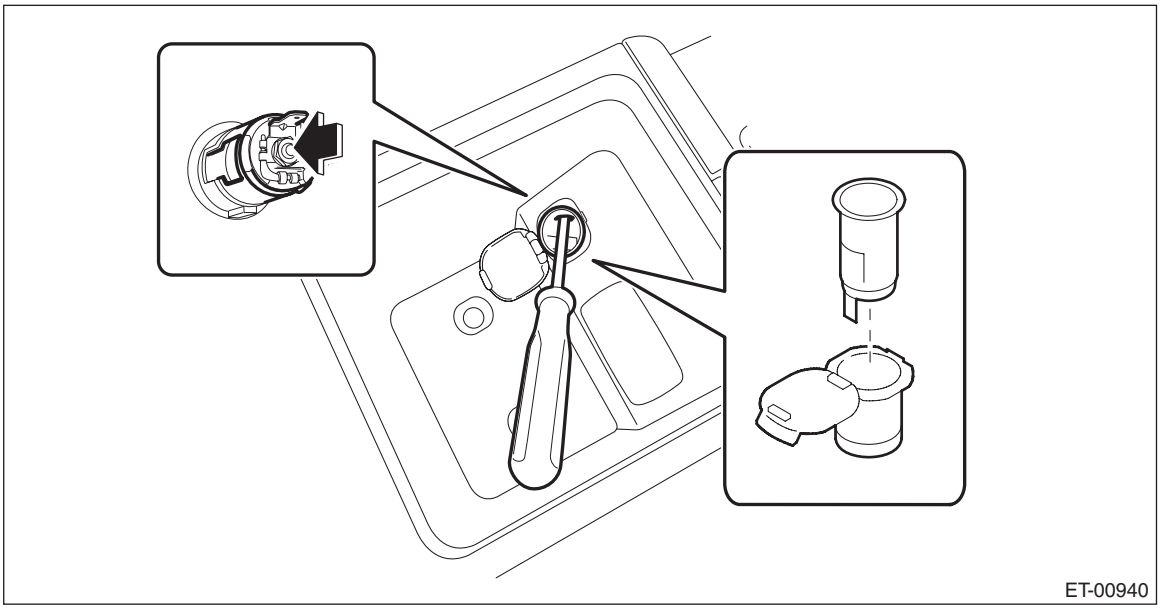

(3) Remove the cap - socket.

C: INSTALLATION

1) Install the cap - socket.
2) Install the socket assembly.

NOTE:
Align the groove of the cap - socket with the claw of the socket assembly.

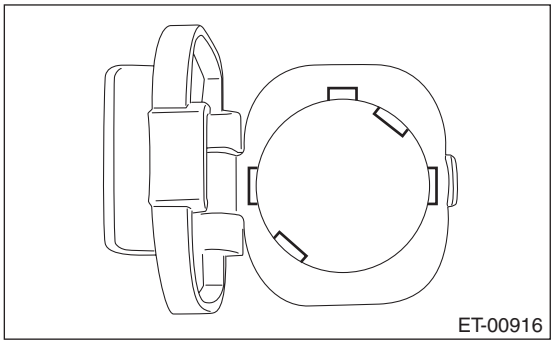

3) Install the console box assembly.
4) Connect the battery ground terminal. <Ref. to NT-6, BATTERY, NOTE, Note.>

21.External Connection Terminal

A: REMOVAL

1) Disconnect the ground cable from battery. <Ref. to NT-6, BATTERY, NOTE, Note.>

NOTE:
For model with battery sensor, disconnect the ground terminal from battery sensor.

2) Remove the console box assembly. <Ref. to EI-67, REMOVAL, Console Box.>
3) While pressing the claw, press it in from the rear to remove the unit assembly - AUX.

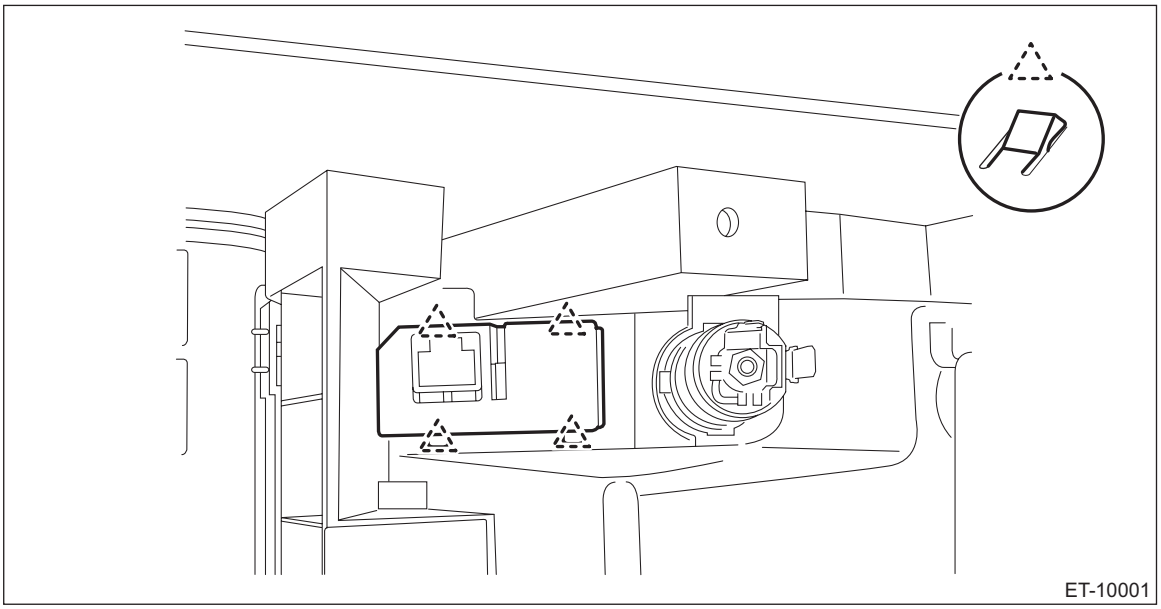

B: INSTALLATION

1) Install the unit assembly - AUX.
2) Install the console box assembly.
3) Connect the battery ground terminal. <Ref. to NT-6, BATTERY, NOTE, Note.>

22.Diagnostics with Phenomenon

A: LIST

1. AUDIO SYSTEM

Symptoms	Reference
Power will not turn ON.	<Ref. to ET-69, POWER WILL NOT TURN ON, INSPECTION, Diagnostics with Phenomenon.>
The screen freezes and does not accept any operation entry.	<Ref. to ET-70, THE SCREEN FREEZES AND DOES NOT ACCEPT ANY OPERATION ENTRY, INSPECTION, Diagnostics with Phenomenon.>
The screen is blacked out, or the screen is not displayed.	<Ref. to ET-71, THE SCREEN IS BLACKED OUT, OR THE SCREEN IS NOT DISPLAYED, INSPECTION, Diagnostics with Phenomenon.>
System is reset.	<Ref. to ET-72, SYSTEM IS RESET, INSPECTION, Diagnostics with Phenomenon.>
CDs cannot be played back.	<Ref. to ET-73, CDS CANNOT BE PLAYED BACK, INSPECTION, Diagnostics with Phenomenon.>
Sound does not come out from the speaker.	<Ref. to ET-74, SOUND DOES NOT COME OUT FROM THE SPEAKER, INSPECTION, Diagnostics with Phenomenon.>
Bluetooth connection cannot be established.	<Ref. to ET-75, BLUETOOTH CONNECTION CANNOT BE ESTABLISHED, INSPECTION, Diagnostics with Phenomenon.>
Bluetooth does not operate.	<Ref. to ET-76, BLUETOOTH DOES NOT OPERATE, INSPECTION, Diagnostics with Phenomenon.>
Radio volume is low or interference noise occurs.	<Ref. to ET-77, RADIO VOLUME IS LOW OR INTERFERENCE NOISE OCCURS, INSPECTION, Diagnostics with Phenomenon.>
Error message is displayed.	<Ref. to ET-67, ERROR MESSAGE IS DISPLAYED, LIST, Diagnostics with Phenomenon.>
SUBARU STARLINK is faulty.	<Ref. to ET-64, CHECK ABNORMALITY OF SUBARU STARLINK, LIST, Diagnostics with Phenomenon.>

2. NAVIGATION SYSTEM

Symptoms	Reference
Power will not turn ON.	<Ref. to ET-69, POWER WILL NOT TURN ON, INSPECTION, Diagnostics with Phenomenon.>
The screen freezes and does not accept any operation entry.	<Ref. to ET-70, THE SCREEN FREEZES AND DOES NOT ACCEPT ANY OPERATION ENTRY, INSPECTION, Diagnostics with Phenomenon.>
The screen is blacked out, or the screen is not displayed.	<Ref. to ET-71, THE SCREEN IS BLACKED OUT, OR THE SCREEN IS NOT DISPLAYED, INSPECTION, Diagnostics with Phenomenon.>
System is reset.	<Ref. to ET-72, SYSTEM IS RESET, INSPECTION, Diagnostics with Phenomenon.>
CDs cannot be played back.	<Ref. to ET-73, CDS CANNOT BE PLAYED BACK, INSPECTION, Diagnostics with Phenomenon.>
Sound does not come out from the speaker.	<Ref. to ET-74, SOUND DOES NOT COME OUT FROM THE SPEAKER, INSPECTION, Diagnostics with Phenomenon.>
Bluetooth connection cannot be established.	<Ref. to ET-75, BLUETOOTH CONNECTION CANNOT BE ESTABLISHED, INSPECTION, Diagnostics with Phenomenon.>
Bluetooth does not operate.	<Ref. to ET-76, BLUETOOTH DOES NOT OPERATE, INSPECTION, Diagnostics with Phenomenon.>
Radio volume is low or interference noise occurs.	<Ref. to ET-77, RADIO VOLUME IS LOW OR INTERFERENCE NOISE OCCURS, INSPECTION, Diagnostics with Phenomenon.>
Wrong location of vehicle, or no GPS reception.	<Ref. to ET-78, WRONG LOCATION OF VEHICLE, NO GPS RECEPTION, INSPECTION, Diagnostics with Phenomenon.>
Error message is displayed.	<Ref. to ET-67, ERROR MESSAGE IS DISPLAYED, LIST, Diagnostics with Phenomenon.>
SUBARU STARLINK is faulty.	<Ref. to ET-64, CHECK ABNORMALITY OF SUBARU STARLINK, LIST, Diagnostics with Phenomenon.>

3. CHECK ABNORMALITY OF SUBARU STARLINK

Symptoms	Counter-measure
SUBARU STARLINK app was terminated.	Perform the procedures described on “Check connection between smartphone and unit”. <Ref. to ET-79, CHECK CONNECTION BETWEEN SMARTPHONE AND UNIT, INSPECTION, Diagnostics with Phenomenon.>
Smartphone was powered off while connecting via the SUBARU STARLINK.	
Bluetooth connection stops while connecting via the SUBARU STARLINK.	
Communication gets out of service while connecting via the SUBARU STARLINK.	
Radio wave reception becomes worse while connecting via the SUBARU STARLINK.	

NOTE:
Possible error messages with relation to the above symptoms. When the message below is displayed, perform inspection according to “Inspection when an error message is displayed (SUBARU STARLINK)”. <Ref. to ET-64, INSPECTION WHEN AN ERROR MESSAGE IS DISPLAYED (SUBARU STARLINK), LIST, Diagnostics with Phenomenon.>

Details of message
Please disconnect mobile device and install the STARLINK application on your mobile device and try again. Bluetooth disconnected, please reconnect and try again. Smartphone data connection is poor, please try to connect again.

4. INSPECTION WHEN AN ERROR MESSAGE IS DISPLAYED (SUBARU STARLINK)

No.	Inspection	Possible cause	Action 1	Action 2
1	Check internet connection of smartphone	Check that the Internet sites can be viewed with a web browser of the smartphone. NOTE: Make sure that the displayed contents are not from previously loaded screen (cache) and that new contents can be reloaded.	When connection to the Internet fails, confirm that connection can be established where the radio wave condition is good, and go to No. 2.	Check that the smartphone can perform communication.
2	Activate SUBARU STARLINK application for the smartphone	Activate the “SUBARU STARLINK” application for the smartphone.	Check that the SUBARU STARLINK application is activated, and go to No. 5.	If the SUBARU STARLINK application is not installed, go to No. 3 and 4.
3	Install the SUBARU STARLINK application (Android)	Search the SUBARU STARLINK on Google Play, and install the application.	After installation, go to No. 2.	When installation cannot be completed, check the setting of the smartphone. (Communication environment, account, etc.)
4	Install the SUBARU STARLINK application (iPhone)	Search the SUBARU STARLINK on APP Store, and install the app.	After installation, go to No. 2.	When installation cannot be completed, check the setting of the smartphone. (Communication environment, account, etc.)
5	Check connection to the SUBARU STARLINK server	Select “SETTING” tab from the SUBARU STARLINK application for the smartphone, and select “Press to check network status”.	When “The network connection is good” is displayed, go to No. 8.	For the case other than shown on the left, go to No. 6 or No. 7.
6		When “NETWORK PROBLEMS” is displayed.	Move to a location where the radio wave condition is good, and go to No. 5.	—
7		When “SERVER MAINTENANCE” is displayed.	Wait until the server maintenance completes, and go to No. 5.	—

No.	Inspection	Possible cause	Action 1	Action 2
8	Check the smartphone type	Check the phone type (iPhone or Android).	For iPhone, go to No. 12.	For Android, go to No. 10.
9	Check Bluetooth connection between smartphone and on-vehicle device	On the on-vehicle device, select [HOME]-[SETTINGS]-Bluetooth tab-“BT devices Connection”, and check that Bluetooth setting at the upper right is ON.	When the setting is OFF, switch to ON and go to No. 10.	When the setting is ON, switch to OFF once and to ON again, then go to No. 10.
10		From the Setting app for the smartphone, select Bluetooth and check that it is set to ON. (Note that procedures vary depending on a device.)	When the setting is OFF, switch to ON and go to No. 11.	When the setting is ON, switch to OFF once and to ON again, then go to No. 11.
11		Check that Bluetooth pairing is established between the smartphone and on-vehicle device. • The selected smartphone icon is displayed on the on-vehicle device. • The smartphone BT is connected to the on-vehicle device.	If the connection cannot be confirmed, go to No. 9.	—
12	Check USB connection between smartphone and on-vehicle device (with iPhone)	Check that the smartphone and on-vehicle device are connected via USB.	After connecting via USB, go to No. 13.	—
13	Check the SUBARU STARLINK initial screen	On the on-vehicle device, press down [APPS] - [SUBARU STARLINK], and check that the SUBARU STARLINK initial screen is displayed.	If the activation cannot be confirmed, go to No. 14.	—
14	Delete the SUBARU STARLINK connection information inside the on-vehicle device.	Clear the Browser cache on the on-vehicle device. (Select the tool tab from the SETTING menu, select Browser cache “Delete”, and select “OK”. Then, press [SETTINGS] from the APPS screen. From SETTING, select the Bluetooth - tab, and select BT Devices Connection. Select the “Trash can” icon of the registered device. Select “OK” on the confirmation pop-up screen.)	For Android, go to No. 15. For iPhone, go to No. 17.	—
15		Clear the Bluetooth connection information inside the on-vehicle device.	Go to No. 16.	—
16		Turn OFF the power supply of the on-vehicle device, and wait for 30 seconds or more before turning ON the power supply again.	Go to No. 17.	—

No.	Inspection	Possible cause	Action 1	Action 2
17	Delete the SUBARU STARLINK connection information inside the smartphone.	Delete data in the SUBARU STARLINK app. (Click the “SETTING” icon of the “SUBARU STARLINK” application. Then, press [CONFIG] from the APPS list screen. Select “Delete the SUBARU STARLINK application data” to delete the data in the application. Activate the Setting app for the smartphone. From SETTING, select the Bluetooth - tab, and select BT Devices Connection. Select the Bluetooth setting item. Select the connection information. Select the “Trash can” icon of the registered device. Select “Forget This Device” to delete the connection information.)	Go to No. 18.	—
18		Delete the Bluetooth connection information.	Go to No. 19.	—
19		Turn OFF the power of the smartphone, then turn it ON again.	Go to No. 20.	—
20	Re-connect SUBARU STARLINK	Establish connection according to the SUBARU STARLINK connection procedure.	—	—

5. ERROR MESSAGE IS DISPLAYED

- Model with 6.2 inch display

Mode	Message	Cause	Action
aha	Please reconnect your mobile device or restart the Aha app. Press VOLUME knob twice to retry, or press AUDIO/TUNE knob to exit.	Displayed when Aha Application needs to be rebooted.	Reboot Aha Application.
	Please login to Aha on your mobile device before accessing in the vehicle.	Displayed when selecting the Aha mode while being log-out.	Log in to Aha on the device that is disconnected from the on-vehicle device, re-connect this device to the on-vehicle device, and select the Aha mode.
	Please update to the latest version of the Aha app on your mobile device.	Displayed when Aha Application needs to be updated.	Update Aha Application.
	Please reconnect mobile device to continue using Aha.	Displayed when the smartphone is disconnected.	Recovers when the connection is established.
	Aha is temporarily unavailable. Please try again later.	Displayed when the connected network is invalid.	Recovers when connection is established again and the network is valid.
	Aha is temporarily unavailable. Please try again later.	When an error occurred during the Start session.	Recovers when the communication between the device and server is normalized.
Pandora	Please reconnect your mobile device or restart the Pandora App. Press VOLUME knob twice to retry, or press AUDIO/TUNE knob to exit.	Displayed when connection is not established, and when Pandora Application needs to be rebooted.	Reboot Pandora Application.
	No saved stations. Please create one on the Pandora mobile app. Press VOLUME knob twice to retry, or press AUDIO/TUNE knob to exit.	Displayed when no Station is set up with Pandora Application.	Recovers when at least one Station is set up on the device side.
	Pandora is temporarily unavailable. Please try again later.	Displayed when Pandora Server is under Maintenance.	Recovers when Maintenance of Pandora Server is completed and Server is resumed.
	Please update the Pandora app on your mobile device.	Displayed when Pandora Application needs to be updated.	Update Pandora Application.
	You have reached the maximum number of saved stations. Please delete a station before creating a new one.	Displayed when the number of Station has already reached the upper limit.	Displays for five seconds.
	Pandora is not available in the current region.	Displayed when connection to Pandora is attempted from outside of the U.S.	Re-connect from inside the U.S.
	Pandora user not logged in. Please login to Pandora on your mobile device. Press VOLUME knob twice to retry, or press AUDIO/TUNE knob to exit.	Displayed when selecting the Pandora mode while being log-out.	Log in and select the Pandora mode.
	Insufficient network connectivity to play Pandora. Waiting to regain connectivity.	Displayed when the connected network is invalid.	Re-connect with valid network.

- Model with 7 inch display (audio and navigation)

Mode	Message	Cause	Action
aha	“Information acquisition error. (Information acquisition error.)”	When not able to get the requested information.	Please try again (Refresh etc.) later or reconnect it.
	“Poor wireless reception. (Poor wireless reception.)”	When a communication error has been detected.	Please try again in a better communications environment.
	“Entry not recognized. (Entry not recognized.)”	When an invalid operation has been executed.	Please try again (Refresh etc.) later or reconnect it.
	“The station list cannot be acquired. (The station list cannot be acquired.)”	When not able to get the station information.	Please try again (Refresh etc.) later or reconnect it.
	“The content cannot be acquired. (The content cannot be acquired.)”	• When not able to get the content information. • When not able to switch to the Top content when touching.	• Please try again (Refresh etc.) later or reconnect it. • Select the desired station again when the station list appears.
	“Action not available. (Action not available.)”	When content-specific operations such as “fast forward” or “reverse” are not available.	Please try again (Refresh etc.) later or reconnect it.
	“Failed. (Failed.)”	When data transmission failed when touching.	Please try again later.
	“aha communication error - Please check Owner's Manual. (aha communication error - Please check Owner's Manual.)”	• When invalid data is received from the aha application or there is no response. • When the connection to the aha application via Bluetooth is not available. • When the data reception from this unit is rejected.	Please try again (Refresh etc.) later or reconnect it. If it is still not improved, restart the aha application.
	“Please select the type of connection in “aha Settings”. (Please select the type of connection in “aha Settings”.)”	When aha radio setting is set to (USB) when the Android device is going to be paired via Bluetooth.	When you want to connect to the aha application with the Android device, select (Bluetooth) in the aha radio setting from the setting screen.
Pandora	“No stations have been added to your list. (No stations have been added to your list.)”	When no stations have been registered.	Please register stations.
	“Your ratings information was not saved. (Your ratings information was not saved.)”	When ratings information has not been updated to the Pandora server.	Please try again later.
	“Bookmark not saved. (Bookmark not saved.)”	When bookmark registration information has not been updated to the Pandora server.	Please try again later.
	“Pandora is not available at your current location. (Pandora is not available at your current location.)”	When Pandora is used in an area where it is not available.	Please try again at a different location.
	“The selected Pandora station is no longer available. (The selected Pandora station is no longer available.)”	When the selected station has been deleted, or has expired.	Please select another station.
	“Pandora Error. (Pandora Error.)”	When the Pandora server is undergoing maintenance, or another error has occurred.	Please try again later.

B: INSPECTION

1. POWER WILL NOT TURN ON

WIRING DIAGRAM:

- Audio system: <Ref. to WI-78, WIRING DIAGRAM, Audio System.>
- Navigation system: <Ref. to WI-277, WIRING DIAGRAM, Navigation System.>

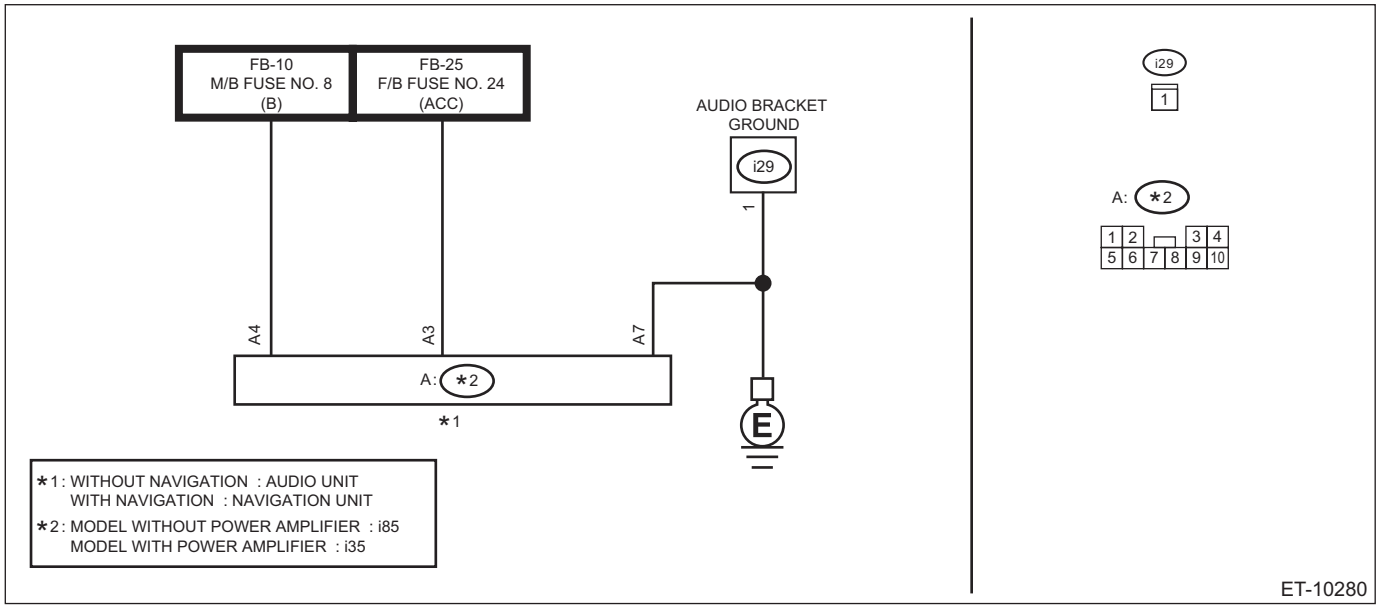

	Step	Check	Yes	No
1	**CHECK CONNECTOR CONNECTION.** Check that the connector is connected to the unit.	Is the connector connected?	Go to step **2**.	Connect the connector.
2	**CHECK CONNECTOR.** Check for poor contact of connectors or terminals.	Is the connector OK?	Go to step **3**.	Repair or replace the harness.
3	**CHECK POWER SUPPLY VOLTAGE.** 1) Disconnect the connector. 2) Turn the ignition switch to ACC. 3) Using a tester, measure the voltage between connector and chassis ground. NOTE: Turn the electrical parts to OFF. ***Connector & terminal*** ***Model without power amplifier*** ***(i85) No. 4 (+) — Chassis ground (–):*** ***Model with power amplifier*** ***(i35) No. 4 (+) — Chassis ground (–):***	Is the voltage 12 V or more?	Go to step **8**.	Go to step **4**.
4	**CHECK FUSE.** 1) Turn the ignition to OFF. 2) Check the fuse No. 8 inside the main fuse box.	Is the fuse OK?	Go to step **5**.	Replace the fuse. If the fuse is blown again, check or replace the short circuit of the power supply harness.
5	**CHECK HARNESS (POWER SUPPLY).** Measure the resistance between main fuse box and connector. ***Connector & terminal*** ***Model without power amplifier*** ***M/B fuse No. 8 — (i85) No. 4:*** ***Model with power amplifier*** ***M/B fuse No. 8 — (i35) No. 4:***	Is the resistance 1 Ω or less?	Go to step **6**.	Repair or replace the open circuit of harness.

	Step	Check	Yes	No
6	**CHECK HARNESS (GROUND).** Measure the resistance between connector and chassis ground. ***Connector & terminal*** ***Model without power amplifier*** ***(i85) No. 7 — Chassis ground:*** ***Model with power amplifier*** ***(i35) No. 7 — Chassis ground:***	Is the resistance 1 Ω or less?	Go to step **7**.	Repair or replace the open circuit of harness.
7	**CHECK BATTERY.** Check the battery. • Except for STI model: <Ref. to SC(w/o STI)-51, INSPECTION, Battery.> • STI model: <Ref. to SC(STI)-24, INSPECTION, Battery.>	Is the battery OK?	Go to step **8**.	Charge or replace the battery.
8	**CHECK OPERATION.** 1) Connect all connectors. 2) Turn the ignition switch to ACC and the power supply switch of the unit to ON.	Does the power turn ON?	Currently no failure is found.	Replace the unit. <Ref. to ET-35, Audio.>

2. THE SCREEN FREEZES AND DOES NOT ACCEPT ANY OPERATION ENTRY

	Step	Check	Yes	No
1	**CHECK RESTARTING DISPLAY.** Turn the ignition switch OFF → ACC.	Is the screen freeze eliminated?	Go to step **5**.	Go to step **2**.
2	**REMOVE OTHER MEDIA OR EXTERNAL DEVICES.** Remove the CD, SD card (model with SD card slot) or external devices connected to USB. Also, remove the external devices with Bluetooth.	Is the screen freeze eliminated?	Go to step **3**.	Go to step **6**.
3	**CHECK OTHER EXTERNAL DEVICE CONNECTION.** When screen freeze is eliminated, connect external devices one by one to identify the device that causes screen freeze.	Is the device that reproduces screen freeze identified?	Go to step **4**.	Go to step **5**.
4	**CHECK OTHER EXTERNAL DEVICE CONNECTION.** 1) Replace the identified device with the one that has the same performance. 2) Turn the ignition switch to ACC.	Does the screen freeze occur?	Replace the unit. <Ref. to ET-35, Audio.>	The external device may be defective.
5	**CHECK OPERATION PROCEDURE.** Ask how the user operates when screen freeze occurs, and perform using the same procedure.	Are the operation and screen normal?	Currently no failure is found.	Go to step **6**.
6	**CHECK ENVIRONMENTAL CONDITION.** Check if any external devices which emit strong electromagnetic waves and noises, such as a radio antenna, is installed inside the vehicle.	Is an external device installed?	Remove the external device and perform the inspection from step 2 again. If the fault is not fixed: Go to step **7**.	Go to step **7**.

	Step	Check	Yes	No
7	**PERFORM INITIALIZATION PROCEDURE.** Perform the initialization procedure for the unit. **CAUTION:** **When the initialization procedure is performed, the data, telephone directory, etc. recorded in the unit body will be deleted. Before initialization, obtain permission from the user.** • Audio system: <Ref. to ET-12, INITIALIZATION (FACTORY DEFAULT), OPERATION, Audio System.> • Navigation system: <Ref. to ET-23, INITIALIZATION (FACTORY DEFAULT), OPERATION, Navigation System.>	Is the screen freeze eliminated?	Go to step **5**. If the screen freeze occurs again, replace the unit. <Ref. to ET-35, Audio.>	Replace the unit. <Ref. to ET-35, Audio.>

3. THE SCREEN IS BLACKED OUT, OR THE SCREEN IS NOT DISPLAYED

	Step	Check	Yes	No
1	**CHECK RESTARTING DISPLAY.** Turn the ignition switch OFF → ACC.	Is the screen properly displayed?	Currently no failure is found.	Go to step **2**.
2	**CHECK POWER SUPPLY BUTTON.** Check if the screen OFF mode is turned on by pressing the power supply button of the unit body.	Is the screen properly displayed?	The screen OFF mode might be activated. Currently no failure is found.	Go to step **3**.
3	**CHECK BUTTON ILLUMINATION.** Turn the ignition switch to ACC.	Do the buttons located beside the screen illuminate?	Go to step **4**.	Perform "Power will not turn ON" in Diagnostics with Phenomenon. <Ref. to ET-69, POWER WILL NOT TURN ON, INSPECTION, Diagnostics with Phenomenon.>
4	**CHECK INDICATION WITH ILLUMINATION ON.** Turn the lighting switch to ON.	Does the screen brightness change?	Go to step **7**.	Go to step **5**.
5	**CHECK HARNESS.** Check for poor contact of the harnesses, connectors and terminals that are connected to the unit body.	Is harness normal?	Go to step **6**.	Repair or replace the harness.
6	**CHECK BODY INTEGRATED UNIT.** Display the data of «Lighting I Switch input» using Subaru Select Monitor. NOTE: For detailed operation procedures, refer to “Application help”.	Is the input signal normal?	Go to step **7**.	Replace the body integrated unit. <Ref. to SL-81, Body Integrated Unit.>
7	**CHECK UNDER OVERLOAD CONDITION.** 1) Turn the ignition to OFF. 2) Leave as is for 10 minutes (cooling down), and then turn the ignition to ACC to check the operation.	Is the screen properly displayed?	Go to step **8**.	Replace the unit. <Ref. to ET-35, Audio.>
8	**OPERATIONAL CHECK.** Obtain the information about the audio device that the user used (SD, Bluetooth, CD, etc.), and connect the same device. Then play the device for 10 minutes or more.	Is the screen properly displayed?	Currently no failure is found.	Go to step **9**.

	Step	Check	Yes	No
9	**CHECK EXTERNAL DEVICE.** 1) Replace the external device that might cause trouble with another device. (If trouble occurs while using a CD, replace the CD with another one. If trouble occurs while using an external device that is connected via USB, replace the external device with another device.) 2) Operate for 10 minutes or more.	Is the screen properly displayed?	The external device might have trouble, resulting in the overload state.	Replace the unit. <Ref. to ET-35, Audio.>

4. SYSTEM IS RESET

- Audio system: <Ref. to WI-78, WIRING DIAGRAM, Audio System.>
- Navigation system: <Ref. to WI-277, WIRING DIAGRAM, Navigation System.>

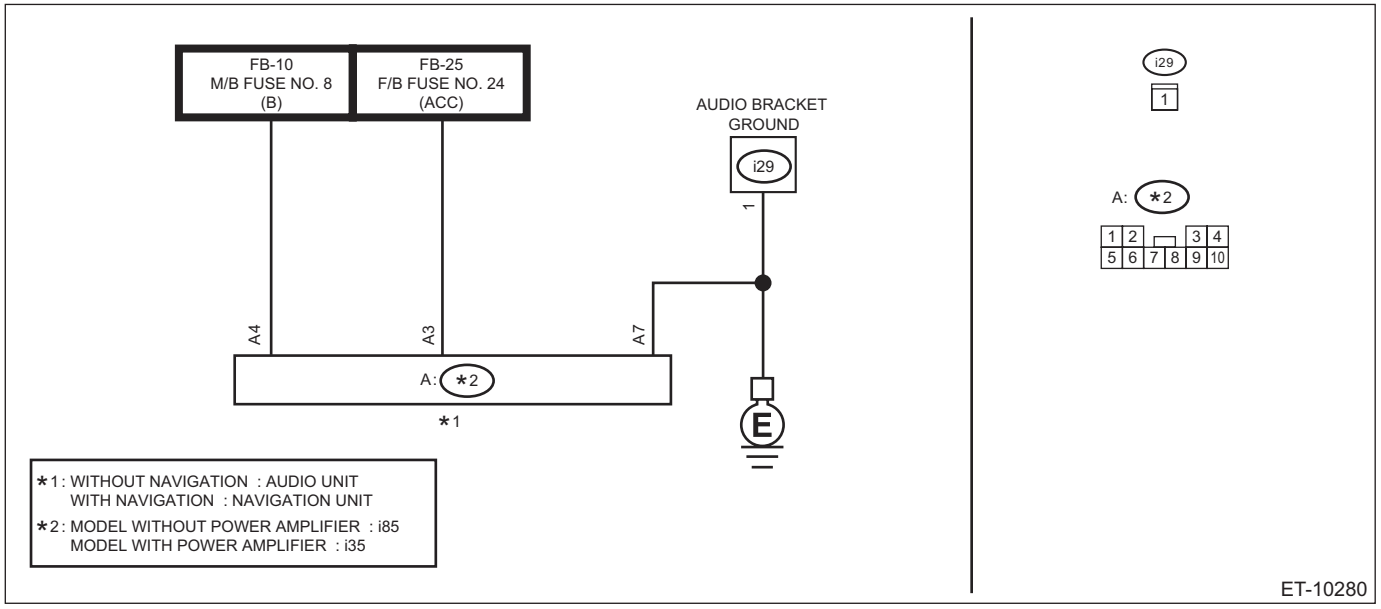

	Step	Check	Yes	No
1	**CHECK ENVIRONMENTAL CONDITION.** Check if any external devices which emit strong electromagnetic waves and noises, such as a radio antenna, is installed inside the vehicle.	Is an external device installed?	Remove the external device to check the operation. If the fault is not fixed: Go to step **2**.	Go to step **2**.
2	**CHECK CONNECTOR CONNECTION.** Check that the connector is connected to the unit.	Is the connector connected?	Go to step **3**.	Connect the connector.
3	**CHECK CONNECTOR.** Check for poor contact of connectors or terminals.	Is the connector OK?	Go to step **4**.	Repair or replace the harness.
4	**CHECK POWER SUPPLY VOLTAGE.** 1) Turn the ignition switch to ACC. 2) Using a tester, measure the voltage between connector and chassis ground. NOTE: Turn the electrical parts to OFF. ***Connector & terminal*** ***Model without power amplifier*** ***(i85) No. 4 (+) — Chassis ground (–):*** ***Model with power amplifier*** ***(i35) No. 4 (+) — Chassis ground (–):***	Is the voltage 12 V or more?	Go to step **8**.	Go to step **5**.

	Step	Check	Yes	No
5	**CHECK OPEN CIRCUIT IN HARNESS (POWER SUPPLY).** Using the tester, measure the resistance between connector and chassis ground while shaking the harness. ***Connector & terminal*** ***Model without power amplifier*** ***(i85) No. 4 — Chassis ground:*** ***Model with power amplifier*** ***(i35) No. 4 — Chassis ground:***	Is the resistance 1 Ω or less?	Go to step **6**.	Repair or replace the open circuit of harness.
6	**CHECK OPEN CIRCUIT IN HARNESS (GROUND).** Using the tester, measure the resistance between connector and chassis ground while shaking the harness. Connector & terminal ***Model without power amplifier*** ***(i85) No. 7 — Chassis ground:*** ***Model with power amplifier*** ***(i35) No. 7 — Chassis ground:***	Is the resistance 1 Ω or less?	Go to step **7**.	Repair or replace the open circuit of harness.
7	**CHECK BATTERY.** Check the battery. • Except for STI model: <Ref. to SC(w/o STI)-51, INSPECTION, Battery.> • STI model: <Ref. to SC(STI)-24, INSPECTION, Battery.>	Is the battery OK?	Go to step **8**.	Replace the unit. <Ref. to ET-35, Audio.>
8	**CHECK UNIT OPERATION.** 1) Connect all connectors. 2) Turn the ignition switch to ACC and the power supply switch of the unit to ON.	Is the reset eliminated?	Currently no failure is found.	Replace the unit. <Ref. to ET-35, Audio.>

5. CDS CANNOT BE PLAYED BACK

	Step	Check	Yes	No
1	**CONFIRM CD INSERTION CONDITION.** Check that the CD is inserted properly.	Is the CD normal?	Go to step **2**.	Insert the CD properly.
2	**CHECK CD.** Check the CD surfaces are free from scratches or dirt.	Is the CD normal?	Go to step **3**.	The CD is defective.
3	**CHECK CD.** Replace the CD with another one. (Use a playable CD. Refer to owner's manual for details.)	Is the CD played back?	The CD is defective.	Go to step **4**.
4	**CHECK DEW CONDENSATION IN UNIT.** 1) After starting the engine, turn ON the air conditioner and dry inside the vehicle for 10 minutes or more. 2) Check the CD operation.	Is the CD played back?	Dew condensation occurred inside the unit.	Replace the unit. <Ref. to ET-35, Audio.>

6. SOUND DOES NOT COME OUT FROM THE SPEAKER

	Step	Check	Yes	No
1	**CHECK THE MODE IN WHICH NO SOUND COME OUT.** Check if sound comes out in each mode such as CD, radio, etc.	Does it have no sound in all modes?	Go to step **2**.	Check each mode in which no sound come out. For CD: <Ref. to ET-73, CDS CANNOT BE PLAYED BACK, INSPECTION, Diagnostics with Phenomenon.> For radio: <Ref. to ET-77, RADIO VOLUME IS LOW OR INTERFERENCE NOISE OCCURS, INSPECTION, Diagnostics with Phenomenon.> For Bluetooth audio: <Ref. to ET-75, BLUETOOTH CONNECTION CANNOT BE ESTABLISHED, INSPECTION, Diagnostics with Phenomenon.>
2	**CHECK DIAGNOSTIC MODE.** Perform {Audio Check} on the {Line Diag} screen. • Audio system: <Ref. to ET-16, CHECK SPEAKER OUTPUT WITH LINE DIAG MODE, OPERATION, Audio System.> • Navigation system: <Ref. to ET-25, CHECK SPEAKER OUTPUT WITH LINE DIAG MODE, OPERATION, Navigation System.>	Does it have no sound in all speakers?	Go to step **3**.	Check the harness between the unit and speaker for open circuit or short circuit. If no fault is found, replace the speaker.
3	**CHECK MUTE MODE.** Check if the MUTE mode is turned on when the MUTE button is installed.	Is the volume level set to the minimum?	Since the MUTE mode is on or the volume level is set to the minimum, sound does not come out.	Go to step **4**.
4	**CHECK DTC (MODEL WITH TELEMATICS).** Read DTCs of the Telematics. <Ref. to TEL(diag)-16, Diagnostic Code(s) Display.>	Are B2A0E (mute line circuit), B2A05 (left speaker/audio circuit) and B2A06 (right speaker/audio circuit) displayed?	Perform the diagnosis according to DTC. <Ref. to TEL(diag)-49, DTC B2A0E MUTE LINE CIRCUIT, Diagnostic Procedure with Diagnostic Trouble Code (DTC).>	Go to step **5**.
5	**CHECK CONNECTOR.** Check for poor contact in the connector of the unit and the connector of each speaker.	Are the connectors and terminals normal?	Replace the unit. <Ref. to ET-35, Audio.>	Repair or replace the harness.

7. BLUETOOTH CONNECTION CANNOT BE ESTABLISHED

	Step	Check	Yes	No
1	**CHECK BLUETOOTH DEVICE.** Restart the Bluetooth device, and connect again.	Does it start properly?	Currently no failure is found.	Go to step **2**.
2	**CHECK BLUETOOTH DEVICE.** Re-register the Bluetooth device, and connect again.	Is communication successful?	Currently no failure is found.	Go to step **3**.
3	**CHECK BLUETOOTH DEVICE.** 1) Connect another Bluetooth device. NOTE: For Bluetooth supported standard, refer to the Notes in the margin.	Is communication successful?	Bluetooth device which cannot be connected might be faulty.	Go to step **4**.
4	**CHECK ENVIRONMENTAL CONDITION.** Check if any external devices which emit strong electromagnetic waves and noises, such as a radio antenna, is installed inside the vehicle.	Is an external device installed?	Remove the external device and perform the inspection from step 1 again.	Replace the unit. <Ref. to ET-35, Audio.>

NOTE:
Supported standard
Supported standard for model with 7-inch display: Ver. 3.0 +EDR supported
- Bluetooth Phone

Profile
  - HFP: Ver. 1.6
  - OPP: Ver. 1.2
  - PBAP: Ver. 1.1
  - MAP: Ver. 1.0
  - SPP: Ver. 1.1

- Bluetooth Audio Device

Profile
  - A2DP: Ver. 1.2
  - AVRCP: Ver. 1.4

Supported standard for model with 6.2-inch display: Ver. 2.1 +EDR supported
- Bluetooth Phone

Profile
  - HFP: Ver. 1.5
  - OPP: Ver. 1.1
  - PBAP: Ver. 1.0
  - MAP: Ver. 1.0
  - SPP: Ver. 1.0

- Bluetooth Audio Device

Profile
  - A2DP: Ver. 1.2
  - AVRCP: Ver. 1.4

8. BLUETOOTH DOES NOT OPERATE

	Step	Check	Yes	No
1	**CHECK BLUETOOTH DEVICE.** Restart the Bluetooth device, and connect again.	Does it start properly?	Currently no failure is found.	Go to step **2**.
2	**CHECK BLUETOOTH DEVICE.** Re-register the Bluetooth device, and connect again.	Is communication successful?	Currently no failure is found.	Go to step **3**.
3	**CHECK BLUETOOTH DEVICE.** 1) Connect another Bluetooth device. NOTE: For Bluetooth supported standard, refer to the Notes in the margin.	Is communication successful?	Bluetooth device which cannot be connected might be faulty.	Go to step **4**.
4	**CHECK ENVIRONMENTAL CONDITION.** Check if any external devices which emit strong electromagnetic waves and noises, such as a radio antenna, is installed inside the vehicle.	Is an external device installed?	Remove the external device and perform the inspection from step 1 again.	Replace the unit. <Ref. to ET-35, Audio.>

NOTE:
Supported standard
Supported standard for model with 7-inch display: Ver. 3.0 +EDR supported
- Bluetooth Phone

Profile
  - HFP: Ver. 1.6
  - OPP: Ver. 1.2
  - PBAP: Ver. 1.1
  - MAP: Ver. 1.0
  - SPP: Ver. 1.1

- Bluetooth Audio Device

Profile
  - A2DP: Ver. 1.2
  - AVRCP: Ver. 1.4

Supported standard for model with 6.2-inch display: Ver. 2.1 +EDR supported
- Bluetooth Phone

Profile
  - HFP: Ver. 1.5
  - OPP: Ver. 1.1
  - PBAP: Ver. 1.0
  - MAP: Ver. 1.0
  - SPP: Ver. 1.0

- Bluetooth Audio Device

Profile
  - A2DP: Ver. 1.2
  - AVRCP: Ver. 1.4

9. RADIO VOLUME IS LOW OR INTERFERENCE NOISE OCCURS

CAUTION:
- **If non-genuine electrical parts are installed, they may cause interference noise.**
- **Refer to the following diagnostic procedure if equipped with the digital radio using the Internet connection.**
  - **– Check SUBARU STARLINK service: <Ref. to ET-80, CHECK SUBARU STARLINK SERVICE, INSPECTION, Diagnostics with Phenomenon.>**
  - **– Bluetooth connection cannot be established: <Ref. to ET-75, BLUETOOTH CONNECTION CANNOT BE ESTABLISHED, INSPECTION, Diagnostics with Phenomenon.>**
  - **– Check connection between smartphone and unit: <Ref. to ET-79, CHECK CONNECTION BETWEEN SMARTPHONE AND UNIT, INSPECTION, Diagnostics with Phenomenon.>**
- Audio system: <Ref. to WI-78, WIRING DIAGRAM, Audio System.>
- Navigation system: <Ref. to WI-277, WIRING DIAGRAM, Navigation System.>

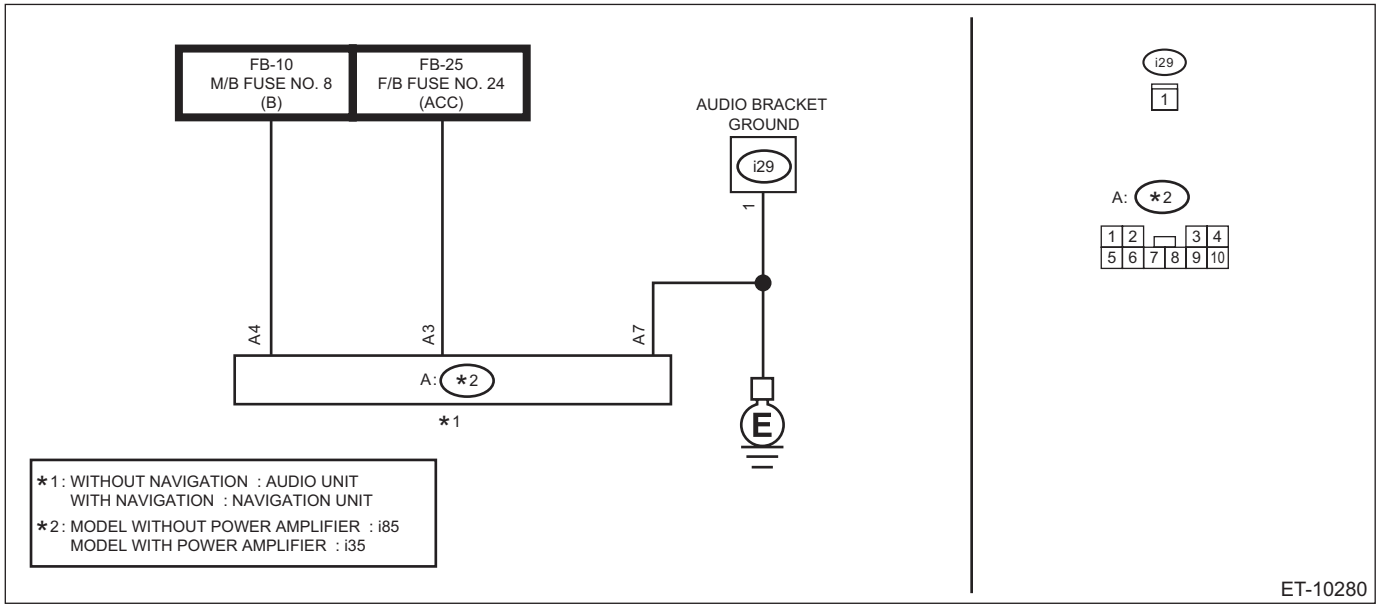

Step		Check	Yes	No
1	**CHECK SYMPTOM.** Check in which condition (place) the noise occurs.	Does it occur in any places?	Go to step **2**.	Radio wave reception condition is poor. (In tunnel, buildings, etc.) There is no failure on the vehicle.
2	**CHECK ANTENNA.** Check for poor contact of connectors or terminals.	Is the connector OK?	Go to step **3**.	Repair or replace the harness.
3	**CHECK HARNESS.** Check the antenna harness for an open or short circuit, and check the booster.	Is harness normal?	Go to step **4**.	Repair or replace the harness.
4	**CHECK UNIT GROUND CIRCUIT.** Check the unit ground connector (1P on back side).	Is the engine ground circuit normal?	Go to step **5**.	Repair or replace the ground circuit.
5	**CHECK ENVIRONMENTAL CONDITION.** Check if any external devices which emit strong electromagnetic waves and noises, such as a radio antenna, is installed inside the vehicle.	Is an external device installed?	Remove the external device. There is no failure if it returns to normal. If the fault is not fixed: Go to step **6**.	Go to step **6**.

	Step	Check	Yes	No
6	**CHECK NOISE OCCURRENCE CONDITION.** Stop the engine, and turn the ignition switch to ON to check for noise occurrence.	Does the noise occur while the engine stops?	Replace the unit. <Ref. to ET-35, Audio.>	Check that the engine ignition system, generator, engine ground circuit and chassis ground circuit are connected securely.

NOTE:
When the volume of Aha and Pandora is low, connect the smartphone to the Internet, and check that Aha and Pandora is audible on the smartphone itself. When it is inaudible, or the volume is too low, there is a problem with the smartphone, Internet connection or service provider. When it is audible with the smartphone without any troubles, there is a problem with connection to the vehicle (USB connection or Bluetooth connection).

10.WRONG LOCATION OF VEHICLE, NO GPS RECEPTION

	Step	Check	Yes	No
1	**CHECK SYMPTOM.** Check in which condition (place) the vehicle is located out of position.	Does it occur in any places?	Go to step **2**.	Go to step **4**.
2	**CHECK EXTERNAL DEVICE INSTALLATION.** Check if an external device is installed near the GPS antenna or unit.	Is an external device installed?	Remove the external device. There is no failure if it returns to normal. If the fault is not fixed: Go to step **3**.	Go to step **3**.
3	**CHECK DIAGNOSTIC MODE.** Check the GPS item on the {Line Diag} screen.	Is the display OK?	Go to step **5**.	Go to step **4**.
4	**CHECK GPS ANTENNA.** Check that the GPS antenna connector is connected.	Is the connector connected?	Replace the navigation assembly. <Ref. to ET-50, Navigation Body.>	Replace the GPS antenna. <Ref. to ET-51, GPS Antenna.>
5	**INSPECTION OF VEHICLE SPEED SENSOR.** Read the DTC of VDC CM using Subaru Select Monitor. NOTE: For detailed operation procedures, refer to “Application help”.	Is DTC displayed?	Perform the diagnosis according to DTC. <Ref. to VDC(diag)-55, LIST, List of Diagnostic Trouble Code (DTC).>	Go to step **6**.
6	**CHECK VEHICLE SPEED SIGNAL.** Check the vehicle speed pulse using an oscilloscope.	Is the pulse normal?	Replace the navigation assembly. <Ref. to ET-50, Navigation Body.>	Go to step **7**.
7	**CHECK VEHICLE SPEED PULSE SIGNAL HARNESS.** 1) Disconnect the VDC CM connector. 2) Check the vehicle speed pulse with VDC CM connector using an oscilloscope.	Is there any noise while the vehicle stops?	Replace the VDC CM. <Ref. to VDC-9, VDC Control Module and Hydraulic Control Unit (VDCCM&H/U).>	Repair or replace the harness.

11.CHECK CONNECTION BETWEEN SMARTPHONE AND UNIT

	Step	Check	Yes	No
1	**CHECK COMPATIBILITY OF SMARTPHONE.** Check that the customer's smartphone is compatible with the system. • iPhone: iOS 4.3.5 or later • Android: Android 4.0 or later	Is it compatible?	Go to step **2**.	The smartphone is not compatible; therefore, it does not work with the system.
2	**ACTIVATION OF APP.** Check the SUBARU STARLINK app of the smartphone.	Is it installed?	Go to step **4**.	Go to step **3**.
3	**INSTALLATION OF APP.** Install SUBARU STARLINK app to smartphone.	Is installation successful?	Go to step **4**.	Reboot the smartphone, and install the SUBARU STARLINK.
4	**ACTIVATION OF APP.** Activate SUBARU STARLINK app.	Is SUBARU STARLINK app activated?	Go to step **5**.	Reinstall the app and activate it. If you still fail to activate it, the smartphone may be defective.
5	**CHECK BLUETOOTH CONNECTION.** NOTE: For model with 6.2-inch display and iPhone (with USB connection): Go to step **6**. Confirm the Bluetooth connection with the unit.	Is Bluetooth connection established?	Go to step **7**.	Check that the unit can connect with other smartphones. If successful, the smartphone may be defective. If the unit cannot communicate with other smartphones, replace the unit. <Ref. to ET-35, Audio.>
6	**CHECK USB (FOR MODEL WITH 6.2-INCH DISPLAY AND IPHONE).** Check that the USB cable is connected to the unit.	Is USB connection successful?	Go to step **7**.	Check that the unit can connect with other smartphones. If successful, the smartphone may be defective. If the unit cannot communicate with other smartphones, replace the unit. <Ref. to ET-35, Audio.>
7	**REBOOT THE SMARTPHONE.** 1) Reboot the smartphone. 2) Reinstall the SUBARU STARLINK app.	Is it operating normally?	The system has returned to a normal condition at this time. Reproduce the failure, and then perform the diagnosis again.	Go to step **8**.

	Step	Check	Yes	No
8	**CHECK POWER SUPPLY.** Turn the ignition to OFF → ACC ON.	Is it operating normally?	The system has returned to a normal condition at this time. Reproduce the failure, and then perform the diagnosis again.	Go to step **9**.
9	**DELETE CACHE INFORMATION OF THE UNIT.** Delete cache information of the unit. Refer to the Notes in the margin.	Is it operating normally?	Cache information temporary stored in the unit was corrupted. Currently, it is normal.	Perform the procedures described on "Check SUBARU STARLINK service". <Ref. to ET-80, CHECK SUBARU STARLINK SERVICE, INSPECTION, Diagnostics with Phenomenon.>

NOTE:
- Model with 7 inch display
  1. Select SUBARU STARLINK from the APPS screen.
  2. On the SUBARU STARLINK display (including an error message screen), press and hold the right bottom corner of the screen for 30 seconds or more.
  3. Lift your finger off the screen. If the message [Select Audio Source] appears when you lift your finger off the screen, the cache information is successfully deleted.
- Model with 6.2 inch display
  1. Press the HOME button to display the HOME screen.
  2. Press the SETTINGS key to display the SETTINGS screen. (The most recent set entry is displayed.)
  3. Press the Settings General key to display the Settings General screen.
  4. Press the System Software key to display the System Software screen.
  5. Press the Delete key, and press OK on the confirmation message display. Then the cache information is successfully deleted.

12.CHECK SUBARU STARLINK SERVICE

	Step	Check	Yes	No
1	**CHECK SMARTPHONE.** Check the smartphone connection.	Can the smartphone connect the Internet?	Go to step **4**.	Go to step **2**.
2	**CHECK RADIO WAVE CONDITION.** Move to a location where the radio wave condition is good, and confirm the connection.	Can the smartphone connect the Internet?	Go to step **4**.	Go to step **3**.
3	**CHECK RADIO WAVE CONDITION.** Communication network gets busy at times even in a good radio wave location. In this case, wait for some time and then try again.	Can the smartphone connect the Internet?	Go to step **4**.	The smartphone may be defective.
4	**CHECK SUBARU STARLINK.** Check service provision status with SUBARU STARLINK.	Is there any problem in the service provision status?	Try to connect after the problem in service provision is solved.	Replace the unit. <Ref. to ET-35, Audio.>

23.Service Diagnostics Mode

A: OPERATION

NOTE:
Installed only to model with 7 inch display.

1. PROCEDURE TO SWITCH TO SERVICE DIAGNOSTICS MODE

1) Turn the ignition switch to ACC.
2) After turning the ignition switch to ACC and wait for 20 seconds or more, press the button (d) five times with the button (a) pressed.

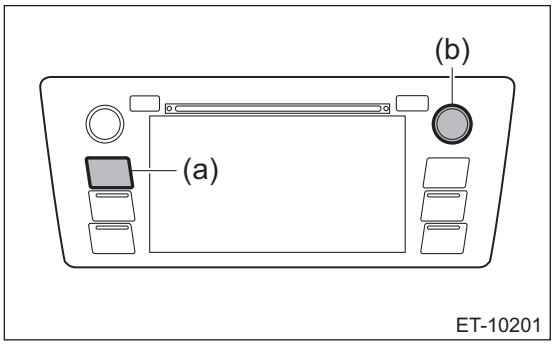

NOTE:
Pressing the button (a) for 3 seconds or more, or turning the ignition switch from the OFF to ACC position can exit the diagnostic mode.

2. SERVICE INSPECTION

Upon entering the service diagnostics mode, the following screen is displayed.

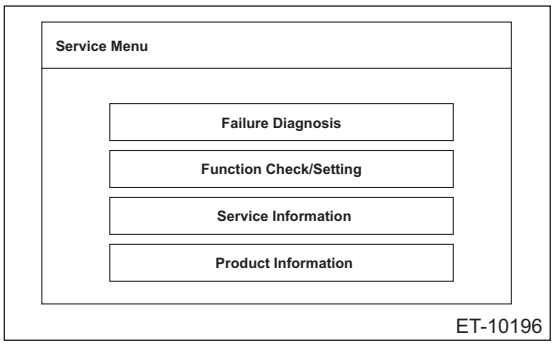

Failure Diagnosis menu

On Service Menu, click Failure Diagnosis to display the following screen.

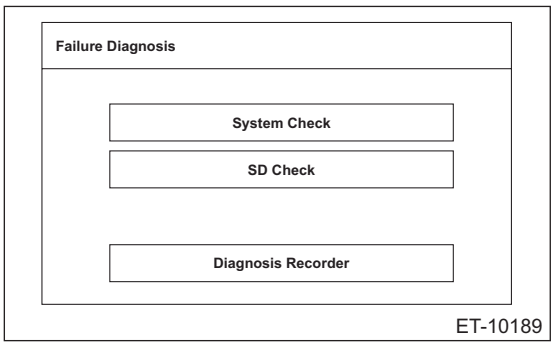

NOTE:
SD Check is displayed only for the navigation system.

1) System Check
On the Failure Diagnosis screen, click System Check to display the following screen.

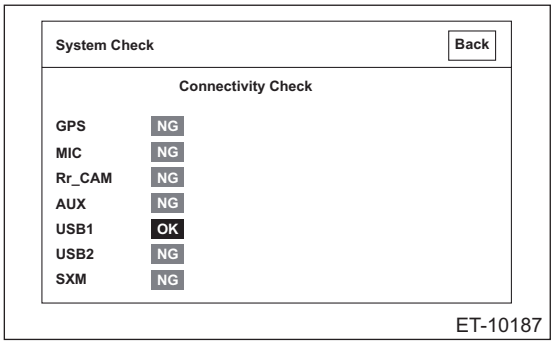

OK: Each connection device is connected properly.
NG: Connection is not established, or connection status (including harness) is faulty.
Check the connection status of the connector and harness. If there are no problems, the connection device or unit could be faulty.

NOTE:
• Check the external connection terminals (USB 1, USB 2 and AUX) by connecting memory or a pin jack for inspection.
• The following shows information to be displayed and its description.

Item	Item detection method	OK judgment condition	Note
GPS	Direct line	GPS antenna is connected. (NG is displayed when short circuit is detected.)	Only model with navigation system
MIC	Direct line	(i87) No. 6 falls to GND level.	—
Rr_CAM	Direct line	Synchronized signals from the camera are input to (i146) No. 3.	—
AUX	Direct line	(i87) No. 25 falls to GND level.	—
USB1	Communication	USB device is connected to USB-HUB to obtain USB device information properly. (Should be recognizable as a supported USB device.)	—
USB2	Communication	USB device is connected to USB-HUB to obtain USB device information properly. (Should be recognizable as a supported USB device.)	—
SXM	Direct line	XM-ANT is connected. (NG is displayed when short circuit is detected.)	It takes approx. 30 seconds to become recognizable.

2) SD Check
On the Failure Diagnosis screen, click SD Check to display the following screen.

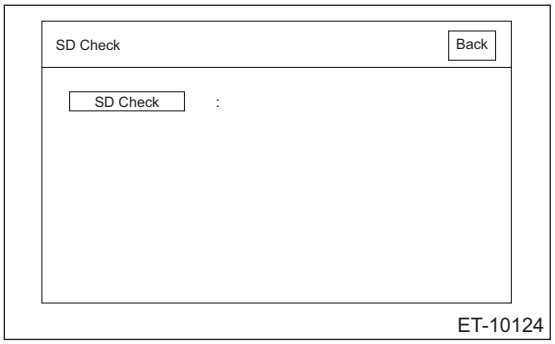

On the SD Check screen, click SD Check to display a diagnostic result.
OK: There is no defect on the SD card.
NG: There is defect on the SD card.

NOTE:
The following shows information to be displayed and its description.

Item	Remarks
OK	SD card diagnosis is completed. Diagnostic result is OK.
NG	SD card diagnosis is completed. Diagnostic result is NG.
During diagnosis	SD card diagnosis is in progress.

Function Check/Setting

On Service Menu, click Function Check/Setting to display the following screen.

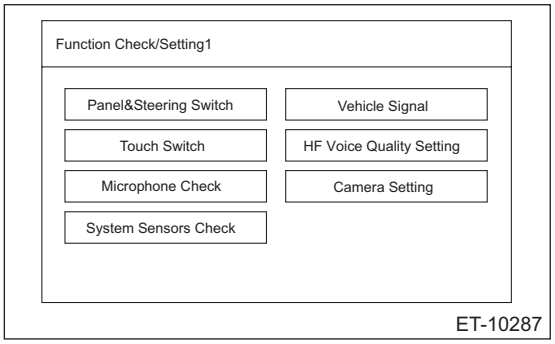

NOTE:
System Sensors Check is displayed only for the navigation system.

1) Panel & Steering Switch Check Mode
On the Function Check/Setting screen, click Panel & Steering Switch to display the following screen.

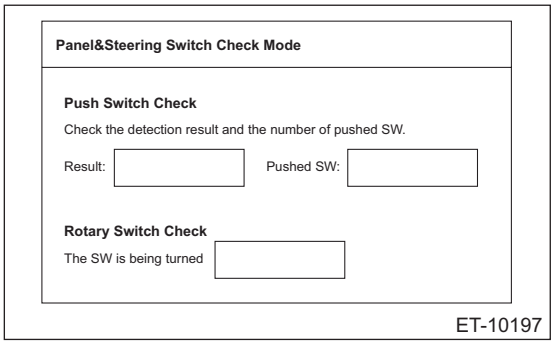

Once the screen is displayed, press the push switches to check that the number of pushed switches matches the number shown in Pushed SW.
If the number of SW does not match, SW conditions are not properly recognized. Therefore, perform inspection for unrecognized switches.
In addition, turn the rotary switch clockwise or counterclockwise to check that the screen indicates correct status according to the operation. If the screen display does not match the actual operation, the rotary SW may be faulty. Perform inspection for the rotary SW.

NOTE:
The following shows information to be displayed and its description.

Item	Display	Remarks
Result	Pressed	Pressing of switch is detected.
Pushed SW	1	One pressed switch is detected.
	2	Two pressed switches are detected.
	3	Three pressed switches are detected.
	4	Four pressed switches are detected.
The SW is being turned	Clockwise	The rotary switch is turned clockwise.
	Counterclockwise	The rotary switch is turned counterclockwise.

2) Touch Switch Check
On the Function Check/Setting screen, click Touch Switch to display the following screen.

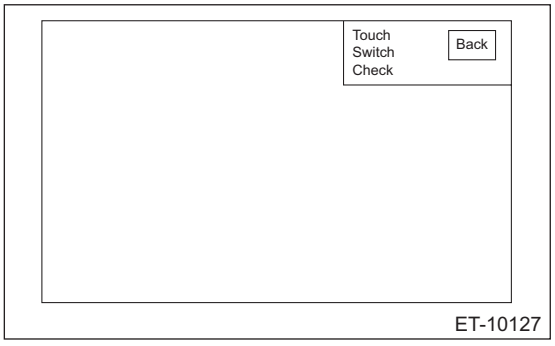

Once the screen appears, touch the screen. + (cursor) appears where you touched.

NOTE:
The following shows information to be displayed and its description.

Item	Remarks
+ (Cursor)	Appears when the screen is touched. The displayed white-outlined + (cursor) stays on, even when a touching finger is removed, until the screen is switched.

3) Microphone Check
On the Function Check/Setting screen, click Microphone Check to perform inspection for microphone.

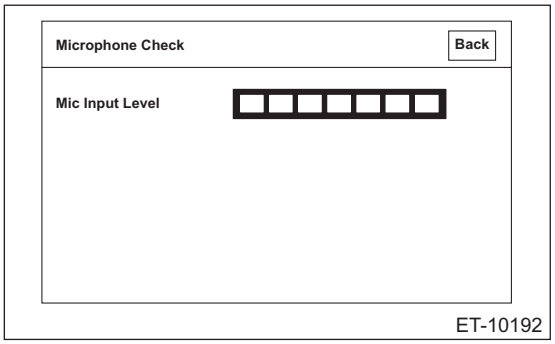

With the microphone input level screen displayed, make sound toward the microphone.
Fluctuate the sound volume to check that the microphone input level changes accordingly.
If the input level does not become green or the input level does not change even when the sound volume is fluctuated, the microphone may be faulty.
4) System Sensors Check
On the Function Check/Setting screen, click Touch Switch to display the following screen.

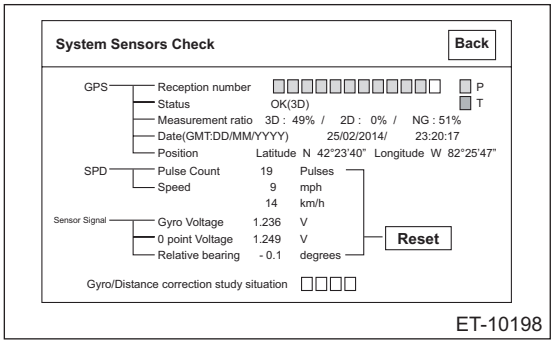

GPS related check: Status of the GPS signal reception can be checked. When there is faulty in reception status, position detection or date indication, re-check the reception status at a location with a fine view and no obstacles around that will interrupt the signal reception. When normal condition is still not obtained, the GPS antenna may be faulty.

- GPS/Reception number: Normal when it is indicated in blue.
- GPS/Status: Normal when OK is indicated.
- GPS/Measurement ratio 3D:
- GPS/Measurement ratio 2D:
- GPS/Date: Normal when current time is indicated. When current date/time is not indicated, click the Date Setting button to set the current date on the displayed date setting screen.
- GPS/Position: Normal when longitude and latitude of the current position are indicated.

SPD check: Status of the vehicle speed sensor signal can be checked.

1. Before starting inspections, check the safety around the vehicle. (Lift up the vehicle as necessary.)
2. When VDC CM detected DTC, clear the DTC.
3. Drive the vehicle at 9 km/h (6 MPH) or more.
4. Check that SPD indicates vehicle speed that is almost equivalent to the figure displayed on the combination meter.

5. Vehicle speed is not displayed. Or, when the vehicle speed is not correct, check if the DTC related to the vehicle sensor is stored for the VDC system, and perform inspection according to the procedure. If no fault is found with the vehicle speed sensor, and the vehicle speed is displayed on the combination meter, the unit itself may be faulty.
Gyro sensor related check: Status of the Gyro sensor signal can be checked. If fault is found with the Gyro sensor related indications, the main unit could be faulty.
- Gyro sensor/Gyro Voltage: Shake the vehicle to the left and right to check that the voltage changes.
- Gyro sensor/Relative bearing: Normal when the value changes when direction of the vehicle is changed.
- Inclined angle sensor/relative angle: Park the vehicle on uphill or downhill surface. Normal when the value changes.
- Gyro/Distance correction study situation: Study situation can be checked.
- Reset: Press and hold the Reset button for three seconds to reset the pulse count of SPD, relative bearing of Gyro sensor, relative angle of inclined angle sensor.

NOTE:
The following shows information to be displayed and its description.

Item	Display	Remarks
GPS/Reception number	Blue	When notification of “Positioning with collected data is used” is received from the GPS reception device. (Status: In-use)
	Yellow	When notification of “Tracking in progress” is received from the GPS reception device. (Status: Reception in progress)
	Transparent	When notification of “Positioning with collected data is not used” or “Searching in progress” is received from the GPS reception device. (Status: Not used)
GPS/Status	OK (H3D)	When three-dimensional positioning (Hyper 3D positioning) using satellites with less accuracy degradation is used.
	OK (H2D)	When two-dimensional positioning (Hyper 2D positioning) using satellites with less accuracy degradation is used.
	OK (3D)	When three-dimensional positioning is used.
	OK (2D)	When two-dimensional positioning is used.
	NG	When the positioning data is not available.
	error	When a reception error occurred.
	—	For cases other than above.
GPS/Measurement ratio 3D	Ratio	Displays ratio of three-dimensional positioning satellites.
GPS/Measurement ratio 2D	Ratio	Displays ratio of two-dimensional positioning satellites.
GPS/Measurement ratio NG	Ratio	Displays ratio of non-positioning satellites.
GPS/Date	Current date and time	Displays date information obtained from GPS in four digits for year and 24-hour clock for time. Date information is displayed as [Y/M/D].
GPS/Position (latitude)	Current position, latitude information	Displays latitude information of the current position in “degree”, “minute” and “second”. When positioning information is not obtained, it appears as 00° 00’ 00”.
GPS/Position (longitude)	Current position, longitude information	Displays longitude information of the current position in “degree”, “minute” and “second”. When positioning information is not obtained, it appears as 00° 00’ 00”.

Item	Display	Remarks
SPD/Pulse Count	Pulse count	Displays SPD signal status in the following format. • The number of input pulses accumulated since this screen is displayed. (Indicated in four-digit DEC code.) • The number returns to 0 after 9999. • Reset with ACC OFF/ON.
SPD/Speed	Speed	Displays SPD signal status in the following format. • LSB: Displays in km-per-hour as 1 [km/h]. • Displays 255 [km/h] for MAX value or more, and 0 [km/h] for MIN value or less.
Gyro sensor/Gyro Voltage	Voltage value	Voltage value (unit: V, LSB: 1 mV)
Gyro sensor/0 point Voltage	Unit: 0 point voltage	Displays 0 point voltage of the Gyro sensor used by each company.
Gyro sensor/Relative bearing	Relative bearing	–360° — +360°
Inclined angle sensor/relative angle	Relative angle	Displays longitudinal inclination angle of the vehicle in the relative angle (unit: °, LSB: 1°, no sign for elevation angle, negative sign for depression angle: –), while the position when this screen appears is set as [0°].
Gyro/Distance correction study situation	Gyro/Distance correction study situation	Gyro/Distance correction study situation is displayed.
Reset	Reset the following display items to [0]. • SPD pulse count • Relative bearing of Gyro sensor • Relative angle of inclined angle sensor	Press and hold the reset button for three seconds or more.

5) Vehicle Signal Check

On the Function Check/Setting screen, click Vehicle Signal to display the following screen.

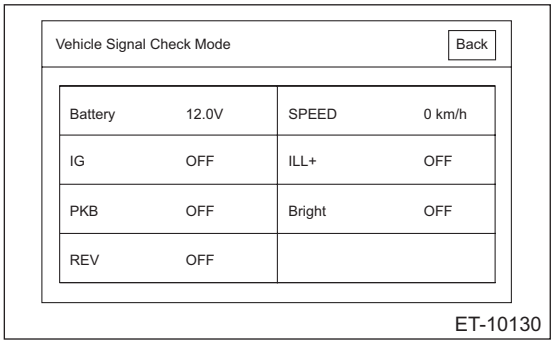

• Battery: Status of the battery voltage signal input can be checked.

Measure the battery voltage using a tester. System is normal when the indicated voltage is almost equivalent to the tester value. When the indicated voltage is different from the tester value, perform inspection for the power supply circuit of main unit.

• SPEED: Status of the vehicle speed signal input can be checked.

1. Before starting inspections, check the safety around the vehicle. (Lift up the vehicle as necessary.)
2. When VDC CM detected DTC, clear the DTC.
3. Drive the vehicle at 9 km/h (6 MPH) or more.
4. Check that SPD indicates vehicle speed that is almost equivalent to the figure displayed on the combination meter.
5. Vehicle speed is not displayed. Or, when the vehicle speed is not correct, check if the DTC related to the vehicle sensor is stored for the VDC system, and perform inspection according to the procedure. If no fault is found with the vehicle speed sensor, and the vehicle speed is displayed on the combination meter, the unit itself may be faulty.

- IG: Status of the IG signal input can be checked.

Turn the ignition switch to ON, and check that the IG indication appears as ON. If the indication does not appear as ON, check the IG signal line.

- ILL+: Status of the illumination signal input can be checked.
  1. Before starting inspections, turn the ignition to ON.
  2. Set the lighting switch to the parking position.
  Make sure that the bright switch is not turned ON at this time.
  3. Check that ON lights in ILL+ and then the screen becomes dim.
  ON: Normal.
  OFF: Abnormal. Check the signal line and connector. If no faulty is found, the unit itself may be faulty.
- PKB: Status of the parking brake signal input can be checked.
- GPS: Normal when longitude and latitude of the current position are indicated.

Pull the parking brake lever or switch. Check that ON is displayed in PKB.
ON: Normal.
OFF: Abnormal. Check the signal line and connector. If no faulty is found, the unit itself may be faulty.

- Bright: Status of the Bright signal input can be checked.

Operate the dial-type bright switch next to the steering wheel. System is normal when the signal indicates ON.
If the signal does not indicate ON, check the bright switch.

- REV: Status of the reverse range signal input can be checked.
  1. Before starting inspections, check the safety around the rear end of the vehicle and then turn the ignition to ON.
  2. Pull the parking brake lever or switch. Depress the brake pedal and place the select lever or gear shift lever in reverse.
  3. Check that ON is displayed in REV.
  ON: Normal.
  OFF: Abnormal. Check the signal line and connector. If no faulty is found, the unit itself may be faulty.

NOTE:
The following shows information to be displayed and its description.

Item	Display	Remarks
Battery	Status of battery voltage	0 [V] — 24 [V] (Minimum unit: 0.1 [V])
SPEED	Status of vehicle speed	0 [km/h] — 255 [km/h] (Minimum unit 1 [km/h])
IG	ON	IG power supply ON
	OFF	IG power supply OFF
ILL+	ON	ILL+ signal ON
	OFF	ILL+ signal OFF
PKB	ON	PKB signal ON
	OFF	PKB signal OFF
Bright	ON	Bright with dimmer
	OFF	Bright without dimmer
REV	ON	REV signal ON
	OFF	REV signal OFF

6) Hands-free voice quality setting
On the Function Check/Setting screen, click Hands-Free Voice Quality Setting to display the following screen.

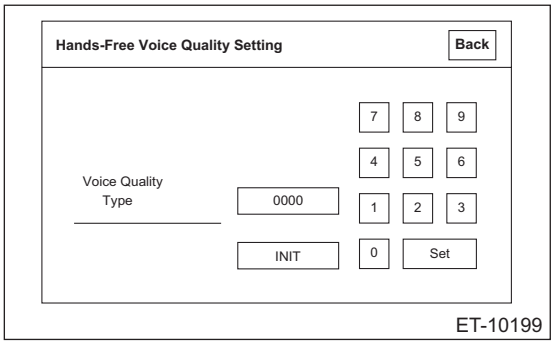

Setting of the hands-free voice quality setting is possible.
7) Camera setting
On the Function Check/Setting screen, click Camera Setting to display the following screen.

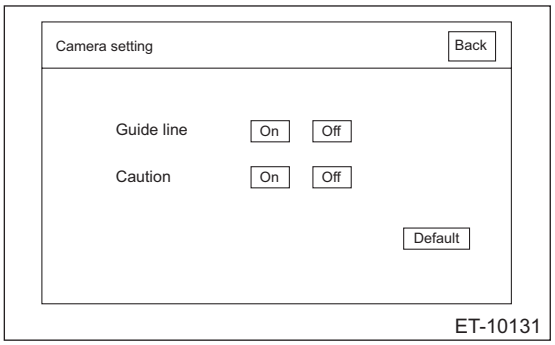

Setting of the rearview camera adjustment is possible.
- Guide line: Turn ON the guide line display to show the guide lines.
- Caution: Turn ON the caution display to enable caution display during the rearview camera display.
- Default: Click the Default button to return the Guide line display and Caution display settings to the initial settings.

NOTE:
The following shows information to be displayed and its description.

Item	Remarks
Guide line	Guide line display setting switch • Turns on/off the guide line display for the rearview camera display screen. • When On is selected, guide lines will appear on the rearview camera display screen.
Caution	Caution display setting switch • Turns on/off the caution display for the rearview camera display screen. • When On is selected, the caution will appear on the rearview camera display screen.
Default	Default setting switch • Returns the Guide line display setting and Caution display setting to the default settings.

Service Information

On Service Menu, click Service Information to display the following screen.

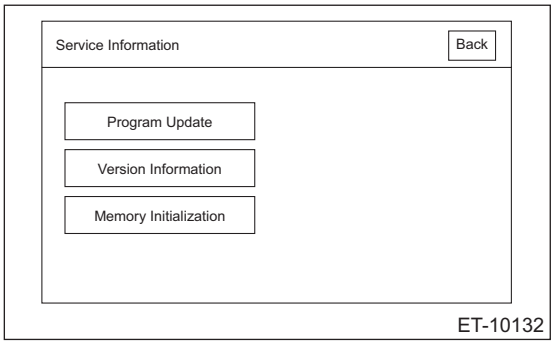

- Program Update: This function is used when the main unit program is updated, and not used as troubleshooting.
- Version Information: This function is used to view version of the main unit, and not used as troubleshooting.
- Memory Initialization: This function is used to initialize information stored in the main unit memory.

CAUTION:
When this function is used, music information and navigation setting information saved in the main unit will be deleted. Therefore, obtain permission from the user before using this function.
When initializing the memory, perform procedures by following the indicated messages. Also, when clicking the OK button, press and hold it.

Product information

On Service Menu, click Product Information to display the following screen.

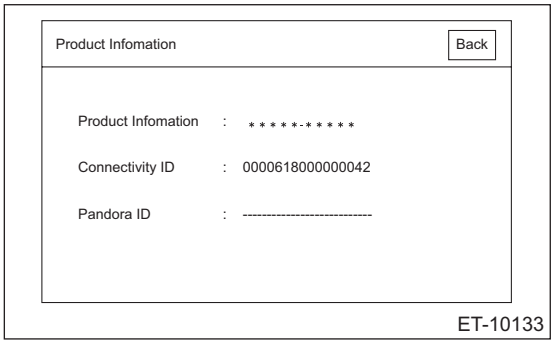

- Product Information: Displays the product number of the main unit.
- Connectivity ID: ID that is required upon using the SUBARU STARLINK functions. When this ID is not indicated, the SUBARU STARLINK functions are not accessible.
- Pandora ID: ID that is required upon using Pandora. When this ID is not indicated, Pandora is not accessible.

COMMUNICATION SYSTEM

COM

Page

1. General Description 2
2. Relay and Fuse 3
3. Horn System 4
4. Horn 5
5. Horn Switch 9

1. General Description

A: COMPONENT

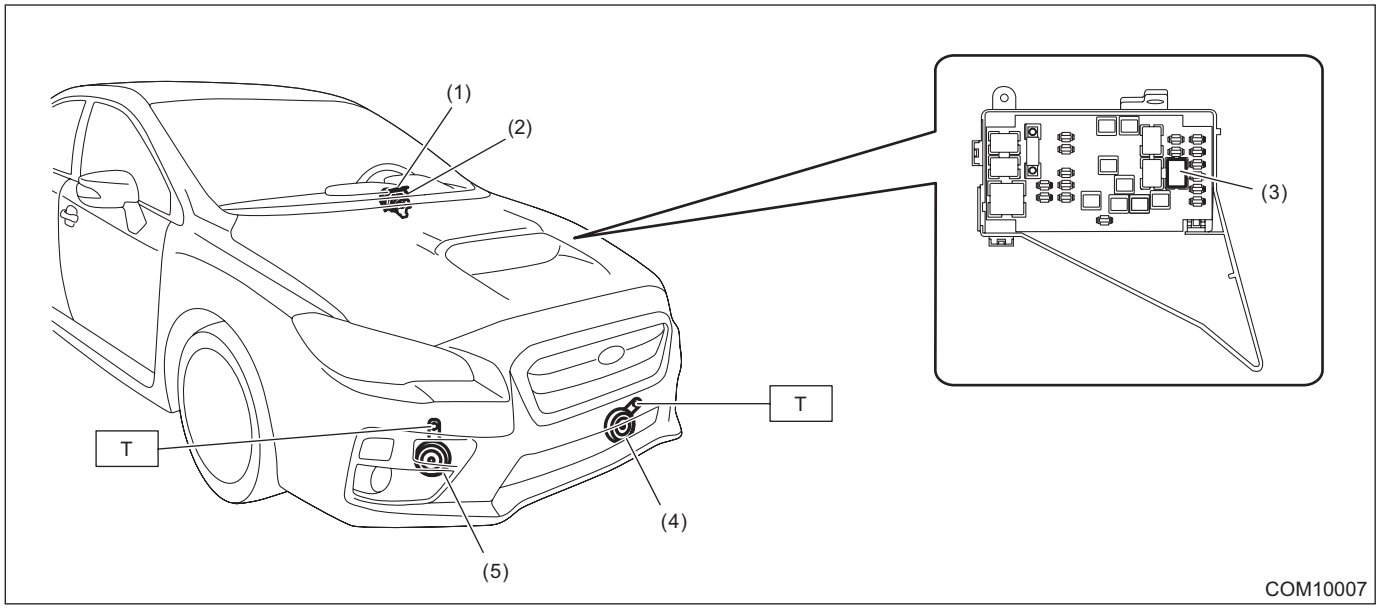

(1) Horn switch (driver's airbag module ASSY)
(2) Roll connector
(3) Horn relay
(4) Horn ASSY - Hi
(5) Horn ASSY - Lo

Tightening torque: N·m (kgf-m, ft-lb)

T: 18 (1.8, 13.3)

B: CAUTION

• Before performing vehicle maintenance, turn the ignition switch to OFF and disconnect the negative terminal from battery. <Ref. to NT-6, BATTERY, NOTE, Note.>
  – For model with battery sensor, disconnect the ground terminal from battery sensor.
• When replacing the audio and MFD parts provided with memory functions, record the memory contents before disconnecting the battery ground cable.
• Be careful of the following items. Failing to do so may cause the airbag system malfunction.
  – Yellow connectors and harnesses with yellow tapes around them are the connectors and harnesses for the airbag system. When using a tester on these circuits, follow the cautions of "AIRBAG SYSTEM". <Ref. to AB-9, CAUTION, General Description.>
  – Be careful not to damage the airbag system wiring harness when servicing the electrical parts around the steering column.
• When removing, installing or replacing the VDCCM&H/U, VDCCM&H/U bracket, steering wheel or steering angle sensor (steering roll connector), perform "VSC(VDC) Centering Mode" of the VDC. <Ref. to VDC-17, ADJUSTMENT, VDC Control Module and Hydraulic Control Unit (VDCCM&H/U).>

C: PREPARATION TOOL

1. GENERAL TOOL

TOOL NAME	REMARKS
Circuit tester	Used for measuring resistance, voltage and current.

2. Relay and Fuse

A: LOCATION

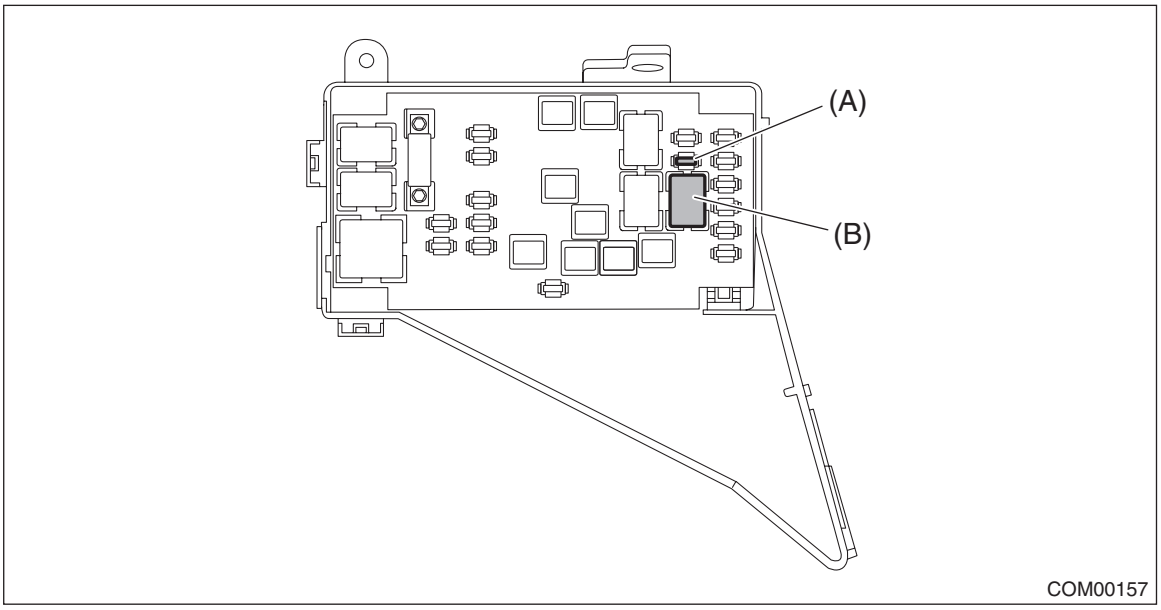

Main fuse box	Fuse 15 A (horn assembly - Hi, Lo)	(A)
	Horn relay	(B)

NOTE:
For other related fuses, refer to the wiring diagram. <Ref. to WI-31, Power Supply Circuit.>

B: INSPECTION

1. CHECK FUSE

1) Remove the fuse and check visually.
2) If the fuse is blown out, replace the fuse.

2. CHECK RELAY

1) Measure the resistance between relay terminals.

Terminal No.	Inspection conditions	Standard	Circuit
1 — 2	Always	1 MΩ or more	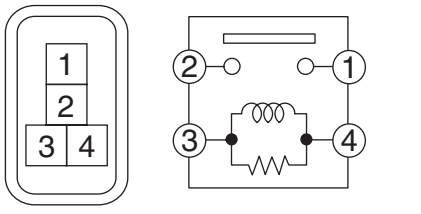
1 — 2	Apply battery voltage between terminals 4 and 3.	Less than 1 Ω	

2) Replace the relay if the inspection result is not within the standard value.

3. Horn System

A: WIRING DIAGRAM

Refer to “Horn System” in the wiring diagram. <Ref. to WI-243, WIRING DIAGRAM, Horn System.>

B: INSPECTION

Symptoms	Inspection steps
Horn does not sound	1. Check the fuse.
	2. Check the horn relay.
	3. Check the role connector.
	4. Check the horn switch.
	5. Check the horn assembly.
	6. Check the harness.

C: NOTE

For procedure of each component in the horn system, refer to the respective section.

- Horn: <Ref. to COM-5, Horn.>
- Horn switch: <Ref. to COM-9, Horn Switch.>

4. Horn

A: REMOVAL

1. HORN ASSY - HI

CAUTION:
When removing the horn, do not remove the bumper face – front. Bracket connection portion of the bumper face may become damaged.

1) Disconnect the ground cable from battery. <Ref. to NT-6, BATTERY, NOTE, Note.>

NOTE:
For model with battery sensor, disconnect the ground terminal from battery sensor.

2) Lift up the vehicle.
3) Remove the under cover - front. <Ref. to EI-22, REMOVAL, Front Under Cover.>
4) Remove the bracket – front center LWR.
   (1) Remove the screw and clips, and turn over the mud guard - front.
   (2) Remove the bolts and clips, and remove the bracket – front center LWR.

NOTE:
While entirely pushing the bracket – front center LWR forward, remove the two hooks (a) on the left and right.

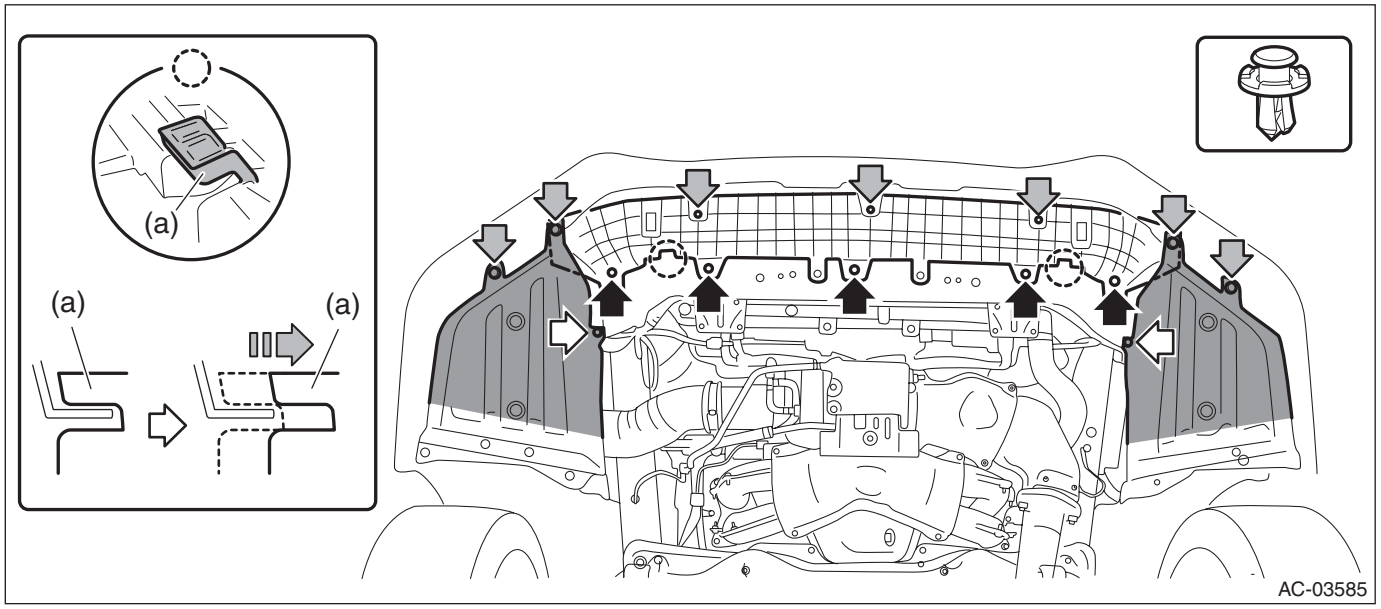

5) Remove the horn assembly - Hi.
(1) Disconnect the connector.
(2) Remove the nut, and remove the horn assembly – Hi.

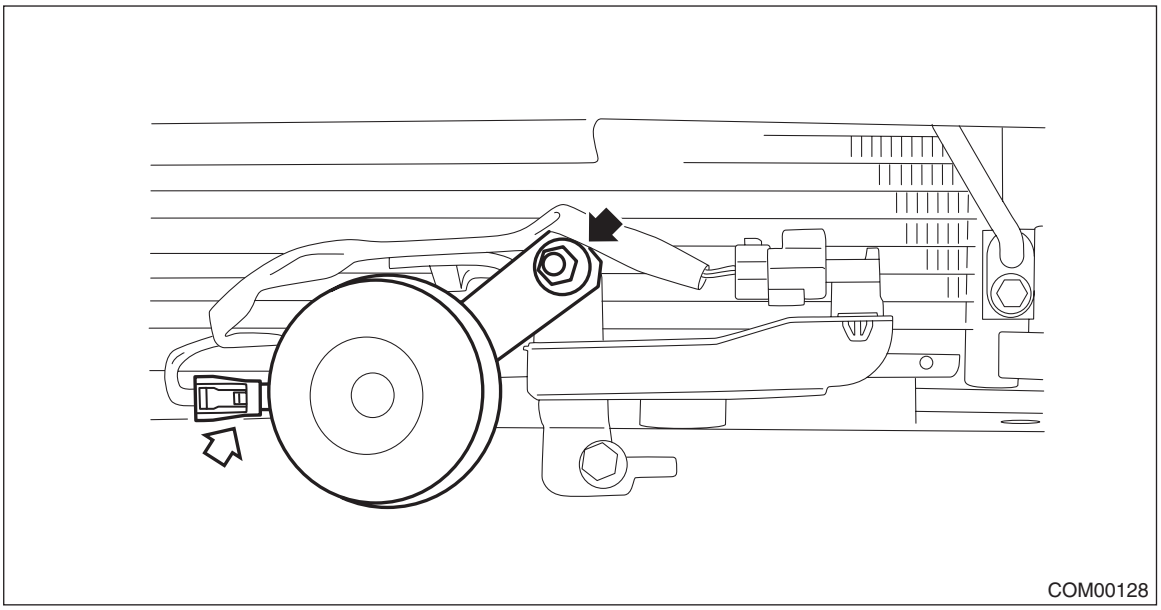
COM00128

2. HORN ASSY - LO

CAUTION:
When removing the horn, do not remove the bumper face – front. Bracket connection portion of the bumper face may become damaged.

1) Disconnect the ground cable from battery. <Ref. to NT-6, BATTERY, NOTE, Note.>

NOTE:
For model with battery sensor, disconnect the ground terminal from battery sensor.

2) Remove the screw and clips, and turn over the mud guard - front on the right side.

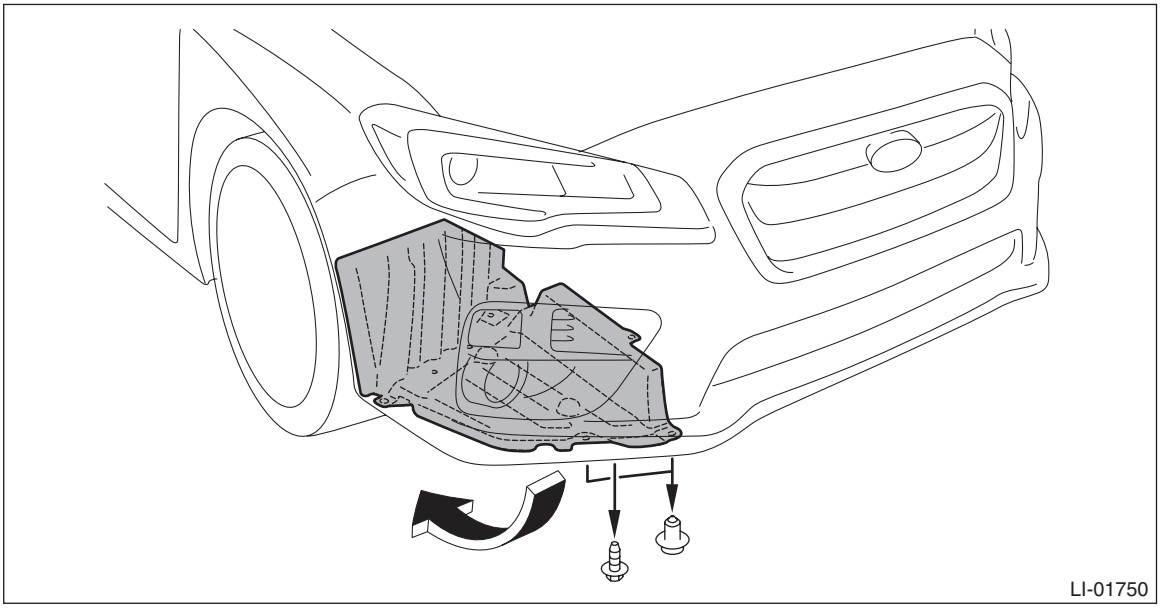
LI-01750

3) Remove the horn assembly - Lo.
(1) Disconnect the connector.

(2) Remove the bolt, and remove the horn assembly - Lo.

CAUTION:
The resistor may become hot. Be careful not to burn yourself.

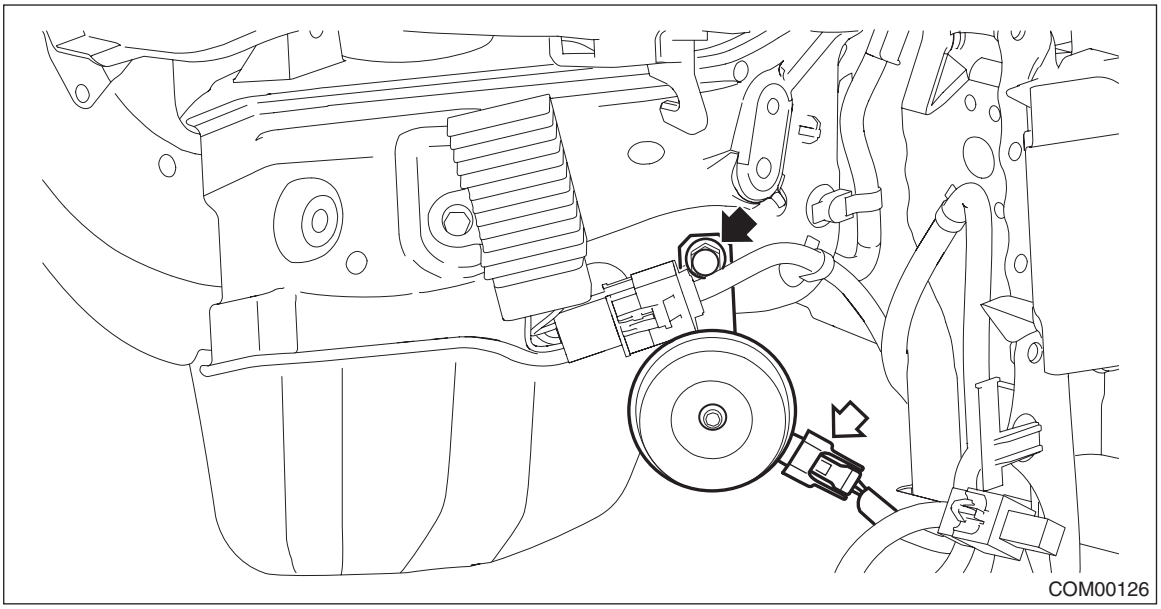

B: INSTALLATION

1. HORN ASSY - HI

CAUTION:
Install so that the front end of the under cover (b) comes inside the bumper face - front (a), and the front end of the mud guard (c) comes outside the bumper face - front (a).

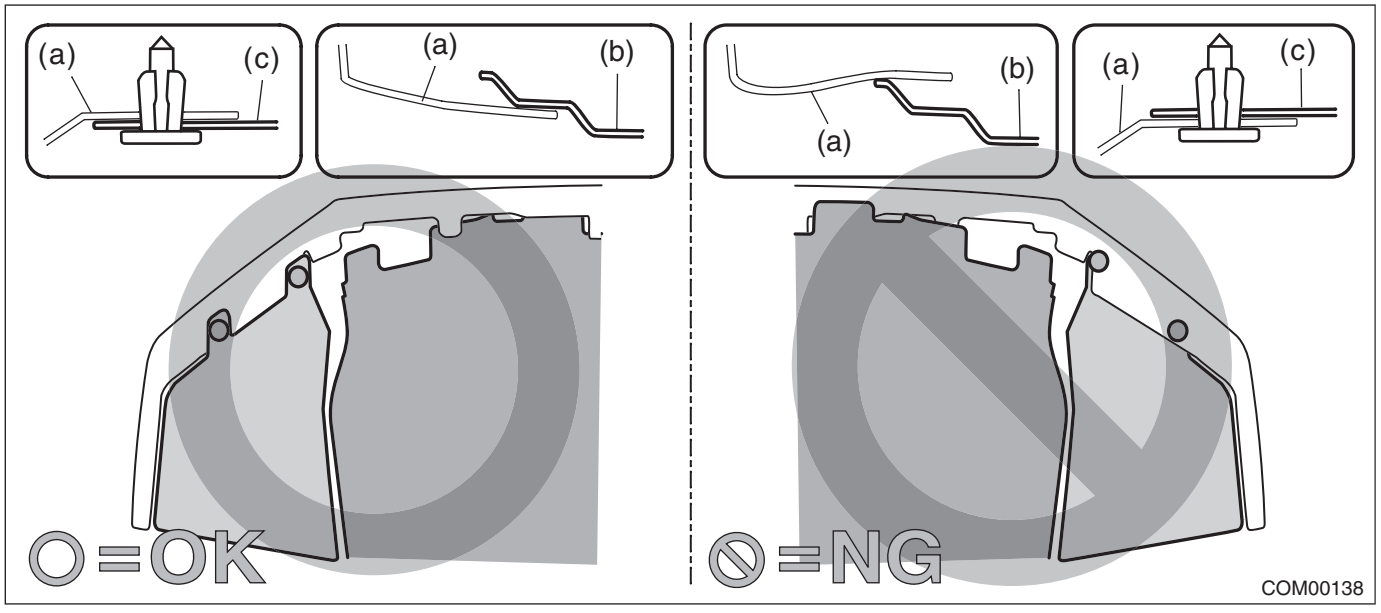

1) Install the horn assembly - Hi.

Tightening torque:
18 N·m (1.8 kgf-m, 13.3 ft-lb)
2) Install the bracket - front center LWR.

Tightening torque:
7.5 N·m (0.8 kgf-m, 5.5 ft-lb)
3) Install the mud guard - front.

4) Install the under cover - front.

Tightening torque:
18 N·m (1.8 kgf-m, 13.3 ft-lb)
5) Lower the vehicle.
6) Connect the battery ground terminal. <Ref. to NT-6, BATTERY, NOTE, Note.>

2. HORN ASSY - LO

CAUTION:
Install the mud guard - front so that the front end of the mud guard (b) comes outside the bumper face - front (a).

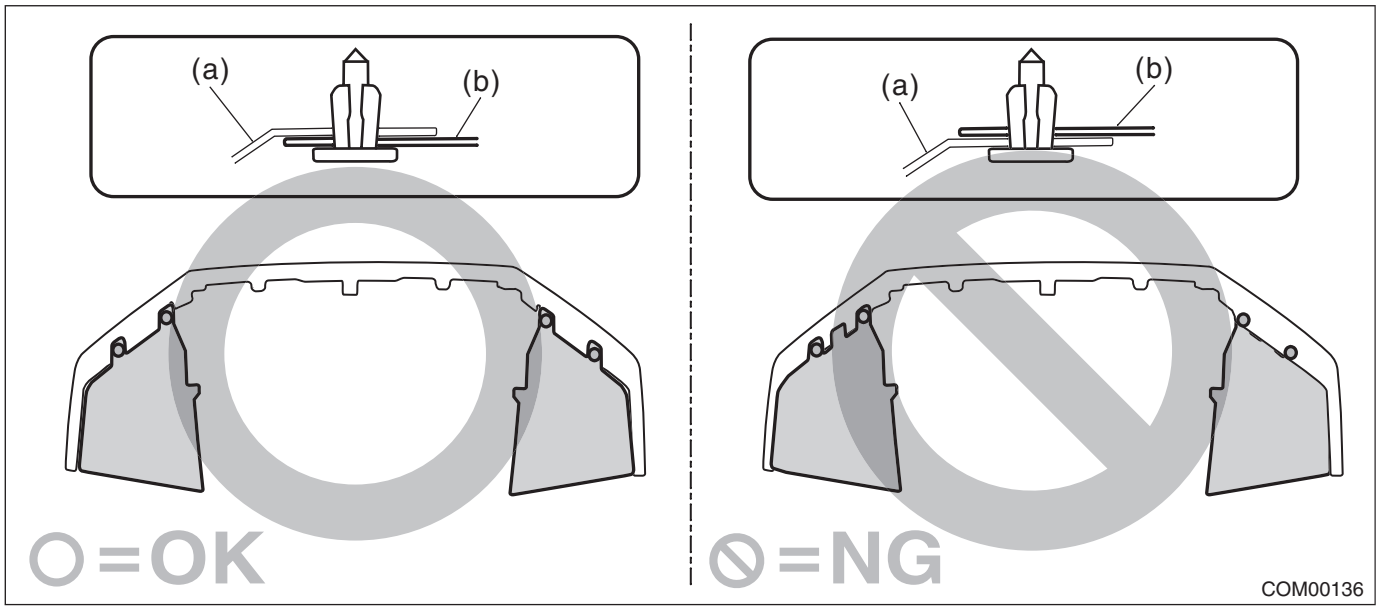

1) Install the horn assembly - Lo.

Tightening torque:
18 N·m (1.8 kgf-m, 13.3 ft-lb)
2) Install the mud guard - front.
3) Connect the battery ground terminal. <Ref. to NT-6, BATTERY, NOTE, Note.>

C: INSPECTION

1) Check that the horn assembly sounds when applying the battery voltage to each connector terminal.

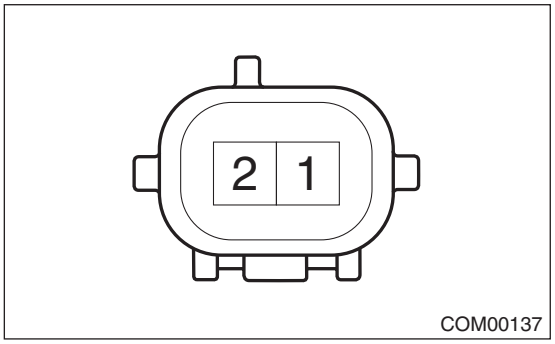

Terminal No.	Inspection conditions	Specification
Terminal 1 (+) — Terminal 2 (–)	Connect battery to the terminals	Sounds

2) If it does not operate normally, replace the horn assembly.

5. Horn Switch

A: NOTE

Horn switch is a unit with the driver's airbag module. For operation procedures, refer to "Driver's Airbag Module" in "AIRBAG SYSTEM". <Ref. to AB-32, Driver's Airbag Module.>

B: INSPECTION

1. CHECK HORN SWITCH

CAUTION:
Before handling the airbag system components, refer to "CAUTION" of "General Description" in "AIRBAG SYSTEM". <Ref. to AB-9, CAUTION, General Description.>

1) Turn the ignition switch to OFF.
2) Disconnect the ground cable from battery and wait for at least 60 seconds before starting work. <Ref. to NT-6, BATTERY, NOTE, Note.>

NOTE:
For model with battery sensor, disconnect the ground terminal from battery sensor.

3) Remove the driver's airbag module. <Ref. to AB-32, REMOVAL, Driver's Airbag Module.>
4) Check that the horn switch connector is connected properly.
5) Measure the resistance between connectors.

Preparation tool:
Circuit tester

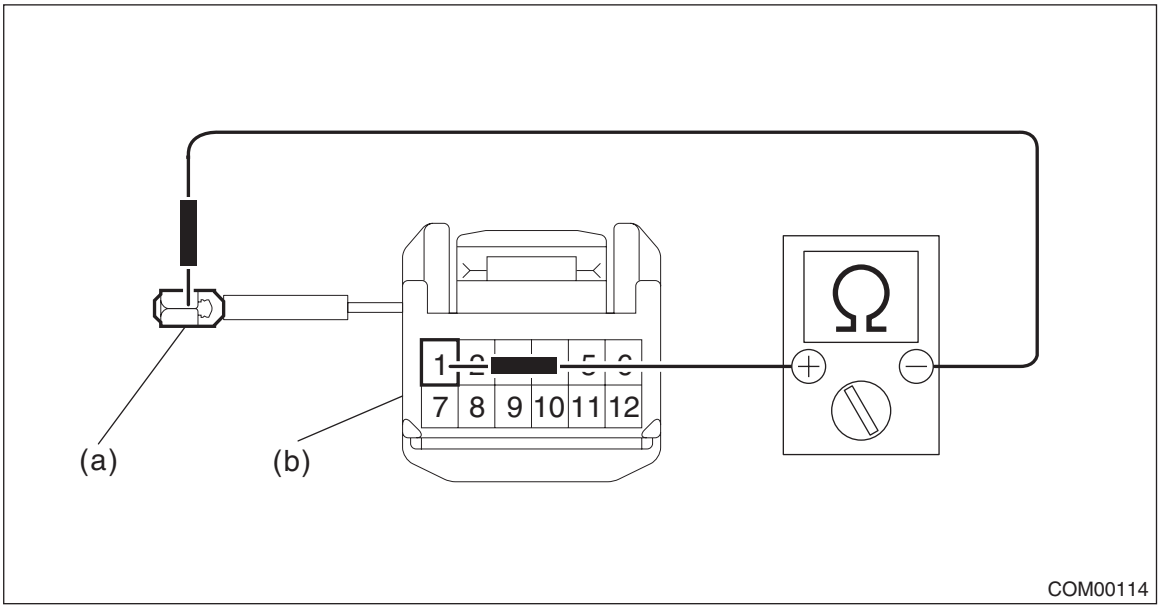

(a) Ground terminal (b) Horn switch terminal

Terminal No.	Inspection conditions	Standard
Horn switch terminal — ground terminal	Always	Less than 1 Ω

6) Replace the driver's airbag module if the inspection result is not within the standard value.

2. CHECK ROLL CONNECTOR

CAUTION:
• Before handling the airbag system components, refer to "CAUTION" of "General Description" in "AIRBAG SYSTEM". <Ref. to AB-9, CAUTION, General Description.>
• If the steering wheel and steering angle sensor (steering roll connector) are removed, be sure to perform the following operations.
– Align the center position of the steering roll connector.
– Perform the neutral position setting of the steering angle sensor.

1) Turn the ignition switch to OFF.
2) Disconnect the ground cable from battery and wait for at least 60 seconds before starting work. <Ref. to NT-6, BATTERY, NOTE, Note.>

NOTE:
For model with battery sensor, disconnect the ground terminal from battery sensor.

3) Remove the roll connector. <Ref. to AB-58, REMOVAL, Roll Connector.>
4) Measure the resistance between connector terminals.

Preparation tool:
Circuit tester

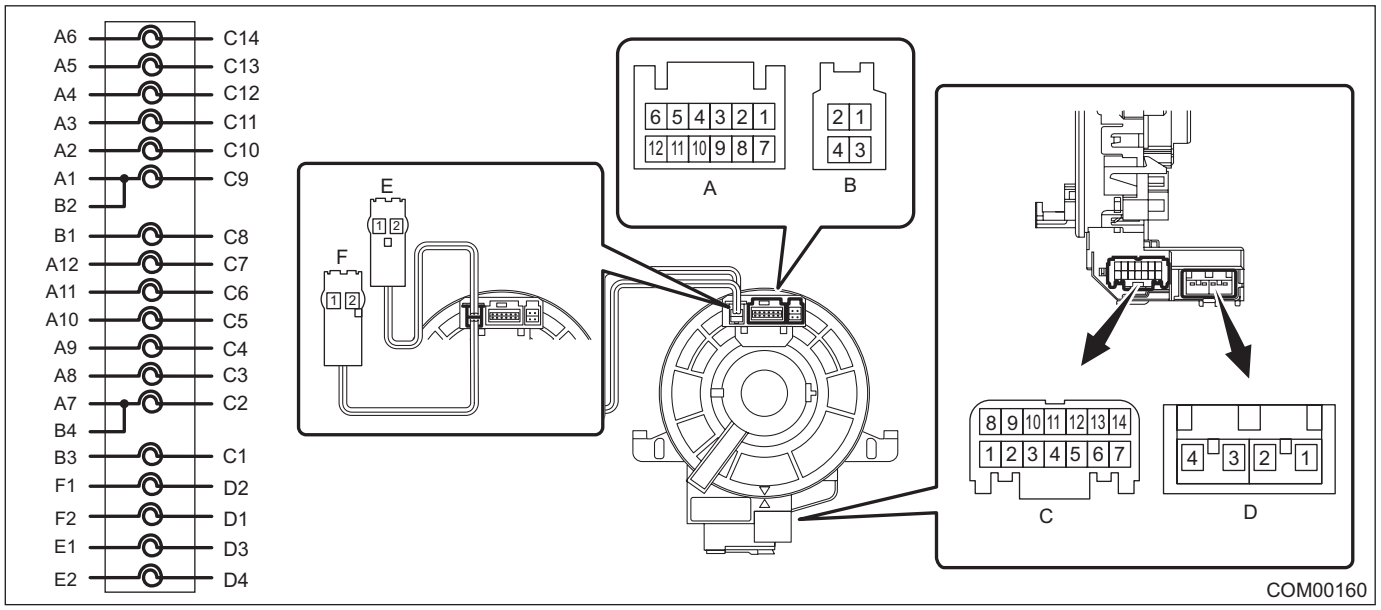

Terminal No.	Inspection conditions	Standard
A1 — C9	Always	Less than 1 Ω

5) Replace the roll connector if the inspection result is not within the standard value.

GLASS/WINDOWS/MIRRORS

GW

		Page
1.	General Description	2
2.	Relay and Fuse	7
3.	Power Window System	9
4.	Power Window Control Switch	11
5.	Front Door Glass	20
6.	Front Regulator and Motor Assembly	24
7.	Remote Control Mirror System	26
8.	Outer Mirror Assembly	27
9.	Remote Control Mirror Switch	32
10.	Rearview Mirror	34
11.	Rear Door Glass	35
12.	Rear Regulator and Motor Assembly	37
13.	Windshield Glass	39
14.	Rear Window Glass	48
15.	Rear Window Defogger System	51
16.	Wiper Deicer System	54

1. General Description

A: COMPONENT

1. FIXED GLASS

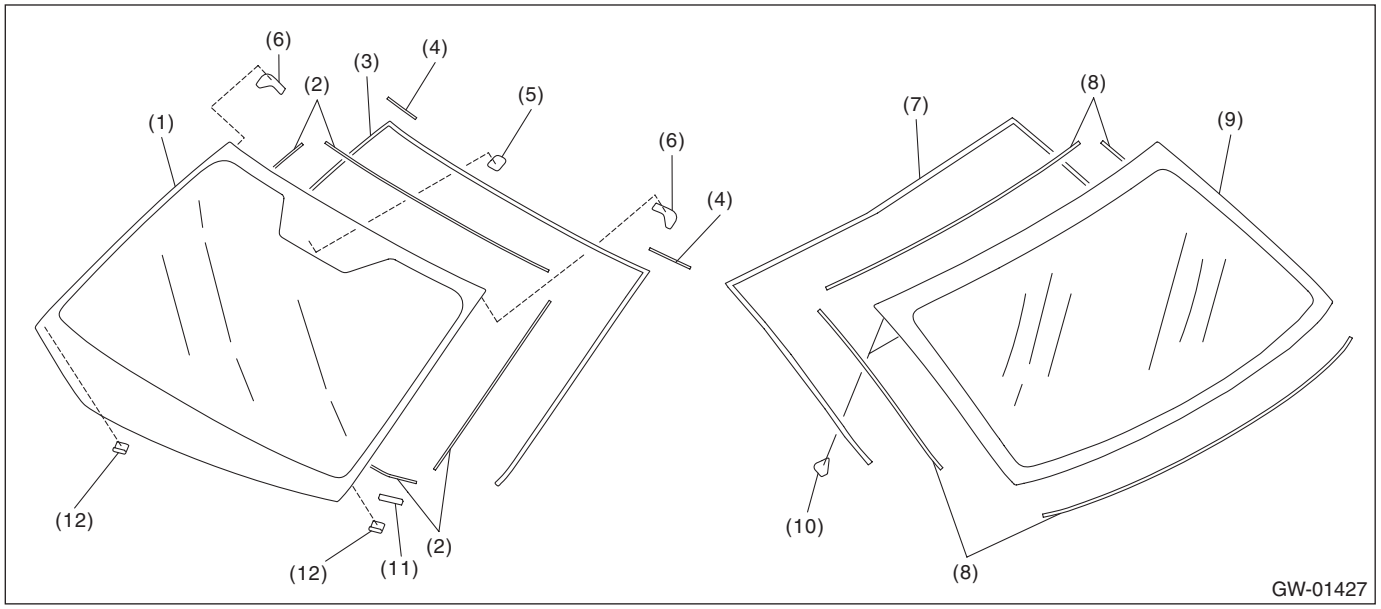

(1)	Glass - front window	(5)	Base - inner mirror	(9)	Glass - rear window
(2)	Dam rubber - front	(6)	Locating pin - front window	(10)	Locating pin - rear window
(3)	Molding - front window	(7)	Molding - rear window	(11)	Seal - lower VIN
(4)	Seal - upper	(8)	Dam rubber - rear	(12)	Seal - lower

NOTE:
Base - inner mirror cannot be removed from the glass - front window.

2. FRONT DOOR GLASS

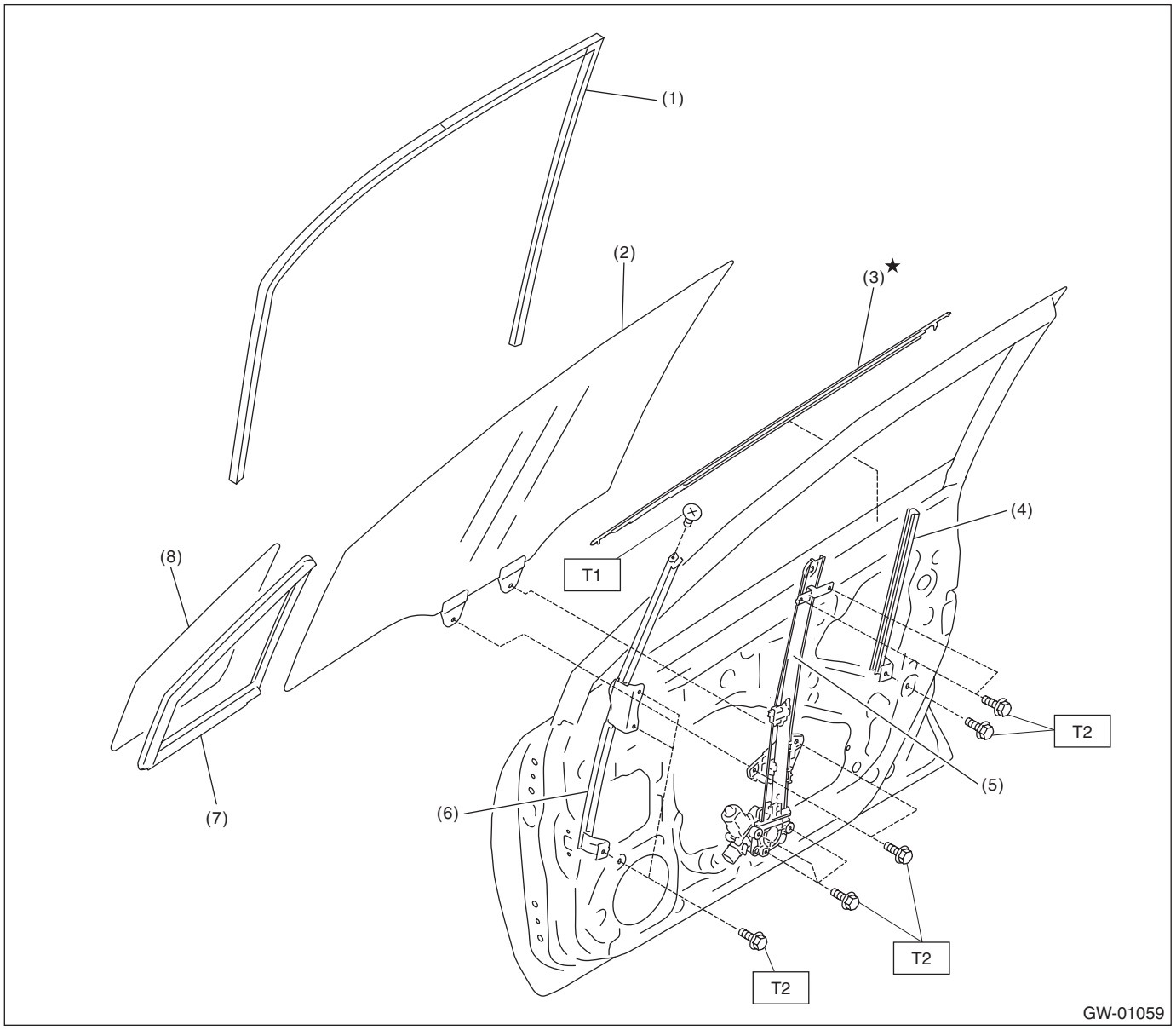

(1)	Running channel - front door	(5)	Regulator & motor ASSY - front	***Tightening torque: N·m (kgf-m, ft-lb)***
(2)	Glass ASSY - front door	(6)	Sash COMPL - partition	***T1: 2.2 (0.2, 1.6)***
(3)	Weather strip outer - front door	(7)	Weather strip - front door partition	***T2: 7.5 (0.8, 5.5)***
(4)	Sash COMPL - lower	(8)	Glass - front door partition	

3. REAR DOOR GLASS

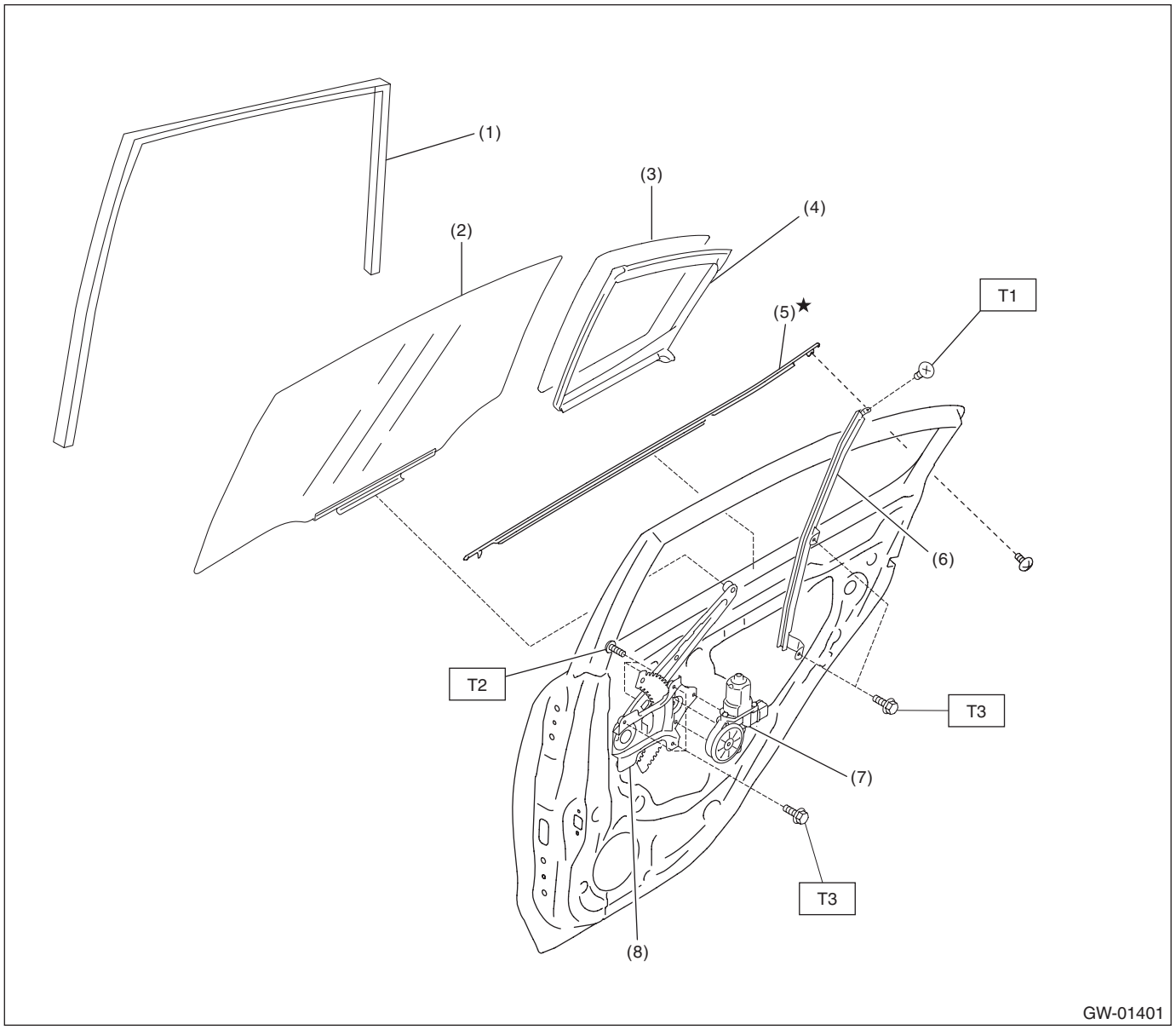

(1)	Running channel - rear door	(5)	Weather strip outer - rear door	***Tightening torque: N·m (kgf-m, ft-lb)***
(2)	Glass ASSY - rear door	(6)	Sash COMPL - rear partition	***T1: 2.2 (0.2, 1.6)***
(3)	Glass - rear door partition	(7)	Motor - rear	***T2: 5.9 (0.6, 4.4)***
(4)	Weather strip - rear door partition	(8)	Regulator - rear	***T3: 7.5 (0.8, 5.5)***

4. MIRROR

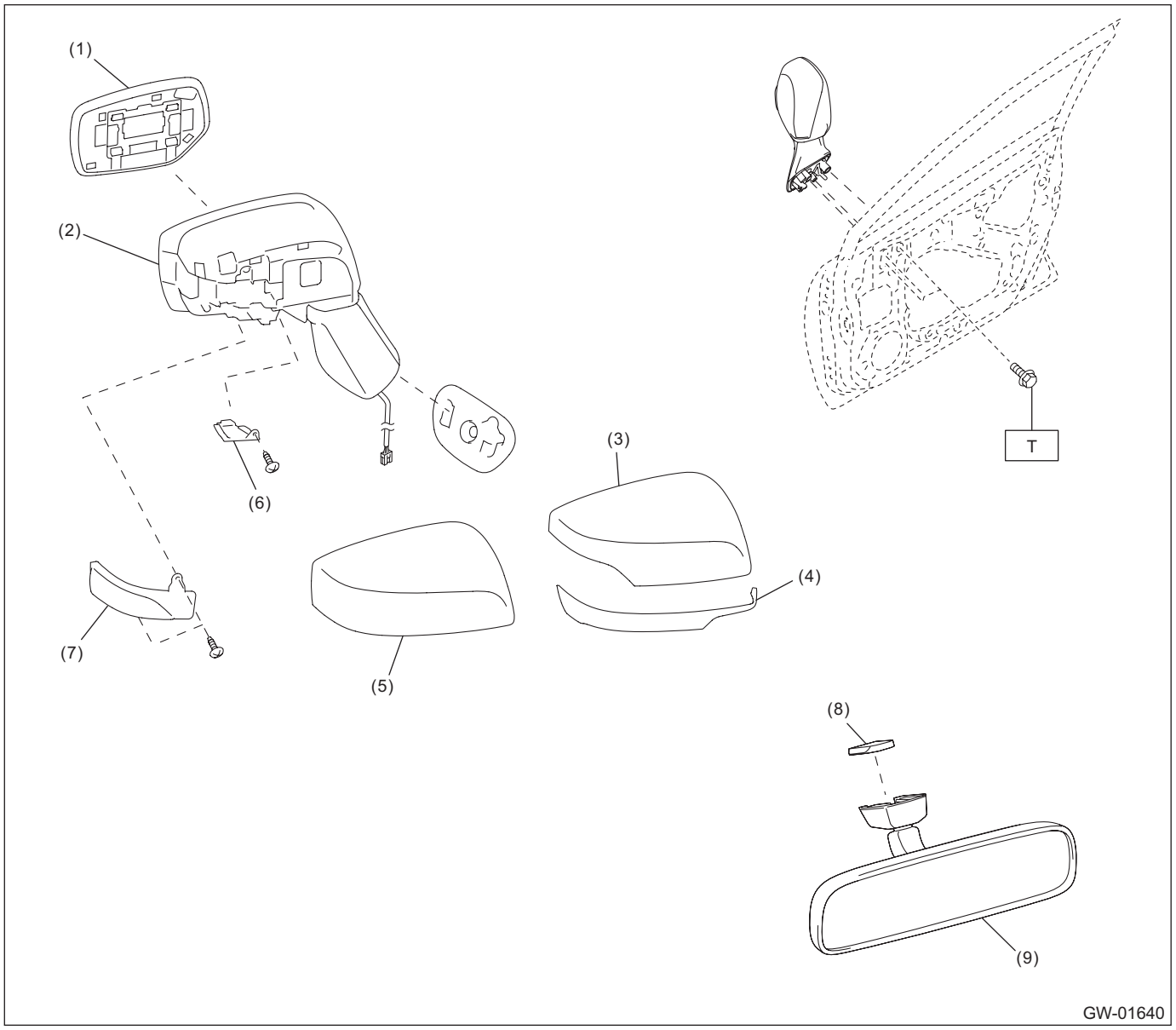

(1)	Mirror - repair	(5)	Cover - cap outer mirror (model without side turn)	(9)	Mirror ASSY - inner rearview
(2)	Mirror unit - door	(6)	Cover		
(3)	Cover - cap outer mirror (model with side turn)	(7)	Light ASSY - side turn mirror (model with side turn)	***Tightening torque: N·m (kgf-m, ft-lb)***	
(4)	Cover - cap outer mirror lower	(8)	Base - inner mirror	***T: 7.5 (0.8, 5.5)***	

B: CAUTION

• Before disconnecting connectors of sensors or units, be sure to disconnect the ground cable from battery. When replacing the audio and MFD parts provided with memory functions, record the memory contents before disconnecting the battery ground cable.
• Avoid impact and damage to the glass.

C: PREPARATION TOOL

1. SPECIAL TOOL

ILLUSTRATION	TOOL NUMBER	DESCRIPTION	REMARKS
 STSSM4	—	SUBARU SELECT MONITOR 4	Used for setting of each function and trouble-shooting for electrical system. NOTE: For detailed operation procedures of Subaru Select Monitor 4, refer to “Application help”.

2. GENERAL TOOL

TOOL NAME	REMARKS
Circuit tester	Used for measuring resistance, voltage and current.
DST-i	Used together with Subaru Select Monitor 4.
Piano wire	Used for removing the window glass.
Cutter knife	Used for removing the window glass.
Windshield glass knife	Used for removing the window glass.

2. Relay and Fuse

A: LOCATION

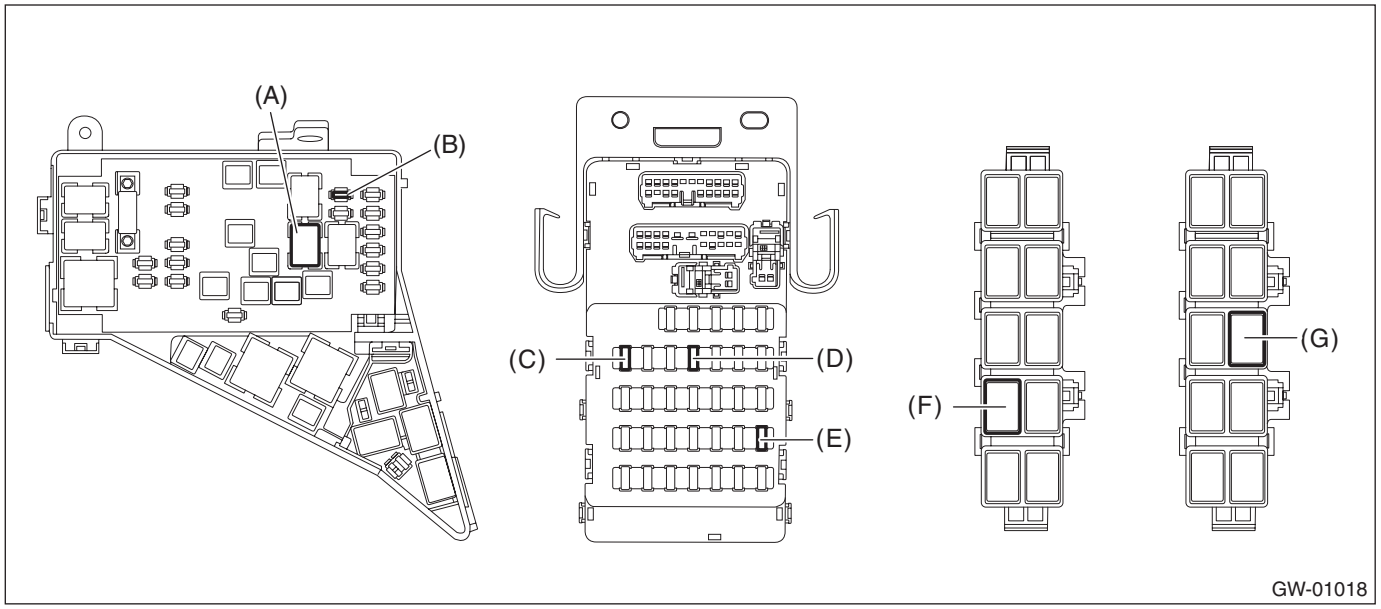

Main fuse box	Rear defogger relay	(A)
	Fuse 25 A (rear defogger)	(B)
Relay & fuse box	Fuse 7.5 A (remote control mirror)	(C)
	Fuse 15 A (wiper deicer)	(D)
	Fuse 7.5 A (power window)	(E)
Relay holder	Power window relay	(F)
	Wiper deicer relay	(G)

NOTE:
For other related fuses, refer to the wiring diagram. <Ref. to WI-31, Power Supply Circuit.>

B: INSPECTION

1. CHECK FUSE

1) Remove the fuse and check visually.
2) If the fuse is blown out, replace the fuse.

2. CHECK RELAY

1) Check the resistance between relay terminals.

Terminal No.	Inspection conditions	Specification	Circuit
1 — 2	Always	1 MΩ or more	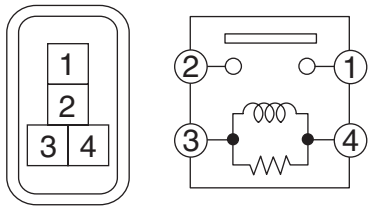 SR-00180
1 — 2	Apply battery voltage between 4 — 3 terminals.	Less than 1 Ω	

Terminal No.	Inspection conditions	Specification	Circuit
1 — 2	Always	1 MΩ or more	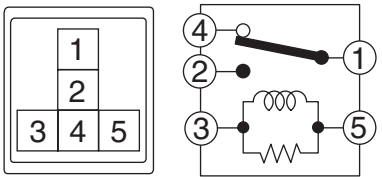 SL-01085
1 — 4	Always	Less than 1 Ω	
1 — 2	Apply battery voltage between 3 — 5 terminals.	Less than 1 Ω	

2) Replace the relay if the inspection result is not within the standard value.

3. Power Window System

A: WIRING DIAGRAM

Refer to “Power Window System” in the wiring diagram. <Ref. to WI-299, WIRING DIAGRAM, Power Window System.>

B: INSPECTION

Symptoms	Inspection order
All power windows do not operate.	1. Check the fuse. 2. Check the power window relay. 3. Check the wiring harness.
Particular window does not operate.	1. Check the fuse. 2. Check the switch - power window main. 3. Check the switch - power window sub. 4. Check the power window motor. 5. Check the wiring harness.
“Window Lock” does not operate.	Check the switch - power window main.
Driver’s side window moves slightly (approx. 20 mm (0.79 in)).	1. Check the motor - front. 2. Check the switch - power window main. 3. Check the wiring harness.
Driver’s side window moves slightly (approx. 50 mm (1.97 in)). (This status is not a failure.)	Perform reset operation A. <Ref. to GW-9, RESET OPERATION A, OPERATION, Power Window System.>
Driver’s side window does not close completely. (Using AUTO UP allows the window to fully close first and then move in reverse resulting in slightly opening.)	Perform reset operation B. <Ref. to GW-9, RESET OPERATION B, OPERATION, Power Window System.>

C: OPERATION

1. RESET OPERATION A

1) Sit in the driver’s seat and close the door.
2) Turn the ignition switch to ON.
3) Operate the switch - power window main to open the glass assembly - front door halfway.
4) Operate the switch - power window main in “UP” direction to fully close the glass assembly - front door on the driver’s side.
5) While the glass assembly - front door is fully closed, hold down the switch - power window main in “UP” direction for one second.
6) Operate the switch - power window main in “AUTO DOWN” direction to check whether the window fully opens properly.

NOTE:
If the window does not fully open properly, repeat steps 1) to 6).

2. RESET OPERATION B

1) Sit in the driver’s seat and close the door.
2) Turn the ignition switch to ON.
3) On the glass assembly - front door of the driver’s side, operate the “AUTO UP” function (fully pull up the switch) using the switch - power window main, and perform auto-reverse operations 10 times in a row (after the window fully closes, it slightly opens).
4) Check that the “AUTO UP” function no longer operates.
5) Perform reset operation A.
6) Check that the window operates properly by operating the “AUTO UP” and “AUTO DOWN” switch.

NOTE:
If the window does not fully open/close properly, repeat steps 1) to 6).

D: NOTE

For operation procedures of each component of the power window system, refer to the respective sections.
- Power window control switch: <Ref. to GW-11, Power Window Control Switch.>
- Front door glass: <Ref. to GW-20, Front Door Glass.>
- Front regulator and motor assembly: <Ref. to GW-24, Front Regulator and Motor Assembly.>
- Rear door glass: <Ref. to GW-35, Rear Door Glass.>
- Rear regulator and motor assembly: <Ref. to GW-37, Rear Regulator and Motor Assembly.>

4. Power Window Control Switch

A: REMOVAL

1. MAIN SWITCH

1) Disconnect the ground cable from battery and wait for at least 60 seconds before starting work. <Ref. to NT-6, BATTERY, NOTE, Note.>

NOTE:
For model with battery sensor, disconnect the ground terminal from battery sensor.
2) Remove the trim panel - front door. <Ref. to EI-57, FRONT DOOR, REMOVAL, Door Trim.>
3) Remove the panel - power window main switch.

CAUTION:
Be careful not to damage the trim panel - front door with the panel - power window main switch.

(1) Insert a sheet of protective paper (a) between panel - power window main switch and trim panel - front door.
(2) Remove the screws and disconnect the connector.

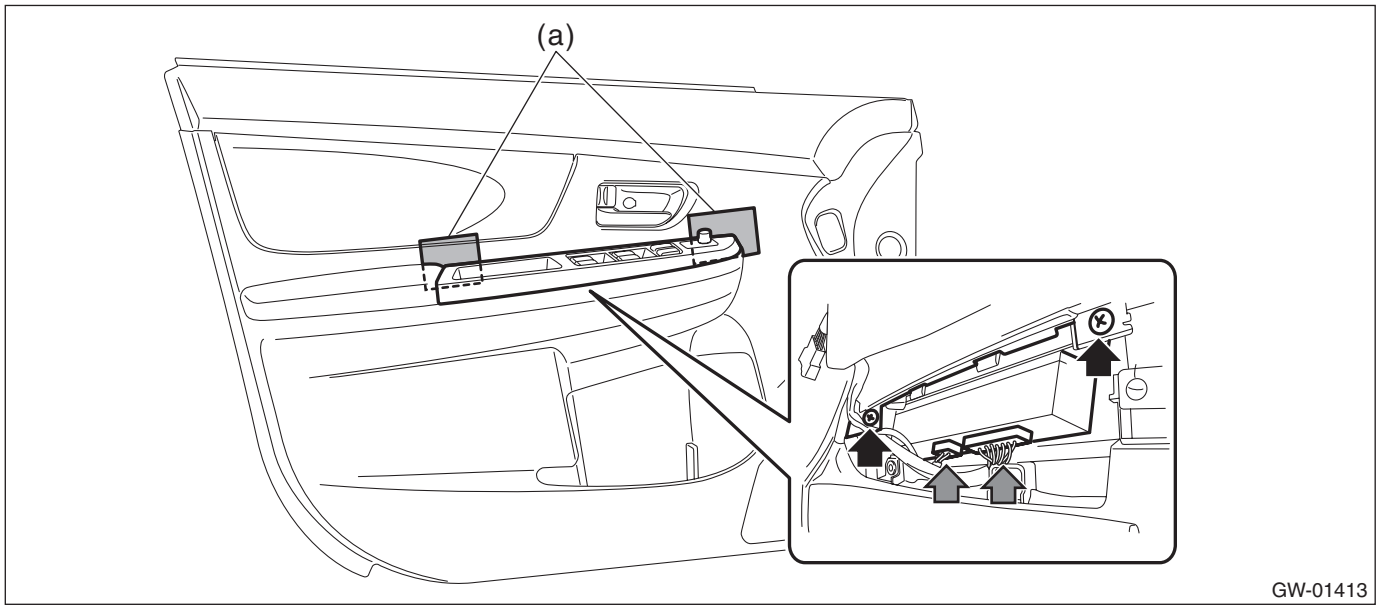

(3) Release the claws, and then remove the panel - power window main switch.

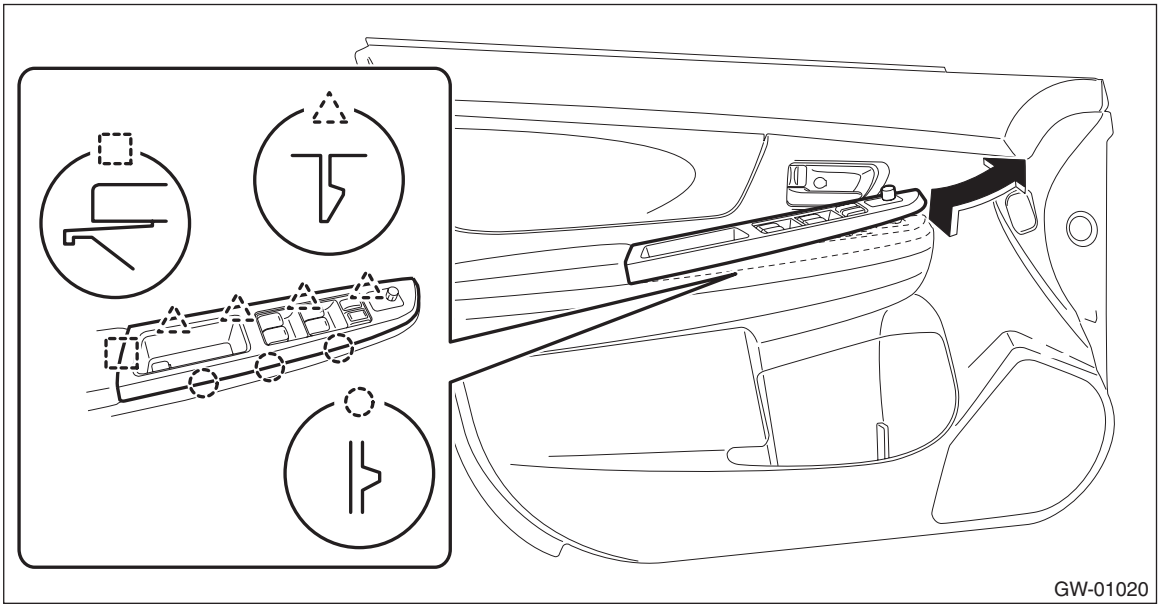

(4) Release the claws, and then remove the switch - power window main.

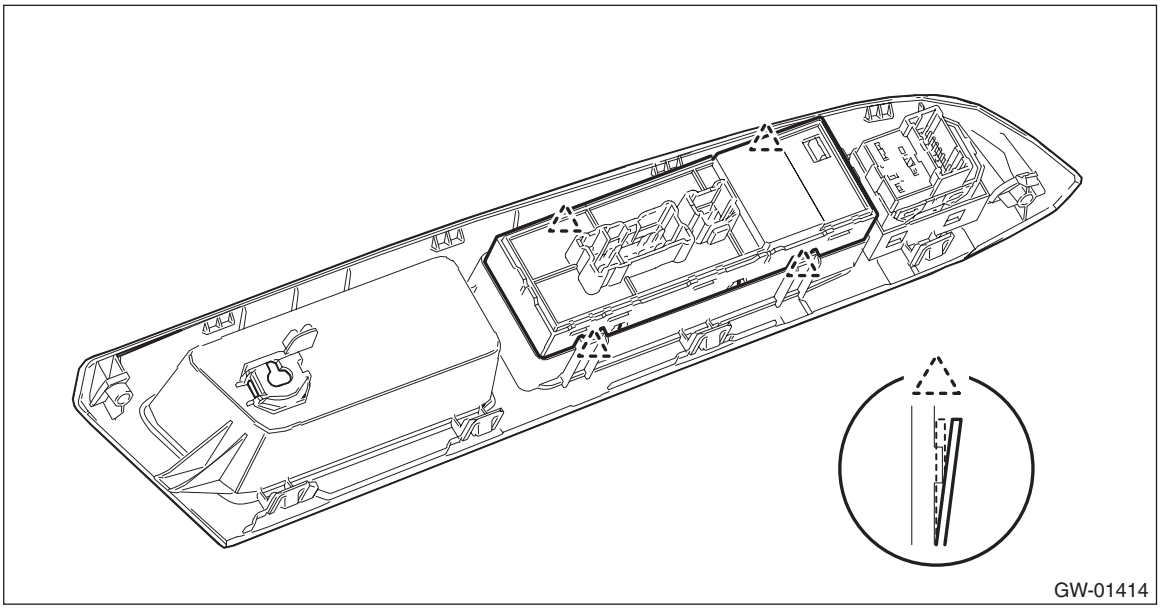

2. SUB-SWITCH

Switch - power window sub front

For removal of the switch - power window sub front on the passenger's seat, refer to the removal procedure of the switch - power window main. <Ref. to GW-11, MAIN SWITCH, REMOVAL, Power Window Control Switch.>

Switch - power window sub rear

1) Disconnect the ground cable from battery. <Ref. to NT-6, BATTERY, NOTE, Note.>

NOTE:
For model with battery sensor, disconnect the ground terminal from battery sensor.
2) Remove the trim panel - rear door. <Ref. to EI-58, REAR DOOR, REMOVAL, Door Trim.>

3) Remove the panel - power window sub switch rear.

CAUTION:
Be careful not to damage the trim panel - rear door with the panel - power window sub switch rear.

(1) Insert a sheet of protective paper (a) between panel - power window sub switch rear and trim panel - rear door.
(2) Remove the screws and disconnect the connector.

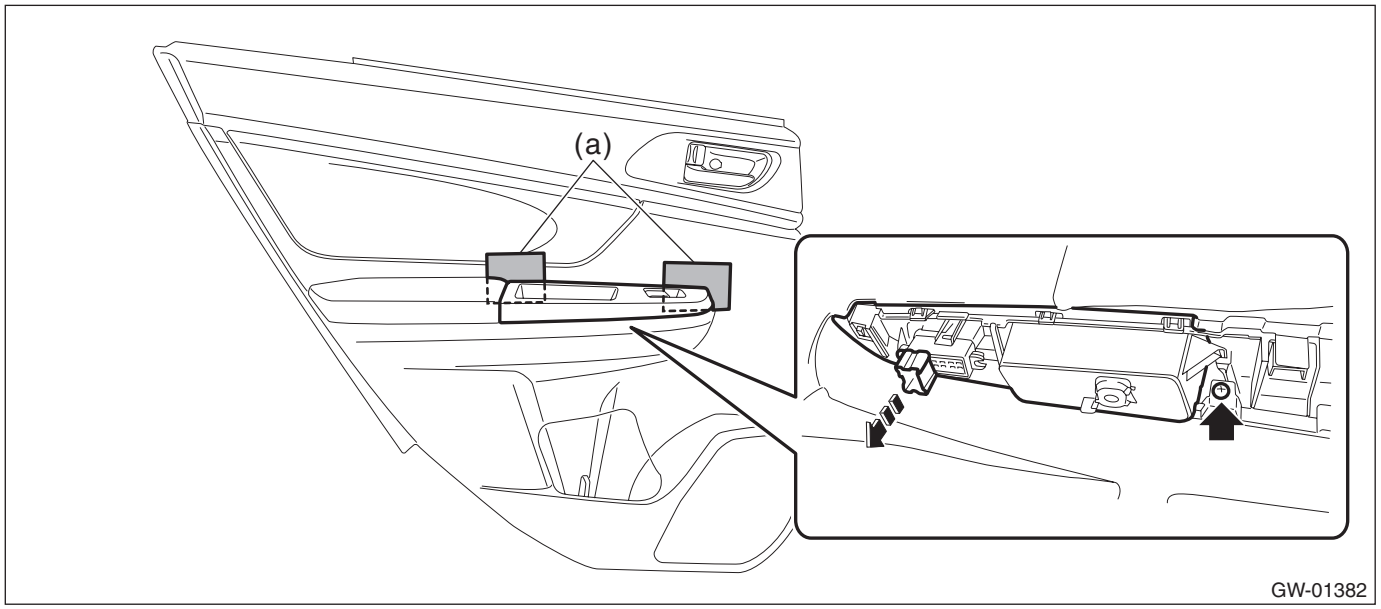

(3) Release the claws, and then remove the panel - power window sub switch rear.

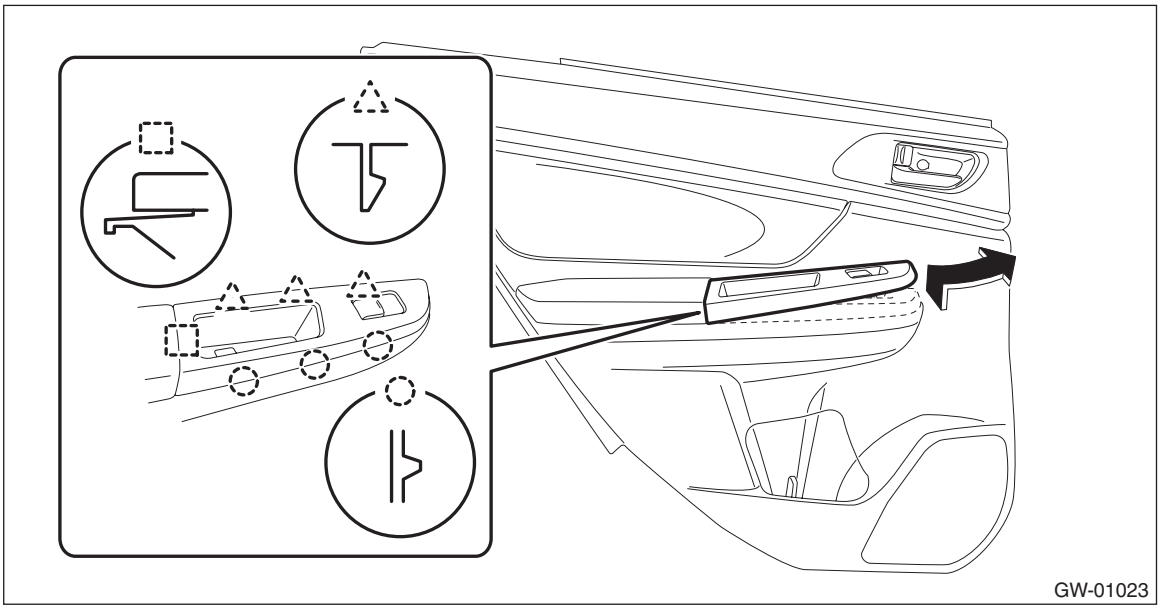

4) Release the claws, and then remove the switch - power window sub rear.

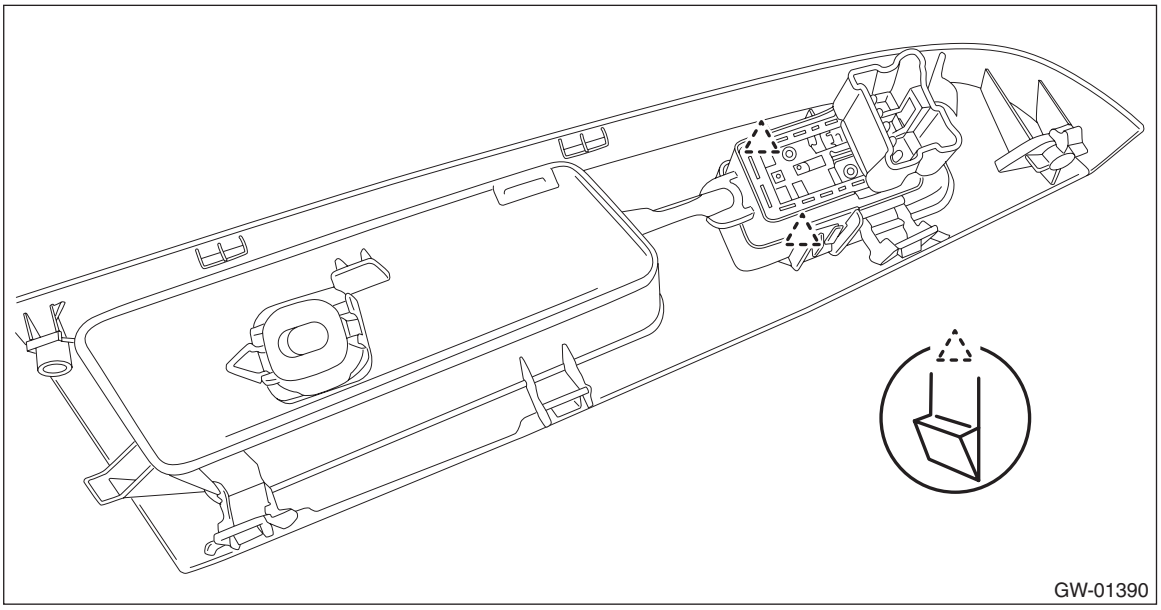

B: INSTALLATION

1. MAIN SWITCH

CAUTION:
• After installing the switch - power window main, always perform the initial setting.
Failure to do so may cause the improper activation of auto-reverse operation for pinching hazard prevention.
• Use protective paper to avoid damage to the trim panel.

1) Install the panel - power window main switch to the trim panel - front door.
2) Install the trim panel - front door. <Ref. to EI-59, INSTALLATION, Door Trim.>
3) Connect the battery ground terminal. <Ref. to NT-6, BATTERY, NOTE, Note.>
4) Perform initial setting operation (reset operation A). <Ref. to GW-9, RESET OPERATION A, OPERATION, Power Window System.>

2. SUB-SWITCH

CAUTION:
Use protective paper to avoid damage to the trim panel.

Switch - power window sub front

For installation of the switch - power window sub front on the passenger's seat, refer to the installation procedure of the switch - power window main. <Ref. to GW-14, MAIN SWITCH, INSTALLATION, Power Window Control Switch.>

Switch - power window sub rear

1) Install the panel - power window sub switch rear to the trim panel - rear door.
2) Install the trim panel - rear door. <Ref. to EI-59, INSTALLATION, Door Trim.>
3) Connect the battery ground terminal. <Ref. to NT-6, BATTERY, NOTE, Note.>

C: INSPECTION

1. MAIN SWITCH

• Driver's seat

CAUTION:
• Since the switch - power window main is controlled by CPU, do not check continuity for switch alone with the circuit tester. Performing continuity check with circuit tester can damage the switch - power window main circuit.
• Since the passenger's seat switch cannot be checked by using the switch - power window main, use the switch - power window sub.
Check output from the switch - power window main to the driver's side motor using the oscilloscope function in the Subaru Select Monitor.
1) Remove the switch - power window main.
2) Connect the battery and the Subaru Select Monitor to the switch - power window main terminal.

CAUTION:
Never mix up the terminals when connecting the harness connector of the switch - power window main and the battery. If the connection is wrong, the switch - power window main may be damaged.

NOTE:
• When the battery is connected to the switch - power window main terminal, the letters "AUTO" on the driver's side knob illuminates.
• For detailed procedures, refer to "Subaru Select Monitor Operation Manual".

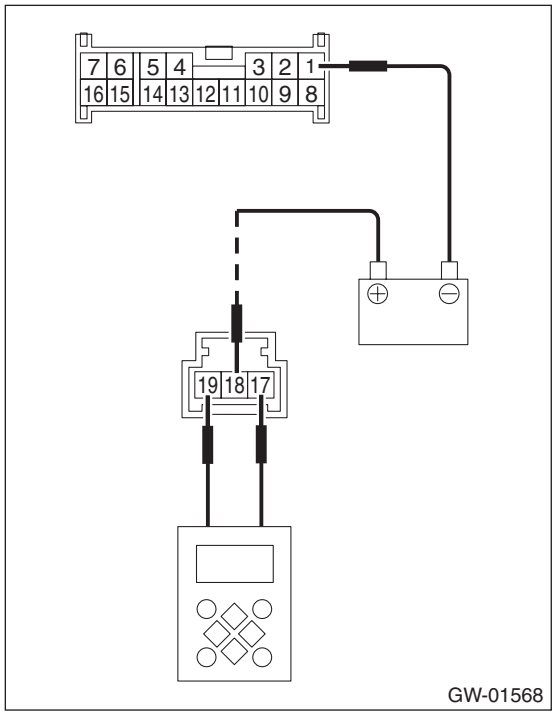

3) Operate the switch - power window main and check the output.

NOTE:
Since output time during window UP operation is extremely short, it cannot be checked without using a measuring instrument such as oscilloscope. Output is constantly produced while the switch is operated for window DOWN operation.

Inspection conditions	Output time	Standard
AUTO UP	Approx. 130 ms	Battery voltage
UP		
OFF	—	0 V
DOWN	During switch operation	Battery voltage
AUTO DOWN	Approx. 300 ms	

4) If the inspection result is not within the standard, replace the switch - power window main.

• **Rear seat**

1) Check the resistance between terminals of the switch - power window main.

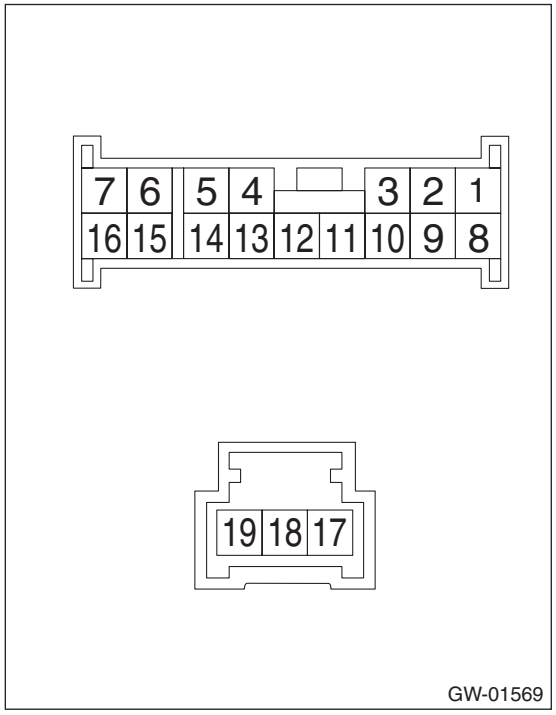

	Terminal No.	Inspection conditions	Standard
Rear LH	14 — 15 1 — 16	UP	Less than 1 Ω
	14 — 15 14 — 16	OFF	1 MΩ or more
	1 — 15 1 — 16 15 — 16		Less than 1 Ω
	14 — 16 1 — 15	DOWN	Less than 1 Ω
Rear RH	14 — 7 1 — 6	UP	Less than 1 Ω
	14 — 6 14 — 7	OFF	1 MΩ or more
	1 — 6 1 — 7 6 — 7		Less than 1 Ω
	14 — 6 7 — 1	DOWN	Less than 1 Ω

2) If the inspection result is not within the standard, replace the switch - power window main.

2. FRONT SUB SWITCH

CAUTION:
Since the switch - power window main is controlled by CPU, do not check continuity for switch alone with the circuit tester. Performing continuity check with circuit tester can damage the switch - power window main circuit.
Check output from the switch - power window sub to the passenger's side motor using the oscilloscope function in the Subaru Select Monitor.
1) Remove the switch - power window sub.
2) Connect the battery and the Subaru Select Monitor to the switch - power window sub terminal.

CAUTION:
Never mix up the terminals when connecting the harness connector of the switch - power window sub and the battery. If the connection is wrong, the switch - power window sub may be damaged.

NOTE:
For detailed procedures, refer to "Subaru Select Monitor Operation Manual".

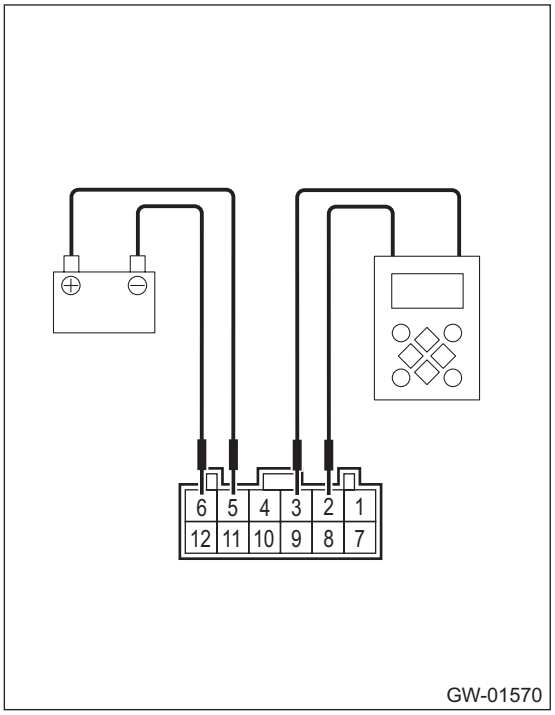

3) Operate the switch - power window sub and check the output.

NOTE:
Since output time during window UP operation is extremely short, it cannot be checked without using a measuring instrument such as oscilloscope. Output is constantly produced while the switch is operated for window DOWN operation.

Inspection conditions	Output time	Standard
AUTO UP	Approx. 130 ms	Battery voltage
UP		
OFF	—	0 V
DOWN	During switch operation	Battery voltage
AUTO DOWN	Approx. 300 ms	

4) If the inspection result is not within the standard, replace the switch - power window sub.

3. REAR SUB SWITCH

1) Remove the switch - power window sub.
2) Check the resistance between terminals of the switch - power window sub.

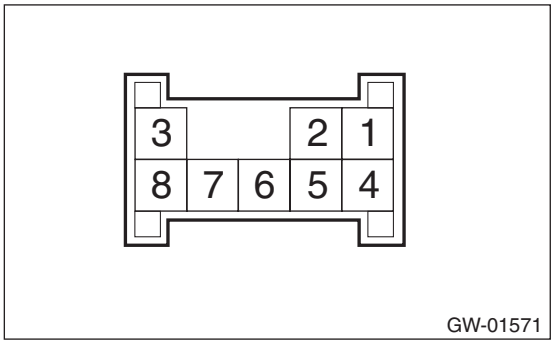

	Terminal No.	Inspection conditions	Standard
Rear	4 — 5 7 — 8	OFF	Less than 1 Ω
	5 — 6 6 — 8		1 MΩ or more
	5 — 6 7 — 8	UP	Less than 1 Ω
	4 — 5 4 — 8		1 MΩ or more
	4 — 5 6 — 8	DOWN	Less than 1 Ω
	4 — 6 7 — 8		1 MΩ or more

3) Check the switch light illumination condition.

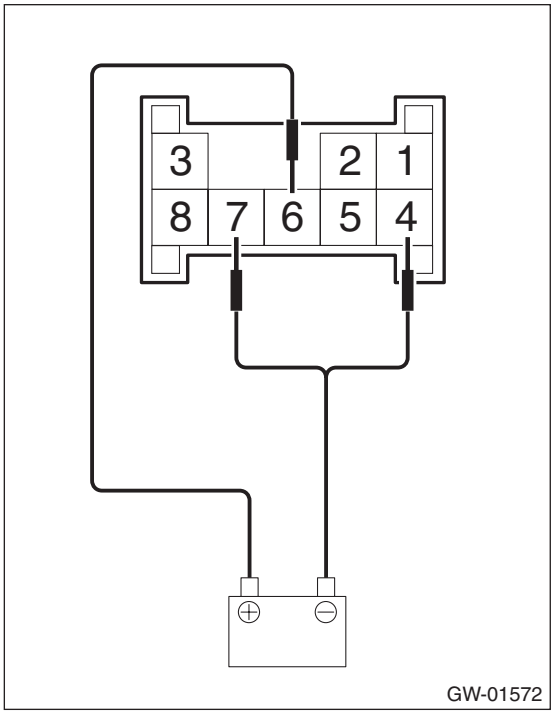

	Terminal No.	Inspection conditions	Specification
Rear	6 — 7, 4	Battery connection between terminals	Light ON

4) If the inspection result is not within the standard, replace the switch - power window sub.

5. Front Door Glass

A: REMOVAL

1) Disconnect the ground cable from battery and wait for at least 60 seconds before starting work. <Ref. to NT-6, BATTERY, NOTE, Note.>

NOTE:
For model with battery sensor, disconnect the ground terminal from battery sensor.
2) Remove the trim panel - front door. <Ref. to EI-57, FRONT DOOR, REMOVAL, Door Trim.>
3) Remove the sealing cover - front door. <Ref. to EB-30, REMOVAL, Front Sealing Cover.>
4) Remove the front door inner pad (a).

CAUTION:
If the clip is damaged, replace it with a new part because the panel assembly - front door may be deformed.

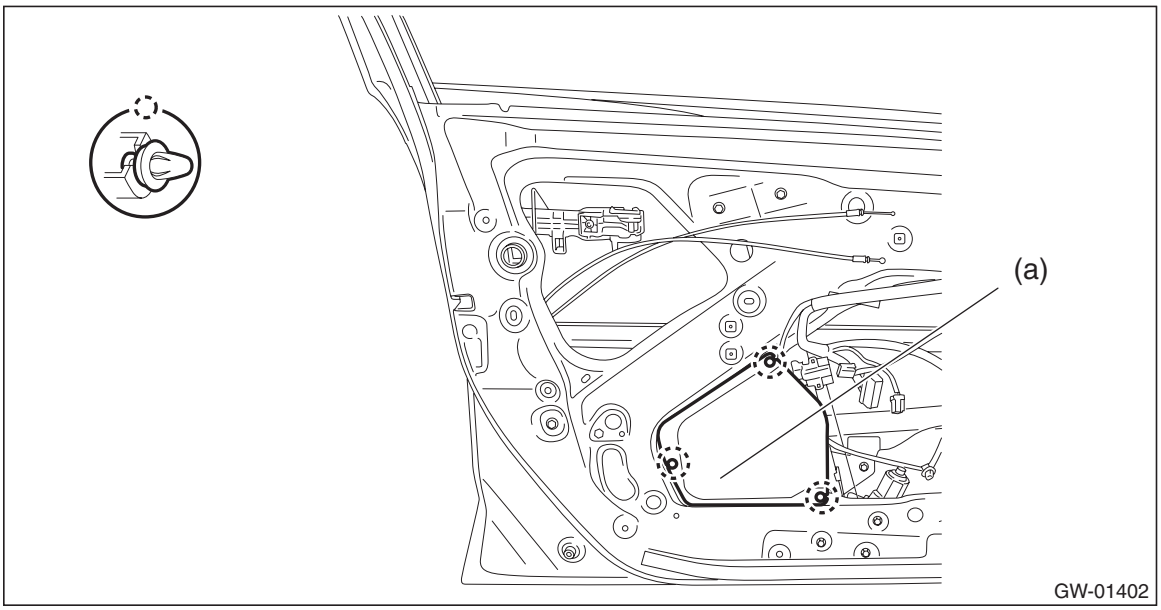

5) Connect the battery ground terminal. <Ref. to NT-6, BATTERY, NOTE, Note.>

6) Remove the glass assembly - front door.
(1) Connect the switch - power window and then turn the ignition switch to ON.
(2) Operate the switch - power window to move the glass assembly - front door to the position where the mounting bolts can be seen.
(3) Remove the mounting bolts from the glass assembly - front door.

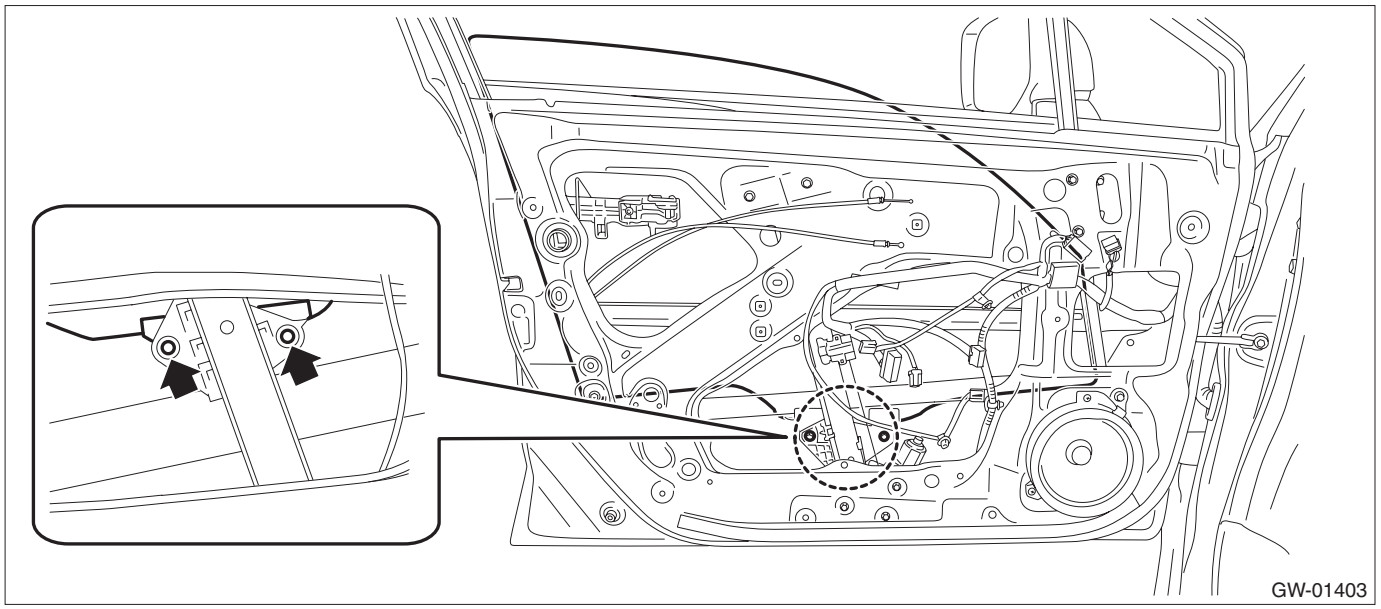

(4) While tilting the glass, remove the glass assembly - front door.

CAUTION:
Avoid impact and damage to the glass assembly - front door.

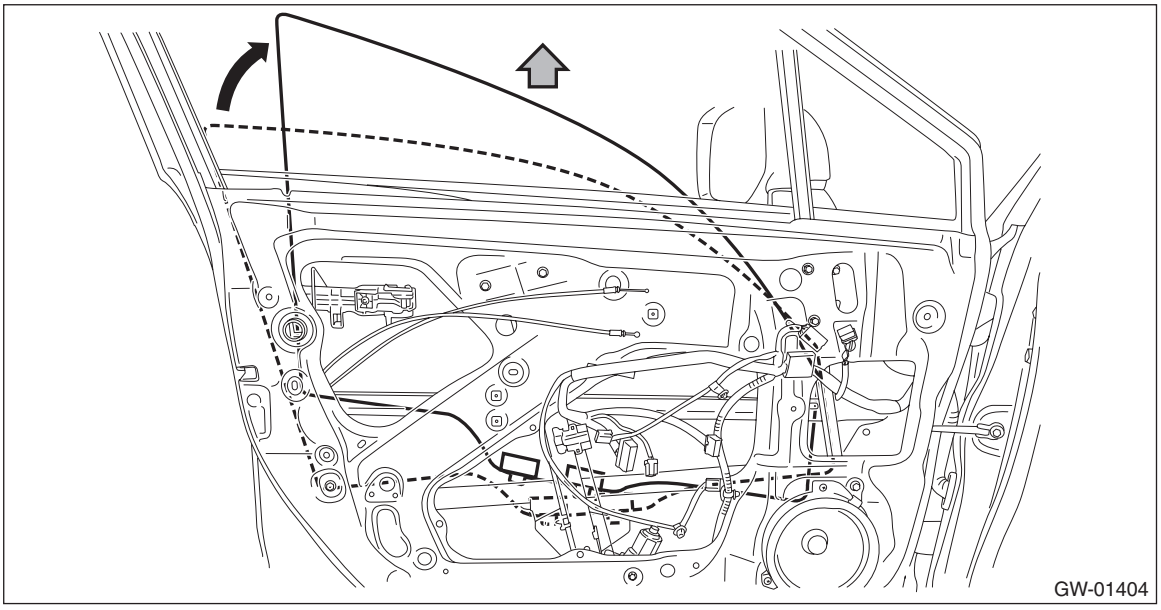

7) Remove the glass - front door partition.
(1) Remove the bolts and screws, and then remove the running channel - front door and the sash COMPL - partition.

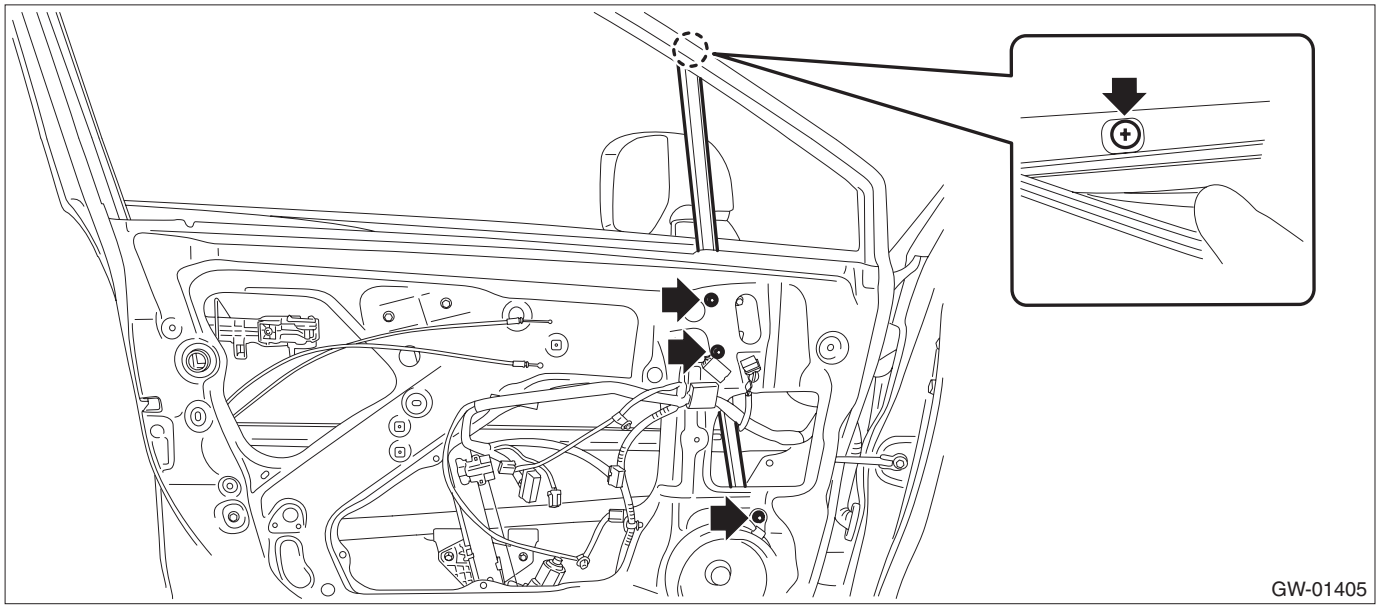
GW-01405

(2) Remove the glass - front door partition.

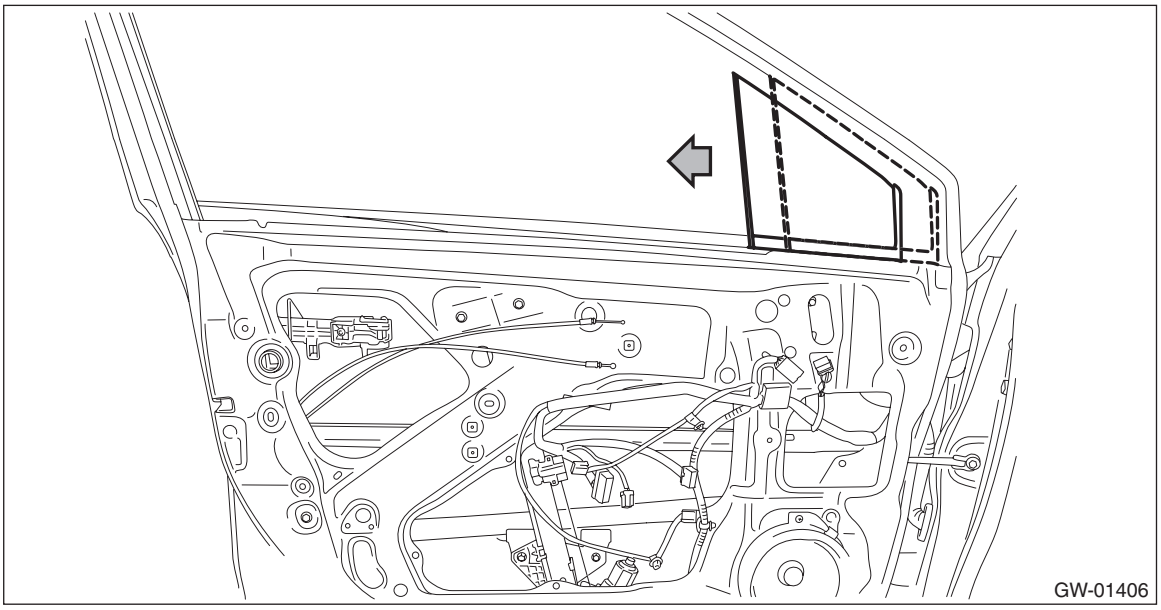
GW-01406

B: INSTALLATION

1) Install the glass - front door partition.

Tightening torque:
7.5 N·m (0.8 kgf-m, 5.5 ft-lb)

2) Install the running channel - front door and the sash COMPL - partition.

CAUTION:
Check that the running channel - front door is securely fixed to the panel assembly - front door and to the sash COMPL - partition.

3) Install the glass assembly - front door.

Tightening torque:
7.5 N·m (0.8 kgf-m, 5.5 ft-lb)

4) Install the front door inner pad.
5) Install the sealing cover - front door.
6) Install the trim panel - front door.
7) Connect the battery ground terminal. <Ref. to NT-6, BATTERY, NOTE, Note.>

6. Front Regulator and Motor Assembly

A: REMOVAL

1) Disconnect the ground cable from battery and wait for at least 60 seconds before starting work. <Ref. to NT-6, BATTERY, NOTE, Note.>

NOTE:
For model with battery sensor, disconnect the ground terminal from battery sensor.
2) Remove the trim panel - front door. <Ref. to EI-57, FRONT DOOR, REMOVAL, Door Trim.>
3) Remove the sealing cover - front door. <Ref. to EB-30, REMOVAL, Front Sealing Cover.>
4) Remove the glass assembly - front door. <Ref. to GW-20, REMOVAL, Front Door Glass.>
5) Remove the regulator and motor assembly - front.
   (1) Disconnect the motor - front connector.
   (2) Remove the bolts, and then remove the regulator and motor assembly - front.

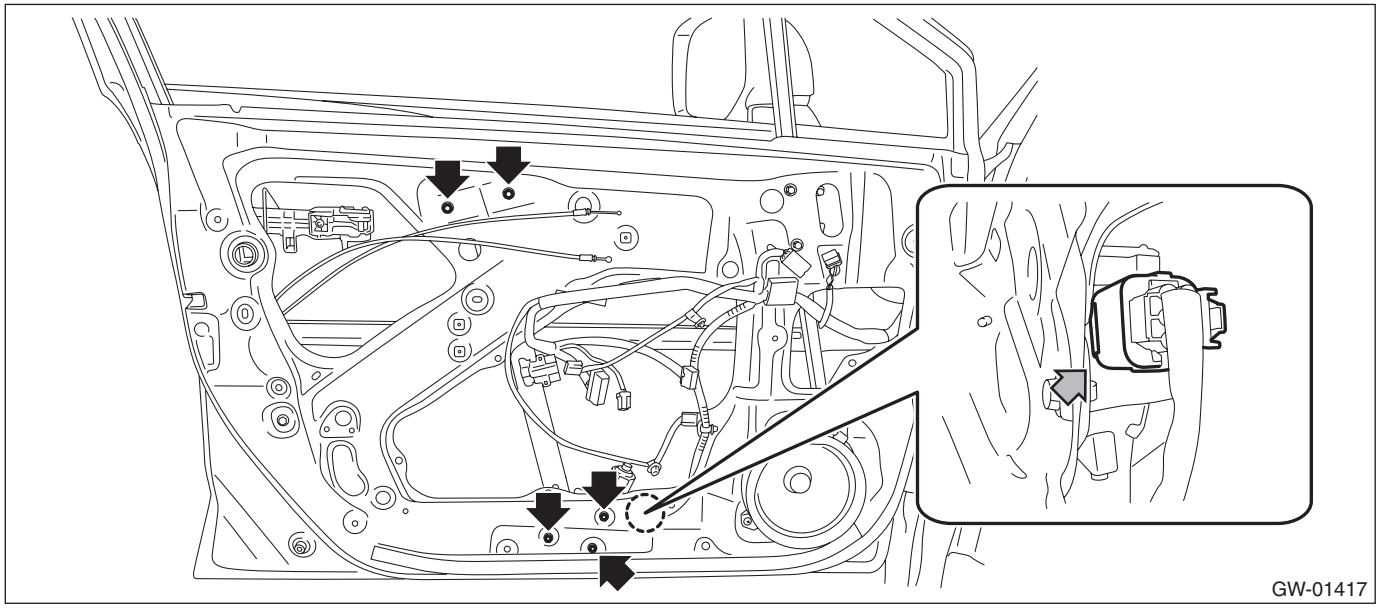

B: INSTALLATION

1) Install the regulator and motor assembly - front.

Tightening torque:
7.5 N·m (0.8 kgf-m, 5.5 ft-lb)
2) Install the glass assembly - front door. <Ref. to GW-23, INSTALLATION, Front Door Glass.>
3) Install the sealing cover - front door.
4) Install the trim panel - front door.
5) Connect the battery ground terminal. <Ref. to NT-6, BATTERY, NOTE, Note.>

C: INSPECTION

1) Disconnect the connector of the motor - front.
2) Check the motor operation when battery voltage is applied between terminals of the motor - front connector.

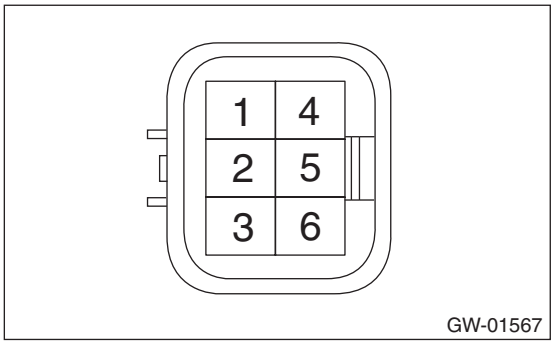

- LH side

Terminal No.	Inspection conditions	Standard
4 (+) — 1 (–)	Apply battery voltage between terminals.	Increase
1 (+) — 4 (–)		Decrease

- RH side

Terminal No.	Inspection conditions	Standard
3 (+) — 6 (–)	Apply battery voltage between terminals.	Increase
6 (+) — 3 (–)		Decrease

3) If it does not operate properly as a result of inspection, replace the regulator and motor assembly - front.

7. Remote Control Mirror System

A: WIRING DIAGRAM

Refer to “Remote Control Mirror System” in the wiring diagram. <Ref. to WI-322, WIRING DIAGRAM, Remote Control Mirror System.>

B: INSPECTION

1. SYMPTOM CHART

Symptoms	Inspection order
All function does not operate.	1. Check the fuse. 2. Check the remote control mirror switch. 3. Check the wiring harness.
One side of the mirror motor does not operate.	1. Check the remote control mirror switch. 2. Check the mirror motor. 3. Check the wiring harness.
Mirror heater does not operate.	1. Check the rear defogger switch. 2. Check the rear defogger relay. 3. Check the mirror heater. 4. Check the wiring harness. 5. Check body integrated unit.

NOTE:
The mirror heater operates with the rear window defogger at the same time. Refer to “INSPECTION” of “Rear Window Defogger System” for details. <Ref. to GW-51, INSPECTION, Rear Window Defogger System.>

C: NOTE

For procedure of each component in the remote control mirror system, refer to the respective section.

- Outer mirror assembly: <Ref. to GW-27, Outer Mirror Assembly.>
- Remote control mirror switch: <Ref. to GW-32, Remote Control Mirror Switch.>

8. Outer Mirror Assembly

A: REMOVAL

Refer to “DISASSEMBLY” for removal procedures of scalp cap and mirror face. <Ref. to GW-28, DISASSEMBLY, Outer Mirror Assembly.>

1) Disconnect the ground cable from battery and wait for at least 60 seconds before starting work. <Ref. to NT-6, BATTERY, NOTE, Note.>

NOTE:
For model with battery sensor, disconnect the ground terminal from battery sensor.

2) Remove the trim panel - front door. <Ref. to EI-57, FRONT DOOR, REMOVAL, Door Trim.>

3) Turn over the sealing cover - front door.

CAUTION:
- **Carefully remove the butyl tape. Excessive force will easily break the sealing cover - front door.**
- **If the sealing cover - front door gets broken, replace it with a new part.**
- **Be careful not to allow the butyl tape to contact any trims and seats because the butyl tape, which has a strong adhesive force, is difficult to remove once it adhered.**

(1) Remove the connector clip that is installed on the panel assembly - front door, and disconnect the connector.

(2) Carefully remove and turn over the sealing cover - front door within the area where the operation can be performed.

4) Remove the bolts to remove outer mirror assembly.

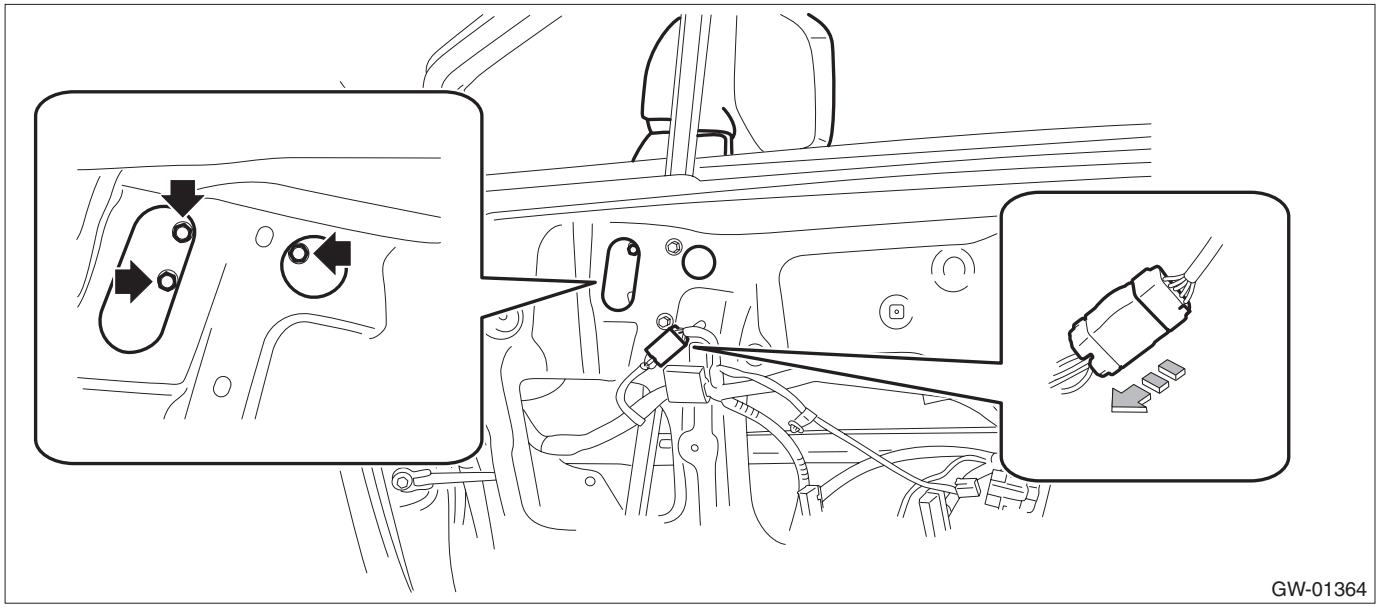

B: INSTALLATION

CAUTION:
Be careful not to catch the harness in between the parts.

1) Install the outer mirror assembly.

Tightening torque:
7.5 N·m (0.8 kgf-m, 5.5 ft-lb)

2) Install the sealing cover - front door.

3) Install the trim panel - front door. <Ref. to EI-59, INSTALLATION, Door Trim.>

4) Connect the battery ground terminal. <Ref. to NT-6, BATTERY, NOTE, Note.>

C: DISASSEMBLY

CAUTION:
• When removing the mirror - repair, be careful not to damage the back surface of mirror - repair with a flat tip screwdriver.
• When installing the mirror - repair, insert the connector and clip securely.

1) Operate the remote control mirror switch to face the mirror - repair upward.
2) Disconnect the ground cable from battery. <Ref. to NT-6, BATTERY, NOTE, Note.>

NOTE:
For model with battery sensor, disconnect the ground terminal from battery sensor.

3) Remove the mirror - repair.
   (1) Using a flat tip screwdriver or similar tool, release the engagement shown in the figure, and slide the mirror - repair downward to remove.

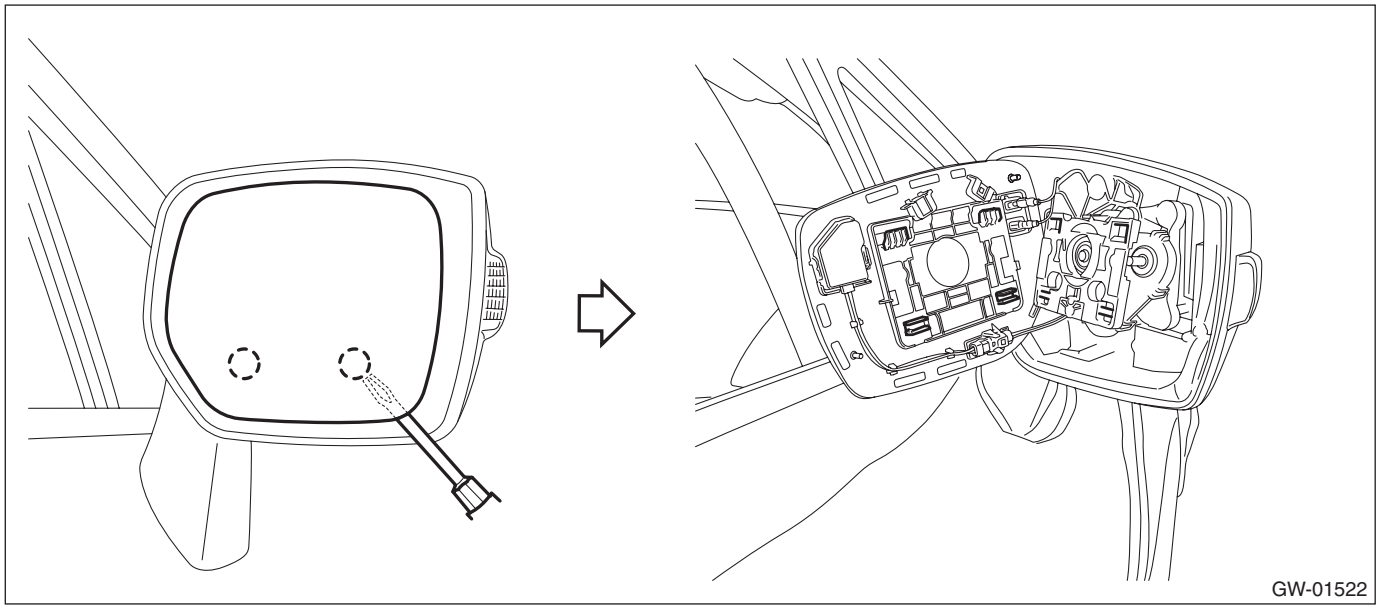
GW-01522

   (2) Disconnect connectors. (Model with mirror heater and Subaru Rear Vehicle Detection system)

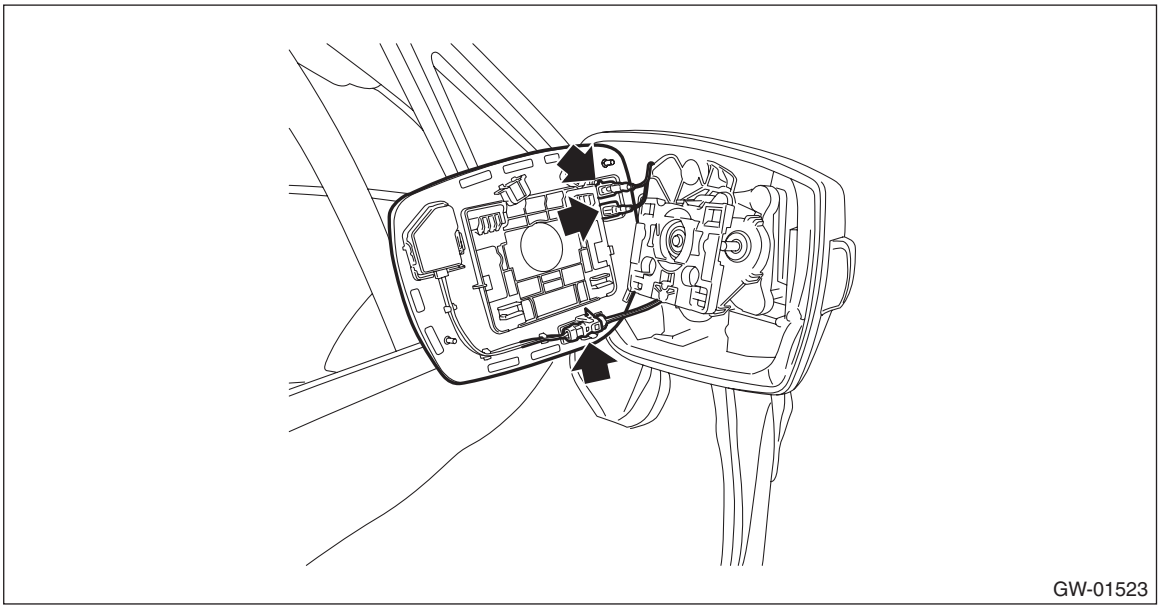
GW-01523

4) Release the claws, and then remove the cover - cap outer mirror lower.

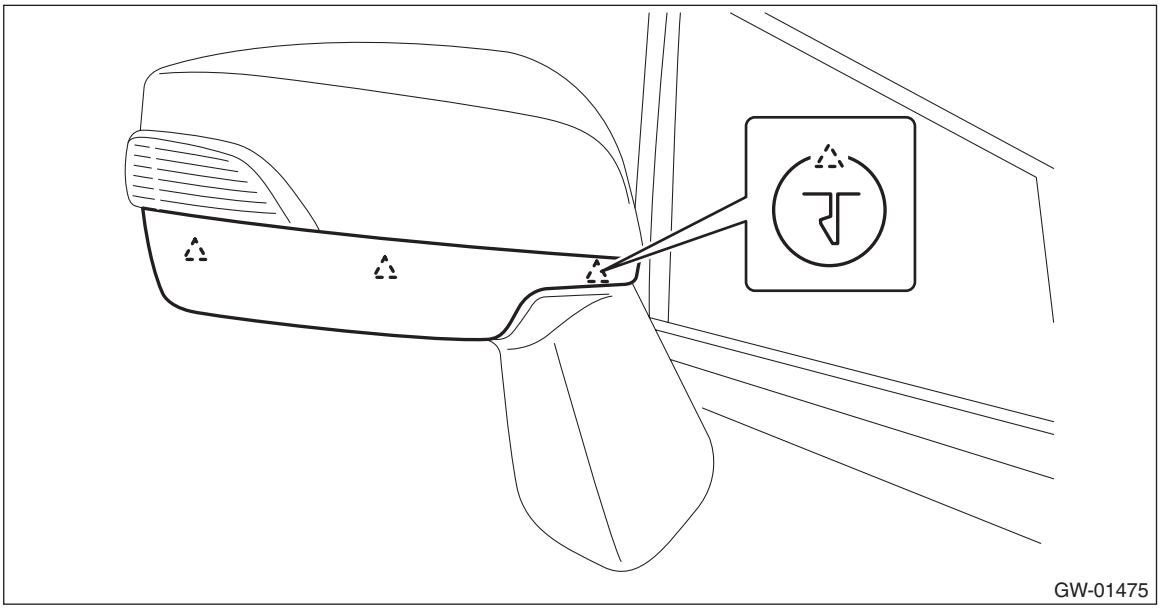

5) Release the claws, and then remove the cover - cap outer mirror.

CAUTION:
Be careful not to apply excessive force when removing the cover - cap outer mirror, as the lower hooks may become damaged.

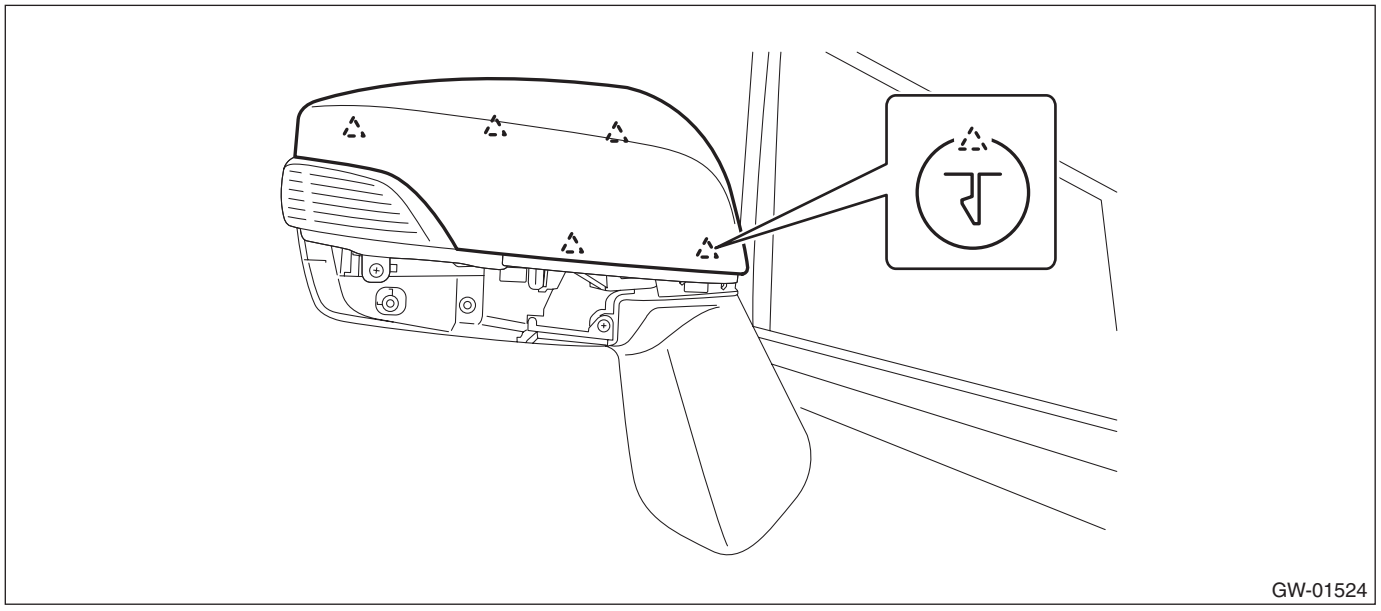

6) Remove the light assembly - side turn mirror. (Model with side turn signal light)
   (1) Remove the screws and pull out the light assembly - side turn mirror to the front of the vehicle.
   (2) Disconnect the connector and remove the light assembly - side turn mirror.

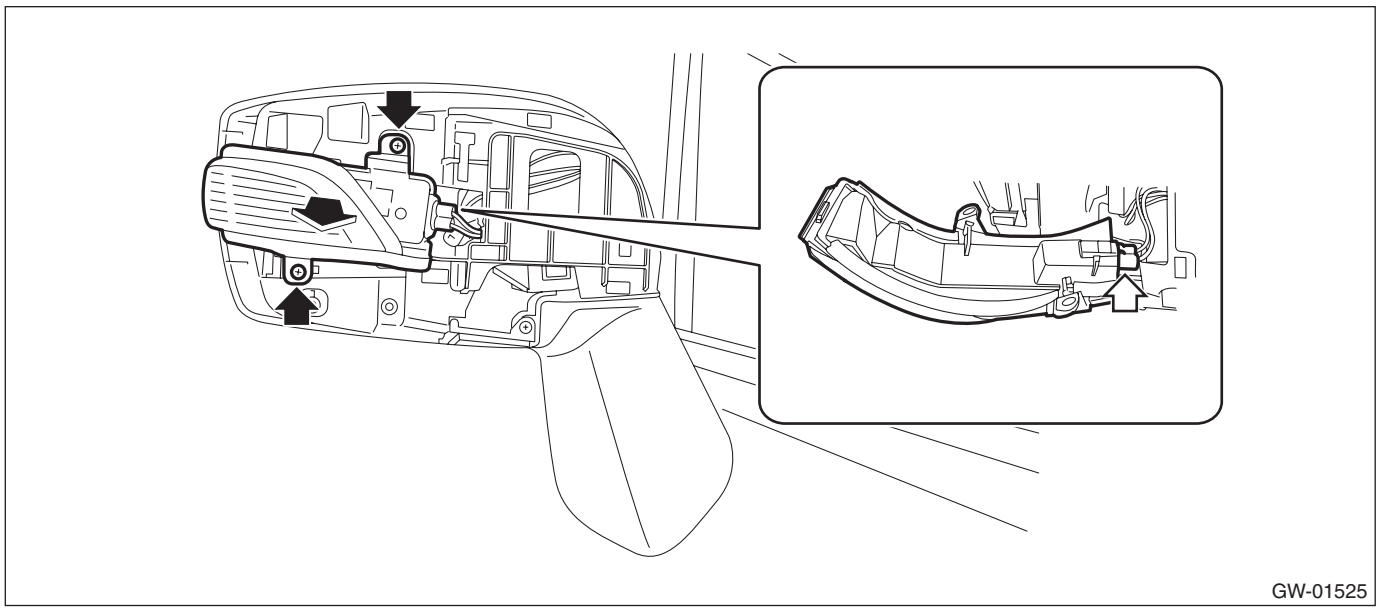

D: ASSEMBLY

CAUTION:
Be careful not to catch the harness in between the parts.
1) Install the light assembly - side turn mirror.
2) Install the cover - cap outer mirror.
3) Install the cover - cap outer mirror lower.
4) Check that all the claws are securely engaged.
5) Install the mirror - repair.

E: INSPECTION

1. CHECK OPERATION

1) Disconnect the outer mirror connector.
2) Apply battery voltage between the outer mirror connector terminals and check the mirror operation.

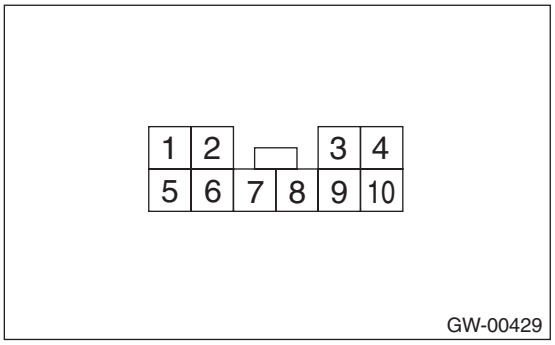

Terminal No.	Inspection conditions	Switch position
—	—	OFF
3 (+) — 8 (–)	Apply battery voltage between terminals.	UP
8 (+) — 3 (–)	Apply battery voltage between terminals.	DOWN
7 (+) — 3 (–)	Apply battery voltage between terminals.	LEFT
3 (+) — 7 (–)	Apply battery voltage between terminals.	RIGHT

3) If it does not operate normally, replace the outer mirror assembly.

2. CHECK OPERATION OF Subaru Rear Vehicle Detection INDICATOR

1) Check the Subaru Rear Vehicle Detection system. <Ref. to RVD(diag)-2, Basic Diagnostic Procedure.>
2) Check the outer mirror assembly.
   (1) Check that the BSD/RCTA indicator on the mirror surface illuminates normally when the BSD/RCTA OFF switch is turned ON while it is installed to the vehicle.
   (2) If it does not illuminate normally, replace the mirror - repair.
   (3) Check that it illuminates normally again. If it does not illuminate normally, replace the outer mirror assembly.

9. Remote Control Mirror Switch

A: REMOVAL

1) Disconnect the ground cable from battery and wait for at least 60 seconds before starting work. <Ref. to NT-6, BATTERY, NOTE, Note.>

NOTE:
For model with battery sensor, disconnect the ground terminal from battery sensor.
2) Remove the trim panel - front door. <Ref. to EI-57, FRONT DOOR, REMOVAL, Door Trim.>
3) Remove the panel - power window main switch. <Ref. to GW-11, REMOVAL, Power Window Control Switch.>
4) Release the claws, and then remove the switch - door mirror from the panel - power window main switch.

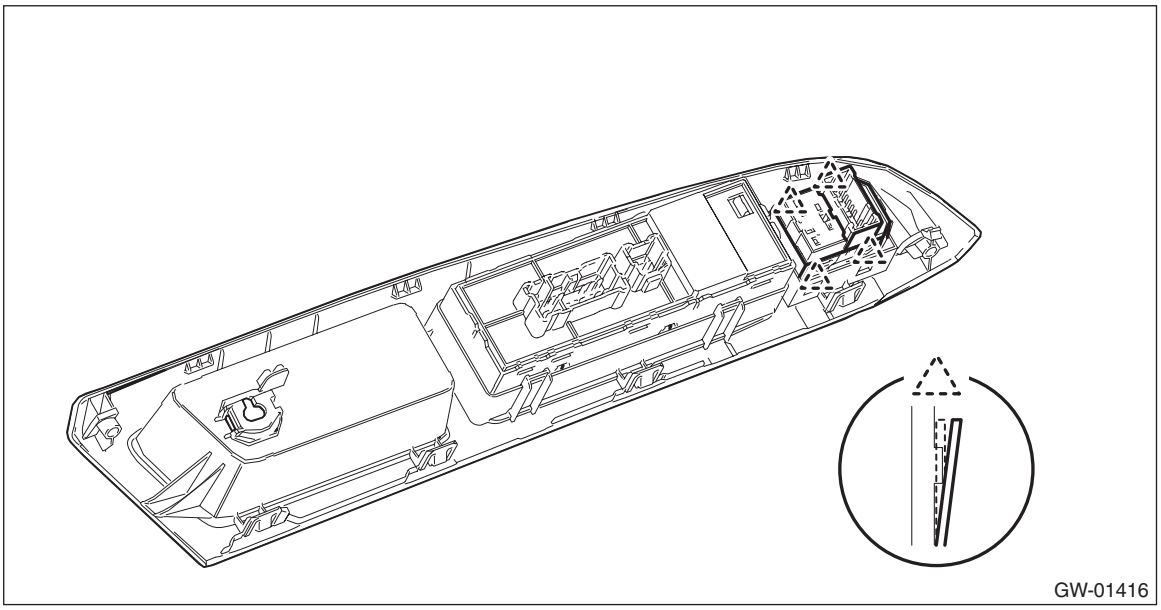

B: INSTALLATION

1) Install the switch - door mirror to the panel - power window main switch.
2) Install the panel - power window main switch to the trim panel - front door.
3) Install the trim panel - front door.
4) Connect the battery ground terminal. <Ref. to NT-6, BATTERY, NOTE, Note.>

C: INSPECTION

1) Disconnect the connector of the switch - door mirror.
2) Check the resistance between switch - door mirror terminals.

Preparation tool:
Circuit tester

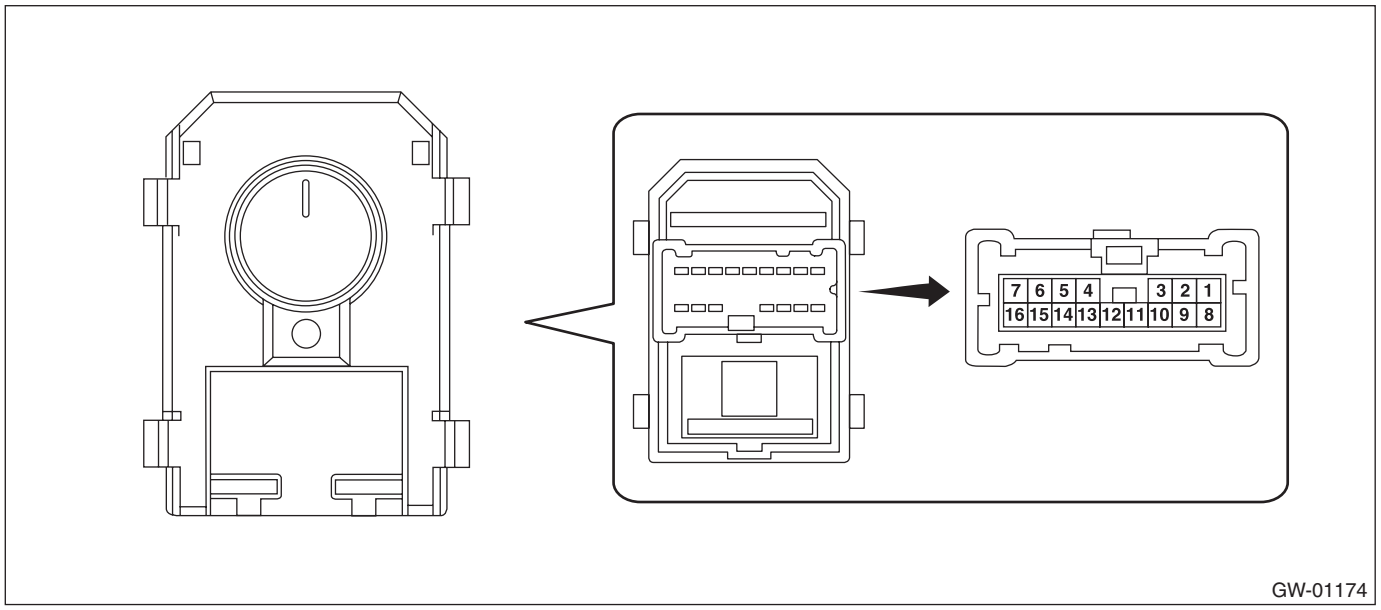

- Changeover switch RH

Terminal No.	Inspection conditions	Standard
—	OFF	1 MΩ or more
1 — 12 9 — 7	UP	Less than 1 Ω
1 — 9 12 — 7	DOWN	Less than 1 Ω
1 — 11 12 — 7	LEFT	Less than 1 Ω
1 — 12 11 — 7	RIGHT	Less than 1 Ω

- Changeover switch LH

Terminal No.	Inspection conditions	Standard
—	OFF	1 MΩ or more
1 — 14 8 — 7	UP	Less than 1 Ω
1 — 8 14 — 7	DOWN	Less than 1 Ω
1 — 10 14 — 7	LEFT	Less than 1 Ω
1 — 14 10 — 7	RIGHT	Less than 1 Ω

3) If the inspection result is not within the standard, replace the switch - door mirror.

10.Rearview Mirror

A: REMOVAL

CAUTION:
Be careful not to damage the mirror surface and the glass - front window.
1) Release the claws, and then remove the cover.

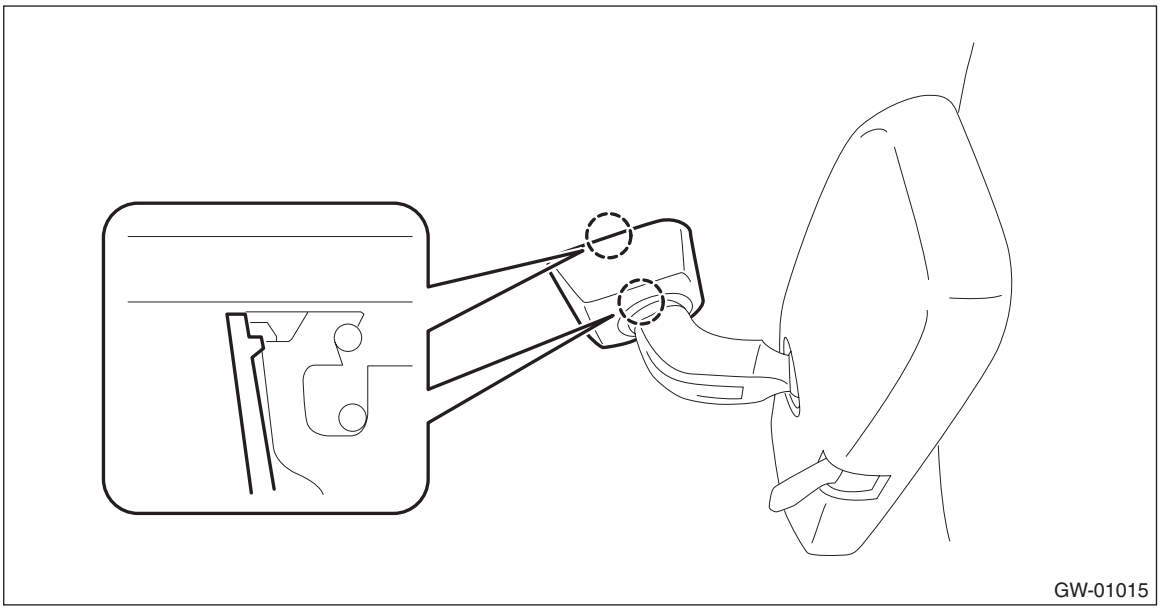

2) Release the lock lever, and slide the mirror assembly - inner rearview to remove.

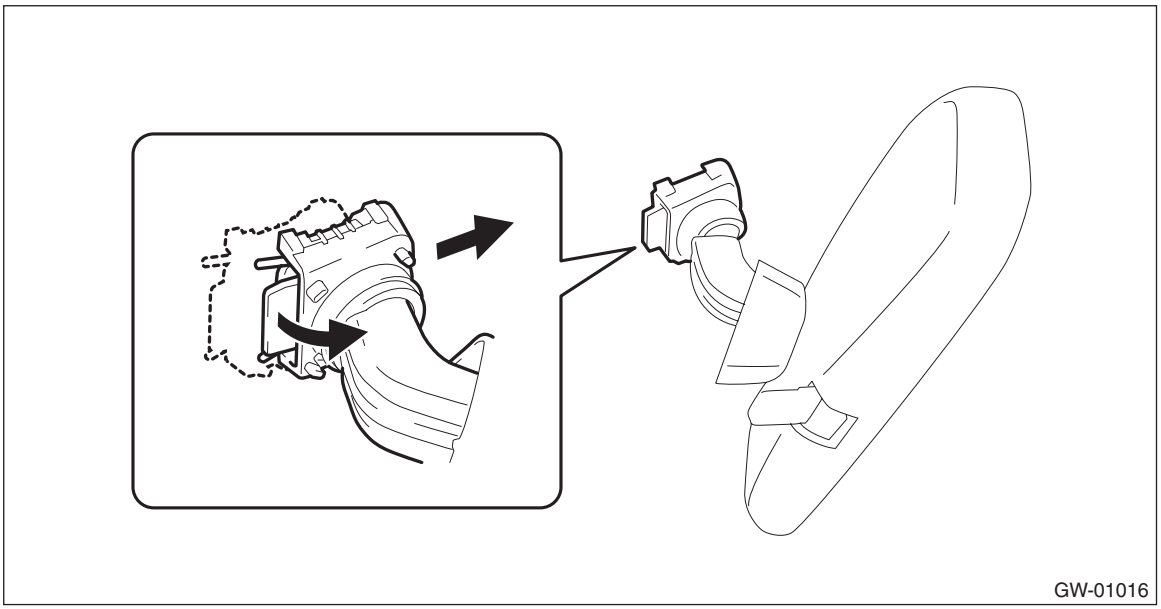

3) Replace the glass - front window if the base - inner mirror is damaged.

B: INSTALLATION

1) To install the mirror assembly - inner rearview, slide and push it until the claw engages.
2) Install the cover to the mirror assembly - inner rearview.

C: INSPECTION

Check that the mirror assembly - inner rearview and base - inner mirror for damage.

11.Rear Door Glass

A: REMOVAL

1) Disconnect the ground cable from battery. <Ref. to NT-6, BATTERY, NOTE, Note.>

NOTE:
For model with battery sensor, disconnect the ground terminal from battery sensor.

2) Remove the trim panel - rear door. <Ref. to EI-58, REAR DOOR, REMOVAL, Door Trim.>
3) Remove the sealing cover - rear door. <Ref. to EB-38, REMOVAL, Rear Sealing Cover.>
4) Reconnect the battery ground terminal. <Ref. to NT-6, BATTERY, NOTE, Note.>
5) Remove the glass assembly - rear door.
   (1) Install the switch - power window and then turn the ignition switch to ON.
   (2) Operate the switch - power window sub rear to move the glass assembly - rear door to the lowest position.
   (3) Remove the running channel - rear door.
   (4) Remove the screws and bolts, and then remove the sash COMPL - rear partition.

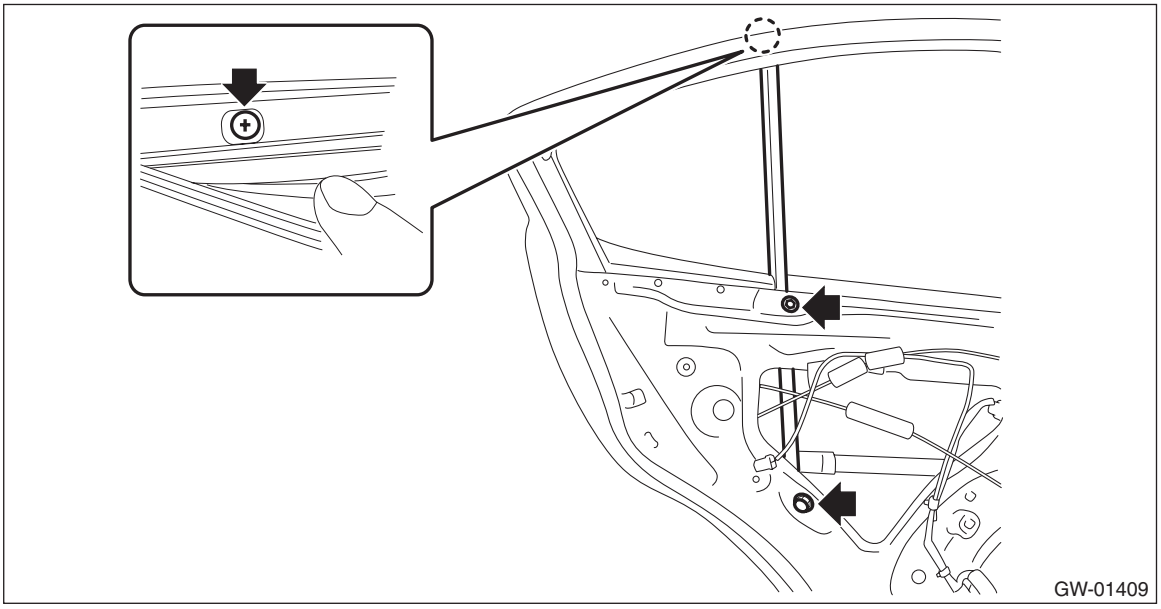
GW-01409

   (5) Remove the glass - rear door partition.

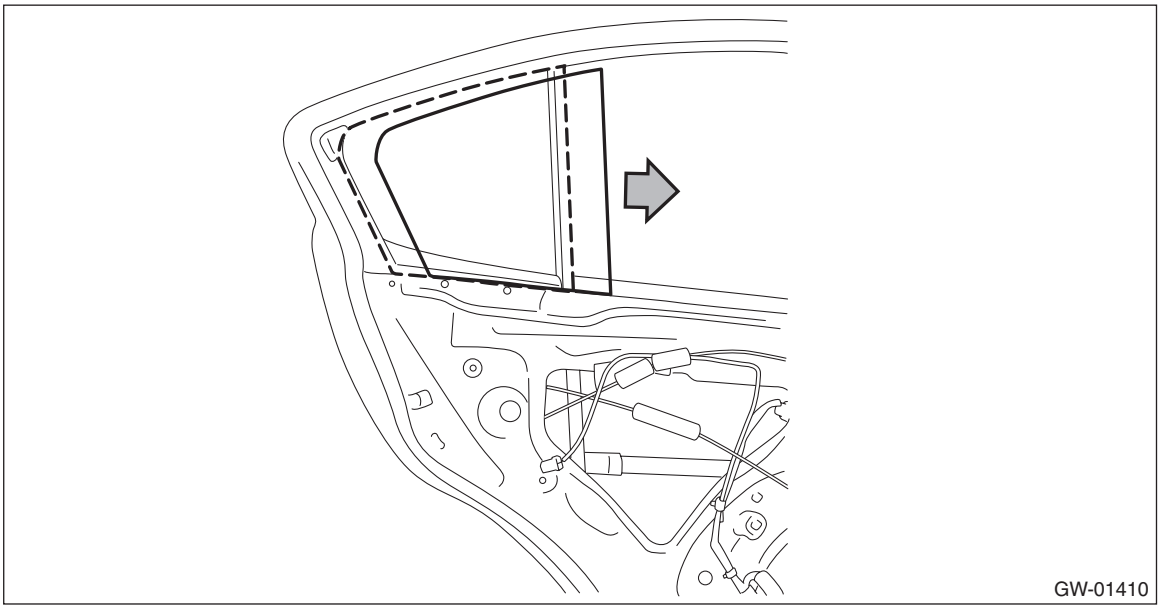
GW-01410

(6) While tilting the glass assembly - rear door, remove the guide from the roller of the regulator and motor assembly - rear, then remove the glass assembly - rear door.

CAUTION:
Avoid impact and damage to the glass assembly - rear door.

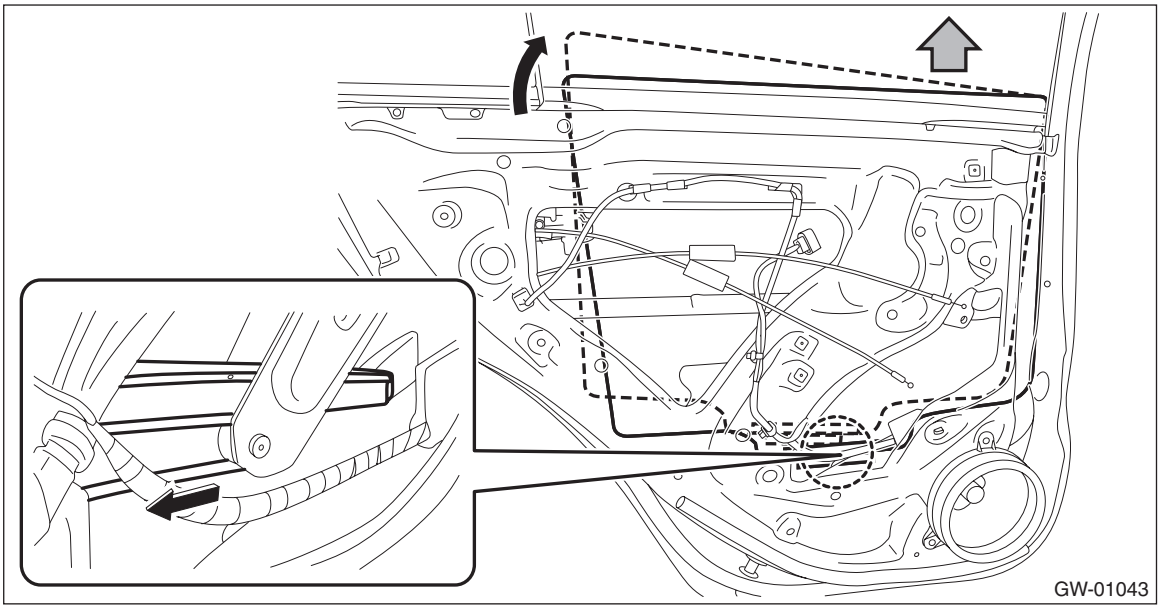

B: INSTALLATION

1) Install the glass assembly - rear door.

CAUTION:
Avoid impact and damage to the glass assembly - rear door.
2) Install the glass - rear door partition and the sash COMPL - rear partition.

Tightening torque:
7.5 N·m (0.8 kgf-m, 5.5 ft-lb)
3) Install the running channel - rear door.

CAUTION:
Check that the running channel - rear door is securely fixed to the panel assembly - rear door and to the sash COMPL - rear partition.
4) Install the sealing cover - rear door. <Ref. to EB-38, INSTALLATION, Rear Sealing Cover.>
5) Install the trim panel - rear door. <Ref. to EI-59, INSTALLATION, Door Trim.>
6) Connect the battery ground terminal. <Ref. to NT-6, BATTERY, NOTE, Note.>

12.Rear Regulator and Motor Assembly

A: REMOVAL

1) Disconnect the ground cable from battery. <Ref. to NT-6, BATTERY, NOTE, Note.>

NOTE:
For model with battery sensor, disconnect the ground terminal from battery sensor.

2) Remove the trim panel - rear door. <Ref. to EI-58, REAR DOOR, REMOVAL, Door Trim.>
3) Remove the sealing cover - rear door.
4) Remove the glass assembly - rear door. <Ref. to GW-35, REMOVAL, Rear Door Glass.>
5) Remove the rear regulator and motor assembly.
   (1) Disconnect the connector of the motor - rear.

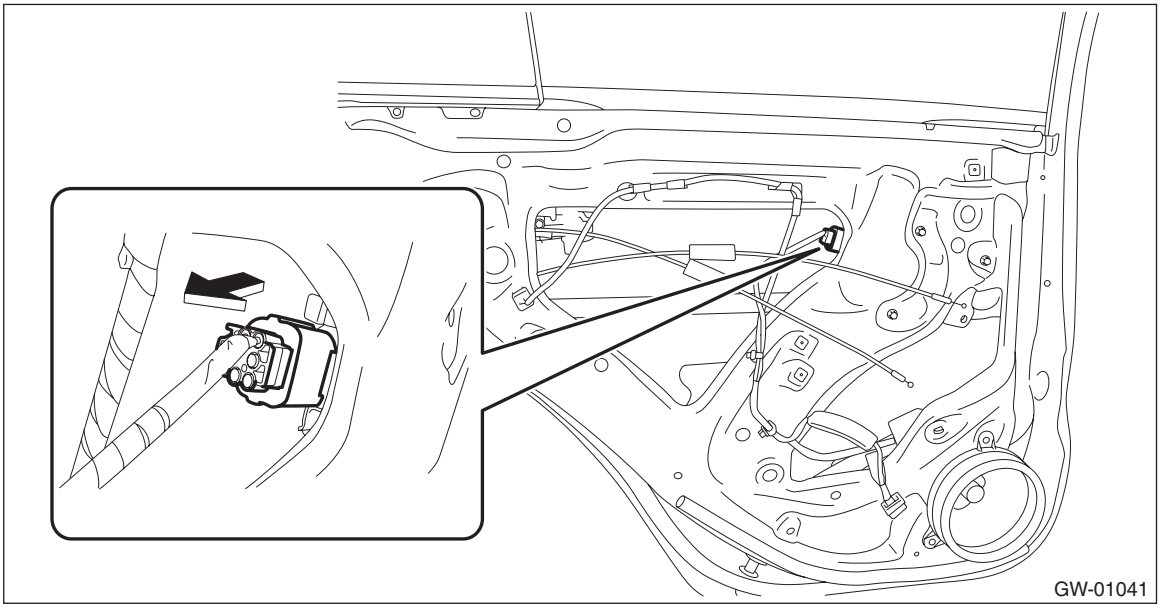
GW-01041

   (2) Remove the bolts, and then remove the regulator and motor assembly - rear.

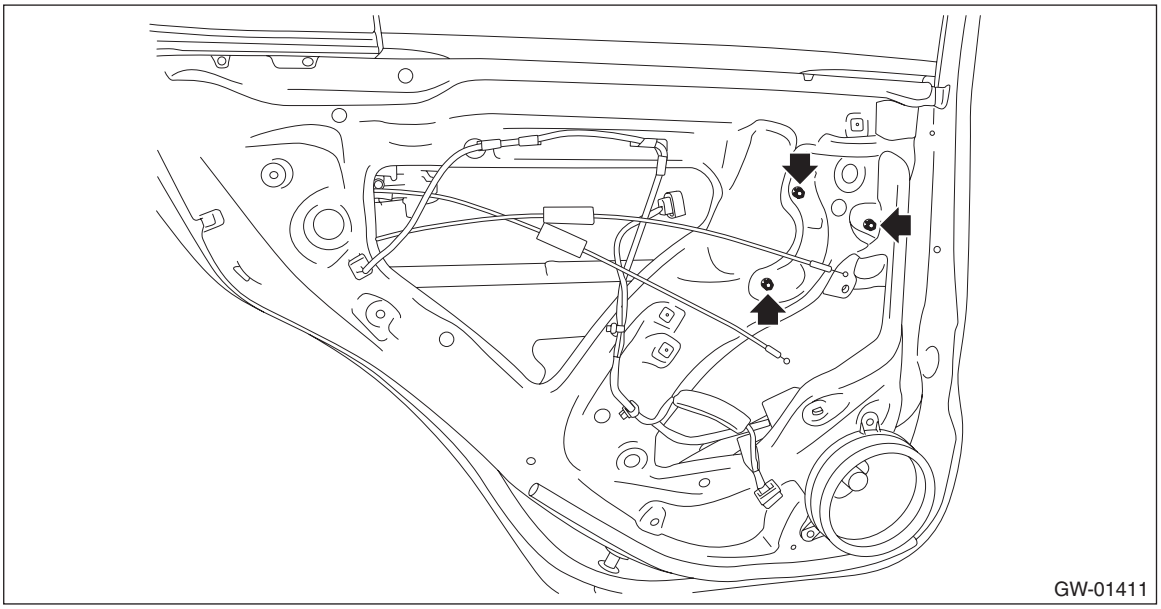
GW-01411

B: INSTALLATION

1) Install the regulator and motor assembly rear.

Tightening torque:
7.5 N·m (0.8 kgf-m, 5.5 ft-lb)

2) Install the glass assembly - rear door. <Ref. to GW-36, INSTALLATION, Rear Door Glass.>
3) Install the sealing cover - rear door.
4) Install the trim panel - rear door. <Ref. to EI-59, INSTALLATION, Door Trim.>
5) Connect the battery ground terminal. <Ref. to NT-6, BATTERY, NOTE, Note.>

C: INSPECTION

1) Disconnect the connector of the motor - rear.
2) Check the motor operation when battery voltage is applied between terminals of the motor - rear connector.

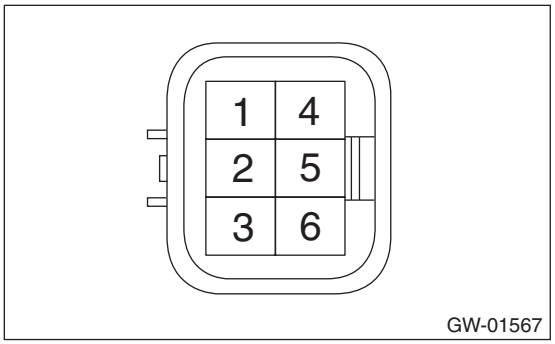

- LH side

Terminal No.	Inspection conditions	Standard
4 (+) — 1 (–)	Apply battery voltage between terminals.	Increase
1 (+) — 4 (–)		Decrease

- RH side

Terminal No.	Inspection conditions	Standard
3 (+) — 6 (–)	Apply battery voltage between terminals.	Increase
6 (+) — 3 (–)		Decrease

3) If it does not operate properly as a result of inspection, replace the regulator and motor assembly - rear.

13.Windshield Glass

A: REMOVAL

CAUTION:
• For model with EyeSight, always remove the glass - front window after the stereo camera is removed.
• For model with EyeSight, always use Subaru genuine windshield glass specially designed for EyeSight. (If the windshield glass other than the glass specially designed for EyeSight is used, the visibility of the camera is blocked or the distortion of the glass prevents the correct measurement of the object, resulting in the EyeSight abnormal operation.)
• For model with EyeSight, if the windshield glass is installed after removal or replaced, always perform the "Inspection" and "Adjustment and check" of the stereo camera.
Inspection: <Ref. to ES(diag)-8, INSPECTION, General Description.>
Adjustment and check: <Ref. to ES-13, Camera Adjustment, Inspection.>
• For model with EyeSight, if the damage is found in the glass repair prohibited area, always replace the glass. Damage in the prohibited area can affect the recognition of the stereo camera even if it is repaired, and thereby EyeSight function may not operate properly.

1. USING WINDSHIELD GLASS KNIFE

1) Disconnect the ground cable from battery. (Models with wiper deicer) <Ref. to NT-6, BATTERY, NOTE, Note.>

NOTE:
For model with battery sensor, disconnect the ground terminal from battery sensor.
2) Remove the trim panel - front pillar UPR. <Ref. to EI-88, REMOVAL, Upper Inner Trim.>
3) Remove the cowl panel assembly. <Ref. to EI-45, REMOVAL, Cowl Panel.>
4) Disconnect the wiper deicer connector. (Models with wiper deicer)
5) Remove the stereo camera cover assembly and stereo camera assembly. (Models with EyeSight) <Ref. to ES-8, REMOVAL, Stereo Camera.>
6) Remove the molding - front window from the glass - front window, and attach protective tape on the body side of the circumference of the glass - front window.

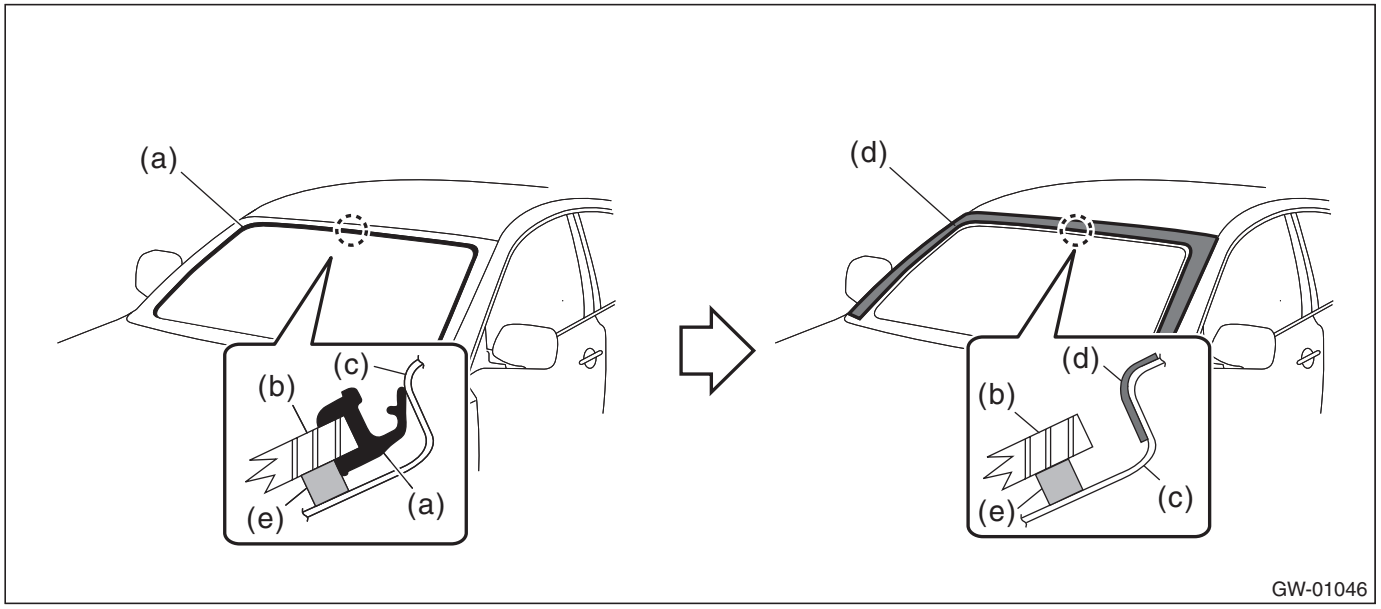

(a) Molding - front window
(b) Glass - front window
(c) Body panel
(d) Protective tape
(e) Adhesive

7) Remove the glass - front window.
(1) Apply sufficient amount of soapy water to the adhesive part and insert the windshield glass knife.
(2) While holding the edges of the knife and the glass - front window at a right angle, move the windshield glass knife parallel to the edge of the glass - front window, and cut the adhesive along the surface and the edge of the glass - front window.

CAUTION:
• Cutting of adhesive part should be started from an area with wider gap between the glass - front window and the body.
• Never twist the windshield glass knife.

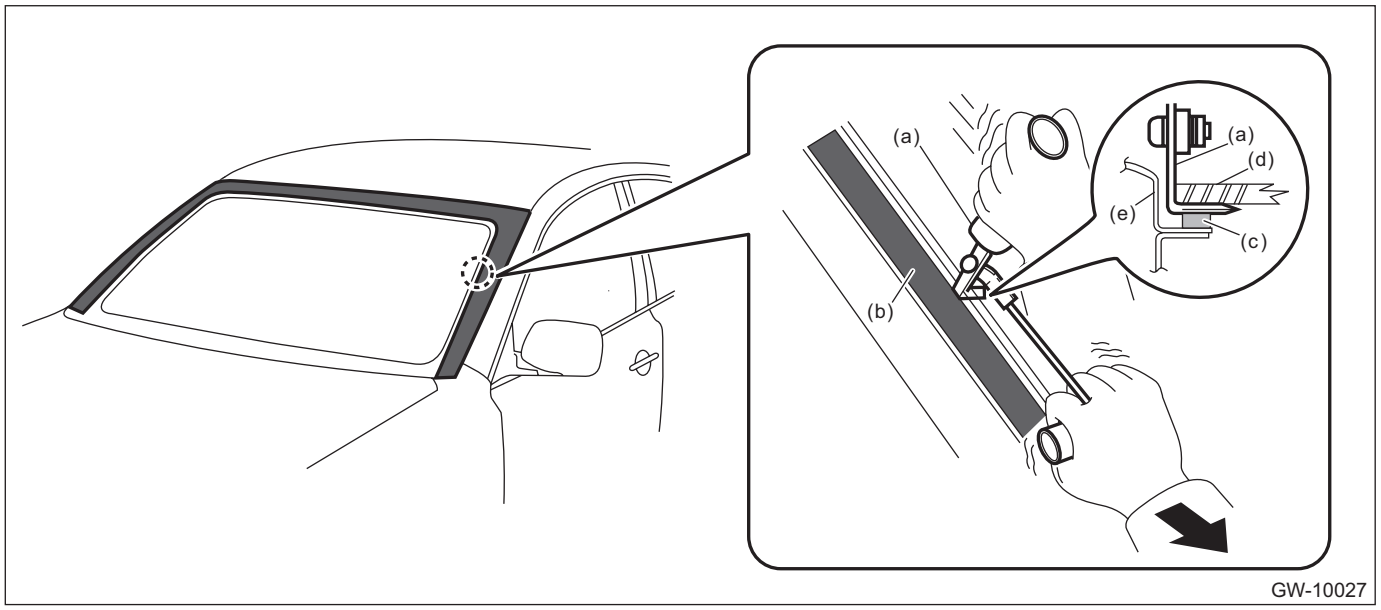

(a) Windshield glass knife
(b) Protective tape
(c) Adhesive
(d) Glass - front window
(e) Body panel

(3) Disconnect the locating pin - front window, and remove the glass - front window.

NOTE:
The locating pin - front window are bonded to the corners of the glass - front window. Use piano wire to disconnect the pins.

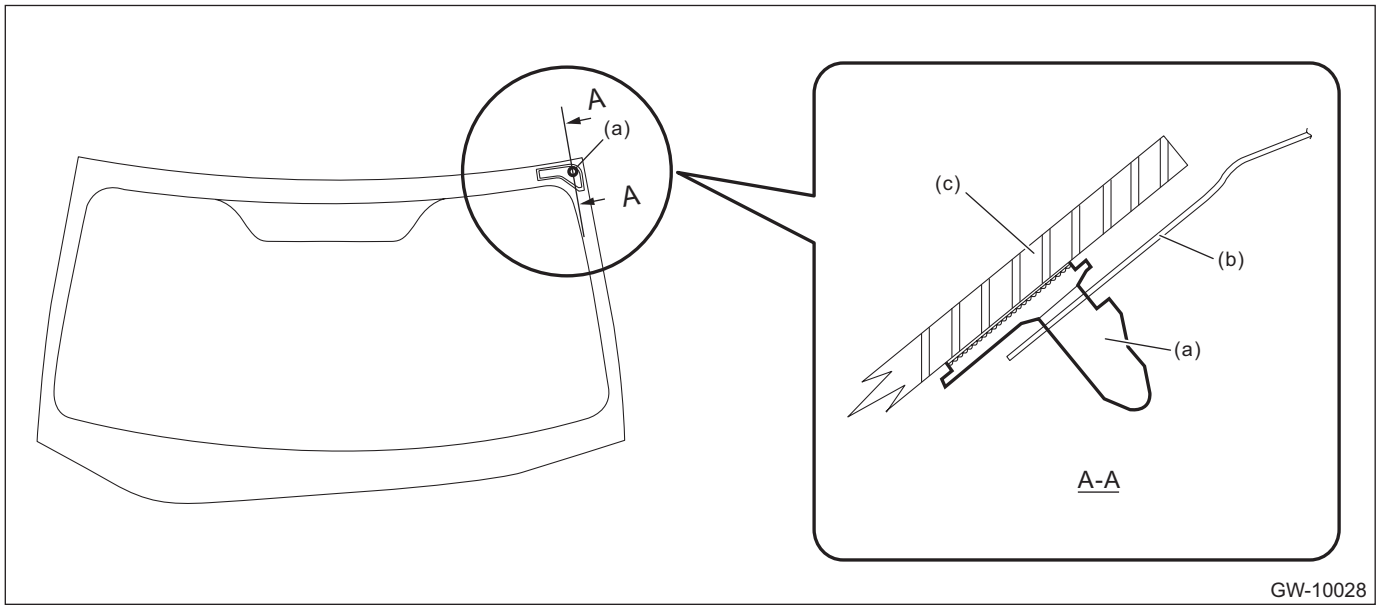

(a) Locating pin - front window
(b) Body panel
(c) Glass - front window

2. USING PIANO WIRE

CAUTION:
- **Do not tightly pull the piano wire against the glass - front window edge.**
- **Apply protective tape, etc, and be careful that the inner and outer components of the vehicle are not damaged.**
- **Do not cross piano wires. Otherwise they may be cut.**

1) Disconnect the ground cable from battery. (Models with wiper deicer) <Ref. to NT-6, BATTERY, NOTE, Note.>

NOTE:
For model with battery sensor, disconnect the ground terminal from battery sensor.

2) Remove the trim panel - front pillar UPR. <Ref. to EI-88, REMOVAL, Upper Inner Trim.>
3) Remove the cowl panel assembly. <Ref. to EI-45, REMOVAL, Cowl Panel.>
4) Disconnect the wiper deicer connector. (Models with wiper deicer)
5) Remove the stereo camera cover assembly and stereo camera assembly. (Models with EyeSight) <Ref. to ES-8, REMOVAL, Stereo Camera.>
6) Remove the molding - front window from the glass - front window, and attach protective tape on the body side of the circumference of the glass - front window.

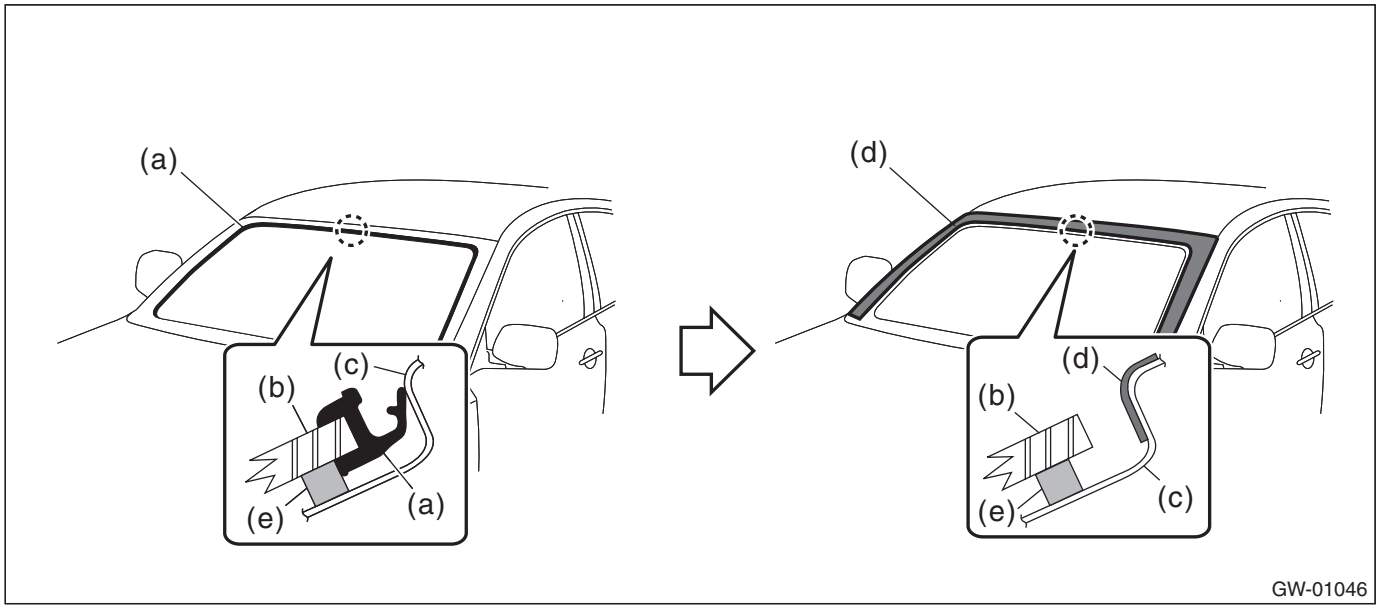

(a) Molding - front window
(b) Glass - front window
(c) Body panel
(d) Protective tape
(e) Adhesive

7) Remove the glass - front window.
(1) Using a drill, make a hole in the adhesive part.
(2) Pass the piano wire through the hole, and pull the wire ends alternately to cut off the adhesive part and the locating pin - front window.

CAUTION:
Attach a piece of wood to both piano wire ends.

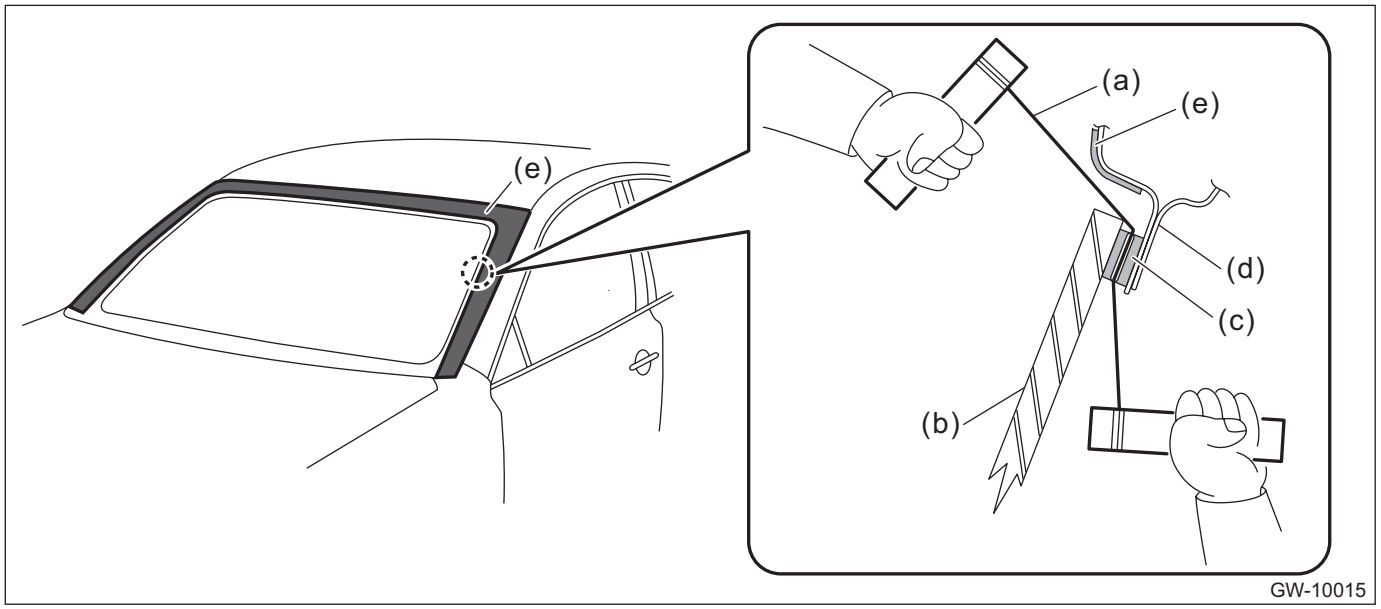

(a) Piano wire
(b) Glass - front window
(c) Adhesive
(d) Body panel
(e) Protective tape

B: INSTALLATION

CAUTION:
• For model with EyeSight, always use Subaru genuine windshield glass specially designed for EyeSight. (If the windshield glass other than the glass specially designed for EyeSight is used, the visibility of the camera is blocked or the distortion of the glass prevents the correct measurement of the object, resulting in the EyeSight abnormal operation.)
• For model with EyeSight, if the windshield glass is installed after removal or replaced, always perform the "Inspection" and "Adjustment and check" of the stereo camera.
Inspection: <Ref. to ES(diag)-8, INSPECTION, General Description.>
Adjustment and check: <Ref. to ES-13, Camera Adjustment, Inspection.>
• For model with EyeSight, if the damage is found in the glass repair prohibited area, always replace the glass. Damage in the prohibited area can affect the recognition of the stereo camera even if it is repaired, and thereby EyeSight function may not operate properly.

1) Fabricate the cartridge nozzle tip as shown and set the sealant gun with the adhesive.

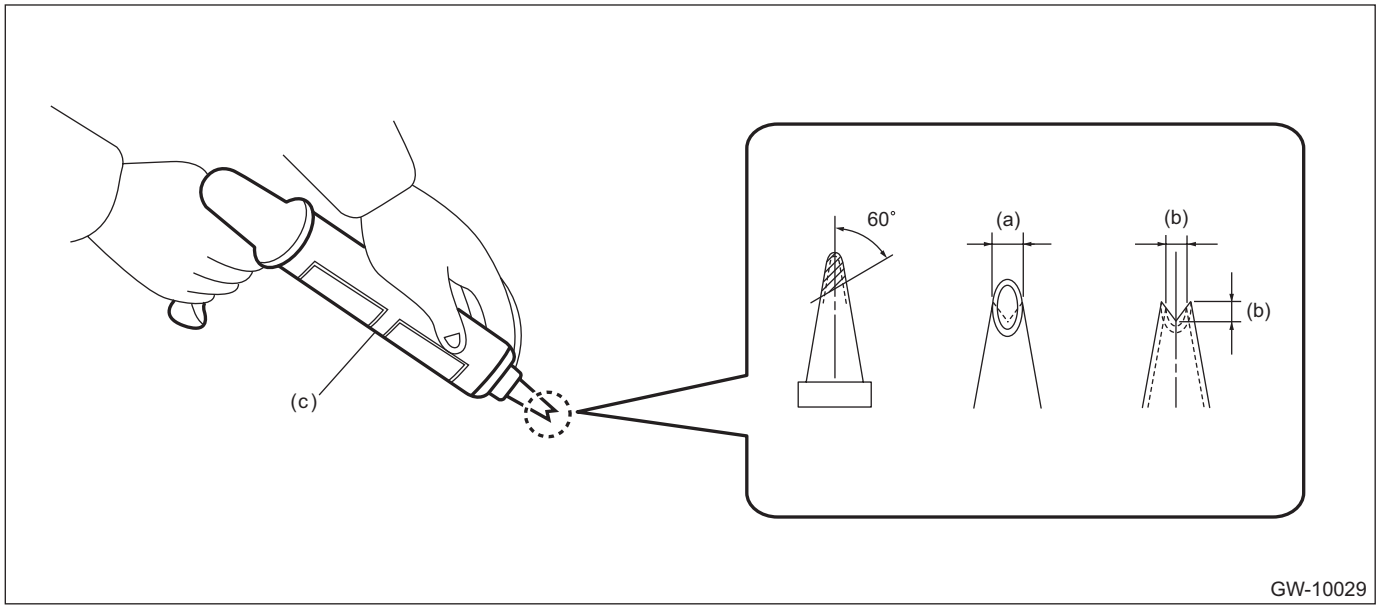

(a) 10 mm (0.39 in) (b) 8 mm (0.31 in) (c) Sealant gun

2) Remove the adhesive layer on the body using cutter knife to obtain smooth face of 2 mm (0.08 in) thick.

CAUTION:
- **Be careful not to damage the body and paint surface.**
- **Be sure to keep some amount of old adhesive.**

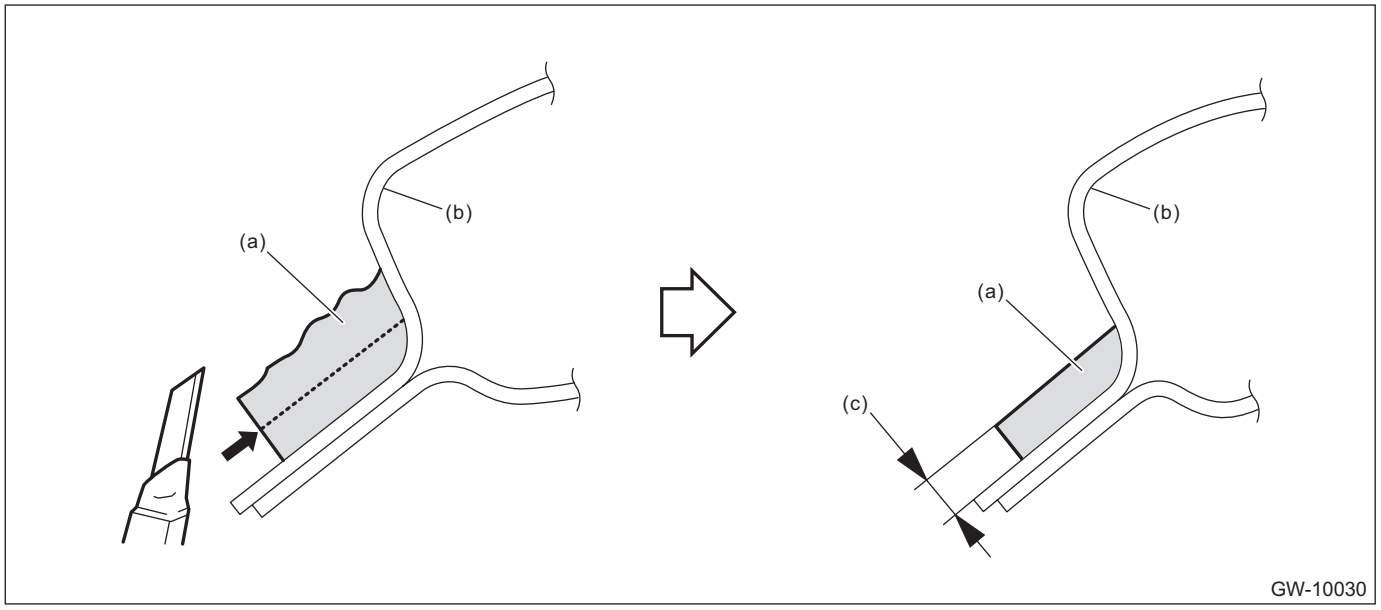

(a) Adhesive (b) Body panel (c) 2 mm (0.08 in)

3) Clean the glass - front window and the body with alcohol or appropriate cleaning solvent to completely eliminate cutting powder, dust and dirt.

4) Attach the dam rubber - front to the glass - front window.

CAUTION:
• Attach the driver's side dam rubber - front lower to the constant distance of 19.1 mm (0.75 in) from the glass end.
• Attach the passenger's side dam rubber - front lower straight between the dam rubber set marks while aligning with the dam rubber set mark.

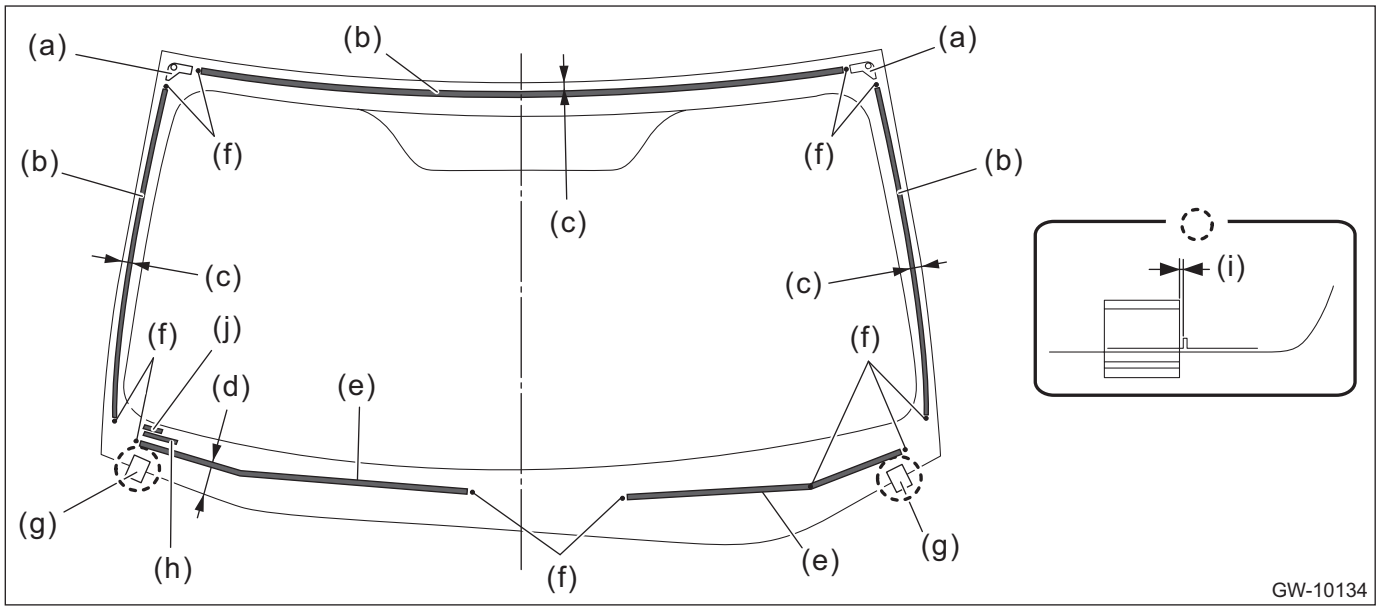

(a)	Locating pin - front window	(e)	Dam rubber - front lower	(i)	0+ 5 mm (0 + 0.2 in)
(b)	Dam rubber - front upper	(f)	Dam rubber set mark	(j)	Seal - lower VIN
(c)	16 mm (0.63 in)	(g)	Seal - lower		
(d)	19.1 mm (0.75 in)	(h)	VIN plate confirmation window		

5) Attach the molding - front window to the glass - front window.

CAUTION:
Be careful to attach the molding - front window so that the molding has no loose or undulating part.

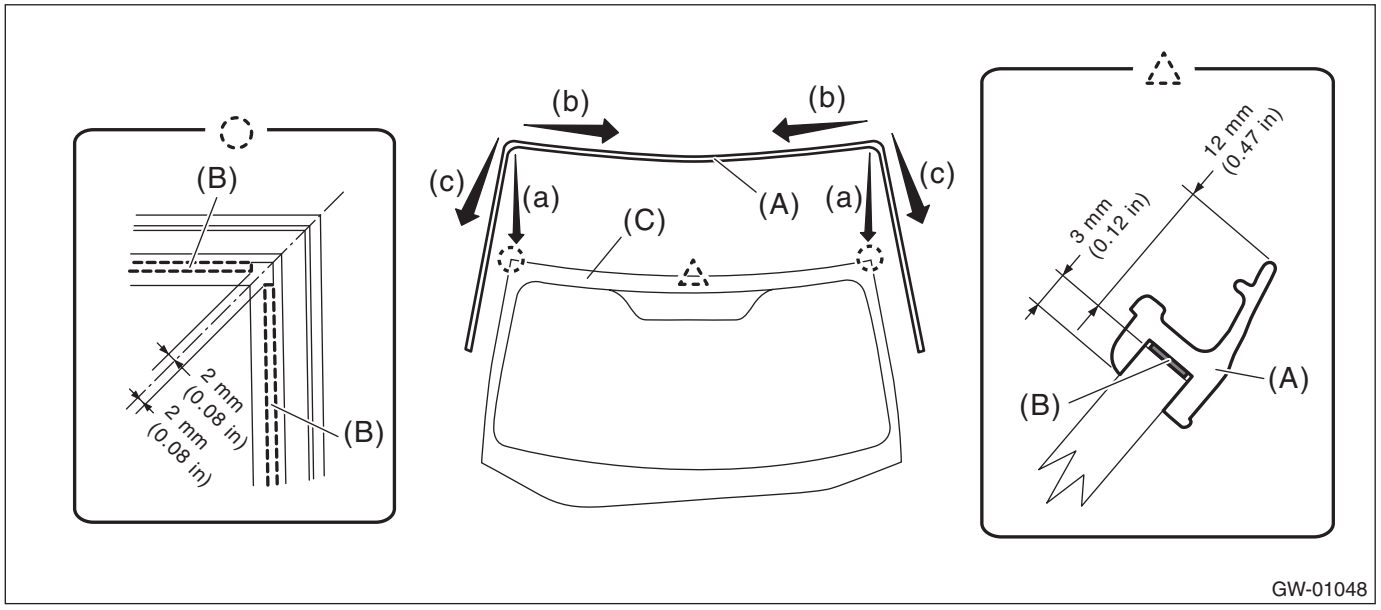

(1) Align the molding - front window (A) to the upper ends (a) of the glass - front window (C).
(2) Install the molding - front window from both corners of the upper edge toward the center (b).
(3) Install the molding - front window from both corners of the upper edge toward the lower side (c).

(4) Firmly apply the double sided tape (B) of the molding - front window evenly to the surface of the glass - front window.

6) Attach the seal - upper to the molding - front window.

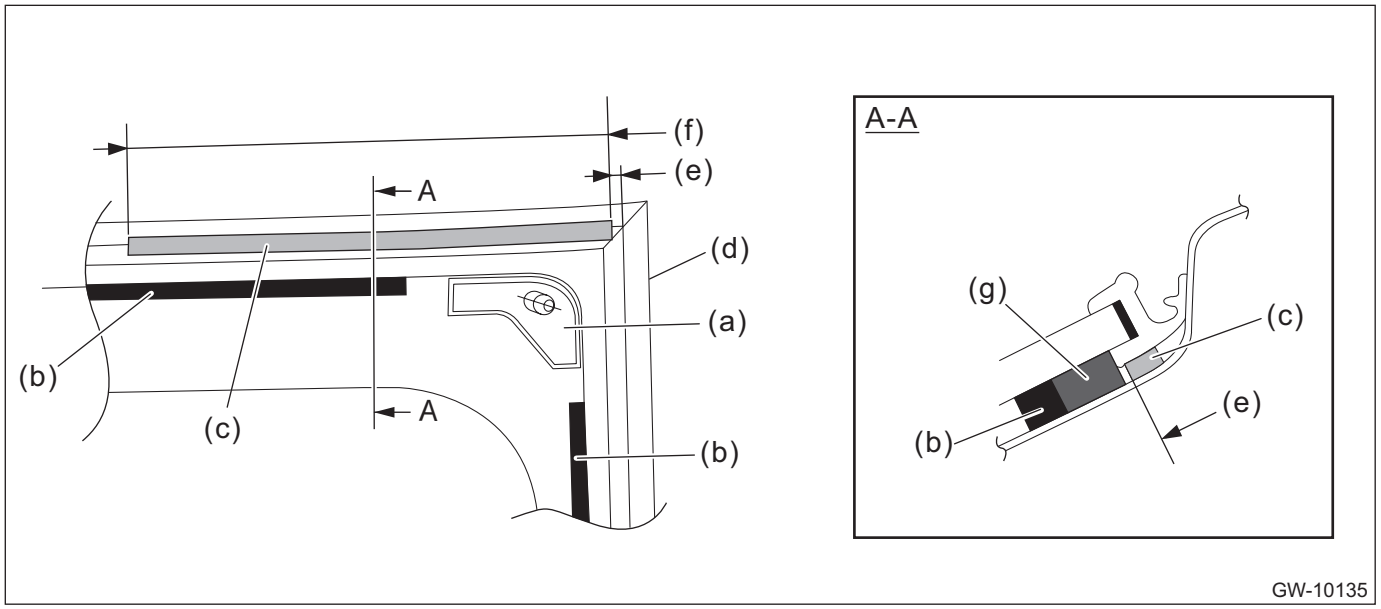

(a)	Locating pin - front window	(d)	Molding - front window	(g)	Adhesive
(b)	Dam rubber - front upper	(e)	0+ 3 mm (0 + 0.12 in)		
(c)	Seal - upper	(f)	165 mm (6.5 in)		

7) Install the glass - front window.

(1) Apply the primer to the adhesive surface of glass - front window side and body side using sponge.

CAUTION:
Do not apply primer to adhesive remaining on the body side.

Preparation items:
Glass primer: Dow Automotive ESSEX U-401, U-402 or equivalent
Painted surface primer: Dow Automotive ESSEX U-413 or equivalent

NOTE:
- Primer once attached to the painted surface of the body and internal trim is hard to wipe off. Mask the circumference of such area.
- Let primer dry for about ten minutes before installing the glass - front window.
- Do not touch the surface coated with primer.

(2) Apply adhesive to the end back surface of the glass - front window.

Preparation items:
Adhesive: Dow Automotive ESSEX U-400HV or equivalent

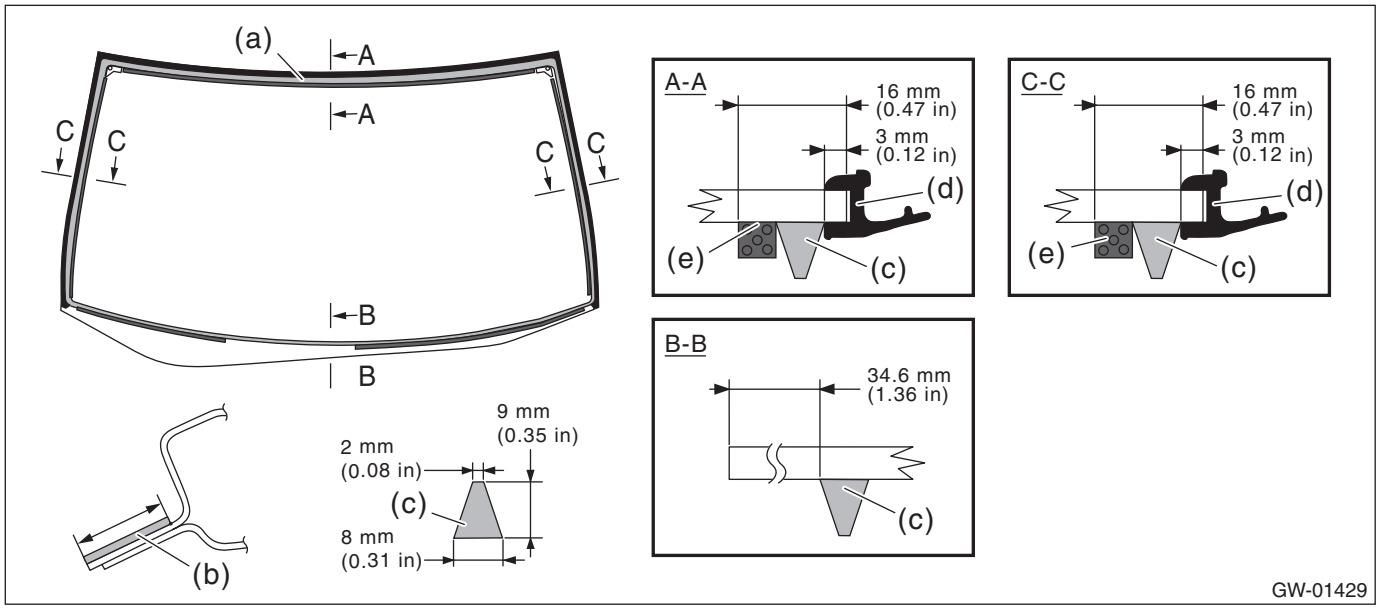

(a) Application of primer (glass side)
(b) Application of primer (body side)
(c) Adhesive
(d) Molding - front window
(e) Dam rubber - front

(3) Fit the locating pins - front window to the vehicle body using suction rubber cups to install the windshield glass.

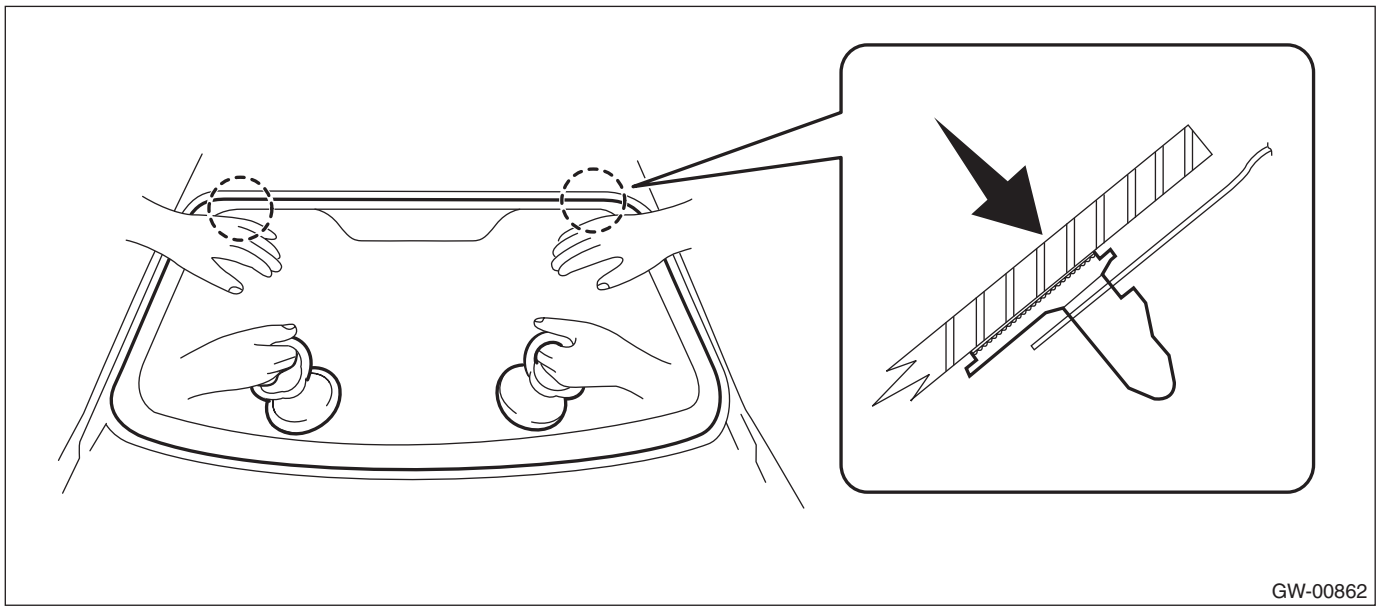

(4) Lightly press the entire perimeter of the glass - front window for tight fit.
(5) Make flush the adhesive surface jutted out using spatula.

8) After completion of all work, allow the vehicle to stand for about 24 hours.

NOTE:
• When opening/closing the door after the glass - front window was bonded, always lower the glass assembly - door first, and then open/close it carefully.
• Move the vehicle slowly.
• For minimum drying time and vehicle standing time before driving after bonding, follow instructions or instruction manual from the adhesive manufacturer.

9) Connect the wiper deicer connector. (Models with wiper deicer)
10) Install the cowl panel assembly. <Ref. to EI-47, INSTALLATION, Cowl Panel.>
11) Install the stereo camera cover assembly and stereo camera assembly. (Models with EyeSight) <Ref. to ES-11, INSTALLATION, Stereo Camera.>
12) Install the trim panel - front pillar UPR. <Ref. to EI-90, INSTALLATION, Upper Inner Trim.>
13) Connect the battery ground terminal. (Models with wiper deicer) <Ref. to NT-6, BATTERY, NOTE, Note.>
14) After curing of adhesive, pour the water on external surface of vehicle to check that there are no water leaks.

NOTE:
When a vehicle is returned to the user, tell him or her that the vehicle should not be subjected to heavy impact for at least three days.

14.Rear Window Glass

A: REMOVAL

1) Disconnect the ground cable from battery. <Ref. to NT-6, BATTERY, NOTE, Note.>

NOTE:
For model with battery sensor, disconnect the ground terminal from battery sensor.
2) Disconnect the rear defogger connector.
3) Remove the glass - rear window in the same procedure as for the glass - front window. <Ref. to GW-39, REMOVAL, Windshield Glass.>

B: INSTALLATION

1) Fabricate the cartridge nozzle tip as shown and set the sealant gun with the adhesive.

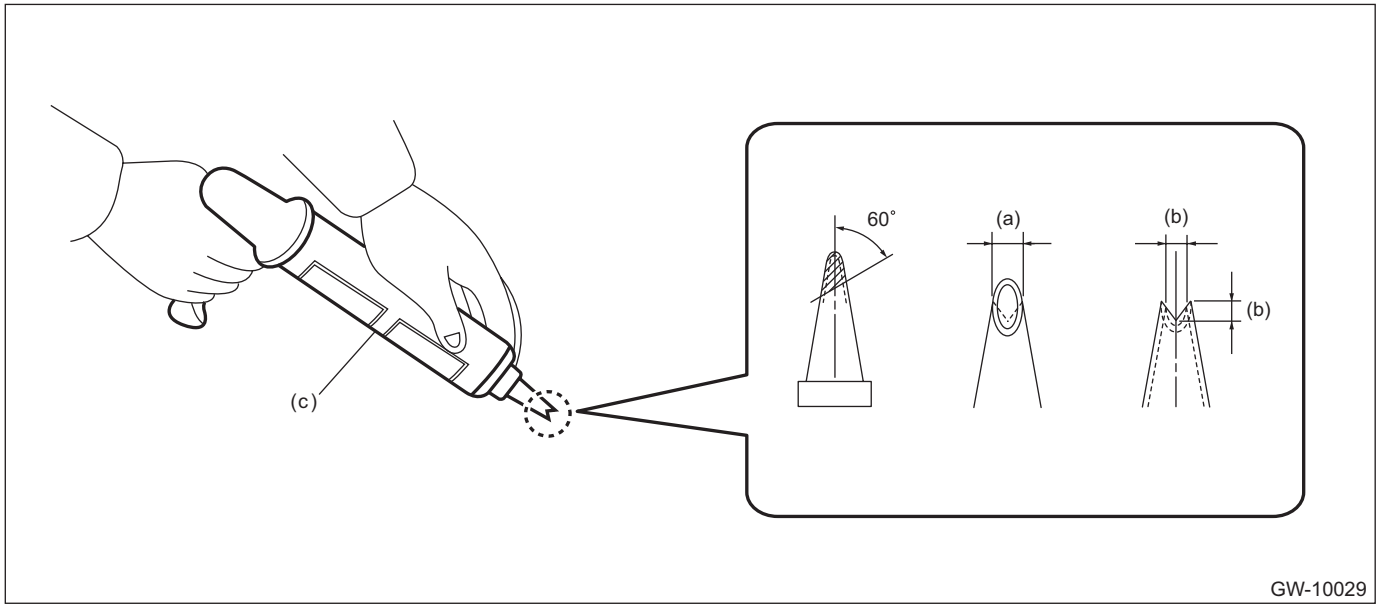

(a) 10 mm (0.39 in) (b) 8 mm (0.31 in) (c) Sealant gun

2) Smoothen and clean the adhesive surfaces of the glass - rear window and body using the same procedures as for the glass - front window. <Ref. to GW-42, INSTALLATION, Windshield Glass.>

3) Attach the dam rubber - rear to the glass - rear window.

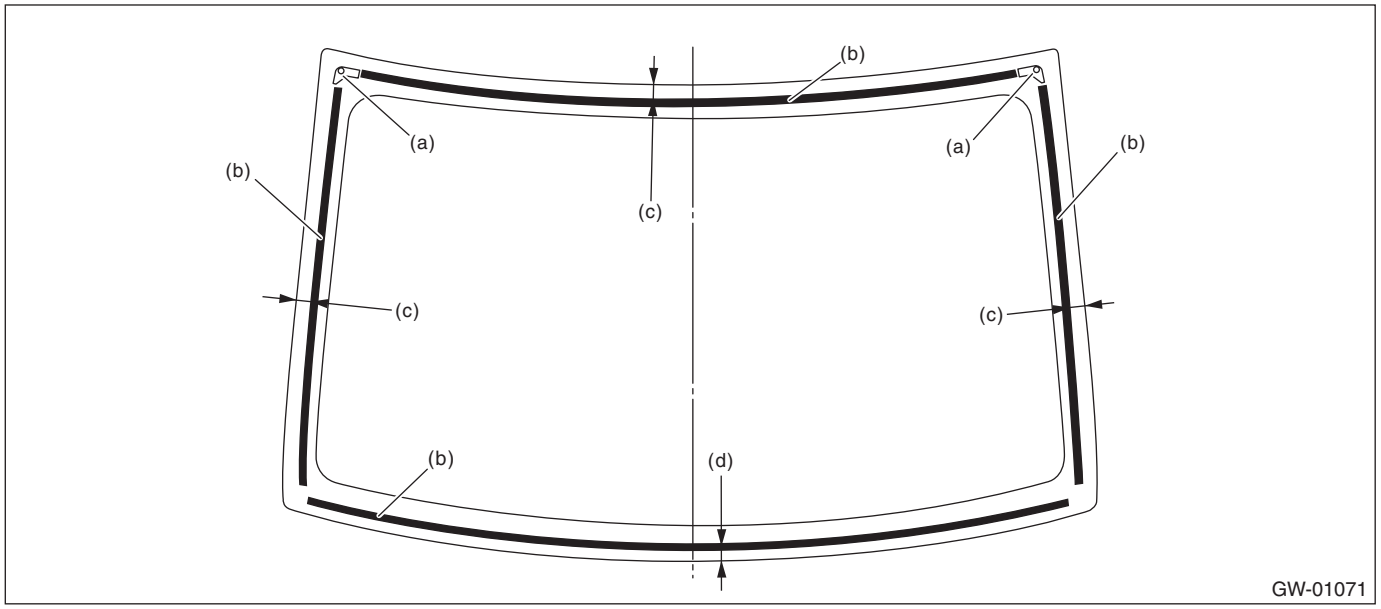

(a) Locating pin - rear window
(b) Dam rubber - rear
(c) 21.9 mm (0.86 in)
(d) 10.7 mm (0.42 in)

4) Attach the molding - rear window to the glass - rear window.

CAUTION:
Be careful to attach the molding - rear window so that the molding has no loose or undulating part.

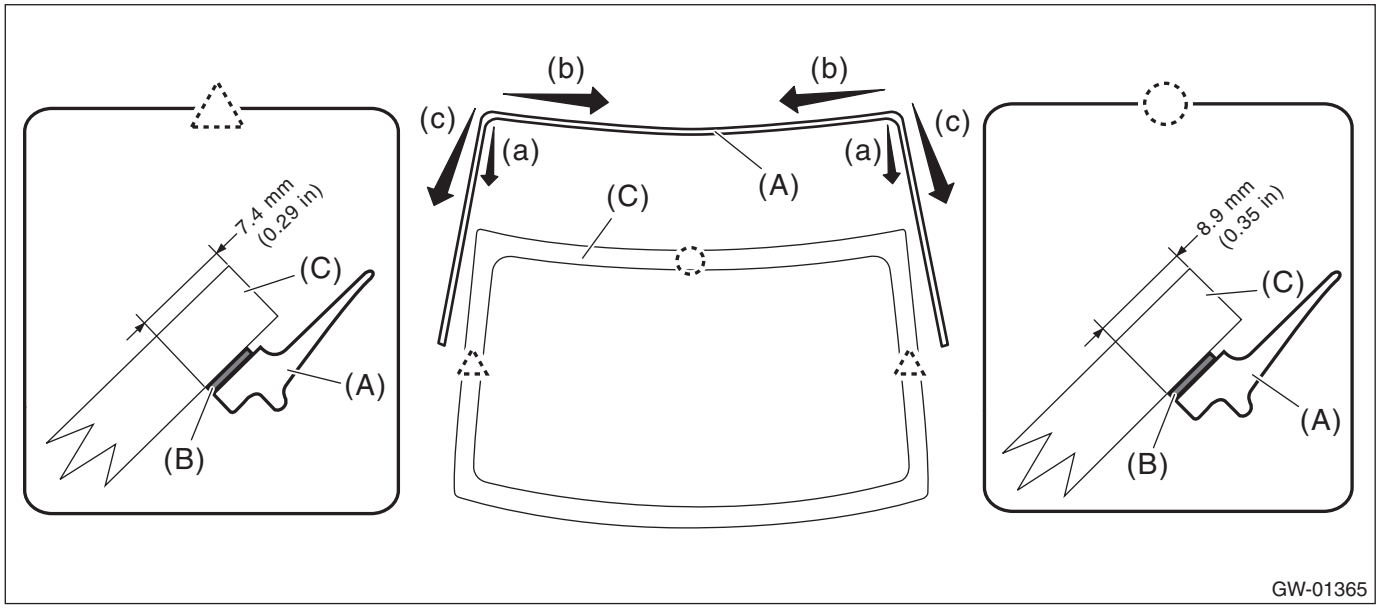

(1) Align the molding - rear window (A) to the upper ends (a) of the glass - rear window (C).
(2) Install the molding - rear window from both corners of the upper edge toward the center (b).
(3) Install the molding - rear window from both corners of the upper edge toward the lower side (c).
(4) Firmly apply the double sided tape (B) of the molding - rear window evenly to the surface of the glass - rear window.

5) Install the glass - rear window in the same procedure as for the glass - front window. <Ref. to GW-42, INSTALLATION, Windshield Glass.>

(1) Apply the primer to the adhesive surface of glass - rear window side and body side using sponge.

CAUTION:
Do not apply primer to adhesive remaining on the body side.

(2) Apply adhesive to the end back surface of the glass - rear window.

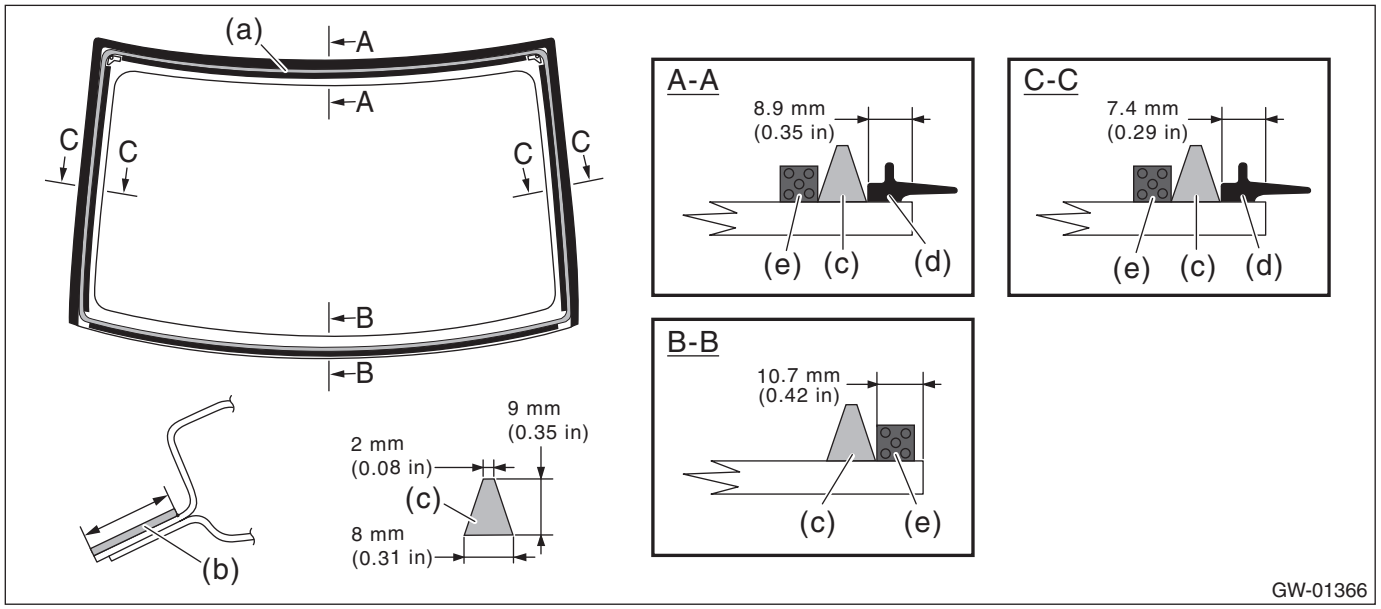

(a) Application of primer (glass side)
(b) Application of primer (body side)
(c) Adhesive
(d) Molding - rear window
(e) Dam rubber - rear

(3) Insert the locating pins - rear window into the rear panel holes, and install the glass - rear window.
(4) Lightly press the entire perimeter of the glass - rear window for tight fit.
(5) Make flush the adhesive surface jutted out using spatula.

6) After completion of all work, allow the vehicle to stand for about 24 hours.

NOTE:
• When opening/closing the door after the glass - rear window was bonded, always lower the glass assembly - door first, and then open/close it carefully.
• Move the vehicle slowly.
• For minimum drying time and vehicle standing time before driving after bonding, follow instructions or instruction manual from the adhesive manufacturer.

7) Connect the rear defogger connector.
8) Connect the battery ground terminal. <Ref. to NT-6, BATTERY, NOTE, Note.>
9) After curing of adhesive, pour the water on external surface of vehicle to check that there are no water leaks.

NOTE:
When a vehicle is returned to the user, tell him or her that the vehicle should not be subjected to heavy impact for at least three days.

15.Rear Window Defogger System

A: WIRING DIAGRAM

Refer to “Rear Defogger System” in the wiring diagram. <Ref. to WI-316, WIRING DIAGRAM, Rear Defogger System.>

B: INSPECTION

1. CHECK SYSTEM

Symptoms	Inspection order
Rear window defogger does not operate.	1. Check the fuse. 2. Check the rear defogger relay. 3. Check the rear window defogger switch. 4. Check the heat wire. 5. Check the wiring harness. 6. Check body integrated unit.

NOTE:
Rear window defogger system can be customized using the Subaru Select Monitor, when the customize setting {Auto A/C ECU Setting} of the body integrated unit is set to {support}.

System name	Initial setting	Customize setting
Rear defogger operation mode	OFF after 15 min.	Repeat 15 min. operation and 2 min. stop.

2. CHECK WITH SUBARU SELECT MONITOR

CAUTION:
Before performing inspection, check whether the rear defogger operation mode setting is either in initial setting or customize setting.

1) Check the input signal when the rear window defogger switch is operated using Subaru Select Monitor.
   (1) Connect the Subaru Select Monitor.

NOTE:
For detailed operation procedures, refer to “Application help”.

   (2) Turn the ignition switch to ON.
   (3) On «Start» display, select «Diagnosis».
   (4) On «Vehicle selection» display, input the target vehicle information and select «Confirmed».
   (5) On «Main Menu» display, select «Each System».
   (6) On «Select System» display, select «Body Control» and then select «Enter».
   (7) On «Select Function» display, select «Data Monitor».
   (8) From the data monitor item list, select «Auto A/C Setting».
   (9) Check the vehicle equipment and the settings of body integrated unit.
   If correct, go to (10).
   If not correct, go to (13).
   (10) From the data monitor item list, select «Rr Defogger output».
   (11) Check the displayed data (ON/OFF) by operating the rear window defogger switch.
   (12) On «Select Function» display, select «Customize».
   (13) From the Customize item list, select «Auto A/C Setting» and match the auto A/C ECM setting to the actual vehicle equipment.

2) Check the operation with rear window defogger switch ON.
• When customize setting is set as “Continuous”, it is normal if the 15-minute operation and 2-minute stop repeats.
• When customize setting is “Normal”, it is normal if the operation lasts for 15 minutes and then turns OFF.
3) When the operation in 2) above fails, replace the body integrated unit.

3. HEAT WIRE INSPECTION

CAUTION:
Use a dry soft cloth to wipe off dirt on the glass along the heat wires with care not to damage the heat wires.

1) Prepare the following checking items.
- Liquid crystal thermograph sheet (Approximate Size: 300 × 300 mm (11.8 × 11.8 in) and thermal temperature: 35 — 40°C (95 — 104°F))
- Aluminum foil

2) Turn the ignition switch to ON.
3) Turn the defogger switch to ON.
4) Push the liquid crystal thermograph sheet from the outside of the glass - rear window.

NOTE:
Use the liquid crystal thermograph sheet every range it is separated with the separate line.

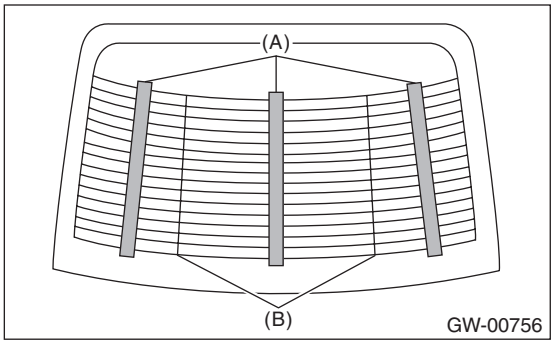

(A) Liquid crystal thermograph sheet
(B) Separate line

5) Determine the faulty heat wire by checking the color of the liquid crystal thermograph sheet.

Liquid crystal thermograph sheet	Criteria
Change occurred (red → blue)	Normal
No change (black)	Open

NOTE:
- Check from the inside of the glass - rear window if the liquid crystal thermograph sheet does not change.
- The time for the color change may differ depends on the surface temperature of the glass.

6) Wrap a piece of aluminum foil around the tip of tester probe and press it against the heat wire with your finger.

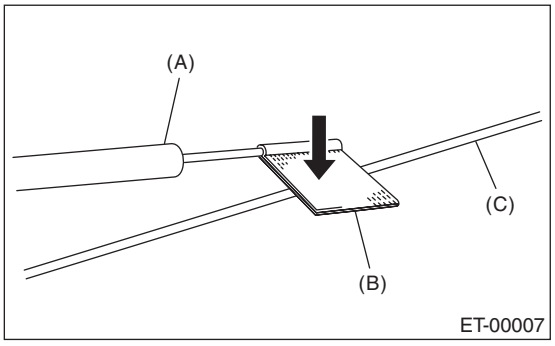

(A) Tester probe
(B) Aluminum foil
(C) Heat wire

7) To both ends of the section that has been found to include an open in the step 5), apply the tester positive (+) probe and the negative (–) probe.

8) Move the tester probe on the negative (–) side slowly along the heat wire. If voltage changes from zero while moving the tester probe, heat wire is open at the voltage change point.

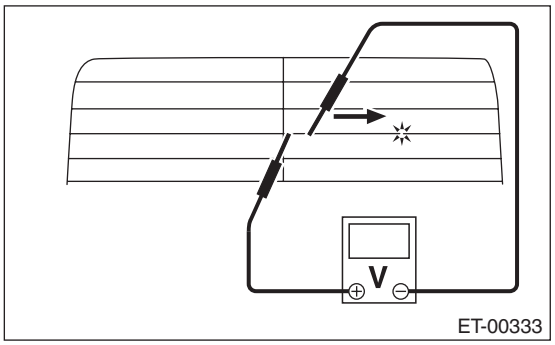

9) Repair the heat wire that determines the place of the open circuit. <Ref. to GW-53, REPAIR, Rear Window Defogger System.>

C: REPAIR

1) Clean the broken portion with alcohol or appropriate cleaning solvent.
2) Mask both side of wire with masking tape.
3) Apply the conductive silver composition to the broken portion.

Preparation items:
Conductive silver composition: Permatex QUICK GRID

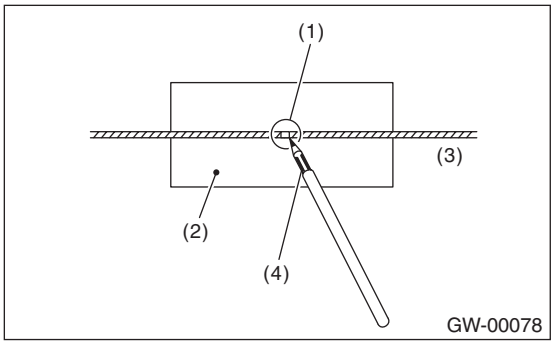

(1) Broken portion
(2) Masking tape
(3) Broken wire
(4) Conductive silver composition

4) Dry using a dryer after applying the composition.
5) After repair, check the wire.

16.Wiper Deicer System

A: WIRING DIAGRAM

Refer to “Wiper Deicer System” in the wiring diagram. <Ref. to WI-376, Wiper Deicer System.>

B: INSPECTION

1. CHECK SYSTEM

NOTE:
- The wiper deicer does not operate when the ambient temperature becomes 5°C (41°F) or more.
- The wiper deicer operates with the rear window defogger at the same time.
- It is possible to perform a forced operation if you keep holding the rear window defogger switch for 3 seconds or more.

Symptoms	Inspection order
Wiper deicer does not operate.	1. Check the fuse. 2. Check the wiper deicer relay. 3. Check the wiper deicer switch. 4. Check the heat wire. 5. Check the wiring harness. 6. Check body integrated unit.

NOTE:
- Wiper deicer system can be customized using the Subaru Select Monitor, when the customize setting {Auto A/C Setting} of the body integrated unit is set to {support}.
- Set the system using the rear defogger operation mode, and setting will be the same as rear defogger system setting.

System name	Initial setting	Customize setting
Rear defogger operation mode	OFF after 15 min.	Continuous operation*

*: When one of the following conditions occurs, continuous operation is suspended and turned off after 15 minutes.
- Ambient temperature at 5°C (41°F) or more continues for 10 seconds.
- Malfunction occurs on ambient sensor.
- Vehicle speed of 15 km/h (9 MPH) or less continues 15 minutes (OFF when conditions are met)
- Malfunction occurs in CAN communication.
- Battery voltage remains at 10 V or less for 30 seconds.
- SI-DRIVE [I] mode driving continues for 10 seconds.

2. CHECK WITH SUBARU SELECT MONITOR

CAUTION:
Before performing the inspection, check the following settings.
- **Wiper deicer setting → "support". If "no support", set to "support" using customize setting.**
- **Rear defogger operation mode setting → initial setting or customize setting.**

1) Check the input signal when the rear window defogger switch is operated using Subaru Select Monitor.
   (1) Connect the Subaru Select Monitor to data link connector.

NOTE:
For detailed operation procedures, refer to "Application help".
   (2) Turn the ignition switch to ON.
   (3) On «Start» display, select «Diagnosis».
   (4) On «Vehicle selection» display, input the target vehicle information and select «Confirmed».
   (5) On «Main Menu» display, select «Each System».
   (6) On «Select System» display, select «Body Control» and then select «Enter».
   (7) On «Select Function» display, select «Data Monitor».
   (8) From the data monitor item list, select «Auto A/C Setting».
   (9) Check the vehicle equipment and the settings of body integrated unit.
   If correct, go to (10).
   If not correct, go to (13).
   (10) From the data monitor item list, select «Rr Defogger output».
   (11) Check the displayed data (ON/OFF) by operating the rear window defogger switch.
   (12) On «Select Function» display, select «Customize».
   (13) From the Customize item list, select «Auto A/C Setting» and match the auto A/C ECM setting to the actual vehicle equipment.

2) Check the operation with rear window defogger switch ON.
- When customize setting is set as "Continuous", it is normal if the 15-minute operation and 2-minute stop repeats.
- When customize setting is "Normal", it is normal if the operation lasts for 15 minutes and then turns OFF.

3) When the operation in 2) above fails, replace the body integrated unit.

3. HEAT WIRE INSPECTION

Refer to "HEAT WIRE INSPECTION" of "Rear Window Defogger System". <Ref. to GW-52, HEAT WIRE INSPECTION, INSPECTION, Rear Window Defogger System.>

NOTE:
Heat wire inspection needs removing/installing procedure of instrument panel assembly.

C: REPAIR

Refer to "REPAIR" of "Rear Window Defogger System". <Ref. to GW-53, REPAIR, Rear Window Defogger System.>

NOTE:
Heat wire repair needs removing/installing procedure of instrument panel assembly.

BODY STRUCTURE

BS

Page
1. General Description 2

1. General Description

A: SPECIFICATION

Refer to “IMPREZA Body Repair Manual” for general description of body structure, reference points and reference dimensions.

INSTRUMENTATION/DRIVER INFO

IDI

		Page
1.	General Description	2
2.	Relay and Fuse	5
3.	Combination Meter System	6
4.	Multi-function Display (MFD) System	10
5.	Combination Meter	13
6.	Speedometer	16
7.	Tachometer	17
8.	Fuel Gauge	18
9.	Engine Coolant Temperature Gauge	19
10.	Multi-function Display (MFD)	20
11.	Steering Switch	24

1. General Description

A: SPECIFICATION

1. COMBINATION METER ASSEMBLY

NOTE:
Specifications of the combination meter vary depending on the market and the grade.

Meter, display	Operation method, display method	Drive control	When checking the indicator needle operation/needle reading operation
Speedometer	Stepping motor type	Combination meter	—
Tachometer			
Engine coolant temperature gauge			
Fuel gauge			
ABS warning light	LED	Combination meter	On/Off
STEERING warning light			
AT oil temperature warning light			
Driver's seat belt warning light			
Door warning light			
Tire pressure warning light			
AWD warning light			
Hill start assist OFF indicator light / hill start assist warning light			
Hill hold ON indicator light			
VDC warning light / VDC operation indicator light			
VDC OFF indicator light			
VDC traction mode indicator light			
High beam indicator light			
Front fog light indicator light			
Lighting indicator light			
Malfunction indicator light			
Airbag warning light			
REV indicator light			
LED headlight warning light			
Lane departure warning OFF indicator light			
Pre-collision brake OFF indicator light			
SRF OFF indicator light			
Electronic parking brake operation indicator light			
Meter illumination back light			Light ON
TFT back-up light			
Fuel level warning light			On/Off (area near the E mark is illuminated)

Meter, display	Operation method, display method	Drive control	When checking the indicator needle operation/needle reading operation
Oil pressure warning light	LED	Oil pressure switch	Turns on or off according to module control
Charge warning light		Generator	
Rear differential oil temperature warning light		Rear differential oil temperature switch	
Turn signal indicator light		Turn signal and hazard unit	
Security indicator light		Body integrated unit	
Auto leveler warning light		Auto headlight beam leveler CM	
Parking brake/brake fluid level warning light/vacuum pump warning light/electronic parking brake warning light		Combination meter/ brake fluid level switch/ECM/ VDCCM&H/U	On/Turns on or off according to module control
ODO indicator	TFT	Combination meter	—
Trip indicator			
ECO gauge			
Select lever / shift position indicator			
SI-DRIVE mode indicator			
Information (intervention) display & indicator			
DCCD mode indicator			
Cruise control system indicator • Constant speed cruise • SET • Set speed			
EyeSight system indicator • Adaptive cruise • Constant speed cruise • SET • READY • Preceding vehicle • Following distance setting • Set speed • Traffic lane • EyeSight warning • EyeSight temporary stop • OFF • HOLD • Lane keep • Signal			

2. MULTI-FUNCTION DISPLAY

NOTE:
Specifications of the multi-function display vary depending on the market and the grade.

Display	Display method
Self-check screen, triple meter screen, setting screen, boost/accelerator opening angle screen, preventive safety screen, diagnostic mode screen, fuel economy screen, economy gauge screen, clock/ambient temperature screen, information screen	TFT
Air conditioner display	LCD
Passenger's airbag ON indicator light	LED
Passenger's airbag OFF indicator light	
Passenger's seat belt warning light	

B: LOCATION

Refer to “LOCATION” of “INSTRUMENTATION/DRIVER INFO (DIAGNOSTICS)” section. <Ref. to IDI(diag)-6, LOCATION, Electrical Component Location.>

C: CAUTION

- Before disconnecting connectors of sensors or units, be sure to disconnect the ground cable from battery. When replacing the audio and MFD parts provided with memory functions, record the memory contents before disconnecting the battery ground cable.
- Use gloves to avoid damage to and get fingerprints on the glass surface. Wipe off using a soft cloth, if the part is contaminated.
- When the combination meter assembly has been replaced, be sure to perform the following operations.
  – For models without the keyless access with push button start except for C0, be sure to perform the registration of immobilizer system. For detailed operation procedure, refer to “Type B” described in “REGISTRATION MANUAL FOR IMMOBILIZER”.
  – Be sure to reset the ODO fuel economy value of the multi-function display (MFD). <Ref. to IDI-11, ODO FUEL ECONOMY VALUE RESET, OPERATION, Multi-function Display (MFD) System.>
- Be careful of the following items. Failing to do so may cause the airbag system malfunction.
  – Yellow connectors and harnesses with yellow tapes around them are the connectors and harnesses for the airbag system. When using a tester on these circuits, follow the cautions of “AIRBAG SYSTEM”. <Ref. to AB-9, CAUTION, General Description.>
  – Be careful not to damage the airbag system wiring harness when servicing the electrical parts around the steering column.
- When removing, installing or replacing the VDCCM&H/U, VDCCM&H/U bracket, steering wheel or steering angle sensor (steering roll connector), perform “VSC(VDC) Centering Mode” of the VDC. <Ref. to VDC-17, VDC SENSOR MIDPOINT SETTING MODE, ADJUSTMENT, VDC Control Module and Hydraulic Control Unit (VDCCM&H/U).>

D: PREPARATION TOOL

1. GENERAL TOOL

TOOL NAME	REMARKS
Circuit tester	Used for measuring resistance, voltage and current.

2. Relay and Fuse

A: LOCATION

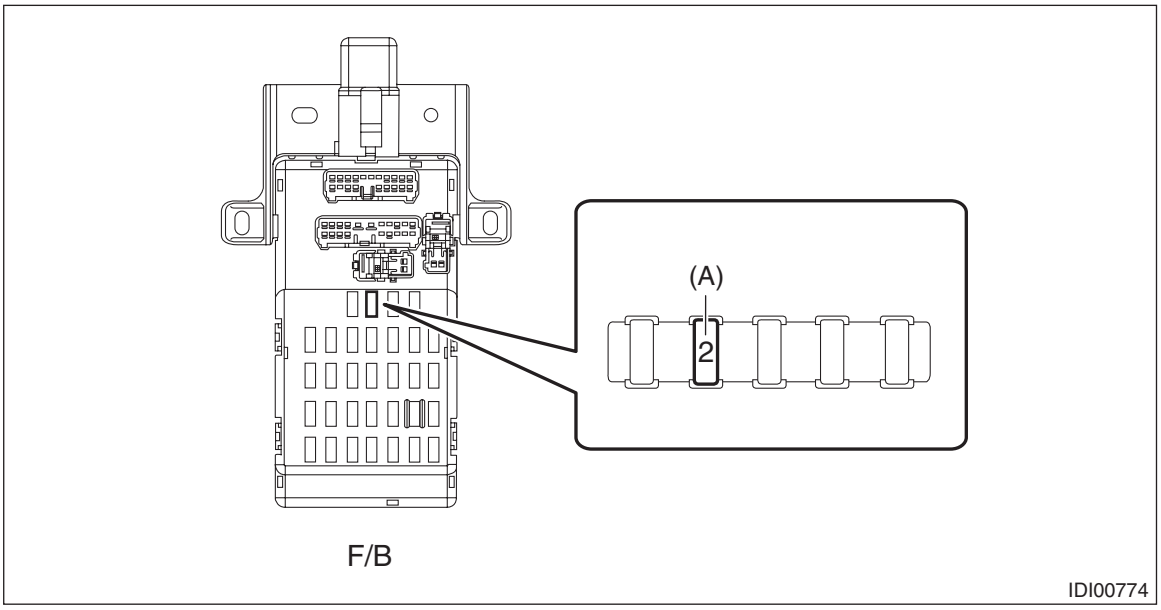

Relay & fuse box	Fuse 7.5 A (combination meter, MFD)	(A)

NOTE:
For other related fuses, refer to the wiring diagram. <Ref. to WI-31, Power Supply Circuit.>

B: INSPECTION

1. CHECK FUSE

1) Remove the fuse and inspect visually.
2) If the fuse is blown out, replace the fuse.

NOTE:
If the fuse is blown again, check the system wiring harness.

3. Combination Meter System

A: WIRING DIAGRAM

Refer to “Combination Meter System” in the wiring diagram. <Ref. to WI-127, WIRING DIAGRAM, Combination Meter System.>

B: ELECTRICAL SPECIFICATION

1. COMBINATION METER ASSEMBLY

Refer to “Control Module I/O Signal” of “INSTRUMENTATION/DRIVER INFO (DIAGNOSTICS)” section. <Ref. to IDI(diag)-7, ELECTRICAL SPECIFICATION, Control Module I/O Signal.>

C: OPERATION

1. SELF-DIAGNOSIS DISPLAY MODE

The self-diagnosis (checking of each meter, warning light, indicator light, illumination, TFT) of combination meter can be performed in the following procedure.
1) Start the self-diagnosis display mode. (There are two methods.)

CAUTION:
Perform the steps described in (1) through (4) within 10 seconds.

- Method with lighting switch

(1)	Within 3 seconds after turning the ignition switch to ON, set the lighting switch to the parking light or headlight position.
(2)	While holding the lighting switch to the parking light or headlight position, press the trip meter knob three times.
(3)	Turn the lighting switch to OFF, and press the trip meter knob three times.
(4)	Set the lighting switch to the parking light or headlight position again, and press the trip meter knob three times.

- Method with seat belt

(1)	Unfasten → fasten the driver’s seat belt within 3 seconds after the ignition switch is turned to ON.
(2)	With the driver’s seat belt fastened, press the trip meter knob three times.
(3)	Unfasten the driver’s seat belt, and then press the trip meter knob three times.
(4)	Fasten the driver’s seat belt again, and then press the trip meter knob three times.

NOTE:
- When the self-diagnosis function operates, the warning light, indicator light, and TFT display checks are performed. After this, the buzzer will sound for 0.5 seconds every time the trip meter knob is pressed, and operation checks are performed in the order of meter indicator needle operation, meter indicator needle indication, and TFT. Turn the ignition switch to OFF (ACC OFF) to cancel the self-diagnosis function.
- When the engine starts during diagnosis, the self-diagnosis function is not cancelled, however, once the vehicle starts driving, the self-diagnosis function is deactivated automatically.

2) Go to “Check meter indicator operation”.
Check meter operation, warning light, indicator light, illumination and TFT.

NOTE:
- After “_S_1” is displayed on the TFT, the meter indicator operation check mode is initiated.
- Each of the meter indicator operation display and TFT display switches every 6 seconds.

Meter indicator	TFT display, illumination	Warning light/ indicator light
MIN indication ↓ MAX indication	ILL1 (Min. brightness) ↓ *3 ILL6 (Max. brightness)	*1, *2
MAX indication ↓ MIN indication	ILL6 (Max. brightness) ↓ *3 ILL1 (Min. brightness)	

*1: Warning lights and indicator lights controlled by the meter drive circuit are illuminated. <Ref. to IDI-2, SPECIFICATION, General Description.>
*2: Warning lights and indicator lights controlled by other module are turned on/off according to the module control. <Ref. to IDI-2, SPECIFICATION, General Description.>
*3: Display for one second for each level.
3) Press the trip meter knob once.
4) Go to “Meter Indicator Needle Indication Check”.
Check meter operation, warning light, indicator light, and TFT.

NOTE:
- Meter indicator switches every 1.5 seconds for each indication.
- ILL indication illuminates at the same brightness as when entering “Meter Indicator Needle Indication Check”.
- During operation, “_S_2” is displayed on the TFT.

Speedometer (km/h)	Tachometer (r/min)	Fuel gauge	Engine coolant temperature gauge	Fuel level warning light	Warning light/ indicator light
0	0	Lowest point	Lowest point	Light ON	*1, *2
0	0	E	C	Light ON	
40	1,000	1/2	1/2	Light OFF	
100	4,000	F	H	Light OFF	
40	1,000	1/2	1/2	Light OFF	
0	0	E	C	Light ON	

*1: Warning lights and indicator lights controlled by the meter drive circuit go off. <Ref. to IDI-2, SPECIFICATION, General Description.>
*2: Warning lights and indicator lights controlled by other module are turned on/off according to the module control. <Ref. to IDI-2, SPECIFICATION, General Description.>
5) Press the trip meter knob once.
6) Go to “Check TFT display”.
Check the TFT display.

NOTE:
- TFT display switches every 10 seconds.
- After “_S_3” is displayed on the TFT, the TFT display check mode is initiated.
- TFT display switches every 1 second.
- Warning lights and indicator lights controlled by the meter drive circuit go off. <Ref. to IDI-2, SPECIFICATION, General Description.>
- Warning lights and indicator lights controlled by other module are turned on/off according to the module control. <Ref. to IDI-2, SPECIFICATION, General Description.>
- The meter indication remains at the same level as “Meter Indicator Needle Indication Check”.
- ILL indication illuminates at ILL6 level (max. brightness).
- After No. 8 is displayed in the illumination order, display is repeated from No. 1 again.

• The version display contents of the illumination order No. 1 varies depending on the vehicle.

Order	TFT display
1	Version display & color gradation
2	Black
3	Red
4	Green
5	Blue
6	White
7	Color gradation
8	Cross talking

2. DEMONSTRATION MODE

The demonstration mode screen of the combination meter can be displayed according to the following procedure.

CAUTION:

• Perform the steps while the ignition switch is OFF (ACC OFF) and the odo/trip meter is not displayed.

• To avoid battery discharge, perform the operation under the following condition.

– Perform the operation while the battery is being charged.

– While performing the operation and displaying the demonstration mode, close all doors and do not operate any electrical parts.

• If the battery voltage is low, the demonstration mode is not initiated.

• To display the demonstration mode, set the "Demonstration mode permission / fault permission" of the user customize mode to "permission". For detailed operation procedures, refer to "Application help".

• When the demonstration mode display is completed, make sure to set "Demonstration mode permission / fault permission" of the user customize mode to "fault permission". Do not deliver the vehicle to the customer with "Demonstration mode permission / fault permission" set to "permission".

• Even if the backup fuse is removed, the demonstration mode can be initiated.

• Perform the steps described in (1) through (4) within 10 seconds.

• If the procedure is not performed properly, stop the operation and wait until the odo/trip meter display disappears (for approx. 10 seconds), and then perform the procedure from (1) to (4) again after confirming that the display disappeared.

(1)	Press the trip meter knob twice. NOTE: When the trip meter knob is pressed once, the odo/trip meter is displayed.
(2)	Press the MID (i/SET) switch three times within three seconds after the operation (1) above is performed.
(3)	Press the trip meter knob once, and press the MID (i/SET) switch three times.
(4)	Press the trip meter knob once, and press the MID (i/SET) switch three times.
(5)	The "demonstration mode" is initiated.

NOTE:

The demonstration mode will be cancelled in the following condition.

When resuming the operation after cancellation, the demonstration mode is displayed. However, the resuming can only be accepted after approx. 1 minute.

• At the completion of the "goodbye screen" display that is shown 60 minutes after the demonstration mode is initiated

• When the ignition switch is turned to ON

• When the MID (i/SET) switch is turned to ON for two seconds

• When the battery voltage is low

• When the push button ignition switch is pressed with the access key out of the passenger room (model with keyless access with push button start)

• When any request switch is pressed with the access key in the passenger room (model with keyless access with push button start)

D: INSPECTION

Refer to “Basic Diagnostic Procedure” of “INSTRUMENTATION/DRIVER INFO (DIAGNOSTICS)” section. <Ref. to IDI(diag)-2, Basic Diagnostic Procedure.>

E: NOTE

For procedure of each component in the combination meter system, refer to the respective section.

- Combination meter assembly: <Ref. to IDI-13, Combination Meter.>
- Speedometer: <Ref. to IDI-16, Speedometer.>
- Tachometer: <Ref. to IDI-17, Tachometer.>
- Fuel gauge: <Ref. to IDI-18, Fuel Gauge.>
- Engine coolant temperature gauge: <Ref. to IDI-19, Engine Coolant Temperature Gauge.>
- Steering switch: <Ref. to IDI-24, Steering Switch.>

4. Multi-function Display (MFD) System

A: WIRING DIAGRAM

Refer to “Multi-function Display (MFD) System” in WI section. <Ref. to WI-275, WIRING DIAGRAM, Multi-function Display (MFD) System.>

B: ELECTRICAL SPECIFICATION

1. MULTI FUNCTION DISPLAY

Refer to “Control Module I/O Signal” of “INSTRUMENTATION/DRIVER INFO (DIAGNOSTICS)” section. <Ref. to IDI(diag)-7, ELECTRICAL SPECIFICATION, Control Module I/O Signal.>

C: OPERATION

1. DIAGNOSTIC MODE

The settings of the multi-function display can be changed by performing the following procedures to display the diagnostic mode. To show the demonstration display only, refer to “DEMONSTRATION DISPLAY”.

CAUTION:
- **To avoid battery discharge, perform the procedure while charging the battery.**
- **While performing the work, close the front hood and all doors, and do not operate any electrical parts.**
- **Display can not be switched to diagnostic mode if the illumination control dial is set to the position for the dimming cancel function (maximum brightness).**

1) Procedure

CAUTION:
Perform the steps described in (2) through (4) within 10 seconds.

(1)	Within 3 seconds after turning the ignition switch to ON, set the lighting switch to the parking light or headlight position.
(2)	While holding the lighting switch to the parking light or headlight position, press the MFD (ENTER) switch three times.
(3)	Turn the lighting switch to OFF, and press the MFD (ENTER) switch three times.
(4)	Set the lighting switch to the parking light or headlight position again, and press the MFD (ENTER) switch three times.
(5)	Go to “Diagnostic mode”.

NOTE:
- Except for the demonstration display setting of the diagnostic mode, the display will terminate by turning the ignition switch to OFF (ACC OFF) or by selecting “Back” from the menu screen.
- The demonstration display setting of the diagnostic mode will terminate by starting the engine or removing the battery. Even if the ignition switch is turned to OFF (ACC OFF), then to ON again, the diagnostic mode will not terminate.
- To select other menus from the demonstration display setting, terminate the diagnostic mode by starting the engine or removing the battery, then access to the diagnostic mode again.

2) Display menu
Change the display and settings from each menu.

Menu	Item	Content
Demonstration display setting	—	Shows demonstration display.
Vehicle status confirmation	• CAN communication	Displays the connection status of input signals.
	• U-ART communication	
	• Camera connection	
Customize	• Key operation sound	Select “ON” or “OFF”, then select “Set” to determine.
	• Correction of lifetime fuel economy value*	Adjust the fuel economy value within the range of –10 — +10 km/l, then determine the value with MFD (ENTER) switch.
Back	—	Finish the diagnostic mode.

*: Correction of lifetime fuel economy value is used only when the multi-function display has been replaced. This function is provided as a compensation feature to bring the current lifetime fuel economy value to the one before the replacement of multi-function display.

2. DEMONSTRATION SCREEN DISPLAY

The demonstration mode screen can be displayed according to the following procedure.

CAUTION:
- **Perform the steps while the ignition switch is OFF (ACC OFF).**
- **To avoid battery discharge, perform the operation under the following condition.**
  – Perform the operation while the battery is being charged.
  – While performing the operation and displaying the demonstration mode, do not operate any electrical parts.
- **Perform the steps described in (2) through (5) within 10 seconds.**

(1)	Sit in the driver’s seat and close the door.
(2)	Open the driver’s door, and within 5 seconds, press the MFD (ENTER) switch three times.
(3)	Close the driver’s door, and press the MFD (ENTER) switch three times.
(4)	Open the driver’s door, and press the MFD (ENTER) switch three times.
(5)	Close the driver’s door, and press the MFD (ENTER) switch three times.
(6)	Go to “Demonstration screen display”.

NOTE:
The demonstration display will be cancelled in any of the following conditions.
- When 60 minutes elapsed since the demonstration mode started
- When the ignition switch is turned to ON
- When the MFD (ENTER) switch is turned to ON for two seconds
- When the battery voltage is low

3. ODO FUEL ECONOMY VALUE RESET

Follow the procedure below to initialize the ODO setting value.

(1)	Turn the ignition switch to ON, and press the MFD (ENTER) switch for two seconds.
(2)	Select “Factory delivery setting” from “Setting screen”.
(3)	Select “ODO setting reset” and determine with “Yes”.
(4)	The screen that indicates the completion of the setting is displayed for three seconds. This is the end of operation.

NOTE:
- The resetting operation is confirmed twice. Select confirmation according to the screen.
- The display will terminate by turning the ignition switch to OFF (ACC OFF) or by selecting “Back” from the menu screen.

D: INSPECTION

Refer to “Basic Diagnostic Procedure” of “INSTRUMENTATION/DRIVER INFO (DIAGNOSTICS)” section. <Ref. to IDI(diag)-2, Basic Diagnostic Procedure.>

E: NOTE

For procedure of each component in the Multi-Function Display (MFD) system, refer to the respective section.

- Multi-function display (MFD): <Ref. to IDI-20, MULTI FUNCTION DISPLAY, REMOVAL, Multi-function Display (MFD).>
- Multi-function display switch: <Ref. to IDI-22, MULTI-FUNCTION DISPLAY SWITCH, REMOVAL, Multi-function Display (MFD).>

5. Combination Meter

A: REMOVAL

1) Disconnect the ground cable from battery. <Ref. to NT-6, BATTERY, NOTE, Note.>

NOTE:
For model with battery sensor, disconnect the ground terminal from battery sensor.
2) Release the lock, tilt the steering column to the lowest end and fully extend the column by the telescopic system.
3) Release the screws, clips and claws, and remove the visor - combination meter.

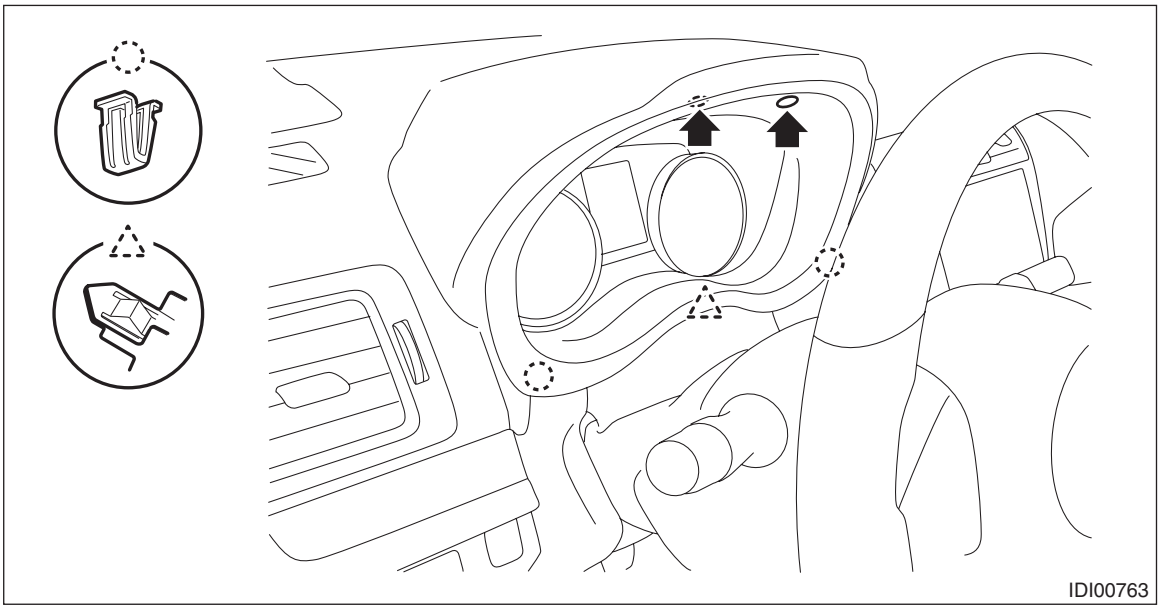

4) Remove the combination meter assembly.

CAUTION:
- **Be careful not to damage the meter or instrument panel.**
- **Pay particular attention to avoid damaging the meter glass.**

(1) Remove the screws.

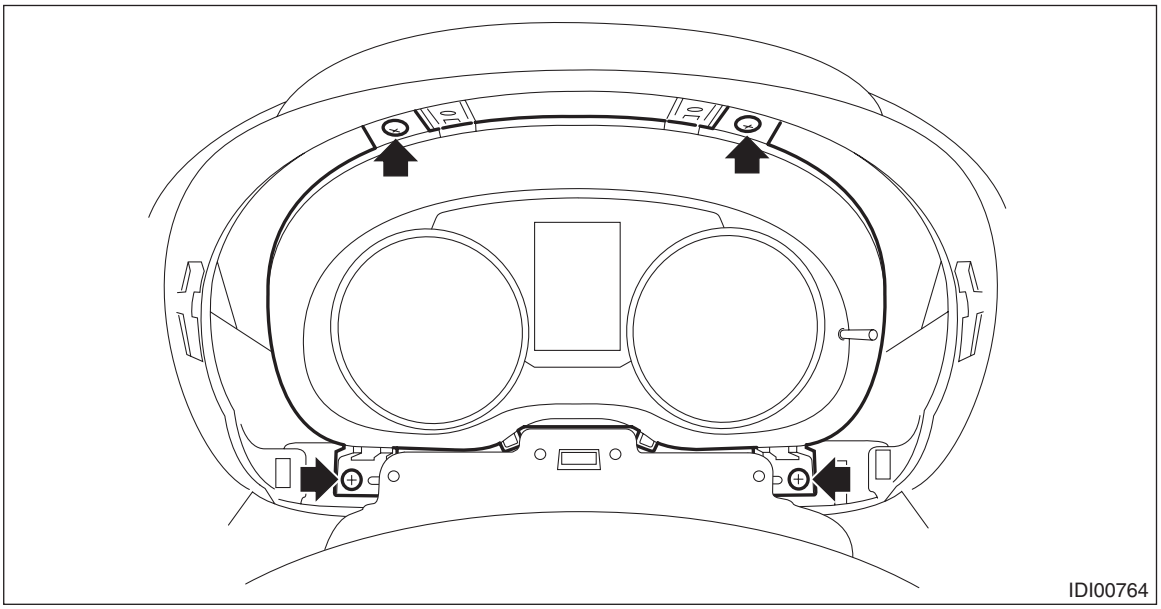

(2) Pull the combination meter assembly toward you and disconnect the connector.

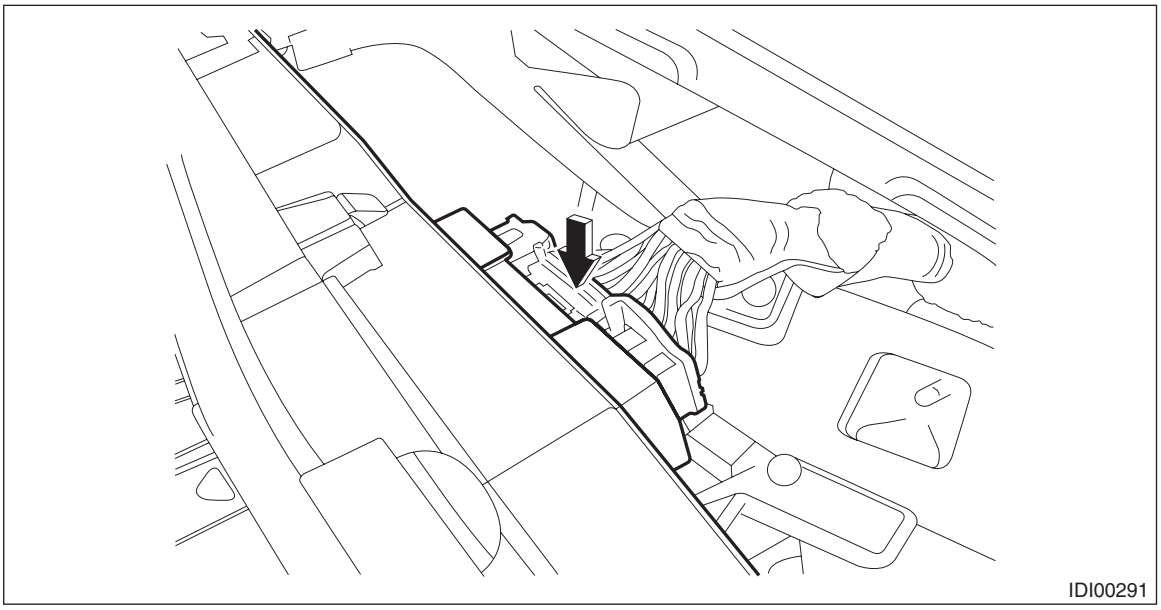

B: INSTALLATION

CAUTION:
- **Make sure the electrical connector is connected securely.**
- **Make sure that each meter operates normally.**
- **When the combination meter assembly has been replaced, be sure to perform the following operations.**
  - **For models without the keyless access with push button start except for C0, be sure to perform the registration of immobilizer system. For detailed operation procedure, refer to "Type B" described in "REGISTRATION MANUAL FOR IMMOBILIZER".**
  - **Be sure to reset the ODO fuel economy value of the multi-function display (MFD). <Ref. to IDI-11, ODO FUEL ECONOMY VALUE RESET, OPERATION, Multi-function Display (MFD) System.>**

1) Install the combination meter assembly.
2) Install the visor - combination meter.
3) Connect the battery ground terminal. <Ref. to NT-6, BATTERY, NOTE, Note.>

C: DISASSEMBLY

CAUTION:
- **Use gloves to avoid damage and getting fingerprints on the glass surface and meter surfaces.**
- **Be careful not to apply excessive force to the trip knob.**
- **Be sure not to touch the meter indicator needle.**
- **Because LEDs are used for all of warning lights and indicator lights, they are not removable from the meter - main assembly.**

1) Release the claws, and then remove the glass - combination meter.

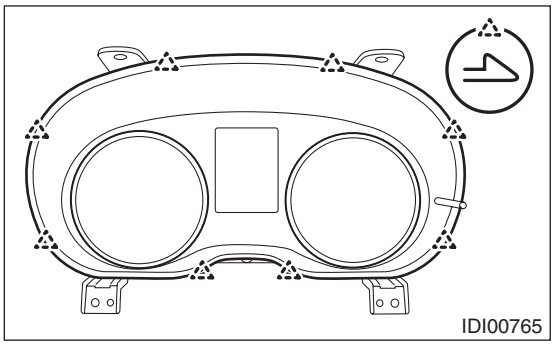

2) Release the claws, and then remove the visor - combination meter.

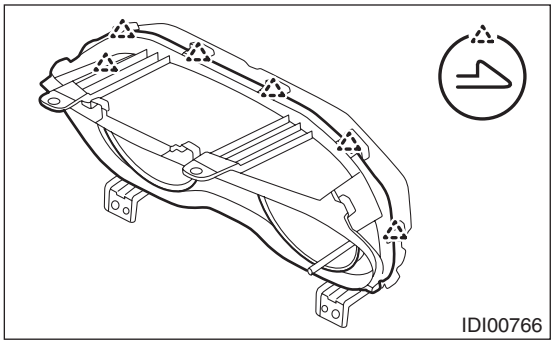

D: ASSEMBLY

1) Install the visor - combination meter.
2) Install the glass - combination meter.

6. Speedometer

A: SPECIFICATION

Since the meter - main assembly cannot be disassembled, do not remove or inspect the speedometer alone. (Do not remove the cover on the back surface.)

7. Tachometer

A: SPECIFICATION

Since the meter - main assembly cannot be disassembled, do not remove or inspect the tachometer alone. (Do not remove the cover on the back surface.)

8. Fuel Gauge

A: SPECIFICATION

Since the meter - main assembly cannot be disassembled, do not remove or inspect the fuel gauge alone. (Do not remove the cover on the back surface.)

9. Engine Coolant Temperature Gauge

A: SPECIFICATION

Since the meter case assembly cannot be disassembled, do not remove or inspect the engine coolant temperature gauge alone. (Do not remove the cover on the back surface.)

10.Multi-function Display (MFD)

A: REMOVAL

1. MULTI FUNCTION DISPLAY

1) Disconnect the ground cable from battery. <Ref. to NT-6, BATTERY, NOTE, Note.>

NOTE:
For model with battery sensor, disconnect the ground terminal from battery sensor.
2) Remove the center grille assembly. <Ref. to AC-91, CENTER GRILLE ASSEMBLY, REMOVAL, Air Vent Grille.>
3) Release the claw and hook, and then remove the cover center UPR.

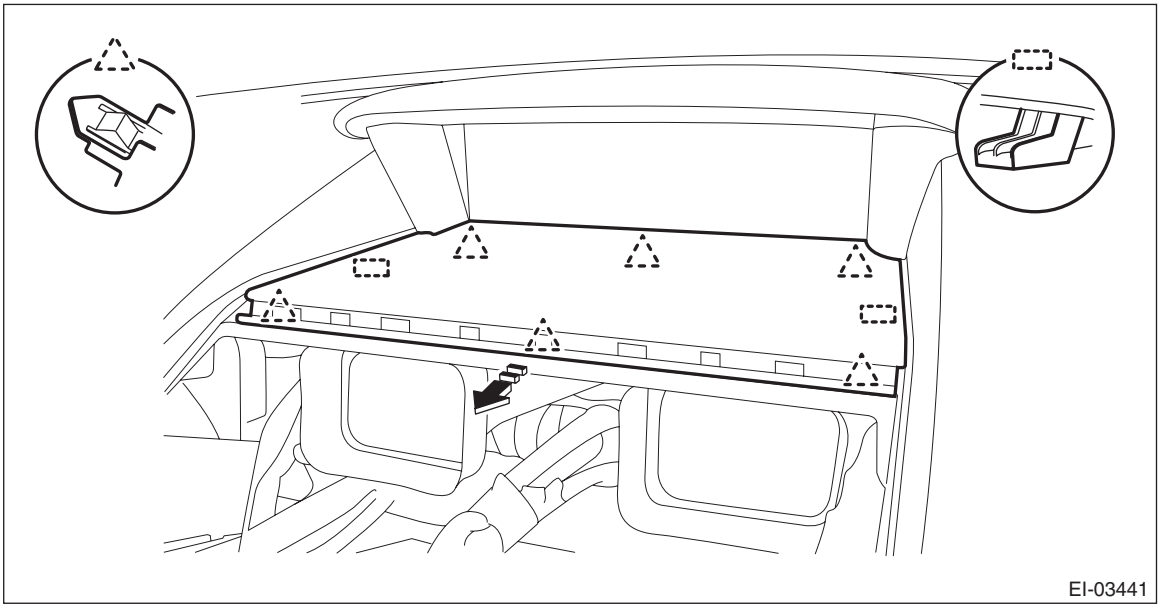

NOTE:
Lightly push up the back of the cover center UPR, hook the finger to the end portion and pull it toward you to remove it.

4) Remove the multi-function display.

CAUTION:
Be careful not to damage the multi-function display or instrument panel.

(1) Release the screws and claws.
(2) Pull the multi-function display assembly toward yourself, and disconnect the connector.

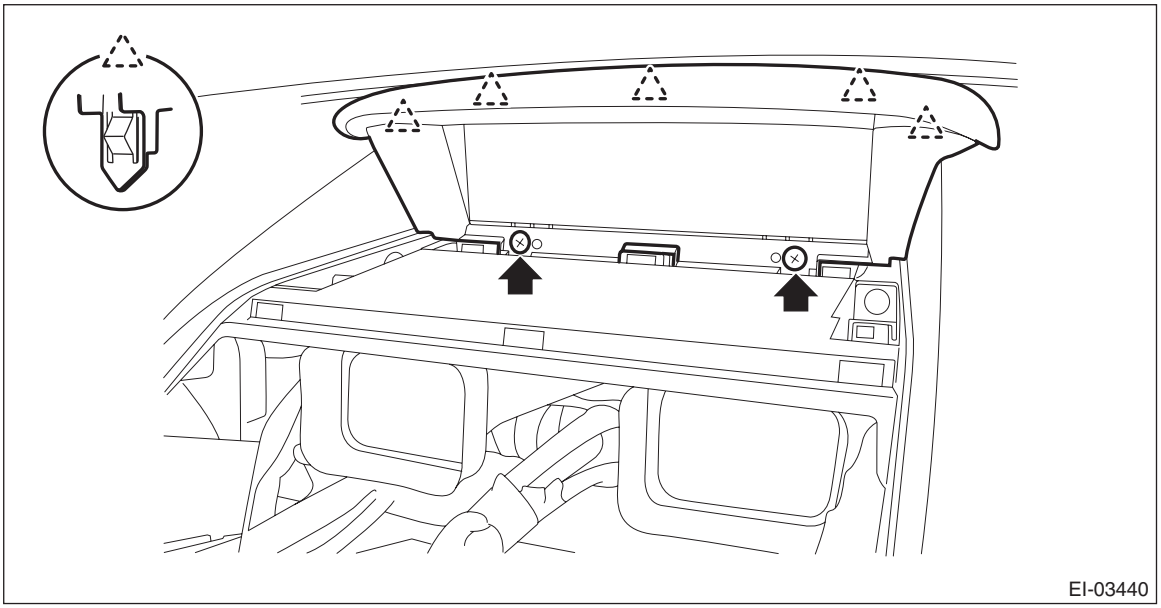
EI-03440

(3) Remove the screws and then remove the multi-function display.

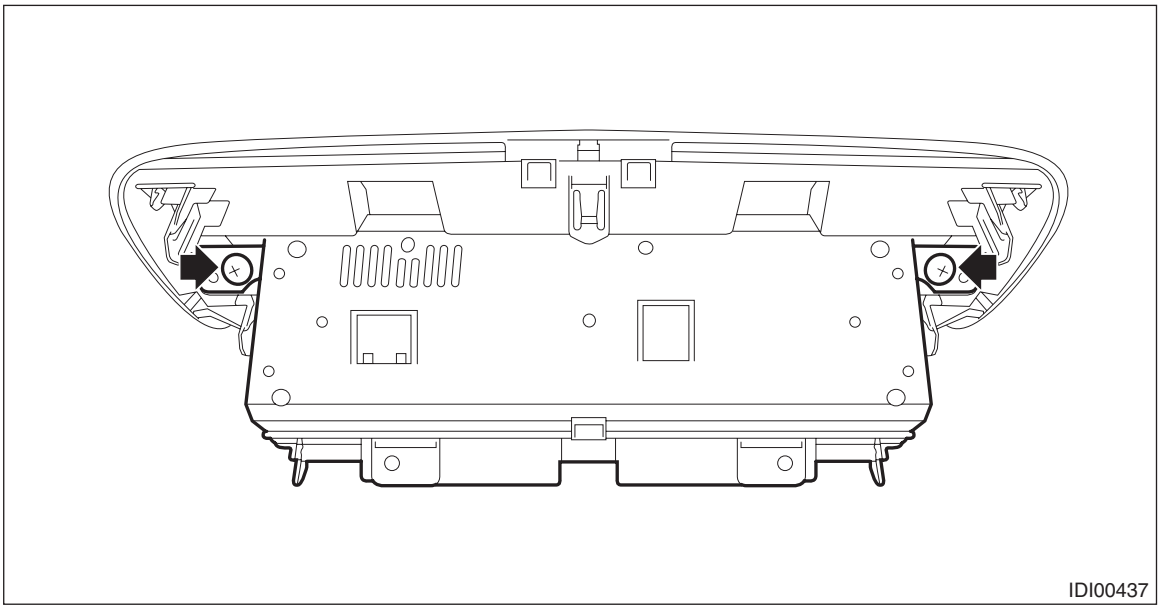
IDI00437

2. MULTI-FUNCTION DISPLAY SWITCH

1) Disconnect the ground cable from battery. <Ref. to NT-6, BATTERY, NOTE, Note.>

NOTE:
For model with battery sensor, disconnect the ground terminal from battery sensor.
2) Remove the center grille assembly. <Ref. to AC-91, CENTER GRILLE ASSEMBLY, REMOVAL, Air Vent Grille.>
3) Release the claws and remove the switch - multi-function display.

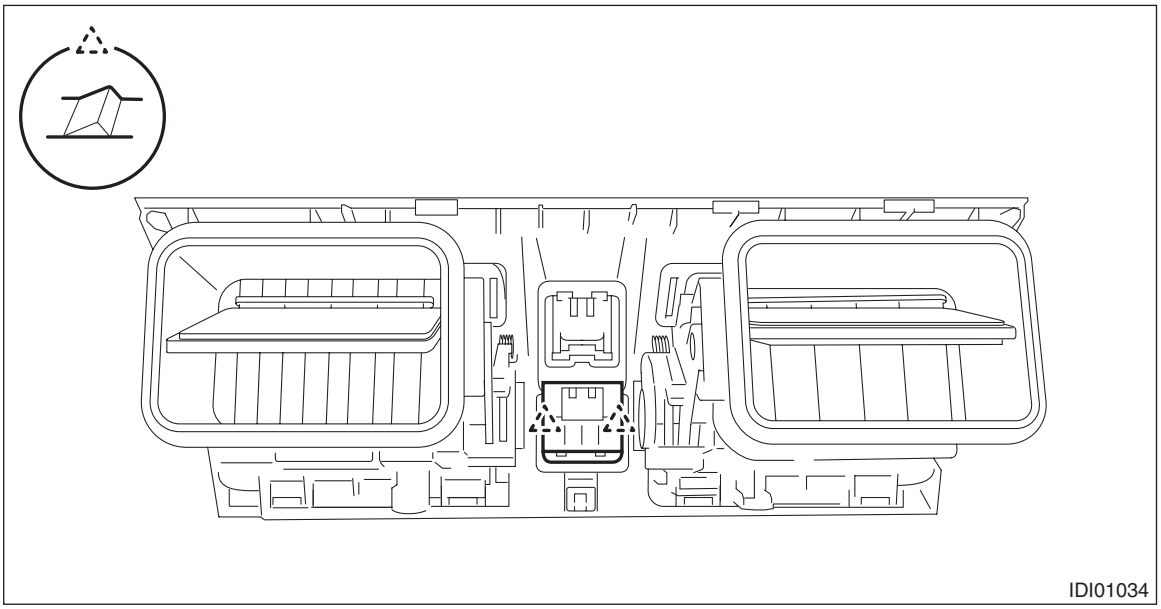

B: INSTALLATION

1. MULTI FUNCTION DISPLAY

CAUTION:
- **Make sure the electrical connector is connected securely.**
- **Make sure that the multi-function display operates normally.**
- **After installing the center grille assembly, check that the air vent grille of the center grille assembly is inserted correctly into the air vent duct.**
- **When the multi-function display has been replaced, perform the following operations.**
  – Be sure to reset the ODO fuel economy value of the multi-function display (MFD). <Ref. to IDI-11, ODO FUEL ECONOMY VALUE RESET, OPERATION, Multi-function Display (MFD) System.>
  – Be sure to correction the lifetime fuel economy value of the multi-function display (MFD). <Ref. to IDI-10, DIAGNOSTIC MODE, OPERATION, Multi-function Display (MFD) System.>

1) Install the multi-function display.
2) Install the cover center UPR.
3) Install the center grille assembly.
4) Connect the battery ground terminal. <Ref. to NT-6, BATTERY, NOTE, Note.>

2. MULTI-FUNCTION DISPLAY SWITCH

CAUTION:
After installing the center grille assembly, check that the air vent grille of the center grille assembly is inserted correctly into the air vent duct.

1) Install the switch - multi-function display.
2) Install the center grille assembly.
3) Connect the battery ground terminal. <Ref. to NT-6, BATTERY, NOTE, Note.>

C: INSPECTION

1. MULTI-FUNCTION DISPLAY SWITCH

1) Measure the resistance between connector terminals.

Preparation tool:
Circuit tester

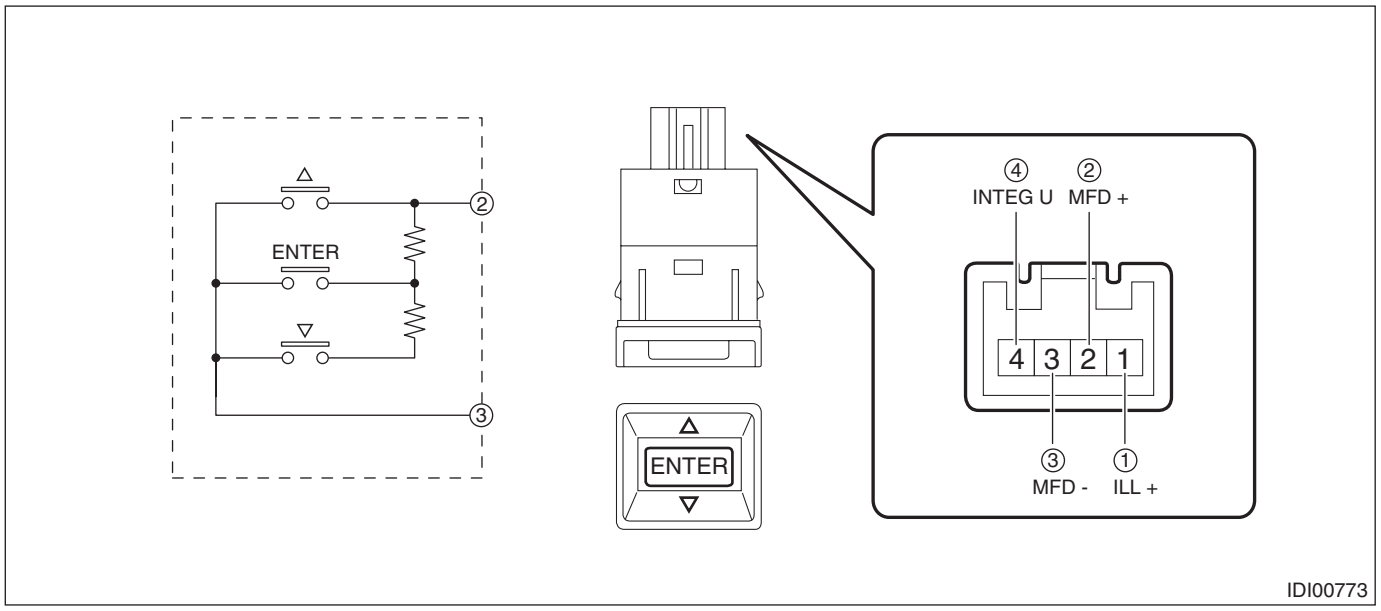

Terminal No.	Inspection conditions		Standard
2 — 3	△ (UP) ENTER ▽ (DOWN)	All OFF	Approx. 1 MΩ or more
	△ (UP)	ON	Less than 1 Ω
	ENTER	ON	Approx. 1,000 Ω
	▽ (DOWN)	ON	Approx. 3,670 Ω

2) Apply battery voltage between the connector terminals to check lighting condition of illumination inside the switch.

Terminal No.	Inspection conditions	Specification
4 (+) — 1 (–)	Apply battery voltage.	Light ON

3) Replace the switch - multi-function display if it is found defective.

11.Steering Switch

A: REMOVAL

CAUTION:
Before handling the airbag system components, refer to "CAUTION" of "General Description" in "AIRBAG SYSTEM". <Ref. to AB-9, CAUTION, General Description.>
1) Set the tire to the straight-ahead position.
2) Disconnect the ground cable from battery and wait for at least 60 seconds before starting work. <Ref. to NT-6, BATTERY, NOTE, Note.>

NOTE:
For model with battery sensor, disconnect the ground terminal from battery sensor.
3) Remove the driver's airbag module. <Ref. to AB-32, REMOVAL, Driver's Airbag Module.>
4) Remove the steering wheel. <Ref. to PS-16, REMOVAL, Steering Wheel.>
5) Remove the MID switch. <Ref. to PS-17, DISASSEMBLY, Steering Wheel.>

B: INSTALLATION

CAUTION:
• Before handling the airbag system components, refer to "CAUTION" of "General Description" in "AIRBAG SYSTEM". <Ref. to AB-9, CAUTION, General Description.>
• Do not allow harness and connectors to interfere or get tangled up with other parts.
• Make sure that the steering roll connector is not turned from the original position.
• If the steering wheel and steering angle sensor (steering roll connector) are removed, perform "VSC(VDC) Centering Mode" of the VDC. <Ref. to VDC-17, VDC SENSOR MIDPOINT SETTING MODE, ADJUSTMENT, VDC Control Module and Hydraulic Control Unit (VDCCM&H/U).>
• Securely install the switch. Improper insertion of the pin or claw of the switch may cause improper installation.
1) Install the MID switch. <Ref. to PS-19, ASSEMBLY, Steering Wheel.>
2) Align the center position of the steering roll connector. <Ref. to AB-62, ADJUSTMENT, Roll Connector.>
3) Install the steering wheel.

Tightening torque:
39 N·m (4 kgf-m, 28.8 ft-lb)

Clearance:
Between cover assembly - column and steering wheel: 4 — 6 mm (0.16 — 0.24 in)
4) Install the driver's airbag module. <Ref. to AB-33, INSTALLATION, Driver's Airbag Module.>
5) Connect the battery ground terminal. <Ref. to NT-6, BATTERY, NOTE, Note.>

C: INSPECTION

1) Measure the resistance between connector terminals.

Preparation tool:
Circuit tester

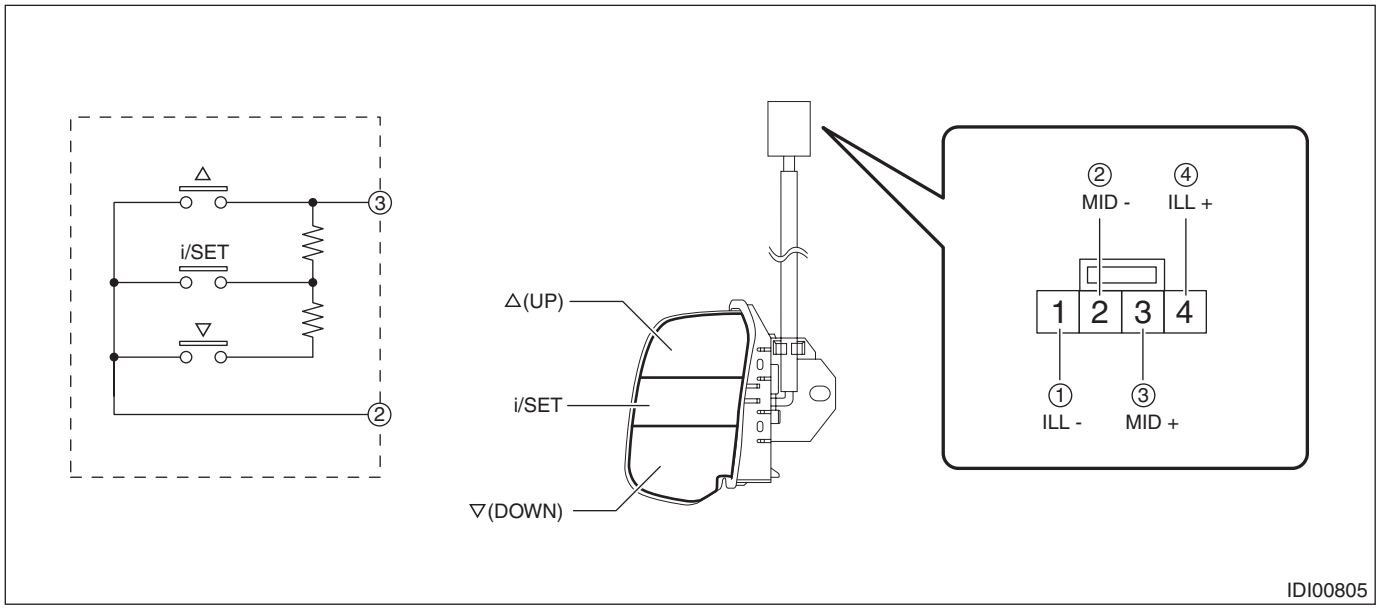

Terminal No.	Inspection conditions		Standard
3 — 2	△ (UP) i/SET ▽ (DOWN)	All OFF	Approx. 1 MΩ or more
	△ (UP)	ON	Less than 1 Ω
	i/SET	ON	Approx. 1,000 Ω
	▽ (DOWN)	ON	Approx. 3,670 Ω

2) Apply battery voltage between the connector terminals to check lighting condition of illumination inside the switch.

Terminal No.	Inspection conditions	Specification
4 (+) — 1 (–)	Apply battery voltage.	Light ON

3) Replace the MID switch if it is found defective.

INSTRUMENTATION/DRIVER INFO (DIAGNOSTICS)

IDI(diag)

		Page
1.	Basic Diagnostic Procedure	2
2.	Check List for Interview	4
3.	General Description	5
4.	Electrical Component Location	6
5.	Control Module I/O Signal	7
6.	Subaru Select Monitor	10
7.	Read Diagnostic Trouble Code (DTC)	13
8.	Clear Memory Mode	14
9.	Inspection Mode	15
10.	Read Current Data	16
11.	System Operation Check Mode	20
12.	User Customizing	22
13.	List of Diagnostic Trouble Code (DTC)	23
14.	Diagnostic Procedure with Diagnostic Trouble Code (DTC)	25

1. Basic Diagnostic Procedure

A: PROCEDURE

1. COMBINATION METER

	Step	Check	Yes	No
1	**PERFORM CUSTOMER INTERVIEW.** Using the Check List for Interview, ask the customer the condition of how trouble occurs. <Ref. to IDI(diag)-4, CHECK, Check List for Interview.>	Did you interview the customer?	Go to step **2**.	Interview the customer. <Ref. to IDI(diag)-4, CHECK, Check List for Interview.>
2	**CHECK CAN COMMUNICATION.** Read the DTC of the CAN system using the Subaru Select Monitor. <Ref. to LAN(diag)-36, OPERATION, Read Diagnostic Trouble Code (DTC).>	Is DTC displayed?	Perform the diagnosis for the displayed DTCs. <Ref. to LAN(diag)-109, LIST, List of Diagnostic Trouble Code (DTC).>	Go to step **3**.
3	**CHECK COMBINATION METER.** Using the Subaru Select Monitor, read DTC of combination meter. <Ref. to IDI(diag)-13, Read Diagnostic Trouble Code (DTC).>	Is DTC displayed?	Record the DTCs and time stamps, and perform the diagnosis for the displayed DTCs. <Ref. to BC(diag)-31, LIST, List of Diagnostic Trouble Code (DTC).> For time stamp, refer to “LAN SYSTEM”. <Ref. to LAN(diag)-6, TIME STAMP, CAUTION, General Description.> Go to step **5**.	Go to step **4**.
4	**CHECK COMBINATION METER.** Check the operation of combination meter. <Ref. to IDI(diag)-20, System Operation Check Mode.>	Is the check result OK?	System is normal.	Replace the combination meter. <Ref. to IDI-13, Combination Meter.>
5	**PERFORM DIAGNOSIS.** 1) Perform the Clear Memory Mode. 2) Perform the Inspection Mode. <Ref. to IDI(diag)-15, Inspection Mode.> 3) Using the Subaru Select Monitor, read DTC of combination meter.	Is DTC displayed?	Perform the diagnosis for the displayed DTCs.	Finish the diagnosis.

2. MFD

	Step	Check	Yes	No
1	**PERFORM CUSTOMER INTERVIEW.** Using the Check List for Interview, ask the customer the condition of how trouble occurs. <Ref. to IDI(diag)-4, CHECK, Check List for Interview.>	Did you interview the customer?	Go to step **2**.	Interview the customer. <Ref. to IDI(diag)-4, CHECK, Check List for Interview.>
2	**CHECK CAN COMMUNICATION.** Read the DTC of the CAN system using the Subaru Select Monitor. <Ref. to LAN(diag)-36, OPERATION, Read Diagnostic Trouble Code (DTC).>	Is DTC displayed?	Perform the diagnosis for the displayed DTCs. <Ref. to LAN(diag)-109, LIST, List of Diagnostic Trouble Code (DTC).>	Go to step **3**.
3	**CHECK MFD.** Read the DTC relating the MFD using the Subaru Select Monitor. <Ref. to IDI(diag)-13, Read Diagnostic Trouble Code (DTC).>	Is DTC displayed?	Record the DTCs and time stamps, and perform the diagnosis for the displayed DTCs. <Ref. to BC(diag)-31, LIST, List of Diagnostic Trouble Code (DTC).> For time stamp, refer to “LAN SYSTEM”. <Ref. to LAN(diag)-6, TIME STAMP, CAUTION, General Description.> Go to step **5**.	Go to step **4**.
4	**CHECK MFD.** Check the MFD display using the system operation check mode of combination meter. <Ref. to IDI(diag)-20, System Operation Check Mode.>	Is the check result OK?	System is normal.	Replace the MFD. <Ref. to IDI-20, Multi-function Display (MFD).>
5	**PERFORM DIAGNOSIS.** 1) Perform the Clear Memory Mode. 2) Perform the Inspection Mode. <Ref. to IDI(diag)-15, Inspection Mode.> 3) Read the DTC relating the MFD using the Subaru Select Monitor.	Is DTC displayed?	Perform the diagnosis for the displayed DTCs.	Finish the diagnosis.

2. Check List for Interview

A: CHECK

- Inspect the following items regarding the vehicle's state.
- Print out this page for interviewing customers.

<table>
<tr><td colspan="4">Combination Meter / MFD Check List for Interview
Date the Vehicle is Received Year Month Day</td></tr>
<tr><td colspan="2" rowspan="2">Customer's name</td><td>Registration No.</td><td>Initial year of registration
Year Month Date</td></tr>
<tr><td>Vehicle model</td><td>Frame number</td></tr>
<tr><td>Interviewer</td><td>Inspector</td><td>Engine type</td><td>Odometer reading</td></tr>
<tr><td colspan="4">Customer specified content
•
•
•</td></tr>
<tr><td>Date and time when the trouble occurred</td><td></td><td>Frequency of trouble occurrence</td><td>Always occurs
Sometimes occurs
(times per day, times per month)</td></tr>
<tr><td rowspan="2">Condition of trouble occurrence
(How the trouble occurs)</td><td rowspan="2"></td><td>Weather</td><td>Fine • Cloudy • Rainy •
Snowy • Others ( )</td></tr>
<tr><td>Temperature</td><td>°C (°F) — °C (°F)</td></tr>
<tr><td>Road conditions</td><td></td><td>Occurrence location</td><td></td></tr>
<tr><td>Accessory installation condition</td><td colspan="3"></td></tr>
<tr><td colspan="4">Confirmation of trouble condition</td></tr>
<tr><td rowspan="3">❑ Combination meter</td><td colspan="3"></td></tr>
<tr><td colspan="3"></td></tr>
<tr><td colspan="3"></td></tr>
<tr><td rowspan="3">❑ MFD</td><td colspan="3"></td></tr>
<tr><td colspan="3"></td></tr>
<tr><td colspan="3"></td></tr>
<tr><td>❑ Diagnostic code</td><td colspan="3"></td></tr>
</table>

3. General Description

A: CAUTION

1. AIRBAG SYSTEM

CAUTION:
• Do not use the electrical test equipment on the airbag system wiring harnesses and connector circuits.
• Be careful not to damage the airbag system wiring harness.

B: INSPECTION

Before performing the diagnosis, check the following items which may cause problems relating the wiper or light.
1) Check the battery. <Ref. to SC(w/o STI)-51, INSPECTION, Battery.> <Ref. to SC(STI)-24, INSPECTION, Battery.>
2) Check the fuse condition. <Ref. to IDI-5, Relay and Fuse.>
3) Check the connecting condition of harness and harness connector.

C: PREPARATION TOOL

1. SPECIAL TOOL

ILLUSTRATION	TOOL NUMBER	DESCRIPTION	REMARKS
 STSSM4	—	SUBARU SELECT MONITOR 4	Used for setting of each function and troubleshooting for electrical system. NOTE: For detailed operation procedures of Subaru Select Monitor 4, refer to “Application help”.

2. GENERAL TOOL

TOOL NAME	REMARKS
Circuit tester	Used for measuring resistance, voltage and current.
DST-i	Used together with Subaru Select Monitor 4.

4. Electrical Component Location

A: LOCATION

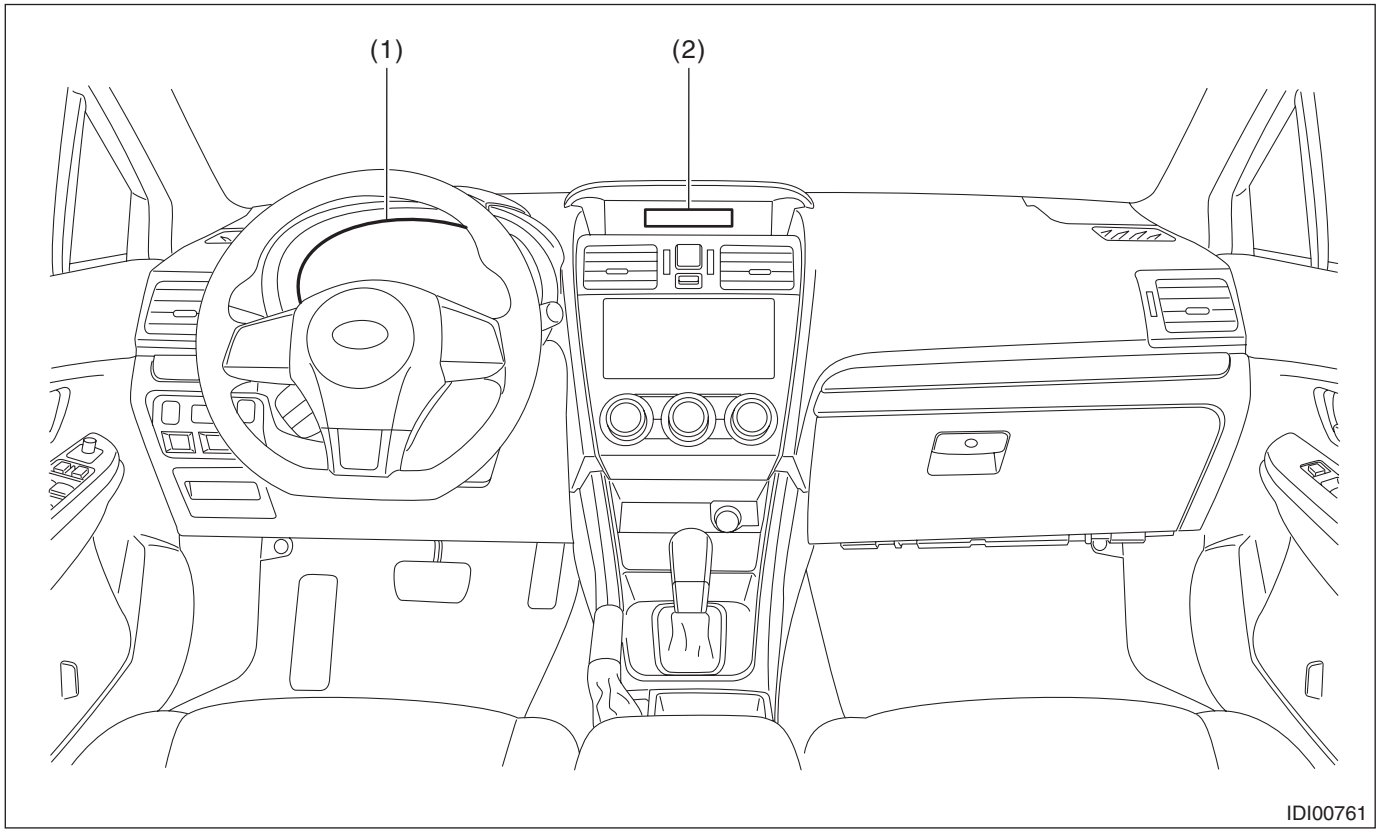

(1) Combination meter
(2) MFD

5. Control Module I/O Signal

A: ELECTRICAL SPECIFICATION

- Combination meter

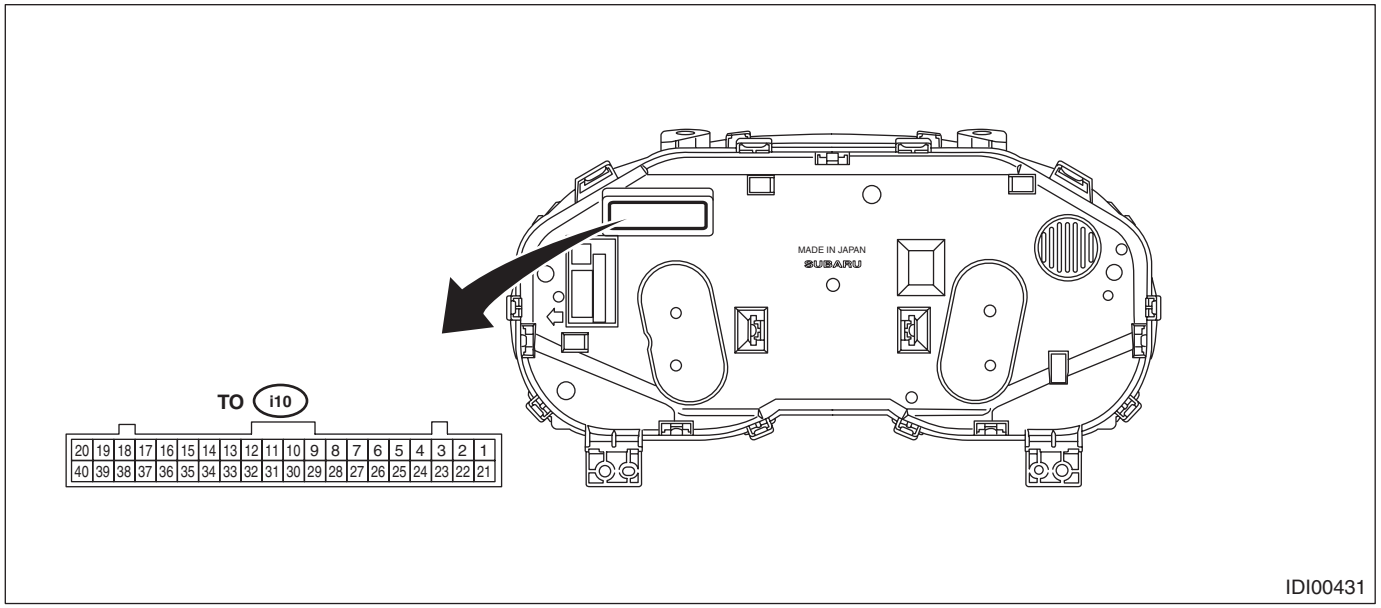

Terminal No.	Contents	Measuring condition	Standard
1 ←→ Chassis ground	Security indicator	Security indicator light off → on	0 V → 10 — 14 V
2 ←→ Chassis ground	Charge warning light	Charge warning light off → on	0 V → 10 — 14 V
3 ←→ Chassis ground	Oil pressure warning light	Oil pressure warning light off → on	0 V → 10 — 14 V
4 ←→ Chassis ground	RH turn indicator	RH turn indicator off → on	0 V → 10 — 14 V
5 ←→ Chassis ground	—	—	—
6 ←→ Chassis ground	LH turn indicator	LH turn indicator off → on	0 V → 10 — 14 V
7 ←→ Chassis ground	—	—	—
8 ←→ Chassis ground	Auto headlight beam leveler warning light	Auto headlight beam leveler warning light off → on	0 V → 10 — 14 V
9	—	—	—
10	—	—	—
11	—	—	—
12	—	—	—
13	—	—	—
14	—	—	—
15 ←→ Chassis ground	Driver's seat belt switch	Driver's seat belt switch ON	Less than 1 Ω
16 ←→ Chassis ground	Passenger's seat belt switch	Passenger's seat belt switch ON	Less than 1 Ω
17	—	—	—
18	—	—	—
19	—	—	—
20 ←→ Chassis ground	Ignition power supply	IG OFF → ON	0 V → 10 — 14 V

Terminal No.	Contents	Measuring condition	Standard
21 ←→ Chassis ground	Washer fluid level sensor	—	—
22	—	—	—
23 ←→ Chassis ground	Brake fluid level switch	Brake fluid level switch OFF → ON	1 MΩ or more → less than 1 Ω
24 ←→ 34	R. DIFF oil temperature sensor	—	—
25 ←→ 37	Fuel level sensor	Always	10 — 600 Ω
26 ←→ 35	SI-DRIVE input (engine type: EJ)	SI-DRIVE switch OFF → ON	1 MΩ or more → less than 1 Ω
27 ←→ 36	Ambient sensor	Always	1 — 35 kΩ
28 ←→ Chassis ground	UART (MFD)	Cannot be measured	—
29 ←→ Chassis ground	STEERING+	i/SET, △, ▽ switch OFF → ON	1 MΩ or more → less than 1 Ω
30	—	—	—
31 ←→ Chassis ground	SI-DRIVE input (engine type: FA)	SI-DRIVE switch OFF → ON	1 MΩ or more → less than 1 Ω
32 ←→ Chassis ground	CAN communication line (–)	Cannot be measured	—
33 ←→ Chassis ground	CAN communication line (+)	Cannot be measured	—
34	R. DIFF GND	—	—
35	SI-DRIVE input GND (engine type: EJ)	—	—
36	Ambient sensor GND	—	—
37	Fuel level sensor GND	—	—
38 ←→ Chassis ground	GND	Always	Less than 1 Ω
39 ←→ Chassis ground	Backup ignition power supply	IG OFF → ON	0 V → 10 — 14 V
40 ←→ Chassis ground	Battery power supply	Always	10 — 14 V

- MFD

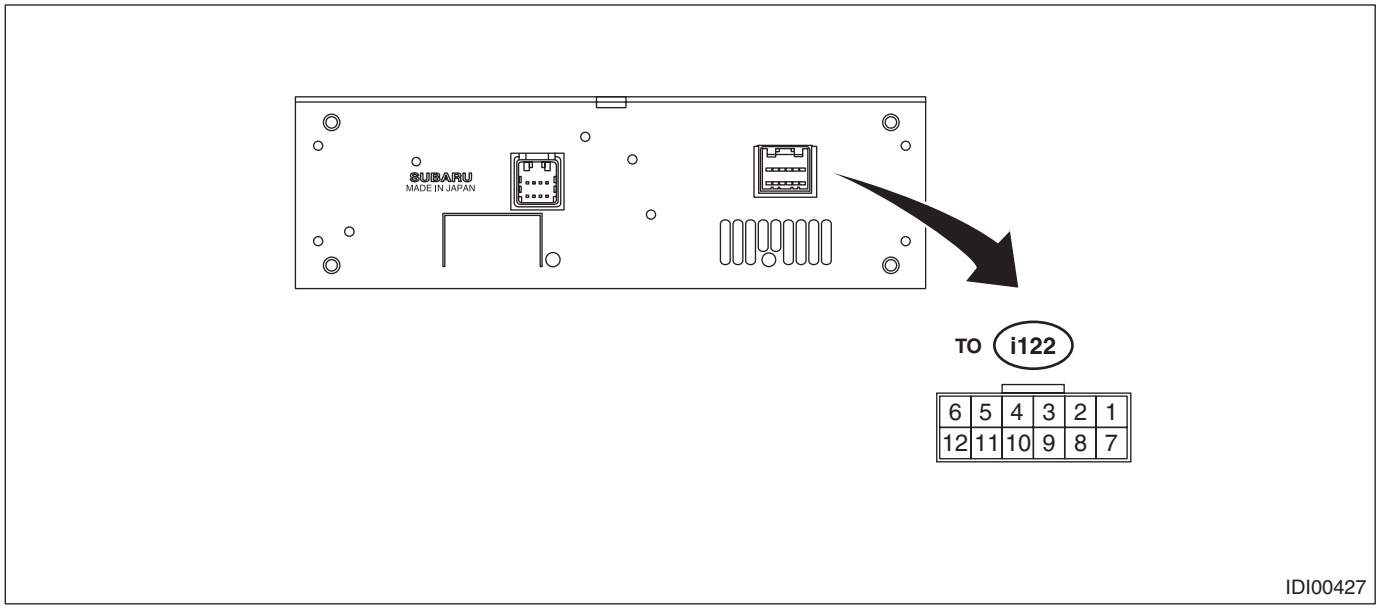

Terminal No.	Contents	Measuring condition	Standard
1 ←→ Chassis ground	Battery power supply	Always	10 — 14 V
2 ←→ Chassis ground	GND	Always	Less than 1 Ω
3 ←→ Chassis ground	Ignition power supply	IG OFF → ON	0 V → 10 — 14 V
4 ←→ Chassis ground	Display change switch communication line (–)	Cannot be measured	—
5 ←→ Chassis ground	CAN communication line (–)	Cannot be measured	—
6 ←→ Chassis ground	CAN communication line (+)	Cannot be measured	—
7	—	—	—
8	—	—	—
9 ←→ Chassis ground	UART (meter)	Cannot be measured	—
10 ←→ Chassis ground	Passenger's airbag ON	Passenger's airbag ON indicator (when illuminating)	Less than 1 V
11 ←→ Chassis ground	Passenger's airbag OFF	Passenger's airbag OFF indicator (when illuminating)	Less than 1 V
12 ←→ Chassis ground	Display change switch communication line (+)	Cannot be measured	—

6. Subaru Select Monitor

A: OPERATION

- For operation procedures, refer to “Application help”.
- If the combination meter or MFD can not communicate with Subaru Select Monitor, perform the “Communication for Initializing Impossible”. <Ref. to IDI(diag)-10, INSPECTION, Subaru Select Monitor.>

If the DTCs related to the LAN system are not displayed, perform the inspection by connecting the Subaru Select Monitor to another vehicle which is operating properly and by establishing the communication.

B: INSPECTION

1. COMMUNICATION FOR INITIALIZING IMPOSSIBLE (COMBINATION METER)

DETECTING CONDITION:

- Defective harness connector
- Power supply circuit malfunction
- Defective combination meter
- Defective CAN communication circuit
- Defective Subaru Select Monitor

TROUBLE SYMPTOM:

Communication is impossible between combination meter and Subaru Select Monitor.

WIRING DIAGRAM:

- Combination meter system <Ref. to WI-127, WIRING DIAGRAM, Combination Meter System.>
- CAN communication system <Ref. to WI-113, WIRING DIAGRAM, CAN Communication System.>

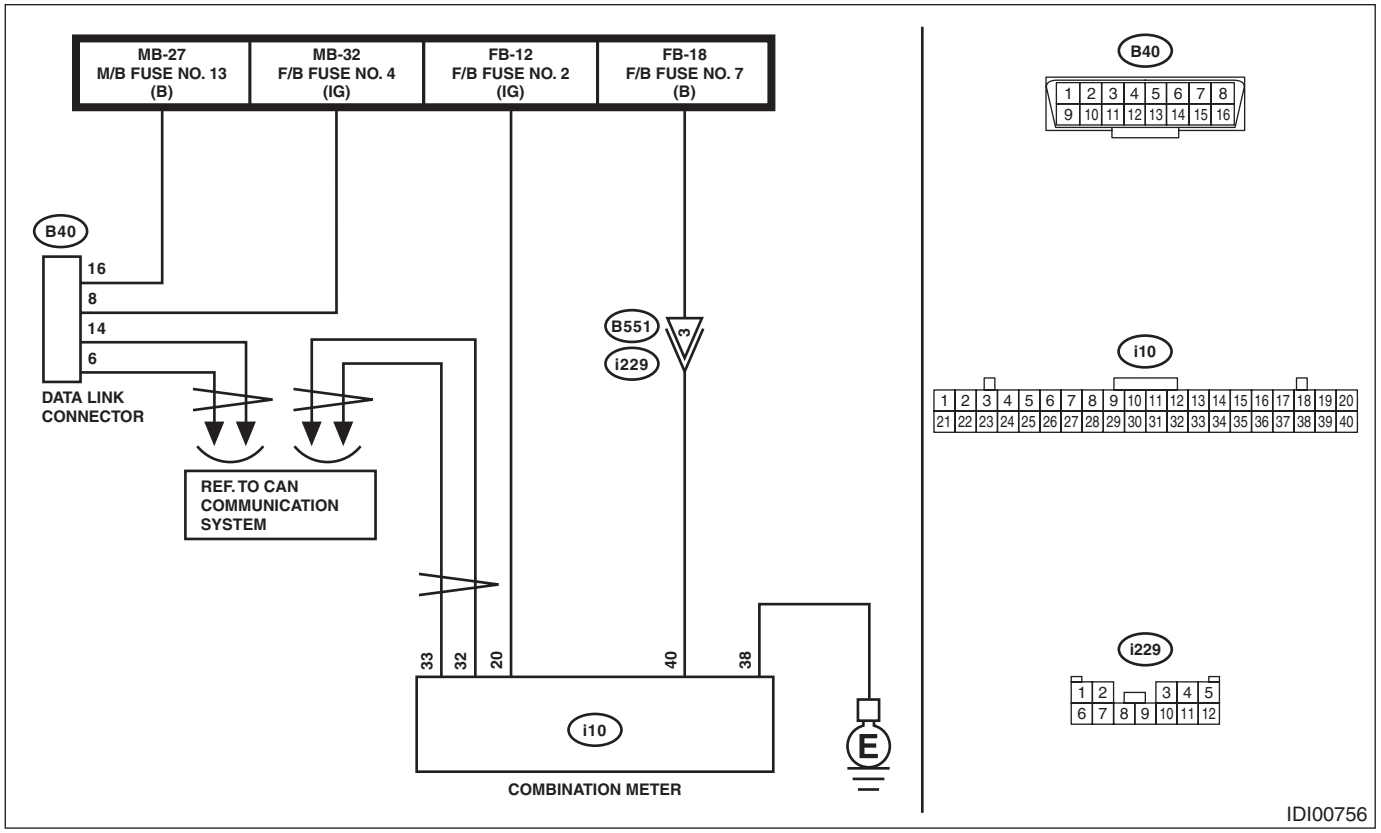

	Step	Check	Yes	No
1	**CHECK OTHER COMMUNICATION.** Communicate with the system other than the combination meter using the Subaru Select Monitor.	Is the communication to other control module possible?	Go to step **2**.	Perform the “Communication for Initializing Impossible” of LAN system. <Ref. to LAN(diag)-12, COMMUNICATION FOR INITIALIZING IMPOSSIBLE, Subaru Select Monitor.>
2	**CHECK DTC.** Read the DTC of the LAN system using the Subaru Select Monitor. <Ref. to LAN(diag)-36, OPERATION, Read Diagnostic Trouble Code (DTC).>	Is DTC displayed?	Perform the diagnosis for the displayed DTCs.	Go to step **3**.
3	**CHECK COMBINATION METER.** 1) Turn the ignition switch to OFF. 2) Disconnect the connector of combination meter. 3) Connect the disconnected connectors. 4) Communicate with the combination meter using the Subaru Select Monitor.	Is communication possible?	It is possible that temporary poor communication occurs.	Replace the combination meter. <Ref. to IDI-13, Combination Meter.>

2. COMMUNICATION FOR INITIALIZING IMPOSSIBLE (MFD)

DETECTING CONDITION:

- Defective harness connector
- Power supply circuit malfunction
- Defective MFD
- Defective CAN communication circuit
- Defective Subaru Select Monitor

TROUBLE SYMPTOM:

Communication is impossible between MFD and Subaru Select Monitor.

WIRING DIAGRAM:

- Multi-function display (MFD) system <Ref. to WI-275, WIRING DIAGRAM, Multi-function Display (MFD) System.>
- CAN communication system <Ref. to WI-113, WIRING DIAGRAM, CAN Communication System.>

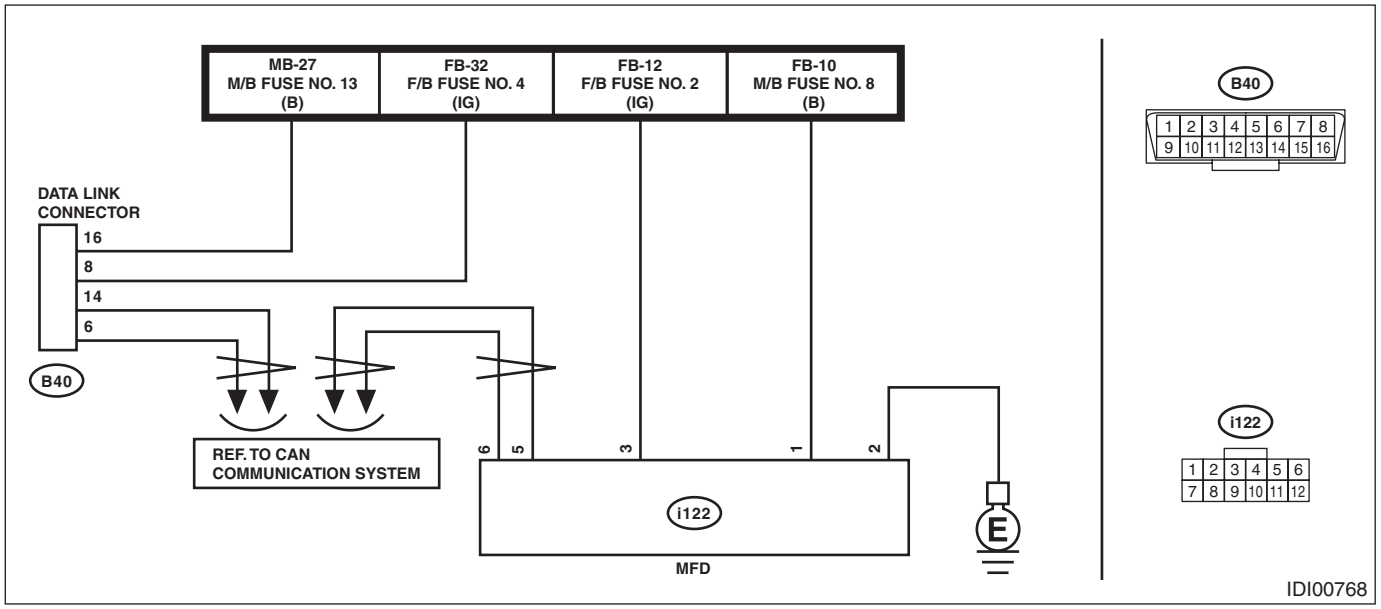

	Step	Check	Yes	No
1	**CHECK OTHER COMMUNICATION.** Communicate with the system other than the MFD using the Subaru Select Monitor.	Is the communication to other control module possible?	Go to step **2**.	Perform the "Communication for Initializing Impossible" of LAN system. <Ref. to LAN(diag)-12, COMMUNICATION FOR INITIALIZING IMPOSSIBLE, Subaru Select Monitor.>
2	**CHECK DTC.** Read the DTC of the LAN system using the Subaru Select Monitor. <Ref. to LAN(diag)-36, OPERATION, Read Diagnostic Trouble Code (DTC).>	Is DTC displayed?	Perform the diagnosis for the displayed DTCs.	Go to step **3**.
3	**CHECK MFD.** 1) Turn the ignition switch to OFF. 2) Disconnect the MFD connector. 3) Connect the disconnected connectors. 4) Communicate with the MFD using the Subaru Select Monitor.	Is communication possible?	It is possible that temporary poor communication occurs.	Replace the MFD. <Ref. to IDI-20, Multi-function Display (MFD).>

7. Read Diagnostic Trouble Code (DTC)

A: OPERATION

1. COMBINATION METER

1) On «Start» display, select «Diagnosis».
2) On «Vehicle selection» display, input the target vehicle information and select «Confirmed».
3) On «Main Menu» display, select «Each System».
4) On «Select System» display, select «Combination Meter» and then select «Enter».
5) On «Select Function» display, select «DTC».

NOTE:
- For detailed operation procedures, refer to “Application help”.
- For details concerning DTC, refer to “List of Diagnostic Trouble Code (DTC)”. <Ref. to IDI(diag)-23, List of Diagnostic Trouble Code (DTC).>

2. MFD

1) On «Start» display, select «Diagnosis».
2) On «Vehicle selection» display, input the target vehicle information and select «Confirmed».
3) On «Main Menu» display, select «Each System».
4) On «Select System» display, select «Multi-function Display», and then select «Enter».
5) On «Select Function» display, select «DTC».

NOTE:
- For detailed operation procedures, refer to “Application help”.
- For details concerning DTC, refer to “List of Diagnostic Trouble Code (DTC)”. <Ref. to IDI(diag)-23, List of Diagnostic Trouble Code (DTC).>

8. Clear Memory Mode

A: OPERATION

1. COMBINATION METER

1) On «Start» display, select «Diagnosis».
2) On «Vehicle selection» display, input the target vehicle information and select «Confirmed».
3) On «Main Menu» display, select «Each System».
4) On «Select System» display, select «Combination Meter» and then select «Enter».
5) On «Select Function» display, select «DTC».
6) On «DTC» display, select «Clear Memory».

NOTE:
For detailed operation procedures, refer to “Application help”.

2. MFD

1) On «Start» display, select «Diagnosis».
2) On «Vehicle selection» display, input the target vehicle information and select «Confirmed».
3) On «Main Menu» display, select «Each System».
4) On «Select System» display, select «Multi-function Display», and then select «Enter».
5) On «Select Function» display, select «DTC».
6) On «DTC» display, select «Clear Memory».

NOTE:
For detailed operation procedures, refer to “Application help”.

9. Inspection Mode

A: OPERATION

After the ignition switch is ON, wait for 10 seconds.

10.Read Current Data

A: OPERATION

1. COMBINATION METER

1) On «Start» display, select «Diagnosis».
2) On «Vehicle selection» display, input the target vehicle information and select «Confirmed».
3) On «Main Menu» display, select «Each System».
4) On «Select System» display, select «Combination Meter» and then select «Enter».
5) On «Select Function» display, select «Data Monitor».

NOTE:
For detailed operation procedures, refer to “Application help”.

2. MFD

1) On «Start» display, select «Diagnosis».
2) On «Vehicle selection» display, input the target vehicle information and select «Confirmed».
3) On «Main Menu» display, select «Each System».
4) On «Select System» display, select «Multi-function Display», and then select «Enter».
5) On «Select Function» display, select «Data Monitor».

NOTE:
For detailed operation procedures, refer to “Application help”.

B: LIST

- Combination meter

Items to be displayed	Unit of measure	Contents	Note
IG on trip number	times	Time stamp information	—
IG on supply system	—	Time stamp information	—
past time after IG on	ms	Time stamp information	—
Fuel level resistance	Ω	Fuel sensor value display	—
Ambient air temperature	°C	External temperature sensor value display	—
Air temperature correction	°C	Correction value for displaying ambient temperature	—
Mean fuel efficiency correction	%	Correction value for displaying average fuel economy	—
Second level belt warning customize	2-stage warning implemented/2-stage warning not implemented	Implementation status of seat belt second stage warning	—
External air temperature indication value	°C	Calculated value of external temperature for indication	—
Vehicle speed data	km/h	Vehicle speed value detected by meter	—
Engine revolution data	rpm	Engine speed value detected by meter	—
Driver side seat belt state	Drivers seat seat-belt wearing state/Drivers seat seat-belt non-wearing state	Seat belt fastening status	—
Passenger side seat belt state	Passenger seat seat-belt wearing state/Passenger seat seat-belt non-wearing state	Seat belt fastening status	—
Rear side (right) seat belt state	Rear seat right seat-belt wearing state/Rear seat right seat-belt non-wearing state	Seat belt fastening status	—

Items to be displayed	Unit of measure	Contents	Note
Rear side (center) seatbelt state	Rear seat center seat-belt wearing state/Rear seat center seat-belt non-wearing state	Seat belt fastening status	—
Rear side (left) seat belt state	Rear seat left seat-belt wearing state/Rear seat left seat-belt non-wearing state	Seat belt fastening status	—
EPS setting presence state	Electric power steering/No Electric power steering	Electric power steering equipment status	—
R.DIFF oil temperature sensing level	°C	Rear differential oil temperature sensor value	—
Outside temperature for diagnosis	°C	External temperature sensor value display	—
Demonstration mode permission / fault permission	Demonstration mode permission / fault permission	Demonstration mode permission status	—

- MFD

Items to be displayed	Unit of measure	Contents	Note
MFD hardware fail flag	Normal/MFD Fail	MFD abnormal status	—
MFD U-ART communication error flag	Normal/MFD U-ART Fail		—
MFD CAN communication error flag	Normal/MFD CAN Fail		—
MFD destination abnormal flag	Normal/MFD destination error		—
MFD failure information	No error High-speed CAN error counter abnormal High-speed CAN bus OFF detection High-speed CAN data abnormal High-speed CAN data not received UART data abnormal UART data not received IGN line wire break System microcomputer abnormal GERDA abnormal		—
Birthday1 setting M	—	Birthday setting value	—
Birthday1 setting D	—		—
Birthday2 setting M	—	Birthday setting value	—
Birthday2 setting D	—		—
Anniversary1 setting M	—	Anniversary setting value	—
Anniversary1 setting D	—		—
Anniversary2 setting M	—	Anniversary setting value	—
Anniversary2setting D	—		—
Driving record1 setting Yard	—	Driving record 1 setting value	—
Driving record1 setting Time	—		—
Driving record1setting fuel cons. Ave.	—		—
Driving record1 setting M	—		—
Driving record1 setting D	—		—

Items to be displayed	Unit of measure	Contents	Note
Driving record2 setting DIS	—	Driving record 2 setting value	—
Driving record2 setting Time	—		—
Driving record2setting fuel cons. Ave.	—		—
Driving record2 setting M	—		—
Driving record2 setting D	—		—
Clock/OFF setting	OFF External air temperature + analog clock External air temperature + digital clock	Clock display setting	—
Engine oil maintenance setting Y	—	Oil maintenance setting value	—
Engine oil maintenance setting M	—		—
Engine oil maintenance setting D	—		—
Engine oil maintenance setting meter	—		—
Oil filter maintenance setting Y	—	Oil filter maintenance setting value	—
Oil filter maintenance setting M	—		—
Oil filter maintenance setting D	—		—
Oil filter maintenance setting meter	—		—
Tire maintenance setting Y	—	Tire maintenance setting value	—
Tire maintenance setting M	—		—
Tire maintenance setting D	—		—
Tire maintenance setting meter	—		—
Maintenance schedule Y	—	Periodic inspection setting value	—
Maintenance schedule M	—		—
Maintenance schedule D	—		—
Maintenance schedule meter	—		—
Sub-meter(left) setting NO1	Indication OFF Avg. Speed ODO fuel efficiency ECVT Fluid Temp. Accel opening angle Section time Section distance Section fuel efficiency	Meter display setting	—
Sub-meter(left) setting NO2	Analog display Digital display	Meter display setting	—
Sub-meter(center) setting NO1	Indication OFF Avg. Speed ODO fuel efficiency ECVT Fluid Temp. Accel opening angle Section time Section distance Section fuel efficiency	Meter display setting	—
Sub-meter(center) setting NO2	Analog display Digital display	Meter display setting	—
Sub-meter(right) setting NO1	Indication OFF Avg. Speed ODO fuel efficiency ECVT Fluid Temp. Accel opening angle Section time Section distance Section fuel efficiency	Meter display setting	—

Items to be displayed	Unit of measure	Contents	Note
Sub-meter(right) setting NO2	Analog display Digital display	Meter display setting	—
MFD brightness setting NO1	—	MFD setting	—
MFD brightness setting NO2	—	MFD setting	—
MFD contrast setting NO1	–5 — +5	MFD setting	—
MFD contrast setting NO2	–5 — +5	MFD setting	—
ECO evaluation ON-OFF setting	OFF/ON	MFD setting	—
Info area setting	OFF Average Fuel Efficiency FUEL CONS Range	MFD setting	—
Menu language setting	(Corresponding languages)	MFD setting	—
Buzzer volume setting	OFF Small Loud	MFD setting	—
Fuel cons. Setting	00/OFF	MFD setting	—
Auto Start Stop interrupt display setting	OFF/ON	MFD setting	Not applicable
Welcome display ON-OFF setting	OFF/ON	MFD setting	—
Self check ON-OFF setting	OFF/ON	MFD setting	—

11.System Operation Check Mode

A: OPERATION

1. COMBINATION METER

1) On «Start» display, select «Diagnosis».
2) On «Vehicle selection» display, input the target vehicle information and select «Confirmed».
3) On «Main Menu» display, select «Each System».
4) On «Select System» display, select «Combination Meter» and then select «Enter».
5) On «Select Function» display, select «Active Test».
6) On «Active Test» display, select an item to be checked.

NOTE:
- For detailed operation procedures, refer to “Application help”.
- If not equipped (depending on destination area or vehicle equipment condition), process will not go on.

CAUTION:
After executing the system operation check mode, execute the Clear Memory Mode. <Ref. to IDI(diag)-14, OPERATION, Clear Memory Mode.>

B: LIST

- Combination meter

Check item	Item 1	Item 2	Note
Meter Needle Movement Check	Speedometer	—	—
	Tacho meter	—	—
	Fuel Meter Operation	—	—
	Water thermometer	—	—
Lamp check	All lamps lighted	—	—
	Indicator drive	High-beam indicator	—
		Position light indicator	—
		Front fog light indicator	—
		Rear fog light indicator	—
		VDC OFF indicator	—
		VDC operation/failure indicator	—
		Hill start assist OFF/failure indicator	—
		LANE OFF indicator	—
		P-CR OFF indicator	—
		REV/RED ZONE indicator	—
		Traction mode indicator	—

Check item	Item 1	Item 2	Note
Lamp check	Warning drive	Driver side seat belt warning	—
		Airbag warning	—
		TPMS warning	—
		E/G remaining oil warning	—
		AT (CVT) oil temperature warning	—
		R.DIFF oil temperature warning	—
		ABS warning	—
		BRAKE warning	—
		AWD warning	—
		Remaining fuel warning	—
		EPS warning	—
		EyeSight failure warning	—
		Check E/G warning	—
		Charge warning	—
		Oil pressure warning	—
		Vacuum pump warning	—
		HID auto leveler warning	—
		LED LO beam warning	—
MFD output check	Passenger side seat belt warning	—	—
	Rear seat (right) seat belt warning	—	—
	Rear seat (center) seat belt warning	—	—
	Rear seat (left) seat belt warning	—	—
	Momentary fuel efficiency display value	—	—
	Mean fuel efficiency A display value	—	—
	Mean fuel efficiency B display value	—	—
	Remaining fuel cruising distance display value	—	—
	External air temperature indication value	—	—
	Mean vehicle speed display value	—	—
Illumination check	Brightness check	—	—
BUZZER	Sounding output ON/OFF	—	—
Display Operation Check Mode	White indication	—	—
	Black indication	—	—
	Red indication	—	—
	Green indication	—	—
	Blue indication	—	—
	Gradation indication	—	—
	Flicker indication	—	—
	Cross talking indication	—	—

12.User Customizing

A: OPERATION

1. COMBINATION METER

1) On «Start» display, select «Diagnosis».
2) On «Vehicle selection» display, input the target vehicle information and select «Confirmed».
3) On «Main Menu» display, select «Each System».
4) On «Select System» display, select «Combination Meter» and then select «Enter».
5) On «Select Function» display, select «Customize».
6) On «Customize» display, select an item to be customized.

NOTE:
• For detailed operation procedures, refer to “Application help”.
• If not equipped (depending on destination area or vehicle equipment condition), some items are not displayed.

B: LIST

• Combination meter

Items to be displayed	Initial setting value	Customize setting	Note
Air temperature correction	±0°C	–5°C — +5°C	Temperature compensation can only be performed by 1°C (1°C change = 1.8°F) interval.
Mean fuel efficiency correction	±0°%	+10% — –10%	—
Second level belt warning customize	2-stage warning implemented	2-stage warning implemented/2-stage warning not implemented	—
Demonstration mode permission / fault permission	OFF	Demonstration mode permission / fault permission	Demonstration mode must not be permitted when used by a customer.

13.List of Diagnostic Trouble Code (DTC)

A: LIST

DTC	Item	Contents	Reference
U0073	CONTROL MODULE COMMUNICATION BUS OFF	Detected when CAN line abnormality is detected.	<Ref. to IDI(diag)-25, DTC U0073 CONTROL MODULE COMMUNICATION BUS OFF, Diagnostic Procedure with Diagnostic Trouble Code (DTC).>
U0100	LOST COMMUNICATION WITH ECM/PCM “A”	Detected when CAN data from the engine control module (ECM) does not arrive.	<Ref. to IDI(diag)-25, DTC U0100 LOST COMMUNICATION WITH ECM/PCM “A”, Diagnostic Procedure with Diagnostic Trouble Code (DTC).>
U0101	LOST COMMUNICATION WITH TCM	Detected when CAN data from TCM does not arrive.	<Ref. to IDI(diag)-25, DTC U0101 LOST COMMUNICATION WITH TCM, Diagnostic Procedure with Diagnostic Trouble Code (DTC).>
U0122	LOST COMMUNICATION WITH VEHICLE DYNAMICS CONTROL MODULE	Detected when CAN data from VDC does not arrive.	<Ref. to IDI(diag)-25, DTC U0122 LOST COMMUNICATION WITH VEHICLE DYNAMICS CONTROL MODULE, Diagnostic Procedure with Diagnostic Trouble Code (DTC).>
U0128	LOST COMMUNICATION WITH PARK BRAKE CONTROL MODULE	Detected when CAN data from VDC does not arrive.	<Ref. to IDI(diag)-25, DTC U0128 LOST COMMUNICATION WITH PARK BRAKE CONTROL MODULE, Diagnostic Procedure with Diagnostic Trouble Code (DTC).>
U0131	LOST COMMUNICATION WITH POWER STEERING CONTROL MODULE	Detected when CAN data from electric power steering CM does not arrive.	<Ref. to IDI(diag)-25, DTC U0131 LOST COMMUNICATION WITH POWER STEERING CONTROL MODULE, Diagnostic Procedure with Diagnostic Trouble Code (DTC).>
U0140	LOST COMMUNICATION WITH BODY CONTROL MODULE	Detected when CAN data from body integrated unit does not arrive.	<Ref. to IDI(diag)-25, DTC U0140 LOST COMMUNICATION WITH BODY CONTROL MODULE, Diagnostic Procedure with Diagnostic Trouble Code (DTC).>
U0151	LOST COMMUNICATION WITH RESTRAINTS CONTROL MODULE	Detected when CAN data from airbag CM does not arrive.	<Ref. to IDI(diag)-25, DTC U0151 LOST COMMUNICATION WITH RESTRAINTS CONTROL MODULE, Diagnostic Procedure with Diagnostic Trouble Code (DTC).>
U0156	LOST COMMUNICATION WITH INFORMATION CENTER "A"	Detected when CAN data from MFD does not arrive.	<Ref. to IDI(diag)-25, DTC U0156 LOST COMMUNICATION WITH INFORMATION CENTER "A", Diagnostic Procedure with Diagnostic Trouble Code (DTC).>
U0164	LOST COMMUNICATION WITH HVAC CONTROL MODULE	Detected when CAN data from A/C CM does not arrive.	<Ref. to IDI(diag)-26, DTC U0164 LOST COMMUNICATION WITH HVAC CONTROL MODULE, Diagnostic Procedure with Diagnostic Trouble Code (DTC).>
U0181	LOST COMMUNICATION WITH HEADLAMP LEVELING CONTROL MODULE	Detected when CAN data from headlight beam leveler CM does not arrive.	<Ref. to IDI(diag)-26, DTC U0181 LOST COMMUNICATION WITH HEADLAMP LEVELING CONTROL MODULE, Diagnostic Procedure with Diagnostic Trouble Code (DTC).>
U0327	SOFTWARE INCOMPATIBILITY WITH VEHICLE SECURITY CONTROL MODULE	Detected when CAN data from keyless access CM does not arrive.	<Ref. to IDI(diag)-26, DTC U0327 SOFTWARE INCOMPATIBILITY WITH VEHICLE SECURITY CONTROL MODULE, Diagnostic Procedure with Diagnostic Trouble Code (DTC).>
U1135	LOST COMMUNICATION WITH DCCD CONTROL MODULE	Detected when CAN data from DCCD CM does not arrive.	<Ref. to IDI(diag)-26, DTC U1135 LOST COMMUNICATION WITH DCCD CONTROL MODULE, Diagnostic Procedure with Diagnostic Trouble Code (DTC).>
U1201	CAN-HS COUNTER ABNORMAL	Detected when CAN data is abnormal.	<Ref. to IDI(diag)-26, DTC U1201 CAN-HS COUNTER ABNORMAL, Diagnostic Procedure with Diagnostic Trouble Code (DTC).>

DTC	Item	Contents	Reference
U1232	LOST COMMUNICATION WITH REAR/SIDE RADAR CONTROL MODULE	Detected when CAN data from radar sensor does not arrive.	<Ref. to IDI(diag)-26, DTC U1232 LOST COMMUNICATION WITH REAR/SIDE RADAR CONTROL MODULE, Diagnostic Procedure with Diagnostic Trouble Code (DTC).>
U1650	INVALID DATA RECEIVED FROM METER (UART)	UART data from the combination meter is abnormal.	<Ref. to IDI(diag)-27, DTC U1650 INVALID DATA RECEIVED FROM METER (UART), Diagnostic Procedure with Diagnostic Trouble Code (DTC).>
U1651	LOST COMMUNICATION WITH METER (UART)	UART data from the combination meter has not arrived.	<Ref. to IDI(diag)-29, DTC U1651 LOST COMMUNICATION WITH METER (UART), Diagnostic Procedure with Diagnostic Trouble Code (DTC).>
B2223	GERDA MALFUNCTION	When transmitting and receiving of data cannot be done normally between system microcomputer and image microcomputer.	<Ref. to IDI(diag)-30, DTC B2223 GERDA MALFUNCTION, Diagnostic Procedure with Diagnostic Trouble Code (DTC).>
B1500	FUEL SENDER OPEN/SHORT-CIRCUIT DETECTION	Fuel gauge circuit is open or shorted.	<Ref. to IDI(diag)-31, DTC B1500 FUEL SENDER OPEN/SHORT-CIRCUIT DETECTION, Diagnostic Procedure with Diagnostic Trouble Code (DTC).>
B1501	POWER SUPPLY SYSTEM ERROR DETECTION	Combination meter power supply circuit is open or shorted.	<Ref. to IDI(diag)-33, DTC B1501 POWER SUPPLY SYSTEM ERROR DETECTION, Diagnostic Procedure with Diagnostic Trouble Code (DTC).>
B1507	EXTERNAL AIR TEMPERATURE OPEN/SHORT-CIRCUIT DETECTION	External air temperature sensor circuit is open or shorted.	<Ref. to IDI(diag)-34, DTC B1507 EXTERNAL AIR TEMPERATURE OPEN/SHORT-CIRCUIT DETECTION, Diagnostic Procedure with Diagnostic Trouble Code (DTC).>

14.Diagnostic Procedure with Diagnostic Trouble Code (DTC)

A: DTC U0073 CONTROL MODULE COMMUNICATION BUS OFF

Detected when CAN line abnormality is detected.

NOTE:
Perform the diagnosis for LAN system. <Ref. to LAN(diag)-2, PROCEDURE, Basic Diagnostic Procedure.>

B: DTC U0100 LOST COMMUNICATION WITH ECM/PCM “A”

Detected when CAN data is not received from engine control module (ECM).

NOTE:
Perform the diagnosis for LAN system. <Ref. to LAN(diag)-2, PROCEDURE, Basic Diagnostic Procedure.>

C: DTC U0101 LOST COMMUNICATION WITH TCM

Detected when CAN data is not received from TCM.

NOTE:
Perform the diagnosis for LAN system. <Ref. to LAN(diag)-2, PROCEDURE, Basic Diagnostic Procedure.>

D: DTC U0122 LOST COMMUNICATION WITH VEHICLE DYNAMICS CONTROL MODULE

Detected when CAN data is not received from VDC.

NOTE:
Perform the diagnosis for LAN system. <Ref. to LAN(diag)-2, PROCEDURE, Basic Diagnostic Procedure.>

E: DTC U0128 LOST COMMUNICATION WITH PARK BRAKE CONTROL MODULE

Detected when CAN data from VDC does not arrive.

NOTE:
Perform the diagnosis for LAN system. <Ref. to LAN(diag)-2, PROCEDURE, Basic Diagnostic Procedure.>

F: DTC U0131 LOST COMMUNICATION WITH POWER STEERING CONTROL MODULE

Detected when CAN data is not received from electric power steering CM.

NOTE:
Perform the diagnosis for LAN system. <Ref. to LAN(diag)-2, PROCEDURE, Basic Diagnostic Procedure.>

G: DTC U0140 LOST COMMUNICATION WITH BODY CONTROL MODULE

Detected when CAN data is not received from body integrated unit.

NOTE:
Perform the diagnosis for LAN system. <Ref. to LAN(diag)-2, PROCEDURE, Basic Diagnostic Procedure.>

H: DTC U0151 LOST COMMUNICATION WITH RESTRAINTS CONTROL MODULE

Detected when CAN data is not received from airbag CM.

NOTE:
Perform the diagnosis for LAN system. <Ref. to LAN(diag)-2, PROCEDURE, Basic Diagnostic Procedure.>

I: DTC U0156 LOST COMMUNICATION WITH INFORMATION CENTER "A"

Detected when CAN data from MFD does not arrive.

NOTE:
Perform the diagnosis for LAN system. <Ref. to LAN(diag)-2, PROCEDURE, Basic Diagnostic Procedure.>

J: DTC U0164 LOST COMMUNICATION WITH HVAC CONTROL MODULE

Detected when CAN data is not received from A/C CM.

NOTE:
Perform the diagnosis for LAN system. <Ref. to LAN(diag)-2, PROCEDURE, Basic Diagnostic Procedure.>

K: DTC U0181 LOST COMMUNICATION WITH HEADLAMP LEVELING CONTROL MODULE

Detected when CAN data is not received from auto headlight beam leveler CM.

NOTE:
Perform the diagnosis for LAN system. <Ref. to LAN(diag)-2, PROCEDURE, Basic Diagnostic Procedure.>

L: DTC U0327 SOFTWARE INCOMPATIBILITY WITH VEHICLE SECURITY CONTROL MODULE

Detected when CAN data is not received from keyless access CM.

NOTE:
Perform the diagnosis for LAN system. <Ref. to LAN(diag)-2, PROCEDURE, Basic Diagnostic Procedure.>

M: DTC U1135 LOST COMMUNICATION WITH DCCD CONTROL MODULE

Detected when CAN data from DCCD CM does not arrive.

NOTE:
Perform the diagnosis for LAN system. <Ref. to LAN(diag)-2, PROCEDURE, Basic Diagnostic Procedure.>

N: DTC U1201 CAN-HS COUNTER ABNORMAL

Detected when CAN data is abnormal.

NOTE:
Perform the diagnosis for LAN system. <Ref. to LAN(diag)-2, PROCEDURE, Basic Diagnostic Procedure.>

O: DTC U1232 LOST COMMUNICATION WITH REAR/SIDE RADAR CONTROL MODULE

Detected when CAN data is not received from keyless access CM.

NOTE:
Perform the diagnosis for LAN system. <Ref. to LAN(diag)-2, PROCEDURE, Basic Diagnostic Procedure.>

P: DTC U1650 INVALID DATA RECEIVED FROM METER (UART)

DTC DETECTING CONDITION:
There is an abnormality in UART data from combination meter.
TROUBLE SYMPTOM:
LCD is not displayed.
WIRING DIAGRAM:
Clearance Light and Illumination Light System <Ref. to WI-117, Clearance Light and Illumination Light System.>

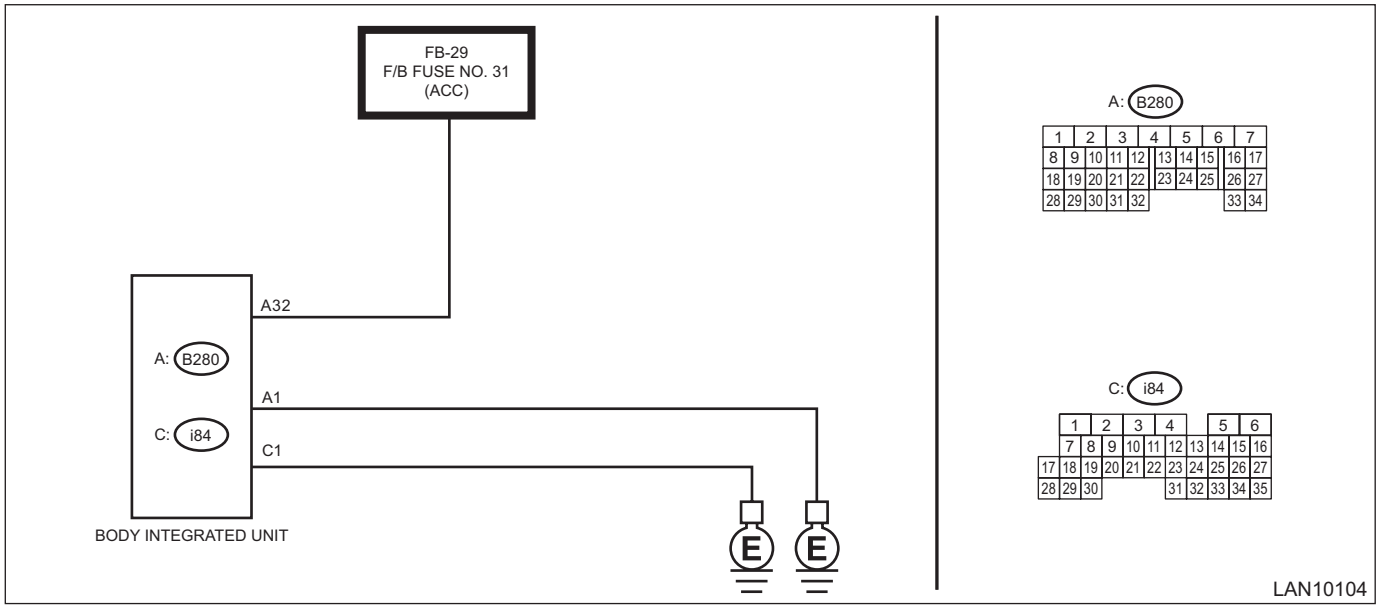

	Step	Check	Yes	No
1	**CHECK LAN SYSTEM.** Read the DTC of body integrated unit and LAN system using Subaru Select Monitor. <Ref. to LAN(diag)-36, OPERATION, Read Diagnostic Trouble Code (DTC).> <Ref. to BC(diag)-11, OPERATION, Read Diagnostic Trouble Code (DTC).>	Is any DTC other than DTC U1650 displayed?	Perform the diagnosis of DTCs other than U1650.	Go to step **2**.
2	**CHECK FUSE.** Check the fuse No. 31 in the fuse & relay box.	Is the check result OK?	Go to step **3**.	Replace the fuse. When the fuse is blown easily, check the wiring.
3	**CHECK HARNESS.** 1) Disconnect the body integrated unit connector. 2) Turn the ignition switch OFF → ACC. 3) Measure the voltage between body integrated unit connector and chassis ground using tester. ***Connector & terminal*** ***(B280) No. 32 (+) — Chassis ground (–):***	Is the voltage 10 V or more?	Go to step **4**.	Repair the ACC power supply circuit of the body integrated unit.

	Step	Check	Yes	No
4	**CHECK CURRENT DATA OF INTEGRATED UNIT.** 1) Connect the Subaru Select Monitor. 2) Turn the ignition switch to ON. 3) Check the current data «ACC voltage» of the body integrated unit. <Ref. to BC(diag)-17, Read Current Data.>	Is the voltage 10 V or more?	Go to step **5**.	Inspect and correct the body integrated unit connector. If there is no abnormality, replace the body integrated unit. <Ref. to SL-81, Body Integrated Unit.> (There may be a poor contact in the body integrated unit connector ((B280) terminal No. 32), or an internal malfunction of the integrated unit.) (If the current data indicates ACC voltage value ≈ Battery voltage, there will be no malfunction up to inside of the integrated unit. If U1650 is still detected in this condition as current malfunction, perform step 5 and subsequent procedures.)
5	**CHECK CONNECTOR.** 1) Disconnect the MFD connector and the combination meter connector. 2) Connect the disconnected connectors. 3) Read the DTC of the MFD using the Subaru Select Monitor. <Ref. to IDI(diag)-13, Read Diagnostic Trouble Code (DTC).>	Is DTC U1650 displayed? (Current malfunction)	Go to step **6**.	There was poor contact of connector. Repair the poor contact of connector. (Poor contact in combination connector (i10) terminal No. 20 or MFD connector (i122) terminal No. 9)
6	**CHECK COMBINATION METER.** 1) Replace the combination meter. <Ref. to IDI-13, Combination Meter.> 2) Read the DTC of the MFD using the Subaru Select Monitor. <Ref. to IDI(diag)-13, Read Diagnostic Trouble Code (DTC).>	Is DTC U1650 displayed? (Current malfunction)	Replace the MFD. <Ref. to IDI-20, Multi-function Display (MFD).>	There was something wrong with the combination meter.

Q: DTC U1651 LOST COMMUNICATION WITH METER (UART)

DTC DETECTING CONDITION:
UART data from combination meter is not received.
TROUBLE SYMPTOM:
LCD is not displayed.
WIRING DIAGRAM:
Multi-function display (MFD) system <Ref. to WI-275, WIRING DIAGRAM, Multi-function Display (MFD) System.>

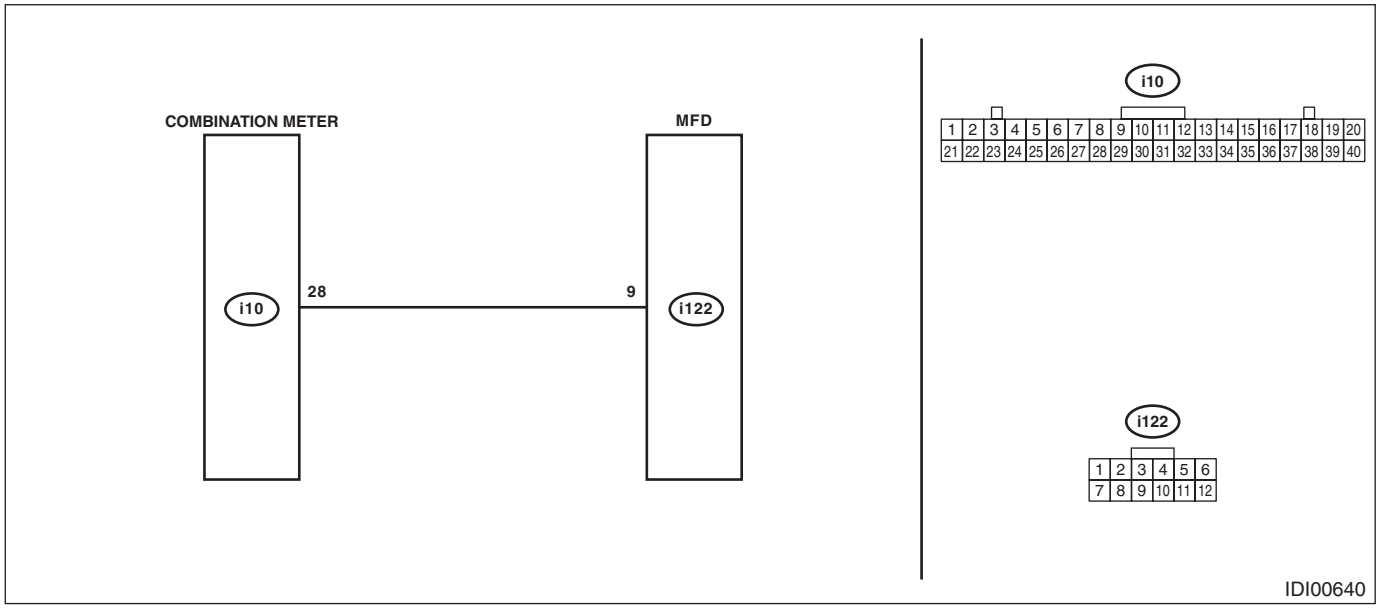

	Step	Check	Yes	No
1	**CHECK LAN SYSTEM.** Read the DTC of the LAN system using the Subaru Select Monitor. <Ref. to LAN(diag)-36, OPERATION, Read Diagnostic Trouble Code (DTC).>	Is DTC for LAN system displayed?	Perform the diagnosis of DTCs for LAN system.	Go to step **2**.
2	**CHECK CONNECTOR.** 1) Disconnect the MFD connector and combination meter connector. 2) Connect the disconnected connectors. 3) Read the DTC of the MFD using the Subaru Select Monitor. <Ref. to IDI(diag)-13, Read Diagnostic Trouble Code (DTC).>	Is DTC U1651 displayed? (Current malfunction)	Go to step **3**.	There was poor contact of connector.
3	**CHECK HARNESS.** 1) Disconnect the MFD connector and combination meter connector. 2) Using the tester, measure the resistance between terminals. ***Connector & terminal*** ***(i10) No. 28 — (i122) No. 9:***	Is the resistance 10 Ω or less?	Go to step **4**.	Repair the open circuit of harness or replace harness.
4	**CHECK HARNESS.** Using the tester, measure the resistance between terminals. ***Connector & terminal*** ***(i122) No. 9 — Chassis ground:***	Is the resistance 10 Ω or less?	Repair the short circuit of harness or replace harness.	Go to step **5**.

	Step	Check	Yes	No
5	**CHECK COMBINATION METER.** 1) Replace the combination meter. <Ref. to IDI-13, Combination Meter.> 2) Read the DTC of the MFD using the Subaru Select Monitor. <Ref. to IDI(diag)-13, Read Diagnostic Trouble Code (DTC).>	Is DTC U1651 displayed? (Current malfunction)	Go to step **6**.	There was something wrong with the combination meter.
6	**CHECK COMBINATION METER.** 1) Replace the current combination meter with the original combination meter. 2) Replace the MFD. <Ref. to IDI-20, Multi-function Display (MFD).> 3) Read the DTC of the MFD using the Subaru Select Monitor. <Ref. to IDI(diag)-13, Read Diagnostic Trouble Code (DTC).>	Is DTC U1651 displayed? (Current malfunction)	Replace the combination meter. <Ref. to IDI-13, Combination Meter.>	There was an abnormality in MFD.

R: DTC B2223 GERDA MALFUNCTION

DTC DETECTING CONDITION:
When the system microcomputer can not send/receive the data with the image microcomputer normally.
TROUBLE SYMPTOM:
There is no display on the TFT. Operation is normal.

NOTE:
Replace the MFD. <Ref. to IDI-20, Multi-function Display (MFD).>

S: DTC B1500 FUEL SENDER OPEN/SHORT-CIRCUIT DETECTION

DTC DETECTING CONDITION:
The fuel gauge circuit is open or shorted.

TROUBLE SYMPTOM:
- Defective fuel gauge.
- Fuel level warning light blinks.

WIRING DIAGRAM:
Fuel gauge system <Ref. to WI-237, WIRING DIAGRAM, Fuel Gauge System.>

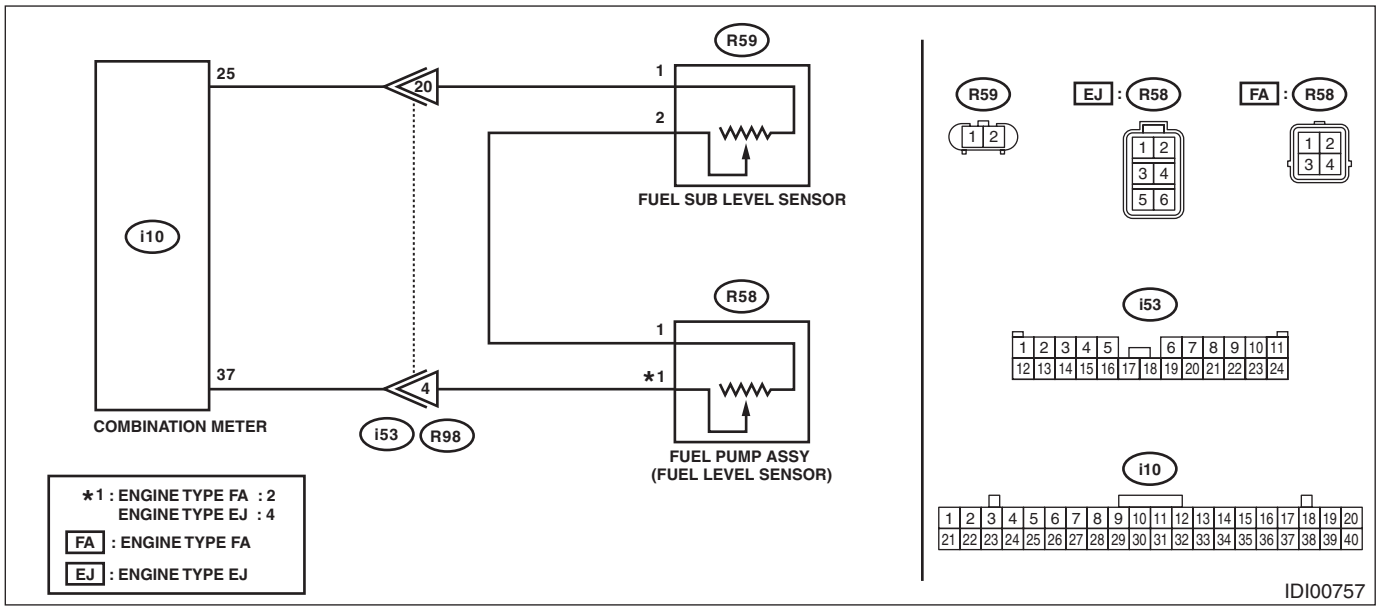

Step		Check	Yes	No
1	**CHECK DTC.** Read the DTC of the combination meter using the Subaru Select Monitor. <Ref. to IDI(diag)-13, Read Diagnostic Trouble Code (DTC).>	Is DTC B1500 displayed? (Current malfunction)	Go to step **2**.	Go to step **7**.
2	**CHECK COMBINATION METER.** 1) Check the operation of combination meter using Subaru Select Monitor. 2) From the {System Operation Check Mode}, select the «Fuel Meter Operation» and «Remaining fuel warning». <Ref. to IDI(diag)-20, System Operation Check Mode.>	Is the operation of combination meter OK?	Go to step **3**.	Replace the combination meter. <Ref. to IDI-13, Combination Meter.>
3	**CHECK HARNESS.** 1) Turn the ignition switch to OFF. 2) Disconnect the combination meter connector and the fuel sub level sensor connector and the fuel level sensor connector. 3) Using the tester, measure the resistance between terminals. ***Connector & terminal*** ***Engine type: FA*** ***(i10) No. 25 — (R59) No. 1:*** ***(i10) No. 37 — (R58) No. 2:*** ***Engine type: EJ*** ***(i10) No. 25 — (R59) No. 1:*** ***(i10) No. 37 — (R58) No. 4:***	Is the resistance 10 Ω or less?	Go to step **4**.	Repair the open circuit of harness or replace harness.

	Step	Check	Yes	No
4	**CHECK HARNESS.** Using the tester, measure the resistance between terminals. ***Connector & terminal*** ***(i10) No. 25 — Chassis ground:*** ***(i10) No. 37 — Chassis ground:***	Is the resistance 10 Ω or less?	Repair the short circuit of harness or replace harness.	Go to step **5**.
5	**CHECK FUEL SUB LEVEL SENSOR.** Check the fuel sub level sensor as a single part. <Ref. to FU(w/o STI)-179, INSPECTION, Fuel Sub Level Sensor.> <Ref. to FU(STI)-92, INSPECTION, Fuel Sub Level Sensor.>	Is the check result OK?	Go to step **6**.	Replace the sensor.
6	**CHECK FUEL LEVEL SENSOR.** Check the fuel level sensor as a single part. <Ref. to FU(w/o STI)-170, INSPECTION, Fuel Level Sensor.> <Ref. to FU(STI)-88, INSPECTION, Fuel Level Sensor.>	Is the check result OK?	Go to step **7**.	Replace the sensor.
7	**CHECK CONNECTOR.** 1) Turn the ignition switch to OFF. 2) Disconnect connectors.	Is there poor contact of connector?	Repair or replace the poor contact of connector.	Go to step **8**.
8	**CHECK CURRENT DATA.** Using the Subaru Select Monitor, display the «Fuel level resistance» from {Data monitor}. <Ref. to IDI(diag)-16, Read Current Data.>	Does the data display 10 — 570 Ω?	System is normal.	Replace the combination meter. <Ref. to IDI-13, Combination Meter.>

T: DTC B1501 POWER SUPPLY SYSTEM ERROR DETECTION

DTC DETECTING CONDITION:
Open or short in combination meter power supply circuit
TROUBLE SYMPTOM:
Defective operation of combination meter
WIRING DIAGRAM:
Combination meter system <Ref. to WI-127, WIRING DIAGRAM, Combination Meter System.>

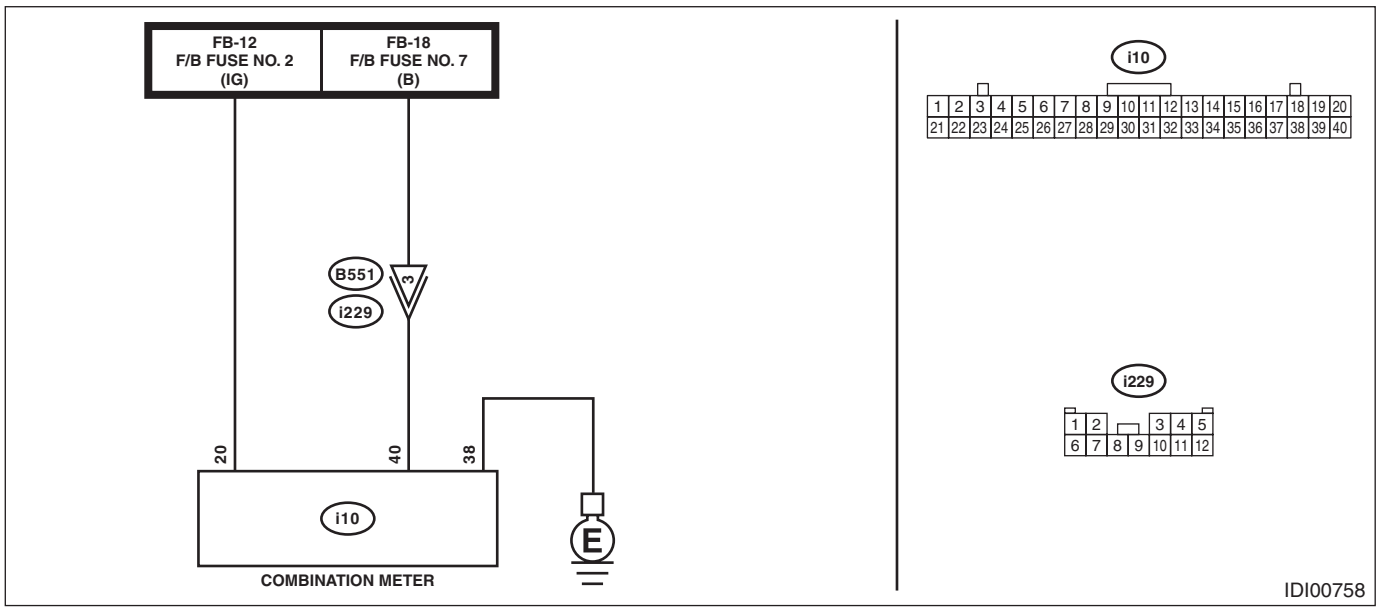

Step		Check	Yes	No
1	**CHECK POWER SUPPLY CIRCUIT.** Turn the ignition switch to ON, and confirm that the illumination of combination meter lights.	Does the illumination light?	Go to step **2**.	Go to step **3**.
2	**CHECK DTC.** Read the DTC of the combination meter using the Subaru Select Monitor. <Ref. to IDI(diag)-13, Read Diagnostic Trouble Code (DTC).>	Is DTC B1501 displayed? (Current malfunction)	Go to step **3**.	Go to step **5**.
3	**CHECK FUSE.** 1) Turn the ignition switch to OFF. 2) Check the fuse. <Ref. to IDI-5, Relay and Fuse.>	Is the check result OK?	Go to step **4**.	Replace the defective fuse.
4	**CHECK HARNESS.** 1) Disconnect the combination meter connector. 2) Turn the ignition switch to ON. 3) Using the tester, measure the voltage between terminals. ***Connector & terminal*** ***(i10) No. 20 (+) — Chassis ground (–):*** ***(i10) No. 40 (+) — Chassis ground (–):***	Is the voltage 8.5 — 16.5 V?	Go to step **5**.	Repair the open circuit of harness or replace harness.
5	**CHECK CONNECTOR.** 1) Turn the ignition switch to OFF. 2) Disconnect connectors.	Is there poor contact of connector?	Repair or replace the poor contact of connector.	A temporary change of voltage occurred.

U: DTC B1507 EXTERNAL AIR TEMPERATURE OPEN/SHORT-CIRCUIT DETECTION

DTC DETECTING CONDITION:
Open or short circuit in ambient sensor
TROUBLE SYMPTOM:
- Defective ambient temperature display
- Defective air conditioner operation

WIRING DIAGRAM:
Air conditioning system <Ref. to WI-74, WIRING DIAGRAM, Air Conditioning System.>

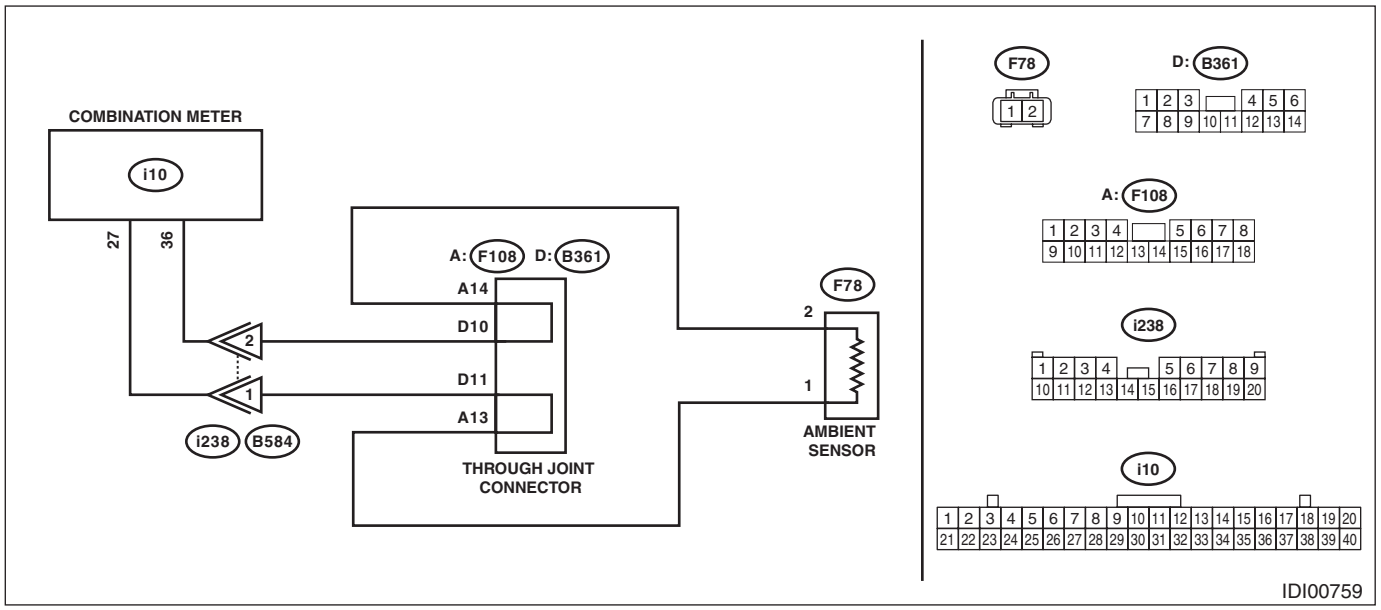

Step		Check	Yes	No
1	**CHECK DTC.** Read the DTC of the combination meter using the Subaru Select Monitor. <Ref. to IDI(diag)-13, Read Diagnostic Trouble Code (DTC).>	Is DTC B1507 displayed? (Current malfunction)	Go to step **2**.	Go to step **6**.
2	**CHECK CURRENT DATA.** Using the Subaru Select Monitor, display the «Ambient air temperature» from {Data monitor}. <Ref. to IDI(diag)-16, Read Current Data.>	Is data displayed?	System is normal.	Go to step **3**.
3	**CHECK HARNESS.** 1) Turn the ignition switch to OFF. 2) Disconnect the combination meter connector and ambient sensor connector. 3) Using the tester, measure the resistance between terminals. ***Connector & terminal*** ***(i10) No. 36 — (F78) No. 2:*** ***(i10) No. 27 — (F78) No. 1:***	Is the resistance 10 Ω or less?	Go to step **4**.	Repair the open circuit of harness or replace harness.
4	**CHECK HARNESS.** Using the tester, measure the resistance between terminals. ***Connector & terminal*** ***(i10) No. 36 — Chassis ground:*** ***(i10) No. 27 — Chassis ground:***	Is the resistance 10 Ω or less?	Repair the short circuit of harness or replace harness.	Go to step **5**.
5	**CHECK AMBIENT SENSOR.** Perform the inspection of ambient sensor unit. <Ref. to AC-73, INSPECTION, Ambient Sensor.>	Is the check result OK?	Go to step **6**.	Replace the sensor.

Step		Check	Yes	No
6	**CHECK CONNECTOR.** 1) Turn the ignition switch to OFF. 2) Disconnect connectors.	Is there poor contact of connector?	Repair or replace the poor contact of connector.	A temporary change of voltage occurred.

SEATS

SE

Page

1. General Description 2
2. Front Seat 9
3. Rear Seat 30
4. Power Seat System 40
5. Seat Heater System 46

1. General Description

A: COMPONENT

1. FRONT SEAT

- Manual seat LH

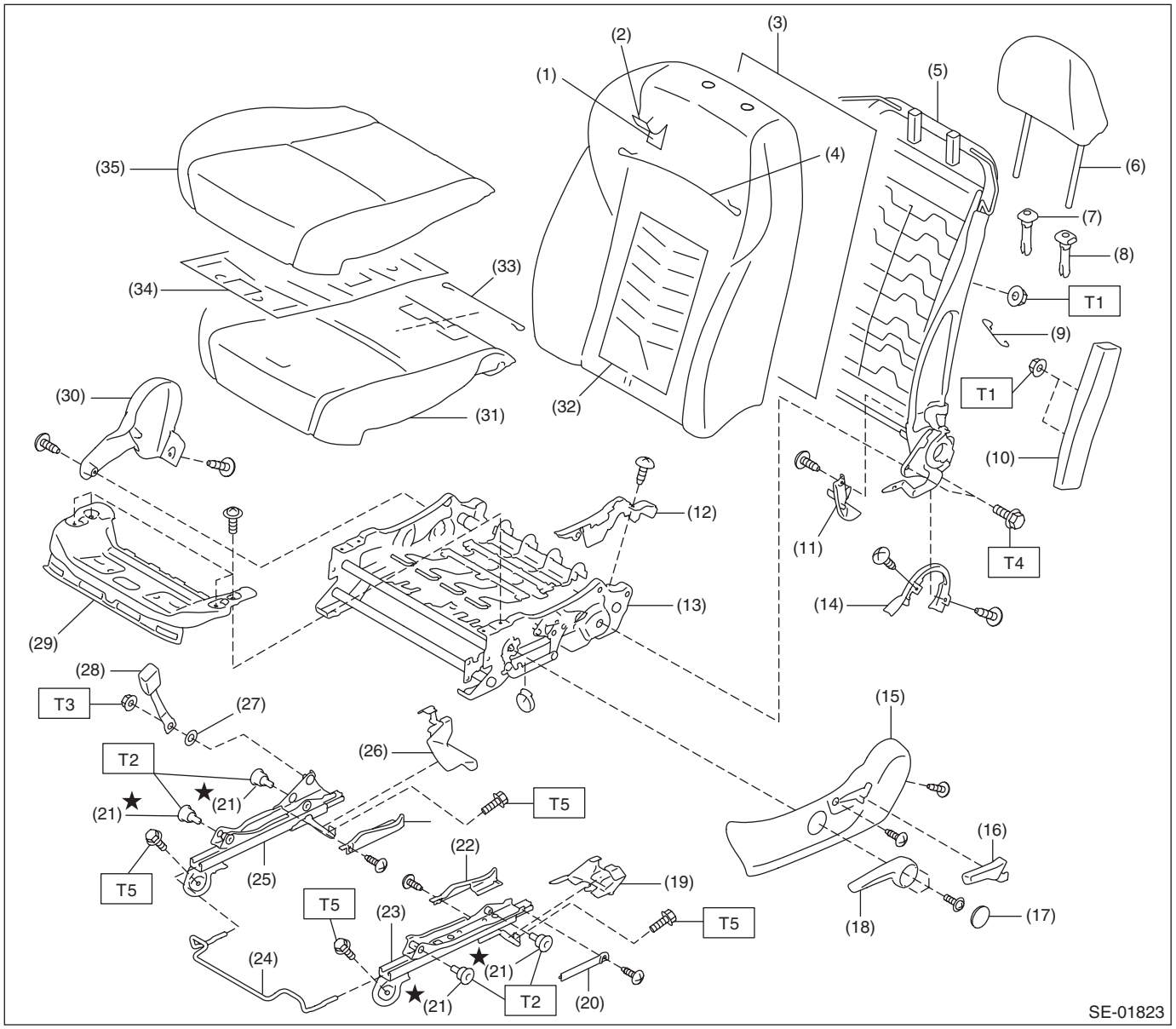

(1) Pad ASSY - front seat backrest
(2) Cover COMPL - front backrest
(3) Cover - silencer front seat backrest
(4) Wire set - front seat backrest
(5) Frame ASSY - front backrest
(6) Headrest ASSY - front
(7) Bushing - free headrest
(8) Bushing - lock headrest
(9) Hook - backrest front
(10) Side airbag module LH
(11) Cover - inner front
(12) Cover - frame front cushion
(13) Frame ASSY - front cushion
(14) Cover - hinge base front seat
(15) Cover - hinge front seat OUT
(16) Lever - reclining
(17) Cap - lifter lever
(18) Knob - lifter
(19) Cover - bolt rear OUT
(20) Cover - slide rail OUT
(21) TORX® bolt
(22) Cover - slide rail OUT
(23) Slide rail ASSY - OUT
(24) Lever - towel bar
(25) Slide rail ASSY - INN
(26) Cover - bolt rear INN
(27) Wave washer
(28) Seat belt inner - front
(29) Panel - front seat
(30) Cover - hinge front seat INN
(31) Pad ASSY - front seat cushion
(32) Heater unit - front seat backrest
(33) Wire set - front seat cushion
(34) Heater unit - front seat cushion
(35) Cover - front cushion

Tightening torque: N·m (kgf-m, ft-lb)

T1: 6 (0.6, 4.4)
T2: 15 (1.5, 11.1)
T3: 38 (3.9, 28)
T4: 52 (5.3, 38.4)
T5: 53 (5.4, 39.1)

SEATS

- Manual seat RH

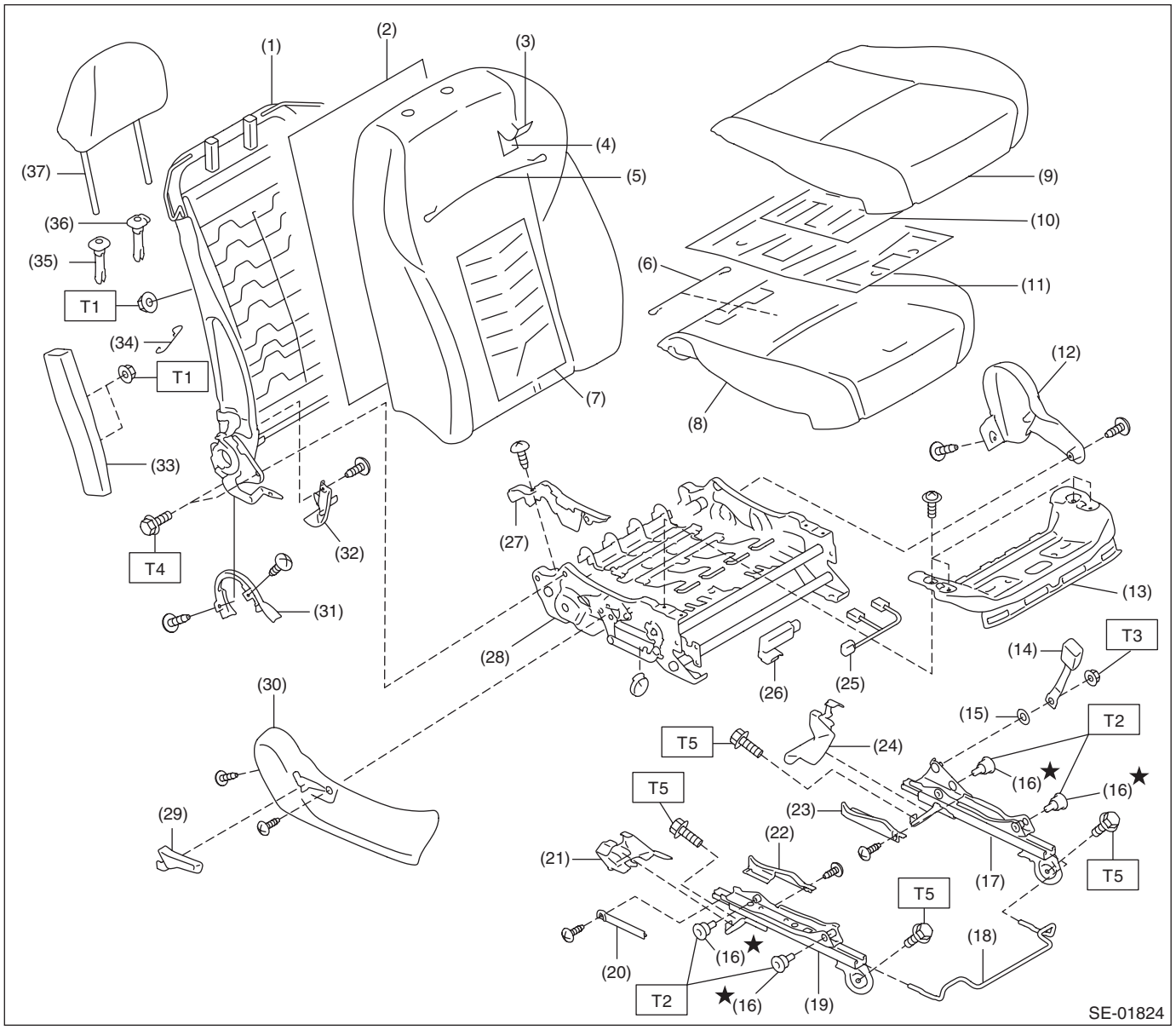

(1) Frame ASSY - front backrest
(2) Cover - silencer front seat backrest
(3) Cover COMPL - front backrest
(4) Pad ASSY - front seat backrest
(5) Wire set - front seat backrest
(6) Wire set - front seat cushion
(7) Heater unit - front seat backrest
(8) Pad ASSY - front seat cushion
(9) Cover - front cushion
(10) Occupant detection sensor
(11) Heater unit - front cushion
(12) Cover - hinge front seat INN
(13) Panel - front seat
(14) Seat belt inner - front
(15) Wave washer
(16) TORX® bolt
(17) Slide rail ASSY - INN
(18) Lever - towel bar
(19) Slide rail ASSY - OUT
(20) Cover - slide rail OUT
(21) Cover - bolt rear OUT
(22) Cover - slide rail OUT
(23) Cover - slide rail INN
(24) Cover - bolt rear INN
(25) Harness - occupant detection sensor
(26) Control module - occupant detection sensor
(27) Cover - frame front seat cushion
(28) Frame ASSY - front seat cushion
(29) Lever - reclining
(30) Cover - hinge front seat OUT
(31) Cover - hinge base front seat
(32) Cover - inner front
(33) Side airbag module RH
(34) Hook - backrest front
(35) Bushing - free headrest
(36) Bushing - lock headrest
(37) Headrest ASSY - front

Tightening torque: N·m (kgf-m, ft-lb)

T1: 6 (0.6, 4.4)
T2: 15 (1.5, 11.1)
T3: 38 (3.9, 28)
T4: 52 (5.3, 38.4)
T5: 53 (5.4, 39.1)

- Power seat

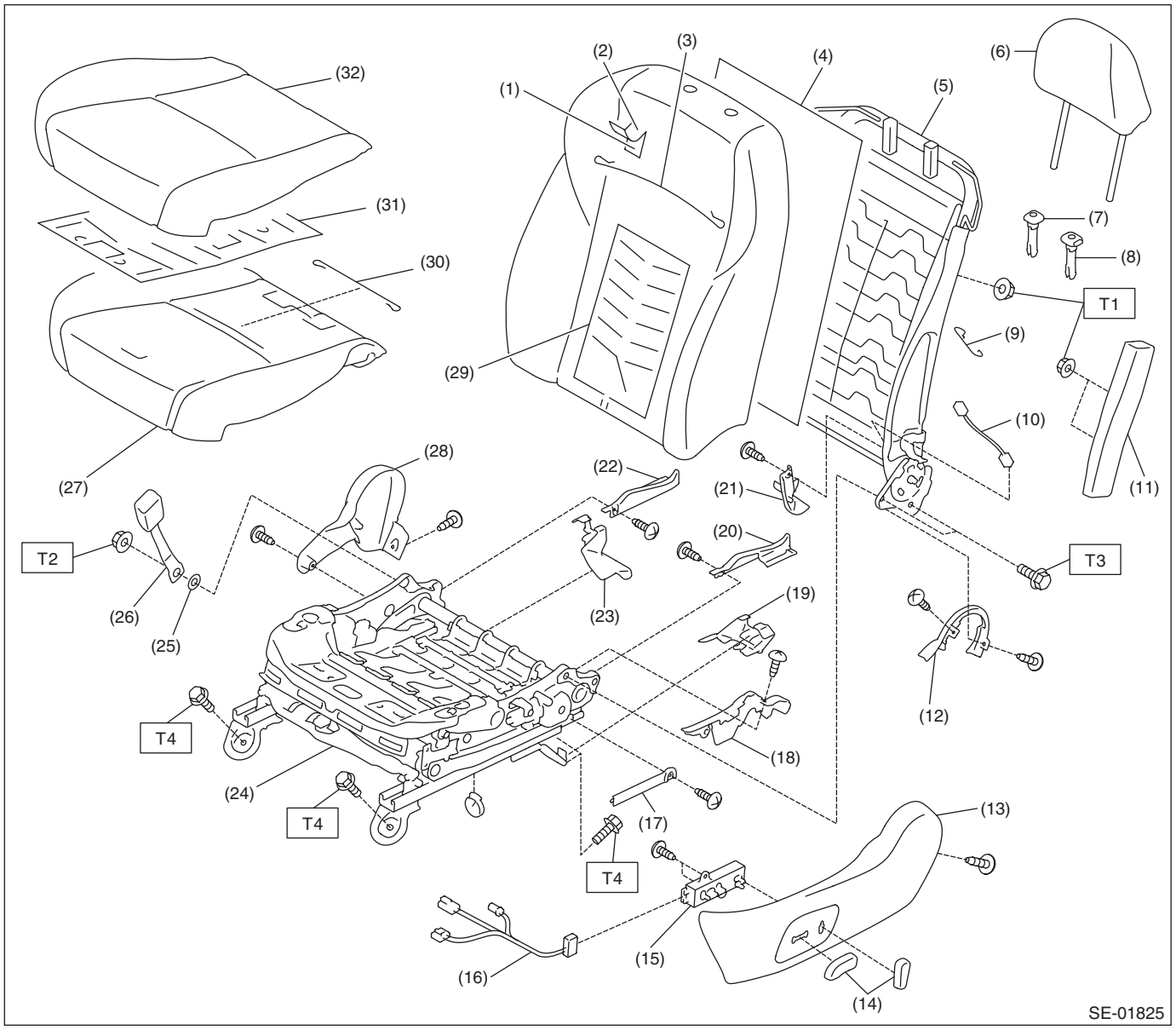

(1) Pad ASSY - front seat backrest
(2) Cover COMPL - front backrest
(3) Wire set - front seat backrest
(4) Cover - silencer front seat backrest
(5) Frame ASSY - front backrest
(6) Headrest ASSY - front
(7) Bushing - free headrest
(8) Bushing - lock headrest
(9) Hook - backrest front
(10) Harness ASSY - power seat
(11) Side airbag module
(12) Cover - hinge base front seat
(13) Cover - hinge front seat OUT
(14) Knob - power seat
(15) Switch ASSY - power seat
(16) Harness ASSY - power seat
(17) Cover - slide rail OUT
(18) Cover - frame front seat cushion
(19) Cover - bolt rear OUT
(20) Cover - slide rail OUT
(21) Cover - inner front
(22) Cover - slide rail INN
(23) Cover - bolt rear INN
(24) Frame ASSY - front cushion
(25) Wave washer
(26) Seat belt inner - front
(27) Pad ASSY - front seat cushion
(28) Cover - hinge front seat INN
(29) Heater unit - front seat backrest
(30) Wire set - front seat cushion
(31) Heater unit - front cushion
(32) Cover - front cushion

Tightening torque: N·m (kgf-m, ft-lb)
T1: 6 (0.6, 4.4)
T2: 38 (3.9, 28)
T3: 52 (5.3, 38.4)
T4: 53 (5.4, 39.1)

2. REAR SEAT

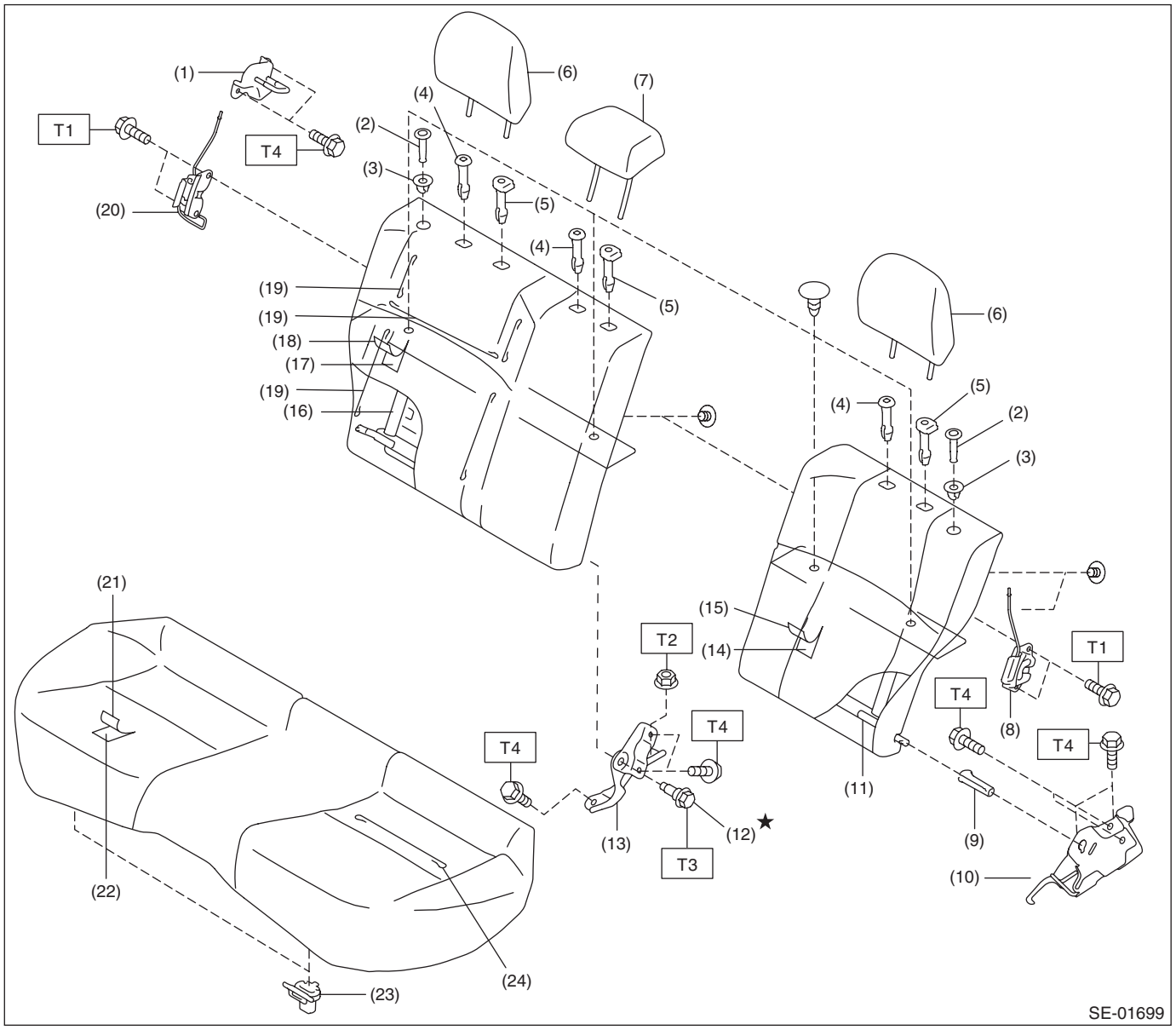

(1) Striker - backrest rear RH
(2) Knob - backrest rear
(3) Knob - guide
(4) Bushing - headrest
(5) Bushing - lock ASSY
(6) Headrest ASSY - rear backrest
(7) Headrest ASSY - rear center
(8) Lock ASSY - backrest rear LH
(9) Bushing - backrest hinge
(10) Hinge ASSY - rear backrest
(11) Frame ASSY - rear backrest LH
(12) Flange bolt
(13) Hinge ASSY - backrest center
(14) Pad ASSY - rear seat backrest LH
(15) Cover COMPL - rear backrest LH
(16) Frame ASSY - rear backrest RH
(17) Pad ASSY - rear seat backrest RH
(18) Cover COMPL - rear backrest RH
(19) Wire set - rear backrest
(20) Lock ASSY - backrest rear RH
(21) Cover - rear cushion
(22) Pad and frame ASSY - rear cushion
(23) Hook - seat cushion rear
(24) Wire set - rear cushion

Tightening torque: N·m (kgf-m, ft-lb)
T1: 22.5 (2.3, 16.6)
T2: 24.5 (2.5, 18.1)
T3: 28.9 (2.9, 21.3)
T4: 33 (3.4, 24.3)

B: CAUTION

When removing the front seat from the vehicle, refer to “CAUTION” of “General Description” in “AIRBAG SYSTEM” section. <Ref. to AB-9, CAUTION, General Description.>

C: PREPARATION TOOL

1. GENERAL TOOL

TOOL NAME	REMARKS
Long nose pliers	Used for removing the hog ring.
Hog ring pliers	Used for installing the hog ring.
Circuit tester	Used for measuring resistance, voltage and current.

2. Front Seat

A: REMOVAL

CAUTION:
Before handling the airbag system components, refer to "CAUTION" of "General Description" in "AIRBAG SYSTEM". <Ref. to AB-9, CAUTION, General Description.>

1) Remove the headrest assembly - front.
2) Disconnect the ground cable from battery and wait for at least 60 seconds before starting work. <Ref. to NT-6, BATTERY, NOTE, Note.>

NOTE:
- For model with battery sensor, disconnect the ground terminal from battery sensor.
- For models with power seat, lift the seating face before removing the seat. (When removing the seat belt inner - front)
- For models with power seat, remove the slide rail installing bolt before removing the battery ground.

3) Remove the slide rail assembly installing bolt.
   (1) Tilt the backrest assembly forward and move the front seat to the front most position.
   (2) Remove the cover - bolt rear (A) and remove the bolts.

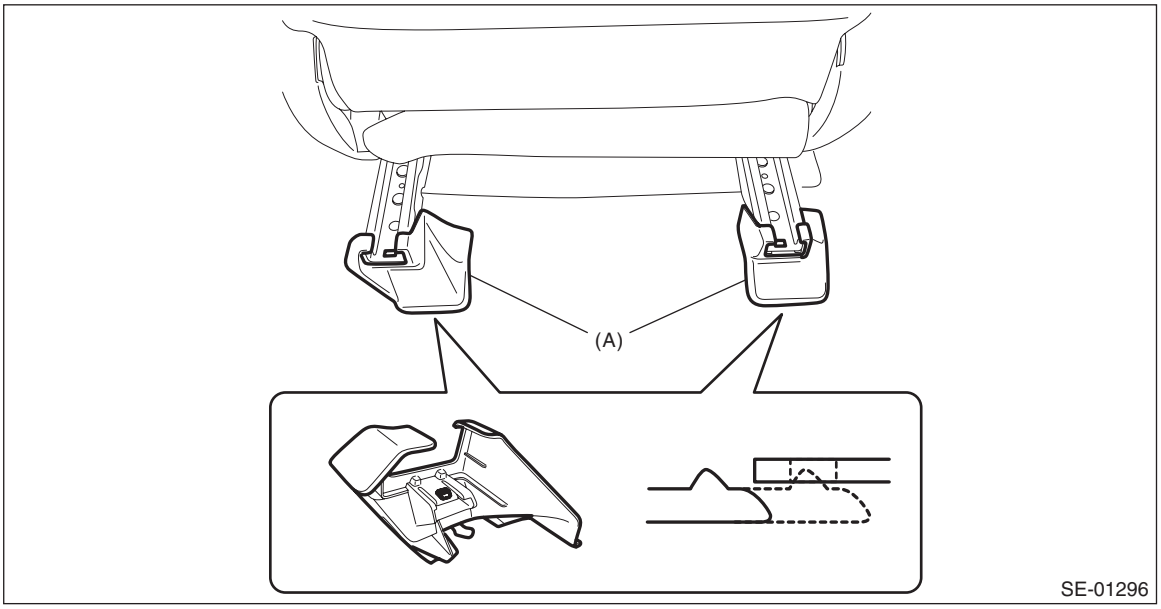

   (3) Move the front seat to the rearmost position, and remove the bolts.

NOTE:
After the bolts are removed, move the seat to the middle position in order to make it easier to take out of the vehicle.

4) Disconnect the connector under the front seat.
- Seat belt warning light connector (driver's seat)
- Occupant detection system harness connector (passenger's seat) <Ref. to OD(diag)-13, OCCUPANT DETECTION SYSTEM (BETWEEN AIRBAG REAR HARNESS AND SEAT HARNESS), PROCEDURE, Airbag Connector.>
- Side airbag connector <Ref. to AB-22, SIDE AIRBAG MODULE, PROCEDURE, Airbag Connector.>
- Seat heater connector (model with seat heater)
- Buckle switch RH connector (passenger's seat) <Ref. to AB-23, BUCKLE SWITCH RH, PROCEDURE, Airbag Connector.>

5) Take out the front seat from the vehicle.

CAUTION:
Be careful not to damage the body.

B: INSTALLATION

1) Bring the front seat inside the vehicle.
2) Connect the connectors located under the front seat.
3) Install the seat assembly.

CAUTION:
• The front seat mounting bolts differ between the front mounting points and the rear mounting points. When installing the front seat, make sure that you are using correct bolts at correct positions.
• Tighten the slide rail assembly installing bolts in the order as shown in the figure, in several steps by gradually increasing the torque until they reach the specified torque.

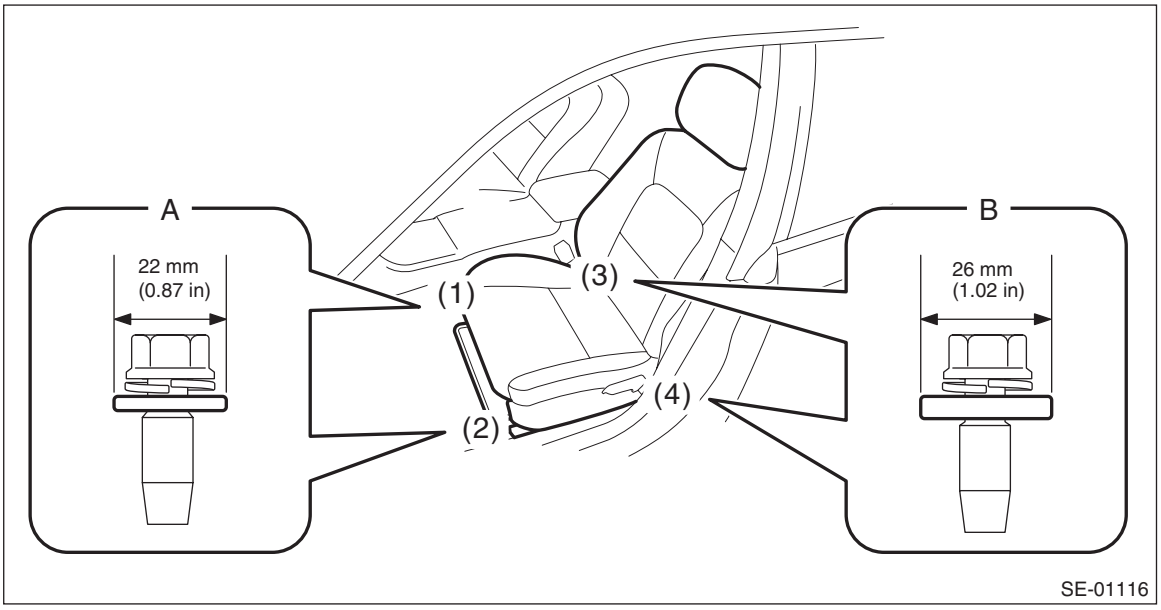

- **Front (bolt A): Washer diameter 22 mm (0.87 in)**
- **Rear (bolt B): Washer diameter 26 mm (1.02 in)**

Tightening torque:
Front seat assembly: 53 N·m (5.4 kgf-m, 39.1 ft-lb)
4) Connect the battery ground terminal. <Ref. to NT-6, BATTERY, NOTE, Note.>
5) Install the headrest assembly - front.

C: DISASSEMBLY

1. MANUAL SEAT

CAUTION:
• Before handling the airbag system components, refer to "CAUTION" of "General Description" in "AIRBAG SYSTEM". <Ref. to AB-9, CAUTION, General Description.>
• Before assembling, make sure how the harnesses such as the side airbag harness and the seat belt inner - front harness are routed in order to avoid misarranging. Assembling with harnesses improperly routed may cause the harness to get caught and short out.
• If the seat heater module is removed, replace the pad assembly with a new part.
• If the seat heater module is reused, remove the polyurethane section from the reverse side completely.

1) Remove the front seat from vehicle. <Ref. to SE-9, REMOVAL, Front Seat.>
2) Remove the knob - lifter.
    (1) Remove the cap - lifter lever (a).

NOTE:
Insert a flat tip screwdriver or similar tool wrapped with protective tape into the gap (shown with arrow) between the cap - lifter lever and the knob - lifter.

    (2) Remove the screws and remove the knob - lifter.

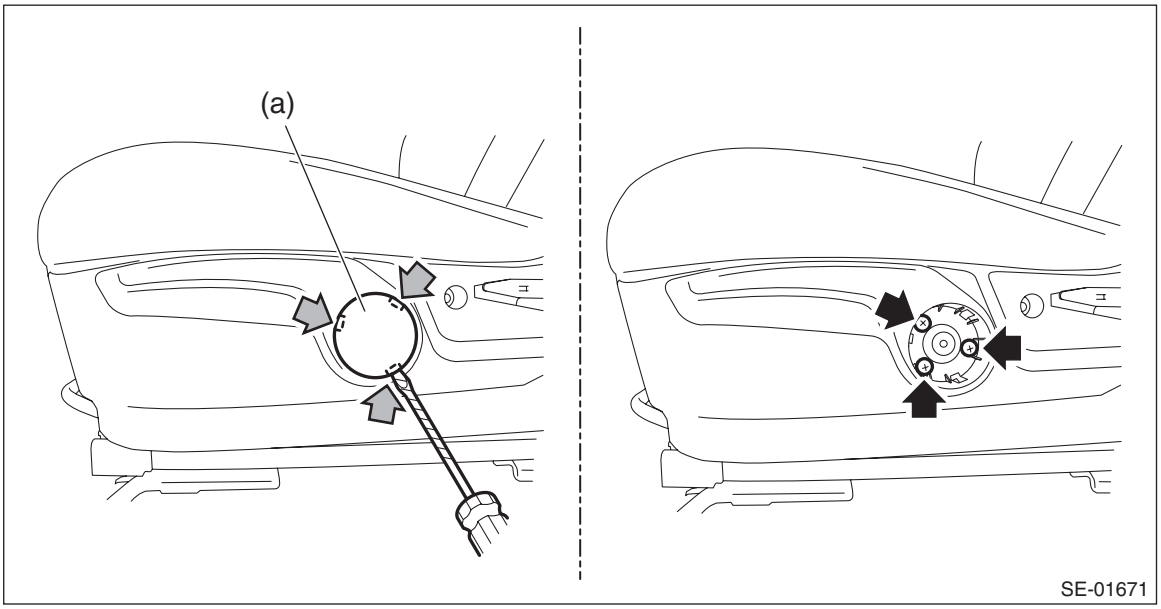

3) Remove the lever - reclining.
(1) Pull up the lever - reclining and release the claws on the back.
(2) Pull out the lever - reclining.

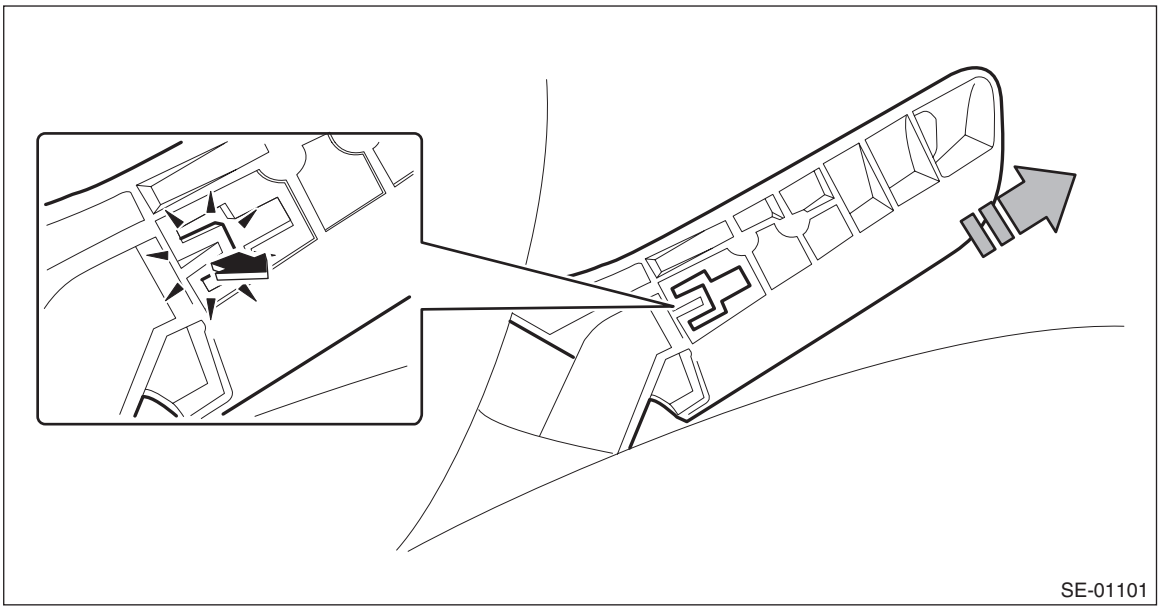
SE-01101

4) Remove the cover - hinge front seat OUT.
(1) Remove the screws.
(2) Release the claw in the upper section of the cover - hinge front seat OUT.
(3) Release the claw in the rear section of the cover - hinge front seat OUT.
(4) Release the claw in the front section of the cover - hinge front seat OUT, then remove the cover - hinge front seat OUT.

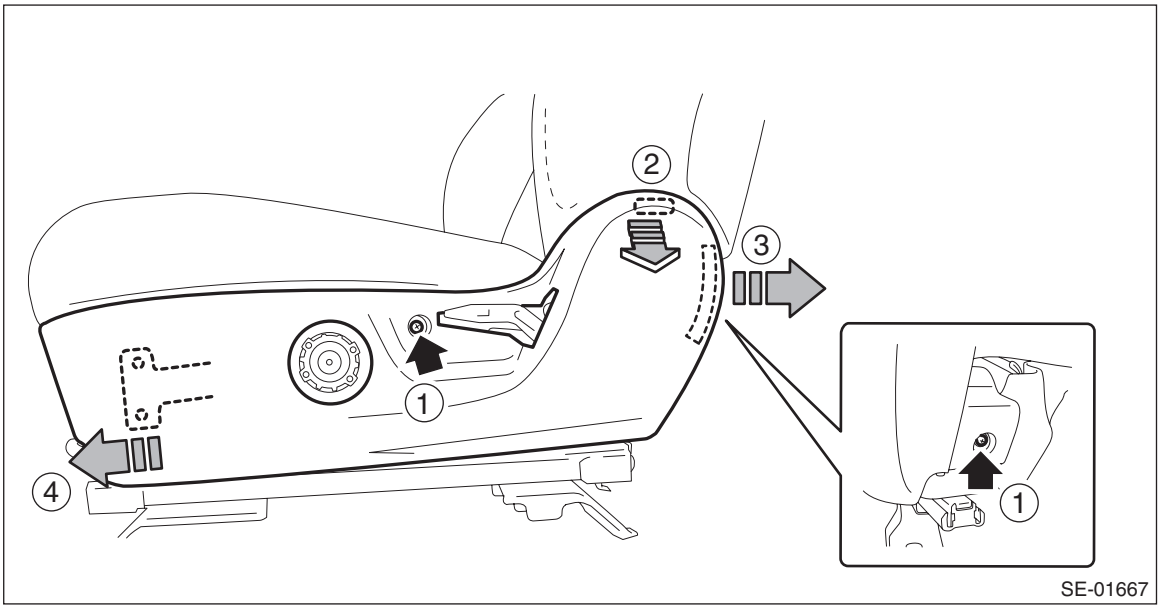

SE-01667

5) Remove the seat belt inner - front. <Ref. to SB-17, SEAT BELT INNER - FRONT, REMOVAL, Front Seat Belt.>

6) Remove the cover - hinge front seat INN.
(1) Remove the screws.
(2) Release the claw in the upper section of the cover - hinge front seat INN.
(3) Release the claw in the rear section of the cover - hinge front seat INN, then remove the cover - hinge front seat INN.

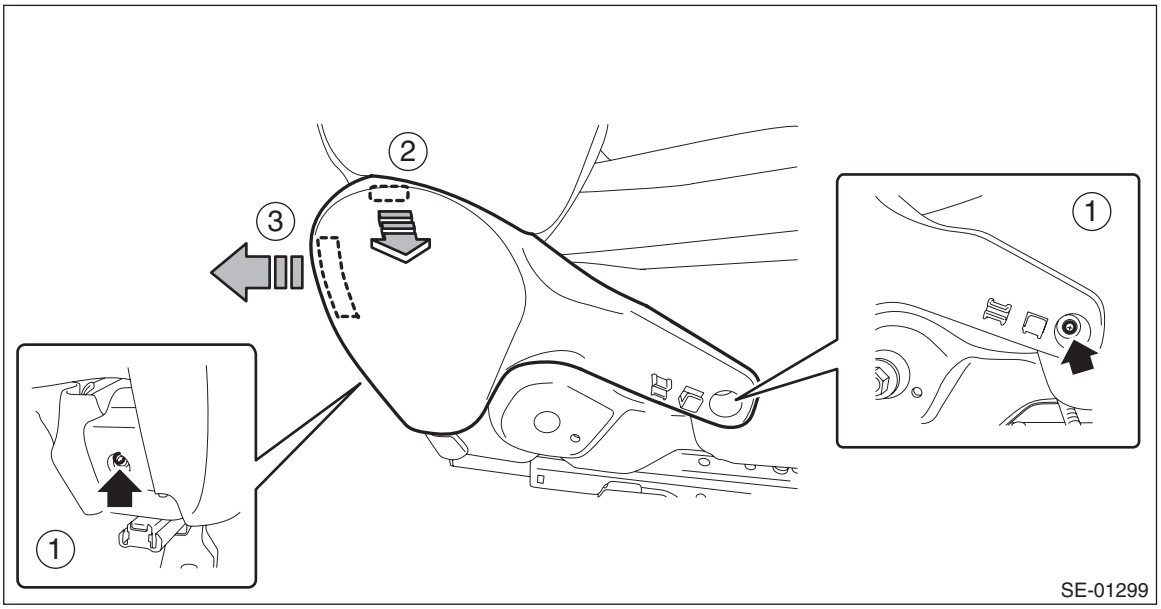

7) Separate the backrest assembly and the seat cushion assembly.
(1) Remove the clip for the side airbag harness located under the seat cushion assembly.
(2) Remove the bolts from reclining hinge of both sides.
(3) While taking care not to damage the airbag harness, separate the backrest assembly and the seat cushion assembly.

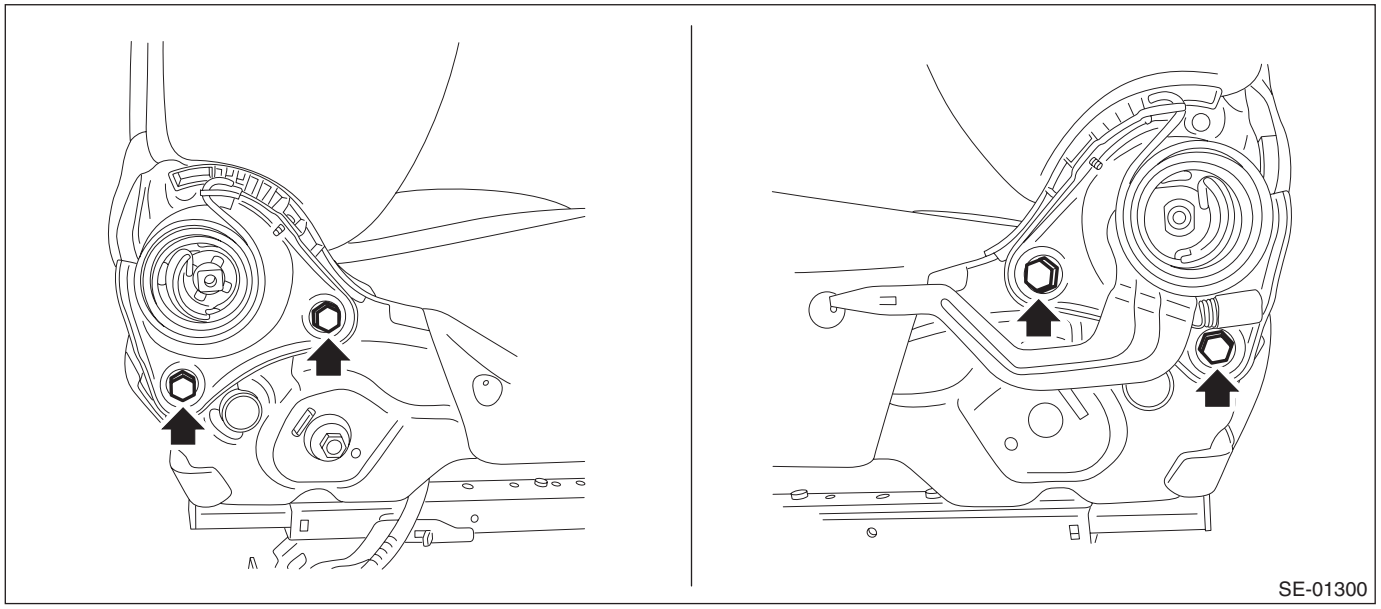

8) Remove the pad assembly - front seat cushion and the cover - front cushion.
(1) Remove the rubber band and clips.
(2) Remove the hooks and hog rings.
(3) Remove the pad assembly - front seat cushion and the cover - front cushion from the seat cushion assembly.

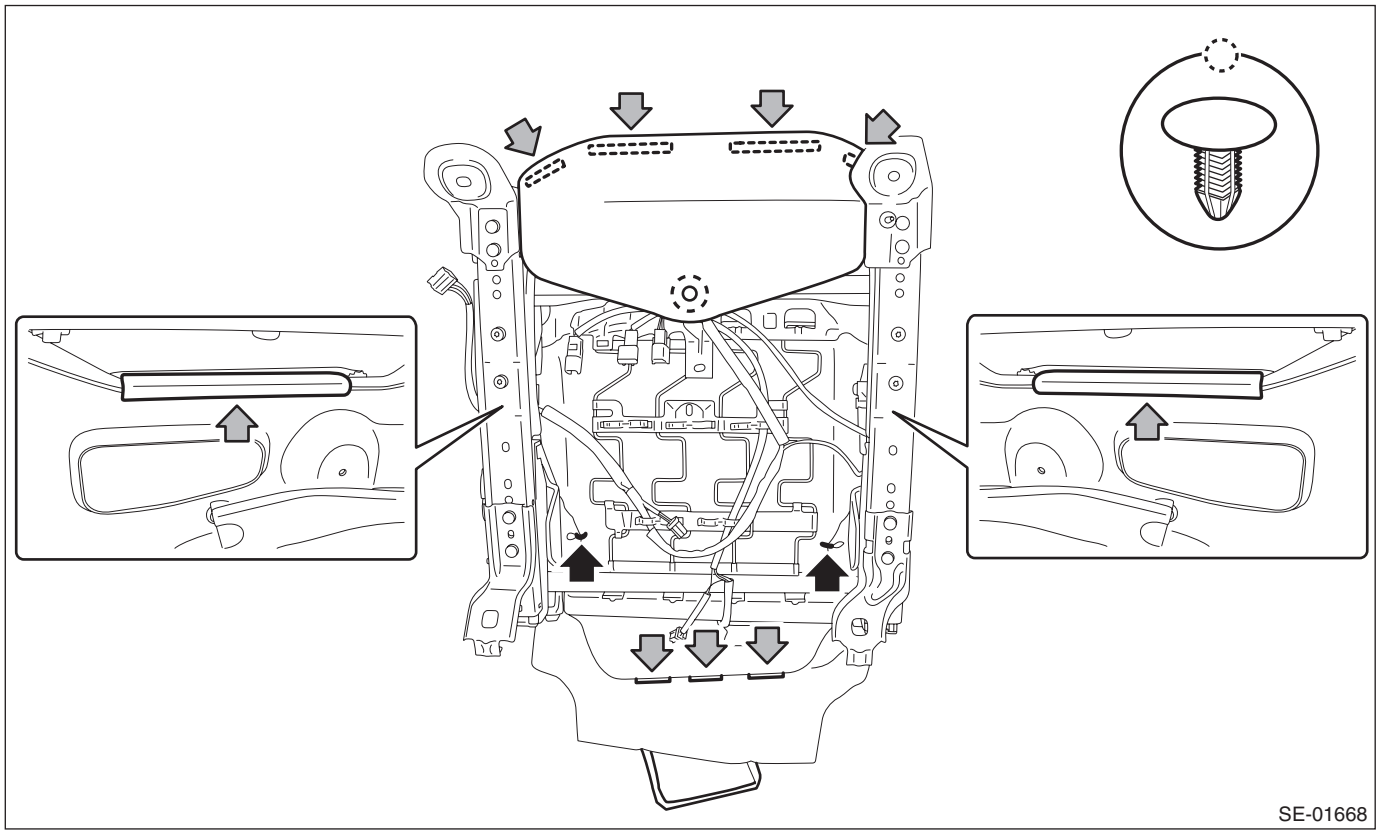

9) Remove the cover - front cushion.
(1) Remove the hog ring (A).

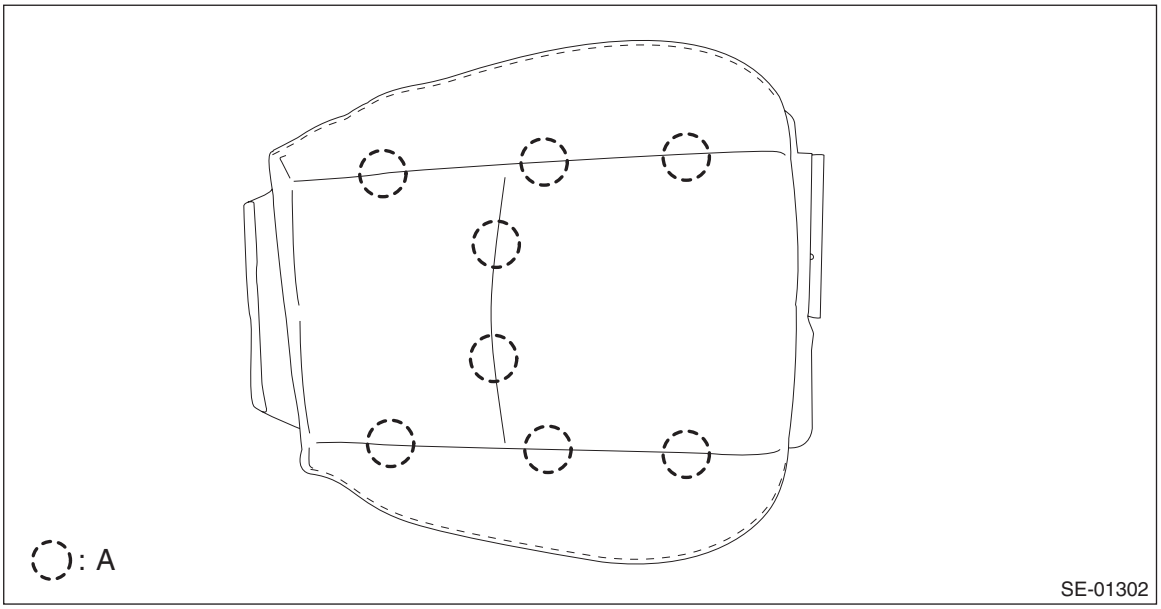

(2) Pull out the pad assembly - front seat cushion from the cover - front cushion.
(3) Remove the seat heater module from the pad assembly as necessary.

CAUTION:
- **If the seat heater module is removed, replace the pad assembly with a new part. (Driver's seat)**
- **If the seat heater module is reused, remove the polyurethane section from the reverse side completely.**

10) Remove the pad assembly - front seat backrest and the cover COMPL - front backrest.
(1) Remove the plastic fastener at the back side (bottom) of backrest assembly.
(2) Open the fastener at the rear side of backrest assembly.

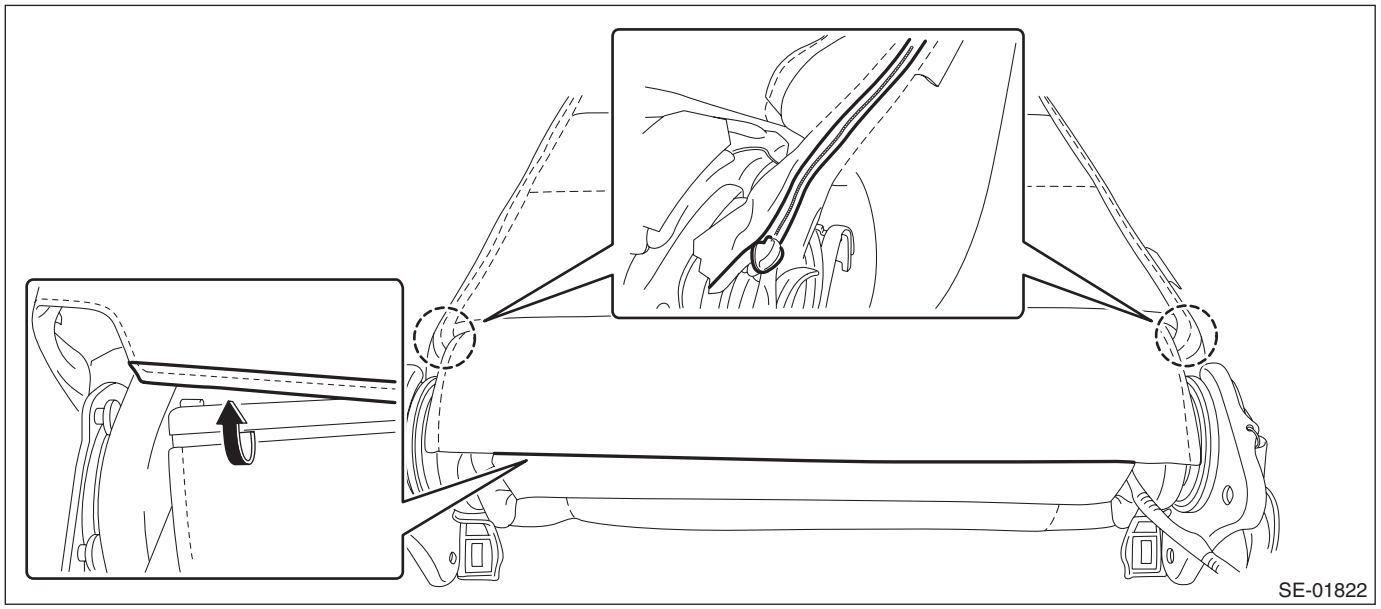

NOTE:
If it is hard to open, use a metal clip, etc.
(3) Remove the hog ring.

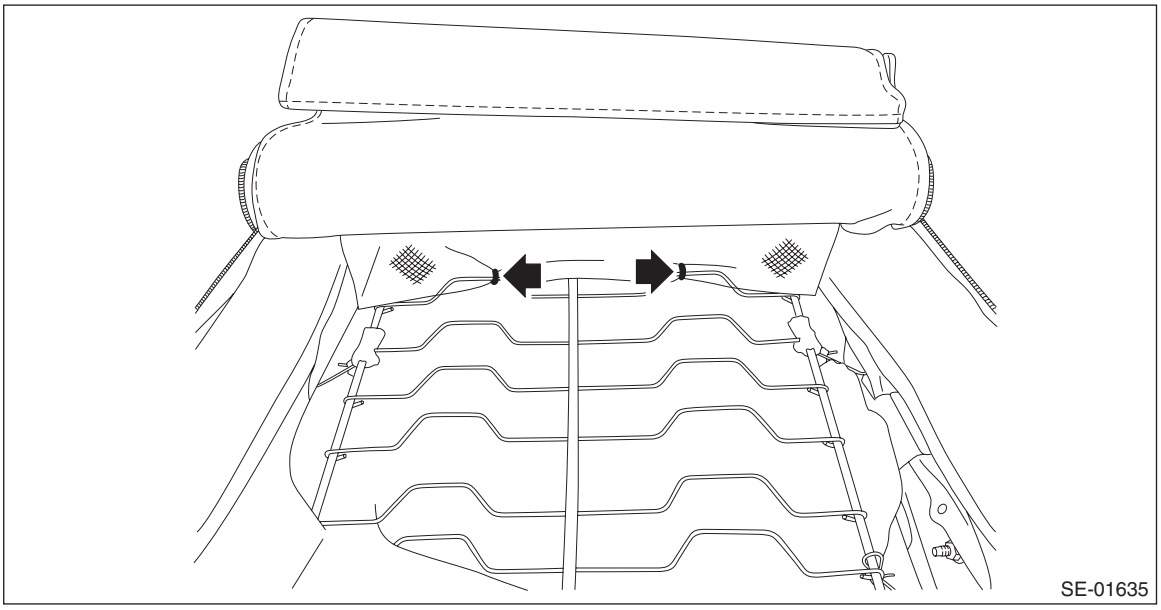

(4) Remove the pad assembly - front seat backrest and the cover COMPL - front backrest from the backrest assembly.

11) Remove the side airbag module.

CAUTION:
Do not open the protective cover of the side airbag. If any damage is present in the protective cover or the cloth of side airbag module comes out from the protective cover slit, replace the side airbag module with a new part.

(1) Remove the hexagon cap nut and nuts.
(2) While taking care not to damage the airbag protective cover, remove the side airbag module.

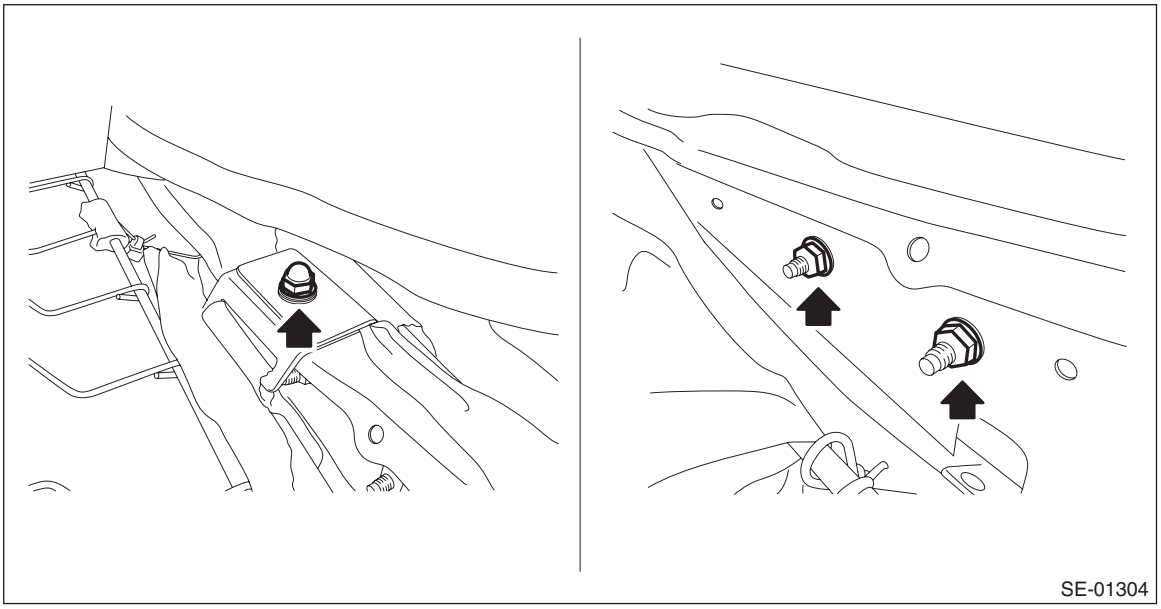
SE-01304

12) Remove the bushing - headrest.

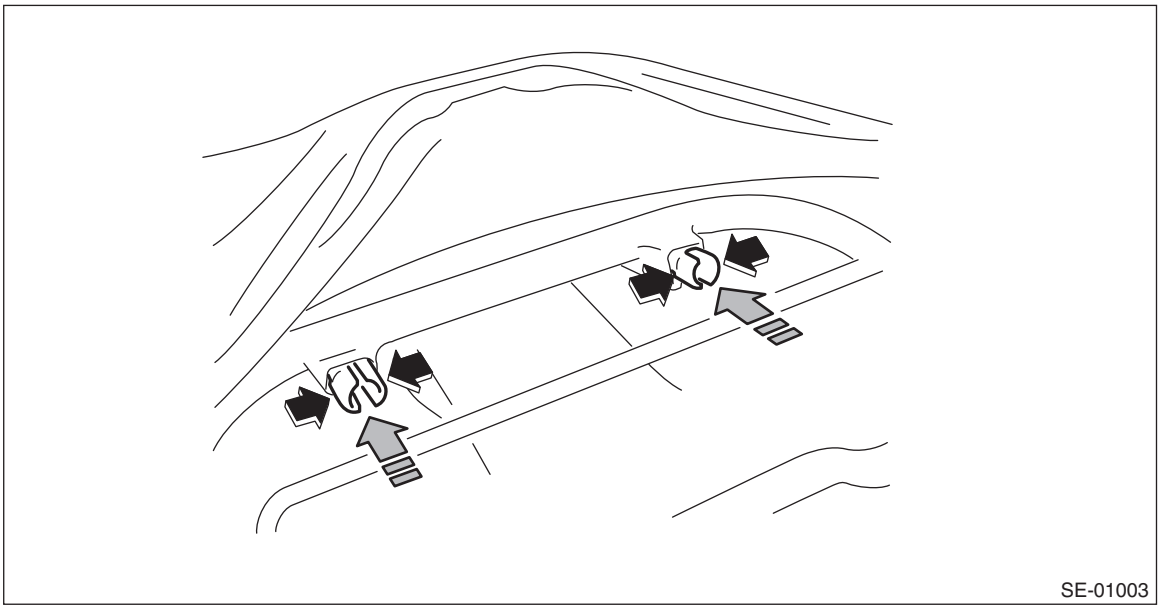
SE-01003

NOTE:
Catch the tip of the bushing - headrest with pliers and push it outward from the inside of seat to remove it.
13) Pull out the frame assembly - front backrest.

14) Remove the cover COMPL - front backrest.
(1) Remove the hog ring (A).

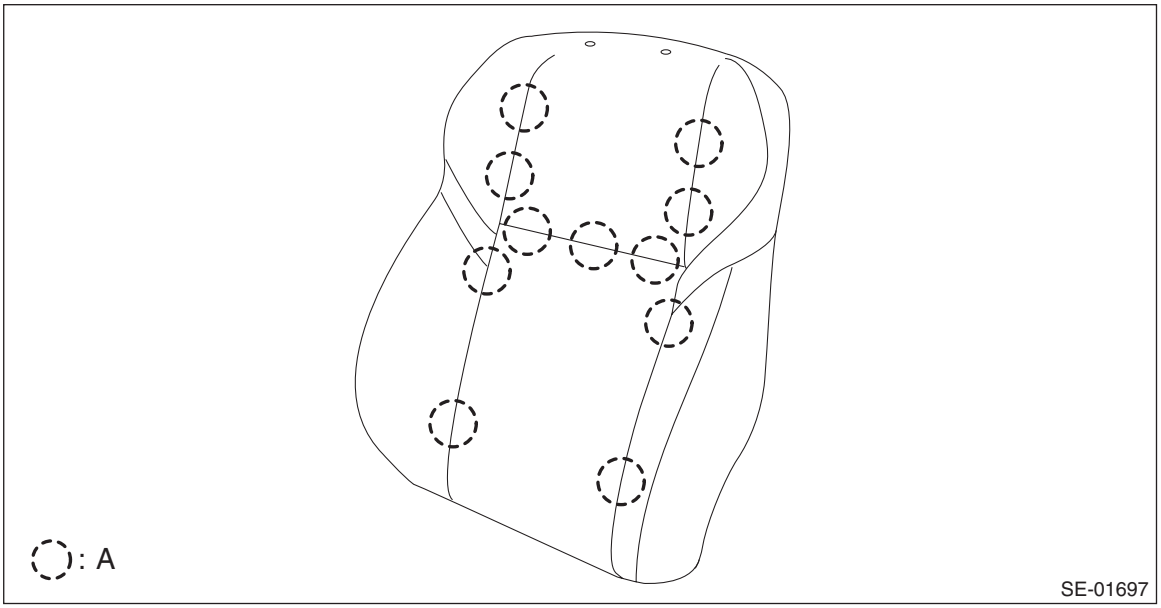

(2) Pull out the pad assembly - front seat backrest from the cover COMPL - front backrest.
(3) Remove the seat heater module from the pad assembly as necessary.

CAUTION:
• If the seat heater module is removed, replace the pad assembly with a new part.
• If the seat heater module is reused, remove the polyurethane section from the reverse side completely.

2. POWER SEAT

CAUTION:
• Before handling the airbag system components, refer to "CAUTION" of "General Description" in "AIRBAG SYSTEM". <Ref. to AB-9, CAUTION, General Description.>
• Before assembling, make sure how the harnesses such as the side airbag harness and the seat belt inner - front harness are routed in order to avoid misarranging. Assembling with harnesses improperly routed may cause the harness to get caught and short out.
• If the seat heater module is removed, replace the pad assembly with a new part.
• If the seat heater module is reused, remove the polyurethane section from the reverse side completely.

1) Remove the seat from vehicle. <Ref. to SE-9, REMOVAL, Front Seat.>

NOTE:
Before removing the seat, raise the seating face.

2) Disconnect the connector for reclining motor from the backside of seat cushion.

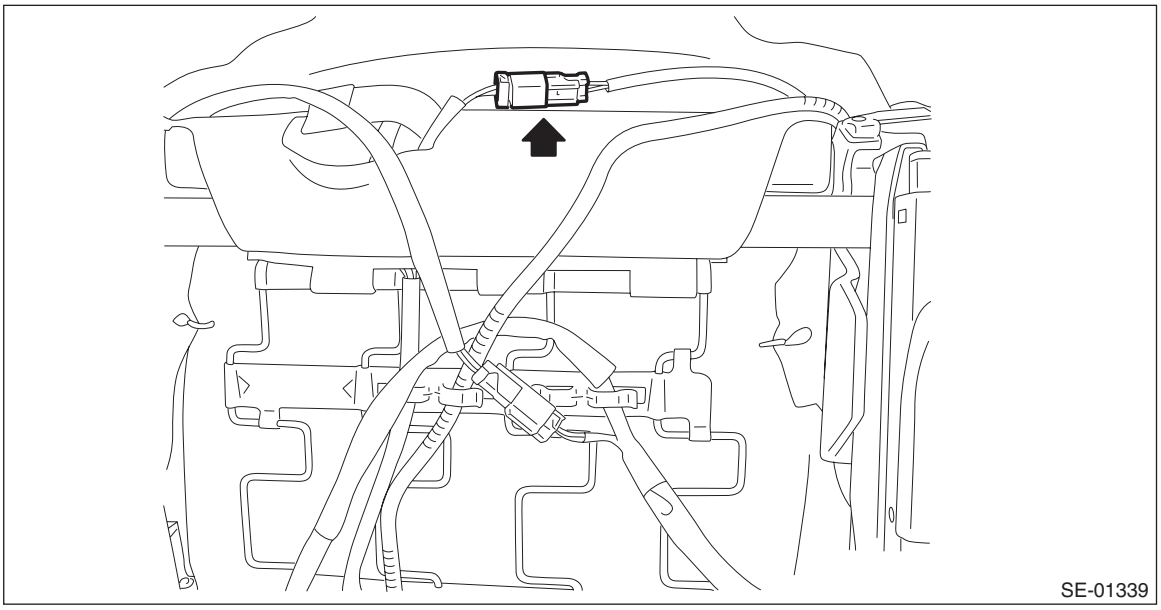

3) Remove the cover - hinge front seat OUT.
(1) Remove the screws in the rear section of the cover - hinge front seat OUT.
(2) Release the claw in the upper section of the cover - hinge front seat OUT.
(3) Remove the clip, and release the claws in the front section of the cover - hinge front seat OUT.
(4) Disconnect the power seat switch and lumbar switch connector and remove the cover - hinge front seat OUT.

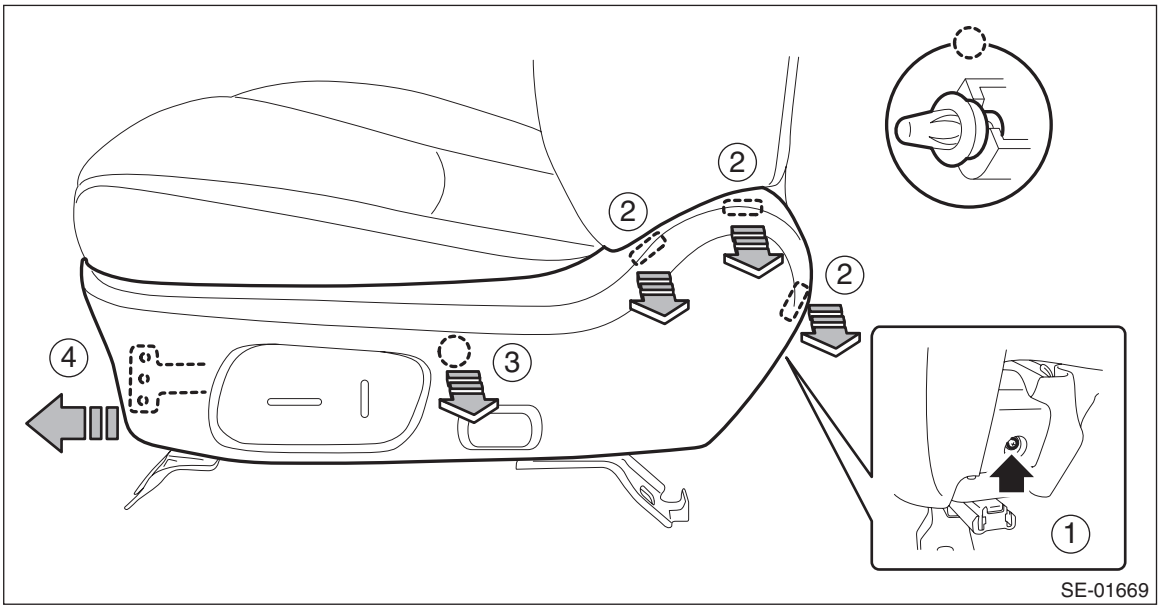

4) Remove the seat belt inner - front. <Ref. to SB-17, SEAT BELT INNER - FRONT, REMOVAL, Front Seat Belt.>

5) Remove the cover - hinge front seat INN.
(1) Remove the screws.
(2) Release the claw in the upper section of the cover - hinge front seat INN, then remove the cover - hinge front seat INN.
(3) Release the claw in the rear section of the cover - hinge front seat INN.

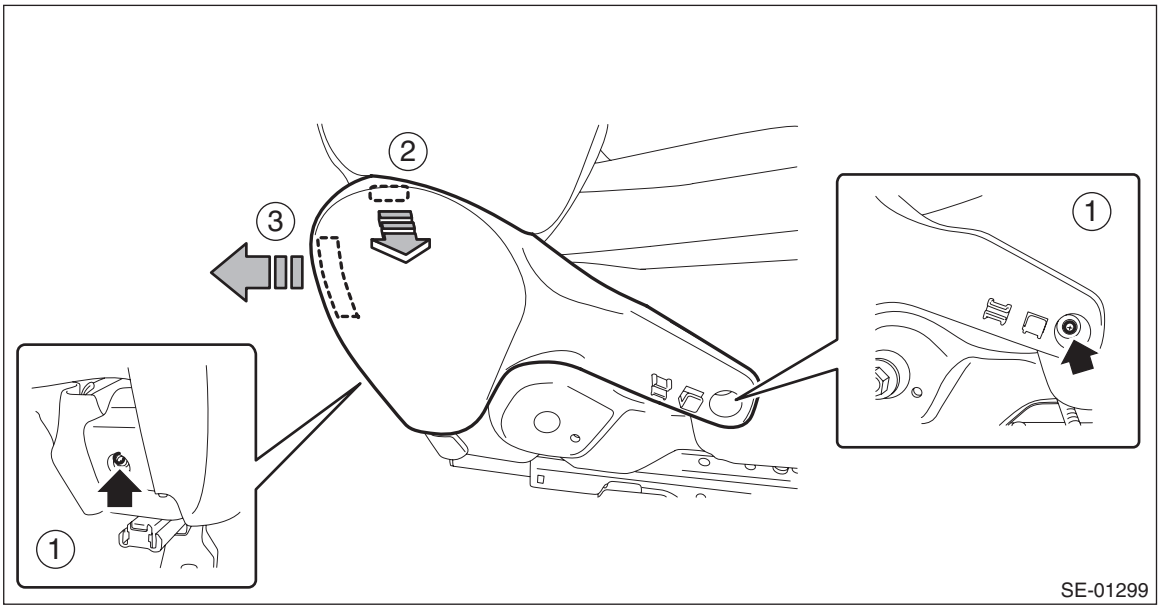

6) Separate the backrest assembly and the seat cushion assembly.
(1) Remove the clip for the side airbag harness located under the seat cushion assembly.
(2) Remove the bolts from reclining hinge of both sides.
(3) While taking care not to damage the airbag harness, separate the backrest assembly and the seat cushion assembly.

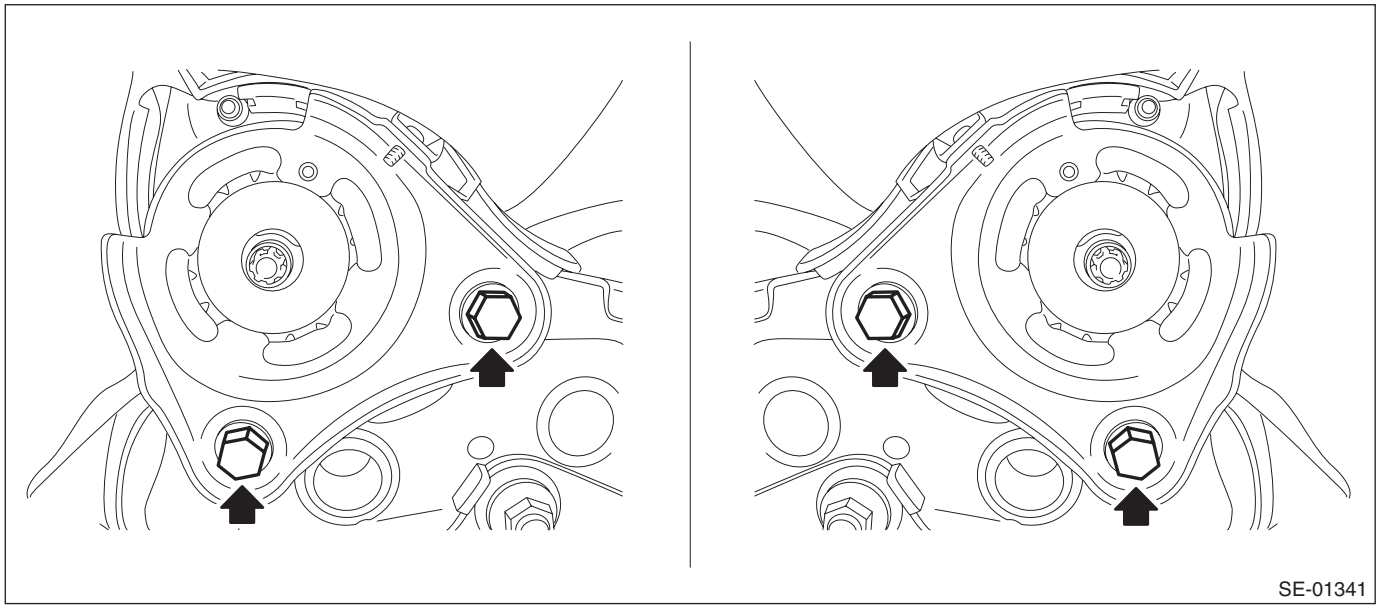

7) Remove the pad assembly - front seat cushion and the cover - front cushion.
(1) Remove the rubber band and clips.
(2) Remove the hooks and hog rings.
(3) Remove the pad assembly - front seat cushion and the cover - front cushion from the seat cushion assembly.

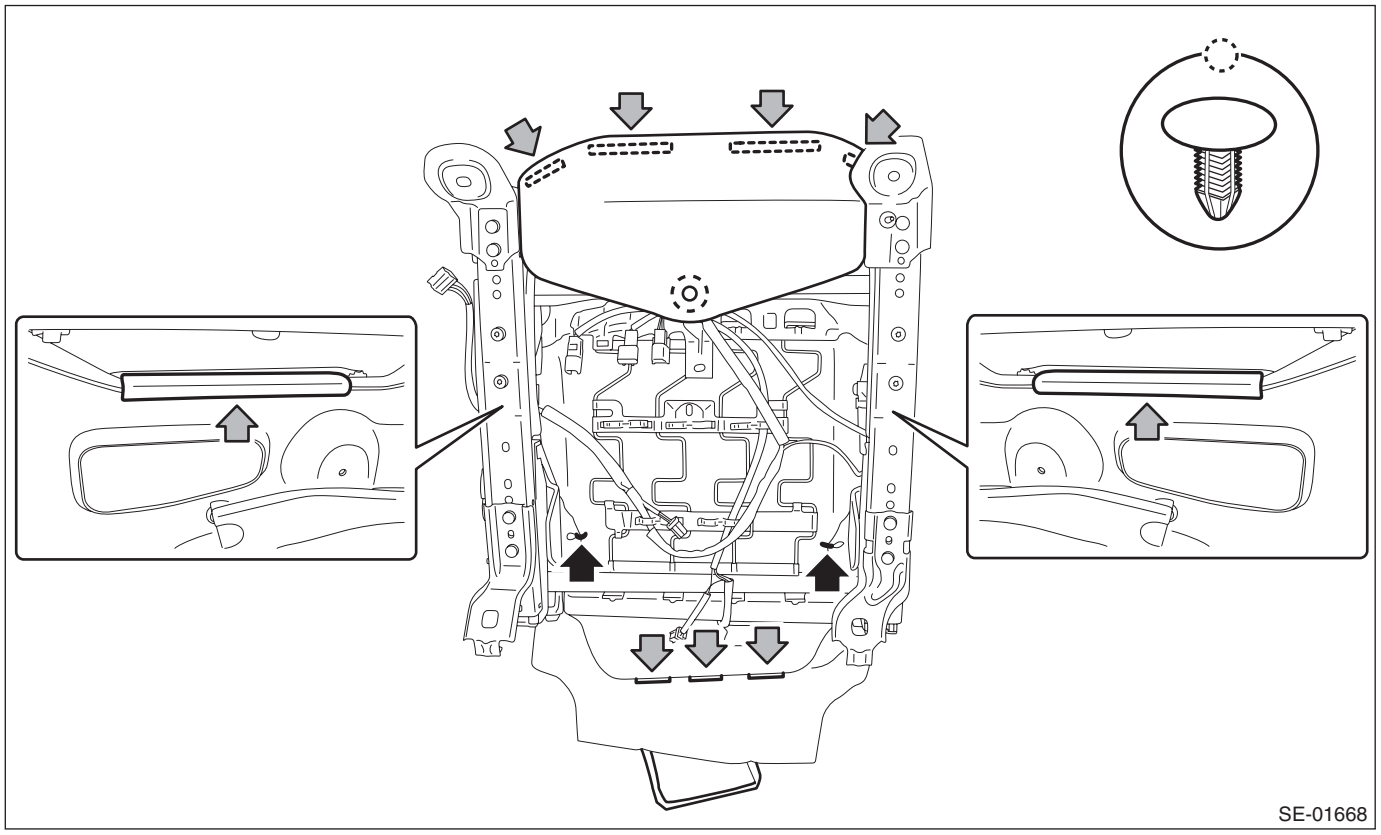

8) Remove the cover - front cushion.
(1) Remove the hog ring (A).

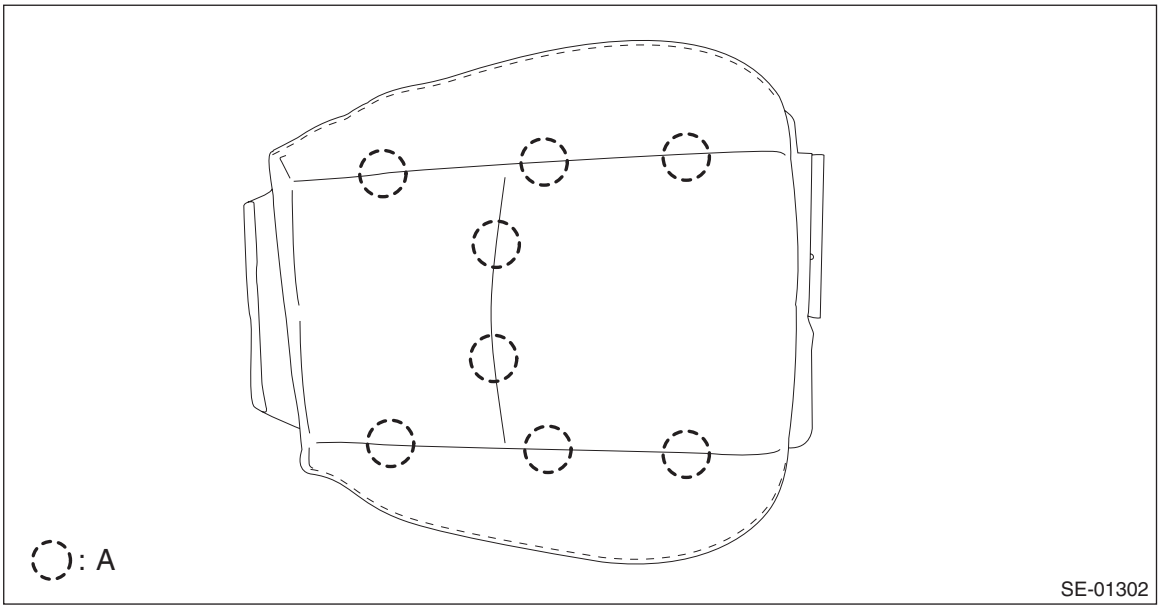

(2) Pull out the pad assembly - front seat cushion from the cover - front cushion.

(3) Remove the seat heater module from the pad assembly as necessary.

CAUTION:
- **If the seat heater module is removed, replace the pad assembly with a new part.**
- **If the seat heater module is reused, remove the polyurethane section from the reverse side completely.**

9) Remove the pad assembly - front seat backrest and the cover COMPL - front backrest.
(1) Remove the plastic fastener at the back side (bottom) of backrest assembly.
(2) Open the fastener at the rear side of backrest assembly.

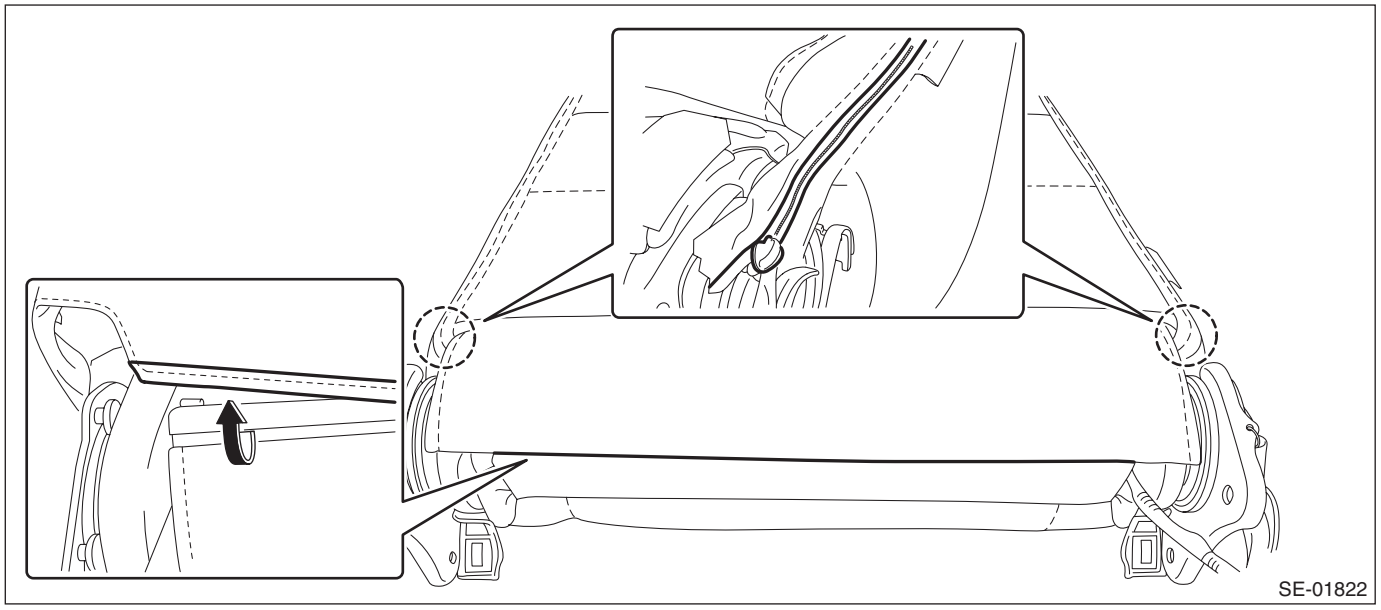

NOTE:
If it is hard to open, use a metal clip, etc.
(3) Remove the hog ring.

CAUTION:
Be careful not to tear the vinyl inside the seat when removing the hog rings.
If torn, replace with a new part.

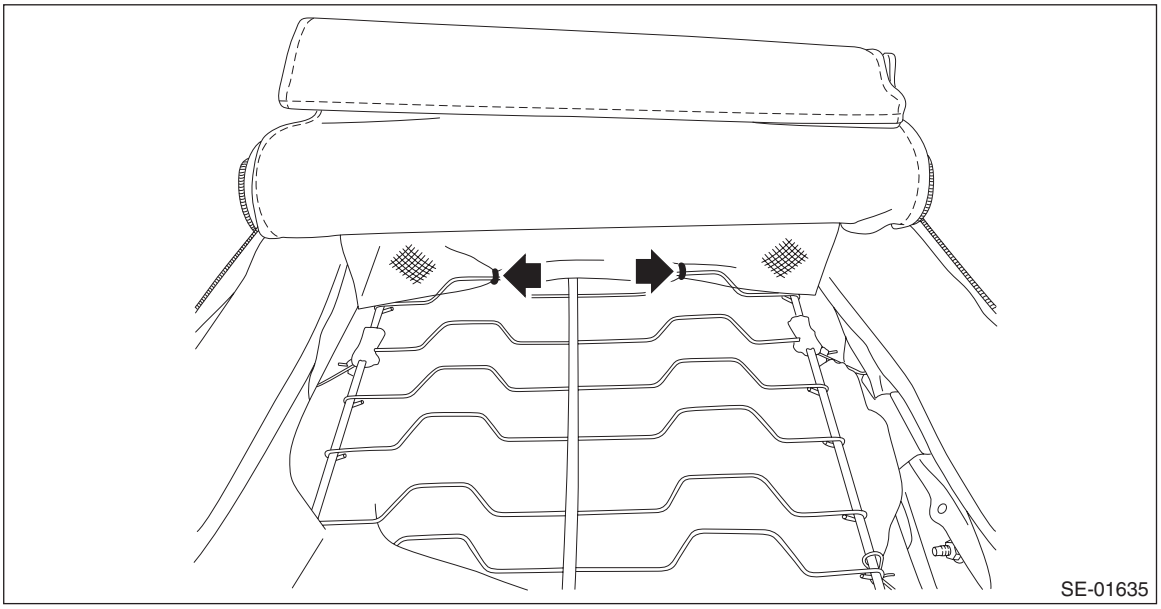

(4) Remove the backrest pad & cover from backrest assembly.

10) Remove the side airbag module. <Ref. to AB-42, REMOVAL, Side Airbag Module.>
11) Remove the headrest bushing.

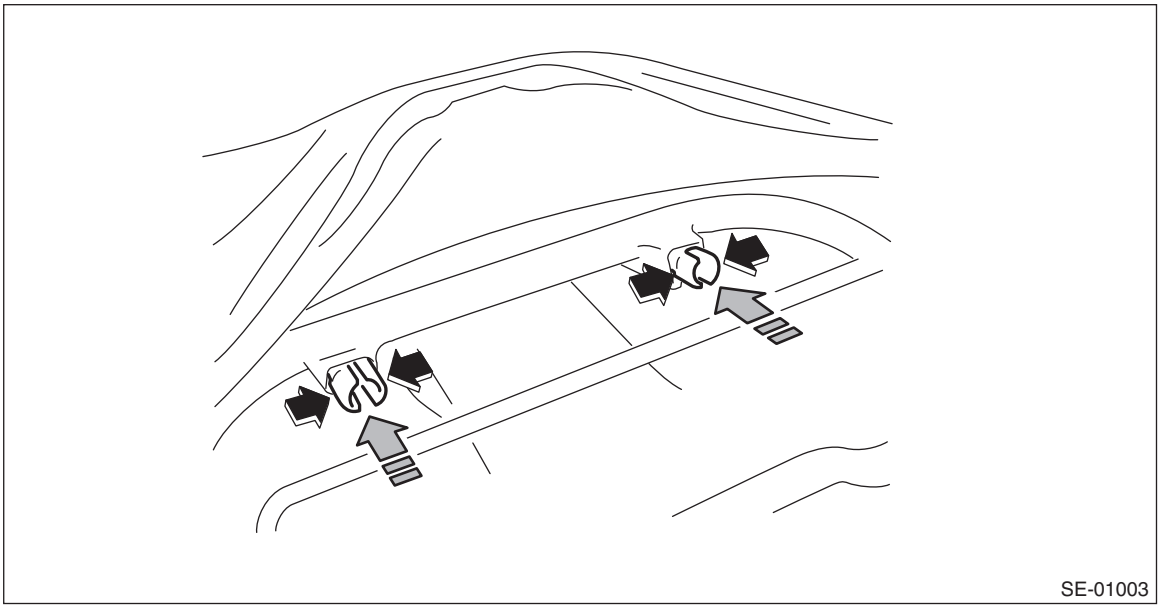
SE-01003

NOTE:
Catch the tip of headrest bushing with pliers and push it from inside seat to outside to remove it.
12) Pull out the frame assembly - front backrest.
13) Remove the cover COMPL - front backrest.
(1) Remove the hog ring (A).

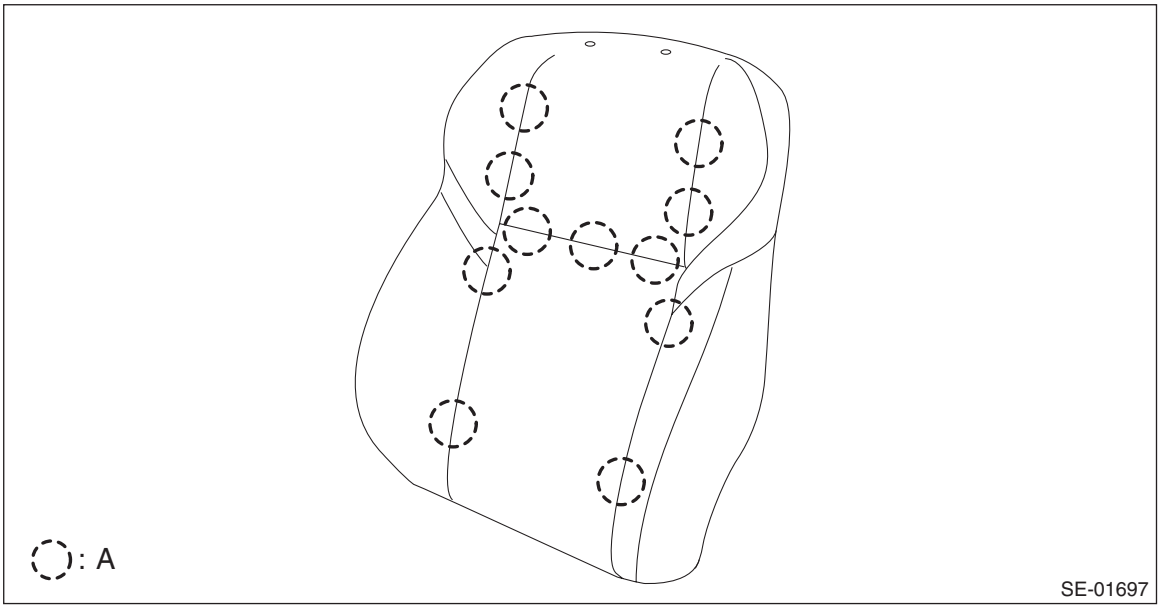

SE-01697

(2) Pull out the pad assembly - front seat backrest from the cover COMPL - front backrest.
(3) Remove the seat heater module from the pad assembly as necessary.

CAUTION:
• If the seat heater module is removed, replace the pad assembly with a new part.
• If the seat heater module is reused, remove the polyurethane section from the reverse side completely.

3. PASSENGER'S SEAT

CAUTION:
• Before handling the airbag system components, refer to "CAUTION" of "General Description" in "AIRBAG SYSTEM". <Ref. to AB-9, CAUTION, General Description.>
• The passenger's seat is integrated in the seat cushion pad and frame assembly. Never remove the following parts.
– Occupant detection control module
– Occupant detection sensor
– Frame assembly - front seat cushion
– Pad assembly - front seat cushion
• If the cover - front cushion is removed, make sure to replace the hang wire on the cover - front cushion side with a new wire.
• Never remove the occupant detection sensor connector from the occupant detection control module.
• When replacing the seat cover, be careful not to damage the occupant detection sensor while installing the hog ring.
• When removing or replacing the seat cover, perform "Occupant Detection System Inspection" after installing the seat to check if the occupant detection system operates normally. <Ref. to PI-23, SEAT, PRE-DELIVERY INSPECTION (PDI) PROCEDURE, Pre-delivery Inspection.>
• If the seat heater module is removed, replace the seat cushion pad & frame assembly with a new part.
• If the seat heater module is reused, remove the polyurethane section from the reverse side completely.
1) Remove the front seat (passenger's side) from vehicle. <Ref. to SE-9, REMOVAL, Front Seat.>
2) Refer to the disassembly procedures for the driver's seat. <Ref. to SE-11, MANUAL SEAT, DISASSEMBLY, Front Seat.>

D: ASSEMBLY

CAUTION:
• Do not confuse the harness routing of the side airbag harness and the seat belt inner - front harness, etc. Assembling with harnesses improperly routed may cause the harness to get caught and short out.
• If the flat mat hook of the frame assembly - front backrest is deformed or comes off due to the deformation, replace the hook with a new part.

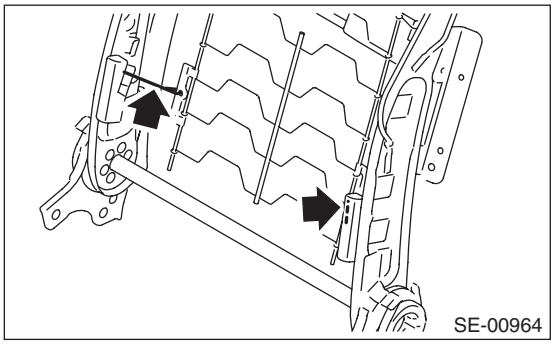

• Before handling the airbag system components, refer to "CAUTION" of "General Description" in "AIRBAG SYSTEM". <Ref. to AB-9, CAUTION, General Description.>
• Make sure that the side airbag module is installed as shown in the figure.

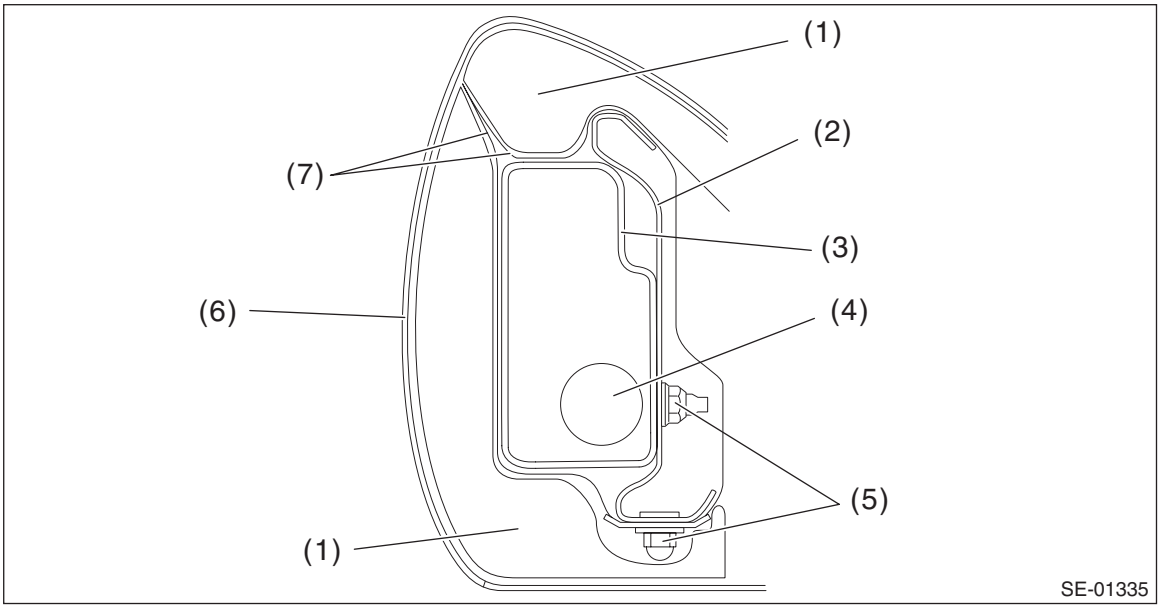

(1) Pad ASSY - front seat backrest
(2) Frame ASSY - front backrest
(3) Side airbag module protective cover
(4) Side airbag module inflator
(5) Nut
(6) Cover COMPL - front backrest
(7) Side airbag guide cloth

Besides, if the cover COMPL - front backrest is not installed securely, the side airbag may not be activated properly, therefore keep strictly to the following procedures.
• Be careful not to stain or damage the cover COMPL - front backrest during assembly.
• Do not reuse hog rings.
• Secure the hog ring using hog ring pliers.
• Install the hog rings to the specified points securely and make sure that there is no wrinkle or twisting on the cover COMPL - front backrest.
1) Install the seat heater module.

CAUTION:
• If the seat heater module is removed, replace the pad assembly with a new part. (Driver's seat)
• If the seat heater module is removed, replace the seat cushion pad & frame assembly with a new part. (Passenger's seat)
• If the seat heater module is reused, remove the polyurethane section from the reverse side completely and attach a new pad assembly with a double-sided tape.

Preparation items:
Double-sided tape: NITTO DENKO 501L or equivalent
2) Make sure that there is no foreign matter on side airbag module.

3) Assemble the seat cover.
(1) Adjust so that the left and right clearances between wire and seat pad become equal, and mark the seat pad.

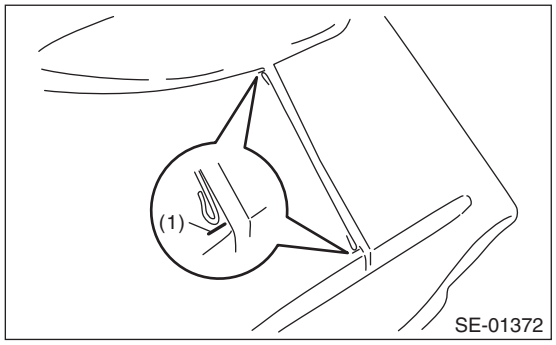

(1) Marking

(2) Mark the center of the wire on the pad side to which the hog ring is attached.

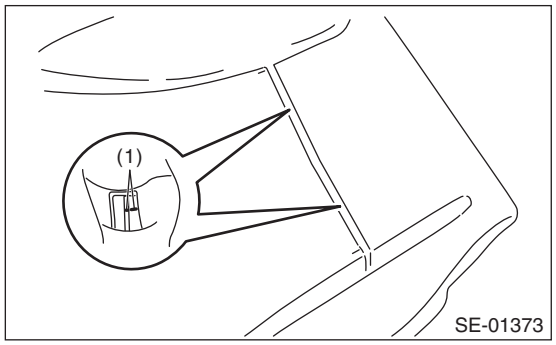

(1) Marking

(3) Insert the wire into the seat cover, and align the wire with the position marked in step 1).

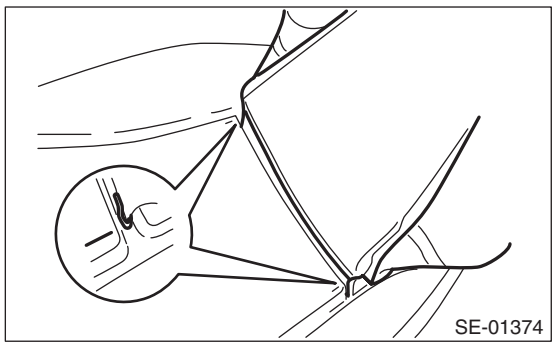

(4) Mark the wire on the seat cover side according to the markings on the seat pad.

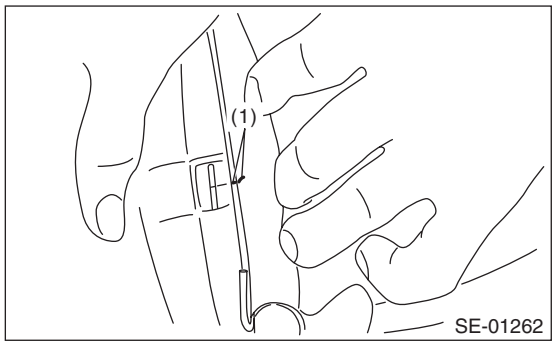

(1) Marking

(5) Perform steps 1) — 4) to all sections to which the hog rings are attached.
(6) Make sure that all hog rings (A) are attached securely.

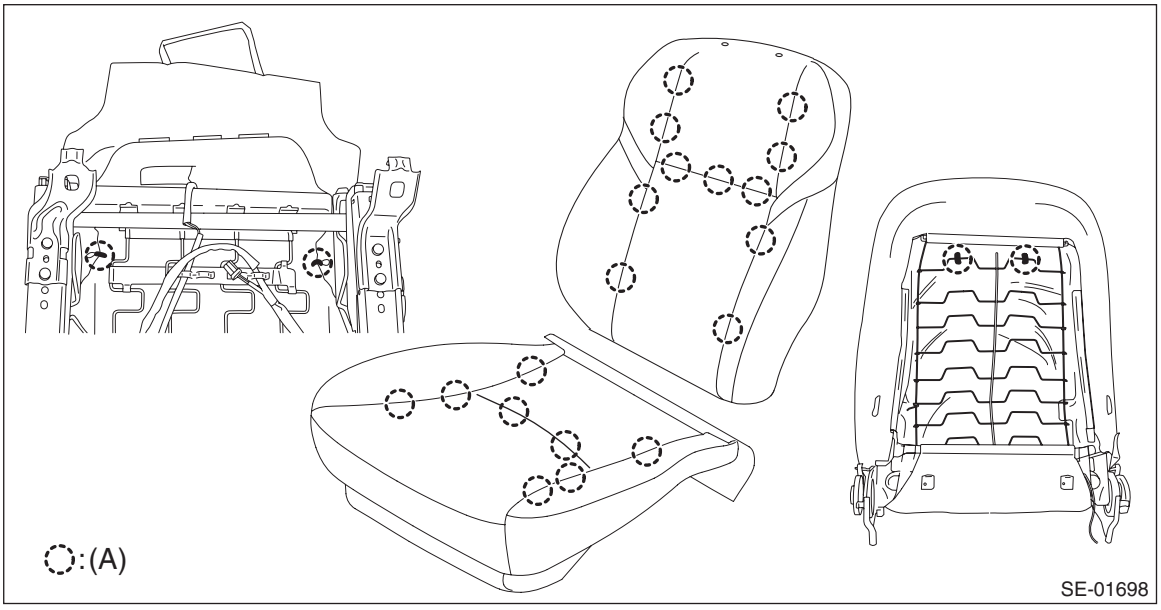

4) Assemble remaining parts in the reverse order of disassemble.

NOTE:
• When installing the seat belt inner - front, follow the procedures described in the seat belt section. <Ref. to SB-18, INSTALLATION, Front Seat Belt.>
• Install the backrest assembly and seat cushion assembly in the following procedure.
1. Temporarily tighten the four reclining hinge bolts.
2. Place the backrest in the most upright position.
3. Tighten the reclining hinge bolts in order from (1) to (4) two or three times, until they reach the specified torque.

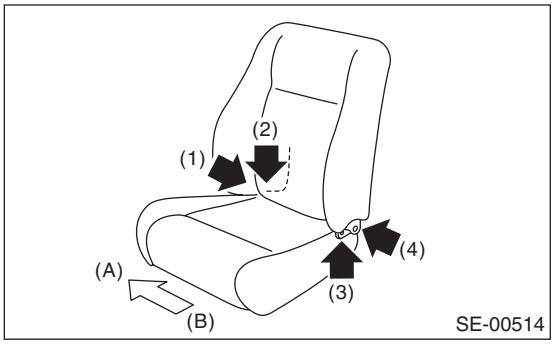

(A) Vehicle inside
(B) Vehicle outside

Tightening torque:
Refer to "COMPONENT" of "General Description". <Ref. to SE-2, FRONT SEAT, COMPONENT, General Description.>

5) If any wrinkles are found after the assembly of the seat cover, finish the seat cover with iron.
(1) Place the wet towel on wrinkles.



(2) Touch up with warm iron.

CAUTION:
Keep moving the iron, otherwise the seat cover surface can be damaged.

NOTE:
This method is available for genuine leather, synthetic leather, cloth, etc.

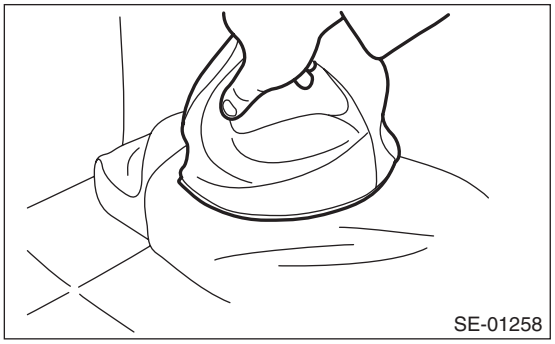

6) Install connectors located under the front seat.
- Manual seat

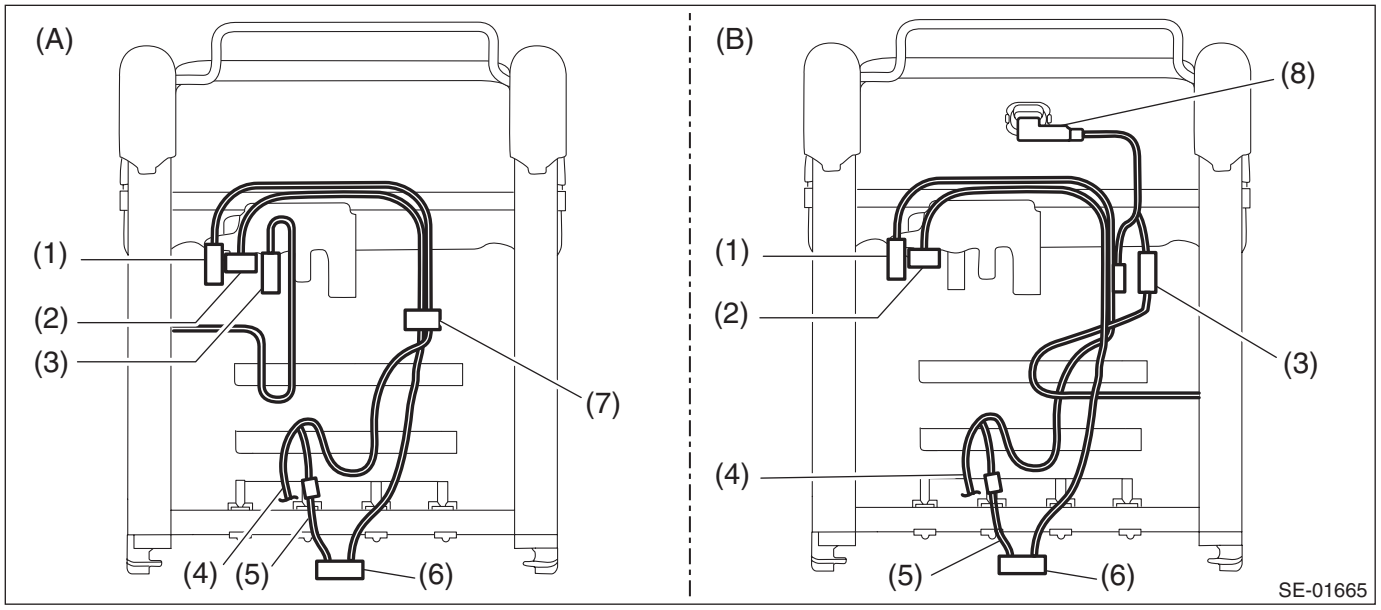

(A) 6 WAY
(B) 4 WAY

(1) Seat cushion heater connector
(2) Side airbag connector
(3) Seat belt switch connector
(4) Seat cushion - heater harness
(5) Backrest heater harness
(6) Velcro
(7) Band A
(8) Occupant detection control module

- Power seat

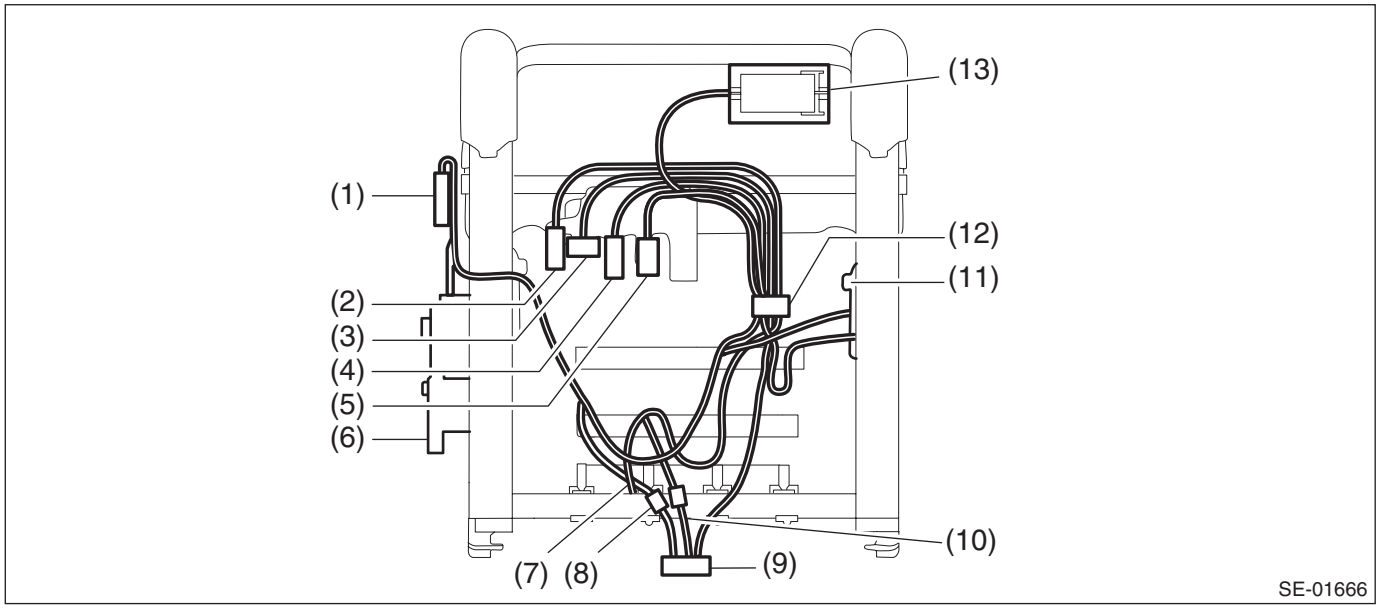

(1) Power seat switch ASSY
(2) Seat cushion heater connector
(3) Side airbag connector
(4) Seat belt switch connector
(5) Power seat connector
(6) Lifter motor
(7) Seat cushion - heater harness
(8) Reclining motor harness
(9) Velcro
(10) Backrest heater harness
(11) Tilt motor
(12) Band A
(13) Slide motor

7) Install the seat assembly. <Ref. to SE-10, INSTALLATION, Front Seat.>

E: INSPECTION

1. SEAT COVER

Check that there is no tear or fray on the cover COMPL - front backrest and the cover - front cushion.

NOTE:
If the door side of the cover COMPL - front backrest is torn or frayed, the side airbag may not be deployed properly. In this case, replace the cover COMPL - front backrest with a new part.

2. CHECK ILLUMINATION OF PASSENGER'S SEAT BELT WARNING LIGHT

Check that the passenger's seat belt warning light illuminates when the passenger's seat is occupied.

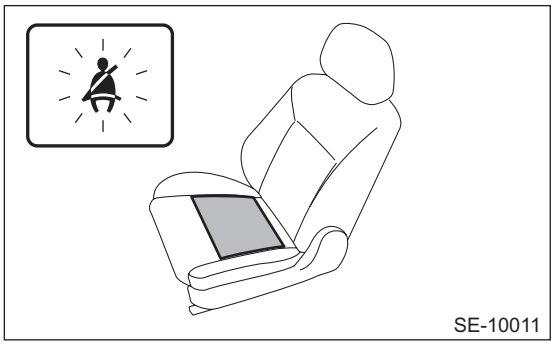

If it does not illuminate, check the seat belt warning system and the occupant detection system.

- Seat belt warning system: <Ref. to SB-12, Seat Belt Warning System.>
- Occupant detection system: <Ref. to OD(diag)-2, Basic Diagnostic Procedure.>

3. FLAT MAT HOOK

Check the flat mat hook by applying weight to the backrest assembly.

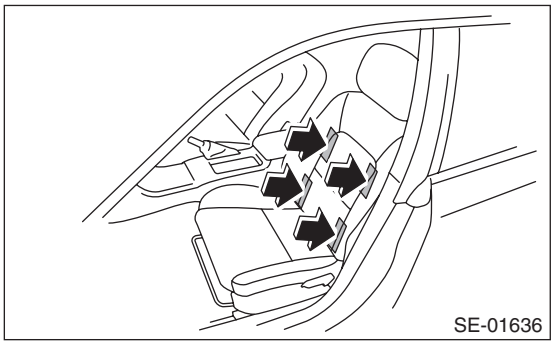

NOTE:
If the appropriate stiffness is not obtained by applying weight to the backrest assembly, the hook may be disengaged.
If it is due to the deformation of the hook, replace the hook with a new part.

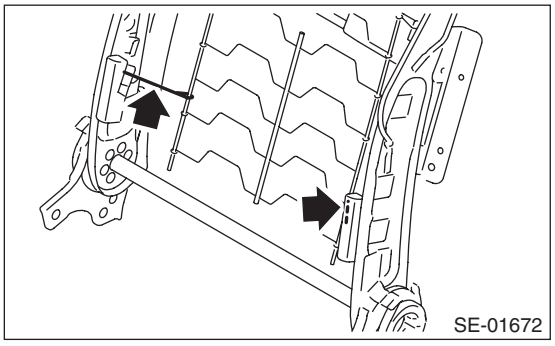

3. Rear Seat

A: REMOVAL

CAUTION:
• Before handling the airbag system components, refer to "CAUTION" of "General Description" in "AIRBAG SYSTEM". <Ref. to AB-9, CAUTION, General Description.>
• Airbag system satellite safing sensor is located in the lower of the rear seat cushion center. Be careful not to apply strong impact to the sensor when working with the rear seat cushion removed.
1) Disconnect the ground cable from battery and wait for at least 60 seconds before starting work. <Ref. to NT-6, BATTERY, NOTE, Note.>

NOTE:
For model with battery sensor, disconnect the ground terminal from battery sensor.
2) Remove the rear seat cushion assembly.
(1) Push the corners of the rear seat cushion from above.
(2) While pushing the corners of the rear seat cushion from above, pull the knob of the hook - seat cushion rear towards yourself.
(3) While pulling the knob towards yourself, disconnect the hooks by lifting up the rear seat cushion.

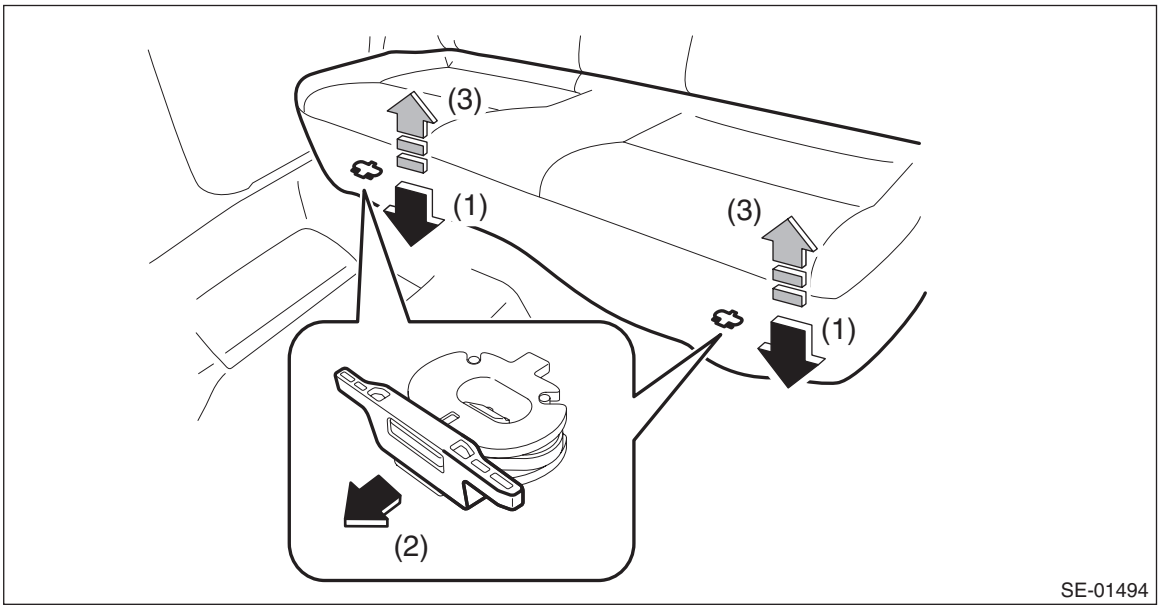

(4) Remove the hook (A) by pushing it back while lifting the front side of the rear seat cushion, and remove the rear seat cushion.

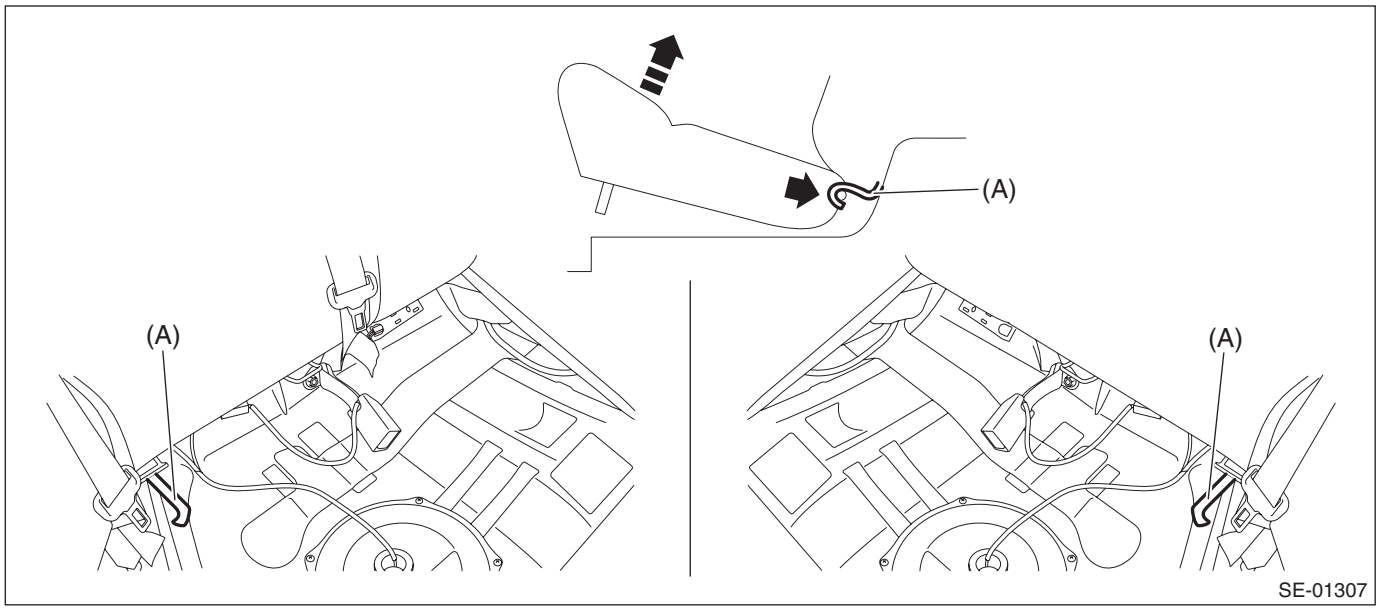

3) Remove the backrest assembly LH.
(1) Tilt the backrest assembly LH forward.
(2) Remove the clips located at the bottom of the cover COMPL - rear backrest LH and RH of the rear seat back.

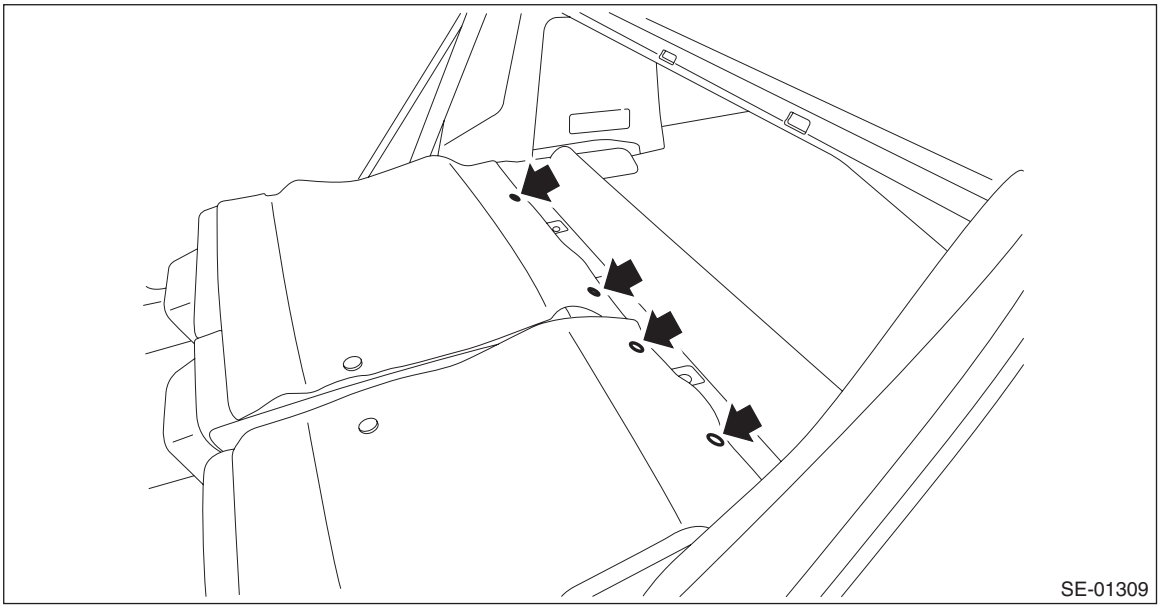

(3) Turn over the cover COMPL - rear backrest LH to remove the bolts.

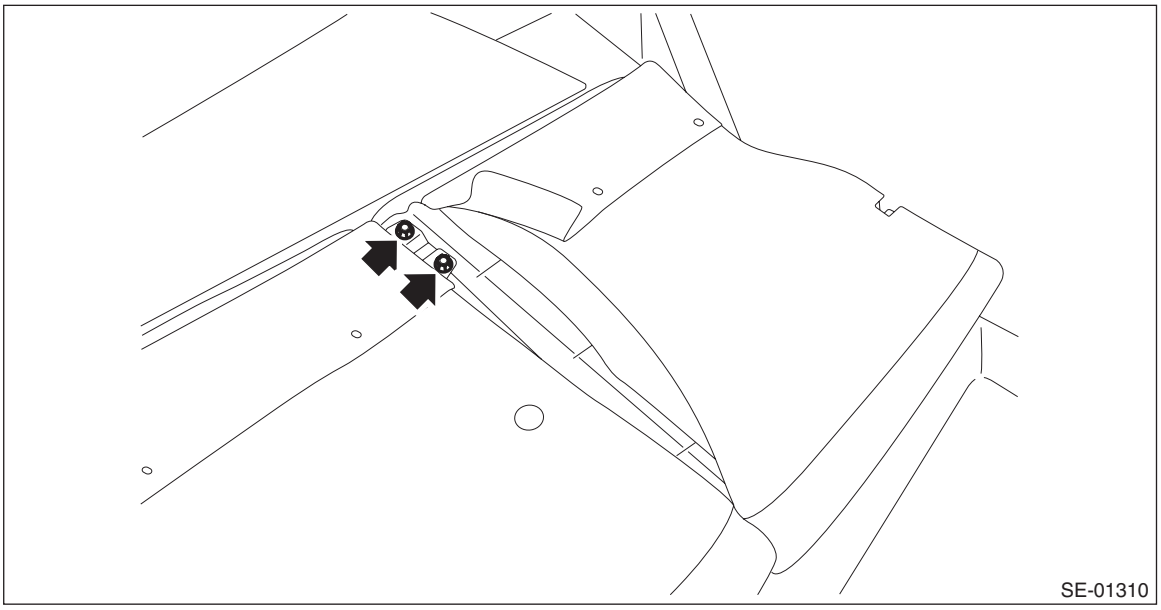

(4) Remove the backrest assembly LH from the hinge assembly.

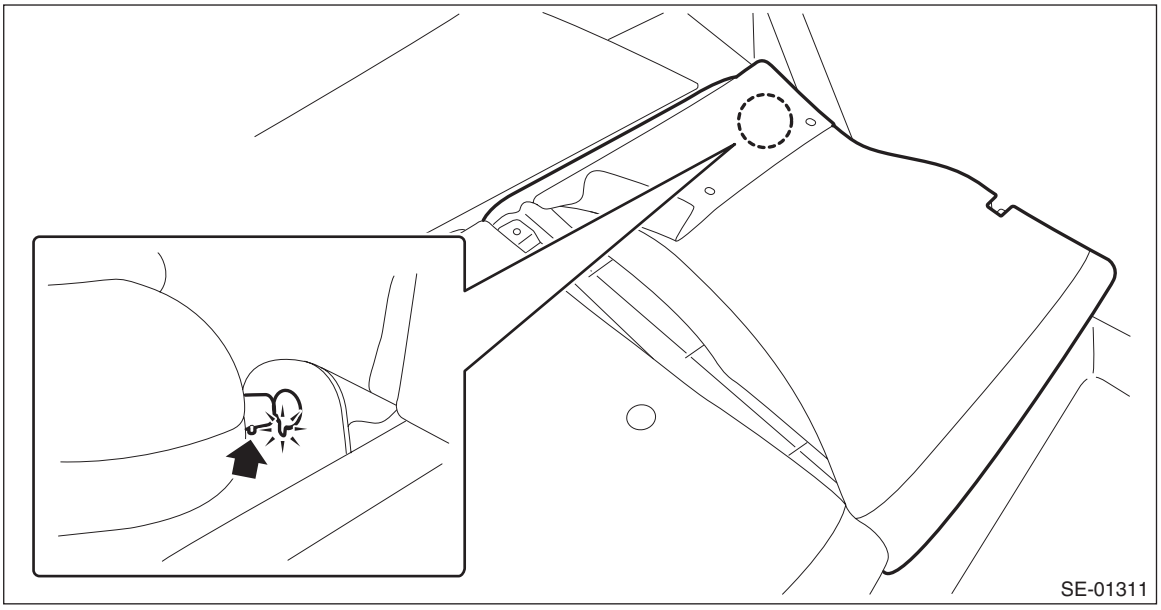

NOTE:
The backrest assembly cannot be removed unless pin positions on the hinge assembly side and backrest assembly side are aligned.

4) Remove the backrest assembly RH.
(1) Remove the bolts and nuts.

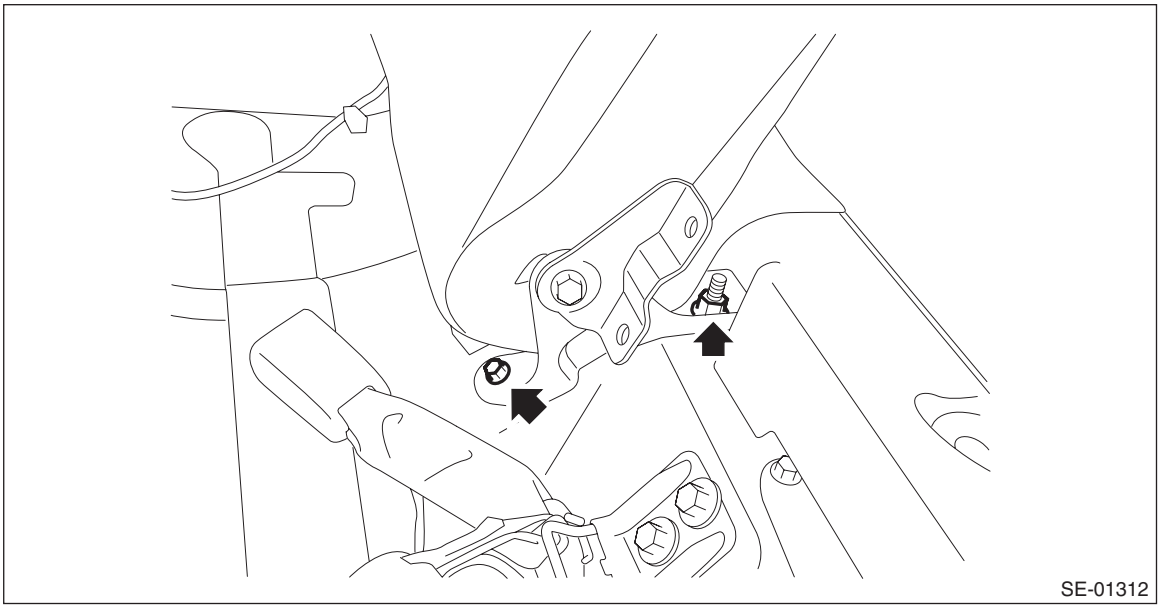

(2) Remove the backrest assembly RH from the hinge assembly.

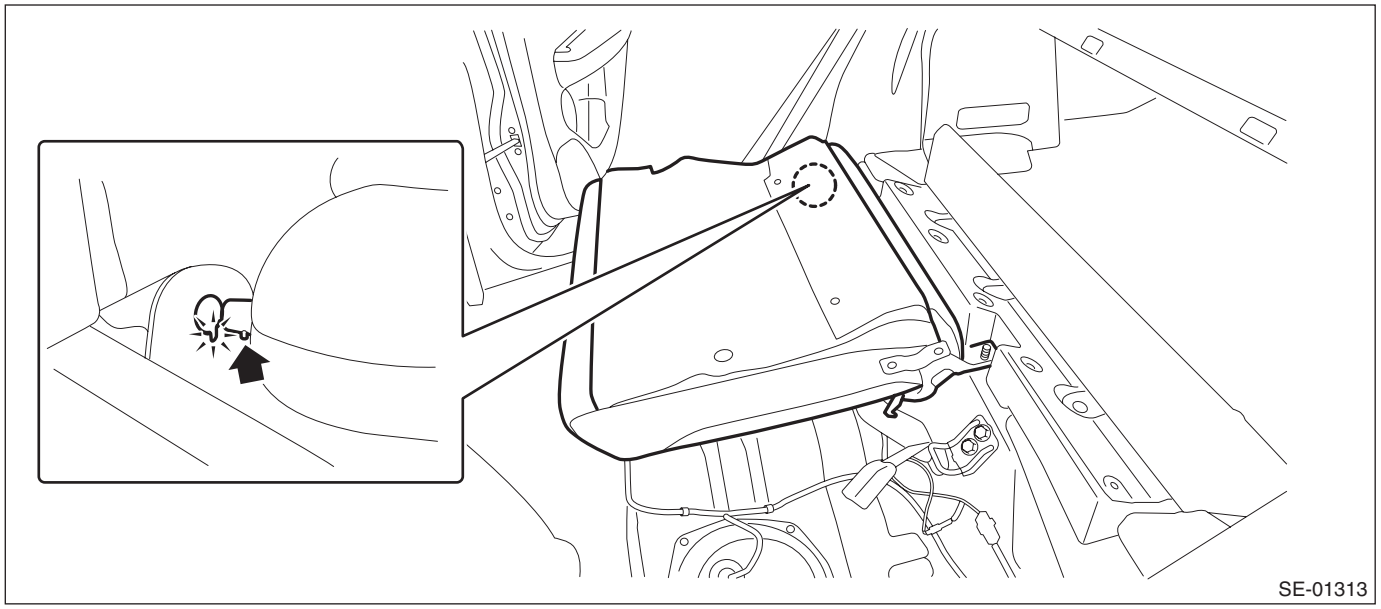

NOTE:
The backrest assembly cannot be removed unless pin positions on the hinge assembly side and backrest assembly side are aligned.

B: INSTALLATION

1) Install the backrest assembly RH and LH.

Tightening torque:
33 N·m (3.4 kgf-m, 24.3 ft-lb)

NOTE:
- After installing the backrest assembly, make sure that each seat belt operates normally.
- Make sure that they are properly secured on each hook on the vehicle side.

2) Install the rear seat cushion assembly.
3) Connect the battery ground terminal. <Ref. to NT-6, BATTERY, NOTE, Note.>

C: DISASSEMBLY

1) Remove the rear seat. <Ref. to SE-30, REMOVAL, Rear Seat.>
2) Remove the headrest assembly - rear backrest.
3) Remove the knob - backrest. (Screw-in type)

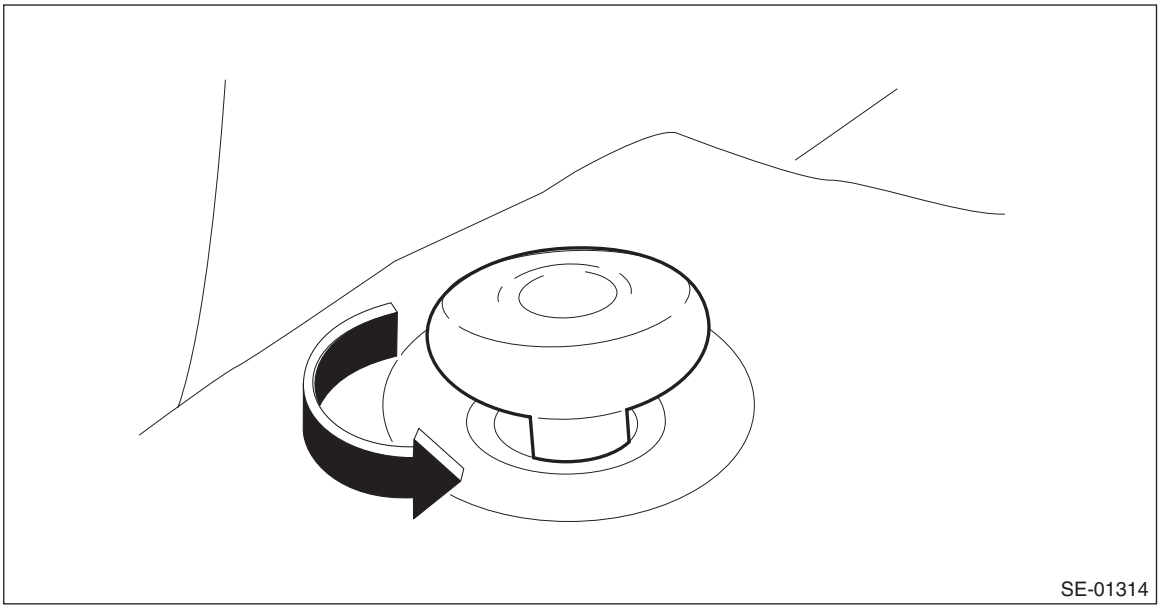

4) Remove the clips on the backside of the cover COMPL - rear backrest LH.

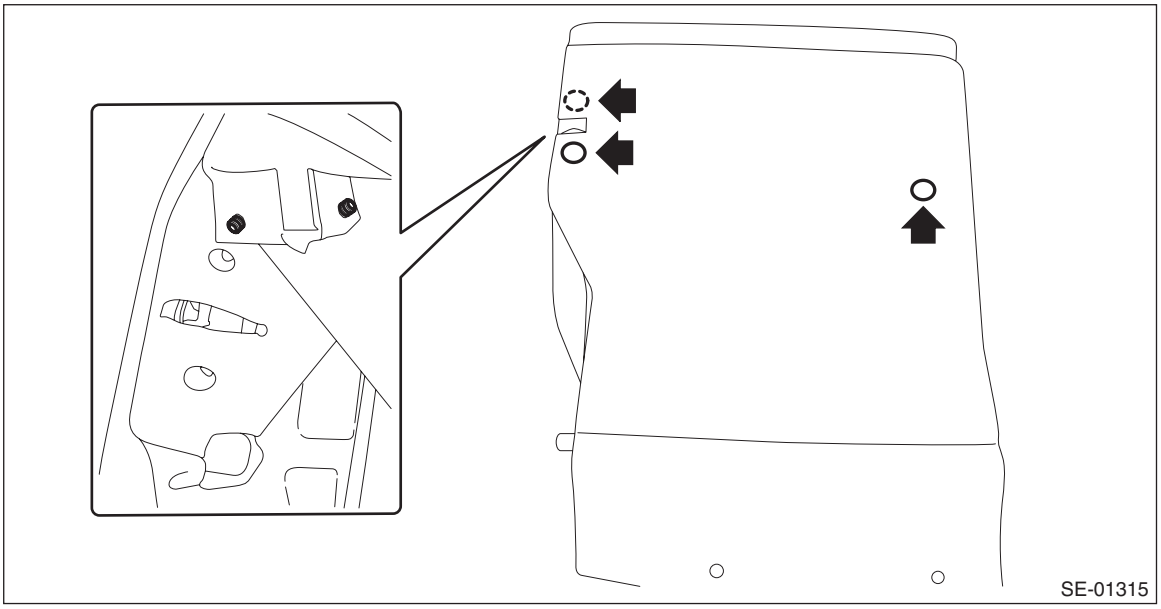

5) Detach the plastic fastener at the bottom of backrest assembly LH and turn over the cover COMPL - rear backrest LH.

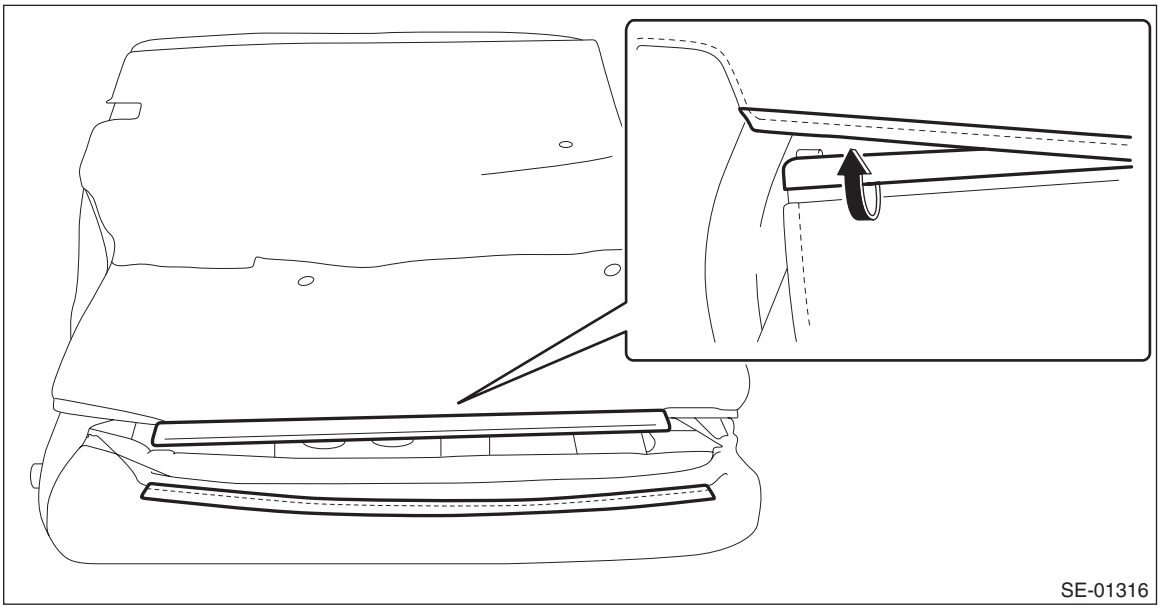

6) Remove the plastic hooks on the back side of the backrest assembly LH.

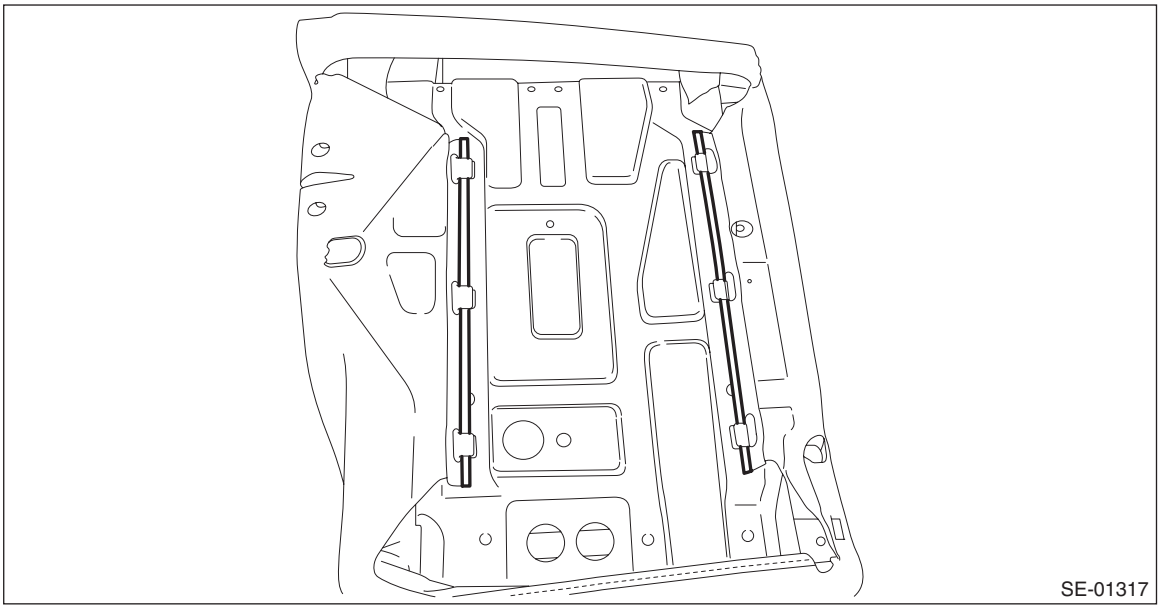

7) Remove the lock assembly - rear backrest rear LH.

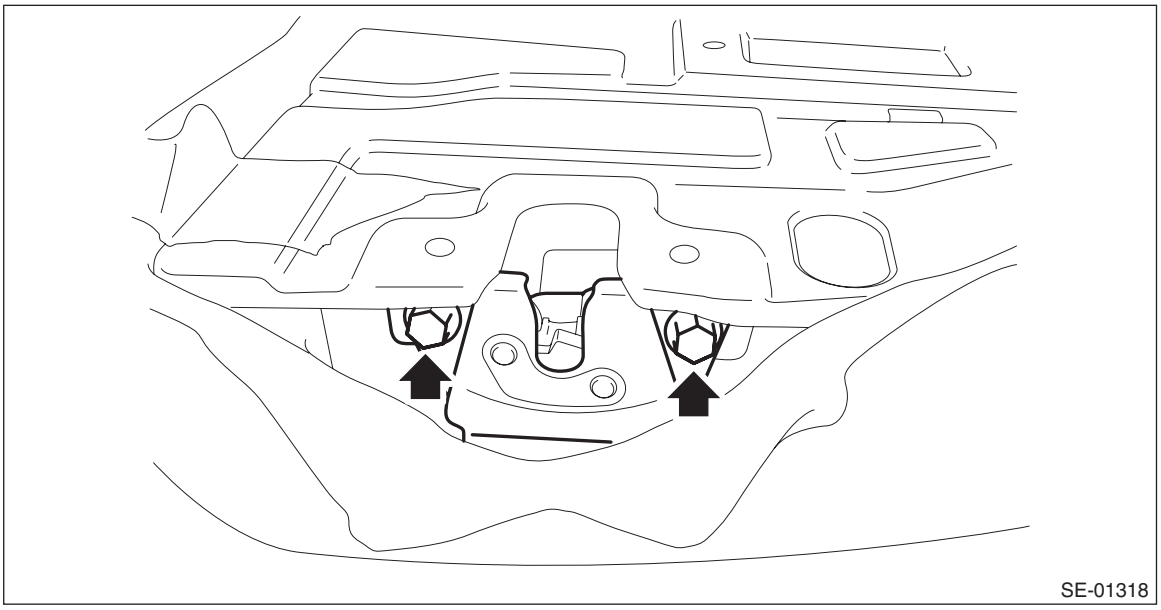

8) Remove the bushing - headrest and the bushing - lock assembly.

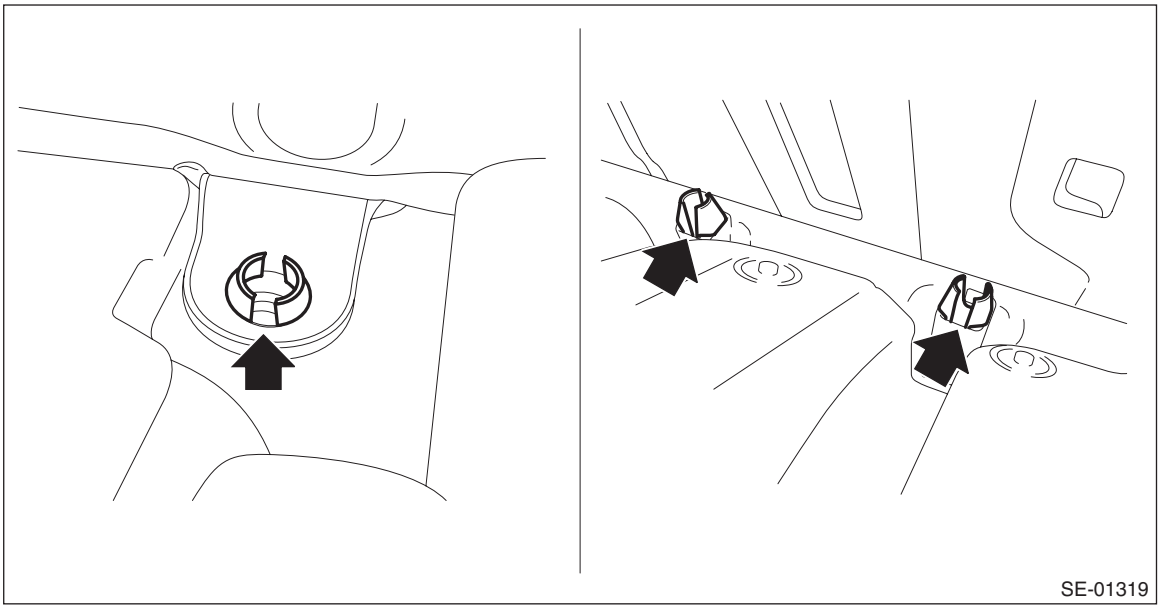

9) Remove the pad assembly - main LH from the frame assembly - rear backrest LH.
10) Remove the hog rings (A) and wire clip (B), then remove the cover COMPL - rear backrest LH.

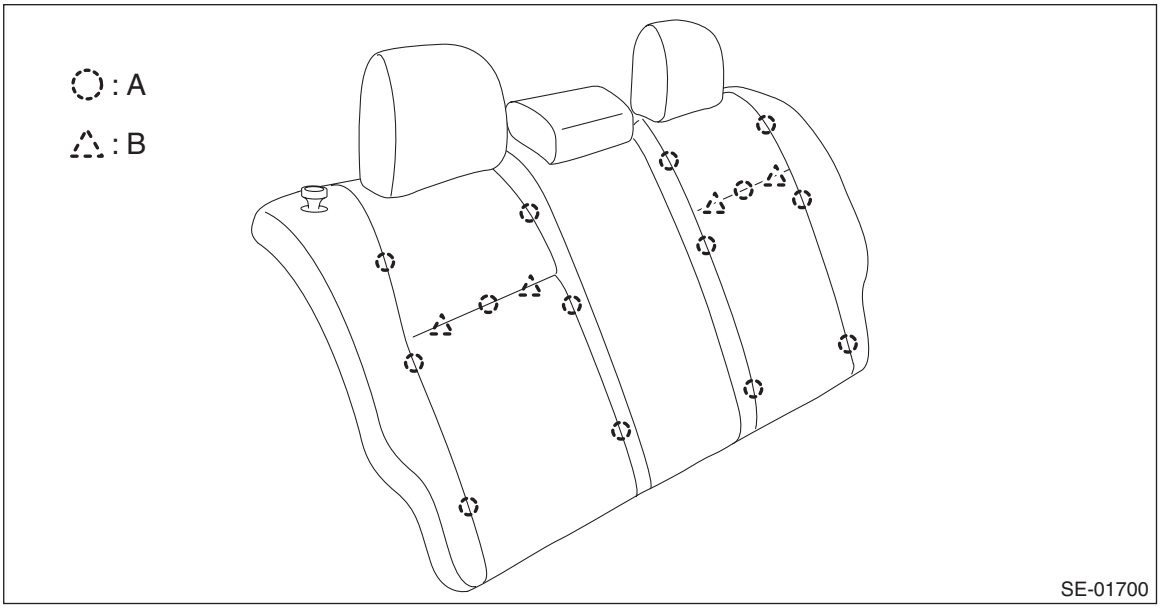

11) Referring to the above steps, disassemble the backrest assembly RH.
12) Detach the plastic fastener and hog ring, and then remove the headrest cover.

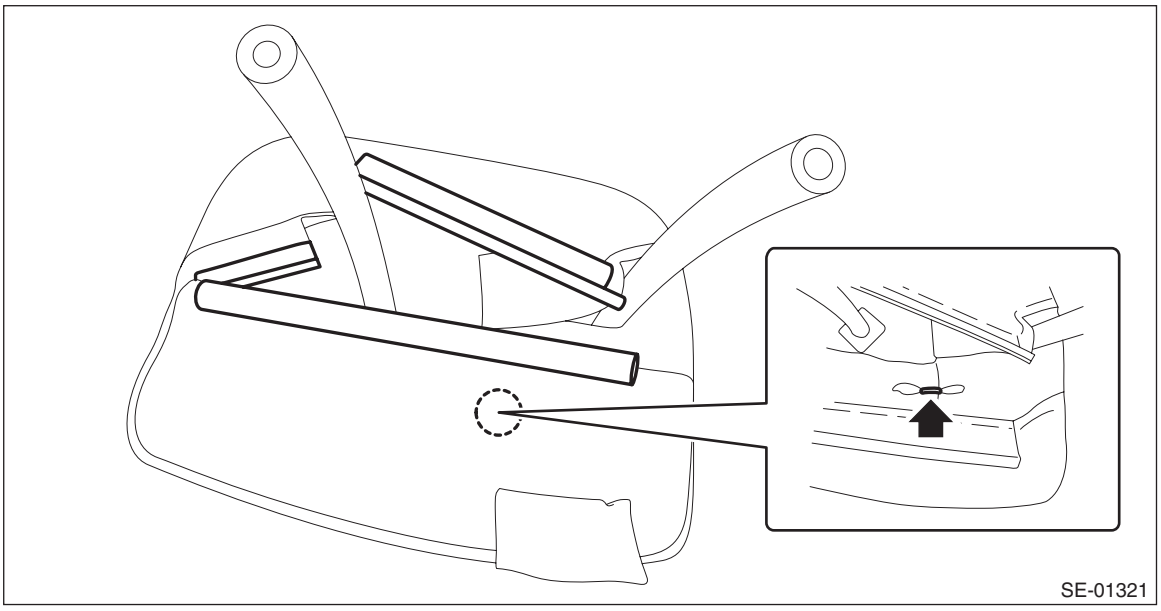

13) Remove the hog rings (A) on the back side of the rear seat cushion assembly.

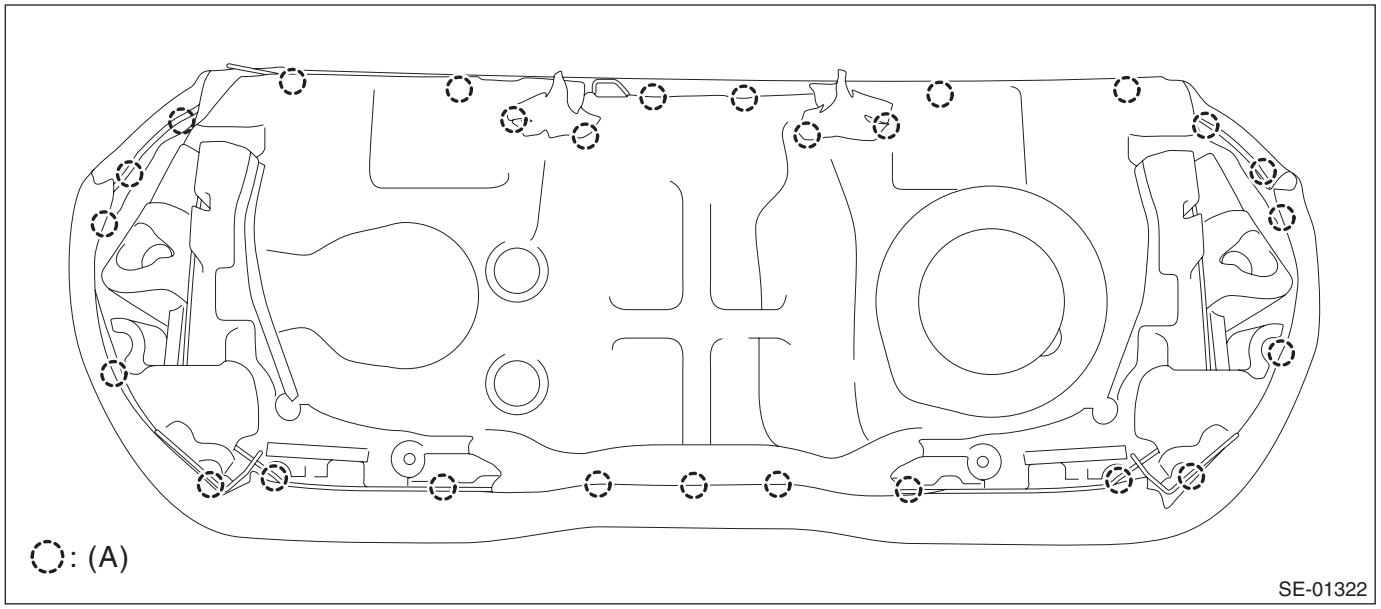

14) Remove the hog rings (A), then remove the cover - rear cushion.

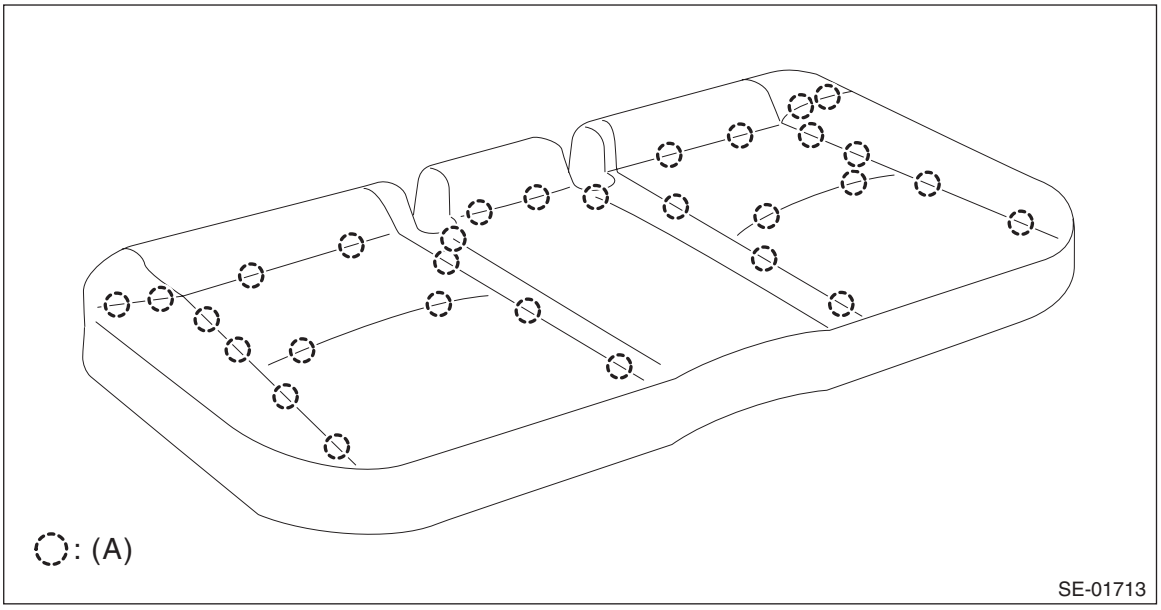

D: ASSEMBLY

CAUTION:
- **Do not reuse hog rings.**
- **Secure the hog ring using hog ring pliers.**
- **Install the hog rings to the specified points securely and make sure that there is no wrinkle or twisting on the cover COMPL - rear backrest.**

1) Assemble the cover COMPL - rear backrest and the cover - rear cushion in the same manner as for the front seat. <Ref. to SE-23, ASSEMBLY, Front Seat.>
2) Install the hog rings (A) on the back side of the rear seat cushion assembly.
3) Install the hog rings and wire clip, then install the cover COMPL - rear backrest LH.

NOTE:
- Do not contaminate or damage the cover COMPL - rear backrest and the cover - rear cushion.
- While installing the hog rings, prevent the cover COMPL - rear backrest and the cover - rear cushion from getting wrinkled.

4) Install the plastic fastener and hog ring, and then install the headrest cover.
5) Install the pad assembly - main LH.
6) Install the bushing - headrest and the bushing - lock assembly.
7) Install the lock assembly - rear backrest rear LH.

Tightening torque:
22.5 N·m (2.3 kgf-m, 16.6 ft-lb)

8) Install the plastic hooks on the back side of the backrest assembly LH.
9) Install the clips on the backside of the cover COMPL - rear backrest LH.
10) Install the knob - backrest. (Screw-in type)
11) Referring to the above steps, install the pad assembly - main RH.

Tightening torque:
Refer to "COMPONENT" of "General Description". <Ref. to SE-7, REAR SEAT, COMPONENT, General Description.>

12) Install the headrest assembly - rear backrest.
13) Before installation, check the following items.
- No tear and fray on the cover COMPL - rear backrest and the cover - rear cushion.
- No fray or deformation on each wire cable.

14) Install the rear seat. <Ref. to SE-33, INSTALLATION, Rear Seat.>

E: INSPECTION

1. SEAT COVER

Check that there is no tear or fray on the cover COMPL - rear backrest and the cover - rear cushion.

4. Power Seat System

A: REMOVAL

CAUTION:
When removing the front seat, disconnect the ground cable from the battery before disconnecting the airbag system and the occupant detection system harness connector, and wait for 60 seconds before starting the operation.

1. POWER SEAT SWITCH

1) Remove the seat from vehicle. <Ref. to SE-9, REMOVAL, Front Seat.>
2) Remove the cover - hinge front seat OUT.
   (1) Remove the screws in the rear section of the cover - hinge front seat OUT.
   (2) Release the claw in the upper section of the cover - hinge front seat OUT.
   (3) Remove the clip, and release the claws in the front section of the cover - hinge front seat OUT.
   (4) Disconnect the power seat switch connector, and remove the cover - hinge front seat OUT.
   (5) Remove the knob - power seat.

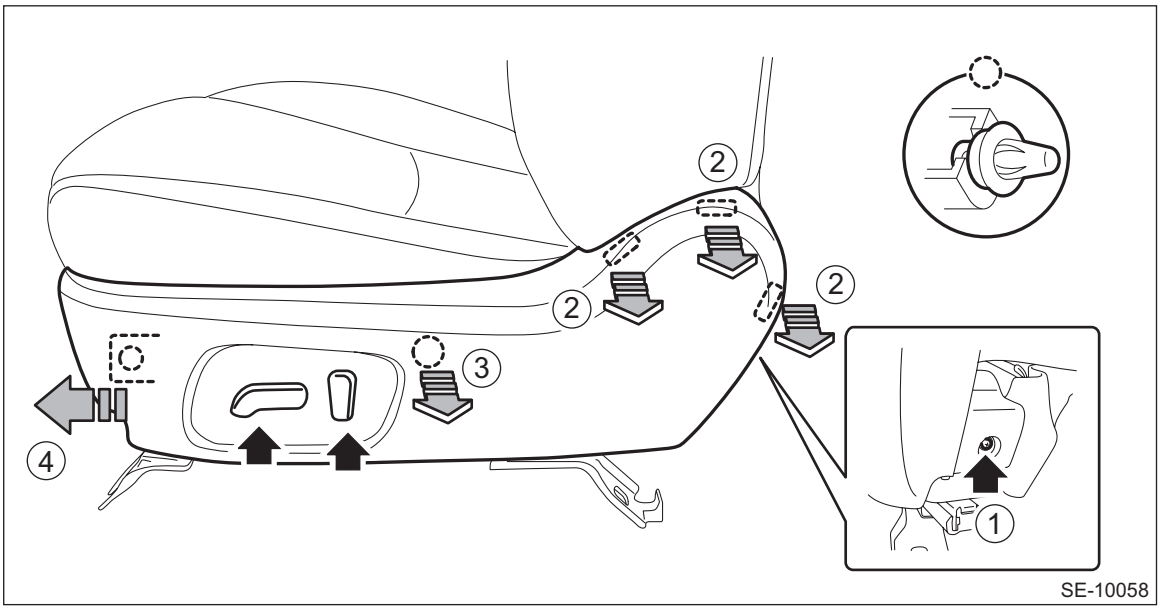

SE-10058

3) Remove the screws to remove the power seat switch assembly.

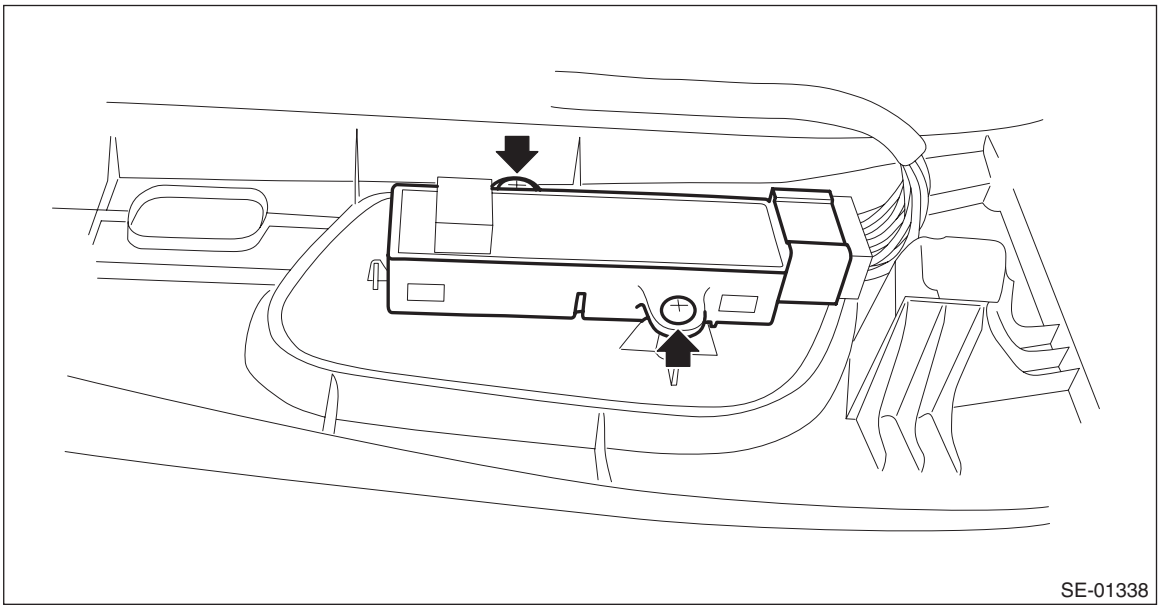
SE-01338

B: INSTALLATION

1) Install the power seat switch assembly.
2) Install the cover - hinge front seat OUT.
3) Install the knob - power seat.
4) Install the seat assembly. <Ref. to SE-10, INSTALLATION, Front Seat.>

C: INSPECTION

1. WIRING DIAGRAM

Refer to “Power Seat” in WI section. <Ref. to WI-298, WIRING DIAGRAM, Power Seat System.>

2. NOTE

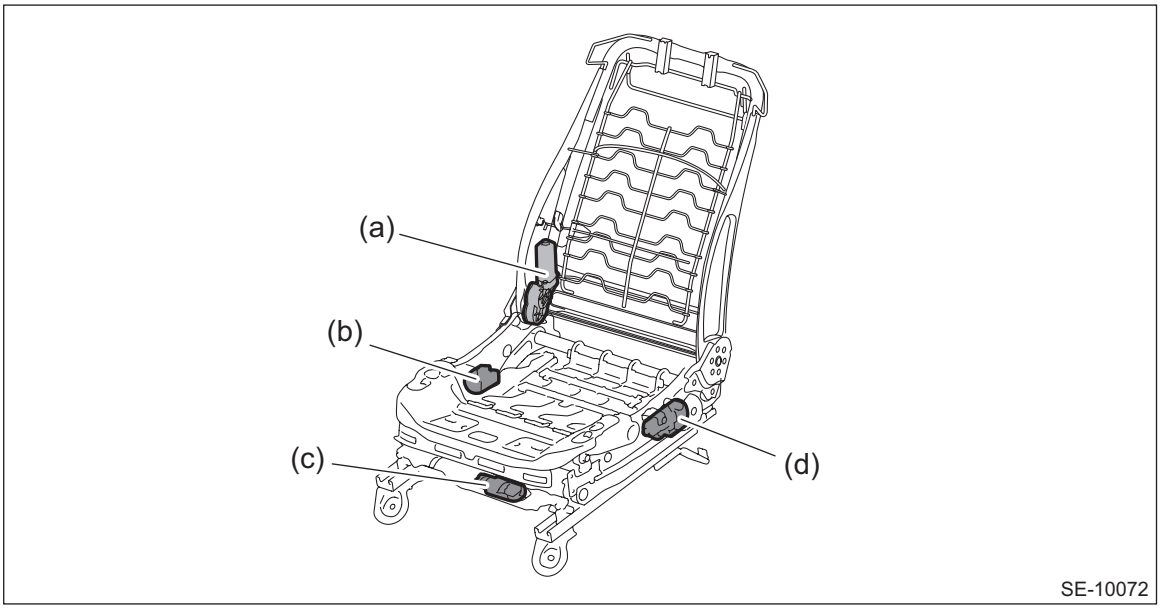

(a) Reclining motor
(b) Tilt motor
(c) Slide motor
(d) Lifter motor

3. TROUBLE SYMPTOM

Symptoms	Criteria
All functions do not operate. <Ref. to SE-43, ALL FUNCTIONS DO NOT OPERATE, INSPECTION, Power Seat System.>	• Power seat switch • Power seat harness • Body harness
A part of function does not operate. <Ref. to SE-43, SOME MOTORS DO NOT OPERATE, INSPECTION, Power Seat System.>	• Power seat switch • Power seat harness • Relevant motor

4. CHECK POWER SEAT SWITCH

Measure resistance between terminals while operating each switch.

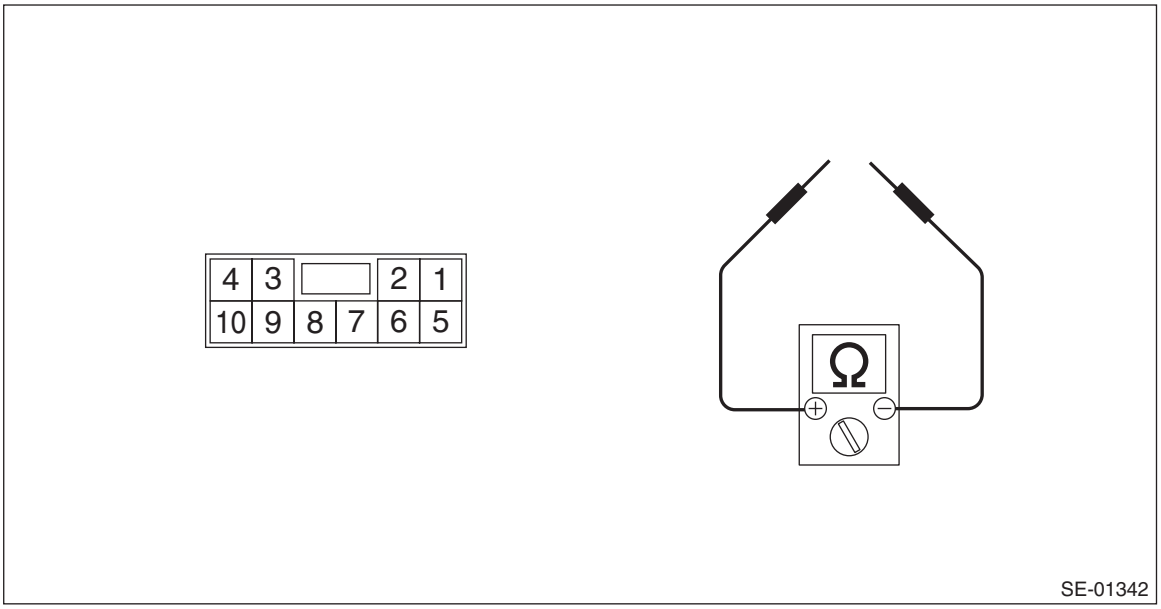

Switch position	Terminal No.	Standard
Slide forward	1 and 8 4 and 7	Less than 10 Ω
Slide rearward	1 and 7 4 and 8	Less than 10 Ω
Tilt up	1 and 3 2 and 4	Less than 10 Ω
Tilt down	1 and 2 3 and 4	Less than 10 Ω
Lifter up	1 and 6 4 and 9	Less than 10 Ω
Lifter down	1 and 9 4 and 6	Less than 10 Ω
Reclining forward	1 and 10 4 and 5	Less than 10 Ω
Reclining rearward	1 and 5 4 and 10	Less than 10 Ω

Replace the power seat switch if the inspection result is not within the standard value.

5. ALL FUNCTIONS DO NOT OPERATE

	Step	Check	Yes	No
1	**CHECK SEAT FUNCTIONS.** Operate each power seat switch and check that each power seat function operates normally.	Does all function fail to operate?	Go to step **2**.	Check the motor which does not operate. <Ref. to SE-43, SOME MOTORS DO NOT OPERATE, INSPECTION, Power Seat System.>
2	**CHECK FUSE.** Check the power seat fuse inside the fuse box.	Is the fuse blown out?	Replace the appropriate fuse.	Go to step **3**.
3	**CHECK POWER SUPPLY CIRCUIT.** 1) Disconnect the connector of power seat switch assembly. 2) Measure the voltage between harness connector and chassis ground. ***Connector & terminal*** ***(R200) No. 1 (+) — Chassis ground (–):***	Is the voltage 10 V or more?	Go to step **4**.	Check body harness.
4	**CHECK POWER SUPPLY CIRCUIT.** Measure the resistance between power seat switch harness connector and chassis ground. ***Connector & terminal*** ***(R200) No. 1 — Chassis ground:***	Is the resistance less than 10 Ω?	Replace the power seat switch assembly.	Check body harness.

6. SOME MOTORS DO NOT OPERATE

- **Slide operation failure**

	Step	Check	Yes	No
1	**CHECK SWITCH.** 1) Disconnect the connector of power seat switch assembly. 2) Measure the resistance between connector terminals when moving the switch to slide forward and slide backward. <Ref. to SE-42, CHECK POWER SEAT SWITCH, INSPECTION, Power Seat System.>	Is the inspection result normal?	Go to step **2**.	Replace the power seat switch assembly.
2	**CHECK HARNESS.** 1) Disconnect the power seat switch connector and slide motor connector. 2) Measure the resistance between power seat switch connector and slide motor connector. ***Connector & terminal*** ***(R200) No. 8 — (R202) No. 5:*** ***(R200) No. 7 — (R202) No. 1:***	Is the resistance less than 10 Ω?	Go to step **3**.	Check power seat harness.
3	**CHECK SLIDE MOTOR.** 1) Connect the power seat switch connector and slide motor connector. 2) Apply 12 V to the slide motor and check the motor rotation. ***Connector & terminal*** ***(R202) No. 5 (+) — (R202) No. 1 (–):*** ***(R202) No. 1 (+) — (R202) No. 5 (–):***	Does the motor rotate normally?	Check for temporary poor contact or mechanical trouble in slide rail.	Slide motor problem. Replace the seat cushion frame assembly.

• Malfunction of tilt operation

	Step	Check	Yes	No
1	**CHECK SWITCH.** 1) Disconnect the connector of power seat switch assembly. 2) Measure the resistance between connector terminals when moving the switch to tilt up and tilt down. <Ref. to SE-42, CHECK POWER SEAT SWITCH, INSPECTION, Power Seat System.>	Is the inspection result normal?	Go to step **2**.	Replace the power seat switch assembly.
2	**CHECK HARNESS.** 1) Disconnect the power seat switch connector and tilt motor connector. 2) Measure the resistance between power seat switch connector and tilt motor connector. ***Connector & terminal*** ***(R200) No. 3 — (R203) No. 4:*** ***(R200) No. 2 — (R203) No. 6:***	Is the resistance less than 10 Ω?	Go to step **3**.	Check power seat harness.
3	**CHECK TILT MOTOR.** 1) Connect the power seat switch connector and tilt motor connector. 2) Apply 12 V to the tilt motor and check the motor rotation. ***Connector & terminal*** ***(R203) No. 4 (+) — (R203) No. 6 (–):*** ***(R203) No. 6 (+) — (R203) No. 4 (–):***	Does the motor rotate normally?	Check for temporary poor contact or mechanical trouble in tilt mechanism.	Tilt motor problem. Replace the seat cushion frame assembly.

• Malfunction of lifter operation

	Step	Check	Yes	No
1	**CHECK SWITCH.** 1) Disconnect the connector of power seat switch assembly. 2) Measure the resistance between connector terminals when moving the switch to lifter up and lifter down. <Ref. to SE-42, CHECK POWER SEAT SWITCH, INSPECTION, Power Seat System.>	Is the inspection result normal?	Go to step **2**.	Replace the power seat switch assembly.
2	**CHECK HARNESS.** 1) Disconnect the power seat switch connector and lifter motor connector. 2) Measure the resistance between power seat switch connector and lifter motor connector. ***Connector & terminal*** ***(R200) No. 6 — (R204) No. 6:*** ***(R200) No. 9 — (R204) No. 4:***	Is the resistance less than 10 Ω?	Go to step **3**.	Check power seat harness.
3	**CHECK LIFTER MOTOR.** 1) Connect the power seat switch connector and lifter motor connector. 2) Apply 12 V to the lifter motor and check the motor rotation. ***Connector & terminal*** ***(R204) No. 6 (+) — (R204) No. 4 (–):*** ***(R204) No. 4 (+) — (R204) No. 6 (–):***	Does the motor rotate normally?	Check for temporary poor contact or mechanical trouble in lifter mechanism.	Lifter motor problem. Replace the seat cushion frame assembly.

- **Malfunction of reclining operation**

	Step	Check	Yes	No
1	**CHECK SWITCH.** 1) Disconnect the connector of power seat switch assembly. 2) Measure the resistance between connector terminals when moving the switch to reclining forward and reclining backward. <Ref. to SE-42, CHECK POWER SEAT SWITCH, INSPECTION, Power Seat System.>	Is the inspection result normal?	Go to step **2**.	Replace the power seat switch assembly.
2	**CHECK HARNESS.** 1) Disconnect the power seat switch connector and reclining motor connector. 2) Measure the resistance between power seat switch connector and reclining motor connector. ***Connector & terminal*** ***(R200) No. 10 — (R201) No. 6:*** ***(R200) No. 5 — (R201) No. 4:***	Is the resistance less than 10 Ω?	Go to step **3**.	Check power seat harness.
3	**CHECK RECLINING MOTOR.** 1) Connect the power seat switch connector and reclining motor connector. 2) Apply 12 V to the reclining motor and check the motor rotation. ***Connector & terminal*** ***(R201) No. 6 (+) — (R201) No. 4 (–):*** ***(R201) No. 4 (+) — (R201) No. 6 (–):***	Does the motor rotate normally?	Check for temporary poor contact or mechanical trouble in reclining hinge.	Reclining motor problem. Replace the backrest frame assembly.

5. Seat Heater System

A: REMOVAL

1. SEAT HEATER UNIT

1) Remove the front seats. <Ref. to SE-9, REMOVAL, Front Seat.>
2) Remove the backrest cover of front seat and seat cushion cover. <Ref. to SE-11, DISASSEMBLY, Front Seat.>
3) Remove the seat heater module.

2. SEAT HEATER SWITCH

1) Disconnect the ground cable from battery and wait for at least 60 seconds before starting work. <Ref. to NT-6, BATTERY, NOTE, Note.>

NOTE:
- For model with battery sensor, disconnect the ground terminal from battery sensor.
- On CVT models, shift the select lever into “N” before disconnecting the battery ground cable.

2) Remove the console box assembly. <Ref. to EI-67, REMOVAL, Console Box.>
3) Remove the screws and remove the seat heater switch from the backside of the console box assembly.

3. SEAT HEATER RELAY AND FUSE

1) Disconnect the ground cable from battery and wait for at least 60 seconds before starting work. <Ref. to NT-6, BATTERY, NOTE, Note.>

NOTE:
For model with battery sensor, disconnect the ground terminal from battery sensor.

2) Remove the cover assembly - instrument panel LWR driver. <Ref. to EI-62, REMOVAL, Instrument Panel Lower Cover.>
3) Remove the glove box assembly. <Ref. to EI-64, REMOVAL, Glove Box.>
4) Remove the seat heater relay and fuse.
   (1) Remove the relay & fuse box bolts.
   (2) Remove the seat heater relay from the relay holder.

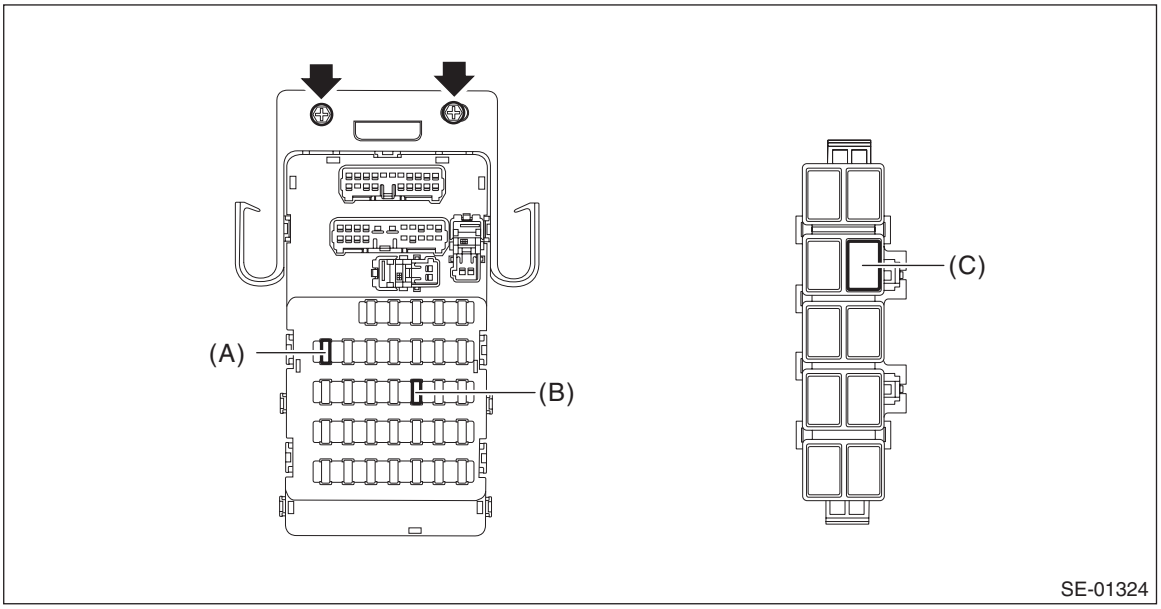

Relay & fuse box	Fuse 7.5 A (remote control mirror)	(A)
	Fuse 15 A (seat heater)	(B)
Relay holder	Seat heater relay	(C)

B: INSTALLATION

1. SEAT HEATER UNIT

1) Install the seat heater module.

CAUTION:
- **If the seat heater module is removed, replace the pad assembly with a new part.**
- **If the seat heater module is reused, remove the polyurethane section from the reverse side completely and attach a new pad assembly with a double-sided tape.**

Preparation items:
Double-sided tape: NITTO DENKO 501L or equivalent

2) Assemble the backrest cover of front seat and seat cushion cover. <Ref. to SE-23, ASSEMBLY, Front Seat.>
3) Install the front seat. <Ref. to SE-10, INSTALLATION, Front Seat.>

2. SEAT HEATER SWITCH

1) Install the seat heater switch.
2) Install the console box assembly.
3) Connect the battery ground terminal. <Ref. to NT-6, BATTERY, NOTE, Note.>

NOTE:
After connecting the battery sensor terminal, place the select lever in the “P” position.

3. SEAT HEATER RELAY AND FUSE

1) Install the seat heater relay & fuse.
2) Install the glove box assembly.
3) Install the cover assembly - instrument panel LWR driver.
4) Connect the battery ground terminal. <Ref. to NT-6, BATTERY, NOTE, Note.>

C: INSPECTION

1. WIRING DIAGRAM

Refer to “Seat Heater System” in the wiring diagram. <Ref. to WI-333, WIRING DIAGRAM, Seat Heater System.>

2. DIAGNOSTIC CHART

Symptoms	Repair order
Seat heater does not operate.	1. Check the fuse. <Ref. to SE-47, CHECK SEAT HEATER FUSE, INSPECTION, Seat Heater System.>
	2. Check the seat heater relay. <Ref. to SE-48, CHECK SEAT HEATER RELAY, INSPECTION, Seat Heater System.>
	3. Check the seat heater system power supply and ground circuit. <Ref. to SE-48, CHECK POWER SUPPLY AND GROUND CIRCUIT, INSPECTION, Seat Heater System.>
	4. Check the seat heater module. <Ref. to SE-49, SEAT HEATER UNIT, INSPECTION, Seat Heater System.>
	5. Check the seat heater switch circuit. <Ref. to SE-50, SEAT HEATER SWITCH, INSPECTION, Seat Heater System.>

3. CHECK SEAT HEATER FUSE

Remove the seat heater fuse and inspect visually.
Is the fuse blown out?
- **Yes** → Replace the fuse.
- **No** → Check the power supply and ground circuits.

4. CHECK SEAT HEATER RELAY

1) Remove the seat heater relay from the relay holder.
2) Measure the resistance between seat heater relay terminals.

Preparation tool:
Circuit tester

Terminal No.	Inspection conditions	Standard	Circuit
36 — 37	Always	1 MΩ or more	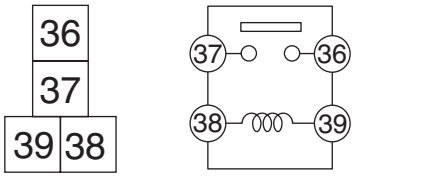
36 — 37	Apply battery voltage between terminals 38 and 39.	Less than 1 Ω	

3) Replace the seat heater relay if the inspection result is not within the standard value.

5. CHECK POWER SUPPLY AND GROUND CIRCUIT

1) Check power supply circuit
   (1) Disconnect the harness connector of seat heater switch.
   (2) Turn the ignition switch to ON.
   (3) Measure the voltage between harness connector terminal and chassis ground.

Connector & terminal
FA engine, model without EyeSight:
RH side (R42) No. 2 (+) — Chassis ground (–):
LH side (R43) No. 2 (+) — Chassis ground (–):
FA engine, model with EyeSight:
(AD8) No. 7 (+) — Chassis ground (–):
EJ engine:
(AD8) No. 7 (+) — Chassis ground (–):

Is the voltage 12 V or more?
- **Yes** → Go to step 2.
- **No** → Check the harness between the seat heater switch and fuse.

2) Check ground circuit
Measure the resistance between harness connector terminal and chassis ground.

Connector & terminal
FA engine, model without EyeSight:
RH side (R42) No. 2 — Chassis ground:
LH side (R43) No. 2 — Chassis ground:
FA engine, model with EyeSight:
(AD8) No. 7 — Chassis ground:
EJ engine:
(AD8) No. 7 — Chassis ground:

Is the resistance less than 10 Ω?
- **Yes** → Go to step 3.
- **No** → Repair the harness.

3) Check ground circuit
Measure the resistance between seat heater switch terminals.

Connector & terminal
FA engine, model without EyeSight:
RH side (R42) No. 2 — (R42) No. 3
LH side (R43) No. 2 — (R43) No. 3
FA engine, model with EyeSight:
(AD8) No. 7 — (AD8) No. 2:
EJ engine:
(AD8) No. 7 — (AD8) No. 2:
Is the resistance less than 10 Ω?
- **Yes** → The power supply and ground circuits are normal.
- **No** → Replace the seat heater switch. <Ref. to SE-46, SEAT HEATER SWITCH, REMOVAL, Seat Heater System.>

6. SEAT HEATER UNIT

1) Disconnect the seat heater unit connector, and check the continuity between terminals of connector.

Connector & terminal
HI
No. 1 — No. 3:
No. 3 — No. 4:
LOW
No. 1 — No. 4:

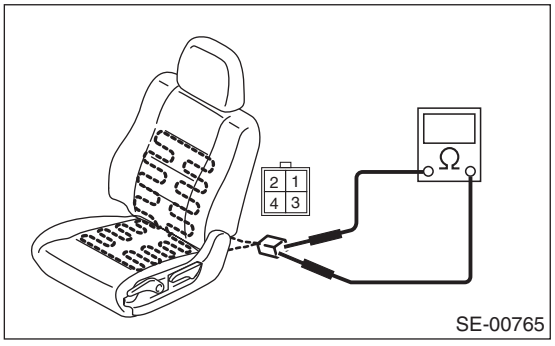

2) If no continuity exists, replace the seat heater module with a new part. <Ref. to SE-11, DISASSEMBLY, Front Seat.>

7. SEAT HEATER SWITCH

1) Inspect the continuity between the seat heater switch terminals.

- Except for FA engine, model without EyeSight

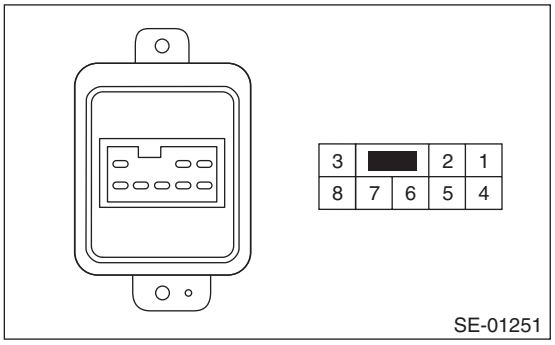

Connector & terminal

HI

No. 7 — No. 2:
No. 7 — No. 4:
No. 7 — No. 8:

LOW

No. 7 — No. 1:
No. 7 — No. 2:
No. 7 — No. 3:

- FA engine, model without EyeSight

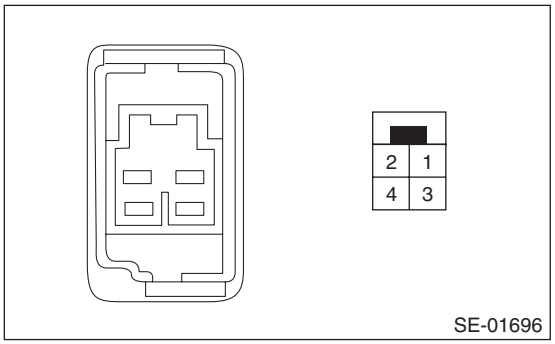

Connector & terminal

HI

No. 2 — No. 1:
No. 4 — No. 3:

LOW

No. 2 — No. 4:

2) If no continuity exists, replace the seat heater switch with a new part. <Ref. to SE-46, SEAT HEATER SWITCH, REMOVAL, Seat Heater System.>

SECURITY AND LOCKS

SL

		Page
1.	General Description	2
2.	Relay and Fuse	8
3.	Door Lock Control System	10
4.	Keyless Entry System	15
5.	Keyless Access System	25
6.	Push Button Start System	26
7.	Security System	28
8.	Front Inner Remote	32
9.	Front Outer Handle	33
10.	Front Door Latch and Door Lock Actuator Assembly	37
11.	Rear Inner Remote	40
12.	Rear Outer Handle	41
13.	Rear Door Latch and Door Lock Actuator Assembly	45
14.	Trunk Opener Switch	47
15.	Trunk Lid Latch and Actuator Assembly	49
16.	Front Hood Lock Assembly	51
17.	Remote Openers	56
18.	Ignition Key Lock	64
19.	Key Lock Cylinders	69
20.	Security Control Module	74
21.	Impact Sensor	76
22.	Keyless Entry Control Module	78
23.	Keyless Buzzer	79
24.	Body Integrated Unit	81
25.	Keyless Transmitter	84
26.	Access Key	86
27.	Immobilizer Control Module	88
28.	Immobilizer Antenna	89
29.	Keyless Access Indoor Antenna	92
30.	Keyless Access Outdoor Antenna	95
31.	Trunk Opener Button	97
32.	Receiver	98
33.	Keyless Access CM	100
34.	ID Code Box	103
35.	Steering Lock CM	104
36.	Push Button Ignition Switch	106
37.	Starter Relay (Push Button Start)	108
38.	IG Relay1 (Push Button Start)	110
39.	IG Relay2 (Push Button Start)	112
40.	Accessory Relay (Push Button Start)	114
41.	Starter Cut Relay	116
42.	Access Buzzer	118
43.	Function Setting (Customize)	120
44.	Keyless Access With Push Button Start System	121

1. General Description

A: COMPONENT

1. DOOR LOCK ASSEMBLY

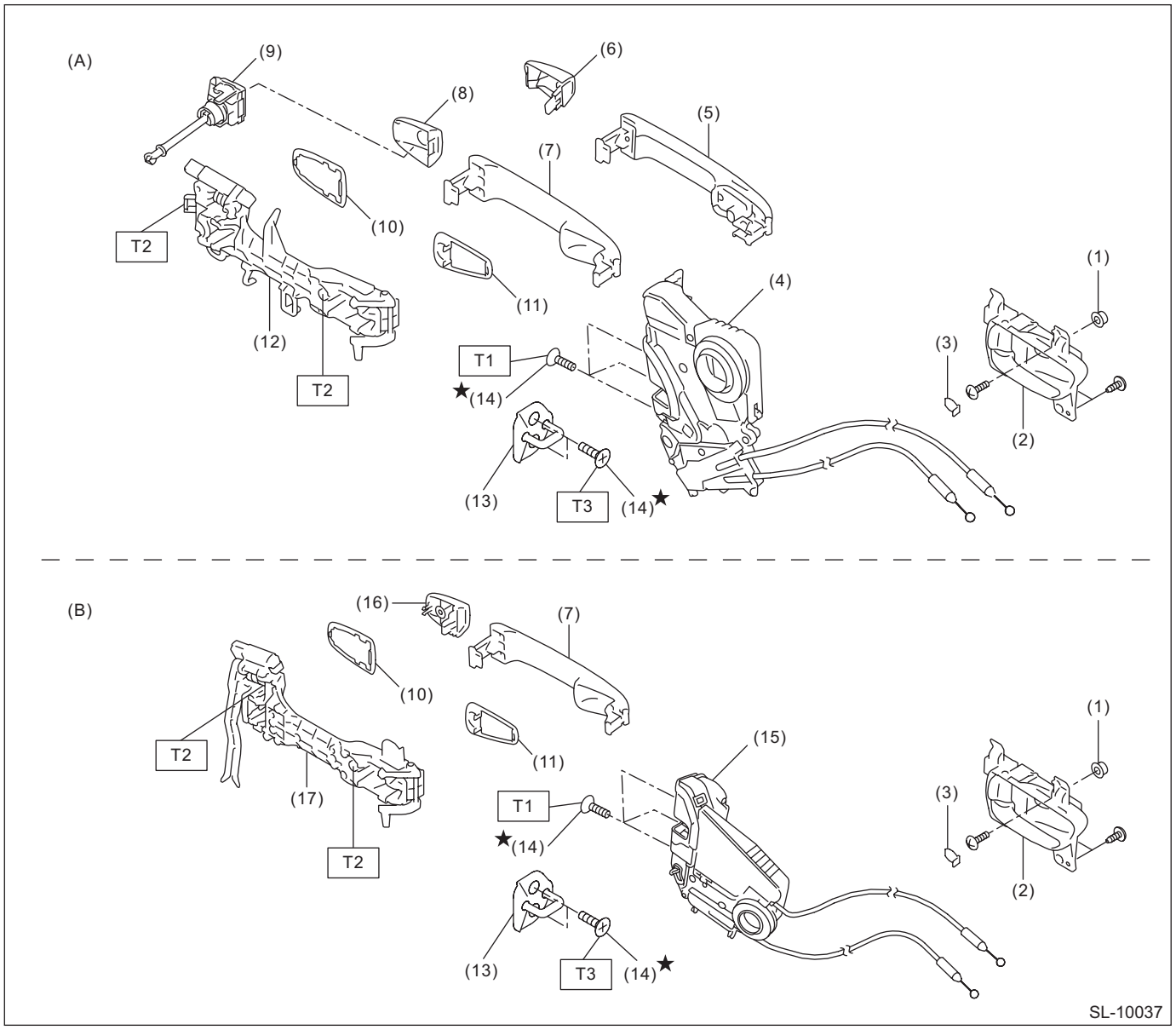

(A) Front
(B) Rear

(1) Grommet - screw
(2) Remote ASSY - door
(3) Cap remote
(4) Latch & actuator ASSY - front
(5) Handle - door outer (model with keyless access with push button start)
(6) Cover - handle front outer (passenger's seat)
(7) Handle - door outer (model without keyless access with push button start)
(8) Cover - handle front outer (driver's seat)
(9) Key lock - door (driver's seat only)
(10) Spacer - door handle outer B
(11) Spacer - door handle outer A
(12) Frame ASSY - front door outer
(13) Striker - door
(14) Screw
(15) Latch & actuator ASSY - rear
(16) Cover - handle rear outer
(17) Frame ASSY - rear door outer

Tightening torque: N·m (kgf-m, ft-lb)
T1: 6.5 (0.7, 4.8)
T2: 7.5 (0.8, 5.5)
T3: 18 (1.8, 13.3)

2. TRUNK LID LOCK

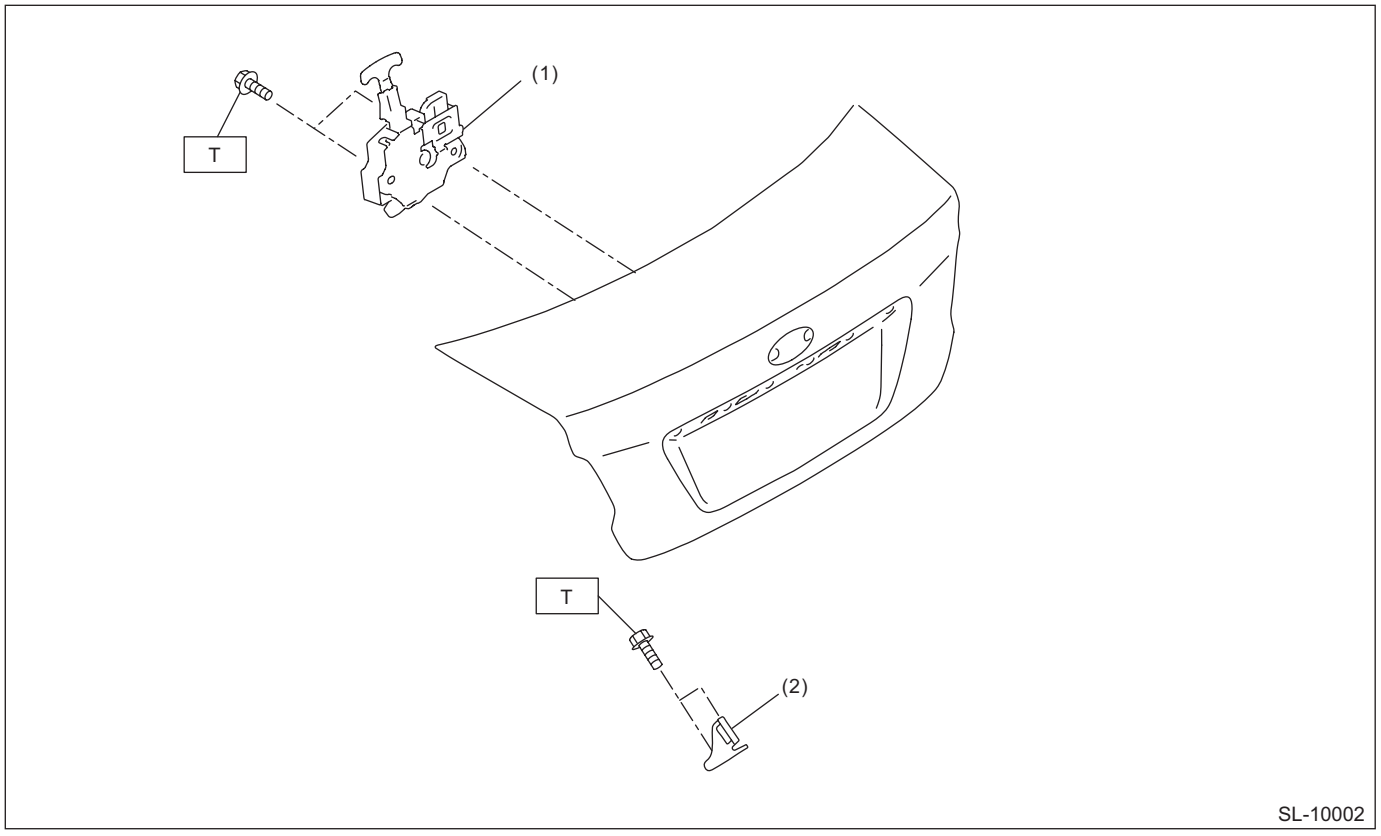

(1) Lock ASSY - trunk lid
(2) Striker - trunk lid

Tightening torque: N·m (kgf-m, ft-lb)
T: 7.5 (0.8, 5.5)

3. FRONT HOOD LOCK

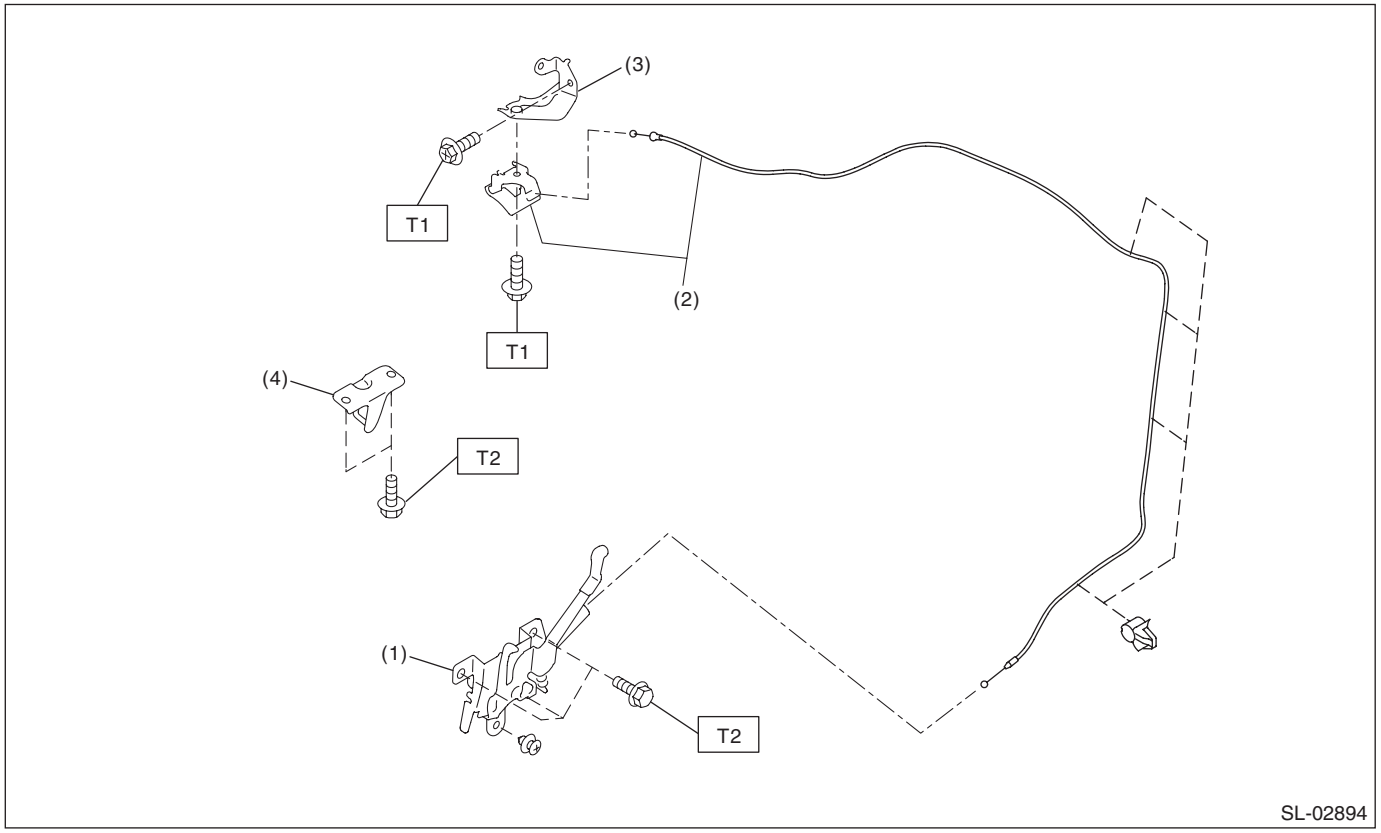

(1) Lock ASSY - front hood
(2) Cable - front hood
(3) Bracket - opener handle
(4) Striker - front hood

Tightening torque: N·m (kgf-m, ft-lb)
T1: 7.5 (0.8, 5.5)
T2: 33 (3.4, 24.3)

4. REMOTE OPENER

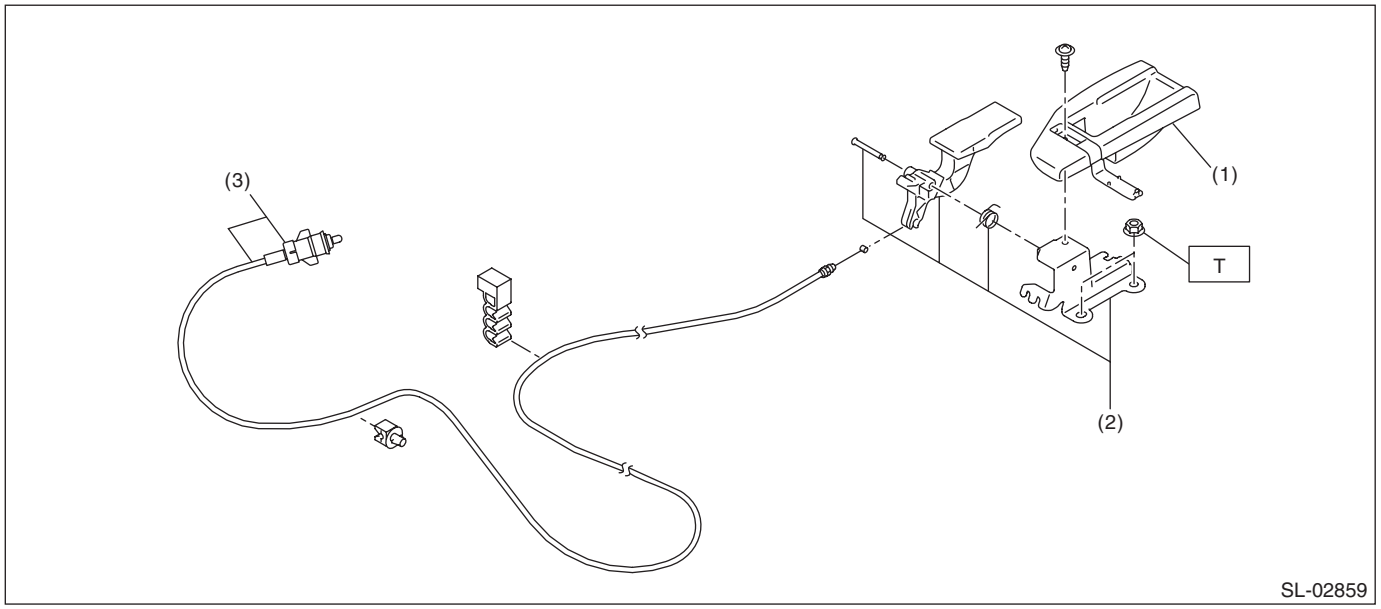

(1) Cover - handle
(2) Pull handle - opener
(3) Cable ASSY - fuel

Tightening torque: N·m (kgf-m, ft-lb)
T: 7.5 (0.8, 5.5)

5. FUEL FLAP

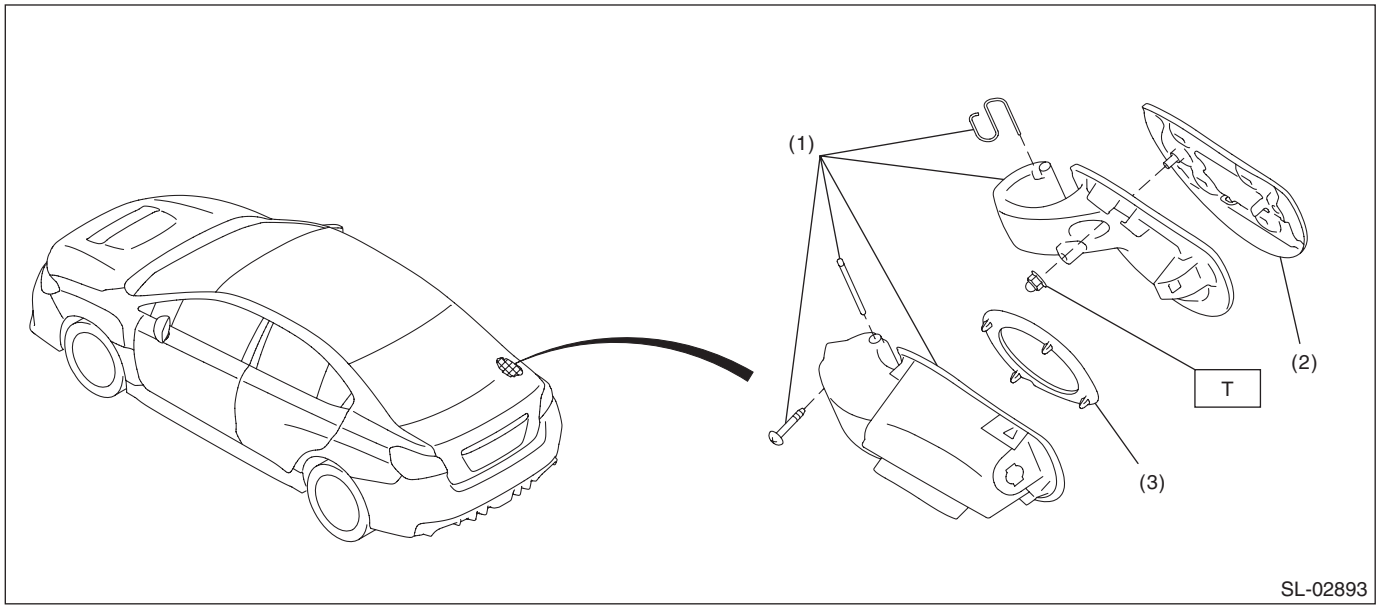

(1) Saucer - COMPL
(2) Flap - COMPL fuel
(3) Ring clip

Tightening torque: N·m (kgf-m, ft-lb)
T: 7.5 (0.8, 5.5)

6. KEYLESS ENTRY SYSTEM

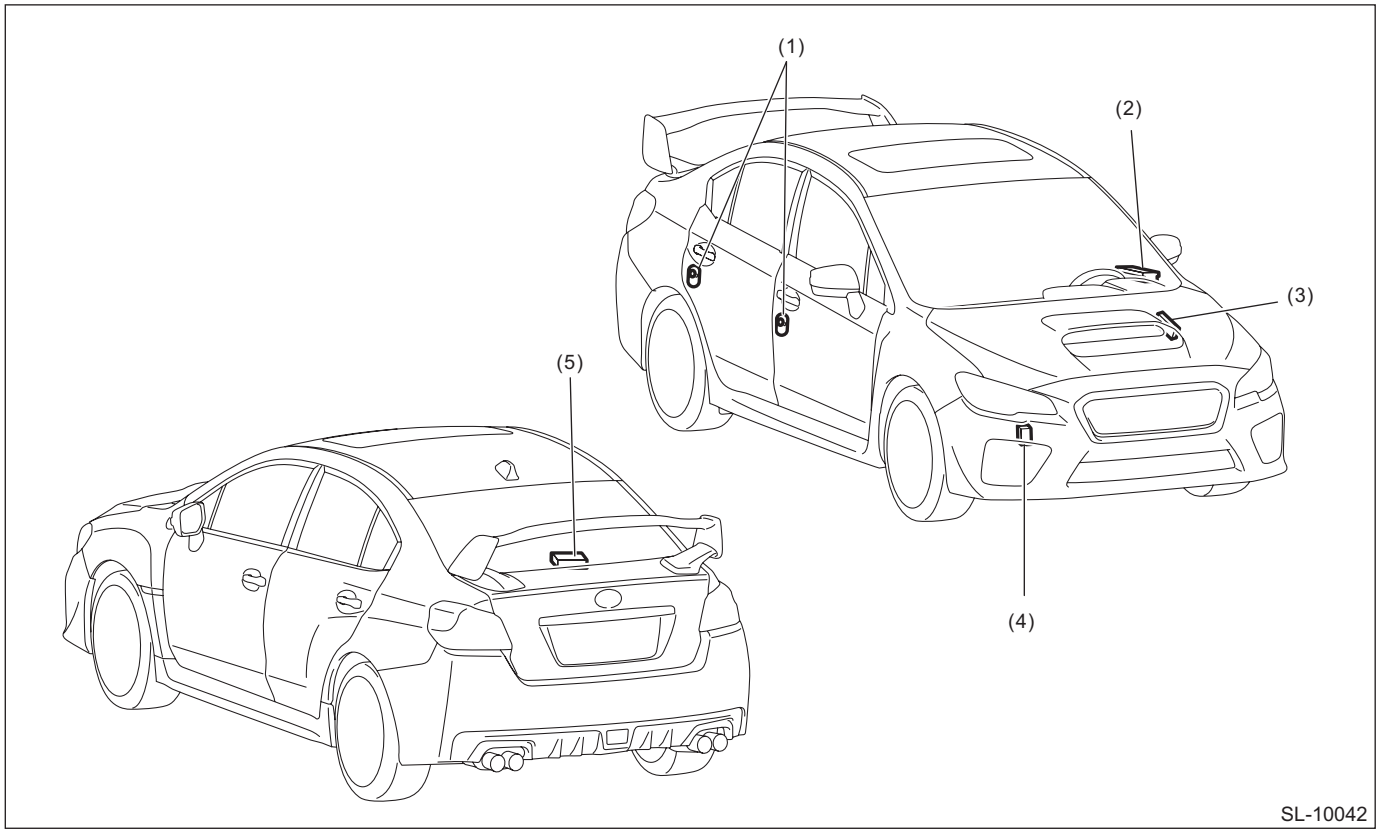

(1) Door switch
(2) Power window main switch
(3) Body integrated unit
(4) Keyless buzzer
(5) Keyless entry control module

7. SECURITY SYSTEM

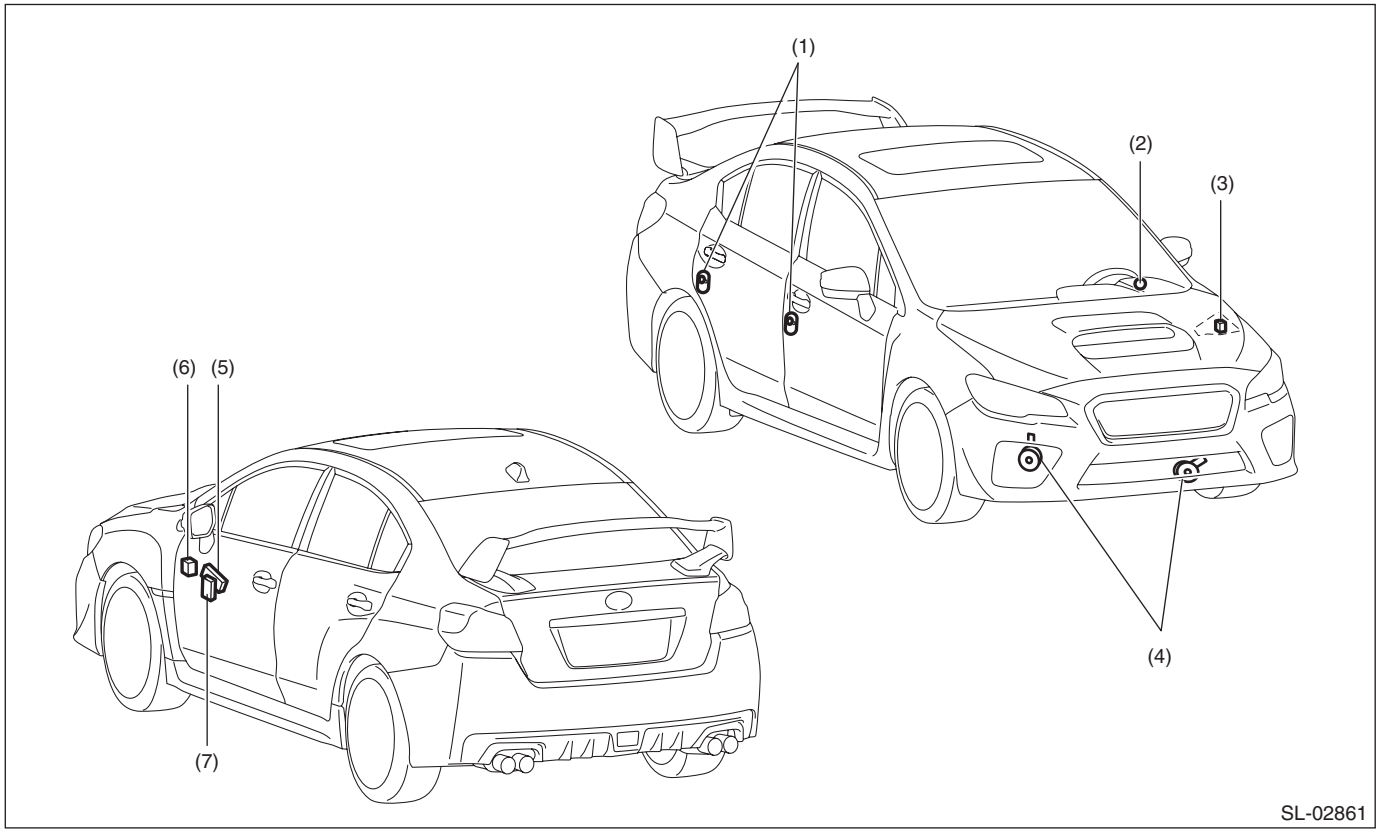

(1)	Door switch	(4)	Horn	(7)	Impact sensor (driver's seat instrument panel side) (dealer option)
(2)	Security indicator light (in combination meter)	(5)	Body integrated unit		
(3)	Horn relay (in main fuse box)	(6)	Turn signal and hazard unit		

8. KEYLESS ACCESS WITH PUSH BUTTON START SYSTEM

NOTE:
Refer to "Electrical Component Location" of "KEYLESS ACCESS WITH PUSH BUTTON START SYSTEM (DIAGNOSTICS)" section. <Ref. to KPS(diag)-11, Electrical Component Location.>

B: CAUTION

• Before disassembling or reassembling parts, always disconnect the battery ground cable from battery. When replacing the audio, control module and other parts provided with memory functions, record the memory contents before disconnecting the battery ground cable. Otherwise, the memory is cleared.
• If any immobilizer related part has been replaced, make sure to register the immobilizer.
• Be careful of the following items. Failing to do so may cause the airbag system malfunction.
  – Yellow connectors and harnesses with yellow tapes around them are the connectors and harnesses for the airbag system. When using a tester on these circuits, follow the cautions of "AIRBAG SYSTEM". <Ref. to AB-9, CAUTION, General Description.>
  – Be careful not to damage the airbag system wiring harness when servicing the electrical parts around the steering column.
• When removing, installing or replacing the VDCCM&H/U, VDCCM&H/U bracket, steering wheel or steering angle sensor (steering roll connector), perform "VDC sensor midpoint setting mode" of the VDC. <Ref. to VDC-17, VDC SENSOR MIDPOINT SETTING MODE, ADJUSTMENT, VDC Control Module and Hydraulic Control Unit (VDCCM&H/U).>

C: PREPARATION TOOL

1. SPECIAL TOOL

ILLUSTRATION	TOOL NUMBER	DESCRIPTION	REMARKS
 STSSM4	—	SUBARU SELECT MONITOR 4	Used for setting of each function and trouble-shooting for electrical system. NOTE: For detailed operation procedures of Subaru Select Monitor 4, refer to “Application help”.
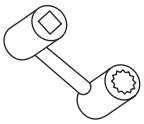 ST499987400	499987400	WRENCH COMPL	Used for adjusting the lock assembly - front hood.

2. GENERAL TOOL

TOOL NAME	REMARKS
Circuit tester	Used for measuring resistance, voltage and current.
DST-i	Used together with Subaru Select Monitor 4.
Drill	Used for replacing ignition key lock.
Reverse tap	Used for replacing ignition key lock.
TORX® T30	Used for removing and installing door outer handle cover and frame assembly.
Clip remover	Used for removing trim clip.

2. Relay and Fuse

A: LOCATION

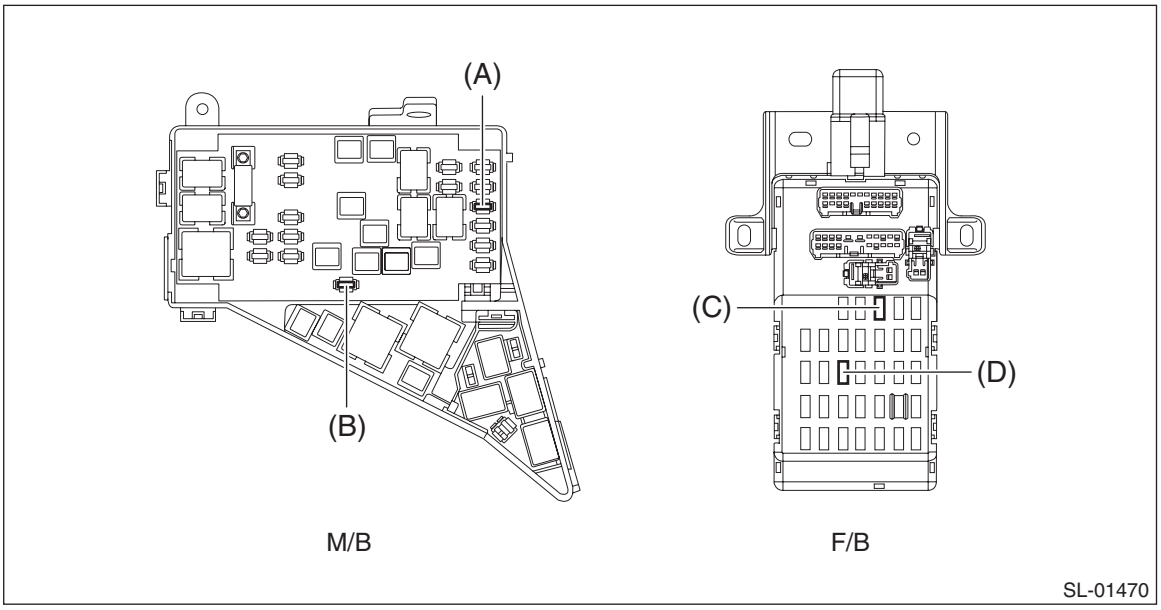

Main fuse box	Fuse 15 A (turn signal & hazard unit, body integrated unit)	(A)
	Fuse 20 A (body integrated unit, immobilizer antenna)	(B)
Relay & fuse box	Fuse 15 A (body integrated unit)	(C)
	Fuse 10 A (keyless access CM, TPMS & keyless entry CM)	(D)

NOTE:
For other related fuses, refer to the wiring diagram. <Ref. to WI-31, Power Supply Circuit.>

B: INSPECTION

1. CHECK FUSE

1) Remove the fuse and inspect visually.
2) If the fuse is blown out, replace the fuse.

NOTE:
If the fuse is blown again, check the system wiring harness.

2. CHECK RELAY

1) Measure the resistance between relay terminals.

Terminal No.	Inspection conditions	Standard	Circuit
1 — 2	Always	1 MΩ or more	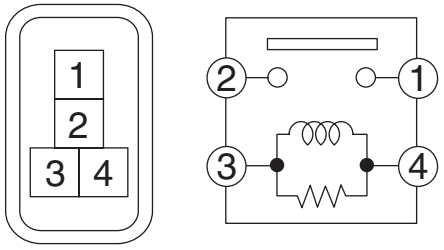 LI-01273
1 — 2	Apply battery voltage between terminals 4 and 3.	Less than 1 Ω	

Terminal No.	Inspection conditions	Standard	Circuit
1 — 4	Always	1 MΩ or more	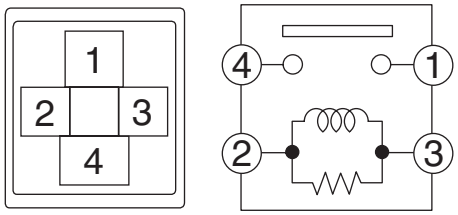 AC-02796
1 — 4	Apply battery voltage between terminals 2 and 3.	Less than 1 Ω	

Terminal No.	Inspection conditions	Standard	Circuit
1 — 2	Always	1 MΩ or more	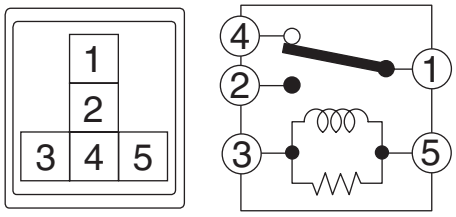 SL-01566
1 — 4	Always	Less than 1 Ω	
1 — 2	Apply battery voltage between terminals 3 and 5.	Less than 1 Ω	

2) Replace the relay if the inspection result is not within the standard value.

3. Door Lock Control System

A: WIRING DIAGRAM

Refer to “Keyless Entry System” in the wiring diagram. <Ref. to WI-271, WIRING DIAGRAM, Keyless Entry System.>

B: ELECTRICAL SPECIFICATION

1. BODY INTEGRATED UNIT

Refer to “Control Module I/O Signal” of “BODY CONTROL SYSTEM (DIAGNOSTICS)” section. <Ref. to BC(diag)-6, ELECTRICAL SPECIFICATION, Control Module I/O Signal.>

C: INSPECTION

1. SYMPTOM CHART

Symptoms	Repair order	Reference
The door lock control system does not operate.	1. Remove and visually inspect the following fuses. • No. 3 (in fuse & relay box) • No. 7 (in fuse & relay box) • No. 8 (in main fuse box) (model without keyless access with push button start only)	If the fuse is blown out, replace the fuse with a new part. When there is no defective with the fuse, check the power supply and ground circuit. <Ref. to SL-11, CHECK POWER SUPPLY AND GROUND CIRCUIT, INSPECTION, Door Lock Control System.>
	2. Check the power supply and ground circuit for body integrated unit.	<Ref. to SL-11, CHECK POWER SUPPLY AND GROUND CIRCUIT, INSPECTION, Door Lock Control System.>
	3. Check the door lock switch and the circuit.	<Ref. to SL-11, CHECK DOOR LOCK SWITCH, INSPECTION, Door Lock Control System.>
	4. Check the trunk opener switch and the circuit.	<Ref. to SL-12, CHECK TRUNK OPENER SWITCH CIRCUIT, INSPECTION, Door Lock Control System.>
	5. Check the door lock actuator and the circuit.	<Ref. to SL-13, CHECK DOOR LOCK ACTUATOR AND CIRCUIT, INSPECTION, Door Lock Control System.>
A specific door lock actuator does not operate.	Check the door lock actuator and circuit.	<Ref. to SL-13, CHECK DOOR LOCK ACTUATOR AND CIRCUIT, INSPECTION, Door Lock Control System.>

2. CHECK POWER SUPPLY AND GROUND CIRCUIT

	Step	Check	Yes	No
1	**CHECK POWER SUPPLY.** 1) Disconnect the connector of body integrated unit. 2) Measure the voltage between the body integrated unit connector and chassis ground. ***Connector & terminal*** ***(i84) No. 6 (+) — Chassis ground (–):*** ***(i171) No. 1 (+) — Chassis ground (–):*** ***(B281) No. 7 (+) — Chassis ground (–):*** ***(model without keyless access with push button start)***	Is the voltage 9 V or more?	Go to step **2**.	Check the harness for open or short circuit between body integrated unit and fuse.
2	**CHECK GROUND CIRCUIT.** Measure the resistance between the body integrated unit connector and chassis ground. ***Connector & terminal*** ***(i84) No. 1 — Chassis ground:*** ***(B280) No. 1 — Chassis ground:***	Is the resistance less than 10 Ω?	The power supply and ground circuit are OK.	Repair or replace the harness.

3. CHECK DOOR LOCK SWITCH

	Step	Check	Yes	No
1	**CHECK DATA MONITOR.** Using the Subaru Select Monitor, display the data of «Manual lock SW input». NOTE: For detailed operation procedures, refer to "Application help".	Does the display switch between OFF ←→ ON when each door lock switch is moved to LOCK?	Go to step **2**.	Go to step **3**.
2	**CHECK DOOR LOCK SWITCH.** From the condition in step 1), operate each door lock switch (driver's and passenger's) in the UNLOCK direction.	Does the display switch between OFF ←→ ON?	The door lock switch is OK.	Go to step **4**.
3	**CHECK POWER WINDOW MAIN SWITCH (DOOR LOCK SWITCH).** 1) Disconnect the power window main switch (door lock switch) connector. 2) Check the continuity between terminals when moving the power window main switch (door lock switch) in LOCK direction. ***Connector & terminal*** ***Driver's side*** ***(D7) No. 3 — (D7) No. 1:*** ***Passenger's side*** ***(D125) No. 4 — (D125) No. 5:***	Did the indicator change from "No continuity" (1 MΩ or more) to "Continuity exists" (less than 10 Ω)?	Go to step **4**.	Replace the power window main switch or door lock switch.
4	**CHECK POWER WINDOW MAIN SWITCH (DOOR LOCK SWITCH).** Check the continuity between terminals when moving the power window main switch (door lock switch) in UNLOCK direction. ***Connector & terminal*** ***Driver's side*** ***(D7) No. 9 — (D7) No. 1:*** ***Passenger's side*** ***(D125) No. 2 — (D125) No. 5:***	Did the indicator change from "No continuity" (1 MΩ or more) to "Continuity exists" (less than 10 Ω)?	Go to step **5**.	Replace the power window main switch or door lock switch.

	Step	Check	Yes	No
5	**CHECK HARNESS.** Measure the resistance between the power window main switch (door lock switch) connector and chassis ground. ***Connector & terminal*** ***Driver's side*** ***(D7) No. 3 — Chassis ground:*** ***Passenger's side*** ***(D125) No. 5 — Chassis ground:***	Is the resistance less than 10 Ω?	Go to step **6**.	Repair or replace the harness.
6	**CHECK HARNESS.** Check the harness between body integrated unit and power window main switch (door lock switch). ***Connector & terminal*** ***Driver's side*** ***(D7) No. 3 — (i84) No. 9:*** ***(D7) No. 9 — (i84) No. 20:*** ***Passenger's side*** ***(D125) No. 4 — (i84) No. 9:*** ***(D125) No. 2 — (i84) No. 20:***	Is harness normal?	Replace the body integrated unit. <Ref. to SL-81, Body Integrated Unit.>	Repair or replace the harness.

4. CHECK TRUNK OPENER SWITCH CIRCUIT

	Step	Check	Yes	No
1	**CHECK DATA MONITOR.** Using the Subaru Select Monitor, display the data of «R Gate Release SW input». NOTE: For detailed operation procedures, refer to "Application help".	Does the display switch between OFF ←→ ON when the trunk opener switch is operated?	The trunk opener switch is normal.	Go to step **2**.
2	**CHECK HARNESS.** 1) Disconnect the connectors of body integrated unit and trunk opener switch. 2) Check the harness between the body integrated unit and trunk opener switch. ***Connector & terminal*** ***(i84) No. 10 — (i13) No. 1:***	Is harness normal?	Go to step **3**.	Repair or replace the harness.
3	**CHECK HARNESS.** Measure the resistance between the trunk opener switch connector and chassis ground. ***Connector & terminal*** ***(i13) No. 2 — Chassis ground:***	Is the resistance less than 10 Ω?	Go to step **4**.	Repair or replace the harness.
4	**CHECK TRUNK OPENER SWITCH.** Measure the resistance between terminals both when trunk opener switch is pressed and when not pressed. ***Terminals*** ***No. 2 — No. 3:***	Is the resistance less than 10 Ω when the switch is pressed and 1 MΩ or more when not pressed?	Replace the body integrated unit. <Ref. to SL-81, Body Integrated Unit.>	Replace the trunk opener switch.

5. CHECK DOOR LOCK ACTUATOR AND CIRCUIT

	Step	Check	Yes	No
1	**CHECK HARNESS (DOOR LOCK).** 1) Disconnect the body integrated unit and each door lock actuator connector. 2) Check the harness between body integrated unit and each door lock actuator. ***Connector & terminal*** ***Front door LH*** ***(i171) No. 2 — (D72) No. 4:*** ***Front door RH*** ***(i171) No. 2 — (D18) No. 4:*** ***Rear door LH*** ***(i171) No. 2 — (D26) No. 4:*** ***Rear door RH*** ***(i171) No. 2 — (D32) No. 4:***	Is harness normal?	Go to step **2**.	Repair or replace the harness.
2	**CHECK HARNESS (DOOR UNLOCK).** Check the harness between body integrated unit and each door lock actuator. ***Connector & terminal*** ***Front door LH*** ***(i171) No. 4 — (D72) No. 1:*** ***Front door RH*** ***(i171) No. 3 — (D18) No. 1:*** ***Rear door LH*** ***(i171) No. 3 — (D26) No. 1:*** ***Rear door RH*** ***(i171) No. 3 — (D32) No. 1:***	Is harness normal?	Go to step **3**.	Repair or replace the harness.
3	**CHECK TRUNK UNLOCK HARNESS.** Check the harness between the body integrated unit and trunk lid lock actuator. ***Connector & terminal*** ***(i171) No. 7 — (R186) No. 1:***	Is harness normal?	Go to step **4**.	Repair or replace the harness.
4	**CHECK TRUNK UNLOCK HARNESS.** Measure the resistance between the trunk lid lock actuator connector and chassis ground. ***Connector & terminal*** ***(R186) No. 2 — Chassis ground:***	Is the resistance less than 10 Ω?	Go to step **5**.	Repair or replace the harness.
5	**CHECK BODY INTEGRATED UNIT OUTPUT SIGNAL.** 1) Connect the body integrated unit connector. 2) Measure the voltage between terminals of the body integrated unit when operating the door lock switch to LOCK direction. ***Connector & terminal*** ***Except for front door LH*** ***(i171) No. 2 (+) — (i171) No. 3 (–):*** ***Front door LH*** ***(i171) No. 2 (+) — (i171) No. 4 (–):***	Does the voltage change from less than 1 V → 9 V or more? (During lock output)	Go to step **6**.	Replace the body integrated unit. <Ref. to SL-81, Body Integrated Unit.>
6	**CHECK BODY INTEGRATED UNIT OUTPUT SIGNAL.** Measure the voltage between terminals of the body integrated unit when operating the door lock switch to UNLOCK direction. ***Connector & terminal*** ***Except for front door LH*** ***(i171) No. 3 (+) — (i171) No. 2 (–):*** ***Front door LH*** ***(i171) No. 4 (+) — (i171) No. 2 (–):***	Does the voltage change from less than 1 V → 9 V or more? (During unlock output)	Go to step **7**.	Replace the body integrated unit. <Ref. to SL-81, Body Integrated Unit.>

	Step	Check	Yes	No
7	**CHECK BODY INTEGRATED UNIT OUTPUT SIGNAL.** Measure the voltage between body integrated unit and chassis ground when operating the trunk opener switch. ***Connector & terminal*** ***(i171) No. 7 (+) — Chassis ground (–):***	Does the voltage change from less than 1 V → 9 V or more? (During unlock output)	Go to step **8**.	Replace the body integrated unit. <Ref. to SL-81, Body Integrated Unit.>
8	**CHECK DOOR LOCK ACTUATOR.** Check the door lock actuator. • Front door lock actuator: <Ref. to SL-39, INSPECTION, Front Door Latch and Door Lock Actuator Assembly.> • Rear door lock actuator: <Ref. to SL-46, INSPECTION, Rear Door Latch and Door Lock Actuator Assembly.>	Is the door lock actuator OK?	Go to step **9**.	Replace the door latch and door lock actuator assembly.
9	**CHECK TRUNK LID LOCK ACTUATOR.** Check the trunk lid lock actuator. <Ref. to SL-49, Trunk Lid Latch and Actuator Assembly.>	Is trunk lid lock actuator normal?	Check the connection status of the harness and connector that may have a temporary poor contact.	Replace the trunk lid latch & actuator assembly.

4. Keyless Entry System

A: WIRING DIAGRAM

Refer to “Keyless Entry System” in the wiring diagram. <Ref. to WI-271, WIRING DIAGRAM, Keyless Entry System.>

B: ELECTRICAL SPECIFICATION

1. KEYLESS ENTRY CONTROL MODULE

- Model without tire pressure monitoring system

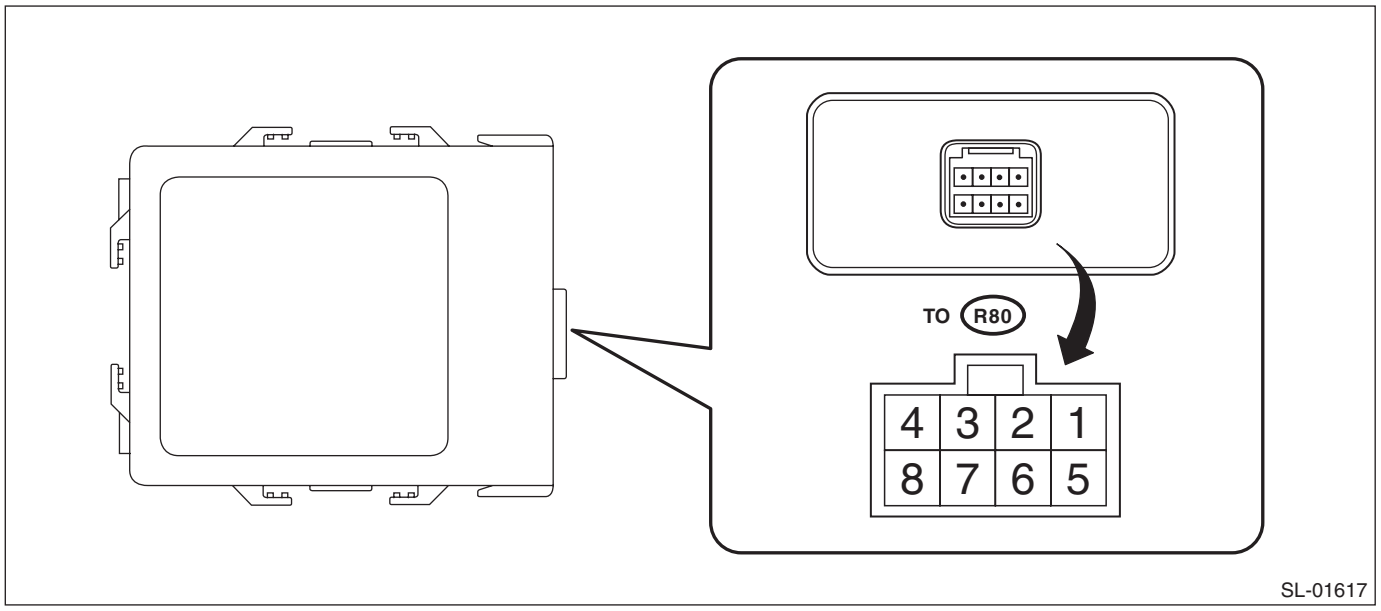

Terminal No.	Item	Measuring condition	Standard
3 (U-ART com.)	—	Cannot be measured	—
4 (+B) ←→ Chassis ground	Voltage	Always	10 — 14 V
7 (GND) ←→ Chassis ground	Resistance	Always	Less than 1 Ω

- Model with tire pressure monitoring system

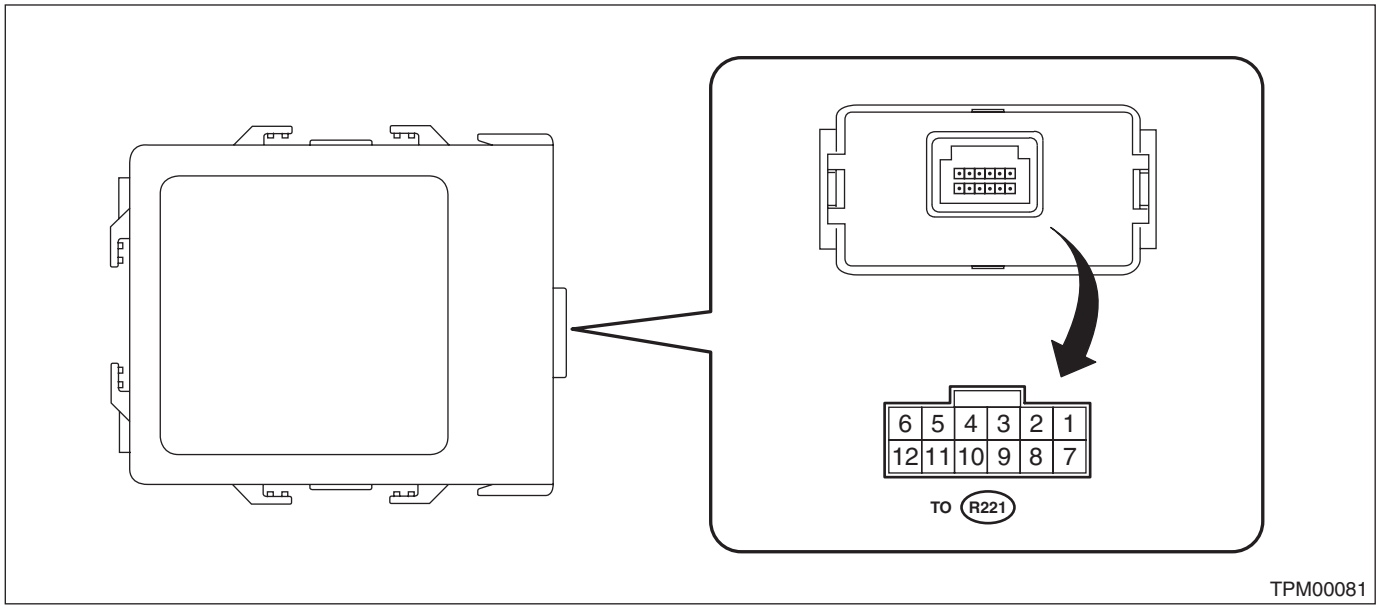

Terminal No.	Item	Measuring condition	Standard
4 (IG) ←→ Chassis ground	Resistance	IG OFF → ON	0 V → 10 — 14 V
5 (GND) ←→ Chassis ground	Resistance	Always	Less than 1 Ω
6 (+B) ←→ Chassis ground	Voltage	Always	10 — 14 V
11 (U-ART com.)	—	Cannot be measured	—

2. BODY INTEGRATED UNIT

Refer to “Control Module I/O Signal” of “BODY CONTROL SYSTEM (DIAGNOSTICS)” section. <Ref. to BC(diag)-6, ELECTRICAL SPECIFICATION, Control Module I/O Signal.>

C: INSPECTION

1. SYMPTOM CHART

Symptoms	Repair order	Reference
None of the functions of the keyless entry system operate.	1. Check the keyless transmitter battery.	<Ref. to SL-18, CHECK KEYLESS TRANSMITTER BATTERY AND FUNCTION, INSPECTION, Keyless Entry System.>
	2. Remove and visually inspect the following fuses. • No. 3 (in fuse & relay box) • No. 7 (in fuse & relay box) • No. 8 (in main fuse box)	If the fuse is blown out, replace the fuse with a new part. When there is no defective with the fuse, check the power supply and ground circuit. <Ref. to SL-11, CHECK POWER SUPPLY AND GROUND CIRCUIT, INSPECTION, Door Lock Control System.>
	3. Check the keyless entry control module.	<Ref. to SL-19, CHECK KEYLESS ENTRY CONTROL MODULE, INSPECTION, Keyless Entry System.>
	4. Check the power supply and ground circuit for body integrated unit.	<Ref. to SL-19, CHECK BODY INTEGRATED UNIT POWER SUPPLY AND GROUND CIRCUIT, INSPECTION, Keyless Entry System.>
	5. Check the key warning switch.	<Ref. to SL-21, CHECK KEY WARNING SWITCH, INSPECTION, Keyless Entry System.>
	6. Check the body integrated unit.	<Ref. to BC(diag)-2, Basic Diagnostic Procedure.>
The keyless transmitter cannot be registered.	1. Check the keyless transmitter battery.	<Ref. to SL-18, CHECK KEYLESS TRANSMITTER BATTERY AND FUNCTION, INSPECTION, Keyless Entry System.>
	2. Check the key warning switch.	<Ref. to SL-21, CHECK KEY WARNING SWITCH, INSPECTION, Keyless Entry System.>
	3. Check the keyless entry control module.	<Ref. to SL-19, CHECK KEYLESS ENTRY CONTROL MODULE, INSPECTION, Keyless Entry System.>
	4. Check the body integrated unit.	<Ref. to BC(diag)-2, Basic Diagnostic Procedure.>
Door lock or unlock does not operate. NOTE: If the door lock control system does not operate when using the door lock switch, check the door lock control system. <Ref. to SL-10, INSPECTION, Door Lock Control System.>	1. Check the keyless transmitter battery.	<Ref. to SL-18, CHECK KEYLESS TRANSMITTER BATTERY AND FUNCTION, INSPECTION, Keyless Entry System.>
	2. Check the key warning switch.	<Ref. to SL-21, CHECK KEY WARNING SWITCH, INSPECTION, Keyless Entry System.>
	3. Check the door switch signal.	<Ref. to SL-20, CHECK DOOR SWITCH, INSPECTION, Keyless Entry System.>
	4. Check the keyless entry control module.	<Ref. to SL-19, CHECK KEYLESS ENTRY CONTROL MODULE, INSPECTION, Keyless Entry System.>
	5. Check the body integrated unit.	<Ref. to BC(diag)-2, Basic Diagnostic Procedure.>

Symptoms	Repair order	Reference
The keyless buzzer and hazard light do not operate.	1. Check the keyless buzzer operation.	<Ref. to SL-23, CHECK KEYLESS BUZZER, INSPECTION, Keyless Entry System.>
	2. Check the hazard light operation.	<Ref. to SL-22, CHECK HAZARD LIGHT OPERATION, INSPECTION, Keyless Entry System.>
	3. Check the body integrated unit.	<Ref. to BC(diag)-2, Basic Diagnostic Procedure.>
Room light does not operate.	1. Check the room light operation.	<Ref. to SL-22, CHECK ROOM LIGHT OPERATION, INSPECTION, Keyless Entry System.>
	2. Check the body integrated unit.	<Ref. to BC(diag)-2, Basic Diagnostic Procedure.>
Ignition switch illumination does not operate.	1. Check the ignition switch illumination.	<Ref. to SL-24, CHECK IGNITION SWITCH ILLUMINATION, INSPECTION, Keyless Entry System.>
	2. Check the body integrated unit.	<Ref. to BC(diag)-2, Basic Diagnostic Procedure.>

2. CHECK KEYLESS TRANSMITTER BATTERY AND FUNCTION

CAUTION:
Be sure to reset keyless transmitter of other vehicles registered to the inspection target vehicle, and vehicles to which keyless transmitters were registered for inspection, to the condition before performing the inspection. (Re-register the keyless transmitters.)

	Step	Check	Yes	No
1	**CHECK KEYLESS TRANSMITTER BATTERY.** 1) Remove the battery from the keyless transmitter. <Ref. to SL-84, REMOVAL, Keyless Transmitter.> 2) Check the battery voltage. <Ref. to SL-85, INSPECTION, Keyless Transmitter.>	Is the voltage 2.5 V or more?	Go to step **2**.	Replace the keyless transmitter battery.
2	**CHECK KEYLESS TRANSMITTER.** Register the keyless transmitter which operates normally on other vehicles to the inspection target vehicle. <Ref. to SL-85, REGISTRATION OF KEYLESS TRANSMITTER WITH SUBARU SELECT MONITOR, REPLACEMENT, Keyless Transmitter.> 1) Close all the doors and trunk lid of inspection target vehicle. 2) Using the keyless transmitter, lock and unlock the doors, and unlock the trunk lid.	Can lock, unlock of doors and unlock of the trunk lid be performed properly on the inspection target vehicle?	Go to step **3**.	Due to vehicle malfunction, continue the keyless entry system diagnosis.
3	**CHECK KEYLESS TRANSMITTER.** Register the keyless transmitter of the inspected vehicle to another vehicle whose keyless system operates normally. <Ref. to SL-85, REGISTRATION OF KEYLESS TRANSMITTER WITH SUBARU SELECT MONITOR, REPLACEMENT, Keyless Transmitter.>	Is the keyless transmitter registered correctly?	Go to step **4**.	Replace the keyless transmitter and perform registration.
4	**CHECK KEYLESS TRANSMITTER.** Check the registered keyless transmitter. 1) Close all the doors and trunk lid of the vehicle which keyless system operates normally. 2) Using the keyless transmitter, lock and unlock the doors, and unlock the trunk lid.	Can lock, unlock of doors and unlock of the trunk lid be performed properly on the vehicle?	Keyless transmitter is OK.	Replace the keyless transmitter and perform registration.

3. CHECK KEYLESS ENTRY CONTROL MODULE

	Step	Check	Yes	No
1	**CHECK KEYLESS ENTRY CONTROL MODULE.** Read the DTC of body integrated unit using Subaru Select Monitor. NOTE: For detailed operation procedures, refer to "Application help".	Is DTC U1500 "KEYLESS UART COM. MALFUNCTION" displayed?	Go to step **2**.	Keyless entry control module is normal.
2	**CHECK POWER SUPPLY.** 1) Disconnect the keyless entry control module connector. 2) Measure the voltage between keyless entry control module connector and chassis ground. ***Connector & terminal*** ***Model without tire pressure monitoring system*** ***(R80) No. 4 (+) — Chassis ground (–):*** ***Model with tire pressure monitoring system*** ***(R221) No. 6 (+) — Chassis ground (–):***	Is the voltage 10 V or more?	Go to step **3**.	Check the harness for open or short circuits between the keyless entry control module and the fuse.
3	**CHECK GROUND CIRCUIT.** Measure the resistance between keyless entry control module connector and chassis ground. ***Connector & terminal*** ***Model without tire pressure monitoring system*** ***(R80) No. 7 — Chassis ground:*** ***Model with tire pressure monitoring system*** ***(R221) No. 5 — Chassis ground:***	Is the resistance less than 10 Ω?	Go to step **4**.	Repair or replace the harness.
4	**CHECK KEYLESS ENTRY CONTROL MODULE CIRCUIT.** 1) Disconnect the body integrated unit connector. 2) Check the harness between keyless entry control module and body integrated unit. ***Connector & terminal*** ***Model without tire pressure monitoring system*** ***(i171) No. 11 — (R80) No. 3:*** ***Model with tire pressure monitoring system*** ***(i171) No. 11 — (R221) No. 11:***	Is harness normal?	Replace the keyless entry control module.	Repair or replace the harness.

4. CHECK BODY INTEGRATED UNIT POWER SUPPLY AND GROUND CIRCUIT

Refer to the "INSPECTION of POWER SUPPLY AND GROUND CIRCUIT" of "Door Lock Control System" for detailed procedures. <Ref. to SL-11, CHECK POWER SUPPLY AND GROUND CIRCUIT, INSPECTION, Door Lock Control System.>

5. CHECK DOOR SWITCH

	Step	Check	Yes	No
1	**CHECK DATA MONITOR.** Display the following items using Subaru Select Monitor. • «Driver's door SW input» • «P-door SW input» • «Rear right door SW input» • «Rear left door SW input» • «R Gate SW input» NOTE: For detailed operation procedures, refer to "Application help".	Does the display switch between OFF ←→ ON when each door or trunk lid is opened/closed?	The door switch or the trunk lid latch switch is normal.	Go to step **2**.
2	**CHECK HARNESS.** 1) Disconnect the connector of body integrated unit. 2) Disconnect the connector of the door switch or the trunk lid latch switch that the display does not change. 3) Check the harness between body integrated unit and defective switch. ***Connector & terminal*** ***Front door LH*** ***(i84) No. 14 — (R9) No. 1:*** ***Front door RH*** ***(i84) No. 13 — (R12) No. 1:*** ***Rear door LH*** ***(i84) No. 24 — (R22) No. 1:*** ***Rear door RH*** ***(i84) No. 25 — (R16) No. 1:*** ***Trunk lid*** ***(i84) No. 33 — (R186) No. 3:***	Is harness normal?	Go to step **3**.	Repair or replace the harness.
3	**CHECK HARNESS.** Measure the resistance between the faulty switch connector and chassis ground. ***Connector & terminal*** ***Front door LH*** ***(R9) No. 3 — Chassis ground:*** ***Front door RH*** ***(R12) No. 3 — Chassis ground:*** ***Rear door LH*** ***(R22) No. 3 — Chassis ground:*** ***Rear door RH*** ***(R16) No. 3 — Chassis ground:*** ***Trunk lid*** ***(R186) No. 2 — Chassis ground:***	Is the resistance less than 10 Ω?	Go to step **4**.	Repair or replace the harness.
4	**CHECK DOOR SWITCH.** Measure the resistance between faulty switch terminals. ***Terminals*** ***Front LH door switch*** ***No. 1 — No. 3:*** ***Front RH door switch*** ***No. 1 — No. 3:*** ***Rear LH door switch*** ***No. 1 — No. 3:*** ***Rear RH door switch*** ***No. 1 — No. 3:*** ***Trunk lid latch switch*** ***No. 3 — No. 2:***	Is the resistance 1 MΩ or more when the door switch is pushed and the trunk lid is closed?	Replace the body integrated unit. <Ref. to SL-81, Body Integrated Unit.>	Replace the faulty parts. • Door switches • Trunk lid latch and actuator assembly

6. CHECK KEY WARNING SWITCH

	Step	Check	Yes	No
1	**CHECK DATA MONITOR.** Using the Subaru Select Monitor, display the data of «key-lock warning SW». NOTE: For detailed operation procedures, refer to "Application help".	Is the normal input signal displayed when the key is inserted in/removed from the ignition switch?	The key warning switch is OK.	Go to step **2**.
2	**CHECK FUSE.** Remove and visually check fuse No. 14 (in the main fuse box).	Is the fuse blown out?	Replace the fuse with a new part.	Go to step **3**.
3	**CHECK KEY WARNING SWITCH CIRCUIT.** 1) Disconnect the connector of body integrated unit. 2) Insert the key into ignition switch. (LOCK position) 3) Measure the voltage between the body integrated unit connector and chassis ground. ***Connector & terminal*** ***(B280) No. 4 (+) — Chassis ground (–):***	Is the voltage 9 V or more?	Go to step **4**.	Go to step **5**.
4	**CHECK KEY WARNING SWITCH CIRCUIT.** 1) Remove the key from ignition switch. 2) Measure the voltage between the body integrated unit connector and chassis ground. ***Connector & terminal*** ***(B280) No. 4 (+) — Chassis ground (–):***	Is the voltage less than 1.5 V?	The key warning switch is OK.	Go to step **5**.
5	**CHECK KEY WARNING SWITCH.** 1) Disconnect the connector of key warning switch. 2) Insert the key into ignition switch. (LOCK position) 3) Measure the resistance between key warning switch terminals. ***Terminals*** ***No. 1 — No. 2:***	Is the resistance less than 1 Ω?	Go to step **6**.	Replace the key warning switch.
6	**CHECK KEY WARNING SWITCH.** 1) Remove the key from ignition switch. 2) Measure the resistance between key warning switch terminals. ***Terminals*** ***No. 1 — No. 2:***	Is the resistance 1 MΩ or more?	Check the following: • Harness for open circuits and shorts between the key warning switch and fuse. • Harness for open or short between the body integrated unit and key warning switch.	Replace the key warning switch.

7. CHECK ROOM LIGHT OPERATION

	Step	Check	Yes	No
1	**CHECK ROOM LIGHT OPERATION.** Make sure the room light illuminates when the room light switch is ON, and goes off when the switch is OFF.	Does the room light illuminate or go off?	Go to step **2**.	Check the room light circuit. <Ref. to LI-66, INSPECTION, Room Light.>
2	**CHECK ROOM LIGHT OPERATION.** 1) Turn the room light switch to the “DOOR” position. 2) Open and close any door.	Does the room light illuminate ←→ go off (including off delay) when the door is opened and closed?	Go to step **3**.	Go to step **4**.
3	**CHECK KEYLESS ENTRY OPERATION.** Press the LOCK/UNLOCK button of the keyless transmitter.	Does it operate properly?	Room light is normal.	Check keyless entry system. <Ref. to SL-17, SYMPTOM CHART, INSPECTION, Keyless Entry System.>
4	**CHECK ROOM LIGHT.** Check the room light. <Ref. to LI-66, INSPECTION, Room Light.>	Is room light normal?	Go to step **5**.	Replace the bulb or room light assembly.
5	**CHECK HARNESS.** 1) Disconnect the connectors of body integrated unit and room light. 2) Check the harness between body integrated unit and room light. ***Connector & terminal*** ***(i84) No. 4 — (R52) No. 2:***	Is harness normal?	Go to step **6**.	Repair or replace the harness.
6	**CHECK HARNESS.** Measure the voltage between the room light connector and chassis ground. ***Connector & terminal*** ***(R52) No. 3 (+) — Chassis ground (–):***	Is the voltage 10 V or more?	Replace the body integrated unit. <Ref. to SL-81, Body Integrated Unit.>	Repair or replace the harness.

8. CHECK HAZARD LIGHT OPERATION

	Step	Check	Yes	No
1	**CHECK HAZARD LIGHT OPERATION.** Make sure the hazard light blinks when hazard switch is turned to ON.	Does the hazard light blink?	Go to step **2**.	Check the hazard light circuit.
2	**CHECK BODY INTEGRATED UNIT SETTING.** Display the data of «Abnormal warning lamp flashing setting» using Subaru Select Monitor. NOTE: For detailed operation procedures, refer to “Application help”.	Is the setting ON?	Go to step **3**.	Turn the setting to ON.
3	**CHECK DATA MONITOR.** Display the data of «Hazard Output» using Subaru Select Monitor.	Is output signal present when operating the transmitter LOCK/UNLOCK button?	Go to step **4**.	Go to step **5**.
4	**CHECK KEYLESS ENTRY OPERATION.** Press the LOCK/UNLOCK button of the keyless transmitter.	Does it operate properly?	Replace the body integrated unit. <Ref. to SL-81, Body Integrated Unit.>	Check keyless entry system. <Ref. to SL-17, SYMPTOM CHART, INSPECTION, Keyless Entry System.>

	Step	Check	Yes	No
5	**CHECK HAZARD LIGHT CIRCUIT.** 1) Disconnect the connectors of the body integrated unit and turn signal & hazard unit. 2) Check the harness between body integrated unit and turn signal & hazard unit. ***Connector & terminal*** ***(i171) No. 18 — (B32) No. 8:***	Is harness normal?	Check body integrated unit. <Ref. to BC(diag)-2, Basic Diagnostic Procedure.>	Repair or replace the harness.

9. CHECK KEYLESS BUZZER

	Step	Check	Yes	No
1	**CHECK BODY INTEGRATED UNIT SETTING.** Display the data of «Answer-back buzzer setup» using Subaru Select Monitor. NOTE: For detailed operation procedures, refer to "Application help".	Is the setting ON?	Go to step **2**.	Turn the setting to ON.
2	**CHECK BODY INTEGRATED UNIT SETTING.** Display the data of «Keyless Buzzer Volume» using Subaru Select Monitor. Turn the setting to "7".	Does the keyless buzzer sound?	Set to the volume that the customer requested.	Go to step **3**.
3	**CHECK BODY INTEGRATED UNIT.** Select and perform the «Keyless Buzzer Output» using Subaru Select Monitor.	Does the keyless buzzer sound?	Check the keyless control module.	Go to step **4**.
4	**CHECK KEYLESS BUZZER CIRCUIT.** 1) Turn the ignition switch to OFF. 2) Disconnect the connectors of the body integrated unit and keyless buzzer. 3) Check the harness between body integrated unit and keyless buzzer. ***Connector & terminal*** ***(B280) No. 20 — (B164) No. 1:***	Is harness normal?	Go to step **5**.	Repair or replace the harness.
5	**CHECK HARNESS.** Measure the resistance between keyless buzzer connector and chassis ground. ***Connector & terminal*** ***(B164) No. 1 — Chassis ground:***	Is the resistance value 10 kΩ or more?	Go to step **6**.	Repair or replace the short circuit of the harness.
6	**CHECK KEYLESS BUZZER CIRCUIT.** Measure the resistance between the keyless buzzer connector and chassis ground. ***Connector & terminal*** ***(B164) No. 2 — Chassis ground:***	Is the resistance less than 10 Ω?	Go to step **7**.	Repair or replace the harness.
7	**CHECK BODY INTEGRATED UNIT.** 1) Connect the connector of body integrated unit. 2) Select and perform the «Keyless Buzzer Output» using Subaru Select Monitor. 3) Measure the voltage between body integrated unit connector and chassis ground using an oscilloscope. ***Connector & terminal*** ***(B280) No. 20 (+) — Chassis ground (–):***	Is the frequency 2 kHz or the voltage 9 V or more?	Replace the keyless buzzer.	Replace the body integrated unit. <Ref. to SL-81, Body Integrated Unit.>

10.CHECK DOOR LOCK SWITCH

For operation procedures, refer to the "INSPECTION OF DOOR LOCK SWITCH" of the "Door Lock Control System". <Ref. to SL-11, CHECK DOOR LOCK SWITCH, INSPECTION, Door Lock Control System.>

11.CHECK IGNITION SWITCH ILLUMINATION

	Step	Check	Yes	No
1	**CHECK IGNITION CIRCUIT.** Check the ignition circuit. <Ref. to SL-31, CHECK IGNITION SWITCH CIRCUIT, INSPECTION, Security System.>	Is the switch circuit normal?	Go to step **2**.	Repair or replace.
2	**CHECK DOOR SWITCH CIRCUIT.** Inspect door switch circuit. <Ref. to SL-20, CHECK DOOR SWITCH, INSPECTION, Keyless Entry System.>	Is the switch circuit normal?	Go to step **3**.	Repair or replace.
3	**CHECK FUSE.** Remove and visually check fuse No. 14 (in the main fuse box).	Is the fuse blown out?	Replace the fuse with a new part.	Go to step **4**.
4	**CHECK HARNESS.** 1) Disconnect the ignition switch illumination connector. NOTE: The ignition switch illumination is integrated into the immobilizer antenna. 2) Measure the voltage between ignition switch illumination connector and chassis ground. ***Connector & terminal*** ***(B415) No. 2 (+) — Chassis ground (–):***	Is the voltage 10 V or more?	Go to step **5**.	Check the harness for open or short circuits between the ignition switch illumination and fuse.
5	**CHECK IGNITION SWITCH ILLUMINATION CIRCUIT.** 1) Disconnect the connector of body integrated unit. 2) Check the harness between body integrated unit and ignition switch illumination. ***Connector & terminal*** ***(B280) No. 25 — (B415) No. 6:***	Is harness normal?	Go to step **6**.	Check the harness for open circuits and shorts between the body integrated unit and ignition switch illumination.
6	**CHECK IGNITION SWITCH ILLUMINATION BULB.** Apply battery voltage between terminals of the bulb. ***Terminals*** ***No. 2 (+) — No. 6 (–):***	Does the bulb illuminate?	Replace the body integrated unit. <Ref. to SL-81, Body Integrated Unit.>	Replace the immobilizer antenna. <Ref. to SL-89, REMOVAL, Immobilizer Antenna.>

5. Keyless Access System

A: WIRING DIAGRAM

For wiring diagrams related to the keyless access system, refer to the following items.

- Keyless access system: <Ref. to WI-255, WIRING DIAGRAM, Keyless Access System.>
- Push button start system: <Ref. to WI-303, WIRING DIAGRAM, Push Button Start System.>

B: ELECTRICAL SPECIFICATION

Refer to “Control Module I/O Signal” of “KEYLESS ACCESS WITH PUSH BUTTON START SYSTEM (DIAGNOSTICS)” section. <Ref. to KPS(diag)-13, ELECTRICAL SPECIFICATION, Control Module I/O Signal.>

C: INSPECTION

1. KEYLESS ACCESS WITH PUSH BUTTON START SYSTEM

Refer to “Basic Diagnostic Procedure” of “KEYLESS ACCESS WITH PUSH BUTTON START SYSTEM (DIAGNOSTICS)” section. <Ref. to KPS(diag)-2, Basic Diagnostic Procedure.>

6. Push Button Start System

A: WIRING DIAGRAM

For wiring diagrams related to the push button start system (ignition change), refer to the following items.
- Keyless access system: <Ref. to WI-255, WIRING DIAGRAM, Keyless Access System.>
- Push button start system: <Ref. to WI-303, WIRING DIAGRAM, Push Button Start System.>

B: ELECTRICAL SPECIFICATION

Refer to “Control Module I/O Signal” of “KEYLESS ACCESS WITH PUSH BUTTON START SYSTEM (DIAGNOSTICS)” section. <Ref. to KPS(diag)-13, ELECTRICAL SPECIFICATION, Control Module I/O Signal.>

C: INSPECTION

1. IGNITION/ACC CHANGE FUNCTION CHECK

1) Check push button ignition switch function

(1) Check the change control through push button ignition switch, brake pedal operation, and shift position.

- CVT model

Shift lever position	Brake pedal operation	Push button ignition switch operation
P	Released	Repeat Ignition switch OFF → ACC ON → Ignition switch ON → Ignition switch OFF
P	Released	Engine running → Ignition switch OFF
P	Depressed	Ignition switch OFF → Engine started
P	Depressed	ACC ON → Engine started
P	Depressed	Ignition switch ON → Engine started
P	Depressed	Engine running → Ignition switch OFF
N	Released	Repeat Ignition switch OFF → ACC ON → Ignition switch ON → ACC ON
N	Released	Engine running → ACC ON
N	Depressed	Ignition switch OFF → Engine started
N	Depressed	ACC ON → Engine started
N	Depressed	Ignition switch ON → Engine started
N	Depressed	Engine running → ACC ON
Other than P or N	Released	Repeat Ignition switch OFF → ACC ON → Ignition switch ON → ACC ON
Other than P or N	Released	Engine running → ACC ON
Other than P or N	Depressed	Ignition switch OFF → Ignition switch ON
Other than P or N	Depressed	ACC ON → Ignition switch ON
Other than P or N	Depressed	Engine running → ACC ON

- MT model

Shift lever position	Clutch pedal operation	Push button ignition switch operation
—	Released	Repeat Ignition switch OFF → ACC ON → Ignition switch ON → Ignition switch OFF
	Released	Engine running → Ignition switch OFF
	Depressed	Ignition switch OFF → Engine started
	Depressed	ACC ON → Engine started
	Depressed	Ignition switch ON → Engine started
	Depressed	Engine running → Ignition switch OFF

(2) Check the changeover functions other than push button ignition switch operation.
With ACC ON or the ignition switch ON, and the shift lever in “P” position, check that ACC is ON or Ignition switch is ON → Ignition switch is OFF when the vehicle is left for 1 hour or more.

(3) If the inspection result indicates an improper operation, check the push button start system. <Ref. to KPS(diag)-113, POWER SUPPLY SWITCHING SYSTEM, INSPECTION, General Diagnostic Table.>

2) Check power status display
(1) Check the power indicator display of the push button ignition switch.

NOTE:
*1: Key collation is normal, and the stop light switch (AT) is ON.
Indicator display

Push button ignition switch status	Indicator lighting status
Ignition switch OFF (except for condition *1)	Light OFF
ACC ON (except for condition *1)	Orange light
Ignition switch ON (except for condition *1)	Orange light
Engine start standby (*1)	Green light
After engine is started	Light OFF

(2) If the inspection result indicates an improper operation, check the push button start system. <Ref. to KPS(diag)-113, POWER SUPPLY SWITCHING SYSTEM, INSPECTION, General Diagnostic Table.>

NOTE:
The indicator blinks if any of the following malfunctions are detected.

Detected malfunction	Indicator lighting status
Steering lock stuck	Green blinking
Steering lock CM internal malfunction	Orange blinking
Keyless access CM internal malfunction	Orange blinking
Vehicle speed signal malfunction	Orange blinking

7. Security System

A: WIRING DIAGRAM

Refer to “Security System” in the wiring diagram. <Ref. to WI-336, WIRING DIAGRAM, Security System.>

B: ELECTRICAL SPECIFICATION

Refer to “Control Module I/O Signal” of “BODY CONTROL SYSTEM (DIAGNOSTICS)” section. <Ref. to BC(diag)-6, ELECTRICAL SPECIFICATION, Control Module I/O Signal.>

C: INSPECTION

1. BASIC DIAGNOSTIC PROCEDURE

	Step	Check	Yes	No
1	**INITIAL CHECK.** Check the keyless entry system or keyless access system operation.	Does the keyless entry system or keyless access system operate normally?	Go to step **2**.	Check the keyless entry system or keyless access system. • Keyless entry system: <Ref. to SL-17, INSPECTION, Keyless Entry System.> • Keyless access system: <Ref. to KPS(diag)-5, KEYLESS ACCESS WITH PUSH BUTTON START SYSTEM, CAUTION, General Description.>
2	**CHECK SECURITY ON/OFF SETTING.** 1) Remove the key from ignition switch or turn the ignition switch to OFF, and close all doors. 2) Check the status of security indicator light. 3) Press the LOCK button of the keyless transmitter or access key. 4) Check the security indicator light blinking patterns.	Is the security indicator light blinking patterns as follows? • Before pressing the LOCK button: Blinks once within 3 seconds • After pressing the LOCK button: When monitoring lag is set to 0 seconds, flashes twice within 0.5 seconds in 2 second intervals / When monitoring lag is set to 30 seconds, flashes once within 0.4 seconds in 30 seconds.	Go to step **4**.	Go to step **3**.
3	**CHANGE SETTING OF SECURITY SYSTEM.** Change the setting of security system to ON using Subaru Select Monitor. <Ref. to SL-30, SECURITY SYSTEM ON/OFF SETTING, INSPECTION, Security System.>	Is setting change completed correctly?	Go to step **4**.	Replace the body integrated unit. <Ref. to SL-81, Body Integrated Unit.>
4	**CHECK SECURITY SYSTEM OPERATION.** 1) Remove the key from ignition switch or turn the ignition switch to OFF, and close all doors. 2) Press the LOCK button on the keyless transmitter or access key, then wait for 30 seconds. 3) Check the security indicator light blinking patterns.	Does the security indicator light blink twice within 0.5 seconds in 2 second intervals?	Go to step **5**.	Check the security indicator light. <Ref. to SL-31, CHECK SECURITY INDICATOR LIGHT CIRCUIT, INSPECTION, Security System.>

	Step	Check	Yes	No
5	**CHECK SECURITY ALARM OPERATION.** 1) Operate the driver's door lock switch to the UNLOCK side. 2) Open any door or trunk lid.	Does the security alarm operate when opening any door or trunk lid?	Go to step **6**.	Check the following parts. <Ref. to SL-20, CHECK DOOR SWITCH, INSPECTION, Keyless Entry System.> • Door switches • Trunk lid latch switch
6	**CHECK SECURITY ALARM OPERATION.** Check the security alarm operation status.	During the operation, does the horn keep sounding and the hazard light blink?	Go to step **7**.	Check the following parts. <Ref. to SL-20, CHECK DOOR SWITCH, INSPECTION, Keyless Entry System.> • Horn: <Ref. to SL-31, CHECK HORN, INSPECTION, Security System.> • Hazard light: <Ref. to SL-31, CHECK HAZARD LIGHT OPERATION, INSPECTION, Security System.>
7	**CHECK SECURITY ALARM CANCEL OPERATION.** Press any button of the transmitter or access key while the security alarm is operating.	Do the horn sound and the blinking of the hazard light stop?	Go to step **8**.	Replace the body integrated unit. <Ref. to SL-81, Body Integrated Unit.>
8	**CHECK IMPACT SENSOR (DEALER OPTION).** Check the sensibility of impact sensor. <Ref. to SL-77, CHECK IMPACT SENSOR, ADJUSTMENT, Impact Sensor.>	Is the sensibility set properly?	Go to step **9**.	Adjust the sensitivity. <Ref. to SL-77, IMPACT SENSITIVITY ADJUSTMENT, ADJUSTMENT, Impact Sensor.>
9	**CHECK SECURITY SYSTEM CONDITION MEMORY.** 1) Remove the key from ignition switch or turn the ignition switch to OFF, and close all doors. 2) Open the front hood. 3) Press the LOCK button on the keyless transmitter or access key, then wait for 30 seconds. 4) Disconnect the ground cable from battery. <Ref. to NT-6, BATTERY, NOTE, Note.> NOTE: For model with battery sensor, disconnect the ground terminal from battery sensor. 5) Connect the ground cable to battery. <Ref. to NT-6, BATTERY, NOTE, Note.> 6) Check the status of security indicator light.	Does the security indicator light blinks twice within 0.5 seconds at 2 second intervals?	Go to step **10**.	Replace the body integrated unit. <Ref. to SL-81, Body Integrated Unit.>

Step		Check	Yes	No
10	**CHECK SECURITY SYSTEM MANUAL ON/OFF SETTING.** 1) Press the UNLOCK button of the keyless transmitter or access key. 2) Change the setting of security system. <Ref. to SL-30, SECURITY SYSTEM ON/OFF SETTING, INSPECTION, Security System.>	Is setting change completed correctly?	Restore the security system settings to those before the diagnosis and finish the diagnosis.	Check the following parts. • Ignition switch circuit: <Ref. to SL-68, INSPECTION, Ignition Key Lock.> • Door lock switch circuit: <Ref. to SL-11, CHECK DOOR LOCK SWITCH, INSPECTION, Door Lock Control System.>

NOTE:
If the horn sounds when the security is turned on (monitor condition) using the keyless transmitter or access key, check the function setting of the body integrated unit. As a cause, it is possible that the impact sensor present (ON) / not present (OFF) setting is set to ON in the customization function though there is no impact sensor. <Ref. to BC(diag)-24, User Customizing.>

2. CHECK SECURITY SYSTEM CONDITION MEMORY

1) Pull out the key from the ignition switch, or turn the ignition switch to OFF.
2) Close all doors or trunk lid.
3) Open the front hood.
4) Press the LOCK button of the keyless transmitter or access key.

NOTE:
Wait until the security indicator light blinks twice within 0.5 seconds at 2 second intervals.
If the 30 second monitoring lag has been set, wait for 30 seconds.
5) Disconnect the battery negative terminal, and reconnect the ground terminal to the battery sensor. <Ref. to NT-6, BATTERY, NOTE, Note.>

NOTE:
For model with battery sensor, disconnect the ground terminal from battery sensor.
6) Check that the security indicator light blinks twice within 0.5 seconds at 2 second intervals. When it does not blink, replace the body integrated unit.

3. SECURITY SYSTEM ON/OFF SETTING

NOTE:
It can be set by «Security Alarm Setup» in unit customizing using Subaru Select Monitor.
For detailed operation procedures, refer to “Application help”.
1) Close all doors or trunk lid, and sit down on the driver’s seat. Press the UNLOCK button of the keyless transmitter or access key.
2) Turn the ignition switch to ON.
3) Press the central door unlock switch and open the driver’s door simultaneously. (Keep the central door unlock switch pressed down.)
4) When the condition in step 3) continues for 10 seconds, the system switches to a mode reverse to the current mode.

Setting	Horn activation	Meter display
ON → OFF	Twice	[AL_OF]
OFF → ON	Once	[AL_ON]

4. CHECK DOOR SWITCH

For operation procedure, refer to “CHECK DOOR SWITCH” of “Keyless Entry System”. <Ref. to SL-20, CHECK DOOR SWITCH, INSPECTION, Keyless Entry System.>

5. CHECK SECURITY INDICATOR LIGHT CIRCUIT

For operation procedures, refer to “CHECK SECURITY INDICATOR LIGHT CIRCUIT” of “IMMOBILIZER (DIAGNOSTICS)” section. <Ref. to IM(diag)-11, CHECK SECURITY INDICATOR LIGHT CIRCUIT, INSPECTION, Diagnostics Chart for Security Indicator Light.>

6. CHECK HORN

	Step	Check	Yes	No
1	**CHECK HORN OPERATION.** Check the horn sounds when the horn switch is pushed.	Does the horn sound?	Go to step **2**.	Check the horn circuit.
2	**CHECK BODY INTEGRATED UNIT.** Select and perform the «Horn Output» using Subaru Select Monitor. NOTE: For detailed operation procedures, refer to “Application help”.	Does the horn sound?	Horn circuit is OK.	Go to step **3**.
3	**CHECK HORN RELAY CIRCUIT.** 1) Turn the ignition switch to OFF. 2) Disconnect the connector of body integrated unit. 3) Remove the horn relay. 4) Check the harness between body integrated unit and horn relay. ***Connector & terminal*** ***(B280) No. 24 — Horn relay No. 4:***	Is harness normal?	Check body integrated unit. <Ref. to BC(diag)-2, Basic Diagnostic Procedure.>	Repair or replace the harness.

7. CHECK HAZARD LIGHT OPERATION

For operation procedure, refer to “CHECK HAZARD LIGHT OPERATION” of “Keyless Entry System”. <Ref. to SL-22, CHECK HAZARD LIGHT OPERATION, INSPECTION, Keyless Entry System.>

8. CHECK IGNITION SWITCH CIRCUIT

	Step	Check	Yes	No
1	**CHECK DATA MONITOR.** Display the data of «BATT voltage» and «Ignition Power Supply Voltage» using the Subaru Select Monitor. NOTE: For detailed operation procedures, refer to “Application help”.	Does the «Ignition Power Supply Voltage» indicate 0 V when the ignition switch is OFF, and fall within a range of ±1 V from the «BATT voltage» when the ignition switch is ON?	The ignition switch input circuit is OK.	Go to step **2**.
2	**CHECK IGNITION SWITCH CIRCUIT.** 1) Turn the ignition switch to OFF. 2) Disconnect the connector of body integrated unit. 3) Turn the ignition switch to ON. 4) Measure the voltage between the body integrated unit connector and chassis ground. ***Connector & terminal*** ***(B281) No. 3 (+) — Chassis ground (–):***	Is the voltage 10 V or more?	Check body integrated unit. <Ref. to BC(diag)-2, Basic Diagnostic Procedure.>	Check the harness for open or short circuit between body integrated unit and fuse.

8. Front Inner Remote

A: REMOVAL

1) Disconnect the ground cable from battery and wait for at least 60 seconds before starting work. <Ref. to NT-6, BATTERY, NOTE, Note.>

NOTE:
For model with battery sensor, disconnect the ground terminal from battery sensor.
2) Remove the trim panel - front door. <Ref. to EI-57, FRONT DOOR, REMOVAL, Door Trim.>
3) Remove the screw, and remove the remote assembly - door.

CAUTION:
The remote assembly - door is tightened with the plate. Be careful not to drop or damage the part.

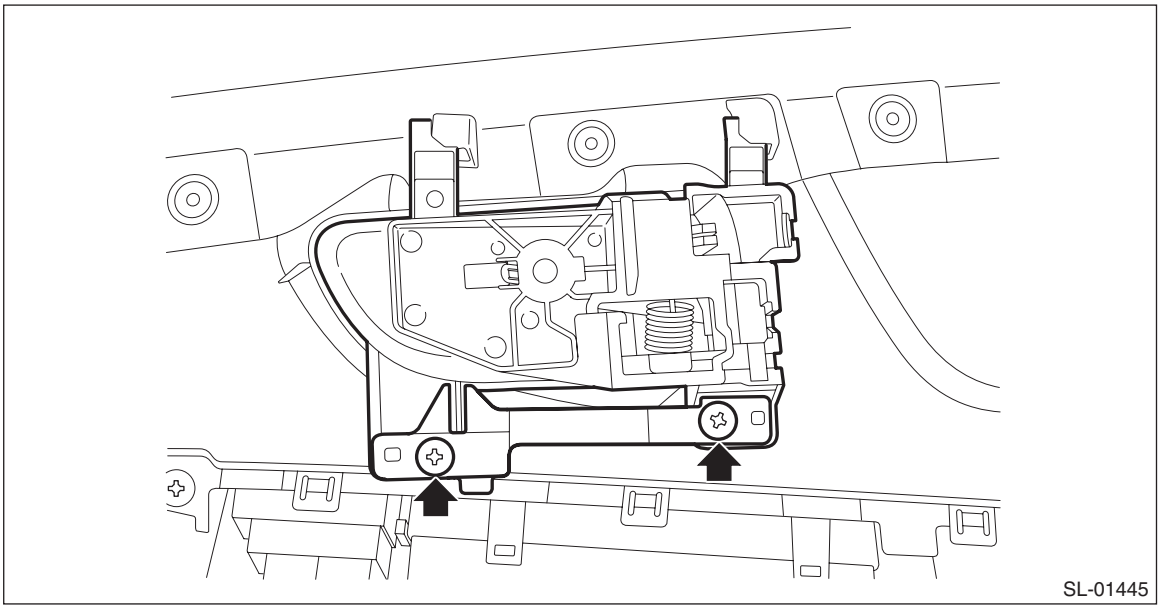

B: INSTALLATION

1) Before installation, check the following items.
- Cable is free from deformation such as fray.
- Grease is applied sufficiently to cable joints.

If grease is insufficient, add it as necessary before assembling the cable.
- If the lever is faulty, replace the front inner remote handle.

2) Install the remote assembly - door.

CAUTION:
Securely install the plate.
3) Install the trim panel - front door.
4) Connect the battery ground terminal. <Ref. to NT-6, BATTERY, NOTE, Note.>

C: INSPECTION

Check if the remote handle operates normally.
- If the lever is faulty, replace the remote handle.
- If the cable is deformed, replace the latch & actuator assembly - front.

9. Front Outer Handle

A: REMOVAL

1) Raise the glass assembly - front door to the top position.
2) Disconnect the ground cable from battery and wait for at least 60 seconds before starting work. <Ref. to NT-6, BATTERY, NOTE, Note.>

NOTE:
For model with battery sensor, disconnect the ground terminal from battery sensor.
3) Remove the trim panel - front door. <Ref. to EI-57, FRONT DOOR, REMOVAL, Door Trim.>
4) Remove the sealing cover - front door. <Ref. to EB-30, REMOVAL, Front Sealing Cover.>
5) Remove the holder of the frame assembly - front door outer.

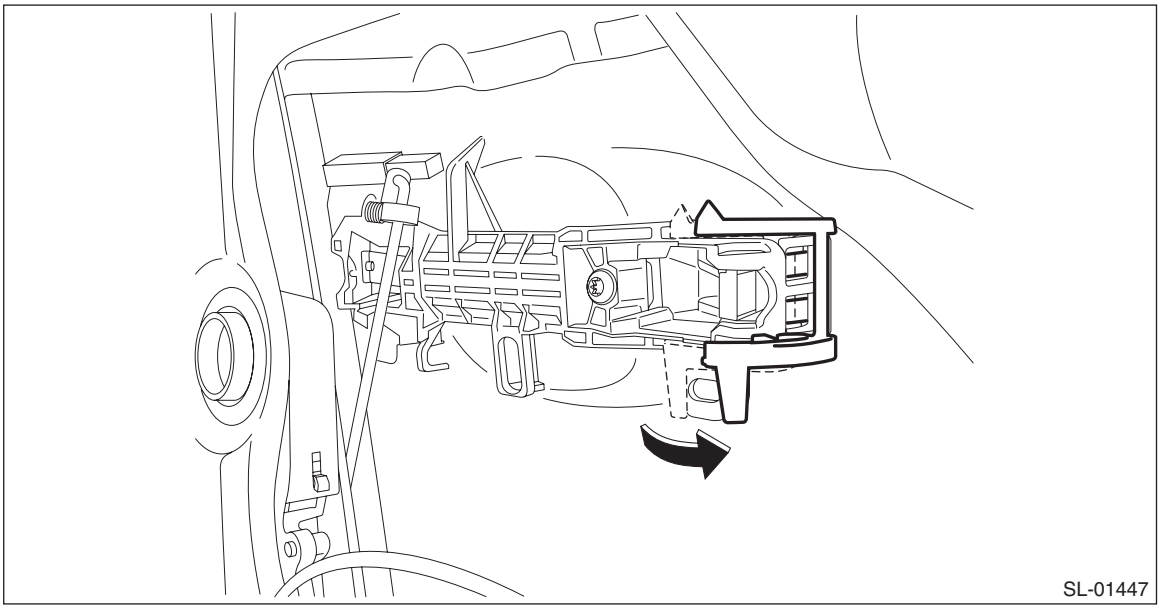
SL-01447

NOTE:
• For model with keyless access with push button start, disconnect the harness clip and exterior antenna (touch sensor) connector.
• Using (a) shown in the figure as a supporting point, pry it with a flat tip screwdriver to remove.

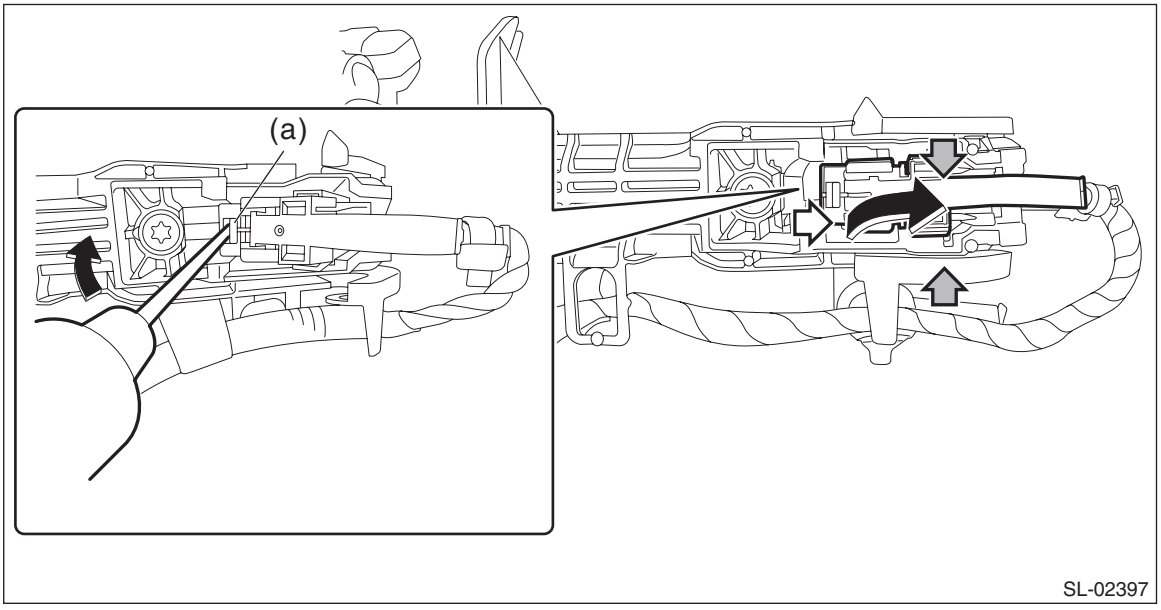

SL-02397

6) Remove the cover - handle front outer.

Preparation tool:
TORX® T30

(1) Remove the plug at the rear end of the panel assembly - front door.
(2) Loosen the TORX® bolt and remove the cover - handle front outer.

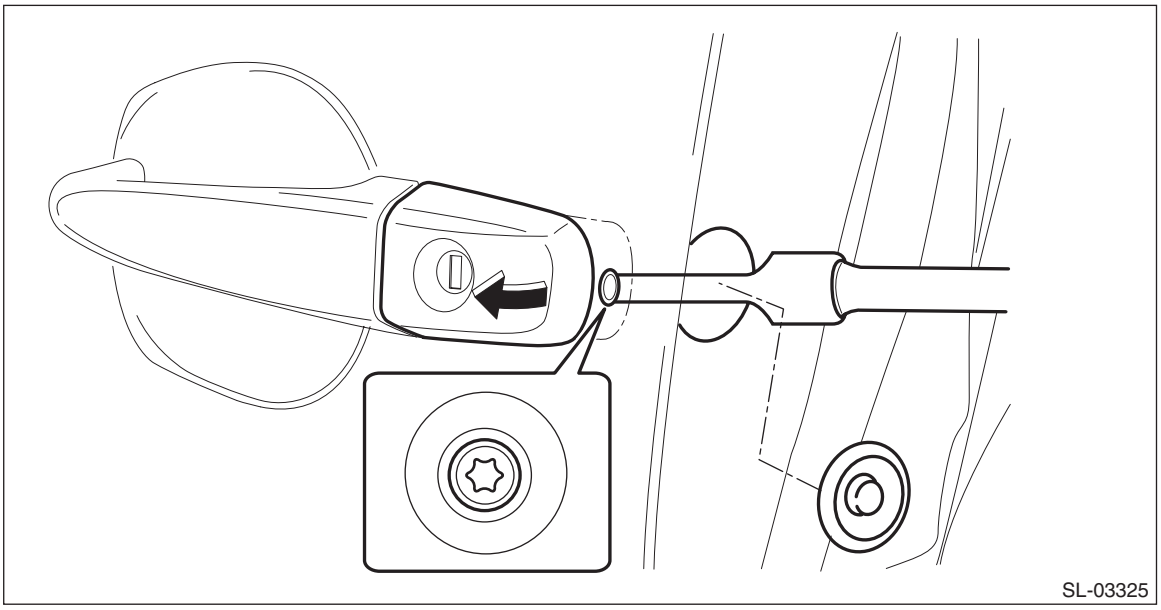
SL-03325

7) Remove the handle - door outer.

CAUTION:
Do not apply excessive force to remove the handle - door outer from the frame assembly - front door.

(1) Pull the handle - door outer rearward to release engagement of the frame assembly - front door outer.
(2) Pull the handle - door outer towards yourself to remove the handle - door outer.

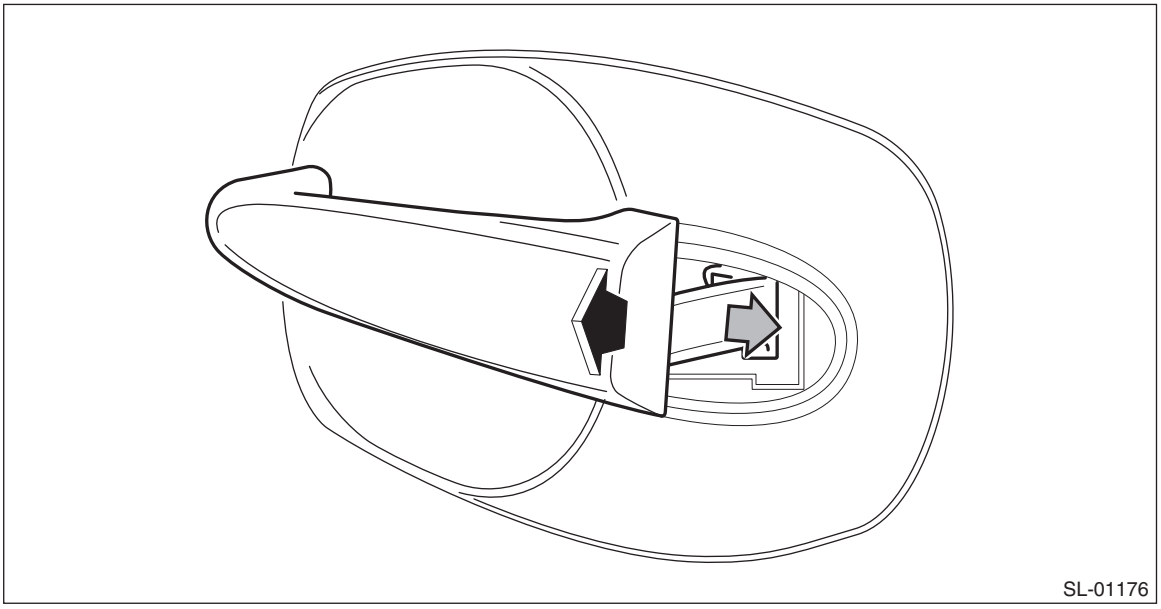
SL-01176

8) Remove the frame assembly - front door outer.

Preparation tool:
TORX® T30

(1) Remove the spacer - door handle outer.

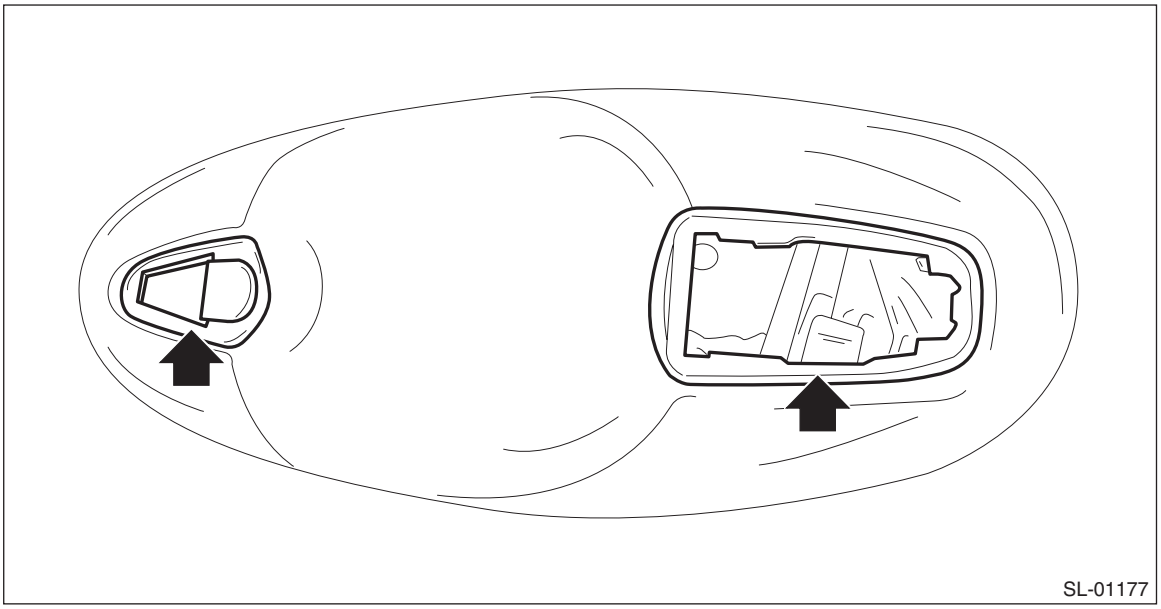

(2) Remove the rod clamp and remove the rod.
(3) Loosen the TORX® bolt and remove the frame assembly - front door outer.

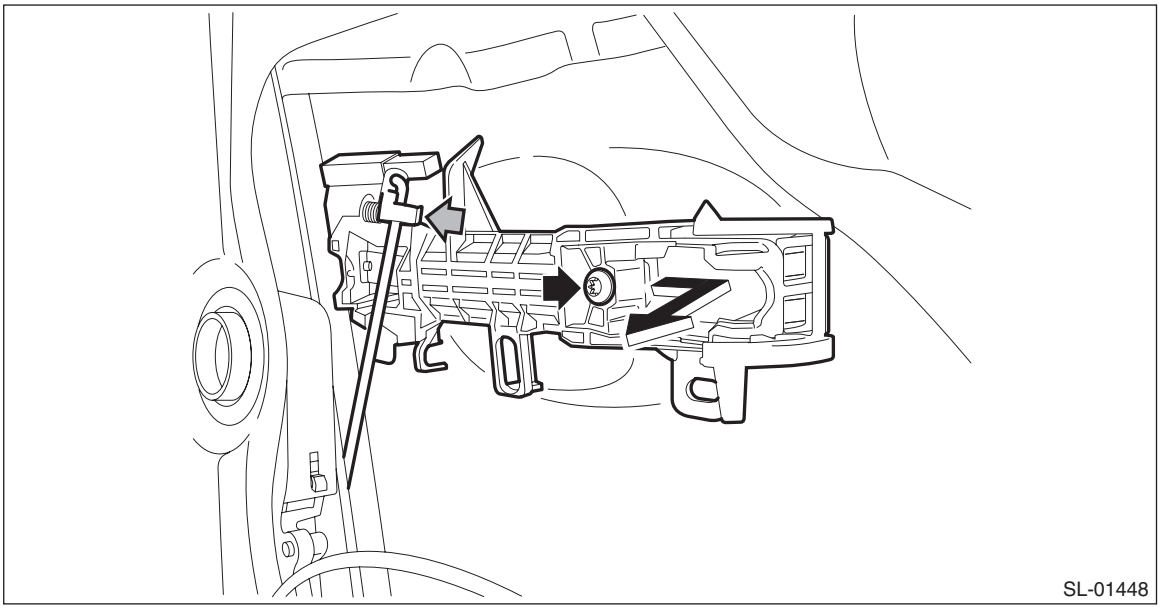

B: INSTALLATION

1) Before installation, check the following items.
- Rod is free from deformation.
- Grease is applied sufficiently to rod joints.

If grease is insufficient, add it as necessary before assembling the rod.
- If the rod is deformed, replace the latch & actuator assembly - front.

2) Install the frame assembly - front door outer.

Preparation tool:
TORX® T30

Tightening torque:
7.5 N·m (0.8 kgf-m, 5.5 ft-lb)

3) Install the spacer - door handle outer.
4) Install the handle - door outer.

NOTE:
For model with keyless access with push button start, connect the harness clip and exterior antenna (touch sensor) connector.

(1) Insert the end of the handle - door outer to the frame assembly - front door outer.
(2) Push forward while inserting the rear end of the handle - door outer to the frame assembly - front door outer.

5) Install the cover - handle front outer.

CAUTION:
When installing the cover - handle front outer on driver's side, make sure that the key cylinder shaft is correctly inserted into the latch & actuator assembly - front.

Preparation tool:
TORX® T30

Tightening torque:
7.5 N·m (0.8 kgf-m, 5.5 ft-lb)

6) Install the sealing cover - front door.
7) Install the trim panel - front door.
8) Connect the battery ground terminal. <Ref. to NT-6, BATTERY, NOTE, Note.>

C: INSPECTION

1) Check if the outer handle operates normally. If the rod is deformed, replace the door latch & actuator assembly - front.

10.Front Door Latch and Door Lock Actuator Assembly

A: REMOVAL

1) Raise the glass assembly - front door to the top position.
2) Disconnect the ground cable from battery and wait for at least 60 seconds before starting work. <Ref. to NT-6, BATTERY, NOTE, Note.>

NOTE:
For model with battery sensor, disconnect the ground terminal from battery sensor.

3) Remove the trim panel - front door. <Ref. to EI-57, FRONT DOOR, REMOVAL, Door Trim.>
4) Remove the sealing cover - front door. <Ref. to EB-30, REMOVAL, Front Sealing Cover.>
5) Remove the rod clamp and remove the rod.

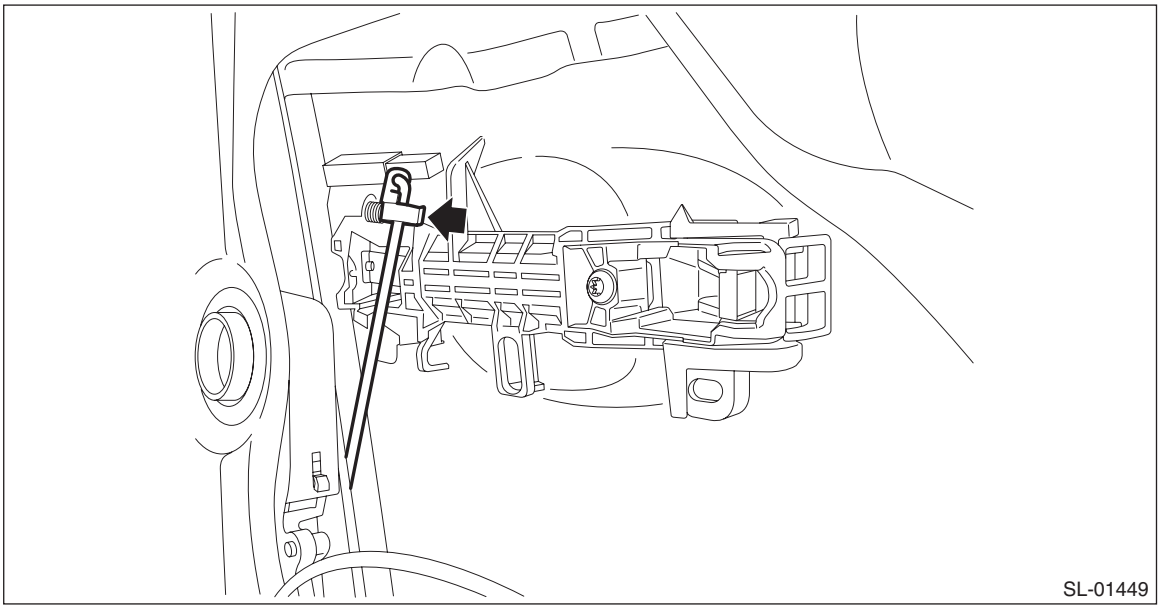
SL-01449

6) Remove the sash COMPL - lower.
   (1) Remove the lower side of the running channel - front door.
   (2) Remove the bolts, and remove the sash COMPL - lower.

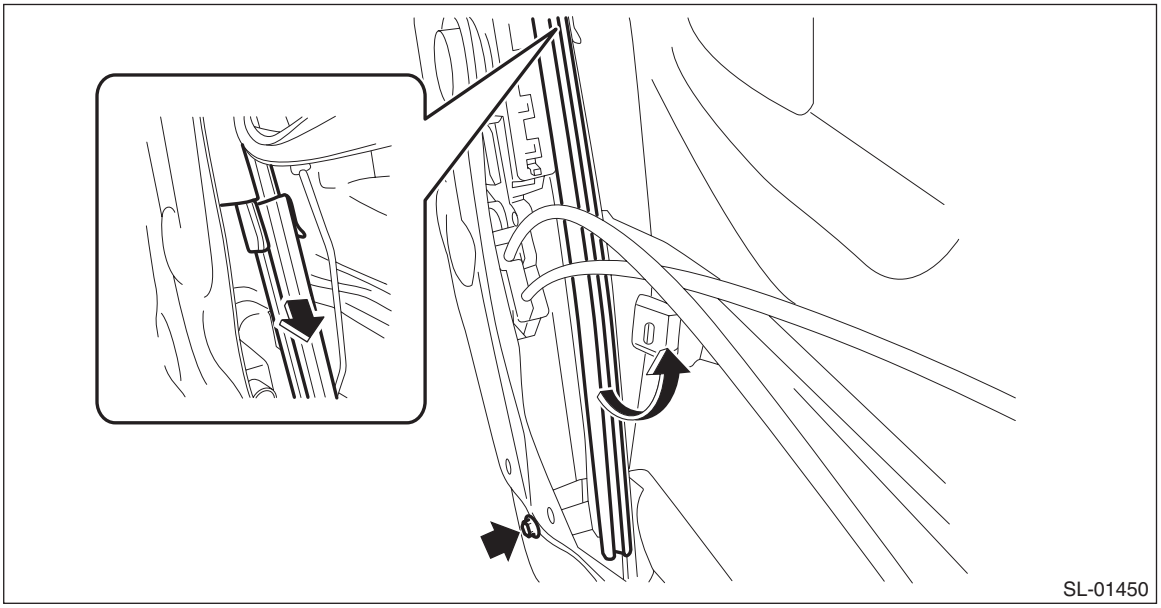
SL-01450

7) Remove the screws to remove the latch & actuator assembly - front.

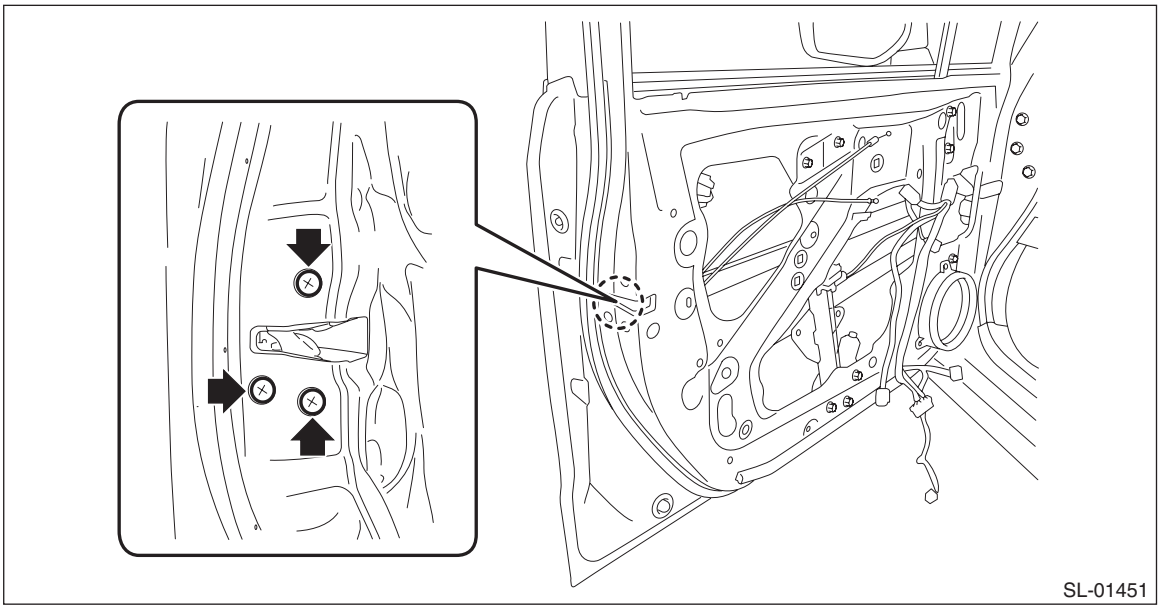

B: INSTALLATION

1) Before installation, check the following items.
- Cable and rod are free from deformation.
- Grease is applied sufficiently to rod joints.

If grease is insufficient, add it as necessary before assembling the rod.
- If the rod is deformed, replace the latch & actuator assembly - front.

2) Install the latch and actuator assembly - front.

CAUTION:
Do not re-use the screws. Always replace with a new part.

Tightening torque:
6.5 N·m (0.7 kgf-m, 5.2 ft-lb)

3) Install the rod clamp to the frame assembly - front door outer.
4) Install the sash COMPL - lower.

Tightening torque:
7.5 N·m (0.8 kgf-m, 5.5 ft-lb)

5) Install the sealing cover - front door.
6) Install the trim panel - front door.
7) Connect the battery ground terminal. <Ref. to NT-6, BATTERY, NOTE, Note.>

C: INSPECTION

1. LATCH

Check if the latch operates normally.
If the cable or rod is faulty, replace the latch & actuator assembly - front.

2. LOCK ACTUATOR

1) Check door lock operation
Check the door lock operation when battery voltage is applied between the connectors.

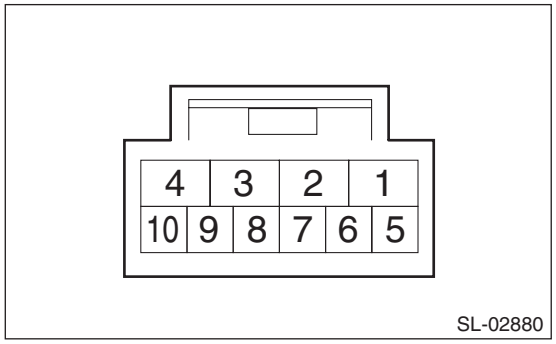

Terminal No.	Inspection conditions	Standard
4 (+) — 1 (–)	Apply battery voltage.	LOCK
1 (+) — 4 (–)		UNLOCK

2) Check position switch
Measure the resistance between connector terminals.

Preparation tool:
Circuit tester

Terminal No.	Inspection conditions	Standard
8 — 7	LOCK	1 MΩ or more
	UNLOCK	Less than 1 Ω

3) Replace the latch & actuator assembly - front if it is found defective.

11.Rear Inner Remote

A: REMOVAL

1) Disconnect the ground cable from battery. <Ref. to NT-6, BATTERY, NOTE, Note.>

NOTE:
For model with battery sensor, disconnect the ground terminal from battery sensor.

2) Remove the trim panel - rear door. <Ref. to EI-58, REAR DOOR, REMOVAL, Door Trim.>
3) Remove the screw, and remove the remote assembly - door.

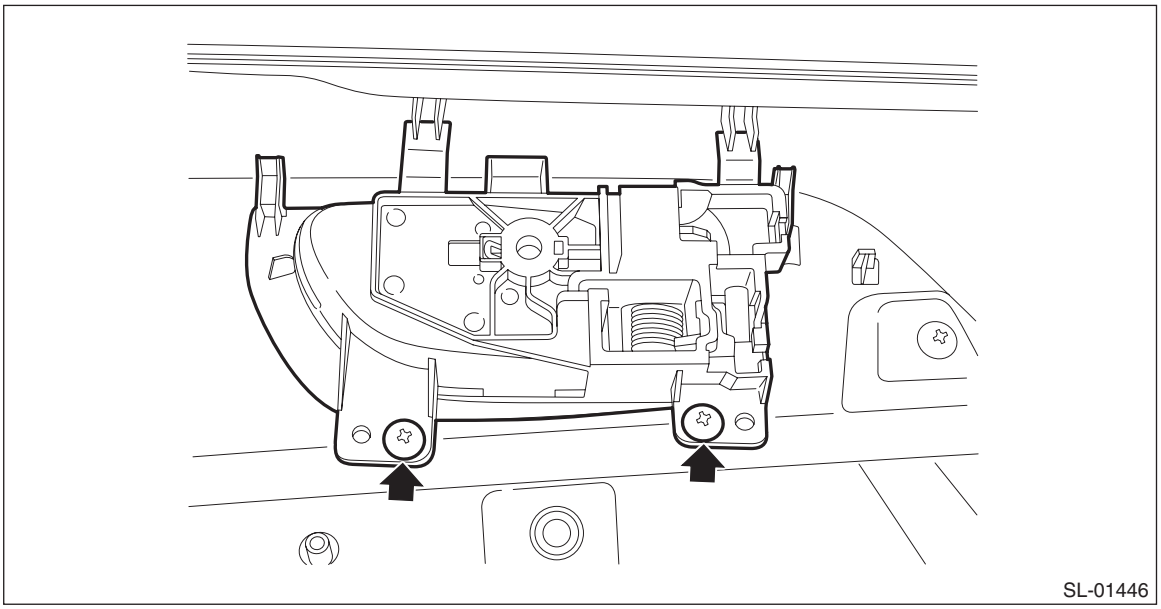

B: INSTALLATION

1) Before installation, check the following items.
- Cable is free from deformation such as fray.
- Grease is applied sufficiently to cable joints.

If grease is insufficient, add it as necessary before assembling the cable.
- If the lever is faulty, replace the rear inner remote handle.

2) Install the remote assembly - door.
3) Install the trim panel - rear door.
4) Connect the battery ground terminal. <Ref. to NT-6, BATTERY, NOTE, Note.>

C: INSPECTION

Check if the remote handle operates normally.
- If the lever is faulty, replace the remote handle.
- If the cable is deformed, replace the latch & actuator assembly - rear.

12.Rear Outer Handle

A: REMOVAL

1) Raise the glass assembly - rear door to the top position.
2) Disconnect the ground cable from battery. <Ref. to NT-6, BATTERY, NOTE, Note.>

NOTE:
For model with battery sensor, disconnect the ground terminal from battery sensor.

3) Remove the trim panel - rear door. <Ref. to EI-58, REAR DOOR, REMOVAL, Door Trim.>
4) Remove the sealing cover - rear door. <Ref. to EB-38, REMOVAL, Rear Sealing Cover.>
5) Remove the screws and move downward the latch & actuator assembly - rear.

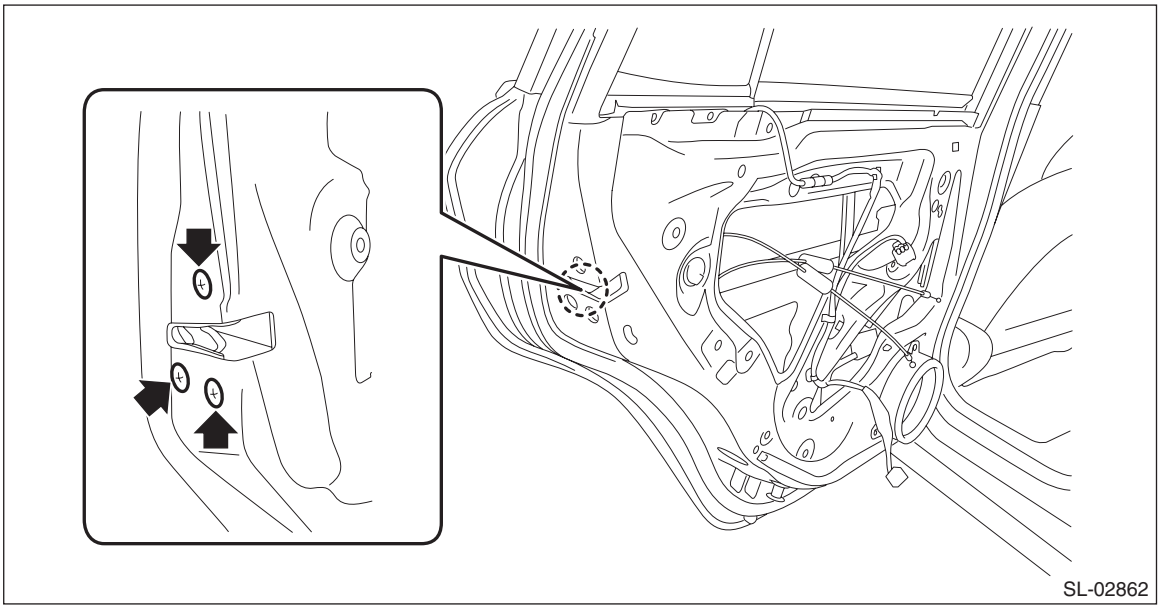
SL-02862

6) Remove the holder of the frame assembly - rear door outer.

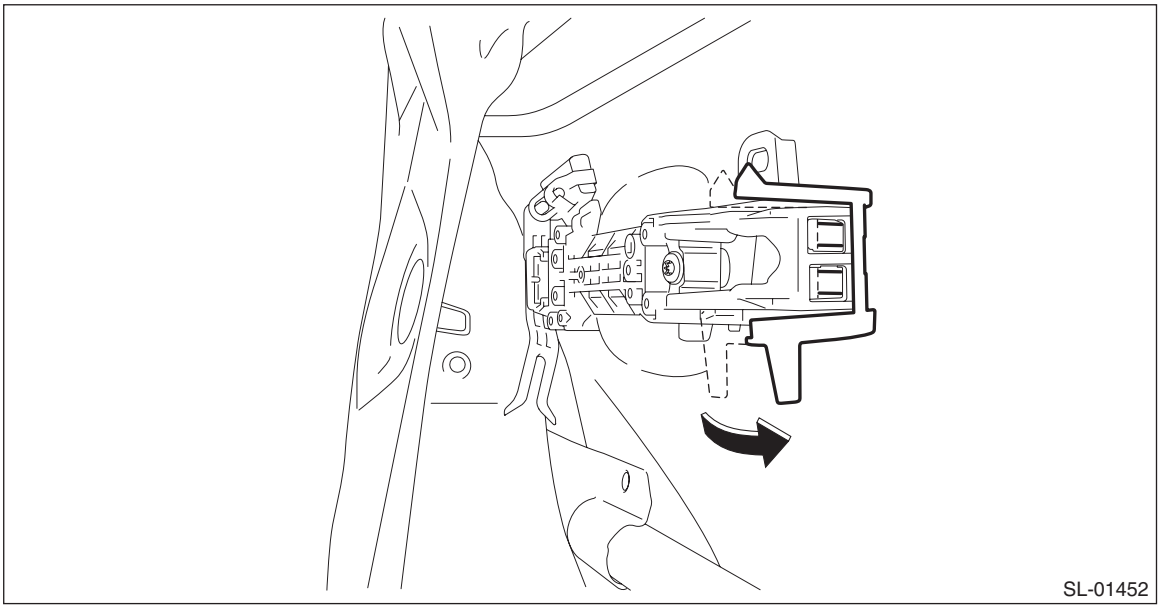
SL-01452

7) Remove the cover - handle rear outer.

Preparation tool:
TORX® T30

(1) Loosen the TORX® bolt.
(2) Release the claws, and then remove the cover - handle rear outer.

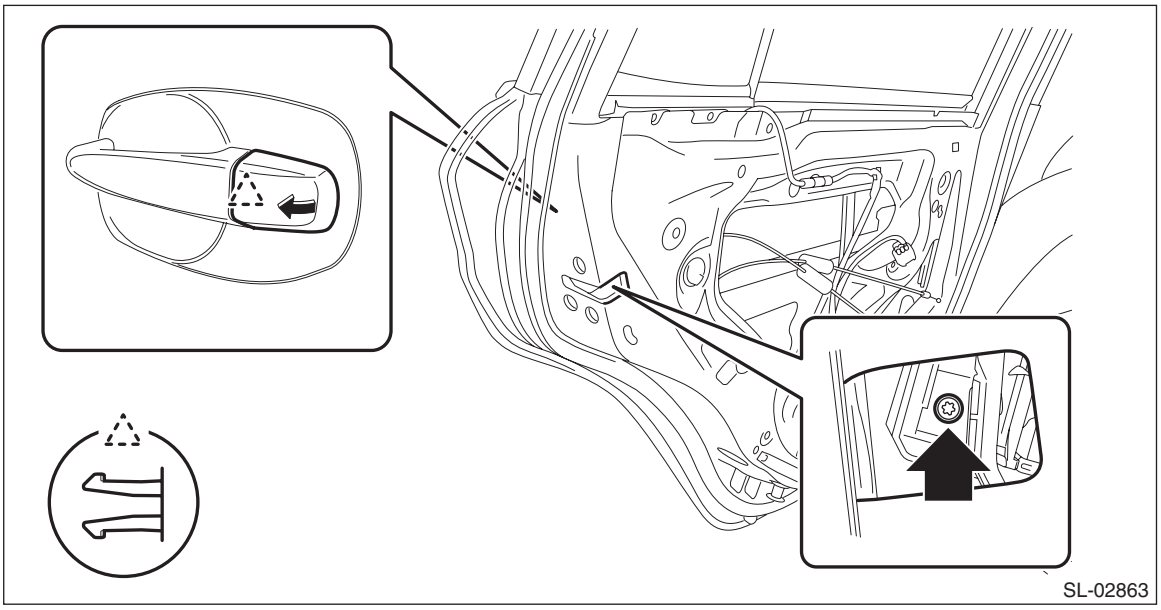

8) Remove the handle - door outer.

CAUTION:
Do not apply excessive force to remove the handle - door outer from the frame assembly - rear door.

(1) Pull the handle - door outer rearward to release engagement of the frame assembly - rear door outer.
(2) Pull the handle - door outer towards yourself to remove the handle - door outer.

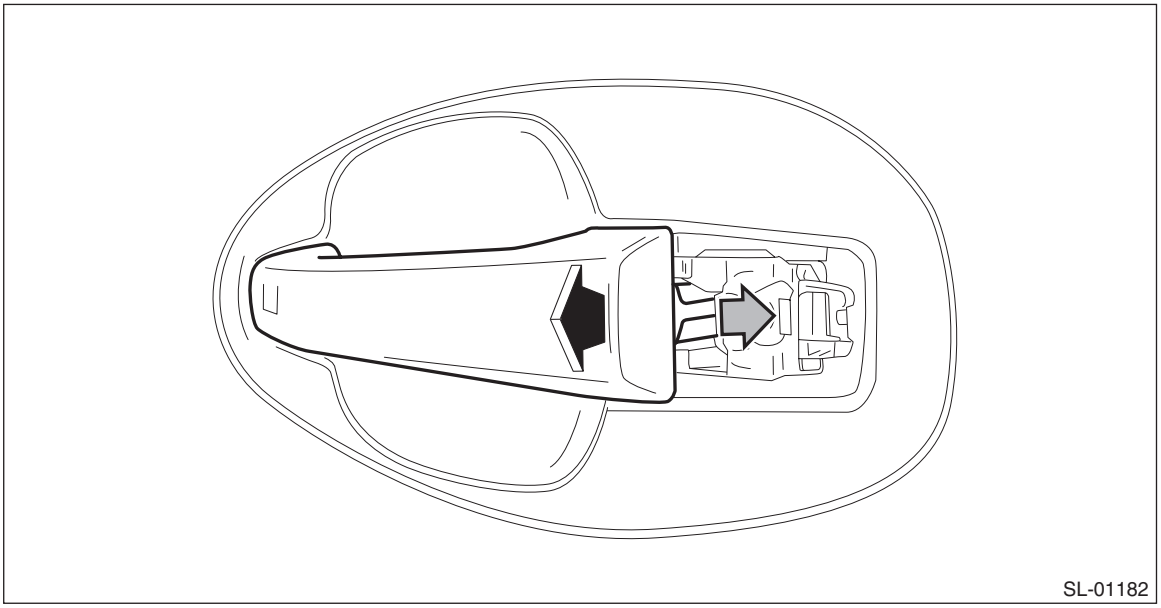

9) Remove the frame assembly - rear door outer.

Preparation tool:
TORX® T30

(1) Remove the spacer - door handle outer.

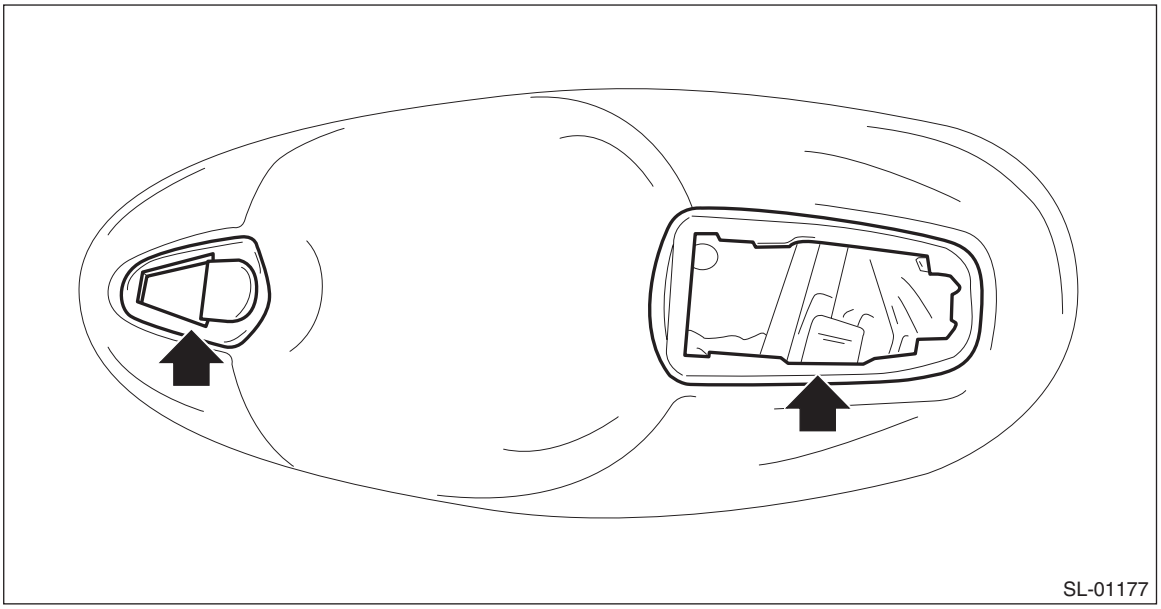

(2) Loosen the TORX® bolt and remove the frame assembly - rear door outer.

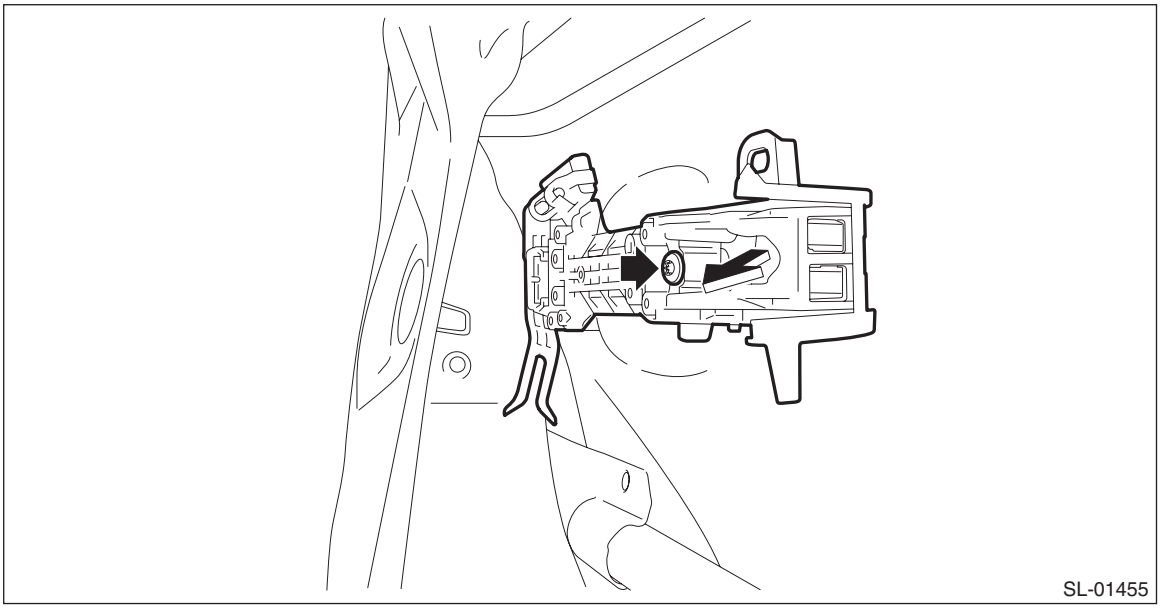

B: INSTALLATION

1) Before installation, check the following items.
- Lever is free from deformation.
- Grease is applied sufficiently to lever joints.

If grease is insufficient, add it as necessary before assembling.
- If the lever is faulty, replace the rear outer handle.

2) Install the frame assembly - rear door outer.

Preparation tool:
TORX® T30

Tightening torque:
7.5 N·m (0.8 kgf-m, 5.5 ft-lb)

3) Install the spacer - door handle outer.
4) Install the handle - door outer.
   (1) Insert the end of the handle - door outer to the frame assembly - rear door outer.
   (2) Push forward while inserting the rear end of the handle - door outer to the frame assembly - rear door outer.
5) Install the cover - handle rear outer.

Preparation tool:
TORX® T30

Tightening torque:
7.5 N·m (0.8 kgf-m, 5.5 ft-lb)

6) Install the latch and actuator assembly - rear.

CAUTION:
Do not re-use the screws. Always replace with a new part.

Tightening torque:
6.5 N·m (0.7 kgf-m, 5.2 ft-lb)

7) Install the sealing cover - rear door.
8) Install the trim panel - rear door.
9) Connect the battery ground terminal. <Ref. to NT-6, BATTERY, NOTE, Note.>

C: INSPECTION

Check if the outer handle operates normally.
If the lever is faulty, replace the handle - door outer.

13.Rear Door Latch and Door Lock Actuator Assembly

A: REMOVAL

1) Raise the glass assembly - rear door to the top position.
2) Disconnect the ground cable from battery. <Ref. to NT-6, BATTERY, NOTE, Note.>

NOTE:
For model with battery sensor, disconnect the ground terminal from battery sensor.
3) Remove the trim panel - rear door. <Ref. to EI-58, REAR DOOR, REMOVAL, Door Trim.>
4) Remove the sealing cover - rear door. <Ref. to EB-38, REMOVAL, Rear Sealing Cover.>
5) Remove the glass assembly - rear door. <Ref. to GW-35, REMOVAL, Rear Door Glass.>
6) Remove the screws to remove the latch & actuator assembly - rear.

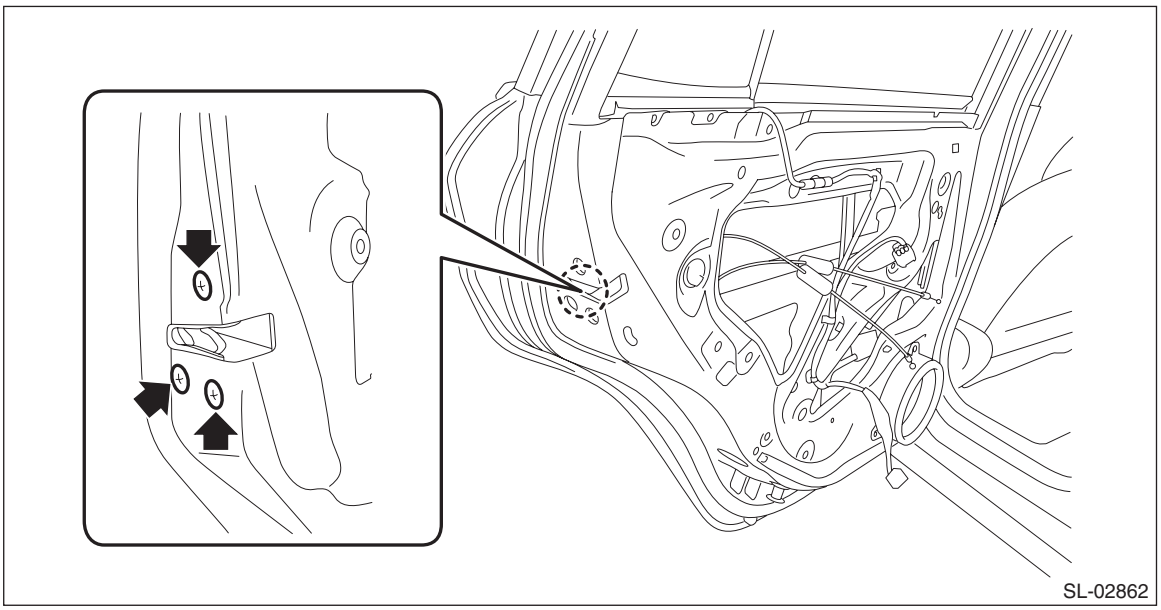

B: INSTALLATION

NOTE:
Make sure the child safety lock works correctly after installation.
1) Before installation, check the following items.
- Cable is free from deformation.
- Grease is applied sufficiently to lever joints.

If grease is insufficient, add it as necessary before assembling.
- If the lever is deformed, replace the latch & actuator assembly - rear.

2) Install the latch and actuator assembly - rear.

CAUTION:
Do not re-use the screws. Always replace with a new part.

Tightening torque:
6.5 N·m (0.7 kgf-m, 5.2 ft-lb)
3) Install the glass assembly - rear door. <Ref. to GW-36, INSTALLATION, Rear Door Glass.>
4) Install the sealing cover - rear door.
5) Install the trim panel - rear door.
6) Connect the battery ground terminal. <Ref. to NT-6, BATTERY, NOTE, Note.>

C: INSPECTION

1. LATCH

Check if the latch operates normally.
If the cable is faulty, replace the latch & actuator assembly - rear.

2. ACTUATOR

1) Check door lock operation
Check the door lock operation when battery voltage is applied between the connectors.

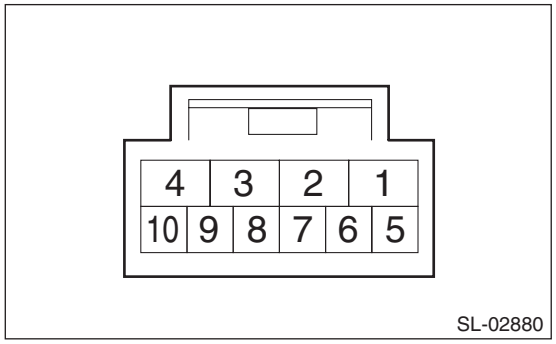

Terminal No.	Inspection conditions	Standard
4 (+) — 1 (–)	Apply battery voltage.	LOCK
1 (+) — 4 (–)		UNLOCK

2) If it does not operate properly as a result of inspection, replace the latch & actuator assembly - rear.

14.Trunk Opener Switch

A: REMOVAL

1) Disconnect the ground cable from battery and wait for at least 60 seconds before starting work. <Ref. to NT-6, BATTERY, NOTE, Note.>

NOTE:
For model with battery sensor, disconnect the ground terminal from battery sensor.
2) Remove the cover assembly - instrument panel LWR driver OUT. <Ref. to EI-62, REMOVAL, Instrument Panel Lower Cover.>
3) Remove the trunk opener switch.
(1) Remove the screw, release the claws, and then remove the panel - switch.

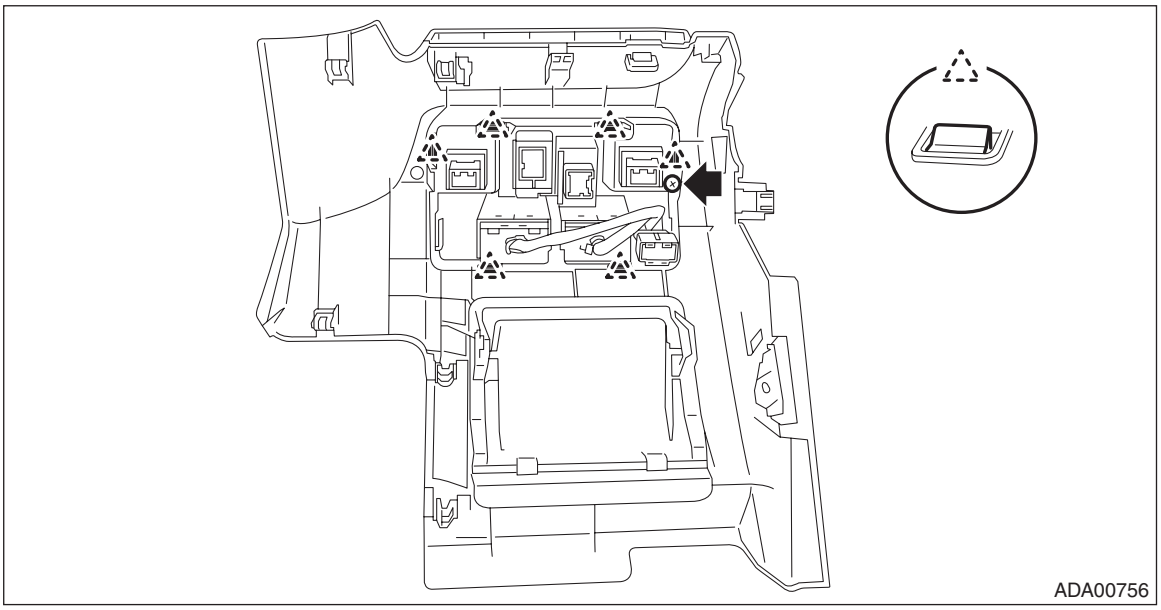

(2) Release the claws and remove the trunk opener button.

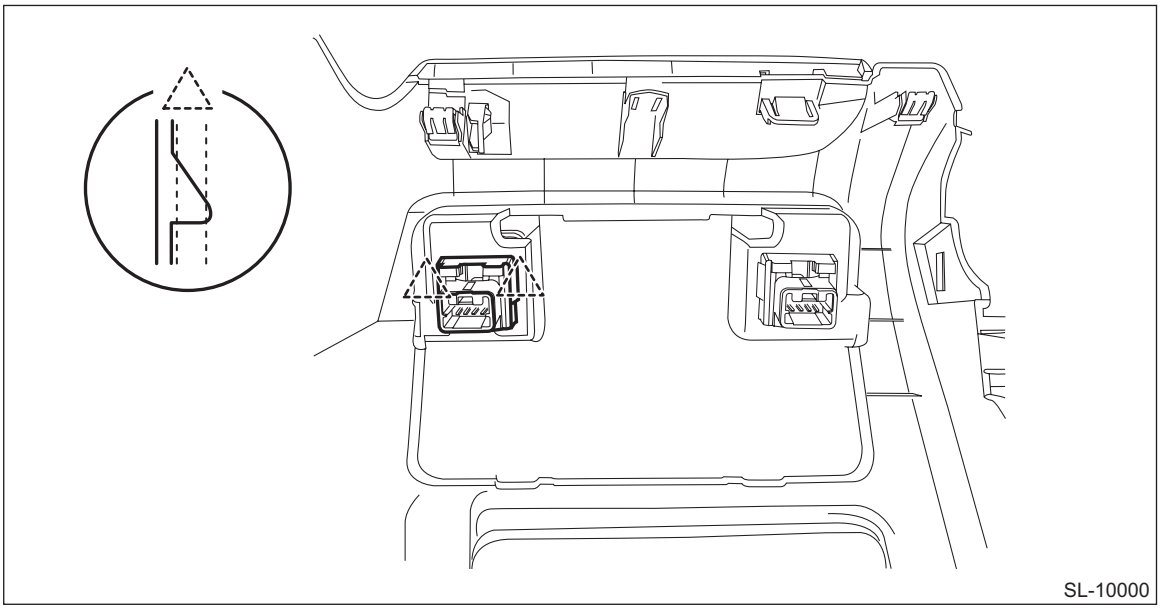

B: INSTALLATION

1) Install the switch - trunk opener.
2) Install the panel - switch.
3) Install the cover assembly - instrument panel LWR driver OUT. <Ref. to EI-63, INSTALLATION, Instrument Panel Lower Cover.>
4) Connect the battery ground terminal. <Ref. to NT-6, BATTERY, NOTE, Note.>

C: INSPECTION

1) Measure the resistance between connector terminals.

Preparation tool:
Circuit tester

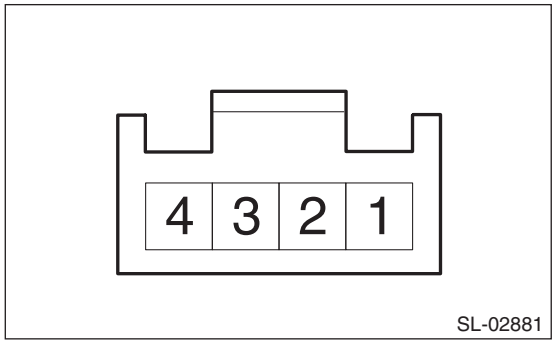

Terminal No.	Inspection conditions	Standard
2 — 3	Switch OFF	1 MΩ or more
	Switch ON	Less than 1 Ω

2) Apply battery voltage between the connector terminals to check lighting condition of illumination inside the switch.

Terminal No.	Inspection conditions	Specification
4 (+) — 1 (–)	Apply battery voltage.	Light ON

3) If the inspection result is not within the standard, replace the switch - trunk opener.

15.Trunk Lid Latch and Actuator Assembly

A: REMOVAL

1) Open the trunk lid COMPL.
2) Disconnect the ground cable from battery. <Ref. to NT-6, BATTERY, NOTE, Note.>

NOTE:
For model with battery sensor, disconnect the ground terminal from battery sensor.

3) Remove the lock assembly - trunk lid.
   (1) Disconnect the connector.
   (2) Remove the bolts, then remove the lock assembly - trunk lid.

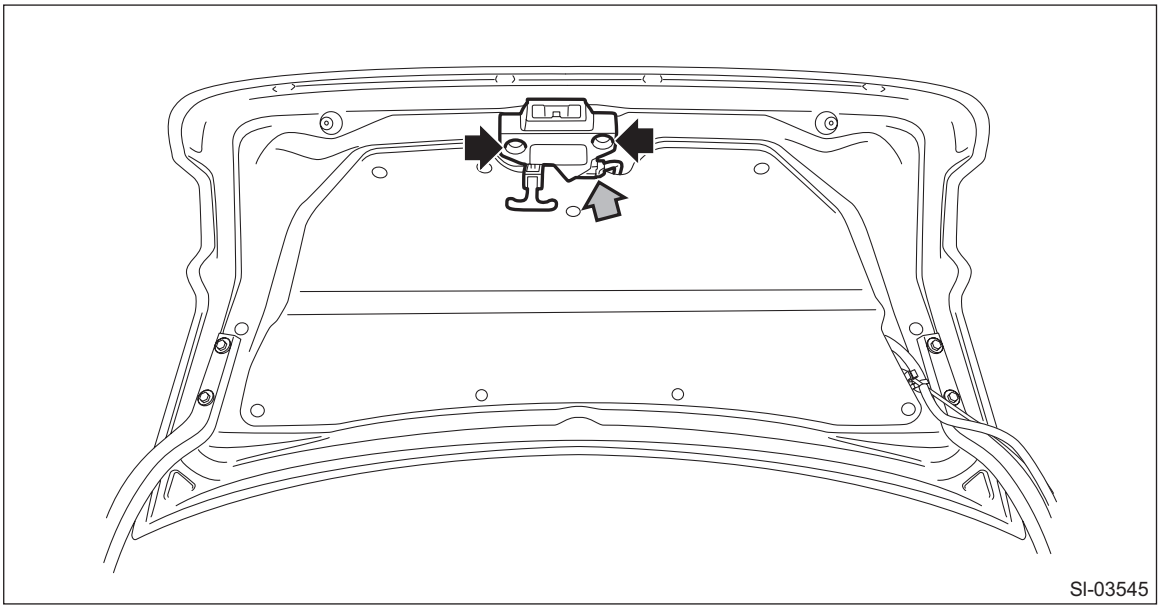

B: INSTALLATION

1) Install the lock assembly - trunk lid.

Tightening torque:
7.5 N·m (0.8 kgf-m, 5.5 ft-lb)

2) Connect the battery ground terminal. <Ref. to NT-6, BATTERY, NOTE, Note.>

C: INSPECTION

1. LATCH

Check if the latch operates normally.
If latch deformation, abnormal wear, or unsmooth lock operation is observed, replace the lock assembly - trunk lid.

2. ACTUATOR

1) Check door lock operation
Check the door lock operation when battery voltage is applied between the connectors.

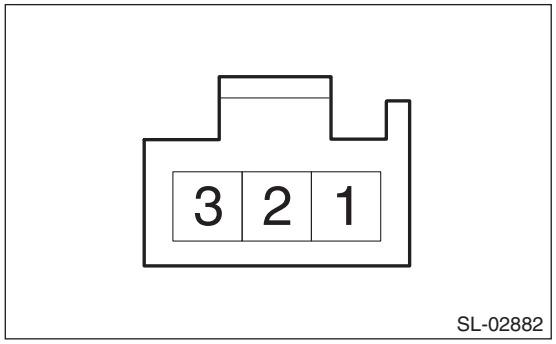

Terminal No.	Inspection conditions	Standard
1 (+) — 2 (–)	Connect battery to the terminals	LOCK → UNLOCK

2) Check switch
Measure the resistance between connector terminals.

Preparation tool:
Circuit tester

Terminal No.	Inspection conditions	Standard
2 — 3	LOCK	1 MΩ or more
	UNLOCK	Less than 1 Ω

3) If it does not operate normally, replace the lock assembly - trunk lid.

16.Front Hood Lock Assembly

A: REMOVAL

1) Open the front hood.
2) Remove the bumper face - front. <Ref. to EI-31, REMOVAL, Front Bumper.>
3) Remove the bolts and clips, and remove the energy absorber plate - front.

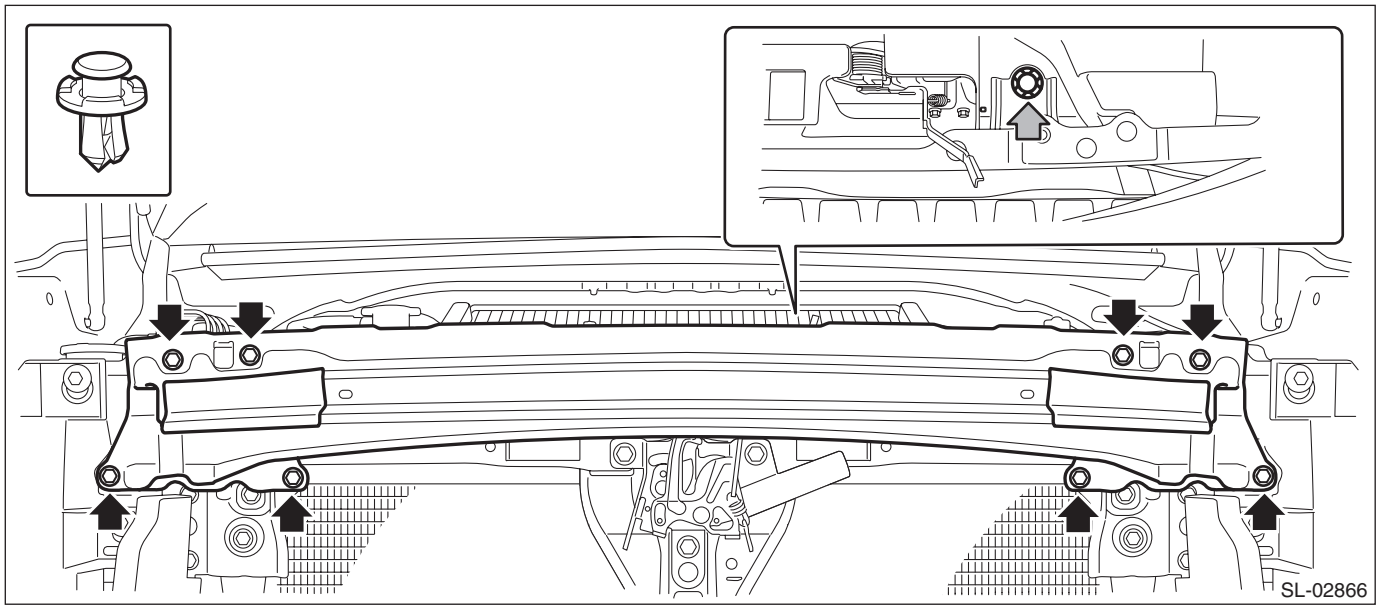

4) Remove the clips, and remove the cover UPR - front.

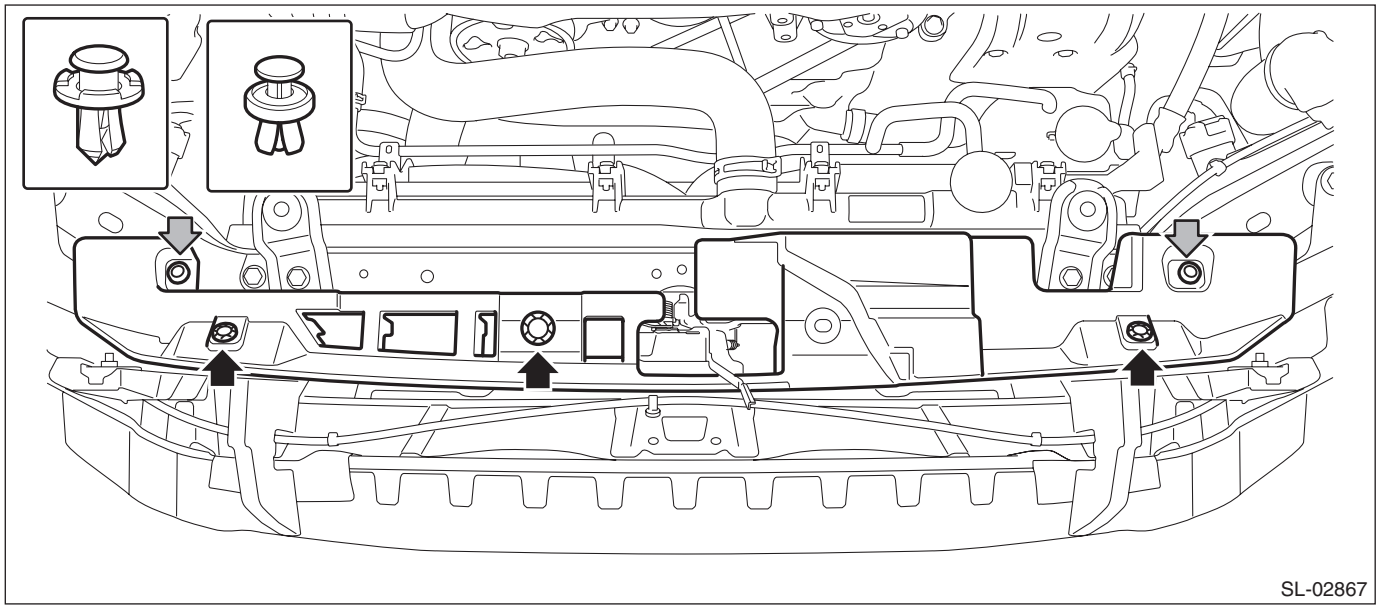

5) Remove the lock assembly - front hood.
(1) Remove the bolt and clip.

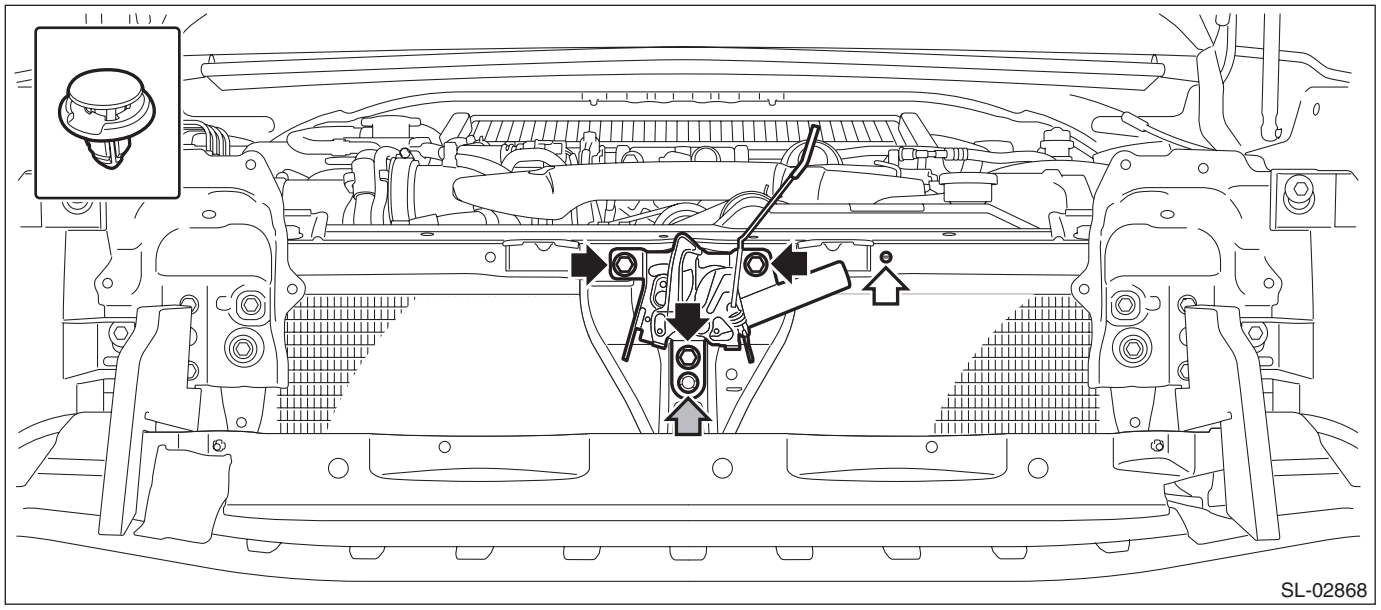

(2) Disconnect the release cable, and detach the lock assembly - front hood.

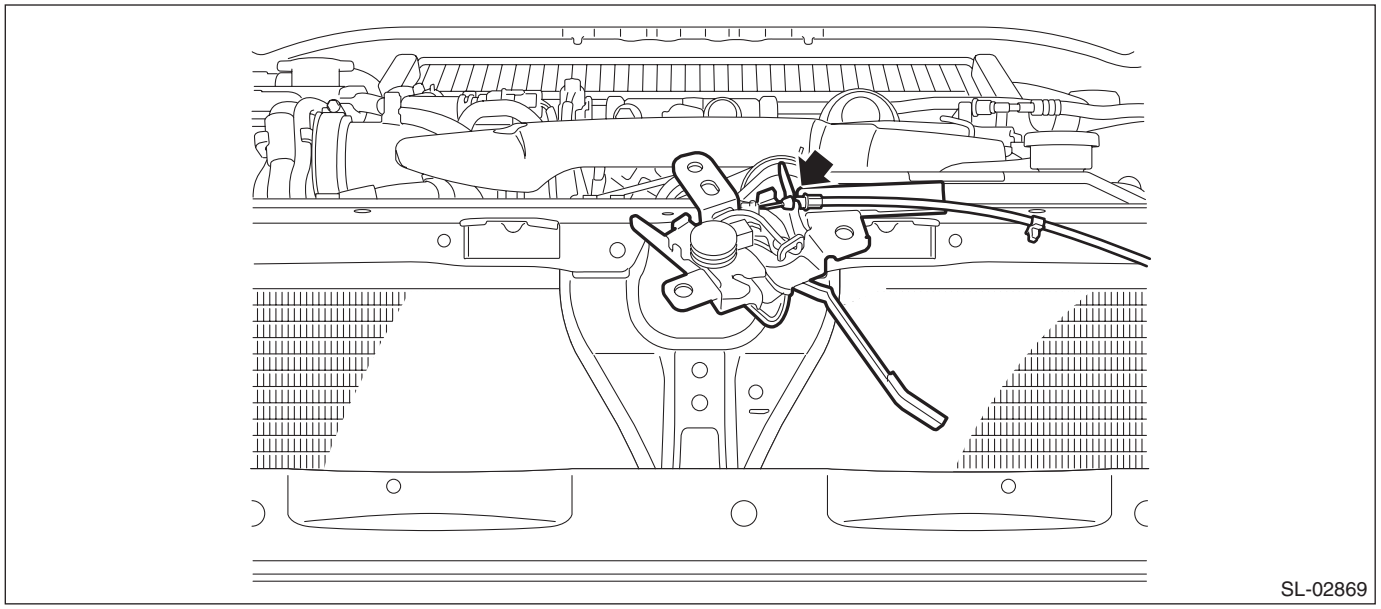

NOTE:
When disconnecting the release cable, refer to “FRONT HOOD OPENER” of “Remote Openers”. <Ref. to SL-56, FRONT HOOD OPENER, REMOVAL, Remote Openers.>

B: INSTALLATION

CAUTION:
• Install the bumper face - front so that the front end of the under cover (b) comes inside the bumper face - front (a), and the front end of the mud guard (c) comes outside the bumper face - front (a).

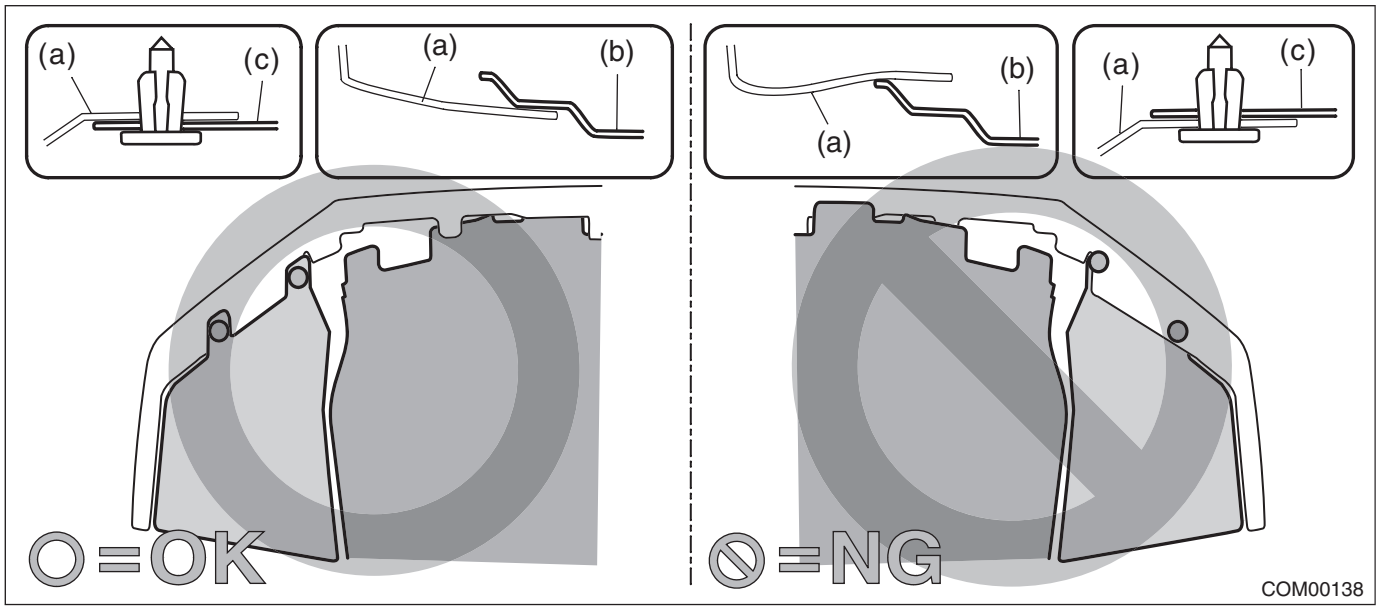

• Before installing the bumper face, match the claws on the bracket - front bumper with the engaging position of flange section on the bumper face side. If the engaging position is not correct, the flange section may be broken or the clearance between fender panel and bumper face may not be uniform.
1) Before installation, check the following items.
- Is the cable deformed?
- Grease is applied sufficiently to cable joints.

If grease is insufficient, add it as necessary before assembling the cable.
2) Adjust and install the lock assembly - front hood.

NOTE:
Refer to “ADJUSTMENT” of the lock assembly - front hood. <Ref. to SL-54, ADJUSTMENT, Front Hood Lock Assembly.>

Tightening torque:
33 N·m (3.4 kgf-m, 24.3 ft-lb)
3) Install the energy absorber plate - front.

Tightening torque:
7.5 N·m (0.8 kgf-m, 5.5 ft-lb)
4) Install the cover UPR - front.
5) Install the bumper face - front. <Ref. to EI-34, INSTALLATION, Front Bumper.>

C: ADJUSTMENT

1) Remove the clips at the cover UPR - front and lock assembly - front hood.

NOTE:
After adjusting the lock assembly - front hood, dispose the clips since they are no longer needed.
The clips cannot be inserted because the clip holes become smaller due to adjustment.

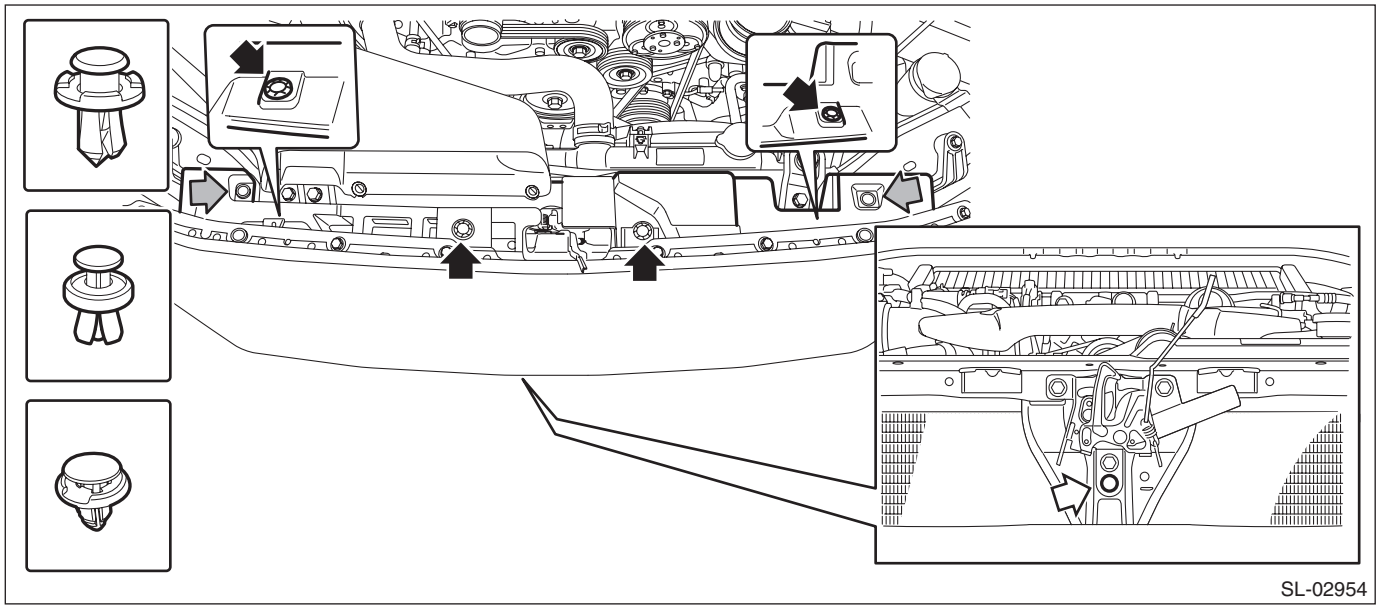

2) Using the ST, make adjustment by loosening the bolt at upper left through the opening (a) of the cover UPR - front, and loosening the bolts at upper right and lower side through the opening (b).

CAUTION:
- **For the bolt at upper left from the vehicle front view, use the ST.**
- **After adjustment, tighten the bolts securely.**

NOTE:
Adjustment range of the lock assembly - front hood becomes 0±1 mm (0±0.04 in).

Preparation tool:
ST: WRENCH COMPL (499987400)

Tightening torque:
33 N·m (3.4 kgf-m, 24.3 ft-lb)

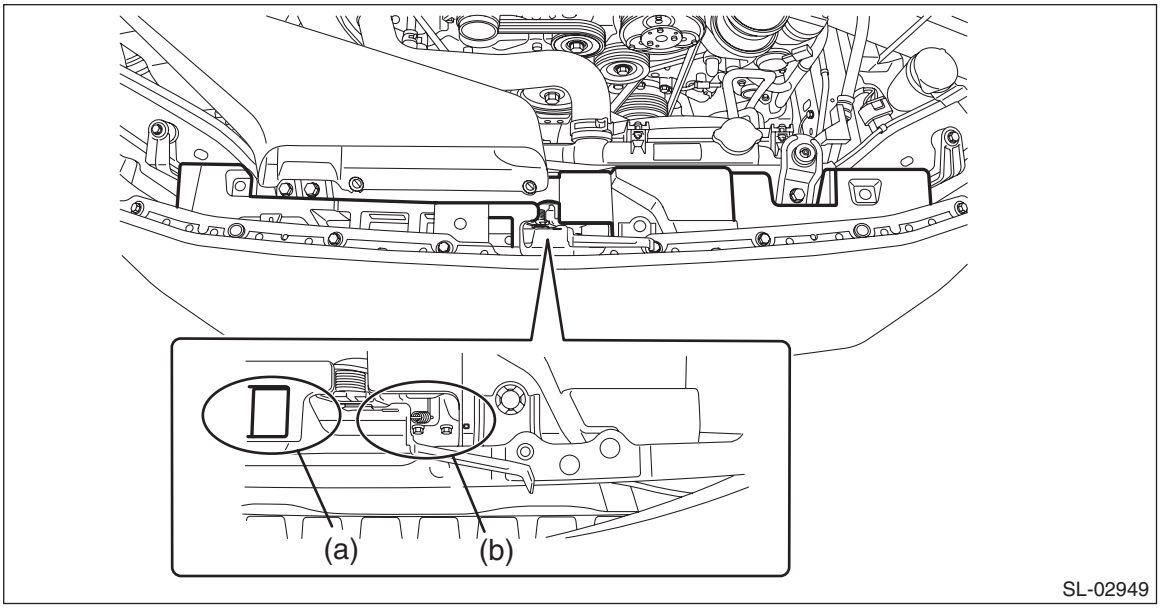

Calculation formula
T = L/(100 mm (3.94 in)+L) × 33 N·m (3.4 kgf-m, 24.3 ft-lb)

T: Tightening torque
L: Effective length of torque wrench

NOTE:
If the effective length of the torque wrench used is unknown, consult the manufacturer of the torque wrench.

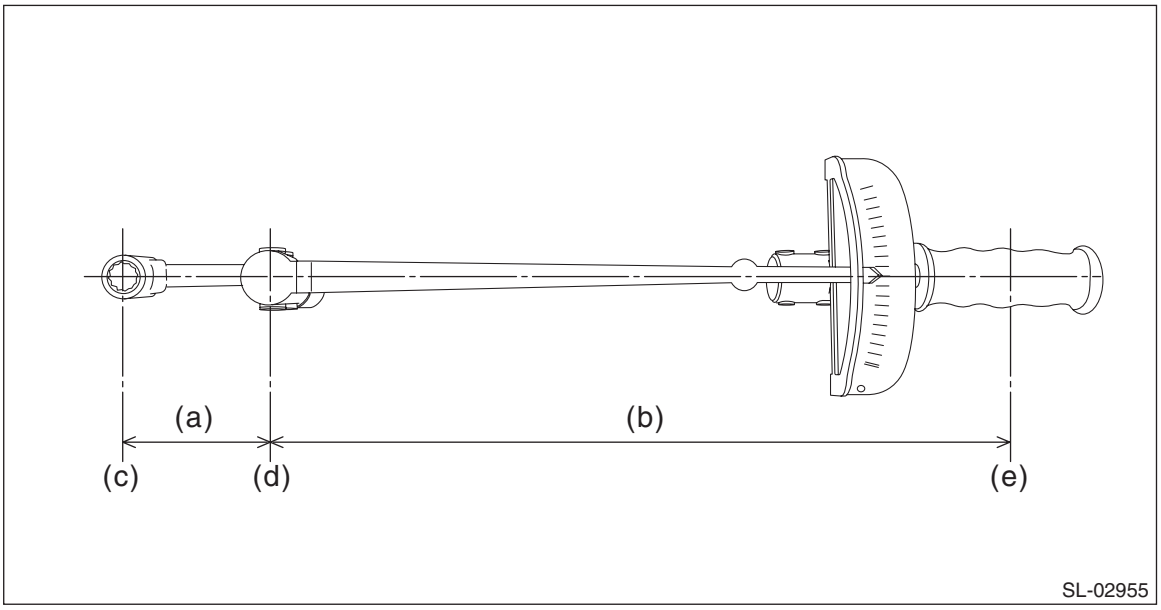

(a) Effective length of the ST
(b) Effective length of the torque wrench
(c) Center of drive angle of the ST
(d) Center of drive angle of the torque wrench
(e) Center of the position where a force is applied by hand

D: INSPECTION

Check if the lock assembly operates normally.
If lever deformation, abnormal wear, or unsmooth lock operation is observed, replace the lock assembly - front hood.

17.Remote Openers

A: REMOVAL

1. FRONT HOOD OPENER

1) Disconnect the ground cable from battery and wait for at least 60 seconds before starting work. <Ref. to NT-6, BATTERY, NOTE, Note.>

NOTE:
For model with battery sensor, disconnect the ground terminal from battery sensor.

2) Remove the cover assembly - instrument panel LWR driver OUT. <Ref. to EI-62, REMOVAL, Instrument Panel Lower Cover.>
3) Remove the cover side sill - front. <Ref. to EI-84, REMOVAL, Lower Inner Trim.>
4) Remove the opener handle.
   (1) Remove the cable - front hood.
   (2) Remove the bolt, and remove the opener handle.

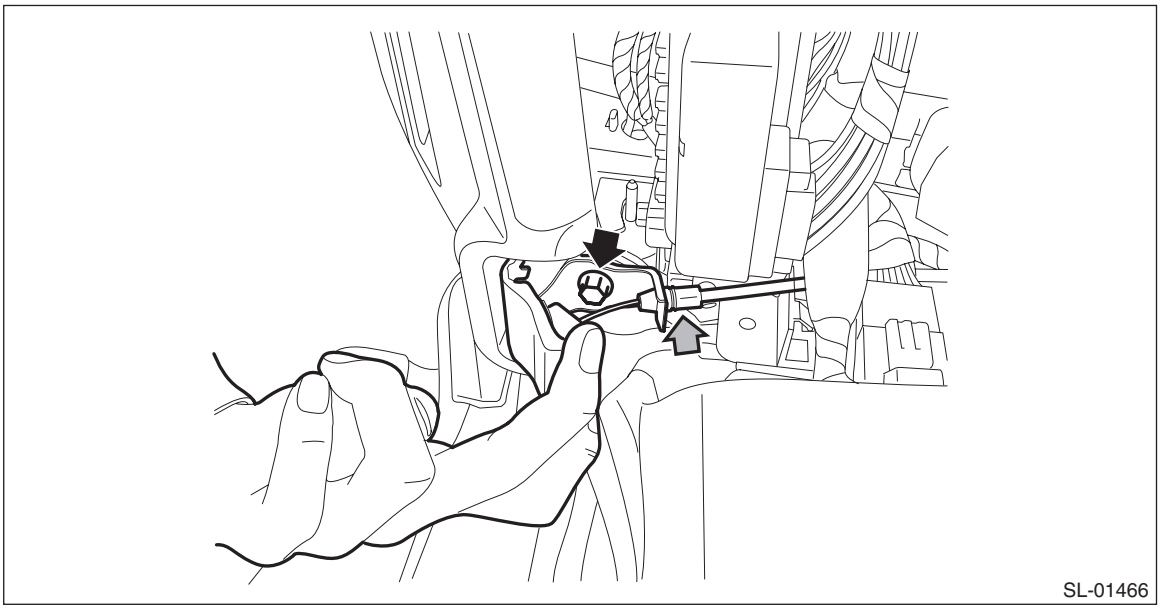

5) Remove the mud guard - front LH. <Ref. to EI-24, REMOVAL, Mud Guard.>
6) Remove the lock assembly - front hood. <Ref. to SL-51, REMOVAL, Front Hood Lock Assembly.>
7) Attach a string to the end of cable - front hood, and remove the cable clip and cable - front hood.

NOTE:
Leave the string attached to the body, and use it during installation.

2. FUEL FLAP OPENER

1) Remove the lower inner trim. <Ref. to EI-84, REMOVAL, Lower Inner Trim.>
2) Remove the cover - handle.
   (1) Open the cover by using a flat tip screwdriver.
   (2) Remove the screws and detach the cover - handle.

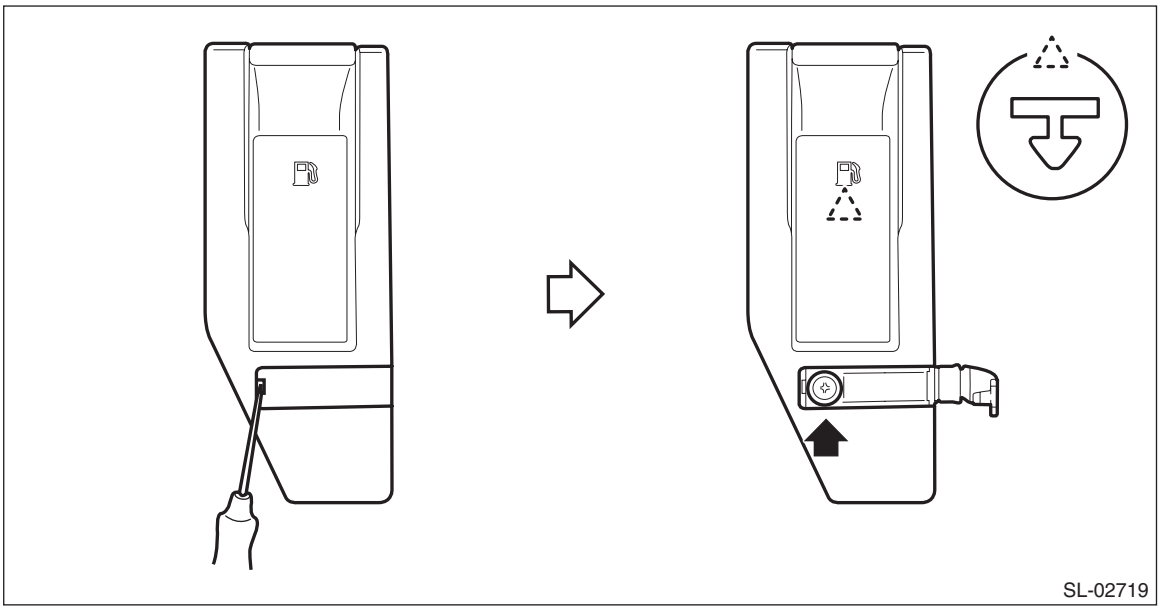
SL-02719

3) Remove the pull handle - opener.
   (1) Remove the nut.
   (2) Remove the cable from pull handle - opener.

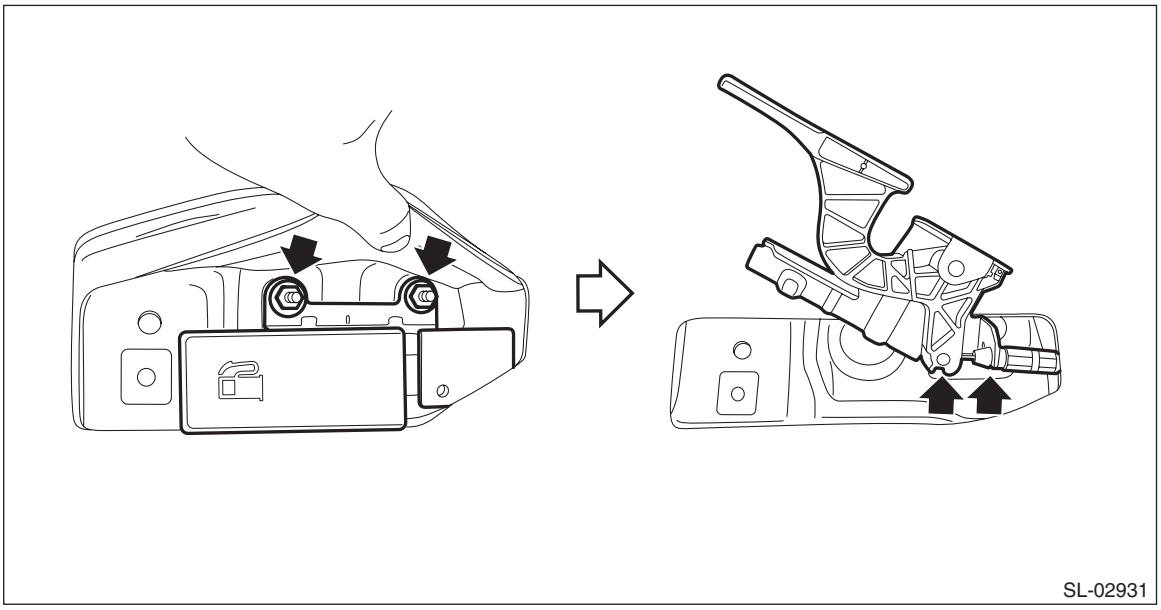
SL-02931

4) Remove the trim panel - trunk side RH. <Ref. to EI-98, REMOVAL, Trunk Room Trim.>
5) Remove the cable assembly - fuel inside the quarter panel.
(1) Turn the cable assembly - fuel counterclockwise and pull toward vehicle rear.

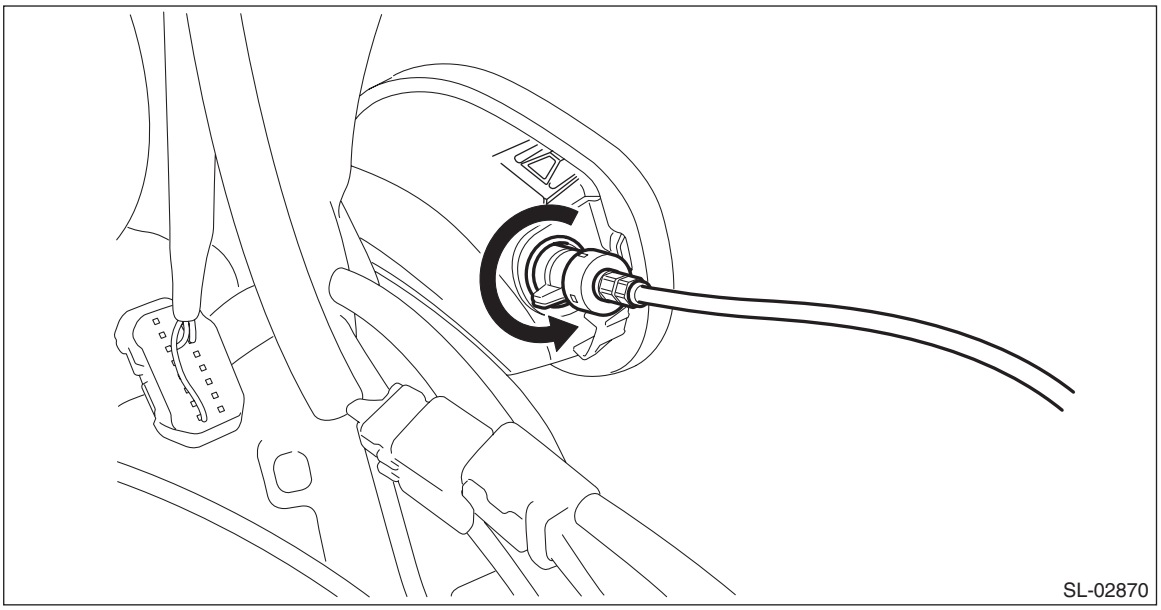
SL-02870

6) Remove the cable clip, and remove the cable.

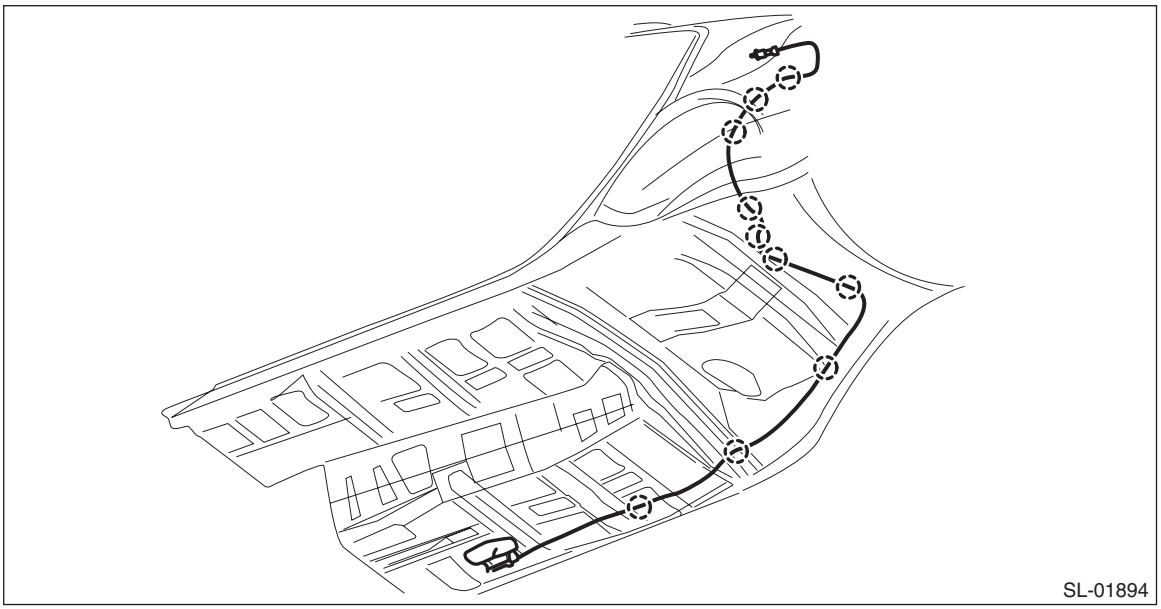
SL-01894

3. FUEL FLAP

1) Open the fuel flap and remove the fuel filler cap.
2) Turn the fuel filler pipe protector in the direction of the arrow to unlock and remove it.

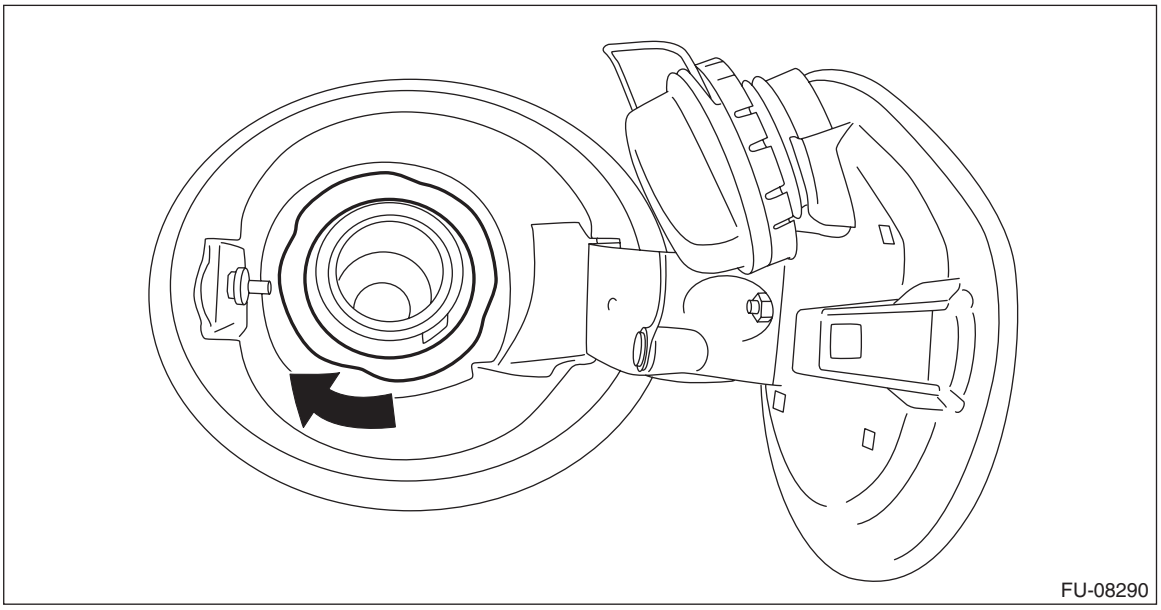

3) Remove the trim panel - trunk side RH. <Ref. to EI-98, REMOVAL, Trunk Room Trim.>
4) Remove the cable assembly - fuel inside the quarter panel.
   (1) Turn the cable assembly - fuel counterclockwise and pull toward vehicle rear.

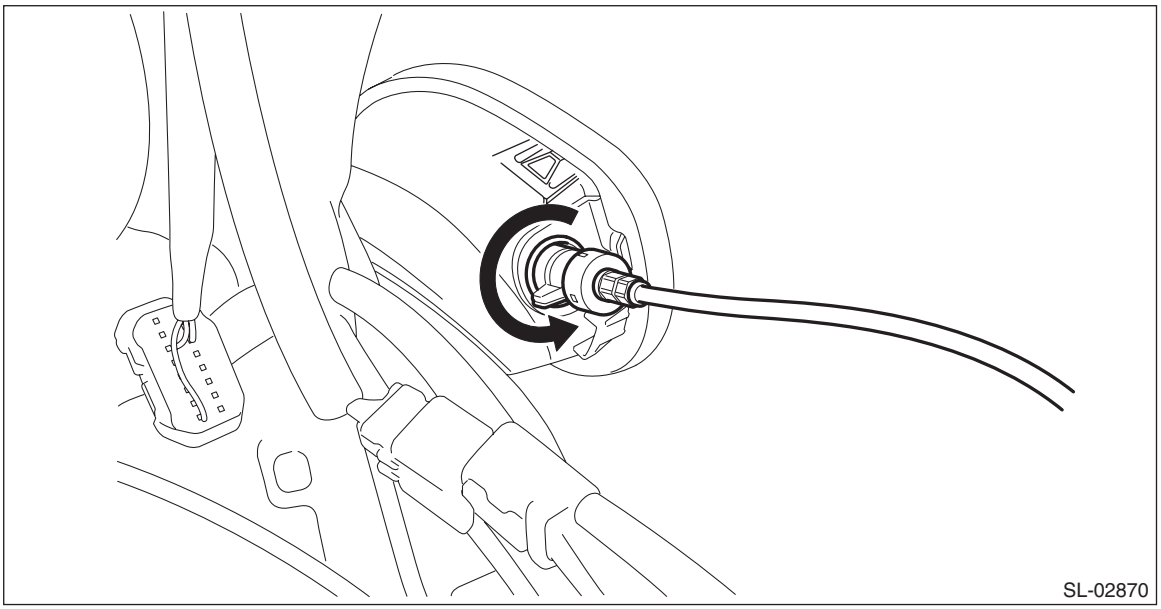

5) Disconnect the ring clips.

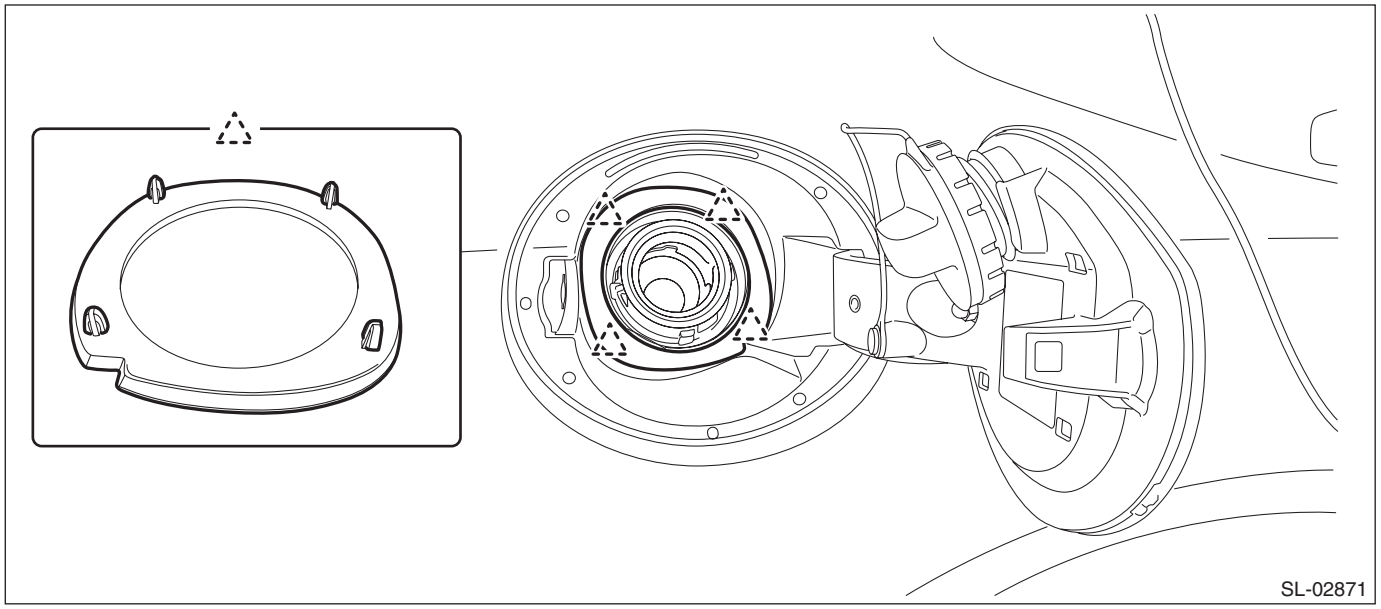

6) Remove the saucer - COMPL.

CAUTION:
Be careful not to damage by forcibly prying at the rubber portion with a flat tip screwdriver or similar tool.

(1) Attach the protective tape (A) to the panel side outer.
(2) Hold the position shown in the figure with your hands, release the claw and pull out toward yourself.

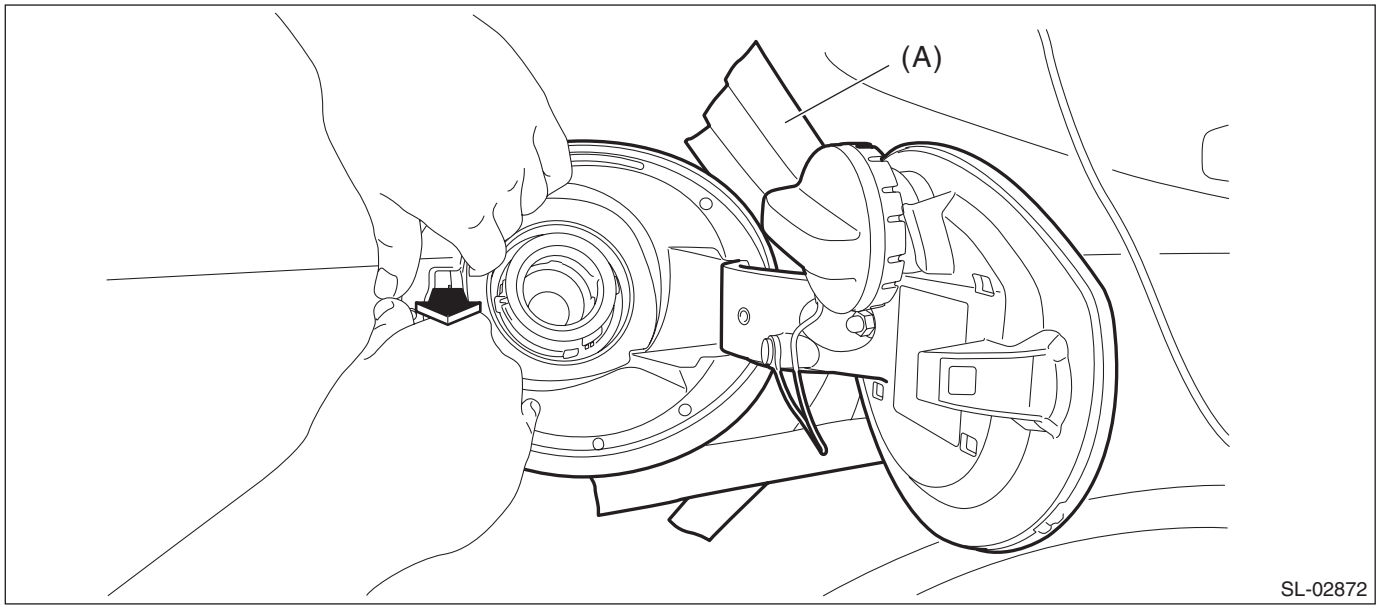

(3) While pulling out toward yourself, remove the rubber portion from the fuel filler pipe using a flat tip screwdriver or similar tool wrapped with a protection tape.

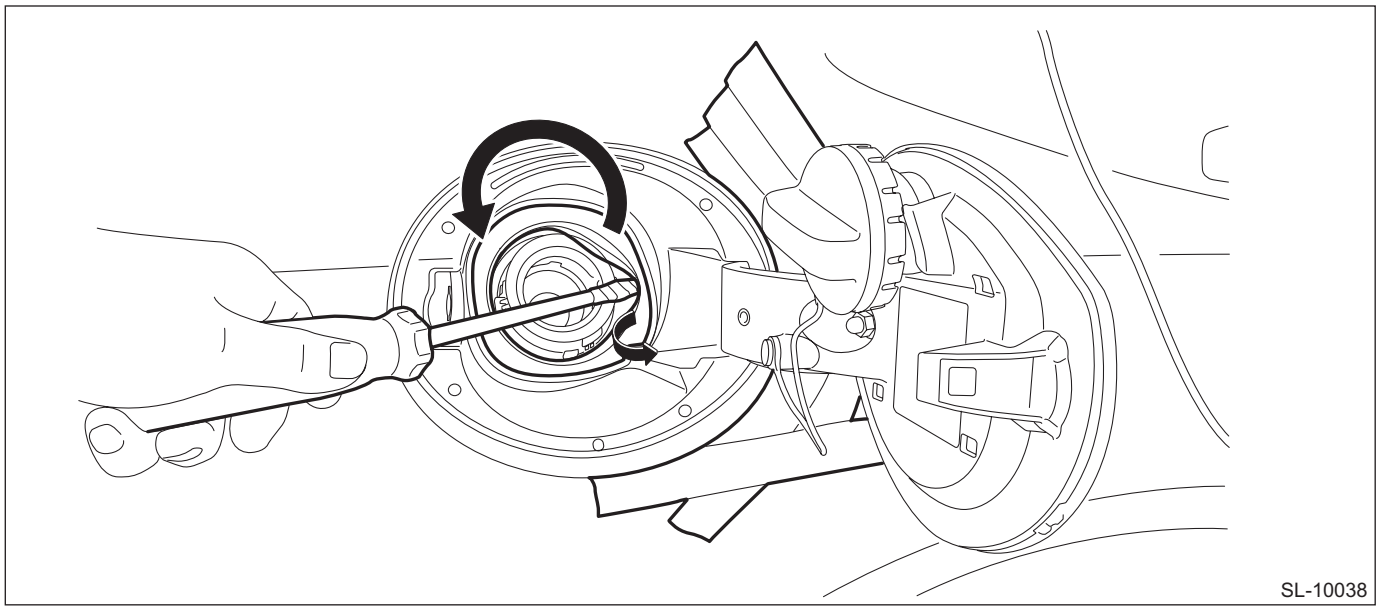

(4) Pull out while tilting toward the front of vehicle.

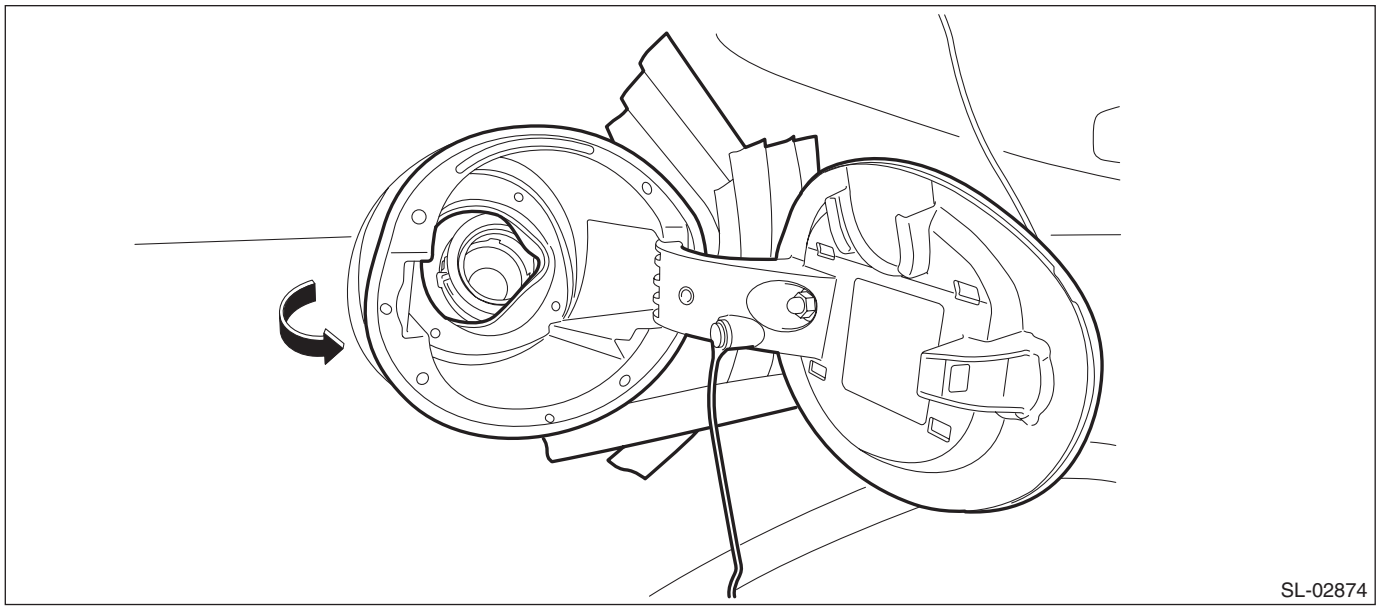

7) Remove the flap - COMPL fuel from the saucer - COMPL.
(1) Remove the nut and release the claws using a flat tip screwdriver or similar tool wrapped with a protection tape.

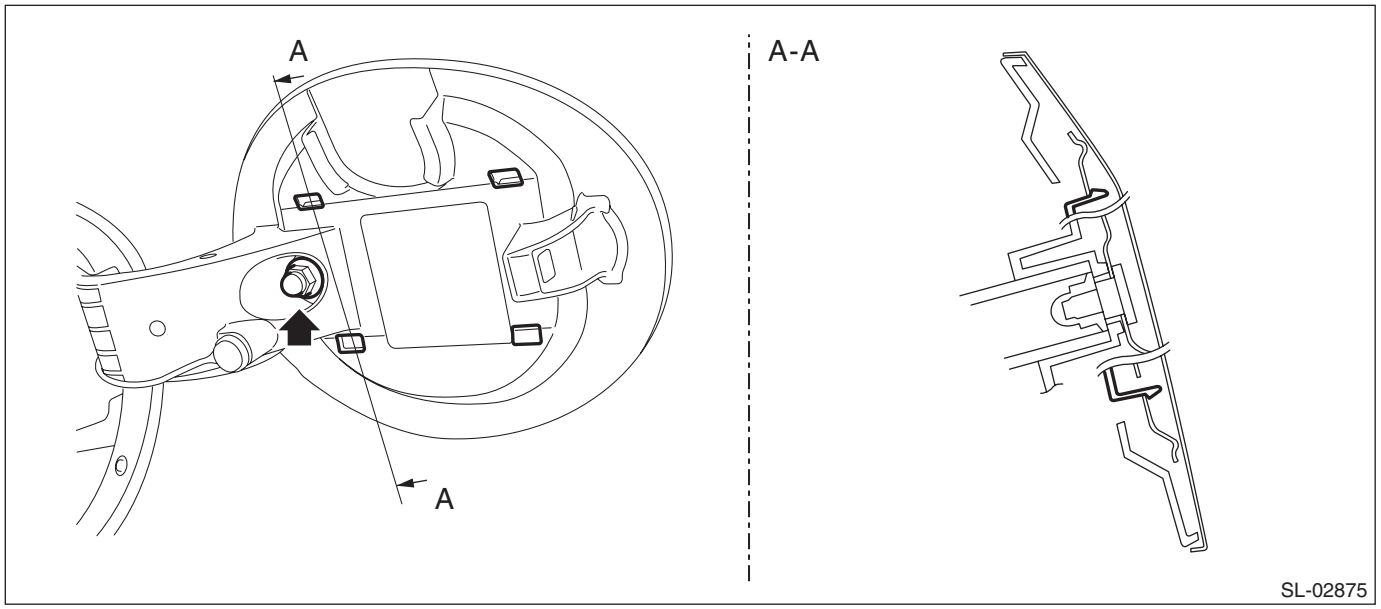

B: INSTALLATION

1. FRONT HOOD OPENER

1) Before installation, check the following items.
- Cable is free from deformation such as fray.

2) Pull the string attached to the cable - front hood into the vehicle, and install the cable clip and cable - front hood.
3) Install the lock assembly - front hood. <Ref. to SL-53, INSTALLATION, Front Hood Lock Assembly.>
4) Install the opener handle.

Tightening torque:
7.5 N·m (0.8 kgf-m, 5.5 ft-lb)

5) Install the cover side sill - front.
6) Install the cover assembly - instrument panel LWR driver OUT.
7) Install the mud guard - front LH.
8) Connect the battery ground terminal. <Ref. to NT-6, BATTERY, NOTE, Note.>

2. FUEL FLAP OPENER

1) Install the cable assembly - fuel.
2) Install the pull handle - opener and cover - handle.

Tightening torque:
7.5 N·m (0.8 kgf-m, 5.5 ft-lb)

3) Install the trim panel - trunk side RH.
4) Install the lower inner trim.

3. FUEL FLAP

1) Install the flap - COMPL fuel to the saucer - COMPL.

Tightening torque:
7.5 N·m (0.8 kgf-m, 5.5 ft-lb)

2) Install the saucer - COMPL.

NOTE:
Securely install the rubber portion of the saucer - COMPL to the fuel filler pipe assembly.

3) Attach the ring clips.
4) Install the fuel filler pipe protector.
5) Install the cable assembly - fuel.
6) Install the trim panel - trunk side RH.

C: INSPECTION

Check if the front hood and fuel flap operate normally.

18.Ignition Key Lock

A: REPLACEMENT

CAUTION:
• Before handling the airbag system components, refer to "CAUTION" of "General Description" in "AIRBAG SYSTEM". <Ref. to AB-9, CAUTION, General Description.>
• Do not allow harness and connectors to interfere or get tangled up with other parts.
• If the steering wheel and steering angle sensor (steering roll connector) are removed, perform "VSC(VDC) Centering Mode" of the VDC. <Ref. to VDC-17, VDC SENSOR MIDPOINT SETTING MODE, ADJUSTMENT, VDC Control Module and Hydraulic Control Unit (VDCCM&H/U).>
1) Disconnect the ground cable from battery and wait for at least 60 seconds before starting work. <Ref. to NT-6, BATTERY, NOTE, Note.>

NOTE:
For model with battery sensor, disconnect the ground terminal from battery sensor.
2) Remove the cover assembly - instrument panel LWR driver. <Ref. to EI-62, REMOVAL, Instrument Panel Lower Cover.>
3) Remove the universal joint assembly - steering. <Ref. to PS-21, REMOVAL, Universal Joint.>

CAUTION:
To prevent damage to the universal joint assembly - steering and improper steering effort, make sure to remove the universal joint assembly - steering.
4) Remove the column assembly - steering. <Ref. to PS-25, REMOVAL, Steering Column.>
5) Remove the ignition key lock.
(1) Secure the column assembly - steering in a vise.
(2) Use the reverse tap and drill to remove the set bolt and remove the ignition key lock.

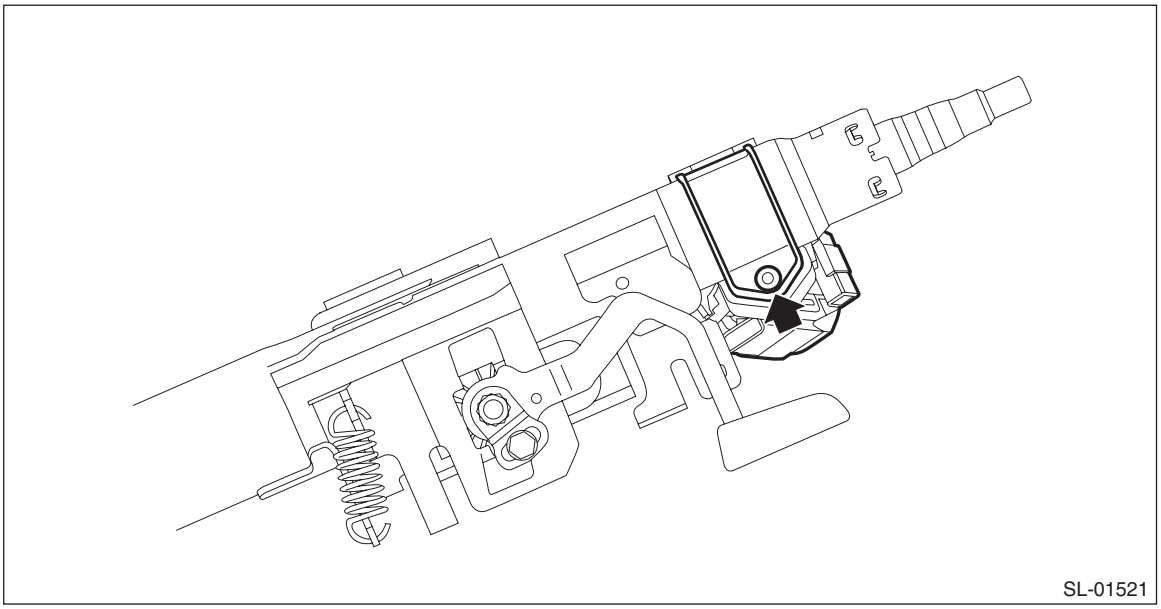

6) Install the ignition key lock.
(1) Secure the ignition key lock to the column assembly - steering.
(2) Use new set bolts. Tighten the bolt until the bolt head is broken (bolt head wrenched off).
7) Install the column assembly - steering. <Ref. to PS-28, INSTALLATION, Steering Column.>
8) Connect the battery ground terminal. <Ref. to NT-6, BATTERY, NOTE, Note.>

B: DISASSEMBLY

1) Remove the immobilizer antenna assembly or the ignition switch illumination.
   (1) Disconnect the connector.
   (2) Release two claws using a flat tip screwdriver or similar tool wrapped with a protection tape, and remove the immobilizer antenna assembly or the ignition switch illumination.

CAUTION:
Do not apply excessive force to disengage the lock of immobilizer antenna assembly or ignition switch illumination. Otherwise they may be broken because those parts are the products made of a plastic.

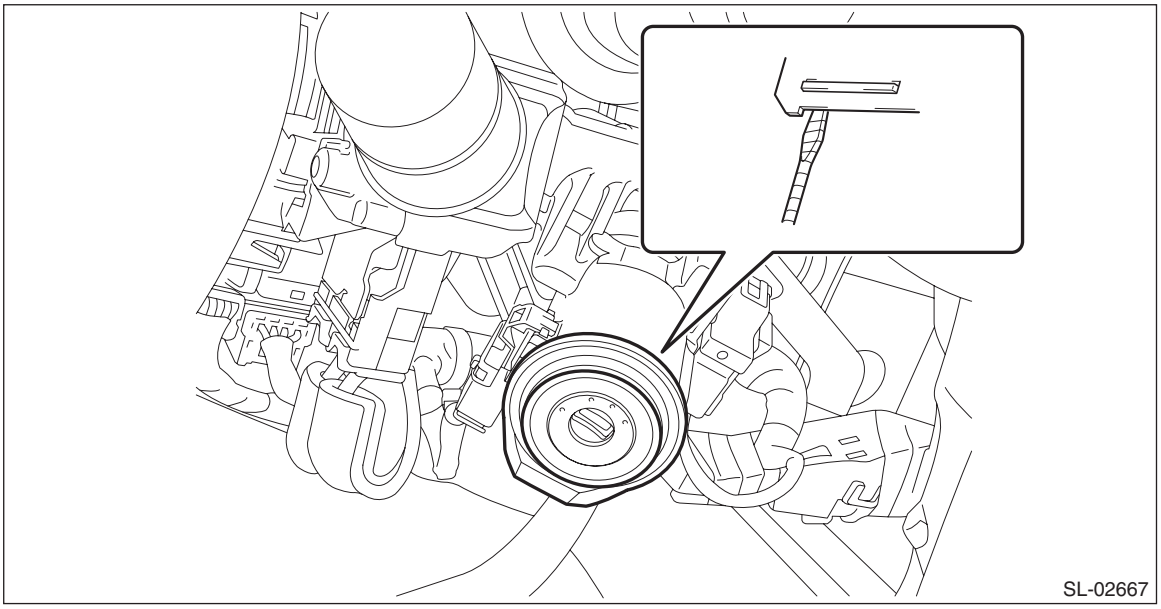

2) Release the claws, and pull the key warning switch downwards to remove.

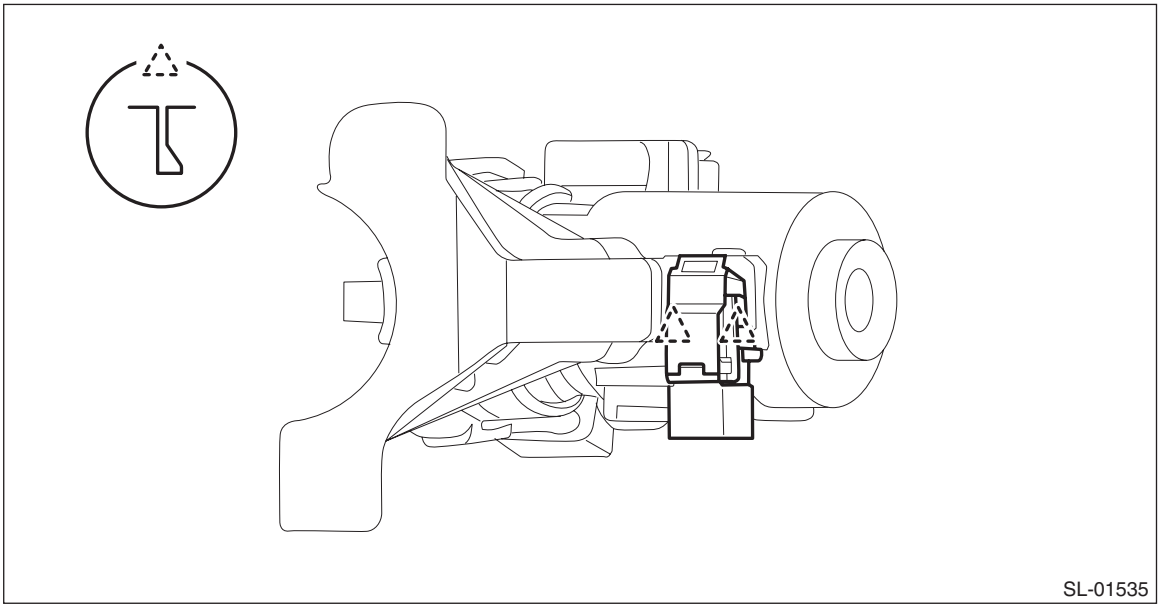

3) Remove the screws and remove the key lock solenoid.

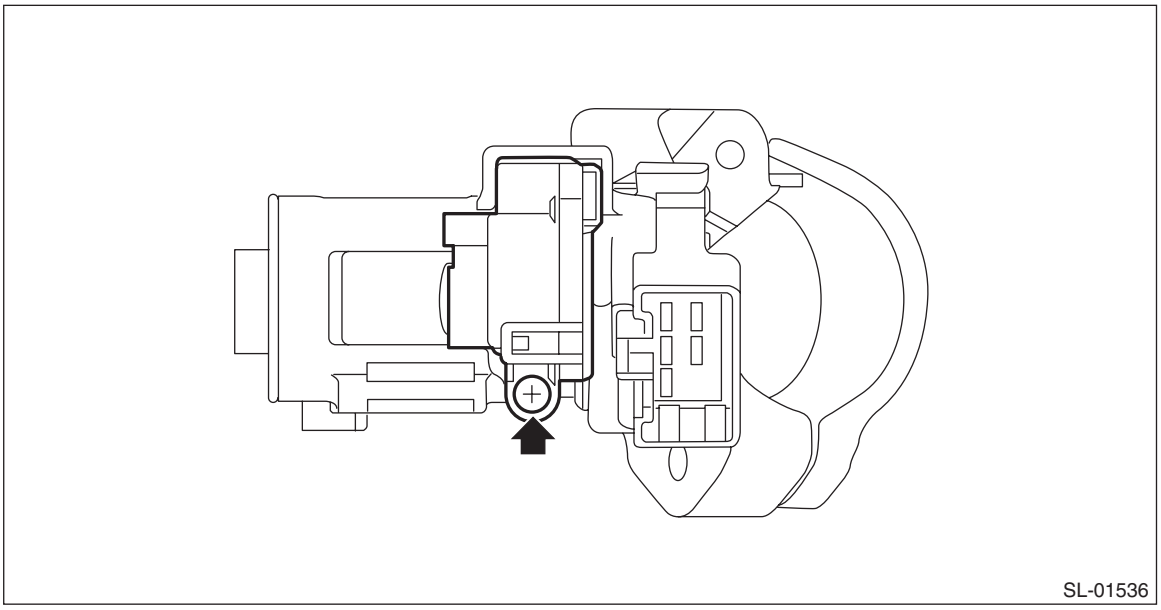

4) Replace the key cylinder.
(1) Insert the key into the key cylinder, and turn the key to the ACC position.
(2) Insert a flat tip screwdriver from the steering lock frame hole (A), and pull the key cylinder until the key cylinder claws touch the steering lock frame stopper (B).

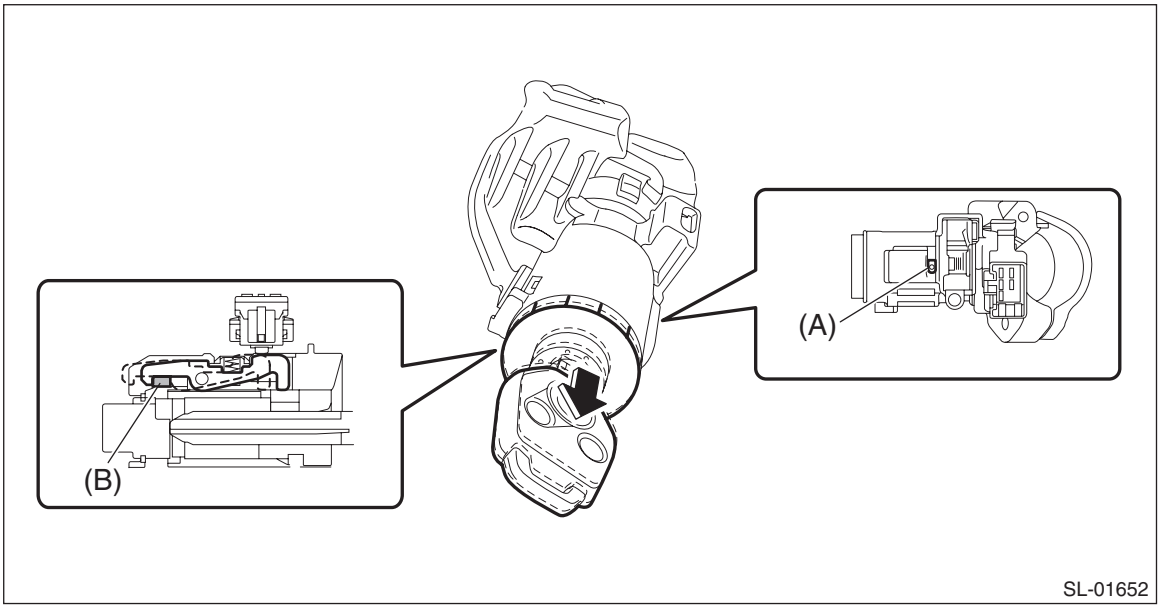

(3) Insert a flat tip screwdriver from the steering lock frame hole (A), and release the claws to pull out the key cylinder.

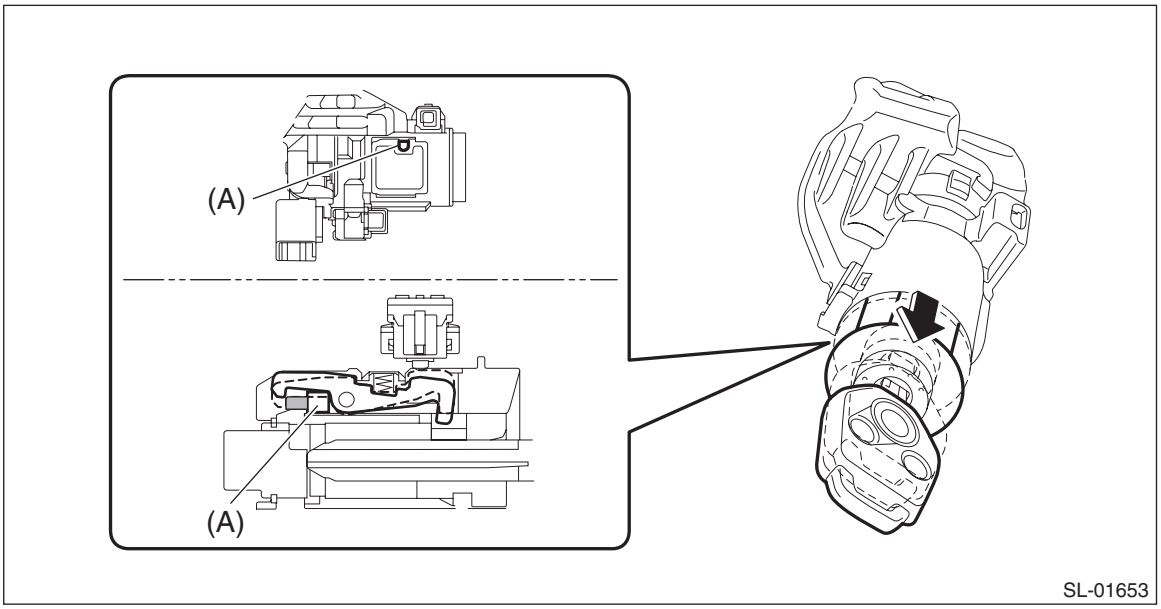

5) Release the claws and remove the ignition switch assembly.

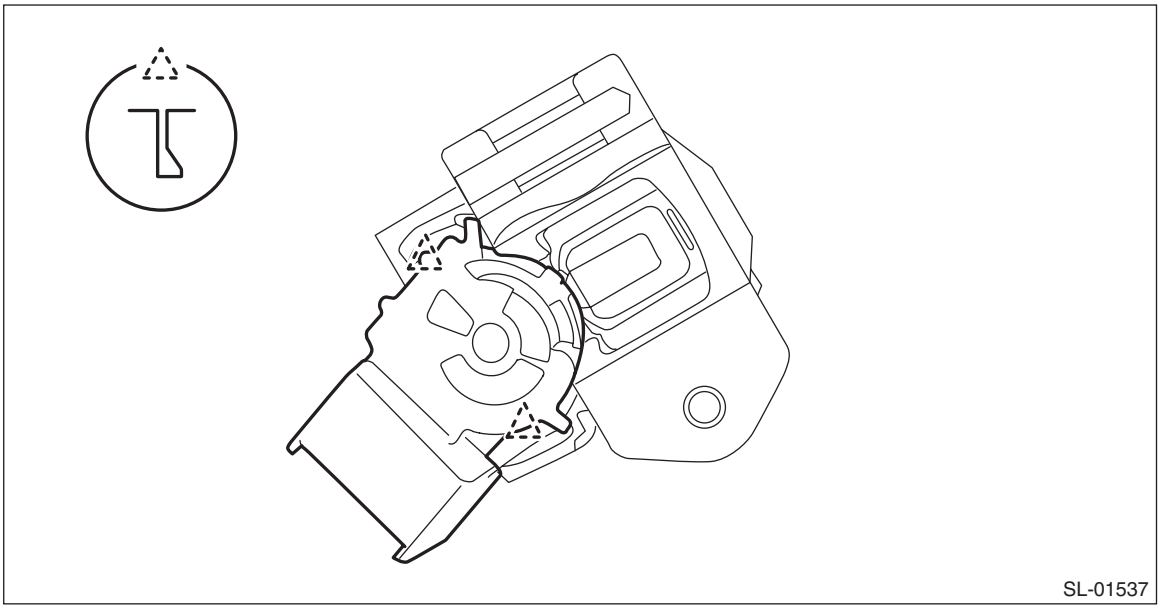

C: INSPECTION

1) Measure the resistance between connector terminals.

Preparation tool:
Circuit tester

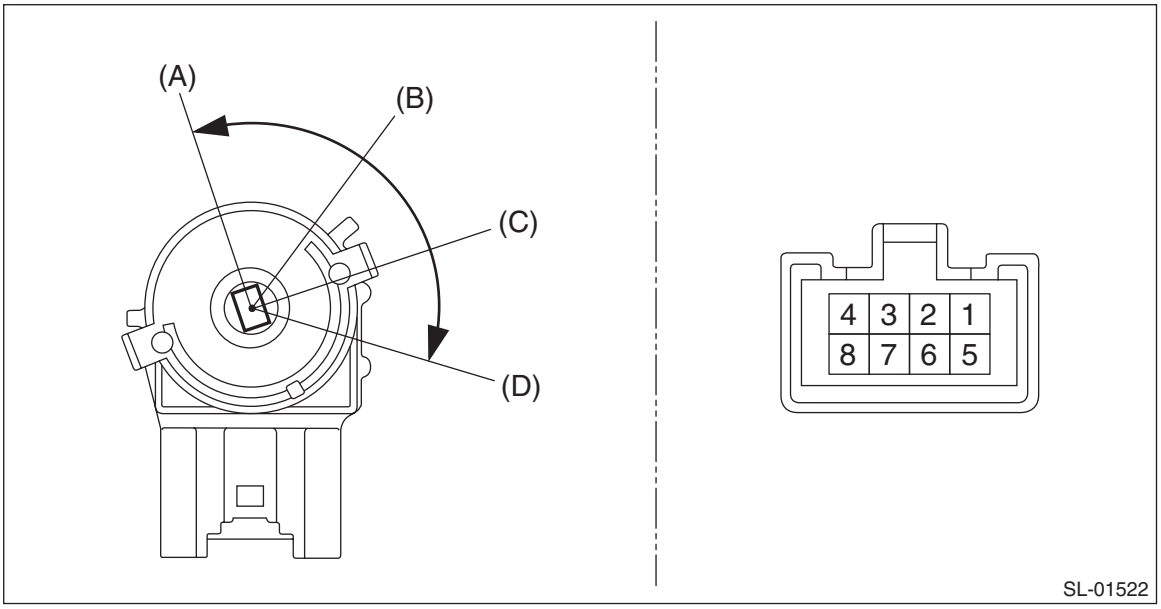

Terminal No.	Inspection conditions		Standard
Between all terminals	(A)	LOCK	1 MΩ or more
2 — 4	(B)	ACC	Less than 1 Ω
1 — 2 — 4 5 — 6	(C)	ON	Less than 1 Ω
1 — 3 — 4 5 — 6 — 7	(D)	ST	Less than 1 Ω

2) Replace the ignition switch assembly if the inspection result is not within the standard.

19.Key Lock Cylinders

A: REPLACEMENT

1. STEERING LOCK

1) Disconnect the ground cable from battery and wait for at least 60 seconds before starting work. <Ref. to NT-6, BATTERY, NOTE, Note.>

NOTE:
For model with battery sensor, disconnect the ground terminal from battery sensor.

2) Remove the cover assembly - column.
   (1) Release the clips, and remove the cover assembly - steering UPR.

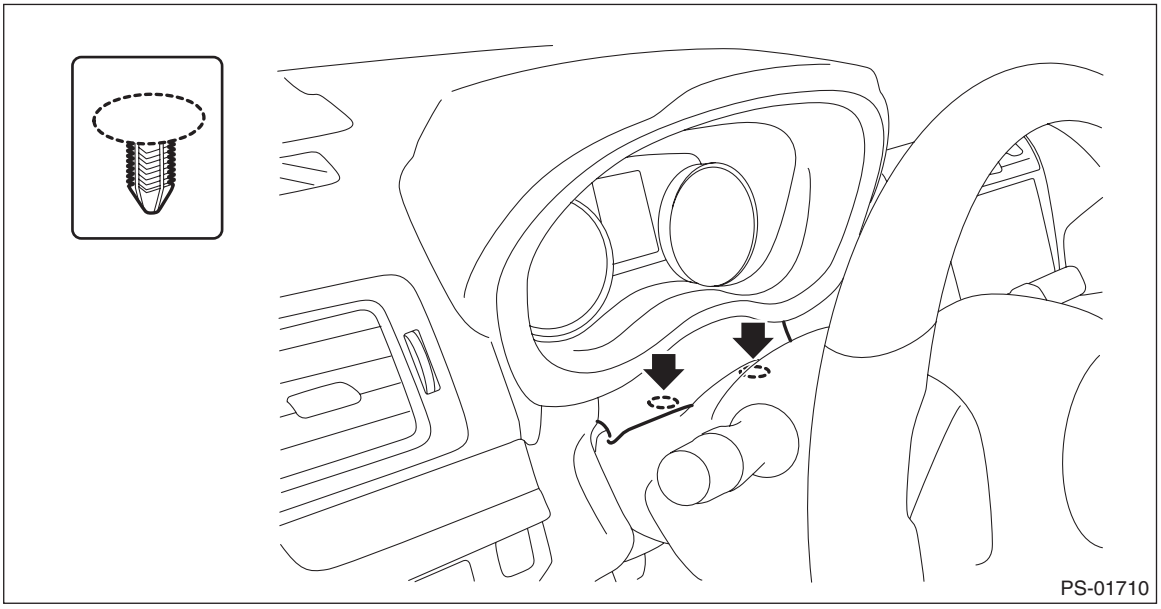

   (2) Remove the screws by turning the steering wheel to right and left.
   (3) Release the claw, and remove the cover assembly - column UPR and the cover assembly - column LWR.

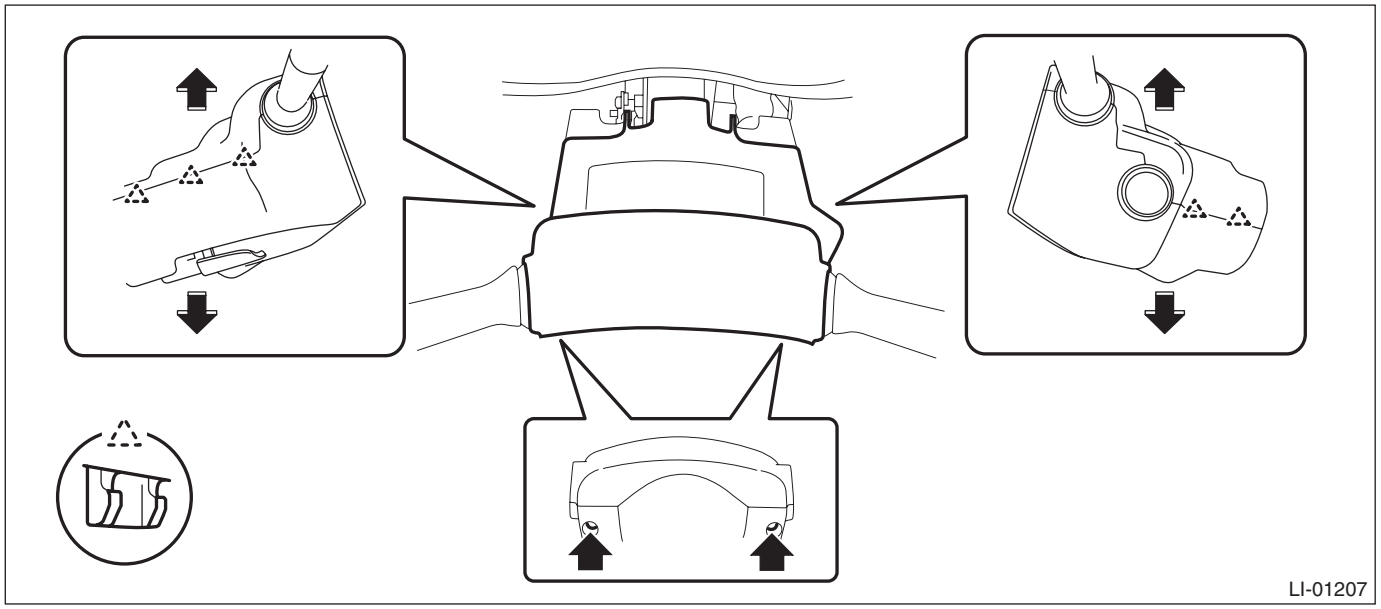

3) Remove the immobilizer antenna assembly or the ignition switch illumination. <Ref. to SL-89, REMOVAL, Immobilizer Antenna.>

4) Remove the key lock solenoid.
(1) Disconnect the connector.
(2) Remove the screws and remove the key lock solenoid.

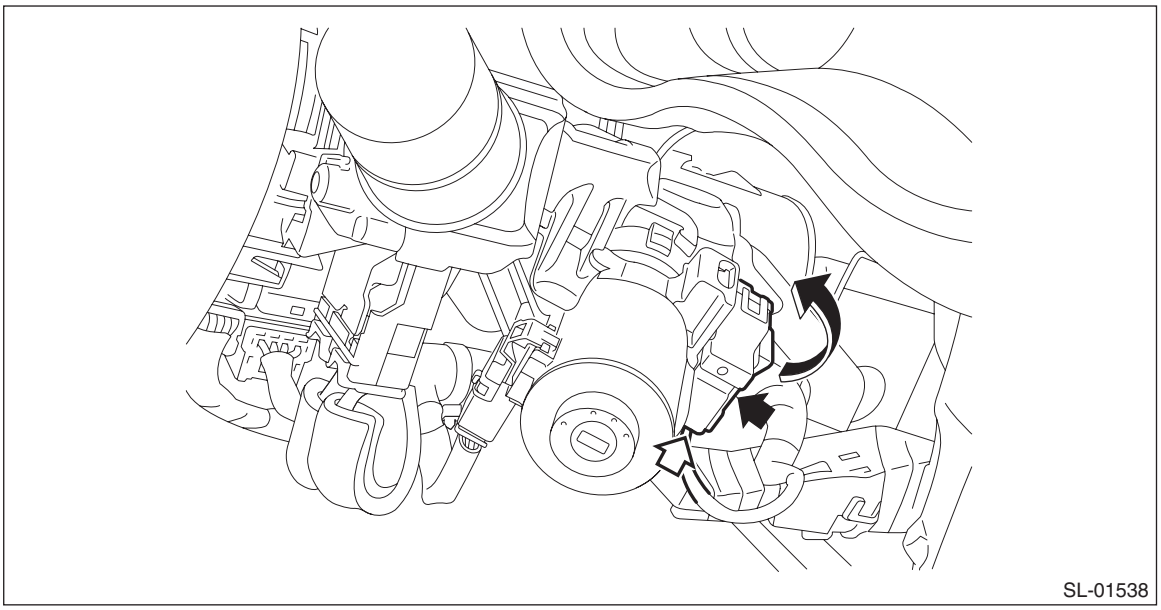
SL-01538

5) Replace the key cylinder.
(1) Insert the key into the key cylinder, and turn the key to the ACC position.
(2) Insert a flat tip screwdriver from the steering lock frame hole (A), and pull the key cylinder until the key cylinder claws touch the steering lock frame stopper (B).

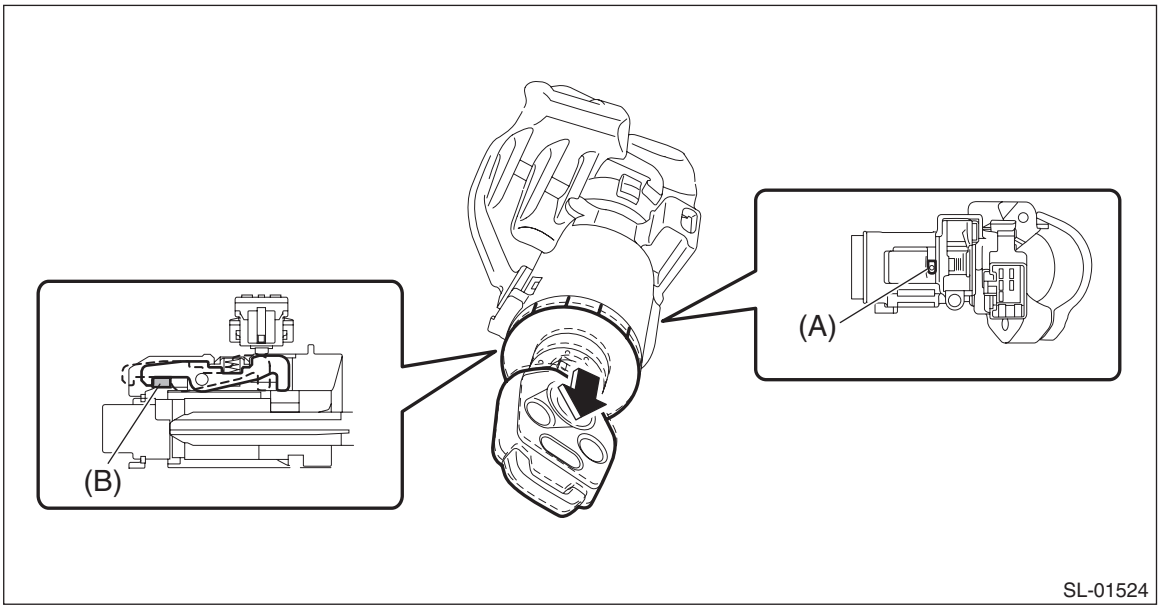

SL-01524

(3) Insert a flat tip screwdriver from the steering lock frame hole (A), and release the claws to pull out the key cylinder.

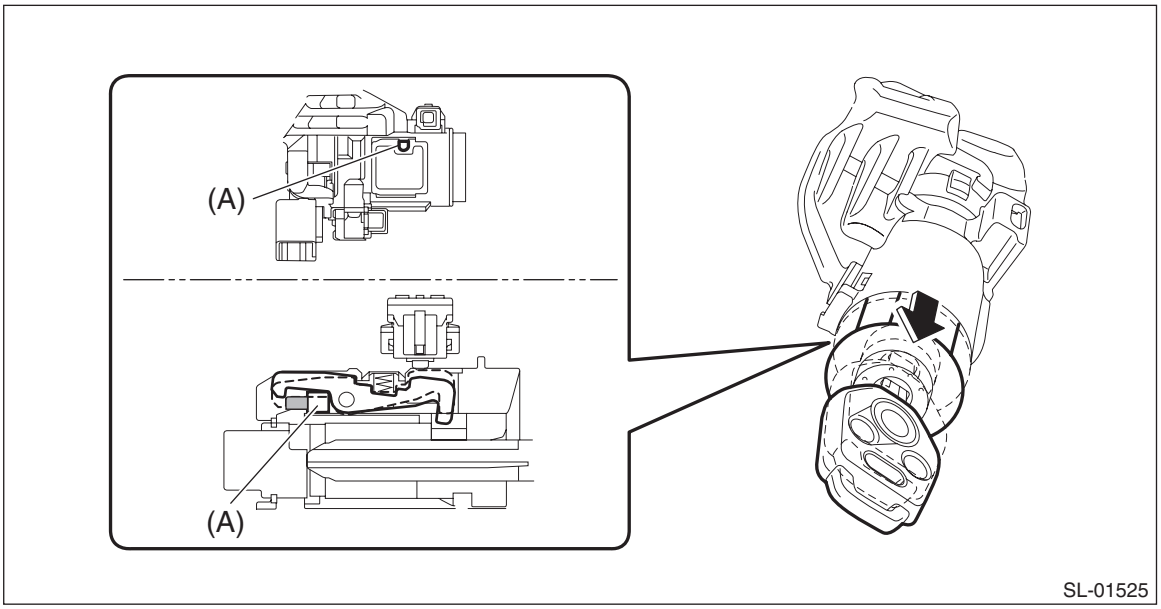

6) Install each part in the reverse order of removal.
7) Connect the battery ground terminal. <Ref. to NT-6, BATTERY, NOTE, Note.>

2. FRONT DOOR

1) Raise the glass assembly - front door to the top position.
2) Remove the cover - handle front outer.

Preparation tool:
TORX® T30

(1) Remove the plug at the rear end of the panel assembly - front door.
(2) Loosen the TORX® bolt and remove the cover - handle front outer.

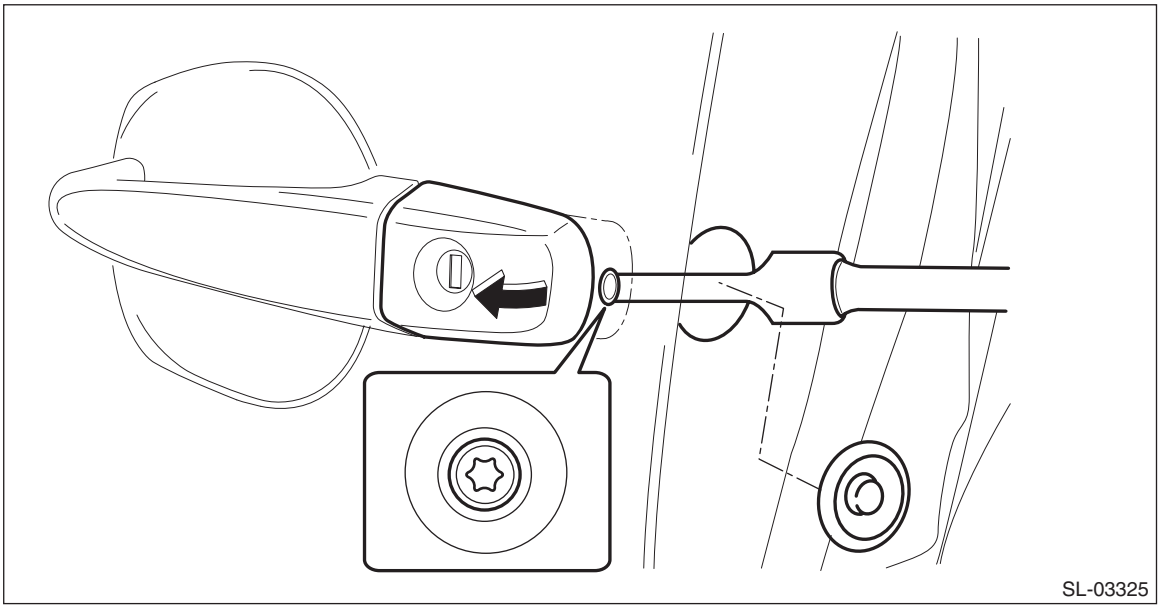

3) Remove the key cylinder (B) from the cover - handle front outer (A), and replace the key cylinder.

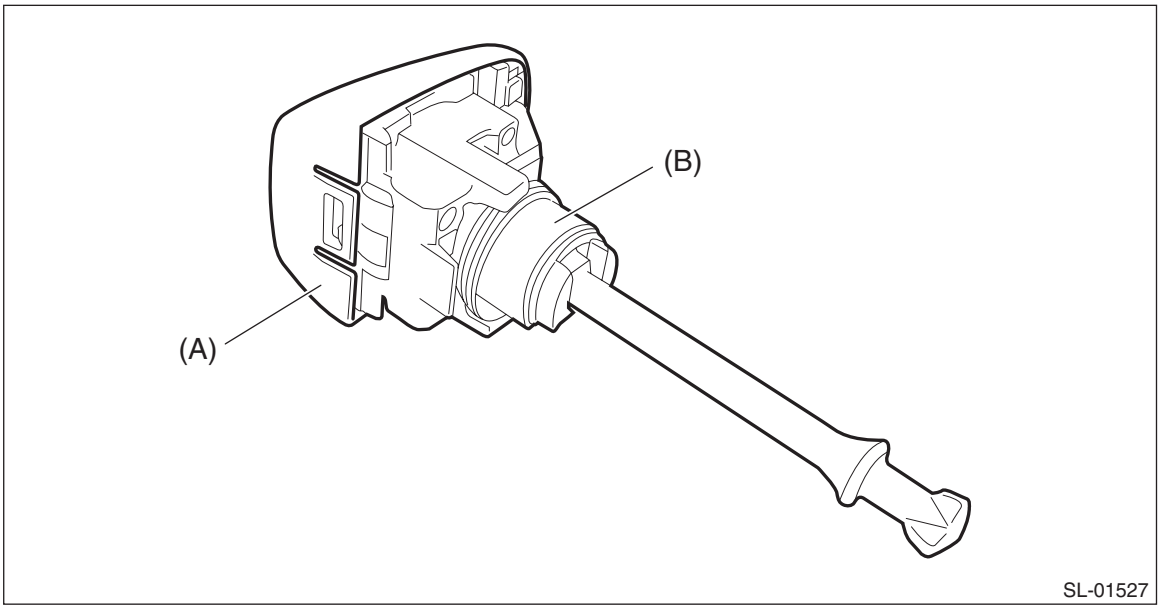

4) Install each part in the reverse order of removal.

CAUTION:
When installing the cover - handle front outer on driver's side, make sure that the key cylinder shaft is correctly inserted into the latch & actuator assembly - front.

Tightening torque:
Refer to "COMPONENT" of "General Description". <Ref. to SL-2, DOOR LOCK ASSEMBLY, COMPONENT, General Description.>

3. GLOVE BOX LID

1) Remove the pocket assembly.
   (1) Attach the protective tape (a) to the panel center LWR.
   (2) Remove the damper COMPL - pocket.
   (3) Release the stoppers and remove the pocket assembly by pulling it toward you.

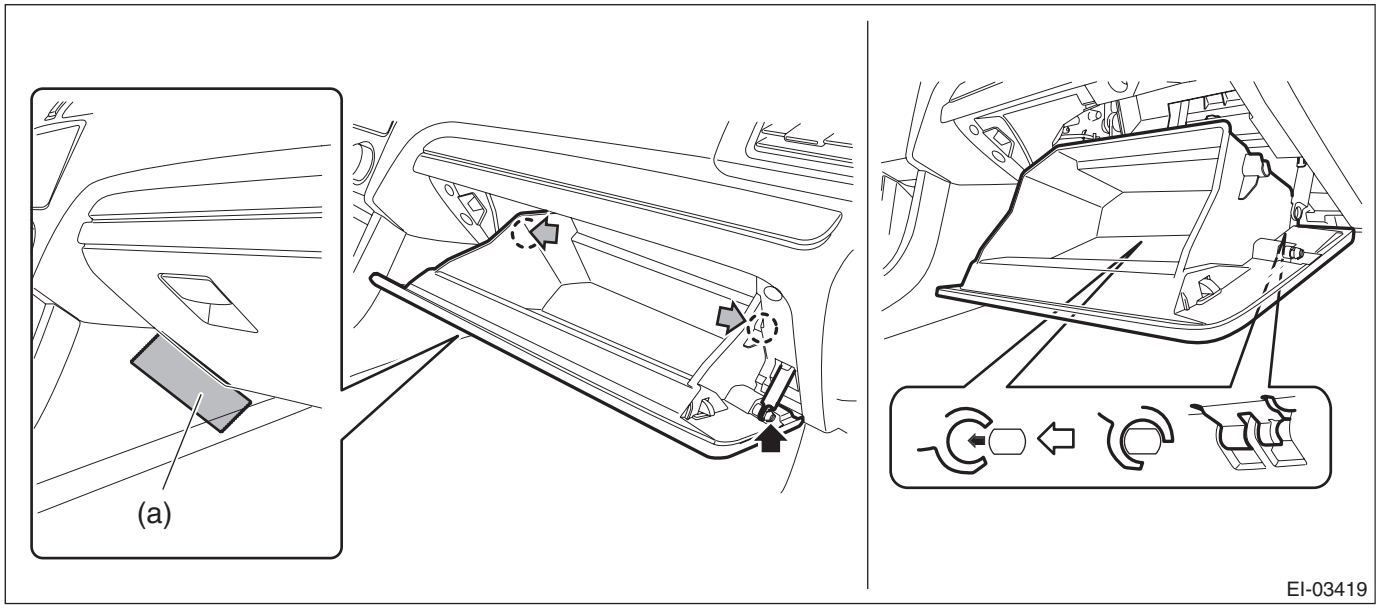

2) Replace the key cylinder.
   (1) Pull up the lock knob.
   (2) Push out the key cylinder from the pocket assembly while pressing in the metal plate.

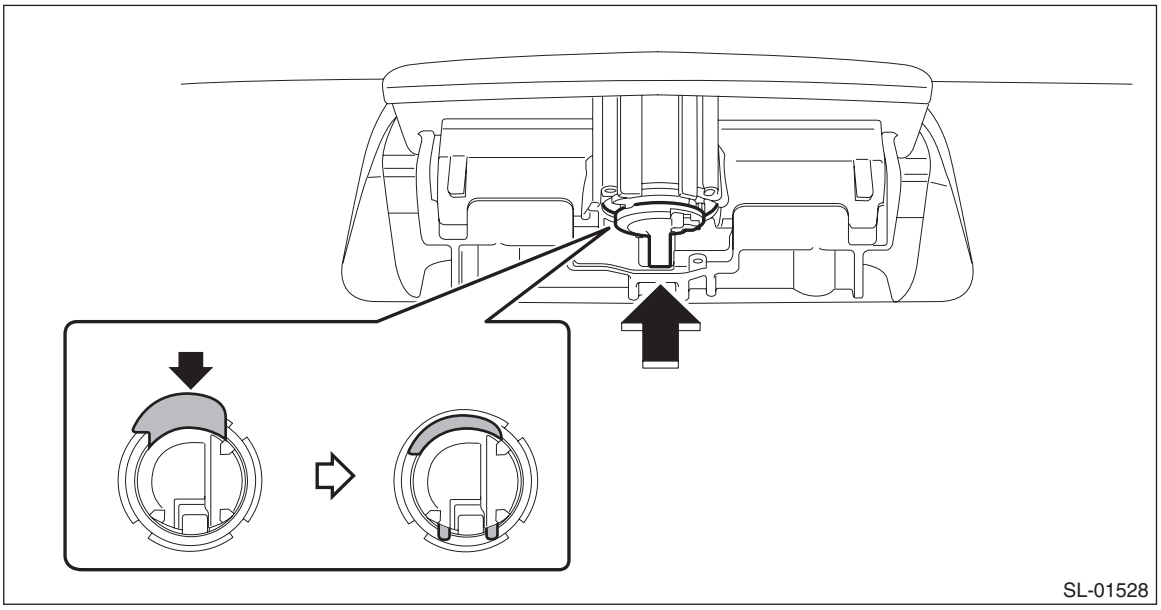

3) Install each part in the reverse order of removal.

20.Security Control Module

A: REMOVAL

CAUTION:
• Before handling the airbag system components, refer to "CAUTION" of "General Description" in "AIRBAG SYSTEM". <Ref. to AB-9, CAUTION, General Description.>
• Do not allow harness and connectors to interfere or get tangled up with other parts.
• If the steering wheel and steering angle sensor (steering roll connector) are removed, perform "VSC(VDC) Centering Mode" of the VDC. <Ref. to VDC-17, VDC SENSOR MIDPOINT SETTING MODE, ADJUSTMENT, VDC Control Module and Hydraulic Control Unit (VDCCM&H/U).>
1) Disconnect the ground cable from battery and wait for at least 60 seconds before starting work. <Ref. to NT-6, BATTERY, NOTE, Note.>

NOTE:
For model with battery sensor, disconnect the ground terminal from battery sensor.
2) Remove the steering wheel. <Ref. to PS-16, REMOVAL, Steering Wheel.>
3) Remove the cover assembly - instrument panel LWR driver. <Ref. to EI-62, REMOVAL, Instrument Panel Lower Cover.>
4) Remove the knee airbag module. <Ref. to AB-34, REMOVAL, Knee Airbag Module.>
5) Remove the instrument panel assembly. <Ref. to EI-72, REMOVAL, Instrument Panel Assembly.>
6) Remove the heater and cooling unit assembly. <Ref. to AC-54, REMOVAL, Heater and Cooling Unit.>
7) Remove the security control module.
(1) Disconnect the connector.
(2) Remove the nuts, and remove the security control module.

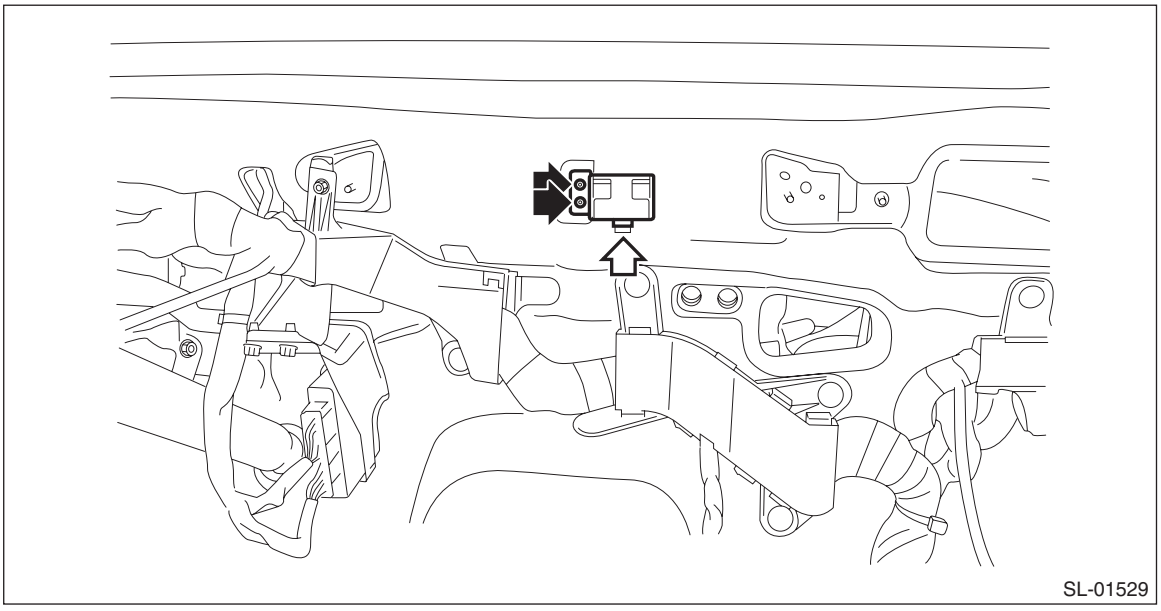

B: INSTALLATION

CAUTION:
• When the control module related to immobilizer has been replaced, be sure to perform the registration of immobilizer system. For detailed operation procedure, refer to "Type B" described in "REGISTRATION MANUAL FOR IMMOBILIZER".
• Before handling the airbag system components, refer to "CAUTION" of "General Description" in "AIRBAG SYSTEM". <Ref. to AB-9, CAUTION, General Description.>
• Do not allow harness and connectors to interfere or get tangled up with other parts.
• If the steering wheel and steering angle sensor (steering roll connector) are removed, perform "VSC(VDC) Centering Mode" of the VDC. <Ref. to VDC-17, VDC SENSOR MIDPOINT SETTING MODE, ADJUSTMENT, VDC Control Module and Hydraulic Control Unit (VDCCM&H/U).>
1) Install the security control module.

Tightening torque:
7.5 N·m (0.8 kgf-m, 5.5 ft-lb)
2) Install the heater and cooling unit assembly. <Ref. to AC-56, INSTALLATION, Heater and Cooling Unit.>
3) Install the instrument panel assembly. <Ref. to EI-80, INSTALLATION, Instrument Panel Assembly.>
4) Install the knee airbag module. <Ref. to AB-34, INSTALLATION, Knee Airbag Module.>
5) Install the cover assembly - instrument panel LWR driver. <Ref. to EI-63, INSTALLATION, Instrument Panel Lower Cover.>
6) Install the steering wheel. <Ref. to PS-17, INSTALLATION, Steering Wheel.>
7) Connect the battery ground terminal. <Ref. to NT-6, BATTERY, NOTE, Note.>

21.Impact Sensor

A: REMOVAL

1) Pull out the key from the ignition switch, or turn the ignition switch to OFF.
2) Close all doors and trunk lid.
3) Press the UNLOCK button of the keyless transmitter or access key.
4) Disconnect the ground cable from battery. <Ref. to NT-6, BATTERY, NOTE, Note.>

NOTE:
For model with battery sensor, disconnect the ground terminal from battery sensor.
5) Remove the impact sensor.
6) Change the setting of impact sensor using Subaru Select Monitor.

B: INSTALLATION

1) Pull out the key from the ignition switch, or turn the ignition switch to OFF.
2) Close all doors and trunk lid.
3) Press the UNLOCK button of the keyless transmitter or access key.
4) Connect the battery ground terminal. <Ref. to NT-6, BATTERY, NOTE, Note.>
5) Install the impact sensor.
6) Change the setting of impact sensor using Subaru Select Monitor.

C: OPERATION

1. IMPACT SENSOR SETTING USING SUBARU SELECT MONITOR

1) Make an impact monitor setting.
   (1) Connect the Subaru Select Monitor.

NOTE:
For detailed operation procedures, refer to “Application help”.
   (2) Turn the ignition switch to ON.
   (3) On «Start» display, select «Diagnosis».
   (4) On «Vehicle selection» display, input the target vehicle information and select «Confirmed».
   (5) On «Main Menu» display, select «Each System».
   (6) On «Select System» display, select «Body Control» and then select «Enter».
   (7) On «Select Function» display, select «Customize».
   (8) From the Customize item list, select «Impact sensor» or «Impact Sensor Setup».
   (9) Make an impact monitor setting.
   - When installing: ON
   - When removing: OFF

   (10) Make an impact monitor ON/OFF setting.
   - When installing: ON
   - When removing: OFF

   (11) Turn the ignition switch to OFF, and then remove the Subaru Select Monitor.

D: ADJUSTMENT

1. CHECK IMPACT SENSOR

1) Pull out the key from the ignition switch, or turn the ignition switch to OFF.
2) Close all the windows.
3) Close all doors and trunk lid. Leave open the front hood.
4) Press the LOCK button of the keyless transmitter or access key from outside of vehicle.
5) Check that the security indicator light blinks twice within 0.5 seconds in 2 second cycles after 30 seconds.
6) Hit all windows with the palm with force repeatedly, to check for whether the security alarm operates. Lift up the front hood approx. 12 cm (4.7 in) or more, and then drop it off to check the operation of security alarm.
7) If NG, adjust the impact sensitivity.

2. IMPACT SENSITIVITY ADJUSTMENT

1) Adjust the impact sensitivity.
   (1) Connect the Subaru Select Monitor.

NOTE:
For detailed operation procedures, refer to “Application help”.

   (2) Turn the ignition switch to ON.
   (3) On «Start» display, select «Diagnosis».
   (4) On «Vehicle selection» display, input the target vehicle information and select «Confirmed».
   (5) On «Main Menu» display, select «Each System».
   (6) On «Select System» display, select «Impact Sensor» and then «Enter».
   (7) On «Select Function» display, select «Work Support».
   (8) From the work support item list, select «Sensitivity Adjustment Mode».
   - Sensitivity can be adjusted in 11 levels (0 to 10).
   - Initial setting is 5.
   - Smaller number means more sensitive.
   - Larger number means less sensitive.

   (9) Turn the ignition switch to OFF, and then remove the Subaru Select Monitor.

NOTE:
- Set the sensor so that it is not triggered by normal vibrations (someone reclining on the door, hit by a ball, etc.).
- Set the sensor to operate the alarm when the windshield glass or door is hit hard repeatedly, etc, where it can be assumed that there is an attempt to damage the car by a burglar, etc.
- Even if there is no burglary attempt, if there is vibration (road construction, elevated parking lots, passage of trains or boarding of ferries), the alarm can be triggered. Because of this, ask the customer about their parking conditions, and set an appropriate sensitivity level after discussion.
- If the sensitivity setting was not performed properly, a buzzer will sound four times. In this case, check that there is no error in CAN communication.

22.Keyless Entry Control Module

A: REMOVAL

1) Disconnect the ground cable from battery and wait for at least 60 seconds before starting work. <Ref. to NT-6, BATTERY, NOTE, Note.>

NOTE:
For model with battery sensor, disconnect the ground terminal from battery sensor.
2) Remove the trim panel assembly - rear shelf. <Ref. to EI-95, REMOVAL, Rear Shelf Trim.>
3) Remove the keyless entry control module.
   (1) Disconnect the connector.
   (2) Remove the bolt and then remove the keyless entry control module.

NOTE:
For models with power amplifier, installation position of the keyless entry control module is different.

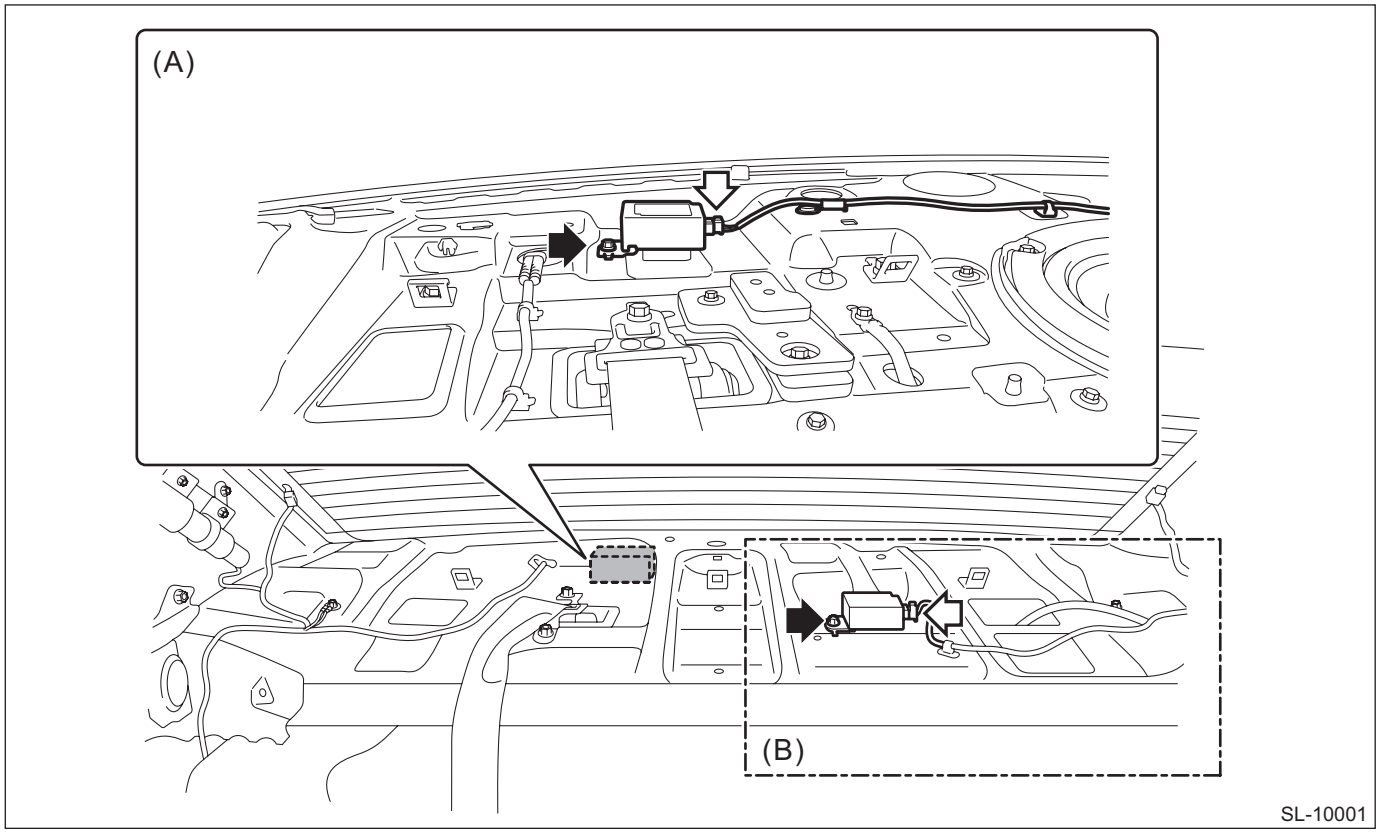

(A) Model with power amplifier (B) Model without power amplifier

B: INSTALLATION

1) Install the keyless entry control module.

Tightening torque:
13 N·m (1.3 kgf-m, 9.6 ft-lb)
2) Install the trim panel assembly - rear shelf.
3) Connect the battery ground terminal. <Ref. to NT-6, BATTERY, NOTE, Note.>

23.Keyless Buzzer

A: REMOVAL

1) Disconnect the ground cable from battery. <Ref. to NT-6, BATTERY, NOTE, Note.>

NOTE:
For model with battery sensor, disconnect the ground terminal from battery sensor.

2) Remove the air cleaner case.
- STI model: <Ref. to IN(STI)-8, REMOVAL, Air Cleaner Case.>
- Except for STI model: <Ref. to IN(w/o STI)-13, REMOVAL, Air Cleaner Case.>

3) Lift up the vehicle.
4) Remove the screw and clips, and turn over the mud guard - front on the right side.

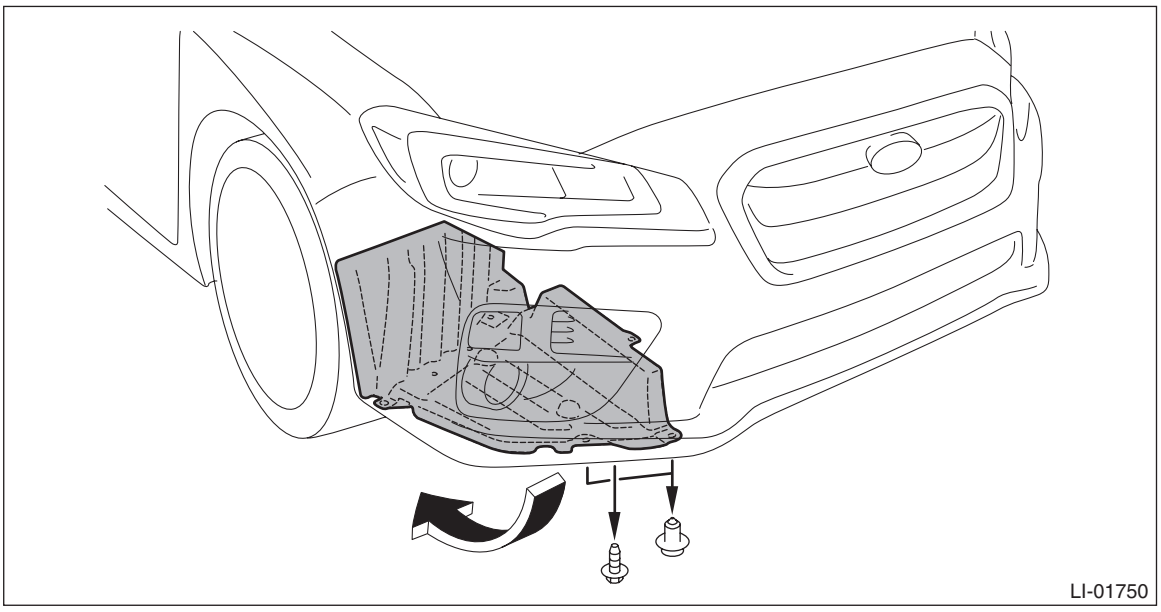

5) Remove the keyless buzzer.
   (1) Disconnect the connector.
   (2) Remove the clip and detach the keyless buzzer.

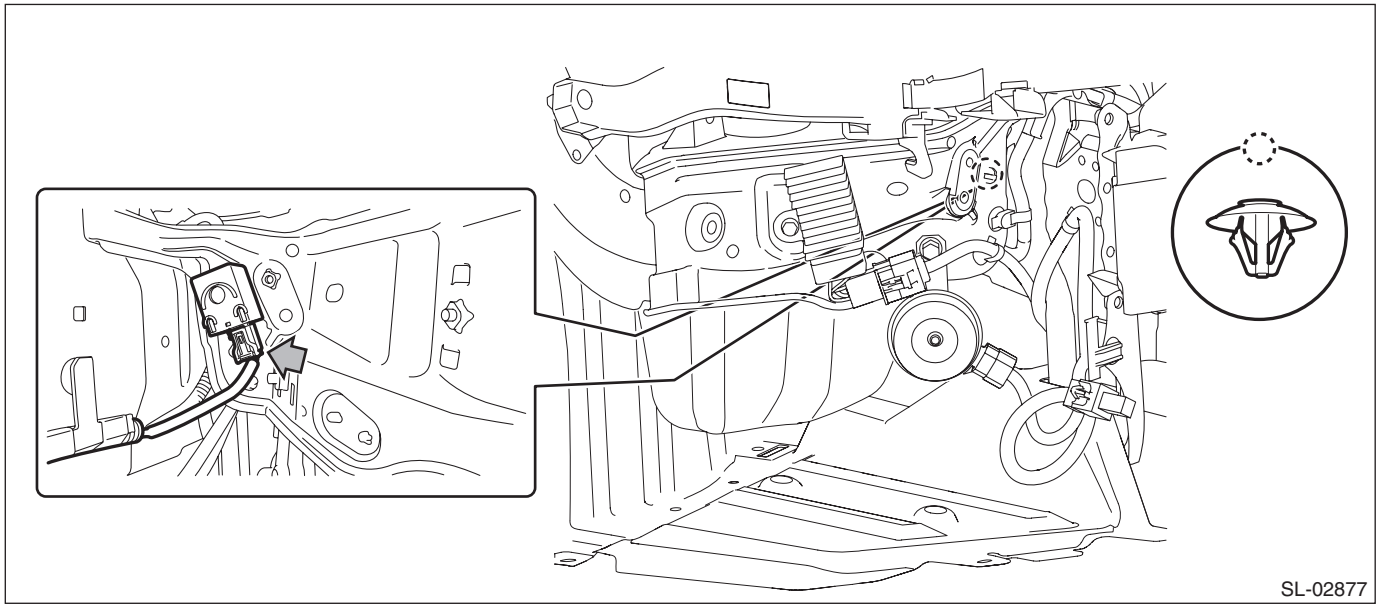

B: INSTALLATION

1) Install the keyless buzzer.
2) Install the mud guard - front.

CAUTION:
Install the mud guard - front so that the front end of the mud guard (b) comes outside the bumper face - front (a).

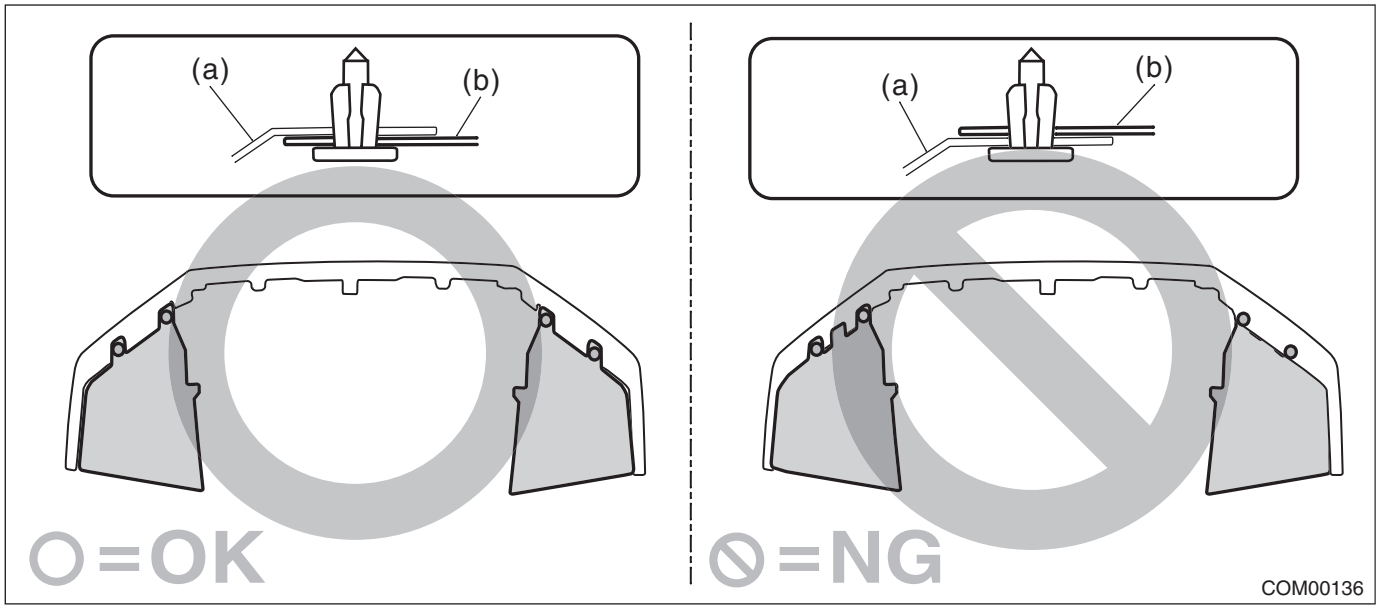

3) Install the air cleaner case.
- STI model: <Ref. to IN(STI)-8, INSTALLATION, Air Cleaner Case.>
- Except for STI model: <Ref. to IN(w/o STI)-16, INSTALLATION, Air Cleaner Case.>

4) Connect the battery ground terminal. <Ref. to NT-6, BATTERY, NOTE, Note.>

C: INSPECTION

- Using the Subaru Select Monitor, set the volume of the keyless buzzer. <Ref. to BC(diag)-24, User Customizing.>
- Using the Subaru Select Monitor, perform forced operation of the keyless buzzer. <Ref. to BC(diag)-24, OPERATION, User Customizing.>

If the buzzer does not sound, replace the keyless buzzer.

24.Body Integrated Unit

A: NOTE

1. REPLACE BODY INTEGRATED UNIT

1) Check and record the current setting. <Ref. to BC(diag)-26, CONFIRM CURRENT SETTING, OPERATION, Registration Body Integrated Unit.>
2) Prepare all immobilizer keys already registered. (Models without the keyless access with push button start)
3) Replace the body integrated unit with a new part.
4) Set the current settings as recorded. <Ref. to BC(diag)-27, REGISTRATION BODY INTEGRATED UNIT (FUNCTION SETTING), OPERATION, Registration Body Integrated Unit.>
5) Register the immobilizer. For detailed operation procedure, refer to “Type B” described in “REGISTRATION MANUAL FOR IMMOBILIZER”.

B: REMOVAL

CAUTION:
Before handling the airbag system components, refer to “CAUTION” of “General Description” in “AIRBAG SYSTEM”. <Ref. to AB-9, CAUTION, General Description.>
1) Disconnect the ground cable from battery and wait for at least 60 seconds before starting work. <Ref. to NT-6, BATTERY, NOTE, Note.>

NOTE:
For model with battery sensor, disconnect the ground terminal from battery sensor.
2) Remove the cover assembly - instrument panel LWR driver. <Ref. to EI-62, REMOVAL, Instrument Panel Lower Cover.>
3) Remove the knee airbag module. <Ref. to AB-34, REMOVAL, Knee Airbag Module.>
4) Release the lock and remove the fuse holder.

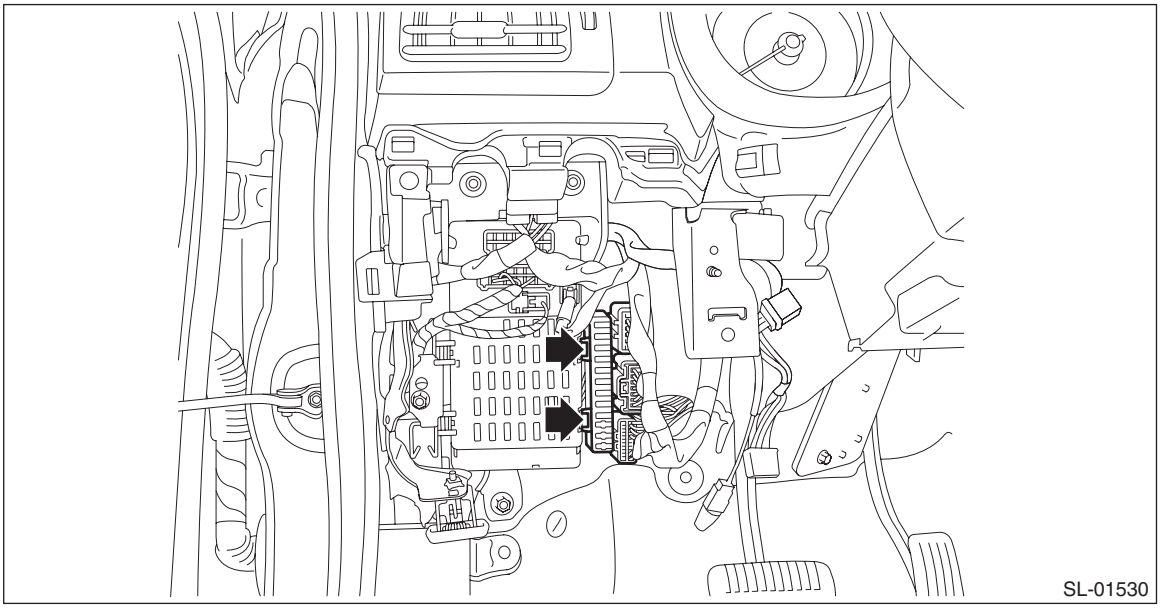
SL-01530

5) Remove the relay & fuse box.
(1) Disconnect the connector.
(2) Remove the bolts and nuts, and remove the relay & fuse box.

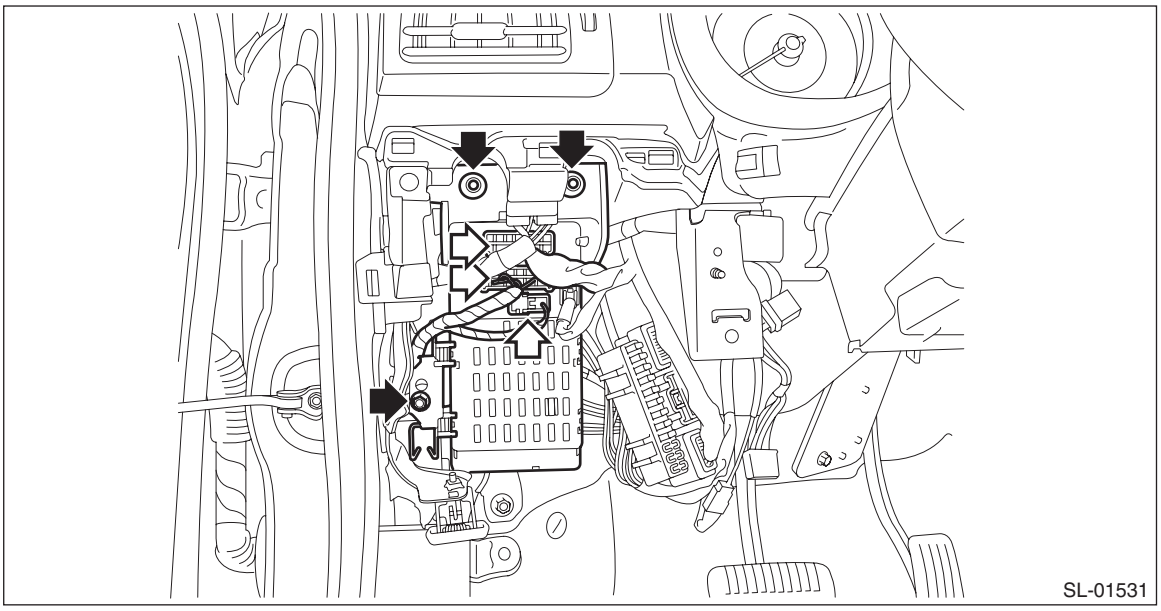
SL-01531

6) Remove the body integrated unit.

CAUTION:
Be careful to keep water and other foreign materials away from body integrated unit terminals.
(1) Disconnect the connector.

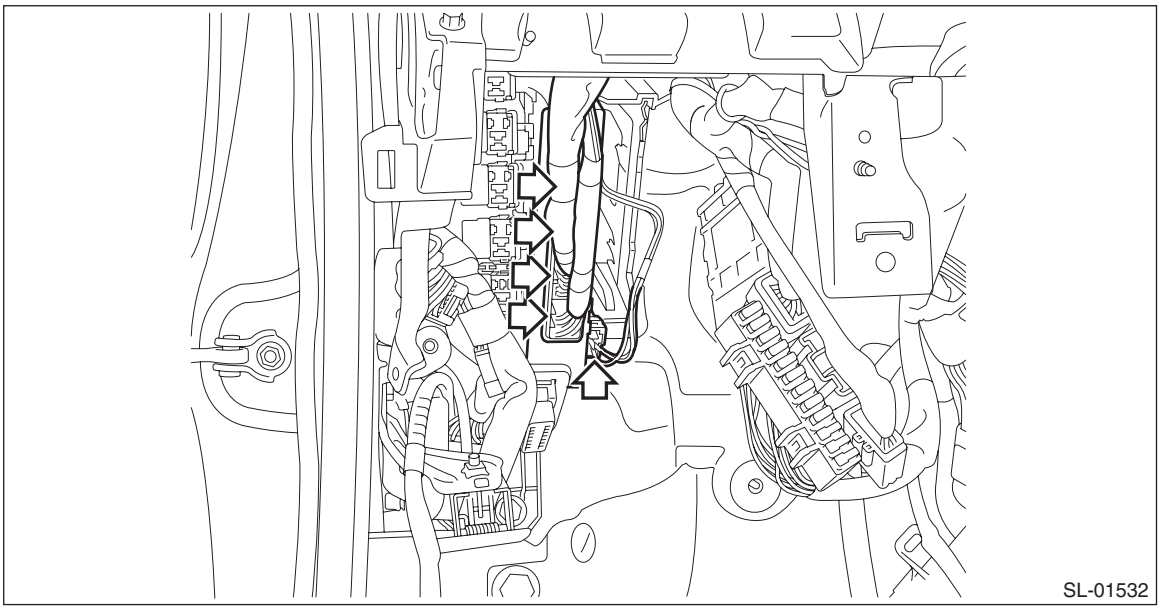
SL-01532

(2) Release the lock and remove the data link connector bracket.

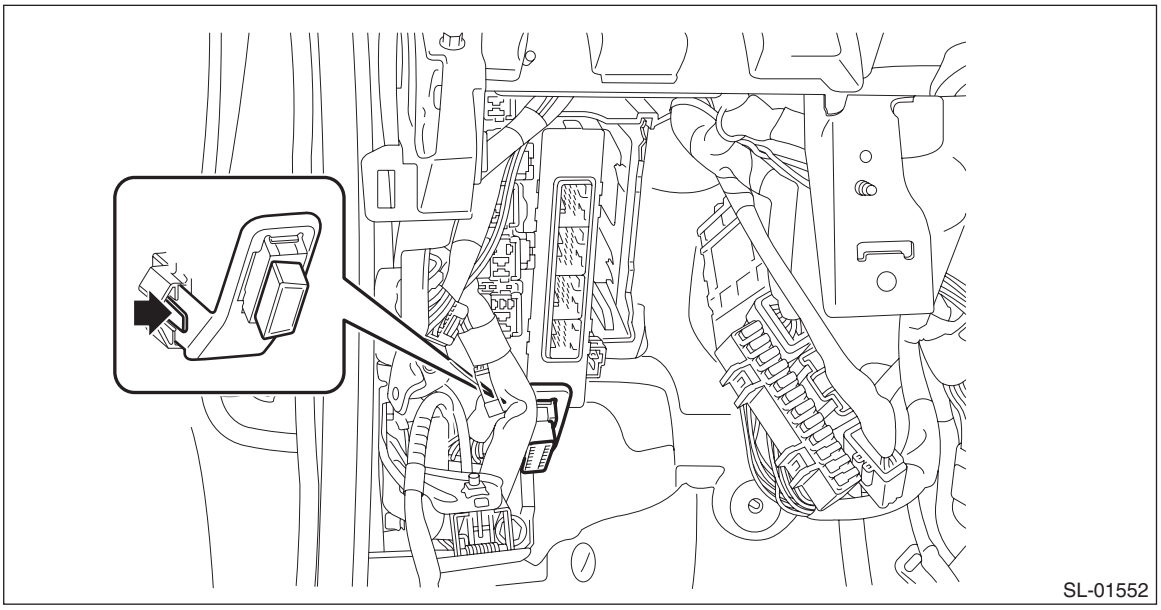

(3) Release the claws, and pull out the body integrated unit.

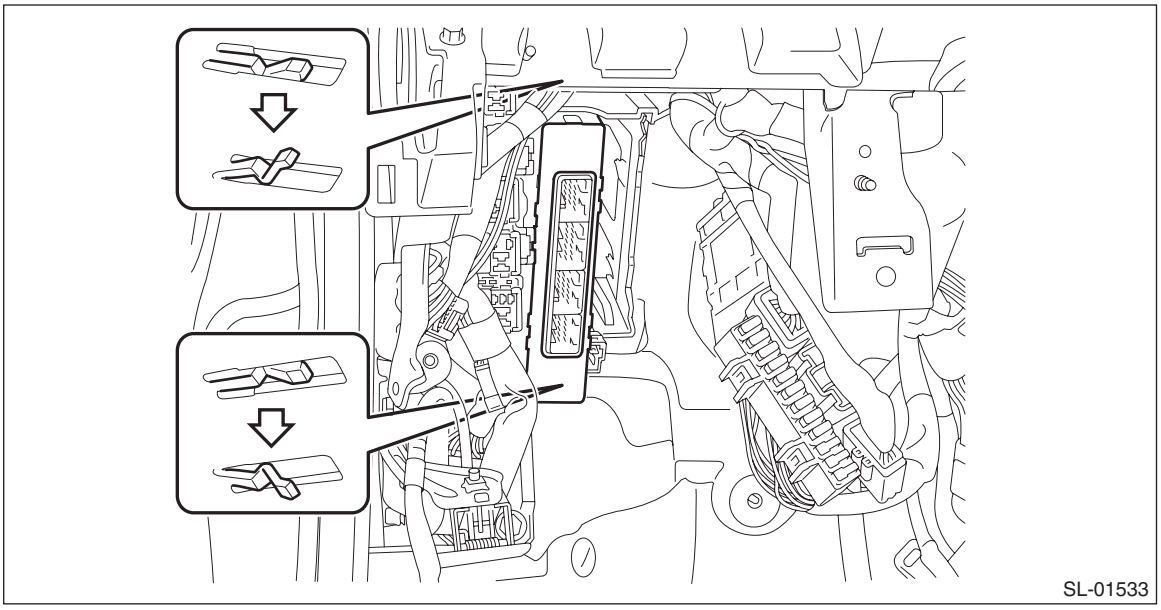

C: INSTALLATION

CAUTION:

• When the control module related to immobilizer has been replaced, be sure to perform the registration of immobilizer system. For detailed operation procedure, refer to "Type B" described in "REGISTRATION MANUAL FOR IMMOBILIZER".

• Before handling the airbag system components, refer to "CAUTION" of "General Description" in "AIRBAG SYSTEM". <Ref. to AB-9, CAUTION, General Description.>

1) Install the body integrated unit.
2) Install the relay & fuse box and fuse holder.

Tightening torque:

Relay & fuse box: 7.5 N·m (0.8 kgf-m, 5.5 ft-lb)

3) Install the cover assembly - instrument panel LWR driver and the knee airbag module.
4) Connect the battery ground terminal. <Ref. to NT-6, BATTERY, NOTE, Note.>

25.Keyless Transmitter

A: REMOVAL

1. KEYLESS TRANSMITTER BATTERY

CAUTION:
To prevent static electricity damage to the keyless transmitter printed circuit board, touch the steel area of building with hand to discharge static electricity carried on body or clothes before disassembling the keyless transmitter.

1) Remove the keyless transmitter cover, and take out the transmitter case (A).

CAUTION:
Use a flat tip screwdriver with protective tape or cloth in order not to damage the components.

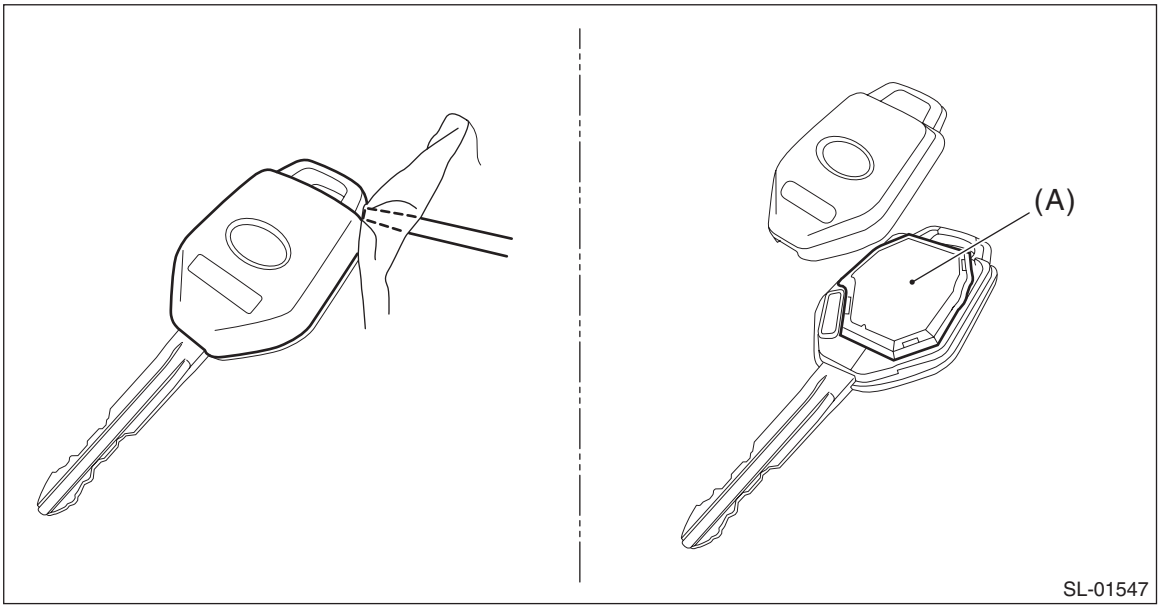

2) Release the claws to open the transmitter case, then remove the battery (A).

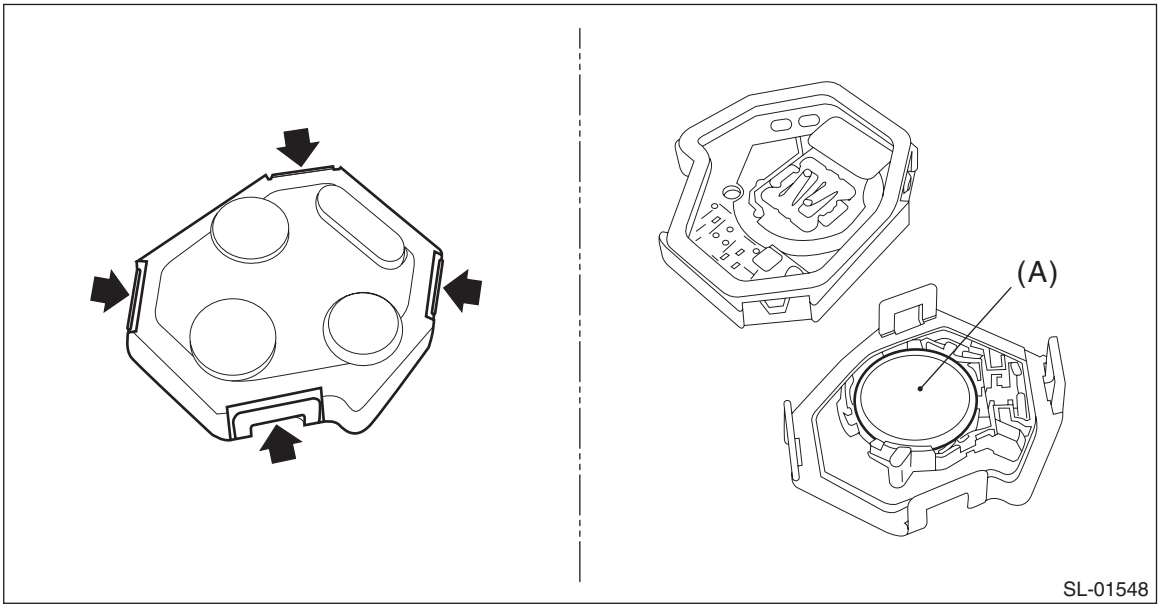

B: INSTALLATION

1. KEYLESS TRANSMITTER BATTERY

Install each part in the reverse order of removal.

C: INSPECTION

1. KEYLESS TRANSMITTER BATTERY

1) Measure the keyless transmitter battery voltage.

Preparation tool:
Circuit tester

NOTE:
Complete the measurement within 5 seconds because the battery discharges during measurement.

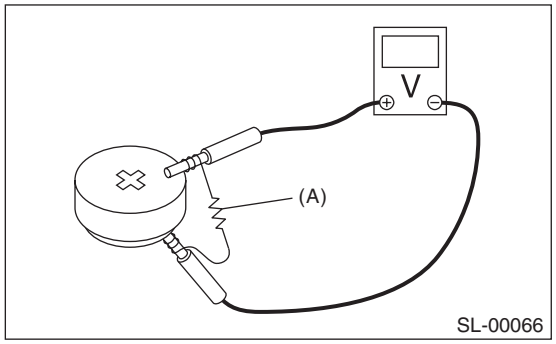

Battery terminal	Inspection conditions	Standard
(+) — (–)	Connect resistor (A) 47 Ω	2.5 — 3 V

2) Replace the battery if the inspection result is not within the standard value. (Use CR1620 or equivalent.)

D: REPLACEMENT

1. REGISTRATION OF KEYLESS TRANSMITTER WITH SUBARU SELECT MONITOR

NOTE:
- A maximum of four keyless transmitters can be registered for each individual vehicle.
- When replacing or adding the keyless transmitter, new registration of transmitter is necessary.

1) Register the transmitter.
(1) Connect the Subaru Select Monitor to data link connector.

NOTE:
For detailed operation procedures, refer to “Application help”.
(2) Turn the ignition switch to ON.
(3) On «Start» display, select «Diagnosis».
(4) On «Vehicle selection» display, input the target vehicle information and select «Confirmed».
(5) On «Main Menu» display, select «Each System».
(6) On «Select System» display, select «Body Control» and then select «Enter».
(7) On «Select Function» display, select «Work Support».
(8) On «Work Support» display, select «Keyless ID registration».
(9) According to the directions on the screen, press the button of the transmitter to be registered in order of Lock → Unlock. (When registration completed: Outside buzzer sounds once.)

NOTE:
- Repeat the procedure as many times as the number of transmitters to be registered.
- When attempting to register a key that has already been registered, the external buzzer sounds twice.

(10) Press the [Exit] button to finish the operations.

2. CLEAR THE REGISTRATION OF IMMOBILIZER

For detailed immobilizer registration clear, refer to “Type B” described in “REGISTRATION MANUAL FOR IMMOBILIZER”.

26.Access Key

A: REMOVAL

NOTE:
Refer to keyless transmitter for model without keyless access with push button start. <Ref. to SL-84, KEYLESS TRANSMITTER BATTERY, REMOVAL, Keyless Transmitter.>

1. ACCESS KEY BATTERY

CAUTION:
To prevent static electricity damage to the access key printed circuit board, touch the steel area of building with hand to discharge static electricity carried on body or clothes before disassembling the access key.
1) Push the lock button and remove the mechanical key from the access key.
2) Insert a flat tip screwdriver end wrapped with insulating tape etc. into the slit (a) of the access key to open the case.

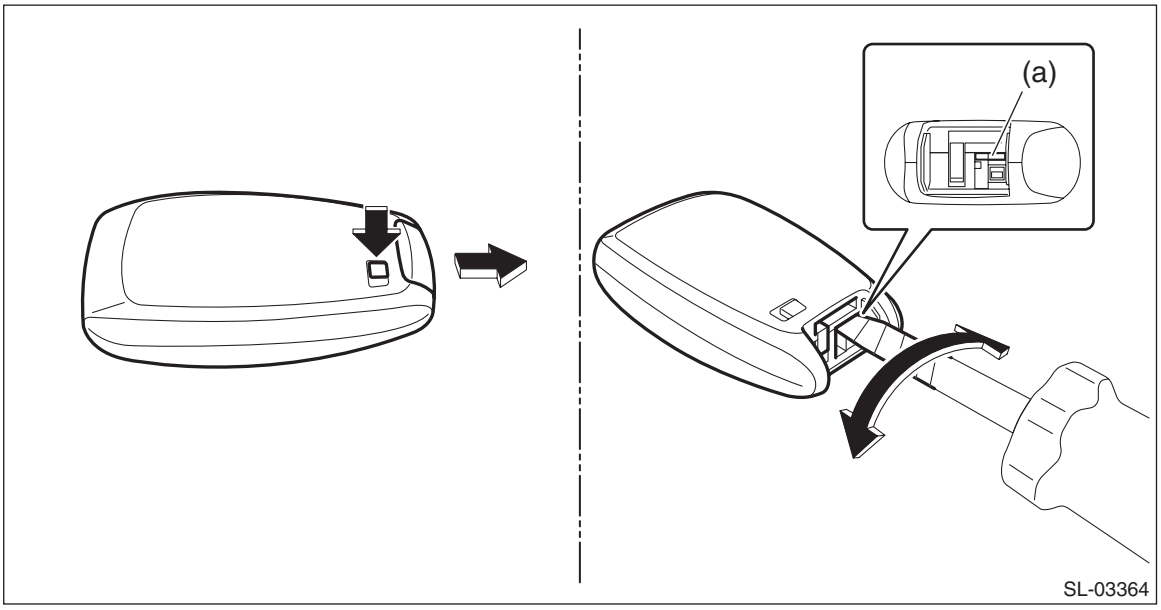

3) Insert a flat tip screwdriver wrapped with insulating tape, and while holding the upper side of the battery (a), remove the battery (a) from the case.

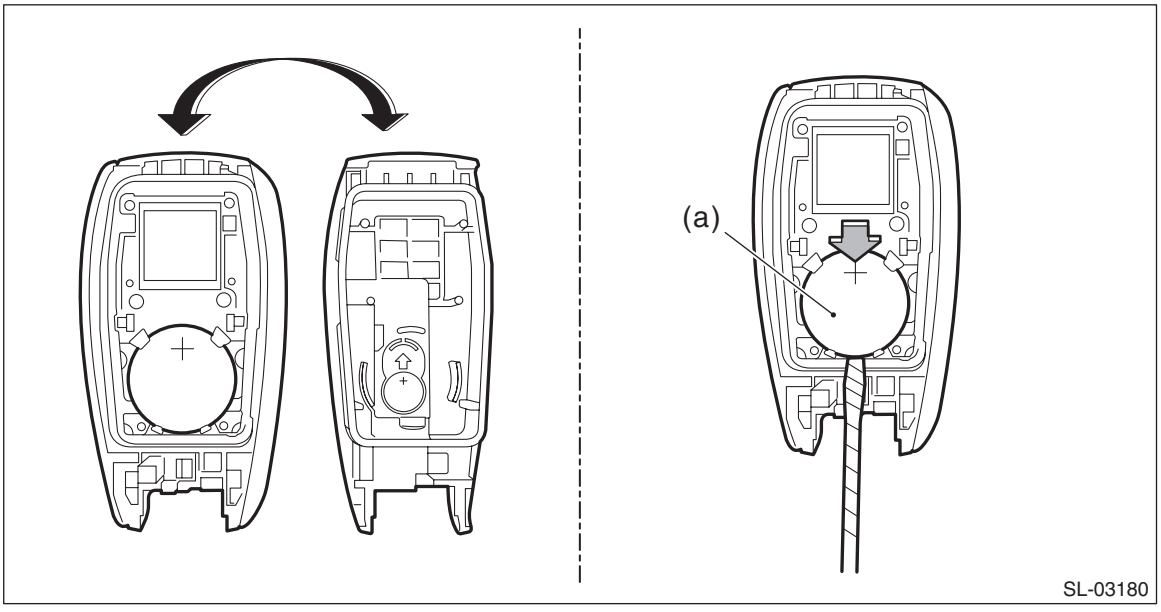

B: INSTALLATION

1. ACCESS KEY BATTERY

Install each part in the reverse order of removal.

C: INSPECTION

1. ACCESS KEY BATTERY

Measure the access key battery voltage.

Preparation tool:
Circuit tester

NOTE:
Complete the measurement within 5 seconds because the battery discharges during measurement.

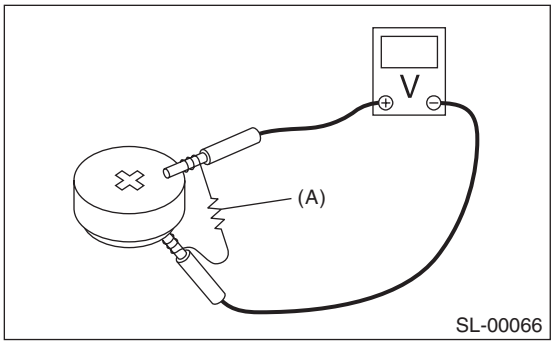

Battery terminal	Inspection conditions	Standard
(+) — (–)	Connect resistor (A) 47 Ω	2.5 — 3 V

Replace the battery if the inspection result is not within the standard value. (Use CR2032 V or equivalent.)

D: REPLACEMENT

1. ACCESS KEY REGISTRATION

NOTE:
- A maximum of seven access keys can be registered for each individual vehicle.
- When replacing or adding an access key, new registration of the access key is necessary.
- When the access key has been newly added, it is registered to the immobilizer system at the same time.

2. CLEARING ACCESS KEY REGISTRATION

For detailed access key registration clear, refer to “Type D” described in “REGISTRATION MANUAL FOR IMMOBILIZER”.

27.Immobilizer Control Module

A: NOTE

The control of immobilizer system is carried out in body integrated unit. For operation procedures, refer to “Body Integrated Unit”. <Ref. to SL-81, Body Integrated Unit.>

28.Immobilizer Antenna

A: REMOVAL

1. MODEL WITHOUT KEYLESS ACCESS WITH PUSH BUTTON START

1) Disconnect the ground cable from battery and wait for at least 60 seconds before starting work. <Ref. to NT-6, BATTERY, NOTE, Note.>

NOTE:
For model with battery sensor, disconnect the ground terminal from battery sensor.

2) Remove the cover assembly - column.
   (1) Release the clips, and remove the cover assembly - steering UPR.

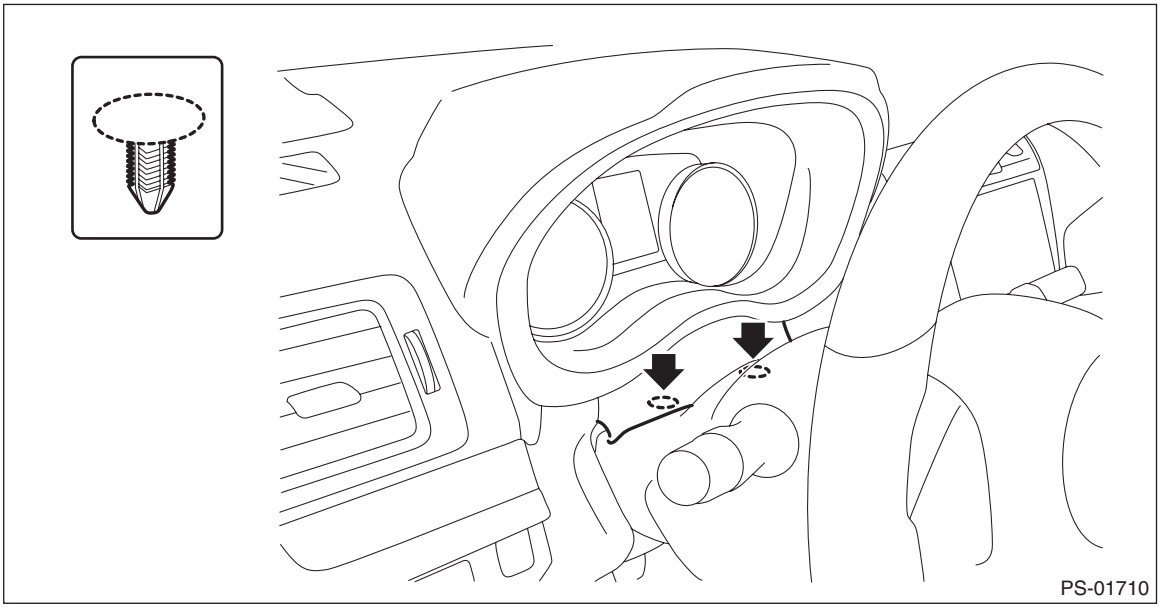

   (2) Remove the screws by turning the steering wheel to right and left.
   (3) Release the claw, and remove the cover assembly - column UPR and the cover assembly - column LWR.

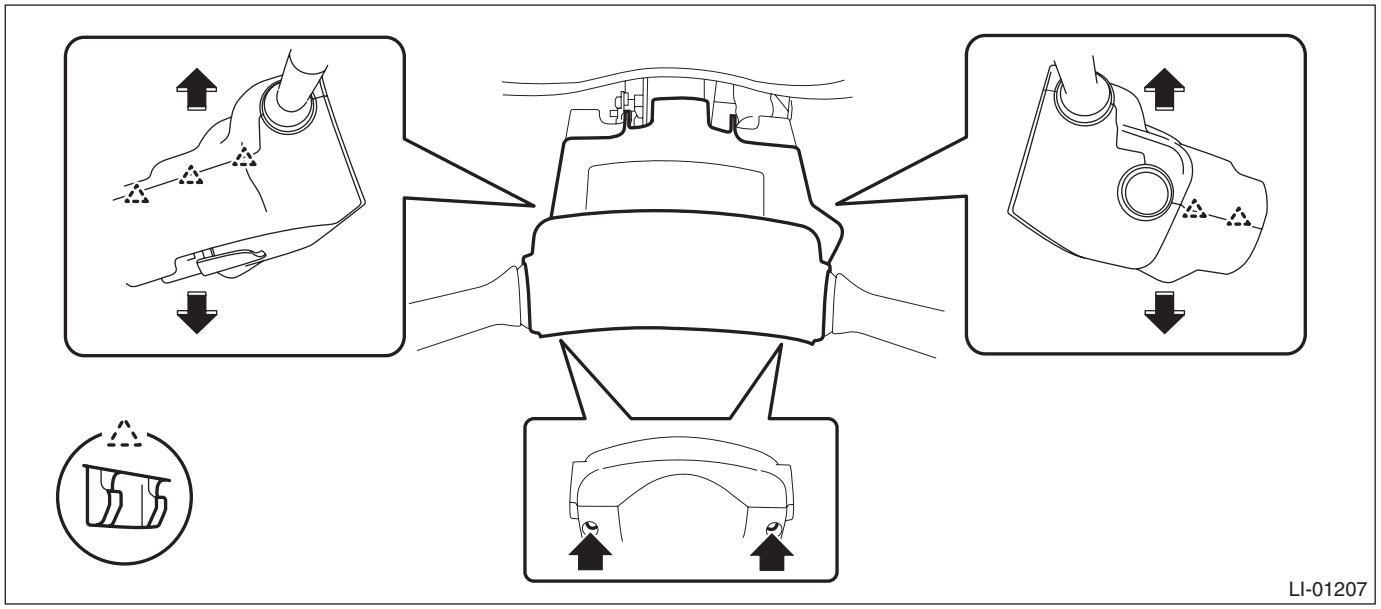

3) Remove the immobilizer antenna assembly.
(1) Disconnect the connector.
(2) Release two claws using a flat tip screwdriver or similar tool wrapped with a protection tape, and remove the immobilizer antenna assembly.

CAUTION:
Do not apply excessive force to disengage the lock of immobilizer antenna assembly. Otherwise they may be broken because those parts are the products made of a plastic.

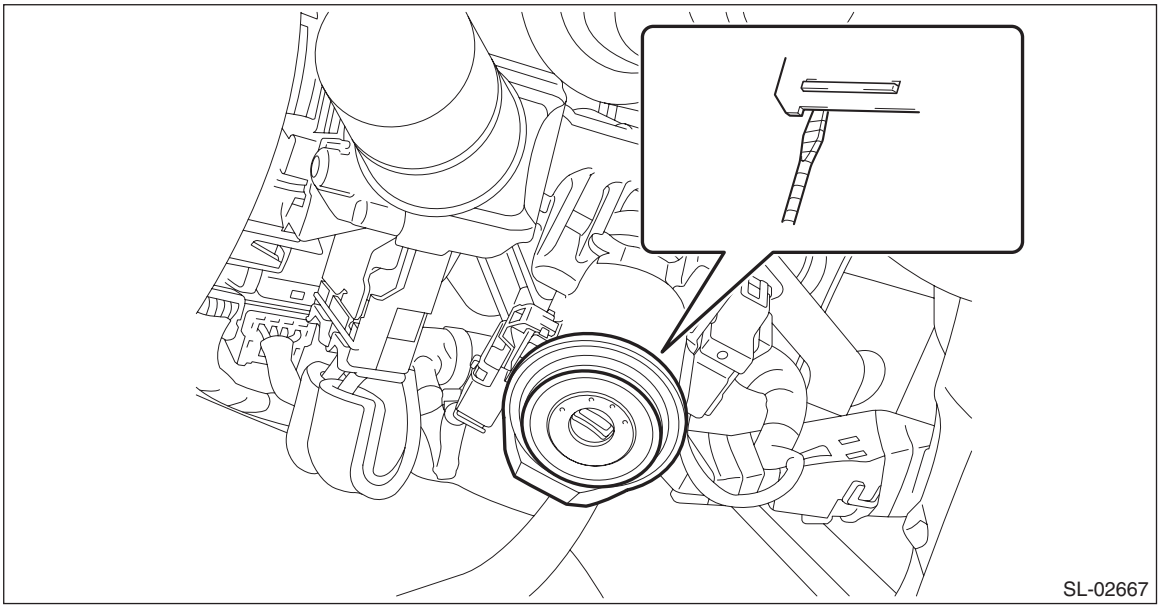

2. MODEL WITH KEYLESS ACCESS WITH PUSH BUTTON START

NOTE:
Immobilizer antenna is integrated with the push button ignition switch.
1) Disconnect the ground cable from battery and wait for at least 60 seconds before starting work. <Ref. to NT-6, BATTERY, NOTE, Note.>

NOTE:
For model with battery sensor, disconnect the ground terminal from battery sensor.
2) Remove the cover assembly - instrument panel LWR driver. <Ref. to EI-62, REMOVAL, Instrument Panel Lower Cover.>

3) Remove the push button ignition switch.
(1) Disconnect the connector, and remove the aspirator hose.

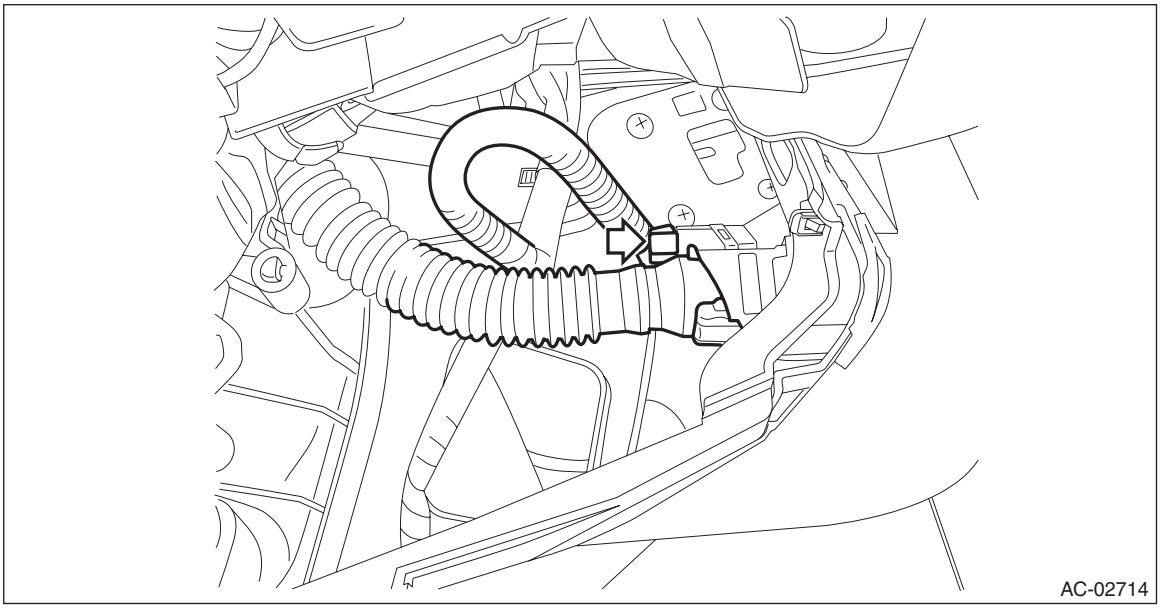

(2) Release the claws, and then remove the panel - switch.
(3) Release the claws, and then remove the push button ignition switch from the panel - switch.

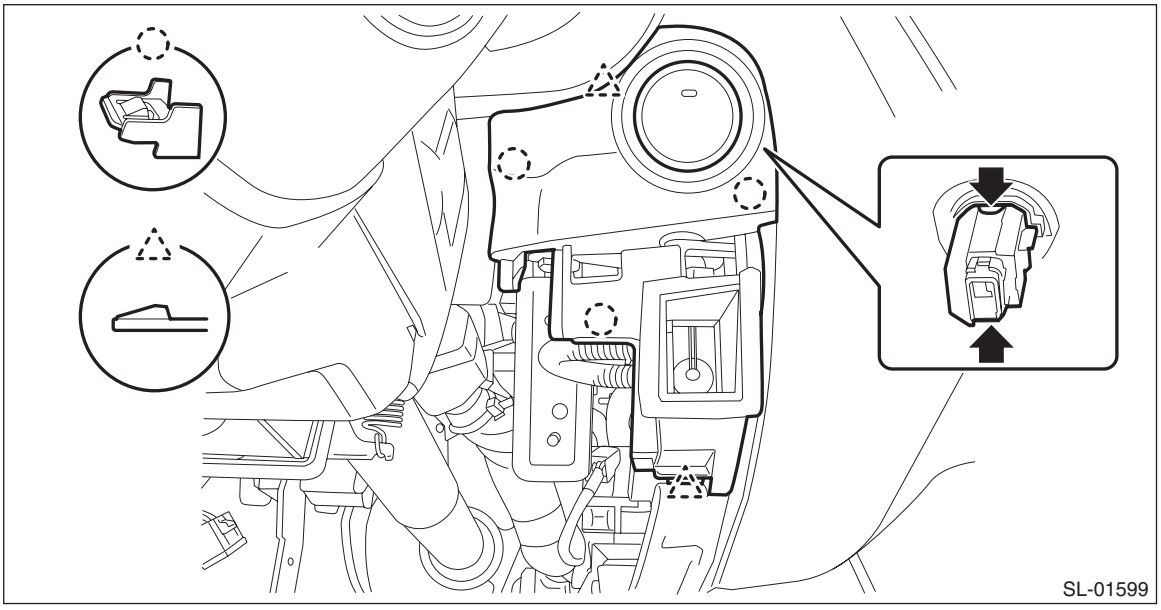

B: INSTALLATION

1. MODEL WITHOUT KEYLESS ACCESS WITH PUSH BUTTON START

1) Install the immobilizer antenna assembly.
2) Install the cover assembly - column.
3) Connect the battery ground terminal. <Ref. to NT-6, BATTERY, NOTE, Note.>

2. MODEL WITH KEYLESS ACCESS WITH PUSH BUTTON START

1) Install the push button ignition switch to the cover assembly - instrument panel LWR driver INN.
2) Install the cover assembly - instrument panel LWR driver.
3) Connect the battery ground terminal. <Ref. to NT-6, BATTERY, NOTE, Note.>

29.Keyless Access Indoor Antenna

A: REMOVAL

1. FRONT ANTENNA

1) Disconnect the ground cable from battery and wait for at least 60 seconds before starting work. <Ref. to NT-6, BATTERY, NOTE, Note.>

NOTE:
For model with battery sensor, disconnect the ground terminal from battery sensor.
2) Remove the cover - shift lever. <Ref. to EI-67, REMOVAL, Console Box.>
3) Disconnect the connector and remove the front antenna assembly - interior.

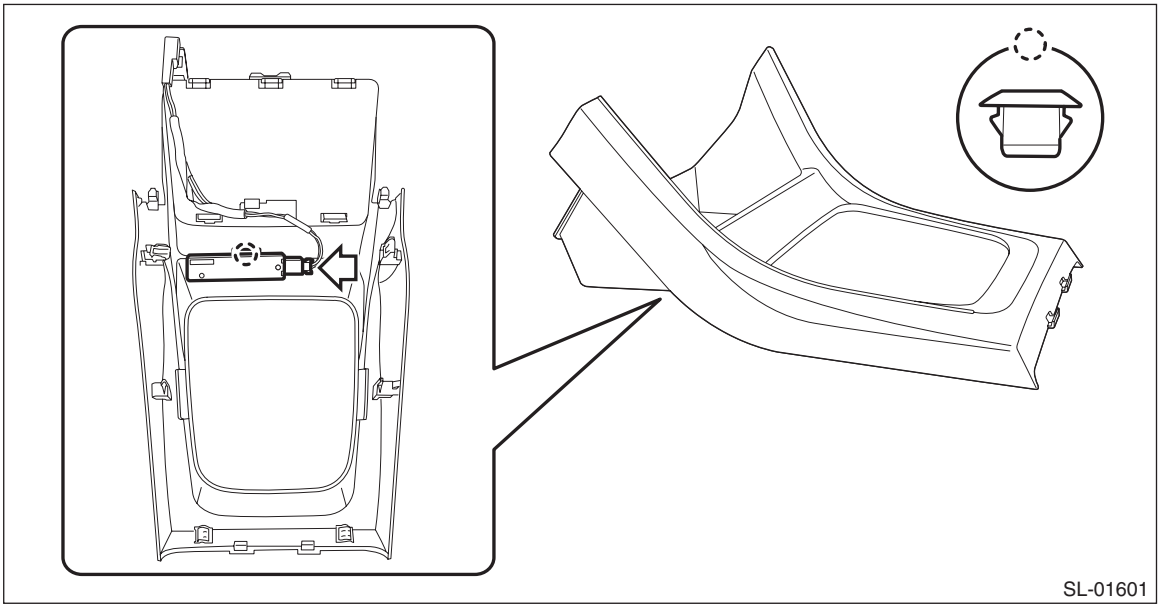

2. CENTER ANTENNA

CAUTION:
• The airbag system is fitted with the airbag power supply. After disconnecting the battery ground cable, the airbag may operate if you do not wait for 60 seconds before starting the service of airbag system.
• Airbag system satellite safing sensor is located in the lower of the rear seat cushion center. Before removing the rear seat, refer to "CAUTION" of "General Description" in "AIRBAG SYSTEM" section. <Ref. to AB-9, CAUTION, General Description.>
1) Disconnect the ground cable from battery and wait for at least 60 seconds before starting work. <Ref. to NT-6, BATTERY, NOTE, Note.>

NOTE:
For model with battery sensor, disconnect the ground terminal from battery sensor.
2) Remove the rear seat cushion assembly. <Ref. to SE-30, REMOVAL, Rear Seat.>

3) Remove the center antenna assembly - interior.

NOTE:
Do not remove the antenna assembly from the cover. If removed, the antenna assembly and cover mounting becomes loose, causing abnormal noises.

(1) Disconnect the connector.
(2) Remove the screw, and remove the center antenna assembly - interior.

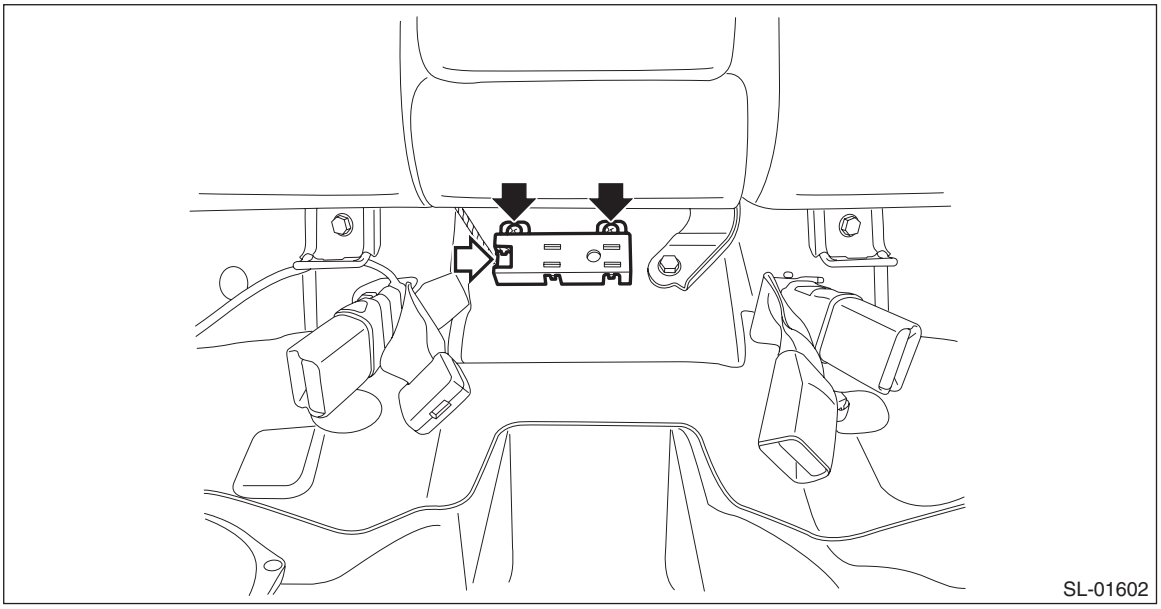
SL-01602

3. REAR ANTENNA

1) Disconnect the ground cable from battery. <Ref. to NT-6, BATTERY, NOTE, Note.>

NOTE:
For model with battery sensor, disconnect the ground terminal from battery sensor.

2) Disconnect the connector and remove the rear antenna assembly - interior.

NOTE:
Do not remove the antenna assembly from the cover. If removed, the antenna assembly and cover mounting becomes loose, causing abnormal noises.

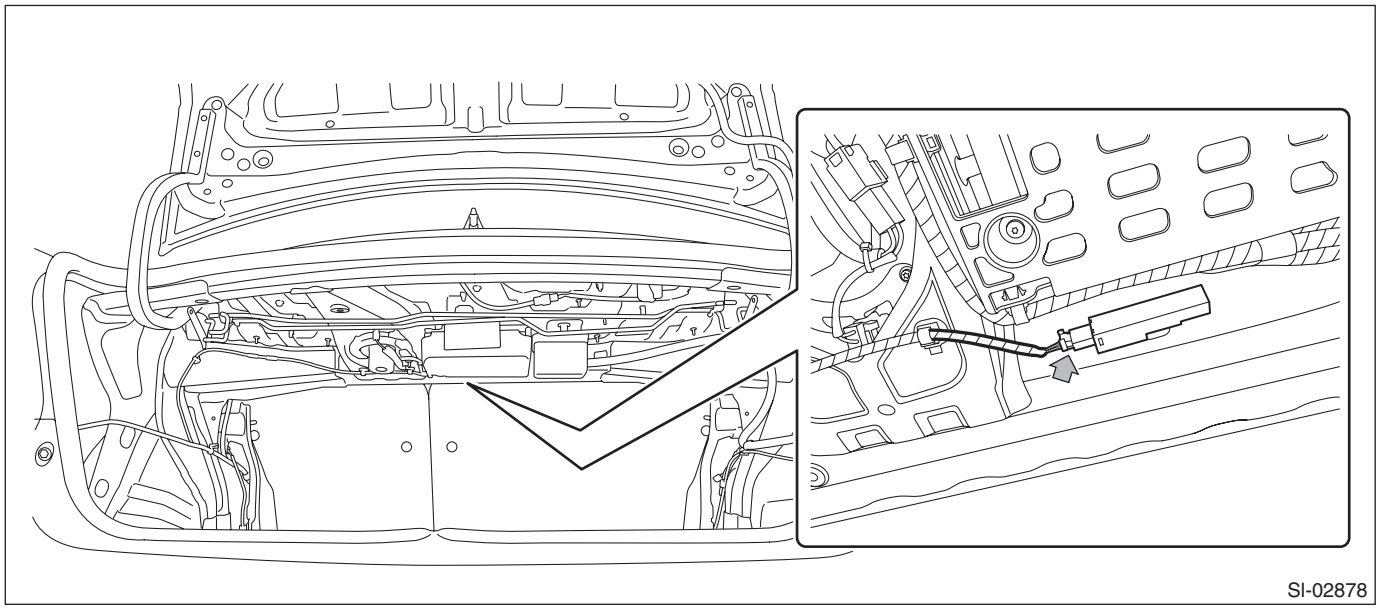
SI-02878

B: INSTALLATION

1. FRONT ANTENNA

1) Install the front antenna assembly - interior.
2) Install the cover - shift lever. <Ref. to EI-71, INSTALLATION, Console Box.>
3) Connect the battery ground terminal. <Ref. to NT-6, BATTERY, NOTE, Note.>

2. CENTER ANTENNA

1) Install the center antenna assembly - interior.
2) Install the rear seat cushion assembly. <Ref. to SE-33, INSTALLATION, Rear Seat.>
3) Connect the battery ground terminal. <Ref. to NT-6, BATTERY, NOTE, Note.>

3. REAR ANTENNA

1) Install the rear antenna assembly - interior.
2) Connect the battery ground terminal. <Ref. to NT-6, BATTERY, NOTE, Note.>

C: INSPECTION

1) Check the setting by performing Keyless access system check using the Subaru Select Monitor. <Ref. to KPS(diag)-37, OPERATION, Keyless Access System Check.>
2) Disconnect the Subaru Select Monitor. Operate the touch sensor of the door outer handle to check if door lock operates.
3) If the system does not operate normally as the result of inspection, refer to “General Diagnostic Table” of the “KEYLESS ACCESS WITH PUSH BUTTON START SYSTEM (DIAGNOSTICS)” section. <Ref. to KPS(diag)-112, KEYLESS ACCESS SYSTEM, INSPECTION, General Diagnostic Table.>

30.Keyless Access Outdoor Antenna

A: REMOVAL

1. FRONT ANTENNA

CAUTION:
Do not detach the antenna from the front door outer handle.
If replacement is required, replace the front outer handle assembly as a whole.

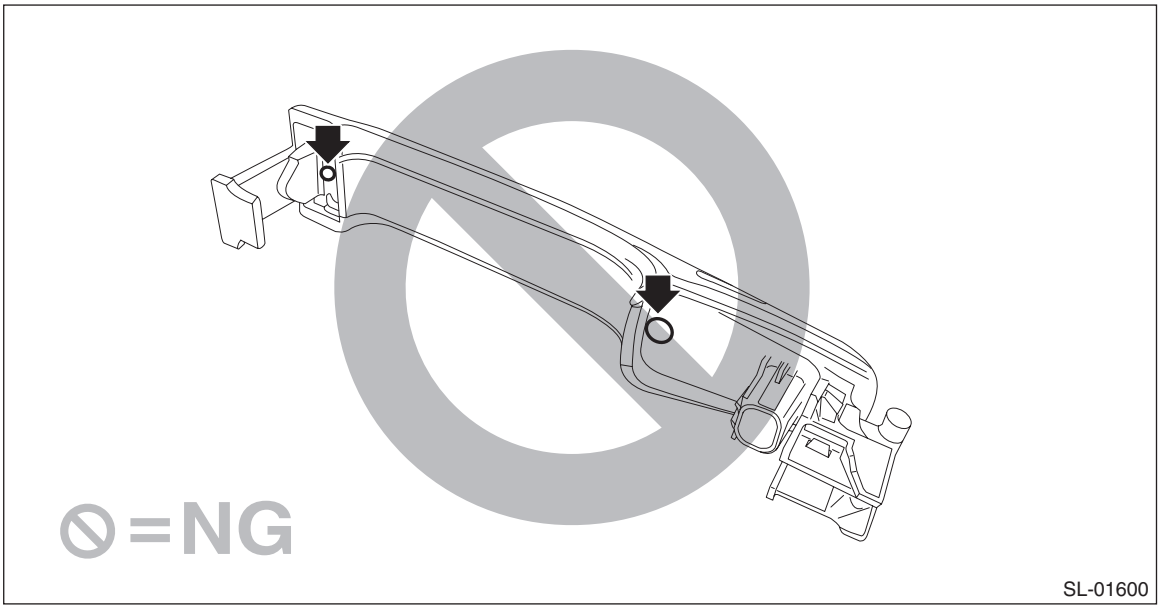

1) Disconnect the ground cable from battery and wait for at least 60 seconds before starting work. <Ref. to NT-6, BATTERY, NOTE, Note.>

NOTE:
For model with battery sensor, disconnect the ground terminal from battery sensor.
2) Remove the handle - door outer. <Ref. to SL-33, REMOVAL, Front Outer Handle.>

2. REAR ANTENNA

CAUTION:
• Do not detach the antenna except when replacing it. Detaching unnecessarily will lead to insecure attachment of the antenna.
• When replacing the antenna, do not reuse the tapping screw. Always replace with new tapping screws.

1) Disconnect the ground cable from battery. <Ref. to NT-6, BATTERY, NOTE, Note.>

NOTE:
For model with battery sensor, disconnect the ground terminal from battery sensor.

2) Remove the bumper face - rear. <Ref. to EI-41, REMOVAL, Rear Bumper.>
3) Remove the rear antenna assembly - exterior.
   (1) Disconnect the connector.
   (2) Remove the screws, and remove the rear antenna assembly - exterior.

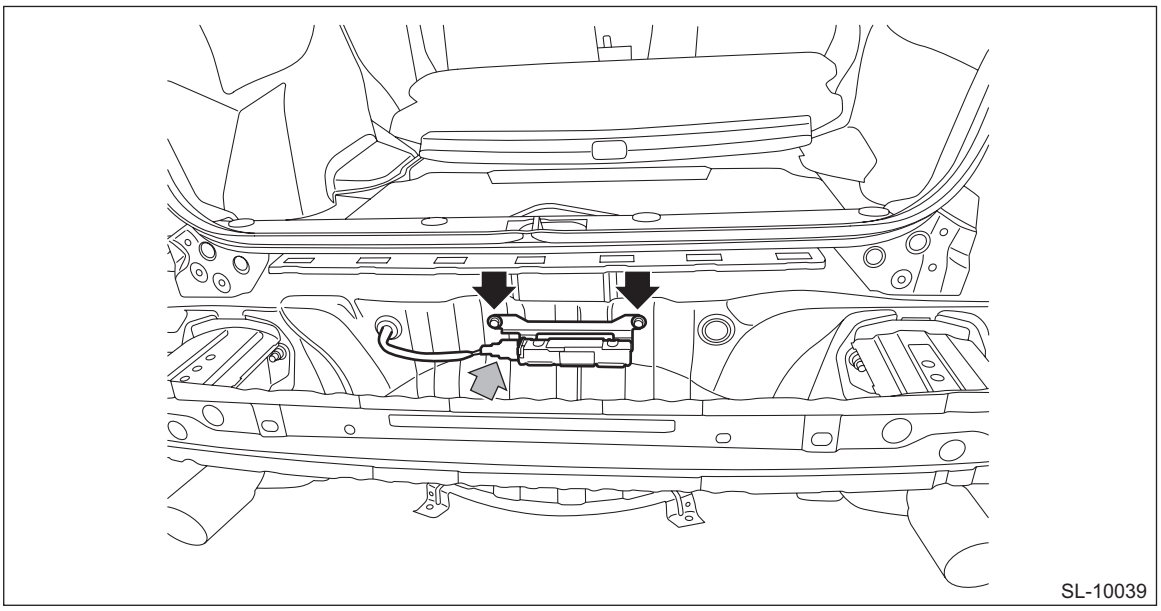

B: INSTALLATION

1) Install the rear antenna assembly - exterior.

Tightening torque:
7.5 N·m (0.8 kgf-m, 5.5 ft-lb)

2) Install the bumper face - rear.
3) Connect the battery ground terminal. <Ref. to NT-6, BATTERY, NOTE, Note.>

C: INSPECTION

1) Check the setting by performing Keyless access system check using the Subaru Select Monitor. <Ref. to KPS(diag)-37, OPERATION, Keyless Access System Check.>
2) Disconnect the Subaru Select Monitor. While bringing the access key, operate the touch sensor on door handle to check if door lock or unlock operates.
3) Disconnect the Subaru Select Monitor. While bringing the access key, operate the trunk opener button to check if the trunk is opened.
4) If the system does not operate normally as the result of inspection, refer to “General Diagnostic Table” of the “KEYLESS ACCESS WITH PUSH BUTTON START SYSTEM (DIAGNOSTICS)” section. <Ref. to KPS(diag)-112, KEYLESS ACCESS SYSTEM, INSPECTION, General Diagnostic Table.>

31.Trunk Opener Button

A: REMOVAL

1) Disconnect the ground cable from battery. <Ref. to NT-6, BATTERY, NOTE, Note.>

NOTE:
For model with battery sensor, disconnect the ground terminal from battery sensor.
2) Remove the garnish - trunk. <Ref. to EI-52, REMOVAL, Trunk Lid Garnish.>
3) Release the locks at both ends of the trunk opener button by pushing them with a flat tip screwdriver.

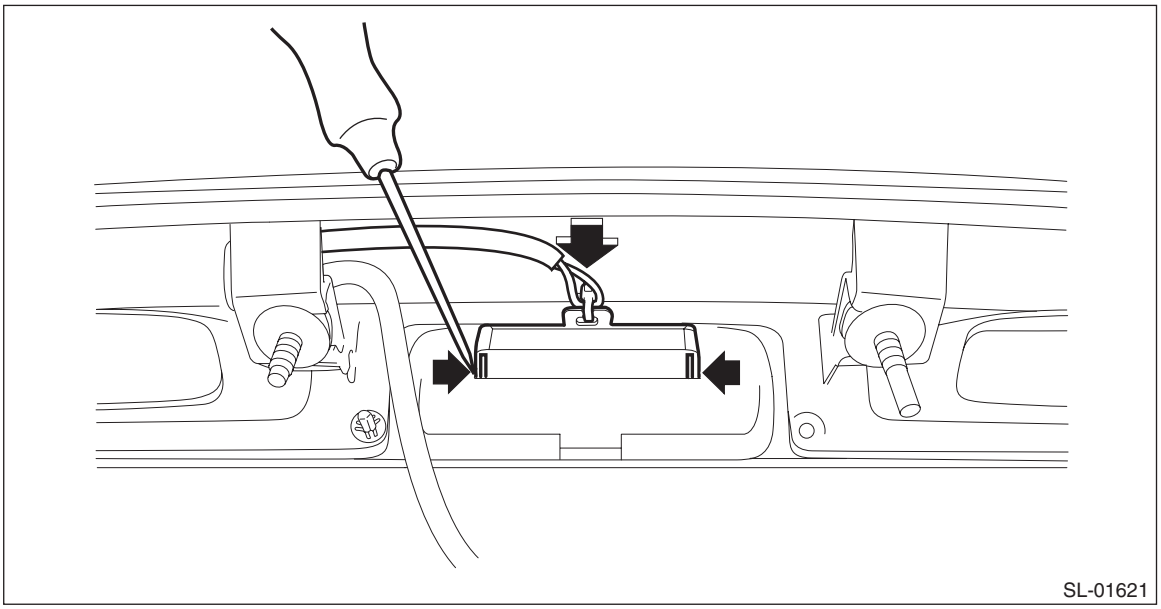

B: INSTALLATION

1) Install the trunk opener button to the garnish - trunk.
2) Install the garnish - trunk.
3) Connect the battery ground terminal. <Ref. to NT-6, BATTERY, NOTE, Note.>

C: INSPECTION

1) Using the Subaru Select Monitor, display «Rear gate/Trunk UNLOCK output» from «Data monitor».
2) Check that the display changes when the trunk opener button is operated.
3) If the display is not correct as the result of inspection, refer to “General Diagnostic Table” of the “KEYLESS ACCESS WITH PUSH BUTTON START SYSTEM (DIAGNOSTICS)” section. <Ref. to KPS(diag)-112, KEYLESS ACCESS SYSTEM, INSPECTION, General Diagnostic Table.>

32.Receiver

A: REMOVAL

CAUTION:
• The airbag system is fitted with the airbag power supply. After disconnecting the battery ground cable, the airbag may operate if you do not wait for 60 seconds before starting the service of airbag system.
• Airbag system satellite safing sensor is located in the lower of the rear seat cushion center. Before removing the rear seat, refer to "CAUTION" of "General Description" in "AIRBAG SYSTEM" section. <Ref. to AB-9, CAUTION, General Description.>

NOTE:
Except for models without keyless access with push button start.
1) Disconnect the ground cable from battery and wait for at least 60 seconds before starting work. <Ref. to NT-6, BATTERY, NOTE, Note.>

NOTE:
For model with battery sensor, disconnect the ground terminal from battery sensor.
2) Remove the trim panel assembly - rear shelf. <Ref. to EI-95, REMOVAL, Rear Shelf Trim.>
3) Remove the receiver assembly.
   (1) Disconnect the connector.
   (2) Remove the bolt and remove the receiver assembly.

NOTE:
For models with power amplifier, installation position of the receiver assembly is different.

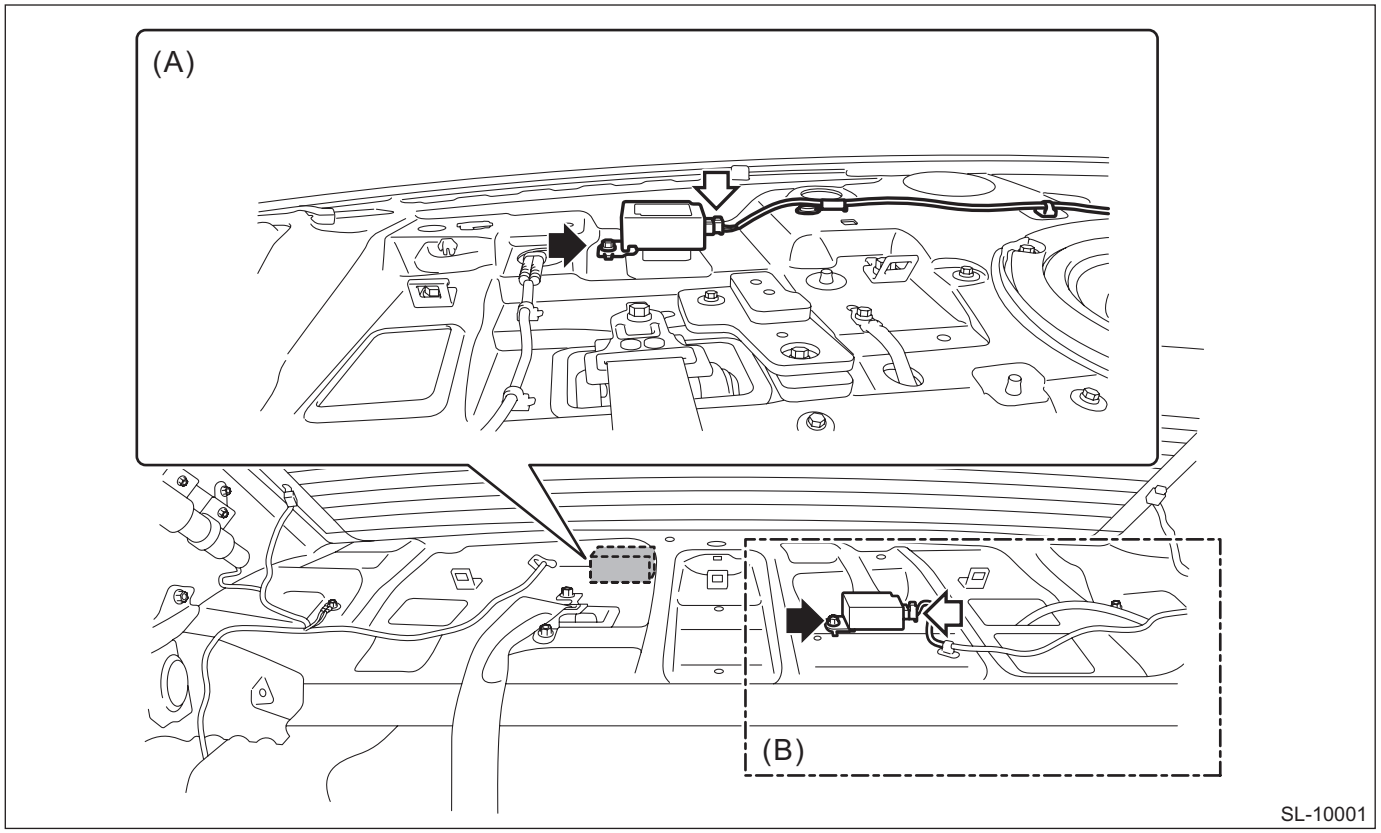

(A) Model with power amplifier (B) Model without power amplifier

B: INSTALLATION

1) Install the receiver assembly.

Tightening torque:
13 N·m (1.3 kgf-m, 9.6 ft-lb)

2) Install the trim panel assembly - rear shelf.
3) Connect the battery ground terminal. <Ref. to NT-6, BATTERY, NOTE, Note.>

C: INSPECTION

1) Check if the door lock operates when the touch sensor of the door outer handle and trunk opener button is operated.
2) If the system does not operate normally as the result of inspection, refer to “General Diagnostic Table” of the “KEYLESS ACCESS WITH PUSH BUTTON START SYSTEM (DIAGNOSTICS)” section. <Ref. to KPS(diag)-112, KEYLESS ACCESS SYSTEM, INSPECTION, General Diagnostic Table.>

33.Keyless Access CM

A: REMOVAL

CAUTION:
Before handling the airbag system components, refer to "CAUTION" of "General Description" in "AIRBAG SYSTEM". <Ref. to AB-9, CAUTION, General Description.>
1) Disconnect the ground cable from battery and wait for at least 60 seconds before starting work. <Ref. to NT-6, BATTERY, NOTE, Note.>

NOTE:
For model with battery sensor, disconnect the ground terminal from battery sensor.
2) Remove the cover assembly - instrument panel LWR driver. <Ref. to EI-62, REMOVAL, Instrument Panel Lower Cover.>
3) Remove the knee airbag module. <Ref. to AB-34, REMOVAL, Knee Airbag Module.>
4) Release the lock and remove the fuse holder.

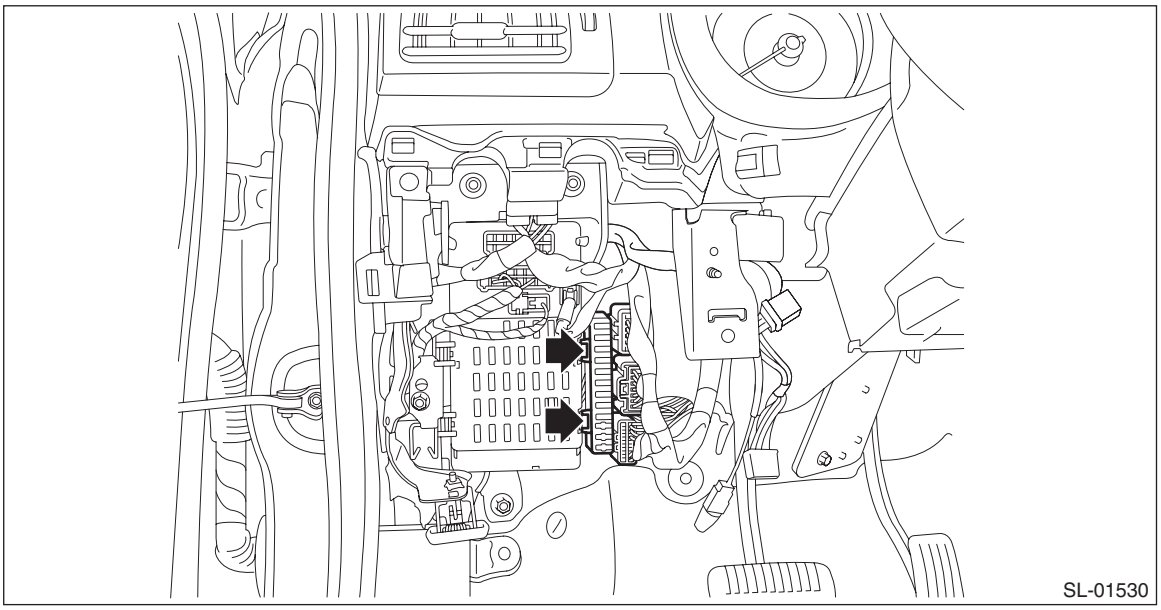
SL-01530

5) Remove the relay & fuse box.
   (1) Disconnect the connector.
   (2) Remove the bolts and nuts, and remove the relay & fuse box.

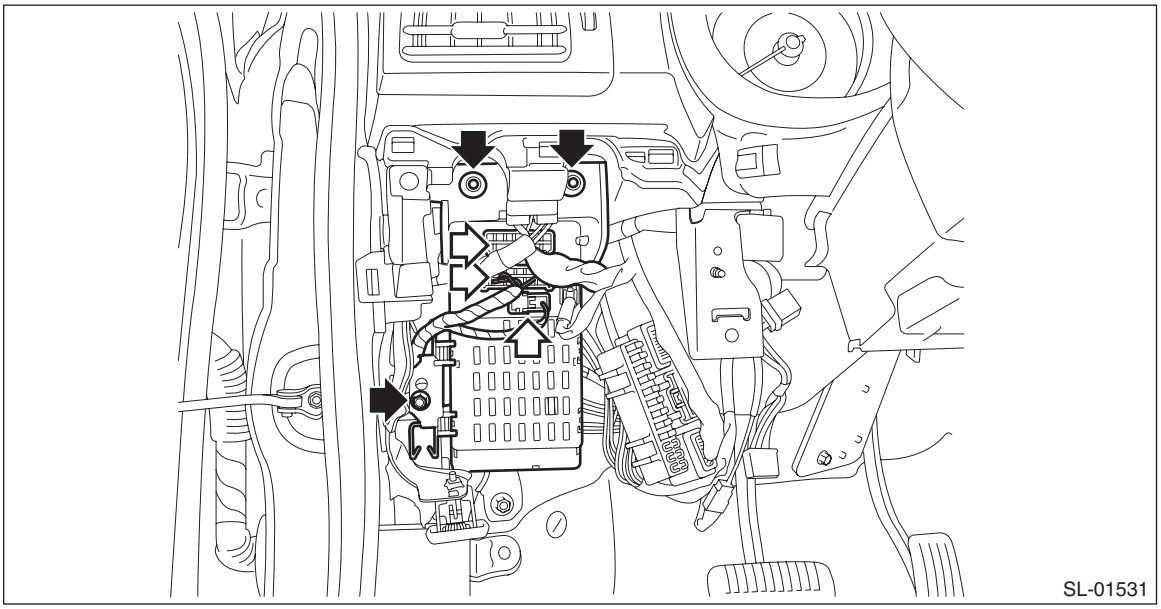
SL-01531

6) Remove the keyless access CM.

CAUTION:
Be careful to keep water and other foreign materials away from body integrated unit terminals.

(1) Disconnect the connector.

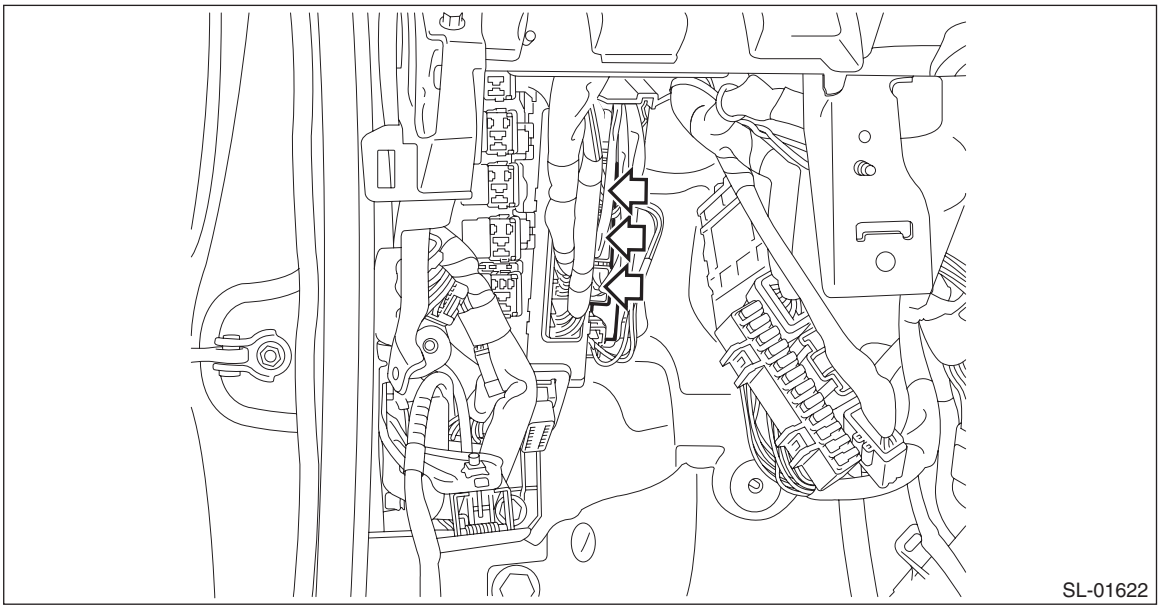

(2) Release the claws and pull out the keyless access CM.

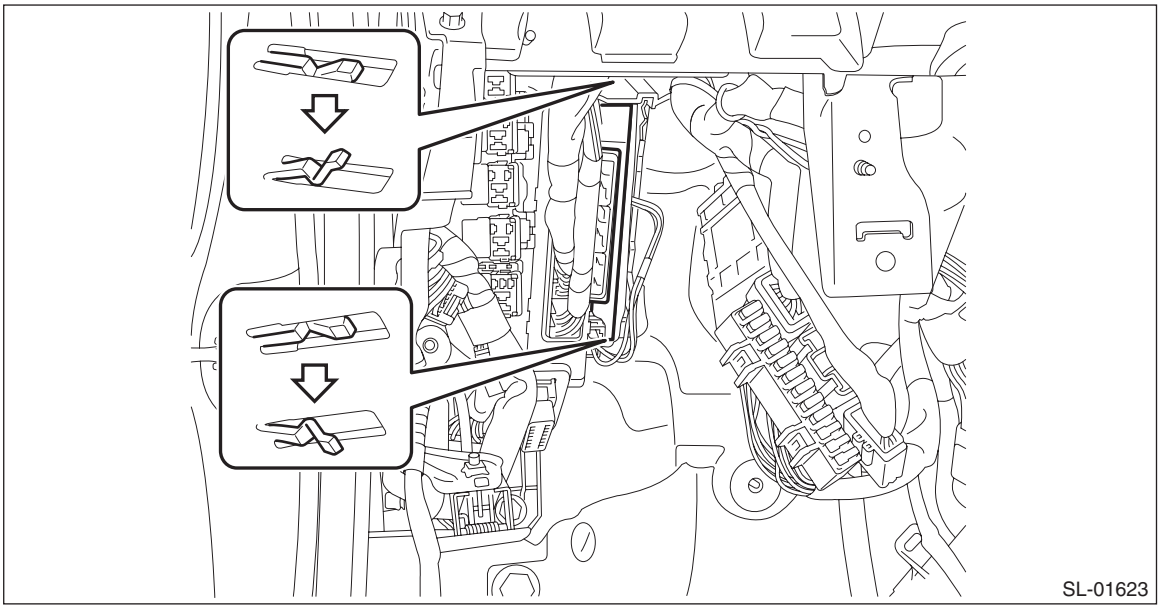

B: INSTALLATION

CAUTION:
• When the control module related to immobilizer has been replaced, be sure to perform the registration of immobilizer system. For detailed operation procedure, refer to "Type D" described in "REGISTRATION MANUAL FOR IMMOBILIZER".
• Before handling the airbag system components, refer to "CAUTION" of "General Description" in "AIRBAG SYSTEM". <Ref. to AB-9, CAUTION, General Description.>
1) Install the keyless access CM.
2) Install the relay & fuse box and fuse holder.

Tightening torque:
Relay & fuse box: 7.5 N·m (0.8 kgf-m, 5.5 ft-lb)
3) Install the cover assembly - instrument panel LWR driver and the knee airbag module.
4) Connect the battery ground terminal. <Ref. to NT-6, BATTERY, NOTE, Note.>

34.ID Code Box

A: NOTE

CAUTION:
When the control module related to immobilizer has been replaced, be sure to perform the registration of immobilizer system. For detailed operation procedure, refer to “Type D” described in “REGISTRATION MANUAL FOR IMMOBILIZER”.

NOTE:
- Equipped on C0 model with keyless access with push button start.
- The ID code box is located at the place of security control module.

Refer to “Security Control Module” for operation procedures on ID code box. <Ref. to SL-74, Security Control Module.>

35.Steering Lock CM

A: REMOVAL

CAUTION:
• Before handling the airbag system components, refer to "CAUTION" of "General Description" in "AIRBAG SYSTEM". <Ref. to AB-9, CAUTION, General Description.>
• Do not allow harness and connectors to interfere or get tangled up with other parts.
• If the steering wheel and steering angle sensor (steering roll connector) are removed, perform "VSC(VDC) Centering Mode" of the VDC. <Ref. to VDC-17, VDC SENSOR MIDPOINT SETTING MODE, ADJUSTMENT, VDC Control Module and Hydraulic Control Unit (VDCCM&H/U).>
1) Disconnect the ground cable from battery and wait for at least 60 seconds before starting work. <Ref. to NT-6, BATTERY, NOTE, Note.>

NOTE:
For model with battery sensor, disconnect the ground terminal from battery sensor.
2) Remove the cover assembly - instrument panel LWR driver. <Ref. to EI-62, REMOVAL, Instrument Panel Lower Cover.>
3) Remove the universal joint assembly - steering. <Ref. to PS-21, REMOVAL, Universal Joint.>
4) Remove the column assembly - steering. <Ref. to PS-25, REMOVAL, Steering Column.>
5) Remove the steering lock CM.
(1) Secure the column assembly - steering in a vise.
(2) Use the reverse tap or drill to remove the set bolt and remove the steering lock CM.

CAUTION:
Do not apply any impact to the set bolt by a chisel or punch. Doing so may damage the CM.

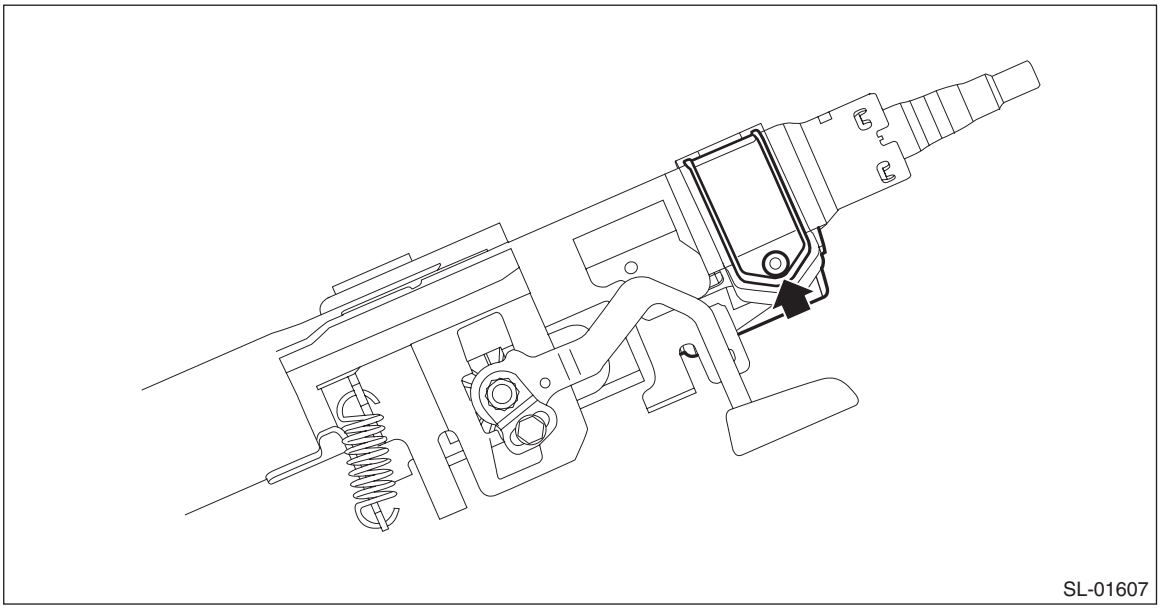
SL-01607

B: INSTALLATION

CAUTION:
• When the control module related to immobilizer has been replaced, be sure to perform the registration of immobilizer system. For detailed operation procedure, refer to "Type D" described in "REGISTRATION MANUAL FOR IMMOBILIZER".
• Before handling the airbag system components, refer to "CAUTION" of "General Description" in "AIRBAG SYSTEM". <Ref. to AB-9, CAUTION, General Description.>
• Do not allow harness and connectors to interfere or get tangled up with other parts.
• If the steering wheel and steering angle sensor (steering roll connector) are removed, perform "VSC(VDC) Centering Mode" of the VDC. <Ref. to VDC-17, VDC SENSOR MIDPOINT SETTING MODE, ADJUSTMENT, VDC Control Module and Hydraulic Control Unit (VDCCM&H/U).>
1) Secure the steering lock CM to the steering column.
2) Use new set bolts. Tighten the bolt until the bolt head is broken (bolt head wrenched off).
3) Install the column assembly - steering.
4) Install the universal joint assembly - steering. <Ref. to PS-22, INSTALLATION, Universal Joint.>
5) Install the cover assembly - instrument panel LWR driver. <Ref. to EI-63, INSTALLATION, Instrument Panel Lower Cover.>
6) Connect the battery ground terminal. <Ref. to NT-6, BATTERY, NOTE, Note.>

C: INSPECTION

1) Check if the steering lock is released when you start the engine using the push button ignition switch.
2) If the system does not operate normally as the result of inspection, refer to "General Diagnostic Table" of the "KEYLESS ACCESS WITH PUSH BUTTON START SYSTEM (DIAGNOSTICS)" section. <Ref. to KPS(diag)-113, STEERING LOCK SYSTEM, INSPECTION, General Diagnostic Table.>

36.Push Button Ignition Switch

A: REMOVAL

CAUTION:
Before handling the airbag system components, refer to "CAUTION" of "General Description" in "AIRBAG SYSTEM". <Ref. to AB-9, CAUTION, General Description.>
1) Disconnect the ground cable from battery and wait for at least 60 seconds before starting work. <Ref. to NT-6, BATTERY, NOTE, Note.>

NOTE:
For model with battery sensor, disconnect the ground terminal from battery sensor.
2) Remove the cover assembly - instrument panel LWR driver. <Ref. to EI-62, REMOVAL, Instrument Panel Lower Cover.>
3) Remove the knee airbag module. <Ref. to AB-34, REMOVAL, Knee Airbag Module.>
4) Remove the push button ignition switch.
(1) Disconnect the connector, and remove the aspirator hose.

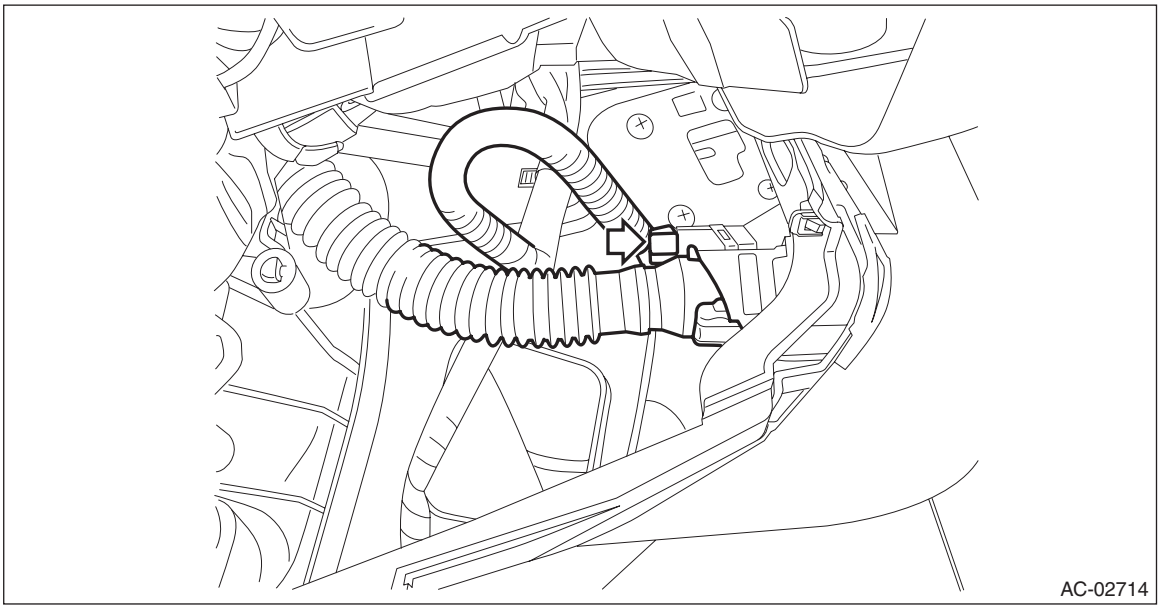
AC-02714

(2) Release the claws, and then remove the panel - switch.
(3) Release the claws, and then remove the push button ignition switch from the panel - switch.

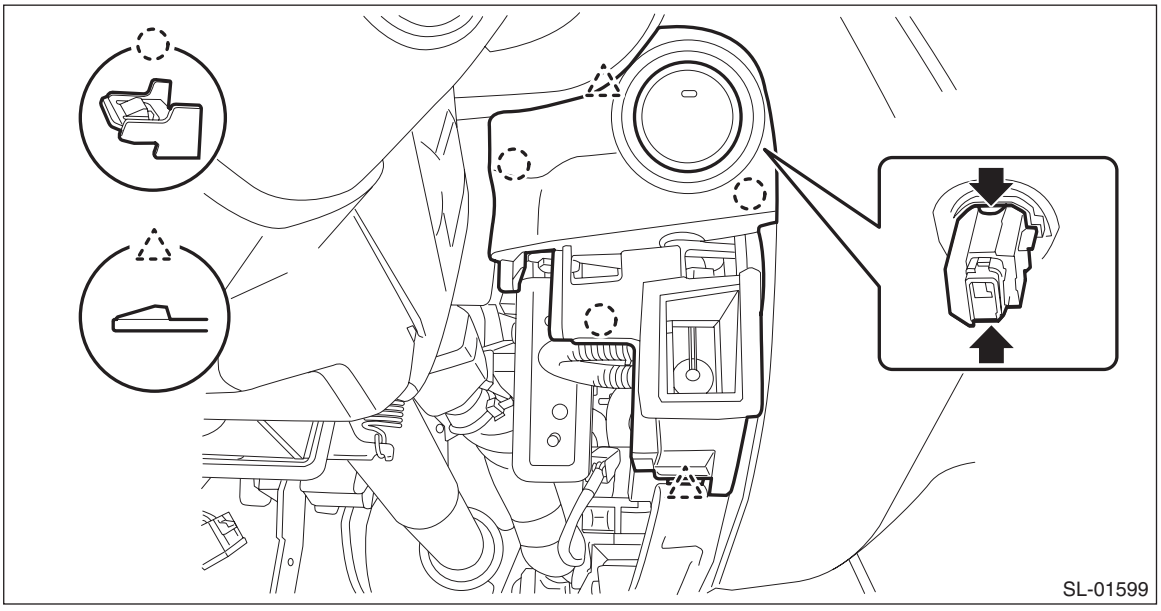
SL-01599

B: INSTALLATION

CAUTION:
Before handling the airbag system components, refer to "CAUTION" of "General Description" in "AIRBAG SYSTEM". <Ref. to AB-9, CAUTION, General Description.>

1) Install the push button ignition switch to the cover assembly - instrument panel LWR driver INN.
2) Install the cover assembly - instrument panel LWR driver.
3) Connect the battery ground terminal. <Ref. to NT-6, BATTERY, NOTE, Note.>

C: INSPECTION

1) Check the continuity between the connectors.

Preparation tool:
Circuit tester

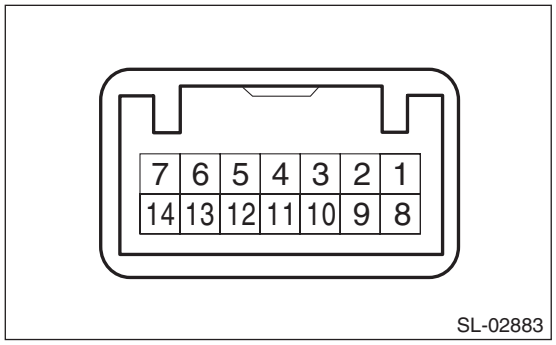

Terminal No.	Inspection conditions	Specification
4 (COM) — 5 (GND)	Always	Continuity exists
7 (SSW1) — 5 (GND)	Push button ignition switch released → pressed	Continuity exists
2 (SSW2) — 5 (GND)	Push button ignition switch released → pressed	Continuity exists

2) Check the push button ignition switch operation when battery voltage is applied between the connectors.

Terminal No.	Inspection conditions	Specification
11 (SWIL) — 5 (GND)	Connect battery to the terminals	Goes off → Red switch illumination light
12 (INDS) — 5 (GND)		Turns off → Switch indicator lights in green
13 (INDW) — 5 (GND)		Turns off → Switch indicator lights in orange

3) Replace the push button ignition switch if the inspection result is not within the standard value.

37.Starter Relay (Push Button Start)

A: REMOVAL

CAUTION:
Before handling the airbag system components, refer to "CAUTION" of "General Description" in "AIRBAG SYSTEM". <Ref. to AB-9, CAUTION, General Description.>
1) Disconnect the ground cable from battery and wait for at least 60 seconds before starting work. <Ref. to NT-6, BATTERY, NOTE, Note.>

NOTE:
For model with battery sensor, disconnect the ground terminal from battery sensor.
2) Remove the cover assembly - instrument panel LWR driver. <Ref. to EI-62, REMOVAL, Instrument Panel Lower Cover.>
3) Remove the knee airbag module. <Ref. to AB-34, REMOVAL, Knee Airbag Module.>
4) Release the lock and remove the fuse holder.

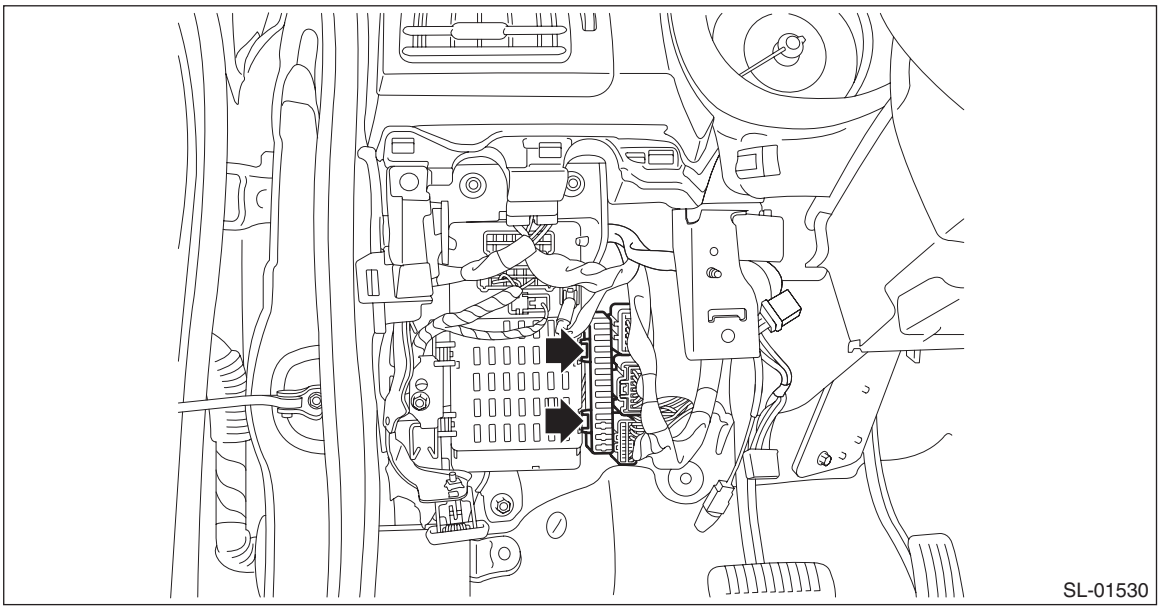
SL-01530

5) Remove the relay & fuse box.
   (1) Disconnect the connector.
   (2) Remove the bolts and nuts, and remove the relay & fuse box.

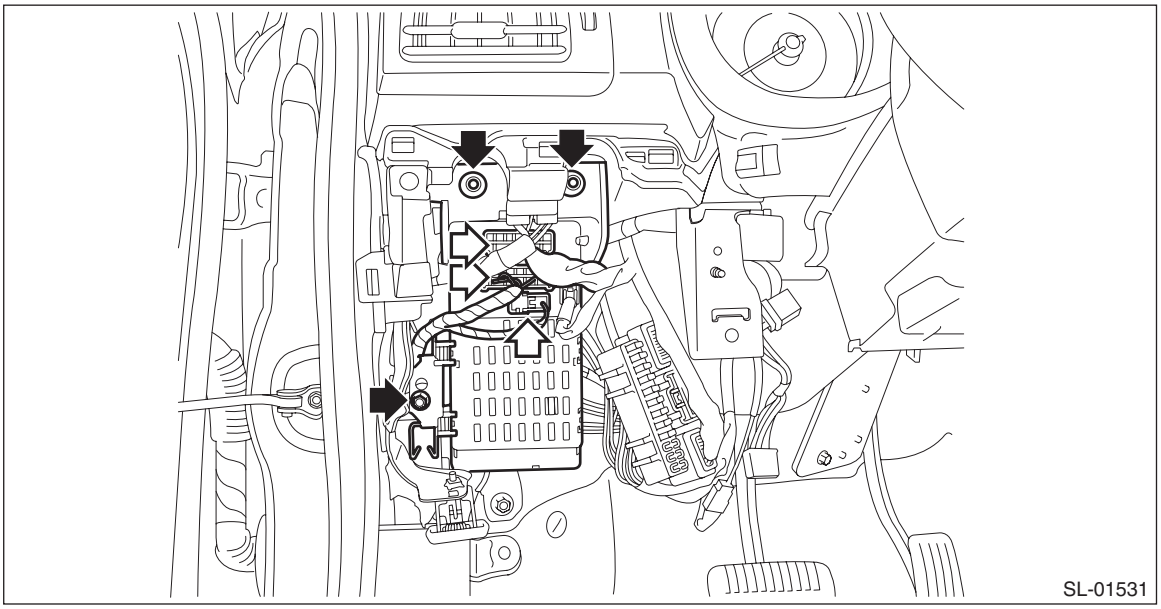
SL-01531

6) Remove the starter relay (push button start) (A) from the relay holder.

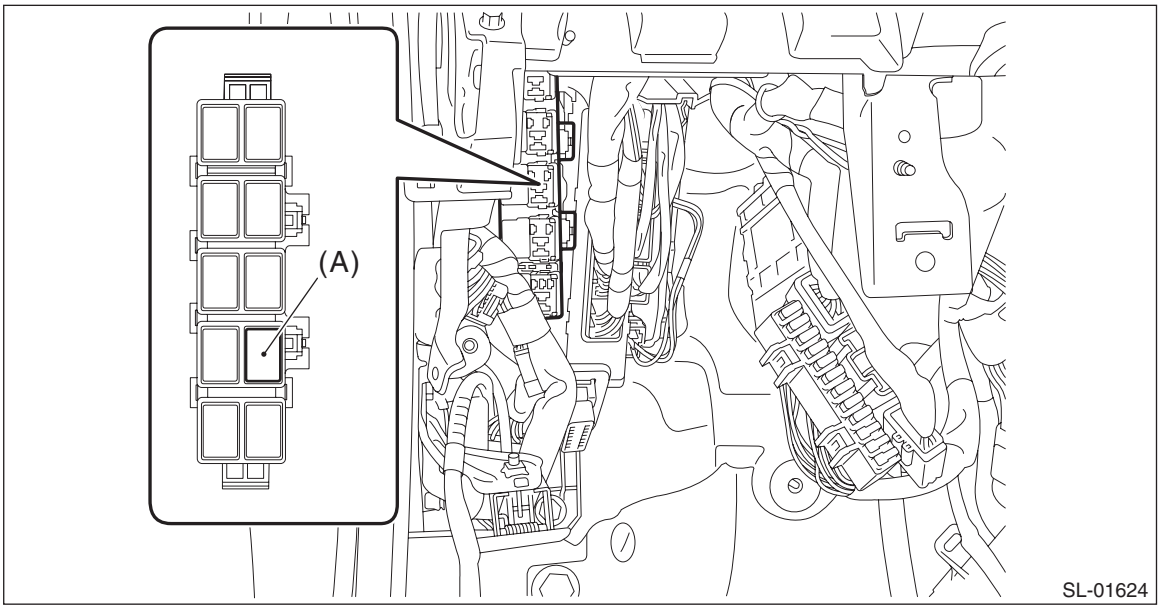

B: INSTALLATION

CAUTION:
Before handling the airbag system components, refer to "CAUTION" of "General Description" in "AIRBAG SYSTEM". <Ref. to AB-9, CAUTION, General Description.>

1) Install the starter relay (push button start).
2) Install the relay & fuse box and fuse holder.

Tightening torque:
Relay & fuse box: 7.5 N·m (0.8 kgf-m, 5.5 ft-lb)

3) Install the knee airbag module.

Tightening torque:
7.5 N·m (0.8 kgf-m, 5.5 ft-lb)

4) Install the cover assembly - instrument panel LWR driver.
5) Connect the battery ground terminal. <Ref. to NT-6, BATTERY, NOTE, Note.>

C: INSPECTION

Refer to "CHECK RELAY" in "Relay and Fuse". <Ref. to SL-9, CHECK RELAY, INSPECTION, Relay and Fuse.>

38.IG Relay1 (Push Button Start)

A: REMOVAL

CAUTION:
Before handling the airbag system components, refer to "CAUTION" of "General Description" in "AIRBAG SYSTEM". <Ref. to AB-9, CAUTION, General Description.>
1) Disconnect the ground cable from battery and wait for at least 60 seconds before starting work. <Ref. to NT-6, BATTERY, NOTE, Note.>

NOTE:
For model with battery sensor, disconnect the ground terminal from battery sensor.
2) Remove the cover assembly - instrument panel LWR driver. <Ref. to EI-62, REMOVAL, Instrument Panel Lower Cover.>
3) Remove the knee airbag module. <Ref. to AB-34, REMOVAL, Knee Airbag Module.>
4) Release the lock and remove the fuse holder.

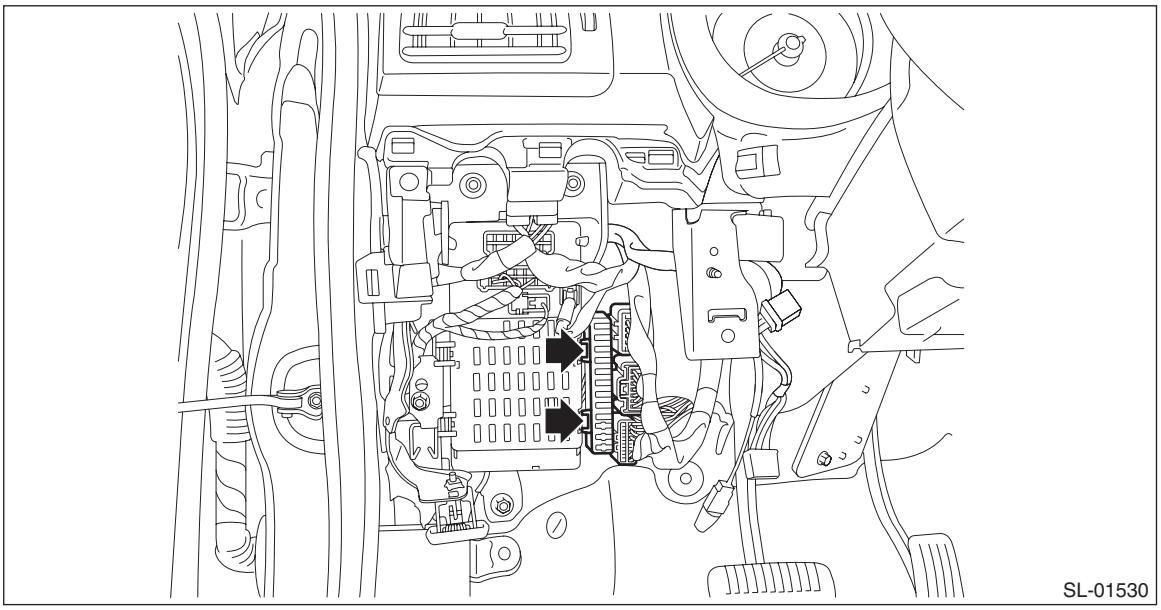
SL-01530

5) Remove the relay & fuse box.
   (1) Disconnect the connector.
   (2) Remove the bolts and nuts, and remove the relay & fuse box.

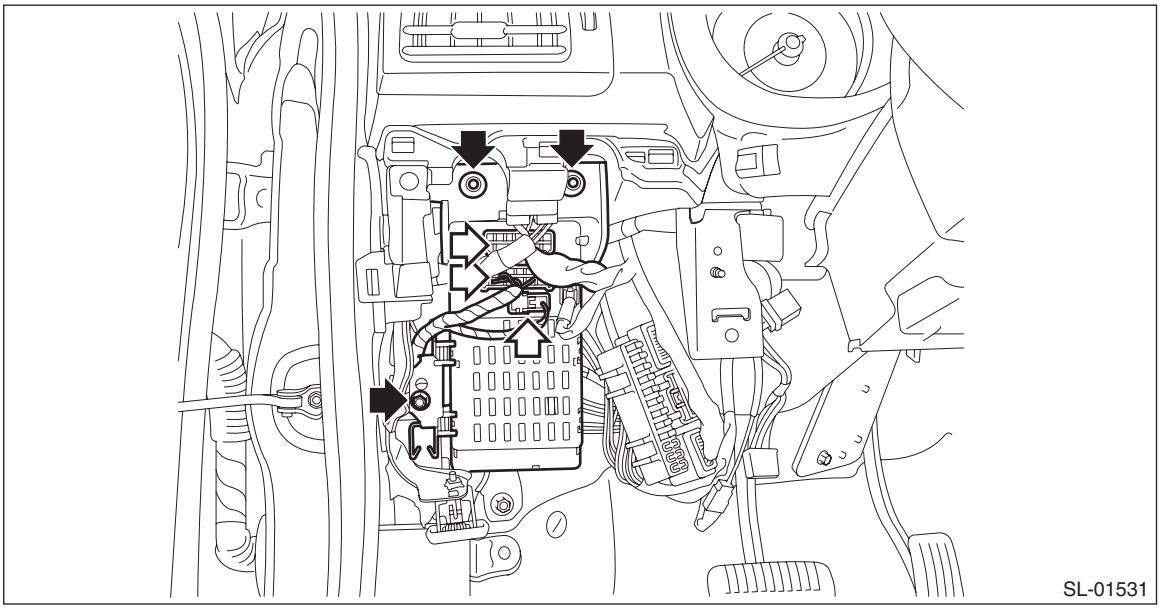
SL-01531

6) Remove IG relay 1 (push button start) (A) from the relay holder.

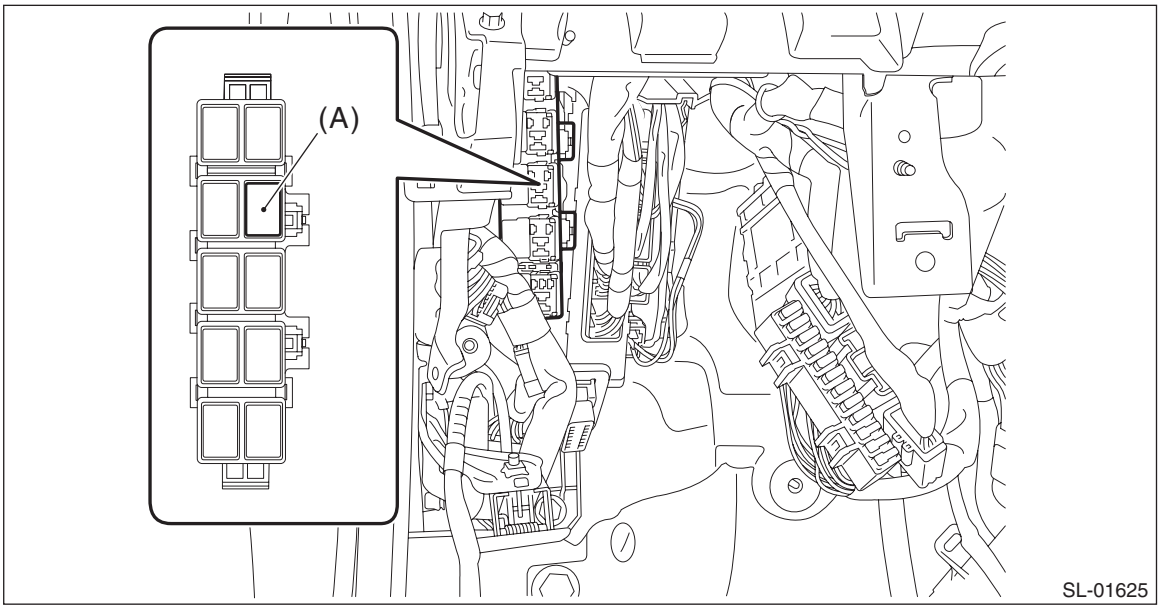

B: INSTALLATION

CAUTION:
Before handling the airbag system components, refer to "CAUTION" of "General Description" in "AIRBAG SYSTEM". <Ref. to AB-9, CAUTION, General Description.>

1) Install the IG relay 1 (push button start).
2) Install the relay & fuse box and fuse holder.

Tightening torque:
Relay & fuse box: 7.5 N·m (0.8 kgf-m, 5.5 ft-lb)

3) Install the knee airbag module.

Tightening torque:
7.5 N·m (0.8 kgf-m, 5.5 ft-lb)

4) Install the cover assembly - instrument panel LWR driver.
5) Connect the battery ground terminal. <Ref. to NT-6, BATTERY, NOTE, Note.>

C: INSPECTION

Refer to "CHECK RELAY" in "Relay and Fuse". <Ref. to SL-9, CHECK RELAY, INSPECTION, Relay and Fuse.>

39.IG Relay2 (Push Button Start)

A: REMOVAL

CAUTION:
Before handling the airbag system components, refer to "CAUTION" of "General Description" in "AIRBAG SYSTEM". <Ref. to AB-9, CAUTION, General Description.>
1) Disconnect the ground cable from battery and wait for at least 60 seconds before starting work. <Ref. to NT-6, BATTERY, NOTE, Note.>

NOTE:
For model with battery sensor, disconnect the ground terminal from battery sensor.
2) Remove the cover assembly - instrument panel LWR driver. <Ref. to EI-62, REMOVAL, Instrument Panel Lower Cover.>
3) Remove the knee airbag module. <Ref. to AB-34, REMOVAL, Knee Airbag Module.>
4) Release the lock and remove the fuse holder.

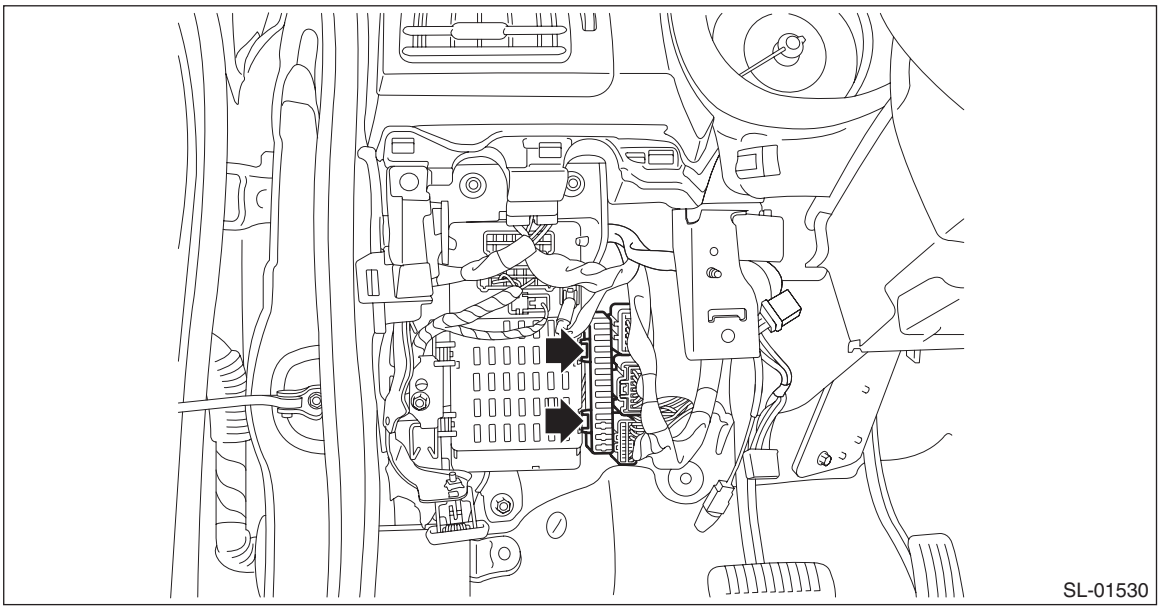
SL-01530

5) Remove the relay & fuse box.
   (1) Disconnect the connector.
   (2) Remove the bolts and nuts, and remove the relay & fuse box.

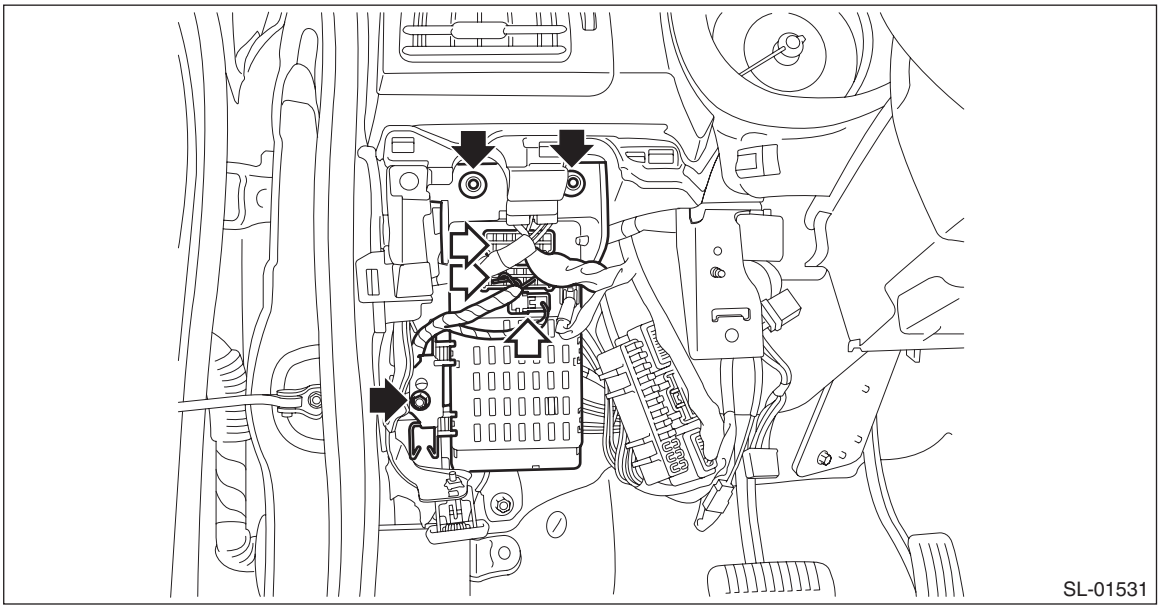
SL-01531

6) Remove IG relay 2 (push button start) (A) from the relay holder.

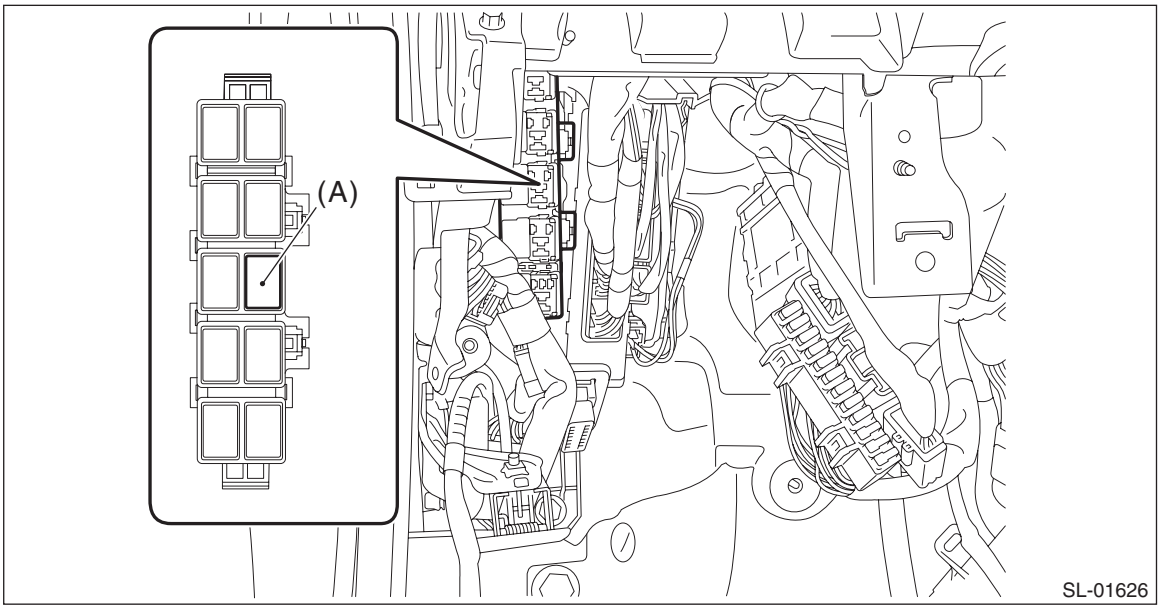

B: INSTALLATION

CAUTION:
Before handling the airbag system components, refer to "CAUTION" of "General Description" in "AIRBAG SYSTEM". <Ref. to AB-9, CAUTION, General Description.>

1) Install the IG relay 2 (push button start).
2) Install the relay & fuse box and fuse holder.

Tightening torque:
Relay & fuse box: 7.5 N·m (0.8 kgf-m, 5.5 ft-lb)

3) Install the knee airbag module.

Tightening torque:
7.5 N·m (0.8 kgf-m, 5.5 ft-lb)

4) Install the cover assembly - instrument panel LWR driver.
5) Connect the battery ground terminal. <Ref. to NT-6, BATTERY, NOTE, Note.>

C: INSPECTION

Refer to "CHECK RELAY" in "Relay and Fuse". <Ref. to SL-9, CHECK RELAY, INSPECTION, Relay and Fuse.>

40.Accessory Relay (Push Button Start)

A: REMOVAL

CAUTION:
Before handling the airbag system components, refer to "CAUTION" of "General Description" in "AIRBAG SYSTEM". <Ref. to AB-9, CAUTION, General Description.>
1) Disconnect the ground cable from battery and wait for at least 60 seconds before starting work. <Ref. to NT-6, BATTERY, NOTE, Note.>

NOTE:
For model with battery sensor, disconnect the ground terminal from battery sensor.
2) Remove the cover assembly - instrument panel LWR driver. <Ref. to EI-62, REMOVAL, Instrument Panel Lower Cover.>
3) Remove the knee airbag module. <Ref. to AB-34, REMOVAL, Knee Airbag Module.>
4) Release the lock and remove the fuse holder.

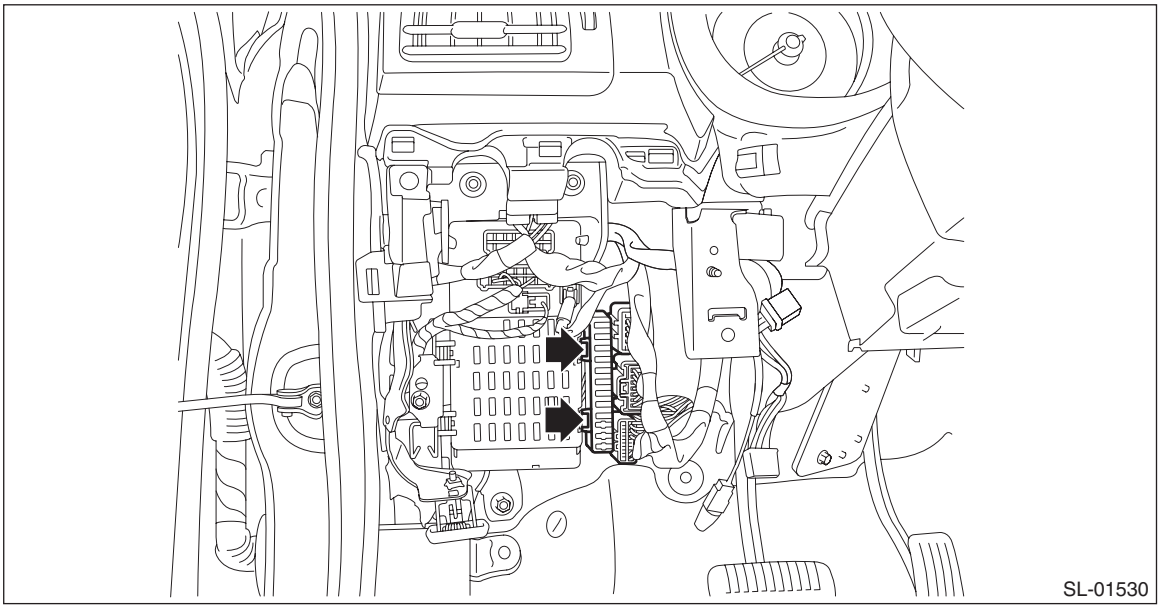
SL-01530

5) Remove the accessory relay (push button start) (A) from the relay and fuse box.

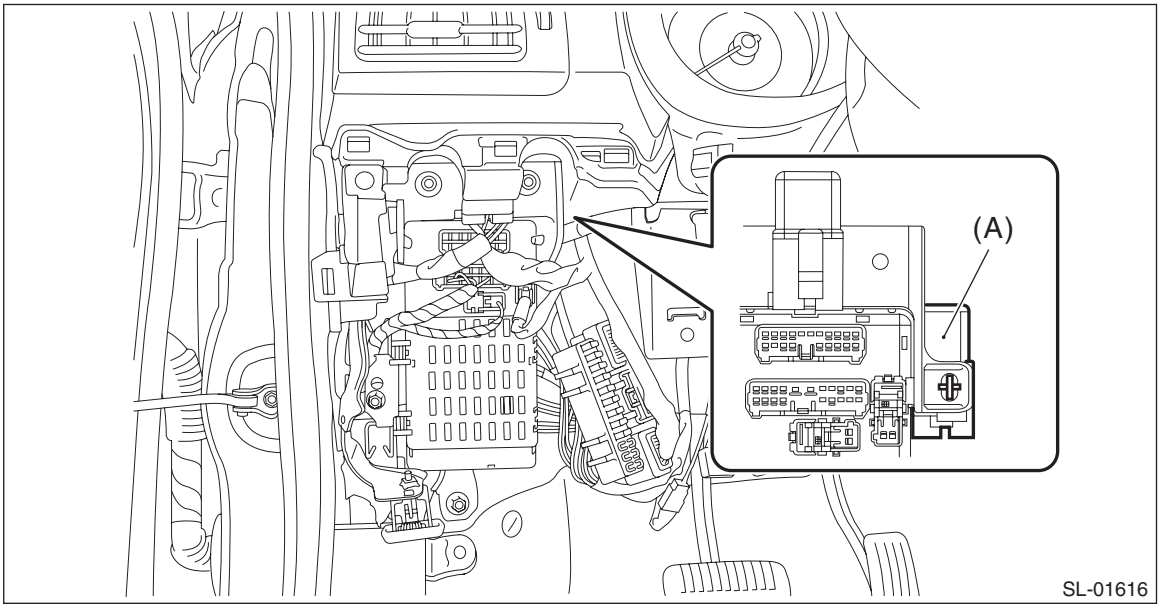

SL-01616

B: INSTALLATION

CAUTION:
Before handling the airbag system components, refer to "CAUTION" of "General Description" in "AIRBAG SYSTEM". <Ref. to AB-9, CAUTION, General Description.>

1) Install the accessory relay.
2) Install the fuse holder.
3) Install the knee airbag module.

Tightening torque:
7.5 N·m (0.8 kgf-m, 5.5 ft-lb)

4) Install the cover assembly - instrument panel LWR driver.
5) Connect the battery ground terminal. <Ref. to NT-6, BATTERY, NOTE, Note.>

C: INSPECTION

Refer to "CHECK RELAY" in "Relay and Fuse". <Ref. to SL-9, CHECK RELAY, INSPECTION, Relay and Fuse.>

41.Starter Cut Relay

A: REMOVAL

CAUTION:
Before handling the airbag system components, refer to "CAUTION" of "General Description" in "AIRBAG SYSTEM". <Ref. to AB-9, CAUTION, General Description.>
1) Disconnect the ground cable from battery and wait for at least 60 seconds before starting work. <Ref. to NT-6, BATTERY, NOTE, Note.>

NOTE:
For model with battery sensor, disconnect the ground terminal from battery sensor.
2) Remove the cover assembly - instrument panel LWR driver. <Ref. to EI-62, REMOVAL, Instrument Panel Lower Cover.>
3) Remove the knee airbag module. <Ref. to AB-34, REMOVAL, Knee Airbag Module.>
4) Release the lock and remove the fuse holder.

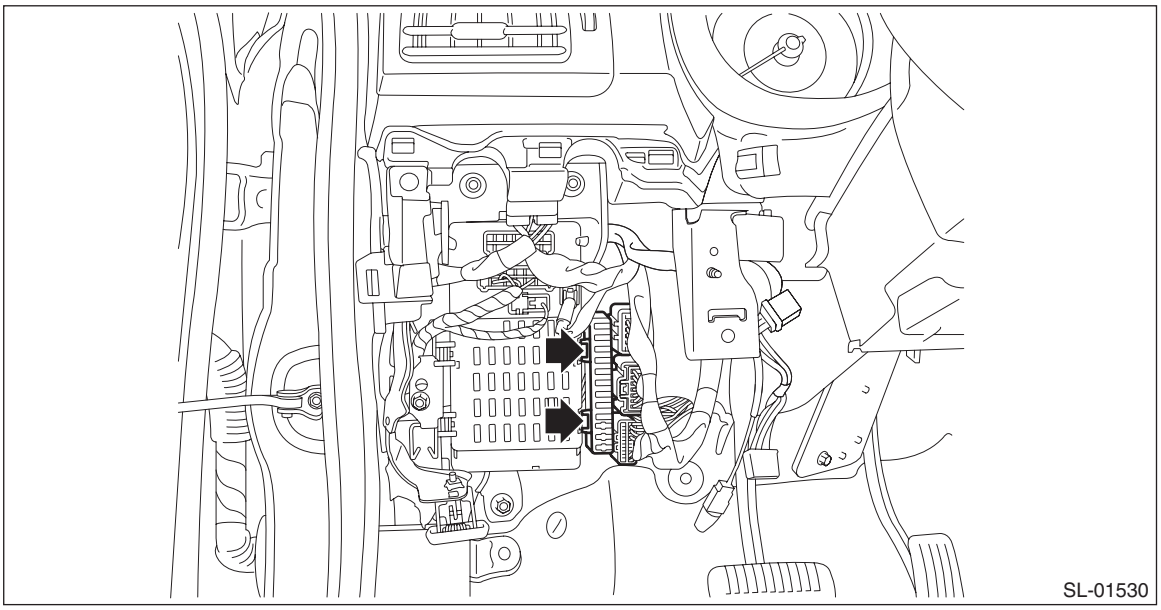
SL-01530

5) Remove the relay & fuse box.
   (1) Disconnect the connector.
   (2) Remove the bolts and nuts, and remove the relay & fuse box.

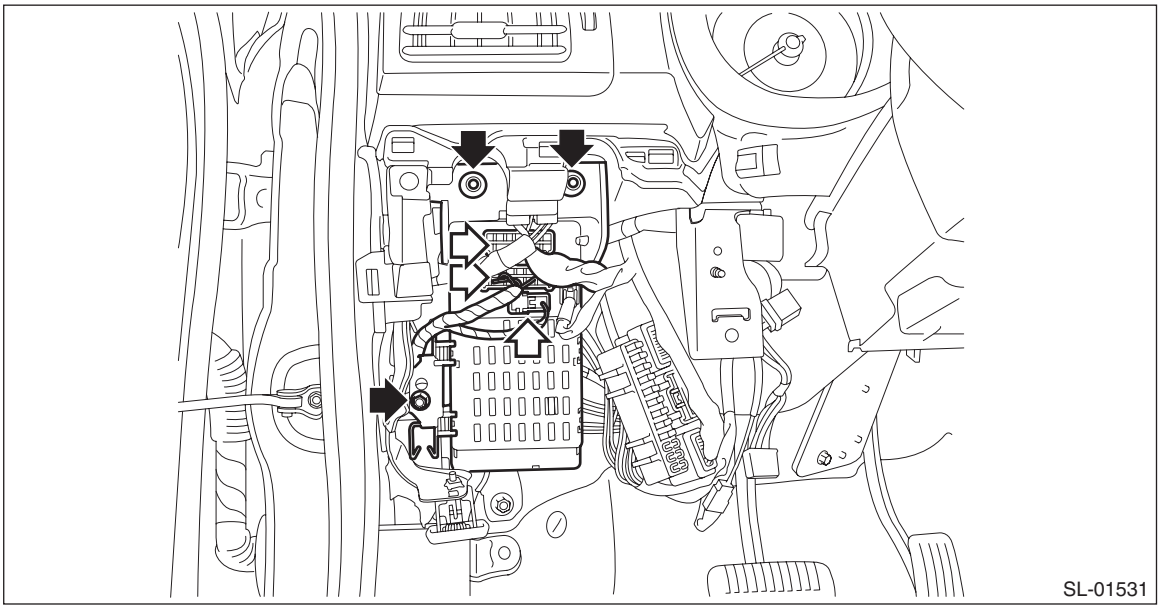
SL-01531

6) Remove the starter cut relay (A) from the relay holder.

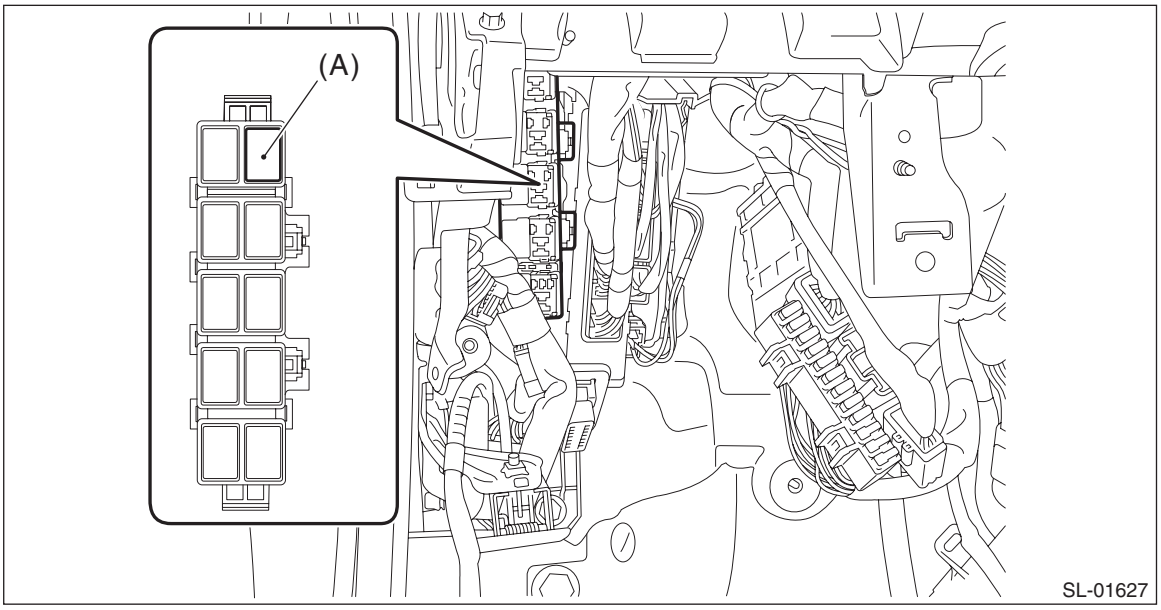

B: INSTALLATION

CAUTION:
Before handling the airbag system components, refer to "CAUTION" of "General Description" in "AIRBAG SYSTEM". <Ref. to AB-9, CAUTION, General Description.>

1) Install the starter cut relay.
2) Install the relay & fuse box and fuse holder.

Tightening torque:
Relay & fuse box: 7.5 N·m (0.8 kgf-m, 5.5 ft-lb)

3) Install the knee airbag module.

Tightening torque:
7.5 N·m (0.8 kgf-m, 5.5 ft-lb)

4) Install the cover assembly - instrument panel LWR driver.
5) Connect the battery ground terminal. <Ref. to NT-6, BATTERY, NOTE, Note.>

C: INSPECTION

Refer to "CHECK RELAY" in "Relay and Fuse". <Ref. to SL-9, CHECK RELAY, INSPECTION, Relay and Fuse.>

42.Access Buzzer

A: REMOVAL

1) Disconnect the ground cable from battery. <Ref. to NT-6, BATTERY, NOTE, Note.>

NOTE:
For model with battery sensor, disconnect the ground terminal from battery sensor.

2) Remove the air cleaner case.
- STI model: <Ref. to IN(STI)-8, REMOVAL, Air Cleaner Case.>
- Except for STI model: <Ref. to IN(w/o STI)-13, REMOVAL, Air Cleaner Case.>

3) Lift up the vehicle.
4) Remove the screw and clips, and turn over the mud guard - front on the right side.

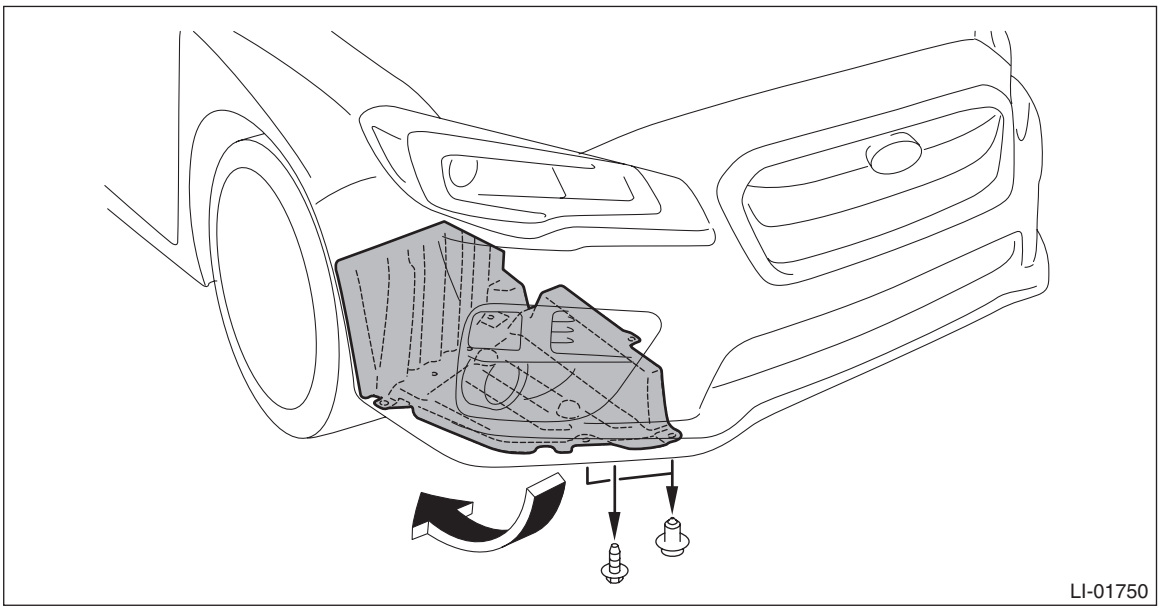
LI-01750

5) Remove the access buzzer.
   (1) Disconnect the connector.
   (2) Remove the clip and detach the access buzzer.

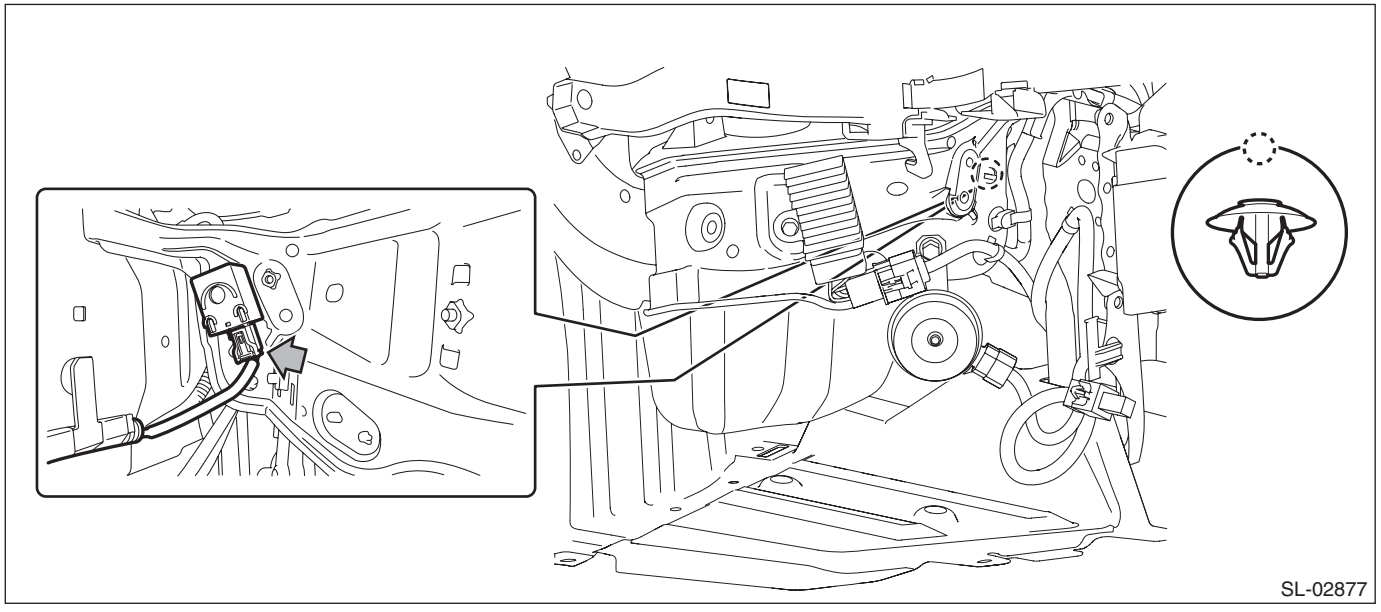
SL-02877

B: INSTALLATION

1) Install the access buzzer.
2) Install the mud guard - front.

CAUTION:
Install the mud guard - front so that the front end of the mud guard (b) comes outside the bumper face - front (a).

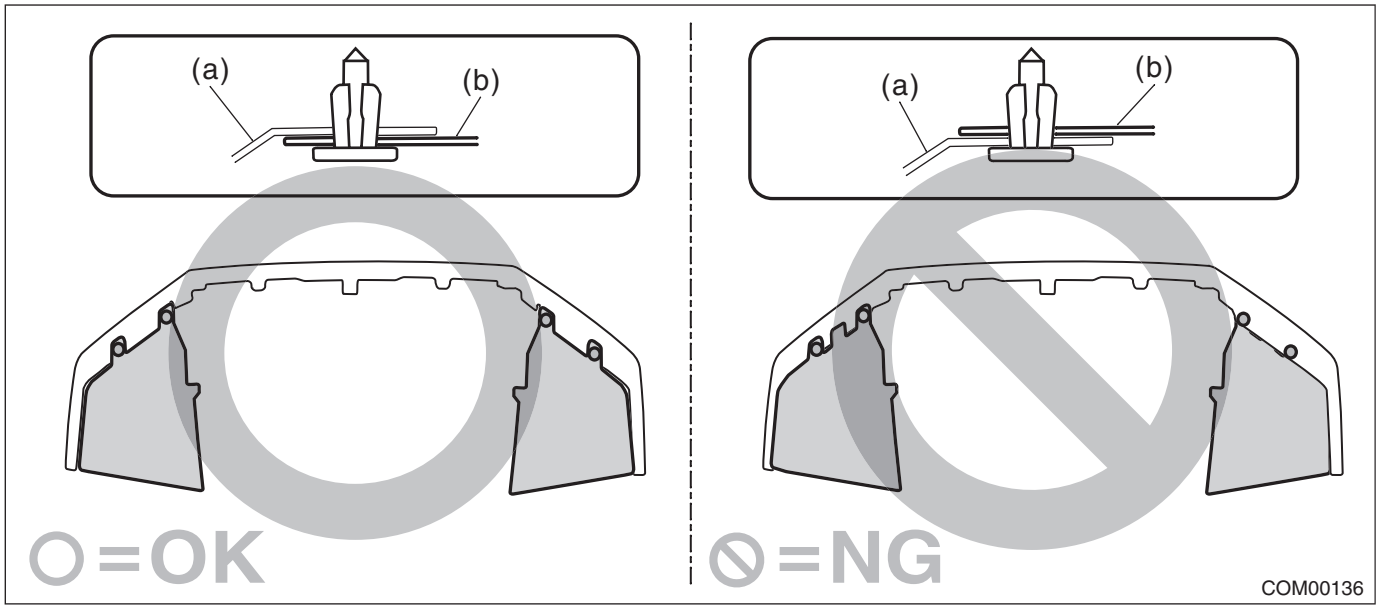

3) Lower the vehicle.
4) Install the air cleaner case.
- STI model: <Ref. to IN(STI)-8, INSTALLATION, Air Cleaner Case.>
- Except for STI model: <Ref. to IN(w/o STI)-16, INSTALLATION, Air Cleaner Case.>

5) Connect the battery ground terminal. <Ref. to NT-6, BATTERY, NOTE, Note.>

C: INSPECTION

- Using the Subaru Select Monitor, set the volume of the access buzzer. <Ref. to BC(diag)-24, User Customizing.>
- Using the Subaru Select Monitor, perform forced operation of the access buzzer. <Ref. to BC(diag)-24, OPERATION, User Customizing.>

If the buzzer does not sound, replace the access buzzer.

43.Function Setting (Customize)

A: OPERATION

Disabling/Activating the keyless access system

The following functions are disabled when the keyless access system functions are disabled:

- LOCK function performed by the operation of touch sensor on the door outer handle
- UNLOCK function by the door touch sensor
- Trunk lid open function by trunk opener button operation in the trunk lid lock condition
- Lockout protection function
- Warning function
- Engine starting control using keyless access collation

B: PROCEDURE

1. STOPPING KEYLESS ACCESS SYSTEM FUNCTION BY DOOR OPEN/CLOSE PROCEDURE

1) Check that the vehicle status is as follows:
- Ignition switch OFF
- One window is completely open
- Keyless access system is activated (or disabled if re-activating)

2) Sit in the driver's seat with the door closed and press the door lock switch to UNLOCK once.
3) Open the driver's door within five seconds.
4) Within 5 seconds, with the driver's door opened, slowly press the door lock switch to UNLOCK twice.
5) Within 30 seconds, perform the closing → opening operation of the driver's door twice.
6) Within 30 seconds, with the driver's door opened, slowly press the door lock switch to UNLOCK twice.
7) Within 30 seconds, perform the closing → opening operation of the driver's door once.
8) Within five seconds, close the driver's door.

NOTE:
- Perform the same procedures to re-activate the keyless access system from the disabled condition.
- If the driver's door is opened or closed in step 4) and step 6), the cancel operation is disabled.

2. STOPPING KEYLESS ACCESS SYSTEM FUNCTION BY USING ACCESS KEY

1) Open the driver's door, and then push the door lock knob forward (LOCK direction).
2) Press the lock button of access key and trunk/rear gate button simultaneously for five seconds or more.
3) The buzzer sounds for two seconds, and the function stops.

NOTE:
Perform the same procedures to re-activate the keyless access system from the disabled condition.

44.Keyless Access With Push Button Start System

A: DIAGNOSTIC PROCEDURE WITH PHENOMENON

Refer to “Diagnostics with Phenomenon” of “KEYLESS ACCESS WITH PUSH BUTTON START SYSTEM (DIAGNOSTICS)” section. <Ref. to KPS(diag)-114, Diagnostics with Phenomenon.>

SUNROOF/T-TOP/CONVERTIBLE TOP (SUNROOF)

SR

		Page
1.	General Description	2
2.	Relay and Fuse	4
3.	Sunroof Control System	5
4.	Glass Lid	7
5.	Sunroof Assembly	11
6.	Sunroof Motor	18
7.	Sunroof Switch	20
8.	Sunshade	22

1. General Description

A: COMPONENT

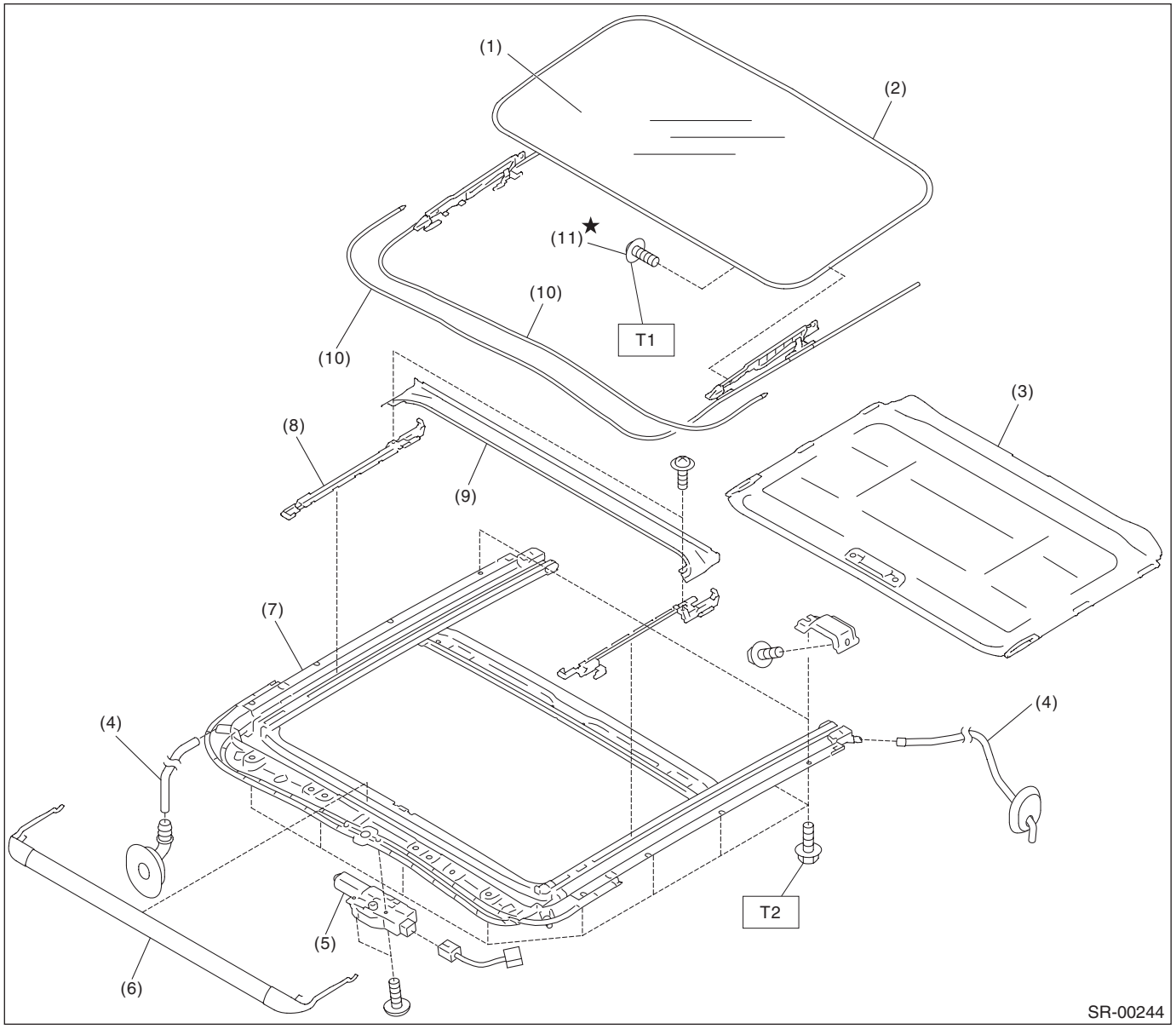

(1) Lid ASSY - sunroof
(2) Weather strip
(3) Sunshade ASSY
(4) Drain tube - sunroof
(5) Motor ASSY - sunroof
(6) Deflector ASSY - sunroof
(7) Rail ASSY - sunroof
(8) Link - drain sunroof
(9) Drain ASSY - sunroof
(10) Cable ASSY
(11) TORX® bolt

Tightening torque: N·m (kgf-m, ft-lb)
T1: 4.5 (0.5, 3.3)
T2: 6 (0.6, 4.4)

B: CAUTION

Before disconnecting connectors of sensors or units, be sure to disconnect the ground cable from battery. When replacing the electrical parts provided with memory functions that store contents specified by a customer, record the memory contents before disconnecting the battery ground cable.

C: PREPARATION TOOL

1. GENERAL TOOL

TOOL NAME	REMARKS
Circuit tester	Used for measuring resistance, voltage and current.
Hexagon wrench	Used for forcibly driving the motor assembly - sunroof. Width across flat 4 mm (0.16 in)
TORX® T25	Used for removing and installing the lid assembly - sunroof.

2. Relay and Fuse

A: LOCATION

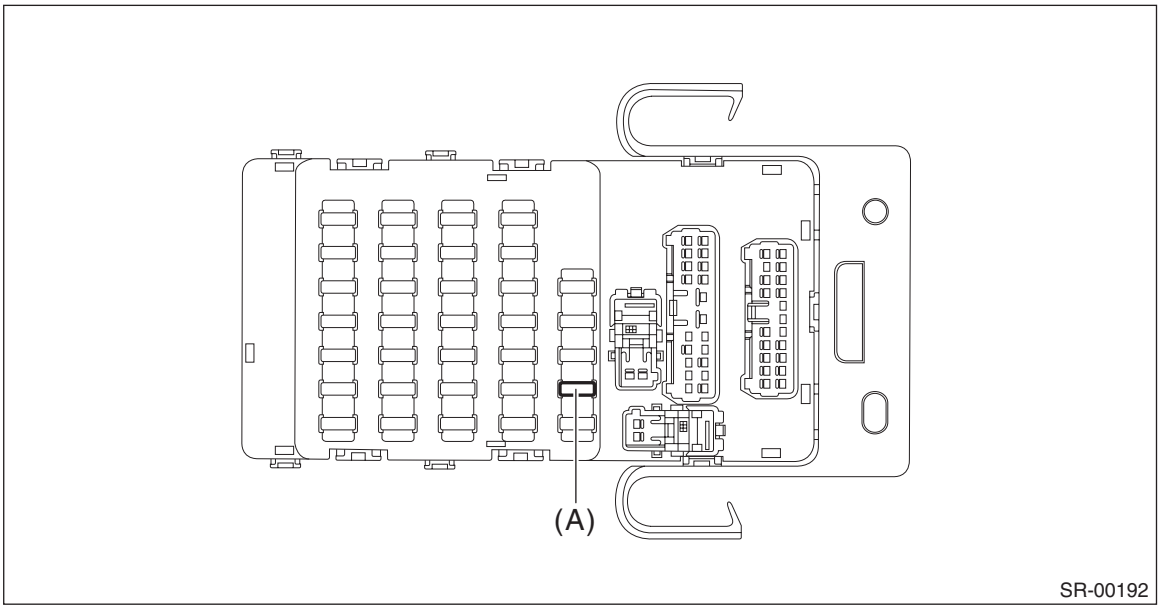

Relay & fuse box	Fuse 10 A (IG 2)	(A)

NOTE:
For other related fuses, refer to the wiring diagram. <Ref. to WI-31, Power Supply Circuit.>

B: INSPECTION

1. CHECK FUSE

1) Remove the fuse and check visually.
2) If the fuse is blown out, replace the fuse.

3. Sunroof Control System

A: WIRING DIAGRAM

Refer to “Sunroof Control System” in the wiring diagram. <Ref. to WI-355, WIRING DIAGRAM, Sunroof Control System.>

B: INSPECTION

Symptoms	Inspection steps
Water leakage	1. Check the roof panel and the lid assembly - sunroof for improper or poor sealing. 2. Check the drain tube - sunroof for clogging. 3. Check the joints of the rail assembly - sunroof for improper sealing and for proper installation to the body.
Booming noise, wind noise and other noise	1. Check the lid assembly - sunroof and the roof panel for improper clearance. 2. Check the sunshade assembly and the trim panel - roof assembly for improper clearance.
Abnormal motor noise	1. Check installing part of motor for looseness. 2. Check gears and bearings for wear. 3. Check cable assembly for wear. 4. Check cable pipe for deformities.
Failure of sunroof (Motor operates properly.)	1. Check guide rail for foreign particles. 2. Check guide rail for improper installation. 3. Check parts for mutual interference. 4. Check cable slider for improper clinching. 5. Check cable assembly for improper installation.
Motor does not rotate or it does not rotate normally.	1. Check fuse for blown out. 2. Check switch for improper function. 3. Check motor assembly for incorrect terminal voltage. 4. Check the relay for improper operation. 5. Check harness for open or short and terminals for poor connections.
Incorrect reverse operation of the lid assembly - sunroof	Check guide rail for foreign particles.

Incorrect reverse operation of the lid assembly - sunroof while driving on rough road

The lid assembly - sunroof has auto-reverse function. When the lid assembly - sunroof is pushed in the opening direction with a force of 110±10 N (11.2 kgf, 24.7 lbf±1.0 kgf, 2.2 lbf), the glass lid moves in reverse and stops.

Therefore, if you operate (open or close) the lid assembly - sunroof while driving on rough road, the vibration may be judged as a force and the lid may incorrectly move in the reverse direction.

When the incorrect reverse operation is occurred repeatedly, perform inspection around the sunroof frame. If there are no problems, perform the initialization operation with following procedure.

C: OPERATION

1. INITIALIZE OPERATION

CAUTION:
During initialization, perform the position learning and the sliding learning. Sliding learning mode can not be initiated unless the position learning is performed.

NOTE:
When initialize operation is performed, it is necessary to press the switch repeatedly as it operates for only at the moment when the switch is pressed, even when the switch is held down.

Position learning

1) Position the lid assembly - sunroof at the full tilt up position, and press and hold the tilt up switch for ten seconds.
2) The motion of the glass lid shifts to inching operation until it reaches the full close position. After that, it returns to the full tilt up position and then stops.
3) Release the tilt up switch to finish the position learning.

Sliding learning

1) Within six seconds after the position learning is finished, press and hold the tilt up switch again.
2) The lid assembly - sunroof moves to the full close position, full open position, and the full close position successively, and stops at the full close position.
3) Release the tilt up switch and turn the IG to OFF to finish the initializing.

D: NOTE

For operation procedures of each component of the sunroof control system, refer to the respective section.
- Glass lid: <Ref. to SR-7, Glass Lid.>
- Sunroof assembly: <Ref. to SR-11, Sunroof Assembly.>
- Sunroof motor: <Ref. to SR-18, Sunroof Motor.>
- Sunroof switch: <Ref. to SR-20, Sunroof Switch.>
- Sunshade: <Ref. to SR-22, Sunshade.>

4. Glass Lid

A: REMOVAL

1. GLASS LID

CAUTION:
Be careful not to damage the lid assembly - sunroof.
1) Completely close the lid assembly - sunroof, and open the sunshade assembly.
2) Remove the lid assembly - sunroof.

Preparation tool:
TORX® T25

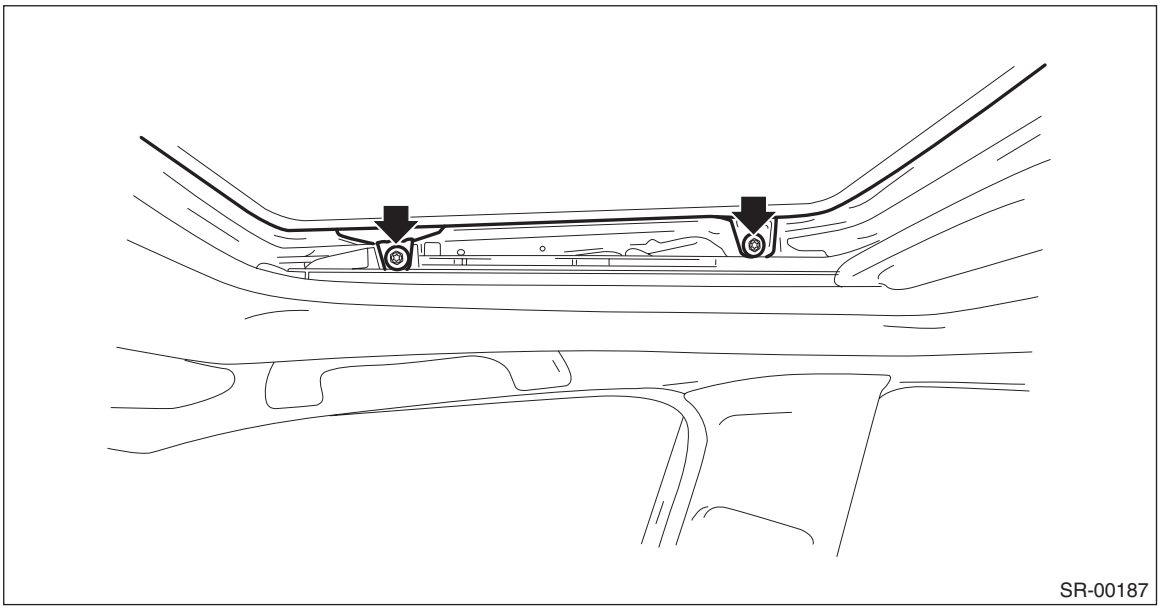
SR-00187

2. DEFLECTOR ASSEMBLY

1) Open the lid assembly - sunroof and the sunshade assembly.
2) Remove the deflector assembly - sunroof.
   (1) Remove the spring from the rail assembly - sunroof.

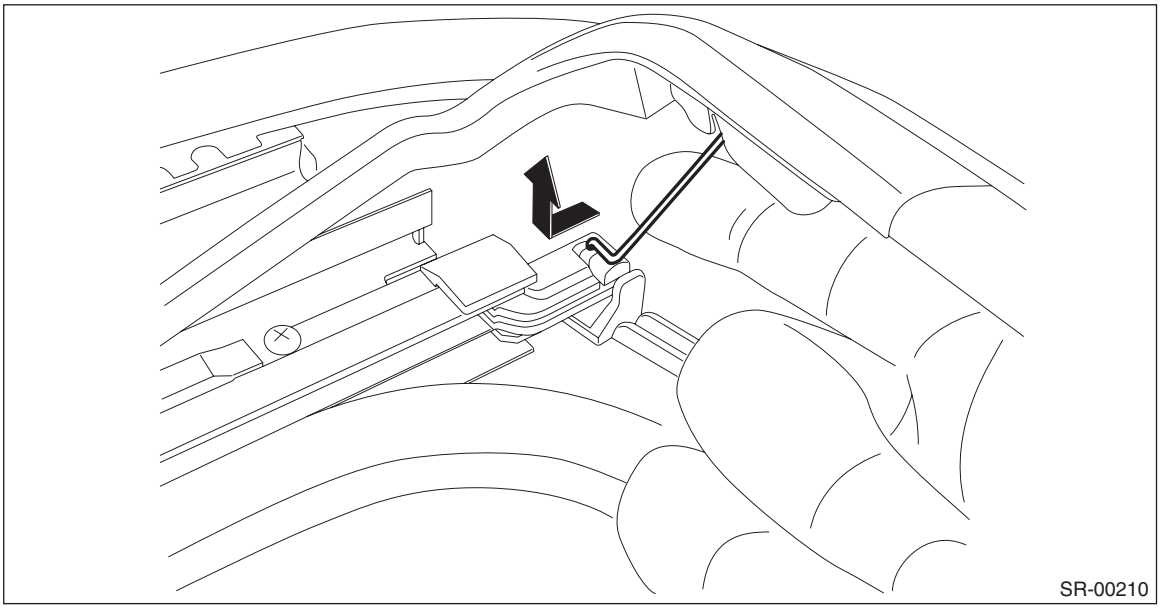
SR-00210

(2) While lifting up the deflector assembly - sunroof, remove the deflector assembly - sunroof from the hook on the rail assembly - sunroof.

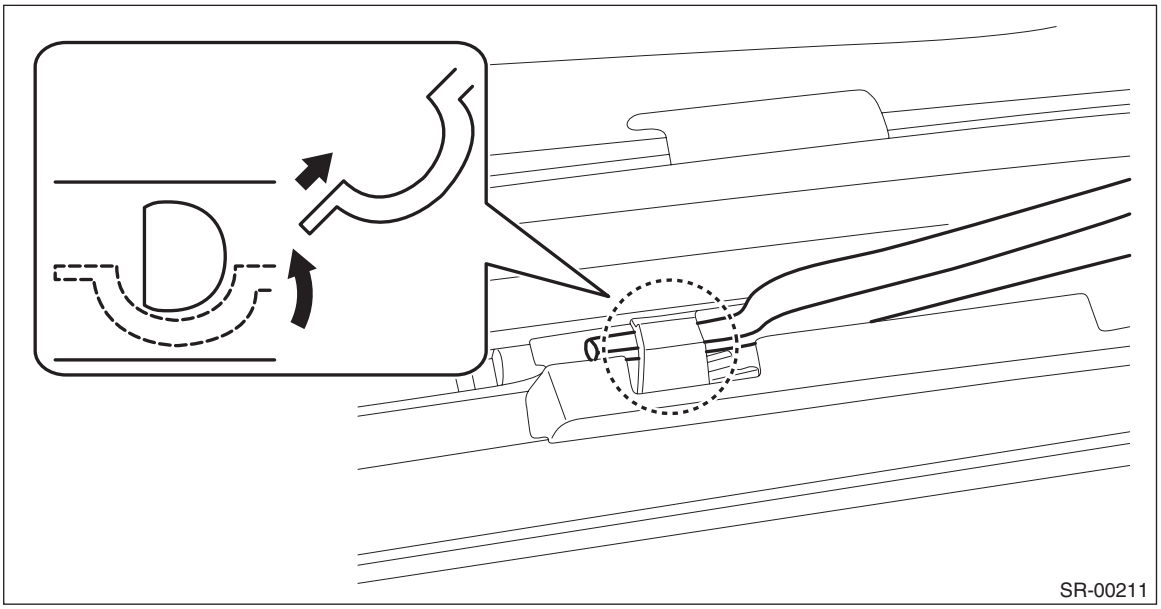

B: INSTALLATION

1. GLASS LID

1) Using a new TORX® bolt, install the lid assembly - sunroof.

Tightening torque:
4.5 N·m (0.5 kgf-m, 3.3 ft-lb)

2) Perform the open/close operation checks for the glass lid.
3) Check the height of the lid assembly - sunroof and the roof panel, and perform adjustment when there is a difference between up and down, and left and right. <Ref. to SR-9, ADJUSTMENT, Glass Lid.>

2. DEFLECTOR ASSEMBLY

1) Install the deflector assembly - sunroof.
2) After installation, measure the height from the roof panel when deflector assembly - sunroof is activated.

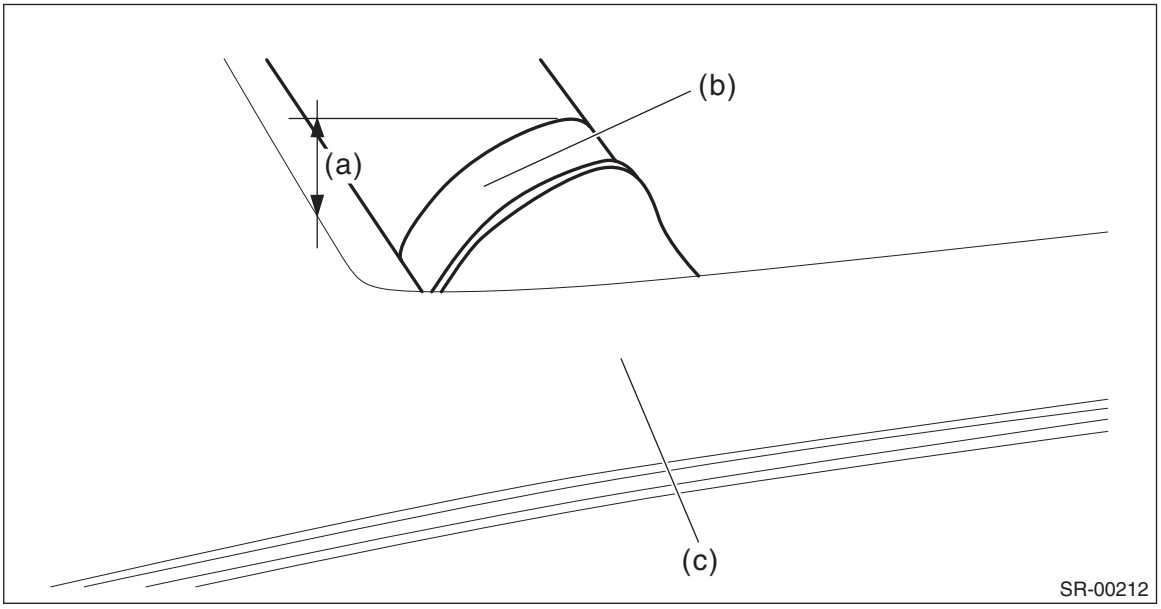

(a) 14 mm (0.55 in) (b) Deflector ASSY - sunroof (c) Roof panel

C: ADJUSTMENT

1) Adjust the height of the lid assembly - sunroof and the roof panel.
2) Loosen the lid assembly - sunroof mounting bolts (A), and then adjust the height by moving the lid assembly - sunroof side.

Lid assembly - sunroof height difference L:
Lid assembly - sunroof to Roof panel: 0.7±1 mm (0.03±0.04 in)

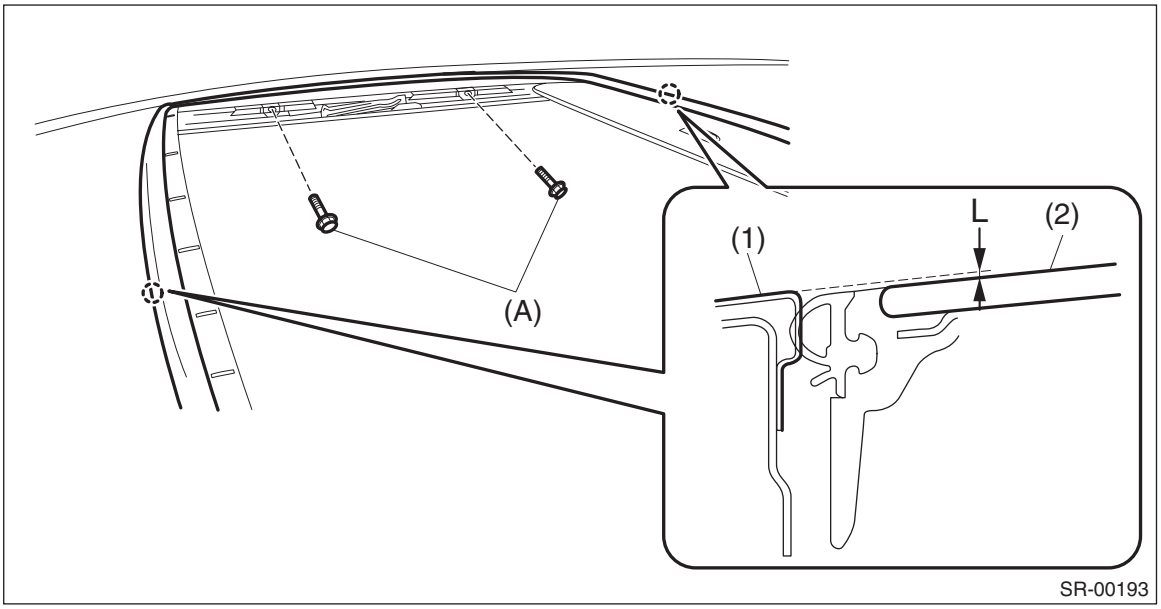

(1) Roof panel
(2) Lid ASSY - sunroof

Tightening torque:
4.5 N·m (0.5 kgf-m, 3.3 ft-lb)

D: FORCED DRIVE

If the lid assembly - sunroof does not operate or the motor assembly is not supplied with power, move the lid assembly - sunroof using the hexagon wrench.

Preparation tool:
Hexagon wrench: width across flat 4 mm (0.16 in)

CAUTION:
After a forced operation, make sure to perform an initialize operation. <Ref. to SR-6, INITIALIZE OPERATION, OPERATION, Sunroof Control System.>

1) Remove the light assembly - map. (Models without EyeSight) <Ref. to LI-61, REMOVAL, Spot Map Light.>
2) Remove the stereo camera cover assembly. (Models with EyeSight) <Ref. to ES-8, REMOVAL, Stereo Camera.>
3) Insert the hexagon wrench securely until it touches the motor shaft end.
4) Turn the hexagon wrench, and move the lid assembly - sunroof.
- Turning right, the lid assembly - sunroof opens.
- Turning left, the lid assembly - sunroof closes.

CAUTION:
Be careful not to damage the adjacent parts with the rod end when moving the lid assembly - sunroof with the hexagon wrench.

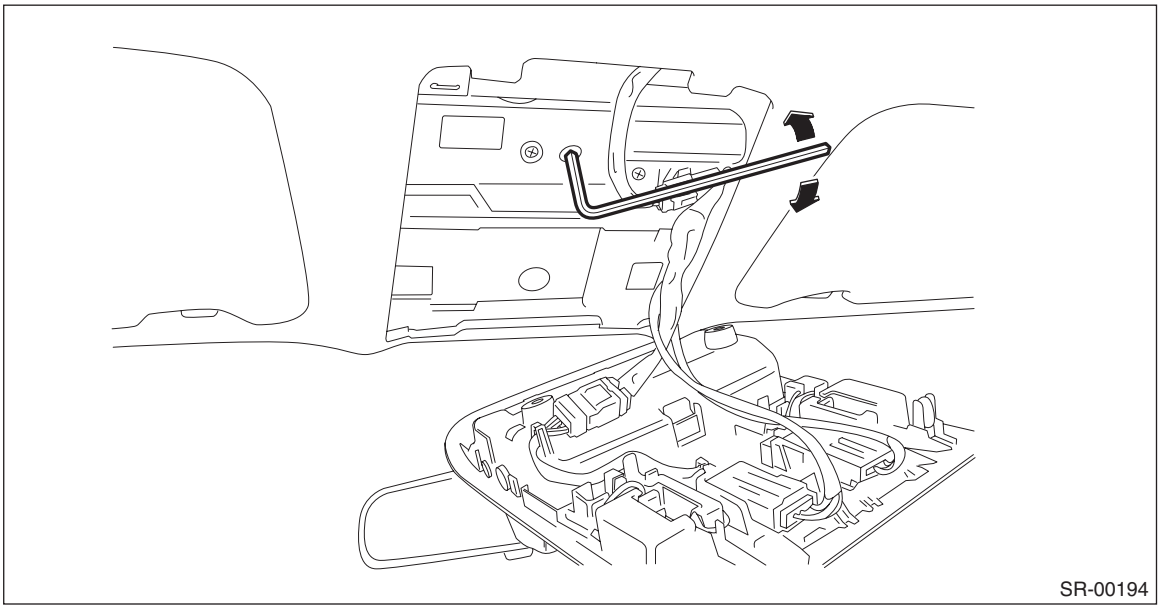

5) Install the light assembly - map. (Models without EyeSight) <Ref. to LI-63, INSTALLATION, Spot Map Light.>
6) Install the stereo camera cover assembly. (Models with EyeSight) <Ref. to ES-11, INSTALLATION, Stereo Camera.>

5. Sunroof Assembly

A: REMOVAL

CAUTION:
• Before handling the airbag system components, refer to "CAUTION" of "General Description" in "AIRBAG SYSTEM". <Ref. to AB-9, CAUTION, General Description.>
• When removing the clip, use great care not to damage the trim panel - roof assembly.

1) Disconnect the ground cable from battery. <Ref. to NT-6, BATTERY, NOTE, Note.>

NOTE:
- Completely close the lid assembly - sunroof, then disconnect the ground cable.
- For model with battery sensor, disconnect the ground terminal from battery sensor.

2) Remove the lid assembly - sunroof.

CAUTION:
Be careful not to damage the lid assembly - sunroof.

(1) Completely close the lid assembly - sunroof, and open the sunshade assembly.
(2) Remove the lid assembly - sunroof.

Preparation tool:
TORX® T25

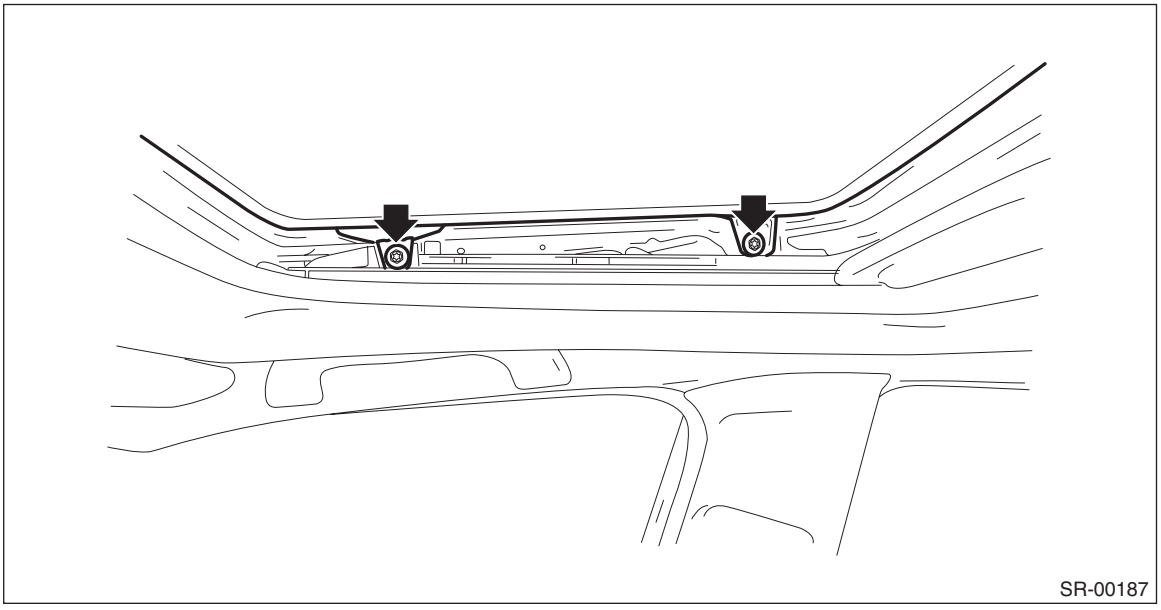

3) Remove the trim panel - roof assembly. <Ref. to EI-102, REMOVAL, Roof Trim.>

4) Remove the bracket - assist rail.

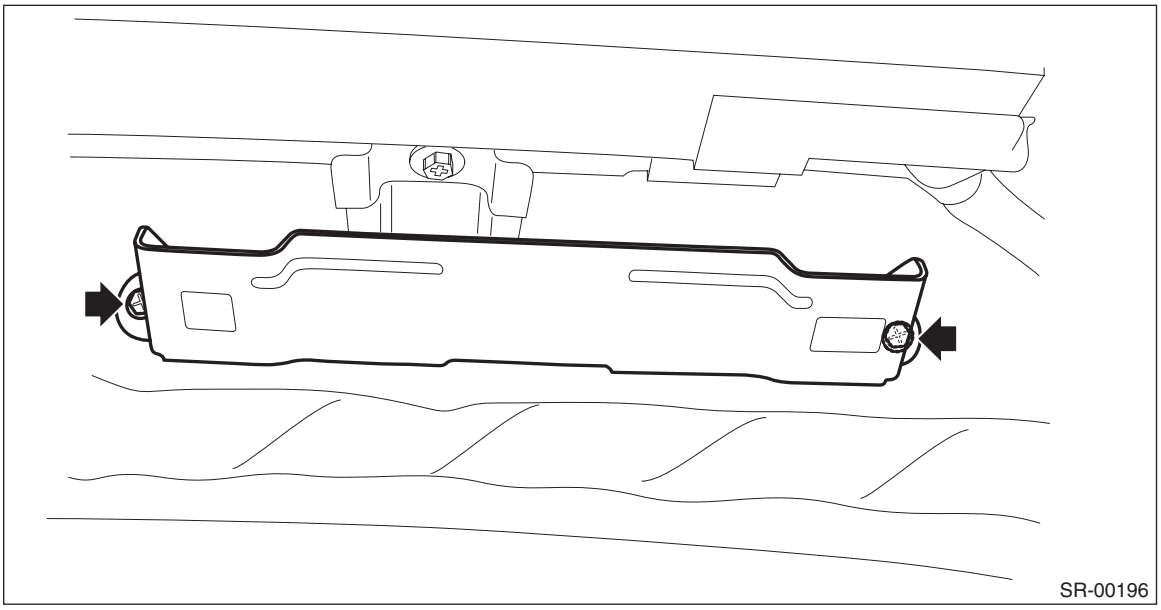

5) Disconnect the connector of the motor assembly - sunroof.
6) Remove the drain tube - sunroof.

NOTE:
When removing the drain tube - sunroof completely, perform the step 8).

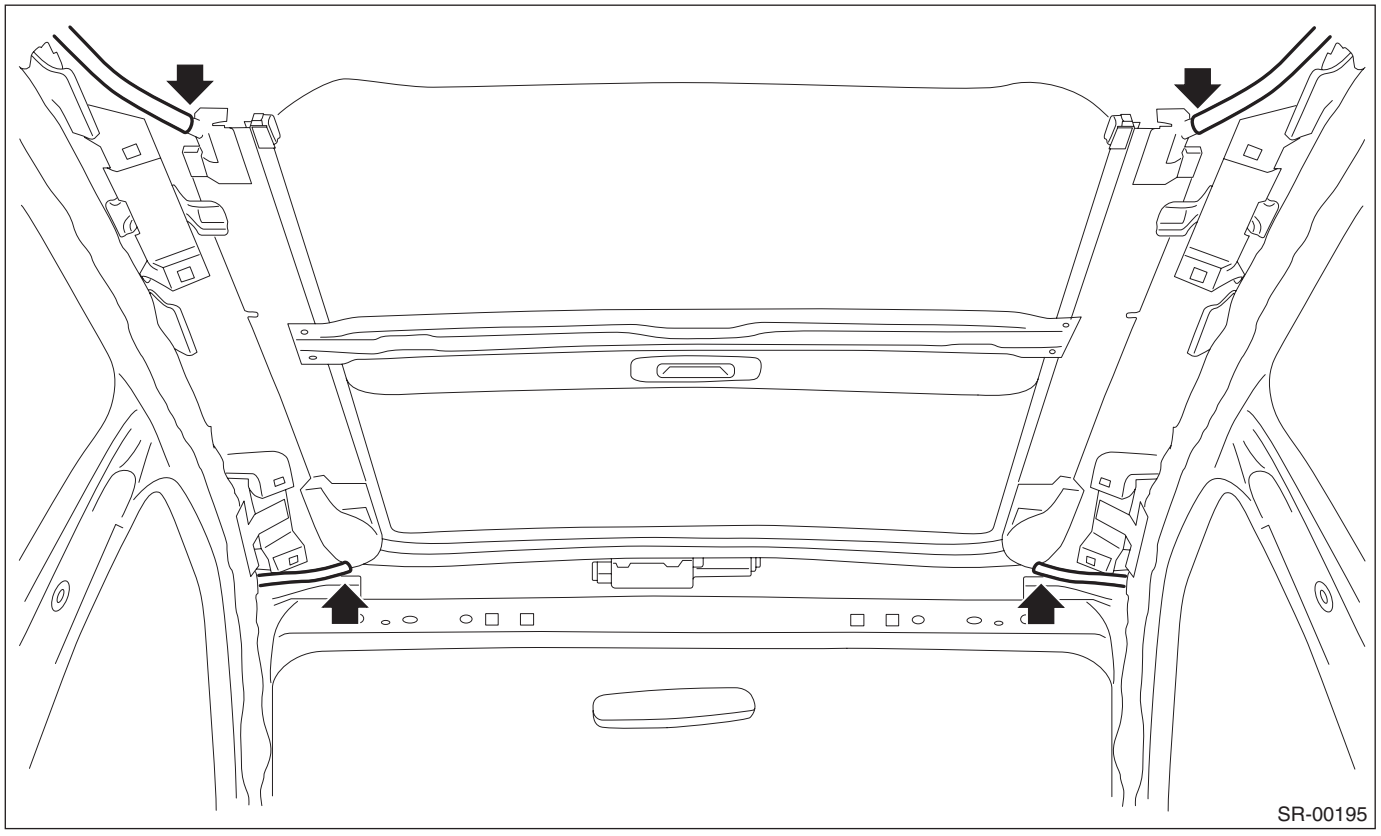

7) Remove the rail assembly - sunroof.
(1) Remove the curtain airbag module. <Ref. to AB-45, REMOVAL, Curtain Airbag Module.>
(2) Remove the bolts and then remove the sunroof bracket.

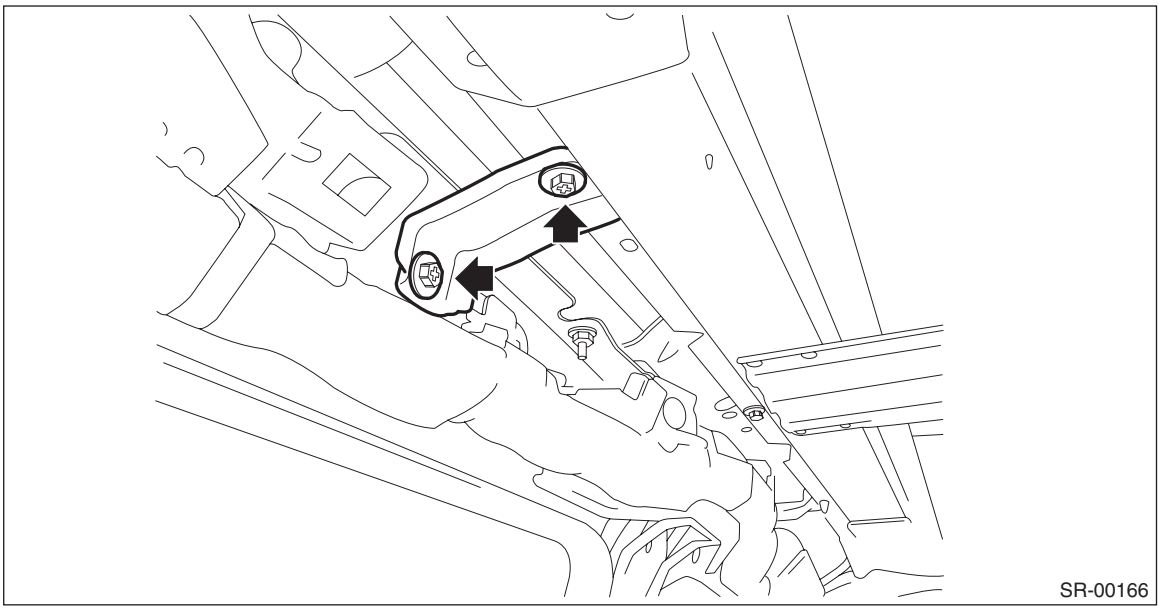
SR-00166

(3) Remove the bolts, then remove the rail assembly.

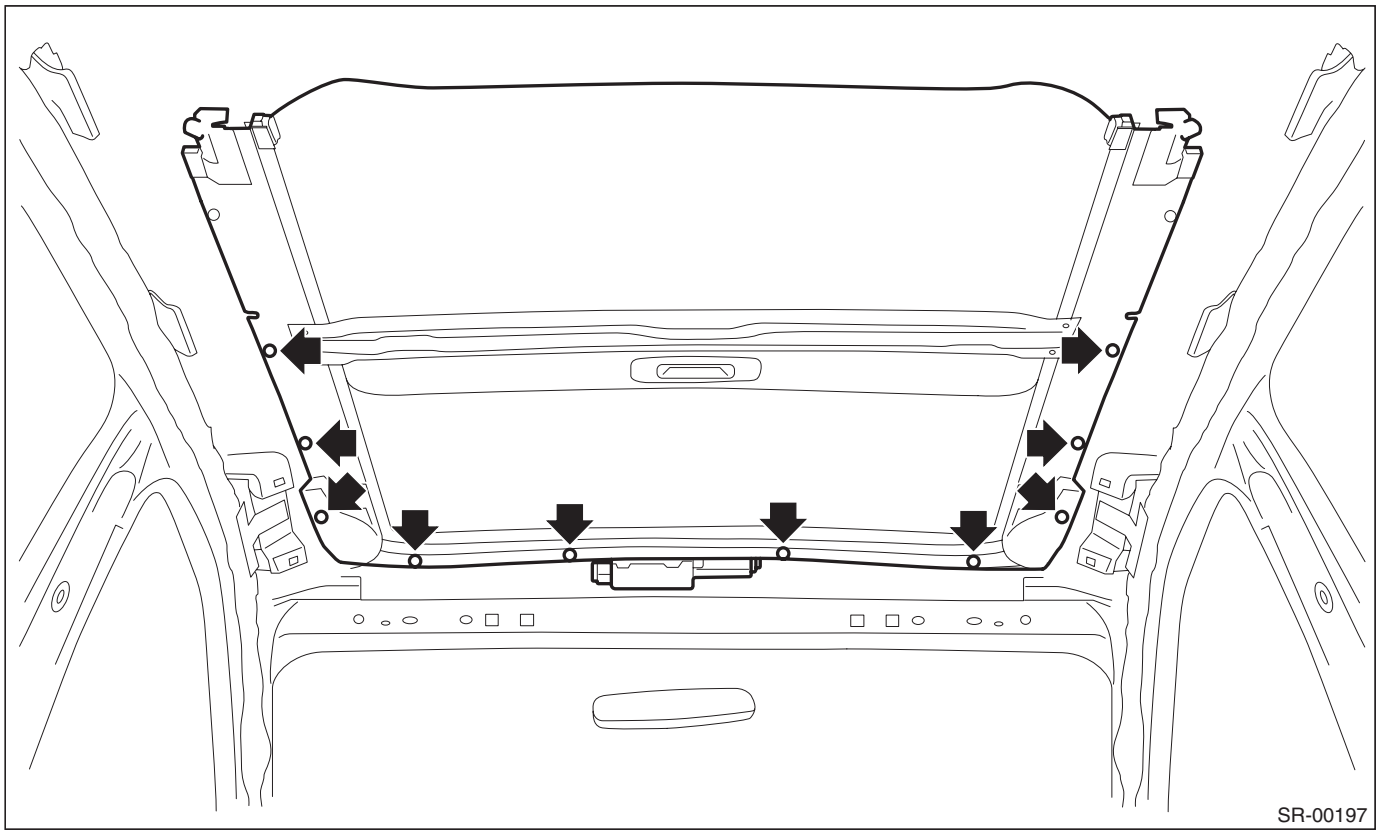
SR-00197

8) Remove the drain tube - sunroof.

NOTE:
For easy replacement work, attach a string when pulling the drain tube - sunroof.

(1) Remove the cover side sill - front INN and cover side sill - front. <Ref. to EI-84, REMOVAL, Lower Inner Trim.>
(2) Disconnect each connector, bolt and clip, then remove the connector holder.
(3) Remove the front side of drain tube - sunroof.
(4) Remove the mat - rear floor and the spacer - rear floor.
(5) Remove the rear side of drain tube - sunroof.

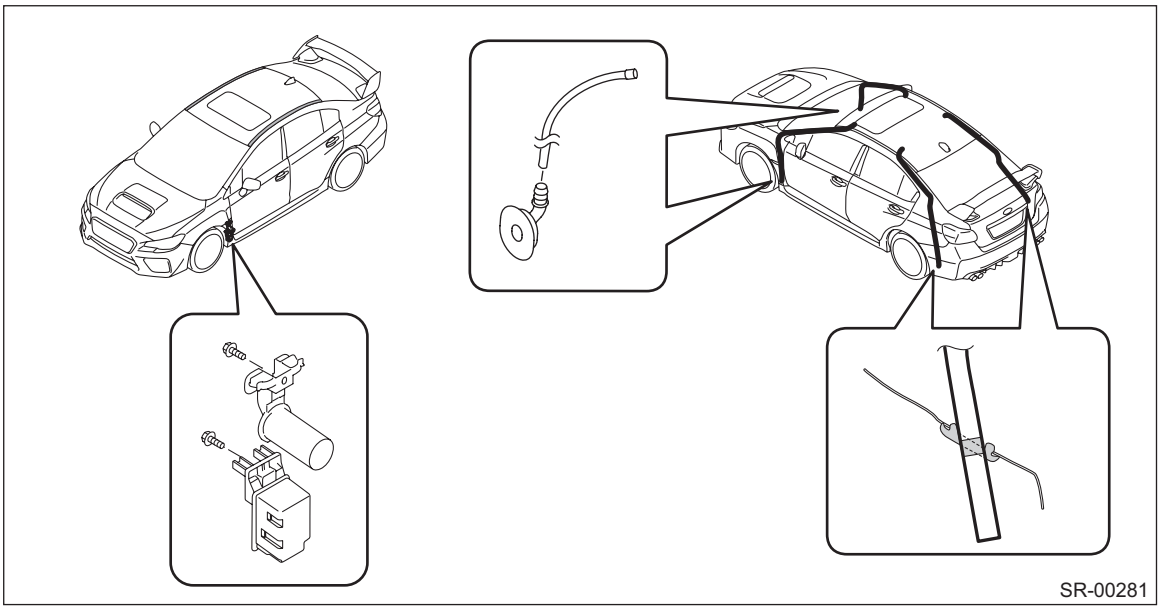

B: INSTALLATION

CAUTION:
• Before handling the airbag system components, refer to "CAUTION" of "General Description" in "AIRBAG SYSTEM". <Ref. to AB-9, CAUTION, General Description.>
• For installation of the stereo camera cover assembly, refer to "INSTALLATION", "Stereo Camera" in the "EyeSight" section and observe the precautions for installation. <Ref. to ES-11, INSTALLATION, Stereo Camera.>
• Be careful not to snag the harness.

1) Install each connector and the drain tube - sunroof.

Tightening torque:
Connector holder: 7.5 N·m (0.8 kgf-m, 5.5 ft-lb)
Ground bolt: 13 N·m (1.3 kgf-m, 9.6 ft-lb)

2) Install the cover side sill - front.
3) Install the sunroof bracket and the rail assembly - sunroof.

Tightening torque:
6 N·m (0.6 kgf-m, 4.4 ft-lb)

4) Connect the harness connector of the drain tube - sunroof and the motor assembly.

CAUTION:
Insert the four drain tubes 15 mm (0.59 in) or more into the drain pipes (A).

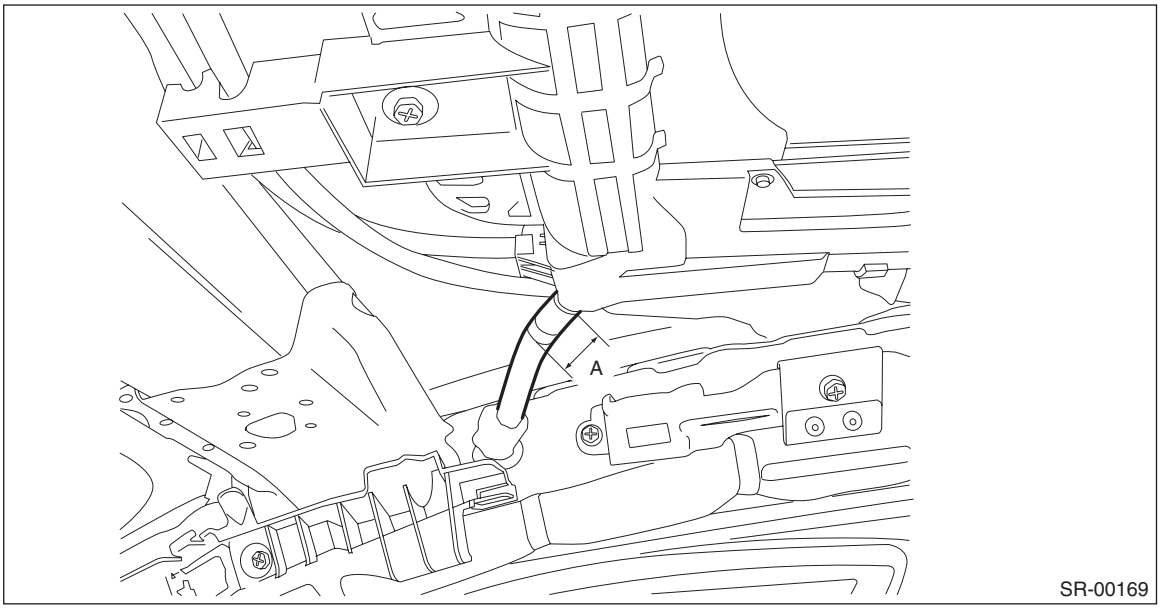

5) Install the bracket - assist rail.

Tightening torque:
7.5 N·m (0.8 kgf-m, 5.5 ft-lb)

6) Install the trim panel - roof assembly. <Ref. to EI-104, INSTALLATION, Roof Trim.>
7) Using a new TORX® bolt, install the lid assembly - sunroof.

Tightening torque:
4.5 N·m (0.5 kgf-m, 3.3 ft-lb)

C: DISASSEMBLY

1) Remove the screw and remove the sunroof motor.

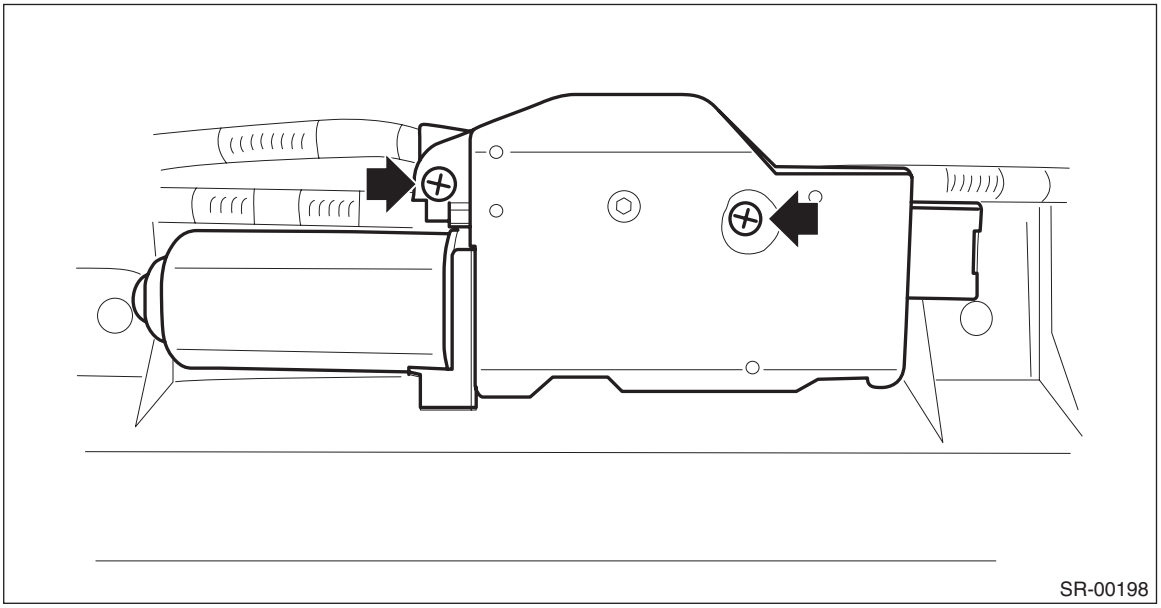

2) Remove the stopper rubber and pull out the sunshade assembly from the rail assembly - sunroof.

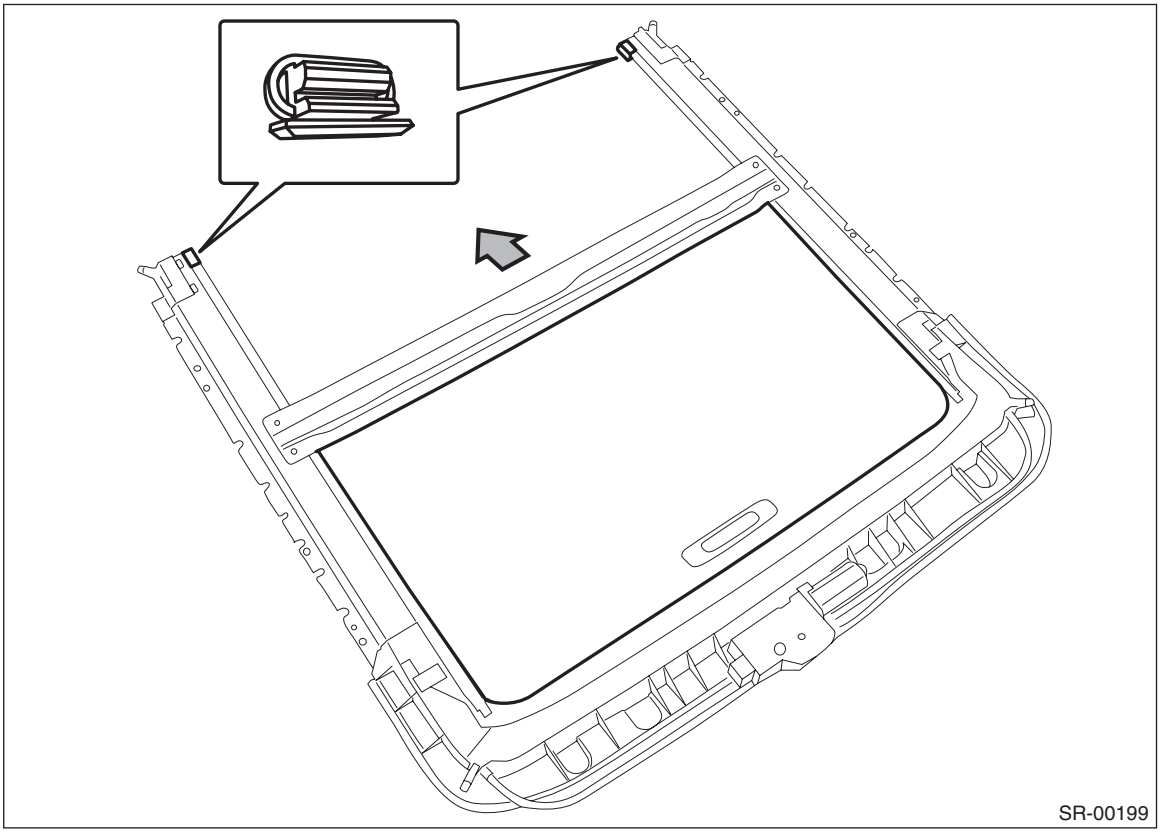

3) Disconnect the claws and then remove the drain holder.

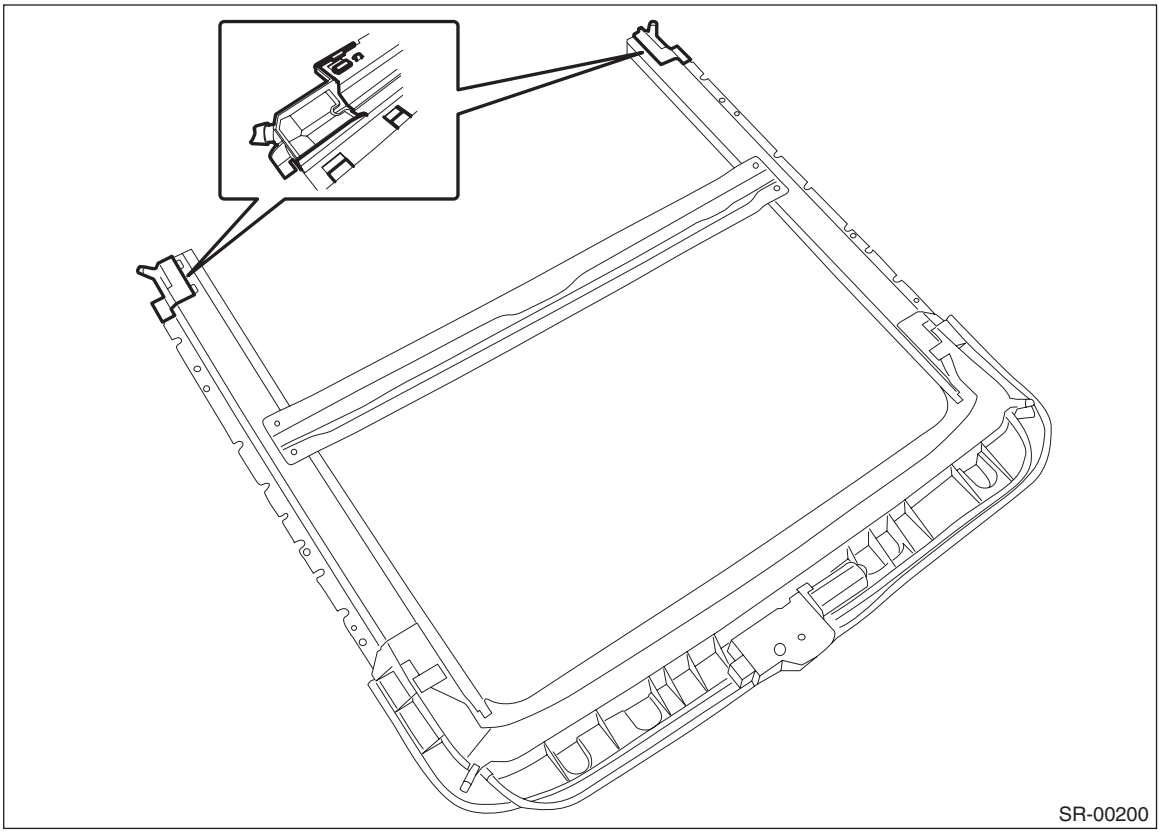

4) Remove the screw and pull out the cable assembly from the rail assembly - sunroof.

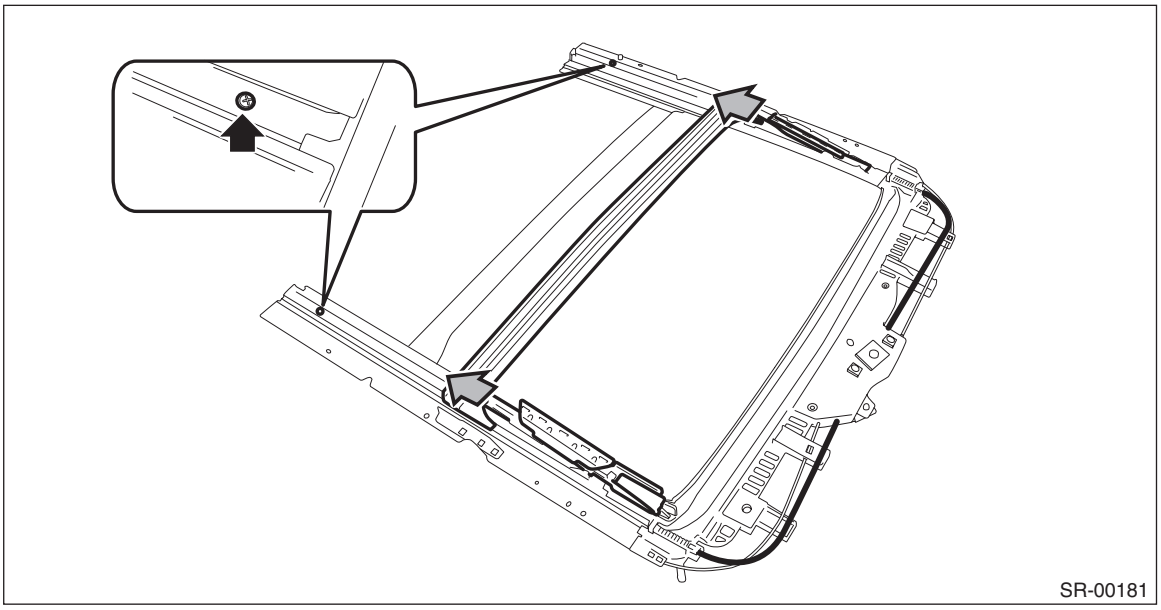

D: ASSEMBLY

1) Insert the cable assembly into the rail assembly - sunroof.
2) Install the drain holder.
3) Insert the sunshade assembly into the rail assembly - sunroof, and install the stopper rubber.
4) Install the sunroof motor.

6. Sunroof Motor

A: REMOVAL

1) Completely close the lid assembly - sunroof.
2) Disconnect the ground cable from battery. <Ref. to NT-6, BATTERY, NOTE, Note.>

NOTE:
For model with battery sensor, disconnect the ground terminal from battery sensor.
3) Remove the light assembly - map. (Models without EyeSight) <Ref. to LI-61, REMOVAL, Spot Map Light.>
4) Remove the stereo camera cover assembly. (Models with EyeSight) <Ref. to ES-8, REMOVAL, Stereo Camera.>
5) Remove the motor assembly - sunroof.
   (1) Disconnect the harness connector.
   (2) Remove the screws and remove the motor assembly - sunroof.

CAUTION:
When removing the motor assembly - sunroof, secure the cable assembly so that it does not move.

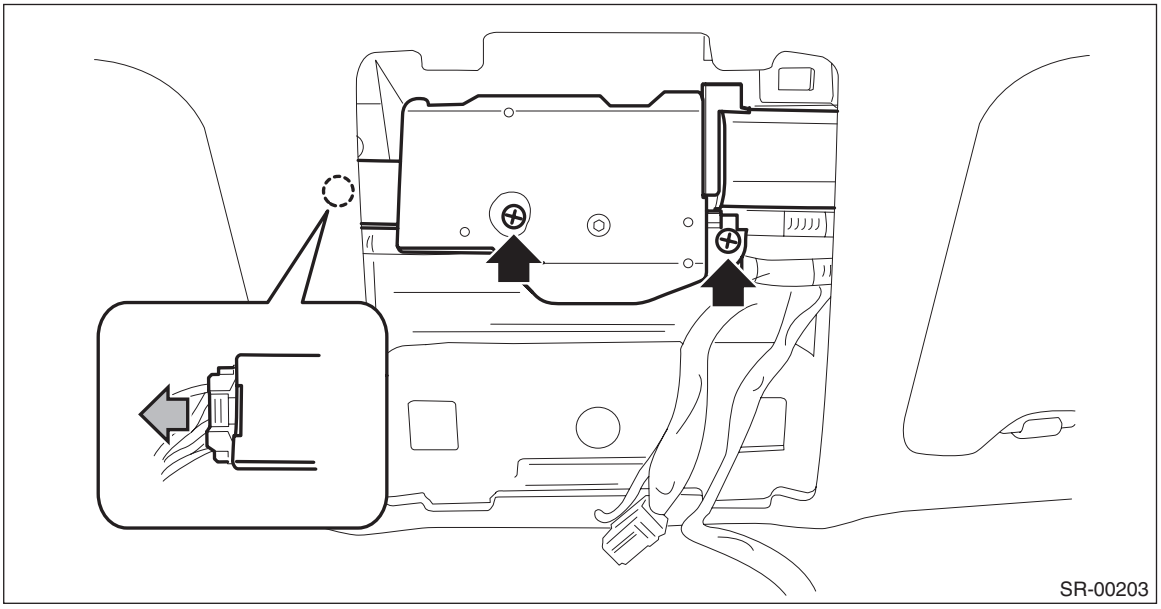

B: INSTALLATION

CAUTION:
• For installation of the stereo camera cover assembly, refer to "INSTALLATION", "Stereo Camera" in the "EyeSight" section and observe the precautions for installation. <Ref. to ES-11, INSTALLATION, Stereo Camera.>
• When installing the motor assembly - sunroof, be careful not to move the cable assembly.
1) Install the motor assembly - sunroof.
2) Install the stereo camera cover assembly. (Models with EyeSight) <Ref. to ES-11, INSTALLATION, Stereo Camera.>
3) Install the light assembly - map. (Models without EyeSight)
4) Connect the battery ground terminal. <Ref. to NT-6, BATTERY, NOTE, Note.>
5) Perform the initialize operation. <Ref. to SR-6, INITIALIZE OPERATION, OPERATION, Sunroof Control System.>
6) Check the operation of sunroof by following the table below.

Operation	Switch position
(1) Lid assembly - sunroof closes completely.	Close
(2) Lid assembly - sunroof is tilted up to the top position.	Tilt up
(3) Lid assembly - sunroof closes completely.	Tilt down
(4) Lid assembly - sunroof opens 295 mm (11.61 in) away from completely closed position.	Open
(5) Lid assembly - sunroof opens completely.	Open
(6) Lid assembly - sunroof closes completely.	Close

C: INSPECTION

Check the auto-reverse mechanism.

CAUTION:
Do not place objects in the way to check the auto-reverse mechanism.
1) Open the lid assembly - sunroof.
2) Push the lid assembly - sunroof in the opening direction with a force of 110±10 N (11.2 kgf, 24.7 lbf±1 kgf, 2.2 lbf) during the auto-closing operation, and check whether the window auto-reverse mechanism functions.

NOTE:
If the auto function is cancelled, perform the initialize operation. <Ref. to SR-6, INITIALIZE OPERATION, OPERATION, Sunroof Control System.>

7. Sunroof Switch

A: REMOVAL

1) Disconnect the ground cable from battery. <Ref. to NT-6, BATTERY, NOTE, Note.>

NOTE:
For model with battery sensor, disconnect the ground terminal from battery sensor.
2) Remove the light assembly - map. (Models without EyeSight) <Ref. to LI-61, REMOVAL, Spot Map Light.>
3) Remove the stereo camera cover assembly. (Models with EyeSight) <Ref. to ES-8, REMOVAL, Stereo Camera.>
4) Release the claws and remove the sunroof switch from the light assembly - map.

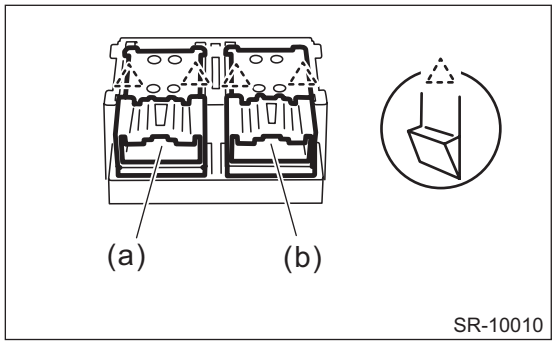

(a) Sunroof switch (tilt)
(b) Sunroof switch (slide)

B: INSTALLATION

CAUTION:
For installation of the stereo camera cover assembly, refer to "INSTALLATION", "Stereo Camera" in the "EyeSight" section and observe the precautions for installation. <Ref. to ES-11, INSTALLATION, Stereo Camera.>
1) Install the sunroof switch.
2) Install the stereo camera cover assembly. (Models with EyeSight) <Ref. to ES-11, INSTALLATION, Stereo Camera.>
3) Install the light assembly - map. (Models without EyeSight)
4) Connect the battery ground terminal. <Ref. to NT-6, BATTERY, NOTE, Note.>

C: INSPECTION

1) Disconnect the harness connector of sunroof switch.
2) Measure the resistance between connector terminals.

Preparation tool:
Circuit tester

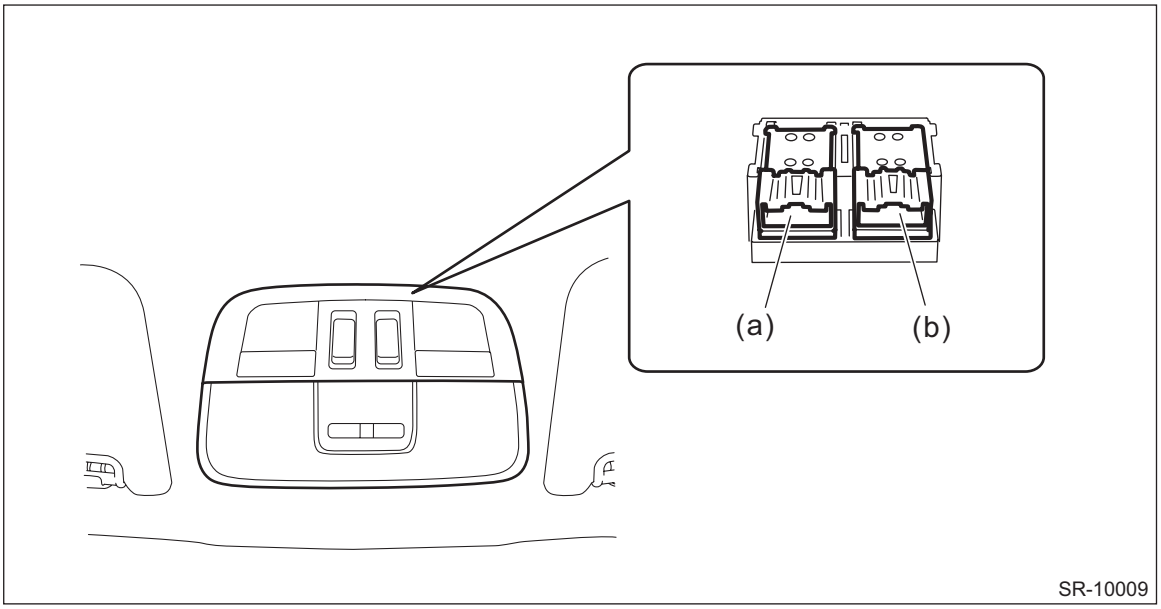

Terminal No.	Inspection conditions	Standard	Connector
1 — 3	Open	Less than 1 Ω	(b): Slide switch
4 — 3	Close	Less than 1 Ω	
1 — 3	Tilt up	Less than 1 Ω	(a): Tilt switch
4 — 3	Tilt down	Less than 1 Ω	

3) Replace the sunroof switch if the inspection result is not within the standard value.

8. Sunshade

A: REMOVAL

1) Disconnect the ground cable from battery. <Ref. to NT-6, BATTERY, NOTE, Note.>

NOTE:
For model with battery sensor, disconnect the ground terminal from battery sensor.
2) Remove the lid assembly - sunroof. <Ref. to SR-7, REMOVAL, Glass Lid.>
3) Remove the trim panel - roof assembly. <Ref. to EI-102, REMOVAL, Roof Trim.>
4) Remove the sunroof assembly. (4 door model) <Ref. to SR-11, REMOVAL, Sunroof Assembly.>
5) Remove the sunshade assembly.

CAUTION:
Be careful not to damage the sunshade assembly.

(1) Attach protective tape (a) on the handle of sunshade assembly.
(2) Remove the left and right stoppers (b).
(3) Remove the sunshade assembly while pulling the center of the brace downward.

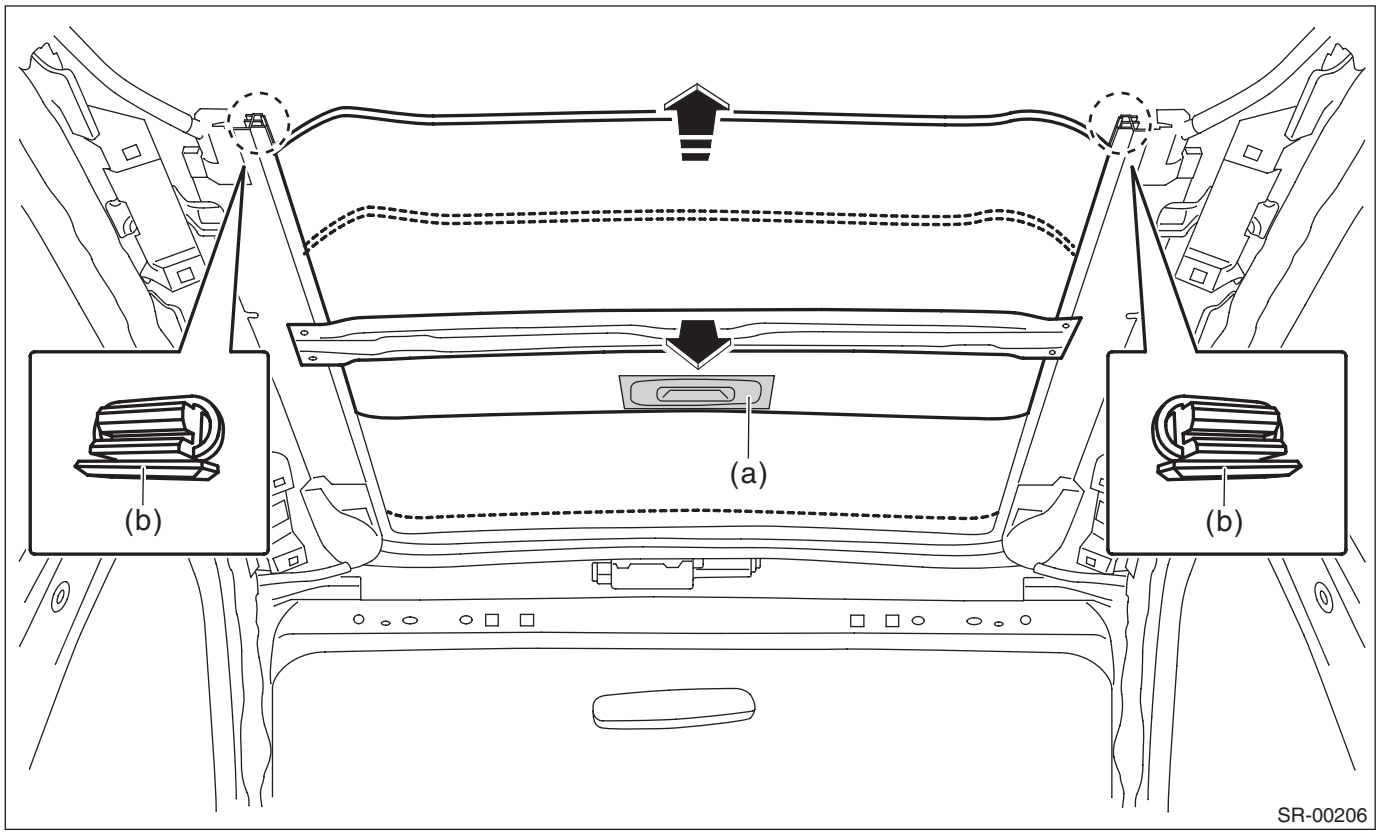

B: INSTALLATION

CAUTION:
For installation of the stereo camera cover assembly, refer to "INSTALLATION", "Stereo Camera" in the "EyeSight" section and observe the precautions for installation. <Ref. to ES-11, INSTALLATION, Stereo Camera.>

1) Attach protective tape on the handle and the edge surface of the sunshade assembly, and install the sunshade assembly.
2) Install the drain holder.
3) Install the sunroof assembly. <Ref. to SR-14, INSTALLATION, Sunroof Assembly.>
4) Install the trim panel - roof assembly. <Ref. to EI-104, INSTALLATION, Roof Trim.>
5) Install the lid assembly - sunroof. <Ref. to SR-7, REMOVAL, Glass Lid.>
6) Connect the battery ground terminal. <Ref. to NT-6, BATTERY, NOTE, Note.>

C: INSPECTION

1. MOVING LOAD OF SUNSHADE ASSEMBLY

1) Attach a spring scale together with a cloth to the edge of sunshade assembly.
2) Pull the spring scale to check the moving load of the sunshade assembly.

Moving load of sunshade assembly:
14±6 N (1.43 kgf, 3.1 lbf±0.61 kgf, 1.3 lbf)

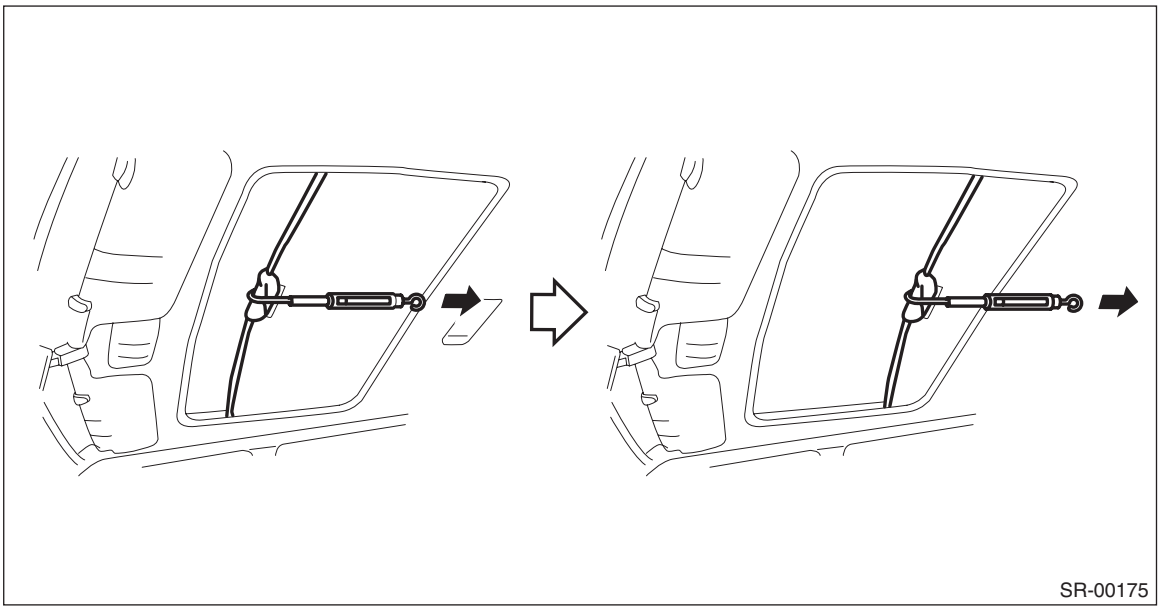

NOTE:
Moving load is larger at the beginning of pulling a spring scale, so take a spring scale reading while the sunshade assembly is sliding smoothly.
3) If the inspection result exceeds the standard, check that the sunshade assembly or the rail assembly - sunroof is installed properly. If necessary, replace the sunshade assembly or the rail assembly - sunroof.

EXTERIOR/INTERIOR TRIM

EI

		Page
1.	General Description	2
2.	Front Under Cover	22
3.	Mud Guard	24
4.	Floor Under Protector	26
5.	Fuel Tank Protector	27
6.	Front Hood Duct	28
7.	Front Grille	29
8.	Front Bumper	31
9.	Rear Bumper	41
10.	Cowl Panel	45
11.	Roof Molding	48
12.	Side Garnish	50
13.	Trunk Lid Garnish	52
14.	Rear Spoiler	53
15.	Heat Shield Cover	55
16.	Ornament	56
17.	Door Trim	57
18.	Instrument Panel Lower Cover	62
19.	Glove Box	64
20.	Center Console	66
21.	Console Box	67
22.	Instrument Panel Assembly	72
23.	Lower Inner Trim	84
24.	Upper Inner Trim	88
25.	Rear Quarter Trim	92
26.	Rear Shelf Trim	95
27.	Trunk Room Trim	98
28.	Sun Visor	100
29.	Assist Grip	101
30.	Roof Trim	102
31.	Floor Mat	107

1. General Description

A: COMPONENT

1. FRONT UNDER COVER

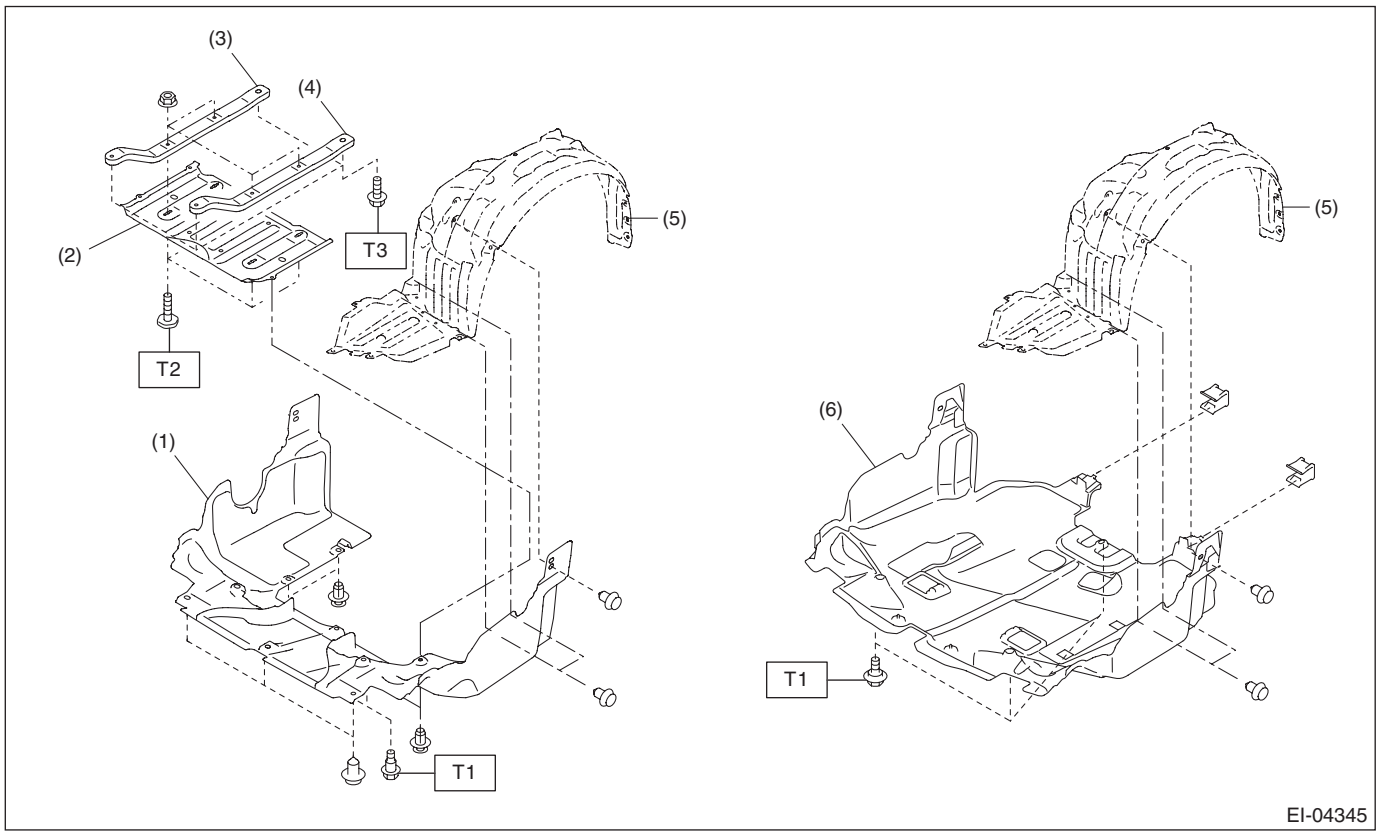

(1)	Under cover - front (except for STI model)	(4)	Frame - under cover LH (except for STI model)	***Tightening torque: N·m (kgf-m, ft-lb)***
(2)	Plate - CTR (except for STI model)	(5)	Mud guard - front	***T1: 18 (1.8, 13.3)***
(3)	Frame - under cover RH (except for STI model)	(6)	Under cover - front (STI model)	***T2: 20 (2, 14.8)***
				T3: 25 (2.5, 18.4)

2. MUD GUARD

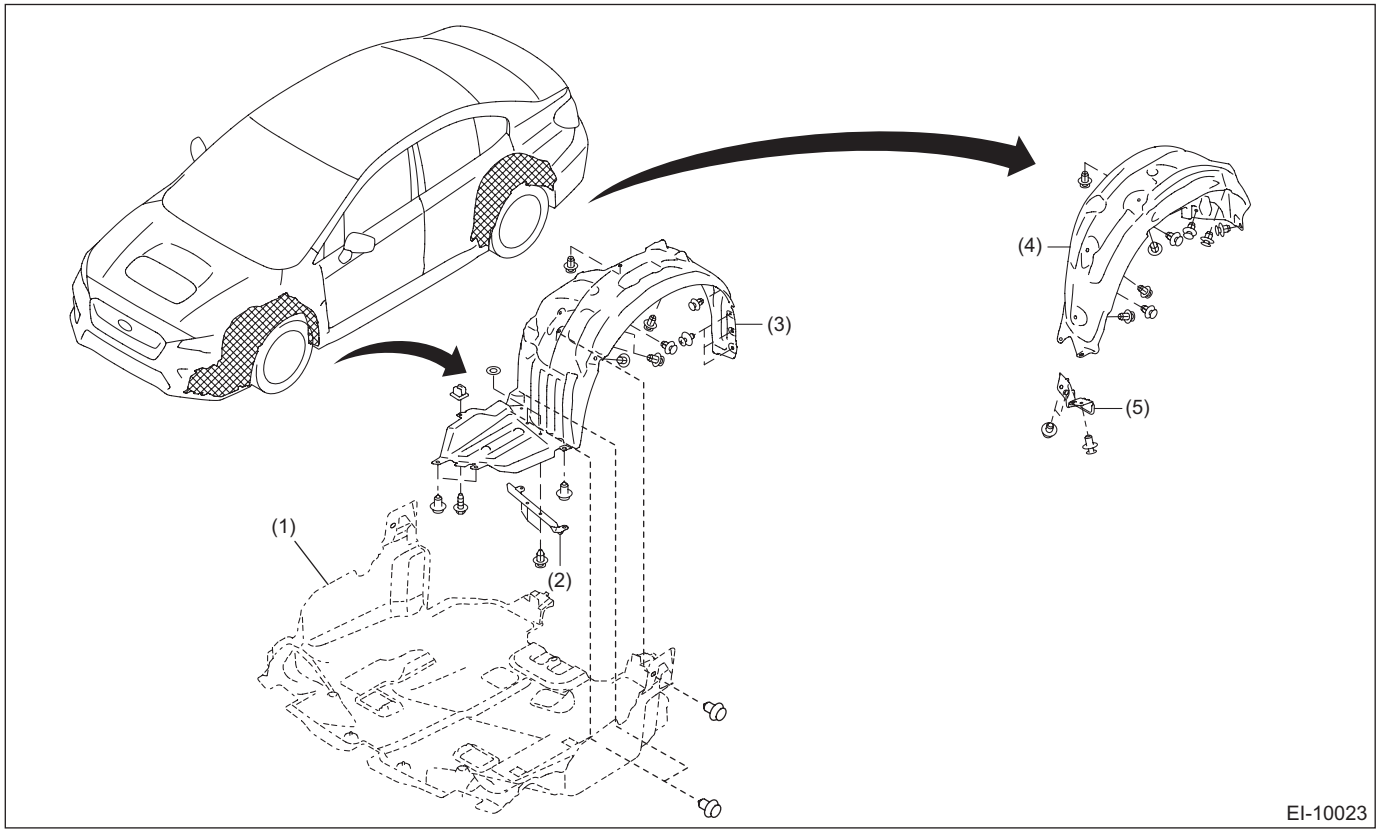

(1) Under cover - front
(2) Plate air flap - front
(3) Mud guard - front
(4) Mud guard - rear
(5) Plate air flap - rear

3. FLOOR UNDER PROTECTOR

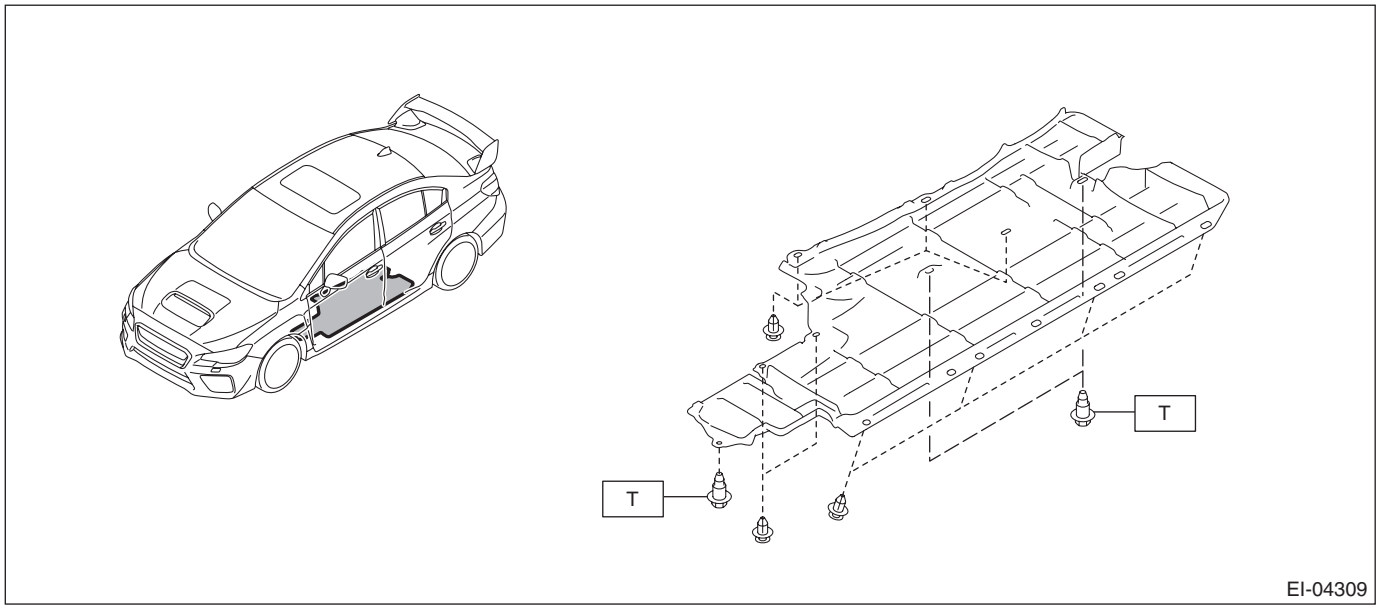

Tightening torque: N·m (kgf-m, ft-lb)
T: 7.5 (0.8, 5.5)

4. FUEL TANK PROTECTOR

For exploded view of the fuel tank protector, refer to “FUEL TANK” of “FUEL INJECTION” section.

- STI model: <Ref. to FU(STI)-66, REMOVAL, Fuel Tank Protector.>
- Except for STI model: <Ref. to FU(w/o STI)-144, REMOVAL, Fuel Tank Protector.>

5. PROTECTOR OIL COVER

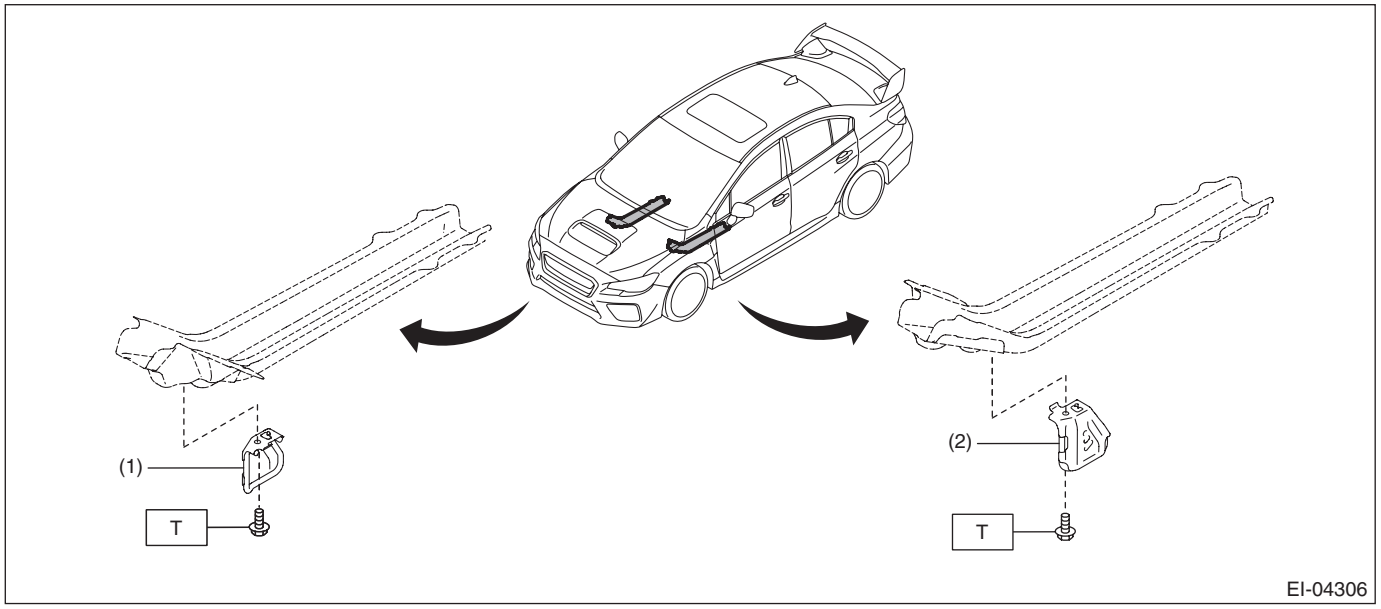

(1) Protector oil cover RH (CVT model)
(2) Protector oil cover LH (CVT model)

Tightening torque: N·m (kgf-m, ft-lb)

T: 100 (10.2, 73.8)

6. FRONT HOOD GRILLE

For exploded view of the front hood grille, refer to “FRONT HOOD” of “EXTERIOR BODY PANELS” section. <Ref. to EB-2, FRONT HOOD, COMPONENT, General Description.>

7. FRONT GRILLE

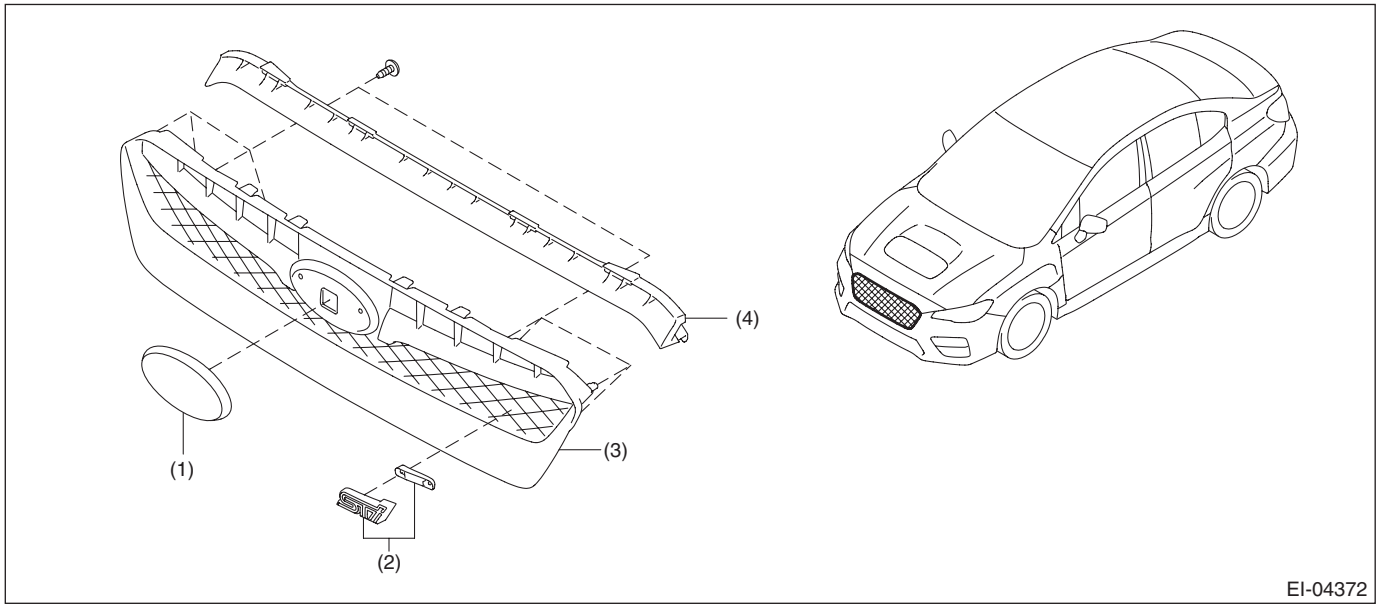

(1) Front grille emblem
(2) Ornament
(3) Front grille ASSY
(4) Spacer grille - front

8. FRONT BUMPER

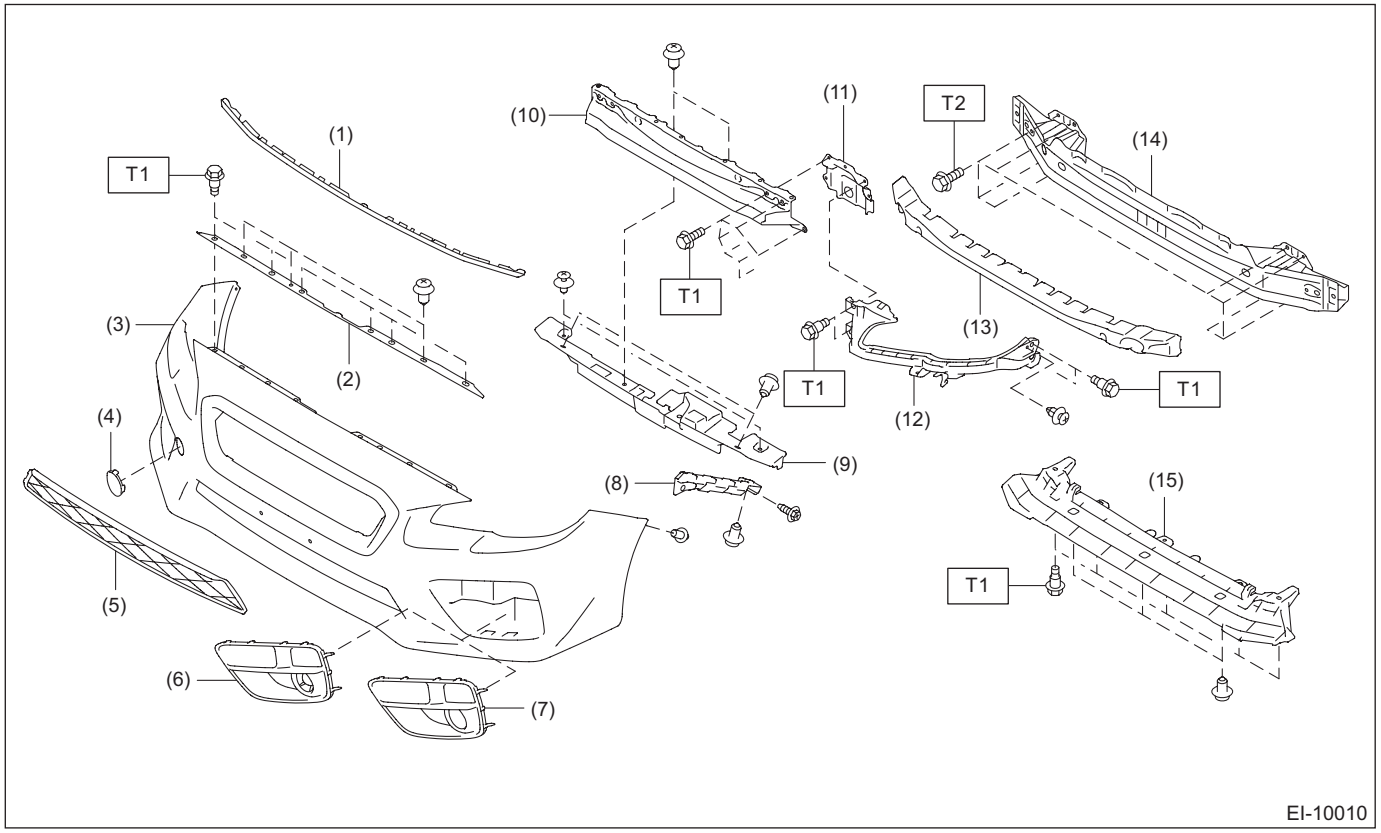

(1) Sealing bumper - front
(2) Plate UPR - front
(3) Bumper face - front
(4) Cover hook - front
(5) Cover intake - front
(6) Cover - fog light (model without fog light)
(7) Cover - fog light (model with fog light)
(8) Bracket - front bumper side
(9) Cover UPR - front
(10) Energy absorber plate - front
(11) Bracket UPR - COMPL
(12) Bracket - front bumper corner
(13) Energy absorber foam
(14) Bumper beam COMPL - front
(15) Bracket center lower - front

Tightening torque: N·m (kgf-m, ft-lb)
T1: 7.5 (0.8, 5.5)
T2: 32 (3.3, 23.6)

9. REAR BUMPER

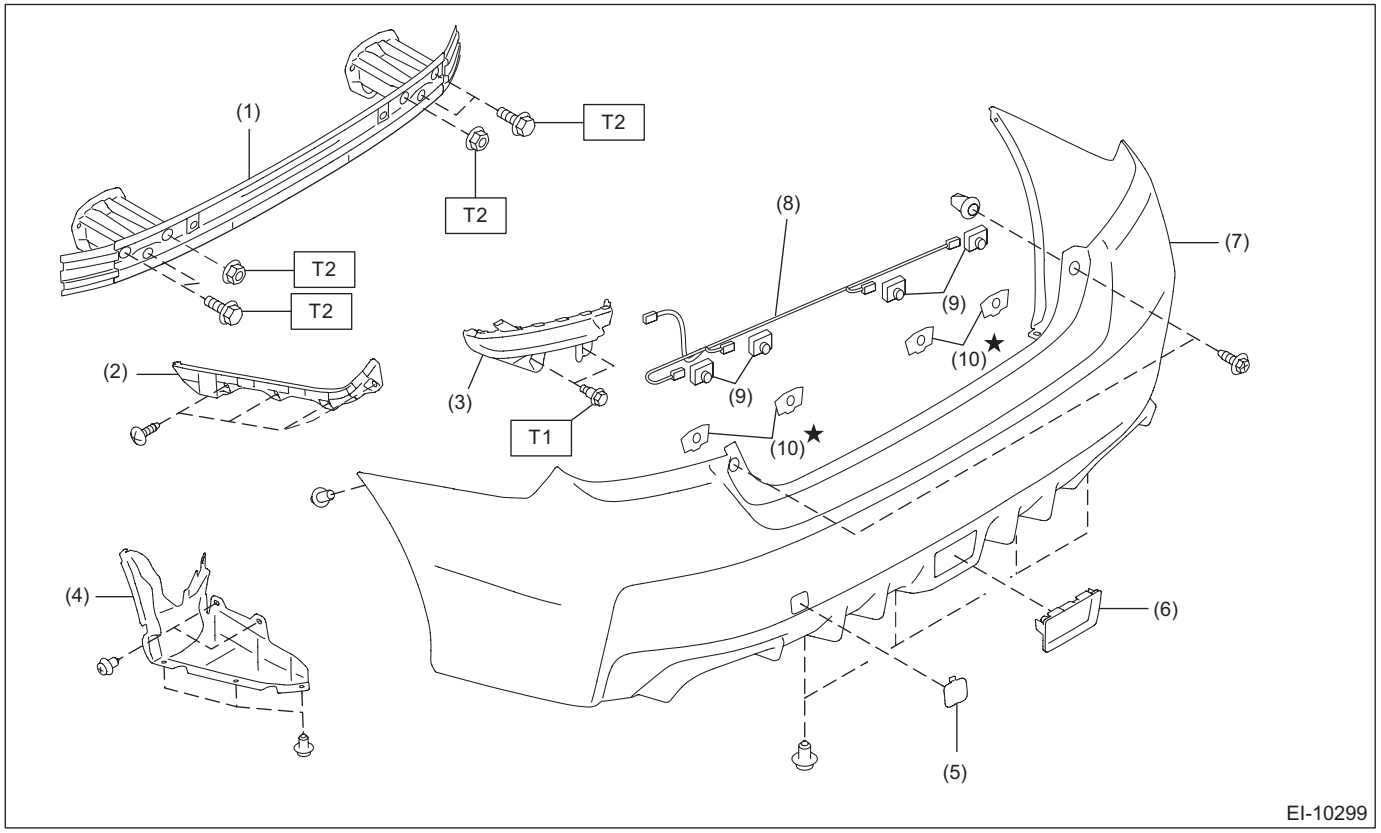

(1) Bumper beam COMPL - rear
(2) Bracket - rear bumper side
(3) Bracket - rear bumper corner
(4) Cover - rear bumper side
(5) Cover - rear bumper A
(6) Cover - rear bumper B
(7) Bumper face - rear
(8) Cord ASSY - sonar
(9) Sonar - sensor
(10) Holder - sonar

Tightening torque: N·m (kgf-m, ft-lb)
T1: 7.5 (0.8, 5.5)
T2: 70 (7.1, 51.6)

10.COWL PANEL

- Models without EyeSight

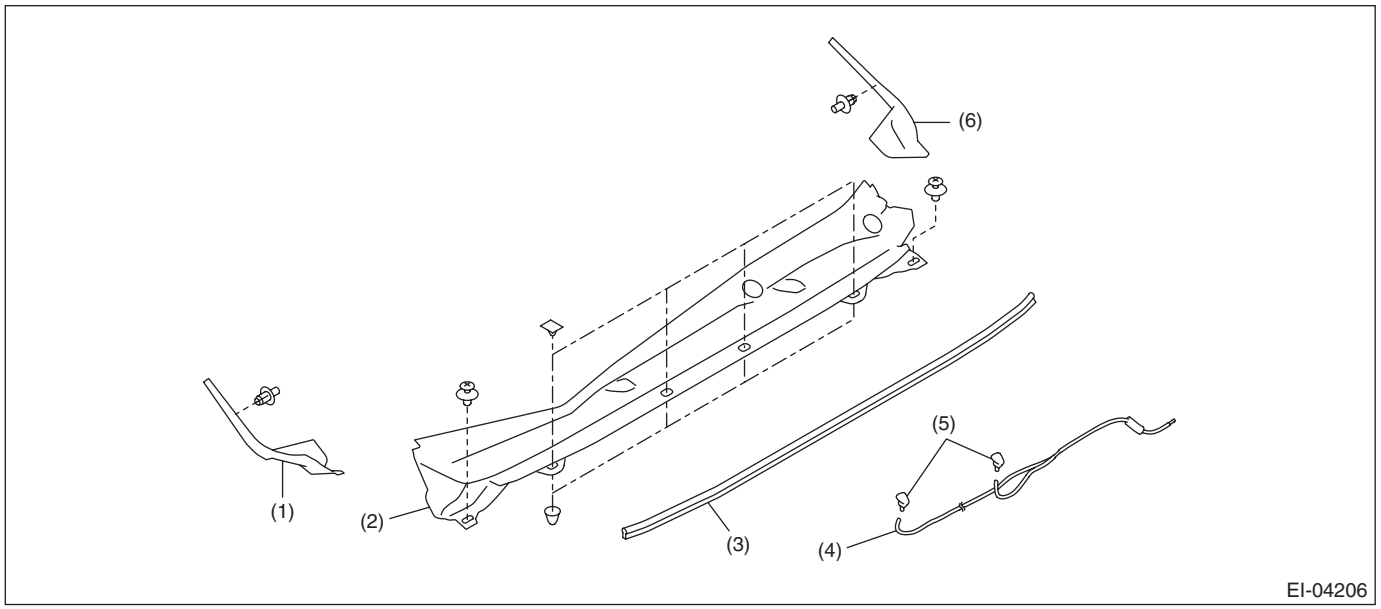

(1) Cowl panel - side RH
(2) Cowl panel ASSY
(3) Seal - front panel
(4) Hose - windshield washer
(5) Nozzle - windshield washer
(6) Cowl panel - side LH

- Models with EyeSight

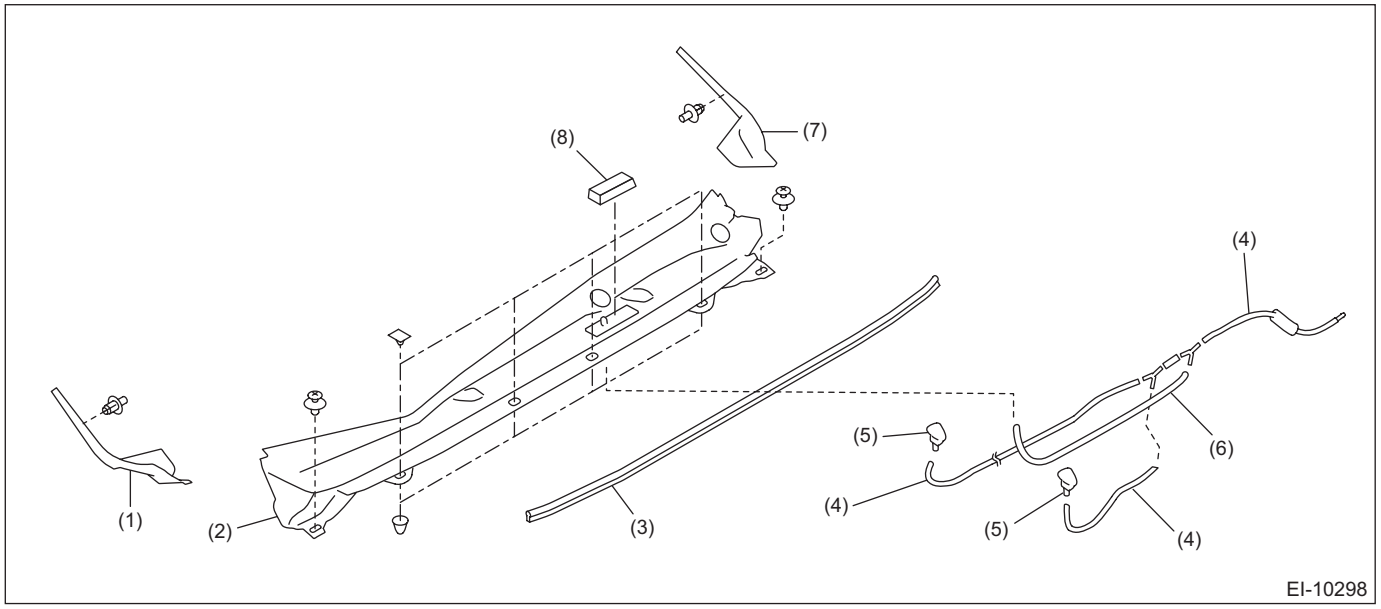

(1) Cowl panel - side RH
(2) Cowl panel ASSY
(3) Seal - front panel
(4) Hose - windshield washer
(5) Nozzle - windshield washer
(6) Hose - wiper arm washer
(7) Cowl panel - side LH
(8) Cover - joint

11.ROOF MOLDING

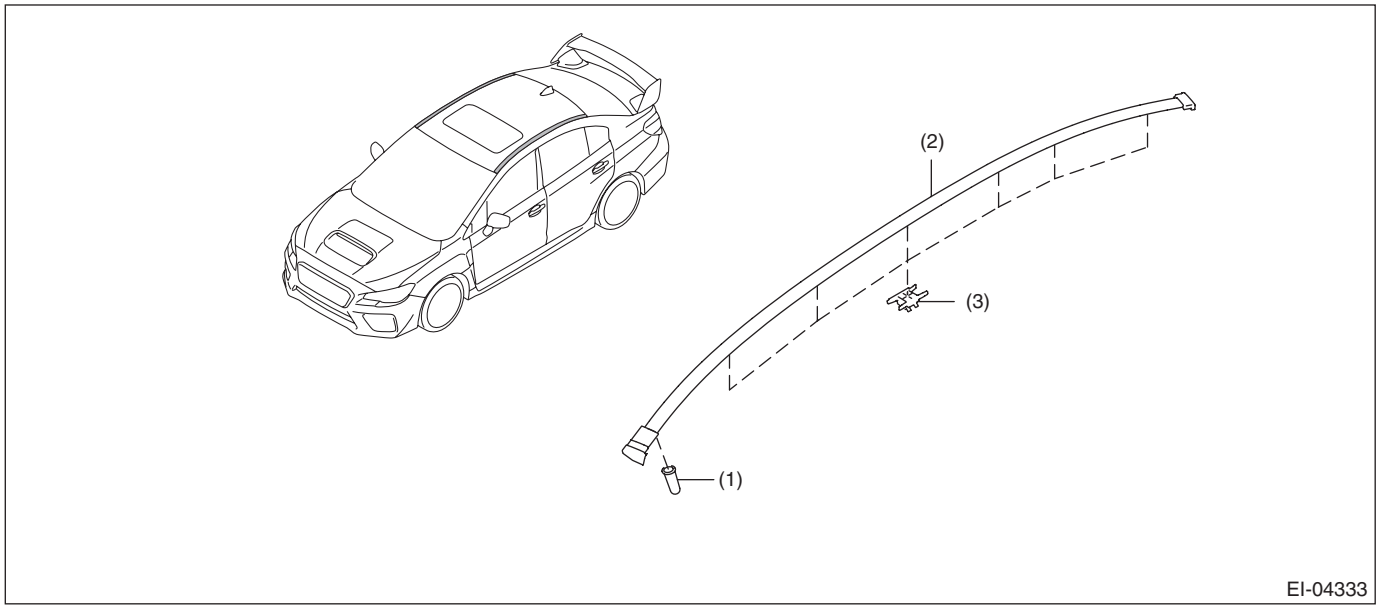

(1) Rivet
(2) Molding - roof
(3) Fastener

12.SIDE GARNISH

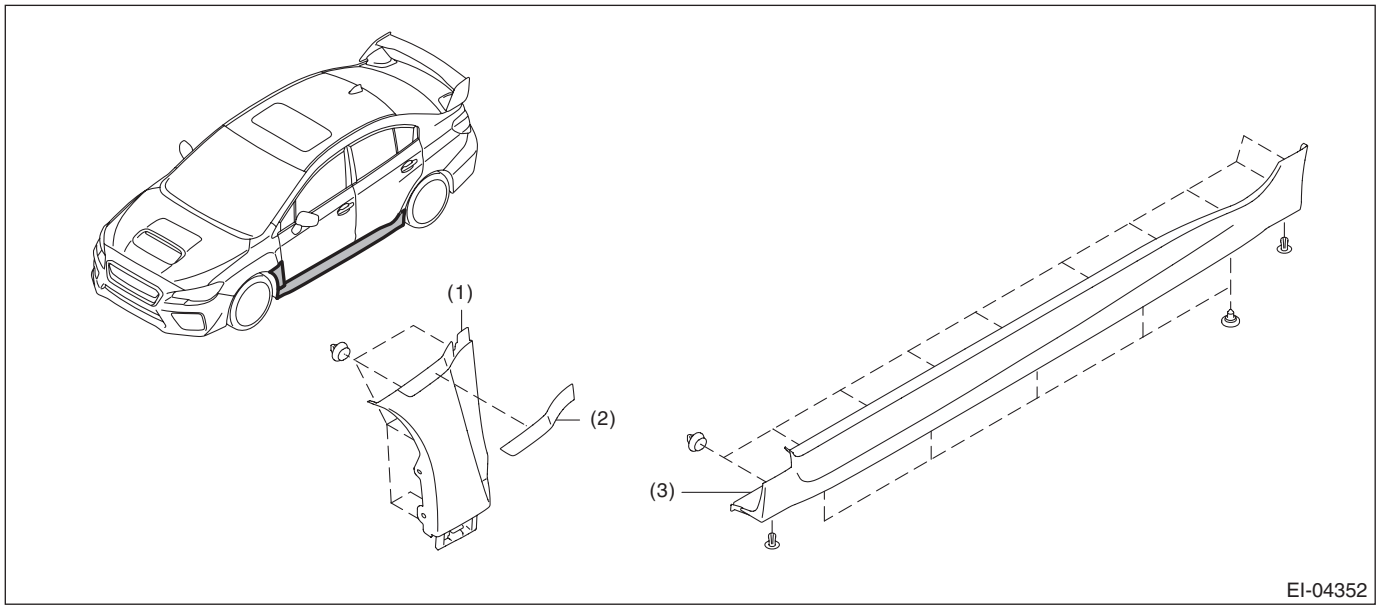

(1) Garnish ASSY - fender
(2) Molding
(3) Spoiler ASSY - side

13.TRUNK LID GARNISH

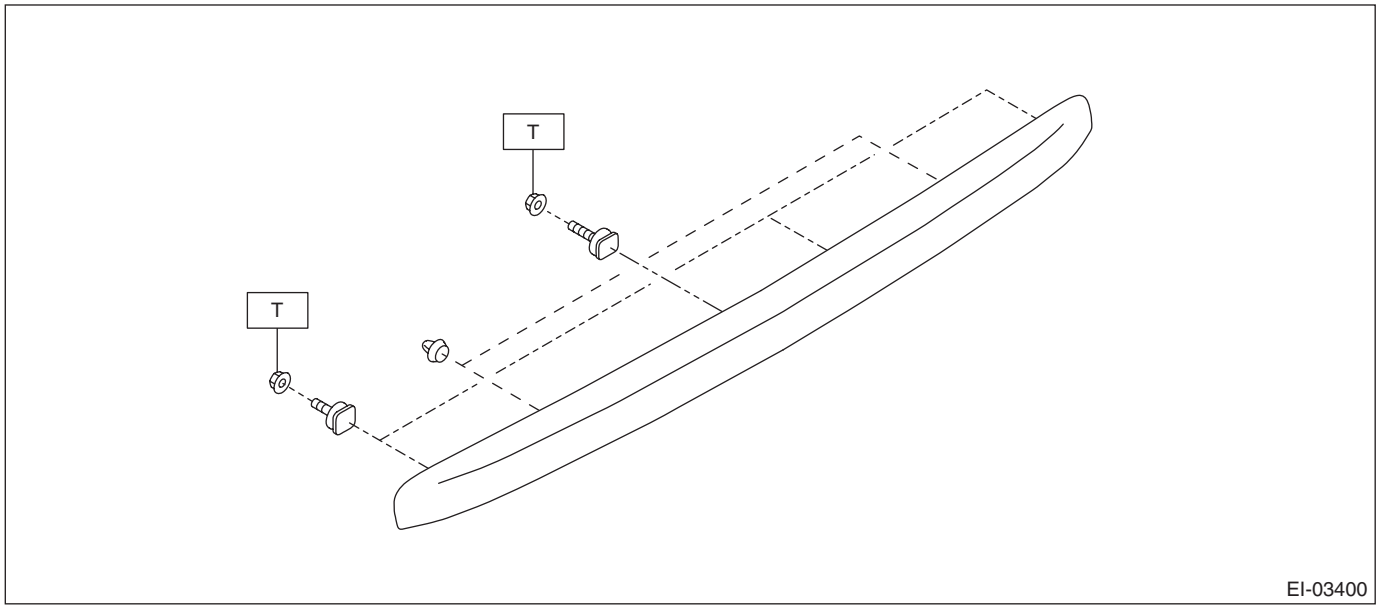

Tightening torque: N·m (kgf-m, ft-lb)
T: 4.5 (0.5, 3.3)

14.REAR SPOILER

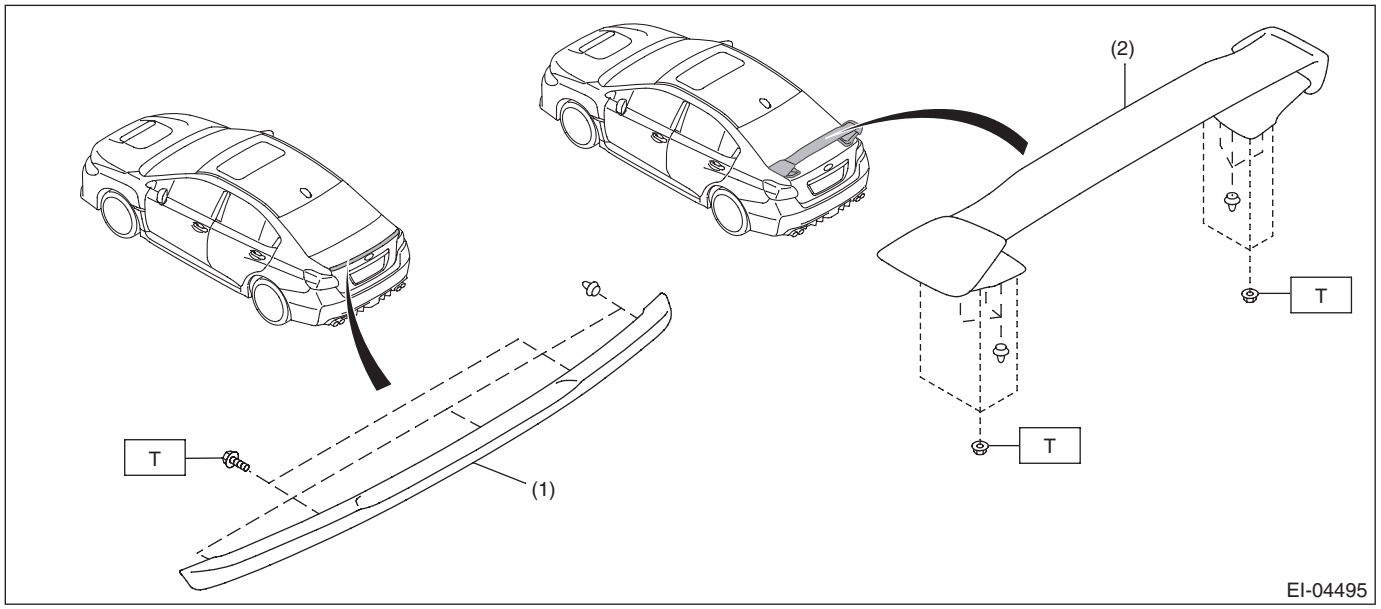

(1) Rear spoiler ASSY (small type)
(2) Rear spoiler ASSY (large type)

Tightening torque: N·m (kgf-m, ft-lb)
T: 7.5 (0.8, 5.5)

15.DOOR TRIM

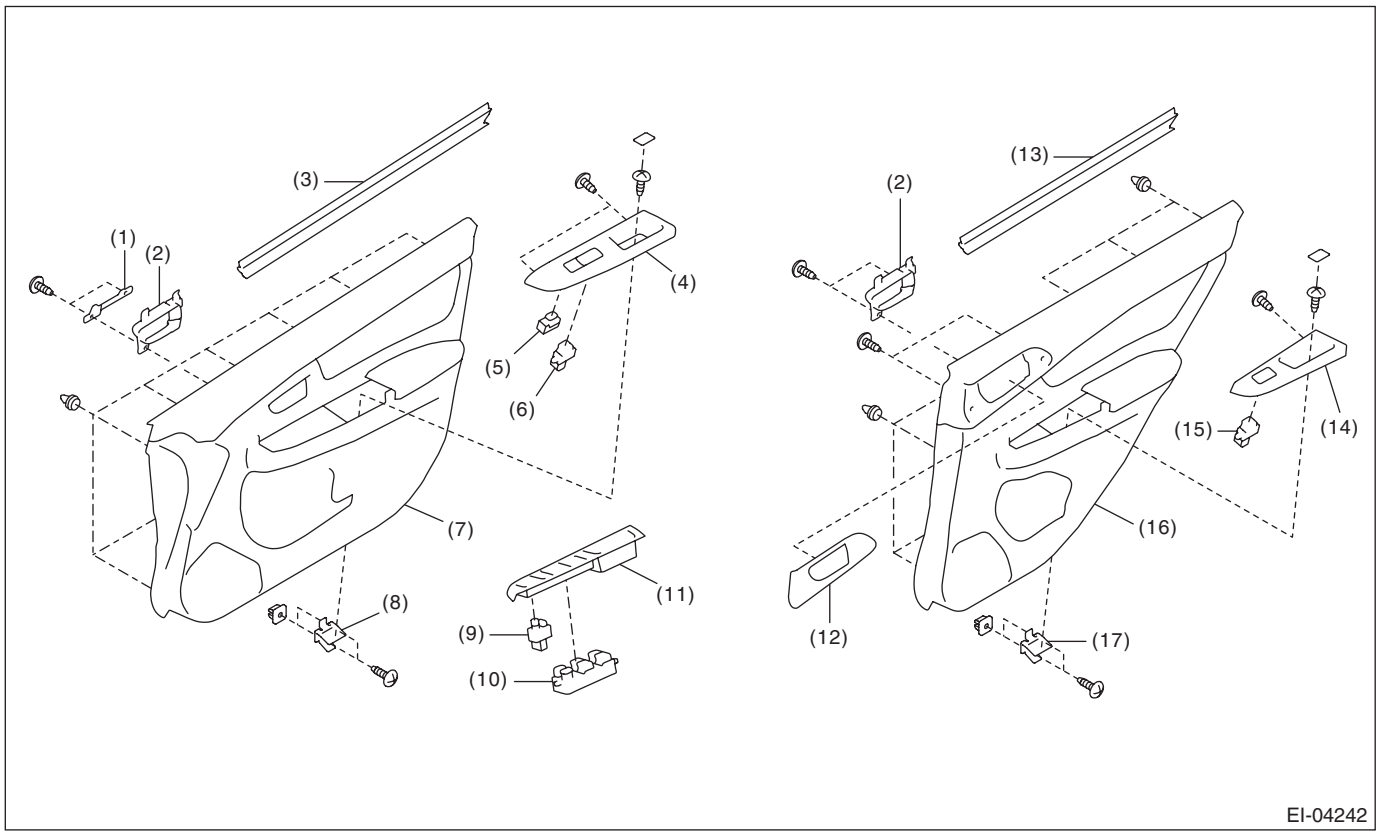

(1)	Plate	(7)	Trim panel - front door	(13)	Weather strip - door rear INN
(2)	Remote ASSY - door	(8)	Bracket - door trim front	(14)	Panel - power window sub-switch rear
(3)	Weather strip - door front INN	(9)	Switch - door mirror	(15)	Switch - power window sub rear
(4)	Panel - power window sub-switch front	(10)	Switch - power window main	(16)	Trim panel - rear door
(5)	Switch - door lock sub	(11)	Panel - power window main switch	(17)	Bracket - door trim rear
(6)	Switch - power window sub front	(12)	Cover - remote rear door		

16.CONSOLE BOX

- STI model

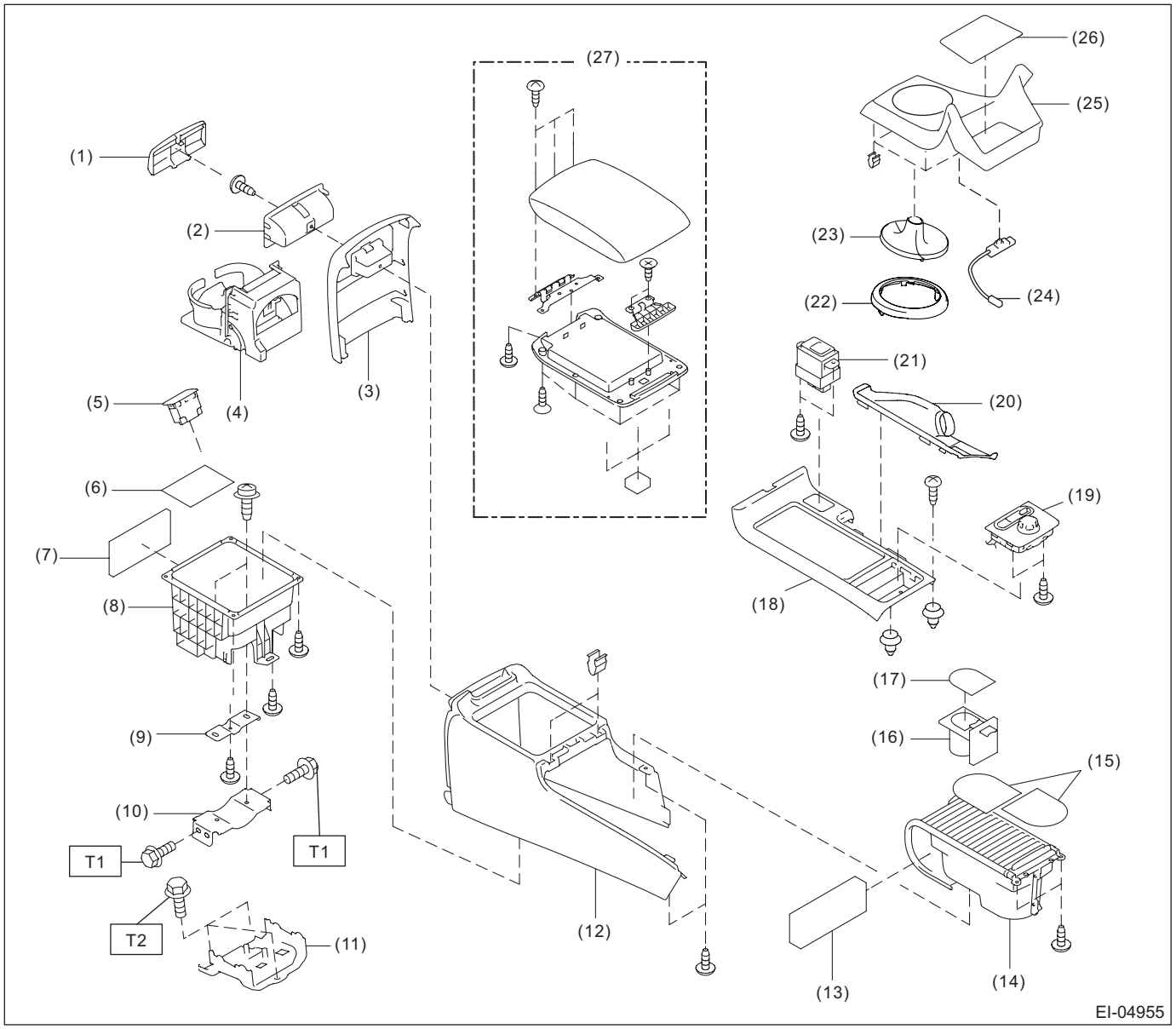

(1) End cap - console box
(2) Cap - console box
(3) End cover - console box
(4) Rear - cup holder ASSY
(5) AUX input terminal
(6) Mat - console pocket
(7) Cushion - console
(8) Pocket - console
(9) Bracket - console A
(10) Bracket - console B
(11) Bracket - console box
(12) Console box outer
(13) Pad - console
(14) Cup holder ASSY
(15) Mat - cup holder A
(16) Case - cup holder
(17) Mat - cup holder B
(18) Console cover
(19) Switch ASSY - SI-DRIVE
(20) Boot - parking brake
(21) Switch ASSY - seat heater
(22) Ring cover - front
(23) Boot - shift lever
(24) Antenna - interior front
(25) Cover front
(26) Mat
(27) Lid ASSY - console box

Tightening torque: N·m (kgf-m, ft-lb)
T1: 6.5 (0.7, 4.8)
T2: 18 (1.8, 13.3)

- Except for STI model

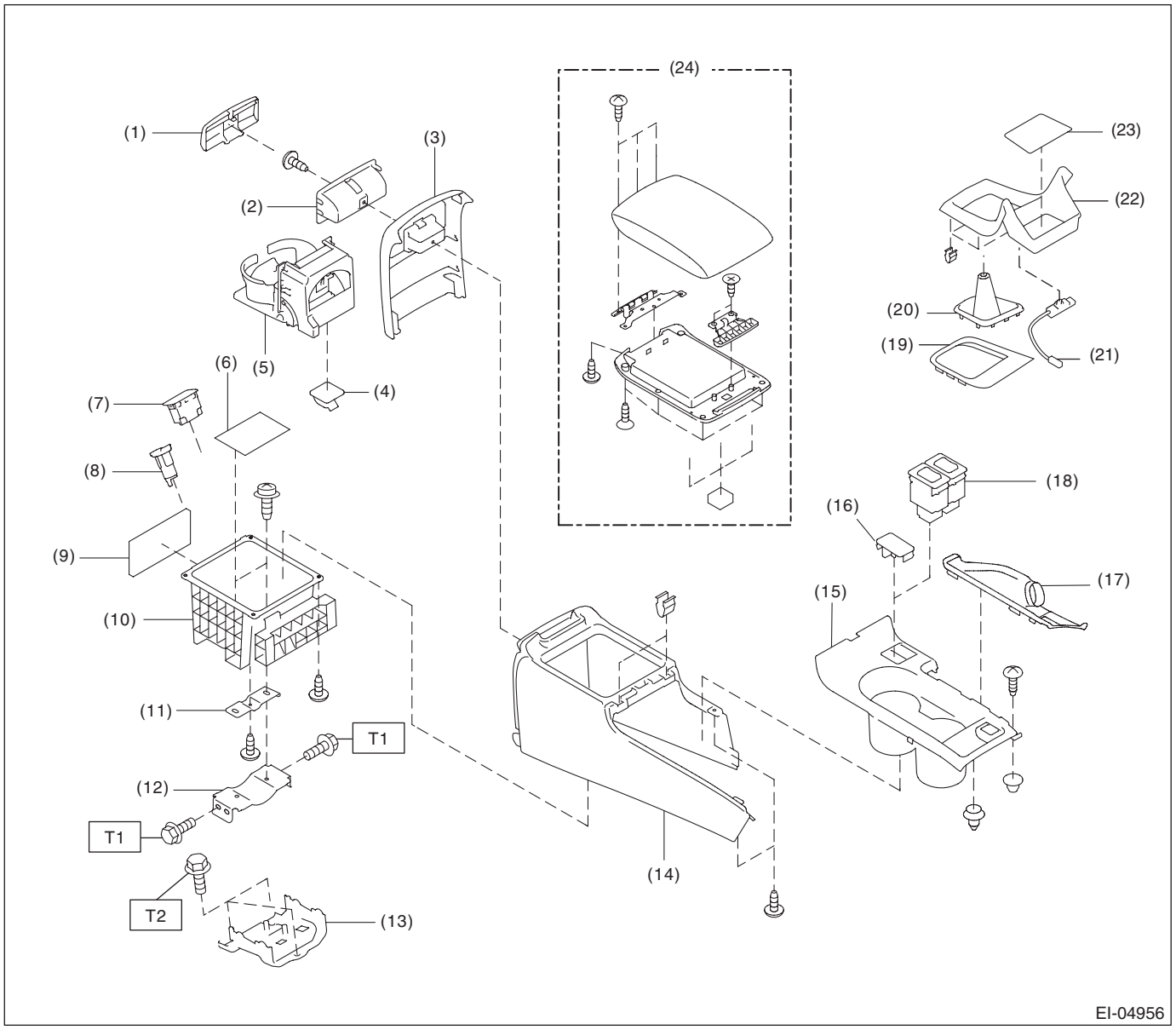

(1) End cap - console box
(2) Cap - console box
(3) End cover - console box
(4) Clamp
(5) Rear - cup holder ASSY
(6) Mat - console pocket
(7) AUX input terminal
(8) Accessory power supply socket
(9) Cushion - console
(10) Pocket - console
(11) Bracket - console A
(12) Bracket - console B
(13) Bracket - console box
(14) Console box outer
(15) Console cover
(16) Cap
(17) Boot - parking brake
(18) Switch ASSY - seat heater
(19) Ring cover - front
(20) Boot - shift lever
(21) Antenna - interior front
(22) Cover front
(23) Mat
(24) Lid ASSY - console box

Tightening torque: N·m (kgf-m, ft-lb)
T1: 6.5 (0.7, 4.8)
T2: 18 (1.8, 13.3)

- Except for STI model (electronic parking brake model)

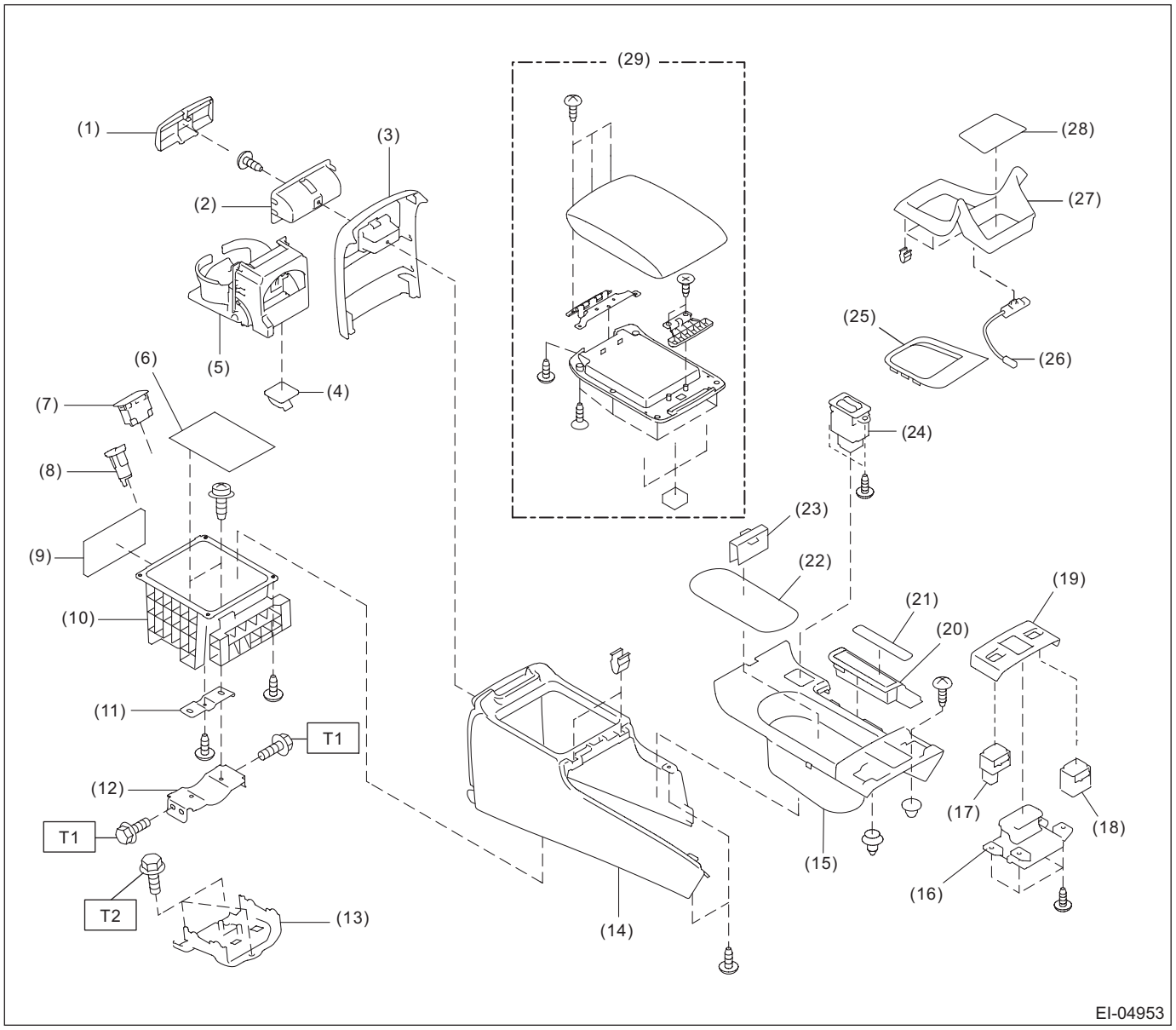

(1)	End cap - console box	(12)	Bracket - console B	(23)	Partition - cup holder
(2)	Cap - console box	(13)	Bracket - console box	(24)	Switch - seat heater
(3)	End cover - console box	(14)	Console box outer	(25)	Ring cover - front
(4)	Clamp	(15)	Console cover	(26)	Antenna - interior front
(5)	Rear - cup holder ASSY	(16)	Switch ASSY - electronic parking brake	(27)	Cover front
(6)	Mat - console pocket	(17)	Cap - switch console	(28)	Mat B
(7)	AUX input terminal	(18)	Switch ASSY - hill hold	(29)	Lid ASSY - console box
(8)	Accessory power supply socket	(19)	Cover ASSY - rear electronic parking brake		
(9)	Cushion - console	(20)	Cover - pocket		
(10)	Pocket - console	(21)	Mat A		
(11)	Bracket - console A	(22)	Mat C		

Tightening torque: N·m (kgf-m, ft-lb)
T1: 6.5 (0.7, 4.8)
T2: 18 (1.8, 13.3)

17.INSTRUMENT PANEL

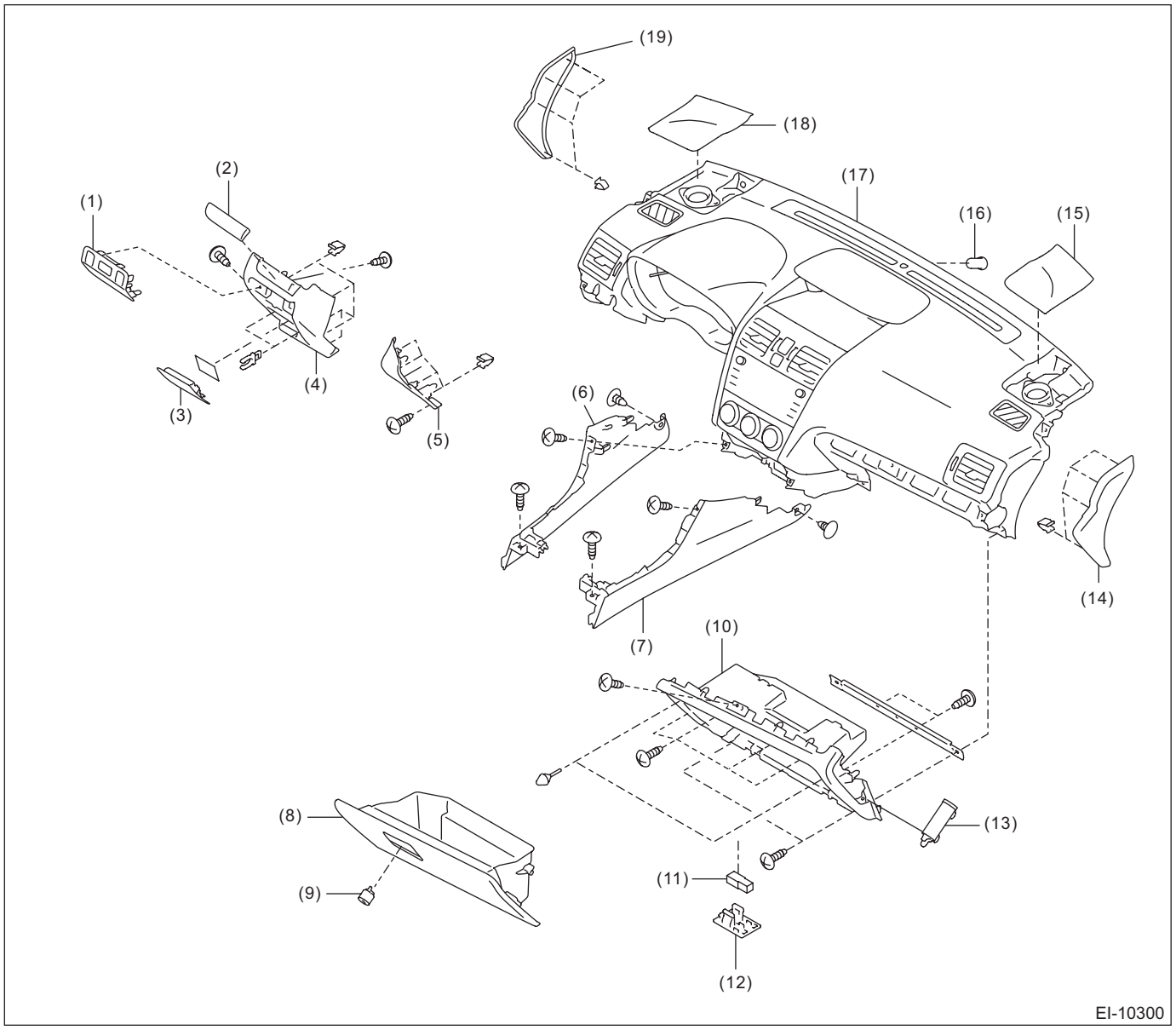

(1) Panel - switch
(2) Ornament - panel ASSY driver
(3) Lid ASSY - fuse box
(4) Cover ASSY - instrument panel LWR driver OUT
(5) Cover ASSY - instrument panel LWR driver INN
(6) Panel center LWR LH
(7) Panel center LWR RH
(8) Pocket ASSY
(9) Key cylinder - pocket
(10) Back panel - pocket
(11) Light - pocket
(12) Holder
(13) Damper COMPL - pocket
(14) Cover - instrument panel side RH
(15) Grille speaker side RH
(16) Cap - guide pin
(17) Panel COMPL - instrument
(18) Grille speaker side LH
(19) Cover - instrument panel side LH

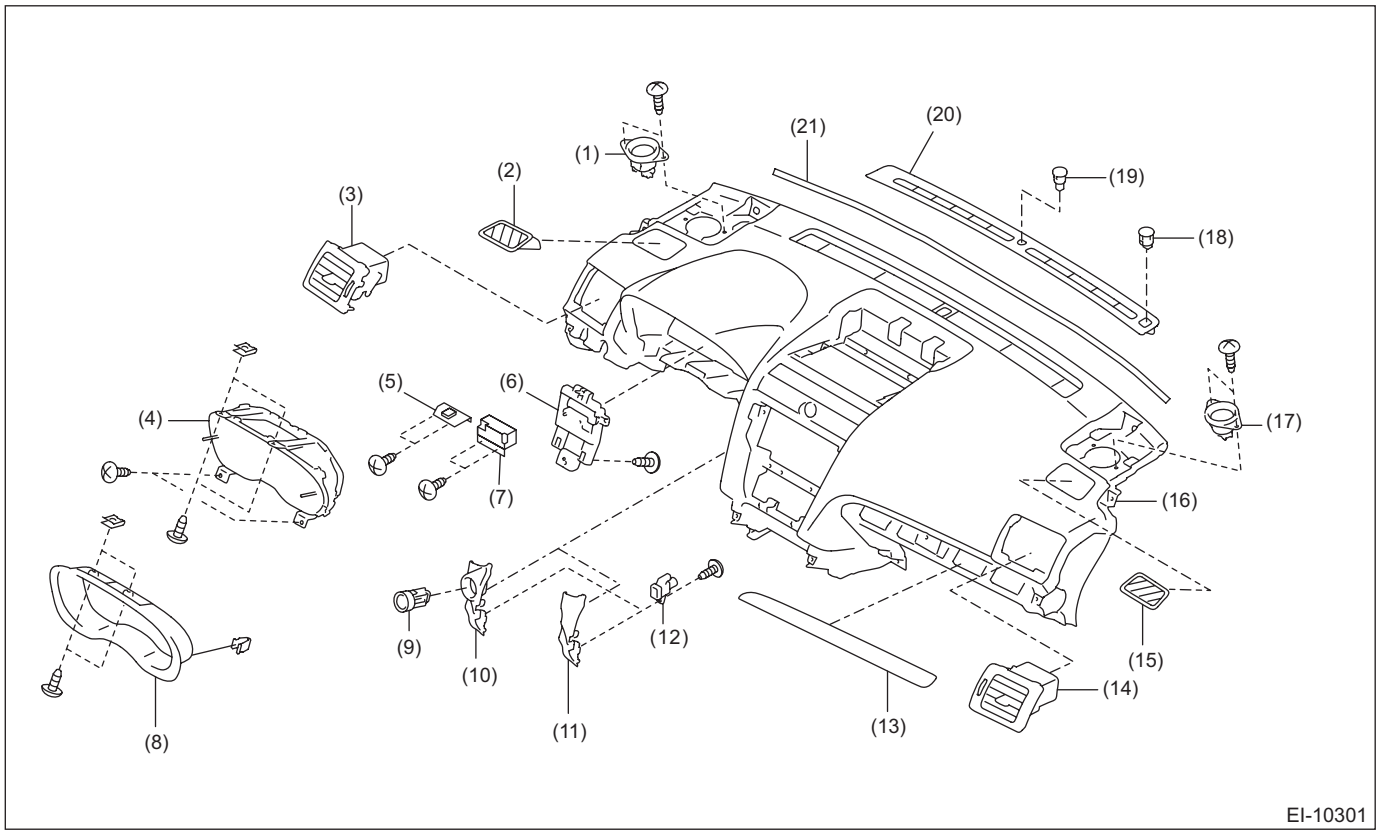

(1) Speaker ASSY - tweeter LH
(2) Grille defroster - front LH
(3) Grille ASSY - ventilation LH
(4) Combination meter ASSY
(5) Antenna ASSY - GPS
(6) Reinforcement - combination meter
(7) SUB antenna ASSY - telematics
(8) Visor - combination meter
(9) Switch - push button start
(10) Panel - switch
(11) Cover - switch starter
(12) Case - sensor
(13) Ornament - panel ASSY passenger
(14) Grille ASSY - ventilation RH
(15) Grille defroster - front RH
(16) Panel COMPL - instrument
(17) Speaker ASSY - tweeter RH
(18) Sensor - automatic light
(19) Sunload sensor
(20) Grille front defroster
(21) Cushion

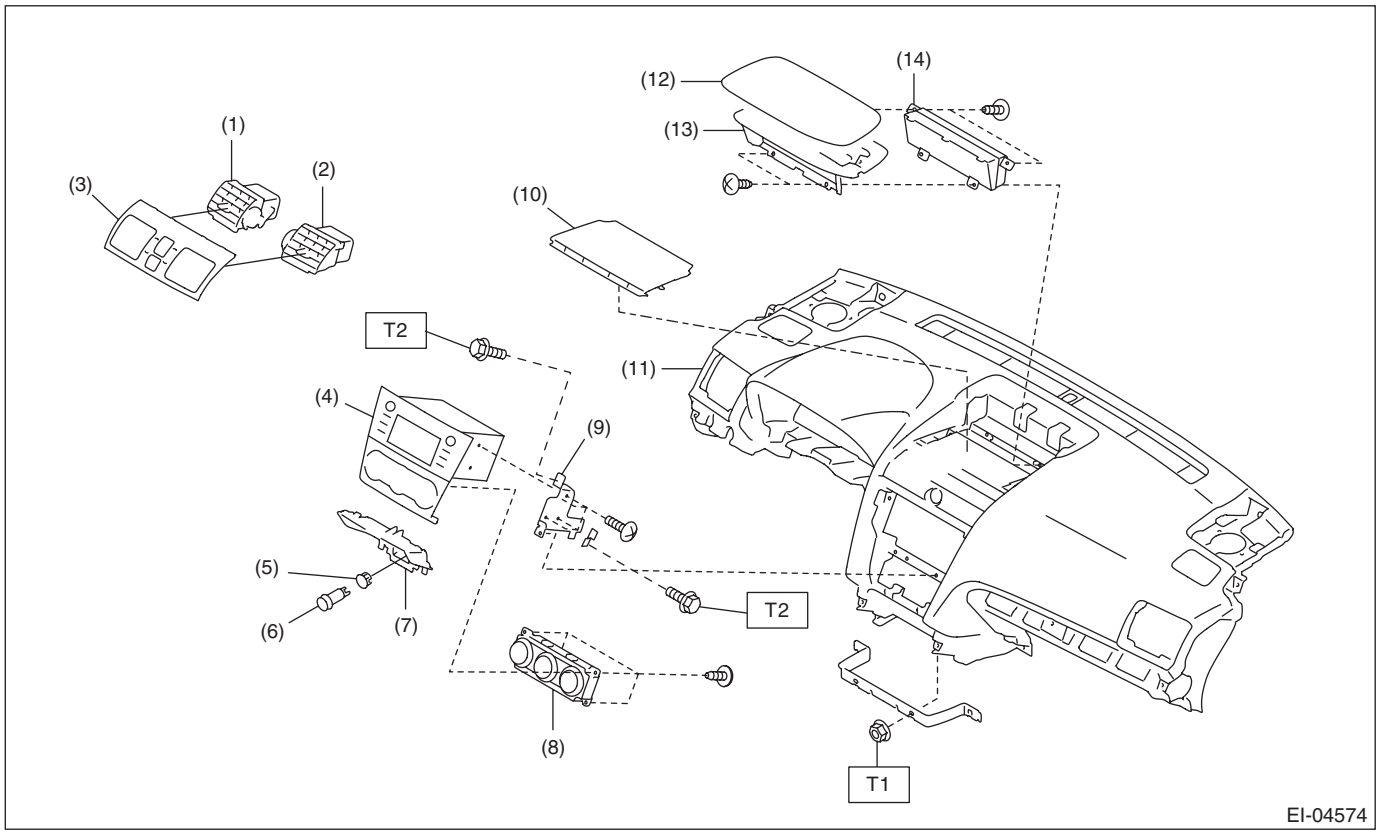

(1) Grille ASSY - CTR ventilation LH
(2) Grille ASSY - CTR ventilation RH
(3) Panel center ASSY
(4) Audio ASSY
(5) Cap
(6) Socket ASSY
(7) Back panel - center pocket
(8) Heater control ASSY
(9) Bracket - audio
(10) Cover center UPR
(11) Panel COMPL - instrument
(12) Panel - display UPR
(13) Panel - display LWR
(14) Multi-function display ASSY

Tightening torque: N·m (kgf-m, ft-lb)
T1: 7 (0.7, 5.2)
T2: 7.5 (0.8, 5.5)

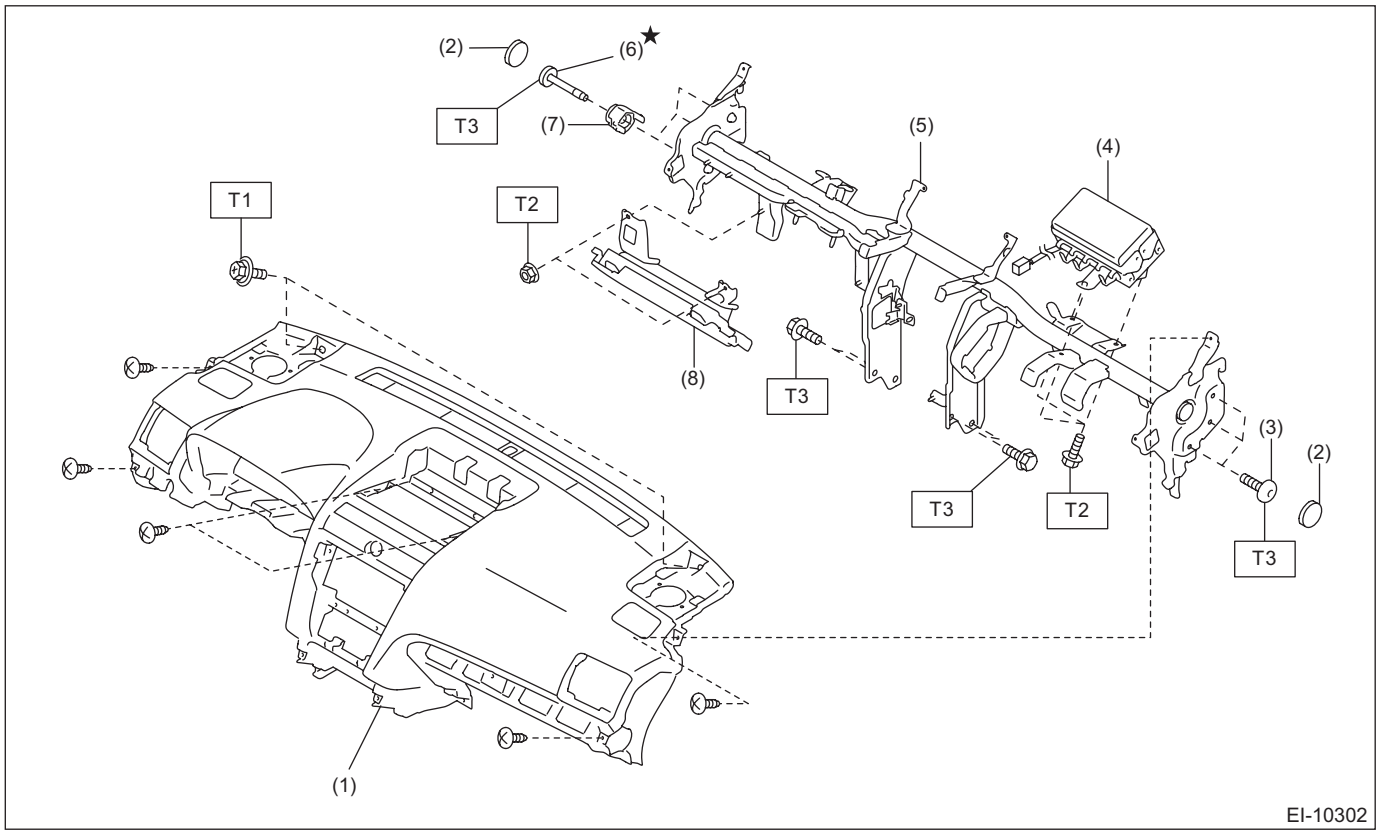

(1)	Panel COMPL - instrument	(5)	Beam COMPL - steering	***Tightening torque: N·m (kgf-m, ft-lb)***
(2)	Cap - bolt	(6)	TORX® bolt (M8 × 57)	***T1: 7 (0.7, 5.2)***
(3)	TORX® bolt (M8 × 37)	(7)	Adjuster - clip space	***T2: 7.5 (0.8, 5.5)***
(4)	Passenger's airbag module	(8)	Knee airbag module	***T3: 25 (2.5, 18.4)***

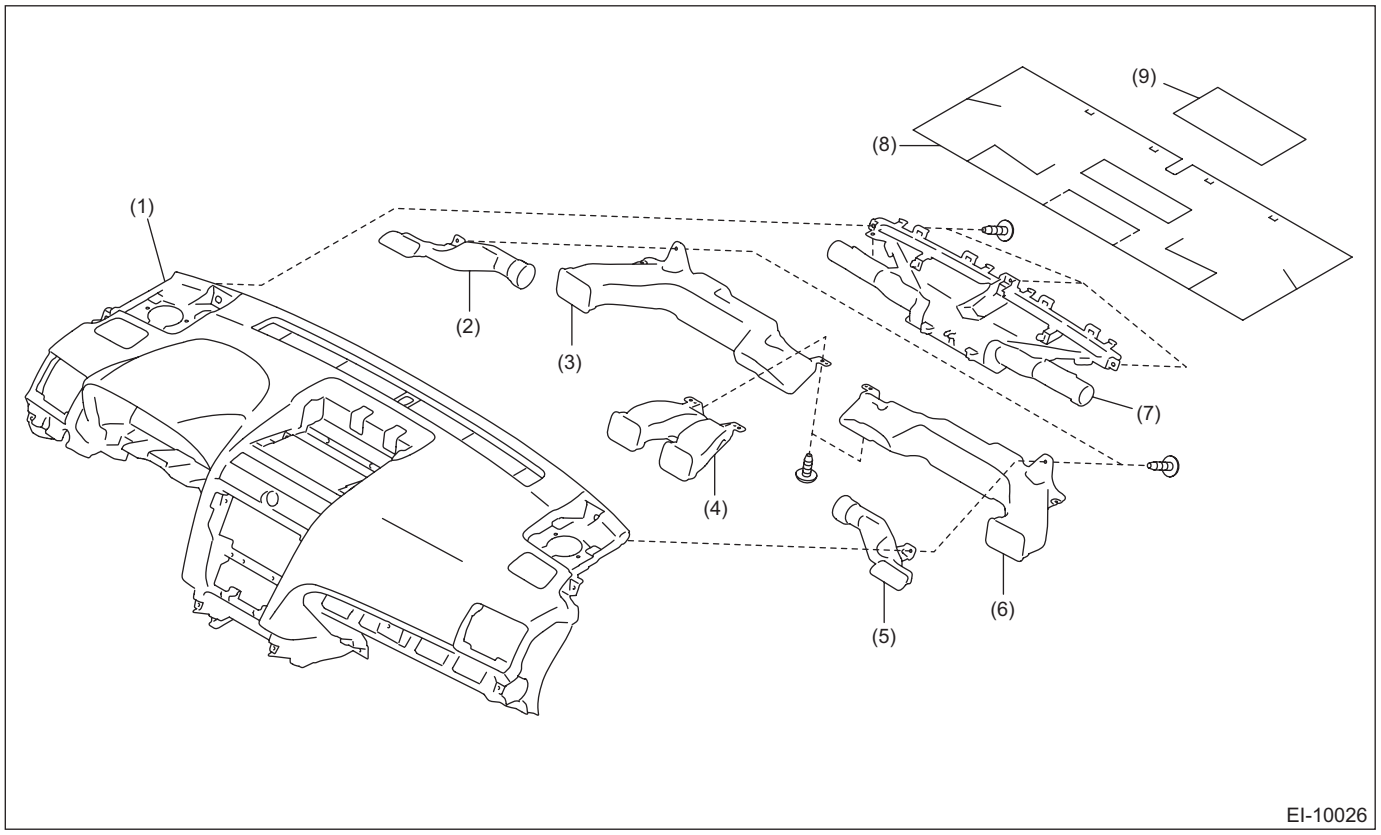

(1) Panel COMPL - instrument
(2) Duct - side defroster LH
(3) Duct - side ventilation LH
(4) Duct - center vent
(5) Duct - side defroster RH
(6) Duct - side ventilation RH
(7) Nozzle - front defroster
(8) Insulator - instrument
(9) Insulator - airbag

18.INNER TRIM

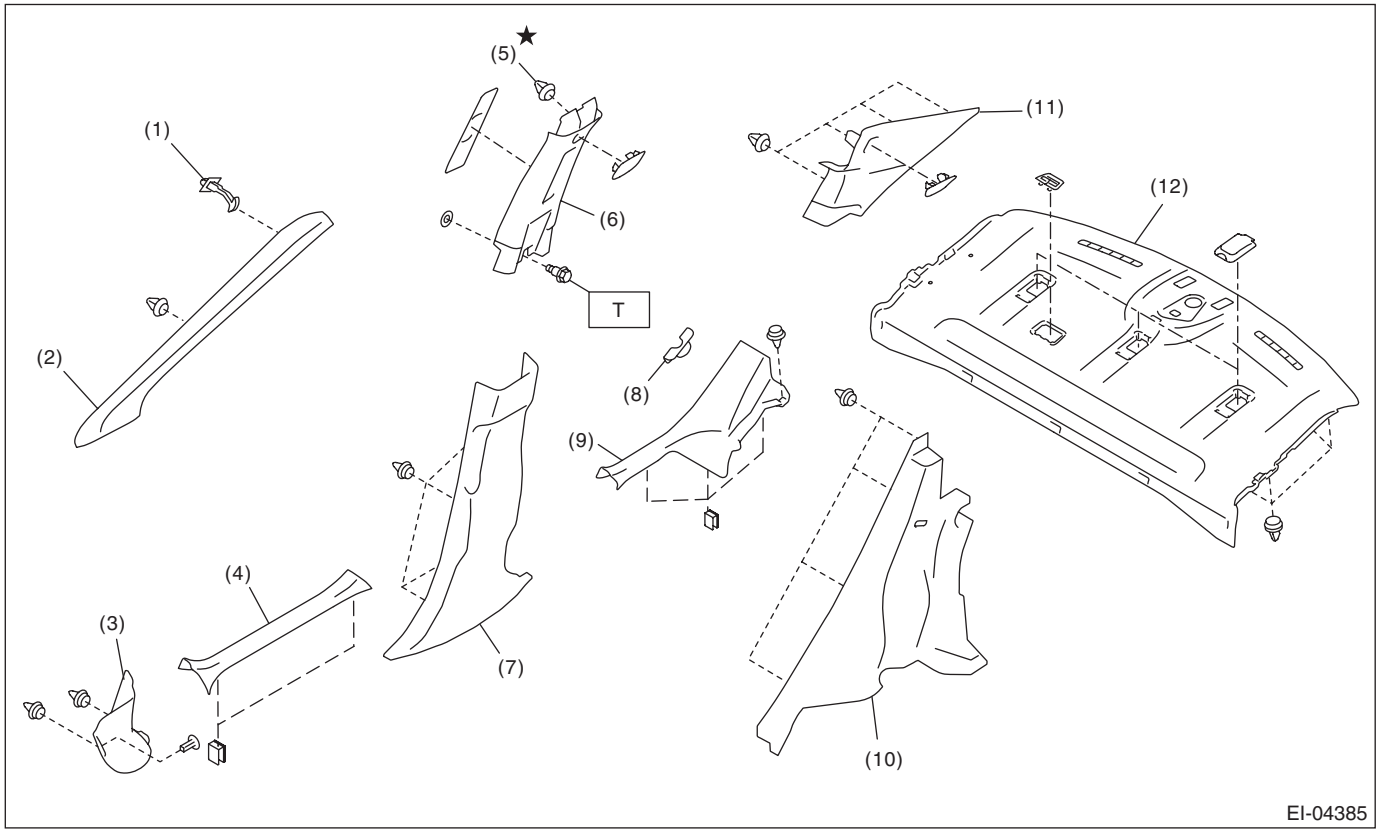

(1) Tether clip
(2) Trim panel - front pillar UPR
(3) Cover side sill - front
(4) Cover side sill - front INN
(5) Clip
(6) Trim panel - center pillar UPR
(7) Trim panel - center pillar LWR
(8) Cover - catcher
(9) Cover side sill - rear INN
(10) Trim panel - rear pillar LWR
(11) Trim panel - rear pillar UPR
(12) Trim panel ASSY - rear shelf

Tightening torque: N·m (kgf-m, ft-lb)
T: 7.5 (0.8, 5.5)

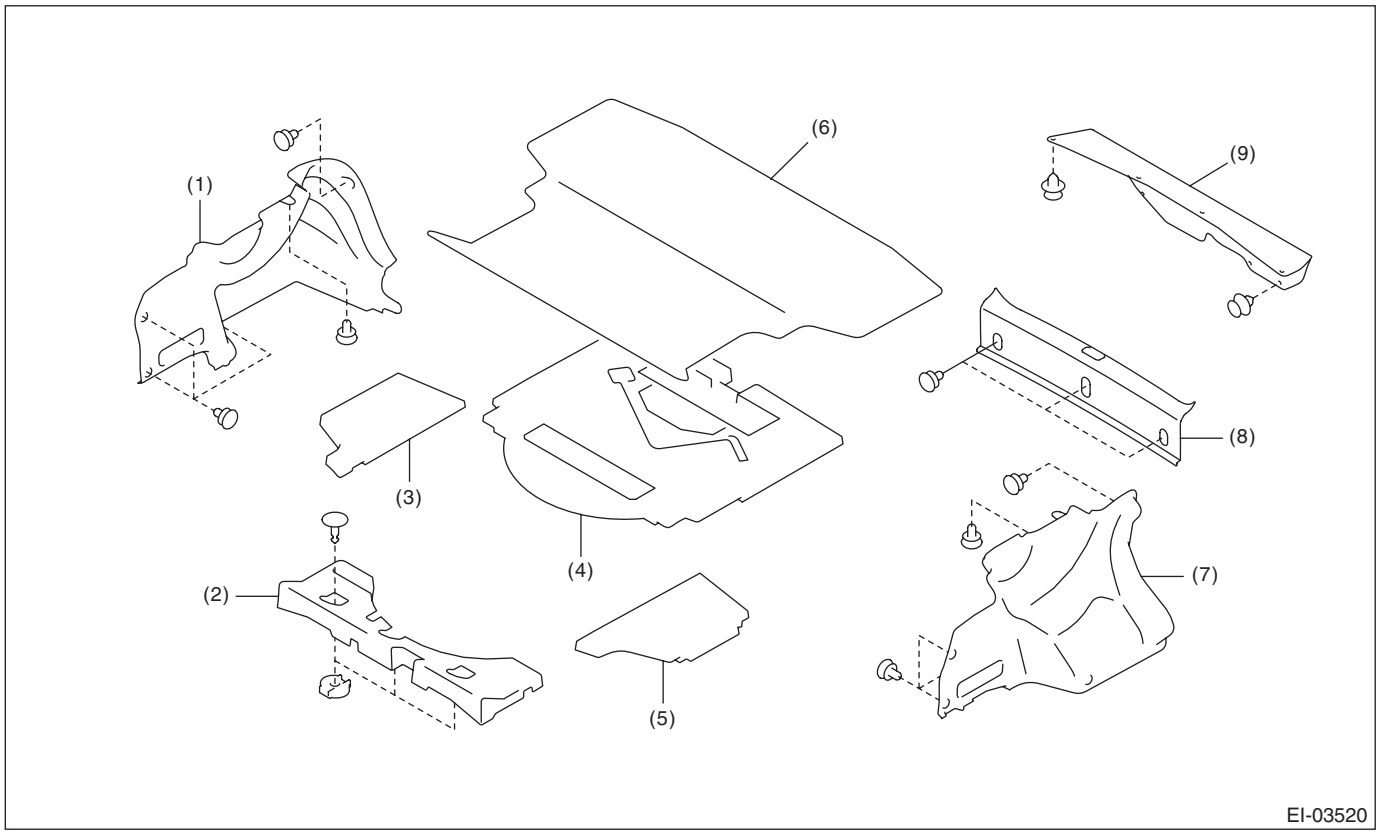

(1) Trim panel - trunk side RH
(2) Spacer - rear floor front
(3) Spacer - rear floor side RH
(4) Sub-trunk ASSY
(5) Spacer - rear floor side LH
(6) Mat - trunk
(7) Trim panel - trunk side LH
(8) Trim panel - trunk rear
(9) Trim panel - trunk lid

19.ROOF TRIM

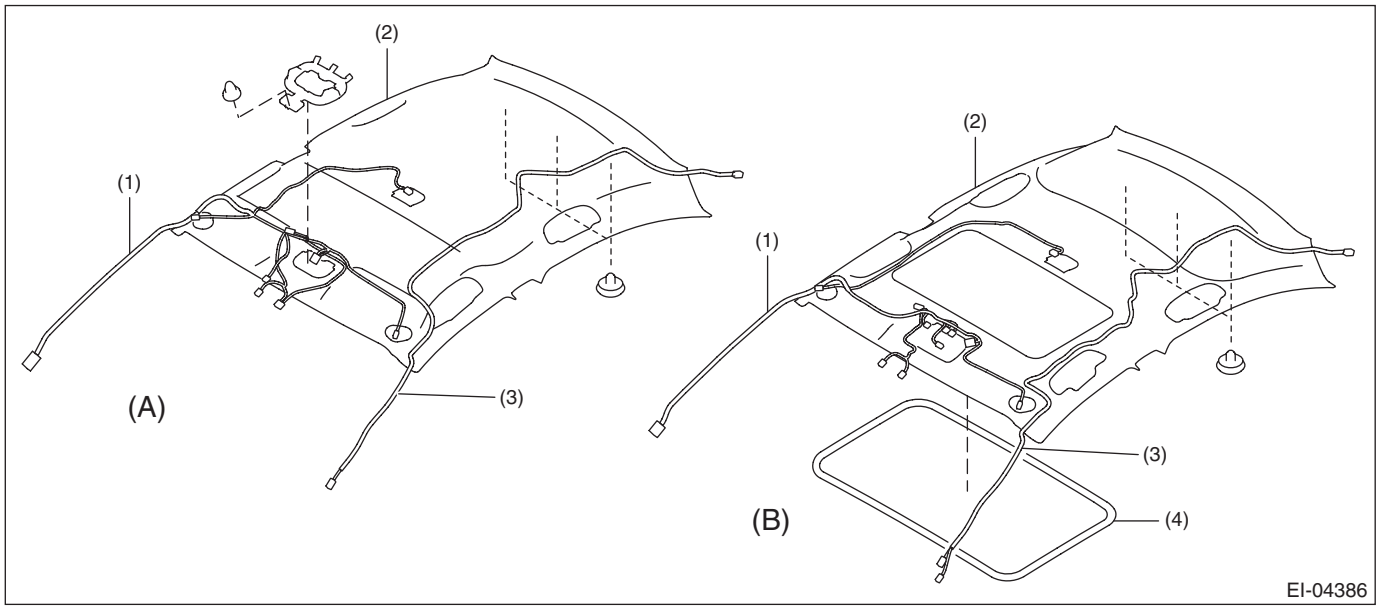

(A) Normal roof type
(B) Sunroof type

(1) Cord - roof
(2) Trim panel - roof ASSY
(3) Cord ASSY - antenna feeder
(4) Garnish - roof

20.ROOM INNER PARTS

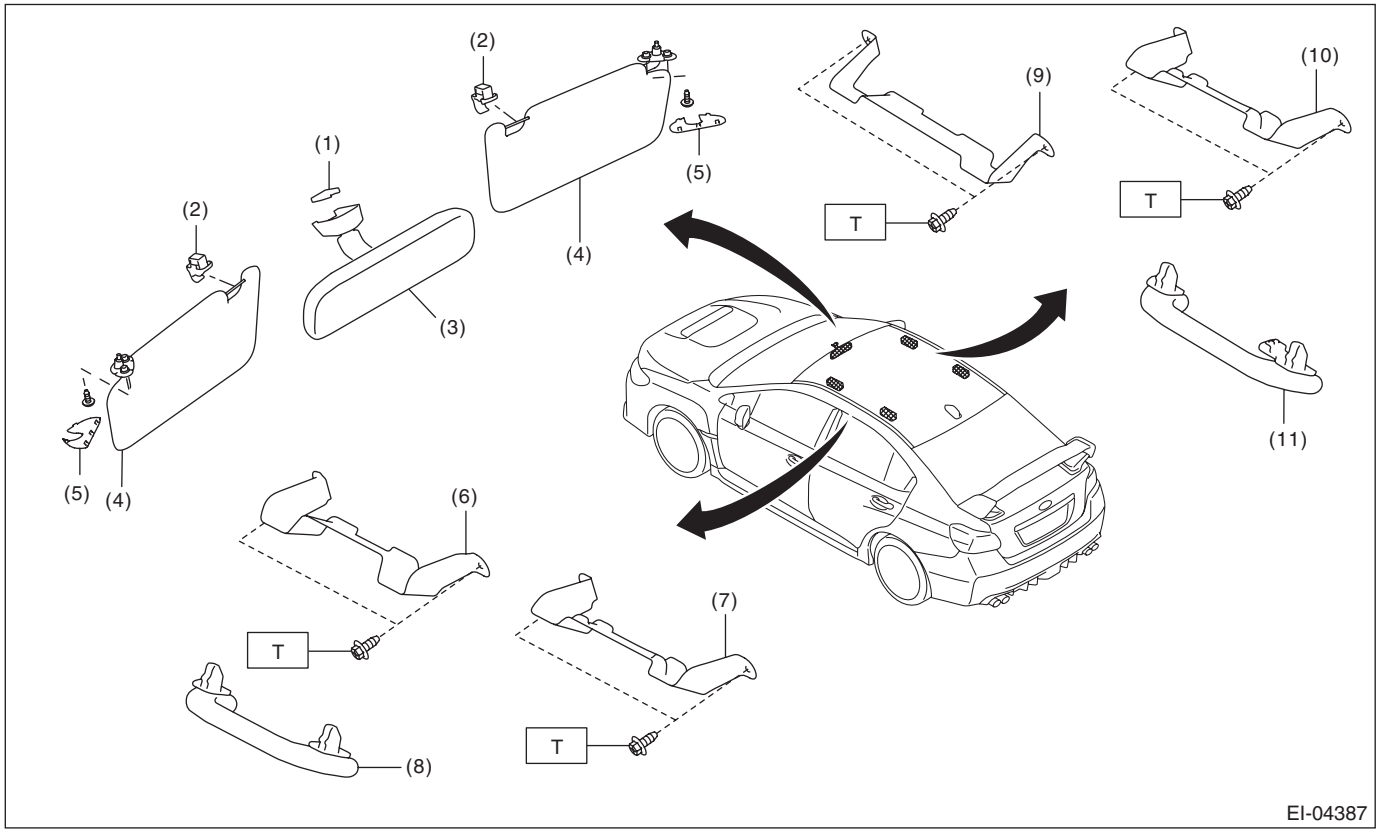

(1) Base - inner mirror
(2) Hook - sun visor
(3) Mirror ASSY - inner rearview
(4) Sun visor ASSY
(5) Cap - sun visor
(6) Bracket - assist rail front (model with sunroof)
(7) Bracket - assist rail front (normal roof)
(8) Assist rail - front
(9) Bracket - assist rail rear (model with sunroof)
(10) Bracket - assist rail rear (normal roof)
(11) Assist rail - rear

Tightening torque: N·m (kgf-m, ft-lb)
T: 7.5 (0.8, 5.5)

B: PREPARATION TOOL

TOOL NAME	REMARKS
Clip remover	Used for removing trim. • KTC AP201-10A • KTC AP201-N • KTC AP203-10A • KTC AP20L-10B Or equivalent.
Clip clamp pliers	Used for removal of various clips and clamps. • KTC CCP-190 Or equivalent.

2. Front Under Cover

A: REMOVAL

1) Lift up the vehicle.
2) Remove the bolts and clips, and remove the under cover - front.

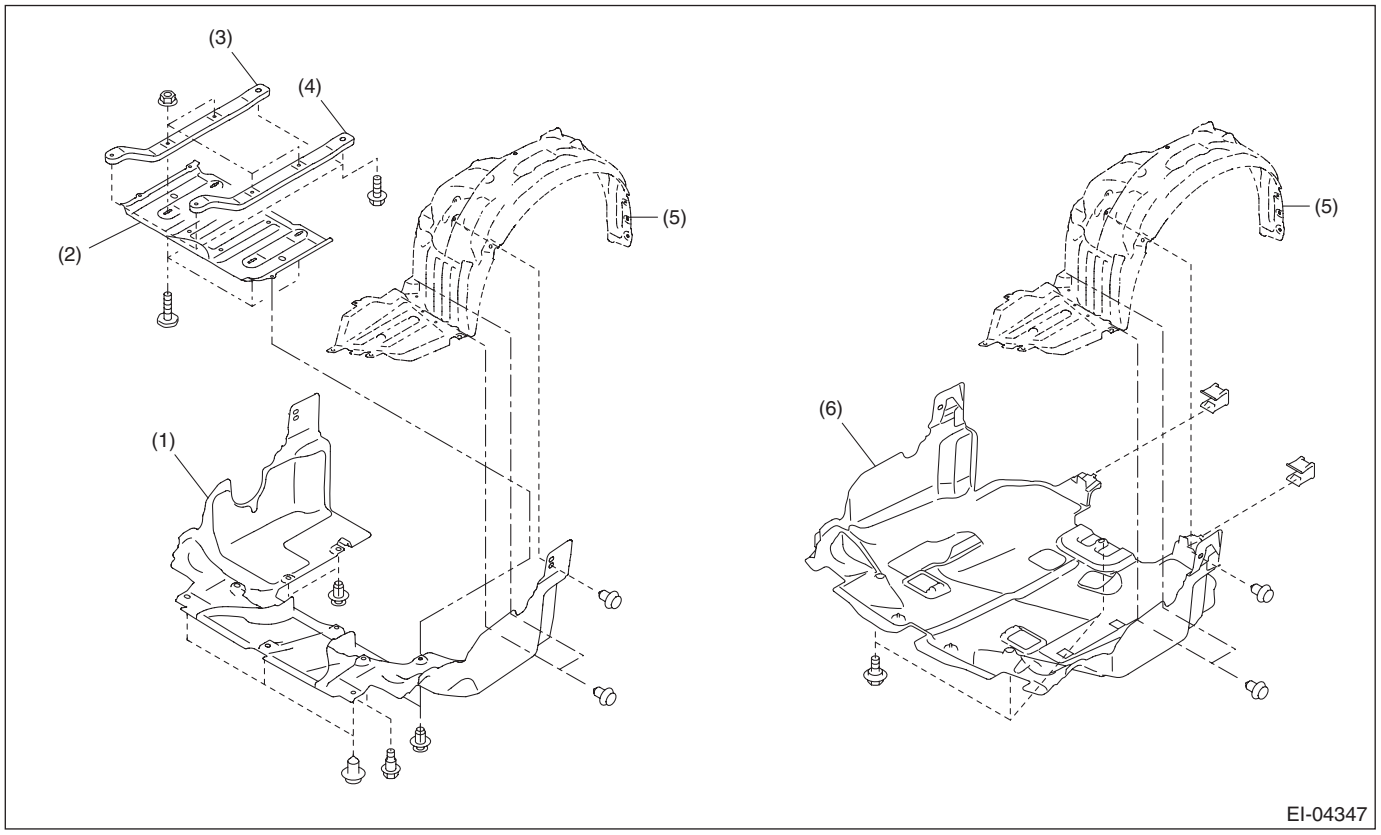

(1)	Under cover - front (except for STI model)	(3)	Frame - under cover RH (except for STI model)	(5)	Mud guard - front
(2)	Plate - CTR (except for STI model)	(4)	Frame - under cover LH (except for STI model)	(6)	Under cover - front (STI model)

B: INSTALLATION

CAUTION:
Install the under cover so that the under cover front end (b) comes inside of the bumper face - front (a).

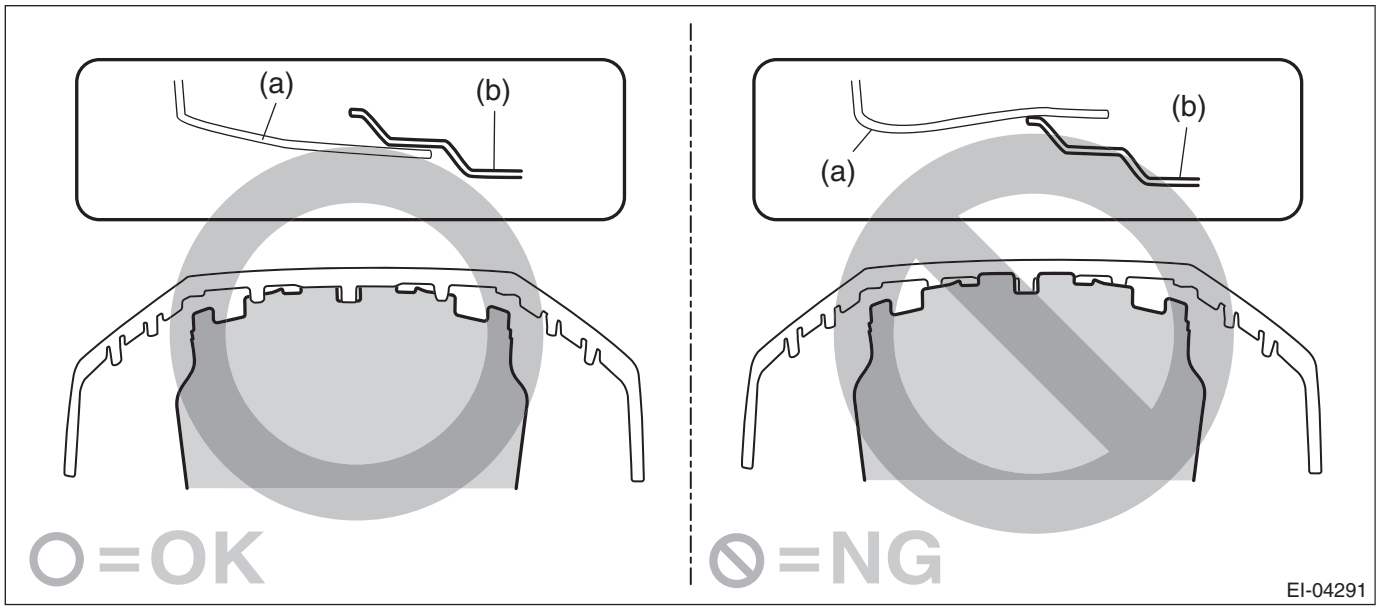

1) Install the under cover - front.

Tightening torque:
Refer to "COMPONENT" of "General Description". <Ref. to EI-2, FRONT UNDER COVER, COMPONENT, General Description.>

2) Lower the vehicle.

3. Mud Guard

A: REMOVAL

1) Lift up the vehicle.
2) Remove the wheels.
3) Remove the screws and clips to remove the mud guard.

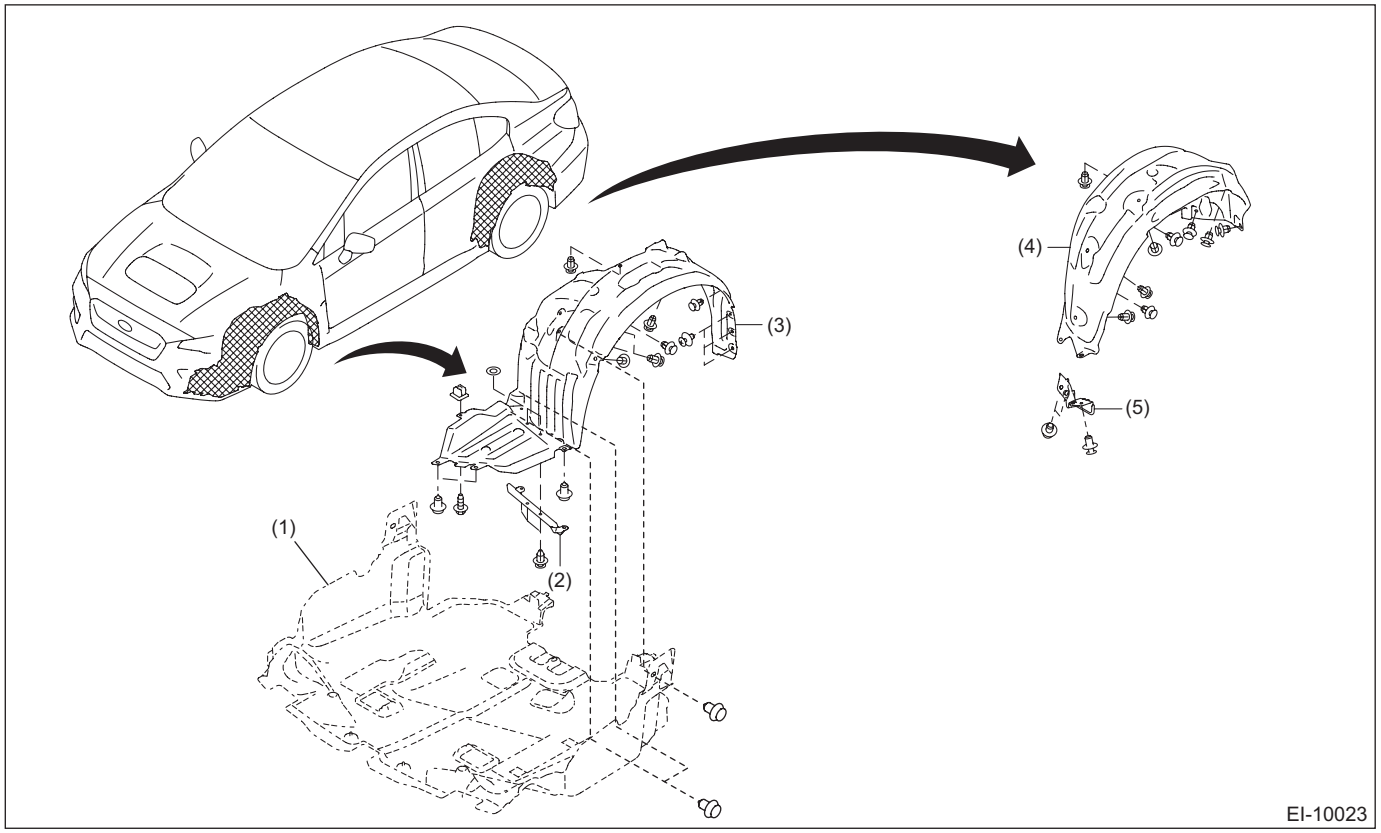

(1) Under cover - front
(2) Plate air flap - front
(3) Mud guard - front
(4) Mud guard - rear
(5) Plate air flap - rear

B: INSTALLATION

CAUTION:
Install the mud guard - front so that the front end of the mud guard (b) comes outside the bumper face - front (a).

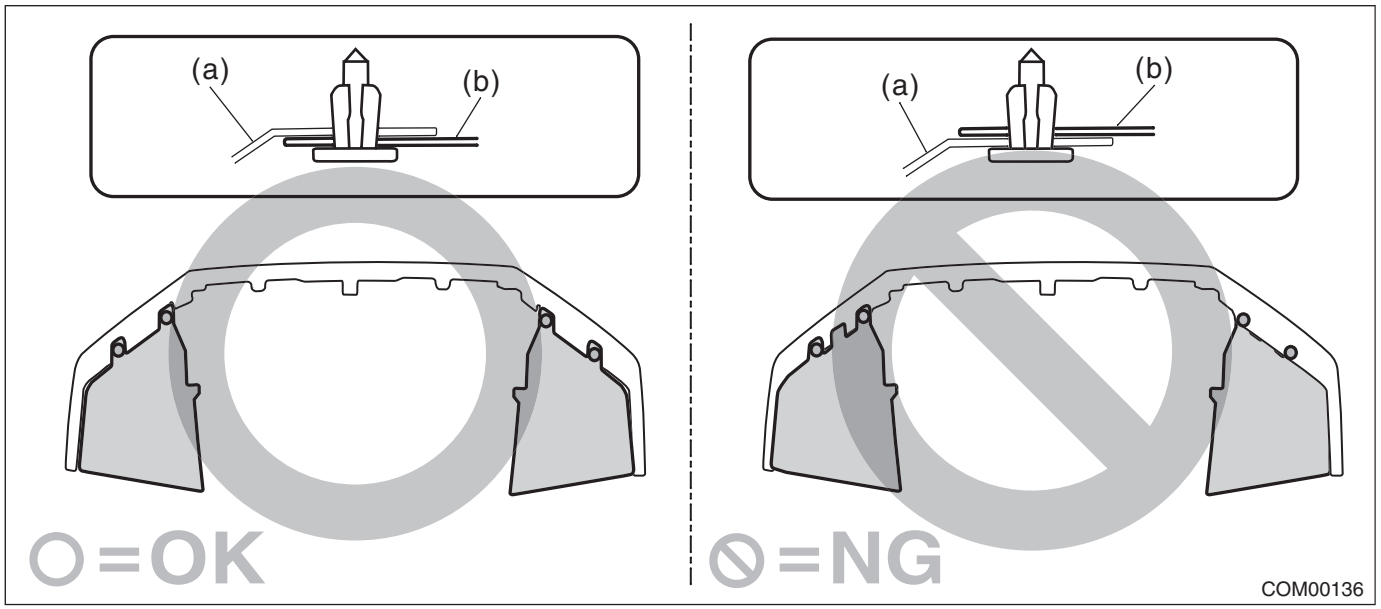

1) Install the mud guard - front.
2) Install the wheel.

Tightening torque:
Wheel nut: 120 N·m (12.2 kgf-m, 88.5 ft-lb)
3) Lower the vehicle.

4. Floor Under Protector

A: REMOVAL

1) Lift up the vehicle.

CAUTION:
Do not use a plate type lift.

2) Remove the bolts and clips, and remove the floor under protector.

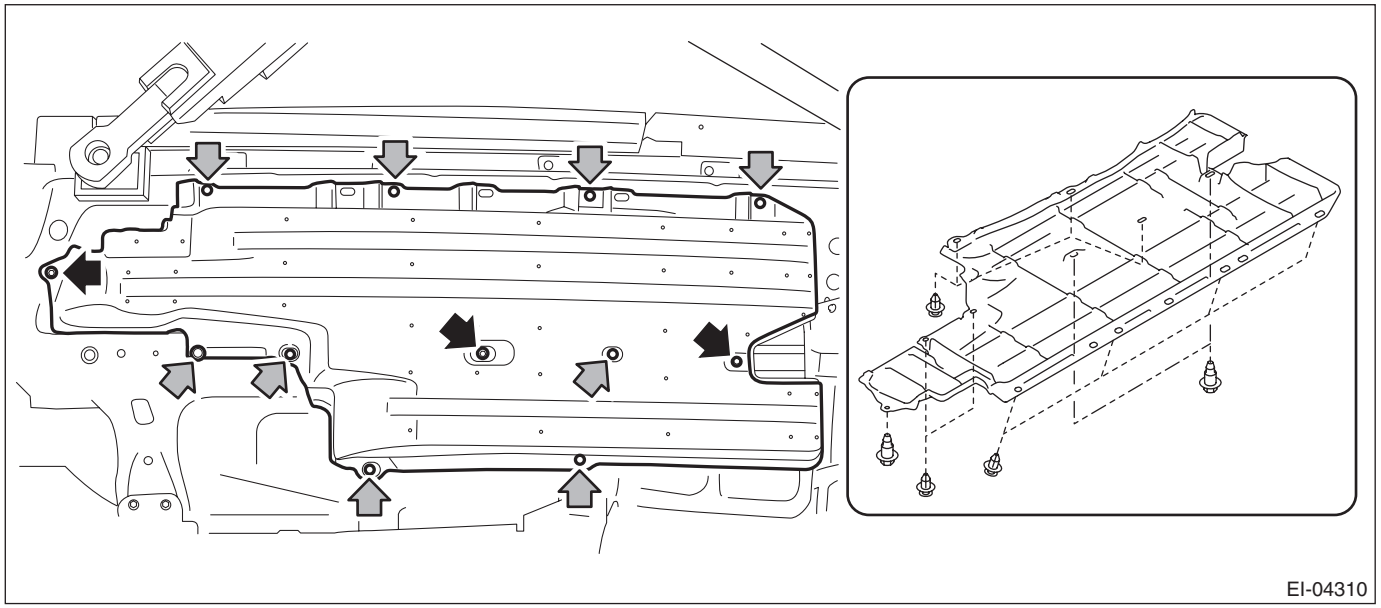

B: INSTALLATION

1) Install the floor under protector.

Tightening torque:
7.5 N·m (0.8 kgf-m, 5.5 ft-lb)

2) Lower the vehicle.

5. Fuel Tank Protector

A: NOTE

Refer to “FUEL INJECTION” section for removal and installation procedure of the fuel tank protector.

- STI model: <Ref. to FU(STI)-66, REMOVAL, Fuel Tank Protector.>
- Except for STI model: <Ref. to FU(w/o STI)-144, REMOVAL, Fuel Tank Protector.>

6. Front Hood Duct

A: NOTE

For operation procedures for front hood duct, refer to “EXTERIOR BODY PANELS” section.

7. Front Grille

A: REMOVAL

1) Disconnect the ground cable from battery. <Ref. to NT-6, BATTERY, NOTE, Note.>

NOTE:
For model with battery sensor, disconnect the ground terminal from battery sensor.
2) Remove the bumper face - front. <Ref. to EI-31, REMOVAL, Front Bumper.>
3) Remove the front grille assembly.
   (1) Remove the screws on the back side.
   (2) Release the claws, and remove the front grille assembly.

CAUTION:
Remove the front grille assembly horizontally. Otherwise, the bumper may be damaged.

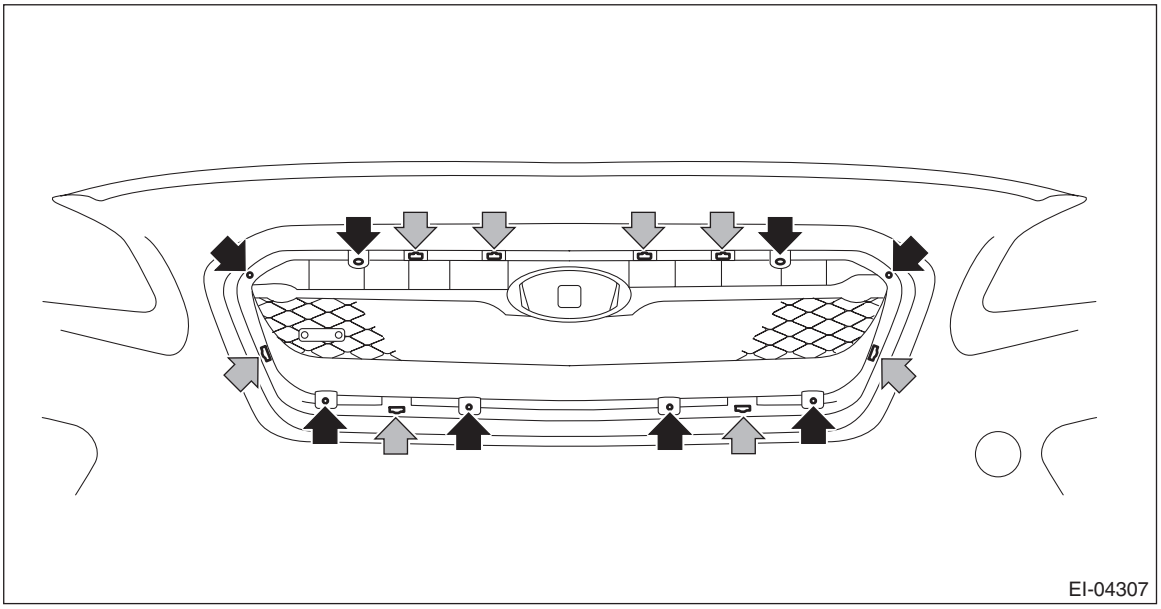

B: INSTALLATION

CAUTION:
• Install so that the front end of the under cover (b) comes inside the bumper face - front (a), and the front end of the mud guard (c) comes outside the bumper face - front (a).

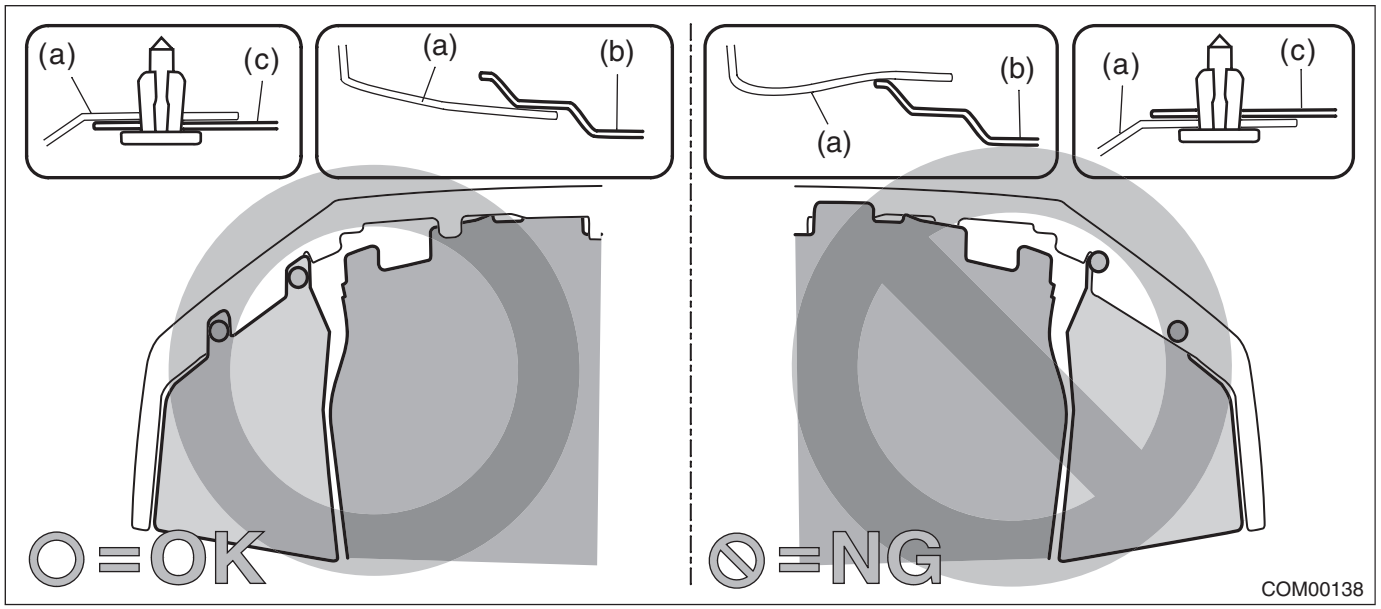

• Before installing the bumper face, match the claws on the bracket - front bumper with the engaging position of flange section on the bumper face side. If the engaging position is not correct, the flange section may be broken or the clearance between fender panel and bumper face may not be uniform.
1) Install the front grille assembly.

CAUTION:
When replacing the bumper, be sure to install the spacer grille front to the bumper.
2) Install the bumper face - front. <Ref. to EI-34, INSTALLATION, Front Bumper.>
3) Connect the battery ground terminal. <Ref. to NT-6, BATTERY, NOTE, Note.>
4) Adjust the fog light beam. (Model with fog light) <Ref. to LI-45, FOG LIGHT AIMING, ADJUSTMENT, Front Fog Light Assembly.>

8. Front Bumper

A: REMOVAL

1) Disconnect the ground cable from battery. <Ref. to NT-6, BATTERY, NOTE, Note.>

NOTE:
For model with battery sensor, disconnect the ground terminal from battery sensor.

2) Remove the bumper face - front.
   (1) Remove the clips and bolts, and remove the plate UPR - front.

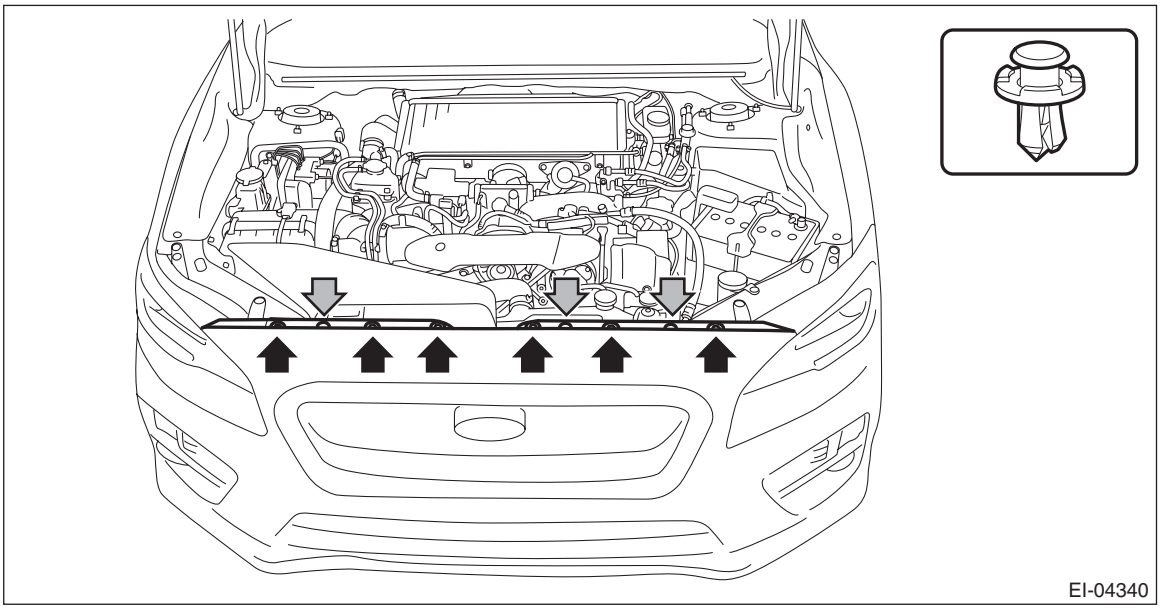

   (2) Remove the clips from the fender.
   (3) Remove the clips at the lower side of the bumper face - front.

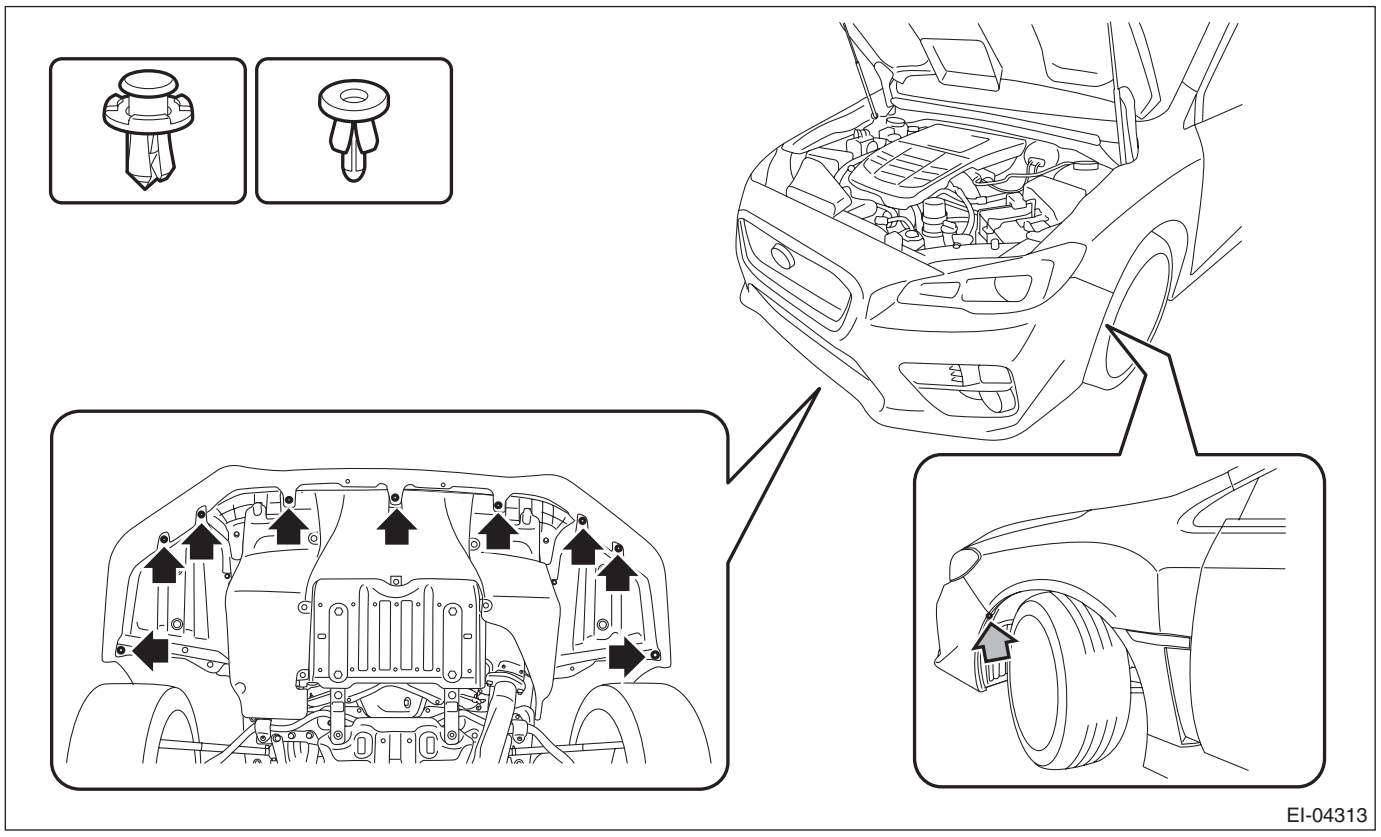

(4) Disconnect the integrated connector of the fog light assembly and turn signal light assembly.
(5) Apply protective tape (A) to the light assembly - head.
(6) While pushing up the lower side (a) of the bumper face - front, release the engagement in the order from (b) to (g).

CAUTION:
Do not pull forcibly. It may damage the flange section on the bumper face - front side when it comes off from the claws of the bracket - front bumper.

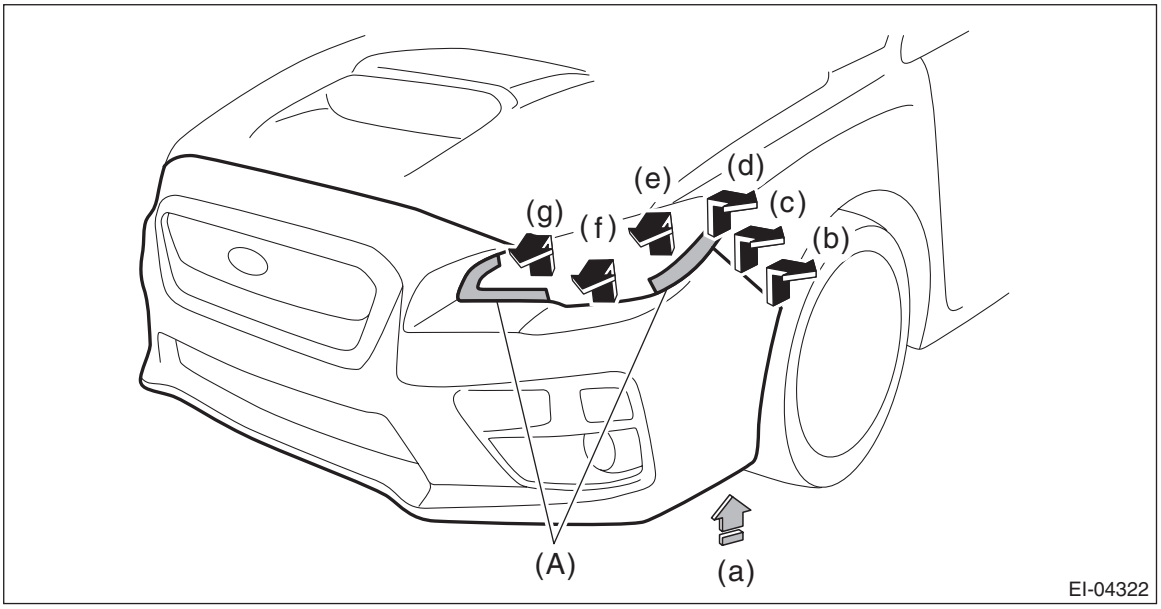

NOTE:
Detach the opposite side in the same manner.
3) Remove the energy absorber foam.
4) Remove the bolts, and remove the bumper beam COMPL - front.

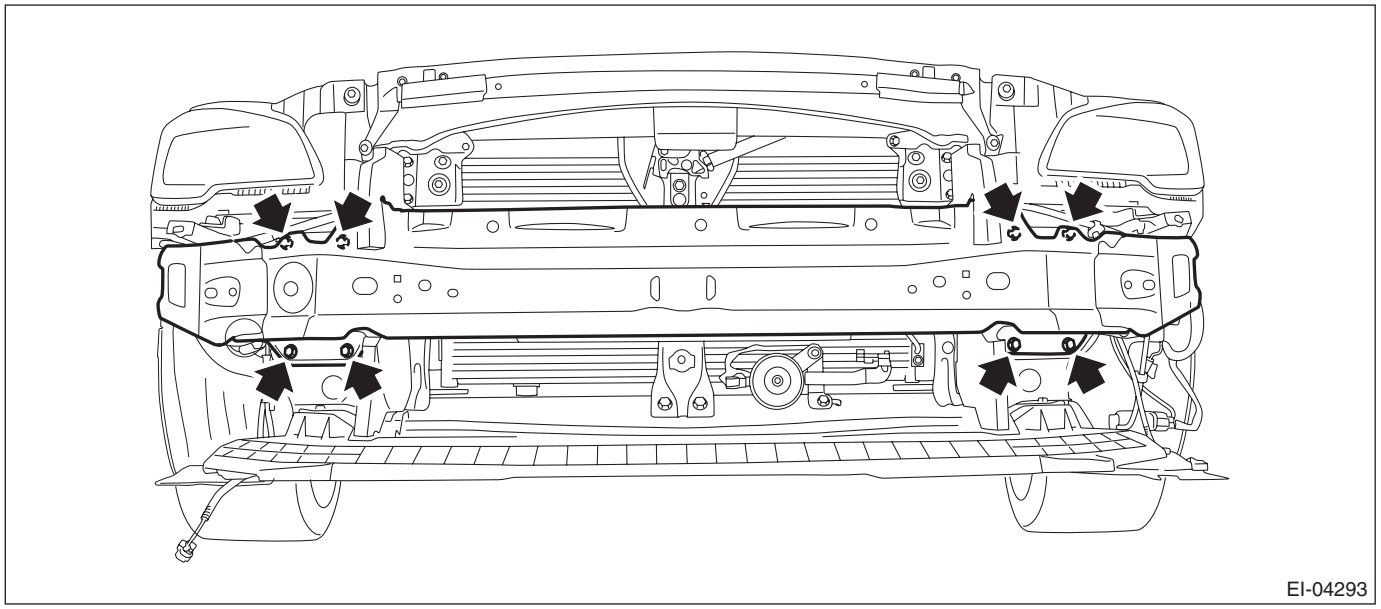

5) Remove the under cover - front. <Ref. to EI-22, REMOVAL, Front Under Cover.>

6) Remove the bolts, and remove the bracket - front center LWR.

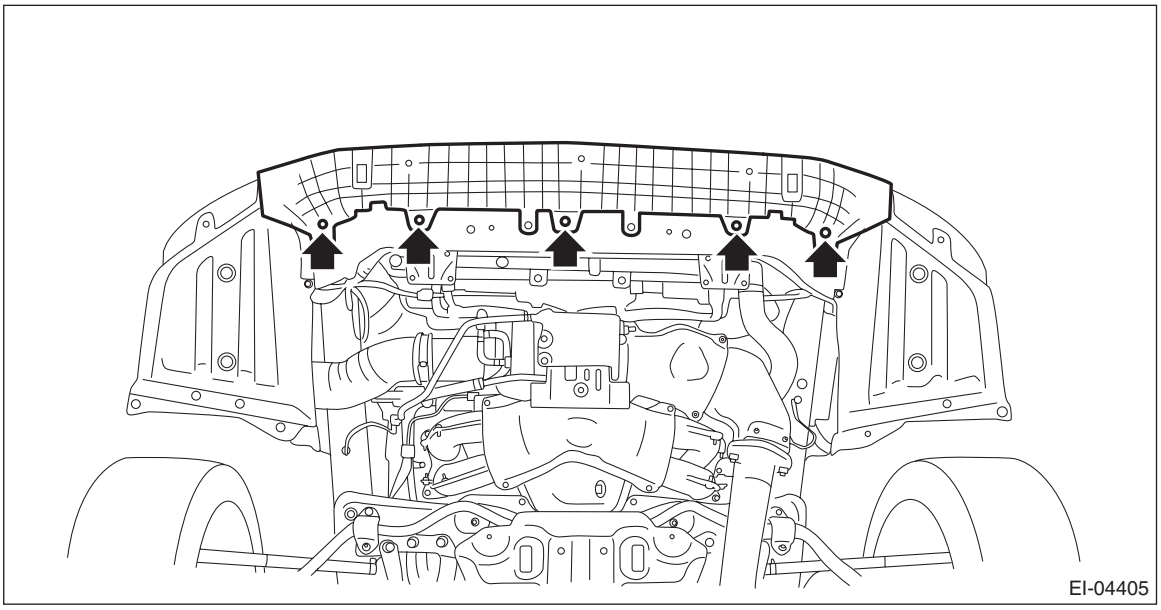

7) Remove the bolts and clips, and remove the bracket - front bumper corner.

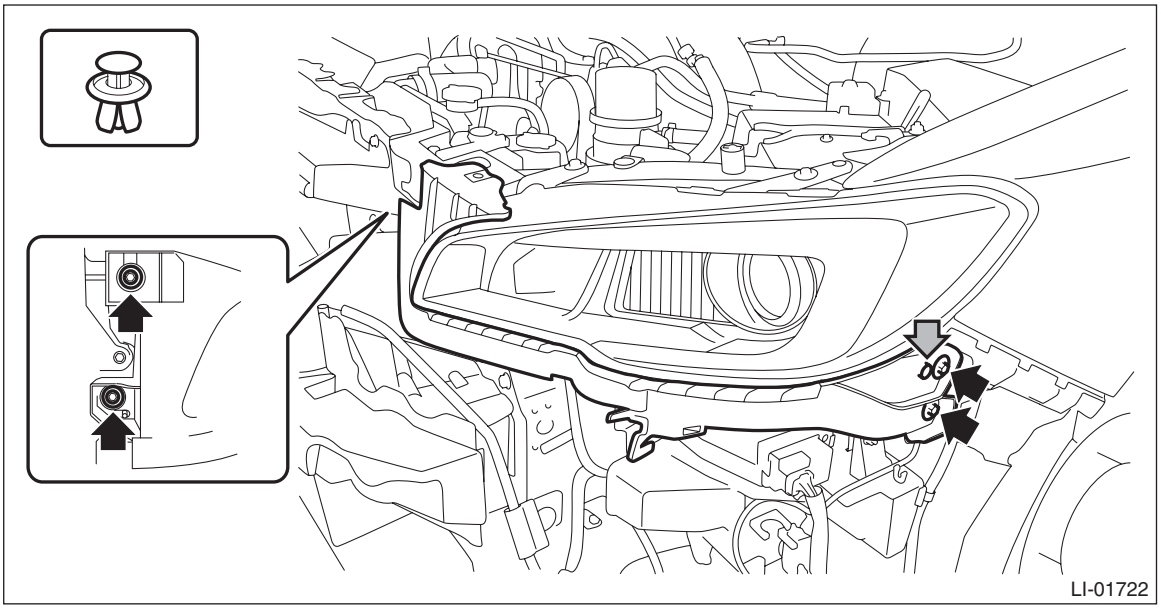

8) Remove the bracket - front bumper side.
(1) Remove the screws.
(2) Remove the claws from behind the fender COMPL - front, and remove the bracket - front bumper side.

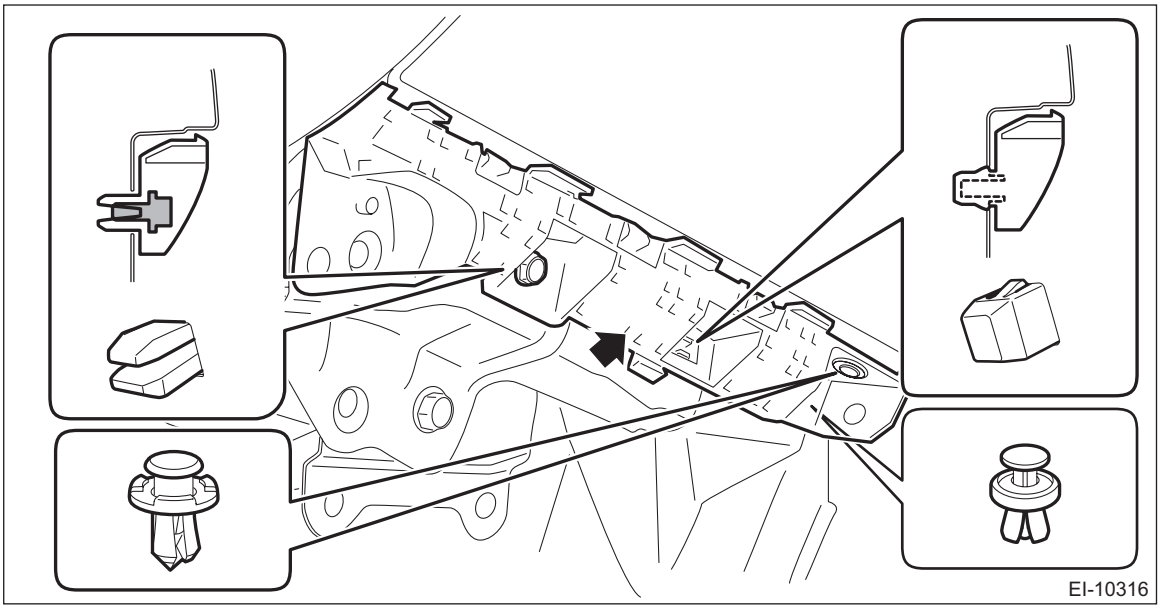

9) Remove the fog light assembly - front. <Ref. to LI-43, REMOVAL, Front Fog Light Assembly.>

B: INSTALLATION

CAUTION:
• Install so that the front end of the under cover (b) comes inside the bumper face - front (a), and the front end of the mud guard (c) comes outside the bumper face - front (a).

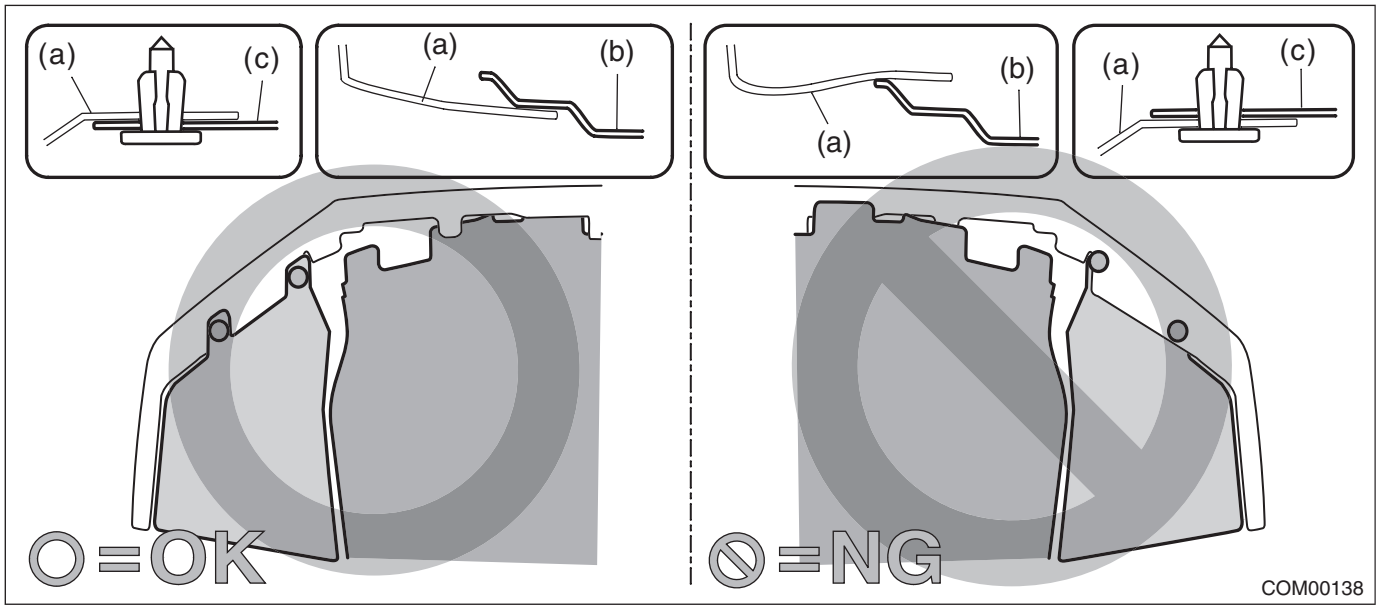

• Before installing the bumper face, match the claws on the bracket - front bumper with the engaging position of flange section on the bumper face side. If the engaging position is not correct, the flange section may be broken or the clearance between fender panel and bumper face may not be uniform.
1) Install the fog light assembly - front.
2) Install the bracket - front bumper side.

Tightening torque:
7.5 N·m (0.8 kgf-m, 5.5 ft-lb)

3) Install the bracket - front bumper corner.

Tightening torque:
7.5 N·m (0.8 kgf-m, 5.5 ft-lb)

4) Install the bracket - front center LWR.

Tightening torque:
7.5 N·m (0.8 kgf-m, 5.5 ft-lb)

5) Install the under cover - front. <Ref. to EI-22, REMOVAL, Front Under Cover.>
6) Install the bumper beam COMPL - front.

Tightening torque:
32 N·m (3.3 kgf-m, 23.6 ft-lb)

7) Install the energy absorber foam.
8) Install the bumper face - front.

NOTE:
Secure the flange section of the bumper face - front to the bracket - front bumper side.

Tightening torque:
Plate UPR - front: 7.5 N·m (0.8 kgf-m, 5.5 ft-lb)

9) Connect the battery ground terminal. <Ref. to NT-6, BATTERY, NOTE, Note.>
10) Adjust the headlight beam and fog light beam.

- Adjust the headlight beam. <Ref. to LI-29, HEADLIGHT BEAM ADJUSTMENT, ADJUSTMENT, Headlight Assembly.>
- Adjust the fog light beam. (Model with fog light) <Ref. to LI-45, FOG LIGHT AIMING, ADJUSTMENT, Front Fog Light Assembly.>

C: REPAIR

1. COATING METHOD FOR PP BUMPER

<table>
<tr><th>Process No.</th><th>Process name</th><th colspan="2">Job contents</th></tr>
<tr><td>1</td><td>Bumper installation</td><td>Place the bumper on a paint worktable as required. Use the paint worktable conforming to inner shape of bumper if possible.</td><td>Cross section of bumper
 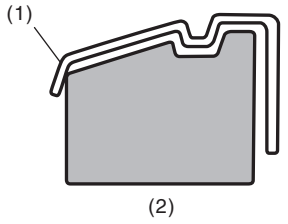

EI-00234
(1) Bumper
(2) Paint worktable</td></tr>
<tr><td>2</td><td>Masking</td><td colspan="2">Mask the black base with masking tape. Use masking tape for PP.</td></tr>
<tr><td>3</td><td>Degreasing/cleaning</td><td colspan="2">Clean all parts to be painted with appropriate cleaning solvent, normal alcohol, etc. to remove dirt, oil, grease, etc.</td></tr>
<tr><td>4</td><td>Primer paint</td><td colspan="2">Apply primer to all parts to be painted, using spray gun. Use primer (clear).</td></tr>
<tr><td>5</td><td>Drying</td><td colspan="2">Dry at normal temperature. [10 — 15 min. at 20°C (68°F)]
In half-dried condition, PP primer paint is dissolved by solvent, e.g. thinner, etc.
Therefore, if dust or dirt must be removed, use ordinary alcohol etc.</td></tr>
<tr><td rowspan="2">6</td><td rowspan="2">Top coat paint (I)</td><td>Non-colored</td><td>Metallic paint</td></tr>
<tr><td>Use section (block) paint for top coat.
For paint/hardener mixture, observe the specifications recommended by the manufacturers.
• Viscosity: 10 — 13 sec./20°C (68°F)
• Film thickness: 35 — 45 μ
• Spraying pressure: 245 — 343 kPa
(2.5 — 3.5 kgf/cm^2, 36 — 50 psi)</td><td>Use section (block) paint for top coat.
For paint/hardener mixture, observe the specifications recommended by the manufacturers.
• Viscosity: 10 — 13 sec./20°C (68°F)
• Film thickness: 15 — 20 μ
• Spraying pressure: 245 — 343 kPa
(2.5 — 3.5 kgf/cm^2, 36 — 50 psi)</td></tr>
<tr><td>7</td><td>Drying</td><td>Not required.</td><td>Dry at normal temperature [at least 10 min. at 20°C (68°F)].
In half-dried condition, avoid dust, dirt.</td></tr>
<tr><td>8</td><td>Top coat paint (II)</td><td>Not required.</td><td>Apply a clear coat to parts with top coat paint (I), three times at 5 — 7 minute intervals.
For paint/hardener mixture, observe the specifications recommended by the manufacturers.
• Viscosity: 14 — 16 sec./20°C (68°F)
• Film thickness: 25 — 30 μ
• Spraying pressure: 245 — 343 kPa
(2.5 — 3.5 kgf/cm^2, 36 — 50 psi)</td></tr>
<tr><td>9</td><td>Drying</td><td colspan="2">60°C (140°F), 60 min. or 80°C (176°F), 30 min.
If the temperature is higher than 80°C (176°F), PP may be deformed. Keep maximum temperature at 80°C (176°F) or less.</td></tr>
<tr><td>10</td><td>Inspection</td><td colspan="2">Check paint.</td></tr>
<tr><td>11</td><td>Removal of masking</td><td colspan="2">Remove the masking tape applied in procedure 2.</td></tr>
</table>

2. REPAIR INSTRUCTIONS FOR COLORED PP BUMPER

NOTE:
If grained PP bumper surface is damaged, it cannot normally be restored to its former condition. Damages limited to the shallow scratches that cause only a change in the luster of the base material or coating, can be almost fully restored. Before repairing a damaged area, explain this point to the customer and obtain an understanding about the matter.
Repair methods are outlined below, based on a classification of the extent of damage.
1) Minor damage causing only a change in the luster of the bumper due to a light touch
Almost restorable.

<table>
<tr><th>Process No.</th><th>Process name</th><th colspan="2">Job contents</th></tr>
<tr><td>1</td><td>Cleaning</td><td colspan="2">Clean the area to be repaired using water.</td></tr>
<tr><td>2</td><td>Sanding</td><td colspan="2">Grind the repairing area with #500 sand paper in a “feathering” motion.</td></tr>
<tr><td rowspan="3">3</td><td rowspan="3">Finish</td><td>Resin section</td><td>Coated section</td></tr>
<tr><td>Repeatedly apply wax to the affected area using soft cloth (such as flannel).
Recommended wax: Tire wax or equivalent</td><td rowspan="2">Perform either the same procedures as for the resin section or process No. 18 and subsequent in section 3), depending on the degree and nature of damage.</td></tr>
<tr><td>Polish the waxed area with clean cloth after 5 — 10 minutes.</td></tr>
</table>

2) Deep damage caused by scratching with fences etc.
A dent cannot be repaired but a whitened or swelled part can be removed.

<table>
<tr><th>Process No.</th><th>Process name</th><th colspan="2">Job contents</th></tr>
<tr><td>1</td><td>Cleaning</td><td colspan="2">Clean the damaged area with water.</td></tr>
<tr><td>2</td><td>Removal of damaged area</td><td colspan="2">Cut off protruding area, if any, due to collision, using a putty knife.</td></tr>
<tr><td>3</td><td>Sanding</td><td colspan="2">Grind the affected area with #100 — #500 sand paper.</td></tr>
<tr><td rowspan="2">4</td><td rowspan="2">Finish</td><td>Resin section</td><td>Coated section</td></tr>
<tr><td>Same as process No. 3 in section “1)”.</td><td>Perform process No. 12 and subsequent operations in section “3)”.</td></tr>
</table>

3) Deep damage such as a break or hole that requires filling
Much of the peripheral grained surface must be sacrificed for repair. The degree of restoration is not really worth the expense. (The surface, however, will become almost flush with adjacent areas.)

<table>
<tr><th>Process No.</th><th>Process name</th><th colspan="2">Job contents</th></tr>
<tr><td>1</td><td>Bumper removal</td><td colspan="2">Remove the bumper as required.</td></tr>
<tr><td>2</td><td>Removal of parts</td><td colspan="2">Remove the parts built into bumper as required.</td></tr>
<tr><td>3</td><td>Bumper placement</td><td>Place the bumper on a paint worktable as required.
It is recommended to use the paint worktable conforming to internal shape of bumper.</td><td>Cross section of bumper
 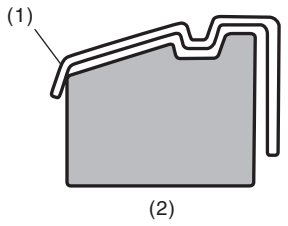

EI-00234
(1) Bumper
(2) Paint worktable</td></tr>
</table>

<table>
<tr><th>Process No.</th><th>Process name</th><th colspan="2">Job contents</th></tr>
<tr><td>4</td><td>Surface preparation</td><td colspan="2">Remove dust, oil, etc. from areas to be repaired and surrounding areas, using an appropriate solvent (appropriate cleaning solvent or alcohol, etc.).</td></tr>
<tr><td>5</td><td>Cutting</td><td>If the damage is a crack or a hole, cut a guide slit of 20 to 30 mm (0.79 to 1.18 in) in length along the crack or hole up to the bumper base surface. Next, use a knife or grinder to carve a V-shaped groove in the area for repair.</td><td> 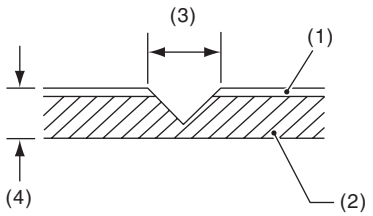

EI-00235
(1) Paint surface
(2) PP base surface
(3) 20 — 30 mm (0.79 — 1.18 in)
(4) 3 mm (0.12 in)</td></tr>
<tr><td>6</td><td>Sanding (I)</td><td colspan="2">Grind beveled surface with sand paper (#40 — #60) to smooth finish.</td></tr>
<tr><td>7</td><td>Cleaning</td><td colspan="2">Clean the sanded surface with the same solvent as used in process No. 4.</td></tr>
<tr><td rowspan="2">8</td><td rowspan="2">Temporary welding</td><td colspan="2">Grind the side just opposite the beveled area with sand paper (#40 — #60) and clean using a solvent.
Temporarily spot-weld the side, using PP welding rod and heater gun.</td></tr>
<tr><td colspan="2"> 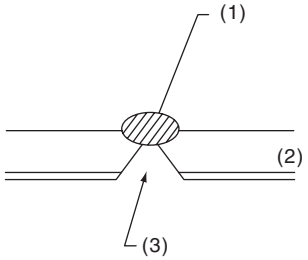

EI-00236
(1) Welded point (Use heater gun and PP welding rod)
(2) PP base surface
(3) Beveled section
NOTE:
• Do not melt welding rod until it flows out. This results in reduced strength.
• Leave the welded spot unattended until it cools completely.</td></tr>
</table>

Process No.	Process name	Job contents
9	Welding	Using a heater gun and PP welding rod, weld the beveled spot while melting both the rod and damaged area.
		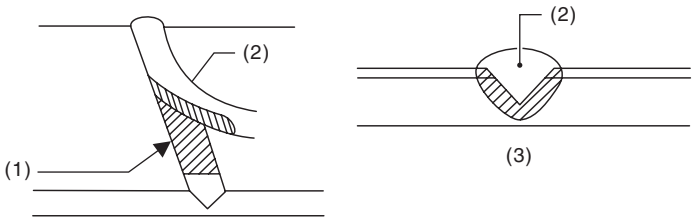 EI-00237 (1) Welding rod (2) Melt hatched area (3) Section NOTE: • Melt the sections indicated by hatched area. • Do not melt the welding rod until it flows out, in order to provide strength. • Always keep the heater gun 1 to 2 cm (0.4 to 0.8 in) away from the welding spot. • Leave the welded spot unattended until it cools completely.
10	Sanding (II)	Remove excess part of weld with a putty knife. If a drill or disc wheel is used instead of the knife, operate it at less than 1,500 r/min and grind the excess part little by little. A higher rpm will cause the PP substrate to melt from the heat.
		 EI-00042
		Sand the welded spot smooth with #240 sand paper.
11	Masking	Mask the black substrate section using masking tape.
12	Cleaning/degreasing	Completely clean the entire coated area, using solvent similar to that used in process No. 4.
13	Primer coating	Apply a coat of primer for bumpers to the repaired surface and its surrounding areas. Mask these areas, if necessary. NOTE: Be sure to apply a coat of primer using a spray gun at a pressure of 245 — 343 kPa (2.5 — 3.5 kgf/cm^2, 36 — 50 psi).
14	Leave unattended	Leave the repaired area unattended at 20°C (68°F) for 10 to 15 minutes until primer is half-dry. NOTE: If dirt or dust comes in contact with the coated area, wipe it off with a cloth dampened with alcohol. (Do not use thinner since it could melt the coated area.)
15	Surfacer coating	Apply a coat of surfacer for PP bumpers to the repaired area two or three times at an interval of 3 — 5 minutes. For surfacer/hardener mixture, viscosity and paint thickness, observe the specifications of the surfacers to be used.
16	Drying	Allow the coated surface to dry for 20 minutes at 20°C (68°F) [or 30 minutes at 60°C (140°F)].
17	Sanding (III)	Sand the coated surface and its surrounding areas using #400 sand paper and water.
18	Cleaning/degreasing	Same as process No. 12.

Process No.	Process name	Job contents	
		Non-colored	Metallic paint
19	Top coat (I)	Use a “block” coating method. For paint/hardener mixture, observe the specifications recommended by the manufacturers. • Viscosity: 11 — 13 sec./20°C (68°F) • Coating film thickness: 40 — 50 µ • Spraying pressure: 245 — 343 kPa (2.5 — 3.5 kgf/cm^2, 36 — 50 psi)	Use a “block” coating method. For paint/hardener mixture, observe the specifications recommended by the manufacturers. • Viscosity: 11 — 13 sec./20°C (68°F) • Coating film thickness: 20 — 30 µ • Spraying pressure: 245 — 343 kPa (2.5 — 3.5 kgf/cm^2, 36 — 50 psi)
20	Leave unattended	Not required.	Leave unattended at 20°C (68°F) for at least 10 minutes until the topcoated area is half-dry. NOTE: Be careful to keep dust or dirt from coming in contact with the affected area.
21	Top coat (II)	Not required.	Apply a clear coat three times at an interval of 3 to 5 minutes. For paint/hardener mixture, observe the specifications recommended by the manufacturers. • Viscosity: 10 — 13 sec./20°C (68°F) • Coating film thickness: 20 — 30 µ • Spraying pressure: 245 — 343 kPa (2.5 — 3.5 kgf/cm^2, 36 — 50 psi)
22	Drying	Allow the coated surface to dry for two hours at 20°C (68°F) or 30 minutes at 60°C (140°F). NOTE: Do not allow the temperature to exceed 80°C (176°F) since this will deform the PP substrate.	
23	Inspection	Carefully check the condition of the repaired area.	
24	Removal of masking	Remove the masking tape applied in process No. 11 and 13.	
25	Parts installation	Install parts on the bumper in reverse order of removal.	
26	Bumper installation	Install the bumper.	

9. Rear Bumper

A: REMOVAL

1) Disconnect the ground cable from battery. <Ref. to NT-6, BATTERY, NOTE, Note.>

NOTE:
For model with battery sensor, disconnect the ground terminal from battery sensor.

2) Remove the trunk room mat.
3) Remove the trim panel - trunk rear.
   (1) Remove the clip.
   (2) Release the claws, and remove the trim panel - trunk rear.

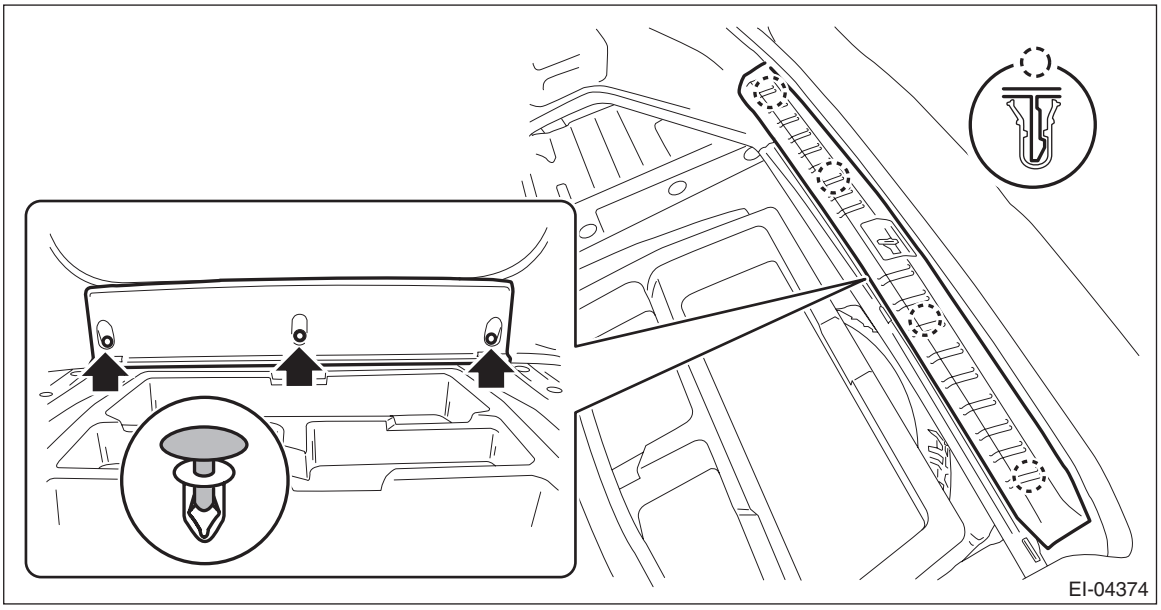

4) Remove the clips, and turn over the trim panel - trunk side.

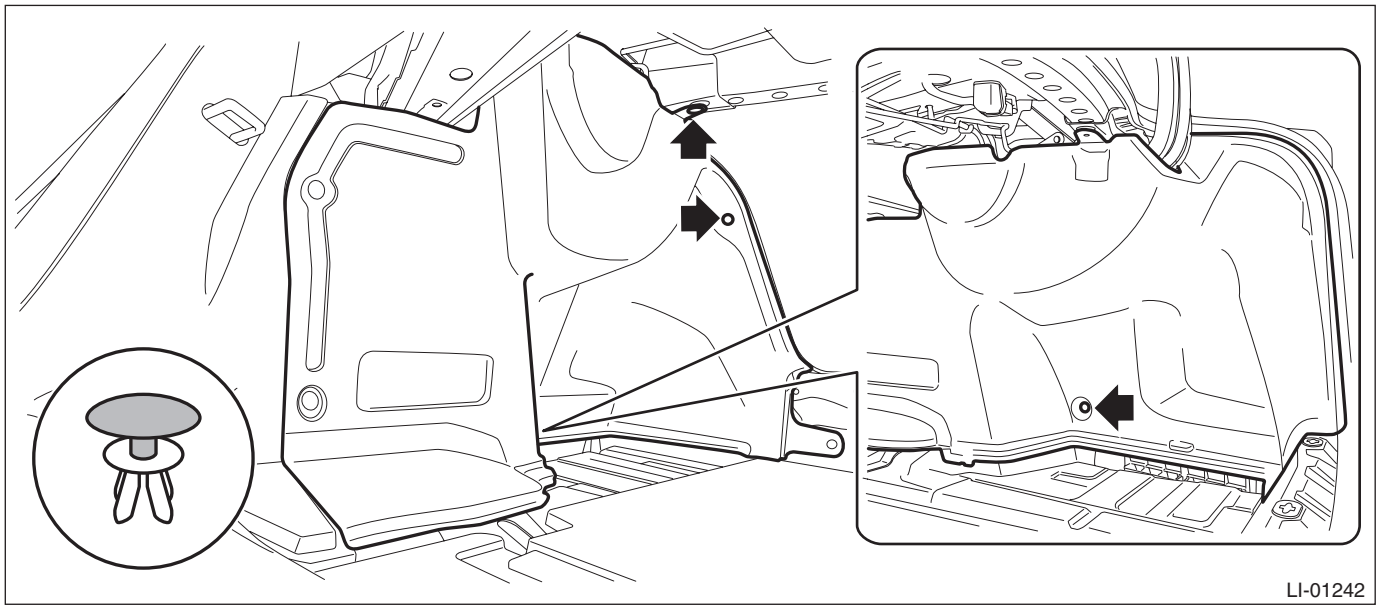

5) Remove the light assembly - rear combination. <Ref. to LI-50, REMOVAL, Rear Combination Light Assembly.>

6) Remove the bumper face - rear.
(1) Remove the clips inside the wheel housing.
(2) Remove the clips at the lower side of the bumper face - rear.

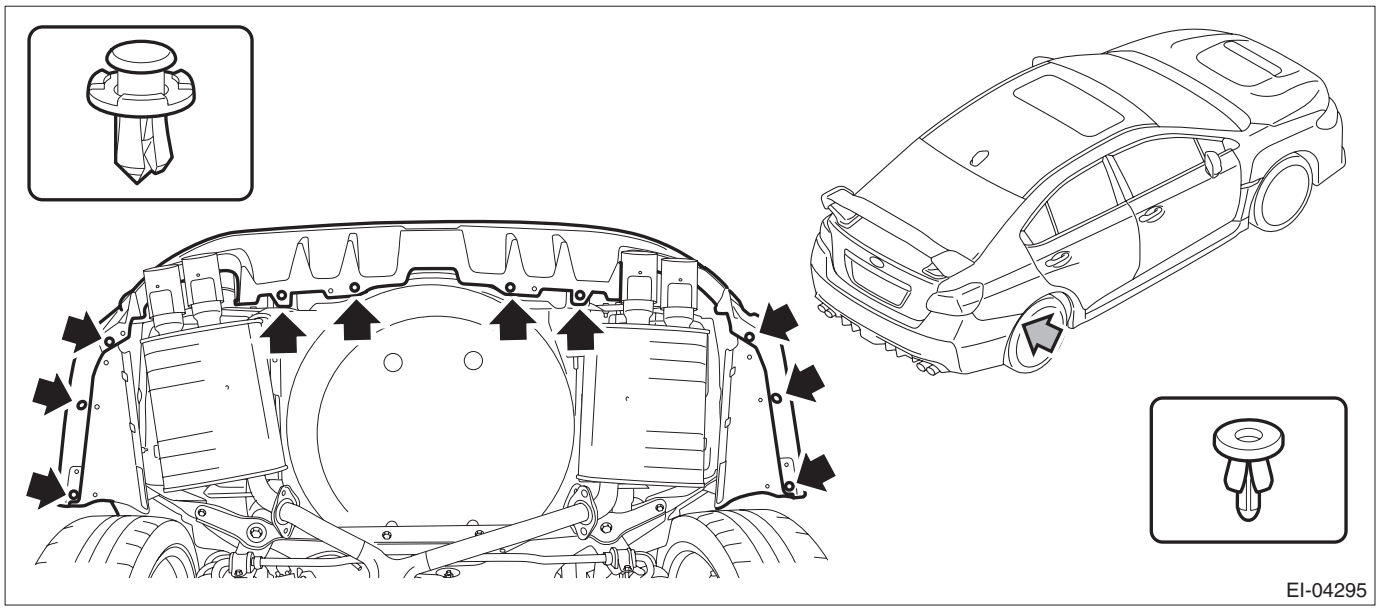
EI-04295

(3) Detach (b) and (c) while pulling up (a) of the bumper face - rear.
(4) Detach (e) while pulling up (d) of the bumper face - rear.
(5) Perform the same procedures when detaching (f) to (h) on the opposite side.
(6) Detach in order from (i) to (k) by carefully pulling toward you while pulling up the center of bumper face - rear.

CAUTION:
- **Pulling with excessive force may damage the bracket.**
- **For models with Reverse Automatic Braking, be careful not to damage the connector located on the gray arrow position.**

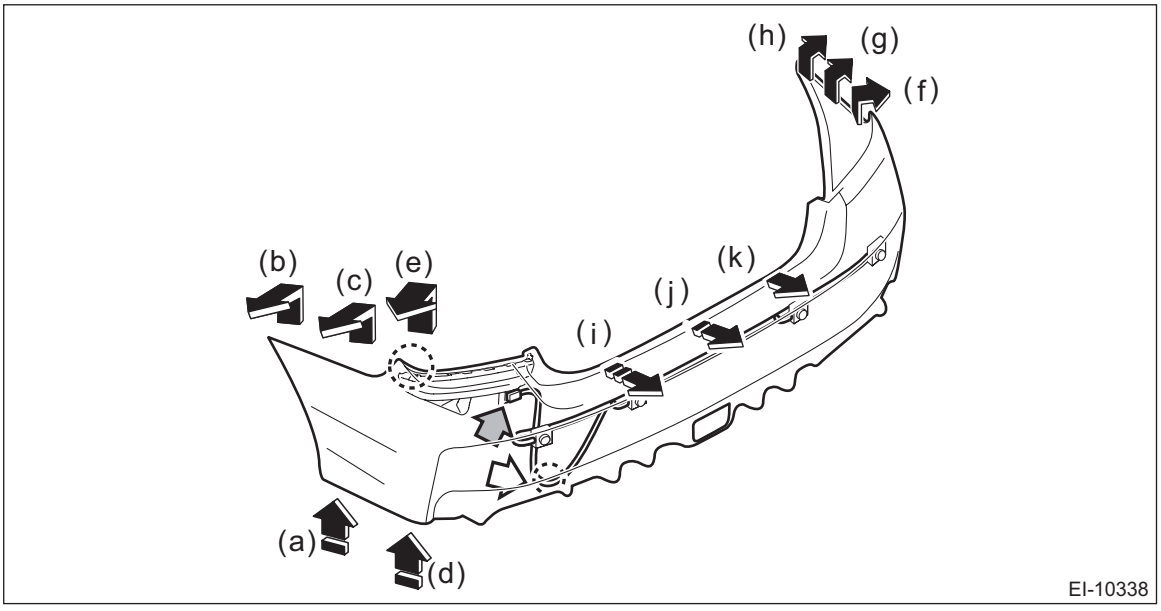

EI-10338

(7) For models with Reverse Automatic Braking, disconnect the connector of the cord assembly - sonar.

7) Remove the bolts and nuts, and remove the bumper beam COMPL - rear.

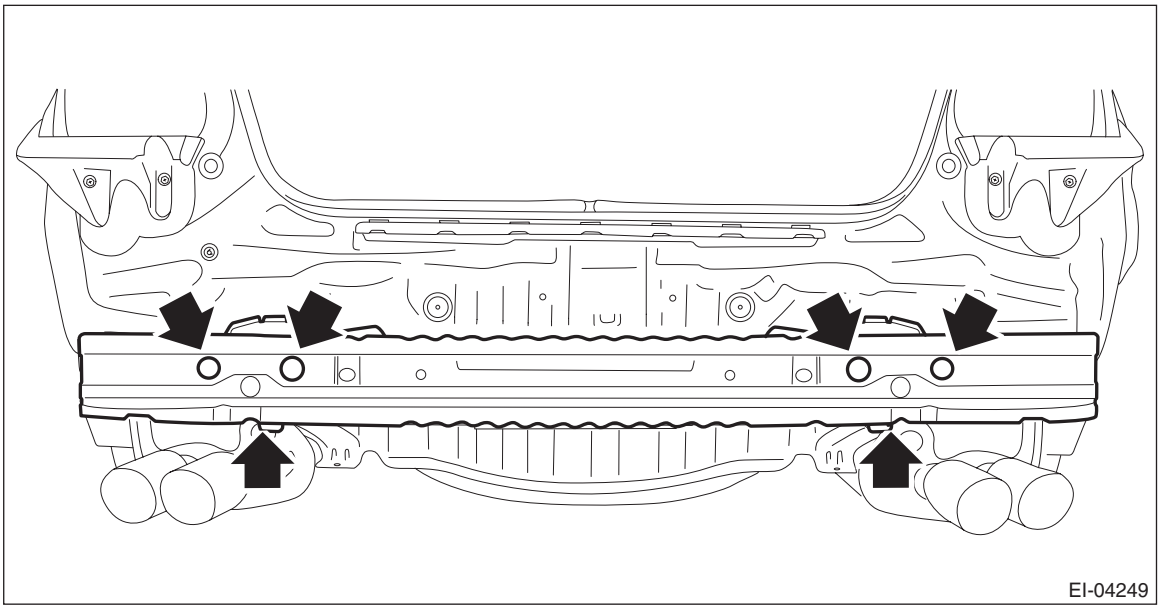

NOTE:
After all nuts are removed, raise the bumper beam COMPL - rear a little to remove it from vehicle body.

8) Remove bumper brackets.
(1) Remove the screws.
(2) Turn over the trim panel - trunk side, and detach the claw of the clip from the back side.

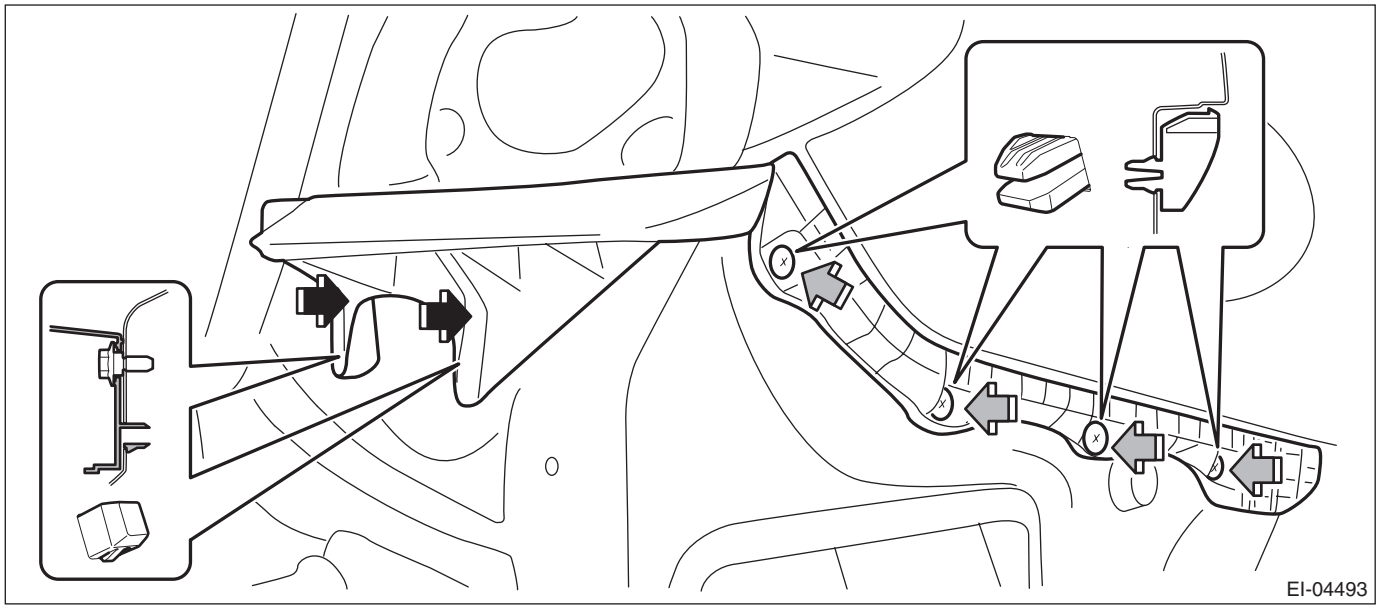

9) If removing the following parts, refer to “Sensor & Harness” of the “Reverse Automatic Braking” section. <Ref. to RAB-7, REMOVAL, Sensor and Harness.>
- Cord assembly - sonar
- Sonar - sensor

B: INSTALLATION

CAUTION:
Before installing the bumper face, match the claws on the bracket - rear bumper with the engaging position of flange section on the bumper face side. If the engaging position is not correct, the flange section may be broken or the clearance between fender panel and bumper face may not be uniform.
1) If installing the following parts, refer to “Sensor & Harness” of the “Reverse Automatic Braking” section. <Ref. to RAB-8, INSTALLATION, Sensor and Harness.>
- Sonar - sensor
- Cord assembly - sonar
- Holder - sonar

2) Install each bumper bracket.
3) Install the bumper beam COMPL - rear.

Tightening torque:
70 N·m (7.1 kgf-m, 51.6 ft-lb)
4) Install the bumper face - rear.

CAUTION:
For models with Reverse Automatic Braking, securely fasten the harness clamp (white arrow) of the cord assembly - sonar.

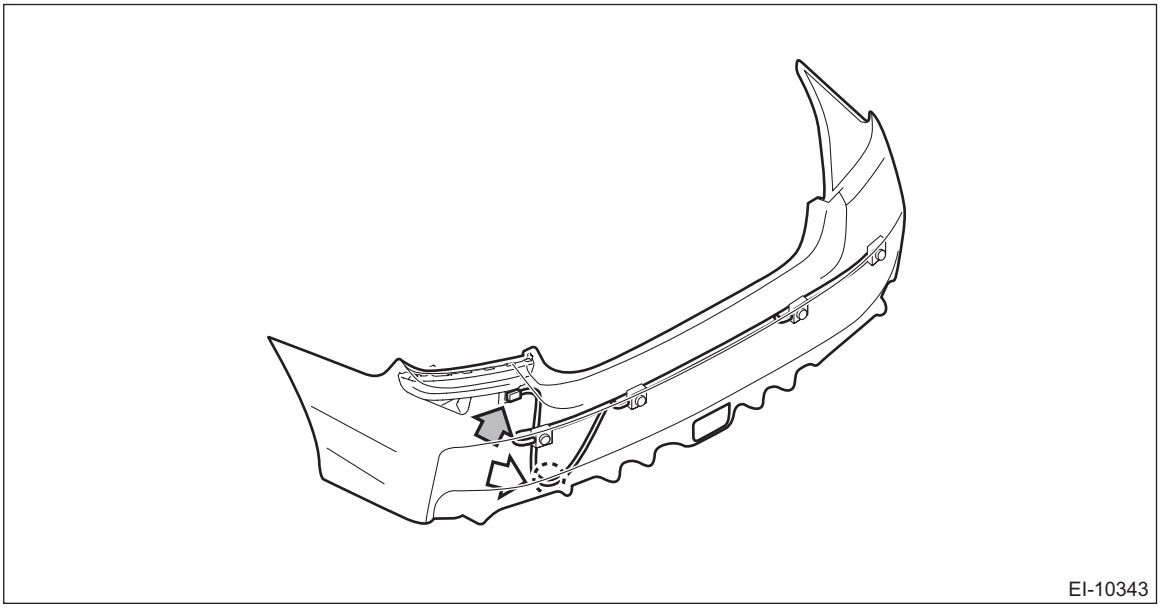

NOTE:
If the bumper face - rear comes off too easily, adjust the hook of the center bracket side.
5) Install the light assembly - rear combination.

CAUTION:
Replace the gasket - rear combination with a new part. If a gasket is reused, water leakage may occur.

Tightening torque:
7.5 N·m (0.8 kgf-m, 5.5 ft-lb)
6) Install the trim panel - trunk rear and trunk room mat.
7) Connect the battery ground terminal. <Ref. to NT-6, BATTERY, NOTE, Note.>

C: REPAIR

Refer to the description concerning repair in “Front Bumper” section. <Ref. to EI-36, REPAIR, Front Bumper.>

10.Cowl Panel

A: REMOVAL

1) Remove the arm assembly - windshield wiper. <Ref. to WW-21, REMOVAL, Front Wiper Arm.>
2) Remove the cowl panel - side.
   (1) Remove the clips.
   (2) Release the claws, and then remove the cowl panel - side.

CAUTION:
Pulling with excessive force may damage the cowl panel - side. If it is difficult to remove, use a plastic remover or equivalent tool.

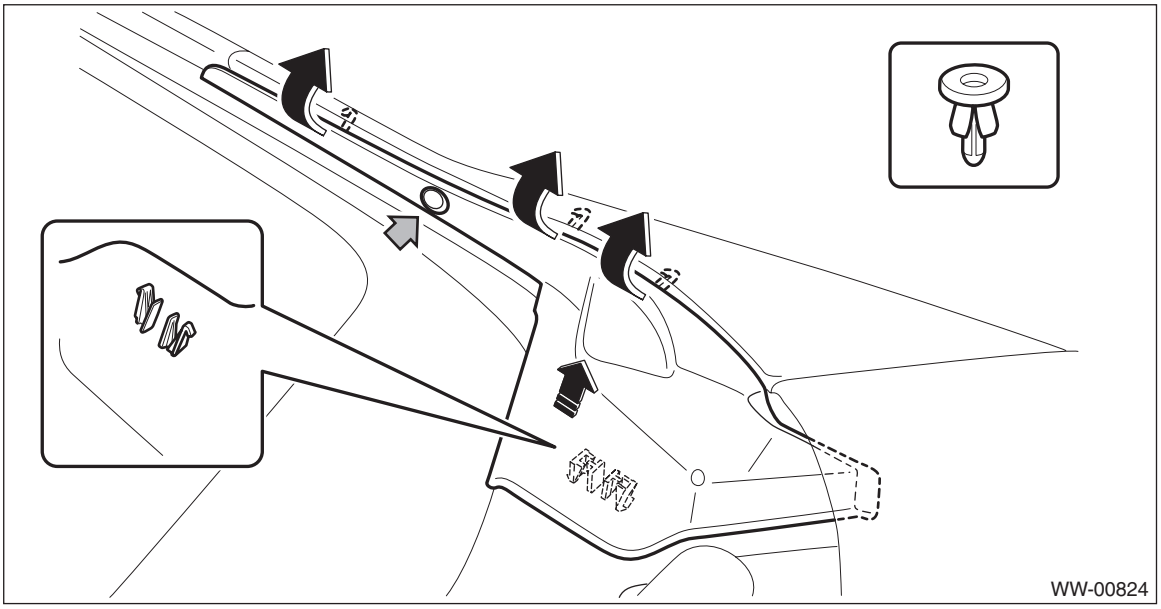

3) Remove the cowl panel assembly.

CAUTION:
Before removing the cowl panel, use an air blower and nylon brush to sweep gravel from the lower area of the front side of the glass.

(1) Disconnect the washer hose.
(2) Remove clips (A).
(3) Check the direction of the clip (B), and push the claws from both sides to remove it.

CAUTION:
When removing the clip (B), push the claws of the clip first.
Be careful not to apply excessive force when pulling the clip (B), as the clip may become damaged.

(4) Remove the cowl panel assembly by pulling it out towards the front of the vehicle.

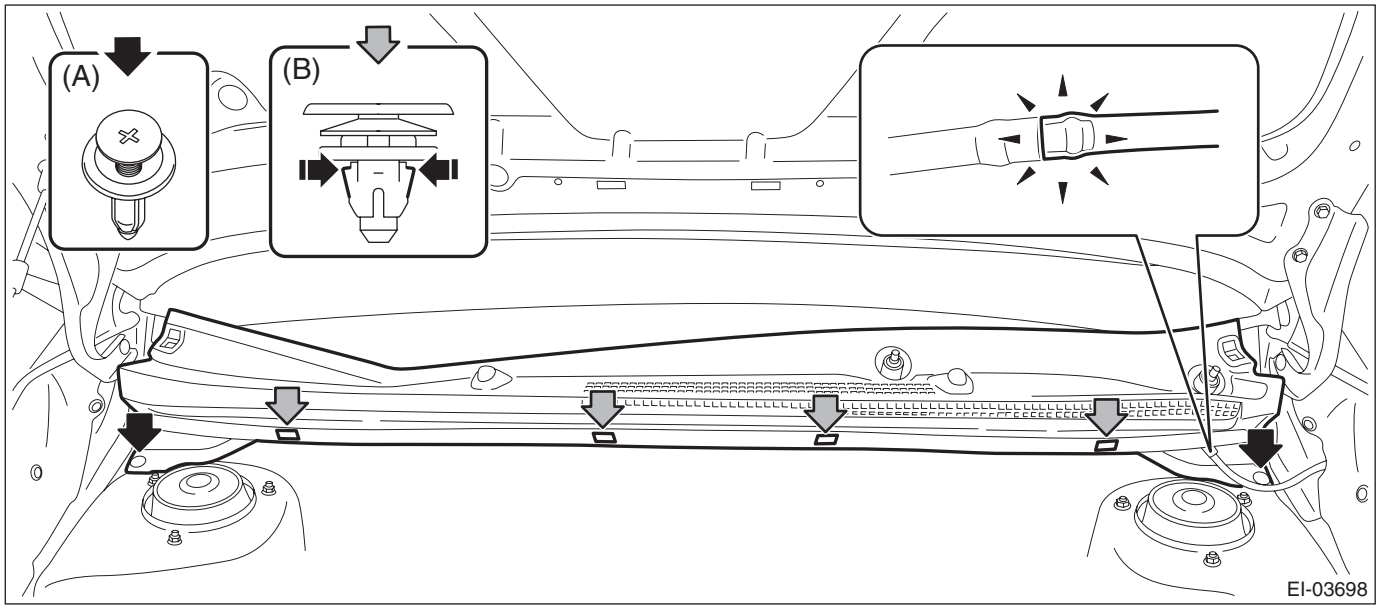

4) Remove the washer nozzle and washer hose as required. <Ref. to WW-30, REMOVAL, Front Washer Nozzle and Hose.>

B: INSTALLATION

CAUTION:
Before installing the windshield glass and cowl panel, make sure there are no gravel in the installing area.

1) Install the cowl panel assembly.

CAUTION:
If the cowl panel assembly cannot be installed properly, do not hit or set it forcibly. The claws of the cowl panel or the windshield glass may be damaged.

(1) Hook the claw of the cowl panel on the lower end (1) of the windshield glass.

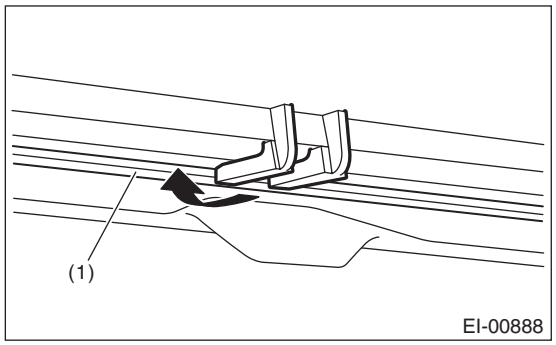

(2) Align the center protrusion of the cowl panel assembly to the cutout portion of the vehicle side, then install the cowl panel assembly.

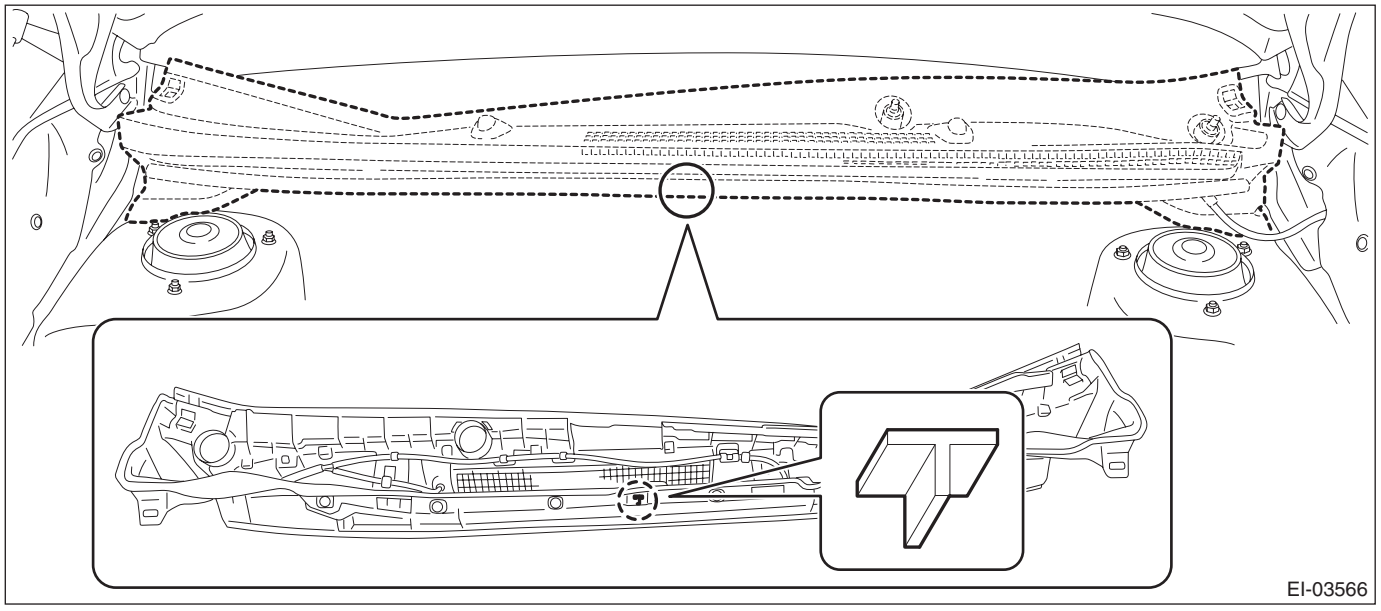

(3) Attach the clip and connect the washer hose.

2) Install the cowl panel - side.

3) Install the arm assembly - windshield wiper. <Ref. to WW-22, INSTALLATION, Front Wiper Arm.>

4) If the washer nozzles have been removed from the cowl panel assembly, adjust the washer spray positions. <Ref. to WW-34, ADJUSTMENT, Front Washer Nozzle and Hose.>

11.Roof Molding

A: REMOVAL

CAUTION:
Be careful not to damage the body.
1) Turn over the front end of the molding - roof.
2) Slide the inner fastener in the direction of the arrow using a flat tip screwdriver, then remove the fastener from the stud on the vehicle side.

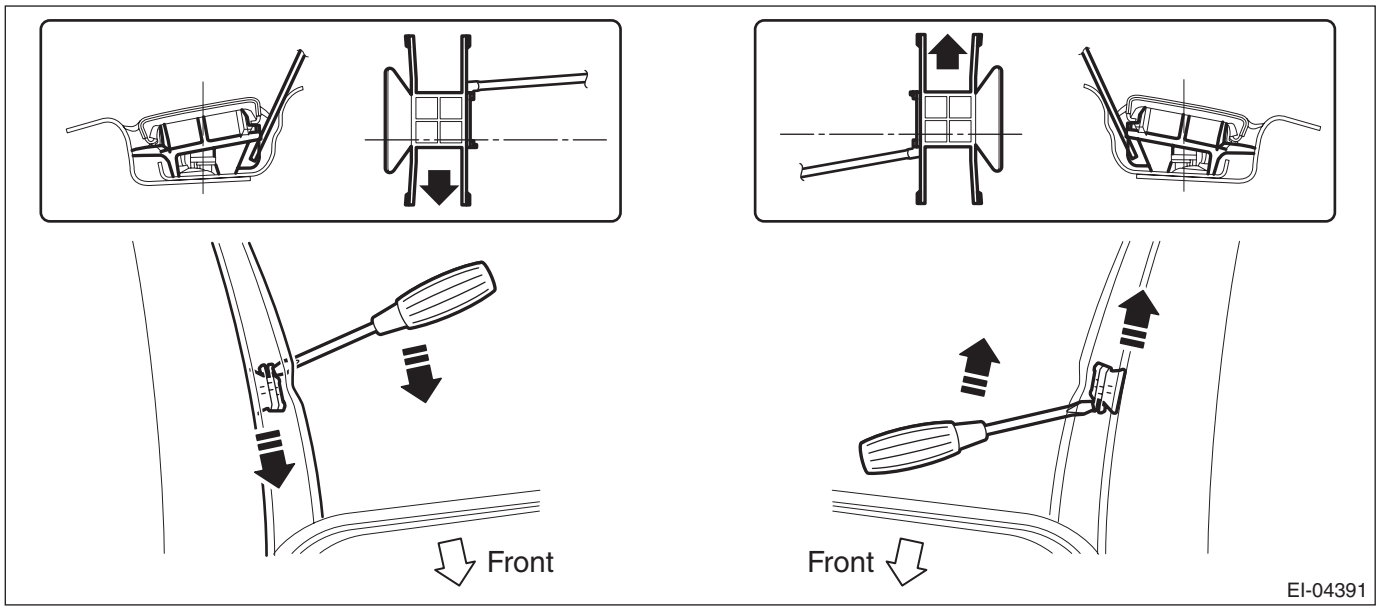

Right side: Slide towards the front of the vehicle.
Left side: Slide towards the rear of the vehicle.
6 places per side

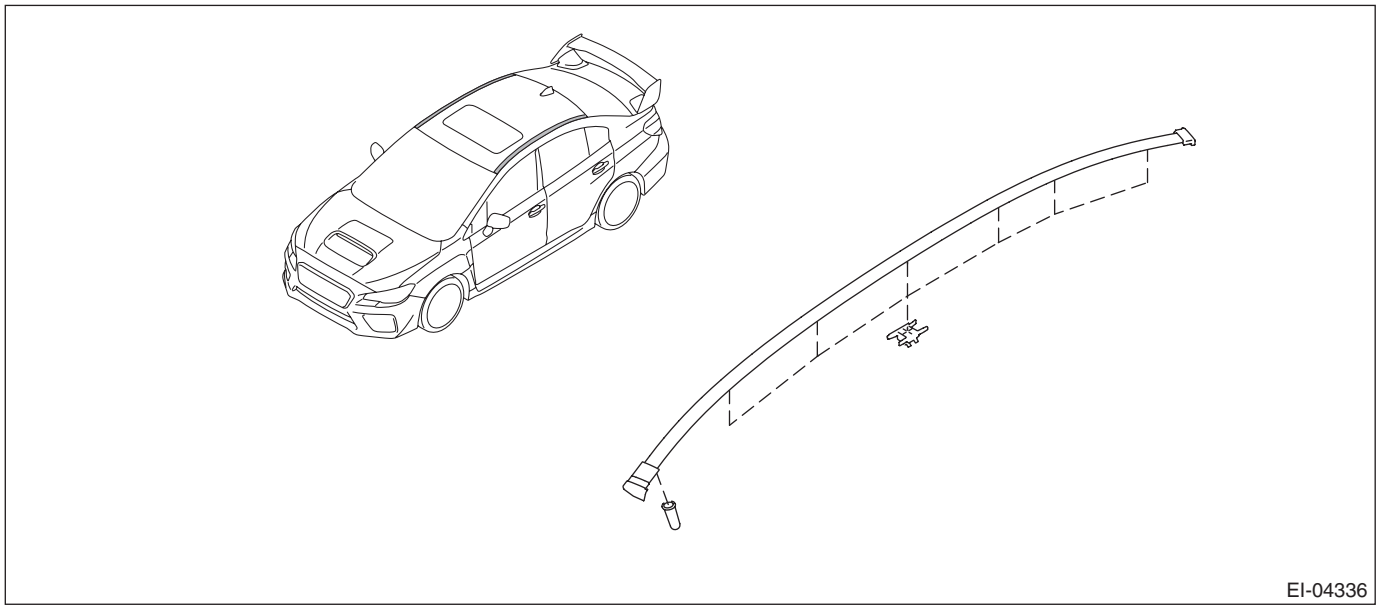

3) Pull up the molding - roof, and remove from the vehicle.

B: INSTALLATION

1) Remove the clips from the molding - roof, and attach to the studs on the vehicle.

CAUTION:
- **Always replace the clips that were damaged during removal of the molding - roof with new parts.**
- **While installing the molding - roof, be careful not to catch the glass molding with the tip of the front side and rear side.**

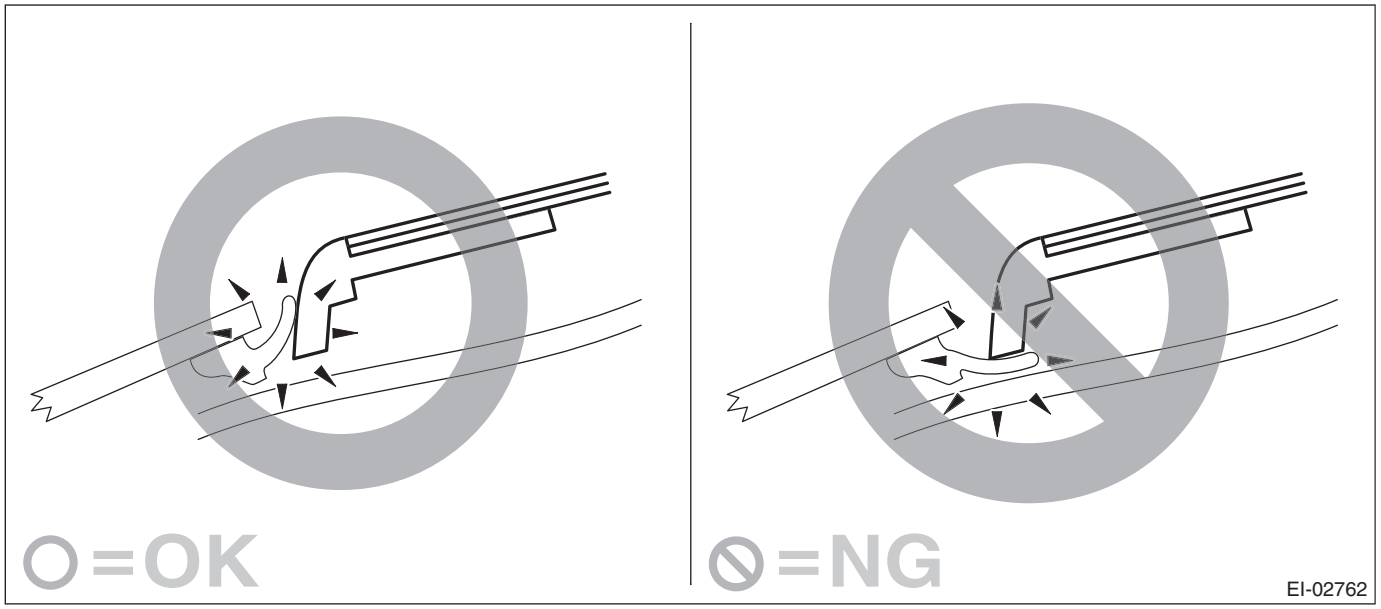

2) Push the front end of the molding - roof against the front window, and attach the forward positioning clip onto the rivet on the body.

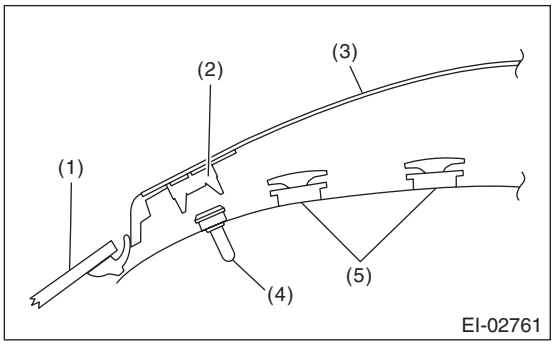

(1) Windshield
(2) Positioning clip
(3) Molding - roof
(4) Rivet
(5) Fastener

3) While pushing down the molding - roof from above, connect the molding - roof and the fastener.

12.Side Garnish

A: REMOVAL

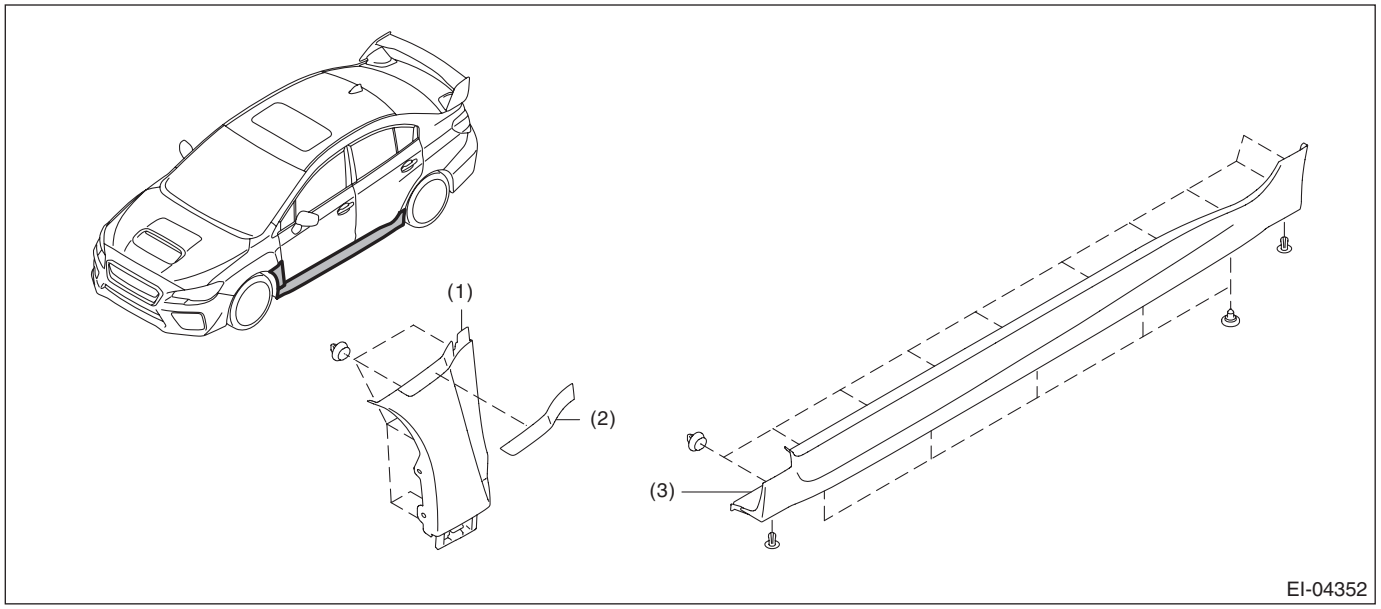

(1) Garnish ASSY - fender (2) Molding (3) Spoiler ASSY - side

1) Remove the spoiler assembly - side.
(1) Apply protective tape to the gap between garnish assembly - fender and spoiler assembly - side.

CAUTION:
If protective tape is not applied, a damage may occur when removing the spoiler assembly - side. If protective tape is difficult to apply, place a piece of paper, etc. between them.

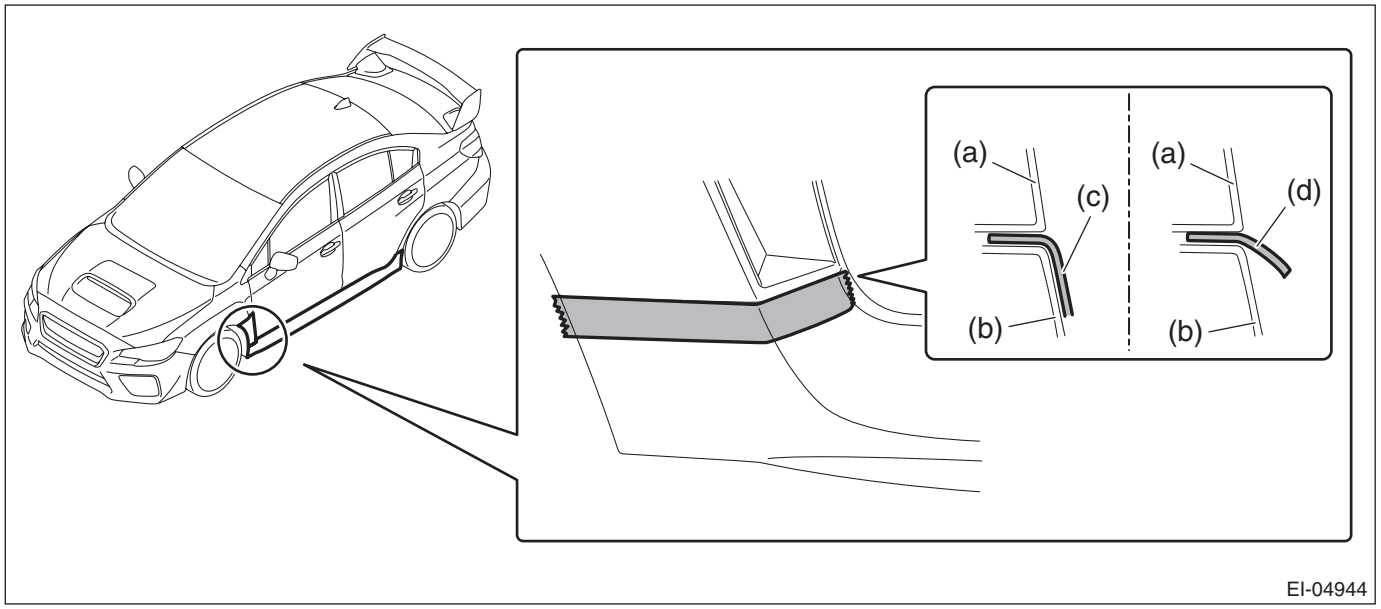

(a) Garnish ASSY - fender (c) Protective tape (d) Paper
(b) Spoiler ASSY - side

NOTE:
If protective tape cannot be applied because there is no gap, perform the operations from the step (4) onward.
(2) Release the lower clip on the spoiler assembly - side.

(3) Release the clips one by one from the front edge to the rear side in sequence, and remove the spoiler assembly - side.
(4) Apply protective tape to the gap between garnish assembly - fender and spoiler assembly - side.

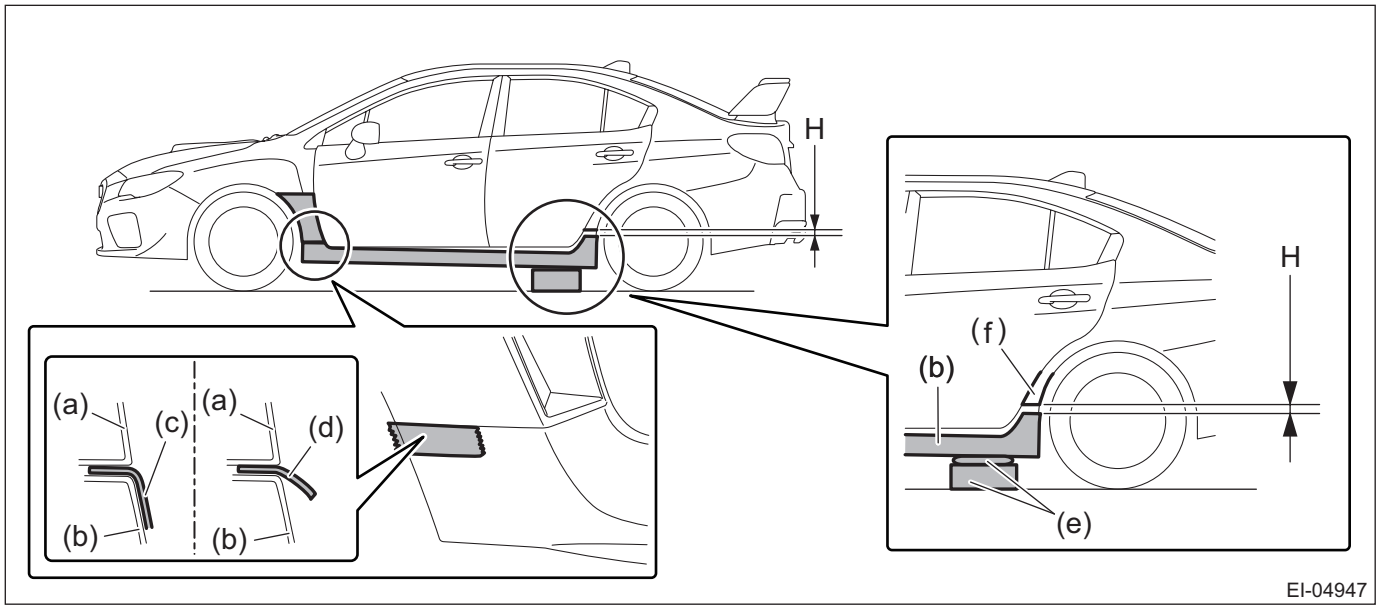

(a)	Garnish ASSY - fender	(d)	Paper	H:	30 — 35 mm (1.2 — 1.4 in)
(b)	Spoiler ASSY - side	(e)	Spacer (a cloth, etc. located on a box)		
(c)	Protective tape	(f)	Panel - side outer		

(5) Release the lower clip on the spoiler assembly - side.
(6) Release 7 clips one by one from the rear edge to the front side in sequence, and place the spoiler assembly - side on the spacer (e).
(7) Adjust the spacer height using a cloth, etc. so that the gap (h) between the rear edge of spoiler assembly - side and the panel - side outer becomes 30 — 35 mm (1.2 — 1.4 in).
(8) Release the clips, and remove the spoiler assembly - side.

2) Remove the garnish assembly - fender. <Ref. to EB-19, FENDER GARNISH, REMOVAL, Front Fender.>

B: INSTALLATION

CAUTION:
Make sure that there is a gasket attached on the clip of the spoiler assembly or garnish assembly. If a gasket is not attached, water leakage may occur.
Install the spoiler assembly - side.

13.Trunk Lid Garnish

A: REMOVAL

1) Disconnect the ground cable from battery. <Ref. to NT-6, BATTERY, NOTE, Note.>

NOTE:
For model with battery sensor, disconnect the ground terminal from battery sensor.
2) Remove the trim panel - trunk lid. <Ref. to EI-98, REMOVAL, Trunk Room Trim.>
3) Remove the garnish - trunk.
   (1) Remove the nut.
   (2) Disconnect the clips and connectors, and remove the garnish - trunk.

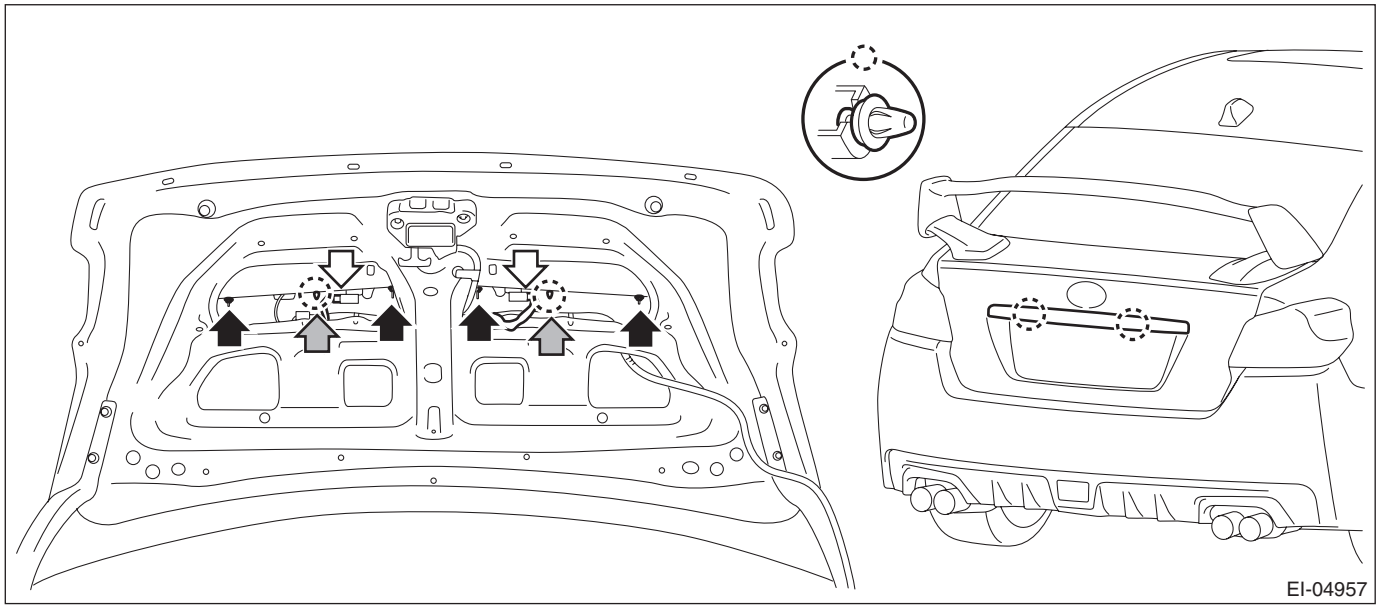

B: INSTALLATION

CAUTION:
Make sure that there is a gasket attached on the clip of the spoiler assembly or garnish assembly. If a gasket is not attached, water leakage may occur.
1) Install the garnish - trunk.

Tightening torque:
4.5 N·m (0.5 kgf-m, 3.3 ft-lb)
2) Install the trim panel - trunk lid.
3) Connect the battery ground terminal. <Ref. to NT-6, BATTERY, NOTE, Note.>

14.Rear Spoiler

A: REMOVAL

1) Remove the trim panel - trunk lid. <Ref. to EI-98, REMOVAL, Trunk Room Trim.>
2) Detach the rear spoiler assembly.

CAUTION:
- **When removing the nut, be careful not to drop the nut inside the trunk lid panel.**
- **Be careful not to damage the vehicle body during removal and installation.**
- **For model with the large rear spoiler, the reactive force of trunk lid increases when the rear spoiler is removed.**

(1) Remove the plugs (a). (Model with large rear spoiler)
(2) Remove the nuts.
(3) Disengage the clips and remove the rear spoiler assembly.

- Model with small rear spoiler

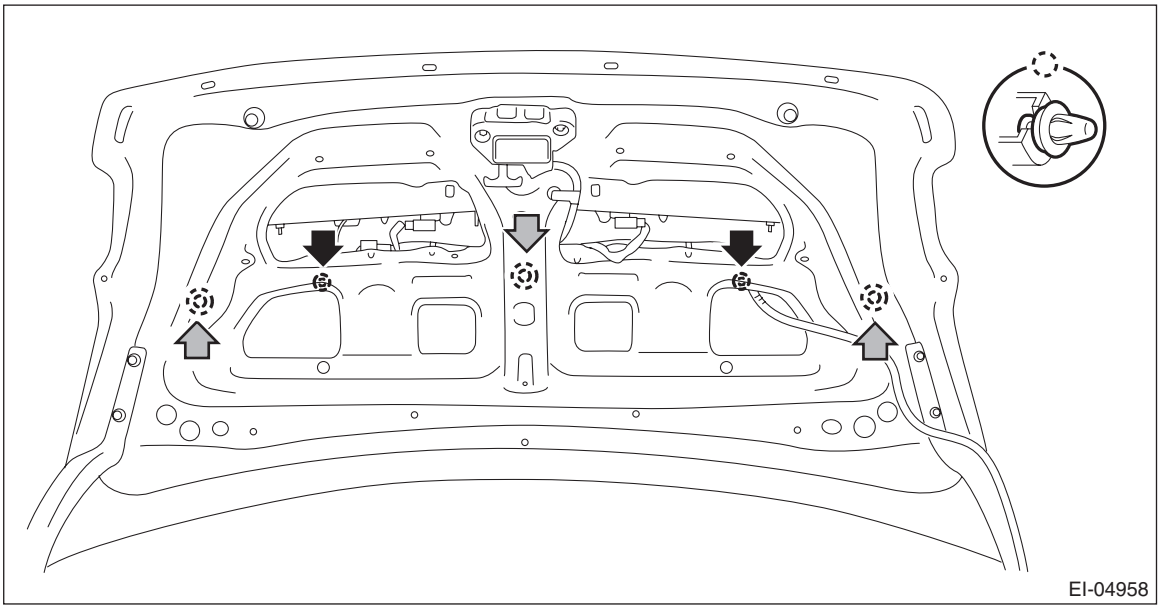
EI-04958

- Model with large rear spoiler

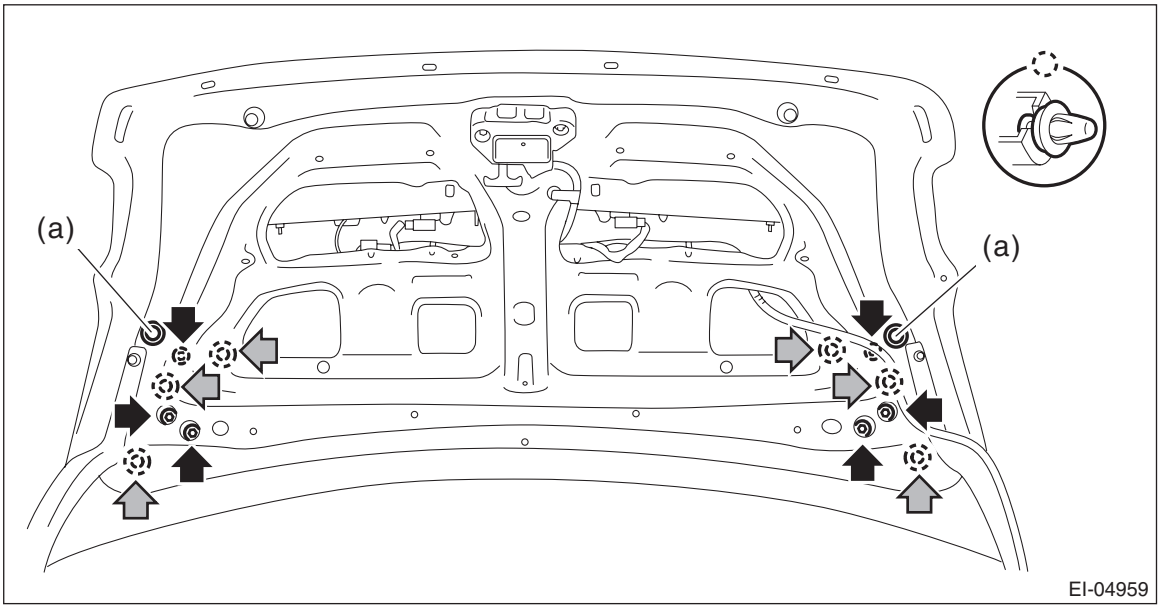

EI-04959

B: INSTALLATION

1) Clean the trunk lid and spoiler attachment surface before installation.

CAUTION:
Make sure that there is a gasket attached on the clip of the spoiler assembly or garnish assembly. If a gasket is not attached, water leakage may occur.

2) Install the rear spoiler assembly.

Tightening torque:
7.5 N·m (0.8 kgf-m, 5.5 ft-lb)

15.Heat Shield Cover

A: NOTE

Refer to “EXHAUST” section for removal and installation procedure of the heat shield cover.

16.Ornament

A: INSTALLATION

1. LETTER MARK

Align the end of application tape with the end of panel, then adhere the letter mark.

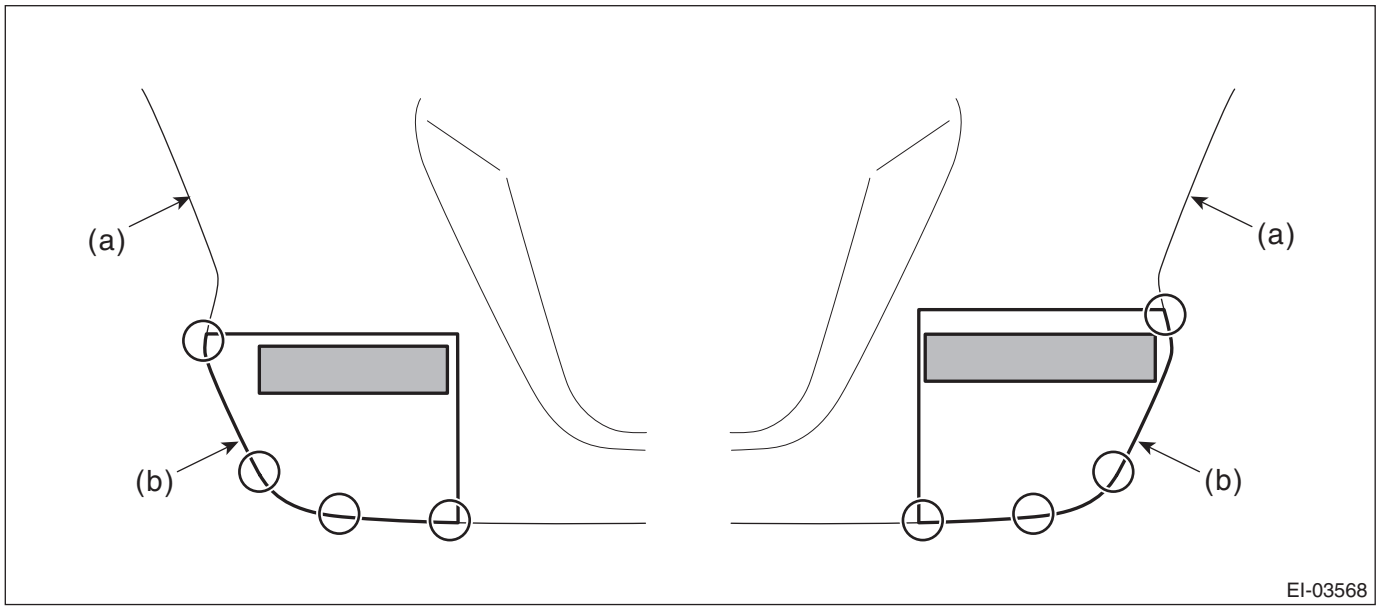

(a) Trunk lid COMPL end
(b) Application tape end

17.Door Trim

A: REMOVAL

1. FRONT DOOR

1) Disconnect the ground cable from battery and wait for at least 60 seconds before starting work. <Ref. to NT-6, BATTERY, NOTE, Note.>

NOTE:
For model with battery sensor, disconnect the ground terminal from battery sensor.

2) Remove the trim panel - front door.
   (1) Attach the protective tape (a).
   (2) Open the cover and remove the screw.
   (3) Remove the clips, and remove the trim panel - front door from the panel assembly - front door.

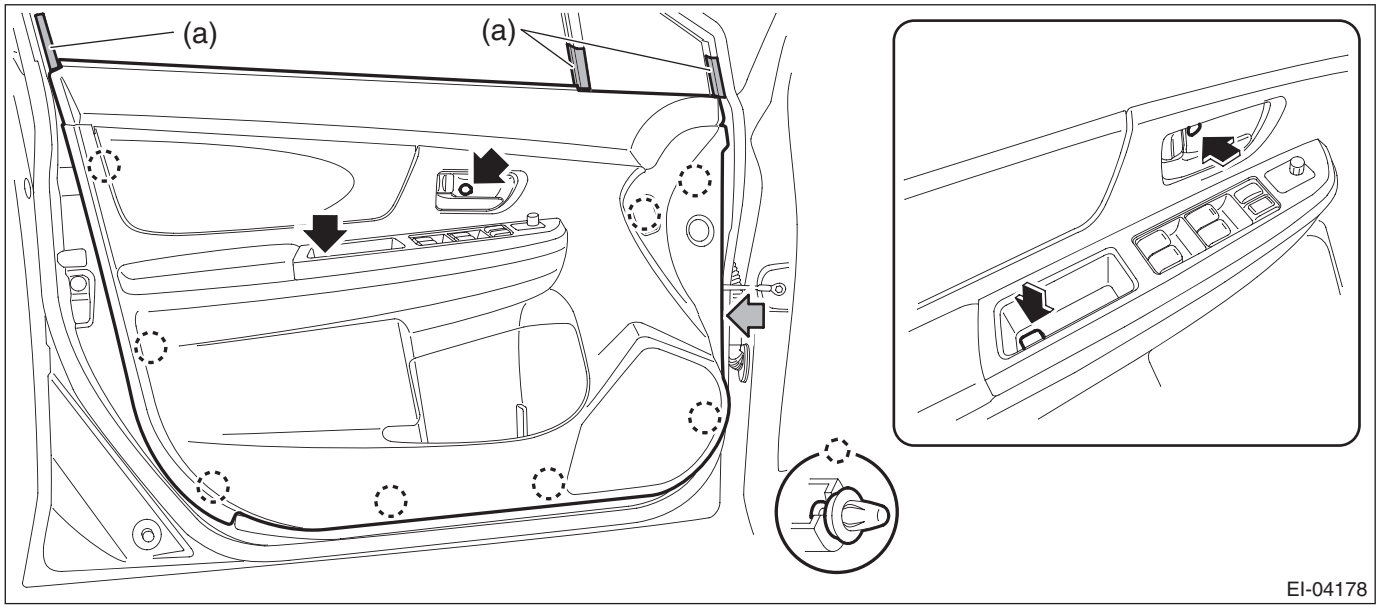

NOTE:
It is easier to remove the door trim if the removal is performed from the gray arrow section.

   (4) Detach the door lock cable (a) and door open cable (b) from the remote assembly - door.

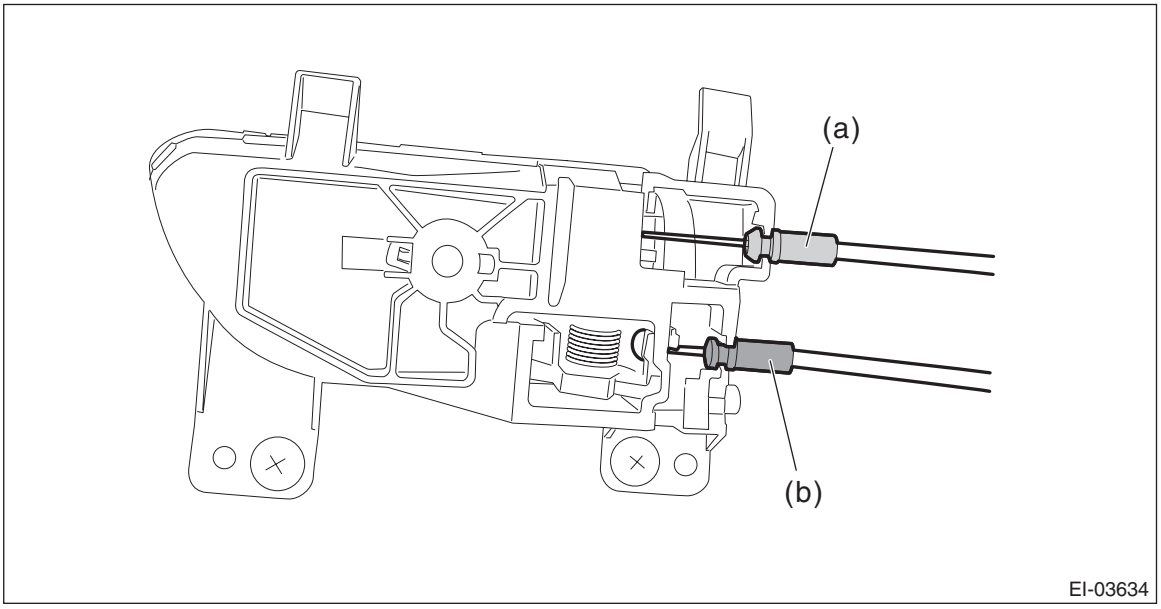

   (5) Disconnect the harness connector and remove the trim panel - front door.

3) Remove each part as required.
- Remote assembly - door: <Ref. to SL-32, REMOVAL, Front Inner Remote.>
- Switch - power window main: <Ref. to GW-11, MAIN SWITCH, REMOVAL, Power Window Control Switch.>
- Weather strip - door INN: <Ref. to EI-60, DISASSEMBLY, Door Trim.>

2. REAR DOOR

1) Disconnect the ground cable from battery. <Ref. to NT-6, BATTERY, NOTE, Note.>

NOTE:
For model with battery sensor, disconnect the ground terminal from battery sensor.

2) Remove the trim panel - rear door.
   (1) Attach the protective tape (a).
   (2) Open the cover and remove the screw.
   (3) Remove the clips, and remove the trim panel - rear door from the panel assembly - rear door.

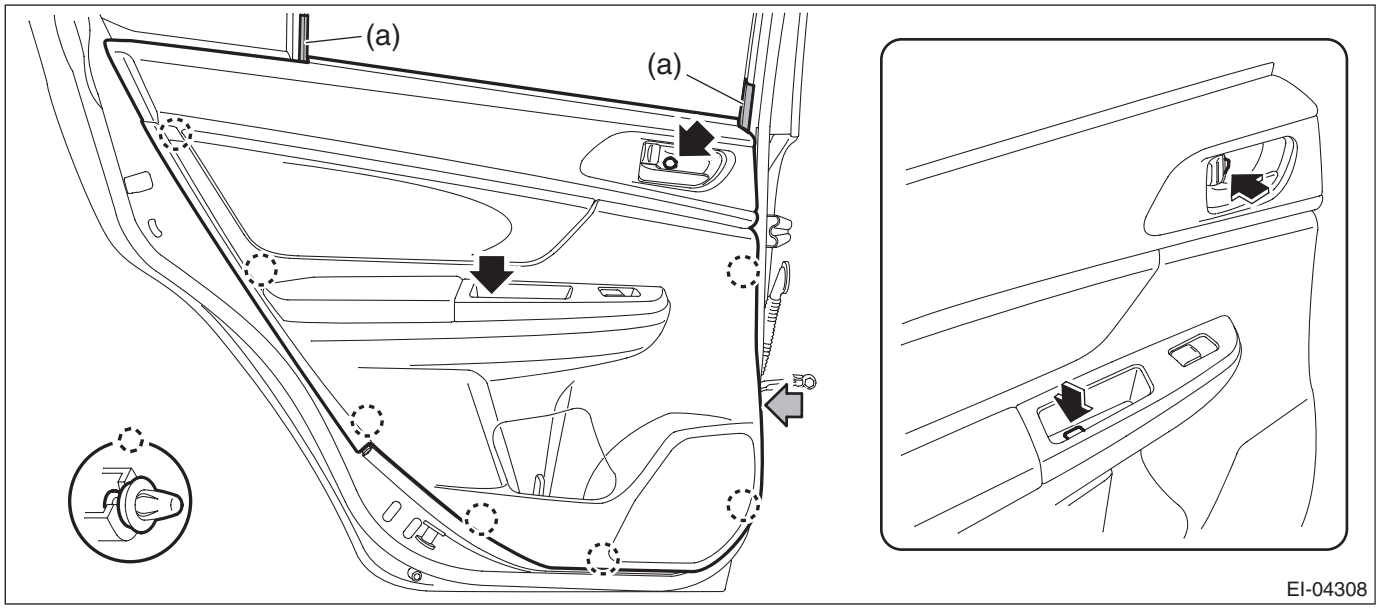

NOTE:
It is easier to remove the door trim if the removal is performed from the gray arrow section.

   (4) Detach the door lock cable (a) and door open cable (b) from the remote assembly - door.

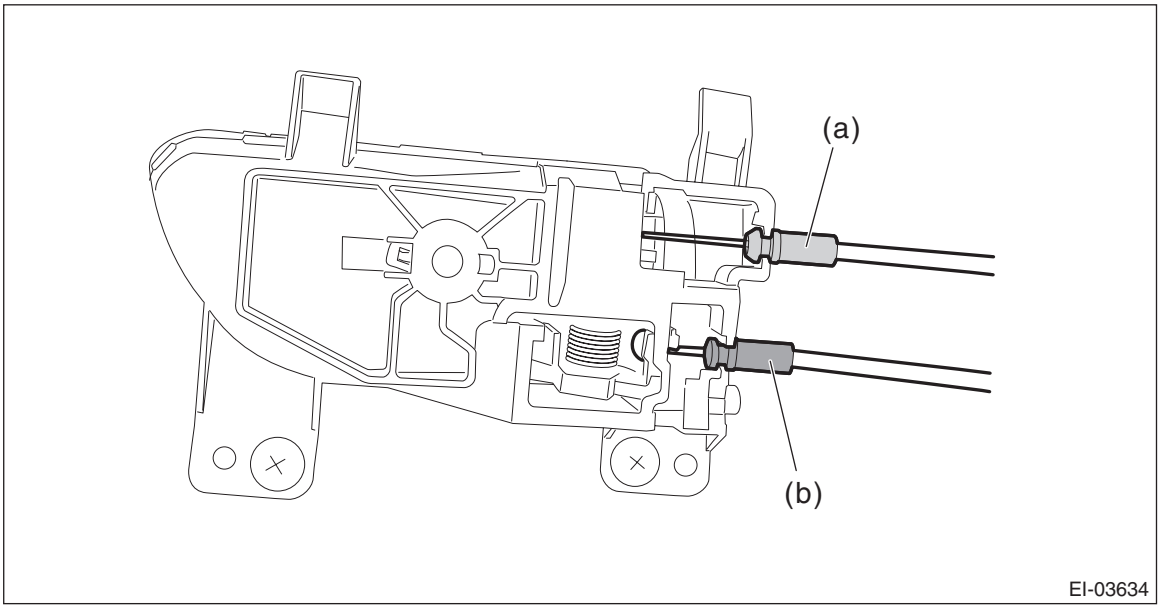

   (5) Disconnect the harness connector and remove the trim panel - rear door.

3) Remove each part as required.
- Remote assembly - door: <Ref. to SL-40, REMOVAL, Rear Inner Remote.>
- Switch - power window sub: <Ref. to GW-12, SUB-SWITCH, REMOVAL, Power Window Control Switch.>
- Weather strip - door INN: <Ref. to EI-60, DISASSEMBLY, Door Trim.>

B: INSTALLATION

1) Before installation, check the following items.
- Cable is free from deformation such as fray.
- Grease is applied sufficiently to cable joints.

If grease is insufficient, add it as necessary before assembling the cable.
2) Install the removed parts to the trim panel - door.
3) Install the trim panel - door.

NOTE:
Attach the door lock cable (a - end ball: small) to the upper side, and attach the door open cable (b - end ball: large) to the lower side.

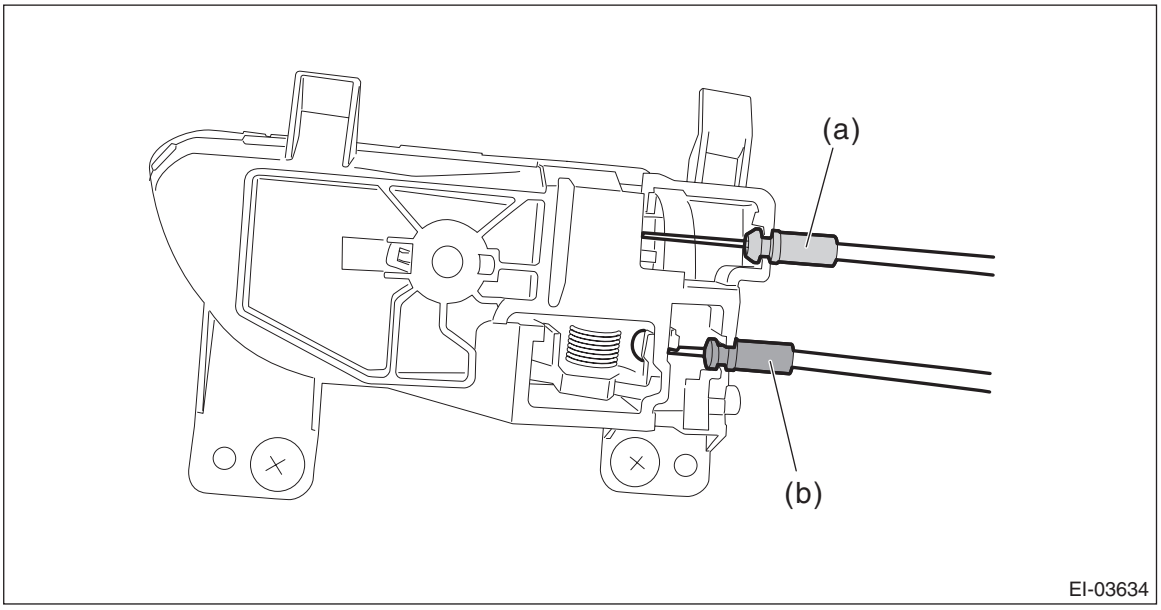

4) Connect the battery ground terminal. <Ref. to NT-6, BATTERY, NOTE, Note.>

C: DISASSEMBLY

1) Remove the trim panel - door.
2) Disengage the rivets and claws, and remove the weather strip - door INN from the trim panel - door.

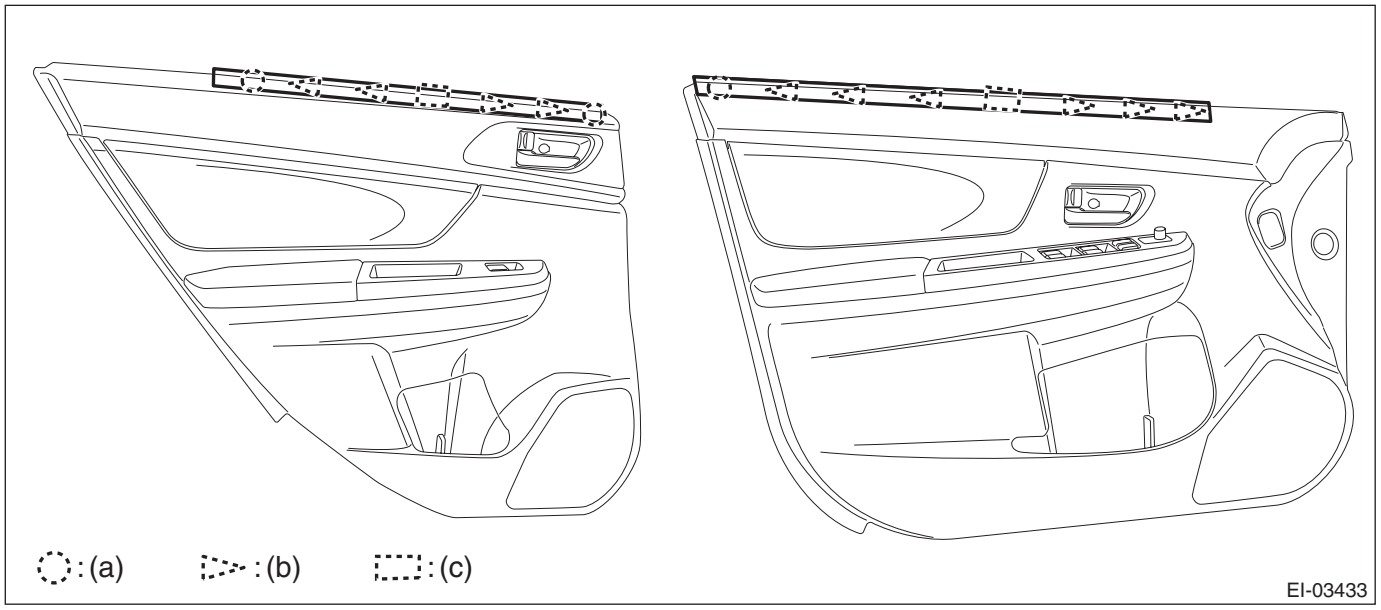

(a) Rivet (b) Claw (c) Claw

NOTE:
Remove the rivets with a rivet cutter or nipper, etc.

D: ASSEMBLY

1) Bend the claws while pushing the weather strip - door INN against the trim panel - door.

CAUTION:
Beware of the direction of folding the claws.

2) Install the rivet.

CAUTION:
Set the height of rivet crimped section as 3 mm (0.12 in). If the crimp is not sufficient, press it with pliers, etc. in order not to interfere the trim panel - door.

Preparation tool and item:
Hand riveter (corresponding to ϕ3.2 mm (0.13 in))
Rivet

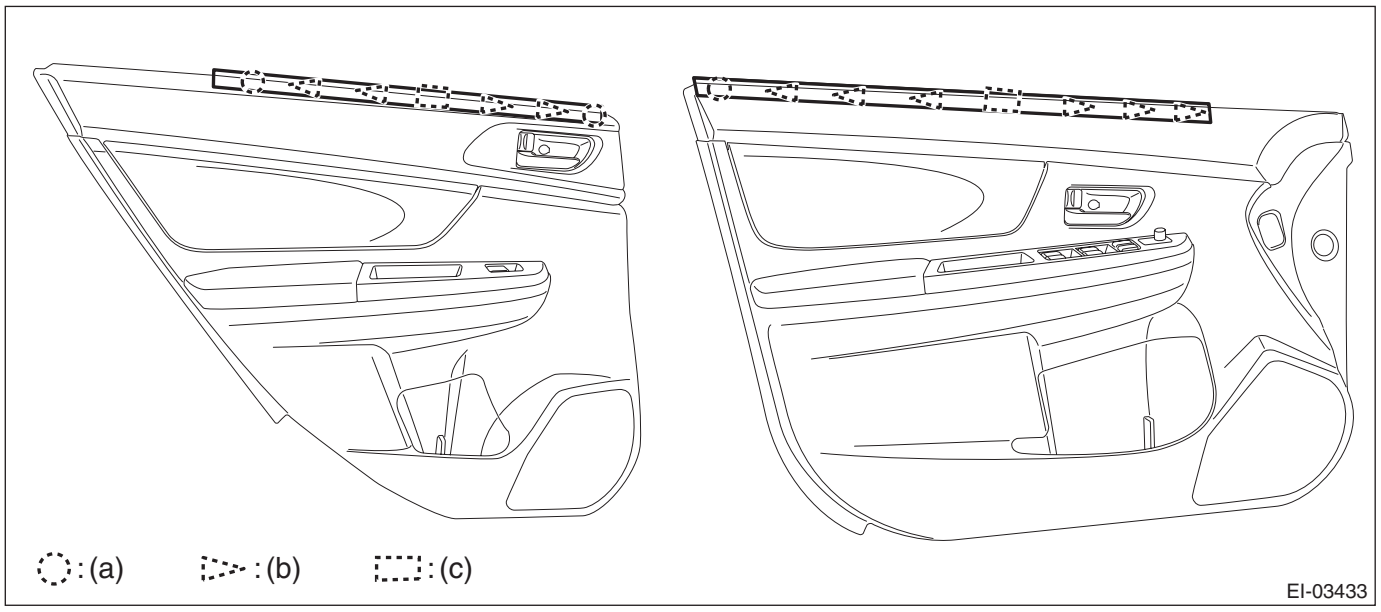

(a) Rivet
(b) Direction of folding claws
(c) Claw bending direction: bend forward for LH side, backward for RH side.

3) After installing the weather strip - door INN, perform the following checks.
- Make sure there are no gaps between the weather strip - door INN and the trim panel - door.
- Make sure there are no looseness when pulling the weather strip - door INN lightly.

18.Instrument Panel Lower Cover

A: REMOVAL

1) Disconnect the ground cable from battery and wait for at least 60 seconds before starting work. <Ref. to NT-6, BATTERY, NOTE, Note.>

NOTE:
For model with battery sensor, disconnect the ground terminal from battery sensor.
2) Remove the clips, and remove the cover - instrument panel side LH.

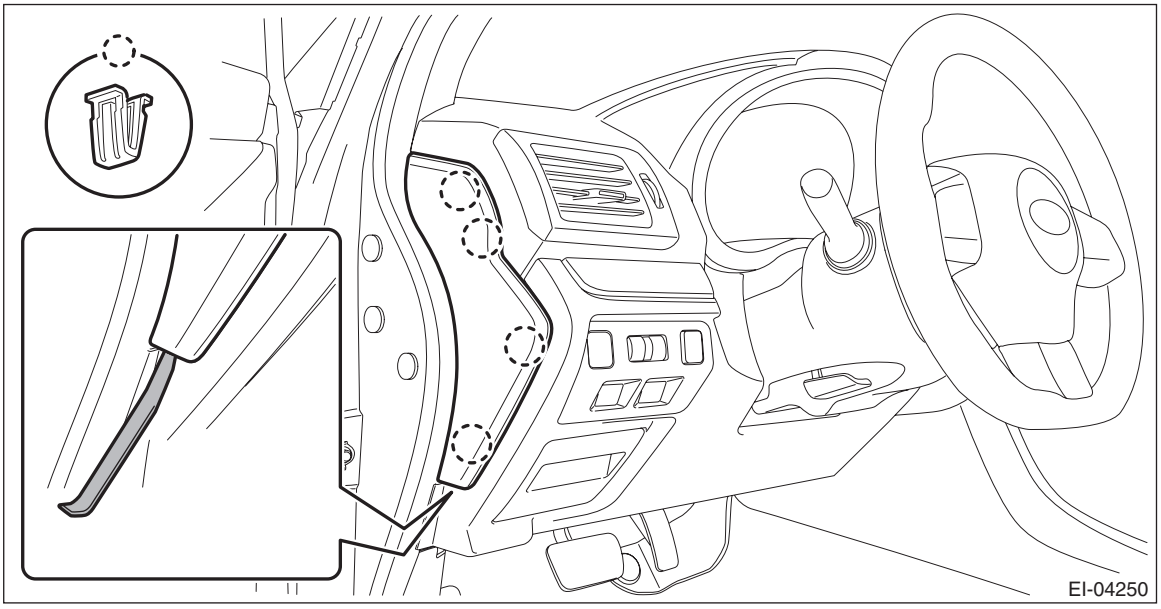

NOTE:
Using a plastic remover, open the cover - instrument panel side LH.
3) Remove the cover assembly - instrument panel LWR driver INN and OUT.

CAUTION:
When removing the cover assembly - instrument panel LWR driver, be sure to pull it toward you. If attempting to remove by turning it upward, the claws may be damaged.

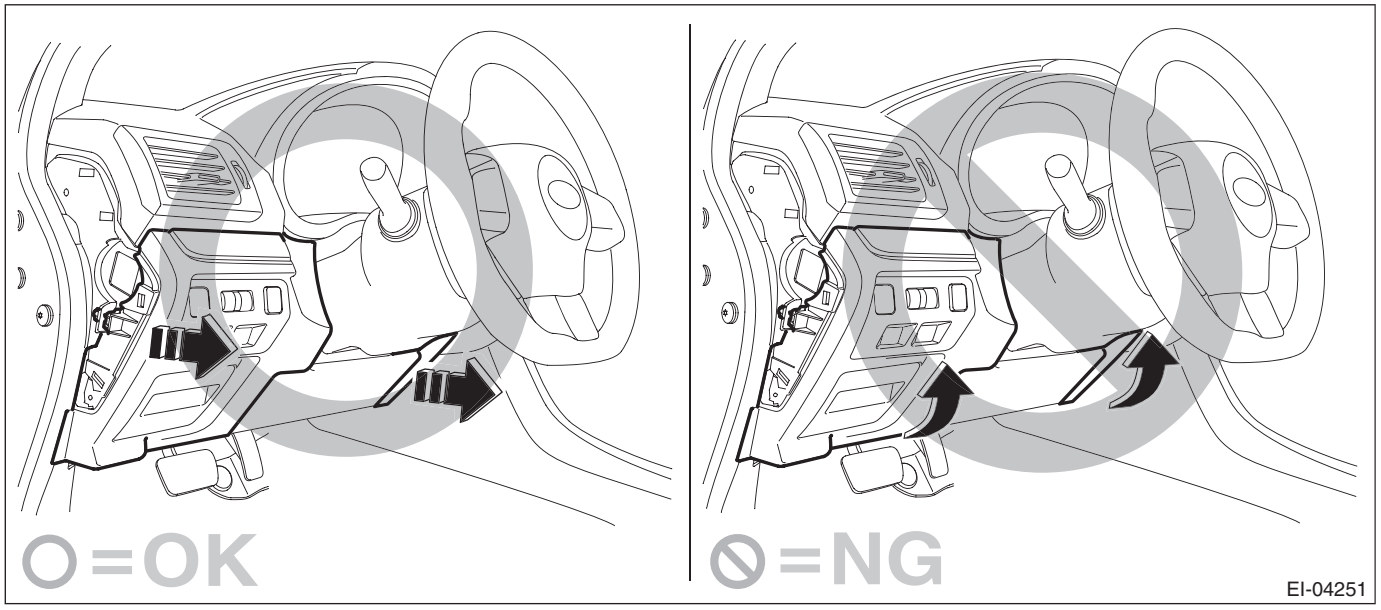

(1) Remove the screws and release the clips and claws.
(2) Disconnect the harness connectors, and remove the cover assembly - instrument panel LWR driver INN and OUT.

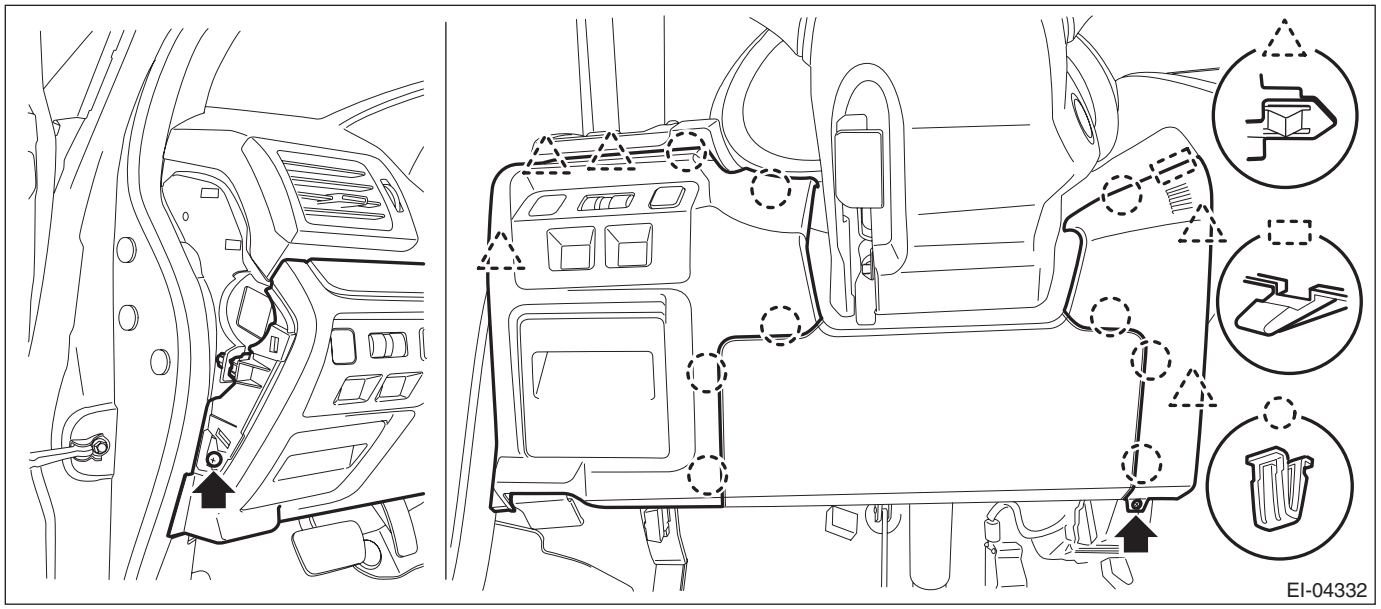

B: INSTALLATION

1) Install the cover assembly - instrument panel LWR driver INN and OUT.
2) Install the cover - instrument panel side LH.
3) Connect the battery ground terminal. <Ref. to NT-6, BATTERY, NOTE, Note.>

19.Glove Box

A: REMOVAL

NOTE:
Refer to “Security and Locks” section for key cylinder replacement. <Ref. to SL-73, GLOVE BOX LID, REPLACEMENT, Key Lock Cylinders.>
1) Disconnect the ground cable from battery. <Ref. to NT-6, BATTERY, NOTE, Note.>

NOTE:
For model with battery sensor, disconnect the ground terminal from battery sensor.
2) Remove the pocket assembly.
   (1) Attach the protective tape (a) to the panel center LWR.
   (2) Remove the damper COMPL - pocket.
   (3) Release the stoppers and remove the pocket assembly by pulling it toward you.

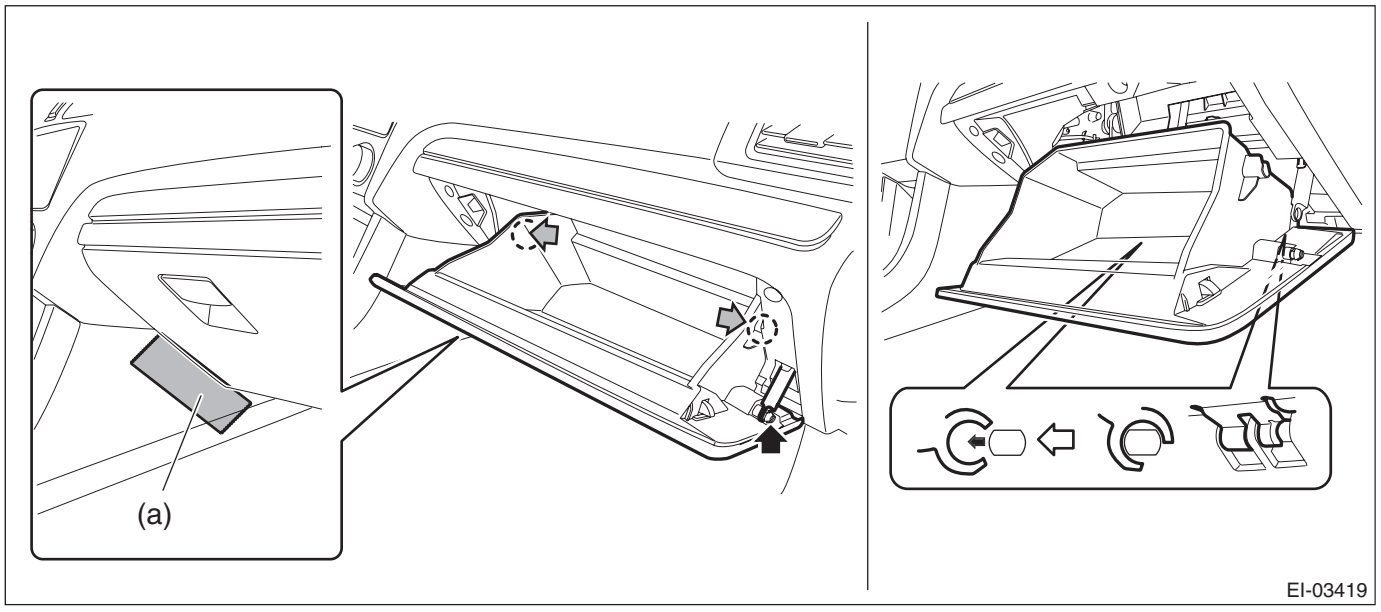

3) Remove the back panel - pocket.
(1) Remove the clips, and remove the cover - instrument panel side RH.

NOTE:
Remove the cover - instrument panel side RH by using a plastic remover.

(2) Release the clips, and remove the ornament - panel assembly passenger.

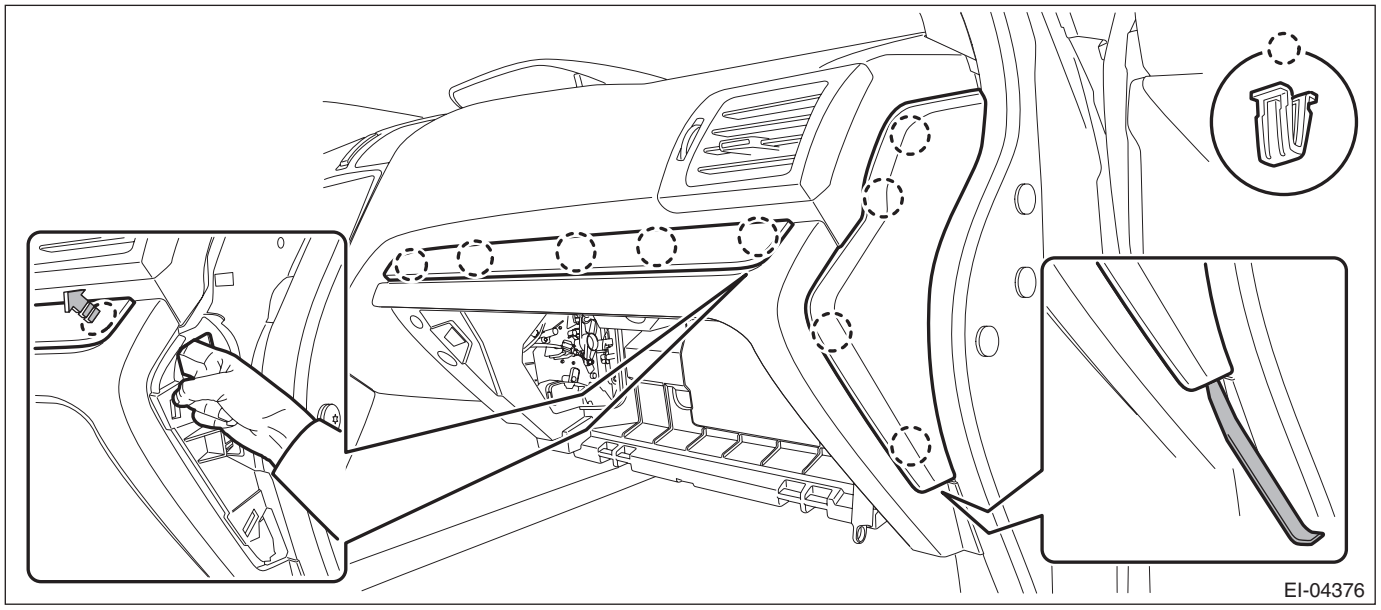

NOTE:
To facilitate the removal, push the clip of the ornament - panel assembly passenger from the backside.

(3) Remove the glove box light LED, and disconnect the connector.
(4) Remove the screws, claws and harness clamp, then remove the back panel - pocket.

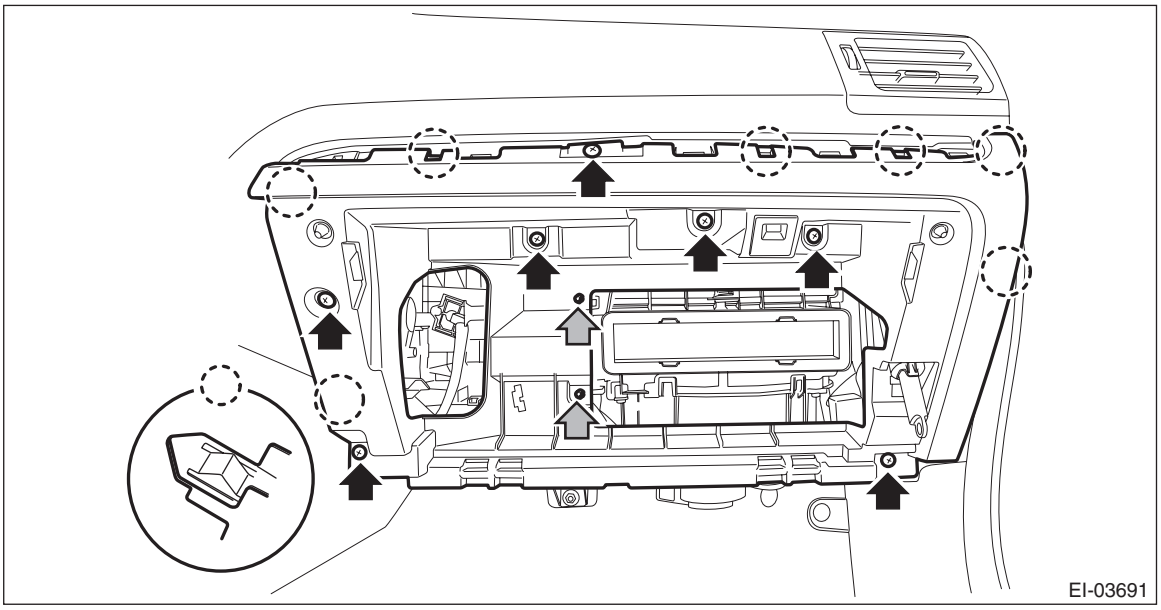

B: INSTALLATION

1) Install the back panel - pocket.
2) Connect the connector, and install the glove box light LED.
3) Install the ornament - panel assembly passenger.
4) Install the under cover assembly - passenger.
5) Install the pocket assembly.
6) Install the cover - instrument panel side RH.
7) Connect the battery ground terminal. <Ref. to NT-6, BATTERY, NOTE, Note.>

20.Center Console

A: REMOVAL

1) Disconnect the ground cable from battery. <Ref. to NT-6, BATTERY, NOTE, Note.>

NOTE:
For model with battery sensor, disconnect the ground terminal from battery sensor.
2) Remove the center grille assembly. <Ref. to AC-91, REMOVAL, Air Vent Grille.>
3) Remove the audio assembly or navigation assembly. <Ref. to ET-35, REMOVAL, Audio.>

B: INSTALLATION

CAUTION:
After installing the panel center assembly, check that the air vent grille of the panel center assembly is inserted correctly into the air vent duct.
1) Install the audio assembly or navigation assembly.
2) Install the center grille assembly.
3) Connect the battery ground terminal. <Ref. to NT-6, BATTERY, NOTE, Note.>

21.Console Box

A: REMOVAL

1. MODEL WITH PARKING BRAKE LEVER

1) Disconnect the ground cable from battery. <Ref. to NT-6, BATTERY, NOTE, Note.>

NOTE:
- For model with battery sensor, disconnect the ground terminal from battery sensor.
- On CVT models, shift the select lever into “N” before disconnecting the battery ground cable.

2) Release the claws, and then remove the boot - hand brake.

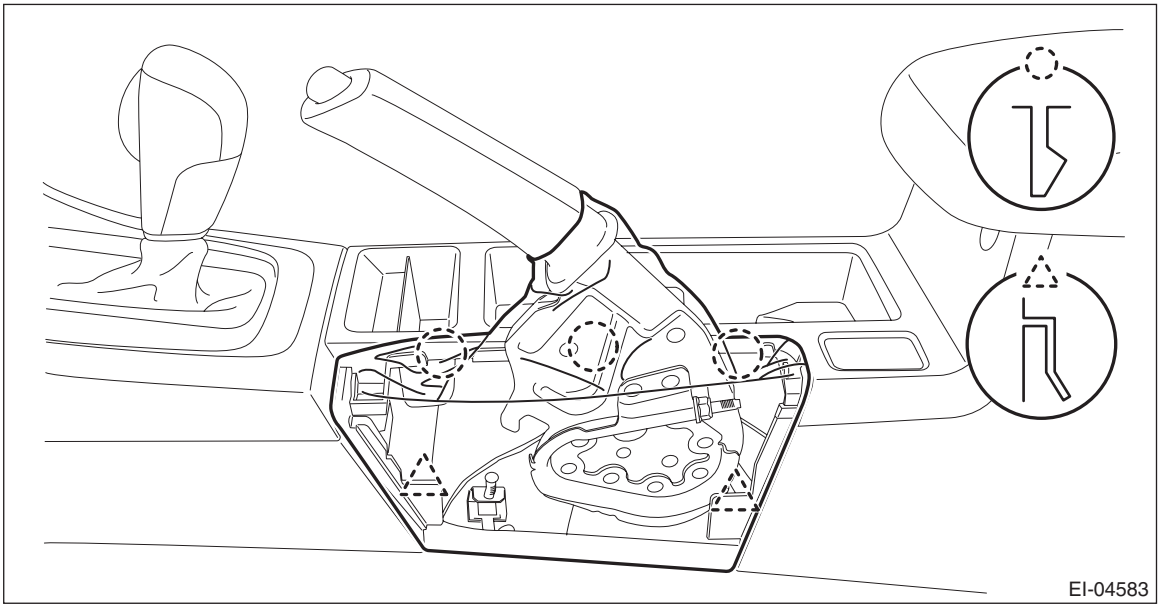

3) Remove the screws, bolts and clips, disconnect the harness connector and remove the console box assembly.

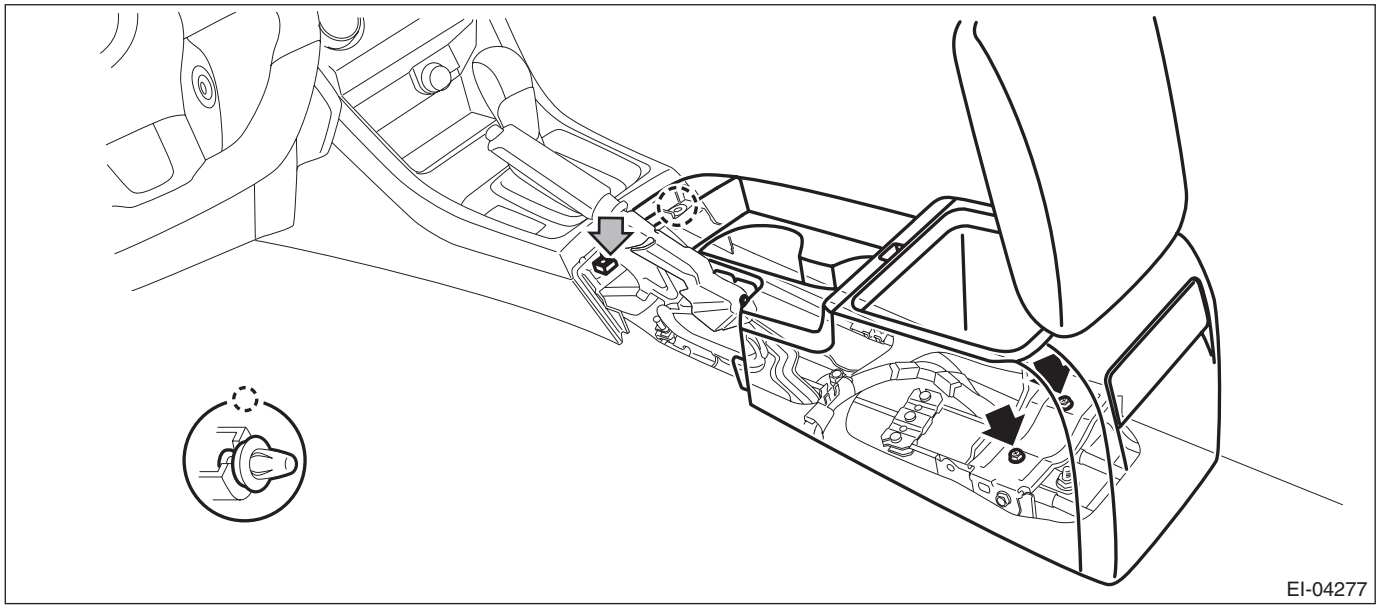

4) Remove the cover - shift lever.
   (1) Remove the shift knob. (MT model)
   (2) Release the clips and claws, then pull up the cover - shift lever.

NOTE:
For vehicles with smart and STI model, disconnect harness connector.

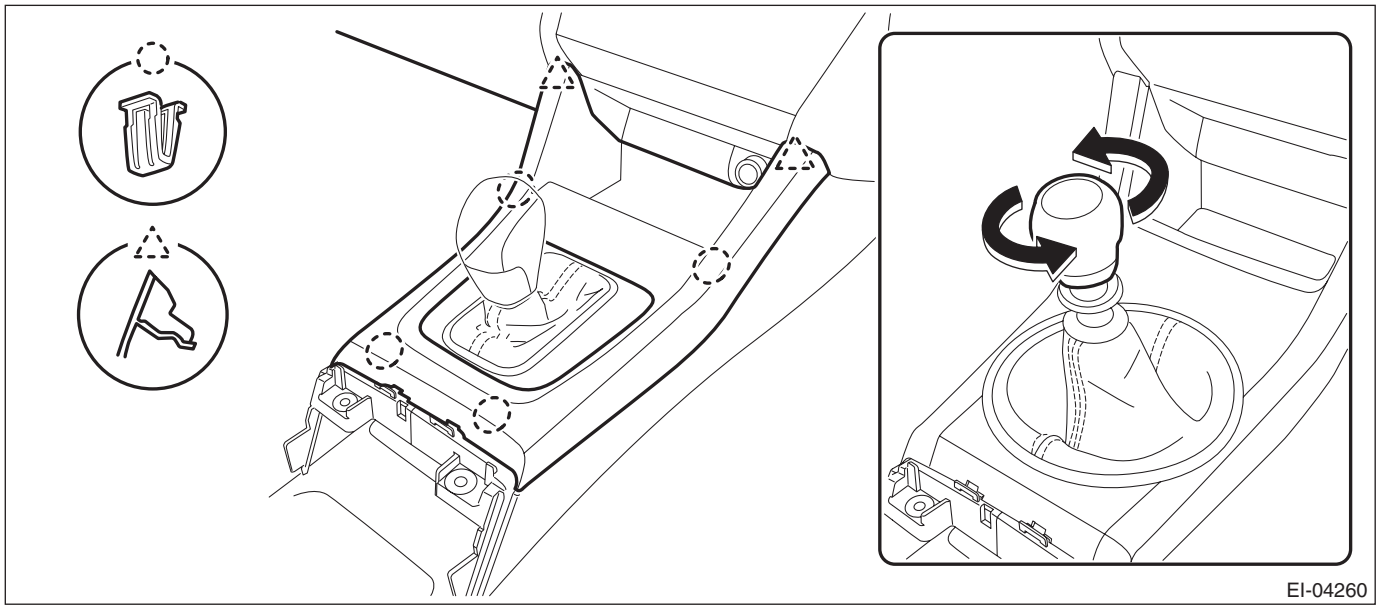

5) Remove the left and right panel center LWR.
   (1) Remove the screws and clips.
   (2) Release the claws, and then pull the panel center LWR to remove.

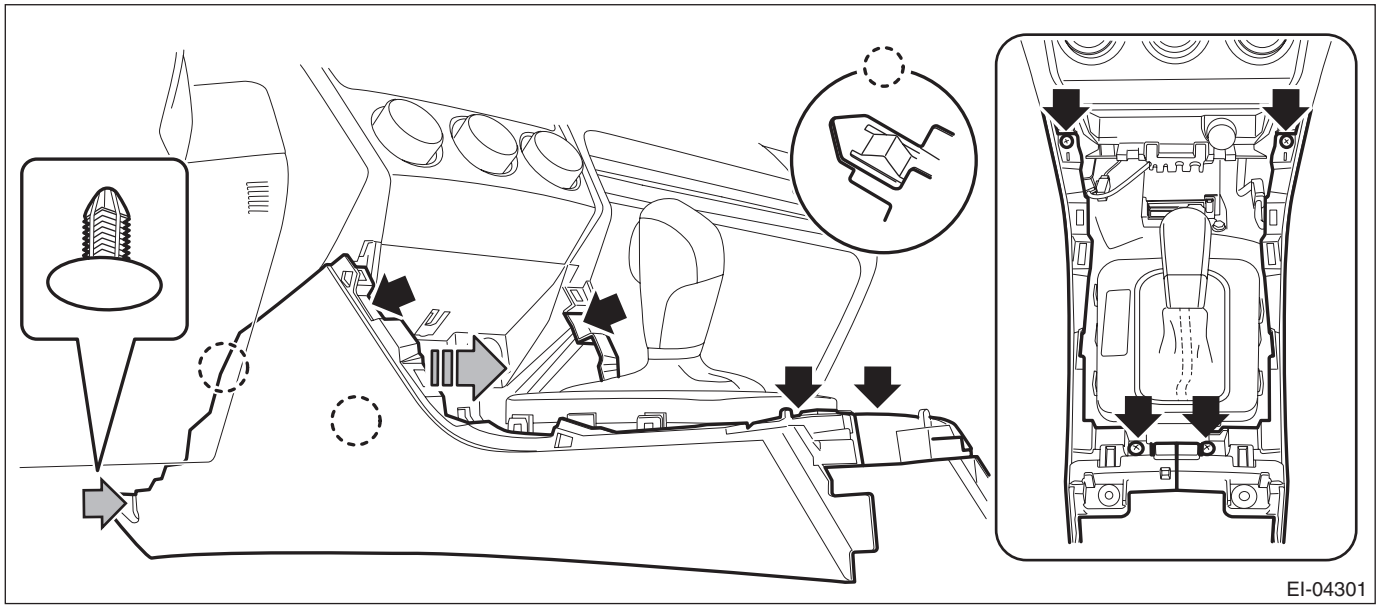

2. MODEL WITH ELECTRONIC PARKING BRAKE SWITCH

1) Disconnect the ground terminal from battery sensor. <Ref. to NT-6, BATTERY, NOTE, Note.>

NOTE:
- Shift the select lever into “N” before disconnecting the battery ground terminal.
- For the power seat, move the seat to the front-most position before removing the battery ground terminal.

2) Remove the cover assembly - rear EPB and the cover pocket.

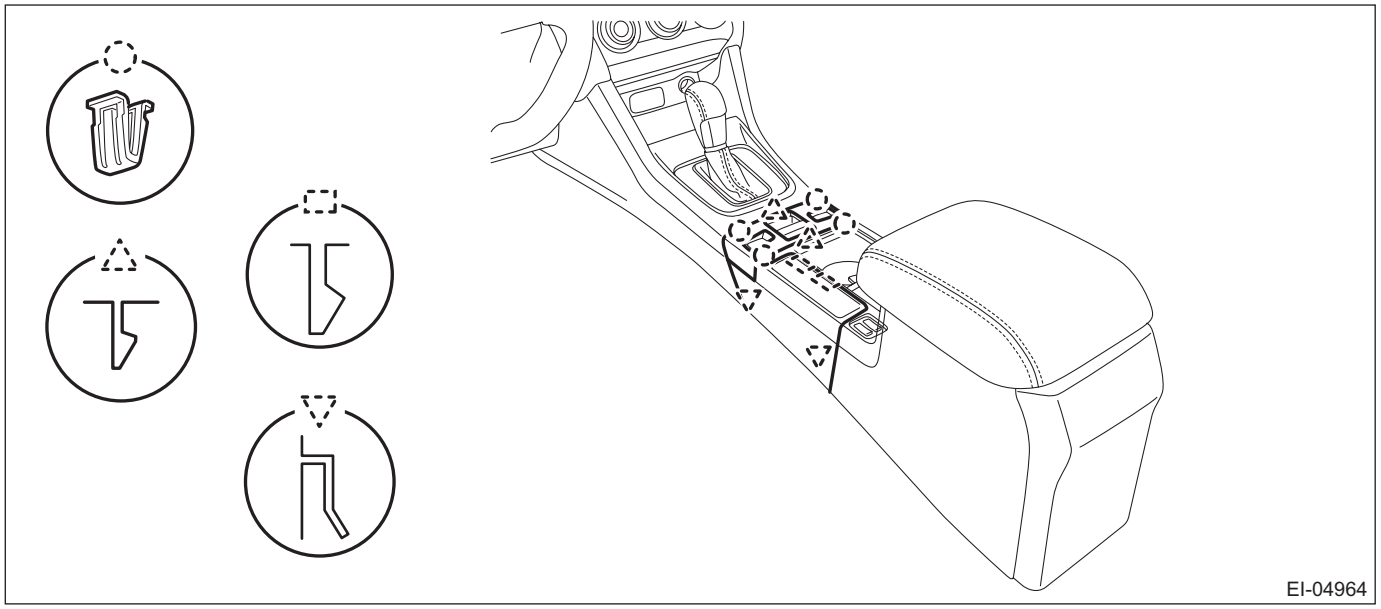

3) Remove the screws and bolts, disconnect the harness connector and remove the console box assembly.

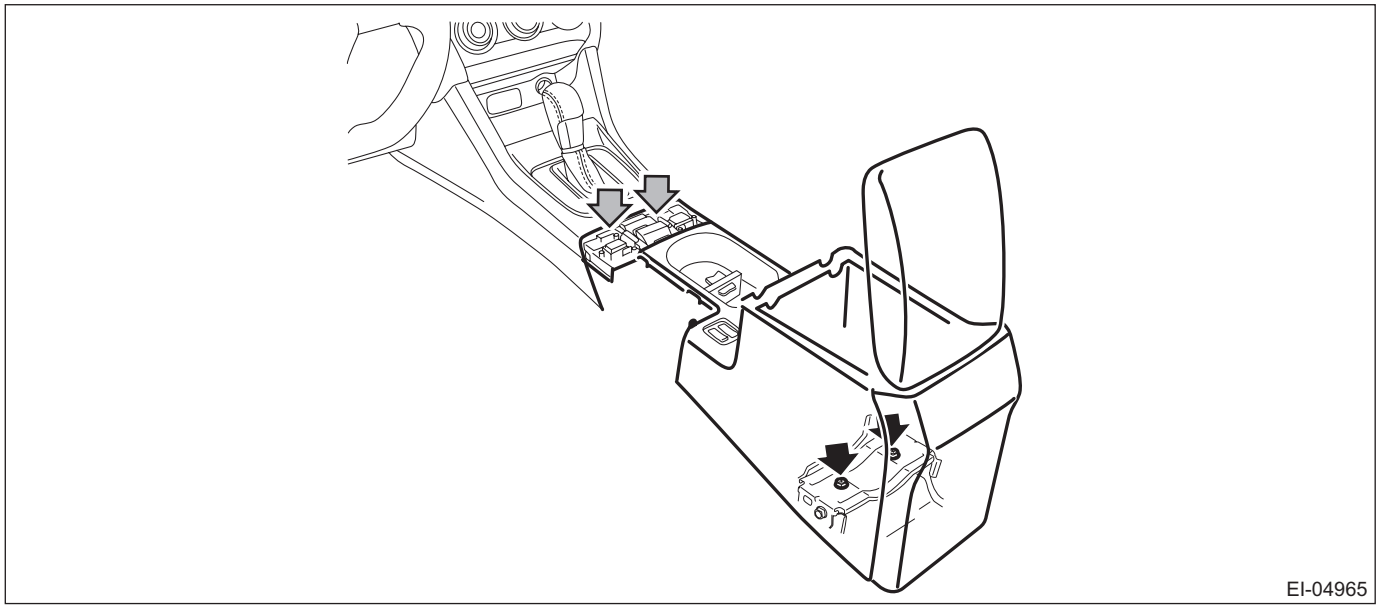

4) Release the clips and claws, and then remove the cover - shift lever.

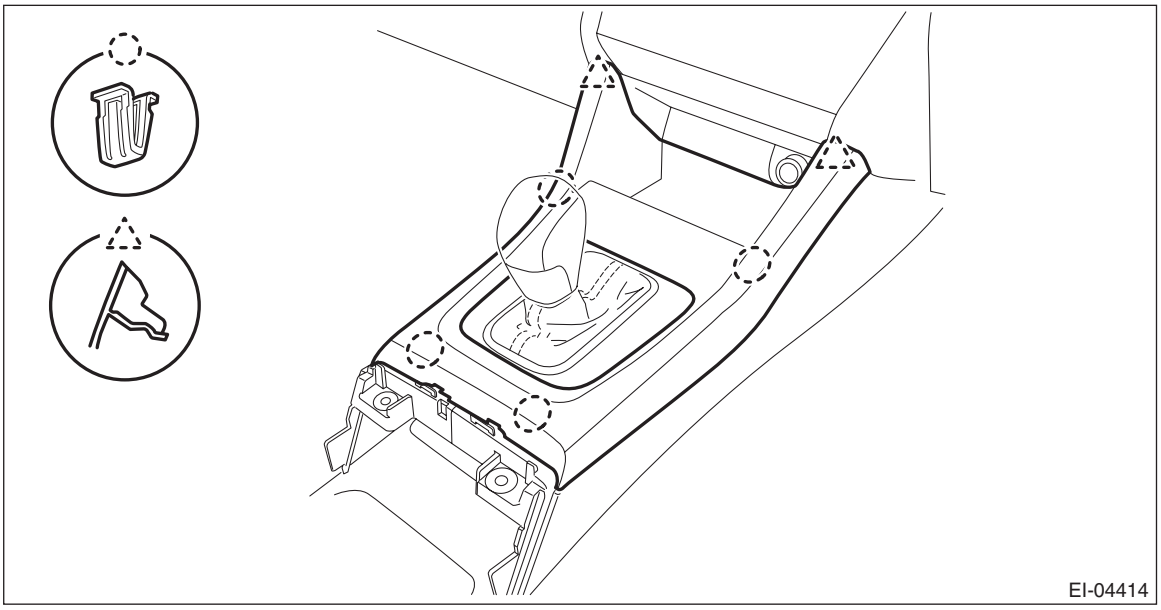

5) Remove the left and right panel center LWR.
   (1) Remove the screws and clips.
   (2) Release the claws, and then pull the panel center LWR to remove.

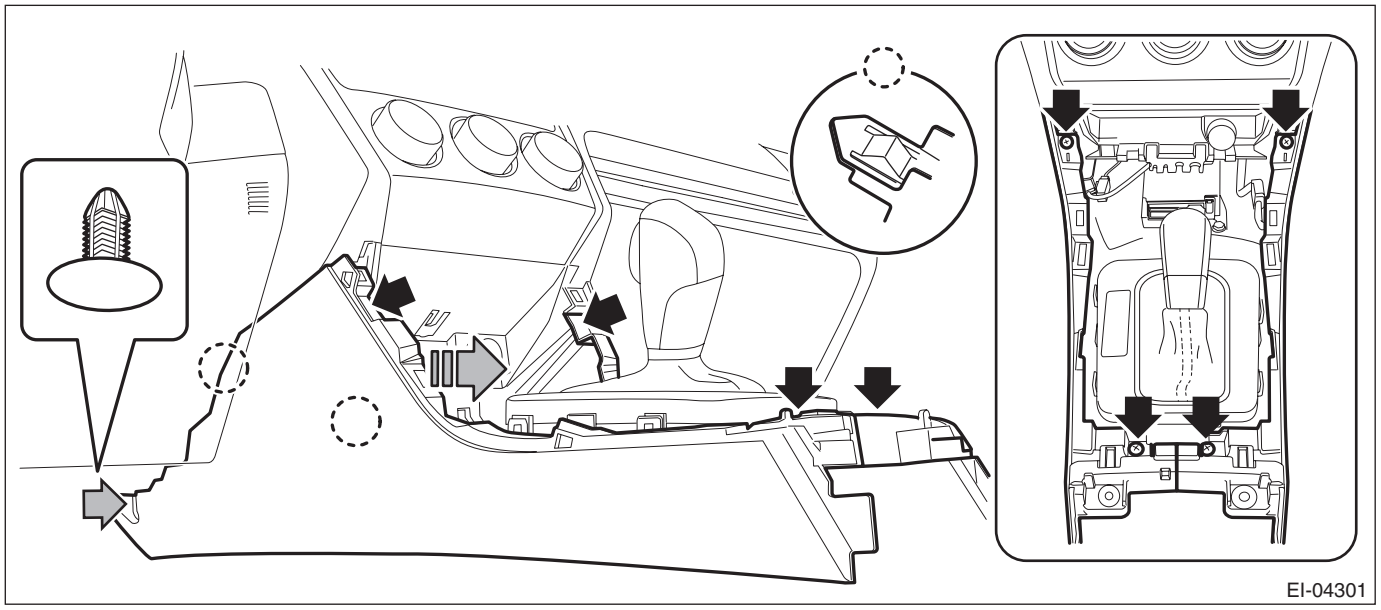

B: INSTALLATION

1. MODEL WITH PARKING BRAKE LEVER

1) Install the panel center LWR.
2) Install the cover - shift lever.
3) Install the shift knob.

NOTE:
Refer to “MT GEAR SHIFT LEVER” in the “CS” section. <Ref. to CS-61, INSTALLATION, MT Gear Shift Lever.>

4) Install the console box assembly.
5) Install the boot - hand brake.
6) Connect the battery ground terminal. <Ref. to NT-6, BATTERY, NOTE, Note.>

NOTE:
After connecting the battery sensor terminal, place the select lever in the “P” position.

2. MODEL WITH ELECTRONIC PARKING BRAKE SWITCH

1) Install the panel center LWR.
2) Install the cover - shift lever.
3) Install the console box assembly.
4) Install the cover assembly - rear EPB and the cover pocket.
5) Connect the ground terminal to battery sensor. <Ref. to NT-6, BATTERY, NOTE, Note.>

NOTE:
After connecting the battery sensor terminal, place the select lever in the “P” position.

22.Instrument Panel Assembly

A: REMOVAL

CAUTION:
• Refer to “CAUTION” of “General Description” before handling the airbag system components. <Ref. to AB-9, CAUTION, General Description.>
• Be careful not to damage the airbag system harness when servicing the instrument panel. Damage may cause the system to malfunction.

NOTE:
Remove the instrument panel assembly and the beam COMPL - steering as a unit.
1) Disconnect the ground cable from battery and wait for at least 60 seconds before starting work. <Ref. to NT-6, BATTERY, NOTE, Note.>

NOTE:
- For model with battery sensor, disconnect the ground terminal from battery sensor.
- On CVT models, shift the select lever into “N” before disconnecting the battery ground cable.
- For the power seat, remove the console box before removing the battery ground terminal.

2) Remove the console box assembly, the cover - shift lever and the panel center LWR on the RH and LH sides. <Ref. to EI-67, REMOVAL, Console Box.>
3) Remove the cover assembly - instrument panel LWR driver. <Ref. to EI-62, REMOVAL, Instrument Panel Lower Cover.>
4) Remove the cover switch - starter. (Models without the keyless access with push button start)
   (1) Release the claws and remove the cover switch - starter.
   (2) Disconnect the connector and aspirator hose.

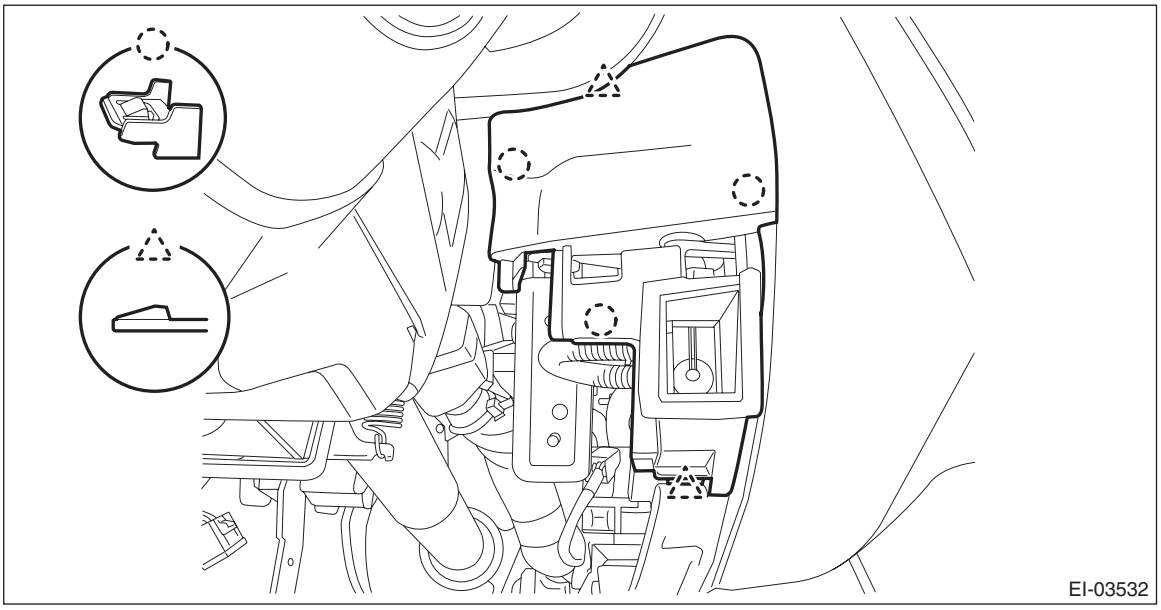

5) Remove the panel - switch. (Model with keyless access with push button start)
(1) Release the claw of the switch - push button start, and disconnect the connector.
(2) Release the claws, and then remove the panel - switch.
(3) Disconnect the connector and aspirator hose.

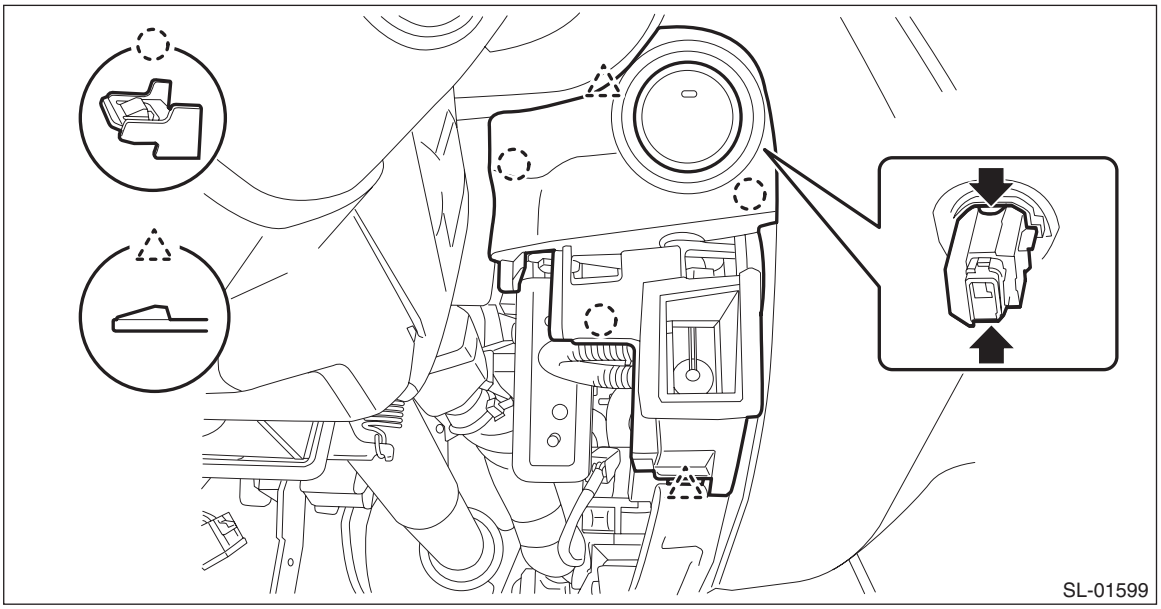

6) Remove the knee airbag module. <Ref. to AB-34, REMOVAL, Knee Airbag Module.>
7) Release the clips and claws, then detach the left and right grille speaker side.

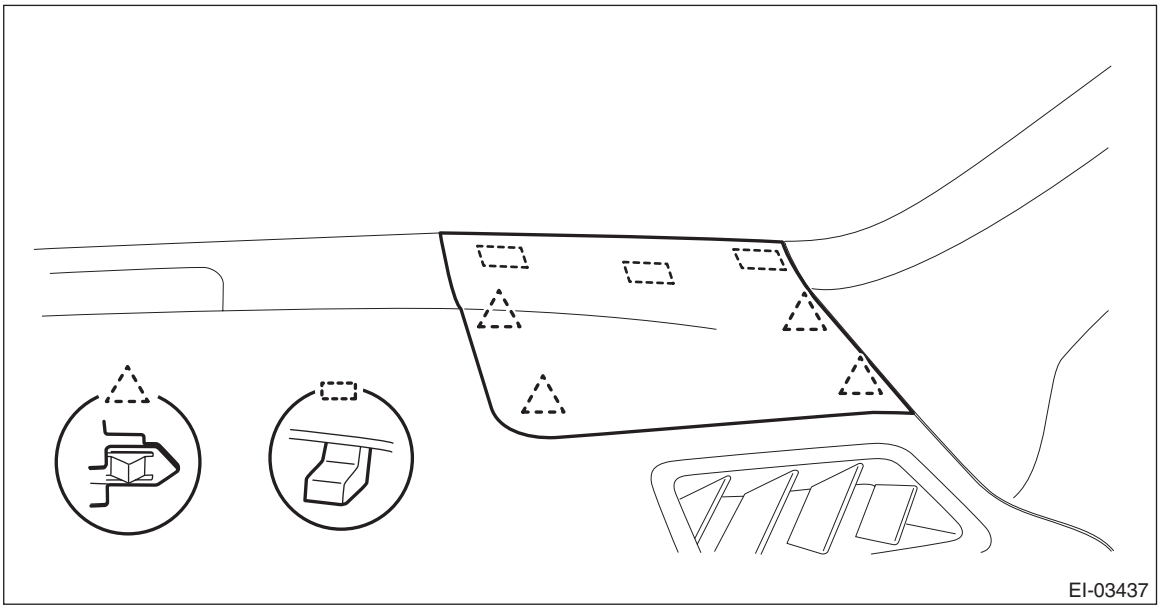

NOTE:
Remove the grille speaker side by using a plastic remover.
8) Remove the trim panel - front pillar UPR on the left and right sides. <Ref. to EI-88, REMOVAL, Upper Inner Trim.>
9) Remove the glove box assembly. <Ref. to EI-64, REMOVAL, Glove Box.>
10) Remove the center grille assembly. <Ref. to AC-91, REMOVAL, Air Vent Grille.>
11) Remove the audio assembly or navigation assembly. <Ref. to ET-35, REMOVAL, Audio.>
12) Remove the multi-function display assembly. <Ref. to IDI-20, REMOVAL, Multi-function Display (MFD).>
13) Remove the combination meter assembly. <Ref. to IDI-13, REMOVAL, Combination Meter.>

14) Disconnect the passenger's airbag module connector. <Ref. to AB-18, PASSENGER'S AIRBAG MODULE, PROCEDURE, Airbag Connector.>

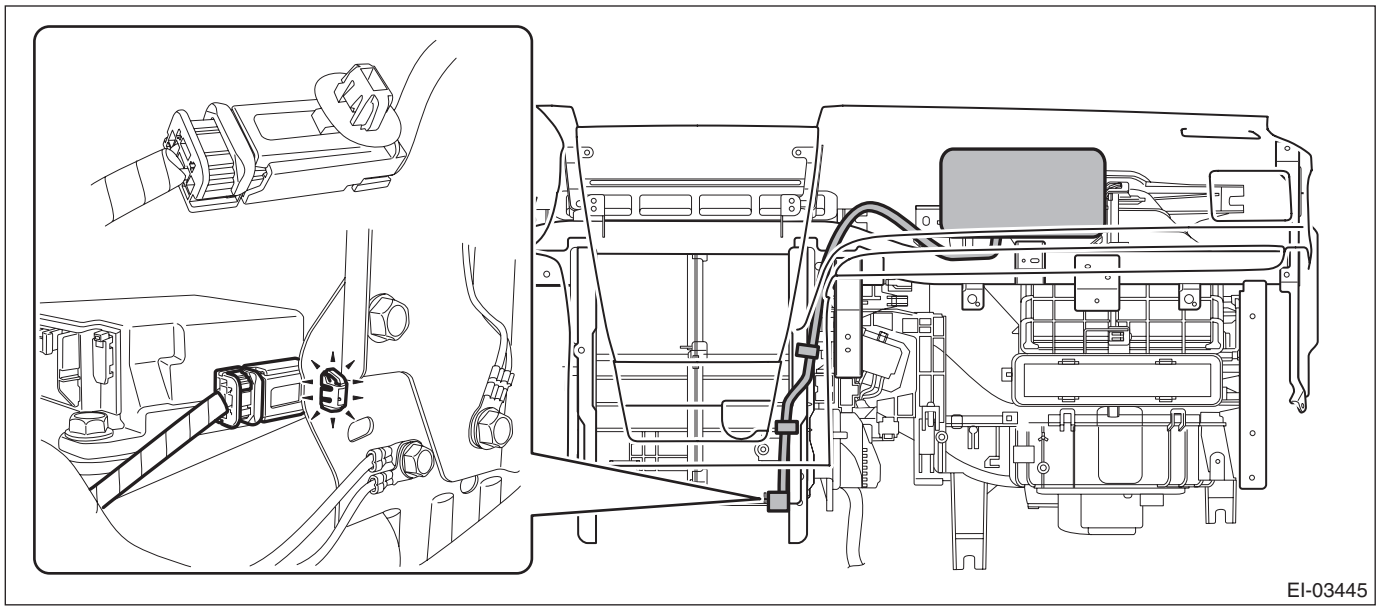
EI-03445

15) Remove the column assembly - steering. <Ref. to PS-25, REMOVAL, Steering Column.>
16) Release the claws, and then remove the cover side sill - front INN and cover side sill - front on the RH and LH sides. <Ref. to EI-84, REMOVAL, Lower Inner Trim.>
17) Remove the body side weather strip - flange front.
18) Remove the instrument panel assembly and the beam COMPL - steering as a unit.

CAUTION:
The instrument panel assembly and the beam COMPL - steering are heavy. Always work in a team of two persons when removing them from the vehicle, so as not to damage the vehicle interior.

(1) Remove the fuse box and relay box.
(2) Disconnect all harness clamps and connectors of the instrument panel harness.
(3) Remove the cap - bolt.
(4) Remove the TORX® bolt. (a), (b)

Preparation tool:
TORX® T40

(5) Remove the bolts at the floor center. (c), (d)

(6) Remove the bolt. (e), (f)

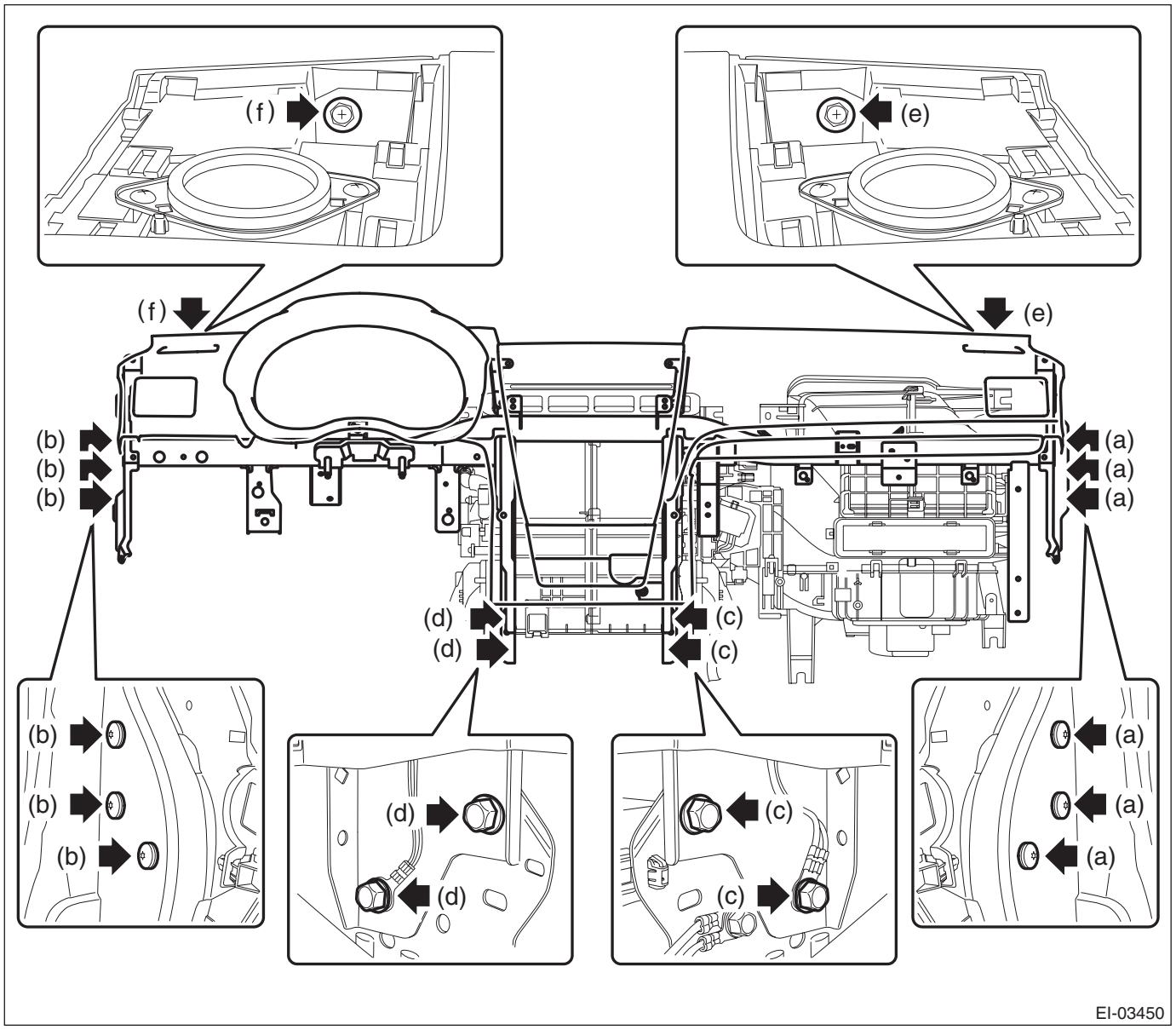

(7) Loosen the adjuster portion (h) of the adjuster - clip space. (Only LH side of the beam COMPL - steering)

Preparation tool:
Hexagon wrench: 8 mm (0.31 in)

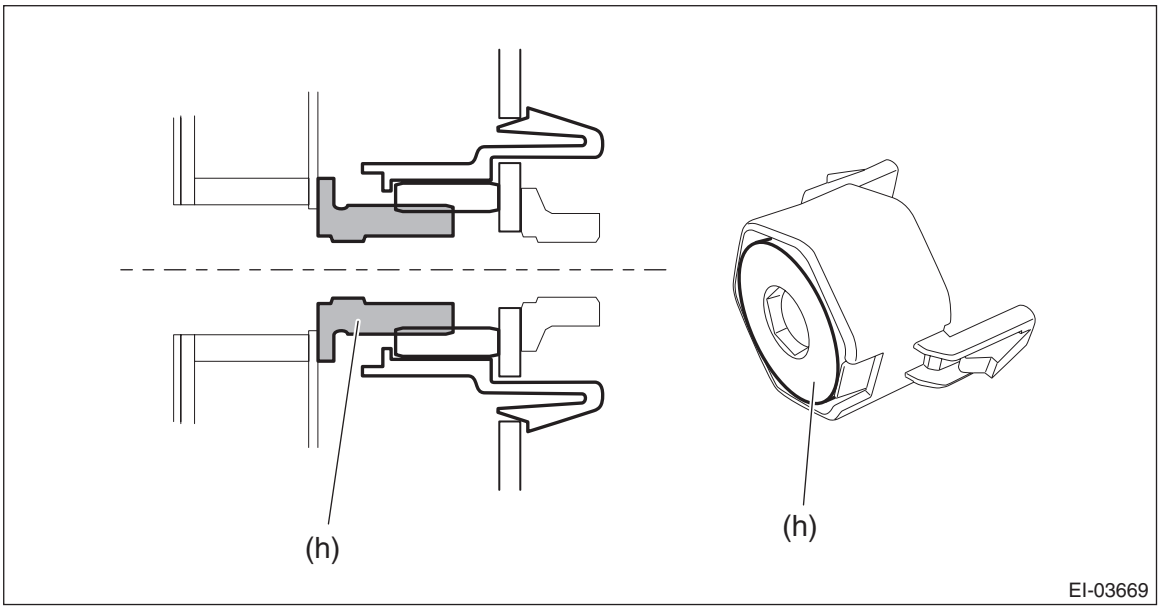

(8) Slightly lift the instrument panel assembly together with the beam COMPL - steering to detach the left and right pins. Then pull it toward you to remove the assembly.

CAUTION:
• Check that all harness clamps and connectors are detached.
• The instrument panel assembly and the beam COMPL - steering are heavy. Always work in a team of two persons when removing them from the vehicle, so as not to damage the vehicle interior.

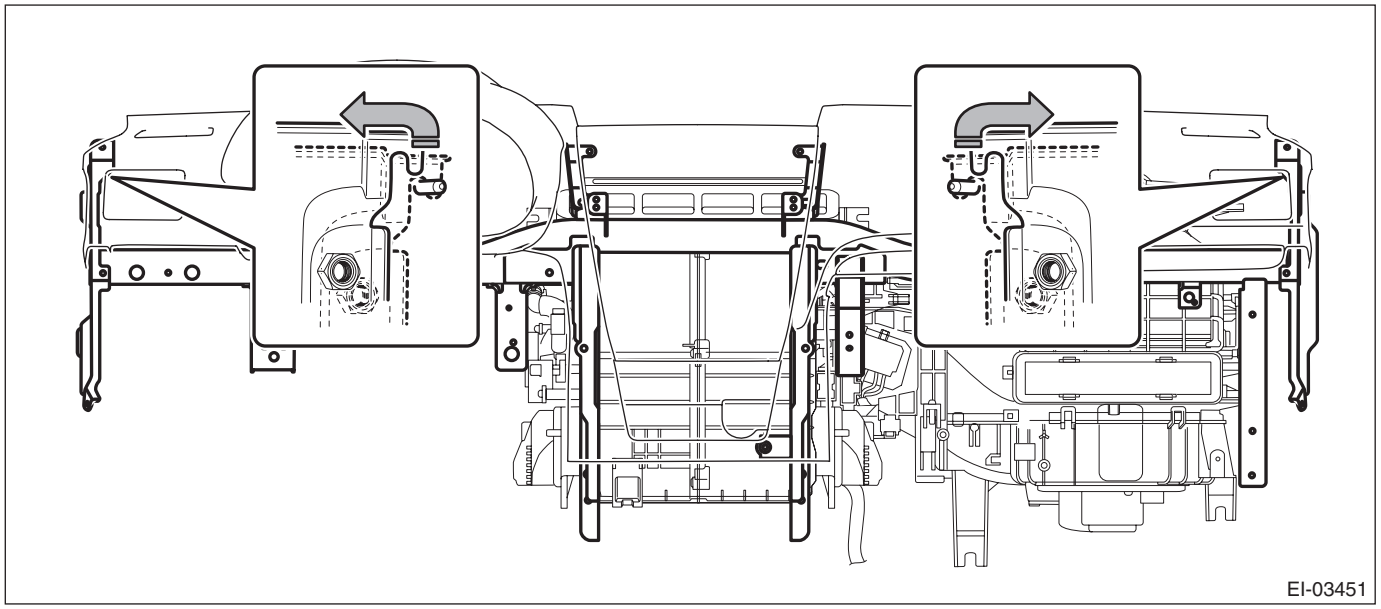

19) Remove the grille front defroster.
(1) Disconnect the sunload sensor connector.
(2) Release the claws and remove the grille front defroster.

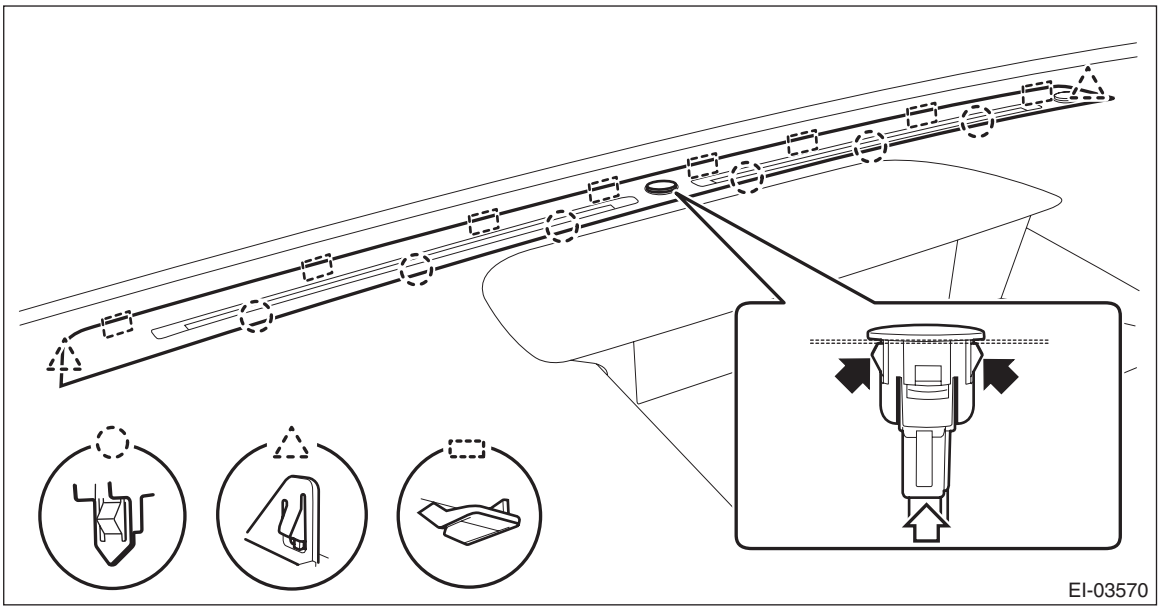

20) Remove the screws and remove the front (A) and side vent duct (B) LH, RH.

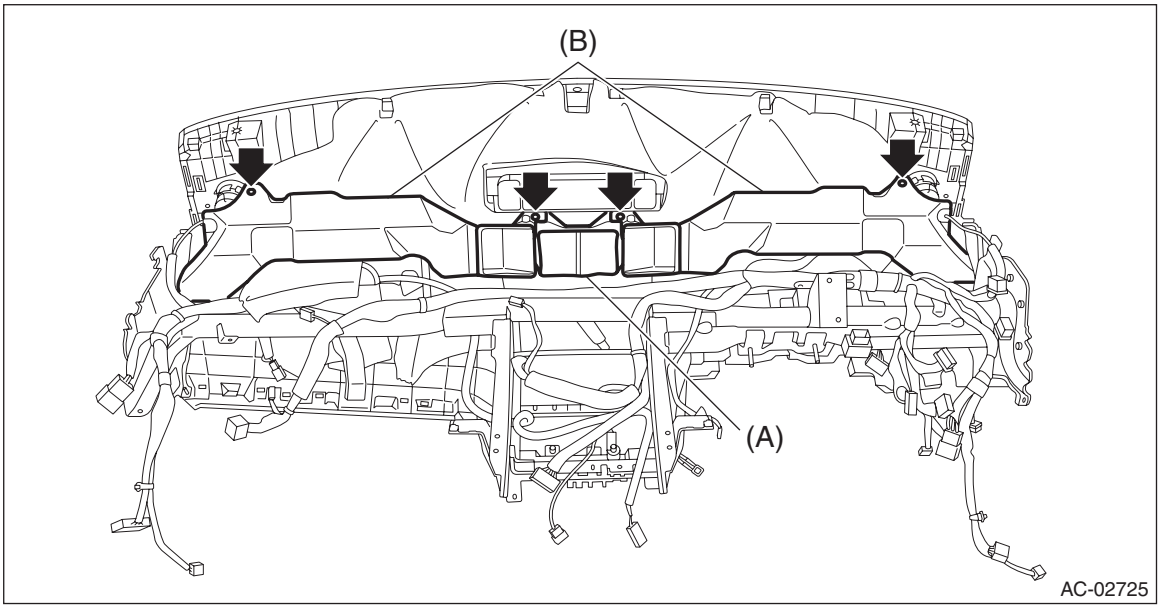

21) Separate the panel COMPL - instrument and the beam COMPL - steering.
(1) Remove the clamps and bolts of the passenger's airbag module harness.

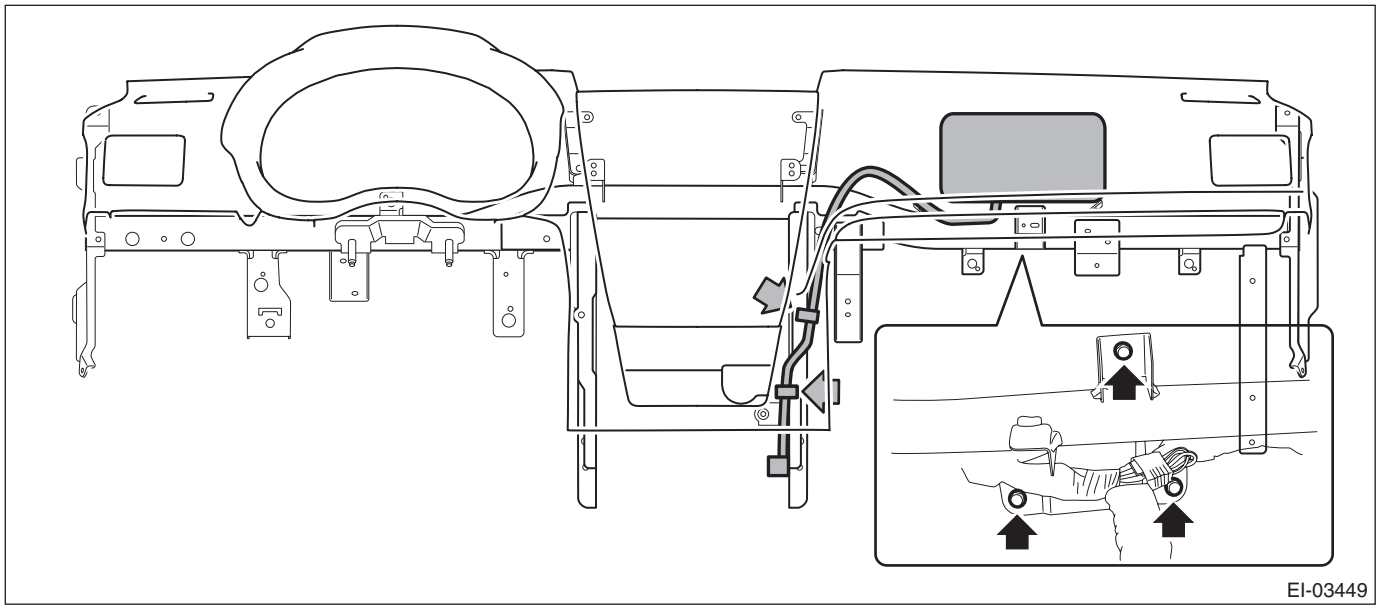
EI-03449

(2) Remove the left and right speakers.

NOTE:
Detach the harness clamp together.

(3) Disconnect the front accessory socket connector.
(4) Remove the nut (a) and screws (b), (c), (d), (e), (f), (g) and (h).

(5) While being careful with the harness, separate the panel COMPL - instrument and the beam COMPL - steering.

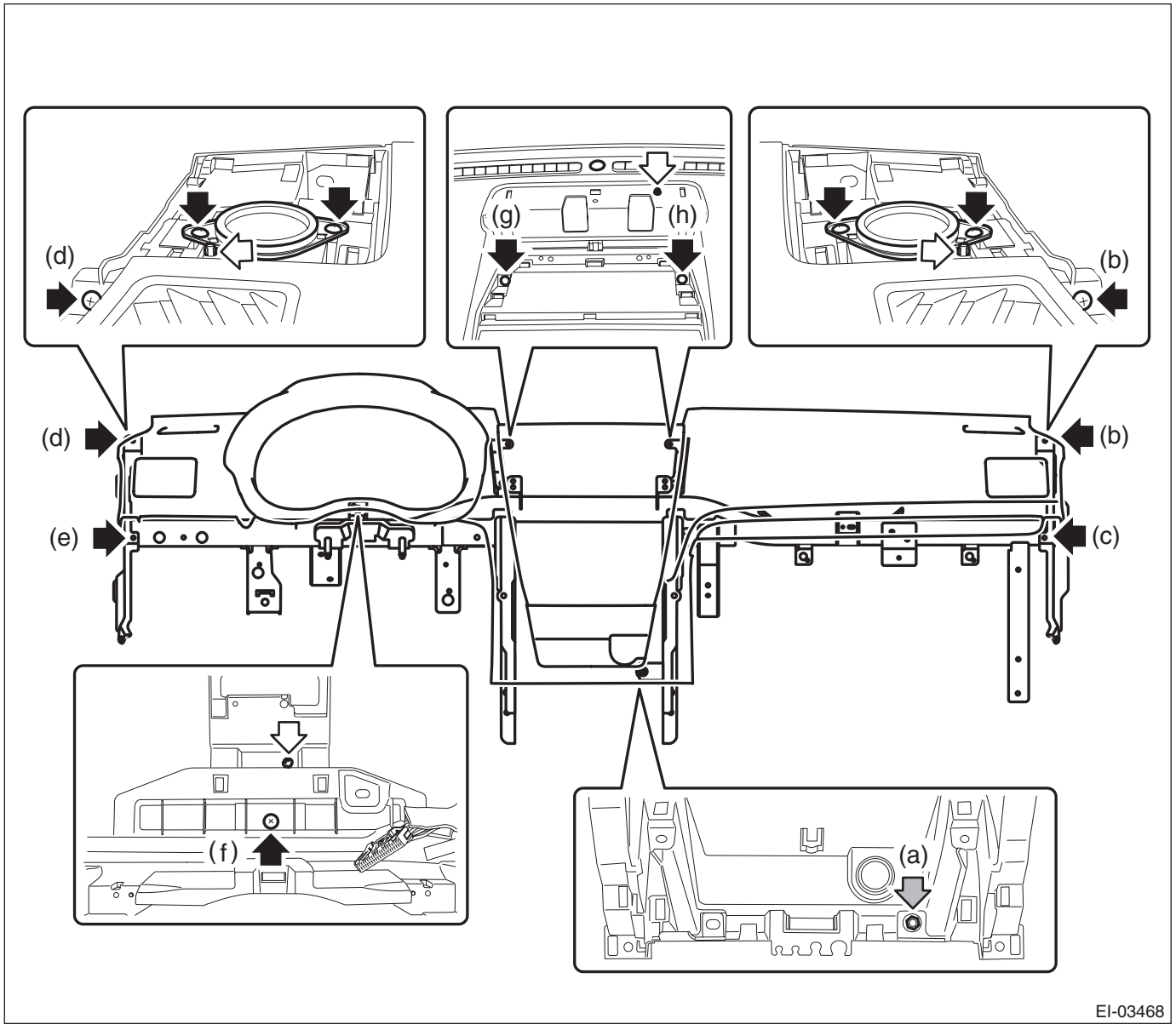

22) Remove the claws, and remove the passenger's airbag module.

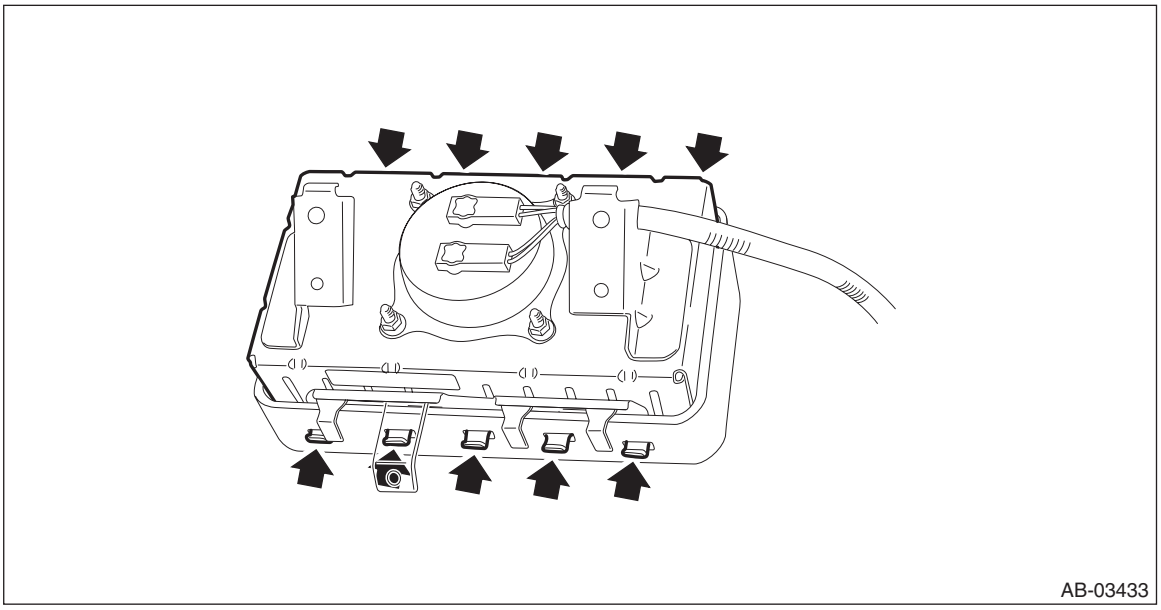

B: INSTALLATION

CAUTION:
• Refer to "CAUTION" of "General Description" before handling the airbag system components. <Ref. to AB-9, CAUTION, General Description.>
• After installing the panel center assembly, check that the air vent grille of the panel center assembly is inserted correctly into the air vent duct.
• When installing the cover - instrument panel side (a), make sure that the body side weather strip - flange front does not come inside the panel COMPL - instrument (b).

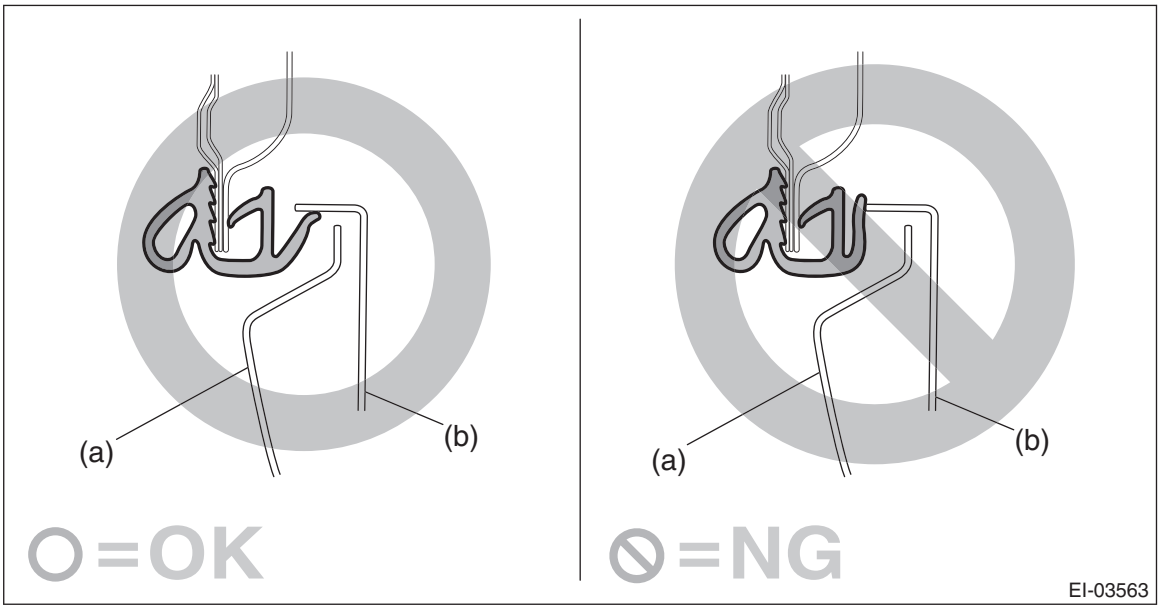

• When reusing the tether clip on the upper part of the trim panel - front pillar UPR, check that there is no damage to the tether clip. If the tether clip is damaged, always replace it with a new tether clip. If the tether clip is damaged, its holding force is reduced and the trim panel - front pillar UPR may come off.
• Do not reuse the tether clip removed from the upper part of the trim panel - front pillar UPR. Always replace with a new part.

- **Check the installation status of the tether clips and install the trim panel - front pillar UPR.**

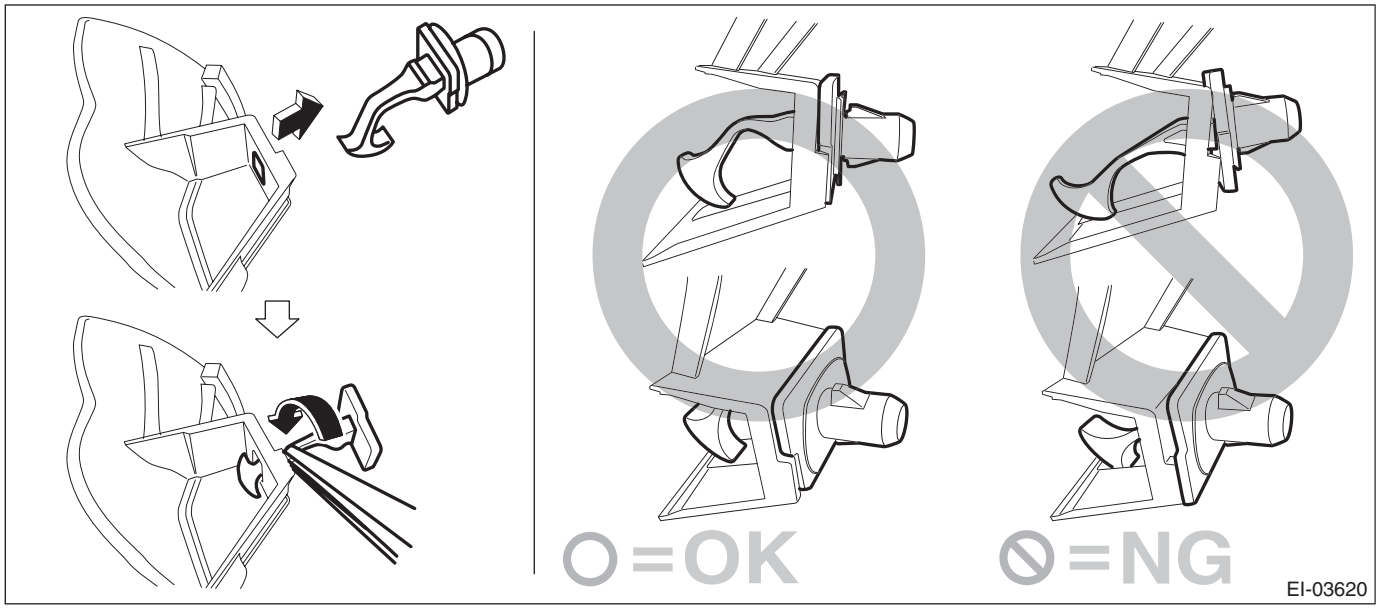

1) Attach components until the instrument panel assembly is formed, in the reverse order of removal.

NOTE:
Method of installing insulator
- Adhesive

Use polyurethane adhesive. When assembling the instrument panel assembly, wait until the adhesive has evaporated to prevent filling of the smell in the compartment.
- Double-sided tape

Use commercial double-sided tape. (Use strong double-sided adhesive tape.)

Tightening torque:
Passenger's airbag module: 7.5 N·m (0.8 kgf-m, 5.5 ft-lb)

2) Insert the matching pins on the body side (three locations - one in the center and the remaining two on both sides) into the instrument panel assembly and the beam COMPL - steering.
3) Check that the matching pins are inserted securely and that the harness is routed properly, and then connect each connector.
4) Install the sunload sensor and the grille - front defroster.

5) Secure the instrument panel assembly and the beam COMPL - steering to the vehicle body.
(1) Position the instrument panel assembly and the beam COMPL - steering to the vehicle body and tighten the adjuster - clip space.

Preparation tool:
Hexagon wrench: 8 mm (0.31 in)

NOTE:
Tighten so that there is no gap between the adjuster portion (h) and the body.

Tightening torque:
Adjuster - clip space : 0.8 — 4 N·m (0.08 — 0.4 kgf-m, 0.6 — 3 ft-lb)

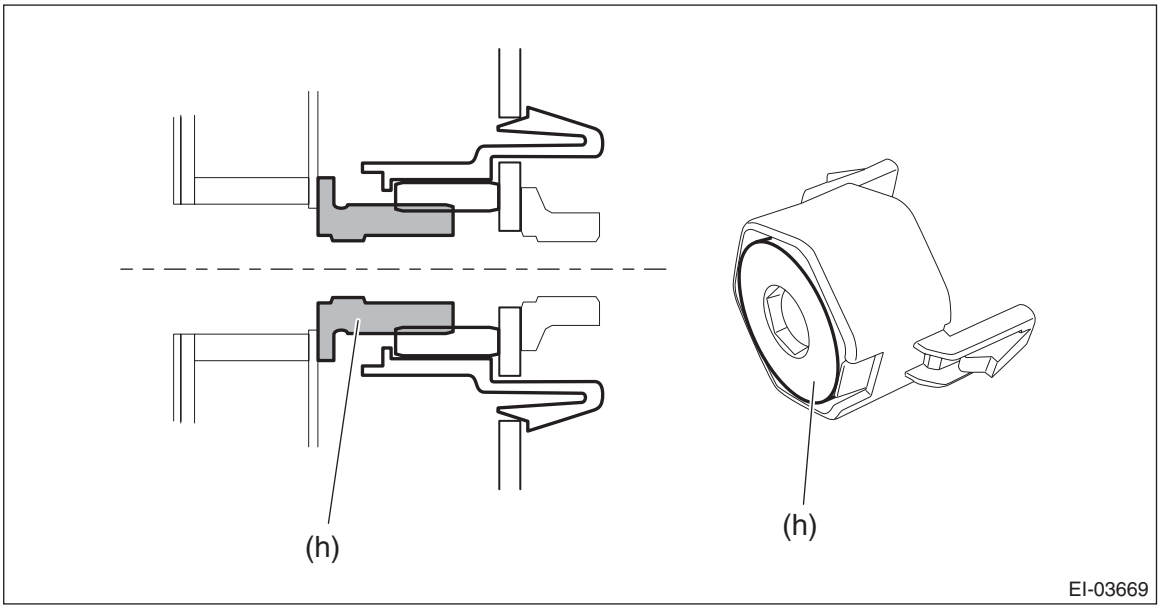

(2) Temporarily tighten the bolts (a), (b), (c) and (d) of the beam COMPL - steering.

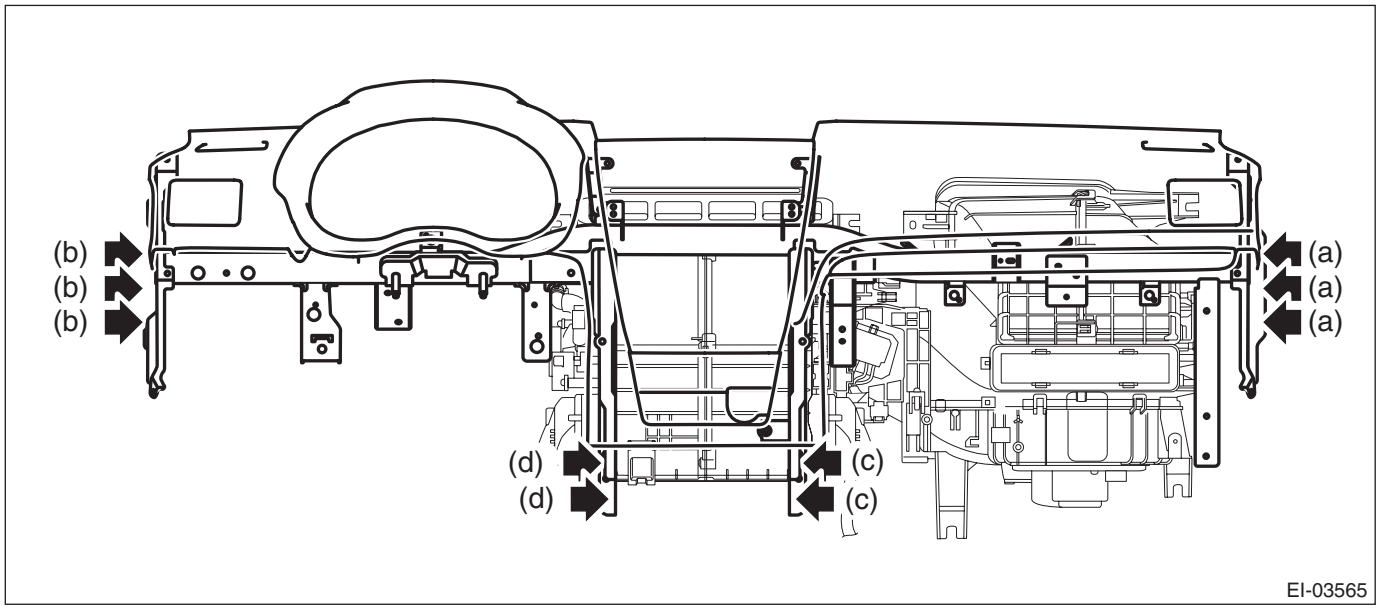

(3) Tighten the beam COMPL - steering in the order from (a) to (d) to the specified torque.

Tightening torque:
Beam COMPL - steering : 25 N·m (2.5 kgf-m, 18.4 ft-lb)

6) Install the body side weather strip - flange front.
7) Install the cover side sill - front on the RH and LH sides.
8) Install the cover side sill - front INN on the RH and LH sides.

9) Install the column assembly - steering.

Tightening torque:
Column assembly - steering: <Ref. to PS-4, STEERING WHEEL AND COLUMN, COMPONENT, General Description.>

10) Install the combination meter assembly.
11) Install the multi-function display assembly.
12) Install the audio assembly or navigation assembly.
13) Install the center grille assembly.
14) Install the glove box assembly.
15) Install the trim panel - front pillar UPR on the RH and LH sides.
16) Install the grille speaker side on the RH and LH sides.
17) Install the knee airbag module.

Tightening torque:
7.5 N·m (0.8 kgf-m, 5.5 ft-lb)

18) Install the panel - switch. (Model with keyless access with push button start only)
19) Install the cover switch - starter. (Model without keyless access with push button start only)
20) Install the cover assembly - instrument panel LWR driver.
21) Install the panel center LWR on the RH and LH sides.
22) Install the cover - shift lever.
23) Install the console box assembly. <Ref. to EI-71, INSTALLATION, Console Box.>
24) Connect the battery ground terminal. <Ref. to NT-6, BATTERY, NOTE, Note.>

NOTE:
After connecting the battery sensor terminal, place the select lever in the “P” position.

23.Lower Inner Trim

A: REMOVAL

CAUTION:
• Before handling the airbag system components, refer to "CAUTION" of "General Description" in "AIRBAG SYSTEM". <Ref. to AB-9, CAUTION, General Description.>
• Airbag system satellite safing sensor is located in the lower of the rear seat cushion center. Be careful not to apply strong impact to the sensor when working with the rear seat cushion removed.
1) Release the claws, and then remove the cover side sill - front INN.

CAUTION:
Do not pull with excessive force. Doing so may damage the claws of the cover side sill - front INN.

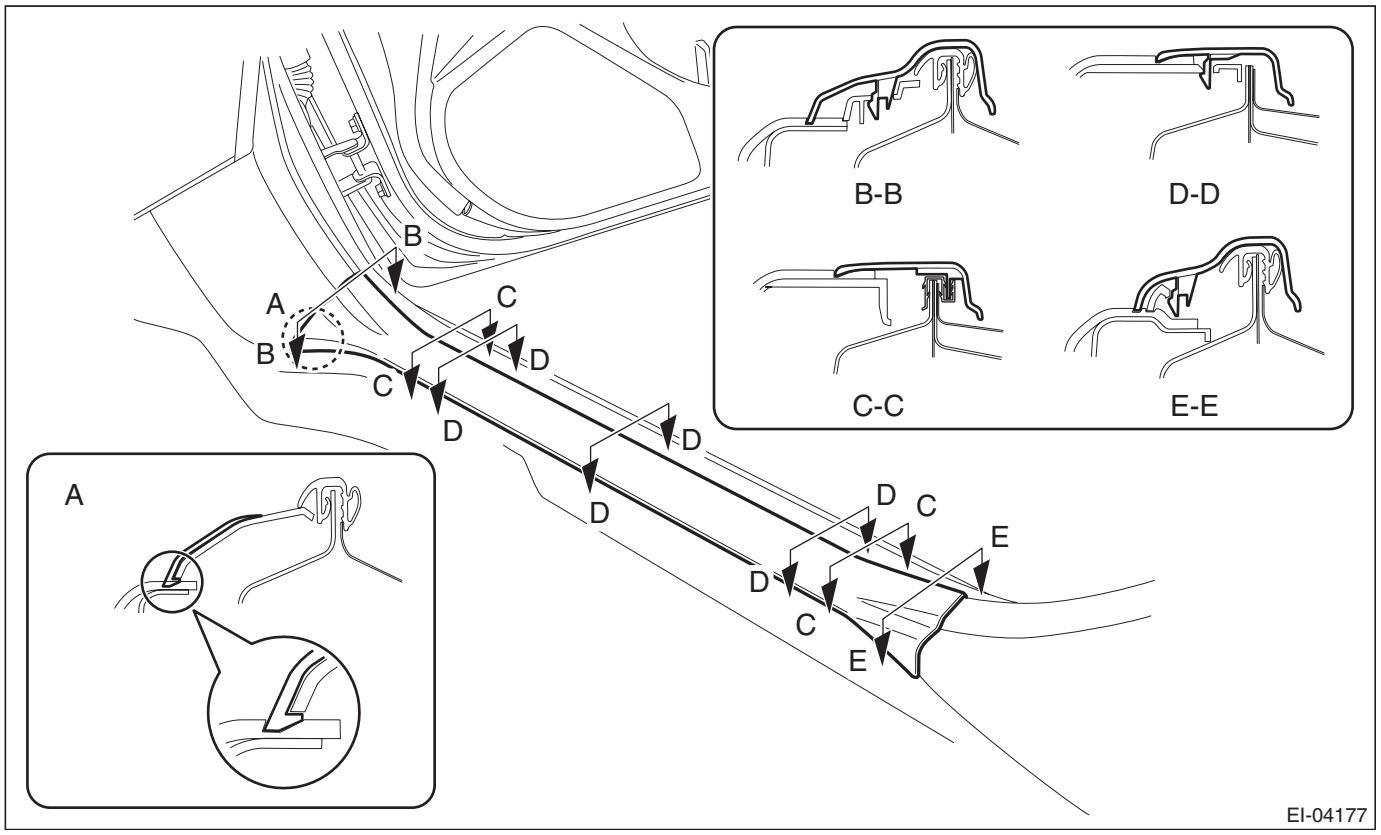

2) Remove the clips, and remove the cover side sill - front.

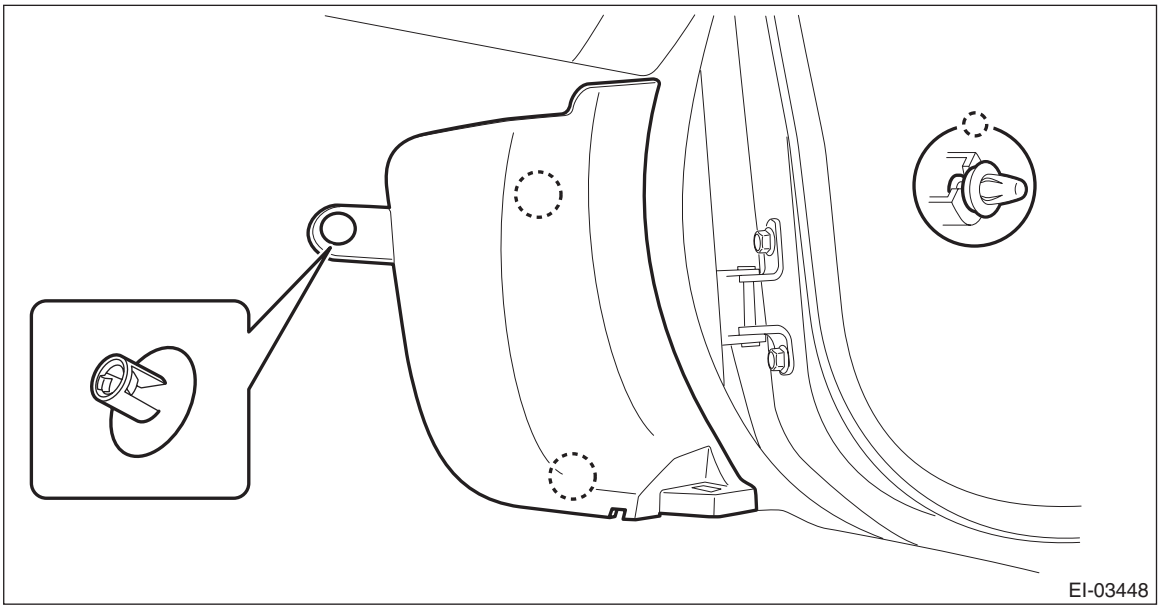

3) Remove the rear seat cushion assembly. <Ref. to SE-30, REMOVAL, Rear Seat.>
4) Release the clips and claws, and then remove the cover side sill - rear INN.

CAUTION:
Do not pull with excessive force. Doing so may damage the claws of the cover side sill - rear INN.

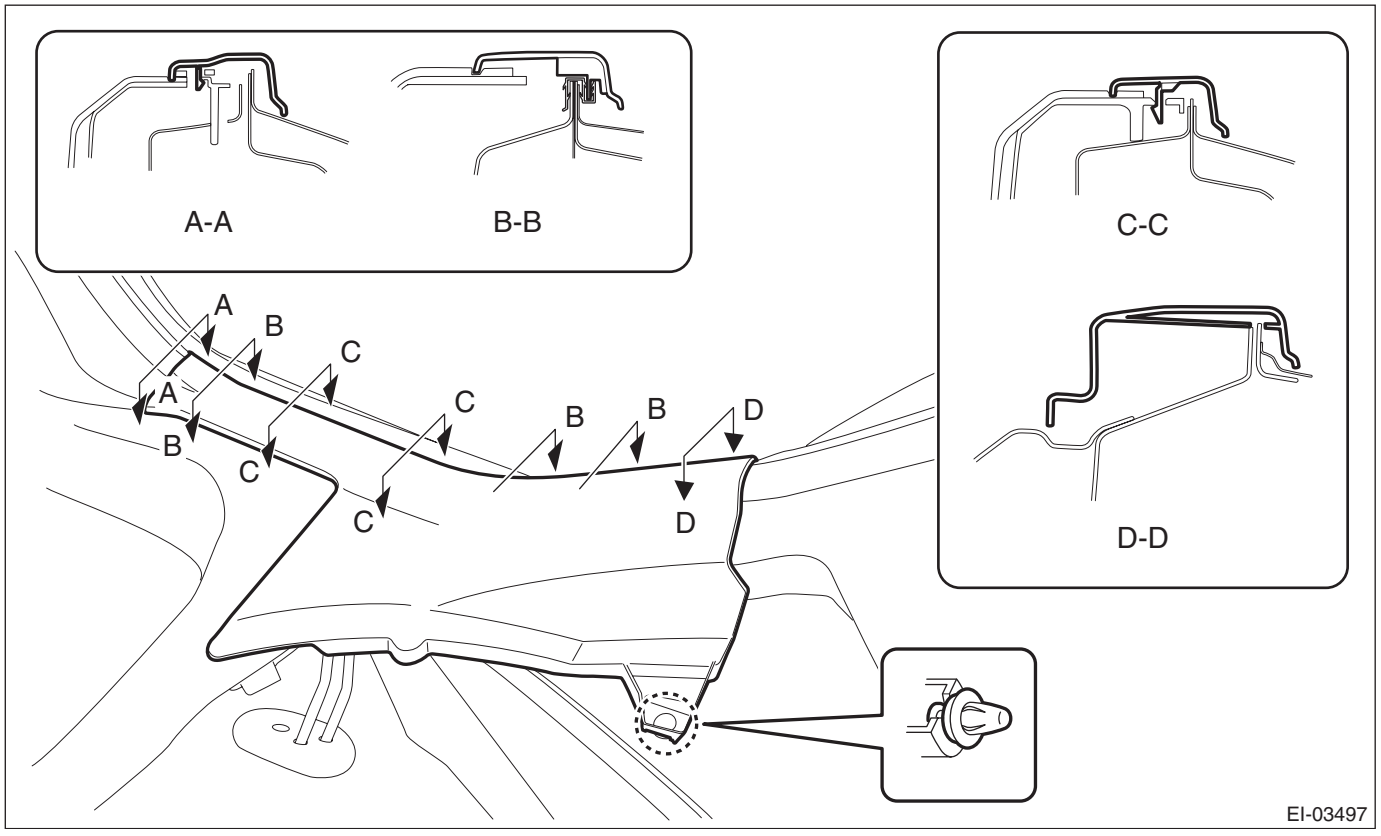

5) Remove the trim panel - center pillar LWR.
(1) Release the clip by pulling the trim panel - center pillar LWR toward you.
(2) Expand the claws of the trim panel - center pillar LWR outward, and remove it from the trim panel - center pillar UPR.

CAUTION:
Do not expand the trim panel - center pillar LWR excessively. Doing so may damage the trim.

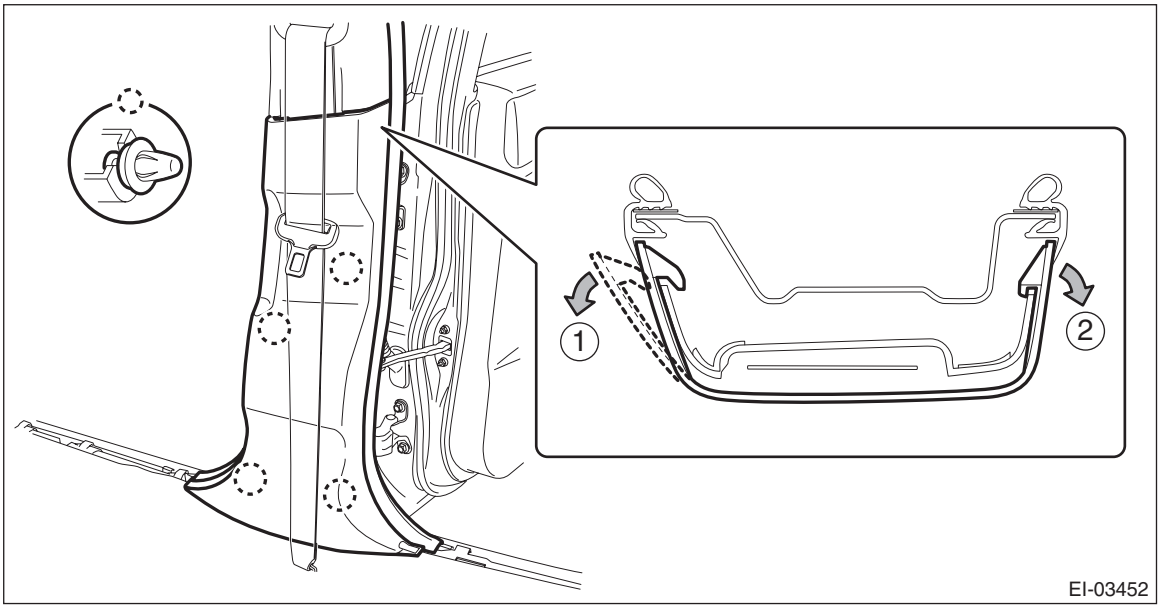

NOTE:
First release the claw located to the front of the vehicle.
6) Disconnect the claws and remove the cover - catcher.

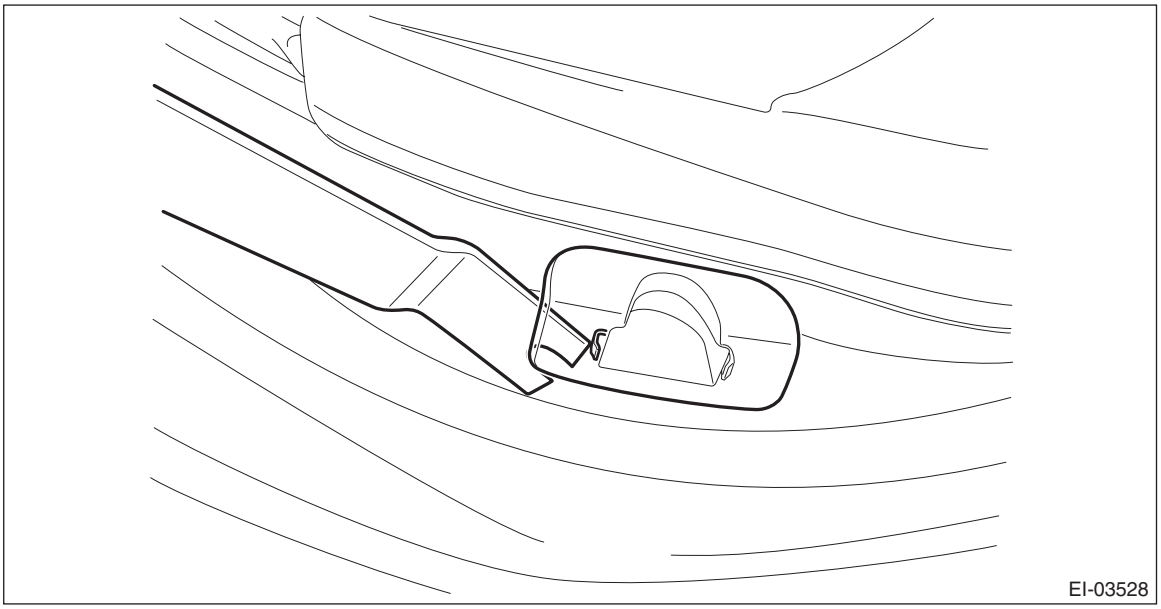

NOTE:
Remove the cover - catcher by using a plastic remover.

B: INSTALLATION

1) Install the cover - catcher.
2) Install the trim panel - center pillar LWR.

NOTE:
Assemble the trim panel - center pillar LWR to the trim panel - center pillar UPR securely.

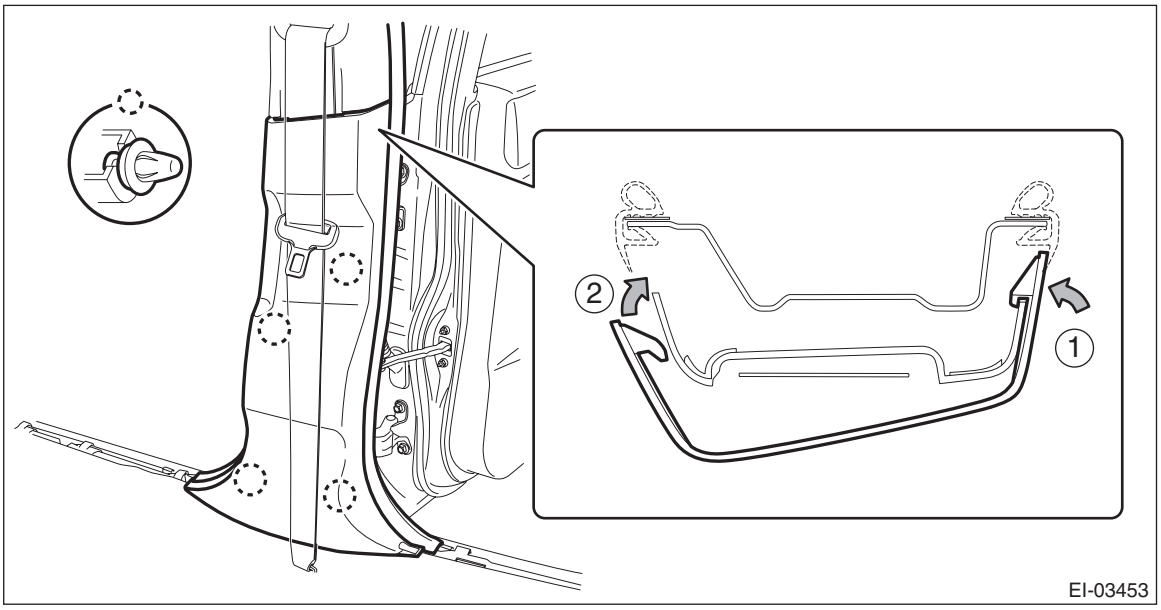

3) Install the cover side sill - rear INN.
4) Install the rear seat cushion assembly.
5) Install the cover side sill - front.
6) Install the cover side sill - front INN.

24.Upper Inner Trim

A: REMOVAL

CAUTION:
• Before handling the airbag system components, refer to "CAUTION" of "General Description" in "AIRBAG SYSTEM". <Ref. to AB-9, CAUTION, General Description.>
• Airbag system satellite safing sensor is located in the lower of the rear seat cushion center. Be careful not to apply strong impact to the sensor when working with the rear seat cushion removed.
1) Release the clips and claws, then detach the left and right grille speaker side.

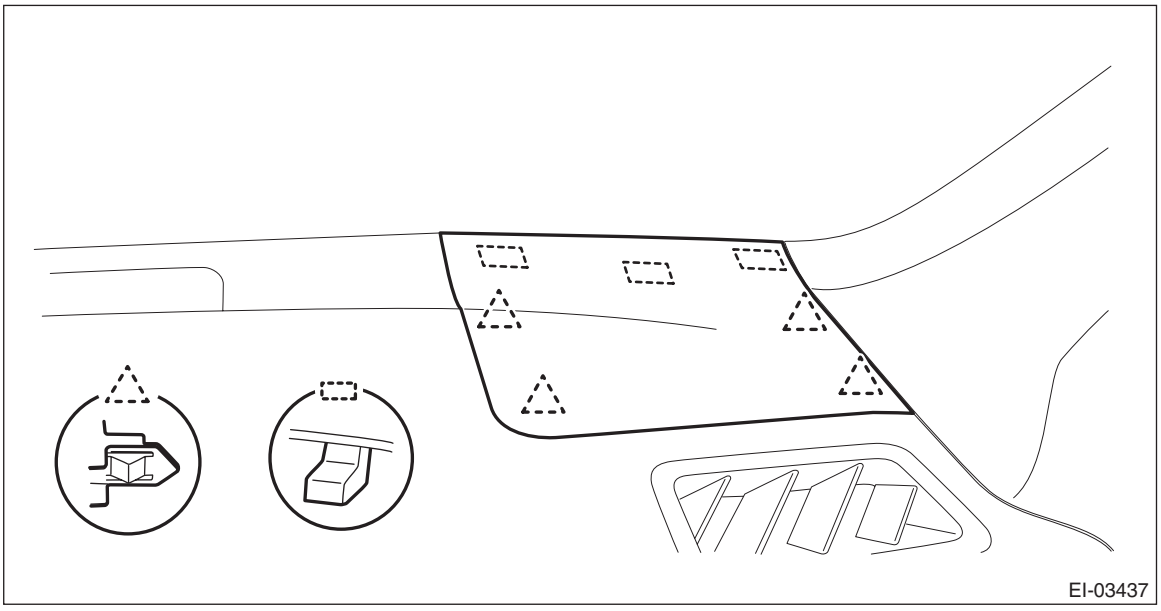

NOTE:
Remove the grille speaker side by using a plastic remover.
2) Remove the trim panel - front pillar UPR.
(1) Pull the upper part of the trim panel - front pillar UPR towards the center of the vehicle.
(2) Insert long-nose pliers into the top part of the trim, grip the tether clip with the pliers and twist 90° in that position.

CAUTION:
Be careful not to damage the pillar trim surface and curtain airbag module when inserting the pliers.
(3) Holding the tether clip twisted as in the previous step, remove the trim panel - front pillar UPR from the tether clip.

(4) Remove the clips, and remove the trim panel - front pillar UPR.

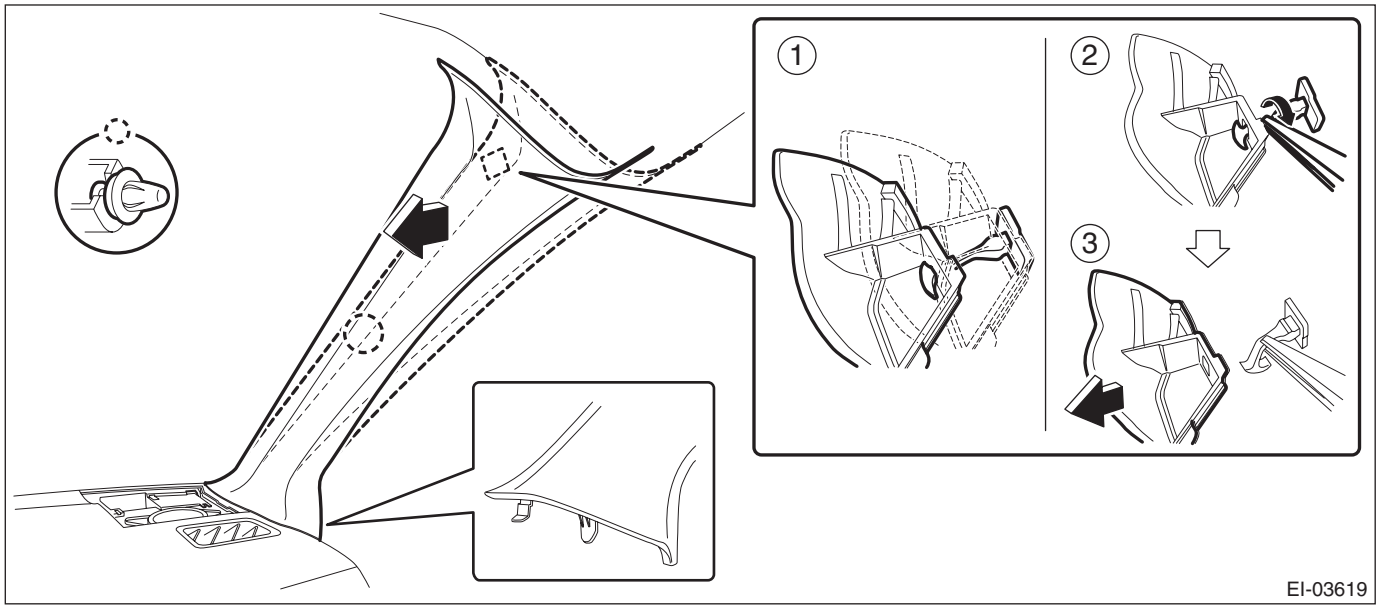

3) Remove the rear seat cushion assembly. <Ref. to SE-30, REMOVAL, Rear Seat.>
4) Remove the cover side sill - front INN, cover side sill - rear INN, and trim panel - center pillar LWR. <Ref. to EI-84, REMOVAL, Lower Inner Trim.>
5) Remove the trim panel - center pillar UPR.
   (1) Remove the cover through (a), and remove the seat belt anchor bolt.
   (2) Remove the bolt on the lower side of the trim panel - center pillar UPR.
   (3) Remove the clip by pulling the upper part of the trim toward you, and while lowering the entire trim, remove the trim panel - center pillar UPR.

CAUTION:
Do not reuse the upper clips of the trim panel - center pillar UPR. Once the clip is removed, its holding force is reduced. Be sure to replace it with a new clip.

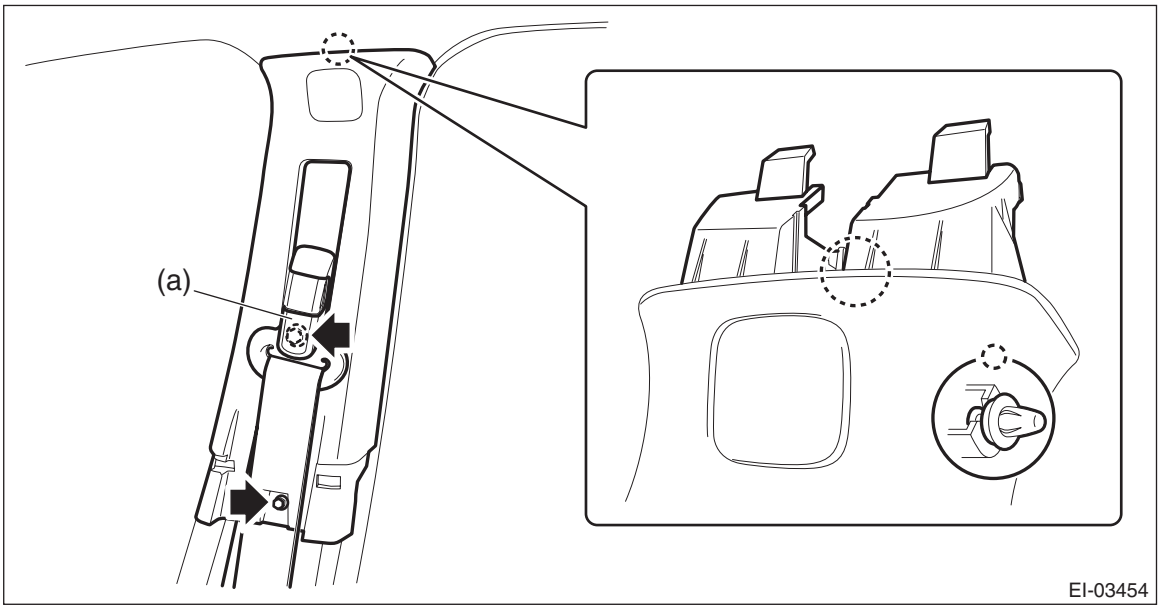

B: INSTALLATION

CAUTION:
• When reusing the tether clip on the upper part of the trim panel - front pillar UPR, check that there is no damage to the tether clip. If the tether clip is damaged, always replace it with a new tether clip. If the tether clip is damaged, its holding force is reduced and the trim panel - front pillar UPR may come off.
• Do not reuse the tether clip removed from the upper part of the trim panel - front pillar UPR. Always replace with a new part.
• Do not reuse the upper clips of the trim panel - center pillar UPR. Once the clip is removed, its holding force is reduced. Be sure to replace it with a new clip.
• Before installing the trim panel - front pillar UPR, check the condition of protective non-woven fabric (white) of the curtain airbag. If it is damaged (airbag module cloth is exposed), replace the curtain airbag module assembly with a new part.
1) Remove the remaining tether clips from the vehicle body.
2) Check the installation status of the tether clips and install the trim panel - front pillar UPR.

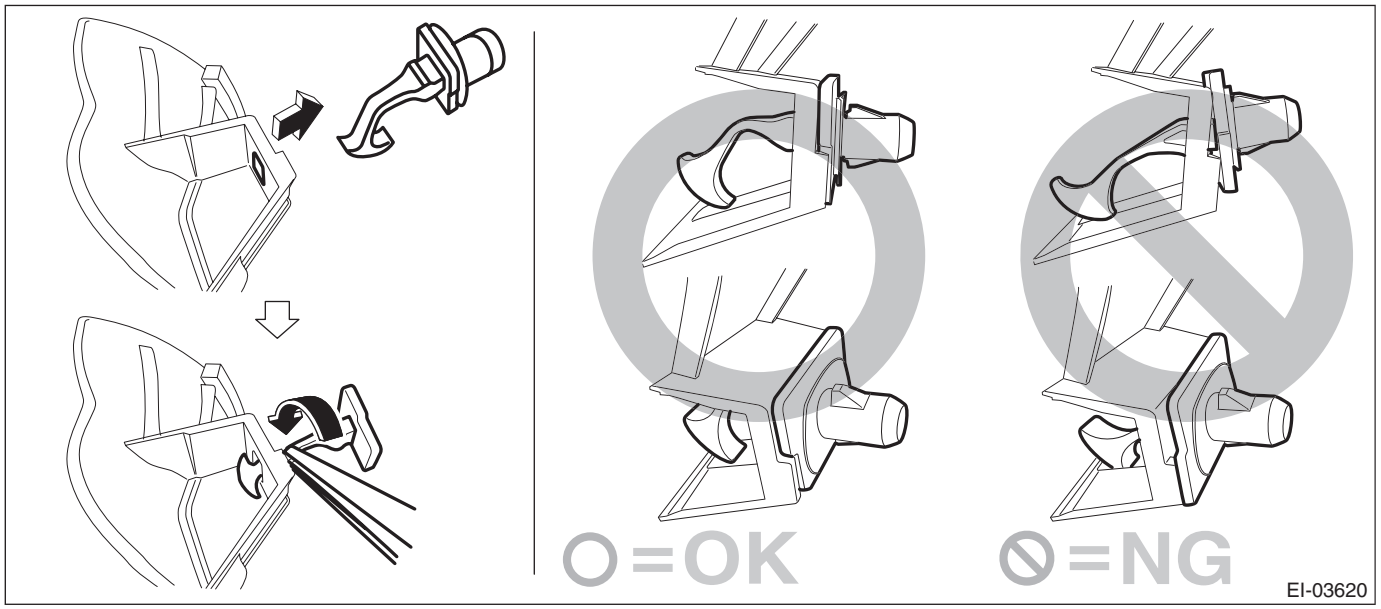

3) Install the trim panel - center pillar UPR.

Tightening torque:
Trim panel - center pillar UPR: 7.5 N·m (0.8 kgf-m, 5.5 ft-lb)
Front seat belt anchor: 30 N·m (3.1 kgf-m, 22.1 ft-lb)

4) Install the trim panel - center pillar LWR, cover side sill - front INN, and cover side sill - rear INN.

NOTE:
Assemble the trim panel - center pillar LWR to the trim panel - center pillar UPR securely.

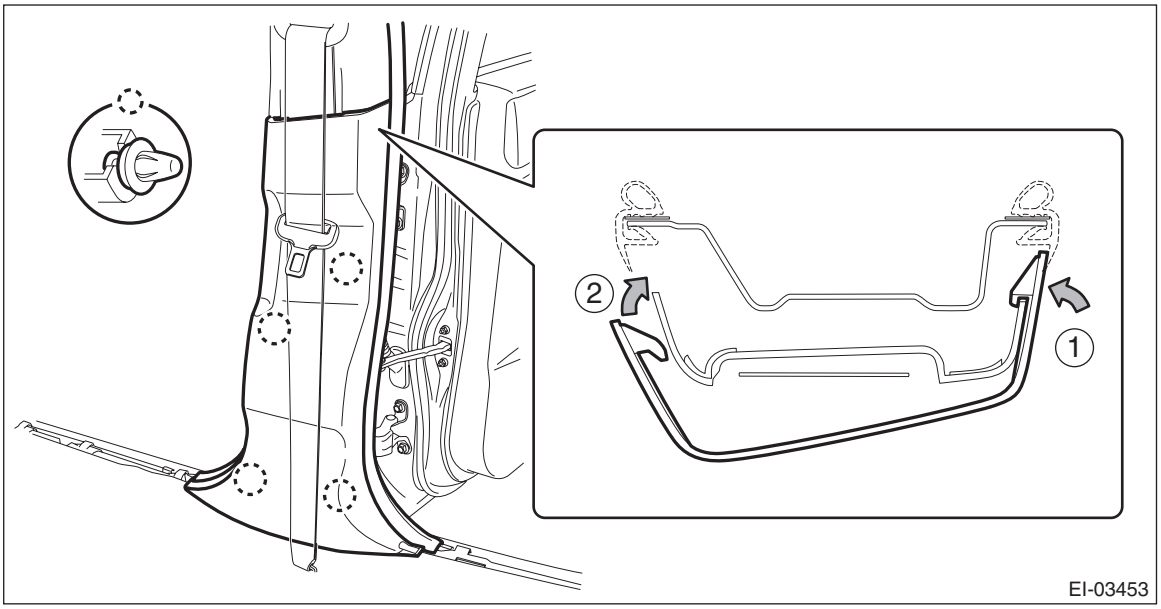

5) Install the rear seat cushion assembly.

25.Rear Quarter Trim

A: REMOVAL

CAUTION:
• Before handling the airbag system components, refer to "CAUTION" of "General Description" in "AIRBAG SYSTEM". <Ref. to AB-9, CAUTION, General Description.>
• Airbag system satellite safing sensor is located in the lower of the rear seat cushion center. Be careful not to apply strong impact to the sensor when working with the rear seat cushion removed.
1) Disconnect the ground cable from battery and wait for at least 60 seconds before starting work. <Ref. to NT-6, BATTERY, NOTE, Note.>

NOTE:
For model with battery sensor, disconnect the ground terminal from battery sensor.
2) Remove the clips, and remove the trim panel - rear pillar UPR.

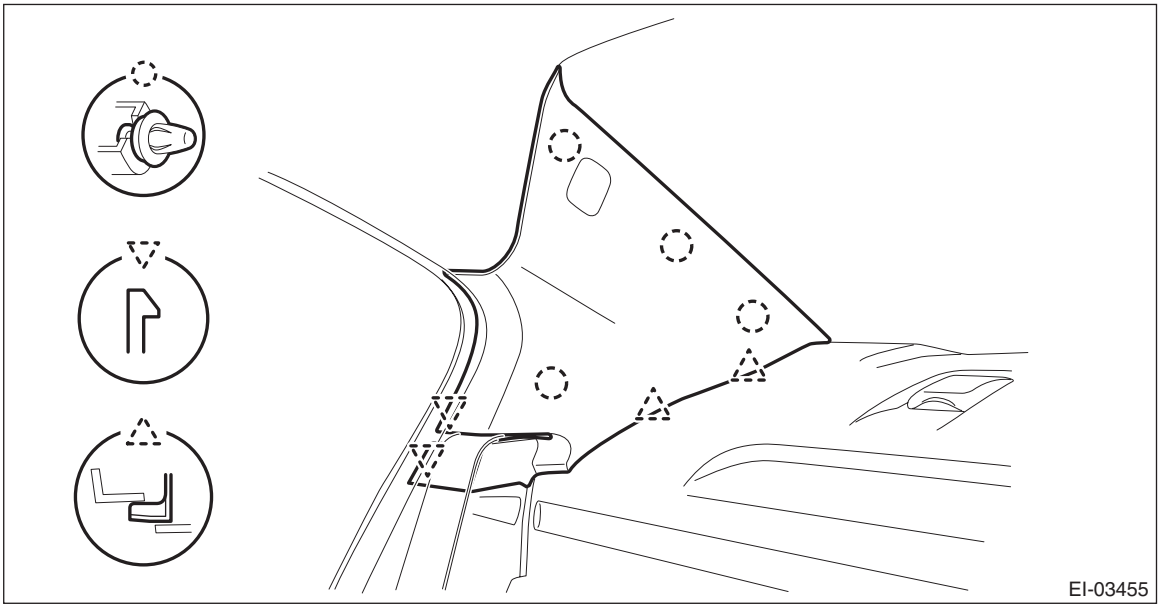

3) Remove the rear seat cushion assembly. <Ref. to SE-30, REMOVAL, Rear Seat.>

4) Release the clips and claws, and then remove the cover side sill - rear INN.

CAUTION:
Do not pull with excessive force. Doing so may damage the claws of the cover side sill - rear INN.

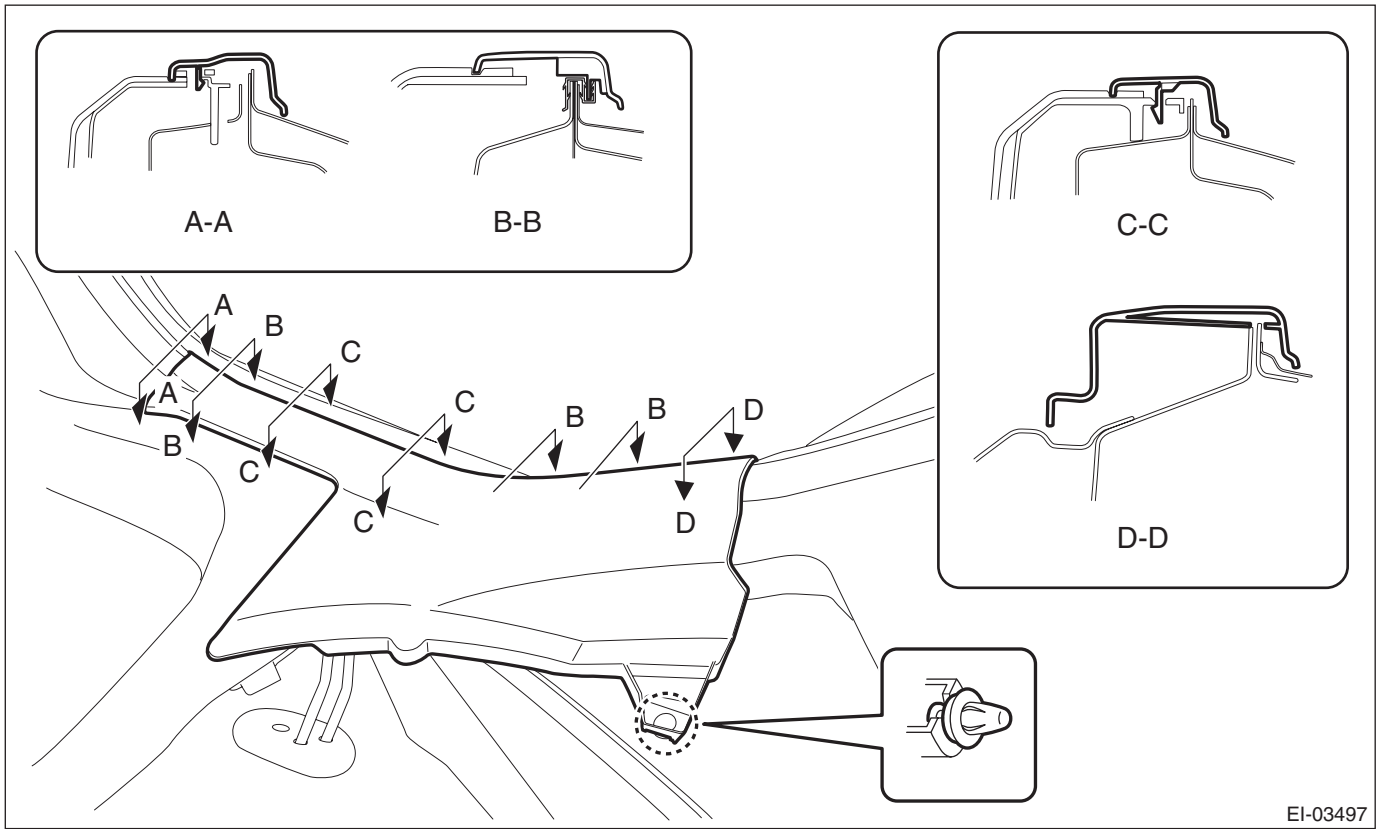

5) Remove the trim panel - rear pillar LWR.
(1) Remove the clips, and turn over the trim panel - trunk side.
(2) Remove the clips, and remove the trim panel - rear pillar LWR.

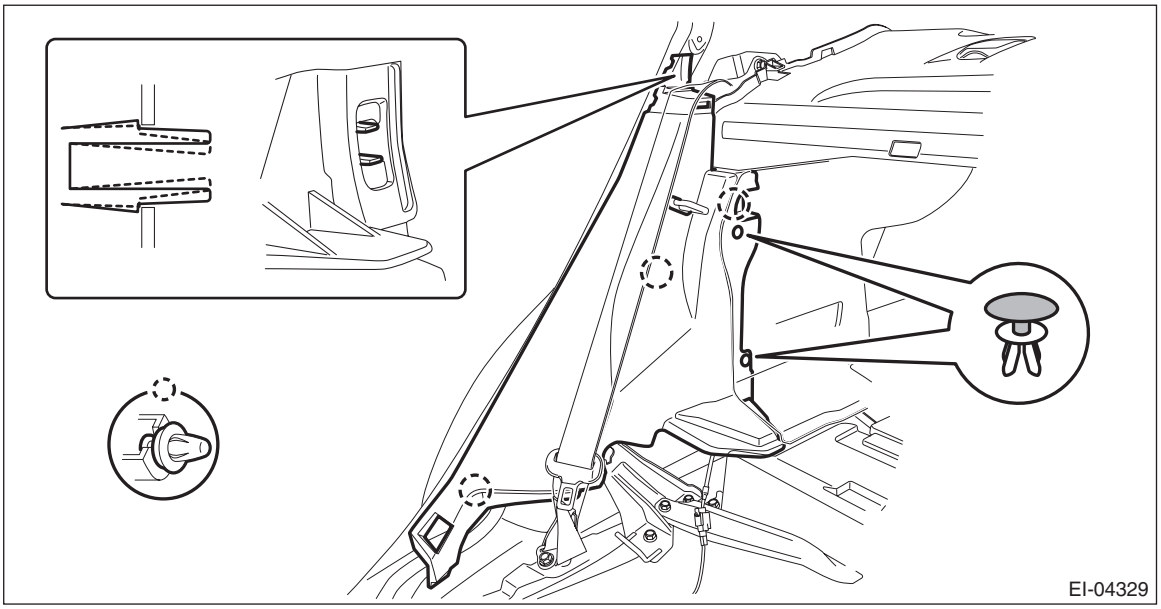

B: INSTALLATION

1) Install the trim panel - rear pillar LWR.
2) Install the cover side sill - rear INN.
3) Install the rear seat cushion assembly.
4) Install the trim panel - rear pillar UPR.
5) Connect the battery ground terminal. <Ref. to NT-6, BATTERY, NOTE, Note.>

26.Rear Shelf Trim

A: REMOVAL

CAUTION:
• Before handling the airbag system components, refer to "CAUTION" of "General Description" in "AIRBAG SYSTEM". <Ref. to AB-9, CAUTION, General Description.>
• Airbag system satellite safing sensor is located in the lower of the rear seat cushion center. Be careful not to apply strong impact to the sensor when working with the rear seat cushion removed.
1) Disconnect the ground cable from battery and wait for at least 60 seconds before starting work. <Ref. to NT-6, BATTERY, NOTE, Note.>

NOTE:
For model with battery sensor, disconnect the ground terminal from battery sensor.
2) Remove the rear seat cushion assembly. <Ref. to SE-30, REMOVAL, Rear Seat.>
3) Release the clips and claws, and remove the side sill covers - rear INN on the left and right sides.

CAUTION:
Do not pull with excessive force. Doing so may damage the claws of the side sill cover - rear INN.

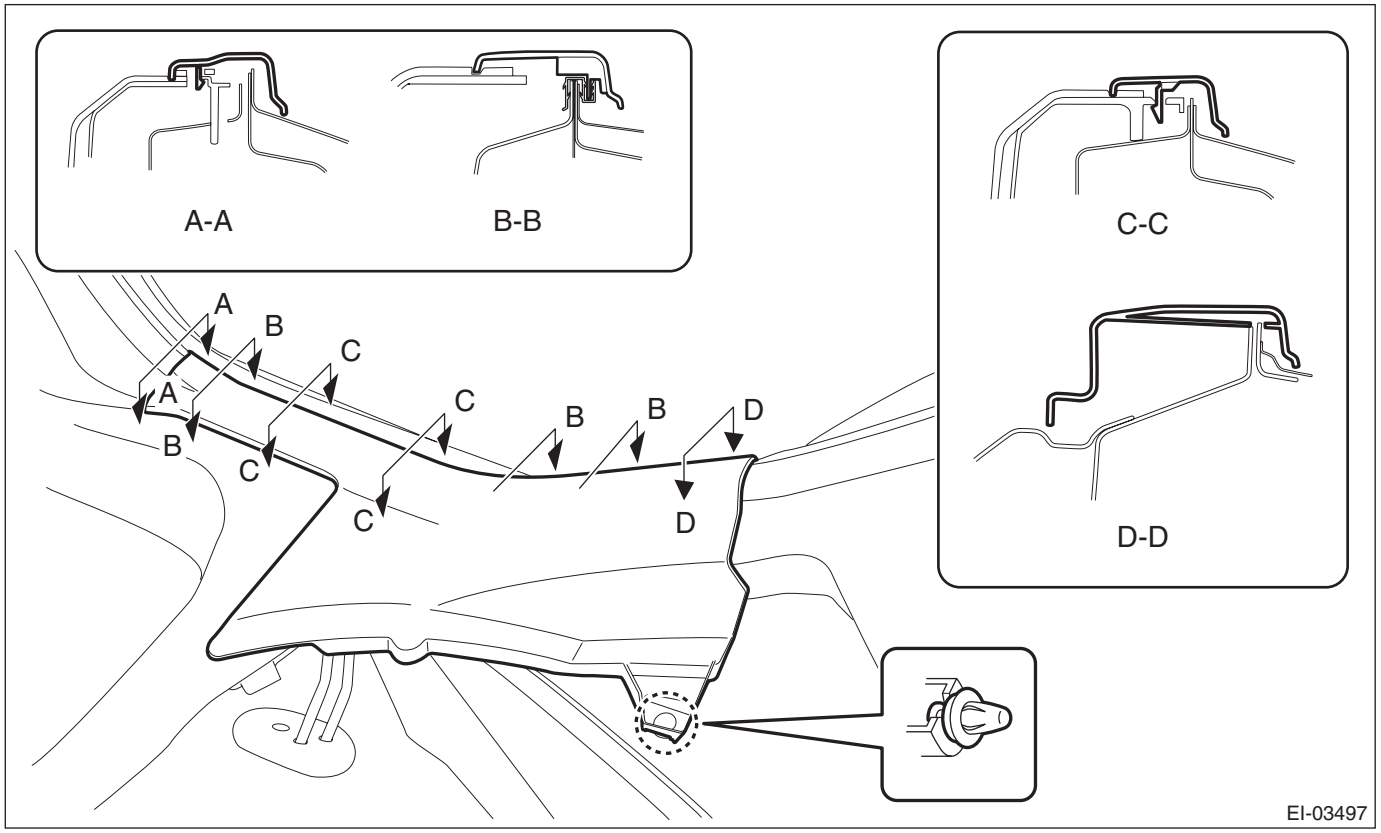

4) Remove the trim panel - rear pillar UPR and trim panel - rear pillar LWR on the RH and LH sides. <Ref. to EI-92, REMOVAL, Rear Quarter Trim.>

5) Remove the bolts, and remove the lower anchor of the seat belt - rear shoulder CTR.

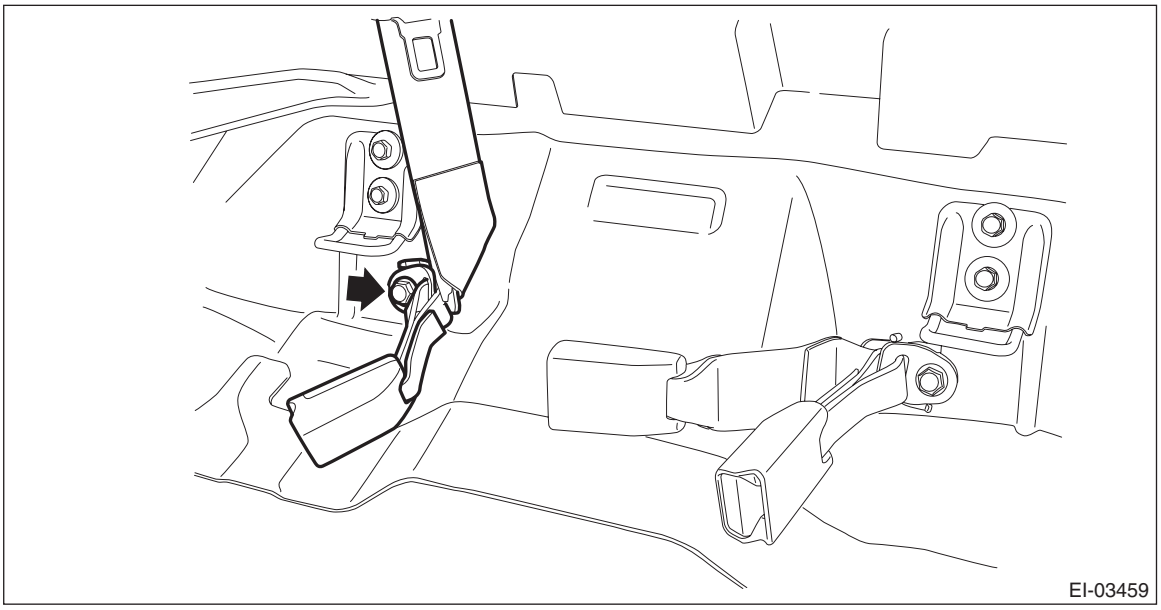

6) Remove the high-mounted stop light. <Ref. to LI-59, REMOVAL, High-mounted Stop Light.>
7) Remove the trim panel assembly - rear shelf.
   (1) Release the clips to float the trim panel assembly - rear shelf.
   (2) Release the belt guide, and guide the anchor of the seat belt - rear shoulder CTR to behind the trim panel - rear shelf assembly.
   (3) Remove the trim panel assembly - rear shelf.

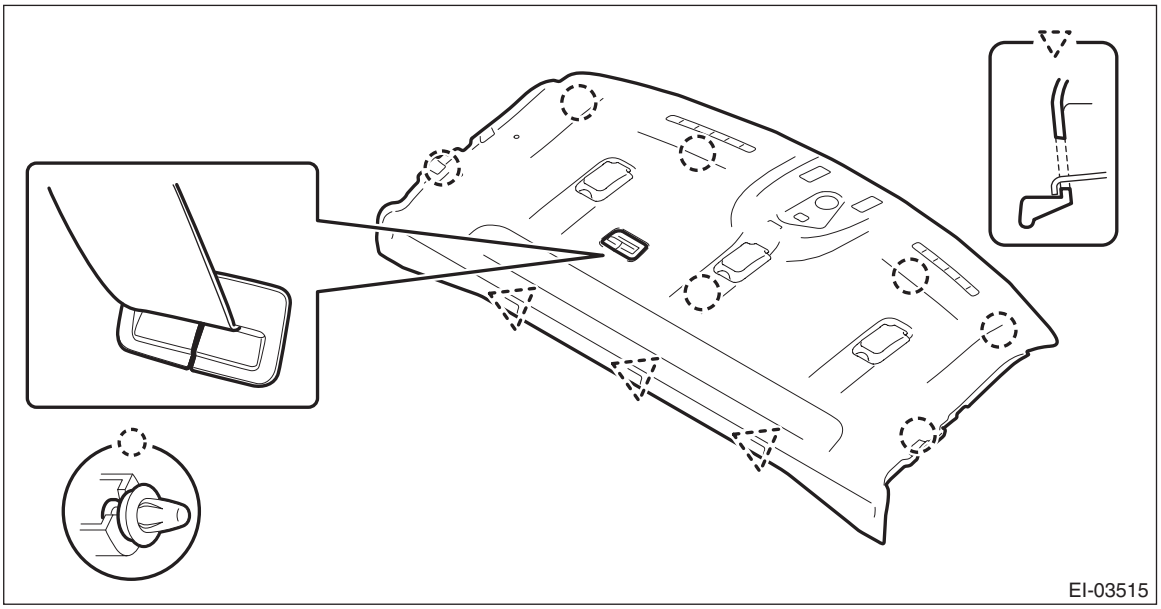

B: INSTALLATION

1) Install the trim panel assembly - rear shelf.
2) Install the high-mounted stop light.

CAUTION:
Make sure that the claw behind the light assembly - high-mounted is securely attached to the trim panel assembly - rear shelf.
3) Install the lower anchor of seat belt - rear shoulder CTR.

Tightening torque:
30 N·m (3.1 kgf-m, 22.1 ft-lb)
4) Install the trim panel - rear pillar UPR and the trim panel - rear pillar LWR.
5) Install the side sill cover - rear INN.
6) Install the rear seat cushion assembly.
7) Connect the battery ground terminal. <Ref. to NT-6, BATTERY, NOTE, Note.>

27.Trunk Room Trim

A: REMOVAL

1) Remove the clips, and remove the trim panel - trunk lid.

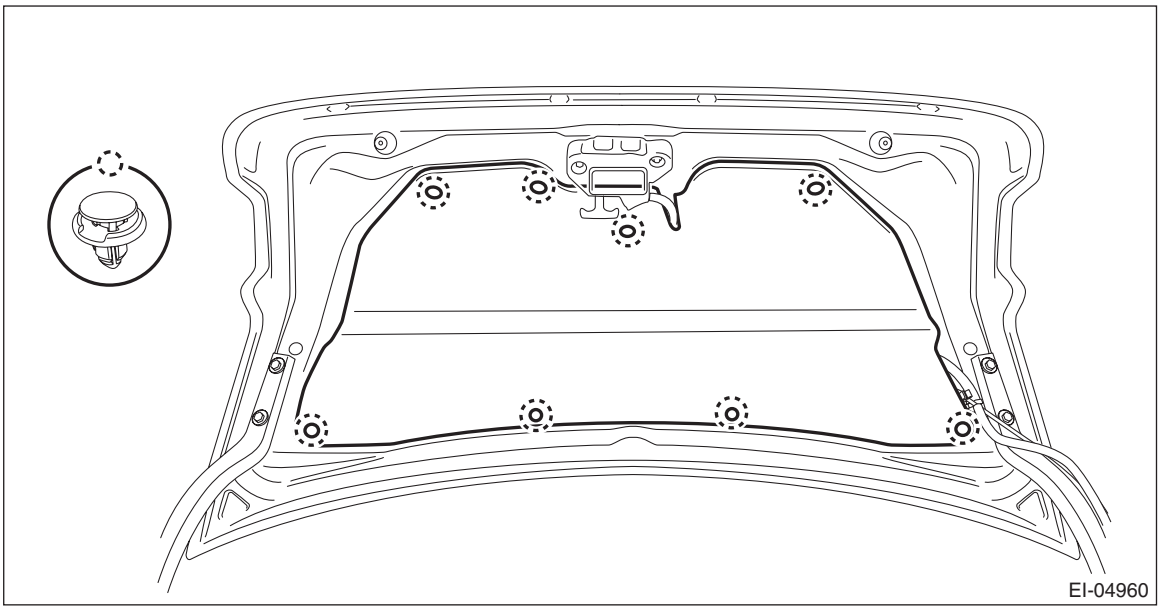

2) Tilt the backrest assembly forward.
3) Remove the mat - trunk.
4) Remove the trim panel - trunk rear.
   (1) Remove the clip.
   (2) Release the claws, and remove the trim panel - trunk rear.

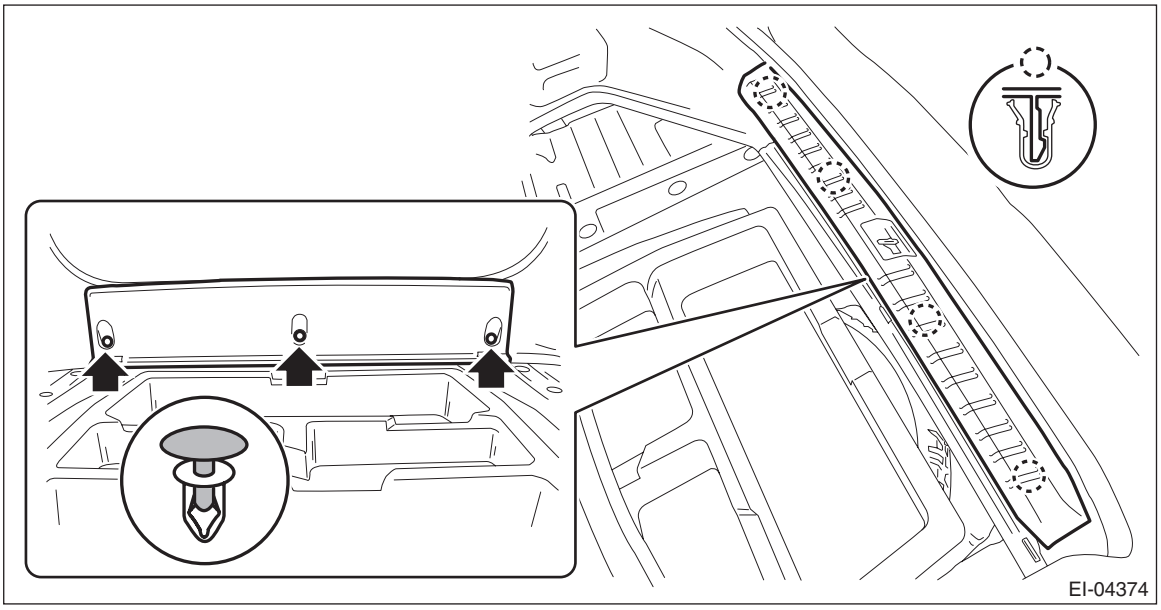

5) Remove the clips, and remove the trim panel - trunk side.

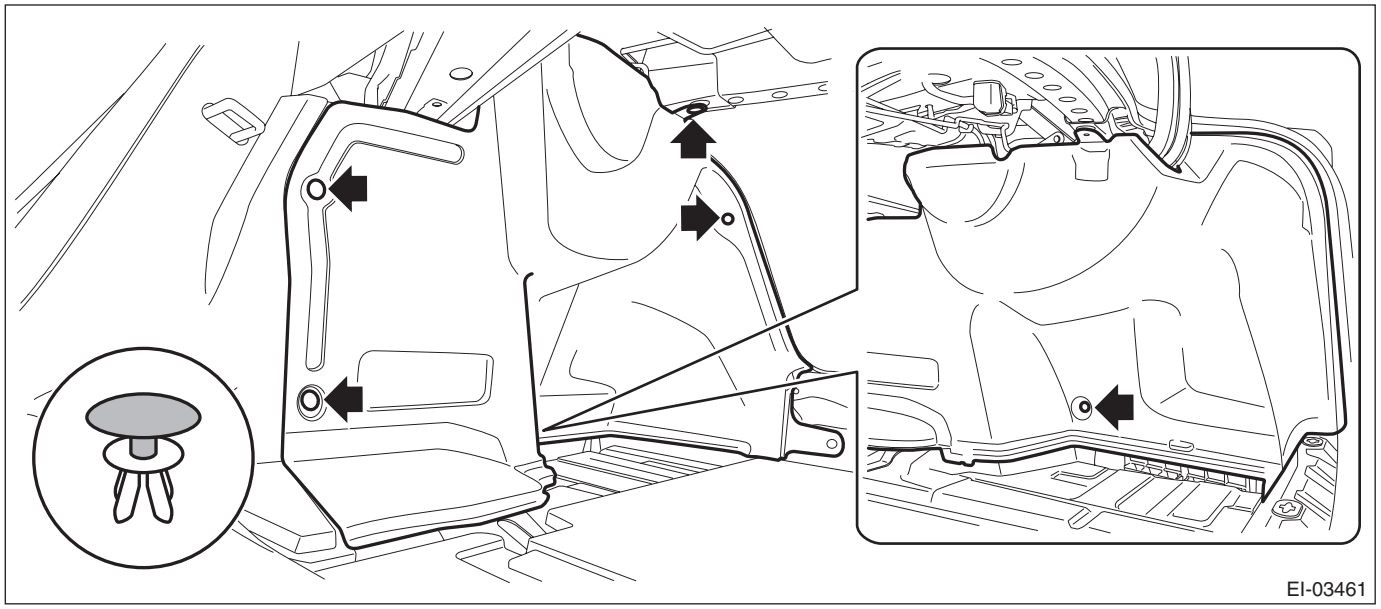

B: INSTALLATION

1) Install the trim panel - trunk lid.
2) Install the trunk room mat.
3) Install the trim panel - trunk rear.

28.Sun Visor

A: REMOVAL

1) Disconnect the ground cable from battery and wait for at least 60 seconds before starting work. (Only model with vanity mirror light) <Ref. to NT-6, BATTERY, NOTE, Note.>

NOTE:
For model with battery sensor, disconnect the ground terminal from battery sensor.

2) Remove the sun visor assembly.
   (1) Remove the cap - sun visor, and then remove the screws.
   (2) Disconnect the connector. (Only model with vanity mirror light)
   (3) Disconnect the connector and remove the sun visor assembly.
3) Remove the hook - sun visor.
   (1) Press both sides using a flat tip screwdriver.
   (2) Remove the hook - sun visor by pulling it toward you.

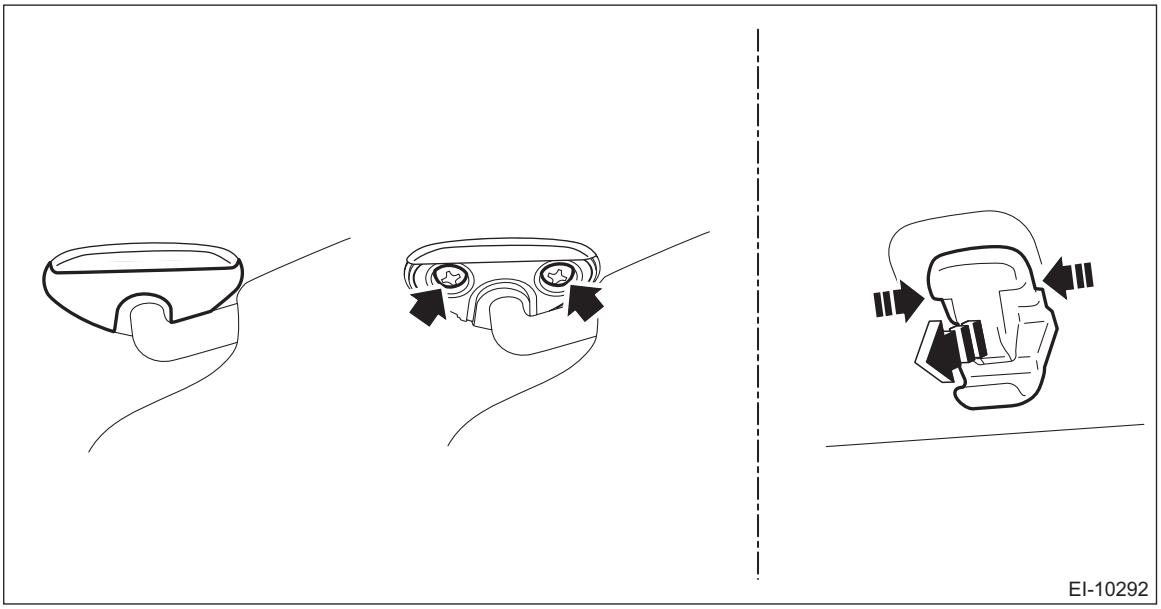

B: INSTALLATION

1) Install the hook - sun visor.
2) Install the sun visor assembly.
3) Connect the battery ground terminal. <Ref. to NT-6, BATTERY, NOTE, Note.>

29.Assist Grip

A: REMOVAL

1) Pull both sides of the cap (a) using a flat tip screwdriver or similar tool wrapped with a protection tape.
2) Pull the assist grip toward yourself (toward the vehicle center) to remove.

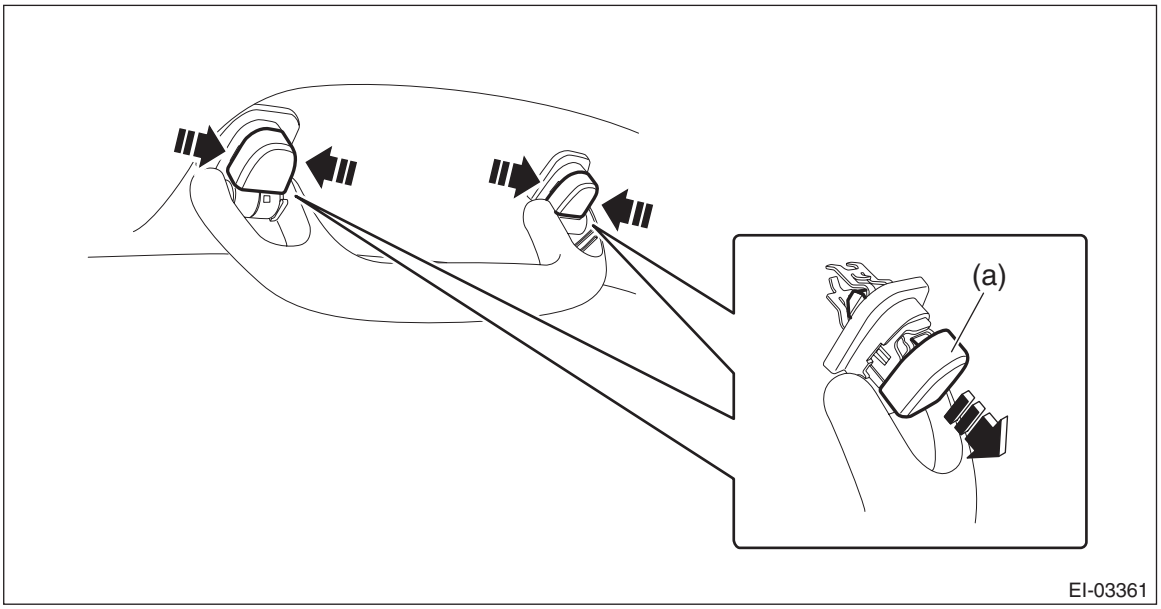

B: INSTALLATION

1) Attach the assist grip.
2) Press in the cap.

30.Roof Trim

A: REMOVAL

CAUTION:
• Before handling the airbag system components, refer to "CAUTION" of "General Description" in "AIRBAG SYSTEM". <Ref. to AB-9, CAUTION, General Description.>
• Airbag system satellite safing sensor is located in the lower of the rear seat cushion center. Be careful not to apply strong impact to the sensor when working with the rear seat cushion removed.
1) Adjust the passenger's seat position.
(1) Remove the headrest.
(2) Move the passenger's seat to the front-most position and tilt the backrest rearward.
2) Disconnect the ground cable from battery and wait for at least 60 seconds before starting work. <Ref. to NT-6, BATTERY, NOTE, Note.>

NOTE:
• For model with battery sensor, disconnect the ground terminal from battery sensor.
• On CVT models, shift the select lever into "N" before disconnecting the battery ground cable.
• For model with power seat, adjust the passenger's seat to the specified position, and remove the driver's seat and then disconnect the battery ground terminal.
3) Remove the driver's seat. <Ref. to SE-9, REMOVAL, Front Seat.>
4) Remove the console box assembly and the cover - shift lever. <Ref. to EI-67, REMOVAL, Console Box.>
5) Cover the following areas to protect from damage.
• Steering wheel surface
• Instrument panel surface
• Glove box surface
6) Remove the rear seat cushion assembly. <Ref. to SE-30, REMOVAL, Rear Seat.>
7) Remove the lower inner trim on the RH and LH sides. <Ref. to EI-84, REMOVAL, Lower Inner Trim.>
8) Remove the upper inner trim on the RH and LH sides. <Ref. to EI-88, REMOVAL, Upper Inner Trim.>
9) Remove the clips, and remove the trim panel - rear pillar UPR on the left and right sides.

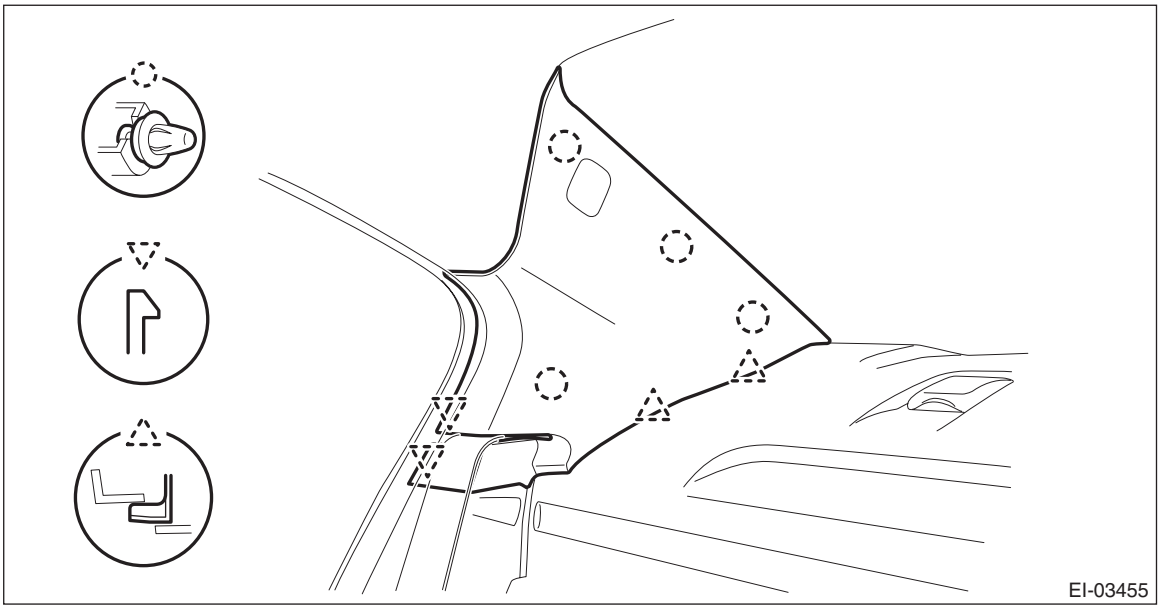

10) Remove the light assembly - map. (Models without EyeSight) <Ref. to LI-61, REMOVAL, Spot Map Light.>
11) Remove the stereo camera cover assembly. (Models with EyeSight) <Ref. to ES-8, REMOVAL, Stereo Camera.>
12) Remove the left and right sun visor assembly. <Ref. to EI-100, REMOVAL, Sun Visor.>
13) Remove the light assembly - room. <Ref. to LI-65, REMOVAL, Room Light.>
14) Remove all assist rails. <Ref. to EI-101, REMOVAL, Assist Grip.>
15) Remove the garnish - roof. (Model with sunroof)

16) Remove the trim panel - roof assembly.
(1) Remove the harness clamp of the cord assembly - antenna feeder and the cord - roof, and disconnect the connectors.
(2) Remove the clips and the Velcro tape behind the room light.
(3) Remove the weather strip - body side flange from the front/rear and left/right doors, and remove the trim panel - roof assembly.

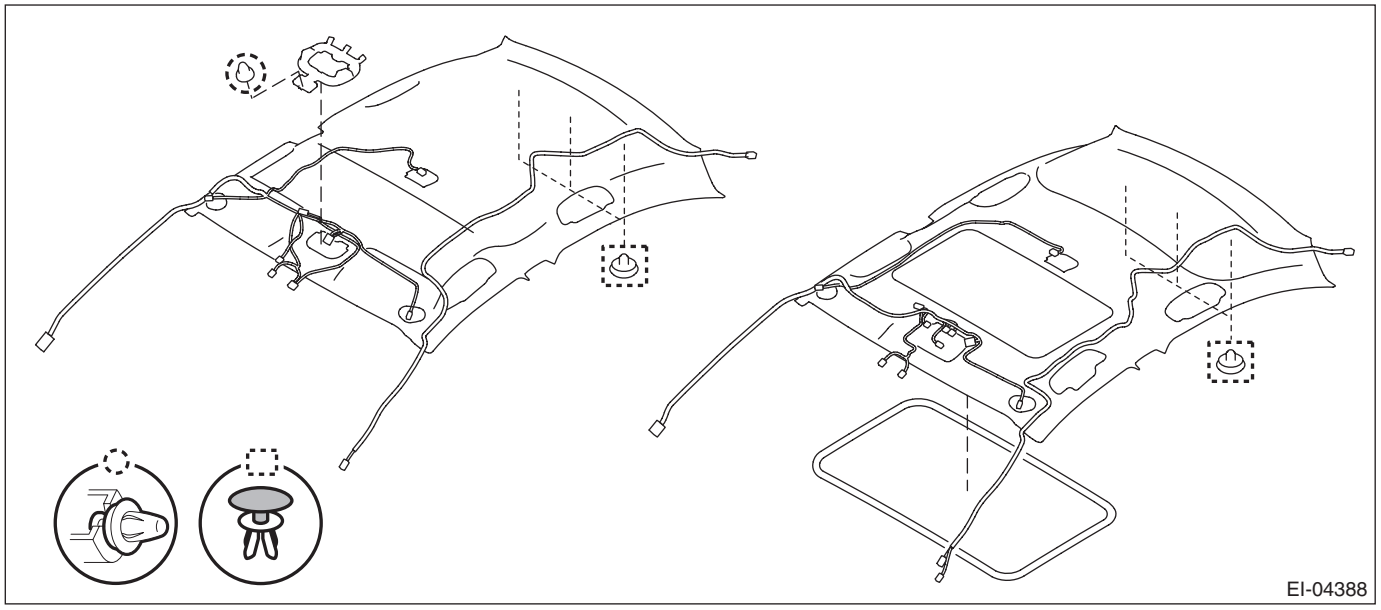

(4) Take out the trim panel - roof assembly from the vehicle.

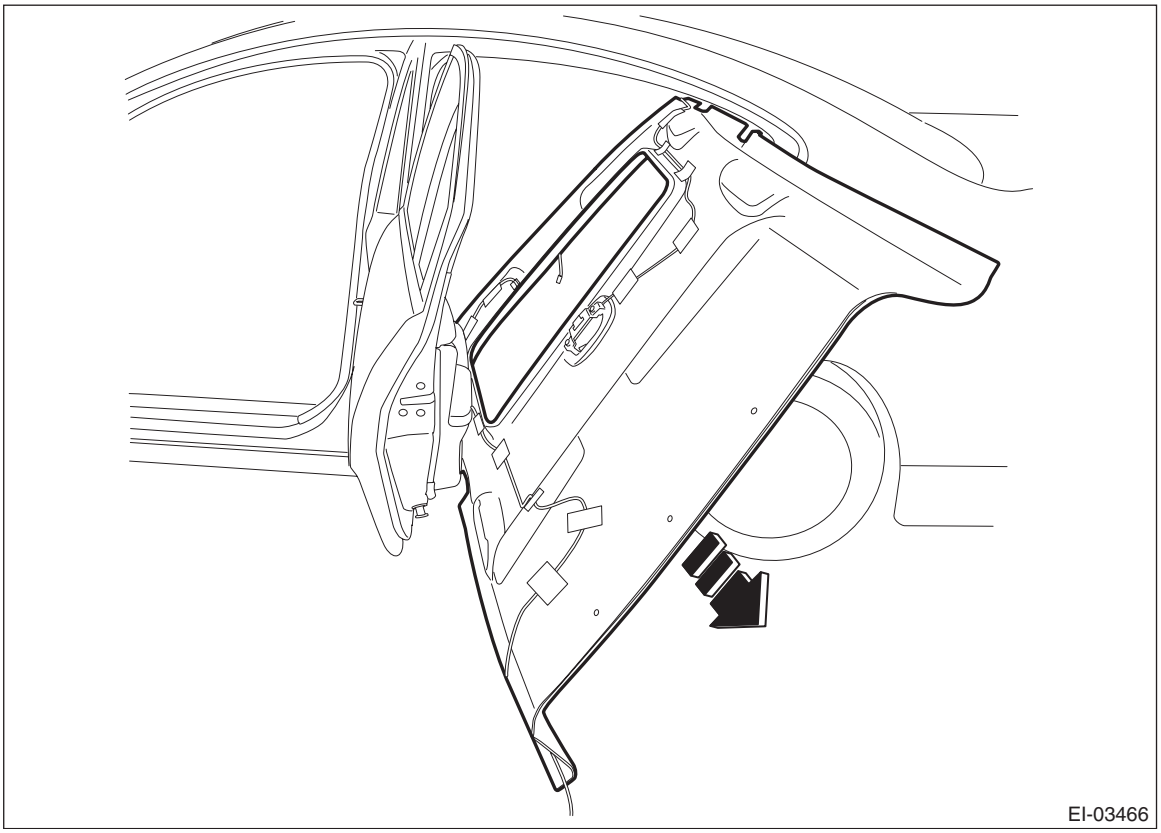

B: INSTALLATION

CAUTION:
• For installation of the stereo camera cover assembly, refer to "INSTALLATION", "Stereo Camera" in the "EyeSight" section and observe the precautions for installation. <Ref. to ES-11, INSTALLATION, Stereo Camera.>
• When reusing the tether clip on the upper part of the trim panel - front pillar UPR, check that there is no damage to the tether clip. If the tether clip is damaged, always replace it with a new tether clip. If the tether clip is damaged, its holding force is reduced and the trim panel - front pillar UPR may come off.
• Do not reuse the tether clip removed from the upper part of the trim panel - front pillar UPR. Always replace with a new part.
• Do not reuse the upper clips of the trim panel - center pillar UPR. Once the clip is removed, its holding force is reduced. Be sure to replace it with a new clip.
• Before installing the trim panel - front pillar UPR, check the condition of protective non-woven fabric (white) of the curtain airbag. If it is damaged (airbag module cloth is exposed), replace the curtain airbag module assembly with a new part.
• Check the installation status of the tether clips and install the trim panel - front pillar UPR.

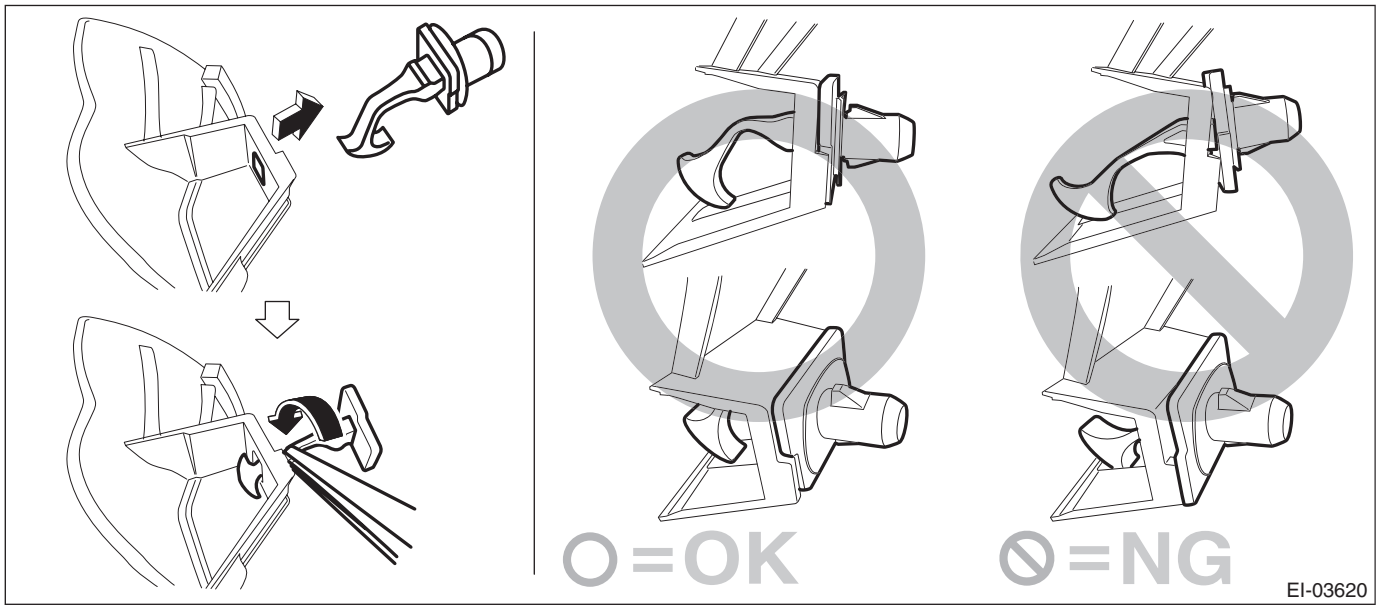

1) Install the trim panel - roof assembly.
   (1) Bring the trim panel - roof assembly inside the vehicle.
   (2) Attach the feeder cord and roof cord to the roof trim.

CAUTION:
Route each cord carefully. The cord may interfere, thus preventing normal deployment of the curtain airbag when necessary.

Preparation items:
Part No.: 86359SC000/TAPE

NOTE:
Use the tape (service parts) by cutting into 100 mm × 50 mm (3.9 in × 2 in).

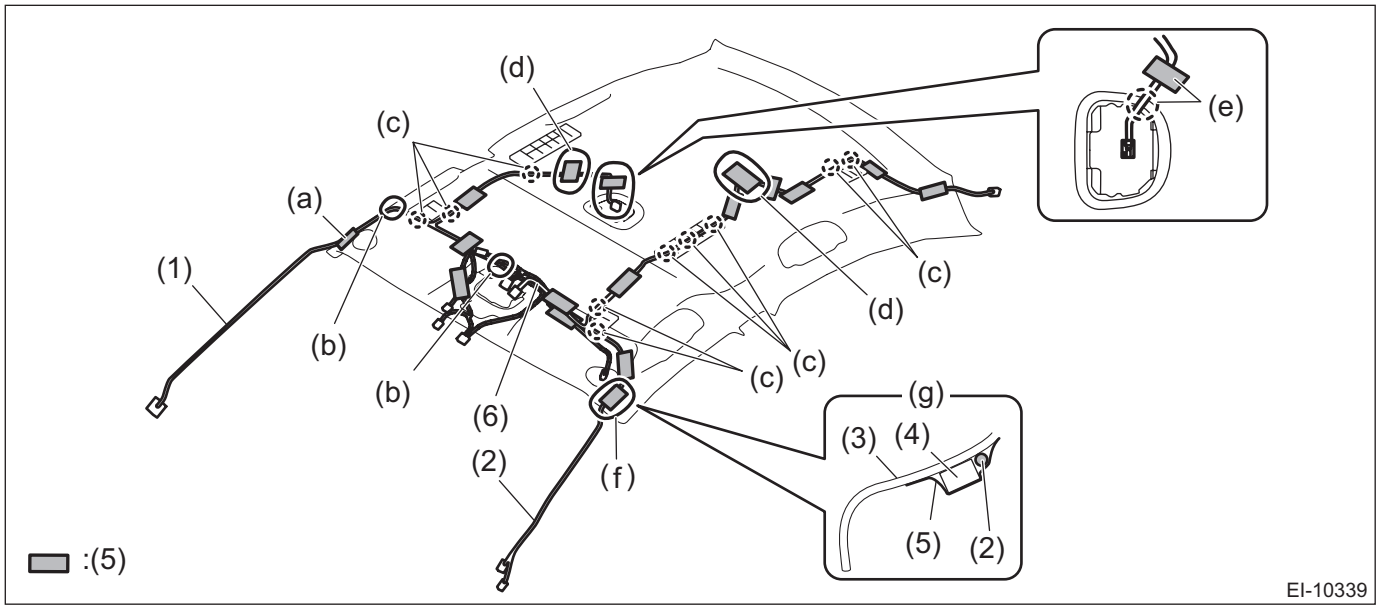

EI-10339

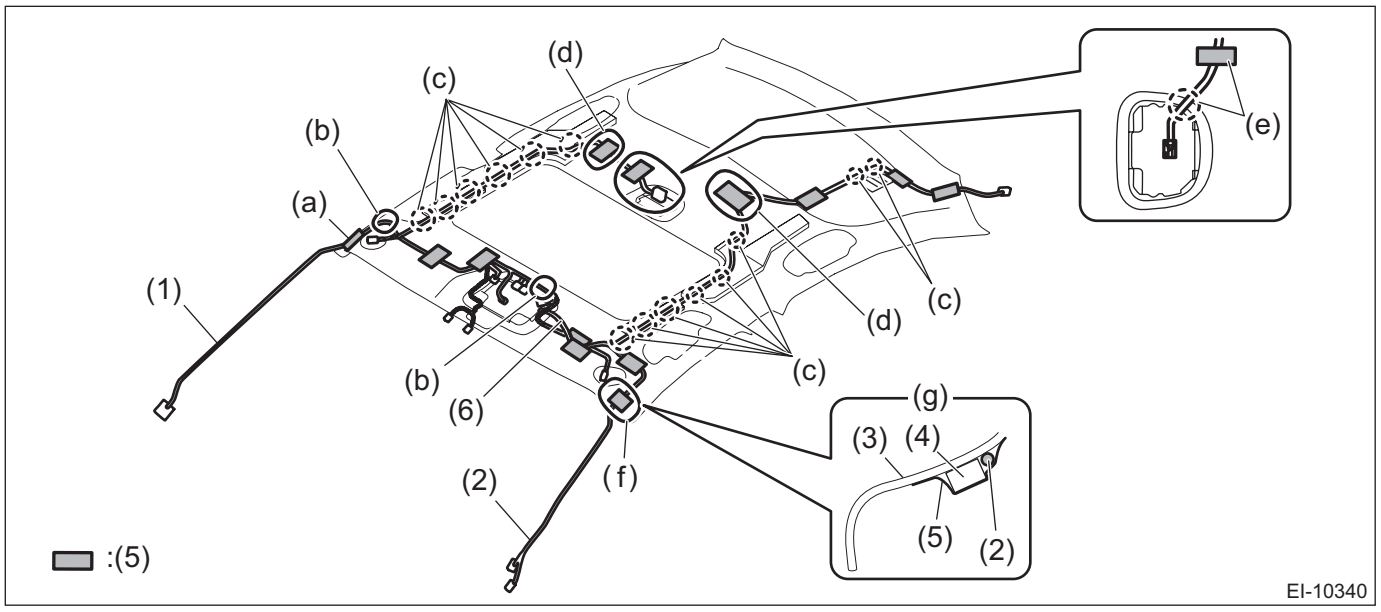

EI-10340

(1) Roof cord
(2) Feeder cord
(3) Trim panel - roof
(4) Cushion
(5) Tape
(6) Telematics harness

(a) Align the center of the marking (white tape) on the cord with the trim end, then secure using the tape.
(b) Align the marking (white tape) of the cord with the clamp to secure.
(c) Secure the cord to the roof pad clamp.
(d) Adjust the excess cord at (d) position and secure using the tape.
(e) Put the marking (white tape) of the cord between the patch ribs so that the marking cannot be viewed from the passenger room. Secure it with clamp and secure the harness with tape.
(f) Align the center of the marking (red tape) on the cord with the roof trim end, then secure using the tape.
(g) Route the cord along inside of the cushion (to the vehicle center) and secure using the tape.

(3) Secure the trim panel - roof assembly with the clips.
2) Install the garnish - roof. (Model with sunroof)
3) Install the assist rail.
4) Install the light assembly - room.
5) Install the sun visor assembly.
6) Install the stereo camera cover assembly. (Models with EyeSight) <Ref. to ES-11, INSTALLATION, Stereo Camera.>
7) Install the light assembly - map. (Models without EyeSight)
8) Install the trim panel - rear pillar UPR.
9) Install the upper inner trim.

Tightening torque:
Trim panel - center pillar UPR: 7.5 N·m (0.8 kgf-m, 5.5 ft-lb)
Front seat belt anchor: 30 N·m (3.1 kgf-m, 22.1 ft-lb)

10) Install the lower inner trim.
11) Install the rear seat cushion assembly.
12) Install the console box assembly and cover - shift lever.
13) Install the driver's seat.

Tightening torque:
53 N·m (5.4 kgf-m, 39.1 ft-lb)

14) Connect the battery ground terminal. <Ref. to NT-6, BATTERY, NOTE, Note.>

NOTE:
After connecting the battery sensor terminal, place the select lever in the "P" position.

31.Floor Mat

A: REMOVAL

CAUTION:
• Before handling the airbag system components, refer to "CAUTION" of "General Description" in "AIRBAG SYSTEM". <Ref. to AB-9, CAUTION, General Description.>
• Airbag system satellite safing sensor is located in the lower of the rear seat cushion center. Be careful not to apply strong impact to the sensor when working with the rear seat cushion removed.
1) Disconnect the ground cable from battery. <Ref. to NT-6, BATTERY, NOTE, Note.>

NOTE:
• For model with battery sensor, disconnect the ground terminal from battery sensor.
• On CVT models, shift the select lever into "N" before disconnecting the battery ground cable.
2) Remove the front seat assembly. <Ref. to SE-9, REMOVAL, Front Seat.>
3) Remove the rear seat cushion assembly. <Ref. to SE-30, REMOVAL, Rear Seat.>
4) Remove the console box assembly, the cover - shift lever and the panel center LWR. <Ref. to EI-67, REMOVAL, Console Box.>
5) Remove the lower inner trim on the RH and LH sides. <Ref. to EI-84, REMOVAL, Lower Inner Trim.>
6) Remove the pull handle cover. <Ref. to SL-59, FUEL FLAP, REMOVAL, Remote Openers.>
7) Remove the knobs of the hook - seat cushion rear.

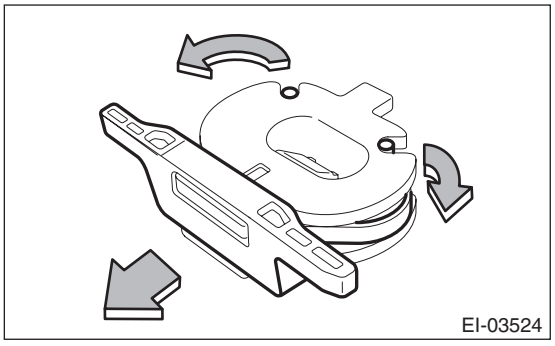
EI-03524

8) Take out the floor mat from the vehicle.
(1) Remove the clips from the floor mat.
(2) Remove the mat hook on both sides.
(3) Take out the floor mat after folding down.

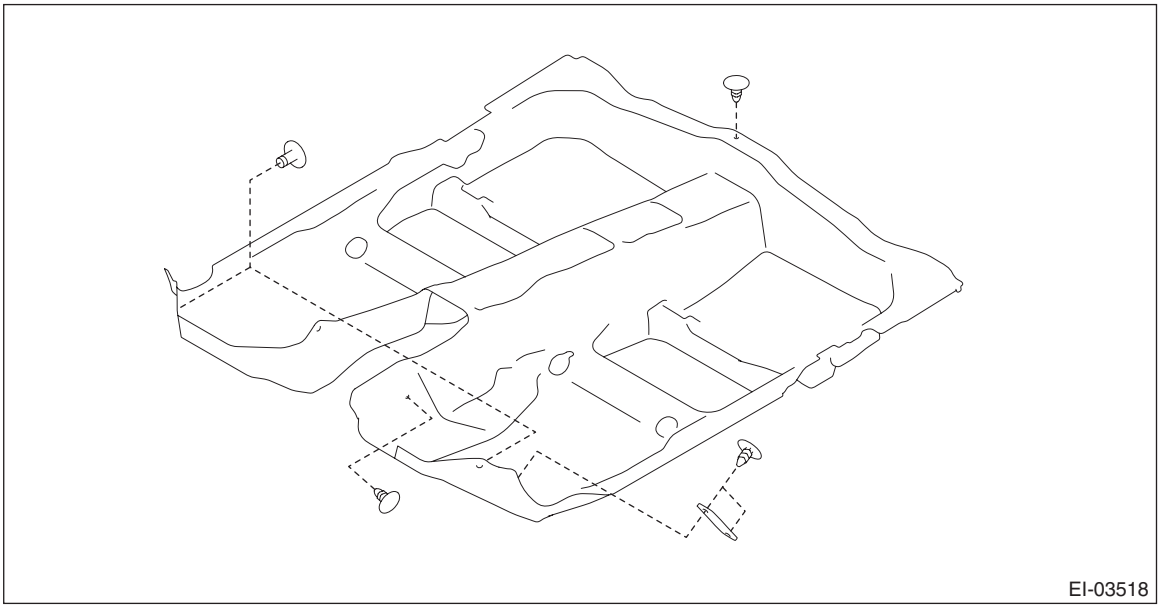
EI-03518

B: INSTALLATION

1) Bring the floor mat into the vehicle, and secure with the clips.

CAUTION:
Make sure that the knobs of the hook - seat cushion rear are securely installed.

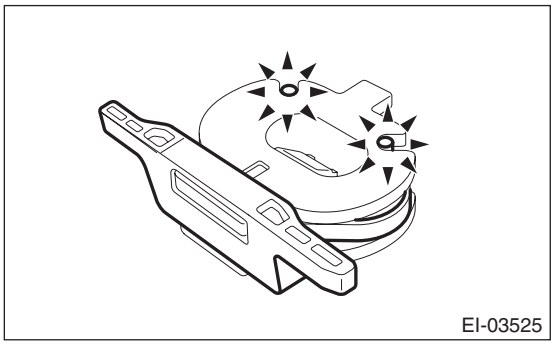

2) Install the pull handle cover.
3) Install the lower inner trim.
4) Install the console box assembly, the cover - shift lever and the panel center LWR.
5) Install the rear seat cushion assembly.
6) Install the front seat.

Tightening torque:
53 N·m (5.4 kgf-m, 39.1 ft-lb)

7) Connect the battery ground terminal. <Ref. to NT-6, BATTERY, NOTE, Note.>

NOTE:
After connecting the battery sensor terminal, place the select lever in the “P” position.

EXTERIOR BODY PANELS

EB

		Page
1.	General Description	2
2.	Front Hood	10
3.	Front Fender	18
4.	Front Door	22
5.	Front Sealing Cover	30
6.	Rear Door	31
7.	Rear Sealing Cover	38
8.	Door Sash Tape	39
9.	Trunk Lid	48
10.	Weather Strip	55

1. General Description

A: COMPONENT

1. FRONT HOOD

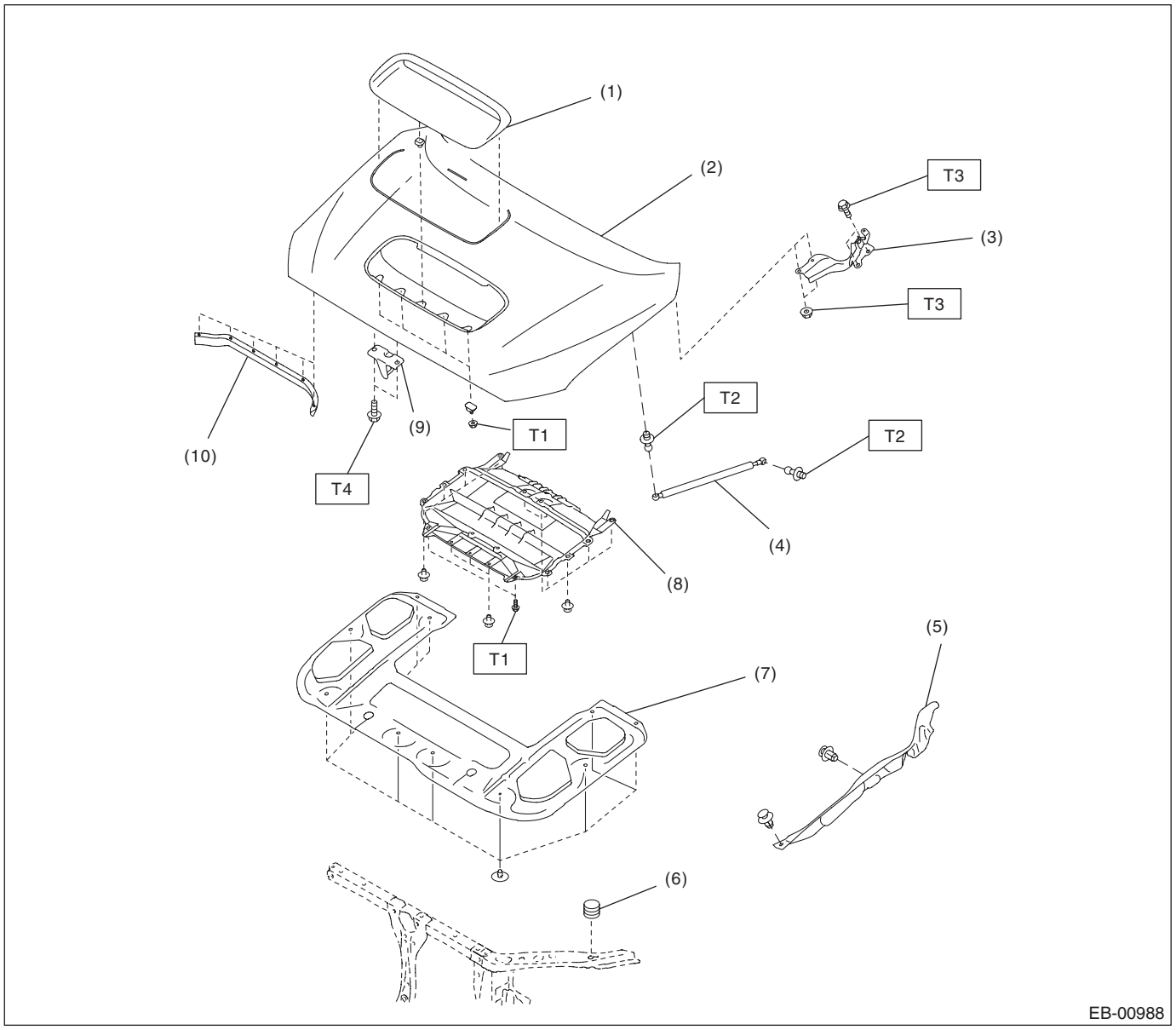

(1)	Grille - front hood	(6)	Buffer - front hood	***Tightening torque: N·m (kgf-m, ft-lb)***
(2)	Hood COMPL - front	(7)	Insulator - front hood	***T1: 4.5 (0.5, 3.3)***
(3)	Hinge COMPL - front hood	(8)	Duct - inner front hood	***T2: 20 (2, 14.8)***
(4)	Stay ASSY - front hood	(9)	Striker - front hood	***T3: 25 (2.5, 18.4)***
(5)	Cover - front fender	(10)	Seal - front duct	***T4: 33 (3.4, 24.5)***

2. FRONT FENDER

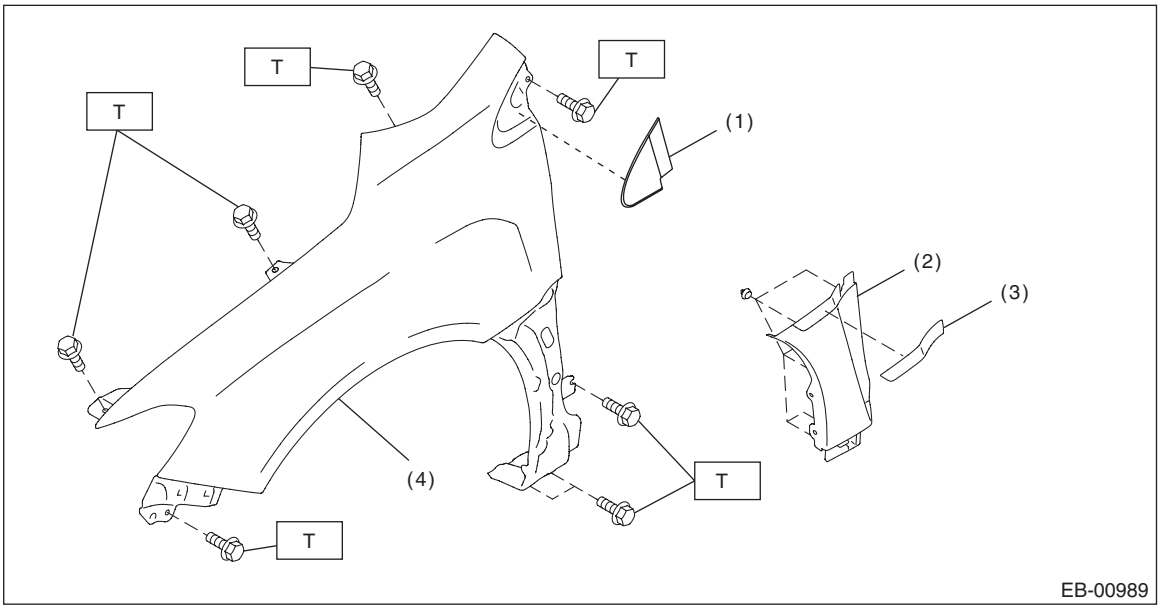

(1) Cover - A pillar ASSY
(2) Garnish ASSY - fender
(3) Molding
(4) Fender COMPL - front

Tightening torque: N·m (kgf-m, ft-lb)
T: 7.5 (0.8, 5.5)

3. FRONT DOOR

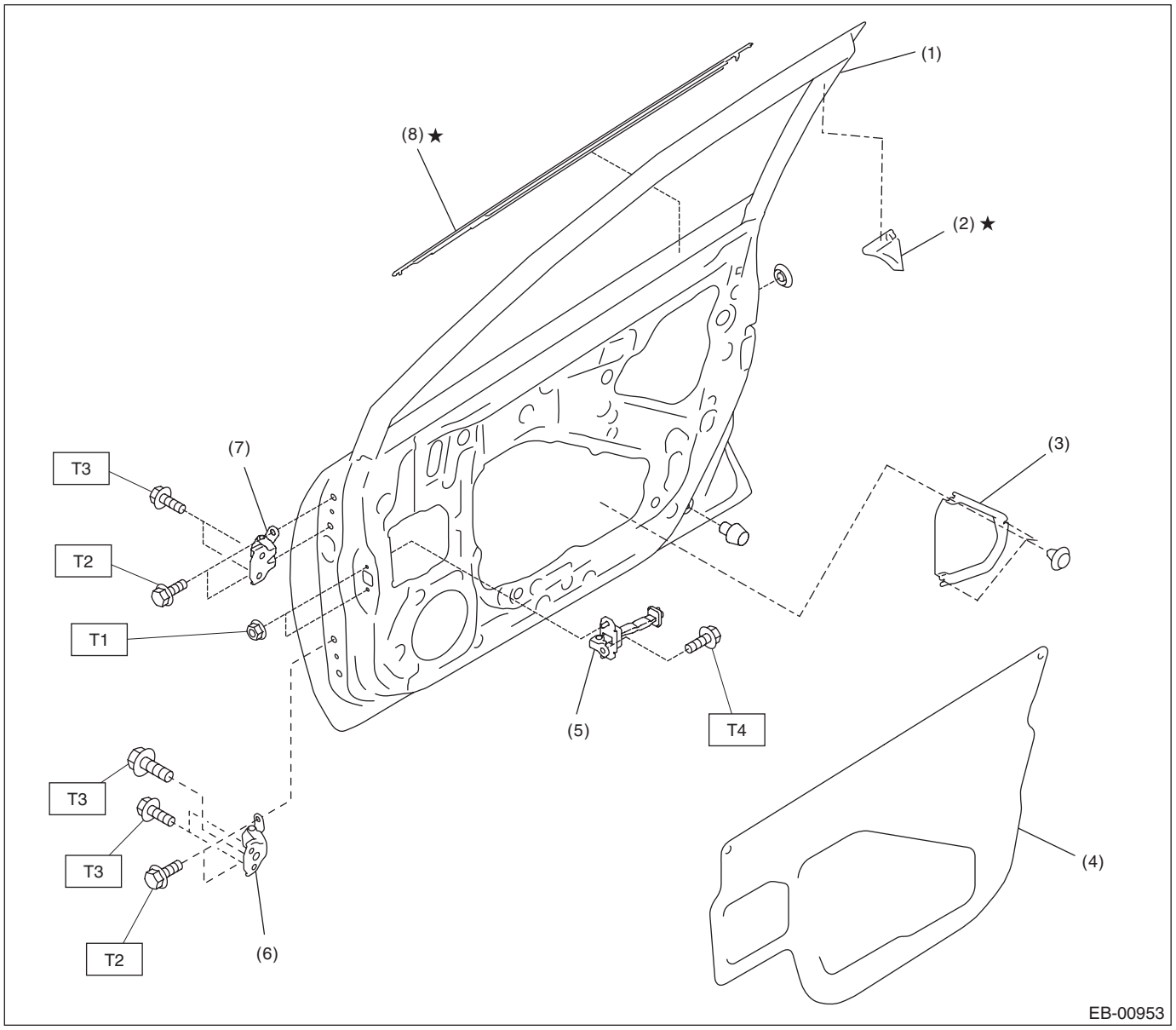

(1)	Panel ASSY - front door	(5)	Checker ASSY - front door	***Tightening torque: N·m (kgf-m, ft-lb)***
(2)	Cover B pillar - front door INN	(6)	Lower hinge - front door	***T1: 7.5 (0.8, 5.5)***
(3)	Front door inner pad	(7)	Upper hinge - front door	***T2: 25 (2.5, 18.4)***
(4)	Sealing cover - front door	(8)	Weather strip outer - front door	***T3: 30 (3.1, 22.1)***
				T4: 33 (3.4, 24.3)

4. REAR DOOR

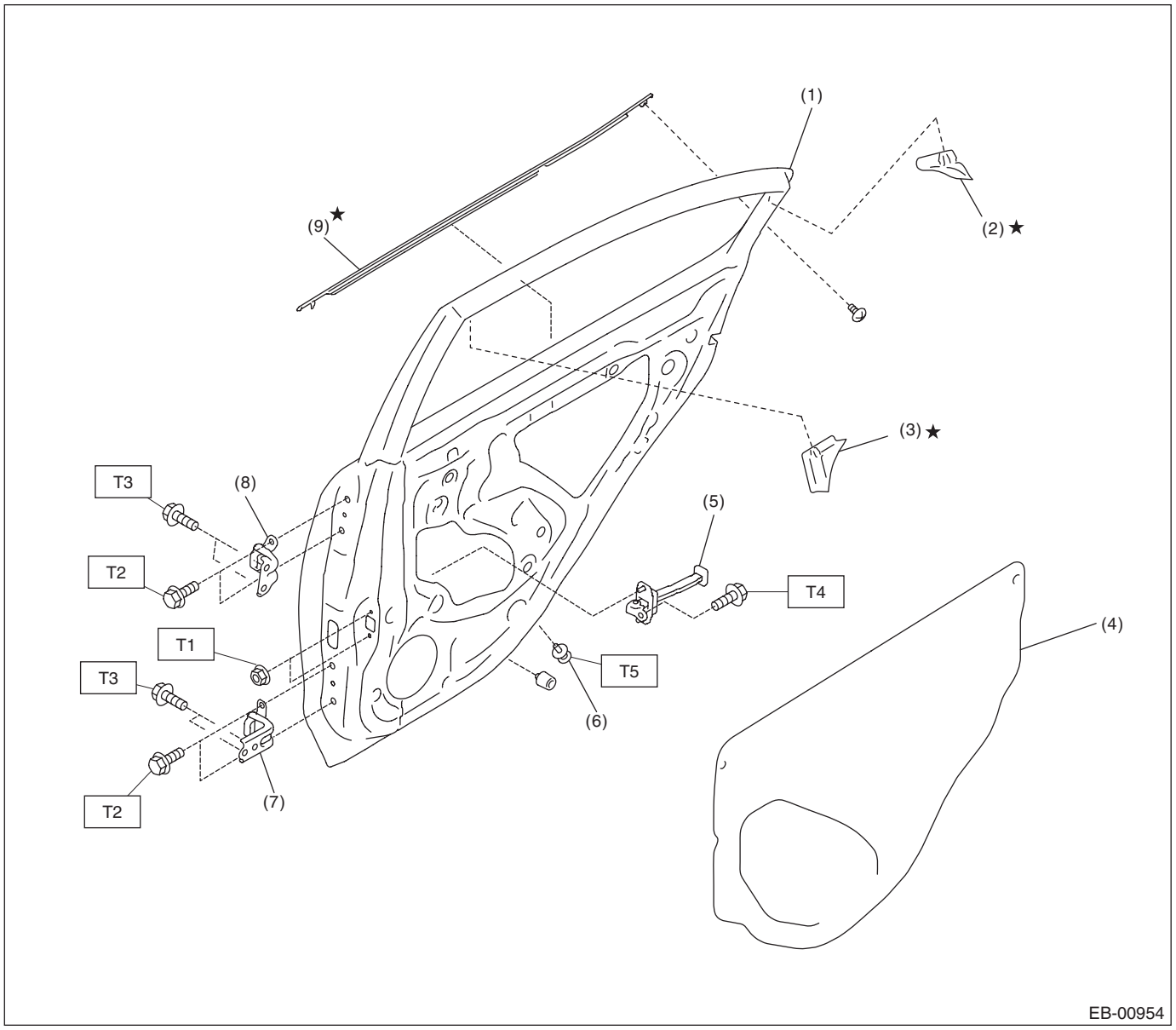

(1) Panel ASSY - rear door
(2) Cover C pillar - rear door INN
(3) Cover B pillar - rear door INN
(4) Sealing cover - rear door
(5) Checker ASSY - rear door
(6) Catcher - rear door
(7) Lower hinge - rear door
(8) Upper hinge - rear door
(9) Weather strip outer - rear door

Tightening torque: N·m (kgf-m, ft-lb)
T1: 7.5 (0.8, 5.5)
T2: 25 (2.5, 18.4)
T3: 30 (3.1, 22.1)
T4: 33 (3.4, 24.3)
T5: 38 (3.9, 28)

5. TRUNK LID PANEL

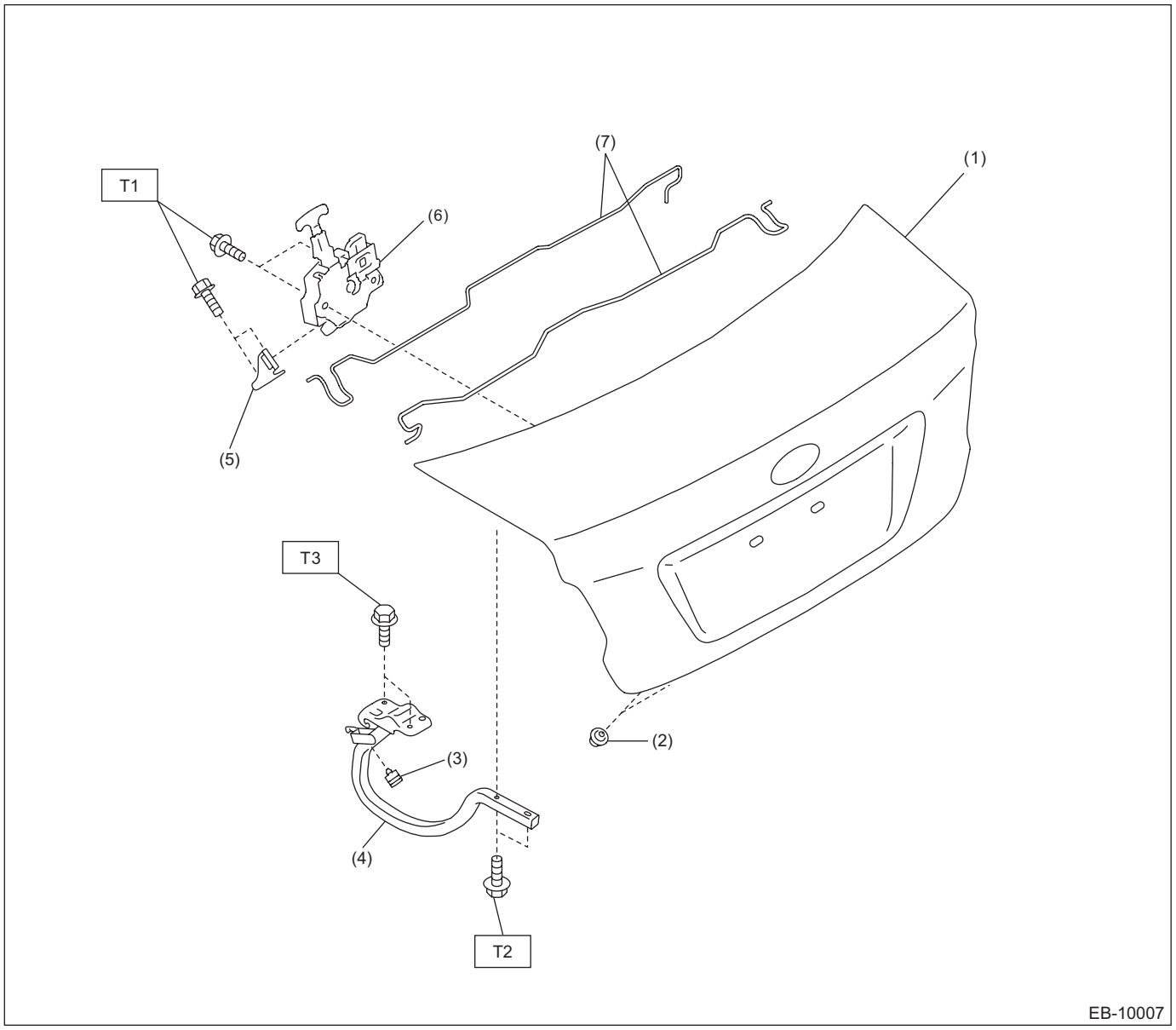

(1)	Trunk lid COMPL	(5)	Striker - trunk	***Tightening torque: N·m (kgf-m, ft-lb)***
(2)	Stopper - trunk lid	(6)	Lock ASSY - trunk lid	***T1: 7.5 (0.8, 5.5)***
(3)	Stopper - trunk	(7)	Torsion bar - trunk lid	***T2: 14 (1.4, 10.3)***
(4)	Trunk lid arm ASSY			***T3: 18 (1.8, 13.3)***

6. WEATHER STRIP

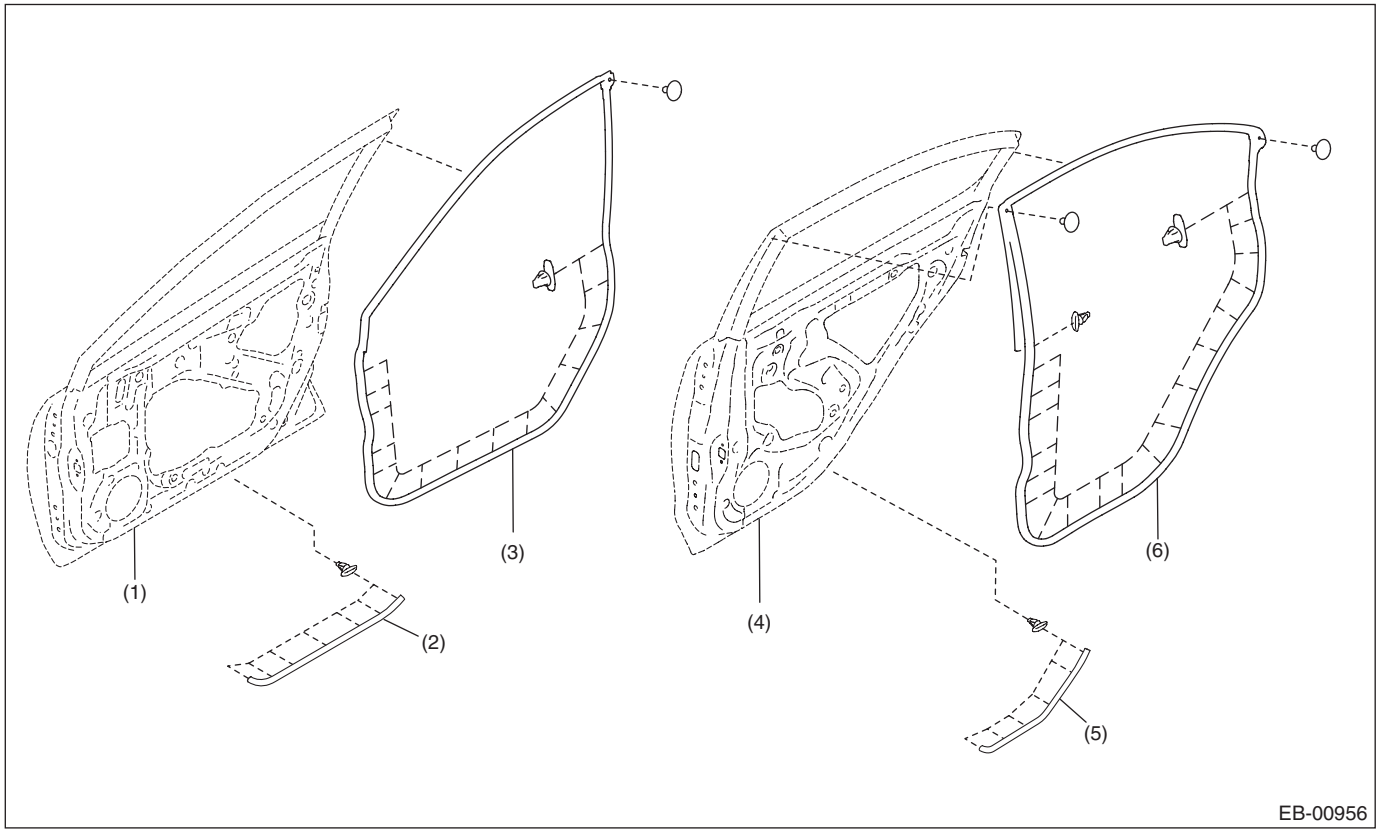

(1) Panel ASSY - front door
(2) Weather strip - front door LWR
(3) Weather strip - front door
(4) Panel ASSY - rear door
(5) Weather strip - rear door LWR
(6) Weather strip - rear door

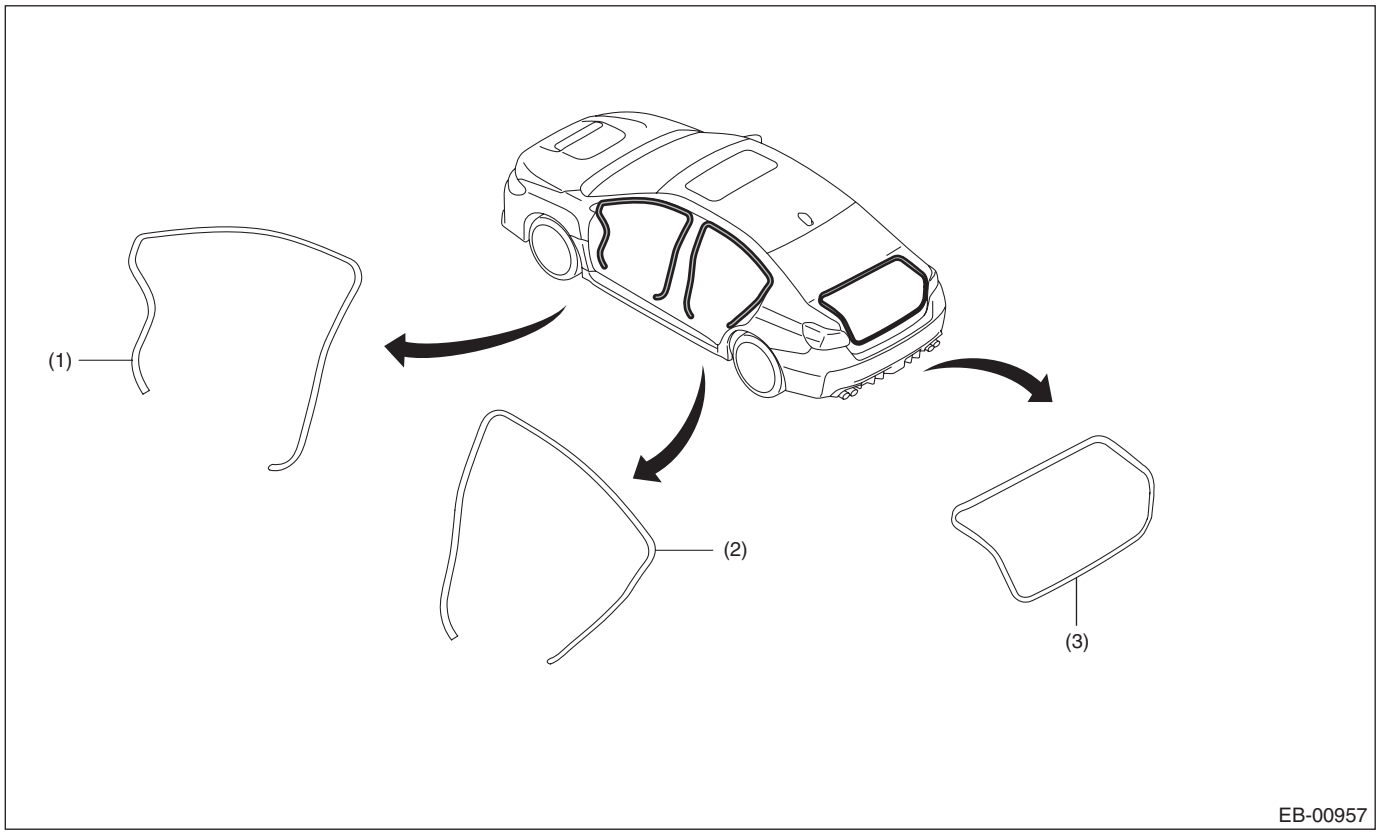

(1) Weather strip - body side flange front
(2) Weather strip - body side flange rear
(3) Weather strip - trunk lid

B: CAUTION

Exterior body panels are heavy. When removing and installing them, do not drop and damage the panels. Also, be careful not to scratch the coated surfaces of the panels.

C: PREPARATION TOOL

1. SPECIAL TOOL

ILLUSTRATION	TOOL NUMBER	DESCRIPTION	REMARKS
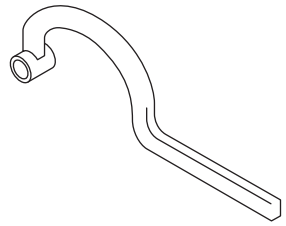 ST-925610000	925610000	WRENCH	Used for removing and installing door hinge.
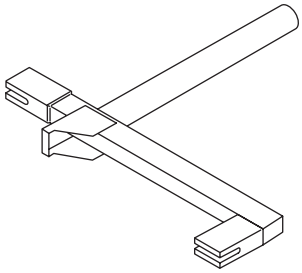 ST-927780000	927780000	REMOVER	• Used for removing and installing the trunk torsion bar. • REMOVER (99099FJ000) can also be used.
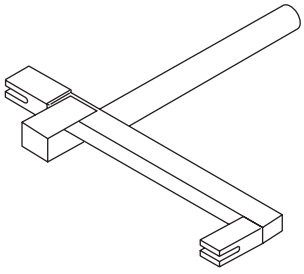 ST99099FJ000	99099FJ000	REMOVER	• Used for removing and installing the trunk torsion bar. • REMOVER (927780000) can also be used.

2. GENERAL TOOL

TOOL NAME	REMARKS
Support jack	Used for supporting door panel.
Clip remover	Used for removing various types of clips.

2. Front Hood

A: REMOVAL

CAUTION:
The hood COMPL - front is heavy. When removing and installing it, always work in a team of two or more persons.

1) Open the hood COMPL - front.
2) Remove the stay assembly - front hood.
   (1) Float the lock pin using a flat tip screwdriver, etc. and slide it.
   (2) Pull the mounting point of the stay assembly - front hood, and remove the stay assembly - front hood.

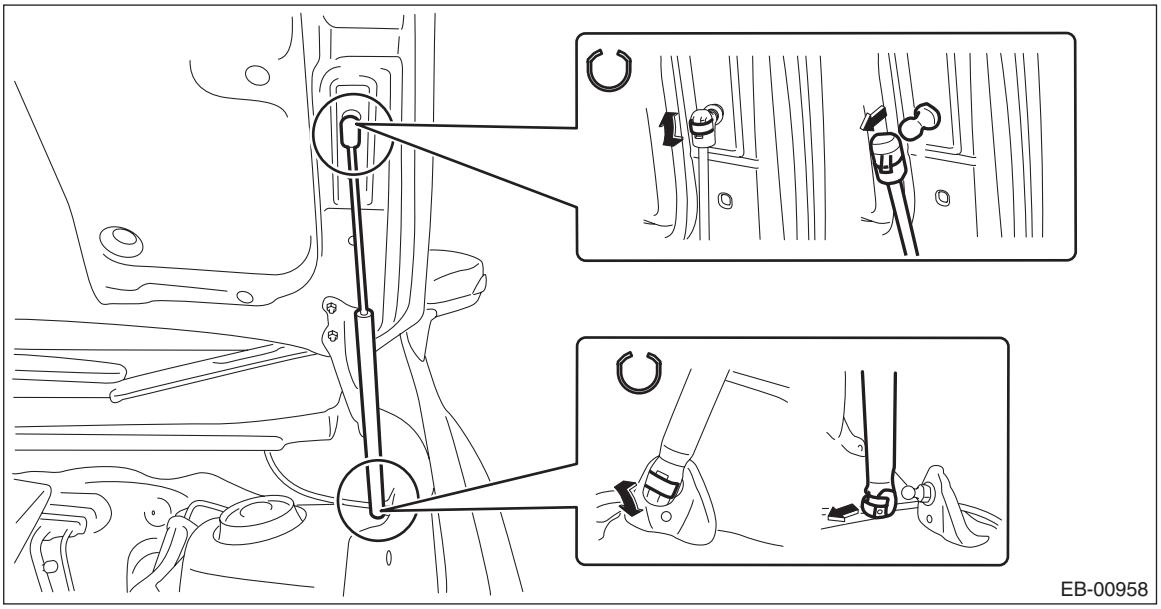

3) Remove the nut on the hood COMPL - front side, and remove the hood COMPL - front.

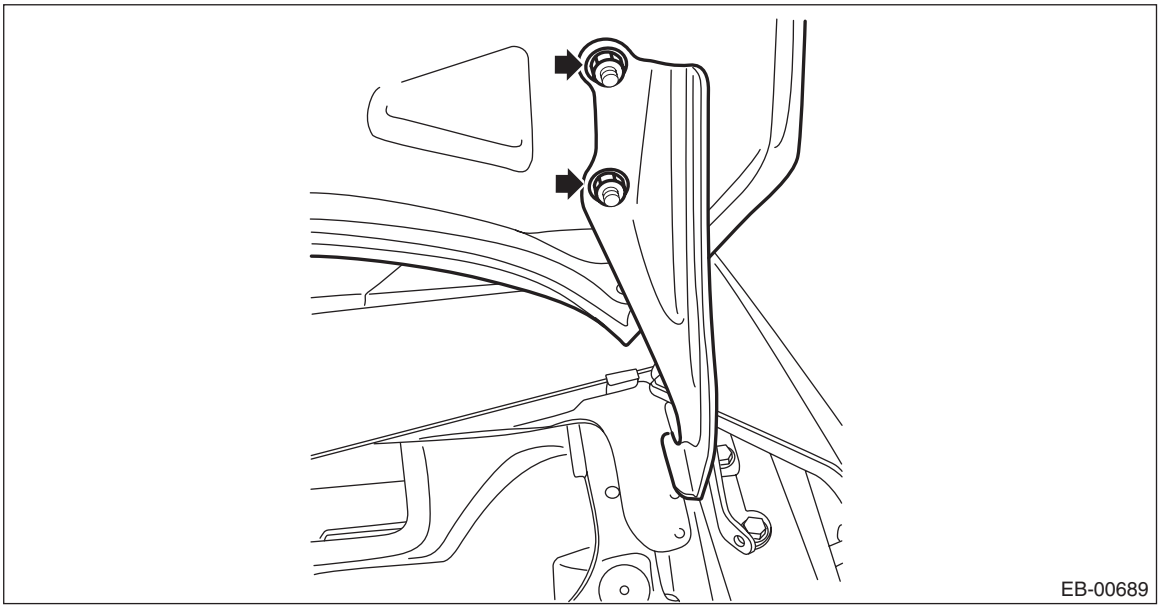

B: INSTALLATION

NOTE:
When the hood COMPL - front is replaced, adhere the label on the same position.
1) Temporarily fit the hinge COMPL - front hood around the original position on the vehicle body.
2) Install the hood COMPL - front to the hinge COMPL - front hood.

Tightening torque:
25 N·m (2.5 kgf-m, 18.4 ft-lb)
3) Install the stay assembly - front hood.
4) When temporarily fitting the fender COMPL - front and adjusting the clearance, make sure that a uniform clearance is created around the hood COMPL - front.

NOTE:
When installing the fender COMPL - front, make sure that a uniform clearance is created around it.
- Fender COMPL - front to Hood COMPL - front: <Ref. to EB-16, ADJUSTMENT, Front Hood.>
- Fender COMPL - front to Panel assembly - front door: <Ref. to EB-28, ADJUSTMENT, Front Door.>

5) Install the hinge COMPL - front hood.
(1) Tighten the bolts at the front side, and temporarily fit the bolts at the rear side.
(2) Remove the fender COMPL - front, and tighten to the specified torque.

Tightening torque:
25 N·m (2.5 kgf-m, 18.4 ft-lb)
6) Readjust the fender COMPL - front to install.

NOTE:
When installing the fender COMPL - front, make sure that a uniform clearance is created around it.
- Fender COMPL - front to Hood COMPL - front: <Ref. to EB-16, ADJUSTMENT, Front Hood.>
- Fender COMPL - front to Panel assembly - front door: <Ref. to EB-28, ADJUSTMENT, Front Door.>

C: DISASSEMBLY

CAUTION:
- **Do not damage the piston rods and oil seals of stay assembly - front hood.**
- **Never disassemble the stay assembly - front hood: They contain gas.**
- **The hood COMPL - front is heavy. When removing or installing the hood COMPL - front, stay assembly - front hood, and hinge COMPL - front hood, be sure to work in a team of two or more persons.**

1) Remove the clips, and remove the insulator - front hood.

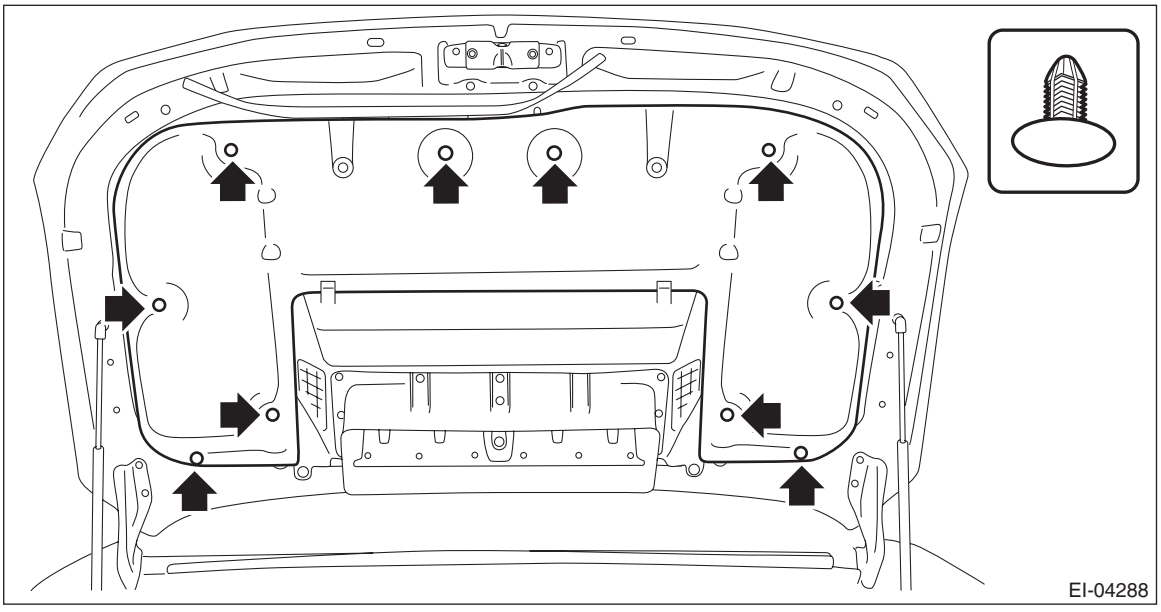

2) Remove the clips and bolts, and remove the duct - inner front hood.

- Except for STI model

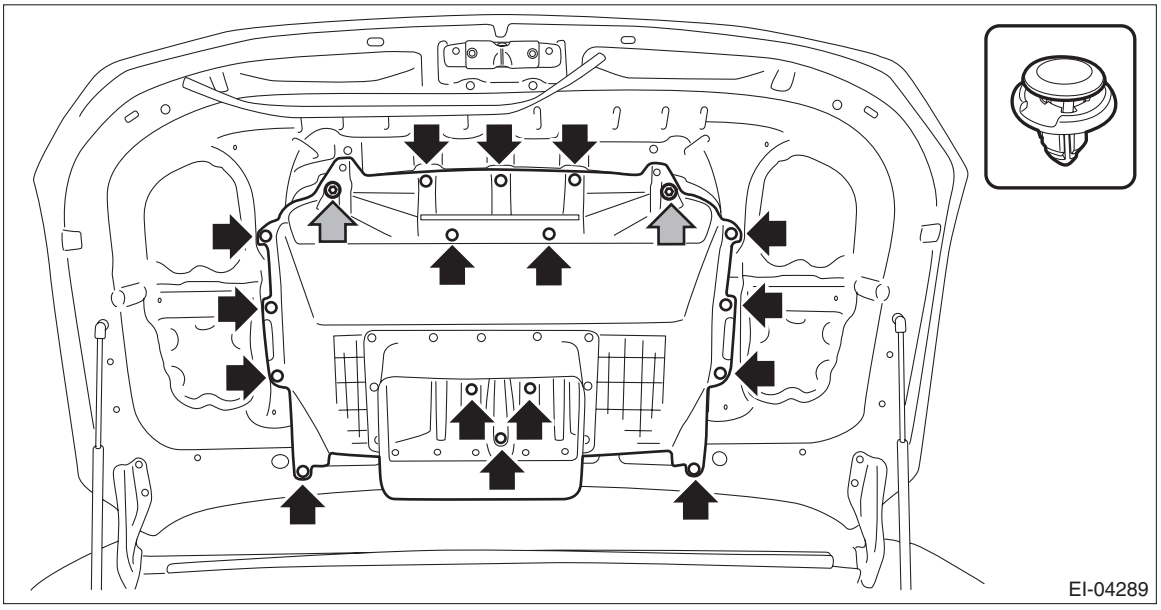

- STI model

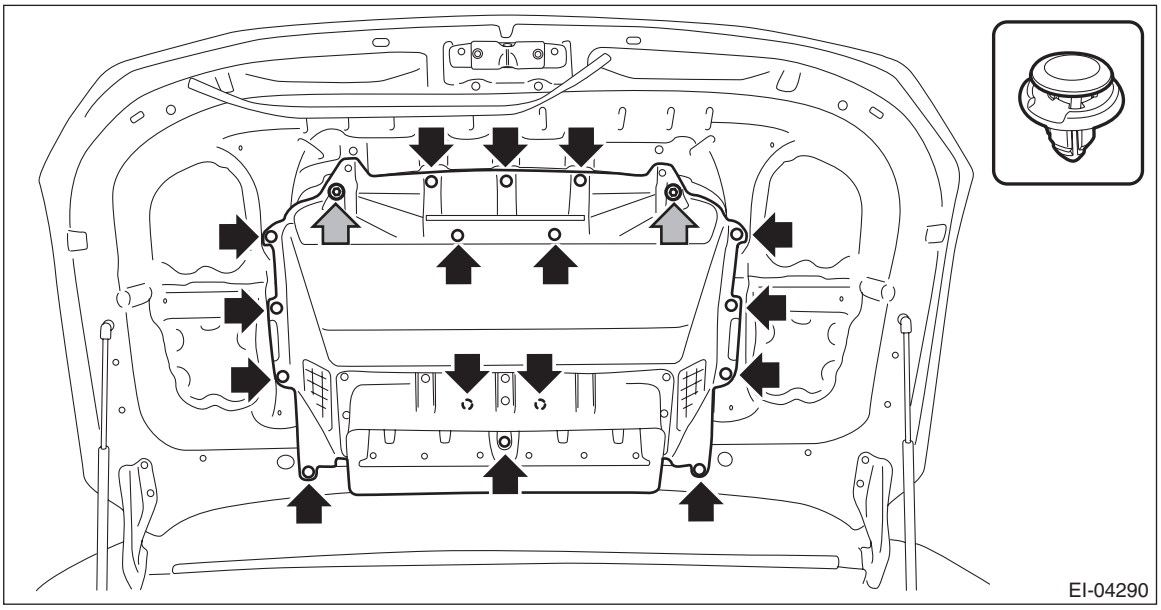

3) Release the nuts and clips, then remove the grille - front hood.

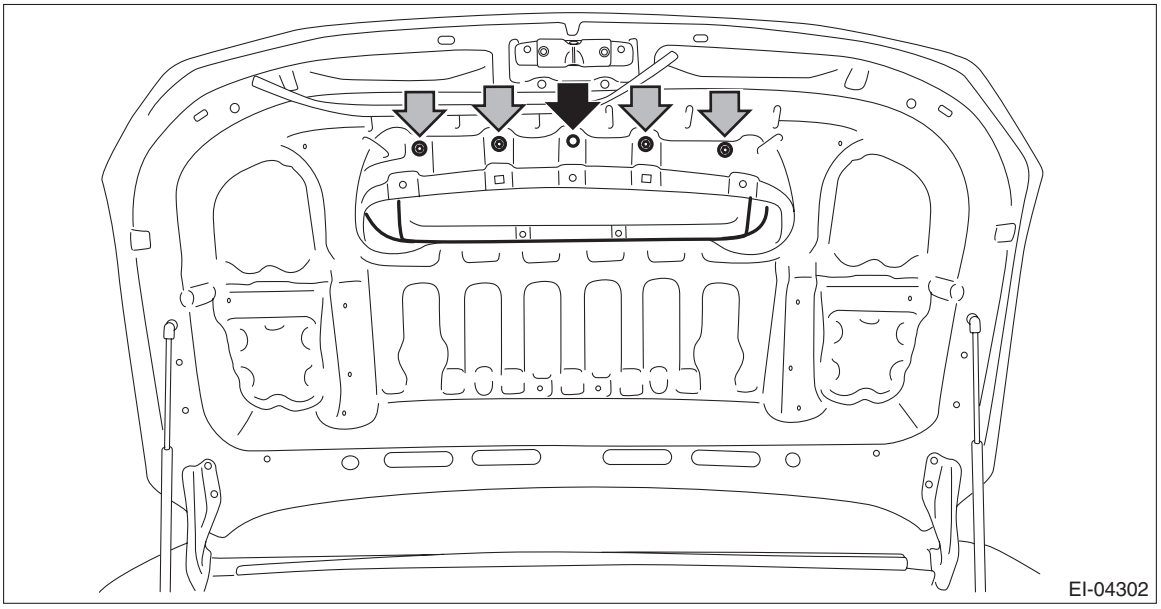

4) Remove the clip, and remove the seal - front duct.

CAUTION:
If the weather strip clip is removed with excessive force, the seal - front duct may be damaged. Be sure to use clip remover, etc. to remove.

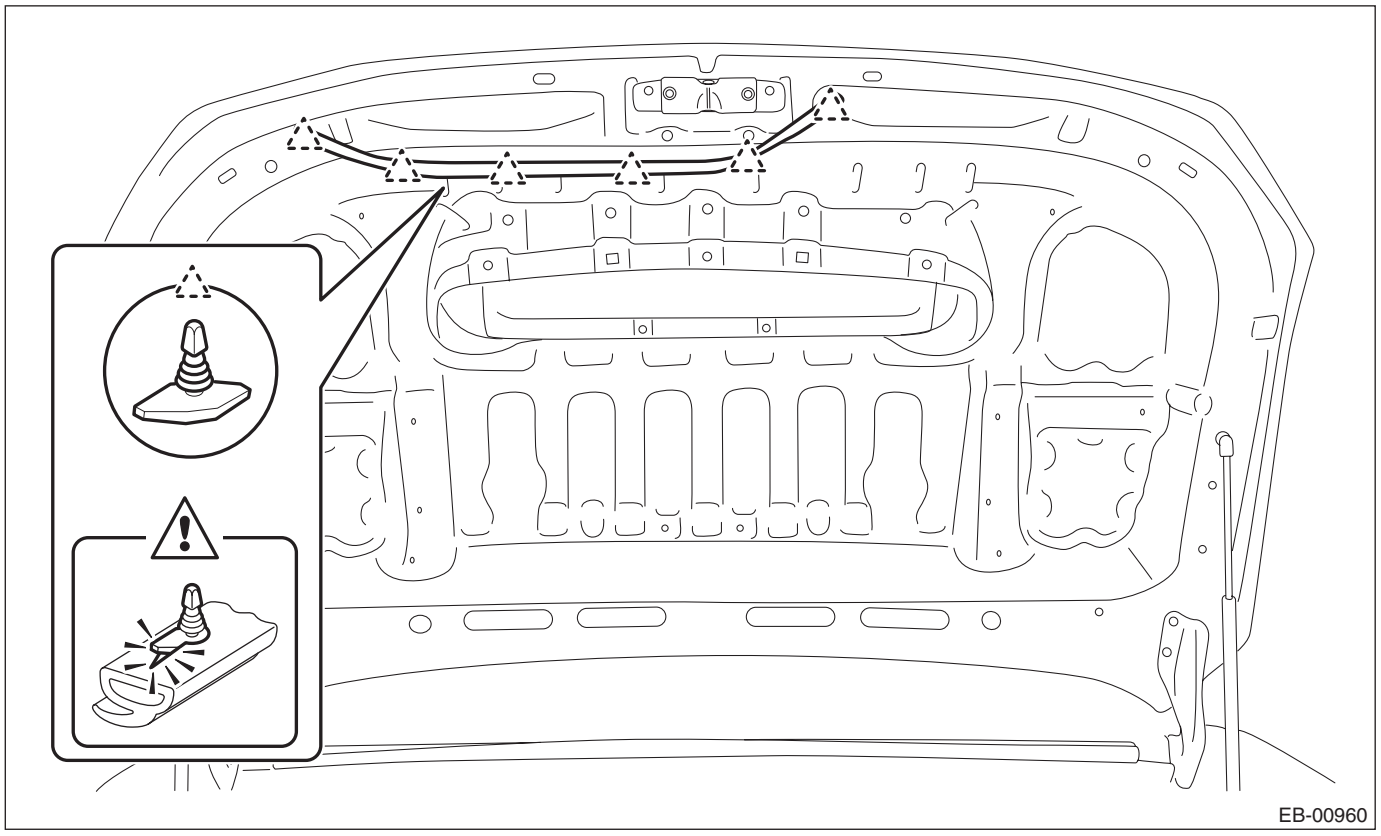

5) Make alignment marks (A), and remove the striker - front hood from the hood COMPL - front.

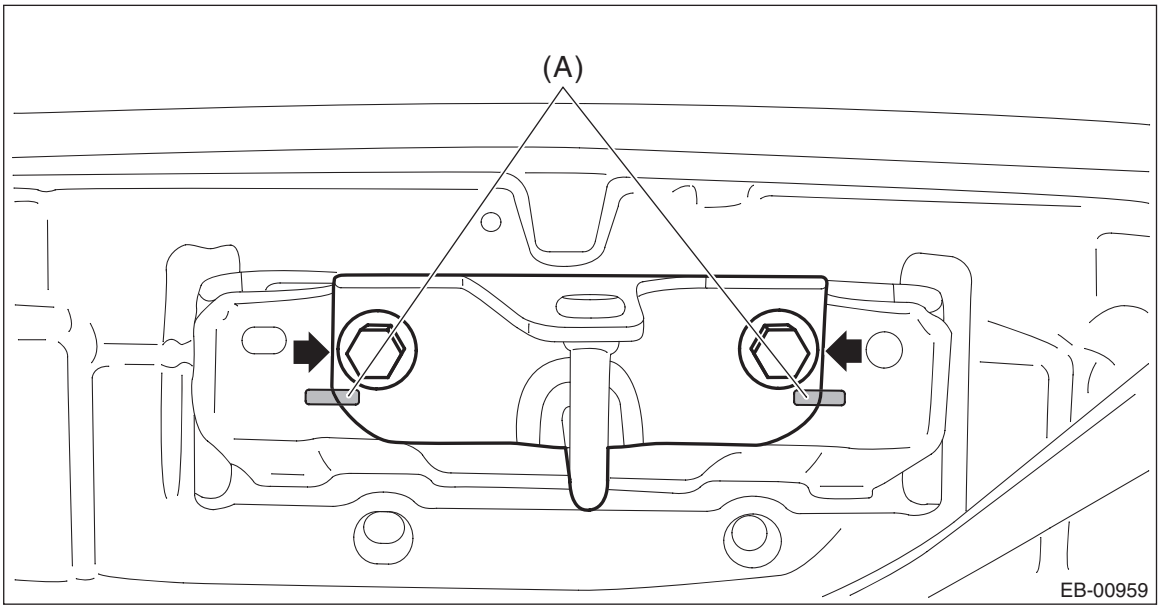

6) Remove the stay assembly - front hood from the body.
   (1) Float the lock pin using a flat tip screwdriver, etc. and slide it.
   (2) Pull the mounting point of the stay assembly - front hood, and remove the stay assembly - front hood.

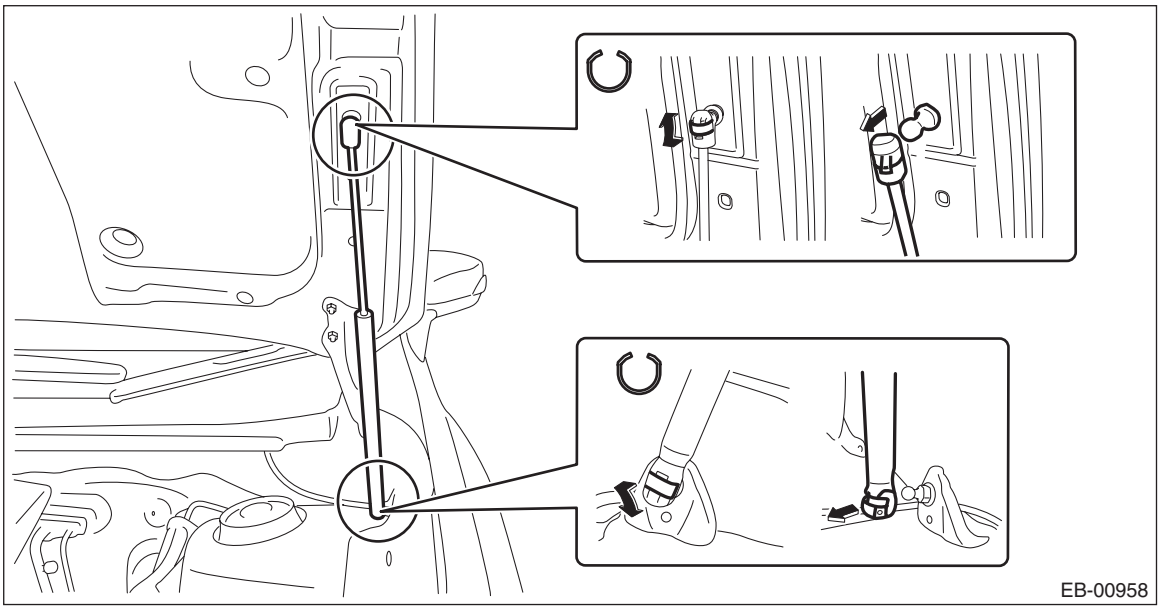

7) Remove the hinge COMPL - front hood from the body.

NOTE:
The hinge COMPL - front hood cannot be removed with the fender COMPL - front attached. Therefore, remove the fender COMPL - front beforehand.

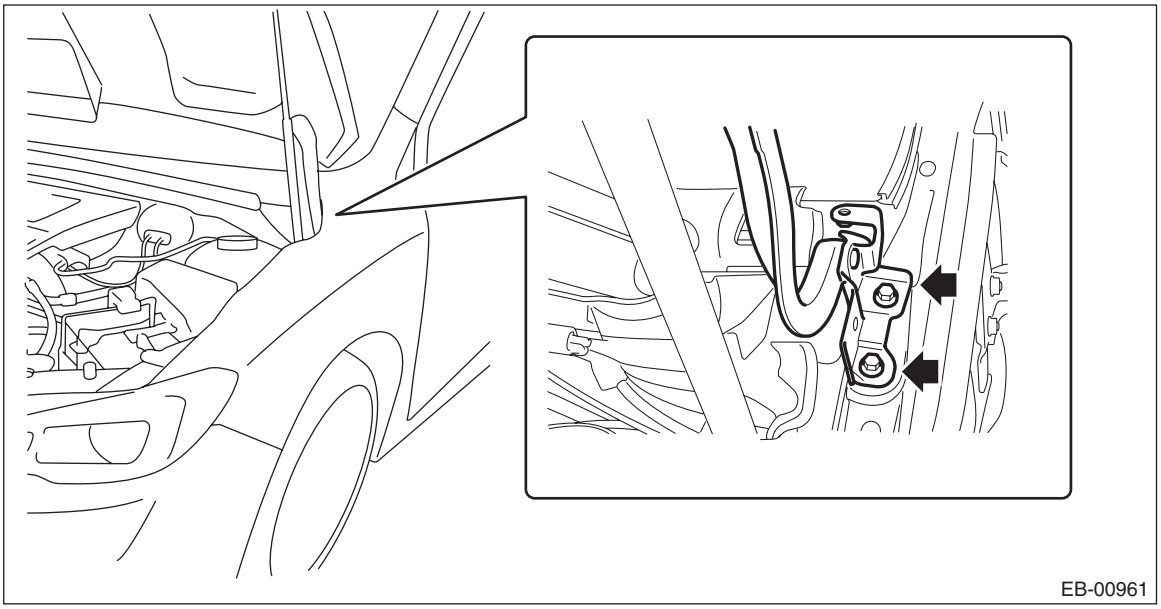

D: ASSEMBLY

1) Install the hinge COMPL - front hood.

Tightening torque:
25 N·m (2.5 kgf-m, 18.4 ft-lb)

2) Install the stay assembly - front hood.

Tightening torque:
20 N·m (2 kgf-m, 14.8 ft-lb)

3) Install the seal - front duct.
4) Install the duct - outer front hood.

Tightening torque:
4.5 N·m (0.5 kgf-m, 3.3 ft-lb)

5) Install the duct - inner front hood.

NOTE:
Securely insert the claws of the front hood duct.

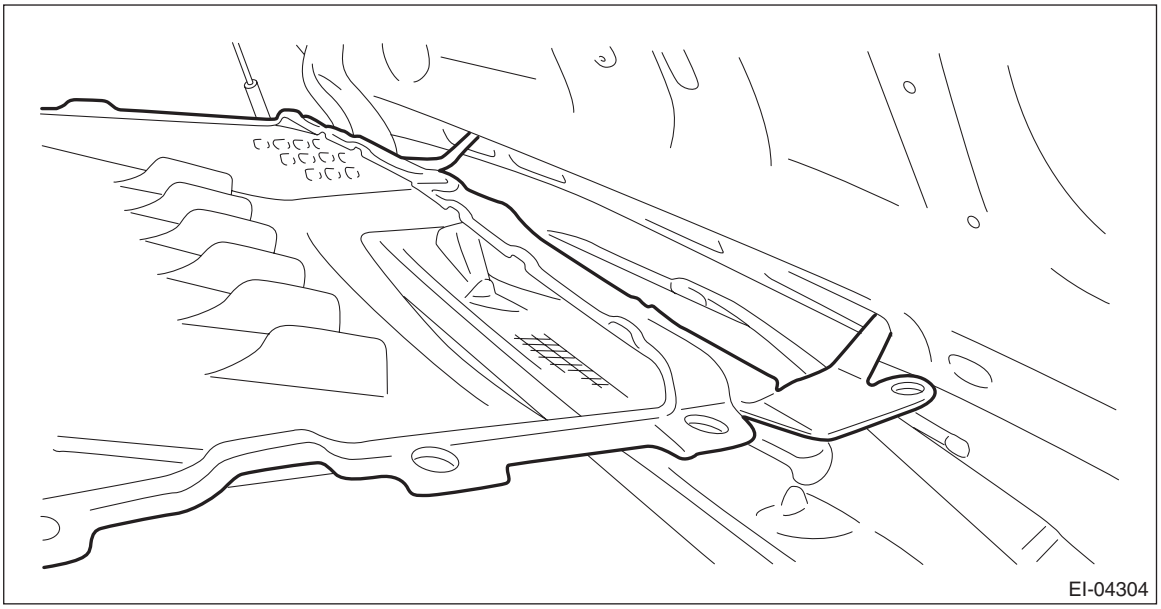

6) Install the insulator - front hood.
7) Align the alignment marks (A), and install the striker - front hood to the hood COMPL - front.

CAUTION:
When installing the striker - front hood, make sure that the front and rear sides are positioned in a correct direction.

NOTE:
It is not necessary to adjust the striker - front hood because there is no span of adjustable range.

Tightening torque:
33 N·m (3.4 kgf-m, 24.3 ft-lb)

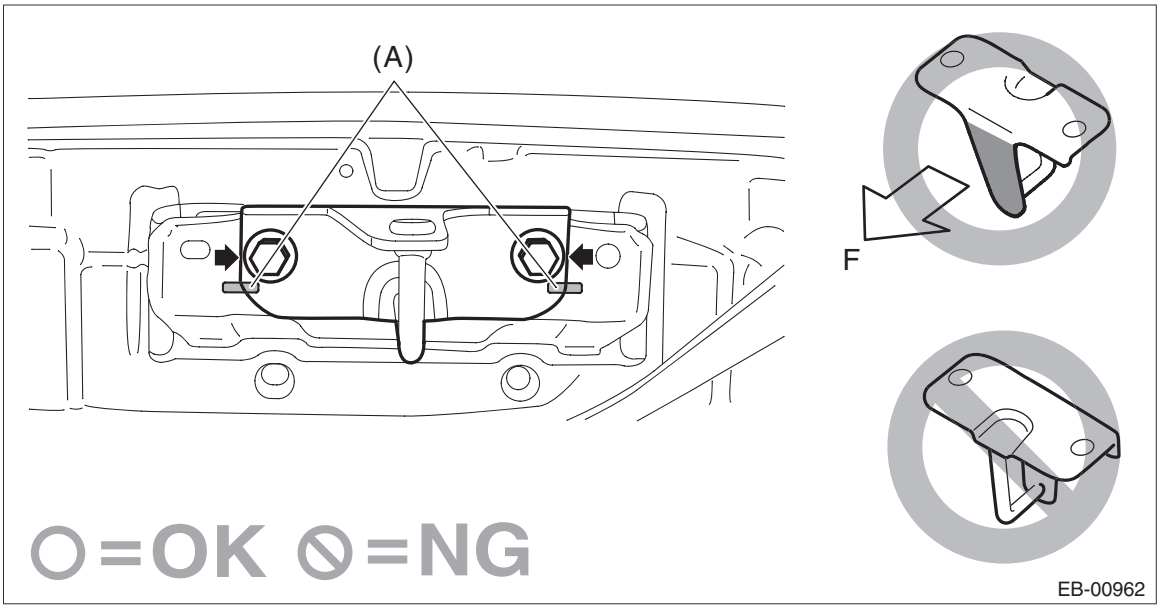

E: ADJUSTMENT

NOTE:
Adjustment should be performed on the fender COMPL - front, lock assembly - front hood and buffer - front hood, because adjustment cannot be performed on the hinge COMPL - front hood.

Adjust the clearance around the hood COMPL - front as follows.

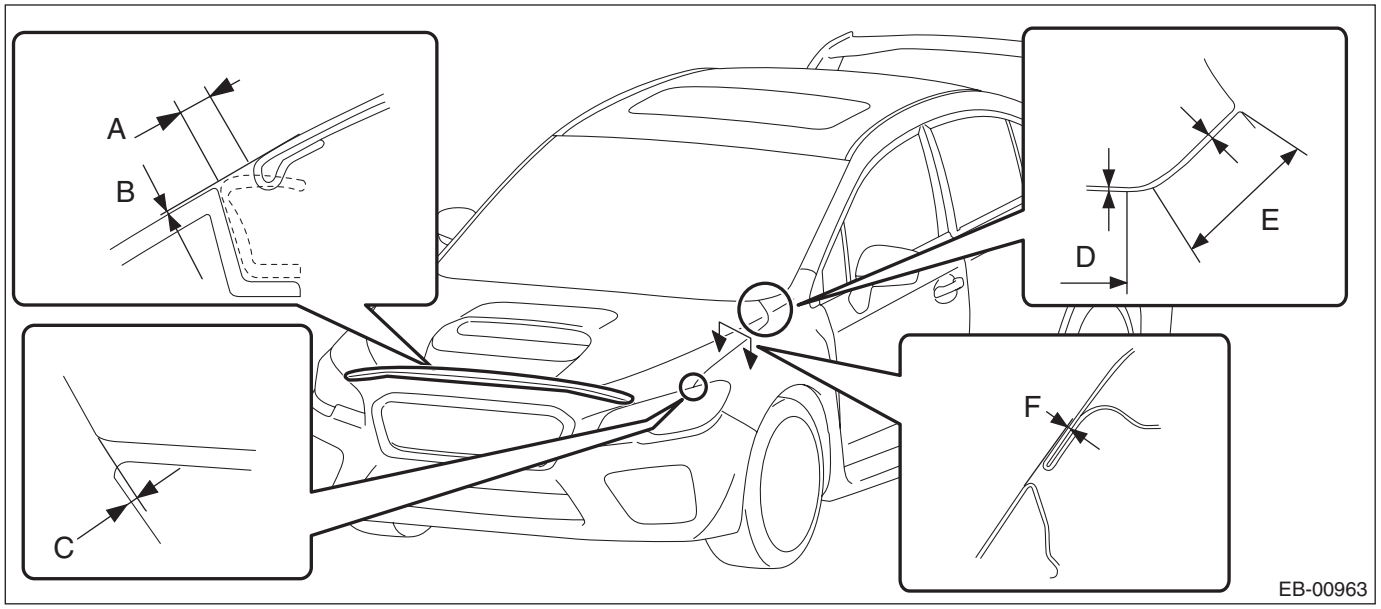

	Part	Standard
A	Hood COMPL - front to Bumper face front	4.5±2 mm (0.18±0.08 in)
B	Surface level gap between Hood COMPL - front and Bumper face front	0+1.5, –2 mm (0+0.06, –0.08 in)
C	Offset value: Hood COMPL - front to Front end of fender COMPL - front	0+0.5, –1 mm (0+0.02, –0.04 in)
D	Hood COMPL - front to Fender COMPL - front (from front end to just before curved portion)	3.5±1 mm (0.14±0.04 in)
E	Hood COMPL - front to Fender COMPL - front (from rear end to just before curved portion)	4.5±1 mm (0.18±0.04 in)
F	Surface level gap: Hood COMPL - front to Fender COMPL - front	0.5+0.5, –1 mm (0.02+0.02, –0.04 in)

1) Adjust the front end height of the hood COMPL - front. <Ref. to SL-54, ADJUSTMENT, Front Hood Lock Assembly.>
2) Rotate the buffer - front hood of the hood COMPL - front to adjust the height.

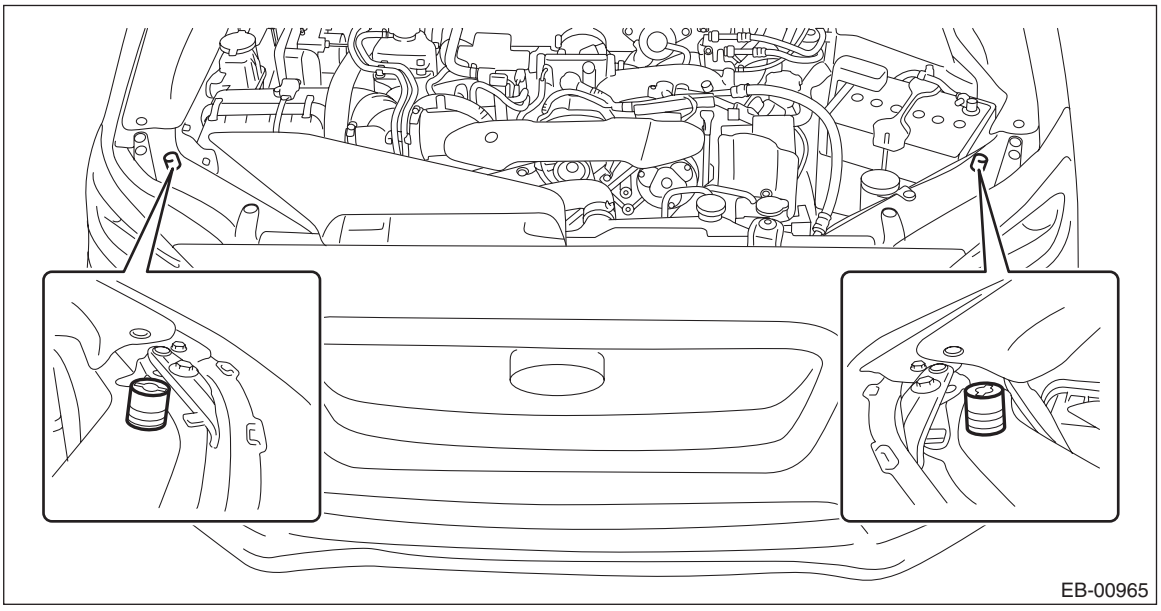

3. Front Fender

A: REMOVAL

1. FENDER PANEL

1) Disconnect the ground cable from battery. <Ref. to NT-6, BATTERY, NOTE, Note.>

NOTE:
For model with battery sensor, disconnect the ground terminal from battery sensor.

2) Remove the bumper face - front. <Ref. to EI-31, REMOVAL, Front Bumper.>
3) Remove the light assembly - head. <Ref. to LI-25, REMOVAL, Headlight Assembly.>
4) Remove the cover - front fender.
   (1) Remove the clip.
   (2) Release the claws by pulling them forward, and remove the cover - front fender.

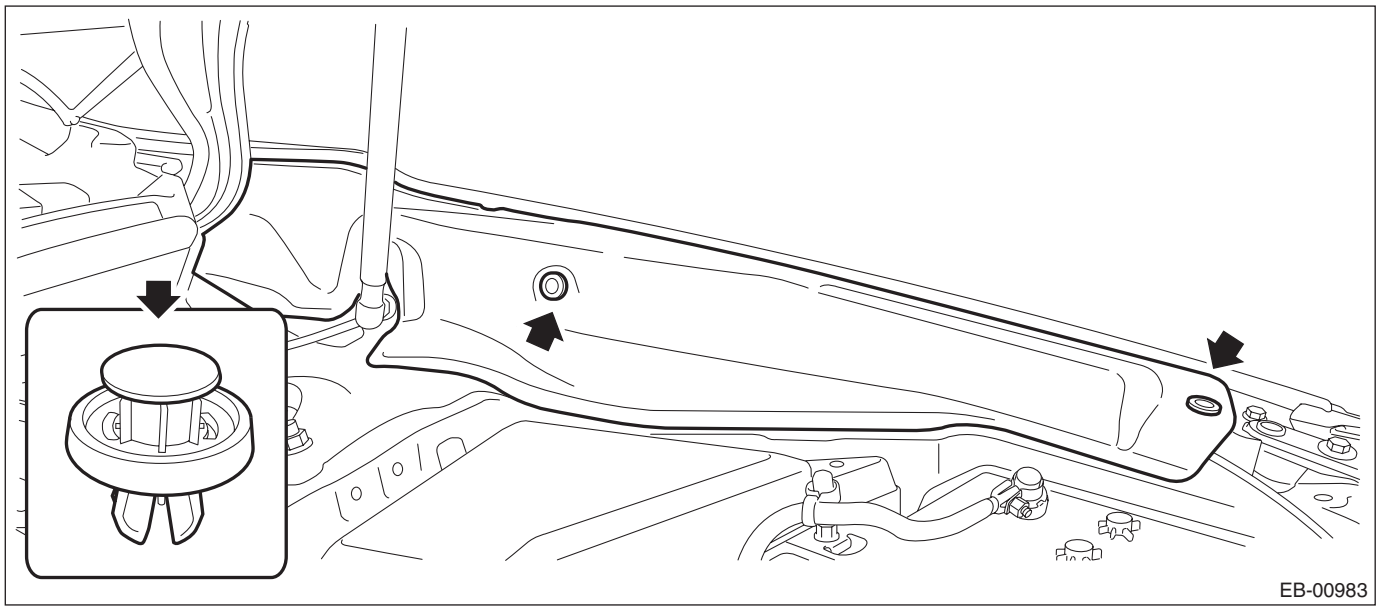

5) Remove the mud guard - front. <Ref. to EI-24, REMOVAL, Mud Guard.>
6) Remove the spoiler assembly - side. <Ref. to EI-50, REMOVAL, Side Garnish.>
7) Remove the cover - A pillar assembly.

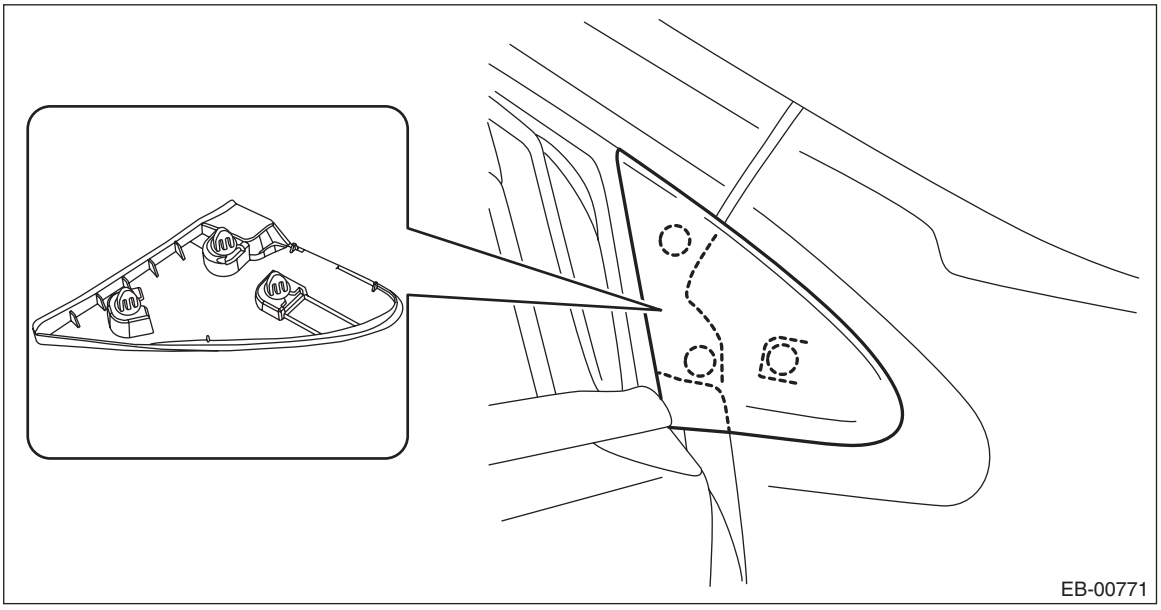

8) Remove the garnish assembly - fender. <Ref. to EB-19, FENDER GARNISH, REMOVAL, Front Fender.>

9) Remove the fender COMPL - front.

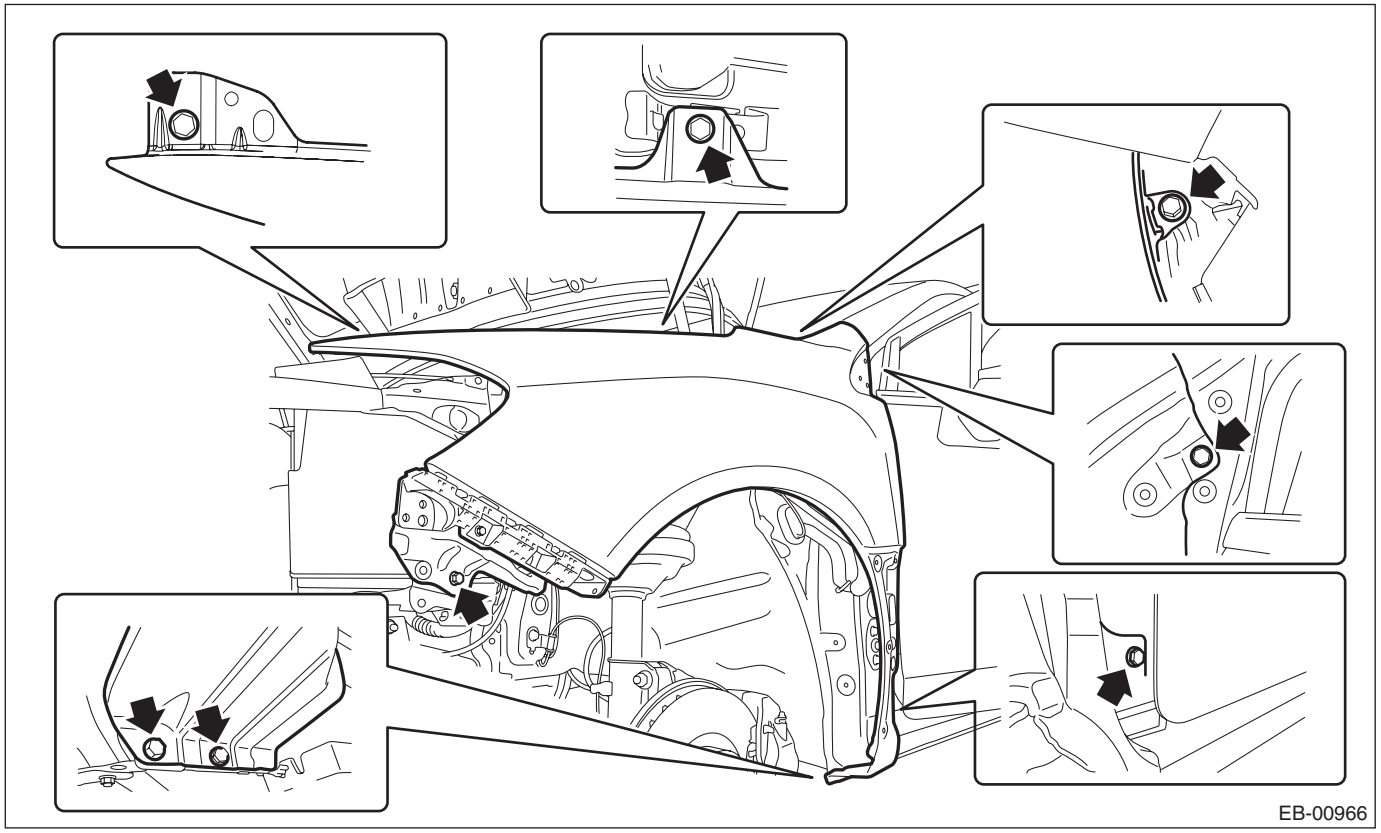

2. FENDER GARNISH

1) Remove the mud guard - front. <Ref. to EI-24, REMOVAL, Mud Guard.>
2) Remove the spoiler assembly - side. <Ref. to EI-50, REMOVAL, Side Garnish.>

3) Remove the garnish assembly - fender.

CAUTION:
Forcibly removing the garnish assembly - fender may damage the clips and the garnish assembly - fender.

NOTE:
• For easy removal of the clips, pinch the claw of clip from the backside of fender COMPL - front with pliers, etc.
• Because there is a claw (a) at the front end of the garnish assembly - fender, turn from the back side to remove.

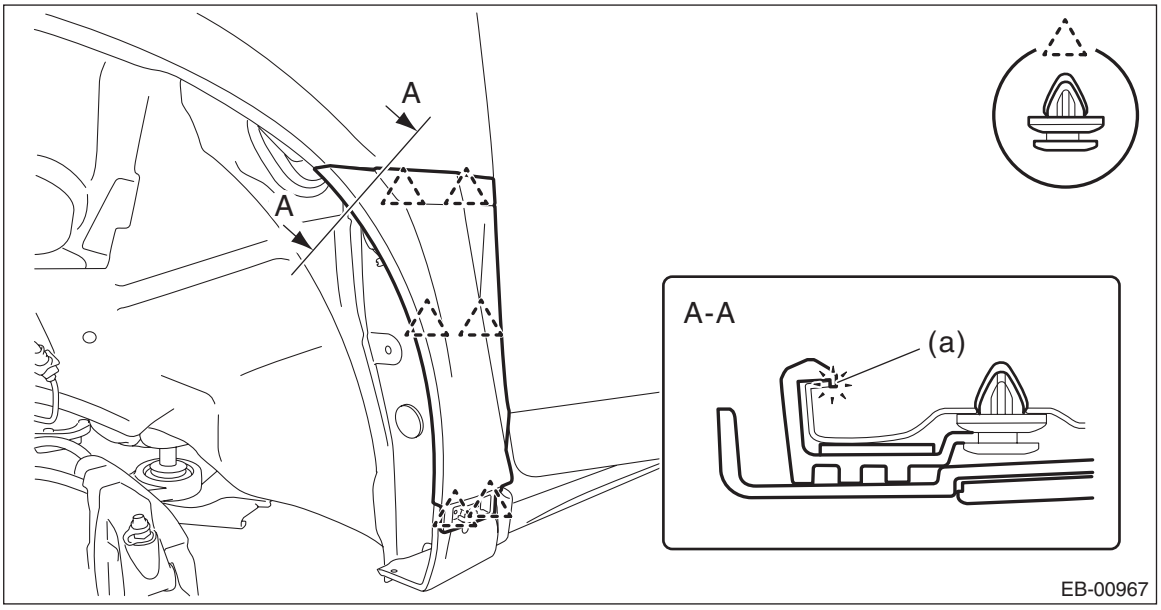

B: INSTALLATION

1. FENDER PANEL

CAUTION:
• Install the bumper face - front so that the front end of the under cover (b) comes inside the bumper face - front (a), and the front end of the mud guard (c) comes outside the bumper face - front (a).

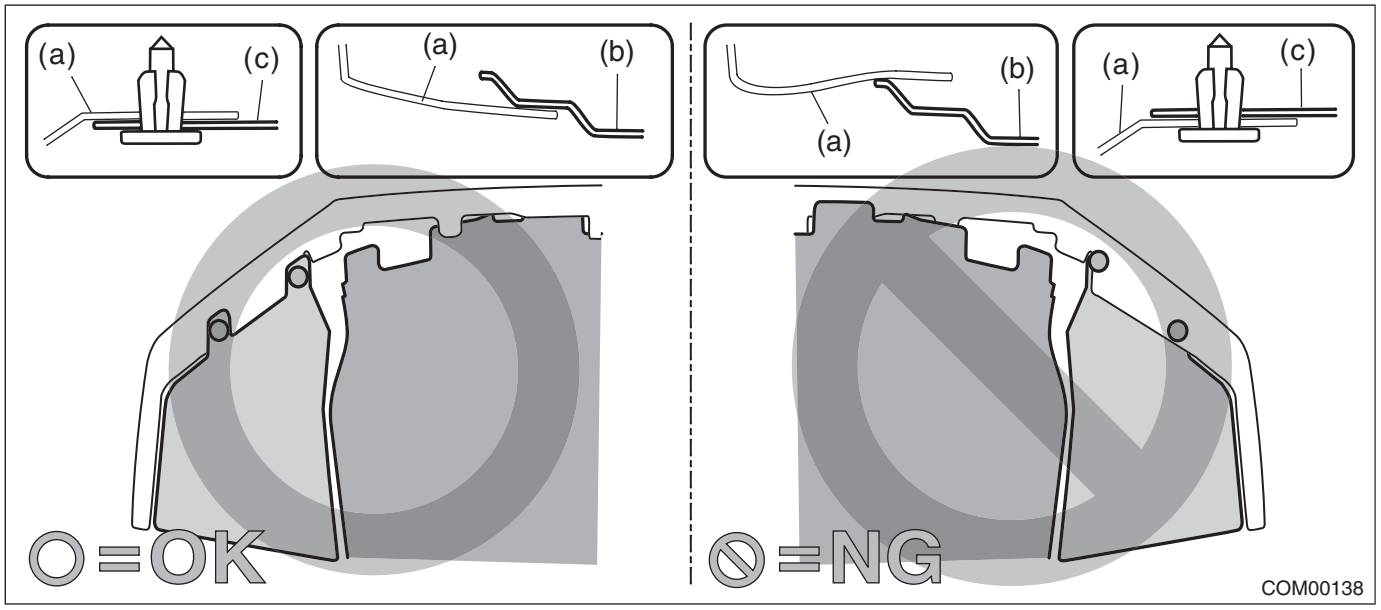

• **Before installing the bumper face, match the claws on the bracket - front bumper with the engaging position of flange section on the bumper face side. If the engaging position is not correct, the flange section may be broken or the clearance between fender panel and bumper face may not be uniform.**

1) Install the fender COMPL - front.

Tightening torque:
7.5 N·m (0.8 kgf-m, 5.5 ft-lb)

NOTE:
When installing the fender COMPL - front, make sure that a uniform clearance is created around it.
• Fender COMPL - front to Hood COMPL - front: <Ref. to EB-16, ADJUSTMENT, Front Hood.>
• Fender COMPL - front to Panel assembly - front door: <Ref. to EB-28, ADJUSTMENT, Front Door.>

2) Install the cover - A pillar assembly.
3) Install the garnish assembly - fender. <Ref. to EB-21, FENDER GARNISH, INSTALLATION, Front Fender.>
4) Install the spoiler assembly - side. <Ref. to EI-51, INSTALLATION, Side Garnish.>
5) Install the mud guard - front.
6) Install the light assembly - head.

Tightening torque:
7.5 N·m (0.8 kgf-m, 5.5 ft-lb)

7) Install the bumper face - front. <Ref. to EI-34, INSTALLATION, Front Bumper.>
8) Connect the battery ground terminal. <Ref. to NT-6, BATTERY, NOTE, Note.>
9) Adjust the headlight beam and fog light beam.
• Adjust the headlight beam. <Ref. to LI-29, HEADLIGHT BEAM ADJUSTMENT, ADJUSTMENT, Headlight Assembly.>
• Adjust the fog light beam. (Model with fog light) <Ref. to LI-45, FOG LIGHT AIMING, ADJUSTMENT, Front Fog Light Assembly.>

2. FENDER GARNISH

1) Install the garnish assembly - fender.
2) Install the spoiler assembly - side. <Ref. to EI-51, INSTALLATION, Side Garnish.>
3) Install the mud guard - front.

CAUTION:
Install the mud guard - front so that the front end of the mud guard (b) comes outside the bumper face - front (a).

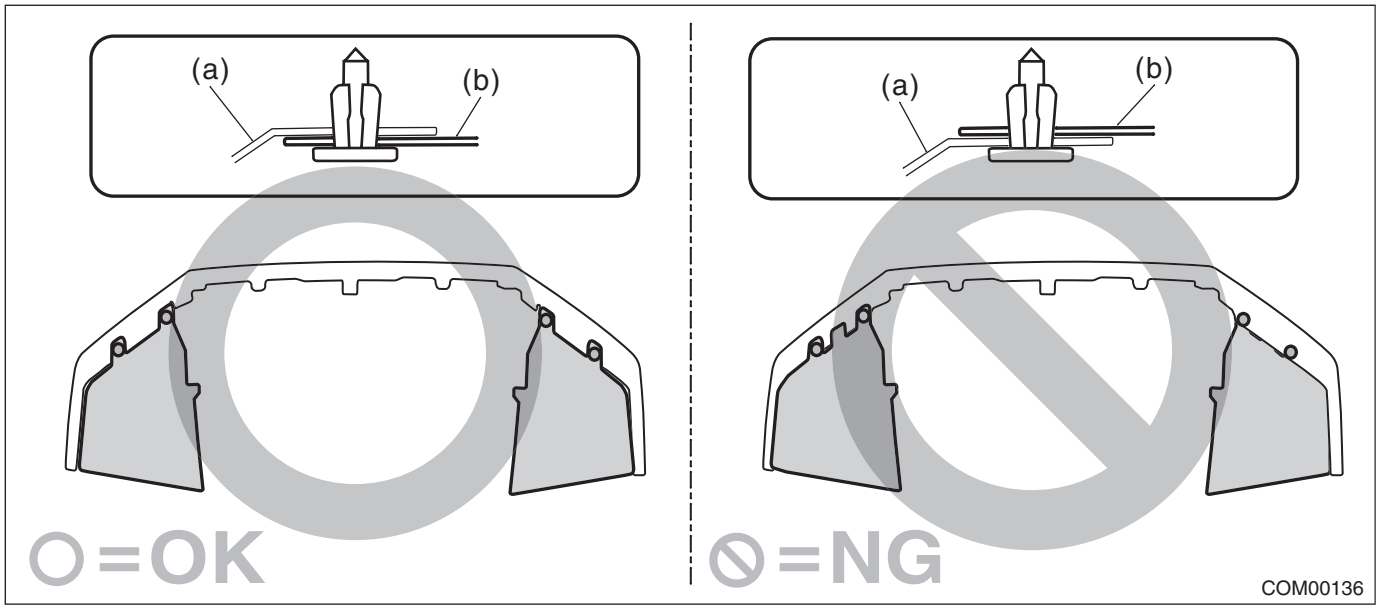

4. Front Door

A: REMOVAL

1. FRONT DOOR PANEL

1) Disconnect the ground cable from battery and wait for at least 60 seconds before starting work. <Ref. to NT-6, BATTERY, NOTE, Note.>

NOTE:
For model with battery sensor, disconnect the ground terminal from battery sensor.
2) Remove the trim panel - front door. <Ref. to EI-57, FRONT DOOR, REMOVAL, Door Trim.>
3) Remove the sealing cover - front door. <Ref. to EB-30, REMOVAL, Front Sealing Cover.>
4) Remove the outer mirror assembly. <Ref. to GW-27, REMOVAL, Outer Mirror Assembly.>
5) Remove the front door speaker assembly. <Ref. to ET-39, DOOR SPEAKER, REMOVAL, Front Speaker.>
6) Remove the cover B pillar - front door INN.

CAUTION:
- **Always replace with a new part, because engagement of the claw weakens.**
- **Do not damage the sash while removing.**

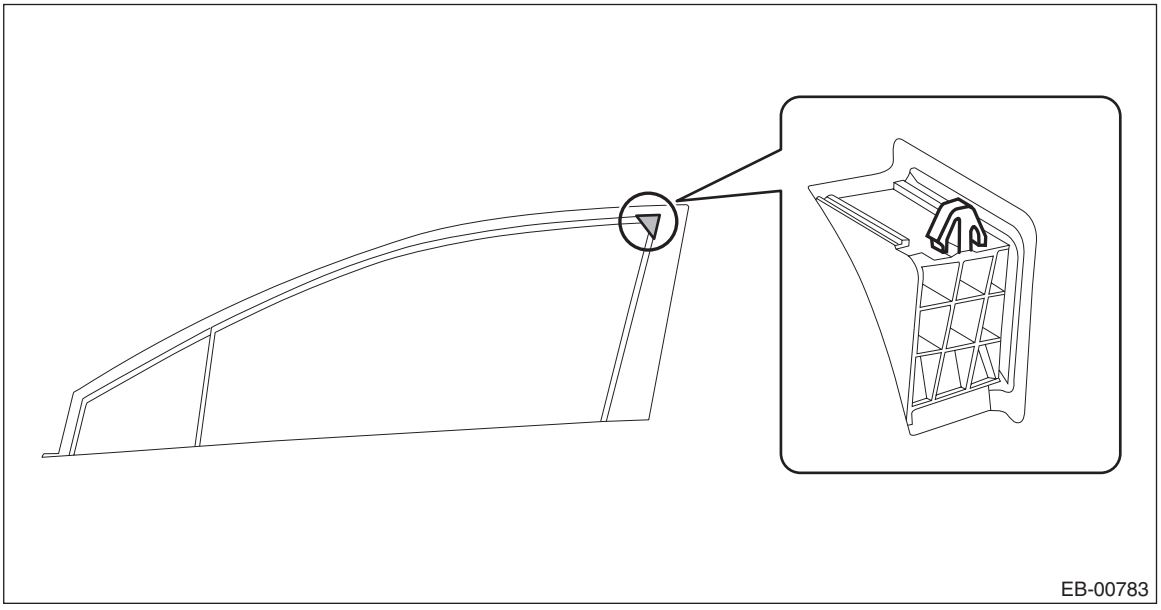

7) Remove the front door impact sensor assembly. <Ref. to AB-51, REMOVAL, Front Door Impact Sensor.>
8) Remove the glass assembly - front door and the glass - front door partition. <Ref. to GW-20, REMOVAL, Front Door Glass.>
9) Remove the door sash tape. <Ref. to EB-39, REMOVAL, Door Sash Tape.>
10) Remove the regulator & motor assembly - front of the front door. <Ref. to GW-24, REMOVAL, Front Regulator and Motor Assembly.>
11) Remove the latch and actuator assembly - front. <Ref. to SL-37, REMOVAL, Front Door Latch and Door Lock Actuator Assembly.>
12) Remove the handle - door outer. <Ref. to SL-33, REMOVAL, Front Outer Handle.>
13) Remove the weather strip - front door. <Ref. to EB-55, REPLACEMENT, Weather Strip.>

14) Remove the bolts and nuts, and then detach the checker assembly - front door.

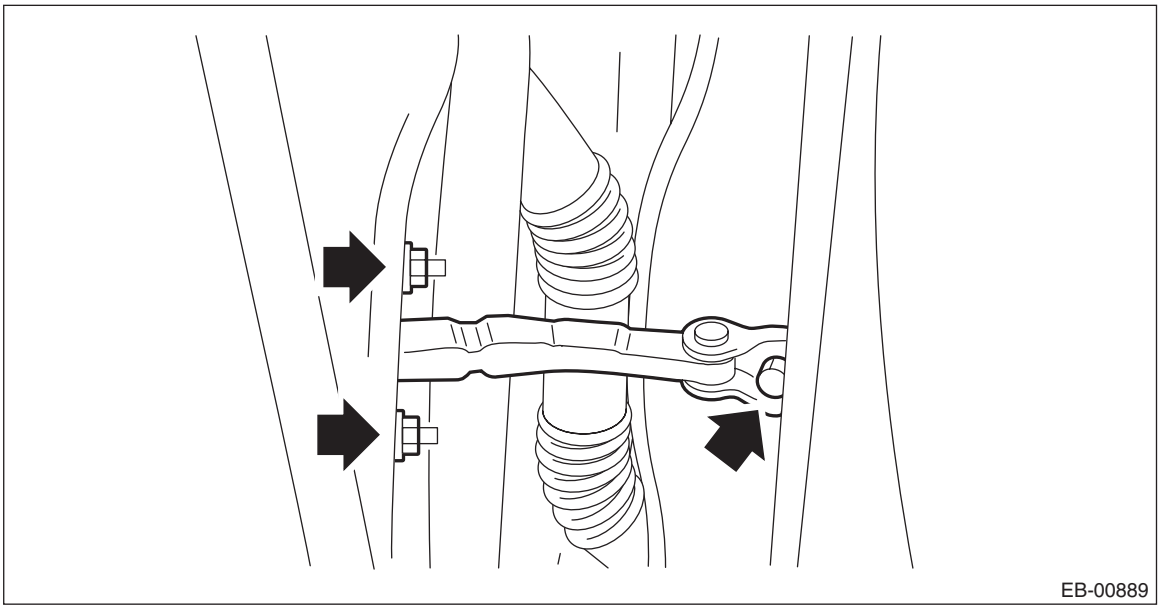

15) Remove the cover side sill - front INN and cover side sill - front. <Ref. to EI-84, REMOVAL, Lower Inner Trim.>

16) Disconnect the front door harness connectors.

(1) Disconnect the connector of door harness from body harness.

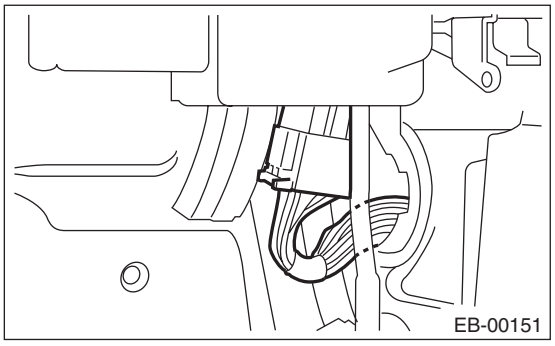

(2) Push in the claws to remove the grommet, and pull out the door harness connector.

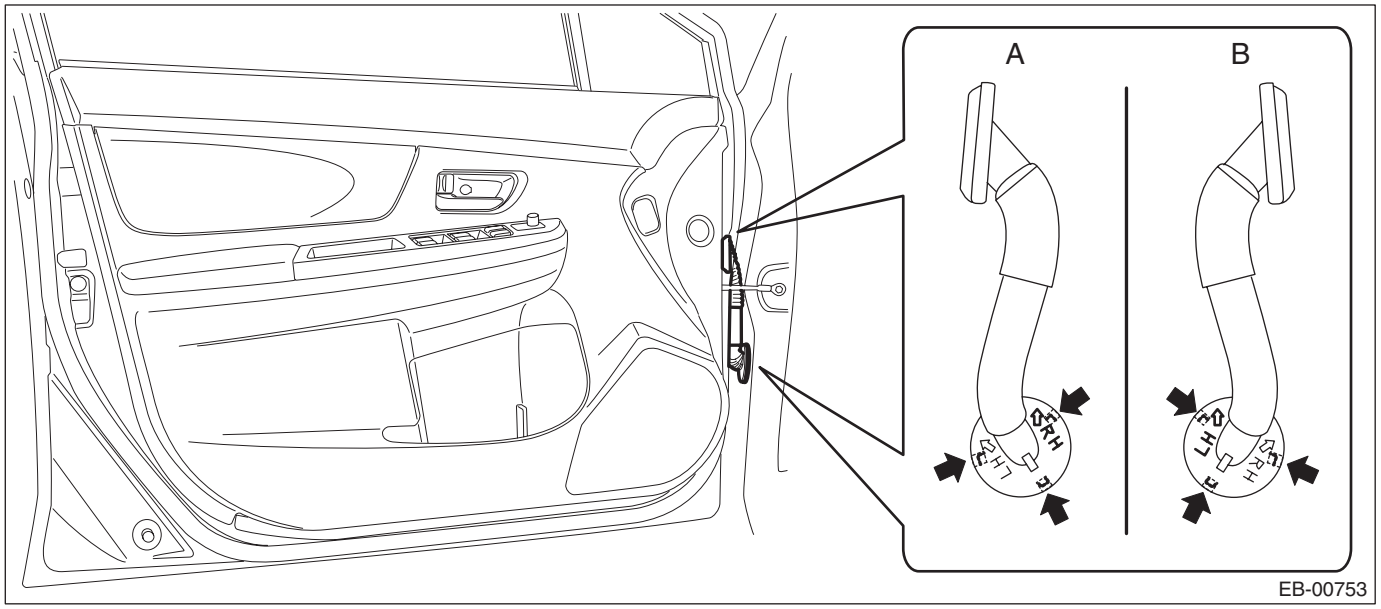

A	Driver's side
B	Passenger's side

17) Before removing the panel assembly - front door, make the following preparations.

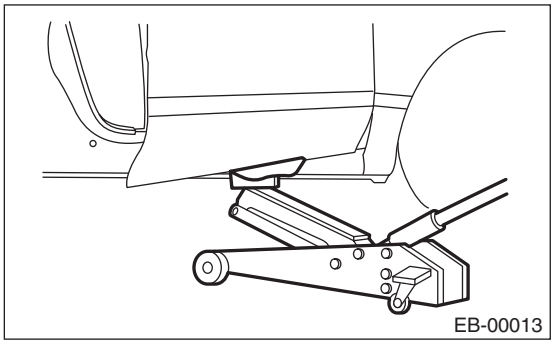

(1) Put a wooden block on a floor jack and place the jack under the panel assembly - front door.
(2) Support the panel assembly - front door with the jack to protect it from damage.

CAUTION:
Do not excessively lift the panel assembly - front door with the floor jack. The door hinges may be damaged.

18) Remove the bolts on the side of the panel assembly - front door of the upper hinge - front door and the lower hinge - front door to remove the panel assembly - front door.

CAUTION:
The panel assembly - front door is heavy. When removing and installing it, always work in a team of two or more persons.

2. FRONT DOOR HINGE

1) Disconnect the ground cable from battery and wait for at least 60 seconds before starting work. <Ref. to NT-6, BATTERY, NOTE, Note.>

NOTE:
For model with battery sensor, disconnect the ground terminal from battery sensor.

2) Remove the cover side sill - front INN and cover side sill - front. <Ref. to EI-84, REMOVAL, Lower Inner Trim.>

3) Disconnect the front door harness connectors.
(1) Disconnect the connector of door harness from body harness.

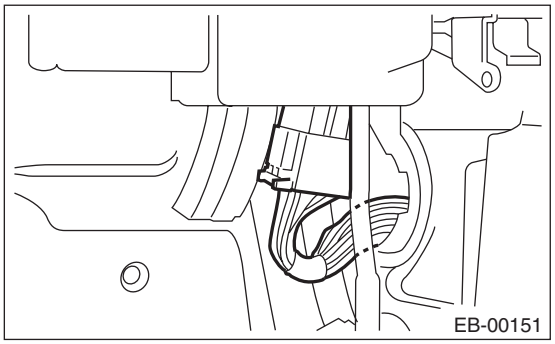

(2) Push in the claws to remove the grommet, and pull out the door harness connector.

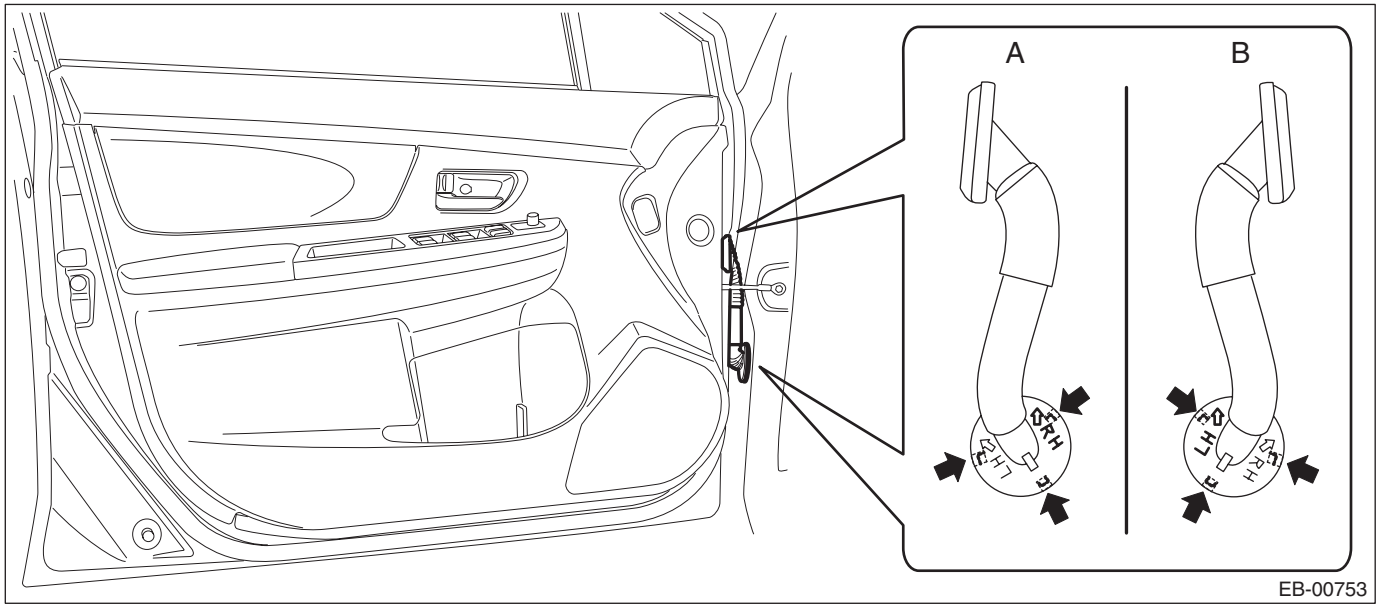

A	Driver's side
B	Passenger's side

4) Remove the bolts on the vehicle side to disconnect the checker assembly - front door.

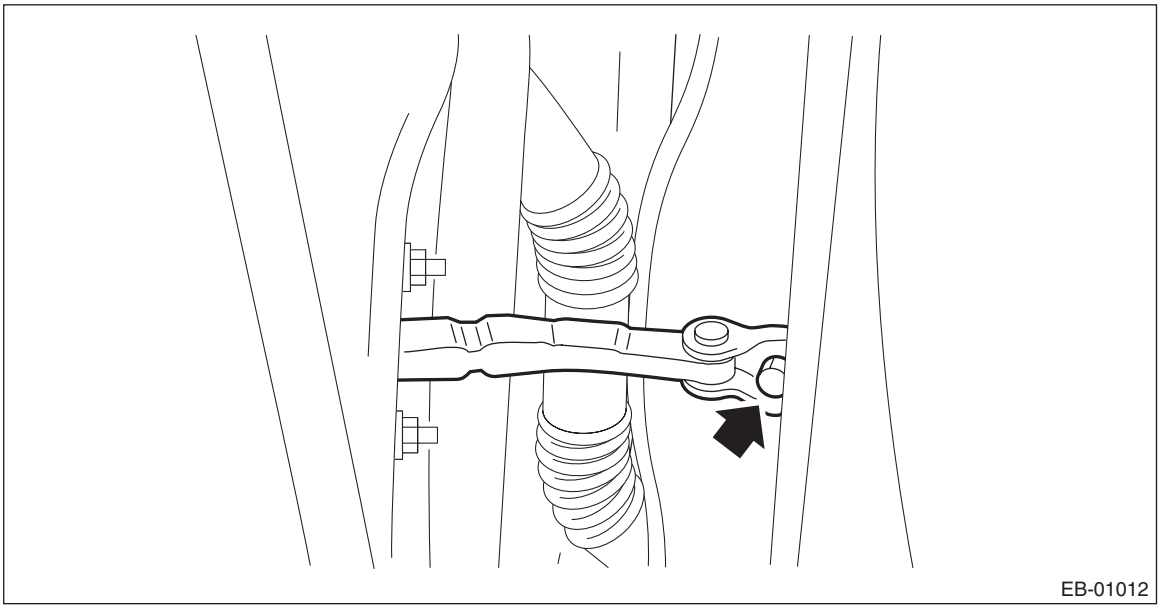

5) Before removing the door hinge, make the following preparations.

CAUTION:
• The panel assembly - front door is heavy. When removing and installing it, always work in a team of two or more persons.
• Do not excessively lift the panel assembly - front door with the floor jack. The door hinges may be damaged.

(1) Put a wooden block on a floor jack and place the jack under the panel assembly - front door.
(2) Support the panel assembly - front door with the jack to protect it from damage.

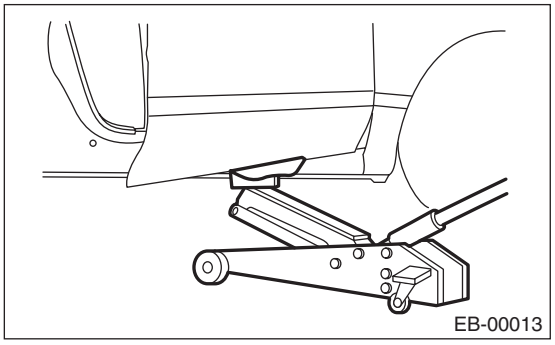

6) Remove the bolts on the side of the panel assembly - front door of the upper hinge - front door or the lower hinge - front door.

CAUTION:
Do not remove the upper hinge - front door and the lower hinge - front door at the same time.
7) Remove the hinge - front door from the vehicle.

B: INSTALLATION

1. FRONT DOOR PANEL

1) Put a wooden block and the like on a jack and place the panel assembly - front door on it.

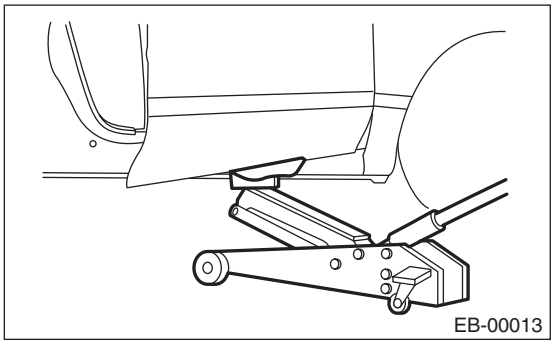

2) Adjust the height by the jack, and temporarily install the panel assembly - front door to the upper hinge - front door and the lower hinge - front door.

NOTE:
• When installing the panel assembly - front door, make sure that a uniform clearance is created around the panel.
• Perform installation while paying attention to the assembly direction of the grommet.

3) Adjust the clearance around the panel assembly - front door. <Ref. to EB-28, ADJUSTMENT, Front Door.>
4) Tighten the mounting bolts of the panel assembly - front door to the specified torque.

Tightening torque:
25 N·m (2.5 kgf-m, 18.4 ft-lb)

5) Tighten the bolts and nuts of the checker assembly - front door.

Tightening torque:
Refer to "COMPONENT" of "General Description". <Ref. to EB-4, FRONT DOOR, COMPONENT, General Description.>

6) Attach the door sash tape. <Ref. to EB-41, INSTALLATION, Door Sash Tape.>
7) Before installing each part, check the following items.
- Rod of the latch and actuator assembly - front is free from deformation.
- Grease is applied sufficiently to the rod joints of the latch and actuator assembly - front.
- Cable of the latch and actuator assembly - front is free from deformation such as fray.
- Grease is applied sufficiently to the cable joints of the latch and actuator assembly - front.

8) Install door internal parts in the reverse order of removal.
- Weather strip - front door
- Handle - door outer

Tightening torque:
7.5 N·m (0.8 kgf-m, 5.5 ft-lb)
- Latch & actuator assembly - front

Tightening torque:
6.5 N·m (0.7 kgf-m, 4.8 ft-lb)
- Regulator & motor assembly - front for the front door

Tightening torque:
7.5 N·m (0.8 kgf-m, 5.5 ft-lb)
- Running channel - front door

CAUTION:
Check that the running channel - door is securely fixed to the panel assembly - front door and to the sash COMPL - partition.
- Glass assembly - front door, and glass - front door partition

Tightening torque:
7.5 N·m (0.8 kgf-m, 5.5 ft-lb)
9) Connect door harness connector, and install the cover side sill - front. <Ref. to EI-87, INSTALLATION, Lower Inner Trim.>
10) Install the front door impact sensor.

CAUTION:
Do not reuse the bolt and nut.
Always replace with the specified new bolts and nuts.

Tightening torque:
7.5 N·m (0.8 kgf-m, 5.5 ft-lb)
11) Install the cover B pillar - front door INN.

CAUTION:
Always replace with a new part, because engagement of the claw weakens.
12) Install the front door speaker assembly.
13) Install the outer mirror assembly.

Tightening torque:
7.5 N·m (0.8 kgf-m, 5.5 ft-lb)
14) Install the sealing cover. <Ref. to EB-30, INSTALLATION, Front Sealing Cover.>
15) Install the trim panel - front door. <Ref. to EI-59, INSTALLATION, Door Trim.>
16) Connect the battery ground terminal. <Ref. to NT-6, BATTERY, NOTE, Note.>

2. FRONT DOOR HINGE

1) Apply grease to the sliding area of door hinges, and install the door hinge to vehicle.

Tightening torque:
30 N·m (3.1 kgf-m, 22.1 ft-lb)

2) Adjust the height by the jack, and temporarily install the panel assembly - front door to the upper hinge - front door and the lower hinge - front door.

NOTE:
When installing the panel assembly - front door, make sure that a uniform clearance is created around the panel.

3) Adjust the clearance around the panel assembly - front door. <Ref. to EB-28, ADJUSTMENT, Front Door.>

4) Tighten the bolts of the panel assembly - front door to the specified torque.

Tightening torque:
25 N·m (2.5 kgf-m, 18.4 ft-lb)

5) Connect door harness connector, and install the cover side sill - front. <Ref. to EI-87, INSTALLATION, Lower Inner Trim.>

6) Tighten the bolts on the vehicle side of the checker assembly - front door.

Tightening torque:
Refer to "COMPONENT" of "General Description". <Ref. to EB-4, FRONT DOOR, COMPONENT, General Description.>

7) Connect the battery ground terminal. <Ref. to NT-6, BATTERY, NOTE, Note.>

C: ADJUSTMENT

Adjust the clearance around the panel assembly - front door as follows.

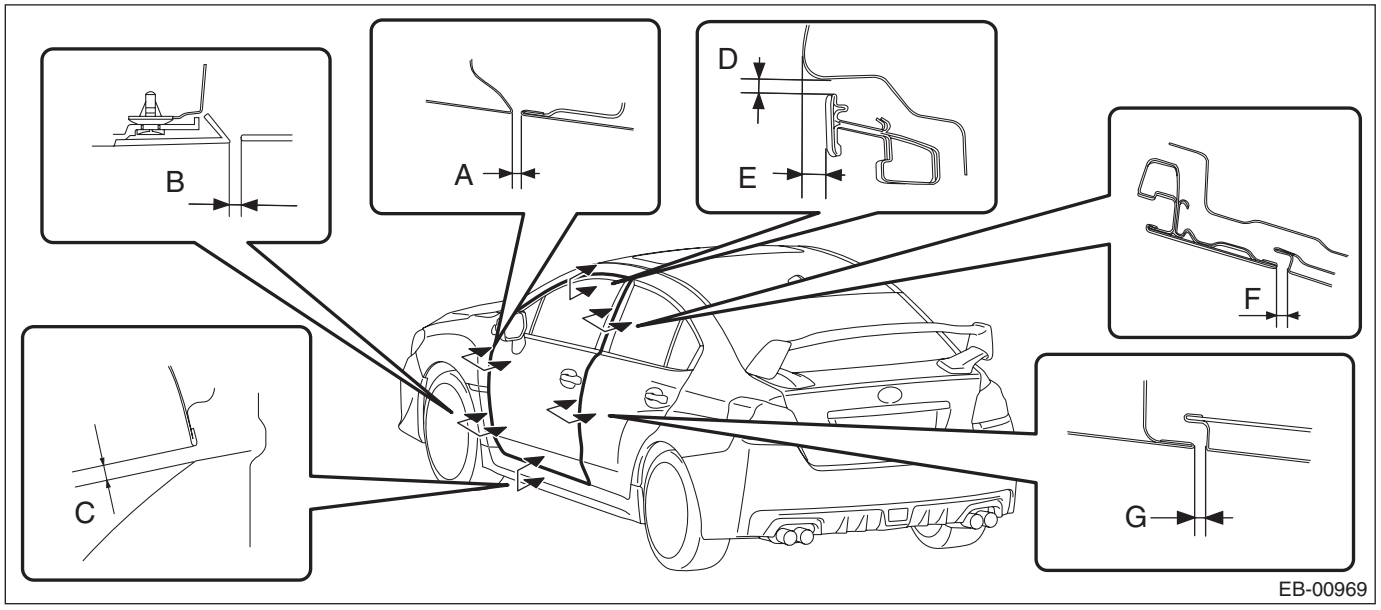

Part		Standard
A	Fender COMPL - front to Panel assembly - front door	4.5±1 mm (0.18±0.04 in)
B	Panel assembly - front door to Garnish assembly - fender	4.5±1 mm (0.18±0.04 in)
C	Panel assembly - front door to Spoiler assembly - side	6+1.5, –1 mm (0.24+0.06, –0.04 in)
D	Panel - side outer to Front door sash	5.1+1.5, –1 mm (0.2+0.06, –0.04 in)
E	Surface level gap between Panel - side outer to Front door sash	7±1.5 mm (0.28±0.06 in)
F	Front door sash to Rear door sash	5.5+1.5, –1 mm (0.22+0.06, –0.04 in)
G	Panel assembly - front door to Panel assembly - rear door	4.5±1 mm (0.18±0.04 in)

1) Adjust the vertical and horizontal positions of the panel assembly - front door.
   (1) Using ST, loosen the bolts on vehicle side of the upper hinge - front door.

Preparation tool:
ST: WRENCH (925610000)

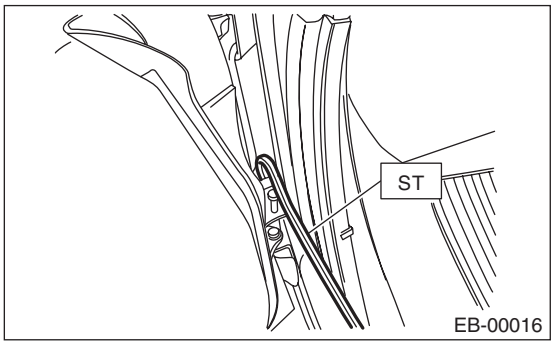

   (2) Turn over the mud guard, and loosen the bolts on vehicle side of the lower hinge - front door.
   (3) Adjust the vertical and horizontal clearance of the panel assembly - front door.
2) Adjust the surface level gap between the panel assembly - front door and the panel assembly - rear door.

CAUTION:
Do not use an impact wrench. Welding area on the striker nut plate is easily broken.

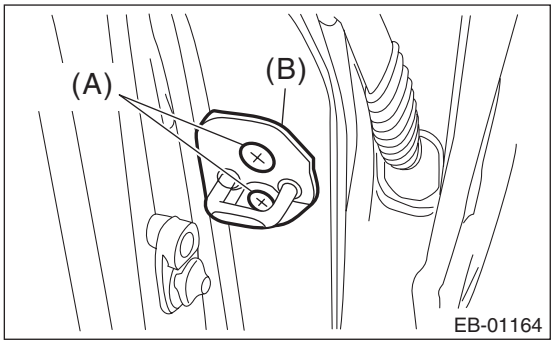

   (1) Loosen the screws (A).
   (2) Tap the striker - front door (B) using a plastic hammer to adjust the surface level gap between the rear end of the panel assembly - front door and the front end of the panel assembly - rear door.

5. Front Sealing Cover

A: REMOVAL

1) Disconnect the ground cable from battery and wait for at least 60 seconds before starting work. <Ref. to NT-6, BATTERY, NOTE, Note.>

NOTE:
For model with battery sensor, disconnect the ground terminal from battery sensor.
2) Remove the trim panel - front door. <Ref. to EI-57, FRONT DOOR, REMOVAL, Door Trim.>
3) Remove the sealing cover - front door.

CAUTION:
- **Carefully remove the butyl tape. Excessive force will easily break the cover.**
- **If the sealing cover - front door gets broken, replace it with a new part.**
- **Be careful not to allow the butyl tape to contact any trims and seats because the butyl tape, which has a strong adhesive force, is difficult to remove once it adhered.**

(1) Remove the screw to remove the bracket - door trim front.
(2) Disconnect connectors.
(3) Carefully remove the butyl tape to remove the sealing cover - front door.

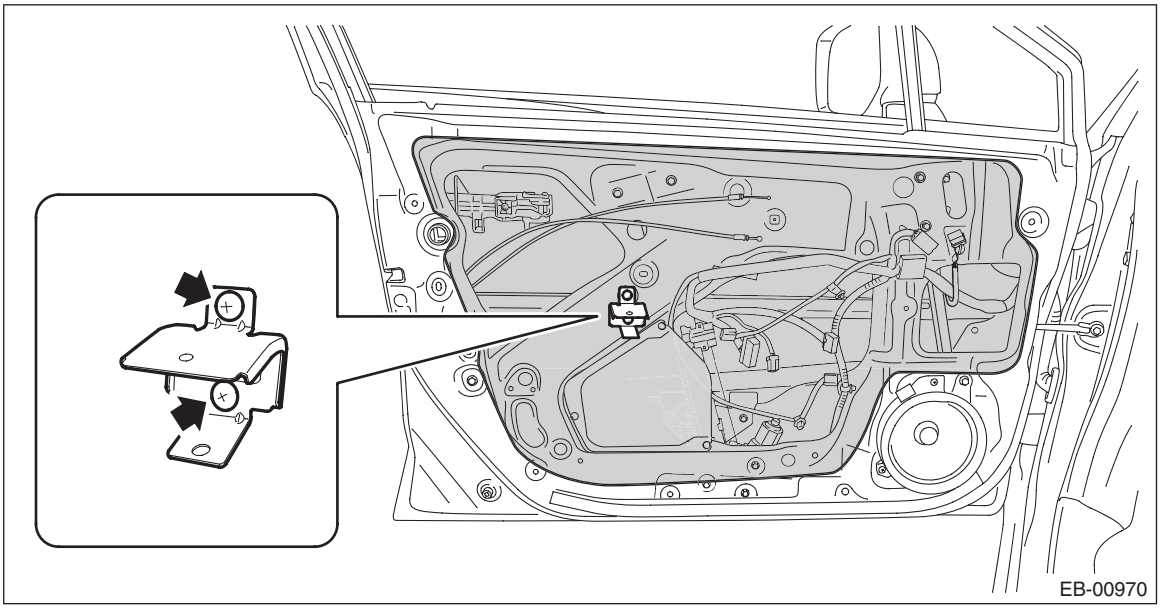

B: INSTALLATION

CAUTION:
- **If the sealing cover - front door gets broken, replace it with a new part.**
- **Apply a uniform bead of butyl tape.**
- **Attach the sealing cover - front door, keeping it from becoming wrinkled.**
- **Breaks in the bead will allow water leakage and contamination.**

1) Install the sealing cover - front door.
(1) Forcefully push the butyl tape portion to prevent any floating on surface.
(2) When replacing the sealing cover, use the butyl tape.

Preparation items:
Butyl tape: 3M Butyl Rubber 8626 or equivalent

2) Install the trim panel - front door. <Ref. to EI-59, INSTALLATION, Door Trim.>
3) Connect the battery ground terminal. <Ref. to NT-6, BATTERY, NOTE, Note.>

C: INSPECTION

If the sealing cover - front door is broken, replace it with a new part.

6. Rear Door

A: REMOVAL

1. REAR DOOR PANEL

1) Disconnect the ground cable from battery. <Ref. to NT-6, BATTERY, NOTE, Note.>

NOTE:
For model with battery sensor, disconnect the ground terminal from battery sensor.
2) Remove the trim panel - rear door. <Ref. to EI-58, REAR DOOR, REMOVAL, Door Trim.>
3) Remove the sealing cover - rear door. <Ref. to EB-38, REMOVAL, Rear Sealing Cover.>
4) Remove the cover B pillar - rear door INN and the cover C pillar - rear door INN.

CAUTION:
- **Always replace with a new part, because engagement of the claw weakens.**
- **Do not damage the sash while removing.**

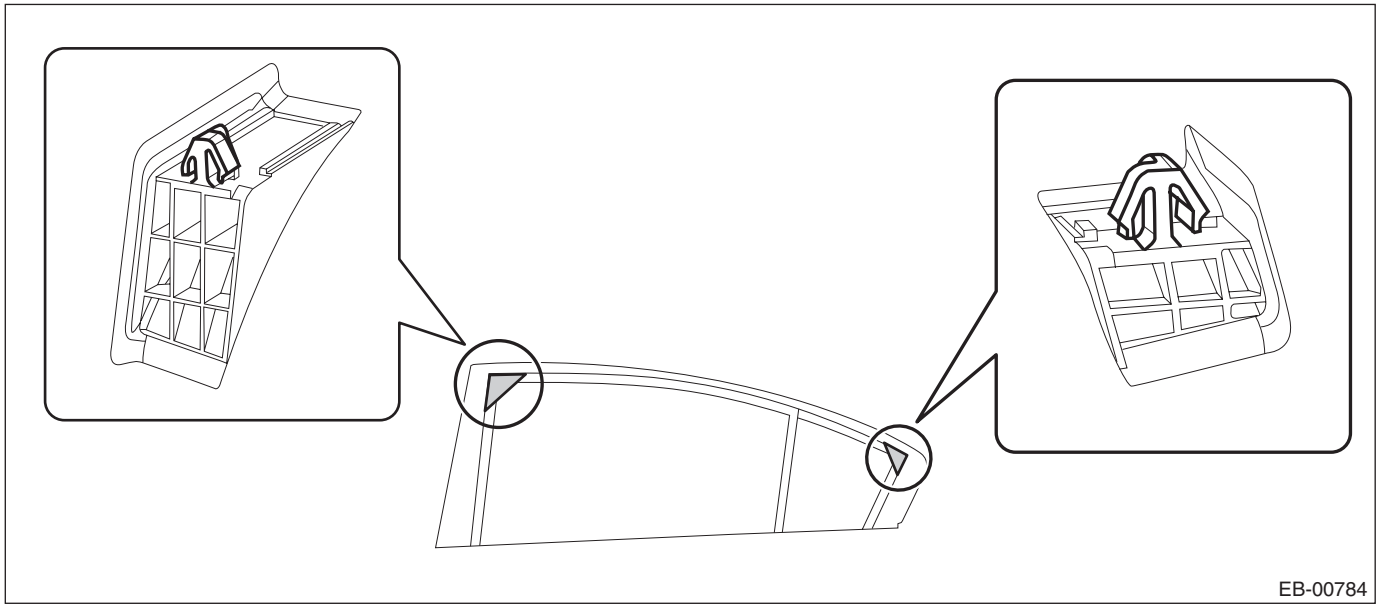

5) Remove the rear door speaker assembly. <Ref. to ET-40, REMOVAL, Rear Speaker.>
6) Remove the sash COMPL - rear partition and the glass assembly - rear door. <Ref. to GW-35, REMOVAL, Rear Door Glass.>
7) Remove the door sash tape. <Ref. to EB-39, REMOVAL, Door Sash Tape.>
8) Remove the regulator - rear. <Ref. to GW-37, REMOVAL, Rear Regulator and Motor Assembly.>
9) Remove the latch and actuator assembly - rear. <Ref. to SL-45, REMOVAL, Rear Door Latch and Door Lock Actuator Assembly.>
10) Remove the cover - handle rear outer. <Ref. to SL-41, REMOVAL, Rear Outer Handle.>
11) Remove the weather strip - rear door. <Ref. to EB-55, REPLACEMENT, Weather Strip.>

12) Remove the bolts and nuts, and then detach the checker assembly - rear door.

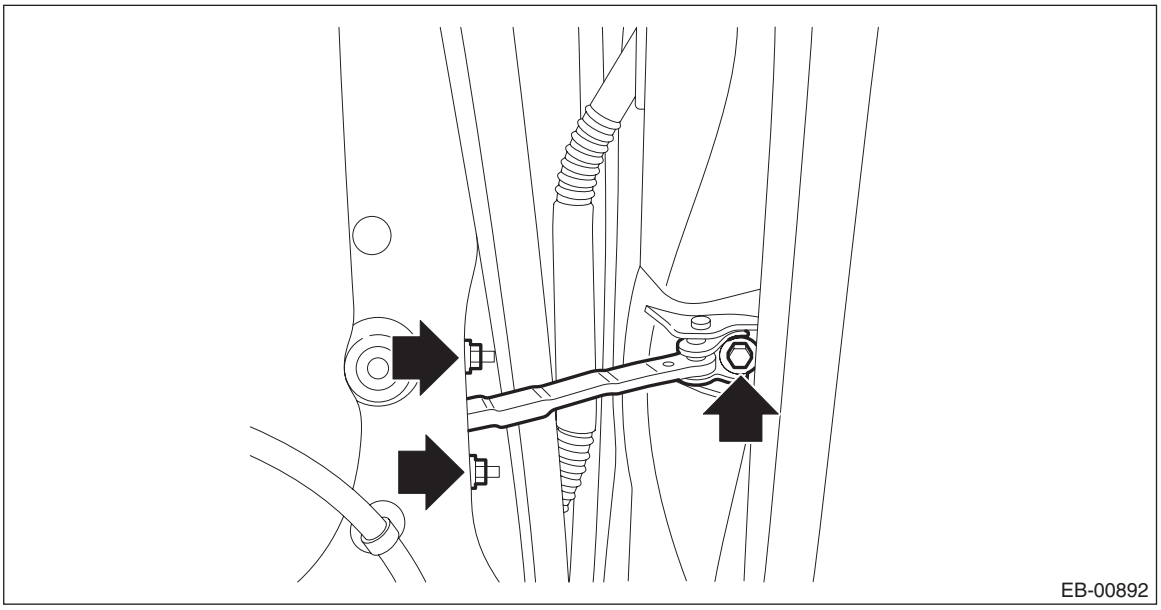

13) Remove the trim panel - center pillar LWR. <Ref. to EI-84, REMOVAL, Lower Inner Trim.>
14) Disconnect the rear door harness connectors.
(1) Remove the grommet and pull out the rear door harness connector from inside the center pillar.

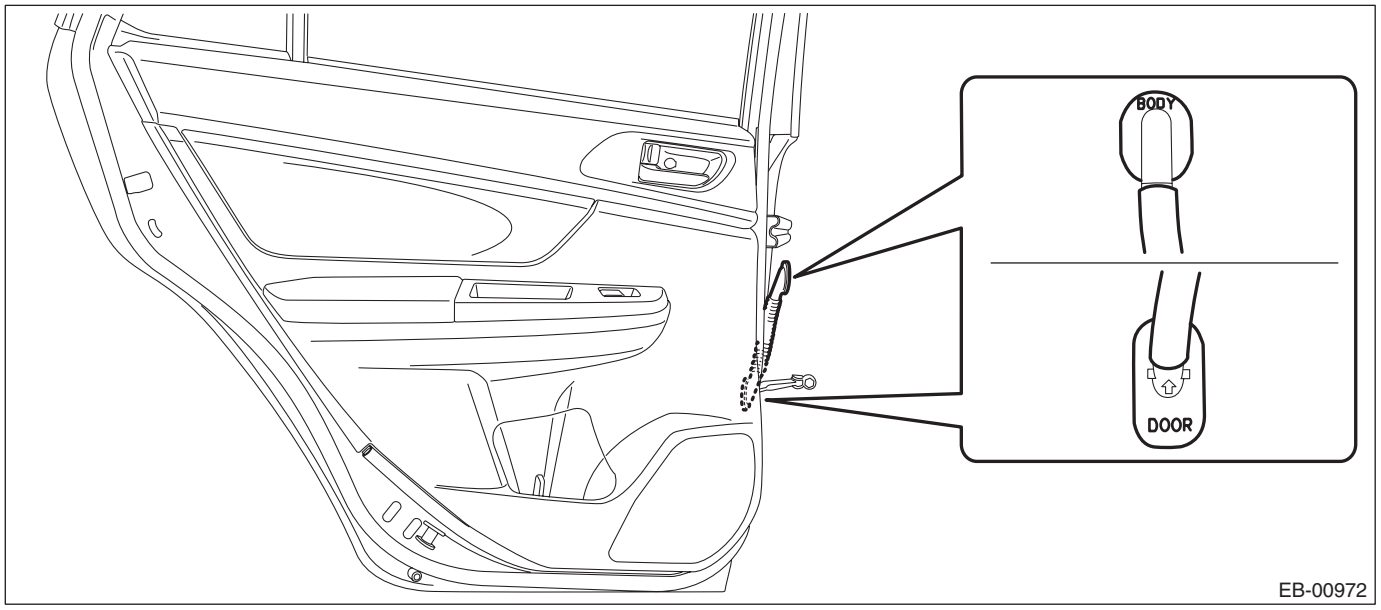

(2) Disconnect the rear door harness connectors.

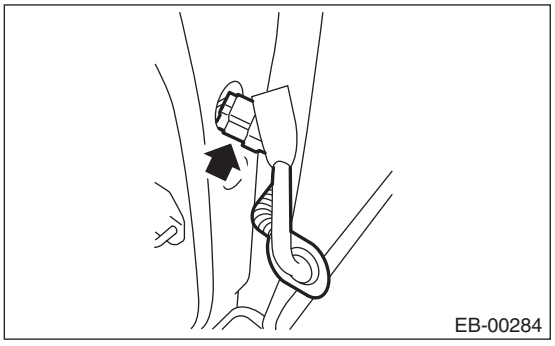

15) Before removing the panel assembly - rear door, make the following preparations.

CAUTION:
Do not excessively lift the panel assembly - rear door with the floor jack. The door hinges may be damaged.

(1) Put a wooden block on a floor jack and place the jack under the panel assembly - rear door.
(2) Support the panel assembly - rear door with the jack to protect it from damage.

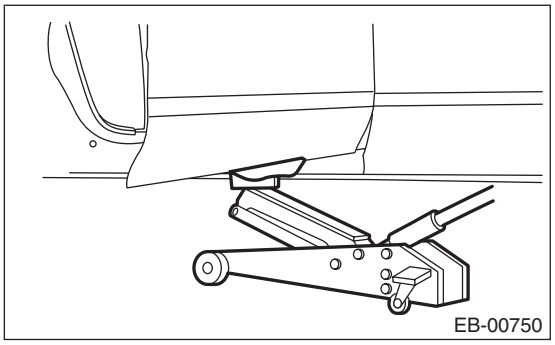

16) Remove the door-side bolts for the upper hinge - rear door and the lower hinge - rear door to remove the panel assembly - rear door.

CAUTION:
The panel assembly - rear door is heavy. When removing and installing it, always work in a team of two or more persons.

2. REAR DOOR HINGE

1) Remove the trim panel - center pillar LWR. <Ref. to EI-84, REMOVAL, Lower Inner Trim.>
2) Disconnect the rear door harness connectors.
(1) Remove the grommet and pull out the rear door harness connector from inside the center pillar.

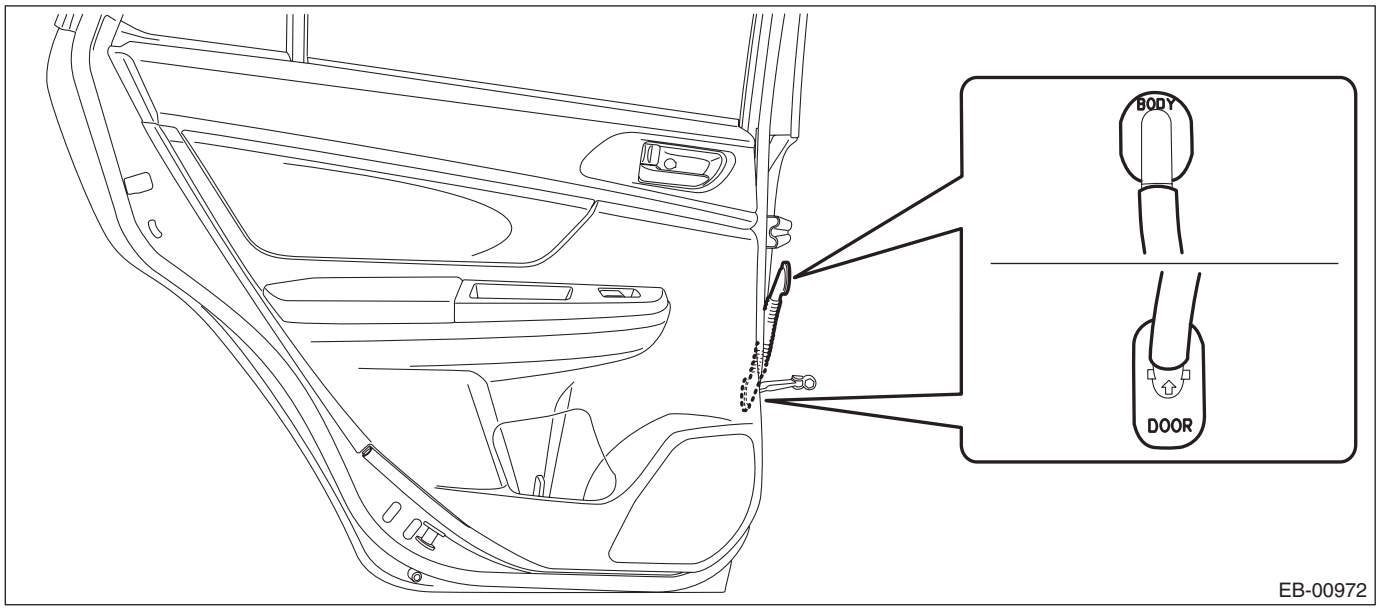

(2) Disconnect the rear door harness connectors.

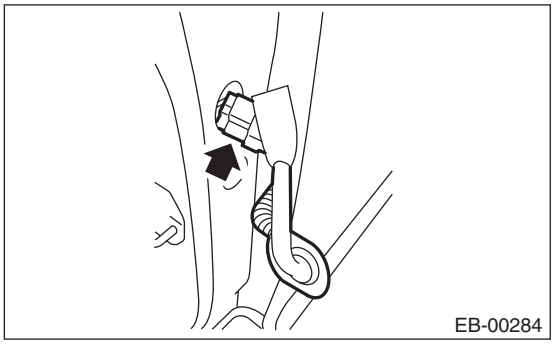

3) Before removing the panel assembly - rear door, make the following preparations.

CAUTION:
• The panel assembly - rear door is heavy. When removing and installing it, always work in a team of two or more persons.
• Do not excessively lift the panel assembly - rear door with the floor jack. The door hinges may be damaged.

(1) Put a wooden block on a floor jack and place the jack under the panel assembly - rear door.
(2) Support the panel assembly - rear door with the jack to protect it from damage.

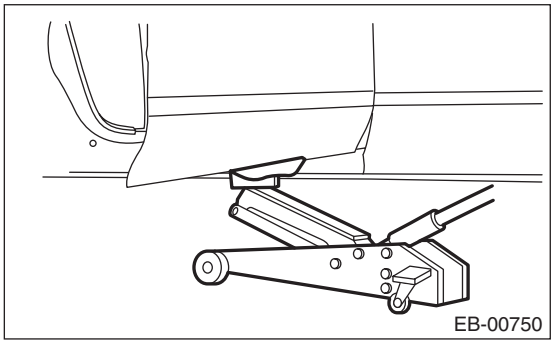

4) Remove the bolts on the side of the panel assembly - rear door of the upper hinge - rear door or the lower hinge - rear door.

CAUTION:
Do not remove the upper hinge - rear door and the lower hinge - rear door at the same time.

5) Remove the hinge - rear door from the vehicle.

B: INSTALLATION

1. REAR DOOR PANEL

1) Put a wooden block and the like on a jack and place the panel assembly - rear door on it.

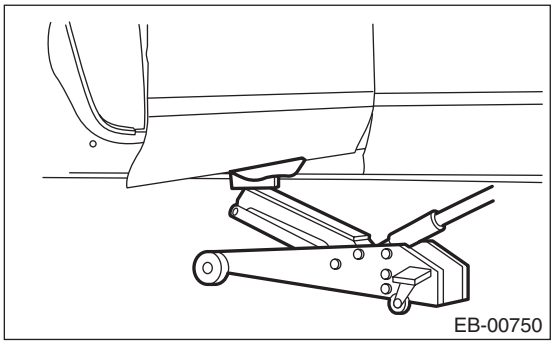

2) Adjust the height by the jack, and temporarily install the panel assembly - rear door to the upper hinge - rear door and the lower hinge - rear door.

NOTE:
• When installing the panel assembly - rear door, make sure that a uniform clearance is created around the panel.
• Perform installation while paying attention to the assembly direction of the grommet.

3) Adjust the clearance around the panel assembly - rear door. <Ref. to EB-36, ADJUSTMENT, Rear Door.>
4) Tighten the mounting bolts of the panel assembly - rear door to the specified torque.

Tightening torque:
25 N·m (2.5 kgf-m, 18.4 ft-lb)

5) Tighten the bolts and nuts of the checker assembly - rear door.

Tightening torque:
Refer to "COMPONENT" of "General Description". <Ref. to EB-5, REAR DOOR, COMPONENT, General Description.>

6) Connect the door harness connector, and install the harness grommet.
7) Attach the door sash tape. <Ref. to EB-41, INSTALLATION, Door Sash Tape.>
8) Before installing each part, check the following items.
• Is the lever of the frame assembly - rear door outer is free from deformation?
• Is grease applied sufficiently to the lever joints of the latch and actuator assembly - rear?
• Is the cable of the latch and actuator assembly - rear free from deformation such as fray?
• Is grease applied sufficiently to the cable joints of the latch and actuator assembly - rear?

9) Install door internal parts in the reverse order of removal.
• Weather strip - rear door
• Handle - door outer

Tightening torque:
7.5 N·m (0.8 kgf-m, 5.5 ft-lb)

• Latch & actuator assembly - rear

Tightening torque:
6.5 N·m (0.7 kgf-m, 4.8 ft-lb)

NOTE:
Make sure the child safety lock works correctly after installation.

• Regulator & motor assembly - rear for the rear door

Tightening torque:
7.5 N·m (0.8 kgf-m, 5.5 ft-lb)

• Sash COMPL - rear partition, and glass assembly - rear door

Tightening torque:
7.5 N·m (0.8 kgf-m, 5.5 ft-lb)

• Running channel - rear door

CAUTION:
Check that the running channel - rear door is securely fixed to the panel assembly - rear door and to the sash COMPL - partition.

10) Install the cover B pillar - rear door INN and the cover C pillar - rear door INN.

CAUTION:
Always replace with a new part, because engagement of the claw weakens.

11) Install the rear door speaker assembly.
12) Install the sealing cover. <Ref. to EB-38, INSTALLATION, Rear Sealing Cover.>
13) Install the trim panel - rear door. <Ref. to EI-59, INSTALLATION, Door Trim.>
14) Connect the battery ground terminal. <Ref. to NT-6, BATTERY, NOTE, Note.>

2. REAR DOOR HINGE

1) Apply grease to the sliding area of door hinges, and install to vehicle.

Tightening torque:
30 N·m (3.1 kgf-m, 22.1 ft-lb)

2) Adjust the height by the jack, and temporarily install the panel assembly - rear door to the upper hinge - rear door and the lower hinge - rear door.

NOTE:
When installing the panel assembly - rear door, make sure that a uniform clearance is created around the panel.

3) Adjust the clearance around the panel assembly - rear door. <Ref. to EB-36, ADJUSTMENT, Rear Door.>

NOTE:
When installing the panel assembly - rear door, make sure that a uniform clearance is created around the panel.

4) Tighten the bolts of the panel assembly - rear door to the specified torque.

Tightening torque:
25 N·m (2.5 kgf-m, 18.4 ft-lb)

5) Connect the door harness connector, and install the trim panel - center pillar LWR. <Ref. to EI-87, INSTALLATION, Lower Inner Trim.>

6) Tighten the bolts on the vehicle side of the checker assembly - rear door.

Tightening torque:
Refer to "COMPONENT" of "General Description". <Ref. to EB-5, REAR DOOR, COMPONENT, General Description.>

C: ADJUSTMENT

Adjust the clearance around the panel assembly - rear door as follows.

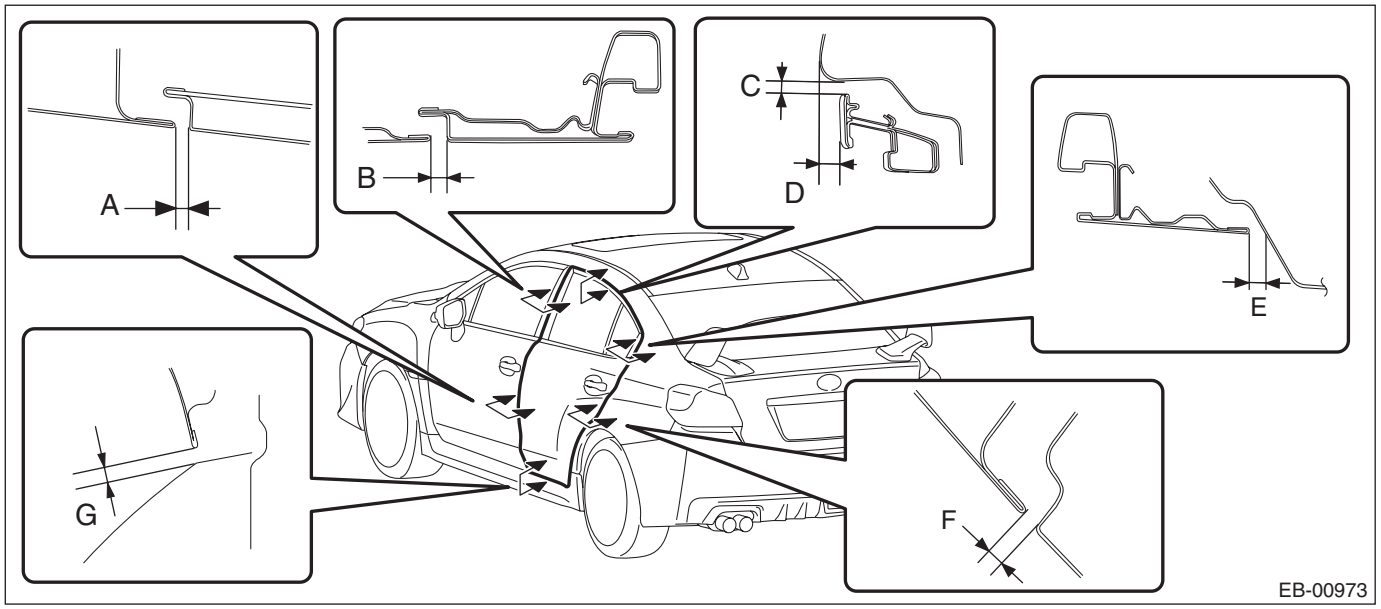

Part		Standard
A	Panel assembly - front door to Panel assembly - rear door	4.5±1 mm (0.18±0.04 in)
B	Front door sash to Rear door sash	5.5+1.5, –1 mm (0.22+0.06, –0.04 in)
C	Panel - side outer to Rear door sash	5.1+1.5, –1 mm (0.2+0.06, –0.04 in)
D	Surface level gap between Panel - side outer to Rear door sash	6.6±1.5 mm (0.26±0.06 in)
E	Rear door sash and Panel - side outer	5.5+1.5, –1 mm (0.22+0.06, –0.04 in)
F	Panel assembly - rear door to Panel - side outer	4.1±1 mm (0.16±0.04 in)
G	Panel assembly - rear door to Spoiler assembly - side	6±1.5 mm (0.24±0.06 in)

1) Adjust the vertical and horizontal positions of the panel assembly - rear door.
   (1) Loosen the body side bolts of the upper hinge - rear door and the lower hinge - rear door.
   (2) Adjust the vertical and horizontal clearance of the panel assembly - rear door.

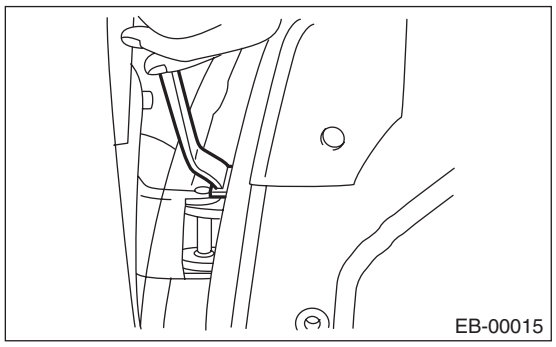

2) Adjust the surface level gap between the panel assembly - rear door and the body.

CAUTION:
Do not use an impact wrench. Welding area on the striker nut plate is easily broken.
   (1) Loosen the screws (A).
   (2) Tap the striker - rear door (B) using a plastic hammer to adjust the surface level gap between the rear end of the panel assembly - rear door and the rear quarter.

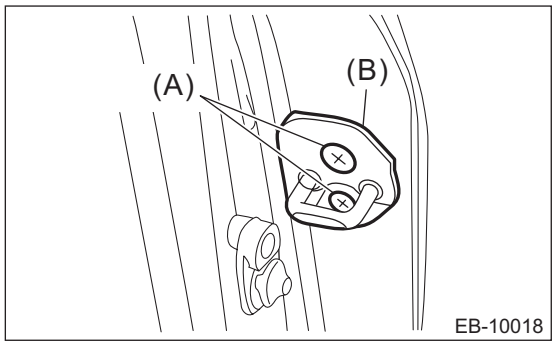

7. Rear Sealing Cover

A: REMOVAL

1) Disconnect the ground cable from battery. <Ref. to NT-6, BATTERY, NOTE, Note.>

NOTE:
For model with battery sensor, disconnect the ground terminal from battery sensor.
2) Remove the trim panel - rear door. <Ref. to EI-58, REAR DOOR, REMOVAL, Door Trim.>
3) Remove the sealing cover - rear door.

CAUTION:
- **Carefully remove the butyl tape. Excessive force will easily break the cover.**
- **If the sealing cover - rear door gets broken, replace it with a new part.**
- **Be careful not to allow the butyl tape to contact any trims and seats because the butyl tape, which has a strong adhesive force, is difficult to remove once it adhered.**

(1) Remove the screw to remove the bracket - door trim rear.
(2) Disconnect connectors.
(3) Carefully remove the butyl tape to remove the sealing cover - rear door.

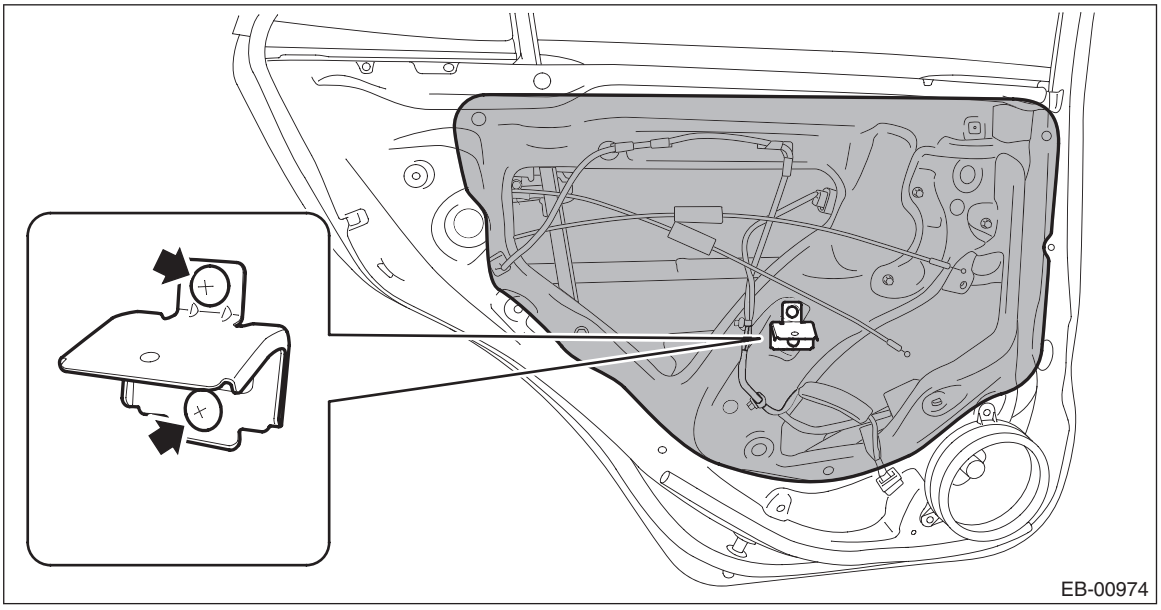

B: INSTALLATION

CAUTION:
- **If the sealing cover - rear door gets broken, replace it with a new part.**
- **Apply a butyl tape evenly.**
- **Attach the sealing cover - rear door, keeping it from becoming wrinkled.**
- **If the butyl tape is applied unevenly, it will cause water leakage and soiling.**

1) Install the sealing cover.
(1) Forcefully push the butyl tape portion to prevent any floating on surface.
(2) When replacing the sealing cover, use the butyl tape.

Preparation items:
Butyl tape: 3M Butyl Rubber 8626 or equivalent

2) Install the trim panel - rear door. <Ref. to EI-59, INSTALLATION, Door Trim.>
3) Connect the battery ground terminal. <Ref. to NT-6, BATTERY, NOTE, Note.>

C: INSPECTION

If the sealing cover - rear door is broken, replace it with a new part.

8. Door Sash Tape

A: REMOVAL

1. FRONT DOOR

1) Disconnect the ground cable from battery and wait for at least 60 seconds before starting work. <Ref. to NT-6, BATTERY, NOTE, Note.>

NOTE:
For model with battery sensor, disconnect the ground terminal from battery sensor.
2) Remove the trim panel - front door. <Ref. to EI-57, FRONT DOOR, REMOVAL, Door Trim.>
3) Remove the outer mirror assembly. <Ref. to GW-27, REMOVAL, Outer Mirror Assembly.>
4) Remove the sealing cover - front door. <Ref. to EB-30, REMOVAL, Front Sealing Cover.>
5) Remove the glass assembly - front door. <Ref. to GW-20, REMOVAL, Front Door Glass.>
6) Remove the running channel - front door.
7) Remove the weather strip outer - front door.

CAUTION:
- **When removing the weather strip outer, be careful not to damage the vehicle.**
- **Do not reuse the weather strip outer. Always replace with a new part.**

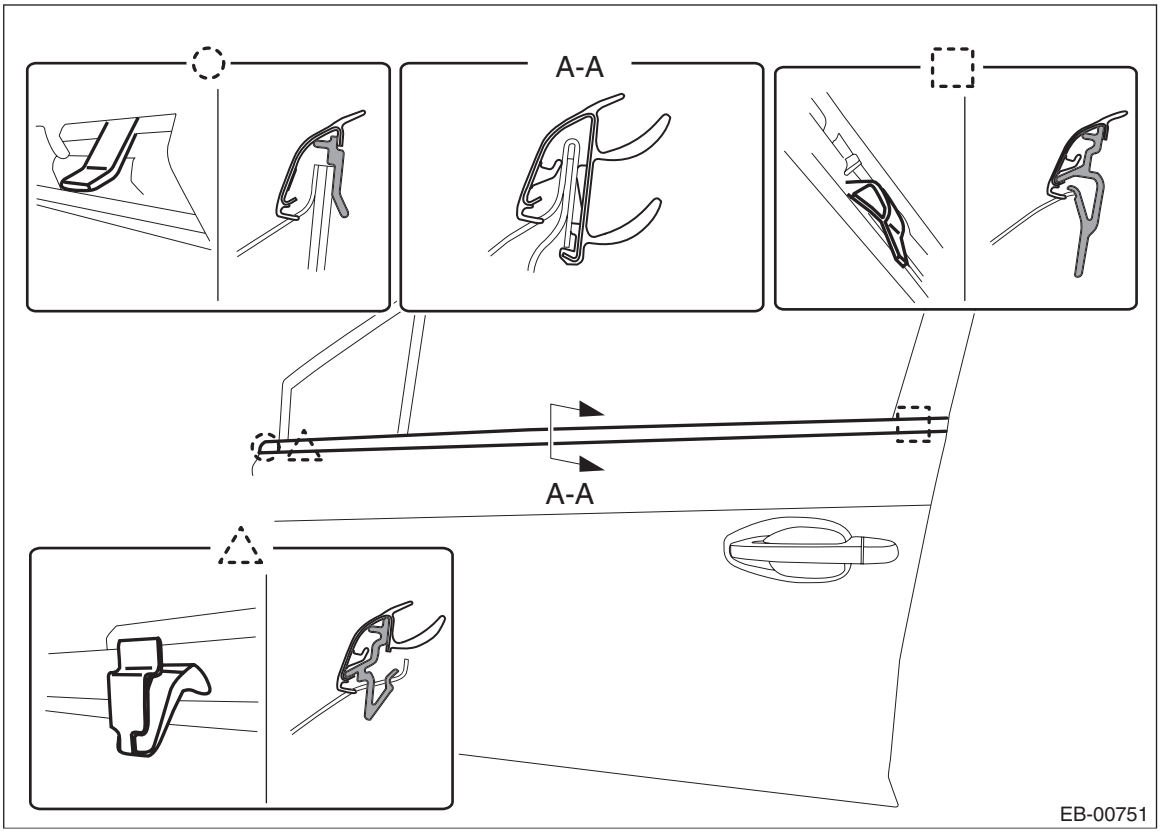

8) Peel the door sash tape from the door sash.

NOTE:
- If the tape is difficult to remove, warm the tape with a hairdryer, etc. to make the removal easier. Use a household hairdryer. Do not use industrial dryers.
- If tape residue is remaining on the door sash, wipe clean.

2. REAR DOOR

1) Disconnect the ground cable from battery. <Ref. to NT-6, BATTERY, NOTE, Note.>

NOTE:
For model with battery sensor, disconnect the ground terminal from battery sensor.
2) Remove the trim panel - rear door. <Ref. to EI-58, REAR DOOR, REMOVAL, Door Trim.>
3) Remove the sealing cover - rear door. <Ref. to EB-38, REMOVAL, Rear Sealing Cover.>
4) Remove the glass assembly - rear door. <Ref. to GW-35, REMOVAL, Rear Door Glass.>
5) Remove the running channel - rear door.
6) Remove the weather strip outer - rear door.

CAUTION:
- **When removing the weather strip outer, be careful not to damage the vehicle.**
- **Do not reuse the weather strip outer. Always replace with a new part.**

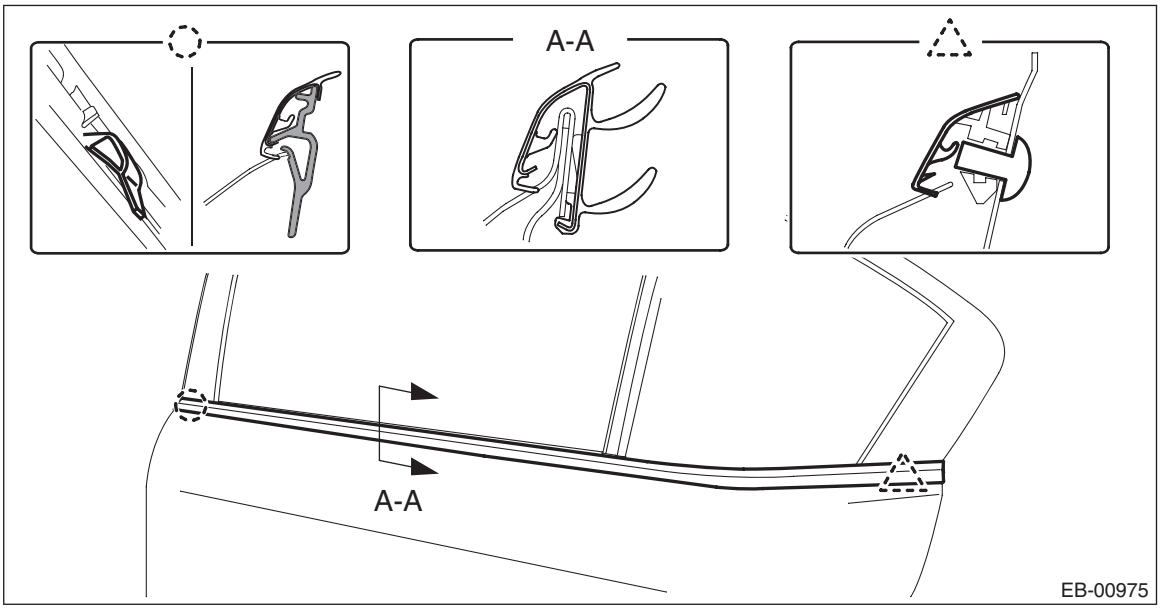

7) Peel the door sash tape from the door sash.

NOTE:
- If the tape is difficult to remove, warm the tape with a hairdryer, etc. to make the removal easier. Use a household hairdryer. Do not use industrial dryers.
- If tape residue is remaining on the door sash, wipe clean.

B: INSTALLATION

CAUTION:
- **Do not reuse the removed door sash tape. Replace it with a new tape.**
- **Press evenly along the sash when applying the tape using a spatula or similar object to make sure no bubbles are formed.**

If air bubbles are formed, reapply the tape.
- **If the tape is wrinkled, etc. during application, replace the tape.**
- **Be sure to press the ends of the tape firmly to adhere securely. If the tape comes off at the ends or where folded, the adhesive strength is weakened and the tape may peel off.**
- **There are locations where the tape ends will overlap each other. When applying the tape, be careful of the following order of their application.**
  - **Front**

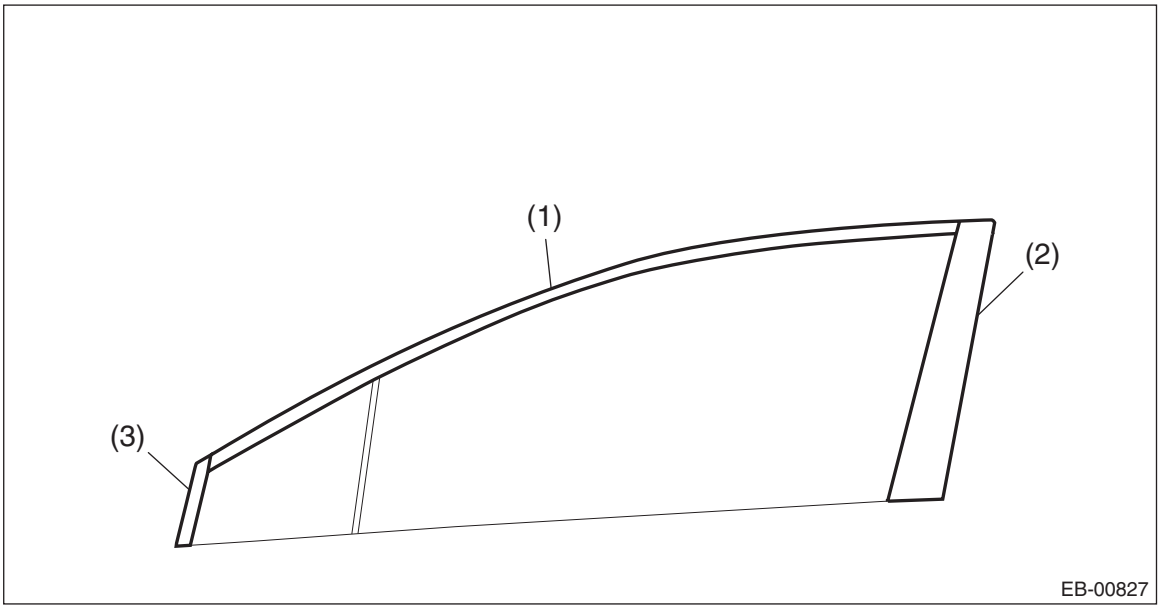

  - **Rear**

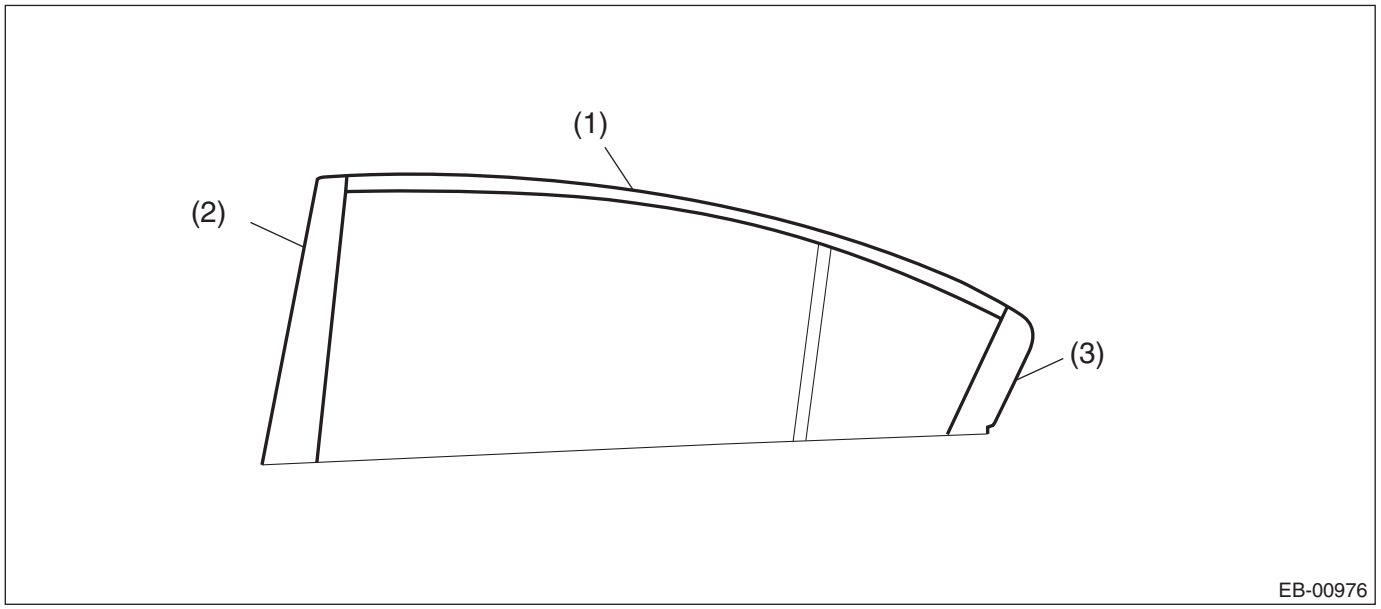

- **Do not reuse the weather strip outer. Always replace with a new part.**

1. FRONT DOOR

1) Apply the front door sash tape - medium from the rear of the vehicle towards the front.

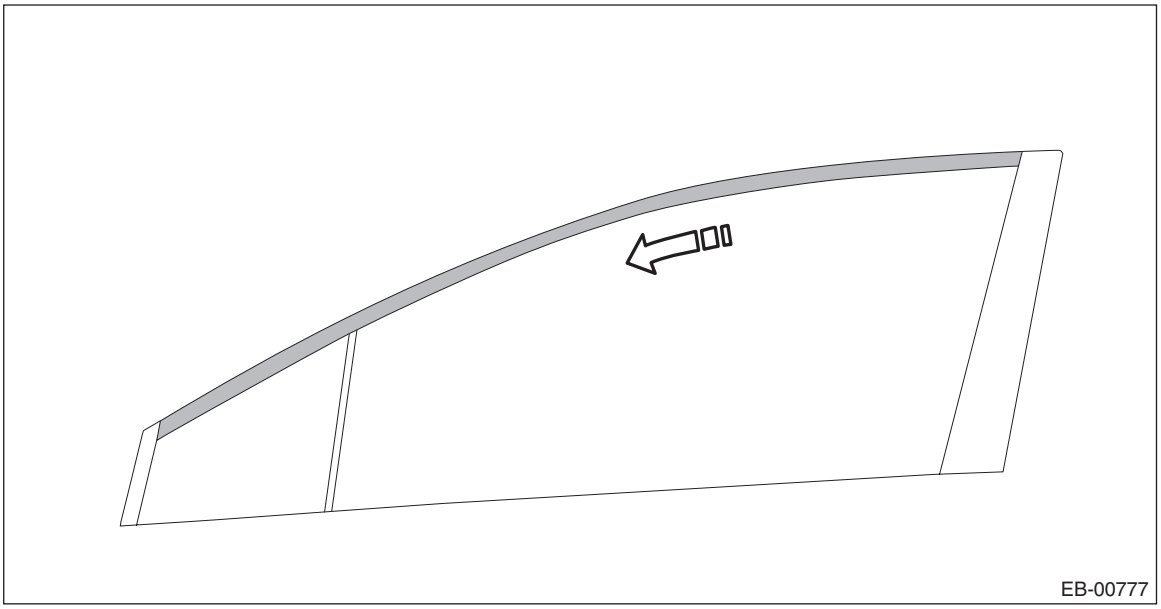

2) Apply the front door sash tape - rear from the top of the vehicle towards the bottom.

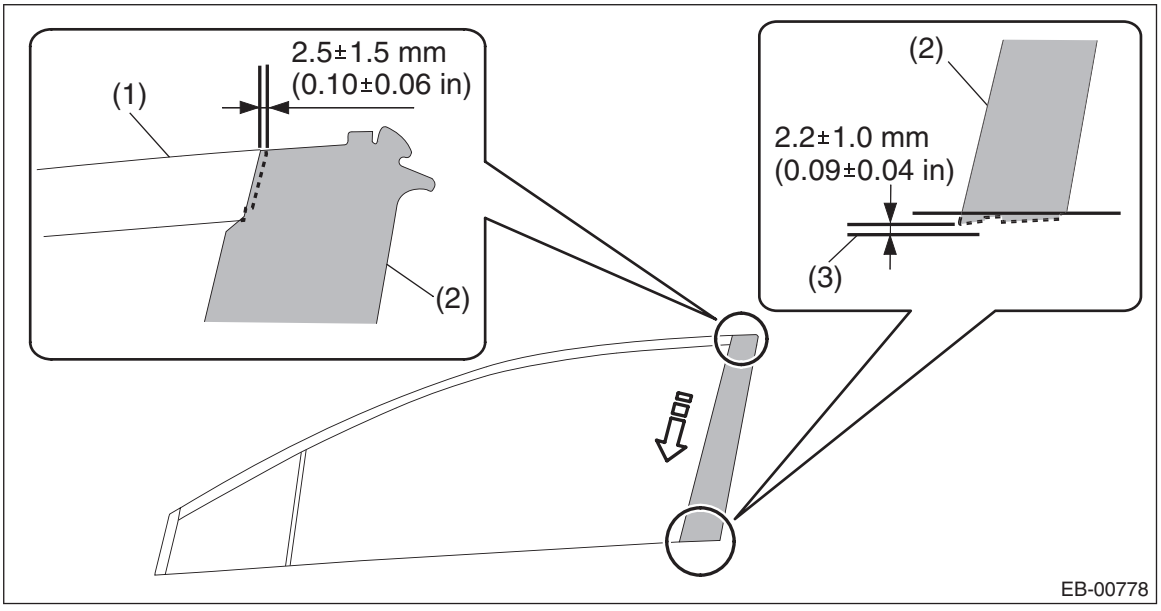

(1) Front door sash tape - medium (2) Front door sash tape - rear (3) End of panel outer

3) Fold the corners at the door upper end area in the order of (1) — (3).

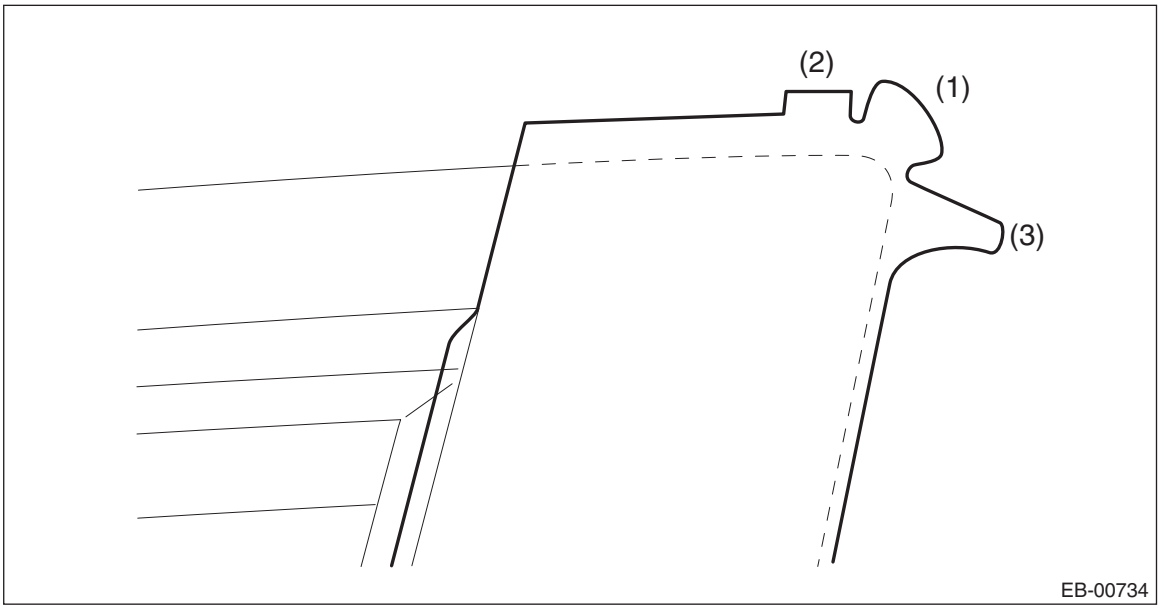

4) Apply the front door sash tape - front from the top of the vehicle towards the bottom.

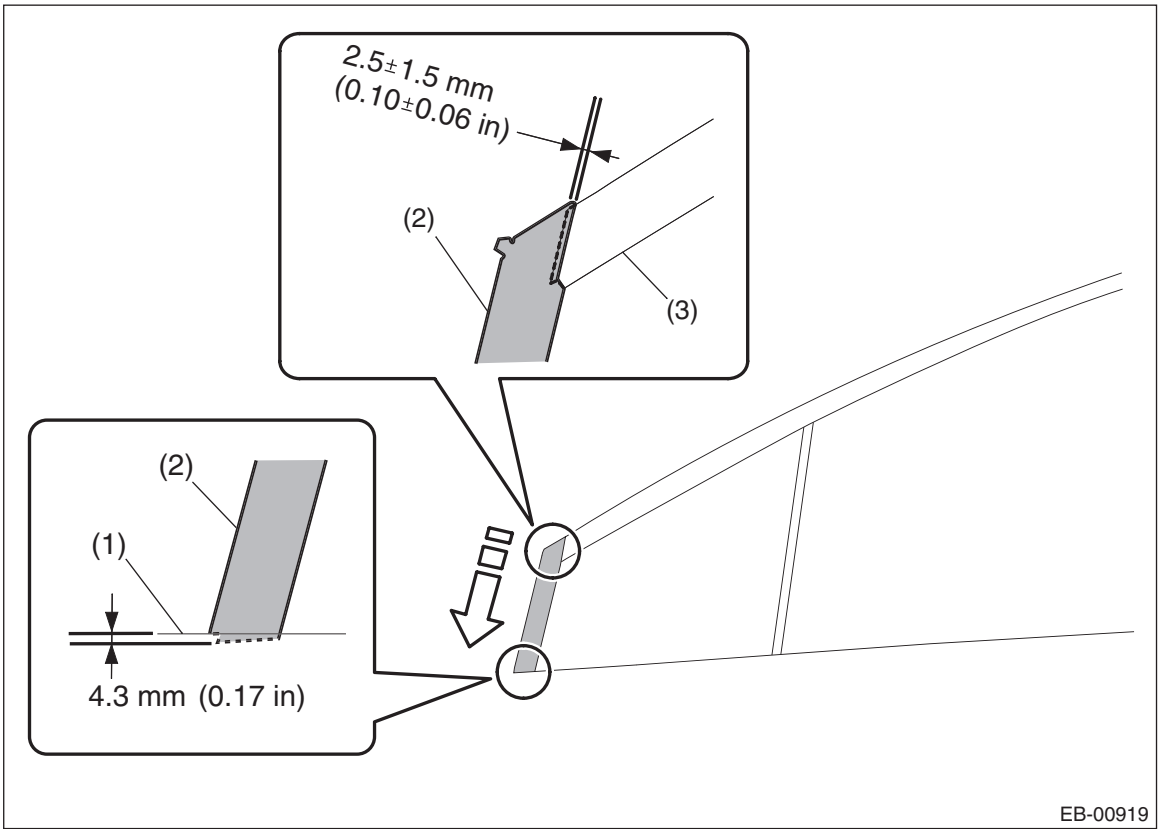

(1) End of panel outer (2) Front door sash tape - front (3) Front door sash tape - medium

5) Fold the corners at the door upper end area in the order of (1) — (3).

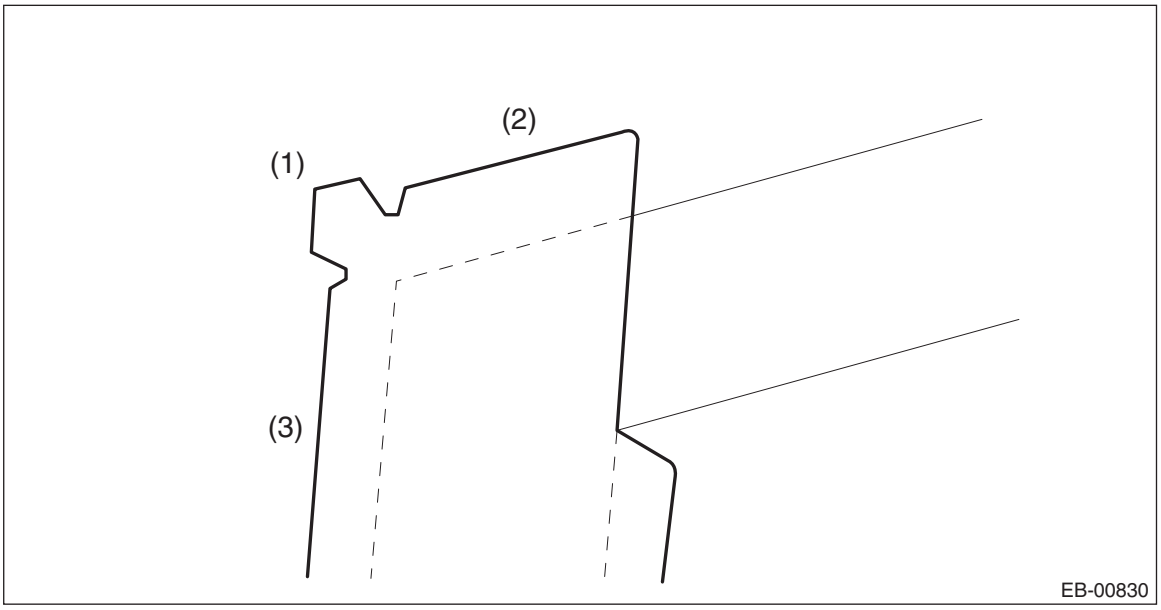

6) Install the weather strip outer - front door.
7) Install the running channel - front door.
8) Install the glass assembly - front door.

Tightening torque:
7.5 N·m (0.8 kgf-m, 5.5 ft-lb)

9) Install the sealing cover - front door.
10) Install the outer mirror assembly.

Tightening torque:
7.5 N·m (0.8 kgf-m, 5.5 ft-lb)

11) Install the trim panel - front door.
12) Connect the battery ground terminal. <Ref. to NT-6, BATTERY, NOTE, Note.>

2. REAR DOOR

1) Apply the rear door sash tape - medium from the front of the vehicle towards the rear.

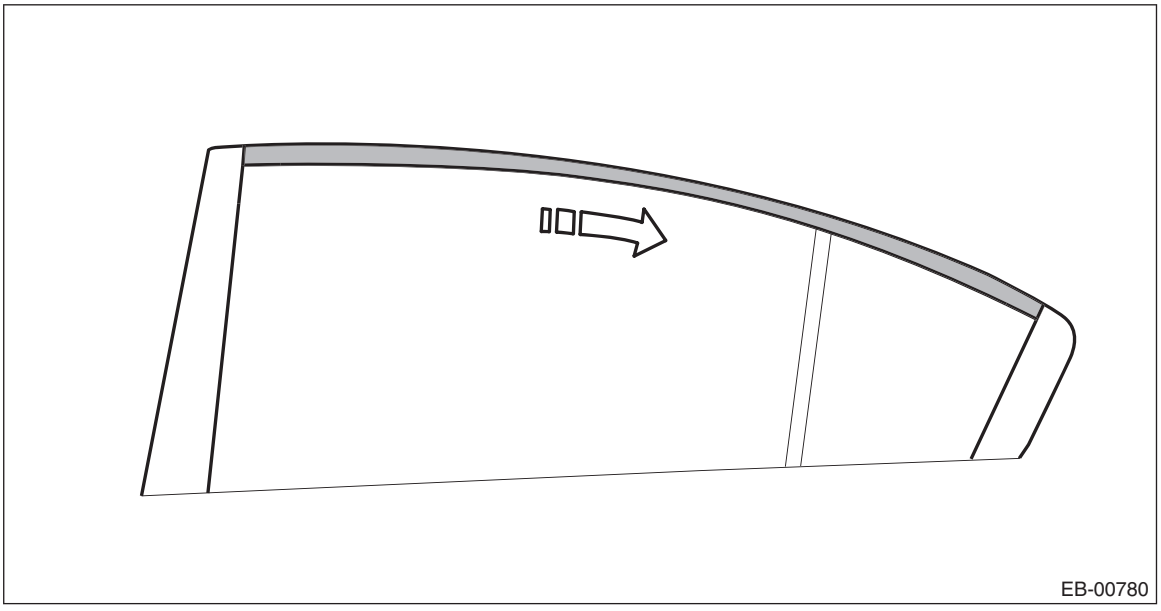

2) Apply the rear door sash tape - front from the top of the vehicle towards the bottom.

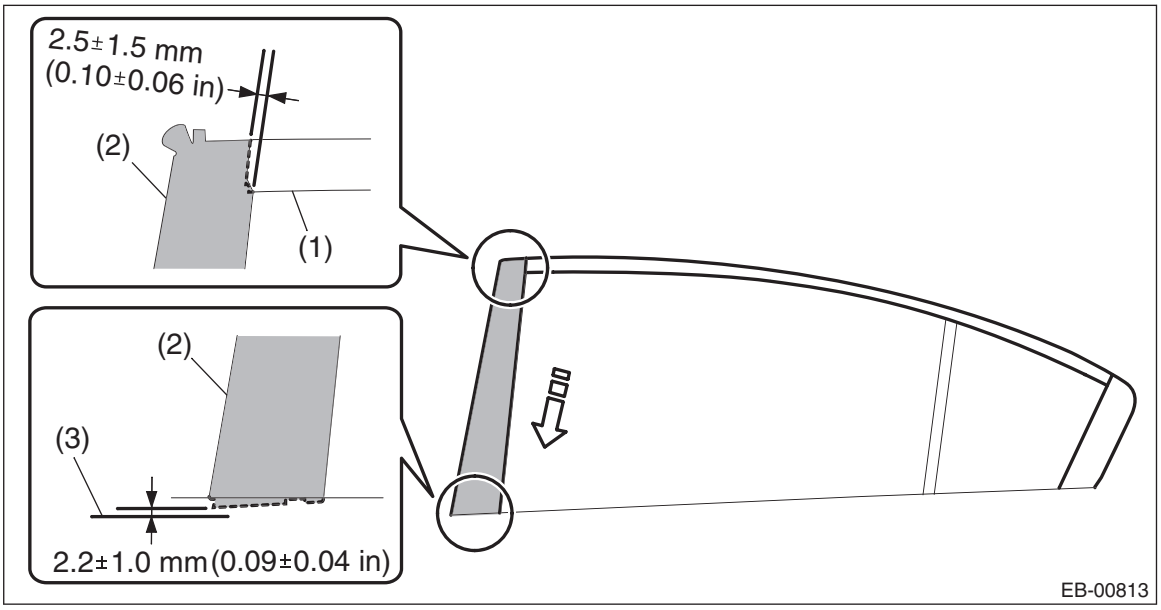

(1) Rear door sash tape - medium (2) Rear door sash tape - front (3) End of panel outer

3) Fold the corners at the door upper end area in the order of (1) — (2).

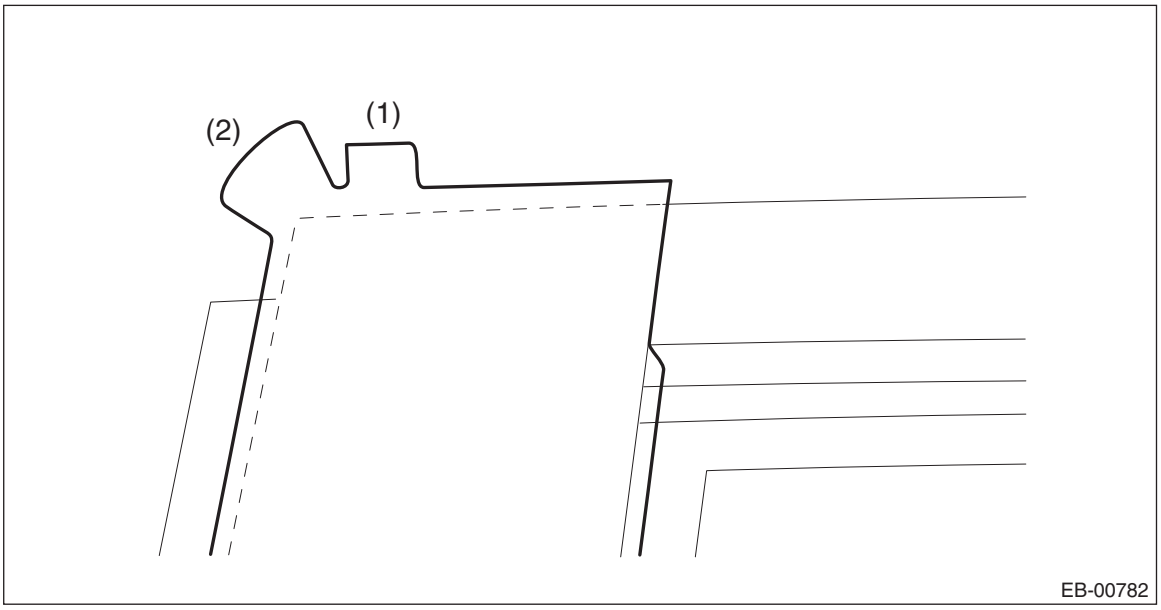

4) Apply the rear door sash tape - rear from the top of the vehicle towards the bottom.

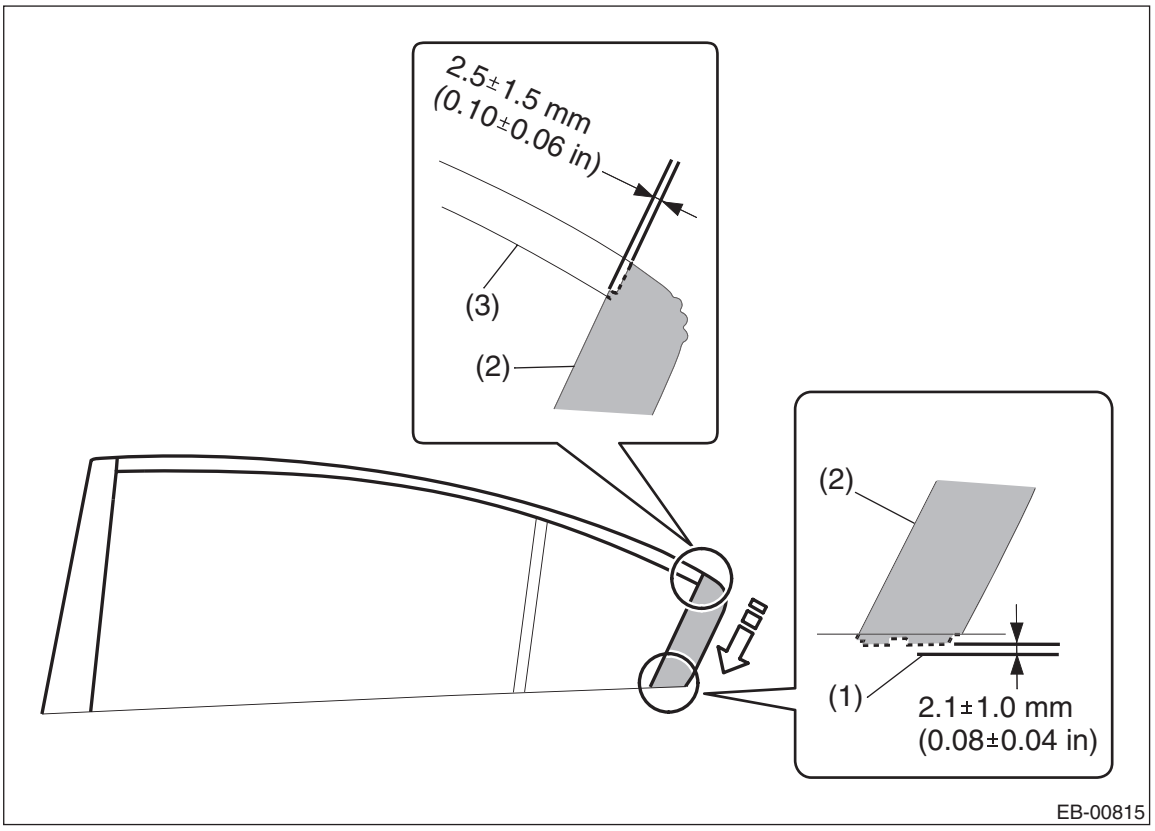

(1) End of panel outer
(2) Rear door sash tape - rear
(3) Rear door sash tape - medium

5) Fold the corners at the door upper end area in the order of (1) — (3).

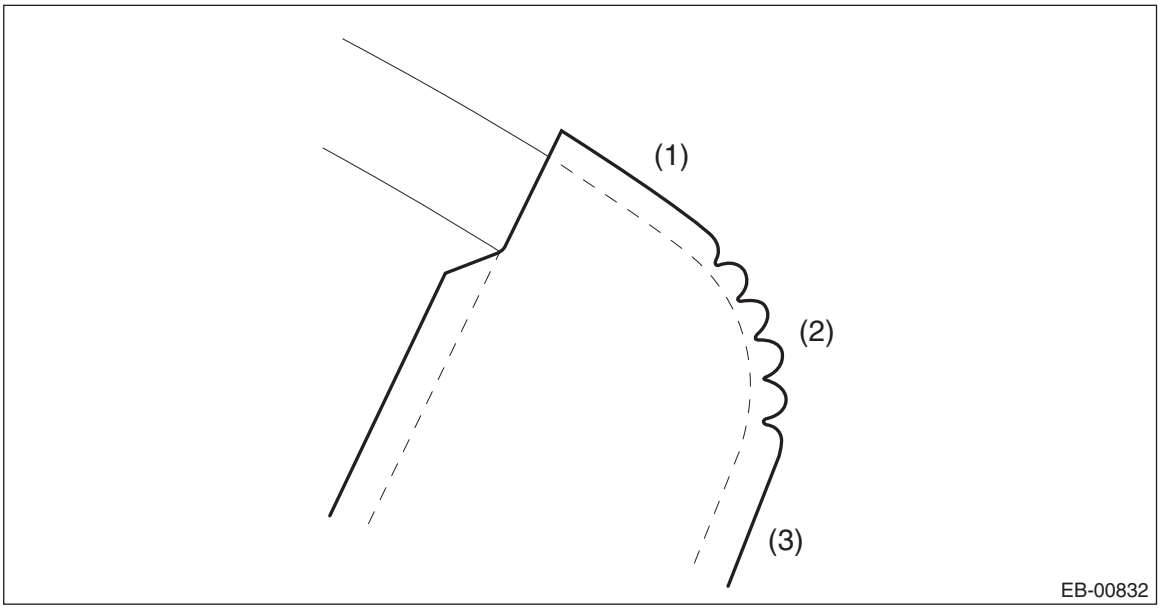

6) Install the weather strip outer - rear door.
7) Install the running channel - rear door.
8) Install the glass assembly - rear door.

Tightening torque:
7.5 N·m (0.8 kgf-m, 5.5 ft-lb)

9) Install the sealing cover - rear door.
10) Install the trim panel - rear door.
11) Connect the battery ground terminal. <Ref. to NT-6, BATTERY, NOTE, Note.>

9. Trunk Lid

A: REMOVAL

1. TORSION BAR

CAUTION:
Trunk lid COMPL is heavy. When removing and installing it, always work in a team of two or more persons.

1) Remove the trunk room trim. <Ref. to EI-98, REMOVAL, Trunk Room Trim.>
2) Attach the protective tape (a) to the amplifier case. (Only for models with power amplifier)

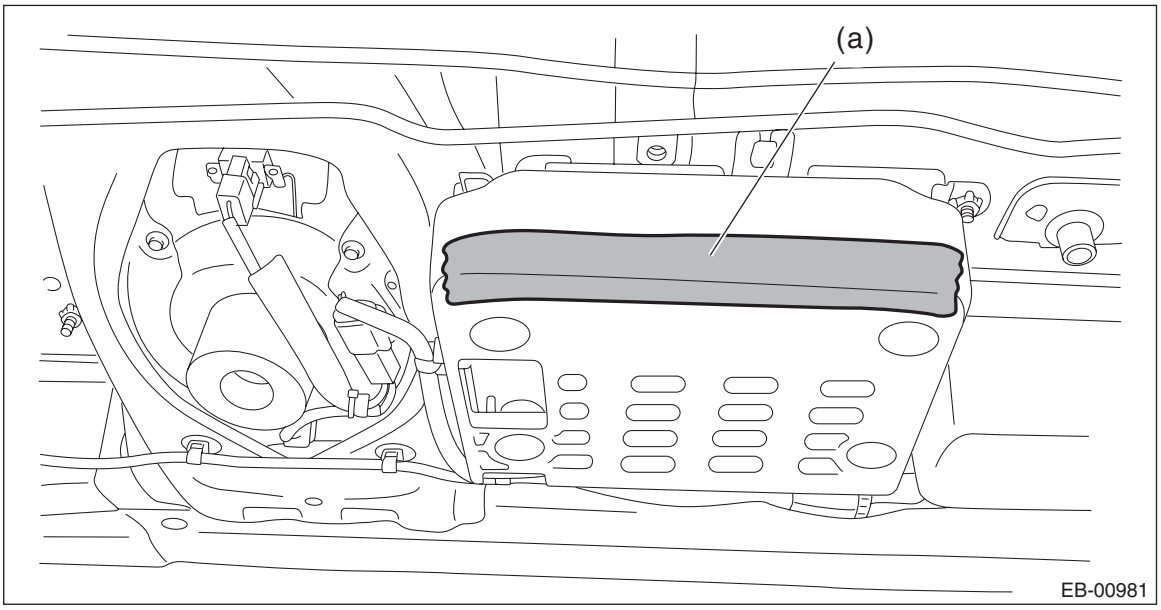

3) Remove the torsion bar - trunk lid.

CAUTION:
During removal and installation, handle the torsion bar - trunk lid carefully, because it will generate reactive force.

Preparation tool:
ST: REMOVER (99099FJ000) and REMOVER (927780000)

(1) Remove the torsion bar - trunk lid on the LH side from the hinge link (a).
(2) Remove the torsion bar - trunk lid on the RH side from the hinge link (b).

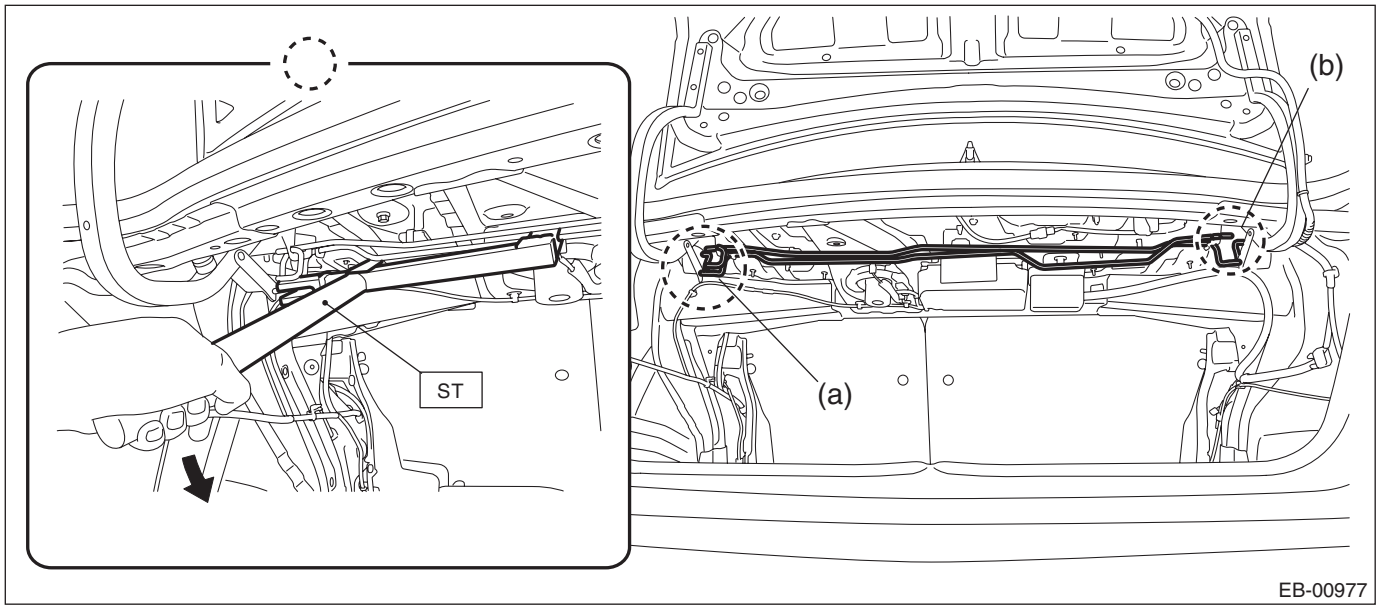

2. TRUNK LID PANEL

1) Disconnect the ground cable from battery. <Ref. to NT-6, BATTERY, NOTE, Note.>

NOTE:
For model with battery sensor, disconnect the ground terminal from battery sensor.
2) Remove the trunk room trim. <Ref. to EI-98, REMOVAL, Trunk Room Trim.>
3) Remove the lock assembly - trunk lid. <Ref. to SL-49, REMOVAL, Trunk Lid Latch and Actuator Assembly.>
4) Disconnect the connector to remove the trunk lid harness.

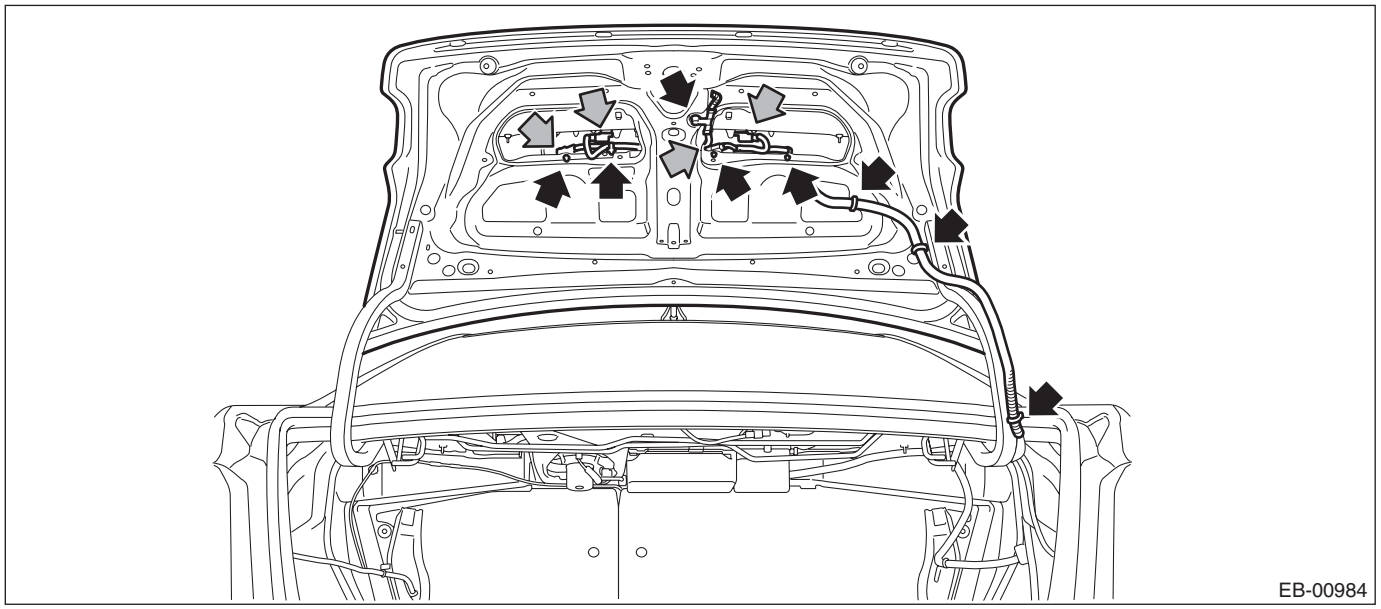

5) Remove the garnish - trunk. <Ref. to EI-52, REMOVAL, Trunk Lid Garnish.>
6) Remove the rearview camera assembly. <Ref. to ET-56, REMOVAL, Rearview Camera System.>
7) Detach the rear spoiler. <Ref. to EI-53, REMOVAL, Rear Spoiler.>

8) Remove the trunk lid COMPL.

CAUTION:
Trunk lid COMPL is heavy. When removing and installing it, always work in a team of two or more persons.

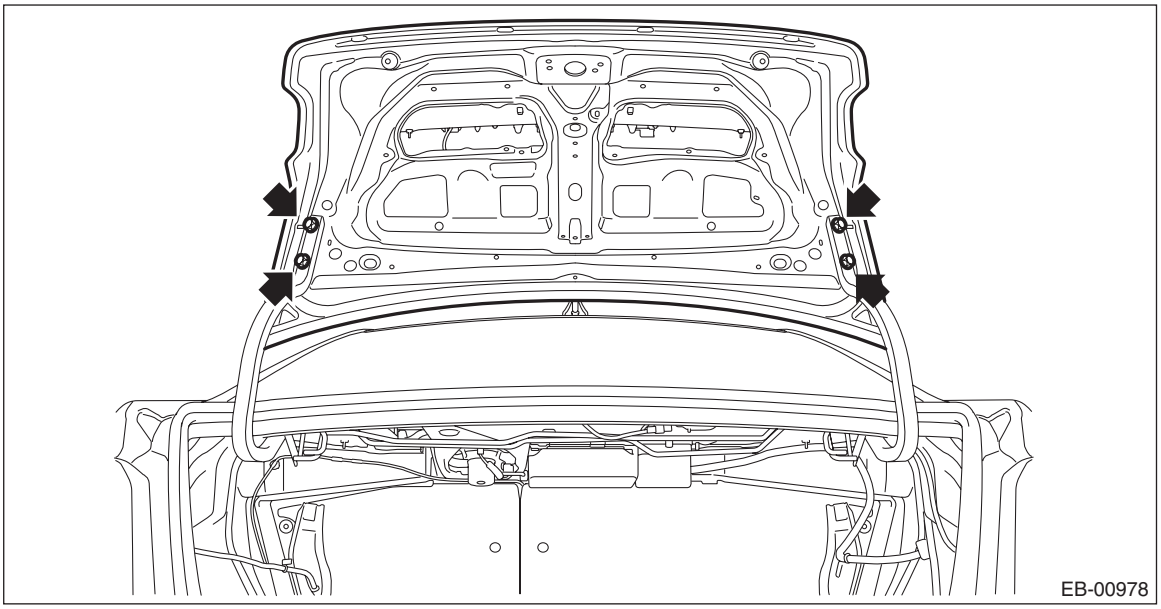

9) Remove the rear seat cushion assembly. <Ref. to SE-30, REMOVAL, Rear Seat.>
10) Release the clips and claws, and remove the side sill covers - rear INN on the left and right sides.

CAUTION:
Do not pull with excessive force. Doing so may damage the claws of the side sill cover - rear INN.

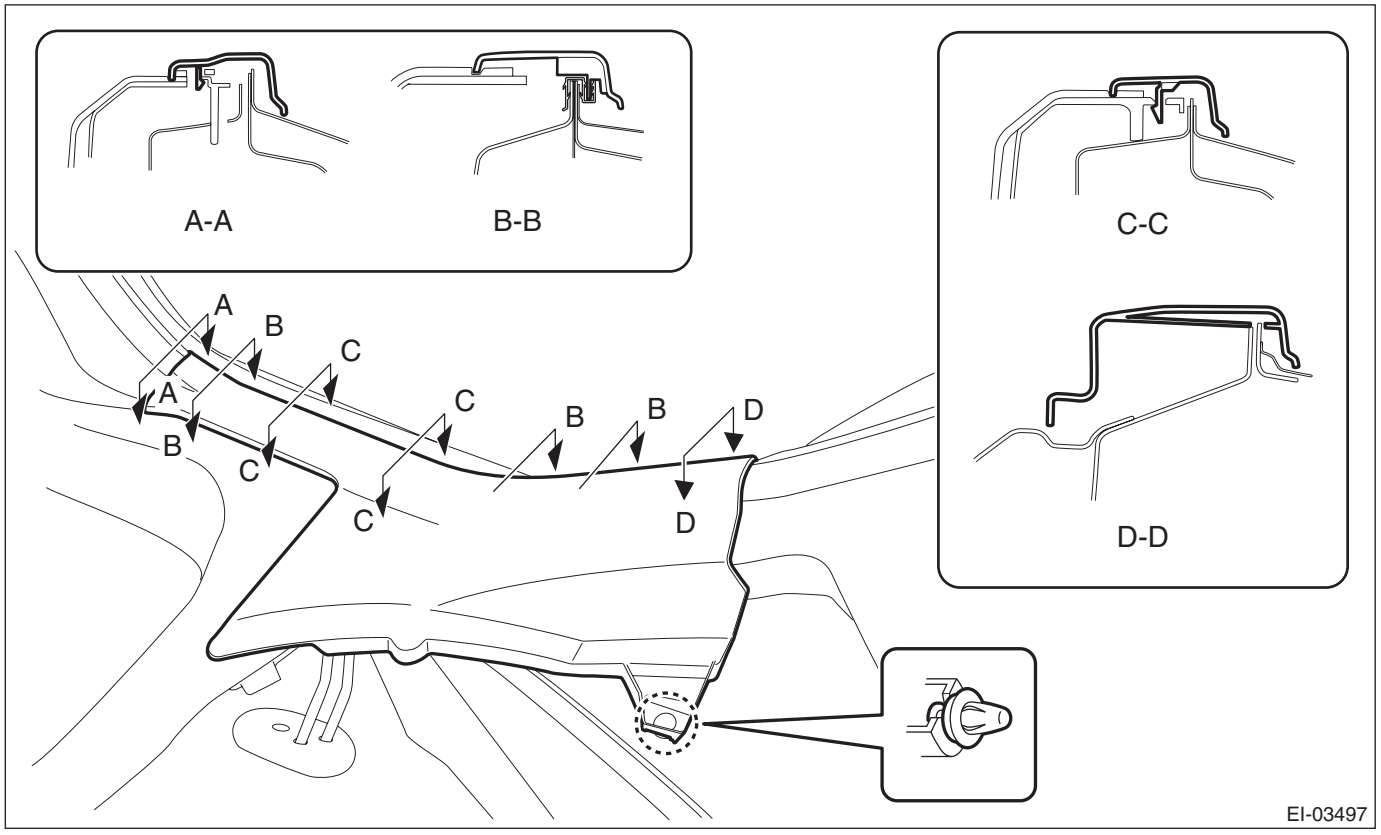

11) Remove the trim panel - rear pillar UPR and trim panel - rear pillar LWR on the RH and LH sides. <Ref. to EI-92, REMOVAL, Rear Quarter Trim.>

12) Remove the bolts, and remove the lower anchor of the seat belt - rear shoulder CTR.

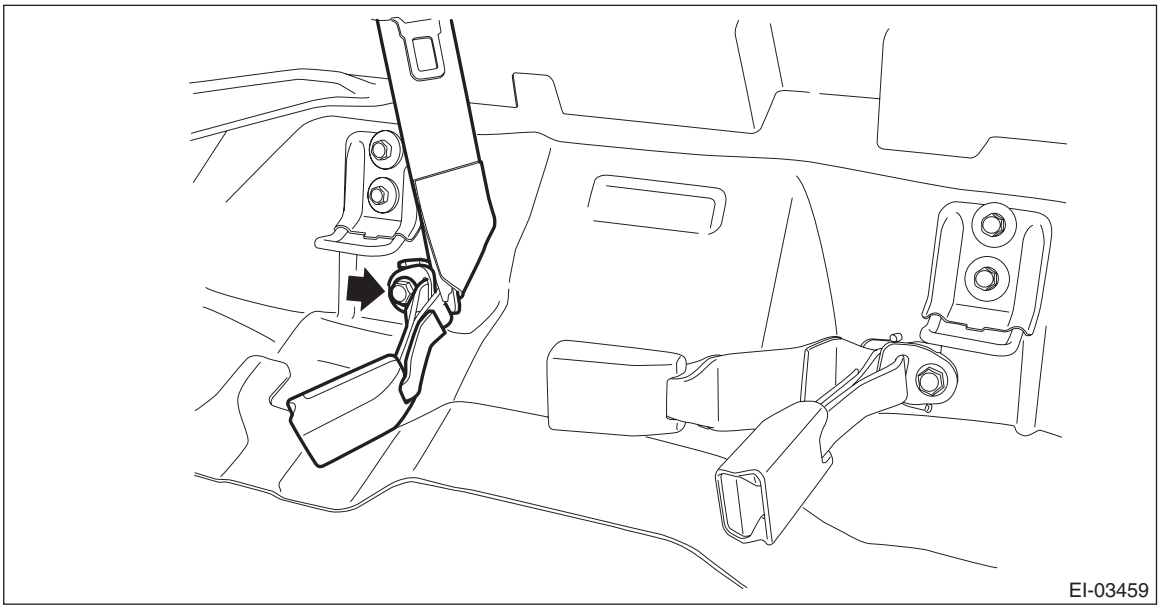

13) Remove the high-mounted stop light. <Ref. to LI-59, REMOVAL, High-mounted Stop Light.>
14) Remove the trim panel assembly - rear shelf. <Ref. to EI-95, REMOVAL, Rear Shelf Trim.>
15) Remove the trunk lid arm assembly.
    (1) Remove the torsion bar - trunk lid from the trunk lid arm. <Ref. to EB-48, TORSION BAR, REMOVAL, Trunk Lid.>
    (2) Remove the bolts, then remove the trunk lid arm assembly.

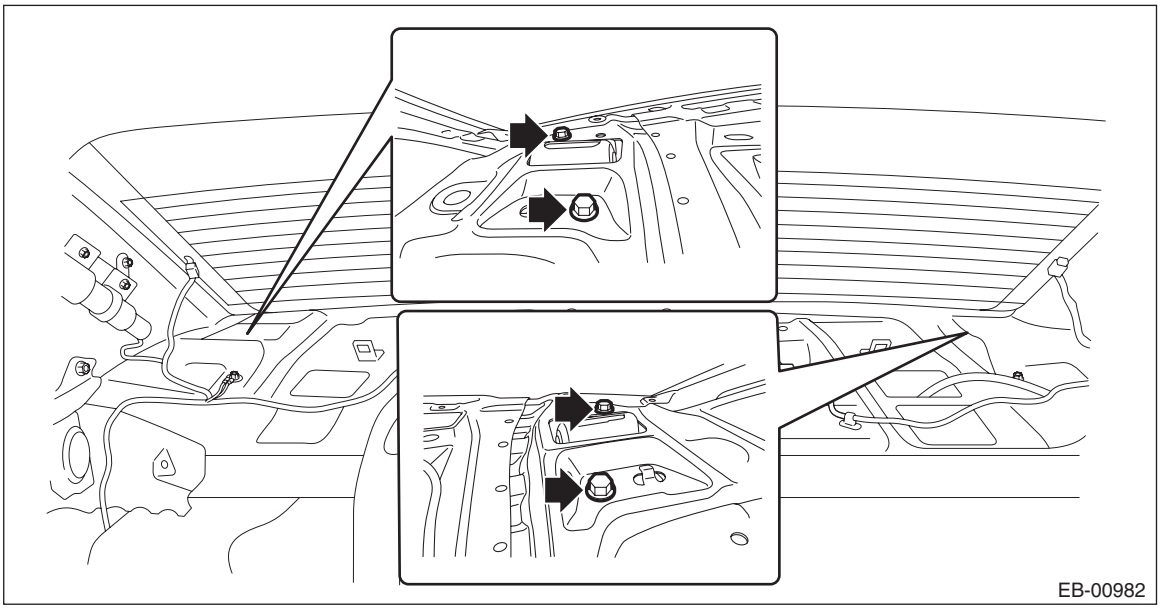

B: INSTALLATION

1) Install the trunk lid arm assembly.

Tightening torque
18 N·m (1.8 kgf-m, 13.3 ft-lb)

2) Install the trim panel assembly - rear shelf.
3) Install the high-mounted stop light.

CAUTION:
Make sure that the claw behind the light assembly - high-mounted is securely attached to the trim panel assembly - rear shelf.

4) Install the lower anchor of seat belt - rear shoulder CTR.

Tightening torque:
30 N·m (3.1 kgf-m, 22.1 ft-lb)

5) Install the trim panel - rear pillar UPR and the trim panel - rear pillar LWR.
6) Install the side sill cover - rear INN.
7) Install the rear seat cushion assembly.
8) Install the torsion bar - trunk lid.

CAUTION:
- **When performing installation, pay close attention to the identification marks and shapes of the torsion bar - trunk lid on the RH and LH sides.**
- **When installing the remover to the torsion bar - trunk lid, leave a slight clearance (c).**

Preparation tool:
ST: REMOVER (99099FJ000) and REMOVER (927780000)

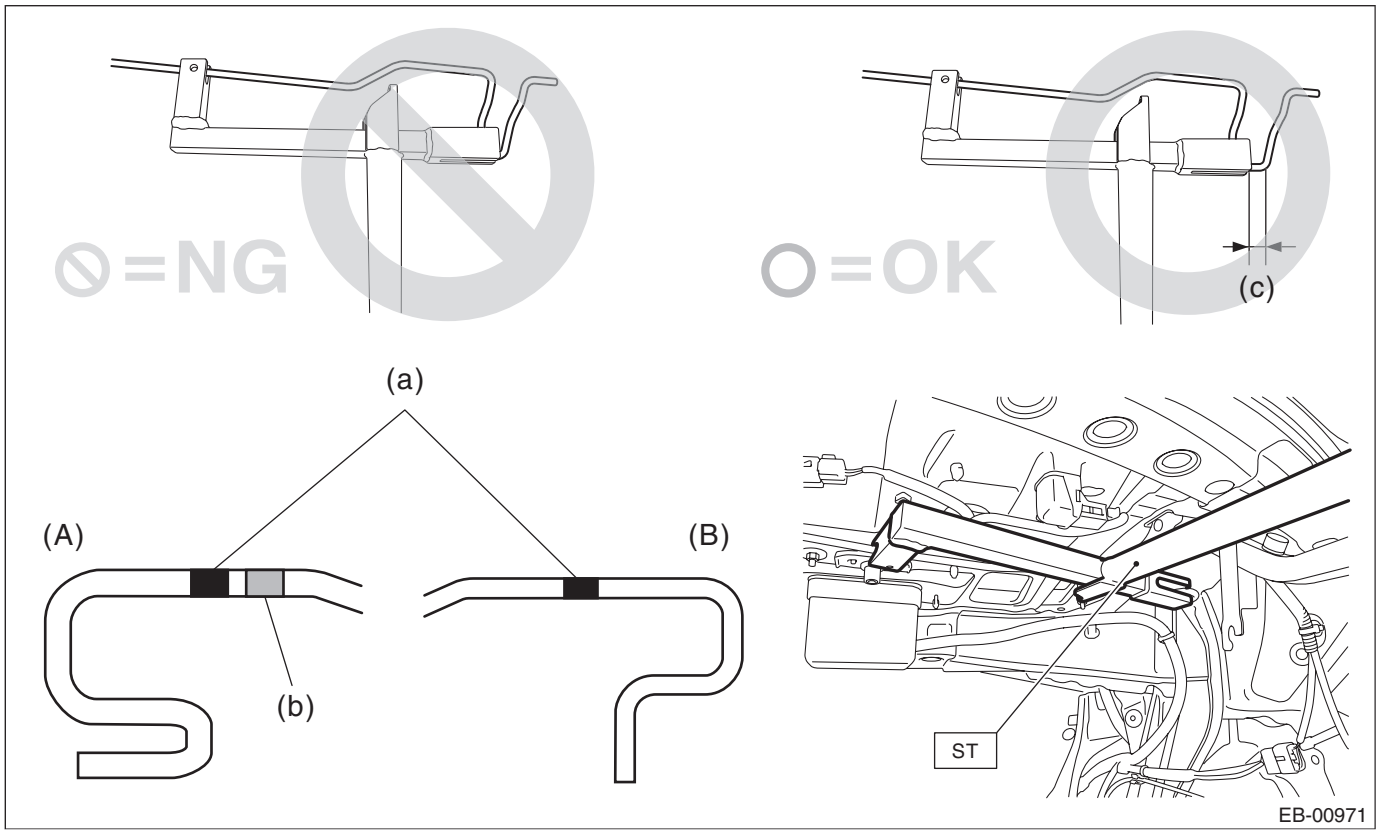

(A) Left Hand
(B) Right Hand
(a) Common marking on the right and left sides
(b) Marking on the left side only
(c) Clearance

9) Install the trunk lid COMPL.

Tightening torque
14 N·m (1.4 kgf-m, 10.3 ft-lb)
10) Install the rear spoiler.

Tightening torque
7.5 N·m (0.8 kgf-m, 5.5 ft-lb)
11) Install the rearview camera assembly. <Ref. to ET-56, INSTALLATION, Rearview Camera System.>
12) Install the garnish - trunk.

Tightening torque
4.5 N·m (0.5 kgf-m, 3.3 ft-lb)
13) Install the trunk lid harness.
14) Install the lock assembly - trunk lid.

Tightening torque
7.5 N·m (0.8 kgf-m, 5.5 ft-lb)
15) Apply grease to the rotating area of hinges.
16) Install while paying attention to make a uniform clearance around the trunk lid COMPL. <Ref. to EB-53, ADJUSTMENT, Trunk Lid.>

Tightening torque:
Refer to "COMPONENT" of "General Description". <Ref. to EB-6, TRUNK LID PANEL, COMPONENT, General Description.>
17) Connect the battery ground terminal. <Ref. to NT-6, BATTERY, NOTE, Note.>

C: ADJUSTMENT

Adjust the clearance around the trunk lid COMPL as follows.

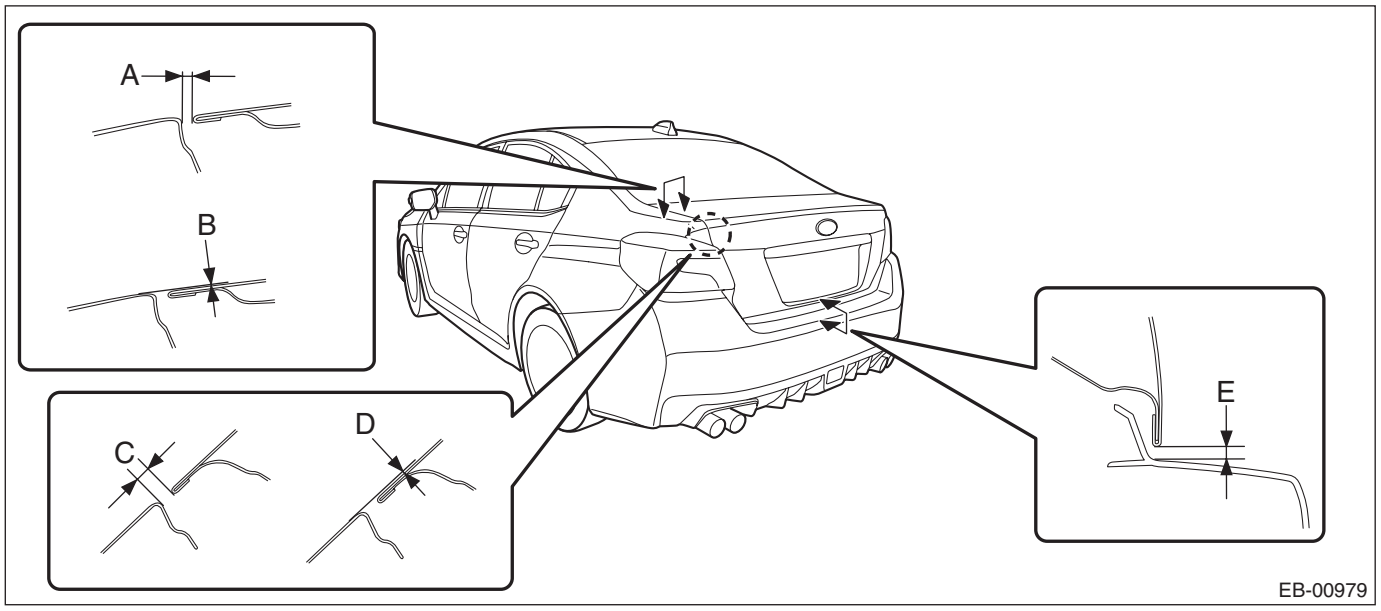

	Part	Standard
A	Trunk lid COMPL and Panel - side outer	3.5±1 mm (0.14±0.04 in)
B	Surface level gap between Trunk lid COMPL and Panel - side outer	–0.5+1, –0.5 mm (–0.02+0.04, –0.02 in)
C	Trunk lid COMPL and Panel - side outer	3.5±1 mm (0.14±0.04 in)
D	Surface level gap between Trunk lid COMPL and Panel - side outer	–0.5±0.7 mm (0.02±0.03 in)
E	Trunk lid COMPL to Bumper face - rear	7.5±1 mm (0.3±0.04 in)

1) Adjust the horizontal position of the trunk lid COMPL.
   (1) Loosen the mounting bolt.
   (2) Adjust the horizontal clearance of the trunk lid COMPL.

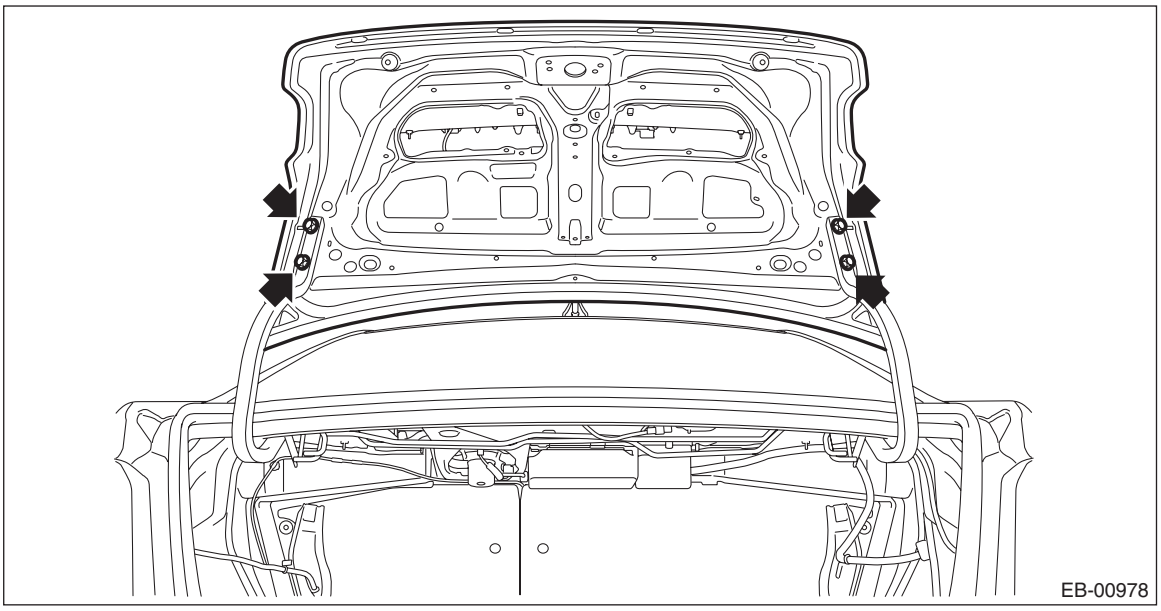

2) Adjust the surface level gap between the trunk lid COMPL and the body.
   (1) Remove the trim panel - trunk rear.
   (2) Loosen the bolt.
   (3) Tap the striker - trunk using a plastic hammer to adjust the surface level gap between the trunk lid COMPL and the body.

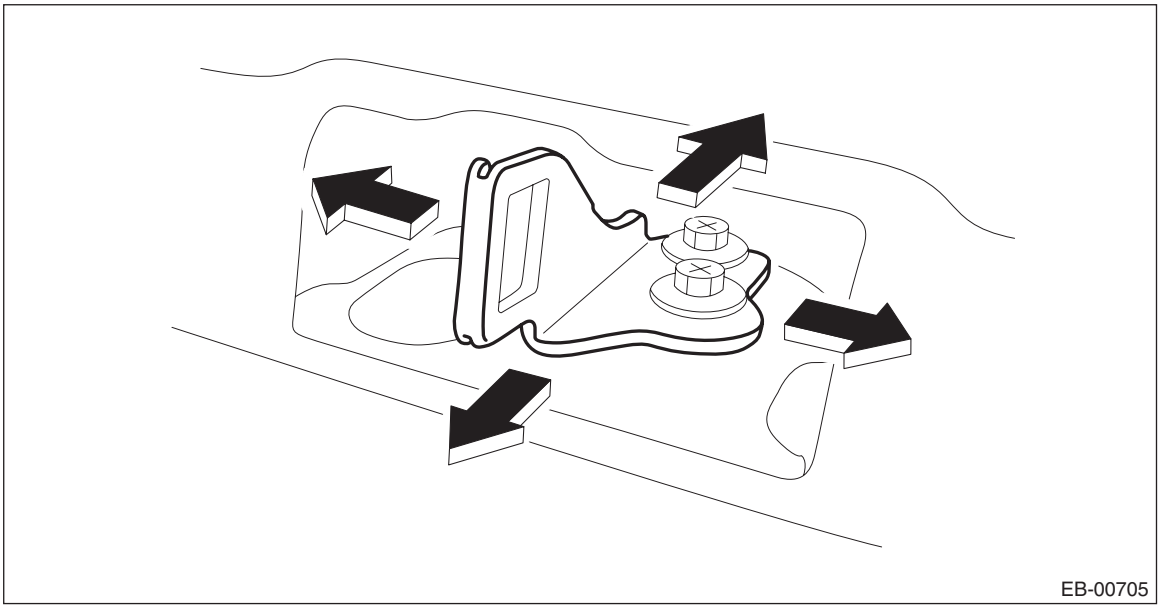

10.Weather Strip

A: REPLACEMENT

1. FLANGE

1) Remove the weather strip - body side flange while pulling the rubber. Be careful not to tear the rubber.
2) Replace the weather strip - trunk lid while pulling the rubber. Be careful not to tear the rubber.

NOTE:
While removing the weather strip - trunk lid, be careful not to allow adhesive to contact the trim panel - trunk side.

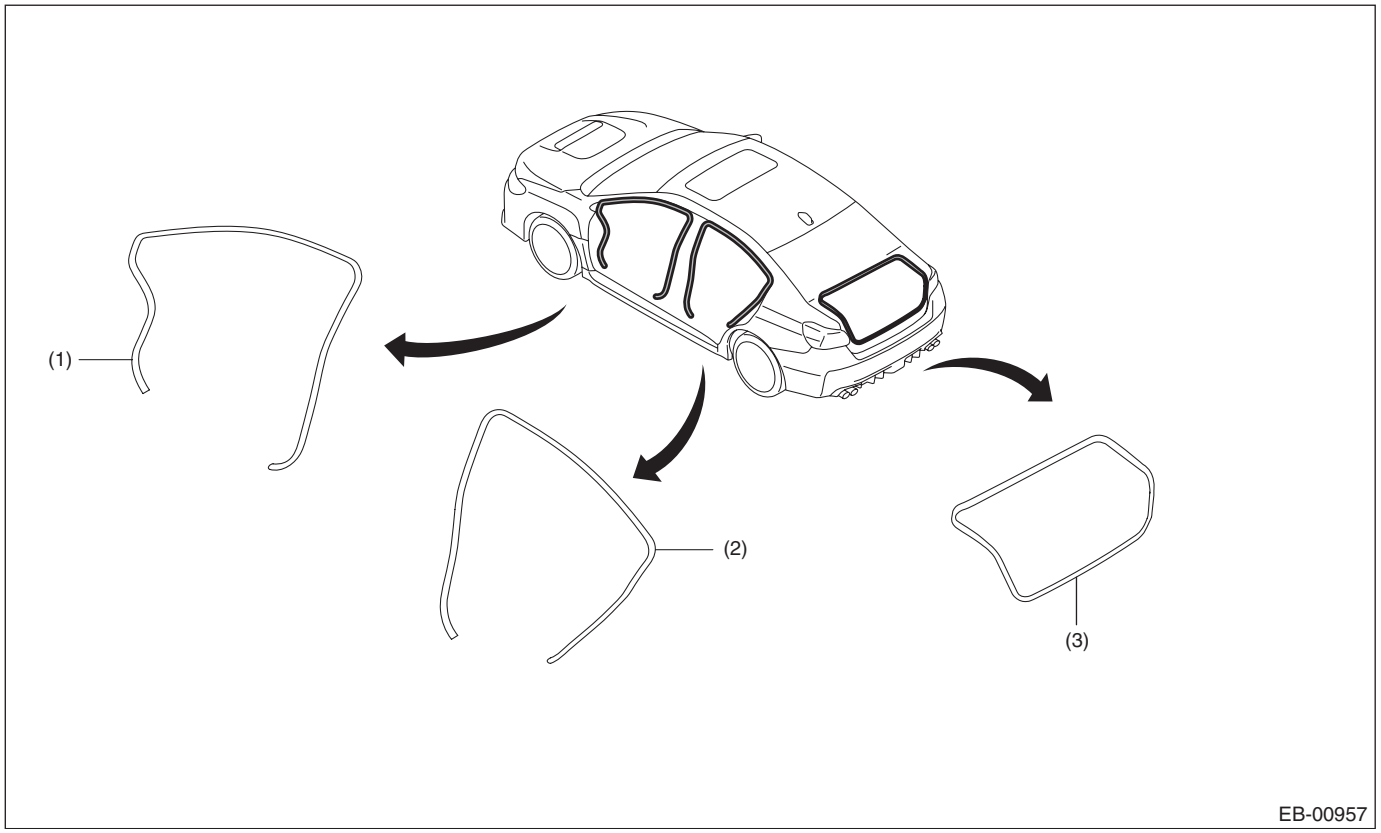

(1) Weather strip - body side flange front
(2) Weather strip - body side flange rear
(3) Weather strip - trunk lid

2. DOOR

1) Remove the weather strip after removing the clip. Be careful not to tear the rubber.

CAUTION:
If the weather strip clip is removed with excessive force, the weather strip may be damaged. Be sure to use clip remover to remove.

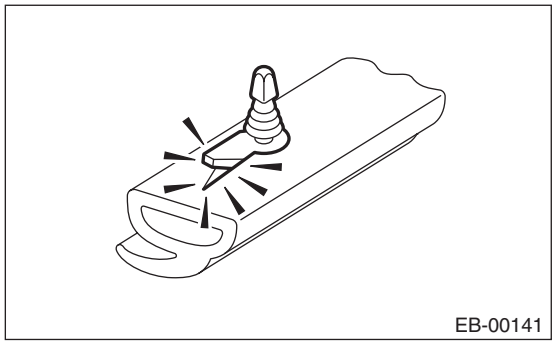

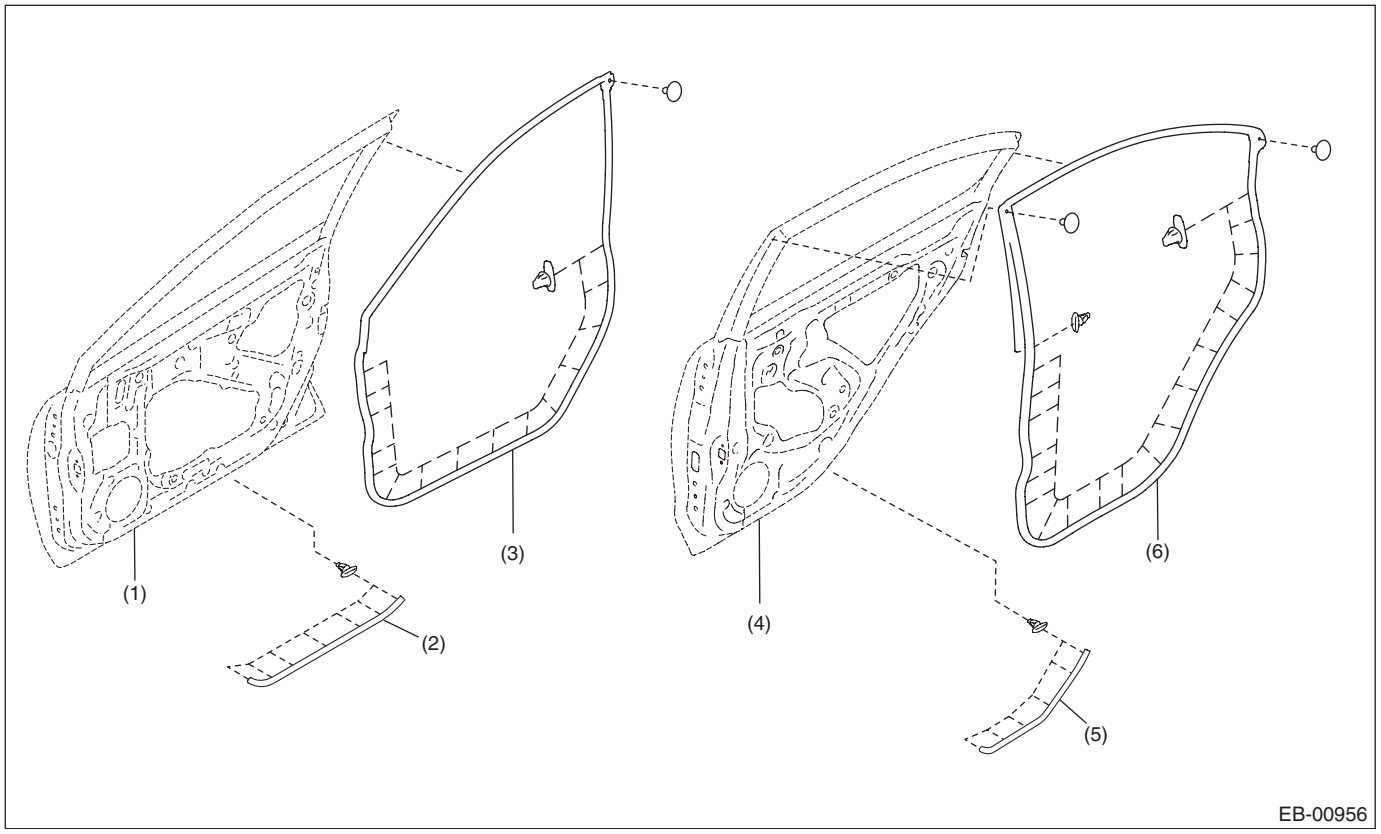

(1) Panel ASSY - front door
(2) Weather strip - front door LWR
(3) Weather strip - front door
(4) Panel ASSY - rear door
(5) Weather strip - rear door LWR
(6) Weather strip - rear door

CRUISE CONTROL SYSTEM

CC

		Page
1.	General Description	2
2.	Relay and Fuse	3
3.	Cruise Control System	4
4.	Control Unit	5
5.	Cruise Control Command Switch	6
6.	Combination Meter	8
7.	Stop Light & Brake Switch	9
8.	Clutch Switch	10
9.	Inhibitor Switch	11
10.	Transmission Control Module (TCM)	12
11.	Neutral Position Switch	13
12.	Diagnostics with Phenomenon	14

1. General Description

A: LOCATION

Refer to “LOCATION” of “CRUISE CONTROL SYSTEM (DIAGNOSTICS)” section. <Ref. to CC(diag)-6, LOCATION, Electrical Component Location.>

B: CAUTION

• Before disconnecting connectors of sensors or units, be sure to disconnect the ground cable from battery. When replacing the audio and MFD parts provided with memory functions, record the memory contents before disconnecting the battery ground cable.
• Be careful of the following items. Failing to do so may cause the airbag system malfunction.
  – Yellow connectors and harnesses with yellow tapes around them are the connectors and harnesses for the airbag system. When using a tester on these circuits, follow the cautions of “AIRBAG SYSTEM”. <Ref. to AB-9, CAUTION, General Description.>
  – Be careful not to damage the airbag system wiring harness when servicing the electrical parts around the steering column.
• When removing, installing or replacing the VDCCM&H/U, VDCCM&H/U bracket, steering wheel or steering angle sensor (steering roll connector), perform “VDC sensor midpoint setting mode” of the VDC. <Ref. to VDC-17, VDC SENSOR MIDPOINT SETTING MODE, ADJUSTMENT, VDC Control Module and Hydraulic Control Unit (VDCCM&H/U).>

C: PREPARATION TOOL

TOOL NAME	REMARKS
Circuit tester	Used for measuring resistance, voltage and current.

2. Relay and Fuse

A: LOCATION

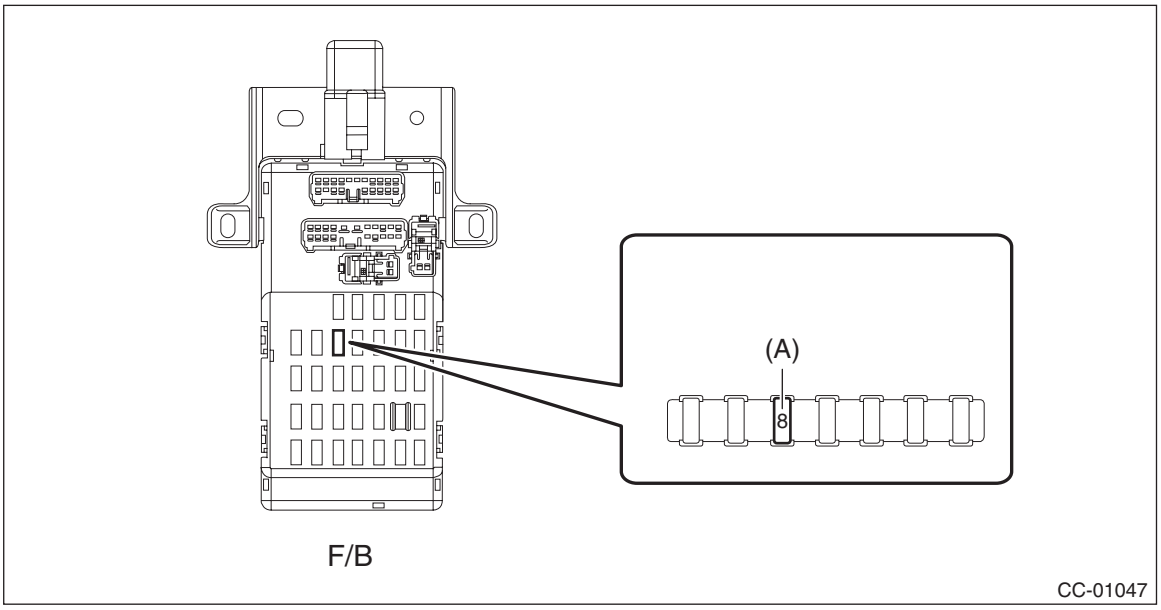

Relay & fuse box	Fuse 7.5 A (stop light and brake switch)	(A)

NOTE:
For other related fuses, refer to the wiring diagram. <Ref. to WI-31, Power Supply Circuit.>

B: INSPECTION

1. CHECK FUSE

1) Remove the fuse and inspect visually.
2) If the fuse is blown out, replace the fuse.

NOTE:
If the fuse is blown again, check the system wiring harness.

3. Cruise Control System

A: WIRING DIAGRAM

Refer to “Cruise Control System” in the wiring diagram.

- ENGINE TYPE FA: <Ref. to WI-135, ENGINE TYPE FA, WIRING DIAGRAM, Cruise Control System.>
- ENGINE TYPE EJ: <Ref. to WI-139, ENGINE TYPE EJ, WIRING DIAGRAM, Cruise Control System.>

B: INSPECTION

Refer to “Basic Diagnostic Procedure” of “CRUISE CONTROL SYSTEM (DIAGNOSTICS)”. <Ref. to CC(diag)-2, Basic Diagnostic Procedure.>

C: NOTE

For operation procedures of each component of the cruise control system, refer to the respective section.

- Control module: <Ref. to CC-5, Control Unit.>

NOTE:
System control of the cruise control is performed by each module. For procedure, refer to the following sections.

- Engine control module (ECM):
  - Except for STI model: <Ref. to FU(w/o STI)-124, Engine Control Module (ECM).>
  - STI model: <Ref. to FU(STI)-56, Engine Control Module (ECM).>
- Transmission control module (TCM): <Ref. to CVT(TR690)-126, Transmission Control Module (TCM).>

- Cruise control command switch: <Ref. to CC-6, Cruise Control Command Switch.>
- Combination meter: <Ref. to IDI-13, Combination Meter.>
- Stop light and brake switch: <Ref. to BR-100, Stop Light Switch.>
- Clutch switch: <Ref. to CL-35, Clutch Switch.>
- Inhibitor switch: <Ref. to CVT(TR690)-93, Inhibitor Switch.>
- Neutral position switch:
  - Except for STI model: <Ref. to 6MT(TY75)-46, Switches and Harness.>
  - STI model: <Ref. to 6MT(TY85)-42, Neutral Position Switch.>

4. Control Unit

A: NOTE

System control of the cruise control is performed by each module. For procedure, refer to the following sections.

- Engine control module (ECM):
  - Except for STI model: <Ref. to FU(w/o STI)-124, Engine Control Module (ECM).>
  - STI model: <Ref. to FU(STI)-56, Engine Control Module (ECM).>
- Transmission control module (TCM): <Ref. to CVT(TR690)-126, Transmission Control Module (TCM).>

5. Cruise Control Command Switch

A: REMOVAL

CAUTION:
Before handling the airbag system components, refer to "CAUTION" of "General Description" in "AIRBAG SYSTEM". <Ref. to AB-9, CAUTION, General Description.>
1) Set the tire to the straight-ahead position.
2) Disconnect the ground cable from battery and wait for at least 60 seconds before starting work. <Ref. to NT-6, BATTERY, NOTE, Note.>

NOTE:
For model with battery sensor, disconnect the ground terminal from battery sensor.
3) Remove the driver's airbag module. <Ref. to AB-32, REMOVAL, Driver's Airbag Module.>
4) Remove the steering wheel. <Ref. to PS-16, REMOVAL, Steering Wheel.>
5) Remove the cruise control command switch assembly. <Ref. to PS-17, DISASSEMBLY, Steering Wheel.>

B: INSTALLATION

CAUTION:
• Before handling the airbag system components, refer to "CAUTION" of "General Description" in "AIRBAG SYSTEM". <Ref. to AB-9, CAUTION, General Description.>
• Do not allow harness and connectors to interfere or get tangled up with other parts.
• Make sure that the steering roll connector is not turned from the original position.
• If the steering wheel and steering angle sensor (steering roll connector) are removed, perform "VSC(VDC) Centering Mode" of the VDC. <Ref. to VDC-17, VDC SENSOR MIDPOINT SETTING MODE, ADJUSTMENT, VDC Control Module and Hydraulic Control Unit (VDCCM&H/U).>
• Securely install the switch. Improper insertion of the pin or claw of the switch may cause improper installation.
1) Install the cruise control command switch assembly.
2) Align the center position of the steering roll connector. <Ref. to AB-62, ADJUSTMENT, Roll Connector.>
3) Install the steering wheel.

Tightening torque:
39 N·m (4 kgf-m, 28.8 ft-lb)

Clearance:
Between cover assembly - column and steering wheel: 4 — 6 mm (0.16 — 0.24 in)
4) Install the driver's airbag module. <Ref. to AB-33, INSTALLATION, Driver's Airbag Module.>
5) Connect the battery ground terminal. <Ref. to NT-6, BATTERY, NOTE, Note.>

C: INSPECTION

1) Measure the resistance between connector terminals.

Preparation tool:
Circuit tester

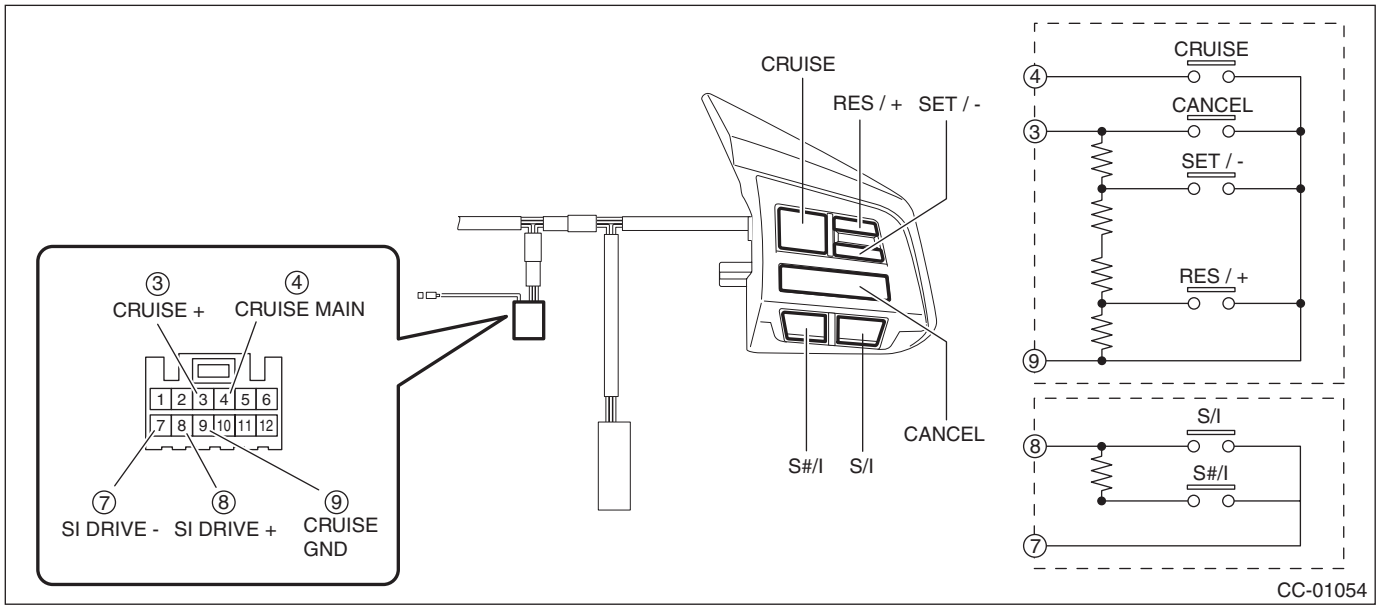

Terminal No.	Inspection conditions		Standard
3 — 9	CANCEL SET/– RES/+	All OFF	Approx. 4,020 Ω
	CANCEL	ON	Less than 1 Ω
	SET/–	ON	Approx. 250 Ω
	RES/+	ON	Approx. 1,470 Ω
4 — 9	CRUISE (MAIN)	OFF	1 MΩ or more
		ON	Less than 1 Ω
8 — 7	S/I S#/I	OFF	1 MΩ or more
	S/I	ON	Less than 1 Ω
	S#/I	ON	Approx. 1,800 Ω

2) Apply battery voltage between the connector terminals to check lighting condition of illumination inside the switch.

Terminal No.	Inspection conditions	Specification
10 (+) — 11 (–)	Apply battery voltage.	Light ON

3) Replace the cruise control command switch assembly if it is found defective.

6. Combination Meter

A: NOTE

For the operation procedures for combination meter, refer to “INSTRUMENTATION/DRIVER INFO” section. <Ref. to IDI-13, Combination Meter.>

7. Stop Light & Brake Switch

A: NOTE

For the operation procedures for stop light and brake switch, refer to “BRAKE” section. <Ref. to BR-100, Stop Light Switch.>

8. Clutch Switch

A: NOTE

For the operation procedures for clutch switch, refer to “CLUTCH SYSTEM” section. <Ref. to CL-35, Clutch Switch.>

9. Inhibitor Switch

A: NOTE

For the operation procedures for inhibitor switch, refer to “CONTINUOUSLY VARIABLE TRANSMISSION” section. <Ref. to CVT(TR690)-93, Inhibitor Switch.>

10.Transmission Control Module (TCM)

A: NOTE

For the operation procedures for transmission control module (TCM), refer to “CONTINUOUSLY VARIABLE TRANSMISSION” section. <Ref. to CVT(TR690)-126, Transmission Control Module (TCM).>

11.Neutral Position Switch

A: NOTE

For the operation procedures for neutral position switch, refer to “MANUAL TRANSMISSION AND DIFFERENTIAL” section.

- Except for STI model: <Ref. to 6MT(TY75)-46, Switches and Harness.>
- STI model: <Ref. to 6MT(TY85)-42, Neutral Position Switch.>

12.Diagnostics with Phenomenon

A: INSPECTION

Refer to “Diagnostics with Phenomenon” of “CRUISE CONTROL SYSTEM (DIAGNOSTICS)” section. <Ref. to CC(diag)-11, Diagnostics with Phenomenon.>

CRUISE CONTROL SYSTEM (DIAGNOSTICS)

CC(diag)

		Page
1.	Basic Diagnostic Procedure	2
2.	General Description	5
3.	Electrical Component Location	6
4.	Engine Control Module (ECM) I/O Signal	7
5.	Subaru Select Monitor	8
6.	Read Cancel Code	9
7.	Real-time Diagnosis	10
8.	Diagnostics with Phenomenon	11
9.	List of Cancel Code	13
10.	Diagnostic Procedure with Cancel Code	15

1. Basic Diagnostic Procedure

A: PROCEDURE

CAUTION:
• When performing the entire diagnosis or cruise control diagnosis, first start the engine and wait until initial illumination of the ABS/VDC warning light completes. (If you start the diagnostics before performing the above procedures, the cancel code "43" is recorded and CRUISE indicator does not illuminate even though the CRUISE switch is pressed.)
• When performing diagnosis, observe the legal speed limit on the road.
• The cancel code will also appear when the cruise control is cancelled by the driver's operation. Do not confuse them.
• Be sure to get an assistant to support the diagnosis while driving, and have him/her operate the select monitor.

	Step	Check	Yes	No
1	**CHECK MALFUNCTION INDICATOR LIGHT.** Make sure the malfunction indicator light illuminates.	Does the malfunction indicator light illuminate?	Go to step **5**.	Go to step **2**.
2	**CHECK CRUISE INDICATOR LIGHT.** Make sure the cruise indicator light blinks.	Does the cruise indicator light blink?	Go to step **7**.	Go to step **3**.
3	**CHECK CRUISE SWITCH OPERATION.** Check the CRUISE switch operation. (Check the illumination of the CRUISE indicator.)	Is the CRUISE switch turned on? (Does the CRUISE indicator illuminate?)	Go to step **4**.	Go to phenomenon 1. <Ref. to CC(diag)-11, DIAGNOSTIC PROCEDURE WITH PHENOMENON, Diagnostics with Phenomenon.>
4	**CHECK CRUISE CONTROL SET OPERATION.** Check the cruise control setting operation.	Can the cruise control be set while driving at 40 km/h (25 MPH) or more?	Go to step **8**.	Go to step **7**.
5	**CHECK DTC.** Read all DTCs using the Subaru Select Monitor.	Is an engine or ABS/VDC related DTC displayed?	Record the DTC. Go to step **6**.	Go to phenomenon 2. <Ref. to CC(diag)-11, DIAGNOSTIC PROCEDURE WITH PHENOMENON, Diagnostics with Phenomenon.>
6	**CHECK FREEZE FRAME DATA.** Using the Subaru Select Monitor, check the Freeze Frame Data or Information in Trouble State.	Was the Freeze Frame Data or Information in Trouble State recorded?	Record the data. Perform the diagnosis according to the engine or ABS/VDC related DTC.	Perform the diagnosis according to the engine or ABS/VDC related DTC.
7	**CHECK CANCEL CODE.** Using the Subaru Select Monitor, read the cancel codes. NOTE: • Do not turn the ignition switch to OFF after the cruise control is deactivated. • Do not operate the cruise control command switch after the cruise control is deactivated. If the above is performed, the cancel code will be cleared.	Is it possible to read the cancel codes?	Perform the diagnosis according to the cancel code. <Ref. to CC(diag)-13, LIST, List of Cancel Code.>	Go to step **8**.

	Step	Check	Yes	No
8	**CHECK SET INDICATOR.** Check the illumination of the SET indicator.	Does the SET indicator illuminate?	Go to step **9**.	Go to phenomenon 3. <Ref. to CC(diag)-11, DIAGNOSTIC PROCEDURE WITH PHENOMENON, Diagnostics with Phenomenon.>
9	**CHECK VEHICLE SPEED IS HELD WITHIN SET SPEED.** Make sure the vehicle speed is held within set speed.	Is the vehicle speed kept within setting speed ±3 km/h (±2 MPH)? (Make sure that on a level road.)	Go to step **10**.	Go to phenomenon 4. <Ref. to CC(diag)-11, DIAGNOSTIC PROCEDURE WITH PHENOMENON, Diagnostics with Phenomenon.>
10	**CHECK RES/+ OPERATION.** Check the RES/+ switch operation.	Does the vehicle speed increase or return to set speed after RES/+ switch has been pressed?	Go to step **11**.	Go to phenomenon 5. <Ref. to CC(diag)-11, DIAGNOSTIC PROCEDURE WITH PHENOMENON, Diagnostics with Phenomenon.>
11	**CHECK SET/– OPERATION.** Check the SET/– switch operation.	Does the vehicle speed decrease after SET/– switch has been pressed?	Go to step **12**.	Go to phenomenon 6. <Ref. to CC(diag)-11, DIAGNOSTIC PROCEDURE WITH PHENOMENON, Diagnostics with Phenomenon.>
12	**CANCEL OPERATION CHECK.** Check the CANCEL switch operation.	Is the cruise control released after CANCEL switch has been pressed?	Go to step **13**.	Go to phenomenon 7. <Ref. to CC(diag)-11, DIAGNOSTIC PROCEDURE WITH PHENOMENON, Diagnostics with Phenomenon.>
13	**CHECK CRUISE CONTROL RELEASE OPERATION.** Check the cruise control release operation.	Is the cruise control released after brake pedal has been depressed?	Go to step **14**.	Go to phenomenon 8. <Ref. to CC(diag)-11, DIAGNOSTIC PROCEDURE WITH PHENOMENON, Diagnostics with Phenomenon.>

	Step	Check	Yes	No
14	**CHECK CRUISE CONTROL RELEASE OPERATION.** Check the cruise control release operation.	Is the cruise control released after shifting to the neutral position?	Go to step **15**.	Go to phenomenon 9. <Ref. to CC(diag)-11, DIAGNOSTIC PROCEDURE WITH PHENOMENON, Diagnostics with Phenomenon.>
15	**CHECK CRUISE CONTROL RELEASE OPERATION.** Check the cruise control release operation.	Is the cruise control released after depressing the clutch pedal?	Finish the diagnosis.	Go to phenomenon 10. <Ref. to CC(diag)-11, DIAGNOSTIC PROCEDURE WITH PHENOMENON, Diagnostics with Phenomenon.>

2. General Description

A: CAUTION

Airbag system wiring harness is routed near the cruise control command switch.

CAUTION:
• Do not use the electrical test equipment on the airbag system wiring harnesses and connector circuits.
• Be careful not to damage the airbag system wiring harness when servicing the cruise control command switch. Airbag system wiring harness is routed near the cruise control command switch.

B: PREPARATION TOOL

1. SPECIAL TOOL

ILLUSTRATION	TOOL NUMBER	DESCRIPTION	REMARKS
 STSSM4	—	SUBARU SELECT MONITOR 4	Used for setting of each function and trouble-shooting for electrical system. NOTE: For detailed operation procedures of Subaru Select Monitor 4, refer to “Application help”.

2. GENERAL TOOL

TOOL NAME	REMARKS
Circuit tester	Used for measuring resistance, voltage and current.
DST-i	Used for Subaru Select Monitor 4.

C: INSPECTION

Check the battery. <Ref. to SC(STI)-24, INSPECTION, Battery.> <Ref. to SC(w/o STI)-51, INSPECTION, Battery.>

3. Electrical Component Location

A: LOCATION

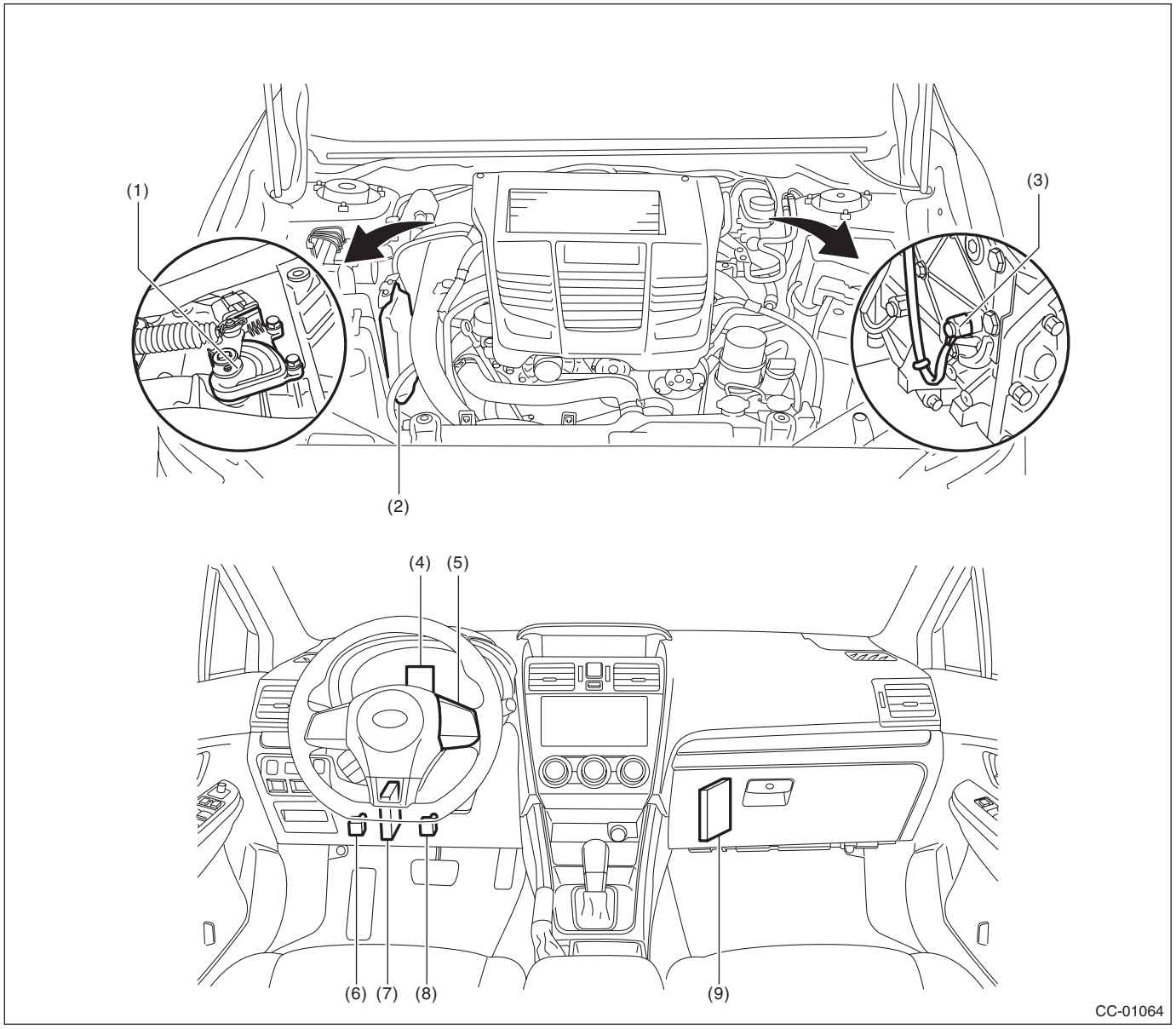

(1) Inhibitor switch (CVT model)
(2) Engine control module (ECM) (engine type FA)
(3) Neutral position switch (MT model)
(4) Cruise indicator light and cruise set indicator light
(5) Cruise control command switch
(6) Clutch switch (MT model)
(7) Transmission control module (TCM) (CVT model)
(8) Stop light and brake switch
(9) Engine control module (ECM) (engine type EJ)

4. Engine Control Module (ECM) I/O Signal

A: ELECTRICAL SPECIFICATION

For details on the input/output signals for the engine control module, refer to ENGINE (DIAGNOSTICS). <Ref. to EN(w/o STI)(diag)-21, ELECTRICAL SPECIFICATION, Engine Control Module (ECM) I/O Signal.> <Ref. to EN(STI)(diag)-20, ELECTRICAL SPECIFICATION, Engine Control Module (ECM) I/O Signal.>

B: WIRING DIAGRAM

Refer to “Cruise Control System” in the wiring diagram. <Ref. to WI-135, WIRING DIAGRAM, Cruise Control System.>

5. Subaru Select Monitor

A: OPERATION

1. GENERAL DESCRIPTION

The on-board diagnosis function of the cruise control system uses Subaru Select Monitor.
The on-board diagnosis function operates in two categories, which are used depending on the type of problems;
1) Cruise Control Cancel Conditions Diagnosis:
(1) This category of diagnosis requires actual vehicle driving in order to determine the cause, as when cruise speed is cancelled during driving although cruise cancel condition is not entered.
(2) Cruise control memory in ECM stores the cancel code which occurred during driving. When there are multiple cancel code, they are shown on the Subaru Select Monitor.

CAUTION:
• In the cruise control memory, not only the cruise control "cancel" occurred (although the "cancel" operation is not entered by the driver), but also the "cancel" condition input by the driver is stored.
• The latest memory content (latest code) is cleared when ignition switch is turned to OFF. However, memory contents set by the diagnosis of faulty switches related to the system and cruise control will remain as trouble history (memory code) after the ignition switch is turned to OFF.
2) Real-time Diagnosis:
Real-time diagnosis function is used to determine whether or not the input signal system is in good order, according to signal emitted from switches, sensors, etc.
(1) Vehicle cannot be driven at cruise speed when the problem occurs in the cruise control system or relevant circuits.
(2) Monitor the signal conditions from switches and sensors.

2. BASIC OPERATION

For operation procedures, refer to "Application help".

6. Read Cancel Code

A: OPERATION

1) On «Start» display, select «Diagnosis».
2) On «Vehicle selection» display, input the target vehicle information and select «Confirmed».
3) On «Main Menu» display, select «Each System».
4) On «Select System» display, select «Engine Control System» and then «Enter».
5) Drive vehicle at 40 km/h (25 MPH) or more and set the cruise control.

NOTE:
When performing the entire diagnosis or cruise control diagnosis, first start the engine and wait until initial illumination of the ABS/VDC warning light completes. (If you start the diagnostics before performing the above procedures, the cancel code “43” is recorded and CRUISE indicator does not illuminate even though the CRUISE switch is pressed.)

CAUTION:
- **When performing diagnosis, observe the legal speed limit on the road.**
- **The cancel code will also appear when the cruise control is cancelled by the driver’s operation. Do not confuse them.**
- **Be sure to get an assistant to support the diagnosis while driving, and have him/her operate the select monitor.**

6) When the set speed is cancelled by itself (when cancelled without a cancel operation such as applying the brake) or if the cruise control could not be set by performing the setting operation, selecting the «Cancel Code» on the engine malfunction diagnosis screen will display the cancel code on the select monitor display.

NOTE:
The «Current» and «The past» are contained in the cancel code. The latest code recognized during current test drive is displayed in «Current». Cancel codes resulting from fault diagnosis of switches relating to the system and cruise control are also displayed in «The past».
7) Perform Engine DTC Clear Memory operation. <Ref. to EN(w/o STI)(diag)-82, OPERATION, Clear Memory Mode.> <Ref. to EN(STI)(diag)-68, OPERATION, Clear Memory Mode.>
Cancel codes for switches relating to the system and cruise control are deleted by clearing memory on the engine side.

NOTE:
- The latest code will be cleared by turning ignition switch to OFF.
- For detailed operation procedures, refer to “Application help”.
- For details on cancel codes, refer to List of Cancel Code. <Ref. to CC(diag)-13, List of Cancel Code.>

7. Real-time Diagnosis

A: OPERATION

1) On «Start» display, select «Diagnosis».
2) On «Vehicle selection» display, input the target vehicle information and select «Confirmed».
3) On «Main Menu» display, select «Each System».
4) On «Select System» display, select «Engine Control System» and then «Enter».
5) On «Select Function» display, select «Data monitor».
6) Make sure that normal display is shown when operated as follows:

- Depress and release the brake pedal. (Stop light switch and brake switch are turned ON.)
- Turn the “CRUISE” switch to ON.
- Turn the “CANCEL” switch to ON.
- Turn the “SET/–” switch to ON.
- Turn the “RES/+” switch to ON.
- Depress or release the clutch switch.
- Place the shift lever in any position other than neutral.

NOTE:
For detailed operation procedures, refer to “Application help”.

8. Diagnostics with Phenomenon

A: DIAGNOSTIC PROCEDURE WITH PHENOMENON

Phenomenon		Check item	Reference
1	CRUISE switch is not turned ON. (CRUISE indicator does not illuminate.) Or the cruise control is cancelled without CRUISE switch operation.	(1) Perform cruise cancel conditions diagnosis.	Perform the diagnosis according to displayed cancel code.
		(2) Perform the real-time diagnosis.	Check the input signal of cruise control system.
		(3) Check the cruise control command switch.	<Ref. to CC(diag)-15, 11, Diagnostic Procedure with Cancel Code.>
		(4) Check the CRUISE indicator.	<Ref. to CC(diag)-12, CHECK CRUISE INDICATOR LIGHT AND CRUISE SET INDICATOR LIGHT, Diagnostics with Phenomenon.>
2	Cruise control cannot be set. Or the cruise control is cancelled without canceling operation.	(1) Perform cruise cancel conditions diagnosis.	Perform the diagnosis according to displayed cancel code.
		(2) Perform the real-time diagnosis.	Check the input signal of cruise control system.
		(3) Check the cruise control command switch.	<Ref. to CC(diag)-15, 11, Diagnostic Procedure with Cancel Code.>
		(4) Check stop light switch and brake switch.	<Ref. to BR-100, Stop Light Switch.> <Ref. to CC(diag)-17, 12, Diagnostic Procedure with Cancel Code.>
		(5) Check clutch switch.	<Ref. to CL-35, Clutch Switch.> <Ref. to CC(diag)-20, 13, Diagnostic Procedure with Cancel Code.>
		(6) Check the neutral position switch.	<Ref. to CC(diag)-22, 14, Diagnostic Procedure with Cancel Code.> <Ref. to CC(diag)-28, 62, Diagnostic Procedure with Cancel Code.>
		(7) Check vehicle speed sensor.	<Ref. to CC(diag)-27, 22, Diagnostic Procedure with Cancel Code.>
3	SET indicator does not illuminate.	Check the SET indicator.	<Ref. to CC(diag)-12, CHECK CRUISE INDICATOR LIGHT AND CRUISE SET INDICATOR LIGHT, Diagnostics with Phenomenon.>
4	Vehicle speed is not held within set speed ±3 km/h (±2 MPH).	Check the vehicle speed sensor.	<Ref. to CC(diag)-27, 22, Diagnostic Procedure with Cancel Code.>
5	Vehicle speed does not increase or does not return to set speed after RES/+ switch has been pressed.	(1) Perform the real-time diagnosis.	Check the input signal of cruise control system.
		(2) Check the RES/+ switch.	<Ref. to CC(diag)-15, 11, Diagnostic Procedure with Cancel Code.>
6	Vehicle speed does not decrease after SET/– switch has been pressed.	(1) Perform the real-time diagnosis.	Check the input signal of cruise control system.
		(2) Check the SET/– switch.	<Ref. to CC(diag)-15, 11, Diagnostic Procedure with Cancel Code.>
7	Cruise control is not released after CANCEL switch has been pressed.	(1) Perform the real-time diagnosis.	Check the input signal of cruise control system.
		(2) Check the CANCEL switch.	<Ref. to CC(diag)-15, 11, Diagnostic Procedure with Cancel Code.>
8	Cruise control is not released after brake pedal has been depressed.	(1) Perform the real-time diagnosis.	Check the input signal of cruise control system.
		(2) Check stop light switch and brake switch.	<Ref. to CC(diag)-17, 12, Diagnostic Procedure with Cancel Code.> <Ref. to BR-101, INSTALLATION, Stop Light Switch.>
9	Cruise control is not released after shifting to the neutral position.	(1) Perform the real-time diagnosis.	Check the input signal of cruise control system.
		(2) Check the neutral position switch.	<Ref. to CC(diag)-22, 14, Diagnostic Procedure with Cancel Code.> <Ref. to CC-13, Neutral Position Switch.>

Phenomenon		Check item	Reference
10	Cruise control is not released after clutch pedal has been depressed.	(1) Perform the real-time diagnosis.	Check the input signal of cruise control system.
		(2) Check clutch switch.	<Ref. to CC(diag)-20, 13, Diagnostic Procedure with Cancel Code.> <Ref. to CL-35, CLUTCH SWITCH (CRUISE CONTROL), INSTALLATION, Clutch Switch.>

B: CHECK CRUISE INDICATOR LIGHT AND CRUISE SET INDICATOR LIGHT

TROUBLE SYMPTOM:

Cruise control can be set, but the CRUISE indicator and SET indicator do not illuminate.

Step		Check	Yes	No
1	**CHECK CRUISE INDICATOR LIGHT AND CRUISE SET INDICATOR LIGHT.** Perform the combination meter operation check. <Ref. to IDI(diag)-20, System Operation Check Mode.>	Do the CRUISE & SET indicators illuminate?	Go to step **2**.	Replace the meter case assembly. <Ref. to IDI-13, Combination Meter.>
2	**CHECK LAN SYSTEM.** Perform the diagnosis for LAN system. <Ref. to LAN(diag)-2, Basic Diagnostic Procedure.>	Is a DTC of the LAN system detected?	Perform the diagnosis according to DTC for LAN system.	Replace the ECM. <Ref. to FU(w/o STI)-124, Engine Control Module (ECM).> <Ref. to FU(STI)-56, Engine Control Module (ECM).>

9. List of Cancel Code

A: LIST

NOTE:
- The cancel code is registered even when cancel is performed intentionally by the driver.
- Cancel codes are cleared if the ignition switch is turned to OFF.
- If a different cancel code is input after a cancel code (latest code) has been input, the latest code is overwritten.
- If the cruise indicator light is flashing, a malfunction is occurring in the system or cruise control related switch. The cancel code at this time is saved even after ignition switch is OFF as a memory code of a past malfunction.
- To display a cancel code, use the Subaru Select Monitor to read the code after the cruise control is deactivated during a driving test.

Cancel code	Item	Contents of diagnosis	Note
11	Main switch	CRUISE switch of cruise control command switch is turned to OFF, and then the cruise control is released.	This code is displayed without operating the CRUISE switch. <Ref. to CC(diag)-15, 11, Diagnostic Procedure with Cancel Code.>
12	Stop & Brake switch	Stop light switch or brake switch is turned to ON, and then the cruise control is released.	This code is displayed without depressing the brake pedal. <Ref. to CC(diag)-17, 12, Diagnostic Procedure with Cancel Code.>
13	Clutch switch	Clutch switch is turned to ON, and then the cruise control is released.	This code is displayed without depressing the clutch pedal. <Ref. to CC(diag)-20, 13, Diagnostic Procedure with Cancel Code.>
14	Neutral switch	Neutral position switch is turned to ON, and then the cruise control is released.	This code is displayed without shifting to neutral position. <Ref. to CC(diag)-22, 14, Diagnostic Procedure with Cancel Code.>
15	Cancel switch	Cancel switch is turned to ON, and then the cruise control is released.	This code is displayed without operating the cancel switch. <Ref. to CC(diag)-24, 15, Diagnostic Procedure with Cancel Code.>
16	Ignition switch	Ignition switch is turned to OFF, and then the cruise control is released.	This code is displayed without operating the ignition switch. <Ref. to CC(diag)-25, 16, Diagnostic Procedure with Cancel Code.>
21	Abnormality of switches when Ignition switch on	When the ignition switch is turned to ON, each switch of cruise control command switch is already turned to ON.	This code is displayed when the ignition switch is turned to ON without operating the cruise control command switch. <Ref. to CC(diag)-26, 21, Diagnostic Procedure with Cancel Code.>
22	Abnormality of change in vehicle speed	Malfunction of vehicle speed signal variation is detected.	<Ref. to CC(diag)-27, 22, Diagnostic Procedure with Cancel Code.>
24	Abnormality of switches related to cruise control	Open circuit of the cruise control switch is detected during cruise driving. (The system is judged as model without cruise control.)	This code is displayed with normal operation. <Ref. to CC(diag)-27, 24, Diagnostic Procedure with Cancel Code.>
31	Abnormal engine speed Signal	• Abnormal increase of engine speed is detected. • Gear is placed in Neutral, 1st (MT model only) or Reverse position.	Cruise in 2nd shift position or more. <Ref. to CC(diag)-27, 31, Diagnostic Procedure with Cancel Code.>

List of Cancel Code

Cancel code	Item	Contents of diagnosis	Note
32	Cruse Control out of Range	• Controlled vehicle speed decreased under the limit during cruising. • Set operation was performed at vehicle speed unavailable for setting. • RESUME operation was performed without memorized vehicle speed.	This code is displayed, though the vehicle speed is increased to the speed available for cruise set and set operation was performed again. <Ref. to CC(diag)-27, 32, Diagnostic Procedure with Cancel Code.>
34	Prohibition of cruise control at continuing big Accel. angle	The vehicle has been driven at higher speed than set vehicle speed for an abnormally long time (approximately 10 minutes) during cruise driving.	This code is displayed when driving for a long period of time at higher speed than appropriate cruise set vehicle speed by operating accelerator pedal. In this case, the cruise setting is deactivated. <Ref. to CC(diag)-27, 34, Diagnostic Procedure with Cancel Code.>
35	Prohibition of cruise control at vehicle speed F/B malfunction	Set vehicle speed cannot be kept because of some reasons (steep uphill, parking brake, abnormal decrease of engine output, etc.) during cruise driving.	This code is displayed when driving condition is not suitable for cruise control. Perform cruise set operation again after clearing the possible cause. <Ref. to CC(diag)-28, 35, Diagnostic Procedure with Cancel Code.>
41	VDC/TCS Operating	Vehicle dynamics control (VDC), TCS or EPB is operated during cruise driving or cruise setting.	This code is displayed when driving condition is not suitable for cruise control. Perform cruise set operation again after clearing the possible cause. <Ref. to CC(diag)-28, 41, Diagnostic Procedure with Cancel Code.>
43	ABS/VDC Failure	• Detected the situation that some or all functions of ABS or VDC can not be activated during cruise driving or cruise setting. • The CRUISE switch was pressed before starting the engine, but the CRUISE indicator did not illuminate.	<Ref. to CC(diag)-28, 43, Diagnostic Procedure with Cancel Code.>
44	Body Integrated unit Failure	Body integrated unit system malfunction is detected during cruise driving or cruise setting.	<Ref. to CC(diag)-28, 44, Diagnostic Procedure with Cancel Code.>
45	Meter Failure	Combination meter malfunction is detected during cruise driving or cruise setting.	<Ref. to CC(diag)-28, 45, Diagnostic Procedure with Cancel Code.>
49	TCM Failure	Transmission control module (TCM) malfunction is detected during cruise driving or cruise setting.	<Ref. to CC(diag)-28, 49, Diagnostic Procedure with Cancel Code.>
61	Stop & Brake switch	Malfunction in the stop light & brake switch is detected.	<Ref. to CC(diag)-28, 61, Diagnostic Procedure with Cancel Code.>
62	Neutral Switch Failure	Neutral position switch malfunction is detected.	<Ref. to CC(diag)-28, 62, Diagnostic Procedure with Cancel Code.>
63	Abnormality 1 of change in vehicle speed	Malfunction of vehicle speed signal variation is detected.	<Ref. to CC(diag)-29, 63, Diagnostic Procedure with Cancel Code.>
64	Engine Sensor Failure 1	Malfunction related to engine is detected.	<Ref. to CC(diag)-29, 64, Diagnostic Procedure with Cancel Code.>
65	Abnormality 1 of switches related to cruise control	Cruise control command switch malfunction is detected. (When the switch is pressed ON for a long time (approximately two minutes), stuck ON condition is detected.)	<Ref. to CC(diag)-29, 65, Diagnostic Procedure with Cancel Code.>
66	Cruise Control Calculation Error	Malfunction of the cruise control calculation (microcomputer) is detected.	<Ref. to CC(diag)-29, 66, Diagnostic Procedure with Cancel Code.>

10.Diagnostic Procedure with Cancel Code

A: 11

When CRUISE switch is pressed, or a malfunction related to CRUISE switch occurs, this is detected.

TROUBLE SYMPTOM:

- Cruise control cannot be set. (Cancelled immediately.)
- Cruise control cannot be released.

WIRING DIAGRAM:

Cruise control system <Ref. to WI-135, WIRING DIAGRAM, Cruise Control System.>

- Engine type: FA

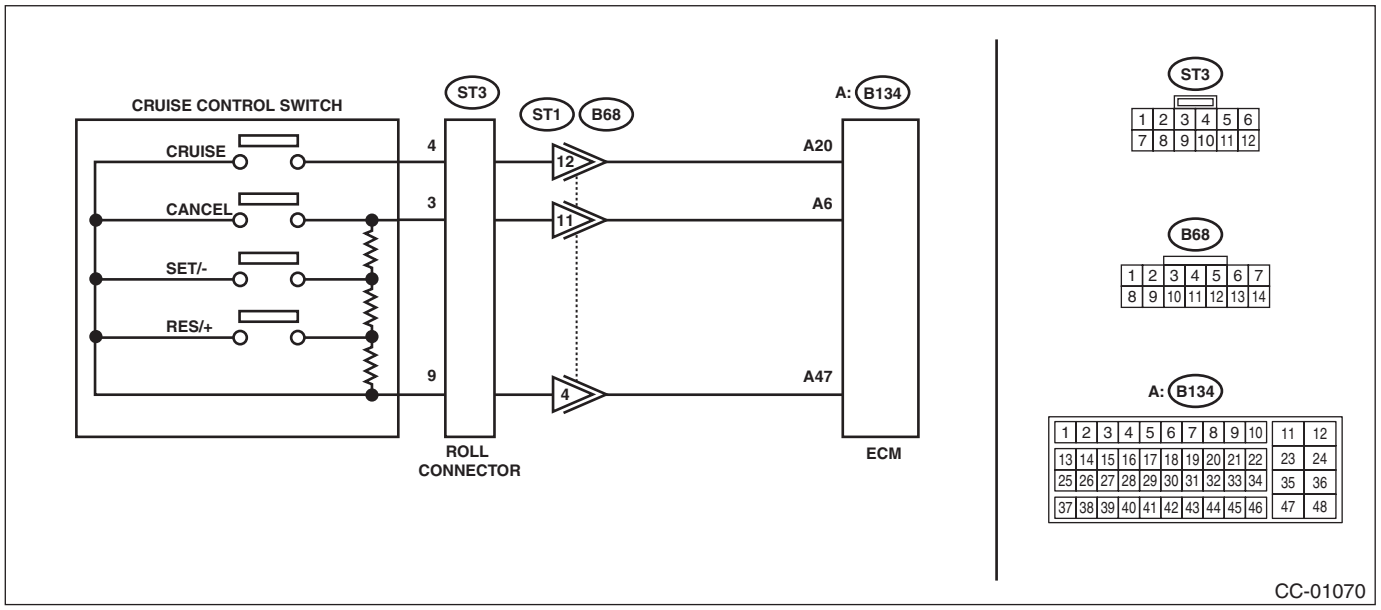

- Engine type: EJ

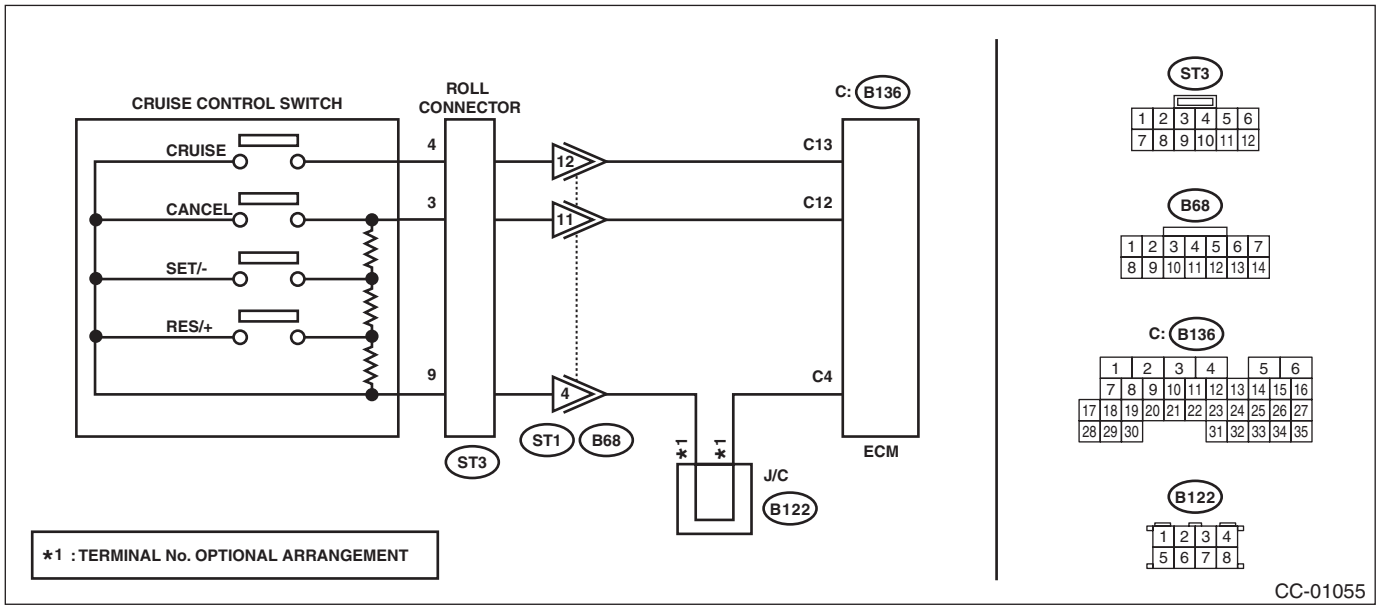

Diagnostic Procedure with Cancel Code

	Step	Check	Yes	No
1	**CHECK CRUISE CONTROL COMMAND SWITCH CIRCUIT.** 1) Remove the driver's airbag module. <Ref. to AB-32, REMOVAL, Driver's Airbag Module.> 2) Disconnect the harness connector of cruise control command switch. 3) Turn the ignition switch to ON. 4) Measure the voltage between harness connector terminal and chassis ground. ***Connector & terminal*** ***(ST3) No. 3 (+) — Chassis ground (–):*** ***(ST3) No. 4 (+) — Chassis ground (–):***	Is the voltage 5 V or more?	Go to step **2**.	Check the harness between cruise control command switch and ECM, and the steering roll connector for open or short circuit, or for poor contact.
2	**CHECK CRUISE CONTROL COMMAND SWITCH CIRCUIT.** 1) Turn the ignition switch to OFF. 2) Remove the cruise control command switch. <Ref. to CC-6, REMOVAL, Cruise Control Command Switch.> 3) Measure the resistance between harness connector terminal and chassis ground. ***Connector & terminal*** ***(ST3) No. 9 — Chassis ground:***	Is the resistance less than 10 Ω?	Go to step **3**.	Check for open circuit between cruise control command switch, ECM, and chassis ground and check the ECM.
3	**CHECK CRUISE CONTROL COMMAND SWITCH.** Measure the resistance between switch terminals when the cruise control command switch is not depressed. ***Terminals*** ***No. 3 — No. 9:***	Is the resistance approx. 4 kΩ?	Go to step **4**.	Replace the cruise control command switch. <Ref. to CC-6, Cruise Control Command Switch.>
4	**CHECK CANCEL SWITCH.** 1) Turn the ignition switch to OFF. 2) Remove the cruise control command switch. <Ref. to CC-6, REMOVAL, Cruise Control Command Switch.> 3) Measure the resistance between switch terminals with the CANCEL switch pressed. ***Terminals*** ***No. 3 — No. 9:***	Is the resistance approx. less than 1 Ω when the CANCEL switch is pressed?	Go to step **5**.	Replace the cruise control command switch. <Ref. to CC-6, Cruise Control Command Switch.>
5	**CHECK SET/– SWITCH.** Measure the resistance between the switch terminals with the SET/– switch pressed. ***Terminals*** ***No. 3 — No. 9:***	Is the resistance approx. 250 Ω when the SET/– switch is pressed?	Go to step **6**.	Replace the cruise control command switch. <Ref. to CC-6, Cruise Control Command Switch.>
6	**CHECK RES/+ SWITCH.** Measure the resistance between the switch terminals with the RES/+ switch pressed. ***Terminals*** ***No. 3 — No. 9:***	Is the resistance approx. 1,500 Ω when the RES/+ switch is pressed?	Replace the ECM. <Ref. to FU(w/o STI)-124, Engine Control Module (ECM).> <Ref. to FU(STI)-56, Engine Control Module (ECM).>	Replace the cruise control command switch. <Ref. to CC-6, Cruise Control Command Switch.>

B: 12

Detected when the brake pedal is depressed, or the error related to the stop light & brake switch occurred.

TROUBLE SYMPTOM:

- Cruise control cannot be set.
- Cruise control cannot be released.

WIRING DIAGRAM:

Cruise control system <Ref. to WI-135, WIRING DIAGRAM, Cruise Control System.>

- Engine type: FA

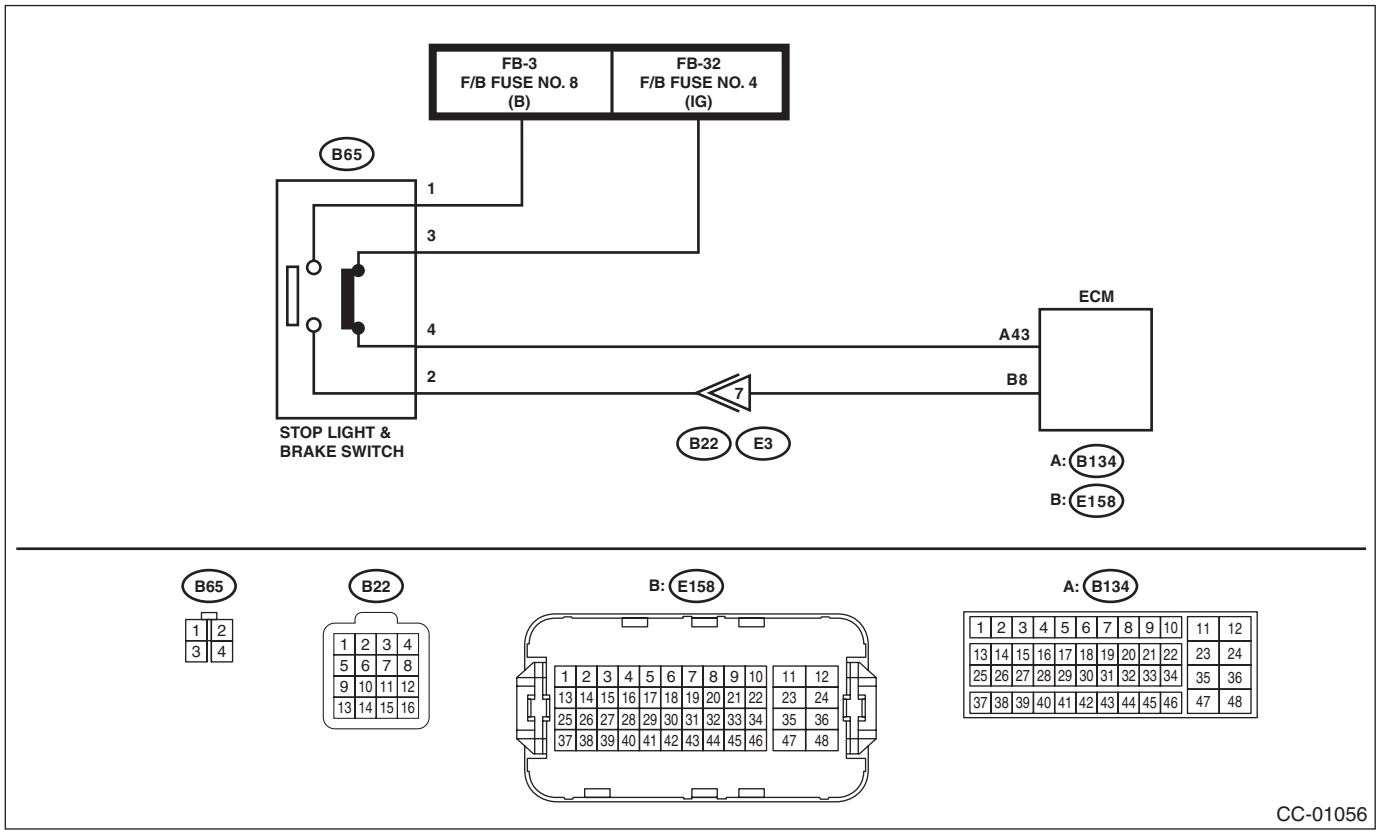

- Engine type: EJ

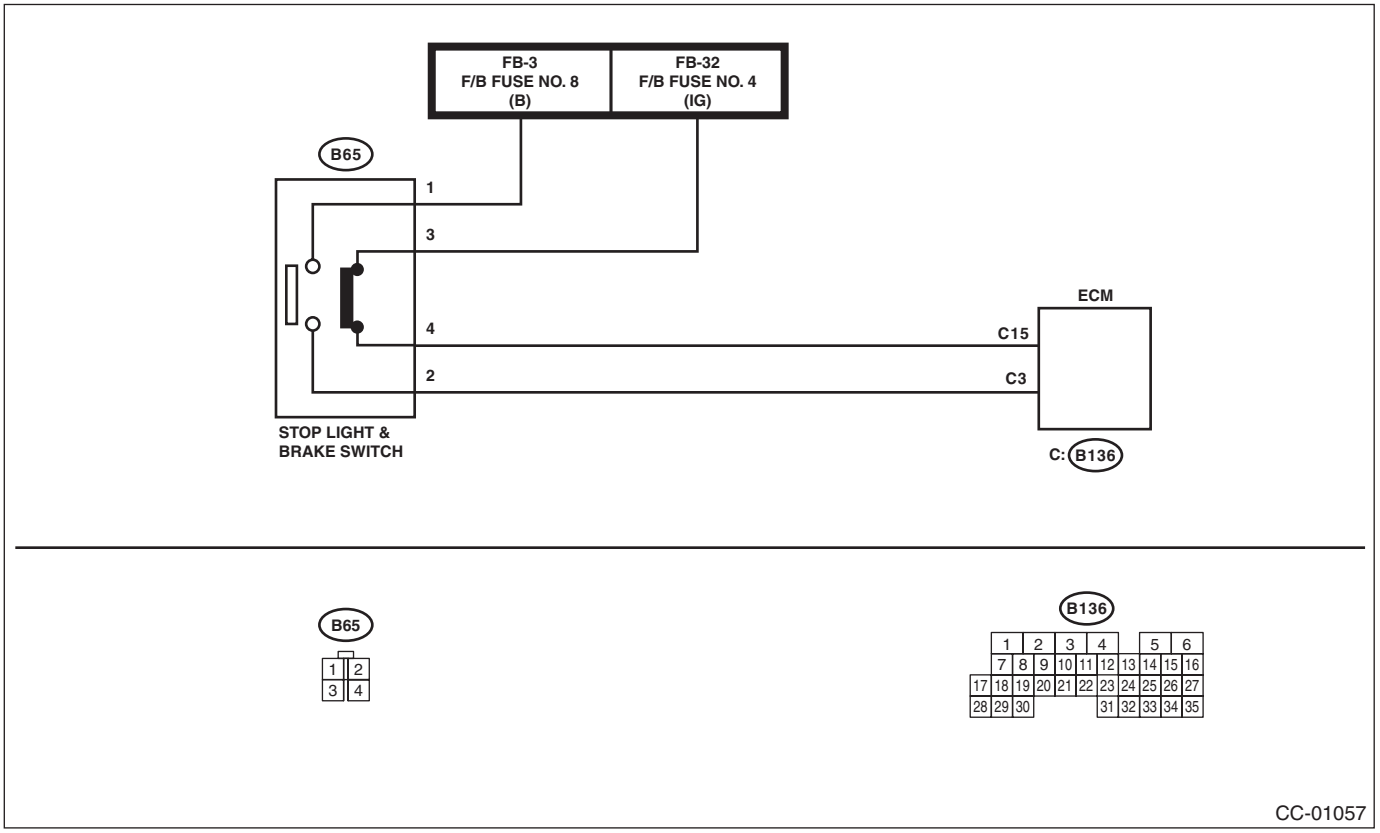

	Step	Check	Yes	No
1	**CHECK STOP LIGHT & BRAKE SWITCH.** Check the stop light & brake switch. <Ref. to CC-9, Stop Light & Brake Switch.>	Are the check results for the stop light & brake switch unit, and installation position OK?	Go to step **2**.	Replace the stop light & brake switch. Or adjust the installation position.
2	**CHECK STOP LIGHT & BRAKE SWITCH CIRCUIT.** 1) Turn the ignition switch to OFF. 2) Disconnect the stop light & brake switch harness connector. 3) Turn the ignition switch to ON. 4) Measure the voltage between harness connector terminal and chassis ground. ***Connector & terminal*** ***(B65) No. 3 (+) — Chassis ground (–):***	Is the voltage 10 V or more?	Go to step **3**.	• Check the fuse No. 8 (fuse & relay box). • Check for open or short circuit in harness between the stop light & brake switch and the fuse & relay box.
3	**CHECK STOP LIGHT & BRAKE SWITCH CIRCUIT.** Measure the voltage between harness connector terminal and chassis ground. ***Connector & terminal*** ***(B65) No. 1 (+) — Chassis ground (–):***	Is the voltage 10 V or more?	Go to step **4**.	• Check the fuse No. 4 (fuse & relay box). • Check for open or short circuit in harness between the stop light & brake switch and the fuse & relay box.

	Step	Check	Yes	No
4	**CHECK STOP LIGHT & BRAKE SWITCH CIRCUIT.** 1) Turn the ignition switch to OFF. 2) Disconnect the harness connector of ECM. 3) Measure the resistance between ECM harness connector terminal and stop light & brake switch harness connector terminal. ***Connector & terminal*** ***Engine type: FA*** ***(B134) No. 43 — (B65) No. 4:*** ***(E158) No. 8 — (B65) No. 2:*** ***Engine type: EJ*** ***(B136) No. 3 — (B65) No. 2:*** ***(B136) No. 15 — (B65) No. 4:***	Is the resistance less than 10 Ω?	Replace the ECM. <Ref. to FU(w/o STI)-124, Engine Control Module (ECM).> <Ref. to FU(STI)-56, Engine Control Module (ECM).>	Repair the harness.

C: 13

Detected when clutch pedal is depressed or malfunction related to clutch switch occurs.

TROUBLE SYMPTOM:

- Cruise control cannot be set.
- Cruise control cannot be released.

WIRING DIAGRAM:

Cruise control system <Ref. to WI-135, WIRING DIAGRAM, Cruise Control System.>

- Engine type: FA

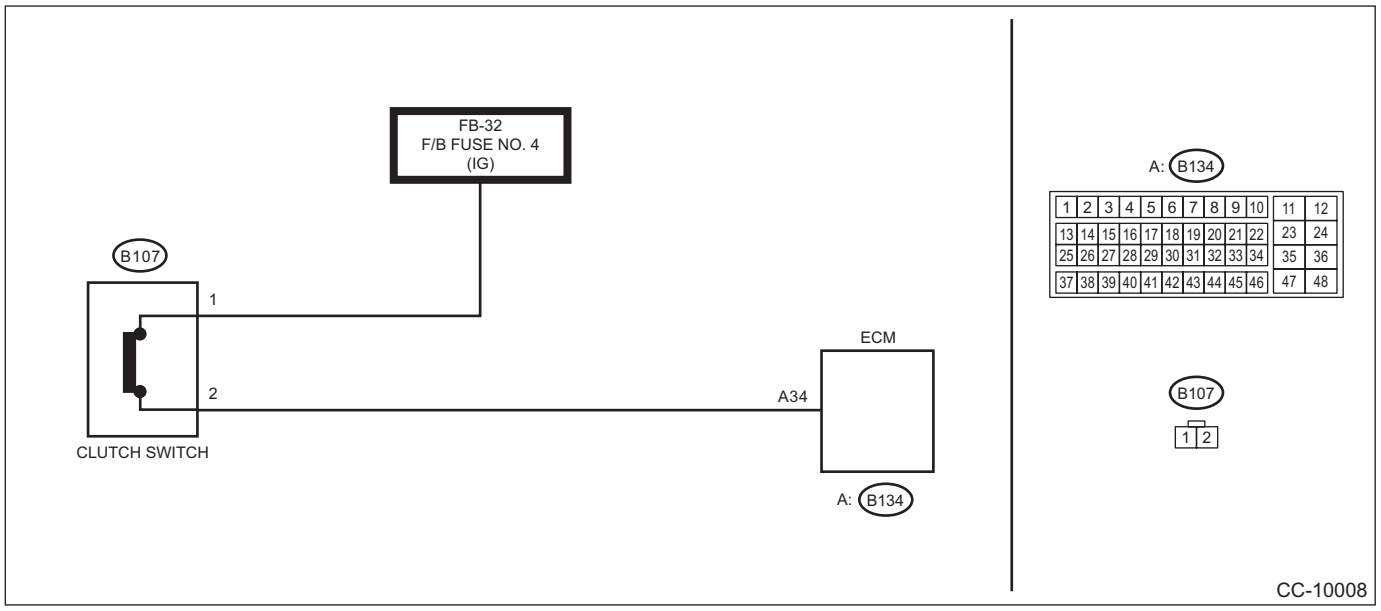

- Engine type: EJ

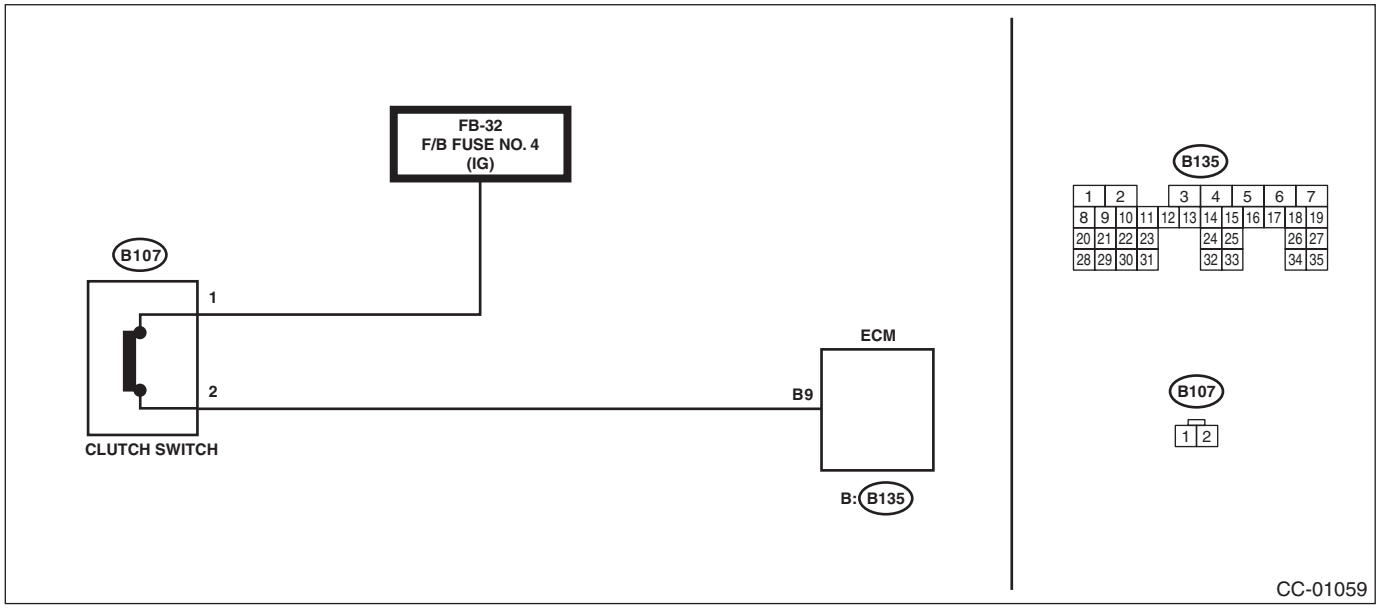

Step		Check	Yes	No
1	**CHECK CLUTCH SWITCH.** Check the clutch switch. <Ref. to CC-10, Clutch Switch.>	Is the check result of the clutch switch unit and installation position OK?	Go to step **2**.	Replace the clutch switch. Or adjust the installation position.

	Step	Check	Yes	No
2	**CHECK CLUTCH SWITCH CIRCUIT.** 1) Turn the ignition switch to OFF. 2) Disconnect the clutch switch harness connector. 3) Turn the ignition switch to ON. 4) Measure the voltage between harness connector terminal and chassis ground. ***Connector & terminal*** ***(B107) No. 1 (+) — Chassis ground (–):***	Is the voltage 10 V or more?	Go to step **3**.	• Check the fuse No. 4 (fuse & relay box). • Check open or shorted circuit of harness between clutch switch and fuse & relay box.
3	**CHECK CLUTCH SWITCH CIRCUIT.** 1) Turn the ignition switch to OFF. 2) Disconnect the harness connector of ECM. 3) Measure the resistance between clutch switch harness connector terminal and ECM harness connector terminal. ***Connector & terminal*** ***Engine type: FA*** ***(B107) No. 2 — (B134) No. 34:*** ***Engine type: EJ*** ***(B107) No. 2 — (B135) No. 9:***	Is the resistance less than 10 Ω?	Replace the ECM. <Ref. to FU(w/o STI)-124, Engine Control Module (ECM).> <Ref. to FU(STI)-56, Engine Control Module (ECM).>	Repair the harness.

D: 14

Detected when the select lever is shifted to the neutral position, or when an error related to the neutral position switch occurs.

TROUBLE SYMPTOM:

Cruise control cannot be set.

WIRING DIAGRAM:

Cruise control system <Ref. to WI-135, WIRING DIAGRAM, Cruise Control System.>

- Engine type: FA

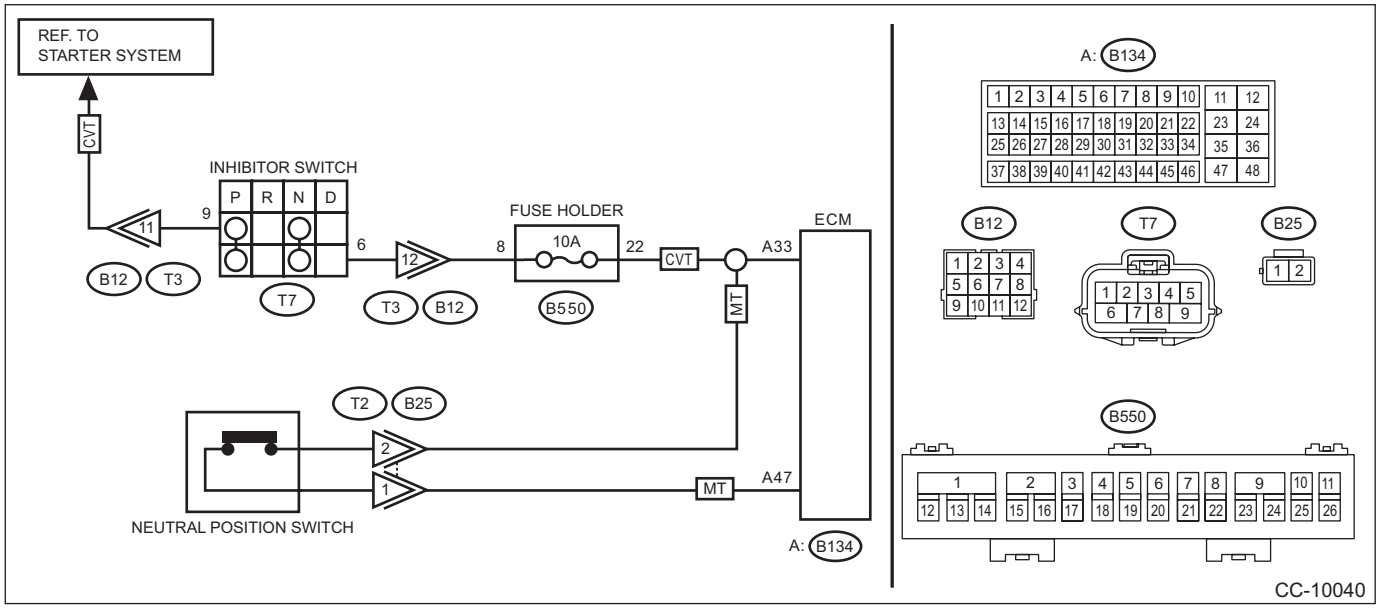

- Engine type: EJ

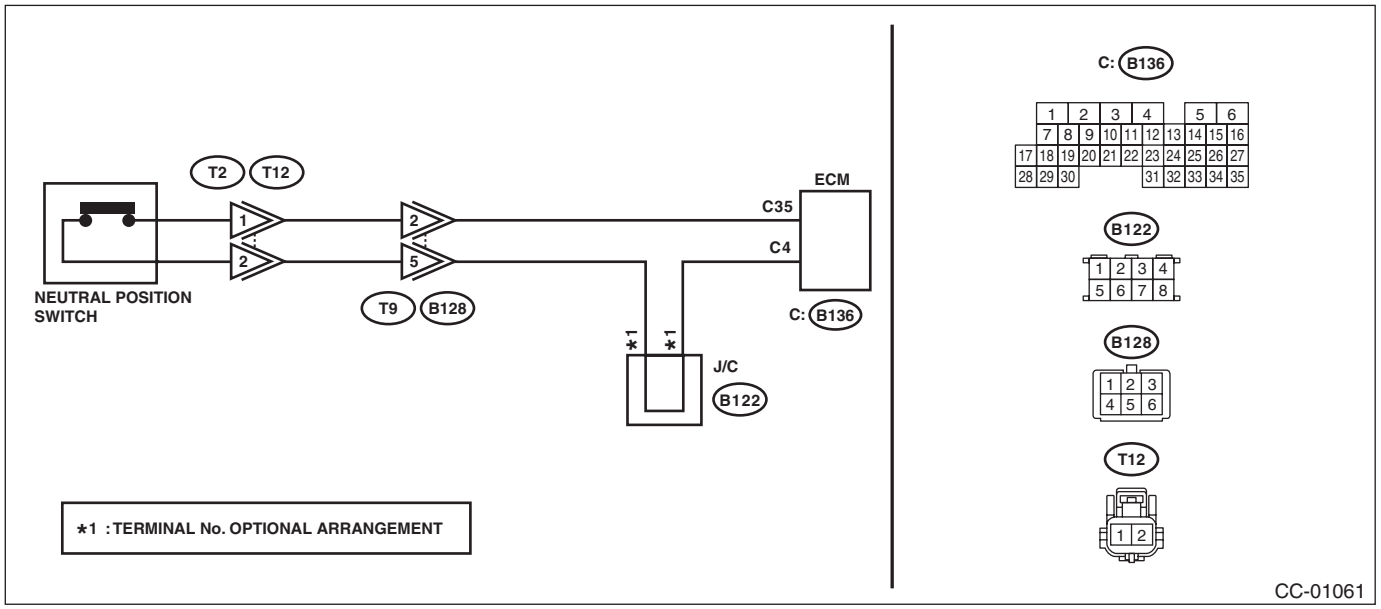

Step		Check	Yes	No
1	**CHECK TRANSMISSION TYPE.**	Is the transmission type CVT?	Go to step **2**.	Go to step **5**. (MT model)

	Step	Check	Yes	No
2	**CHECK INHIBITOR SWITCH CIRCUIT.** 1) Turn the ignition switch to OFF. 2) Disconnect the inhibitor switch harness connector. 3) Turn the ignition switch to ON. 4) Measure the voltage between harness connector terminal and chassis ground. ***Connector & terminal*** ***(T7) No. 6 (+) — Chassis ground (–):***	Is the voltage 10 V or more?	Go to step **3**.	Check for open or short circuit in the harness between inhibitor switch and ECM.
3	**CHECK INHIBITOR SWITCH CIRCUIT.** 1) Turn the ignition switch to OFF. 2) Disconnect the starter motor harness connector. 3) Measure the resistance between the inhibitor switch harness connector terminal and the starter motor. ***Connector & terminal*** ***(T7) No. 9 — Starter motor:***	Is the resistance less than 10 Ω?	Go to step **4**.	Repair the harness.
4	**CHECK INHIBITOR SWITCH.** Remove and check the inhibitor switch. <Ref. to CC-11, Inhibitor Switch.>	Is the check result OK?	Replace the ECM. <Ref. to FU(w/o STI)-124, Engine Control Module (ECM).> <Ref. to FU(STI)-56, Engine Control Module (ECM).>	Replace the inhibitor switch.
5	**CHECK NEUTRAL POSITION SWITCH CIRCUIT.** 1) Turn the ignition switch to OFF. 2) Disconnect the neutral position switch harness connector. 3) Turn the ignition switch to ON. 4) Measure the voltage between harness connector terminal and chassis ground. ***Connector & terminal*** ***Engine type: FA*** ***(B25) No. 2 (+) — Chassis ground (–):*** ***Engine type: EJ*** ***(T12) No. 1 (+) — Chassis ground (–):***	Is the voltage 10 V or more?	Go to step **6**.	Check for open or short in the harness between neutral position switch and ECM.
6	**CHECK NEUTRAL POSITION SWITCH CIRCUIT.** 1) Turn the ignition switch to OFF. 2) Measure resistance between harness connector terminal of neutral position switch and chassis ground. ***Connector & terminal*** ***Engine type: FA*** ***(B25) No. 1 — Chassis ground:*** ***Engine type: EJ*** ***(T12) No. 2 — Chassis ground:***	Is the resistance less than 10 Ω?	Go to step **7**.	Repair the harness.
7	**CHECK NEUTRAL POSITION SWITCH.** Remove and check the neutral position switch. <Ref. to CC-13, Neutral Position Switch.>	Is the check result OK?	Replace the ECM. <Ref. to FU(w/o STI)-124, Engine Control Module (ECM).> <Ref. to FU(STI)-56, Engine Control Module (ECM).>	Replace the neutral position switch.

E: 15

Detected when CANCEL switch is pressed or malfunction related to CRUISE switch occurs.
TROUBLE SYMPTOM:
- Cruise control cannot be set. (Cancelled immediately.)
- Cruise control cannot be released.

Refer to DTC 11 for diagnostic procedure.
<Ref. to CC(diag)-15, 11, Diagnostic Procedure with Cancel Code.>

F: 16

Detected when ignition switch is turned to OFF or malfunction related to the ignition switch occurs.
TROUBLE SYMPTOM:
Cruise control cannot be set.
WIRING DIAGRAM:
Cruise control system <Ref. to WI-135, WIRING DIAGRAM, Cruise Control System.>

- Engine type: FA

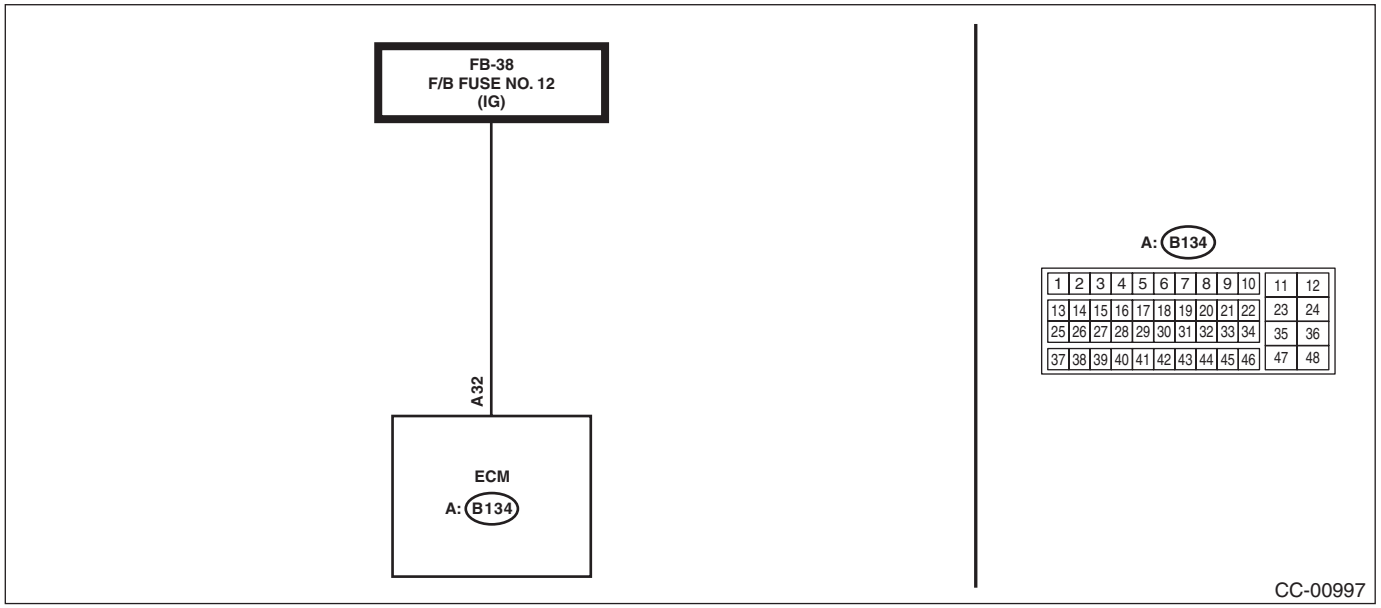

- Engine type: EJ

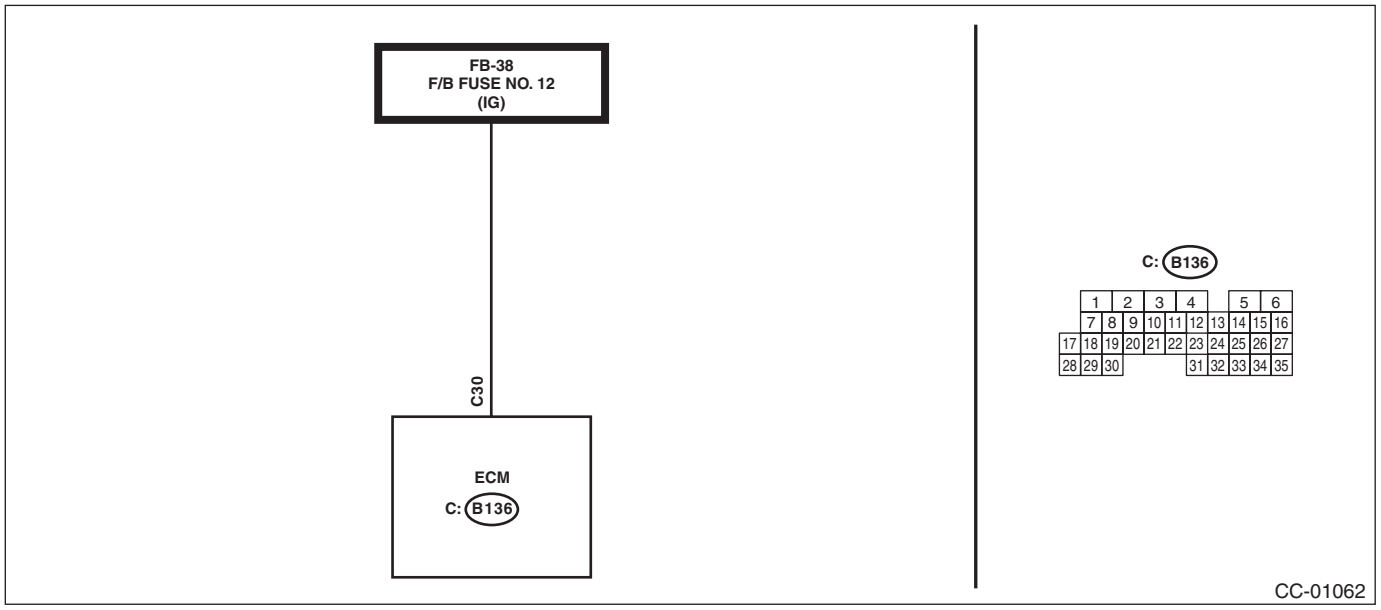

Step		Check	Yes	No
1	**CHECK IGNITION SWITCH CIRCUIT.** 1) Turn the ignition switch to OFF. 2) Disconnect the ECM harness connector. 3) Turn the ignition switch to ON. 4) Measure the voltage between harness connector terminal and chassis ground. ***Connector & terminal*** ***Engine type: FA*** ***(B134) No. 32 (+) — Chassis ground (–):*** ***Engine type: EJ*** ***(B136) No. 30 (+) — Chassis ground (–):***	Is the voltage 10 V or more?	Check for poor contact of ECM connector.	• Check fuse No. 12 (in fuse & relay box). • Check the harness for open or short circuit between ignition switch and ECM.

G: 21

Cruise control command switch malfunction is detected.
TROUBLE SYMPTOM:
- Cruise control cannot be set. (Cancelled immediately.)
- Cruise control cannot be released.

Refer to DTC 11 for diagnostic procedure.
<Ref. to CC(diag)-15, 11, Diagnostic Procedure with Cancel Code.>

H: 22

Malfunction related to vehicle speed sensor is detected.
DIAGNOSIS:
Open or short circuit in the vehicle speed sensor system.
TROUBLE SYMPTOM:
Cruise control cannot be set. (Cancelled immediately.)

	Step	Check	Yes	No
1	**CHECK ABS OR VDC WARNING LIGHT.** 1) Turn the ignition switch to ON. 2) After the initial operation of the combination meter finished, check if the ABS or VDC warning light stays illuminated.	Does the warning light stay illuminated?	Check the VDCCM. <Ref. to VDC(diag)-2, Basic Diagnostic Procedure.>	Go to step **2**.
2	**CHECK DTC OF LAN COMMUNICATION CIRCUIT.** Read the DTC of body integrated unit using Subaru Select Monitor. <Ref. to BC(diag)-11, Read Diagnostic Trouble Code (DTC).>	Is DTC displayed?	Perform inspection according to DTC.	Replace the ECM. <Ref. to FU(w/o STI)-124, Engine Control Module (ECM).> <Ref. to FU(STI)-56, Engine Control Module (ECM).>

I: 24

Malfunction in cruise control-related switch is detected.
TROUBLE SYMPTOM:
- Cruise control cannot be set. (Cancelled immediately.)
- Cruise control cannot be released.

Refer to DTC 11 for diagnostic procedure.
<Ref. to CC(diag)-15, 11, Diagnostic Procedure with Cancel Code.>

J: 31

Engine speed signal malfunction is detected.
Abnormal increase of engine speed is detected.
Gear is placed in 1st (only for MT vehicles) or Reverse position.
After driving at the 2nd gear position or higher, perform the cruise setting again. If a cancel code is not detected, it is normal.

K: 32

This DTC is detected out of vehicle speed range.
Increase vehicle speed high enough to allow the cruise control to function, and then perform setting operation again.
If cancel code is still detected after setting cruise again, perform the diagnosis for DTC 22.
Refer to DTC 22 for diagnostic procedure.
<Ref. to CC(diag)-27, 22, Diagnostic Procedure with Cancel Code.>

L: 34

The vehicle has been driven at a speed higher than set speed for a long time (approximately 10 minutes) during cruise driving.
This cancel code is detected when driving for a long period of time at a speed higher than appropriate for cruise control setting by operating the accelerator pedal.
Perform the cruise control setting operation again. If the cancel code is not detected, it is normal.

M: 35

Detected when it is impossible to perform the vehicle speed feedback.
Set vehicle speed cannot be kept for some reasons (steep uphill, unreleased parking brake, etc.) during cruise driving.
Cancel code is detected when driving conditions are not suitable for cruise control.
Perform cruise set operation again after clearing the possible cause.

N: 41

VDC/TCS/EPB is operated.
Vehicle dynamics control (VDC) or TCS/EPB is operated during cruise driving or cruise setting.
<Ref. to VDC(diag)-2, PROCEDURE, Basic Diagnostic Procedure.>

O: 43

- The situation that some or all functions for ABS/VDC can not work is detected.

During cruise driving or cruise setting, the situation that some or all functions for ABS/VDC can not work is detected.
<Ref. to VDC(diag)-2, PROCEDURE, Basic Diagnostic Procedure.>

- CRUISE indicator does not illuminate even though you pressed the CRUISE switch before starting the engine.

Detected when the CRUISE switch is pressed during the initial diagnosis of ABS/VDC. It is normal if the CRUISE indicator illuminates when you press the CRUISE switch again after starting the engine and confirming that the initial illumination of the ABS/VDC warning light has been ended.

P: 44

Body integrated unit malfunction is detected.
Body integrated unit system malfunction is detected during cruise driving or cruise setting.
<Ref. to LAN(diag)-2, PROCEDURE, Basic Diagnostic Procedure.>

Q: 45

Malfunction of the combination meter is detected.
Combination meter malfunction is detected during cruise driving or cruise setting.
<Ref. to LAN(diag)-2, PROCEDURE, Basic Diagnostic Procedure.>

R: 49

Automatic transmission malfunction is detected.
Automatic transmission malfunction is detected during cruise driving or cruise control setting.
<Ref. to CVT(diag)-2, PROCEDURE, Basic Diagnostic Procedure.>

S: 61

Malfunction in the stop light & brake switch is detected.
TROUBLE SYMPTOM:

- Cruise control cannot be set.
- Cruise control cannot be released.

Refer to DTC 12 for diagnostic procedure.
<Ref. to CC(diag)-17, 12, Diagnostic Procedure with Cancel Code.>

T: 62

Neutral position switch malfunction is detected.
TROUBLE SYMPTOM:
Cruise control cannot be set.
Refer to DTC 14 for diagnostic procedure.
<Ref. to CC(diag)-22, 14, Diagnostic Procedure with Cancel Code.>

U: 63

Malfunction of vehicle speed signal variation is detected.
TROUBLE SYMPTOM:
Cruise control cannot be set. (Cancelled immediately.)
Refer to 22 for diagnostic procedure.
<Ref. to CC(diag)-27, 22, Diagnostic Procedure with Cancel Code.>

NOTE:
This cancel code may be detected when the vehicle suddenly started with VDC OFF on low μ road surface. In this case, restart the engine and perform the cruise control setting operation again. If the cancel code is not detected, it is normal.

V: 64

Malfunction related to engine is detected.
Refer to the Engine Diagnostic Procedure for diagnostic procedure.
<Ref. to EN(w/o STI)(diag)-2, PROCEDURE, Basic Diagnostic Procedure.> <Ref. to EN(STI)(diag)-2, PROCEDURE, Basic Diagnostic Procedure.>

W: 65

Cruise control command switch malfunction is detected.
While the command switch is pressed ON for a long time (approximately two minutes), stuck ON condition is detected.
TROUBLE SYMPTOM:
- Cruise control cannot be set. (Cancelled immediately.)
- Cruise control cannot be released.

Refer to DTC 11 for diagnostic procedure.
<Ref. to CC(diag)-15, 11, Diagnostic Procedure with Cancel Code.>

X: 66

Cruise control calculation malfunction is detected.
Refer to the Engine Diagnostic Procedure for diagnostic procedure.
<Ref. to EN(w/o STI)(diag)-2, PROCEDURE, Basic Diagnostic Procedure.> <Ref. to EN(STI)(diag)-2, PROCEDURE, Basic Diagnostic Procedure.>

IMMOBILIZER (DIAGNOSTICS)

IM(diag)

Page

1. Basic Diagnostic Procedure 2
2. General Description 4
3. Electrical Component Location 6
4. Immobilizer Control Module I/O Signal 7
5. Subaru Select Monitor 8
6. Read Diagnostic Trouble Code (DTC) 9
7. Clear Memory Mode 10
8. Diagnostics Chart for Security Indicator Light 11
9. List of Diagnostic Trouble Code (DTC) 14
10. Diagnostic Procedure with Diagnostic Trouble Code (DTC) 16

1. Basic Diagnostic Procedure

A: PROCEDURE

1. MODEL WITHOUT KEYLESS ACCESS WITH PUSH BUTTON START SYSTEM

CAUTION:
When the body integrated unit is replaced, registration of the immobilizer system is required. For details, refer to the "REGISTRATION MANUAL FOR IMMOBILIZER" provided as a separate volume.

	Step	Check	Yes	No
1	**CONFIRM NUMBER OF REGISTERED IMMOBILIZER KEY.** Confirm the number of registered immobilizer key. For details, refer to the "REGISTRATION MANUAL FOR IMMOBILIZER" provided as a separate volume.	Is the number of registration 0?	Register the immobilizer system.	Go to step **2**.
2	**CHECK SECURITY INDICATOR LIGHT.** 1) Remove the ignition key from ignition switch. 2) Wait at least 60 seconds.	Does the security indicator light blink?	Go to step **3**.	Check the security indicator light circuit. <Ref. to IM(diag)-11, CHECK SECURITY INDICATOR LIGHT CIRCUIT, INSPECTION, Diagnostics Chart for Security Indicator Light.>
3	**CHECK KEY SWITCH.** Insert the ignition key in the ignition switch. (OFF or ACC)	Does the security indicator light remain blinking?	Check the key switch circuit. <Ref. to IM(diag)-13, CHECK KEY SWITCH CIRCUIT, INSPECTION, Diagnostics Chart for Security Indicator Light.>	Go to step **4**.
4	**CHECK SECURITY INDICATOR LIGHT.** Check the security indicator light status in the condition of step 3.	Does the security indicator light go off?	Go to step **7**.	Go to step **5**.
5	**CHECK SECURITY INDICATOR LIGHT.** Turn the ignition switch to ON.	Does the security indicator light go off?	Go to step **7**.	Go to step **6**.
6	**CHECK ENGINE START.** Turn the ignition switch to START.	Does the starter operate?	Check the LAN communication system. <Ref. to LAN(diag)-2, Basic Diagnostic Procedure.>	Go to step **8**.
7	**CHECK ENGINE START.** Turn the ignition switch to START.	Does the engine start?	Immobilizer system is normal.	Go to step **9**.
8	**CHECK DTC.** Read the DTC of body integrated unit and ECM and time stamp using Subaru Select Monitor. <Ref. to IM(diag)-9, Read Diagnostic Trouble Code (DTC).> NOTE: For time stamp, refer to "LAN SYSTEM". <Ref. to LAN(diag)-6, TIME STAMP, CAUTION, General Description.>	Is DTC displayed?	Go to step **10**.	Replace the body integrated unit. <Ref. to SL-81, Body Integrated Unit.>

	Step	Check	Yes	No
9	**CHECK DTC.** Read the DTC of body integrated unit and ECM and time stamp using Subaru Select Monitor. <Ref. to IM(diag)-9, Read Diagnostic Trouble Code (DTC).> NOTE: For time stamp, refer to “LAN SYSTEM”. <Ref. to LAN(diag)-6, TIME STAMP, CAUTION, General Description.>	Is DTC displayed?	Go to step **10**.	Perform the diagnosis for engine system. <Ref. to EN(w/o STI)(diag)-2, ENGINE, PROCEDURE, Basic Diagnostic Procedure.> <Ref. to EN(STI)(diag)-2, ENGINE, PROCEDURE, Basic Diagnostic Procedure.>
10	**CHECK FREEZE FRAME DATA.** Using the Subaru Select Monitor, check the Freeze Frame Data.	Are the data recorded?	Record the data. Go to step **11**.	Go to step **11**.
11	**CHECK DTC.** Check the displayed DTC.	Are DTCs irrelevant to the immobilizer displayed?	Perform the diagnosis according to DTCs irrelevant to the immobilizer first.	Go to step **12**.
12	**PERFORM DIAGNOSIS.** 1) Inspect using the “Diagnostic Procedure with Diagnostic Trouble Code (DTC)”. <Ref. to IM(diag)-16, Diagnostic Procedure with Diagnostic Trouble Code (DTC).> 2) Repair the trouble cause. 3) Perform the Clear Memory Mode. <Ref. to IM(diag)-10, Clear Memory Mode.> 4) Read DTCs again. <Ref. to IM(diag)-9, Read Diagnostic Trouble Code (DTC).>	Is DTC displayed?	Inspect using the “Diagnostic Procedure with Diagnostic Trouble Code (DTC)”. <Ref. to IM(diag)-16, Diagnostic Procedure with Diagnostic Trouble Code (DTC).>	Finish the diagnosis.

2. MODEL WITH KEYLESS ACCESS WITH PUSH BUTTON START SYSTEM

NOTE:
For immobilizer diagnosis of model with the keyless access with push button start system, refer to “Keyless Access with Push Button Start System”. <Ref. to KPS(diag)-2, Basic Diagnostic Procedure.>

2. General Description

A: CAUTION

CAUTION:
• Do not use the electrical test equipment on the airbag system wiring harnesses and connector circuits.
• Be careful not to damage the airbag system wiring harness.
• While diagnostic items are being checked, do not operate radios, portable telephones, etc. which emit electromagnetic waves near or inside the vehicle.

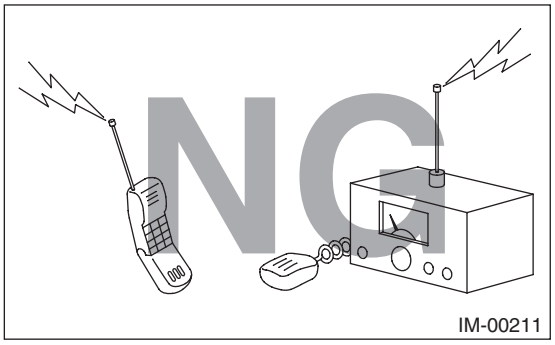

• When turning the ignition switch to ON or OFF while diagnostic items are being checked, do not allow keys with different ID codes close to the ignition switch. If the ignition key is on a key holder, remove it from the key holder before performing diagnoses.

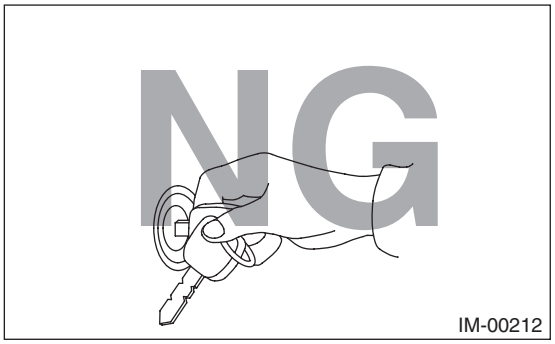

• When repeatedly turning the ignition switch to ON or OFF while diagnostic items are being checked, it should be switched in cycles of "ON" for at least 5 seconds → "OFF" for at least 8 seconds.

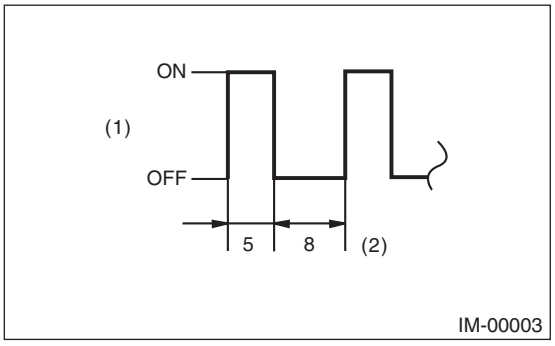

(1) Ignition switch position
(2) Sec.

• If the engine fails to start with a registered ignition key, detach the ignition key from ignition switch and wait for approx. 1 second until security indicator light begins to flash. And then start the engine again.
• Before performing the diagnostics, obtain all keys for the vehicle from the owner.
• Do not register a body integrated unit already registered to another vehicle to diagnose failures or inspect functions.

B: PREPARATION TOOL

1. SPECIAL TOOL

ILLUSTRATION	TOOL NUMBER	DESCRIPTION	REMARKS
 STSSM4	—	SUBARU SELECT MONITOR 4	Used for setting of each function and trouble-shooting for electrical system. NOTE: For detailed operation procedures of Subaru Select Monitor 4, refer to “Application help”.

2. GENERAL TOOL

TOOL NAME	REMARKS
Circuit tester	Used for measuring resistance, voltage and current.
DST-i	Used together with Subaru Select Monitor 4.

3. Electrical Component Location

A: LOCATION

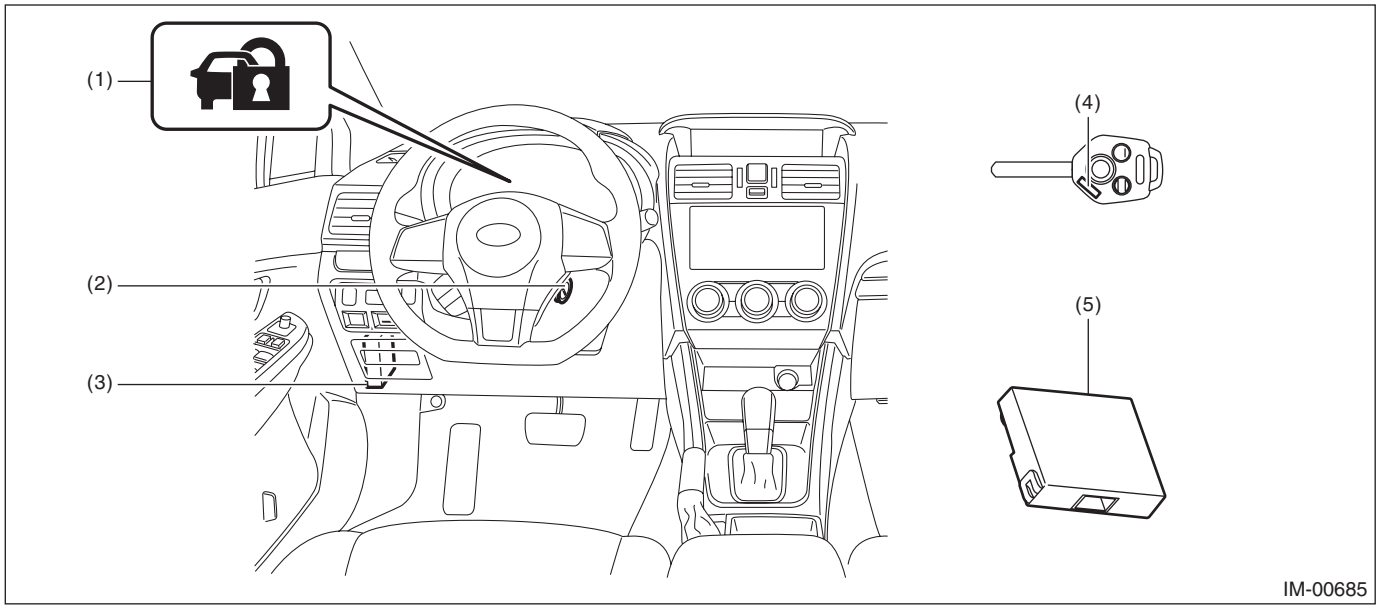

(1) Security indicator light (LED bulb)
(2) Antenna
(3) Body integrated unit
(4) Transponder
(5) Security control module (for C0 model only)

4. Immobilizer Control Module I/O Signal

A: WIRING DIAGRAM

1. IMMOBILIZER

Refer to “Immobilizer System” in the wiring diagram. <Ref. to WI-244, WIRING DIAGRAM, Immobilizer System.>

5. Subaru Select Monitor

A: OPERATION

1. HOW TO USE THE SUBARU SELECT MONITOR

For operation procedures, refer to “Application help”.

2. READ DIAGNOSTIC TROUBLE CODE (DTC) FOR ENGINE AND BODY INTEGRATED UNIT

Refer to “Read Diagnostic Trouble Code (DTC)” for information about how to indicate DTC. <Ref. to IM(diag)-9, Read Diagnostic Trouble Code (DTC).>

NOTE:
If a problem is detected, repair the trouble cause. <Ref. to IM(diag)-19, DTC B1572 IMM CIRCUIT EXCEPT ANTENNA CIRCUIT, Diagnostic Procedure with Diagnostic Trouble Code (DTC).>

6. Read Diagnostic Trouble Code (DTC)

A: OPERATION

NOTE:
- For detailed operation procedures, refer to “Application help”.
- For details concerning DTC, refer to List of Diagnostic Trouble Code (DTC). <Ref. to IM(diag)-14, List of Diagnostic Trouble Code (DTC).>

1. ECM

1) On «Start» display, select «Diagnosis».
2) On «Vehicle selection» display, input the target vehicle information and select «Confirmed».
3) On «Main Menu» display, select «Each System».
4) On «Select System» display, select «Engine Control System» and then select «Enter».
5) On «Engine Control System» display, select «DTC».

2. BODY INTEGRATED UNIT

1) On «Start» display, select «Diagnosis».
2) On «Vehicle selection» display, input the target vehicle information and select «Confirmed».
3) On «Main Menu» display, select «Each System».
4) On «Select System» display, select «Body Control» and then select «Enter».
5) On «Body Control» display, select «DTC».

7. Clear Memory Mode

A: OPERATION

NOTE:
For detailed operation procedures, refer to “Application help”.

1. ECM

1) On «Start» display, select «Diagnosis».
2) On «Vehicle selection» display, input the target vehicle information and select «Confirmed».
3) On «Main Menu» display, select «Each System».
4) On «Select System» display, select «Engine Control System» and then select «Enter».
5) On «Engine Control System» display, select «DTC».
6) On «DTC» display, select «Clear Memory».

NOTE:
Initial diagnosis of electronic throttle control is performed after memory clearance. Wait for 10 seconds or more after turning the ignition switch to ON, and then start the engine.

2. BODY INTEGRATED UNIT

1) On «Start» display, select «Diagnosis».
2) On «Vehicle selection» display, input the target vehicle information and select «Confirmed».
3) On «Main Menu» display, select «Each System».
4) On «Select System» display, select «Body Control» and then select «Enter».
5) On «Body Control» display, select «DTC».
6) On «DTC» display, select «Clear Memory».

8. Diagnostics Chart for Security Indicator Light

A: INSPECTION

1. CHECK SECURITY INDICATOR LIGHT CIRCUIT

CAUTION:
When the body integrated unit is replaced, registration of the immobilizer system is required. For details, refer to the "REGISTRATION MANUAL FOR IMMOBILIZER" provided as a separate volume.
WIRING DIAGRAM:
Immobilizer system <Ref. to WI-244, WIRING DIAGRAM, Immobilizer System.>

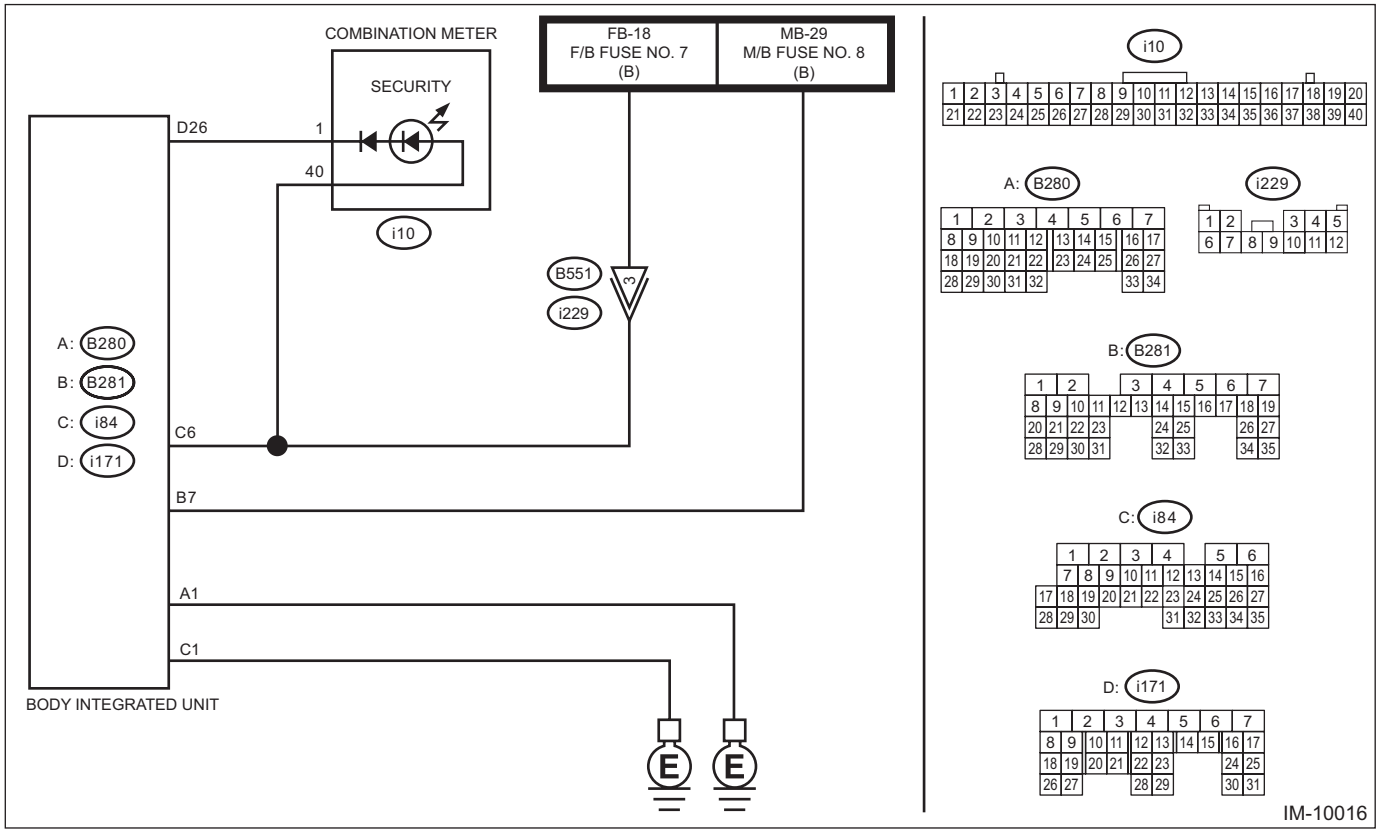

Step		Check	Yes	No
1	**CHECK FUSE.** 1) Remove the ignition key from ignition switch. Or, turn off the power. 2) Check the fuse (M/B No. 8).	Is the check result OK?	Go to step **2**.	Replace the fuse. If the replaced fuse blows out easily, repair the short circuit in the harness between the fuse and body integrated unit.
2	**CHECK SECURITY INDICATOR LIGHT.** 1) Disconnect the connector from body integrated unit. 2) Connect the resistor (100 Ω) between the body integrated unit connector terminal (i171) No. 26 and chassis ground.	Does the security indicator light illuminate?	Go to step **3**.	Go to step **5**.

Diagnostics Chart for Security Indicator Light

	Step	Check	Yes	No
3	**CHECK BODY INTEGRATED UNIT GROUND CIRCUIT (OPEN CIRCUIT).** Measure the resistance between the body integrated unit connector terminal and chassis ground. ***Connector & terminal*** ***(B280) No. 1 — Chassis ground:*** ***(i84) No. 1 — Chassis ground:***	Is the resistance less than 10 Ω?	Go to step **4**.	Repair the open circuit of the body integrated unit ground circuit.
4	**CHECK BODY INTEGRATED UNIT POWER SUPPLY CIRCUIT.** Measure the voltage between the body integrated unit connector terminal and chassis ground. ***Connector & terminal*** ***(B281) No. 7 (+) — Chassis ground (–):*** ***(i84) No. 6 (+) — Chassis ground (–):***	Is the voltage 10 V or more?	Replace the body integrated unit. <Ref. to SL-81, Body Integrated Unit.>	Check the harness for open or short circuit between body integrated unit and fuse.
5	**CHECK COMBINATION METER CIRCUIT.** 1) Remove the combination meter. <Ref. to IDI-13, Combination Meter.> 2) Measure the voltage between combination meter connector terminal and chassis ground. ***Connector & terminal*** ***(i10) No. 40 (+) — Chassis ground (–):***	Is the voltage 10 V or more?	Go to step **6**.	Check for an open or short circuit in the harness between the combination meter and fuse.
6	**CHECK COMBINATION METER CIRCUIT (OPEN).** Measure the resistance between the body integrated unit connector terminal and combination meter connector terminal. ***Connector & terminal*** ***(i171) No. 26 — (i10) No. 1:***	Is the resistance less than 10 Ω?	LED bulb is defective. Replace the combination meter case assembly. <Ref. to IDI-15, DISASSEMBLY, Combination Meter.>	Repair the harness or connector.

2. CHECK KEY SWITCH CIRCUIT

CAUTION:
When the body integrated unit is replaced, registration of the immobilizer system is required. For details, refer to the "REGISTRATION MANUAL FOR IMMOBILIZER" provided as a separate volume.
WIRING DIAGRAM:
Immobilizer system <Ref. to WI-244, WIRING DIAGRAM, Immobilizer System.>

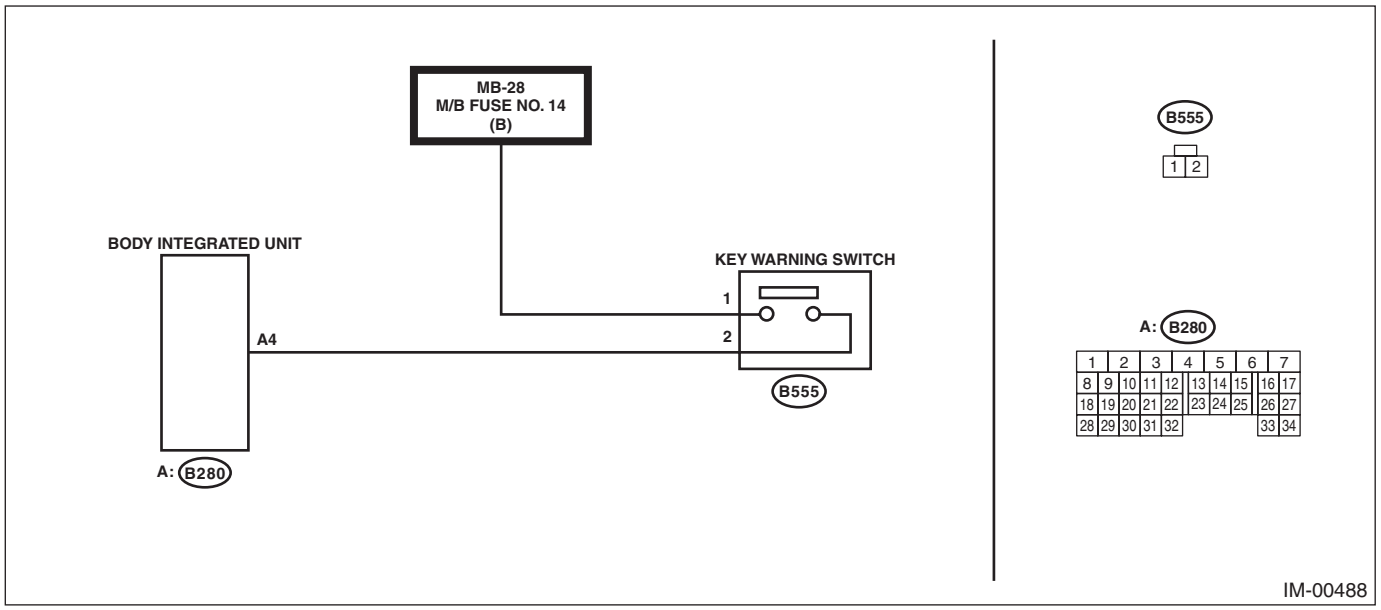

	Step	Check	Yes	No
1	**CHECK POWER SUPPLY CIRCUIT.** 1) Disconnect the connector from key warning switch. 2) Measure the voltage between key warning switch connector terminal and chassis ground. ***Connector & terminal*** ***(B555) No. 1 (+) — Chassis ground (–):***	Is the voltage 10 V or more?	Go to step **2**.	Check the harness for an open or short between the key warning switch and fuse.
2	**CHECK KEY WARNING SWITCH.** 1) Insert the ignition key in the ignition switch. (OFF or ACC) 2) Measure the resistance between key warning switch connector terminals. ***Terminals*** ***No. 1 — No. 2:***	Is the resistance less than 1 Ω?	Go to step **3**.	Replace the key warning switch. <Ref. to SL-69, Key Lock Cylinders.>
3	**CHECK KEY WARNING SWITCH.** 1) Remove the ignition key from ignition switch. 2) Measure the resistance between key warning switch connector terminals. ***Terminals*** ***No. 1 — No. 2:***	Is the resistance 1 MΩ or more?	Go to step **4**.	Replace the key warning switch. <Ref. to SL-69, Key Lock Cylinders.>
4	**CHECK HARNESS BETWEEN KEY WARNING SWITCH AND BODY INTEGRATED UNIT (OPEN).** 1) Disconnect the connector from body integrated unit. 2) Measure the resistance between key warning switch connector terminal and body integrated unit connector terminal. ***Connector & terminal*** ***(B555) No. 2 — (B280) No. 4:***	Is the resistance less than 10 Ω?	Replace the body integrated unit. <Ref. to SL-81, Body Integrated Unit.>	Repair the harness between key warning switch and body integrated unit.

9. List of Diagnostic Trouble Code (DTC)

A: LIST

NOTE:
If DTCs irrelevant to the immobilizer are displayed, perform diagnosis according to the DTCs irrelevant to the immobilizer first.

1. ECM

DTC	Item	Contents of diagnosis	Index No.
B1570	ANTENNA	Faulty antenna	<Ref. to IM(diag)-16, DTC B1570 ANTENNA, Diagnostic Procedure with Diagnostic Trouble Code (DTC).>
B1571	REFERENCE CODE INCOMPATIBILITY	Reference code incompatibility between body integrated unit and ECM	<Ref. to IM(diag)-18, DTC B1571 REFERENCE CODE INCOMPATIBILITY, Diagnostic Procedure with Diagnostic Trouble Code (DTC).>
B1572	IMM CIRCUIT EXCEPT ANTENNA CIRCUIT	Communication failure between body integrated unit and ECM	<Ref. to IM(diag)-19, DTC B1572 IMM CIRCUIT EXCEPT ANTENNA CIRCUIT, Diagnostic Procedure with Diagnostic Trouble Code (DTC).>
B1574	KEY COMMUNICATION	Communication failure between key and body integrated unit	<Ref. to IM(diag)-23, DTC B1574 KEY COMMUNICATION, Diagnostic Procedure with Diagnostic Trouble Code (DTC).>
B1575	INCORRECT IMMOBILIZER KEY	Incorrect immobilizer key (use of unregistered key in body integrated unit)	<Ref. to IM(diag)-24, DTC B1575 INCORRECT IMMOBILIZER KEY, Diagnostic Procedure with Diagnostic Trouble Code (DTC).>
B1576	EGI CONTROL MODULE EEPROM	ECM malfunctioning	<Ref. to IM(diag)-25, DTC B1576 EGI CONTROL MODULE EEPROM, Diagnostic Procedure with Diagnostic Trouble Code (DTC).>
B1577	IMM CONTROL MODULE EEPROM	Body integrated unit malfunctioning	<Ref. to IM(diag)-26, DTC B1577 IMM CONTROL MODULE EEPROM, Diagnostic Procedure with Diagnostic Trouble Code (DTC).>
B1578	METER	Except for C0 model • Reference code incompatibility between combination meter and body integrated unit • Communication failure between body integrated unit and ECM	<Ref. to IM(diag)-26, DTC B1578 METER, Diagnostic Procedure with Diagnostic Trouble Code (DTC).>
		C0 model • Reference code incompatibility between body integrated unit and security control module • Communication failure between body integrated unit and ECM	

2. BODY INTEGRATED UNIT

DTC	Item	Contents of diagnosis	Index No.	Relation between ECM and DTC
B1401	Meter Collation	Reference code incompatibility between combination meter and body integrated unit	<Ref. to IM(diag)-27, DTC B1401 METER COLLATION, Diagnostic Procedure with Diagnostic Trouble Code (DTC).>	B1578
B1402	Immobilizer Key Collation	• Incorrect immobilizer key (use of unregistered key in body integrated unit) • Faulty antenna • Communication failure between key and body integrated unit	<Ref. to IM(diag)-27, DTC B1402 IMMOBILIZER KEY COLLATION, Diagnostic Procedure with Diagnostic Trouble Code (DTC).>	• B1575 • B1570 • B1574
B1405	SCU Collation	Reference code incompatibility between body integrated unit and security control module	<Ref. to IM(diag)-28, DTC B1405 SCU COLLATION, Diagnostic Procedure with Diagnostic Trouble Code (DTC).>	B1578
B1406	SCU_EEPROM	Malfunction of security control module	<Ref. to IM(diag)-28, DTC B1406 SCU_EEPROM, Diagnostic Procedure with Diagnostic Trouble Code (DTC).>	B1578
B1407	Met Communication	Communication failure between body integrated unit and combination meter	<Ref. to IM(diag)-29, DTC B1407 MET COMMUNICATION, Diagnostic Procedure with Diagnostic Trouble Code (DTC).>	B1578
B1408	Meter Non-Volatile Memory	Combination meter malfunction	<Ref. to IM(diag)-29, DTC B1408 METER NON-VOLATILE MEMORY, Diagnostic Procedure with Diagnostic Trouble Code (DTC).>	B1578
B1409	SCU Communication	Communication failure between body integrated unit and security control module	<Ref. to IM(diag)-30, DTC B1409 SCU COMMUNICATION, Diagnostic Procedure with Diagnostic Trouble Code (DTC).>	B1578
B1410	Transponder Communication	Communication failure between key and body integrated unit	<Ref. to IM(diag)-32, DTC B1410 TRANSPONDER COMMUNICATION, Diagnostic Procedure with Diagnostic Trouble Code (DTC).>	B1574
B1411	Immobilizer Antenna	Faulty antenna	<Ref. to IM(diag)-32, DTC B1411 IMMOBILIZER ANTENNA, Diagnostic Procedure with Diagnostic Trouble Code (DTC).>	B1570

NOTE:
The starter relay control is performed in immobilizer system. When the body integrated unit detects a nonconformity of reference code, it immediately outputs a starter relay cut signal to ECM, and then ECM stops the starter relay operation. In this case, engine does not start, and DTC is not recorded in ECM. Check that the engine does not start on the DTC of body integrated unit.

10.Diagnostic Procedure with Diagnostic Trouble Code (DTC)

A: DTC B1570 ANTENNA

DTC DETECTING CONDITION:
Faulty antenna

CAUTION:
When the body integrated unit is replaced, registration of the immobilizer system is required. For details, refer to the "REGISTRATION MANUAL FOR IMMOBILIZER" provided as a separate volume.
WIRING DIAGRAM:
Immobilizer system <Ref. to WI-244, WIRING DIAGRAM, Immobilizer System.>

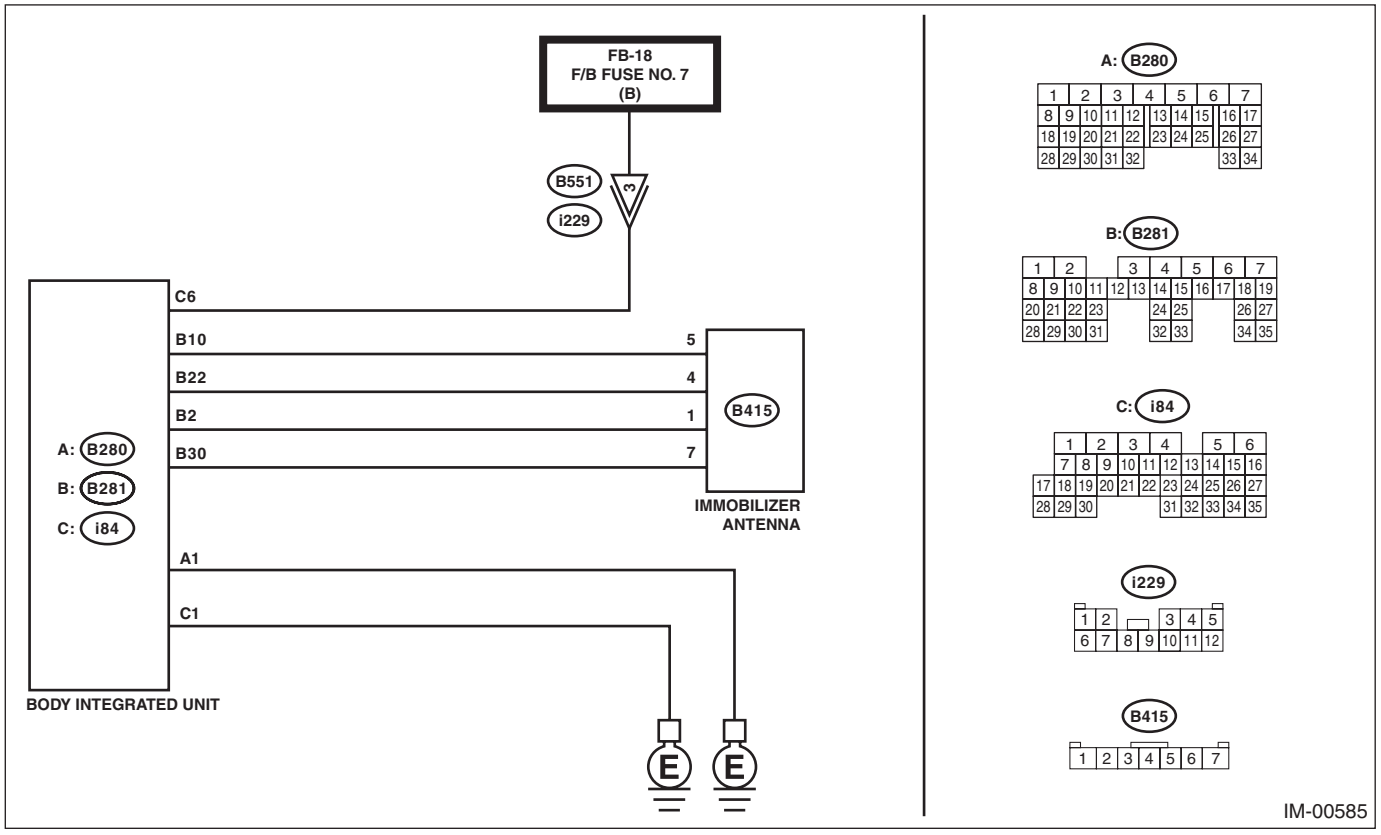

Step		Check	Yes	No
1	**CHECK BODY INTEGRATED UNIT POWER SUPPLY CIRCUIT.** 1) Turn the ignition switch to OFF. 2) Disconnect the connector from body integrated unit. 3) Measure the voltage between the body integrated unit connector terminal and chassis ground. ***Connector & terminal*** ***(i84) No. 6 (+) — Chassis ground (–):***	Is the voltage 10 V or more?	Go to step **2**.	Check the harness for open or short circuit between body integrated unit and fuse.
2	**CHECK BODY INTEGRATED UNIT GROUND CIRCUIT (OPEN CIRCUIT).** Measure the resistance between the body integrated unit connector terminal and chassis ground. ***Connector & terminal*** ***(B280) No. 1 — Chassis ground:*** ***(i84) No. 1 — Chassis ground:***	Is the resistance less than 10 Ω?	Go to step **3**.	Repair the open circuit of the body integrated unit ground circuit.

	Step	Check	Yes	No
3	**CHECK ANTENNA POWER SUPPLY CIRCUIT.** 1) Connect the connector to body integrated unit. 2) Disconnect the connector from the antenna. 3) Insert the ignition key into the key cylinder, then measure the voltage between the antenna connector terminal and the chassis ground. ***Connector & terminal*** ***(B415) No. 1 (+) — Chassis ground (–):***	Is the voltage 5±0.5 V approx. 200 ms after inserting the ignition key into the key cylinder? And then, does the voltage return to 0 V within 2 s?	Go to step **5**.	Go to step **4**.
4	**CHECK ANTENNA POWER SUPPLY CIRCUIT (OPEN).** 1) Disconnect the connector from body integrated unit. 2) Measure the resistance of body integrated unit connector terminal and antenna connector terminal. ***Connector & terminal*** ***(B281) No. 2 — (B415) No. 1:***	Is the resistance less than 10 Ω?	Replace the body integrated unit. <Ref. to SL-81, Body Integrated Unit.>	Repair the harness or connector between body integrated unit and antenna.
5	**CHECK ANTENNA GROUND CIRCUIT (SHORT CIRCUIT TO GROUND).** Measure the resistance between antenna connector terminal and chassis ground. ***Connector & terminal*** ***(B415) No. 7 — Chassis ground:***	Is the resistance less than 10 Ω?	Go to step **7**.	Go to step **6**.
6	**CHECK ANTENNA GROUND CIRCUIT (OPEN).** 1) Disconnect the connector from body integrated unit. 2) Measure the resistance between antenna connector terminal and chassis ground. ***Connector & terminal*** ***(B281) No. 30 — (B415) No. 7:***	Is the resistance less than 10 Ω?	Replace the body integrated unit. <Ref. to SL-81, Body Integrated Unit.>	Repair the harness or connector between body integrated unit and antenna.
7	**CHECK ANTENNA COMMUNICATION CIRCUIT (OPEN).** Measure the resistance of body integrated unit connector terminal and antenna connector terminal. ***Connector & terminal*** ***(B281) No. 10 — (B415) No. 5:*** ***(B281) No. 22 — (B415) No. 4:***	Is the resistance less than 10 Ω?	Go to step **8**.	Repair the harness or connector between body integrated unit and antenna.
8	**CHECK ANTENNA.** 1) Replace the immobilizer antenna. <Ref. to SL-89, Immobilizer Antenna.> 2) Insert the ignition key in the ignition switch. (OFF or ACC) 3) Perform the Clear Memory Mode. <Ref. to IM(diag)-10, Clear Memory Mode.> 4) Read the DTC of the body integrated unit. <Ref. to IM(diag)-9, Read Diagnostic Trouble Code (DTC).>	Is DTC B1411 displayed?	Replace the body integrated unit. <Ref. to SL-81, Body Integrated Unit.>	Antenna has a failure.

B: DTC B1571 REFERENCE CODE INCOMPATIBILITY

DTC DETECTING CONDITION:
Reference code incompatibility between body integrated unit and ECM

CAUTION:
When the body integrated unit is replaced, registration of the immobilizer system is required. For details, refer to the "REGISTRATION MANUAL FOR IMMOBILIZER" provided as a separate volume.

	Step	Check	Yes	No
1	**CONFIRM NUMBER OF REGISTERED IMMOBILIZER KEY.** Confirm the number of registered immobilizer key. Refer to the "REGISTRATION MANUAL FOR IMMOBILIZER" provided as a separate volume.	Is the number of registration 0?	Go to step **2**.	Go to step **3**.
2	**PERFORM IMMOBILIZER SYSTEM REGISTRATION.** Register the immobilizer system. Refer to the "REGISTRATION MANUAL FOR IMMOBILIZER" provided as a separate volume.	Is registration complete?	Finish the diagnosis.	Go to step **4**.
3	**PERFORM ECM REGISTRATION.** Perform ECM registration. Refer to the "REGISTRATION MANUAL FOR IMMOBILIZER" provided as a separate volume.	Is registration complete?	Finish the diagnosis.	Go to step **4**.
4	**CHECK FOR ANY OTHER DTC ON DISPLAY.** 1) Perform the Clear Memory Mode. <Ref. to IM(diag)-10, Clear Memory Mode.> 2) Read the DTC of the ECM. <Ref. to IM(diag)-9, Read Diagnostic Trouble Code (DTC).>	Are DTCs other than DTC B1571 displayed?	Perform the diagnosis for DTC other than DTC B1571.	Go to step **5**.
5	**PERFORM ECM REGISTRATION.** 1) Replace the ECM. <Ref. to FU(STI)-56, Engine Control Module (ECM).> <Ref. to FU(w/o STI)-124, Engine Control Module (ECM).> 2) Perform ECM registration. Refer to the "REGISTRATION MANUAL FOR IMMOBILIZER" provided as a separate volume.	Is registration complete?	Finish the diagnosis.	Replace the body integrated unit. <Ref. to SL-81, Body Integrated Unit.>

C: DTC B1572 IMM CIRCUIT EXCEPT ANTENNA CIRCUIT

DTC DETECTING CONDITION:

Communication failure between body integrated unit and ECM

CAUTION:

When the body integrated unit is replaced, registration of the immobilizer system is required. For details, refer to the "REGISTRATION MANUAL FOR IMMOBILIZER" provided as a separate volume.

WIRING DIAGRAM:

Immobilizer system <Ref. to WI-244, WIRING DIAGRAM, Immobilizer System.>

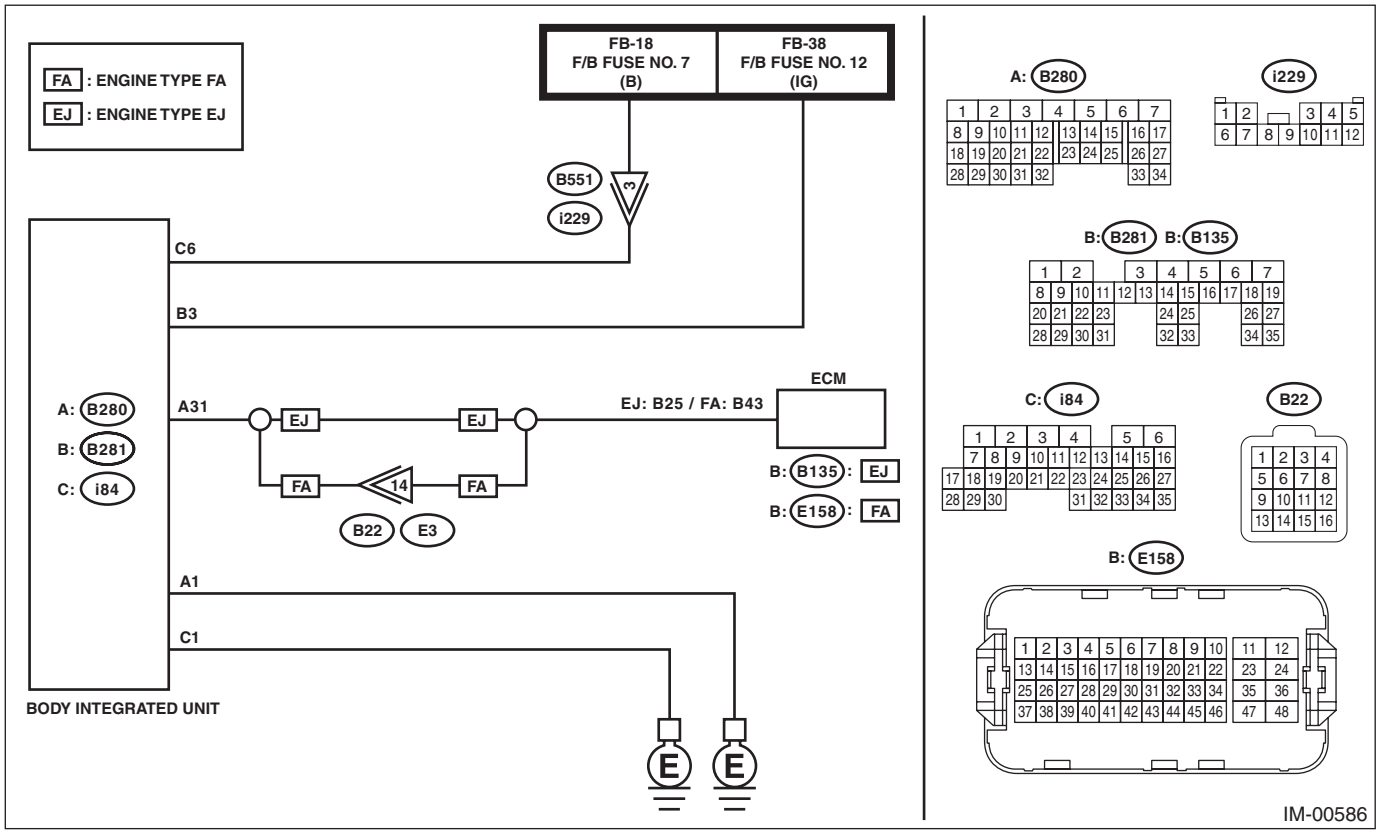

- Engine type FA

Engine electrical system <Ref. to WI-154, WIRING DIAGRAM, Engine Electrical System.>

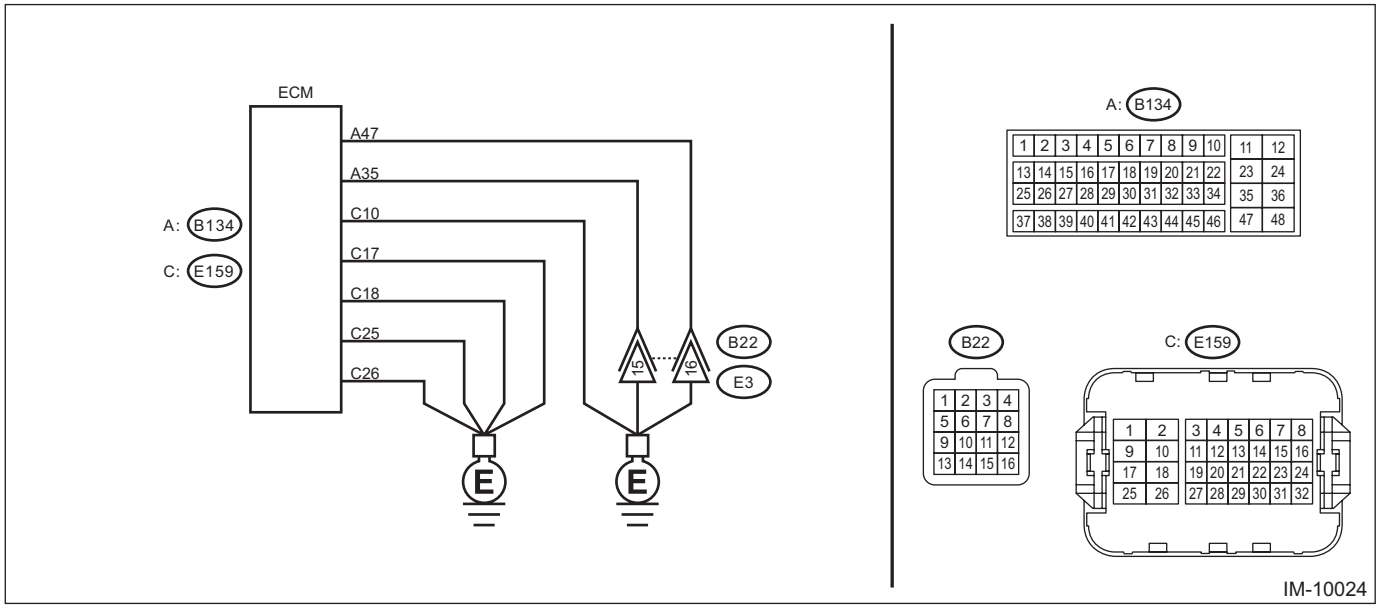

- Engine type EJ

Engine electrical system <Ref. to WI-154, WIRING DIAGRAM, Engine Electrical System.>

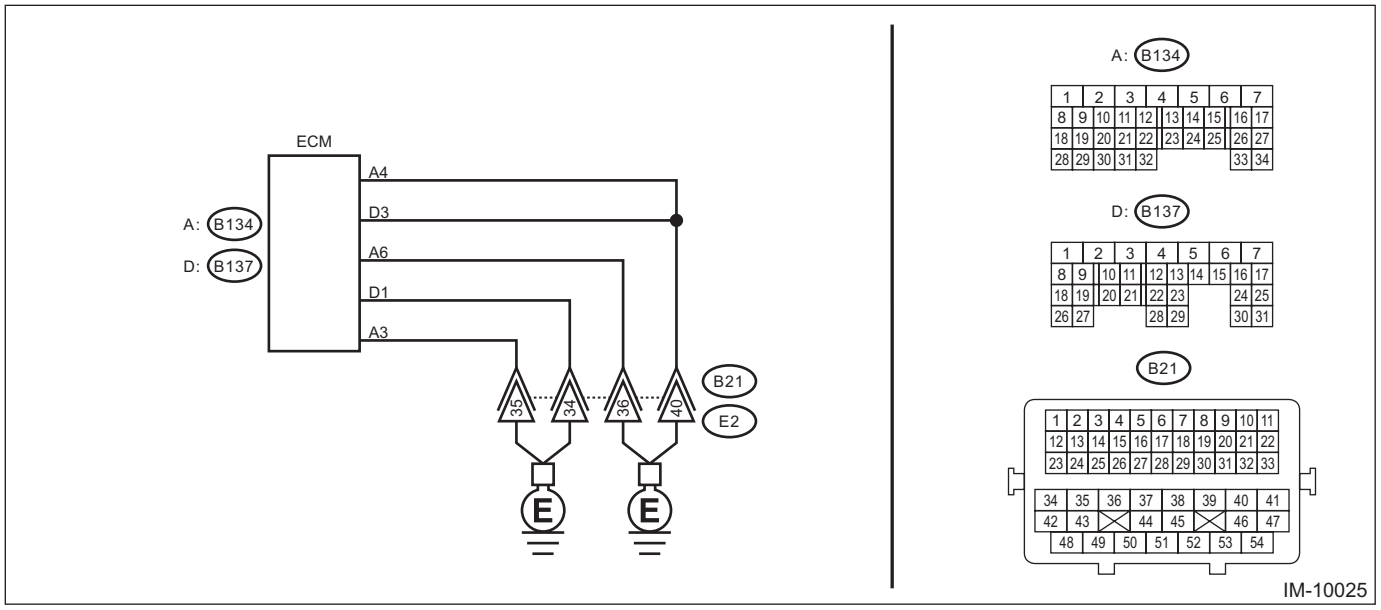

	Step	Check	Yes	No
1	**CHECK GROUNDING POINT.** Check the grounding point of the engine ground and chassis ground.	Are there any loose connections, any foreign objects caught in the ground lines or contact surface, or any fluid stains?	Remove the foreign matters, and tighten to the specified torque. Then start the engine, and check that the fault was removed. Check DTC <Ref. to IM(diag)-9, Read Diagnostic Trouble Code (DTC).>, and when DTC B1572 is still displayed, Go to step **2**.	Go to step **2**.
2	**CHECK FUSE.** 1) Turn the ignition switch to OFF. 2) Check the fuse.	Is the check result OK?	Go to step **3**.	Replace the fuse. If the fuse blows out easily, repair the short circuit to power supply in harness between the battery and body integrated unit.
3	**CHECK CURRENT DATA.** Confirm the current data «BATT voltage (control)» display of body integrated unit. <Ref. to BC(diag)-17, Read Current Data.>	Is the voltage 10 V or more?	Go to step **4**.	Go to step **5**.
4	**CHECK CURRENT DATA.** Check the current data «Voltage of IGN» display of body integrated unit. <Ref. to BC(diag)-17, Read Current Data.>	Is the voltage 10 V or more?	Go to step **7**.	Go to step **6**.

	Step	Check	Yes	No
5	**CHECK BODY INTEGRATED UNIT BATTERY POWER SUPPLY CIRCUIT.** 1) Turn the ignition switch to OFF. 2) Disconnect the body integrated unit connector. 3) Measure the voltage between body integrated unit connector and chassis ground. ***Connector & terminal*** ***(i84) No. 6 (+) — Chassis ground (–):***	Is the voltage 10 V or more?	Go to step **6**.	Repair the open or short circuit of harness between the body integrated unit connector and fuse.
6	**CHECK BODY INTEGRATED UNIT IGN POWER SUPPLY CIRCUIT.** 1) Turn the ignition switch to ON. 2) Measure the voltage between the body integrated unit connector terminal and chassis ground. ***Connector & terminal*** ***(B281) No. 3 (+) — Chassis ground (–):***	Is the voltage 10 V or more?	Go to step **7**.	Repair the open or short circuit of harness between the body integrated unit connector and ignition switch.
7	**CHECK BODY INTEGRATED UNIT GROUND CIRCUIT (OPEN CIRCUIT).** 1) Turn the ignition switch to OFF. 2) Measure the resistance between body integrated unit connector and chassis ground. ***Connector & terminal*** ***(B280) No. 1 — Chassis ground:*** ***(i84) No. 1 — Chassis ground:***	Is the resistance less than 10 Ω?	Go to step **8**.	Repair the open circuit of harness between the body integrated unit connector and chassis ground.
8	**CHECK GROUND CIRCUIT FOR ECM (OPEN CIRCUIT).** Measure the resistance between the ECM ground terminal and engine ground. ***Connector & terminal*** ***Engine type: FA*** ***(B134) No. 35 — Engine ground:*** ***(B134) No. 47 — Engine ground:*** ***(E159) No. 10 — Engine ground:*** ***(E159) No. 17 — Engine ground:*** ***(E159) No. 18 — Engine ground:*** ***(E159) No. 25 — Engine ground:*** ***(E159) No. 26 — Engine ground:*** ***Engine type: EJ*** ***(B134) No. 3 — Engine ground:*** ***(B134) No. 4 — Engine ground:*** ***(B134) No. 6 — Engine ground:*** ***(B137) No. 1 — Engine ground:*** ***(B137) No. 3 — Engine ground:***	Is the resistance less than 10 Ω?	Go to step **9**.	Repair the ECM ground circuit.
9	**CHECK HARNESS (OPEN CIRCUIT) BETWEEN BODY INTEGRATED UNIT AND ECM.** 1) Disconnect the ECM connector. 2) Measure the resistance between the body integrated unit connector and ECM. ***Connector & terminal*** ***Engine type: FA*** ***(B280) No. 31 — (E158) No. 43:*** ***Engine type: EJ*** ***(B280) No. 31 — (B135) No. 25:***	Is the resistance less than 10 Ω?	Go to step **10**.	Repair the open circuit of harness between the body integrated unit connector and ECM.

	Step	Check	Yes	No
10	**CHECK COMMUNICATION LINE HARNESS (SHORT CIRCUIT TO POWER SUPPLY).** 1) Disconnect the body integrated unit connector. 2) Turn the ignition switch to ON. 3) Measure the voltage between ECM connector and engine ground. ***Connector & terminal*** ***Engine type: FA*** ***(E158) No. 43 (+) — Engine ground (–):*** ***Engine type: EJ*** ***(B135) No. 25 (+) — Engine ground (–):***	Is the voltage 6 V or more?	Repair the short circuit to power supply in harness between body integrated unit connector and ECM connector.	Go to step **11**.
11	**CHECK COMMUNICATION CIRCUIT HARNESS (SHORT CIRCUIT TO GROUND).** 1) Turn the ignition switch to OFF. 2) Measure the resistance between the ECM connector and engine ground. ***Connector & terminal*** ***Engine type: FA*** ***(E158) No. 43 — Engine ground:*** ***Engine type: EJ*** ***(B135) No. 25 — Engine ground:***	Is the resistance less than 10 Ω?	Repair the ground short circuit of harness between body integrated unit connector and ECM connector.	Go to step **12**.
12	**CHECK ECM.** 1) Replace the ECM. (Do not perform ECM registration.) <Ref. to FU(w/o STI)-124, Engine Control Module (ECM).> <Ref. to FU(STI)-56, Engine Control Module (ECM).> 2) Connect all connectors. 3) Turn the ignition switch to ON. 4) Wait for 5 seconds. 5) Read DTC of engine. <Ref. to IM(diag)-9, Read Diagnostic Trouble Code (DTC).>	Is DTC B1572 displayed?	Replace the body integrated unit. <Ref. to SL-81, Body Integrated Unit.>	Register the ECM. Refer to the “REGISTRATION MANUAL FOR IMMOBILIZER” provided as a separate volume.

D: DTC B1574 KEY COMMUNICATION

DTC DETECTING CONDITION:
Communication failure between key and body integrated unit

CAUTION:
When the body integrated unit is replaced, registration of the immobilizer system is required. For details, refer to the "REGISTRATION MANUAL FOR IMMOBILIZER" provided as a separate volume.

	Step	Check	Yes	No
1	**CHECK IGNITION KEY.** 1) Remove the ignition key from the ignition switch. 2) Insert the ignition key into the ignition switch, and then turn the ignition switch to ON. 3) Perform the Clear Memory Mode. <Ref. to IM(diag)-10, Clear Memory Mode.> 4) Read the DTC of the body integrated unit. <Ref. to IM(diag)-9, Read Diagnostic Trouble Code (DTC).>	Is DTC B1410 displayed?	Go to step **2**.	Even if DTC is detected, the circuit has returned to a normal condition at this time. Reproduce the failure, and then perform the diagnosis again. NOTE: In this case, temporary poor contact of connector, temporary open or short circuit of harness may be the cause.
2	**CHECK IGNITION KEY.** 1) Prepare a spare ignition key that is already registered. 2) Insert the ignition key into the ignition switch, and then turn the ignition switch to ON. 3) Perform the Clear Memory Mode. <Ref. to IM(diag)-10, Clear Memory Mode.> 4) Read the DTC of the body integrated unit. <Ref. to IM(diag)-9, Read Diagnostic Trouble Code (DTC).>	Is DTC B1410 displayed?	Go to step **3**.	Ignition key unit was defective.
3	**CHECK IMMOBILIZER ANTENNA.** 1) Replace the immobilizer antenna. 2) Insert the ignition key into the ignition switch, and then turn the ignition switch to ON. 3) Perform the Clear Memory Mode. <Ref. to IM(diag)-10, Clear Memory Mode.> 4) Read the DTC of the body integrated unit. <Ref. to IM(diag)-9, Read Diagnostic Trouble Code (DTC).>	Is DTC B1410 displayed?	Replace the body integrated unit. <Ref. to SL-81, Body Integrated Unit.>	Immobilizer antenna was defective.

E: DTC B1575 INCORRECT IMMOBILIZER KEY

DTC DETECTING CONDITION:
Incorrect immobilizer key (use of unregistered key in body integrated unit)

CAUTION:
When the body integrated unit is replaced, registration of the immobilizer system is required. For details, refer to the "REGISTRATION MANUAL FOR IMMOBILIZER" provided as a separate volume.

	Step	Check	Yes	No
1	**PERFORM IGNITION KEY REGISTRATION.** Using the Subaru Select Monitor, check the number of registered ignition keys. Refer to the "REGISTRATION MANUAL FOR IMMOBILIZER" provided as a separate volume.	Is one or more ignition key(s) registered?	Go to step **2**.	Register the immobilizer.
2	**CHECK IGNITION KEY.** 1) Prepare all the pre-registered ignition keys. 2) Insert the ignition key in the ignition switch. 3) Turn the ignition switch to ON. 4) Read the DTC of the body integrated unit. <Ref. to IM(diag)-9, Read Diagnostic Trouble Code (DTC).> 5) Perform the steps 2) to 4) on all the registered ignition keys.	Is DTC B1402 displayed for all ignition keys?	Refer to "REGISTRATION MANUAL FOR IMMOBILIZER" provided as a separate volume, and perform the actions for the case that all keys are faulty/lost.	Ignition key unit was defective, or ignition key was not registered.

F: DTC B1576 EGI CONTROL MODULE EEPROM

DTC DETECTING CONDITION:

- ECM malfunctioning
- Failed to access ROM in ECM during key registration.

CAUTION:
When the ECM is replaced, registration of the immobilizer system is required. For details, refer to the "REGISTRATION MANUAL FOR IMMOBILIZER" provided as a separate volume.

	Step	Check	Yes	No
1	**PERFORM ECM REGISTRATION.** Perform ECM registration. Refer to the "REGISTRATION MANUAL FOR IMMOBILIZER" provided as a separate volume.	Is registration complete?	Finish the diagnosis.	Go to step **2**.
2	**PERFORM ECM REGISTRATION.** Perform ECM registration. Refer to the "REGISTRATION MANUAL FOR IMMOBILIZER" provided as a separate volume.	Is registration complete?	Finish the diagnosis.	Go to step **3**.
3	**PERFORM ECM REGISTRATION.** Perform ECM registration. Refer to the "REGISTRATION MANUAL FOR IMMOBILIZER" provided as a separate volume.	Is registration complete?	Finish the diagnosis.	Refer to "Correspondence table when registration is not possible" in the "REGISTRATION MANUAL FOR IMMOBILIZER" provided as a separate volume. If the registration still does not work properly, replace the ECM. <Ref. to FU(w/o STI)-124, Engine Control Module (ECM).> <Ref. to FU(STI)-56, Engine Control Module (ECM).>

G: DTC B1577 IMM CONTROL MODULE EEPROM

DTC DETECTING CONDITION:

- Body integrated unit malfunctioning
- Failed to access ROM inside the body integrated unit.

CAUTION:
When the body integrated unit is replaced, registration of the immobilizer system is required. For details, refer to the "REGISTRATION MANUAL FOR IMMOBILIZER" provided as a separate volume.

	Step	Check	Yes	No
1	**PERFORM ECM REGISTRATION.** Perform ECM registration. Refer to the "REGISTRATION MANUAL FOR IMMOBILIZER" provided as a separate volume.	Is registration complete?	Finish the diagnosis.	Go to step **2**.
2	**PERFORM ECM REGISTRATION.** Perform the Clear Memory Mode. (ECM and body integrated unit) <Ref. to IM(diag)-10, Clear Memory Mode.> Perform ECM registration. Refer to the "REGISTRATION MANUAL FOR IMMOBILIZER" provided as a separate volume.	Is registration complete?	Even if DTC is detected, the circuit has returned to a normal condition at this time. Reproduce the failure, and then perform the diagnosis again. NOTE: In this case, temporary poor contact of connector, temporary open or short circuit of harness may be the cause.	Refer to "Correspondence table when registration is not possible" in the "REGISTRATION MANUAL FOR IMMOBILIZER" provided as a separate volume. If the registration still does not work properly, replace the body integrated unit. <Ref. to SL-81, Body Integrated Unit.>

H: DTC B1578 METER

DTC DETECTING CONDITION:

- Except for C0 model

Reference code incompatibility between combination meter and body integrated unit or communication failure between body integrated unit and ECM

- C0 model

Reference code incompatibility between security control module and body integrated unit or communication failure between body integrated unit and ECM

	Step	Check	Yes	No
1	**CHECK DTC.** Read the DTC of the body integrated unit. <Ref. to IM(diag)-9, Read Diagnostic Trouble Code (DTC).>	Is DTC B1401, B1405, B1406, B1407, B1408 or B1409 displayed?	Perform the diagnosis for the displayed DTC B1401, B1405, B1406, B1407, B1408 or B1409.	<Ref. to IM(diag)-19, DTC B1572 IMM CIRCUIT EXCEPT ANTENNA CIRCUIT, Diagnostic Procedure with Diagnostic Trouble Code (DTC).>

I: DTC B1401 METER COLLATION

DTC DETECTING CONDITION:
Reference code incompatibility between combination meter and body integrated unit

CAUTION:
When the combination meter is replaced, registration of the immobilizer system is required. For details, refer to the "REGISTRATION MANUAL FOR IMMOBILIZER" provided as a separate volume.

	Step	Check	Yes	No
1	**CHECK DTC.** Read the DTC of the body integrated unit. <Ref. to IM(diag)-9, Read Diagnostic Trouble Code (DTC).>	Is DTC B1407 or B1408 displayed?	Perform the diagnosis for the displayed DTC B1407 or B1408.	Go to step **2**.
2	**CHECK COMBINATION METER REGISTRATION.** Perform registration of combination meter. Refer to the "REGISTRATION MANUAL FOR IMMOBILIZER" provided as a separate volume.	Is registration complete?	Currently, it is normal. (Combination meter registration is not complete.)	Go to step **3**.
3	**CHECK DTC.** 1) Perform the Clear Memory Mode. <Ref. to IM(diag)-10, Clear Memory Mode.> 2) Read the DTC of the body integrated unit. <Ref. to IM(diag)-9, Read Diagnostic Trouble Code (DTC).>	Is DTC B1407 or B1408 displayed?	Perform the diagnosis for the displayed DTC B1407 or B1408.	Replace the combination meter. <Ref. to IDI-13, Combination Meter.>

J: DTC B1402 IMMOBILIZER KEY COLLATION

DTC DETECTING CONDITION:
- Incorrect immobilizer key (use of unregistered key in body integrated unit)
- Faulty antenna
- Communication failure between key and body integrated unit

	Step	Check	Yes	No
1	**CHECK DTC.** Read the DTC of the body integrated unit. <Ref. to IM(diag)-9, Read Diagnostic Trouble Code (DTC).>	Is DTC B1410 or B1411 displayed?	Perform the diagnosis for the displayed DTC B1410 or B1411.	<Ref. to IM(diag)-24, DTC B1575 INCORRECT IMMOBILIZER KEY, Diagnostic Procedure with Diagnostic Trouble Code (DTC).>

K: DTC B1405 SCU COLLATION

DTC DETECTING CONDITION:

Reference code incompatibility between security control module and body integrated unit

CAUTION:

When the security control module is replaced, registration of the immobilizer system is required. For details, refer to the "REGISTRATION MANUAL FOR IMMOBILIZER" provided as a separate volume.

	Step	Check	Yes	No
1	**CHECK DTC.** Read the DTC of the body integrated unit. <Ref. to IM(diag)-9, Read Diagnostic Trouble Code (DTC).>	Is DTC B1406 or B1409 displayed?	Perform the diagnosis for the displayed DTC B1406 or B1409.	Go to step **2**.
2	**PERFORM SECURITY CONTROL MODULE REGISTRATION.** Perform security control module registration. Refer to the "REGISTRATION MANUAL FOR IMMOBILIZER" provided as a separate volume.	Is registration complete?	Currently, it is normal. (Security control module registration is not complete.)	Go to step **3**.
3	**CHECK DTC.** 1) Perform the Clear Memory Mode. <Ref. to IM(diag)-10, Clear Memory Mode.> 2) Read the DTC of the body integrated unit. <Ref. to IM(diag)-9, Read Diagnostic Trouble Code (DTC).>	Is DTC B1406 or B1409 displayed?	Perform the diagnosis for the displayed DTC B1406 or B1409.	Replace the security control module. <Ref. to SL-74, Security Control Module.>

L: DTC B1406 SCU_EEPROM

DTC DETECTING CONDITION:

- Defective security control module
- ROM of security control module cannot be accessed

CAUTION:

When the security control module is replaced, registration of the immobilizer system is required. For details, refer to the "REGISTRATION MANUAL FOR IMMOBILIZER" provided as a separate volume.

	Step	Check	Yes	No
1	**PERFORM SECURITY CONTROL MODULE REGISTRATION.** 1) Perform security control module registration. Refer to the "REGISTRATION MANUAL FOR IMMOBILIZER" provided as a separate volume. 2) Perform the Clear Memory Mode. <Ref. to IM(diag)-10, Clear Memory Mode.> 3) Read the DTC of the body integrated unit. <Ref. to IM(diag)-9, Read Diagnostic Trouble Code (DTC).>	Is DTC B1406 displayed?	Replace the security control module. <Ref. to SL-74, Security Control Module.>	Finish the diagnosis.

M: DTC B1407 MET COMMUNICATION

DTC DETECTING CONDITION:
Communication failure between body integrated unit and combination meter

CAUTION:
When the combination meter is replaced, registration of the immobilizer system is required. For details, refer to the "REGISTRATION MANUAL FOR IMMOBILIZER" provided as a separate volume.

	Step	Check	Yes	No
1	**CHECK DTC.** Read the DTC of the body integrated unit. <Ref. to IM(diag)-9, Read Diagnostic Trouble Code (DTC).>	Are DTCs other than DTC B1407 displayed?	Perform the diagnosis for DTC other than DTC B1407.	Replace the combination meter. <Ref. to IDI-13, Combination Meter.>

N: DTC B1408 METER NON-VOLATILE MEMORY

DTC DETECTING CONDITION:
Defective combination meter

CAUTION:
When the combination meter is replaced, registration of the immobilizer system is required. For details, refer to the "REGISTRATION MANUAL FOR IMMOBILIZER" provided as a separate volume.

	Step	Check	Yes	No
1	**CHECK COMBINATION METER REGISTRATION.** 1) Perform the Clear Memory Mode. (Combination meter <Ref. to IDI(diag)-14, Clear Memory Mode.> and body integrated unit <Ref. to IM(diag)-10, Clear Memory Mode.>) 2) Perform registration of combination meter. Refer to the "REGISTRATION MANUAL FOR IMMOBILIZER" provided as a separate volume. 3) Perform the Clear Memory Mode. <Ref. to IM(diag)-10, Clear Memory Mode.> 4) Read the DTC of the body integrated unit. <Ref. to IM(diag)-9, Read Diagnostic Trouble Code (DTC).>	Is DTC B1408 displayed?	Replace the combination meter. <Ref. to IDI-13, Combination Meter.>	Even if DTC is detected, the circuit has returned to a normal condition at this time. Reproduce the failure, and then perform the diagnosis again. NOTE: In this case, temporary poor contact of connector, temporary open or short circuit of harness may be the cause.

O: DTC B1409 SCU COMMUNICATION

DTC DETECTING CONDITION:
Communication failure between body integrated unit and security control module

CAUTION:
When the body integrated unit is replaced, registration of the immobilizer system is required. For details, refer to the "REGISTRATION MANUAL FOR IMMOBILIZER" provided as a separate volume.
WIRING DIAGRAM:
Immobilizer system <Ref. to WI-244, WIRING DIAGRAM, Immobilizer System.>

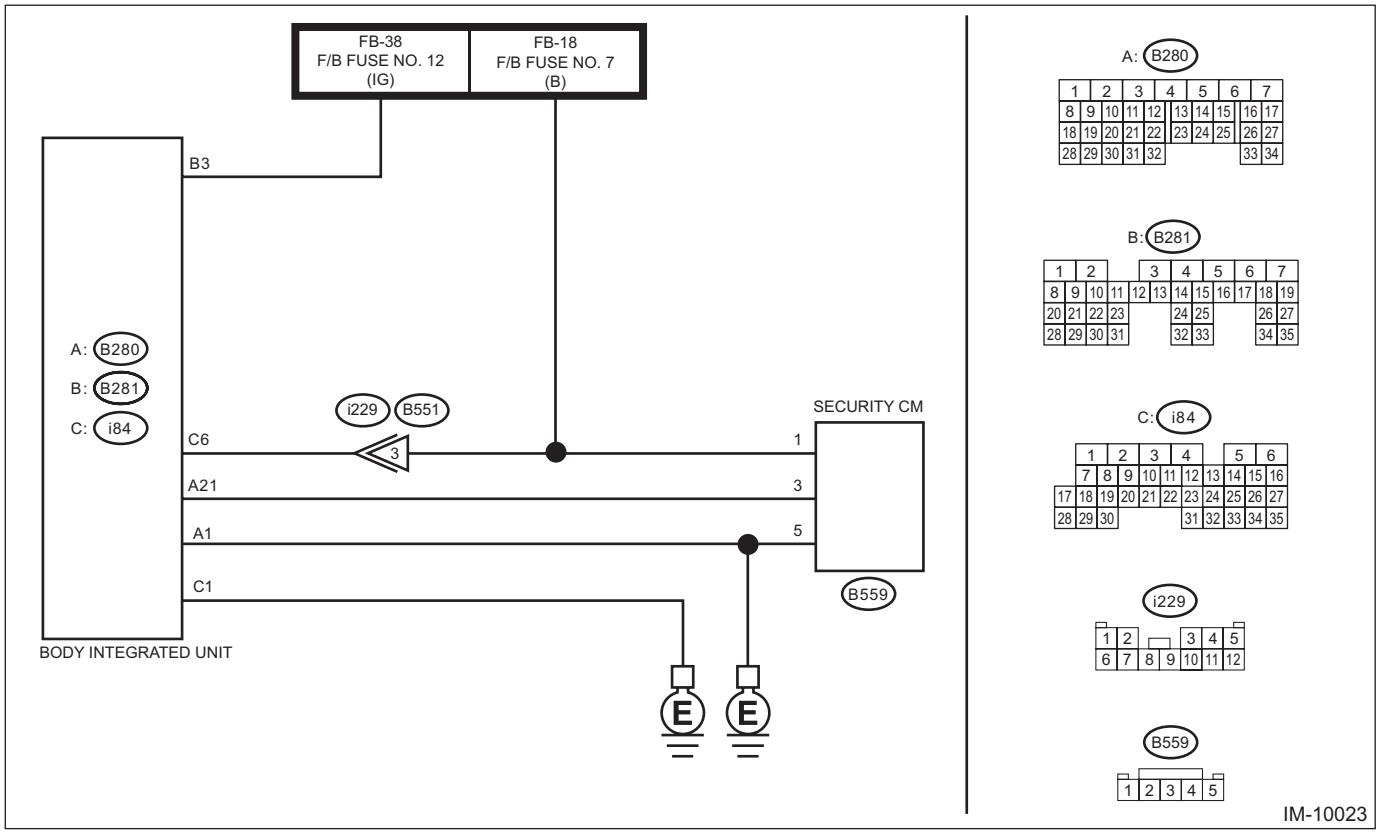

Step		Check	Yes	No
1	**CHECK BODY INTEGRATED UNIT POWER SUPPLY CIRCUIT.** 1) Turn the ignition switch to OFF. 2) Disconnect the connector from body integrated unit. 3) Measure the voltage between the body integrated unit connector terminal and chassis ground. ***Connector & terminal*** ***(i84) No. 6 (+) — Chassis ground (–):***	Is the voltage 10 V or more?	Go to step **2**.	Check the harness for open or short circuit between body integrated unit and fuse.
2	**CHECK BODY INTEGRATED UNIT POWER SUPPLY CIRCUIT.** 1) Turn the ignition switch to ON. 2) Measure the voltage between the body integrated unit connector terminal and chassis ground. ***Connector & terminal*** ***(B281) No. 3 (+) — Chassis ground (–):***	Is the voltage 10 V or more?	Go to step **3**.	Check the harness for open or short circuit between the body integrated unit and ignition switch.

	Step	Check	Yes	No
3	**CHECK BODY INTEGRATED UNIT GROUND CIRCUIT (OPEN CIRCUIT).** 1) Turn the ignition switch to OFF. 2) Measure the resistance between the body integrated unit connector terminal and chassis ground. ***Connector & terminal*** ***(B280) No. 1 — Chassis ground:*** ***(i84) No. 1 — Chassis ground:***	Is the resistance less than 10 Ω?	Go to step **4**.	Repair the open circuit of the body integrated unit ground circuit.
4	**CHECK SECURITY CONTROL MODULE POWER SUPPLY CIRCUIT.** 1) Disconnect the connector from the security control module. 2) Measure the power supply between security control module connector terminal and chassis ground. ***Connector & terminal*** ***(B559) No. 1 (+) — Chassis ground (–):***	Is the voltage 10 V or more?	Go to step **5**.	Check for an open or short circuit in the harness between security control module and fuse.
5	**CHECK SECURITY CONTROL MODULE GROUND CIRCUIT (OPEN).** Measure the resistance between security control module connector terminal and chassis ground. ***Connector & terminal*** ***(B559) No. 5 — Chassis ground:***	Is the resistance less than 10 Ω?	Go to step **6**.	Repair the open circuit of the security control module ground circuit.
6	**CHECK HARNESS (OPEN CIRCUIT) BETWEEN BODY INTEGRATED UNIT AND SECURITY CONTROL MODULE.** Measure the resistance between the body integrated unit connector terminal and security control module connector terminal. ***Connector & terminal*** ***(B280) No. 21 — (B559) No. 3:***	Is the resistance less than 10 Ω?	Go to step **7**.	Repair the harness between body integrated unit and security control module.
7	**CHECK COMMUNICATION LINE HARNESS (SHORT CIRCUIT TO POWER SUPPLY).** 1) Turn the ignition switch to ON. 2) Measure the voltage between security control module connector terminal and chassis ground. ***Connector & terminal*** ***(B559) No. 3 (+) — Chassis ground (–):***	Is the voltage 6 V or more?	Repair the harness between body integrated unit and security control module.	Go to step **8**.
8	**CHECK COMMUNICATION CIRCUIT HARNESS (SHORT CIRCUIT TO GROUND).** 1) Turn the ignition switch to OFF. 2) Measure the resistance between security control module connector terminal and chassis ground. ***Connector & terminal*** ***(B559) No. 3 — Chassis ground:***	Is the resistance less than 10 Ω?	Repair the harness between body integrated unit and ECM.	Go to step **9**.
9	**CHECK SECURITY CONTROL MODULE.** 1) Replace the security control module. (Do not perform security control module registration.) 2) Turn the ignition switch to ON. 3) Perform the Clear Memory Mode. <Ref. to IM(diag)-10, Clear Memory Mode.> 4) Read the DTC of the body integrated unit. <Ref. to IM(diag)-9, Read Diagnostic Trouble Code (DTC).>	Is DTC B1409 displayed?	Replace the body integrated unit. <Ref. to SL-81, Body Integrated Unit.>	Security control module was defective. Perform security control module registration. Refer to the "REGISTRATION MANUAL FOR IMMOBILIZER" provided as a separate volume.

P: DTC B1410 TRANSPONDER COMMUNICATION

NOTE:
Refer to DTC B1574 for diagnostic procedure. <Ref. to IM(diag)-23, DTC B1574 KEY COMMUNICATION, Diagnostic Procedure with Diagnostic Trouble Code (DTC).>

Q: DTC B1411 IMMOBILIZER ANTENNA

NOTE:
Refer to DTC B1570 for diagnostic procedure. <Ref. to IM(diag)-16, DTC B1570 ANTENNA, Diagnostic Procedure with Diagnostic Trouble Code (DTC).>

LAN SYSTEM (DIAGNOSTICS)

LAN(diag)

		Page
1.	Basic Diagnostic Procedure	2
2.	Check List for Interview	4
3.	General Description	5
4.	Electrical Component Location	9
5.	Control Module I/O Signal	10
6.	Subaru Select Monitor	12
7.	Read Diagnostic Trouble Code (DTC)	36
8.	Clear Memory Mode	37
9.	CAN Communication Circuit Check	38
10.	List of Diagnostic Trouble Code (DTC)	109
11.	Diagnostic Procedure with Diagnostic Trouble Code (DTC)	115
12.	Diagnostics with Phenomenon	150

1. Basic Diagnostic Procedure

A: PROCEDURE

CAUTION:
• Subaru Select Monitor is required for reading DTC, performing diagnosis, reading current data, customizing and active test (compulsory drive).
• Remove foreign matter (dust, water, oil, etc.) from each control module connector during removal and installation.
• Registration of immobilizer may be needed after the replacement of control modules, etc. For detailed procedure, refer to the "REGISTRATION MANUAL FOR IMMOBILIZER" provided as a separate volume.

NOTE:
• To check harness for open or short circuits, shake the suspected trouble spot or connector.
• Perform the diagnosis, and when the control module is replaced as a result of judgment that malfunction is the control module, re-check that the control module was actually malfunctioning. Replace to a new control module, and confirm that the malfunction is eliminated. Then, install the previously removed control module again and check that the malfunction reproduces again.
• Check List for Interview <Ref. to LAN(diag)-4, Check List for Interview.>

	Step	Check	Yes	No
1	**CHECK PRE-INSPECTION.** Ask the customer when and how the trouble occurred using the interview check list. <Ref. to LAN(diag)-4, Check List for Interview.>	Did you interview the customer?	Go to step **2**.	Interview the customer.
2	**BASIC INSPECTION (CAN DIAGNOSTIC IS NOT USED).** Check the power supply circuit of the module which might affect CAN communication problem. <Ref. to LAN(diag)-7, INSPECTION WITHOUT USING CAN DIAGNOSTIC, INSPECTION, General Description.>	Is the power supply circuit of each module that is performing CAN communication normal?	Go to step **3**.	Repair or replace the faulty portion.
3	**BASIC INSPECTION (CAN DIAGNOSTIC IS NOT USED).** Check the registration status of the body integrated unit which might affect CAN communication problem. <Ref. to LAN(diag)-8, INSPECTION USING CAN DIAGNOSTIC, INSPECTION, General Description.>	Does the registration status of the body integrated unit match with the vehicle specification? (When the Subaru Select Monitor and the body integrated unit cannot communicate, and the registration status cannot be checked, Go to step **5**.	Go to step **4**.	Match the registration status of the body integrated unit with the vehicle specification.)
4	**CHECK COMMUNICATION FOR INITIALIZING.** Communicate with the all systems by connecting the Subaru Select Monitor.	Is the communication for initializing finished for all modules?	Go to step **5**.	Check the error of communication for initializing. <Ref. to LAN(diag)-12, COMMUNICATION FOR INITIALIZING IMPOSSIBLE, Subaru Select Monitor.>

	Step	Check	Yes	No
5	**CHECK DTC.** 1) Start the engine and read all DTCs. NOTE: When the engine does not start, perform the diagnosis for the engine start malfunction. <Ref. to EN(w/o STI)(diag)-87, Diagnostics for Engine Starting Failure.> <Ref. to EN(STI)(diag)-77, Diagnostics for Engine Starting Failure.> 2) Record all DTCs (current malfunction and past malfunction), time stamp and freeze frame data. NOTE: For time stamp, refer to “TIME STAMP” of General Description. <Ref. to LAN(diag)-6, TIME STAMP, CAUTION, General Description.>	Is DTC U**** displayed on Subaru Select Monitor?	Go to step **6**.	Using the diagnostics with phenomenon, perform inspection. <Ref. to LAN(diag)-150, Diagnostics with Phenomenon.>
6	**CHECK USING THE DTC CHECK SHEET.** Perform the inspection using the DTC check sheet. <Ref. to LAN(diag)-111, CHECK USING THE DTC CHECK SHEET, LIST, List of Diagnostic Trouble Code (DTC).>	Is CAN communication line faulty?	Repair or replace the faulty portion of the harness. And then, Go to step **7**.	Perform the diagnosis for the displayed DTCs. And then, Go to step **7**.
7	**PERFORM DIAGNOSIS.** 1) Perform the Clear Memory Mode. <Ref. to LAN(diag)-37, OPERATION, Clear Memory Mode.> 2) Read the DTC. <Ref. to LAN(diag)-36, OPERATION, Read Diagnostic Trouble Code (DTC).>	Is DTC displayed?	Repeat the Basic Diagnostic Procedure from the beginning until DTC is not shown.	Finish the diagnosis.

2. Check List for Interview

A: CHECK

Inspect the following item about the vehicle's state.

1. DISPLAY STATUS IN THE COMBINATION METER

Display status in the combination meter	Engine coolant temperature gauge display	❑ OK / ❑ NG
	Fuel gauge display	❑ OK / ❑ NG
	Tachometer display	❑ OK / ❑ NG (0 rpm at idling etc.)
Display of other indicators	Malfunction indicator light	❑ ON / ❑ Blink / ❑ OFF
	Sport indicator light (AT warning light)	❑ ON / ❑ Blink / ❑ OFF
	ABS warning light	❑ ON / ❑ Blink / ❑ OFF
	VDC warning light	❑ ON / ❑ Blink / ❑ OFF
	Security indicator	❑ ON / ❑ Blink / ❑ OFF
	AT OIL TEMP warning light	❑ ON / ❑ Blink / ❑ OFF
	Tire pressure warning light	❑ ON / ❑ Blink / ❑ OFF
	Engine coolant temperature warning light	❑ Blue light ON / ❑ Red light ON / ❑ Red light blinks / ❑ Blue and red lights blink
	CRUISE indicator	❑ ON / ❑ Blink / ❑ OFF
	Shift indicator	❑ OK / ❑ NG
	Fuel level warning light	❑ ON / ❑ Blink / ❑ OFF
	Airbag warning light	❑ ON / ❑ OFF
	VDC OFF indicator	❑ ON / ❑ OFF
	Brake warning light	❑ ON / ❑ OFF
	Headlight beam leveler indicator	❑ ON / ❑ OFF

2. CONDITIONS UNDER WHICH TROUBLE OCCURS

Driving condition	❑ At standstill (While idling)				
	❑ When the vehicle is running	Vehicle speed	km/h (MPH)		
	❑ While accelerating	Acceleration	km/h (MPH) to	km/h (MPH)	
	❑ Decelerating (With braking)	Deceleration	km/h (MPH) to	km/h (MPH)	
	❑ Decelerating (Without braking)	Deceleration	km/h (MPH) to	km/h (MPH)	
	❑ Flat road ❑ Uphill ❑ Downhill ❑ Gravel road ❑ Bumpy road ❑ Snowy road				
	Does it occur when operating any part? Operated part: **TROUBLE SYMPTOM:**				
	Are there any other troubles occurred? From where: **TROUBLE SYMPTOM:**				

3. General Description

A: CAUTION

1. SUPPLEMENTAL RESTRAINT SYSTEM "AIRBAG"

Airbag system wiring harness is routed near the body integrated unit and twisted pair line.

CAUTION:
- **Do not use the electrical test equipment on all airbag system wiring harnesses and connectors.**
- **Be careful not to damage the airbag system wiring harness when servicing the body integrated unit and LAN system.**

2. LAN SYSTEM

- Bus line of LAN system is twisted pair line. Be careful not to by-pass or partly unbind the twisted pair line.
- Do not make clearance between bus lines (CAN High, CAN Low).
- Difference of bus line length should be within 10 cm (3.94 in).
- Fray near the connector should be within 8 cm (3.14 in).

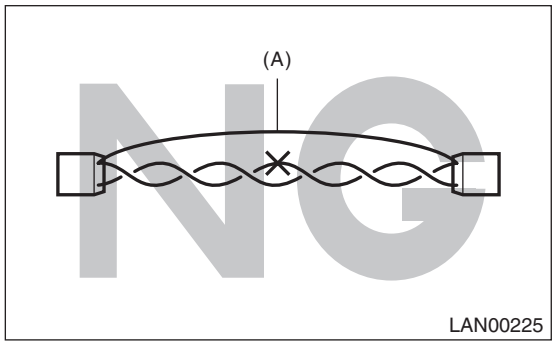

(A) Bypass wire connection

- If the characteristics of the twisted pair line are changed, it may extremely weaken against noise.
- When repairing the harness, connect the wires using soldering and protect it with insulating tape etc.

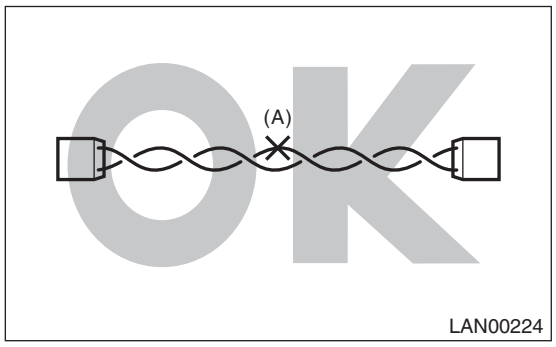

(A) Soldering and protection with insulating tape

3. TIME STAMP

There are three types of record data for the information of time stamp, and they are stored together with diagnostic codes.

NOTE:
Depending on DTCs, time stamp may not be stored.

a. **«Trip Count»**

This indicates the number of times that the ignition has been turned to ON since the vehicle was manufactured. The ignition ON count of when the diagnostic code is stored is displayed on the diagnostic code check screen.

NOTE:
Subaru Select Monitor 4 screen (A/C system diagnostic code and time stamp)

Code	Description & trouble position	Trouble occurrence record	**«Trip Count»**	«Time Count»	«Category»
B14E1	Air Mix Door Actuator Stepping Motor Circuit Open (Driver)	Detected on the first time	**983**	18000	Common
B14E7	Heater Core Sensor Circuit Open	Detected on the 2nd time	**984**	117800	Common

The current Trip Count can be checked at “Current Data Display & Save” in “Integ. unit mode”.
By comparing the current Trip Count and the Trip Count of when the diagnostic code was stored, it is possible to determine that it is how many ignition-ON operations ago that DTC was stored.

b. **«Time Count»**

The elapsed time from when the ignition is turned to ON to when the diagnostic code is stored is displayed on the diagnostic code check screen. It is possible to determine the length of time that passed between when the user started driving and when the diagnostic code was stored. Therefore, if Trip Count until the vehicle-received-date is determined by interviewing the user, it is possible to estimate where the user was driving when the diagnostic code was stored, using the information such as Trip Count and Time Count. This estimate is useful information to perform diagnosis including checking of repeatability.

NOTE:
Subaru Select Monitor 4 screen (A/C system diagnostic code and time stamp)

Code	Description & trouble position	Trouble occurrence record	«Trip Count»	**«Time Count»**	«Category»
B14E1	Air Mix Door Actuator Stepping Motor Circuit Open (Driver)	Detected on the first time	983	**18000**	Common
B14E7	Heater Core Sensor Circuit Open	Detected on the 2nd time	984	**117800**	Common

When multiple diagnostic codes are recorded for one trouble, it is extremely important to determine the diagnostic code that was stored first. (It is important to perform the diagnosis for the first recorded diagnostic code.) In this case, it is also possible to immediately determine which diagnostic code was recorded first, using the information such as Trip Count and Time Count.

c. **«Category»**
Each unit individually counts the elapsed time since the ignition is turned to ON. However, these time counts may have some errors, and therefore, the control modules need to be adjusted to the time carried by the master-time unit (the body integrated unit). When the count is set as common, it means that each control module is already adjusted to the master time, and the display for the master integrated unit is always indicated as “Common”. When the count is indicated as “Originally”, it means that the time is not synchronized with the master time. In this case, check the communication between the corresponding control module and integrated unit. When all controls other than the body integrated unit is indicated as “Originally”, perform the basic inspection for the body integrated unit. <Ref. to BC(diag)-2, PROCEDURE, Basic Diagnostic Procedure.>

NOTE:
Subaru Select Monitor 4 screen (A/C system diagnostic code and time stamp)

Code	Description & trouble position	Trouble occurrence record	«Trip Count»	«Time Count»	**«Category»**
B14E1	Air Mix Door Actuator Stepping Motor Circuit Open (Driver)	Detected on the first time	983	18000	**Common**
B14E7	Heater Core Sensor Circuit Open	Detected on the 2nd time	984	117800	**Common**

Even when multiple diagnostic codes are stored in multiple control modules, it is possible to determine the code stored first through the count function.

NOTE:
Troubleshooting for CAN system U-code occurrence
When the first stored diagnostic code is a U-code for CAN system, perform the troubleshooting as a U code combination, instead of a U code alone. In addition, when CAN open circuit occurs, communication of the diagnostic device itself becomes impossible beyond the particular areas. However, trouble positions can also be determined by the combination of initial communication success/failure. Thus, by performing the basic diagnostic procedure in LAN system, trouble positions can be determined efficiently on the principle above. <Ref. to LAN(diag)-2, PROCEDURE, Basic Diagnostic Procedure.>

B: INSPECTION

1. INSPECTION WITHOUT USING CAN DIAGNOSTIC

	Step	Check	Yes	No
1	**CHECK BATTERY.** Check the battery. <Ref. to SC(w/o STI)-51, INSPECTION, Battery.> <Ref. to SC(STI)-24, INSPECTION, Battery.>	Is the check result OK?	Go to step **2**.	Charge or replace the battery.
2	**CHECK FUSE.** Check the fuse which might affect the problem.	Is the check result OK?	Go to step **3**.	Replace the fuse. If the replaced fuse blows out easily, some type of fault is present. Therefore, repair the faulty portion.
3	**CHECK HARNESS.** Check the harness and harness connector connection which might affect the problem.	Is the check result OK?	In the Basic Diagnostic Procedure, Go to step **3**.	Repair or replace the faulty harness or harness connector.

2. INSPECTION USING CAN DIAGNOSTIC

Step		Check	Yes	No
1	**CHECK BODY INTEGRATED UNIT REGISTRATION STATUS.** Check that settings of body integrated unit correspond to vehicle equipment. <Ref. to BC(diag)-26, Registration Body Integrated Unit.>	Does the vehicle equipment correspond to settings?	Go to step **2**.	Match the settings of the body integrated unit with the vehicle equipment.
2	**CHECK BODY INTEGRATED UNIT CUSTOMIZE SETTING.** Check that settings of body integrated unit correspond to vehicle condition. <Ref. to BC(diag)-24, User Customizing.>	Do the customize settings correspond to the vehicle condition?	Go to step **3**.	Match the settings of the body integrated unit with the vehicle condition.
3	**CHECK FACTORY INITIAL SETTING OF BODY INTEGRATED UNIT.** Confirm «Factory initial setting» of body integrated unit registrations is set to «Market». <Ref. to BC(diag)-26, Registration Body Integrated Unit.>	Is it set to «Market»?	In the Basic Diagnostic Procedure, Go to step **4**.	Switch from «Factory» to «Market».

C: PREPARATION TOOL

1. SPECIAL TOOL

ILLUSTRATION	TOOL NUMBER	DESCRIPTION	REMARKS
 STSSM4	—	SUBARU SELECT MONITOR 4	Used for setting of each function and troubleshooting for electrical system. NOTE: For detailed operation procedures of Subaru Select Monitor 4, refer to “Application help”.

2. GENERAL TOOL

TOOL NAME	REMARKS
Circuit tester	Used for measuring resistance, voltage and current.
DST-i	Used together with Subaru Select Monitor 4.

3. PREPARATION ITEMS

ITEM NAME	REMARKS
120 Ω resistance element (1/4 W or more)	Used as an alternative to end resistance.

4. Electrical Component Location

A: LOCATION

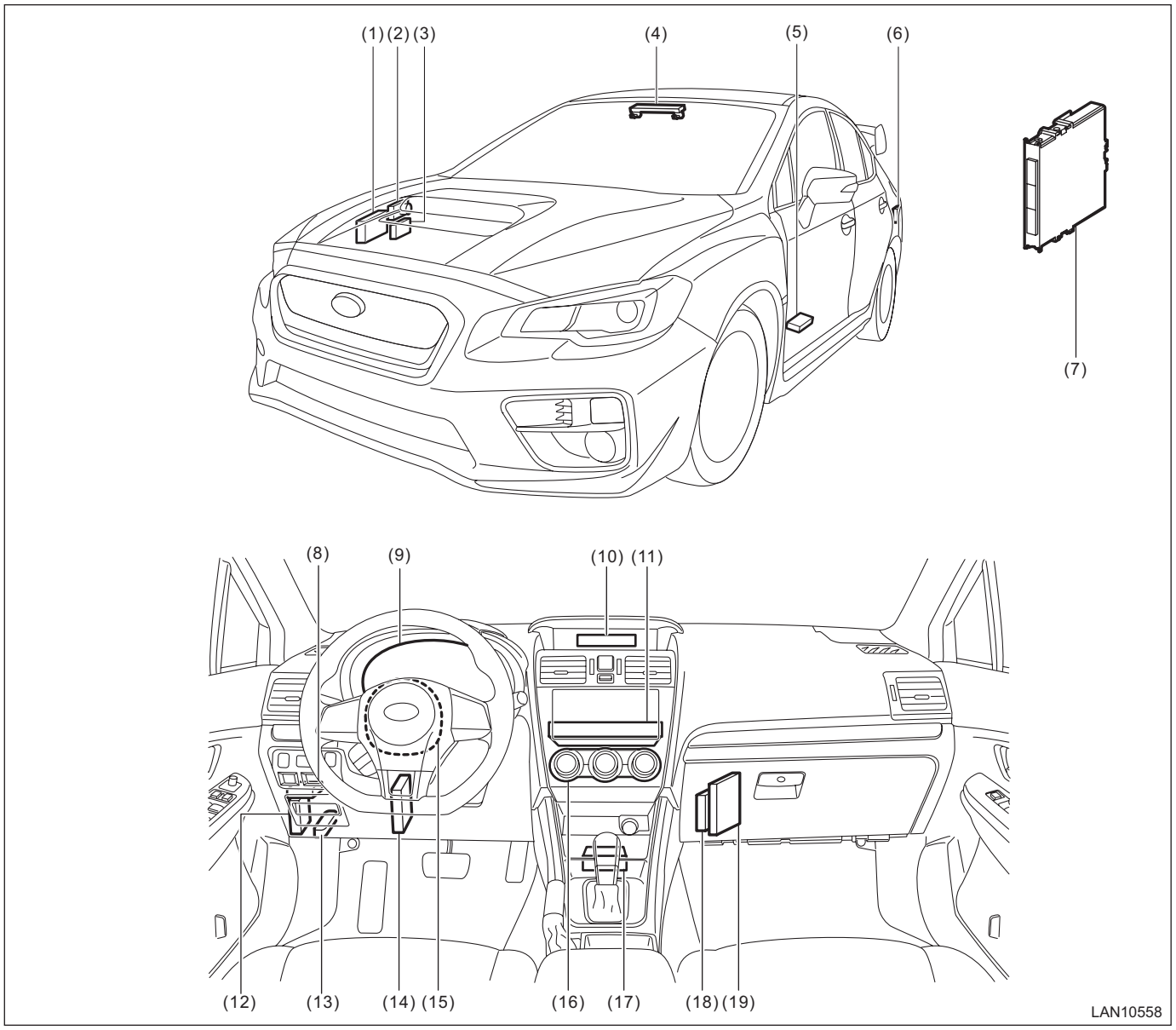

(1) Engine CM (engine type FA)
(2) VDC CM
(3) Power steering CM
(4) Stereo camera
(5) RAB CM
(6) Radar sensor LH
(7) Keyless access CM
(8) Auto headlight beam leveler CM
(9) Combination meter
(10) MFD
(11) Data communication module (DCM)
(12) Body integrated unit
(13) Data link connector
(14) Transmission CM
(15) Steering angle sensor
(16) A/C control panel
(17) Airbag CM
(18) Driver's control center differential (DCCD) CM
(19) Engine CM (engine type EJ)

5. Control Module I/O Signal

A: ELECTRICAL SPECIFICATION

- Body integrated unit

For I/O signals of the body integrated unit, refer to BODY CONTROL SYSTEM (DIAGNOSTICS). <Ref. to BC(diag)-6, Control Module I/O Signal.>

- Engine CM

For I/O signals of ECM, refer to ENGINE (DIAGNOSTICS). <Ref. to EN(w/o STI)(diag)-21, Engine Control Module (ECM) I/O Signal.> <Ref. to EN(STI)(diag)-20, Engine Control Module (ECM) I/O Signal.>

- Transmission CM

For I/O signals of TCM, refer to AUTOMATIC TRANSMISSION (DIAGNOSTICS). <Ref. to CVT(diag)-10, Transmission Control Module (TCM) I/O Signal.>

- VDC CM

For I/O signals of VDC CM, refer to VEHICLE DYNAMICS CONTROL (VDC) (DIAGNOSTICS). <Ref. to VDC(diag)-17, Control Module I/O Signal.>

- Driver's control center differential (DCCD) control module

For I/O signals of driver's control center differential (DCCD) CM, refer to MANUAL TRANSMISSION & DIFFERENTIAL (DIAGNOSTICS). <Ref. to 6MT(diag)-6, Driver's Control Center Differential (DCCD) Control Module I/O Signal.>

- Power steering CM

For unit I/O signals of power steering CM, refer to POWER ASSISTED SYSTEM (POWER STEERING) (DIAGNOSTICS). <Ref. to PS(diag)-9, Control Module I/O Signal.>

- A/C control panel

For unit I/O signals of A/C control panel, refer to HVAC SYSTEM (DIAGNOSTICS). <Ref. to AC(diag)-6, Auto A/C Control Module I/O Signal.>

- Combination meter

For I/O signals of combination meter, refer to INSTRUMENTATION/DRIVER INFO (DIAGNOSTICS). <Ref. to IDI(diag)-7, Control Module I/O Signal.>

- Airbag CM

For I/O signals of the airbag CM, refer to AIRBAG SYSTEM (DIAGNOSTICS). <Ref. to AB(diag)-17, Airbag Control Module I/O Signal.>

- High grade MFD

For I/O signals of high grade MFD, refer to INSTRUMENTATION/DRIVER INFO (DIAGNOSTICS). <Ref. to IDI(diag)-7, Control Module I/O Signal.>

- Keyless access CM

For I/O signals of keyless access CM, refer to KEYLESS ACCESS WITH PUSH BUTTON START SYSTEM (DIAGNOSTICS). <Ref. to KPS(diag)-13, Control Module I/O Signal.>

- Auto headlight beam leveler CM

For I/O signals of auto headlight beam leveler CM, refer to INSTRUMENTATION/DRIVER INFO (DIAGNOSTICS). <Ref. to AL(diag)-6, Control Module I/O Signal.>

- Stereo camera

For I/O signals of stereo camera, refer to EyeSight (Diagnostics). <Ref. to ES(diag)-18, Control Module I/O Signal.>

- Radar sensor

For I/O signals of the radar sensor, refer to BSD/RCTA (DIAGNOSTICS). <Ref. to RVD(diag)-8, Control Module I/O Signal.>

- RAB CM

For I/O signals of the RAB CM, refer to Reverse Automatic Braking (DIAGNOSTICS). <Ref. to RAB(diag)-7, Control Module I/O Signal.>

- Data communication module (DCM)

For I/O signals of DCM, refer to TELEMATICS (DIAGNOSTICS). <Ref. to TEL(diag)-8, Control Module I/O Signal.>

- Data link connector

For I/O signals of data link connector, refer to ENGINE (DIAGNOSTICS). <Ref. to EN(w/o STI)(diag)-21, Engine Control Module (ECM) I/O Signal.> <Ref. to EN(STI)(diag)-20, Engine Control Module (ECM) I/O Signal.>

B: WIRING DIAGRAM

Refer to “CAN Communication System” in the wiring diagram. <Ref. to WI-113, WIRING DIAGRAM, CAN Communication System.>

6. Subaru Select Monitor

A: OPERATION

For details of basic operations, refer to “Application help”.

B: COMMUNICATION FOR INITIALIZING IMPOSSIBLE

DIAGNOSIS:
Subaru Select Monitor communication line is open or shorted.
TROUBLE SYMPTOM:
Not communicable with Subaru Select Monitor.
WIRING DIAGRAM:
CAN communication system <Ref. to WI-113, WIRING DIAGRAM, CAN Communication System.>

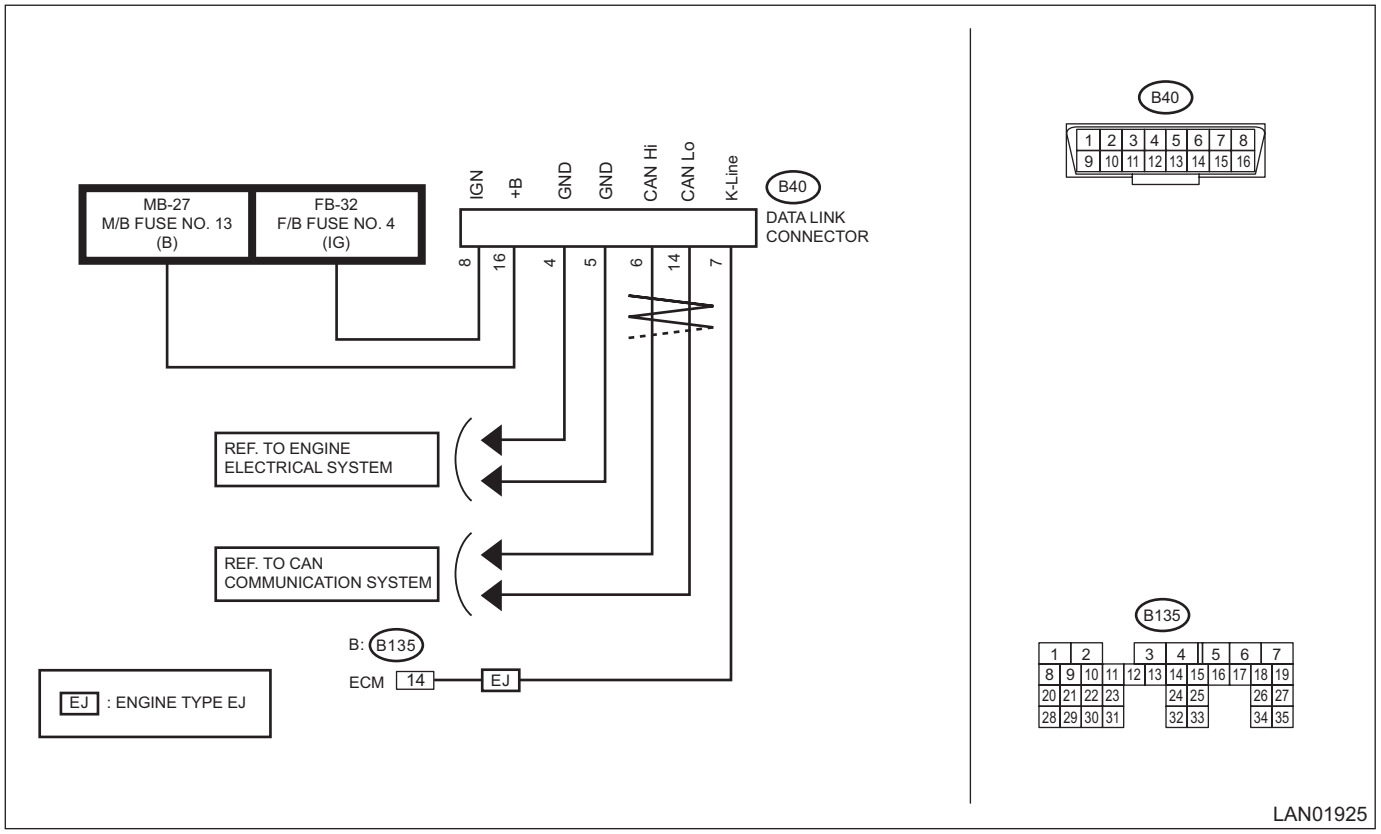

	Step	Check	Yes	No
1	**CHECK SUBARU SELECT MONITOR.** 1) Connect the Subaru Select Monitor to another vehicle. 2) Check communication condition between Subaru Select Monitor and vehicle.	Is communication performed normally?	Go to step **2**.	Subaru Select Monitor unit or diagnosis cable is faulty. Or check the fuse on the vehicle side.
2	**CHECK VEHICLE CONDITION.** Check the target vehicle.	Is the installed engine type EJ?	Go to step **3**.	For engine type FA, Go to step **9**.
3	**CHECK K-LINE.** 1) Establish the communication between Select Monitor and K-Line communication module. 2) Using a tester, check continuity between the modules that did not communicate with Select Monitor. ***Connector & terminal*** ***(B40) No. 7 — (B135) No. 14 (ECM):***	Is there continuity?	Go to step **4**.	Repair or replace the open circuit.

	Step	Check	Yes	No
4	**CHECK K-LINE.** Using a tester, check continuity between K-line and chassis ground. ***Connector & terminal*** ***(B40) No. 7 — Chassis ground:***	Is there continuity?	Repair or replace the short circuit.	Go to step **5**.
5	**CHECK K-LINE.** Using a tester, check voltage between K-line and chassis ground. ***Connector & terminal*** ***(B40) No. 7 (+) — Chassis ground (–):***	Is the voltage 5 V or more with IG ON?	Repair or replace the short circuit.	Go to step **6**.
6	**CHECK K-LINE.** Use a tester to check for continuity in the ground circuit. ***Connector & terminal*** ***(B40) No. 4 — Chassis ground:*** ***(B40) No. 5 — Chassis ground:***	Is there continuity?	Go to step **8**.	Go to step **7**.
7	**CHECK K-LINE.** 1) Disconnect the ECM connector. 2) Use a tester to check for continuity in the ground circuit. ***Connector & terminal*** ***(B40) No. 4 — (B137) No. 3:*** ***(B40) No. 5 — (B136) No. 4:***	Is there continuity?	Check ECM ground.	Repair or replace the open circuit.
8	**CHECK K-LINE.** 1) Turn the ignition switch to ON. 2) Using a tester, check the power supply of data link connector. ***Connector & terminal*** ***(B40) No. 8 (+) — Chassis ground (–):*** ***(B40) No. 16 (+) — Chassis ground (–):***	Is the voltage 10 V or more?	K-Line is normal. Check the power supply circuit of each module.	Go to step **11**.
9	**CHECK DATA LINK CONNECTOR.** Use a tester to check for continuity in the ground circuit. ***Connector & terminal*** ***(B40) No. 4 — Chassis ground:*** ***(B40) No. 5 — Chassis ground:***	Is there continuity?	Go to step **10**.	Repair or replace the open circuit.
10	**CHECK DATA LINK CONNECTOR.** 1) Turn the ignition switch to ON. 2) Using a tester, check the power supply of data link connector. ***Connector & terminal*** ***(B40) No. 8 (+) — Chassis ground (–):*** ***(B40) No. 16 (+) — Chassis ground (–):***	Is there continuity?	Repair or replace the short circuit.	Go to step **11**.
11	**CHECK COMMUNICATION FOR INITIALIZING ERROR.** Perform the communication for initializing with each module by connecting the Subaru Select Monitor. (For systems whose module can communicate with diagnostic devices)	Is the communication possible with all modules?	The circuit has returned to a normal condition at this time. Reproduce the failure, and then perform the diagnosis again. NOTE: In this case, temporary poor contact of connector, temporary open or short circuit of harness may be the cause.	Perform the inspection using the check sheet of communication for initializing. <Ref. to LAN(diag)-14, CHECK USING THE CHECK SHEET OF COMMUNICATION FOR INITIALIZING, COMMUNICATION FOR INITIALIZING IMPOSSIBLE, Subaru Select Monitor.>

1. CHECK USING THE CHECK SHEET OF COMMUNICATION FOR INITIALIZING

- **Network diagram**

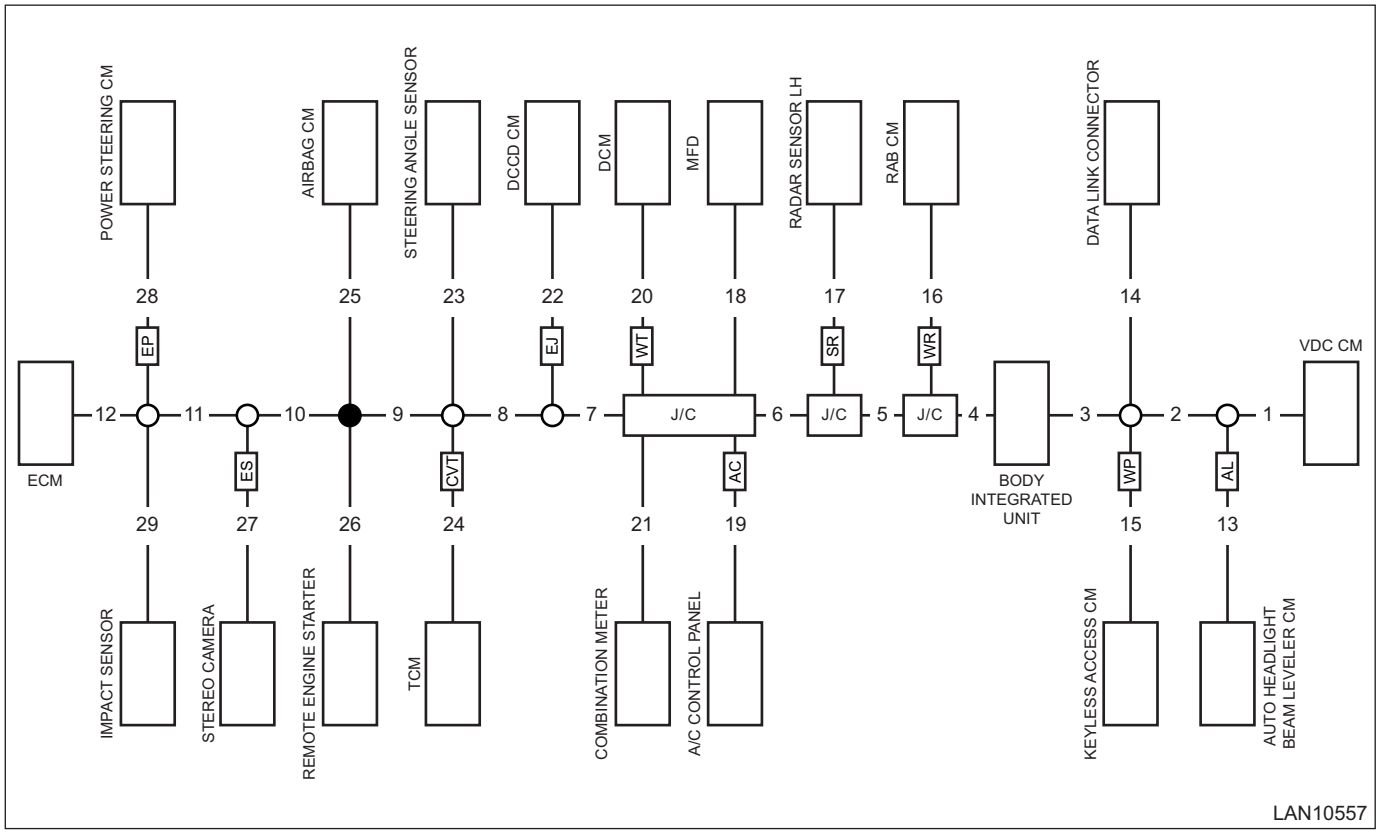

AL: With auto headlight beam leveler system
WP: With keyless access with push button start system
WR: With Reverse Automatic Braking
SR: With BSD/RCTA
AC: With automatic air conditioner
WT: With telematics
EJ: Engine type EJ model
CVT: CVT model
ES: With EyeSight
WE: With electric power steering

- **Check sheet of communication for initializing**

	(A)	(B)		(E)																												
				1	2	3	4	5	6	7	8	9	10	11	12	13	14	15	16	17	18	19	20	21	22	23	24	25	26	27	28	29
		(C)	(D)																													
VDC		–				–	–	–	–	–	–	–	–	–	–	–		–	–	–	–	–	–	–	–	–	–	–	–	–	–	–
AHL		–		–		–	–	–	–	–	–	–	–	–	–			–	–	–	–	–	–	–	–	–	–	–	–	–	–	–
KPS		–		–	–	–	–	–	–	–	–	–	–	–	–	–			–	–	–	–	–	–	–	–	–	–	–	–	–	–
BIU		–		–	–		–	–	–	–	–	–	–	–	–	–		–	–	–	–	–	–	–	–	–	–	–	–	–	–	–
RAB		–		–	–			–	–	–	–	–	–	–	–	–		–		–	–	–	–	–	–	–	–	–	–	–	–	–
RAD		–		–	–				–	–	–	–	–	–	–	–		–	–		–	–	–	–	–	–	–	–	–	–	–	–
MFD		–		–	–					–	–	–	–	–	–	–		–	–	–		–	–	–	–	–	–	–	–	–	–	–
A/C		–		–	–					–	–	–	–	–	–	–		–	–	–	–		–	–	–	–	–	–	–	–	–	–
DCM		–		–	–					–	–	–	–	–	–	–		–	–	–	–	–		–	–	–	–	–	–	–	–	–
MET		–		–	–					–	–	–	–	–	–	–		–	–	–	–	–	–		–	–	–	–	–	–	–	–
DCCD		–		–	–						–	–	–	–	–	–		–	–	–	–	–	–	–		–	–	–	–	–	–	–
STR		–	–	–	–	–	–	–	–	–	–	–	–	–	–	–	–	–	–	–	–	–	–	–	–	–	–	–	–	–	–	–
TCM		–		–	–							–	–	–	–	–		–	–	–	–	–	–	–	–	–		–	–	–	–	–
A/B		–		–	–								–	–	–	–		–	–	–	–	–	–	–	–	–	–		–	–	–	–
RST		–	–	–	–	–	–	–	–	–	–	–	–	–	–	–	–	–	–	–	–	–	–	–	–	–	–	–	–	–	–	–
CAM		–		–	–									–	–	–		–	–	–	–	–	–	–	–	–	–	–	–		–	–
EPS		–		–	–										–	–		–	–	–	–	–	–	–	–	–	–	–	–	–		–
IMP		–	–	–	–	–	–	–	–	–	–	–	–	–	–	–	–	–	–	–	–	–	–	–	–	–	–	–	–	–	–	–
ECM(FA)		–		–	–											–		–	–	–	–	–	–	–	–	–	–	–	–	–	–	–
ECM(EJ)			–	–	–	–	–	–	–	–	–	–	–	–	–	–	–	–	–	–	–	–	–	–	–	–	–	–	–	–	–	–	–

LAN10559

(A) Installation check

(B) Communication initialization

(C) K-Line

(D) CAN

(E) Wiring location

VDC: VDC CM

AHL: Auto headlight beam leveler CM

KPS: Keyless access CM

BIU: Body integrated unit

RAB: RAB CM

RAD: Radar sensor

MFD: High grade MFD

A/C: A/C control panel

DCM: Data communication module

MET: Combination meter

DCCD: Driver's control center differential CM

STR: Steering angle sensor

TCM: Transmission CM

A/B: Airbag CM

RST: Remote engine starter CM

CAM: Stereo camera

EPS: Power steering CM

IMP: Impact sensor

ECM (FA): Engine CM (engine type FA)

ECM (EJ): Engine CM (engine type EJ)

	Step	Check	Yes	No
1	**MODULE INSTALLATION CHECK.** 1) Using the check sheet for communication for initializing, check the vehicle installation module (module targeted for CAN communication). 2) Write "-" marks in the field for installation check (A) if the vehicle to be inspected does not have relevant module. 3) Write "-" marks in all blank fields on the same row that the "-" mark has filled in.	Was the module installation check on the left performed?	Go to step **2**.	Perform the module installation check, Go to step **2**.
2	**SUBARU SELECT MONITOR COMMUNICATION INITIALIZATION CHECK.** 1) Connect the Subaru Select Monitor to the vehicle. 2) Check if communication with the module installed on the vehicle is possible. 3) Write "◯" marks in the field for communication initialization (B) if the module succeeded in the communication for initializing with Subaru Select Monitor. If the module failed in the communication, write a "×". 4) Write "◯" marks in all blank fields on the same row that the "◯" mark has filled in. 5) When at least one field in a column of wiring location (E) is filled with the "◯" mark, then the wiring for that location is normal. Write "◯" marks in all blank fields on the same column that the "◯" mark has filled in under the circled number.	Was the communication checked with all the modules installed on the vehicle?	Go to step **3**.	Perform the communication check, Go to step **3**.
3	**CHECK FIELD FOR COMMUNICATION FOR INITIALIZING (B).** Check if communication with all the modules installed on the vehicle was possible.	Is "×" written in all the fields for communication for initializing (B)? (The communication was not possible between all the modules and the Subaru Select Monitor.)	Go to step **6**.	Go to step **4**.
4	**CHECK WIRING LOCATION OF MODULE THAT CANNOT PERFORM COMMUNICATION.** Using the check sheet for communication for initializing, check open circuit of the modules which have no "◯" mark in their columns of the wiring location (E) in ascending order by referring to the network diagram.	Is CAN communication line faulty?	Repair or replace the faulty portion of the harness.	Go to step **5**.
5	**CHECK POWER SUPPLY CIRCUIT OF CONTROL MODULE.** Check power supply circuit of the control module that cannot perform communication. (Check the harness between control module connector and battery, and check the fuse.)	Is power supply circuit faulty?	Repair or replace the faulty portion of the power supply circuit.	In the Basic Diagnostic Procedure, Go to step **5**.
6	**CHECK CAN COMMUNICATION LINE.** Check for short circuit to ground of CAN communication line. <Ref. to LAN(diag)-44, GROUND SHORT INSPECTION, INSPECTION, CAN Communication Circuit Check.>	Is CAN communication line faulty?	Repair or replace the faulty portion of the harness.	Go to step **7**.
7	**CHECK CAN COMMUNICATION LINE.** Check for short circuit to power supply of CAN communication line. <Ref. to LAN(diag)-47, BATTERY SHORT INSPECTION, INSPECTION, CAN Communication Circuit Check.>	Is CAN communication line faulty?	Repair or replace the faulty portion of the harness.	Go to step **8**.

Step		Check	Yes	No
8	**CHECK CAN COMMUNICATION LINE.** Check for short circuit between the CAN communication lines. <Ref. to LAN(diag)-53, 52 Ω OR LESS, INSPECTION, CAN Communication Circuit Check.>	Is CAN communication line faulty?	Repair or replace the faulty portion of the harness.	Go to step **9**.
9	**CHECK CAN COMMUNICATION LINE.** Check the data link connector harness. (Check for open circuit of network diagram No. 12.)	Is CAN communication line faulty?	Repair or replace the faulty portion of the harness.	Go to step **10**.
10	**CHECK SUBARU SELECT MONITOR.** Connect the Subaru Select Monitor to another vehicle to check whether the communication can be executed normally.	Is the Subaru Select Monitor OK?	It is possible that poor contact occurs at the data link connector.	The Subaru Select Monitor is faulty. Replace with a normal Subaru Select Monitor, and perform the diagnosis.

2. EXAMPLE OF WRITING FOR THE CHECK SHEET OF COMMUNICATION FOR INITIALIZING

- When No. 1 is open

	(A)	(B)		(E)																											
				1	2	3	4	5	6	7	8	9	10	11	12	13	14	15	16	17	18	19	20	21	22	23	24	25	26	27	28	29
		(C)	(D)		○	○	○	○	○	○	○	○	○	○	○	○	○	○	○	○	○	○	○	○	–	○	○	–	○	○	–
VDC	○	–	X		○	–	–	–	–	–	–	–	–	–	–	–	○	–	–	–	–	–	–	–	–	–	–	–	–	–	–
AHL	○	–	○	–	○	–	–	–	–	–	–	–	–	–	–	○	○	–	–	–	–	–	–	–	–	–	–	–	–	–	–
KPS	○	–	○	–	–	–	–	–	–	–	–	–	–	–	–	–	○	○	–	–	–	–	–	–	–	–	–	–	–	–	–
BIU	○	–	○	–	–	○	–	–	–	–	–	–	–	–	–	–	○	–	–	–	–	–	–	–	–	–	–	–	–	–	–
RAB	○	–	○	–	–	○	○	–	–	–	–	–	–	–	–	–	○	–	○	–	–	–	–	–	–	–	–	–	–	–	–
RAD	○	–	○	–	–	○	○	○	–	–	–	–	–	–	–	–	○	–	–	○	–	–	–	–	–	–	–	–	–	–	–
MFD	○	–	○	–	–	○	○	○	○	–	–	–	–	–	–	–	○	–	–	–	○	–	–	–	–	–	–	–	–	–	–
A/C	○	–	○	–	–	○	○	○	○	–	–	–	–	–	–	–	○	–	–	–	–	○	–	–	–	–	–	–	–	–	–
DCM	○	–	○	–	–	○	○	○	○	–	–	–	–	–	–	–	○	–	–	–	–	–	○	–	–	–	–	–	–	–	–
MET	○	–	○	–	–	○	○	○	○	–	–	–	–	–	–	–	○	–	–	–	–	–	–	○	–	–	–	–	–	–	–
DCCD	○	–	○	–	–	○	○	○	○	○	–	–	–	–	–	–	○	–	–	–	–	–	–	–	○	–	–	–	–	–	–
STR	○	–	–	–	–	–	–	–	–	–	–	–	–	–	–	–	–	–	–	–	–	–	–	–	–	–	–	–	–	–	–
TCM	○	–	○	–	–	○	○	○	○	○	○	–	–	–	–	–	○	–	–	–	–	–	–	–	–	–	○	–	–	–	–
A/B	○	–	○	–	–	○	○	○	○	○	○	○	–	–	–	–	○	–	–	–	–	–	–	–	–	–	–	○	–	–	–
RST	○	–	–	–	–	–	–	–	–	–	–	–	–	–	–	–	–	–	–	–	–	–	–	–	–	–	–	–	–	–	–
CAM	○	–	○	–	–	○	○	○	○	○	○	○	○	–	–	–	○	–	–	–	–	–	–	–	–	–	–	–	○	–	–
EPS	○	–	○	–	–	○	○	○	○	○	○	○	○	○	–	–	○	–	–	–	–	–	–	–	–	–	–	–	–	○	–
IMP	○	–	–	–	–	–	–	–	–	–	–	–	–	–	–	–	–	–	–	–	–	–	–	–	–	–	–	–	–	–	–
ECM(FA)	○	–	○	–	–	○	○	○	○	○	○	○	○	○	○	–	○	–	–	–	–	–	–	–	–	–	–	–	–	–	–
ECM(EJ)	○	○	–	–	–	–	–	–	–	–	–	–	–	–	–	–	–	–	–	–	–	–	–	–	–	–	–	–	–	–	–

LAN10560

- When No. 2 is open

	(A)	(B)		(E)																												
				1	2	3	4	5	6	7	8	9	10	11	12	13	14	15	16	17	18	19	20	21	22	23	24	25	26	27	28	29
		(C)	(D)			○	○	○	○	○	○	○	○	○	○	○	○	○	○	○	○	○	○	○	○	–	○	○	–	○	○	–
VDC	○	–	X			–	–	–	–	–	–	–	–	–	–	–	○	–	–	–	–	–	–	–	–	–	–	–	–	–	–	–
AHL	○	–	X	–		–	–	–	–	–	–	–	–	–	–	○	○	–	–	–	–	–	–	–	–	–	–	–	–	–	–	–
KPS	○	–	○	–	–	–	–	–	–	–	–	–	–	–	–	–	○	○	–	–	–	–	–	–	–	–	–	–	–	–	–	–
BIU	○	–	○	–	–	○	–	–	–	–	–	–	–	–	–	–	○	–	–	–	–	–	–	–	–	–	–	–	–	–	–	–
RAB	○	–	○	–	–	○	○	–	–	–	–	–	–	–	–	–	○	–	○	–	–	–	–	–	–	–	–	–	–	–	–	–
RAD	○	–	○	–	–	○	○	○	–	–	–	–	–	–	–	–	○	–	–	○	–	–	–	–	–	–	–	–	–	–	–	–
MFD	○	–	○	–	–	○	○	○	○	–	–	–	–	–	–	–	○	–	–	–	○	–	–	–	–	–	–	–	–	–	–	–
A/C	○	–	○	–	–	○	○	○	○	–	–	–	–	–	–	–	○	–	–	–	–	○	–	–	–	–	–	–	–	–	–	–
DCM	○	–	○	–	–	○	○	○	○	–	–	–	–	–	–	–	○	–	–	–	–	–	○	–	–	–	–	–	–	–	–	–
MET	○	–	○	–	–	○	○	○	○	–	–	–	–	–	–	–	○	–	–	–	–	–	–	○	–	–	–	–	–	–	–	–
DCCD	○	–	○	–	–	○	○	○	○	○	–	–	–	–	–	–	○	–	–	–	–	–	–	–	○	–	–	–	–	–	–	–
STR	○	–	–	–	–	–	–	–	–	–	–	–	–	–	–	–	–	–	–	–	–	–	–	–	–	–	–	–	–	–	–	–
TCM	○	–	○	–	–	○	○	○	○	○	○	–	–	–	–	–	○	–	–	–	–	–	–	–	–	–	○	–	–	–	–	–
A/B	○	–	○	–	–	○	○	○	○	○	○	○	–	–	–	–	○	–	–	–	–	–	–	–	–	–	–	○	–	–	–	–
RST	○	–	–	–	–	–	–	–	–	–	–	–	–	–	–	–	–	–	–	–	–	–	–	–	–	–	–	–	–	–	–	–
CAM	○	–	○	–	–	○	○	○	○	○	○	○	○	–	–	–	○	–	–	–	–	–	–	–	–	–	–	–	–	○	–	–
EPS	○	–	○	–	–	○	○	○	○	○	○	○	○	○	–	–	○	–	–	–	–	–	–	–	–	–	–	–	–	–	○	–
IMP	○	–	–	–	–	–	–	–	–	–	–	–	–	–	–	–	–	–	–	–	–	–	–	–	–	–	–	–	–	–	–	–
ECM(FA)	○	–	○	–	–	○	○	○	○	○	○	○	○	○	○	–	○	–	–	–	–	–	–	–	–	–	–	–	–	–	–	–
ECM(EJ)	○	○	–	–	–	–	–	–	–	–	–	–	–	–	–	–	–	–	–	–	–	–	–	–	–	–	–	–	–	–	–	–

LAN10561

- When No. 3 is open

	(A)	(B)		(E)																												
				1	2	3	4	5	6	7	8	9	10	11	12	13	14	15	16	17	18	19	20	21	22	23	24	25	26	27	28	29
		(C)	(D)	○	○											○	○	○								–			–			–
VDC	○	–	○	○	○	–	–	–	–	–	–	–	–	–	–	–	○	–	–	–	–	–	–	–	–	–	–	–	–	–	–	–
AHL	○	–	○	–	○	–	–	–	–	–	–	–	–	–	–	○	○	–	–	–	–	–	–	–	–	–	–	–	–	–	–	–
KPS	○	–	○	–	–	–	–	–	–	–	–	–	–	–	–	–	○	○	–	–	–	–	–	–	–	–	–	–	–	–	–	–
BIU	○	–	X	–	–		–	–	–	–	–	–	–	–	–	–	○	–	–	–	–	–	–	–	–	–	–	–	–	–	–	–
RAB	○	–	X	–	–			–	–	–	–	–	–	–	–	–	○	–		–	–	–	–	–	–	–	–	–	–	–	–	–
RAD	○	–	X	–	–				–	–	–	–	–	–	–	–	○	–	–		–	–	–	–	–	–	–	–	–	–	–	–
MFD	○	–	X	–	–					–	–	–	–	–	–	–	○	–	–	–		–	–	–	–	–	–	–	–	–	–	–
A/C	○	–	X	–	–					–	–	–	–	–	–	–	○	–	–	–	–		–	–	–	–	–	–	–	–	–	–
DCM	○	–	X	–	–					–	–	–	–	–	–	–	○	–	–	–	–	–		–	–	–	–	–	–	–	–	–
MET	○	–	X	–	–					–	–	–	–	–	–	–	○	–	–	–	–	–	–		–	–	–	–	–	–	–	–
DCCD	○	–	X	–	–						–	–	–	–	–	–	○	–	–	–	–	–	–	–		–	–	–	–	–	–	–
STR	○	–	–	–	–	–	–	–	–	–	–	–	–	–	–	–	–	–	–	–	–	–	–	–	–	–	–	–	–	–	–	–
TCM	○	–	X	–	–							–	–	–	–	–	○	–	–	–	–	–	–	–	–	–		–	–	–	–	–
A/B	○	–	X	–	–								–	–	–	–	○	–	–	–	–	–	–	–	–	–	–		–	–	–	–
RST	○	–	–	–	–	–	–	–	–	–	–	–	–	–	–	–	–	–	–	–	–	–	–	–	–	–	–	–	–	–	–	–
CAM	○	–	X	–	–									–	–	–	○	–	–	–	–	–	–	–	–	–	–	–	–		–	–
EPS	○	–	X	–	–										–	–	○	–	–	–	–	–	–	–	–	–	–	–	–	–		–
IMP	○	–	–	–	–	–	–	–	–	–	–	–	–	–	–	–	–	–	–	–	–	–	–	–	–	–	–	–	–	–	–	–
ECM(FA)	○	–	X	–	–											–	○	–	–	–	–	–	–	–	–	–	–	–	–	–	–	–
ECM(EJ)	○	○	–	–	–	–	–	–	–	–	–	–	–	–	–	–	–	–	–	–	–	–	–	–	–	–	–	–	–	–	–	–

LAN10562

- When No. 4 is open

	(A)	(B)		(E)																												
				1	2	3	4	5	6	7	8	9	10	11	12	13	14	15	16	17	18	19	20	21	22	23	24	25	26	27	28	29
		(C)	(D)	○	○	○										○	○	○								–			–			–
VDC	○	–	○	○	○	–	–	–	–	–	–	–	–	–	–	–	○	–	–	–	–	–	–	–	–	–	–	–	–	–	–	–
AHL	○	–	○	–	○	–	–	–	–	–	–	–	–	–	–	○	○	–	–	–	–	–	–	–	–	–	–	–	–	–	–	–
KPS	○	–	○	–	–	–	–	–	–	–	–	–	–	–	–	–	○	○	–	–	–	–	–	–	–	–	–	–	–	–	–	–
BIU	○	–	○	–	–	○	–	–	–	–	–	–	–	–	–	–	○	–	–	–	–	–	–	–	–	–	–	–	–	–	–	–
RAB	○	–	X	–	–	○		–	–	–	–	–	–	–	–	–	○	–		–	–	–	–	–	–	–	–	–	–	–	–	–
RAD	○	–	X	–	–	○			–	–	–	–	–	–	–	–	○	–	–		–	–	–	–	–	–	–	–	–	–	–	–
MFD	○	–	X	–	–	○				–	–	–	–	–	–	–	○	–	–	–		–	–	–	–	–	–	–	–	–	–	–
A/C	○	–	X	–	–	○				–	–	–	–	–	–	–	○	–	–	–	–		–	–	–	–	–	–	–	–	–	–
DCM	○	–	X	–	–	○				–	–	–	–	–	–	–	○	–	–	–	–	–		–	–	–	–	–	–	–	–	–
MET	○	–	X	–	–	○				–	–	–	–	–	–	–	○	–	–	–	–	–	–		–	–	–	–	–	–	–	–
DCCD	○	–	X	–	–	○					–	–	–	–	–	–	○	–	–	–	–	–	–	–		–	–	–	–	–	–	–
STR	○	–	–	–	–	–	–	–	–	–	–	–	–	–	–	–	–	–	–	–	–	–	–	–	–	–	–	–	–	–	–	–
TCM	○	–	X	–	–	○					–	–	–	–	–	–	○	–	–	–	–	–	–	–	–	–		–	–	–	–	–
A/B	○	–	X	–	–	○						–	–	–	–	–	○	–	–	–	–	–	–	–	–	–	–		–	–	–	–
RST	○	–	–	–	–	–	–	–	–	–	–	–	–	–	–	–	–	–	–	–	–	–	–	–	–	–	–	–	–	–	–	–
CAM	○	–	X	–	–	○							–	–	–	–	○	–	–	–	–	–	–	–	–	–	–	–		–	–	–
EPS	○	–	X	–	–	○								–	–	–	○	–	–	–	–	–	–	–	–	–	–	–	–		–	–
IMP	○	–	–	–	–	–	–	–	–	–	–	–	–	–	–	–	–	–	–	–	–	–	–	–	–	–	–	–	–	–	–	–
ECM(FA)	○	–	X	–	–	○									–	–	○	–	–	–	–	–	–	–	–	–	–	–	–	–	–	–
ECM(EJ)	○	○	–	–	–	–	–	–	–	–	–	–	–	–	–	–	–	–	–	–	–	–	–	–	–	–	–	–	–	–	–	–

LAN10563

- When No. 5 is open

	(A)	(B)		(E)																												
				1	2	3	4	5	6	7	8	9	10	11	12	13	14	15	16	17	18	19	20	21	22	23	24	25	26	27	28	29
		(C)	(D)	○	○	○	○									○	○	○	○							–			–			–
VDC	○	–	○	○	○	–	–	–	–	–	–	–	–	–	–	–	○	–	–	–	–	–	–	–	–	–	–	–	–	–	–	–
AHL	○	–	○	–	○	–	–	–	–	–	–	–	–	–	–	○	○	–	–	–	–	–	–	–	–	–	–	–	–	–	–	–
KPS	○	–	○	–	–	–	–	–	–	–	–	–	–	–	–	–	○	○	–	–	–	–	–	–	–	–	–	–	–	–	–	–
BIU	○	–	○	–	–	○	–	–	–	–	–	–	–	–	–	–	○	–	–	–	–	–	–	–	–	–	–	–	–	–	–	–
RAB	○	–	○	–	–	○	○	–	–	–	–	–	–	–	–	–	○	–	○	–	–	–	–	–	–	–	–	–	–	–	–	–
RAD	○	–	X	–	–	○	○		–	–	–	–	–	–	–	–	○	–	–		–	–	–	–	–	–	–	–	–	–	–	–
MFD	○	–	X	–	–	○	○			–	–	–	–	–	–	–	○	–	–	–		–	–	–	–	–	–	–	–	–	–	–
A/C	○	–	X	–	–	○	○			–	–	–	–	–	–	–	○	–	–	–	–		–	–	–	–	–	–	–	–	–	–
DCM	○	–	X	–	–	○	○			–	–	–	–	–	–	–	○	–	–	–	–	–		–	–	–	–	–	–	–	–	–
MET	○	–	X	–	–	○	○			–	–	–	–	–	–	–	○	–	–	–	–	–	–		–	–	–	–	–	–	–	–
DCCD	○	–	X	–	–	○	○				–	–	–	–	–	–	○	–	–	–	–	–	–	–		–	–	–	–	–	–	–
STR	○	–	–	–	–	–	–	–	–	–	–	–	–	–	–	–	–	–	–	–	–	–	–	–	–	–	–	–	–	–	–	–
TCM	○	–	X	–	–	○	○					–	–	–	–	–	○	–	–	–	–	–	–	–	–	–		–	–	–	–	–
A/B	○	–	X	–	–	○	○						–	–	–	–	○	–	–	–	–	–	–	–	–	–	–		–	–	–	–
RST	○	–	–	–	–	–	–	–	–	–	–	–	–	–	–	–	–	–	–	–	–	–	–	–	–	–	–	–	–	–	–	–
CAM	○	–	X	–	–	○	○							–	–	–	○	–	–	–	–	–	–	–	–	–	–	–	–		–	–
EPS	○	–	X	–	–	○	○								–	–	○	–	–	–	–	–	–	–	–	–	–	–	–	–		–
IMP	○	–	–	–	–	–	–	–	–	–	–	–	–	–	–	–	–	–	–	–	–	–	–	–	–	–	–	–	–	–	–	–
ECM(FA)	○	–	X	–	–	○	○									–	○	–	–	–	–	–	–	–	–	–	–	–	–	–	–	–
ECM(EJ)	○	○	–	–	–	–	–	–	–	–	–	–	–	–	–	–	–	–	–	–	–	–	–	–	–	–	–	–	–	–	–	–

LAN10564

- When No. 6 is open

	(A)	(B)		(E)																												
				1	2	3	4	5	6	7	8	9	10	11	12	13	14	15	16	17	18	19	20	21	22	23	24	25	26	27	28	29
		(C)	(D)	○	○	○	○	○								○	○	○	○	○						–			–			–
VDC	○	–	○	○	○	–	–	–	–	–	–	–	–	–	–	–	○	–	–	–	–	–	–	–	–	–	–	–	–	–	–	–
AHL	○	–	○	–	○	–	–	–	–	–	–	–	–	–	–	○	○	–	–	–	–	–	–	–	–	–	–	–	–	–	–	–
KPS	○	–	○	–	–	–	–	–	–	–	–	–	–	–	–	–	○	○	–	–	–	–	–	–	–	–	–	–	–	–	–	–
BIU	○	–	○	–	–	○	–	–	–	–	–	–	–	–	–	–	○	–	–	–	–	–	–	–	–	–	–	–	–	–	–	–
RAB	○	–	○	–	–	○	○	–	–	–	–	–	–	–	–	–	○	–	○	–	–	–	–	–	–	–	–	–	–	–	–	–
RAD	○	–	○	–	–	○	○	○	–	–	–	–	–	–	–	–	○	–	–	○	–	–	–	–	–	–	–	–	–	–	–	–
MFD	○	–	X	–	–	○	○	○		–	–	–	–	–	–	–	○	–	–	–		–	–	–	–	–	–	–	–	–	–	–
A/C	○	–	X	–	–	○	○	○		–	–	–	–	–	–	–	○	–	–	–	–		–	–	–	–	–	–	–	–	–	–
DCM	○	–	X	–	–	○	○	○		–	–	–	–	–	–	–	○	–	–	–	–	–		–	–	–	–	–	–	–	–	–
MET	○	–	X	–	–	○	○	○		–	–	–	–	–	–	–	○	–	–	–	–	–	–		–	–	–	–	–	–	–	–
DCCD	○	–	X	–	–	○	○	○			–	–	–	–	–	–	○	–	–	–	–	–	–	–		–	–	–	–	–	–	–
STR	○	–	–	–	–	–	–	–	–	–	–	–	–	–	–	–	–	–	–	–	–	–	–	–	–	–	–	–	–	–	–	–
TCM	○	–	X	–	–	○	○	○				–	–	–	–	–	○	–	–	–	–	–	–	–	–	–		–	–	–	–	–
A/B	○	–	X	–	–	○	○	○					–	–	–	–	○	–	–	–	–	–	–	–	–	–	–		–	–	–	–
RST	○	–	–	–	–	–	–	–	–	–	–	–	–	–	–	–	–	–	–	–	–	–	–	–	–	–	–	–	–	–	–	–
CAM	○	–	X	–	–	○	○	○						–	–	–	○	–	–	–	–	–	–	–	–	–	–	–		–	–	–
EPS	○	–	X	–	–	○	○	○							–	–	○	–	–	–	–	–	–	–	–	–	–	–	–		–	–
IMP	○	–	–	–	–	–	–	–	–	–	–	–	–	–	–	–	–	–	–	–	–	–	–	–	–	–	–	–	–	–	–	–
ECM(FA)	○	–	X	–	–	○	○	○								–	○	–	–	–	–	–	–	–	–	–	–	–	–	–	–	–
ECM(EJ)	○	○	–	–	–	–	–	–	–	–	–	–	–	–	–	–	–	–	–	–	–	–	–	–	–	–	–	–	–	–	–	–

LAN10565

- When No. 7 is open

	(A)	(B)		(E)																												
				1	2	3	4	5	6	7	8	9	10	11	12	13	14	15	16	17	18	19	20	21	22	23	24	25	26	27	28	29
		(C)	(D)	○	○	○	○	○	○							○	○	○	○	○	○	○	○	○		–			–			–
VDC	○	–	○	○	○	–	–	–	–	–	–	–	–	–	–	–	○	–	–	–	–	–	–	–	–	–	–	–	–	–	–	–
AHL	○	–	○	–	○	–	–	–	–	–	–	–	–	–	–	○	○	–	–	–	–	–	–	–	–	–	–	–	–	–	–	–
KPS	○	–	○	–	–	–	–	–	–	–	–	–	–	–	–	–	○	○	–	–	–	–	–	–	–	–	–	–	–	–	–	–
BIU	○	–	○	–	–	○	–	–	–	–	–	–	–	–	–	–	○	–	–	–	–	–	–	–	–	–	–	–	–	–	–	–
RAB	○	–	○	–	–	○	○	–	–	–	–	–	–	–	–	–	○	–	○	–	–	–	–	–	–	–	–	–	–	–	–	–
RAD	○	–	○	–	–	○	○	○	–	–	–	–	–	–	–	–	○	–	–	○	–	–	–	–	–	–	–	–	–	–	–	–
MFD	○	–	○	–	–	○	○	○	○	–	–	–	–	–	–	–	○	–	–	–	○	–	–	–	–	–	–	–	–	–	–	–
A/C	○	–	○	–	–	○	○	○	○	–	–	–	–	–	–	–	○	–	–	–	–	○	–	–	–	–	–	–	–	–	–	–	–
DCM	○	–	○	–	–	○	○	○	○	–	–	–	–	–	–	–	○	–	–	–	–	–	○	–	–	–	–	–	–	–	–	–	–
MET	○	–	○	–	–	○	○	○	○	–	–	–	–	–	–	–	○	–	–	–	–	–	–	○	–	–	–	–	–	–	–	–	–
DCCD	○	–	X	–	–	○	○	○	○		–	–	–	–	–	–	○	–	–	–	–	–	–	–		–	–	–	–	–	–	–	–
STR	○	–	–	–	–	–	–	–	–	–	–	–	–	–	–	–	–	–	–	–	–	–	–	–	–	–	–	–	–	–	–	–	–
TCM	○	–	X	–	–	○	○	○	○			–	–	–	–	–	○	–	–	–	–	–	–	–	–	–		–	–	–	–	–	–
A/B	○	–	X	–	–	○	○	○	○				–	–	–	–	○	–	–	–	–	–	–	–	–	–	–		–	–	–	–	–
RST	○	–	–	–	–	–	–	–	–	–	–	–	–	–	–	–	–	–	–	–	–	–	–	–	–	–	–	–	–	–	–	–	–
CAM	○	–	X	–	–	○	○	○	○					–	–	–	○	–	–	–	–	–	–	–	–	–	–	–	–		–	–	–
EPS	○	–	X	–	–	○	○	○	○						–	–	○	–	–	–	–	–	–	–	–	–	–	–	–	–		–	–
IMP	○	–	–	–	–	–	–	–	–	–	–	–	–	–	–	–	–	–	–	–	–	–	–	–	–	–	–	–	–	–	–	–	–
ECM(FA)	○	–	X	–	–	○	○	○	○							–	○	–	–	–	–	–	–	–	–	–	–	–	–	–	–	–	–
ECM(EJ)	○	○	–	–	–	–	–	–	–	–	–	–	–	–	–	–	–	–	–	–	–	–	–	–	–	–	–	–	–	–	–	–	–

LAN10566

- When No. 8 is open

	(A)	(B)		(E)																												
				1	2	3	4	5	6	7	8	9	10	11	12	13	14	15	16	17	18	19	20	21	22	23	24	25	26	27	28	29
		(C)	(D)	○	○	○	○	○	○	○						○	○	○	○	○	○	○	○	○	○	–			–			–
VDC	○	–	○	○	○	–	–	–	–	–	–	–	–	–	–	–	○	–	–	–	–	–	–	–	–	–	–	–	–	–	–	–
AHL	○	–	○	–	○	–	–	–	–	–	–	–	–	–	–	○	○	–	–	–	–	–	–	–	–	–	–	–	–	–	–	–
KPS	○	–	○	–	–	–	–	–	–	–	–	–	–	–	–	–	○	○	–	–	–	–	–	–	–	–	–	–	–	–	–	–
BIU	○	–	○	–	–	○	–	–	–	–	–	–	–	–	–	–	○	–	–	–	–	–	–	–	–	–	–	–	–	–	–	–
RAB	○	–	○	–	–	○	○	–	–	–	–	–	–	–	–	–	○	–	○	–	–	–	–	–	–	–	–	–	–	–	–	–
RAD	○	–	○	–	–	○	○	○	–	–	–	–	–	–	–	–	○	–	–	○	–	–	–	–	–	–	–	–	–	–	–	–
MFD	○	–	○	–	–	○	○	○	○	–	–	–	–	–	–	–	○	–	–	–	○	–	–	–	–	–	–	–	–	–	–	–
A/C	○	–	○	–	–	○	○	○	○	–	–	–	–	–	–	–	○	–	–	–	–	○	–	–	–	–	–	–	–	–	–	–	–
DCM	○	–	○	–	–	○	○	○	○	–	–	–	–	–	–	–	○	–	–	–	–	–	○	–	–	–	–	–	–	–	–	–
MET	○	–	○	–	–	○	○	○	○	–	–	–	–	–	–	–	○	–	–	–	–	–	–	○	–	–	–	–	–	–	–	–
DCCD	○	–	○	–	–	○	○	○	○	○	–	–	–	–	–	–	○	–	–	–	–	–	–	–	○	–	–	–	–	–	–	–
STR	○	–	–	–	–	–	–	–	–	–	–	–	–	–	–	–	–	–	–	–	–	–	–	–	–	–	–	–	–	–	–	–
TCM	○	–	X	–	–	○	○	○	○	○		–	–	–	–	–	○	–	–	–	–	–	–	–	–	–		–	–	–	–	–
A/B	○	–	X	–	–	○	○	○	○	○			–	–	–	–	○	–	–	–	–	–	–	–	–	–		–	–	–	–	–
RST	○	–	–	–	–	–	–	–	–	–	–	–	–	–	–	–	–	–	–	–	–	–	–	–	–	–	–	–	–	–	–	–
CAM	○	–	X	–	–	○	○	○	○	○				–	–	–	○	–	–	–	–	–	–	–	–	–	–	–		–	–	–
EPS	○	–	X	–	–	○	○	○	○	○					–	–	○	–	–	–	–	–	–	–	–	–	–	–	–		–	–
IMP	○	–	–	–	–	–	–	–	–	–	–	–	–	–	–	–	–	–	–	–	–	–	–	–	–	–	–	–	–	–	–	–
ECM(FA)	○	–	X	–	–	○	○	○	○	○						–	○	–	–	–	–	–	–	–	–	–	–	–	–	–	–	–
ECM(EJ)	○	○	–	–	–	–	–	–	–	–	–	–	–	–	–	–	–	–	–	–	–	–	–	–	–	–	–	–	–	–	–	–

LAN10567

- When No. 9 is open

	(A)	(B)		(E)																												
				1	2	3	4	5	6	7	8	9	10	11	12	13	14	15	16	17	18	19	20	21	22	23	24	25	26	27	28	29
		(C)	(D)	○	○	○	○	○	○	○	○					○	○	○	○	○	○	○	○	○	○	–	○		–			–
VDC	○	–	○	○	○	–	–	–	–	–	–	–	–	–	–	–	○	–	–	–	–	–	–	–	–	–	–	–	–	–	–	–
AHL	○	–	○	–	○	–	–	–	–	–	–	–	–	–	–	○	○	–	–	–	–	–	–	–	–	–	–	–	–	–	–	–
KPS	○	–	○	–	–	–	–	–	–	–	–	–	–	–	–	–	○	○	–	–	–	–	–	–	–	–	–	–	–	–	–	–
BIU	○	–	○	–	–	○	–	–	–	–	–	–	–	–	–	–	○	–	–	–	–	–	–	–	–	–	–	–	–	–	–	–
RAB	○	–	○	–	–	○	○	–	–	–	–	–	–	–	–	–	○	–	○	–	–	–	–	–	–	–	–	–	–	–	–	–
RAD	○	–	○	–	–	○	○	○	–	–	–	–	–	–	–	–	○	–	–	○	–	–	–	–	–	–	–	–	–	–	–	–
MFD	○	–	○	–	–	○	○	○	○	–	–	–	–	–	–	–	○	–	–	–	○	–	–	–	–	–	–	–	–	–	–	–
A/C	○	–	○	–	–	○	○	○	○	–	–	–	–	–	–	–	○	–	–	–	–	○	–	–	–	–	–	–	–	–	–	–	–
DCM	○	–	○	–	–	○	○	○	○	–	–	–	–	–	–	–	○	–	–	–	–	–	○	–	–	–	–	–	–	–	–	–
MET	○	–	○	–	–	○	○	○	○	–	–	–	–	–	–	–	○	–	–	–	–	–	–	○	–	–	–	–	–	–	–	–
DCCD	○	–	○	–	–	○	○	○	○	○	–	–	–	–	–	–	○	–	–	–	–	–	–	–	○	–	–	–	–	–	–	–
STR	○	–	–	–	–	–	–	–	–	–	–	–	–	–	–	–	–	–	–	–	–	–	–	–	–	–	–	–	–	–	–	–
TCM	○	–	○	–	–	○	○	○	○	○	○	–	–	–	–	–	○	–	–	–	–	–	–	–	–	–	○	–	–	–	–	–
A/B	○	–	X	–	–	○	○	○	○	○	○		–	–	–	–	○	–	–	–	–	–	–	–	–	–	–		–	–	–	–
RST	○	–	–	–	–	–	–	–	–	–	–	–	–	–	–	–	–	–	–	–	–	–	–	–	–	–	–	–	–	–	–	–
CAM	○	–	X	–	–	○	○	○	○	○	○			–	–	–	○	–	–	–	–	–	–	–	–	–	–	–	–		–	–
EPS	○	–	X	–	–	○	○	○	○	○	○				–	–	○	–	–	–	–	–	–	–	–	–	–	–	–	–		–
IMP	○	–	–	–	–	–	–	–	–	–	–	–	–	–	–	–	–	–	–	–	–	–	–	–	–	–	–	–	–	–	–	–
ECM(FA)	○	–	X	–	–	○	○	○	○	○	○					–	○	–	–	–	–	–	–	–	–	–	–	–	–	–	–	–
ECM(EJ)	○	○	–	–	–	–	–	–	–	–	–	–	–	–	–	–	–	–	–	–	–	–	–	–	–	–	–	–	–	–	–	–

LAN10568

- When No. 10 is open

	(A)	(B)		(E)																												
				1	2	3	4	5	6	7	8	9	10	11	12	13	14	15	16	17	18	19	20	21	22	23	24	25	26	27	28	29
		(C)	(D)	○	○	○	○	○	○	○	○	○				○	○	○	○	○	○	○	○	○	○	–	○	○	–			–
VDC	○	–	○	○	○	–	–	–	–	–	–	–	–	–	–	–	○	–	–	–	–	–	–	–	–	–	–	–	–	–	–	–
AHL	○	–	○	–	○	–	–	–	–	–	–	–	–	–	–	○	○	–	–	–	–	–	–	–	–	–	–	–	–	–	–	–
KPS	○	–	○	–	–	–	–	–	–	–	–	–	–	–	–	–	○	○	–	–	–	–	–	–	–	–	–	–	–	–	–	–
BIU	○	–	○	–	–	○	–	–	–	–	–	–	–	–	–	–	○	–	–	–	–	–	–	–	–	–	–	–	–	–	–	–
RAB	○	–	○	–	–	○	○	–	–	–	–	–	–	–	–	–	○	–	○	–	–	–	–	–	–	–	–	–	–	–	–	–
RAD	○	–	○	–	–	○	○	○	–	–	–	–	–	–	–	–	○	–	–	○	–	–	–	–	–	–	–	–	–	–	–	–
MFD	○	–	○	–	–	○	○	○	○	–	–	–	–	–	–	–	○	–	–	–	○	–	–	–	–	–	–	–	–	–	–	–
A/C	○	–	○	–	–	○	○	○	○	–	–	–	–	–	–	–	○	–	–	–	–	○	–	–	–	–	–	–	–	–	–	–	–
DCM	○	–	○	–	–	○	○	○	○	–	–	–	–	–	–	–	○	–	–	–	–	–	○	–	–	–	–	–	–	–	–	–
MET	○	–	○	–	–	○	○	○	○	–	–	–	–	–	–	–	○	–	–	–	–	–	–	○	–	–	–	–	–	–	–	–
DCCD	○	–	○	–	–	○	○	○	○	○	–	–	–	–	–	–	○	–	–	–	–	–	–	–	○	–	–	–	–	–	–	–
STR	○	–	–	–	–	–	–	–	–	–	–	–	–	–	–	–	–	–	–	–	–	–	–	–	–	–	–	–	–	–	–	–
TCM	○	–	○	–	–	○	○	○	○	○	○	–	–	–	–	–	○	–	–	–	–	–	–	–	–	–	○	–	–	–	–	–
A/B	○	–	○	–	–	○	○	○	○	○	○	○	–	–	–	–	○	–	–	–	–	–	–	–	–	–	–	○	–	–	–	–
RST	○	–	–	–	–	–	–	–	–	–	–	–	–	–	–	–	–	–	–	–	–	–	–	–	–	–	–	–	–	–	–	–
CAM	○	–	X	–	–	○	○	○	○	○	○	○		–	–	–	○	–	–	–	–	–	–	–	–	–	–	–	–		–	–
EPS	○	–	X	–	–	○	○	○	○	○	○	○			–	–	○	–	–	–	–	–	–	–	–	–	–	–	–	–		–
IMP	○	–	–	–	–	–	–	–	–	–	–	–	–	–	–	–	–	–	–	–	–	–	–	–	–	–	–	–	–	–	–	–
ECM(FA)	○	–	X	–	–	○	○	○	○	○	○	○				–	○	–	–	–	–	–	–	–	–	–	–	–	–	–	–	–
ECM(EJ)	○	○	–	–	–	–	–	–	–	–	–	–	–	–	–	–	–	–	–	–	–	–	–	–	–	–	–	–	–	–	–	–

LAN10569

- When No. 11 is open

	(A)	(B)		(E)																												
				1	2	3	4	5	6	7	8	9	10	11	12	13	14	15	16	17	18	19	20	21	22	23	24	25	26	27	28	29
		(C)	(D)	○	○	○	○	○	○	○	○	○	○			○	○	○	○	○	○	○	○	○	○	–	○	○	–	○		–
VDC	○	–	○	○	○	–	–	–	–	–	–	–	–	–	–	–	○	–	–	–	–	–	–	–	–	–	–	–	–	–	–	–
AHL	○	–	○	–	○	–	–	–	–	–	–	–	–	–	–	○	○	–	–	–	–	–	–	–	–	–	–	–	–	–	–	–
KPS	○	–	○	–	–	–	–	–	–	–	–	–	–	–	–	–	○	○	–	–	–	–	–	–	–	–	–	–	–	–	–	–
BIU	○	–	○	–	–	○	–	–	–	–	–	–	–	–	–	–	○	–	–	–	–	–	–	–	–	–	–	–	–	–	–	–
RAB	○	–	○	–	–	○	○	–	–	–	–	–	–	–	–	–	○	–	○	–	–	–	–	–	–	–	–	–	–	–	–	–
RAD	○	–	○	–	–	○	○	○	–	–	–	–	–	–	–	–	○	–	–	○	–	–	–	–	–	–	–	–	–	–	–	–
MFD	○	–	○	–	–	○	○	○	○	–	–	–	–	–	–	–	○	–	–	–	○	–	–	–	–	–	–	–	–	–	–	–
A/C	○	–	○	–	–	○	○	○	○	–	–	–	–	–	–	–	○	–	–	–	–	○	–	–	–	–	–	–	–	–	–	–	–
DCM	○	–	○	–	–	○	○	○	○	–	–	–	–	–	–	–	○	–	–	–	–	–	○	–	–	–	–	–	–	–	–	–
MET	○	–	○	–	–	○	○	○	○	–	–	–	–	–	–	–	○	–	–	–	–	–	–	○	–	–	–	–	–	–	–	–
DCCD	○	–	○	–	–	○	○	○	○	○	–	–	–	–	–	–	○	–	–	–	–	–	–	–	○	–	–	–	–	–	–	–
STR	○	–	–	–	–	–	–	–	–	–	–	–	–	–	–	–	–	–	–	–	–	–	–	–	–	–	–	–	–	–	–	–
TCM	○	–	○	–	–	○	○	○	○	○	○	–	–	–	–	–	○	–	–	–	–	–	–	–	–	–	○	–	–	–	–	–
A/B	○	–	○	–	–	○	○	○	○	○	○	○	–	–	–	–	○	–	–	–	–	–	–	–	–	–	–	○	–	–	–	–
RST	○	–	–	–	–	–	–	–	–	–	–	–	–	–	–	–	–	–	–	–	–	–	–	–	–	–	–	–	–	–	–	–
CAM	○	–	○	–	–	○	○	○	○	○	○	○	○	–	–	–	○	–	–	–	–	–	–	–	–	–	–	–	–	○	–	–
EPS	○	–	X	–	–	○	○	○	○	○	○	○	○		–	–	○	–	–	–	–	–	–	–	–	–	–	–	–	–		–
IMP	○	–	–	–	–	–	–	–	–	–	–	–	–	–	–	–	–	–	–	–	–	–	–	–	–	–	–	–	–	–	–	–
ECM(FA)	○	–	X	–	–	○	○	○	○	○	○	○	○			–	○	–	–	–	–	–	–	–	–	–	–	–	–	–	–	–
ECM(EJ)	○	○	–	–	–	–	–	–	–	–	–	–	–	–	–	–	–	–	–	–	–	–	–	–	–	–	–	–	–	–	–	–

LAN10570

- When No. 12 is open (engine type: FA)

	(A)	(B)		(E)																												
				1	2	3	4	5	6	7	8	9	10	11	12	13	14	15	16	17	18	19	20	21	22	23	24	25	26	27	28	29
		(C)	(D)	○	○	○	○	○	○	○	○	○	○	○		○	○	○	○	○	○	○	○	○	○	–	○	○	–	○	○	–
VDC	○	–	○	○	○	–	–	–	–	–	–	–	–	–	–	–	○	–	–	–	–	–	–	–	–	–	–	–	–	–	–	–
AHL	○	–	○	–	○	–	–	–	–	–	–	–	–	–	–	○	○	–	–	–	–	–	–	–	–	–	–	–	–	–	–	–
KPS	○	–	○	–	–	–	–	–	–	–	–	–	–	–	–	–	○	○	–	–	–	–	–	–	–	–	–	–	–	–	–	–
BIU	○	–	○	–	–	○	–	–	–	–	–	–	–	–	–	–	○	–	–	–	–	–	–	–	–	–	–	–	–	–	–	–
RAB	○	–	○	–	–	○	○	–	–	–	–	–	–	–	–	–	○	–	○	–	–	–	–	–	–	–	–	–	–	–	–	–
RAD	○	–	○	–	–	○	○	○	–	–	–	–	–	–	–	–	○	–	–	○	–	–	–	–	–	–	–	–	–	–	–	–
MFD	○	–	○	–	–	○	○	○	○	–	–	–	–	–	–	–	○	–	–	–	○	–	–	–	–	–	–	–	–	–	–	–
A/C	○	–	○	–	–	○	○	○	○	–	–	–	–	–	–	–	○	–	–	–	–	○	–	–	–	–	–	–	–	–	–	–
DCM	○	–	○	–	–	○	○	○	○	–	–	–	–	–	–	–	○	–	–	–	–	–	○	–	–	–	–	–	–	–	–	–
MET	○	–	○	–	–	○	○	○	○	–	–	–	–	–	–	–	○	–	–	–	–	–	–	○	–	–	–	–	–	–	–	–
DCCD	○	–	○	–	–	○	○	○	○	○	–	–	–	–	–	–	○	–	–	–	–	–	–	–	○	–	–	–	–	–	–	–
STR	○	–	–	–	–	–	–	–	–	–	–	–	–	–	–	–	–	–	–	–	–	–	–	–	–	–	–	–	–	–	–	–
TCM	○	–	○	–	–	○	○	○	○	○	○	–	–	–	–	–	○	–	–	–	–	–	–	–	–	–	○	–	–	–	–	–
A/B	○	–	○	–	–	○	○	○	○	○	○	○	–	–	–	–	○	–	–	–	–	–	–	–	–	–	–	○	–	–	–	–
RST	○	–	–	–	–	–	–	–	–	–	–	–	–	–	–	–	–	–	–	–	–	–	–	–	–	–	–	–	–	–	–	–
CAM	○	–	○	–	–	○	○	○	○	○	○	○	○	–	–	–	○	–	–	–	–	–	–	–	–	–	–	–	–	○	–	–
EPS	○	–	○	–	–	○	○	○	○	○	○	○	○	○	–	–	○	–	–	–	–	–	–	–	–	–	–	–	–	–	○	–
IMP	○	–	–	–	–	–	–	–	–	–	–	–	–	–	–	–	–	–	–	–	–	–	–	–	–	–	–	–	–	–	–	–
ECM(FA)	○	–	X	–	–	○	○	○	○	○	○	○	○	○		–	○	–	–	–	–	–	–	–	–	–	–	–	–	–	–	–
ECM(EJ)	○	○	–	–	–	–	–	–	–	–	–	–	–	–	–	–	–	–	–	–	–	–	–	–	–	–	–	–	–	–	–	–

LAN10571

- When No. 12 is open (engine type: EJ)

NOTE:
This is the same as No. 23, No. 26 and No. 29, but it is possible to diagnose using examples of lost communication detection in each module. <Ref. to LAN(diag)-113, EXAMPLE OF DTC DATA NOT RECEIVED, LIST, List of Diagnostic Trouble Code (DTC).>

	(A)	(B)		(E)																												
				1	2	3	4	5	6	7	8	9	10	11	12	13	14	15	16	17	18	19	20	21	22	23	24	25	26	27	28	29
		(C)	(D)	○	○	○	○	○	○	○	○	○	○	○	○	○	○	○	○	○	○	○	○	○	○	–	○	○	–	○	○	–
VDC	○	–	○	○	○	–	–	–	–	–	–	–	–	–	–	–	○	–	–	–	–	–	–	–	–	–	–	–	–	–	–	–
AHL	○	–	○	–	○	–	–	–	–	–	–	–	–	–	–	○	○	–	–	–	–	–	–	–	–	–	–	–	–	–	–	–
KPS	○	–	○	–	–	–	–	–	–	–	–	–	–	–	–	–	○	○	–	–	–	–	–	–	–	–	–	–	–	–	–	–
BIU	○	–	○	–	–	○	–	–	–	–	–	–	–	–	–	–	○	–	–	–	–	–	–	–	–	–	–	–	–	–	–	–
RAB	○	–	○	–	–	○	○	–	–	–	–	–	–	–	–	–	○	–	○	–	–	–	–	–	–	–	–	–	–	–	–	–
RAD	○	–	○	–	–	○	○	○	–	–	–	–	–	–	–	–	○	–	–	○	–	–	–	–	–	–	–	–	–	–	–	–
MFD	○	–	○	–	–	○	○	○	○	–	–	–	–	–	–	–	○	–	–	–	○	–	–	–	–	–	–	–	–	–	–	–
A/C	○	–	○	–	–	○	○	○	○	–	–	–	–	–	–	–	○	–	–	–	–	○	–	–	–	–	–	–	–	–	–	–
DCM	○	–	○	–	–	○	○	○	○	–	–	–	–	–	–	–	○	–	–	–	–	–	○	–	–	–	–	–	–	–	–	–
MET	○	–	○	–	–	○	○	○	○	–	–	–	–	–	–	–	○	–	–	–	–	–	–	○	–	–	–	–	–	–	–	–
DCCD	○	–	○	–	–	○	○	○	○	○	–	–	–	–	–	–	○	–	–	–	–	–	–	–	○	–	–	–	–	–	–	–
STR	○	–	–	–	–	–	–	–	–	–	–	–	–	–	–	–	–	–	–	–	–	–	–	–	–	–	–	–	–	–	–	–
TCM	○	–	○	–	–	○	○	○	○	○	○	–	–	–	–	–	○	–	–	–	–	–	–	–	–	–	○	–	–	–	–	–
A/B	○	–	○	–	–	○	○	○	○	○	○	○	–	–	–	–	○	–	–	–	–	–	–	–	–	–	–	○	–	–	–	–
RST	○	–	–	–	–	–	–	–	–	–	–	–	–	–	–	–	–	–	–	–	–	–	–	–	–	–	–	–	–	–	–	–
CAM	○	–	○	–	–	○	○	○	○	○	○	○	○	–	–	–	○	–	–	–	–	–	–	–	–	–	–	–	–	○	–	–
EPS	○	–	○	–	–	○	○	○	○	○	○	○	○	○	–	–	○	–	–	–	–	–	–	–	–	–	–	–	–	–	○	–
IMP	○	–	–	–	–	–	–	–	–	–	–	–	–	–	–	–	–	–	–	–	–	–	–	–	–	–	–	–	–	–	–	–
ECM(FA)	○	–	○	–	–	○	○	○	○	○	○	○	○	○	○	–	○	–	–	–	–	–	–	–	–	–	–	–	–	–	–	–
ECM(EJ)	○	○	–	–	–	–	–	–	–	–	–	–	–	–	–	–	–	–	–	–	–	–	–	–	–	–	–	–	–	–	–	–

LAN10572

- When No. 13 is open

	(A)	(B)		(E)																												
				1	2	3	4	5	6	7	8	9	10	11	12	13	14	15	16	17	18	19	20	21	22	23	24	25	26	27	28	29
		(C)	(D)	○	○	○	○	○	○	○	○	○	○	○	○		○	○	○	○	○	○	○	○	○	–	○	○	–	○	○	–
VDC	○	–	○	○	○	–	–	–	–	–	–	–	–	–	–	–	○	–	–	–	–	–	–	–	–	–	–	–	–	–	–	–
AHL	○	–	X	–	○	–	–	–	–	–	–	–	–	–	–		○	–	–	–	–	–	–	–	–	–	–	–	–	–	–	–
KPS	○	–	○	–	–	–	–	–	–	–	–	–	–	–	–	–	○	○	–	–	–	–	–	–	–	–	–	–	–	–	–	–
BIU	○	–	○	–	–	○	–	–	–	–	–	–	–	–	–	–	○	–	–	–	–	–	–	–	–	–	–	–	–	–	–	–
RAB	○	–	○	–	–	○	○	–	–	–	–	–	–	–	–	–	○	–	○	–	–	–	–	–	–	–	–	–	–	–	–	–
RAD	○	–	○	–	–	○	○	○	–	–	–	–	–	–	–	–	○	–	–	○	–	–	–	–	–	–	–	–	–	–	–	–
MFD	○	–	○	–	–	○	○	○	○	–	–	–	–	–	–	–	○	–	–	–	○	–	–	–	–	–	–	–	–	–	–	–
A/C	○	–	○	–	–	○	○	○	○	–	–	–	–	–	–	–	○	–	–	–	–	○	–	–	–	–	–	–	–	–	–	–
DCM	○	–	○	–	–	○	○	○	○	–	–	–	–	–	–	–	○	–	–	–	–	–	○	–	–	–	–	–	–	–	–	–
MET	○	–	○	–	–	○	○	○	○	–	–	–	–	–	–	–	○	–	–	–	–	–	–	○	–	–	–	–	–	–	–	–
DCCD	○	–	○	–	–	○	○	○	○	○	–	–	–	–	–	–	○	–	–	–	–	–	–	–	○	–	–	–	–	–	–	–
STR	○	–	–	–	–	–	–	–	–	–	–	–	–	–	–	–	–	–	–	–	–	–	–	–	–	–	–	–	–	–	–	–
TCM	○	–	○	–	–	○	○	○	○	○	○	–	–	–	–	–	○	–	–	–	–	–	–	–	–	–	○	–	–	–	–	–
A/B	○	–	○	–	–	○	○	○	○	○	○	○	–	–	–	–	○	–	–	–	–	–	–	–	–	–	–	○	–	–	–	–
RST	○	–	–	–	–	–	–	–	–	–	–	–	–	–	–	–	–	–	–	–	–	–	–	–	–	–	–	–	–	–	–	–
CAM	○	–	○	–	–	○	○	○	○	○	○	○	○	–	–	–	○	–	–	–	–	–	–	–	–	–	–	–	–	○	–	–
EPS	○	–	○	–	–	○	○	○	○	○	○	○	○	○	–	–	○	–	–	–	–	–	–	–	–	–	–	–	–	–	○	–
IMP	○	–	–	–	–	–	–	–	–	–	–	–	–	–	–	–	–	–	–	–	–	–	–	–	–	–	–	–	–	–	–	–
ECM(FA)	○	–	○	–	–	○	○	○	○	○	○	○	○	○	○	–	○	–	–	–	–	–	–	–	–	–	–	–	–	–	–	–
ECM(EJ)	○	○	–	–	–	–	–	–	–	–	–	–	–	–	–	–	–	–	–	–	–	–	–	–	–	–	–	–	–	–	–	–

LAN10573

- When No. 14 is open

NOTE:
Perform the inspection from step 6 using the check sheet of communication for initializing. (There may be a malfunction other than open circuit) Go to step **6**.

	(A)	(B)		(E)																												
				1	2	3	4	5	6	7	8	9	10	11	12	13	14	15	16	17	18	19	20	21	22	23	24	25	26	27	28	29
		(C)	(D)																													
VDC	○	–	X			–	–	–	–	–	–	–	–	–	–	–		–	–	–	–	–	–	–	–	–	–	–	–	–	–	–
AHL	○	–	X	–		–	–	–	–	–	–	–	–	–	–			–	–	–	–	–	–	–	–	–	–	–	–	–	–	–
KPS	○	–	X	–	–	–	–	–	–	–	–	–	–	–	–	–			–	–	–	–	–	–	–	–	–	–	–	–	–	–
BIU	○	–	X	–	–		–	–	–	–	–	–	–	–	–	–		–	–	–	–	–	–	–	–	–	–	–	–	–	–	–
RAB	○	–	X	–	–			–	–	–	–	–	–	–	–	–		–		–	–	–	–	–	–	–	–	–	–	–	–	–
RAD	○	–	X	–	–				–	–	–	–	–	–	–	–		–	–		–	–	–	–	–	–	–	–	–	–	–	–
MFD	○	–	X	–	–					–	–	–	–	–	–	–		–	–	–		–	–	–	–	–	–	–	–	–	–	–
A/C	○	–	X	–	–					–	–	–	–	–	–	–		–	–	–	–		–	–	–	–	–	–	–	–	–	–
DCM	○	–	X	–	–					–	–	–	–	–	–	–		–	–	–	–	–		–	–	–	–	–	–	–	–	–
MET	○	–	X	–	–					–	–	–	–	–	–	–		–	–	–	–	–	–		–	–	–	–	–	–	–	–
DCCD	○	–	X	–	–						–	–	–	–	–	–		–	–	–	–	–	–	–		–	–	–	–	–	–	–
STR	○	–	–	–	–	–	–	–	–	–	–	–	–	–	–	–	–	–	–	–	–	–	–	–	–	–	–	–	–	–	–	–
TCM	○	–	X	–	–							–	–	–	–	–		–	–	–	–	–	–	–	–	–		–	–	–	–	–
A/B	○	–	X	–	–								–	–	–	–		–	–	–	–	–	–	–	–	–	–		–	–	–	–
RST	○	–	–	–	–	–	–	–	–	–	–	–	–	–	–	–	–	–	–	–	–	–	–	–	–	–	–	–	–	–	–	–
CAM	○	–	X	–	–									–	–	–		–	–	–	–	–	–	–	–	–	–	–	–		–	–
EPS	○	–	X	–	–										–	–		–	–	–	–	–	–	–	–	–	–	–	–	–		–
IMP	○	–	–	–	–	–	–	–	–	–	–	–	–	–	–	–	–	–	–	–	–	–	–	–	–	–	–	–	–	–	–	–
ECM(FA)	○	–	X	–	–											–		–	–	–	–	–	–	–	–	–	–	–	–	–	–	–
ECM(EJ)	○	○	–	–	–	–	–	–	–	–	–	–	–	–	–	–	–	–	–	–	–	–	–	–	–	–	–	–	–	–	–	–

LAN10574

- When No. 15 is open

	(A)	(B)		(E)																												
				1	2	3	4	5	6	7	8	9	10	11	12	13	14	15	16	17	18	19	20	21	22	23	24	25	26	27	28	29
		(C)	(D)	○	○	○	○	○	○	○	○	○	○	○	○	○	○		○	○	○	○	○	○	○	–	○	○	–	○	○	–
VDC	○	–	○	○	○	–	–	–	–	–	–	–	–	–	–	–	○	–	–	–	–	–	–	–	–	–	–	–	–	–	–	–
AHL	○	–	○	–	○	–	–	–	–	–	–	–	–	–	–	○	○	–	–	–	–	–	–	–	–	–	–	–	–	–	–	–
KPS	○	–	X	–	–	–	–	–	–	–	–	–	–	–	–	–	○		–	–	–	–	–	–	–	–	–	–	–	–	–	–
BIU	○	–	○	–	–	○	–	–	–	–	–	–	–	–	–	–	○	–	–	–	–	–	–	–	–	–	–	–	–	–	–	–
RAB	○	–	○	–	–	○	○	–	–	–	–	–	–	–	–	–	○	–	○	–	–	–	–	–	–	–	–	–	–	–	–	–
RAD	○	–	○	–	–	○	○	○	–	–	–	–	–	–	–	–	○	–	–	○	–	–	–	–	–	–	–	–	–	–	–	–
MFD	○	–	○	–	–	○	○	○	○	–	–	–	–	–	–	–	○	–	–	–	○	–	–	–	–	–	–	–	–	–	–	–
A/C	○	–	○	–	–	○	○	○	○	–	–	–	–	–	–	–	○	–	–	–	–	○	–	–	–	–	–	–	–	–	–	–
DCM	○	–	○	–	–	○	○	○	○	–	–	–	–	–	–	–	○	–	–	–	–	–	○	–	–	–	–	–	–	–	–	–
MET	○	–	○	–	–	○	○	○	○	–	–	–	–	–	–	–	○	–	–	–	–	–	–	○	–	–	–	–	–	–	–	–
DCCD	○	–	○	–	–	○	○	○	○	○	–	–	–	–	–	–	○	–	–	–	–	–	–	–	○	–	–	–	–	–	–	–
STR	○	–	–	–	–	–	–	–	–	–	–	–	–	–	–	–	–	–	–	–	–	–	–	–	–	–	–	–	–	–	–	–
TCM	○	–	○	–	–	○	○	○	○	○	○	–	–	–	–	–	○	–	–	–	–	–	–	–	–	–	○	–	–	–	–	–
A/B	○	–	○	–	–	○	○	○	○	○	○	○	–	–	–	–	○	–	–	–	–	–	–	–	–	–	–	○	–	–	–	–
RST	○	–	–	–	–	–	–	–	–	–	–	–	–	–	–	–	–	–	–	–	–	–	–	–	–	–	–	–	–	–	–	–
CAM	○	–	○	–	–	○	○	○	○	○	○	○	○	–	–	–	○	–	–	–	–	–	–	–	–	–	–	–	–	○	–	–
EPS	○	–	○	–	–	○	○	○	○	○	○	○	○	○	–	–	○	–	–	–	–	–	–	–	–	–	–	–	–	–	○	–
IMP	○	–	–	–	–	–	–	–	–	–	–	–	–	–	–	–	–	–	–	–	–	–	–	–	–	–	–	–	–	–	–	–
ECM(FA)	○	–	○	–	–	○	○	○	○	○	○	○	○	○	○	–	○	–	–	–	–	–	–	–	–	–	–	–	–	–	–	–
ECM(EJ)	○	○	–	–	–	–	–	–	–	–	–	–	–	–	–	–	–	–	–	–	–	–	–	–	–	–	–	–	–	–	–	–

LAN10575

- When No. 16 is open

	(A)	(B)		(E)																												
				1	2	3	4	5	6	7	8	9	10	11	12	13	14	15	16	17	18	19	20	21	22	23	24	25	26	27	28	29
		(C)	(D)	○	○	○	○	○	○	○	○	○	○	○	○	○	○	○		○	○	○	○	○	○	–	○	○	–	○	○	–
VDC	○	–	○	○	○	–	–	–	–	–	–	–	–	–	–	–	○	–	–	–	–	–	–	–	–	–	–	–	–	–	–	–
AHL	○	–	○	–	○	–	–	–	–	–	–	–	–	–	–	○	○	–	–	–	–	–	–	–	–	–	–	–	–	–	–	–
KPS	○	–	○	–	–	–	–	–	–	–	–	–	–	–	–	–	○	○	–	–	–	–	–	–	–	–	–	–	–	–	–	–
BIU	○	–	○	–	–	○	–	–	–	–	–	–	–	–	–	–	○	–	–	–	–	–	–	–	–	–	–	–	–	–	–	–
RAB	○	–	X	–	–	○	○	–	–	–	–	–	–	–	–	–	○	–		–	–	–	–	–	–	–	–	–	–	–	–	–
RAD	○	–	○	–	–	○	○	○	–	–	–	–	–	–	–	–	○	–	–	○	–	–	–	–	–	–	–	–	–	–	–	–
MFD	○	–	○	–	–	○	○	○	○	–	–	–	–	–	–	–	○	–	–	–	○	–	–	–	–	–	–	–	–	–	–	–
A/C	○	–	○	–	–	○	○	○	○	–	–	–	–	–	–	–	○	–	–	–	–	○	–	–	–	–	–	–	–	–	–	–
DCM	○	–	○	–	–	○	○	○	○	–	–	–	–	–	–	–	○	–	–	–	–	–	○	–	–	–	–	–	–	–	–	–
MET	○	–	○	–	–	○	○	○	○	–	–	–	–	–	–	–	○	–	–	–	–	–	–	○	–	–	–	–	–	–	–	–
DCCD	○	–	○	–	–	○	○	○	○	○	–	–	–	–	–	–	○	–	–	–	–	–	–	–	○	–	–	–	–	–	–	–
STR	○	–	–	–	–	–	–	–	–	–	–	–	–	–	–	–	–	–	–	–	–	–	–	–	–	–	–	–	–	–	–	–
TCM	○	–	○	–	–	○	○	○	○	○	○	–	–	–	–	–	○	–	–	–	–	–	–	–	–	–	○	–	–	–	–	–
A/B	○	–	○	–	–	○	○	○	○	○	○	○	–	–	–	–	○	–	–	–	–	–	–	–	–	–	–	○	–	–	–	–
RST	○	–	–	–	–	–	–	–	–	–	–	–	–	–	–	–	–	–	–	–	–	–	–	–	–	–	–	–	–	–	–	–
CAM	○	–	○	–	–	○	○	○	○	○	○	○	○	–	–	–	○	–	–	–	–	–	–	–	–	–	–	–	–	○	–	–
EPS	○	–	○	–	–	○	○	○	○	○	○	○	○	○	–	–	○	–	–	–	–	–	–	–	–	–	–	–	–	–	○	–
IMP	○	–	–	–	–	–	–	–	–	–	–	–	–	–	–	–	–	–	–	–	–	–	–	–	–	–	–	–	–	–	–	–
ECM(FA)	○	–	○	–	–	○	○	○	○	○	○	○	○	○	○	–	○	–	–	–	–	–	–	–	–	–	–	–	–	–	–	–
ECM(EJ)	○	○	–	–	–	–	–	–	–	–	–	–	–	–	–	–	–	–	–	–	–	–	–	–	–	–	–	–	–	–	–	–

LAN10576

- When No. 17 is open

	(A)	(B)		(E)																												
				1	2	3	4	5	6	7	8	9	10	11	12	13	14	15	16	17	18	19	20	21	22	23	24	25	26	27	28	29
		(C)	(D)	○	○	○	○	○	○	○	○	○	○	○	○	○	○	○	○		○	○	○	○	○	–	○	○	–	○	○	–
VDC	○	–	○	○	○	–	–	–	–	–	–	–	–	–	–	–	○	–	–	–	–	–	–	–	–	–	–	–	–	–	–	–
AHL	○	–	○	–	○	–	–	–	–	–	–	–	–	–	–	○	○	–	–	–	–	–	–	–	–	–	–	–	–	–	–	–
KPS	○	–	○	–	–	–	–	–	–	–	–	–	–	–	–	–	○	○	–	–	–	–	–	–	–	–	–	–	–	–	–	–
BIU	○	–	○	–	–	○	–	–	–	–	–	–	–	–	–	–	○	–	–	–	–	–	–	–	–	–	–	–	–	–	–	–
RAB	○	–	○	–	–	○	○	–	–	–	–	–	–	–	–	–	○	–	○	–	–	–	–	–	–	–	–	–	–	–	–	–
RAD	○	–	X	–	–	○	○	○	–	–	–	–	–	–	–	–	○	–	–		–	–	–	–	–	–	–	–	–	–	–	–
MFD	○	–	○	–	–	○	○	○	○	–	–	–	–	–	–	–	○	–	–	–	○	–	–	–	–	–	–	–	–	–	–	–
A/C	○	–	○	–	–	○	○	○	○	–	–	–	–	–	–	–	○	–	–	–	–	○	–	–	–	–	–	–	–	–	–	–
DCM	○	–	○	–	–	○	○	○	○	–	–	–	–	–	–	–	○	–	–	–	–	–	○	–	–	–	–	–	–	–	–	–
MET	○	–	○	–	–	○	○	○	○	–	–	–	–	–	–	–	○	–	–	–	–	–	–	○	–	–	–	–	–	–	–	–
DCCD	○	–	○	–	–	○	○	○	○	○	–	–	–	–	–	–	○	–	–	–	–	–	–	–	○	–	–	–	–	–	–	–
STR	○	–	–	–	–	–	–	–	–	–	–	–	–	–	–	–	–	–	–	–	–	–	–	–	–	–	–	–	–	–	–	–
TCM	○	–	○	–	–	○	○	○	○	○	○	–	–	–	–	–	○	–	–	–	–	–	–	–	–	–	○	–	–	–	–	–
A/B	○	–	○	–	–	○	○	○	○	○	○	○	–	–	–	–	○	–	–	–	–	–	–	–	–	–	–	○	–	–	–	–
RST	○	–	–	–	–	–	–	–	–	–	–	–	–	–	–	–	–	–	–	–	–	–	–	–	–	–	–	–	–	–	–	–
CAM	○	–	○	–	–	○	○	○	○	○	○	○	○	–	–	–	○	–	–	–	–	–	–	–	–	–	–	–	–	○	–	–
EPS	○	–	○	–	–	○	○	○	○	○	○	○	○	○	–	–	○	–	–	–	–	–	–	–	–	–	–	–	–	–	○	–
IMP	○	–	–	–	–	–	–	–	–	–	–	–	–	–	–	–	–	–	–	–	–	–	–	–	–	–	–	–	–	–	–	–
ECM(FA)	○	–	○	–	–	○	○	○	○	○	○	○	○	○	○	–	○	–	–	–	–	–	–	–	–	–	–	–	–	–	–	–
ECM(EJ)	○	○	–	–	–	–	–	–	–	–	–	–	–	–	–	–	–	–	–	–	–	–	–	–	–	–	–	–	–	–	–	–

LAN10577

- When No. 18 is open

	(A)	(B)		(E)																												
				1	2	3	4	5	6	7	8	9	10	11	12	13	14	15	16	17	18	19	20	21	22	23	24	25	26	27	28	29
		(C)	(D)	○	○	○	○	○	○	○	○	○	○	○	○	○	○	○	○	○		○	○	○	○	–	○	○	–	○	○	–
VDC	○	–	○	○	○	–	–	–	–	–	–	–	–	–	–	–	○	–	–	–	–	–	–	–	–	–	–	–	–	–	–	–
AHL	○	–	○	–	○	–	–	–	–	–	–	–	–	–	–	○	○	–	–	–	–	–	–	–	–	–	–	–	–	–	–	–
KPS	○	–	○	–	–	–	–	–	–	–	–	–	–	–	–	–	○	○	–	–	–	–	–	–	–	–	–	–	–	–	–	–
BIU	○	–	○	–	–	○	–	–	–	–	–	–	–	–	–	–	○	–	–	–	–	–	–	–	–	–	–	–	–	–	–	–
RAB	○	–	○	–	–	○	○	–	–	–	–	–	–	–	–	–	○	–	○	–	–	–	–	–	–	–	–	–	–	–	–	–
RAD	○	–	○	–	–	○	○	○	–	–	–	–	–	–	–	–	○	–	–	○	–	–	–	–	–	–	–	–	–	–	–	–
MFD	○	–	X	–	–	○	○	○	○	–	–	–	–	–	–	–	○	–	–	–		–	–	–	–	–	–	–	–	–	–	–
A/C	○	–	○	–	–	○	○	○	○	–	–	–	–	–	–	–	○	–	–	–	–	○	–	–	–	–	–	–	–	–	–	–
DCM	○	–	○	–	–	○	○	○	○	–	–	–	–	–	–	–	○	–	–	–	–	–	○	–	–	–	–	–	–	–	–	–
MET	○	–	○	–	–	○	○	○	○	–	–	–	–	–	–	–	○	–	–	–	–	–	–	○	–	–	–	–	–	–	–	–
DCCD	○	–	○	–	–	○	○	○	○	○	–	–	–	–	–	–	○	–	–	–	–	–	–	–	○	–	–	–	–	–	–	–
STR	○	–	–	–	–	–	–	–	–	–	–	–	–	–	–	–	–	–	–	–	–	–	–	–	–	–	–	–	–	–	–	–
TCM	○	–	○	–	–	○	○	○	○	○	○	–	–	–	–	–	○	–	–	–	–	–	–	–	–	–	○	–	–	–	–	–
A/B	○	–	○	–	–	○	○	○	○	○	○	○	–	–	–	–	○	–	–	–	–	–	–	–	–	–	–	○	–	–	–	–
RST	○	–	–	–	–	–	–	–	–	–	–	–	–	–	–	–	–	–	–	–	–	–	–	–	–	–	–	–	–	–	–	–
CAM	○	–	○	–	–	○	○	○	○	○	○	○	○	–	–	–	○	–	–	–	–	–	–	–	–	–	–	–	–	○	–	–
EPS	○	–	○	–	–	○	○	○	○	○	○	○	○	○	–	–	○	–	–	–	–	–	–	–	–	–	–	–	–	–	○	–
IMP	○	–	–	–	–	–	–	–	–	–	–	–	–	–	–	–	–	–	–	–	–	–	–	–	–	–	–	–	–	–	–	–
ECM(FA)	○	–	○	–	–	○	○	○	○	○	○	○	○	○	○	–	○	–	–	–	–	–	–	–	–	–	–	–	–	–	–	–
ECM(EJ)	○	○	–	–	–	–	–	–	–	–	–	–	–	–	–	–	–	–	–	–	–	–	–	–	–	–	–	–	–	–	–	–

LAN10578

- When No. 19 is open

	(A)	(B)		(E)																												
				1	2	3	4	5	6	7	8	9	10	11	12	13	14	15	16	17	18	19	20	21	22	23	24	25	26	27	28	29
		(C)	(D)	○	○	○	○	○	○	○	○	○	○	○	○	○	○	○	○	○	○		○	○	○	–	○	○	–	○	○	–
VDC	○	–	○	○	○	–	–	–	–	–	–	–	–	–	–	–	○	–	–	–	–	–	–	–	–	–	–	–	–	–	–	–
AHL	○	–	○	–	○	–	–	–	–	–	–	–	–	–	–	○	○	–	–	–	–	–	–	–	–	–	–	–	–	–	–	–
KPS	○	–	○	–	–	–	–	–	–	–	–	–	–	–	–	–	○	○	–	–	–	–	–	–	–	–	–	–	–	–	–	–
BIU	○	–	○	–	–	○	–	–	–	–	–	–	–	–	–	–	○	–	–	–	–	–	–	–	–	–	–	–	–	–	–	–
RAB	○	–	○	–	–	○	○	–	–	–	–	–	–	–	–	–	○	–	○	–	–	–	–	–	–	–	–	–	–	–	–	–
RAD	○	–	○	–	–	○	○	○	–	–	–	–	–	–	–	–	○	–	–	○	–	–	–	–	–	–	–	–	–	–	–	–
MFD	○	–	○	–	–	○	○	○	○	–	–	–	–	–	–	–	○	–	–	–	○	–	–	–	–	–	–	–	–	–	–	–
A/C	○	–	X	–	–	○	○	○	○	–	–	–	–	–	–	–	○	–	–	–	–		–	–	–	–	–	–	–	–	–	–
DCM	○	–	○	–	–	○	○	○	○	–	–	–	–	–	–	–	○	–	–	–	–	–	○	–	–	–	–	–	–	–	–	–
MET	○	–	○	–	–	○	○	○	○	–	–	–	–	–	–	–	○	–	–	–	–	–	–	○	–	–	–	–	–	–	–	–
DCCD	○	–	○	–	–	○	○	○	○	○	–	–	–	–	–	–	○	–	–	–	–	–	–	–	○	–	–	–	–	–	–	–
STR	○	–	–	–	–	–	–	–	–	–	–	–	–	–	–	–	–	–	–	–	–	–	–	–	–	–	–	–	–	–	–	–
TCM	○	–	○	–	–	○	○	○	○	○	○	–	–	–	–	–	○	–	–	–	–	–	–	–	–	–	○	–	–	–	–	–
A/B	○	–	○	–	–	○	○	○	○	○	○	○	–	–	–	–	○	–	–	–	–	–	–	–	–	–	–	○	–	–	–	–
RST	○	–	–	–	–	–	–	–	–	–	–	–	–	–	–	–	–	–	–	–	–	–	–	–	–	–	–	–	–	–	–	–
CAM	○	–	○	–	–	○	○	○	○	○	○	○	○	–	–	–	○	–	–	–	–	–	–	–	–	–	–	–	–	○	–	–
EPS	○	–	○	–	–	○	○	○	○	○	○	○	○	○	–	–	○	–	–	–	–	–	–	–	–	–	–	–	–	–	○	–
IMP	○	–	–	–	–	–	–	–	–	–	–	–	–	–	–	–	–	–	–	–	–	–	–	–	–	–	–	–	–	–	–	–
ECM(FA)	○	–	○	–	–	○	○	○	○	○	○	○	○	○	○	–	○	–	–	–	–	–	–	–	–	–	–	–	–	–	–	–
ECM(EJ)	○	○	–	–	–	–	–	–	–	–	–	–	–	–	–	–	–	–	–	–	–	–	–	–	–	–	–	–	–	–	–	–

LAN10579

- When No. 20 is open

	(A)	(B)		(E)																												
				1	2	3	4	5	6	7	8	9	10	11	12	13	14	15	16	17	18	19	20	21	22	23	24	25	26	27	28	29
		(C)	(D)	○	○	○	○	○	○	○	○	○	○	○	○	○	○	○	○	○	○	○		○	○	–	○	○	–	○	○	–
VDC	○	–	○	○	○	–	–	–	–	–	–	–	–	–	–	–	○	–	–	–	–	–	–	–	–	–	–	–	–	–	–	–
AHL	○	–	○	–	○	–	–	–	–	–	–	–	–	–	–	○	○	–	–	–	–	–	–	–	–	–	–	–	–	–	–	–
KPS	○	–	○	–	–	–	–	–	–	–	–	–	–	–	–	–	○	○	–	–	–	–	–	–	–	–	–	–	–	–	–	–
BIU	○	–	○	–	–	○	–	–	–	–	–	–	–	–	–	–	○	–	–	–	–	–	–	–	–	–	–	–	–	–	–	–
RAB	○	–	○	–	–	○	○	–	–	–	–	–	–	–	–	–	○	–	○	–	–	–	–	–	–	–	–	–	–	–	–	–
RAD	○	–	○	–	–	○	○	○	–	–	–	–	–	–	–	–	○	–	–	○	–	–	–	–	–	–	–	–	–	–	–	–
MFD	○	–	○	–	–	○	○	○	○	–	–	–	–	–	–	–	○	–	–	–	○	–	–	–	–	–	–	–	–	–	–	–
A/C	○	–	○	–	–	○	○	○	○	–	–	–	–	–	–	–	○	–	–	–	–	○	–	–	–	–	–	–	–	–	–	–
DCM	○	–	X	–	–	○	○	○	○	–	–	–	–	–	–	–	○	–	–	–	–	–		–	–	–	–	–	–	–	–	–
MET	○	–	○	–	–	○	○	○	○	–	–	–	–	–	–	–	○	–	–	–	–	–	–	○	–	–	–	–	–	–	–	–
DCCD	○	–	○	–	–	○	○	○	○	○	–	–	–	–	–	–	○	–	–	–	–	–	–	–	○	–	–	–	–	–	–	–
STR	○	–	–	–	–	–	–	–	–	–	–	–	–	–	–	–	–	–	–	–	–	–	–	–	–	–	–	–	–	–	–	–
TCM	○	–	○	–	–	○	○	○	○	○	○	–	–	–	–	–	○	–	–	–	–	–	–	–	–	–	○	–	–	–	–	–
A/B	○	–	○	–	–	○	○	○	○	○	○	○	–	–	–	–	○	–	–	–	–	–	–	–	–	–	–	○	–	–	–	–
RST	○	–	–	–	–	–	–	–	–	–	–	–	–	–	–	–	–	–	–	–	–	–	–	–	–	–	–	–	–	–	–	–
CAM	○	–	○	–	–	○	○	○	○	○	○	○	○	–	–	–	○	–	–	–	–	–	–	–	–	–	–	–	–	○	–	–
EPS	○	–	○	–	–	○	○	○	○	○	○	○	○	○	–	–	○	–	–	–	–	–	–	–	–	–	–	–	–	–	○	–
IMP	○	–	–	–	–	–	–	–	–	–	–	–	–	–	–	–	–	–	–	–	–	–	–	–	–	–	–	–	–	–	–	–
ECM(FA)	○	–	○	–	–	○	○	○	○	○	○	○	○	○	○	–	○	–	–	–	–	–	–	–	–	–	–	–	–	–	–	–
ECM(EJ)	○	○	–	–	–	–	–	–	–	–	–	–	–	–	–	–	–	–	–	–	–	–	–	–	–	–	–	–	–	–	–	–

LAN10580

- When No. 21 is open

	(A)	(B)		(E)																												
				1	2	3	4	5	6	7	8	9	10	11	12	13	14	15	16	17	18	19	20	21	22	23	24	25	26	27	28	29
		(C)	(D)	○	○	○	○	○	○	○	○	○	○	○	○	○	○	○	○	○	○	○	○		○	—	○	○	—	○	○	—
VDC	○	—	○	○	○	—	—	—	—	—	—	—	—	—	—	—	○	—	—	—	—	—	—	—	—	—	—	—	—	—	—	—
AHL	○	—	○	—	○	—	—	—	—	—	—	—	—	—	—	○	○	—	—	—	—	—	—	—	—	—	—	—	—	—	—	—
KPS	○	—	○	—	—	—	—	—	—	—	—	—	—	—	—	—	○	○	—	—	—	—	—	—	—	—	—	—	—	—	—	—
BIU	○	—	○	—	—	○	—	—	—	—	—	—	—	—	—	—	○	—	—	—	—	—	—	—	—	—	—	—	—	—	—	—
RAB	○	—	○	—	—	○	○	—	—	—	—	—	—	—	—	—	○	—	○	—	—	—	—	—	—	—	—	—	—	—	—	—
RAD	○	—	○	—	—	○	○	○	—	—	—	—	—	—	—	—	○	—	—	○	—	—	—	—	—	—	—	—	—	—	—	—
MFD	○	—	○	—	—	○	○	○	○	—	—	—	—	—	—	—	○	—	—	—	○	—	—	—	—	—	—	—	—	—	—	—
A/C	○	—	○	—	—	○	○	○	○	—	—	—	—	—	—	—	○	—	—	—	—	○	—	—	—	—	—	—	—	—	—	—
DCM	○	—	○	—	—	○	○	○	○	—	—	—	—	—	—	—	○	—	—	—	—	—	○	—	—	—	—	—	—	—	—	—
MET	○	—	X	—	—	○	○	○	○	—	—	—	—	—	—	—	○	—	—	—	—	—	—		—	—	—	—	—	—	—	—
DCCD	○	—	○	—	—	○	○	○	○	○	—	—	—	—	—	—	○	—	—	—	—	—	—	—	○	—	—	—	—	—	—	—
STR	○	—	—	—	—	—	—	—	—	—	—	—	—	—	—	—	—	—	—	—	—	—	—	—	—	—	—	—	—	—	—	—
TCM	○	—	○	—	—	○	○	○	○	○	○	—	—	—	—	—	○	—	—	—	—	—	—	—	—	—	○	—	—	—	—	—
A/B	○	—	○	—	—	○	○	○	○	○	○	○	—	—	—	—	○	—	—	—	—	—	—	—	—	—	—	○	—	—	—	—
RST	○	—	—	—	—	—	—	—	—	—	—	—	—	—	—	—	—	—	—	—	—	—	—	—	—	—	—	—	—	—	—	—
CAM	○	—	○	—	—	○	○	○	○	○	○	○	○	—	—	—	○	—	—	—	—	—	—	—	—	—	—	—	—	○	—	—
EPS	○	—	○	—	—	○	○	○	○	○	○	○	○	○	—	—	○	—	—	—	—	—	—	—	—	—	—	—	—	—	○	—
IMP	○	—	—	—	—	—	—	—	—	—	—	—	—	—	—	—	—	—	—	—	—	—	—	—	—	—	—	—	—	—	—	—
ECM(FA)	○	—	○	—	—	○	○	○	○	○	○	○	○	○	○	—	○	—	—	—	—	—	—	—	—	—	—	—	—	—	—	—
ECM(EJ)	○	○	—	—	—	—	—	—	—	—	—	—	—	—	—	—	—	—	—	—	—	—	—	—	—	—	—	—	—	—	—	—

LAN10581

- When No. 22 is open

	(A)	(B)		(E)																												
				1	2	3	4	5	6	7	8	9	10	11	12	13	14	15	16	17	18	19	20	21	22	23	24	25	26	27	28	29
		(C)	(D)	○	○	○	○	○	○	○	○	○	○	○	○	○	○	○	○	○	○	○	○	○		—	○	○	—	○	○	—
VDC	○	—	○	○	○	—	—	—	—	—	—	—	—	—	—	—	○	—	—	—	—	—	—	—	—	—	—	—	—	—	—	—
AHL	○	—	○	—	○	—	—	—	—	—	—	—	—	—	—	○	○	—	—	—	—	—	—	—	—	—	—	—	—	—	—	—
KPS	○	—	○	—	—	—	—	—	—	—	—	—	—	—	—	—	○	○	—	—	—	—	—	—	—	—	—	—	—	—	—	—
BIU	○	—	○	—	—	○	—	—	—	—	—	—	—	—	—	—	○	—	—	—	—	—	—	—	—	—	—	—	—	—	—	—
RAB	○	—	○	—	—	○	○	—	—	—	—	—	—	—	—	—	○	—	○	—	—	—	—	—	—	—	—	—	—	—	—	—
RAD	○	—	○	—	—	○	○	○	—	—	—	—	—	—	—	—	○	—	—	○	—	—	—	—	—	—	—	—	—	—	—	—
MFD	○	—	○	—	—	○	○	○	○	—	—	—	—	—	—	—	○	—	—	—	○	—	—	—	—	—	—	—	—	—	—	—
A/C	○	—	○	—	—	○	○	○	○	—	—	—	—	—	—	—	○	—	—	—	—	○	—	—	—	—	—	—	—	—	—	—	—
DCM	○	—	○	—	—	○	○	○	○	—	—	—	—	—	—	—	○	—	—	—	—	—	○	—	—	—	—	—	—	—	—	—	—
MET	○	—	○	—	—	○	○	○	○	—	—	—	—	—	—	—	○	—	—	—	—	—	—	○	—	—	—	—	—	—	—	—	—
DCCD	○	—	X	—	—	○	○	○	○	○	—	—	—	—	—	—	○	—	—	—	—	—	—	—		—	—	—	—	—	—	—
STR	○	—	—	—	—	—	—	—	—	—	—	—	—	—	—	—	—	—	—	—	—	—	—	—	—	—	—	—	—	—	—	—
TCM	○	—	○	—	—	○	○	○	○	○	○	—	—	—	—	—	○	—	—	—	—	—	—	—	—	—	○	—	—	—	—	—
A/B	○	—	○	—	—	○	○	○	○	○	○	○	—	—	—	—	○	—	—	—	—	—	—	—	—	—	—	○	—	—	—	—
RST	○	—	—	—	—	—	—	—	—	—	—	—	—	—	—	—	—	—	—	—	—	—	—	—	—	—	—	—	—	—	—	—
CAM	○	—	○	—	—	○	○	○	○	○	○	○	○	—	—	—	○	—	—	—	—	—	—	—	—	—	—	—	—	○	—	—
EPS	○	—	○	—	—	○	○	○	○	○	○	○	○	○	—	—	○	—	—	—	—	—	—	—	—	—	—	—	—	—	○	—
IMP	○	—	—	—	—	—	—	—	—	—	—	—	—	—	—	—	—	—	—	—	—	—	—	—	—	—	—	—	—	—	—	—
ECM(FA)	○	—	○	—	—	○	○	○	○	○	○	○	○	○	○	—	○	—	—	—	—	—	—	—	—	—	—	—	—	—	—	—
ECM(EJ)	○	○	—	—	—	—	—	—	—	—	—	—	—	—	—	—	—	—	—	—	—	—	—	—	—	—	—	—	—	—	—	—

LAN10582

- When No. 23 is open

NOTE:
This is the same as No. 12 (engine type EJ), No. 26 and No. 29, but it is possible to diagnose using examples of lost communication detection in each module. <Ref. to LAN(diag)-113, EXAMPLE OF DTC DATA NOT RECEIVED, LIST, List of Diagnostic Trouble Code (DTC).>

	(A)	(B)		(E)																											
				1	2	3	4	5	6	7	8	9	10	11	12	13	14	15	16	17	18	19	20	21	22	23	24	25	26	27	28	29
		(C)	(D)	○	○	○	○	○	○	○	○	○	○	○	○	○	○	○	○	○	○	○	○	○	○	–	○	○	–	○	○	–
VDC	○	–	○	○	○	–	–	–	–	–	–	–	–	–	–	–	○	–	–	–	–	–	–	–	–	–	–	–	–	–	–	–
AHL	○	–	○	–	○	–	–	–	–	–	–	–	–	–	–	○	○	–	–	–	–	–	–	–	–	–	–	–	–	–	–	–
KPS	○	–	○	–	–	–	–	–	–	–	–	–	–	–	–	–	○	○	–	–	–	–	–	–	–	–	–	–	–	–	–	–
BIU	○	–	○	–	–	○	–	–	–	–	–	–	–	–	–	–	○	–	–	–	–	–	–	–	–	–	–	–	–	–	–	–
RAB	○	–	○	–	–	○	○	–	–	–	–	–	–	–	–	–	○	–	○	–	–	–	–	–	–	–	–	–	–	–	–	–
RAD	○	–	○	–	–	○	○	○	–	–	–	–	–	–	–	–	○	–	–	○	–	–	–	–	–	–	–	–	–	–	–	–
MFD	○	–	○	–	–	○	○	○	○	–	–	–	–	–	–	–	○	–	–	–	○	–	–	–	–	–	–	–	–	–	–	–
A/C	○	–	○	–	–	○	○	○	○	–	–	–	–	–	–	–	○	–	–	–	–	○	–	–	–	–	–	–	–	–	–	–
DCM	○	–	○	–	–	○	○	○	○	–	–	–	–	–	–	–	○	–	–	–	–	–	○	–	–	–	–	–	–	–	–	–
MET	○	–	○	–	–	○	○	○	○	–	–	–	–	–	–	–	○	–	–	–	–	–	–	○	–	–	–	–	–	–	–	–
DCCD	○	–	○	–	–	○	○	○	○	○	–	–	–	–	–	–	○	–	–	–	–	–	–	–	○	–	–	–	–	–	–	–
STR	○	–	–	–	–	–	–	–	–	–	–	–	–	–	–	–	–	–	–	–	–	–	–	–	–	–	–	–	–	–	–	–
TCM	○	–	○	–	–	○	○	○	○	○	○	–	–	–	–	–	○	–	–	–	–	–	–	–	–	–	○	–	–	–	–	–
A/B	○	–	○	–	–	○	○	○	○	○	○	○	–	–	–	–	○	–	–	–	–	–	–	–	–	–	–	○	–	–	–	–
RST	○	–	–	–	–	–	–	–	–	–	–	–	–	–	–	–	–	–	–	–	–	–	–	–	–	–	–	–	–	–	–	–
CAM	○	–	○	–	–	○	○	○	○	○	○	○	○	–	–	–	○	–	–	–	–	–	–	–	–	–	–	–	–	○	–	–
EPS	○	–	○	–	–	○	○	○	○	○	○	○	○	○	–	–	○	–	–	–	–	–	–	–	–	–	–	–	–	–	○	–
IMP	○	–	–	–	–	–	–	–	–	–	–	–	–	–	–	–	–	–	–	–	–	–	–	–	–	–	–	–	–	–	–	–
ECM(FA)	○	–	○	–	–	○	○	○	○	○	○	○	○	○	○	–	○	–	–	–	–	–	–	–	–	–	–	–	–	–	–	–
ECM(EJ)	○	○	–	–	–	–	–	–	–	–	–	–	–	–	–	–	–	–	–	–	–	–	–	–	–	–	–	–	–	–	–	–

LAN10572

- When No. 24 is open

	(A)	(B)		(E)																												
				1	2	3	4	5	6	7	8	9	10	11	12	13	14	15	16	17	18	19	20	21	22	23	24	25	26	27	28	29
		(C)	(D)	○	○	○	○	○	○	○	○	○	○	○	○	○	○	○	○	○	○	○	○	○	○	–		○	–	○	○	–
VDC	○	–	○	○	○	–	–	–	–	–	–	–	–	–	–	–	○	–	–	–	–	–	–	–	–	–	–	–	–	–	–	–
AHL	○	–	○	–	○	–	–	–	–	–	–	–	–	–	–	○	○	–	–	–	–	–	–	–	–	–	–	–	–	–	–	–
KPS	○	–	○	–	–	–	–	–	–	–	–	–	–	–	–	–	○	○	–	–	–	–	–	–	–	–	–	–	–	–	–	–
BIU	○	–	○	–	–	○	–	–	–	–	–	–	–	–	–	–	○	–	–	–	–	–	–	–	–	–	–	–	–	–	–	–
RAB	○	–	○	–	–	○	○	–	–	–	–	–	–	–	–	–	○	–	○	–	–	–	–	–	–	–	–	–	–	–	–	–
RAD	○	–	○	–	–	○	○	○	–	–	–	–	–	–	–	–	○	–	–	○	–	–	–	–	–	–	–	–	–	–	–	–
MFD	○	–	○	–	–	○	○	○	○	–	–	–	–	–	–	–	○	–	–	–	○	–	–	–	–	–	–	–	–	–	–	–
A/C	○	–	○	–	–	○	○	○	○	–	–	–	–	–	–	–	○	–	–	–	–	○	–	–	–	–	–	–	–	–	–	–
DCM	○	–	○	–	–	○	○	○	○	–	–	–	–	–	–	–	○	–	–	–	–	–	○	–	–	–	–	–	–	–	–	–
MET	○	–	○	–	–	○	○	○	○	–	–	–	–	–	–	–	○	–	–	–	–	–	–	○	–	–	–	–	–	–	–	–
DCCD	○	–	○	–	–	○	○	○	○	○	–	–	–	–	–	–	○	–	–	–	–	–	–	–	○	–	–	–	–	–	–	–
STR	○	–	–	–	–	–	–	–	–	–	–	–	–	–	–	–	–	–	–	–	–	–	–	–	–	–	–	–	–	–	–	–
TCM	○	–	X	–	–	○	○	○	○	○	○	–	–	–	–	–	○	–	–	–	–	–	–	–	–	–		–	–	–	–	–
A/B	○	–	○	–	–	○	○	○	○	○	○	○	–	–	–	–	○	–	–	–	–	–	–	–	–	–	–	○	–	–	–	–
RST	○	–	–	–	–	–	–	–	–	–	–	–	–	–	–	–	–	–	–	–	–	–	–	–	–	–	–	–	–	–	–	–
CAM	○	–	○	–	–	○	○	○	○	○	○	○	○	–	–	–	○	–	–	–	–	–	–	–	–	–	–	–	–	○	–	–
EPS	○	–	○	–	–	○	○	○	○	○	○	○	○	○	–	–	○	–	–	–	–	–	–	–	–	–	–	–	–	–	○	–
IMP	○	–	–	–	–	–	–	–	–	–	–	–	–	–	–	–	–	–	–	–	–	–	–	–	–	–	–	–	–	–	–	–
ECM(FA)	○	–	○	–	–	○	○	○	○	○	○	○	○	○	○	–	○	–	–	–	–	–	–	–	–	–	–	–	–	–	–	–
ECM(EJ)	○	○	–	–	–	–	–	–	–	–	–	–	–	–	–	–	–	–	–	–	–	–	–	–	–	–	–	–	–	–	–	–

LAN10583

- When No. 25 is open

	(A)	(B)		(E)																												
				1	2	3	4	5	6	7	8	9	10	11	12	13	14	15	16	17	18	19	20	21	22	23	24	25	26	27	28	29
		(C)	(D)	○	○	○	○	○	○	○	○	○	○	○	○	○	○	○	○	○	○	○	○	○	○	–	○		–	○	○	–
VDC	○	–	○	○	○	–	–	–	–	–	–	–	–	–	–	–	○	–	–	–	–	–	–	–	–	–	–	–	–	–	–	–
AHL	○	–	○	–	○	–	–	–	–	–	–	–	–	–	–	○	○	–	–	–	–	–	–	–	–	–	–	–	–	–	–	–
KPS	○	–	○	–	–	–	–	–	–	–	–	–	–	–	–	–	○	○	–	–	–	–	–	–	–	–	–	–	–	–	–	–
BIU	○	–	○	–	–	○	–	–	–	–	–	–	–	–	–	–	○	–	–	–	–	–	–	–	–	–	–	–	–	–	–	–
RAB	○	–	○	–	–	○	○	–	–	–	–	–	–	–	–	–	○	–	○	–	–	–	–	–	–	–	–	–	–	–	–	–
RAD	○	–	○	–	–	○	○	○	–	–	–	–	–	–	–	–	○	–	–	○	–	–	–	–	–	–	–	–	–	–	–	–
MFD	○	–	○	–	–	○	○	○	○	–	–	–	–	–	–	–	○	–	–	–	○	–	–	–	–	–	–	–	–	–	–	–
A/C	○	–	○	–	–	○	○	○	○	–	–	–	–	–	–	–	○	–	–	–	–	○	–	–	–	–	–	–	–	–	–	–
DCM	○	–	○	–	–	○	○	○	○	–	–	–	–	–	–	–	○	–	–	–	–	–	○	–	–	–	–	–	–	–	–	–
MET	○	–	○	–	–	○	○	○	○	–	–	–	–	–	–	–	○	–	–	–	–	–	–	○	–	–	–	–	–	–	–	–
DCCD	○	–	○	–	–	○	○	○	○	○	–	–	–	–	–	–	○	–	–	–	–	–	–	–	○	–	–	–	–	–	–	–
STR	○	–	–	–	–	–	–	–	–	–	–	–	–	–	–	–	–	–	–	–	–	–	–	–	–	–	–	–	–	–	–	–
TCM	○	–	○	–	–	○	○	○	○	○	○	–	–	–	–	–	○	–	–	–	–	–	–	–	–	–	○	–	–	–	–	–
A/B	○	–	X	–	–	○	○	○	○	○	○	○	–	–	–	–	○	–	–	–	–	–	–	–	–	–	–		–	–	–	–
RST	○	–	–	–	–	–	–	–	–	–	–	–	–	–	–	–	–	–	–	–	–	–	–	–	–	–	–	–	–	–	–	–
CAM	○	–	○	–	–	○	○	○	○	○	○	○	○	–	–	–	○	–	–	–	–	–	–	–	–	–	–	–	–	○	–	–
EPS	○	–	○	–	–	○	○	○	○	○	○	○	○	○	–	–	○	–	–	–	–	–	–	–	–	–	–	–	–	–	○	–
IMP	○	–	–	–	–	–	–	–	–	–	–	–	–	–	–	–	–	–	–	–	–	–	–	–	–	–	–	–	–	–	–	–
ECM(FA)	○	–	○	–	–	○	○	○	○	○	○	○	○	○	○	–	○	–	–	–	–	–	–	–	–	–	–	–	–	–	–	–
ECM(EJ)	○	○	–	–	–	–	–	–	–	–	–	–	–	–	–	–	–	–	–	–	–	–	–	–	–	–	–	–	–	–	–	–

LAN10584

- When No. 26 is open

NOTE:
This is the same as No. 12 (engine type EJ), No. 23 and No. 29, but it is possible to diagnose using examples of lost communication detection in each module. <Ref. to LAN(diag)-113, EXAMPLE OF DTC DATA NOT RECEIVED, LIST, List of Diagnostic Trouble Code (DTC).>

	(A)	(B)		(E)																											
				1	2	3	4	5	6	7	8	9	10	11	12	13	14	15	16	17	18	19	20	21	22	23	24	25	26	27	28	29
		(C)	(D)	○	○	○	○	○	○	○	○	○	○	○	○	○	○	○	○	○	○	○	○	○	○	–	○	○	–	○	○	–
VDC	○	–	○	○	○	–	–	–	–	–	–	–	–	–	–	–	○	–	–	–	–	–	–	–	–	–	–	–	–	–	–	–
AHL	○	–	○	–	○	–	–	–	–	–	–	–	–	–	–	○	○	–	–	–	–	–	–	–	–	–	–	–	–	–	–	–
KPS	○	–	○	–	–	–	–	–	–	–	–	–	–	–	–	–	○	○	–	–	–	–	–	–	–	–	–	–	–	–	–	–
BIU	○	–	○	–	–	○	–	–	–	–	–	–	–	–	–	–	○	–	–	–	–	–	–	–	–	–	–	–	–	–	–	–
RAB	○	–	○	–	–	○	○	–	–	–	–	–	–	–	–	–	○	–	○	–	–	–	–	–	–	–	–	–	–	–	–	–
RAD	○	–	○	–	–	○	○	○	–	–	–	–	–	–	–	–	○	–	–	○	–	–	–	–	–	–	–	–	–	–	–	–
MFD	○	–	○	–	–	○	○	○	○	–	–	–	–	–	–	–	○	–	–	–	○	–	–	–	–	–	–	–	–	–	–	–
A/C	○	–	○	–	–	○	○	○	○	–	–	–	–	–	–	–	○	–	–	–	–	○	–	–	–	–	–	–	–	–	–	–
DCM	○	–	○	–	–	○	○	○	○	–	–	–	–	–	–	–	○	–	–	–	–	–	○	–	–	–	–	–	–	–	–	–
MET	○	–	○	–	–	○	○	○	○	–	–	–	–	–	–	–	○	–	–	–	–	–	–	○	–	–	–	–	–	–	–	–
DCCD	○	–	○	–	–	○	○	○	○	○	–	–	–	–	–	–	○	–	–	–	–	–	–	–	○	–	–	–	–	–	–	–
STR	○	–	–	–	–	–	–	–	–	–	–	–	–	–	–	–	–	–	–	–	–	–	–	–	–	–	–	–	–	–	–	–
TCM	○	–	○	–	–	○	○	○	○	○	○	–	–	–	–	–	○	–	–	–	–	–	–	–	–	–	○	–	–	–	–	–
A/B	○	–	○	–	–	○	○	○	○	○	○	○	–	–	–	–	○	–	–	–	–	–	–	–	–	–	–	○	–	–	–	–
RST	○	–	–	–	–	–	–	–	–	–	–	–	–	–	–	–	–	–	–	–	–	–	–	–	–	–	–	–	–	–	–	–
CAM	○	–	○	–	–	○	○	○	○	○	○	○	○	–	–	–	○	–	–	–	–	–	–	–	–	–	–	–	–	○	–	–
EPS	○	–	○	–	–	○	○	○	○	○	○	○	○	○	–	–	○	–	–	–	–	–	–	–	–	–	–	–	–	–	○	–
IMP	○	–	–	–	–	–	–	–	–	–	–	–	–	–	–	–	–	–	–	–	–	–	–	–	–	–	–	–	–	–	–	–
ECM(FA)	○	–	○	–	–	○	○	○	○	○	○	○	○	○	○	–	○	–	–	–	–	–	–	–	–	–	–	–	–	–	–	–
ECM(EJ)	○	○	–	–	–	–	–	–	–	–	–	–	–	–	–	–	–	–	–	–	–	–	–	–	–	–	–	–	–	–	–	–

LAN10572

- When No. 27 is open

	(A)	(B)		(E)																												
				1	2	3	4	5	6	7	8	9	10	11	12	13	14	15	16	17	18	19	20	21	22	23	24	25	26	27	28	29
		(C)	(D)	○	○	○	○	○	○	○	○	○	○	○	○	○	○	○	○	○	○	○	○	○	○	–	○	○	–		○	–
VDC	○	–	○	○	○	–	–	–	–	–	–	–	–	–	–	–	○	–	–	–	–	–	–	–	–	–	–	–	–	–	–	–
AHL	○	–	○	–	○	–	–	–	–	–	–	–	–	–	–	○	○	–	–	–	–	–	–	–	–	–	–	–	–	–	–	–
KPS	○	–	○	–	–	–	–	–	–	–	–	–	–	–	–	–	○	○	–	–	–	–	–	–	–	–	–	–	–	–	–	–
BIU	○	–	○	–	–	○	–	–	–	–	–	–	–	–	–	–	○	–	–	–	–	–	–	–	–	–	–	–	–	–	–	–
RAB	○	–	○	–	–	○	○	–	–	–	–	–	–	–	–	–	○	–	○	–	–	–	–	–	–	–	–	–	–	–	–	–
RAD	○	–	○	–	–	○	○	○	–	–	–	–	–	–	–	–	○	–	–	○	–	–	–	–	–	–	–	–	–	–	–	–
MFD	○	–	○	–	–	○	○	○	○	–	–	–	–	–	–	–	○	–	–	–	○	–	–	–	–	–	–	–	–	–	–	–
A/C	○	–	○	–	–	○	○	○	○	–	–	–	–	–	–	–	○	–	–	–	–	○	–	–	–	–	–	–	–	–	–	–
DCM	○	–	○	–	–	○	○	○	○	–	–	–	–	–	–	–	○	–	–	–	–	–	○	–	–	–	–	–	–	–	–	–
MET	○	–	○	–	–	○	○	○	○	–	–	–	–	–	–	–	○	–	–	–	–	–	–	○	–	–	–	–	–	–	–	–
DCCD	○	–	○	–	–	○	○	○	○	○	–	–	–	–	–	–	○	–	–	–	–	–	–	–	○	–	–	–	–	–	–	–
STR	○	–	–	–	–	–	–	–	–	–	–	–	–	–	–	–	–	–	–	–	–	–	–	–	–	–	–	–	–	–	–	–
TCM	○	–	○	–	–	○	○	○	○	○	○	–	–	–	–	–	○	–	–	–	–	–	–	–	–	–	○	–	–	–	–	–
A/B	○	–	○	–	–	○	○	○	○	○	○	○	–	–	–	–	○	–	–	–	–	–	–	–	–	–	–	○	–	–	–	–
RST	○	–	–	–	–	–	–	–	–	–	–	–	–	–	–	–	–	–	–	–	–	–	–	–	–	–	–	–	–	–	–	–
CAM	○	–	X	–	–	○	○	○	○	○	○	○	○	–	–	–	○	–	–	–	–	–	–	–	–	–	–	–	–		–	–
EPS	○	–	○	–	–	○	○	○	○	○	○	○	○	○	–	–	○	–	–	–	–	–	–	–	–	–	–	–	–	–	○	–
IMP	○	–	–	–	–	–	–	–	–	–	–	–	–	–	–	–	–	–	–	–	–	–	–	–	–	–	–	–	–	–	–	–
ECM(FA)	○	–	○	–	–	○	○	○	○	○	○	○	○	○	○	–	○	–	–	–	–	–	–	–	–	–	–	–	–	–	–	–
ECM(EJ)	○	○	–	–	–	–	–	–	–	–	–	–	–	–	–	–	–	–	–	–	–	–	–	–	–	–	–	–	–	–	–	–

LAN10585

- When No. 28 is open

	(A)	(B)		(E)																												
				1	2	3	4	5	6	7	8	9	10	11	12	13	14	15	16	17	18	19	20	21	22	23	24	25	26	27	28	29
		(C)	(D)	○	○	○	○	○	○	○	○	○	○	○	○	○	○	○	○	○	○	○	○	○	○	–	○	○	–	○		–
VDC	○	–	○	○	○	–	–	–	–	–	–	–	–	–	–	–	○	–	–	–	–	–	–	–	–	–	–	–	–	–	–	–
AHL	○	–	○	–	○	–	–	–	–	–	–	–	–	–	–	○	○	–	–	–	–	–	–	–	–	–	–	–	–	–	–	–
KPS	○	–	○	–	–	–	–	–	–	–	–	–	–	–	–	–	○	○	–	–	–	–	–	–	–	–	–	–	–	–	–	–
BIU	○	–	○	–	–	○	–	–	–	–	–	–	–	–	–	–	○	–	–	–	–	–	–	–	–	–	–	–	–	–	–	–
RAB	○	–	○	–	–	○	○	–	–	–	–	–	–	–	–	–	○	–	○	–	–	–	–	–	–	–	–	–	–	–	–	–
RAD	○	–	○	–	–	○	○	○	–	–	–	–	–	–	–	–	○	–	–	○	–	–	–	–	–	–	–	–	–	–	–	–
MFD	○	–	○	–	–	○	○	○	○	–	–	–	–	–	–	–	○	–	–	–	○	–	–	–	–	–	–	–	–	–	–	–
A/C	○	–	○	–	–	○	○	○	○	–	–	–	–	–	–	–	○	–	–	–	–	○	–	–	–	–	–	–	–	–	–	–
DCM	○	–	○	–	–	○	○	○	○	–	–	–	–	–	–	–	○	–	–	–	–	–	○	–	–	–	–	–	–	–	–	–
MET	○	–	○	–	–	○	○	○	○	–	–	–	–	–	–	–	○	–	–	–	–	–	–	○	–	–	–	–	–	–	–	–
DCCD	○	–	○	–	–	○	○	○	○	○	–	–	–	–	–	–	○	–	–	–	–	–	–	–	○	–	–	–	–	–	–	–
STR	○	–	–	–	–	–	–	–	–	–	–	–	–	–	–	–	–	–	–	–	–	–	–	–	–	–	–	–	–	–	–	–
TCM	○	–	○	–	–	○	○	○	○	○	○	–	–	–	–	–	○	–	–	–	–	–	–	–	–	–	○	–	–	–	–	–
A/B	○	–	○	–	–	○	○	○	○	○	○	○	–	–	–	–	○	–	–	–	–	–	–	–	–	–	–	○	–	–	–	–
RST	○	–	–	–	–	–	–	–	–	–	–	–	–	–	–	–	–	–	–	–	–	–	–	–	–	–	–	–	–	–	–	–
CAM	○	–	○	–	–	○	○	○	○	○	○	○	○	–	–	–	○	–	–	–	–	–	–	–	–	–	–	–	–	○	–	–
EPS	○	–	X	–	–	○	○	○	○	○	○	○	○	○	–	–	○	–	–	–	–	–	–	–	–	–	–	–	–	–		–
IMP	○	–	–	–	–	–	–	–	–	–	–	–	–	–	–	–	–	–	–	–	–	–	–	–	–	–	–	–	–	–	–	–
ECM(FA)	○	–	○	–	–	○	○	○	○	○	○	○	○	○	○	–	○	–	–	–	–	–	–	–	–	–	–	–	–	–	–	–
ECM(EJ)	○	○	–	–	–	–	–	–	–	–	–	–	–	–	–	–	–	–	–	–	–	–	–	–	–	–	–	–	–	–	–	–

LAN10586

- When No. 29 is open

NOTE:
This is the same as No. 12 (engine type EJ), No. 23 and No. 26, but it is possible to diagnose using examples of lost communication detection in each module. <Ref. to LAN(diag)-113, EXAMPLE OF DTC DATA NOT RECEIVED, LIST, List of Diagnostic Trouble Code (DTC).>

	(A)	(B)		(E)																												
				1	2	3	4	5	6	7	8	9	10	11	12	13	14	15	16	17	18	19	20	21	22	23	24	25	26	27	28	29
		(C)	(D)	○	○	○	○	○	○	○	○	○	○	○	○	○	○	○	○	○	○	○	○	○	○	–	○	○	–	○	○	–
VDC	○	–	○	○	○	–	–	–	–	–	–	–	–	–	–	–	○	–	–	–	–	–	–	–	–	–	–	–	–	–	–	–
AHL	○	–	○	–	○	–	–	–	–	–	–	–	–	–	–	○	○	–	–	–	–	–	–	–	–	–	–	–	–	–	–	–
KPS	○	–	○	–	–	–	–	–	–	–	–	–	–	–	–	–	○	○	–	–	–	–	–	–	–	–	–	–	–	–	–	–
BIU	○	–	○	–	–	○	–	–	–	–	–	–	–	–	–	–	○	–	–	–	–	–	–	–	–	–	–	–	–	–	–	–
RAB	○	–	○	–	–	○	○	–	–	–	–	–	–	–	–	–	○	–	○	–	–	–	–	–	–	–	–	–	–	–	–	–
RAD	○	–	○	–	–	○	○	○	–	–	–	–	–	–	–	–	○	–	–	○	–	–	–	–	–	–	–	–	–	–	–	–
MFD	○	–	○	–	–	○	○	○	○	–	–	–	–	–	–	–	○	–	–	–	○	–	–	–	–	–	–	–	–	–	–	–
A/C	○	–	○	–	–	○	○	○	○	–	–	–	–	–	–	–	○	–	–	–	–	○	–	–	–	–	–	–	–	–	–	–
DCM	○	–	○	–	–	○	○	○	○	–	–	–	–	–	–	–	○	–	–	–	–	–	○	–	–	–	–	–	–	–	–	–
MET	○	–	○	–	–	○	○	○	○	–	–	–	–	–	–	–	○	–	–	–	–	–	–	○	–	–	–	–	–	–	–	–
DCCD	○	–	○	–	–	○	○	○	○	○	–	–	–	–	–	–	○	–	–	–	–	–	–	–	○	–	–	–	–	–	–	–
STR	○	–	–	–	–	–	–	–	–	–	–	–	–	–	–	–	–	–	–	–	–	–	–	–	–	–	–	–	–	–	–	–
TCM	○	–	○	–	–	○	○	○	○	○	○	–	–	–	–	–	○	–	–	–	–	–	–	–	–	–	○	–	–	–	–	–
A/B	○	–	○	–	–	○	○	○	○	○	○	○	–	–	–	–	○	–	–	–	–	–	–	–	–	–	–	○	–	–	–	–
RST	○	–	–	–	–	–	–	–	–	–	–	–	–	–	–	–	–	–	–	–	–	–	–	–	–	–	–	–	–	–	–	–
CAM	○	–	○	–	–	○	○	○	○	○	○	○	○	–	–	–	○	–	–	–	–	–	–	–	–	–	–	–	–	○	–	–
EPS	○	–	○	–	–	○	○	○	○	○	○	○	○	○	–	–	○	–	–	–	–	–	–	–	–	–	–	–	–	–	○	–
IMP	○	–	–	–	–	–	–	–	–	–	–	–	–	–	–	–	–	–	–	–	–	–	–	–	–	–	–	–	–	–	–	–
ECM(FA)	○	–	○	–	–	○	○	○	○	○	○	○	○	○	○	–	○	–	–	–	–	–	–	–	–	–	–	–	–	–	–	–
ECM(EJ)	○	○	–	–	–	–	–	–	–	–	–	–	–	–	–	–	–	–	–	–	–	–	–	–	–	–	–	–	–	–	–	–

LAN10572

7. Read Diagnostic Trouble Code (DTC)

A: OPERATION

1) On «Start» display, select «Diagnosis».
2) On «Vehicle selection» display, input the target vehicle information and select «Confirmed».
3) On «Main Menu» display, select «All diagnostic codes».

NOTE:
- For detailed operation procedures, refer to “Application help”.
- For details concerning DTC, refer to List of Diagnostic Trouble Code (DTC). <Ref. to LAN(diag)-109, List of Diagnostic Trouble Code (DTC).>

8. Clear Memory Mode

A: OPERATION

1) On «Start» display, select «Diagnosis».
2) On «Vehicle selection» display, input the target vehicle information and select «Confirmed».
3) On «Main Menu» display, select «All diagnostic codes».
On «All diagnostic codes» display, select «Clear Memory».

NOTE:
For detailed operation procedures, refer to “Application help”.

9. CAN Communication Circuit Check

A: PROCEDURE

NOTE:
- When measuring the resistance of CAN communication circuit, measure it in sleep status.

To enter sleep status
  – With ignition switch OFF and key or switch operation stopped, keep the doors, trunk, and rear gate all closed for one minute or more.
  – On models with keyless access function, keep the access key 2 m or more away from the vehicle.

- When the bus line is measured, combined resistance of the end resistance (120 Ω) in ECM and the end resistance (120 Ω) in VDC CM can be measured. The combined resistance is supposed to be approximately 53 — 61 Ω with the stabilizing circuit included. If the measured resistance value becomes 52 Ω or less, main wiring harness or related lines may be shorted. Or, the combined resistance may have changed because of a resistance other than the end resistance created on the circuit. If the measured value is 62 Ω or more, there may be a malfunction such as open circuit in one of the end resistances, in the stabilizing circuit, or in the main wiring harness.

Also, even when the resistance value falls within approx. 53 — 61 Ω, related lines may be open if an error of communication for initializing or a CAN system U-code has occurred. (The resistance cannot be between approx. 53 — 61 Ω if the main wiring harness is open.)

WIRING DIAGRAM:

- Engine electrical system <Ref. to WI-154, WIRING DIAGRAM, Engine Electrical System.>
- CAN communication system <Ref. to WI-113, WIRING DIAGRAM, CAN Communication System.>

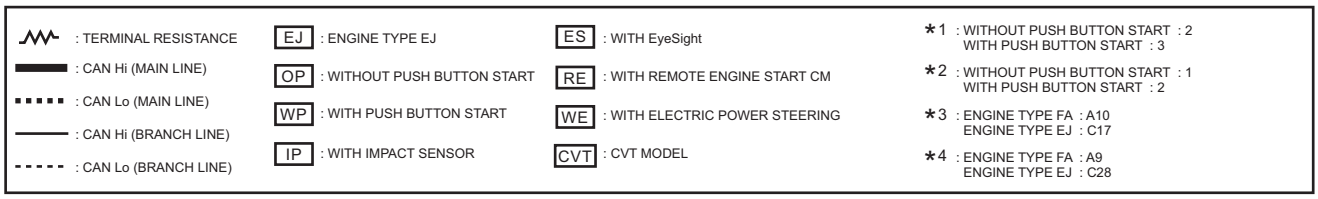

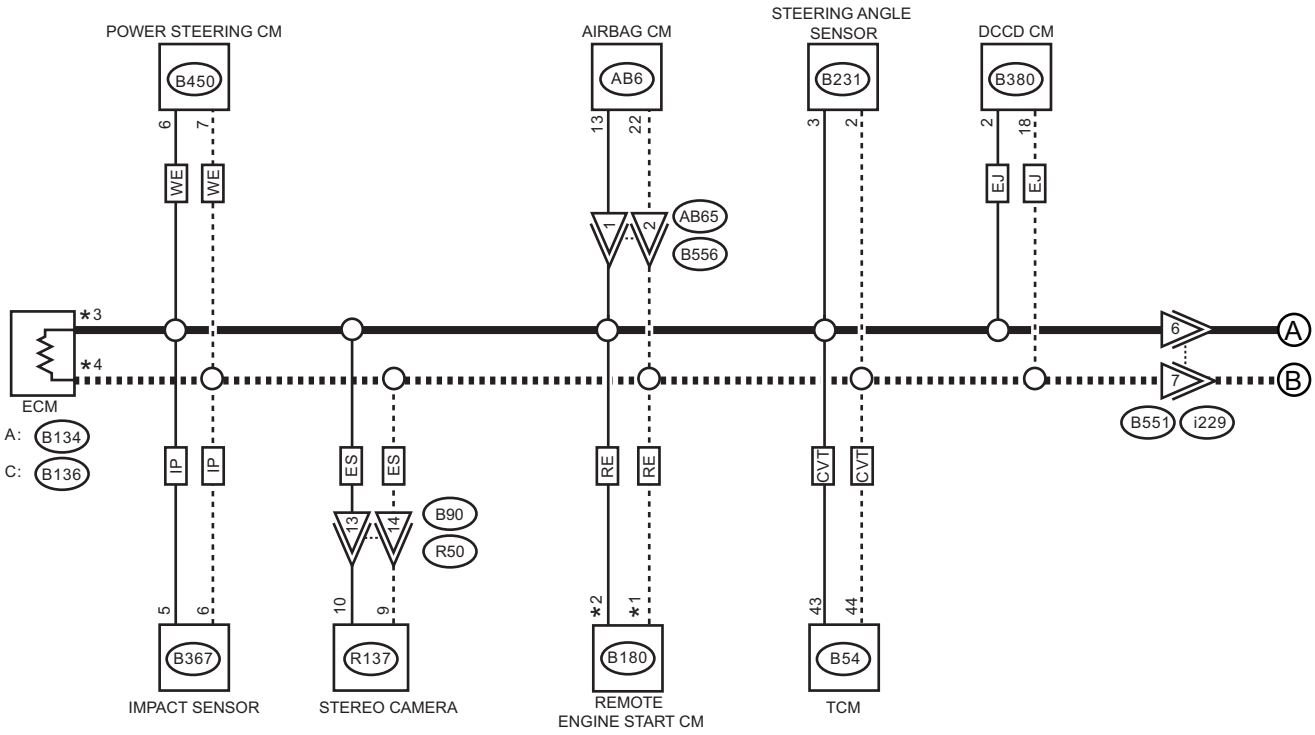

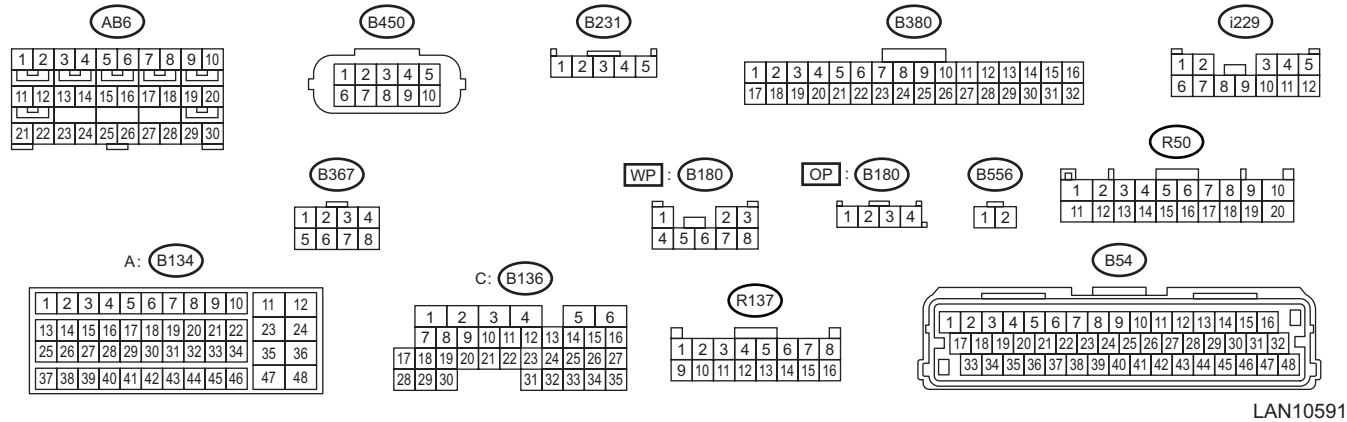

LAN10591

CAN Communication Circuit Check

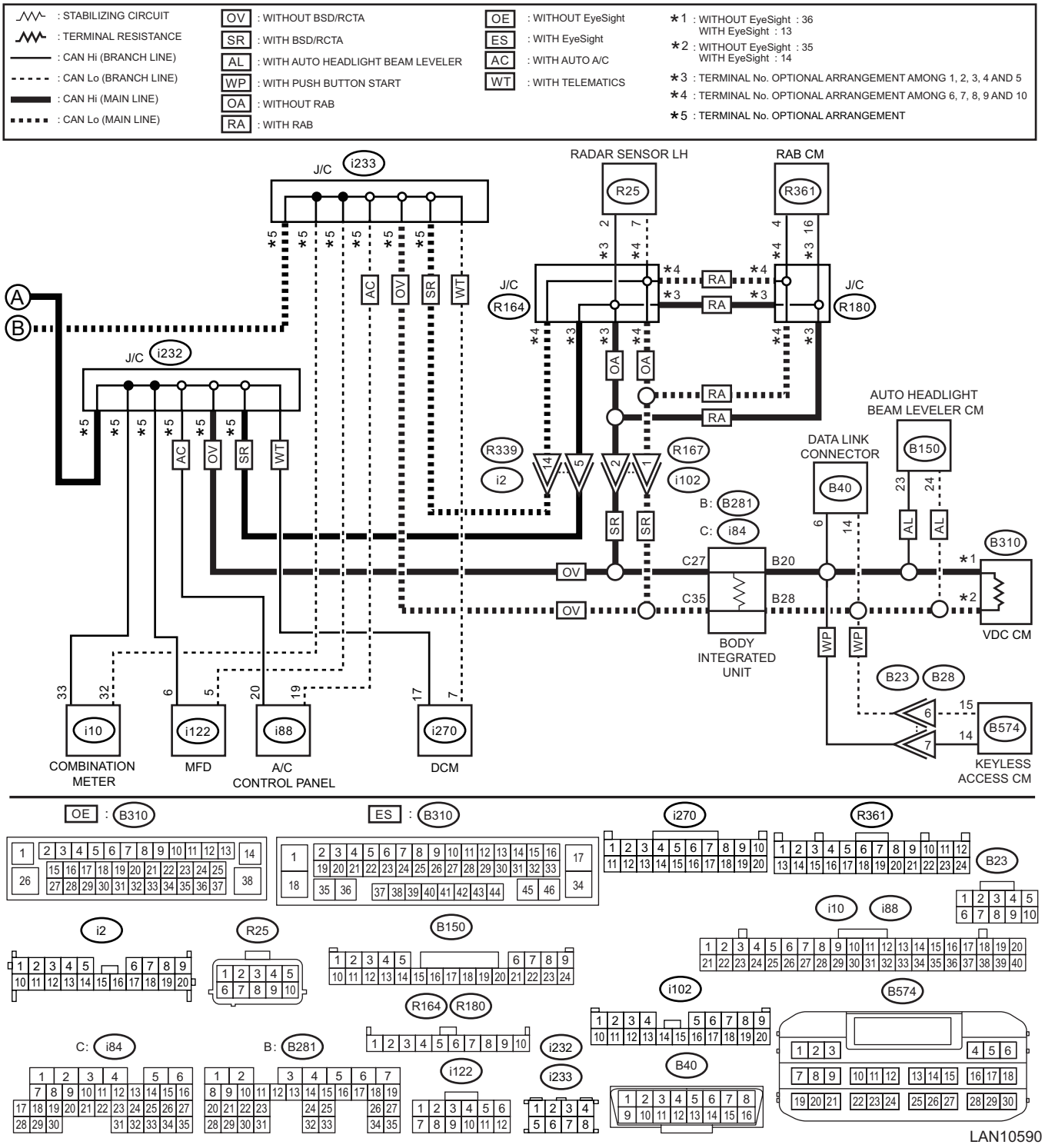

Step		Check	Yes	No
1	**CHECK BASIC DIAGNOSTIC PROCEDURE.** Check that the basic diagnosis has been performed up to step 8. NOTE: Possible defective parts can be narrowed easily by inspection using Subaru Select Monitor before performing “CHECK CAN COMMUNICATION CIRCUIT” using a tester.	Was the basic diagnostic procedure performed?	Go to step **2**.	Perform the basic diagnostic procedure. <Ref. to LAN(diag)-2, PROCEDURE, Basic Diagnostic Procedure.>

	Step	Check	Yes	No
2	**CHECK FROM DATA LINK CONNECTOR.** Using the tester, measure the resistance between terminals. ***Connector & terminal*** ***(B40) No. 6 — Chassis ground:*** ***(B40) No. 14 — Chassis ground:***	Is the resistance less than 10 Ω?	Check for ground short. <Ref. to LAN(diag)-44, GROUND SHORT INSPECTION, INSPECTION, CAN Communication Circuit Check.>	Go to step **3**.
3	**CHECK FROM DATA LINK CONNECTOR.** 1) Turn the ignition switch to ON. 2) Using the tester, measure the voltage between terminals. ***Connector & terminal*** ***(B40) No. 6 — Chassis ground:*** ***(B40) No. 14 — Chassis ground:***	Is the voltage less than 5 V?	Go to step **4**.	Check for battery short. <Ref. to LAN(diag)-47, BATTERY SHORT INSPECTION, INSPECTION, CAN Communication Circuit Check.>
4	**CHECK FROM DATA LINK CONNECTOR.** 1) Turn the ignition switch to OFF. 2) Using the tester, measure the resistance between terminals. ***Connector & terminal*** ***(B40) No. 6 — No. 14:***	Is the resistance 52 Ω or less?	Perform the inspection for resistance of 52 Ω or less. <Ref. to LAN(diag)-53, 52 Ω OR LESS, INSPECTION, CAN Communication Circuit Check.>	Go to step **5**.
5	**CHECK FROM DATA LINK CONNECTOR.** Using the tester, measure the resistance between terminals. ***Connector & terminal*** ***(B40) No. 6 — No. 14:***	Is the resistance 62 Ω or more?	Perform the inspection for resistance of 62 Ω or more. <Ref. to LAN(diag)-57, 62 Ω OR MORE, INSPECTION, CAN Communication Circuit Check.>	If the display of CAN system U-code disappears from the current malfunction, the CAN network is currently normal. If the U-code has detected as current malfunction, related lines may be open. Perform the inspection for the related line corresponding to the detected DTC. <Ref. to LAN(diag)-42, LIST, CAN Communication Circuit Check.>

B: LIST

Resistance value between CAN Hi and Lo	Contents of inspection	Remarks
Ground short inspection	<Ref. to LAN(diag)-44, GROUND SHORT INSPECTION, INSPECTION, CAN Communication Circuit Check.>	Shorted to ground in the communication circuit or control module.
Battery short inspection	<Ref. to LAN(diag)-47, BATTERY SHORT INSPECTION, INSPECTION, CAN Communication Circuit Check.>	Shorted to battery power supply in the communication circuit or control module.
53 — 61 Ω	<Ref. to LAN(diag)-50, 53 — 61 Ω, INSPECTION, CAN Communication Circuit Check.>	Combined resistance of end resistance does not have malfunction; short to ground or +B short of the CAN communication circuit is possible, however.
52 Ω or less	<Ref. to LAN(diag)-53, 52 Ω OR LESS, INSPECTION, CAN Communication Circuit Check.>	Resistance is lower than combined resistance of end resistance. Short to CAN Hi and CAN Lo on the CAN communication circuit is possible.
62 Ω or more	<Ref. to LAN(diag)-57, 62 Ω OR MORE, INSPECTION, CAN Communication Circuit Check.>	Resistance is higher than combined resistance of end resistance. Open circuit of CAN communication circuit is possible.
Related lines 53 — 61 Ω (TCM)	<Ref. to LAN(diag)-61, RELATED LINES 53 — 61 Ω (TCM), INSPECTION, CAN Communication Circuit Check.>	No TCM data is received. Perform inspection when faulty is detected.
Related lines 53 — 61 Ω (steering angle sensor)	<Ref. to LAN(diag)-64, RELATED LINES 53 — 61 Ω (STEERING ANGLE SENSOR), INSPECTION, CAN Communication Circuit Check.>	No steering angle sensor data is received. Perform inspection when faulty is detected.
Related line 53 — 61 Ω (A/C control panel)	<Ref. to LAN(diag)-67, RELATED LINE 53 — 61 Ω (A/C CONTROL PANEL), INSPECTION, CAN Communication Circuit Check.>	No A/C data is received. Perform inspection when faulty is detected.
Related lines 53 — 61 Ω (power steering CM)	<Ref. to LAN(diag)-70, RELATED LINES 53 — 61 Ω (POWER STEERING CM), INSPECTION, CAN Communication Circuit Check.>	No electric power steering data is received. Perform inspection when faulty is detected.
Related lines 53 — 61 Ω (combination meter)	<Ref. to LAN(diag)-73, RELATED LINES 53 — 61 Ω (COMBINATION METER), INSPECTION, CAN Communication Circuit Check.>	No meter data is received. Perform inspection when faulty is detected.
Related lines 53 — 61 Ω (MFD)	<Ref. to LAN(diag)-76, RELATED LINES 53 — 61 Ω (MFD), INSPECTION, CAN Communication Circuit Check.>	No MFD data is received. Perform inspection when faulty is detected.
Related lines 53 — 61 Ω (airbags)	<Ref. to LAN(diag)-79, RELATED LINES 53 — 61 Ω (AIRBAG CM SYSTEM), INSPECTION, CAN Communication Circuit Check.>	No airbag data is received. Perform inspection when faulty is detected.
Related lines 53 — 61 Ω (keyless access system)	<Ref. to LAN(diag)-82, RELATED LINES 53 — 61 Ω (KEYLESS ACCESS SYSTEM), INSPECTION, CAN Communication Circuit Check.>	No keyless access CM data is received. Perform inspection when faulty is detected.
Related lines 53 — 61 Ω (impact sensor system)	<Ref. to LAN(diag)-91, RELATED LINES 53 — 61 Ω (IMPACT SENSOR SYSTEM), INSPECTION, CAN Communication Circuit Check.>	Perform inspection when impact sensor malfunction is detected.
Related lines 53 — 61 Ω (DCCD)	<Ref. to LAN(diag)-94, RELATED LINES 53 — 61 Ω (DCCD), INSPECTION, CAN Communication Circuit Check.>	No DCCD data is received. Perform inspection when faulty is detected.
Related lines 53 — 61 Ω (headlight beam leveler)	<Ref. to LAN(diag)-85, RELATED LINES 53 — 61 Ω (HEADLIGHT BEAM LEVELER), INSPECTION, CAN Communication Circuit Check.>	No headlight beam leveler data is received. Perform inspection when faulty is detected.
Related lines 53 — 61 Ω (remote engine starter)	<Ref. to LAN(diag)-88, RELATED LINES 53 — 61 Ω (REMOTE ENGINE STARTER), INSPECTION, CAN Communication Circuit Check.>	Perform inspection when the remote engine starter does not operate, while the mobile key side operates normally.

Resistance value between CAN Hi and Lo	Contents of inspection	Remarks
Related lines 53 — 61 Ω (BSD/RCTA)	<Ref. to LAN(diag)-97, RELATED LINES 53 — 61 Ω (BSD/RCTA), INSPECTION, CAN Communication Circuit Check.>	No BSD/RCTA data is received. Perform inspection when faulty is detected.
Related lines 53 — 61 Ω (stereo camera)	<Ref. to LAN(diag)-100, RELATED LINES 53 — 61 Ω (STEREO CAMERA), INSPECTION, CAN Communication Circuit Check.>	No stereo camera data is received. Perform inspection when faulty is detected.
Related lines 53 — 61 Ω (telematics)	<Ref. to LAN(diag)-103, RELATED LINES 53 — 61 Ω (TELEMATICS), INSPECTION, CAN Communication Circuit Check.>	No telematics data is received. Perform inspection when faulty is detected.
Related lines 53 — 61 Ω (RAB)	<Ref. to LAN(diag)-106, RELATED LINES 53 — 61 Ω (RAB), INSPECTION, CAN Communication Circuit Check.>	Perform inspection when no RAB data is received, or invalid data is detected.

C: INSPECTION

1. GROUND SHORT INSPECTION

WIRING DIAGRAM:

CAN communication system <Ref. to WI-113, WIRING DIAGRAM, CAN Communication System.>

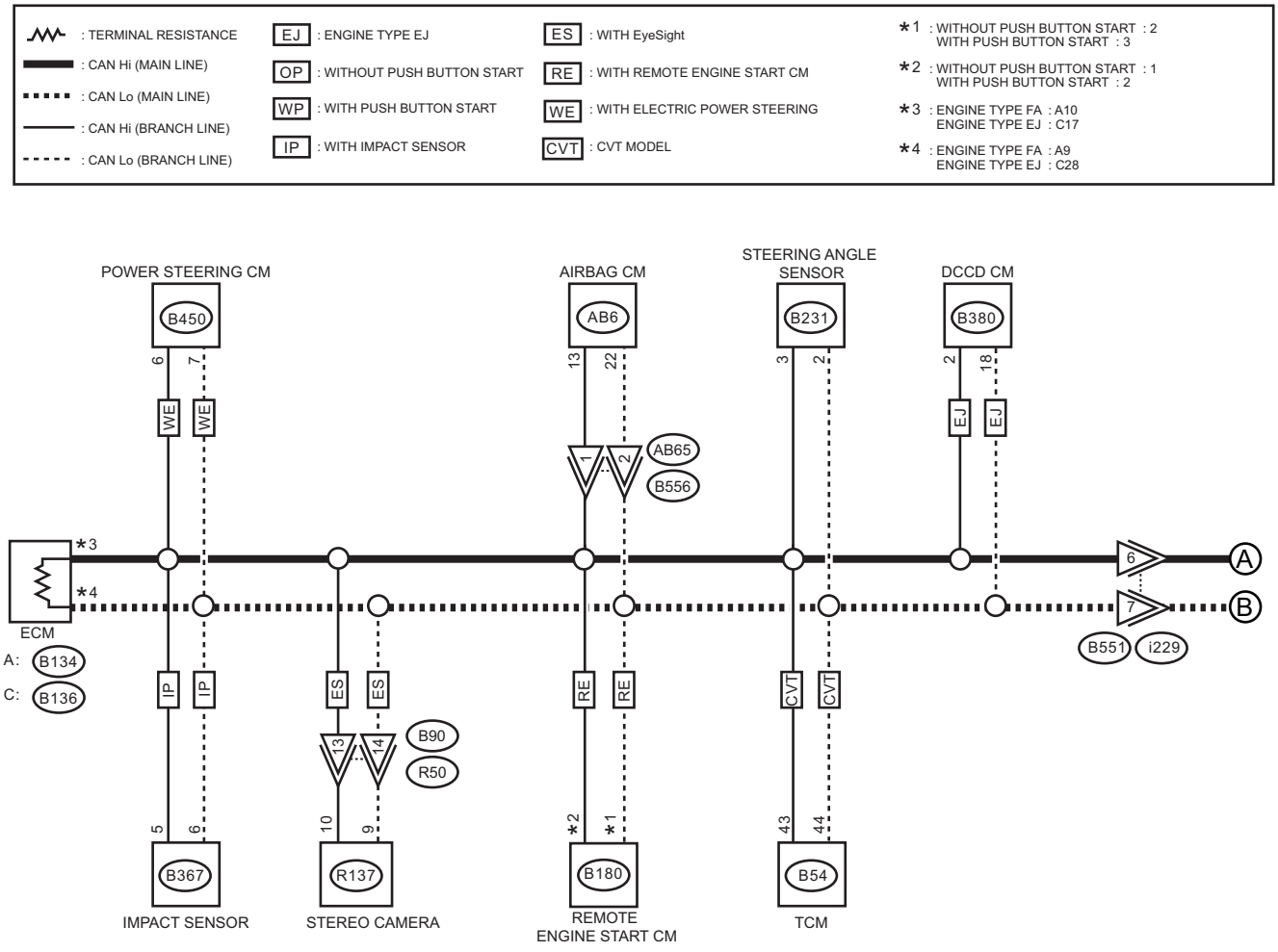

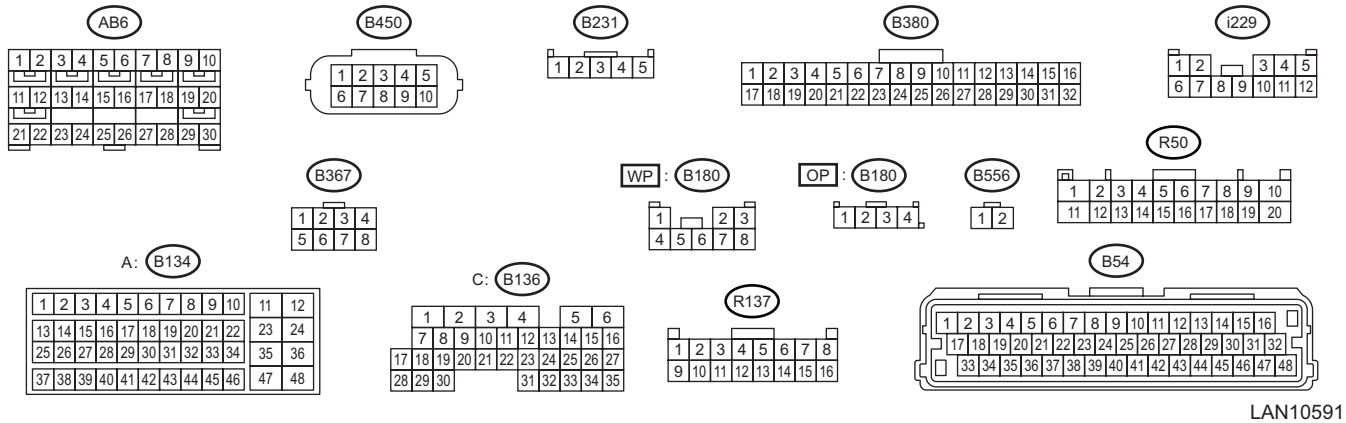

LAN10591

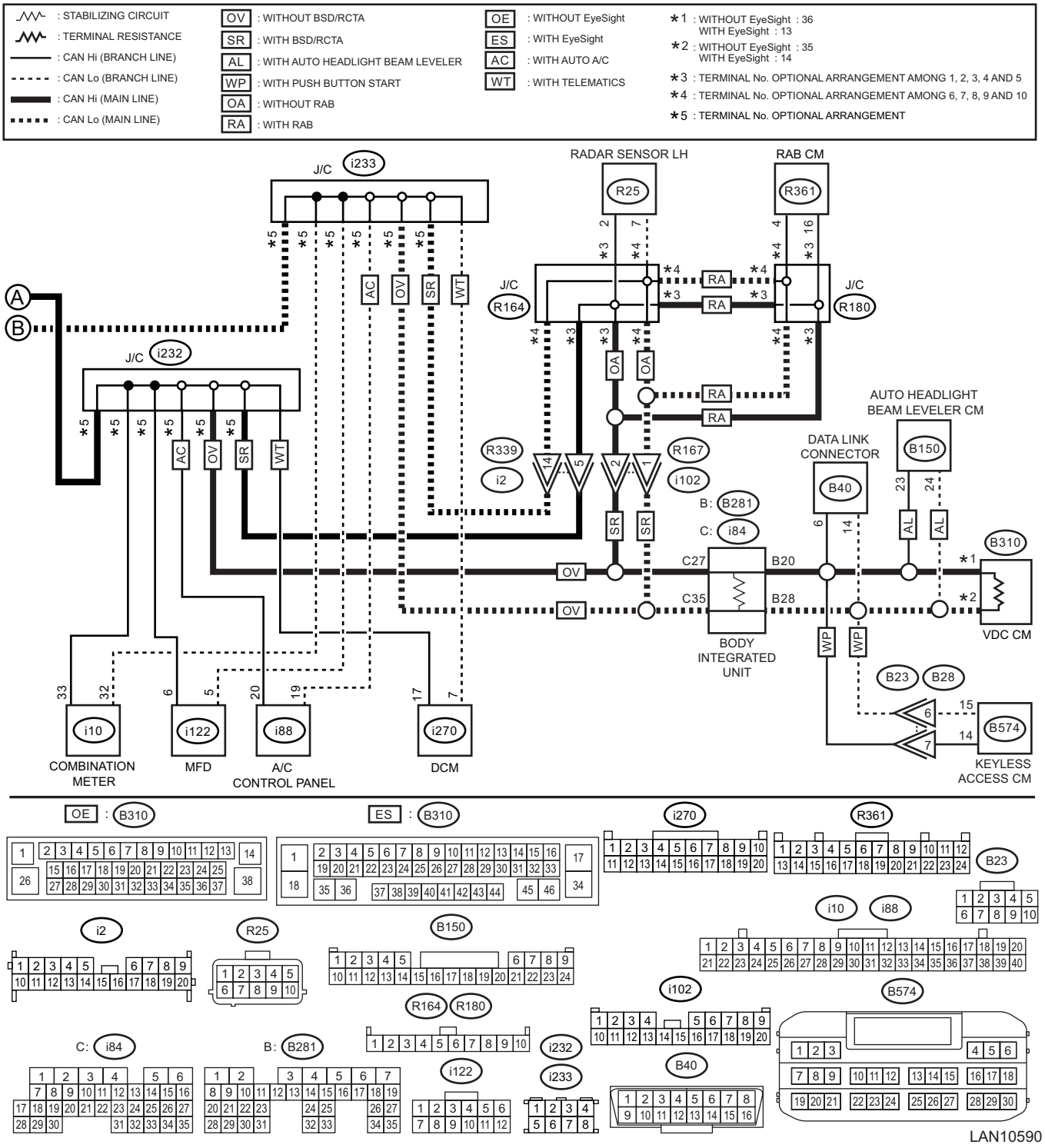

NOTE:
Main wiring harness or related lines may be shorted to ground, or shorted to ground in one of the control modules.

	Step	Check	Yes	No
1	**CHECK BETWEEN RELATED LINES AND MAIN WIRING HARNESS.** Using the tester, measure the resistance between terminals. ***Connector & terminal*** ***(B40) No. 6 — Chassis ground:*** ***(B40) No. 14 — Chassis ground:***	Is the resistance less than 10 Ω?	Go to step **2**.	Currently, it is normal.
2	**CHECK CONTROL MODULE.** With the tester connected, disconnect control module. NOTE: Disconnect the body integrated unit at the end. ***Connector & terminal*** ***(B40) No. 6 — Chassis ground:*** ***(B40) No. 14 — Chassis ground:***	Did the resistance change to 10 Ω or more?	Replace the control module whose resistance has changed. When the value changed at disconnecting the body integrated unit, Go to step **3**.	Repair or replace the short circuit of the main wiring harness and related lines between body integrated unit and VDC CM.
3	**CHECK BETWEEN MAIN WIRING HARNESSES.** Using the tester, measure the resistance between terminals. ***Connector & terminal*** ***(i84) No. 27 — Chassis ground:*** ***(i84) No. 35 — Chassis ground:***	Is the resistance less than 10 Ω?	Repair or replace the short circuit of the main wiring harness and related lines between ECM and body integrated unit.	Replace the body integrated unit. <Ref. to SL-81, Body Integrated Unit.>

2. BATTERY SHORT INSPECTION

WIRING DIAGRAM:

CAN communication system <Ref. to WI-113, WIRING DIAGRAM, CAN Communication System.>

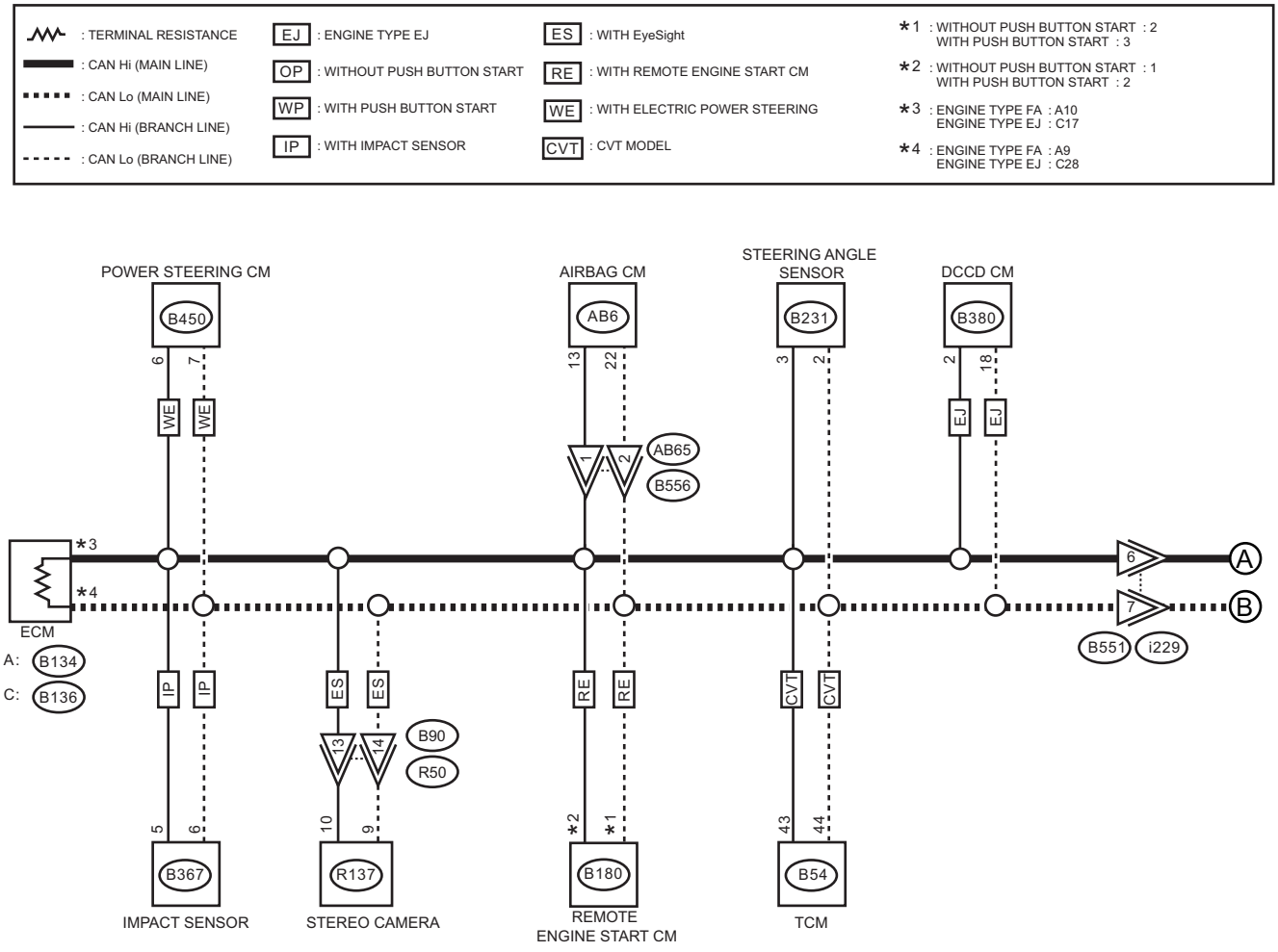

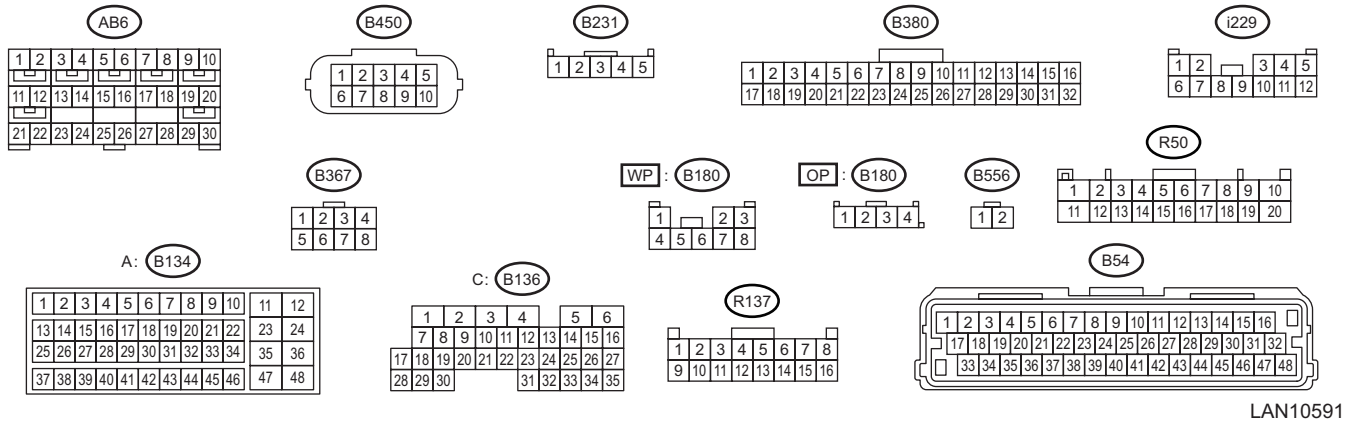

LAN10591

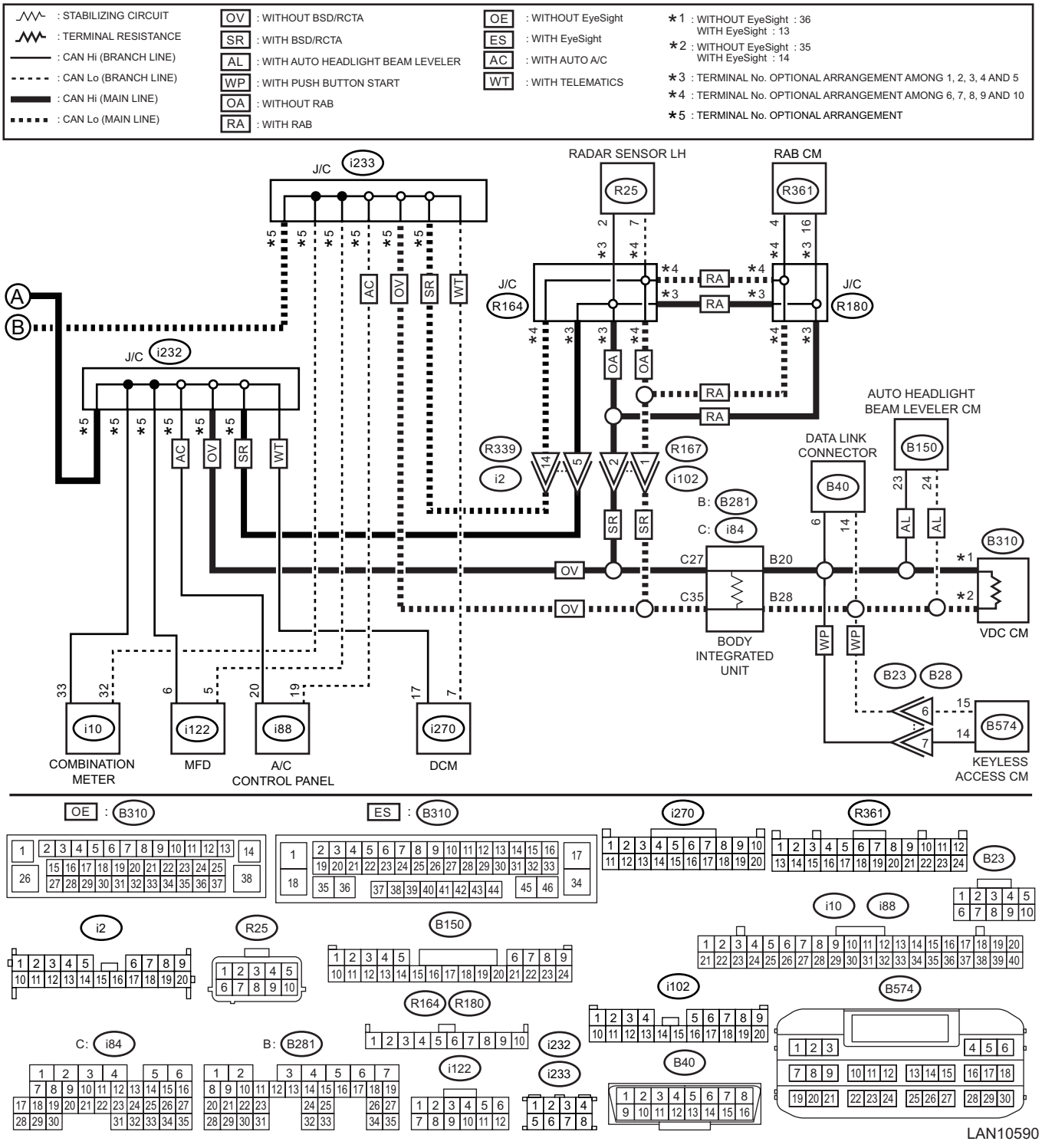

NOTE:
Main wiring harness or related lines may be shorted to battery circuit, or shorted to battery circuit in one of the control modules.

	Step	Check	Yes	No
1	**CHECK BETWEEN RELATED LINES AND MAIN WIRING HARNESS.** 1) Turn the ignition switch to ON. 2) Using the tester, measure the voltage between terminals. ***Connector & terminal*** ***(B40) No. 6 — Chassis ground:*** ***(B40) No. 14 — Chassis ground:***	Is the voltage less than 5 V?	Currently, it is normal.	Go to step **2**.
2	**CHECK CONTROL MODULE.** With the tester connected, disconnect control module. NOTE: Disconnect the body integrated unit at the end. ***Connector & terminal*** ***(B40) No. 6 — Chassis ground:*** ***(B40) No. 14 — Chassis ground:***	Did the voltage change less than 5 V?	Replace the control module whose voltage has changed. When the value changed at disconnecting the body integrated unit, Go to step **3**.	Repair or replace the short circuit of the harness between body integrated unit and VDC CM.
3	**CHECK BETWEEN MAIN WIRING HARNESSES.** Using the tester, measure the voltage between terminals. ***Connector & terminal*** ***(i84) No. 27 — Chassis ground:*** ***(i84) No. 35 — Chassis ground:***	Is the voltage less than 5 V?	Replace the body integrated unit. <Ref. to SL-81, Body Integrated Unit.>	Repair or replace the short circuit of the harness between ECM and body integrated unit.

3. 53 — 61 Ω

WIRING DIAGRAM:

CAN communication system <Ref. to WI-113, WIRING DIAGRAM, CAN Communication System.>

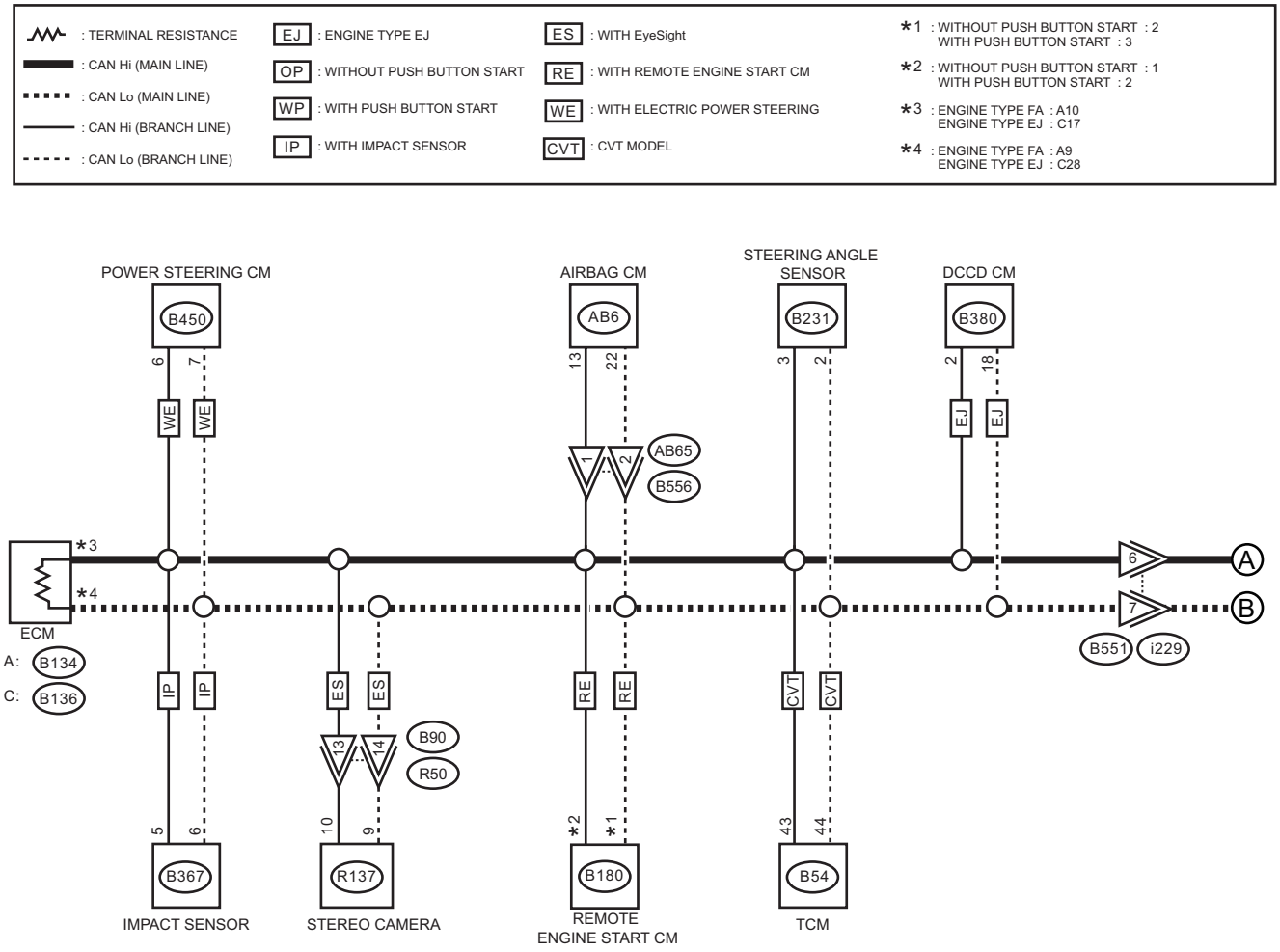

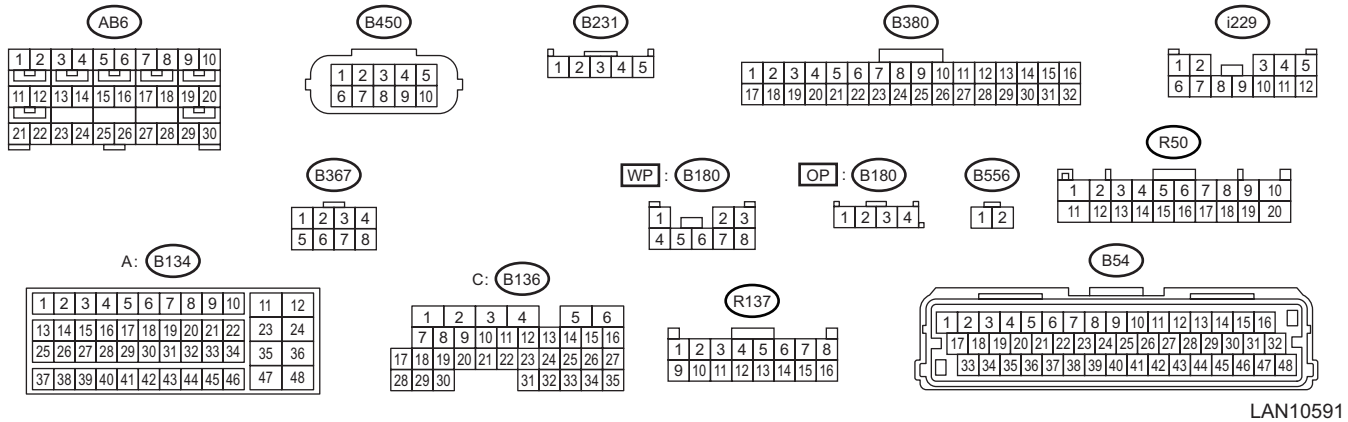

LAN10591

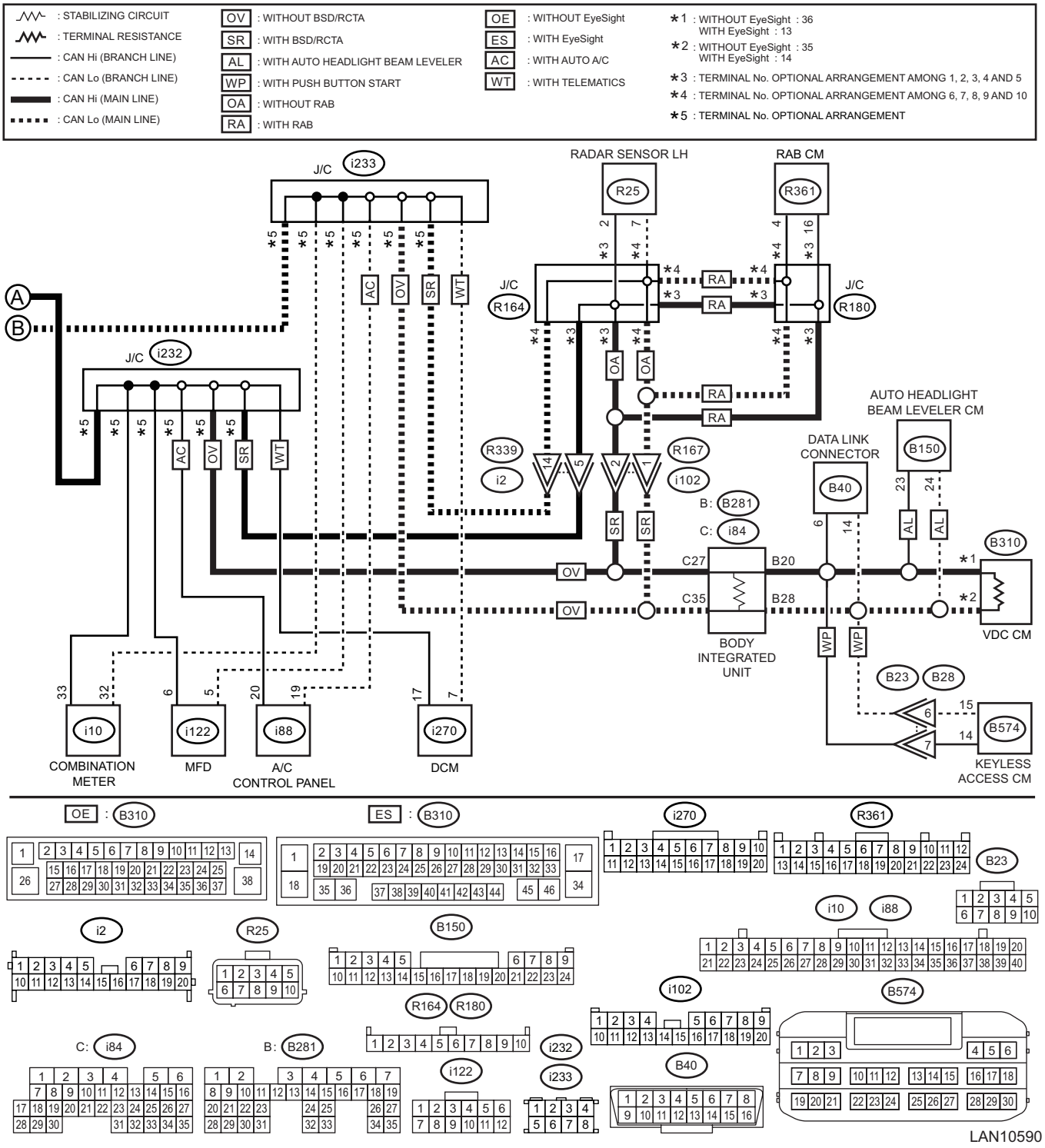

NOTE:
When the measured resistance value is 53 — 61 Ω, main wiring harness or related lines may be shorted to ground, or shorted to power supply line, or related line may be open.

	Step	Check	Yes	No
1	**CHECK BETWEEN RELATED LINES AND MAIN WIRING HARNESS.** Using the tester, measure the resistance between terminals. ***Connector & terminal*** ***(B40) No. 6 — Chassis ground:*** ***(B40) No. 14 — Chassis ground:***	Is the resistance less than 10 Ω?	Go to step **2**.	Go to step **4**.
2	**CHECK CONTROL MODULE.** With the tester connected, disconnect control module. NOTE: Disconnect the body integrated unit at the end. ***Connector & terminal*** ***(B40) No. 6 — Chassis ground:*** ***(B40) No. 14 — Chassis ground:***	Did the resistance change to 10 Ω or more?	Replace the control module whose resistance has changed. When the value changed at disconnecting the body integrated unit, Go to step **3**.	Repair or replace the short circuit of the harness between body integrated unit and VDC CM.
3	**CHECK MAIN WIRING HARNESS AND RELATED LINES.** Using the tester, measure the resistance between terminals. ***Connector & terminal*** ***(i84) No. 27 — Chassis ground:*** ***(i84) No. 35 — Chassis ground:***	Is the resistance less than 10 Ω?	Repair or replace the short circuit of the harness between ECM and body integrated unit.	Replace the body integrated unit. <Ref. to SL-81, Body Integrated Unit.>
4	**CHECK BETWEEN RELATED LINES AND MAIN WIRING HARNESS.** 1) Turn the ignition switch to ON. 2) Using the tester, measure the voltage between terminals. ***Connector & terminal*** ***(B40) No. 6 — Chassis ground:*** ***(B40) No. 14 — Chassis ground:***	Is the voltage less than 5 V?	CAN communication circuit is normal.	Go to step **5**.
5	**CHECK CONTROL MODULE.** With the tester connected, disconnect control module. NOTE: Disconnect the body integrated unit at the end. ***Connector & terminal*** ***(B40) No. 6 — Chassis ground:*** ***(B40) No. 14 — Chassis ground:***	Did the voltage change less than 5 V?	Replace the control module whose voltage has changed. When the value changed at disconnecting the body integrated unit, Go to step **6**.	Repair or replace the short circuit of the harness between body integrated unit and VDC CM.
6	**CHECK HARNESS.** Using a tester, measure the voltage between terminals and chassis ground. ***Connector & terminal*** ***(i84) No. 27 — Chassis ground:*** ***(i84) No. 35 — Chassis ground:***	Is the voltage less than 5 V?	Replace the body integrated unit. <Ref. to SL-81, Body Integrated Unit.>	Repair or replace the short circuit of the harness between ECM and body integrated unit.

4. 52 Ω OR LESS

WIRING DIAGRAM:

CAN communication system <Ref. to WI-113, WIRING DIAGRAM, CAN Communication System.>

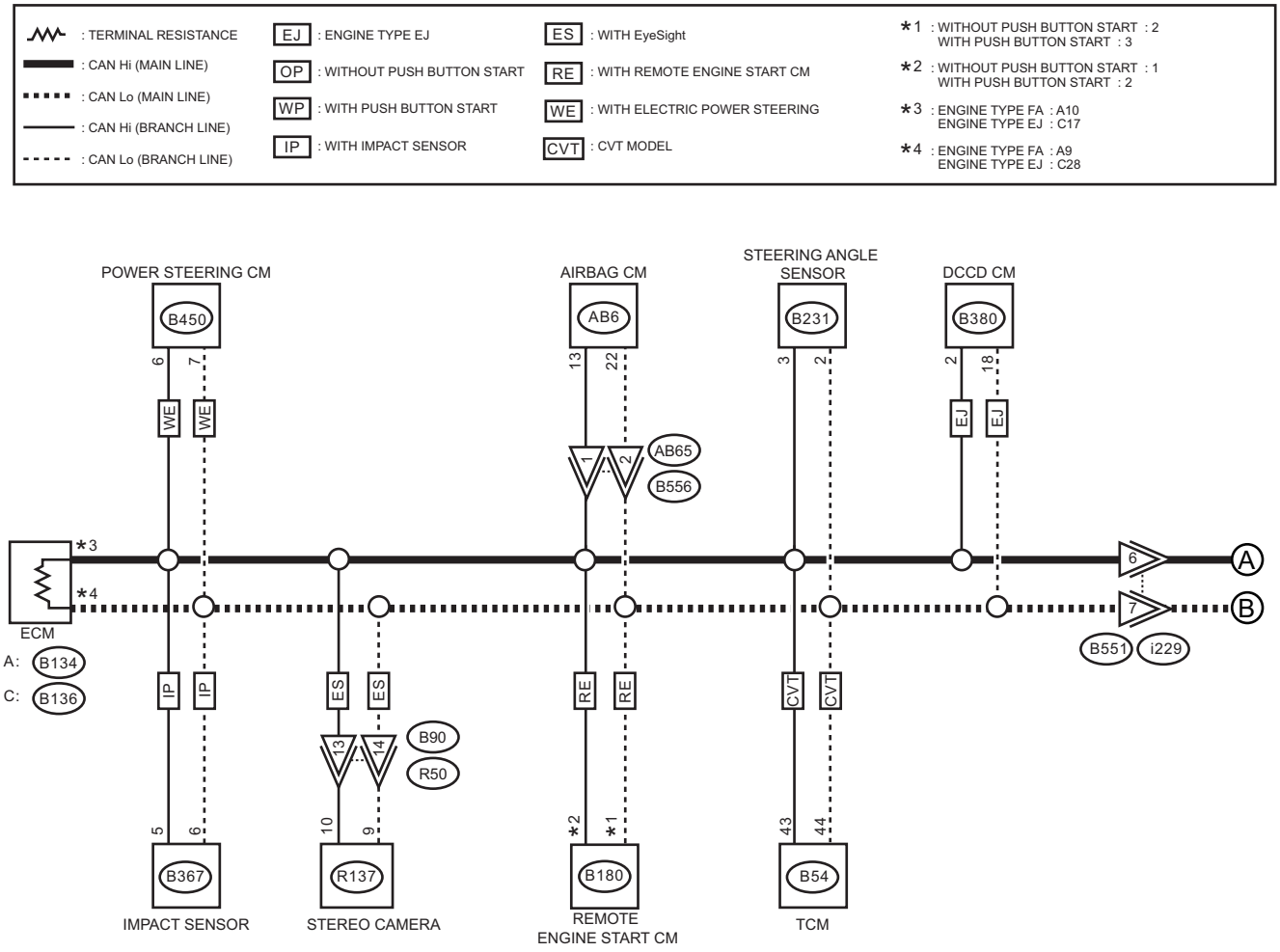

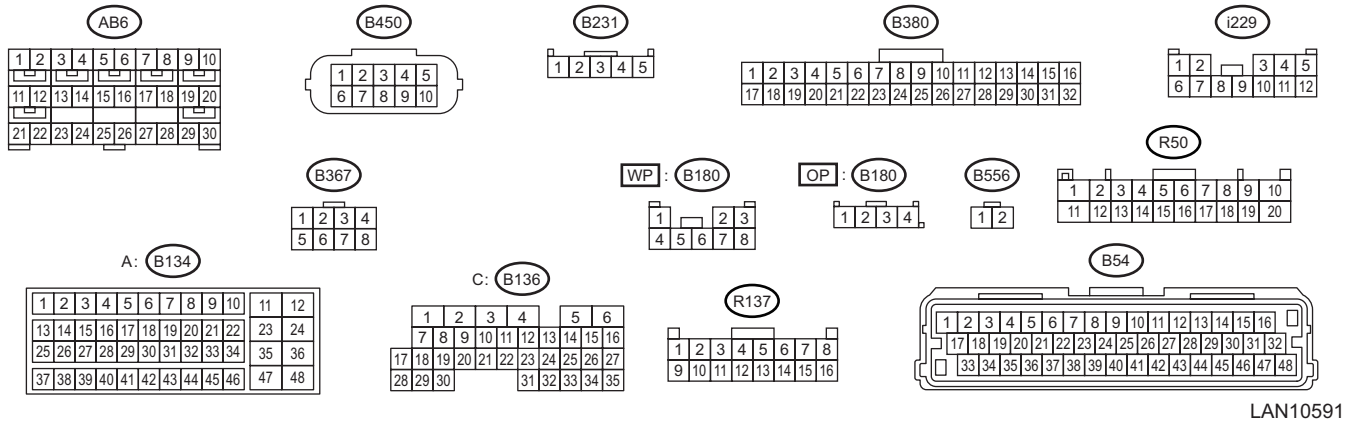

LAN10591

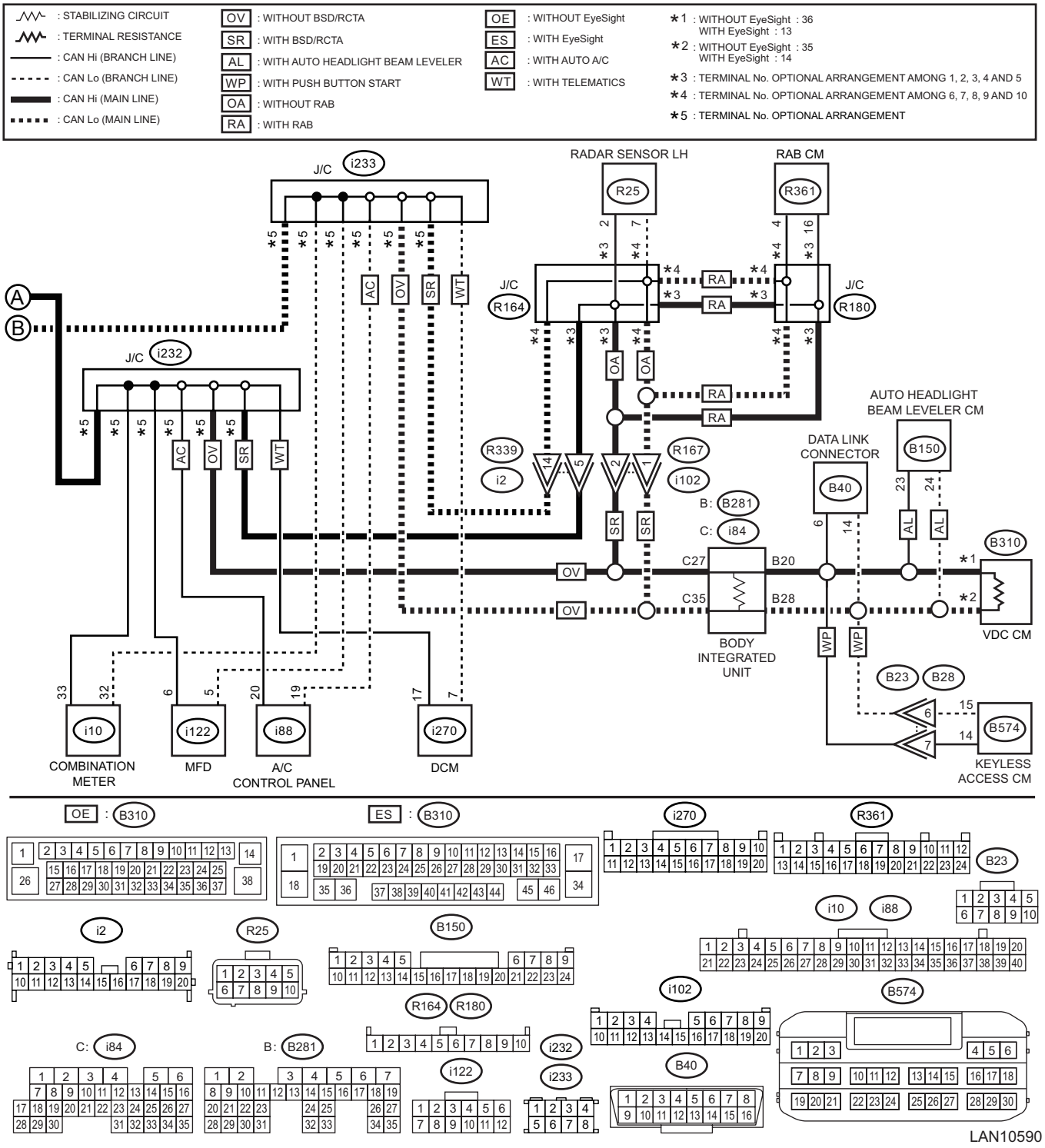

NOTE:

When the bus line is measured, combined resistance of end resistance (120 Ω) in ECM and end resistance (120 Ω) in VDC CM can be measured. The combined resistance is approximately 53 — 61 Ω with the stabilizing circuit included. When the measured resistance value is 52 Ω or less, main wiring harness or related lines may be shorted, or combined resistance may have changed because resistance other than end resistance is created on the circuit.

	Step	Check	Yes	No
1	**CHECK BETWEEN RELATED LINES AND MAIN WIRING HARNESS.** Using the tester, measure the resistance between terminals. ***Connector & terminal*** ***(B40) No. 6 — (B40) No. 14:***	Is the resistance less than 10 Ω?	Go to step **2**.	Go to step **4**.
2	**CHECK MAIN WIRING HARNESS AND RELATED LINES.** With a tester connected, disconnect control module connectors in order. NOTE: Disconnect the body integrated unit at the end. ***Connector & terminal*** ***(B40) No. 6 — (B40) No. 14:***	Is there any control module whose condition has changed from short state?	Replace the control module whose resistance has changed. When the value changed at disconnecting the body integrated unit, Go to step **3**.	Repair or replace the short circuit of the harness between body integrated unit and VDC CM.
3	**CHECK BETWEEN MAIN WIRING HARNESSES.** Using the tester, measure the resistance between terminals. ***Connector & terminal*** ***(i84) No. 27 — (i84) No. 35:***	Is the resistance less than 10 Ω?	Repair or replace the short circuit of the harness between ECM and body integrated unit.	Replace the body integrated unit. <Ref. to SL-81, Body Integrated Unit.>
4	**CHECK CONTROL MODULE.** 1) Disconnect ECM and VDC CM connectors. 2) Using a tester, measure the resistance between control module terminals. ***Connector & terminal*** ***Engine type: FA*** ***(B134) No. 9 — No. 10:*** ***(B310) No. 35 — No. 36 (without EyeSight):*** ***(B310) No. 13 — No. 14 (with EyeSight):*** ***Engine type: EJ*** ***(B136) No. 17 — No. 28:*** ***(B310) No. 35 — No. 36 (without EyeSight):*** ***(B310) No. 13 — No. 14 (with EyeSight):***	Is the resistance 114 — 126 Ω?	Go to step **5**.	Replace the control module whose end resistance value is out of the specified range.
5	**CHECK CONTROL MODULE.** 1) Disconnect the connector of body integrated unit. 2) Using a tester, measure the resistance between control module terminals. ***Connector & terminal*** ***(B281) No. 28 — (i84) No. 27:*** ***(B281) No. 20 — (i84) No. 35:***	Is the resistance 2850 — 3150 Ω?	Go to step **6**.	Replace the body integrated unit. <Ref. to SL-81, Body Integrated Unit.>
6	**CHECK CONTROL MODULE.** Using a tester, measure the resistance between control module terminals. ***Connector & terminal*** ***(B281) No. 28 — (i84) No. 35:*** ***(B281) No. 20 — (i84) No. 27:***	Is the resistance less than 1 Ω?	Go to step **7**.	Replace the body integrated unit. <Ref. to SL-81, Body Integrated Unit.>
7	**CHECK CONTROL MODULE.** 1) Disconnect the combination meter connector. 2) Using a tester, measure the resistance between control module terminals. ***Connector & terminal*** ***(i10) No. 32 — (i10) No. 33:***	Is the resistance 2850 — 3150 Ω?	Go to step **8**.	Replace the combination meter. <Ref. to IDI-13, Combination Meter.>

	Step	Check	Yes	No
8	**CHECK CONTROL MODULE (ONLY FOR MODELS WITH HIGH GRADE MFD).** 1) Disconnect the MFD connector. 2) Using a tester, measure the resistance between control module terminals. ***Connector & terminal*** ***(i122) No. 5 — (i122) No. 6:***	Is the resistance 2850 — 3150 Ω?	Go to step **9**.	Replace the MFD. <Ref. to IDI-20, Multi-function Display (MFD).>
9	**CHECK HARNESS.** Using the tester, check the short circuit of each harness. ***Connector & terminal*** ***(B281) No. 28 — (B281) No. 20:***	Is the resistance 1 MΩ or more?	Go to step **11**.	Go to step **10**.
10	**CHECK CONTROL MODULE.** With a tester connected, disconnect control modules in order. ***Connector & terminal*** ***(B281) No. 28 — (B281) No. 20:***	Are there any control modules whose resistance changed to 1 MΩ or more?	Replace the control module that has changed.	Repair or replace the harness part which has resistance component.
11	**CHECK CONTROL MODULE.** With a tester connected, disconnect control modules in order. ***Connector & terminal*** ***(i84) No. 27 — (i84) No. 35:***	Is there any control module whose resistance has changed to 1 MΩ or more?	Replace the control module that has changed.	Repair or replace the harness part which has resistance component.

5. 62 Ω OR MORE

WIRING DIAGRAM:

CAN communication system <Ref. to WI-113, WIRING DIAGRAM, CAN Communication System.>

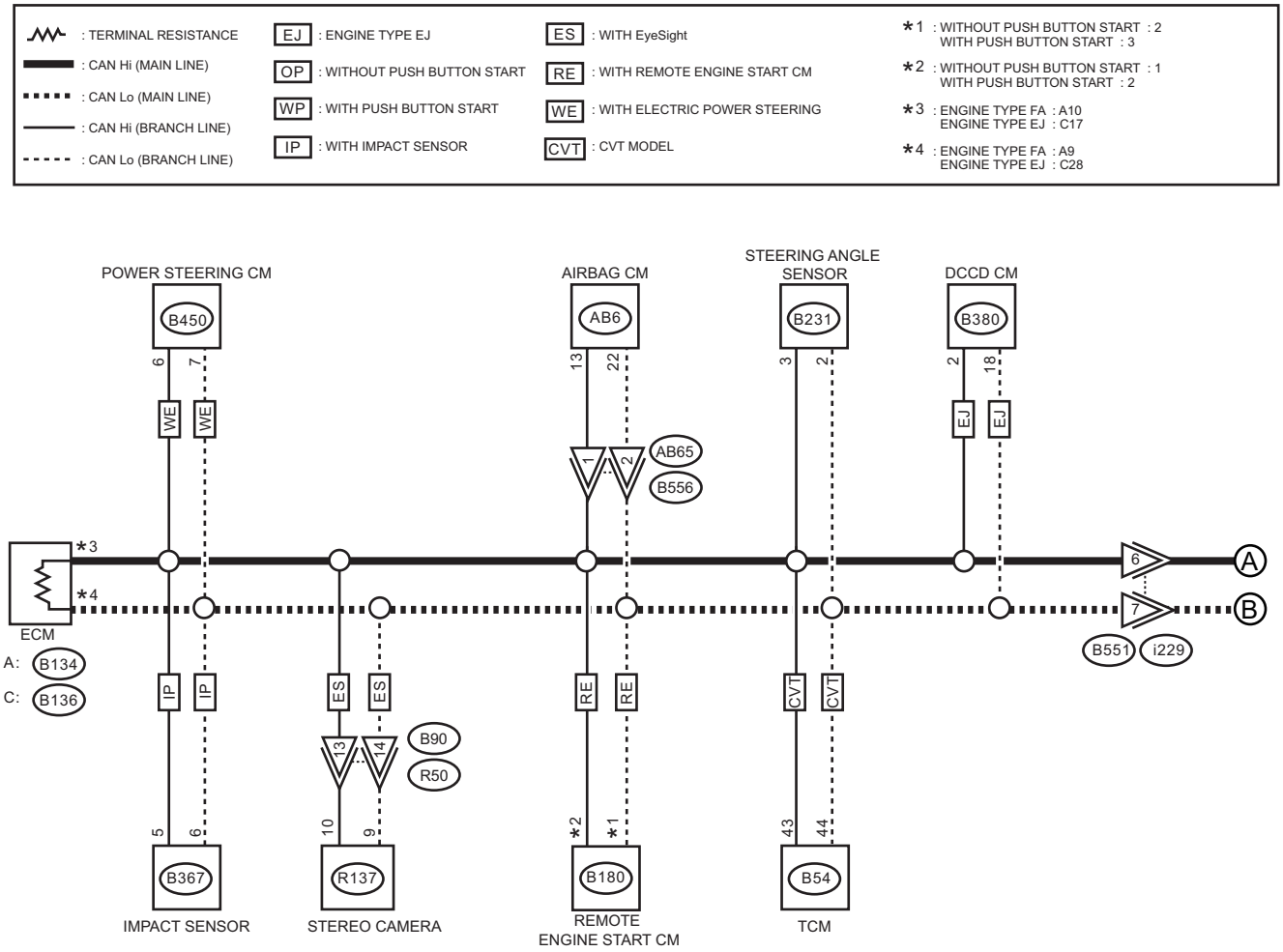

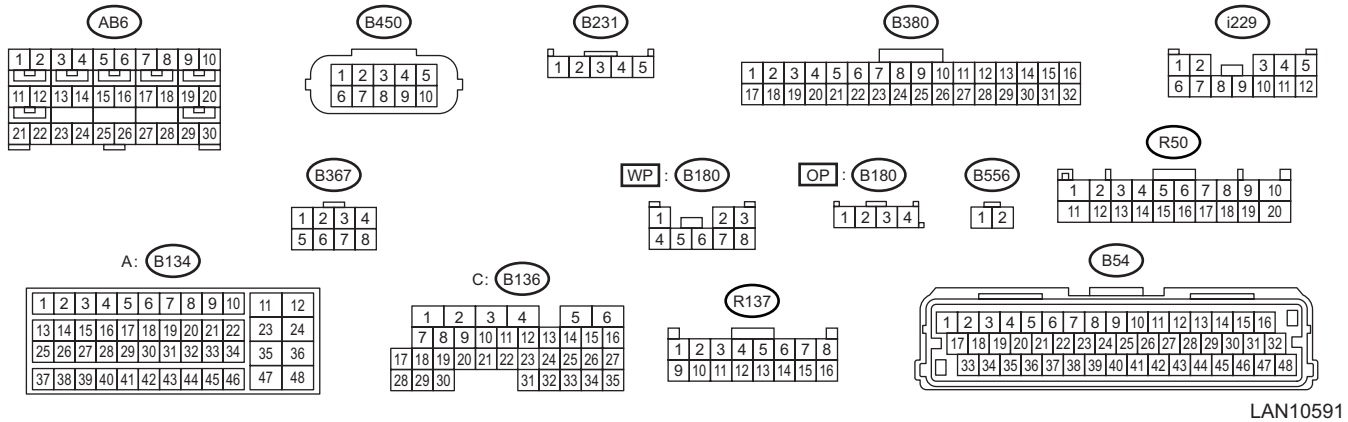

LAN10591

CAN Communication Circuit Check

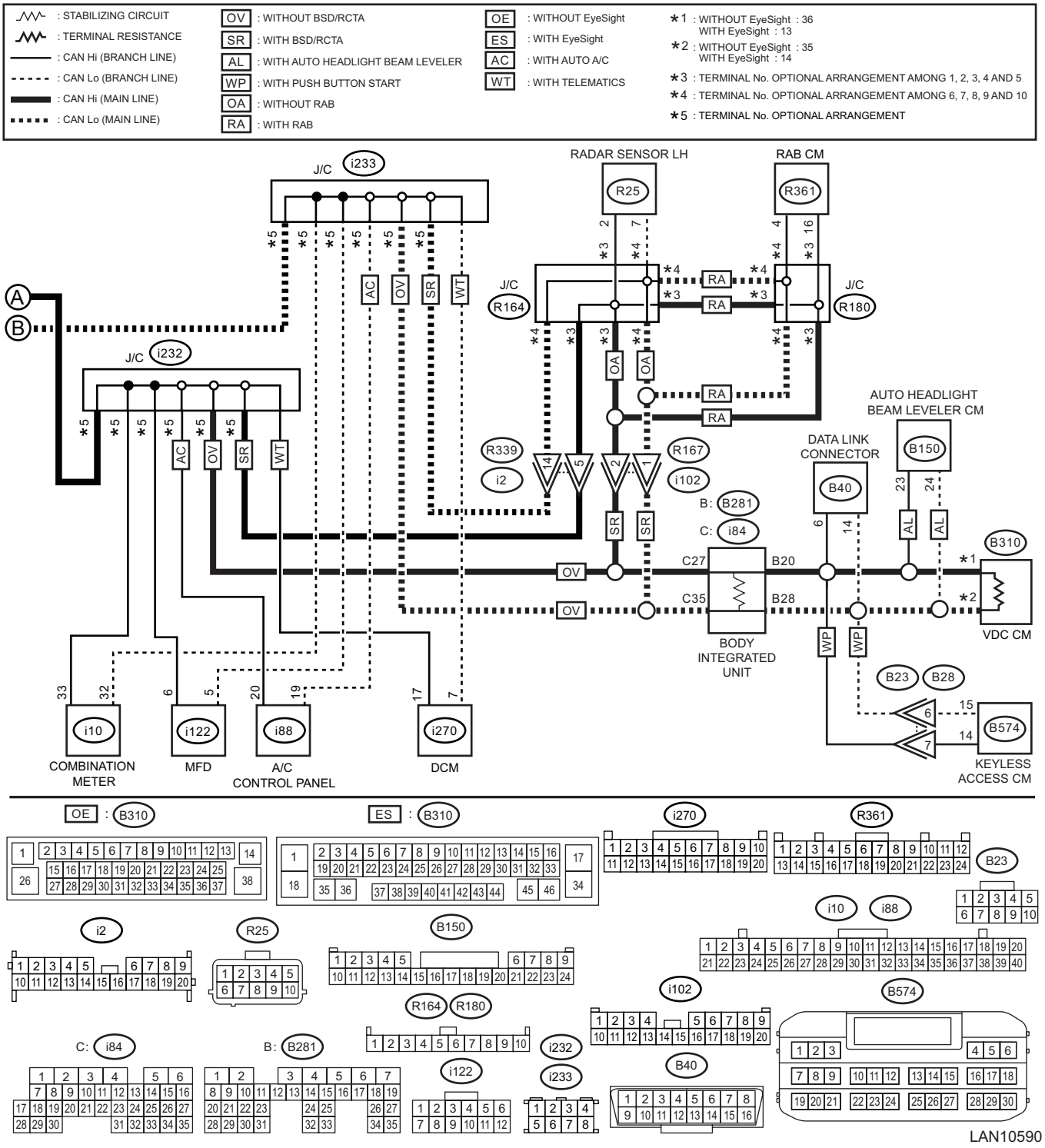

NOTE:
When CAN communication circuit is measured, combined resistance of end resistance (120 Ω) in ECM and end resistance (120 Ω) in VDC CM can be measured. The combined resistance is approximately 53 — 61 Ω with the stabilizing circuit included. When the measured resistance value is 62 Ω or more, either one of the end resistances, or stabilizing circuit, or main wiring harness may have malfunction such as open circuit.

	Step	Check	Yes	No
1	**CHECK CONTROL MODULE.** 1) Disconnect ECM and VDC CM connectors. 2) Using a tester, measure the resistance between control module terminals. ***Connector & terminal*** ***Engine type: FA*** ***(B134) No. 9 — No. 10:*** ***(B310) No. 35 — No. 36 (without EyeSight):*** ***(B310) No. 13 — No. 14 (with EyeSight):*** ***Engine type: EJ*** ***(B136) No. 17 — No. 28:*** ***(B310) No. 35 — No. 36 (without EyeSight):*** ***(B310) No. 13 — No. 14 (with EyeSight):***	Is the resistance 114 — 126 Ω?	Go to step **2**.	Replace the control module whose value is out of the specification.
2	**CHECK CONTROL MODULE.** 1) Disconnect the connector of body control module. 2) Using a tester, measure the resistance between control module terminals. ***Connector & terminal*** ***(B281) No. 28 — (i84) No. 27:*** ***(B281) No. 20 — (i84) No. 35:***	Is the resistance 2850 — 3150 Ω?	Go to step **3**.	Replace the body integrated unit. <Ref. to SL-81, Body Integrated Unit.>
3	**CHECK CONTROL MODULE.** Using the tester, measure the resistance between terminals. ***Connector & terminal*** ***(B281) No. 28 — (i84) No. 35:*** ***(B281) No. 20 — (i84) No. 27:***	Is the resistance less than 1 Ω?	Go to step **4**.	Replace the body integrated unit. <Ref. to SL-81, Body Integrated Unit.>
4	**CHECK CONTROL MODULE.** 1) Disconnect the combination meter connector. 2) Using a tester, measure the resistance between control module terminals. ***Connector & terminal*** ***(i10) No. 32 — (i10) No. 33:***	Is the resistance 2850 — 3150 Ω?	Go to step **5**.	Replace the combination meter. <Ref. to IDI-13, Combination Meter.>
5	**CHECK CONTROL MODULE (ONLY FOR MODELS WITH HIGH GRADE MFD).** 1) Disconnect the MFD connector. 2) Using a tester, measure the resistance between control module terminals. ***Connector & terminal*** ***(i122) No. 5 — (i122) No. 6:***	Is the resistance 2850 — 3150 Ω?	Go to step **6**.	Replace the MFD. <Ref. to IDI-20, Multi-function Display (MFD).>
6	**CHECK HARNESS.** Using a tester, check continuity between terminals. ***Connector & terminal*** ***(B40) No. 6 — (B310) No. 36 (without EyeSight):*** ***(B40) No. 14 — (B310) No. 35 (without EyeSight):*** ***(B40) No. 6 — (B310) No. 13 (with EyeSight):*** ***(B40) No. 14 — (B310) No. 14 (with EyeSight):*** ***(B40) No. 6 — (B281) No. 20:*** ***(B40) No. 14 — (B281) No. 28:***	Is there continuity?	Go to step **7**.	Repair or replace the open circuit of harness.

Step		Check	Yes	No
7	**CHECK HARNESS.** 1) Disconnect the ECM connector. 2) Using a tester, check continuity between terminals. ***Connector & terminal*** ***Engine type: FA*** ***(i84) No. 27 — (B134) No. 10:*** ***(i84) No. 35 — (B134) No. 9:*** ***Engine type: EJ*** ***(i84) No. 27 — (B136) No. 17:*** ***(i84) No. 35 — (B136) No. 28:***	Is there continuity?	It is possible that temporary poor communication occurs.	Repair or replace the open circuit of harness.

6. RELATED LINES 53 — 61 Ω (TCM)

WIRING DIAGRAM:

CAN communication system <Ref. to WI-113, WIRING DIAGRAM, CAN Communication System.>

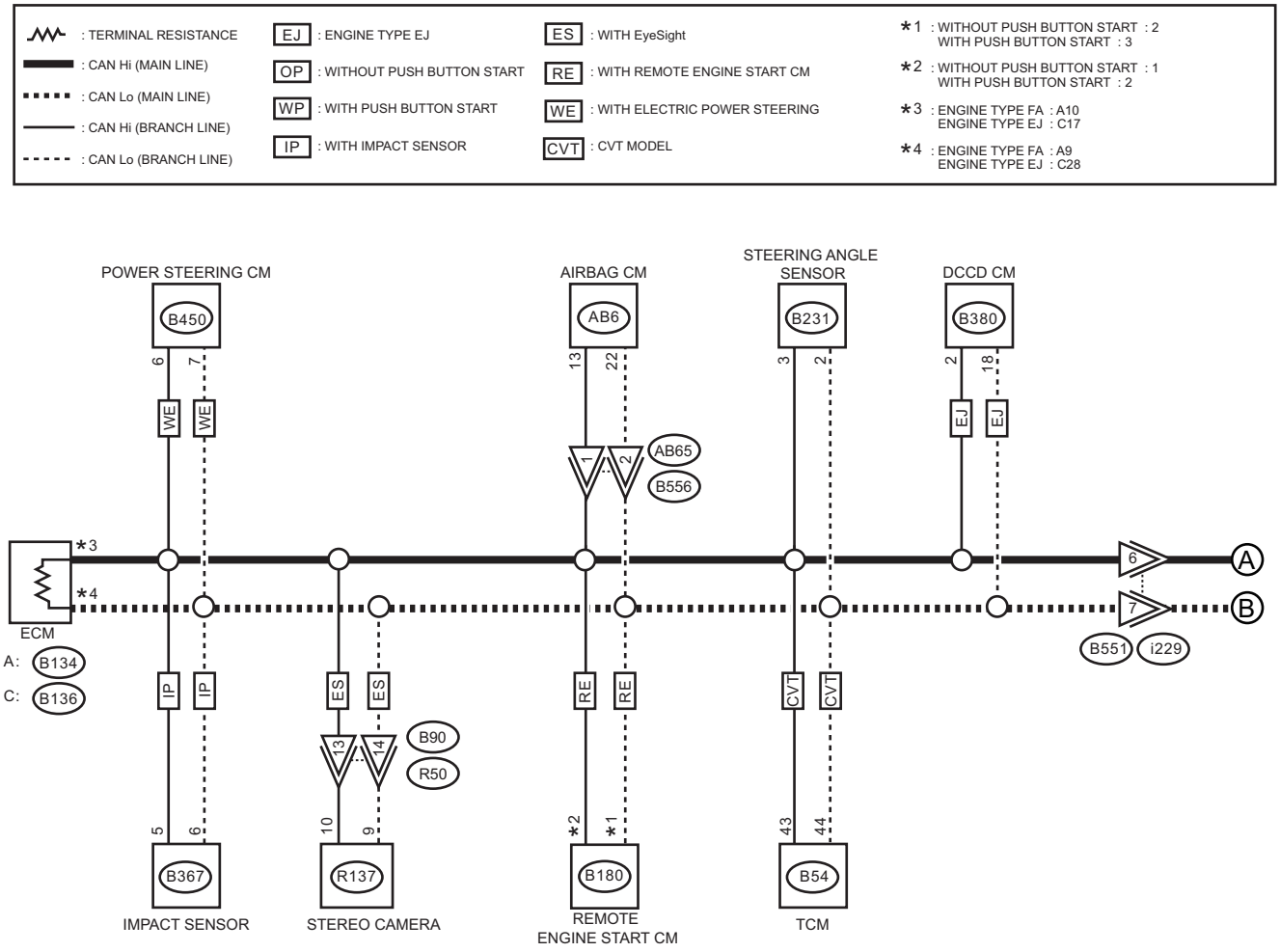

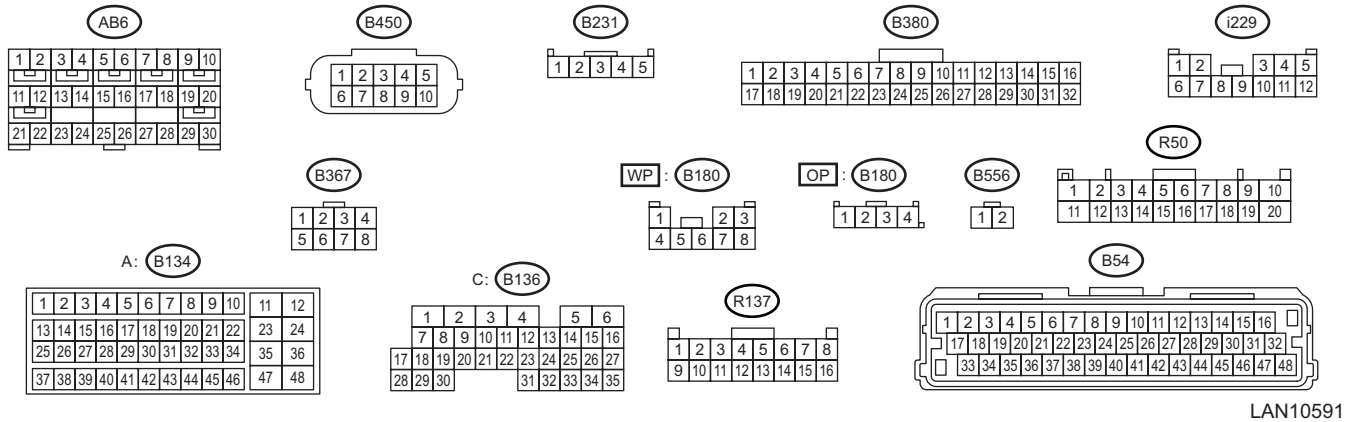

LAN10591

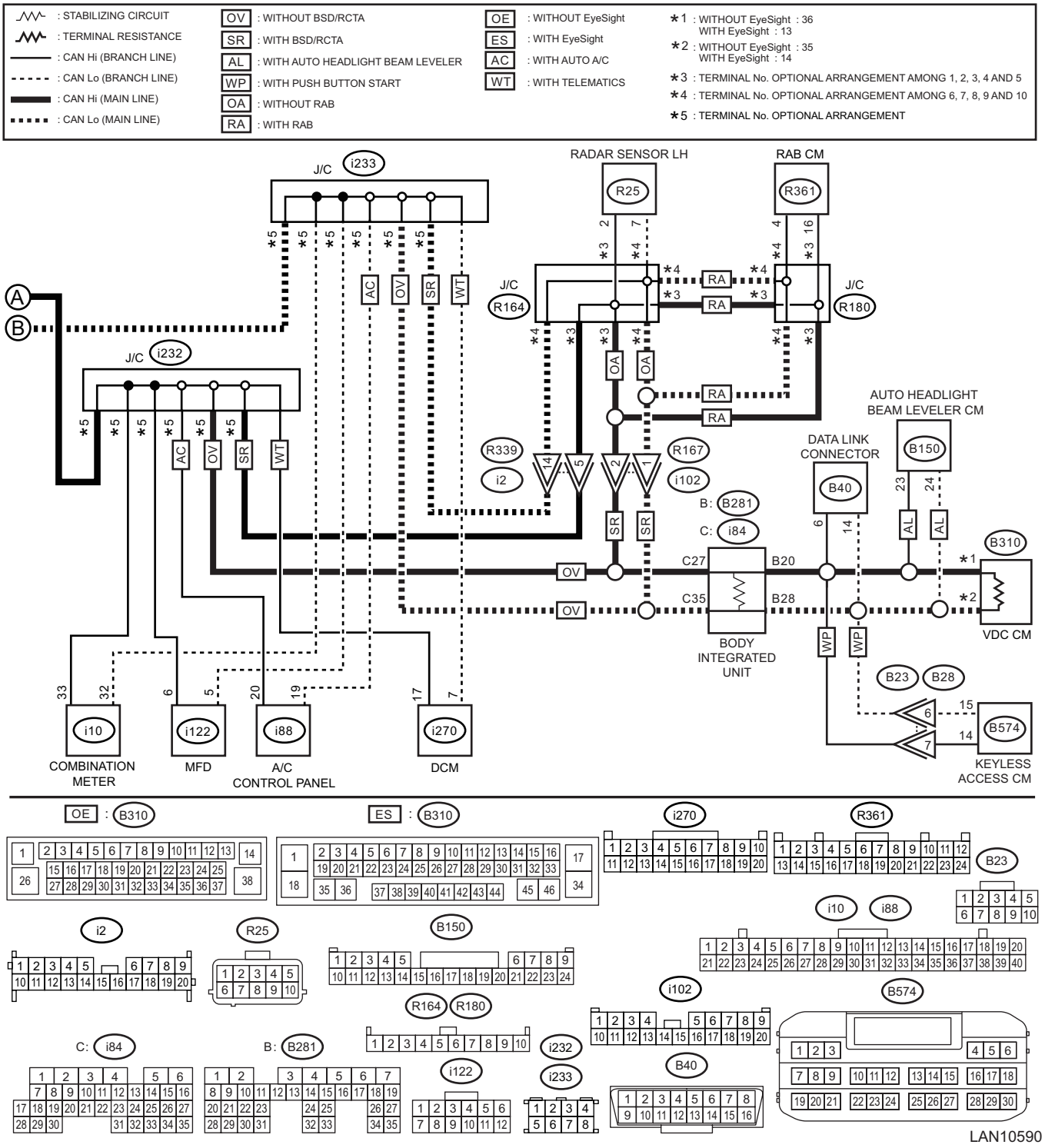

NOTE:
Perform inspection when no data is received, or faulty is detected. This is different from power supply shorted or ground shorted.

	Step	Check	Yes	No
1	**CHECK BETWEEN RELATED LINES AND MAIN WIRING HARNESS.** 1) Disconnect the TCM connector. 2) Using the tester, measure the resistance between terminals. ***Connector & terminal*** ***(B54) No. 43 — (B54) No. 44:***	Is the resistance 400 Ω or more?	Related lines between TCM and main wiring harness is open, or main wiring harness is open at two places or more.	Go to step **2**.
2	**CHECK RELATED LINES.** Using the tester, measure the resistance between terminals. ***Connector & terminal*** ***(B54) No. 44 — (B40) No. 14:*** ***(B54) No. 43 — (B40) No. 6:***	Is the resistance 10 Ω or more?	Repair or replace the open circuit of TCM related lines.	Check DTC of TCM. <Ref. to CVT(diag)-18, OPERATION, Read Diagnostic Trouble Code (DTC).>

7. RELATED LINES 53 — 61 Ω (STEERING ANGLE SENSOR)

WIRING DIAGRAM:

CAN communication system <Ref. to WI-113, WIRING DIAGRAM, CAN Communication System.>

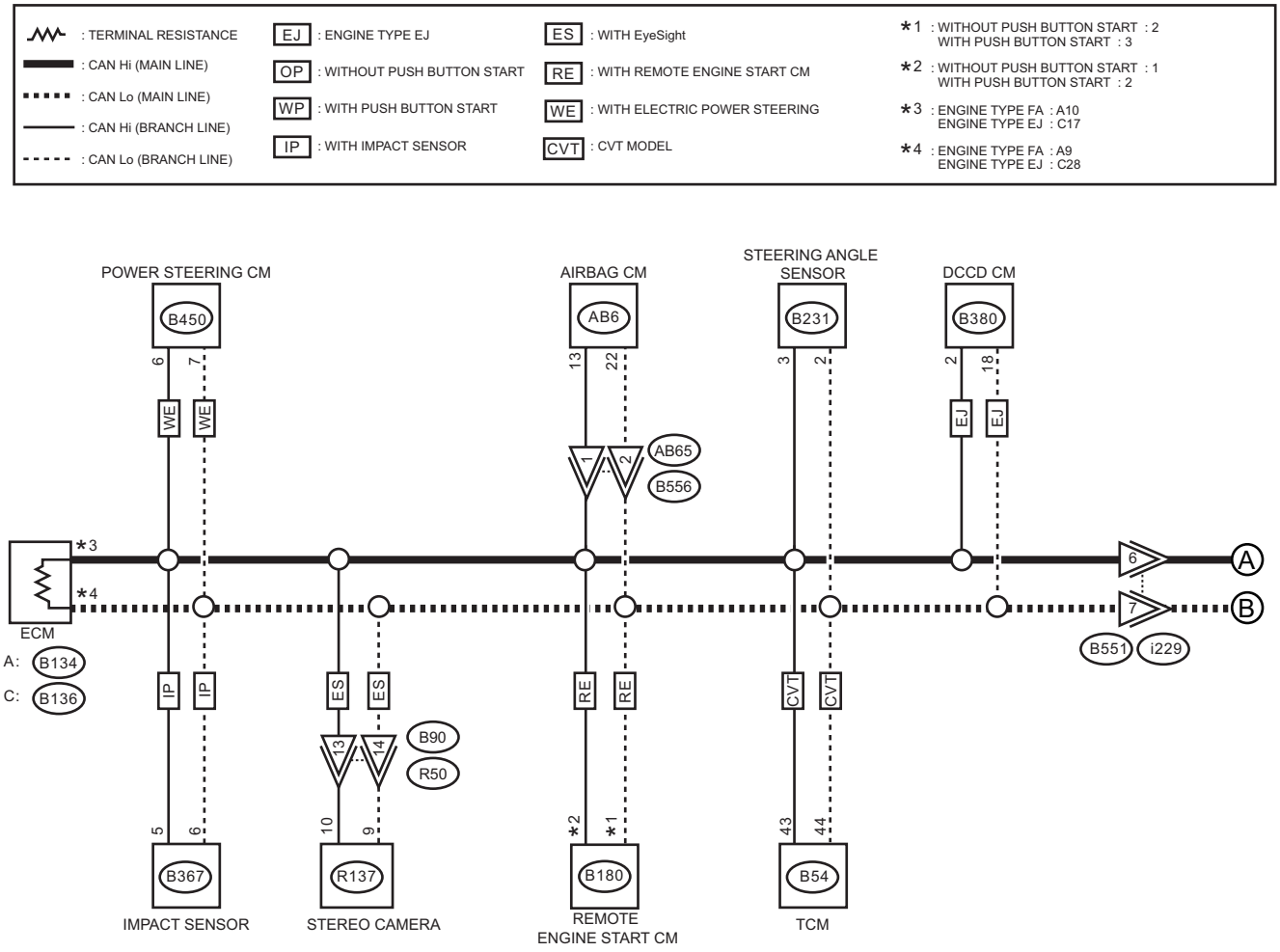

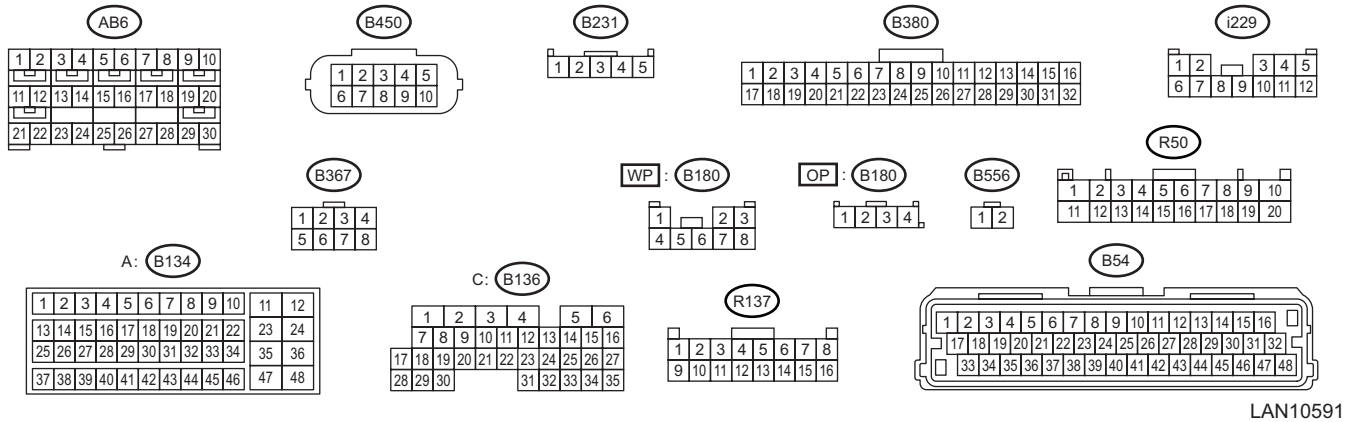

LAN10591

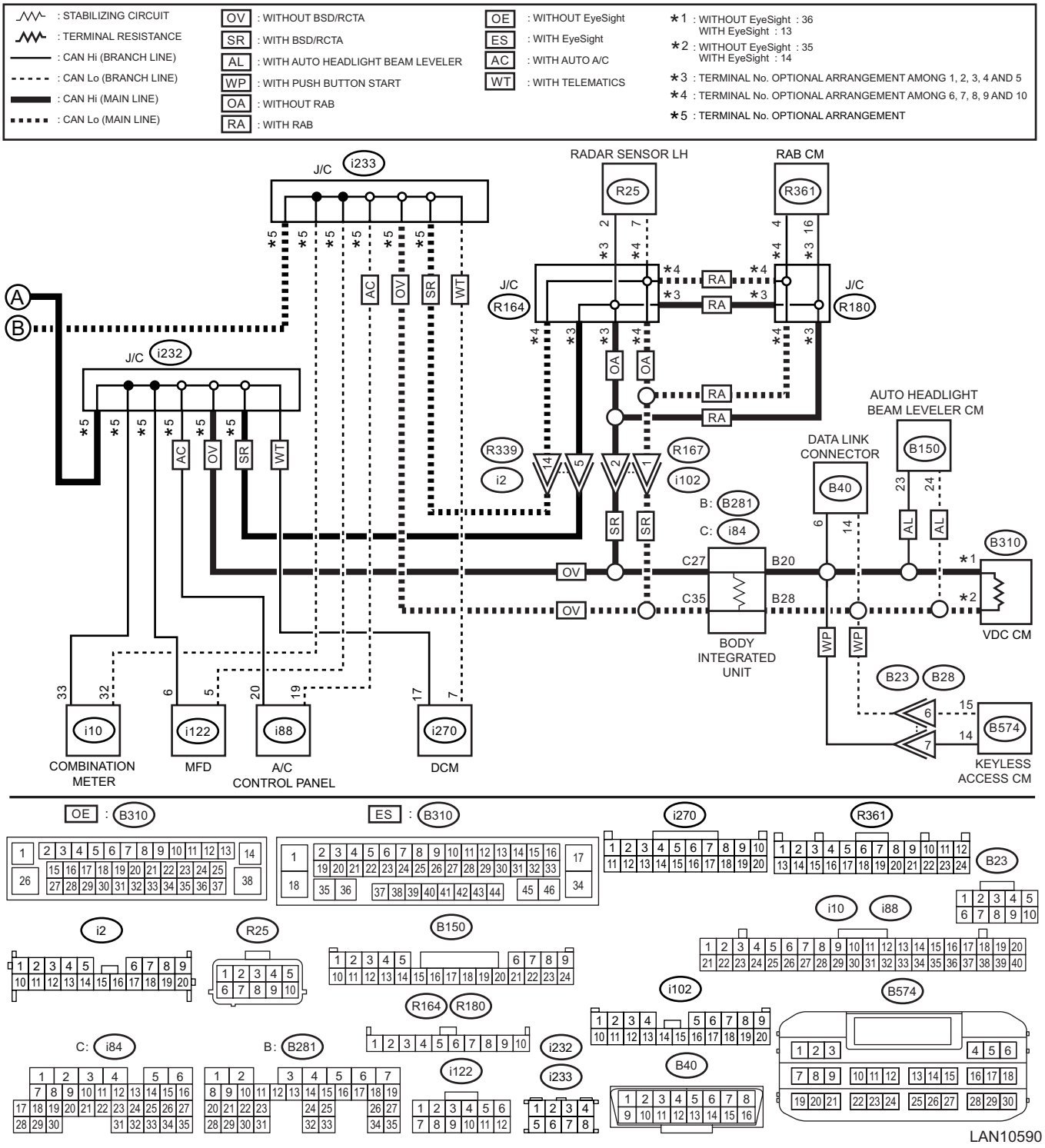

Step		Check	Yes	No
1	**CHECK BETWEEN RELATED LINES AND MAIN WIRING HARNESS.** 1) Disconnect the steering angle sensor connector. 2) Using the tester, measure the resistance between terminals. ***Connector & terminal*** ***(B231) No. 2 — (B231) No. 3:***	Is the resistance 400 Ω or more?	Related lines between steering angle sensor and main wiring harness is open, or main wiring harness is open at two places or more.	Go to step **2**.

Step		Check	Yes	No
2	**CHECK RELATED LINES.** Using the tester, measure the resistance between terminals. ***Connector & terminal*** ***(B231) No. 2 — (B40) No. 14:*** ***(B231) No. 3 — (B40) No. 6:***	Is the resistance 10 Ω or more?	Repair or replace the open circuit of steering angle sensor related lines.	Check DTC of VDC CM. <Ref. to VDC(diag)-28, OPERATION, Read Diagnostic Trouble Code (DTC).>

8. RELATED LINE 53 — 61 Ω (A/C CONTROL PANEL)

WIRING DIAGRAM:

CAN communication system <Ref. to WI-113, WIRING DIAGRAM, CAN Communication System.>

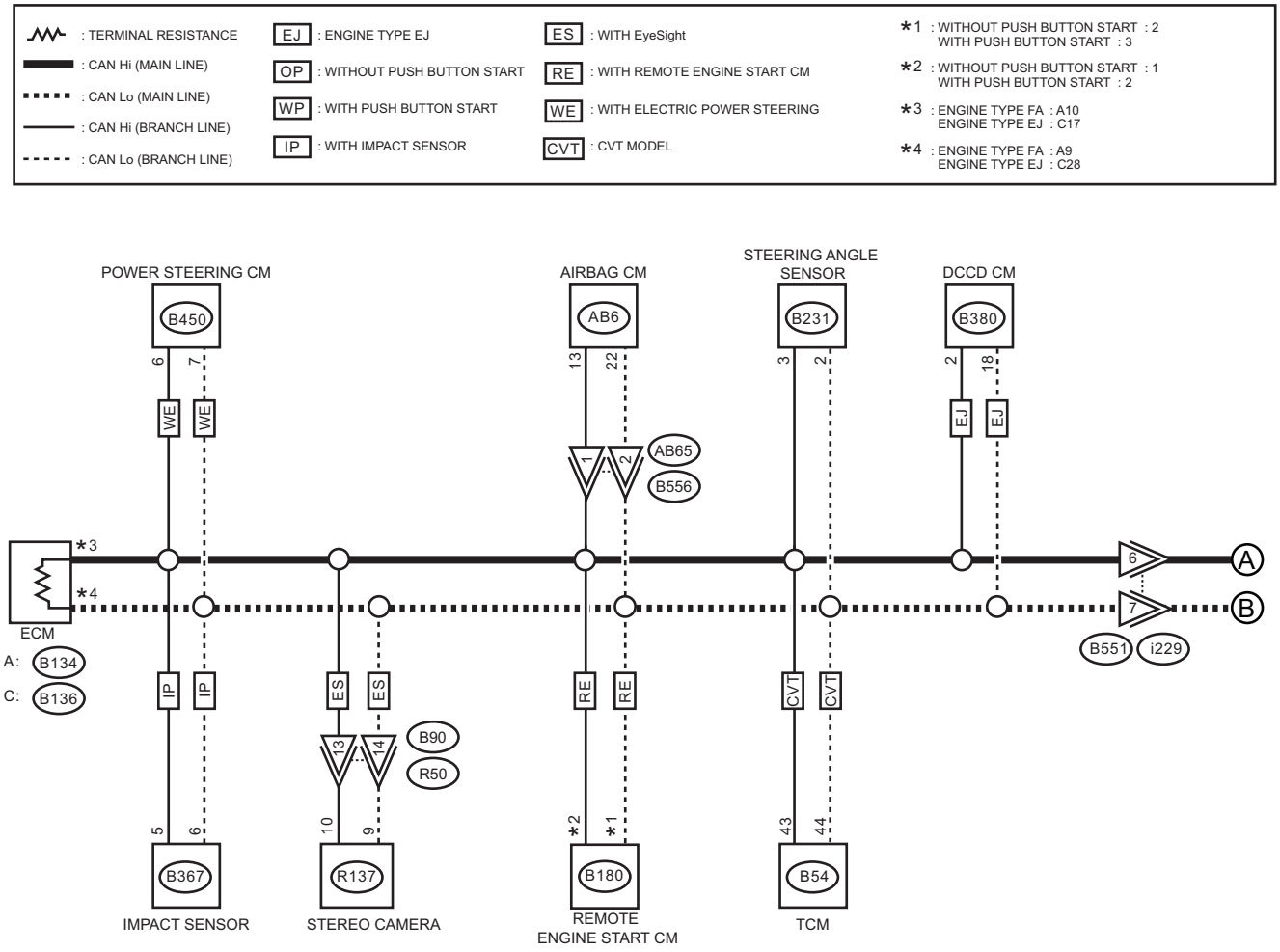

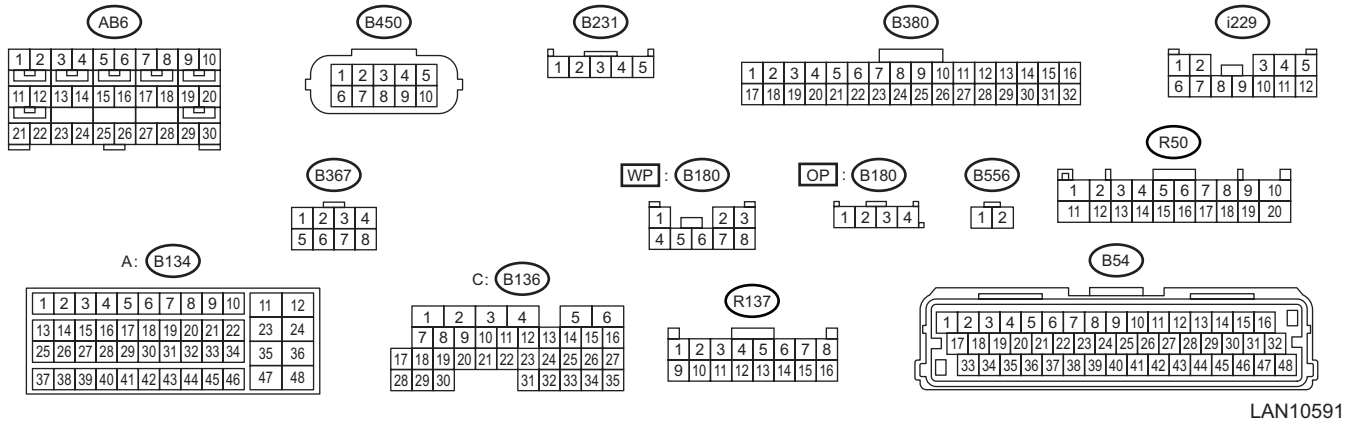

LAN10591

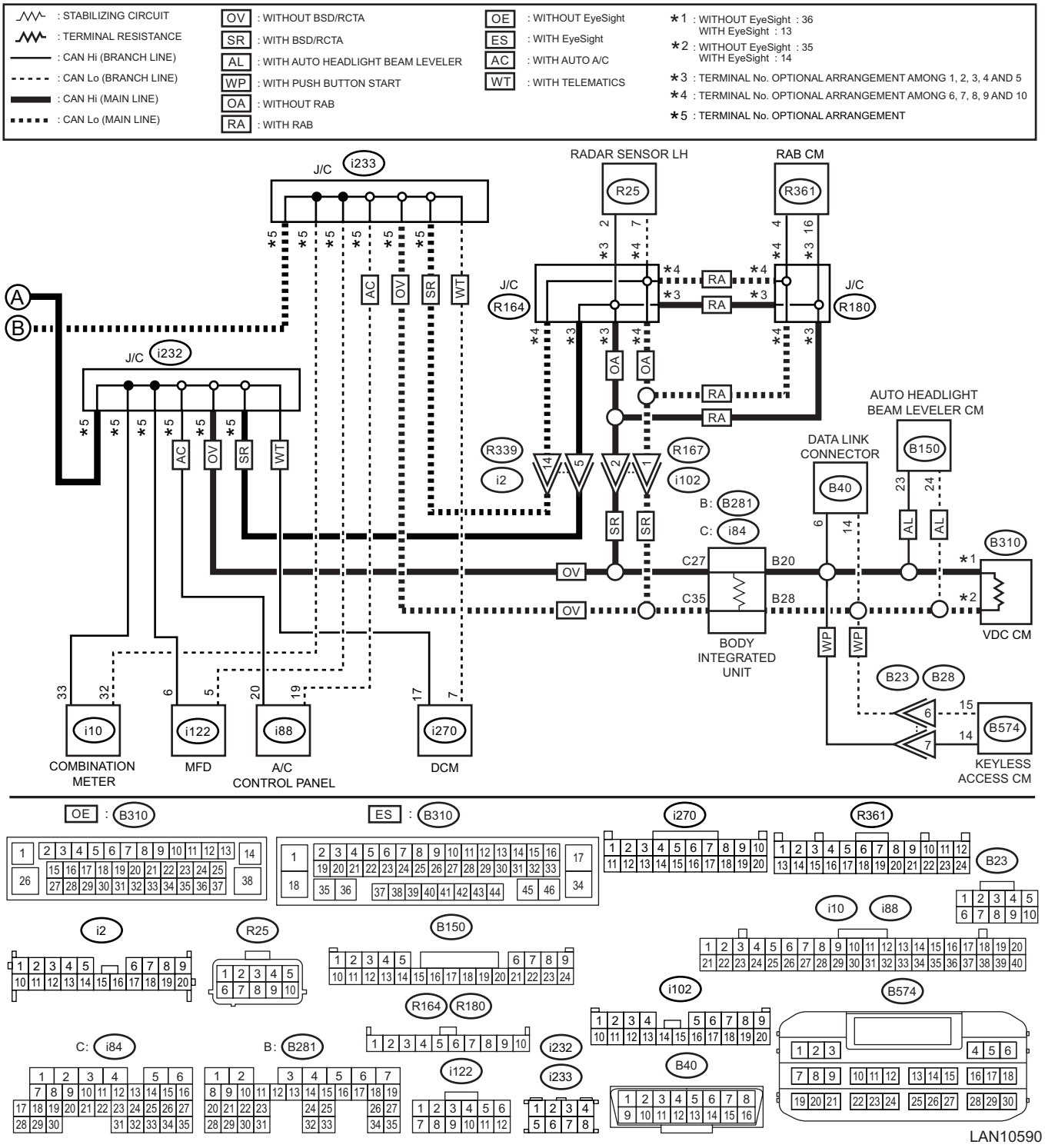

Step		Check	Yes	No
1	**CHECK BETWEEN RELATED LINES AND MAIN WIRING HARNESS.** 1) Disconnect the A/C control panel connector. 2) Using the tester, measure the resistance between terminals. ***Connector & terminal*** ***(i88) No. 19 — (i88) No. 20:***	Is the resistance 400 Ω or more?	Related lines between A/C control panel and main wiring harness is open, or main wiring harness is open at two places or more.	Go to step **2**.

Step		Check	Yes	No
2	**CHECK RELATED LINES.** Using the tester, measure the resistance between terminals. ***Connector & terminal*** ***(i88) No. 19 — (B40) No. 14:*** ***(i88) No. 20 — (B40) No. 6:***	Is the resistance 10 Ω or more?	Repair or replace the open circuit of A/C control panel related lines.	Check the DTC of A/C control panel. <Ref. to AC(diag)-43, Read Diagnostic Trouble Code (DTC).>

9. RELATED LINES 53 — 61 Ω (POWER STEERING CM)

WIRING DIAGRAM:

CAN communication system <Ref. to WI-113, WIRING DIAGRAM, CAN Communication System.>

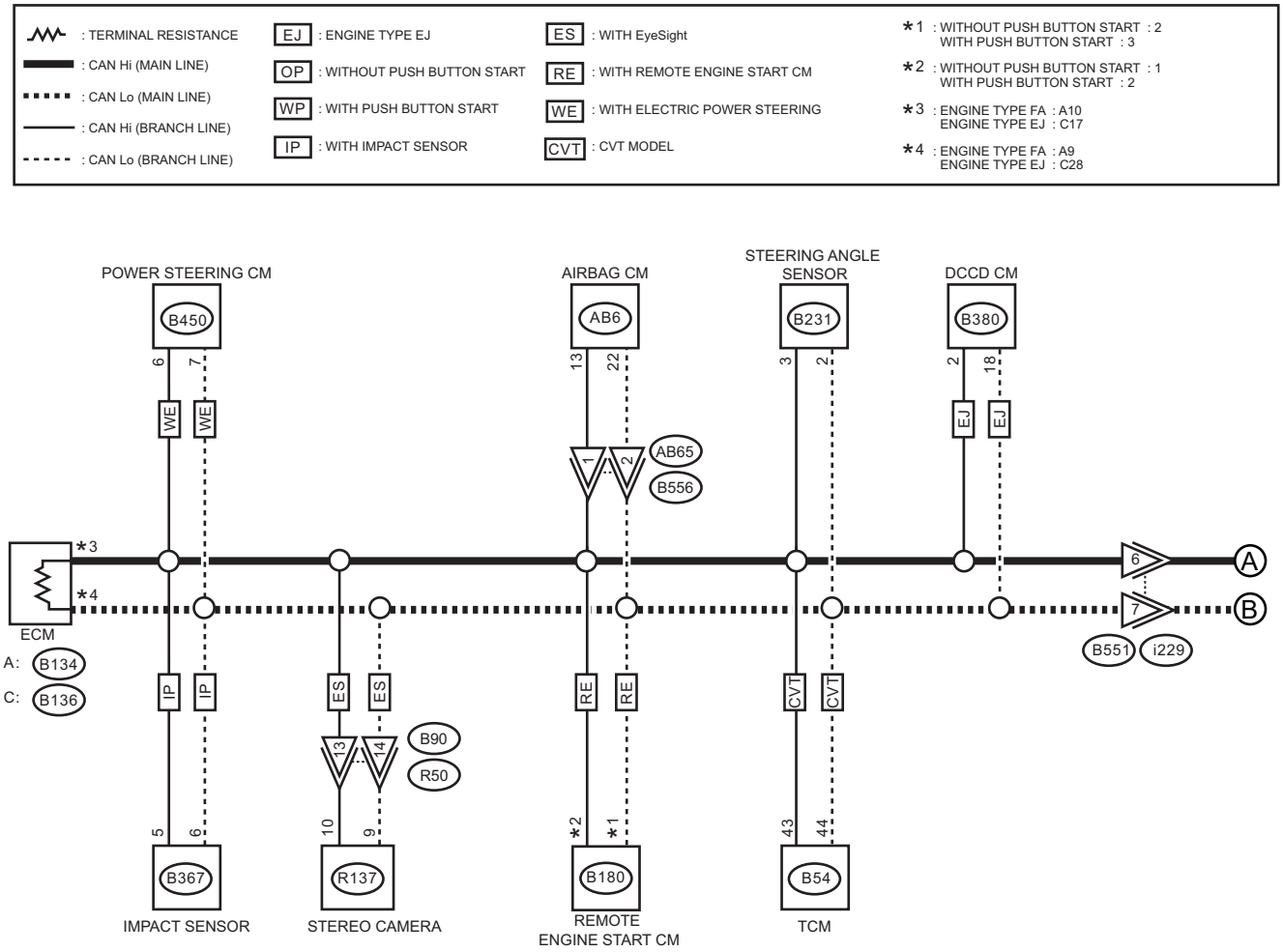

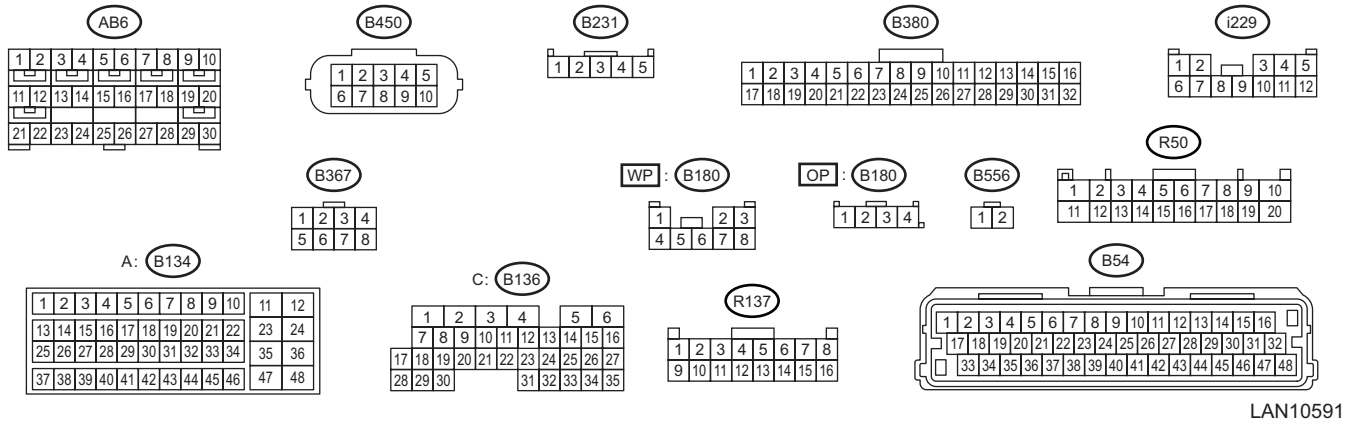

LAN10591

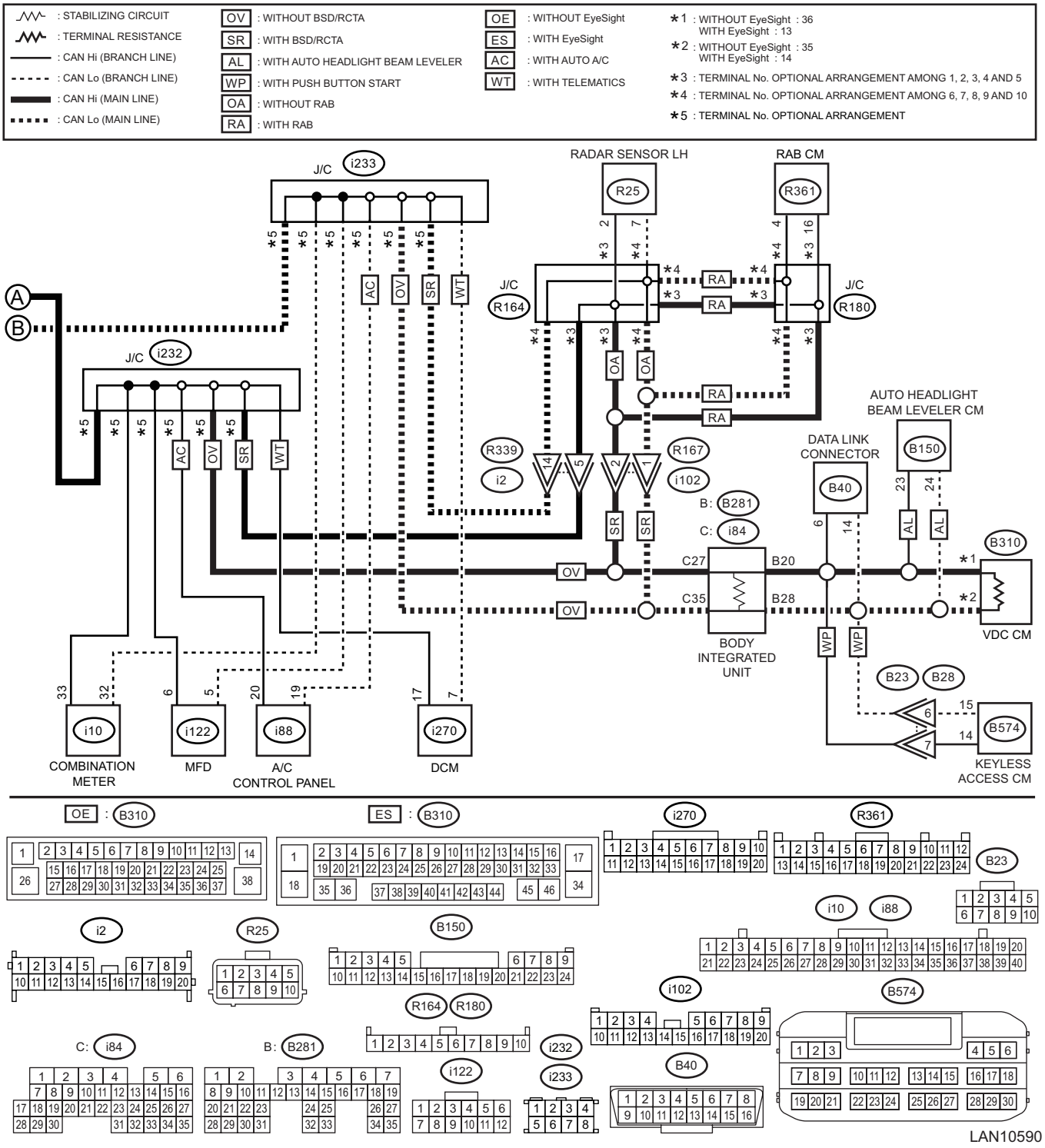

LAN10590

Step		Check	Yes	No
1	**CHECK BETWEEN RELATED LINES AND MAIN WIRING HARNESS.** 1) Disconnect the power steering CM connector. 2) Using the tester, measure the resistance between terminals. ***Connector & terminal*** ***(B450) No. 6 — (B450) No. 7:***	Is the resistance 400 Ω or more?	Related lines or main wiring harness between power steering CM and main wiring harness is open at two places or more.	Go to step **2**.

Step		Check	Yes	No
2	**CHECK RELATED LINES.** Using the tester, measure the resistance between terminals. ***Connector & terminal*** ***(B450) No. 6 — (B40) No. 6:*** ***(B450) No. 7 — (B40) No. 14:***	Is the resistance 10 Ω or more?	Repair or replace the open circuit portion of power steering CM related lines.	Check DTC of power steering CM. <Ref. to PS(diag)-16, OPERATION, Read Diagnostic Trouble Code (DTC).>

10.RELATED LINES 53 — 61 Ω (COMBINATION METER)

WIRING DIAGRAM:

CAN communication system <Ref. to WI-113, WIRING DIAGRAM, CAN Communication System.>

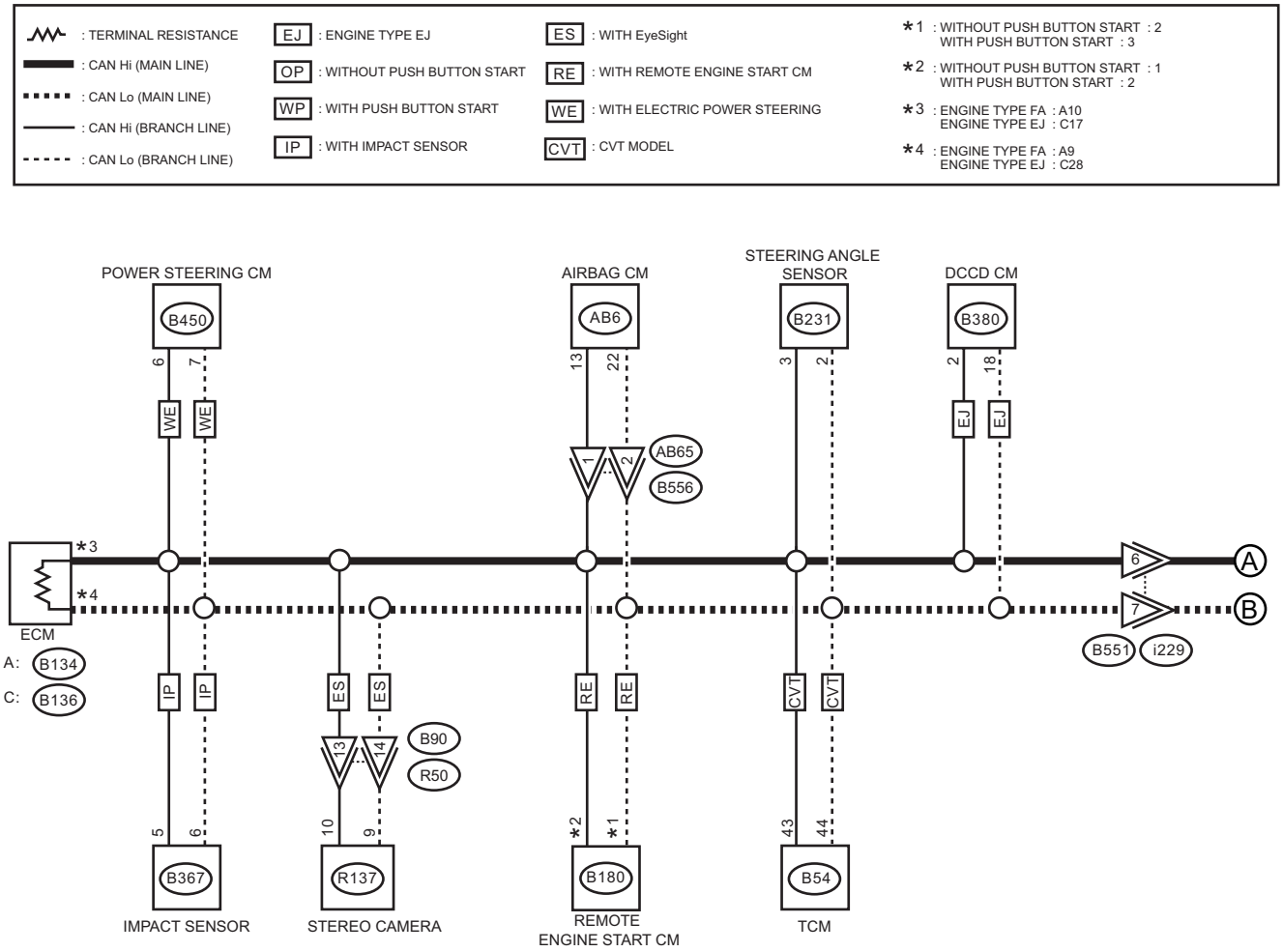

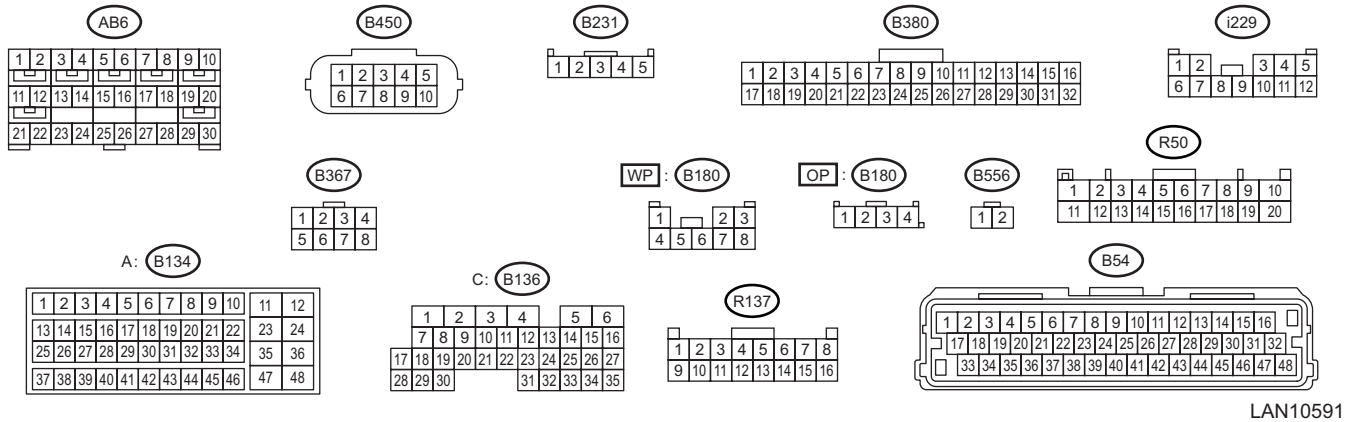

LAN10591

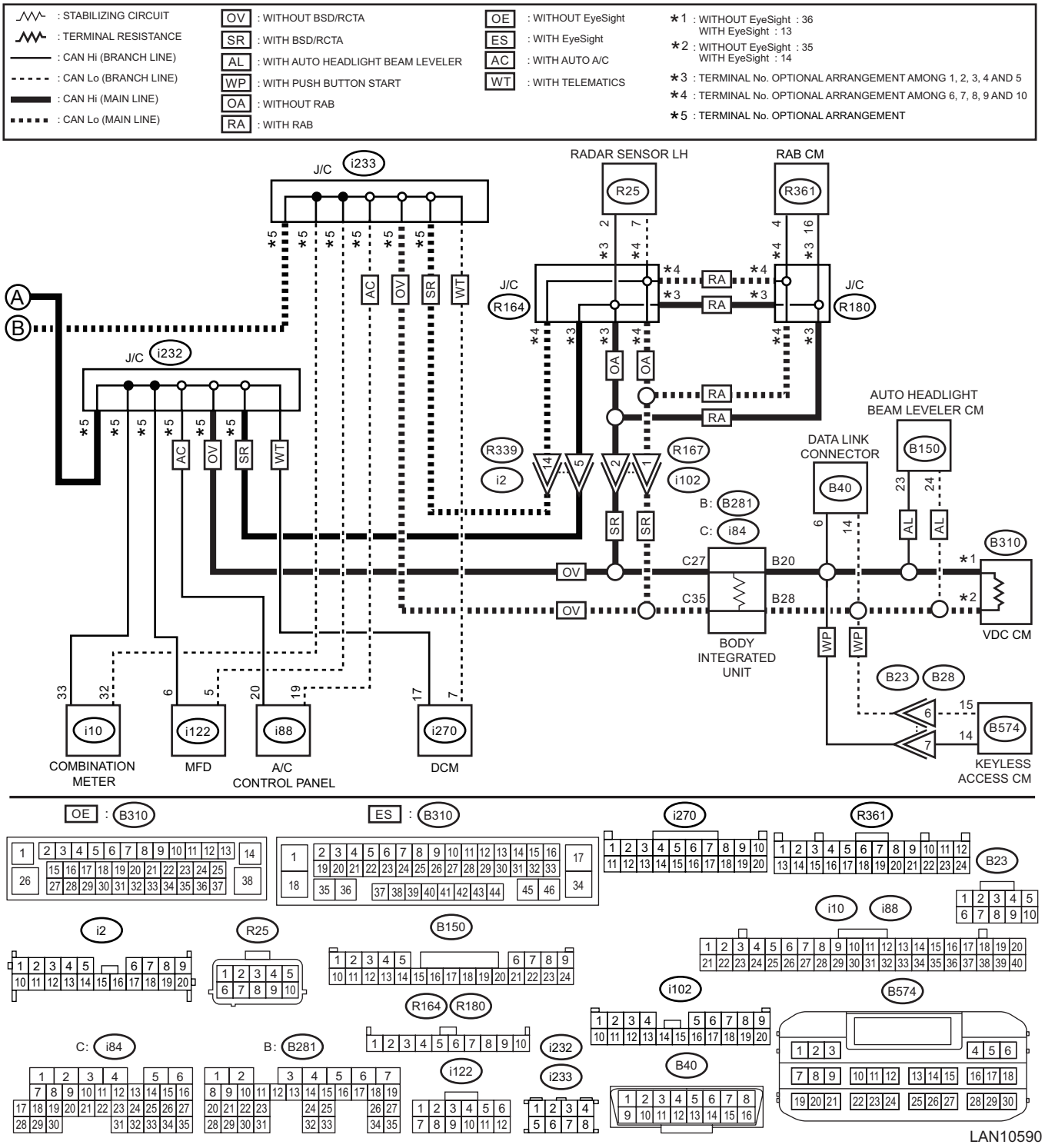

Step		Check	Yes	No
1	**CHECK BETWEEN RELATED LINES AND MAIN WIRING HARNESS.** 1) Disconnect the combination meter connector. 2) Using the tester, measure the resistance between terminals. ***Connector & terminal*** ***(i10) No. 32 — (i10) No. 33:***	Is the resistance 400 Ω or more?	Related lines between combination meter and main wiring harness is open, or main wiring harness is open at two places or more.	Go to step **2**.

Step		Check	Yes	No
2	**CHECK RELATED LINES.** Using the tester, measure the resistance between terminals. ***Connector & terminal*** ***(i10) No. 32 — (B40) No. 14:*** ***(i10) No. 33 — (B40) No. 6:***	Is the resistance 10 Ω or more?	Repair or replace the open circuit of combination meter related lines.	Check DTC of combination meter. <Ref. to IDI(diag)-13, Read Diagnostic Trouble Code (DTC).>

11.RELATED LINES 53 — 61 Ω (MFD)

WIRING DIAGRAM:

CAN communication system <Ref. to WI-113, WIRING DIAGRAM, CAN Communication System.>

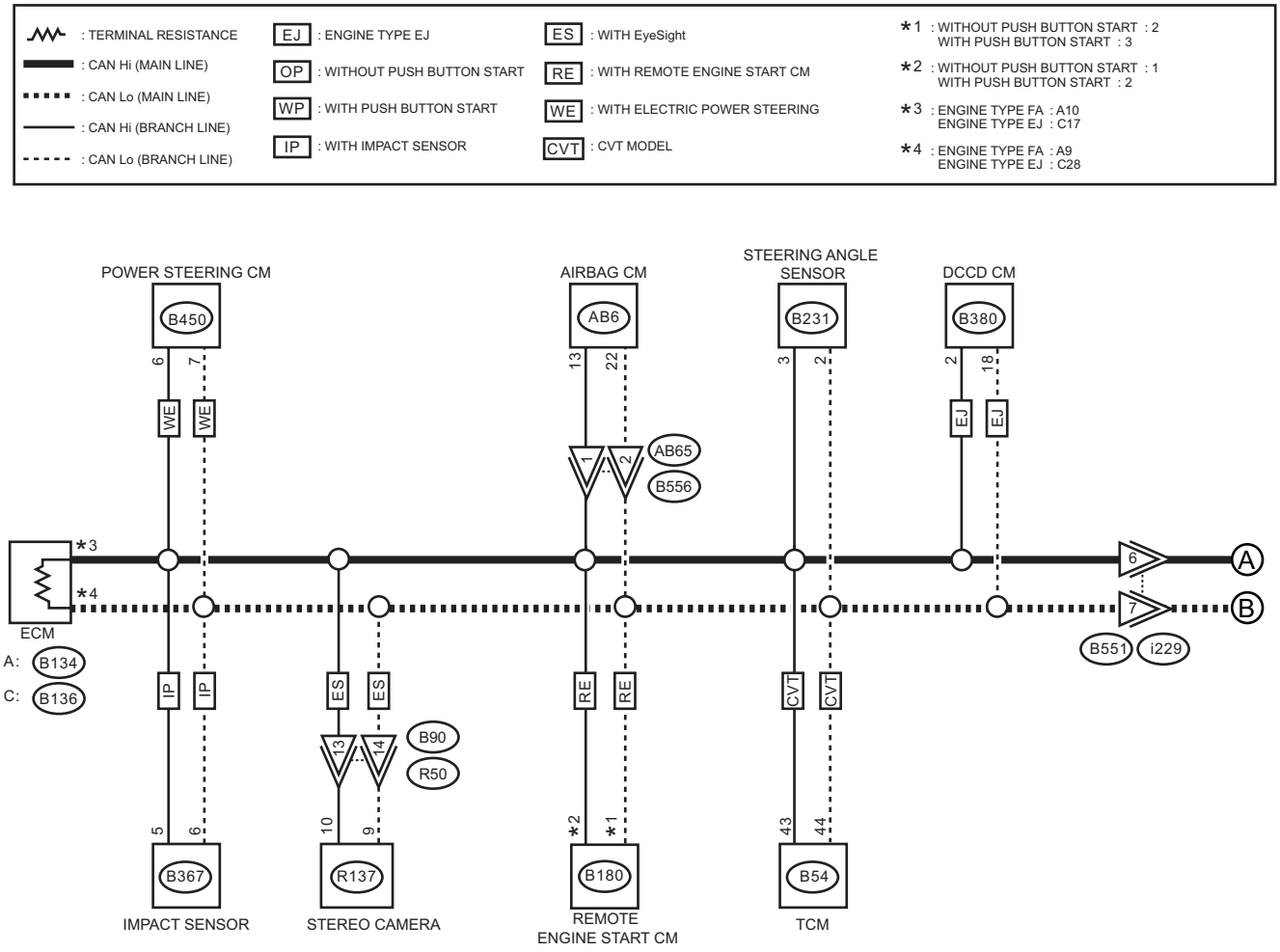

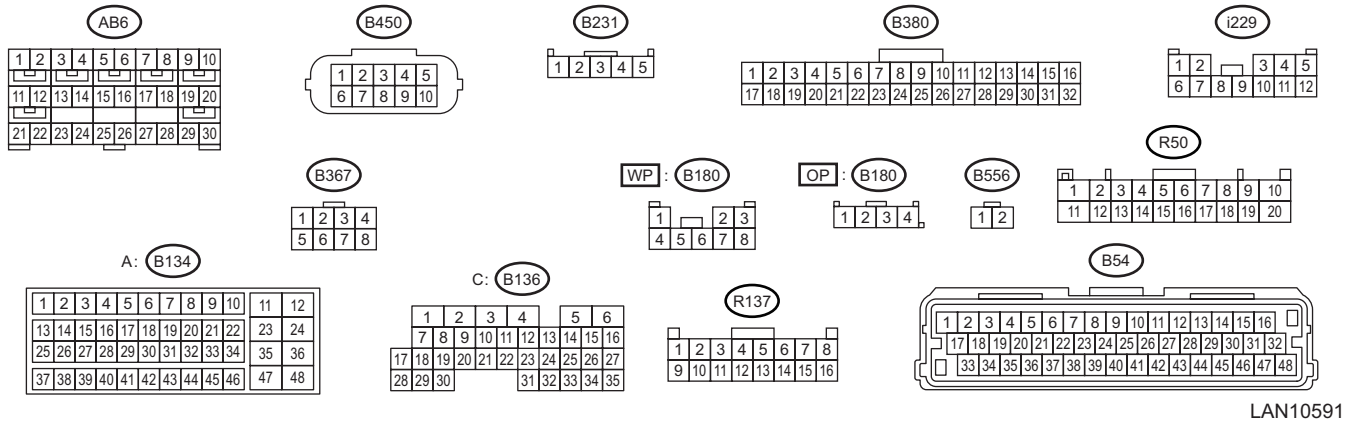

LAN10591

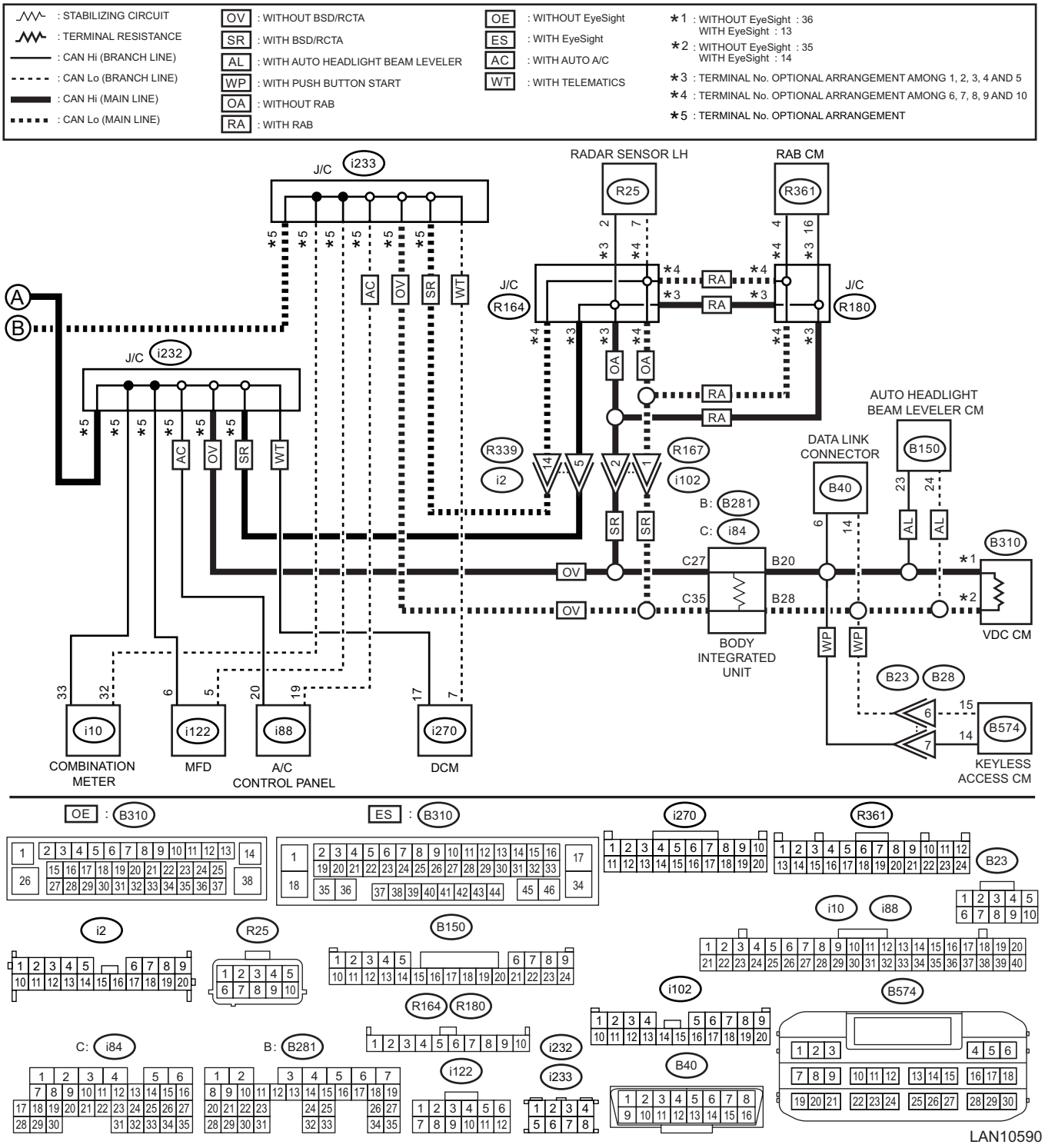

Step		Check	Yes	No
1	**CHECK BETWEEN RELATED LINES AND MAIN WIRING HARNESS.** 1) Disconnect the MFD connector. 2) Using the tester, measure the resistance between terminals. ***Connector & terminal (i122) No. 5 — (i122) No. 6:***	Is the resistance 400 Ω or more?	Related lines between MFD and main wiring harness is open, or main wiring harness is open at two places or more.	Go to step **2**.

Step		Check	Yes	No
2	**CHECK RELATED LINES.** Using the tester, measure the resistance between terminals. ***Connector & terminal*** ***(i122) No. 5 — (B40) No. 14:*** ***(i122) No. 6 — (B40) No. 6:***	Is the resistance 10 Ω or more?	Repair or replace the open circuit of MFD related lines.	Check DTC of MFD. <Ref. to IDI(diag)-13, Read Diagnostic Trouble Code (DTC).>

12.RELATED LINES 53 — 61 Ω (AIRBAG CM SYSTEM)

WIRING DIAGRAM:

CAN communication system <Ref. to WI-113, WIRING DIAGRAM, CAN Communication System.>

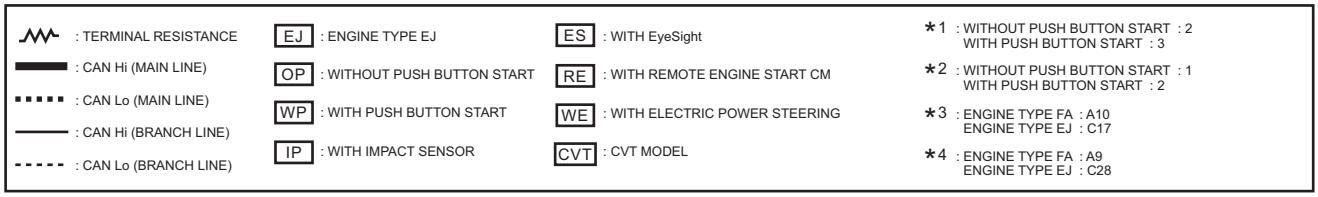

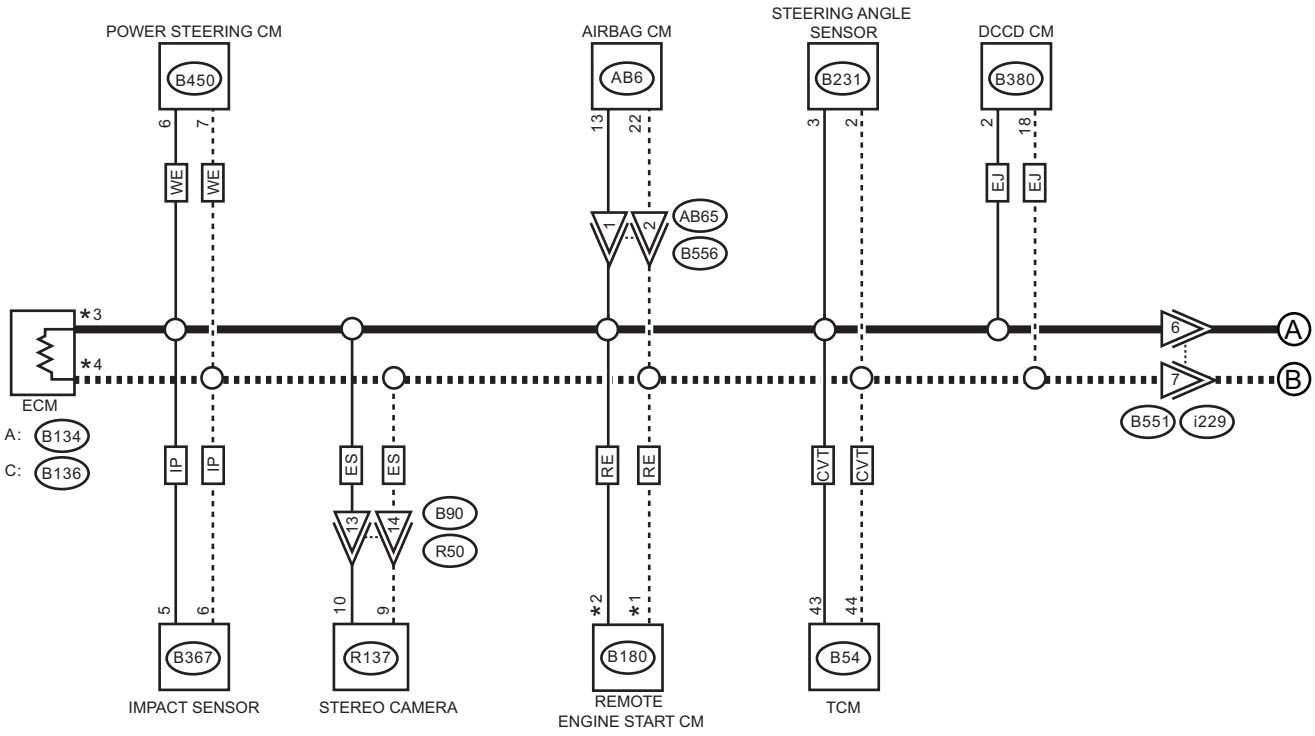

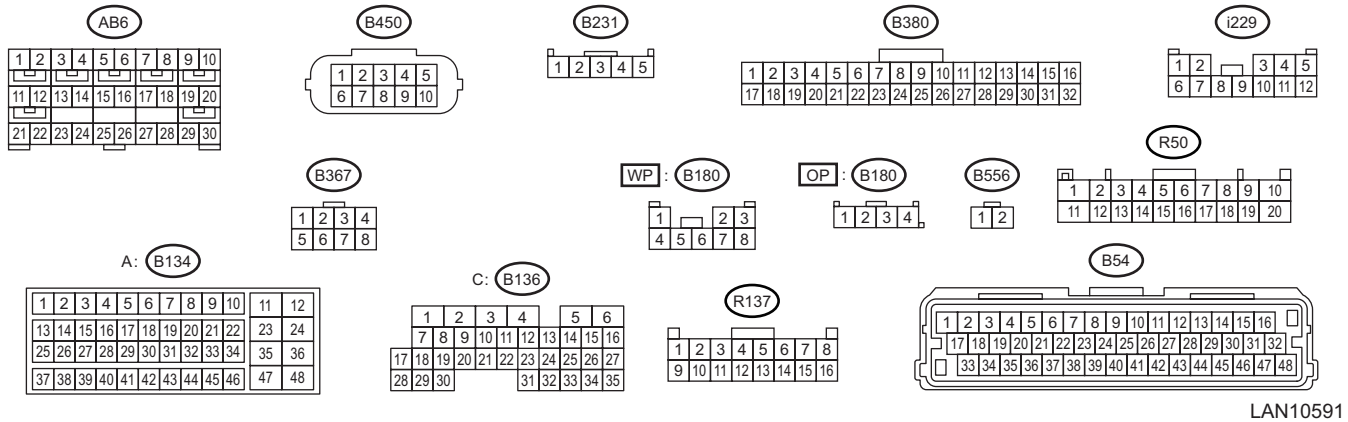

LAN10591

CAN Communication Circuit Check

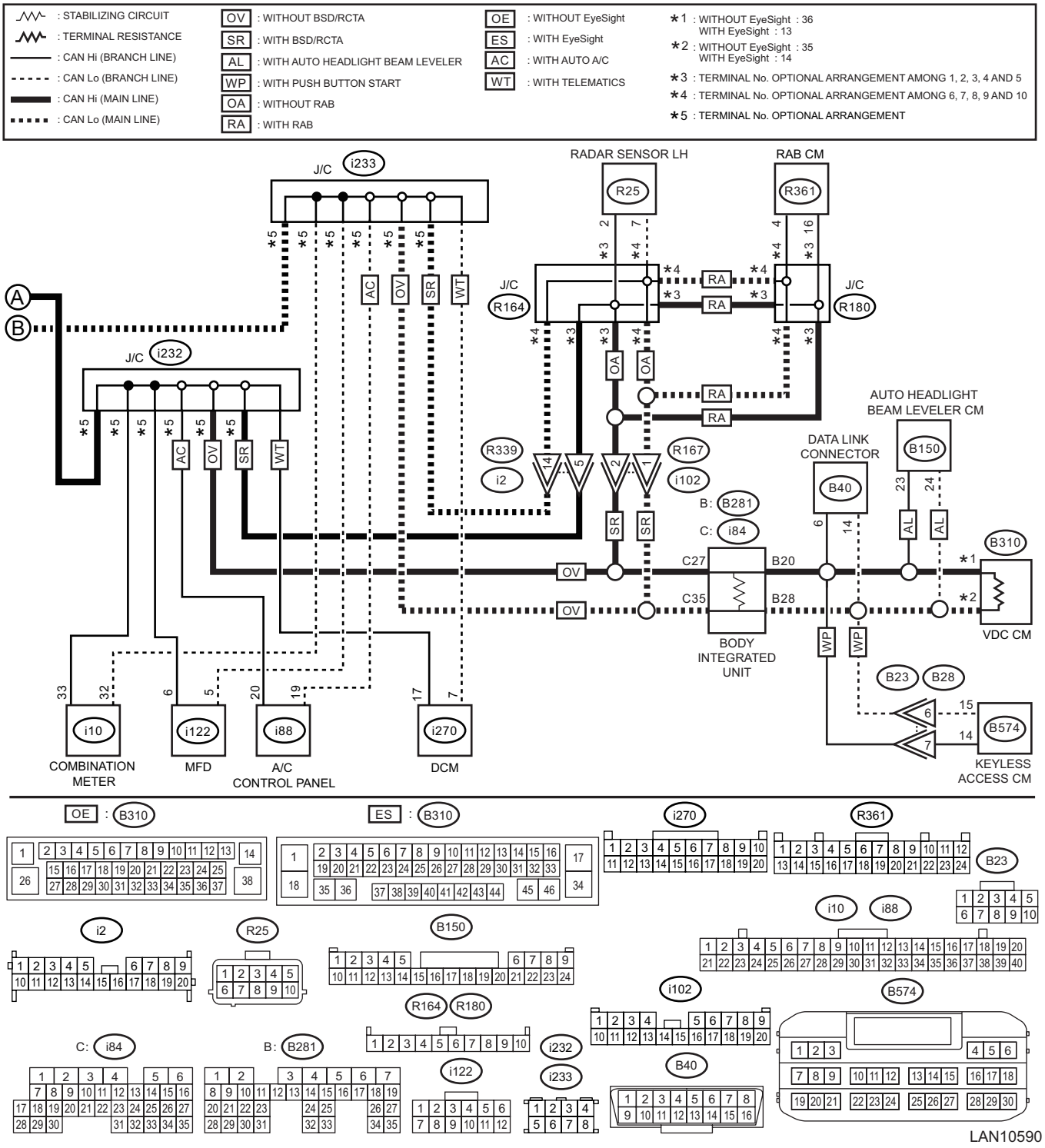

CAUTION:

- **When checking the airbag system, refer to the cautions regarding the airbag system prior to the inspection. <Ref. to AB-2, General Description.>**
- **To measure the voltage and resistance of airbag system component, be sure to use the specified test harness. <Ref. to AB(diag)-4, General Description.>**

	Step	Check	Yes	No
1	**CHECK BETWEEN RELATED LINES AND MAIN WIRING HARNESS.** 1) Disconnect the airbag CM connector. 2) Using the tester, measure the resistance between terminals. ***Connector & terminal*** ***(AB6) No. 13 — (AB6) No. 22:***	Is the resistance 400 Ω or more?	Related lines between airbag CM and main wiring harness is open, or main wiring harness is open at two places or more.	Go to step **2**.
2	**CHECK RELATED LINES.** Using the tester, measure the resistance between terminals. ***Connector & terminal*** ***(AB6) No. 22 — (B40) No. 14:*** ***(AB6) No. 13 — (B40) No. 6:***	Is the resistance 10 Ω or more?	Repair or replace the open circuit portion of airbag CM related lines.	Check DTC of airbag CM. <Ref. to AB(diag)-22, Read Diagnostic Trouble Code (DTC).>

13.RELATED LINES 53 — 61 Ω (KEYLESS ACCESS SYSTEM)

WIRING DIAGRAM:

CAN communication system <Ref. to WI-113, WIRING DIAGRAM, CAN Communication System.>

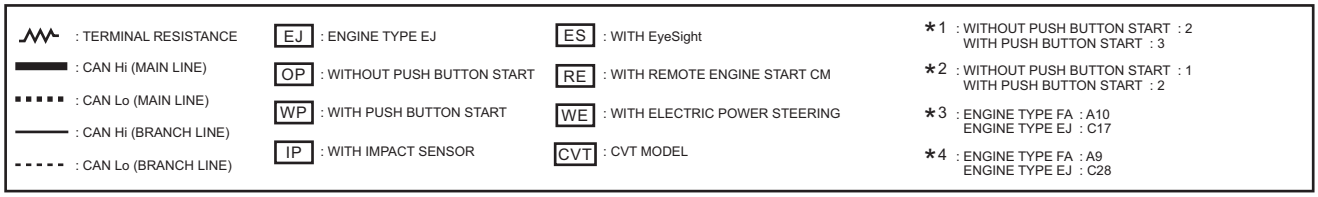

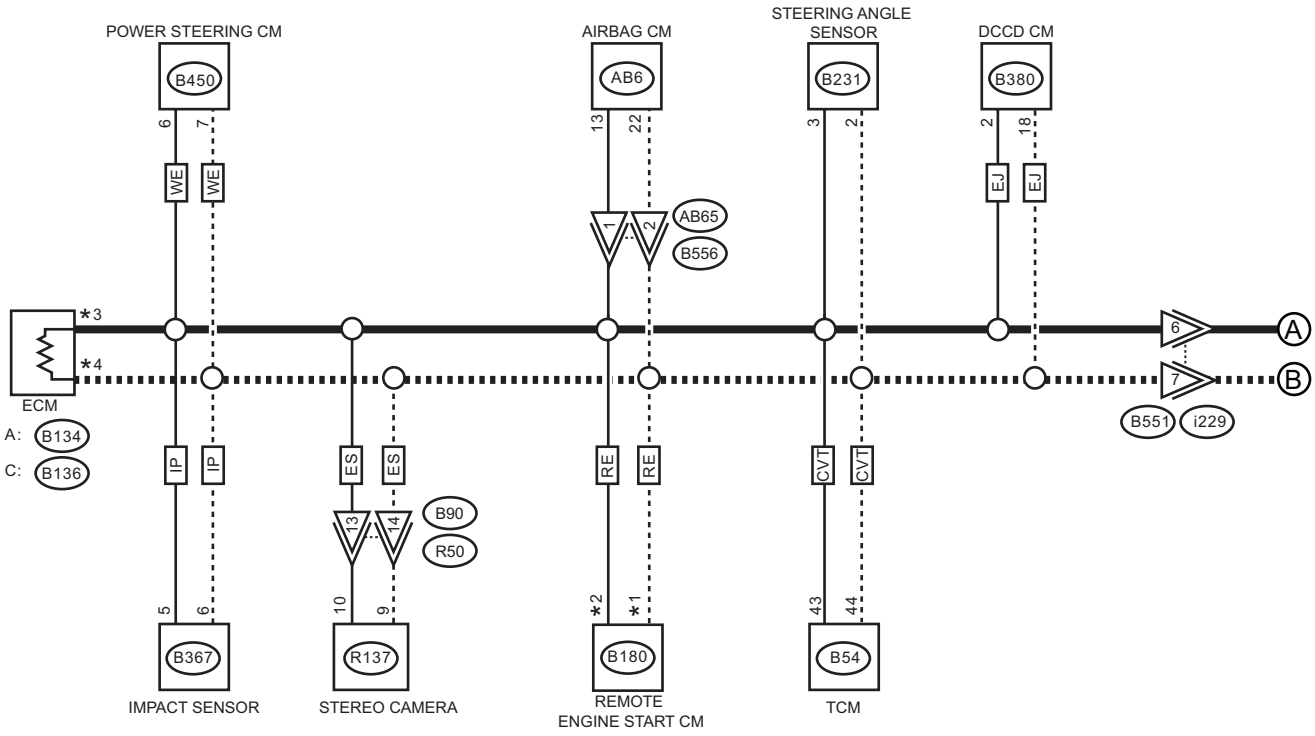

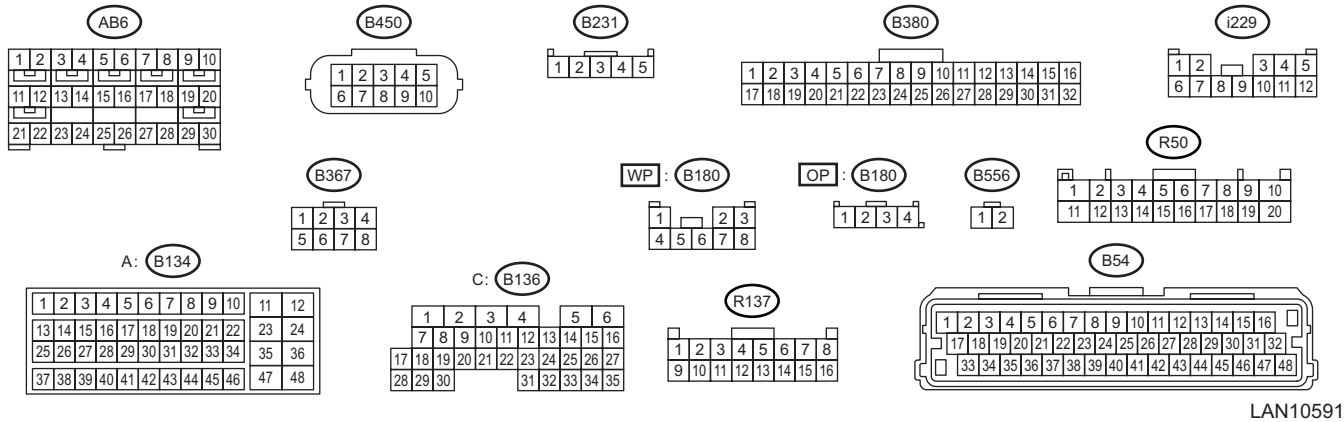

LAN10591

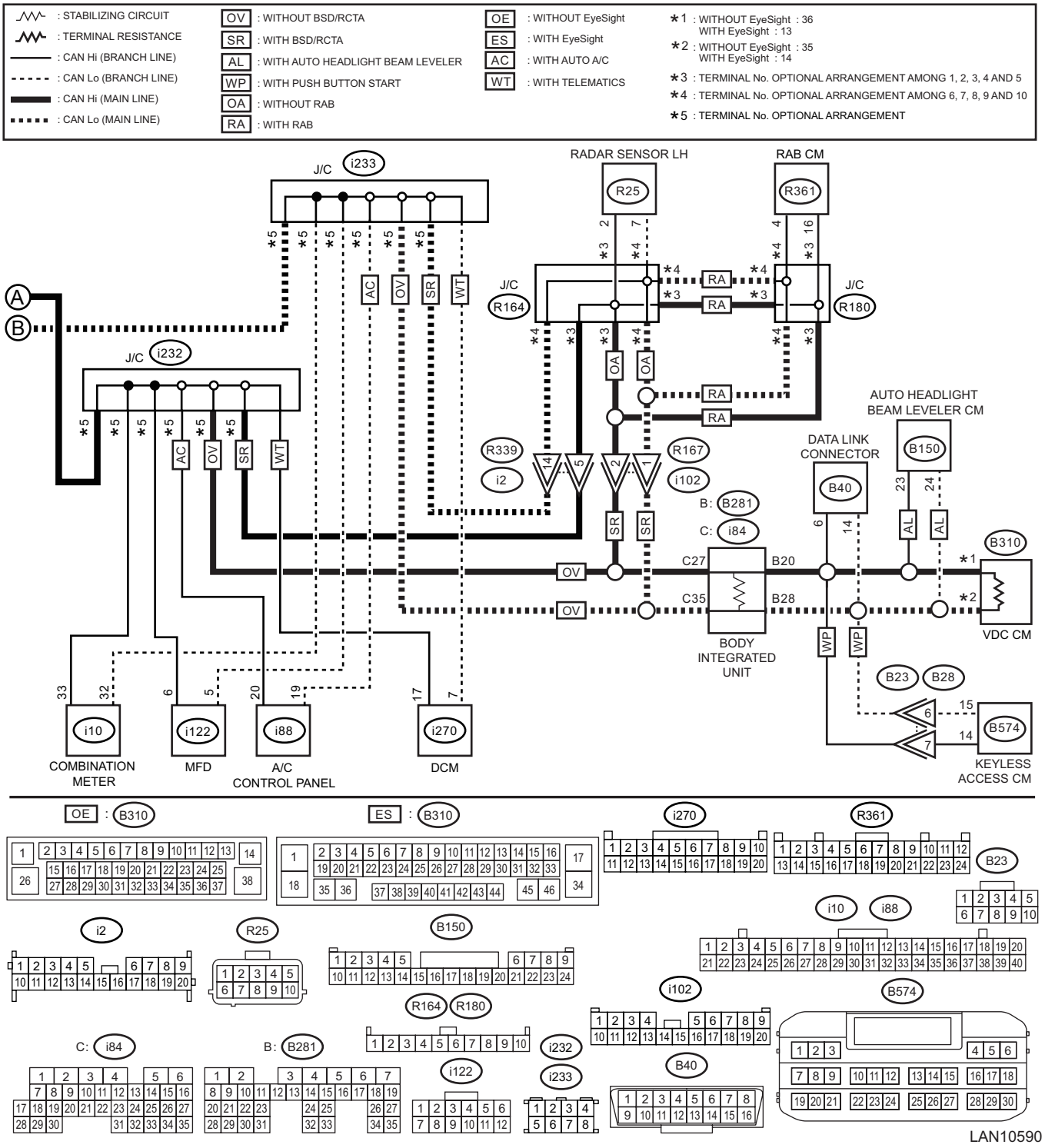

Step		Check	Yes	No
1	**CHECK BETWEEN RELATED LINES AND MAIN WIRING HARNESS.** 1) Disconnect the keyless access CM connector. 2) Using the tester, measure the resistance between terminals. ***Connector & terminal*** ***(B574) No. 14 — (B574) No. 15:***	Is the resistance 400 Ω or more?	Related lines between keyless access CM and main wiring harness is open, or main wiring harness is open at two places or more.	Go to step **2**.

Step		Check	Yes	No
2	**CHECK RELATED LINES.** Using the tester, measure the resistance between terminals. ***Connector & terminal*** ***(B574) No. 15 — (B40) No. 14:*** ***(B574) No. 14 — (B40) No. 6:***	Is the resistance 10 Ω or more?	Repair or replace the open circuit of keyless access CM related lines.	Check DTC of keyless access CM. <Ref. to KPS(diag)-26, OPERATION, Read Diagnostic Trouble Code (DTC).>

14.RELATED LINES 53 — 61 Ω (HEADLIGHT BEAM LEVELER)

WIRING DIAGRAM:

CAN communication system <Ref. to WI-113, WIRING DIAGRAM, CAN Communication System.>

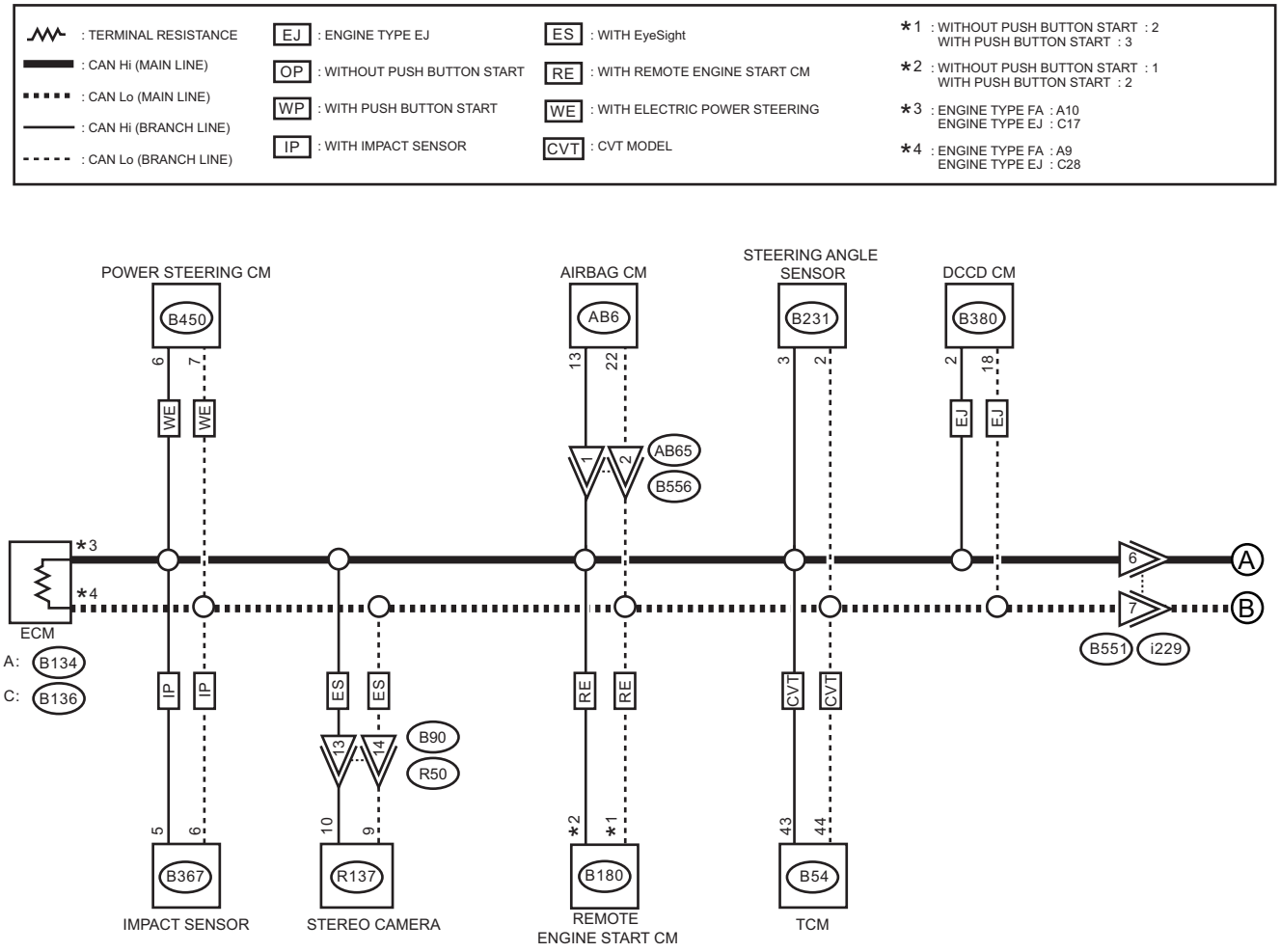

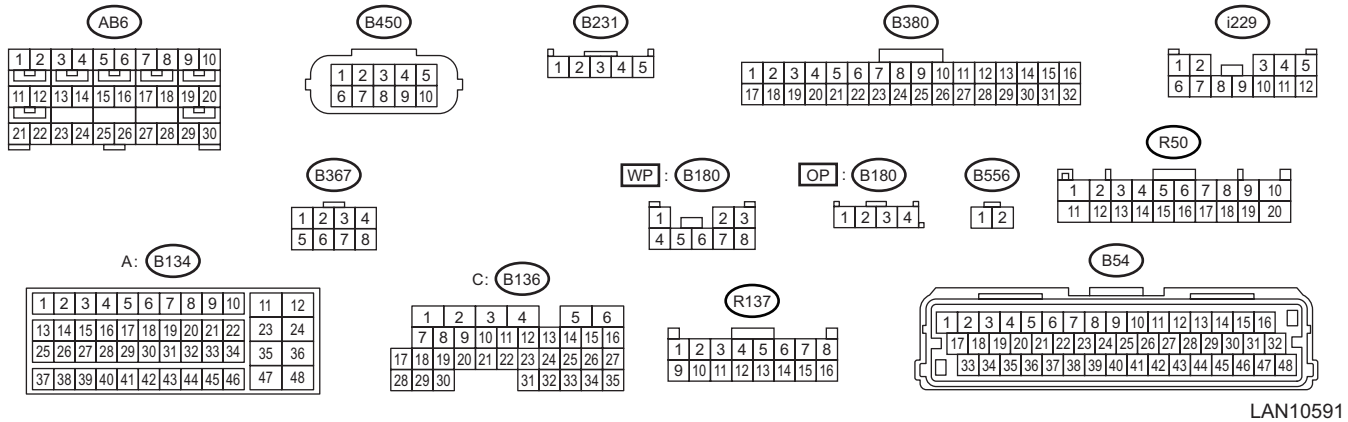

LAN10591

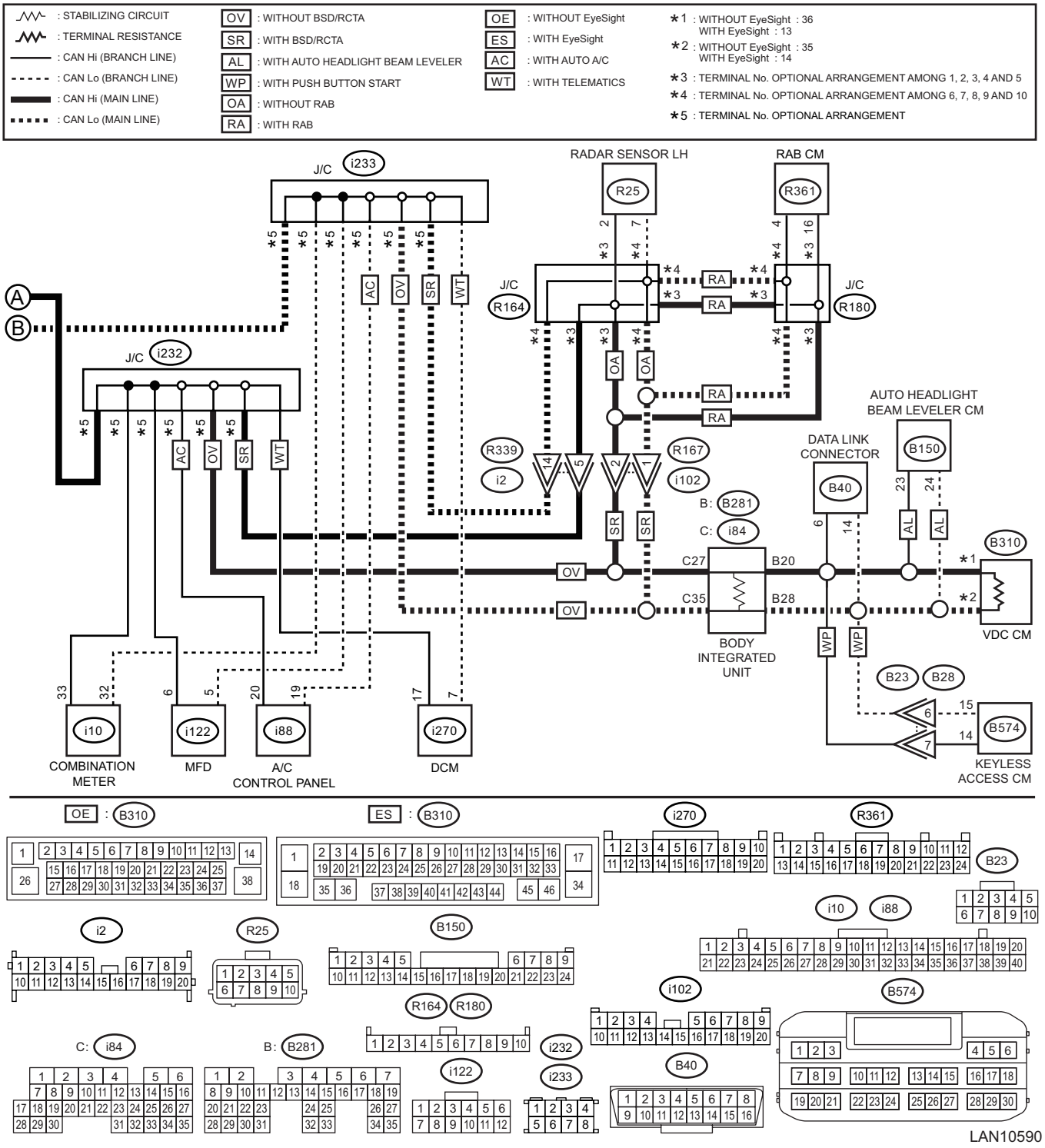

Step		Check	Yes	No
1	**CHECK BETWEEN RELATED LINES AND MAIN WIRING HARNESS.** 1) Disconnect the headlight beam leveler CM connector. 2) Using the tester, measure the resistance between terminals. ***Connector & terminal*** ***(B150) No. 23 — (B150) No. 24:***	Is the resistance 400 Ω or more?	Related lines between headlight beam leveler CM and main wiring harness is open, or main wiring harness is open at two places or more.	Go to step **2**.

Step		Check	Yes	No
2	**CHECK RELATED LINES.** Using the tester, measure the resistance between terminals. ***Connector & terminal*** ***(B150) No. 24 — (B40) No. 14:*** ***(B150) No. 23 — (B40) No. 6:***	Is the resistance 10 Ω or more?	Repair or replace the open circuit portion of headlight beam leveler CM related lines.	Check DTC of headlight beam leveler system. <Ref. to AL(diag)-10, Read Diagnostic Trouble Code (DTC).>

15.RELATED LINES 53 — 61 Ω (REMOTE ENGINE STARTER)

WIRING DIAGRAM:

CAN communication system <Ref. to WI-113, WIRING DIAGRAM, CAN Communication System.>

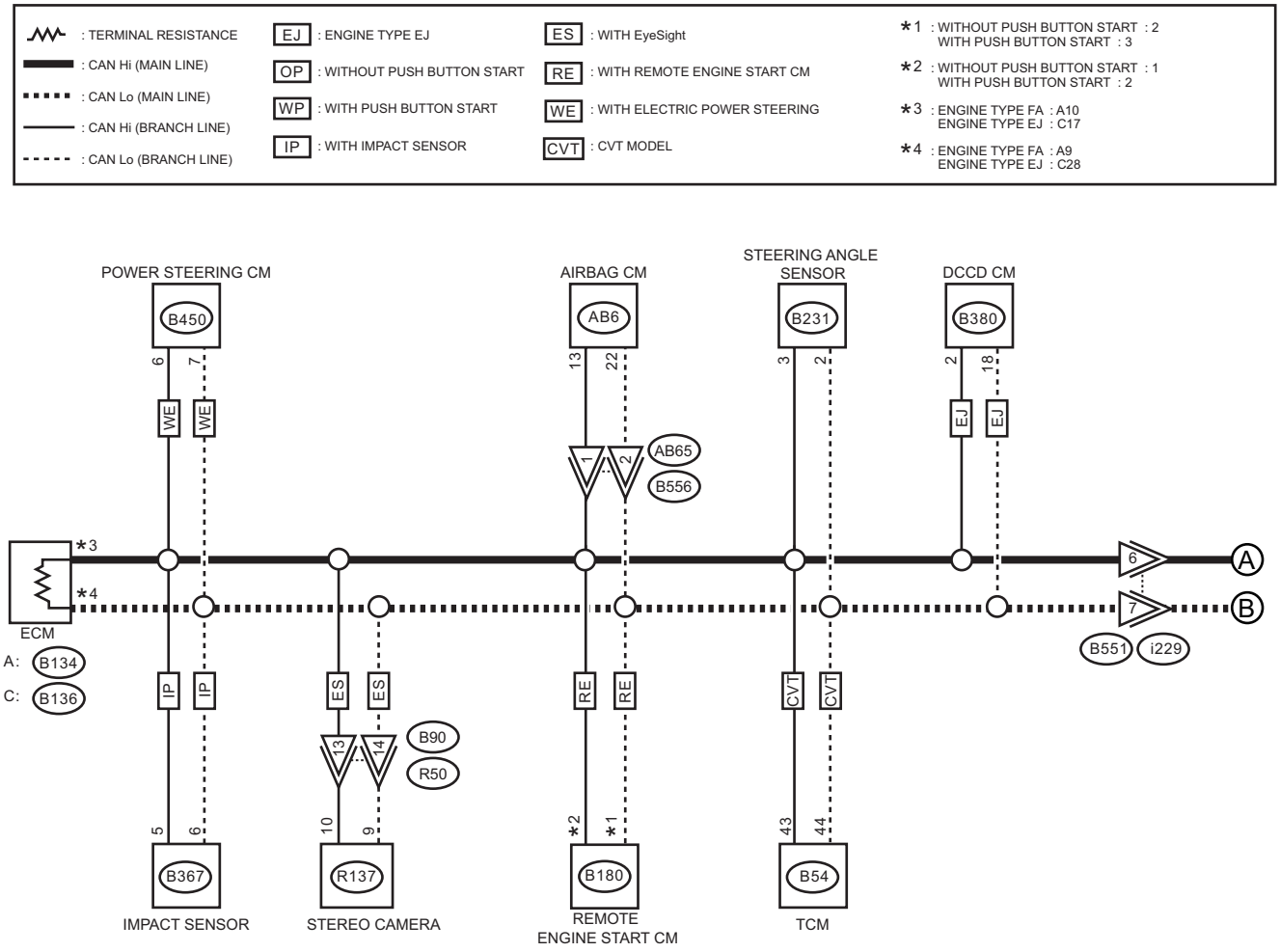

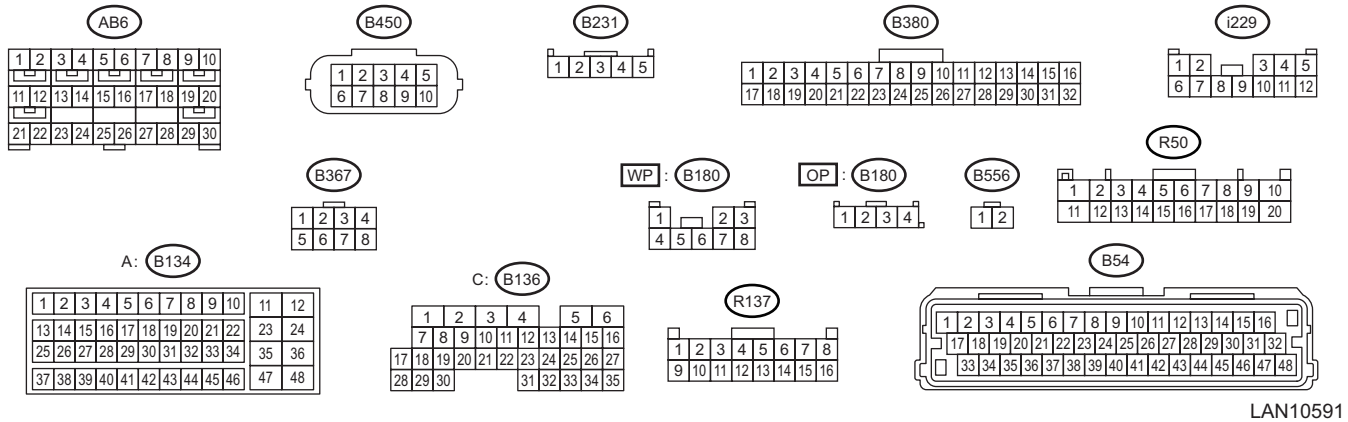

LAN10591

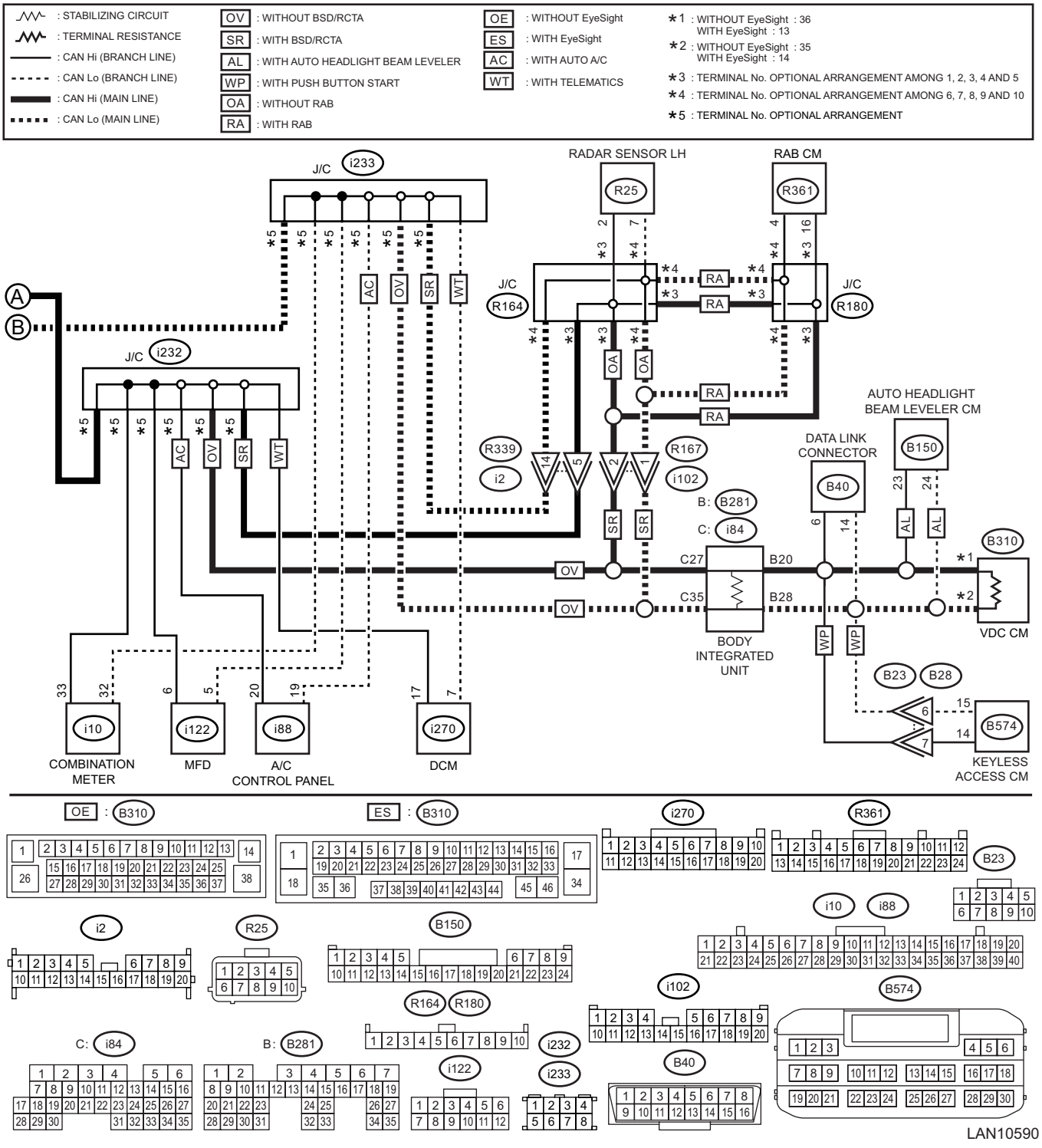
: STABILIZING CIRCUIT
: TERMINAL RESISTANCE
: CAN Hi (BRANCH LINE)
: CAN Lo (BRANCH LINE)
: CAN Hi (MAIN LINE)
: CAN Lo (MAIN LINE)
OV : WITHOUT BSD/RCTA
SR : WITH BSD/RCTA
AL : WITH AUTO HEADLIGHT BEAM LEVELER
WP : WITH PUSH BUTTON START
OA : WITHOUT RAB
RA : WITH RAB
OE : WITHOUT EyeSight
ES : WITH EyeSight
AC : WITH AUTO A/C
WT : WITH TELEMATICS
*1 : WITHOUT EyeSight : 36 WITH EyeSight : 13
*2 : WITHOUT EyeSight : 35 WITH EyeSight : 14
*3 : TERMINAL No. OPTIONAL ARRANGEMENT AMONG 1, 2, 3, 4 AND 5
*4 : TERMINAL No. OPTIONAL ARRANGEMENT AMONG 6, 7, 8, 9 AND 10
*5 : TERMINAL No. OPTIONAL ARRANGEMENT
J/C i233
J/C i232
RADAR SENSOR LH R25
RAB CM R361
J/C R164
J/C R180
AUTO HEADLIGHT BEAM LEVELER CM B150
DATA LINK CONNECTOR B40
R339 i2
R167 i102
B: B281
C: i84
B310
C27 C35 B20 B28
BODY INTEGRATED UNIT
VDC CM
B23 B28
B574
KEYLESS ACCESS CM
i10 COMBINATION METER
i122 MFD
i88 A/C CONTROL PANEL
i270 DCM
OE : B310
ES : B310
i270
R361
B23
i10
i88
i2
R25
B150
R164 R180
i102
B574
C: i84
B: B281
i122
i232
i233
B40

LAN10590

	Step	Check	Yes	No
1	**CHECK BETWEEN RELATED LINES AND MAIN WIRING HARNESS.** 1) Disconnect the remote engine start CM connector. 2) Using the tester, measure the resistance between terminals. ***Connector & terminal*** ***Without push button start*** ***(B180) No. 1 — (B180) No. 2:*** ***With push button start*** ***(B180) No. 2 — (B180) No. 3:***	Is the resistance 400 Ω or more?	Related lines between remote engine start CM and main wiring harness is open, or main wiring harness is open at two places or more.	Go to step **2**.
2	**CHECK RELATED LINES.** Using the tester, measure the resistance between terminals. ***Connector & terminal*** ***Without push button start*** ***(B180) No. 1 — (B40) No. 6:*** ***(B180) No. 2 — (B40) No. 14:*** ***With push button start*** ***(B180) No. 2 — (B40) No. 6:*** ***(B180) No. 3 — (B40) No. 14:***	Is the resistance 10 Ω or more?	Repair or replace the open circuit of remote engine start CM related lines.	The communication harness is normal. Check the remote engine starter CM or the mobile key.

16.RELATED LINES 53 — 61 Ω (IMPACT SENSOR SYSTEM)

WIRING DIAGRAM:

CAN communication system <Ref. to WI-113, WIRING DIAGRAM, CAN Communication System.>

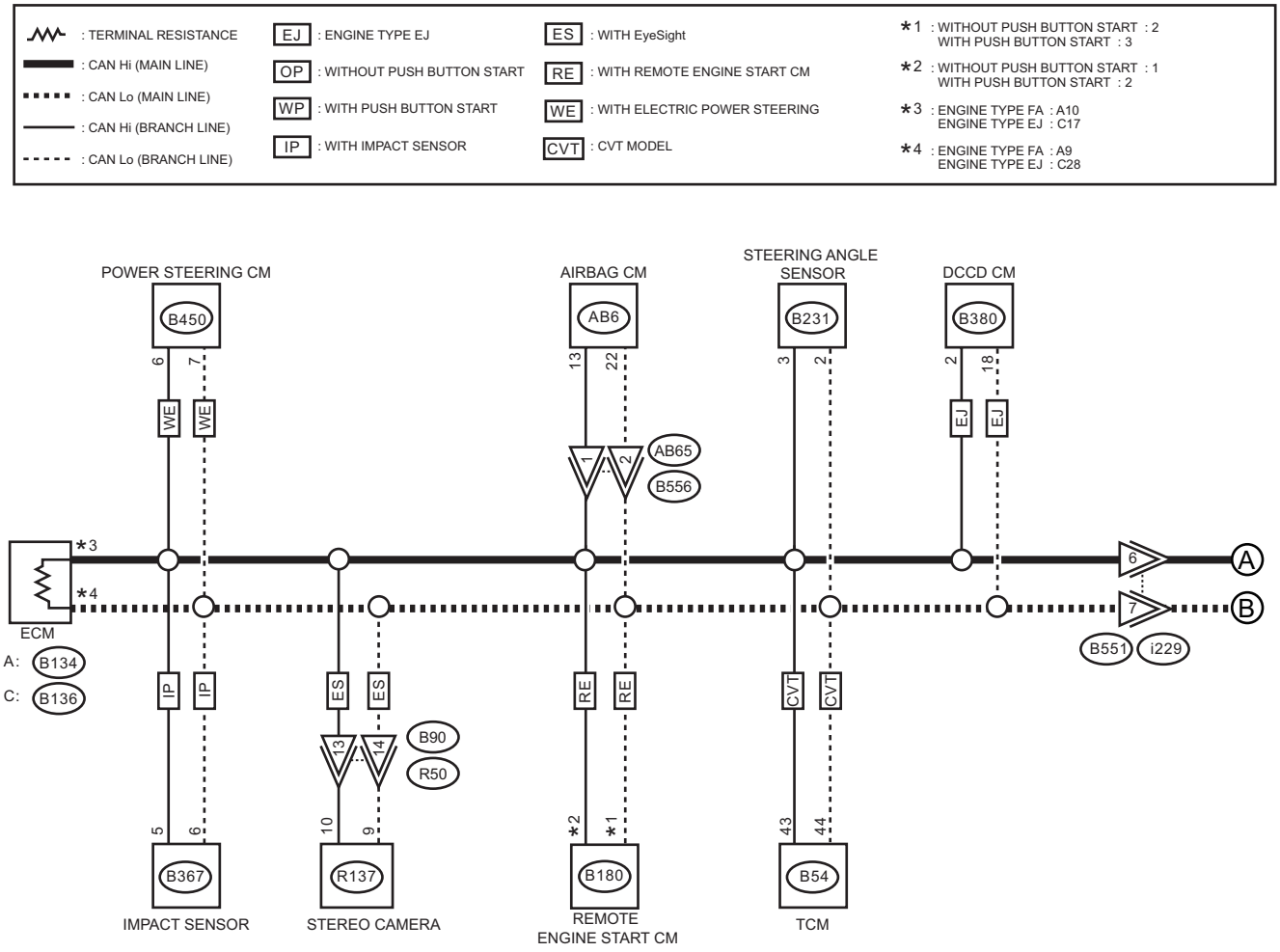

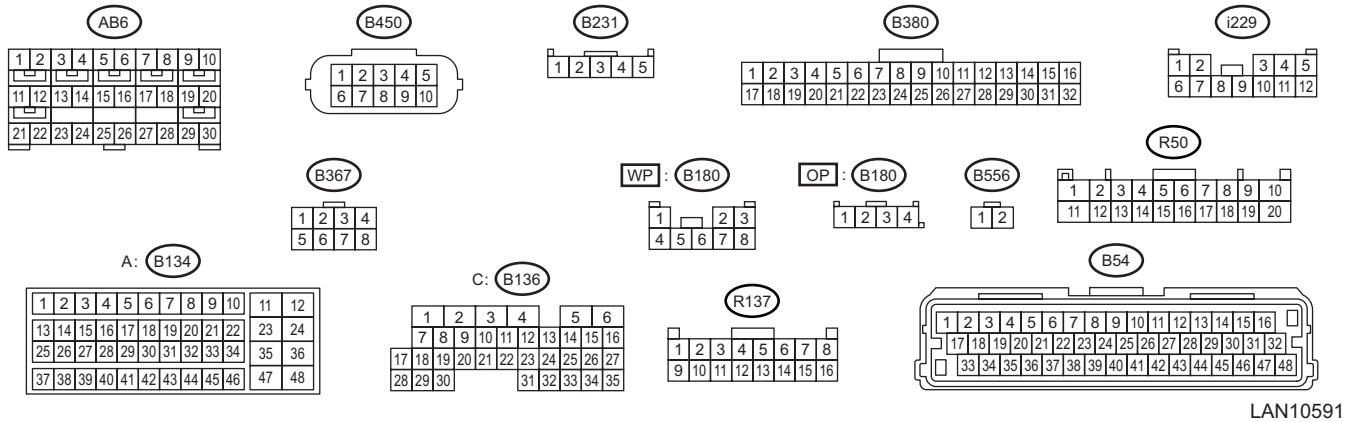

LAN10591

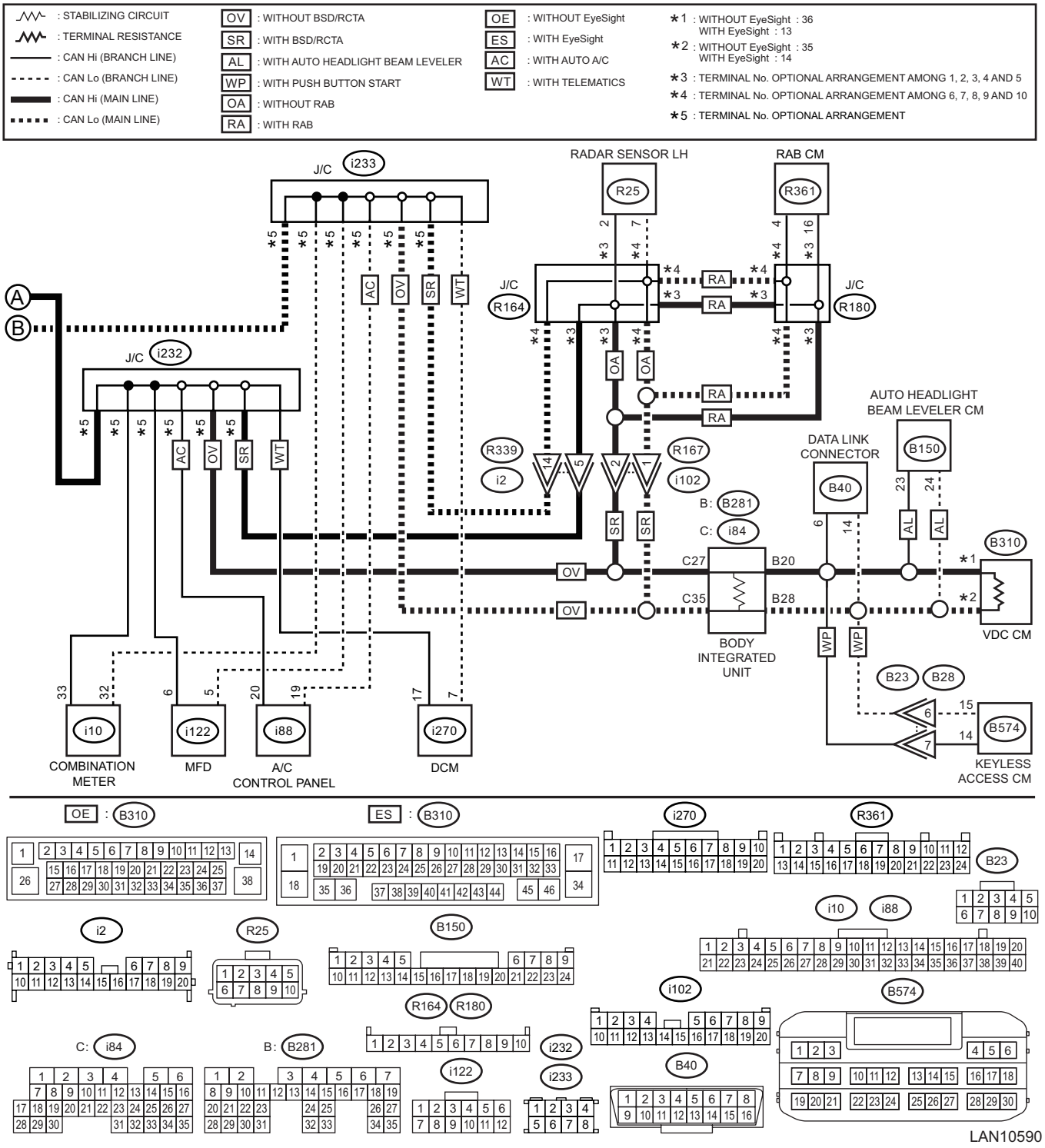

Step		Check	Yes	No
1	**CHECK BETWEEN RELATED LINES AND MAIN WIRING HARNESS.** 1) Disconnect the impact sensor connector. 2) Using the tester, measure the resistance between terminals. ***Connector & terminal*** ***(B367) No. 5 — (B367) No. 6:***	Is the resistance 400 Ω or more?	Related lines between the impact sensor and main wiring harness is open, or main wiring harness is open at two places or more.	Go to step **2**.

Step		Check	Yes	No
2	**CHECK RELATED LINES.** Using the tester, measure the resistance between terminals. ***Connector & terminal*** ***(B367) No. 6 — (B40) No. 14:*** ***(B367) No. 5 — (B40) No. 6:***	Is the resistance 10 Ω or more?	Repair or replace the open circuit of the impact sensor system related lines.	The communication harness is normal. Check the impact sensor.

17.RELATED LINES 53 — 61 Ω (DCCD)

WIRING DIAGRAM:

CAN communication system <Ref. to WI-113, WIRING DIAGRAM, CAN Communication System.>

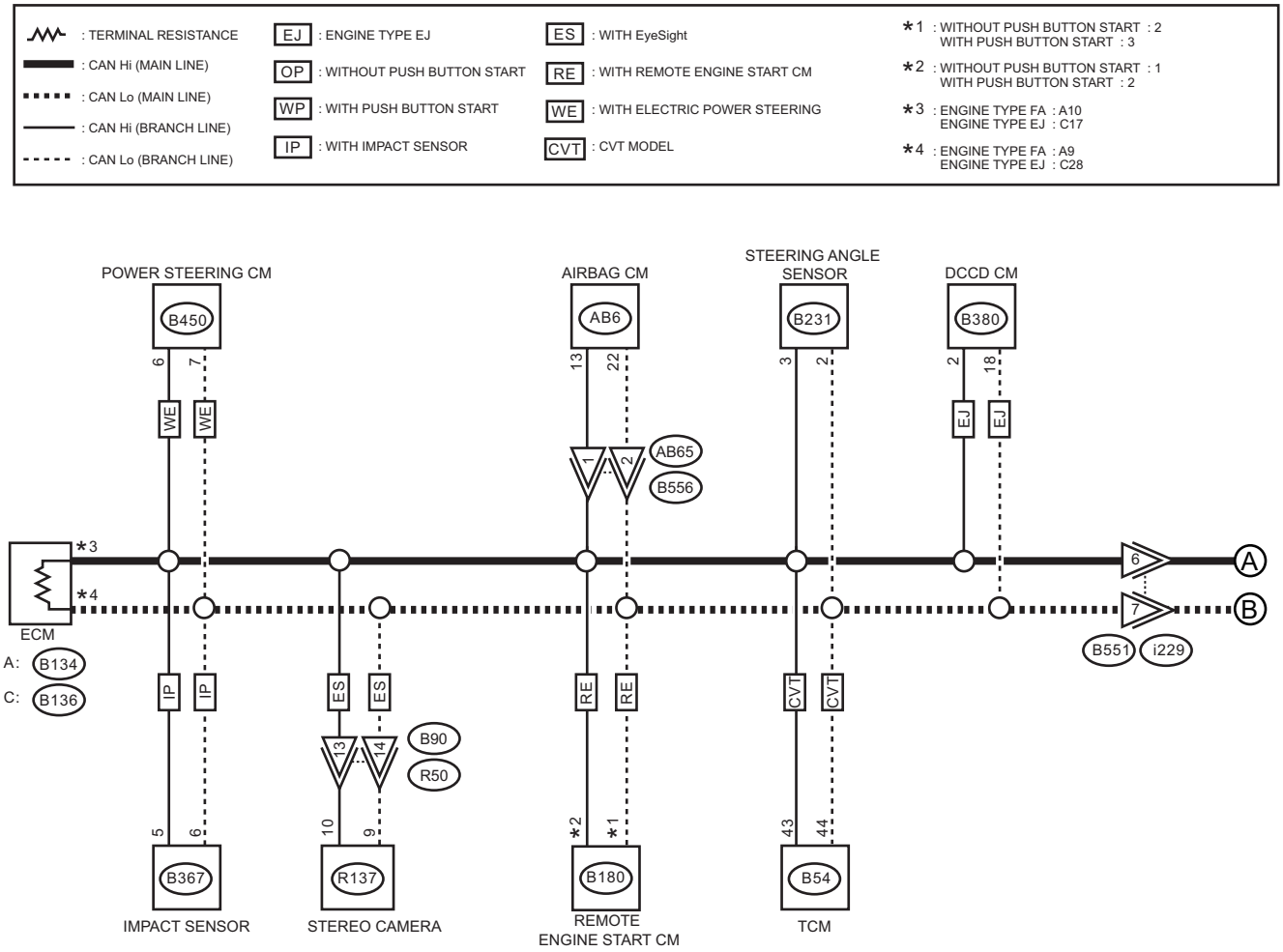

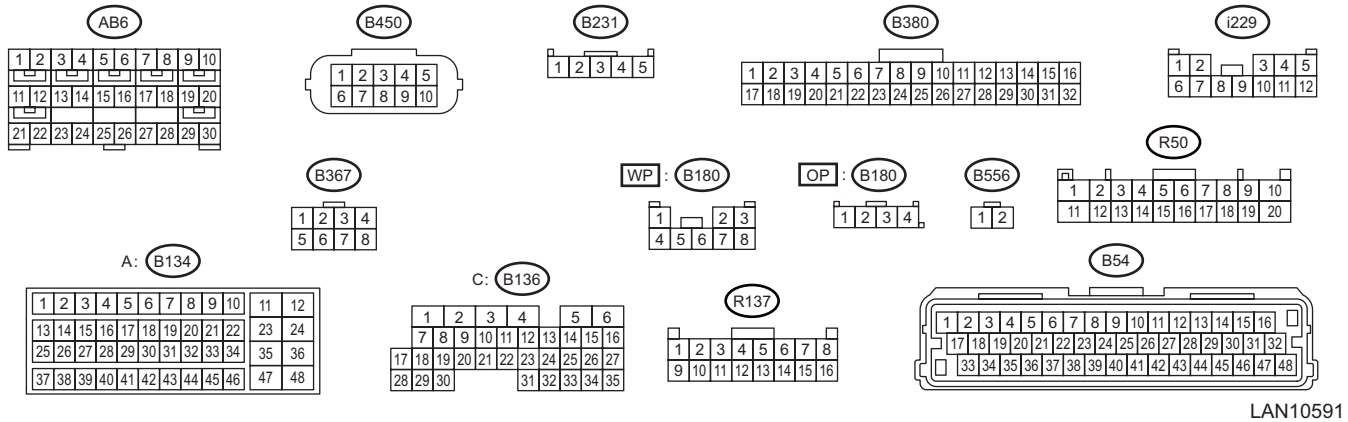

LAN10591

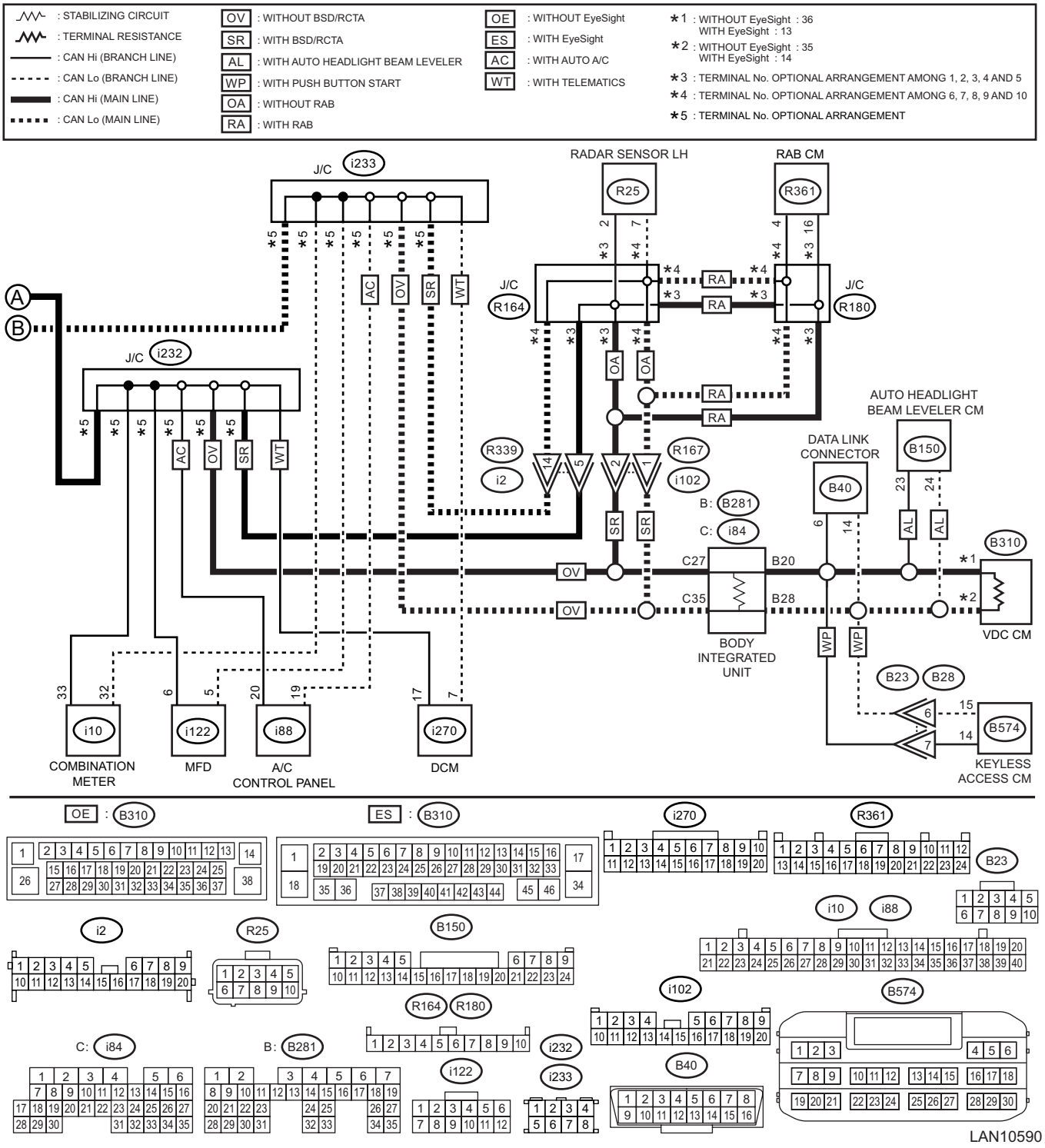

LAN10590

Step		Check	Yes	No
1	**CHECK BETWEEN RELATED LINES AND MAIN WIRING HARNESS.** 1) Disconnect the DCCD CM connector. 2) Using the tester, measure the resistance between terminals. ***Connector & terminal (B380) No. 2 — (B380) No. 18:***	Is the resistance 400 Ω or more?	Related lines between DCCD CM and main wiring harness is open, or main wiring harness is open at two places or more.	Go to step **2**.

Step		Check	Yes	No
2	**CHECK RELATED LINES.** Using the tester, measure the resistance between terminals. ***Connector & terminal*** ***(B380) No. 18 — (B40) No. 14:*** ***(B380) No. 2 — (B40) No. 6:***	Is the resistance 10 Ω or more?	Repair or replace the open portion of DCCD CM related lines.	The communication harness is normal. Check the DCCD CM. <Ref. to 6MT(diag)-9, Read Diagnostic Trouble Code (DTC).>

18.RELATED LINES 53 — 61 Ω (BSD/RCTA)

WIRING DIAGRAM:

CAN communication system <Ref. to WI-113, WIRING DIAGRAM, CAN Communication System.>

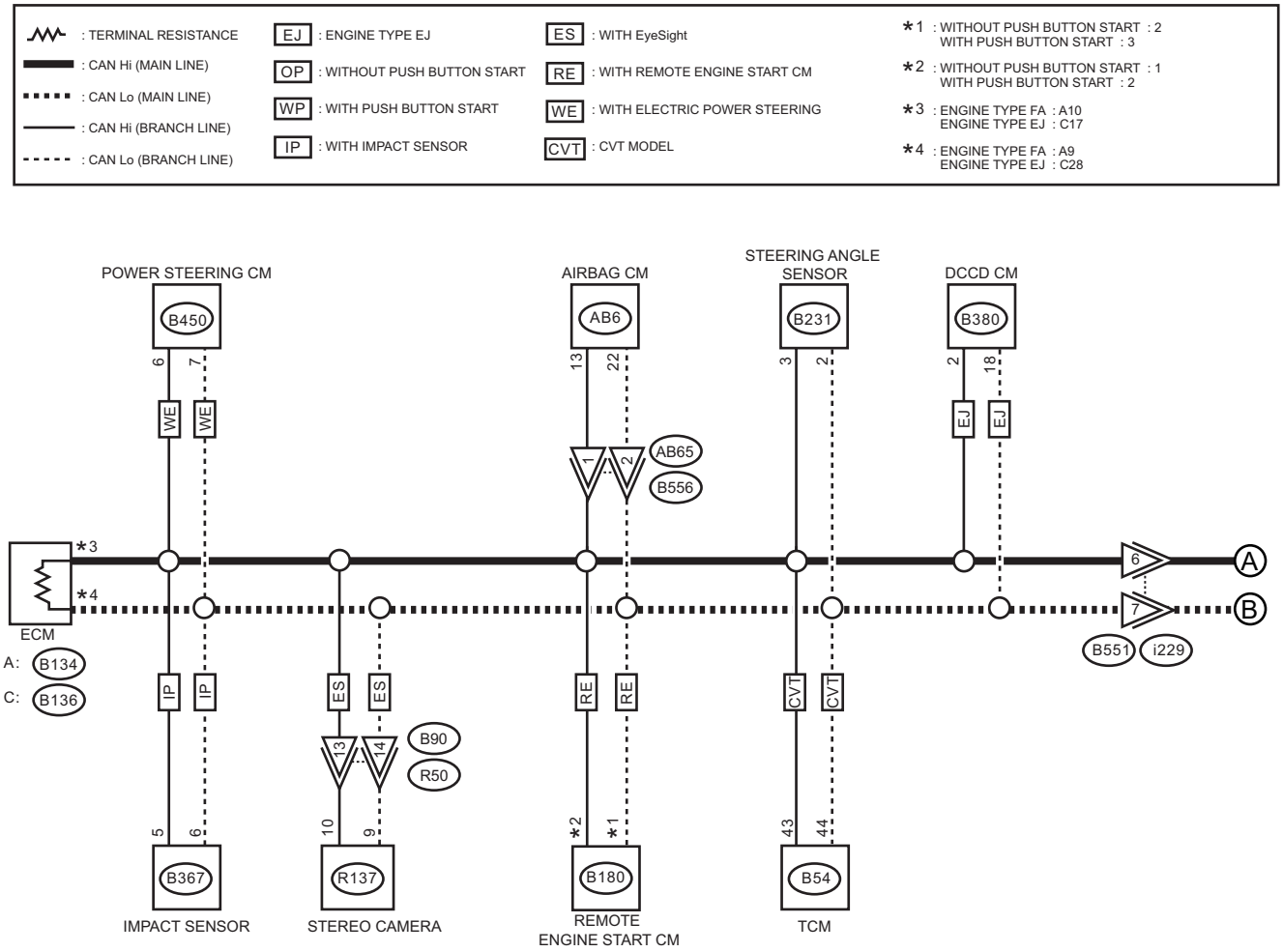

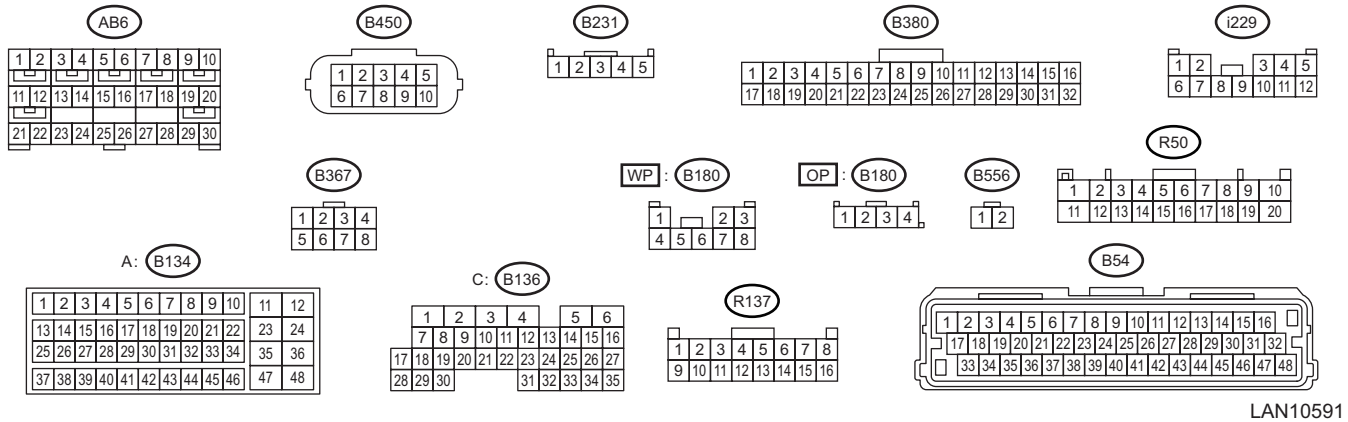

LAN10591

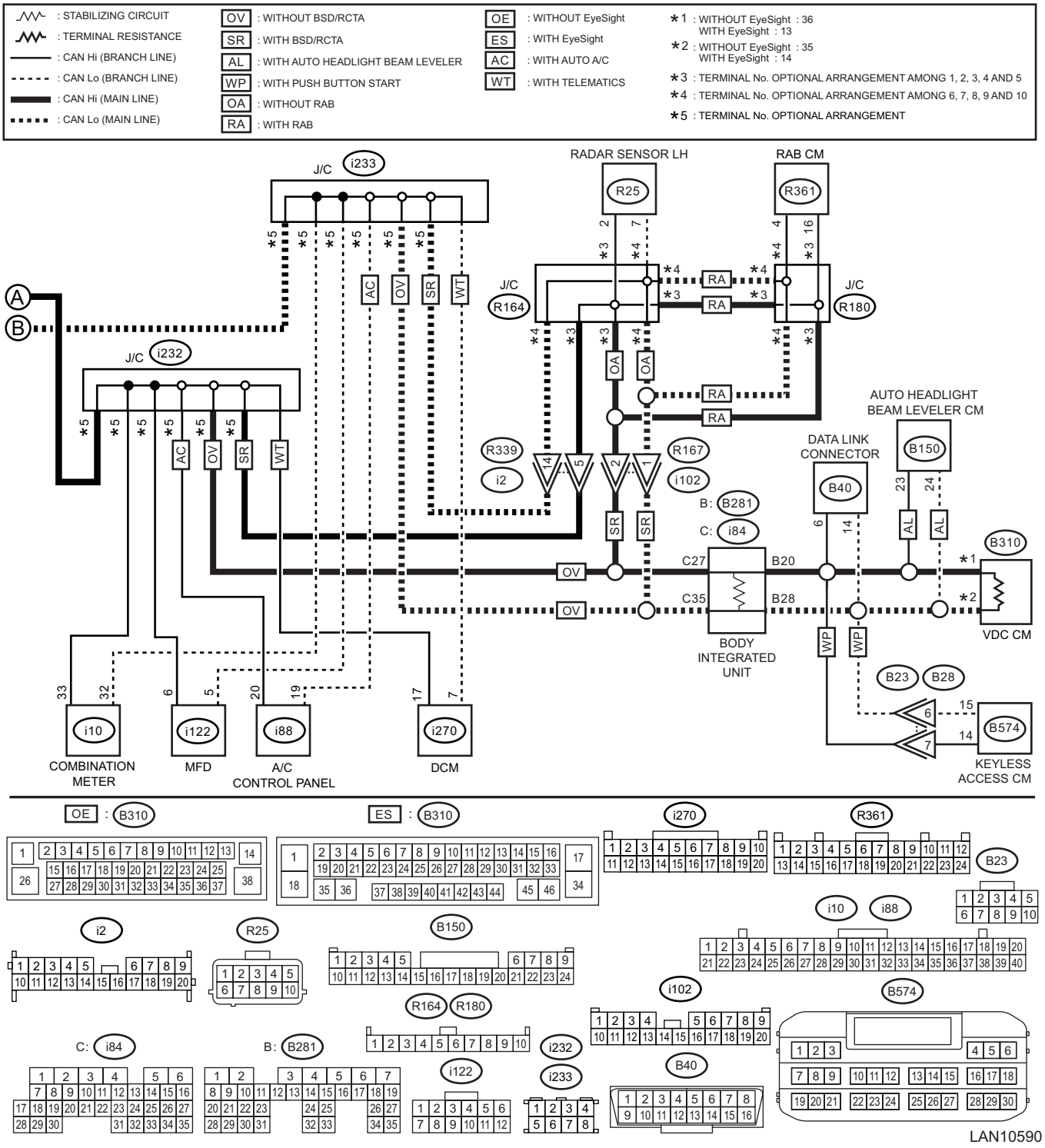

Step		Check	Yes	No
1	**CHECK BETWEEN RELATED LINES AND MAIN WIRING HARNESS.** 1) Disconnect the radar sensor LH connector. 2) Using the tester, measure the resistance between terminals. ***Connector & terminal*** ***(R25) No. 2 — (R25) No. 7:***	Is the resistance 400 Ω or more?	Related lines between radar sensor LH and main wiring harness is open, or main wiring harness is open at two places or more.	Go to step **2**.

Step		Check	Yes	No
2	**CHECK RELATED LINES.** Using the tester, measure the resistance between terminals. ***Connector & terminal*** ***(R25) No. 2 — (B40) No. 6:*** ***(R25) No. 7 — (B40) No. 14:***	Is the resistance 10 Ω or more?	Repair or replace the open circuit of the Subaru Rear Vehicle Detection related lines.	The communication harness is normal. Check DTC of radar sensor. <Ref. to RVD(diag)-12, OPERATION, Read Diagnostic Trouble Code (DTC).>

19.RELATED LINES 53 — 61 Ω (STEREO CAMERA)

WIRING DIAGRAM:

CAN communication system <Ref. to WI-113, WIRING DIAGRAM, CAN Communication System.>

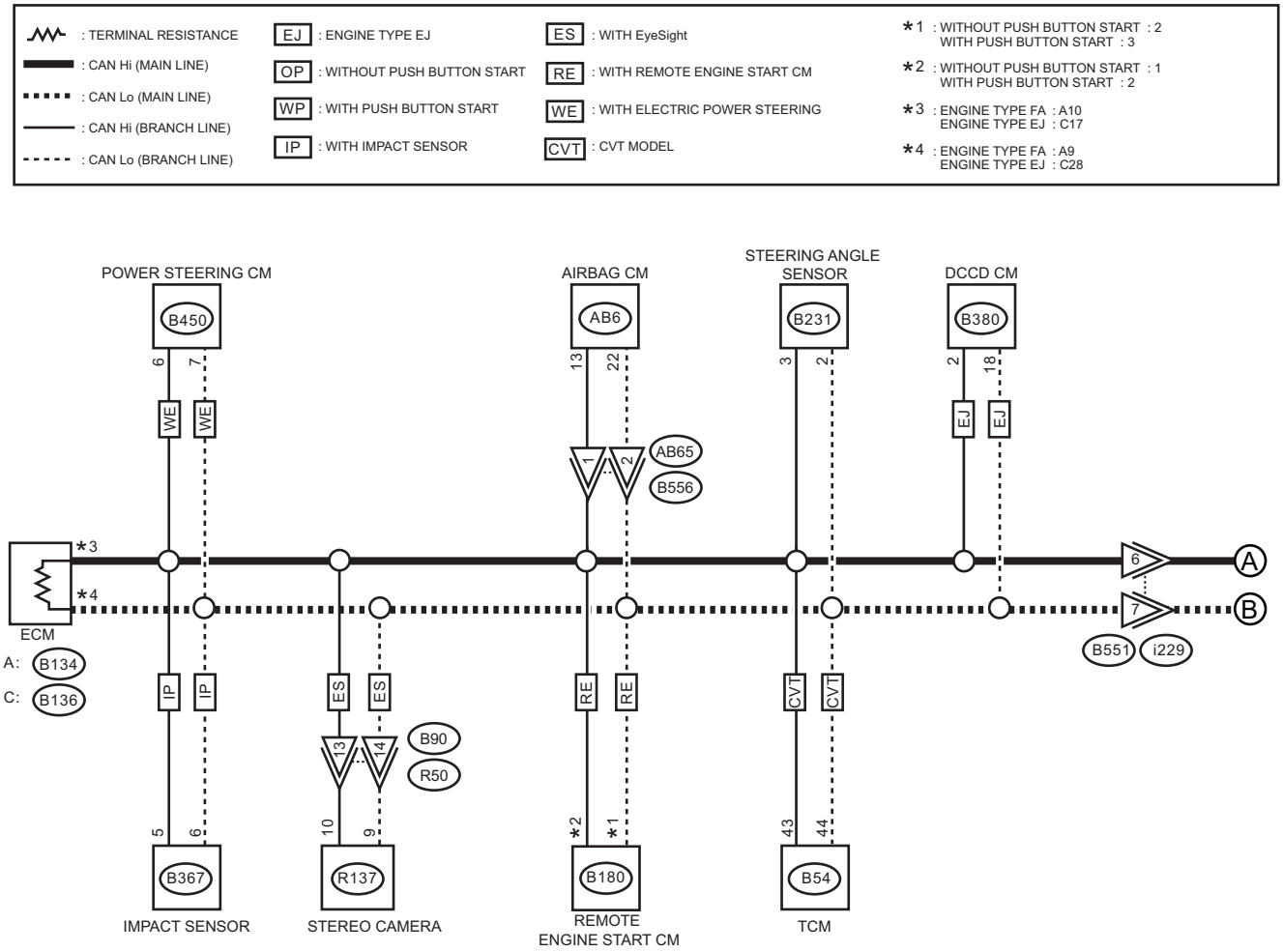

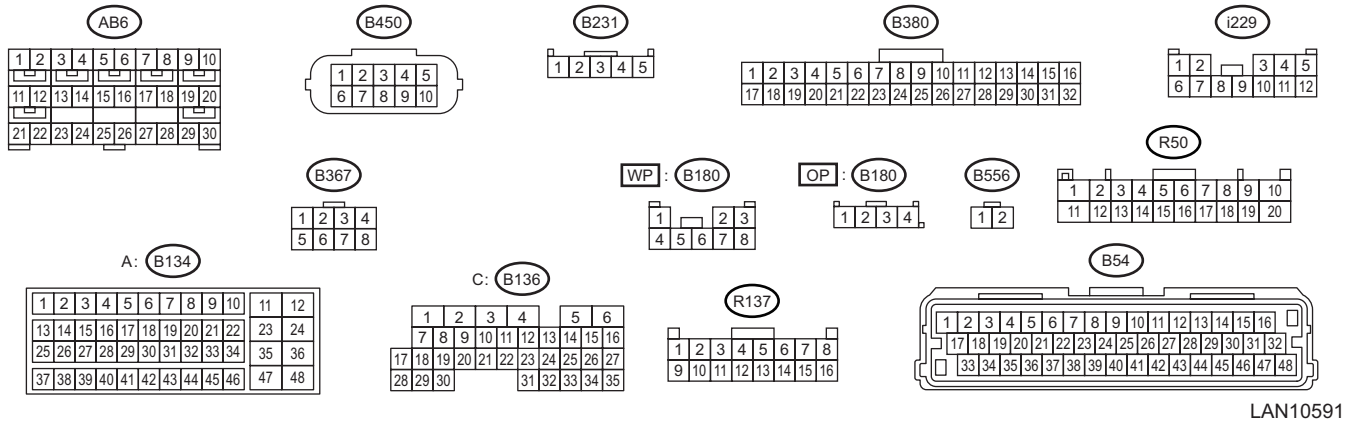

LAN10591

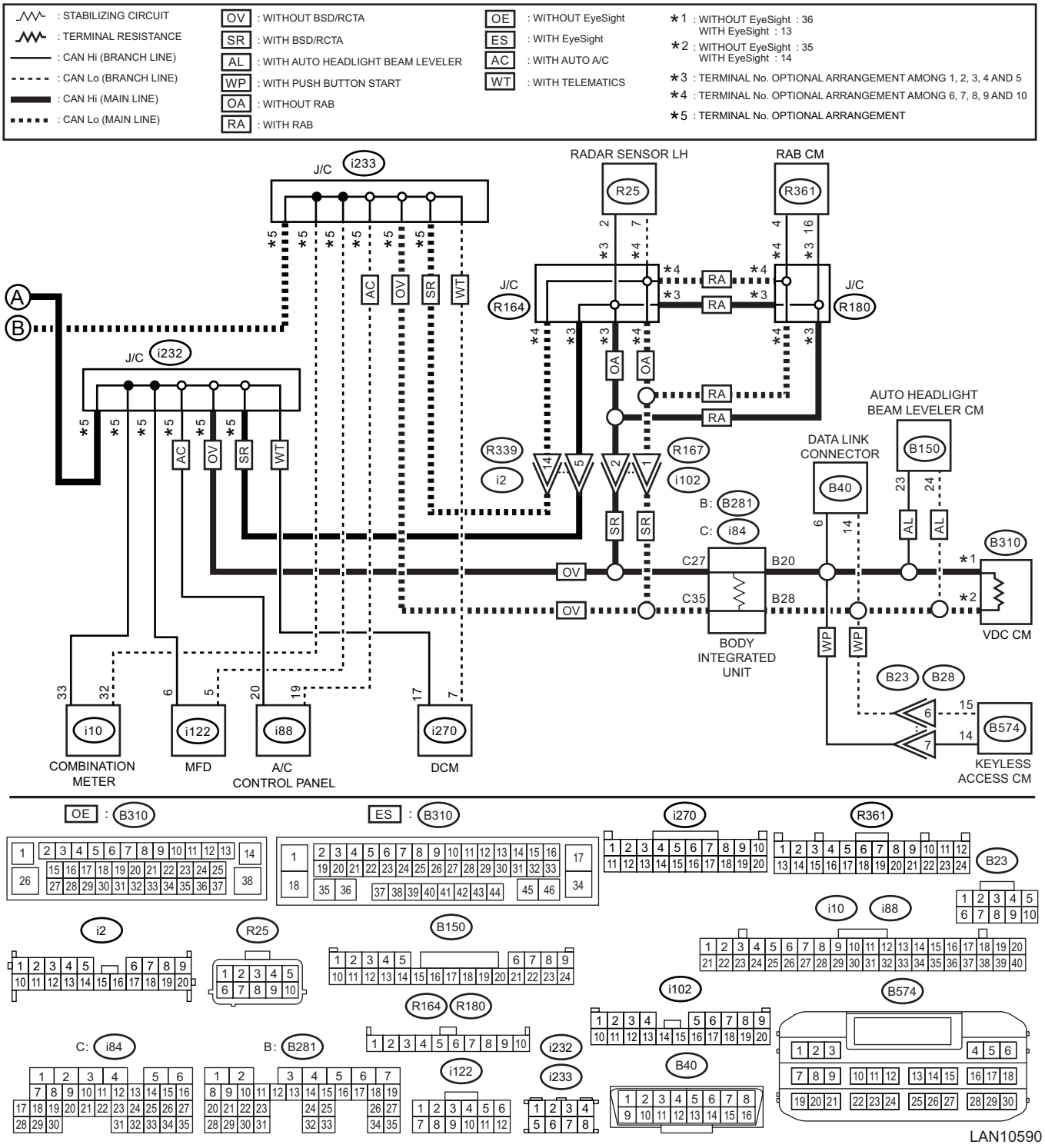

Step		Check	Yes	No
1	**CHECK BETWEEN RELATED LINES AND MAIN WIRING HARNESS.** 1) Disconnect the stereo camera connector. 2) Using the tester, measure the resistance between terminals. ***Connector & terminal (R137) No. 10 — No. 9:***	Is the resistance 400 Ω or more?	Related lines between stereo camera and main wiring harness is open, or main wiring harness is open at two places or more.	Go to step **2**.

Step		Check	Yes	No
2	**CHECK RELATED LINES.** Using the tester, measure the resistance between terminals. ***Connector & terminal*** ***(R137) No. 9 — (B40) No. 14:*** ***(R137) No. 10 — (B40) No. 6:***	Is the resistance 10 Ω or more?	Repair or replace the open circuit of stereo camera related lines.	Check DTC of stereo camera. <Ref. to ES(diag)-43, Diagnostic Code(s) Display.>

20.RELATED LINES 53 — 61 Ω (TELEMATICS)

WIRING DIAGRAM:

CAN communication system <Ref. to WI-113, WIRING DIAGRAM, CAN Communication System.>

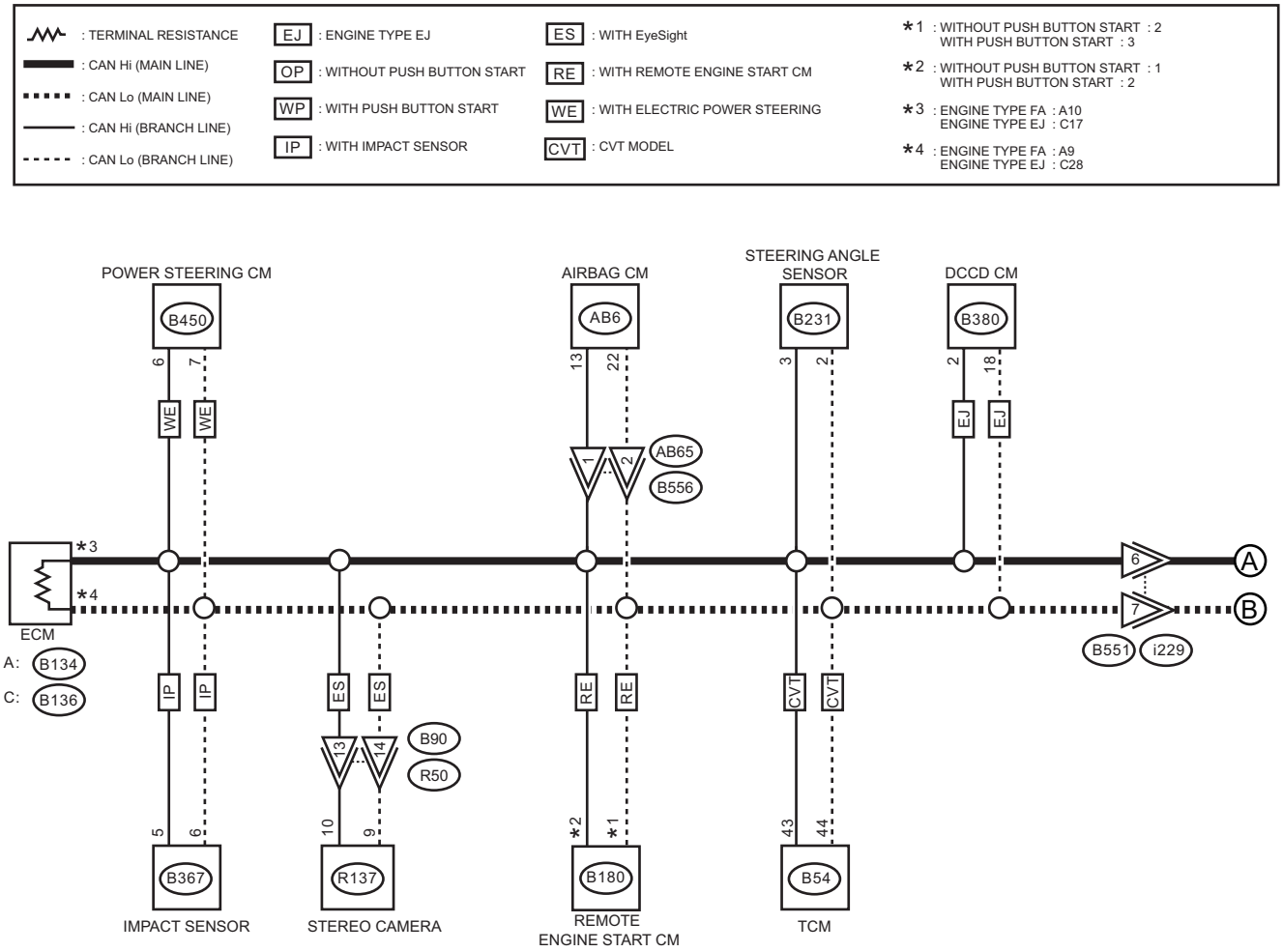

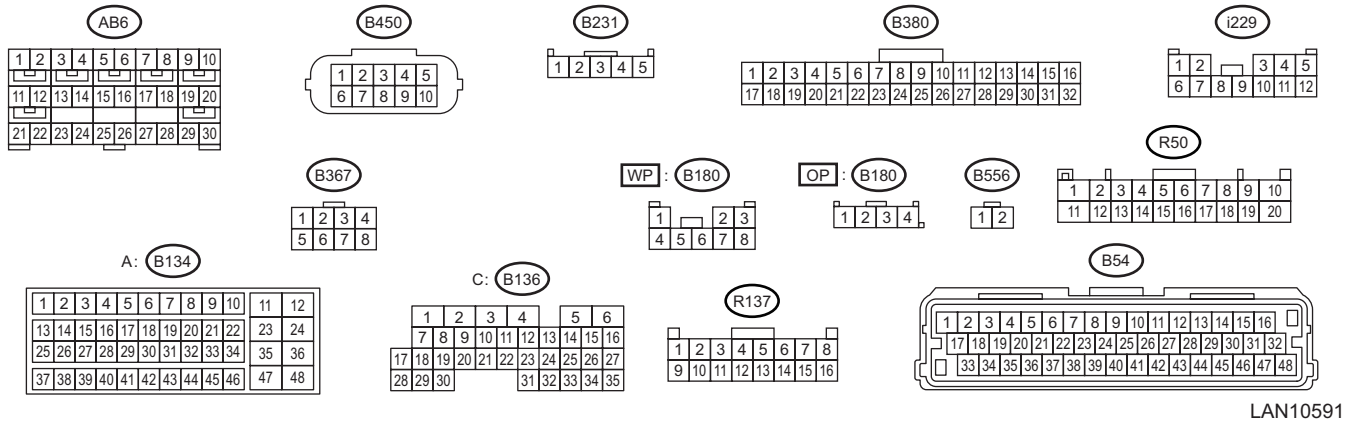

LAN10591

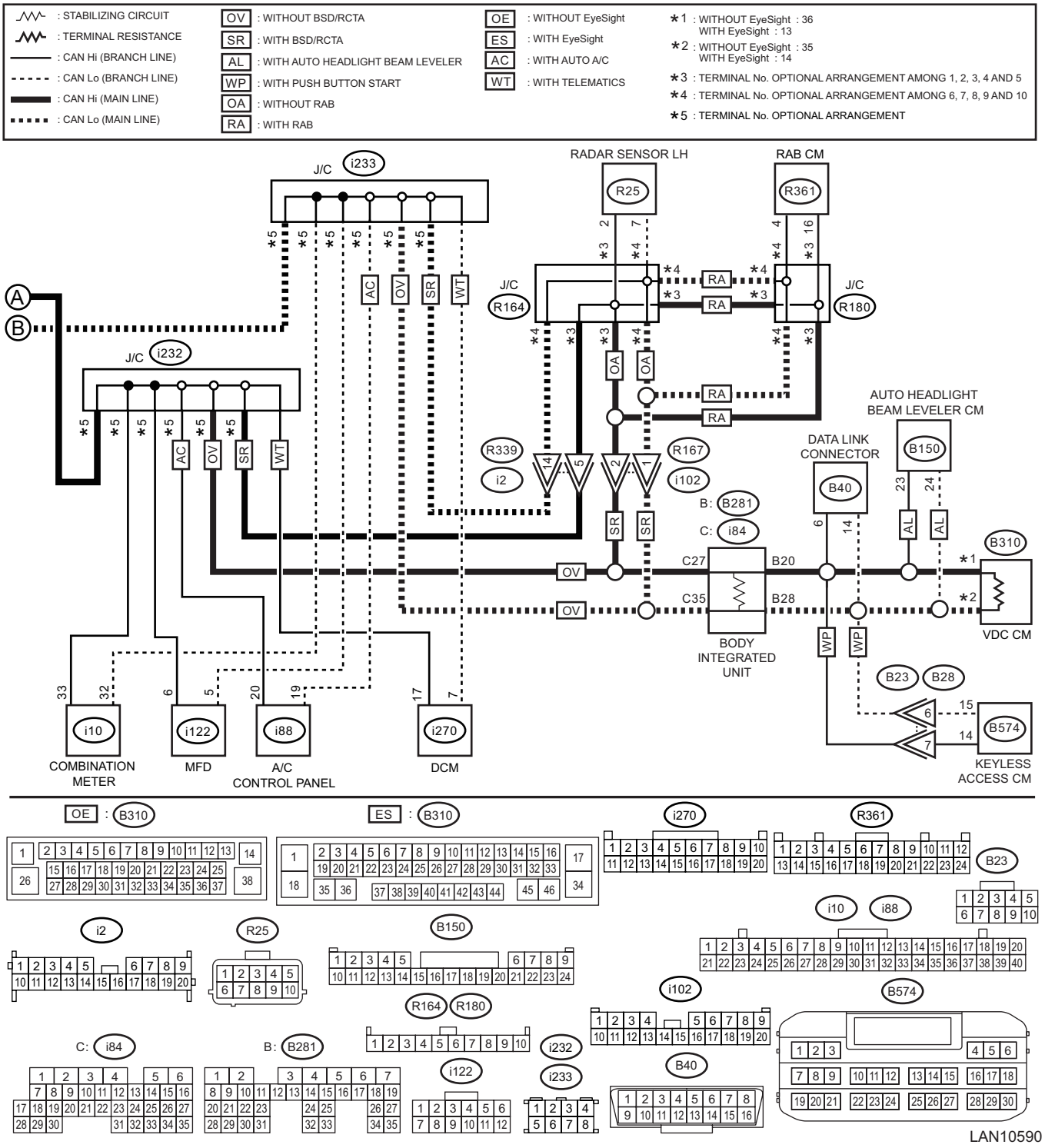

Step		Check	Yes	No
1	**CHECK BETWEEN RELATED LINES AND MAIN WIRING HARNESS.** 1) Disconnect the DCM connector. 2) Using the tester, measure the resistance between terminals. ***Connector & terminal (i270) No. 7 — No. 17:***	Is the resistance 400 Ω or more?	Related lines between DCM and main wiring harness is open, or main wiring harness is open at two places or more.	Go to step **2**.

Step		Check	Yes	No
2	**CHECK RELATED LINES.** Using the tester, measure the resistance between terminals. ***Connector & terminal*** ***(i270) No. 17 — (B40) No. 6:*** ***(i270) No. 7 — (B40) No. 14:***	Is the resistance 10 Ω or more?	Repair or replace the open circuit of telematics system related lines.	The communication harness is normal. Check DTC of the telematics. <Ref. to ES(diag)-43, Diagnostic Code(s) Display.>

21.RELATED LINES 53 — 61 Ω (RAB)

WIRING DIAGRAM:

CAN communication system <Ref. to WI-113, WIRING DIAGRAM, CAN Communication System.>

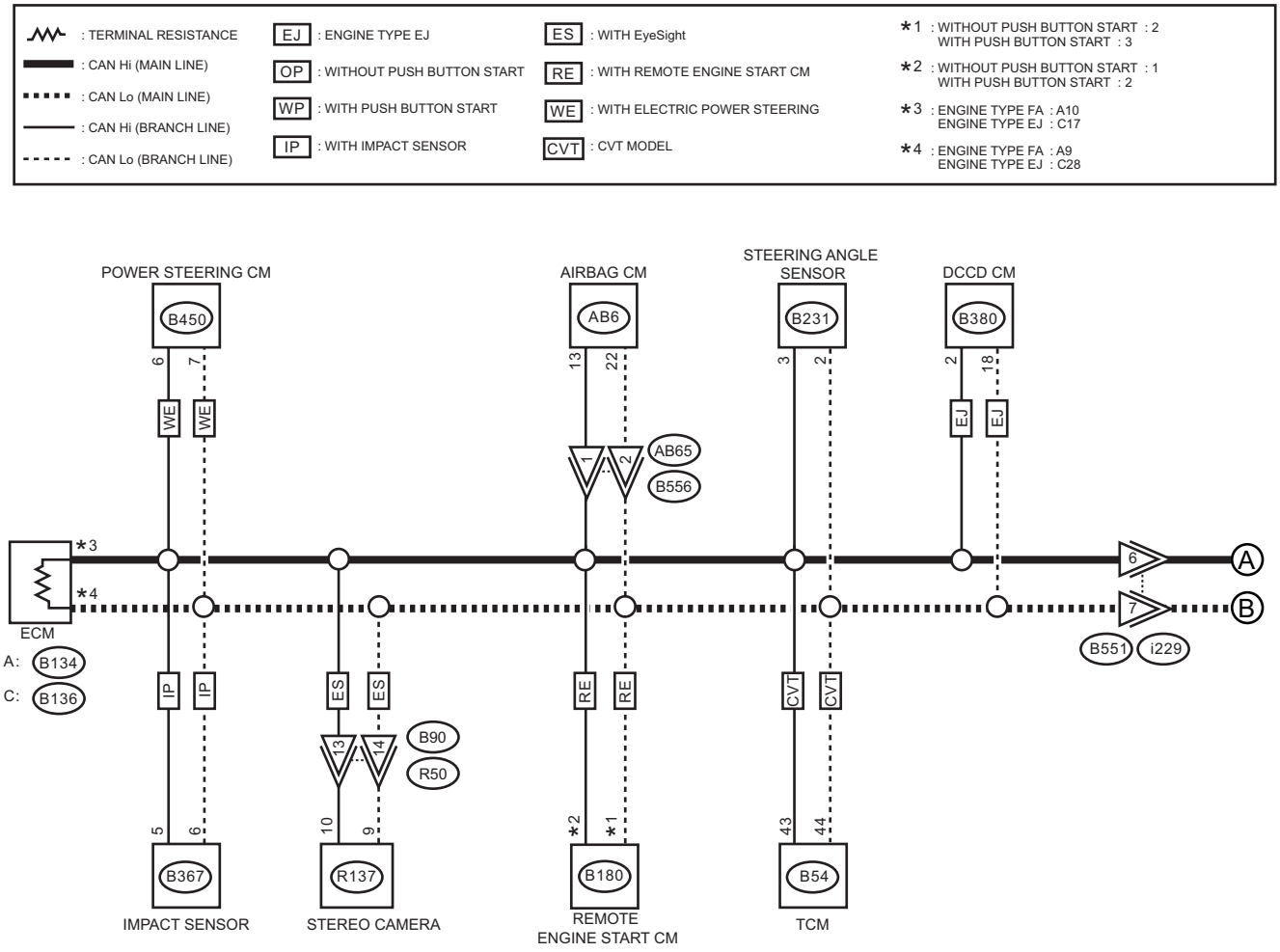

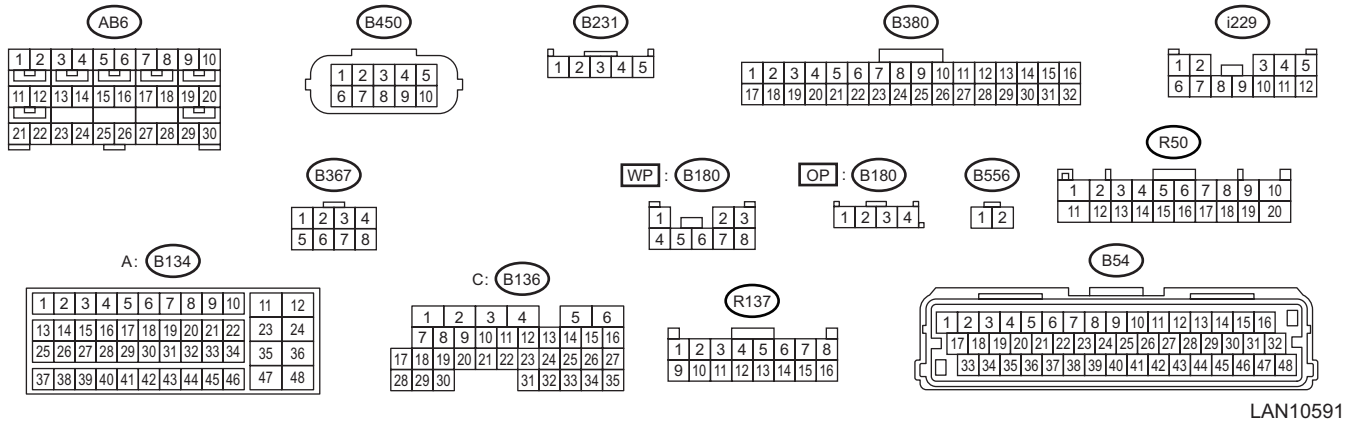

LAN10591

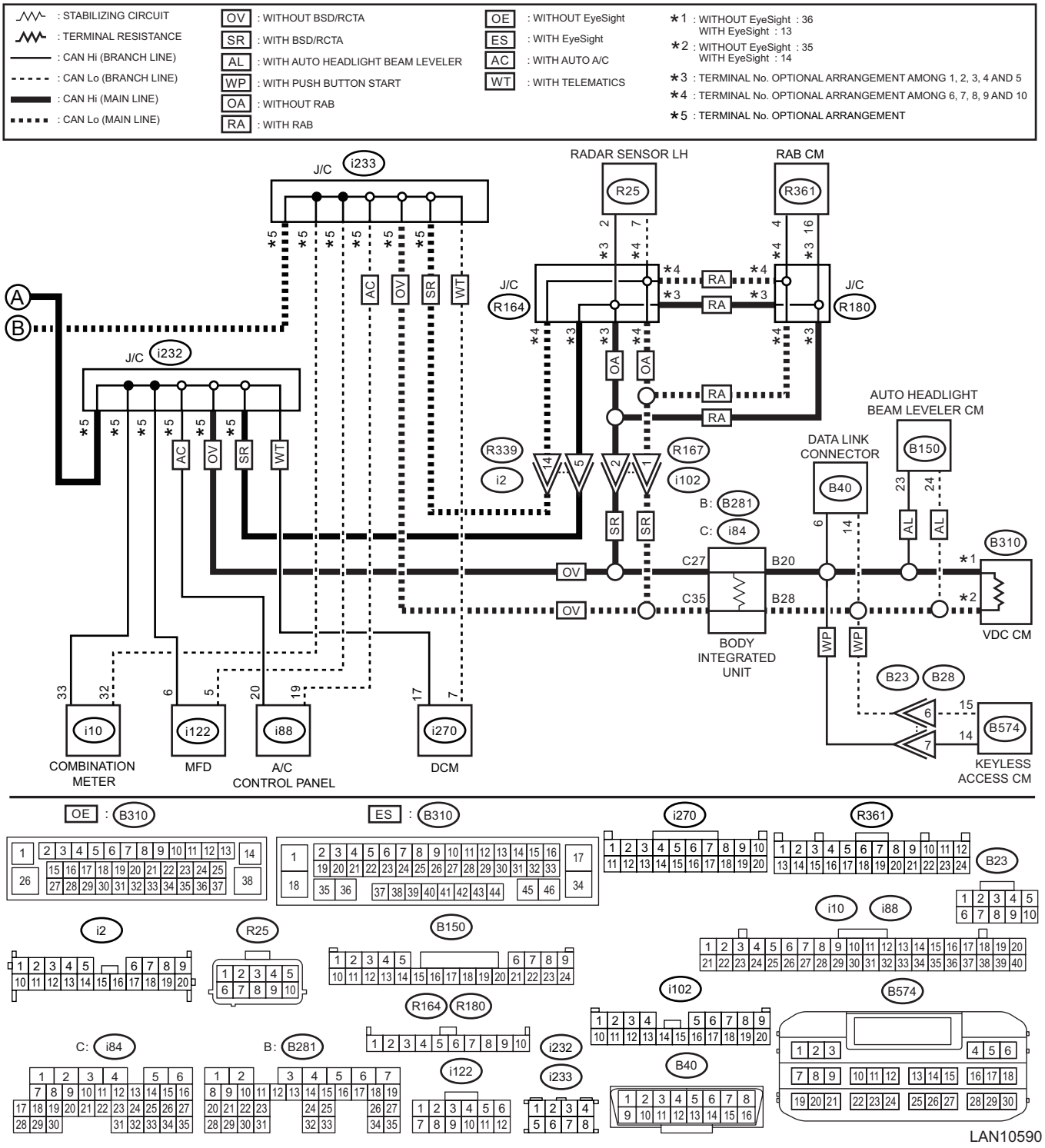

Step		Check	Yes	No
1	**CHECK BETWEEN RELATED LINES AND MAIN WIRING HARNESS.** 1) Disconnect the RAB CM connector. 2) Using the tester, measure the resistance between terminals. ***Connector & terminal (R361) No. 4 — No. 16:***	Is the resistance 400 Ω or more?	Related lines between RAB CM and main wiring harness is open, or main wiring harness is open at two places or more.	Go to step **2**.

Step		Check	Yes	No
2	**CHECK RELATED LINES.** Using the tester, measure the resistance between terminals. ***Connector & terminal*** ***(R361) No. 4 — (B40) No. 14:*** ***(R361) No. 16 — (B40) No. 6:***	Is the resistance 10 Ω or more?	Repair or replace the open circuit of RAB related lines.	The communication harness is normal. Check DTC of RAB. <Ref. to RAB(diag)-12, Read Diagnostic Trouble Code (DTC).>

10.List of Diagnostic Trouble Code (DTC)

A: LIST

DTC	Item	Note
U0073	CONTROL MODULE COMMUNICATION BUS OFF	<Ref. to LAN(diag)-115, DTC U0073 CONTROL MODULE COMMUNICATION BUS OFF, Diagnostic Procedure with Diagnostic Trouble Code (DTC).>
U0100	LOST COMMUNICATION WITH ECM/PCM “A”	<Ref. to LAN(diag)-116, DTC U0100 LOST COMMUNICATION WITH ECM/PCM “A”, Diagnostic Procedure with Diagnostic Trouble Code (DTC).>
U0101	LOST COMMUNICATION WITH TCM	<Ref. to LAN(diag)-117, DTC U0101 LOST COMMUNICATION WITH TCM, Diagnostic Procedure with Diagnostic Trouble Code (DTC).>
U0122	LOST COMMUNICATION WITH VEHICLE DYNAMICS CONTROL MODULE	<Ref. to LAN(diag)-118, DTC U0122 LOST COMMUNICATION WITH VEHICLE DYNAMICS CONTROL MODULE, Diagnostic Procedure with Diagnostic Trouble Code (DTC).>
U0126	LOST COMMUNICATION WITH STEERING ANGLE SENSOR MODULE	<Ref. to LAN(diag)-119, DTC U0126 LOST COMMUNICATION WITH STEERING ANGLE SENSOR MODULE, Diagnostic Procedure with Diagnostic Trouble Code (DTC).>
U0128	LOST COMMUNICATION WITH PARK BRAKE CONTROL MODULE	<Ref. to LAN(diag)-120, DTC U0128 LOST COMMUNICATION WITH PARK BRAKE CONTROL MODULE, Diagnostic Procedure with Diagnostic Trouble Code (DTC).>
U0131	LOST COMMUNICATION WITH POWER STEERING CONTROL MODULE	<Ref. to LAN(diag)-121, DTC U0131 LOST COMMUNICATION WITH POWER STEERING CONTROL MODULE, Diagnostic Procedure with Diagnostic Trouble Code (DTC).>
U0140	LOST COMMUNICATION WITH BODY CONTROL MODULE	<Ref. to LAN(diag)-122, DTC U0140 LOST COMMUNICATION WITH BODY CONTROL MODULE, Diagnostic Procedure with Diagnostic Trouble Code (DTC).>
U0151	LOST COMMUNICATION WITH RESTRAINTS CONTROL MODULE	<Ref. to LAN(diag)-123, DTC U0151 LOST COMMUNICATION WITH RESTRAINTS CONTROL MODULE, Diagnostic Procedure with Diagnostic Trouble Code (DTC).>
U0155	LOST COMMUNICATION WITH INSTRUMENT PANEL CLUSTER (IPC) CONTROL MODULE	<Ref. to LAN(diag)-124, DTC U0155 LOST COMMUNICATION WITH INSTRUMENT PANEL CLUSTER (IPC) CONTROL MODULE, Diagnostic Procedure with Diagnostic Trouble Code (DTC).>
U0156	LOST COMMUNICATION WITH INFORMATION CENTER "A"	<Ref. to LAN(diag)-125, DTC U0156 LOST COMMUNICATION WITH INFORMATION CENTER "A", Diagnostic Procedure with Diagnostic Trouble Code (DTC).>
U0164	LOST COMMUNICATION WITH HVAC CONTROL MODULE	<Ref. to LAN(diag)-126, DTC U0164 LOST COMMUNICATION WITH HVAC CONTROL MODULE, Diagnostic Procedure with Diagnostic Trouble Code (DTC).>
U0181	LOST COMMUNICATION WITH HEADLAMP LEVELING CONTROL MODULE	<Ref. to LAN(diag)-127, DTC U0181 LOST COMMUNICATION WITH HEADLAMP LEVELING CONTROL MODULE, Diagnostic Procedure with Diagnostic Trouble Code (DTC).>
U0327	SOFTWARE INCOMPATIBILITY WITH VEHICLE SECURITY CONTROL MODULE	<Ref. to LAN(diag)-128, DTC U0327 SOFTWARE INCOMPATIBILITY WITH VEHICLE SECURITY CONTROL MODULE, Diagnostic Procedure with Diagnostic Trouble Code (DTC).>
U0401	INVALID DATA RECEIVED FROM ECM/PCM “A”	<Ref. to LAN(diag)-129, DTC U0401 INVALID DATA RECEIVED FROM ECM/PCM “A”, Diagnostic Procedure with Diagnostic Trouble Code (DTC).>
U0402	INVALID DATA RECEIVED FROM TCM	<Ref. to LAN(diag)-130, DTC U0402 INVALID DATA RECEIVED FROM TCM, Diagnostic Procedure with Diagnostic Trouble Code (DTC).>
U0416	INVALID DATA RECEIVED FROM VEHICLE DYNAMICS CONTROL MODULE	<Ref. to LAN(diag)-131, DTC U0416 INVALID DATA RECEIVED FROM VEHICLE DYNAMICS CONTROL MODULE, Diagnostic Procedure with Diagnostic Trouble Code (DTC).>
U0417	INVALID DATA RECEIVED FROM PARK BRAKE CONTROL MODULE	<Ref. to LAN(diag)-132, DTC U0417 INVALID DATA RECEIVED FROM PARK BRAKE CONTROL MODULE, Diagnostic Procedure with Diagnostic Trouble Code (DTC).>
U0420	INVALID DATA RECEIVED FROM POWER STEERING CONTROL MODULE	<Ref. to LAN(diag)-133, DTC U0420 INVALID DATA RECEIVED FROM POWER STEERING CONTROL MODULE, Diagnostic Procedure with Diagnostic Trouble Code (DTC).>

DTC	Item	Note
U0422	INVALID DATA RECEIVED FROM BODY CONTROL MODULE	<Ref. to LAN(diag)-134, DTC U0422 INVALID DATA RECEIVED FROM BODY CONTROL MODULE, Diagnostic Procedure with Diagnostic Trouble Code (DTC).>
U0423	INVALID DATA RECEIVED FROM INSTRUMENT PANEL CLUSTER CONTROL MODULE	<Ref. to LAN(diag)-135, DTC U0423 INVALID DATA RECEIVED FROM INSTRUMENT PANEL CLUSTER CONTROL MODULE, Diagnostic Procedure with Diagnostic Trouble Code (DTC).>
U0424	INVALID DATA RECEIVED FROM HVAC CONTROL MODULE	<Ref. to LAN(diag)-136, DTC U0424 INVALID DATA RECEIVED FROM HVAC CONTROL MODULE, Diagnostic Procedure with Diagnostic Trouble Code (DTC).>
U0427	INVALID DATA RECEIVED FROM VEHICLE SECURITY CONTROL MODULE	<Ref. to LAN(diag)-137, DTC U0427 INVALID DATA RECEIVED FROM VEHICLE SECURITY CONTROL MODULE, Diagnostic Procedure with Diagnostic Trouble Code (DTC).>
U0428	INVALID DATA RECEIVED FROM STEERING ANGLE SENSOR MODULE	<Ref. to LAN(diag)-138, DTC U0428 INVALID DATA RECEIVED FROM STEERING ANGLE SENSOR MODULE, Diagnostic Procedure with Diagnostic Trouble Code (DTC).>
U0452	INVALID DATA RECEIVED FROM RESTRAINTS CONTROL MODULE	<Ref. to LAN(diag)-139, DTC U0452 INVALID DATA RECEIVED FROM RESTRAINTS CONTROL MODULE, Diagnostic Procedure with Diagnostic Trouble Code (DTC).>
U0457	INVALID DATA RECEIVED FROM INFORMATION CENTER "A"	<Ref. to LAN(diag)-140, DTC U0457 INVALID DATA RECEIVED FROM INFORMATION CENTER "A", Diagnostic Procedure with Diagnostic Trouble Code (DTC).>
U0482	INVALID DATA RECEIVED FROM HEADLAMP LEVELING CONTROL MODULE	<Ref. to LAN(diag)-141, DTC U0482 INVALID DATA RECEIVED FROM HEADLAMP LEVELING CONTROL MODULE, Diagnostic Procedure with Diagnostic Trouble Code (DTC).>
U1073	CONTROL MODULE COMMUNICATION BUS "SONAR-CAN" OFF	<Ref. to LAN(diag)-142, DTC U1073 CONTROL MODULE COMMUNICATION BUS "SONAR-CAN" OFF, Diagnostic Procedure with Diagnostic Trouble Code (DTC).>
U1135	LOST COMMUNICATION WITH DCCD CONTROL MODULE	<Ref. to LAN(diag)-143, DTC U1135 LOST COMMUNICATION WITH DCCD CONTROL MODULE, Diagnostic Procedure with Diagnostic Trouble Code (DTC).>
U1201	CAN-HS COUNTER ABNORMAL	<Ref. to LAN(diag)-144, DTC U1201 CAN-HS COUNTER ABNORMAL, Diagnostic Procedure with Diagnostic Trouble Code (DTC).>
U1232	LOST COMMUNICATION WITH REAR/SIDE RADAR CONTROL MODULE	<Ref. to LAN(diag)-145, DTC U1232 LOST COMMUNICATION WITH REAR/SIDE RADAR CONTROL MODULE, Diagnostic Procedure with Diagnostic Trouble Code (DTC).>
U1233	LOST COMMUNICATION WITH RAB CONTROL MODULE	<Ref. to LAN(diag)-146, DTC U1233 LOST COMMUNICATION WITH RAB CONTROL MODULE, Diagnostic Procedure with Diagnostic Trouble Code (DTC).>
U1235	LOST COMMUNICATION WITH EyeSight	<Ref. to LAN(diag)-147, DTC U1235 LOST COMMUNICATION WITH EyeSight, Diagnostic Procedure with Diagnostic Trouble Code (DTC).>
U1433	INVALID DATA RECEIVED FROM EyeSight	<Ref. to LAN(diag)-148, DTC U1433 INVALID DATA RECEIVED FROM EyeSight, Diagnostic Procedure with Diagnostic Trouble Code (DTC).>
U1534	INVALID DATA RECEIVED FROM SONAR ECU	<Ref. to LAN(diag)-149, DTC U1534 INVALID DATA RECEIVED FROM SONAR ECU, Diagnostic Procedure with Diagnostic Trouble Code (DTC).>

1. CHECK USING THE DTC CHECK SHEET

DTC check sheet

	(A)	(B)		(C)																	(D)																	
				ECM	TCM	VDC	STR	EPB	EPS	BIU	A/B	MET	MFD	A/C	AHL	KPS	DCCD	RAD	RAB	CAM	ECM	TCM	VDC	EPB	EPS	BIU	MET	A/C	KPS	STR	A/B	MFD	AHL	CAM	RAB	CAN-HS
		U0073	U1073	U0100	U0101	U0122	U0126	U0128	U0131	U0140	U0151	U0155	U0156	U0164	U0181	U0327	U1135	U1232	U1233	U1235	U0401	U0402	U0416	U0417	U0420	U0422	U0423	U0424	U0427	U0428	U0452	U0457	U0482	U1433	U1534	U1201
VDC			–			–		–	–		–		–	–	–	–	–	–	–				–	–	–			–	–		–	–	–		–	–
AHL			–	–	–		–	–	–		–	–	–	–	–	–	–	–	–	–	–	–		–	–		–	–	–	–	–	–	–	–	–	–
KPS			–				–	–	–		–		–	–	–	–	–	–	–	–		–	–	–	–		–	–	–	–	–	–	–	–	–	–
BIU			–				–		–	–	–		–		–		–	–	–	–					–	–				–	–	–	–	–		
RAB			–			–	–		–		–			–		–	–	–	–						–	–		–	–	–	–				–	–
RAD			–				–	–	–		–		–	–	–	–	–	–	–	–				–	–			–	–	–	–	–	–	–	–	–
MFD			–					–					–		–		–	–	–		–	–	–	–	–	–	–	–	–	–	–	–	–	–	–	–
A/C			–				–	–	–		–		–	–	–	–	–	–	–	–				–	–			–	–	–	–	–	–	–	–	–
DCM			–				–	–	–				–	–	–	–	–	–	–					–	–	–	–	–	–	–		–	–	–	–	–
MET			–				–					–							–		–	–	–	–	–	–	–	–	–	–	–	–			–
DCCD			–		–		–	–	–		–		–	–	–	–	–	–	–	–		–		–	–			–	–	–	–	–	–	–	–	
TCM			–	–	–		–	–	–		–		–		–	–	–	–	–			–		–	–				–	–	–	–	–		–	–
A/B			–	–	–	–	–	–	–	–	–	–	–	–	–	–	–	–	–	–	–	–	–	–	–	–	–	–	–	–	–	–	–	–	–	–
CAM								–			–		–	–	–	–	–	–		–				–				–	–	–	–	–		–
EPS			–		–			–	–	–	–		–	–	–	–	–	–	–			–		–	–	–	–	–	–	–	–	–		–	–	–
ECM			–	–			–	–	–	–	–		–	–	–	–	–	–	–	–	–			–	–	–		–	–	–	–	–	–	–	–	–

LAN10587

(A) Installation check
(B) Bus off detection
(C) Data no-receive detection
(D) Data abnormal detection

VDC: VDC CM
AHL: Auto headlight beam leveler CM
KPS: Keyless access CM
BIU: Body integrated unit
RAB: RAB CM
RAD: Radar sensor
MFD: High grade MFD
A/C: A/C control panel
DCM: Data communication module
MET: Combination meter
DCCD: Driver's control center differential CM
TCM: Transmission CM
A/B: Airbag CM
CAM: Stereo camera
EPS: Power steering CM
ECM: Engine CM

Step		Check	Yes	No
1	**MODULE INSTALLATION CHECK.** 1) Using the check sheet for communication for initializing, check the vehicle installation module (module targeted for CAN communication). 2) Write "-" marks in the field for installation check (A) if the vehicle to be inspected does not have relevant module. 3) Write "-" marks in all blank fields on the same row that the "-" mark has filled in.	Was the module installation check on the left performed?	Go to step **2**.	Perform the module installation check, Go to step **2**.

	Step	Check	Yes	No
2	**CHECK DTC (BUS OFF DETECTION / DATA NOT RECEIVED).** Check the DTC. NOTE: It becomes impossible for CAN diagnostic module to read DTC, if there is a current malfunction of open harness (data not received). If this occurs, perform the “Check using the check sheet of communication for initializing” <Ref. to LAN(diag)-14, CHECK USING THE CHECK SHEET OF COMMUNICATION FOR INITIALIZING, COMMUNICATION FOR INITIALIZING IMPOSSIBLE, Subaru Select Monitor.>, and use this check sheet to confirm that the corresponding part becomes the past malfunction.	Is DTC bus off or data not received?	Perform the diagnosis for the displayed DTCs.	Perform the communication check, Go to step **3**.
3	**CHECK DTC (BUS OFF DETECTION / DATA NOT RECEIVED).** Mark “X” in the field corresponding to the DTCs that has been detected by each module in the DTC check sheet.	Were all the corresponding field in the DTC check sheet filled?	Go to step **4**.	Fill all the corresponding field in the DTC check sheet, Go to step **4**.
4	**CHECK CAN COMMUNICATION LINE.** Check the CAN communication line by referring to the example of DTC data not received.	Is CAN communication line faulty?	Repair or replace the faulty portion of the harness.	Perform the diagnosis for the displayed DTCs.

2. EXAMPLE OF DTC DATA NOT RECEIVED

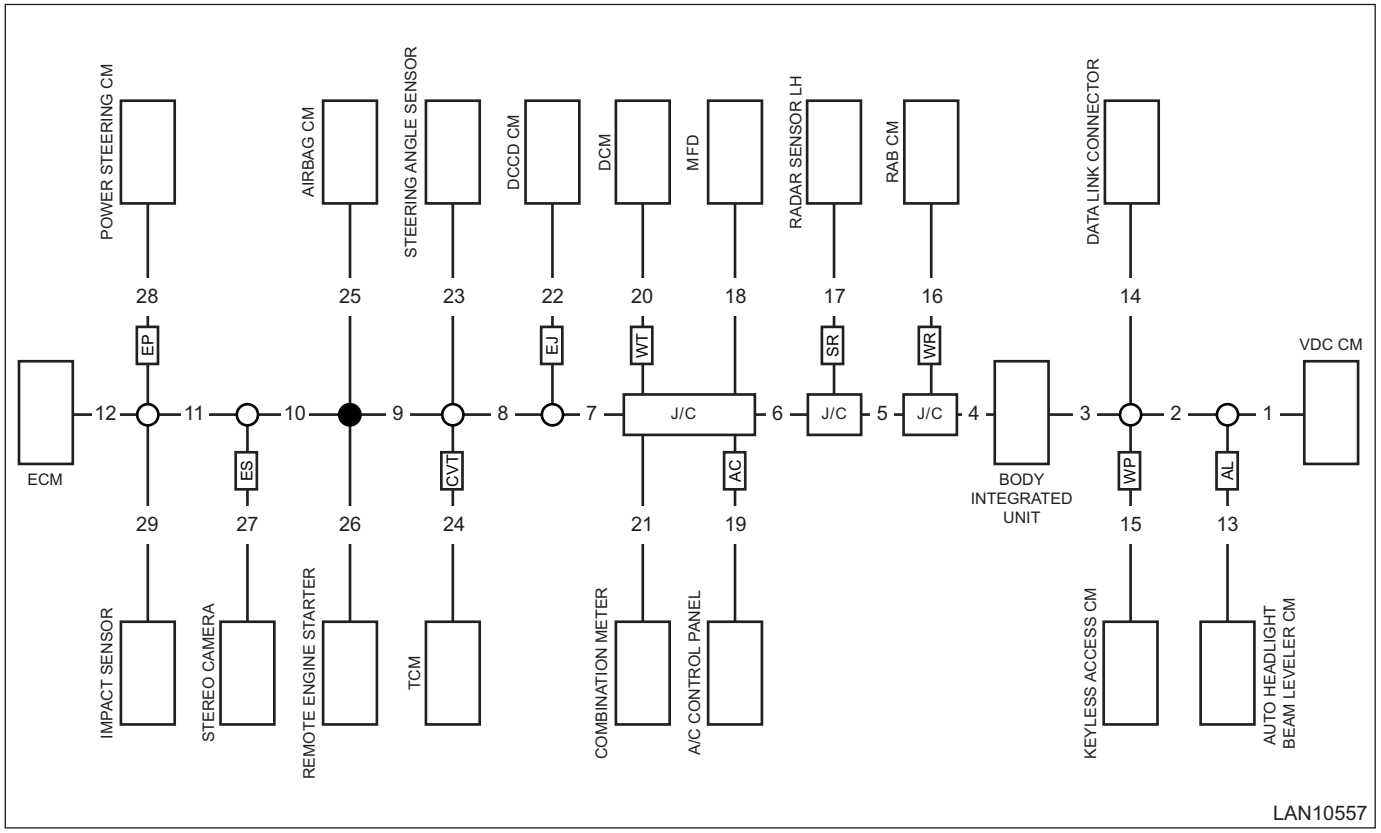

AL: With auto headlight beam leveler system
WP: With keyless access with push button start system
WR: With Reverse Automatic Braking
SR: With BSD/RCTA
AC: With automatic air conditioner
WT: With telematics
EJ: Engine type EJ model
CVT: CVT model
ES: With EyeSight
WE: With electric power steering

- Vicinity of No. 12 ECM (engine type: EJ)

	(A)	(B)		(C)																		(D)																	
				ECM	TCM	VDC	STR	EPB	EPS	BIU	A/B	MET	MFD	A/C	AHL	KPS	DCCD	RAD	RAB	CAM		ECM	TCM	VDC	EPB	EPS	BIU	MET	A/C	KPS	STR	A/B	MFD	AHL	CAM	RAB	CAN-HS	
		U0073	U1073	U0100	U0101	U0122	U0126	U0128	U0131	U0140	U0151	U0155	U0156	U0164	U0181	U0327	U1135	U1232	U1233	U1235		U0401	U0402	U0416	U0417	U0420	U0422	U0423	U0424	U0427	U0428	U0452	U0457	U0482	U1433	U1534	U1201		
VDC			–	X		–		–	–		–		–	–	–	–	–	–	–				–	–	–			–	–		–	–	–		–	–		
AHL			–	–	–		–	–	–		–	–	–	–	–	–	–	–	–	–		–	–		–	–		–	–	–	–	–	–	–	–	–	–		
KPS			–	X			–	–	–		–		–	–	–	–	–	–	–	–			–	–	–	–		–	–	–	–	–	–	–	–	–	–		
BIU			–	X			–		–	–	–		–		–		–	–	–	–						–	–				–	–	–	–	–			
RAB			–	X		–	–		–		–			–		–	–	–	–						–	–		–	–	–	–				–	–		
RAD			–	X			–	–	–		–		–	–	–	–	–	–	–	–					–	–		–	–	–	–	–	–	–	–	–		
MFD			–	X				–					–		–		–	–	–			–	–	–	–	–	–	–	–	–	–	–	–	–	–	–	–	
A/C			–	X			–	–	–		–		–	–	–	–	–	–	–	–					–	–			–	–	–	–	–	–	–	–		
DCM			–	X			–	–	–				–	–	–	–	–	–	–						–	–	–	–	–	–		–	–	–	–	–		
MET			–	X			–					–							–			–	–	–	–	–	–	–	–	–	–	–	–	–			–	
DCCD			–	X	–		–	–	–		–		–	–	–	–	–	–	–	–			–		–	–				–	–	–	–	–	–	–		
TCM			–	–	–		–	–	–		–		–		–	–	–	–	–				–		–	–				–	–	–	–	–	–	–		
A/B			–	–	–	–	–	–	–	–	–	–	–	–	–	–	–	–	–	–		–	–	–	–	–	–	–	–	–	–	–	–	–	–	–	–		
CAM				X				–			–		–	–	–	–	–	–		–					–			–	–		–	–	–	–		–		
EPS			–	X	–			–	–	–	–		–	–	–	–	–	–	–				–		–	–	–	–	–	–	–	–	–	–		–	–		
ECM		X	–	–	X	X	–	–	–	–	–	X	–	–	–	–	–	–	–	–		–			–	–	–		–	–	–	–	–	–	–	–	–		

LAN10588

- Vicinity of No. 23 steering sensor

	(A)	(B)		(C)																		(D)																	
				ECM	TCM	VDC	STR	EPB	EPS	BIU	A/B	MET	MFD	A/C	AHL	KPS	DCCD	RAD	RAB	CAM		ECM	TCM	VDC	EPB	EPS	BIU	MET	A/C	KPS	STR	A/B	MFD	AHL	CAM	RAB	CAN-HS	
		U0073	U1073	U0100	U0101	U0122	U0126	U0128	U0131	U0140	U0151	U0155	U0156	U0164	U0181	U0327	U1135	U1232	U1233	U1235		U0401	U0402	U0416	U0417	U0420	U0422	U0423	U0424	U0427	U0428	U0452	U0457	U0482	U1433	U1534	U1201		
VDC			–			–	X	–	–		–		–	–	–	–	–	–	–				–	–	–			–	–		–	–	–		–	–		
AHL			–	–	–		–	–	–		–	–	–	–	–	–	–	–	–	–		–	–		–	–		–	–	–	–	–	–	–	–	–	–		
KPS			–				–	–	–		–		–	–	–	–	–	–	–	–			–	–	–	–		–	–	–	–	–	–	–	–	–	–		
BIU			–				–		–	–	–		–		–		–	–	–	–						–	–				–	–	–	–	–			
RAB			–			–	–		–		–			–		–	–	–	–						–	–		–	–	–	–				–	–		
RAD			–				–	–	–		–		–	–	–	–	–	–	–	–					–	–		–	–	–	–	–	–	–	–	–		
MFD			–				X	–					–		–		–	–	–			–	–	–	–	–	–	–	–	–	–	–	–	–	–	–	–	
A/C			–				–	–	–		–		–	–	–	–	–	–	–	–					–	–			–	–	–	–	–	–	–	–		
DCM			–				–	–	–				–	–	–	–	–	–	–						–	–	–	–	–	–		–	–	–	–	–		
MET			–				–					–							–			–	–	–	–	–	–	–	–	–	–	–	–	–			–	
DCCD			–		–		–	–	–		–		–	–	–	–	–	–	–	–			–		–	–				–	–	–	–	–	–	–		
TCM			–	–	–		–	–	–		–		–		–	–	–	–	–				–		–	–				–	–	–	–	–	–	–		
A/B			–	–	–	–	–	–	–	–	–	–	–	–	–	–	–	–	–	–		–	–	–	–	–	–	–	–	–	–	–	–	–	–	–	–		
CAM							X	–			–		–	–	–	–	–	–		–					–			–	–		–	–	–	–		–		
EPS			–		–		X	–	–	–	–		–	–	–	–	–	–	–				–		–	–	–	–	–	–	–	–	–	–		–	–		
ECM			–	–			–	–	–	–	–		–	–	–	–	–	–	–	–		–			–	–	–		–	–	–	–	–	–	–	–	–		

LAN10589

11.Diagnostic Procedure with Diagnostic Trouble Code (DTC)

A: DTC U0073 CONTROL MODULE COMMUNICATION BUS OFF

DTC DETECTING CONDITION:
Integrated unit communication is shut down because of high speed CAN error.
TROUBLE SYMPTOM:
CAN communication is not normal.

	Step	Check	Yes	No
1	**CHECK CAN COMMUNICATION HARNESS.** Perform the basic diagnostic procedure to check for fault in CAN communication harness. <Ref. to LAN(diag)-2, Basic Diagnostic Procedure.>	Was the basic diagnostic procedure performed up to step 7?	Go to step **2**.	Perform the basic diagnostic procedure. <Ref. to LAN(diag)-2, Basic Diagnostic Procedure.>
2	**CHECK DTC (CURRENT MALFUNCTION).** 1) Start the engine. 2) Using the Subaru Select Monitor, read DTC of CAN system.	Is U0073 a current malfunction?	Go to step **3**.	It may be a temporary poor contact. Perform the clear memory.
3	**CHECK CAN COMMUNICATION CIRCUIT.** Check CAN communication circuit. <Ref. to LAN(diag)-38, PROCEDURE, CAN Communication Circuit Check.>	Is CAN communication circuit faulty?	Repair the faulty portion, following the diagnosis procedure.	Go to step **4**.
4	**CHECK DTC.** 1) Perform the inspection using the DTC check sheet. <Ref. to LAN(diag)-111, CHECK USING THE DTC CHECK SHEET, LIST, List of Diagnostic Trouble Code (DTC).> 2) Using the Subaru Select Monitor, read DTC of CAN system.	Is U0073 a current malfunction?	Go to step **5**.	System is normal.
5	**CHECK CONTROL MODULE.** 1) Turn the ignition switch to OFF. 2) Disconnect the control modules other than body integrated unit in order. NOTE: When disconnecting ECM or VDC CM, connect resistance of 120 Ω between CAN Hi and CAN Lo as an alternative of end resistance. 3) Turn the ignition switch to ON. 4) Using the Subaru Select Monitor, read DTC of CAN system.	Is there any control module that U0073 is not detected as current malfunction?	Replace the control module.	Repeat 1) to 4) in step 3 until U0073 is not detected.

B: DTC U0100 LOST COMMUNICATION WITH ECM/PCM "A"

DTC DETECTING CONDITION:
No data is received from ECM.
TROUBLE SYMPTOM:
Cooperation control of transmission may not operate properly.

	Step	Check	Yes	No
1	**CHECK CAN COMMUNICATION HARNESS.** Perform the basic diagnostic procedure to check for fault in CAN communication harness. <Ref. to LAN(diag)-2, Basic Diagnostic Procedure.>	Was the basic diagnostic procedure performed up to step 7?	Go to step **2**.	Perform the basic diagnostic procedure. <Ref. to LAN(diag)-2, Basic Diagnostic Procedure.>
2	**CHECK DTC (OTHER THAN U-CODE).** Check the displayed DTC.	Are DTCs other than U*** displayed?	Perform the diagnosis for DTCs other than the displayed U-code.	Go to step **3**.
3	**CHECK DTC (CURRENT MALFUNCTION).** Check the displayed DTC.	Is U0100 a current malfunction?	Go to step **4**.	Go to step **6**.
4	**CHECK DTC (CURRENT MALFUNCTION).** 1) Check CAN communication circuit. <Ref. to LAN(diag)-38, CAN Communication Circuit Check.> 2) Read the DTC using Subaru Select Monitor.	Is U0100 a current malfunction?	Go to step **5**.	Go to step **6**.
5	**CHECK DTC.** Using the Subaru Select Monitor, read DTC of all the systems. <Ref. to LAN(diag)-36, Read Diagnostic Trouble Code (DTC).>	Is the engine data no-receive detected in several modules?	Replace the ECM. <Ref. to FU(w/o STI)-124, Engine Control Module (ECM).> <Ref. to FU(STI)-56, Engine Control Module (ECM).>	Replace the module that the DTC has been detected.
6	**CHECK HARNESS.** 1) Shake the harness, and check for poor contact. 2) Read the DTC using Subaru Select Monitor. <Ref. to LAN(diag)-36, Read Diagnostic Trouble Code (DTC).>	Is U0100 a current malfunction?	Repair the poor contact of harness, or replace the harness.	Go to step **7**.
7	**CHECK CONNECTOR.** Check the connector used for high speed CAN for poor contact.	Is there poor contact of connector?	Repair the connector that has poor contact, or replace harness.	It is possible that temporary poor communication occurs. Delete the DTC.

C: DTC U0101 LOST COMMUNICATION WITH TCM

DTC DETECTING CONDITION:
No data is received from TCM.
TROUBLE SYMPTOM:
Cooperation control with transmission is not performed.

	Step	Check	Yes	No
1	**CHECK CAN COMMUNICATION HARNESS.** Perform the basic diagnostic procedure to check for fault in CAN communication harness. <Ref. to LAN(diag)-2, Basic Diagnostic Procedure.>	Was the basic diagnostic procedure performed up to step 7?	Go to step **2**.	Perform the basic diagnostic procedure. <Ref. to LAN(diag)-2, Basic Diagnostic Procedure.>
2	**CHECK DTC (OTHER THAN U-CODE).** Check the displayed DTC.	Are DTCs other than U*** displayed?	Perform the diagnosis for DTCs other than the displayed U-code.	Go to step **3**.
3	**CHECK DTC (CURRENT MALFUNCTION).** Check the displayed DTC.	Is U0101 a current malfunction?	Go to step **4**.	Go to step **6**.
4	**CHECK DTC (CURRENT MALFUNCTION).** 1) Check CAN communication circuit. <Ref. to LAN(diag)-38, CAN Communication Circuit Check.> 2) Read the DTC using Subaru Select Monitor. <Ref. to LAN(diag)-36, Read Diagnostic Trouble Code (DTC).>	Is U0101 a current malfunction?	Go to step **5**.	Go to step **6**.
5	**CHECK DTC.** Using the Subaru Select Monitor, read DTC of all the systems. <Ref. to LAN(diag)-36, Read Diagnostic Trouble Code (DTC).>	Is the transmission data no-receive detected in several modules?	Replace the TCM. <Ref. to CVT(TR690)-126, Transmission Control Module (TCM).>	Replace the module that the DTC has been detected.
6	**CHECK HARNESS.** 1) Shake the harness, and check for poor contact. 2) Read the DTC using Subaru Select Monitor. <Ref. to LAN(diag)-36, Read Diagnostic Trouble Code (DTC).>	Is U0101 a current malfunction?	Repair the poor contact of harness, or replace the harness.	Go to step **7**.
7	**CHECK CONNECTOR.** Check the connector used for high speed CAN for poor contact.	Is there poor contact of connector?	Repair the connector that has poor contact, or replace harness.	It is possible that temporary poor communication occurs. Delete the DTC.

D: DTC U0122 LOST COMMUNICATION WITH VEHICLE DYNAMICS CONTROL MODULE

DTC DETECTING CONDITION:
No data from VDCCM is received.
TROUBLE SYMPTOM:
ABS warning light and VDC warning light illuminate.

	Step	Check	Yes	No
1	**CHECK CAN COMMUNICATION HARNESS.** Perform the basic diagnostic procedure to check for fault in CAN communication harness. <Ref. to LAN(diag)-2, Basic Diagnostic Procedure.>	Was the basic diagnostic procedure performed up to step 7?	Go to step **2**.	Perform the basic diagnostic procedure. <Ref. to LAN(diag)-2, Basic Diagnostic Procedure.>
2	**CHECK DTC (OTHER THAN U-CODE).** Check the displayed DTC.	Are DTCs other than U*** displayed?	Perform the diagnosis for DTCs other than the displayed U-code.	Go to step **3**.
3	**CHECK DTC (CURRENT MALFUNCTION).** Check the displayed DTC.	Is U0122 a current malfunction?	Go to step **4**.	Go to step **6**.
4	**CHECK DTC (CURRENT MALFUNCTION).** 1) Check CAN communication circuit. <Ref. to LAN(diag)-38, CAN Communication Circuit Check.> 2) Read the DTC using Subaru Select Monitor. <Ref. to LAN(diag)-36, Read Diagnostic Trouble Code (DTC).>	Is U0122 a current malfunction?	Go to step **5**.	Go to step **6**.
5	**CHECK DTC.** Using the Subaru Select Monitor, read DTC of all the systems. <Ref. to LAN(diag)-36, Read Diagnostic Trouble Code (DTC).>	Is the VDC data no-receive detected in several modules?	Replace the VDC CM. <Ref. to VDC-9, VDC Control Module and Hydraulic Control Unit (VDCCM&H/U).>	Replace the module that the DTC has been detected.
6	**CHECK HARNESS.** 1) Shake the harness, and check for poor contact. 2) Read the DTC using Subaru Select Monitor. <Ref. to LAN(diag)-36, Read Diagnostic Trouble Code (DTC).>	Is U0122 a current malfunction?	Repair the poor contact of harness, or replace the harness.	Go to step **7**.
7	**CHECK CONNECTOR.** Check the connector used for high speed CAN for poor contact.	Is there poor contact of connector?	Repair the connector that has poor contact, or replace harness.	It is possible that temporary poor communication occurs. Delete the DTC.

E: DTC U0126 LOST COMMUNICATION WITH STEERING ANGLE SENSOR MODULE

DTC DETECTING CONDITION:
No data is received from steering angle sensor.
TROUBLE SYMPTOM:
VDC CM does not operate normally.

	Step	Check	Yes	No
1	**CHECK CAN COMMUNICATION HARNESS.** Perform the basic diagnostic procedure to check for fault in CAN communication harness. <Ref. to LAN(diag)-2, Basic Diagnostic Procedure.>	Was the basic diagnostic procedure performed up to step 7?	Go to step **2**.	Perform the basic diagnostic procedure. <Ref. to LAN(diag)-2, Basic Diagnostic Procedure.>
2	**CHECK DTC (OTHER THAN U-CODE).** Check the displayed DTC.	Are DTCs other than U*** displayed?	Perform the diagnosis for DTCs other than the displayed U-code.	Go to step **3**.
3	**CHECK DTC (CURRENT MALFUNCTION).** Check the displayed DTC.	Is U0126 a current malfunction?	Go to step **4**.	Go to step **6**.
4	**CHECK DTC (CURRENT MALFUNCTION).** 1) Check CAN communication circuit. <Ref. to LAN(diag)-38, CAN Communication Circuit Check.> 2) Read the DTC using Subaru Select Monitor. <Ref. to LAN(diag)-36, Read Diagnostic Trouble Code (DTC).>	Is U0126 a current malfunction?	Go to step **5**.	Go to step **6**.
5	**CHECK DTC.** Using the Subaru Select Monitor, read DTC of all the systems. <Ref. to LAN(diag)-36, Read Diagnostic Trouble Code (DTC).>	Is the steering angle sensor data no-receive detected in several modules?	Replace the steering angle sensor. <Ref. to VDC-28, Steering Angle Sensor.>	Replace the module that the DTC has been detected.
6	**CHECK HARNESS.** 1) Shake the harness, and check for poor contact. 2) Read the DTC using Subaru Select Monitor. <Ref. to LAN(diag)-36, Read Diagnostic Trouble Code (DTC).>	Is U0126 a current malfunction?	Repair the poor contact of harness, or replace the harness.	Go to step **7**.
7	**CHECK CONNECTOR.** Check the connector used for high speed CAN for poor contact.	Is there poor contact of connector?	Repair the connector that has poor contact, or replace harness.	It is possible that temporary poor communication occurs. Delete the DTC.

F: DTC U0128 LOST COMMUNICATION WITH PARK BRAKE CONTROL MODULE

DTC DETECTING CONDITION:
No data from VDCCM is received.
TROUBLE SYMPTOM:
ABS warning light and VDC warning light illuminate.

	Step	Check	Yes	No
1	**CHECK CAN COMMUNICATION HARNESS.** Perform the basic diagnostic procedure to check for fault in CAN communication harness. <Ref. to LAN(diag)-2, Basic Diagnostic Procedure.>	Was the basic diagnostic procedure performed up to step 7?	Go to step **2**.	Perform the basic diagnostic procedure. <Ref. to LAN(diag)-2, Basic Diagnostic Procedure.>
2	**CHECK DTC (OTHER THAN U-CODE).** Check the displayed DTC.	Are DTCs other than U*** displayed?	Perform the diagnosis for DTCs other than the displayed U-code.	Go to step **3**.
3	**CHECK DTC (CURRENT MALFUNCTION).** Check the displayed DTC.	Is U0128 a current malfunction?	Go to step **4**.	Go to step **6**.
4	**CHECK DTC (CURRENT MALFUNCTION).** 1) Check CAN communication circuit. <Ref. to LAN(diag)-38, CAN Communication Circuit Check.> 2) Read the DTC using Subaru Select Monitor. <Ref. to LAN(diag)-36, Read Diagnostic Trouble Code (DTC).>	Is U0128 a current malfunction?	Go to step **5**.	Go to step **6**.
5	**CHECK DTC.** Using the Subaru Select Monitor, read DTC of all the systems. <Ref. to LAN(diag)-36, Read Diagnostic Trouble Code (DTC).>	Is the electronic parking data no-receive detected in several modules?	Replace the VDC CM. <Ref. to VDC-9, VDC Control Module and Hydraulic Control Unit (VDCCM&H/U).>	Replace the module that the DTC has been detected.
6	**CHECK HARNESS.** 1) Shake the harness, and check for poor contact. 2) Read the DTC using Subaru Select Monitor. <Ref. to LAN(diag)-36, Read Diagnostic Trouble Code (DTC).>	Is U0128 a current malfunction?	Repair the poor contact of harness, or replace the harness.	Go to step **7**.
7	**CHECK CONNECTOR.** Check the connector used for high speed CAN for poor contact.	Is there poor contact of connector?	Repair the connector that has poor contact, or replace harness.	It is possible that temporary poor communication occurs. Delete the DTC.

G: DTC U0131 LOST COMMUNICATION WITH POWER STEERING CONTROL MODULE

DTC DETECTING CONDITION:
No data is received from power steering CM.
TROUBLE SYMPTOM:
Cooperation control with power steering CM does not operate properly.

	Step	Check	Yes	No
1	**CHECK CAN COMMUNICATION HARNESS.** Perform the basic diagnostic procedure to check for fault in CAN communication harness. <Ref. to LAN(diag)-2, Basic Diagnostic Procedure.>	Was the basic diagnostic procedure performed up to step 7?	Go to step **2**.	Perform the basic diagnostic procedure. <Ref. to LAN(diag)-2, Basic Diagnostic Procedure.>
2	**CHECK DTC (OTHER THAN U-CODE).** Check the displayed DTC.	Are DTCs other than U*** displayed?	Perform the diagnosis for DTCs other than the displayed U-code.	Go to step **3**.
3	**CHECK DTC (CURRENT MALFUNCTION).** Check the displayed DTC.	Is U0131 a current malfunction?	Go to step **4**.	Go to step **6**.
4	**CHECK DTC (CURRENT MALFUNCTION).** 1) Check CAN communication circuit. <Ref. to LAN(diag)-38, CAN Communication Circuit Check.> 2) Read the DTC using Subaru Select Monitor. <Ref. to LAN(diag)-36, Read Diagnostic Trouble Code (DTC).>	Is U0131 a current malfunction?	Go to step **5**.	Go to step **6**.
5	**CHECK DTC.** Using the Subaru Select Monitor, read DTC of all the systems. <Ref. to LAN(diag)-36, Read Diagnostic Trouble Code (DTC).>	Is the electric power steering data no-receive detected in several modules?	Replace the power steering CM. <Ref. to PS-100, Power Steering Control Module.>	Replace the module that the DTC has been detected.
6	**CHECK HARNESS.** 1) Shake the harness, and check for poor contact. 2) Read the DTC using Subaru Select Monitor. <Ref. to LAN(diag)-36, Read Diagnostic Trouble Code (DTC).>	Is U0131 a current malfunction?	Repair the poor contact of harness, or replace the harness.	Go to step **7**.
7	**CHECK CONNECTOR.** Check the connector used for high speed CAN for poor contact.	Is there poor contact of connector?	Repair the connector that has poor contact, or replace harness.	It is possible that temporary poor communication occurs. Delete the DTC.

H: DTC U0140 LOST COMMUNICATION WITH BODY CONTROL MODULE

DTC DETECTING CONDITION:
No data is received from body integrated unit.
TROUBLE SYMPTOM:
Cooperation control with body integrated unit does not operate properly.

	Step	Check	Yes	No
1	**CHECK CAN COMMUNICATION HARNESS.** Perform the basic diagnostic procedure to check for fault in CAN communication harness. <Ref. to LAN(diag)-2, Basic Diagnostic Procedure.>	Was the basic diagnostic procedure performed up to step 7?	Go to step **2**.	Perform the basic diagnostic procedure. <Ref. to LAN(diag)-2, Basic Diagnostic Procedure.>
2	**CHECK DTC (OTHER THAN U-CODE).** Check the displayed DTC.	Are DTCs other than U*** displayed?	Perform the diagnosis for DTCs other than the displayed U-code.	Go to step **3**.
3	**CHECK DTC (CURRENT MALFUNCTION).** Check the displayed DTC.	Is U0140 a current malfunction?	Go to step **4**.	Go to step **6**.
4	**CHECK DTC (CURRENT MALFUNCTION).** 1) Check CAN communication circuit. <Ref. to LAN(diag)-38, CAN Communication Circuit Check.> 2) Read the DTC using Subaru Select Monitor. <Ref. to LAN(diag)-36, Read Diagnostic Trouble Code (DTC).>	Is U0140 a current malfunction?	Go to step **5**.	Go to step **6**.
5	**CHECK DTC.** Using the Subaru Select Monitor, read DTC of all the systems. <Ref. to LAN(diag)-36, Read Diagnostic Trouble Code (DTC).>	Is the body integrated data no-receive detected in several modules?	Replace the body integrated unit. <Ref. to SL-81, Body Integrated Unit.>	Replace the module that the DTC has been detected.
6	**CHECK HARNESS.** 1) Shake the harness, and check for poor contact. 2) Read the DTC using Subaru Select Monitor. <Ref. to LAN(diag)-36, Read Diagnostic Trouble Code (DTC).>	Is U0140 a current malfunction?	Repair the poor contact of harness, or replace the harness.	Go to step **7**.
7	**CHECK CONNECTOR.** Check the connector used for high speed CAN for poor contact.	Is there poor contact of connector?	Repair the connector that has poor contact, or replace harness.	It is possible that temporary poor communication occurs. Delete the DTC.

I: DTC U0151 LOST COMMUNICATION WITH RESTRAINTS CONTROL MODULE

DTC DETECTING CONDITION:
No data is received from airbag CM.
TROUBLE SYMPTOM:
Cooperation control with airbag CM does not operate properly.

CAUTION:
When checking the airbag system, refer to the cautions regarding the airbag system prior to the inspection. <Ref. to AB-9, CAUTION, General Description.>

	Step	Check	Yes	No
1	**CHECK CAN COMMUNICATION HARNESS.** Perform the basic diagnostic procedure to check for fault in CAN communication harness. <Ref. to LAN(diag)-2, Basic Diagnostic Procedure.>	Was the basic diagnostic procedure performed up to step 7?	Go to step **2**.	Perform the basic diagnostic procedure. <Ref. to LAN(diag)-2, Basic Diagnostic Procedure.>
2	**CHECK DTC (OTHER THAN U-CODE).** Check the displayed DTC.	Are DTCs other than U*** displayed?	Perform the diagnosis for DTCs other than the displayed U-code.	Go to step **3**.
3	**CHECK DTC (CURRENT MALFUNCTION).** Check the displayed DTC.	Is U0151 a current malfunction?	Go to step **4**.	Go to step **6**.
4	**CHECK DTC (CURRENT MALFUNCTION).** 1) Check CAN communication circuit. <Ref. to LAN(diag)-38, CAN Communication Circuit Check.> 2) Read the DTC using Subaru Select Monitor. <Ref. to LAN(diag)-36, Read Diagnostic Trouble Code (DTC).>	Is U0151 a current malfunction?	Go to step **5**.	Go to step **6**.
5	**CHECK DTC.** Using the Subaru Select Monitor, read DTC of all the systems. <Ref. to LAN(diag)-36, Read Diagnostic Trouble Code (DTC).>	Is the airbag data no-receive detected in several modules?	Replace the airbag CM. <Ref. to AB-47, Airbag Control Module.>	Replace the module that the DTC has been detected.
6	**CHECK HARNESS.** 1) Shake the harness, and check for poor contact. 2) Read the DTC using Subaru Select Monitor. <Ref. to LAN(diag)-36, Read Diagnostic Trouble Code (DTC).>	Is U0151 a current malfunction?	Repair the poor contact of harness, or replace the harness.	Go to step **7**.
7	**CHECK CONNECTOR.** Check the connector used for high speed CAN for poor contact.	Is there poor contact of connector?	Repair the connector that has poor contact, or replace harness.	It is possible that temporary poor communication occurs. Delete the DTC.

J: DTC U0155 LOST COMMUNICATION WITH INSTRUMENT PANEL CLUSTER (IPC) CONTROL MODULE

DTC DETECTING CONDITION:
No data is received from combination meter.
TROUBLE SYMPTOM:
Display of combination meter does not operate properly.

	Step	Check	Yes	No
1	**CHECK CAN COMMUNICATION HARNESS.** Perform the basic diagnostic procedure to check for fault in CAN communication harness. <Ref. to LAN(diag)-2, Basic Diagnostic Procedure.>	Was the basic diagnostic procedure performed up to step 7?	Go to step **2**.	Perform the basic diagnostic procedure. <Ref. to LAN(diag)-2, Basic Diagnostic Procedure.>
2	**CHECK DTC (OTHER THAN U-CODE).** Check the displayed DTC.	Are DTCs other than U*** displayed?	Perform the diagnosis for DTCs other than the displayed U-code.	Go to step **3**.
3	**CHECK DTC (CURRENT MALFUNCTION).** Check the displayed DTC.	Is U0155 a current malfunction?	Go to step **4**.	Go to step **6**.
4	**CHECK DTC (CURRENT MALFUNCTION).** 1) Check CAN communication circuit. <Ref. to LAN(diag)-38, CAN Communication Circuit Check.> 2) Read the DTC using Subaru Select Monitor. <Ref. to LAN(diag)-36, Read Diagnostic Trouble Code (DTC).>	Is U0155 a current malfunction?	Go to step **5**.	Go to step **6**.
5	**CHECK DTC.** Using the Subaru Select Monitor, read DTC of all the systems. <Ref. to LAN(diag)-36, Read Diagnostic Trouble Code (DTC).>	Is the meter data no-receive detected in several modules?	Replace the meter. <Ref. to IDI-13, Combination Meter.>	Replace the module that the DTC has been detected.
6	**CHECK HARNESS.** 1) Shake the harness, and check for poor contact. 2) Read the DTC using Subaru Select Monitor. <Ref. to LAN(diag)-36, Read Diagnostic Trouble Code (DTC).>	Is U0155 a current malfunction?	Repair the poor contact of harness, or replace the harness.	Go to step **7**.
7	**CHECK CONNECTOR.** Check the connector used for high speed CAN for poor contact.	Is there poor contact of connector?	Repair the connector that has poor contact, or replace harness.	It is possible that temporary poor communication occurs. Delete the DTC.

K: DTC U0156 LOST COMMUNICATION WITH INFORMATION CENTER "A"

DTC DETECTING CONDITION:
No data is received from MFD.
TROUBLE SYMPTOM:
Display of MFD does not operate properly.

	Step	Check	Yes	No
1	**CHECK CAN COMMUNICATION HARNESS.** Perform the basic diagnostic procedure to check for fault in CAN communication harness. <Ref. to LAN(diag)-2, Basic Diagnostic Procedure.>	Was the basic diagnostic procedure performed up to step 7?	Go to step **2**.	Perform the basic diagnostic procedure. <Ref. to LAN(diag)-2, Basic Diagnostic Procedure.>
2	**CHECK DTC (OTHER THAN U-CODE).** Check the displayed DTC.	Are DTCs other than U*** displayed?	Perform the diagnosis for DTCs other than the displayed U-code.	Go to step **3**.
3	**CHECK DTC (CURRENT MALFUNCTION).** Check the displayed DTC.	Is U0156 a current malfunction?	Go to step **4**.	Go to step **6**.
4	**CHECK DTC (CURRENT MALFUNCTION).** 1) Check CAN communication circuit. <Ref. to LAN(diag)-38, CAN Communication Circuit Check.> 2) Read the DTC using Subaru Select Monitor. <Ref. to LAN(diag)-36, Read Diagnostic Trouble Code (DTC).>	Is U0156 a current malfunction?	Go to step **5**.	Go to step **6**.
5	**CHECK DTC.** Using the Subaru Select Monitor, read DTC of all the systems. <Ref. to LAN(diag)-36, Read Diagnostic Trouble Code (DTC).>	Is the MFD data no-receive detected in several modules?	Replace the MFD. <Ref. to IDI-13, Combination Meter.>	Replace the module that the DTC has been detected.
6	**CHECK HARNESS.** 1) Shake the harness, and check for poor contact. 2) Read the DTC using Subaru Select Monitor. <Ref. to LAN(diag)-36, Read Diagnostic Trouble Code (DTC).>	Is U0156 a current malfunction?	Repair the poor contact of harness, or replace the harness.	Go to step **7**.
7	**CHECK CONNECTOR.** Check the connector used for high speed CAN for poor contact.	Is there poor contact of connector?	Repair the connector that has poor contact, or replace harness.	It is possible that temporary poor communication occurs. Delete the DTC.

L: DTC U0164 LOST COMMUNICATION WITH HVAC CONTROL MODULE

DTC DETECTING CONDITION:
No data is received from A/C control panel.
TROUBLE SYMPTOM:
Cooperation control of air conditioner does not operate properly.

	Step	Check	Yes	No
1	**CHECK CAN COMMUNICATION HARNESS.** Perform the basic diagnostic procedure to check for fault in CAN communication harness. <Ref. to LAN(diag)-2, Basic Diagnostic Procedure.>	Was the basic diagnostic procedure performed up to step 7?	Go to step **2**.	Perform the basic diagnostic procedure. <Ref. to LAN(diag)-2, Basic Diagnostic Procedure.>
2	**CHECK DTC (OTHER THAN U-CODE).** Check the displayed DTC.	Are DTCs other than U*** displayed?	Perform the diagnosis for DTCs other than the displayed U-code.	Go to step **3**.
3	**CHECK DTC (CURRENT MALFUNCTION).** Check the displayed DTC.	Is U0164 a current malfunction?	Go to step **4**.	Go to step **6**.
4	**CHECK DTC (CURRENT MALFUNCTION).** 1) Check CAN communication circuit. <Ref. to LAN(diag)-38, CAN Communication Circuit Check.> 2) Read the DTC using Subaru Select Monitor. <Ref. to LAN(diag)-36, Read Diagnostic Trouble Code (DTC).>	Is U0164 a current malfunction?	Go to step **5**.	Go to step **6**.
5	**CHECK DTC.** Using the Subaru Select Monitor, read DTC of all the systems. <Ref. to LAN(diag)-36, Read Diagnostic Trouble Code (DTC).>	Is the air conditioner data no-receive detected in several modules?	Replace the A/C control panel. <Ref. to AC-43, Control Panel.>	Replace the module that the DTC has been detected.
6	**CHECK HARNESS.** 1) Shake the harness, and check for poor contact. 2) Read the DTC using Subaru Select Monitor. <Ref. to LAN(diag)-36, Read Diagnostic Trouble Code (DTC).>	Is U0164 a current malfunction?	Repair the poor contact of harness, or replace the harness.	Go to step **7**.
7	**CHECK CONNECTOR.** Check the connector used for high speed CAN for poor contact.	Is there poor contact of connector?	Repair the connector that has poor contact, or replace harness.	It is possible that temporary poor communication occurs. Delete the DTC.

M: DTC U0181 LOST COMMUNICATION WITH HEADLAMP LEVELING CONTROL MODULE

DTC DETECTING CONDITION:
No data is received from auto headlight beam leveler CM.
TROUBLE SYMPTOM:
Coordination control of auto headlight beam leveler CM does not operate normally.

	Step	Check	Yes	No
1	**CHECK CAN COMMUNICATION HARNESS.** Perform the basic diagnostic procedure to check for fault in CAN communication harness. <Ref. to LAN(diag)-2, Basic Diagnostic Procedure.>	Was the basic diagnostic procedure performed up to step 7?	Go to step **2**.	Perform the basic diagnostic procedure. <Ref. to LAN(diag)-2, Basic Diagnostic Procedure.>
2	**CHECK DTC (OTHER THAN U-CODE).** Check the displayed DTC.	Are DTCs other than U*** displayed?	Perform the diagnosis for DTCs other than the displayed U-code.	Go to step **3**.
3	**CHECK DTC (CURRENT MALFUNCTION).** Check the displayed DTC.	Is U0181 a current malfunction?	Go to step **4**.	Go to step **6**.
4	**CHECK DTC (CURRENT MALFUNCTION).** 1) Check CAN communication circuit. <Ref. to LAN(diag)-38, CAN Communication Circuit Check.> 2) Read the DTC using Subaru Select Monitor. <Ref. to LAN(diag)-36, Read Diagnostic Trouble Code (DTC).>	Is U0181 a current malfunction?	Go to step **5**.	Go to step **6**.
5	**CHECK DTC.** Using the Subaru Select Monitor, read DTC of all the systems. <Ref. to LAN(diag)-36, Read Diagnostic Trouble Code (DTC).>	Is the air conditioner data no-receive detected in several modules?	Replace the auto headlight beam leveler CM. <Ref. to LI-74, Auto Headlight Beam Leveler Control Module.>	Replace the module that the DTC has been detected.
6	**CHECK HARNESS.** 1) Shake the harness, and check for poor contact. 2) Read the DTC using Subaru Select Monitor. <Ref. to LAN(diag)-36, Read Diagnostic Trouble Code (DTC).>	Is U0181 a current malfunction?	Repair the poor contact of harness, or replace the harness.	Go to step **7**.
7	**CHECK CONNECTOR.** Check the connector used for high speed CAN for poor contact.	Is there poor contact of connector?	Repair the connector that has poor contact, or replace harness.	It is possible that temporary poor communication occurs. Delete the DTC.

N: DTC U0327 SOFTWARE INCOMPATIBILITY WITH VEHICLE SECURITY CONTROL MODULE

DTC DETECTING CONDITION:
No data is received from keyless access CM.
TROUBLE SYMPTOM:
Cooperation control of keyless access does not operate properly.

	Step	Check	Yes	No
1	**CHECK CAN COMMUNICATION HARNESS.** Perform the basic diagnostic procedure to check for fault in CAN communication harness. <Ref. to LAN(diag)-2, Basic Diagnostic Procedure.>	Was the basic diagnostic procedure performed up to step 7?	Go to step **2**.	Perform the basic diagnostic procedure. <Ref. to LAN(diag)-2, Basic Diagnostic Procedure.>
2	**CHECK DTC (OTHER THAN U-CODE).** Check the displayed DTC.	Are DTCs other than U*** displayed?	Perform the diagnosis for DTCs other than the displayed U-code.	Go to step **3**.
3	**CHECK DTC (CURRENT MALFUNCTION).** Check the displayed DTC.	Is U0327 a current malfunction?	Go to step **4**.	Go to step **6**.
4	**CHECK DTC (CURRENT MALFUNCTION).** 1) Check CAN communication circuit. <Ref. to LAN(diag)-38, CAN Communication Circuit Check.> 2) Read the DTC using Subaru Select Monitor. <Ref. to LAN(diag)-36, Read Diagnostic Trouble Code (DTC).>	Is U0327 a current malfunction?	Go to step **5**.	Go to step **6**.
5	**CHECK DTC (CURRENT MALFUNCTION).** Using the Subaru Select Monitor, read DTC of all the systems. <Ref. to LAN(diag)-36, Read Diagnostic Trouble Code (DTC).>	Is the smart data no-receive detected in several modules?	Replace the keyless access CM. <Ref. to SL-100, Keyless Access CM.>	Replace the module that the DTC has been detected.
6	**CHECK HARNESS.** 1) Shake the harness, and check for poor contact. 2) Read the DTC using Subaru Select Monitor. <Ref. to LAN(diag)-36, Read Diagnostic Trouble Code (DTC).>	Is U0327 a current malfunction?	Repair the poor contact of harness, or replace the harness.	Go to step **7**.
7	**CHECK CONNECTOR.** Check the connector used for high speed CAN for poor contact.	Is there poor contact of connector?	Repair the connector that has poor contact, or replace harness.	It is possible that temporary poor communication occurs. Delete the DTC.

O: DTC U0401 INVALID DATA RECEIVED FROM ECM/PCM "A"

DTC DETECTING CONDITION:
Defective data from ECM.
TROUBLE SYMPTOM:
Defective data on CAN communication occurs.

	Step	Check	Yes	No
1	**CHECK CAN COMMUNICATION HARNESS.** Perform the basic diagnostic procedure to check for fault in CAN communication harness. <Ref. to LAN(diag)-2, Basic Diagnostic Procedure.>	Was the basic diagnostic procedure performed up to step 7?	Go to step **2**.	Perform the basic diagnostic procedure. <Ref. to LAN(diag)-2, Basic Diagnostic Procedure.>
2	**CHECK DTC (OTHER THAN U-CODE).** Check the displayed DTC.	Are DTCs other than U*** displayed?	Perform the diagnosis for DTCs other than the displayed U-code.	Go to step **3**.
3	**CHECK DTC (U-CODE).** Check the displayed DTC.	Is DTC for the bus off or the data no-receive displayed?	Perform the diagnosis for DTCs for the displayed bus off or the data no-receive.	Go to step **4**.
4	**CHECK DTC (CURRENT MALFUNCTION).** Check the displayed DTC.	Is U0401 a current malfunction?	Go to step **5**.	Go to step **7**.
5	**CHECK DTC (CURRENT MALFUNCTION).** 1) Turn the ignition switch to OFF. 2) Disconnect the ECM connector. 3) Connect the disconnected connectors. 4) Read the DTC using Subaru Select Monitor. <Ref. to LAN(diag)-36, Read Diagnostic Trouble Code (DTC).>	Is U0401 a current malfunction?	Go to step **6**.	Go to step **7**.
6	**CHECK DTC.** Using the Subaru Select Monitor, read DTC of all the systems. <Ref. to LAN(diag)-36, Read Diagnostic Trouble Code (DTC).>	Is the engine data abnormal detected in several modules?	Replace the ECM. <Ref. to FU(w/o STI)-124, Engine Control Module (ECM).> <Ref. to FU(STI)-56, Engine Control Module (ECM).>	Replace the module that the DTC has been detected.
7	**CHECK HARNESS.** 1) Shake the harness, and check for poor contact. 2) Using the Subaru Select Monitor, read DTC of CAN system. <Ref. to LAN(diag)-36, Read Diagnostic Trouble Code (DTC).>	Is U0401 a current malfunction?	Repair the poor contact of harness, or replace the harness.	Go to step **8**.
8	**CHECK CONNECTOR.** Check the connector used for high speed CAN for poor contact.	Is there poor contact of connector?	Repair the connector that has poor contact, or replace harness.	It is possible that temporary poor communication occurs. Delete the DTC.

P: DTC U0402 INVALID DATA RECEIVED FROM TCM

DTC DETECTING CONDITION:
Received error data from TCM.
TROUBLE SYMPTOM:
Sport indicator light blinks.

	Step	Check	Yes	No
1	**CHECK CAN COMMUNICATION HARNESS.** Perform the basic diagnostic procedure to check for fault in CAN communication harness. <Ref. to LAN(diag)-2, Basic Diagnostic Procedure.>	Was the basic diagnostic procedure performed up to step 7?	Go to step **2**.	Perform the basic diagnostic procedure. <Ref. to LAN(diag)-2, Basic Diagnostic Procedure.>
2	**CHECK DTC (OTHER THAN U-CODE).** Check the displayed DTC.	Are DTCs other than U*** displayed?	Perform the diagnosis for DTCs other than the displayed U-code.	Go to step **3**.
3	**CHECK DTC (U-CODE).** Check the displayed DTC.	Is DTC for the bus off or the data no-receive displayed?	Perform the diagnosis for DTCs for the displayed bus off or the data no-receive.	Go to step **4**.
4	**CHECK DTC (CURRENT MALFUNCTION).** Check the displayed DTC.	Is U0402 a current malfunction?	Go to step **5**.	Go to step **7**.
5	**CHECK DTC (CURRENT MALFUNCTION).** 1) Turn the ignition switch to OFF. 2) Disconnect the TCM connector. 3) Connect the disconnected connectors. 4) Read the DTC using Subaru Select Monitor. <Ref. to LAN(diag)-36, Read Diagnostic Trouble Code (DTC).>	Is U0402 a current malfunction?	Go to step **6**.	Go to step **7**.
6	**CHECK DTC.** Using the Subaru Select Monitor, read DTC of all the systems. <Ref. to LAN(diag)-36, Read Diagnostic Trouble Code (DTC).>	Is the transmission data abnormal detected in several modules?	Replace the TCM. <Ref. to CVT(TR690)-126, Transmission Control Module (TCM).>	Replace the module that the DTC has been detected.
7	**CHECK HARNESS.** 1) Shake the harness, and check for poor contact. 2) Using the Subaru Select Monitor, read DTC of CAN system. <Ref. to LAN(diag)-36, Read Diagnostic Trouble Code (DTC).>	Is U0402 a current malfunction?	Repair the poor contact of harness, or replace the harness.	Go to step **8**.
8	**CHECK CONNECTOR.** Check the connector used for high speed CAN for poor contact.	Is there poor contact of connector?	Repair the connector that has poor contact, or replace harness.	It is possible that temporary poor communication occurs. Delete the DTC.

Q: DTC U0416 INVALID DATA RECEIVED FROM VEHICLE DYNAMICS CONTROL MODULE

DTC DETECTING CONDITION:
Data from VDCCM is faulty.
TROUBLE SYMPTOM:
ABS warning light and VDC warning light illuminate.

	Step	Check	Yes	No
1	**CHECK CAN COMMUNICATION HARNESS.** Perform the basic diagnostic procedure to check for fault in CAN communication harness. <Ref. to LAN(diag)-2, Basic Diagnostic Procedure.>	Was the basic diagnostic procedure performed up to step 7?	Go to step **2**.	Perform the basic diagnostic procedure. <Ref. to LAN(diag)-2, Basic Diagnostic Procedure.>
2	**CHECK DTC (OTHER THAN U-CODE).** Check the displayed DTC.	Are DTCs other than U*** displayed?	Perform the diagnosis for DTCs other than the displayed U-code.	Go to step **3**.
3	**CHECK DTC (U-CODE).** Check the displayed DTC.	Is DTC for the bus off or the data no-receive displayed?	Perform the diagnosis for DTCs for the displayed bus off or the data no-receive.	Go to step **4**.
4	**CHECK DTC (CURRENT MALFUNCTION).** Check the displayed DTC.	Is U0416 a current malfunction?	Go to step **5**.	Go to step **7**.
5	**CHECK DTC (CURRENT MALFUNCTION).** 1) Turn the ignition switch to OFF. 2) Disconnect the VDC CM connector. 3) Connect the disconnected connectors. 4) Read the DTC using Subaru Select Monitor. <Ref. to LAN(diag)-36, Read Diagnostic Trouble Code (DTC).>	Is U0416 a current malfunction?	Go to step **6**.	Go to step **7**.
6	**CHECK DTC.** Using the Subaru Select Monitor, read DTC of all the systems. <Ref. to LAN(diag)-36, Read Diagnostic Trouble Code (DTC).>	Is the VDC data abnormal detected in several modules?	Replace the VDC CM. <Ref. to VDC-9, VDC Control Module and Hydraulic Control Unit (VDCCM&H/U).>	Replace the module that the DTC has been detected.
7	**CHECK HARNESS.** 1) Shake the harness, and check for poor contact. 2) Using the Subaru Select Monitor, read DTC of CAN system. <Ref. to LAN(diag)-36, Read Diagnostic Trouble Code (DTC).>	Is U0416 a current malfunction?	Repair the poor contact of harness, or replace the harness.	Go to step **8**.
8	**CHECK CONNECTOR.** Check the connector used for high speed CAN for poor contact.	Is there poor contact of connector?	Repair the connector that has poor contact, or replace harness.	It is possible that temporary poor communication occurs. Delete the DTC.

R: DTC U0417 INVALID DATA RECEIVED FROM PARK BRAKE CONTROL MODULE

DTC DETECTING CONDITION:
Data from VDCCM is faulty.
TROUBLE SYMPTOM:
ABS warning light and VDC warning light illuminate.

	Step	Check	Yes	No
1	**CHECK CAN COMMUNICATION HARNESS.** Perform the basic diagnostic procedure to check for fault in CAN communication harness. <Ref. to LAN(diag)-2, Basic Diagnostic Procedure.>	Was the basic diagnostic procedure performed up to step 7?	Go to step **2**.	Perform the basic diagnostic procedure. <Ref. to LAN(diag)-2, Basic Diagnostic Procedure.>
2	**CHECK DTC (OTHER THAN U-CODE).** Check the displayed DTC.	Are DTCs other than U*** displayed?	Perform the diagnosis for DTCs other than the displayed U-code.	Go to step **3**.
3	**CHECK DTC (U-CODE).** Check the displayed DTC.	Is DTC for the bus off or the data no-receive displayed?	Perform the diagnosis for DTCs for the displayed bus off or the data no-receive.	Go to step **4**.
4	**CHECK DTC (CURRENT MALFUNCTION).** Check the displayed DTC.	Is U0417 a current malfunction?	Go to step **5**.	Go to step **7**.
5	**CHECK DTC (CURRENT MALFUNCTION).** 1) Turn the ignition switch to OFF. 2) Disconnect the VDC CM connector. 3) Connect the disconnected connectors. 4) Read the DTC using Subaru Select Monitor. <Ref. to LAN(diag)-36, Read Diagnostic Trouble Code (DTC).>	Is U0417 a current malfunction?	Go to step **6**.	Go to step **7**.
6	**CHECK DTC.** Using the Subaru Select Monitor, read DTC of all the systems. <Ref. to LAN(diag)-36, Read Diagnostic Trouble Code (DTC).>	Is the electronic parking data abnormal detected in several modules?	Replace the VDC CM. <Ref. to VDC-9, VDC Control Module and Hydraulic Control Unit (VDCCM&H/U).>	Replace the module that the DTC has been detected.
7	**CHECK HARNESS.** 1) Shake the harness, and check for poor contact. 2) Using the Subaru Select Monitor, read DTC of CAN system. <Ref. to LAN(diag)-36, Read Diagnostic Trouble Code (DTC).>	Is U0417 a current malfunction?	Repair the poor contact of harness, or replace the harness.	Go to step **8**.
8	**CHECK CONNECTOR.** Check the connector used for high speed CAN for poor contact.	Is there poor contact of connector?	Repair the connector that has poor contact, or replace harness.	It is possible that temporary poor communication occurs. Delete the DTC.

S: DTC U0420 INVALID DATA RECEIVED FROM POWER STEERING CONTROL MODULE

DTC DETECTING CONDITION:
Defective data was transmitted from EPS CM.
TROUBLE SYMPTOM:
Cooperation control with EPS CM does not operate properly.

	Step	Check	Yes	No
1	**CHECK CAN COMMUNICATION HARNESS.** Perform the basic diagnostic procedure to check for fault in CAN communication harness. <Ref. to LAN(diag)-2, Basic Diagnostic Procedure.>	Was the basic diagnostic procedure performed up to step 7?	Go to step **2**.	Perform the basic diagnostic procedure. <Ref. to LAN(diag)-2, Basic Diagnostic Procedure.>
2	**CHECK DTC (OTHER THAN U-CODE).** Check the displayed DTC.	Are DTCs other than U*** displayed?	Perform the diagnosis for DTCs other than the displayed U-code.	Go to step **3**.
3	**CHECK DTC (U-CODE).** Check the displayed DTC.	Is DTC for the bus off or the data no-receive displayed?	Perform the diagnosis for DTCs for the displayed bus off or the data no-receive.	Go to step **4**.
4	**CHECK DTC (CURRENT MALFUNCTION).** Check the displayed DTC.	Is U0420 a current malfunction?	Go to step **5**.	Go to step **7**.
5	**CHECK DTC (CURRENT MALFUNCTION).** 1) Turn the ignition switch to OFF. 2) Disconnect the power steering CM connector. 3) Connect the disconnected connectors. 4) Read the DTC using Subaru Select Monitor. <Ref. to LAN(diag)-36, Read Diagnostic Trouble Code (DTC).>	Is U0420 a current malfunction?	Go to step **6**.	Go to step **7**.
6	**CHECK DTC.** Using the Subaru Select Monitor, read DTC of all the systems. <Ref. to LAN(diag)-36, Read Diagnostic Trouble Code (DTC).>	Is the electric power steering data abnormal detected in several modules?	Replace the power steering CM. <Ref. to PS-100, Power Steering Control Module.>	Replace the module that the DTC has been detected.
7	**CHECK HARNESS.** 1) Shake the harness, and check for poor contact. 2) Using the Subaru Select Monitor, read DTC of CAN system. <Ref. to LAN(diag)-36, Read Diagnostic Trouble Code (DTC).>	Is U0420 a current malfunction?	Repair the poor contact of harness, or replace the harness.	Go to step **8**.
8	**CHECK CONNECTOR.** Check the connector used for high speed CAN for poor contact.	Is there poor contact of connector?	Repair the connector that has poor contact, or replace harness.	It is possible that temporary poor communication occurs. Delete the DTC.

T: DTC U0422 INVALID DATA RECEIVED FROM BODY CONTROL MODULE

DTC DETECTING CONDITION:
Defective data was transmitted from body integrated unit.
TROUBLE SYMPTOM:
Cooperation control with body integrated unit does not operate properly.

	Step	Check	Yes	No
1	**CHECK CAN COMMUNICATION HARNESS.** Perform the basic diagnostic procedure to check for fault in CAN communication harness. <Ref. to LAN(diag)-2, Basic Diagnostic Procedure.>	Was the basic diagnostic procedure performed up to step 7?	Go to step **2**.	Perform the basic diagnostic procedure. <Ref. to LAN(diag)-2, Basic Diagnostic Procedure.>
2	**CHECK DTC (OTHER THAN U-CODE).** Check the displayed DTC.	Are DTCs other than U*** displayed?	Perform the diagnosis for DTCs other than the displayed U-code.	Go to step **3**.
3	**CHECK DTC (U-CODE).** Check the displayed DTC.	Is DTC for the bus off or the data no-receive displayed?	Perform the diagnosis for DTCs for the displayed bus off or the data no-receive.	Go to step **4**.
4	**CHECK DTC (CURRENT MALFUNCTION).** Check the displayed DTC.	Is U0422 a current malfunction?	Go to step **5**.	Go to step **7**.
5	**CHECK DTC (CURRENT MALFUNCTION).** 1) Turn the ignition switch to OFF. 2) Disconnect the body integrated unit connector. 3) Connect the disconnected connectors. 4) Read the DTC using Subaru Select Monitor. <Ref. to LAN(diag)-36, Read Diagnostic Trouble Code (DTC).>	Is U0422 a current malfunction?	Go to step **6**.	Go to step **7**.
6	**CHECK DTC.** Using the Subaru Select Monitor, read DTC of all the systems. <Ref. to LAN(diag)-36, Read Diagnostic Trouble Code (DTC).>	Is the body integrated data abnormal detected in several modules?	Replace the body integrated unit. <Ref. to SL-81, Body Integrated Unit.>	Replace the module that the DTC has been detected.
7	**CHECK HARNESS.** 1) Shake the harness, and check for poor contact. 2) Using the Subaru Select Monitor, read DTC of CAN system. <Ref. to LAN(diag)-36, Read Diagnostic Trouble Code (DTC).>	Is U0422 a current malfunction?	Repair the poor contact of harness, or replace the harness.	Go to step **8**.
8	**CHECK CONNECTOR.** Check the connector used for high speed CAN for poor contact.	Is there poor contact of connector?	Repair the connector that has poor contact, or replace harness.	It is possible that temporary poor communication occurs. Delete the DTC.

U: DTC U0423 INVALID DATA RECEIVED FROM INSTRUMENT PANEL CLUSTER CONTROL MODULE

DTC DETECTING CONDITION:
Defective data was transmitted from combination meter.
TROUBLE SYMPTOM:
Display of combination meter does not operate properly.

	Step	Check	Yes	No
1	**CHECK CAN COMMUNICATION HARNESS.** Perform the basic diagnostic procedure to check for fault in CAN communication harness. <Ref. to LAN(diag)-2, Basic Diagnostic Procedure.>	Was the basic diagnostic procedure performed up to step 7?	Go to step **2**.	Perform the basic diagnostic procedure. <Ref. to LAN(diag)-2, Basic Diagnostic Procedure.>
2	**CHECK DTC (OTHER THAN U-CODE).** Check the displayed DTC.	Are DTCs other than U*** displayed?	Perform the diagnosis for DTCs other than the displayed U-code.	Go to step **3**.
3	**CHECK DTC (U-CODE).** Check the displayed DTC.	Is DTC for the bus off or the data no-receive displayed?	Perform the diagnosis for DTCs for the displayed bus off or the data no-receive.	Go to step **4**.
4	**CHECK DTC (CURRENT MALFUNCTION).** Check the displayed DTC.	Is U0423 a current malfunction?	Go to step **5**.	Go to step **7**.
5	**CHECK DTC (CURRENT MALFUNCTION).** 1) Turn the ignition switch to OFF. 2) Disconnect the combination meter connector. 3) Connect the disconnected connectors. 4) Read the DTC using Subaru Select Monitor. <Ref. to LAN(diag)-36, Read Diagnostic Trouble Code (DTC).>	Is U0423 a current malfunction?	Go to step **6**.	Go to step **7**.
6	**CHECK DTC.** Using the Subaru Select Monitor, read DTC of all the systems. <Ref. to LAN(diag)-36, Read Diagnostic Trouble Code (DTC).>	Is the meter data abnormal detected in several modules?	Replace the combination meter. <Ref. to IDI-13, Combination Meter.>	Replace the module that the DTC has been detected.
7	**CHECK HARNESS.** 1) Shake the harness, and check for poor contact. 2) Using the Subaru Select Monitor, read DTC of CAN system. <Ref. to LAN(diag)-36, Read Diagnostic Trouble Code (DTC).>	Is U0423 a current malfunction?	Repair the poor contact of harness, or replace the harness.	Go to step **8**.
8	**CHECK CONNECTOR.** Check the connector used for high speed CAN for poor contact.	Is there poor contact of connector?	Repair the connector that has poor contact, or replace harness.	It is possible that temporary poor communication occurs. Delete the DTC.

V: DTC U0424 INVALID DATA RECEIVED FROM HVAC CONTROL MODULE

DTC DETECTING CONDITION:
Defective data was transmitted from A/C control panel.
TROUBLE SYMPTOM:
Cooperation control of air conditioner does not operate properly.

	Step	Check	Yes	No
1	**CHECK CAN COMMUNICATION HARNESS.** Perform the basic diagnostic procedure to check for fault in CAN communication harness. <Ref. to LAN(diag)-2, Basic Diagnostic Procedure.>	Was the basic diagnostic procedure performed up to step 7?	Go to step **2**.	Perform the basic diagnostic procedure. <Ref. to LAN(diag)-2, Basic Diagnostic Procedure.>
2	**CHECK DTC (OTHER THAN U-CODE).** Check the displayed DTC.	Are DTCs other than U*** displayed?	Perform the diagnosis for DTCs other than the displayed U-code.	Go to step **3**.
3	**CHECK DTC (U-CODE).** Check the displayed DTC.	Is DTC for the bus off or the data no-receive displayed?	Perform the diagnosis for DTCs for the displayed bus off or the data no-receive.	Go to step **4**.
4	**CHECK DTC (CURRENT MALFUNCTION).** Check the displayed DTC.	Is U0424 a current malfunction?	Go to step **5**.	Go to step **7**.
5	**CHECK DTC (CURRENT MALFUNCTION).** 1) Turn the ignition switch to OFF. 2) Disconnect the A/C control panel connector. 3) Connect the disconnected connectors. 4) Read the DTC using Subaru Select Monitor. <Ref. to LAN(diag)-36, Read Diagnostic Trouble Code (DTC).>	Is U0424 a current malfunction?	Go to step **6**.	Go to step **7**.
6	**CHECK DTC.** Using the Subaru Select Monitor, read DTC of all the systems. <Ref. to LAN(diag)-36, Read Diagnostic Trouble Code (DTC).>	Is the air conditioner data abnormal detected in several modules?	Replace the A/C control panel. <Ref. to AC-43, Control Panel.>	Replace the module that the DTC has been detected.
7	**CHECK HARNESS.** 1) Shake the harness, and check for poor contact. 2) Read the DTC using Subaru Select Monitor. <Ref. to LAN(diag)-36, Read Diagnostic Trouble Code (DTC).>	Is U0424 a current malfunction?	Repair the poor contact of harness, or replace the harness.	Go to step **8**.
8	**CHECK CONNECTOR.** Check the connector used for high speed CAN for poor contact.	Is there poor contact of connector?	Repair the connector that has poor contact, or replace harness.	It is possible that temporary poor communication occurs. Delete the DTC.

W: DTC U0427 INVALID DATA RECEIVED FROM VEHICLE SECURITY CONTROL MODULE

DTC DETECTING CONDITION:
Defective data was transmitted from keyless access CM.
TROUBLE SYMPTOM:
Cooperation control of keyless access does not operate properly.

	Step	Check	Yes	No
1	**CHECK CAN COMMUNICATION HARNESS.** Perform the basic diagnostic procedure to check for fault in CAN communication harness. <Ref. to LAN(diag)-2, Basic Diagnostic Procedure.>	Was the basic diagnostic procedure performed up to step 7?	Go to step **2**.	Perform the basic diagnostic procedure. <Ref. to LAN(diag)-2, Basic Diagnostic Procedure.>
2	**CHECK DTC (OTHER THAN U-CODE).** Check the displayed DTC.	Are DTCs other than U*** displayed?	Perform the diagnosis for DTCs other than the displayed U-code.	Go to step **3**.
3	**CHECK DTC (U-CODE).** Check the displayed DTC.	Is DTC for the bus off or the data no-receive displayed?	Perform the diagnosis for DTCs for the displayed bus off or the data no-receive.	Go to step **4**.
4	**CHECK DTC (CURRENT MALFUNCTION).** Check the displayed DTC.	Is U0427 a current malfunction?	Go to step **5**.	Go to step **7**.
5	**CHECK DTC (CURRENT MALFUNCTION).** 1) Turn the ignition switch to OFF. 2) Disconnect the keyless access CM connector. 3) Connect the disconnected connectors. 4) Read the DTC using Subaru Select Monitor. <Ref. to LAN(diag)-36, Read Diagnostic Trouble Code (DTC).>	Is U0427 a current malfunction?	Go to step **6**.	Go to step **7**.
6	**CHECK DTC.** Using the Subaru Select Monitor, read DTC of all the systems. <Ref. to LAN(diag)-36, Read Diagnostic Trouble Code (DTC).>	Is the smart data abnormal detected in several modules?	Replace the keyless access CM. <Ref. to SL-100, Keyless Access CM.>	Replace the module that the DTC has been detected.
7	**CHECK HARNESS.** 1) Shake the harness, and check for poor contact. 2) Read the DTC using Subaru Select Monitor. <Ref. to LAN(diag)-36, Read Diagnostic Trouble Code (DTC).>	Is U0427 a current malfunction?	Repair the poor contact of harness, or replace the harness.	Go to step **8**.
8	**CHECK CONNECTOR.** Check the connector used for high speed CAN for poor contact.	Is there poor contact of connector?	Repair the connector that has poor contact, or replace harness.	It is possible that temporary poor communication occurs. Delete the DTC.

X: DTC U0428 INVALID DATA RECEIVED FROM STEERING ANGLE SENSOR MODULE

DTC DETECTING CONDITION:
Defective data was transmitted from steering angle sensor.
TROUBLE SYMPTOM:
VDC CM does not operate normally.

	Step	Check	Yes	No
1	**CHECK CAN COMMUNICATION HARNESS.** Perform the basic diagnostic procedure to check for fault in CAN communication harness. <Ref. to LAN(diag)-2, Basic Diagnostic Procedure.>	Was the basic diagnostic procedure performed up to step 7?	Go to step **2**.	Perform the basic diagnostic procedure. <Ref. to LAN(diag)-2, Basic Diagnostic Procedure.>
2	**CHECK DTC (OTHER THAN U-CODE).** Check the displayed DTC.	Are DTCs other than U*** displayed?	Perform the diagnosis for DTCs other than the displayed U-code.	Go to step **3**.
3	**CHECK DTC (U-CODE).** Check the displayed DTC.	Is DTC for the bus off or the data no-receive displayed?	Perform the diagnosis for DTCs for the displayed bus off or the data no-receive.	Go to step **4**.
4	**CHECK DTC (CURRENT MALFUNCTION).** Check the displayed DTC.	Is U0428 a current malfunction?	Go to step **5**.	Go to step **7**.
5	**CHECK DTC (CURRENT MALFUNCTION).** 1) Turn the ignition switch to OFF. 2) Disconnect the steering angle sensor connector. 3) Connect the disconnected connectors. 4) Read the DTC using Subaru Select Monitor. <Ref. to LAN(diag)-36, Read Diagnostic Trouble Code (DTC).>	Is U0428 a current malfunction?	Go to step **6**.	Go to step **7**.
6	**CHECK DTC.** Using the Subaru Select Monitor, read DTC of all the systems. <Ref. to LAN(diag)-36, Read Diagnostic Trouble Code (DTC).>	Is the steering angle sensor data abnormal detected in several modules?	Replace the steering angle sensor. <Ref. to VDC-28, Steering Angle Sensor.>	Replace the module that the DTC has been detected.
7	**CHECK HARNESS.** 1) Shake the harness, and check for poor contact. 2) Using the Subaru Select Monitor, read DTC of CAN system. <Ref. to LAN(diag)-36, Read Diagnostic Trouble Code (DTC).>	Is U0428 a current malfunction?	Repair the poor contact of harness, or replace the harness.	Go to step **8**.
8	**CHECK CONNECTOR.** Check the connector used for high speed CAN for poor contact.	Is there poor contact of connector?	Repair the connector that has poor contact, or replace harness.	It is possible that temporary poor communication occurs. Delete the DTC.

Y: DTC U0452 INVALID DATA RECEIVED FROM RESTRAINTS CONTROL MODULE

DTC DETECTING CONDITION:
Invalid data was transmitted from airbag CM.
TROUBLE SYMPTOM:
The airbag does not operate normally.

CAUTION:
When checking the airbag system, refer to the cautions regarding the airbag system prior to the inspection. <Ref. to AB-9, CAUTION, General Description.>

	Step	Check	Yes	No
1	**CHECK CAN COMMUNICATION HARNESS.** Perform the basic diagnostic procedure to check for fault in CAN communication harness. <Ref. to LAN(diag)-2, Basic Diagnostic Procedure.>	Was the basic diagnostic procedure performed up to step 7?	Go to step **2**.	Perform the basic diagnostic procedure. <Ref. to LAN(diag)-2, Basic Diagnostic Procedure.>
2	**CHECK DTC (OTHER THAN U-CODE).** Check the displayed DTC.	Are DTCs other than U*** displayed?	Perform the diagnosis for DTCs other than the displayed U-code.	Go to step **3**.
3	**CHECK DTC (U-CODE).** Check the displayed DTC.	Is DTC for the bus off or the data no-receive displayed?	Perform the diagnosis for DTCs for the displayed bus off or the data no-receive.	Go to step **4**.
4	**CHECK DTC (CURRENT MALFUNCTION).** Check the displayed DTC.	Is U0452 a current malfunction?	Go to step **5**.	Go to step **7**.
5	**CHECK DTC (CURRENT MALFUNCTION).** 1) Turn the ignition switch to OFF. 2) Disconnect the airbag CM connector. 3) Connect the disconnected connectors. 4) Read the DTC using Subaru Select Monitor. <Ref. to LAN(diag)-36, Read Diagnostic Trouble Code (DTC).>	Is U0452 a current malfunction?	Go to step **6**.	Go to step **7**.
6	**CHECK DTC.** Using the Subaru Select Monitor, read DTC of all the systems. <Ref. to LAN(diag)-36, Read Diagnostic Trouble Code (DTC).>	Is the airbag CM data abnormal detected in several modules?	Replace the airbag CM. <Ref. to AB-47, Airbag Control Module.>	Replace the module that the DTC has been detected.
7	**CHECK HARNESS.** 1) Shake the harness, and check for poor contact. 2) Using the Subaru Select Monitor, read DTC of CAN system. <Ref. to LAN(diag)-36, Read Diagnostic Trouble Code (DTC).>	Is U0452 a current malfunction?	Repair the poor contact of harness, or replace the harness.	Go to step **8**.
8	**CHECK CONNECTOR.** Check the connector used for high speed CAN for poor contact.	Is there poor contact of connector?	Repair the connector that has poor contact, or replace harness.	It is possible that temporary poor communication occurs. Delete the DTC.

Z: DTC U0457 INVALID DATA RECEIVED FROM INFORMATION CENTER "A"

DTC DETECTING CONDITION:
Defective data was transmitted from MFD.
TROUBLE SYMPTOM:
MFD does not operate normally.

	Step	Check	Yes	No
1	**CHECK CAN COMMUNICATION HARNESS.** Perform the basic diagnostic procedure to check for fault in CAN communication harness. <Ref. to LAN(diag)-2, Basic Diagnostic Procedure.>	Was the basic diagnostic procedure performed up to step 7?	Go to step **2**.	Perform the basic diagnostic procedure. <Ref. to LAN(diag)-2, Basic Diagnostic Procedure.>
2	**CHECK DTC (OTHER THAN U-CODE).** Check the displayed DTC.	Are DTCs other than U*** displayed?	Perform the diagnosis for DTCs other than the displayed U-code.	Go to step **3**.
3	**CHECK DTC (U-CODE).** Check the displayed DTC.	Is DTC for the bus off or the data no-receive displayed?	Perform the diagnosis for DTCs for the displayed bus off or the data no-receive.	Go to step **4**.
4	**CHECK DTC (CURRENT MALFUNCTION).** Check the displayed DTC.	Is U0457 a current malfunction?	Go to step **5**.	Go to step **7**.
5	**CHECK DTC (CURRENT MALFUNCTION).** 1) Turn the ignition switch to OFF. 2) Disconnect the MFD connector. 3) Connect the disconnected connectors. 4) Read the DTC using Subaru Select Monitor. <Ref. to LAN(diag)-36, Read Diagnostic Trouble Code (DTC).>	Is U0457 a current malfunction?	Go to step **6**.	Go to step **7**.
6	**CHECK DTC.** Using the Subaru Select Monitor, read DTC of all the systems. <Ref. to LAN(diag)-36, Read Diagnostic Trouble Code (DTC).>	Is the MFD invalid data detected in several modules?	Replace the MFD. <Ref. to IDI-20, Multi-function Display (MFD).>	Replace the module that the DTC has been detected.
7	**CHECK HARNESS.** 1) Shake the harness, and check for poor contact. 2) Using the Subaru Select Monitor, read DTC of CAN system. <Ref. to LAN(diag)-36, Read Diagnostic Trouble Code (DTC).>	Is U0457 a current malfunction?	Repair the poor contact of harness, or replace the harness.	Go to step **8**.
8	**CHECK CONNECTOR.** Check the connector used for high speed CAN for poor contact.	Is there poor contact of connector?	Repair the connector that has poor contact, or replace harness.	It is possible that temporary poor communication occurs. Delete the DTC.

AA:DTC U0482 INVALID DATA RECEIVED FROM HEADLAMP LEVELING CONTROL MODULE

DTC DETECTING CONDITION:
Invalid data was transmitted from auto headlight beam leveler CM.
TROUBLE SYMPTOM:
The auto headlight beam leveler does not operate normally.

	Step	Check	Yes	No
1	**CHECK CAN COMMUNICATION HARNESS.** Perform the basic diagnostic procedure to check for fault in CAN communication harness. <Ref. to LAN(diag)-2, Basic Diagnostic Procedure.>	Was the basic diagnostic procedure performed up to step 7?	Go to step **2**.	Perform the basic diagnostic procedure. <Ref. to LAN(diag)-2, Basic Diagnostic Procedure.>
2	**CHECK DTC (OTHER THAN U-CODE).** Check the displayed DTC.	Are DTCs other than U*** displayed?	Perform the diagnosis for DTCs other than the displayed U-code.	Go to step **3**.
3	**CHECK DTC (U-CODE).** Check the displayed DTC.	Is DTC for the bus off or the data no-receive displayed?	Perform the diagnosis for DTCs for the displayed bus off or the data no-receive.	Go to step **4**.
4	**CHECK DTC (CURRENT MALFUNCTION).** Check the displayed DTC.	Is U0482 a current malfunction?	Go to step **5**.	Go to step **7**.
5	**CHECK DTC (CURRENT MALFUNCTION).** 1) Turn the ignition switch to OFF. 2) Disconnect the auto headlight beam leveler CM connector. 3) Connect the disconnected connectors. 4) Read the DTC using Subaru Select Monitor. <Ref. to LAN(diag)-36, Read Diagnostic Trouble Code (DTC).>	Is U0482 a current malfunction?	Go to step **6**.	Go to step **7**.
6	**CHECK DTC.** Using the Subaru Select Monitor, read DTC of all the systems. <Ref. to LAN(diag)-36, Read Diagnostic Trouble Code (DTC).>	Is the MFD invalid data detected in several modules?	Replace the auto headlight beam leveler CM. <Ref. to LI-74, Auto Headlight Beam Leveler Control Module.>	Replace the module that the DTC has been detected.
7	**CHECK HARNESS.** 1) Shake the harness, and check for poor contact. 2) Using the Subaru Select Monitor, read DTC of CAN system. <Ref. to LAN(diag)-36, Read Diagnostic Trouble Code (DTC).>	Is U0482 a current malfunction?	Repair the poor contact of harness, or replace the harness.	Go to step **8**.
8	**CHECK CONNECTOR.** Check the connector used for high speed CAN for poor contact.	Is there poor contact of connector?	Repair the connector that has poor contact, or replace harness.	It is possible that temporary poor communication occurs. Delete the DTC.

AB:DTC U1073 CONTROL MODULE COMMUNICATION BUS "SONAR-CAN" OFF

DTC DETECTING CONDITION:
RAB CM communication is shut down because of high speed CAN error.
TROUBLE SYMPTOM:
CAN communication is not normal.

	Step	Check	Yes	No
1	**CHECK CAN COMMUNICATION HARNESS.** Perform the basic diagnostic procedure to check for fault in CAN communication harness. <Ref. to LAN(diag)-2, Basic Diagnostic Procedure.>	Was the basic diagnostic procedure performed up to step 7?	Go to step **2**.	Perform the basic diagnostic procedure. <Ref. to LAN(diag)-2, Basic Diagnostic Procedure.>
2	**CHECK DTC (CURRENT MALFUNCTION).** 1) Start the engine. 2) Using the Subaru Select Monitor, read DTC of CAN system.	Is U1073 a current malfunction?	Go to step **3**.	It may be a temporary poor contact. Perform the clear memory.
3	**CHECK CAN COMMUNICATION CIRCUIT.** Check CAN communication circuit. <Ref. to LAN(diag)-38, PROCEDURE, CAN Communication Circuit Check.>	Is CAN communication circuit faulty?	Repair the faulty portion, following the diagnosis procedure.	Go to step **4**.
4	**CHECK DTC.** 1) Perform the inspection using the DTC check sheet. <Ref. to LAN(diag)-111, CHECK USING THE DTC CHECK SHEET, LIST, List of Diagnostic Trouble Code (DTC).> 2) Using the Subaru Select Monitor, read DTC of CAN system.	Is U1073 a current malfunction?	Go to step **5**.	System is normal.
5	**CHECK CONTROL MODULE.** 1) Turn the ignition switch to OFF. 2) Disconnect the control modules other than body integrated unit in order. NOTE: When disconnecting ECM or VDC CM, connect resistance of 120 Ω between CAN Hi and CAN Lo as an alternative of end resistance. 3) Turn the ignition switch to ON. 4) Using the Subaru Select Monitor, read DTC of CAN system.	Is there any control module that U1073 is not detected as a current malfunction?	Replace the control module.	Repeat 1) to 4) in step 3 until U1073 is not detected.

AC:DTC U1135 LOST COMMUNICATION WITH DCCD CONTROL MODULE

DTC DETECTING CONDITION:
No data is received from DCCD CM.
TROUBLE SYMPTOM:
Cooperation control of DCCD does not operate properly.

	Step	Check	Yes	No
1	**CHECK CAN COMMUNICATION HARNESS.** Perform the basic diagnostic procedure to check for fault in CAN communication harness. <Ref. to LAN(diag)-2, Basic Diagnostic Procedure.>	Was the basic diagnostic procedure performed up to step 7?	Go to step **2**.	Perform the basic diagnostic procedure. <Ref. to LAN(diag)-2, Basic Diagnostic Procedure.>
2	**CHECK DTC (OTHER THAN U-CODE).** Check the displayed DTC.	Are DTCs other than U*** displayed?	Perform the diagnosis for DTCs other than the displayed U-code.	Go to step **3**.
3	**CHECK DTC (CURRENT MALFUNCTION).** Check the displayed DTC.	Is U1135 a current malfunction?	Go to step **4**.	Go to step **6**.
4	**CHECK DTC (CURRENT MALFUNCTION).** 1) Check CAN communication circuit. <Ref. to LAN(diag)-38, CAN Communication Circuit Check.> 2) Read the DTC using Subaru Select Monitor. <Ref. to LAN(diag)-36, Read Diagnostic Trouble Code (DTC).>	Is U1135 a current malfunction?	Go to step **5**.	Go to step **6**.
5	**CHECK DTC.** Using the Subaru Select Monitor, read DTC of all the systems. <Ref. to LAN(diag)-36, Read Diagnostic Trouble Code (DTC).>	Is the DCCD data reception error detected in several modules?	Replace the DCCD CM. <Ref. to ES-8, Stereo Camera.>	Replace the module that the DTC has been detected.
6	**CHECK HARNESS.** 1) Shake the harness, and check for poor contact. 2) Read the DTC using Subaru Select Monitor. <Ref. to LAN(diag)-36, Read Diagnostic Trouble Code (DTC).>	Is U1135 a current malfunction?	Repair the poor contact of harness, or replace the harness.	Go to step **7**.
7	**CHECK CONNECTOR.** Check the connector used for high speed CAN for poor contact.	Is there poor contact of connector?	Repair the connector that has poor contact, or replace harness.	It is possible that temporary poor communication occurs. Delete the DTC.

AD:DTC U1201 CAN-HS COUNTER ABNORMAL

DTC DETECTING CONDITION:
Communication is unstable because of high speed CAN communication error.
TROUBLE SYMPTOM:
- Display of combination meter indicates faulty.
- Control faulty may occur due to CAN communication error.

	Step	Check	Yes	No
1	**CHECK CAN COMMUNICATION HARNESS.** Perform the basic diagnostic procedure to check for fault in CAN communication harness. <Ref. to LAN(diag)-2, Basic Diagnostic Procedure.>	Was the basic diagnostic procedure performed up to step 7?	Go to step **2**.	Perform the basic diagnostic procedure. <Ref. to LAN(diag)-2, Basic Diagnostic Procedure.>
2	**CHECK CAN COMMUNICATION CIRCUIT.** Check CAN communication circuit. <Ref. to LAN(diag)-38, PROCEDURE, CAN Communication Circuit Check.>	Is CAN communication circuit faulty?	Repair the faulty portion, following the diagnosis procedure.	Go to step **3**.
3	**CHECK DTC (BUS OFF).** 1) Start the engine. 2) Using the Subaru Select Monitor, read DTC of CAN system. <Ref. to LAN(diag)-36, Read Diagnostic Trouble Code (DTC).>	Is U0073 a current malfunction?	Perform the diagnosis of U0073. <Ref. to LAN(diag)-115, DTC U0073 CONTROL MODULE COMMUNICATION BUS OFF, Diagnostic Procedure with Diagnostic Trouble Code (DTC).>	Go to step **4**.
4	**CHECK DTC (CURRENT MALFUNCTION).** Check the displayed DTC.	Is U1201 a current malfunction?	Go to step **5**.	It is possible that temporary poor communication occurs. Perform the clear memory.
5	**CHECK DTC (CURRENT MALFUNCTION).** 1) Turn the ignition switch to ON. 2) Using the Subaru Select Monitor, read DTC of CAN system. <Ref. to LAN(diag)-36, Read Diagnostic Trouble Code (DTC).>	Is U1201 a current malfunction?	Go to step **6**.	It is possible that temporary poor communication occurs. Perform the clear memory.
6	**CHECK CONTROL MODULE.** 1) Turn the ignition switch to OFF. 2) Disconnect the control modules other than body integrated unit in order. NOTE: When disconnecting ECM or VDC CM, connect resistance of 120 Ω between CAN Hi and CAN Lo as an alternative of end resistance. 3) Turn the ignition switch to ON. 4) Using the Subaru Select Monitor, read DTC of CAN system. <Ref. to LAN(diag)-36, Read Diagnostic Trouble Code (DTC).>	Is there any control module that U1201 is not detected as current malfunction?	Replace the control module.	Repeat 1) to 4) in step 5 until U1201 is not detected.

AE:DTC U1232 LOST COMMUNICATION WITH REAR/SIDE RADAR CONTROL MODULE

DTC DETECTING CONDITION:
No data is received from radar sensor.
TROUBLE SYMPTOM:
Cooperation control of radar sensor does not operate properly.

	Step	Check	Yes	No
1	**CHECK CAN COMMUNICATION HARNESS.** Perform the basic diagnostic procedure to check for fault in CAN communication harness. <Ref. to LAN(diag)-2, Basic Diagnostic Procedure.>	Was the basic diagnostic procedure performed up to step 7?	Go to step **2**.	Perform the basic diagnostic procedure. <Ref. to LAN(diag)-2, Basic Diagnostic Procedure.>
2	**CHECK DTC (OTHER THAN U-CODE).** Check the displayed DTC.	Are DTCs other than U*** displayed?	Perform the diagnosis for DTCs other than the displayed U-code.	Go to step **3**.
3	**CHECK DTC (CURRENT MALFUNCTION).** Check the displayed DTC.	Is U1232 a current malfunction?	Go to step **4**.	Go to step **6**.
4	**CHECK DTC (CURRENT MALFUNCTION).** 1) Check CAN communication circuit. <Ref. to LAN(diag)-38, CAN Communication Circuit Check.> 2) Read the DTC using Subaru Select Monitor. <Ref. to LAN(diag)-36, Read Diagnostic Trouble Code (DTC).>	Is U1232 a current malfunction?	Go to step **5**.	Go to step **6**.
5	**CHECK DTC.** Using the Subaru Select Monitor, read DTC of all the systems. <Ref. to LAN(diag)-36, Read Diagnostic Trouble Code (DTC).>	Is the Subaru Rear Vehicle Detection data no-receive detected in several modules?	Replace the radar sensor LH. <Ref. to RVD-6, Radar Sensor.>	Replace the module that the DTC has been detected.
6	**CHECK HARNESS.** 1) Shake the harness, and check for poor contact. 2) Read the DTC using Subaru Select Monitor. <Ref. to LAN(diag)-36, Read Diagnostic Trouble Code (DTC).>	Is U1232 a current malfunction?	Repair the poor contact of harness, or replace the harness.	Go to step **7**.
7	**CHECK CONNECTOR.** Check the connector used for high speed CAN for poor contact.	Is there poor contact of connector?	Repair the connector that has poor contact, or replace harness.	It is possible that temporary poor communication occurs. Delete the DTC.

AF:DTC U1233 LOST COMMUNICATION WITH RAB CONTROL MODULE

DTC DETECTING CONDITION:
No data is received from RAB CM.
TROUBLE SYMPTOM:
Coordination control of RAB CM does not operate normally.

	Step	Check	Yes	No
1	**CHECK CAN COMMUNICATION HARNESS.** Perform the basic diagnostic procedure to check for fault in CAN communication harness. <Ref. to LAN(diag)-2, Basic Diagnostic Procedure.>	Was the basic diagnostic procedure performed up to step 7?	Go to step **2**.	Perform the basic diagnostic procedure. <Ref. to LAN(diag)-2, Basic Diagnostic Procedure.>
2	**CHECK DTC (OTHER THAN U-CODE).** Check the displayed DTC.	Are DTCs other than U*** displayed?	Perform the diagnosis for DTCs other than the displayed U-code.	Go to step **3**.
3	**CHECK DTC (CURRENT MALFUNCTION).** Check the displayed DTC.	Is U1233 a current malfunction?	Go to step **4**.	Go to step **6**.
4	**CHECK DTC (CURRENT MALFUNCTION).** 1) Check CAN communication circuit. <Ref. to LAN(diag)-38, CAN Communication Circuit Check.> 2) Read the DTC using Subaru Select Monitor. <Ref. to LAN(diag)-36, Read Diagnostic Trouble Code (DTC).>	Is U1233 a current malfunction?	Go to step **5**.	Go to step **6**.
5	**CHECK DTC.** Using the Subaru Select Monitor, read DTC of all the systems. <Ref. to LAN(diag)-36, Read Diagnostic Trouble Code (DTC).>	Is the sonar data no-receive detected in several modules?	Replace the RAB CM.	Replace the module that the DTC has been detected.
6	**CHECK HARNESS.** 1) Shake the harness, and check for poor contact. 2) Read the DTC using Subaru Select Monitor. <Ref. to LAN(diag)-36, Read Diagnostic Trouble Code (DTC).>	Is U1233 a current malfunction?	Repair the poor contact of harness, or replace the harness.	Go to step **7**.
7	**CHECK CONNECTOR.** Check the connector used for high speed CAN for poor contact.	Is there poor contact of connector?	Repair the connector that has poor contact, or replace harness.	It is possible that temporary poor communication occurs. Delete the DTC.

AG:DTC U1235 LOST COMMUNICATION WITH EyeSight

DTC DETECTING CONDITION:
No data from stereo camera is received.
TROUBLE SYMPTOM:
Cooperation control of EyeSight does not operate properly.

	Step	Check	Yes	No
1	**CHECK CAN COMMUNICATION HARNESS.** Perform the basic diagnostic procedure to check for fault in CAN communication harness. <Ref. to LAN(diag)-2, Basic Diagnostic Procedure.>	Was the basic diagnostic procedure performed up to step 7?	Go to step **2**.	Perform the basic diagnostic procedure. <Ref. to LAN(diag)-2, Basic Diagnostic Procedure.>
2	**CHECK DTC (OTHER THAN U-CODE).** Check the displayed DTC.	Are DTCs other than U*** displayed?	Perform the diagnosis for DTCs other than the displayed U-code.	Go to step **3**.
3	**CHECK DTC (CURRENT MALFUNCTION).** Check the displayed DTC.	Is U1235 a current malfunction?	Go to step **4**.	Go to step **6**.
4	**CHECK DTC (CURRENT MALFUNCTION).** Read the DTC using Subaru Select Monitor. <Ref. to LAN(diag)-36, Read Diagnostic Trouble Code (DTC).>	Is U1235 a current malfunction?	Go to step **5**.	Go to step **6**.
5	**CHECK DTC.** Using the Subaru Select Monitor, read DTC of all the systems. <Ref. to LAN(diag)-36, Read Diagnostic Trouble Code (DTC).>	Is the EyeSight data no-receive detected in several modules?	Replace the stereo camera. <Ref. to ES-8, Stereo Camera.>	Replace the module that the DTC has been detected.
6	**CHECK HARNESS.** 1) Shake the harness, and check for poor contact. 2) Read the DTC using Subaru Select Monitor. <Ref. to LAN(diag)-36, Read Diagnostic Trouble Code (DTC).>	Is U1235 a current malfunction?	Repair the poor contact of harness, or replace the harness.	Go to step **7**.
7	**CHECK CONNECTOR.** Check the connector used for high speed CAN for poor contact.	Is there poor contact of connector?	Repair the connector that has poor contact, or replace harness.	It is possible that temporary poor communication occurs. Delete the DTC.

AH:DTC U1433 INVALID DATA RECEIVED FROM EyeSight

DTC DETECTING CONDITION:
Defective data was transmitted from stereo camera.
TROUBLE SYMPTOM:
Cooperation control of EyeSight does not operate properly.

	Step	Check	Yes	No
1	**CHECK CAN COMMUNICATION HARNESS.** Perform the basic diagnostic procedure to check for fault in CAN communication harness. <Ref. to LAN(diag)-2, Basic Diagnostic Procedure.>	Was the basic diagnostic procedure performed up to step 7?	Go to step **2**.	Perform the basic diagnostic procedure. <Ref. to LAN(diag)-2, Basic Diagnostic Procedure.>
2	**CHECK DTC (OTHER THAN U-CODE).** Check the displayed DTC.	Are DTCs other than U*** displayed?	Perform the diagnosis for DTCs other than the displayed U-code.	Go to step **3**.
3	**CHECK DTC (U-CODE).** Check the displayed DTC.	Is DTC for the bus off or the data no-receive displayed?	Perform the diagnosis for DTCs for the displayed bus off or the data no-receive.	Go to step **4**.
4	**CHECK DTC (CURRENT MALFUNCTION).** Check the displayed DTC.	Is U1433 a current malfunction?	Go to step **5**.	Go to step **7**.
5	**CHECK DTC (CURRENT MALFUNCTION).** 1) Turn the ignition switch to OFF. 2) Disconnect the stereo camera connector. 3) Connect the disconnected connectors. 4) Read the DTC using Subaru Select Monitor. <Ref. to LAN(diag)-36, Read Diagnostic Trouble Code (DTC).>	Is U1433 a current malfunction?	Go to step **6**.	Go to step **7**.
6	**CHECK DTC.** Using the Subaru Select Monitor, read DTC of all the systems. <Ref. to LAN(diag)-36, Read Diagnostic Trouble Code (DTC).>	Is the EyeSight data abnormal detected in several modules?	Replace the stereo camera. <Ref. to ES-8, Stereo Camera.>	Replace the module that the DTC has been detected.
7	**CHECK HARNESS.** 1) Shake the harness, and check for poor contact. 2) Using the Subaru Select Monitor, read DTC of CAN system. <Ref. to LAN(diag)-36, Read Diagnostic Trouble Code (DTC).>	Is U1433 a current malfunction?	Repair the poor contact of harness, or replace the harness.	Go to step **8**.
8	**CHECK CONNECTOR.** Check the connector used for high speed CAN for poor contact.	Is there poor contact of connector?	Repair the connector that has poor contact, or replace harness.	It is possible that temporary poor communication occurs. Delete the DTC.

AI: DTC U1534 INVALID DATA RECEIVED FROM SONAR ECU

DTC DETECTING CONDITION:
Defective data was transmitted from RAB CM.
TROUBLE SYMPTOM:
Coordination control of RAB CM does not operate normally.

	Step	Check	Yes	No
1	**CHECK CAN COMMUNICATION HARNESS.** Perform the basic diagnostic procedure to check for fault in CAN communication harness. <Ref. to LAN(diag)-2, Basic Diagnostic Procedure.>	Was the basic diagnostic procedure performed up to step 7?	Go to step **2**.	Perform the basic diagnostic procedure. <Ref. to LAN(diag)-2, Basic Diagnostic Procedure.>
2	**CHECK DTC (OTHER THAN U-CODE).** Check the displayed DTC.	Are DTCs other than U*** displayed?	Perform the diagnosis for DTCs other than the displayed U-code.	Go to step **3**.
3	**CHECK DTC (U-CODE).** Check the displayed DTC.	Is DTC for the bus off or the data no-receive displayed?	Perform the diagnosis for DTCs for the displayed bus off or the data no-receive.	Go to step **4**.
4	**CHECK DTC (CURRENT MALFUNCTION).** Check the displayed DTC.	Is U1534 current malfunction?	Go to step **5**.	Go to step **7**.
5	**CHECK DTC (CURRENT MALFUNCTION).** 1) Turn the ignition switch to OFF. 2) Disconnect the RAB CM connector. 3) Connect the disconnected connectors. 4) Read the DTC using Subaru Select Monitor. <Ref. to LAN(diag)-36, Read Diagnostic Trouble Code (DTC).>	Is U1534 current malfunction?	Go to step **6**.	Go to step **7**.
6	**CHECK DTC.** Using the Subaru Select Monitor, read DTC of all the systems. <Ref. to LAN(diag)-36, Read Diagnostic Trouble Code (DTC).>	Is the sonar invalid data detected in several modules?	Replace the RAB CM.	Replace the module that the DTC has been detected.
7	**CHECK HARNESS.** 1) Shake the harness, and check for poor contact. 2) Using the Subaru Select Monitor, read DTC of CAN system. <Ref. to LAN(diag)-36, Read Diagnostic Trouble Code (DTC).>	Is U1534 current malfunction?	Repair the poor contact of harness, or replace the harness.	Go to step **8**.
8	**CHECK CONNECTOR.** Check the connector used for high speed CAN for poor contact.	Is there poor contact of connector?	Repair the connector that has poor contact, or replace harness.	It is possible that temporary poor communication occurs. Delete the DTC.

12.Diagnostics with Phenomenon

A: LIST

Symptoms	Reference
DTC other than U-code is displayed.	<Ref. to LAN(diag)-151, DTC OTHER THAN U-CODE IS DISPLAYED, INSPECTION, Diagnostics with Phenomenon.>
Faster/slower vehicle speed than the actual speed is displayed.	<Ref. to LAN(diag)-151, FASTER/SLOWER VEHICLE SPEED THAN THE ACTUAL SPEED IS DISPLAYED, INSPECTION, Diagnostics with Phenomenon.>
More/less fuel than the actual amount is displayed.	<Ref. to LAN(diag)-152, MORE/LESS FUEL THAN THE ACTUAL AMOUNT IS DISPLAYED, INSPECTION, Diagnostics with Phenomenon.>
Fuel level warning light illuminates despite of sufficient fuel.	<Ref. to LAN(diag)-152, FUEL LEVEL WARNING LIGHT ILLUMINATES DESPITE OF SUFFICIENT FUEL, INSPECTION, Diagnostics with Phenomenon.>
Engine coolant temperature light blinks in red and blue alternately.	<Ref. to LAN(diag)-153, ENGINE COOLANT TEMPERATURE LIGHT BLINKS IN RED AND BLUE ALTERNATELY, INSPECTION, Diagnostics with Phenomenon.>
[S], [I] or [S#] indicator is blinking.	<Ref. to LAN(diag)-153, [S], [I] OR [S#] INDICATOR IS BLINKING, INSPECTION, Diagnostics with Phenomenon.>
The VDC warning light illuminates.	<Ref. to LAN(diag)-154, THE VDC WARNING LIGHT ILLUMINATES, INSPECTION, Diagnostics with Phenomenon.>
VDC-OFF indicator illuminates.	<Ref. to LAN(diag)-154, VDC-OFF INDICATOR ILLUMINATES, INSPECTION, Diagnostics with Phenomenon.>
Brake warning light illuminates.	<Ref. to LAN(diag)-155, BRAKE WARNING LIGHT ILLUMINATES, INSPECTION, Diagnostics with Phenomenon.>
Shift position is not displayed.	<Ref. to LAN(diag)-155, SHIFT POSITION IS NOT DISPLAYED, INSPECTION, Diagnostics with Phenomenon.>
AT oil temperature warning light is blinking.	<Ref. to LAN(diag)-156, AT OIL TEMPERATURE WARNING LIGHT IS BLINKING, INSPECTION, Diagnostics with Phenomenon.>
Door indicator is not displayed.	<Ref. to LAN(diag)-156, DOOR INDICATOR IS NOT DISPLAYED, INSPECTION, Diagnostics with Phenomenon.>
Clearance indicator does not illuminate.	<Ref. to LAN(diag)-157, CLEARANCE INDICATOR DOES NOT ILLUMINATE, INSPECTION, Diagnostics with Phenomenon.>
HI beam indicator does not illuminate.	<Ref. to LAN(diag)-157, HI BEAM INDICATOR DOES NOT ILLUMINATE, INSPECTION, Diagnostics with Phenomenon.>
Front fog light indicator does not illuminate.	<Ref. to LAN(diag)-158, FRONT FOG LIGHT INDICATOR DOES NOT ILLUMINATE, INSPECTION, Diagnostics with Phenomenon.>
Illumination is fixed at the maximum brightness.	<Ref. to LAN(diag)-158, ILLUMINATION IS FIXED AT THE MAXIMUM BRIGHTNESS, INSPECTION, Diagnostics with Phenomenon.>
Cruise control indicator does not illuminate.	<Ref. to LAN(diag)-159, CRUISE CONTROL INDICATOR DOES NOT ILLUMINATE, INSPECTION, Diagnostics with Phenomenon.>
AWD indicator illuminates.	<Ref. to LAN(diag)-159, AWD INDICATOR ILLUMINATES, INSPECTION, Diagnostics with Phenomenon.>
Hill hold indicator does not illuminate.	<Ref. to LAN(diag)-160, HILL HOLD INDICATOR DOES NOT ILLUMINATE, INSPECTION, Diagnostics with Phenomenon.>

B: INSPECTION

1. DTC OTHER THAN U-CODE IS DISPLAYED

	Step	Check	Yes	No
1	**CHECK DTC (CURRENT MALFUNCTION).** 1) Start the engine. 2) Read all DTCs. <Ref. to LAN(diag)-36, Read Diagnostic Trouble Code (DTC).>	Is DTC other than U-code displayed.	Perform the diagnosis for DTC other than the U-code.	Perform troubleshooting according to phenomenon of the problem. (If no phenomenon of the problem is present, it is normal currently.)

2. FASTER/SLOWER VEHICLE SPEED THAN THE ACTUAL SPEED IS DISPLAYED

	Step	Check	Yes	No
1	**CHECK THE ACTUAL VEHICLE SPEED.** Check that the vehicle speed indicated in the meter matches with the actual vehicle speed.	Does the vehicle speed match?	Currently, it is normal.	Go to step **2**.
2	**CHECK DTC (CURRENT MALFUNCTION).** Read DTC of combination meter. <Ref. to IDI(diag)-13, Read Diagnostic Trouble Code (DTC).>	Is DTC U0122 LOST COMMUNICATION WITH VEHICLE DYNAMICS CONTROL MODULE displayed?	Perform the diagnosis according to the basic diagnostic procedure in LAN SYSTEM (DIAGNOSTICS). <Ref. to LAN(diag)-2, Basic Diagnostic Procedure.>	Go to step **3**.
3	**CHECK SPEEDOMETER.** Connect the Subaru Select Monitor, and perform forced operation of the speedometer with «Active Test» for the combination meter. <Ref. to IDI(diag)-20, System Operation Check Mode.>	Do the indicated vehicle speed on Subaru Select Monitor and the speedometer indication match?	Perform a unit inspection for the vehicle speed sensor.	Replace the combination meter. <Ref. to IDI-13, Combination Meter.>

3. MORE/LESS FUEL THAN THE ACTUAL AMOUNT IS DISPLAYED

	Step	Check	Yes	No
1	**CHECK DTC (CURRENT MALFUNCTION).** Read DTC of combination meter. <Ref. to IDI(diag)-13, Read Diagnostic Trouble Code (DTC).>	Is «DTC B1500 FUEL SENDER OPEN/SHORT-CIRCUIT DETECTION» displayed?	Perform the diagnosis for the displayed DTCs.	Go to step **2**.
2	**CHECK DTC (CURRENT MALFUNCTION).** 1) Start the engine. 2) Read all DTCs. <Ref. to LAN(diag)-36, Read Diagnostic Trouble Code (DTC).>	Is DTC U**** displayed?	Perform the diagnosis according to the basic diagnostic procedure in LAN SYSTEM (DIAGNOSTICS). <Ref. to LAN(diag)-2, Basic Diagnostic Procedure.>	Go to step **3**.
3	**CHECK FUEL GAUGE.** Connect the Subaru Select Monitor, and perform forced operation of the fuel gauge with «Active Test» for the combination meter. <Ref. to IDI(diag)-20, System Operation Check Mode.>	Do the indicated amount on Subaru Select Monitor and the fuel gauge indication match?	Perform a unit inspection for the fuel sub level sensor and the fuel level sensor. <Ref. to FU(STI)-89, Fuel Sub Level Sensor.> <Ref. to FU(STI)-88, Fuel Level Sensor.>	Replace the combination meter. <Ref. to IDI-13, Combination Meter.>

4. FUEL LEVEL WARNING LIGHT ILLUMINATES DESPITE OF SUFFICIENT FUEL

	Step	Check	Yes	No
1	**CHECK DTC (CURRENT MALFUNCTION).** Read DTC of combination meter. <Ref. to IDI(diag)-13, Read Diagnostic Trouble Code (DTC).>	Is «DTC B1500 FUEL SENDER OPEN/SHORT-CIRCUIT DETECTION» displayed?	Perform the diagnosis for the displayed DTCs.	Go to step **2**.
2	**CHECK DTC (CURRENT MALFUNCTION).** 1) Start the engine. 2) Read all DTCs. <Ref. to LAN(diag)-36, Read Diagnostic Trouble Code (DTC).>	Is DTC U**** displayed?	Perform the diagnosis according to the basic diagnostic procedure in LAN SYSTEM (DIAGNOSTICS). <Ref. to LAN(diag)-2, Basic Diagnostic Procedure.>	Go to step **3**.
3	**CHECK FUEL LEVEL WARNING LIGHT.** Connect the Subaru Select Monitor, and perform forced operation of the fuel level warning light with «Active Test» for the combination meter. <Ref. to IDI(diag)-20, System Operation Check Mode.>	Do the indicated amount on Subaru Select Monitor and the fuel level warning light indication match?	Perform a unit inspection for the fuel sub level sensor and the fuel level sensor. <Ref. to FU(STI)-89, Fuel Sub Level Sensor.> <Ref. to FU(STI)-88, Fuel Level Sensor.>	Replace the combination meter. <Ref. to IDI-13, Combination Meter.>

5. ENGINE COOLANT TEMPERATURE LIGHT BLINKS IN RED AND BLUE ALTERNATELY

	Step	Check	Yes	No
1	**CHECK DTC (CURRENT MALFUNCTION).** Read DTC of engine. <Ref. to EN(STI)(diag)-47, Read Diagnostic Trouble Code (DTC).> <Ref. to EN(w/o STI)(diag)-63, Read Diagnostic Trouble Code (DTC).>	Is any of «DTC P0116 ENGINE COOLANT TEMPERATURE SENSOR 1 CIRCUIT RANGE/PERFORMANCE»«DTC P0117 ENGINE COOLANT TEMPERATURE SENSOR 1 CIRCUIT LOW»«DTC P0118 ENGINE COOLANT TEMPERATURE SENSOR 1 CIRCUIT HIGH» displayed?	Perform the diagnosis for the displayed DTCs.	Go to step **2**.
2	**CHECK DTC (CURRENT MALFUNCTION).** 1) Start the engine. 2) Read all DTCs. <Ref. to LAN(diag)-36, Read Diagnostic Trouble Code (DTC).>	Is DTC U**** displayed?	Perform the diagnosis according to the basic diagnostic procedure in LAN SYSTEM (DIAGNOSTICS). <Ref. to LAN(diag)-2, Basic Diagnostic Procedure.>	Go to step **3**.
3	**CHECK THE ENGINE COOLANT TEMPERATURE LIGHT.** Connect the Subaru Select Monitor, and perform forced operation of the engine coolant temperature light with «Active Test» for the combination meter. <Ref. to IDI(diag)-20, System Operation Check Mode.>	Do the indicated amount on Subaru Select Monitor and the engine coolant temperature light indication match?	Perform a unit inspection of the engine coolant temperature sensor. <Ref. to FU(STI)-33, Engine Coolant Temperature Sensor.>	Replace the combination meter. <Ref. to IDI-13, Combination Meter.>

6. [S], [I] OR [S#] INDICATOR IS BLINKING

	Step	Check	Yes	No
1	**CHECK DTC (CURRENT MALFUNCTION).** Read DTC of engine and combination meter. <Ref. to EN(STI)(diag)-47, Read Diagnostic Trouble Code (DTC).> <Ref. to EN(w/o STI)(diag)-63, Read Diagnostic Trouble Code (DTC).> <Ref. to IDI(diag)-13, Read Diagnostic Trouble Code (DTC).>	Is DTC displayed?	Perform the diagnosis for the displayed DTCs.	Go to step **2**.
2	**CHECK DTC (CURRENT MALFUNCTION).** 1) Start the engine. 2) Read all DTCs. <Ref. to LAN(diag)-36, Read Diagnostic Trouble Code (DTC).>	Is DTC U**** displayed?	Perform the diagnosis according to the basic diagnostic procedure in LAN SYSTEM (DIAGNOSTICS). <Ref. to LAN(diag)-2, Basic Diagnostic Procedure.>	Go to step **3**.
3	**CHECK THE ENGINE COOLANT TEMPERATURE LIGHT.** Connect the Subaru Select Monitor, and perform forced operation of the SI-DRIVE indication with «Active Test» for the combination meter. <Ref. to IDI(diag)-20, System Operation Check Mode.>	Do the indicated amount on Subaru Select Monitor and the SI-DRIVE indication match?	Check the engine. <Ref. to EN(w/o STI)(diag)-2, Basic Diagnostic Procedure.>	Replace the combination meter. <Ref. to IDI-13, Combination Meter.>

7. THE VDC WARNING LIGHT ILLUMINATES

	Step	Check	Yes	No
1	**CHECK DTC (CURRENT MALFUNCTION).** Read DTC of the VDC. <Ref. to VDC(diag)-28, Read Diagnostic Trouble Code (DTC).>	Is DTC displayed?	Perform the diagnosis for the displayed DTCs.	Go to step **2**.
2	**CHECK DTC (CURRENT MALFUNCTION).** 1) Start the engine. 2) Read all DTCs. <Ref. to LAN(diag)-36, Read Diagnostic Trouble Code (DTC).>	Is DTC U**** displayed?	Perform the diagnosis according to the basic diagnostic procedure in LAN SYSTEM (DIAGNOSTICS). <Ref. to LAN(diag)-2, Basic Diagnostic Procedure.>	Go to step **3**.
3	**CHECK VDC WARNING LIGHT.** Connect the Subaru Select Monitor, and perform forced operation of «VDC operation/failure indicator» with «Active Test» for the combination meter. <Ref. to IDI(diag)-20, System Operation Check Mode.>	Do the indication on Subaru Select Monitor and indication of «VDC operation/failure indicator» match?	Check the VDC warning light. <Ref. to VDC(diag)-31, Warning Light Illumination Pattern.>	Replace the combination meter. <Ref. to IDI-13, Combination Meter.>

8. VDC-OFF INDICATOR ILLUMINATES

	Step	Check	Yes	No
1	**CHECK DTC (CURRENT MALFUNCTION).** Read DTC of the VDC. <Ref. to VDC(diag)-28, Read Diagnostic Trouble Code (DTC).>	Is DTC displayed?	Perform the diagnosis for the displayed DTCs.	Go to step **2**.
2	**CHECK DTC (CURRENT MALFUNCTION).** 1) Start the engine. 2) Read all DTCs. <Ref. to LAN(diag)-36, Read Diagnostic Trouble Code (DTC).>	Is DTC U**** displayed?	Perform the diagnosis according to the basic diagnostic procedure in LAN SYSTEM (DIAGNOSTICS). <Ref. to LAN(diag)-2, Basic Diagnostic Procedure.>	Go to step **3**.
3	**CHECK VDC OFF INDICATOR LIGHT.** Connect the Subaru Select Monitor, and perform forced operation of «VDC OFF indicator» with «Active Test» for the combination meter. <Ref. to IDI(diag)-20, System Operation Check Mode.>	Do the indication on Subaru Select Monitor and indication of «VDC OFF indicator» match?	Check the VDC OFF indicator light. <Ref. to VDC(diag)-31, Warning Light Illumination Pattern.>	Replace the combination meter. <Ref. to IDI-13, Combination Meter.>

9. BRAKE WARNING LIGHT ILLUMINATES

	Step	Check	Yes	No
1	**CHECK DTC (CURRENT MALFUNCTION).** Read DTC of the VDC. <Ref. to VDC(diag)-28, Read Diagnostic Trouble Code (DTC).>	Is DTC displayed?	Perform the diagnosis for the displayed DTCs.	Go to step **2**.
2	**CHECK DTC (CURRENT MALFUNCTION).** 1) Start the engine. 2) Read all DTCs. <Ref. to LAN(diag)-36, Read Diagnostic Trouble Code (DTC).>	Is DTC U**** displayed?	Perform the diagnosis according to the basic diagnostic procedure in LAN SYSTEM (DIAGNOSTICS). <Ref. to LAN(diag)-2, Basic Diagnostic Procedure.>	Go to step **3**.
3	**CHECK BRAKE WARNING LIGHT.** Connect the Subaru Select Monitor, and perform forced operation of «BRAKE warning» with «Active Test» for the combination meter. <Ref. to IDI(diag)-20, System Operation Check Mode.>	Do the indication on Subaru Select Monitor and indication of «BRAKE warning» match?	Check the brake warning light. <Ref. to VDC(diag)-31, Warning Light Illumination Pattern.>	Replace the combination meter. <Ref. to IDI-13, Combination Meter.>

10.SHIFT POSITION IS NOT DISPLAYED

	Step	Check	Yes	No
1	**CHECK DTC (CURRENT MALFUNCTION).** Read the DTC of the TCM. <Ref. to CVT(diag)-18, Read Diagnostic Trouble Code (DTC).>	Is DTC displayed?	Perform the diagnosis for the displayed DTCs.	Go to step **2**.
2	**CHECK DTC (CURRENT MALFUNCTION).** 1) Start the engine. 2) Read all DTCs. <Ref. to LAN(diag)-36, Read Diagnostic Trouble Code (DTC).>	Is DTC U**** displayed?	Perform the diagnosis according to the basic diagnostic procedure in LAN SYSTEM (DIAGNOSTICS). <Ref. to LAN(diag)-2, Basic Diagnostic Procedure.>	Go to step **3**.
3	**CHECK SHIFT INDICATOR.** Connect the Subaru Select Monitor, and perform forced operation of the shift indicator with «Active Test» for the combination meter. <Ref. to IDI(diag)-20, System Operation Check Mode.>	Do the indication on Subaru Select Monitor and the shift indicator indication match?	Check the shift indicator. <Ref. to CVT(diag)-169, Diagnostic Procedure without Diagnostic Trouble Code (DTC).>	Replace the combination meter. <Ref. to IDI-13, Combination Meter.>

11.AT OIL TEMPERATURE WARNING LIGHT IS BLINKING

	Step	Check	Yes	No
1	**CHECK DTC (CURRENT MALFUNCTION).** Read the DTC of the TCM. <Ref. to CVT(diag)-18, Read Diagnostic Trouble Code (DTC).>	Is DTC displayed?	Perform the diagnosis for the displayed DTCs.	Go to step **2**.
2	**CHECK DTC (CURRENT MALFUNCTION).** 1) Start the engine. 2) Read all DTCs. <Ref. to LAN(diag)-36, Read Diagnostic Trouble Code (DTC).>	Is DTC U**** displayed?	Perform the diagnosis according to the basic diagnostic procedure in LAN SYSTEM (DIAGNOSTICS). <Ref. to LAN(diag)-2, Basic Diagnostic Procedure.>	Go to step **3**.
3	**CHECK AT OIL TEMP LIGHT.** Connect the Subaru Select Monitor, and perform forced operation of «AT (CVT) oil temperature warning» with «Active Test» for the combination meter. <Ref. to IDI(diag)-20, System Operation Check Mode.>	Do the indication on Subaru Select Monitor and indication of «AT (CVT) oil temperature warning» match?	Go to step **4**.	Replace the combination meter. <Ref. to IDI-13, Combination Meter.>
4	**PERFORM CVT LEARNING.** Connect the Subaru Select Monitor and perform the CVT learning. <Ref. to CVT(diag)-26, Learning Control.>	Does the AT oil temperature warning light go off?	Currently, it is normal.	Check the AT OIL TEMP light. <Ref. to CVT(diag)-28, AT OIL TEMP Warning Light Display.>

12.DOOR INDICATOR IS NOT DISPLAYED

	Step	Check	Yes	No
1	**CHECK DTC (CURRENT MALFUNCTION).** Read the DTC of the body integrated unit. <Ref. to BC(diag)-11, Read Diagnostic Trouble Code (DTC).>	Is DTC displayed?	Perform the diagnosis for the displayed DTCs.	Go to step **2**.
2	**CHECK DTC (CURRENT MALFUNCTION).** 1) Start the engine. 2) Read all DTCs. <Ref. to LAN(diag)-36, Read Diagnostic Trouble Code (DTC).>	Is DTC U**** displayed?	Perform the diagnosis according to the basic diagnostic procedure in LAN SYSTEM (DIAGNOSTICS). <Ref. to LAN(diag)-2, Basic Diagnostic Procedure.>	Go to step **3**.
3	**CHECK DOOR INDICATOR.** Connect the Subaru Select Monitor, and perform forced operation of the door indicator with «Active Test» for the combination meter. <Ref. to IDI(diag)-20, System Operation Check Mode.>	Do the indication on Subaru Select Monitor and the door indicator indication match?	Go to step **4**.	Replace the combination meter. <Ref. to IDI-13, Combination Meter.>
4	**CHECK DATA MONITOR FOR BODY INTEGRATED UNIT.** Connect the Subaru Select Monitor, and display data monitor of the body integrated unit: «Driver's door SW input»«P-door SW input»«Rear right door SW input»«Rear left door SW input». <Ref. to BC(diag)-17, Read Current Data.>	Do the door open/close and data indication match?	Replace the body integrated unit. <Ref. to SL-81, Body Integrated Unit.>	Inspect door switch circuit. <Ref. to SL-17, INSPECTION, Keyless Entry System.>

13.CLEARANCE INDICATOR DOES NOT ILLUMINATE

	Step	Check	Yes	No
1	**CHECK DTC (CURRENT MALFUNCTION).** Read the DTC of the body integrated unit. <Ref. to BC(diag)-11, Read Diagnostic Trouble Code (DTC).>	Is DTC displayed?	Perform the diagnosis for the displayed DTCs.	Go to step **2**.
2	**CHECK DTC (CURRENT MALFUNCTION).** 1) Start the engine. 2) Read all DTCs. <Ref. to LAN(diag)-36, Read Diagnostic Trouble Code (DTC).>	Is DTC U**** displayed?	Perform the diagnosis according to the basic diagnostic procedure in LAN SYSTEM (DIAGNOSTICS). <Ref. to LAN(diag)-2, Basic Diagnostic Procedure.>	Go to step **3**.
3	**CHECK CLEARANCE INDICATOR.** Connect the Subaru Select Monitor, and perform forced operation of «Position light indicator» with «Active Test» for the combination meter. <Ref. to IDI(diag)-20, System Operation Check Mode.>	Do the indication on Subaru Select Monitor and the clearance indicator indication match?	Go to step **4**.	Replace the combination meter. <Ref. to IDI-13, Combination Meter.>
4	**CHECK DATA MONITOR FOR BODY INTEGRATED UNIT.** Connect the Subaru Select Monitor, and display the data monitor of the body integrated unit: «Lighting I Switch Input». <Ref. to BC(diag)-17, Read Current Data.>	Do the switch operation and data indication match?	Replace the body integrated unit. <Ref. to SL-81, Body Integrated Unit.>	Check the clearance light. <Ref. to LI-11, Clearance Light and Illumination Light System.>

14.HI BEAM INDICATOR DOES NOT ILLUMINATE

	Step	Check	Yes	No
1	**CHECK DTC (CURRENT MALFUNCTION).** Read the DTC of the body integrated unit. <Ref. to BC(diag)-11, Read Diagnostic Trouble Code (DTC).>	Is DTC displayed?	Perform the diagnosis for the displayed DTCs.	Go to step **2**.
2	**CHECK DTC (CURRENT MALFUNCTION).** 1) Start the engine. 2) Read all DTCs. <Ref. to LAN(diag)-36, Read Diagnostic Trouble Code (DTC).>	Is DTC U**** displayed?	Perform the diagnosis according to the basic diagnostic procedure in LAN SYSTEM (DIAGNOSTICS). <Ref. to LAN(diag)-2, Basic Diagnostic Procedure.>	Go to step **3**.
3	**CHECK HI BEAM INDICATOR.** Connect the Subaru Select Monitor, and perform forced operation of «High-beam indicator» with «Active Test» for the combination meter. <Ref. to IDI(diag)-20, System Operation Check Mode.>	Do the indication on Subaru Select Monitor and the HI beam indicator indication match?	Go to step **4**.	Replace the combination meter. <Ref. to IDI-13, Combination Meter.>
4	**CHECK DATA MONITOR FOR BODY INTEGRATED UNIT.** Connect the Subaru Select Monitor, and display the data monitor of the body integrated unit: «Dimmer Hi Switch Input». <Ref. to BC(diag)-17, Read Current Data.>	Do the switch operation and data indication match?	Replace the body integrated unit. <Ref. to SL-81, Body Integrated Unit.>	Check the headlight system. <Ref. to LI-6, Headlight System.>

15.FRONT FOG LIGHT INDICATOR DOES NOT ILLUMINATE

	Step	Check	Yes	No
1	**CHECK DTC (CURRENT MALFUNCTION).** Read the DTC of the body integrated unit. <Ref. to BC(diag)-11, Read Diagnostic Trouble Code (DTC).>	Is DTC displayed?	Perform the diagnosis for the displayed DTCs.	Go to step **2**.
2	**CHECK DTC (CURRENT MALFUNCTION).** 1) Start the engine. 2) Read all DTCs. <Ref. to LAN(diag)-36, Read Diagnostic Trouble Code (DTC).>	Is DTC U**** displayed?	Perform the diagnosis according to the basic diagnostic procedure in LAN SYSTEM (DIAGNOSTICS). <Ref. to LAN(diag)-2, Basic Diagnostic Procedure.>	Go to step **3**.
3	**CHECK THE FRONT FOG LIGHT INDICATOR.** Connect the Subaru Select Monitor, and perform forced operation of «Front fog light indicator» with «Active Test» for the combination meter. <Ref. to IDI(diag)-20, System Operation Check Mode.>	Do the indication on Subaru Select Monitor and the front fog light indicator indication match?	Go to step **4**.	Replace the combination meter. <Ref. to IDI-13, Combination Meter.>
4	**CHECK DATA MONITOR FOR BODY INTEGRATED UNIT.** Connect the Subaru Select Monitor, and display the data monitor of the body integrated unit: «Front fog lamp SW input». <Ref. to BC(diag)-17, Read Current Data.>	Do the switch operation and data indication match?	Replace the body integrated unit. <Ref. to SL-81, Body Integrated Unit.>	Check the front fog light system. <Ref. to LI-12, Front Fog Light System.>

16.ILLUMINATION IS FIXED AT THE MAXIMUM BRIGHTNESS

	Step	Check	Yes	No
1	**CHECK DTC (CURRENT MALFUNCTION).** Read DTC of combination meter. <Ref. to IDI(diag)-13, Read Diagnostic Trouble Code (DTC).>	Is DTC displayed?	Perform the diagnosis for the displayed DTCs.	Go to step **2**.
2	**CHECK DTC (CURRENT MALFUNCTION).** 1) Start the engine. 2) Read all DTCs. <Ref. to LAN(diag)-36, Read Diagnostic Trouble Code (DTC).>	Is DTC U**** displayed?	Perform the diagnosis according to the basic diagnostic procedure in LAN SYSTEM (DIAGNOSTICS). <Ref. to LAN(diag)-2, Basic Diagnostic Procedure.>	Go to step **3**.
3	**CHECK ILLUMINATION.** Connect the Subaru Select Monitor, and perform forced operation of «Illumination check» with «Active Test» for the combination meter. <Ref. to IDI(diag)-20, System Operation Check Mode.>	Do the indication on Subaru Select Monitor and the indicator indication match?	Check the clearance light & illumination light system. <Ref. to LI-11, Clearance Light and Illumination Light System.>	Replace the combination meter. <Ref. to IDI-13, Combination Meter.>

17.CRUISE CONTROL INDICATOR DOES NOT ILLUMINATE

	Step	Check	Yes	No
1	**CHECK DTC (CURRENT MALFUNCTION).** 1) Start the engine. 2) Read all DTCs. <Ref. to LAN(diag)-36, Read Diagnostic Trouble Code (DTC).>	Is DTC U**** displayed?	Perform the diagnosis according to the basic diagnostic procedure in LAN SYSTEM (DIAGNOSTICS). <Ref. to LAN(diag)-2, Basic Diagnostic Procedure.>	Go to step **2**.
2	**CHECK DATA MONITOR OF ENGINE.** Display the data monitor of engine «Main Switch» using Subaru Select Monitor. <Ref. to EN(w/o STI)(diag)-46, DISPLAY CURRENT ENGINE DATA, OPERATION, Subaru Select Monitor.> <Ref. to EN(STI)(diag)-36, DISPLAY CURRENT ENGINE DATA (NORMAL MODE), OPERATION, Subaru Select Monitor.>	Do the switch operation and data indication match?	Replace the combination meter. <Ref. to IDI-13, Combination Meter.>	Check the cruise control command switch. <Ref. to CC-6, Cruise Control Command Switch.>

18.AWD INDICATOR ILLUMINATES

	Step	Check	Yes	No
1	**CHECK MODE.** Connect the Subaru Select Monitor and change to AWD mode. NOTE: When AWD ON/OFF switching mode is not available, go to step 2.	Did the AWD indicator go off?	Currently, it is normal.	Go to step **2**.
2	**CHECK DTC (CURRENT MALFUNCTION).** Read the DTC of the TCM. <Ref. to CVT(diag)-18, Read Diagnostic Trouble Code (DTC).>	Is DTC displayed?	Perform the diagnosis for the displayed DTCs.	Go to step **3**.
3	**CHECK DTC (CURRENT MALFUNCTION).** 1) Start the engine. 2) Read all DTCs. <Ref. to LAN(diag)-36, Read Diagnostic Trouble Code (DTC).>	Is DTC U**** displayed?	Perform the diagnosis according to the basic diagnostic procedure in LAN SYSTEM (DIAGNOSTICS). <Ref. to LAN(diag)-2, Basic Diagnostic Procedure.>	Go to step **4**.
4	**CHECK AWD INDICATOR.** Connect the Subaru Select Monitor, and perform forced operation of «AWD warning» with «Active Test» for the combination meter. <Ref. to IDI(diag)-20, System Operation Check Mode.>	Do the indication on Subaru Select Monitor and the AWD indicator indication match?	Check the AWD indicator. <Ref. to CVT(diag)-31, AWD Warning Light Display.> <Ref. to 6MT(diag)-15, AWD Warning Light Display.>	Replace the combination meter. <Ref. to IDI-13, Combination Meter.>

19.HILL HOLD INDICATOR DOES NOT ILLUMINATE

	Step	Check	Yes	No
1	**CHECK DTC (CURRENT MALFUNCTION).** Read DTC of the VDC. <Ref. to VDC(diag)-28, Read Diagnostic Trouble Code (DTC).>	Is DTC displayed?	Perform the diagnosis for the displayed DTCs.	Go to step **2**.
2	**CHECK DTC (CURRENT MALFUNCTION).** 1) Start the engine. 2) Read all DTCs. <Ref. to LAN(diag)-36, Read Diagnostic Trouble Code (DTC).>	Is DTC U**** displayed?	Perform the diagnosis according to the basic diagnostic procedure in LAN SYSTEM (DIAGNOSTICS). <Ref. to LAN(diag)-2, Basic Diagnostic Procedure.>	Check the hill hold indicator light. <Ref. to VDC(diag)-31, Warning Light Illumination Pattern.>

EyeSight

ES

		Page
1.	General Description	2
2.	Relay and Fuse	5
3.	EyeSight System	6
4.	Control Unit	7
5.	Stereo Camera	8
6.	Camera Adjustment, Inspection	13
7.	Switches and Harness	35
8.	Combination Meter	37
9.	Transmission Control Module (TCM)	38
10.	Stop Light & Brake Switch	39
11.	VDC Control Module and Hydraulic Control Unit (VDCCM&H/U)	40
12.	Power Steering Control Module	41
13.	Roll Connector	42
14.	Body Integrated Unit	43
15.	Reverse Automatic Braking CM	44
16.	Diagnostics with Phenomenon	45

1. General Description

A: LOCATION

Refer to “LOCATION” of “EyeSight (DIAGNOSTICS)” section. <Ref. to ES(diag)-15, LOCATION, Electrical Component Location.>

B: COMPONENT

1. STEREO CAMERA

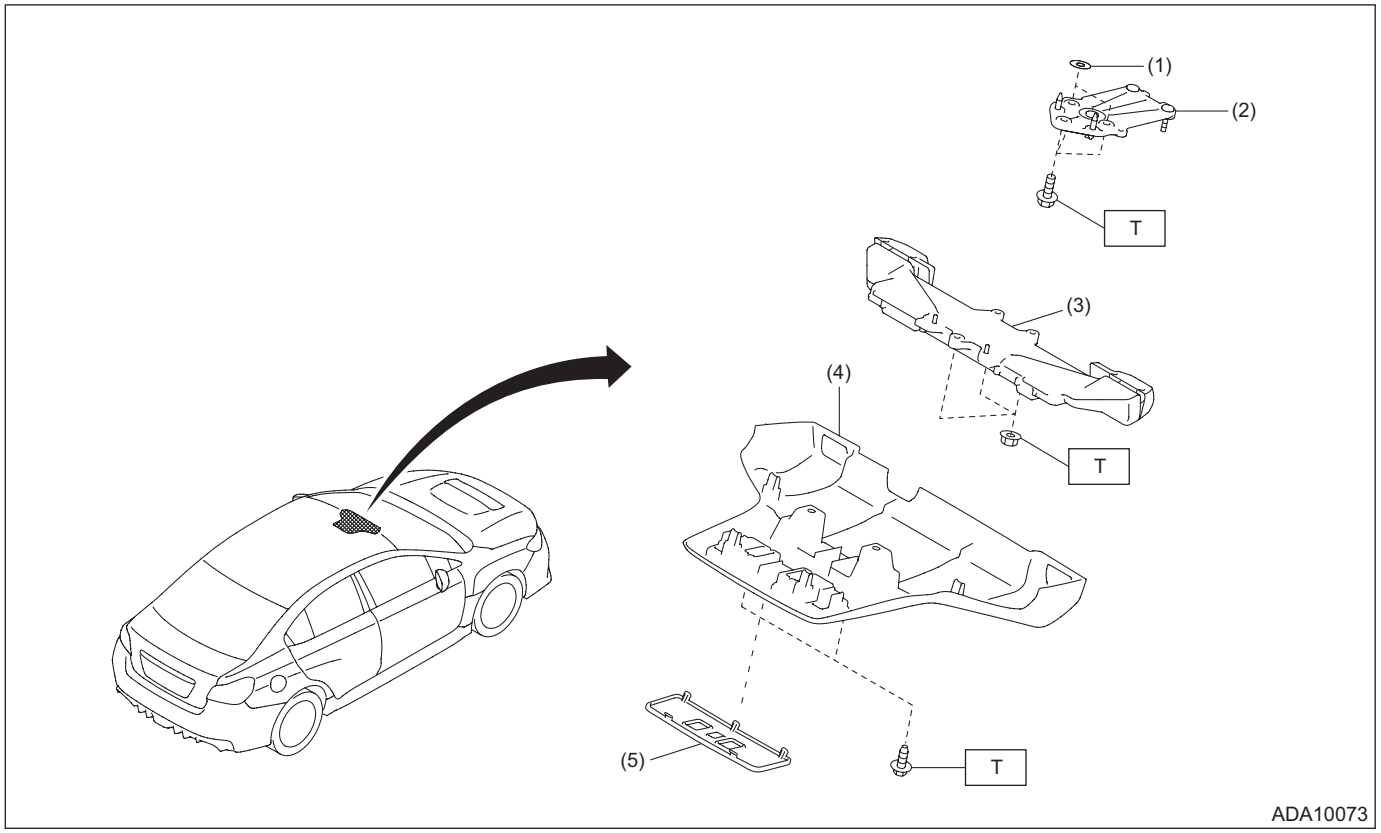

(1) Shim (washer)
(2) Camera plate
(3) Stereo camera
(4) Stereo camera cover ASSY
(5) Cap

Tightening torque: N·m (kgf-m, ft-lb)
T: 5.5±1 (0.56±0.1, 4.1±0.7)

C: CAUTION

• Before disconnecting connectors of sensors or units, be sure to disconnect the ground cable from battery. When replacing the audio and MFD parts provided with memory functions, record the memory contents before disconnecting the battery ground cable.
• Be careful of the following items. Failing to do so may cause the airbag system malfunction.
  – Yellow connectors and harnesses with yellow tapes around them are the connectors and harnesses for the airbag system. When using a tester on these circuits, follow the cautions of “AIRBAG SYSTEM”. <Ref. to AB-9, CAUTION, General Description.>
  – Be careful not to damage the airbag system wiring harness when servicing the electrical parts around the steering column.
• When removing, installing or replacing the VDCCM&H/U, VDCCM&H/U bracket, steering wheel or steering angle sensor (steering roll connector), perform “VSC(VDC) Centering Mode” of the VDC. <Ref. to VDC-17, VDC SENSOR MIDPOINT SETTING MODE, ADJUSTMENT, VDC Control Module and Hydraulic Control Unit (VDCCM&H/U).>
• If the damage is found in the glass repair prohibited area, always replace the glass. <Ref. to ES(diag)-8, WINDSHIELD GLASS AND DASHBOARD, INSPECTION, General Description.>
Damage in the prohibited area can affect the recognition of the stereo camera even if it is repaired, and thereby EyeSight function may not operate properly.
• When the suspension-related components have been removed, installed or replaced, or the wheel alignment is adjusted, perform “Clear Active Lane Keep System Learning Value”. <Ref. to ES(diag)-50, OPERATION, CLEAR ACTIVE LANE KEEP SYSTEM LEARNING VALUE.>

D: PREPARATION TOOL

1. SPECIAL TOOL

ILLUSTRATION	TOOL NUMBER	DESCRIPTION	REMARKS
 ST87599VA000	87599VA000	RANDOM CHART	Used for adjusting stereo camera.
 STSSM4	—	SUBARU SELECT MONITOR 4	Used for setting of each function and troubleshooting for electrical system. NOTE: For detailed operation procedures of Subaru Select Monitor 4, refer to “Application help”.

2. GENERAL TOOL

TOOL NAME	REMARKS
Circuit tester	Used for measuring resistance, voltage and current.
DST-i	Used together with Subaru Select Monitor 4.
Measure (5 m (16 ft) or more)	Used for adjusting stereo camera.
Leveling line	
Plumb bob	
Packing tape	

2. Relay and Fuse

A: LOCATION

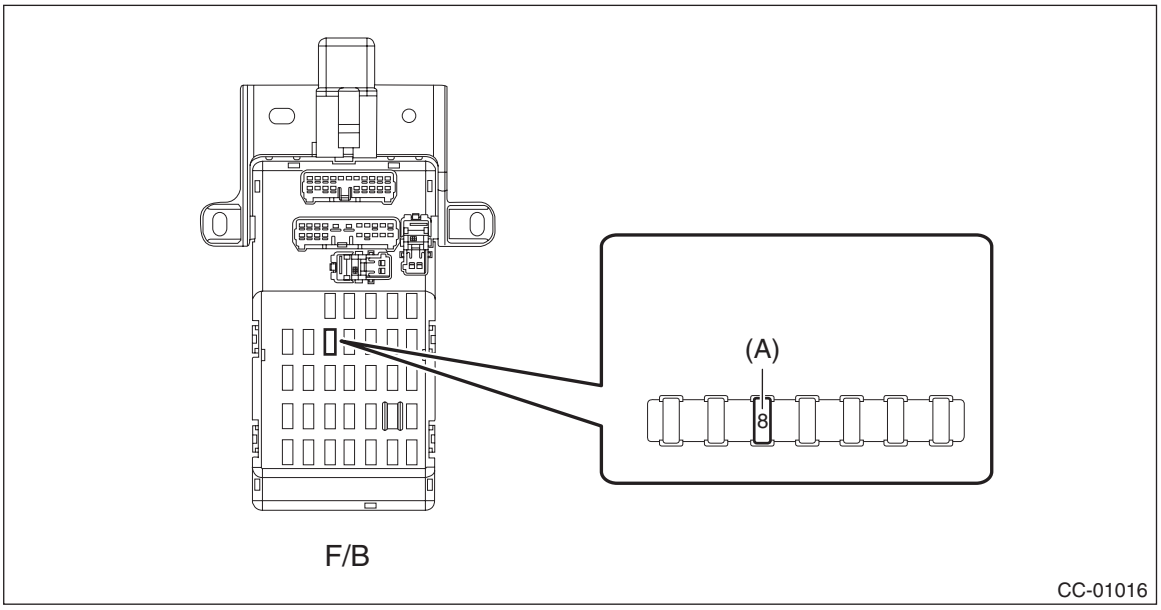

Relay & fuse box	Fuse 7.5 A (stop light and brake switch, brake light relay)	(A)

NOTE:
For other related fuses, refer to the wiring diagram. <Ref. to WI-31, Power Supply Circuit.>

B: INSPECTION

1. CHECK FUSE

1) Remove the fuse and inspect visually.
2) If the fuse is blown out, replace the fuse.

NOTE:
If the fuse is blown again, check the system wiring harness.

3. EyeSight System

A: WIRING DIAGRAM

Refer to “EyeSight System” in the wiring diagram. <Ref. to WI-222, WIRING DIAGRAM, EyeSight System.>

B: INSPECTION

Refer to “Basic Diagnostic Procedure” of “EyeSight (DIAGNOSTICS)” section. <Ref. to ES(diag)-2, Basic Diagnostic Procedure.>

C: NOTE

For procedure of each component in the EyeSight system, refer to the respective section.

- Control module: <Ref. to ES-7, Control Unit.>

NOTE:
System control of the EyeSight is performed by each module. For procedure, refer to the following sections.

  – Engine control module (ECM): <Ref. to FU(w/o STI)-124, Engine Control Module (ECM).>
  – Transmission control module (TCM): <Ref. to CVT(TR690)-126, Transmission Control Module (TCM).>
  – VDC control module & hydraulic control unit (VDCCM&H/U): <Ref. to VDC-9, VDC Control Module and Hydraulic Control Unit (VDCCM&H/U).>
  – Stereo camera: <Ref. to ES-8, Stereo Camera.>
  – Power steering control module: <Ref. to PS-100, Power Steering Control Module.>
  – Body integrated unit: <Ref. to SL-81, Body Integrated Unit.>
  – Reverse Automatic Braking CM: <Ref. to RAB-6, Reverse Automatic Braking CM.>

- Stereo camera: <Ref. to ES-8, Stereo Camera.>
- Combination meter: <Ref. to IDI-13, Combination Meter.>
- Stop light and brake switch: <Ref. to BR-100, Stop Light Switch.>
- Switches and harness: <Ref. to ES-35, Switches and Harness.>
- Roll connector (steering angle sensor): <Ref. to AB-58, Roll Connector.>

4. Control Unit

A: NOTE

System control of the EyeSight is performed by each module. For procedure, refer to the following sections.

- Engine control module (ECM): <Ref. to FU(w/o STI)-124, Engine Control Module (ECM).>
- Transmission control module (TCM): <Ref. to CVT(TR690)-126, Transmission Control Module (TCM).>
- VDC control module (VDCCM): <Ref. to VDC-9, VDC Control Module and Hydraulic Control Unit (VDC-CM&H/U).>
- Stereo camera: <Ref. to ES-8, Stereo Camera.>
- Power steering control module: <Ref. to PS-100, Power Steering Control Module.>
- Body integrated unit: <Ref. to SL-81, Body Integrated Unit.>
- Reverse Automatic Braking CM: <Ref. to RAB-6, Reverse Automatic Braking CM.>

5. Stereo Camera

A: REMOVAL

CAUTION:
• When the stereo camera or windshield glass has been replaced, removed or installed, always perform the adjustment and inspection of the camera. (When the stereo camera has been replaced with a new part, the camera remains in a failed state until adjustment and inspection are performed.)
• Since the stereo camera is a precision equipment, install the protective cover before handling it. (New stereo camera is equipped with a protective cover as a service part.)
• During removal, do not hold at the left and right cameras.
• Do not apply any impact to the stereo camera. (Even the slightest shock will deviate the optical axis of the camera, resulting in the loss of normal operation of the camera.)
• Do not disassemble the stereo camera.
• Attach the protective cover to the replacement part, put it into the box in the same way as the other parts and return it.
• Do not touch the lens filter on the stereo camera. If touched, replace the stereo camera.
• When removing the stereo camera cover assembly, cover with dust-free paper such as copy paper to avoid interference with the lens filter section, and attach the paper using tape while being careful not to let the adhesive surface contact the glass surface. Be sure to remove the paper after the procedure.
Also, do not put your hand on the polyurethane section of the windshield contact surface. Doing so may cause the polyurethane section to be removed, which may interfere with the normal operation if it hangs down in front of the lens filter section.
1) Disconnect the ground cable from battery. <Ref. to NT-6, BATTERY, NOTE, Note.>

NOTE:
For model with battery sensor, disconnect the ground terminal from battery sensor.
2) Attach dust-free paper (a) such as copy paper to the stereo camera cover assembly.

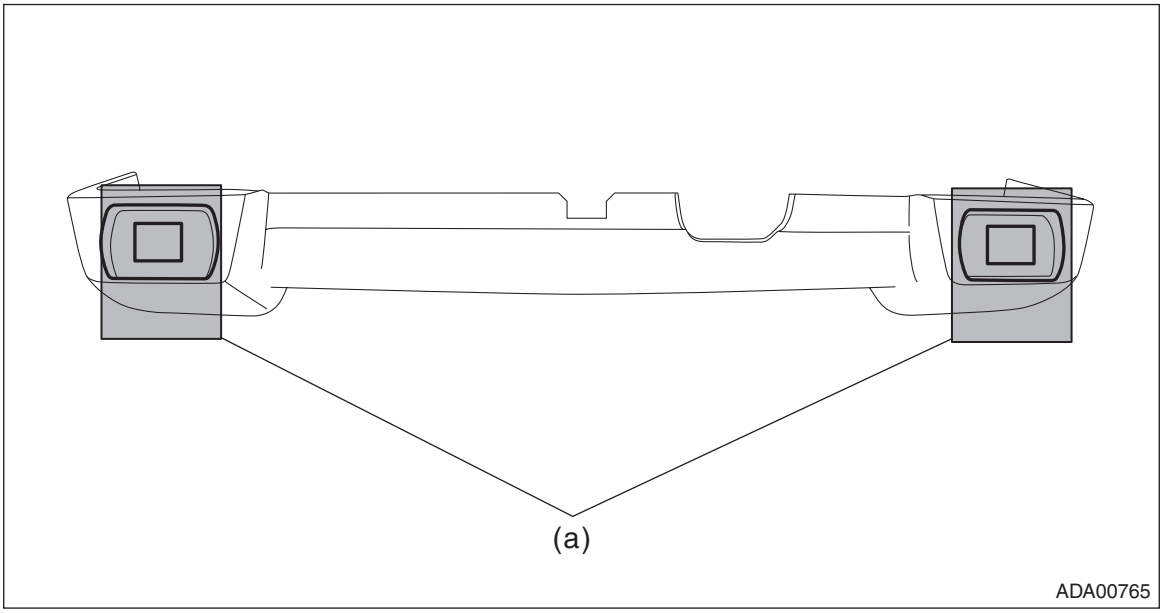

3) Remove the stereo camera cover assembly.
(1) Disconnect the claws and hooks and remove the cap.
(2) Remove the bolt.

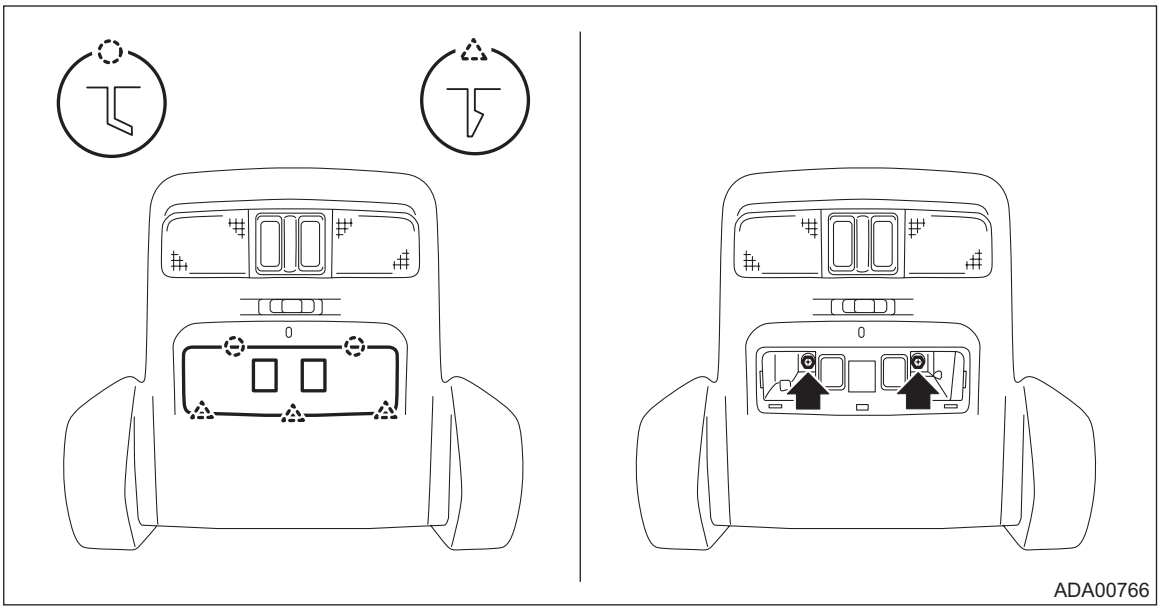

(3) Pull down the rear of the stereo camera cover assembly, and then release the clips.
(4) Release the hook on the front side of stereo camera cover assembly.

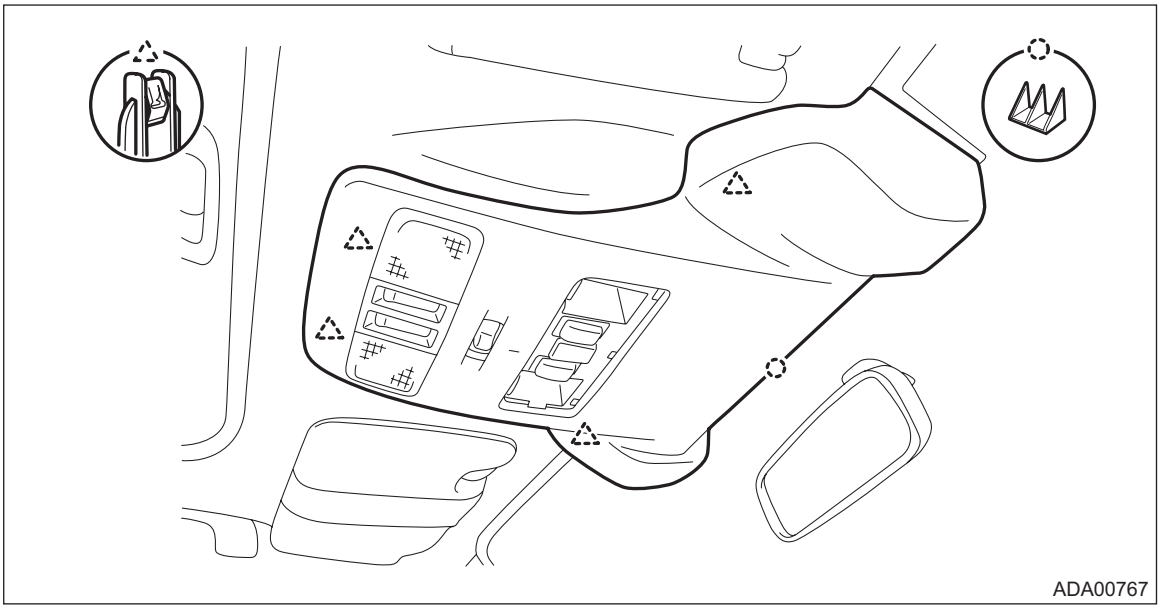

(5) Disconnect the connectors, and remove the stereo camera cover assembly.

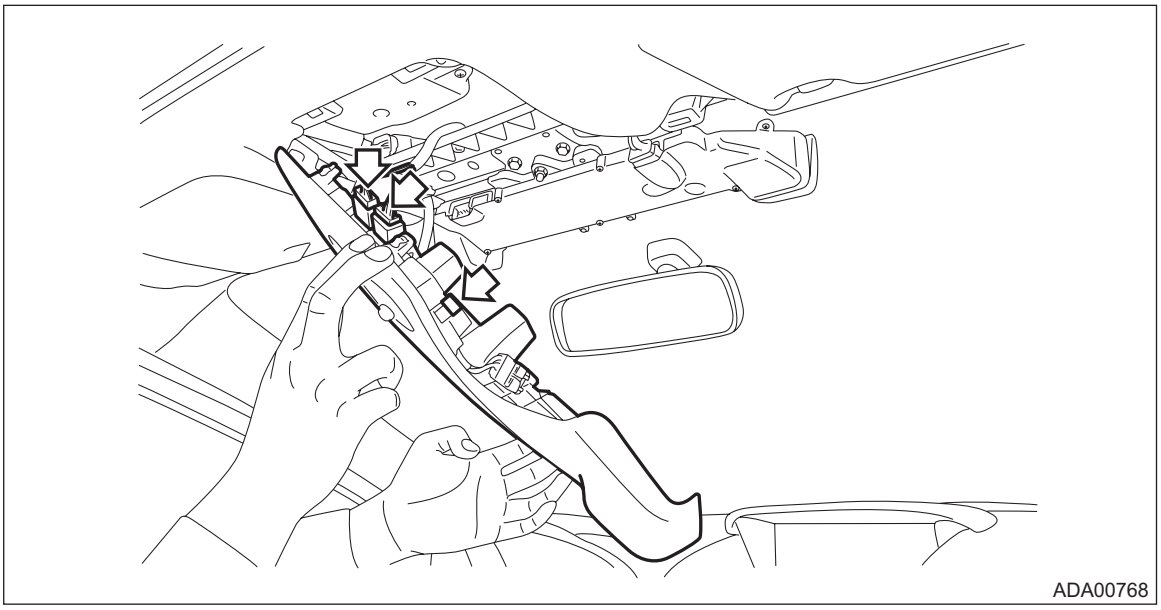

4) Remove the stereo camera.
(1) Disconnect the connector.
(2) Remove the nuts, and then remove the stereo camera.

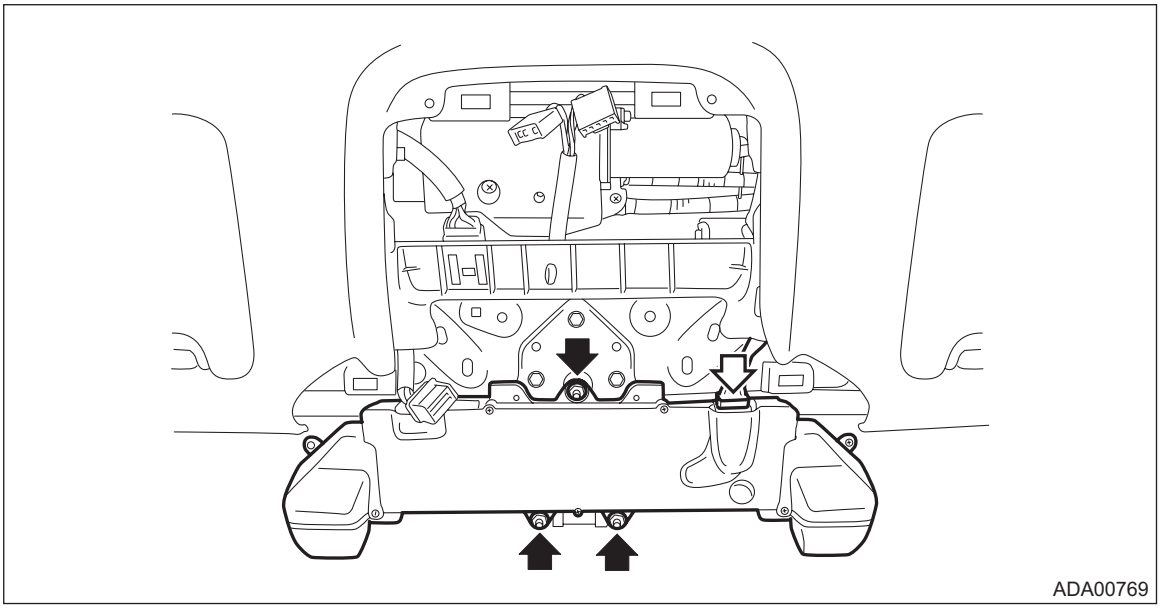

NOTE:
Remove the camera plate (a) as required.

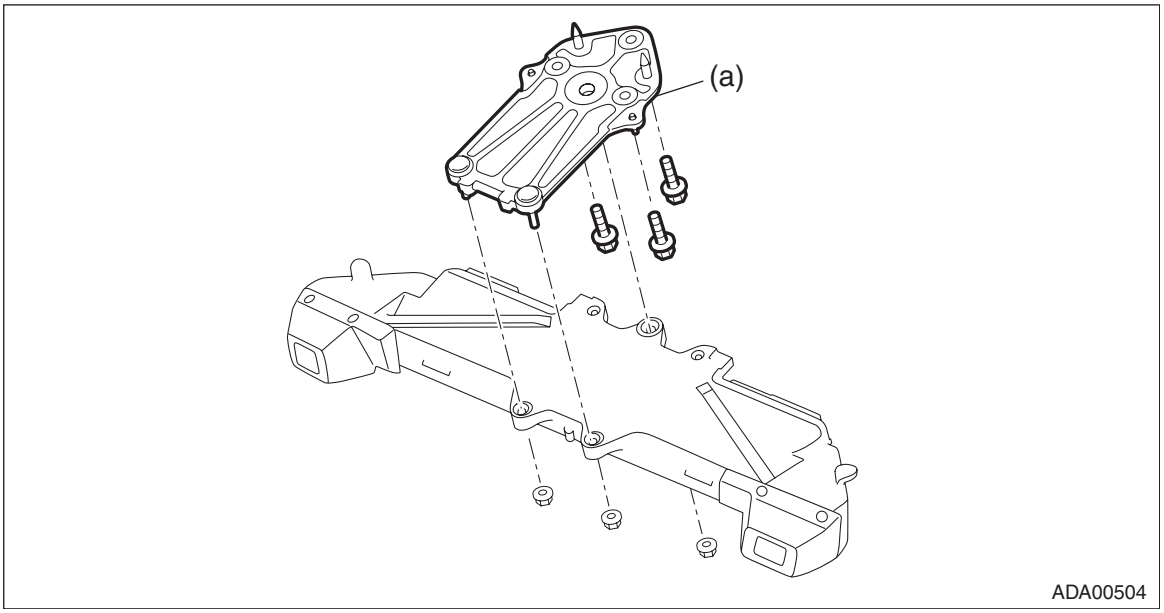

B: INSTALLATION

CAUTION:
• Do not remove the protective cover until just before installing the stereo camera cover assembly. Using the bolt and nut, install the stereo camera with the protective cover attached, connect the connectors, and then remove the protective cover.
• Do not apply any impact to the stereo camera. (Even the slightest shock will deviate the optical axis of the camera, resulting in the loss of normal operation of the camera.)
• During installation, do not hold at the left and right cameras.
• Do not change the installation position of the stereo camera or do not modify the surrounding structure.
• Remove the protective cover, install the stereo camera cover assembly, and then perform adjustment and inspection of the stereo camera. <Ref. to ES-13, Camera Adjustment, Inspection.>
• Do not touch the lens filter on the stereo camera. If touched, replace the stereo camera.
• When installing the stereo camera cover assembly, cover with dust-free paper such as copy paper to avoid interference with the lens filter section, and attach the paper using tape while being careful not to let the adhesive surface contact the glass surface. Be sure to remove the paper after the procedure.
Also, do not put your hand on the polyurethane section of the windshield contact surface. Doing so may cause the polyurethane section to be removed, which may interfere with the normal operation if it hangs down in front of the lens filter section.
• When installing the stereo camera cover assembly, take care so that the harness does not interfere with the stereo camera or does not get caught.
• Do not allow the stereo camera cover assembly to come in contact with the stereo camera. Install the stereo camera cover assembly precisely so that it will not block the visibility of the camera.
• Because the stereo camera is incompatible, be sure to check the part number before installation.
1) Attach the camera plate.

Tightening torque:
5.5±1 N·m (0.56±0.1 kgf-m, 4.1±0.7 ft-lb)

NOTE:
Align the positioning pins of camera plate to the positioning holes of front rail.

2) Install the stereo camera.

Tightening torque:
5.5±1 N·m (0.56±0.1 kgf-m, 4.1±0.7 ft-lb)

NOTE:
Align the positioning holes of stereo camera to the positioning pins of camera plate.
3) Install the stereo camera cover assembly.

Tightening torque:
5.5±1 N·m (0.56±0.1 kgf-m, 4.1±0.7 ft-lb)
4) Connect the battery ground terminal. <Ref. to NT-6, BATTERY, NOTE, Note.>
5) Perform the adjustment or inspection of the stereo camera. <Ref. to ES-13, Camera Adjustment, Inspection.>

6. Camera Adjustment, Inspection

A: PROCEDURE

CAUTION:
- **Perform the camera adjustment and inspection at curb weight without passengers.**
- **Handle RANDOM CHART (ST) carefully so as not to break it with the adhesive force of the tape.**

Perform inspection or adjustment according to the following procedures.
- Readjustment of stereo camera

Perform the adjustment in the following order: [1. Preparations] → [4. Camera all adjustment mode (replacement/removal)] → [5. Automatic adjustment and function check by driving].
- Replacement of stereo camera

Perform the replacement in the following order: [1. Preparations] → [2. Vehicle Model Information Registration] → [3. Adjustment value clear] → [4. Camera all adjustment mode (replacement/removal)] → [5. Automatic adjustment and function check by driving].

NOTE:
- When the stereo camera or windshield glass has been removed or installed, always perform readjustment of the stereo camera.

- If aiming is started when the model information is not registered, NG termination will occur because the implementation conditions are not met.

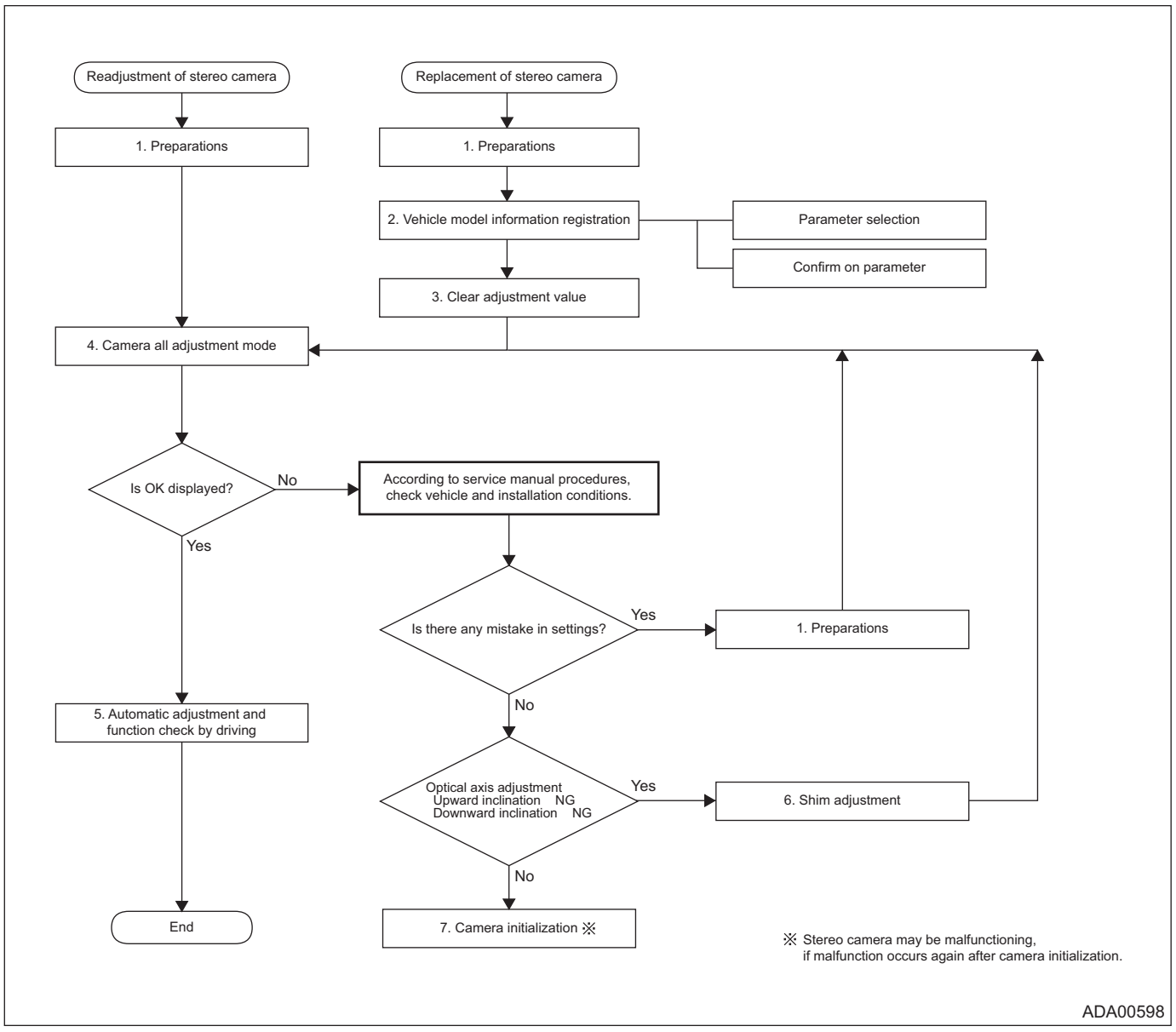

1. PREPARATIONS

Perform the preparation of the adjustment and inspection for the stereo camera.

- **When performing adjustment or inspection by affixing RANDOM CHART onto partition**

1) Before preparation, check the following items.
   (1) The headlight is off.
   (2) The vehicle is parked on a level surface.
   (3) The inflation pressure of tires is correct.
   (4) The vehicle does not have load.
   (5) The front wheels are directed to the straight ahead position, when the steering wheel is set to the center position.

NOTE:
When the front wheels are not directed to the straight ahead position, adjust the alignment. <Ref. to FS-14, ADJUSTMENT, Wheel Alignment.>

2) Prepare the Subaru Select Monitor, measure, plumb bob, leveling line and RANDOM CHART (ST).

Preparation tool:
ST: RANDOM CHART (87599VA000)

3) Stop the vehicle on a level surface where approximately 5 m (16.41 ft) space can be secured in front of the vehicle.

4) Suspend the plumb bob with leveling line from front center position of vehicle (center of the license plate base), and mark the position where the plumb bob touches the ground. (Point A)

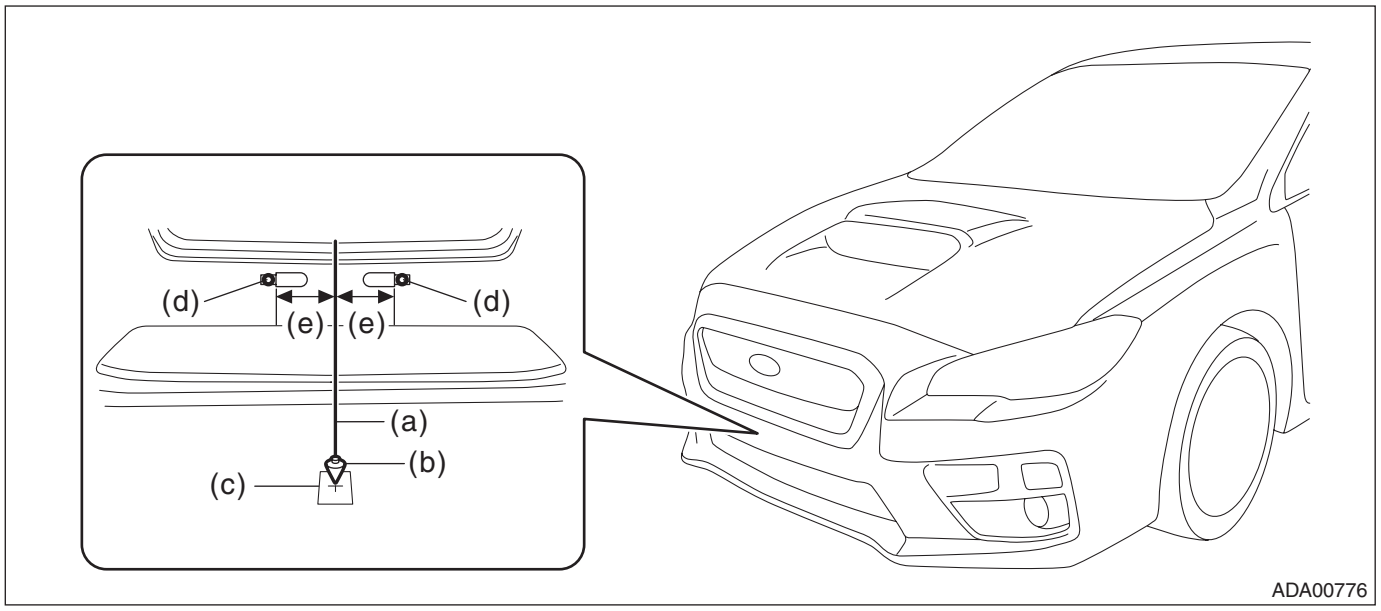

(a) Leveling line
(b) Plumb bob
(c) Point A
(d) License plate base
(e) Same distance

NOTE:
Stick the packing tape etc. on the floor, then make a marking on the tape.

5) Suspend the plumb bob with leveling line from rear center position of vehicle (center of the cover - rear bumper B), and mark the position where the plumb bob touches the ground. (Point B)

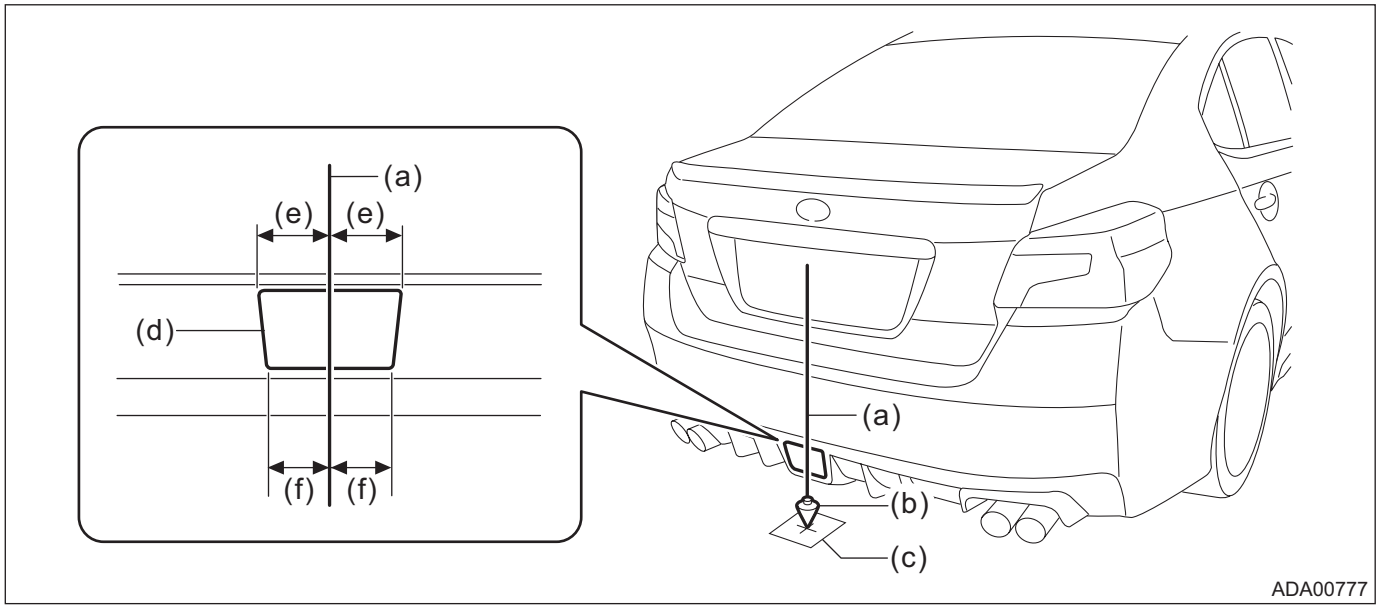

(a) Leveling line
(b) Plumb bob
(c) Point B
(d) Cover - rear bumper B
(e) Same distance
(f) Same distance

NOTE:
Stick the packing tape etc. on the floor, then make a marking on the tape.
6) Strain approximately 5 m (16.41 ft) leveling line from the marking point B through the marking point A toward front of the vehicle, and fix it with packing tape. (A-B line)

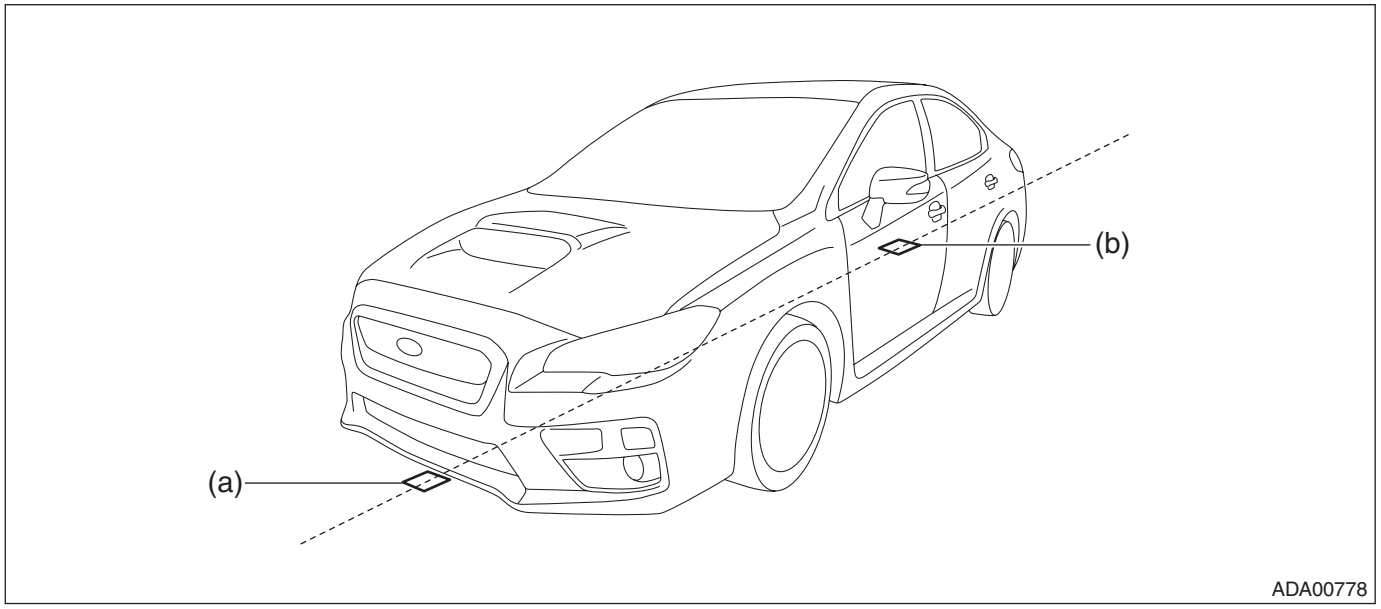

(a) Point A
(b) Point B

NOTE:
Confirm that there is no wet condition or unevenness on the floor, to strain the leveling line correctly.
7) Mark the installation position of the partition.
(1) Suspend the plumb bob from the center of each front wheel, and mark the point C and point D.
(2) Strain the leveling lines from the point C and point D toward the front of vehicle parallel to the vehicle body center line (A-B line), and fix the leveling lines with packing tape.
(3) Make markings at the points 4,000 mm (13 ft, 1 1/2 in) ahead of the vehicle from the point C and point D. (Point E and point F)
(4) Strain the leveling line so that it passes through the point E and point F. (E-F line)

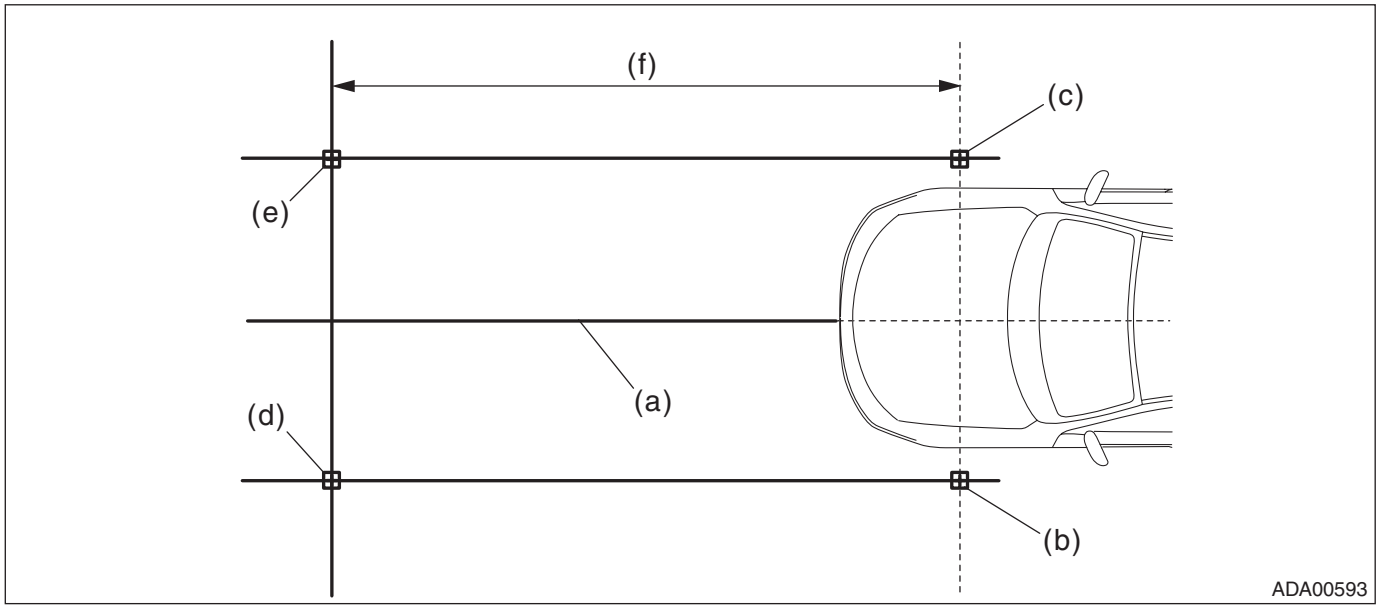

(a) Vehicle body center line (A-B line)
(b) Point C
(c) Point D
(d) Point E
(e) Point F
(f) 4,000 mm (13 ft, 1 1/2 in)

8) Place the partition and RANDOM CHART.

CAUTION:
• Affix the RANDOM CHART onto the vertical partition with flat surface.
• When affixing the RANDOM CHART using tape, place the tape within 10 mm (0.39 in) from the edge of the CHART. In this case, do not affix with lustrous tapes which may reflect the light.
• Perform the adjustment work at lighted places. If the lighting is not enough, adjustment cannot be done, and accuracy rate may not be acquired.
• The adjustment in the outdoors cannot be recommended. Note the sun position, when adjusting it in outdoor by necessity. (It is not acceptable when the sunlight comes from front or rear of the vehicle)

(1) Using the plumb bob, attach the RANDOM CHART on the wall or partition, so that the setting reference (vertical line) center is aligned with the vehicle body center line (leveling line) and the height of the setting reference (horizontal line) center from the floor is 1,000 mm (3 ft, 3 3/8 in).
(2) Adjust the partition so that it is parallel to E-F line.

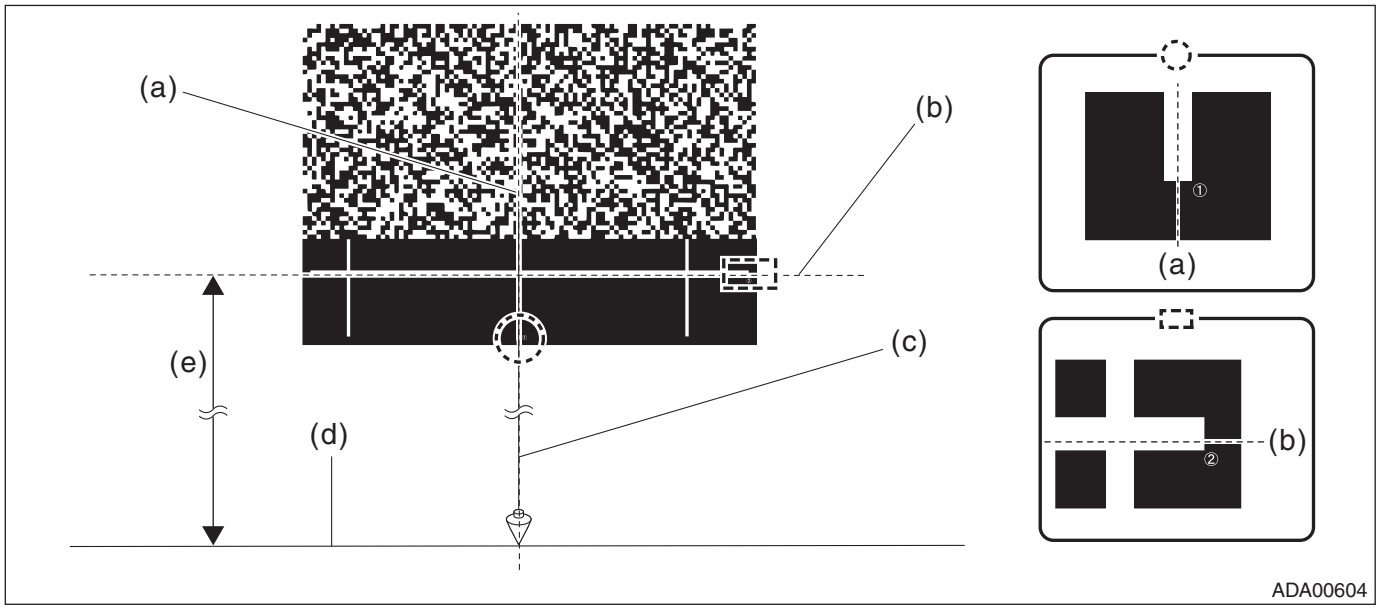

(a) ① = Setting reference (vertical line) and vehicle body center line (A-B line)
(b) ② = Setting reference (horizontal line)
(c) Plumb bob
(d) E-F line
(e) 1,000 mm (3 ft, 3 3/8 in)

CAUTION:
- **Centering accuracy of the plumb bob shall be ±4 mm (±0.16 in) or less.**

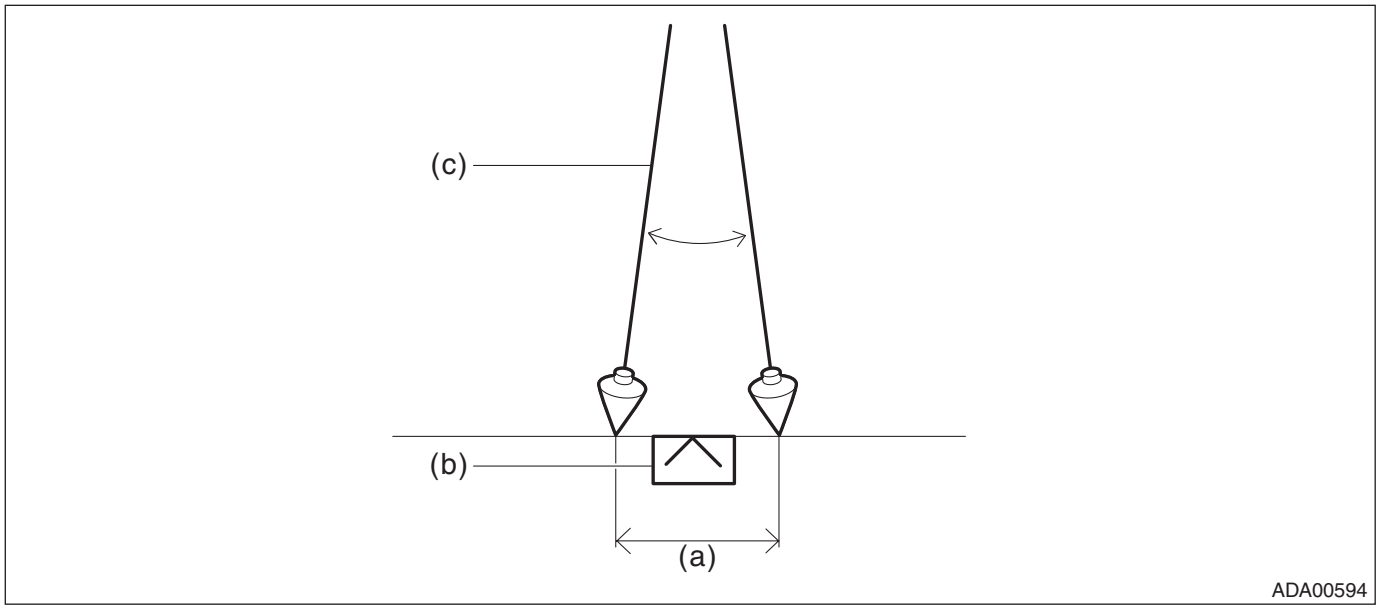

(a) ±4 mm (±0.16 in) (b) Marking (c) Plumb bob

- **Positioning accuracy of the measure shall be ±2 mm (±0.08 in) or less.**
- **Centering accuracy of the tire shall be ±4 mm (±0.16 in) or less.**

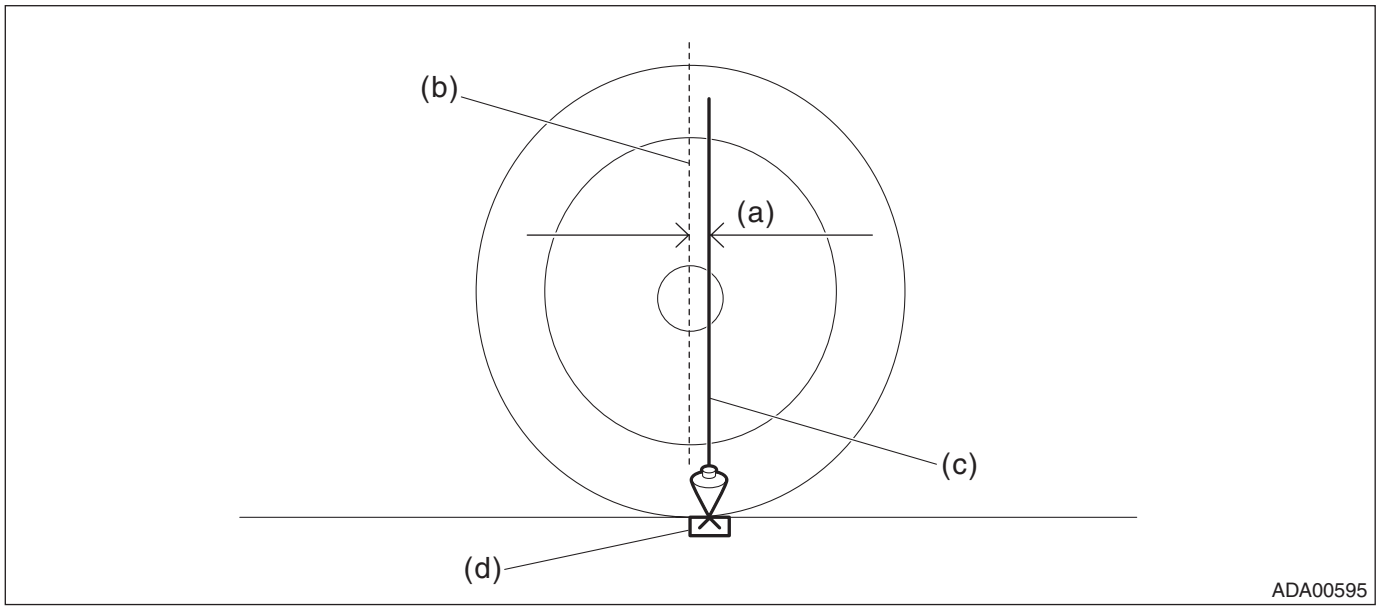

(a) ±4 mm (±0.16 in) (c) Plumb bob (d) Marking
(b) Tire center line

• Apply the lighting from the upper direction of RANDOM CHART, and make adjustment so that brightness is even in the CHART. (If the lighting is applied from the position where light reflects at RANDOM CHART, the adjustment cannot be done, because the reflected light enters the camera.)

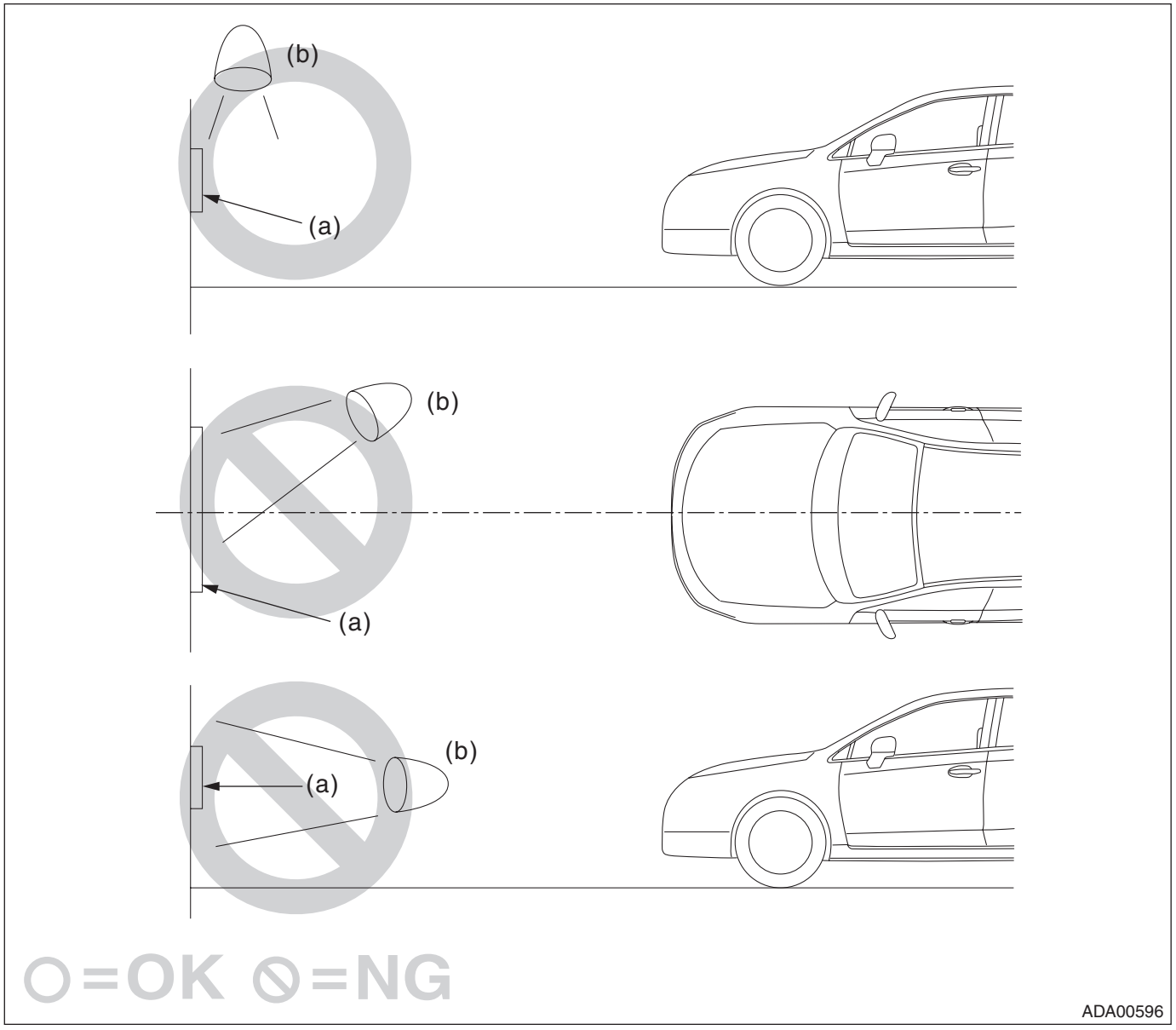

(a) RANDOM CHART (b) Lighting

• When using a white board as a partition, affix the RANDOM CHART on the flat surface without protrusion such as penholder. When suspending the plumb bob, suspend it vertically from the RANDOM CHART while avoiding any protrusion.

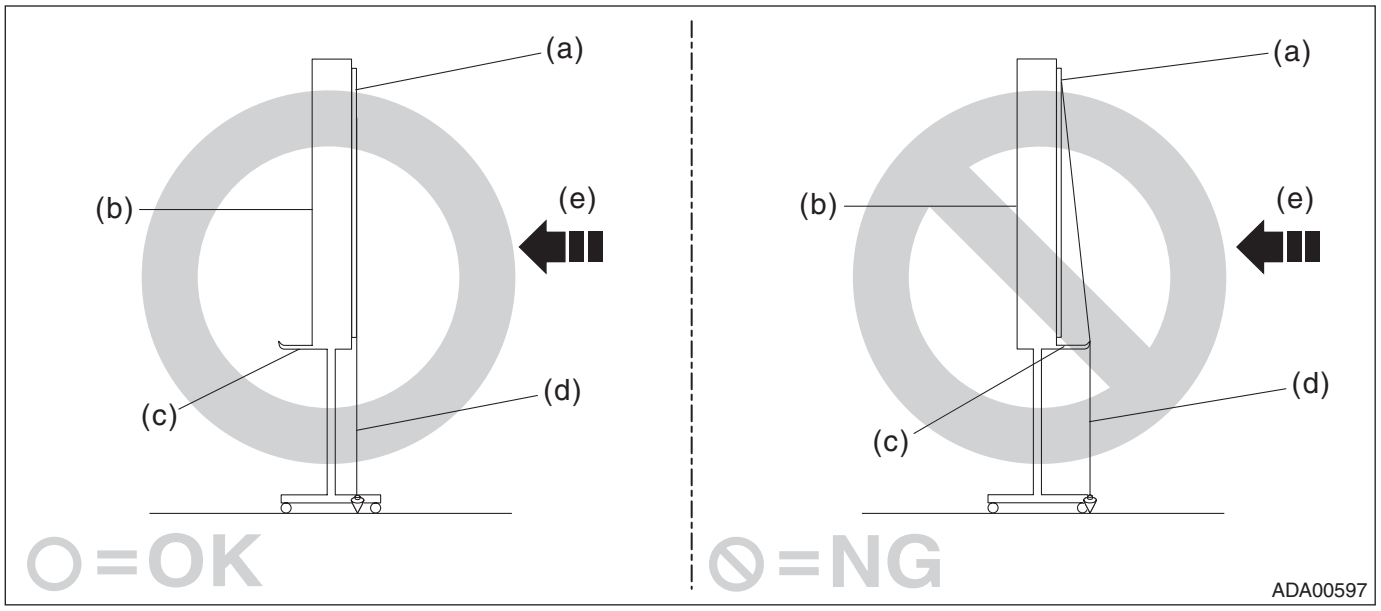

(a) RANDOM CHART
(b) White board
(c) Protrusion (penholder, etc.)
(d) Plumb bob
(e) Vehicle travel direction

9) Turn the ignition switch to OFF.
10) Check the windshield glass and the dashboard. <Ref. to ES(diag)-8, WINDSHIELD GLASS AND DASHBOARD, INSPECTION, General Description.>

CAUTION:
If there are any dirt, object or reflection from dashboard within the visibility of stereo camera, the correct adjustment and inspection can not be performed. Especially, do not put paper etc. on the dashboard.
11) Connect the Subaru Select Monitor.

NOTE:
- Use the Subaru Select Monitor equipped with the latest version of the software.
- For detailed operation procedures, refer to “Application help”.

12) Turn the ignition switch to ON.
13) Wait for 10 seconds.
14) On «Start» display, select «Diagnosis».
15) On «Vehicle selection» display, enter vehicle information and select «Confirmed».
16) On «Main Menu» display, select «Each System».
17) Select «EyeSight» on «Select System» display while pressing the pre-collision brake OFF switch and the lane departure warning OFF switch mounted on stereo camera cover assembly at the same time, and then select «Enter».

NOTE:
If «EyeSight» is selected without pressing two switches at the same time, the camera adjustment items are not displayed in «Work Support». (for preventing misoperation)
Also, the message is not displayed, when the camera does not finish the start-up (approx. 10 seconds after ignition switch ON). In this case, repeat from the selection of «EyeSight».
18) On «Select Function» display, select «Work Support».

19) From the work support item list, select and perform camera adjustment or other inspections.

NOTE:
• When performing {Camera adjustment, inspection}, pre-collision brake OFF indicator light, lane departure warning OFF indicator light in the meter will illuminate, and the normal function will be disabled.
• After camera adjustment, the function will be enabled, when the ignition switch is turned to OFF and system is restarted.

• When performing adjustment or inspection by affixing RANDOM CHART onto wall

1) Before preparation, check the following items.
(1) The headlight is off.
(2) The vehicle is parked on a level surface.
(3) The inflation pressure of tires is correct.
(4) The vehicle does not have load.
(5) The front wheels are directed to the straight ahead position, when the steering wheel is set to the center position.

NOTE:
When the front wheels are not directed to the straight ahead position, adjust the alignment. <Ref. to FS-14, ADJUSTMENT, Wheel Alignment.>

2) Prepare the Subaru Select Monitor, measure, plumb bob, leveling line and RANDOM CHART (ST).

Preparation tool:
ST: RANDOM CHART (87599VA000)

3) Mark the park position of the vehicle.
(1) Strain the leveling line so that it is at right angles to wall on which the RANDOM CHART is affixed, and fix the leveling line with packing tape.
(2) Make a marking 4,000 mm (13 ft, 1 1/2 in) away from the wall where the leveling line is fixed. (Point A and point B)

NOTE:
Stick the packing tape etc. on the floor, then make a marking on the tape.
(3) Strain the leveling line so that it passes through the point A and point B. (A-B line)

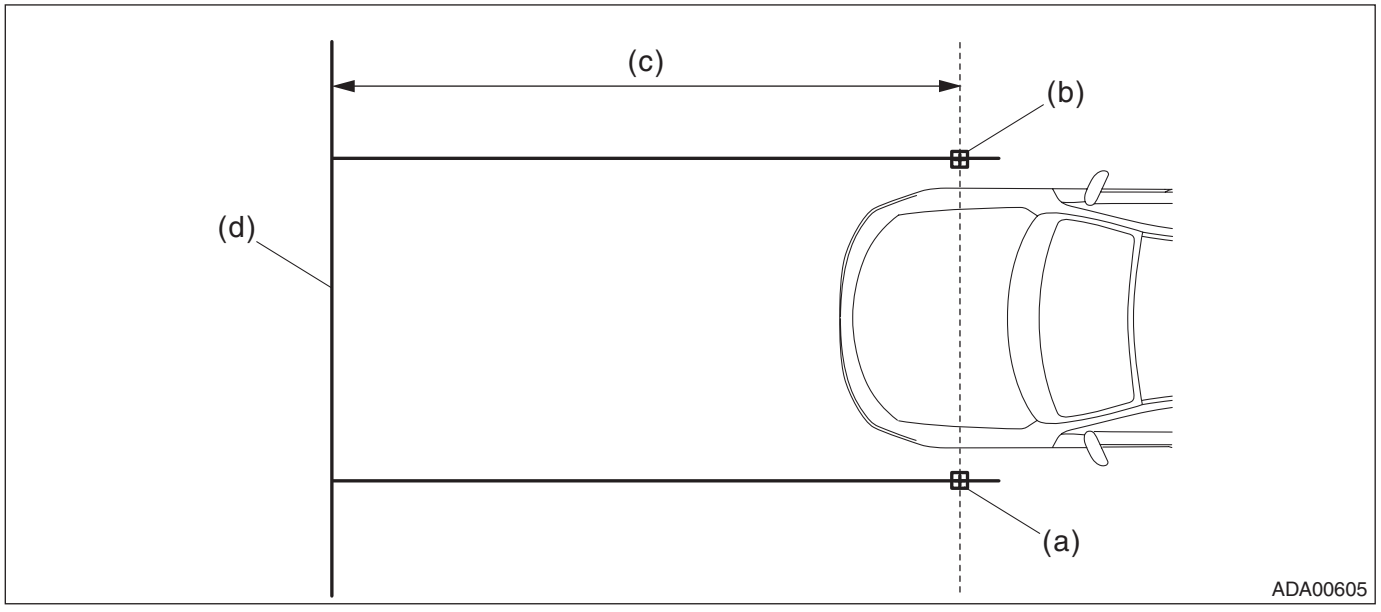

(a) Point A
(b) Point B
(c) 4,000 mm (13 ft, 1 1/2 in)
(d) Wall

4) Suspend the plumb bob from the center of each front wheel of the vehicle, and place the vehicle so that it is aligned with the leveling line (A-B line).

5) Suspend the plumb bob with leveling line from front center position of vehicle (center of the license plate base), and mark the position where the plumb bob touches the ground. (Point C)

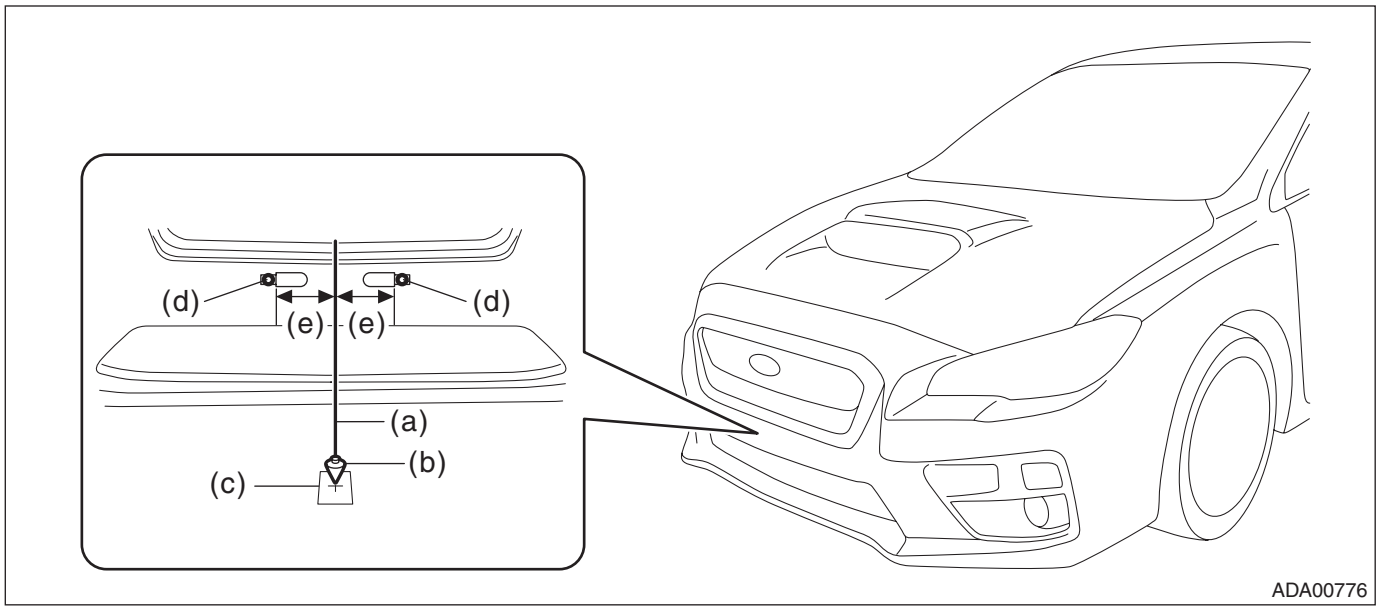

(a) Leveling line
(b) Plumb bob
(c) Point C
(d) License plate base
(e) Same distance

NOTE:
Stick the packing tape etc. on the floor, then make a marking on the tape.

6) Suspend the plumb bob with leveling line from rear center position of vehicle (center of the cover - rear bumper B), and mark the position where the plumb bob touches the ground. (Point D)

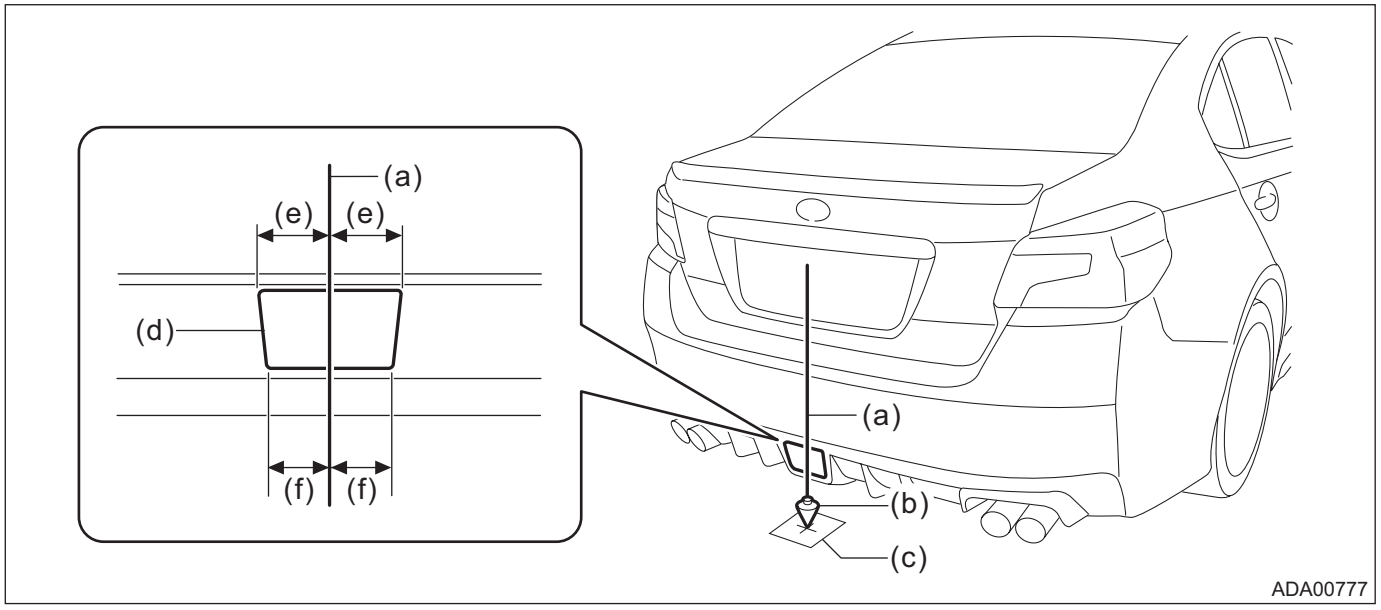

(a) Leveling line
(b) Cover - rear bumper B
(c) Plumb bob
(d) Point D
(e) Same distance
(f) Same distance

NOTE:
Stick the packing tape etc. on the floor, then make a marking on the tape.

7) Strain the leveling line from the making point D through the marking point C to the wall, and fix it with packing tape. (C-D line)

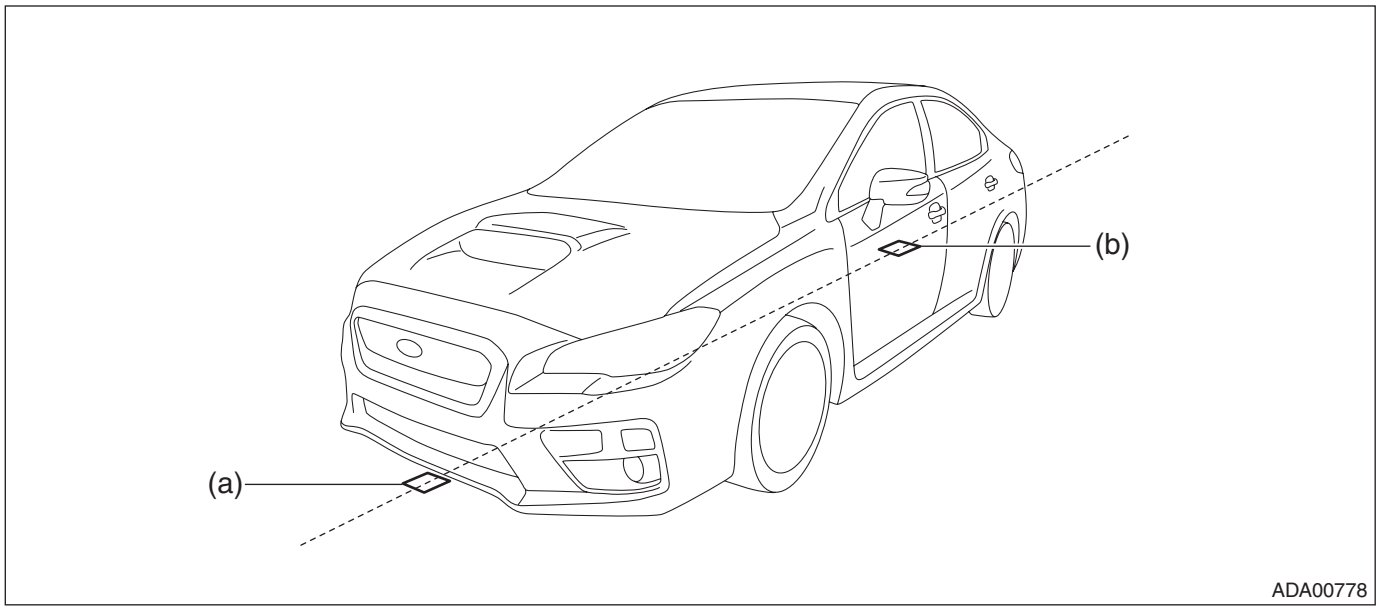

(a) Point C (b) Point D

8) Place the RANDOM CHART.

CAUTION:
• Affix the RANDOM CHART onto the vertical wall, etc. with flat surface.
• When affixing the RANDOM CHART using tape, place the tape within 10 mm (0.39 in) from the edge of the CHART. In this case, do not affix with lustrous tapes which may reflect the light.
• Perform the adjustment work at lighted places. If the lighting is not enough, adjustment cannot be done, and accuracy rate may not be acquired.
• The adjustment in the outdoors cannot be recommended. Note the sun position, when adjusting it in outdoor by necessity. (It is not acceptable when the sunlight comes from front or rear of the vehicle)

(1) Using the plumb bob, attach the RANDOM CHART on a wall, so that the setting reference (vertical line) center is aligned with the vehicle body center line (leveling line) and the height of the setting reference (horizontal line) center from the floor is 1,000 mm (3 ft, 3 3/8 in).

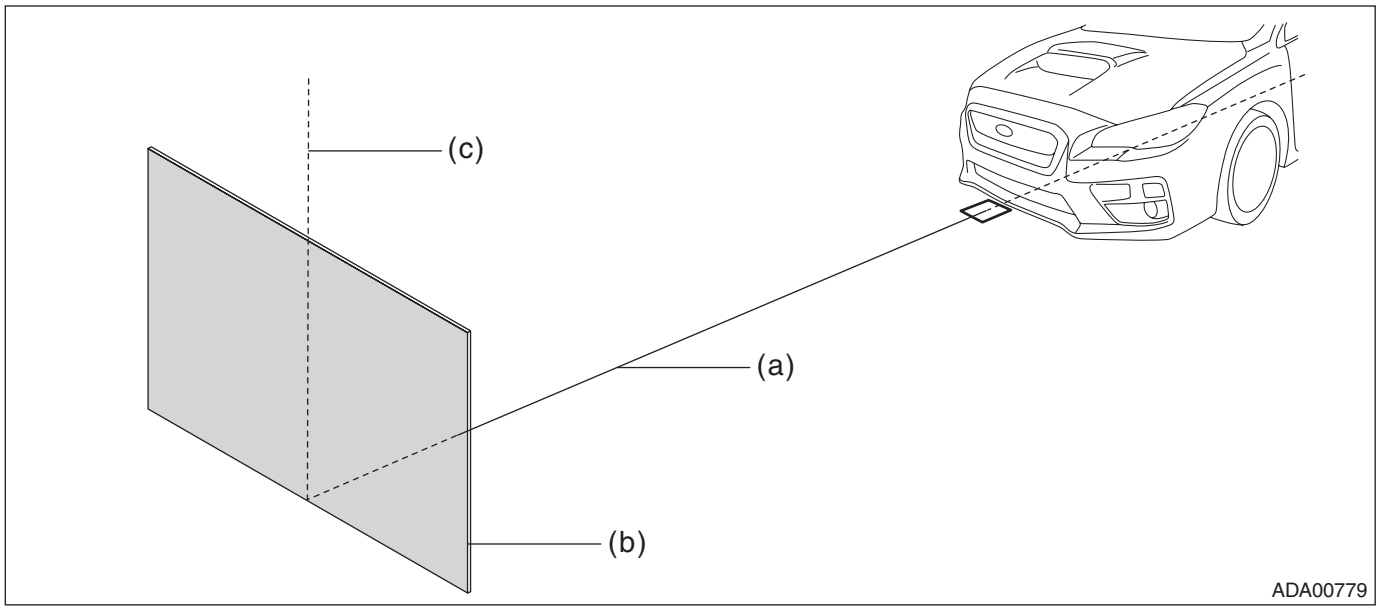

(a) Vehicle body center line (C-D line)
(b) Wall
(c) Setting reference (vertical line)

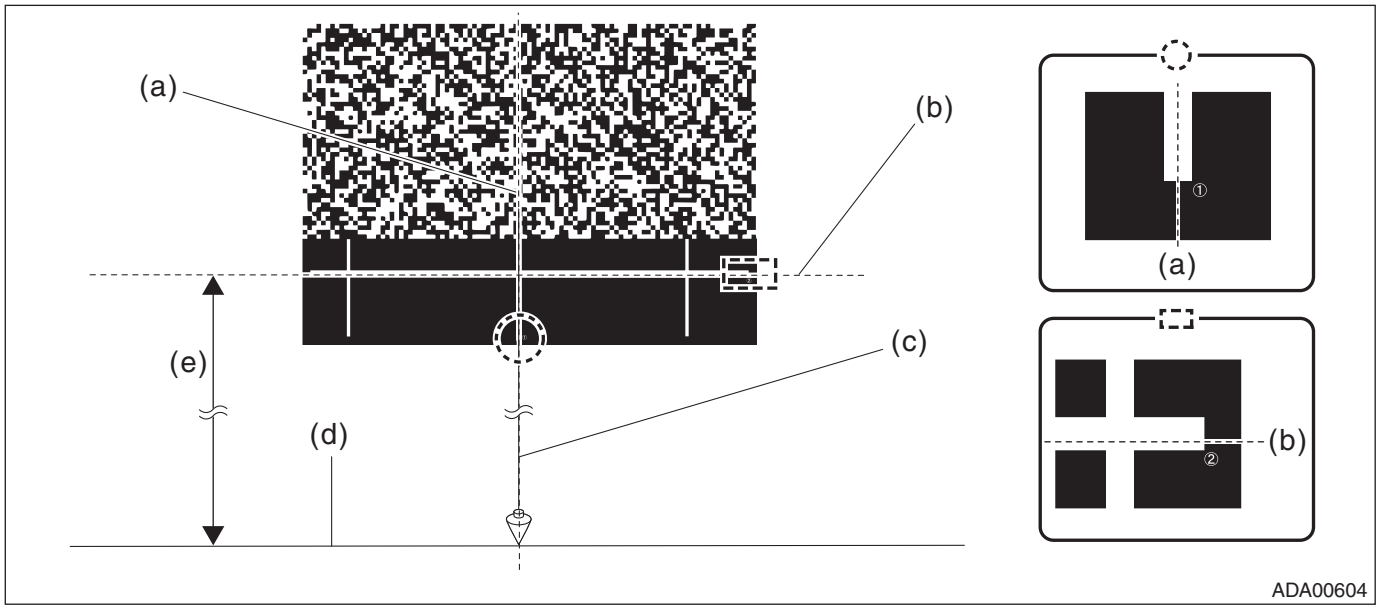

(a) ① = Setting reference (vertical line) and vehicle body center line (C-D line)
(b) ② = Setting reference (horizontal line)
(c) Plumb bob
(d) Floor
(e) 1,000 mm (3 ft, 3 3/8 in)

CAUTION:
- **Centering accuracy of the plumb bob shall be ±4 mm (±0.16 in) or less.**

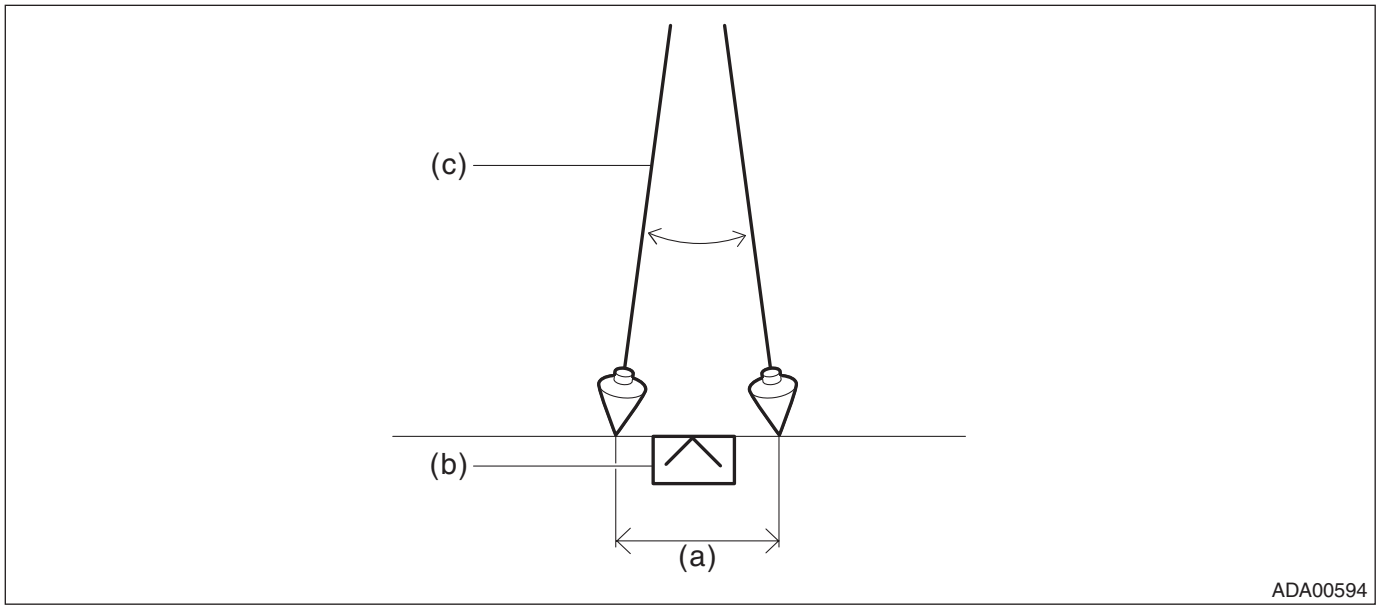

(a) ±4 mm (±0.16 in) (b) Marking (c) Plumb bob

- **Positioning accuracy of the measure shall be ±2 mm (±0.08 in) or less.**
- **Centering accuracy of the tire shall be ±4 mm (±0.16 in) or less.**

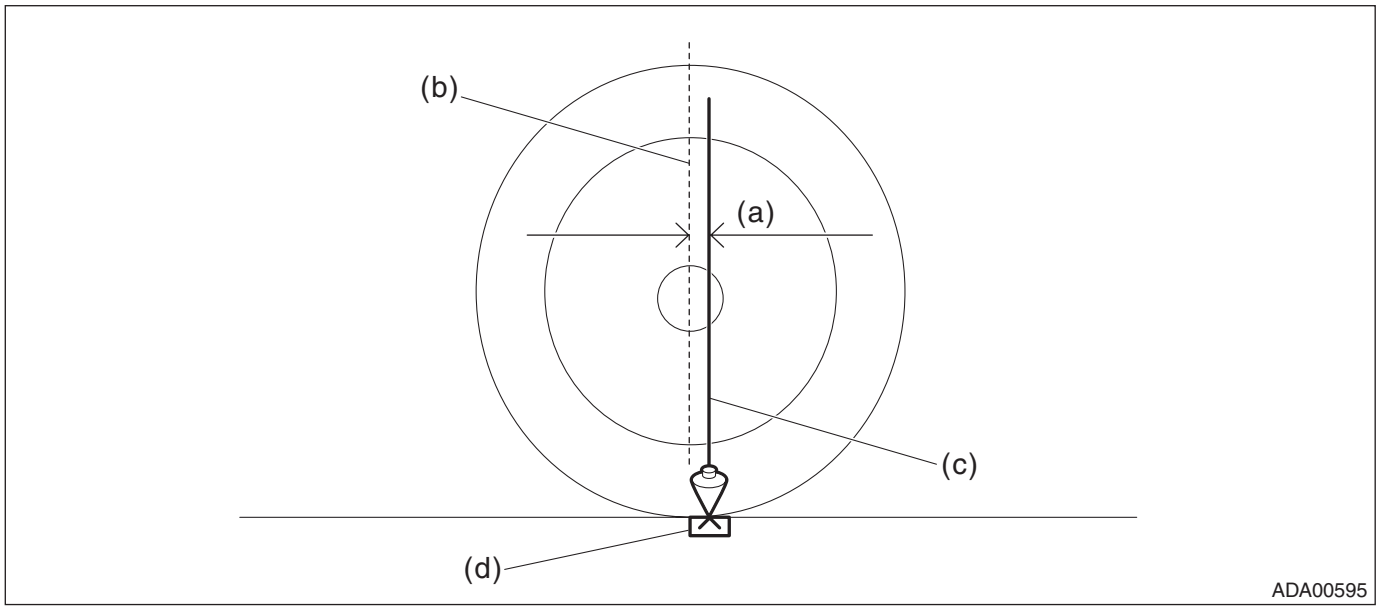

(a) ±4 mm (±0.16 in) (c) Plumb bob (d) Marking
(b) Tire center line

• Apply the lighting from the upper direction of RANDOM CHART, and make adjustment so that brightness is even in the CHART. (If the lighting is applied from the position where light reflects at RANDOM CHART, the adjustment cannot be done, because the reflected light enters the camera.)

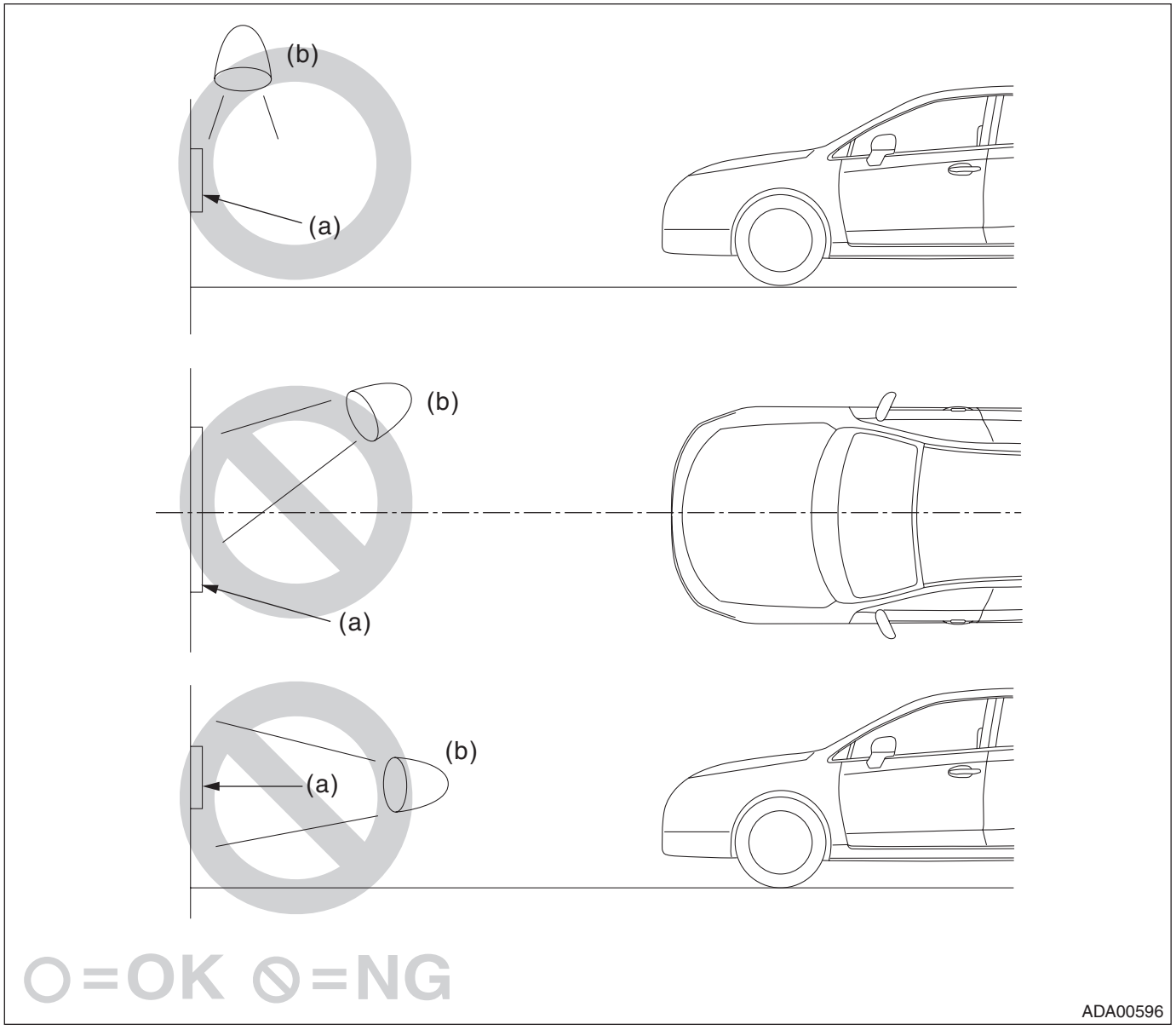

(a) RANDOM CHART (b) Lighting

9) Turn the ignition switch to OFF.
10) Check the windshield glass and the dashboard. <Ref. to ES(diag)-8, WINDSHIELD GLASS AND DASHBOARD, INSPECTION, General Description.>

CAUTION:
If there are any dirt, object or reflection from dashboard within the visibility of stereo camera, the correct adjustment and inspection can not be performed. Especially, do not put paper etc. on the dashboard.
11) Connect the Subaru Select Monitor.

NOTE:
- Use the Subaru Select Monitor equipped with the latest version of the software.
- For detailed operation procedures, refer to “Application help”.

12) Turn the ignition switch to ON.
13) Wait for 10 seconds.

14) On «Start» display, select «Diagnosis».
15) On «Vehicle selection» display, enter vehicle information and select «Confirmed».
16) On «Main Menu» display, select «Each System».
17) Select «EyeSight» on «Select System» display while pressing the pre-collision brake OFF switch and the lane departure warning OFF switch mounted on stereo camera cover assembly at the same time, and then select «Enter».

NOTE:
If «EyeSight» is selected without pressing two switches at the same time, the camera adjustment items are not displayed in «Work Support». (for preventing misoperation)
Also, the message is not displayed, when the camera does not finish the start-up (approx. 10 seconds after ignition switch ON). In this case, repeat from the selection of «EyeSight».
18) On «Select Function» display, select «Work Support».
19) From the work support item list, select and perform camera adjustment or other inspections.

NOTE:
• When performing {Camera adjustment, inspection}, pre-collision brake OFF indicator light, lane departure warning OFF indicator light in the meter will illuminate, and the normal function will be disabled.
• After camera adjustment, the function will be enabled, when the ignition switch is turned to OFF and system is restarted.

2. VEHICLE INFORMATION REGISTRATION

Perform when replacing stereo camera. (Do not perform when performing stereo camera re-adjustment and inspection)
Register the vehicle information according to the procedure of “Selection of Parameter”, and confirm the vehicle information content in “Confirm on parameter”.

PARAMETER SELECTION

NOTE:
• To check the applied model, refer to the “Model number plate” attached to the vehicle. <Ref. to ID-2, IDENTIFICATION, Identification.>
• If you entered a wrong applied model, you can re-write it.
1) Connect the Subaru Select Monitor.

NOTE:
• Use the Subaru Select Monitor equipped with the latest version of the software.
• For detailed operation procedures, refer to “Application help”.
2) On «Start» display, select «Diagnosis».
3) On «Vehicle selection» display, enter vehicle information and select «Confirmed».
4) On «Main Menu» display, select «Each System».
5) On «Select System» display, select «EyeSight» and then select «Enter».
6) On «Select Function» display, select «Work Support».
7) From the work support item list, select «Selection of Parameter».
8) Check the applied model and option code indicated on the “Model number plate”. <Ref. to ID-2, IDENTIFICATION, Identification.>
9) Enter the applied model of 7-digit alphanumeric characters and press the Enter key.
10) When the option code input screen appears after entering the applied model, enter the option code consisting of 3-digit alphanumeric characters, and press the Enter key.
11) When the confirmation screen indicating the vehicle information appears, check that the correct applied model and OP code are displayed and click the «OK» button.

NOTE:
When the displayed applied model and OP code are different from those of the vehicle, perform registration operations again after clicking the «OK» button.
Note that checking the digit corresponding to OP code is not required if “*” or “_” is displayed for OP code.

PARAMETER CHECK

NOTE:
The parameter data registered in the stereo camera is shown on the display.
1) Connect the Subaru Select Monitor.

NOTE:
- Use the Subaru Select Monitor equipped with the latest version of the software.
- For detailed operation procedures, refer to “Application help”.

2) On «Start» display, select «Diagnosis».
3) On «Vehicle selection» display, enter vehicle information and select «Confirmed».
4) On «Main Menu» display, select «Each System».
5) On «Select System» display, select «EyeSight» and then select «Enter».
6) On «Select Function» display, select «Work Support».
7) From the work support item list, select «Confirm on parameter».
8) On the «Confirm on parameter» display screen, check that the applied model and OP code of the target vehicle are displayed, and click the «OK» button.
9) If the applied model and OP code of the target vehicle are not displayed on the «Confirm on parameter» display screen, perform parameter selection and registration.

NOTE:
Note that checking the digit corresponding to OP code is not required if “*” or “_” is displayed for OP code.

3. ADJUSTMENT VALUE CLEAR

Perform when replacing stereo camera. (Do not perform when performing stereo camera re-adjustment and inspection)
1) From the work support item list, select «Clear adjustment value».
2) When «Make the following adjustment/inspection. Please push OK if ready.» is displayed, if preparation is ready, select «OK».
3) When «Clear the adjustment value.» is displayed, select «OK».
4) When «Clearing adjustment value...» is displayed, wait until process finishes.
5) When the adjustment value clear is finished correctly, and «Adjustment value cleared OK!» is displayed, select «OK» to finish.
6) Turn the ignition switch to OFF and wait for approx. 5 seconds or more.

CAUTION:
If the ignition switch OFF period is short, the adjustment value clear can not be performed correctly.
7) Next, perform the camera all adjustment mode (replacement/removal). <Ref. to ES-28, CAMERA ALL ADJUSTMENT MODE (REPLACEMENT/REMOVAL), PROCEDURE, Camera Adjustment, Inspection.>

4. CAMERA ALL ADJUSTMENT MODE (REPLACEMENT/REMOVAL)

Perform this procedure when the stereo camera is replaced or re-adjustment is necessary (when stereo camera malfunctioning, when stereo camera reinstalled, when windshield glass replaced).

CAUTION:
- **When the stereo camera is replaced, be sure to perform the «Clear adjustment value» first. When {Clear adjustment value} was skipped, restart the procedure from {Clear adjustment value} again. <Ref. to ES-28, ADJUSTMENT VALUE CLEAR, PROCEDURE, Camera Adjustment, Inspection.>**
- **Perform the camera adjustment and inspection at curb weight without passengers.**
- **When the camera all adjustment mode is performed, the procedures must be completed correctly to the end. Otherwise, the warning is displayed on the meter LCD when the vehicle moves.**

1) From the work support item list, select «Camera all adjustment mode (replacement/removal)».
2) When «Make the following adjustment/inspection. Please push OK if ready.» is displayed, if preparation is ready, select «OK».
3) When «In process...» is displayed, wait until inspection finishes.
4) When the accuracy rate inspection is finished correctly, and «Accuracy rate ○○% OK!» is displayed, select «OK» to go to step 9).

5) When «Distance inspection NG!» is displayed, refer to the NOTE below.

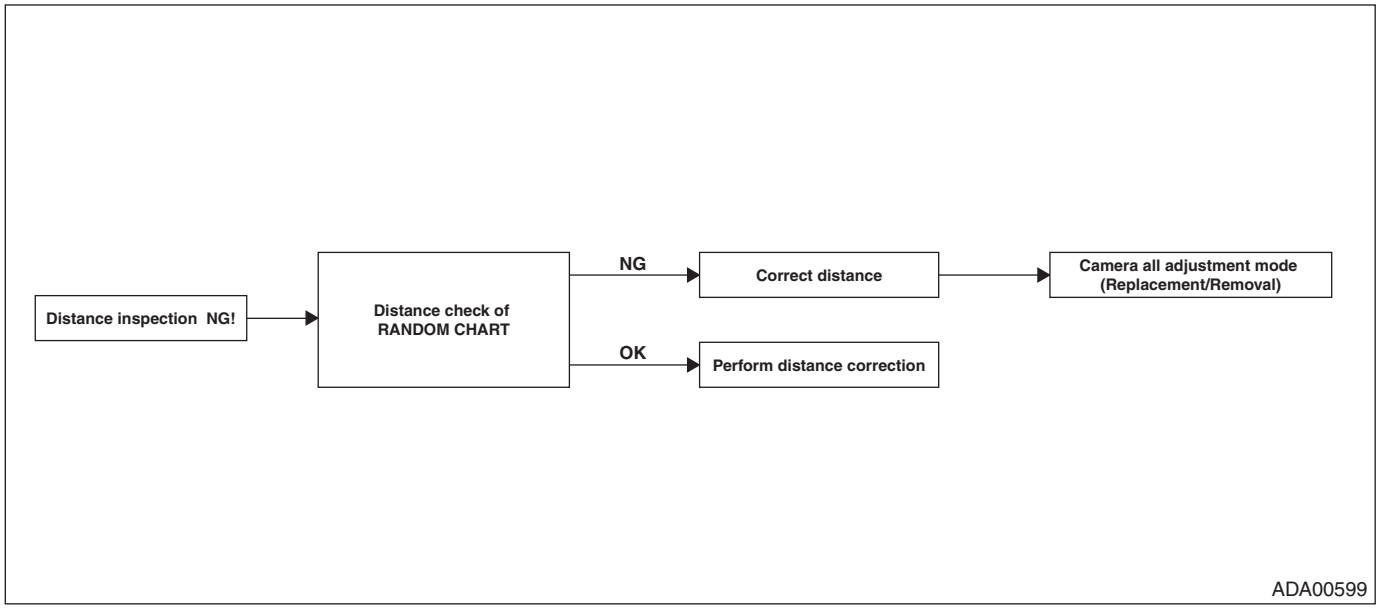

NOTE:
Distance check and adjustment of RANDOM CHART <Ref. to ES-14, PREPARATIONS, PROCEDURE, Camera Adjustment, Inspection.>

6) When «Perform distance correction.» is displayed, select «OK». When the distance correction is finished correctly, and «Distance correction OK!» is displayed, select «OK» and proceed to the accuracy rate inspection.

7) When «Perform accuracy rate inspection.» is displayed, select «OK». When the accuracy rate inspection is finished correctly, and «Accuracy rate ○○% OK!» is displayed, select «OK» to go to next.

8) When «○○ NG!» is displayed during adjustment, refer to the NOTE below.

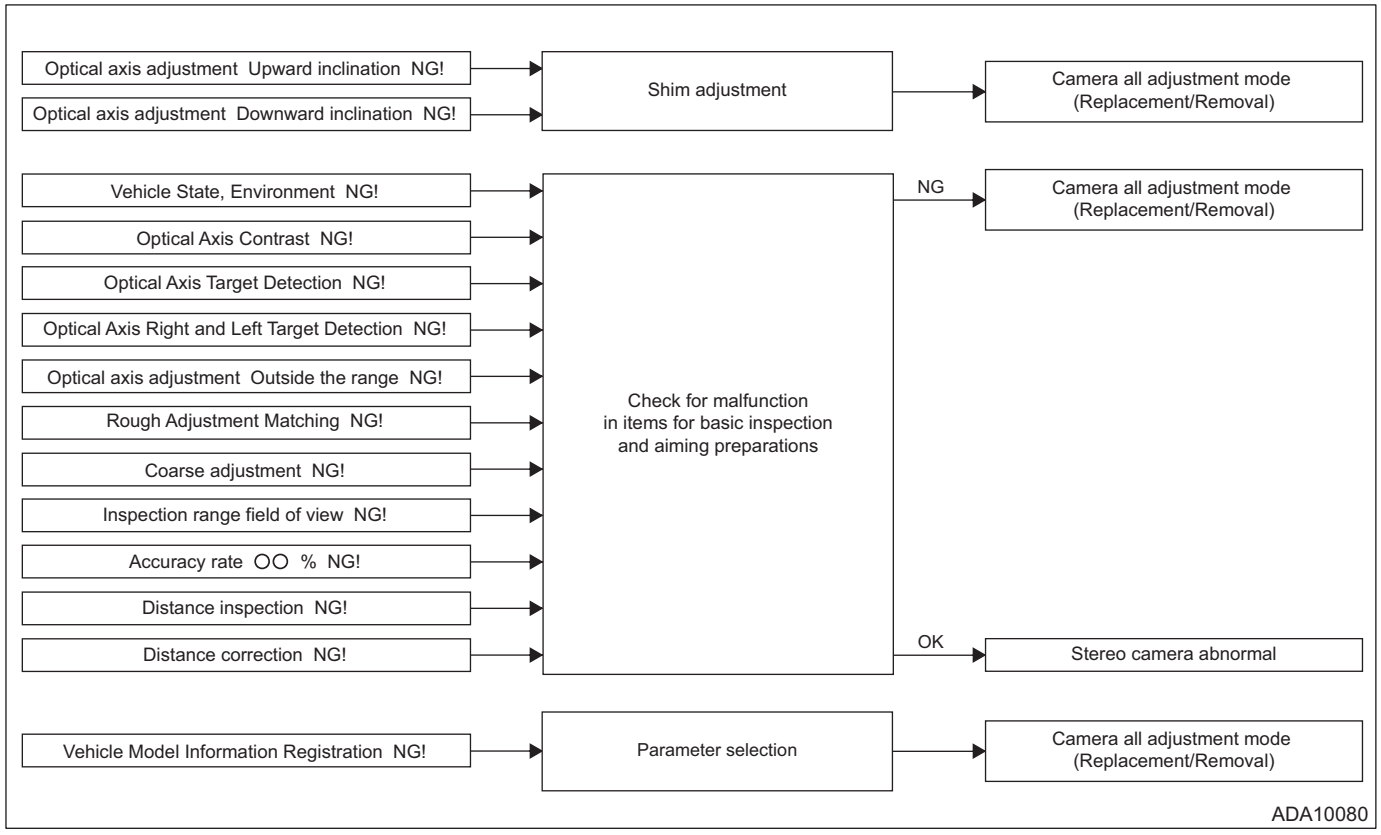

LIST

Error code	Display	Check items on error	Remarks
1401	«Vehicle State, Environment NG!»	Check body integrated unit.	—
1402	«Vehicle Model Information Registration NG!»	Confirm the part numbers and parameters (variant setting information) of EyeSight system components, and reconfirm that the unit should be installed to that vehicle. To confirm the components, check each item.	—
1403	«Optical Axis Contrast NG!»	1. Make sure that the stereo camera cover is installed correctly. 2. There should be no obstacles that blocks the stereo camera. 3. Stereo camera and camera plate are assembled with no gap. 4. Random chart for ver. 3 must be used. 5. There should be no obstacles that blocks the random chart. 6. Random chart must be set correctly for the vehicle. 7. Grid pattern of random chart should not be dirty or damaged. 8. Lighting circumstance for random chart should be normal. 9. Make sure that the headlight is off. 10.There should be no objects (reflection) on the instrument panel. 11.Dirt should not adhere to the windshield or the lens filter of the stereo camera. 12.There should be no crack on the windshield. NOTE: Detecting measures for the error codes 1403, 1404, 1405, 1406 and 1407 are different. Check items on error with high relevance are shown in the remarks.	Highly relevant with the check items 1 to 12.
1404	«Optical Axis Target Detection NG!»		Highly relevant with the check items 4, 6, 7, 8, 9, 10, 11 and 12.
1405	«Optical Axis Target Detection NG!»		Highly relevant with the check items 4, 6, 7, 8, 9, 10, 11 and 12.
1406	«Optical Axis Right and Left Target Detection NG!»		Highly relevant with the check items 1 to 12.
1407	«Out of the Optical Axis Adjustment Range NG!»		Highly relevant with the check items 3 and 6.
1408	«Optical axis adjustment Upward inclination NG!»	1. Random chart must be set correctly for the vehicle. 2. Aiming is performed with the vehicle at curb weight. 3. There should be no malfunction in the suspension. If there are no problems above, perform shim adjustment so that optical axis turns downward.	—
1409	«Optical axis adjustment Downward inclination NG!»	1. Random chart must be set correctly for the vehicle. 2. Aiming is performed with the vehicle at curb weight. 3. There should be no malfunction in the suspension. If there are no problems above, perform shim adjustment so that optical axis turns upward.	—

Error code	Display	Check items on error	Remarks
140A	«Rough Adjustment Matching NG!»	1. Make sure that the stereo camera cover is installed correctly. 2. There should be no obstacles that blocks the stereo camera. 3. Stereo camera and camera plate are assembled with no gap. 4. There should be no obstacles that blocks the random chart. 5. Random pattern of random chart should not be dirty or damaged. 6. Lighting circumstance for random chart should be normal. 7. There should be no objects (reflection) on the instrument panel. 8. Dirt should not adhere to the windshield or the lens filter of the stereo camera. 9. There should be no crack on the windshield. NOTE: Detecting measures for the error codes 140A, 140B and 140C are different. Check items on error with high relevance are shown in the remarks.	Highly relevant with the check items 1 to 9.
140B	«Coarse adjustment NG!»		Highly relevant with the check items 3, 5, 7 and 9.
140C	«Coarse adjustment NG!»		Highly relevant with the check items 3, 5, 7 and 9.
140E	«Inspection range field of view NG!»	1. Make sure that the stereo camera cover is installed correctly. 2. There should be no obstacles that blocks the random chart. 3. Random pattern of random chart should not be dirty or damaged. 4. Lighting circumstance for random chart should be normal. 5. There should be no objects (reflection) on the instrument panel. 6. Dirt should not adhere to the windshield or the lens filter of the stereo camera. 7. There should be no crack on the windshield. 8. Windshield for EyeSight should be assembled.	—
140F	«Distance inspection NG!»	1. Distance from random chart to wheel center of the vehicle should be 4,000 mm (13.12 ft). 2. Lighting circumstance for random chart should be normal.	—
1410	«Accuracy rate 00% NG !»	1. Lighting circumstance for random chart should be normal. 2. Random pattern of random chart should not be dirty or damaged. 3. There should be no objects (reflection) on the instrument panel. 4. Dirt should not adhere to the windshield or the lens filter of the stereo camera. 5. There should be no crack on the windshield.	—
1501	«Distance correction NG!»	When «Distance inspection NG!» is displayed and distance correction is performed without inspection, check the following. 1. Distance from random chart to wheel center of the vehicle should be 4,000 mm (13.12 ft). 2. Lighting circumstance for random chart should be normal.	—

NOTE:
• Shim adjustment: <Ref. to ES-34, SHIM ADJUSTMENT, PROCEDURE, Camera Adjustment, Inspection.>
• Basic inspection items: <Ref. to ES(diag)-8, INSPECTION, General Description.>
• Aiming preparation items: <Ref. to ES-14, PREPARATIONS, PROCEDURE, Camera Adjustment, Inspection.>
9) Turn the ignition switch to OFF and wait for approx. 10 seconds. (time necessary to save adjustment and inspection result)

CAUTION:
• If the ignition switch OFF period after adjustment and inspection finished is short, the adjustment and inspection result cannot be saved correctly. The warning is displayed on the meter LCD, when the vehicle moves.
• When aiming begins, normal recognition process stops and the warning is displayed on the meter LCD. The warning display will be cleared by turning the ignition switch OFF → ON.
• If the steering wheel is operated many times during adjustment and inspection preparation, the power steering control module is overheated. Therefore, you may have to wait for at least 10 seconds after turning the ignition switch to OFF.
10) Turn the ignition switch to ON. Make sure the «Aiming Completion Status» of «Data monitor» is «Exit» using Subaru Select Monitor.
11) Perform the {Clear Memory}, and turn the ignition switch to OFF.
12) Next, perform the automatic adjustment and function check by driving. <Ref. to ES-33, AUTOMATIC ADJUSTMENT AND FUNCTION CHECK BY DRIVING, PROCEDURE, Camera Adjustment, Inspection.>

5. AUTOMATIC ADJUSTMENT AND FUNCTION CHECK BY DRIVING

NOTE:
• Perform the automatic adjustment and function check by driving to improve the recognition accuracy of stereo camera, when the stereo camera is replaced or re-adjusted, or the EyeSight function does not operate correctly.
• The automatic adjustment and function check by driving adjust the stereo camera more in detail, based on the stereo camera adjustment using RANDOM CHART.
1) Perform this procedure after finishing stereo camera adjustment and inspection.
2) Connect the Subaru Select Monitor.

NOTE:
• Use the Subaru Select Monitor equipped with the latest version of the software.
• For detailed operation procedures, refer to “Application help”.
3) On «Start» display, select «Diagnosis».
4) On «Vehicle selection» display, enter vehicle information and select «Confirmed».
5) On «Main Menu» display, select «Each System».
6) On «Select System» display, select «EyeSight» and then select «Enter».
7) On «Select Function» display, select «Data Monitor».
8) From the data monitor item list, select «Automatic Adjustment Status».
9) Drive the vehicle until «Automatic adjustment status» displays «0F», «1F», «2F» or «3F».

CAUTION:
• For the automatic adjustment, drive the vehicle on straight road with white lines on both sides at a speed of 40 km/h (25 MPH) or more for at least five minutes, while maintaining distance from the preceding vehicle 40 m (132 ft) or more.
• Maintain the following conditions until «Automatic adjustment status» displays «0F», «1F», «2F» or «3F».
– Turn the active lane keep and cruise main to OFF.
– Hold down the pre-collision brake OFF switch for two seconds to turn OFF the pre-collision brake function.

Display	Content	Unit of measure	Note (at idling)
Automatic adjustment status	Index for automatic adjustment operation performed by the driving test after the completion of the optical axis adjustment	—	«0F», «1F», «2F» or «3F» is displayed when completed.

NOTE:
• It may takes long until «0F», «1F», «2F» or «3F» is displayed depends on the road condition etc.
• For new vehicles, «00» may be displayed. A test-drive is not necessary before delivery because high-accuracy aiming setting has been performed at the factory.
10) From the data monitor item list, display «Lane recognition status» to check if any of the following appears.

NOTE:
When driving does not continue until «0F», «1F», «2F» or «3F» is displayed, it may take long before recognition completes.
• Recognizing white lines on both sides during driving at 40 km/h (25 MPH) or more: «03»
• Recognizing white lines on both sides with lane width 3 m (10 ft) or more during driving at 65 km/h (40 MPH) or more: «05»

Display	Content	Unit of measure	Note (at idling)
Lane recognition status	Display of lane recognition status	—	Recognized when vehicle lane can be seen by 20 m (66 ft) or more.

11) From the data monitor item list, display «Preceding vehicle distance» to check if the distance from the preceding vehicle is approximately the same.

6. SHIM ADJUSTMENT

1) Turn the ignition switch to OFF.
2) Detach the stereo camera cover assembly, and remove the stereo camera. <Ref. to ES-8, REMOVAL, Stereo Camera.>
3) Remove the stereo camera plate, and insert the shim into the vehicle body and camera plate.

Preparation items:
Genuine part: Shim (washer) (031105000)

NOTE:
- Inserting the shim into the vehicle front side makes camera downward.
- Inserting the shim into the vehicle rear side makes camera upward.
- There is a case that the shim may be inserted at the production line, but it is not abnormal.

4) Install the stereo camera plate.

Tightening torque:
5.5±1 N·m (0.56±0.1 kgf-m, 4.1±0.7 ft-lb)

5) Install the stereo camera and stereo camera cover assembly. <Ref. to ES-11, INSTALLATION, Stereo Camera.>
6) Perform the camera all adjustment mode (replacement/removal). <Ref. to ES-28, CAMERA ALL ADJUSTMENT MODE (REPLACEMENT/REMOVAL), PROCEDURE, Camera Adjustment, Inspection.>

7. CAMERA INITIALIZATION

This is a recovery measures prepared for the data failure caused by the low battery voltage during data storage to inside the stereo camera.

CAUTION:
Do not usually perform camera initialization because it will clear the aiming data and/or DTCs.
Perform the camera initialization only when the aiming result is NG even if the vehicle is placed correctly as shown in the flowchart described in “A: Procedure”. After camera initialization, perform the aiming in the same procedure as for camera replacement.
1) Connect the Subaru Select Monitor.

NOTE:
- Use the Subaru Select Monitor equipped with the latest version of the software.
- For detailed operation procedures, refer to “Application help”.

2) Turn the ignition switch to ON.
3) Wait for 10 seconds.
4) On «Start» display, select «Diagnosis».
5) On «Vehicle selection» display, enter vehicle information and select «Confirmed».
6) On «Main Menu» display, select «Each System».
7) On «Select System» display, select «EyeSight» and then select «Enter».
8) On «Select Function» display, select «DTC».
9) Select «Clear Memory» while pressing the pre-collision brake OFF switch and the lane departure warning OFF switch mounted on stereo camera cover assembly at the same time.
10) Turn the ignition switch to OFF.
11) Wait for 5 seconds.
12) Next, perform the clear adjustment value. <Ref. to ES-28, ADJUSTMENT VALUE CLEAR, PROCEDURE, Camera Adjustment, Inspection.>

7. Switches and Harness

A: NOTE

1. PRE-COLLISION BRAKE OFF & LANE DEPARTURE WARNING OFF SWITCH

The pre-collision brake OFF & lane departure warning OFF switch is integrated in the stereo camera cover assembly.
If the pre-collision brake OFF & lane departure warning OFF switch is faulty, replace the stereo camera cover assembly. <Ref. to ES-8, Stereo Camera.>

2. EyeSight STEERING SWITCH

For the removal and installation operation procedures for the EyeSight steering switch, refer to “CRUISE CONTROL SYSTEM” section. <Ref. to CC-6, Cruise Control Command Switch.>

B: INSPECTION

1. PRE-COLLISION BRAKE OFF SWITCH AND LANE DEPARTURE WARNING OFF SWITCH

1) Measure the resistance between connector terminals.

Preparation tool:
Circuit tester

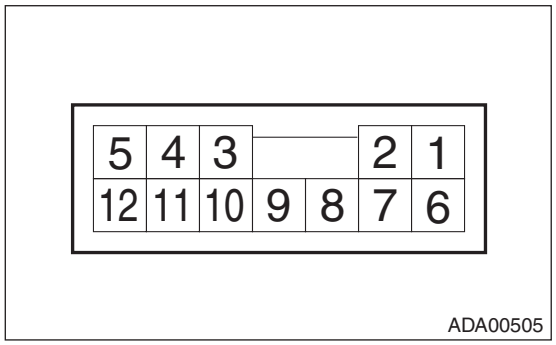

- Pre-collision brake OFF switch

Terminal No.	Inspection conditions	Standard
10 — 8	OFF	Approx. 1 kΩ
	ON	Less than 1 Ω

- Lane departure warning OFF switch

Terminal No.	Inspection conditions	Standard
9 — 8	OFF	Approx. 1 kΩ
	ON	Less than 1 Ω

2) Apply battery voltage between the connector terminals to check lighting condition of illumination inside the switch.

Terminal No.	Inspection conditions	Specification
6 (+) — 7 (–)	Apply battery voltage.	Light ON

3) Replace the stereo camera cover assembly if faulty is found in the inspection.

2. EyeSight STEERING SWITCH

1) Measure the resistance between connector terminals.

Preparation tool:
Circuit tester

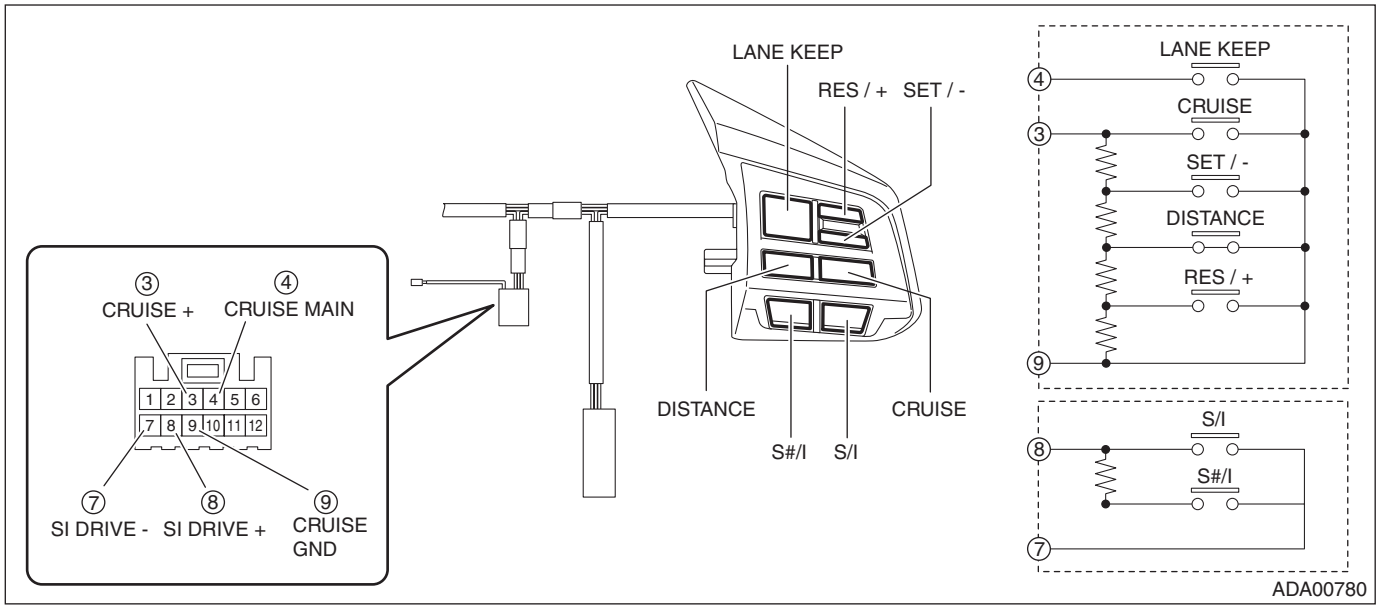

Terminal No.	Inspection conditions		Standard
3 — 9	CRUISE SET/– DISTANCE RES/+	All OFF	Approx. 4,020 Ω
	CRUISE	ON	Less than 1 Ω
	SET/–	ON	Approx. 250 Ω
	DISTANCE	ON	Approx. 680 Ω
	RES/+	ON	Approx. 1,470 Ω
4 — 9	LANE KEEP	OFF	1 MΩ or more
		ON	Less than 1 Ω
8 — 7	S/I S#/I	All OFF	1 MΩ or more
	S/I	ON	Less than 1 Ω
	S#/I	ON	Approx. 1,800 Ω

2) Apply battery voltage between the connector terminals to check lighting condition of illumination inside the switch.

Terminal No.	Inspection conditions	Specification
10 (+) — 11 (–)	Apply battery voltage.	Light ON

3) Replace the EyeSight steering switch if it is found defective.

8. Combination Meter

A: NOTE

For the operation procedures for combination meter, refer to “INSTRUMENTATION/DRIVER INFO” section. <Ref. to IDI-13, Combination Meter.>

9. Transmission Control Module (TCM)

A: NOTE

For the operation procedures for transmission control module (TCM), refer to “CONTINUOUSLY VARIABLE TRANSMISSION” section. <Ref. to CVT(TR690)-126, Transmission Control Module (TCM).>

10.Stop Light & Brake Switch

A: NOTE

For the operation procedures for stop light and brake switch, refer to “BRAKE” section. <Ref. to BR-100, Stop Light Switch.>

11.VDC Control Module and Hydraulic Control Unit (VDCCM&H/U)

A: NOTE

For the operation procedures for VDC control module & hydraulic control module (VDCCM&H/U), refer to “VEHICLE DYNAMICS CONTROL (VDC)” section. <Ref. to VDC-9, VDC Control Module and Hydraulic Control Unit (VDCCM&H/U).>

12.Power Steering Control Module

A: NOTE

For the operation procedures for power steering control module, refer to “POWER ASSISTED SYSTEM (POWER STEERING)” section. <Ref. to PS-100, Power Steering Control Module.>

13.Roll Connector

A: NOTE

For the operation procedures for roll connector (steering angle sensor), refer to “AIRBAG SYSTEM” section. <Ref. to AB-58, Roll Connector.>

14.Body Integrated Unit

A: NOTE

Refer to the “SECURITY AND LOCKS” section for operation procedures of the body integrated unit. <Ref. to SL-81, Body Integrated Unit.>

15.Reverse Automatic Braking CM

A: NOTE

For the operation procedures for Reverse Automatic Braking CM, refer to “Reverse Automatic Braking” section. <Ref. to RAB-6, Reverse Automatic Braking CM.>

16.Diagnostics with Phenomenon

A: INSPECTION

Refer to “Diagnostics with Phenomenon” of “EyeSight (DIAGNOSTICS)” section. <Ref. to ES(diag)-51, Diagnostics with Phenomenon.>

EyeSight (DIAGNOSTICS)

ES(diag)

Page

1. Basic Diagnostic Procedure 2
2. Check List for Interview 3
3. General Description 6
4. Electrical Component Location 15
5. Control Module I/O Signal 18
6. Subaru Select Monitor 21
7. Read Current Data 24
8. Real-time Diagnosis 42
9. Diagnostic Code(s) Display 43
10. Freeze Frame Data Display 48
11. Clear Memory Mode 49
12. Clear Active Lane Keep System Learning Value 50
13. Diagnostics with Phenomenon 51
14. EyeSight Temporary Code(s) Display 71
15. ECM Cancel Code(s) Display 79
16. ACC Cancel Code(s) Display 82
17. Active Lane Keep System Code(s) Display 84
18. Diagnostic Procedure with Diagnostic Trouble Code (DTC) 85
19. Diagnostic Procedure with ECU Cancel Code 111

1. Basic Diagnostic Procedure

A: PROCEDURE

CAUTION:
• Start the diagnosis after the engine has started. (Cruise control main switch does not turn on even if it is pressed before the engine starts.)
• When performing diagnosis, observe the legal speed limit on the road.
• ECM cancel code, ACC cancel code and lane keep assist code are not the diagnostic trouble codes (DTCs). These codes will also appear when the cruise control or the active lane keep is cancelled by the driver's operation. Do not confuse them.
• Be sure to get an assistant to support the diagnosis while driving, and have him/her operate the select monitor.
• Be sure to record the following data before performing the Clear Memory. (Data must be obtained before inspection because the Clear Memory operation deletes previous faults and temporary stop history.)
– All diagnostic trouble codes (DTCs)
– DTC of stereo camera (current malfunction, past malfunction)
– Freeze frame data of stereo camera
– ACC cancel code of stereo camera
– Lane keep assist code of stereo camera
– EyeSight temporary stop code of stereo camera
– Current data of stereo camera
(To obtain the data concerning camera adjustment information, previous trouble or temporary stop history, all data must be measured for a few seconds after the engine has started.)
• When a temporary stop occurs, stereo camera may be affected by a small amount of dirt that would not be perceived by the driver. In this case, cleaning the windshield glass is effective. <Ref. to ES(diag)-8, WINDSHIELD GLASS AND DASHBOARD, INSPECTION, General Description.>

	Step	Check	Yes	No
1	**PREPARATION BEFORE INSPECTION.** Using the Check List for Interview, confirm the condition of the malfunction occurrence from the user. <Ref. to ES(diag)-3, CHECK, Check List for Interview.>	Is there any component that obviously seems to affect the malfunction?	Repair or replace the component that seems to affect the malfunction.	Go to step **2**.
2	**CHECK DTC.** Read the DTC using Subaru Select Monitor. <Ref. to ES(diag)-43, Diagnostic Code(s) Display.> NOTE: When communication with the stereo camera could not be established, check the circuit. <Ref. to ES(diag)-22, COMMUNICATION FOR INITIALIZING IMPOSSIBLE, INSPECTION, Subaru Select Monitor.>	Is DTC displayed on Subaru Select Monitor?	Perform the diagnosis according to DTC and freeze frame data. <Ref. to ES(diag)-43, Diagnostic Code(s) Display.> <Ref. to ES(diag)-48, Freeze Frame Data Display.> If the diagnostic codes other than the stereo camera are displayed, refer to the diagnosis for the relevant codes.	Go to step **3**.
3	**PERFORM DIAGNOSTICS WITH PHENOMENON.** Using the diagnostics with phenomenon, perform inspection. <Ref. to ES(diag)-51, Diagnostics with Phenomenon.>	Is the vehicle free from any problem described in the diagnostics with phenomenon? / Are indicators normal?	Finish the diagnosis.	Perform the diagnosis according to the diagnostics with phenomenon.

2. Check List for Interview

A: CHECK

Inspect the following items regarding the vehicle's state.

Writer/ Inspector	Writer's name		
	Inspector's Name		
Vehicle information	Car accessory equipment condition	Car accessory is installed to the windshield glass.	No/Yes (Position:)
		Other	No/Yes (Accessory's name:)
	Is there any modification for the following items?	Suspension?	Not changed / Changed (Specifically:)
		Headlight?	Not changed / Changed (Specifically:)
		Tire size?	Not changed / Changed (Specifically:)
		Front wiper?	Not changed / Changed (Specifically:)
	How is the condition around camera?	Is there any scratch or damage on the windshield glass?	No/Yes (Specifically:)
		Are antennas, etc. attached on the prohibited area?	No/Yes (Specifically:)
		Is wide mirror or accessory attached?	No/Yes (Specifically:)
	How is the surface condition of the windshield glass?	Presence of oil film, fogging, dirt and/or glass coating	No/Yes (Specifically:)
	How is the condition of the dashboard?	Is there anything that can be easily reflected against the windshield glass on the dashboard?	No/Yes (Specifically:)
	How is the deterioration of the wiper?	Does any streak or uneven wiping area remain in front of the camera?	No/Yes (Specifically:)
	How is the condition of the tire?	Is there any wear? Is there any excessive wear difference?	No/Yes (Specifically:)
		Is the air pressure proper?	Proper/Improper (Specifically:)
	How is the condition of the camera lens filter?	Is there finger print adhesion or cracks on the lens filter?	No/Yes (Specifically:)
Description of malfunction	What kind of malfunction has been detected?	Failure / temporary stop / faulty operation of adaptive cruise control / faulty operation of pre-collision brake / other faulty operations	
	What kind of DTC and/or cancel code is displayed?		
	How is the meter display?	EyeSight warning light	Off/On/Blink
		Pre-collision brake OFF indicator light	Off/On
		Lane departure warning OFF indicator light	Off/On
		Multi-information display	• Halt: camera view defectiveness • Halt: camera temperature range outside • Halt

Check List for Interview

Occurrence conditions	Occurrence date		Occurrence location	
	Vehicle speed at occurrence	Approx. km/h (MPH)	Occurrence timing	During driving / during stopping / continues after engine has started
	Road type	Express way / limited highway / main highway / general road	Weather	Fine/cloudy/rainy/snowy/other
	Road condition ①	Dry/slippery (Rainy • compacted snow • icy road)	Ambient temperature	Approx. ° C(°F)
	Road condition ②	Asphalt / gravel / earth and sand / other	Position of solar radiation	Described in the detailed chart when the weather is fine.
	Road shape	Uphill / downhill / bank / roll / uneven surface	Time elapsed after engine start	Immediately after engine start / within 5 minutes after engine start / more than 5 minutes after engine start
	Wiper operation status	OFF/INT/LO/HI/AUTO	Light on status	Off / LO On / HI On
	Vehicle weight	Number of passengers: ( ), Did the vehicle carry heavy load? (No/Yes (Approx. kg))		
	Detailed chart (Refer to the example of description.)			
	In case of malfunction caused by temporary stop or faulty operation, describe the details by referring to the example below so that the following conditions can be recognized. (Images taken with a digital camera, etc. are acceptable.) • Road shape (straight, curve, tunnel, number of lane, etc.) • Road grade and it's change • Presence of white line, guardrails and/or side wall (degree of clarity) • Position of the sun • Presence and shape of preceding vehicle, oncoming vehicle, vehicle running on the next lane or pedestrian • Presence and shape of surrounding building or structure • Traveled course of own vehicle and preceding vehicle			

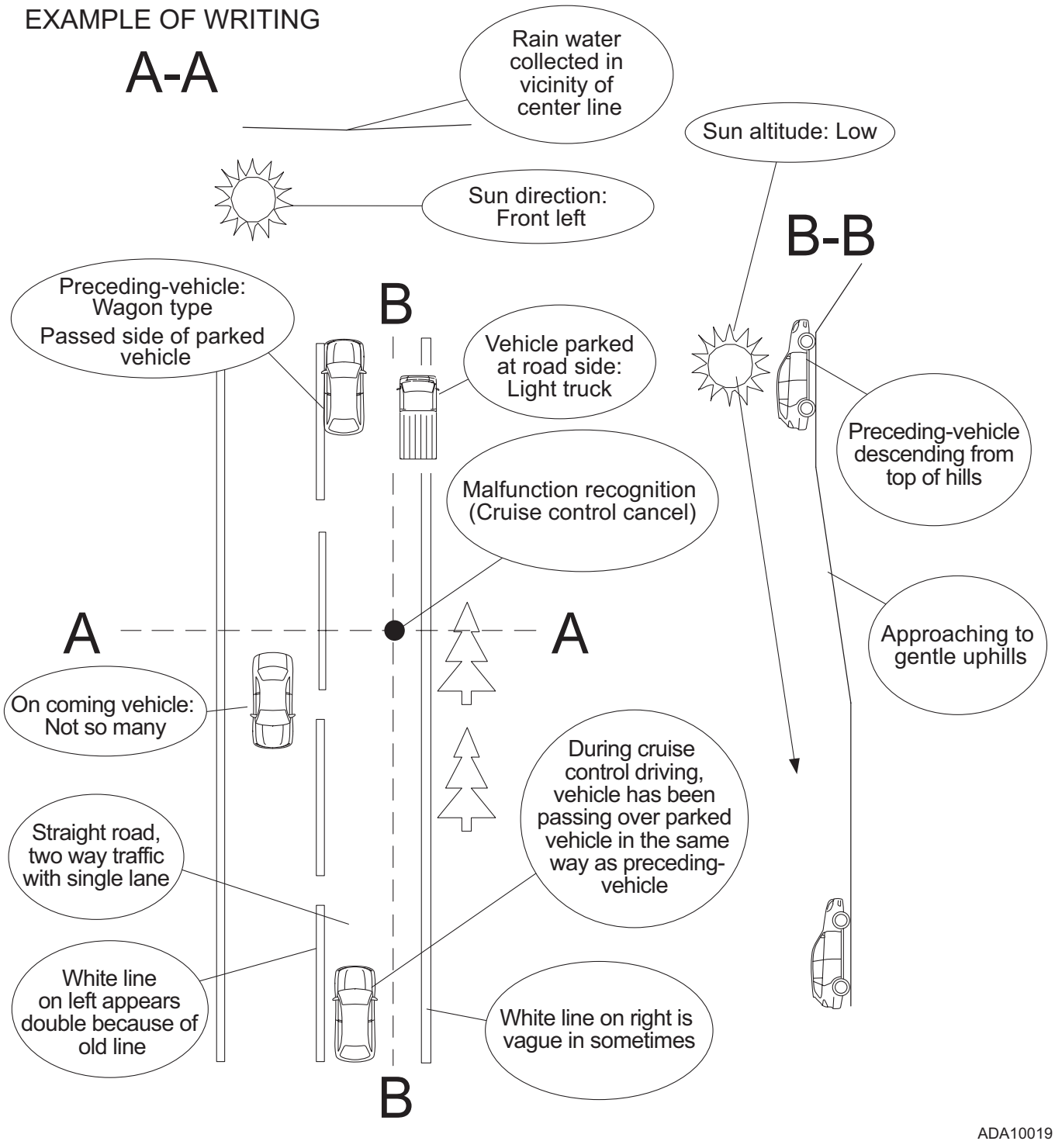
EXAMPLE OF WRITING
A-A
Rain water collected in vicinity of center line
Sun direction: Front left
Sun altitude: Low
B-B
Preceding-vehicle: Wagon type
Passed side of parked vehicle
B
Vehicle parked at road side: Light truck
Preceding-vehicle descending from top of hills
Malfunction recognition (Cruise control cancel)
A
A
Approaching to gentle uphills
On coming vehicle: Not so many
During cruise control driving, vehicle has been passing over parked vehicle in the same way as preceding-vehicle
Straight road, two way traffic with single lane
White line on left appears double because of old line
White line on right is vague in sometimes
B
ADA10019

3. General Description

A: CAUTION

1. AIRBAG SYSTEM

Airbag system wiring harness is routed near the cruise control command switch.

CAUTION:
• Do not use the electrical test equipment on the airbag system wiring harnesses and connector circuits.
• Be careful not to damage the airbag system wiring harness when servicing the cruise control command switch.

2. EyeSight

CAUTION:
• Do not hold the camera unit of the stereo camera.
• Do not touch the lens on the stereo camera.
• Do not clean the lens of the stereo camera.
• When cleaning the windshield glass, use care so that the glass cleaner, etc. does not come in contact with the lens of the stereo camera.
• Do not make an impact or apply excessive force to the stereo camera.
• Do not disassemble the stereo camera.
• Do not change the installation position of the stereo camera or do not modify the surrounding structure.
• If the stereo camera or windshield glass is removed or replaced, always adjust or check the stereo camera.
• When lifting up the vehicle to rotate the tires, turn off the pre-crash function.
• Stereo camera axis may be displaced even in a minor collision. So be sure to adjust the stereo camera even when the EyeSight warning light is not illuminated or when the "Stereo Camera Temporary Stop" is not displayed on the multi-information display.
• When removing the stereo camera cover assembly, cover it with a copy paper or similar dust-free paper to avoid any interference to the camera lens, and tape the paper while being careful not to let the adhesive surface contact the glass surface. Be sure to remove the paper after the procedure. <Ref. to ES-8, REMOVAL, Stereo Camera.>

B: PREPARATION TOOL

1. SPECIAL TOOL

ILLUSTRATION	TOOL NUMBER	DESCRIPTION	REMARKS
 STSSM4	—	SUBARU SELECT MONITOR 4	Used for setting of each function and trouble-shooting for electrical system. NOTE: For detailed operation procedures of Subaru Select Monitor 4, refer to “Application help”.

2. GENERAL TOOL

TOOL NAME	REMARKS
Circuit tester	Used for measuring resistance, voltage and current.
Masking tape	Used for removing and installing stereo camera cover assembly.
DST-i	Used for Subaru Select Monitor 4.

C: INSPECTION

1. BATTERY

Check the battery. <Ref. to SC(w/o STI)-51, INSPECTION, Battery.> <Ref. to SC(STI)-24, INSPECTION, Battery.>

2. WINDSHIELD GLASS AND DASHBOARD

Remove the windshield glass and dashboard in front of the stereo camera.

Standard:

There must be no oil film, dirt, scratch or fogging that obstructs the forward visibility of the stereo camera.

Do not stick or attach the aftermarket parts on the prohibited area (D) shown in the figure below.

Even outside the prohibited area, if the abnormal operation occurs due to the reflection of the light or the reflection on the glass, change the adhering position or installation position.

- ***Application of stickers or antennas, installation of wide-type mirror***
  - ***This will affect the visibility of the stereo camera, causing the function not to operate correctly.***
- ***Placement of navigation unit, ETC or other things on the dashboard***
  - ***These things will be reflected on the windshield glass, affecting the recognition of the stereo camera, thus causing the function not to operate correctly.***

- Front view

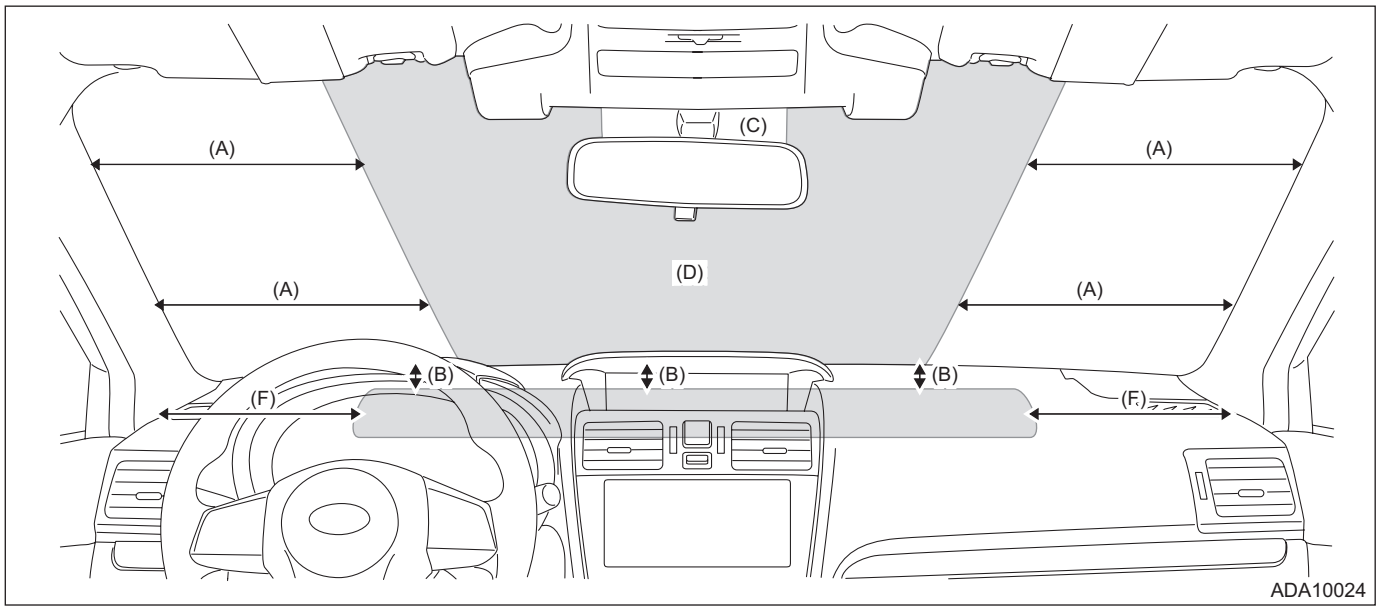

(A) 300 mm (11.8 in)
(B) 120 mm (4.7 in)
(C) Ceramic area
(D) Prohibited area
(E) 200 mm (7.8 in)

- Side view

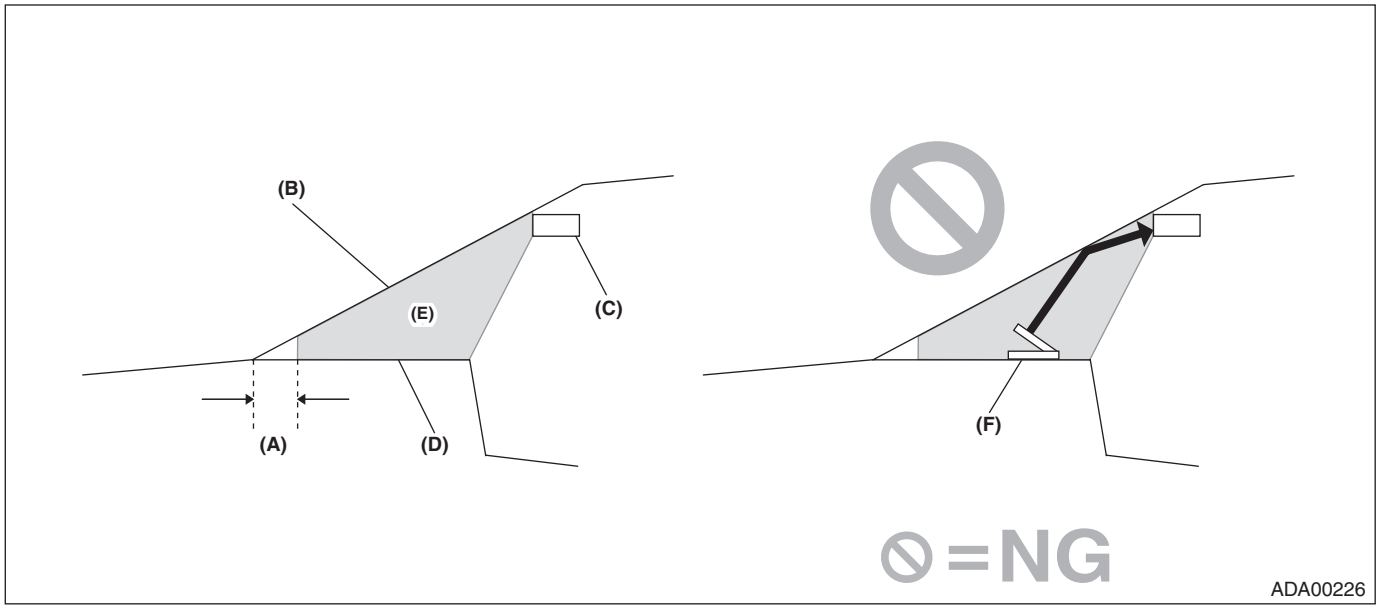

(A) 120 mm (4.7 in)
(B) Windshield glass
(C) Stereo camera cover
(D) Dashboard
(E) Prohibited area
(F) External monitor etc.

NOTE:
- Clean the windshield glass if dirt or fogging is found on the glass. Repair or replace the glass if damage is found.
  – When cleaning the inner side of the windshield glass, be careful not to touch the lens of the stereo camera. Take care so that the glass cleaner is not applied to the lens. (As with the removal procedure of the stereo camera, cover the opening of camera cover with a copy paper or similar dust-free paper before the procedure, in order to avoid any interference to the camera lens, and tape the paper while being careful not to let the adhesive surface contact the glass surface. Be sure to remove the paper after the procedure. <Ref. to ES-8, REMOVAL, Stereo Camera.>
  – When replacing the windshield glass, be sure to replace the part for the EyeSight.
  – If the glass is removed or replaced, always perform the stereo camera adjustment and inspection.
- If the damage is found in the glass repair prohibited area shown in the figure below, replace the glass.

– Damage in the prohibited area can affect the recognition of the stereo camera even if it is repaired, and thereby EyeSight function may not operate properly.

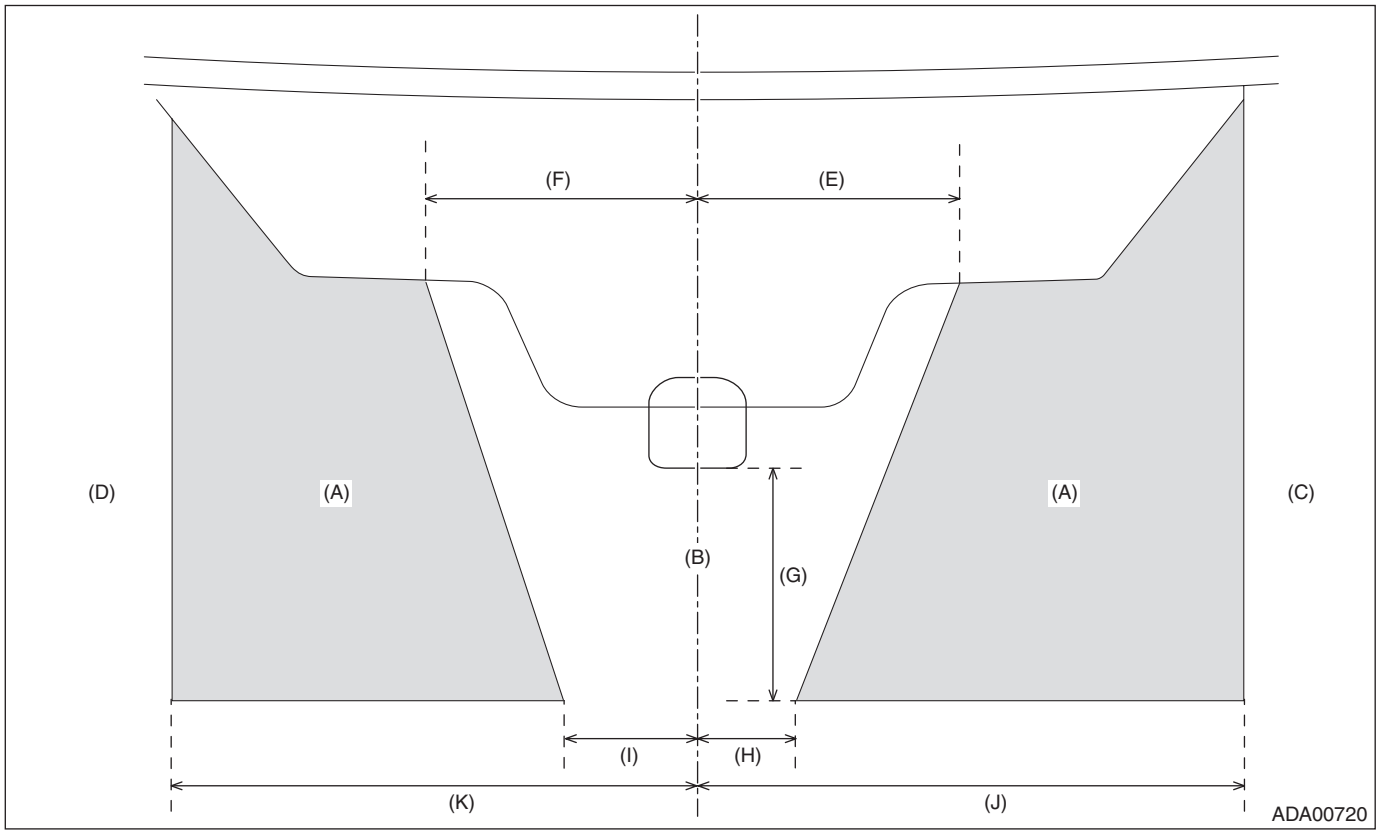

(A)	Glass repair prohibited area	(E)	130 mm (5.1 in)	(I)	65 mm (2.6 in)
(B)	Glass repairable area	(F)	135 mm (5.3 in)	(J)	280 mm (11.0 in)
(C)	Glass repairable area (Driver's side)	(G)	120 mm (4.7 in)	(K)	280 mm (11.0 in)
(D)	Glass repairable area (Passenger's side)	(H)	40 mm (1.6 in)		

- Install the ETC transponder inside the area (A) shown in the figure below.

Before installing, attach a full-scale copy of the following figure onto the windshield glass surface to install the parts to correct positions.

– Align the position with respect to the end of the ceramic area.
– Prepare a full-scale copy in which the reference dimension on the upper part of the figure actually has 4 inches long.
– Only the transponder with a thickness of 1.5 inches or less can be used.

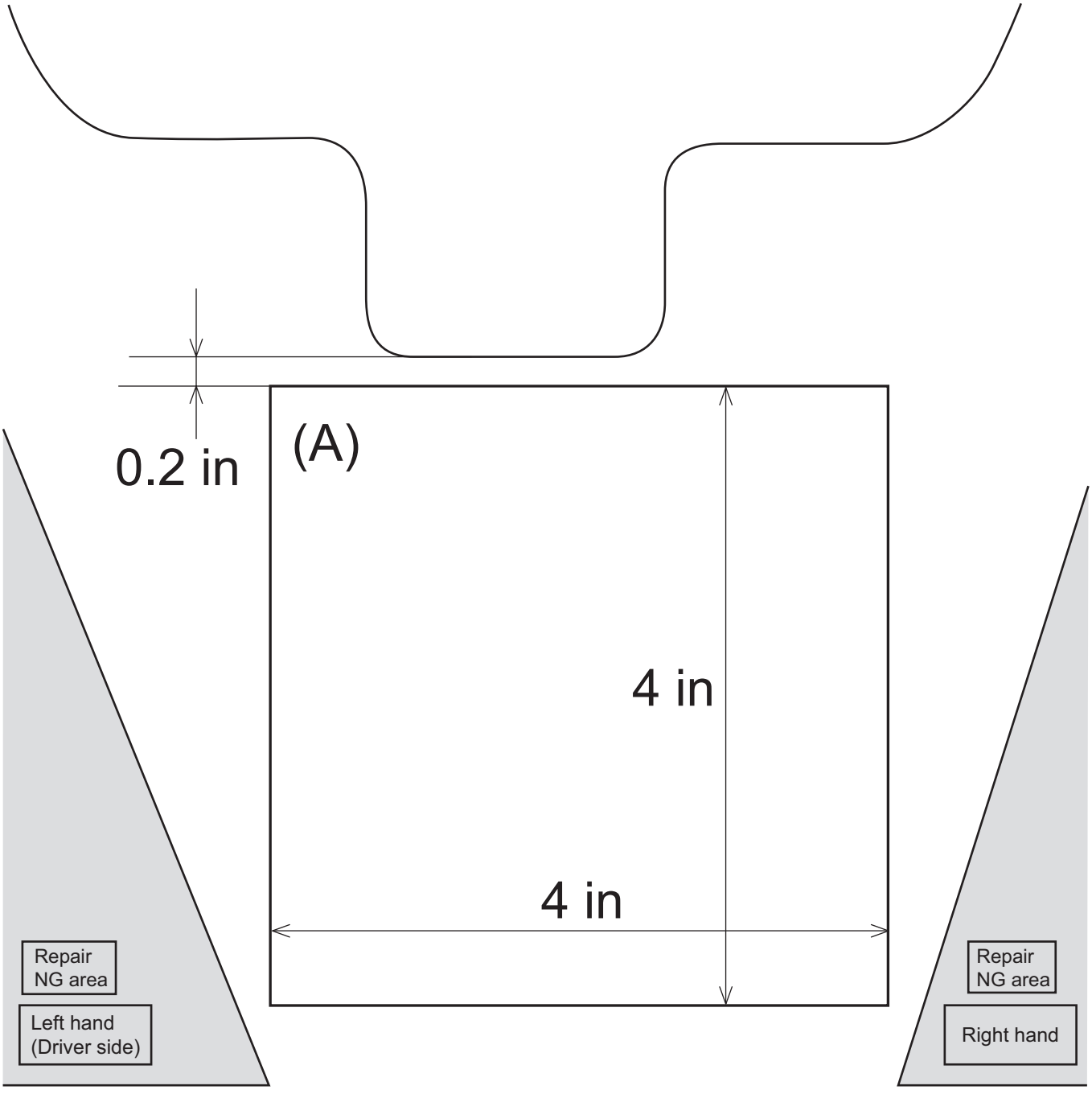

ADA10018

• Relocate any aftermarket parts out of the prohibited area.
• Do not touch the lens on the stereo camera. Do not clean the lens of the stereo camera. (If the lens surface is touched, the stereo camera must be replaced as it is impossible to clean the lens surface for ensuring quality.)

3. REAR VIEW MIRROR

Check the rear view mirror condition.

Standard:

The rear view mirror other than genuine parts shall not be used. (Wide mirrors shall not be used)
The visibility of the stereo camera shall not be blocked.
— This will affect the visibility of the stereo camera, causing the system not to operate correctly.

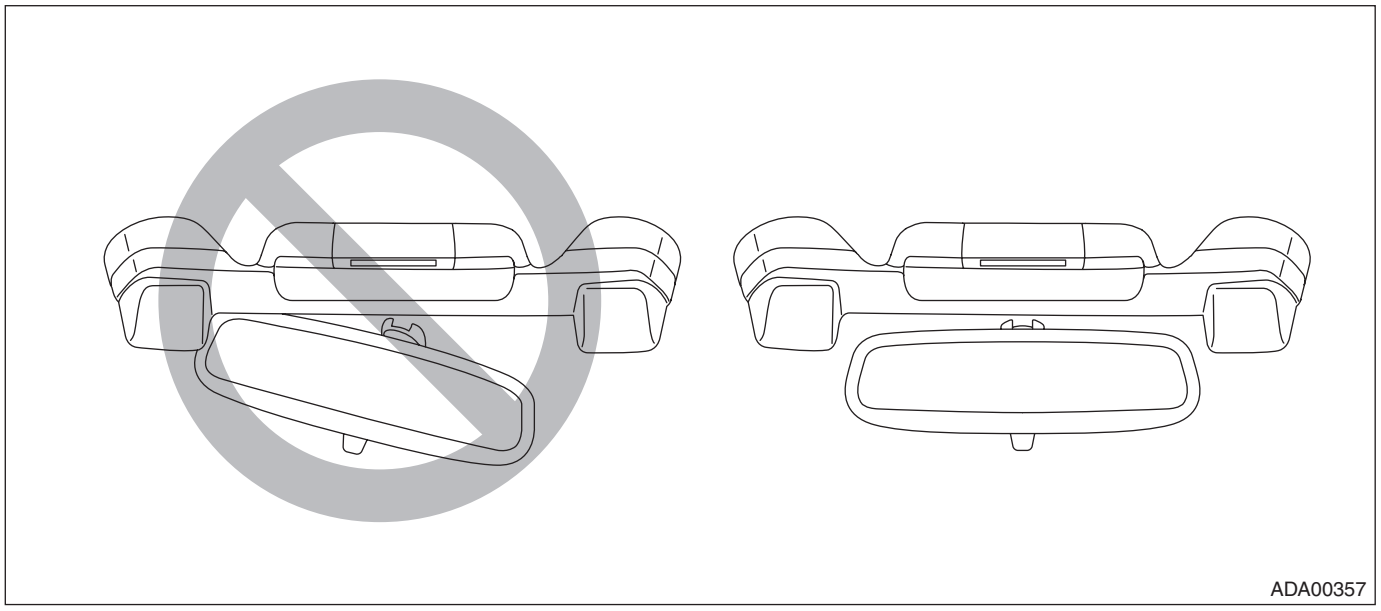

4. FRONT WIPER

Check the wiping condition of windshield glass.

Standard:

Use Subaru genuine part only for wiper blade body and blade rubber.
— Using the part other than genuine part will affect the recognition of the stereo camera, which may cause the function not to operate correctly.
Do not continue using the damaged blade rubber.
— The glass may be damaged. If the wiping performance decreases, or if the distinct streak is found, replace it as soon as possible.

NOTE:
Clean the windshield glass if there is an oil film or any dirt on the surface.

5. TIRE INFLATION PRESSURE

Check the tire air pressure.

Standard:

Adjust to the specified air pressure. <Ref. to WT-2, SPECIFICATION, General Description.>
Do not install worn tire or tires with excessive wear difference.
Install tires with specified size.

6. STEREO CAMERA

Through the windshield glass, check if there are any fingerprints or faults such as crack found on lens filters at the left and right camera lenses of the stereo camera.

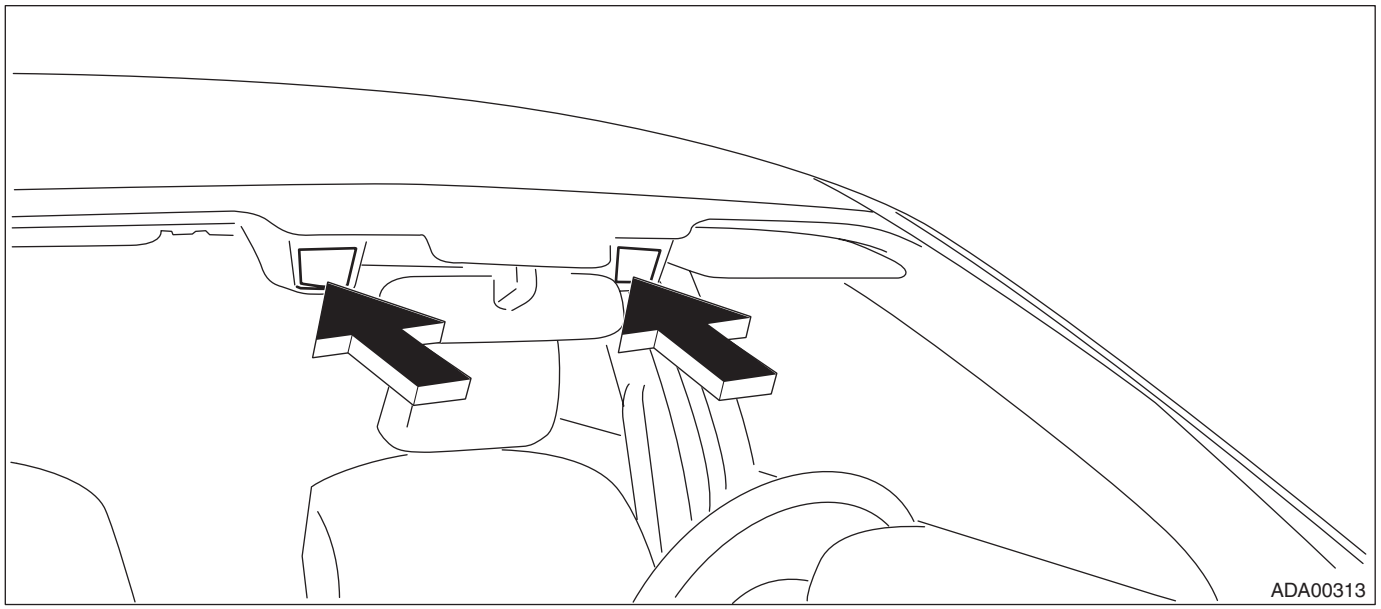

NOTE:

- Do not remove the camera or camera cover to check the lens.
- When spider's web or insects are found within the camera view or inside the lens hood, remove it by blowing air etc. while taking care not to touch the lens surface. Do not use a hand or a cloth.
- Thin and uniform adhesion of dust, dirt or tobacco stains to the lens filter surface resulting from normal use will not be an obstacle. Do not attempt to clean in such cases.
- If an oil film such as a fingerprint or any excessive dirt adheres, or if the lens filter cracks, replace the stereo camera. <Ref. to ES-8, Stereo Camera.>
- If the fingerprint adhesions or cracks occur on the lens filter, the following failures may arise.
  – The vehicle may not be able to detect the preceding vehicle or obstacle due to the effects of the headlight of the oncoming vehicle.
  – The vehicle may not be able to detect the preceding vehicle or obstacle due to the effects of the brake light operation of the preceding vehicle.
  – All the functions of the EyeSight may be suspended by the self-diagnosis function equipped with the camera.
  – When the lens filter is broken, the vehicle may not be able to detect the preceding vehicle or obstacle all day and all night.
- Do not clean the lens filter with any cleaner. It is quite difficult to uniformly clean both of the right and left lenses, and such an attempt just ends up spreading dirt and will cause problems as same as those from oil film.

7. LOAD ON THE ROOF

Check that load on the roof is not sticking out to the front of the stereo camera.

Standard:

The load on the roof is placed outside the prohibited area (A) shown in the figure below.

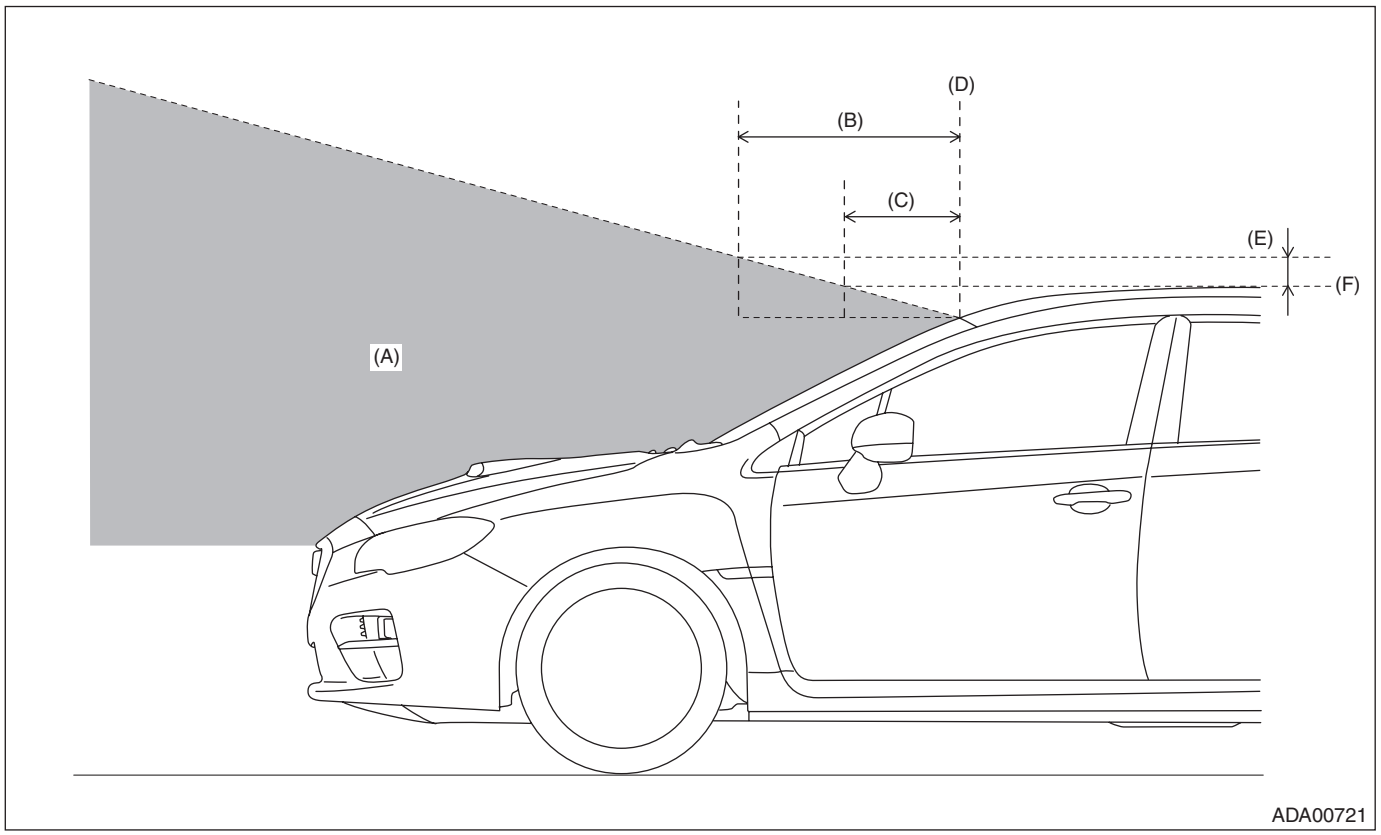

(A) Prohibited area
(B) 870 mm (34.3 in)
(C) 500 mm (19.7 in)
(D) Windshield glass upper end
(E) 100 mm (3.9 in)
(F) Highest surface of the roof

4. Electrical Component Location

A: LOCATION

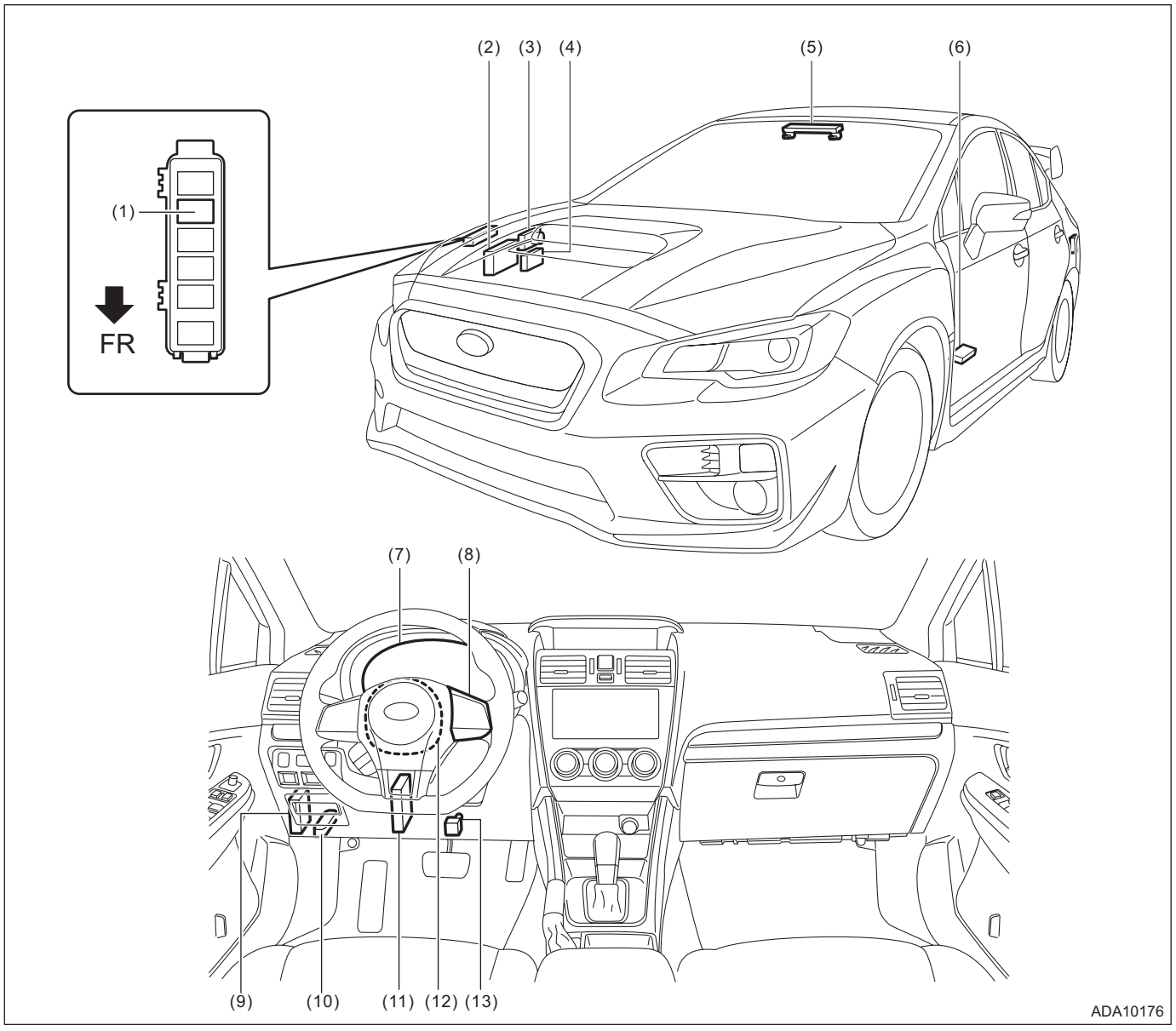

(1) Brake light relay
(2) ECM
(3) VDC CM
(4) Power steering CM
(5) Stereo camera
(6) RAB CM
(7) Combination meter
(8) EyeSight steering switch
(9) Body integrated unit
(10) Data link connector
(11) TCM
(12) Steering angle sensor
(13) Stop light and brake switch

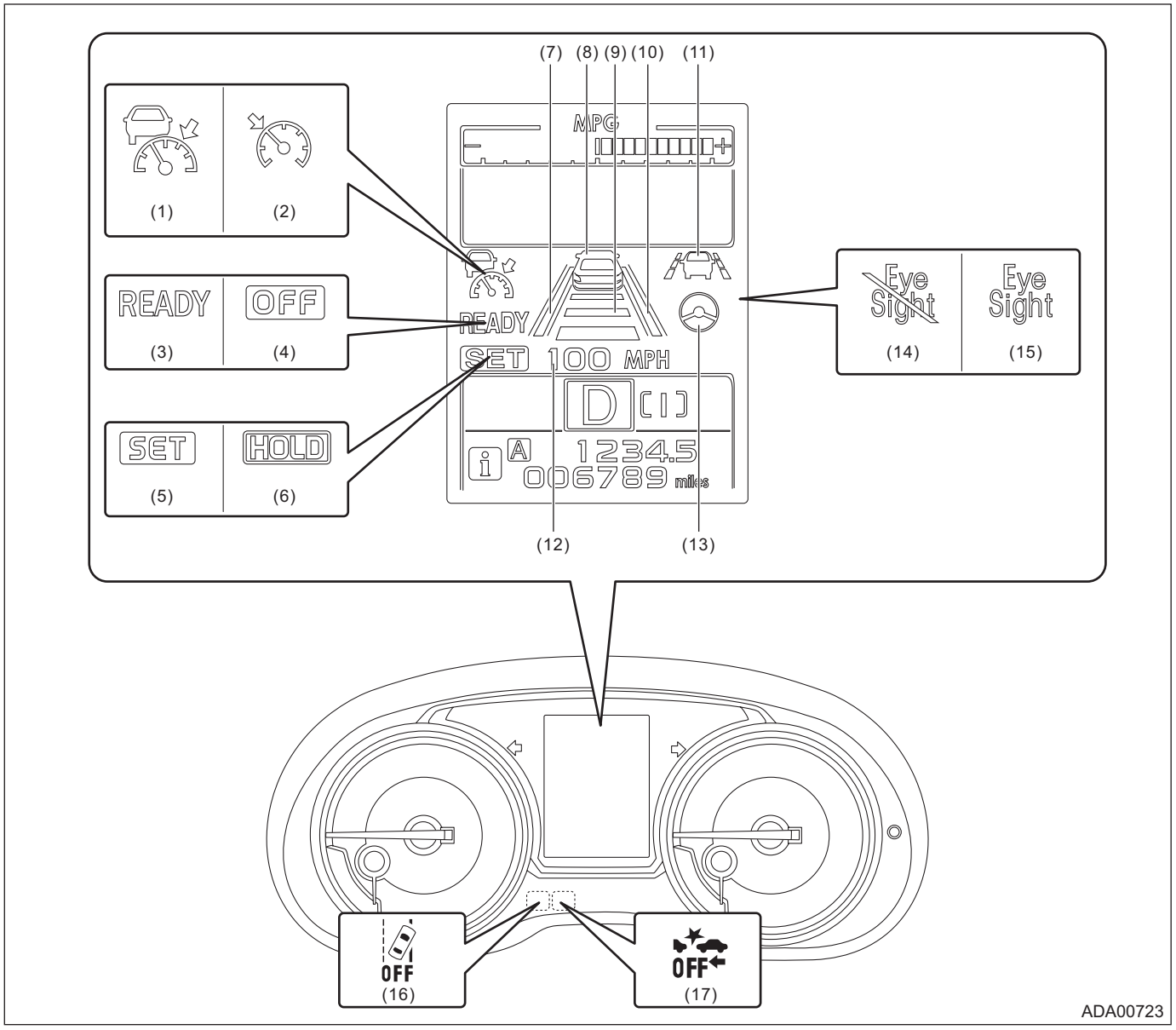

(1) Adaptive cruise display
(2) Conventional cruise display
(3) READY indicator
(4) OFF indicator
(5) SET indicator
(6) HOLD indicator
(7) Lane indicator (left)
(8) Preceding vehicle indicator
(9) Following distance setting indicator
(10) Lane indicator (right)
(11) Lane keep display
(12) Set vehicle speed display
(13) Steering wheel indicator
(14) EyeSight temporary stop indicator
(15) EyeSight warning indicator
(16) Lane departure warning OFF indicator light
(17) Pre-collision brake OFF indicator light

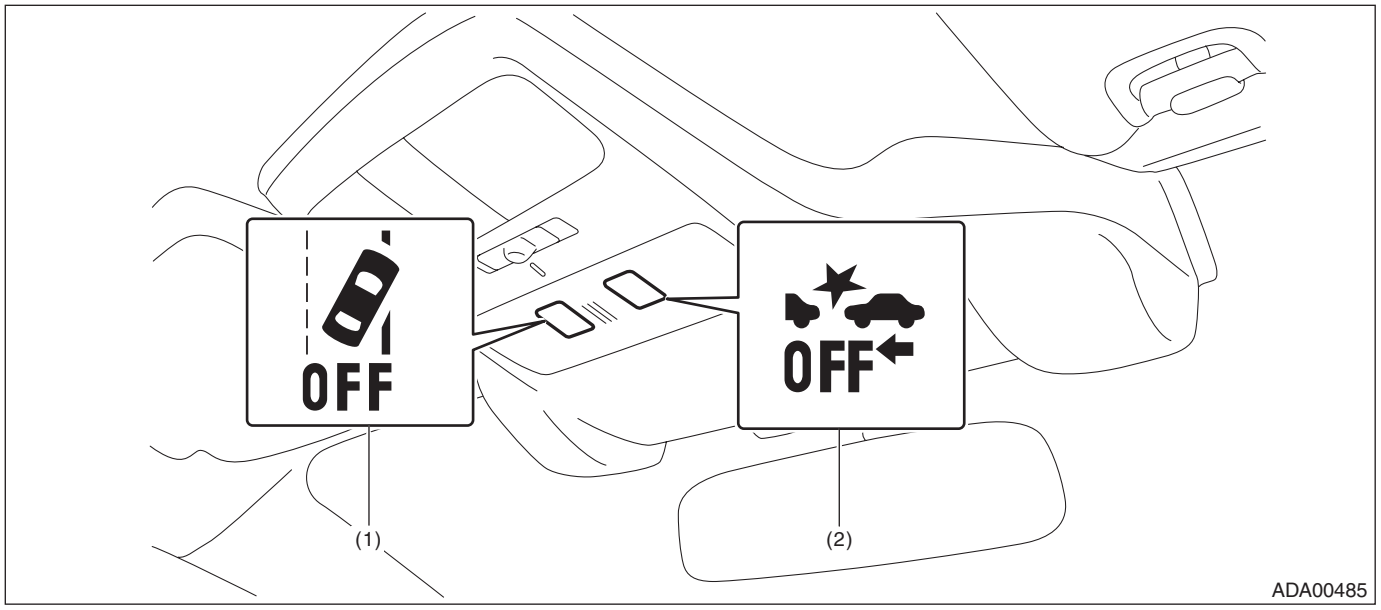

(1) Lane departure warning OFF switch
(2) Pre-collision brake OFF switch

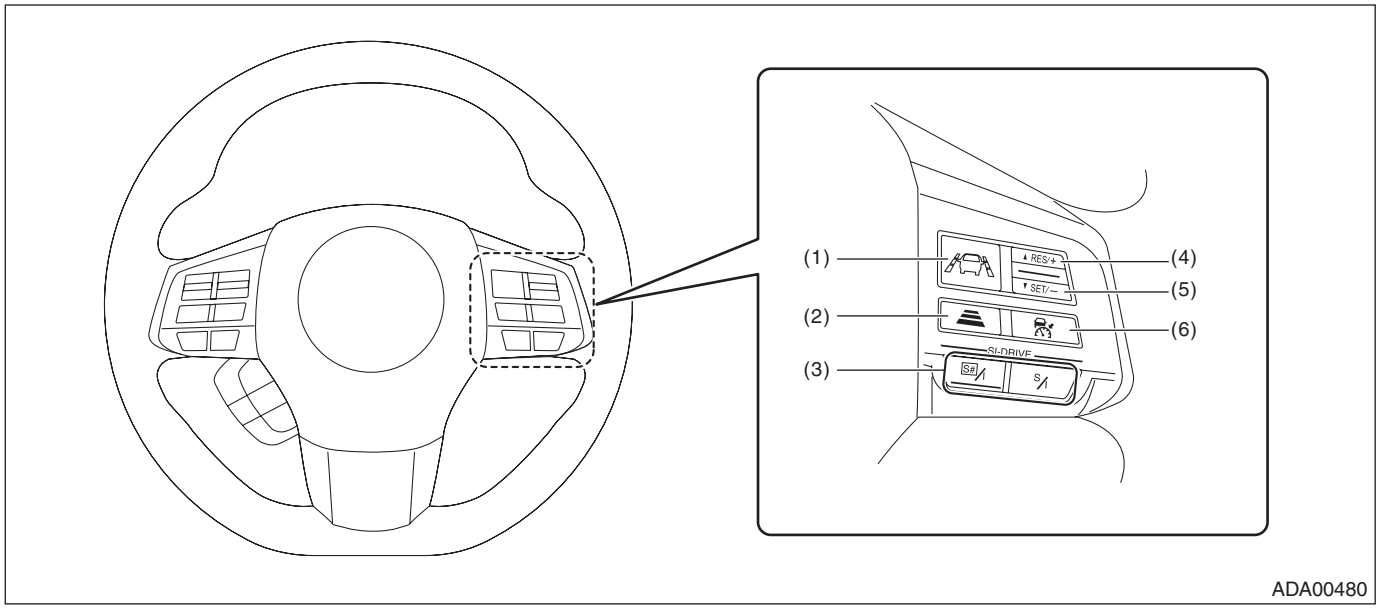

(1) Lane keep switch
(2) Following distance setting switch
(3) SI-DRIVE switch
(4) RES/+ (resume/plus) switch
(5) SET/– (set/minus) switch
(6) CRUISE switch

5. Control Module I/O Signal

A: ELECTRICAL SPECIFICATION

1. STEREO CAMERA

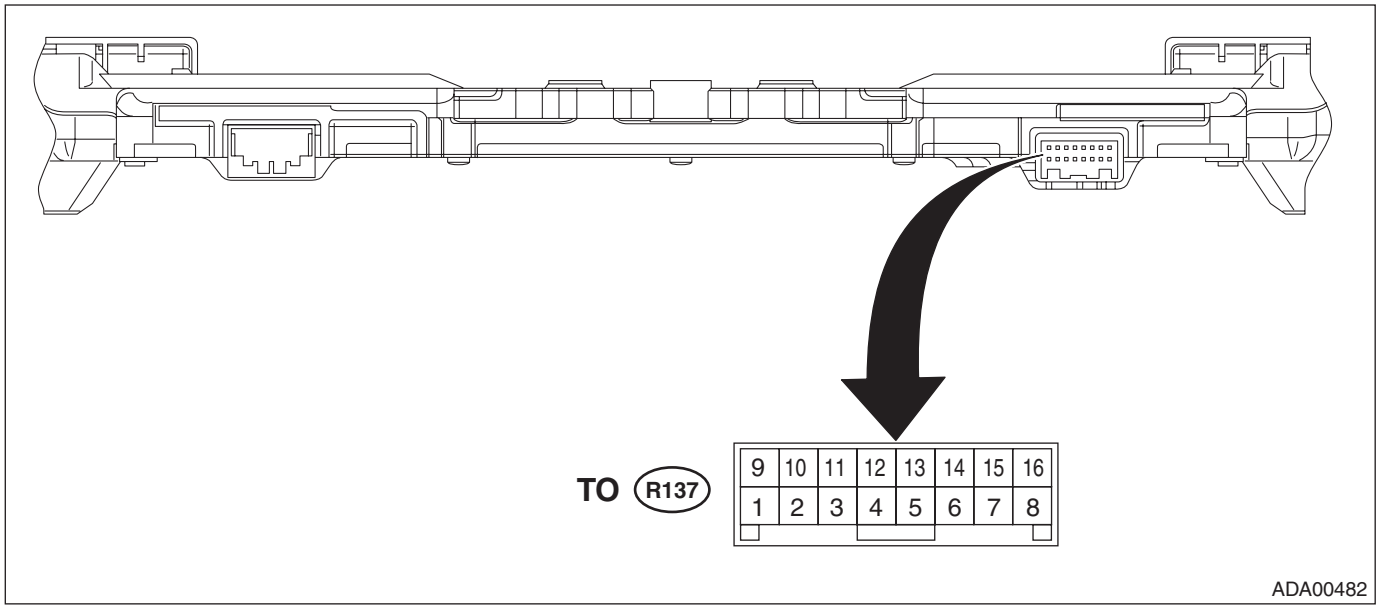

Terminal No.	Content	Measuring condition	Standard
(R137) No. 1 ←→ Chassis ground	Local CAN-H (RAB communication line)	Always	1 kΩ or more
(R137) No. 2 ←→ Chassis ground	Local CAN-L (RAB communication line)	Always	1 kΩ or more
(R137) No. 3	—	—	—
(R137) No. 4	—	—	—
(R137) No. 5	—	—	—
(R137) No. 6 ←→ Chassis ground	Ignition power supply	Ignition switch OFF → ON	Less than 1 V → 9 — 16 V
(R137) No. 7 ←→ Chassis ground	GND	Always	Less than 1 Ω
(R137) No. 8 ←→ Chassis ground	Battery power supply	Always	9 — 16 V
(R137) No. 9 ←→ Chassis ground	Main CAN-L	Always	1 kΩ or more
(R137) No. 10 ←→ Chassis ground	Main CAN-H	Always	1 kΩ or more
(R137) No. 11	—	—	—
(R137) No. 12 ←→ Chassis ground	Pre-collision brake OFF switch input	Pre-collision brake OFF switch OFF → ON	Approx. 1 kΩ → less than 1 Ω
(R137) No. 13 ←→ Chassis ground	Lane departure warning OFF switch input	Lane departure warning OFF switch OFF → ON	Approx. 1 kΩ → less than 1 Ω
(R137) No. 14 ←→ (R137) No. 15	EyeSight steering switch input	ALL OFF (no switch operation)	3.6 V — 4.5 V
		ALL OFF → RES/+ ON	2.6 V — 3.5 V
		ALL OFF → following distance ON	1.6 V — 2.5 V
		ALL OFF → SET/– ON	0.6 V — 1.5 V
		ALL OFF → CRUISE ON	0.0 V — 0.5 V
		ALL OFF → lane keep switch ON	3.6 V — 4.5 V
(R137) No. 15 ←→ Chassis ground	EyeSight steering switch GND	Always	Less than 1 Ω

Terminal No.	Content	Measuring condition	Standard
(R137) No. 16 ←→ (R137) No. 15	EyeSight steering switch input	ALL OFF (no switch operation)	2.6 V — 5.0 V
		ALL OFF → RES/+ ON	2.6 V — 5.0 V
		ALL OFF → following distance ON	2.6 V — 5.0 V
		ALL OFF → SET/– ON	2.6 V — 5.0 V
		ALL OFF → CRUISE ON	2.6 V — 5.0 V
		ALL OFF → lane keep switch ON	0.0 V — 2.5 V

2. ENGINE CONTROL MODULE (ECM)

For details on the input/output signals for the engine control module, refer to ENGINE (DIAGNOSTICS). <Ref. to EN(w/o STI)(diag)-21, ELECTRICAL SPECIFICATION, Engine Control Module (ECM) I/O Signal.>

3. VDC CONTROL MODULE (VDCCM)

For details on the input/output signals for VDC control module, refer to VDC (DIAGNOSTICS). <Ref. to VDC(diag)-17, ELECTRICAL SPECIFICATION, Control Module I/O Signal.>

4. TRANSMISSION CONTROL MODULE (TCM)

For details on the input/output signals for the transmission control module, refer to AUTOMATIC TRANSMISSION (DIAGNOSTICS). <Ref. to CVT(diag)-10, Transmission Control Module (TCM) I/O Signal.>

5. BODY INTEGRATED UNIT

Refer to the BODY CONTROL SYSTEM (DIAGNOSTICS) for the I/O Signal of the body integrated unit. <Ref. to BC(diag)-6, ELECTRICAL SPECIFICATION, Control Module I/O Signal.>

6. COMBINATION METER

For details on the input/output signals for the combination meter, refer to INSTRUMENTATION/DRIVER INFO (DIAGNOSTICS). <Ref. to IDI(diag)-7, ELECTRICAL SPECIFICATION, Control Module I/O Signal.>

7. POWER STEERING CM

Refer to the POWER ASSISTED SYSTEM (POWER STEERING) (DIAGNOSTICS) for the I/O signal of the power steering CM. <Ref. to PS(diag)-9, ELECTRICAL SPECIFICATION, Control Module I/O Signal.>

8. RAB CM

For details on the input/output signals for RAB CM, refer to RAB (DIAGNOSTICS). <Ref. to RAB(diag)-7, ELECTRICAL SPECIFICATION, Control Module I/O Signal.>

B: WIRING DIAGRAM

Refer to “EyeSight System” in the wiring diagram. <Ref. to WI-222, EyeSight System.>

C: SYSTEM BLOCK DIAGRAM

Main signals used between stereo camera and relevant CM

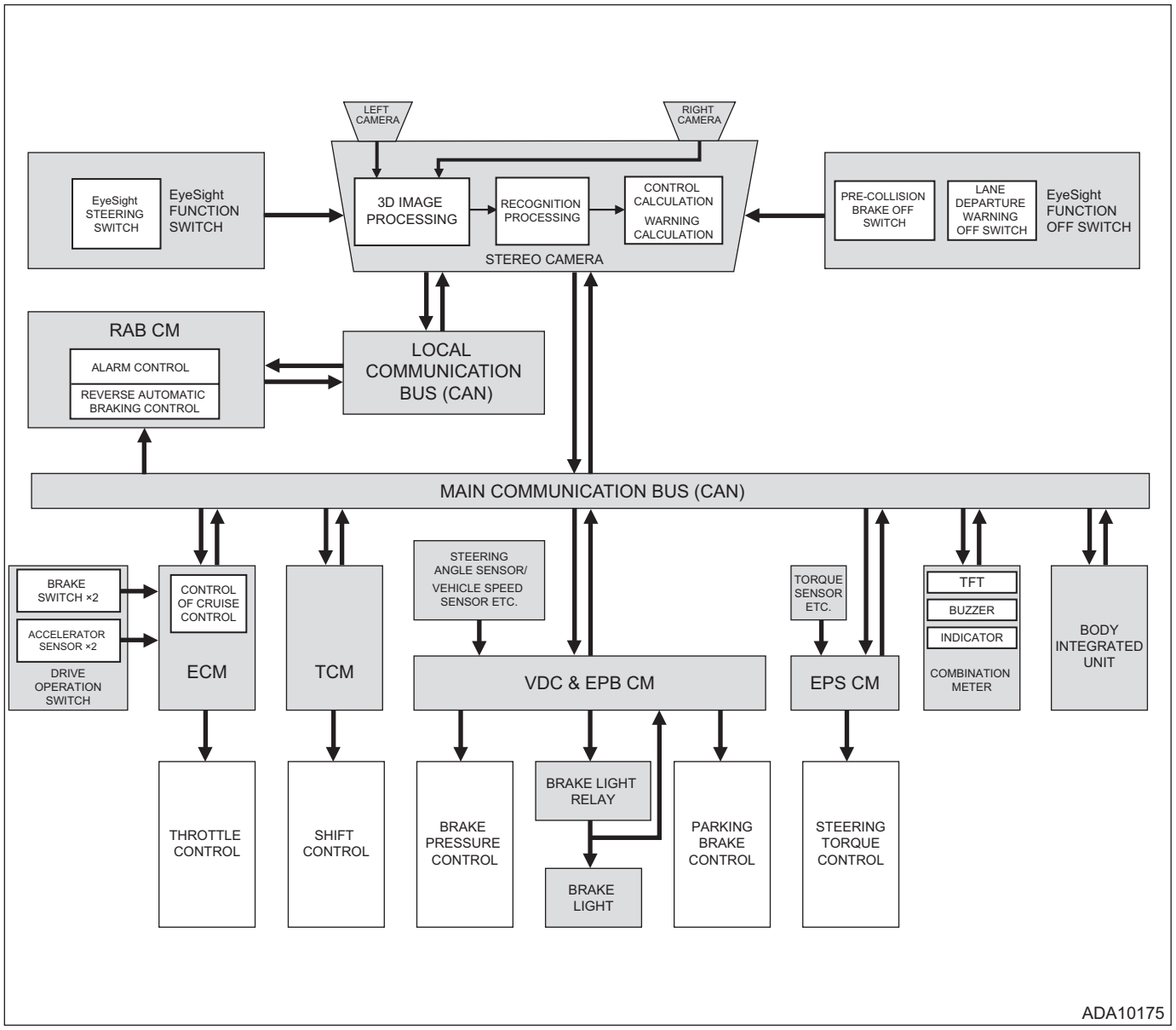

6. Subaru Select Monitor

A: OPERATION

1. GENERAL DESCRIPTION

For on-board diagnosis function of the EyeSight, use the Subaru Select Monitor.
The on-board diagnosis function operates in three categories, which are used depending on the type of problems.
1) Diagnosis with diagnostic trouble code (DTC):
When the electrical failure occurs in the EyeSight, DTC is detected from the stereo camera. If the DTC is detected, the relevant DTC is displayed by illuminating or blinking the EyeSight warning light. To check the details concerning the DTC, use the Subaru Select Monitor.
2) Diagnosis with cancel code and lane keep assist code:
(1) This category of diagnosis requires actual driving of the vehicle in order to determine the cause in such a case when the set speed is cancelled during cruise control driving or the control is cancelled during active lane keep driving although any cancel condition is not entered.
(2) With ECM cancel code and stereo camera ACC cancel code, cancel condition (Code No.) is stored when detected during cruise control driving. With lane keep assist code of stereo camera, cancel condition (Code No.) is stored if active lane keeping does not operate or if control cancel occurs during active lane keep driving.

CAUTION:
• With ECM cancel code, not only the cruise control "cancel" occurred (although the driver does not input the "cancel" operation), but also the "cancel" condition input by the driver is stored.
• The latest memory contents of the ECM cancel code (latest code) is cleared when the ignition switch is turned to OFF. However, memory contents set by the diagnosis of faulty switches related to the system and cruise control will remain as trouble history (memory code) after the ignition switch is turned to OFF.
3) Real-time diagnosis:
Real-time diagnosis function is used to determine whether or not the input signal system is in good order, according to signal emitted from switches, sensors, etc.
(1) Vehicle cannot be driven at cruise speed when the problem occurs in the cruise control system or relevant circuits.
(2) Monitor the signal conditions from switches and sensors.

2. BASIC OPERATION

For operation procedures, refer to "Application help".

B: INSPECTION

1. COMMUNICATION FOR INITIALIZING IMPOSSIBLE

- Communication error with stereo camera

DETECTING CONDITION:

- Defective harness connector
- Power supply circuit malfunction
- Defective stereo camera
- Defective CAN system
- Defective Subaru Select Monitor

TROUBLE SYMPTOM:

- EyeSight warning light blinks.

WIRING DIAGRAM:

EyeSight System <Ref. to WI-222, WIRING DIAGRAM, EyeSight System.>

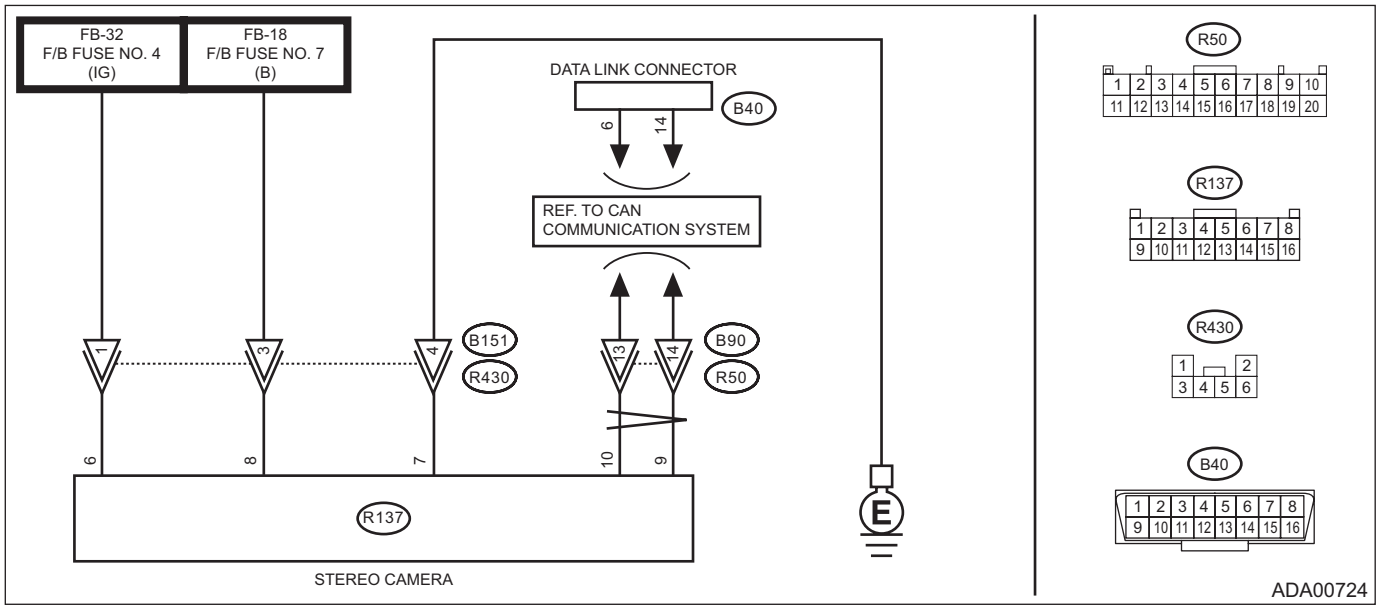

Step		Check	Yes	No
1	**CHECK IGNITION SWITCH.**	Is the ignition switch ON?	Go to step **2**.	Turn the ignition switch to ON, and select «EyeSight» using the Subaru Select Monitor.
2	**CHECK BATTERY.** 1) Turn the ignition switch to OFF. 2) Measure the battery voltage.	Is the voltage 10 V or more?	Go to step **3**.	Charge or replace the battery.
3	**CHECK BATTERY TERMINAL.**	Is the battery terminal contact proper?	Go to step **4**.	Connect the battery terminal securely or replace it.
4	**CHECK SUBARU SELECT MONITOR COMMUNICATION.** 1) Turn the ignition switch to ON. 2) Using the Subaru Select Monitor, check whether the communication can be executed normally.	Is the communication between Subaru Select Monitor and body integrated unit normal?	Go to step **5**.	Check the connection of the Subaru Select Monitor, and perform communication with the body integrated unit again.
5	**CHECK LAN SYSTEM.** Inspect LAN system. <Ref. to LAN(diag)-2, PROCEDURE, Basic Diagnostic Procedure.>	Is the check result OK?	Go to step **6**.	Perform the inspection according to the diagnosis for LAN system.

	Step	Check	Yes	No
6	**CHECK HARNESS CONNECTOR BETWEEN STEREO CAMERA AND DATA LINK CONNECTOR.** 1) Turn the ignition switch to OFF. 2) Disconnect the stereo camera connector. 3) Measure the resistance between the stereo camera and the data link connector. ***Connector & terminal*** ***(R137) No. 10 — (B40) No. 6:*** ***(R137) No. 9 — (B40) No. 14:***	Is the resistance less than 10 Ω?	Go to step **7**.	Repair or replace the harness and connectors between the stereo camera and data link connector.
7	**CHECK POWER SUPPLY CIRCUIT.** 1) Turn the ignition switch to ON. 2) Measure the voltage between stereo camera and chassis ground. ***Connector & terminal*** ***(R137) No. 6 (+) — Chassis ground (–):***	Is the voltage 10 V or more?	Go to step **8**.	Check the power supply system circuit, and if any fault is found, repair the defective parts or replace the harness.
8	**CHECK GROUND CIRCUIT.** 1) Turn the ignition switch to OFF, then disconnect the ground cable from battery. 2) Measure the resistance between harness connector of stereo camera and chassis ground. ***Connector & terminal*** ***(R137) No. 7 — Chassis ground:***	Is the resistance less than 10 Ω?	Go to step **9**.	Check the harness from stereo camera to chassis ground.
9	**CHECK CONNECTOR.**	Is there poor contact of stereo camera connector?	Repair the connector, or replace harness.	Replace the stereo camera. <Ref. to ES-8, REMOVAL, Stereo Camera.>

7. Read Current Data

A: OPERATION

1. STEREO CAMERA

1) On «Start» display, select «Diagnosis».
2) On «Vehicle selection» display, input the target vehicle information and select «Confirmed».
3) On «Main Menu» display, select «Each System».
4) On «Select System» display, select «EyeSight» and select «Enter».
5) On «Select Function» display, select «Data Monitor».

NOTE:
For detailed operation procedures, refer to “Application help”.

• LIST

Display	Content	Unit of measure	Reference
Camera ID	Display of serial No. inside the stereo camera	—	—
Control Software Version	Control software version	—	—
Recognition Software Version	Recognition software version	—	—
Model Registration	Display of displacement and vehicle model	—	—
ECU Power Supply Voltage (IG)	Display of input voltage of stereo camera	V	—
Initial Aiming Completion Status	Initial aiming completion flag	—	Finished (After factory shipping, when stereo camera is replaced or adjusted, "Not Finish" is displayed.)
Aiming Completion Status	Aiming completion flag	—	Not Finish (After factory shipping, when stereo camera is replaced or adjusted, "Finished" is displayed.)
Ignition SW ON Count	Total count of ignition switch ON	times	—
Trip Meter	Odometer value	• km • mile	—
Front Axle Wheel Average Speed	Front axle average wheel speed	km/h	—
Engine Speed	Engine speed	rpm	—
Accel opening angle	Acceleration opening angle signal	%	—
ETC Throttle Angle Signal	Electronic throttle control opening angle signal	%	—
Steering Angle Sensor Value (Right +) (Left -)	Steering angle sensor value signal	deg	—
Longitudinal G Sensor Value (Deceleration +) (Acceleration -)	Longitudinal acceleration	m/s^2	—
Brake Fluid Target Pressure	Target value of brake fluid pressure	MPa	—
Master Cylinder Actual Fluid Pressure	Brake pressure	MPa	—
Right Front Wheel W/C Actual Fluid Pressure	Right front wheel cylinder fluid pressure	MPa	—
Left Front Wheel W/C Actual Fluid Pressure	Left front wheel cylinder fluid pressure	MPa	—
Target Torque	Target torque command signal	Nm	—
Engine Torque	Actual engine shaft torque value	Nm	—
AT rapid start prevention, engine torque down command value	AT false start prevention control, engine torque down command value Or AT false start (reverse) prevention control, engine torque down command value	Nm	—

Display	Content	Unit of measure	Reference
Warning Code	Warning code signal	—	• No alarm • HALT • Brake More or Following Distance or Pre-Collision Brake(1st) • ACC Cancel • Pre-Collision Brake (2nd Braking) • LDW/Privent • Lane Sway Warning • L_Keep Cancel • Detection/Lost of Vehicle Beep • Lead Vehicle Start Alert • Steering Wheel Not Held • Pre-Collision Throttle Management
Brake SW Input	Brake switch signal status	—	• OFF • ON
Brake Lamp SW (BIU)	Brake light switch signal status	—	• OFF • ON
Brake Lamp SW (VDC)	Brake light switch status	—	• OFF • ON
Current Gear Position	Current gear position signal	—	• P • R • Auto Neutral • 6 • 5 • 4 • 3 • 2 • 1 • N
SI Drive Mode	SI-DRIVE mode (display)	—	• OFF • S# • I • S
Trip Count	Number of ignition ON	times	—
Count	Original counts identification information	—	—
Time Count [msec]	Elapsed time after ignition switch ON	ms	—
Automatic Adjustment Status	Automatic adjustment status	—	—
Lane Recognition Status	Display of lane recognition status	—	• Other than follows: 00 • Both lanes are recognized at 40 km/h (25 MPH) or more: 03 • Both lanes are recognized at 65 km/h (40 MPH) or more: 05
Distance from Leading Vehicle	Display of distance from preceding vehicle	m	—

Display	Content	Unit of measure	Reference
EyeSight Temporary 0 Count	Occurrence count of EyeSight temporary stop 0	times	Refer to “List of contents for camera temporary stop”. <Ref. to ES(diag)-77, LIST OF CONTENTS FOR CAMERA TEMPORARY STOP, LIST, EyeSight Temporary Code(s) Display.>
EyeSight Temporary 1 Count	Occurrence count of EyeSight temporary stop 1	times	
EyeSight Temporary 2 Count	Occurrence count of EyeSight temporary stop 2	times	
EyeSight Temporary 3 Count	Occurrence count of EyeSight temporary stop 3	times	
EyeSight Temporary 4 Count	Occurrence count of EyeSight temporary stop 4	times	
EyeSight Temporary 5 Count	Occurrence count of EyeSight temporary stop 5	times	
EyeSight Temporary 6 Count	Occurrence count of EyeSight temporary stop 6	times	
EyeSight Temporary 7 Count	Occurrence count of EyeSight temporary stop 7	times	
EyeSight Temporary 8 Count	Occurrence count of EyeSight temporary stop 8	times	
EyeSight Temporary 9 Count	Occurrence count of EyeSight temporary stop 9	times	
EyeSight Temporary 10 Count	Occurrence count of EyeSight temporary stop 10	times	
EyeSight Temporary 11 Count	Occurrence count of EyeSight temporary stop 11	times	
EyeSight Temporary 12 Count	Occurrence count of EyeSight temporary stop 12	times	
EyeSight Temporary 13 Count	Occurrence count of EyeSight temporary stop 13	times	
EyeSight Temporary 14 Count	Occurrence count of EyeSight temporary stop 14	times	
EyeSight Temporary 15 Count	Occurrence count of EyeSight temporary stop 15	times	
EyeSight Temporary 16 Count	Occurrence count of EyeSight temporary stop 16	times	
EyeSight Temporary 17 Count	Occurrence count of EyeSight temporary stop 17	times	
EyeSight Temporary 18 Count	Occurrence count of EyeSight temporary stop 18	times	
EyeSight Temporary 19 Count	Occurrence count of EyeSight temporary stop 19	times	
EyeSight Temporary 20 Count	Occurrence count of EyeSight temporary stop 20	times	
EyeSight Temporary 21 Count	Occurrence count of EyeSight temporary stop 21	times	
EyeSight Temporary 22 Count	Occurrence count of EyeSight temporary stop 22	times	
EyeSight Temporary 23 Count	Occurrence count of EyeSight temporary stop 23	times	
EyeSight Temporary 24 Count	Occurrence count of EyeSight temporary stop 24	times	
EyeSight Temporary 25 Count	Occurrence count of EyeSight temporary stop 25	times	
EyeSight Temporary 26 Count	Occurrence count of EyeSight temporary stop 26	times	
EyeSight Temporary 27 Count	Occurrence count of EyeSight temporary stop 27	times	
EyeSight Temporary 28 Count	Occurrence count of EyeSight temporary stop 28	times	
EyeSight Temporary 29 Count	Occurrence count of EyeSight temporary stop 29	times	
EyeSight Temporary 30 Count	Occurrence count of EyeSight temporary stop 30	times	
EyeSight Temporary 31 Count	Occurrence count of EyeSight temporary stop 31	times	
Camera Failure Check 1	Camera failure supplementary information	—	—
Camera Failure Check 2			
Camera Failure Check 3			
Camera Failure Check 4			
Camera Failure Check 5			
Cruise Control Main Status (ECM → EyeSight)	Status of the cruise control main switch (cruise switch)	—	• OFF • ON
Main Cruise Control Display (EyeSight → Combination Meter)	CRUISE indicator ON signal	—	• OFF • ON
Cruise Control Main Display (ECM → EyeSight)	CRUISE indicator ON request signal	—	• OFF • ON
Cruise Control SW (EyeSight → ECM)	EyeSight steering switch information	—	• OFF • Main ON • SET/- (Shallow) ON • RES/+ (Shallow) ON • Open

Display	Content	Unit of measure	Reference
Cruise Control SW Voltage (Port14)	Cruise control switch input voltage value on Port 14	V	Normal voltage range when each switch is operated • No operation (all switch operations OFF): 3.6 — 4.5 • CRUISE ON: 0.0 — 0.5 • Lane keep ON: 3.6 — 4.5 • SET/– ON: 0.6 — 1.5 • Vehicle distance setting ON: 1.6 — 2.5 • RES/+ ON: 2.6 — 3.5
Cruise Control SW Voltage (Port16)	Cruise control switch input voltage value on Port 16	V	Normal voltage range when each switch is operated • No operation (all switch operations OFF): 2.6 — 5.0 • CRUISE ON: 2.6 — 5.0 • Lane keep ON: 0.0 — 2.5 • SET/– ON: 2.6 — 5.0 • Vehicle distance setting ON: 2.6 — 5.0 • RES/+ ON: 2.6 — 5.0
Cruise Control Set Status (ECM → EyeSight)	Status of the cruise control set status	—	• Released • Set
Cruise Control Set Display (EyeSight → Combination Meter)	SET indicator illumination signal	—	• OFF • ON
Cruise Control Set Display (ECM → EyeSight)	Request signal for SET indicator illumination	—	• OFF • ON
Cruise Control Mode	Cruise control mode signal	—	• ACC Mode • CC Mode
Pre-Collision Brake OFF Display Signal	Pre-collision brake OFF indicator light illumination command signal	—	• OFF • ON
Pre-Collision Brake OFF SW	Pre-collision brake OFF switch status	—	• OFF • ON • Disconnected
Pre-Collision Brake Function	ON/OFF status of pre-collision brake function	—	• OFF • ON
Lane Departure Warning OFF Indicator	Lane departure warning OFF indicator light illumination command signal	—	• OFF • ON
Lane Departure Warning Function	ON/OFF status of the lane departure warning function	—	• OFF • ON
Lane Departure Warning OFF SW	Lane departure warning OFF switch status	—	• OFF • ON • Disconnected
Vehicle Speed Set Display	Cruise control set vehicle speed set value	• km/h • MPH	—
Cruise Control Set Speed	Set vehicle speed value for cruise control	• km/h • MPH	—
Drive Wheel Average Speed	Average wheel speed signal	km/h	—
Front Left Wheel Speed	Front left wheel speed signal	km/h	—
Front Right Wheel Speed	Front right wheel speed signal	km/h	—

Display	Content	Unit of measure	Reference
Rear Left Wheel Speed	Rear left wheel speed signal	km/h	—
Rear Right Wheel Speed	Rear right wheel speed signal	km/h	—
Wheel Speed (Pulse)	Wheel speed pulse counter signal	—	—
CVT Target Revolution Speed Control Signal	CVT target revolution speed command signal	—	• OFF • ON
CVT Target Revolution Speed Value	CVT target revolution speed	rpm	—
Transmission Turbine Speed	AT turbine speed signal	rpm	—
Driver Torque Request	Torque value requested by driver	Nm	—
Accelerator wide opening judgment status	Signal that judges the accelerator opening angle to be “wide”	—	• Not established • Established
Intake Manifold Pressure Absolute	Engine intake manifold pressure	mmHg	—
Gear Ratio	Current total reduction ratio signal	—	—
Atmospheric Pressure	Atmospheric pressure signal	mmHg	—
Adaptive Cruise Control Brake Control Status	Brake control permission signal for adaptive cruise control	—	• OFF • ON
Adaptive Cruise Control Braking Signal	Actuation signal of brake control	—	• Not performed • Perform
Adaptive Cruise Control Braking (ACC or Driver) Status (for CVT)	Adaptive cruise control braking (driver or control) signal (for CVT)	—	• No Braking • Braking applied
Brake Lamp Command	Brake lamp light up command signal	—	• OFF • ON
Hill Down Mode	Hill down mode signal	—	• Releasing • Going Down Grade
HOLD Display	HOLD display illumination signal (stop and hold)	—	• OFF • ON
READY Display	READY indicator illumination signal	—	• OFF • ON
Vehicle Distance Setting Display	Vehicle distance setting indicator signal	—	• Follow Far Distance • Follow Medium Distance • Follow Close Distance • Conventional Cruise Control
Preceding vehicle indication	Preceding vehicle indicator signal	—	• OFF • ON • BLINK
Distance from Leading Vehicle	Preceding vehicle distance signal	m	• 0 <= x < 5 • 5 <= x < 10 • 10 <= x < 15 • 15 <= x < 20 • 20 <= x < 25 • 25 <= x < 30 • 30 <= x < 35 • 35 <= x < 40 • 40 <= x < 45 • 45 <= x < 50 • 50 <= x < 55 • 55 <= x < 60 • 60 <= x < 65 • 65 <= x < 70 • 70 <= x < 75 • 75 <= x
Adaptive Cruise Control OFF Display	OFF indicator signal	—	• OFF • ON • BLINK

Display	Content	Unit of measure	Reference
EPB Activate Request	Electronic parking brake activate request	—	• OFF • ON
EPB Operation Status	Electronic parking brake operation status signal	—	• Error • Released • Operate • Operating • Releasing • Dynamic Parking
EPB active indicator	Electronic parking brake operating light status signal	—	• OFF • ON • BLINK
EPB Warning Lamp	Electronic parking brake warning light status signal	—	• OFF • ON • BLINK
EPB Buzzer	Electronic parking brake buzzer beeping	—	• No Sound • Change • Not Change • Cancel
Dynamic Parking Status	Dynamic parking signal	—	• OFF • ON
Adaptive Cruise Control Stop Hold Status	Signal of stop and hold status before reservation	—	• OFF • Stop is held
EPB Hill Hold Prohibited	Hill hold prohibition signal	—	• ON • OFF
Hill Hold Lamp	Hill hold function ON light status signal	—	• OFF • ON
Idle SW for EPB Control	Idle switch signal for electronic parking brake control	—	• OFF • ON
Hill Hold Operation Status	Hill hold operation status signal	—	• Not Operating • Operate
Fuel Cut Control Status	Fuel cut control permission signal	—	• ON • OFF
All Cylinder Fuel Cut Status	Fuel cut signal	—	• Normal • Cut
Low Speed Following	Low speed following mode signal	—	• No • Yes
Display for Adaptive Cruise Control Cancel Reason	Display for adaptive cruise control cancel reason	—	• No Manual Mode or No D Position • Door Open • Driver Seat Belt Unfastened • Parking Brake Operation • VDC SW OFF • Steering Operation • High Speed • ABS Operation • VDC Operation • Road Surface Steep Slope • Other
Adaptive Cruise Control Forced Cancel	Adaptive cruise control forced cancel signal	—	• No • Yes
EyeSight Deceleration Request (VDC)	Deceleration request reception status signal from stereo camera	—	• Not yet received • Receive

Display	Content	Unit of measure	Reference
Parking Brake SW	Parking brake switch signal status	—	• OFF • ON
Driver Brake Detection	Driver brake detection signal	—	• OFF • ON
Driver Door Status	Driver's door switch signal status	—	• Close • Open
Passenger Door Front Status	Passenger's door switch signal status	—	• Close • Open
Right Rear Door Status	Right rear door switch signal status	—	• Close • Open
Left Rear Door Status	Left rear door switch signal status	—	• Close • Open
Driver Seat Belt Status	Status of driver's seat belt	—	• OFF • ON
VDC Over Steer Control	VDC operating status signal 1	—	• Not Controlling • Controlling
VDC Under Steer Control	VDC operating status signal 2	—	• Not Controlling • Controlling
ABS Operation	Operating status signal of ABS	—	• Not Operating • Operate
TCS Operation	Operating status signal of TCS	—	• Not Operating • Operate
RMI Operation	RMI operation signal	—	• Not Controlling • Controlling
Brake Control Actuation	Brake operation permission signal	—	• Not performed • Perform
Ignition SW ON Count When Pre-Collision Throttle Management at The Latest	Ignition switch ON count when AT false start prevention control is activated (the latest)	times	—
Ignition SW ON Count When Pre-Collision Throttle Management at The 1 Time before	Ignition switch ON count when AT false start prevention control is activated (1 time before)	times	—
Ignition SW ON Count When Pre-Collision Throttle Management at The 2 Time before	Ignition switch ON count when AT false start prevention control is activated (2 times before)	times	—
Ignition SW ON Count When Following Distance Warning at The Latest	Ignition switch ON count when the vehicle distance alarm is activated (the latest)	times	—
Ignition SW ON Count When Following Distance Warning at The 1 Time before	Ignition switch ON count when the vehicle distance alarm is activated (1 time before)	times	—
Ignition SW ON Count When Following Distance Warning at The 2 Time before	Ignition switch ON count when the vehicle distance alarm is activated (2 times before)	times	—
Ignition SW ON Count When Pre-Collision 1st Braking at The Latest	Ignition switch ON count when the pre-collision 1st braking is operated (at the latest)	times	—
Ignition SW ON Count When Pre-Collision 1st Braking at The 1 Time before	Ignition switch ON count when the pre-collision 1st braking is operated (1 times before)	times	—
Ignition SW ON Count When Pre-Collision 1st Braking at The 2 Time before	Ignition switch ON count when the pre-collision 1st braking is operated (2 times before)	times	—
Ignition SW ON Count When Pre-Collision 1st Braking at The 3 Time before	Ignition switch ON count when the pre-collision 1st braking is operated (3 times before)	times	—

Display	Content	Unit of measure	Reference
Ignition SW ON Count When Pre-Collision 2nd Braking at The Latest	Ignition switch ON count when the pre-collision 2nd braking is operated (at the latest)	times	—
Ignition SW ON Count When Pre-Collision 2nd Braking at The 1 Time before	Ignition switch ON count when the pre-collision 2nd braking is operated (1 time before)	times	—
Ignition SW ON Count When Pre-Collision 2nd Braking at The 2 Time before	Ignition switch ON count when the pre-collision 2nd braking is operated (2 times before)	times	—
Ignition SW ON Count When Pre-Collision 2nd Braking at The 3 Time before	Ignition switch ON count when the pre-collision 2nd braking is operated (3 times before)	times	—
Pre-Collision Brake Assist Command	Pre-collision brake assist command signal	—	• OFF • ON
Pre-Collision Brake Assist Operation	Pre-collision brake assist request reception status	—	• Not Operating • Operate
Pre-Collision Brake Action	Pre-collision brake command signal	—	• OFF • ON
Pre-Collision Brake Operation	Pre-collision brake operation status	—	• Not Operating • Operate
Pre-Collision Brake Assist Threshold	Pre-collision brake threshold	—	• Normal • Threshold 1 • Threshold 2 • No Request
Risk Avoidance Assist standby Command	Pre-collision steering assist, command signal	—	• Normal VDC State • AvoidRiskCmd
Risk Avoidance Assist Standby Status	Pre-collision steering assist stand-by status	—	• Normal VDC State • AvoidRiskStb
Risk Avoidance Assist State	Pre-collision steering assist, characteristic signal	—	• Normal • Parameter 1 • Parameter 2 • Invalid
Traction Mode	Traction mode signal	—	• OFF • ON
Rear Wheel Slip Control Operation	Rear wheel slip detection signal	—	• Not Operating • Operating
EyeSight Initialization(RAB)	Signal notifying the RAB CM of whether the EyeSight has already started	—	• Not Applicable • Completed
RAB Function Setting Existence	Reverse Automatic Braking function, presence/absence information of the RAB alarm function (RAB → EyeSight)	—	• No Setting • Setting
RAB Fail Indication(EyeSight → RAB)	RAB function stop command information to RAB CM due to EyeSight failure	—	• No Indication • Indication
RAB Sonar System Failure(RAB → EyeSight)	Reverse Automatic Braking function, failure status of the RAB alarm function (RAB → EyeSight)	—	• Normal • Sonar Failure • System Failure • Not Applicable
RAB OFF Indication(EyeSight → RAB)	Reverse Automatic Braking function forced stop signal to RAB CM due to an EyeSight temporary stop etc.	—	• RAB ON • RAB Force OFF
Recession Control Permission(RAB)	Information of whether the Reverse Automatic Braking control is executable or not	—	• prohibition • Permit
RAB Acceleration Suppression Control State(EyeSight → RAB)	Acceleration suppression control status of EyeSight by the command from RAB CM	—	• No Control • Precom • Recruitment

Display	Content	Unit of measure	Reference
RAB Brake Control State (EyeSight → RAB)	Brake control status of EyeSight by the command from RAB CM	—	• No Control • Precompression • Brake Control In • Stop holding • Gradual Decrease
RAB Setting Information	Reverse Automatic Braking function, presence/absence information of the RAB alarm function (EyeSight → RAB)	—	• OFF • ON
Sonar System Image Display(RAB)	RAB display hide status notification for MFD	—	• Display • No Display
RAB Function OFF Information	Reverse Automatic Braking function OFF status	—	• ON • RAB Function OFF Information
Audible Alarm function OFF Information(RAB)	RAB alarm function OFF status	—	• ON • OFF
RAB Sonar System Failure (EyeSight → RAB)	Reverse Automatic Braking function, failure status of the RAB alarm function (EyeSight → RAB)	—	• Normal • Sonar Failure • System Failure • Not Applicable
Sonar System HALT(RAB)	Reverse Automatic Braking function, temporary stop status of the RAB alarm function (EyeSight → RAB)	—	• Normal • Fouling • Detection Error • Not Applicable
RAB Function pause Do Not Disturb	Disabled status of the Reverse Automatic Braking function temporary OFF switch for MFD	—	• Ready • Do Not Disturb
RAB Alarm pause Do Not Disturb	Disabled status of the RAB alarm function temporary OFF switch for MFD	—	• Ready • Do Not Disturb
Rear Sonar Distance Alarm Information (Rear Left Corner)	Rear sonar: Distance alert information of RLCorner (left corner, 3 stages)	—	• No Obstacle • Far • Middle • Short
Rear Sonar Distance Alarm Information (Rear Right Corner)	Rear sonar: Distance alert information of RRCorner (right corner, 3 stages)	—	• No Obstacle • Far • Middle • Short
Rear Sonar Distance Alarm Information (Rear Left Corner)	Rear sonar: Distance alert information of RLSide (left side, 3 stages)	—	• No Obstacle • Far • Middle • Short
Rear Sonar Distance Alarm Information (Rear Right Corner)	Rear sonar: Distance alert information of RRSide (right side, 3 stages)	—	• No Obstacle • Far • Middle • Short
Rear Sonar Distance Alarm Information (Rear Center)	Rear sonar: Distance alert information of RCenter (center, 4 stages)	—	• No Obstacle • Far • Middle • Short
RAB Alarm Level	Reverse Automatic Braking function, alarm sound level information of the RAB alarm function	—	• OFF • LEVEL1 • LEVEL2 • LEVEL3 • Continuous Sound
RAB Alarm Interrupt Display Instruction	Alarm interruption display information when the Reverse Automatic Braking function is activated	—	• No display • Backward Note • Encourage Stepping Brake • Not Applicable

Display	Content	Unit of measure	Reference
Active Lane Keep System Main Display	Lighting request of lane keep display	—	• OFF • ON
Left-Line Display (Solid Line)	Request signal for left-line (white) illumination	—	• OFF • ON
Right-Line Display (Solid Line)	Request signal for right-line (white) illumination	—	• OFF • ON
Lane Blink	Request signal for lane (solid line) blinking	—	• OFF • Flashing at The Same Time • Flashing Alternately
Steering Wheel Display	Lane deviation warning light (steering wheel icon) illumination signal	—	• OFF • ON • Flashing1 • Flashing2
Turn SW (Left)	Operation status of left turn switch	—	• OFF • ON
Turn SW (Right)	Operation status of right turn switch	—	• OFF • ON
Calibration (EPS)	Calibration signal (not used)	—	• Not set • Set
Steering Control Active	Lane keep control operation instruction	—	• Not Operating • Operate
Steering Assistance Operation Status	Lane keep control operation status	—	• Normal • Assist stop • Limited Assist
EyeSight Recognition Status (EPS)	EyeSight recognition status signal	—	• Not Detect • Detect
Absolute Steering Angle Detection	Absolute angle detection signal (not used)	—	• No detection • detection
Steering Angle Sensor Signal	Steering angle sensor signal	deg	—
Yaw Rate Value (Right -) (Left +)	Yaw rate value signal	rad/sec	—
Lateral G Sensor Value (Right -) (Left +)	Lateral acceleration signal	m/s^2	—
Steering Control Torque Target	Steering control instruction signal	Nm	—
Additional Steering Torque(Active Lane Keep System)	Additional steering torque signal (lane keep)	Nm	—
EPS Motor Operation Current	Motor operation current value	A	—
EPS Torque	Torque sensor main value	Nm	—
EPS Torque (Detailed)	Torque sensor value (resolution improved)	Nm	—
EPS Motor Operation Current (Steering Support High Speed)	Motor operation current value (high speed steering support)	Arms	—
Target Current Value (EPS)	Final target current value	Arms	—
EPS Motor Absolute Angle	Motor absolute angle	deg	—
Driver Throttle Input Override Control	Instruction signal of AT false start prevention control Or instruction signal of AT false start (reverse) prevention control	—	• OFF • ON
Adaptive Cruise Control Torque Down	Torque down prohibition signal of stereo camera	—	• ON • OFF
Initial Inspection Distance Accuracy Rate	Accuracy rate of initial inspection distance	%	—
Initial inspection distance	Initial inspection distance	—	—
Initial Optical Axis (X-Axis)	Initial optical axis (X-axis)	pix	—
Initial Optical Axis (X-Axis2)	Initial optical axis (X-axis 2)	pix	—
Initial Optical Axis (Y-Axis)	Initial optical axis (Y-axis)	pix	—

Display	Content	Unit of measure	Reference
Initial Left Image Rotation Deviation Correction Value	Initial left image, rotation deviation correction value	—	—
Initial Left Image Vertical Deviation Correction Value	Initial left image, vertical deviation correction value	—	—
Initial Right Image Rotation Deviation Correction Value	Initial right image, rotation deviation correction value	—	—
Initial Distance Correction Value	Initial distance correction value	—	—
Initial Invalid Distance Data Count	Number of initial invalid distance data	—	—
Initial Other Inspection	Another initial inspection	—	—
Initial Error Code	Initial error code	—	—
DC-Ratio	Accuracy rate of inspection distance	%	—
Distance	Inspection distance	—	—
Optical Axis (X-Axis)	Optical axis (X-axis)	pix	—
Optical Axis (X-Axis2)	Optical axis (X-axis 2)	pix	—
Optical Axis (Y-Axis)	Optical axis (Y-axis)	pix	—
Left Image Rotation Deviation Correction Value	Left image, rotation deviation correction value	—	—
Left Image Vertical Deviation Correction Value	Left image, vertical deviation correction value	—	—
Right Image Rotation Deviation Correction Value	Right image, rotation deviation correction value	—	—
Distance Correction Value	Distance correction value	—	—
Invalid Distance Data Count	Number of invalid distance data	—	—
Other Inspection	Other inspection	—	—
Error Code	Error code detailed information	—	—
Camera Battery Open Status (+B)	Display of stereo camera battery (+B circuit) status	—	• Connect • Disconnected
Image ON/OFF status	ON/OFF status of present image sensor	—	• OFF • ON
Camera Temperature (Current)	Current temperature display of stereo camera internal circuit	°C	—
Camera temperature, operation status	Camera temperature and operation status	—	• Normal • High Temp. • Low Temp.
Camera Temperature (Previous Maximum Value)	Display of stereo camera internal circuit temperature (past MAX value)	°C	—
Ignition SW ON Count When Camera Temperature (Previous Maximum Value)	Ignition switch ON count when stereo camera internal circuit temperature is displayed (past MAX value)	times	—
Camera Temperature (Previous Minimum Value)	Display of stereo camera internal circuit temperature (past MIN value)	°C	—
Ignition SW ON Count When Camera Temperature (Previous Minimum Value)	Ignition switch ON count when stereo camera internal circuit temperature is displayed (past MIN value)	times	—
EyeSight Temporary 0 Continuation Count	Continuation count of EyeSight temporary stop 0	times	—
EyeSight Temporary 1 Continuation Count	Continuation count of EyeSight temporary stop 1	times	—
EyeSight Temporary 2 Continuation Count	Continuation count of EyeSight temporary stop 2	times	—
EyeSight Temporary 3 Continuation Count	Continuation count of EyeSight temporary stop 3	times	—

Display	Content	Unit of measure	Reference
EyeSight Temporary 4 Continuation Count	Continuation count of EyeSight temporary stop 4	times	—
EyeSight Temporary 5 Continuation Count	Continuation count of EyeSight temporary stop 5	times	—
EyeSight Temporary 6 Continuation Count	Continuation count of EyeSight temporary stop 6	times	—
EyeSight Temporary 7 Continuation Count	Continuation count of EyeSight temporary stop 7	times	—
EyeSight HALT Code	EyeSight halt code signal	—	• OFF • E1(No Camera View) • E2(Out of Temp. Range) • E3(Other)
Ambient Air Temperature(Indication)	Ambient air temperature signal	°C	—
Ambient Air Temperature(Control)	Outside temperature for control signal	°C	—
Head lamp : small	Headlight small signal status	—	• OFF • ON
Headlight SW (LO)	Headlight LO switch operation status	—	• OFF • ON
Head Lamp High Beam	Headlight Hi beam signal status	—	• OFF • ON
Wiper SW (Front)	Front wiper switch operation status	—	• OFF • ON
VDC OFF SW	VDC OFF signal	—	• OFF • ON
VDC "OFF" Indicator Status	VDC OFF indicator status	—	• OFF • ON
EyeSight Input Control Suspended Status (EPS)	Overheat protection limit signal	—	• No detection • detection
Camera Failure Real-Time Check (At The Time of Failure)	Camera failure real-time information at the time of failure	—	—
Camera Temperature (At The Time of Failure)	Camera temperature sensor at the time of failure	°C	—
Image ON/OFF Status/Sensor Ready Status (At The Time of Failure)	Image ON/OFF status at the time of failure	—	• OFF • ON
Adaptive Cruise Control Failure (EyeSight → Combination Meter)	Stereo camera failure signal for combination meter	—	• Normal • Abnormal
VDC Sensor Failure	VDC sensor failure signal	—	• Normal • Abnormal
ABS System Failure	ABS system failure signal	—	• Normal • Abnormal
Vehicle Speed Sensor Failure	Vehicle speed sensor failure signal	—	• Normal • Abnormal
Adaptive Cruise Control Failure (EyeSight → VDC)	Failure signal of stereo camera to VDC control module	—	• Normal • Abnormal
EyeSight Reception (VDC)	Failure signal of stereo camera	—	• Not yet received • Receive
EPB Error Status	Electronic parking brake error information signal	—	• Normal • Stroke Too Short • Urgent Release • Pulling Power Abnormal

Display	Content	Unit of measure	Reference
Hill Start Assist Operation Status	Hill start assist operation status signal	—	• Not Operating • Operate
EyeSight Failure	EyeSight failure signal	—	• Normal • Abnormal
Engine Failure	Engine failure signal	—	• Normal • Abnormal
Transmission Failure	TCM failure signal	—	• Normal • Abnormal
EyeSight Failure (EPS → EyeSight)	Failure signal for EyeSight (EPS)	—	• Normal • Abnormal
Adaptive Cruise Control Failure (EyeSight → EPS)	Stereo camera failure signal for EPS control module	—	• Normal • Abnormal
ETC Failure	Electronic throttle control failure signal	—	• Normal • Abnormal
EEPROM Failure	Failure signal of combination meter	—	• Normal • Abnormal
Brake Lamp SW Fail Status	Brake light switch failure signal	—	• Normal • Abnormal
Brake Lamp Relay Drive	Brake light relay drive status signal	—	• Not Operating • Operating
EyeSight Communication Error (VDC)	Stereo camera communication failure signal	—	• Normal • Abnormal
Judgment of Lost Communication with Adaptive Cruise Control ECM CAN	No-receive signal of EyeSight CAN data	—	• Normal • Not Receive
EyeSight Received Data (ECM)	NG signal of stereo camera data	—	• Normal • Abnormal
Steering Angle Sensor Status	Steering angle sensor status	—	• Normal • Abnormal
Steering Angle Sensor Error Code	Steering angle sensor error code signal	—	• Normal • EEPROM Abnormal • IG Voltage Drop • Counter Overflow • ROM Trouble • RAM Trouble • Magnetometric Sensor Trouble
EyeSight Customization Change Request (Combination Meter → EyeSight)	EyeSight customization change request signal	—	• OFF • ON
EyeSight Customization Reset Request (Combination Meter → EyeSight)	EyeSight customization reset request signal	—	• OFF • ON
Target Gear Position	Target gear position signal	—	• P • R • Auto Neutral • 6 • 5 • 4 • 3 • 2 • 1 • N

Display	Content	Unit of measure	Reference
Transmission Shift Control Mode	TCM shift control mode signal	—	• Position Fixed Mode • Gear Fixed Mode • Position Fixed Temporary • Gear Fixed Temporary • M Position • D Range • ” — ” display
Shift Position	Shift position information	—	• Error • P • R • N • D • D-S • 3 • 2 • 1
CVT 8-speed Mode Control	CVT multi-stage speed control signal when EyeSight operates	—	• Not Operating • Operate
Lock Up Status	Lock up information	—	• Converter • Slip Lock Up • Lock Up
Brake Lamp Status	Brake light state signal	—	• OFF • ON
Brake Vectoring Control Operation	Active torque vectoring control operation status	—	• Not Operating • Operate
EyeSight Specification	EyeSight judgment signal	—	• No • Yes
Vehicle Height	Vehicle height information	—	• Unclear • OBK • Standard
Fuel Type	Fuel type	—	• Gasoline • Diesel
Engine Displacement	Engine displacement	—	• 1500 cc • 2000 cc • 2500 cc • 3000 cc • 3600 cc • 1600 cc
Camshaft Type	Engine type	—	• SOHC • DOHC
Number of Cylinders	Number of cylinder for engine	—	• 4 Cylinder • 6 Cylinder
Turbo	Presence or absence of turbo	—	• Turbo • NA
Vehicle Type	Vehicle type information signal	—	• Impreza Type • Forester Type • Exiga Type • Legacy/Outback Type • WRX Type

Display	Content	Unit of measure	Reference
Destination Code	Destination code signal	—	• Japan • U.S(U4,U5,U6) • Canada(C0) • EURO(Left)(EC,EA,E2,EL) • General(Left)(K4) & Latin America(C4) • Middle & Near East(KS) • U.K(EK) • Thailand/Singapore(ER,EN) • Australia(KA,KC) • China(EH) • South Korea(C6)
WGN/SDN	Vehicle type signal	—	• SEDAN • WAGON
Drive System	Driving method of AWD	—	• AWD • VTD • 2WD
AT Type	AT type	—	• CVT(TR58) • 4AT • 5AT • 6AT • CVT(TR690)
Idling Stop Specification	Auto Start Stop judgment signal	—	• No • Yes
EPB Check 1	Electronic parking brake failure information signal	—	• Abnormal • Normal
EPB Check 2	Electronic parking brake failure information signal	—	• Abnormal • Normal
EPB Check 3	Electronic parking brake failure information signal	—	• Abnormal • Normal
Steering Control Check 1	Stereo camera transmission data abnormal	—	• Normal • Abnormal
Steering Control Check 2	Steering control instruction value from stereo camera abnormal	—	• Normal • Abnormal
Active Lane Keep System Standby Status	Active lane keep assist stand-by status	—	• NG • OK
Lane Departure Prevention Assist Canceled Reason Control Check	Active lane keep, reason of cancelling the lane departure prevention assist	—	—
Active Lane Keep System Canceled Reason Control Check	Reason of cancelling the lane keep assist (system failure)	—	—
Active Lane Keep System Recognition Check 1	Lane keep assist - recognition data detailed information 1	—	—
Active Lane Keep System Recognition Check 2	Lane keep assist - recognition data detailed information 2	—	—
Active Lane Keep System Recognition Check 4	Lane keep assist - recognition data detailed information 4	—	—
Active Lane Keep System Recognition Check 6	Lane keep assist - recognition data detailed information 6	—	—
Lane Departure Prevention Assist Control Check 3	Lane departure prevention assist - control data detailed information 3	—	—
Active Lane Keep System Control Check 3	Lane keep assist - control data detailed information 3	—	—

Display	Content	Unit of measure	Reference
Active Lane Keep System Control Check 4	Lane keep assist - control data detailed information 4	—	—
Active Lane Keep System Control Check 5	Lane keep assist - control data detailed information 5	—	—
Camera Battery Voltage (At The Time of EyeSight Temporary)	ECM power supply voltage (at an EyeSight temporary stop)	V	—
Camera Temperature Sensor (At The Time of EyeSight Temporary)	Camera temperature (at an EyeSight temporary stop)	°C	—
Automatic Adjustment Status Check (At The Time of EyeSight Temporary)	Automatic adjustment status (at an EyeSight temporary stop)	—	—
Camera Adjustment Value 1 (At The Time of EyeSight Temporary)	Camera adjustment value detailed information 1 (at an EyeSight temporary stop)	—	—
Camera Adjustment Value 2 (At The Time of EyeSight Temporary)	Camera adjustment value detailed information 2 (at an EyeSight temporary stop)	—	—
Camera Adjustment Value 3 (At The Time of EyeSight Temporary)	Camera adjustment value detailed information 3 (at an EyeSight temporary stop)	—	—
EyeSight Temporary Detail Check 1	EyeSight temporary stop, detailed information 1	—	—
EyeSight Temporary Detail Check 2	EyeSight temporary stop, detailed information 2	—	—
EyeSight Temporary Detail Check 3	EyeSight temporary stop, detailed information 3	—	—
EyeSight Temporary Detail Check 4	EyeSight temporary stop, detailed information 4	—	—
Details Check 1 (At The Time of EyeSight Temporary)	Detailed information 1 at the time of EyeSight temporary stop	—	—
Details Check 2 (At The Time of EyeSight Temporary)	Detailed information 2 at the time of EyeSight temporary stop	—	—
Details Check 3 (At The Time of EyeSight Temporary)	Detailed information 3 at the time of EyeSight temporary stop	—	—
Details Check 4 (At The Time of EyeSight Temporary)	Detailed information 4 at the time of EyeSight temporary stop	—	—
Camera Temperature Operation Status (At The Time of EyeSight Temporary)	Stereo camera operation status at the time of EyeSight temporary stop	—	• Normal • High Temp. • Low Temp.
Camera Failure Real-Time Check	Current camera failure information	—	—
Camera Failure Details Cumulative Check 1	Camera failure details, cumulative information 1	—	—
Camera Failure Details Cumulative Check 2	Camera failure details, cumulative information 2	—	—
Camera Failure Details Cumulative Check 3	Camera failure details, cumulative information 3	—	—
Camera Failure Details Cumulative Check 4	Camera failure details, cumulative information 4	—	—
Camera Failure Details Cumulative Check 5	Camera failure details, cumulative information 5	—	—
Camera Failure Details Cumulative Check 6	Camera failure details, cumulative information 6	—	—
Camera Failure Details Cumulative Check 7	Camera failure details, cumulative information 7	—	—
Camera Failure Details Cumulative Check 8	Camera failure details, cumulative information 8	—	—
Camera Failure Details Cumulative Check 9	Camera failure details, cumulative information 9	—	—
Camera Failure Details Cumulative Check 10	Camera failure details, cumulative information 10	—	—

Display	Content	Unit of measure	Reference
Camera Failure Details Cumulative Check 11	Camera failure details, cumulative information 11	—	—
Camera Failure Details Cumulative Check 12	Camera failure details, cumulative information 12	—	—
Camera Failure Details Cumulative Check 13	Camera failure details, cumulative information 13	—	—
Camera Failure Details Cumulative Check 14	Camera failure details, cumulative information 14	—	—
Camera Temperature Abnormality Ignition SW ON Count Check 1	Camera temperature abnormal IG ON count 1	times	—
Camera Temperature Abnormality Ignition SW ON Count Check 2	Camera temperature abnormal IG ON count 2	times	—
Camera Temperature Abnormality Ignition SW ON Count Check 3	Camera temperature abnormal IG ON count 3	times	—
Camera Temperature Abnormality Ignition SW ON Count Check 4	Camera temperature abnormal IG ON count 4	times	—
Camera Temperature Abnormality Ignition SW ON Count Check 5	Camera temperature abnormal IG ON count 5	times	—
Camera Adjustment Value 1	Camera adjustment value detailed information 1	—	—
Camera Adjustment Value 2	Camera adjustment value detailed information 2	—	—
Camera Adjustment Value 3	Camera adjustment value detailed information 3	—	—
Camera Status Check 1	Camera status detailed information 1	—	—
Camera Status Check 2	Camera status detailed information 2	—	—
Camera Status Check 3	Camera status detailed information 3	—	—
Camera Status Check 4	Camera status detailed information 4	—	—
Camera Status Check 5	Camera status detailed information 5	—	—
Camera Status Check 6	Camera status detailed information 6	—	—
Camera Status Check 7	Camera status detailed information 7	—	—
Camera Status Check 8	Camera status detailed information 8	—	—
Camera Status Check 9	Camera status detailed information 9	—	—
Camera Status Check 10	Camera status detailed information 10	—	—
Camera Status Check 11	Camera status detailed information 11	—	—
Camera Status Check 12	Camera status detailed information 12	—	—
Camera Status Check 13	Camera status detailed information 13	—	—
Camera Status Check 14	Camera status detailed information 14	—	—
Camera Status Check 15	Camera status detailed information 15	—	—
Camera Status Check 16	Camera status detailed information 16	—	—
Camera Status Check 17	Camera status detailed information 17	—	—
Camera Status Check 18	Camera status detailed information 18	—	—
Camera Status Check 19	Camera status detailed information 19	—	—
Camera Status Check 20	Camera status detailed information 20	—	—
Camera Status Check 21	Camera status detailed information 21	—	—
Camera Status Check 22	Camera status detailed information 22	—	—
Camera Status Check 23	Camera status detailed information 23	—	—
Camera Status Check 24	Camera status detailed information 24	—	—
Camera Status Check 25	Camera status detailed information 25	—	—
Front Axle Average Wheel Speed (At The Time of EyeSight Temporary)	Front axle wheel average speed at the time of EyeSight temporary stop	km/h	—
Ignition SW ON Count (At The Time of EyeSight Temporary)	IG ON count at the time of EyeSight temporary stop	times	—

2. ENGINE CONTROL MODULE (ECM)

For current data of engine control module, refer to ENGINE (DIAGNOSTICS). <Ref. to EN(w/o STI)(diag)-46, Subaru Select Monitor.>

3. VDC CONTROL MODULE (VDCCM)

For current data of VDC control module, refer to VDC (DIAGNOSTICS). <Ref. to VDC(diag)-20, READ CURRENT DATA, OPERATION, Subaru Select Monitor.>

4. TRANSMISSION CONTROL MODULE (TCM)

For current data of transmission control module, refer to CVT (DIAGNOSTICS). <Ref. to CVT(diag)-14, READ CURRENT DATA, OPERATION, Subaru Select Monitor.>

5. BODY INTEGRATED UNIT

For current data of body integrated unit, refer to BODY CONTROL (DIAGNOSTICS). <Ref. to BC(diag)-17, LIST, Read Current Data.>

6. POWER STEERING CM

For current data of power steering CM, refer to POWER ASSISTED SYSTEM (POWER STEERING) (DIAGNOSTICS). <Ref. to PS(diag)-11, READ CURRENT DATA, OPERATION, Subaru Select Monitor.>

7. COMBINATION METER

For current data of the combination meter, refer to INSTRUMENTATION/DRIVER INFO (DIAGNOSTICS). <Ref. to IDI(diag)-16, LIST, Read Current Data.>

8. RAB CM

For details on the current data for RAB CM, refer to RAB (DIAGNOSTICS). <Ref. to RAB(diag)-14, LIST, Read Current Data.>

8. Real-time Diagnosis

A: OPERATION

1) On «Start» display, select «Diagnosis».
2) On «Vehicle selection» display, input the target vehicle information and select «Confirmed».
3) On «Main Menu» display, select «Each System».
4) On «Select System» display, select «EyeSight» and select «Enter».
5) On «Select Function» display, select «Data Monitor».
6) Check that the display changes and the contents are correct when performing the operations as follows.

- Depress and release the brake pedal. (Stop light switch and brake switch are turned ON.)
  - Item «Brake Lamp SW (BIU)» «Brake SW Input» «Brake Lamp SW (VDC)»
- Turn the main switch to ON.
  - Item «Cruise Control SW Voltage (Port14)» and «Cruise Control SW Voltage (Port16)»
- Turn the “SET/–” switch to ON.
  - Item «Cruise Control SW Voltage (Port14)» and «Cruise Control SW Voltage (Port16)»
- Turn the “RES/+” switch to ON.
  - Item «Cruise Control SW Voltage (Port14)» and «Cruise Control SW Voltage (Port16)»
- Turn the “Vehicle distance” switch to ON.
  - Item «Cruise Control SW Voltage (Port14)» and «Cruise Control SW Voltage (Port16)»
- Turn the “Lane keep” switch to ON.
  - Item «Cruise Control SW Voltage (Port14)» and «Cruise Control SW Voltage (Port16)»
- Operate the shift lever.
  - Item «Current gear position»
- Press and hold the pre-collision brake OFF switch.
  - Item «Pre-Collision Brake OFF Indicator»
- Press and hold the lane departure warning OFF switch.
  - Item «Lane Departure Warning OFF Indicator»

NOTE:
For detailed operation procedures, refer to “Application help”.

9. Diagnostic Code(s) Display

A: OPERATION

1) On «Start» display, select «Diagnosis».
2) On «Vehicle selection» display, input the target vehicle information and select «Confirmed».
3) On «Main Menu» display, select «Each System».
4) On «Select System» display, select «EyeSight» and select «Enter».
5) On «Select Function» display, select «DTC».

NOTE:
- For detailed operation procedures, refer to “Application help”.
- For details concerning DTC, refer to “List of Diagnostic Trouble Code (DTC)”. <Ref. to ES(diag)-43, LIST, Diagnostic Code(s) Display.>
- Up to ten codes can be stored. When more than ten codes are output, they will not be stored.
- The same code is stored only once, and even when the same code occurs several times, information will not be updated.

B: LIST

- List of Diagnostic Trouble Code (DTC)

DTC	Item	Contents of diagnosis	Reference
U0073	CONTROL MODULE COMMUNICATION BUS OFF	Detected when bus off status (the stereo camera detects the failure and is disconnected from CAN line) occurs.	<Ref. to ES(diag)-85, DTC U0073 CONTROL MODULE COMMUNICATION BUS OFF, Diagnostic Procedure with Diagnostic Trouble Code (DTC).>
U0100	LOST COMMUNICATION WITH ECM/PCM “A”	Detected when CAN data from ECM is not transmitted to stereo camera.	<Ref. to ES(diag)-85, DTC U0100 LOST COMMUNICATION WITH ECM/PCM “A”, Diagnostic Procedure with Diagnostic Trouble Code (DTC).>
U0101	LOST COMMUNICATION WITH TCM	Detected when CAN data from TCM is not transmitted to stereo camera.	<Ref. to ES(diag)-85, DTC U0101 LOST COMMUNICATION WITH TCM, Diagnostic Procedure with Diagnostic Trouble Code (DTC).>
U0122	LOST COMMUNICATION WITH VEHICLE DYNAMICS CONTROL MODULE	Detected when CAN data from VDC is not transmitted to stereo camera.	<Ref. to ES(diag)-85, DTC U0122 LOST COMMUNICATION WITH VEHICLE DYNAMICS CONTROL MODULE, Diagnostic Procedure with Diagnostic Trouble Code (DTC).>
U0126	LOST COMMUNICATION WITH STEERING ANGLE SENSOR MODULE	Detected when CAN data from steering angle sensor is not transmitted to stereo camera.	<Ref. to ES(diag)-85, DTC U0126 LOST COMMUNICATION WITH STEERING ANGLE SENSOR MODULE, Diagnostic Procedure with Diagnostic Trouble Code (DTC).>
U0131	LOST COMMUNICATION WITH POWER STEERING CONTROL MODULE	Detected when CAN data from EPS CM is not transmitted to stereo camera.	<Ref. to ES(diag)-85, DTC U0131 LOST COMMUNICATION WITH POWER STEERING CONTROL MODULE, Diagnostic Procedure with Diagnostic Trouble Code (DTC).>
U0140	LOST COMMUNICATION WITH BODY CONTROL MODULE	Detected when CAN data from body integrated unit is not transmitted to stereo camera.	<Ref. to ES(diag)-85, DTC U0140 LOST COMMUNICATION WITH BODY CONTROL MODULE, Diagnostic Procedure with Diagnostic Trouble Code (DTC).>
U0155	LOST COMMUNICATION WITH INSTRUMENT PANEL CLUSTER (IPC) CONTROL MODULE	Detected when CAN data from combination meter is not transmitted to stereo camera.	<Ref. to ES(diag)-85, DTC U0155 LOST COMMUNICATION WITH INSTRUMENT PANEL CLUSTER (IPC) CONTROL MODULE, Diagnostic Procedure with Diagnostic Trouble Code (DTC).>

DTC	Item	Contents of diagnosis	Reference
U0401	INVALID DATA RECEIVED FROM ECM/PCM “A”	Failure counter diagnosis of engine control module (ECM)	<Ref. to ES(diag)-86, DTC U0401 INVALID DATA RECEIVED FROM ECM/PCM “A”, Diagnostic Procedure with Diagnostic Trouble Code (DTC).>
U0402	INVALID DATA RECEIVED FROM TCM	Failure counter diagnosis of automatic transmission control module (TCM)	<Ref. to ES(diag)-86, DTC U0402 INVALID DATA RECEIVED FROM TCM, Diagnostic Procedure with Diagnostic Trouble Code (DTC).>
U0416	INVALID DATA RECEIVED FROM VEHICLE DYNAMICS CONTROL MODULE	Failure counter diagnosis of VDC control module (VDC CM)	<Ref. to ES(diag)-86, DTC U0416 INVALID DATA RECEIVED FROM VEHICLE DYNAMICS CONTROL MODULE, Diagnostic Procedure with Diagnostic Trouble Code (DTC).>
U0420	INVALID DATA RECEIVED FROM POWER STEERING CONTROL MODULE	Failure counter diagnosis of EPS CM	<Ref. to ES(diag)-86, DTC U0420 INVALID DATA RECEIVED FROM POWER STEERING CONTROL MODULE, Diagnostic Procedure with Diagnostic Trouble Code (DTC).>
U0422	INVALID DATA RECEIVED FROM BODY CONTROL MODULE	Failure counter diagnosis of body integrated unit	<Ref. to ES(diag)-86, DTC U0422 INVALID DATA RECEIVED FROM BODY CONTROL MODULE, Diagnostic Procedure with Diagnostic Trouble Code (DTC).>
U0423	INVALID DATA RECEIVED FROM INSTRUMENT PANEL CLUSTER CONTROL MODULE	Failure counter diagnosis of combination meter	<Ref. to ES(diag)-86, DTC U0423 INVALID DATA RECEIVED FROM INSTRUMENT PANEL CLUSTER CONTROL MODULE, Diagnostic Procedure with Diagnostic Trouble Code (DTC).>
U0428	INVALID DATA RECEIVED FROM STEERING ANGLE SENSOR MODULE	Failure counter diagnosis of steering angle sensor	<Ref. to ES(diag)-86, DTC U0428 INVALID DATA RECEIVED FROM STEERING ANGLE SENSOR MODULE, Diagnostic Procedure with Diagnostic Trouble Code (DTC).>
U1073	CONTROL MODULE COMMUNICATION BUS "SONAR-CAN" OFF	Detected when bus off status (the stereo camera detects the failure and is disconnected from the local CAN line) occurs.	<Ref. to ES(diag)-86, DTC U1073 CONTROL MODULE COMMUNICATION BUS "SONAR-CAN" OFF, Diagnostic Procedure with Diagnostic Trouble Code (DTC).>
U1233	LOST COMMUNICATION WITH RAB CONTROL MODULE	Detected when CAN data from RAB CM is not transmitted to the stereo camera.	<Ref. to ES(diag)-86, DTC U1233 LOST COMMUNICATION WITH RAB CONTROL MODULE, Diagnostic Procedure with Diagnostic Trouble Code (DTC).>
U1534	INVALID DATA RECEIVED FROM SONAR ECU	Failure counter diagnosis of RAB CM	<Ref. to ES(diag)-87, DTC U1534 INVALID DATA RECEIVED FROM SONAR ECU, Diagnostic Procedure with Diagnostic Trouble Code (DTC).>
B2801	TCM ABNORMAL	Detected when error occurs in the automatic transmission.	<Ref. to ES(diag)-87, DTC B2801 TCM ABNORMAL, Diagnostic Procedure with Diagnostic Trouble Code (DTC).>
B2802	ETC ABNORMAL	Detected when error occurs in the electronic throttle control.	<Ref. to ES(diag)-87, DTC B2802 ETC ABNORMAL, Diagnostic Procedure with Diagnostic Trouble Code (DTC).>
B2803	EPB OPERATION PROHIBIT	Detected when error occurs in EPB operation, or when executing VDC brake maintenance mode. (EPB operation prohibited)	<Ref. to ES(diag)-87, DTC B2803 EPB OPERATION PROHIBIT, Diagnostic Procedure with Diagnostic Trouble Code (DTC).>

DTC	Item	Contents of diagnosis	Reference
B2804	EPB NO ACTIVITY DETECTED	Detected when error occurs in the EPB operation. (EPB operation abnormal)	<Ref. to ES(diag)-87, DTC B2804 EPB NO ACTIVITY DETECTED, Diagnostic Procedure with Diagnostic Trouble Code (DTC).>
B2806	ECM ABNORMAL	Detected when error occurs in the engine control module (ECM).	<Ref. to ES(diag)-87, DTC B2806 ECM ABNORMAL, Diagnostic Procedure with Diagnostic Trouble Code (DTC).>
B2807		Detected when cruise indicator illumination request from ECM and ON/OFF information of cruise function do not match.	<Ref. to ES(diag)-87, DTC B2807 ECM ABNORMAL, Diagnostic Procedure with Diagnostic Trouble Code (DTC).>
B2809	VDC MALFUNCTION	Detected when error occurs in the VDC.	<Ref. to ES(diag)-87, DTC B2809 VDC MALFUNCTION, Diagnostic Procedure with Diagnostic Trouble Code (DTC).>
B280A	VDC ECHO BACK DISAGREEMENT	Detected when error occurs in the VDC. (VDC brake control malfunction 1)	<Ref. to ES(diag)-88, DTC B280A VDC ECHO BACK DISAGREEMENT, Diagnostic Procedure with Diagnostic Trouble Code (DTC).>
B280B	VDC BRAKE FLUID PRESSURE	Detected when error occurs in the VDC. (VDC brake control malfunction 3)	<Ref. to ES(diag)-88, DTC B280B VDC BRAKE FLUID PRESSURE, Diagnostic Procedure with Diagnostic Trouble Code (DTC).>
B280F	COMBINATION METER MALFUNCTION	Detected when error occurs in the CAN communication with combination meter.	<Ref. to ES(diag)-88, DTC B280F COMBINATION METER MALFUNCTION, Diagnostic Procedure with Diagnostic Trouble Code (DTC).>
B2810	INCOMPATIBLE WITH EyeSight (COMBINATION METER)	Detected when different (undesignated) type of combination meter is installed.	<Ref. to ES(diag)-88, DTC B2810 INCOMPATIBLE WITH EyeSight (COMBINATION METER), Diagnostic Procedure with Diagnostic Trouble Code (DTC).>
B2811	EPS ABNORMAL	EPS abnormal	<Ref. to ES(diag)-88, DTC B2811 EPS ABNORMAL, Diagnostic Procedure with Diagnostic Trouble Code (DTC).>
B2814	POWER SUPPLY LOW VOLTAGE	Detected when battery voltage is below specified value or when the +B harness of the stereo camera is broken.	<Ref. to ES(diag)-89, DTC B2814 POWER SUPPLY LOW VOLTAGE, Diagnostic Procedure with Diagnostic Trouble Code (DTC).>
B2815	POWER SUPPLY HIGH VOLTAGE	Detected when battery voltage exceeds the specified value.	<Ref. to ES(diag)-90, DTC B2815 POWER SUPPLY HIGH VOLTAGE, Diagnostic Procedure with Diagnostic Trouble Code (DTC).>
B2817	BRAKE LAMP	Detected when error occurs in the brake light illumination circuit.	<Ref. to ES(diag)-90, DTC B2817 BRAKE LAMP, Diagnostic Procedure with Diagnostic Trouble Code (DTC).>
B281B	STEERING ANGLE SENSOR FAIL	Detected when error occurs in the steering angle sensor system.	<Ref. to ES(diag)-91, DTC B281B STEERING ANGLE SENSOR FAIL, Diagnostic Procedure with Diagnostic Trouble Code (DTC).>
B281C	INCOMPATIBLE WITH EyeSight (EPS)	Detected when the EPS CM which is not exclusively for EyeSight is installed.	<Ref. to ES(diag)-91, DTC B281C INCOMPATIBLE WITH EyeSight (EPS), Diagnostic Procedure with Diagnostic Trouble Code (DTC).>
B281E	RAB CONTROL MODULE	Detected when there is a malfunction in sonar sensor or RAB CM.	<Ref. to ES(diag)-92, DTC B281E RAB CONTROL MODULE, Diagnostic Procedure with Diagnostic Trouble Code (DTC).>

DTC	Item	Contents of diagnosis	Reference
B281F	Reverse Automatic Braking OVERRIDE	Detected when a stop hold command is output from RAB CM even when an accelerator override is generated by the driver.	<Ref. to ES(diag)-92, DTC B281F Reverse Automatic Braking OVERRIDE, Diagnostic Procedure with Diagnostic Trouble Code (DTC).>
B2821	Reverse Automatic Braking CONTROL PROHIBITION	Detected when error occurs in RAB CM.	<Ref. to ES(diag)-92, DTC B2821 Reverse Automatic Braking CONTROL PROHIBITION, Diagnostic Procedure with Diagnostic Trouble Code (DTC).>
B28A0	VEHICLE MODEL JUDGMENT	Detected when the model code stored in EEPROM and the model code used for CAN data are different, or when +B harness of the stereo camera is broken at aiming completion.	<Ref. to ES(diag)-93, DTC B28A0 VEHICLE MODEL JUDGMENT, Diagnostic Procedure with Diagnostic Trouble Code (DTC).>
B28A1	EyeSight COMMUNICATION(ECM)	Abnormal judgment for stereo camera by ECM Or detected when the stereo camera or ECM is assembled incorrectly.	<Ref. to ES(diag)-95, DTC B28A1 EyeSight COMMUNICATION(ECM), Diagnostic Procedure with Diagnostic Trouble Code (DTC).>
B28A2	EyeSight COMMUNICATION(VDC)	Abnormal judgment for stereo camera data by VDC	<Ref. to ES(diag)-96, DTC B28A2 EyeSight COMMUNICATION(VDC), Diagnostic Procedure with Diagnostic Trouble Code (DTC).>
B28A3	EyeSight COMMUNICATION(METER)	Abnormal judgment for stereo camera data by combination meter	<Ref. to ES(diag)-97, DTC B28A3 EyeSight COMMUNICATION(METER), Diagnostic Procedure with Diagnostic Trouble Code (DTC).>
B28A4	EyeSight COMMUNICATION(EPS)	Abnormal judgment for stereo camera data by EPS CM	<Ref. to ES(diag)-98, DTC B28A4 EyeSight COMMUNICATION(EPS), Diagnostic Procedure with Diagnostic Trouble Code (DTC).>
B28A5	ENGINE TORQUE LIMITER CONTROL PROHIBIT	Detected when error occurs in the transmission data from stereo camera to ECM.	<Ref. to ES(diag)-99, DTC B28A5 ENGINE TORQUE LIMITER CONTROL PROHIBIT, Diagnostic Procedure with Diagnostic Trouble Code (DTC).>
B28A6	INTERNAL STEREO CAMERA COMMUNICATION 1	Detected when an communication error occurs inside the stereo camera.	<Ref. to ES(diag)-100, DTC B28A6 INTERNAL STEREO CAMERA COMMUNICATION 1, Diagnostic Procedure with Diagnostic Trouble Code (DTC).>
B28A7	STEREO CAMERA RECOGNITION(TARGET)	Detected when error occurs in the communication data inside the control module due to external factors such as noises.	<Ref. to ES(diag)-100, DTC B28A7 STEREO CAMERA RECOGNITION(TARGET), Diagnostic Procedure with Diagnostic Trouble Code (DTC).>
B28A8	INTERNAL STEREO CAMERA COMMUNICATION 2		<Ref. to ES(diag)-100, DTC B28A8 INTERNAL STEREO CAMERA COMMUNICATION 2, Diagnostic Procedure with Diagnostic Trouble Code (DTC).>
B28A9	STEREO CAMERA SYNCHRONIZED RECOGNITION DATA		<Ref. to ES(diag)-100, DTC B28A9 STEREO CAMERA SYNCHRONIZED RECOGNITION DATA, Diagnostic Procedure with Diagnostic Trouble Code (DTC).>
B28AA	STEREO CAMERA MICROCOMPUTER 1	Detected when error occurs in the communication with microcomputer 1 system inside the stereo camera.	<Ref. to ES(diag)-100, DTC B28AA STEREO CAMERA MICROCOMPUTER 1, Diagnostic Procedure with Diagnostic Trouble Code (DTC).>
B28AB	STEREO CAMERA MICROCOMPUTER 2	Detected when error occurs in the communication with microcomputer 2 system inside the stereo camera.	<Ref. to ES(diag)-100, DTC B28AB STEREO CAMERA MICROCOMPUTER 2, Diagnostic Procedure with Diagnostic Trouble Code (DTC).>

DTC	Item	Contents of diagnosis	Reference
B28AC	STEREO CAMERA ASIC	Detected when error occurs in the ASIC system inside the stereo camera.	<Ref. to ES(diag)-101, DTC B28AC STEREO CAMERA ASIC, Diagnostic Procedure with Diagnostic Trouble Code (DTC).>
B28AD	STEREO CAMERA IMAGE RECOGNITION	Detected when error occurs in the stereo camera image system.	<Ref. to ES(diag)-101, DTC B28AD STEREO CAMERA IMAGE RECOGNITION, Diagnostic Procedure with Diagnostic Trouble Code (DTC).>
B28AE	INTERNAL STEREO CAMERA POWER SUPPLY	Detected when error occurs in the internal power supply system of stereo camera.	<Ref. to ES(diag)-101, DTC B28AE INTERNAL STEREO CAMERA POWER SUPPLY, Diagnostic Procedure with Diagnostic Trouble Code (DTC).>
B28AF	STEREO CAMERA ADJUSTMENT INCOMPLETE	Detected when adjustment/inspection of camera has not been completed normally.	<Ref. to ES(diag)-101, DTC B28AF STEREO CAMERA ADJUSTMENT INCOMPLETE, Diagnostic Procedure with Diagnostic Trouble Code (DTC).>
B28B1	STEREO CAMERA AUTOMATIC ADJUSTMENT	Detected when the optical axis of stereo camera is deviated in lateral direction or when the fluctuation range of automatic adjustment value has been enlarged.	<Ref. to ES(diag)-101, DTC B28B1 STEREO CAMERA AUTOMATIC ADJUSTMENT, Diagnostic Procedure with Diagnostic Trouble Code (DTC).>
B28B2	STEREO CAMERA HIGH TEMPERATURE	Detected when the temperature of the stereo camera excessively increases. (When this DTC is detected, the camera will not return to the normal state after performing adjustment or inspection. In this case, always replace the stereo camera.)	<Ref. to ES(diag)-101, DTC B28B2 STEREO CAMERA HIGH TEMPERATURE, Diagnostic Procedure with Diagnostic Trouble Code (DTC).>
B28B3	STEREO CAMERA LOW TEMPERATURE	Detected when the temperature of the stereo camera excessively decreases. (When this DTC is detected, the camera will not return to the normal state after performing adjustment or inspection. In this case, always replace the stereo camera.)	<Ref. to ES(diag)-102, DTC B28B3 STEREO CAMERA LOW TEMPERATURE, Diagnostic Procedure with Diagnostic Trouble Code (DTC).>
B28B5	+B CIRCUIT OPEN	Detected when there is an open circuit in power supply line of the stereo camera.	<Ref. to ES(diag)-102, DTC B28B5 +B CIRCUIT OPEN, Diagnostic Procedure with Diagnostic Trouble Code (DTC).>
B28B6	PRE-COLLISION OFF SWITCH	Pre-collision brake switch or harness is faulty. Detected also when the switch is held down for over 45 seconds.	<Ref. to ES(diag)-103, DTC B28B6 PRE-COLLISION OFF SWITCH, Diagnostic Procedure with Diagnostic Trouble Code (DTC).>
B28B7	LDP OFF SWITCH	Lane departure warning OFF switch or harness is faulty. Detected also when the switch is held down for over 45 seconds.	<Ref. to ES(diag)-105, DTC B28B7 LDP OFF SWITCH, Diagnostic Procedure with Diagnostic Trouble Code (DTC).>
B28B8	EyeSight STEERING SWITCH 1	Detected when EyeSight steering switch is malfunctioning, when the harness is abnormal or when there is an open circuit.	<Ref. to ES(diag)-107, DTC B28B8 EyeSight STEERING SWITCH 1, Diagnostic Procedure with Diagnostic Trouble Code (DTC).>
B28B9	EyeSight STEERING SWITCH 2		<Ref. to ES(diag)-108, DTC B28B9 EyeSight STEERING SWITCH 2, Diagnostic Procedure with Diagnostic Trouble Code (DTC).>
B28BA	STEERING ANGLE AND STEREO CAMERA CORRELATION MISALIGNED	• Detected when the center point of steering angle sensor deviates. • Detected when there is an excessive deviation in the alignment.	<Ref. to ES(diag)-109, DTC B28BA STEERING ANGLE AND STEREO CAMERA CORRELATION MISALIGNED, Diagnostic Procedure with Diagnostic Trouble Code (DTC).>

10.Freeze Frame Data Display

A: OPERATION

1) On «Start» display, select «Diagnosis».
2) On «Vehicle selection» display, input the target vehicle information and select «Confirmed».
3) On «Main Menu» display, select «Each System».
4) On «Select System» display, select «EyeSight» and select «Enter».
5) On «Select Function» display, select «DTC».
6) On «DTC» display, select «FFD».

NOTE:
- For detailed operation procedures, refer to “Application help”.
- Freeze frame data is stored for three DTCs. Allocation of the three DTCs are as follows:
  – DTC that occurred first.
  – DTC that occurred first during the latest driving cycle (from IGN ON to IGN OFF).
  – DTC that occurred first during the second latest driving cycle.
  – However, DTCs will be stored in order of occurrence until these three DTCs are stored.
- For details on freeze frame data, refer to List of freeze frame data. <Ref. to ES(diag)-48, LIST, Freeze Frame Data Display.>
- Freeze frame data is cleared in Clear Memory Mode. <Ref. to ES(diag)-49, Clear Memory Mode.>

B: LIST

- List of freeze frame data

Display	Content	Unit
ECU Power Supply Voltage (IG)	Display of input voltage of stereo camera	V
Engine Speed	Engine speed	rpm
Accel opening angle	Acceleration opening angle signal	%
Brake Fluid Target Pressure	Target value of brake fluid pressure	MPa
Master Cylinder Actual Fluid Pressure	Brake pressure	MPa
Right Front Wheel W/C Actual Fluid Pressure	Right front wheel cylinder fluid pressure	MPa
Left Front Wheel W/C Actual Fluid Pressure	Left front wheel cylinder fluid pressure	MPa
Brake SW Input	Brake switch signal status	—
Brake Lamp SW (BIU)	Brake light switch signal status	—
Brake Lamp SW (VDC)	Brake light switch status	—
Trip Count	Timestamp information_Trip counter	times
Count	Timestamp information_original count identification information	—
Time Count [msec]	Timestamp information_time counter	ms
Drive Wheel Average Speed	Average wheel speed signal	km/h
Brake Lamp Command	Brake lamp light up command signal	—
EPB Activate Request	Electronic parking brake activate request	—
EPB Operation Status	Electronic parking brake operation status signal	—
Idle SW for EPB Control	Idle switch signal for electronic parking brake control	—
Driver Brake Detection	Driver brake detection signal	—
Brake Control Actuation	Brake operation permission signal	—
Pre-Collision Brake Assist Command	Pre-collision brake assist command signal	—
Pre-Collision Brake Action	Pre-collision brake command signal	—
Risk Avoidance Assist standby Command	Risk avoidance assist stand-by command signal	—
Adaptive Cruise Control Torque Down	Torque down prohibition signal of stereo camera	—
Hill Descent Control Status	Hill descent control status signal	—
Engine Failure	Engine failure signal	—
Brake Lamp SW Fail Status	Brake light switch failure signal	—

11.Clear Memory Mode

A: OPERATION

1) On «Start» display, select «Diagnosis».
2) On «Vehicle selection» display, input the target vehicle information and select «Confirmed».
3) On «Main Menu» display, select «Each System».
4) On «Select System» display, select «EyeSight» and select «Enter».
5) On «Select Function» display, select «DTC».
6) On «DTC» display, select «Clear Memory».

NOTE:
For detailed operation procedures, refer to “Application help”.

12.Clear Active Lane Keep System Learning Value

A: OPERATION

1) On «Start» display, select «Diagnosis».
2) On «Vehicle selection» display, input the target vehicle information and select «Confirmed».
3) On «Main Menu» display, select «Each System».
4) On «Select System» display, select «EyeSight» and select «Enter».
5) On «Select Function» display, select «Work Support».
6) On «Work Support» display, select «Clear Active Lane Keep System Learning Value».

NOTE:
- When suspension parts are replaced or wheel alignment is adjusted, perform «Clear Active Lane Keep System Learning Value».
- For detailed operation procedures, refer to “Application help”.

13.Diagnostics with Phenomenon

A: DIAGNOSTIC PROCEDURE WITH PHENOMENON

1. TEMPORARY STOP OF EyeSight

Phenomenon		Check Item	Reference
1	Temporary stop occurs frequently. EyeSight temporary stop indicator illuminates frequently.	(1) Check EyeSight temporary stop code. <Ref. to ES(diag)-71, EyeSight Temporary Code(s) Display.>	For details on temporary stop codes, refer to Check list (Camera temporary stop). Check list (Camera temporary stop) <Ref. to ES(diag)-75, CHECK LIST (CAMERA TEMPORARY STOP), LIST, EyeSight Temporary Code(s) Display.> When there is a relevant item in the check list, it can be the cause of malfunction. Eliminate the cause, and check that the malfunction has been improved. If not solved, the stereo camera may be malfunctioning.

2. ADAPTIVE CRUISE CONTROL, CONVENTIONAL CRUISE CONTROL

Phenomenon		Check Item	Reference
1	Cruise control switch is not turned to ON. (CRUISE indicator light does not illuminate) Or cruise control was cancelled without operating the cruise switch.	(1) Check the ECM cruise control cancel code.	Perform the diagnosis according to displayed cancel code. <Ref. to ES(diag)-79, ECM Cancel Code(s) Display.> If not displayed, go to (2).
		(2) Perform the real-time diagnosis. Check the input signal of cruise control system.	Real-time Diagnosis <Ref. to ES(diag)-42, Real-time Diagnosis.> When normal, go to (4). When abnormal, go to (3).
		(3) Check the EyeSight steering switch.	Check EyeSight steering switch <Ref. to ES(diag)-70, CHECK EyeSight STEERING SWITCH, Diagnostics with Phenomenon.>
		(4) Check the CRUISE indicator.	Inspection of cruise indicator <Ref. to ES(diag)-69, CHECK ADAPTIVE CRUISE CONTROL INDICATOR LIGHT/CONSTANT SPEED CRUISE CONTROL INDICATOR LIGHT AND CRUISE SET INDICATOR LIGHT, Diagnostics with Phenomenon.>
2	Cruise control cannot be set. Or cruise control is cancelled without releasing operation. NOTE: • Do not turn the ignition switch to OFF after the cruise control is deactivated. • Do not operate the EyeSight steering switch after the cruise control is deactivated. If the above is performed, the cancel code the ECM will be cleared.	(1) Check the ECM cruise control cancel code.	Perform the diagnosis according to displayed cancel code. <Ref. to ES(diag)-79, ECM Cancel Code(s) Display.> If not displayed, go to (2).
		(2) Perform the real-time diagnosis. Check the input signal of cruise control system.	Real-time Diagnosis <Ref. to ES(diag)-42, Real-time Diagnosis.> When normal, go to (6). When abnormal, go to the relevant items for (3), (4), (5).
		(3) Check the EyeSight steering switch.	Check EyeSight steering switch <Ref. to ES(diag)-70, CHECK EyeSight STEERING SWITCH, Diagnostics with Phenomenon.>
		(4) Check stop light switch and brake switch.	Inspection of stop light switch and brake switch <Ref. to BR-96, Brake Pedal.> <Ref. to CC(diag)-17, 12, Diagnostic Procedure with Cancel Code.>
		(5) Check the neutral position switch.	Inspection of neutral position switch <Ref. to CC(diag)-22, 14, Diagnostic Procedure with Cancel Code.> <Ref. to CC(diag)-28, 62, Diagnostic Procedure with Cancel Code.>
		(6) Check vehicle speed sensor.	Inspection of vehicle speed sensor <Ref. to CC(diag)-27, 22, Diagnostic Procedure with Cancel Code.>

Phenomenon		Check Item	Reference
3	SET indicator does not illuminate.	Check the SET indicator.	Inspection of SET indicator <Ref. to ES(diag)-69, CHECK ADAPTIVE CRUISE CONTROL INDICATOR LIGHT/ CONSTANT SPEED CRUISE CONTROL INDICATOR LIGHT AND CRUISE SET INDICATOR LIGHT, Diagnostics with Phenomenon.>
4	Vehicle speed is not held within set speed ±3 km/h (±2 MPH) on a level road.	Check the vehicle speed sensor.	Inspection of vehicle speed sensor <Ref. to CC(diag)-27, 22, Diagnostic Procedure with Cancel Code.>
5	Vehicle speed does not increase or does not return to set speed after RES/+ switch has been pressed.	(1) Perform the real-time diagnosis. Check the input signal of cruise control system.	Real-time Diagnosis <Ref. to ES(diag)-42, Real-time Diagnosis.> When abnormal, go to (2).
		(2) Check the RES/+ switch.	Inspection of RES/+ switch <Ref. to ES(diag)-70, CHECK EyeSight STEERING SWITCH, Diagnostics with Phenomenon.>
6	Vehicle speed does not decrease after SET/– switch has been pressed.	(1) Perform the real-time diagnosis. Check the input signal of cruise control system.	Real-time Diagnosis <Ref. to ES(diag)-42, Real-time Diagnosis.> When abnormal, go to (2).
		(2) Check the SET/– switch.	Inspection of SET/– switch <Ref. to ES(diag)-70, CHECK EyeSight STEERING SWITCH, Diagnostics with Phenomenon.>
7	Cruise control is not deactivated after the cruise switch is pressed.	(1) Perform the real-time diagnosis. Check the input signal of cruise control system.	Real-time Diagnosis <Ref. to ES(diag)-42, Real-time Diagnosis.> When abnormal, go to (2).
		(2) Check the cruise switch.	Inspection of cruise switch <Ref. to ES(diag)-70, CHECK EyeSight STEERING SWITCH, Diagnostics with Phenomenon.>
8	Following distance does not change, even after the following distance switch is pressed.	(1) Perform the real-time diagnosis. Check the input signal of cruise control system.	Real-time Diagnosis <Ref. to ES(diag)-42, Real-time Diagnosis.> When abnormal, go to (2).
		(2) Check the following distance switch.	Inspection of following distance switch <Ref. to ES(diag)-70, CHECK EyeSight STEERING SWITCH, Diagnostics with Phenomenon.>
9	Cruise control is not released after brake pedal has been depressed.	(1) Perform the real-time diagnosis. Check the input signal of cruise control system.	Real-time Diagnosis <Ref. to ES(diag)-42, Real-time Diagnosis.> When abnormal, go to (2).
		(2) Check stop light switch and brake switch.	Inspection of stop light switch and brake switch <Ref. to CC(diag)-17, 12, Diagnostic Procedure with Cancel Code.> <Ref. to BR-101, INSTALLATION, Stop Light Switch.>
10	Cruise control is not released after shifting to the neutral position.	(1) Perform the real-time diagnosis. Check the input signal of cruise control system.	Real-time Diagnosis <Ref. to ES(diag)-42, Real-time Diagnosis.> When abnormal, go to (2).
		(2) Check the neutral position switch.	Inspection of neutral position switch <Ref. to CC(diag)-22, 14, Diagnostic Procedure with Cancel Code.>

Phenomenon		Check Item	Reference
11	Acceleration or deceleration does not occur according to the preceding vehicle. The preceding vehicle is difficult to be detected. Braking force is weaker than usual. Alarm for requiring more brake pedal force does not sound.	(1) Using CHECK LIST (ADAPTIVE CRUISE CONTROL), check the condition and respond to it. 1) Does it apply to the condition that the use of adaptive cruise control is not desired? 2) Does it apply to the condition or the object that is hard to be recognized by the stereo camera? 3) Does it apply to the driving condition that the preceding vehicle cannot be recognized or the vehicle on the next lane or the object on the roadside may be recognized by mistake? 4) Does it apply to the condition that brake force may become poor? 5) Does it apply to the condition that the alarm for requiring more brake pedal force does not sound even in a short vehicle distance?	Check list (Adaptive cruise control) <Ref. to ES(diag)-59, CHECK LIST (ADAPTIVE CRUISE CONTROL), DIAGNOSTIC PROCEDURE WITH PHENOMENON, Diagnostics with Phenomenon.> When there is a relevant item in the check list, it can be the cause of malfunction. Eliminate the cause, and check that the malfunction has been improved. If not solved, go to (2).
		(2) Check the windshield glass and dashboard.	Inspection of windshield glass and dashboard <Ref. to ES(diag)-8, WINDSHIELD GLASS AND DASHBOARD, INSPECTION, General Description.> When normal, go to (3).
		(3) Check the front wiper.	Inspection of front wiper <Ref. to ES(diag)-12, FRONT WIPER, INSPECTION, General Description.> When normal, go to (4).
		(4) Check the stereo camera.	Check stereo camera. <Ref. to ES(diag)-13, STEREO CAMERA, INSPECTION, General Description.> When normal, go to (5).
		(5) Bleed air from brake system.	Air bleeding from brake system <Ref. to BR-89, BRAKE LINE, PROCEDURE, Air Bleeding.> Go to (6).
		(6) Check the optical axis of the stereo camera.	Adjust the optical axis of the stereo camera. <Ref. to ES-13, PROCEDURE, Camera Adjustment, Inspection.>

3. PRE-COLLISION BRAKE, AT RAPID START PREVENTION CONTROL

	Phenomenon	Check Item	Reference
1	Pre-collision brake does not operate. Or the pre-collision brake operates, but the vehicle cannot stop safely before collision. Or the pre-collision brake is released automatically. Or the pre-collision brake assist does not operate.	(1) Check that the pre-collision brake OFF indicator light goes off.	If this indicator light illuminates, the operation is not performed.
		(2) Using CHECK LIST (PRE-COLLISION BRAKE), check the following and respond to it. 1) Does it apply to the condition that the pre-collision brake does not operate, or there is a high possibility that the vehicle cannot stop safely before collision with the pre-collision brake? 2) Does it apply to the condition that there is a high possibility that the pre-collision brake does not operate due to the recognition status of the stereo camera? 3) Does it apply to the condition that the system does not operate correctly and the turning OFF of the pre-collision brake is desired? 4) Does it apply to the condition that the pre-collision brake OFF indicator light illuminates?	Check list (Pre-collision brake) <Ref. to ES(diag)-61, CHECK LIST (PRE-COLLISION BRAKE), DIAGNOSTIC PROCEDURE WITH PHENOMENON, Diagnostics with Phenomenon.> When there is a relevant item in the check list, it can be the cause of malfunction. Eliminate the cause, and check that the malfunction has been improved. If not solved, the stereo camera may be malfunctioning.
2	Pre-collision brake operates improperly. Or the pre-collision brake is not released. Or the pre-collision brake assist operates improperly.	(1) Using CHECK LIST (PRE-COLLISION BRAKE), check the following and respond to it. 1) Does it apply to the condition that turning OFF of the pre-collision brake is desired? 2) Does it apply to the condition that the pre-collision brake may operate?	Check list (Pre-collision brake) <Ref. to ES(diag)-61, CHECK LIST (PRE-COLLISION BRAKE), DIAGNOSTIC PROCEDURE WITH PHENOMENON, Diagnostics with Phenomenon.> When there is a relevant item in the check list, it can be the cause of malfunction. Eliminate the cause, and check that the malfunction has been improved. If not solved, the stereo camera may be malfunctioning.
3	Pre-collision brake OFF indicator light does not go off. Or the pre-collision brake OFF indicator light illuminates automatically.	(1) Check that this failure occurs during engine start.	Light illumination for a while after the engine start is a normal.
		(2) Check EyeSight temporary stop code to see if temporary stop has occurred.	If the EyeSight temporary stop code is displayed, check the diagnosis from the List of EyeSight temporary stop code, and perform the corresponding operations. <Ref. to ES(diag)-71, EyeSight Temporary Code(s) Display.> If the cancel code is not displayed, go to (3).
		(3) Check the pre-collision brake OFF switch.	Inspection of pre-collision brake OFF switch <Ref. to ES(diag)-103, DTC B28B6 PRE-COLLISION OFF SWITCH, Diagnostic Procedure with Diagnostic Trouble Code (DTC).>
4	Pre-collision brake OFF indicator light does not illuminate. Or the pre-collision brake OFF indicator light goes off automatically.	(1) Check that this failure occurs during engine start.	Even if the pre-collision brake is turned off, it is turned on again when the engine switch is turned off and the engine has restarted.
		(2) Check the pre-collision brake OFF switch.	Inspection of pre-collision brake OFF switch <Ref. to ES(diag)-103, DTC B28B6 PRE-COLLISION OFF SWITCH, Diagnostic Procedure with Diagnostic Trouble Code (DTC).>

Phenomenon		Check Item	Reference
5	AT rapid start prevention control does not operate. Or the AT rapid start prevention control is released automatically.	(1) Check that the pre-collision brake OFF indicator light goes off.	If this indicator light illuminates, the operation is not performed.
		(2) Using CHECK LIST (AT RAPID START PREVENTION CONTROL), check the following and respond to it. 1) Does it apply to the condition that the AT rapid start prevention control may not operate? 2) Does it apply to the condition that the pre-collision brake OFF indicator light illuminates?	Check list (AT rapid start prevention control) <Ref. to ES(diag)-64, CHECK LIST (AT RAPID START PREVENTION CONTROL), DIAGNOSTIC PROCEDURE WITH PHENOMENON, Diagnostics with Phenomenon.> When there is a relevant item in the check list, it can be the cause of malfunction. Eliminate the cause, and check that the malfunction has been improved. If not solved, the stereo camera may be malfunctioning.
6	AT rapid start prevention control operates improperly. Or the AT rapid start prevention control is not released.	(1) Using CHECK LIST (AT RAPID START PREVENTION CONTROL), check the following and respond to it. 1) Does it apply to the condition that turning OFF of the AT rapid start prevention control is desired? 2) Does it apply to the condition that the AT rapid start prevention control may operate?	Check list (AT rapid start prevention control) <Ref. to ES(diag)-64, CHECK LIST (AT RAPID START PREVENTION CONTROL), DIAGNOSTIC PROCEDURE WITH PHENOMENON, Diagnostics with Phenomenon.> When there is a relevant item in the check list, it can be the cause of malfunction. Eliminate the cause, and check that the malfunction has been improved. If not solved, the stereo camera may be malfunctioning.

4. LANE DEPARTURE WARNING, SWAY WARNING, FORWARD VEHICLE'S START MONITORING FUNCTION

Phenomenon		Check Item	Reference
1	Lane departure warning does not operate. Or the lane departure warning is released automatically.	(1) Check that the lane departure warning OFF indicator light goes off.	If this indicator light illuminates, the operation is not performed.
		(2) Using CHECK LIST (LANE DEPARTURE WARNING, SWAY WARNING, FORWARD VEHICLE'S START MONITORING FUNCTION), check the following and respond to it. 1) Does it apply to the condition that the lane departure warning does not operate or is difficult to operate? 2) Does it apply to the condition that the lane departure warning OFF indicator light illuminates?	Check list (lane departure warning, sway warning, forward vehicle's start monitoring function) <Ref. to ES(diag)-65, CHECK LIST (LANE DEPARTURE WARNING, SWAY WARNING, FORWARD VEHICLE'S START MONITORING FUNCTION), DIAGNOSTIC PROCEDURE WITH PHENOMENON, Diagnostics with Phenomenon.> When there is a relevant item in the check list, it can be the cause of malfunction. Eliminate the cause, and check that the malfunction has been improved. If not solved, the stereo camera may be malfunctioning.

Phenomenon		Check Item	Reference
2	Lane departure warning operates improperly. Or the lane departure warning is not released.	(1) Using CHECK LIST (LANE DEPARTURE WARNING, SWAY WARNING, FORWARD VEHICLE'S START MONITORING FUNCTION), check the following and respond to it. 1) Does it apply to the condition that the vehicle lane is recognized erroneously and the lane departure warning may operate?	Check list (lane departure warning, sway warning, forward vehicle's start monitoring function) <Ref. to ES(diag)-65, CHECK LIST (LANE DEPARTURE WARNING, SWAY WARNING, FORWARD VEHICLE'S START MONITORING FUNCTION), DIAGNOSTIC PROCEDURE WITH PHENOMENON, Diagnostics with Phenomenon.> When there is a relevant item in the check list, it can be the cause of malfunction. Eliminate the cause, and check that the malfunction has been improved. If not solved, the stereo camera may be malfunctioning.
3	Lane departure warning OFF indicator light does not go off. Or the lane departure warning OFF indicator light illuminates automatically.	(1) Check that this failure occurs during engine start.	Light illumination for a while after the engine start is a normal. Even if the engine switch is turned off and the engine is restarted, the status before the engine switch off is maintained.
		(2) Check EyeSight temporary stop code to see if temporary stop has occurred.	If the EyeSight temporary stop code is displayed, check the diagnosis from the List of EyeSight temporary stop code, and perform the corresponding operations. <Ref. to ES(diag)-71, EyeSight Temporary Code(s) Display.> If the cancel code is not displayed, go to (3).
		(3) Check the lane departure warning OFF indicator light.	Inspection of lane departure warning OFF indicator light <Ref. to ES(diag)-105, DTC B28B7 LDP OFF SWITCH, Diagnostic Procedure with Diagnostic Trouble Code (DTC).>
4	Lane departure warning OFF indicator light does not illuminate. Or the lane departure warning OFF indicator light goes off automatically.	(1) Check the lane departure warning OFF indicator light.	Inspection of lane departure warning OFF indicator light <Ref. to ES(diag)-105, DTC B28B7 LDP OFF SWITCH, Diagnostic Procedure with Diagnostic Trouble Code (DTC).>
5	Sway warning does not operate. Or the sway warning is released automatically.	(1) Check that the lane departure warning OFF indicator light goes off.	If this indicator light illuminates, the operation is not performed.
		(2) Using CHECK LIST (LANE DEPARTURE WARNING, SWAY WARNING, FORWARD VEHICLE'S START MONITORING FUNCTION), check the following and respond to it. 1) Does it apply to the condition that the sway warning may not operate? 2) Does it apply to the condition that the lane departure warning OFF indicator light illuminates?	Check list (lane departure warning, sway warning, forward vehicle's start monitoring function) <Ref. to ES(diag)-65, CHECK LIST (LANE DEPARTURE WARNING, SWAY WARNING, FORWARD VEHICLE'S START MONITORING FUNCTION), DIAGNOSTIC PROCEDURE WITH PHENOMENON, Diagnostics with Phenomenon.> When there is a relevant item in the check list, it can be the cause of malfunction. Eliminate the cause, and check that the malfunction has been improved. If not solved, the stereo camera may be malfunctioning.
6	Sway warning operates improperly. Or the sway warning is not released.	(1) Using CHECK LIST (LANE DEPARTURE WARNING, SWAY WARNING, FORWARD VEHICLE'S START MONITORING FUNCTION), check the following and respond to it. 1) Does it apply to the condition that the sway warning may operate improperly?	Check list (lane departure warning, sway warning, forward vehicle's start monitoring function) <Ref. to ES(diag)-65, CHECK LIST (LANE DEPARTURE WARNING, SWAY WARNING, FORWARD VEHICLE'S START MONITORING FUNCTION), DIAGNOSTIC PROCEDURE WITH PHENOMENON, Diagnostics with Phenomenon.> When there is a relevant item in the check list, it can be the cause of malfunction. Eliminate the cause, and check that the malfunction has been improved. If not solved, the stereo camera may be malfunctioning.

Phenomenon		Check Item	Reference
7	Forward vehicle's start monitoring function does not operate. Or the forward vehicle's start monitoring function is released automatically.	(1) Using CHECK LIST (LANE DEPARTURE WARNING, SWAY WARNING, FORWARD VEHICLE'S START MONITORING FUNCTION), check the following and respond to it. 1) Does it apply to the condition that the forward vehicle's start monitoring function does not operate even when the preceding vehicle has already started?	Check list (lane departure warning, sway warning, forward vehicle's start monitoring function) <Ref. to ES(diag)-65, CHECK LIST (LANE DEPARTURE WARNING, SWAY WARNING, FORWARD VEHICLE'S START MONITORING FUNCTION), DIAGNOSTIC PROCEDURE WITH PHENOMENON, Diagnostics with Phenomenon.> When there is a relevant item in the check list, it can be the cause of malfunction. Eliminate the cause, and check that the malfunction has been improved. If not solved, the stereo camera may be malfunctioning.
8	Forward vehicle's start monitoring function operates improperly. Or the forward vehicle's start monitoring function is not released.	(1) Using CHECK LIST (LANE DEPARTURE WARNING, SWAY WARNING, FORWARD VEHICLE'S START MONITORING FUNCTION), check the following and respond to it. 1) Does it apply to the condition that the forward vehicle's start monitoring function operates even when the preceding vehicle has not yet started?	Check list (lane departure warning, sway warning, forward vehicle's start monitoring function) <Ref. to ES(diag)-65, CHECK LIST (LANE DEPARTURE WARNING, SWAY WARNING, FORWARD VEHICLE'S START MONITORING FUNCTION), DIAGNOSTIC PROCEDURE WITH PHENOMENON, Diagnostics with Phenomenon.> When there is a relevant item in the check list, it can be the cause of malfunction. Eliminate the cause, and check that the malfunction has been improved. If not solved, the stereo camera may be malfunctioning.

5. ACTIVE LANE KEEP (LANE DEPARTURE PREVENTION)

NOTE:
Check the following first.
- Adaptive cruise control is not set.

Phenomenon		Check Item	Reference
1	Lane keep switch is not turned to ON. (Lane keep indicator light does not illuminate in white.)	(1) Perform the real-time diagnosis. Check the input signal of EyeSight system.	Real-time Diagnosis <Ref. to ES(diag)-42, Real-time Diagnosis.> When normal, go to (3). When abnormal, go to (2).
		(2) Check the lane keep switch.	Check EyeSight steering switch <Ref. to ES(diag)-70, CHECK EyeSight STEERING SWITCH, Diagnostics with Phenomenon.>
		(3) Check the combination meter.	INSTRUMENTATION/DRIVER INFO (DIAGNOSTICS) <Ref. to IDI(diag)-2, COMBINATION METER, PROCEDURE, Basic Diagnostic Procedure.>

Phenomenon		Check Item	Reference
2	Lane keep (lane departure prevention) does not turn to standby mode. (Lane indicator light does not illuminate.) Lane keep (lane departure prevention) does not operate. (Lane keep indicator light does not illuminate in green.) Though lane keep (lane departure prevention) is operating, the vehicle departs out of the lane due to poor assistance.	(1) Read the lane departure prevention deactivate code. <Ref. to ES(diag)-84, Active Lane Keep System Code(s) Display.>	When there is a relevant item in the lane departure prevention deactivate code, it can be the cause of malfunction. Eliminate the cause, and check that the malfunction has been improved. If not solved, go to (2).
		(2) Using CHECK LIST (LANE KEEP), check the current conditions and respond to it. 1) Does it apply to the condition that use of lane keeping is not desired? 2) Does it apply to the condition or the object that is hard to be recognized by the stereo camera? 3) Does it apply to the road condition that the white line is difficult to be recognized?	Check list (lane keep) <Ref. to ES(diag)-67, CHECK LIST (ACTIVE LANE KEEP), DIAGNOSTIC PROCEDURE WITH PHENOMENON, Diagnostics with Phenomenon.> When there is a relevant item in the check list, it can be the cause of malfunction. Eliminate the cause, and check that the malfunction has been improved. If not solved, go to (3).
		(3) Check the windshield glass and dashboard.	Inspection of windshield glass and dashboard <Ref. to ES(diag)-8, WINDSHIELD GLASS AND DASHBOARD, INSPECTION, General Description.> When normal, go to (4).
		(4) Check the front wiper.	Inspection of front wiper <Ref. to ES(diag)-12, FRONT WIPER, INSPECTION, General Description.> When normal, go to (5).
		(5) Check the optical axis of the headlights.	Headlight optical axis adjustment <Ref. to LI-29, ADJUSTMENT, Headlight Assembly.> When normal, go to (6).
		(6) Check the stereo camera.	CHECK STEREO CAMERA. <Ref. to ES(diag)-13, STEREO CAMERA, INSPECTION, General Description.> When normal, go to (7).
		(7) Check the tires and wheel alignment.	When normal, go to (8).
		(8) Check the optical axis of the stereo camera.	Adjust the optical axis of the stereo camera. <Ref. to ES-13, PROCEDURE, Camera Adjustment, Inspection.>
3	Lane keep (lane departure prevention) is cancelled without releasing operation.	Read the lane departure prevention deactivate code. <Ref. to ES(diag)-84, Active Lane Keep System Code(s) Display.>	When there is a relevant item in the lane departure prevention deactivate code, it can be the cause of malfunction. Eliminate the cause, and check that the malfunction has been improved.

6. CHECK LIST (ADAPTIVE CRUISE CONTROL)

Item name			Yes/No	
[1]: When the vehicle does not accelerate or decelerate according to the preceding vehicle, or when it is difficult to detect the preceding vehicle.				
1	Check that the current status applies to the condition that the use of adaptive cruise control is not desired.			
	1	Tire pressure is not correct.	Yes	No
	2	The vehicle is equipped with the temporary spare tire.	Yes	No
	3	The vehicle is equipped with worn tire or tires with excessive wear difference.	Yes	No
	4	The vehicle is equipped with the tires out of specification.	Yes	No
	5	The suspension has been modified.	Yes	No
	6	The vehicle is equipped with the tire chain.	Yes	No
	7	Headlight is dirty or the optical axis is deviated. (The vehicle cannot correctly emit the headlight beam against the object and recognize it.)	Yes	No
	8	The driving of own vehicle is unstable due to an accident or failure.	Yes	No
	9	The brake warning light illuminates.	Yes	No
	10	Vehicle is tilted by the heavy load.	Yes	No
	11	Passenger capacity is exceeded.	Yes	No
	12	The vehicle is towing the trailer or other vehicle.	Yes	No
	13	The vehicle drives on the general road (other than limited highway). (Depending on the road environment (complicated roads etc.), the vehicle may not be able to drive according to the traffic condition, which may lead to the traffic accident.)	Yes	No
	14	The vehicle drives on the sharp bend.	Yes	No
	15	The vehicle drives on the slippery roads such as icy road or snow-covered road. (Tires can spin, losing the vehicle control.)	Yes	No
	16	The vehicle drives under the traffic condition that the certain vehicle distance is difficult to be maintained due to frequent acceleration and deceleration. (The vehicle may not be able to drive according to the traffic condition.)	Yes	No
	17	There is a steep downhill. (The vehicle may drive at higher speed than the set vehicle speed.)	Yes	No
	18	The vehicle performs adaptive driving while recognizing the preceding vehicle on the steep downhills. (Brake can be overheated.)	Yes	No
	19	The vehicle drives on the road with repeated steep uphills and downhills or crossover. (The vehicle may not be able to recognize the preceding vehicle or may recognize the road surface, and appropriate control may not be performed.)	Yes	No
	20	The vehicle is entering the interchange, service area, parking area, junction or tollgate. (The vehicle may not be able to recognize the preceding vehicle.)	Yes	No
	21	When the surrounding brightness (such as inlet and outlet of a tunnel) suddenly changes.	Yes	No
	22	There are water, snow or sandy dust raised by the preceding vehicle or oncoming vehicle, or sand or smoke blown in the wind, or moisture in front of own vehicle. (The vehicle may not be able to recognize the preceding vehicle or may recognize the water, and appropriate control may not be performed.)	Yes	No
	23	The windshield glass is covered with fog, snow, dirt, frost or sandy dust.	Yes	No
	24	The raindrops, water drops or dirt on the windshield glass are not wiped off sufficiently. (The vehicle may not be able to recognize the preceding vehicle, and appropriate control may not be performed.)	Yes	No
	25	Canoes etc. loaded on the roof block the visibility of the stereo camera.	Yes	No

		Item name	Yes/No	
2	Check that the current status applies to the condition or the object that is hard to be recognized by the stereo camera.			
	1	That was a vehicle with large speed difference (low-speed driving vehicle, stopping vehicle, oncoming vehicle).	Yes	No
	2	That was a cutting-in vehicle.	Yes	No
	3	That was a motorcycle, bicycle, pedestrian or animal, etc.	Yes	No
	4	It was dim in the evening or in the morning.	Yes	No
	5	The headlight did not illuminate during nighttime hours or inside the tunnel.	Yes	No
	6	The tail light of the preceding vehicle did not illuminate during nighttime hours or inside the tunnel.	Yes	No
	7	The vehicle was exposed to the intense light (backlight such as sunlight or headlight high-beam light) from the front of the vehicle.	Yes	No
	8	The rearmost surface of the preceding vehicle was small, low or uneven. That was a truck equipped with an unloaded platform without gate, a vehicle that the luggage was protruding from the rear end of the vehicle, a vehicle of special shape (carrier car, side car, etc.) or a vehicle with low vehicle height.	Yes	No
	9	There was an object extremely close to the bumper of the own vehicle.	Yes	No
3	Check that the current status applies to the driving condition that the preceding vehicle cannot be recognized or the vehicle on the next lane or the object on the roadside may be recognized by mistake.			
	1	The vehicle began adaptive cruise control from the condition that the vehicle distance was short immediately after the preceding vehicle was cut in.	Yes	No
	2	The vehicle drives on the curve, outlet and inlet of the curve, or the road with many curves in succession. (Recognition may not be performed properly, because the preceding vehicle is out of recognition area.)	Yes	No
	3	The position against the preceding vehicle deviated laterally.	Yes	No
	4	There were some objects just near the road side.		
	5	The speed difference against the preceding vehicle was large.	Yes	No
	6	Other vehicle cut ahead of the own vehicle.	Yes	No
	7	The vehicle distance was extremely short.	Yes	No
	8	The own vehicle swayed in the vehicle lane.	Yes	No
	9	The road surface was uneven due to roll or unpaved track.	Yes	No
	10	The vehicle drove on the narrow lane because of the lane closure or construction work.	Yes	No
	11	The driving of own vehicle was unstable due to an accident or failure.	Yes	No
	12	The own vehicle was loaded with the extremely heavy load in the luggage compartment or on the rear seat.	Yes	No
[2]: When braking force is weaker than usual.				
1	Check that the current status applies to the condition that brake force may become poor.			
	1	The vehicle status (loading amount, passenger, etc.) was inappropriate.	Yes	No
	2	The road surface was very steep, slippery, sharp turn, or uneven.	Yes	No
	3	The service maintenance condition of the vehicle (brake system, tire wear, tire pressure, spare tire, etc.) was inappropriate.	Yes	No
	4	The brake was cold at low ambient temperature or immediately after the driving had started.	Yes	No
	5	The symptom occurred between immediately after engine started and after a while the vehicle started driving (Completion of warming up operation can be used as an indication.).	Yes	No
	6	The brake force becomes poor due to the overheating of the brake on the downhills.	Yes	No
	7	The brake force becomes poor because of the wet brake after driving onto the puddle or washing the vehicle.	Yes	No
[3]: When the alarm for requiring more brake pedal force does not sound.				
1	Check that the current status applies to the condition that the alarm for requiring more brake pedal force does not sound even in a short vehicle distance.			
	1	The speed difference between own vehicle and preceding vehicle (when the vehicle speed of the own vehicle was approximately the same as that of the preceding vehicle) was small.	Yes	No
	2	The vehicle speed of the preceding vehicle was faster than that of the own vehicle (when the vehicle distance was getting longer).	Yes	No
	3	Other vehicle cut in extremely close to the own vehicle.	Yes	No
	4	The preceding vehicle decelerated abruptly.	Yes	No
	5	There are many continuous uphills and downhills.	Yes	No

7. CHECK LIST (PRE-COLLISION BRAKE)

Item name			Yes/No	
[1]: When pre-collision brake did not operate, or when vehicle could not stop safely before collision in spite of pre-collision brake operation.				
1	Check that the current status applies to the condition that the pre-collision brake does not operate, or there is a high possibility that the vehicle cannot stop safely before collision in spite of pre-collision brake operation.			
	1	Conditions such as the followings occurred: 1) Vehicle speed difference with the preceding vehicle is small. 2) Distance from the preceding vehicle is long. 3) Lateral deviation (offset amount) is large.	Yes	No
	2	The vehicle status (loading amount, number of passenger, etc.) was inappropriate.	Yes	No
	3	The road surface was very steep, slippery, sharp turn, or uneven.	Yes	No
	4	There was problem for the frontal visibility. (Rain, snow, fog, smoke, etc.)	Yes	No
	5	The objects were livestock, animals, guardrail, telephone pole, tree, fence, wall, etc.	Yes	No
	6	The object was motorcycle, bicycle, or pedestrian. However, the system could not recognize the object due to surrounding brightness, motion, posture, and/or angle.	Yes	No
	7	Crash avoidance operation (accelerator pedal, brake pedal, steering wheel, etc.) was performed.	Yes	No
	8	The service maintenance condition of the vehicle (brake system, tire wear, tire pressure, spare tire, etc.) was inappropriate.	Yes	No
	9	The vehicle is towing the trailer or other vehicle.	Yes	No
	10	The brake was cold at low ambient temperature or immediately after the driving had started.	Yes	No
	11	The brake force becomes poor due to the overheating of the brake on the downhills.	Yes	No
	12	The brake force becomes poor because of the wet brake after driving onto the puddle or washing the vehicle.	Yes	No

		Item name	Yes/No	
2	Check that the current status applies to the condition that there is a high possibility that the pre-collision brake does not operate depending on the recognition status of the stereo camera.			
	1	It was bad weather (heavy rain, snowstorm, dense fog).	Yes	No
	2	The field of view was insufficient due to water, snow or sandy dust raised by the preceding vehicle or oncoming vehicle, or the moisture, sand or smoke blown in the wind.	Yes	No
	3	The headlight did not illuminate during nighttime hours or inside the tunnel.	Yes	No
	4	The tail light of the preceding vehicle did not illuminate during nighttime hours or inside the tunnel.	Yes	No
	5	The vehicle approached the motorcycle, bicycle or pedestrian in the night.	Yes	No
	6	It was dark in the evening or in the morning.	Yes	No
	7	The rearmost surface of the preceding vehicle was small, low or uneven. That was a truck equipped with an unloaded platform without gate, a vehicle that the luggage was protruding from the rear end of the vehicle, a vehicle of special shape (carrier car, side car, etc.) or a vehicle with low vehicle height.	Yes	No
	8	There was a wall in front of the stopping vehicle.	Yes	No
	9	There was an object close to the vehicle.	Yes	No
	10	That was a vehicle stopped sideways.	Yes	No
	11	That was a vehicle which was oncoming or driving in reverse.	Yes	No
	12	The object was small seen from the stereo camera. (Small animals, infants, person squatting down or lying down)	Yes	No
	13	The preceding vehicle made a sharp turn, or performed abrupt acceleration or deceleration.	Yes	No
	14	Other vehicle, motorcycle, bicycle or pedestrian existed extremely close to the bumper of the own vehicle.	Yes	No
	15	The speed difference was 5 km/h (3.1 MPH) or less. (The control is performed in close distance. Depending on the objects shape and size, the rear end surface may be outside the camera visibility area.)	Yes	No
	16	Other vehicle, motorcycle, bicycle or pedestrian cut in from the side or jumped in front of the own vehicle.	Yes	No
	17	The own vehicle changed the vehicle lane, and followed the preceding vehicle right behind.	Yes	No
	18	The vehicle was exposed to the intense light (backlight such as sunlight or headlight high-beam light) from the front of the vehicle.	Yes	No
	19	The windshield glass was covered with fog, snow, dirt, frost or sandy dust.	Yes	No
	20	The windshield glass has not yet been wiped off sufficiently during or after the use of the window washer.	Yes	No
	21	The recognition of the object was imperfect due to the raindrop or droplet of the window washer or the wiper blade blocking the visibility of the stereo camera.	Yes	No
	22	Canoes etc. loaded on the roof blocked the visibility of the stereo camera.	Yes	No
	23	Other vehicle, motorcycle, bicycle or pedestrian existed out of the illuminating area of the headlight.	Yes	No
	24	The vehicle drove on the sharp turn, steep uphills or steep downhills.	Yes	No
	25	The road surface was uneven due to roll or unpaved track.	Yes	No
	26	The vehicle passed through the outlet or inlet of a tunnel.	Yes	No
	27	The object was fence or wall.	Yes	No
	28	The object was a plate of glass, mirror wall or door.	Yes	No
3	Check that the current status applies to the condition that the system does not operate correctly and the turning OFF of the pre-collision brake is desired.			
	1	Tire pressure is not correct.	Yes	No
	2	The vehicle is equipped with the temporary spare tire.	Yes	No
	3	The vehicle is equipped with worn tire or tires with excessive wear difference.	Yes	No
	4	The vehicle is equipped with the tires out of specification.	Yes	No
	5	The suspension has been modified.	Yes	No
	6	The vehicle is equipped with the tire chain.	Yes	No
	7	Headlight is dirty or the optical axis is deviated. (The vehicle cannot correctly emit the headlight beam against the object and recognize it.)	Yes	No
	8	The driving status of own vehicle is unstable due to an accident or failure.	Yes	No
	9	The brake warning light illuminates.	Yes	No
	10	Vehicle is tilted by the heavy load. Or, passenger capacity is exceeded.	Yes	No

Item name			Yes/No	
4	Check that the current status applies to the condition that the pre-collision brake OFF indicator light illuminates. (When the pre-collision brake OFF indicator light illuminates, the pre-collision brake does not operate.)			
	1	The pre-collision brake is turned off, using the pre-collision brake OFF switch.	Yes	No
	2	Approximately for 7 seconds after the engine has started.	Yes	No
	3	EyeSight is malfunctioning.	Yes	No
	4	EyeSight is stopped temporarily.	Yes	No
[2]: When pre-collision brake operated improperly.				
1	Check that the current status applies to the condition that turning OFF of the pre-collision brake is desired.			
	1	The vehicle is towed.	Yes	No
	2	The vehicle is loaded on the carrier car.	Yes	No
	3	The chassis dynamometer or free roller is used.	Yes	No
	4	The vehicle is lifted up, engine is started and the tire is spun.	Yes	No
	5	The vehicle passes through the banners, flags, drooping branches or grass while making contact with them.	Yes	No
	6	The vehicle performs sporty driving on the circuit.	Yes	No
	7	When the vehicle uses the movable type car wash machine.	Yes	No
2	Check that the current status applies to the condition that the pre-collision brake may operate.			
	1	The vehicle passes through the ETC gate at a speed exceeding the specification.	Yes	No
	2	The vehicle drives close to the preceding vehicle.	Yes	No
	3	The vehicle drives on the place where the road surface gradient changed suddenly.	Yes	No
	4	The vehicle passes through the moisture or mass of smoke.	Yes	No
	5	When the exhaust gas emitted from the preceding vehicle is visible clearly at cold weather.	Yes	No
	6	There is an obstacle on the curve or crossing.	Yes	No
	7	The vehicle passes through close to other vehicle or obstacle.	Yes	No
	8	The vehicle parks close to the wall in front or to other vehicle.	Yes	No

8. CHECK LIST (AT RAPID START PREVENTION CONTROL)

Item name			Yes/No	
[1]: When AT rapid start prevention control did not operate.				
1	Check that the current status applies to the condition that the AT rapid start prevention control may not operate.			
	1	Conditions such as the followings occurred: 1) Distance from the front object is long. 2) Vehicle speed difference is small. 3) Lateral deviation (offset amount) is large.	Yes	No
	2	It was bad weather (heavy rain, snowstorm, dense fog).	Yes	No
	3	The visibility was insufficient due to sand or smoke blown in the air.	Yes	No
	4	The vehicle approached the object in the evening, in the morning or in the night.	Yes	No
	5	The vehicle approached the object in the dark place (e.g. closed-in parking lot).	Yes	No
	6	The height of the object was low. (low wall, low guardrail, vehicle with low height etc.)	Yes	No
	7	The object was small seen from the stereo camera. (Small animals, infants, person squatting down or lying down)	Yes	No
	8	The object or rearmost area of the preceding vehicle (trailer, etc.) was small. Or the vehicle approached them too close. (The system triggers the operation by recognizing the area other than the rearmost section, resulting in insufficient control.)	Yes	No
	9	The object such as other vehicle, motorcycle, bicycle or pedestrian cut in from the side or jumped in front of the own vehicle.	Yes	No
	10	The own vehicle changed the vehicle lane when it started, and approached right behind the object.	Yes	No
	11	The vehicle was exposed to the intense light (backlight such as sunlight or headlight high-beam light) from the front of the vehicle.	Yes	No
	12	The windshield glass was covered with fog, snow, dirt, frost or sandy dust.	Yes	No
	13	The windshield glass has not yet been wiped off sufficiently during or after the use of the window washer.	Yes	No
	14	The recognition of the object was imperfect due to the raindrop or droplet of the window washer or the wiper blade blocking the visibility of the stereo camera.	Yes	No
	15	Canoes etc. loaded on the roof blocked the visibility of the stereo camera.	Yes	No
	16	The object existed out of the illuminating area of the headlight.	Yes	No
	17	The vehicle drove on the sharp turn, steep uphills or steep downhills.	Yes	No
	18	The object was a fence or wall with even pattern (striped pattern or bricks) or unpatterned surface.	Yes	No
	19	The object was a plate of glass, mirror wall or door.	Yes	No
	20	Crash avoidance operation (accelerator pedal, brake pedal, steering wheel, etc.) was performed.	Yes	No
2	Check that the current status applies to the condition that the pre-collision brake OFF indicator light illuminates. (When the pre-collision brake OFF indicator light illuminates, the AT rapid start prevention control does not operate.)			
	1	The pre-collision brake was turned off, using the pre-collision brake OFF switch.	Yes	No
	2	Approximately for 7 seconds after the engine has started.	Yes	No
	3	EyeSight is malfunctioning.	Yes	No
	4	EyeSight is stopped temporarily.	Yes	No
[2]: When AT rapid start prevention control operated improperly.				
1	Check that the current status applies to the condition that the releasing of the AT rapid start prevention control is desired.			
	1	The vehicle is towed.	Yes	No
	2	The vehicle is loaded on the carrier car.	Yes	No
	3	The chassis dynamometer or free roller is used.	Yes	No
	4	The vehicle is lifted up, engine is started and the tire is spun.	Yes	No
	5	The vehicle passes through the banners, flags, drooping branches or grass while making contact with them.	Yes	No
	6	The vehicle performs sporty driving on the circuit.	Yes	No

		Item name	Yes/No	
2	Check that the current status applies to the condition that the AT rapid start prevention control may operate.			
	1	The vehicle passes through the ETC gate at a speed exceeding the specification.	Yes	No
	2	The vehicle drives close to the preceding vehicle.	Yes	No
	3	The vehicle drives on the place where the road surface gradient changed suddenly.	Yes	No
	4	The vehicle passes through the moisture or mass of smoke.	Yes	No
	5	There is an obstacle on the curve or crossing.	Yes	No
	6	The vehicle passes through close to other vehicle or obstacle.	Yes	No
	7	The vehicle parks close to the wall in front or to other vehicle.	Yes	No

9. CHECK LIST (LANE DEPARTURE WARNING, SWAY WARNING, FORWARD VEHICLE'S START MONITORING FUNCTION)

		Item name	Yes/No	
[1]: When the lane departure warning did not operate.				
1	Check that the current status applies to the condition that the lane departure warning does not operate or is difficult to operate.			
	1	The lane departure warning is turned off.	Yes	No
	2	The vehicle speed of the own vehicle is approximately less than 50 km/h (31 MPH).	Yes	No
	3	That was approximately 7 seconds period after the lane departure warning had occurred once.	Yes	No
	4	The steering wheel was turned fully or rapidly.	Yes	No
	5	The brake pedal is depressed.	Yes	No
	6	The vehicle is accelerated by depressing the accelerator pedal.	Yes	No
	7	The vehicle distance from the preceding vehicle is short.	Yes	No
	8	That was approximately 7 seconds period while the turn signal indicator was operating or after the lever was returned.	Yes	No
	9	The vehicle has not returned inside the vehicle lane after the operation of the lane departure warning.	Yes	No
	10	The width of the vehicle lane is narrow.	Yes	No
	11	The vehicle lane is difficult to be recognized seen from the stereo camera. (Lane line (white line, etc.) does not exist or is fading out. Or the color of the lane line is very similar to that of the road surface, and difficult to be seen. Or the width of the lane line is very thin.)	Yes	No
	12	The preceding vehicle performed crash avoidance action to avoid the obstacle, and the own vehicle performed steering operation after the preceding vehicle.	Yes	No
2	Check that the current status applies to the condition that the lane departure warning OFF indicator light illuminates. (When the lane departure warning OFF indicator light illuminates, the lane departure warning does not operate.)			
	1	The lane departure warning is turned off, using the lane departure warning OFF switch.	Yes	No
	2	Approximately for 7 seconds after the engine has started.	Yes	No
	3	EyeSight is malfunctioning.	Yes	No
	4	EyeSight is stopped temporarily.	Yes	No
[2]: When the lane departure warning malfunctioned.				
1	Check that the current status applies to the condition that the vehicle lane is recognized erroneously and the lane departure warning may operate.			
	1	There was the tire track on the wet road or snow-covered road.	Yes	No
	2	There was the boundary line between snow-covered area and asphalt or on the trace of road repair.	Yes	No
	3	There was the double vehicle lane.	Yes	No
	4	The shadow of the guardrail was detected by mistake.	Yes	No

		Item name	Yes/No	
[3]: When the sway warning did not operate.				
1	Check that the current status applies to the condition that the sway warning may not operate.			
	1	The vehicle drove on the road with many curves in succession.	Yes	No
	2	The vehicle speed changed greatly.	Yes	No
	3	That was immediately after the vehicle lane had changed.	Yes	No
	4	The vehicle lane was difficult to be recognized seen from the stereo camera. (Lane line (white line, etc.) does not exist or is fading out. Or the color of the lane line is very similar to that of the road surface, and difficult to be seen. Or the width of the lane line is very thin.)	Yes	No
	5	That was immediately after the sway had begun.	Yes	No
2	Check that the current status applies to the condition that the lane departure warning OFF indicator light illuminates. (When the lane departure warning OFF indicator light illuminates, the sway warning does not operate.)			
	1	The lane departure warning is turned off, using the lane departure warning OFF switch.	Yes	No
	2	Approximately for 7 seconds after the engine has started.	Yes	No
	3	EyeSight is malfunctioning.	Yes	No
	4	EyeSight is stopped temporarily.	Yes	No
[4]: When the sway warning malfunctioned.				
1	Check that the current status applies to the condition that the sway warning may operate.			
	1	That was after the sway had stopped.	Yes	No
	2	The driver lost concentration on driving the vehicle due to fatigue or looking away.	Yes	No
[5]: When the forward vehicle's start monitoring function did not operate or when it malfunctioned.				
1	Check that the current status applies to the condition that the forward vehicle's start monitoring function does not operate even when the preceding vehicle has already started, or that the forward vehicle's start monitoring function operates even when the preceding vehicle has not yet started.			
	1	The motorcycle cut in the space between the own vehicle and the stopped preceding vehicle.	Yes	No
	2	The vehicle could not recognize the preceding vehicle properly due to the weather condition or road shape.	Yes	No
	3	The stereo camera lost sight of the preceding vehicle.	Yes	No
	4	The driver did not depress the brake pedal with select lever in D, M or N range. (At this time, forward vehicle's start monitoring function does not operate.)	Yes	No
	5	The forward vehicle's start monitoring function was turned OFF via the customization function.	Yes	No

10.CHECK LIST (ACTIVE LANE KEEP)

Item name			Yes/No	
1	Check that the current status applies to the condition that use of lane keeping is not desired.			
	1	An object was placed on the dashboard.	Yes	No
	2	Tire pressure is not correct.	Yes	No
	3	The vehicle is equipped with the temporary spare tire.	Yes	No
	4	The vehicle is equipped with worn tire or tires with excessive wear difference.	Yes	No
	5	The vehicle is equipped with the tires out of specification.	Yes	No
	6	The flat tire is repaired using the temporary repair kit.	Yes	No
	7	The suspension (including STI parts) has been modified.	Yes	No
	8	Wheel balance is abnormal (balance weight falls off, slides off, etc.).	Yes	No
	9	Wheel alignment is out of the specified value.	Yes	No
	10	The steering wheel has been replaced with a non-genuine part.	Yes	No
	11	The steering wheel is off-center.	Yes	No
	12	The lighting devices, such as headlights and fog lights, have been modified.	Yes	No
	13	An abnormal vibration can be felt on the steering wheel.	Yes	No
	14	The steering wheel operation is heavier than usual.	Yes	No
	15	An error occurs, for example, no display appears in the combination meter or no alarm sounds.	Yes	No
	16	The headlight cannot illuminate the road surface sufficiently because the headlight is dirty, attached with ice, snow or mud, or the optical axis is deviated.	Yes	No
	17	The driving status of own vehicle was unstable due to an accident or failure.	Yes	No
	18	The vehicle carried heavy load.	Yes	No
	19	Passenger capacity was exceeded.	Yes	No
	20	The vehicle towed another vehicle.	Yes	No
	21	The vehicle drove on a general road (other than limited highways).	Yes	No
	22	The vehicle drove on a road with sharp curves, such as an urban highway.	Yes	No
	23	The vehicle drove on a slippery road such as icy roads or snow-covered roads.	Yes	No
	24	The vehicle drove on a lane restricted road or a temporary road due to road construction.	Yes	No
	25	The vehicle drove on a road where obsolete white lines did not disappear completely.	Yes	No
	26	On the road surface there were some snow, puddles, snow melting agent, cracks, road repair traces, obsolete white lines.	Yes	No
	27	The vehicle entered the interchange, service area, parking area, junction or tollgate.	Yes	No
	28	The vehicle drove on a road where the surrounding brightness (such as inlet and outlet of a tunnel) suddenly changed.	Yes	No
	29	The vehicle drove on a road where there was some water or sandy dust raised by a preceding vehicle or oncoming vehicle, or sand or smoke blown in the wind, or moisture in front of own vehicle.	Yes	No
	30	The windshield glass was covered with fog, snow, dirt, frost or sandy dust.	Yes	No
	31	The raindrops, water drops or dirt on the windshield glass were not wiped off sufficiently.	Yes	No
	32	Canoes etc. loaded on the roof block the visibility of the stereo camera.	Yes	No
	33	The vehicle drove immediately after the stereo camera was replaced or adjusted.	Yes	No

		Item name	Yes/No	
2	Check that the current status applies to the condition or the object, such as a white line, that is hard to be recognized by the stereo camera.			
	1	The vehicle drove when it was dark in the evening or in the morning.	Yes	No
	2	The vehicle drove under the road condition, such as rainy or snowy weather, that the white line was difficult to be recognized.	Yes	No
	3	The headlight did not illuminate during nighttime hours or inside the tunnel.	Yes	No
	4	The vehicle was exposed to the intense light (backlight such as sunlight or headlight) from the front of the vehicle.	Yes	No
	5	The vehicle drove on a road where the driving lane was yellow.	Yes	No
	6	The vehicle drove on a road where the color of the lane division line was similar to the color of the road surface, which was difficult to be recognized.	Yes	No
	7	The vehicle drove on a road where the width of the lane division line was narrow.	Yes	No
	8	The vehicle drove on a road where the lane division line did not exist or almost disappeared.	Yes	No
	9	The vehicle drove on a road where the width of the driving lane was narrow.	Yes	No
	10	The vehicle drove on a road where there was a fork lane, such as an interchange outlet of the highway, or an intersection.	Yes	No
	11	The vehicle drove on a road where the surrounding brightness (such as inlet and outlet of a tunnel) suddenly changed.	Yes	No
	12	The vehicle drove on a road where the white line had a special shape, such as a double line.	Yes	No
	13	The vehicle drove under the condition that the white line was difficult to be recognized due to the short distance to the preceding vehicle.	Yes	No
	14	Another vehicle cut in ahead of the vehicle from the next lane, or the preceding vehicle changed the driving lane.	Yes	No
	15	The vehicle drove on a road where the curve shape changed suddenly.	Yes	No
	16	A shadow of the guardrail formed on the white line.	Yes	No
3	Check that the current status applies to the condition that sufficient performance of lane keeping cannot be achieved.		Yes	No
	1	The vehicle was subjected to cross wind.	Yes	No
	2	The vehicle is equipped with winter tires or non-genuine tires.	Yes	No
	3	The vehicle drove on a uphill or a downhill where the road surface gradient suddenly changed.	Yes	No
	4	The vehicle drove on an uneven, rolling or jointed road surface.	Yes	No
	5	The vehicle drove on a road where the road surface cross gradient changed suddenly or was large.	Yes	No
	6	The acceleration or deceleration speed was large.	Yes	No
	7	The vehicle drove immediately after the tire was replaced or the tire air pressure was changed.	Yes	No
	8	The vehicle drove immediately after the vehicle weight was extremely changed.	Yes	No
	9	The vehicle drove immediately after the stereo camera was repaired, adjusted or replaced.	Yes	No
	10	The vehicle drove immediately after the suspension or steering system was repaired or replaced.	Yes	No
	11	The vehicle drove immediately after the engine was started at a low outside temperature.	Yes	No

B: CHECK ADAPTIVE CRUISE CONTROL INDICATOR LIGHT/CONSTANT SPEED CRUISE CONTROL INDICATOR LIGHT AND CRUISE SET INDICATOR LIGHT

TROUBLE SYMPTOM:
Adaptive cruise control or conventional cruise control can be set, but adaptive cruise control indicator light/constant speed cruise control indicator light and cruise SET indicator light do not illuminate.

	Step	Check	Yes	No
1	**CHECK ADAPTIVE CRUISE CONTROL INDICATOR LIGHT/CONSTANT SPEED CRUISE CONTROL INDICATOR LIGHT AND CRUISE SET INDICATOR LIGHT.** Check the combination meter. <Ref. to IDI(diag)-20, OPERATION, System Operation Check Mode.>	Does adaptive cruise control indicator light/constant speed cruise control indicator light and cruise SET indicator light illuminate?	Go to step **2**.	Replace the meter case assembly. <Ref. to IDI-13, Combination Meter.>
2	**CHECK LAN SYSTEM.** Perform the diagnosis for LAN system. <Ref. to LAN(diag)-2, Basic Diagnostic Procedure.>	Is the check result OK?	Replace the stereo camera. <Ref. to ES-8, Stereo Camera.>	Perform the diagnosis according to diagnosis for LAN system.

C: CHECK EyeSight STEERING SWITCH

TROUBLE SYMPTOM:

- Cruise control cannot be set. (Cancelled immediately.)
- Cruise control cannot be released.

WIRING DIAGRAM:

EyeSight System <Ref. to WI-222, WIRING DIAGRAM, EyeSight System.>

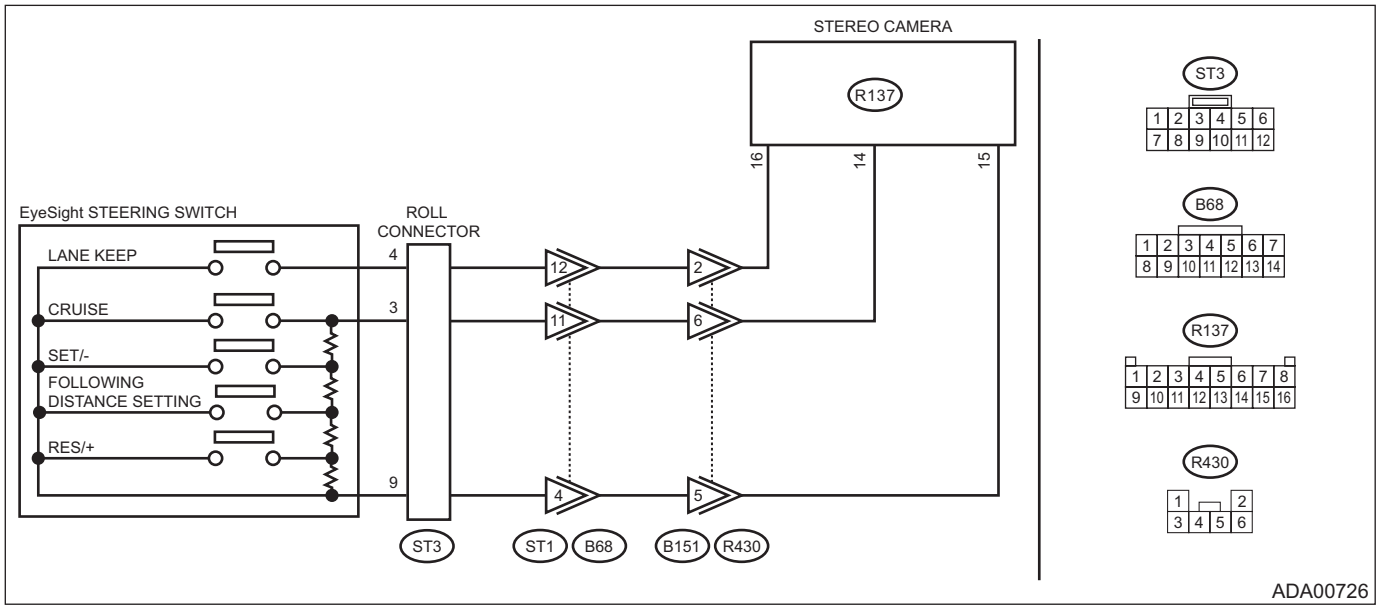

Step		Check	Yes	No
1	**CHECK EyeSight STEERING SWITCH CIRCUIT.** 1) Remove the driver's airbag module. <Ref. to AB-32, REMOVAL, Driver's Airbag Module.> 2) Disconnect the EyeSight steering switch harness connector. 3) Turn the ignition switch to ON. 4) Measure the voltage between harness connector terminal and chassis ground. ***Connector & terminal*** ***(ST3) No. 3 (+) — Chassis ground (–):*** ***(ST3) No. 4 (+) — Chassis ground (–):***	Is the voltage 5 V or more?	Go to step **2**.	Check for open/short circuit or poor contact in the harness between EyeSight steering switch and ECM and in the steering roll connector.
2	**CHECK EyeSight STEERING SWITCH CIRCUIT.** 1) Turn the ignition switch to OFF. 2) Remove the EyeSight steering switch. <Ref. to CC-6, REMOVAL, Cruise Control Command Switch.> 3) Measure the resistance between harness connector terminal and chassis ground. ***Connector & terminal*** ***(ST3) No. 9 — Chassis ground:***	Is the resistance less than 10 Ω?	Go to step **3**.	Check for open circuit between EyeSight steering switch and chassis ground.
3	**CHECK EyeSight STEERING SWITCH.** Check EyeSight steering switch. <Ref. to CC-7, INSPECTION, Cruise Control Command Switch.>	Is the check result OK?	Replace the stereo camera. <Ref. to ES-8, Stereo Camera.>	Replace the EyeSight steering switch.

14.EyeSight Temporary Code(s) Display

A: OPERATION

If the EyeSight pause code is detected from the stereo camera, all the functions of the EyeSight excluding the conventional cruise control stop temporarily and cannot be used. When the failure is resolved, the function starts operating.

1) On «Start» display, select «Diagnosis».
2) On «Vehicle selection» display, input the target vehicle information and select «Confirmed».
3) On «Main Menu» display, select «Each System».
4) On «Select System» display, select «EyeSight» and select «Enter».
5) On «Select Function» display, select «Cancel Code».
6) On «Cancel Code» display, select «EyeSight HALT Code».

NOTE:

- For detailed operation procedures, refer to “Application help”.
- Temporary stop is not released even if the lane departure warning OFF switch or pre-collision brake OFF switch is pressed.
- Depending on the situation, temporary stop may not be released even if the ignition switch is turned off.
- Up to 20 codes can be stored.
- Stored codes will be cleared by Clear Memory.
- For details on EyeSight temporary stop codes, refer to List of EyeSight temporary stop code. <Ref. to ES(diag)-72, LIST, EyeSight Temporary Code(s) Display.>

B: LIST

- List of EyeSight temporary stop code

EyeSight pause code	Item	Contents of diagnosis	Reference
E5	Stereo Camera Temporary Stop	The operation stopped temporarily due to vertical deviation of the optical axis of the stereo camera. (During CRUISE MAIN ON, "Temporary stop" is displayed in the multi-information display.)	Perform inspection concerning the item for E5 of the "CHECK LIST (CAMERA TEMPORARY STOP)". <Ref. to ES(diag)-75, CHECK LIST (CAMERA TEMPORARY STOP), LIST, EyeSight Temporary Code(s) Display.> This code may be displayed when the rear of the vehicle is lowered by the overload. When the failure is resolved, and the operation returns from the temporary stop status after driving for a while, it is normal. If this code is displayed in an ordinary use under which the vehicle is not tilted, readjust the stereo camera. <Ref. to ES-13, PROCEDURE, Camera Adjustment, Inspection.> If the same cancel code is still detected after readjustment, replace the stereo camera. <Ref. to ES-8, REMOVAL, Stereo Camera.>
CC CD		Temporary stop was performed due to the bad weather, backlight, fogged window or dirty window interfering with the recognition function of the stereo camera. And this code may be displayed also when the front of the camera is blocked by the hand or when it is very dark around the vehicle or when the vehicle is surrounded by the blanket of snow and nothing can be seen from the stereo camera. (During CRUISE MAIN ON, "Temporary stop Camera view defectiveness" is displayed in the multi-information display.)	Investigate the following items No. 1 and No. 2, and check that the possible cause of the temporary stop is applied either to No. 1 or No. 2. 1. Perform inspection concerning the item for CC and CD of the "CHECK LIST (CAMERA TEMPORARY STOP)". <Ref. to ES(diag)-75, CHECK LIST (CAMERA TEMPORARY STOP), LIST, EyeSight Temporary Code(s) Display.> When there is a relevant item in the check list, it can be the cause of malfunction. 2. Read the temporary stop count stored in the temporary stop count of current data, and check the cause of the temporary stop occurred in the past from "LIST OF CONTENTS FOR CAMERA TEMPORARY STOP: 0 — 23 COUNTS". <Ref. to ES(diag)-77, LIST OF CONTENTS FOR CAMERA TEMPORARY STOP, LIST, EyeSight Temporary Code(s) Display.> When the causes of the temporary stop for No. 1 and No. 2 correspond, drive the vehicle for a while after the cause of the temporary stop has been eliminated. If the operation returns from the temporary stop status, it is normal. (However, when the temporary stop takes place and is cancelled repeatedly, the temporary stop status is kept for a while to delay the return of the operation, which prevents the irritation.) When this is not the case, check the stereo camera and its periphery. <Ref. to ES(diag)-8, WINDSHIELD GLASS AND DASHBOARD, INSPECTION, General Description.> <Ref. to ES(diag)-12, FRONT WIPER, INSPECTION, General Description.> <Ref. to ES(diag)-13, STEREO CAMERA, INSPECTION, General Description.>
CE		The temperature of the stereo camera became excessively high or low, and the operation stopped temporarily. (During CRUISE MAIN ON, "Temporary stop Camera temperature range outside" is displayed in the multi-information display.)	Perform inspection concerning the item for CE of the "CHECK LIST (CAMERA TEMPORARY STOP)". <Ref. to ES(diag)-75, CHECK LIST (CAMERA TEMPORARY STOP), LIST, EyeSight Temporary Code(s) Display.> When the operation returns from the temporary stop status after the failure is resolved, it is normal. When the operation does not return from the temporary status even if driving the vehicle for a while after the failure has been resolved, replace the stereo camera. <Ref. to ES-8, REMOVAL, Stereo Camera.>
33		Detected when engine speed is 300 rpm or less. (Not detected at an initial ignition switch ON.) (During CRUISE MAIN ON, "Temporary stop" is displayed in the multi-information display.)	Detected when the engine speed drops below 300 rpm after the engine has started once. If the same EyeSight temporary stop code is detected again when the engine is restarted, check the ECM. <Ref. to EN(w/o STI)(diag)-2, PROCEDURE, Basic Diagnostic Procedure.>

EyeSight Temporary Code(s) Display

EyeSight pause code	Item	Contents of diagnosis	Reference
C0	Pre-Collision Second Braking Activation	The operation stopped temporarily because the pre-collision secondary brake operated three times between engine starting and stopping. (This is not a normal driving operation, or the system may be malfunctioning.) (During CRUISE MAIN ON, “Temporary stop” is displayed in the multi-information display.)	This code may be displayed when the pre-collision brake is operated intentionally. Turn the ignition switch to OFF, and restart after a while. If the operation returns from the temporary stop status, it is normal. When temporary stop status continues with a code other than C0 after restart, perform diagnosis according to the code. When temporary stop status continues with the code of C0 after restart, the stereo camera may be malfunctioning. Replace the stereo camera. <Ref. to ES-8, REMOVAL, Stereo Camera.>
A0	CAN Diagnosis	The voltage dropped below 10 V immediately after IGN ON. (During CRUISE MAIN ON, “Temporary stop” is displayed in the multi-information display.)	This code may be displayed when the engine is not started for a while with the ignition switch ON and when the engine has started after that. This is a normal operation. If this is not the case, the supply voltage may be malfunctioning. <Ref. to ES(diag)-89, DTC B2814 POWER SUPPLY LOW VOLTAGE, Diagnostic Procedure with Diagnostic Trouble Code (DTC).>
A1	ECM Reprogramming	The operation stopped temporarily because the control module (CM) is being reprogrammed. (During CRUISE MAIN ON, “Temporary stop” is displayed in the multi-information display.)	After the completion of the reprogramming operation, turn the ignition to OFF and restart. If the operation returns from the temporary stop status, it is normal.
F9	EPS Input Control Suspended	The operation stopped temporarily because an assist limitation (overheat prevention control) was operated in order to prevent the electric power steering malfunction due to overheat.	This code may be displayed when the steering wheel is operated repeatedly while the vehicle is stopped or running in very low speed. After stopping the engine, leave the vehicle for approximately 30 minutes to cool down, and restart the engine. If the operation returns from the temporary stop status, it is normal.
		The operation stopped temporarily because of an electric power steering voltage decrease.	This code may be displayed when battery power is low. Replace or charge the battery, and restart the engine. If the operation returns from the temporary stop status, it is normal.
		The operation stopped temporarily because of an electric power steering bus off.	Electric power steering detected a failure and was disconnected from CAN line.
FA	EPS Input Control Suspended	The operation stopped temporarily because the center point of steering angle sensor deviated.	This code may be displayed when the center point of steering angle sensor deviates when removing and installing the steering etc. If the system returns from the temporary stop status after inspecting/adjusting the center point and driving the vehicle for a while, it is normal.
		The operation stopped temporarily because there was an excessive deviation in the alignment. (During CRUISE MAIN ON, “Temporary stop” is displayed in the multi-information display.)	This code may be displayed when vehicle underbody parts are damaged by a car accident etc, or when the underbody parts are replaced. If the system returns from the temporary stop status after replacing the parts and driving the vehicle for a while, it is normal.

NOTE:
*: Automatic adjustment by driving
1. Drive vehicle at a speed from 45 km/h (25 MPH) to 100 km/h (62 MPH).
2. Drive the vehicle so that the distance from the preceding vehicle is 40 m (131 ft) or more or there are no preceding vehicles. (To recognize both right and left white lines)
3. Drive the vehicle on a road where right and left white lines are clearly recognized and there are many straight segments. (If there are no corresponding general roads, drive the vehicle on a limited highway.)
4. Display the current data «Lane recognition status» with Subaru Select Monitor, and then drive the vehicle on a road where Subaru Select Monitor indicates 03 or 05 (the system recognizes both white lines). <Ref. to ES(diag)-24, STEREO CAMERA, OPERATION, Read Current Data.>

CAUTION:
When performing operations by one person, use Save of the current data for the Subaru Select Monitor to save «Lane recognition status». Check the saved data after stopping the vehicle.

1. CHECK LIST (CAMERA TEMPORARY STOP)

Even when the set status of the adaptive cruise control is canceled or when a temporary stop status occurs, the EyeSight temporary stop code will not be retained for the following conditions.

- When the VDC operation is stopped by pressing the VDC OFF switch
- When the pre-collision brake operation is stopped by pressing the pre-collision brake OFF switch
- When the lane departure warning is stopped by pressing the lane departure warning OFF switch
- Immediately after the engine start

When these cases does not apply but the EyeSight temporary stop code is displayed, perform the inspection according to the following items.

Item name			Yes/No	
[1]: EyeSight temporary stop code [CC, CD] (At this time, “HALT(E1 camera view defectiveness)” is displayed in the multi-information display.)				
1	Check that the current status applies to the condition that are difficult to be recognized by the stereo camera.			
	1	It was bad weather (heavy rain, snowstorm, dense fog; especially when the oil film adheres to the windshield glass, the glass coating agent is used, or when the old wiper is used).	Yes	No
	2	The vehicle was exposed to the intense light (backlight such as sunlight or headlight high-beam light) from the front of the vehicle.	Yes	No
	3	The raindrops, water drops or dirt on the windshield glass are not wiped off sufficiently.	Yes	No
	4	The windshield glass is covered with fog, snow, dirt, frost or sandy dust, and either of them blocks the visibility of the stereo camera.	Yes	No
	5	The vehicle was tilted excessively by the heavy load.	Yes	No
	6	Canoes etc. loaded on the roof blocked the visibility of the stereo camera.	Yes	No
	7	The field of view was insufficient due to water or snow raised by the preceding vehicle or oncoming vehicle, or the moisture, sand, smoke or sandy dust blown in the wind.	Yes	No
	8	The vehicle passed through the outlet or inlet of a tunnel.	Yes	No
	9	The rearmost area of preceding vehicle was small (trailer, etc.), low or uneven.	Yes	No
	10	The object was a fence or wall with even pattern (striped pattern or bricks) or unpatterned surface.	Yes	No
	11	The object was a plate of glass, mirror wall or door.	Yes	No
	12	The tail light of the preceding vehicle did not illuminate during nighttime hours or inside the tunnel.	Yes	No
	13	The vehicle passed through the banners, flags, drooping branches or grass.	Yes	No
	14	The vehicle drove on the steep uphills or steep downhills.	Yes	No
	15	Front of the camera was blocked by the hand.	Yes	No
	16	It was very dark and there was no obstacle around the vehicle.	Yes	No
	17	The surrounding ground surface was similarly colored. (There is snow as far as the eye can see.)	Yes	No
	18	Dirt such as fingerprint adhered to the lens portion of the stereo camera.	Yes	No
	19	Stable recognition was difficult because of reflection to the windshield glass.	Yes	No
	20	The stereo camera was subject to impact, and the displacement or distortion occurred.	Yes	No
[2]: EyeSight temporary stop code [CE] (At this time, “HALT(E2 camera temperature range outside)” is displayed in the multi-information display.)				
1	Check that the current status applies to the condition that the temperature of the stereo camera becomes excessively high or low.			
	1	The compartment temperature was high. (For example: The vehicle was left under the scorching sun.) Or the compartment temperature was low. (For example: The vehicle was left under the frigid environment.)	Yes	No
[3]: EyeSight temporary stop code [E5] (At this time, “Temporary stop” is displayed in the multi-information display.)				
1	Check that the current status applies to the condition that the vertical deviation occurs on the stereo camera optical axis.			
	1	The vehicle was tilted excessively by the heavy load.	Yes	No
	2	The vehicle drove on the steep uphills or steep downhills.	Yes	No
	3	The stereo camera was subject to impact, and the displacement or distortion occurred.	Yes	No
[4]: EyeSight temporary stop code [33] (At this time, “Temporary stop” is displayed in the multi-information display.)				
1	Check that the current status applies to the condition that the engine speed drops to 300 rpm or below.		Yes	No
[5]: EyeSight temporary stop code [C0] (At this time, “Temporary stop” is displayed in the multi-information display.)				
1	Check that the current status applies to the condition that the pre-collision secondary brake operated three times between starting and stopping of engine.		Yes	No

EyeSight Temporary Code(s) Display

	Item name	Yes/No	
[6]: EyeSight temporary stop code [A0] (At this time, “Temporary stop” is displayed in the multi-information display.)			
1	Check that the current status applies to the condition that the voltage dropped below 10 V immediately after the ignition ON.	Yes	No
[7]: EyeSight temporary stop code [A1] (At this time, “Temporary stop” is displayed in the multi-information display.)			
1	Check that the control module (CM) is currently being reprogrammed.	Yes	No
[8]: EyeSight temporary stop code [F9] (At this time, “Temporary stop” is displayed in the multi-information display.)			
1	Check that the current status applies to the condition that the steering wheel is operated repeatedly when the vehicle stops or moves very slowly.	Yes	No
[9]: EyeSight temporary stop code [FA] (At this time, “Temporary stop” is displayed in the multi-information display.)			
1	Check that this is applied to the condition that the wheel alignment is extremely misaligned.	Yes	No
2	Check that this is applied to the condition that the center point of the steering angle sensor is misaligned.	Yes	No

2. LIST OF CONTENTS FOR CAMERA TEMPORARY STOP

Read the camera temporary stop count from Current Data Display & Save of Subaru Select Monitor, estimate the possible cause of the temporary stop according to the chart below. (After clearing the memory, the number of occurrences for each temporary stop is accumulated.)

Displayed item	Main causes	Possible conditions for temporary stop (including events occurring less frequently)
EyeSight Temporary 0 Count	Front of the camera is blocked by hand, dirty window glass	Backlight, dirty window glass, fogged window glass, frost on the window glass, oil film on the window glass, raindrop adhering to the window glass, fingerprint adhering to the lens, deteriorated wiper, front of the camera is blocked by hand, bad weather (heavy rain, snowstorm, dense fog), unpatterned wall, water or snow raised by preceding vehicle
EyeSight Temporary 1 Count	Front of the camera is blocked by hand, dirty window glass	Backlight, dirty window glass, fogged window glass, frost on the window glass, oil film on the window glass, raindrop adhering to the window glass, fingerprint adhering to the lens, deteriorated wiper, front of the camera is blocked by hand, bad weather (heavy rain, snowstorm, dense fog), water or snow raised by preceding vehicle, very dark and no obstacle around the vehicle, unpatterned wall, blanket of snow around the vehicle and no obstacle is found
EyeSight Temporary 2 Count	Fogged window glass, frost on the window glass	Dirty window glass, fogged window glass, frost on the window glass, oil film on the window glass, raindrop adhering to the window glass, fingerprint adhering to the lens, deteriorated wiper, front of the camera is blocked by hand, bad weather (heavy rain, snowstorm, dense fog), unpatterned wall, water or snow raised by preceding vehicle
EyeSight Temporary 3 Count	Backlight	Backlight, dirty window glass, fogged window glass, frost on the window glass, oil film on the window glass, raindrop adhering to the window glass, fingerprint adhering to the lens, deteriorated wiper, bad weather (heavy rain, snowstorm, dense fog), unpatterned wall, water or snow raised by preceding vehicle
EyeSight Temporary 4 Count	Water raised by preceding vehicle	Backlight, dirty window glass, fogged window glass, frost on the window glass, oil film on the window glass, raindrop adhering to the window glass, fingerprint adhering to the lens, deteriorated wiper, front of the camera is blocked by hand, bad weather (heavy rain, snowstorm, dense fog), unpatterned wall, water or snow raised by preceding vehicle, use of the window washer
EyeSight Temporary 5 Count	Dirty window glass, fogged window glass, oil film on the window glass	Dirty window glass, fogged window glass, frost on the window glass, oil film on the window glass, raindrop adhering to the window glass, fingerprint adhering to the lens, deteriorated wiper, bad weather (heavy rain, snowstorm, dense fog), water or snow raised by preceding vehicle
EyeSight Temporary 6 Count	Storm of rain	Dirty window glass, fogged window glass, frost on the window glass, oil film on the window glass, raindrop adhering to the window glass, fingerprint adhering to the lens, deteriorated wiper, bad weather (heavy rain, snowstorm, dense fog), water or snow raised by preceding vehicle, use of the window washer
EyeSight Temporary 7 Count	Object on the dashboard reflected against the windshield glass	Object on the dashboard reflected against the windshield glass, snowstorm
EyeSight Temporary 8 Count	Dirty window glass, bad weather	Backlight, dirty window glass, fogged window glass, frost on the window glass, oil film on the window glass, raindrop adhering to the window glass, fingerprint adhering to the lens, deteriorated wiper, front of the camera is blocked by hand, object on the dashboard reflected against the windshield glass, bad weather (heavy rain, snowstorm, dense fog), unpatterned wall, water drop raised by preceding vehicle, steep slope, continuous sharp curve, banner, grass, preceding vehicle with large uneven surface (trailer, etc.), preceding vehicle driving in the night without illuminating the tail light, preceding vehicle with snow adhered, use of the window washer
EyeSight Temporary 9 Count	Not used	—
EyeSight Temporary 10 Count	Not used	—

EyeSight Temporary Code(s) Display

Displayed item	Main causes	Possible conditions for temporary stop (including events occurring less frequently)
EyeSight Temporary 11 Count	Not used	—
EyeSight Temporary 12 Count	Camera has been deformed by hitting it.	The stereo camera was subject to impact, and the displacement or distortion occurred.
EyeSight Temporary 13 Count	Not used	—
EyeSight Temporary 14 Count	Not used	—
EyeSight Temporary 15 Count	Not used	—
EyeSight Temporary 16 Count	Not used	—
EyeSight Temporary 17 Count	Not used	—
EyeSight Temporary 18 Count	Not used	—
EyeSight Temporary 19 Count	Not used	—
EyeSight Temporary 20 Count	Not used	—
EyeSight Temporary 21 Count	The vehicle is tilted excessively by the heavy load.	• The vehicle is tilted excessively by the heavy load. • The vehicle drives on the steep uphills or steep downhills. • The stereo camera was subject to impact, and the displacement or distortion occurred.
EyeSight Temporary 22 Count	Camera has been deformed by hitting it.	The stereo camera was subject to impact, and the displacement or distortion occurred.
EyeSight Temporary 23 Count	Camera has been deformed by hitting it.	The stereo camera was subject to impact, and the displacement or distortion occurred.
EyeSight Temporary 24 Count	Camera has been deformed by hitting it.	The stereo camera was subject to impact, and the displacement or distortion occurred.
EyeSight Temporary 25 Count	Camera has been deformed by hitting it.	The stereo camera was subject to impact, and the displacement or distortion occurred.
EyeSight Temporary 26 Count	Dirty window glass left for a long time	Dirty window glass, fogged window glass, frost on the window glass, raindrop adhering to the window glass, fingerprint adhering to the lens
EyeSight Temporary 27 Count	Not used	—
EyeSight Temporary 28 Count	Can't see anything in a complete darkness.	The vehicle drove in a complete darkness with the headlight turned off. Or, the camera was blinded when driving.
EyeSight Temporary 29 Count	Not used	—
EyeSight Temporary 30 Count	Not used	—
EyeSight Temporary 31 Count	In a high temperature of 70°C (158°F) or more or in a low temperature of –10°C (14°F) or less	—

15.ECM Cancel Code(s) Display

A: OPERATION

1) On «Main Menu» display, select «Each System».
On «Select System» display, select «Engine Control System».
2) Drive vehicle at 40 km/h (25 MPH) or more and set the cruise control.

CAUTION:
- **When performing diagnosis, observe the legal speed limit on the road.**
- **The cancel code will also appear when the cruise control is cancelled by the driver's operation. Do not confuse them.**
- **Be sure to get an assistant to support the diagnosis while driving, and have him/her operate the select monitor.**

3) When the set speed is cancelled by itself (without any cancel operations such as applying brake) or when the cruise control could not be set by performing the setting operation, select the «Cancel Code(s) Display» on the engine malfunction diagnosis screen.

NOTE:
The «Current» and «The past» are contained in the cancel code. The latest code recognized during current test drive is displayed in «Current». Cancel codes resulting from fault diagnosis of switches relating to the system and cruise control are also displayed in «The past».
4) Perform Engine DTC Clear Memory operation. <Ref. to EN(w/o STI)(diag)-82, OPERATION, Clear Memory Mode.>
Cancel codes for switches relating to the system and cruise control are deleted by clearing memory on the engine side.

NOTE:
- For detailed operation procedures, refer to “Application help”.
- The latest code will be cleared by turning ignition switch to OFF.
- For details on cancel codes, refer to List of ECM cruise control cancel code. <Ref. to ES(diag)-80, LIST, ECM Cancel Code(s) Display.>

B: LIST

• List of ECM cruise control cancel code(s)
When the cruise control is cancelled, the ECM outputs the following cancel codes.

Cancel code	Item	Contents of diagnosis	Reference
11	Main switch	Main switch of the EyeSight steering switch is turned to OFF, and the cruise control is released.	This DTC is displayed without operating the main switch. <Ref. to ES(diag)-111, 11, Diagnostic Procedure with ECU Cancel Code.>
12	Stop & Brake switch	Stop light switch or brake switch is turned to ON, and then the cruise control is released.	This DTC is displayed without depressing the brake pedal. <Ref. to ES(diag)-112, 12, Diagnostic Procedure with ECU Cancel Code.>
14	Neutral switch	Neutral position switch is turned to ON, and then the cruise control is released.	This DTC is displayed without shifting to neutral position. <Ref. to ES(diag)-114, 14, Diagnostic Procedure with ECU Cancel Code.>
15	Cancel switch	Cancel switch is turned to ON, and then the cruise control is released.	This DTC is displayed without operating the cancel switch. <Ref. to ES(diag)-115, 15, Diagnostic Procedure with ECU Cancel Code.>
16	Ignition switch	Ignition switch is turned to OFF, and then the cruise control is released.	This DTC is displayed without operating the ignition switch. <Ref. to ES(diag)-115, 16, Diagnostic Procedure with ECU Cancel Code.>
21	Abnormality of switches when Ignition switch on	When the ignition switch is turned to ON, each switch of the EyeSight steering switch is already turned ON.	This DTC is displayed when turning ignition switch to ON without operating the EyeSight steering switch. <Ref. to ES(diag)-115, 21, Diagnostic Procedure with ECU Cancel Code.>
22	Abnormality of change in vehicle speed	Malfunction of vehicle speed signal variation is detected.	<Ref. to ES(diag)-116, 22, Diagnostic Procedure with ECU Cancel Code.>
24	Abnormality of switches related to cruise control	Open circuit of the EyeSight steering switch is detected during cruise driving. (The system is judged as model without cruise control.)	This DTC is displayed with normal operation. <Ref. to ES(diag)-116, 24, Diagnostic Procedure with ECU Cancel Code.>
31	Engine Speed	• Abnormal increase of engine speed is detected. • Gear is placed in Neutral, 1st or Reverse position.	Cruise in 2nd shift position or more. <Ref. to ES(diag)-116, 31, Diagnostic Procedure with ECU Cancel Code.>
32	Cruse Control out of Range	• Vehicle speed exceeds the controllable range during cruising. • Set operation was performed at vehicle speed unavailable for setting. • RESUME operation was performed without memorized vehicle speed.	This DTC is displayed, though the vehicle speed is increased to the speed available for cruise set and set operation was performed again. <Ref. to ES(diag)-116, 32, Diagnostic Procedure with ECU Cancel Code.>
34	Prohibition of cruise control at continuing big Accel. angle	The vehicle has been driven at higher speed than set vehicle speed for an abnormally long time (approximately 10 minutes) during cruise driving.	<Ref. to ES(diag)-116, 34, Diagnostic Procedure with ECU Cancel Code.>
35	Prohibition of cruise control at vehicle speed F/B malfunction	Set vehicle speed cannot be kept because of some reasons (steep uphill, parking brake, abnormal decrease of engine output, etc.) during cruise driving.	<Ref. to ES(diag)-116, 35, Diagnostic Procedure with ECU Cancel Code.>
41	VDC/TCS Operating	Vehicle dynamics control (VDC), TCS or EPB is operated during cruise driving or cruise setting.	<Ref. to ES(diag)-117, 41, Diagnostic Procedure with ECU Cancel Code.>
43	ABS/VDC Failure	When the cruise switch is ON, ABS or vehicle dynamics control (VDC) system malfunction is detected.	<Ref. to ES(diag)-117, 43, Diagnostic Procedure with ECU Cancel Code.>

Cancel code	Item	Contents of diagnosis	Reference
44	Body Integrated unit Failure	When the cruise switch is ON, body integrated unit system malfunction is detected.	<Ref. to ES(diag)-117, 44, Diagnostic Procedure with ECU Cancel Code.>
45	Meter Failure	When the cruise switch is ON, combination meter malfunction is detected.	<Ref. to ES(diag)-117, 45, Diagnostic Procedure with ECU Cancel Code.>
47	Adaptive cruise control ECM abnormal	When the cruise switch is ON, stereo camera malfunction is detected.	Check the DTCs related to stereo camera.
49	TCM Failure	Transmission control module (TCM) malfunction is detected during cruise driving or cruise setting.	<Ref. to ES(diag)-117, 49, Diagnostic Procedure with ECU Cancel Code.>
53	Adaptive Cruise Control Forced Cancel	Stereo camera detects the release command of the cruise control during cruise driving or cruise setting operation.	Check the stereo camera. Check the ACC cancel code. <Ref. to ES(diag)-82, ACC Cancel Code(s) Display.>
54	Release SW	Brake control module detects the brake pedal operation by the driver during cruise driving or cruise setting operation.	If this code is detected when the brake pedal is not depressed intentionally, check the release switch.
55	Adaptive cruise control reception data abnormal	When the cruise switch is ON, malfunction is detected in the reception data from the stereo camera.	Check the cancel code of stereo camera.
61	Brake Switch Failure	Malfunction in the stop light & brake switch is detected.	<Ref. to ES(diag)-117, 61, Diagnostic Procedure with ECU Cancel Code.>
62	Neutral Switch Failure	Neutral position switch malfunction is detected.	<Ref. to ES(diag)-117, 62, Diagnostic Procedure with ECU Cancel Code.>
63	Abnormality 1 of change in vehicle speed	Malfunction of vehicle speed signal variation is detected. This code may be displayed by a sudden starting of the vehicle on a road with low μ and with the VDC OFF. In this case, restart the engine and perform the cruise setting again. If the cancel code is not displayed, the vehicle is in normal status.	<Ref. to ES(diag)-117, 63, Diagnostic Procedure with ECU Cancel Code.>
64	Engine Sensor Failure 1	Malfunction related to engine is detected.	<Ref. to ES(diag)-118, 64, Diagnostic Procedure with ECU Cancel Code.>
65	Abnormality 1 of switches related to cruise control	Malfunction of the EyeSight steering switch is detected. (When the switch is pressed ON for a long time (approximately two minutes), stuck ON condition is detected.)	<Ref. to ES(diag)-118, 65, Diagnostic Procedure with ECU Cancel Code.>
66	Cruise Control Calculation Error	Malfunction of the cruise control calculation (microcomputer) is detected.	<Ref. to ES(diag)-118, 66, Diagnostic Procedure with ECU Cancel Code.>

16.ACC Cancel Code(s) Display

A: OPERATION

When the ACC cancel code is detected from the stereo camera, the cruise control will be cancelled.
1) On «Start» display, select «Diagnosis».
2) On «Vehicle selection» display, input the target vehicle information and select «Confirmed».
3) On «Main Menu» display, select «Each System».
4) On «Select System» display, select «EyeSight» and select «Enter».
5) On «Select Function» display, select «Cancel Code».
6) On «Cancel Code» display, select «ACC Cancel Code(s) Display».

NOTE:
- For detailed operation procedures, refer to “Application help”.
- Up to 8 codes can be stored. When more than eight codes are output, the oldest code will be deleted to store the latest code.
- Stored codes will be cleared by Clear Memory.
- For details on ACC cancel codes, refer to List of ACC cancel code. <Ref. to ES(diag)-82, LIST, ACC Cancel Code(s) Display.>

B: LIST

- List of ACC cancel code(s)

ACC cancel code	Item	Contents of diagnosis
02	Adaptive mode: Stop holding	Displayed when the cruise control is cancelled after the own vehicle stops following the preceding vehicle.
04	Adaptive mode: Camera temporary stop	Displayed when the cruise control is canceled by the EyeSight temporarily stop while driving in the adaptive cruise mode.
08	Common:Vehicle Speed Sensor Abnormal	Displayed when the cruise control is canceled due to a wheel speed sensor malfunction.
09	Common: Brake operation	Displayed when the cruise control is canceled by the brake operation of the driver.
0A	Common: Pre-crash brake	Displayed when the cruise control is canceled because the pre-collision brake function is activated.
0B	Common: AT manual mode	Displayed when the cruise control is canceled because the AT manual mode is selected or paddle operation is performed.
0C	Common: VDC switch OFF	Displayed when the VDC function is turned OFF by the VDC OFF switch and the cruise control is canceled.
0D	Common:Any Door is Opened	Displayed when the cruise control is canceled because either of the driver’s door, passenger’s door, or rear doors is opened.
0E	Common:Driver Seat Belt Unfastened	Displayed when the cruise control is canceled because the driver’s seat belt is unfastened.
0F	Common: EPB operation	Displayed when the cruise control is canceled because the EPB is activated.
10	Common: EPB special mode	Displayed when the cruise control is canceled by an irregular operation of a driver, which repeats activation/deactivation of the EPB.
11	Common: High speed	This item is displayed when the own vehicle speed becomes approximately 160 km/h (99 MPH) or more and the cruise control is canceled.
12	Common:AT Gear Range	Displayed in the following situations: The driver performed the SET or RES operation to drive the vehicle either in the adaptive cruise mode or in the constant speed mode, but that operation was not accepted because it was done immediately after shifting into D range.
13	Common:Steep Sloping Road	Displayed when the road surface was judged to be too steep and therefore the cruise control is canceled.
14	Common: ABS operation	Displayed when the cruise control is canceled because the ABS is activated.
15	Common: Large steering operation	Displayed when the cruise control is canceled because the steering wheel is fully turned.
16	Adaptive mode: Stop judgment	Displayed when the cruise control is cancelled after the own vehicle stops following the preceding vehicle while driving in the adaptive cruise control mode.

ACC cancel code	Item	Contents of diagnosis
17	Common:Parking Brake Activation	Displayed when the cruise control is cancelled because the parking brake is applied.
18	Adaptive mode: Stop forced cancellation	Displayed when the cruise control is cancelled under the following situations: The own vehicle stops following the preceding vehicle while driving in the adaptive cruise control mode, and the driver repeats the SET or RES operation and the automatic brake control continues for 120 seconds.
19	Common:X-Mode	Displayed when the cruise control is canceled because the X mode is activated.
1B	Common:VDC Activation	Displayed when the cruise control is canceled because the VDC is activated.
1C	Common:Cancel SW Operation	This item is displayed when the cruise control is canceled by the operation of CANCEL switch.
1D	Common:Cruise SW OFF	This item is displayed when the cruise control is canceled by turning the cruise switch OFF.
1E	CC Mode:Max Speed Exceeded	Displayed when the cruise control is canceled because the own vehicle speed exceeds the controllable range while driving in the constant speed mode.
1F	ACC Mode:Max Speed Exceeded	Displayed when the cruise control is canceled because the own vehicle speed exceeds the controllable range while driving in the adaptive cruise mode.

NOTE:
- “Adaptive cruise mode”: Adaptive cruise control
- “Constant speed mode”: Conventional cruise control
- “Common”: Adaptive cruise control and conventional cruise control

17.Active Lane Keep System Code(s) Display

A: OPERATION

Lane Departure Prevention Deactivate Code(s) Display: The lane departure prevention deactivate code is output, when the lane keep (lane departure prevention) is canceled during the operation or the standby state is canceled.

1) On «Start» display, select «Diagnosis».
2) On «Vehicle selection» display, input the target vehicle information and select «Confirmed».
3) On «Main Menu» display, select «Each System».
4) On «Select System» display, select «EyeSight» and select «Enter».
5) On «Select Function» display, select «Cancel Code».
6) On «Cancel Code» display, select «Lane Departure Prevention Assist Deactivate Code(s) Display».

NOTE:

- For detailed operation procedures, refer to “Application help”.
- Up to 8 codes can be stored. When more than eight codes are output, the oldest code will be deleted to store the latest code.
- Stored codes will be cleared by Clear Memory.
- For details on lane keep assist codes, refer to List of lane keep assist code. <Ref. to ES(diag)-84, OPERATION, Active Lane Keep System Code(s) Display.>

B: LIST

- List of lane keep assist code

Code	Item	Contents of diagnosis
04	Lateral Acceleration is Large	Detected when control output value exceeds the controllable range by a driving operation such as rounding a curve at high speed or making a sharp turn.
0C	Lane Recognition Prohibition(Environmental Factor)	Detected when a driving lane width is narrowed.
18	Out of Control Return Possibility Range	Detected when lane departure prevention control continues for a predetermined time.
37	Yaw Rate Sensor Abnormal(Control)	Detected when the difference between actual yaw rate and expected yaw rate becomes the specified value or more.
50	Camera Adjustment Abnormal 1	Detected when the accuracy of camera learning values is not sufficient. Usually detected after replacing the camera and performing an aiming, and resolved by an automatic adjustment while driving.
52	Yaw Rate Sensor Abnormal(Recognition)	Detected when the vehicle weaves all over the road or when the camera condition is not good and therefore white lines are not correctly recognized.

18.Diagnostic Procedure with Diagnostic Trouble Code (DTC)

A: DTC U0073 CONTROL MODULE COMMUNICATION BUS OFF

Detected when an error occurs in the CAN line. (Bus off)

NOTE:
Perform the diagnosis for LAN system. <Ref. to LAN(diag)-2, PROCEDURE, Basic Diagnostic Procedure.>

B: DTC U0100 LOST COMMUNICATION WITH ECM/PCM “A”

Detected when CAN data from engine control module (ECM) is not transmitted to stereo camera.

NOTE:
Perform the diagnosis for LAN system. <Ref. to LAN(diag)-2, PROCEDURE, Basic Diagnostic Procedure.>

C: DTC U0101 LOST COMMUNICATION WITH TCM

Detected when CAN data from TCM is not transmitted to stereo camera.
When lost communication with TCM and TCM abnormal occur simultaneously, perform diagnosis for lost communication with TCM first.

NOTE:
Perform the diagnosis for LAN system. <Ref. to LAN(diag)-2, PROCEDURE, Basic Diagnostic Procedure.>

D: DTC U0122 LOST COMMUNICATION WITH VEHICLE DYNAMICS CONTROL MODULE

Detected when CAN data from VDC is not transmitted to stereo camera.
When lost communication with vehicle dynamics control and vehicle dynamics control module abnormal or VDC echo back disagreement occur simultaneously, perform diagnosis for lost communication with vehicle dynamics control first.

NOTE:
Perform the diagnosis for LAN system. <Ref. to LAN(diag)-2, PROCEDURE, Basic Diagnostic Procedure.>

E: DTC U0126 LOST COMMUNICATION WITH STEERING ANGLE SENSOR MODULE

Detected when CAN data from steering angle sensor is not transmitted to stereo camera.

NOTE:
Perform the diagnosis for LAN system. <Ref. to LAN(diag)-2, PROCEDURE, Basic Diagnostic Procedure.>

F: DTC U0131 LOST COMMUNICATION WITH POWER STEERING CONTROL MODULE

Detected when CAN data from EPS CM is not transmitted to stereo camera.

NOTE:
Perform the diagnosis for LAN system. <Ref. to LAN(diag)-2, PROCEDURE, Basic Diagnostic Procedure.>

G: DTC U0140 LOST COMMUNICATION WITH BODY CONTROL MODULE

Detected when CAN data from body integrated unit is not transmitted to stereo camera.

NOTE:
Perform the diagnosis for LAN system. <Ref. to LAN(diag)-2, PROCEDURE, Basic Diagnostic Procedure.>

H: DTC U0155 LOST COMMUNICATION WITH INSTRUMENT PANEL CLUSTER (IPC) CONTROL MODULE

Detected when CAN data from combination meter is not transmitted to stereo camera.

NOTE:
Perform the diagnosis for LAN system. <Ref. to LAN(diag)-2, PROCEDURE, Basic Diagnostic Procedure.>

I: DTC U0401 INVALID DATA RECEIVED FROM ECM/PCM “A”

Failure counter diagnosis of engine control module (ECM)

NOTE:
Perform the diagnosis for LAN system. <Ref. to LAN(diag)-2, PROCEDURE, Basic Diagnostic Procedure.>

J: DTC U0402 INVALID DATA RECEIVED FROM TCM

Failure counter diagnosis of automatic transmission control module (TCM)

NOTE:
Perform the diagnosis for LAN system. <Ref. to LAN(diag)-2, PROCEDURE, Basic Diagnostic Procedure.>

K: DTC U0416 INVALID DATA RECEIVED FROM VEHICLE DYNAMICS CONTROL MODULE

Failure counter diagnosis of VDC control module (VDC CM)

NOTE:
Perform the diagnosis for LAN system. <Ref. to LAN(diag)-2, PROCEDURE, Basic Diagnostic Procedure.>

L: DTC U0420 INVALID DATA RECEIVED FROM POWER STEERING CONTROL MODULE

Failure counter diagnosis of EPS CM

NOTE:
Perform the diagnosis for LAN system. <Ref. to LAN(diag)-2, PROCEDURE, Basic Diagnostic Procedure.>

M: DTC U0422 INVALID DATA RECEIVED FROM BODY CONTROL MODULE

Failure counter diagnosis of body integrated unit

NOTE:
Perform the diagnosis for LAN system. <Ref. to LAN(diag)-2, PROCEDURE, Basic Diagnostic Procedure.>

N: DTC U0423 INVALID DATA RECEIVED FROM INSTRUMENT PANEL CLUSTER CONTROL MODULE

Failure counter diagnosis of combination meter

NOTE:
Perform the diagnosis for LAN system. <Ref. to LAN(diag)-2, PROCEDURE, Basic Diagnostic Procedure.>

O: DTC U0428 INVALID DATA RECEIVED FROM STEERING ANGLE SENSOR MODULE

Failure counter diagnosis of steering angle sensor

NOTE:
Perform the diagnosis for LAN system. <Ref. to LAN(diag)-2, PROCEDURE, Basic Diagnostic Procedure.>

P: DTC U1073 CONTROL MODULE COMMUNICATION BUS "SONAR-CAN" OFF

Detected when the bus off status (the stereo camera detects the failure and is disconnected from the local CAN line) occurs.

NOTE:
Perform the diagnosis for LAN system. <Ref. to LAN(diag)-2, PROCEDURE, Basic Diagnostic Procedure.>

Q: DTC U1233 LOST COMMUNICATION WITH RAB CONTROL MODULE

Detected when CAN data from RAB CM did not reach the stereo camera.

NOTE:
Perform the diagnosis for LAN system. <Ref. to LAN(diag)-2, PROCEDURE, Basic Diagnostic Procedure.>

R: DTC U1534 INVALID DATA RECEIVED FROM SONAR ECU

Failure counter diagnosis of RAB CM.

NOTE:
Perform the diagnosis for LAN system. <Ref. to LAN(diag)-2, PROCEDURE, Basic Diagnostic Procedure.>

S: DTC B2801 TCM ABNORMAL

Detected when error occurs in the automatic transmission.
When lost communication with TCM and TCM abnormal occur simultaneously, perform diagnosis for lost communication with TCM first.

NOTE:
Check the automatic transmission. <Ref. to CVT(diag)-2, PROCEDURE, Basic Diagnostic Procedure.>

T: DTC B2802 ETC ABNORMAL

Detected when error occurs in the electronic throttle control.

NOTE:
Check the electronic throttle control. <Ref. to EN(w/o STI)(diag)-2, PROCEDURE, Basic Diagnostic Procedure.>

U: DTC B2803 EPB OPERATION PROHIBIT

EPB operation is prohibited.
When the DTC is detected by the brake maintenance mode for VDC, the system malfunction does not exist. Therefore, perform Clear Memory Mode. <Ref. to ES(diag)-49, Clear Memory Mode.>

NOTE:
Check the VDC. <Ref. to VDC(diag)-2, PROCEDURE, Basic Diagnostic Procedure.>

V: DTC B2804 EPB NO ACTIVITY DETECTED

EPB control is abnormal.

NOTE:
Check the VDC. <Ref. to VDC(diag)-2, PROCEDURE, Basic Diagnostic Procedure.>

W: DTC B2806 ECM ABNORMAL

Detected when error occurs in the engine control module (ECM).

NOTE:
Perform check of the ECM. <Ref. to EN(w/o STI)(diag)-2, PROCEDURE, Basic Diagnostic Procedure.>

X: DTC B2807 ECM ABNORMAL

Detected when cruise indicator illumination request from ECM and ON/OFF information of cruise function do not match.

NOTE:
Perform check of the ECM. <Ref. to EN(w/o STI)(diag)-2, PROCEDURE, Basic Diagnostic Procedure.>

Y: DTC B2809 VDC MALFUNCTION

Detected when error occurs in the VDC. (VDC failure)
When lost communication with vehicle dynamics control and vehicle dynamics control module abnormal or VDC echo back disagreement occur simultaneously, perform diagnosis for lost communication with vehicle dynamics control first.

NOTE:
Check the VDC. <Ref. to VDC(diag)-2, PROCEDURE, Basic Diagnostic Procedure.>

Z: DTC B280A VDC ECHO BACK DISAGREEMENT

Detected when error occurs in the VDC. (VDC brake control malfunction 1)
When lost communication with vehicle dynamics control and vehicle dynamics control module abnormal or VDC echo back disagreement occur simultaneously, perform diagnosis for lost communication with vehicle dynamics control first.

NOTE:
Check the VDC. <Ref. to VDC(diag)-2, PROCEDURE, Basic Diagnostic Procedure.>

AA:DTC B280B VDC BRAKE FLUID PRESSURE

Detected when error occurs in the VDC. (VDC brake control malfunction 3)

NOTE:
Check the VDC. <Ref. to VDC(diag)-2, PROCEDURE, Basic Diagnostic Procedure.>

AB:DTC B280F COMBINATION METER MALFUNCTION

Malfunction is detected in the combination meter.
DTC DETECTING CONDITION:
Defective combination meter
TROUBLE SYMPTOM:
- All functions of EyeSight system do not operate.
- EyeSight warning light blinks or illuminates.
- Combination meter does not illuminate.

NOTE:
Check the combination meter. <Ref. to IDI-9, INSPECTION, Combination Meter System.>

AC:DTC B2810 INCOMPATIBLE WITH EyeSight (COMBINATION METER)

Detected when the combination meter, which is not designed exclusively for EyeSight is installed.
DTC DETECTING CONDITION:
Incorrect specifications of combination meter
TROUBLE SYMPTOM:
All functions of EyeSight system do not operate.

NOTE:
Replace the combination meter with the one designed for EyeSight. <Ref. to IDI-13, Combination Meter.>

AD:DTC B2811 EPS ABNORMAL

Malfunction is detected in the electric power steering.

NOTE:
Check the electric power steering. <Ref. to PS(diag)-2, PROCEDURE, Basic Diagnostic Procedure.>

AE:DTC B2814 POWER SUPPLY LOW VOLTAGE

Detected when the status of 7.0 V or less continues approximately for 5 seconds and is judged to be low-voltage malfunction, or when the +B harness of the stereo camera is broken.

DTC DETECTING CONDITION:

- Input voltage to stereo camera is out of specifications.
- Defective stereo camera control harness (open circuit in +B harness)
- Defective stereo camera

TROUBLE SYMPTOM:

- All functions of EyeSight system do not operate.
- EyeSight warning light blinks or illuminates.
- Cruise indicator light blinks.
- Malfunction indicator light illuminates.
- VDC warning light illuminates.
- ATF temperature warning light illuminates.

WIRING DIAGRAM:

EyeSight System <Ref. to WI-222, WIRING DIAGRAM, EyeSight System.>

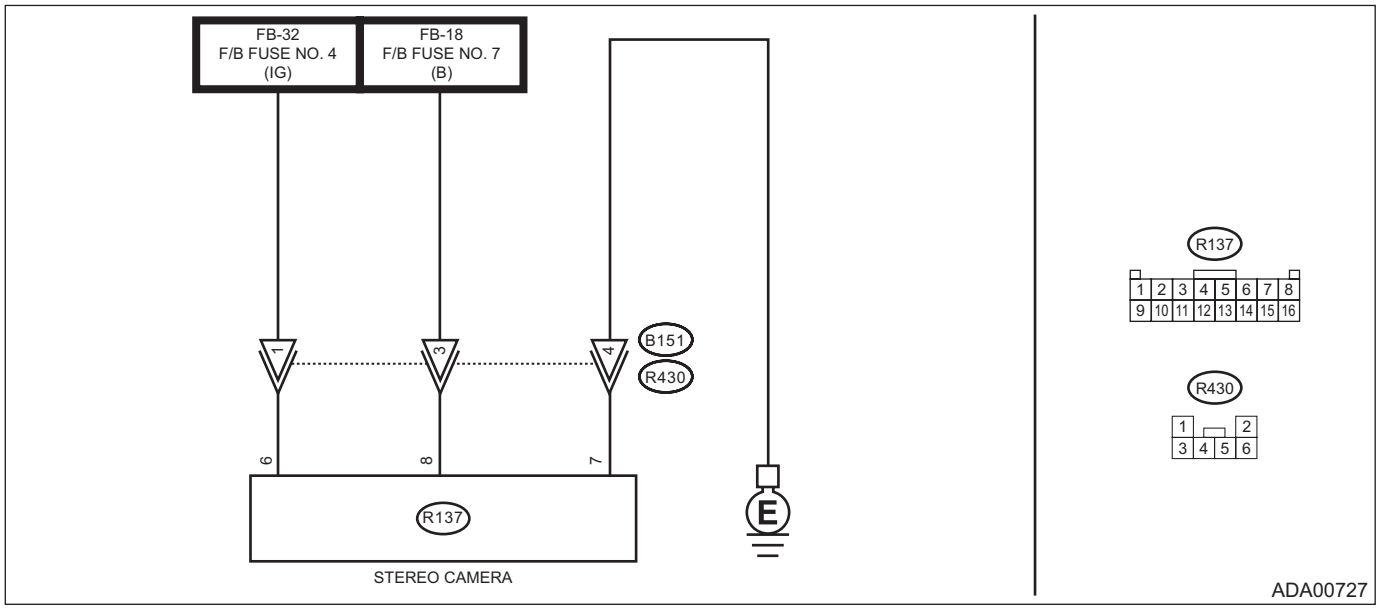

Step		Check	Yes	No
1	**CHECK GENERATOR.** 1) Start the engine and idle for a while. 2) Measure the voltage between generator terminal B and chassis ground. ***Connector & terminal*** ***Generator terminal B (+) — Chassis ground (–):***	Is the voltage 10 V or more?	Go to step **2**.	Check the generator. <Ref. to SC(STI)-18, Generator.> <Ref. to SC(w/o STI)-31, Generator.>
2	**CHECK BATTERY TERMINAL.** Turn the ignition switch to OFF.	Is the battery terminal connected securely?	Go to step **3**.	Tighten the battery terminal securely.
3	**CHECK FUSE.** Check the fuse. <Ref. to ES-5, Relay and Fuse.>	Is the check result OK?	Go to step **4**.	Replace the faulty fuse. When the replaced fuse blows out easily, check the short circuit in harness.

	Step	Check	Yes	No
4	**CHECK HARNESS (POWER SUPPLY CIRCUIT).** 1) Disconnect the stereo camera. 2) Turn the ignition switch to ON. 3) Measure the voltage between harness connector of stereo camera and chassis ground. ***Connector & terminal*** ***(R137) No. 6 (+) — Chassis ground (–):*** ***(R137) No. 8 (+) — Chassis ground (–):***	Is the voltage 10 V or more?	Go to step **5**.	Check the power supply system circuit, and if any fault is found, repair the defective parts or replace the harness.
5	**CHECK HARNESS (GROUND CIRCUIT).** 1) Turn the ignition switch to OFF. 2) Disconnect the ground cable from battery. 3) Measure the resistance between stereo camera and chassis ground. ***Connector & terminal*** ***(R137) No. 7 — Chassis ground:***	Is the resistance less than 10 Ω?	Go to step **6**.	Check the ground system circuit, and if any fault is found, repair the defective parts or replace the harness.
6	**CHECK POOR CONTACT OF CONNECTORS.** Check stereo camera connector.	Is there poor contact of the connector?	Repair the connector.	Go to step **7**.
7	**CHECK STEREO CAMERA.** 1) Connect all connectors and battery terminals securely. 2) Start the engine, drive the vehicle at 40 km/h (25 MPH) or more, stop the vehicle and then stop the engine. 3) After 3 seconds or more have elapsed, restart the engine. 4) Clear the memory. <Ref. to ES(diag)-49, Clear Memory Mode.> 5) Read the DTC. <Ref. to ES(diag)-43, Diagnostic Code(s) Display.>	Is DTC B2814 or B2815 displayed?	Replace the stereo camera. <Ref. to ES-8, REMOVAL, Stereo Camera.>	Even if DTC is displayed, the circuit has returned to a normal condition at this time. Reproduce the failure, and then perform the diagnosis again. NOTE: In this case, temporary poor contact of connector, or temporary open or short circuit of harness may be the cause.

AF:DTC B2815 POWER SUPPLY HIGH VOLTAGE

Detected when the status for the battery voltage of 16 V or more continues approximately for 5 seconds and is judged to be abnormally high voltage.
Refer to DTC B2814 for DTC detecting condition, trouble symptom and diagnostic procedure. <Ref. to ES(diag)-89, DTC B2814 POWER SUPPLY LOW VOLTAGE, Diagnostic Procedure with Diagnostic Trouble Code (DTC).>

AG:DTC B2817 BRAKE LAMP

DTC DETECTING CONDITION:

- Defective brake light relay
- Defective brake light switch
- Defective VDC

TROUBLE SYMPTOM:

- All functions of EyeSight system do not operate.
- EyeSight warning light illuminates.
- Brake light does not go off or illuminate.

NOTE:
When DTC B2817 is detected, check VDC system. <Ref. to VDC(diag)-2, PROCEDURE, Basic Diagnostic Procedure.>

AH:DTC B281B STEERING ANGLE SENSOR FAIL

DTC DETECTING CONDITION:
Defective steering angle sensor
TROUBLE SYMPTOM:
All functions of EyeSight system do not operate.

NOTE:
Check the steering angle sensor. <Ref. to VDC(diag)-2, PROCEDURE, Basic Diagnostic Procedure.>

AI: DTC B281C INCOMPATIBLE WITH EyeSight (EPS)

Detected when the EPS CM which is not exclusively for EyeSight is installed.
DTC DETECTING CONDITION:
Incorrect specifications of EPS CM.
TROUBLE SYMPTOM:
All functions of EyeSight system do not operate.

NOTE:
Replace the EPS CM with the one exclusively designed for EyeSight.

AJ:DTC B281E RAB CONTROL MODULE

DTC DETECTING CONDITION:
- Defective RAB CM.
- Defective unit that is cooperatively controlled with stereo camera.

TROUBLE SYMPTOM:
- The Reverse Automatic Braking function does not operate.
- RAB warning light illuminates.
- All functions of EyeSight do not operate. (Functions terminated due to a cooperative control unit failure)
- EyeSight warning light illuminates. (Functions terminated due to a cooperative control unit failure)

	Step	Check	Yes	No
1	**CHECK DTCS (DETERMINING A FAILURE OF COOPERATIVE CONTROL UNIT).** Read the DTC related to EyeSight using the Subaru Select Monitor. <Ref. to ES(diag)-43, Diagnostic Code(s) Display.>	Is DTC other than DTC B281E displayed?	Perform the diagnosis for the displayed DTCs.	Go to step **2**.
2	**CHECK DTC.** Read the DTC related to the Reverse Automatic Braking using the Subaru Select Monitor. <Ref. to RAB(diag)-12, Read Diagnostic Trouble Code (DTC).>	Is DTC displayed?	Perform the diagnosis for the displayed DTCs.	Finish the diagnosis.

AK:DTC B281F Reverse Automatic Braking OVERRIDE

DTC DETECTING CONDITION:
Defective RAB CM.

TROUBLE SYMPTOM:
- The Reverse Automatic Braking function does not operate.
- RAB warning light illuminates.

NOTE:
Check the Reverse Automatic Braking. <Ref. to RAB(diag)-2, Basic Diagnostic Procedure.>

AL:DTC B2821 Reverse Automatic Braking CONTROL PROHIBITION

DTC DETECTING CONDITION:
Defective RAB CM.

TROUBLE SYMPTOM:
- The Reverse Automatic Braking function does not operate.
- RAB warning light illuminates.

NOTE:
Check the Reverse Automatic Braking. <Ref. to RAB(diag)-2, Basic Diagnostic Procedure.>

AM:DTC B28A0 VEHICLE MODEL JUDGMENT

Detected when the model code for stereo camera and the model code used for CAN data are different.

DTC DETECTING CONDITION:

- Defective CAN system
- Defective stereo camera
- In the aiming operation, there is an open circuit in the +B harness of the stereo camera.
- In the completion of the aiming operation, the switching from IGN OFF to IGN ON takes place too early, and the recording of the model information has not yet been finished.

TROUBLE SYMPTOM:

- All functions of EyeSight system do not operate.
- EyeSight warning light illuminates.

WIRING DIAGRAM:

EyeSight System <Ref. to WI-222, WIRING DIAGRAM, EyeSight System.>

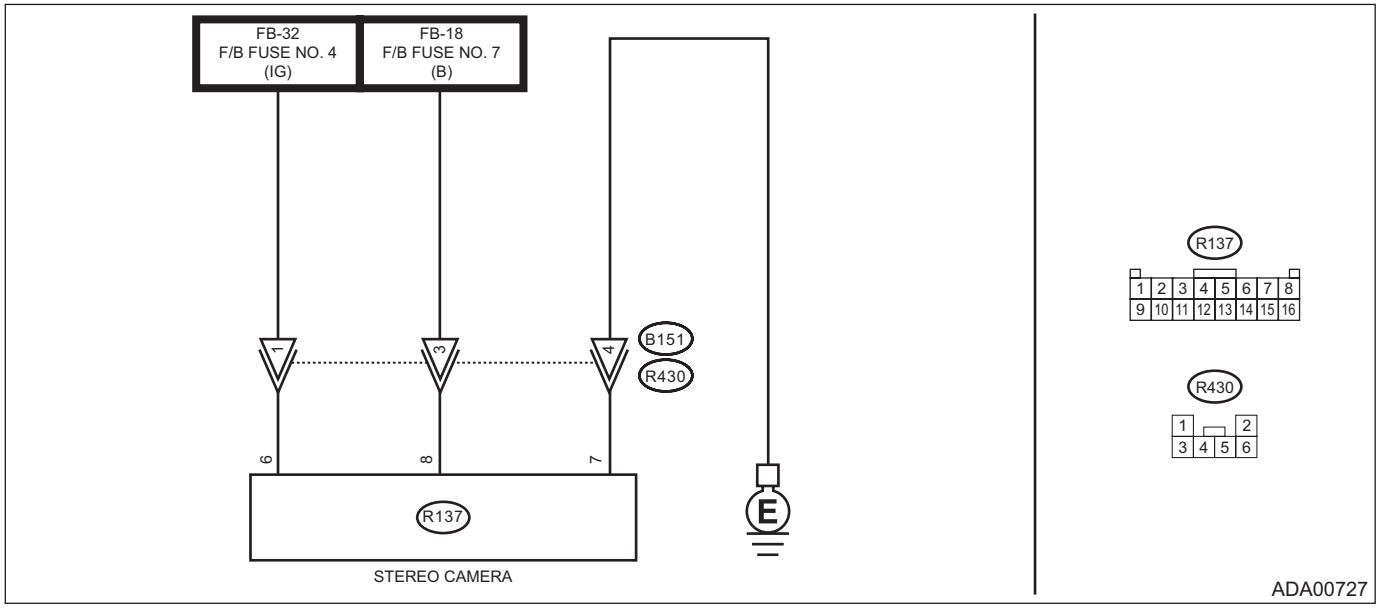

Step		Check	Yes	No
1	**CHECK RELATED CM.** Check the part number of the ECM, TCM, VDC CM and combination meter.	Is each CM a genuine part?	Go to step **2**.	Replace the non-genuine CM with a genuine one.
2	**CHECK STEREO CAMERA.** 1) Remove the camera cover. 2) Check the part number of the stereo camera.	Is the stereo camera genuine?	Go to step **3**.	Replace the stereo camera. <Ref. to ES-8, REMOVAL, Stereo Camera.>
3	**CHECK LAN SYSTEM.** Perform the diagnosis for LAN system. <Ref. to LAN(diag)-2, Basic Diagnostic Procedure.>	Is DTC for LAN system displayed?	Perform the diagnosis of DTCs for LAN system.	Go to step **4**.
4	**CHECK MODEL REGISTRATION INFORMATION.** Check the «Model registration information» from the current data of stereo camera. <Ref. to ES(diag)-24, Read Current Data.>	Does vehicle and data correspond?	Perform the adjustment or inspection of the camera. <Ref. to ES-13, Camera Adjustment, Inspection.>	Go to step **5**.
5	**CHECK FUSE.** Check the fuse. <Ref. to ES-5, Relay and Fuse.>	Is the check result OK?	Go to step **6**.	Replace the faulty fuse. When the replaced fuse blows out easily, check the short circuit in harness.

	Step	Check	Yes	No
6	**CHECK HARNESS (POWER SUPPLY CIRCUIT).** 1) Disconnect the stereo camera. 2) Turn the ignition switch to ON. 3) Measure the voltage between harness connector of stereo camera and chassis ground. ***Connector & terminal*** ***(R137) No. 6 (+) — Chassis ground (–):*** ***(R137) No. 8 (+) — Chassis ground (–):***	Is the voltage 10 V or more?	Go to step **7**.	Check the power supply system circuit, and if any fault is found, repair the defective parts or replace the harness.
7	**CHECK HARNESS (GROUND CIRCUIT).** 1) Turn the ignition switch to OFF. 2) Disconnect the ground cable from battery. 3) Measure the resistance between stereo camera and chassis ground. ***Connector & terminal*** ***(R137) No. 7 — Chassis ground:***	Is the resistance less than 10 Ω?	Go to step **8**.	Check the ground system circuit, and if any fault is found, repair the defective parts or replace the harness.
8	**CHECK POOR CONTACT OF CONNECTORS.** Check stereo camera connector.	Is there poor contact of the connector?	Repair the connector.	Go to step **9**.
9	**CHECK STEREO CAMERA.** 1) Connect all connectors and battery terminals securely. 2) Clear the memory. <Ref. to ES(diag)-49, Clear Memory Mode.> 3) Read the DTC. <Ref. to ES(diag)-43, Diagnostic Code(s) Display.>	Is DTC B28A0 displayed?	Replace the stereo camera. <Ref. to ES-8, REMOVAL, Stereo Camera.>	Even if DTC is displayed, the circuit has returned to a normal condition at this time. Reproduce the failure, and then perform the diagnosis again. NOTE: In this case, temporary poor contact of connector, or temporary open or short circuit of harness may be the cause.

AN:DTC B28A1 EyeSight COMMUNICATION(ECM)

Detected when the engine control module (ECM) detects the malfunction of stereo camera, or when the stereo camera or ECM is assembled incorrectly.

DTC DETECTING CONDITION:

- Defective CAN system
- Defective engine control module (ECM)
- Defective stereo camera
- Incorrect assembly of stereo camera (when the stereo camera designed for EyeSight (Ver. 2) type vehicle is installed to the EyeSight (Ver. 3) type vehicle, etc.)
- Incorrect assembly of ECM (when the ECM designed for another model is installed, etc.)

TROUBLE SYMPTOM:

- All functions of EyeSight system do not operate.
- EyeSight warning light illuminates.

	Step	Check	Yes	No
1	**CHECK ECM.** Check the part number of the ECM.	Is the ECM genuine?	Go to step **2**.	Replace the ECM. <Ref. to FU(w/o STI)-124, Engine Control Module (ECM).>
2	**CHECK STEREO CAMERA.** 1) Remove the camera cover. 2) Check the part number of the stereo camera.	Is the stereo camera genuine?	Go to step **3**.	Replace the stereo camera. <Ref. to ES-8, REMOVAL, Stereo Camera.>
3	**CHECK LAN SYSTEM.** Perform the diagnosis for LAN system. <Ref. to LAN(diag)-2, PROCEDURE, Basic Diagnostic Procedure.>	Is DTC for LAN system displayed?	Perform the diagnosis of DTCs for LAN system.	Go to step **4**.
4	**CHECK ECM.** Perform the diagnosis for the engine. <Ref. to EN(w/o STI)(diag)-2, Basic Diagnostic Procedure.>	Is DTC for engine displayed?	Perform the diagnosis for DTC for the engine.	Go to step **5**.
5	**CHECK CONNECTOR.** Check the ECM connector and the stereo camera connector.	Is the check result OK?	Go to step **6**.	Repair or replace the connector.
6	**CHECK STEREO CAMERA.** Read the DTC. <Ref. to ES(diag)-43, Diagnostic Code(s) Display.>	Is DTC other than DTC B28A1 displayed?	Perform the diagnosis for DTC other than DTC B28A1.	Go to step **7**.
7	**CHECK STEREO CAMERA.** 1) Clear the memory. <Ref. to ES(diag)-49, Clear Memory Mode.> 2) Read the DTC. <Ref. to ES(diag)-43, Diagnostic Code(s) Display.>	Is DTC B28A1 displayed?	Replace the stereo camera. <Ref. to ES-8, REMOVAL, Stereo Camera.>	Even if DTC is displayed, the circuit has returned to a normal condition at this time. Reproduce the failure, and then perform the diagnosis again. NOTE: In this case, temporary poor contact of connector, or temporary open or short circuit of harness may be the cause.

AO:DTC B28A2 EyeSight COMMUNICATION(VDC)

Detected when the VDC control module (VDCCM) detects the malfunction of stereo camera.

DTC DETECTING CONDITION:

- Defective CAN system
- Defective VDC control module (VDCCM)
- Defective stereo camera

TROUBLE SYMPTOM:

- All functions of EyeSight system do not operate.
- EyeSight warning light illuminates.

	Step	Check	Yes	No
1	**CHECK LAN SYSTEM.** Perform the diagnosis for LAN system. <Ref. to LAN(diag)-2, PROCEDURE, Basic Diagnostic Procedure.>	Is DTC for LAN system displayed?	Perform the diagnosis of DTCs for LAN system.	Go to step **2**.
2	**CHECK VDC.** Perform the diagnosis for VDC. <Ref. to VDC(diag)-2, PROCEDURE, Basic Diagnostic Procedure.>	Is DTC for VDC displayed?	Perform the diagnosis for DTC for VDC.	Go to step **3**.
3	**CHECK CONNECTOR.** Check the VDC connector and the stereo camera connector.	Is the check result OK?	Go to step **4**.	Repair or replace the connector.
4	**CHECK STEREO CAMERA.** Read the DTC. <Ref. to ES(diag)-43, Diagnostic Code(s) Display.>	Is DTC other than DTC B28A2 displayed?	Perform the diagnosis for DTC other than DTC B28A2.	Go to step **5**.
5	**CHECK STEREO CAMERA.** 1) Clear the memory. <Ref. to ES(diag)-49, Clear Memory Mode.> 2) Read the DTC. <Ref. to ES(diag)-43, Diagnostic Code(s) Display.>	Is DTC B28A2 displayed?	Replace the stereo camera. <Ref. to ES-8, REMOVAL, Stereo Camera.>	Even if DTC is displayed, the circuit has returned to a normal condition at this time. Reproduce the failure, and then perform the diagnosis again. NOTE: In this case, temporary poor contact of connector, or temporary open or short circuit of harness may be the cause.

AP:DTC B28A3 EyeSight COMMUNICATION(METER)

Detected when the combination meter detects the malfunction of stereo camera.

DTC DETECTING CONDITION:

- Defective CAN system
- Defective combination meter
- Defective stereo camera

TROUBLE SYMPTOM:

- All functions of EyeSight system do not operate.
- EyeSight warning light illuminates.

	Step	Check	Yes	No
1	**CHECK LAN SYSTEM.** Perform the diagnosis for LAN system. <Ref. to LAN(diag)-2, PROCEDURE, Basic Diagnostic Procedure.>	Is DTC for LAN system displayed?	Perform the diagnosis of DTCs for LAN system.	Go to step **2**.
2	**CHECK COMBINATION METER.** Check the combination meter. <Ref. to IDI(diag)-2, COMBINATION METER, PROCEDURE, Basic Diagnostic Procedure.>	Is DTC for combination meter displayed?	Perform the diagnosis for DTC for the combination meter.	Go to step **3**.
3	**CHECK CONNECTOR.** Check the combination meter connector and the stereo camera connector.	Is the check result OK?	Go to step **4**.	Repair or replace the connector.
4	**CHECK STEREO CAMERA.** Read the DTC. <Ref. to ES(diag)-43, Diagnostic Code(s) Display.>	Is DTC other than DTC B28A3 displayed?	Perform the diagnosis for DTC other than DTC B28A3.	Go to step **5**.
5	**CHECK STEREO CAMERA.** 1) Clear the memory. <Ref. to ES(diag)-49, Clear Memory Mode.> 2) Read the DTC. <Ref. to ES(diag)-43, Diagnostic Code(s) Display.>	Is DTC B28A3 displayed?	Replace the stereo camera. <Ref. to ES-8, REMOVAL, Stereo Camera.>	Even if DTC is displayed, the circuit has returned to a normal condition at this time. Reproduce the failure, and then perform the diagnosis again. NOTE: In this case, temporary poor contact of connector, or temporary open or short circuit of harness may be the cause.

AQ:DTC B28A4 EyeSight COMMUNICATION(EPS)

Detected when the power steering control module (EPS CM) detects the malfunction of stereo camera.

DTC DETECTING CONDITION:

- Defective CAN system
- Defective EPS CM
- Defective stereo camera

TROUBLE SYMPTOM:

- All functions of EyeSight system do not operate.
- EyeSight warning light illuminates.

	Step	Check	Yes	No
1	**CHECK LAN SYSTEM.** Perform the diagnosis for LAN system. <Ref. to LAN(diag)-2, PROCEDURE, Basic Diagnostic Procedure.>	Is DTC for LAN system displayed?	Perform the diagnosis of DTCs for LAN system.	Go to step **2**.
2	**CHECK EPS CM.** Perform the diagnosis for the power steering system. <Ref. to PS(diag)-2, PROCEDURE, Basic Diagnostic Procedure.>	Is DTC for power steering system displayed?	Perform the diagnosis for DTC for the EPS.	Go to step **3**.
3	**CHECK CONNECTOR.** Check the EPS CM connector and the stereo camera connector.	Is the check result OK?	Go to step **4**.	Repair or replace the connector.
4	**CHECK STEREO CAMERA.** Read the DTC. <Ref. to ES(diag)-43, Diagnostic Code(s) Display.>	Is DTC other than DTC B28A4 displayed?	Perform the diagnosis for DTC other than DTC B28A4.	Go to step **5**.
5	**CHECK STEREO CAMERA.** 1) Clear the memory. <Ref. to ES(diag)-49, Clear Memory Mode.> 2) Read the DTC. <Ref. to ES(diag)-43, Diagnostic Code(s) Display.>	Is DTC B28A4 displayed?	Replace the stereo camera. <Ref. to ES-8, REMOVAL, Stereo Camera.>	Even if DTC is displayed, the circuit has returned to a normal condition at this time. Reproduce the failure, and then perform the diagnosis again. NOTE: In this case, temporary poor contact of connector, or temporary open or short circuit of harness may be the cause.

AR:DTC B28A5 ENGINE TORQUE LIMITER CONTROL PROHIBIT

Detected when abnormal data is transmitted from stereo camera to engine control module (ECM) and the engine control module (ECM) prohibits the AT rapid start prevention control, or when the engine control module (ECM) prohibits the AT rapid start prevention control.

DTC DETECTING CONDITION:

- Defective CAN system
- Defective engine control module (ECM)
- Defective stereo camera
- Defective combination meter
- Incorrect assembly of combination meter (when the combination meter that is not for EyeSight is installed.)

TROUBLE SYMPTOM:

- All functions of EyeSight system do not operate.
- EyeSight warning light illuminates.

	Step	Check	Yes	No
1	**CHECK COMBINATION METER.** Check the part number of the combination meter.	Is the combination meter genuine?	Go to step **2**.	Replace the combination meter. <Ref. to IDI-13, Combination Meter.>
2	**CHECK LAN SYSTEM.** Perform the diagnosis for LAN system. <Ref. to LAN(diag)-2, Basic Diagnostic Procedure.>	Is DTC for LAN system displayed?	Perform the diagnosis of DTCs for LAN system.	Go to step **3**.
3	**CHECK ECM.** Perform the diagnosis for the engine. <Ref. to EN(w/o STI)(diag)-2, Basic Diagnostic Procedure.>	Is DTC for engine displayed?	Perform the diagnosis for DTC for the engine.	Go to step **4**.
4	**CHECK CONNECTOR.** Check the ECM connector and the stereo camera connector.	Is the check result OK?	Go to step **5**.	Repair or replace the connector.
5	**CHECK STEREO CAMERA.** Read the DTC. <Ref. to ES(diag)-43, Diagnostic Code(s) Display.>	Is DTC other than DTC B28A5 displayed?	Perform the diagnosis for DTC other than DTC B28A5.	Go to step **6**.
6	**CHECK STEREO CAMERA.** 1) Clear the memory. <Ref. to ES(diag)-49, Clear Memory Mode.> 2) Read the DTC again. <Ref. to ES(diag)-43, Diagnostic Code(s) Display.>	Is DTC B28A5 displayed?	Replace the stereo camera. <Ref. to ES-8, REMOVAL, Stereo Camera.>	Even if DTC is displayed, the circuit has returned to a normal condition at this time. Reproduce the failure, and then perform the diagnosis again. NOTE: In this case, temporary poor contact of connector, or temporary open or short circuit of harness may be the cause.

AS:DTC B28A6 INTERNAL STEREO CAMERA COMMUNICATION 1

Detected when communication error occurs inside the stereo camera.
DTC DETECTING CONDITION:
Communication error occurs inside the stereo camera.
TROUBLE SYMPTOM:
All functions of EyeSight system do not operate.

	Step	Check	Yes	No
1	**CHECK RESTARTING.** 1) Turn the ignition switch to OFF. 2) Start the engine. 3) Read the DTC related to the stereo camera using the Subaru Select Monitor. <Ref. to ES(diag)-43, Diagnostic Code(s) Display.>	Is DTC B28A6 displayed after restarting the engine?*1	Replace the stereo camera. <Ref. to ES-8, REMOVAL, Stereo Camera.>	Clear the memory, in which temporary communication failure occurs and complete the step.

*1: When malfunction is detected after restarting the engine, 0 is registered in IG counter. Other values can be regarded as DTCs detected in the past.

AT:DTC B28A7 STEREO CAMERA RECOGNITION(TARGET)

Detected when error occurs in the communication data inside the control module caused by external factors such as noises.

NOTE:
If DTC B28A7 is still detected after the engine has restarted, replace the stereo camera. <Ref. to ES-8, REMOVAL, Stereo Camera.>

AU:DTC B28A8 INTERNAL STEREO CAMERA COMMUNICATION 2

Detected when error occurs in the communication data inside the control module caused by external factors such as noises.

NOTE:
If DTC B28A8 is still detected after the engine has restarted, replace the stereo camera. <Ref. to ES-8, REMOVAL, Stereo Camera.>

AV:DTC B28A9 STEREO CAMERA SYNCHRONIZED RECOGNITION DATA

Detected when error occurs in the communication data inside the control module caused by external factors such as noises.

NOTE:
If DTC B28A9 is still detected after the engine has restarted, replace the stereo camera. <Ref. to ES-8, REMOVAL, Stereo Camera.>

AW:DTC B28AA STEREO CAMERA MICROCOMPUTER 1

Detected when communication error occurs due to malfunction of microcomputer inside the stereo camera.
DTC DETECTING CONDITION:
Communication error occurs due to malfunction of microcomputer inside the stereo camera.
TROUBLE SYMPTOM:
All functions of EyeSight system do not operate.
Refer to DTC B28A6 for diagnostic procedure. <Ref. to ES(diag)-100, DTC B28A6 INTERNAL STEREO CAMERA COMMUNICATION 1, Diagnostic Procedure with Diagnostic Trouble Code (DTC).>

AX:DTC B28AB STEREO CAMERA MICROCOMPUTER 2

Detected when communication error occurs due to malfunction of microcomputer inside the stereo camera.
DTC DETECTING CONDITION:
Communication error occurs due to malfunction of microcomputer inside the stereo camera.
TROUBLE SYMPTOM:
All functions of EyeSight system do not operate.
Refer to DTC B28A6 for diagnostic procedure. <Ref. to ES(diag)-100, DTC B28A6 INTERNAL STEREO CAMERA COMMUNICATION 1, Diagnostic Procedure with Diagnostic Trouble Code (DTC).>

AY:DTC B28AC STEREO CAMERA ASIC

Detected when communication error occurs due to malfunction of ASIC.
DTC DETECTING CONDITION:
Communication error occurs due to malfunction of ASIC.
TROUBLE SYMPTOM:
All functions of EyeSight system do not operate.
Refer to DTC B28A6 for diagnostic procedure. <Ref. to ES(diag)-100, DTC B28A6 INTERNAL STEREO CAMERA COMMUNICATION 1, Diagnostic Procedure with Diagnostic Trouble Code (DTC).>

AZ:DTC B28AD STEREO CAMERA IMAGE RECOGNITION

Detected when improper image recognition occurs in the microcomputer inside the stereo camera.
DTC DETECTING CONDITION:
Improper image recognition occurs in the microcomputer inside the stereo camera.
TROUBLE SYMPTOM:
All functions of EyeSight system do not operate.
Refer to DTC B28A6 for diagnostic procedure. <Ref. to ES(diag)-100, DTC B28A6 INTERNAL STEREO CAMERA COMMUNICATION 1, Diagnostic Procedure with Diagnostic Trouble Code (DTC).>

BA:DTC B28AE INTERNAL STEREO CAMERA POWER SUPPLY

Detected when improper power supply inside the stereo camera occurs.
DTC DETECTING CONDITION:
Improper power supply inside the stereo camera occurs.
TROUBLE SYMPTOM:
All functions of EyeSight system do not operate.
Refer to DTC B28A6 for diagnostic procedure. <Ref. to ES(diag)-100, DTC B28A6 INTERNAL STEREO CAMERA COMMUNICATION 1, Diagnostic Procedure with Diagnostic Trouble Code (DTC).>

BB:DTC B28AF STEREO CAMERA ADJUSTMENT INCOMPLETE

Detected when adjustment or inspection of stereo camera has not been completed normally.
DTC DETECTING CONDITION:
- Operation is aborted during adjustment or inspection of the stereo camera.
- After the replacement of the stereo camera, adjustment or inspection of camera has not yet been performed.

TROUBLE SYMPTOM:
All functions of EyeSight system do not operate.
For diagnostic procedure, perform adjustment/inspection of camera. When the adjustment or inspection of camera is performed, and if it is not completed successfully, replace the camera.

BC:DTC B28B1 STEREO CAMERA AUTOMATIC ADJUSTMENT

Detected when the optical axis of stereo camera is deviated in lateral direction or when the fluctuation range of automatic adjustment value has expanded.

NOTE:
Readjust the stereo camera. <Ref. to ES-13, PROCEDURE, Camera Adjustment, Inspection.>
If DTC B28B1 is still detected after readjustment, replace the stereo camera. <Ref. to ES-8, REMOVAL, Stereo Camera.>

BD:DTC B28B2 STEREO CAMERA HIGH TEMPERATURE

Detected when the temperature of the stereo camera excessively increases.

NOTE:
When DTC B28B2 is detected, performing adjustment or inspection of the camera will not return to the normal state. In this case, always replace the stereo camera. <Ref. to ES-8, REMOVAL, Stereo Camera.>

BE:DTC B28B3 STEREO CAMERA LOW TEMPERATURE

Detected when the temperature of the stereo camera excessively decreases.

NOTE:
When DTC B28B3 is detected, performing adjustment or inspection of the camera will not return to the normal state. In this case, always replace the stereo camera. <Ref. to ES-8, REMOVAL, Stereo Camera.>

BF:DTC B28B5 +B CIRCUIT OPEN

Detected when there is an open circuit in power supply line.

NOTE:
Refer to DTC B2814 for diagnostic procedure. <Ref. to ES(diag)-89, DTC B2814 POWER SUPPLY LOW VOLTAGE, Diagnostic Procedure with Diagnostic Trouble Code (DTC).>

BG:DTC B28B6 PRE-COLLISION OFF SWITCH

Detected when pre-collision brake OFF switch circuit is not installed, open-circuited or is stuck to ON.

DTC DETECTING CONDITION:

- Wiring of pre-collision brake OFF switch is not connected.
- Pre-collision brake OFF switch circuit is open.
- Pre-collision brake OFF switch circuit stays ON for 45 seconds or more.

TROUBLE SYMPTOM:

All functions of EyeSight system do not operate.

WIRING DIAGRAM:

EyeSight System <Ref. to WI-222, WIRING DIAGRAM, EyeSight System.>

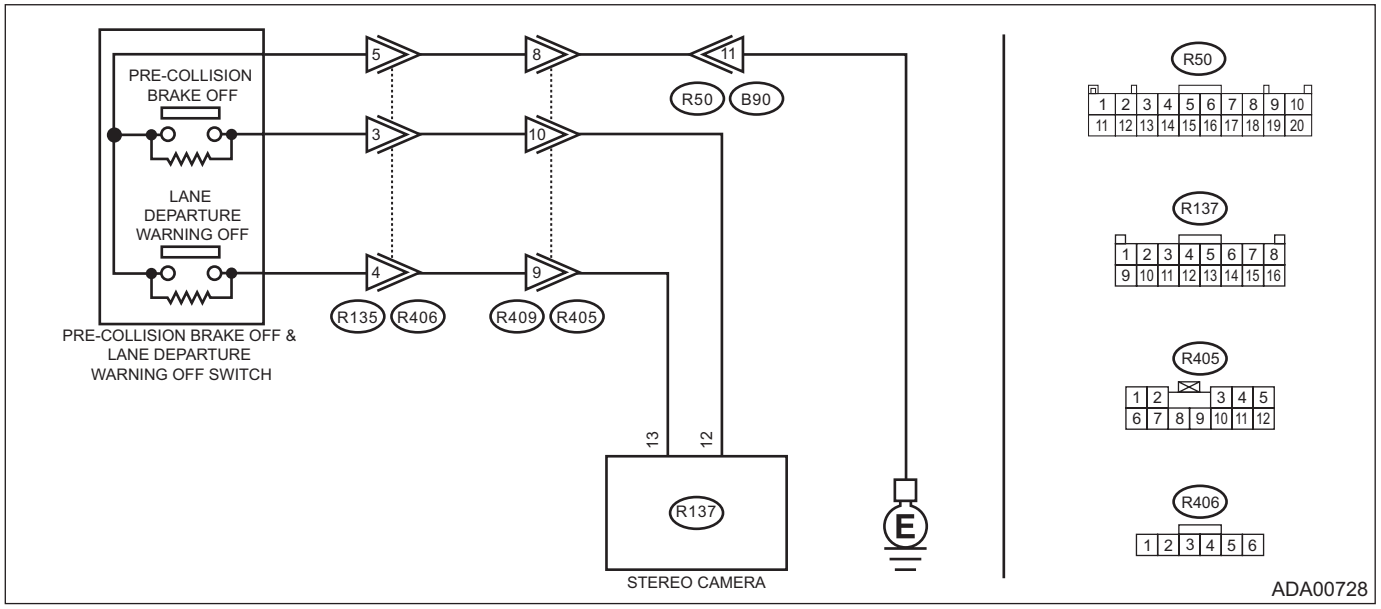

Step		Check	Yes	No
1	**CHECK CURRENT DATA.** Confirm the current data «Pre-Collision Brake OFF SW» of EyeSight using Subaru Select Monitor. <Ref. to ES(diag)-24, Read Current Data.>	Does the display change according to ON/OFF operation of the pre-collision brake OFF switch?	Even if DTC is displayed, the circuit has returned to a normal condition at this time. Reproduce the failure, and then perform the diagnosis again. NOTE: In this case, temporary poor contact of connector, or temporary open or short circuit of harness may be the cause.	Go to step **2**.

Step		Check	Yes	No
2	**CHECK HARNESS.** 1) Disconnect the stereo camera connector and the pre-collision brake OFF switch connector. 2) Using the tester, measure the resistance between the stereo camera connector and pre-collision brake OFF switch connector as well as chassis ground. ***Connector & terminal*** ***(R137) No. 12 — (R406) No. 3:*** ***(R406) No. 5 — Chassis ground:***	Is the resistance less than 1 Ω?	Go to step **3**.	Repair or replace an open circuit in harness between the stereo camera connector and pre-collision brake OFF switch connector or between the pre-collision brake OFF switch connector and chassis ground.
3	**CHECK HARNESS.** Using the tester, measure the resistance between the pre-collision brake OFF switch connector and chassis ground. ***Connector & terminal*** ***(R406) No. 3 — Chassis ground:***	Is the resistance 1 MΩ or more?	Check the pre-collision brake OFF switch. <Ref. to ES-35, INSPECTION, Switches and Harness.>	Repair or replace the short circuit to ground in harness between the stereo camera connector and pre-collision brake OFF switch connector.

BH:DTC B28B7 LDP OFF SWITCH

Detected when lane departure warning OFF switch circuit is not installed, open-circuited, or is stuck to ON.

DTC DETECTING CONDITION:

- Wiring of lane departure warning OFF switch is not connected.
- Lane departure warning OFF switch circuit is open.
- Lane departure warning OFF switch circuit stays ON for 45 seconds or more.

TROUBLE SYMPTOM:

All functions of EyeSight system do not operate.

WIRING DIAGRAM:

EyeSight System <Ref. to WI-222, WIRING DIAGRAM, EyeSight System.>

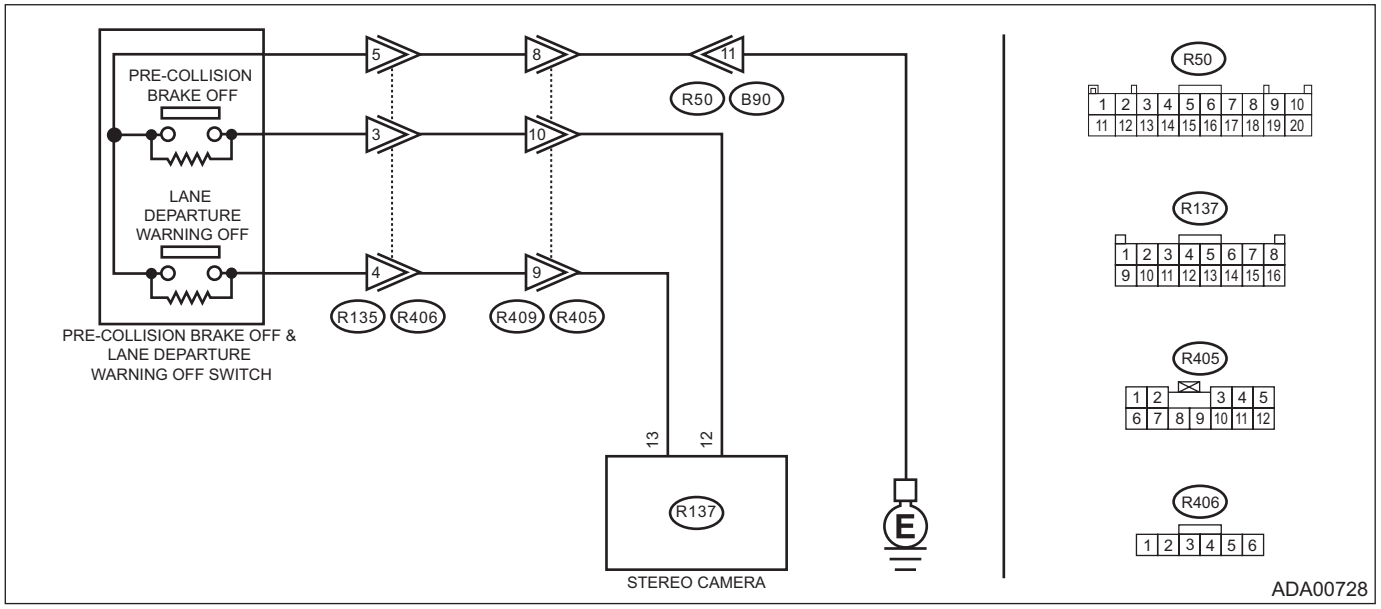

Step		Check	Yes	No
1	**CHECK CURRENT DATA.** Confirm the current data «Lane Departure Warning OFF SW» of EyeSight using Subaru Select Monitor. <Ref. to ES(diag)-24, Read Current Data.>	Does the display change according to the lane departure warning OFF switch ON/OFF operation?	Even if DTC is displayed, the circuit has returned to a normal condition at this time. Reproduce the failure, and then perform the diagnosis again. NOTE: In this case, temporary poor contact of connector, or temporary open or short circuit of harness may be the cause.	Go to step **2**.

Step		Check	Yes	No
2	**CHECK HARNESS.** 1) Disconnect the stereo camera connector and the lane departure warning OFF switch connector. 2) Using the tester, measure the resistance between the stereo camera connector and lane departure warning OFF switch connector. ***Connector & terminal*** ***(R137) No. 13 — (R406) No. 4:*** ***(R406) No. 5 — Chassis ground:***	Is the resistance less than 1 Ω?	Go to step **3**.	Repair or replace an open circuit in harness between the stereo camera connector and lane departure warning OFF switch connector or between the lane departure warning OFF switch connector and chassis ground.
3	**CHECK HARNESS.** Using the tester, measure the resistance between the lane departure warning OFF switch connector and chassis ground. ***Connector & terminal*** ***(R406) No. 4 — Chassis ground:***	Is the resistance 1 MΩ or more?	Check the lane departure warning OFF switch. <Ref. to ES-35, INSPECTION, Switches and Harness.>	Repair or replace the short circuit to ground in harness between the stereo camera connector and lane departure warning OFF switch connector.

BI: DTC B28B8 EyeSight STEERING SWITCH 1

Detected when steering switch for EyeSight is not installed, is open-circuited or is stuck to ON.

DTC DETECTING CONDITION:

- Wiring of the EyeSight steering switch is not connected.
- EyeSight steering switch circuit is open.
- EyeSight steering switch circuit stays ON.

TROUBLE SYMPTOM:

All functions of EyeSight system do not operate.

WIRING DIAGRAM:

EyeSight System <Ref. to WI-222, WIRING DIAGRAM, EyeSight System.>

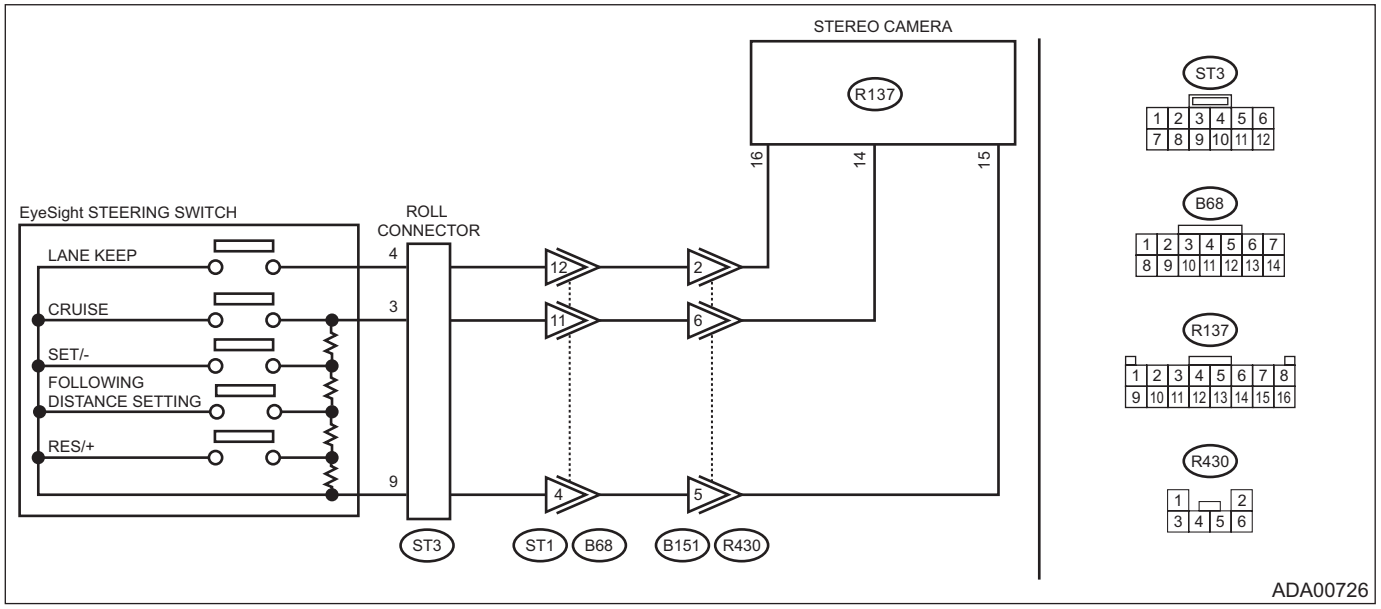

	Step	Check	Yes	No
1	**CHECK CURRENT DATA.** Confirm the current data «Cruise Control SW Voltage (Port14)» and «Cruise Control SW Voltage (Port16)» of EyeSight using Subaru Select Monitor. <Ref. to ES(diag)-24, Read Current Data.>	Is the voltage according to the pressed EyeSight steering switch displayed?	Even if DTC is displayed, the circuit has returned to a normal condition at this time. Reproduce the failure, and then perform the diagnosis again. NOTE: In this case, temporary poor contact of connector, or temporary open or short circuit of harness may be the cause.	Go to step **2**.
2	**CHECK HARNESS.** 1) Disconnect the stereo camera connector and EyeSight steering switch connector. 2) Using the tester, measure the resistance between stereo camera connector and EyeSight steering switch connector. ***Connector & terminal*** ***(ST3) No. 4 — (R137) No. 16:*** ***(ST3) No. 3 — (R137) No. 14:*** ***(ST3) No. 9 — (R137) No. 15:***	Is the resistance less than 1 Ω?	Go to step **3**.	Repair or replace an open circuit in harness between the stereo camera connector and the EyeSight steering switch connector.

	Step	Check	Yes	No
3	**CHECK HARNESS.** Using the tester, measure the resistance between EyeSight steering switch connector and chassis ground. ***Connector & terminal*** ***(ST3) No. 4 — Chassis ground:*** ***(ST3) No. 3 — Chassis ground:*** ***(ST3) No. 9 — Chassis ground:***	Is the resistance 1 MΩ or more?	Check the EyeSight steering switch. <Ref. to ES-35, INSPECTION, Switches and Harness.>	Repair or replace the short circuit to ground in harness between the stereo camera connector and the EyeSight steering switch connector.

BJ:DTC B28B9 EyeSight STEERING SWITCH 2

Detected when steering switch for EyeSight is not installed, is open-circuited or is stuck to ON.
Refer to DTC B28B8 for diagnostic procedure. <Ref. to ES(diag)-107, DTC B28B8 EyeSight STEERING SWITCH 1, Diagnostic Procedure with Diagnostic Trouble Code (DTC).>

BK:DTC B28BA STEERING ANGLE AND STEREO CAMERA CORRELATION MISALIGNED

- Detected when the center point of the steering angle sensor is misaligned.
- Detected when the alignment is extremely misaligned.

DTC DETECTING CONDITION:

- Defective wheel alignment
- Defective VDC CM
- Defective stereo camera

TROUBLE SYMPTOM:

- All functions of EyeSight system do not operate.
- EyeSight warning light illuminates.

NOTE:

- Prior confirmation is required to check if the work related to alignment has been performed or there is an accident history.
- Record the value of current data «Active Lane Keep System Control Learning Value 3» of stereo camera using Subaru Select Monitor.

	Step	Check	Yes	No
1	**CHECK DTC.** Read DTC of the VDC. <Ref. to VDC(diag)-2, Basic Diagnostic Procedure.>	Is DTC related to steering angle sensor displayed?	Perform the diagnosis for DTC for VDC, Go to step **2**.	Go to step **2**.
2	**CHECK DRIVING CONDITION.** Check the driving condition.	Is the steering wheel obviously tilted when the vehicle is in the straight ahead position? (Check if it is obviously tilted at the closest point between the column cover and the steering wheel.)	Perform the wheel alignment adjustment. <Ref. to FS-10, Wheel Alignment.>, and Go to step **3**.	Go to step **3**.
3	**CHECK CURRENT DATA.** 1) Display the current data «Steer Angle Sensor Op» of stereo camera using Subaru Select Monitor. NOTE: Do not use «Steering Angle Sensor Value (Right +) (Left -)» when checking. 2) Check the value when the vehicle is in the straight ahead position.	Is the value from –2 to+2 degrees?	Go to step **4**.	Perform «VSC(VDC) Centering Mode» for VDC. <Ref. to VDC-17, VDC SENSOR MID-POINT SETTING MODE, ADJUSTMENT, VDC Control Module and Hydraulic Control Unit (VDCCM&H/U).> Repeat the step 3. Go to step **3**.
4	**CHECK JOB CONTENT.** Check the job contents performed so far. (To identify whether the problem belongs to the vehicle or the stereo camera.)	Is one of the following actions performed: steering angle sensor diagnosis, wheel alignment adjustment or VDC sensor centering mode?	Go to step **5**.	Replace the stereo camera. <Ref. to ES-8, Stereo Camera.>
5	**LANE KEEP ASSIST LEARNING VALUE CLEAR.** 1) Perform «Clear Active Lane Keep System Learning Value». <Ref. to ES(diag)-50, CLEAR ACTIVE LANE KEEP SYSTEM LEARNING VALUE.> 2) Turn the ignition switch OFF → ON. 3) Display the current data «Active Lane Keep System Control Learning Value 3» of stereo camera using Subaru Select Monitor.	Is the value of «Active Lane Keep System Control Learning Value 3» 0?	Go to step **6**.	Performing «Clear Active Lane Keep System Learning Value» is not complete. Go to step **7**.

	Step	Check	Yes	No
6	**CHECK DTC.** 1) Clear the memory. <Ref. to ES(diag)-49, Clear Memory Mode.> 2) Turn the ignition switch OFF → ON. 3) Read the DTC. <Ref. to ES(diag)-43, Diagnostic Code(s) Display.>	Is DTC B28BA displayed?	Clearing the memory is not complete. Go to step **7**.	The current state is normal. Finish the diagnosis.
7	**CHECK SUBARU SELECT MONITOR CONNECTION.** Check the connection of Subaru Select Monitor.	Is there any fault in the harness and connection between Subaru Select Monitor and stereo camera?	Replace the harness or repair the connection. In case that the step 5 is not performed Go to step **5**. In case that the step 5 has been performed Go to step **6**.	Replace the stereo camera. <Ref. to ES-8, Stereo Camera.>

19.Diagnostic Procedure with ECU Cancel Code

A: 11

Detected, when the CRUISE switch is pressed. Or, when an error related to the CRUISE switch occurs.

TROUBLE SYMPTOM:

- Cruise control cannot be set. (Cancelled immediately.)
- Cruise control cannot be released.

WIRING DIAGRAM:

Cruise control system <Ref. to WI-135, WIRING DIAGRAM, Cruise Control System.>

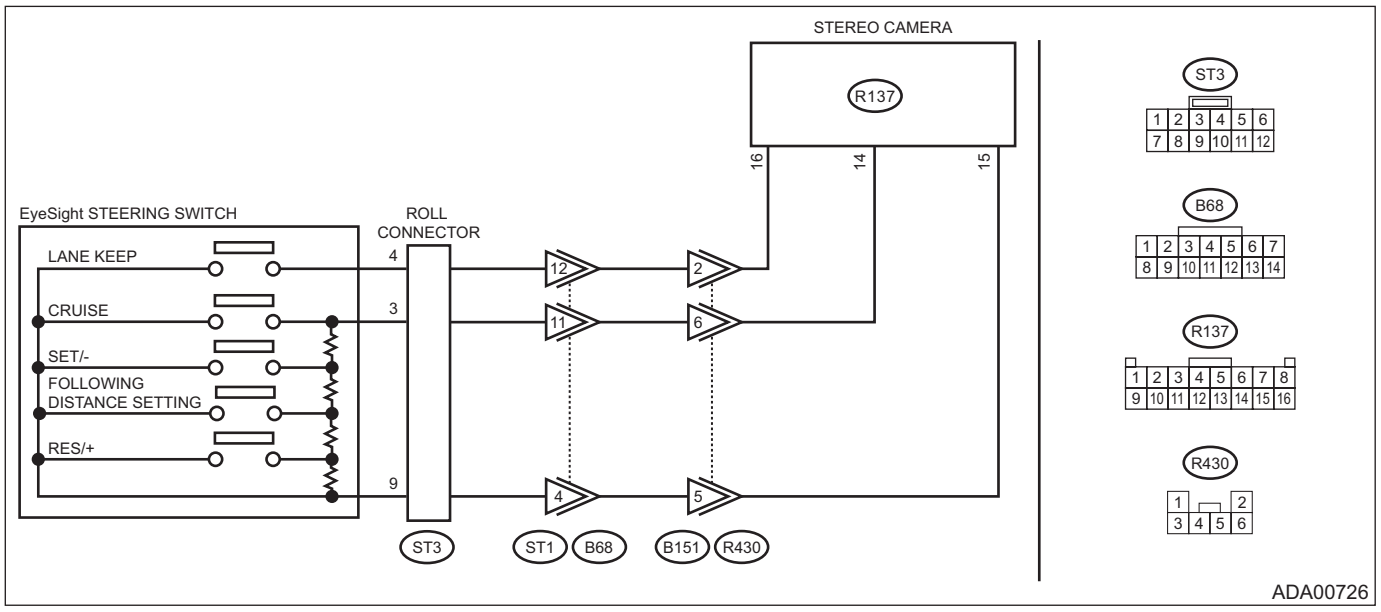

	Step	Check	Yes	No
1	**CHECK CRUISE CONTROL COMMAND SWITCH CIRCUIT.** 1) Remove the driver's airbag module. <Ref. to AB-32, REMOVAL, Driver's Airbag Module.> 2) Disconnect the harness connector of cruise control command switch. 3) Turn the ignition switch to ON. 4) Measure the voltage between harness connector terminal and chassis ground. ***Connector & terminal*** ***(ST3) No. 3 (+) — Chassis ground (–):*** ***(ST3) No. 4 (+) — Chassis ground (–):***	Is the voltage 5 V or more?	Go to step **2**.	Check the harness between cruise control command switch and stereo camera, and the steering roll connector for open or short circuit, or for poor contact.
2	**CHECK CRUISE CONTROL COMMAND SWITCH CIRCUIT.** 1) Turn the ignition switch to OFF. 2) Remove the cruise control command switch. <Ref. to CC-6, REMOVAL, Cruise Control Command Switch.> 3) Measure the resistance between harness connector terminal and chassis ground. ***Connector & terminal*** ***(ST3) No. 9 — Chassis ground:***	Is the resistance less than 10 Ω?	Go to step **3**.	Check for open circuit between the cruise control command switch, stereo camera and chassis ground, and check the stereo camera.
3	**CHECK CRUISE CONTROL COMMAND SWITCH.** Measure the resistance between switch terminals, when the cruise control command switch is not pressed. ***Terminals*** ***No. 3 — No. 9:***	Is the resistance approximately 4 kΩ?	Go to step **4**.	Replace the cruise control command switch. <Ref. to CC-6, Cruise Control Command Switch.>

	Step	Check	Yes	No
4	**CHECK CANCEL SWITCH.** 1) Turn the ignition switch to OFF. 2) Remove the cruise control command switch. <Ref. to CC-6, REMOVAL, Cruise Control Command Switch.> 3) Measure the resistance between switch terminals with the CANCEL switch pressed. ***Terminals*** ***No. 3 — No. 9:***	Is the resistance with the CANCEL switch pressed approximately less than 1 Ω?	Go to step **5**.	Replace the cruise control command switch. <Ref. to CC-6, Cruise Control Command Switch.>
5	**INSPECTION OF SET/– SWITCH.** Measure the resistance between switch terminals with the SET/– switch pressed. ***Terminals*** ***No. 3 — No. 9:***	Is the resistance with the SET/– switch pressed approximately 250 Ω?	Go to step **6**.	Replace the cruise control command switch. <Ref. to CC-6, Cruise Control Command Switch.>
6	**CHECK RES/+ SWITCH CIRCUIT.** Measure the resistance between the switch terminals with the RES/+ switch pressed. ***Terminals*** ***No. 3 — No. 9:***	Is the resistance with the RES/+ switch pressed approximately 1,500 Ω?	Replace the stereo camera. <Ref. to ES-8, REMOVAL, Stereo Camera.>	Replace the cruise control command switch. <Ref. to CC-6, Cruise Control Command Switch.>

B: 12

Detected when the brake pedal is depressed, or the error related to the stop light & brake switch occurred.

TROUBLE SYMPTOM:

- Cruise control cannot be set.
- Cruise control cannot be released.

WIRING DIAGRAM:

Cruise control system <Ref. to WI-135, WIRING DIAGRAM, Cruise Control System.>

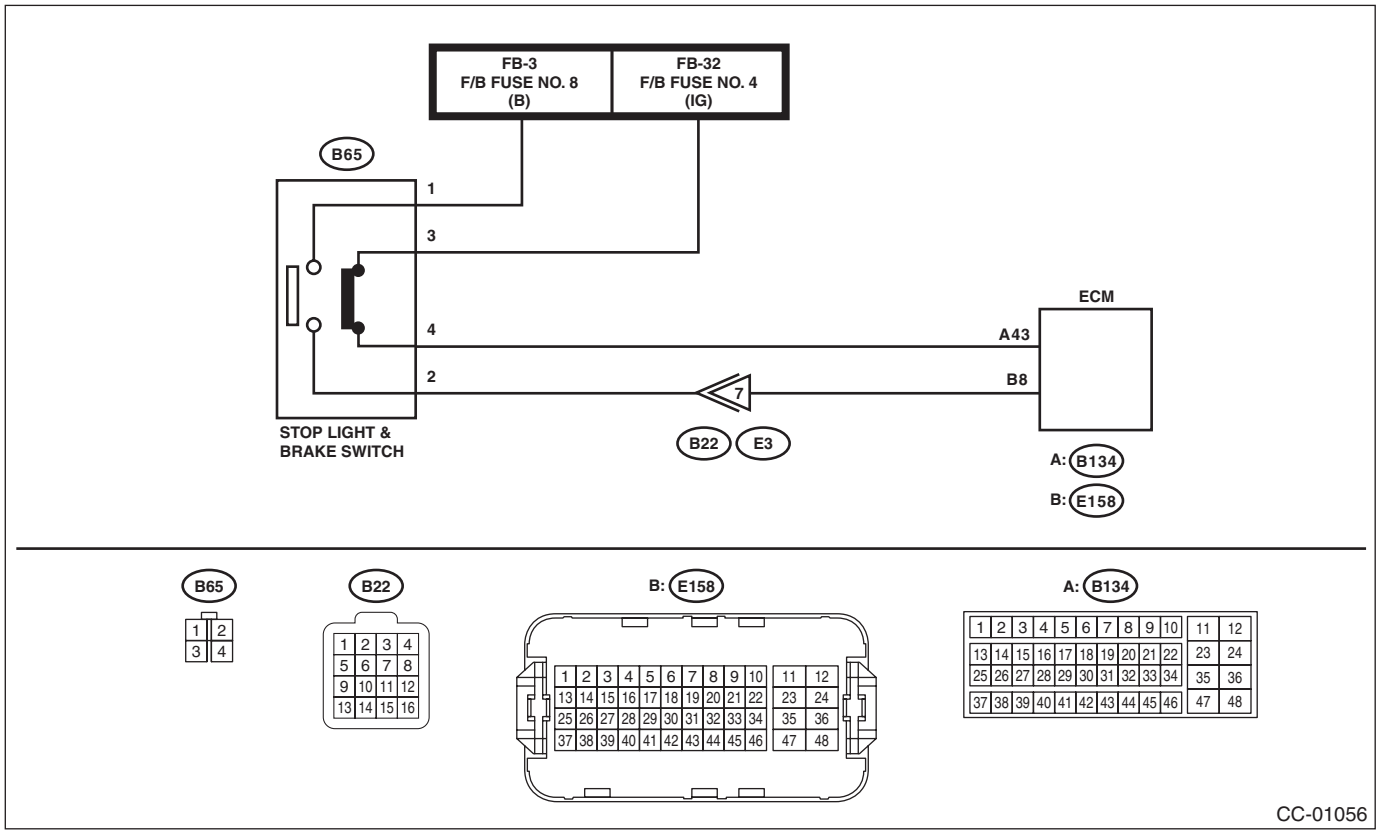

	Step	Check	Yes	No
1	**CHECK STOP LIGHT & BRAKE SWITCH.** Check the stop light & brake switch. <Ref. to CC-9, Stop Light & Brake Switch.>	Are the check results for the stop light & brake switch unit, and installation position OK?	Go to step **2**.	Replace the stop light & brake switch. Or adjust the installation position.
2	**CHECK STOP LIGHT & BRAKE SWITCH CIRCUIT.** 1) Turn the ignition switch to OFF. 2) Disconnect the stop light & brake switch harness connector. 3) Turn the ignition switch to ON. 4) Measure the voltage between harness connector terminal and chassis ground. ***Connector & terminal*** ***(B65) No. 3 (+) — Chassis ground (–):***	Is the voltage 10 V or more?	Go to step **3**.	• Check the fuse No. 8 (fuse & relay box). • Check for open or short circuit in harness between the stop light & brake switch and the fuse & relay box.
3	**CHECK STOP LIGHT & BRAKE SWITCH CIRCUIT.** Measure the voltage between harness connector terminal and chassis ground. ***Connector & terminal*** ***(B65) No. 1 (+) — Chassis ground (–):***	Is the voltage 10 V or more?	Go to step **4**.	• Check the fuse No. 4 (fuse & relay box). • Check for open or short circuit in harness between the stop light & brake switch and the fuse & relay box.
4	**CHECK STOP LIGHT & BRAKE SWITCH CIRCUIT.** 1) Turn the ignition switch to OFF. 2) Disconnect the harness connector of ECM. 3) Measure the resistance between ECM harness connector terminal and stop light & brake switch harness connector terminal. ***Connector & terminal*** ***(B134) No. 43 — (B65) No. 4:*** ***(E158) No. 8 — (B65) No. 2:***	Is the resistance less than 10 Ω?	Replace the ECM. <Ref. to FU(w/o STI)-124, Engine Control Module (ECM).>	Repair the harness.

C: 14

Detected when the select lever is shifted to the neutral position, or when an error related to the neutral position switch occurs.

TROUBLE SYMPTOM:

Cruise control cannot be set.

WIRING DIAGRAM:

Cruise control system <Ref. to WI-135, WIRING DIAGRAM, Cruise Control System.>

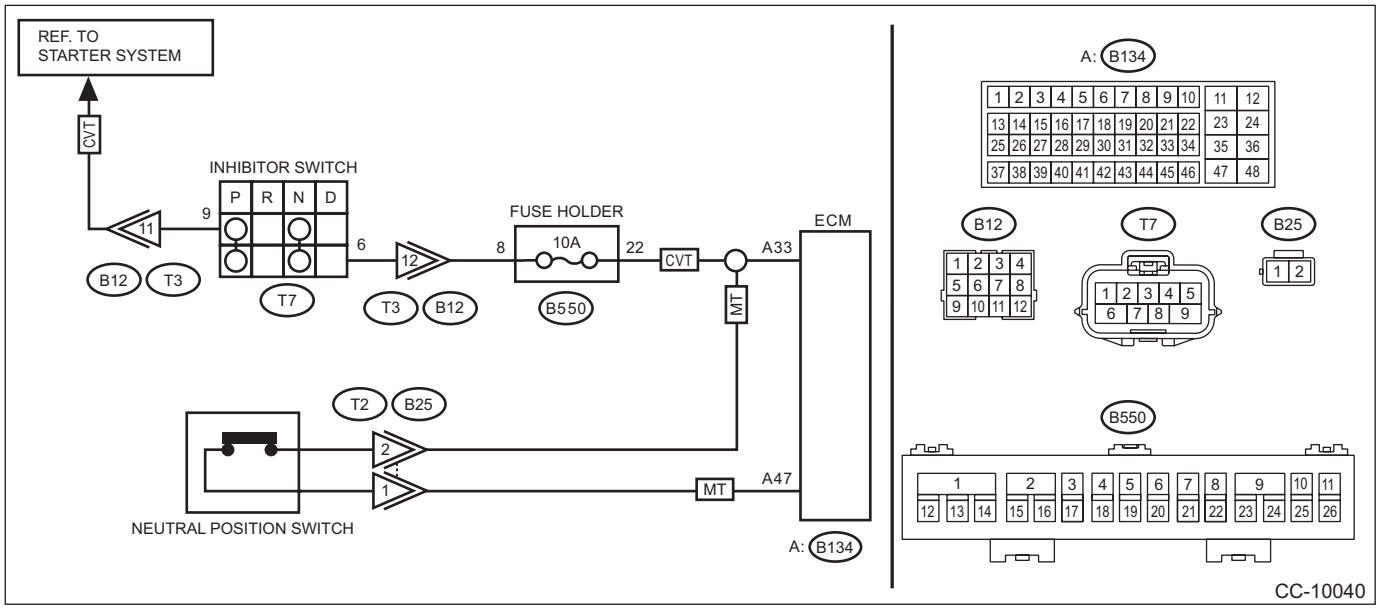

Step		Check	Yes	No
1	**CHECK INHIBITOR SWITCH CIRCUIT.** 1) Turn the ignition switch to OFF. 2) Disconnect the inhibitor switch harness connector. 3) Turn the ignition switch to ON. 4) Measure the voltage between harness connector terminal and chassis ground. ***Connector & terminal*** ***(T7) No. 6 (+) — Chassis ground (–):***	Is the voltage 10 V or more?	Go to step **2**.	Check for open or short circuit in the harness between inhibitor switch and ECM.
2	**CHECK INHIBITOR SWITCH CIRCUIT.** 1) Turn the ignition switch to OFF. 2) Disconnect the starter motor harness connector. 3) Measure the resistance between the inhibitor switch harness connector terminal and the starter motor. ***Connector & terminal*** ***(T7) No. 9 — Starter motor:***	Is the resistance less than 10 Ω?	Go to step **3**.	Repair the harness.
3	**CHECK INHIBITOR SWITCH.** Remove and check the inhibitor switch. <Ref. to CC-11, Inhibitor Switch.>	Is the check result OK?	Replace the ECM. <Ref. to FU(w/o STI)-124, Engine Control Module (ECM).>	Replace the inhibitor switch.

D: 15

Detected when the CANCEL switch is pressed, or when an error related to the CRUISE switch occurs.
TROUBLE SYMPTOM:
- Cruise control cannot be set. (Cancelled immediately.)
- Cruise control cannot be released.

Refer to 11 for diagnostic procedure.
<Ref. to ES(diag)-111, 11, Diagnostic Procedure with ECU Cancel Code.>

E: 16

Detected when the ignition switch is turned to OFF, or when an error related to the ignition switch occurs.
TROUBLE SYMPTOM:
Cruise control cannot be set.
WIRING DIAGRAM:
Cruise control system <Ref. to WI-135, WIRING DIAGRAM, Cruise Control System.>

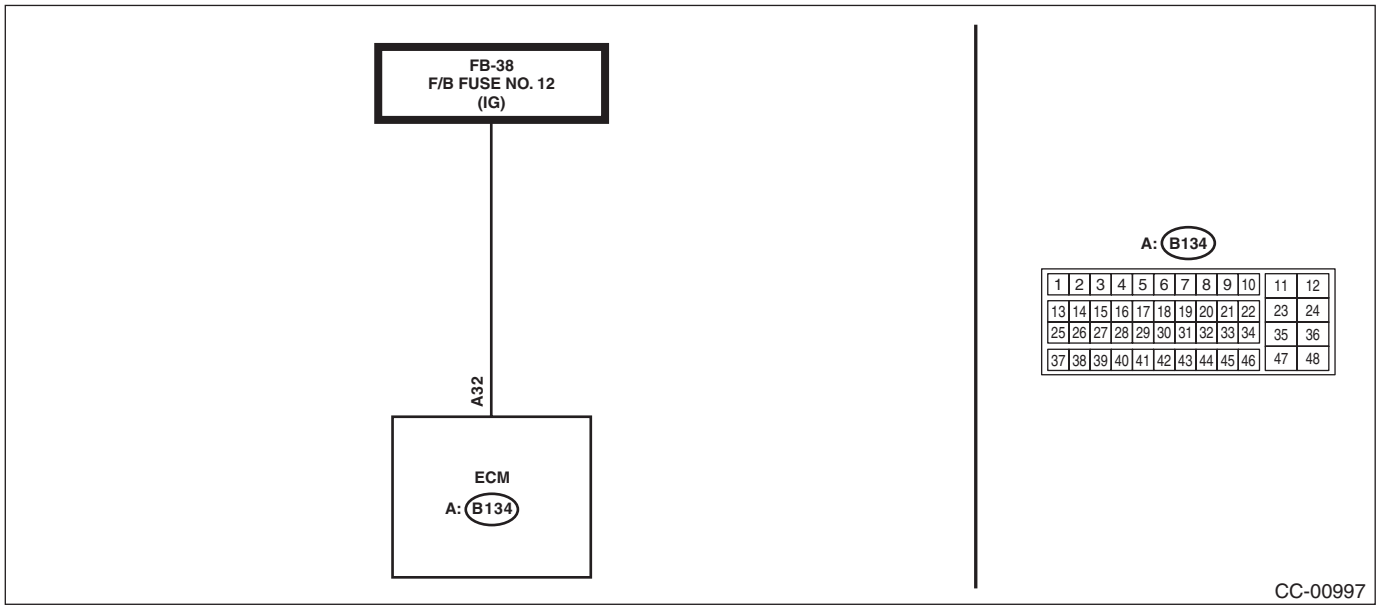

Step		Check	Yes	No
1	**CHECK IGNITION SWITCH CIRCUIT.** 1) Turn the ignition switch to OFF. 2) Disconnect the ECM harness connector. 3) Turn the ignition switch to ON. 4) Measure the voltage between harness connector terminal and chassis ground. ***Connector & terminal*** ***(B134) No. 32 (+) — Chassis ground (–):***	Is the voltage 10 V or more?	Check for poor contact of ECM connector.	• Check the fuse No. 12 (fuse & relay box). • Check open or short circuit in harness between the ignition switch and ECM.

F: 21

Cruise control command switch malfunction is detected.
TROUBLE SYMPTOM:
- Cruise control cannot be set. (Cancelled immediately.)
- Cruise control cannot be released.

Refer to 11 for diagnostic procedure.
<Ref. to ES(diag)-111, 11, Diagnostic Procedure with ECU Cancel Code.>

G: 22

Malfunction related to vehicle speed sensor is detected.
DIAGNOSIS:
Open or short circuit in the vehicle speed sensor system.
TROUBLE SYMPTOM:
Cruise control cannot be set. (Cancelled immediately.)

	Step	Check	Yes	No
1	**CHECK ABS OR VDC WARNING LIGHT.** 1) Turn the ignition switch to ON. 2) After the initial operation of the combination meter finished, check if the ABS or VDC warning light stays illuminated.	Does the warning light stay illuminated?	Check the VDCCM. <Ref. to VDC(diag)-2, Basic Diagnostic Procedure.>	Go to step **2**.
2	**CHECK DTC OF LAN COMMUNICATION CIRCUIT.** Read the DTC of body integrated unit using Subaru Select Monitor. <Ref. to BC(diag)-11, Read Diagnostic Trouble Code (DTC).>	Is DTC displayed?	Perform inspection according to DTC.	Replace the ECM. <Ref. to FU(w/o STI)-124, Engine Control Module (ECM).>

H: 24

Switch malfunction related to cruise control is detected.
TROUBLE SYMPTOM:
- Cruise control cannot be set. (Cancelled immediately.)
- Cruise control cannot be released.

Refer to 11 for diagnostic procedure.
<Ref. to ES(diag)-111, 11, Diagnostic Procedure with ECU Cancel Code.>

I: 31

Malfunction related to engine speed signal is detected.
Abnormal increase of engine speed is detected.
Gear is placed in 1st (MT model only) or Reverse position.
Drive with the gear in 2nd position or higher, and perform the cruise setting again. It is normal if the cancel code is not detected.

J: 32

Detected outside the system operation vehicle speed range.
Increase the vehicle speed to the speed available for cruise set and perform the cruise set operation again.
If the cancel code is detected even when the cruise setting is performed again, perform the diagnosis for 22.
Refer to 22 for diagnostic procedure.
<Ref. to ES(diag)-116, 22, Diagnostic Procedure with ECU Cancel Code.>

K: 34

The vehicle was driven at higher speed than the set vehicle speed for a long time (approximately 10 minutes) during cruise driving.
The cancel code is detected when the vehicle was driven for a long time at the higher speed than the speed available for cruise set through the accelerator operation.
Perform the cruise setting again. It is normal if the cancel code is not detected.

L: 35

Detected when the vehicle speed feedback is not possible.
Set vehicle speed cannot be maintained because of some reasons (steep uphill, parking brake forgotten to be returned to the home position, etc.) during cruise driving.
The cancel code is detected when the driving condition is not suitable for cruise control.
Eliminate the probable cause, and perform the cruise set operation again.

M: 41

VDC/TCS/EPB is operated.
Vehicle dynamics control (VDC), TCS/EPB is operated during cruise driving or cruise set operation.
<Ref. to VDC(diag)-2, PROCEDURE, Basic Diagnostic Procedure.>

N: 43

- Detected that part or all of the functions of ABS/VDC are not able to function.

Detected that part or all of the functions of ABS/VDC are not able to function during cruise driving or cruise set operation.
<Ref. to VDC(diag)-2, PROCEDURE, Basic Diagnostic Procedure.>

- The CRUISE indicator did not illuminate even if the CRUISE switch is pressed before the engine starts.

Detected when the CRUISE switch is pressed during the initial diagnosis of ABS/VDC. After starting the engine, wait until the initial illumination of the ABS/VDC warning light ends, and then press the CRUISE switch again. It is normal if the CRUISE indicator illuminates.

O: 44

Body integrated unit malfunction is detected.
Body integrated unit system malfunction is detected during cruise driving or cruise setting operation.
<Ref. to LAN(diag)-2, PROCEDURE, Basic Diagnostic Procedure.>

P: 45

Combination meter malfunction is detected.
Combination meter malfunction is detected during cruise driving or cruise setting operation.
<Ref. to LAN(diag)-2, PROCEDURE, Basic Diagnostic Procedure.>

Q: 49

Automatic transmission malfunction is detected.
Automatic transmission malfunction is detected during cruise driving or cruise setting operation.
<Ref. to CVT(diag)-2, PROCEDURE, Basic Diagnostic Procedure.>

R: 61

Malfunction in the stop light & brake switch is detected.
TROUBLE SYMPTOM:

- Cruise control cannot be set.
- Cruise control cannot be released.

Refer to 12 for diagnostic procedure.
<Ref. to ES(diag)-112, 12, Diagnostic Procedure with ECU Cancel Code.>

S: 62

Neutral position switch malfunction is detected.
TROUBLE SYMPTOM:
Cruise control cannot be set.
Refer to 14 for diagnostic procedure.
<Ref. to ES(diag)-114, 14, Diagnostic Procedure with ECU Cancel Code.>

T: 63

Malfunction of vehicle speed signal variation is detected.
TROUBLE SYMPTOM:
Cruise control cannot be set. (Cancelled immediately.)
Refer to 22 for diagnostic procedure.
<Ref. to ES(diag)-116, 22, Diagnostic Procedure with ECU Cancel Code.>

NOTE:
This cancel code may be detected when the vehicle suddenly started with VDC OFF on low μ road surface. In this case, restart the engine and perform the cruise control setting operation again. If the cancel code is not detected, it is normal.

U: 64

Malfunction related to engine is detected.
For diagnostic procedure, refer to the malfunction diagnostic procedure for the engine.
<Ref. to EN(w/o STI)(diag)-2, PROCEDURE, Basic Diagnostic Procedure.>

V: 65

Cruise control command switch malfunction is detected.
When the command switch is pressed ON for a long time (approximately two minutes), stuck ON condition is detected.
TROUBLE SYMPTOM:
- Cruise control cannot be set. (Cancelled immediately.)
- Cruise control cannot be released.

Refer to 11 for diagnostic procedure.
<Ref. to ES(diag)-111, 11, Diagnostic Procedure with ECU Cancel Code.>

W: 66

Cruise control calculation malfunction is detected.
For diagnostic procedure, refer to the malfunction diagnostic procedure for the engine.
<Ref. to EN(w/o STI)(diag)-2, PROCEDURE, Basic Diagnostic Procedure.>

Blind Spot Detection/Rear Cross Traffic Alert

RVD

		Page
1.	General Description	2
2.	Relay and Fuse	4
3.	Blind Spot Detection/Rear Cross Traffic Alert	5
4.	Radar Sensor	6
5.	Switches and Harness	12
6.	Combination Meter	14
7.	Outer Mirror Assembly	15
8.	Diagnostics with Phenomenon	16

1. General Description

A: LOCATION

Refer to “LOCATION” of “Blind Spot Detection/Rear Cross Traffic Alert (DIAGNOSTICS)” section. <Ref. to RVD(diag)-7, LOCATION, Electrical Component Location.>

B: COMPONENT

1. RADAR SENSOR

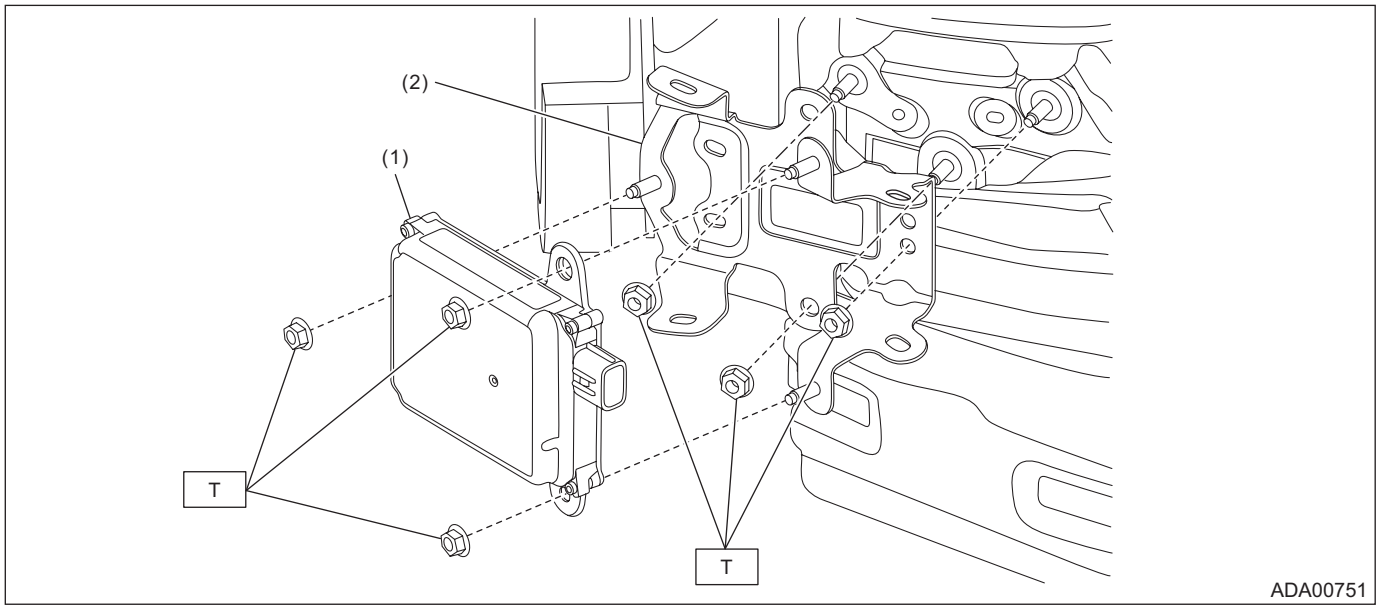

(1) Radar sensor (master & slave) (2) Radar bracket

Tightening torque: N·m (kgf-m, ft-lb)
T: 7.5 (0.8, 5.5)

C: CAUTION

• Before disconnecting connectors of sensors or units, be sure to disconnect the ground cable from battery. When replacing the electrical parts provided with memory functions that store contents specified by a customer, record the memory contents before disconnecting the battery ground cable.
• For precautions for rear vehicle detection function, refer to “CAUTION” in “Blind Spot Detection/Rear Cross Traffic Alert (DIAGNOSTICS)” section. <Ref. to RVD(diag)-4, CAUTION, General Description.>

D: PREPARATION TOOL

1. SPECIAL TOOL

ILLUSTRATION	TOOL NUMBER	DESCRIPTION	REMARKS
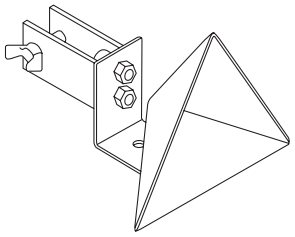 ST87699AL00A	87699AL00A	Radar reflector	Used for adjusting the radar axis of the radar sensor. NOTE: Attach the radar reflector to a round pole with a diameter of approx. 20 mm (0.79 in) or a 20-mm (0.79-in) square pole.
 STSSM4	—	SUBARU SELECT MONITOR 4	Used for setting of each function and trouble-shooting for electrical system. NOTE: For detailed operation procedures of Subaru Select Monitor 4, refer to “Application help”.

2. GENERAL TOOL

TOOL NAME	REMARKS
Circuit tester	Used for measuring resistance, voltage and current.
DST-i	Used together with Subaru Select Monitor 4.
Measure (5 m (16 ft) or more)	Used for adjusting the radar axis of the radar sensor.
Leveling line	
Plumb bob	
Packing tape	
Stand, tripod, etc.	

2. Relay and Fuse

A: LOCATION

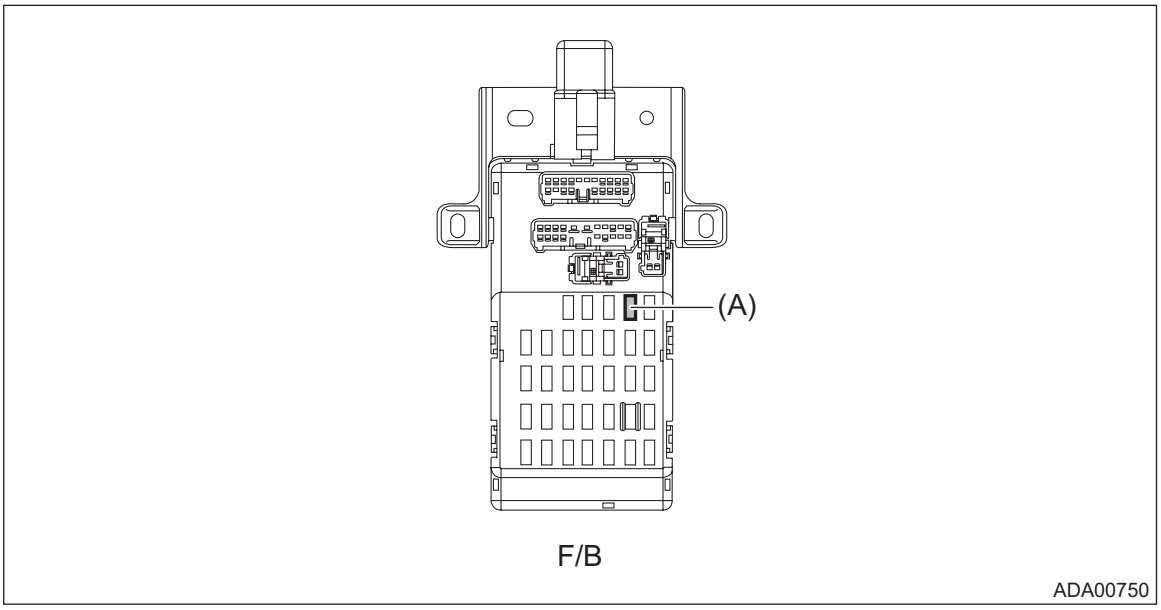

Fuse & Relay Box	Fuse 10 A (radar sensor LH (master), radar sensor RH (slave), BSD/RCTA OFF switch)	(A)

NOTE:
For other related fuses, refer to the wiring diagram. <Ref. to WI-31, Power Supply Circuit.>

B: INSPECTION

1. CHECK FUSE

1) Remove the fuse and inspect visually.
2) If the fuse is blown out, replace the fuse.

NOTE:
If the fuse is blown again, check the system wiring harness.

3. Blind Spot Detection/Rear Cross Traffic Alert

A: WIRING DIAGRAM

Refer to “Blind Spot Detection/Rear Cross Traffic Alert” in the wiring diagram. <Ref. to WI-110, WIRING DIAGRAM, Blind Spot Detection/Rear Cross Traffic Alert.>

B: INSPECTION

Refer to “Basic Diagnostic Procedure” of “Blind Spot Detection/Rear Cross Traffic Alert (DIAGNOSTICS)” section. <Ref. to RVD(diag)-2, Basic Diagnostic Procedure.>

C: NOTE

For procedure of each component in the Subaru Rear Vehicle Detection system, refer to the respective sections.

- Radar sensor: <Ref. to RVD-6, Radar Sensor.>
- BSD/RCTA OFF switch: <Ref. to RVD-12, Switches and Harness.>
- Combination meter: <Ref. to IDI-13, Combination Meter.>
- Outer mirror assembly: <Ref. to GW-27, Outer Mirror Assembly.>

4. Radar Sensor

A: REMOVAL

1. RADAR SENSOR LH (MASTER)

1) Disconnect the ground cable from battery. <Ref. to NT-6, BATTERY, NOTE, Note.>

NOTE:
For model with battery sensor, disconnect the ground terminal from battery sensor.

2) Remove the bumper face - rear. <Ref. to EI-41, REMOVAL, Rear Bumper.>
3) Remove the radar sensor LH (master).
   (1) Disconnect the connector.
   (2) Remove the nut and remove the radar sensor LH.

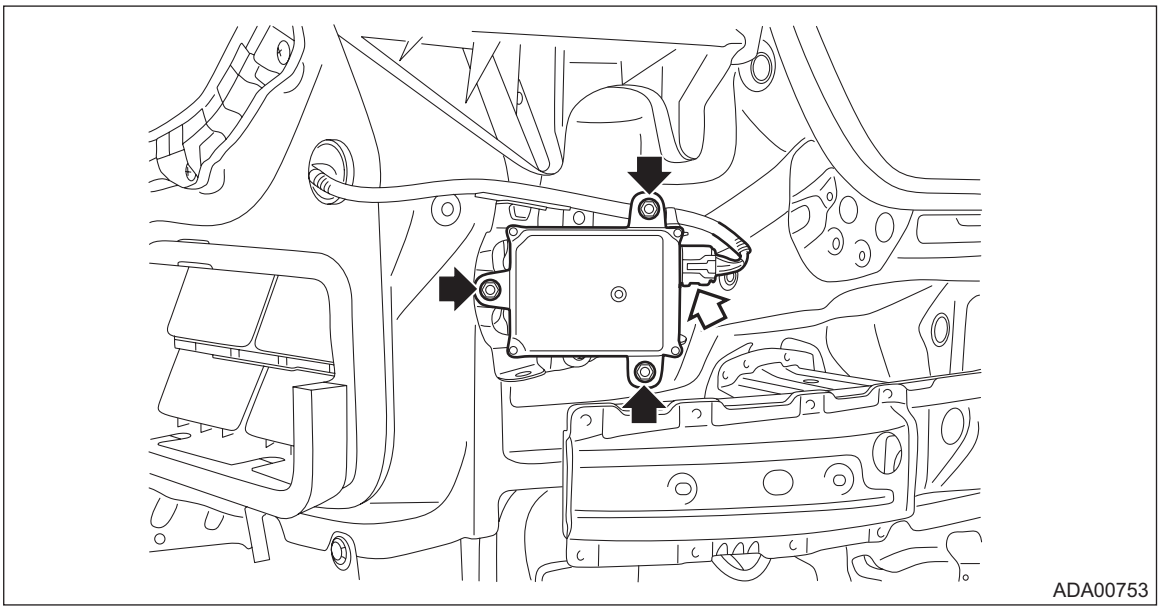

4) Remove the radar bracket.
   (1) Remove the harness clamp.
   (2) Remove the nut and remove the radar bracket.

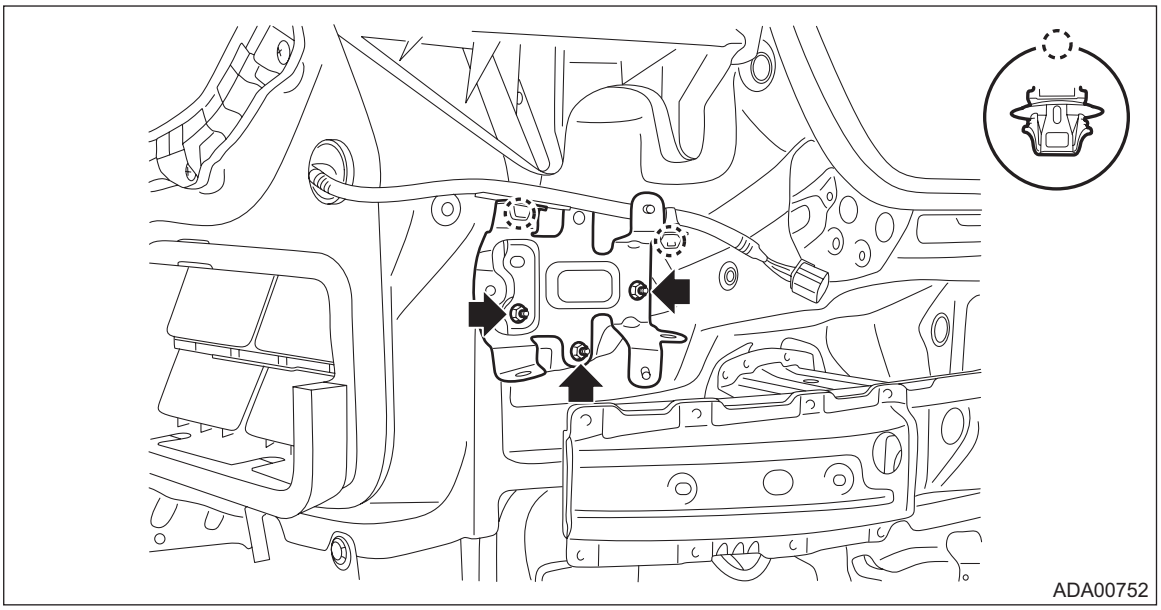

2. RADAR SENSOR RH (SLAVE)

NOTE:
For the procedure of radar sensor RH (slave), refer to “RADAR SENSOR LH (MASTER)”.

B: INSTALLATION

1) Install the radar bracket.

Tightening torque:
7.5 N·m (0.8 kgf-m, 5.5 ft-lb)
2) Install the radar sensor.

Tightening torque:
7.5 N·m (0.8 kgf-m, 5.5 ft-lb)
3) Install the bumper face - rear.
4) Connect the battery ground terminal. <Ref. to NT-6, BATTERY, NOTE, Note.>
5) Perform the adjustment of the radar sensor radar axis. <Ref. to RVD-8, RADAR AXIS ADJUSTMENT, ADJUSTMENT, Radar Sensor.>

C: ADJUSTMENT

1. RADAR AXIS ADJUSTMENT

CAUTION:
- **After removal/installation or replacement of the radar sensor, perform the radar axis adjustment.**
- **The procedure for the master is only shown here. However the procedure for the slave can also be done in the same way as the master.**

1) Before performing the inspection, check the following items.
- The inflation pressure of tires is correct.
- The vehicle does not have load.
- Vehicle's fuel tank is fully filled.

2) Place the vehicle on a level surface, where approximately 5 square meters (16.41 square ft) area can be secured behind the vehicle.

CAUTION:
- **No metallic objects around the vehicle and on the floor in the area.**
- **Do not let in objects other than the RADAR REFLECTOR (ST), persons and metallic objects inside the area.**

NOTE:
The illustration shows the secured area for adjusting the radar axis on the master side.

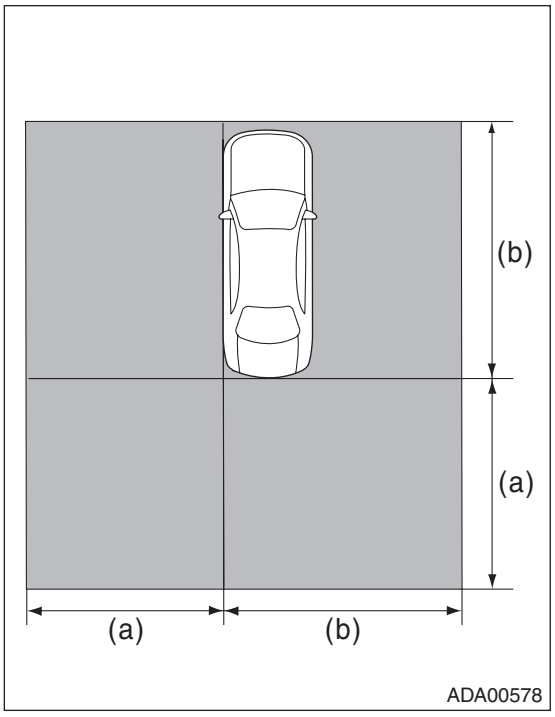

(a) Approx. 4 m (13.12 ft)
(b) Approx. 5 m (16.41 ft)

3) Prepare the Subaru Select Monitor, measure, leveling line, plumb bob, packing tape, RADAR REFLECTOR (ST), and stand or tripod for fixing the RADAR REFLECTOR.

Preparation tool:
ST: RADAR REFLECTOR (87699AL00A)

4) Set up the radar reflector.

NOTE:
The following procedure explains the method of setting the radar reflector so that the distance between radar reflector and radar sensor is 1,500 mm (4.92 ft) and the radar is positioned at an angle of 50 degree.

(1) Suspend the plumb bob from the center of the front hole cap, and mark the position where the plumb bob touches the ground. (Point A)

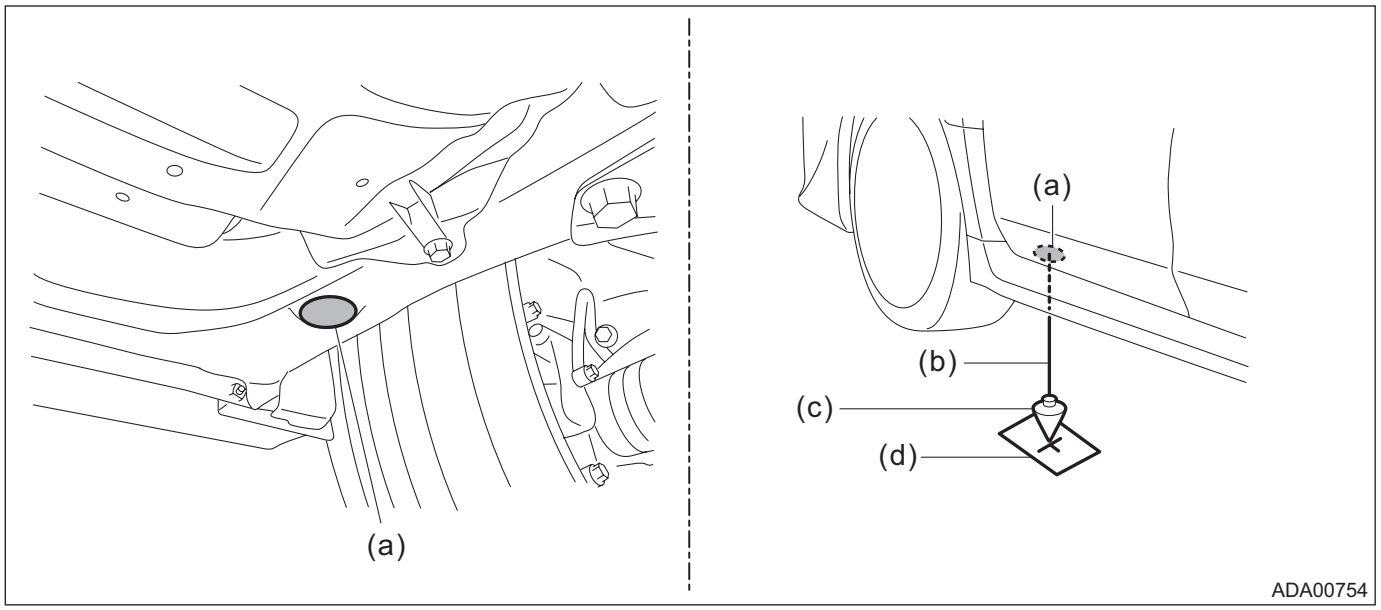

(a) Front hole cap
(b) Leveling line
(c) Plumb bob
(d) Point A

NOTE:
Stick the packing tape etc. on the floor, then make a marking on the tape.

(2) Suspend the plumb bob from the center of the rear hole cap, and mark the position where the plumb bob touches the ground. (Point B)

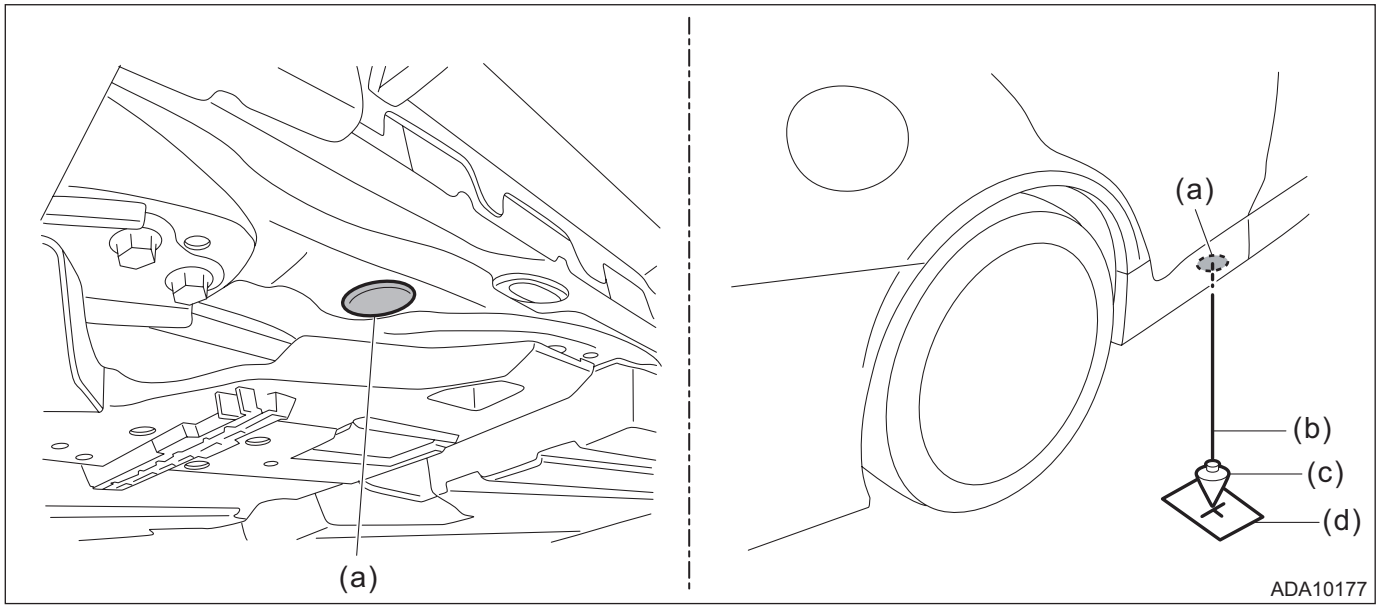

(a) Rear hole cap
(b) Leveling line
(c) Plumb bob
(d) Point B

NOTE:
Stick the packing tape etc. on the floor, then make a marking on the tape.

(3) Stretch a leveling line to draw an arc with the marked point A as a pivot.
(4) Stretch a leveling line to draw an arc with the marked point B as a pivot.
(5) Set up the radar reflector at the cross point.

CAUTION:
When setting up the radar reflector, adjust the height so that the center of the pyramid points at the radar sensor as shown in the figure.

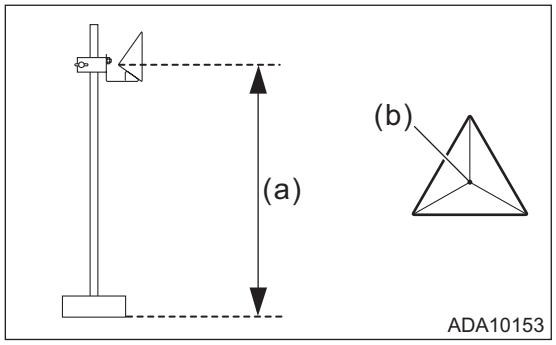

(a) 575±10 mm (22.64±0.39 in)
(b) Center of pyramid

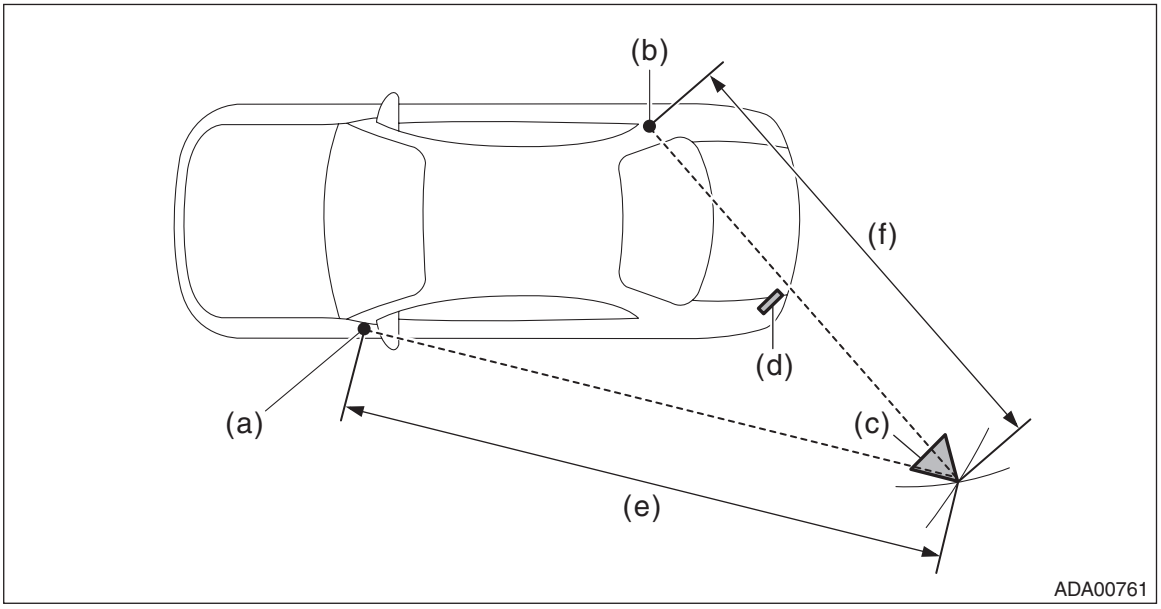

(a) Point A
(b) Point B
(c) Radar reflector
(d) Radar sensor
(e) 4,290 mm (14.08 ft)
(f) 3,430 mm (11.25 ft)

5) Connect the Subaru Select Monitor.

NOTE:
- Use the Subaru Select Monitor equipped with the latest version of the software.
- For detailed operation procedures, refer to “Application help”.

6) Turn the ignition switch to ON and wait for 10 seconds.
7) Perform radar axis adjustment.
   (1) On «Start» display, select «Diagnosis».
   (2) On «Vehicle selection» display, enter vehicle information and select «Confirmed».
   (3) On «Main Menu» display, select «Each System».
   (4) On «Select System» display, select «Subaru Rear Vehicle Detection(RH)» or «Subaru Rear Vehicle Detection(LH)» and then select «Enter».
   (5) On «Select Function» display, select «Work Support».
   (6) From the work support item list, select «RADAR Alignment».
   (7) Follow the messages displayed on the Subaru Select Monitor screen when working.

NOTE:
Deviation of radar axis direction is indicated by + (plus) or – (minus).

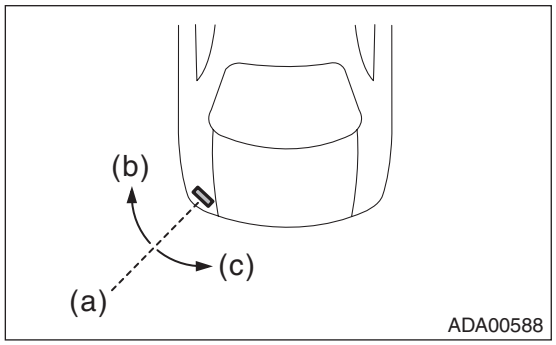

(a) Center of radar
(b) + (plus)
(c) – (minus)

(8) If the result is out of permissive range, it is assumed that the radar reflector position may be incorrect or the radar bracket or its installation location on the vehicle may be deformed. Check the set position of the radar reflector, radar bracket and other attachment, and perform the radar axis adjustment again.

5. Switches and Harness

A: REMOVAL

BSD/RCTA OFF switch

1) Disconnect the ground cable from battery and wait for at least 60 seconds before starting work. <Ref. to NT-6, BATTERY, NOTE, Note.>

NOTE:
For model with battery sensor, disconnect the ground terminal from battery sensor.

2) Remove the cover assembly - instrument panel LWR driver OUT. <Ref. to EI-62, REMOVAL, Instrument Panel Lower Cover.>

3) Remove the BSD/RCTA OFF switch.

(1) Remove the screw, release the claws, and then remove the panel - switch.

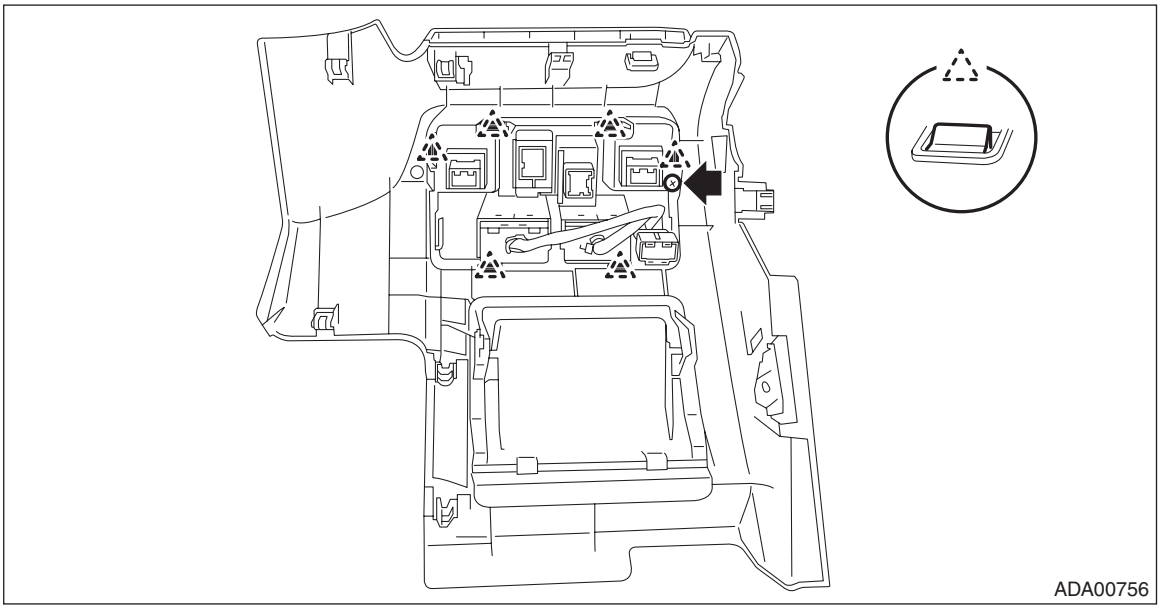

(2) Release the claws and remove the BSD/RCTA OFF switch.

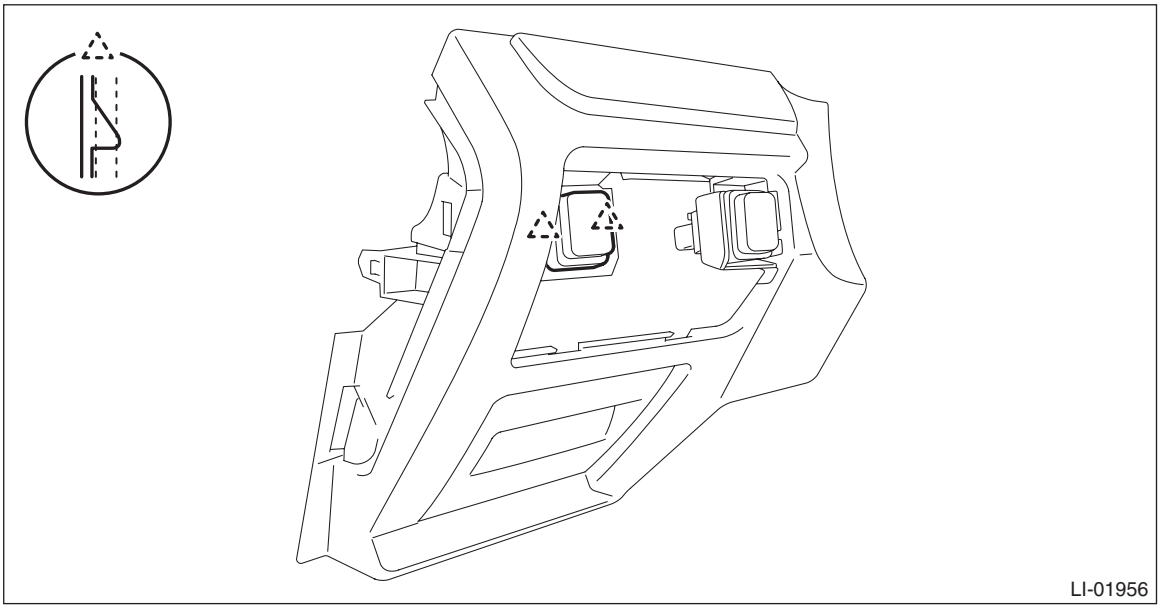

B: INSTALLATION

BSD/RCTA OFF switch

1) Install the BSD/RCTA OFF switch.
2) Install the panel - switch.
3) Install the cover assembly - instrument panel LWR driver OUT.
4) Connect the battery ground terminal. <Ref. to NT-6, BATTERY, NOTE, Note.>

C: INSPECTION

BSD/RCTA OFF switch

1) Measure the resistance between connector terminals.

Preparation tool:
Circuit tester

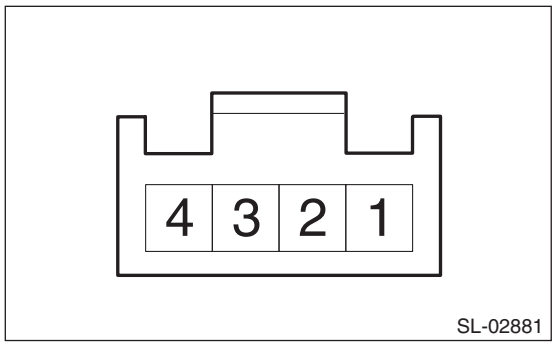

Terminal No.	Inspection conditions	Standard
2 — 3	Switch OFF	1 MΩ or more
	Switch ON	Less than 1 Ω

2) Apply battery voltage between the connector terminals to check lighting condition of illumination inside the switch.

Terminal No.	Inspection conditions	Specification
1 (+) — 4 (–)	Apply battery voltage.	Light ON

3) Replace the BSD/RCTA OFF switch if it is found defective.

6. Combination Meter

A: NOTE

For the operation procedures for combination meter, refer to “INSTRUMENTATION/DRIVER INFO” section. <Ref. to IDI-13, Combination Meter.>

7. Outer Mirror Assembly

A: NOTE

For the operation procedures for the outer mirror assembly, refer to “GLASS/WINDOWS/MIRRORS” section. <Ref. to GW-27, Outer Mirror Assembly.>

8. Diagnostics with Phenomenon

A: INSPECTION

Refer to “Diagnostics with Phenomenon” of “Blind Spot Detection/Rear Cross Traffic Alert (DIAGNOSTICS)” section. <Ref. to RVD(diag)-40, Diagnostics with Phenomenon.>

Blind Spot Detection/Rear Cross Traffic Alert (DIAGNOSTICS)

RVD(diag)

		Page
1.	Basic Diagnostic Procedure	2
2.	Check List for Interview	3
3.	General Description	4
4.	Electrical Component Location	7
5.	Control Module I/O Signal	8
6.	Subaru Select Monitor	10
7.	Read Diagnostic Trouble Code (DTC)	12
8.	Clear Memory Mode	13
9.	Read Cancel Code	14
10.	Inspection Mode	15
11.	Read Current Data	17
12.	System Operation Check Mode	19
13.	List of Diagnostic Trouble Code (DTC)	20
14.	List of Cancel Code	21
15.	Diagnostic Procedure with Diagnostic Trouble Code (DTC)	22
16.	Diagnostic Procedure with Cancel Code	39
17.	Diagnostics with Phenomenon	40

1. Basic Diagnostic Procedure

A: PROCEDURE

	Step	Check	Yes	No
1	**PERFORM CUSTOMER INTERVIEW.** Using the Check List for Interview, ask the customer the condition of how trouble occurs.	Did you interview the customer?	Go to step **2**.	Interview the customer. <Ref. to RVD(diag)-3, Check List for Interview.>
2	**CHECK SUBARU SELECT MONITOR COMMUNICATION.** Check for communication with the radar sensor. NOTE: If the communication function of the Subaru Select Monitor cannot be executed properly, check the communication circuit. <Ref. to RVD(diag)-10, INSPECTION, Subaru Select Monitor.>	Is communication possible?	Go to step **3**.	Check the communication circuit.
3	**CHECK RADAR SENSOR.** Read the DTC and cancel code of the radar sensors LH and RH using the Subaru Select Monitor. <Ref. to RVD(diag)-12, Read Diagnostic Trouble Code (DTC).> <Ref. to RVD(diag)-14, Read Cancel Code.>	Is DTC displayed?	Perform the diagnosis for the displayed DTCs and cancel code. (Perform the diagnosis to the side that displayed the DTC.) <Ref. to RVD(diag)-20, List of Diagnostic Trouble Code (DTC).> <Ref. to RVD(diag)-14, Read Cancel Code.> After diagnosis, Go to step **6**.	Go to step **4**.
4	**PERFORM DIAGNOSTICS WITH PHENOMENON.** Check the list of Diagnostics with Phenomenon. <Ref. to RVD(diag)-40, Diagnostics with Phenomenon.>	Does the symptom apply?	Perform diagnosis according to the procedures in the diagnostics with phenomenon.	Go to step **5**.
5	**CHECK TROUBLE PHENOMENON.** 1) Perform the basic inspection. <Ref. to RVD(diag)-6, INSPECTION, General Description.> 2) Check the radar sensor. <Ref. to RVD(diag)-8, Control Module I/O Signal.> 3) Perform check of current data. <Ref. to RVD(diag)-17, Read Current Data.>	Was the trouble cause found?	Perform the Clear Memory after repairing or replacing the cause of trouble.	System is normal.
6	**PERFORM DIAGNOSIS.** 1) Perform the Clear Memory Mode. <Ref. to RVD(diag)-13, Clear Memory Mode.> 2) Perform the Inspection Mode. <Ref. to RVD(diag)-15, Inspection Mode.>	Is DTC displayed?	Perform the diagnosis for the displayed DTCs. <Ref. to RVD(diag)-20, List of Diagnostic Trouble Code (DTC).>	Finish the diagnosis.

2. Check List for Interview

A: CHECK

- Inspect the following items regarding the vehicle's state.
- Print out this page for interviewing customers.

<table>
<tr><td colspan="2">Blind Spot Detection/Rear Cross Traffic Alert Check List for Interview</td><td colspan="2">Received Year Month Date</td></tr>
<tr><td colspan="2" rowspan="2">Customer's name</td><td>Registration No.</td><td>Initial year of registration
Year Month Date</td></tr>
<tr><td>Vehicle model</td><td>Frame number</td></tr>
<tr><td>Interviewer</td><td>Inspector</td><td>Engine type</td><td>Odometer reading</td></tr>
<tr><td colspan="4">Customer specified content
•
•
•</td></tr>
<tr><td>Date when problem occurred</td><td>Year Month Date</td><td>Frequency of trouble occurrence</td><td>Always occurs
Sometimes occurs
(times per day, times per month)</td></tr>
<tr><td rowspan="2">Condition of trouble occurrence
(How the trouble occurs)</td><td rowspan="2"></td><td>Weather</td><td>Fine • Cloudy • Rainy •
Snowy • Others ( )</td></tr>
<tr><td>Temperature</td><td>°C (°F) — °C (°F)</td></tr>
<tr><td>Road conditions</td><td></td><td>Occurrence location</td><td></td></tr>
<tr><td>Accessory installation condition</td><td colspan="3"></td></tr>
<tr><td>Confirmation of trouble condition</td><td colspan="3"></td></tr>
<tr><td>Diagnostic Trouble Code</td><td colspan="3"></td></tr>
</table>

3. General Description

A: CAUTION

1. BSD/RCTA

1. In some cases, BSD/RCTA may not work correctly under the following conditions.
   - In bad weather such as heavy rain, fog, snow, sand storm, etc.
   - When ice, snow, dirt, etc. cover the rear bumper.
   - When the rear bumper has scratches or deformation in the area of the radar sensor.
   - When a difference of vehicle speeds between your own vehicle and another vehicle within the detection range is too large.
   - When there is another vehicle remaining within the detection range while your own vehicle starts from stationary state.
   - While driving on a steep slope with a series of uphills and downhills.
   - While driving on a wet road with such as puddles.
   - When more than one vehicle is approaching one after another with a short distance.
   - When vehicle speed of your own vehicle is almost the same as that of the vehicle within the detection range.
   - When a difference of the vehicle heights between your own vehicle and another vehicle in the next lane is too large.
   - Immediately after operating the BSD/RCTA OFF switch.
   - On wide lanes, when another vehicle of the next lane drives along the opposite edge so the distance is too large for the detection.
2. BSD/RCTA does not detect the following type of vehicles as well as objects other than vehicles.
   - Oncoming vehicle
   - Small motorcycle, bike, pedestrian, etc. *
   - Vehicle following behind on the same lane *
   - Stationary objects such as guardrail, wall, sign and parked vehicle*
   - Another vehicle driving on two lanes away*

NOTE:
*: Detection may be successful depending on circumstances.

3. BSD/RCTA may perform unnecessary detection in the following conditions.
   - When guardrails or walls are close enough to be within the detection range.
   - When distance from the vehicle behind is short.
   - On narrow lanes, when another vehicle driving on two lanes away enters the detection range.

4. Radar sensors of BSD/RCTA are each located on LH and RH sides. Always observe the followings for proper operation of the system.

- Always clean the vicinity of radar sensors.
- Do not give a strong impact to the radar sensor areas. Displacement of the radar sensors may result in improper operation of the system such that it may not detect the vehicle entering the detection range.
- Do not disassemble the radar sensors.
- Do not scratch or deform the bumper areas with the radar sensors.

NOTE:
Replace the rear bumper in the following cases.

– When there is any collision trace or dent inside the radar projection area.
– When there is any scuffed (chipped off) section inside the radar projection area on the resin bumper.
– When there is any crack inside the radar projection area.

NOTE:
Radar projection area

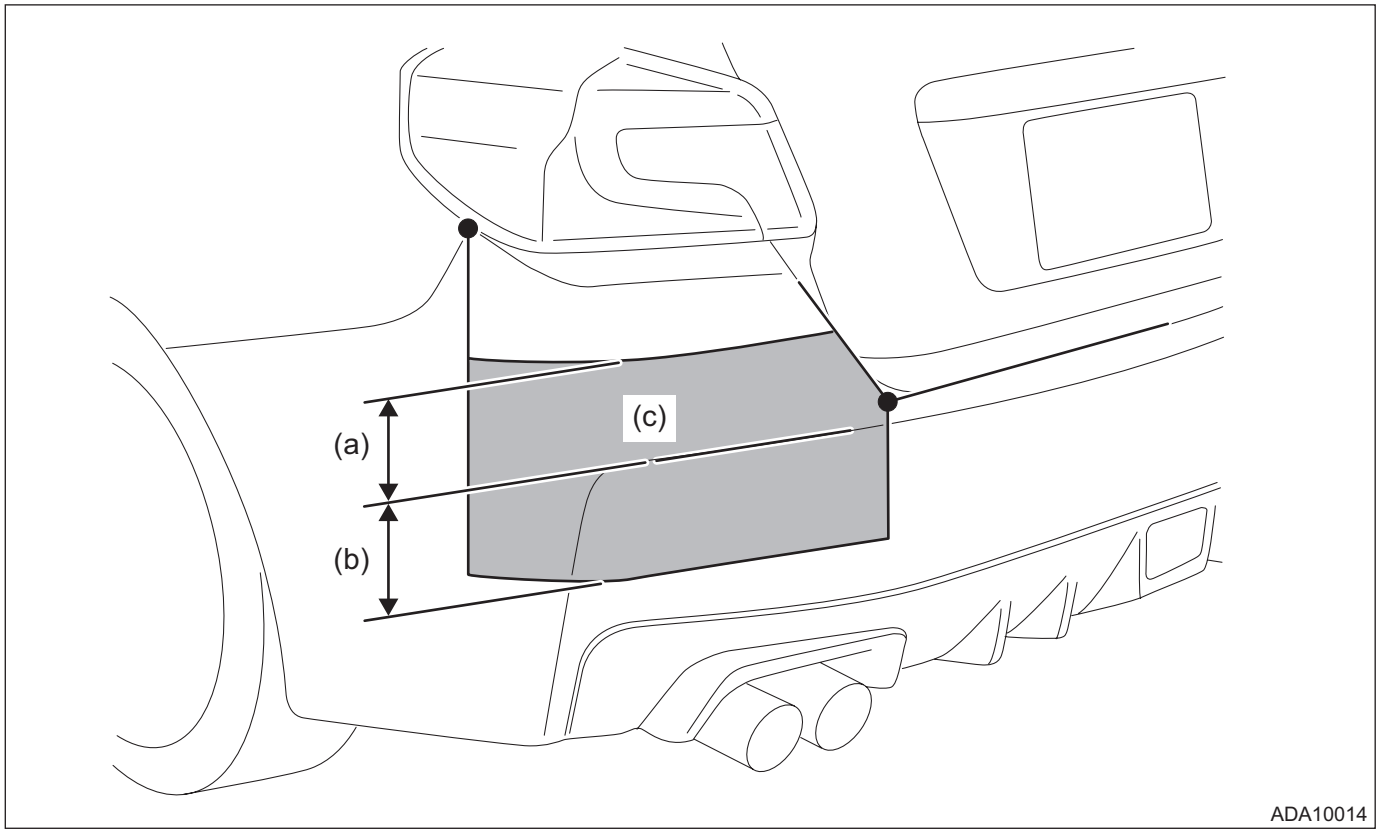

(a) 100 mm (3.9 in) (b) 100 mm (3.9 in) (c) Radar projection area

For other flaws, perform the sensor readjustment. If no problem is found, replacement is unnecessary.

- Do not put a sticker, etc. on/around the radar sensors.
- Do not retrofit the radar sensors or the bumper close to the radar sensors.
- Do not repaint the radar sensors or the bumper close to the radar sensors.

NOTE:
If there is any painting defect inside the radar projection area, replace the rear bumper without trying to repair it.

- Do not give a strong impact, force or drop-off to the radar sensors because they are precision devices.
- Do not reuse the radar sensors that were affected by strong impact, force, or fell off.

B: INSPECTION

1. BASIC INSPECTION

Before performing diagnosis, check the following items that might provoke the problems related to BSD/RCTA.
1) Check the battery. <Ref. to SC(w/o STI)-51, INSPECTION, Battery.> <Ref. to SC(STI)-24, INSPECTION, Battery.>
2) Check the relay and fuse condition. <Ref. to RVD-4, Relay and Fuse.>
3) Check the connecting condition of harness and connector.

C: PREPARATION TOOL

1. SPECIAL TOOL

ILLUSTRATION	TOOL NUMBER	DESCRIPTION	REMARKS
 STSSM4	—	SUBARU SELECT MONITOR 4	Used for setting of each function and trouble-shooting for electrical system. NOTE: For detailed operation procedures of Subaru Select Monitor 4, refer to “Application help”.

2. GENERAL TOOL

TOOL NAME	REMARKS
Circuit tester	Used for measuring resistance, voltage and current.
DST-i	Used together with Subaru Select Monitor 4.

4. Electrical Component Location

A: LOCATION

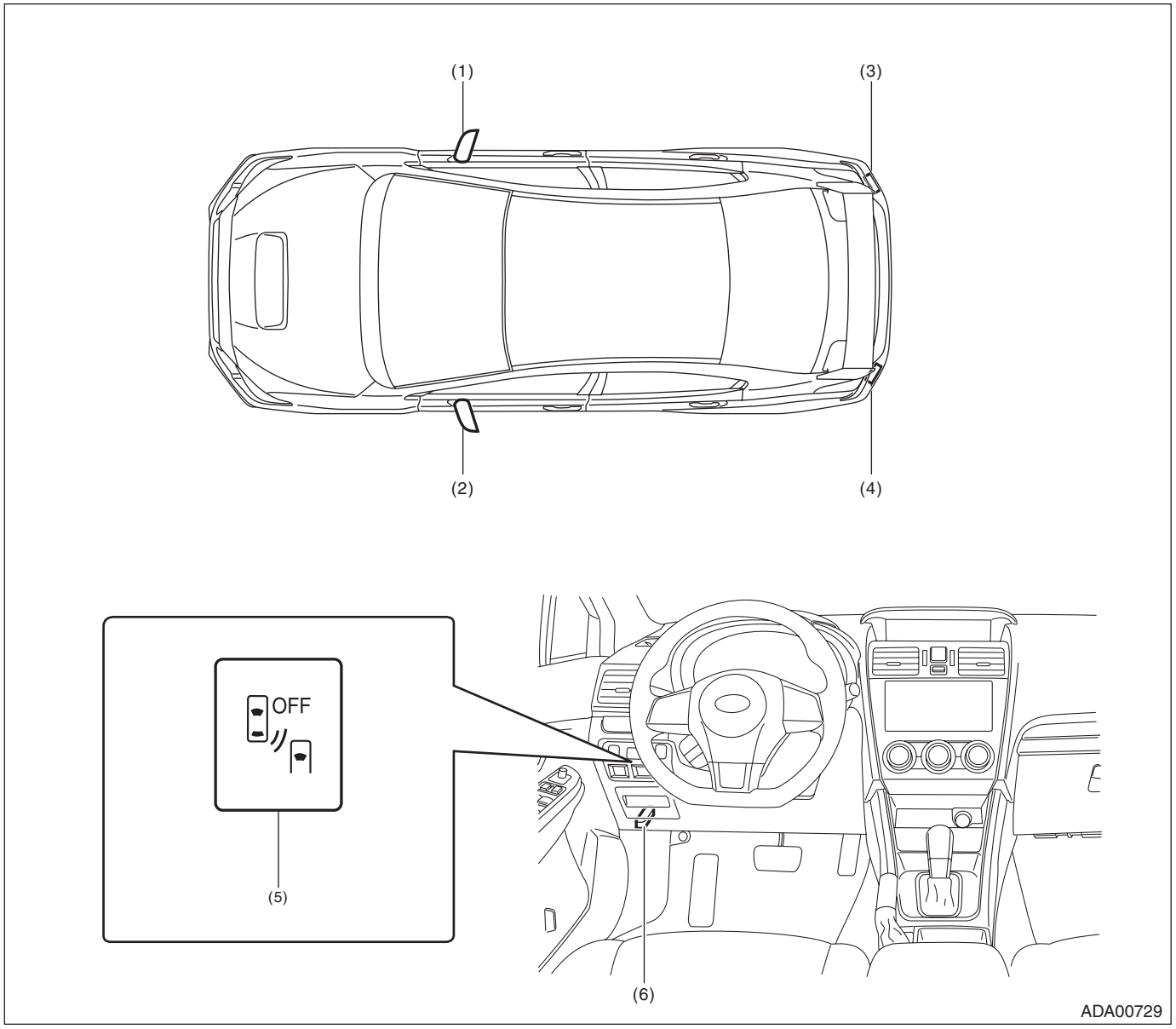

(1) Outer mirror assembly RH
(2) Outer mirror assembly LH
(3) Radar sensor RH (slave)
(4) Radar sensor LH (master)
(5) BSD/RCTA OFF switch
(6) Data link connector

5. Control Module I/O Signal

A: ELECTRICAL SPECIFICATION

1. RADAR SENSOR

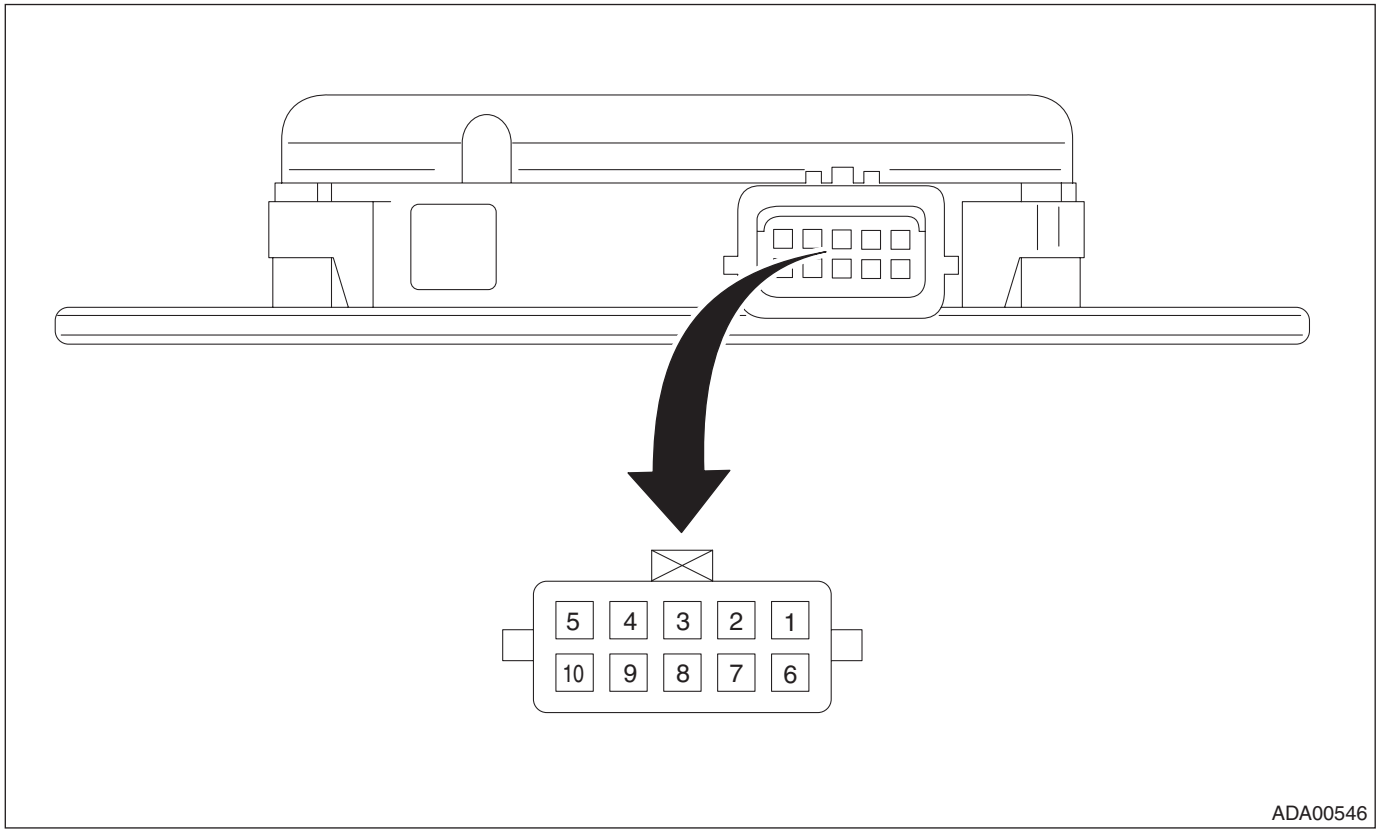

Terminal No.	Contents		Measuring condition	Standard
	Radar sensor LH (master)	Radar sensor RH (slave)		
1 ←→ Chassis ground	Private CAN H	Private CAN H	Always	1 MΩ or more
2 ←→ Chassis ground	Master CAN H	—	Always	1 MΩ or more
3 ←→ Chassis ground	—	—	—	—
4 ←→ Chassis ground	Left mirror LED output	Right mirror LED output	• Ignition switch OFF → ON • BSD/RCTA OFF switch OFF → ON	• When indicator is ON: 2.5 — 10.5 V • When indicator is blinking: 0 ←→ 2.5 — 10.5 V • When indicator is OFF: Less than 1 V
5 ←→ Chassis ground	Ignition power supply	Ignition power supply	Ignition switch OFF → ON	Less than 1 V → 9 — 16 V
6 ←→ Chassis ground	Private CAN L	Private CAN L	Always	1 MΩ or more
7 ←→ Chassis ground	Master CAN L	—	Always	1 MΩ or more
8 ←→ Chassis ground	BSD/RCTA OFF switch	—	• Ignition switch ON • BSD/RCTA OFF switch OFF → ON (while pressing and holding the switch)	Less than 1 V → 9 — 16 V
9 ←→ Chassis ground	—	—	—	—
10 ←→ Chassis ground	GND	GND	Always	Less than 1 Ω

B: WIRING DIAGRAM

Refer to “SRVD System” in the wiring diagram. <Ref. to WI-110, WIRING DIAGRAM, Blind Spot Detection/Rear Cross Traffic Alert.>

C: SYSTEM BLOCK DIAGRAM

- Blind Spot Detection/Rear Cross Traffic Alert system consists of the following.
- There is a control ECM in the radar sensor main body, which performs the vehicle identification and the alert judgment control.
- The LH/RH radar sensors are identified as Master/Slave for control purposes. They are connected by the private CAN to execute the controls through mutual communication. The radar on the Master side receives the input from the vehicle CAN and the SRVD OFF switch, and information necessary for control can be obtained from other modules via the vehicle CAN.
- The outer mirror LED is directly driven by the signal from the radar sensor.

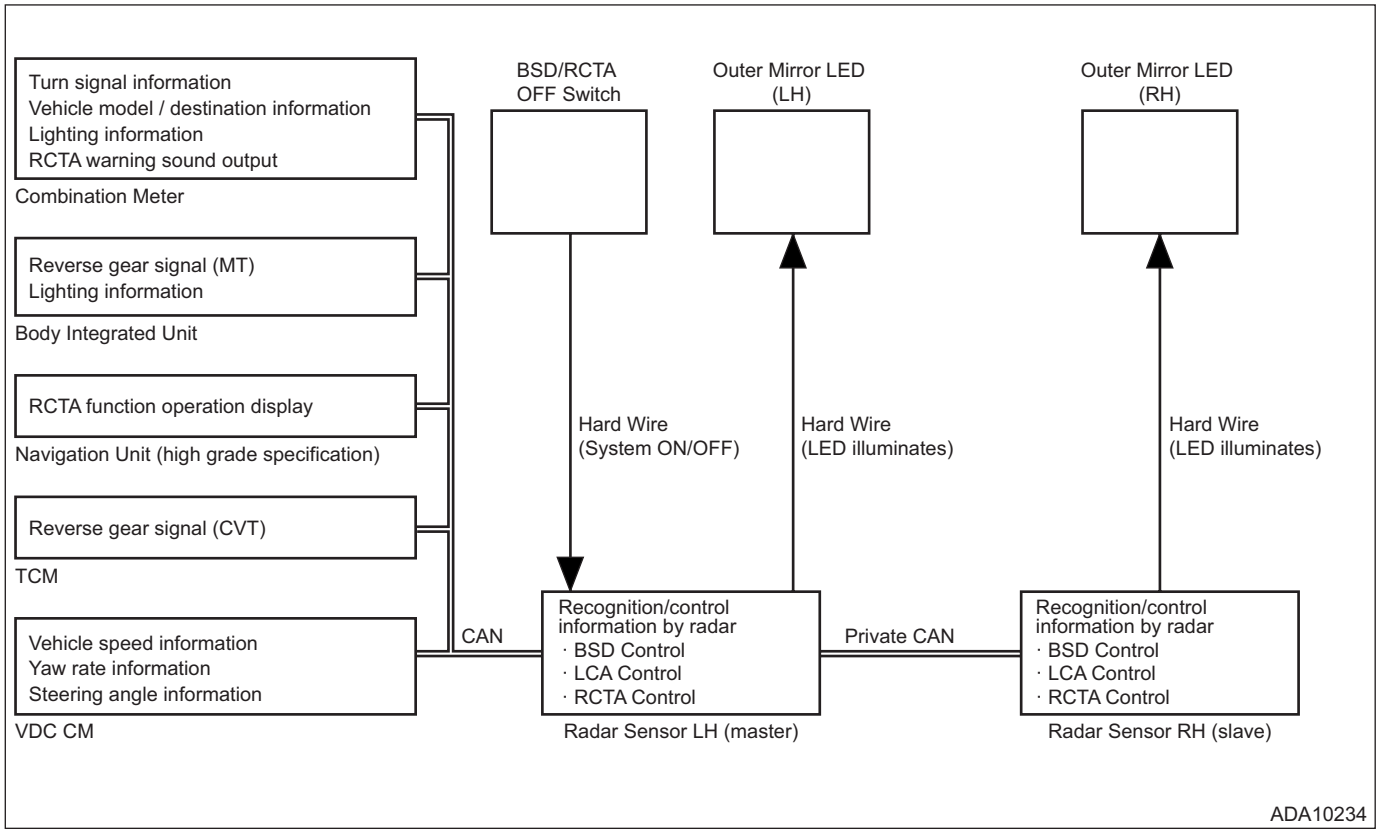

6. Subaru Select Monitor

A: OPERATION

- For operation procedures, refer to “Application help”.
- When the radar sensor cannot communicate with Subaru Select Monitor, perform “COMMUNICATION FOR INITIALIZING IMPOSSIBLE”. <Ref. to RVD(diag)-10, COMMUNICATION FOR INITIALIZING IMPOSSIBLE, INSPECTION, Subaru Select Monitor.>

B: INSPECTION

1. COMMUNICATION FOR INITIALIZING IMPOSSIBLE

When communication with the radar sensor is impossible

DETECTING CONDITION:

- Defective harness connector
- Power supply circuit malfunction
- Defective radar sensor
- Defective CAN communication circuit
- Defective Subaru Select Monitor

TROUBLE SYMPTOM:

Communication is impossible between radar sensor and Subaru Select Monitor.

WIRING DIAGRAM:

SRVD system <Ref. to WI-110, WIRING DIAGRAM, Blind Spot Detection/Rear Cross Traffic Alert.>

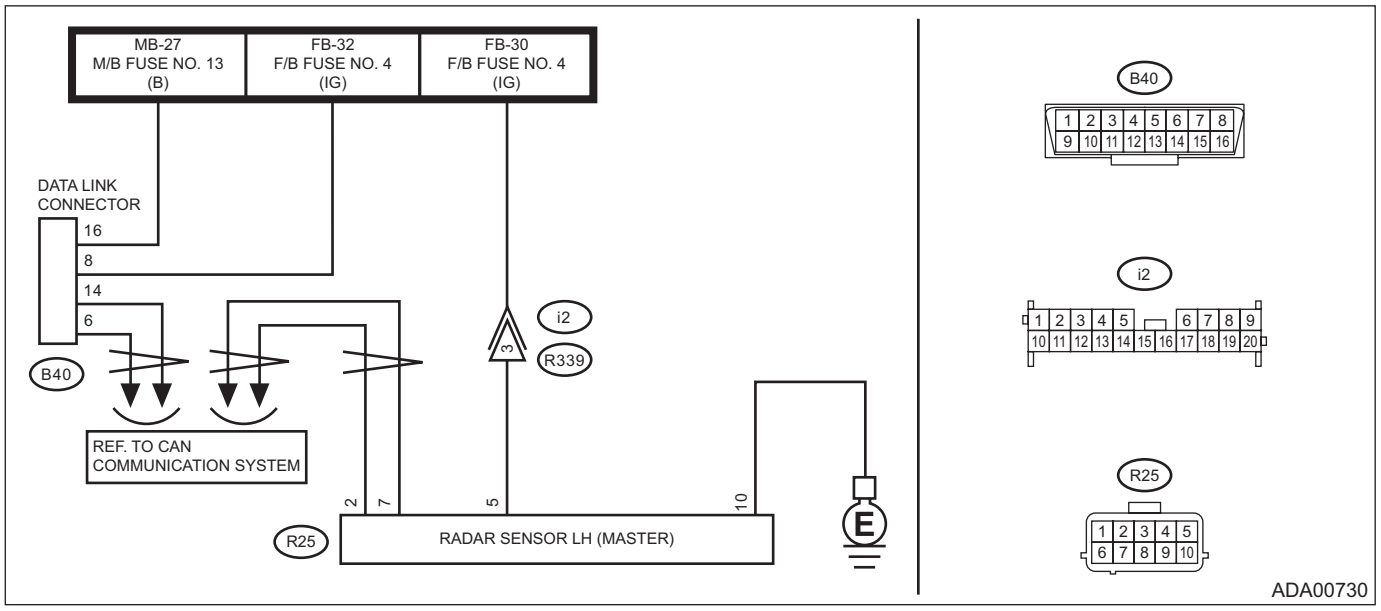

Step		Check	Yes	No
1	**CHECK FUSE.** 1) Turn the ignition switch to OFF. 2) Check the fuse for radar sensor LH. <Ref. to RVD-4, Relay and Fuse.>	Is the check result OK?	Go to step **2**.	Replace the fuse. If the replaced fuse has blown out immediately, repair the short circuit to ground in harness between fuse and radar sensor LH.

	Step	Check	Yes	No
2	**CHECK HARNESS (OPEN CIRCUIT).** 1) Disconnect the radar sensor LH connector. 2) Turn the ignition switch to ON. 3) Using a tester, measure the voltage between radar sensor LH connector (harness side) and chassis ground. ***Connector & terminal*** ***(R25) No. 5 (+) — Chassis ground (–):***	Is the voltage 10 V or more?	Go to step **3**.	Repair the open circuit of harness between fuse and radar sensor LH connector.
3	**CHECK HARNESS (OPEN CIRCUIT).** 1) Turn the ignition switch to OFF. 2) Using a tester, measure the resistance between radar sensor LH connector (harness side) and chassis ground. ***Connector & terminal*** ***(R25) No. 10 — Chassis ground:***	Is the resistance less than 1 Ω?	Go to step **4**.	Repair the open circuit in harness between radar sensor and chassis ground.
4	**CHECK LAN SYSTEM.** 1) Connect the radar sensor LH connector. 2) Inspect LAN system. <Ref. to RVD(diag)-2, Basic Diagnostic Procedure.>	Is the check result OK?	Go to step **5**.	Perform the inspection according to the diagnosis for LAN system.
5	**CHECK RADAR SENSOR.** Communicate with the radar sensor.	Is communication possible?	The circuit has returned to a normal condition at this time. Reproduce the failure, and then perform the diagnosis again. NOTE: In this case, temporary poor contact of connector, temporary open or short circuit of harness may be the cause.	Replace the radar sensor LH. <Ref. to RVD-6, Radar Sensor.>

7. Read Diagnostic Trouble Code (DTC)

A: OPERATION

1) On «Start» display, select «Diagnosis».
2) On «Vehicle selection» display, input the target vehicle information and select «Confirmed».
3) On «Main Menu» display, select «Each System».
4) On «Select System» display, select «Subaru Rear Vehicle Detection(RH)» or «Subaru Rear Vehicle Detection(LH)» and then select «Enter».
5) On «Select Function» display, select «DTC».

NOTE:
- For detailed operation procedures, refer to “Application help”.
- For details concerning DTC, refer to the List of Diagnostic Trouble Codes (DTC). <Ref. to RVD(diag)-20, List of Diagnostic Trouble Code (DTC).>
- Check and replace the side that displayed the DTC.

8. Clear Memory Mode

A: OPERATION

1) On «Start» display, select «Diagnosis».
2) On «Vehicle selection» display, input the target vehicle information and select «Confirmed».
3) On «Main Menu» display, select «Each System».
4) On «Select System» display, select «Subaru Rear Vehicle Detection(RH)» or «Subaru Rear Vehicle Detection(LH)» and then select «Enter».
5) On «Select Function» display, select «DTC».
6) On «DTC» display, select «Clear Memory».

NOTE:
For detailed operation procedures, refer to “Application help”.

9. Read Cancel Code

A: OPERATION

1) On «Start» display, select «Diagnosis».
2) On «Vehicle selection» display, input the target vehicle information and select «Confirmed».
3) On «Main Menu» display, select «Each System».
4) On «Select System» display, select «Subaru Rear Vehicle Detection(RH)» or «Subaru Rear Vehicle Detection(LH)» and then select «Enter».
5) On «Select Function» display, select «Cancel Code».

NOTE:
- For operation procedures, refer to “Application help”.
- For details concerning cancel codes, refer to the List of Cancel Codes. <Ref. to RVD(diag)-21, List of Cancel Code.>

10.Inspection Mode

A: OPERATION

It is possible to diagnose the DTC by performing the indicated inspection mode. After correcting the DTC, perform a necessary inspection mode and make sure that the function is resumed correctly and the DTC is recorded.

1. INSPECTION MODE 1

DTC	Item	Note
U0073	CONTROL MODULE COMMUNICATION BUS OFF	—
U0074	CONTROL MODULE COMMUNICATION BUS "BODY-CAN" OFF	—
U0100	LOST COMMUNICATION WITH ECM/PCM “A”	—
U0101	LOST COMMUNICATION WITH TCM	—
U0122	LOST COMMUNICATION WITH VEHICLE DYNAMICS CONTROL MODULE	—
U0140	LOST COMMUNICATION WITH BODY CONTROL MODULE	—
U0155	LOST COMMUNICATION WITH INSTRUMENT PANEL CLUSTER (IPC) CONTROL MODULE	—
U0401	INVALID DATA RECEIVED FROM ECM/PCM “A”	—
U0402	INVALID DATA RECEIVED FROM TCM	—
U0416	INVALID DATA RECEIVED FROM VEHICLE DYNAMICS CONTROL MODULE	—
U0422	INVALID DATA RECEIVED FROM BODY CONTROL MODULE	—
U0423	INVALID DATA RECEIVED FROM INSTRUMENT PANEL CLUSTER CONTROL MODULE	—
B2304	REAR RADAR ON-OFF SWITCH STUCK	—
B2311	REAR RADAR DETECT TCM	—
B2313	REAR RADAR DETECT VDC	—
B2327	REAR RADAR INTERNAL FAILURE (INTERNAL ELECTRIC CIRCUIT)	—
B2350	REAR RADAR COMMUNICATION ERROR BETWEEN MASTER AND SLAVE	—

1) Perform the Clear Memory Mode. <Ref. to RVD(diag)-13, Clear Memory Mode.>
2) Read the DTC and check that the DTC is not displayed. <Ref. to RVD(diag)-12, Read Diagnostic Trouble Code (DTC).>

NOTE:
If the DTC is displayed on the screen, the trouble is still present. Perform the diagnosis for the displayed DTCs. After solving the DTC, repeat from step 1).
3) Start the engine and wait for 30 seconds or more.
4) Read the DTC and check that the DTC is not displayed.

NOTE:
If the DTC is displayed on the screen, the trouble is still present. Perform the diagnosis for the displayed DTCs. <Ref. to RVD(diag)-20, List of Diagnostic Trouble Code (DTC).>

2. INSPECTION MODE 2

DTC	Item	Note
B2300	REAR RADAR CIRCUIT LOW	—
B2301	REAR RADAR CIRCUIT HIGH	—

1) Perform the Clear Memory Mode. <Ref. to RVD(diag)-13, Clear Memory Mode.>
2) Read the DTC and check that the DTC is not displayed. <Ref. to RVD(diag)-12, Read Diagnostic Trouble Code (DTC).>

NOTE:
If the DTC is displayed on the screen, the trouble is still present. Perform the diagnosis for the displayed DTCs. After solving the DTC, repeat from step 1).
3) Start the engine.
4) Perform the System Operation Check Mode «Door mirror indicator active test». <Ref. to RVD(diag)-19, System Operation Check Mode.>
5) Read the DTC and check that the DTC is not displayed.

NOTE:
If the DTC is displayed on the screen, the trouble is still present. Perform the diagnosis for the displayed DTCs. <Ref. to RVD(diag)-20, List of Diagnostic Trouble Code (DTC).>

3. INSPECTION MODE 3

DTC	Item	Note
B2329	REAR RADAR AXIS ALIGNMENT INCOMPLETE	—

1) Perform the Clear Memory Mode. <Ref. to RVD(diag)-13, Clear Memory Mode.>
2) Read the DTC and check that the DTC is not displayed. <Ref. to RVD(diag)-12, Read Diagnostic Trouble Code (DTC).>

NOTE:
If the DTC is displayed on the screen, the trouble is still present. Perform the diagnosis for the displayed DTCs. After solving the DTC, repeat from step 1).
3) Perform the adjustment of radar axis.
4) Read the DTC and check that the DTC is not displayed.

NOTE:
If the DTC is displayed on the screen, the trouble is still present. Perform the diagnosis for the displayed DTCs. <Ref. to RVD(diag)-20, List of Diagnostic Trouble Code (DTC).>

11.Read Current Data

A: OPERATION

1) On «Start» display, select «Diagnosis».
2) On «Vehicle selection» display, input the target vehicle information and select «Confirmed».
3) On «Main Menu» display, select «Each System».
4) On «Select System» display, select «Subaru Rear Vehicle Detection(RH)» or «Subaru Rear Vehicle Detection(LH)» and then select «Enter».
5) On «Select Function» display, select «Data Monitor».

NOTE:
For detailed operation procedures, refer to “Application help”.

B: LIST

- «Subaru Rear Vehicle Detection(LH)»

Display	Content	Reference value	Note
SRVD System fail flag	Current failure status of BSD/RCTA system is displayed.	• Normal • Fail	—
SRVD System HALT flag	Current temporary stop status of BSD/RCTA system is displayed. Temporary stop: Temporarily stops when reception of radar sensor waves failed due to some obstacles or when the temperature is not within the range of –40°C (–40°F) — 85°C (185°F).	• Normal • Halt	—
SRVD System ON-OFF flag	ON/OFF status of BSD/RCTA system is displayed. If this flag is set to «OFF» while the values of «SRVD System fail flag» and «SRVD System HALT flag» are «Normal», the BSD/RCTA system is set to OFF by the BSD/RCTA OFF switch.	• OFF • ON	—
LH-Side Target detection flag	Detection status of the control target vehicle on the rear left side is displayed. Detection is possible if the target vehicle is moving when the own vehicle drives forward at 12 km/h (8 MPH) or more or backward at 0 km/h (0 MPH) or more.	• Un-detect • Detect	—
LH-Side BSD caution 1st flag	ON is displayed when the 1st stage BSD warning on the left side is activated (when the outer mirror assembly illuminates).	• OFF • ON	—
LH-Side LCA caution 1st flag	ON is displayed when the 1st stage LCA warning on the left side is activated (when the outer mirror assembly illuminates).	• OFF • ON	—
LH-Side RCTA caution flag	ON is displayed when the RCTA warning on the left side is activated (when the outer mirror assembly illuminates and buzzer sounds).	• OFF • ON	—
LH-Side Radar Voltage value	Power supply voltage of the radar sensor LH is displayed.	0 — 25.5 V	—
LH-Side Temperature value	Ambient temperature of the radar sensor LH is displayed.	–128 — 127°C	—
Trip Count	Time stamp information <Ref. to LAN(diag)-6, TIME STAMP, CAUTION, General Description.>	—	—
Count		—	—
Time Count		—	—

- «Subaru Rear Vehicle Detection(RH)»

Display	Content	Reference value	Note
SRVD System fail flag	Current failure status of BSD/RCTA system is displayed.	• Normal • Fail	—
SRVD System HALT flag	Current temporary stop status of BSD/RCTA system is displayed. Temporary stop: Temporarily stops when reception of radar sensor waves failed due to some obstacles or when the temperature is not within the range of –40°C (–40°F) — 85°C (185°F).	• Normal • Halt	—
SRVD System ON-OFF flag	ON/OFF status of BSD/RCTA system is displayed. If this flag is set to «OFF» while the values of «SRVD System fail flag» and «SRVD System HALT flag» are «Normal», the BSD/RCTA system is set to OFF by the BSD/RCTA OFF switch.	• OFF • ON	—
RH-Side Target detection flag	Detection status of the control target vehicle on the rear right side is displayed. Detection is possible if the target vehicle is moving when the own vehicle drives forward at 12 km/h (8 MPH) or more or backward at 0 km/h (0 MPH) or more.	• Un-detect • Detect	—
RH-Side BSD caution 1st flag	ON is displayed when the 1st stage BSD warning on the right side is activated (outer mirror assembly illuminates).	• OFF • ON	—
RH-Side LCA caution 1st flag	ON is displayed when the 1st stage LCA warning on the right side is activated (outer mirror assembly illuminates).	• OFF • ON	—
RH-Side RCTA caution flag	ON is displayed when the RCTA warning on the right side is activated (when the outer mirror assembly illuminates and buzzer sounds).	• OFF • ON	—
RH-Side Radar Voltage value	Power supply voltage of the radar sensor RH is displayed.	0 — 25.5 V	—
RH-Side Temperature value	Ambient temperature of the radar sensor RH is displayed.	–128 — 127°C	—
Trip Count	Time stamp information <Ref. to LAN(diag)-6, TIME STAMP, CAUTION, General Description.>	—	—
Count		—	—
Time Count		—	—

12.System Operation Check Mode

A: OPERATION

1) On «Start» display, select «Diagnosis».
2) On «Vehicle selection» display, input the target vehicle information and select «Confirmed».
3) On «Main Menu» display, select «Each System».
4) On «Select System» display, select «Subaru Rear Vehicle Detection(RH)» or «Subaru Rear Vehicle Detection(LH)» and then select «Enter».
5) On «Select Function» display, select «Active Test».

NOTE:
For detailed operation procedures, refer to “Application help”.

B: LIST

Data	Note
Door mirror indicator active test	Outer mirror assembly indicator is illuminated.

13.List of Diagnostic Trouble Code (DTC)

A: LIST

DTC	Item	Reference
B2300	Rear Radar Circuit Low	<Ref. to RVD(diag)-22, DTC B2300 REAR RADAR CIRCUIT LOW, Diagnostic Procedure with Diagnostic Trouble Code (DTC).>
B2301	Rear Radar Circuit High	<Ref. to RVD(diag)-25, DTC B2301 REAR RADAR CIRCUIT HIGH, Diagnostic Procedure with Diagnostic Trouble Code (DTC).>
B2304	Rear Radar On-Off Switch Stuck	<Ref. to RVD(diag)-28, DTC B2304 REAR RADAR ON-OFF SWITCH STUCK, Diagnostic Procedure with Diagnostic Trouble Code (DTC).> NOTE: Only radar sensor LH (master) is detected.
B2311	Rear Radar Detect TCM	<Ref. to RVD(diag)-31, DTC B2311 REAR RADAR DETECT TCM, Diagnostic Procedure with Diagnostic Trouble Code (DTC).>
B2313	Rear Radar Detect VDC	<Ref. to RVD(diag)-32, DTC B2313 REAR RADAR DETECT VDC, Diagnostic Procedure with Diagnostic Trouble Code (DTC).>
B2327	Rear Radar Internal Failure (Internal Electric Circuit)	<Ref. to RVD(diag)-33, DTC B2327 REAR RADAR INTERNAL FAILURE (INTERNAL ELECTRIC CIRCUIT), Diagnostic Procedure with Diagnostic Trouble Code (DTC).>
B2329	Rear Radar Axis Alignment Incomplete	<Ref. to RVD(diag)-34, DTC B2329 REAR RADAR AXIS ALIGNMENT INCOMPLETE, Diagnostic Procedure with Diagnostic Trouble Code (DTC).>
B2350	Rear Radar Communication Error Between Master And Slave	<Ref. to RVD(diag)-35, DTC B2350 REAR RADAR COMMUNICATION ERROR BETWEEN MASTER AND SLAVE, Diagnostic Procedure with Diagnostic Trouble Code (DTC).>
U0073	Control Module Communication Bus Off	<Ref. to RVD(diag)-37, DTC U0073 CONTROL MODULE COMMUNICATION BUS OFF, Diagnostic Procedure with Diagnostic Trouble Code (DTC).>
U0074	Control Module Communication Bus "BODY-CAN" Off	<Ref. to RVD(diag)-37, DTC U0074 CONTROL MODULE COMMUNICATION BUS "BODY-CAN" OFF, Diagnostic Procedure with Diagnostic Trouble Code (DTC).>
U0100	Lost Communication With ECM/PCM “A”	<Ref. to RVD(diag)-37, DTC U0100 LOST COMMUNICATION WITH ECM/PCM “A”, Diagnostic Procedure with Diagnostic Trouble Code (DTC).>
U0101	Lost Communication With TCM	<Ref. to RVD(diag)-37, DTC U0101 LOST COMMUNICATION WITH TCM, Diagnostic Procedure with Diagnostic Trouble Code (DTC).>
U0122	Lost Communication With Vehicle Dynamics Control Module	<Ref. to RVD(diag)-37, DTC U0122 LOST COMMUNICATION WITH VEHICLE DYNAMICS CONTROL MODULE, Diagnostic Procedure with Diagnostic Trouble Code (DTC).>
U0140	Lost Communication With Body Control Module	<Ref. to RVD(diag)-37, DTC U0140 LOST COMMUNICATION WITH BODY CONTROL MODULE, Diagnostic Procedure with Diagnostic Trouble Code (DTC).>
U0155	Lost Communication With Instrument Panel Cluster (IPC) Control Module	<Ref. to RVD(diag)-37, DTC U0155 LOST COMMUNICATION WITH INSTRUMENT PANEL CLUSTER (IPC) CONTROL MODULE, Diagnostic Procedure with Diagnostic Trouble Code (DTC).>
U0401	Invalid Data Received From ECM/PCM “A”	<Ref. to RVD(diag)-37, DTC U0401 INVALID DATA RECEIVED FROM ECM/PCM “A”, Diagnostic Procedure with Diagnostic Trouble Code (DTC).>
U0402	Invalid Data Received From TCM	<Ref. to RVD(diag)-37, DTC U0402 INVALID DATA RECEIVED FROM TCM, Diagnostic Procedure with Diagnostic Trouble Code (DTC).>
U0416	Invalid Data Received From Vehicle Dynamics Control Module	<Ref. to RVD(diag)-37, DTC U0416 INVALID DATA RECEIVED FROM VEHICLE DYNAMICS CONTROL MODULE, Diagnostic Procedure with Diagnostic Trouble Code (DTC).>
U0422	Invalid Data Received From Body Control Module	<Ref. to RVD(diag)-38, DTC U0422 INVALID DATA RECEIVED FROM BODY CONTROL MODULE, Diagnostic Procedure with Diagnostic Trouble Code (DTC).>
U0423	Invalid Data Received From Instrument Panel Cluster Control Module	<Ref. to RVD(diag)-38, DTC U0423 INVALID DATA RECEIVED FROM INSTRUMENT PANEL CLUSTER CONTROL MODULE, Diagnostic Procedure with Diagnostic Trouble Code (DTC).>

14.List of Cancel Code

A: LIST

Code	Item	Contents of diagnosis
B2320	Rear Radar Low Voltage (Less Than 9V)	Temporarily stops because the voltage supplied to radar drops to or below 9 V. Returns to normal when the voltage becomes normal.
B2321	Rear Radar High Voltage (More Than 16V)	Temporarily stops because the voltage supplied to radar rises to or above 16 V. Returns to normal when the voltage becomes normal.
B2328	Rear Radar Internal Failure (Radar Misalignment)	Deviation of the radar axis prevents normal detection. Returns to normal when the radar axis becomes normal. When B2328 is frequently detected, perform “Diagnostic Procedure with Cancel Code”. <Ref. to RVD(diag)-39, DTC B2328 REAR RADAR INTERNAL FAILURE (RADAR MISALIGNMENT), Diagnostic Procedure with Cancel Code.>
B2340	Radar ASSY B&S Out Of Operation Temperature Range	Temporarily stops because the temperature is outside the operative range (–40°C (–40°F) — 85°C (185°F)). Returns to normal when the ambient temperature falls within the operative range.
B2341	Radar ASSY B&S Degradation Of Detecting Performance	Temporarily stops because some obstacles blocked radar waves of the back and side radar. Returns to normal when the transmission and reception of radar signals becomes normal.

15.Diagnostic Procedure with Diagnostic Trouble Code (DTC)

A: DTC B2300 REAR RADAR CIRCUIT LOW

DTC DETECTING CONDITION:

- Short circuit to ground in the harness between radar sensor and outer mirror assembly
- Ground short circuit of the harness in outer mirror assembly module (Malfunction of the outer mirror assembly)
- Defective radar sensor

TROUBLE SYMPTOM:

- All functions of BSD/RCTA stop.
- Fail icon is displayed in the combination meter LCD display.
- Failure-related notification is displayed for approx. two seconds on LCD display in the combination meter.

WIRING DIAGRAM:

SRVD system <Ref. to WI-110, WIRING DIAGRAM, Blind Spot Detection/Rear Cross Traffic Alert.>

- Radar sensor LH

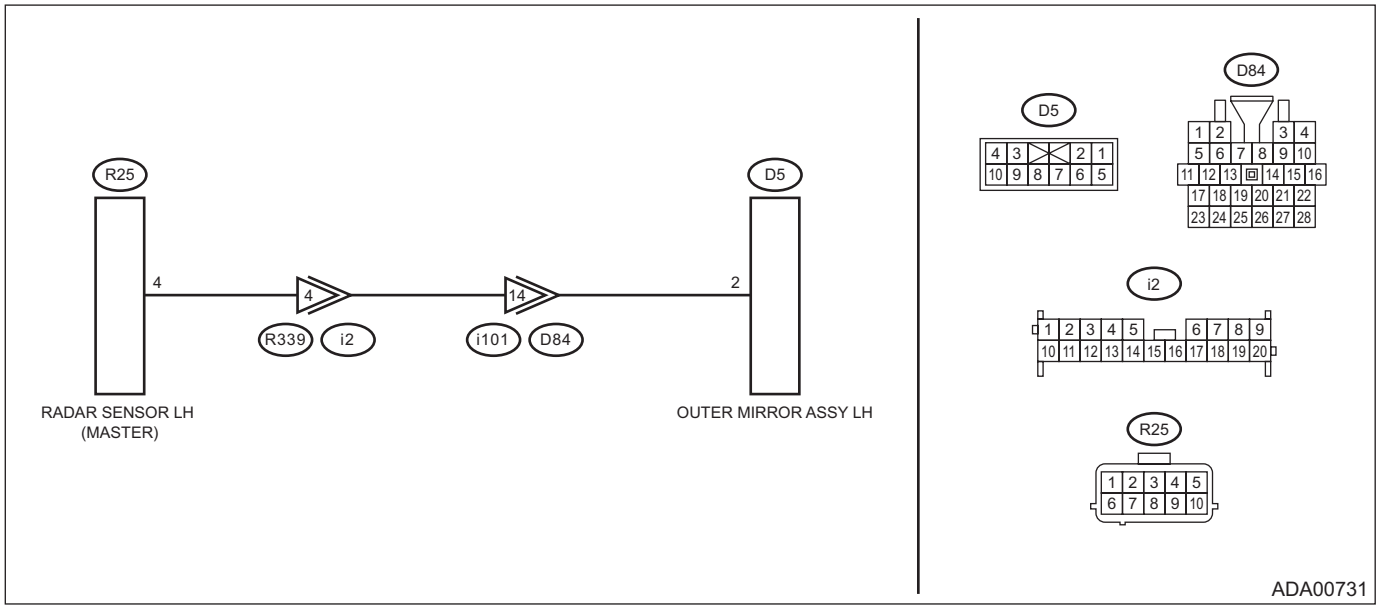

- Radar sensor RH

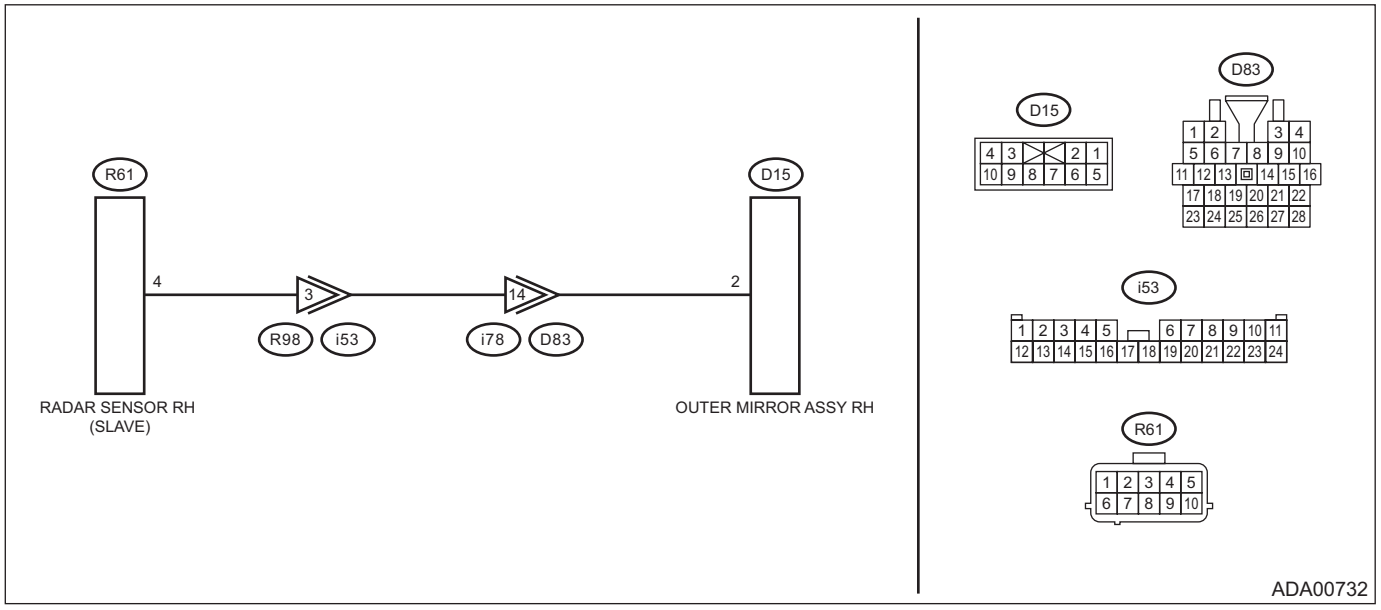

NOTE:
Check and replace the side that displayed the DTC.

	Step	Check	Yes	No
1	**CHECK DTC.** Read the DTC. <Ref. to RVD(diag)-12, OPERATION, Read Diagnostic Trouble Code (DTC).>	Is DTC B2327 displayed? (Current malfunction)	Perform the diagnosis of DTC B2327. <Ref. to RVD(diag)-33, DTC B2327 REAR RADAR INTERNAL FAILURE (INTERNAL ELECTRIC CIRCUIT), Diagnostic Procedure with Diagnostic Trouble Code (DTC).>	Go to step **2**.
2	**CHECK DTC.** Read the DTC. <Ref. to RVD(diag)-12, OPERATION, Read Diagnostic Trouble Code (DTC).>	Is DTC B2300 displayed? (Current malfunction)	Go to step **3**.	Even if DTC is displayed, the circuit has returned to a normal condition at this time. Reproduce the failure, and then perform the diagnosis again. NOTE: In this case, temporary poor contact of connector, temporary open or short circuit of harness may be the cause.
3	**CHECK OPERATION CHECK MODE.** Perform the system operation check mode «Door mirror indicator active test» from «Subaru Rear Vehicle Detection(RH)» or «Subaru Rear Vehicle Detection(LH)». <Ref. to RVD(diag)-19, System Operation Check Mode.>	Does the indicator illuminate?	Even if DTC is displayed, the circuit has returned to a normal condition at this time. Reproduce the failure, and then perform the diagnosis again. NOTE: In this case, temporary poor contact of connector, temporary open or short circuit of harness may be the cause.	Go to step **4**.
4	**CHECK HARNESS (GROUND SHORT CIRCUIT).** 1) Disconnect the radar sensor connector. 2) Disconnect the outer mirror assembly connector. 3) Using a tester, measure the resistance between radar sensor connector (harness side) and the chassis ground. ***Connector & terminal*** ***Radar sensor LH*** ***(R25) No. 4 — Chassis ground:*** ***Radar sensor RH*** ***(R61) No. 4 — Chassis ground:***	Is the resistance 1 MΩ or more?	Go to step **5**.	Repair the short to ground in harness between radar sensor connector and outer mirror assembly connector.

	Step	Check	Yes	No
5	**CHECK CONNECTOR.** Check the radar sensor connector and the outer mirror assembly connector. (Insecure connection, poor contact, etc.)	Is the check result OK?	Go to step **6**.	Repair the connector.
6	**CHECK OUTER MIRROR ASSEMBLY.** Perform unit-check for the outer mirror assembly. <Ref. to GW-27, Outer Mirror Assembly.>	Is the check result OK?	Go to step **7**.	Replace the outer mirror assembly.
7	**CHECK BSD/RCTA.** 1) Restore the vehicle to its original state. 2) Perform the Inspection Mode. <Ref. to RVD(diag)-15, Inspection Mode.>	Is DTC B2300 displayed? (Current malfunction)	Replace the radar sensor. <Ref. to RVD-6, Radar Sensor.>	Even if DTC is displayed, the circuit has returned to a normal condition at this time. Reproduce the failure, and then perform the diagnosis again. NOTE: In this case, temporary poor contact of connector, temporary open or short circuit of harness may be the cause.

B: DTC B2301 REAR RADAR CIRCUIT HIGH

DTC DETECTING CONDITION:

- Open circuit or short circuit to power supply in harness between radar sensor and outer mirror assembly.
- Open circuit or short circuit to power supply of harness in the outer mirror assembly module. (Malfunction of the outer mirror assembly)
- Open circuit or short circuit to power supply of harness between outer mirror assembly and ground.
- Defective radar sensor

TROUBLE SYMPTOM:

- All functions of BSD/RCTA stop.
- Fail icon is displayed in the combination meter LCD display.
- Failure-related notification is displayed for approx. two seconds on LCD display in the combination meter.

WIRING DIAGRAM:

SRVD system <Ref. to WI-110, WIRING DIAGRAM, Blind Spot Detection/Rear Cross Traffic Alert.>

- Radar sensor LH

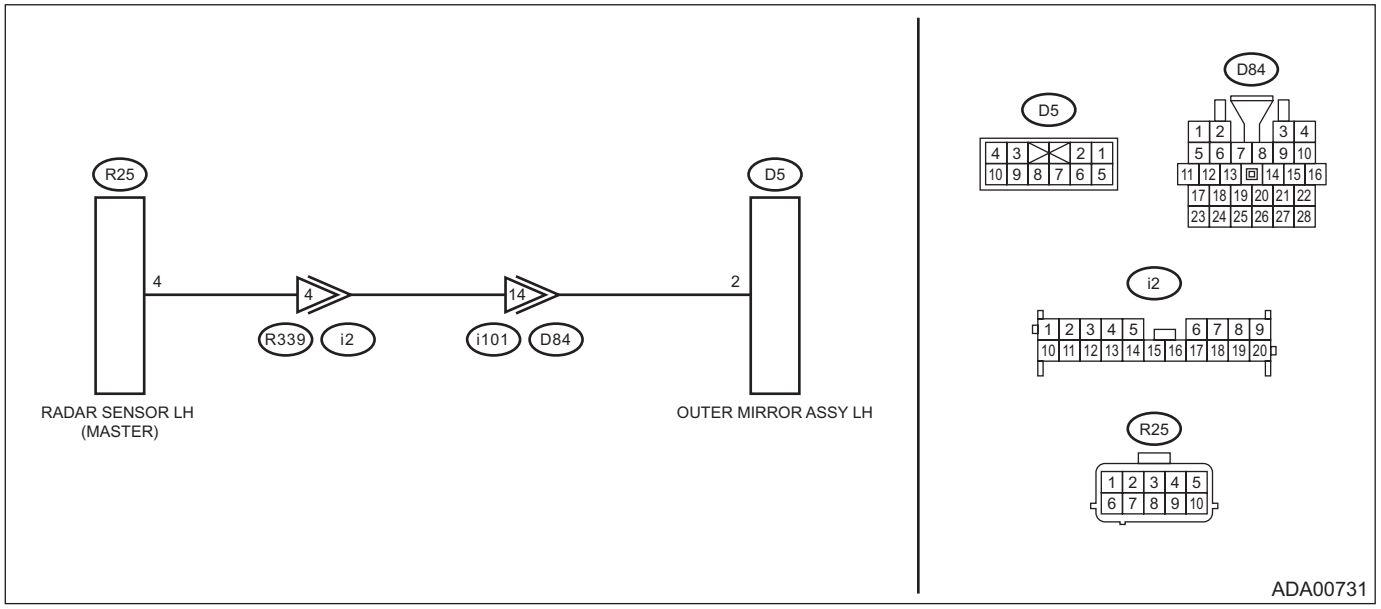

- Radar sensor RH

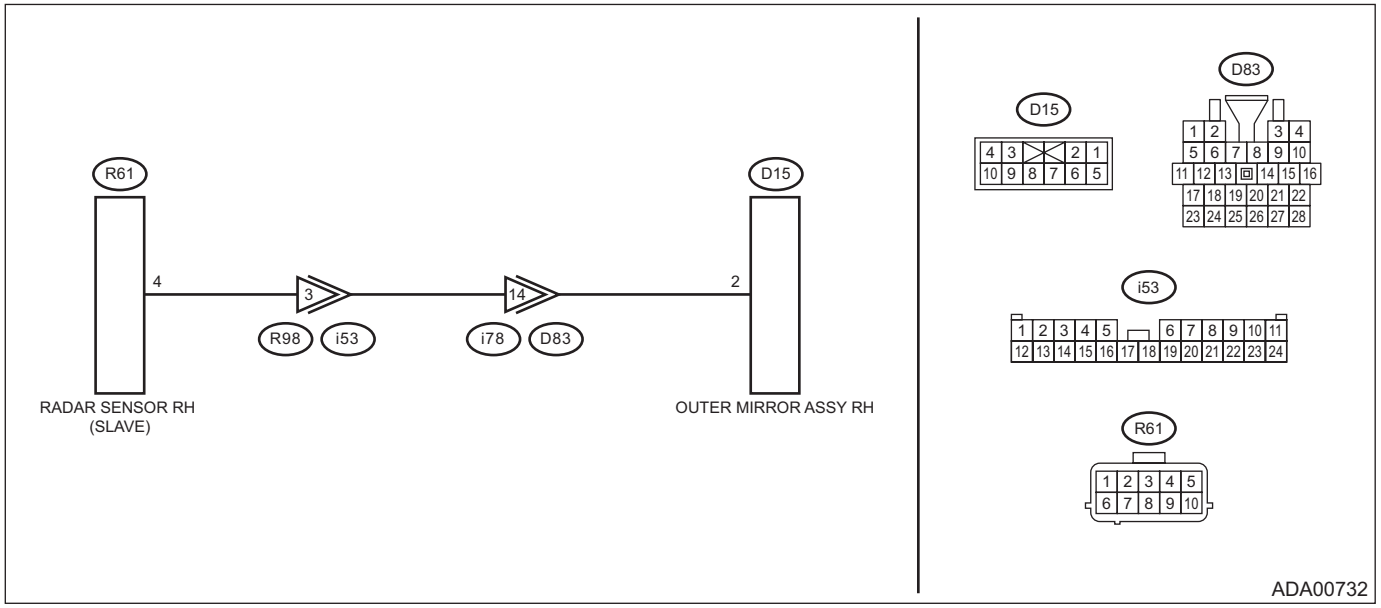

NOTE:
Check and replace the side that displayed the DTC.

	Step	Check	Yes	No
1	**CHECK DTC.** Read the DTC. <Ref. to RVD(diag)-12, OPERATION, Read Diagnostic Trouble Code (DTC).>	Is DTC B2327 displayed? (Current malfunction)	Perform the diagnosis of DTC B2327. <Ref. to RVD(diag)-33, DTC B2327 REAR RADAR INTERNAL FAILURE (INTERNAL ELECTRIC CIRCUIT), Diagnostic Procedure with Diagnostic Trouble Code (DTC).>	Go to step **2**.
2	**CHECK DTC.** Read the DTC. <Ref. to RVD(diag)-12, OPERATION, Read Diagnostic Trouble Code (DTC).>	Is DTC B2301 displayed? (Current malfunction)	Go to step **3**.	Even if DTC is displayed, the circuit has returned to a normal condition at this time. Reproduce the failure, and then perform the diagnosis again. NOTE: In this case, temporary poor contact of connector, temporary open or short circuit of harness may be the cause.
3	**CHECK OPERATION CHECK MODE.** Perform the system operation check mode «Door mirror indicator active test» from «Subaru Rear Vehicle Detection(RH)» or «Subaru Rear Vehicle Detection(LH)». <Ref. to RVD(diag)-19, System Operation Check Mode.>	Does the indicator illuminate?	Even if DTC is displayed, the circuit has returned to a normal condition at this time. Reproduce the failure, and then perform the diagnosis again. NOTE: In this case, temporary poor contact of connector, temporary open or short circuit of harness may be the cause.	Go to step **4**.
4	**CHECK HARNESS (OPEN CIRCUIT).** 1) Disconnect the radar sensor connector. 2) Disconnect the outer mirror assembly connector. 3) Using a tester, measure the resistance between radar sensor connector (harness side) and outer mirror assembly connector (harness side). ***Connector & terminal*** ***Radar sensor LH*** ***(R25) No. 4 — (D5) No. 2:*** ***Radar sensor RH*** ***(R61) No. 4 — (D15) No. 2:***	Is the resistance less than 1 Ω?	Go to step **5**.	Repair the open circuit of harness between radar sensor connector and outer mirror assembly connector.

	Step	Check	Yes	No
5	**CHECK HARNESS (SHORT CIRCUIT TO POWER SUPPLY).** 1) Turn the ignition switch to ON. 2) Using a tester, measure the voltage between radar sensor connector (harness side) and the chassis ground. ***Connector & terminal*** ***Radar sensor LH*** ***(R25) No. 4 (+) — Chassis ground (–):*** ***Radar sensor RH*** ***(R61) No. 4 (+) — Chassis ground (–):***	Is the voltage less than 1 V?	Go to step **6**.	Repair the short circuit to power supply in harness between radar sensor connector and outer mirror assembly connector.
6	**CHECK CONNECTOR.** Check the radar sensor connector and the outer mirror assembly connector. (Insecure connection, poor contact, etc.)	Is the check result OK?	Go to step **7**.	Repair the connector.
7	**CHECK OUTER MIRROR ASSEMBLY.** Perform unit-check for the outer mirror assembly. <Ref. to GW-27, Outer Mirror Assembly.>	Is the check result OK?	Go to step **8**.	Replace the outer mirror assembly.
8	**CHECK BSD/RCTA.** 1) Restore the vehicle to its original state. 2) Perform the Inspection Mode. <Ref. to RVD(diag)-15, Inspection Mode.>	Is DTC B2301 displayed? (Current malfunction)	Replace the radar sensor. <Ref. to RVD-6, Radar Sensor.>	Even if DTC is displayed, the circuit has returned to a normal condition at this time. Reproduce the failure, and then perform the diagnosis again. NOTE: In this case, temporary poor contact of connector, temporary open or short circuit of harness may be the cause.

C: DTC B2304 REAR RADAR ON-OFF SWITCH STUCK

DTC DETECTING CONDITION:

- BSD/RCTA OFF switch is stuck to ON. (Switch malfunction)
- Switch was left pressed for a prolonged time.
- Defective radar sensor

TROUBLE SYMPTOM:

- All functions of BSD/RCTA stop.
- Fail icon is displayed in the combination meter LCD display.
- Failure-related notification is displayed for approx. two seconds on LCD display in the combination meter.

WIRING DIAGRAM:

SRVD system <Ref. to WI-110, WIRING DIAGRAM, Blind Spot Detection/Rear Cross Traffic Alert.>

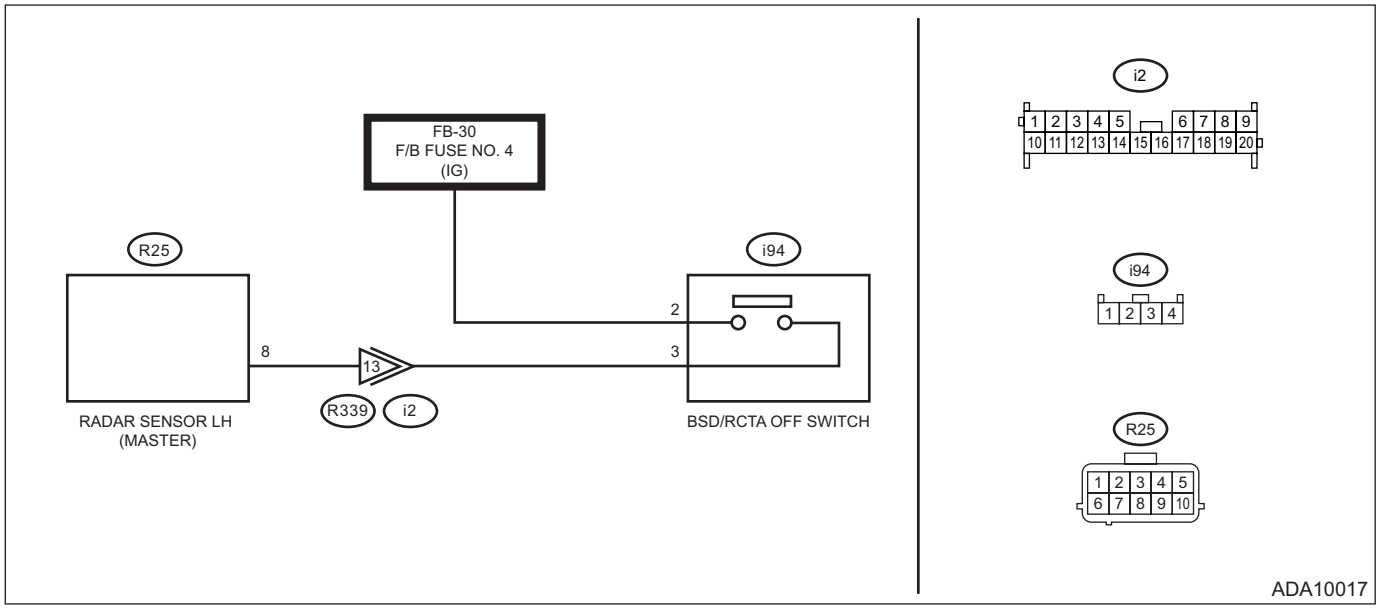

Step		Check	Yes	No
1	**CHECK METER DISPLAY.** 1) Turn the ignition switch to ON. 2) Check the display of OFF indicator in the combination meter LCD display.	Does the display change according to operation of BSD/RCTA OFF switch?	Even if DTC is displayed, the circuit has returned to a normal condition at this time. Reproduce the failure, and then perform the diagnosis again. NOTE: • Temporary poor contact of connector, temporary open or short circuit of harness may be the cause. • User may have kept pressing the switch for 30 seconds or more.	Go to step **2**.
2	**CHECK CURRENT DATA.** Check the current data «SRVD System ON-OFF flag» of «Subaru Rear Vehicle Detection(RH)» or «Subaru Rear Vehicle Detection(LH)». <Ref. to RVD(diag)-17, Read Current Data.>	Does the display change according to operation of BSD/RCTA OFF switch?	Check the combination meter. <Ref. to IDI(diag)-2, Basic Diagnostic Procedure.>	Go to step **3**.

	Step	Check	Yes	No
3	**INSPECTION OF SWITCH UNIT.** Perform unit inspection of the BSD/RCTA OFF switch. <Ref. to RVD-12, Switches and Harness.>	Is the check result OK?	Go to step **4**.	Replace the BSD/RCTA OFF switch.
4	**CHECK BATTERY.** Check the battery. <Ref. to SC(w/o STI)-50, Battery.> <Ref. to SC(STI)-24, Battery.>	Is the check result OK?	Go to step **5**.	Charge or replace the battery.
5	**CHECK FUSE.** Check the fuse of BSD/RCTA OFF switch. <Ref. to RVD-4, Relay and Fuse.>	Is the check result OK?	Go to step **6**.	Replace the fuse. If the replaced fuse blows out easily, repair the ground short circuit in harness between the fuse and the BSD/RCTA OFF switch.
6	**CHECK HARNESS (OPEN CIRCUIT).** 1) Disconnect the BSD/RCTA OFF switch connector. 2) Turn the ignition switch to ON. 3) Using a tester, measure the voltage between BSD/RCTA OFF switch connector and chassis ground. ***Connector & terminal*** ***(i94) No. 2 (+) — Chassis ground (–):***	Is the voltage 10 V or more?	Go to step **7**.	Repair the open circuit of harness between the fuse and the BSD/RCTA OFF switch.
7	**CHECK HARNESS (OPEN CIRCUIT).** 1) Turn the ignition switch to OFF. 2) Disconnect the radar sensor LH connector. 3) Using a tester, measure the resistance between BSD/RCTA OFF switch connector and radar sensor LH connector (harness side). ***Connector & terminal*** ***(i94) No. 3 — (R25) No. 8:***	Is the resistance less than 1 Ω?	Go to step **8**.	Repair the open circuit of harness between BSD/RCTA OFF switch and radar sensor LH.
8	**CHECK HARNESS (GROUND SHORT CIRCUIT).** Using a tester, measure the resistance between the BSD/RCTA OFF switch connector (harness side) and the chassis ground. ***Connector & terminal*** ***(i94) No. 2 — Chassis ground:***	Is the resistance 1 MΩ or more?	Go to step **9**.	Repair the short circuit to ground in harness between BSD/RCTA OFF switch and radar sensor LH.
9	**CHECK HARNESS (SHORT CIRCUIT TO POWER SUPPLY).** 1) Turn the ignition switch to ON. 2) Using a tester, measure the voltage between the BSD/RCTA OFF switch connector (harness side) and the chassis ground. ***Connector & terminal*** ***(i94) No. 3 (+) — Chassis ground (–):***	Is the voltage less than 1 V?	Go to step **10**.	Repair the short circuit to power supply in harness between BSD/RCTA OFF switch and radar sensor LH.
10	**CHECK CONNECTOR.** Check the radar sensor LH connector. (Insecure connection, poor contact, etc.)	Is the check result OK?	Go to step **11**.	Repair the connector.

Step		Check	Yes	No
11	**CHECK BSD/RCTA.** 1) Restore the vehicle to its original state. 2) Perform the Inspection Mode. <Ref. to RVD(diag)-15, Inspection Mode.>	Is DTC B2304 displayed? (Current malfunction)	Replace the radar sensor LH. <Ref. to RVD-6, Radar Sensor.>	Even if DTC is displayed, the circuit has returned to a normal condition at this time. Reproduce the failure, and then perform the diagnosis again. NOTE: In this case, temporary poor contact of connector, temporary open or short circuit of harness may be the cause.

D: DTC B2311 REAR RADAR DETECT TCM

DTC DETECTING CONDITION:
Automatic transmission fails.
TROUBLE SYMPTOM:

- All functions of BSD/RCTA stop.
- Fail icon is displayed in the combination meter LCD display.
- Failure-related notification is displayed for approx. two seconds on LCD display in the combination meter.
- AT OIL TEMP light blinks in the combination meter.

NOTE:
Check and replace the side that displayed the DTC.

	Step	Check	Yes	No
1	**CHECK TRANSMISSION.** Check the transmission. <Ref. to CVT(diag)-2, Basic Diagnostic Procedure.>	Is the check result OK?	Go to step **2**.	Perform the inspection according to the diagnosis of the transmission.
2	**CHECK BSD/RCTA.** 1) Restore the vehicle to its original state. 2) Perform the Inspection Mode. <Ref. to RVD(diag)-15, Inspection Mode.>	Is DTC B2311 displayed? (Current malfunction)	Replace the radar sensor. <Ref. to RVD-6, Radar Sensor.>	Even if DTC is displayed, the circuit has returned to a normal condition at this time. Reproduce the failure, and then perform the diagnosis again. NOTE: In this case, temporary poor contact of connector, temporary open or short circuit of harness may be the cause.

E: DTC B2313 REAR RADAR DETECT VDC

DTC DETECTING CONDITION:
Vehicle dynamics control (VDC) fails.
TROUBLE SYMPTOM:

- All functions of BSD/RCTA stop.
- Fail icon is displayed in the combination meter LCD display.
- Failure-related notification is displayed for approx. two seconds on LCD display in the combination meter.
- VDC warning light illuminates in the combination meter.

NOTE:
Check and replace the side that displayed the DTC.

	Step	Check	Yes	No
1	**CHECK VDC.** Check the VDC. <Ref. to VDC(diag)-2, Basic Diagnostic Procedure.>	Is the check result OK?	Go to step **2**.	Perform the inspection according to the VDC diagnosis.
2	**CHECK BSD/RCTA.** 1) Restore the vehicle to its original state. 2) Perform the Inspection Mode. <Ref. to RVD(diag)-15, Inspection Mode.>	Is DTC B2313 displayed? (Current malfunction)	Replace the radar sensor. <Ref. to RVD-6, Radar Sensor.>	Even if DTC is displayed, the circuit has returned to a normal condition at this time. Reproduce the failure, and then perform the diagnosis again. NOTE: In this case, temporary poor contact of connector, temporary open or short circuit of harness may be the cause.

F: DTC B2327 REAR RADAR INTERNAL FAILURE (INTERNAL ELECTRIC CIRCUIT)

DTC DETECTING CONDITION:
Defective radar sensor
TROUBLE SYMPTOM:
- All functions of BSD/RCTA stop.
- Fail icon is displayed in the combination meter LCD display.
- Failure-related notification is displayed for approx. two seconds on LCD display in the combination meter.

NOTE:
Check and replace the side that displayed the DTC.

	Step	Check	Yes	No
1	**CHECK BSD/RCTA.** 1) Perform the Clear Memory Mode. <Ref. to RVD(diag)-13, OPERATION, Clear Memory Mode.> 2) Read the DTC again. <Ref. to RVD(diag)-12, OPERATION, Read Diagnostic Trouble Code (DTC).>	Is DTC B2327 displayed? (Current malfunction)	Replace the radar sensor. <Ref. to RVD-6, Radar Sensor.>	Even if DTC is displayed, the circuit has returned to a normal condition at this time. Reproduce the failure, and then perform the diagnosis again. NOTE: In this case, temporary poor contact of connector, temporary open or short circuit of harness may be the cause.

G: DTC B2329 REAR RADAR AXIS ALIGNMENT INCOMPLETE

DTC DETECTING CONDITION:

Axis adjustment of the radar sensor has failed.
(Forced termination of the Subaru Select Monitor, improper location of the target reflector, or deviation of the radar sensor due to impact.)

TROUBLE SYMPTOM:

- All functions of BSD/RCTA stop.
- Fail icon is displayed in the combination meter LCD display.
- Failure-related notification is displayed for approx. two seconds on LCD display in the combination meter.

NOTE:
Check and replace the side that displayed the DTC.

	Step	Check	Yes	No
1	**CHECK REAR BUMPER.** Check the rear bumper. (Stickered, trace of repainting, etc.)	Is the check result OK?	Go to step **2**.	Replace or repair the bumper. <Ref. to EI-41, Rear Bumper.> Go to step **2**.
2	**CHECK RADAR SENSOR BRACKET.** 1) Remove the rear bumper. <Ref. to EI-41, Rear Bumper.> 2) Check the mounting bracket of the radar sensor as well as its installation position. (Visible damage, deformation, etc.)	Is the check result OK?	Go to step **3**.	Replace the mounting bracket of the radar sensor, or repair the installation position. Go to step **3**.
3	**ADJUSTMENT OF RADAR SENSOR AXIS.** 1) Install the rear bumper. 2) Perform the adjustment of radar axis. <Ref. to RVD-8, ADJUSTMENT, Radar Sensor.> 3) Perform the Inspection Mode. <Ref. to RVD(diag)-15, Inspection Mode.>	Is DTC B2329 displayed? (Current malfunction)	Replace the radar sensor. <Ref. to RVD-6, Radar Sensor.>	Even if DTC is displayed, the circuit has returned to a normal condition at this time. Reproduce the failure, and then perform the diagnosis again. NOTE: In this case, temporary poor contact of connector, temporary open or short circuit of harness may be the cause.

H: DTC B2350 REAR RADAR COMMUNICATION ERROR BETWEEN MASTER AND SLAVE

DTC DETECTING CONDITION:

- Defective harness for CAN communication between radar sensor LH and radar sensor RH
- Defective radar sensor

TROUBLE SYMPTOM:

- All functions of BSD/RCTA stop.
- Fail icon is displayed in the combination meter LCD display.
- Failure-related notification is displayed for approx. two seconds on LCD display in the combination meter.

WIRING DIAGRAM:

SRVD system <Ref. to WI-110, WIRING DIAGRAM, Blind Spot Detection/Rear Cross Traffic Alert.>

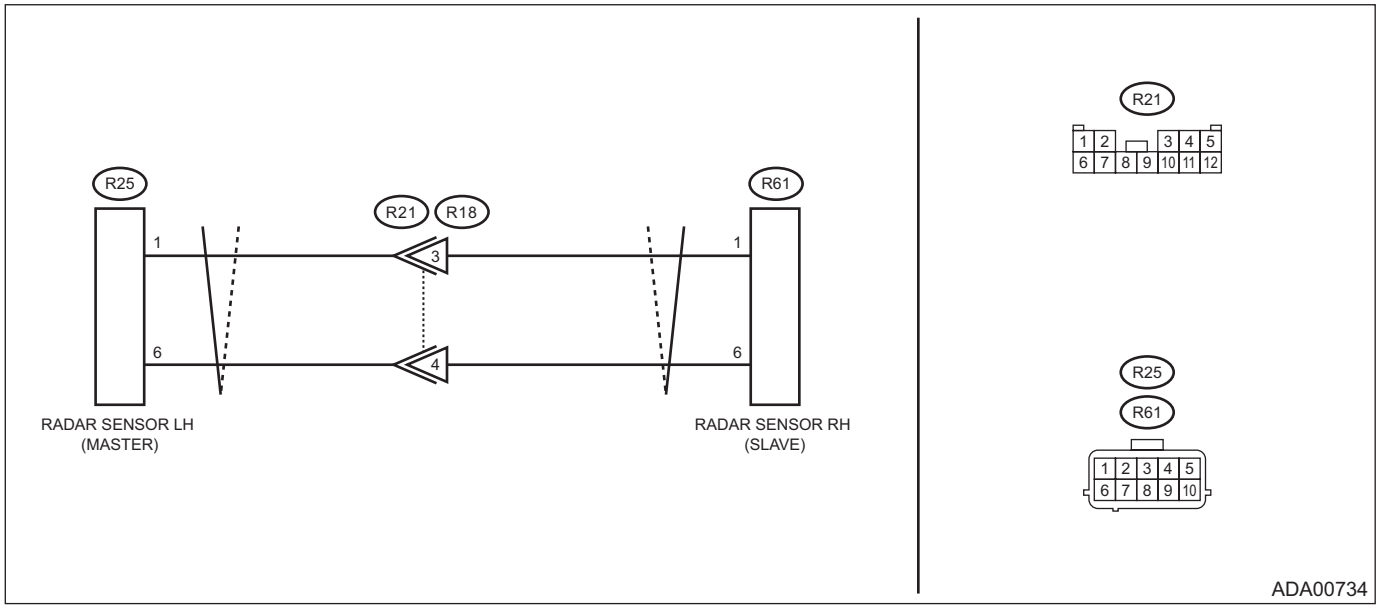

Step		Check	Yes	No
1	**CHECK DTC.** Read the DTC. <Ref. to RVD(diag)-12, OPERATION, Read Diagnostic Trouble Code (DTC).>	Is DTC B2350 displayed? (Current malfunction)	Go to step **2**.	Even if DTC is displayed, the circuit has returned to a normal condition at this time. Reproduce the failure, and then perform the diagnosis again. NOTE: In this case, temporary poor contact of connector, temporary open or short circuit of harness may be the cause.

	Step	Check	Yes	No
2	**CHECK HARNESS (OPEN CIRCUIT).** 1) Disconnect the radar sensor connectors LH and RH. 2) Using a tester, measure the resistance between radar sensor RH connector (harness side) and radar sensor LH connector (harness side). ***Connector & terminal*** ***(R25) No. 1 — (R61) No. 1:*** ***(R25) No. 6 — (R61) No. 6:***	Is the resistance less than 1 Ω?	Go to step **3**.	Repair the open circuit of harness between radar sensor RH connector and radar sensor LH connector.
3	**CHECK HARNESS (SHORT BETWEEN LINES, GROUND SHORT CIRCUIT).** Using a tester, measure the resistance between radar sensor LH connectors (harness side) and the resistance between radar sensor LH connector (harness side) and chassis ground. ***Connector & terminal*** ***(R25) No. 1 — (R25) No. 6:*** ***(R25) No. 1 — Chassis ground:*** ***(R25) No. 6 — Chassis ground:***	Is the resistance 1 MΩ or more?	Go to step **4**.	Repair the short circuit of harness between radar sensor RH connector and radar sensor LH connector.
4	**CHECK HARNESS (SHORT CIRCUIT TO POWER SUPPLY).** Using a tester, measure the voltage between radar sensor LH connector (harness side) and chassis ground. ***Connector & terminal*** ***(R25) No. 1 (+) — Chassis ground (–):*** ***(R25) No. 6 (+) — Chassis ground (–):***	Is the voltage less than 1 V?	Go to step **5**.	Repair the short to power supply in harness between radar sensor RH connector and radar sensor LH connector.
5	**CHECK RADAR SENSOR. (INTERNAL IMPEDANCE).** Using a tester, measure the resistance between radar sensor LH connectors (module side) and the resistance between radar sensor RH connectors (module side). ***Connector & terminal*** ***(R25) No. 1 — (R25) No. 6:*** ***(R61) No. 1 — (R61) No. 6:***	Is the resistance approximately 120 Ω?	Go to step **6**.	Replace the radar sensor RH or radar sensor LH. <Ref. to RVD-6, Radar Sensor.>
6	**CHECK BSD/RCTA.** 1) Restore the vehicle to its original state. 2) Perform the Clear Memory Mode. <Ref. to RVD(diag)-12, OPERATION, Read Diagnostic Trouble Code (DTC).> 3) Perform the Inspection Mode. <Ref. to RVD(diag)-15, Inspection Mode.>	Is DTC B2350 displayed? (Current malfunction)	Replace the radar sensor on the side that displayed the DTC. <Ref. to RVD-6, Radar Sensor.>	Even if DTC is displayed, the circuit has returned to a normal condition at this time. Reproduce the failure, and then perform the diagnosis again. NOTE: In this case, temporary poor contact of connector, temporary open or short circuit of harness may be the cause.

I: DTC U0073 CONTROL MODULE COMMUNICATION BUS OFF

Detected when CAN line abnormality is detected.

NOTE:
Perform the diagnosis for LAN system. <Ref. to LAN(diag)-2, PROCEDURE, Basic Diagnostic Procedure.>

J: DTC U0074 CONTROL MODULE COMMUNICATION BUS "BODY-CAN" OFF

Detected when CAN line abnormality is detected.

NOTE:
Perform the diagnosis for LAN system. <Ref. to LAN(diag)-2, PROCEDURE, Basic Diagnostic Procedure.>

K: DTC U0100 LOST COMMUNICATION WITH ECM/PCM “A”

Detected when CAN data from ECM does not arrive.

NOTE:
Perform the diagnosis for LAN system. <Ref. to LAN(diag)-2, PROCEDURE, Basic Diagnostic Procedure.>

L: DTC U0101 LOST COMMUNICATION WITH TCM

Detected when CAN data from TCM does not arrive.

NOTE:
Perform the diagnosis for LAN system. <Ref. to LAN(diag)-2, PROCEDURE, Basic Diagnostic Procedure.>

M: DTC U0122 LOST COMMUNICATION WITH VEHICLE DYNAMICS CONTROL MODULE

Detected when CAN data from VDC CM does not arrive.

NOTE:
Perform the diagnosis for LAN system. <Ref. to LAN(diag)-2, PROCEDURE, Basic Diagnostic Procedure.>

N: DTC U0140 LOST COMMUNICATION WITH BODY CONTROL MODULE

Detected when CAN data from BIU does not arrive.

NOTE:
Perform the diagnosis for LAN system. <Ref. to LAN(diag)-2, PROCEDURE, Basic Diagnostic Procedure.>

O: DTC U0155 LOST COMMUNICATION WITH INSTRUMENT PANEL CLUSTER (IPC) CONTROL MODULE

Detected when CAN data from combination meter does not arrive.

NOTE:
Perform the diagnosis for LAN system. <Ref. to LAN(diag)-2, PROCEDURE, Basic Diagnostic Procedure.>

P: DTC U0401 INVALID DATA RECEIVED FROM ECM/PCM “A”

Detected when CAN data from ECM does not arrive.

NOTE:
Perform the diagnosis for LAN system. <Ref. to LAN(diag)-2, PROCEDURE, Basic Diagnostic Procedure.>

Q: DTC U0402 INVALID DATA RECEIVED FROM TCM

Received error data from TCM.

NOTE:
Perform the diagnosis for LAN system. <Ref. to LAN(diag)-2, PROCEDURE, Basic Diagnostic Procedure.>

R: DTC U0416 INVALID DATA RECEIVED FROM VEHICLE DYNAMICS CONTROL MODULE

Received error data from VDC CM.

NOTE:
Perform the diagnosis for LAN system. <Ref. to LAN(diag)-2, PROCEDURE, Basic Diagnostic Procedure.>

S: DTC U0422 INVALID DATA RECEIVED FROM BODY CONTROL MODULE

Received error data from BIU.

NOTE:
Perform the diagnosis for LAN system. <Ref. to LAN(diag)-2, PROCEDURE, Basic Diagnostic Procedure.>

T: DTC U0423 INVALID DATA RECEIVED FROM INSTRUMENT PANEL CLUSTER CONTROL MODULE

Received error data from combination meter.

NOTE:
Perform the diagnosis for LAN system. <Ref. to LAN(diag)-2, PROCEDURE, Basic Diagnostic Procedure.>

16.Diagnostic Procedure with Cancel Code

A: DTC B2328 REAR RADAR INTERNAL FAILURE (RADAR MISALIGNMENT)

DETECTING CONDITION:

- Excessive impact was given to the installation area of the radar sensor, which resulted in deviation of the radar sensor axis.
- Mounting bracket for the radar sensor is deformed.
- Defective radar sensor

TROUBLE SYMPTOMS:

- All functions of BSD/RCTA are temporarily suspended.
- The icon indicating function suspended will be displayed in the combination meter LCD display.
- Function-suspended confirmation will be displayed for approx. two seconds on LCD display in the combination meter.

NOTE:
If DTC B2328 is detected repeatedly, check or replace the part corresponding to the cancel code.

	Step	Check	Yes	No
1	**CHECK REAR BUMPER.** Check the rear bumper. (Stickered, trace of repainting, etc.)	Is the check result OK?	Go to step **2**.	Replace or repair the bumper. <Ref. to EI-41, Rear Bumper.> Go to step **2**.
2	**CHECK RADAR SENSOR BRACKET.** 1) Remove the rear bumper. <Ref. to EI-41, Rear Bumper.> 2) Check the mounting bracket of the radar sensor as well as its installation position. (Visible damage, deformation, etc.)	Is the check result OK?	Go to step **3**.	Replace the mounting bracket of the radar sensor, or repair the installation position. Go to step **3**.
3	**ADJUSTMENT OF RADAR SENSOR AXIS.** 1) Install the rear bumper. 2) Perform the adjustment of radar axis. <Ref. to RVD-8, ADJUSTMENT, Radar Sensor.> 3) Read the cancel code. <Ref. to RVD(diag)-14, Read Cancel Code.>	Is B2328 displayed?	Replace the radar sensor. <Ref. to RVD-6, Radar Sensor.>	The circuit has returned to a normal condition at this time. Reproduce the failure, and then perform the diagnosis again. NOTE: In this case, temporary poor contact of connector, temporary open or short circuit of harness may be the cause.

17.Diagnostics with Phenomenon

A: INSPECTION

Symptoms	Maintenance parts
BSD/RCTA does not operate.	Fuse
	LAN system <Ref. to LAN(diag)-2, Basic Diagnostic Procedure.>
	Body control system <Ref. to BC(diag)-2, Basic Diagnostic Procedure.>
	Radar sensor LH
	Radar sensor RH
BSD/RCTA cannot be turned OFF.	BSD/RCTA OFF switch
	LAN system <Ref. to LAN(diag)-2, Basic Diagnostic Procedure.>
	Body control system <Ref. to BC(diag)-2, Basic Diagnostic Procedure.>
	Radar sensor LH
Error message appears in the combination meter.	CHECK CANCEL CODE. <Ref. to RVD(diag)-14, Read Cancel Code.>
	Radar sensor LH
	Radar sensor RH
	Combination meter <Ref. to IDI(diag)-2, Basic Diagnostic Procedure.>
Outer mirror assembly (LH) indicator does not illuminate.	Outer mirror assembly <Ref. to GW-27, Outer Mirror Assembly.>
	Radar sensor LH
Outer mirror assembly (RH) indicator does not illuminate.	Outer mirror assembly <Ref. to GW-27, Outer Mirror Assembly.>
	Radar sensor RH
Outer mirror assembly (LH) indicator remains on.	Radar sensor LH
Outer mirror assembly (RH) indicator remains on.	Radar sensor RH
Outer mirror assembly (LH) indicator does not blink.	Radar sensor LH
Outer mirror assembly (RH) indicator does not blink.	Radar sensor RH
Outer mirror assembly (LH) indicator keeps blinking.	Radar sensor LH
Outer mirror assembly (RH) indicator keeps blinking.	Radar sensor RH

Reverse Automatic Braking

RAB

Page

1. General Description 2
2. Relay and Fuse 4
3. Reverse Automatic Braking 5
4. Reverse Automatic Braking CM 6
5. Sensor and Harness 7
6. Control Unit 12
7. Stereo Camera 13
8. Combination Meter 14
9. Multi-function Display (MFD) 15

1. General Description

A: NOTE

Using the EyeSight brake control, the Reverse Automatic Braking detects obstacles with the Reverse Automatic Braking CM and sonar sensor to operate the system.

B: LOCATION

Refer to “LOCATION” in the “Reverse Automatic Braking (DIAGNOSTICS)” section. <Ref. to RAB(diag)-6, LOCATION, Electrical Component Location.>

C: COMPONENT

1. Reverse Automatic Braking CM AND SONAR SENSOR

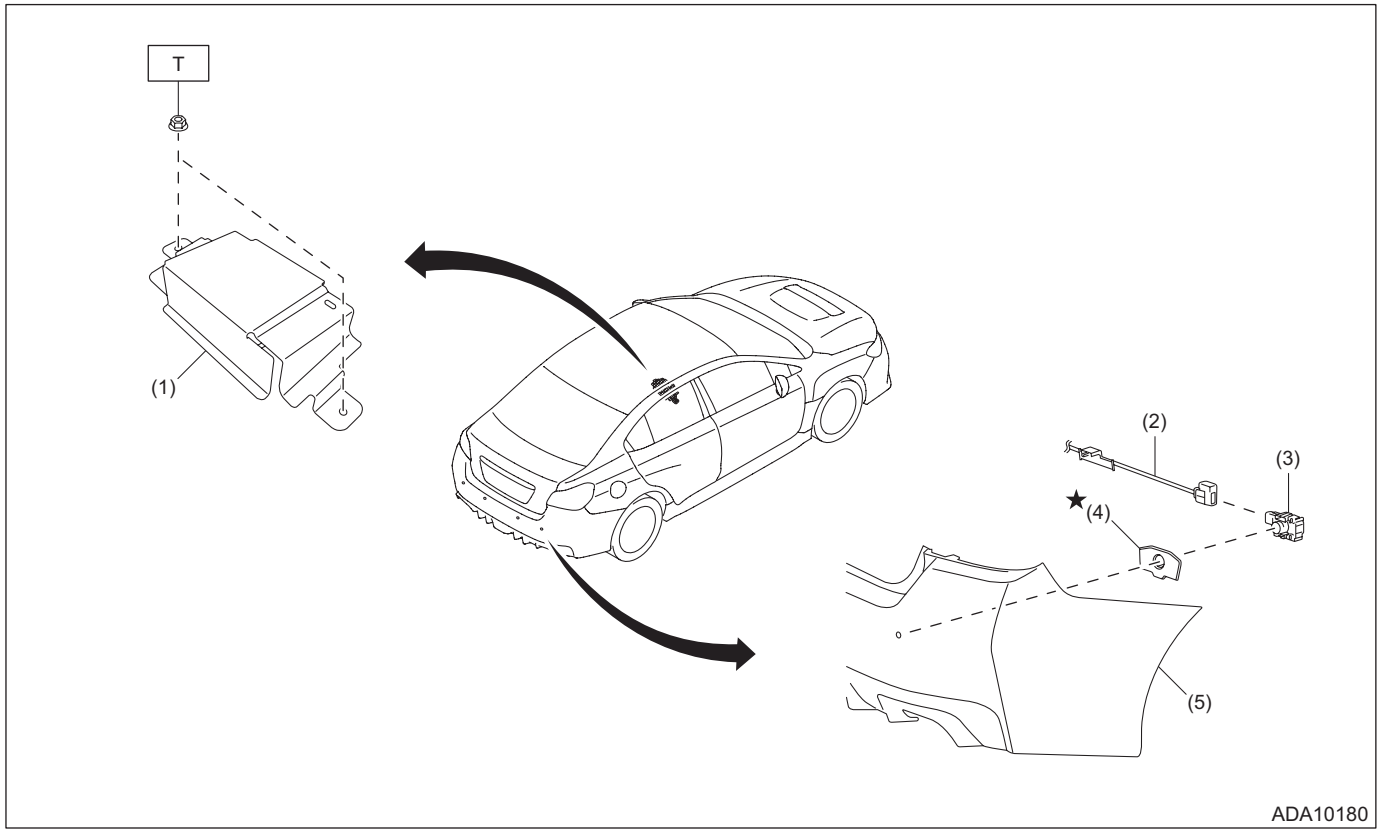

(1) Reverse Automatic Braking CM
(2) Cord ASSY - sonar
(3) Sonar sensor
(4) Holder - sonar
(5) Bumper face - rear

Tightening torque: N·m (kgf-m, ft-lb)
T: 7.5 (0.8, 5.5)

D: CAUTION

• Before disconnecting connectors of sensors or units, be sure to disconnect the ground cable from battery. When replacing the electrical parts provided with memory functions that store contents specified by a customer, record the memory contents before disconnecting the battery ground cable.
• For precautions for Reverse Automatic Braking, refer to “CAUTION” in “Reverse Automatic Braking (DIAGNOSTICS)” section. <Ref. to RAB(diag)-4, CAUTION, General Description.>

E: PREPARATION TOOL

1. SPECIAL TOOL

ILLUSTRATION	TOOL NUMBER	DESCRIPTION	REMARKS
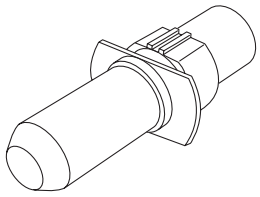 ST87692VA000	87692VA000 (Newly adopted tool)	SONAR TOOL	Used for installing the holder - sonar.

2. GENERAL TOOL

TOOL NAME	REMARKS
Angle gauge	Used for inspecting height and angle of the sonar sensor.
Try square	
Measure	
Leveling line	
Plumb bob	
Packing tape	

2. Relay and Fuse

A: LOCATION

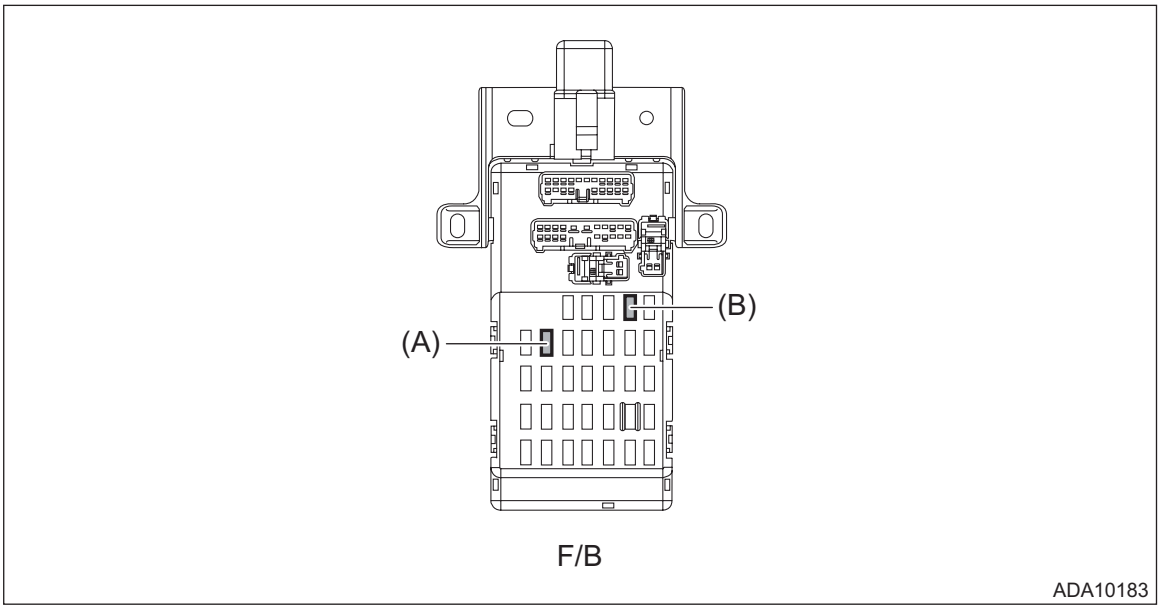

Fuse & Relay Box	Fuse 10 A (RAB CM)	(A)
	Fuse 10 A (RAB CM)	(B)

NOTE:
- Refer to “LOCATION” of the “EyeSight” section because the EyeSight system control is used. <Ref. to ES-5, LOCATION, Relay and Fuse.>
- For other related fuses, refer to the wiring diagram. <Ref. to WI-31, Power Supply Circuit.>

B: INSPECTION

1. CHECK FUSE

1) Remove the fuse and inspect visually.
2) If the fuse is blown out, replace the fuse.

NOTE:
If the fuse is blown again, check the system wiring harness.

3. Reverse Automatic Braking

A: WIRING DIAGRAM

Refer to “Reverse Automatic Braking” in the wiring diagram. <Ref. to WI-329, WIRING DIAGRAM, Reverse Automatic Braking.>

B: INSPECTION

Refer to “Basic Diagnostic Procedure” of “Reverse Automatic Braking (DIAGNOSTICS)” section. <Ref. to RAB(diag)-2, Basic Diagnostic Procedure.>

C: NOTE

For procedure of each component in the Reverse Automatic Braking, refer to the respective section.

- Reverse Automatic Braking CM: <Ref. to RAB-6, Reverse Automatic Braking CM.>
- Sensor and harness: <Ref. to RAB-7, Sensor and Harness.>
- Control module: <Ref. to RAB-12, Control Unit.>

NOTE:
System control of the Reverse Automatic Braking is performed by each module. For procedure, refer to the following sections.

  - Engine control module (ECM): <Ref. to FU(w/o STI)-124, Engine Control Module (ECM).>
  - Transmission control module (TCM): <Ref. to CVT(TR690)-126, Transmission Control Module (TCM).>
  - VDC control module (VDC CM): <Ref. to VDC-9, VDC Control Module and Hydraulic Control Unit (VDCCM&H/U).>
  - Body integrated unit: <Ref. to SL-81, Body Integrated Unit.>
  - Parking brake actuator: <Ref. to PB-23, Parking Brake Actuator.>
  - Reverse Automatic Braking CM: <Ref. to RAB-6, Reverse Automatic Braking CM.>
- Stereo camera: <Ref. to ES-8, Stereo Camera.>
- Combination meter: <Ref. to IDI-13, Combination Meter.>
- Multi-function display (MFD): <Ref. to IDI-20, Multi-function Display (MFD).>

4. Reverse Automatic Braking CM

A: REMOVAL

NOTE:
Remove the Reverse Automatic Braking CM after sliding the front seat LH back and forth as necessary.
1) Disconnect the ground cable from battery. <Ref. to NT-6, BATTERY, NOTE, Note.>

NOTE:
For model with battery sensor, disconnect the ground terminal from battery sensor.
2) Remove the Reverse Automatic Braking CM.
   (1) Remove the connector and harness clip.
   (2) Remove the nut and remove the Reverse Automatic Braking CM.

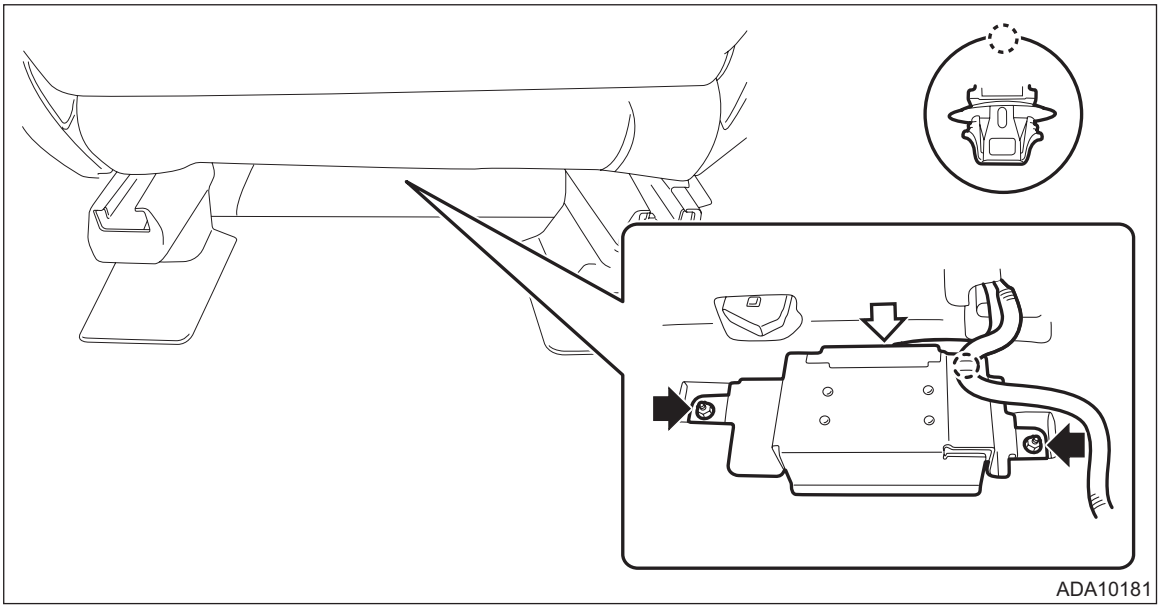

B: INSTALLATION

1) Install the Reverse Automatic Braking CM.

Tightening torque:
7.5 N·m (0.8 kgf-m, 5.5 ft-lb)
2) Connect the battery ground terminal. <Ref. to NT-6, BATTERY, NOTE, Note.>

5. Sensor and Harness

A: REMOVAL

1. SONAR SENSOR

1) Disconnect the ground cable from battery. <Ref. to NT-6, BATTERY, NOTE, Note.>

NOTE:
For model with battery sensor, disconnect the ground terminal from battery sensor.
2) Remove the bumper face - rear. <Ref. to EI-41, REMOVAL, Rear Bumper.>
3) Remove the sonar sensor.

CAUTION:
• When reusing the sensor, make sure to place a mark on the sensor and the bumper face - rear or others, and surely return each sensor to the original position before removed.
• The holder - sonar is fixed to the bumper face - rear with the double-sided tape and therefore cannot be removed.

(1) Disconnect the connector.
(2) Release the claws and then remove the sonar sensor.

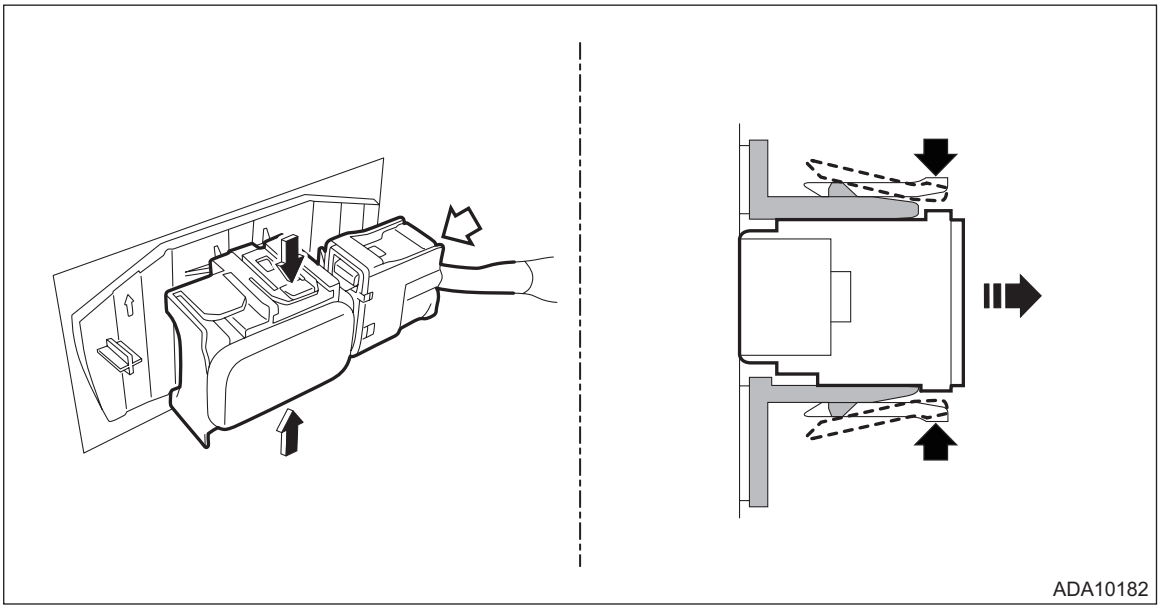

NOTE:
- The sonar sensors are equipped at four portions on the bumper face - rear.
- The figure indicates the sonar sensor (right corner). Remove the rest of the sensors in the same manner.

(3) Using a flat tip screwdriver wrapped with a protection tape or cloth, release the lock from the front side of the sonar sensor to remove the cord assembly - sonar.

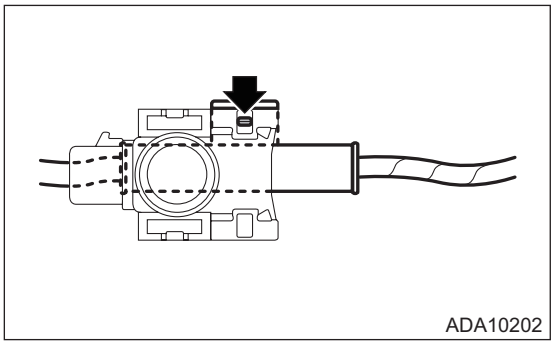

NOTE:
Use a flat tip screwdriver with an appropriate size for the insertion opening.

B: INSTALLATION

1. SONAR SENSOR

CAUTION:
• When reusing the sensor, make sure to align the mark on the sensor and the bumper face - rear or others, and surely return each sensor to the original position before removed.
• If either the bumper face - rear or the holder - sonar is damaged, replace both to new parts.

1) When installing the holder - sonar, perform work according to the following procedures.
(1) Clean the holder - sonar installation area of the bumper face - rear.
(2) Apply the primer to the primer application range frame (a) using sponge.

CAUTION:
• The primer has high volatility and can damage the coating surface. Therefore, be careful not to apply the primer on the surface of the bumper face - rear.
• Do not reapply the primer over the dried surface.

Preparation items:
Primer: 3M K-540NT or equivalent

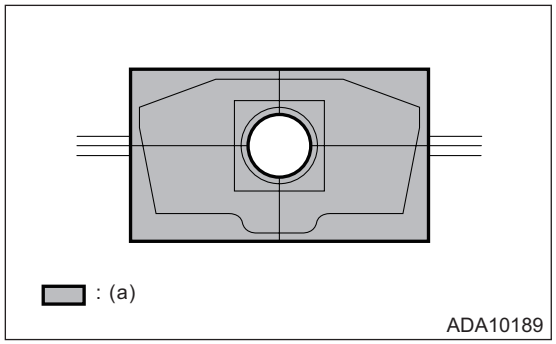

(3) Install SONAR TOOL (ST) to the holder - sonar.

Preparation tool:
ST: SONAR TOOL (87692VA000)

1. Confirm that the arrows of the holder - sonar are facing up, and then set SONAR TOOL (ST) with the two slit portions facing up.

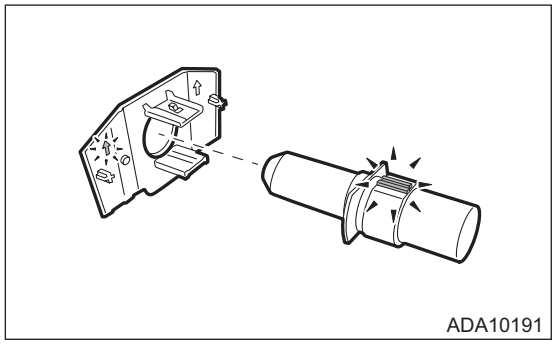

2. Install the holder - sonar and SONAR TOOL (ST) so that there is no gap in between.

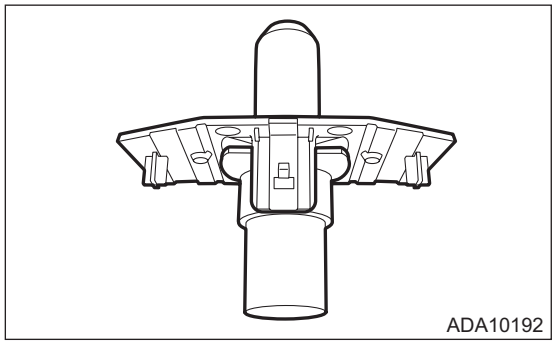

(4) Install the holder - sonar.
1. Check if the primer is dry.
2. Detach the double-sided tape of the holder - sonar.
3. Insert the centering pin ends of SONAR TOOL (ST) into the sensor holes of the bumper face - rear, and install while aligning with the mark-off line (shape of the holder - sonar) within the primer application range frame of the bumper face - rear.

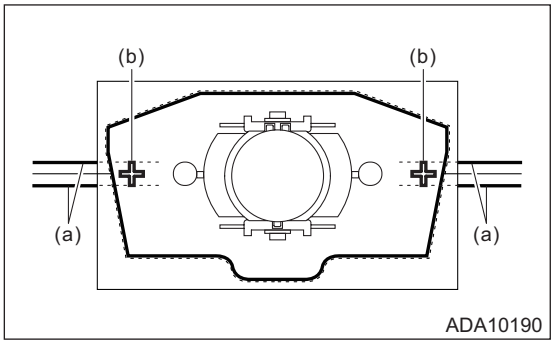

NOTE:
The mark-off (a) and pins (b) of the holder - sonar come to the same position.

4. To prevent play or looseness between the installation surface of the bumper face - rear and the holder - sonar, press down SONAR TOOL (ST) with approximately 49 — 59 N (5 — 6 kgf, 11 — 13 lb) for one second.
(5) Remove SONAR TOOL (ST), and check if the holder - sonar is fixed securely.

2) Install the sonar sensor.
3) Install the bumper face - rear.
4) Connect the battery ground terminal. <Ref. to NT-6, BATTERY, NOTE, Note.>
5) When the bumper face - rear, holder - sonar and sonar sensor are replaced, check the installation height and angle. <Ref. to RAB-10, SONAR SENSOR, INSPECTION, Sensor and Harness.>

C: INSPECTION

1. SONAR SENSOR

• Height and angle inspection

CAUTION:
Perform the inspection for each sonar sensor at curb weight.

1) Before performing measurement, check the following items.
   (1) The vehicle is parked on a level surface.
   (2) The inflation pressure of tires is correct.
   (3) The vehicle does not have load.
   (4) Check the area around the sensor and rear bumper for any scratches or other type of deformation.
2) Prepare the measure, plumb bob, leveling line, angle gauge and try square.
3) Measure installation height of the sonar sensor.
   (1) Suspend the plumb bob with leveling line from the sensor, and mark the position where the plumb bob touches the ground. (Point A)

NOTE:
Stick the packing tape etc. on the floor, then make a marking on the tape.

   (2) Measure the height from the sensor to the marked Point A.

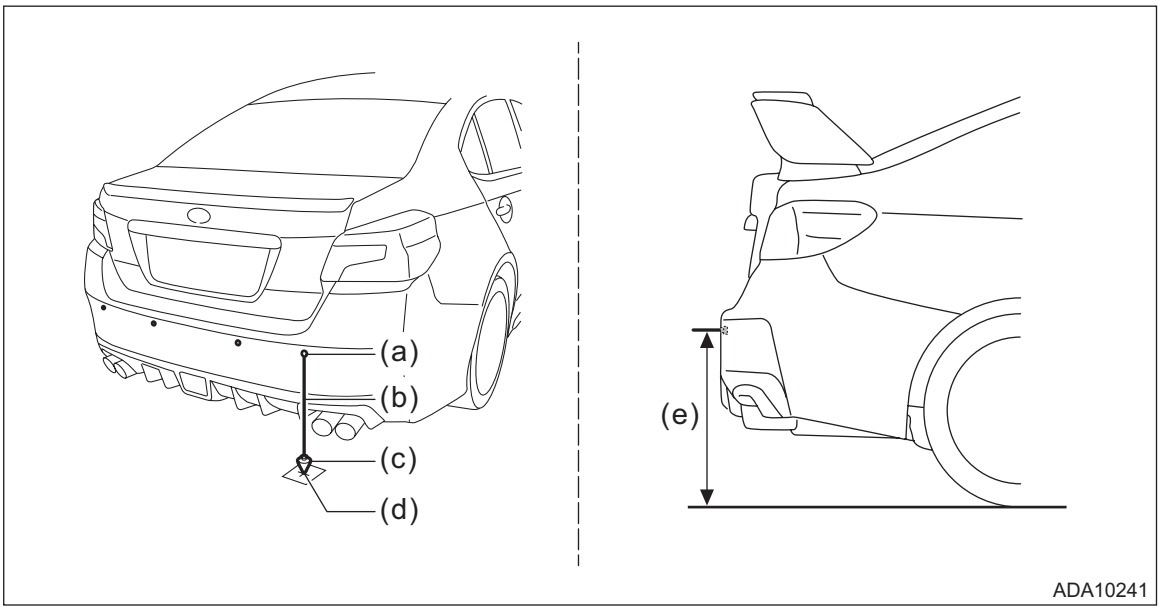

(a) Sonar sensor
(b) Leveling line
(c) Plumb bob
(d) Point A
(e) Height

   (3) Confirm that sensor installation height is within the acceptable limit.

Specification:
560 — 600 mm (22.05 — 23.62 in)

4) Measure the installation angle of the sonar sensor.
(1) Using an angle gauge and try square, measure the installation angle as shown in the figure.

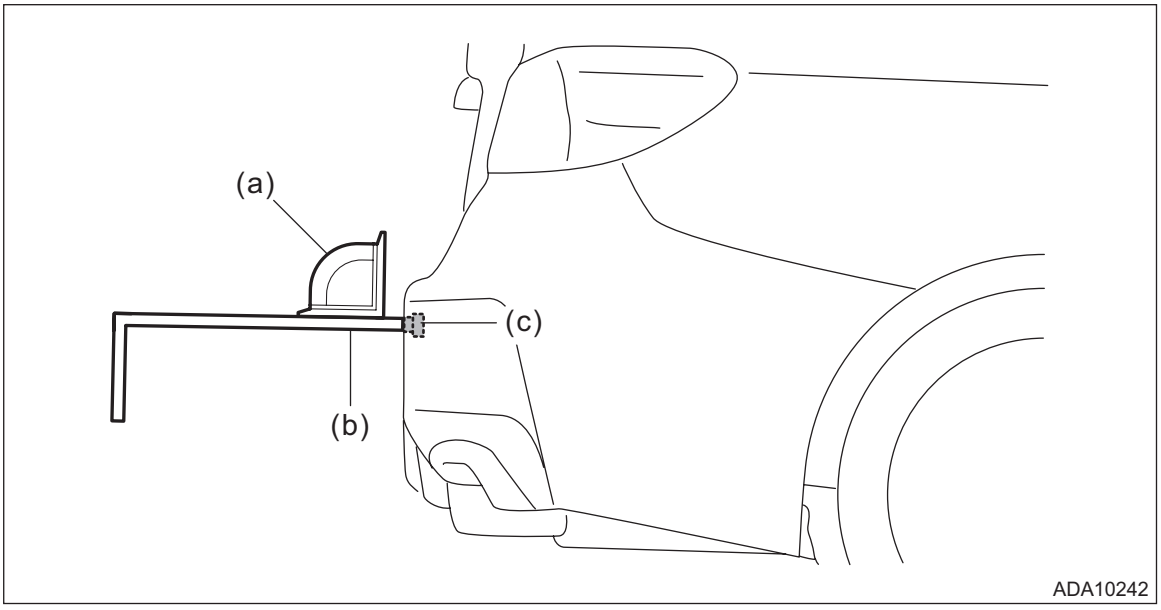

(a) Angle gauge (b) Try square (c) Sonar sensor

NOTE:
Use the measurement tools while placing them perpendicularly to the sonar sensor.
(2) Confirm that sensor installation angle is within the acceptable limit.

Specification:
2° — 5°

5) If the inspection result is not within the standard value, the rear bumper, holder - sonar or sonar sensor may be improperly installed or deformed. Check the installation status of each part, and perform inspection again.

6. Control Unit

A: NOTE

System control of the Reverse Automatic Braking is performed by each module. For procedure, refer to the following sections.

- Engine control module (ECM): <Ref. to FU(w/o STI)-124, Engine Control Module (ECM).>
- Transmission control module (TCM): <Ref. to CVT(TR690)-126, Transmission Control Module (TCM).>
- VDC control module (VDC CM): <Ref. to VDC-9, VDC Control Module and Hydraulic Control Unit (VDC-CM&H/U).>
- Body integrated unit: <Ref. to SL-81, Body Integrated Unit.>
- Parking brake actuator: <Ref. to PB-23, Parking Brake Actuator.>
- Reverse Automatic Braking CM: <Ref. to RAB-6, Reverse Automatic Braking CM.>

7. Stereo Camera

A: NOTE

For the operation procedures for the stereo camera, refer to “EyeSight” section. <Ref. to ES-8, Stereo Camera.>

8. Combination Meter

A: NOTE

For the operation procedures for combination meter, refer to “INSTRUMENTATION/DRIVER INFO” section. <Ref. to IDI-13, Combination Meter.>

9. Multi-function Display (MFD)

A: NOTE

For the operation procedures for Multi-Function Display (MFD), refer to “INSTRUMENTATION/DRIVER INFO” section. <Ref. to IDI-10, Multi-function Display (MFD) System.>

Reverse Automatic Braking (DIAGNOSTICS)

RAB(diag)

		Page
1.	Basic Diagnostic Procedure	2
2.	Check List for Interview	3
3.	General Description	4
4.	Electrical Component Location	6
5.	Control Module I/O Signal	7
6.	Inspection Mode	8
7.	Warning Light Illumination Pattern	9
8.	Diagnostic Procedure for Subaru Select Monitor Communication	10
9.	Read Diagnostic Trouble Code (DTC)	12
10.	Clear Memory Mode	13
11.	Read Current Data	14
12.	Freeze Frame Data	16
13.	Customize	21
14.	Work Support	22
15.	List of Diagnostic Trouble Code (DTC)	23
16.	Diagnostic Procedure with Diagnostic Trouble Code (DTC)	26
17.	Cancel Code	60

1. Basic Diagnostic Procedure

A: PROCEDURE

Step		Check	Yes	No
1	**PERFORM CUSTOMER INTERVIEW.** Ask the customer when and how the trouble occurred using the interview check list.	Did you interview the customer?	Go to step **2**.	Perform the interview.
2	**CHECK SUBARU SELECT MONITOR COMMUNICATION.** 1) Turn the ignition switch to OFF. 2) Connect the Subaru Select Monitor to data link connector. 3) Turn the ignition switch to ON and run the Subaru Select Monitor. 4) Select «Reverse Automatic Braking». NOTE: For detailed operation procedures, refer to “Application help”.	Is communication possible?	Go to step **3**.	Check the communication circuit.
3	**CHECK DTC.** Read the DTC relating «Reverse Automatic Braking» using the Subaru Select Monitor. <Ref. to RAB(diag)-12, Read Diagnostic Trouble Code (DTC).>	Is DTC displayed?	Record the DTC, time stamp and freeze frame data, and go to next.	Perform diagnosis according to the procedures in the diagnostics with phenomenon.
4	**PERFORM DIAGNOSIS.** 1) Perform the diagnosis for the displayed DTCs. 2) Repair or replace the cause of trouble. 3) Perform the clear memory for «Reverse Automatic Braking» using the Subaru Select Monitor. <Ref. to RAB(diag)-13, Clear Memory Mode.> 4) Execute the inspection mode. 5) Read the DTC relating «Reverse Automatic Braking» using the Subaru Select Monitor. <Ref. to RAB(diag)-12, Read Diagnostic Trouble Code (DTC).>	Is DTC displayed?	Repeat step 4 until DTC is not shown.	Finish the diagnosis.

2. Check List for Interview

A: CHECK

- Inspect the following items regarding the vehicle's state.
- Print out this page for interviewing customers.

<table>
<tr><td colspan="2">Reverse Automatic Braking Check List for Interview</td><td>Received Year Month Date</td><td></td></tr>
<tr><td colspan="2" rowspan="2">Customer's name</td><td>Registration No.</td><td>Initial year of registration
Year Month Date</td></tr>
<tr><td>Vehicle model</td><td>Frame number</td></tr>
<tr><td>Interviewer</td><td>Inspector</td><td>Engine type</td><td>Odometer reading</td></tr>
<tr><td colspan="4">Customer specified content
•
•
•</td></tr>
<tr><td rowspan="2">Date and time when the trouble occurred</td><td rowspan="2"></td><td rowspan="2">Frequency of trouble occurrence</td><td>Always occurs</td></tr>
<tr><td>Sometimes occurs
(times per day, times per month)</td></tr>
<tr><td rowspan="2">Location where the trouble occurred</td><td rowspan="2"></td><td>Weather</td><td>❑ Fine❑ Cloudy❑ Rainy❑ Snowy
❑ Others</td></tr>
<tr><td>Temperature</td><td>°C (°F) — °C (°F)</td></tr>
<tr><td>Road conditions</td><td colspan="3"></td></tr>
<tr><td>Road condition</td><td colspan="3"></td></tr>
<tr><td>Condition of warning light</td><td colspan="3">❑ On❑ Off❑ Blink</td></tr>
<tr><td>Accessory installation condition</td><td colspan="3"></td></tr>
<tr><td>Diagnostic code</td><td colspan="3"></td></tr>
<tr><td>Time stamp</td><td colspan="3"></td></tr>
<tr><td>Control module item number/ver</td><td colspan="3"></td></tr>
<tr><td>Condition of trouble occurrence
(How the trouble occurs)</td><td colspan="3"></td></tr>
<tr><td>Vehicle bring-in history information</td><td colspan="3"></td></tr>
</table>

3. General Description

A: CAUTION

1. AIRBAG SYSTEM

Airbag system harness is routed near the RAB CM.

CAUTION:
- **Do not use the electrical test equipment on the airbag system harnesses and connector circuits.**
- **Be careful not to damage the airbag system harness.**

B: INSPECTION

Before performing diagnostics, check the following item which might affect the Reverse Automatic Braking problems.

1. BASIC INSPECTION

1) Check the battery.
2) Check the main and other fuses, harnesses and connectors. Also check for proper grounding.

C: PREPARATION TOOL

1. SPECIAL TOOL

ILLUSTRATION	TOOL NUMBER	DESCRIPTION	REMARKS
 STSSM4	—	SUBARU SELECT MONITOR 4	Used for setting of each function and trouble-shooting for electrical system. NOTE: For detailed operation procedures of Subaru Select Monitor 4, refer to “Application help”.

2. GENERAL TOOL

TOOL NAME	REMARKS
Circuit tester	Used for measuring resistance, voltage and current.
DST-i	Used together with Subaru Select Monitor 4.

D: SYSTEM BLOCK DIAGRAM

The Reverse Automatic Braking is a system to avoid collision or reduce collision damage by informing with sound and operating the brake automatically, when the vehicle may collide with walls or obstacles on the rear during reversing.

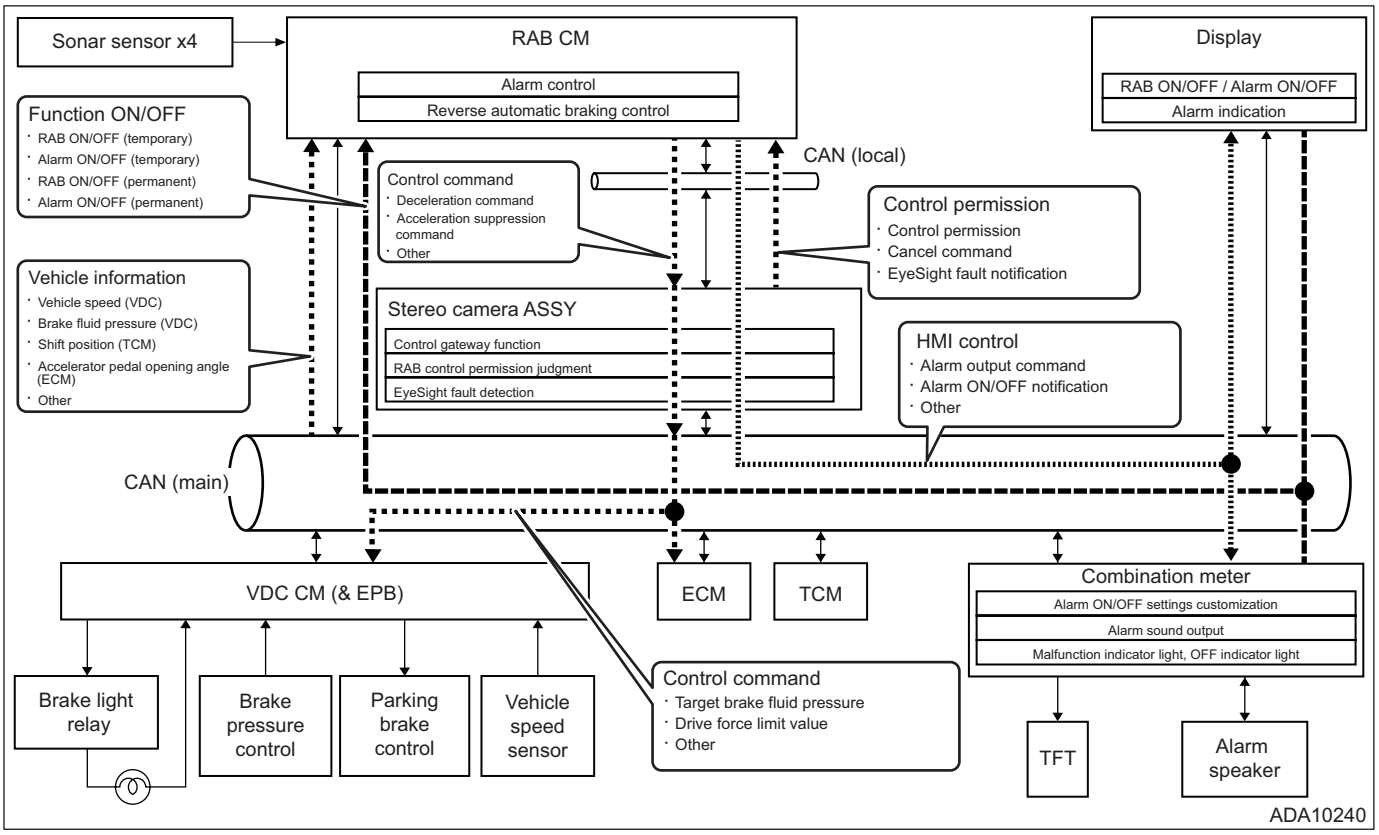

4. Electrical Component Location

A: LOCATION

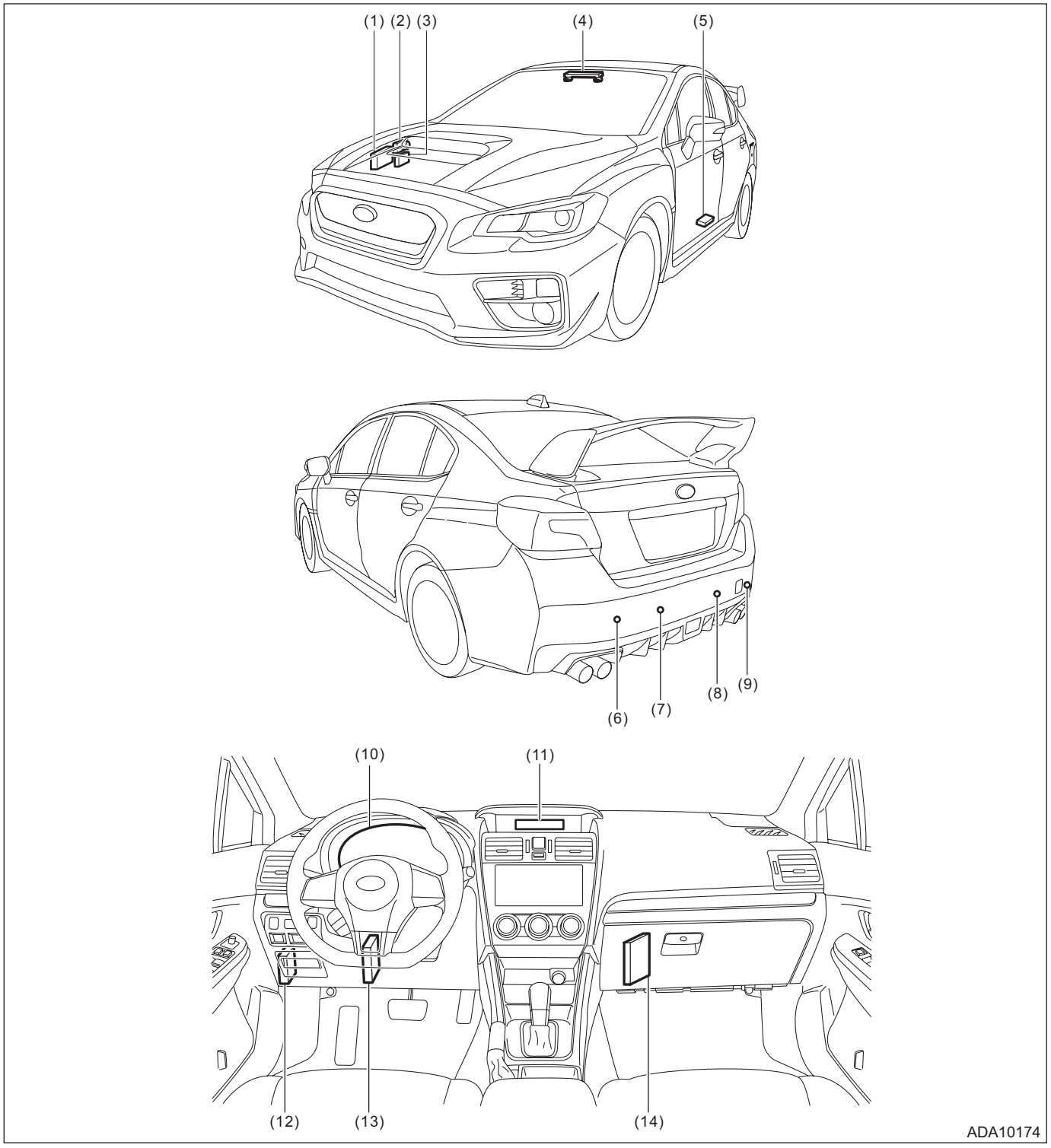

(1) Engine CM (engine type FA)
(2) VDC CM
(3) Power steering CM
(4) Stereo camera
(5) RAB CM
(6) Sonar sensor (left corner)
(7) Sonar sensor (left inner)
(8) Sonar sensor (right inner)
(9) Sonar sensor (right corner)
(10) Combination meter
(11) MFD
(12) Body integrated unit
(13) Transmission CM
(14) Engine CM

5. Control Module I/O Signal

A: ELECTRICAL SPECIFICATION

1. RAB CM

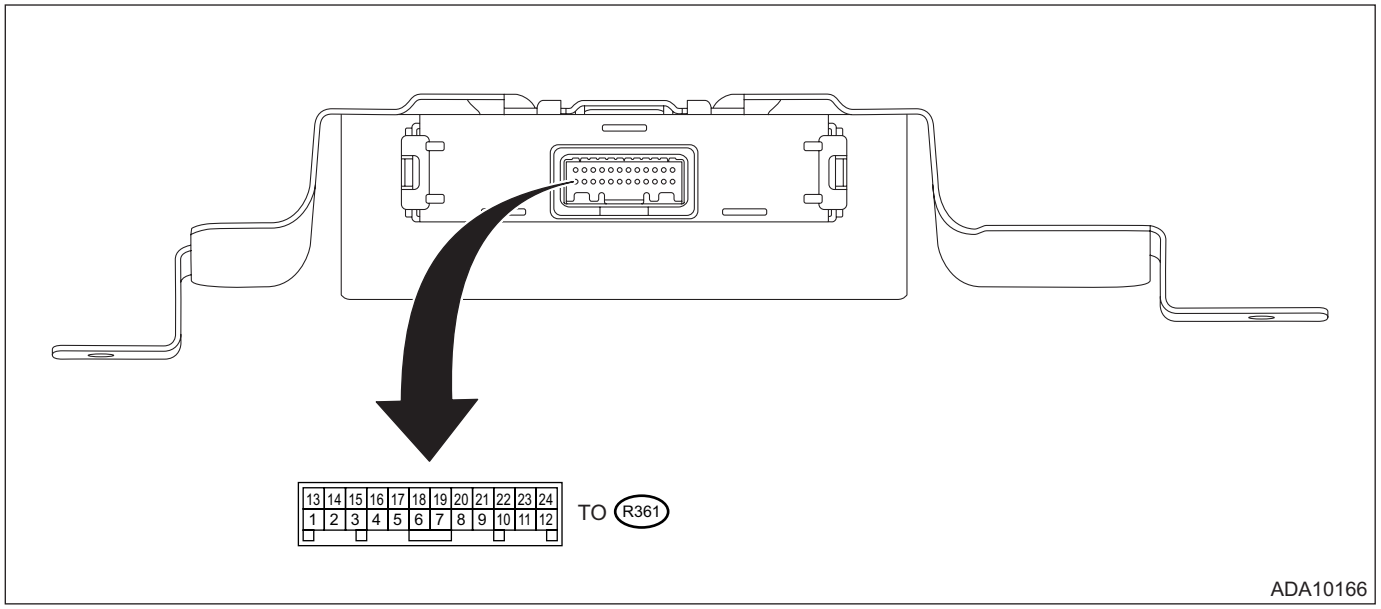

Terminal No.	Content	Measuring condition	Standard
(R361) No. 1 ←→ Chassis ground	Ignition power supply	Ignition switch ON	Battery voltage
(R361) No. 2 ←→ Chassis ground	Ground	Always	1 Ω or less
(R361) No. 3	Not used	—	—
(R361) No. 4	Main CAN-L	—	—
(R361) No. 5	Local CAN-H (stereo camera communication line)	—	—
(R361) No. 6	Not used	—	—
(R361) No. 7	Not used	—	—
(R361) No. 8	Sonar sensor communication line (left corner -)	—	—
(R361) No. 9	Sonar sensor communication line (right inner -)	—	—
(R361) No. 10	Not used	—	—
(R361) No. 11	Sonar sensor communication line (left inner +)	—	—
(R361) No. 12	Sonar sensor communication line (right corner +)	—	—
(R361) No. 13	Battery power supply	Always	Battery voltage
(R361) No. 14	Not used	—	—
(R361) No. 15	Not used	—	—
(R361) No. 16	Main CAN-H	—	—
(R361) No. 17	Not used	—	—
(R361) No. 18	Local CAN-L (stereo camera communication line)	—	—
(R361) No. 19	Not used	—	—
(R361) No. 20	Not used	—	—
(R361) No. 21	Sonar sensor communication line (left inner -)	—	—
(R361) No. 22	Sonar sensor communication line (right corner -)	—	—
(R361) No. 23	Sonar sensor communication line (left corner +)	—	—
(R361) No. 24	Sonar sensor communication line (right inner +)	—	—

6. Inspection Mode

A: PROCEDURE

It is possible to diagnose the DTC by performing the indicated inspection mode. After correcting the DTC, perform the inspection mode and make sure that the function is resumed correctly and the DTC is recorded.
1) Turn the ignition switch to ON, and wait for 6 seconds or more. (*1)
2) Confirm that the RAB warning light (RAB malfunction indicator light) of MID in the combination meter is off.
3) Read the DTC and check that the DTC is not displayed. (*2)
*1: Even with normal condition, “RAB warning light (RAB OFF indicator light)” illuminates for 6 seconds after turning the ignition switch to ON, and then goes off after 6 seconds.
*2: Perform all DTC diagnosis within 3 seconds after the ignition switch is turned to ON. It is not necessary to shift the gear in the R range to operate the function.

7. Warning Light Illumination Pattern

A: NOTE

- When the Reverse Automatic Braking is error

“RAB” illuminates in MID in the combination meter.

- When the Reverse Automatic Braking is stopped temporarily

“RAB OFF” illuminates in MID in the combination meter.

NOTE:
Even with normal condition, “RAB warning light (RAB OFF indicator light)” illuminates for 6 seconds after turning the ignition switch to ON, and then goes off after 6 seconds.

8. Diagnostic Procedure for Subaru Select Monitor Communication

A: INSPECTION

1. COMMUNICATION FOR INITIALIZING IMPOSSIBLE

Trouble symptom:
Communication is not possible with «Reverse Automatic Braking».
Detecting condition:
- Defective harness connector
- Power supply circuit malfunction
- Defective RAB CM
- Defective CAN communication circuit
- Defective Subaru Select Monitor

Wiring diagram:
Reverse Automatic Braking <Ref. to WI-329, Reverse Automatic Braking.>

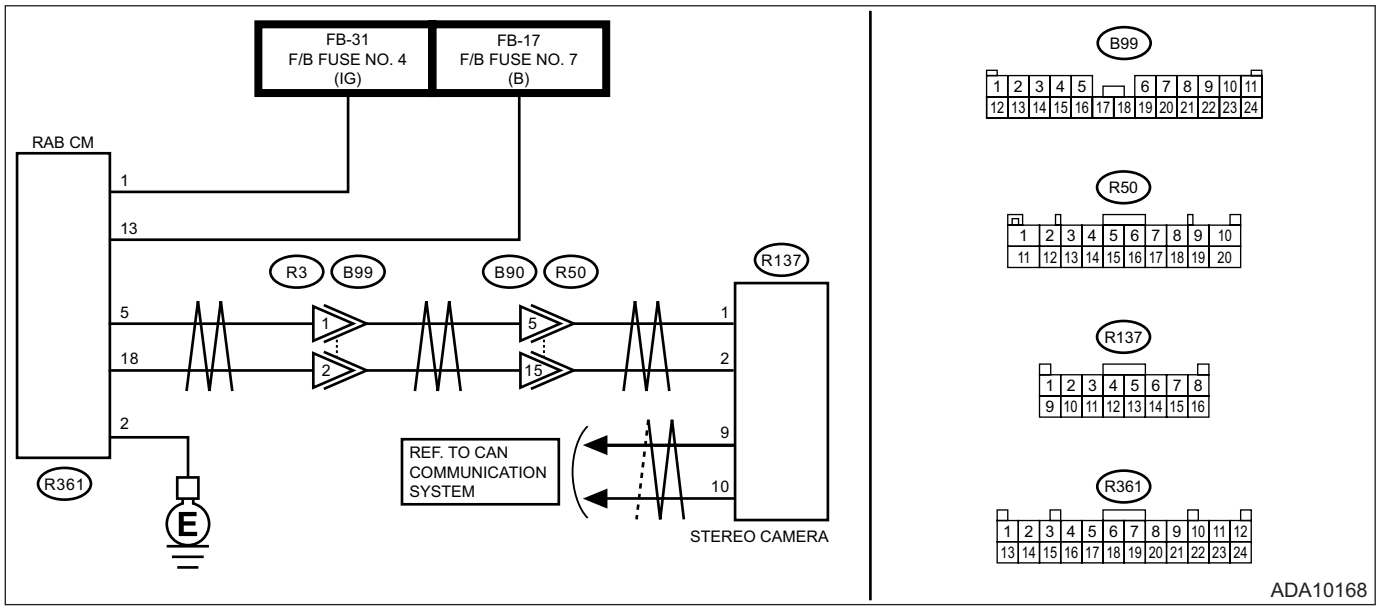

Step		Check	Yes	No
1	**CHECK OUTPUT SIGNAL OF ECM.** 1) Turn the ignition switch to OFF. 2) Check the fuse.	Is the check result OK?	Go to step **2**.	Replace the fuse. If the replaced fuse has blown out immediately, repair the short circuit to ground in harness between fuse and RAB CM.
2	**CHECK POWER SUPPLY CIRCUIT.** 1) Disconnect the RAB CM connector. 2) Turn the ignition switch to ON. 3) Using a tester, measure the voltage between the RAB CM connector and chassis ground. ***Connector & terminal*** ***(R361) No. 1 (+) — Chassis ground (–):*** ***(R361) No. 13 (+) — Chassis ground (–):***	Is the voltage 10 V or more?	Go to step **3**.	Repair the open circuit in the harness between fuse and RAB CM connector.

	Step	Check	Yes	No
3	**CHECK GROUND CIRCUIT.** 1) Turn the ignition switch to OFF. 2) Using a tester, measure the resistance between the RAB CM connector and chassis ground. ***Connector & terminal*** ***(R361) No. 2 — Chassis ground:***	Is the resistance less than 1 Ω?	Go to step **4**.	Repair the open circuit of harness between RAB CM connector and chassis ground.
4	**CHECK LAN SYSTEM.** 1) Connect the RAB CM connector. 2) Inspect LAN system. <Ref. to LAN(diag)-2, PROCEDURE, Basic Diagnostic Procedure.>	Is the check result OK?	Go to step **5**.	Perform the inspection according to the diagnosis for LAN system.
5	**CHECK SUBARU SELECT MONITOR.** Connect the Subaru Select Monitor to another vehicle.	Is the communication possible with the vehicle?	Go to step **6**.	Replace or repair the Subaru Select Monitor.
6	**CHECK RAB CM.** Communicate with «Reverse Automatic Braking».	Is communication possible?	The circuit has returned to a normal condition at this time. Reproduce the failure, and then perform the diagnosis again. NOTE: In this case, temporary poor contact of connector, temporary open or short circuit of harness may be the cause.	Replace the RAB CM. <Ref. to RAB-6, Reverse Automatic Braking CM.>

9. Read Diagnostic Trouble Code (DTC)

A: OPERATION

1) On «Start» display, select «Diagnosis».
2) On «Vehicle selection» display, input the target vehicle information and select «Confirmed».
3) On «Main Menu» display, select «Each System».
4) On «Select System» display, select «Reverse Automatic Braking» and then select «Enter».
5) On «Select Function» display, select «DTC».

NOTE:
- For detailed operation procedures, refer to “Application help”.
- •For details concerning DTC, refer to “List of Diagnostic Trouble Code (DTC)”. <Ref. to RAB(diag)-23, List of Diagnostic Trouble Code (DTC).>

10.Clear Memory Mode

A: OPERATION

1) On «Start» display, select «Diagnosis».
2) On «Vehicle selection» display, input the target vehicle information and select «Confirmed».
3) On «Main Menu» display, select «Each System».
4) On «Select System» display, select «Reverse Automatic Braking» and then select «Enter».
5) On «Select Function» display, select «DTC».
6) On «DTC» display, select «Clear Memory».

NOTE:
For detailed operation procedures, refer to “Application help”.

11.Read Current Data

A: OPERATION

1) On «Start» display, select «Diagnosis».
2) On «Vehicle selection» display, input the target vehicle information and select «Confirmed».
3) On «Main Menu» display, select «Each System».
4) On «Select System» display, select «Reverse Automatic Braking» and then select «Enter».
5) On «Select Function» display, select «Data Monitor».

NOTE:
For detailed operation procedures, refer to “Application help”.

B: LIST

Items to be displayed	Content	Standard	Note (unit)
Battery Voltage	System information.	0 — 24.5	V
Ignition Voltage	System information.	0 — 17.85	V
Sonar	System information.	0 — 24.5	V
RAB Detection Distance(Coordinate:X)	Sonar sensor detection information.	0 — 510	cm
RAB Detection Distance(Coordinate:Y)	Sonar sensor detection information.	–255 — 254	cm
RR Sonar Detection Distance	Sonar sensor detection information.	0 — 510	cm
RRC Sonar Detection Distance	Sonar sensor detection information.	0 — 510	cm
RL Sonar Detection Distance	Sonar sensor detection information.	0 — 510	cm
RLC Sonar Detection Distance	Sonar sensor detection information.	0 — 510	cm
Drive Wheel Average Speed	Vehicle information.	0 — 3686.4	km/h
Wheel Speed for Fail Safe	Vehicle information.	0 — 3686.4	km/h
Vehicle Height Sensor Voltage	Vehicle information.	0 — 5.1	V
Ambient Air Temperature	Vehicle information.	–40 — 87	°C
Shift Position	Vehicle information.	—	—
EPB Equipment Information	Operation instruction from EyeSight.	• Vehicle without EPB • Vehicle with EPB	—
EyeSight Initialization(RAB)	Operation instruction from EyeSight.	• During initialization of EyeSight • Initialization completion	—
Recession Control Permission(RAB)	Operation instruction from EyeSight.	• Can not Reverse Control • Permit	—
RAB Fail Indication(EyeSight → RAB)	Operation instruction from EyeSight.	• No failure • Fail	—
RAB OFF Indication(EyeSight → RAB)	Operation instruction from EyeSight.	• RAB ON • RAB Force OFF	—
RAB Acceleration Suppression Control State(EyeSight → RAB)	Operation instruction from EyeSight.	• No Control • Precom • Recruitment	—
RAB Brake Control State(EyeSight → RAB)	Operation instruction from EyeSight.	• No Control • Precompression • Brake Control In • Stop holding • Gradual Decrease	—
RAB Precompression Control	Braking control instruction from RAB CM.	• Not performed • Yes	—

Items to be displayed	Content	Standard	Note (unit)
RAB Acceleration Suppression Control	Braking control instruction from RAB CM.	• Not performed • Yes	—
Recession Pre-Collision Brake Control	Braking control instruction from RAB CM.	• Not performed • Run the Reverse Pre-Crash	—
RAB Function OFF Information	HMI control instruction from RAB CM.	• ON • OFF	—
Audible Alarm function OFF Information(RAB)	HMI control instruction from RAB CM.	• ON • OFF	—
Sonar System HALT(RAB)	HMI control instruction from RAB CM.	• Normal • Extraneous Matter on Sonar • Detection Abnormality	—
RAB Sonar System Failure(EyeSight → RAB)	HMI control instruction from RAB CM.	• Normal • Sonar Failure • System Failure	—
RAB Function pause Do Not Disturb	HMI control instruction from RAB CM.	• Ready • Do Not Disturb	—
RAB Alarm pause Do Not Disturb	HMI control instruction from RAB CM.	• Ready • Do Not Disturb	—
Rear Sonar Distance Alarm Information (Rear_Center)	HMI control instruction from RAB CM.	• No Obstacle • Far • Middle • Short • Closest Approach	—
Rear Sonar Distance Alarm Information (Rear Right Corner)	HMI control instruction from RAB CM.	• No Obstacle • Far • Middle • Short • Closest Approach	—
Rear Sonar Distance Alarm Information (Rear Left Corner)	HMI control instruction from RAB CM.	• No Obstacle • Far • Middle • Short • Closest Approach	—
RAB Alarm Level	HMI control instruction from RAB CM.	• OFF • LEVEL2 • LEVEL3 • LEVEL4	—
RAB Alarm Interrupt Display Instruction	HMI control instruction from RAB CM.	• No display • Backward Note • Encourage Stepping Brake	—
RAB Function Pause Information(MFD)	HMI settings instruction from MFD/navigation.	• ON • OFF	—
RAB Alarm Pause Information(MFD)	HMI settings instruction from MFD/navigation.	• ON • OFF	—
RAB Function Pause Information Change Request(MFD)	HMI settings instruction from MFD/navigation.	• ON • OFF	—
RAB Function ON/OFF Information(MET)	HMI settings instruction from the combination meter.	• ON • OFF	—
RAB Alarm ON/OFF Information(MET)	HMI settings instruction from the combination meter.	• ON • OFF	—
RAB Function ON/OFF Information Change Request(MET)	HMI settings instruction from the combination meter.	• ON • OFF	—

12.Freeze Frame Data

A: OPERATION

1) On «Start» display, select «Diagnosis».
2) On «Vehicle selection» display, input the target vehicle information and select «Confirmed».
3) On «Main Menu» display, select «Each System».
4) On «Select System» display, select «Reverse Automatic Braking» and then select «Enter».
5) On «Select Function» display, select «DTC».
6) On «DTC» display, select «FFD».

NOTE:
- For detailed operation procedures, refer to “Application help”.
- The system conditions when malfunction occurred (when DTC code was confirmed) can be stored up to 15 conditions.

B: LIST

Items to be displayed	Content	Standard	Note (unit)
Trip Count	Time stamp information. <Ref. to LAN(diag)-6, TIME STAMP, CAUTION, General Description.>	—	times
Count		—	—
Time Count [msec]		—	ms
Battery Voltage	System information.	0 — 24.5	V
Ignition Voltage	System information.	0 — 17.85	V
Sonar	System information.	0 — 24.5	V
RAB Operation Times	System information.	0 — 255	Times (within a single IGN_ON)
RAB Cancel Times	System information.	0 — 255	Times (within a single IGN_ON)
Stop Hold Cancel Times	System information.	0 — 255	Times (within a single IGN_ON)
FAIL times	System information.	0 — 255	Times (within a single IGN_ON)
HALT times	System information.	0 — 255	Times (within a single IGN_ON)
RR Sonar Sensitivity	System information.	–128 — 127	—
RRC Sonar Sensitivity	System information.	–128 — 127	—
RL Sonar Sensitivity	System information.	–128 — 127	—
RL Sonar Sensitivity	System information.	–128 — 127	—
RAB Detection Distance(Coordinate:X)	Sonar sensor detection information.	0 — 510	cm
RAB Detection Distance(Coordinate:Y)	Sonar sensor detection information.	–255 — 254	cm
RR Sonar Detection Distance	Sonar sensor detection information.	0 — 510	cm
RRC Sonar Detection Distance	Sonar sensor detection information.	0 — 510	cm
RL Sonar Detection Distance	Sonar sensor detection information.	0 — 510	cm
RLC Sonar Detection Distance	Sonar sensor detection information.	0 — 510	cm
Drive Wheel Average Speed	Vehicle information.	0 — 3686.4	km/h
Wheel Speed for Fail Safe	Vehicle information.	0 — 3686.4	km/h
Driver Brake Detection	Vehicle information.	• ON • OFF	—
Vehicle Height Sensor Voltage	Vehicle information.	0 — 5.1	V
Ambient Air Temperature	Vehicle information.	–40 — 87	°C
Shift Position	Vehicle information.	—	—
EPB Equipment Information	Operation instruction from EyeSight.	• Vehicle without EPB • Vehicle with EPB	—

Items to be displayed	Content	Standard	Note (unit)
EyeSight Initialization(RAB)	Operation instruction from EyeSight.	• During initialization of EyeSight • Initialization completion	—
Recession Control Permission(RAB)	Operation instruction from EyeSight.	• Can not Reverse Control • Permit	—
RAB Fail Indication(EyeSight → RAB)	Operation instruction from EyeSight.	• No failure • Fail	—
RAB OFF Indication(EyeSight → RAB)	Operation instruction from EyeSight.	• RAB ON • RAB Force OFF	—
RAB Acceleration Suppression Control State(EyeSight → RAB)	Operation instruction from EyeSight.	• No Control • Precom • Recruitment	—
RAB Brake Control State(EyeSight → RAB)	Operation instruction from EyeSight.	• No Control • Precompression • Brake Control In • Stop holding • Gradual Decrease	—
RAB Precompression Control	Braking control instruction from RAB CM.	• Not performed • Yes	—
RAB Acceleration Suppression Value	Braking control instruction from RAB CM.	0 — 2.55	G
RAB Acceleration Suppression Control	Braking control instruction from RAB CM.	• Not performed • Yes	—
Deceleration Braking Instruction	Braking control instruction from RAB CM.	0 — 2.55	—
Recession Pre-Collision Brake Control	Braking control instruction from RAB CM.	• Not performed • Perform	—
RAB Function OFF Information	HMI control instruction from RAB CM	• ON • OFF	—
Audible Alarm function OFF Information(RAB)	HMI control instruction from RAB CM	• ON • OFF	—
Sonar System HALT(RAB)	HMI control instruction from RAB CM	• Normal • Extraneous Matter on Sonar • Detection Abnormality	—
RAB Sonar System Failure(EyeSight → RAB)	HMI control instruction from RAB CM	• Normal • Sonar Failure • System Failure	—
RAB Function pause Do Not Disturb	HMI control instruction from RAB CM	• Ready • Do Not Disturb	—
RAB Alarm pause Do Not Disturb	HMI control instruction from RAB CM	• Ready • Do Not Disturb	—
Rear Sonar Distance Alarm Information (Rear_Center)	HMI control instruction from RAB CM	• No Obstacle • Far • Middle • Short • Closest Approach	—
Rear Sonar Distance Alarm Information (Rear Right Corner)	HMI control instruction from RAB CM	• No Obstacle • Far • Middle • Short	—
Rear Sonar Distance Alarm Information (Rear Left Corner)	HMI control instruction from RAB CM	• No Obstacle • Far • Middle • Short	—

Items to be displayed	Content	Standard	Note (unit)
RAB Alarm Level	HMI control instruction from RAB CM	• OFF • LEVEL1 • LEVEL2 • LEVEL3 • LEVEL4	—
RAB Alarm Interrupt Display Instruction	HMI control instruction from RAB CM	• No display • Backward Note • Encourage Stepping Brake	—
RAB Function Pause Information(MFD)	HMI settings instruction from MFD/navigation	• OFF • ON	—
RAB Alarm Pause Information(MFD)	HMI settings instruction from MFD/navigation	• OFF • ON	—
RAB Function Pause Information Change Request(MFD)	HMI settings instruction from MFD/navigation	• OFF • ON	—
RAB Function ON/OFF Information(MET)	HMI settings instruction from the combination meter	• OFF • ON	—
RAB Alarm ON/OFF Information(MET)	HMI settings instruction from the combination meter	• OFF • ON	—
RAB Function ON/OFF Information Change Request(MET)	HMI settings instruction from the combination meter	• OFF • ON	—
DTC Sub Code FS A001	Information for failure analysis	• 0 • 1	—
DTC Sub Code FS A002	Information for failure analysis	• 0 • 1	—
DTC Sub Code FS A003	Information for failure analysis	• 0 • 1	—
DTC Sub Code FS A004	Information for failure analysis	• 0 • 1	—
DTC Sub Code FS A005	Information for failure analysis	• 0 • 1	—
DTC Sub Code FS A006	Information for failure analysis	• 0 • 1	—
DTC Sub Code FS A007	Information for failure analysis	• 0 • 1	—
DTC Sub Code FS A008	Information for failure analysis	• 0 • 1	—
DTC Sub Code FS A009	Information for failure analysis	• 0 • 1	—
DTC Sub Code FS A010	Information for failure analysis	• 0 • 1	—
DTC Sub Code FS A011	Information for failure analysis	• 0 • 1	—
DTC Sub Code FS A012	Information for failure analysis	• 0 • 1	—
DTC Sub Code FS A013	Information for failure analysis	• 0 • 1	—
DTC Sub Code FS A014	Information for failure analysis	• 0 • 1	—
DTC Sub Code FS A015	Information for failure analysis	• 0 • 1	—
DTC Sub Code FS A016	Information for failure analysis	• 0 • 1	—
DTC Sub Code FS A017 Count	Information for failure analysis	—	—

Items to be displayed	Content	Standard	Note (unit)
DTC Sub Code FS A018 Count	Information for failure analysis	—	—
RRC <A-01> Count	Information for failure analysis	—	—
RRC <A-02> Count	Information for failure analysis	—	—
RRC <A-03> Count	Information for failure analysis	—	—
RRC <A-04> Count	Information for failure analysis	—	—
RRC <A-05> Count	Information for failure analysis	—	—
RRC <B-01> Count	Information for failure analysis	—	—
RRC <B-02> Count	Information for failure analysis	—	—
RRC <B-03> Count	Information for failure analysis	—	—
RRC <B-04> Count	Information for failure analysis	—	—
RRC <B-05> Count	Information for failure analysis	—	—
RRC <C-01> Count	Information for failure analysis	—	—
RRC <C-02> Count	Information for failure analysis	—	—
RRC <C-03> Count	Information for failure analysis	—	—
RRC <C-04> Count	Information for failure analysis	—	—
RRC <C-05> Count	Information for failure analysis	—	—
RRC <D-02> Count	Information for failure analysis	—	—
RRC <D-05> Count	Information for failure analysis	—	—
RLC <A-01> Count	Information for failure analysis	—	—
RLC <A-02> Count	Information for failure analysis	—	—
RLC <A-03> Count	Information for failure analysis	—	—
RLC <A-04> Count	Information for failure analysis	—	—
RLC <A-05> Count	Information for failure analysis	—	—
RLC <B-01> Count	Information for failure analysis	—	—
RLC <B-02> Count	Information for failure analysis	—	—
RLC <B-03> Count	Information for failure analysis	—	—
RLC <B-04> Count	Information for failure analysis	—	—
RLC <B-05> Count	Information for failure analysis	—	—
RLC <C-01> Count	Information for failure analysis	—	—
RLC <C-02> Count	Information for failure analysis	—	—
RLC <C-03> Count	Information for failure analysis	—	—
RLC <C-04> Count	Information for failure analysis	—	—
RLC <C-05> Count	Information for failure analysis	—	—
RLC <D-02> Count	Information for failure analysis	—	—
RLC <D-05> Count	Information for failure analysis	—	—
RR <A-01> Count	Information for failure analysis	—	—
RR <A-02> Count	Information for failure analysis	—	—
RR <A-03> Count	Information for failure analysis	—	—
RR <A-04> Count	Information for failure analysis	—	—
RR <A-05> Count	Information for failure analysis	—	—
RR <B-01> Count	Information for failure analysis	—	—
RR <B-02> Count	Information for failure analysis	—	—
RR <B-03> Count	Information for failure analysis	—	—
RR <B-04> Count	Information for failure analysis	—	—
RR <B-05> Count	Information for failure analysis	—	—
RR <C-01> Count	Information for failure analysis	—	—
RR <C-02> Count	Information for failure analysis	—	—
RR <C-03> Count	Information for failure analysis	—	—
RR <C-04> Count	Information for failure analysis	—	—

Items to be displayed	Content	Standard	Note (unit)
RR <C-05> Count	Information for failure analysis	—	—
RR <D-02> Count	Information for failure analysis	—	—
RR <D-05> Count	Information for failure analysis	—	—
RL <A-01> Count	Information for failure analysis	—	—
RL <A-02> Count	Information for failure analysis	—	—
RL <A-03> Count	Information for failure analysis	—	—
RL <A-04> Count	Information for failure analysis	—	—
RL <A-05> Count	Information for failure analysis	—	—
RL <B-01> Count	Information for failure analysis	—	—
RL <B-02> Count	Information for failure analysis	—	—
RL <B-03> Count	Information for failure analysis	—	—
RL <B-04> Count	Information for failure analysis	—	—
RL <B-05> Count	Information for failure analysis	—	—
RL <C-01> Count	Information for failure analysis	—	—
RL <C-02> Count	Information for failure analysis	—	—
RL <C-03> Count	Information for failure analysis	—	—
RL <C-04> Count	Information for failure analysis	—	—
RL <C-05> Count	Information for failure analysis	—	—
RL <D-02> Count	Information for failure analysis	—	—
RL <D-05> Count	Information for failure analysis	—	—

13.Customize

A: OPERATION

1) On «Start» display, select «Diagnosis».
2) On «Vehicle selection» display, input the vehicle information and select «Confirmed».
3) On «Main Menu» display, select «Each System».
4) On «Select System» display, select «Reverse Automatic Braking» and then select «Enter».
5) On «Select Function» display, select «Customize» and then select «Enter».

NOTE:
For detailed operation procedures, refer to “Application help”.

B: LIST

Customize item	Initial setting value	Setting value	Content
RAB Function ON/OFF Information(SSM)	ON	ON OFF	ON/OFF of the RAB function can be selected.
RAB Alarm ON/OFF Information(SSM)	ON	ON OFF	ON/OFF of the alarm sound can be selected.

14.Work Support

A: OPERATION

1) On «Start» display, select «Diagnosis».
2) On «Vehicle selection» display, input the target vehicle information and select «Confirmed».
3) On «Main Menu» display, select «Each System».
4) On «Select System» display, select «Reverse Automatic Braking» and then select «Enter».
5) On «Select Function» display, select «Work Support» and then select «Enter».

NOTE:
For detailed operation procedures, refer to “Application help”.

B: LIST

Work support item	Content
RAB Operation Record Data Save	When ignition switch ON counts of “Latest”, “1 block before”, “2 blocks before”... “4 blocks before” all shows “0”, it can be judges that there is no data. The display shows the latest data and the data in the previous 4 times in the order of their occurrence. Blue letter means that the data exists, and black letter means that there is no data. Select the blue letters and read out the details.
ECU Initialize	RAB CM is reset to the factory settings.
ECU Parts Number Display	RAB CM part number is displayed.
Software Information Display	Software information is displayed

Sensitivity of each sonar sensor can NOT be adjusted.

15.List of Diagnostic Trouble Code (DTC)

A: LIST

DTC	Item	Reference
B2C00	SONAR CONTROL MODULE CIRCUIT	<Ref. to RAB(diag)-26, DTC B2C00 SONAR CONTROL MODULE CIRCUIT, Diagnostic Procedure with Diagnostic Trouble Code (DTC).>
B2C01	RR SONAR CONTROL MODULE CIRCUIT	<Ref. to RAB(diag)-26, DTC B2C01 RR SONAR CONTROL MODULE CIRCUIT, Diagnostic Procedure with Diagnostic Trouble Code (DTC).>
B2C02	RRC SONAR CONTROL MODULE CIRCUIT	<Ref. to RAB(diag)-26, DTC B2C02 RRC SONAR CONTROL MODULE CIRCUIT, Diagnostic Procedure with Diagnostic Trouble Code (DTC).>
B2C03	RL SONAR CONTROL MODULE CIRCUIT	<Ref. to RAB(diag)-27, DTC B2C03 RL SONAR CONTROL MODULE CIRCUIT, Diagnostic Procedure with Diagnostic Trouble Code (DTC).>
B2C04	RLC SONAR CONTROL MODULE CIRCUIT	<Ref. to RAB(diag)-27, DTC B2C04 RLC SONAR CONTROL MODULE CIRCUIT, Diagnostic Procedure with Diagnostic Trouble Code (DTC).>
B2C05	SONAR CONTROL MODULE POWER SUPPLY	<Ref. to RAB(diag)-28, DTC B2C05 SONAR CONTROL MODULE POWER SUPPLY, Diagnostic Procedure with Diagnostic Trouble Code (DTC).>
B2C06	RR SONAR SENSOR CIRCUIT / NO SIGNAL	<Ref. to RAB(diag)-29, DTC B2C06 RR SONAR SENSOR CIRCUIT / NO SIGNAL, Diagnostic Procedure with Diagnostic Trouble Code (DTC).>
B2C07	RR SONAR SENSOR / SONAR CONTROL MODULE CIRCUIT	<Ref. to RAB(diag)-30, DTC B2C07 RR SONAR SENSOR / SONAR CONTROL MODULE CIRCUIT, Diagnostic Procedure with Diagnostic Trouble Code (DTC).>
B2C08	RRC SONAR SENSOR CIRCUIT / NO SIGNAL	<Ref. to RAB(diag)-31, DTC B2C08 RRC SONAR SENSOR CIRCUIT / NO SIGNAL, Diagnostic Procedure with Diagnostic Trouble Code (DTC).>
B2C09	RRC SONAR SENSOR / SONAR CONTROL MODULE CIRCUIT	<Ref. to RAB(diag)-32, DTC B2C09 RRC SONAR SENSOR / SONAR CONTROL MODULE CIRCUIT, Diagnostic Procedure with Diagnostic Trouble Code (DTC).>
B2C0A	RL SONAR SENSOR CIRCUIT / NO SIGNAL	<Ref. to RAB(diag)-33, DTC B2C0A RL SONAR SENSOR CIRCUIT / NO SIGNAL, Diagnostic Procedure with Diagnostic Trouble Code (DTC).>
B2C0B	RL SONAR SENSOR / SONAR CONTROL MODULE CIRCUIT	<Ref. to RAB(diag)-34, DTC B2C0B RL SONAR SENSOR / SONAR CONTROL MODULE CIRCUIT, Diagnostic Procedure with Diagnostic Trouble Code (DTC).>
B2C0C	RLC SONAR SENSOR CIRCUIT / NO SIGNAL	<Ref. to RAB(diag)-35, DTC B2C0C RLC SONAR SENSOR CIRCUIT / NO SIGNAL, Diagnostic Procedure with Diagnostic Trouble Code (DTC).>
B2C0D	RLC SONAR SENSOR / SONAR CONTROL MODULE CIRCUIT	<Ref. to RAB(diag)-36, DTC B2C0D RLC SONAR SENSOR / SONAR CONTROL MODULE CIRCUIT, Diagnostic Procedure with Diagnostic Trouble Code (DTC).>
B2C0E	RR SONAR HARNESS HIGH	<Ref. to RAB(diag)-37, DTC B2C0E RR SONAR HARNESS HIGH, Diagnostic Procedure with Diagnostic Trouble Code (DTC).>
B2C0F	RR SONAR HARNESS LOW	<Ref. to RAB(diag)-39, DTC B2C0F RR SONAR HARNESS LOW, Diagnostic Procedure with Diagnostic Trouble Code (DTC).>
B2C10	RRC SONAR HARNESS HIGH	<Ref. to RAB(diag)-41, DTC B2C10 RRC SONAR HARNESS HIGH, Diagnostic Procedure with Diagnostic Trouble Code (DTC).>
B2C11	RRC SONAR HARNESS LOW	<Ref. to RAB(diag)-43, DTC B2C11 RRC SONAR HARNESS LOW, Diagnostic Procedure with Diagnostic Trouble Code (DTC).>
B2C12	RL SONAR HARNESS HIGH	<Ref. to RAB(diag)-45, DTC B2C12 RL SONAR HARNESS HIGH, Diagnostic Procedure with Diagnostic Trouble Code (DTC).>

DTC	Item	Reference
B2C13	RL SONAR HARNESS LOW	<Ref. to RAB(diag)-47, DTC B2C13 RL SONAR HARNESS LOW, Diagnostic Procedure with Diagnostic Trouble Code (DTC).>
B2C14	RLC SONAR HARNESS HIGH	<Ref. to RAB(diag)-49, DTC B2C14 RLC SONAR HARNESS HIGH, Diagnostic Procedure with Diagnostic Trouble Code (DTC).>
B2C15	RLC SONAR HARNESS LOW	<Ref. to RAB(diag)-51, DTC B2C15 RLC SONAR HARNESS LOW, Diagnostic Procedure with Diagnostic Trouble Code (DTC).>
B2C16	RRC SONAR HARNESS HIGH / RRC SONAR CONTROL MODULE CIRCUIT	<Ref. to RAB(diag)-52, DTC B2C16 RRC SONAR HARNESS HIGH / RRC SONAR CONTROL MODULE CIRCUIT, Diagnostic Procedure with Diagnostic Trouble Code (DTC).>
B2C17	RLC SONAR HARNESS HIGH / RLC SONAR CONTROL MODULE CIRCUIT	<Ref. to RAB(diag)-52, DTC B2C17 RLC SONAR HARNESS HIGH / RLC SONAR CONTROL MODULE CIRCUIT, Diagnostic Procedure with Diagnostic Trouble Code (DTC).>
B2C18	RR SONAR HARNESS HIGH / RR SONAR CONTROL MODULE CIRCUIT	<Ref. to RAB(diag)-52, DTC B2C18 RR SONAR HARNESS HIGH / RR SONAR CONTROL MODULE CIRCUIT, Diagnostic Procedure with Diagnostic Trouble Code (DTC).>
B2C19	RL SONAR HARNESS HIGH / RL SONAR CONTROL MODULE CIRCUIT	<Ref. to RAB(diag)-52, DTC B2C19 RL SONAR HARNESS HIGH / RL SONAR CONTROL MODULE CIRCUIT, Diagnostic Procedure with Diagnostic Trouble Code (DTC).>
B2C1A	RRC SONAR SENSOR	<Ref. to RAB(diag)-53, DTC B2C1A RRC SONAR SENSOR, Diagnostic Procedure with Diagnostic Trouble Code (DTC).>
B2C1B	RLC SONAR SENSOR	<Ref. to RAB(diag)-54, DTC B2C1B RLC SONAR SENSOR, Diagnostic Procedure with Diagnostic Trouble Code (DTC).>
B2C1C	RR SONAR SENSOR	<Ref. to RAB(diag)-55, DTC B2C1C RR SONAR SENSOR, Diagnostic Procedure with Diagnostic Trouble Code (DTC).>
B2C1D	RL SONAR SENSOR	<Ref. to RAB(diag)-56, DTC B2C1D RL SONAR SENSOR, Diagnostic Procedure with Diagnostic Trouble Code (DTC).>
B2C1E	RRC SONAR HARNESS LOW / RRC SONAR CONTROL MODULE CIRCUIT	<Ref. to RAB(diag)-57, DTC B2C1E RRC SONAR HARNESS LOW / RRC SONAR CONTROL MODULE CIRCUIT, Diagnostic Procedure with Diagnostic Trouble Code (DTC).>
B2C1F	RLC SONAR HARNESS LOW / RLC SONAR CONTROL MODULE CIRCUIT	<Ref. to RAB(diag)-57, DTC B2C1F RLC SONAR HARNESS LOW / RLC SONAR CONTROL MODULE CIRCUIT, Diagnostic Procedure with Diagnostic Trouble Code (DTC).>
B2C20	RR SONAR HARNESS LOW / RR SONAR CONTROL MODULE CIRCUIT	<Ref. to RAB(diag)-57, DTC B2C20 RR SONAR HARNESS LOW / RR SONAR CONTROL MODULE CIRCUIT, Diagnostic Procedure with Diagnostic Trouble Code (DTC).>
B2C21	RL SONAR HARNESS LOW / RL SONAR CONTROL MODULE CIRCUIT	<Ref. to RAB(diag)-57, DTC B2C21 RL SONAR HARNESS LOW / RL SONAR CONTROL MODULE CIRCUIT, Diagnostic Procedure with Diagnostic Trouble Code (DTC).>
B2C22	EyeSight SYSTEM	<Ref. to RAB(diag)-57, DTC B2C22 EyeSight SYSTEM, Diagnostic Procedure with Diagnostic Trouble Code (DTC).>
U0077	LIN COMMUNICATION BUS "ECM/PCM" OFF	<Ref. to RAB(diag)-58, DTC U0077 LIN COMMUNICATION BUS "ECM/PCM" OFF, Diagnostic Procedure with Diagnostic Trouble Code (DTC).>
U0100	LOST COMMUNICATION WITH ECM/PCM “A”	<Ref. to RAB(diag)-58, DTC U0100 LOST COMMUNICATION WITH ECM/PCM “A”, Diagnostic Procedure with Diagnostic Trouble Code (DTC).>
U0101	LOST COMMUNICATION WITH TCM	<Ref. to RAB(diag)-58, DTC U0101 LOST COMMUNICATION WITH TCM, Diagnostic Procedure with Diagnostic Trouble Code (DTC).>
U0122	LOST COMMUNICATION WITH VEHICLE DYNAMICS CONTROL MODULE	<Ref. to RAB(diag)-58, DTC U0122 LOST COMMUNICATION WITH VEHICLE DYNAMICS CONTROL MODULE, Diagnostic Procedure with Diagnostic Trouble Code (DTC).>
U0128	LOST COMMUNICATION WITH PARK BRAKE CONTROL MODULE	<Ref. to RAB(diag)-58, DTC U0128 LOST COMMUNICATION WITH PARK BRAKE CONTROL MODULE, Diagnostic Procedure with Diagnostic Trouble Code (DTC).>

DTC	Item	Reference
U0140	LOST COMMUNICATION WITH BODY CONTROL MODULE	<Ref. to RAB(diag)-58, DTC U0140 LOST COMMUNICATION WITH BODY CONTROL MODULE, Diagnostic Procedure with Diagnostic Trouble Code (DTC).>
U0155	LOST COMMUNICATION WITH INSTRUMENT PANEL CLUSTER (IPC) CONTROL MODULE	<Ref. to RAB(diag)-58, DTC U0155 LOST COMMUNICATION WITH INSTRUMENT PANEL CLUSTER (IPC) CONTROL MODULE, Diagnostic Procedure with Diagnostic Trouble Code (DTC).>
U0156	LOST COMMUNICATION WITH INFORMATION CENTER "A"	<Ref. to RAB(diag)-58, DTC U0156 LOST COMMUNICATION WITH INFORMATION CENTER "A", Diagnostic Procedure with Diagnostic Trouble Code (DTC).>
U0181	LOST COMMUNICATION WITH HEADLAMP LEVELING CONTROL MODULE	<Ref. to RAB(diag)-58, DTC U0181 LOST COMMUNICATION WITH HEADLAMP LEVELING CONTROL MODULE, Diagnostic Procedure with Diagnostic Trouble Code (DTC).>
U0401	INVALID DATA RECEIVED FROM ECM/PCM “A”	<Ref. to RAB(diag)-58, DTC U0401 INVALID DATA RECEIVED FROM ECM/PCM “A”, Diagnostic Procedure with Diagnostic Trouble Code (DTC).>
U0402	INVALID DATA RECEIVED FROM TCM	<Ref. to RAB(diag)-59, DTC U0402 INVALID DATA RECEIVED FROM TCM, Diagnostic Procedure with Diagnostic Trouble Code (DTC).>
U0416	INVALID DATA RECEIVED FROM VEHICLE DYNAMICS CONTROL MODULE	<Ref. to RAB(diag)-59, DTC U0416 INVALID DATA RECEIVED FROM VEHICLE DYNAMICS CONTROL MODULE, Diagnostic Procedure with Diagnostic Trouble Code (DTC).>
U0417	INVALID DATA RECEIVED FROM PARK BRAKE CONTROL MODULE	<Ref. to RAB(diag)-59, DTC U0417 INVALID DATA RECEIVED FROM PARK BRAKE CONTROL MODULE, Diagnostic Procedure with Diagnostic Trouble Code (DTC).>
U0423	INVALID DATA RECEIVED FROM INSTRUMENT PANEL CLUSTER CONTROL MODULE	<Ref. to RAB(diag)-59, DTC U0423 INVALID DATA RECEIVED FROM INSTRUMENT PANEL CLUSTER CONTROL MODULE, Diagnostic Procedure with Diagnostic Trouble Code (DTC).>
U0457	INVALID DATA RECEIVED FROM INFORMATION CENTER "A"	<Ref. to RAB(diag)-59, DTC U0457 INVALID DATA RECEIVED FROM INFORMATION CENTER "A", Diagnostic Procedure with Diagnostic Trouble Code (DTC).>
U0482	INVALID DATA RECEIVED FROM HEADLAMP LEVELING CONTROL MODULE	<Ref. to RAB(diag)-59, DTC U0482 INVALID DATA RECEIVED FROM HEADLAMP LEVELING CONTROL MODULE, Diagnostic Procedure with Diagnostic Trouble Code (DTC).>
U1235	LOST COMMUNICATION WITH EyeSight	<Ref. to RAB(diag)-59, DTC U1235 LOST COMMUNICATION WITH EyeSight, Diagnostic Procedure with Diagnostic Trouble Code (DTC).>
U1433	INVALID DATA RECEIVED FROM EyeSight	<Ref. to RAB(diag)-59, DTC U1433 INVALID DATA RECEIVED FROM EyeSight, Diagnostic Procedure with Diagnostic Trouble Code (DTC).>

16.Diagnostic Procedure with Diagnostic Trouble Code (DTC)

A: DTC B2C00 SONAR CONTROL MODULE CIRCUIT

Outline of diagnosis:
Detect the malfunction of the RAB CM.
Time needed for diagnosis:
10 ms
Recovery conditions:
Ignition switch OFF → ON

Step		Check	Yes	No
1	**CHECK DTC.** Read the DTC relating «Reverse Automatic Braking» using the Subaru Select Monitor. <Ref. to RAB(diag)-12, Read Diagnostic Trouble Code (DTC).>	Is a DTC other than DTC B2C00 displayed? (Current malfunction)	Perform the diagnosis for DTC other than DTC B2C00.	Replace the RAB CM. <Ref. to RAB-6, Reverse Automatic Braking CM.>

B: DTC B2C01 RR SONAR CONTROL MODULE CIRCUIT

Outline of diagnosis:
Detect the malfunction of the RAB CM.
Time needed for diagnosis:
1200 ms
Recovery conditions:
Ignition switch OFF → ON

Step		Check	Yes	No
1	**CHECK DTC.** Read the DTC relating «Reverse Automatic Braking» using the Subaru Select Monitor. <Ref. to RAB(diag)-12, Read Diagnostic Trouble Code (DTC).>	Is a DTC other than DTC B2C01 displayed? (Current malfunction)	Perform the diagnosis for DTC other than DTC B2C01.	Replace the RAB CM. <Ref. to RAB-6, Reverse Automatic Braking CM.>

C: DTC B2C02 RRC SONAR CONTROL MODULE CIRCUIT

Outline of diagnosis:
Detect the malfunction of the RAB CM.
Time needed for diagnosis:
- 600 ms (when two waves transmitted)
- 1200 ms (when four waves transmitted)

Recovery conditions:
Ignition switch OFF → ON

Step		Check	Yes	No
1	**CHECK DTC.** Read the DTC relating «Reverse Automatic Braking» using the Subaru Select Monitor. <Ref. to RAB(diag)-12, Read Diagnostic Trouble Code (DTC).>	Is a DTC other than DTC B2C02 displayed? (Current malfunction)	Perform the diagnosis for DTC other than DTC B2C02.	Replace the RAB CM. <Ref. to RAB-6, Reverse Automatic Braking CM.>

D: DTC B2C03 RL SONAR CONTROL MODULE CIRCUIT

Outline of diagnosis:
Detect the malfunction of the RAB CM.
Time needed for diagnosis:
1200 ms
Recovery conditions:
Ignition switch OFF → ON

	Step	Check	Yes	No
1	**CHECK DTC.** Read the DTC relating «Reverse Automatic Braking» using the Subaru Select Monitor. <Ref. to RAB(diag)-12, Read Diagnostic Trouble Code (DTC).>	Is a DTC other than DTC B2C03 displayed? (Current malfunction)	Perform the diagnosis for DTC other than DTC B2C03.	Replace the RAB CM. <Ref. to RAB-6, Reverse Automatic Braking CM.>

E: DTC B2C04 RLC SONAR CONTROL MODULE CIRCUIT

Outline of diagnosis:
Detect the malfunction of the RAB CM.
Time needed for diagnosis:
- 600 ms (when two waves transmitted)
- 1200 ms (when four waves transmitted)

Recovery conditions:
Ignition switch OFF → ON

	Step	Check	Yes	No
1	**CHECK DTC.** Read the DTC relating «Reverse Automatic Braking» using the Subaru Select Monitor. <Ref. to RAB(diag)-12, Read Diagnostic Trouble Code (DTC).>	Is a DTC other than DTC B2C04 displayed? (Current malfunction)	Perform the diagnosis for DTC other than DTC B2C04.	Replace the RAB CM. <Ref. to RAB-6, Reverse Automatic Braking CM.>

F: DTC B2C05 SONAR CONTROL MODULE POWER SUPPLY

Outline of diagnosis:
Voltage supply to the ignition power supply terminal and the battery power supply terminal was 16 V or more.
Time needed for diagnosis:
200 ms
Recovery conditions:
Ignition switch OFF → ON
Wiring diagram:
Reverse Automatic Braking <Ref. to WI-329, Reverse Automatic Braking.>

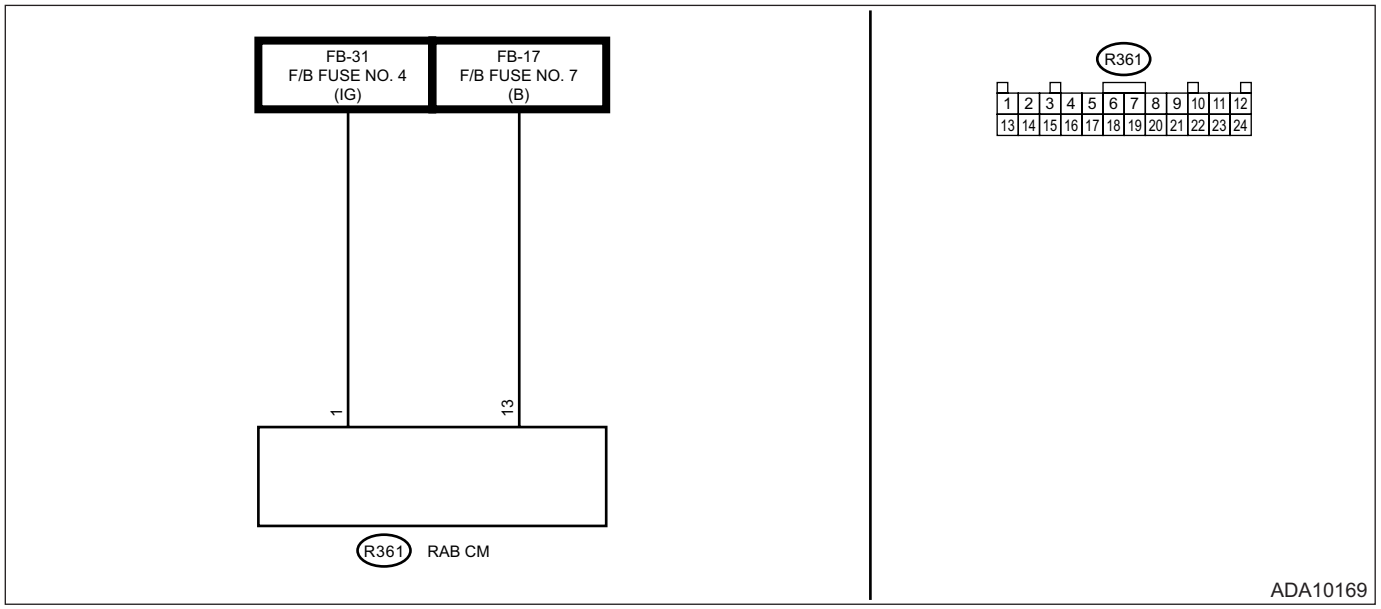

	Step	Check	Yes	No
1	**CHECK CONNECTOR.** 1) Turn the ignition switch to OFF. 2) Disconnect the RAB CM connector. 3) Connect the disconnected connectors. 4) Turn the ignition switch to ON. 5) Read the DTC relating «Reverse Automatic Braking» using the Subaru Select Monitor. <Ref. to RAB(diag)-12, Read Diagnostic Trouble Code (DTC).>	Is DTC B2C05 displayed? (Current malfunction)	Go to step **2**.	Even if DTC is displayed, the circuit has returned to a normal condition at this time. Reproduce the failure, and then perform the diagnosis again. NOTE: In this case, temporary poor contact of connector, temporary open or short circuit of harness may be the cause.
2	**CHECK RAB CM POWER SUPPLY CIRCUIT.** 1) Turn the ignition switch to OFF. 2) Disconnect the RAB CM connector. 3) Turn the ignition switch to ON. 4) Using a tester, measure the voltage between the RAB CM connector and chassis ground. ***Connector & terminal*** ***(R361) No. 1 (+) — Chassis ground (–):*** ***(R361) No. 13 (+) — Chassis ground (–):***	Is the voltage 16 V or less?	Replace the RAB CM. <Ref. to RAB-6, Reverse Automatic Braking CM.>	Check the harness between the RAB CM connector and power supply.

G: DTC B2C06 RR SONAR SENSOR CIRCUIT / NO SIGNAL

Outline of diagnosis:
Sonar sensor (right corner) harness is open.
Time needed for diagnosis:
1200 ms
Recovery conditions:
Ignition switch OFF → ON
Wiring diagram:
Reverse Automatic Braking <Ref. to WI-329, Reverse Automatic Braking.>

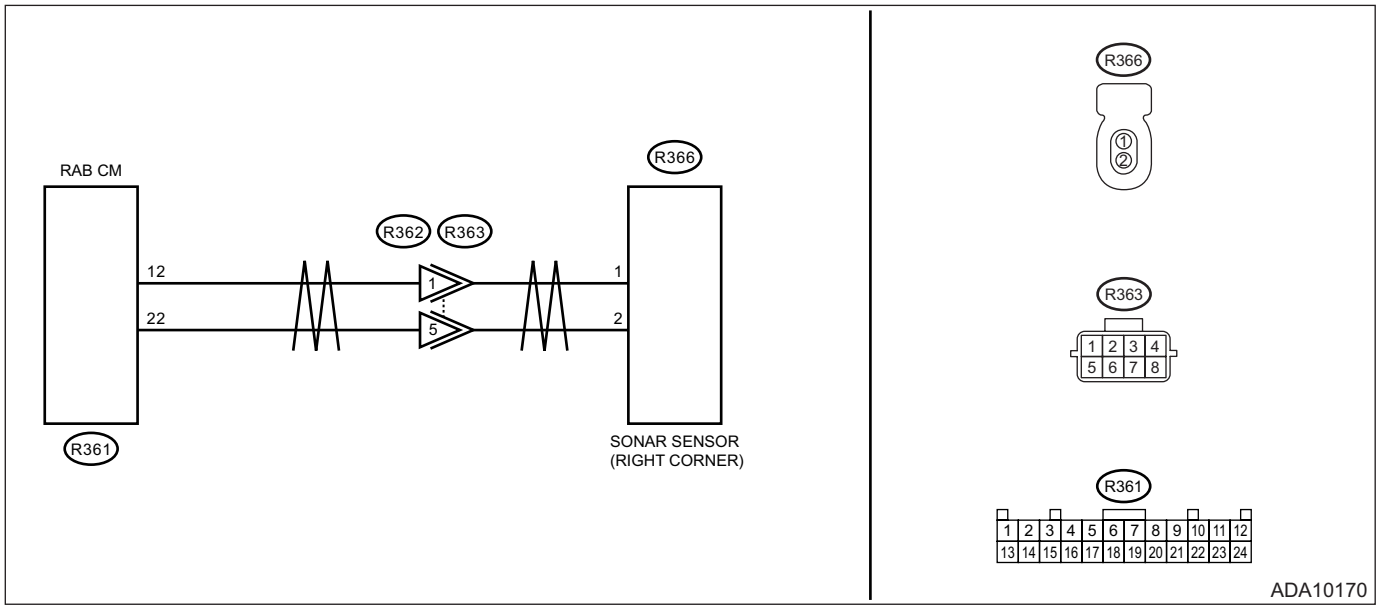

Step		Check	Yes	No
1	**CHECK CONNECTOR.** 1) Turn the ignition switch to OFF. 2) Disconnect the sonar sensor (right corner) connector. 3) Connect the disconnected connectors. 4) Turn the ignition switch to ON. 5) Read the DTC relating «Reverse Automatic Braking» using the Subaru Select Monitor. <Ref. to RAB(diag)-12, Read Diagnostic Trouble Code (DTC).>	Is DTC B2C06 displayed? (Current malfunction)	Go to step **2**.	Even if DTC is displayed, the circuit has returned to a normal condition at this time. Reproduce the failure, and then perform the diagnosis again. NOTE: In this case, temporary poor contact of connector, temporary open or short circuit of harness may be the cause.
2	**CHECK HARNESS BETWEEN SONAR SENSOR CONNECTOR AND RAB CM CONNECTOR. (OPEN CIRCUIT).** 1) Turn the ignition switch to OFF. 2) Disconnect the sonar sensor (right corner) connector and the RAB CM connector. 3) Using a tester, measure resistance value of the harness between the sonar sensor (right corner) connector and RAB CM connector. ***Connector & terminal*** ***(R361) No. 12 — (R366) No. 1:*** ***(R361) No. 22 — (R366) No. 2:***	Is the resistance less than 10 Ω?	Go to step **3**.	Repair or replace the open circuit in the harness between sonar sensor connector and RAB CM connector.

	Step	Check	Yes	No
3	**CHECK SONAR SENSOR.** 1) Switch the sonar sensor (right corner) and sonar sensor (right inner). 2) Connect the disconnected connectors. 3) Turn the ignition switch to ON. 4) Read the DTC relating «Reverse Automatic Braking» using the Subaru Select Monitor. <Ref. to RAB(diag)-12, Read Diagnostic Trouble Code (DTC).>	Is DTC B2C06 displayed? (Current malfunction)	Replace the RAB CM. <Ref. to RAB-6, Reverse Automatic Braking CM.>	Replace the sensor installed as a sonar sensor (right corner). <Ref. to RAB-7, Sensor and Harness.>

H: DTC B2C07 RR SONAR SENSOR / SONAR CONTROL MODULE CIRCUIT

NOTE:
For the diagnostic procedure, refer to DTC B2C06. <Ref. to RAB(diag)-29, DTC B2C06 RR SONAR SENSOR CIRCUIT / NO SIGNAL, Diagnostic Procedure with Diagnostic Trouble Code (DTC).>

I: DTC B2C08 RRC SONAR SENSOR CIRCUIT / NO SIGNAL

Outline of diagnosis:
Sonar sensor (right inner) harness is open.
Time needed for diagnosis:
- 600 ms (when two waves transmitted)
- 1200 ms (when four waves transmitted)

Recovery conditions:
Ignition switch OFF → ON
Wiring diagram:
Reverse Automatic Braking <Ref. to WI-329, Reverse Automatic Braking.>

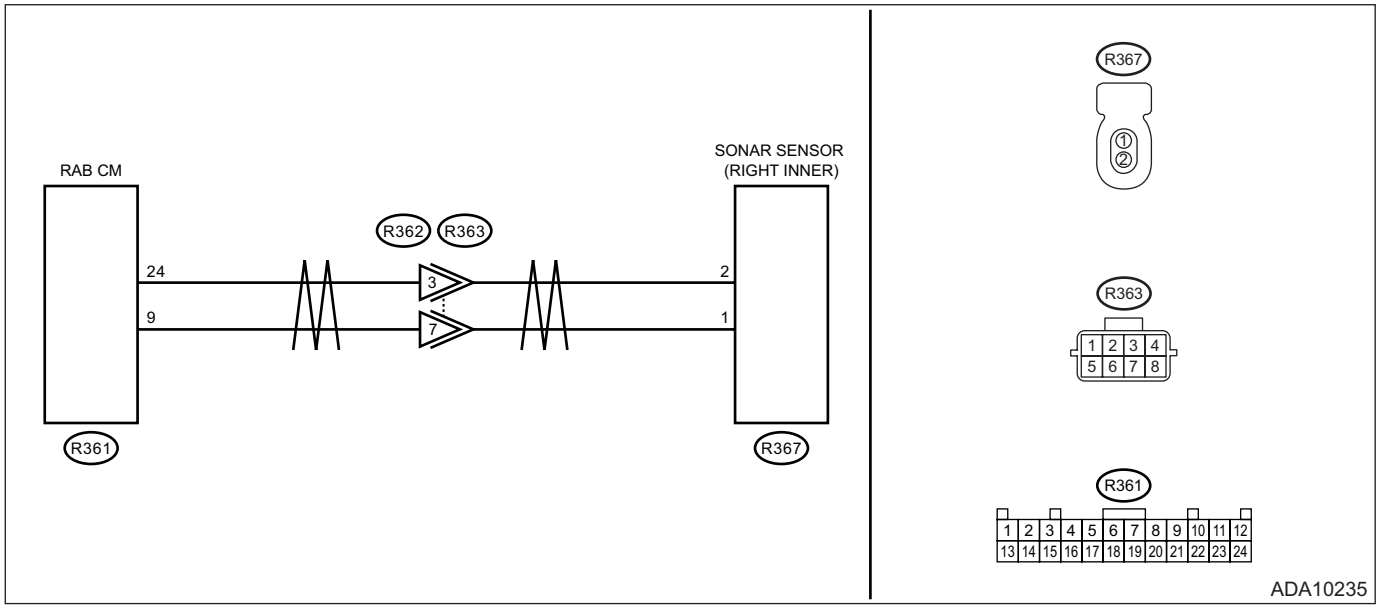

Step		Check	Yes	No
1	**CHECK CONNECTOR.** 1) Turn the ignition switch to OFF. 2) Disconnect the sonar sensor (right inner) connector. 3) Connect the disconnected connectors. 4) Turn the ignition switch to ON. 5) Read the DTC relating «Reverse Automatic Braking» using the Subaru Select Monitor. <Ref. to RAB(diag)-12, Read Diagnostic Trouble Code (DTC).>	Is DTC B2C08 displayed? (Current malfunction)	Go to step **2**.	Even if DTC is displayed, the circuit has returned to a normal condition at this time. Reproduce the failure, and then perform the diagnosis again. NOTE: In this case, temporary poor contact of connector, temporary open or short circuit of harness may be the cause.

	Step	Check	Yes	No
2	**CHECK HARNESS BETWEEN SONAR SENSOR CONNECTOR AND RAB CM CONNECTOR. (OPEN CIRCUIT).** 1) Turn the ignition switch to OFF. 2) Disconnect the sonar sensor (right inner) connector and the RAB CM connector. 3) Using a tester, measure resistance value of the harness between the sonar sensor (right inner) connector and RAB CM connector. ***Connector & terminal*** ***(R361) No. 24 — (R367) No. 2:*** ***(R361) No. 9 — (R367) No. 1:***	Is the resistance less than 10 Ω?	Go to step **3**.	Repair or replace the open circuit in the harness between sonar sensor connector and RAB CM connector.
3	**CHECK SONAR SENSOR.** 1) Switch the sonar sensor (right inner) and sonar sensor (right corner). 2) Connect the disconnected connectors. 3) Turn the ignition switch to ON. 4) Read the DTC relating «Reverse Automatic Braking» using the Subaru Select Monitor. <Ref. to RAB(diag)-12, Read Diagnostic Trouble Code (DTC).>	Is DTC B2C08 displayed? (Current malfunction)	Replace the RAB CM. <Ref. to RAB-6, Reverse Automatic Braking CM.>	Replace the sensor installed as a sonar sensor (right inner). <Ref. to RAB-7, Sensor and Harness.>

J: DTC B2C09 RRC SONAR SENSOR / SONAR CONTROL MODULE CIRCUIT

NOTE:
For the diagnostic procedure, refer to DTC B2C07. <Ref. to RAB(diag)-30, DTC B2C07 RR SONAR SENSOR / SONAR CONTROL MODULE CIRCUIT, Diagnostic Procedure with Diagnostic Trouble Code (DTC).>

K: DTC B2C0A RL SONAR SENSOR CIRCUIT / NO SIGNAL

Outline of diagnosis:
Sonar sensor (left corner) harness is open.
Time needed for diagnosis:
1200 ms
Recovery conditions:
Ignition switch OFF → ON
Wiring diagram:
Reverse Automatic Braking <Ref. to WI-329, Reverse Automatic Braking.>

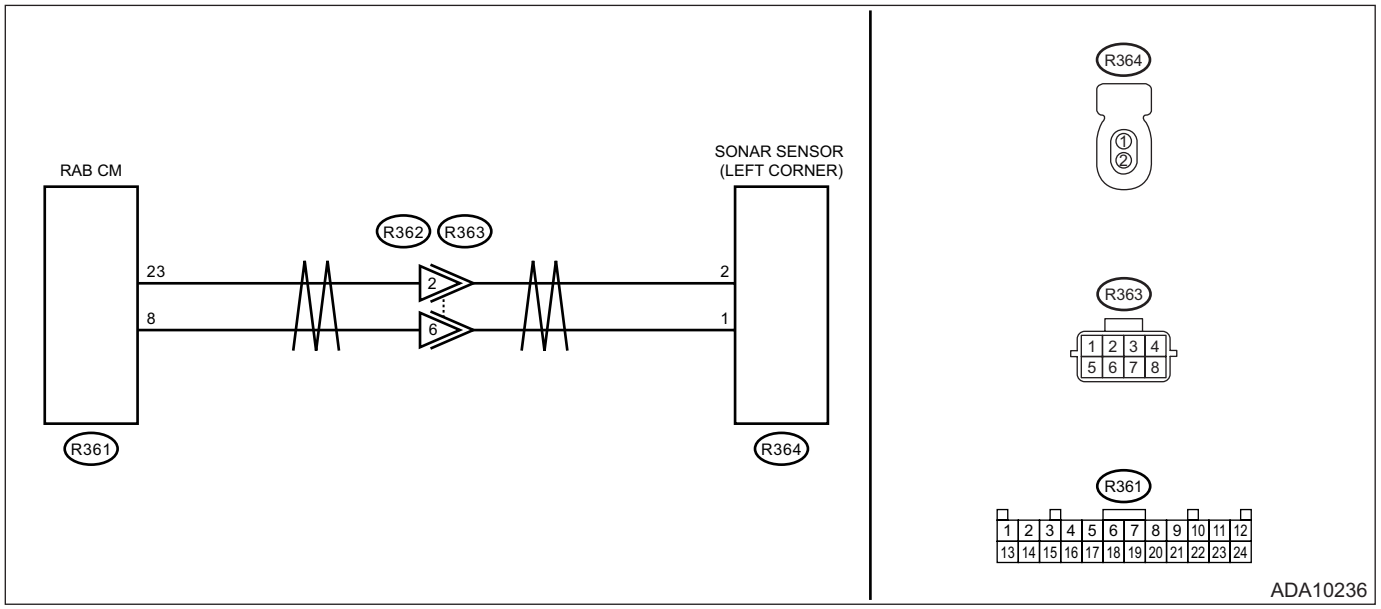

Step		Check	Yes	No
1	**CHECK CONNECTOR.** 1) Turn the ignition switch to OFF. 2) Disconnect the sonar sensor (left corner) connector. 3) Connect the disconnected connectors. 4) Turn the ignition switch to ON. 5) Read the DTC relating «Reverse Automatic Braking» using the Subaru Select Monitor. <Ref. to RAB(diag)-12, Read Diagnostic Trouble Code (DTC).>	Is DTC B2C0A displayed? (Current malfunction)	Go to step **2**.	Even if DTC is displayed, the circuit has returned to a normal condition at this time. Reproduce the failure, and then perform the diagnosis again. NOTE: In this case, temporary poor contact of connector, temporary open or short circuit of harness may be the cause.
2	**CHECK HARNESS BETWEEN SONAR SENSOR CONNECTOR AND RAB CM CONNECTOR. (OPEN CIRCUIT).** 1) Turn the ignition switch to OFF. 2) Disconnect the sonar sensor (left corner) connector and the RAB CM connector. 3) Using a tester, measure resistance value of the harness between the sonar sensor (left corner) connector and RAB CM connector. ***Connector & terminal*** ***(R361) No. 8 — (R364) No. 2:*** ***(R361) No. 23 — (R364) No. 1:***	Is the resistance less than 10 Ω?	Go to step **3**.	Repair or replace the open circuit in the harness between sonar sensor connector and RAB CM connector.

	Step	Check	Yes	No
3	**CHECK SONAR SENSOR.** 1) Switch the sonar sensor (left corner) and sonar sensor (left inner). 2) Connect the disconnected connectors. 3) Turn the ignition switch to ON. 4) Read the DTC relating «Reverse Automatic Braking» using the Subaru Select Monitor. <Ref. to RAB(diag)-12, Read Diagnostic Trouble Code (DTC).>	Is DTC B2C0A displayed? (Current malfunction)	Replace the RAB CM. <Ref. to RAB-6, Reverse Automatic Braking CM.>	Replace the sensor installed as a sonar sensor (left corner). <Ref. to RAB-7, Sensor and Harness.>

L: DTC B2C0B RL SONAR SENSOR / SONAR CONTROL MODULE CIRCUIT

NOTE:
For the diagnostic procedure, refer to DTC B2C0A. <Ref. to RAB(diag)-33, DTC B2C0A RL SONAR SENSOR CIRCUIT / NO SIGNAL, Diagnostic Procedure with Diagnostic Trouble Code (DTC).>

M: DTC B2C0C RLC SONAR SENSOR CIRCUIT / NO SIGNAL

Outline of diagnosis:
Sonar sensor (left inner) harness is open.
Time needed for diagnosis:
- 600 ms (when two waves transmitted)
- 1200 ms (when four waves transmitted)

Recovery conditions:
Ignition switch OFF → ON
Wiring diagram:
Reverse Automatic Braking <Ref. to WI-329, Reverse Automatic Braking.>

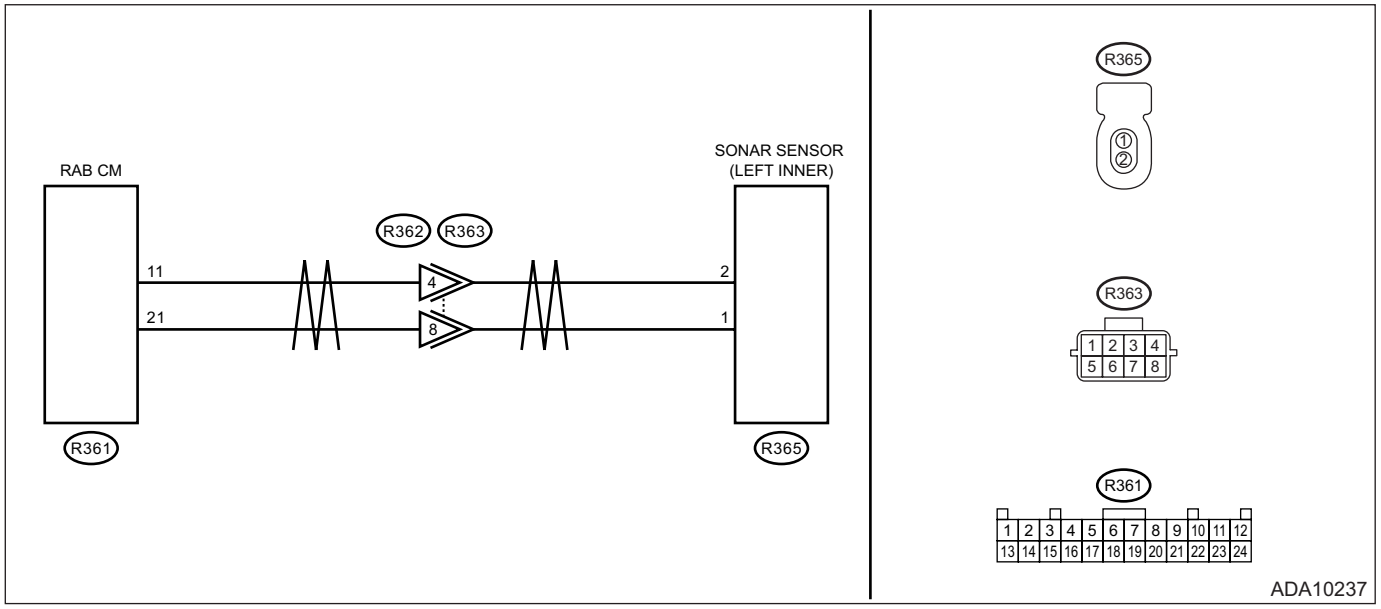

Step		Check	Yes	No
1	**CHECK CONNECTOR.** 1) Turn the ignition switch to OFF. 2) Disconnect the sonar sensor (left inner) connector. 3) Connect the disconnected connectors. 4) Turn the ignition switch to ON. 5) Read the DTC relating «Reverse Automatic Braking» using the Subaru Select Monitor. <Ref. to RAB(diag)-12, Read Diagnostic Trouble Code (DTC).>	Is DTC B2C0C displayed? (Current malfunction)	Go to step **2**.	Even if DTC is displayed, the circuit has returned to a normal condition at this time. Reproduce the failure, and then perform the diagnosis again. NOTE: In this case, temporary poor contact of connector, temporary open or short circuit of harness may be the cause.

	Step	Check	Yes	No
2	**CHECK HARNESS BETWEEN SONAR SENSOR CONNECTOR AND RAB CM CONNECTOR. (OPEN CIRCUIT).** 1) Turn the ignition switch to OFF. 2) Disconnect the sonar sensor (left inner) connector and the RAB CM connector. 3) Using a tester, measure resistance value of the harness between the sonar sensor (left inner) connector and RAB CM connector. ***Connector & terminal*** ***(R361) No. 11 — (R365) No. 2:*** ***(R361) No. 21 — (R365) No. 1:***	Is the resistance less than 10 Ω?	Go to step **3**.	Repair or replace the open circuit in the harness between sonar sensor connector and RAB CM connector.
3	**CHECK SONAR SENSOR.** 1) Switch the sonar sensor (left inner) and sonar sensor (left corner). 2) Connect the disconnected connectors. 3) Turn the ignition switch to ON. 4) Read the DTC relating «Reverse Automatic Braking» using the Subaru Select Monitor. <Ref. to RAB(diag)-12, Read Diagnostic Trouble Code (DTC).>	Is DTC B2C0C displayed? (Current malfunction)	Replace the RAB CM. <Ref. to RAB-6, Reverse Automatic Braking CM.>	Replace the sensor installed as a sonar sensor (left inner). <Ref. to RAB-7, Sensor and Harness.>

N: DTC B2C0D RLC SONAR SENSOR / SONAR CONTROL MODULE CIRCUIT

NOTE:
For the diagnostic procedure, refer to DTC B2C0C. <Ref. to RAB(diag)-35, DTC B2C0C RLC SONAR SENSOR CIRCUIT / NO SIGNAL, Diagnostic Procedure with Diagnostic Trouble Code (DTC).>

O: DTC B2C0E RR SONAR HARNESS HIGH

Outline of diagnosis:
Sonar sensor (right corner) harness is shorted to power supply.
Time needed for diagnosis:
1200 ms
Recovery conditions:
Ignition switch OFF → ON
Wiring diagram:
Reverse Automatic Braking <Ref. to WI-329, Reverse Automatic Braking.>

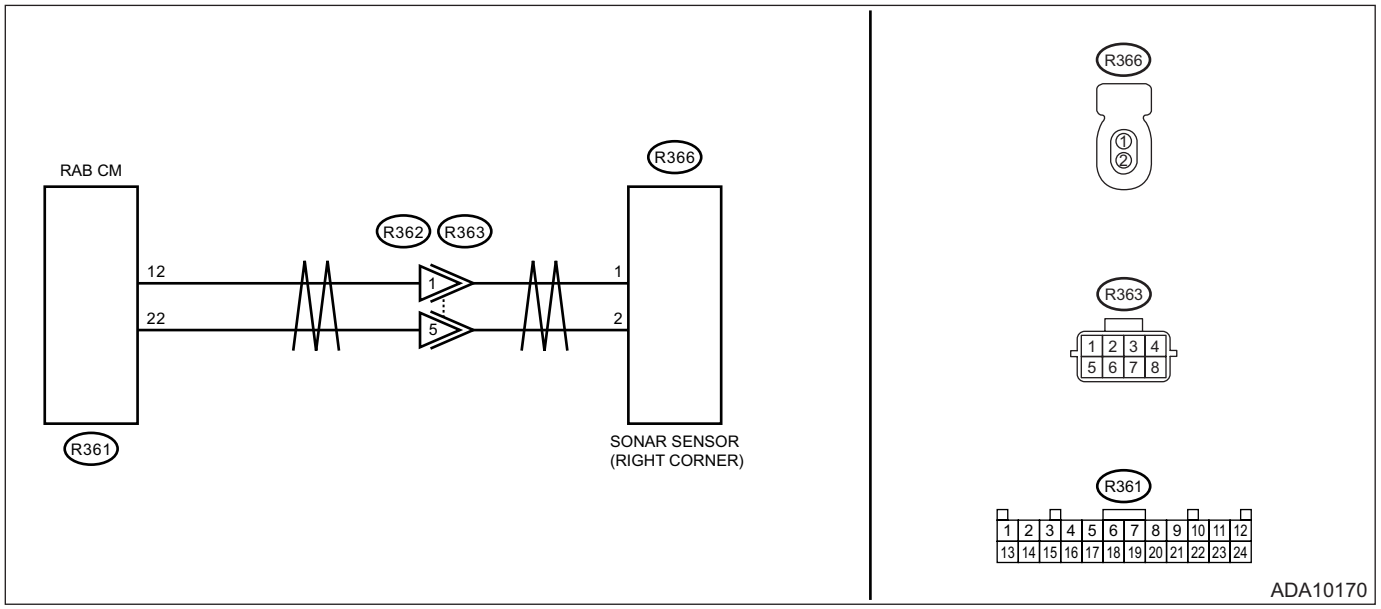

Step		Check	Yes	No
1	**CHECK CONNECTOR.** 1) Turn the ignition switch to OFF. 2) Disconnect the sonar sensor (right corner) connector. 3) Connect the disconnected connectors. 4) Turn the ignition switch to ON. 5) Read the DTC relating «Reverse Automatic Braking» using the Subaru Select Monitor. <Ref. to RAB(diag)-12, Read Diagnostic Trouble Code (DTC).>	Is DTC B2C0E displayed? (Current malfunction)	Go to step **2**.	Even if DTC is displayed, the circuit has returned to a normal condition at this time. Reproduce the failure, and then perform the diagnosis again. NOTE: In this case, temporary poor contact of connector, temporary open or short circuit of harness may be the cause.

	Step	Check	Yes	No
2	**CHECK HARNESS BETWEEN SONAR SENSOR CONNECTOR AND RAB CM CONNECTOR. (SHORT CIRCUIT TO POWER SUPPLY).** 1) Turn the ignition switch to OFF. 2) Disconnect the sonar sensor (right corner) connector and the RAB CM connector. 3) Turn the ignition switch to ON. 4) Using a tester, measure the voltage between sonar sensor (right corner) connector and chassis ground. ***Connector & terminal (R366) No. 1 (+) — Chassis ground (–):***	Is the voltage less than 1 V?	Go to step **3**.	Repair or replace the short circuit in the harness between sonar sensor connector and RAB CM connector.
3	**CHECK SONAR SENSOR.** 1) Turn the ignition switch to OFF. 2) Switch the sonar sensor (right corner) and sonar sensor (right inner). 3) Connect the disconnected connectors. 4) Turn the ignition switch to ON. 5) Read the DTC relating «Reverse Automatic Braking» using the Subaru Select Monitor. <Ref. to RAB(diag)-12, Read Diagnostic Trouble Code (DTC).>	Is DTC B2C0E displayed? (Current malfunction)	Replace the RAB CM. <Ref. to RAB-6, Reverse Automatic Braking CM.>	Replace the sensor installed as a sonar sensor (right corner).

P: DTC B2C0F RR SONAR HARNESS LOW

Outline of diagnosis:
Sonar sensor (right corner) harness is shorted to ground.
Time needed for diagnosis:
1200 ms
Recovery conditions:
Ignition switch OFF → ON
Wiring diagram:
Reverse Automatic Braking <Ref. to WI-329, Reverse Automatic Braking.>

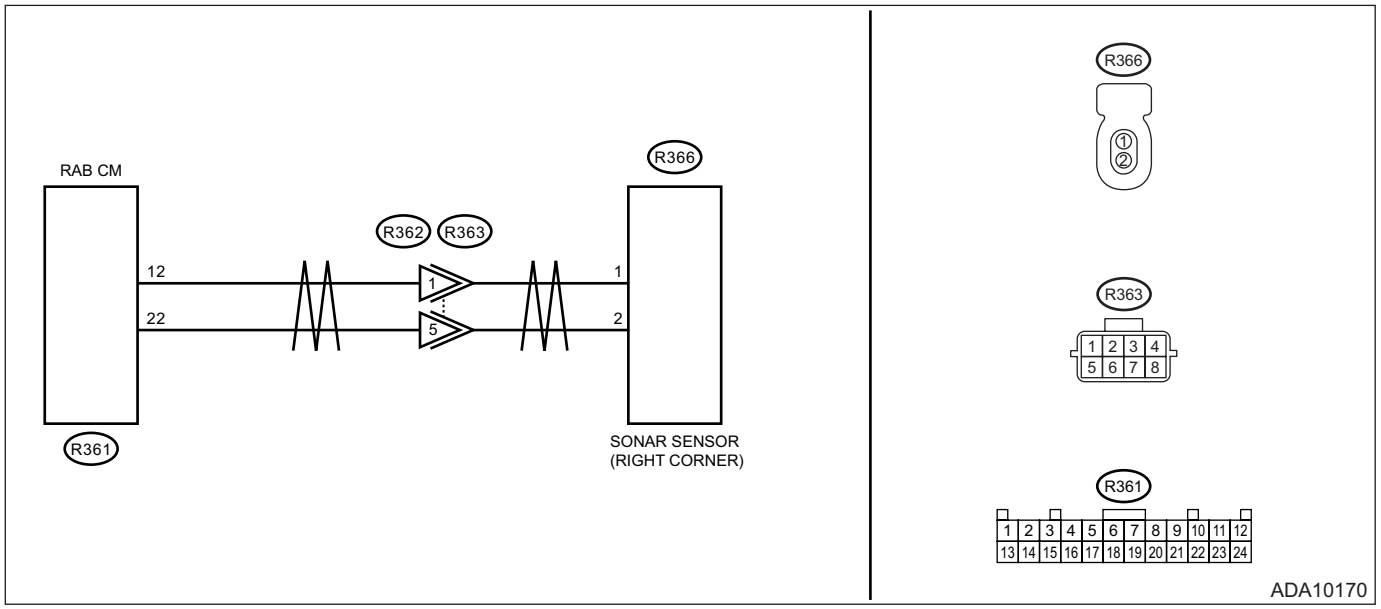

Step		Check	Yes	No
1	**CHECK CONNECTOR.** 1) Turn the ignition switch to OFF. 2) Disconnect the sonar sensor (right corner) connector. 3) Connect the disconnected connectors. 4) Turn the ignition switch to ON. 5) Read the DTC relating «Reverse Automatic Braking» using the Subaru Select Monitor. <Ref. to RAB(diag)-12, Read Diagnostic Trouble Code (DTC).>	Is DTC B2C0F displayed? (Current malfunction)	Go to step **2**.	Even if DTC is displayed, the circuit has returned to a normal condition at this time. Reproduce the failure, and then perform the diagnosis again. NOTE: In this case, temporary poor contact of connector, temporary open or short circuit of harness may be the cause.
2	**CHECK HARNESS BETWEEN SONAR SENSOR CONNECTOR AND RAB CM CONNECTOR. (SHORTED TO GROUND).** 1) Turn the ignition switch to OFF. 2) Disconnect the sonar sensor (right corner) connector and the RAB CM connector. 3) Using a tester, measure the resistance between sonar sensor (right corner) connector and chassis ground. ***Connector & terminal*** ***(R366) No. 1 — Chassis ground:***	Is the resistance 1 MΩ or more?	Go to step **3**.	Repair or replace the short circuit in the harness between sonar sensor connector and RAB CM connector.

	Step	Check	Yes	No
3	**CHECK SONAR SENSOR.** 1) Switch the sonar sensor (right corner) and sonar sensor (right inner). 2) Connect the disconnected connectors. 3) Turn the ignition switch to ON. 4) Read the DTC relating «Reverse Automatic Braking» using the Subaru Select Monitor. <Ref. to RAB(diag)-12, Read Diagnostic Trouble Code (DTC).>	Is DTC B2C0F displayed? (Current malfunction)	Replace the RAB CM. <Ref. to RAB-6, Reverse Automatic Braking CM.>	Replace the sensor installed as a sonar sensor (right corner).

Q: DTC B2C10 RRC SONAR HARNESS HIGH

Outline of diagnosis:
Sonar sensor (right inner) harness is shorted to power supply.
Time needed for diagnosis:
- 600 ms (when two waves transmitted)
- 1200 ms (when four waves transmitted)

Recovery conditions:
Ignition switch OFF → ON
Wiring diagram:
Reverse Automatic Braking <Ref. to WI-329, Reverse Automatic Braking.>

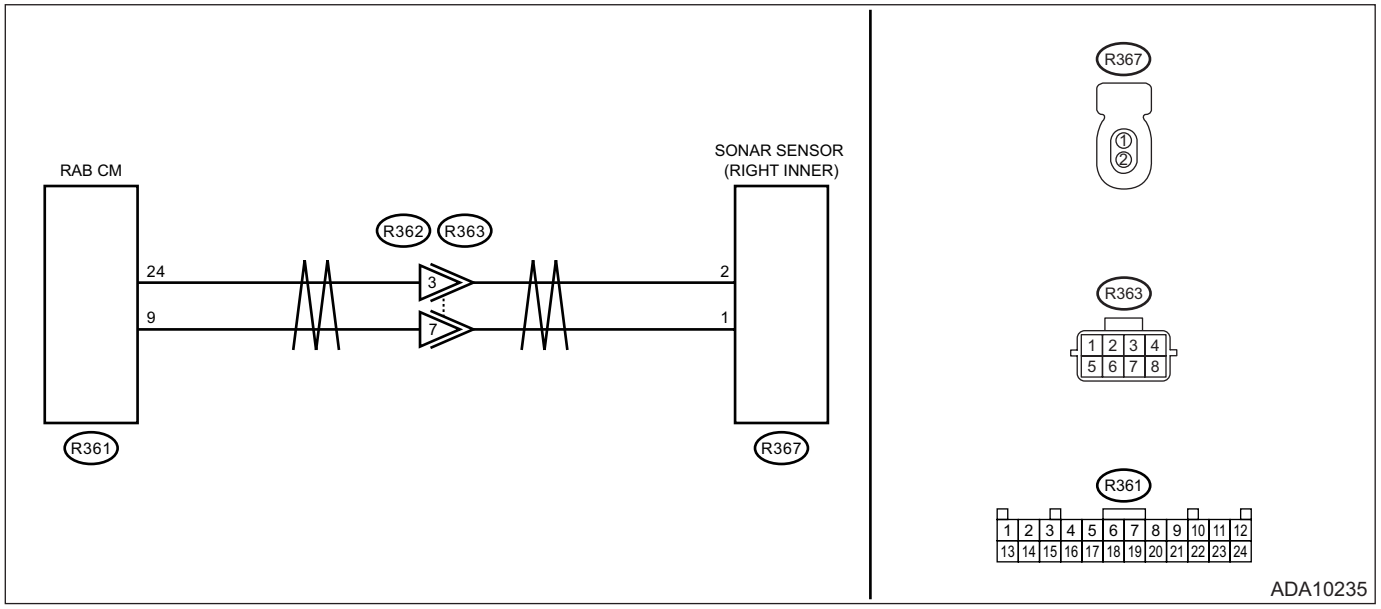

Step		Check	Yes	No
1	**CHECK CONNECTOR.** 1) Turn the ignition switch to OFF. 2) Disconnect the sonar sensor (right inner) connector. 3) Connect the disconnected connectors. 4) Turn the ignition switch to ON. 5) Read the DTC relating «Reverse Automatic Braking» using the Subaru Select Monitor. <Ref. to RAB(diag)-12, Read Diagnostic Trouble Code (DTC).>	Is DTC B2C10 displayed? (Current malfunction)	Go to step **2**.	Even if DTC is displayed, the circuit has returned to a normal condition at this time. Reproduce the failure, and then perform the diagnosis again. NOTE: In this case, temporary poor contact of connector, temporary open or short circuit of harness may be the cause.

	Step	Check	Yes	No
2	**CHECK HARNESS BETWEEN SONAR SENSOR CONNECTOR AND RAB CM CONNECTOR. (SHORTED TO GROUND).** 1) Turn the ignition switch to OFF. 2) Disconnect the sonar sensor (right inner) connector and the RAB CM connector. 3) Using a tester, measure the voltage between sonar sensor (right inner) connector and chassis ground. ***Connector & terminal*** ***(R367) No. 2 (+) — Chassis ground (–):***	Is the voltage less than 1 V?	Go to step **3**.	Repair or replace the short circuit in the harness between sonar sensor connector and RAB CM connector.
3	**CHECK SONAR SENSOR.** 1) Switch the sonar sensor (right inner) and sonar sensor (right corner). 2) Connect the disconnected connectors. 3) Turn the ignition switch to ON. 4) Read the DTC relating «Reverse Automatic Braking» using the Subaru Select Monitor. <Ref. to RAB(diag)-12, Read Diagnostic Trouble Code (DTC).>	Is DTC B2C10 displayed? (Current malfunction)	Replace the RAB CM. <Ref. to RAB-6, Reverse Automatic Braking CM.>	Replace the sensor installed as a sonar sensor (right inner).

R: DTC B2C11 RRC SONAR HARNESS LOW

Outline of diagnosis:
Sonar sensor (right inner) harness is shorted to ground.
Time needed for diagnosis:
- 600 ms (when two waves transmitted)
- 1200 ms (when four waves transmitted)

Recovery conditions:
Ignition switch OFF → ON
Wiring diagram:
Reverse Automatic Braking <Ref. to WI-329, Reverse Automatic Braking.>

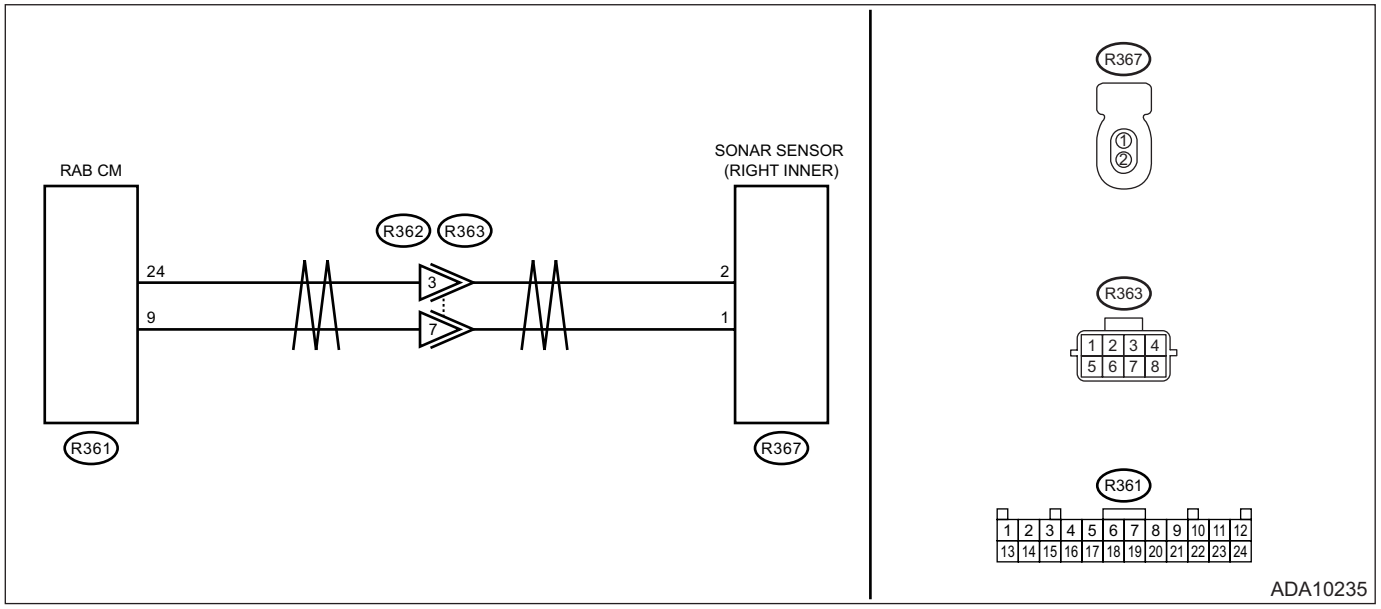

Step		Check	Yes	No
1	**CHECK CONNECTOR.** 1) Turn the ignition switch to OFF. 2) Disconnect the sonar sensor (right inner) connector. 3) Connect the disconnected connectors. 4) Turn the ignition switch to ON. 5) Read the DTC relating «Reverse Automatic Braking» using the Subaru Select Monitor. <Ref. to RAB(diag)-12, Read Diagnostic Trouble Code (DTC).>	Is DTC B2C11 displayed? (Current malfunction)	Go to step **2**.	Even if DTC is displayed, the circuit has returned to a normal condition at this time. Reproduce the failure, and then perform the diagnosis again. NOTE: In this case, temporary poor contact of connector, temporary open or short circuit of harness may be the cause.

	Step	Check	Yes	No
2	**CHECK HARNESS BETWEEN SONAR SENSOR CONNECTOR AND RAB CM CONNECTOR. (SHORTED TO GROUND).** 1) Turn the ignition switch to OFF. 2) Disconnect the sonar sensor (right inner) connector and the RAB CM connector. 3) Using a tester, measure the resistance between sonar sensor (right inner) connector and chassis ground. ***Connector & terminal*** ***(R367) No. 2 — Chassis ground:***	Is the resistance less than 1 MΩ?	Go to step **3**.	Repair or replace the short circuit in the harness between sonar sensor connector and RAB CM connector.
3	**CHECK SONAR SENSOR.** 1) Switch the sonar sensor (right inner) and sonar sensor (right corner). 2) Connect the disconnected connectors. 3) Turn the ignition switch to ON. 4) Read the DTC relating «Reverse Automatic Braking» using the Subaru Select Monitor. <Ref. to RAB(diag)-12, Read Diagnostic Trouble Code (DTC).>	Is DTC B2C11 displayed? (Current malfunction)	Replace the RAB CM. <Ref. to RAB-6, Reverse Automatic Braking CM.>	Replace the sensor installed as a sonar sensor (right inner).

S: DTC B2C12 RL SONAR HARNESS HIGH

Outline of diagnosis:
Sonar sensor (left corner) harness is shorted to power supply.
Time needed for diagnosis:
- 600 ms (when two waves transmitted)
- 1200 ms (when four waves transmitted)

Recovery conditions:
Ignition switch OFF → ON
Wiring diagram:
Reverse Automatic Braking <Ref. to WI-329, Reverse Automatic Braking.>

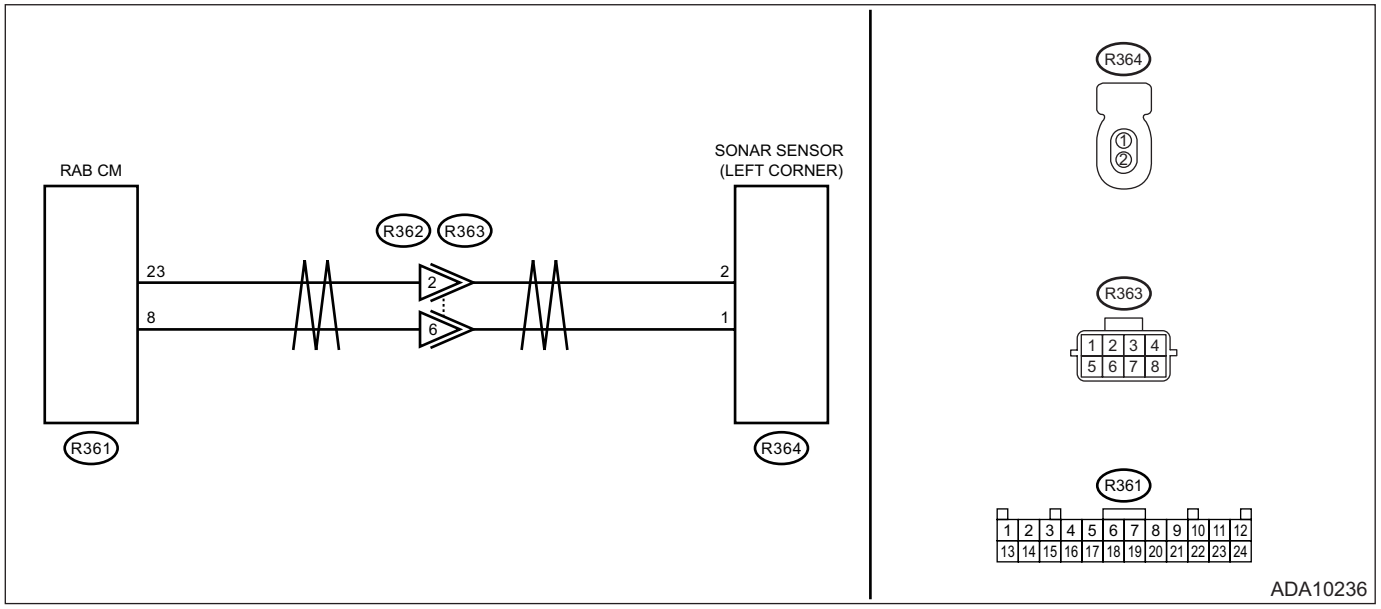

Step		Check	Yes	No
1	**CHECK CONNECTOR.** 1) Turn the ignition switch to OFF. 2) Disconnect the sonar sensor (left corner) connector. 3) Connect the disconnected connectors. 4) Turn the ignition switch to ON. 5) Read the DTC relating «Reverse Automatic Braking» using the Subaru Select Monitor. <Ref. to RAB(diag)-12, Read Diagnostic Trouble Code (DTC).>	Is DTC B2C12 displayed? (Current malfunction)	Go to step **2**.	Even if DTC is displayed, the circuit has returned to a normal condition at this time. Reproduce the failure, and then perform the diagnosis again. NOTE: In this case, temporary poor contact of connector, temporary open or short circuit of harness may be the cause.

	Step	Check	Yes	No
2	**CHECK HARNESS BETWEEN SONAR SENSOR CONNECTOR AND RAB CM CONNECTOR. (SHORT CIRCUIT TO POWER SUPPLY).** 1) Turn the ignition switch to OFF. 2) Disconnect the sonar sensor (left corner) connector and the RAB CM connector. 3) Turn the ignition switch to ON. 4) Using a tester, measure the voltage between sonar sensor (left corner) connector and chassis ground. ***Connector & terminal (R364) No. 2 (+) — Chassis ground (–):***	Is the voltage less than 1 V?	Go to step **3**.	Repair or replace the short circuit in the harness between sonar sensor connector and RAB CM connector.
3	**CHECK SONAR SENSOR.** 1) Switch the sonar sensor (left corner) and sonar sensor (left inner). 2) Connect the disconnected connectors. 3) Turn the ignition switch to ON. 4) Read the DTC relating «Reverse Automatic Braking» using the Subaru Select Monitor. <Ref. to RAB(diag)-12, Read Diagnostic Trouble Code (DTC).>	Is DTC B2C12 displayed? (Current malfunction)	Replace the RAB CM. <Ref. to RAB-6, Reverse Automatic Braking CM.>	Replace the sensor installed as a sonar sensor (left corner).

T: DTC B2C13 RL SONAR HARNESS LOW

Outline of diagnosis:
Sonar sensor (left corner) harness is shorted to ground.
Time needed for diagnosis:
1200 ms
Recovery conditions:
Ignition switch OFF → ON
Wiring diagram:
Reverse Automatic Braking <Ref. to WI-329, Reverse Automatic Braking.>

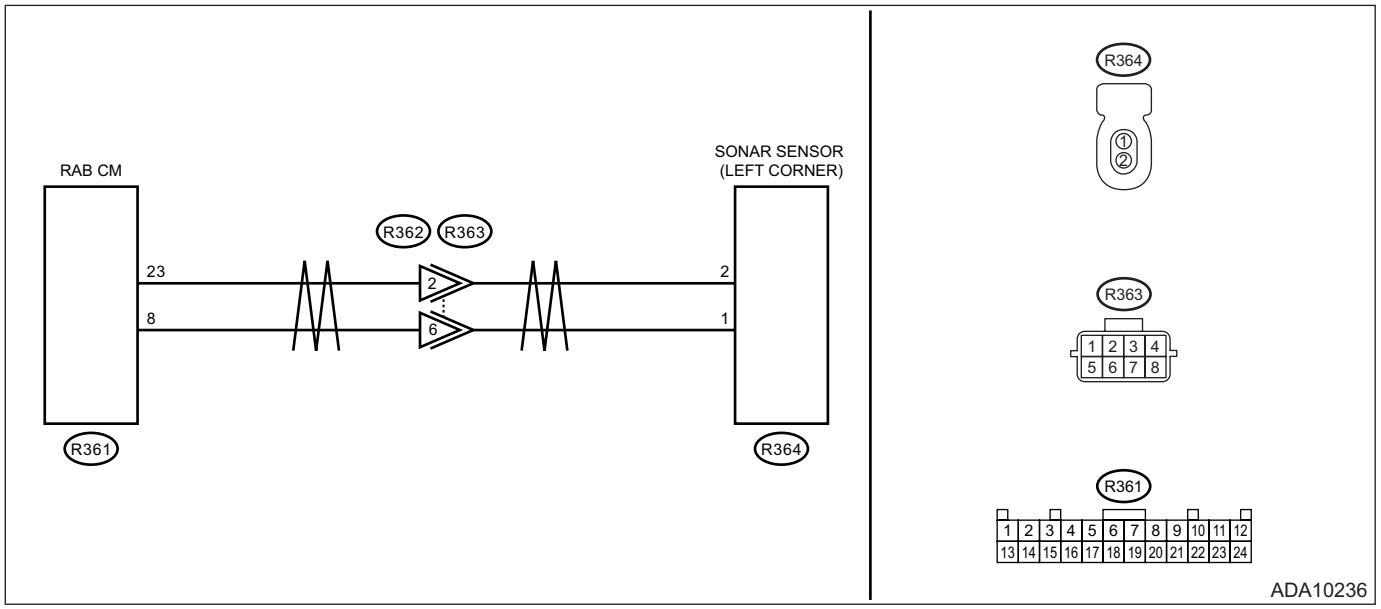

Step		Check	Yes	No
1	**CHECK CONNECTOR.** 1) Turn the ignition switch to OFF. 2) Disconnect the sonar sensor (left corner) connector. 3) Connect the disconnected connectors. 4) Turn the ignition switch to ON. 5) Read the DTC relating «Reverse Automatic Braking» using the Subaru Select Monitor. <Ref. to RAB(diag)-12, Read Diagnostic Trouble Code (DTC).>	Is DTC B2C13 displayed? (Current malfunction)	Go to step **2**.	Even if DTC is displayed, the circuit has returned to a normal condition at this time. Reproduce the failure, and then perform the diagnosis again. NOTE: In this case, temporary poor contact of connector, temporary open or short circuit of harness may be the cause.
2	**CHECK HARNESS BETWEEN SONAR SENSOR CONNECTOR AND RAB CM CONNECTOR. (SHORTED TO GROUND).** 1) Turn the ignition switch to OFF. 2) Disconnect the sonar sensor (left corner) connector and the RAB CM connector. 3) Using a tester, measure the resistance between sonar sensor (left corner) connector and chassis ground. ***Connector & terminal*** ***(R364) No. 2 — Chassis ground:***	Is the resistance 1 MΩ or more?	Go to step **3**.	Repair or replace the short circuit in the harness between sonar sensor connector and RAB CM connector.

	Step	Check	Yes	No
3	**CHECK SONAR SENSOR.** 1) Switch the sonar sensor (left corner) and sonar sensor (left inner). 2) Connect the disconnected connectors. 3) Turn the ignition switch to ON. 4) Read the DTC relating «Reverse Automatic Braking» using the Subaru Select Monitor. <Ref. to RAB(diag)-12, Read Diagnostic Trouble Code (DTC).>	Is DTC B2C13 displayed? (Current malfunction)	Replace the RAB CM. <Ref. to RAB-6, Reverse Automatic Braking CM.>	Replace the sensor installed as a sonar sensor (left corner).

U: DTC B2C14 RLC SONAR HARNESS HIGH

Outline of diagnosis:
Sonar sensor (left inner) harness is shorted to power supply.
Time needed for diagnosis:
- 600 ms (when two waves transmitted)
- 1200 ms (when four waves transmitted)

Recovery conditions:
Ignition switch OFF → ON
Wiring diagram:
Reverse Automatic Braking <Ref. to WI-329, Reverse Automatic Braking.>

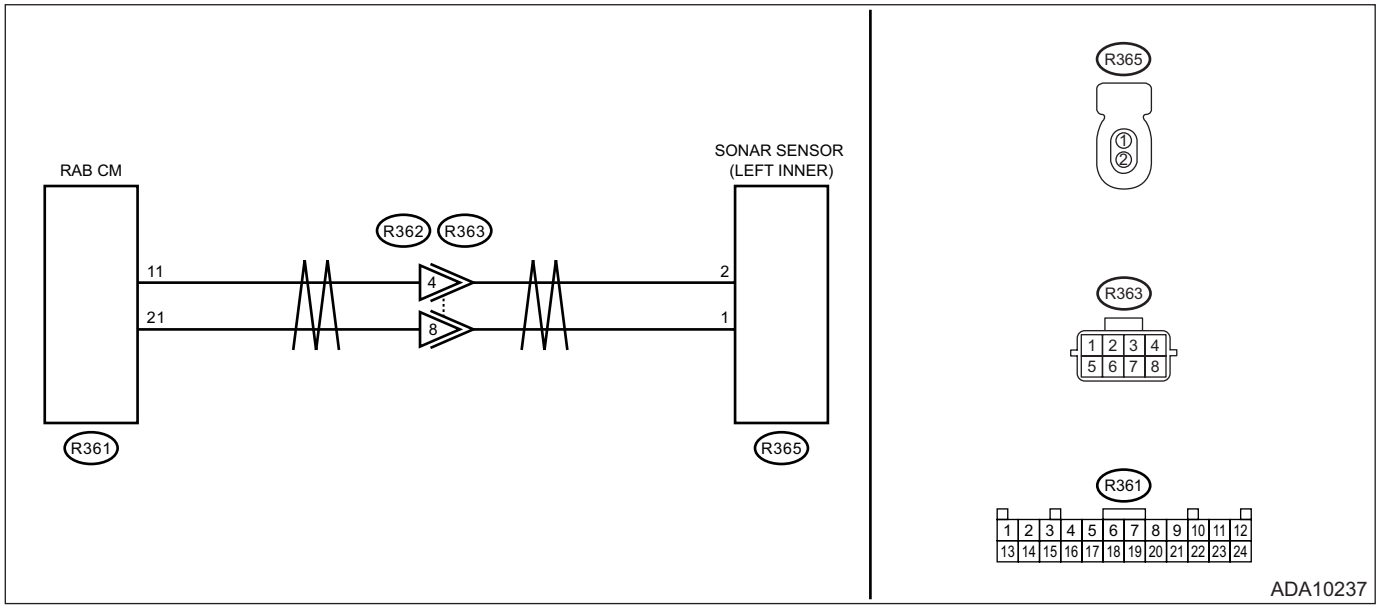

Step		Check	Yes	No
1	**CHECK CONNECTOR.** 1) Turn the ignition switch to OFF. 2) Disconnect the sonar sensor (left inner) connector. 3) Connect the disconnected connectors. 4) Turn the ignition switch to ON. 5) Read the DTC relating «Reverse Automatic Braking» using the Subaru Select Monitor. <Ref. to RAB(diag)-12, Read Diagnostic Trouble Code (DTC).>	Is DTC B2C14 displayed? (Current malfunction)	Go to step **2**.	Even if DTC is displayed, the circuit has returned to a normal condition at this time. Reproduce the failure, and then perform the diagnosis again. NOTE: In this case, temporary poor contact of connector, temporary open or short circuit of harness may be the cause.

	Step	Check	Yes	No
2	**CHECK HARNESS BETWEEN SONAR SENSOR CONNECTOR AND RAB CM CONNECTOR. (SHORT CIRCUIT TO POWER SUPPLY).** 1) Turn the ignition switch to OFF. 2) Disconnect the sonar sensor (left inner) connector and the RAB CM connector. 3) Turn the ignition switch to ON. 4) Using a tester, measure the voltage between sonar sensor (left inner) connector and chassis ground. ***Connector & terminal (R365) No. 2 (+) — Chassis ground (–):***	Is the voltage less than 1 V?	Go to step **3**.	Repair or replace the short circuit in the harness between sonar sensor connector and RAB CM connector.
3	**CHECK SONAR SENSOR.** 1) Switch the sonar sensor (left inner) and sonar sensor (left corner). 2) Connect the disconnected connectors. 3) Turn the ignition switch to ON. 4) Read the DTC relating «Reverse Automatic Braking» using the Subaru Select Monitor. <Ref. to RAB(diag)-12, Read Diagnostic Trouble Code (DTC).>	Is DTC B2C14 displayed? (Current malfunction)	Replace the RAB CM. <Ref. to RAB-6, Reverse Automatic Braking CM.>	Replace the sensor installed as a sonar sensor (left inner).

V: DTC B2C15 RLC SONAR HARNESS LOW

Outline of diagnosis:
Sonar sensor (left inner) harness is shorted to ground.
Time needed for diagnosis:
1200 ms
Recovery conditions:
Ignition switch OFF → ON
Wiring diagram:
Reverse Automatic Braking <Ref. to WI-329, Reverse Automatic Braking.>

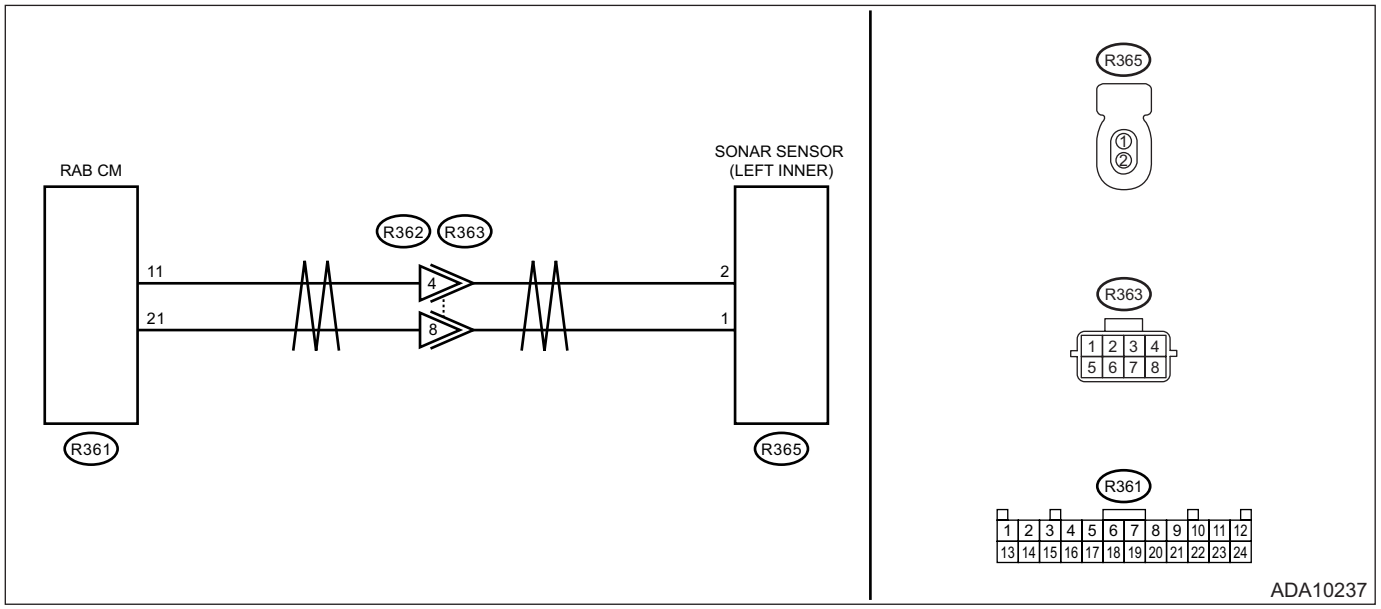

Step		Check	Yes	No
1	**CHECK CONNECTOR.** 1) Turn the ignition switch to OFF. 2) Disconnect the sonar sensor (left inner) connector. 3) Connect the disconnected connectors. 4) Turn the ignition switch to ON. 5) Read the DTC relating «Reverse Automatic Braking» using the Subaru Select Monitor. <Ref. to RAB(diag)-12, Read Diagnostic Trouble Code (DTC).>	Is DTC B2C15 displayed? (Current malfunction)	Go to step **2**.	Even if DTC is displayed, the circuit has returned to a normal condition at this time. Reproduce the failure, and then perform the diagnosis again. NOTE: In this case, temporary poor contact of connector, temporary open or short circuit of harness may be the cause.
2	**CHECK HARNESS BETWEEN SONAR SENSOR CONNECTOR AND RAB CM CONNECTOR. (SHORTED TO GROUND).** 1) Turn the ignition switch to OFF. 2) Disconnect the sonar sensor (left inner) connector and the RAB CM connector. 3) Using a tester, measure the resistance between sonar sensor (left inner) connector and chassis ground. ***Connector & terminal*** ***(R365) No. 2 — Chassis ground:***	Is the resistance 1 MΩ or more?	Go to step **3**.	Repair or replace the short circuit in the harness between sonar sensor connector and RAB CM connector.

	Step	Check	Yes	No
3	**CHECK SONAR SENSOR.** 1) Switch the sonar sensor (left inner) and sonar sensor (left corner). 2) Connect the disconnected connectors. 3) Turn the ignition switch to ON. 4) Read the DTC relating «Reverse Automatic Braking» using the Subaru Select Monitor. <Ref. to RAB(diag)-12, Read Diagnostic Trouble Code (DTC).>	Is DTC B2C15 displayed? (Current malfunction)	Replace the RAB CM. <Ref. to RAB-6, Reverse Automatic Braking CM.>	Replace the sensor installed as a sonar sensor (left inner).

W: DTC B2C16 RRC SONAR HARNESS HIGH / RRC SONAR CONTROL MODULE CIRCUIT

NOTE:
For the diagnostic procedure, refer to DTC B2C10. <Ref. to RAB(diag)-41, DTC B2C10 RRC SONAR HARNESS HIGH, Diagnostic Procedure with Diagnostic Trouble Code (DTC).>

X: DTC B2C17 RLC SONAR HARNESS HIGH / RLC SONAR CONTROL MODULE CIRCUIT

NOTE:
For the diagnostic procedure, refer to DTC B2C14. <Ref. to RAB(diag)-49, DTC B2C14 RLC SONAR HARNESS HIGH, Diagnostic Procedure with Diagnostic Trouble Code (DTC).>

Y: DTC B2C18 RR SONAR HARNESS HIGH / RR SONAR CONTROL MODULE CIRCUIT

NOTE:
For the diagnostic procedure, refer to DTC B2C0E. <Ref. to RAB(diag)-37, DTC B2C0E RR SONAR HARNESS HIGH, Diagnostic Procedure with Diagnostic Trouble Code (DTC).>

Z: DTC B2C19 RL SONAR HARNESS HIGH / RL SONAR CONTROL MODULE CIRCUIT

NOTE:
For the diagnostic procedure, refer to DTC B2C12. <Ref. to RAB(diag)-45, DTC B2C12 RL SONAR HARNESS HIGH, Diagnostic Procedure with Diagnostic Trouble Code (DTC).>

AA:DTC B2C1A RRC SONAR SENSOR

Outline of diagnosis:
Sonar sensor (right inner) is faulty.
Time needed for diagnosis:
- 600 ms (when two waves transmitted)
- 1200 ms (when four waves transmitted)

Recovery conditions:
Ignition switch OFF → ON
Wiring diagram:
Reverse Automatic Braking <Ref. to WI-329, Reverse Automatic Braking.>

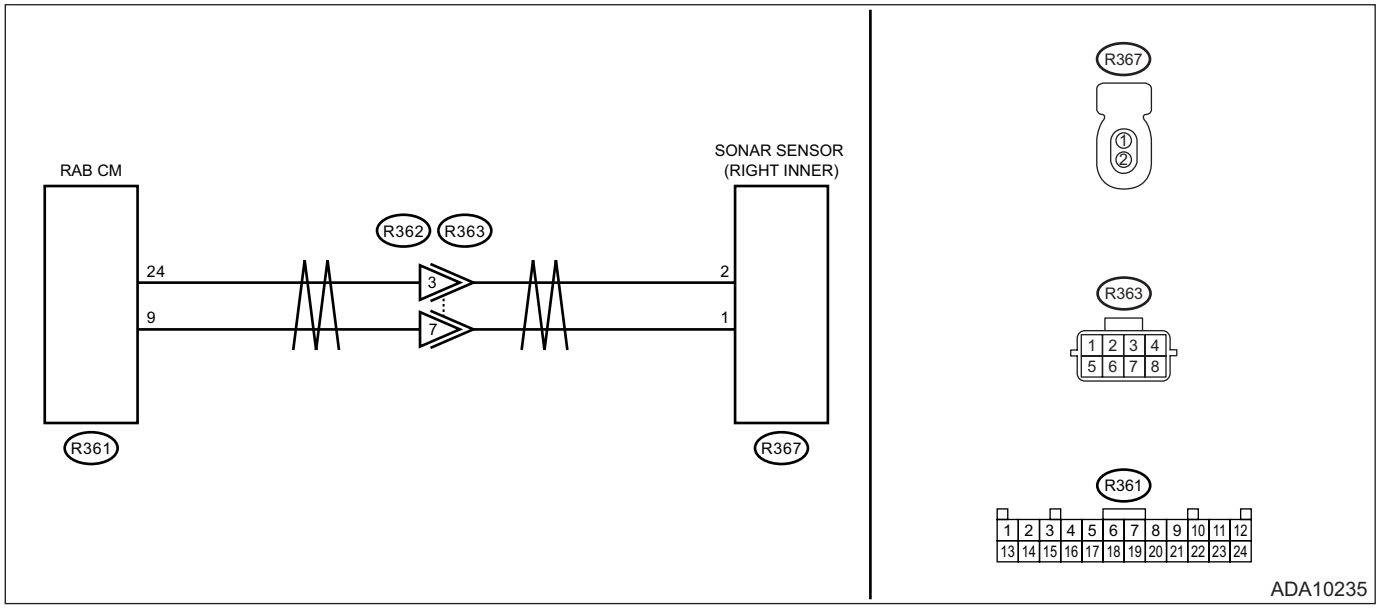

	Step	Check	Yes	No
1	**CHECK CONNECTOR.** 1) Turn the ignition switch to OFF. 2) Disconnect the sonar sensor (right inner) connector. 3) Connect the disconnected connectors. 4) Turn the ignition switch to ON. 5) Read the DTC relating «Reverse Automatic Braking» using the Subaru Select Monitor. <Ref. to RAB(diag)-12, Read Diagnostic Trouble Code (DTC).>	Is DTC B2C1A displayed? (Current malfunction)	Go to step **2**.	Even if DTC is displayed, the circuit has returned to a normal condition at this time. Reproduce the failure, and then perform the diagnosis again. NOTE: In this case, temporary poor contact of connector, temporary open or short circuit of harness may be the cause.
2	**CHECK SONAR SENSOR.** 1) Switch the sonar sensor (right inner) and sonar sensor (right corner). 2) Connect the disconnected connectors. 3) Turn the ignition switch to ON. 4) Read the DTC relating «Reverse Automatic Braking» using the Subaru Select Monitor. <Ref. to RAB(diag)-12, Read Diagnostic Trouble Code (DTC).>	Is DTC B2C1A displayed? (Current malfunction)	Replace the RAB CM. <Ref. to RAB-6, Reverse Automatic Braking CM.>	Replace the sensor installed as a sonar sensor (right inner). <Ref. to RAB-7, Sensor and Harness.>

AB:DTC B2C1B RLC SONAR SENSOR

Outline of diagnosis:
Sonar sensor (left inner) is faulty.
Time needed for diagnosis:
- 600 ms (when two waves transmitted)
- 1200 ms (when four waves transmitted)

Recovery conditions:
Ignition switch OFF → ON
Wiring diagram:
Reverse Automatic Braking <Ref. to WI-329, Reverse Automatic Braking.>

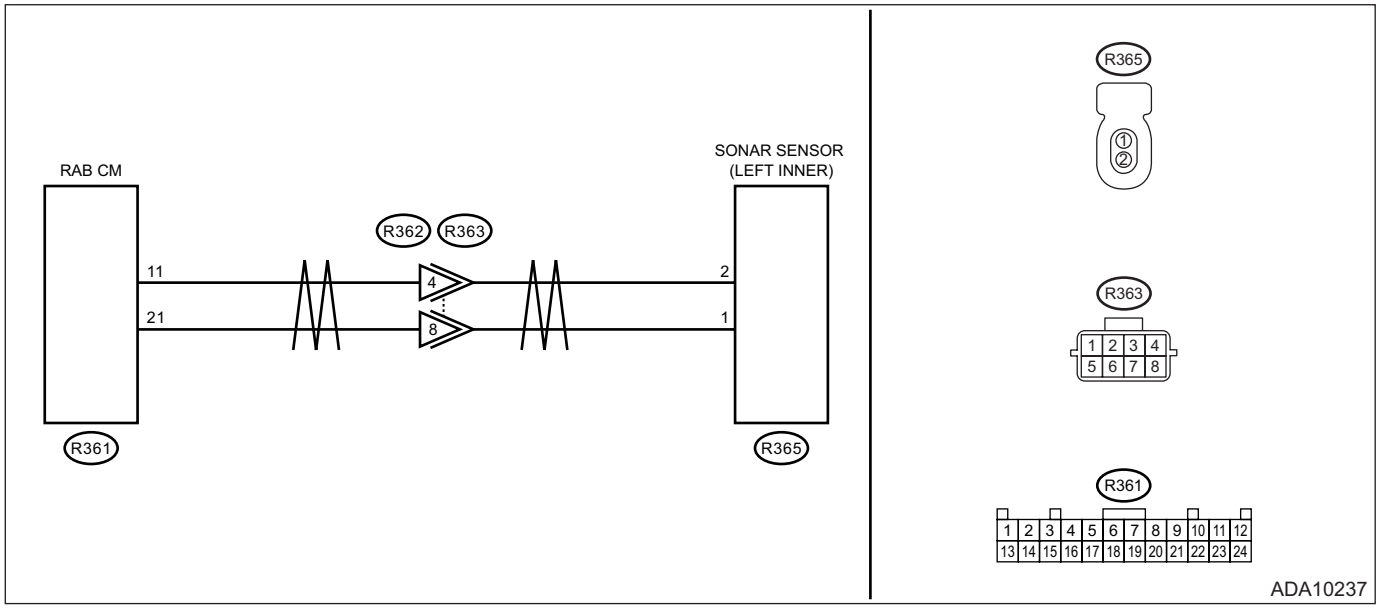

Step		Check	Yes	No
1	**CHECK CONNECTOR.** 1) Turn the ignition switch to OFF. 2) Disconnect the sonar sensor (left inner) connector. 3) Connect the disconnected connectors. 4) Turn the ignition switch to ON. 5) Read the DTC relating «Reverse Automatic Braking» using the Subaru Select Monitor. <Ref. to RAB(diag)-12, Read Diagnostic Trouble Code (DTC).>	Is DTC B2C1B displayed? (Current malfunction)	Go to step **2**.	Even if DTC is displayed, the circuit has returned to a normal condition at this time. Reproduce the failure, and then perform the diagnosis again. NOTE: In this case, temporary poor contact of connector, temporary open or short circuit of harness may be the cause.
2	**CHECK SONAR SENSOR.** 1) Switch the sonar sensor (left inner) and sonar sensor (left corner). 2) Connect the disconnected connectors. 3) Turn the ignition switch to ON. 4) Read the DTC relating «Reverse Automatic Braking» using the Subaru Select Monitor. <Ref. to RAB(diag)-12, Read Diagnostic Trouble Code (DTC).>	Is DTC B2C1B displayed? (Current malfunction)	Replace the RAB CM. <Ref. to RAB-6, Reverse Automatic Braking CM.>	Replace the sensor installed as a sonar sensor (left inner). <Ref. to RAB-7, Sensor and Harness.>

AC:DTC B2C1C RR SONAR SENSOR

Outline of diagnosis:
Sonar sensor (right corner) harness is shorted to power supply.
Time needed for diagnosis:
1200 ms
Recovery conditions:
Ignition switch OFF → ON
Wiring diagram:
Reverse Automatic Braking <Ref. to WI-329, Reverse Automatic Braking.>

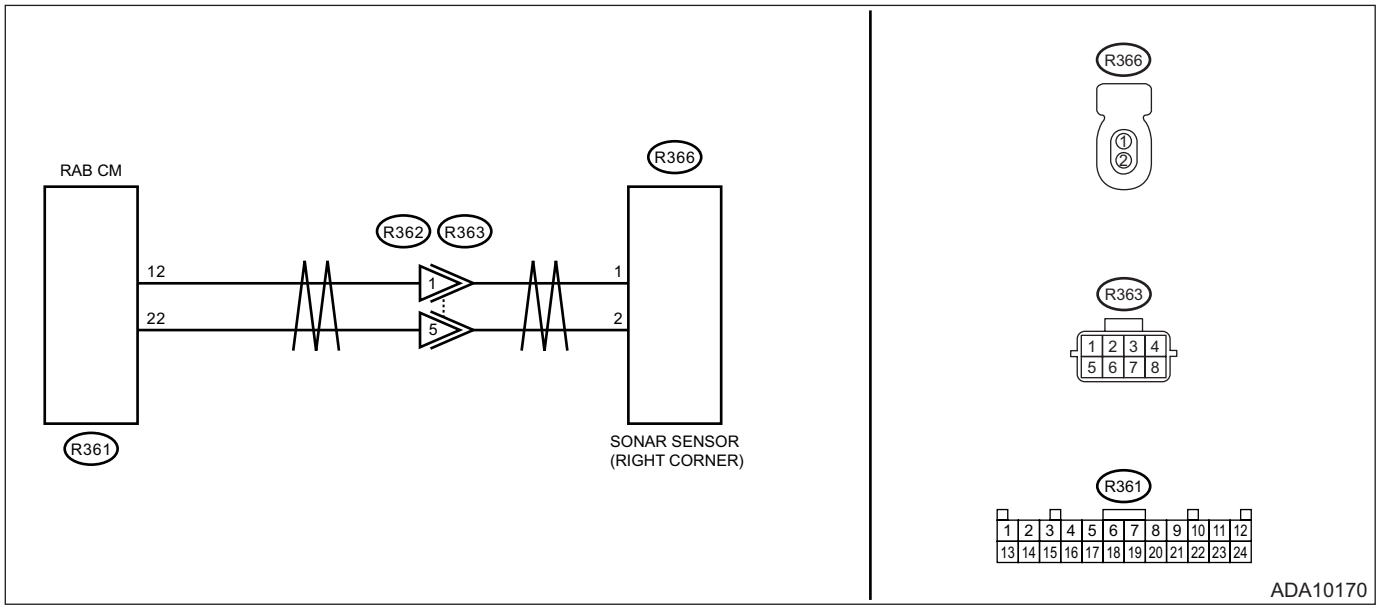

	Step	Check	Yes	No
1	**CHECK CONNECTOR.** 1) Turn the ignition switch to OFF. 2) Disconnect the sonar sensor (right corner) connector. 3) Connect the disconnected connectors. 4) Turn the ignition switch to ON. 5) Using the Subaru Select Monitor, read DTC of «Reverse Automatic Braking». <Ref. to RAB(diag)-12, Read Diagnostic Trouble Code (DTC).>	Is DTC B2C1C displayed? (Current malfunction)	Go to step **2**.	Even if DTC is displayed, the circuit has returned to a normal condition at this time. Reproduce the failure, and then perform the diagnosis again. NOTE: In this case, temporary poor contact of connector, temporary open or short circuit of harness may be the cause.
2	**CHECK SONAR SENSOR.** 1) Switch the sonar sensor (right corner) and sonar sensor (right inner). 2) Connect the disconnected connectors. 3) Turn the ignition switch to ON. 4) Read the DTC relating «Reverse Automatic Braking» using the Subaru Select Monitor. <Ref. to RAB(diag)-12, Read Diagnostic Trouble Code (DTC).>	Is DTC B2C1C displayed? (Current malfunction)	Replace the RAB CM. <Ref. to RAB-6, Reverse Automatic Braking CM.>	Replace the sensor installed as a sonar sensor (right corner). <Ref. to RAB-7, Sensor and Harness.>

AD:DTC B2C1D RL SONAR SENSOR

Outline of diagnosis:
Sonar sensor (left corner) harness is shorted to ground.
Time needed for diagnosis:
1200 ms
Recovery conditions:
Ignition switch OFF → ON
Wiring diagram:
Reverse Automatic Braking <Ref. to WI-329, Reverse Automatic Braking.>

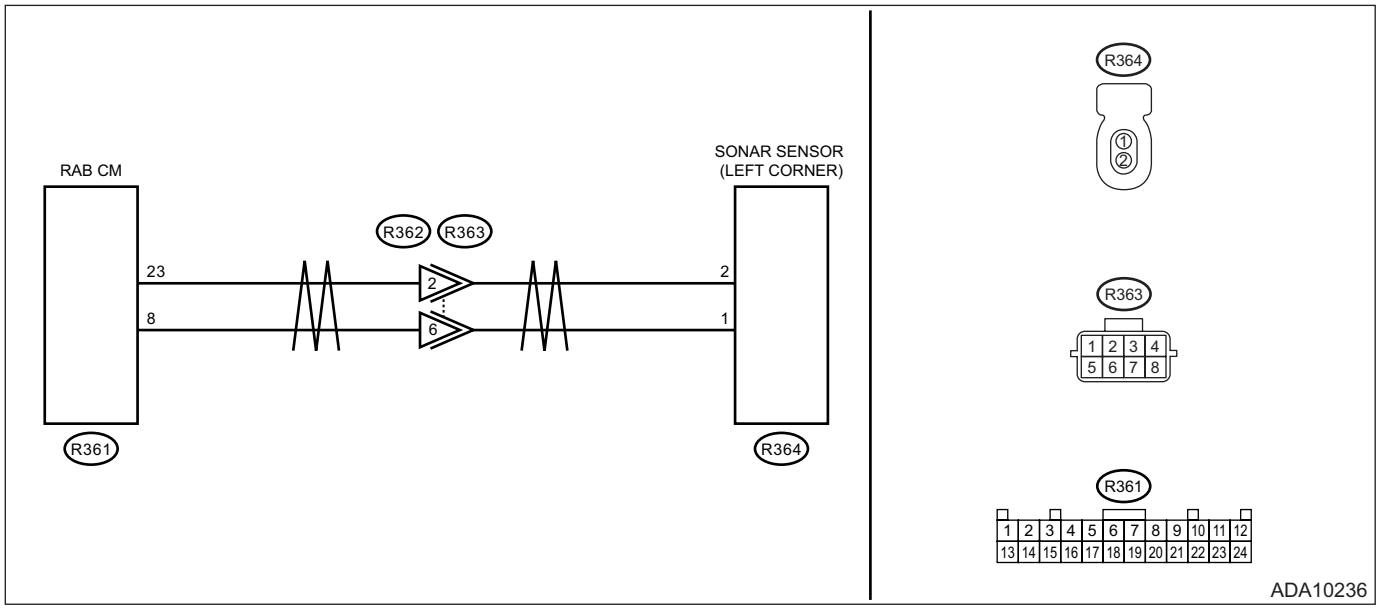

Step		Check	Yes	No
1	**CHECK CONNECTOR.** 1) Turn the ignition switch to OFF. 2) Disconnect the sonar sensor (left corner) connector. 3) Connect the disconnected connectors. 4) Turn the ignition switch to ON. 5) Read the DTC relating «Reverse Automatic Braking» using the Subaru Select Monitor. <Ref. to RAB(diag)-12, Read Diagnostic Trouble Code (DTC).>	Is DTC B2C1D displayed? (Current malfunction)	Go to step **2**.	Even if DTC is displayed, the circuit has returned to a normal condition at this time. Reproduce the failure, and then perform the diagnosis again. NOTE: In this case, temporary poor contact of connector, temporary open or short circuit of harness may be the cause.
2	**CHECK SONAR SENSOR.** 1) Switch the sonar sensor (left corner) and sonar sensor (left inner). 2) Connect the disconnected connectors. 3) Turn the ignition switch to ON. 4) Read the DTC relating «Reverse Automatic Braking» using the Subaru Select Monitor. <Ref. to RAB(diag)-12, Read Diagnostic Trouble Code (DTC).>	Is DTC B2C1D displayed? (Current malfunction)	Replace the RAB CM. <Ref. to RAB-6, Reverse Automatic Braking CM.>	Replace the sensor installed as a sonar sensor (left corner). <Ref. to RAB-7, Sensor and Harness.>

AE:DTC B2C1E RRC SONAR HARNESS LOW / RRC SONAR CONTROL MODULE CIRCUIT

NOTE:
For the diagnostic procedure, refer to DTC B2C11. <Ref. to RAB(diag)-43, DTC B2C11 RRC SONAR HARNESS LOW, Diagnostic Procedure with Diagnostic Trouble Code (DTC).>

AF:DTC B2C1F RLC SONAR HARNESS LOW / RLC SONAR CONTROL MODULE CIRCUIT

NOTE:
For the diagnostic procedure, refer to DTC B2C15. <Ref. to RAB(diag)-51, DTC B2C15 RLC SONAR HARNESS LOW, Diagnostic Procedure with Diagnostic Trouble Code (DTC).>

AG:DTC B2C20 RR SONAR HARNESS LOW / RR SONAR CONTROL MODULE CIRCUIT

NOTE:
For the diagnostic procedure, refer to DTC B2C0F. <Ref. to RAB(diag)-39, DTC B2C0F RR SONAR HARNESS LOW, Diagnostic Procedure with Diagnostic Trouble Code (DTC).>

AH:DTC B2C21 RL SONAR HARNESS LOW / RL SONAR CONTROL MODULE CIRCUIT

NOTE:
For the diagnostic procedure, refer to DTC B2C13. <Ref. to RAB(diag)-47, DTC B2C13 RL SONAR HARNESS LOW, Diagnostic Procedure with Diagnostic Trouble Code (DTC).>

AI: DTC B2C22 EyeSight SYSTEM

Outline of diagnosis:
EyeSight is faulty.
Time needed for diagnosis:
800 ms
Recovery conditions:
Ignition switch OFF → ON

NOTE:
Perform the diagnosis for EyeSight. <Ref. to ES(diag)-2, PROCEDURE, Basic Diagnostic Procedure.>

AJ:DTC U0077 LIN COMMUNICATION BUS "ECM/PCM" OFF

Outline of diagnosis:
Local communication is faulty.
Time needed for diagnosis:
500 ms
Recovery conditions:
Ignition switch OFF → ON

	Step	Check	Yes	No
1	**CHECK DTC.** Read the DTC relating «Reverse Automatic Braking» using the Subaru Select Monitor. <Ref. to RAB(diag)-12, Read Diagnostic Trouble Code (DTC).>	Is a DTC other than DTC U0077 displayed? (Current malfunction)	Perform the diagnosis for DTC other than DTC U0077.	Replace the RAB CM. <Ref. to RAB-6, Reverse Automatic Braking CM.>

AK:DTC U0100 LOST COMMUNICATION WITH ECM/PCM “A”

NOTE:
Perform the diagnosis for LAN system. <Ref. to LAN(diag)-2, PROCEDURE, Basic Diagnostic Procedure.>

AL:DTC U0101 LOST COMMUNICATION WITH TCM

NOTE:
Perform the diagnosis for LAN system. <Ref. to LAN(diag)-2, PROCEDURE, Basic Diagnostic Procedure.>

AM:DTC U0122 LOST COMMUNICATION WITH VEHICLE DYNAMICS CONTROL MODULE

NOTE:
Perform the diagnosis for LAN system. <Ref. to LAN(diag)-2, PROCEDURE, Basic Diagnostic Procedure.>

AN:DTC U0128 LOST COMMUNICATION WITH PARK BRAKE CONTROL MODULE

NOTE:
Perform the diagnosis for LAN system. <Ref. to LAN(diag)-2, PROCEDURE, Basic Diagnostic Procedure.>

AO:DTC U0140 LOST COMMUNICATION WITH BODY CONTROL MODULE

NOTE:
Perform the diagnosis for LAN system. <Ref. to LAN(diag)-2, PROCEDURE, Basic Diagnostic Procedure.>

AP:DTC U0155 LOST COMMUNICATION WITH INSTRUMENT PANEL CLUSTER (IPC) CONTROL MODULE

NOTE:
Perform the diagnosis for LAN system. <Ref. to LAN(diag)-2, PROCEDURE, Basic Diagnostic Procedure.>

AQ:DTC U0156 LOST COMMUNICATION WITH INFORMATION CENTER "A"

NOTE:
Perform the diagnosis for LAN system. <Ref. to LAN(diag)-2, PROCEDURE, Basic Diagnostic Procedure.>

AR:DTC U0181 LOST COMMUNICATION WITH HEADLAMP LEVELING CONTROL MODULE

NOTE:
Perform the diagnosis for LAN system. <Ref. to LAN(diag)-2, PROCEDURE, Basic Diagnostic Procedure.>

AS:DTC U0401 INVALID DATA RECEIVED FROM ECM/PCM “A”

NOTE:
Perform the diagnosis for LAN system. <Ref. to LAN(diag)-2, PROCEDURE, Basic Diagnostic Procedure.>

AT:DTC U0402 INVALID DATA RECEIVED FROM TCM

NOTE:
Perform the diagnosis for LAN system. <Ref. to LAN(diag)-2, PROCEDURE, Basic Diagnostic Procedure.>

AU:DTC U0416 INVALID DATA RECEIVED FROM VEHICLE DYNAMICS CONTROL MODULE

NOTE:
Perform the diagnosis for LAN system. <Ref. to LAN(diag)-2, PROCEDURE, Basic Diagnostic Procedure.>

AV:DTC U0417 INVALID DATA RECEIVED FROM PARK BRAKE CONTROL MODULE

NOTE:
Perform the diagnosis for LAN system. <Ref. to LAN(diag)-2, PROCEDURE, Basic Diagnostic Procedure.>

AW:DTC U0423 INVALID DATA RECEIVED FROM INSTRUMENT PANEL CLUSTER CONTROL MODULE

NOTE:
Perform the diagnosis for LAN system. <Ref. to LAN(diag)-2, PROCEDURE, Basic Diagnostic Procedure.>

AX:DTC U0457 INVALID DATA RECEIVED FROM INFORMATION CENTER "A"

NOTE:
Perform the diagnosis for LAN system. <Ref. to LAN(diag)-2, PROCEDURE, Basic Diagnostic Procedure.>

AY:DTC U0482 INVALID DATA RECEIVED FROM HEADLAMP LEVELING CONTROL MODULE

NOTE:
Perform the diagnosis for LAN system. <Ref. to LAN(diag)-2, PROCEDURE, Basic Diagnostic Procedure.>

AZ:DTC U1235 LOST COMMUNICATION WITH EyeSight

NOTE:
Perform the diagnosis for LAN system. <Ref. to LAN(diag)-2, PROCEDURE, Basic Diagnostic Procedure.>

BA:DTC U1433 INVALID DATA RECEIVED FROM EyeSight

NOTE:
Perform the diagnosis for LAN system. <Ref. to LAN(diag)-2, PROCEDURE, Basic Diagnostic Procedure.>

17.Cancel Code

A: NOTE

When the cancel codes are detected from the RAB CM, the Reverse Automatic Braking will be cancelled.

B: OPERATION

1) On «Start» display, select «Diagnosis».
2) On «Vehicle selection» display, input the target vehicle information and select «Confirmed».
3) On «Main Menu» display, select «Each System».
4) On «Select System» display, select «Reverse Automatic Braking» and then select «Enter».
5) On «Select Function» display, select «Cancel Code».

NOTE:
- For detailed operation procedures, refer to “Application help”.
- Up to three codes can be stored. When there are four or more codes, the oldest code is deleted and the newest code is stored.
- Stored codes will be cleared by Clear Memory.

C: LIST

Code	Description & trouble position	Content
0X01	+B Low Voltage	The battery power supply of RAB CM is reduced.
0X02	IGN Low Voltage	The ignition power supply of RAB CM is reduced.
0X03	RRC Sonar Noise	Sonar sensor (right inner) signal is interfered due to noise.
0X04	RLC Sonar Noise	Sonar sensor (left inner) signal is interfered due to noise.
0X05	RR Sonar Noise	Sonar sensor (right corner) signal is interfered due to noise.
0X06	RL Sonar Noise	Sonar sensor (left corner) signal is interfered due to noise.
0X07	RRC Sonar Dirty HALT I	Substance adhered to the sonar sensor (right inner).
0X08	RLC Sonar Dirty HALT I	Substance adhered to the sonar sensor (left inner).
0X09	RR Sonar Dirty HALT I	Substance adhered to the sonar sensor (right corner).
0X0A	RL Sonar Dirty HALT I	Substance adhered to the sonar sensor (left corner).
0X0B	RRC Sonar Dirty HALT II	Substance adhered to the sonar sensor (right inner).
0X0C	RLC Sonar Dirty HALT II	Substance adhered to the sonar sensor (left inner).
0X0D	RR Sonar Dirty HALT II	Substance adhered to the sonar sensor (right corner).
0X0E	RL Sonar Dirty HALT II	Substance adhered to the sonar sensor (left corner).
0X0F	RRC Sonar Mount Error	Substance adhered to the sonar sensor (right inner).
0X10	RLC Sonar Mount Error	Substance adhered to the sonar sensor (left inner).
0X11	Detect Low Level of Vehicle Height	The vehicle was tilted (ex. the rear of the vehicle was lowered) due to overload.

KEYLESS ACCESS WITH PUSH BUTTON START SYSTEM (DIAGNOSTICS)

KPS(diag)

		Page
1.	Basic Diagnostic Procedure	2
2.	Check List for Interview	4
3.	General Description	5
4.	Electrical Component Location	11
5.	Control Module I/O Signal	13
6.	Subaru Select Monitor	22
7.	Read Diagnostic Trouble Code (DTC)	26
8.	Read Current Data	27
9.	Clear Memory Mode	33
10.	Inspection Mode	34
11.	Keyless Access System Check	37
12.	System Operation Check Mode	38
13.	List of Diagnostic Trouble Code (DTC)	39
14.	Diagnostic Procedure with Diagnostic Trouble Code (DTC)	43
15.	General Diagnostic Table	112
16.	Diagnostics with Phenomenon	114

1. Basic Diagnostic Procedure

A: PROCEDURE

CAUTION:
• Subaru Select Monitor kit is required for reading DTC, performing diagnosis and reading current data.
• Before removal or installation, be sure to remove any foreign matter (dust, moisture, oil, etc.).
• Registration of immobilizer may be needed after the replacement of control modules, etc. For detailed procedure, refer to the "REGISTRATION MANUAL FOR IMMOBILIZER" provided as a separate volume.

NOTE:
• Using the Function Setting (Customize), check that the keyless access system is not in a cancelled state. <Ref. to SL-120, OPERATION, Function Setting (Customize).>
• Check List for Interview <Ref. to KPS(diag)-4, Check List for Interview.>

	Step	Check	Yes	No
1	**CHECK BATTERY.** Use a tester to measure the voltage of the battery.	Is the voltage 11 V or more?	Go to step **2**.	Charge or replace the battery and perform check pre-inspection. Go to step **2**.
2	**CHECK PRE-INSPECTION.** Use the interview check list to interview the user. <Ref. to KPS(diag)-4, Check List for Interview.>	Was the symptoms of the trouble recorded in the interview?	Go to step **3**.	Interview the user again.
3	**BASIC INSPECTION.** Perform the inspection for LAN system. <Ref. to LAN(diag)-2, PROCEDURE, Basic Diagnostic Procedure.>	Is the check result OK?	Go to step **4**.	Check it according to DTC of LAN system. <Ref. to LAN(diag)-2, PROCEDURE, Basic Diagnostic Procedure.>
4	**CHECK TROUBLE SYMPTOM.** 1) Read DTCs for the keyless access system. <Ref. to KPS(diag)-26, OPERATION, Read Diagnostic Trouble Code (DTC).> NOTE: If the communication function of the Subaru Select Monitor cannot be executed properly, check the communication circuit. <Ref. to KPS(diag)-22, COMMUNICATION FOR INITIALIZING IMPOSSIBLE, Subaru Select Monitor.> 2) Record all DTCs, time stamp and freeze frame data. NOTE: For time stamp, refer to "LAN SYSTEM". <Ref. to LAN(diag)-6, TIME STAMP, CAUTION, General Description.>	Is DTC displayed?	Perform the diagnosis for the displayed DTCs. After diagnosis, Go to step **7**.	Go to step **5**.
5	**CHECK PHENOMENON LIST.** Check the "Phenomenon List". <Ref. to KPS(diag)-112, General Diagnostic Table.>	Is there a symptom that corresponds in the phenomenon list?	Perform diagnosis according to the procedures in the phenomenon list.	Go to step **6**.

	Step	Check	Yes	No
6	**CHECK TROUBLE PHENOMENON.** 1) Perform check of current data. <Ref. to KPS(diag)-27, Read Current Data.> 2) Perform a function check. <Ref. to KPS(diag)-5, KEYLESS ACCESS WITH PUSH BUTTON START SYSTEM, CAUTION, General Description.> 3) Perform a unit check.	Was the trouble cause found?	Repair the cause of trouble.	Repeat a basic check again.
7	**PERFORM DIAGNOSIS.** 1) Perform the Clear Memory Mode. <Ref. to KPS(diag)-33, Clear Memory Mode.> 2) Perform the Inspection Mode. <Ref. to KPS(diag)-34, Inspection Mode.>	Is DTC displayed?	Perform the diagnosis for the displayed DTCs.	Finish the diagnosis.

2. Check List for Interview

A: CHECK

Inspect the following items regarding the vehicle's state.

<table>
<tr><td colspan="4">Keyless Access with Push Button Start System Trouble Check List for Interview
Received Year Month Date</td></tr>
<tr><td colspan="2" rowspan="2">Customer's name</td><td>Registration No.</td><td>Initial year of registration
Year Month Date</td></tr>
<tr><td>Vehicle model</td><td>Frame number</td></tr>
<tr><td>Interviewer</td><td>Inspector</td><td>Engine type</td><td>Odometer reading</td></tr>
<tr><td colspan="4">Customer specified content</td></tr>
<tr><td>Date and time when the trouble occurred</td><td></td><td>Frequency of trouble occurrence</td><td></td></tr>
<tr><td>Condition of trouble occurrence</td><td></td><td>Weather</td><td></td></tr>
<tr><td>Road conditions</td><td></td><td>Occurrence location</td><td></td></tr>
<tr><td>Accessory installation condition</td><td colspan="3"></td></tr>
<tr><td colspan="4">Trouble condition</td></tr>
<tr><td colspan="3">❑ DTC</td><td>❑( )</td></tr>
<tr><td rowspan="2">❑ Immobilizer system</td><td>Engine does not start</td><td colspan="2">❑ Starter does not operate
❑ Starter operates but engine does not start
❑ Engine starts but stops immediately</td></tr>
<tr><td colspan="3">Does not start with remote engine starter</td></tr>
<tr><td rowspan="2">❑ Steering lock system</td><td colspan="3">The steering lock is not released</td></tr>
<tr><td colspan="3">The steering lock does not lock</td></tr>
<tr><td rowspan="6">❑ Keyless access system</td><td colspan="3">Cannot lock nor unlock with the touch sensor (lock), touch sensor (unlock) and trunk opener button</td></tr>
<tr><td>Cannot lock with the touch sensor (lock)
Cannot unlock with the touch sensor (unlock)
Cannot lock nor unlock with the touch sensor (lock), touch sensor (unlock)
Trunk does not open with the trunk opener button.</td><td colspan="2">❑ Driver's side door
❑ Passenger's side door</td></tr>
<tr><td>Access key lockout protection function does not operate</td><td colspan="2">❑ Passenger room
❑ Luggage room</td></tr>
<tr><td colspan="3">The LED does not illuminate when the access key button is pressed</td></tr>
<tr><td colspan="3">The external buzzer does not beep</td></tr>
<tr><td colspan="3">The passenger room buzzer does not sound</td></tr>
<tr><td>❑ Other</td><td colspan="3">The room light or map light does not illuminate
( )</td></tr>
</table>

NOTE:
- Perform the diagnostics according to the basic diagnostic procedure.
- If the room light or map light does not illuminate and the keyless access does not function at the same time, the back-up fuse may be loose or blown.

3. General Description

A: CAUTION

1. SRS AIRBAG SYSTEM

The airbag system wiring harness is routed near the keyless access with push button start system.

CAUTION:
- **Do not use electrical test equipment on any wiring harnesses and connectors in the airbag system.**
- **Be careful not to damage the wiring harness of the airbag system when servicing the keyless access with push button start system.**

2. KEYLESS ACCESS WITH PUSH BUTTON START SYSTEM

NOTE:
- Using the function setting (ECM customizing), check that the keyless access system is not OFF. <Ref. to SL-120, OPERATION, Function Setting (Customize).>
- The dark current is approx. 400 mA if there is communication between the vehicle and access key.
- The dark current is approx. 40 mA if there is no communication between the vehicle and access key.*

* No communication with the vehicle means that the keyless access function has been cancelled or that the access key has not been near the vehicle for 15 minutes or more after door locking.

1) Keyless access door unlock function check

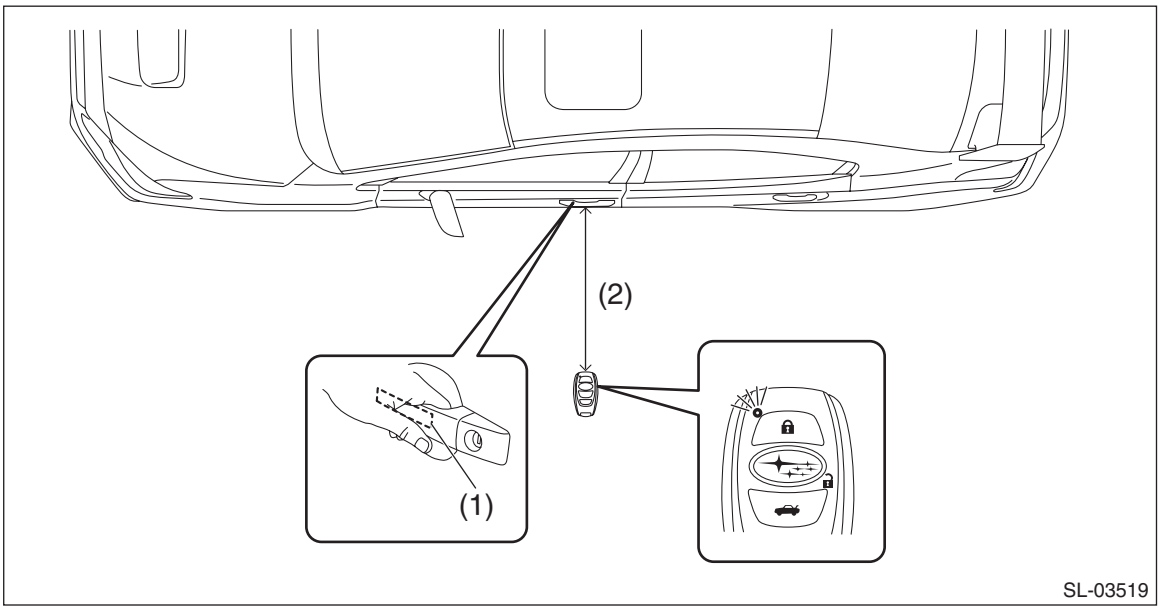

(1) Touch sensor (unlock) (2) 40 — 80 cm

(1) When carrying the access key with all doors locked by keyless lock operation, check that when the touch sensor (unlock) built in to the back side surface of door outer handle of front door is touched, the driver's door will unlock (when touched on the driver's side) or all doors will unlock (when touched on the passenger's side) and the answer-back function operates (hazard light blinks twice, access buzzer sounds twice).

(2) In the keyless access door unlock detection area, hold the access key at the same height as the outer handle (approx. 80 cm from the ground) and in the direction shown in the figure, and check that the vehicle becomes unlock mode [access key LED (red) blinks] at 40 to 80 cm from the vehicle.

NOTE:
Check the access key battery if the LED (red) does not illuminates when the access key button is pressed. <Ref. to SL-87, INSPECTION, Access Key.>

2) Check keyless access door lock function

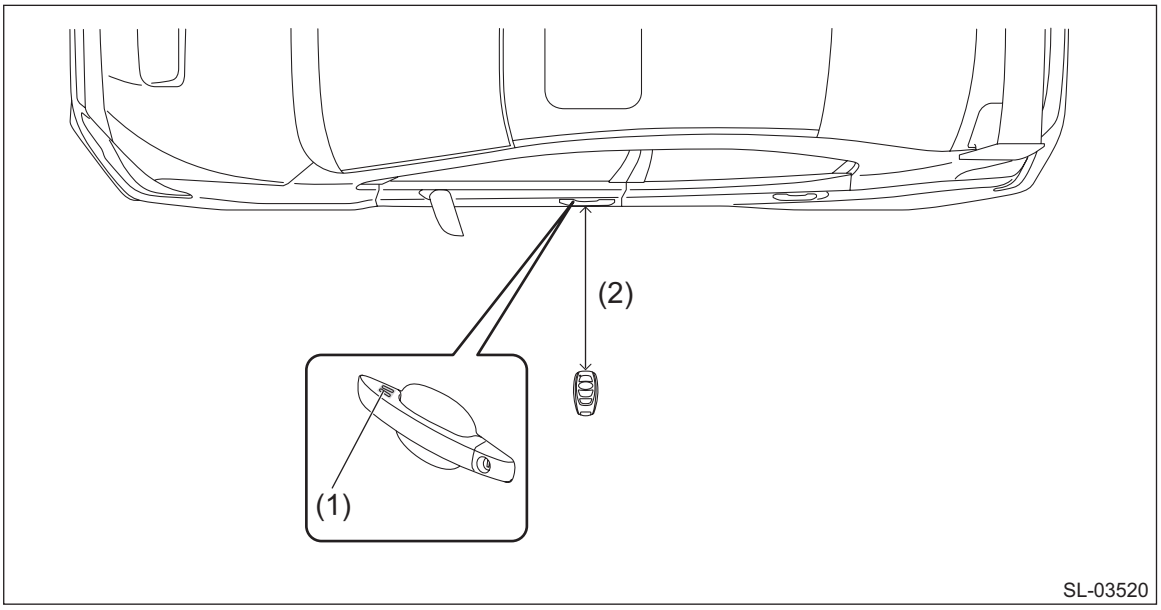

(1) Touch sensor (lock) (2) Approx. 30 cm

(1) When carrying the access key outside of the vehicle with all doors closed and unlocked, check that when the touch sensor (lock) on the surface of door outer handle of front door is touched, all doors will lock and the answer-back function operates (hazard light blinks once, access buzzer sounds once).

CAUTION:
If the access key is within the vehicle but not within the detection area (in the instrument panel, on the rear tray, in the glove box, on the floor, or in the door trim pocket), then lockout protection will not function when the doors are locked and the access key will be locked into the vehicle.

(2) To check the keyless access door lock operation range, hold the access key at a height of 10 cm under the bottom edge of the door glass (approx. 80 cm from the ground), point it in the direction shown in the figure at a distance of approx. 30 cm from the vehicle, and check that all doors lock and the answer-back function operates (hazard light blinks once, access buzzer sounds once) when you touch the touch sensor (lock).

(3) Check the passenger's side door in the same manner.

NOTE:
- When the door cannot lock if the touch sensor (lock) is touched, touch the touch sensor (lock) with palm.
- Since communication is not possible within close range (20 cm or less) of the door outer handle, the access key may not operate if you touch the touch sensor (lock) with the same hand you are holding the access key.
- If the lockout prevention buzzer sounds, it is possible that the interior transmitter has radio wave leakage.

3) Check of the keyless access trunk open function

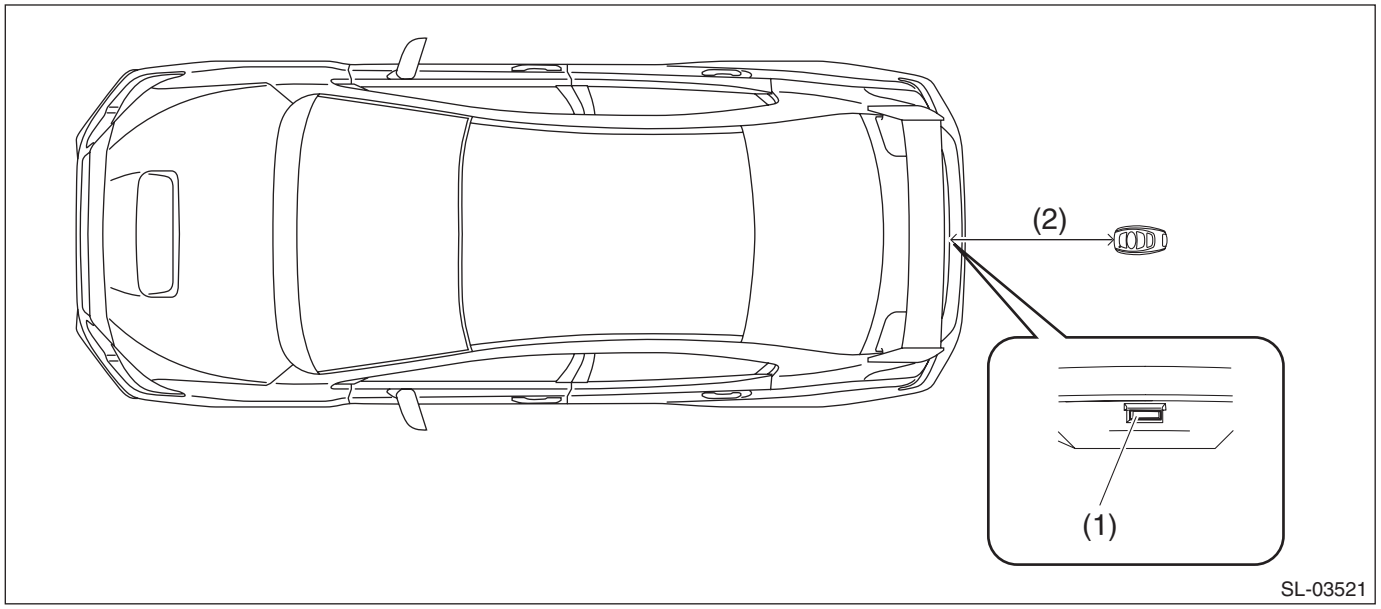

(1) Trunk opener button (2) 40 — 80 cm

(1) With the trunk closed, check that the trunk opens and the answer-back function operates (hazard light blinks twice, access buzzer sounds twice) when you press the trunk opener button while carrying the access key.
(2) To check the keyless access trunk open operation range, hold the access key behind and in the center of the vehicle at the same height as the trunk opener button (90 cm from the ground), point it in the direction shown in the figure at a distance of 40 to 80 cm from the vehicle, and check that the trunk opens and the answer-back function operates (hazard light blinks twice, access buzzer sounds twice) when the trunk opener button is pressed.

4) Check of the keyless access ignition switching function
(1) With the ignition OFF, enter the vehicle while carrying the access key. Depress the brake pedal with the shift lever in the “P” range (CVT model) or depress the clutch pedal (MT model), check that the push button ignition switch indicator is illuminated in green, and check that the engine starts when you press the push button ignition switch.
(2) While carrying the access key, check that the status changes as follows each time you press the push button ignition switch without depressing the brake pedal (CVT model) or clutch pedal (MT model): ‘Ignition OFF’ → ‘ACC ON’ → ‘Ignition ON’ → ‘Ignition OFF’. However on the CVT model, if the shift lever is in other than the “P” range and the push button ignition switch is pressed from ignition ON, then the status will not change to ignition OFF and instead will change to ACC ON.
(3) After the vehicle has stopped, press the push button ignition switch and ignition is turned OFF (engine stopped · all power supplies OFF). However on the CVT model, if the shift lever is in other than the “P” range and the push button ignition switch is pressed with the vehicle stopped, then the power supply will not change to ignition OFF and instead will change to ACC ON. Check that the steering lock operates if the door is opened in the ignition OFF state. (For CVT model, the shift must be in the “P” range).
(4) To check the range of the keyless access ignition operation, check that the engine can start when you set the access key at the check position on the seat in the direction indicated in the figure.

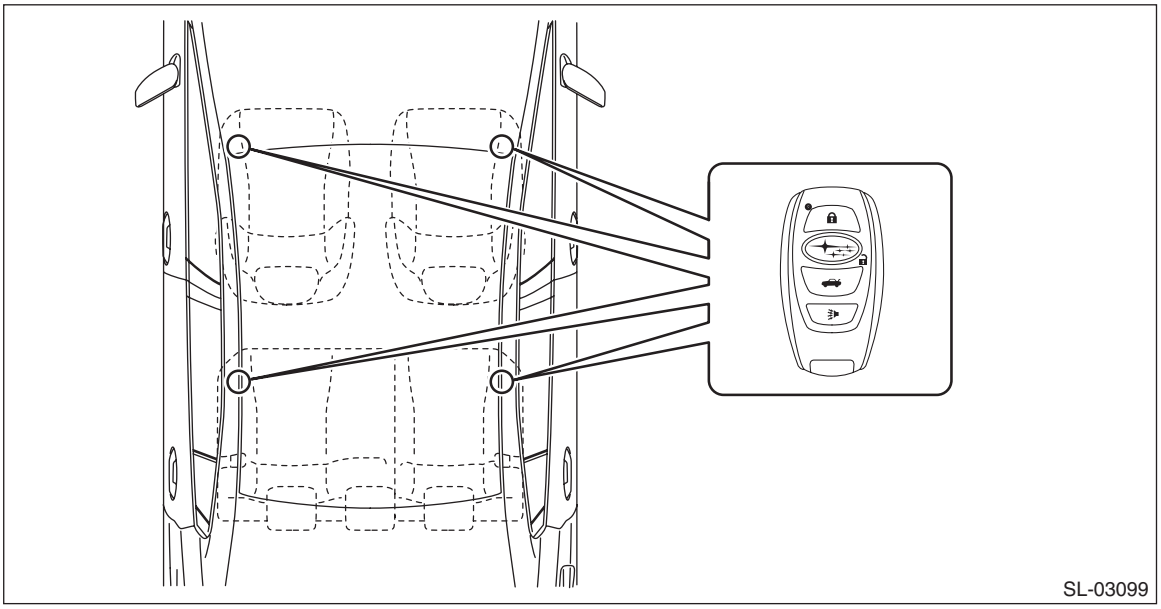

CAUTION:
The access key may not be correctly detected even though it is within the detection area within the passenger room, if it is on the instrument panel, on the rear tray, in the glove box, on the floor, or in the door trim pocket.

NOTE:
Perform the check multiple times, once each with the access key positioned on the driver’s seat, on the passenger’s seat, and on the rear seat in 2 locations.

5) Lockout protection function check with the access key in the trunk

CAUTION:
Open one of the windows before performing this check in order to prevent the key from being locked inside the vehicle.

(1) With all doors closed and locked, and with the access key in the trunk room and the trunk closed, check that the access buzzer sounds (approx. 2 seconds). Also check that the trunk opens when you press the trunk opener button.

(2) To check the detection range of the lockout protection function with the access key in the trunk, position the access key in the direction shown in the figure, and check that the lockout protection function operates normally when you check the lockout protection function for the access key locked in the trunk.

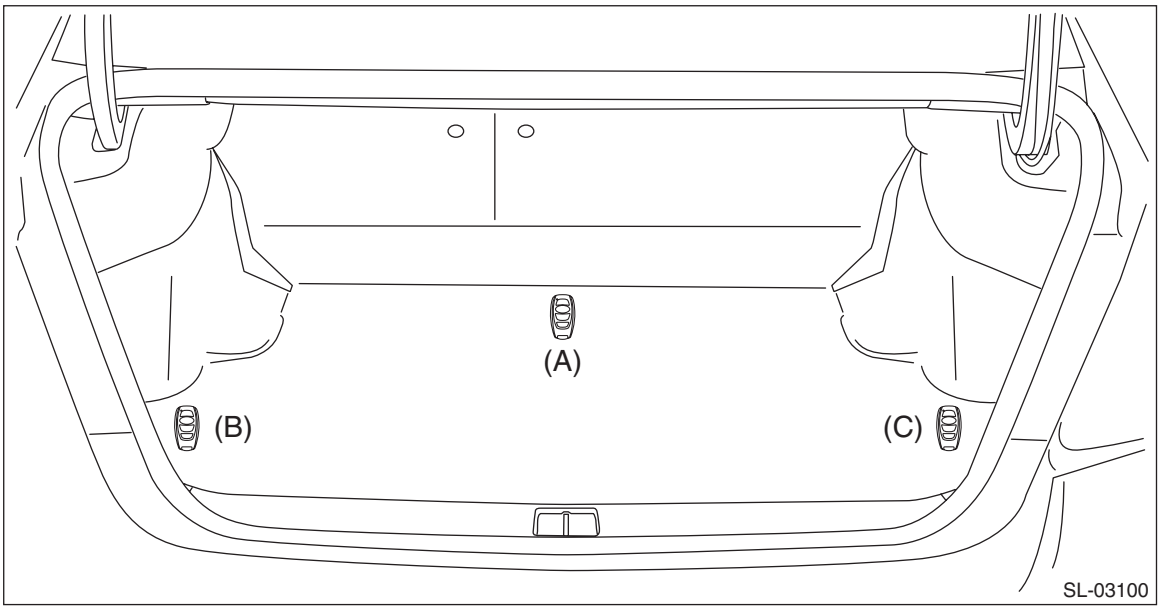

CAUTION:
The lockout protection function will not operate if the access key is any of the locations described below.

- Near the spare tire or on the edge of the trunk room.
- Inside a bag made of metallic material or near metal objects.

NOTE:
Check the trunk in two locations or more.

6) Lockout protection function check (in the passenger room)

CAUTION:
Open one of the windows before performing this check in order to prevent the key from being locked inside the vehicle.

(1) Position the access key on the driver's or passenger's seat.

(2) Close all doors. (with all doors unlocked)

(3) Check that the doors do not lock and the lockout protection buzzer (exterior) sounds for 2 seconds when you touch the touch sensor (lock) of either the driver's or passenger's door.

7) Check of the keyless access cancel function

(1) After setting the keyless access cancel function, check that all keyless access and start system (keyless access) functions are inoperable. (For cancel setting, refer to <Ref. to SL-120, OPERATION, Function Setting (Customize).>)

NOTE:
When keyless access is cancelled, door lock and unlock can be operated by access key button operation and the starter system can be operated by passing the access key over the push button ignition switch with the access key button toward you.

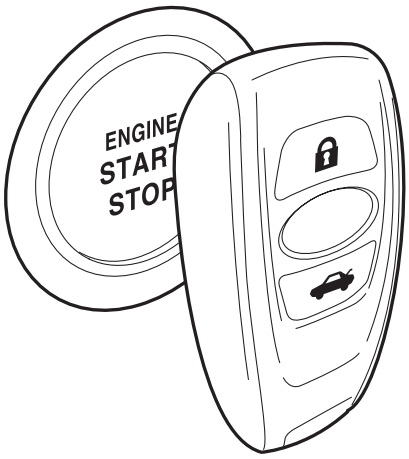

SL-03328

8) Access key diagnostic mode
(1) Connect to the Subaru Select Monitor, and select «Diagnosis» on the «Start» display.
(2) On «Vehicle selection» display, input the target vehicle information and select «Confirmed».
(3) On «Main Menu» display, select «Each System».
(4) On «Select System» display, select «Keyless Access with Push Button Start» and then select «Enter».
(5) On «Select Function» display, select «Work Support».
(6) On «Work Support» display, select «Keyless access system check».
(7) Select the transmitter to check from the items.
(8) Check that the door lock buzzer sounds (short blips, a continuous beeping sound for the center room antenna) when the access key is near the selected transmitter or antenna.

B: PREPARATION TOOL

1. SPECIAL TOOL

ILLUSTRATION	TOOL NUMBER	DESCRIPTION	REMARKS
 STSSM4	—	SUBARU SELECT MONITOR 4	Used for setting of each function and trouble-shooting for electrical system. NOTE: For detailed operation procedures of Subaru Select Monitor 4, refer to “Application help”.

2. GENERAL TOOL

TOOL NAME	REMARKS
Circuit tester	Used for measuring resistance, voltage and current.
DST-i	Used together with Subaru Select Monitor 4.
Oscilloscope	Used for measuring the waveform.

4. Electrical Component Location

A: LOCATION

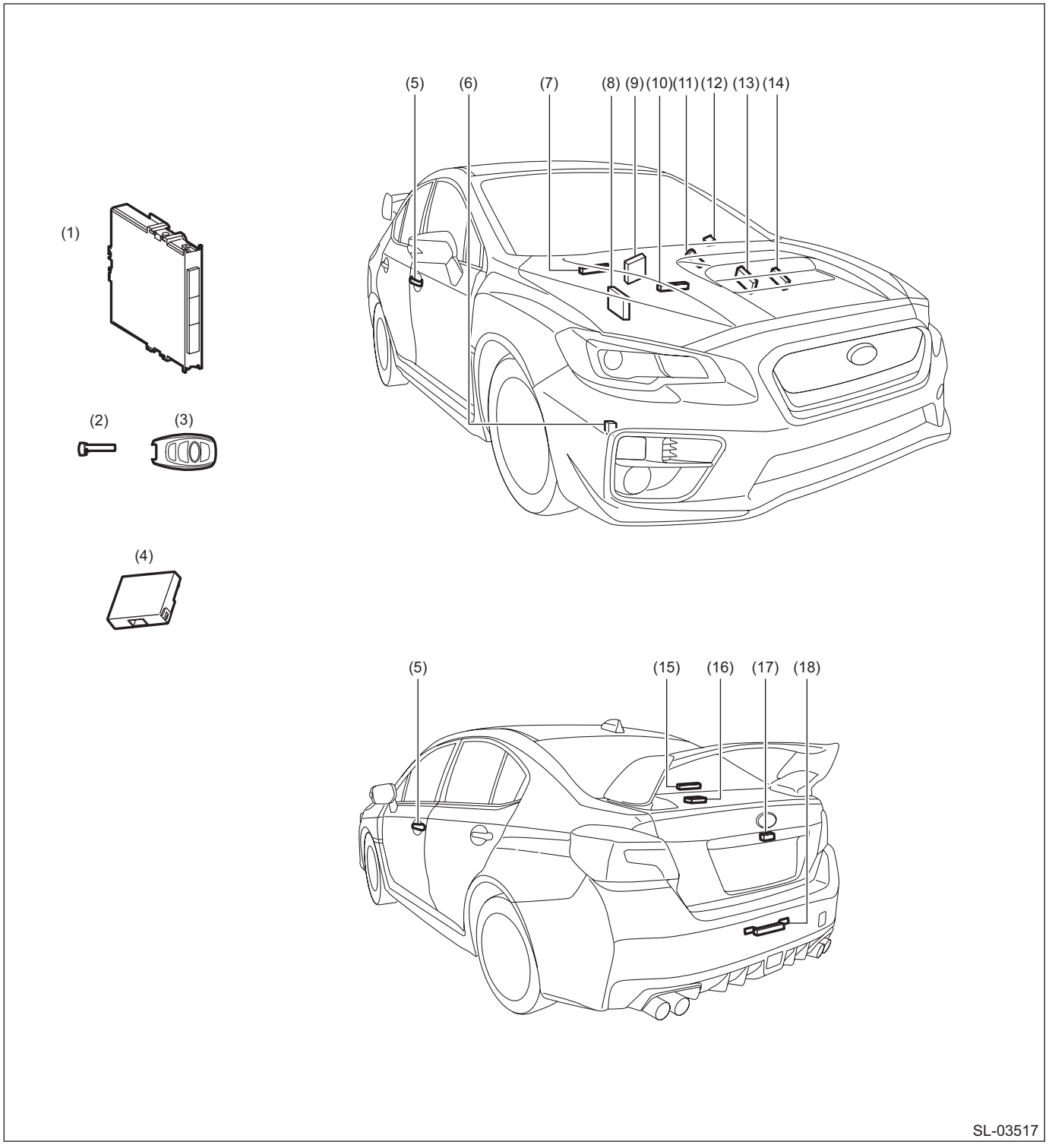

(1) Keyless access CM
(2) Mechanical key
(3) Access key
(4) ID code box
(For C0 model only)
(5) Front outer handle (front exterior antenna)
– Touch sensor (lock)
– Touch sensor (unlock)
(6) Access buzzer
(7) Center interior antenna
(8) ECM
(Engine type FA)
(9) ECM
(Engine type EJ)
(10) Front interior antenna
(11) Push button ignition switch
(12) Steering lock CM
(13) TCM
(14) Body integrated unit
(15) Rear interior antenna
(16) Receiver
(17) Trunk opener button
(18) Rear exterior antenna

5. Control Module I/O Signal

A: ELECTRICAL SPECIFICATION

1. KEYLESS ACCESS CM

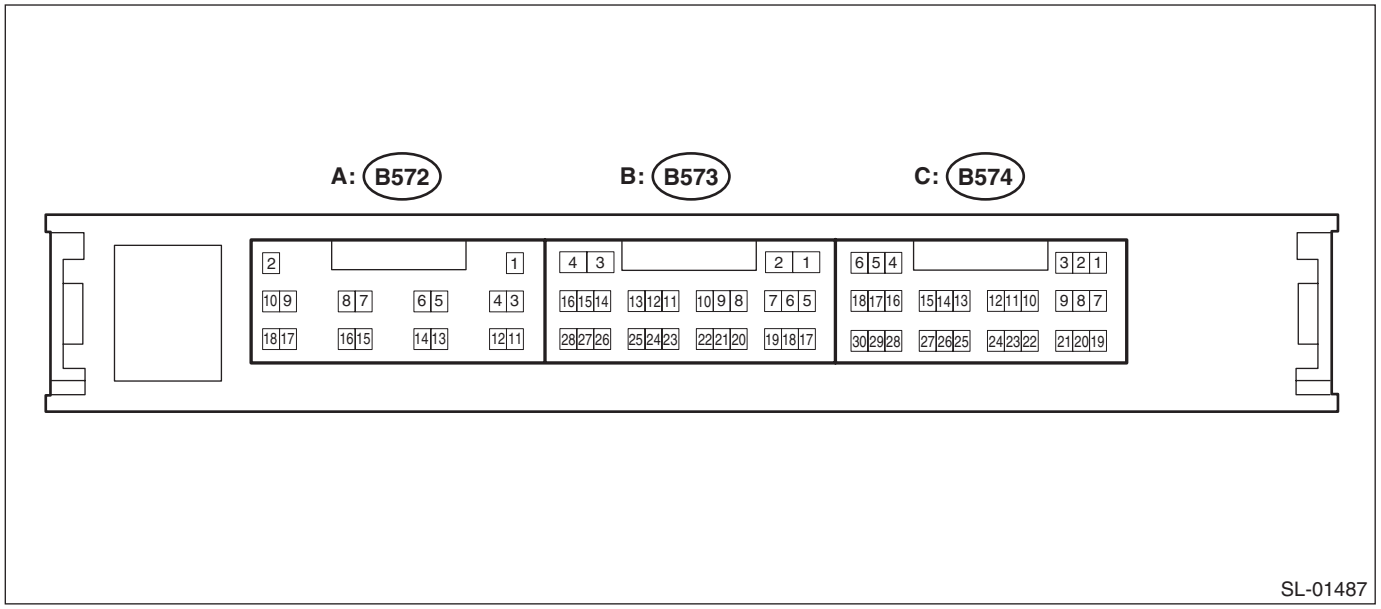

Terminal No.	Terminal symbol	Contents
(B572) No. 2	+B	+B
(B572) No. 3	INDS	Start switch indicator (green) output
(B572) No. 5	N-SW	Neutral switch input
(B572) No. 7	STSW	STSW output
(B572) No. 9	IG2D	IG2 relay drive output
(B572) No. 10	CLUT	Clutch switch input
(B572) No. 11	GND	GND
(B572) No. 13	EGIO	Immobilizer communication 1
(B572) No. 17	TACH	Engine speed input
(B572) No. 18	STP1	Stop light switch input
(B573) No. 1	CG8B	Outside rear antenna output –
(B573) No. 2	CLG8	Outside rear antenna output +
(B573) No. 5	RCO	Tuner power supply
(B573) No. 8	CG7B	Inside rear antenna output –
(B573) No. 9	CLG7	Inside rear antenna output +
(B573) No. 10	CG6B	Inside center antenna output –
(B573) No. 11	CLG6	Inside center antenna output +
(B573) No. 15	IDW	ID code box presence judgment terminal
(B573) No. 17	RDA	Tuner reception data input
(B573) No. 19	RSSI	Tuner reception start signal input
(B573) No. 27	TSW5	Trunk opener button input
(B573) No. 28	ACCR	ACC cutoff input
(B574) No. 1	VC5	Immobilizer amplifier power supply (start switch)
(B574) No. 2	CG5B	Inside front antenna output –
(B574) No. 3	CLG5	Inside front antenna output +
(B574) No. 4	ACCD	ACC relay drive output
(B574) No. 5	IG	IGN power supply
(B574) No. 6	IG1D	IG1 relay drive output

Terminal No.	Terminal symbol	Contents
(B574) No. 7	CODE	Immobilizer signal reception (start switch)
(B574) No. 8	TSW2	Passenger's lock sensor signal input
(B574) No. 9	TXCT	Immobilizer signal transmission (start switch)
(B574) No. 10	CG2B	Passenger's antenna output –
(B574) No. 11	CLG2	Passenger's antenna output +
(B574) No. 12	CLG1	Driver's antenna output +
(B574) No. 13	CG1B	Driver's antenna output –
(B574) No. 14	CANH	HS-CAN H
(B574) No. 15	CANL	HS-CAN L
(B574) No. 16	SWIL	Start switch character illumination output
(B574) No. 17	LIN	LIN communication
(B574) No. 18	INDW	Start switch indicator (orange) output
(B574) No. 19	POS1	Driver's sensor drive power supply
(B574) No. 20	TSW1	Driver's lock sensor signal input
(B574) No. 21	POS2	Passenger's sensor drive power supply
(B574) No. 22	SEN1	Driver's unlock sensor signal input
(B574) No. 23	SEN2	Passenger's unlock sensor signal input
(B574) No. 24	AGND	Immobilizer amplifier GND (start switch)
(B574) No. 25	P	Parking position switch input
(B574) No. 26	SLP	Steering lock position input
(B574) No. 27	SPD	Vehicle speed signal input
(B574) No. 28	SSW1	Start switch input 1
(B574) No. 29	SLR+	Steering motor power supply signal output
(B574) No. 30	SSW2	Start switch input 2

Disconnect the control module connector (B572) before checking the following items.

NOTE:
If the measured value is out of standard, it is possible that the vehicle has a fault.

Terminal No.	Item	Measuring condition	Standard
(B572) No. 2 (+B) ←→ (B572) No. 11 (GND)	Voltage	Always	9.5 — 16 V
(B572) No. 11 (GND) ←→ Chassis ground	Resistance	Always	Less than 1 Ω
(B574) No. 5 (IG) ←→ Chassis ground	Voltage	ACC ON → IG ON	1 V or less → 9 — 14 V

Disconnect the control module connector (B573) before checking the following items.

NOTE:
If the measured value is out of standard, it is possible that the vehicle has a fault.

Terminal No.	Item	Measuring condition	Standard
(B573) No. 15 (IDW) ←→ Chassis ground (For C0 model only)	Continuity	Always	Continuity exists

Disconnect the control module connectors (B574) and (B572) before checking the following items.

NOTE:
If the measured value is out of standard, it is possible that the vehicle has a fault.

Terminal No.	Item	Measuring condition	Standard
(B574) No. 4 (ACCD) ←→ Chassis ground	Resistance	Always (20°C)	152.61 — 216.5 Ω
(B572) No. 9 (IG2D) ←→ Chassis ground	Resistance	Always (20°C)	74.15 — 460.88 Ω
(B574) No. 6 (IG1D) ←→ Chassis ground	Resistance	Always (20°C)	50.87 — 72.17 Ω
(B572) No. 18 (STP1) ←→ Chassis ground (CVT model)	Voltage	Brake pedal depressed → released	11 — 14 V → 1 V or less
(B574) No. 25 (P) ←→ Chassis ground (CVT model)	Resistance	Except for shift positions P → Shift position P	40 kΩ or more → 200 Ω or less
(B574) No. 27 (SPD) ←→ Chassis ground	Resistance	Always	30 kΩ or more
(B574) No. 28 (SSW1) ←→ Chassis ground	Resistance	Push button ignition switch pressed → released	Less than 1 Ω → 10 kΩ or more
(B574) No. 29 (SLR+) ←→ Chassis ground	Resistance	Always	10 kΩ or more
(B574) No. 30 (SSW2) ←→ Chassis ground	Resistance	Push button ignition switch pressed → released	Less than 1 Ω → 10 kΩ or more
(B574) No. 17 (LIN) ←→ Chassis ground	Continuity	Always	Continuity does not exist
(B574) No. 14 (CANH) ←→ Chassis ground	Pulse	ACC ON or IGN ON	Pulse generation
(B574) No. 15 (CANL) ←→ Chassis ground	Pulse	ACC ON or IGN ON	Pulse generation

Connect the control module connector before checking the following items.

NOTE:
If the measured value is out of standard, it is possible that the keyless access CM has a fault.

Terminal No.	Item	Measuring condition	Standard
(B574) No. 1 (VC5) ←→ (B574) No. 24 (AGND)	Voltage	30 seconds or more have passed after the door was opened or closed with IG OFF and without depressing the brake pedal (CVT model) or clutch pedal (MT model).	1 V or less
	Waveform	Within 30 seconds after the push button ignition switch is pressed with IG OFF and access key not in the passenger room	Waveform 1
(B574) No. 2 (CG5B) ←→ (B572) No. 11 (GND)	Pulse	All doors closed, ACC and IG OFF, access key not in passenger room, touch sensor (lock) OFF → ON	No pulse output → Pulse output detected
(B574) No. 3 (CLG5) ←→ (B572) No. 11 (GND)	Pulse	All doors closed, ACC and IG OFF, access key not in passenger room, touch sensor (lock) OFF → ON	No pulse output → Pulse output detected
(B574) No. 4 (ACCD) ←→ (B572) No. 11 (GND)	Voltage	IG OFF → ACC ON	1 V or less → 9 — 14 V
(B574) No. 6 (IG1D) ←→ (B572) No. 11 (GND)	Voltage	ACC ON → IG ON	1 V or less → 9 — 14 V
(B574) No. 7 (CODE) ←→ (B574) No. 24 (AGND)	Voltage	30 seconds or more have passed after the door was opened or closed with IG OFF and without depressing the brake pedal (CVT model) or clutch pedal (MT model).	1 V or less
	Waveform	Turn the ignition switch to OFF and with the access key near the push button ignition switch, press the push button ignition switch*1	Waveform 2
(B574) No. 9 (TXCT) ←→ (B574) No. 24 (AGND)	Voltage	30 seconds or more have passed after the door was opened or closed with IG OFF and without depressing the brake pedal (CVT model) or clutch pedal (MT model).	1 V or less
	Waveform	Turn the ignition switch to OFF and with the access key near the push button ignition switch, press the push button ignition switch*1	Waveform 3
(B574) No. 10 (CG2B) ←→ (B572) No. 11 (GND)	Pulse	ACC and IG OFF, all doors closed, all doors locked by lock operation with wireless remote control, access key not in passenger room	No pulse output → Pulse output detected

Terminal No.	Item	Measuring condition	Standard
(B574) No. 11 (CLG2) ←→ (B572) No. 11 (GND)	Pulse	ACC and IG OFF, all doors closed, all doors locked by lock operation with wireless remote control, access key not in passenger room	No pulse output → Pulse output detected
(B574) No. 12 (CLG1) ←→ (B572) No. 11 (GND)	Pulse	ACC and IG OFF, all doors closed, all doors locked by lock operation with wireless remote control, access key not in passenger room	No pulse output → Pulse output detected
(B573) No. 10 (CG6B) ←→ (B572) No. 11 (GND)	Pulse	ACC and IG OFF, all doors closed, all doors locked by lock operation with wireless remote control, access key not in passenger room	No pulse output → Pulse output detected
(B573) No. 11 (CLG6) ←→ (B572) No. 11 (GND)	Pulse	ACC and IG OFF, all doors closed, all doors locked by lock operation with wireless remote control, access key not in passenger room	No pulse output → Pulse output detected
(B574) No. 13 (CG1B) ←→ (B572) No. 11 (GND)	Pulse	ACC and IG OFF, all doors closed, all doors locked by lock operation with wireless remote control, access key not in passenger room	No pulse output → Pulse output detected
(B574) No. 19 (POS1) ←→ (B572) No. 11 (GND)	Voltage	ACC and IG OFF, access key carried, driver's seat touch sensor OFF → ON	9 — 14 V → less than 2 V
(B574) No. 21 (POS2) ←→ (B572) No. 11 (GND)	Voltage	ACC and IG OFF, access key carried, passenger's seat touch sensor OFF → ON	9 — 14 V → less than 2 V
(B574) No. 24 (AGND) ←→ Chassis ground	Resistance	Always	Less than 1 Ω
(B574) No. 25 (P) ←→ (B572) No. 11 (GND) (CVT model)	Voltage	Except for shift positions P → Shift position P	9 — 14 V or more → 1.5 V or less
(B574) No. 26 (SLP) ←→ (B572) No. 11 (GND)	Voltage	With ignition switch OFF and shift position P, Steering lock → Steering unlock	11 — 14 V → 1.2 V or less
(B574) No. 27 (SPD) ←→ Chassis ground	Pulse	Driving at approx. 5 km/h (3 MPH)	Pulse generation according to vehicle speed (approx. 5 km/h (3 MPH): 3.54 Hz)
(B574) No. 28 (SSW1) ←→ (B572) No. 11 (GND)	Voltage	Push button ignition switch released → pressed	11 — 14 V → 1 V or less
(B574) No. 29 (SLR+) ←→ (B572) No. 11 (GND)	Voltage	When the following conditions are met, the doors are closed → opened, and steering lock motor is driven • Steering lock is unlocked • IG OFF • Shift position P	11 — 14 V (Steering lock motor is stopped) → 1 V or less (Steering lock motor is driven)
(B574) No. 30 (SSW2) ←→ (B572) No. 11 (GND)	Voltage	Push button ignition switch released → pressed	11 — 14 V → 1 V or less
(B573) No. 1 (CG8B) ←→ (B572) No. 11 (GND)	Pulse	ACC and IG OFF, all doors closed, all doors locked, trunk opener button OFF → ON	No pulse output → Pulse output detected
(B573) No. 2 (CLG8) ←→ (B572) No. 11 (GND)	Pulse	ACC and IG OFF, all doors closed, all doors locked, trunk opener button OFF → ON	No pulse output → Pulse output detected
(B573) No. 5 (RCO) ←→ (B572) No. 11 (GND)	Voltage	ACC and IG OFF, access key is locked or unlock switch OFF → ON	1 V or less → 4.5 — 5.5 V
(B573) No. 8 (CG7B) ←→ (B572) No. 11 (GND)	Pulse	All doors closed, all doors locked, trunk opened → closed	No pulse output → Pulse output detected
(B573) No. 9 (CLG7) ←→ (B572) No. 11 (GND)	Pulse	All doors closed, all doors locked, trunk opened → closed	No pulse output → Pulse output detected
(B573) No. 19 (RSSI) ←→ (B572) No. 11 (GND)	Voltage	All doors closed, all doors locked, access key is locked or unlock switch OFF → ON	11 — 14 V → 2 V or less
(B573) No. 27 (TSW5) ←→ (B572) No. 11 (GND)	Pulse/voltage	ACC and IG OFF, all doors locked, trunk opener button OFF → ON	9 V or more → less than 2 V
(B572) No. 9 (IG2D) ←→ (B572) No. 11 (GND)	Voltage	ACC ON → IG ON	1 V or less → 9 — 14 V

Terminal No.	Item	Measuring condition	Standard
(B572) No. 13 (EGIO) ←→ (B574) No. 24 (AGND)	Voltage/ pulse	IG ON	11 to 14 V (Waveform 4)
(B574) No. 8 (TSW2) ←→ (B572) No. 11 (GND)	Voltage	ACC and IG OFF, all doors closed, all doors locked, access key carried, passenger's seat touch sensor (lock) OFF → ON	9 V or more → less than 2 V (→ 9 V or more)
(B574) No. 20 (TSW1) ←→ (B572) No. 11 (GND)	Voltage	ACC and IG OFF, all doors closed, all doors locked, access key carried, driver's seat touch sensor (lock) OFF → ON	9 V or more → less than 2 V (→ 9 V or more)
(B574) No. 23 (SEN2) ←→ (B572) No. 11 (GND)	Voltage	ACC and IG OFF, all doors closed, all doors locked, access key carried, passenger's seat touch sensor (unlock) OFF → ON	9 V or more → less than 2 V (→ 9 V or more)
(B574) No. 22 (SEN1) ←→ (B572) No. 11 (GND)	Voltage	ACC and IG OFF, all doors closed, all doors locked, access key carried, driver's seat touch sensor (unlock) OFF → ON	9 V or more → less than 2 V (→ 9 V or more)
(B574) No. 16 (SWIL) ←→ (B572) No. 11 (GND)	Voltage	When illumination of start switch goes off, headlight goes off after setting the illumination control to MAX	Less than 2 V → 9 V or more
(B572) No. 17 (TACH) ←→ Chassis ground	Waveform	While engine idling	Pulse generation (waveform 5)
(B573) No. 28 (ACCR) ←→ (B572) No. 11 (GND)	Voltage	Brake pedal (CVT model) or clutch pedal (MT model) depressed and push button ignition switch pressed (while cranking) → Except when cranking	Less than 2 V → 9 V or more
(B572) No. 5 (N-SW) ←→ (B572) No. 11 (GND) (CVT model)	Voltage	ACC ON → IG ON	Less than 2 V → 9 V or more
(B573) No. 17 (RDA) ←→ (B572) No. 11 (GND)	Pulse	All doors closed, all doors locked, access key is locked or unlock switch OFF → ON	2 V or less → 11 — 14 V → 2 V or less
(B572) No. 7 (STSW) ←→ (B572) No. 11 (GND)	Voltage	While depressing the brake pedal with the shift lever in position P or N and with the access key inside the vehicle (AT model), or while depressing the clutch pedal (MT model), press the push button ignition switch. (Engine start)	Less than 2 V → 9 V or more
(B572) No. 3 (INDS) ←→ (B572) No. 11 (GND)	Voltage	Depress the brake pedal (CVT model) or clutch pedal (MT model).	9 V or more
(B574) No. 18 (INDW) ←→ (B572) No. 11 (GND)	Voltage	ACC ON or IG ON, and brake pedal (CVT model) or clutch pedal (MT model) is not depressed.	9 V or more

NOTE:
*1: Remove the access key battery before checking.
1. Waveform 1

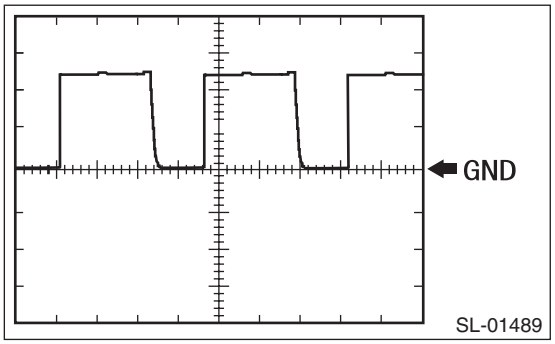

Item	Contents
Measured terminal	(B574) No. 1 (VC5) ←→ (B574) No. 24 (AGND)
Equipment setting	2 V/DIV, 200 ms/DIV
Measuring condition	Within 30 seconds after the push button ignition switch is pressed with IG OFF and access key not in the passenger room

2. Waveform 2

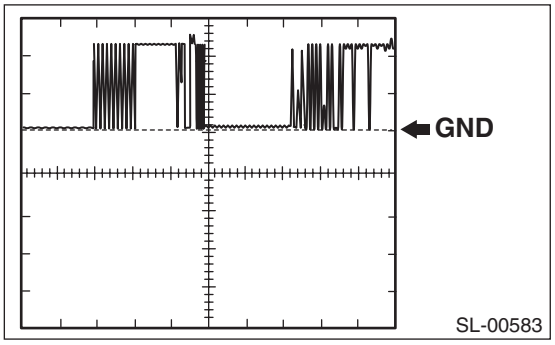

Item	Contents
Measured terminal	(B574) No. 7 (CODE) ←→ (B574) No. 24 (AGND)
Equipment setting	2 V/DIV, 20 ms/DIV
Measuring condition	Turn the ignition switch to OFF and with the access key near the push button ignition switch, press the push button ignition switch. *1

NOTE:
*1: Remove the access key battery before checking.

3. Waveform 3

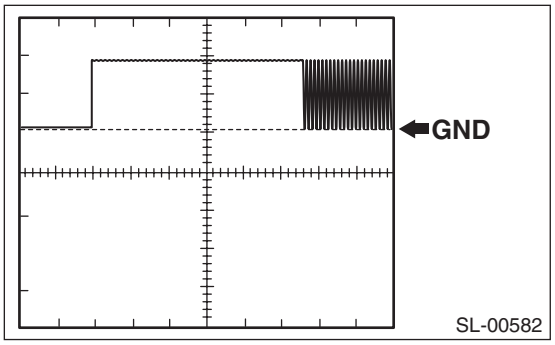

Item	Contents
Measured terminal	(B574) No. 9 (TXCT) ←→ (B574) No. 24 (AGND)
Equipment setting	2 V/DIV, 20 ms/DIV
Measuring condition	Within 30 seconds after the push button ignition switch is pressed with IG OFF and access key not in the passenger room

4. Waveform 4

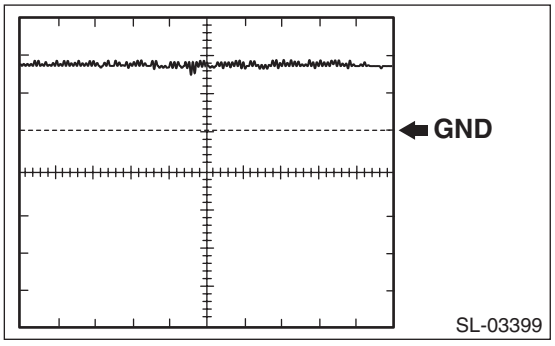

Item	Contents
Measured terminal	(B572) No. 13 (EGIO) ←→ (B572) No. 11 (GND)
Equipment setting	5 V/DIV, 100 ms/DIV
Measuring condition	Ignition ON

5. Waveform 5

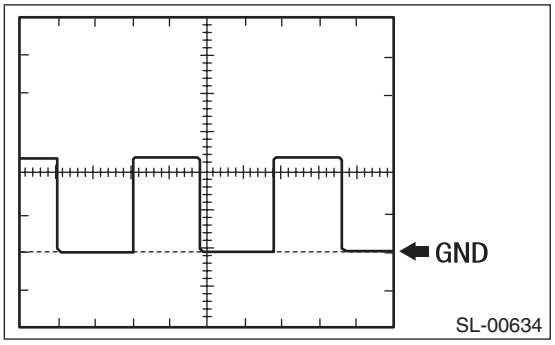

Item	Contents
Measured terminal	(B572) No. 17 (TACH) ←→ Chassis ground
Equipment setting	5 V/DIV, 100 ms/DIV
Measuring condition	While engine idling

2. ID CODE BOX

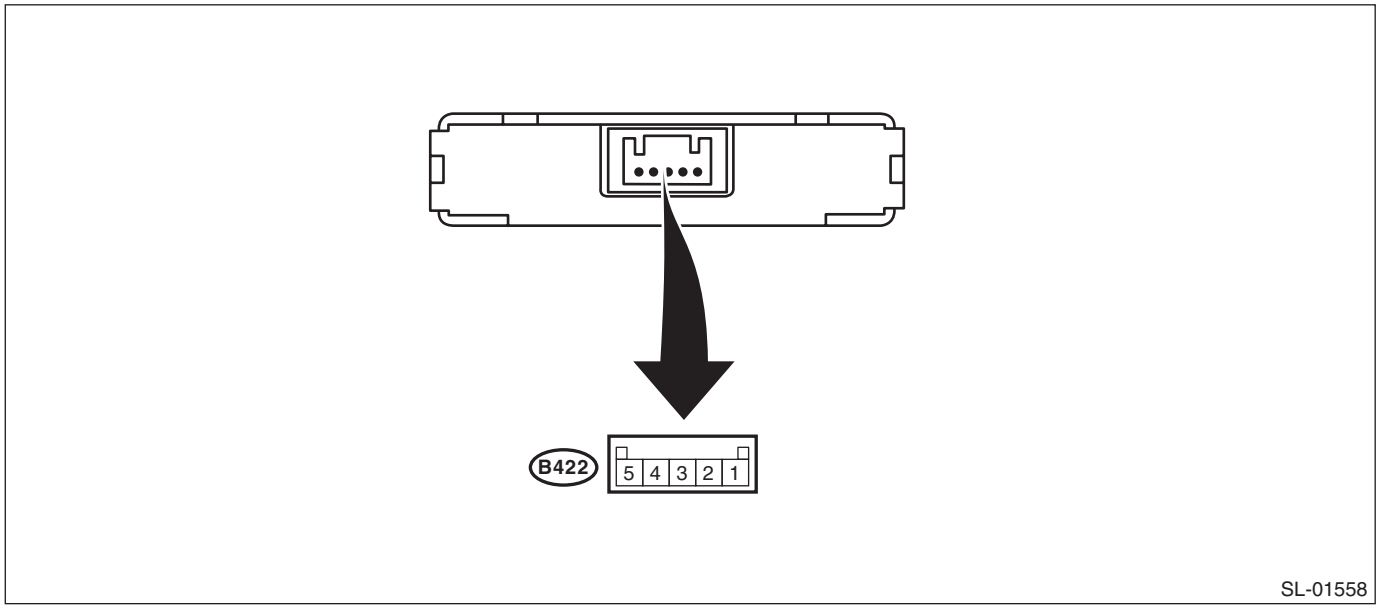

Terminal No.	Terminal symbol	Contents
(B422) No. 1	+B	+B
(B422) No. 2	LIN	LIN communication
(B422) No. 4	IMO1	Immobilizer communication 1
(B422) No. 5	GND	GND

NOTE:
Disconnect the control module connector before checking the following items.

Terminal No.	Standard	Measuring condition	Item
1 (+B) ←→ 5 (GND)	10 — 14 V	Always	Voltage
4 (IMO1) ←→ 5 (GND)	0 V	Ignition OFF	Voltage
5 (GND) ←→ Chassis ground	Continuity exists	Always	Continuity

NOTE:
Connect the control module connector before checking the following items.

Terminal No.	Standard	Measuring condition	Item
4 (IMO1) ←→ 5 (GND)	0 V	Ignition OFF	Voltage
4 (IMO1) ←→ 5 (GND)	Waveform 1	Ignition ON	Voltage

Waveform 1

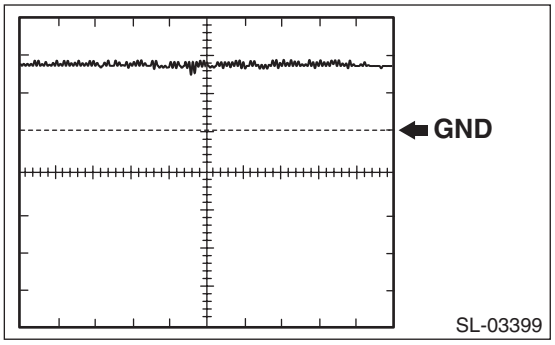

Item	Contents
Measured terminal	4 (IMO1) ←→ 5 (GND)
Equipment setting	5 V/DIV, 100 ms/DIV
Measuring condition	Ignition ON

3. BODY INTEGRATED UNIT

Refer to the BODY CONTROL SYSTEM (DIAGNOSTICS) for the I/O Signal of the body integrated unit. <Ref. to BC(diag)-6, ELECTRICAL SPECIFICATION, Control Module I/O Signal.>

4. STEERING LOCK CM

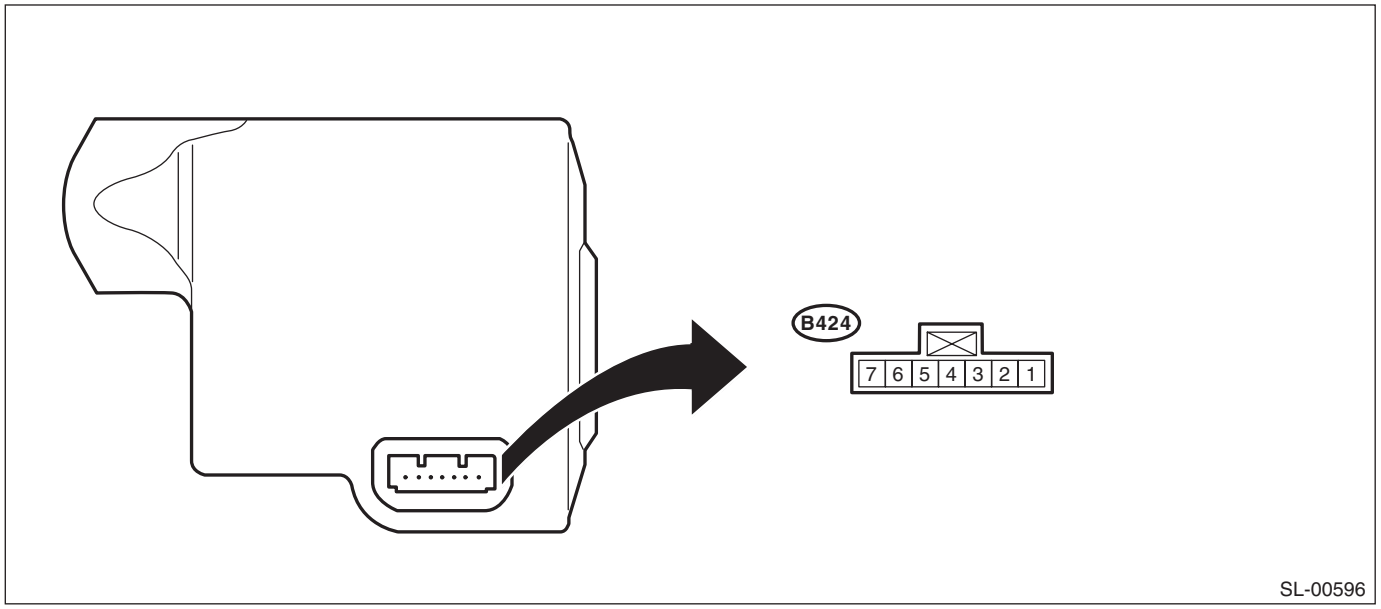

Terminal No.	Terminal symbol	Contents
(B424) No. 1	GND	GND
(B424) No. 3	SLR+	Steering lock motor drive power supply
(B424) No. 4	SLP	Unlock position output
(B424) No. 5	LIN	LIN communication
(B424) No. 6	IG2	IGN power supply
(B424) No. 7	B	+B

NOTE:
Perform the following check from the back side of the connector, with the connector of the control module connected.
If the measured value is out of standard, it is possible that the vehicle has a fault.

Terminal No.	Standard	Measuring condition	Item
1 (GND) ←→ Chassis ground	Continuity exists	Always	Continuity
—	—	—	—
3 (SLR+) ←→ Chassis ground	10 — 14 V → 1 V or less	Motor not operating → Motor operating	Voltage
4 (SLP) ←→ Chassis ground	10 — 14 V → 1 V or less	Lock → Unlock	Voltage
5 (LIN)	Input/output signal	—	—
6 (IG2) ←→ Chassis ground	10 — 14 V	Ignition ON	Voltage
7 (B) ←→ Chassis ground	10 — 14 V	Always	Voltage

B: WIRING DIAGRAM

Refer to “Keyless Access System” in the wiring diagram. <Ref. to WI-255, WIRING DIAGRAM, Keyless Access System.>

6. Subaru Select Monitor

A: OPERATION

For detailed operation procedures, refer to “Application help”.

B: COMMUNICATION FOR INITIALIZING IMPOSSIBLE

NOTE:
Confirm that the LAN system is working properly before the diagnosis.
Subaru Select Monitor communication line is open or shorted.

DETECTING CONDITION:

- Defective harness
- Power supply circuit malfunction
- Defective keyless access CM
- Defective CAN communication circuit
- Defective Subaru Select Monitor

TROUBLE SYMPTOM:

Not communicable with Subaru Select Monitor.

WIRING DIAGRAM:

– Push button start system <Ref. to WI-303, WIRING DIAGRAM, Push Button Start System.>
– CAN communication system <Ref. to WI-113, WIRING DIAGRAM, CAN Communication System.>

• Engine type: FA

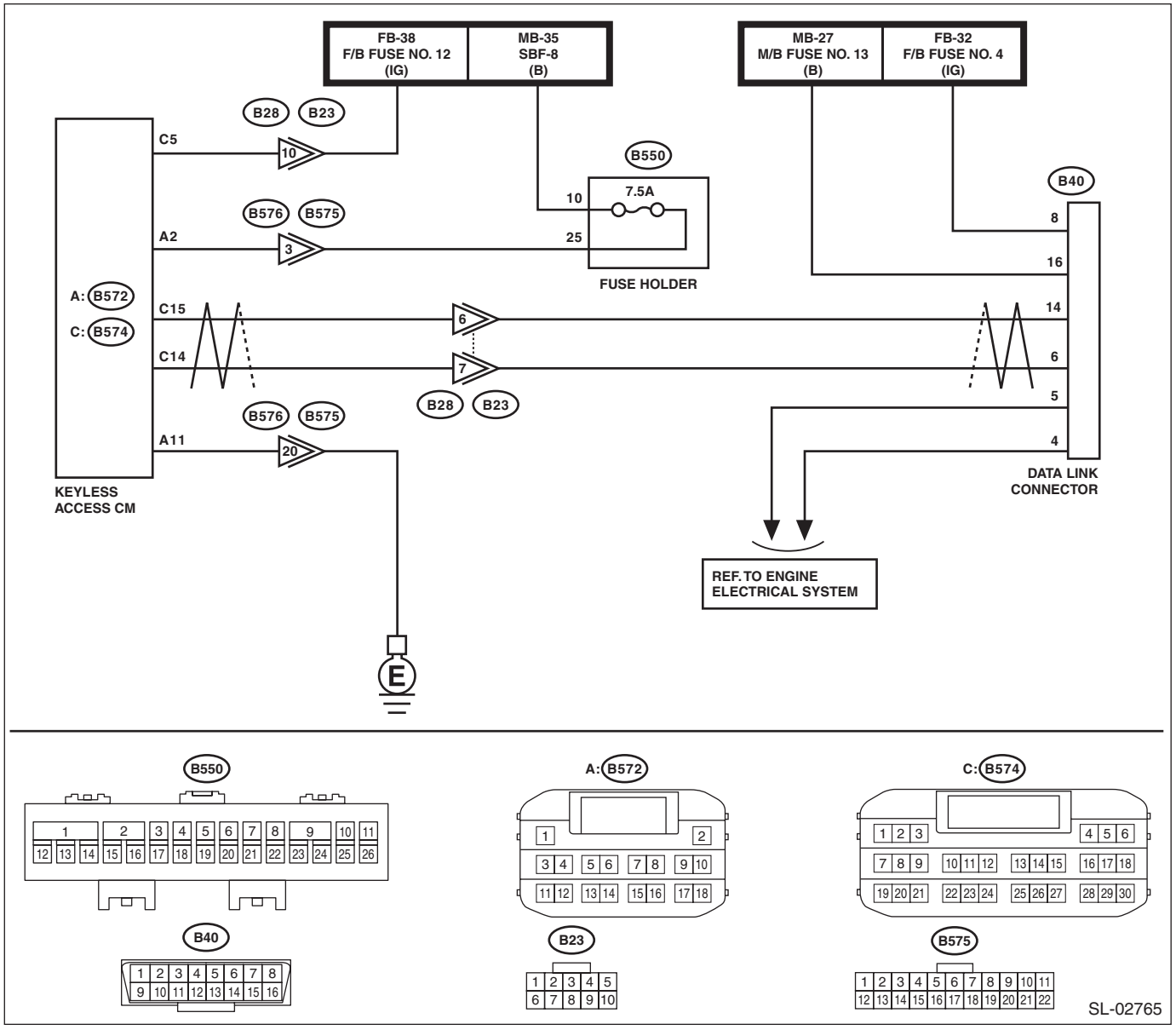

- Engine type: EJ

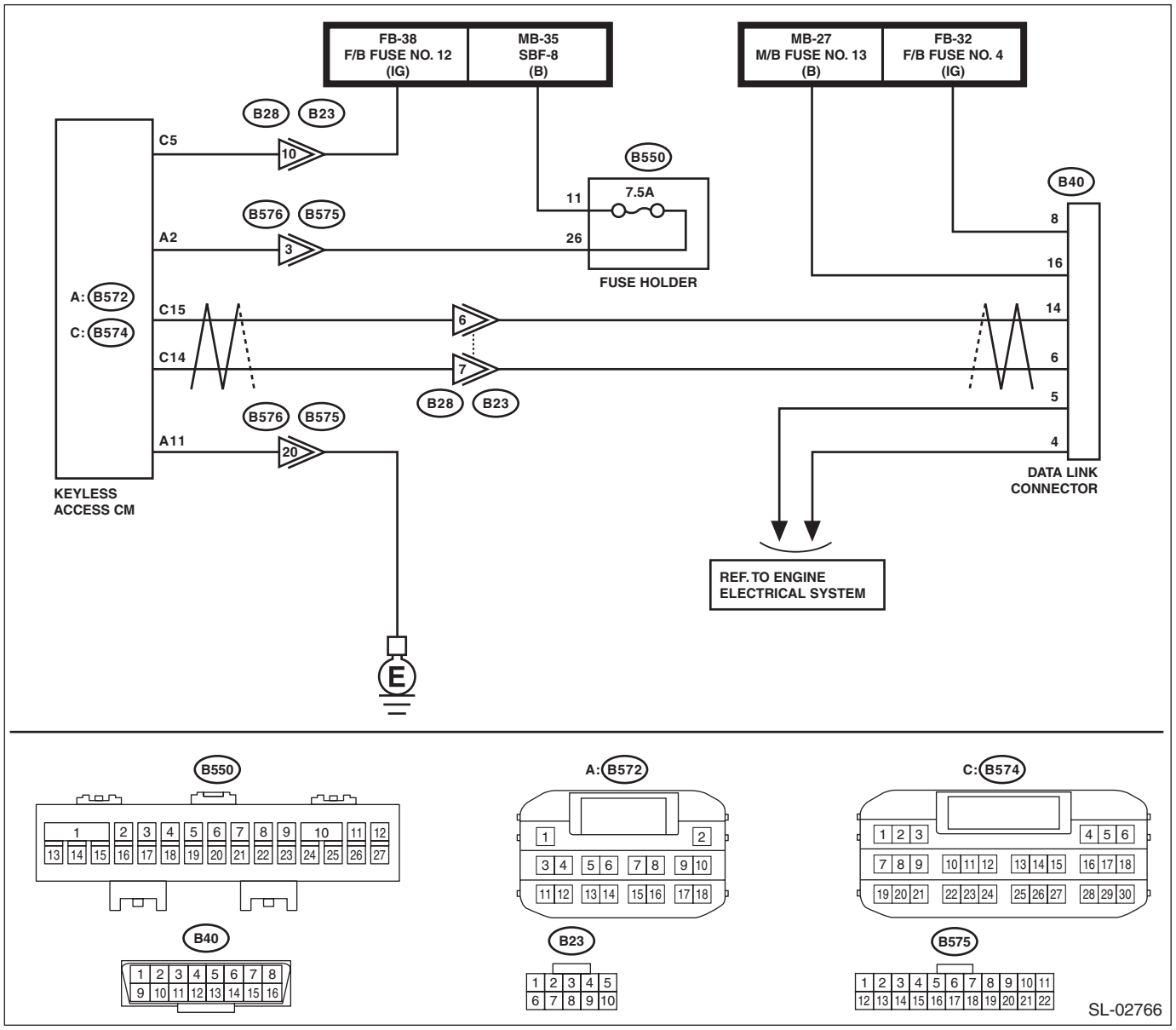

Step		Check	Yes	No
1	**CHECK OTHER COMMUNICATION.** Communicate with the system other than the keyless access system using the Subaru Select Monitor.	Is the communication to other control module possible?	Go to step **2**.	Perform the "Communication for Initializing Impossible" of LAN system. <Ref. to LAN(diag)-12, COMMUNICATION FOR INITIALIZING IMPOSSIBLE, Subaru Select Monitor.>
2	**CHECK DTC.** Read the DTC of the LAN system using the Subaru Select Monitor. <Ref. to LAN(diag)-36, OPERATION, Read Diagnostic Trouble Code (DTC).>	Is DTC displayed?	Perform the diagnosis of the displayed DTCs for LAN system.	Go to step **3**.

Step		Check	Yes	No
3	**CHECK KEYLESS ACCESS CM.** 1) Turn the ignition switch to OFF. 2) Disconnect the keyless access CM connector. 3) Connect the disconnected connectors. 4) Perform communication with the keyless access system using the Subaru Select Monitor.	Is communication possible?	It is possible that temporary poor communication occurs.	Replace the keyless access CM. <Ref. to SL-100, Keyless Access CM.>

CAUTION:
For replacement procedure of keyless access CM, refer to the "REGISTRATION MANUAL FOR IMMOBILIZER" provided as a separate volume.

7. Read Diagnostic Trouble Code (DTC)

A: OPERATION

1) On «Start» display, select «Diagnosis».
2) On «Vehicle selection» display, input the target vehicle information and select «Confirmed».
3) On «Main Menu» display, select «Each System».
4) On «Select System» display, select «Keyless Access with Push Button Start» and then select «Enter».
5) On «Select Function» display, select «DTC».

NOTE:
- For detailed operation procedures, refer to “Application help”.
- For details concerning DTC, refer to “List of Diagnostic Trouble Code (DTC)”. <Ref. to KPS(diag)-39, List of Diagnostic Trouble Code (DTC).>

8. Read Current Data

A: OPERATION

1) On «Start» display, select «Diagnosis».
2) On «Vehicle selection» display, input the target vehicle information and select «Confirmed».
3) On «Main Menu» display, select «Each System».
4) On «Select System» display, select «Keyless Access with Push Button Start» and then select «Enter».
5) On «Select Function» display, select «Data Monitor».

NOTE:
For detailed operation procedures, refer to “Application help”.

B: LIST

1. Keyless access system

Items to be displayed	Unit of measure	Contents	Note
Driver’s unlock touch sensor switch	ON/OFF	Keyless access CM input value	ON when the touch sensor (unlock) built on the back surface of the driver’s door outer handle is touched
Passenger’s unlock touch sensor switch	ON/OFF	Keyless access CM input value	ON when the touch sensor (unlock) built on the back surface of the passenger’s door outer handle is touched
Driver’s lock touch sensor SW	ON/OFF	Keyless access CM input value	ON when the touch sensor (lock) built on the surface of the driver’s door outer handle is touched
Passenger’s lock touch sensor SW	ON/OFF	Keyless access CM input value	ON when the touch sensor (lock) built on the surface of the passenger’s door outer handle is touched
Trunk Request SW	ON/OFF	Keyless access CM input value	ON when the trunk opener button is pressed
Secret code Keyless registration	unregistered/registered	Keyless access CM input value	Registered when secret code keyless registration
IGN SW	ON/OFF	Keyless access CM input value	ON when ignition is ON
B/up fuse	Connecting/Not connected	Keyless access CM internal value	When backup fuse is connected/connecting
ACC SW	ON/OFF	Keyless access CM input value	ON when accessory or ignition is ON
Incorrect vehicle ID	Yes/No	Keyless access CM internal value	Yes when the access key is different when keyless access is performed
No response	Yes/No	Keyless access CM internal value	Yes when there is no response from the access key when keyless access is performed
Incorrect response code, format	Yes/No	Keyless access CM internal value	Yes if the response from the access key differs when keyless access is performed
Battery consumption	Yes/No	Keyless access CM internal value	Yes if the access key battery is depleted
Incorrect response code, ID code	Yes/No	Keyless access CM internal value	Yes if the response from the access key differs when keyless access is performed
Incorrect response code, collation result	Yes/No	Keyless access CM internal value	Yes if the response from the access key differs when keyless access is performed
Incorrect ID code	Yes/No	Keyless access CM internal value	Yes if the response from the access key differs when keyless access is performed
Incorrect rolling code	Yes/No	Keyless access CM internal value	Yes if the response from the access key differs when keyless access is performed
Smart Cancel	Cancel/Normal	Keyless access CM internal value	Cancel in the keyless access function stopped condition

Items to be displayed	Unit of measure	Contents	Note
Simple Smart system cancel	Cancel/Normal	Keyless access CM internal value	Cancel in the simple cancel function set condition
ID Code Box W/H Connection State	Connecting/Not connected	Keyless access CM internal value	Connecting status of the terminal (B573) No. 15
ID Code Box Existence Judging	ON/OFF/Existence Judging	Keyless access CM internal value	Normal «Existence Judging»
Immobilizer	Set/Unset	Keyless access CM internal value	Set when the immobilizer is set
Remote engine starter communication ID confirmation	NG/OK	Keyless access CM internal value	Collation OK when using a registered remote control engine starter
Remote engine starter code registration confirmation	unregistered/registered	Keyless access CM internal value	Registered when the code is registered
STLC sleep possible status	Possible/Impossible	Steering lock CM internal value	Possible when sleep is possible
STLC wake-up transmission status	Transmission/No transmission	Steering lock CM internal value	Transmission when the wake-up signal is transmitted
Lock side sensor status	ON/OFF	Steering lock CM internal value	ON when steering lock is locked
Unlock side sensor status	ON/OFF	Steering lock CM internal value	ON when steering lock is unlocked
Lock confirmation	Confirmed/Unconfirmed	Steering lock CM internal value	Confirmed when steering lock is locked
Unlock confirmation	Confirmed/Unconfirmed	Steering lock CM internal value	Confirmed when steering lock is unlocked
Sensor initialization	Complete/incomplete	Steering lock CM internal value	Completed when sensor initial operation is completed
Motor protection control status	Rejected range/Permitted range	Steering lock CM internal value	Rejected range when motor protection control is not activated
Motor operation prohibition voltage evaluation	ON/OFF	Steering lock CM internal value	Prohibition when motor operation is prohibited
Diagnosis response	Normal/response	Steering lock CM internal value	Response when diagnostic communication is in progress
Sensor abnormal	Normal/Abnormal	Steering lock CM internal value	Abnormal when a trouble occurs in steering lock CM
Motor power supply short-circuit abnormal	Normal/Abnormal	Steering lock CM internal value	Abnormal when a trouble occurs in steering lock CM
Motor driver short-circuit abnormal	Normal/Abnormal	Steering lock CM internal value	Abnormal when a trouble occurs in steering lock CM
Lock bar engagement abnormal	Normal/Abnormal	Steering lock CM internal value	ON when the steering lock bar has experienced interference
Push start abnormal	Normal/Abnormal	Steering lock CM internal value	Abnormal when a trouble occurs in steering lock CM
Lock side relay operation	Stopped/Operating	Steering lock CM internal value	Operating in an unlock → lock status
Unlock side relay operation	Stopped/Operating	Steering lock CM internal value	Operating in an lock → unlock status
Motor drive FET drive	Stopped/Operating	Steering lock CM internal value	Operating when motor drive FET is operating
Motor reversal protection control	Stopped/Operating	Steering lock CM internal value	Operating when motor drive FET is operating
Engine start	Engine start permission/Engine start prohibition	Steering lock CM internal value	Permission when ignition ON
Sensor abnormal (past)	Normal/Abnormal	Steering lock CM internal value	Abnormal when a trouble occurs in steering lock CM

Items to be displayed	Unit of measure	Contents	Note
Motor power supply short-circuit abnormal (past)	Normal/Abnormal	Steering lock CM internal value	Abnormal when a trouble occurs in steering lock CM
Motor driver short-circuit abnormal (past)	Normal/Abnormal	Steering lock CM internal value	Abnormal when a trouble occurs in steering lock CM
Steering lock lock/unlock command reception history	ON (keep 10 sec)/OFF	Steering lock CM internal value	ON when steering lock is locked → unlocked, unlocked → locked
Lock bar engagement abnormal (past)	ON/OFF	Steering lock CM internal value	ON when the steering lock bar has experienced interference in the past
Push start abnormal (past)	Normal/Abnormal	Steering lock CM internal value	Abnormal when a trouble occurs in steering lock CM
STLC Abnormal EEPROM access	Normal/Abnormal	Steering lock CM internal value	Abnormal when a trouble occurs in steering lock CM
ID code BOX sleep possible status	Impossible/Possible	Keyless access CM internal value (models without ID code box) or ID code box internal value (models with ID code box)	Possible when sleep is possible
ID code BOX wake-up transmission status	No transmission/ Transmission	Keyless access CM internal value (models without ID code box) or ID code box internal value (models with ID code box)	Transmission when the wake-up signal is transmitted
ID code BOX Abnormal EEPROM access (now)	Normal/Abnormal	Keyless access CM internal value (models without ID code box) or ID code box internal value (models with ID code box)	Abnormal when the ID code box is malfunctioning
EGI code reception status	Receive/Not yet received	Keyless access CM internal value (models without ID code box) or ID code box internal value (models with ID code box)	Reception at engine start operation
Engine start permission request reception status	Receive/Not yet received	Keyless access CM internal value (models without ID code box) or ID code box internal value (models with ID code box)	Reception at ignition ON
Provisional injection request reception status	Receive/Not yet received	Keyless access CM internal value (models without ID code box) or ID code box internal value (models with ID code box)	Reception at ignition ON
Code collation result between smart ECM and ID code box	Normal/Abnormal	Keyless access CM internal value (models without ID code box) or ID code box internal value (models with ID code box)	Normal when engine start is allowed
Code collation result between steering locked ECM and ID code box	Normal/Abnormal	Keyless access CM internal value (models without ID code box) or ID code box internal value (models with ID code box)	Normal when steering lock operation allowed
Steering lock unlock request reception status	Reception (keep 10 sec)/Not yet received	Keyless access CM internal value (models without ID code box) or ID code box internal value (models with ID code box)	Reception when steering lock is performing unlock

Items to be displayed	Unit of measure	Contents	Note
Steering lock lock request reception status	Reception (keep 10 sec)/Not yet received	Keyless access CM internal value (models without ID code box) or ID code box internal value (models with ID code box)	Reception when steering lock is performing lock
Driver's external transmitter output circuit abnormal	Normal/Abnormal	Keyless access CM internal value	Abnormal when a trouble occurs in transmitter output circuit
Passenger's external transmitter output circuit abnormal	Normal/Abnormal	Keyless access CM internal value	Abnormal when a trouble occurs in transmitter output circuit
Driver's external transmitter output circuit abnormal (past)	Normal/Abnormal	Keyless access CM internal value	Abnormal when a trouble occurs in transmitter output circuit in the past
Passenger's external transmitter output circuit abnormal (past)	Normal/Abnormal	Keyless access CM internal value	Abnormal when a trouble occurs in transmitter output circuit in the past
ID code registration mode status	Normal/Register/Deletion	—	For immobilizer registration
Smart related ECM code registration mode status	On mode/Normal		
ID code collation completion confirmation	Complete/Normal		
ID code registration completion confirmation	Complete/Normal		
Smart related ECM code registration completion confirmation	Complete/Normal		
Registered smart key confirmation status	Confirming/Normal		
Smart related ECM code confirmation status	Confirming/Normal		
ID code registration status	Registering/Normal		
ID code collation status	Normal/Collating the immobilizer/Collating the smart		
All registered keys confirmation status	Confirming/Normal		
Confirmed number of all registered keys	0 — 7		
Number of required registrations (smart)	0 — 7		
Number of collation completed (smart)	0 — 7		
Number of registration completed (smart)	0 — 7	Keyless access CM internal value	Number of recognized keyless access CM
ID Code Box	Connecting/Not connected	Keyless access CM internal value	Connecting with ID code box normal connection
Steer Lock ECM	Connecting/Not connected	Keyless access CM internal value	Connecting with steering lock CM normal connection

Items to be displayed	Unit of measure	Contents	Note
Driver's lock request SW/ touch sensor switch ON edge record	ON/OFF	Keyless access CM internal value	The display is continued when the collation is once established by the combination indicated on the left. NOTE: When confirming the data on the left, confirm after performing Keyless access system check. <Ref. to KPS(diag)-37, Keyless Access System Check.>
Passenger's lock request SW/ touch sensor switch ON edge record	ON/OFF	Keyless access CM internal value	
Driver's unlock touch sensor switch ON edge record	ON/OFF	Keyless access CM internal value	
Passenger's unlock touch sensor switch ON edge record	ON/OFF	Keyless access CM internal value	
Trunk unlock request SW ON edge history	ON/OFF	Keyless access CM internal value	
Collation OK result history (driver's external transmitter + interior tuner)	ON/OFF	Keyless access CM internal value	
Collation OK result history (passenger's external transmitter + interior tuner)	ON/OFF	Keyless access CM internal value	
Collation OK result history (front interior transmitter + interior tuner)	ON/OFF	Keyless access CM internal value	
Collation OK result history (rear interior transmitter + interior tuner)	ON/OFF	Keyless access CM internal value	
Collation OK result history (trunk internal transmitter + interior tuner)	ON/OFF	Keyless access CM internal value	
Collation OK result history (trunk external transmitter + interior tuner)	ON/OFF	Keyless access CM internal value	
Collation OK result history (immobilizer amplifier + immobilizer amplifier)	ON/OFF	Keyless access CM internal value	
Push start SW 1	ON/OFF	Keyless access CM input value	ON when push button start is pressed
Push start SW 2	ON/OFF	Keyless access CM input value	ON when push button start is pressed
Stop Light Switch	ON/OFF	Keyless access CM input value	ON when brake pedal is depressed
Steering unlock SW	ON/OFF	Keyless access CM input value	OFF when steering locked
Shift P signal(AT only)	ON/OFF	Keyless access CM input value	ON when the shift position is "P"
Neutral SW/Clutch SW	ON/OFF	Keyless access CM output value	ON when the shift position is at "P" or "N"
Shift N signal(AT only)	ON/OFF	Keyless access CM input value	ON when the shift position is "N"
Delivery mode signal(AT only)	ON/OFF	Keyless access CM input value	OFF when in other than the delivery mode
IGN2 relay monitor (drive output)	ON/OFF	Keyless access CM output value	ON during IG relay 2 (push button start) drive output
IGN1 relay monitor (drive output)	ON/OFF	Keyless access CM output value	ON during IG relay 1 (push button start) drive output
ACC relay monitor	ON/OFF	Keyless access CM output value	ON during accessory relay (push button start) drive output

Items to be displayed	Unit of measure	Contents	Note
IGN2 relay monitor (coil voltage)	ON/OFF	Keyless access CM output value	ON during IG relay 2 (push button start) drive output
IGN1 relay monitor (coil voltage)	ON/OFF	Keyless access CM output value	ON during IG relay 1 (push button start) drive output
IGN latch monitor	ON/OFF	Keyless access CM output value	ON during IG relay 2 (push button start) drive output
STSW signal monitor	ON/OFF	Keyless access CM output value	ON when brake pedal (CVT model) or clutch pedal (MT model) is depressed and push button ignition switch is pressed
ACCR signal	ON/OFF	Keyless access CM input value	ON during starter relay drive output
Vehicle Speed Signal	Drive status/Stop status	Keyless access CM input value	Driving status when vehicle speed is input
Engine Speed	Rotating/Stopped	Keyless access CM input value	Rotating while the engine is running
Power Supply Condition	All OFF status	Keyless access CM output value	Displayed when IG relay 1 (push button start), IG relay 2 (push button start), and accessory relay (push button start) are all OFF
	ACC relay ON status	Keyless access CM output value	Displayed when accessory ON
	IGN1 relay ON status	Keyless access CM output value	Displayed when ignition ON
	IGN2 relay ON status	Keyless access CM output value	Displayed when ignition ON
	STSW Condition	Keyless access CM output value	Displayed when brake pedal (CVT model) or clutch pedal (MT model) is depressed and push button ignition switch is pressed
Vehicle identification	GAS MT/GAS AT/HEV AT/Auto Start Stop MT/Auto Start Stop AT	Keyless access CM output value	Equipped vehicle is displayed.
IGN1 external circuit abnormal	Not Detect/Detect	Keyless access CM output value	Detect when IGN1 external circuit is faulty
IGN2 external circuit abnormal	Not Detect/Detect	Keyless access CM output value	Detect when IGN2 external circuit is faulty
Start SW trouble	Not Detect/Detect	Keyless access CM output value	Detect when start SW is faulty
P signal mismatch	Not Detect/Detect	Keyless access CM output value	Detect when shift P signal is abnormal
Steering lock unlock waiting time out	Not Detect/Detect	Keyless access CM output value	Detect when the steering lock release time out occurred
Key collation waiting time out	Not Detect/Detect	Keyless access CM output value	Detect when the key collation time out occurred

2. Body integrated unit

Refer to the BODY CONTROL SYSTEM (DIAGNOSTICS) for the current data of the body integrated unit. <Ref. to BC(diag)-17, LIST, Read Current Data.>

9. Clear Memory Mode

A: OPERATION

1) On «Start» display, select «Diagnosis».
2) On «Vehicle selection» display, input the target vehicle information and select «Confirmed».
3) On «Main Menu» display, select «Each System».
4) On «Select System» display, select «Keyless Access with Push Button Start» and then select «Enter».
5) On «Select Function» display, select «DTC».
6) On «DTC» display, select «Clear Memory».

NOTE:
- For detailed operation procedures, refer to “Application help”.
- Initial diagnosis of electronic throttle control is performed after memory clearance. Wait for 10 seconds or more after turning the ignition switch to ON, and then start the engine.

10.Inspection Mode

A: PROCEDURE

It is possible to diagnose the DTC by performing the indicated inspection mode. After correcting the DTC, perform a necessary inspection mode and make sure that the function is resumed correctly and the DTC is recorded.

1. PREPARATION FOR THE INSPECTION MODE

1) Check that the battery voltage is 12 V or more and fuel remains approx. half [20 — 40 L (5.3 — 10.6 US gal, 4.4 — 8.8 Imp gal)].
2) Perform the Clear Memory Mode. <Ref. to KPS(diag)-33, Clear Memory Mode.>
3) Read the DTC and check that the DTC is not displayed. <Ref. to KPS(diag)-26, Read Diagnostic Trouble Code (DTC).>

NOTE:
If the DTC is displayed on the screen, the trouble is still present. Perform the diagnosis for the displayed DTCs. After solving the DTC, repeat from step 2).

2. INSPECTION MODE 1

DTC	Item	Note
U0073	CONTROL MODULE COMMUNICATION BUS OFF	—
U0100	LOST COMMUNICATION WITH ECM/PCM “A”	—
U0101	LOST COMMUNICATION WITH TCM	—
U0122	LOST COMMUNICATION WITH VEHICLE DYNAMICS CONTROL MODULE	—
U0140	LOST COMMUNICATION WITH BODY CONTROL MODULE	—
U0155	LOST COMMUNICATION WITH INSTRUMENT PANEL CLUSTER (IPC) CONTROL MODULE	—
U0401	INVALID DATA RECEIVED FROM ECM/PCM “A”	—
U0422	INVALID DATA RECEIVED FROM BODY CONTROL MODULE	—
B2271	IGN RELAY CONTROL CIRCUIT	—
B2274	ACC RELAY CONTROL CIRCUIT	—
B2275	ENGINE START REQUEST CONTROL CIRCUIT	—
B2276	ACC RELAY OFF SIGNAL	—
B2277	SUBMERGING CIRCUIT	—
B2285	STEERING LOCK POSITION SIGNAL CORRELATION	—
B2286	ENGINE SPEED SIGNAL(WITHOUT Auto Start Stop)	—
B2781	STEERING LOCK CM CONTROL CIRCUIT	—
B2782	STEERING LOCK DRIVE REQUEST SIGNAL CORRELATION	—
B2785	LIN COMMUNICATION	—
B2786	STEERING LOCK CM COMMUNICATION	—
B2788	IGN SIGNAL CORRELATION (STEERING LOCK CM)	—
B2789	ID CODE BOX COMMUNICATION	—
B278D	ID CODE BOX JUDGMENT CIRCUIT	—

Diagnostic procedure:
1) Prepare for the inspection mode. <Ref. to KPS(diag)-34, PREPARATION FOR THE INSPECTION MODE, PROCEDURE, Inspection Mode.>
2) Start the engine, and let it idle for 40 seconds or more.
3) Read the DTC and check that the DTC is not displayed. <Ref. to KPS(diag)-26, Read Diagnostic Trouble Code (DTC).>

NOTE:
If the DTC is displayed on the screen, the trouble is still present. Perform the diagnosis for the displayed DTCs.

3. INSPECTION MODE 2

DTC	Item	Note
B1242	WIRELESS TUNER	—

Diagnostic procedure:
1) Prepare for the inspection mode. <Ref. to KPS(diag)-34, PREPARATION FOR THE INSPECTION MODE, PROCEDURE, Inspection Mode.>
2) Turn the ignition switch to OFF and then leave it for 10 seconds or more.
3) Read the DTC and check that the DTC is not displayed. <Ref. to KPS(diag)-26, Read Diagnostic Trouble Code (DTC).>

NOTE:
If the DTC is displayed on the screen, the trouble is still present. Perform the diagnosis for the displayed DTCs.

4. INSPECTION MODE 3

DTC	Item	Note
B2779	REMOTE CONTROL ENGINE STARTER COLLATION	—

Diagnostic procedure:
1) Prepare for the inspection mode. <Ref. to KPS(diag)-34, PREPARATION FOR THE INSPECTION MODE, PROCEDURE, Inspection Mode.>
2) Register the remote engine starter, and operate it.
3) Read the DTC and check that the DTC is not displayed. <Ref. to KPS(diag)-26, Read Diagnostic Trouble Code (DTC).>

NOTE:
If the DTC is displayed on the screen, the trouble is still present. Perform the diagnosis for the displayed DTCs.

5. INSPECTION MODE 4

DTC	Item	Note
B2784	ANTENNA CIRCUIT (PUSH ENGINE SWITCH)	—
B2790	ID CODE BOX CIRCUIT	—
B27A1	DRIVER SIDE EXTERNAL ANTENNA OPEN	—
B27A2	PASSENGER SIDE EXTERNAL ANTENNA OPEN	—
B27A5	FRONT INTERNAL ANTENNA OPEN	—
B27A6	REAR INTERNAL ANTENNA OPEN	—
B27A7	TRUNK/REAR GATE INTERNAL ANTENNA OPEN	—
B27A8	TRUNK/REAR GATE EXTERNAL ANTENNA OPEN	—

Diagnostic procedure:
1) Prepare for the inspection mode. <Ref. to KPS(diag)-34, PREPARATION FOR THE INSPECTION MODE, PROCEDURE, Inspection Mode.>
2) Read the DTC and check that the DTC is not displayed. <Ref. to KPS(diag)-26, Read Diagnostic Trouble Code (DTC).>

NOTE:
If the DTC is displayed on the screen, the trouble is still present. Perform the diagnosis for the displayed DTCs.

6. INSPECTION MODE 5

DTC	Item	Note
B2282	VEHICLE SPEED SIGNAL CORRELATION	—
B2283	VEHICLE SPEED SENSOR	—

Diagnostic procedure:
1) Prepare for the inspection mode. <Ref. to KPS(diag)-34, PREPARATION FOR THE INSPECTION MODE, PROCEDURE, Inspection Mode.>
2) Drive for 20 seconds or more at a vehicle speed of 25 km/h (15.5 MPH) or more.
3) Read the DTC and check that the DTC is not displayed. <Ref. to KPS(diag)-26, Read Diagnostic Trouble Code (DTC).>

NOTE:
If the DTC is displayed on the screen, the trouble is still present. Perform the diagnosis for the displayed DTCs.

7. INSPECTION MODE 6

DTC	Item	Note
B2784	ANTENNA CIRCUIT (PUSH ENGINE SWITCH)	—
B278A	PUSH ENGINE SWITCH POWER SUPPLY CIRCUIT	—

Diagnostic procedure:
1) Prepare for the inspection mode. <Ref. to KPS(diag)-34, PREPARATION FOR THE INSPECTION MODE, PROCEDURE, Inspection Mode.>
2) Hold the access key that doesn't have a battery over the push button start SW for collation.
3) Read the DTC and check that the DTC is not displayed. <Ref. to KPS(diag)-26, Read Diagnostic Trouble Code (DTC).>

NOTE:
If the DTC is displayed on the screen, the trouble is still present. Perform the diagnosis for the displayed DTCs.

8. INSPECTION MODE 7

DTC	Item	Note
B2284	BRAKE SIGNAL CORRELATION	—

Diagnostic procedure:
1) Prepare for the inspection mode. <Ref. to KPS(diag)-34, PREPARATION FOR THE INSPECTION MODE, PROCEDURE, Inspection Mode.>
2) Turn the ignition switch to ON, depress and hold the brake pedal for 20 seconds of more, then release the brake pedal and wait for 20 seconds and more.
3) Read the DTC and check that the DTC is not displayed. <Ref. to KPS(diag)-26, Read Diagnostic Trouble Code (DTC).>

NOTE:
If the DTC is displayed on the screen, the trouble is still present. Perform the diagnosis for the displayed DTCs.

11.Keyless Access System Check

A: OPERATION

1) On «Start» display, select «Diagnosis».
2) On «Vehicle selection» display, input the target vehicle information and select «Confirmed».
3) On «Main Menu» display, select «Each System».
4) On «Select System» display, select «Keyless Access with Push Button Start» and then select «Enter».
5) On «Select Function» display, select «Work Support».
6) On «Work Support» display, select «Keyless access system check».
7) Select a transmitter to be checked.
8) Select [Exit] to exit the system check. The screen will return to the «Keyless access system check» screen.

Data	Customize setting	Remarks
Keyless access system check	Driver side external transmitter - internal tuner	When the setting content on the left is selected, the access key is neared to the selected transmitter (access antenna) and collation matches, the buzzer will sound.
	Passenger side external transmitter - internal tuner	
	Fr internal transmitter - internal tuner	
	Rr internal transmitter - internal tuner	
	Trunk internal transmitter, interior tuner	
	Trunk-external transmitter - trunk-internal tuner	
	Immobilizer amplifier transmission	
Collation result history Clear	Operate	
	—	

NOTE:
For detailed operation procedures, refer to “Application help”.

12.System Operation Check Mode

A: OPERATION

1) On «Start» display, select «Diagnosis».
2) On «Vehicle selection» display, input the target vehicle information and select «Confirmed».
3) On «Main Menu» display, select «Each System».
4) On «Select System» display, select «Keyless Access with Push Button Start» and then select «Enter».
5) On «Select Function» display, select «Active Test».
6) Select a location to be inspected.

NOTE:
Each output check continues to run for five seconds before stopping automatically.

Data	Keyless access CM output check	Remarks
Tuner power supply ON (indoor tuner)	Output	Perform the power supply check for the receiver.
	Stop	
Driver's external transmitter	Output	Perform the output check for the driver's side door outside antenna.
	Stop	
Passenger's external transmitter	Output	Perform the output check for the passenger's side door outside antenna.
	Stop	
STSW	Output	Turn on the STSW. *2
	Stop	
IGN2	Output	Turn on the IGN2.
	Stop	
IGN1	Output	Turn on the IGN1.
	Stop	
ACC	Output	Turn on the ACC.
	Stop	
Start SW character illumination lighted	Output	Perform ON output of the push button ignition switch back-up light. *1
	Stop	
Start SW indicator lighted (green)	Output	Perform ON output of the push button ignition switch back-up light. *1
	Stop	
Start SW indicator lighted (orange)	Output	Perform ON output of the push button ignition switch back-up light. *1
	Stop	
Steering lock power supply	Output	Output power supply signal from power supply CM to steering lock CM.
	Stop	

*1: When lit by a condition other than for a system operation check mode, it will not become unlit even when set to OFF or no output.
*2: When performed with ignition switch ON, engine will start. Therefore, great care must be exercised.

NOTE:
For detailed operation procedures, refer to “Application help”.

13.List of Diagnostic Trouble Code (DTC)

A: LIST

1. Keyless access system

DTC	Item	Content of diagnosis	Note
U0073	CONTROL MODULE COMMUNICATION BUS OFF	Detected when CAN line abnormality is detected.	<Ref. to KPS(diag)-43, DTC U0073 CONTROL MODULE COMMUNICATION BUS OFF, Diagnostic Procedure with Diagnostic Trouble Code (DTC).>
U0100	LOST COMMUNICATION WITH ECM/PCM “A”	Detected when CAN data from the engine control module (ECM) does not arrive.	<Ref. to KPS(diag)-43, DTC U0100 LOST COMMUNICATION WITH ECM/PCM “A”, Diagnostic Procedure with Diagnostic Trouble Code (DTC).>
U0101	LOST COMMUNICATION WITH TCM	Detected when CAN data from TCM does not arrive.	<Ref. to KPS(diag)-43, DTC U0101 LOST COMMUNICATION WITH TCM, Diagnostic Procedure with Diagnostic Trouble Code (DTC).>
U0122	LOST COMMUNICATION WITH VEHICLE DYNAMICS CONTROL MODULE	Detected when CAN data from VDC does not arrive.	<Ref. to KPS(diag)-43, DTC U0122 LOST COMMUNICATION WITH VEHICLE DYNAMICS CONTROL MODULE, Diagnostic Procedure with Diagnostic Trouble Code (DTC).>
U0140	LOST COMMUNICATION WITH BODY CONTROL MODULE	Detected when CAN data from BIU does not arrive.	<Ref. to KPS(diag)-43, DTC U0140 LOST COMMUNICATION WITH BODY CONTROL MODULE, Diagnostic Procedure with Diagnostic Trouble Code (DTC).>
U0155	LOST COMMUNICATION WITH INSTRUMENT PANEL CLUSTER (IPC) CONTROL MODULE	Detected when CAN data from meter does not arrive.	<Ref. to KPS(diag)-43, DTC U0155 LOST COMMUNICATION WITH INSTRUMENT PANEL CLUSTER (IPC) CONTROL MODULE, Diagnostic Procedure with Diagnostic Trouble Code (DTC).>
U0401	INVALID DATA RECEIVED FROM ECM/PCM “A”	Detected when there is malfunction in CAN data from the engine control module (ECM).	<Ref. to KPS(diag)-43, DTC U0401 INVALID DATA RECEIVED FROM ECM/PCM “A”, Diagnostic Procedure with Diagnostic Trouble Code (DTC).>
U0422	INVALID DATA RECEIVED FROM BODY CONTROL MODULE	Detected when CAN data from BIU is abnormal.	<Ref. to KPS(diag)-43, DTC U0422 INVALID DATA RECEIVED FROM BODY CONTROL MODULE, Diagnostic Procedure with Diagnostic Trouble Code (DTC).>
B1242	WIRELESS TUNER	When short circuit occurs in harness between keyless access CM and receiver.	<Ref. to KPS(diag)-44, DTC B1242 WIRELESS TUNER, Diagnostic Procedure with Diagnostic Trouble Code (DTC).>
B2271	IGN RELAY CONTROL CIRCUIT	• When malfunction is detected in IG1 and IG2 drive circuits in the keyless access CM. • When malfunction is detected in IG hold circuit in the keyless access CM.	<Ref. to KPS(diag)-46, DTC B2271 IGN RELAY CONTROL CIRCUIT, Diagnostic Procedure with Diagnostic Trouble Code (DTC).>
B2274	ACC RELAY CONTROL CIRCUIT	When malfunction is detected in ACC relay drive circuit in the keyless access CM or external circuit.	<Ref. to KPS(diag)-49, DTC B2274 ACC RELAY CONTROL CIRCUIT, Diagnostic Procedure with Diagnostic Trouble Code (DTC).>
B2275	ENGINE START REQUEST CONTROL CIRCUIT	• When malfunction is detected in engine start permission signal output circuit in the keyless access CM. • When malfunction is detected in external engine start permission signal circuit.	<Ref. to KPS(diag)-52, DTC B2275 ENGINE START REQUEST CONTROL CIRCUIT, Diagnostic Procedure with Diagnostic Trouble Code (DTC).>

DTC	Item	Content of diagnosis	Note
B2276	ACC RELAY OFF SIGNAL	When input error occurs in accessory relay cut input signal of keyless access CM.	<Ref. to KPS(diag)-54, DTC B2276 ACC RELAY OFF SIGNAL, Diagnostic Procedure with Diagnostic Trouble Code (DTC).>
B2277	SUBMERGING CIRCUIT	When the water-submersion detection circuit integrated into the keyless access CM detects the water submersion.	<Ref. to KPS(diag)-56, DTC B2277 SUBMERGING CIRCUIT, Diagnostic Procedure with Diagnostic Trouble Code (DTC).>
B2282	VEHICLE SPEED SIGNAL CORRELATION	When the vehicle speed signal transmitted from VDC via solid line and the vehicle speed signal transmitted from VDC via CAN communication line do not match.	<Ref. to KPS(diag)-57, DTC B2282 VEHICLE SPEED SIGNAL CORRELATION, Diagnostic Procedure with Diagnostic Trouble Code (DTC).>
B2283	VEHICLE SPEED SENSOR	Either of the following malfunctions is detected. (Vehicle speed sensor failure is detected.) • Vehicle speed signal failure detection 1: Excessive deceleration detection • Vehicle speed signal failure detection 2: Engine speed interlock detection	<Ref. to KPS(diag)-60, DTC B2283 VEHICLE SPEED SENSOR, Diagnostic Procedure with Diagnostic Trouble Code (DTC).>
B2284	BRAKE SIGNAL CORRELATION	When the brake signal transmitted via solid line and the brake signal transmitted via CAN communication line do not match.	<Ref. to KPS(diag)-63, DTC B2284 BRAKE SIGNAL CORRELATION, Diagnostic Procedure with Diagnostic Trouble Code (DTC).>
B2285	STEERING LOCK POSITION SIGNAL CORRELATION	When the steering lock position signal transmitted from the steering lock CM via solid line and the steering lock position signal transmitted via LIN communication system do not match.	<Ref. to KPS(diag)-65, DTC B2285 STEERING LOCK POSITION SIGNAL CORRELATION, Diagnostic Procedure with Diagnostic Trouble Code (DTC).>
B2286	ENGINE SPEED SIGNAL(WITHOUT Auto Start Stop)	When the engine speed signal transmitted from ECM via solid line and the engine speed signal transmitted from ECM via CAN communication line do not match.	<Ref. to KPS(diag)-69, DTC B2286 ENGINE SPEED SIGNAL(WITHOUT Auto Start Stop), Diagnostic Procedure with Diagnostic Trouble Code (DTC).>
B2779	REMOTE CONTROL ENGINE STARTER COLLATION	When the keyless access CM does not respond to engine start even when the remote control engine starter is ON, or when there is a code mismatch.	<Ref. to KPS(diag)-72, DTC B2779 REMOTE CONTROL ENGINE STARTER COLLATION, Diagnostic Procedure with Diagnostic Trouble Code (DTC).>
B2781	STEERING LOCK CM CONTROL CIRCUIT	• When malfunction is detected in lock/unlock position detection sensor. • When the open or short circuit in the steering lock motor drive circuit is detected.	<Ref. to KPS(diag)-72, DTC B2781 STEERING LOCK CM CONTROL CIRCUIT, Diagnostic Procedure with Diagnostic Trouble Code (DTC).>
B2782	STEERING LOCK DRIVE REQUEST SIGNAL CORRELATION	When the open or short circuit in the steering lock motor power supply circuit is detected.	<Ref. to KPS(diag)-73, DTC B2782 STEERING LOCK DRIVE REQUEST SIGNAL CORRELATION, Diagnostic Procedure with Diagnostic Trouble Code (DTC).>
B2784	ANTENNA CIRCUIT (PUSH ENGINE SWITCH)	When open or short circuit occurs in the antenna coil.	<Ref. to KPS(diag)-75, DTC B2784 ANTENNA CIRCUIT (PUSH ENGINE SWITCH), Diagnostic Procedure with Diagnostic Trouble Code (DTC).>
B2785	LIN COMMUNICATION	When the keyless access CM detects the collation system LIN bus communication error three times in a row.	<Ref. to KPS(diag)-77, DTC B2785 LIN COMMUNICATION, Diagnostic Procedure with Diagnostic Trouble Code (DTC).>
B2786	STEERING LOCK CM COMMUNICATION	When communication between keyless access CM and steering lock CM is interrupted for a set amount of time.	<Ref. to KPS(diag)-79, DTC B2786 STEERING LOCK CM COMMUNICATION, Diagnostic Procedure with Diagnostic Trouble Code (DTC).>

DTC	Item	Content of diagnosis	Note
B2788	IGN SIGNAL CORRELATION (STEERING LOCK CM)	When mismatch occurs in the IG1 input of the steering lock CM between LIN communication line input and solid line input.	<Ref. to KPS(diag)-82, DTC B2788 IGN SIGNAL CORRELATION (STEERING LOCK CM), Diagnostic Procedure with Diagnostic Trouble Code (DTC).>
B2789	ID CODE BOX COMMUNICATION	• When communication between keyless access CM and ID code box is interrupted for a set amount of time. • Open or short circuit in the wiring harness between keyless access CM and ID code box.	<Ref. to KPS(diag)-85, DTC B2789 ID CODE BOX COMMUNICATION, Diagnostic Procedure with Diagnostic Trouble Code (DTC).>
B278A	PUSH ENGINE SWITCH POWER SUPPLY CIRCUIT	When the power supply circuit of the push button ignition switch is shorted to ground.	<Ref. to KPS(diag)-88, DTC B278A PUSH ENGINE SWITCH POWER SUPPLY CIRCUIT, Diagnostic Procedure with Diagnostic Trouble Code (DTC).>
B278D	ID CODE BOX JUDGMENT CIRCUIT	Either of the following malfunctions is detected. • ID code box existence judgment status says NO, but the ID code box existence judging circuit in the solid line detects the connection. • ID code box existence judgment status says NO, but the communication signal from ID code box is received. • ID code box existence judging circuit in the solid line detects no connection, but the communication signal from ID code box is received. (During a new registration)	<Ref. to KPS(diag)-90, DTC B278D ID CODE BOX JUDGMENT CIRCUIT, Diagnostic Procedure with Diagnostic Trouble Code (DTC).>
B2790	ID CODE BOX CIRCUIT	An error has occurred inside the ID code box.	<Ref. to KPS(diag)-91, DTC B2790 ID CODE BOX CIRCUIT, Diagnostic Procedure with Diagnostic Trouble Code (DTC).>
B27A1	DRIVER SIDE EXTERNAL ANTENNA OPEN	When open circuit occurs in the harness between keyless access CM and driver's side front door outer handle.	<Ref. to KPS(diag)-92, DTC B27A1 DRIVER SIDE EXTERNAL ANTENNA OPEN, Diagnostic Procedure with Diagnostic Trouble Code (DTC).>
B27A2	PASSENGER SIDE EXTERNAL ANTENNA OPEN	When open circuit occurs in the harness between keyless access CM and passenger's side front door outer handle.	<Ref. to KPS(diag)-94, DTC B27A2 PASSENGER SIDE EXTERNAL ANTENNA OPEN, Diagnostic Procedure with Diagnostic Trouble Code (DTC).>
B27A5	FRONT INTERNAL ANTENNA OPEN	When open circuit occurs in the harness between keyless access CM and front interior antenna.	<Ref. to KPS(diag)-96, DTC B27A5 FRONT INTERNAL ANTENNA OPEN, Diagnostic Procedure with Diagnostic Trouble Code (DTC).>
B27A6	REAR INTERNAL ANTENNA OPEN	When open circuit occurs in the harness between keyless access CM and rear interior antenna.	<Ref. to KPS(diag)-98, DTC B27A6 REAR INTERNAL ANTENNA OPEN, Diagnostic Procedure with Diagnostic Trouble Code (DTC).>
B27A7	TRUNK/REAR GATE INTERNAL ANTENNA OPEN	When open circuit occurs in the harness between keyless access CM and rear interior antenna.	<Ref. to KPS(diag)-100, DTC B27A7 TRUNK/REAR GATE INTERNAL ANTENNA OPEN, Diagnostic Procedure with Diagnostic Trouble Code (DTC).>
B27A8	TRUNK/REAR GATE EXTERNAL ANTENNA OPEN	When open circuit occurs in the harness between keyless access CM and rear exterior antenna.	<Ref. to KPS(diag)-102, DTC B27A8 TRUNK/REAR GATE EXTERNAL ANTENNA OPEN, Diagnostic Procedure with Diagnostic Trouble Code (DTC).>

2. Immobilizer (ECM)

DTC	Item	Content of diagnosis	Note
B1571	REFERENCE CODE INCOMPATIBILITY	Reference code mismatch occurs between keyless access CM (model without ID code box) or ID code box (model with ID code box) and ECM.	<Ref. to KPS(diag)-104, DTC B1571 REFERENCE CODE INCOMPATIBILITY, Diagnostic Procedure with Diagnostic Trouble Code (DTC).>
B1572	IMM CIRCUIT EXCEPT ANTENNA CIRCUIT	Communication error occurs between keyless access CM (model without ID code box) or ID code box (model with ID code box) and ECM.	<Ref. to KPS(diag)-105, DTC B1572 IMM CIRCUIT EXCEPT ANTENNA CIRCUIT, Diagnostic Procedure with Diagnostic Trouble Code (DTC).>
B1576	EGI CONTROL MODULE EEPROM	ECM malfunctioning	<Ref. to KPS(diag)-110, DTC B1576 EGI CONTROL MODULE EEPROM, Diagnostic Procedure with Diagnostic Trouble Code (DTC).>
B1577	IMM CONTROL MODULE EEPROM	Malfunction occurs in keyless access CM (model without ID code box) or ID code box (model with ID code box).	<Ref. to KPS(diag)-111, DTC B1577 IMM CONTROL MODULE EEPROM, Diagnostic Procedure with Diagnostic Trouble Code (DTC).>

14.Diagnostic Procedure with Diagnostic Trouble Code (DTC)

A: DTC U0073 CONTROL MODULE COMMUNICATION BUS OFF

Detected when CAN line abnormality is detected.

NOTE:
Perform the diagnosis for LAN system. <Ref. to LAN(diag)-2, PROCEDURE, Basic Diagnostic Procedure.>

B: DTC U0100 LOST COMMUNICATION WITH ECM/PCM “A”

Detected when CAN data from the engine control module (ECM) does not arrive.

NOTE:
Perform the diagnosis for LAN system. <Ref. to LAN(diag)-2, PROCEDURE, Basic Diagnostic Procedure.>

C: DTC U0101 LOST COMMUNICATION WITH TCM

Detected when CAN data from TCM does not arrive.

NOTE:
Perform the diagnosis for LAN system. <Ref. to LAN(diag)-2, PROCEDURE, Basic Diagnostic Procedure.>

D: DTC U0122 LOST COMMUNICATION WITH VEHICLE DYNAMICS CONTROL MODULE

Detected when CAN data from VDC does not arrive.

NOTE:
Perform the diagnosis for LAN system. <Ref. to LAN(diag)-2, PROCEDURE, Basic Diagnostic Procedure.>

E: DTC U0140 LOST COMMUNICATION WITH BODY CONTROL MODULE

Detected when CAN data from BIU does not arrive.

NOTE:
Perform the diagnosis for LAN system. <Ref. to LAN(diag)-2, PROCEDURE, Basic Diagnostic Procedure.>

F: DTC U0155 LOST COMMUNICATION WITH INSTRUMENT PANEL CLUSTER (IPC) CONTROL MODULE

Detected when CAN data from meter does not arrive.

NOTE:
Perform the diagnosis for LAN system. <Ref. to LAN(diag)-2, PROCEDURE, Basic Diagnostic Procedure.>

G: DTC U0401 INVALID DATA RECEIVED FROM ECM/PCM “A”

Detected when there is malfunction in CAN data from the engine control module (ECM).

NOTE:
Perform the diagnosis for LAN system. <Ref. to LAN(diag)-2, PROCEDURE, Basic Diagnostic Procedure.>

H: DTC U0422 INVALID DATA RECEIVED FROM BODY CONTROL MODULE

Detected when CAN data from BIU is abnormal.

NOTE:
Perform the diagnosis for LAN system. <Ref. to LAN(diag)-2, PROCEDURE, Basic Diagnostic Procedure.>

I: DTC B1242 WIRELESS TUNER

DTC DETECTING CONDITION:
When short circuit occurs in harness between keyless access CM and receiver.
TROUBLE SYMPTOM:
- The keyless access with push button start function (except for emergency function) does not operate properly.
- Operation by the access key button does not function.

CAUTION:
- **For replacement procedure of keyless access CM, refer to the "REGISTRATION MANUAL FOR IMMOBILIZER" provided as a separate volume.**
- **When the harness comes close to the receiver, the performance of keyless access system operation and wireless operation may reduce. So, when replacing or inspecting the receiver and harness, do not change the route and length of the surrounding harnesses.**

WIRING DIAGRAM:
Push button start system <Ref. to WI-303, WIRING DIAGRAM, Push Button Start System.>

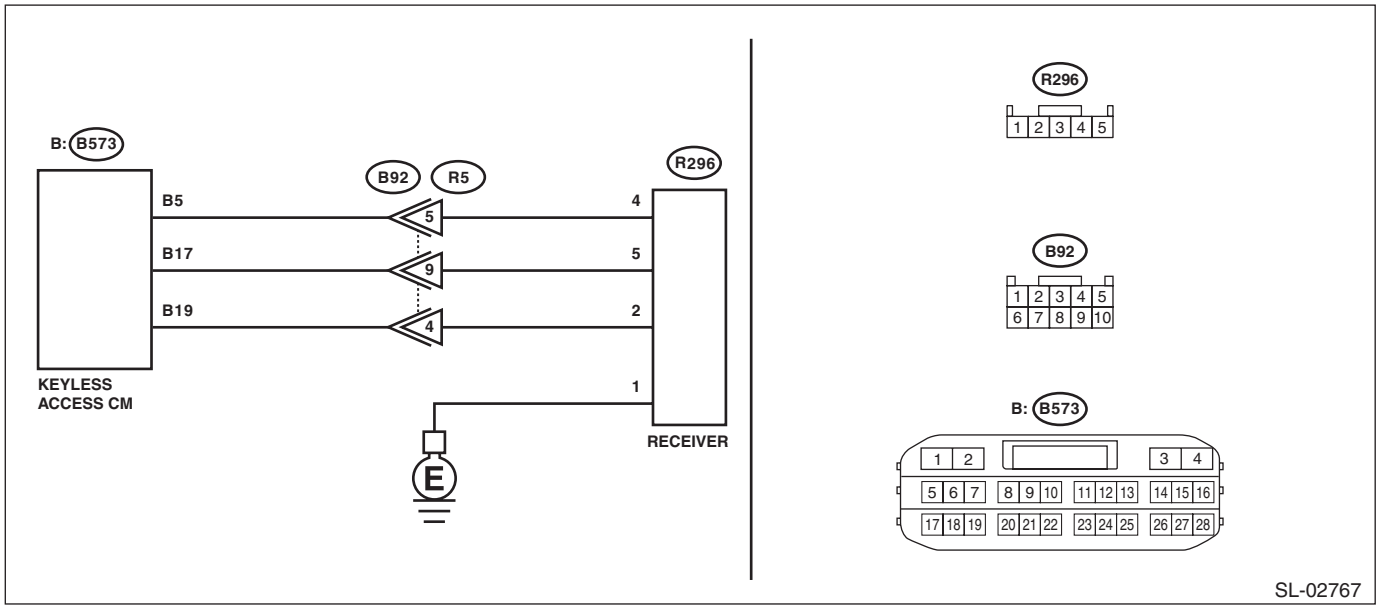

	Step	Check	Yes	No
1	**CHECK LAN SYSTEM.** Inspect LAN system. <Ref. to LAN(diag)-2, PROCEDURE, Basic Diagnostic Procedure.>	Is the check result OK?	Go to step **2**.	Perform the inspection according to the diagnosis for LAN system.
2	**CHECK HARNESS (OPEN CIRCUIT).** 1) Disconnect the keyless access CM connector. 2) Disconnect the receiver connector. 3) Using the tester, measure the resistance between terminals of keyless access CM connector and receiver connector, and between receiver connector and chassis ground. ***Connector & terminal*** ***(B573) No. 19 — (R296) No. 2:*** ***(B573) No. 17 — (R296) No. 5:*** ***(B573) No. 5 — (R296) No. 4:*** ***(R296) No. 1 — Chassis ground:***	Is the resistance less than 1 Ω?	Go to step **3**.	Repair or replace the open circuit of harness.

	Step	Check	Yes	No
3	**CHECK HARNESS (GROUND SHORT CIRCUIT).** Using a tester, measure the resistance between the keyless access CM connector and chassis ground. ***Connector & terminal*** ***(B573) No. 19 — Chassis ground:*** ***(B573) No. 17 — Chassis ground:*** ***(B573) No. 5 — Chassis ground:***	Is the resistance 10 kΩ or more?	Go to step **4**.	Repair or replace the short circuit of the harness.
4	**CHECK RECEIVER.** 1) Replace the receiver, and then connect it. <Ref. to SL-98, Receiver.> 2) Using the Subaru Select Monitor, clear the memory. <Ref. to KPS(diag)-33, Clear Memory Mode.> 3) Read the DTC using Subaru Select Monitor. <Ref. to KPS(diag)-26, Read Diagnostic Trouble Code (DTC).>	Is DTC B1242 displayed?	Replace the keyless access CM. <Ref. to SL-100, Keyless Access CM.>	Receiver has a malfunction.

J: DTC B2271 IGN RELAY CONTROL CIRCUIT

DTC DETECTING CONDITION:

- When malfunction is detected in IG1 and IG2 drive circuits in the keyless access CM.
- When malfunction is detected in IG hold circuit in the keyless access CM.

TROUBLE SYMPTOM:

Not all functions operate at IGN ON.

CAUTION:

For replacement procedure of keyless access CM, refer to the "REGISTRATION MANUAL FOR IMMOBILIZER" provided as a separate volume.

WIRING DIAGRAM:

Push button start system <Ref. to WI-303, WIRING DIAGRAM, Push Button Start System.>

- Engine type: FA

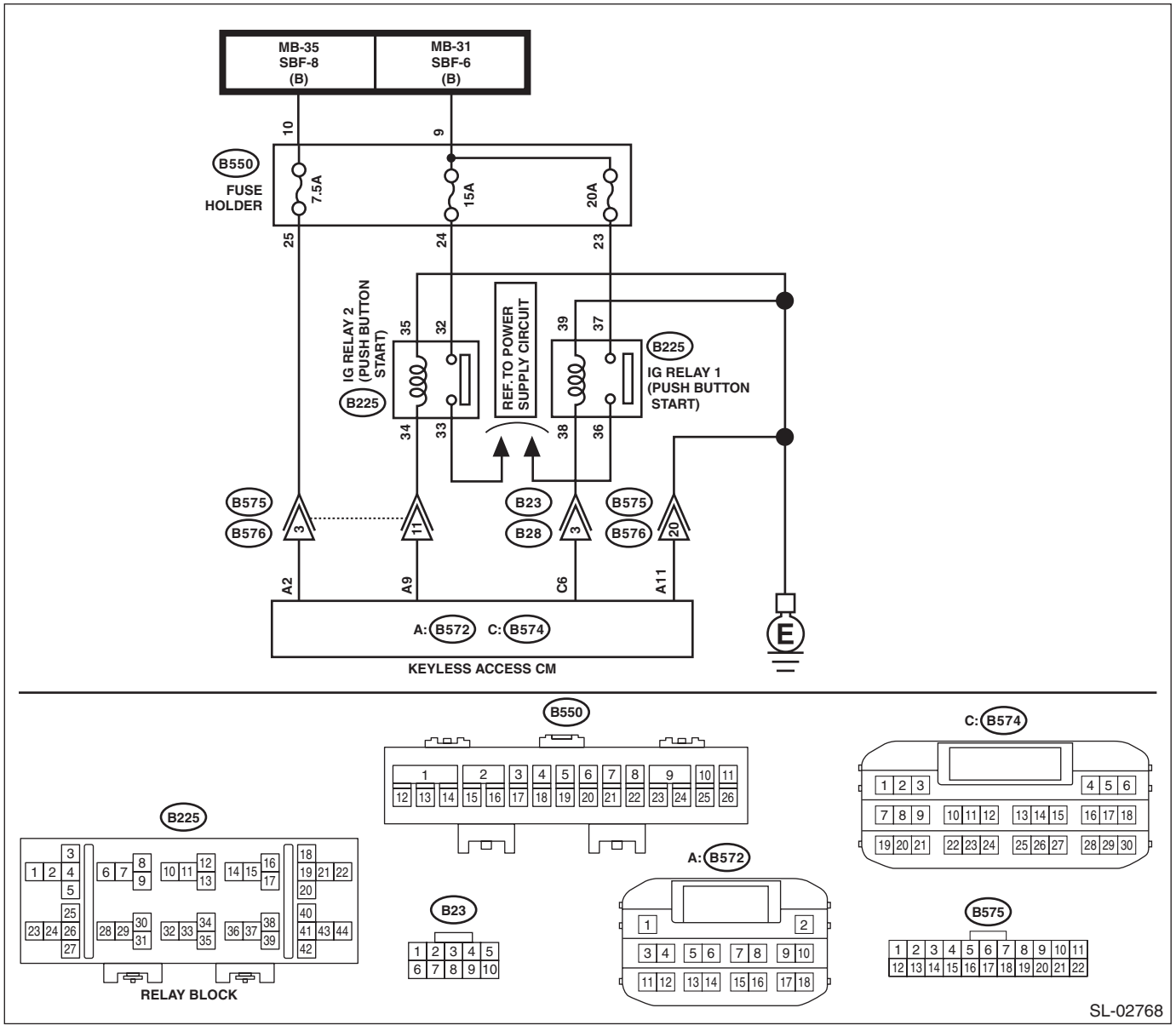

- Engine type: EJ

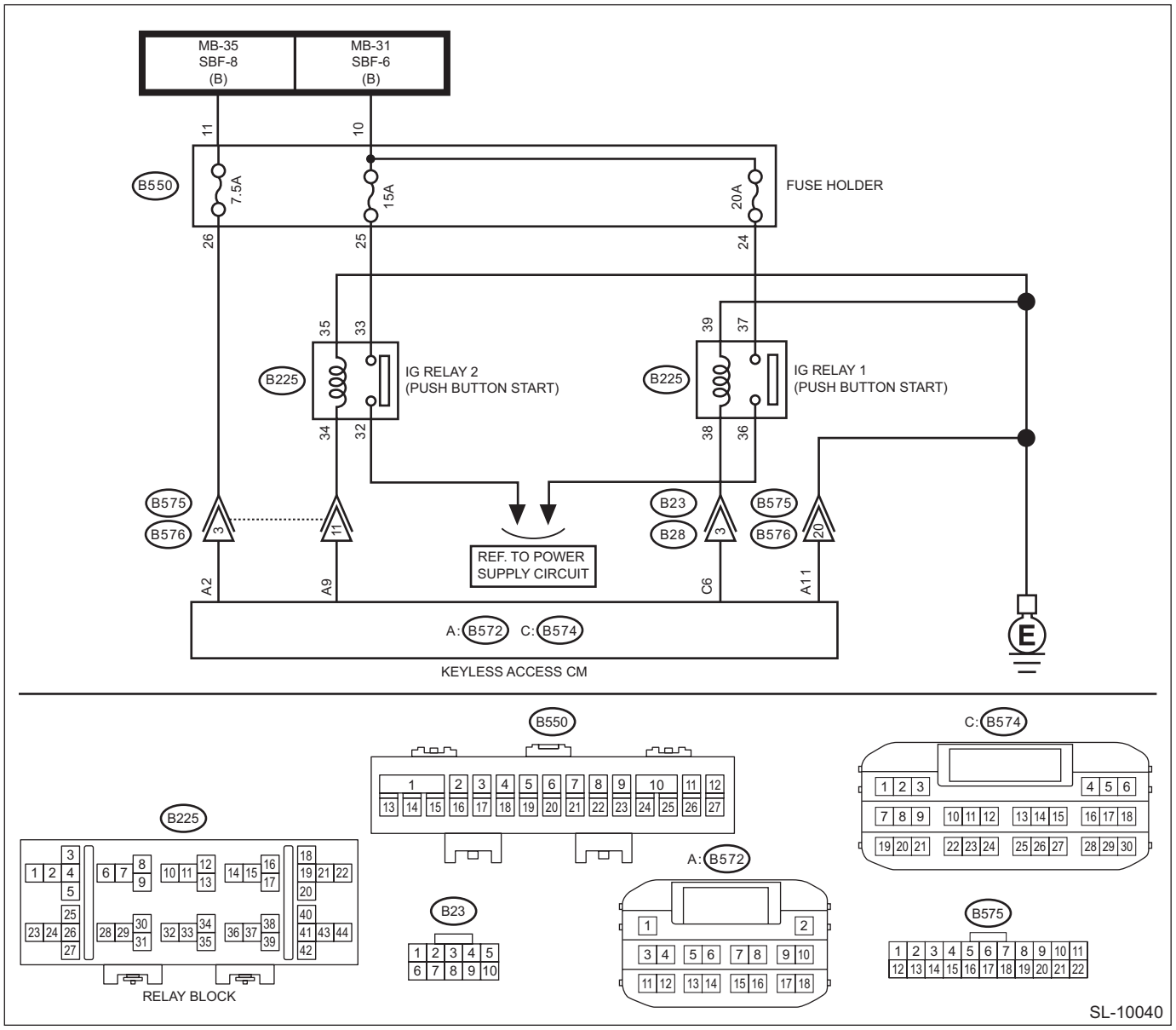

Step		Check	Yes	No
1	**CHECK LAN SYSTEM.** Inspect LAN system. <Ref. to LAN(diag)-2, PROCEDURE, Basic Diagnostic Procedure.>	Is the check result OK?	Go to step **2**.	Perform the inspection according to the diagnosis for LAN system.
2	**CHECK FUSE.** Check the fuse. <Ref. to SL-8, Relay and Fuse.>	Is the check result OK?	Go to step **3**.	Replace the fuse. When the replaced fuse is blown immediately, check the power supply circuit for short-circuited.

	Step	Check	Yes	No
3	**CHECK HARNESS.** 1) Disconnect the keyless access CM connector. 2) Using a tester, measure the voltage between the keyless access CM connector and chassis ground. ***Connector & terminal*** ***(B572) No. 2 (+) — Chassis ground (–):***	Is the voltage 9.5 — 16 V?	Go to step **4**.	Check the power supply circuit.
4	**CHECK HARNESS (OPEN CIRCUIT).** Using a tester, measure the resistance between the keyless access CM connector and chassis ground. ***Connector & terminal*** ***(B572) No. 11 — Chassis ground:***	Is the resistance less than 1 Ω?	Go to step **5**.	Repair or replace the open circuit of harness.
5	**CHECK HARNESS.** 1) Disconnect the keyless access CM connector. 2) Using a tester, measure the resistance between the keyless access CM connector and chassis ground. ***Connector & terminal*** ***(B572) No. 9 — Chassis ground:***	Is resistance 74.15 — 460.88 Ω? (20°C)	Go to step **6**.	Check IG relay 2. Go to step **7**.
6	**CHECK HARNESS.** 1) Disconnect the keyless access CM connector. 2) Using a tester, measure the resistance between the keyless access CM connector and chassis ground. ***Connector & terminal*** ***(B574) No. 6 — Chassis ground:***	Is resistance 50.87 — 72.17 Ω? (20°C)	Go to step **8**.	Check IG relay 1. Go to step **7**.
7	**CHECK RELAY.** Perform unit inspection of IG relay 1 and IG relay 2. <Ref. to SL-9, CHECK RELAY, INSPECTION, Relay and Fuse.>	Is the check result OK?	Go to step **8**.	Replace the relay. <Ref. to SL-110, REMOVAL, IG Relay1 (Push Button Start).> <Ref. to SL-112, REMOVAL, IG Relay2 (Push Button Start).>
8	**CHECK KEYLESS ACCESS CM.** 1) Connect the keyless access CM connector. 2) Using a tester, measure the voltage between the keyless access CM connector and chassis ground. ***Connector & terminal*** ***(B574) No. 6 (+) — Chassis ground (–):*** ***(B572) No. 9 (+) — Chassis ground (–):***	Is the voltage 1 V or less → 9.5 — 16 V when ACC → IGN ON?	Even if DTC is displayed, the circuit has returned to a normal condition at this time. Reproduce the failure, and then perform the diagnosis again. NOTE: In this case, temporary poor contact of connector, temporary open or short circuit of harness may be the cause.	Replace the keyless access CM. <Ref. to SL-100, REMOVAL, Keyless Access CM.>

K: DTC B2274 ACC RELAY CONTROL CIRCUIT

DTC DETECTING CONDITION:
When malfunction is detected in ACC relay drive circuit in the keyless access CM or external circuit.
TROUBLE SYMPTOM:
Each function does not operate at the ACC position.

CAUTION:
For replacement procedure of keyless access CM, refer to the "REGISTRATION MANUAL FOR IMMOBILIZER" provided as a separate volume.
WIRING DIAGRAM:
Push button start system <Ref. to WI-303, WIRING DIAGRAM, Push Button Start System.>
- Engine type: FA

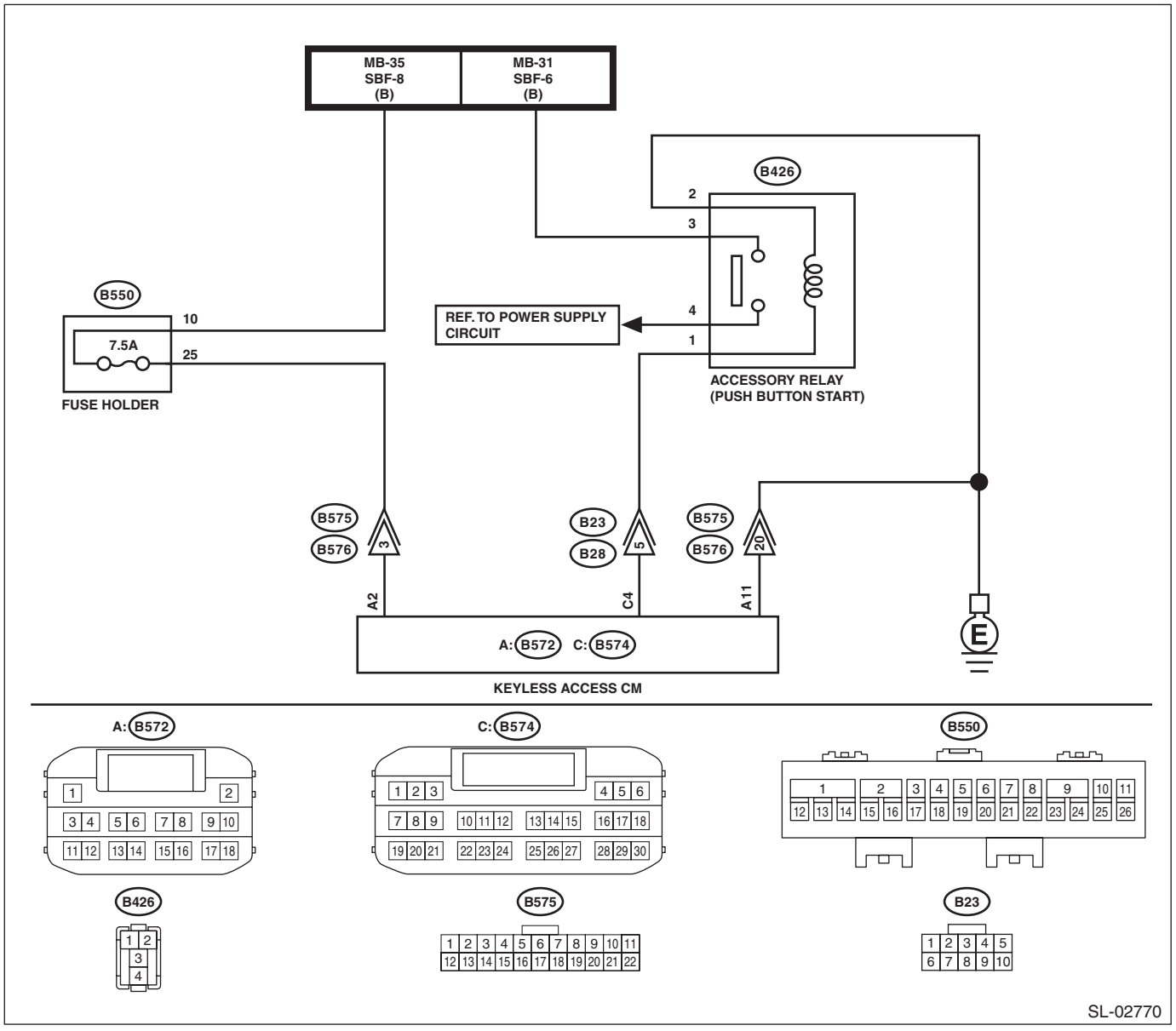

- Engine type: EJ

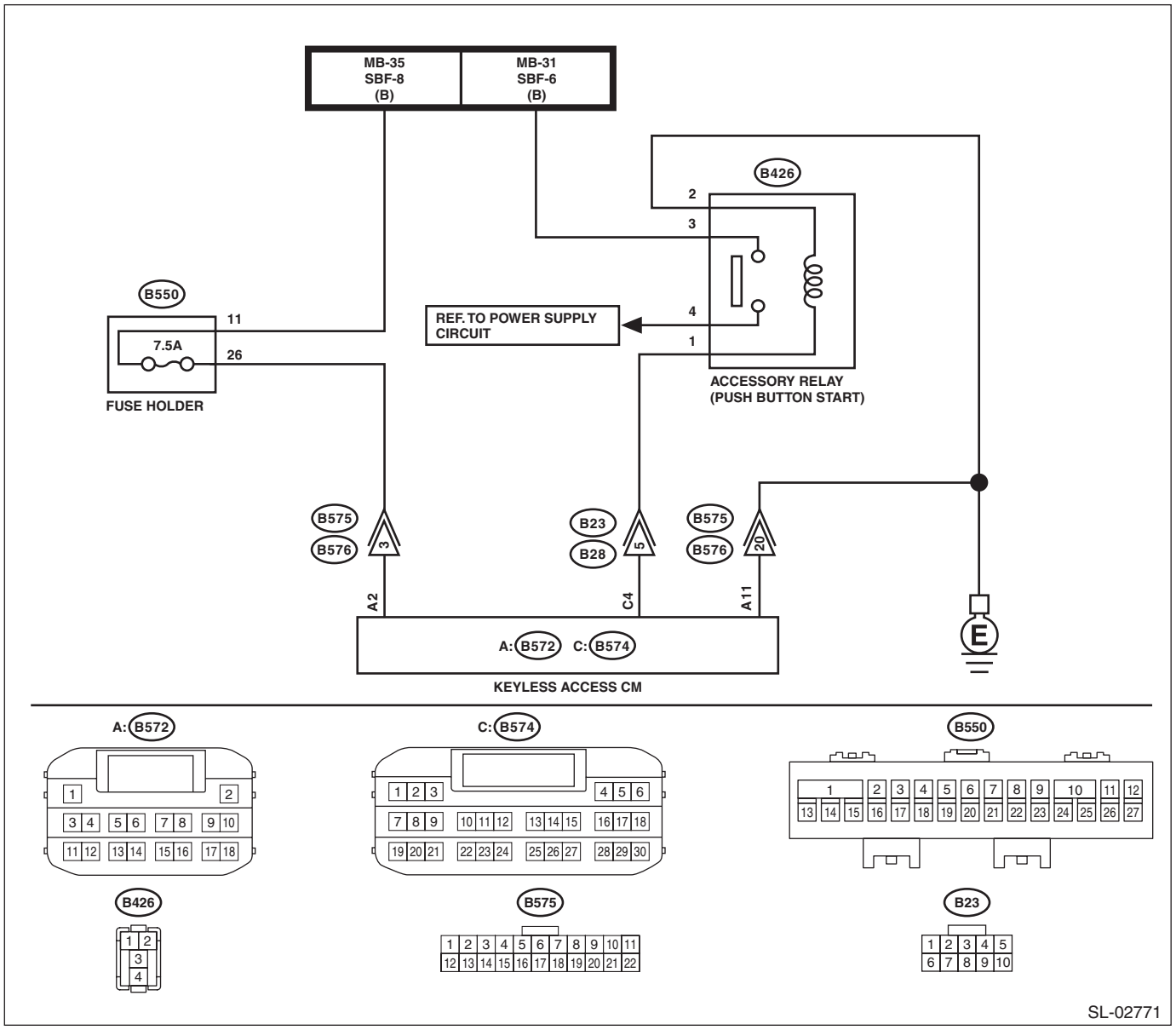

Step		Check	Yes	No
1	**CHECK LAN SYSTEM.** Inspect LAN system. <Ref. to LAN(diag)-2, PROCEDURE, Basic Diagnostic Procedure.>	Is the check result OK?	Go to step **2**.	Perform the inspection according to the diagnosis for LAN system.
2	**CHECK FUSE.** Check the fuse. <Ref. to SL-8, Relay and Fuse.>	Is the check result OK?	Go to step **3**.	Replace the fuse. When the replaced fuse is blown immediately, check the power supply circuit for short-circuited.

	Step	Check	Yes	No
3	**CHECK HARNESS.** 1) Disconnect the keyless access CM connector. 2) Using a tester, measure the resistance between the keyless access CM connector and chassis ground. ***Connector & terminal*** ***(B572) No. 2 (+) — Chassis ground (–):***	Is the voltage 9.5 — 16 V?	Go to step **4**.	Check the power supply circuit.
4	**CHECK HARNESS (OPEN CIRCUIT).** Using a tester, measure the resistance between the keyless access CM connector and chassis ground. ***Connector & terminal*** ***(B572) No. 11 — Chassis ground:***	Is the resistance less than 1 Ω?	Go to step **5**.	Repair or replace the open circuit of harness.
5	**CHECK HARNESS.** 1) Disconnect the keyless access CM connector. 2) Using a tester, measure the resistance between the keyless access CM connector and chassis ground. ***Connector & terminal*** ***(B574) No. 4 — Chassis ground:***	Is resistance 152.61 — 216.5 Ω? (20°C)	Go to step **7**.	Go to step **6**.
6	**CHECK RELAY.** Perform inspection of ACC relay unit. <Ref. to SL-114, Accessory Relay (Push Button Start).>	Is the check result OK?	Go to step **7**.	Replace the relay.
7	**CHECK HARNESS (OPEN CIRCUIT).** Using a tester, measure the resistance between the keyless access CM connector and the accessory relay (push button start), and between the accessory relay (push button start) and chassis ground. ***Connector & terminal*** ***(B574) No. 4 — (B426) No. 1:*** ***(B426) No. 2 — Chassis ground:***	Is the resistance less than 1 Ω?	Go to step **8**.	Repair or replace the open circuit of harness.
8	**CHECK KEYLESS ACCESS CM.** 1) Connect the keyless access CM connector. 2) Using a tester, measure the voltage between the keyless access CM connector and chassis ground. ***Connector & terminal*** ***(B574) No. 4 (+) — Chassis ground (–):***	Is the voltage 1 V or less → 9.5 — 16 V when OFF → ACC ON?	Even if DTC is displayed, the circuit has returned to a normal condition at this time. Reproduce the failure, and then perform the diagnosis again. NOTE: In this case, temporary poor contact of connector, temporary open or short circuit of harness may be the cause.	Replace the keyless access CM. <Ref. to SL-100, Keyless Access CM.>

L: DTC B2275 ENGINE START REQUEST CONTROL CIRCUIT

DTC DETECTING CONDITION:

- When malfunction is detected in engine start permission signal output circuit in the keyless access CM.
- When malfunction is detected in external engine start permission signal circuit.

TROUBLE SYMPTOM:

Engine will not start.

CAUTION:

For replacement procedure of keyless access CM, refer to the "REGISTRATION MANUAL FOR IMMOBILIZER" provided as a separate volume.

WIRING DIAGRAM:

Push button start system <Ref. to WI-303, WIRING DIAGRAM, Push Button Start System.>

- Engine type: FA

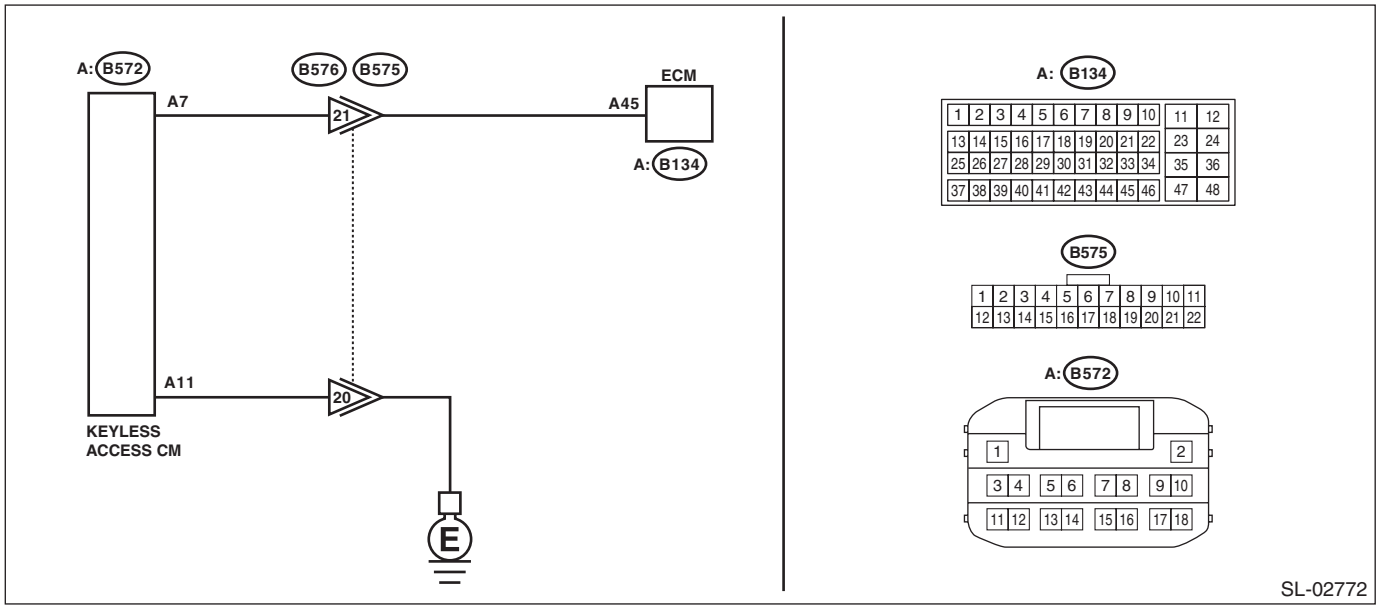

- Engine type: EJ

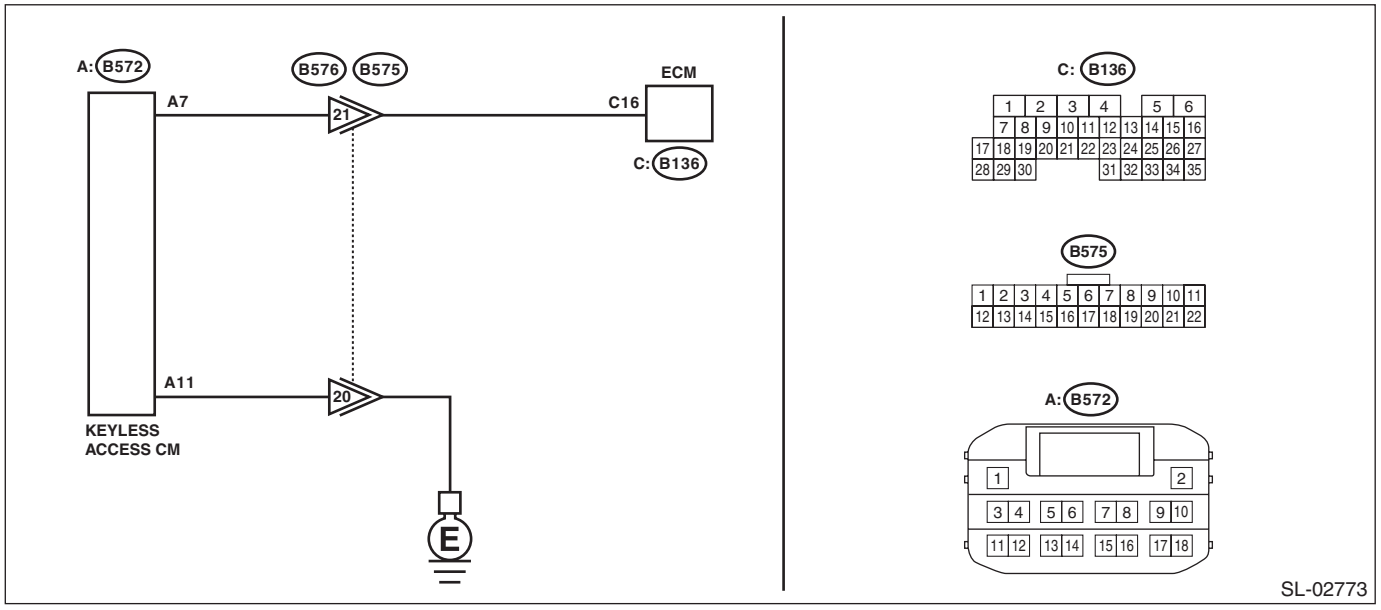

	Step	Check	Yes	No
1	**CHECK LAN SYSTEM.** Inspect LAN system. <Ref. to LAN(diag)-2, PROCEDURE, Basic Diagnostic Procedure.>	Is the check result OK?	Go to step **2**.	Perform the inspection according to the diagnosis for LAN system.
2	**CHECK FUSE.** Check the fuse. <Ref. to SL-8, Relay and Fuse.>	Is the check result OK?	Go to step **3**.	Replace the fuse. When the replaced fuse is blown immediately, check the power supply circuit for short-circuited.
3	**CHECK HARNESS (OPEN CIRCUIT).** 1) Disconnect the keyless access CM connector and ECM connector. 2) Using a tester, measure the resistance between the keyless access CM connector and ECM. ***Connector & terminal*** ***Engine type: FA*** ***(B572) No. 7 — (B134) No. 45:*** ***Engine type: EJ*** ***(B572) No. 7 — (B136) No. 16:***	Is the resistance less than 1 Ω?	Go to step **4**.	Repair or replace the open circuit of harness.
4	**CHECK HARNESS (OPEN CIRCUIT).** Using a tester, measure the resistance between the keyless access CM connector and chassis ground. ***Connector & terminal*** ***(B572) No. 11 — Chassis ground:***	Is the resistance less than 1 Ω?	Go to step **5**.	Repair or replace the open circuit of harness.
5	**CHECK HARNESS (GROUND SHORT CIRCUIT).** Using a tester, measure the resistance between the keyless access CM connector and chassis ground. ***Connector & terminal*** ***(B572) No. 7 — Chassis ground:***	Is the resistance 10 kΩ or more?	Go to step **6**.	Repair or replace the short circuit of the harness.
6	**CHECK KEYLESS ACCESS CM.** 1) Connect the keyless access CM connector and ECM connector. 2) Using a tester, measure the voltage between the terminals of keyless access CM connector. ***Connector & terminal*** ***(B572) No. 7 (+) — (B572) No. 11 (–):***	Does the voltage change as 2 V or less → 9 V or more when the push button ignition switch is turned on while depressing the brake pedal with the shift position in P or N (AT model) or while depressing clutch pedal (MT model)?	Perform inspection according to the diagnosis of engine. <Ref. to EN(w/o STI)(diag)-87, Diagnostics for Engine Starting Failure.> <Ref. to EN(STI)(diag)-77, PROCEDURE, Diagnostics for Engine Starting Failure.>	Replace the keyless access CM. <Ref. to SL-100, Keyless Access CM.>

M: DTC B2276 ACC RELAY OFF SIGNAL

DTC DETECTING CONDITION:

When input error occurs in accessory relay cut input signal of keyless access CM.

TROUBLE SYMPTOM:

- The accessory power supply is not cut during engine start.
- Starter rotation is slow.

CAUTION:

For replacement procedure of keyless access CM, refer to the "REGISTRATION MANUAL FOR IMMOBILIZER" provided as a separate volume.

WIRING DIAGRAM:

Push button start system <Ref. to WI-303, WIRING DIAGRAM, Push Button Start System.>

- Engine type: FA

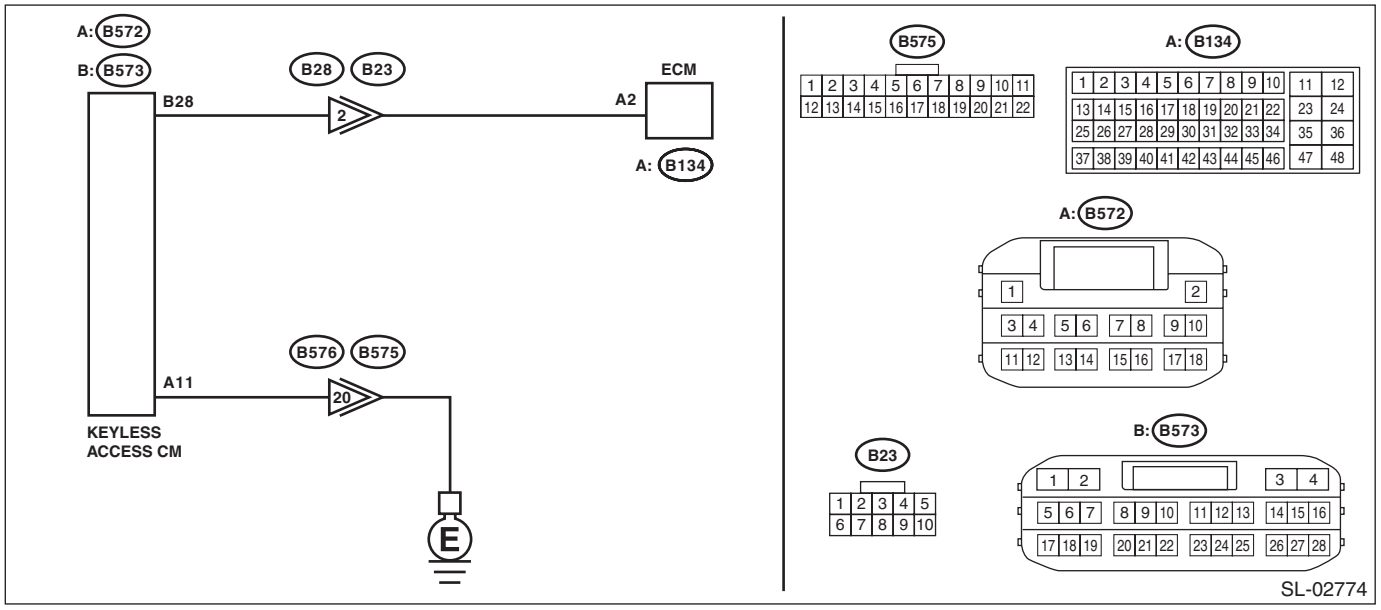

- Engine type: EJ

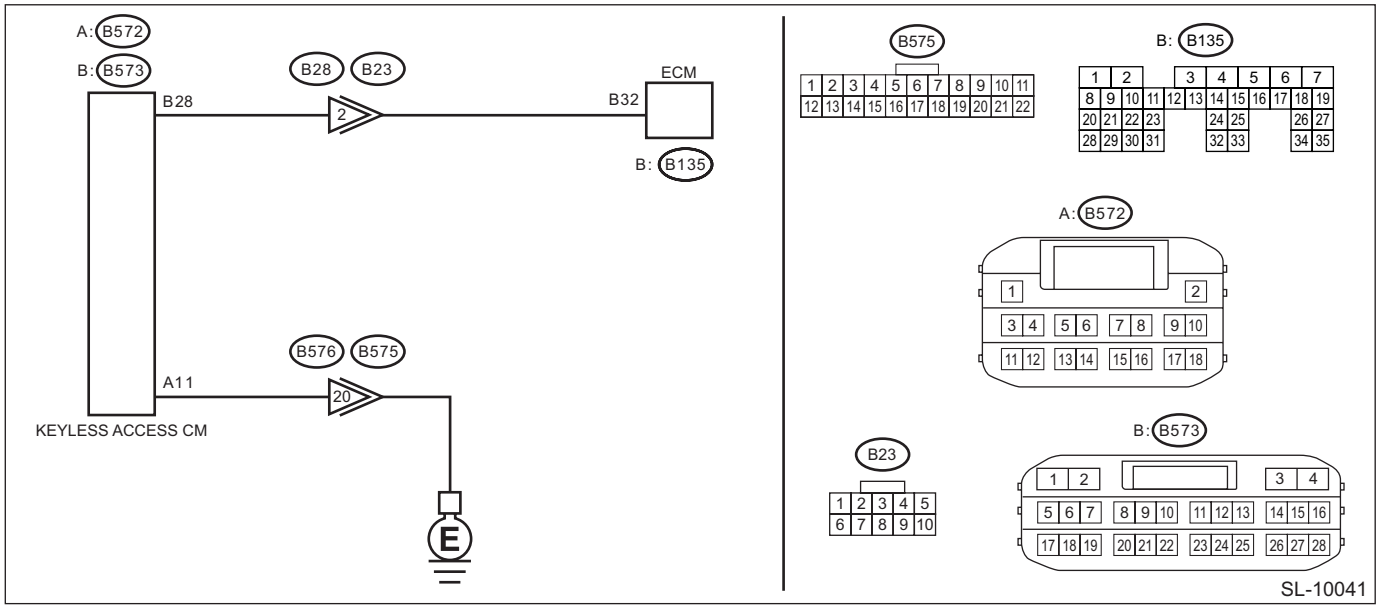

	Step	Check	Yes	No
1	**CHECK LAN SYSTEM.** Inspect LAN system. <Ref. to LAN(diag)-2, PROCEDURE, Basic Diagnostic Procedure.>	Is the check result OK?	Go to step **2**.	Perform the inspection according to the diagnosis for LAN system.
2	**CHECK HARNESS (OPEN CIRCUIT).** 1) Disconnect the keyless access CM connector and ECM connector. 2) Using a tester, measure the resistance between the keyless access CM connector and ECM. ***Connector & terminal*** ***Engine type: FA*** ***(B573) No. 28 — (B134) No. 2:*** ***Engine type: EJ*** ***(B573) No. 28 — (B135) No. 32:***	Is the resistance less than 1 Ω?	Go to step **3**.	Repair or replace the open circuit of harness.
3	**CHECK HARNESS (GROUND SHORT CIRCUIT).** Using a tester, measure the resistance between the keyless access CM connector and chassis ground. ***Connector & terminal*** ***(B573) No. 28 — Chassis ground:***	Is the resistance 10 kΩ or more?	Go to step **4**.	Repair or replace the short circuit of the harness.
4	**CHECK HARNESS (OPEN CIRCUIT).** Using a tester, measure the resistance between the keyless access CM connector and chassis ground. ***Connector & terminal*** ***(B572) No. 11 — Chassis ground:***	Is the resistance less than 1 Ω?	Go to step **5**.	Repair or replace the open circuit of harness.
5	**CHECK KEYLESS ACCESS CM.** 1) Connect the keyless access CM connector and ECM connector. 2) Using a tester, measure the voltage between terminals of the keyless access CM connector when the push button ignition switch is pressed, while depressing the brake pedal with the shift lever in the “P” range (for CVT model) or while depressing the clutch pedal (for MT model). ***Connector & terminal*** ***(B573) No. 28 (+) — (B572) No. 11 (–):***	Is the voltage 9.5 — 16 V → 1 V or less?	Replace the keyless access CM. <Ref. to SL-100, Keyless Access CM.>	Replace the ECM. <Ref. to FU(w/o STI)-124, REMOVAL, Engine Control Module (ECM).> <Ref. to FU(STI)-56, REMOVAL, Engine Control Module (ECM).>

N: DTC B2277 SUBMERGING CIRCUIT

DTC DETECTING CONDITION:

When the water-submersion detection circuit integrated into the keyless access CM detects the water submersion.

TROUBLE SYMPTOM:

- The ignition can be turned ON, but cannot be turned OFF.
- Engine will not start.

CAUTION:

For replacement procedure of keyless access CM, refer to the "REGISTRATION MANUAL FOR IMMOBILIZER" provided as a separate volume.

	Step	Check	Yes	No
1	**CHECK LAN SYSTEM.** Inspect LAN system. <Ref. to LAN(diag)-2, PROCEDURE, Basic Diagnostic Procedure.>	Is the check result OK?	Go to step **2**.	Perform the inspection according to the diagnosis for LAN system.
2	**CHECK SUBMERSION CONDITION.** Check the keyless access CM and environment of equipment, and check the harness for any trace of water submersion.	Is there any trace of water submersion?	Take necessary measures against water submersion and replace the keyless access CM. <Ref. to SL-100, Keyless Access CM.>	Replace the keyless access CM. <Ref. to SL-100, Keyless Access CM.>

O: DTC B2282 VEHICLE SPEED SIGNAL CORRELATION

DTC DETECTING CONDITION:

When the vehicle speed signal transmitted from VDC via solid line and the vehicle speed signal transmitted from VDC via CAN communication line do not match.

CAUTION:

For replacement procedure of keyless access CM, refer to the "REGISTRATION MANUAL FOR IMMOBILIZER" provided as a separate volume.

WIRING DIAGRAM:

Push button start system <Ref. to WI-303, WIRING DIAGRAM, Push Button Start System.>

- Engine type: FA

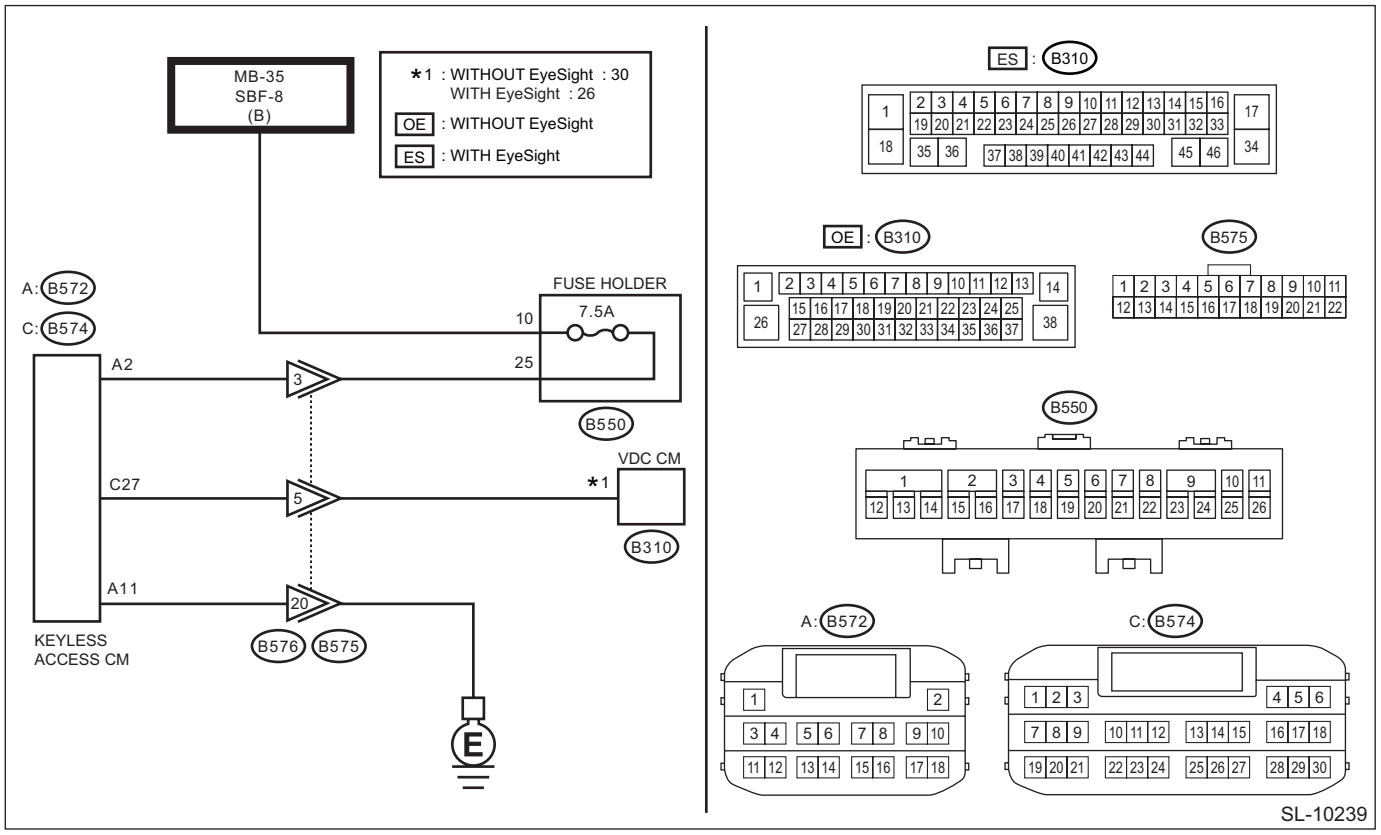

- Engine type: EJ

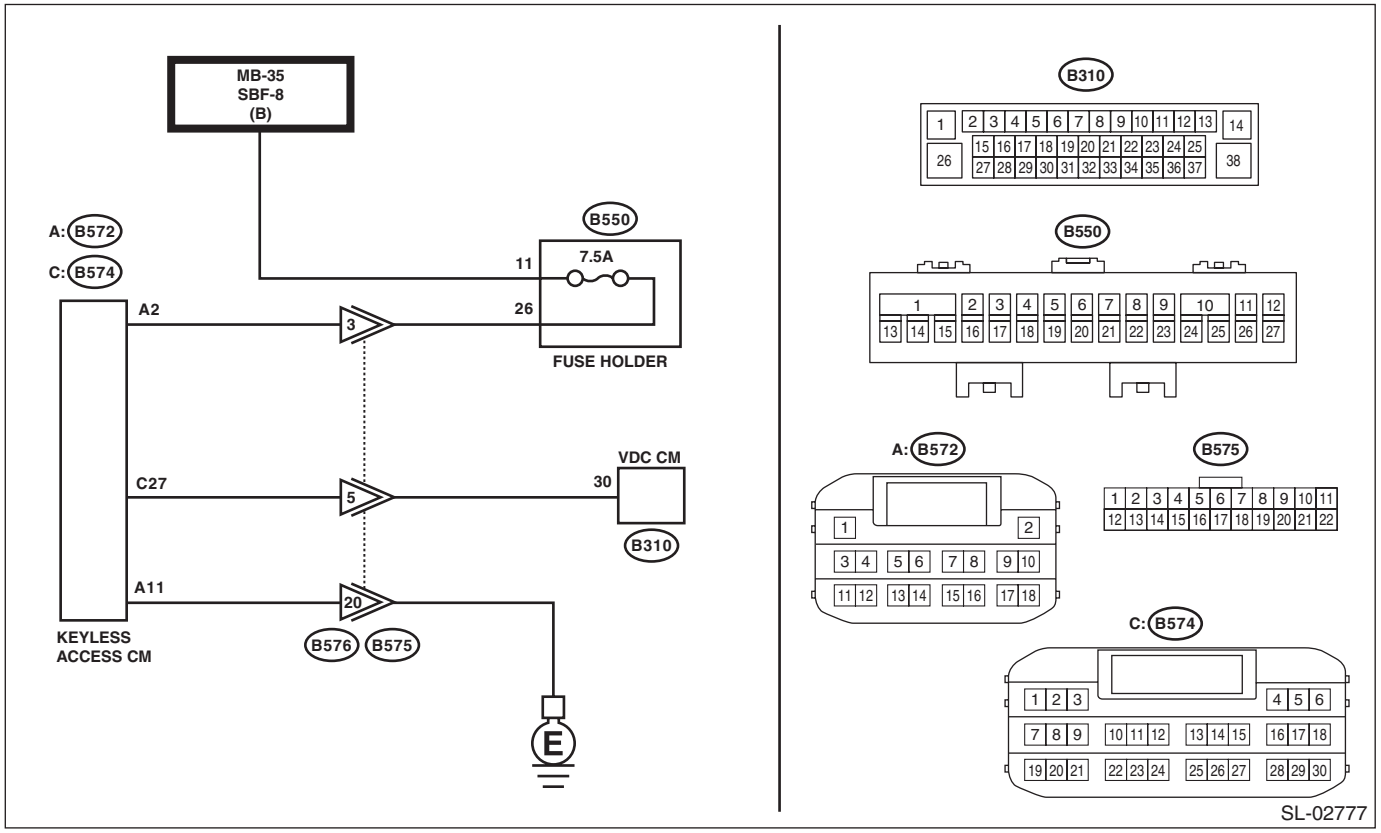

Step		Check	Yes	No
1	**CHECK LAN SYSTEM.** Inspect LAN system. <Ref. to LAN(diag)-2, PROCEDURE, Basic Diagnostic Procedure.>	Is the check result OK?	Go to step **2**.	Perform the inspection according to the diagnosis for LAN system.
2	**CHECK COMBINATION METER.** Check that the speedometer is displayed normally.	Is the check result OK?	Go to step **3**.	Check the VDC. <Ref. to VDC(diag)-2, PROCEDURE, Basic Diagnostic Procedure.>
3	**CHECK CURRENT DATA.** Check the current data display of «Keyless Access with Push Button Start» using Subaru Select Monitor. <Ref. to KPS(diag)-27, Read Current Data.> • «Vehicle speed signal»	Is the display normal according to the parked state or driving state?	Even if DTC is displayed, the circuit has returned to a normal condition at this time. Reproduce the failure, and then perform the diagnosis again. NOTE: In this case, temporary poor contact of connector, temporary open or short circuit of harness may be the cause.	Go to step **4**.

	Step	Check	Yes	No
4	**CHECK HARNESS (OPEN CIRCUIT).** 1) Disconnect the keyless access CM connector. 2) Disconnect the combination meter connector. 3) Using a tester, measure the resistance between the keyless access CM connector and VDC CM connector. ***Connector & terminal*** ***Engine type FA with EyeSight*** ***(B574) No. 27 — (B310) No. 26:*** ***Engine type FA without EyeSight*** ***(B574) No. 27 — (B310) No. 30:***	Is the resistance less than 1 Ω?	Go to step **5**.	Repair or replace the open circuit of harness.
5	**CHECK HARNESS (OPEN CIRCUIT).** Using a tester, measure the resistance between the keyless access CM connector and chassis ground. ***Connector & terminal*** ***(B574) No. 27 — Chassis ground:***	Is the resistance 30 kΩ or more?	Go to step **6**.	Repair or replace the short circuit of the harness.
6	**CHECK KEYLESS ACCESS CM.** 1) Connect each connector. 2) Using the Subaru Select Monitor, measure the waveform between the terminals of keyless access CM connectors. ***Connector & terminal*** ***(B574) No. 27 — Chassis ground:***	Is 3.54 Hz displayed when the vehicle is driven approx. at 5 km/h (3 MPH)?	Replace the keyless access CM. <Ref. to SL-100, Keyless Access CM.>	Check the VDC. <Ref. to VDC(diag)-2, PROCEDURE, Basic Diagnostic Procedure.>

P: DTC B2283 VEHICLE SPEED SENSOR

DTC DETECTING CONDITION:

Either of the following malfunctions is detected. (Vehicle speed sensor failure is detected.)

- Vehicle speed signal failure detection 1: Excessive deceleration detection
- Vehicle speed signal failure detection 2: Engine speed interlock detection

TROUBLE SYMPTOM:

The steering lock cannot be released.

CAUTION:

For replacement procedure of keyless access CM, refer to the "REGISTRATION MANUAL FOR IMMOBILIZER" provided as a separate volume.

WIRING DIAGRAM:

Push button start system <Ref. to WI-303, WIRING DIAGRAM, Push Button Start System.>

- Engine type: FA

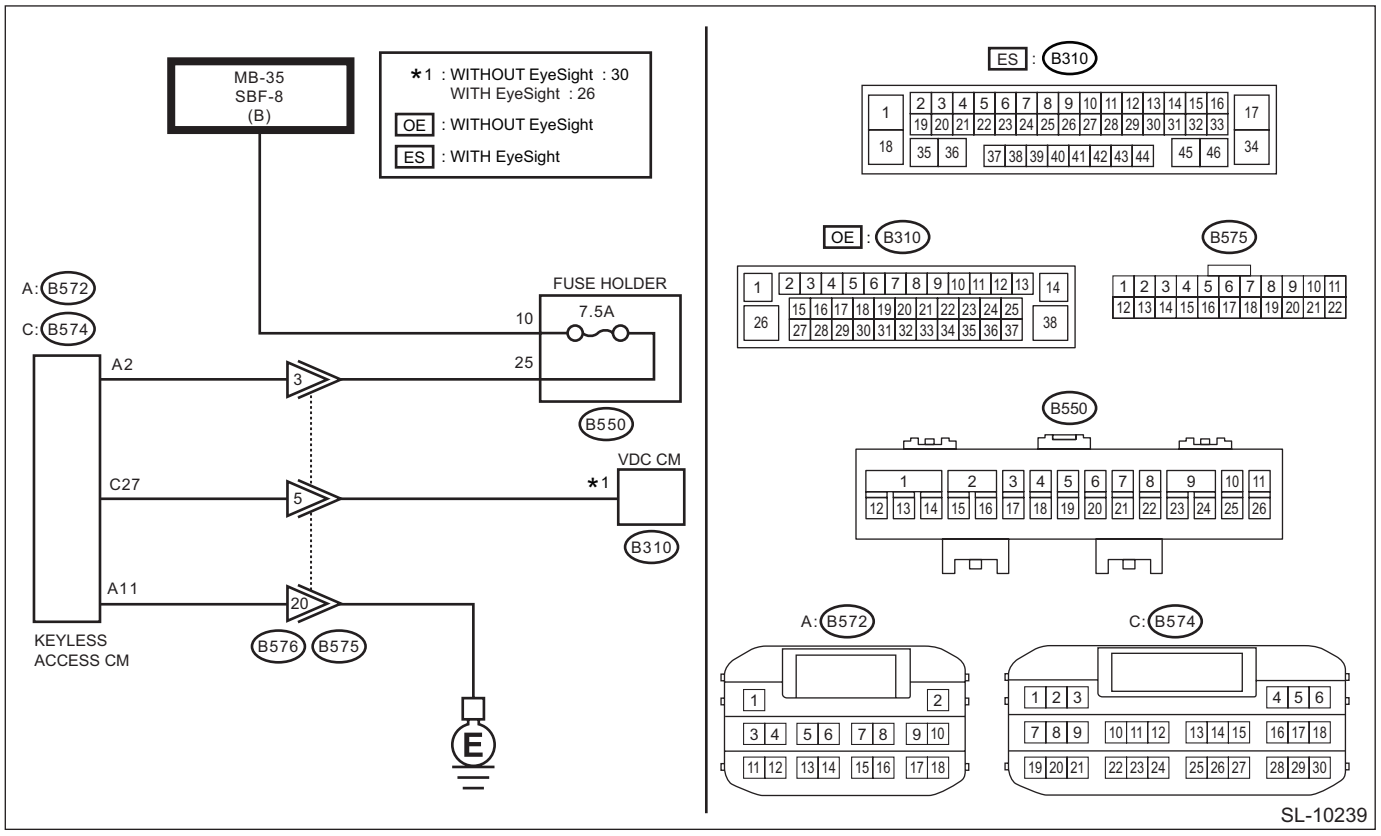

- Engine type: EJ

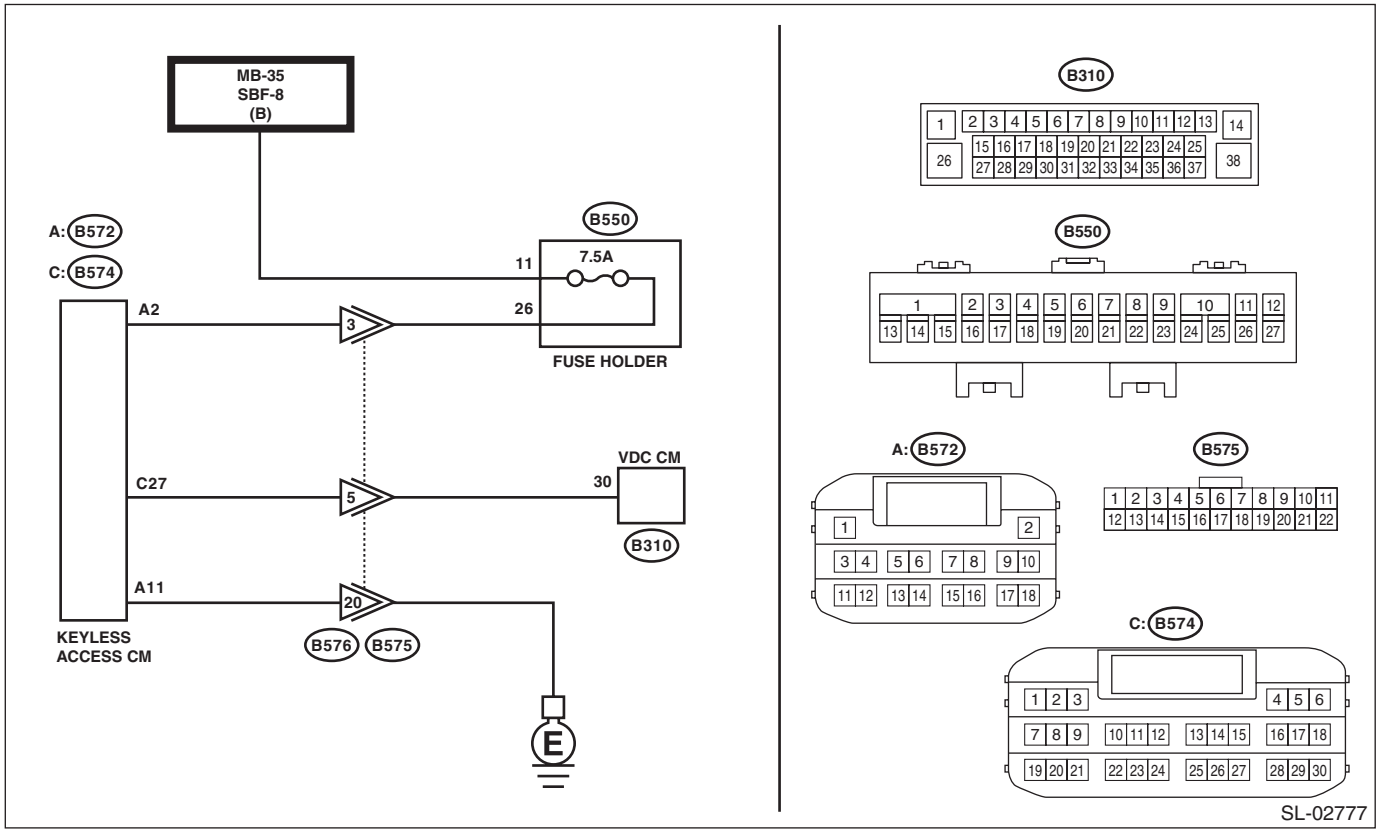

Step		Check	Yes	No
1	**CHECK LAN SYSTEM.** Inspect LAN system. <Ref. to LAN(diag)-2, PROCEDURE, Basic Diagnostic Procedure.>	Is the check result OK?	Go to step **2**.	Perform the inspection according to the diagnosis for LAN system.
2	**CHECK COMBINATION METER.** Check that the speedometer is displayed normally.	Is the check result OK?	Go to step **3**.	Check the VDC. <Ref. to VDC(diag)-2, PROCEDURE, Basic Diagnostic Procedure.>
3	**CHECK CURRENT DATA.** Check the current data display of «Keyless Access with Push Button Start» using Subaru Select Monitor. <Ref. to KPS(diag)-27, Read Current Data.> • «Vehicle speed signal»	Is the display normal according to the parked state or driving state?	Even if DTC is displayed, the circuit has returned to a normal condition at this time. Reproduce the failure, and then perform the diagnosis again. NOTE: In this case, temporary poor contact of connector, temporary open or short circuit of harness may be the cause.	Go to step **4**.

	Step	Check	Yes	No
4	**CHECK HARNESS (OPEN CIRCUIT).** 1) Disconnect the keyless access CM connector. 2) Disconnect the combination meter connector. 3) Using a tester, measure the resistance between the keyless access CM connector and VDC CM connector. ***Connector & terminal*** ***Engine type FA with EyeSight*** ***(B574) No. 27 — (B310) No. 26:*** ***Engine type FA without EyeSight*** ***(B574) No. 27 — (B310) No. 30:***	Is the resistance less than 1 Ω?	Go to step **5**.	Repair or replace the open circuit of harness.
5	**CHECK HARNESS (OPEN CIRCUIT).** Using a tester, measure the resistance between the keyless access CM connector and chassis ground. ***Connector & terminal*** ***(B574) No. 27 — Chassis ground:***	Is the resistance 30 kΩ or more?	Go to step **6**.	Repair or replace the short circuit of the harness.
6	**CHECK KEYLESS ACCESS CM.** 1) Connect each connector. 2) Using the Subaru Select Monitor, measure the waveform between the keyless access CM connector and chassis ground. ***Connector & terminal*** ***(B574) No. 27 — Chassis ground:***	Is 3.54 Hz displayed when the vehicle is driven approx. at 5 km/h (3 MPH)?	Replace the keyless access CM. <Ref. to SL-100, Keyless Access CM.>	Check the VDC. <Ref. to VDC(diag)-2, PROCEDURE, Basic Diagnostic Procedure.>

Q: DTC B2284 BRAKE SIGNAL CORRELATION

DTC DETECTING CONDITION:

When the brake signal transmitted via solid line and the brake signal transmitted via CAN communication line do not match.

TROUBLE SYMPTOM:

CAUTION:

For replacement procedure of keyless access CM, refer to the "REGISTRATION MANUAL FOR IMMOBILIZER" provided as a separate volume.

WIRING DIAGRAM:

Stop light system <Ref. to WI-351, WIRING DIAGRAM, Stop Light System.>

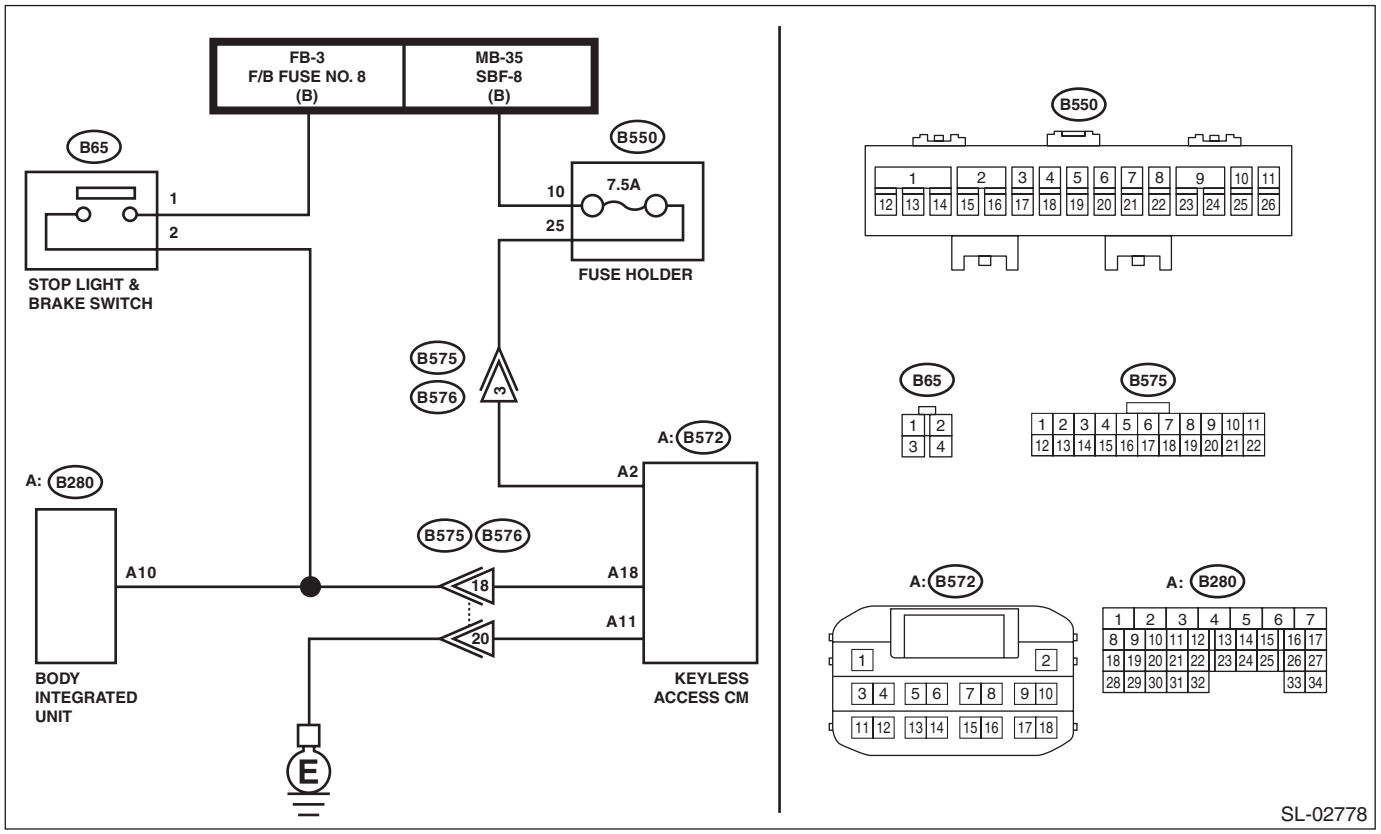

Step		Check	Yes	No
1	**CHECK LAN SYSTEM.** Inspect LAN system. <Ref. to LAN(diag)-2, PROCEDURE, Basic Diagnostic Procedure.>	Is the check result OK?	Go to step **2**.	Perform the inspection according to the diagnosis for LAN system.
2	**CHECK CURRENT DATA.** Check the current data display of «Keyless Access with Push Button Start» using Subaru Select Monitor. <Ref. to KPS(diag)-27, Read Current Data.> • «Stop light SW»	Is DTC displayed normally according to the brake pedal operation?	Go to step **3**.	Check the stop light system.
3	**CHECK CURRENT DATA.** Confirm the current data display of «Body Control» using Subaru Select Monitor. <Ref. to KPS(diag)-27, Read Current Data.> • «Stop light SW»	Is DTC displayed normally according to the brake pedal operation?	Go to step **4**.	Check body integrated unit <Ref. to BC(diag)-2, PROCEDURE, Basic Diagnostic Procedure.> and the stop light switch circuit.

	Step	Check	Yes	No
4	**CHECK FUSE.** Check the fuse. <Ref. to SL-8, Relay and Fuse.>	Is the check result OK?	Go to step **5**.	Replace the fuse. When the replaced fuse is blown immediately, check the power supply circuit for short-circuited.
5	**CHECK HARNESS.** 1) Disconnect the keyless access CM connector. 2) Using a tester, measure the voltage between the keyless access CM connector and chassis ground. ***Connector & terminal*** ***(B572) No. 2 (+) — Chassis ground (–):***	Is the voltage 9.5 — 16 V?	Go to step **6**.	Check the power supply circuit.
6	**CHECK HARNESS (OPEN CIRCUIT).** Using a tester, measure the resistance between the keyless access CM connector and chassis ground. ***Connector & terminal*** ***(B572) No. 11 — Chassis ground:***	Is the resistance less than 1 Ω?	Go to step **7**.	Repair or replace the open circuit of harness.
7	**CHECK HARNESS (OPEN CIRCUIT).** 1) Disconnect the stop light switch connector. 2) Using a tester, measure the resistance between the keyless access CM connector and stop light switch connector. ***Connector & terminal*** ***(B572) No. 18 — (B65) No. 2:***	Is the resistance less than 1 Ω?	Go to step **8**.	Repair or replace the open circuit of harness.
8	**CHECK HARNESS (GROUND SHORT CIRCUIT).** Using a tester, measure the resistance between the keyless access CM connector and chassis ground. ***Connector & terminal*** ***(B572) No. 18 — Chassis ground:***	Is the resistance 10 kΩ or more?	Go to step **9**.	Repair or replace the short circuit of the harness.
9	**CHECK HARNESS.** Using a tester, measure the voltage between the keyless access CM connector and chassis ground when the brake pedal is depressed. ***Connector & terminal*** ***(B572) No. 18 (+) — Chassis ground (–):***	Does the voltage change as follows? 1 V or less (brake pedal not depressed) → 11 — 14 V (brake pedal depressed)	Replace the keyless access CM. <Ref. to SL-100, REMOVAL, Keyless Access CM.>	Check the power supply circuit of stop light switch.

R: DTC B2285 STEERING LOCK POSITION SIGNAL CORRELATION

DTC DETECTING CONDITION:

When the steering lock position signal transmitted from the steering lock CM via solid line and the steering lock position signal transmitted via LIN communication system do not match.

TROUBLE SYMPTOM:

- There are conditions when the steering lock is not released.
- Engine will not start.

CAUTION:

For replacement procedure of keyless access CM, refer to the "REGISTRATION MANUAL FOR IMMOBILIZER" provided as a separate volume.

WIRING DIAGRAM:

Push button start system <Ref. to WI-303, WIRING DIAGRAM, Push Button Start System.>

- Engine type: FA

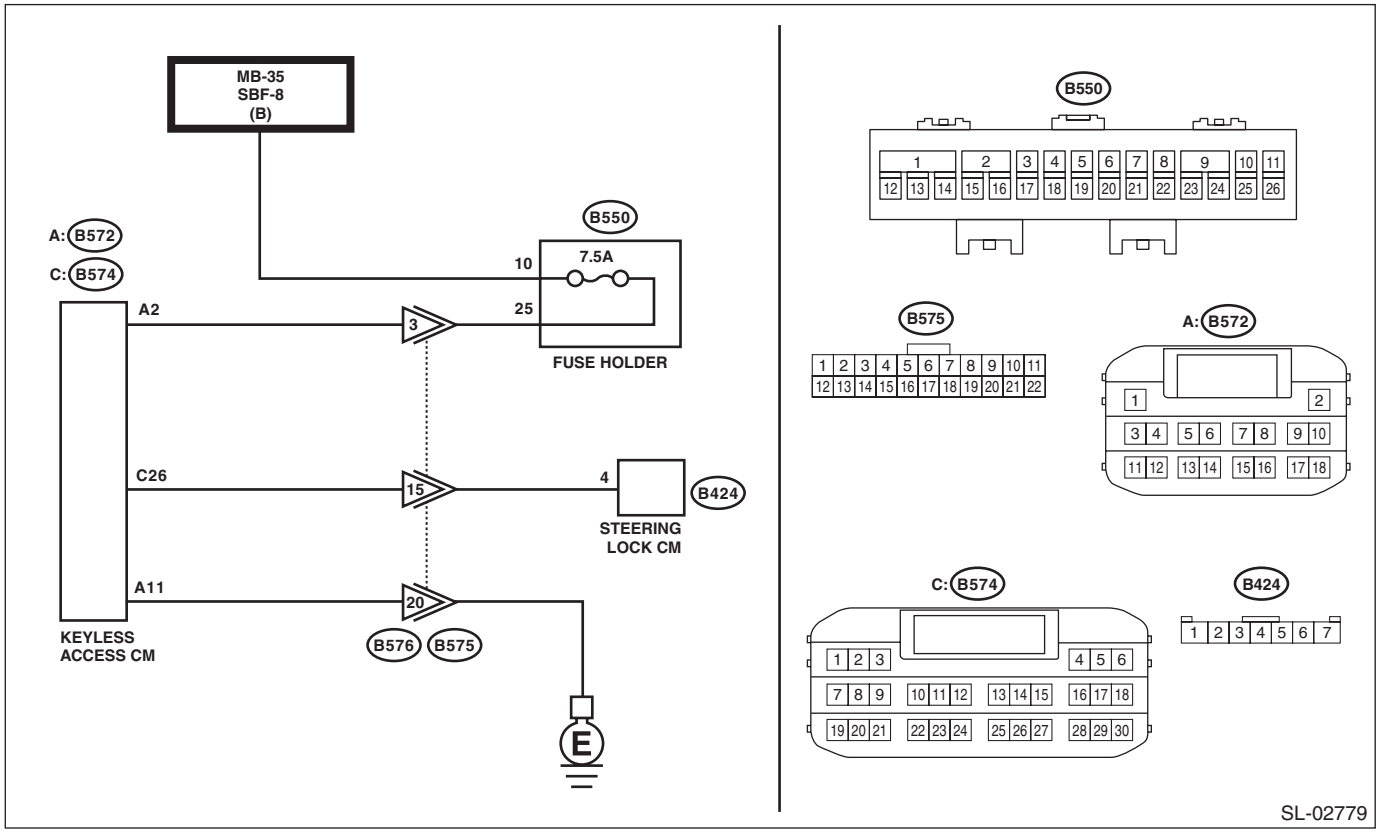

- Engine type: EJ

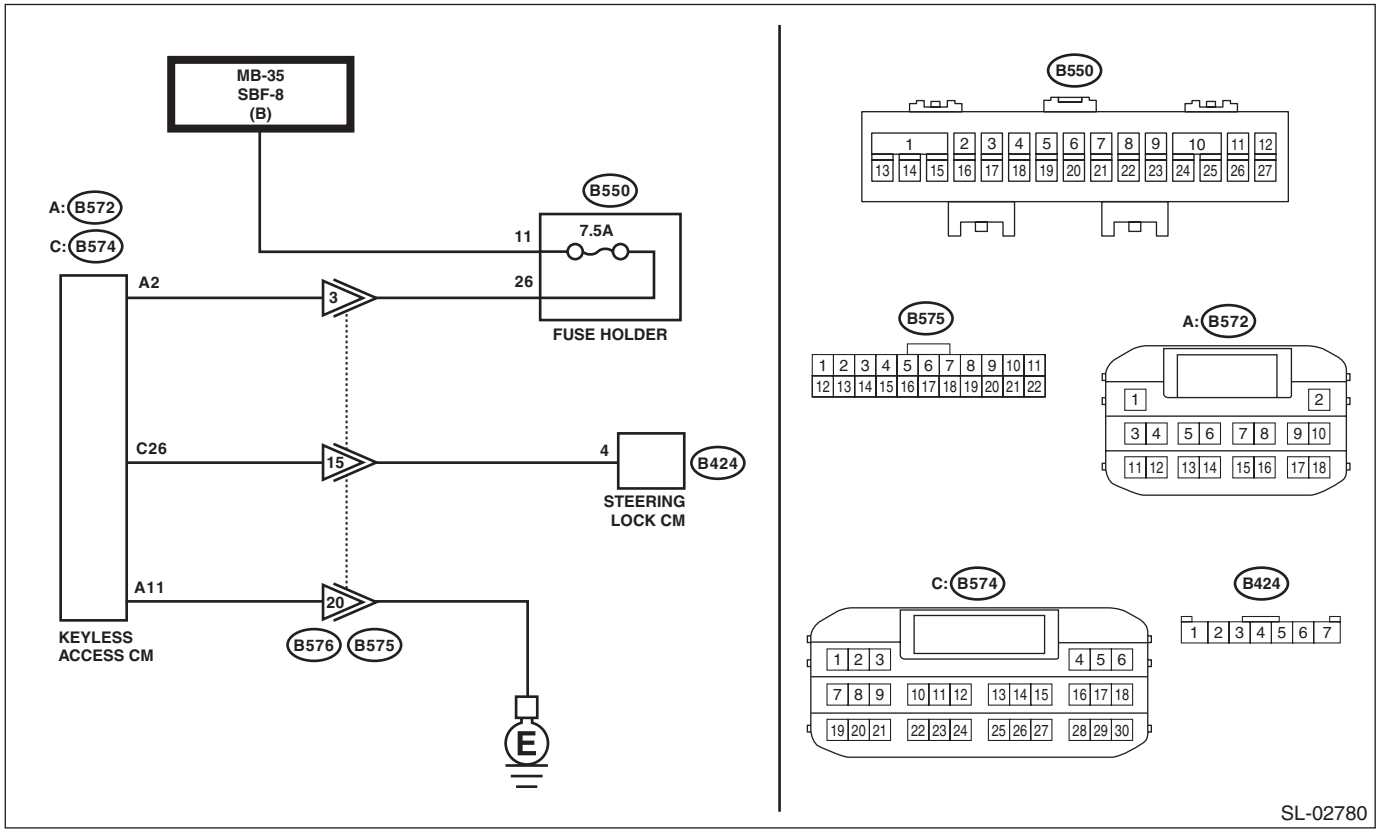

Step		Check	Yes	No
1	**CHECK LAN SYSTEM.** Inspect LAN system. <Ref. to LAN(diag)-2, PROCEDURE, Basic Diagnostic Procedure.>	Is the check result OK?	Go to step **2**.	Perform the inspection according to the diagnosis for LAN system.
2	**CHECK DTC.** Read the DTC using Subaru Select Monitor. <Ref. to KPS(diag)-26, Read Diagnostic Trouble Code (DTC).>	Is DTC B2785 displayed?	Perform the diagnosis of DTC B2785. <Ref. to KPS(diag)-77, DTC B2785 LIN COMMUNICATION, Diagnostic Procedure with Diagnostic Trouble Code (DTC).>	Go to step **3**.

	Step	Check	Yes	No
3	**CHECK CURRENT DATA.** Check the current data display of «Keyless Access with Push Button Start» using Subaru Select Monitor. <Ref. to KPS(diag)-27, Read Current Data.> When locked: • Lock side sensor status: ON • Unlock side sensor status: OFF • Lock confirmation: Confirmed • Unlock confirmation: Not confirmed When unlocked: • Lock side sensor status: OFF • Unlock side sensor status: ON • Lock confirmation: Not confirmed • Unlock confirmation: Confirmed NOTE: To lock the steering lock, turn off the power, and open → close, or close → open the driver's door. To unlock the steering lock, turn the ignition switch to ACC ON or IGN ON.	Are the readings as shown on the left according to the steering lock status?	Go to step **4**.	Replace the steering lock CM. <Ref. to SL-104, REMOVAL, Steering Lock CM.>
4	**CHECK CURRENT DATA.** Check the current data display of «Keyless Access with Push Button Start» using Subaru Select Monitor. <Ref. to KPS(diag)-27, Read Current Data.> When locked: • Steering unlock switch: OFF When unlocked: • Steering unlock switch: ON NOTE: To lock the steering lock, turn off the power, and open → close, or close → open the driver's door. To unlock the steering lock, turn the ignition switch to ACC ON or IGN ON.	Are the readings as shown on the left according to the steering lock status?	Replace the keyless access CM. <Ref. to SL-100, REMOVAL, Keyless Access CM.>	Go to step **5**.
5	**CHECK FUSE.** Check the fuse. <Ref. to SL-8, Relay and Fuse.>	Is the check result OK?	Go to step **6**.	Replace the fuse. When the replaced fuse is blown immediately, check the power supply circuit for short-circuited.
6	**CHECK HARNESS.** 1) Disconnect the keyless access CM connector. 2) Using a tester, measure the voltage between the keyless access CM connector and chassis ground. ***Connector & terminal*** ***(B572) No. 2 (+) — Chassis ground (–):***	Is the voltage 9.5 — 16 V?	Go to step **7**.	Check the power supply circuit.
7	**CHECK HARNESS (OPEN CIRCUIT).** Using a tester, measure the resistance between the keyless access CM connector and chassis ground. ***Connector & terminal*** ***(B572) No. 11 — Chassis ground:***	Is the resistance less than 1 Ω?	Go to step **8**.	Repair or replace the open circuit of harness.

	Step	Check	Yes	No
8	**CHECK HARNESS.** Using a tester, measure the resistance between the steering lock CM connector and chassis ground. ***Connector & terminal*** ***(B424) No. 4 — Chassis ground:***	Does the following occur? Steering lock: 10 kΩ or more → Steering unlock: less than 1 Ω	Go to step **9**.	Replace the steering lock CM. <Ref. to SL-104, REMOVAL, Steering Lock CM.>
9	**CHECK HARNESS (OPEN CIRCUIT).** 1) Disconnect the keyless access CM connector. 2) Disconnect the steering lock CM connector. 3) Using a tester, measure the resistance between the keyless access CM connector and steering lock CM connector. ***Connector & terminal*** ***(B574) No. 26 — (B424) No. 4:***	Is the resistance less than 1 Ω?	Go to step **10**.	Repair or replace the open circuit of harness.
10	**CHECK HARNESS (GROUND SHORT CIRCUIT).** Using a tester, measure the resistance between the keyless access CM connector and chassis ground. ***Connector & terminal*** ***(B574) No. 26 — Chassis ground:***	Is the resistance 10 kΩ or more?	Replace the keyless access CM. <Ref. to SL-100, REMOVAL, Keyless Access CM.>	Repair or replace the short circuit of the harness.

S: DTC B2286 ENGINE SPEED SIGNAL(WITHOUT Auto Start Stop)

DTC DETECTING CONDITION:

When the engine speed signal transmitted from the ECM via solid line and the engine speed signal transmitted from the ECM via CAN communication line do not match.

TROUBLE SYMPTOM:

Cannot start the engine, or the engine stops after starting.

CAUTION:

For replacement procedure of keyless access CM, refer to the "REGISTRATION MANUAL FOR IMMOBILIZER" provided as a separate volume.

WIRING DIAGRAM:

Push button start system <Ref. to WI-303, WIRING DIAGRAM, Push Button Start System.>

- Engine type: FA

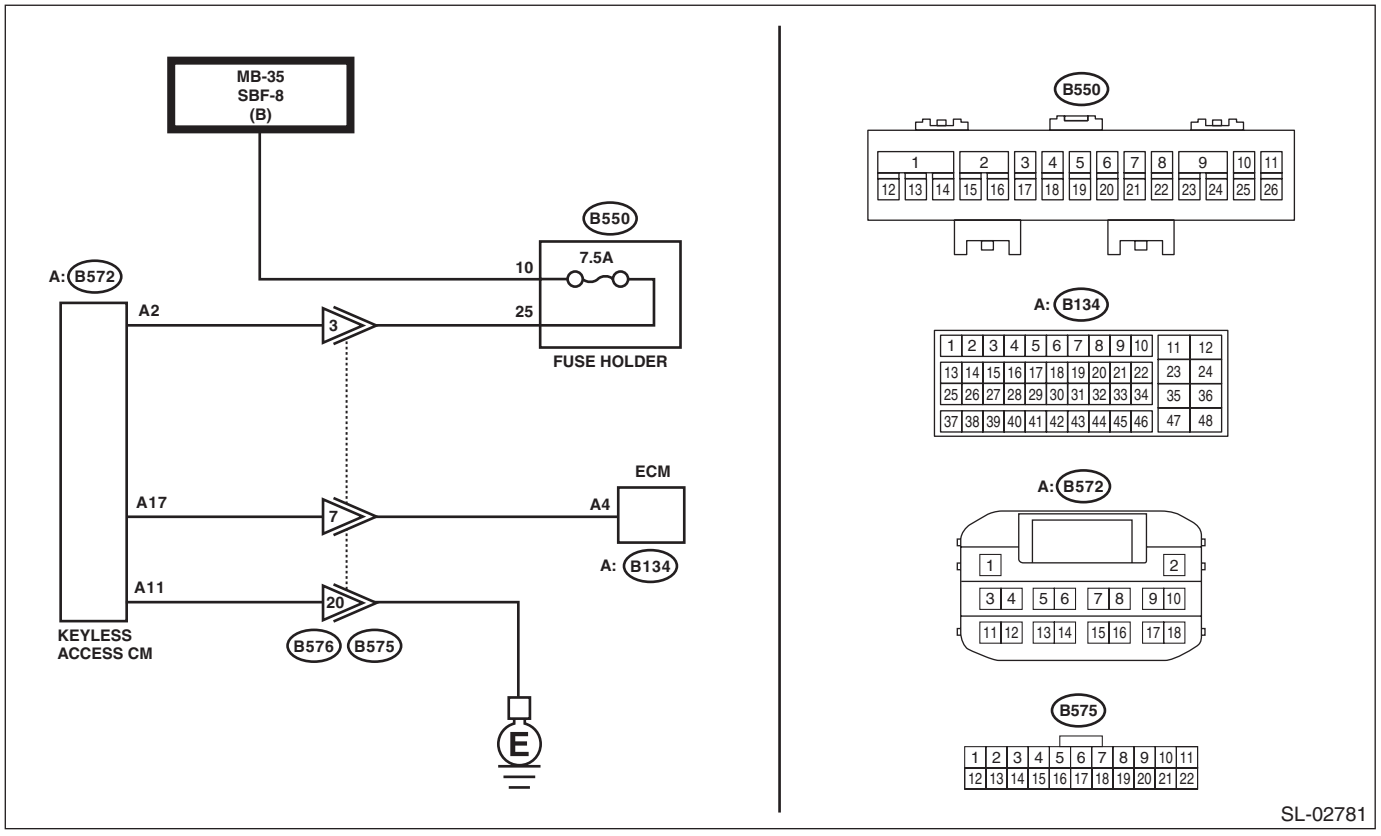

- Engine type: EJ

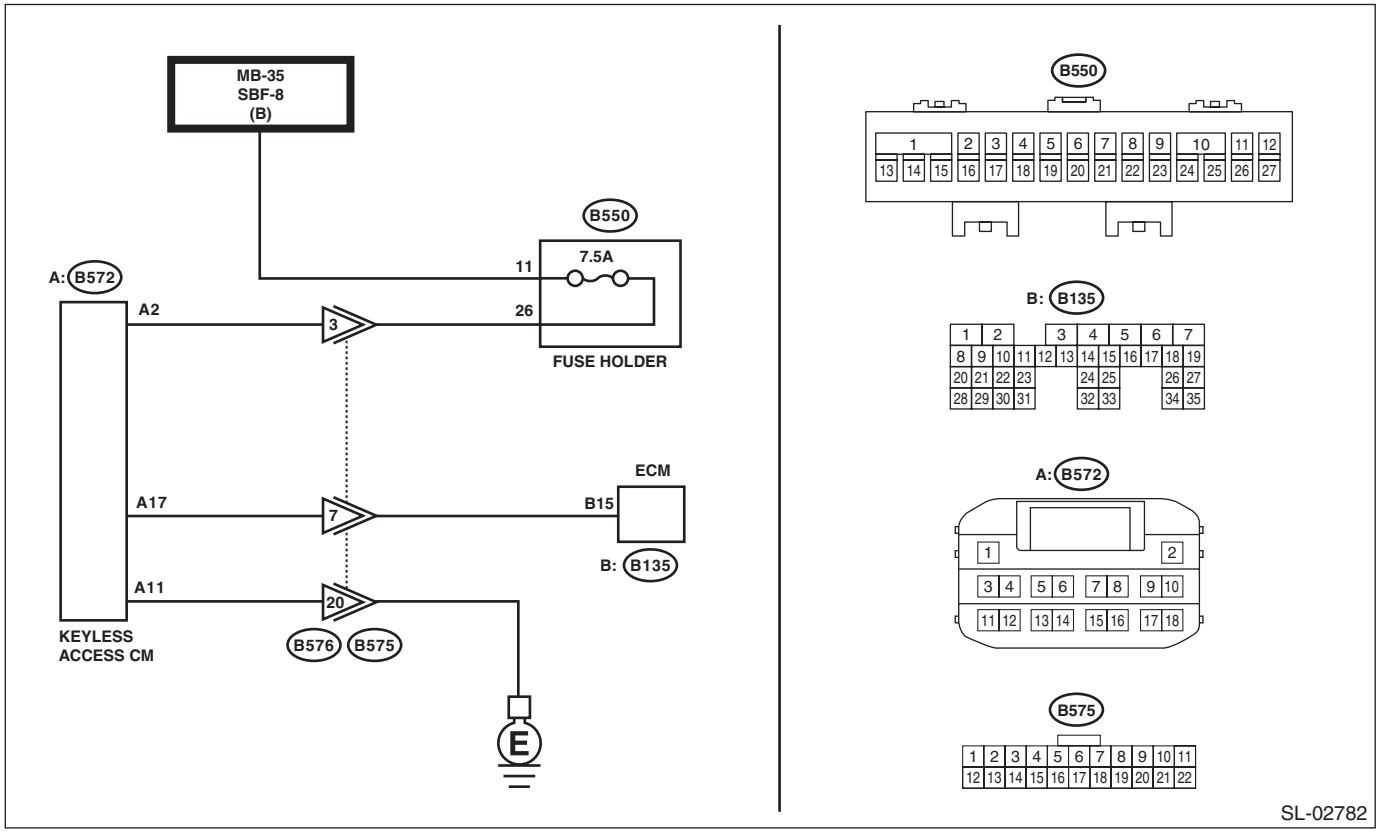

Step		Check	Yes	No
1	**CHECK LAN SYSTEM.** Inspect LAN system. <Ref. to LAN(diag)-2, PROCEDURE, Basic Diagnostic Procedure.>	Is the check result OK?	Go to step **2**.	Perform the inspection according to the diagnosis for LAN system.
2	**CHECK COMBINATION METER.** Confirm that the speedometer is displayed normally.	Is the check result OK?	Go to step **3**.	Perform the diagnosis for the engine. <Ref. to EN(w/o STI)(diag)-2, PROCEDURE, Basic Diagnostic Procedure.> <Ref. to EN(STI)(diag)-2, PROCEDURE, Basic Diagnostic Procedure.>

	Step	Check	Yes	No
3	**CHECK CURRENT DATA.** Check the current data display of «Keyless Access with Push Button Start» using Subaru Select Monitor. <Ref. to KPS(diag)-27, Read Current Data.> • Engine speed	Can the data be read normally?	Even if DTC is displayed, the circuit has returned to a normal condition at this time. Reproduce the failure, and then perform the diagnosis again. NOTE: In this case, temporary poor contact of connector, temporary open or short circuit of harness may be the cause.	Go to step **4**.
4	**CHECK HARNESS (OPEN CIRCUIT).** 1) Disconnect the keyless access CM connector. 2) Disconnect the ECM connector. 3) Using a tester, measure the resistance between the keyless access CM connector and ECM connector. ***Connector & terminal*** ***Engine type: FA*** ***(B572) No. 17 — (B134) No. 4:*** ***Engine type: EJ*** ***(B572) No. 17 — (B135) No. 15:***	Is the resistance less than 1 Ω?	Go to step **5**.	Repair or replace the open circuit of harness.
5	**CHECK HARNESS (GROUND SHORT CIRCUIT).** Using a tester, measure the resistance between the keyless access CM connector and chassis ground. ***Connector & terminal*** ***(B572) No. 17 — Chassis ground:***	Is the resistance 10 kΩ or more?	Go to step **6**.	Repair or replace the short circuit of the harness.
6	**CHECK HARNESS.** 1) Connect the keyless access CM connector and ECM connector. 2) Using the Subaru Select Monitor, measure the waveform between the keyless access CM connector and chassis ground. ***Connector & terminal*** ***(B572) No. 17 — Chassis ground:***	Does the pulse stop when the engine is stopped, and does the pulse generate when the engine is started?	Replace the keyless access CM. <Ref. to SL-100, Keyless Access CM.>	Perform the diagnosis for the engine. <Ref. to EN(w/o STI)(diag)-87, PROCEDURE, Diagnostics for Engine Starting Failure.> <Ref. to EN(STI)(diag)-77, PROCEDURE, Diagnostics for Engine Starting Failure.>

T: DTC B2779 REMOTE CONTROL ENGINE STARTER COLLATION

DTC DETECTING CONDITION:
When the keyless access CM does not respond to engine start even when the remote control engine starter is ON, or when there is a code mismatch.
TROUBLE SYMPTOM:
Remote engine starter does not function.

Step		Check	Yes	No
1	**REGISTER THE REMOTE ENGINE STARTER.** 1) Clear the DTC. <Ref. to KPS(diag)-33, Clear Memory Mode.> 2) Register the remote engine starter using the Subaru Select Monitor. (Refer to the "REGISTRATION MANUAL FOR IMMOBILIZER" provided as a separate volume.) 3) Read the DTC again. <Ref. to KPS(diag)-26, Read Diagnostic Trouble Code (DTC).>	Is DTC B2779 displayed?	Replace the remote engine starter.	Even if DTC is displayed, the circuit has returned to a normal condition at this time. Reproduce the failure, and then perform the diagnosis again. NOTE: In this case, temporary poor contact of connector, temporary open or short circuit of harness may be the cause.

U: DTC B2781 STEERING LOCK CM CONTROL CIRCUIT

DTC DETECTING CONDITION:
- When malfunction is detected in lock/unlock position detection sensor.
- When the open or short circuit in the steering lock motor drive circuit is detected.

TROUBLE SYMPTOM:
- The steering lock cannot be released.
- Engine will not start.

CAUTION:
For replacement procedure of steering lock CM, refer to the "REGISTRATION MANUAL FOR IMMOBILIZER" provided as a separate volume.

NOTE:
When all ECMs connected to collation system LIN bus cannot communicate with the keyless access CM, DTC B2785 is output.

Step		Check	Yes	No
1	**CHECK DTC.** Read the DTC using Subaru Select Monitor. <Ref. to KPS(diag)-26, Read Diagnostic Trouble Code (DTC).>	Is DTC B2785 displayed?	Perform the diagnosis of DTC B2785. <Ref. to KPS(diag)-77, DTC B2785 LIN COMMUNICATION, Diagnostic Procedure with Diagnostic Trouble Code (DTC).>	Replace the steering lock CM. <Ref. to SL-104, Steering Lock CM.>

V: DTC B2782 STEERING LOCK DRIVE REQUEST SIGNAL CORRELATION

DTC DETECTING CONDITION:
When the open or short circuit in the steering lock motor power supply circuit is detected.
TROUBLE SYMPTOM:
- The steering lock cannot be released.
- Engine will not start.

CAUTION:
For replacement procedure of keyless access CM and steering lock CM, refer to the "REGISTRATION MANUAL FOR IMMOBILIZER" provided as a separate volume.
WIRING DIAGRAM:
Push button start system <Ref. to WI-303, WIRING DIAGRAM, Push Button Start System.>

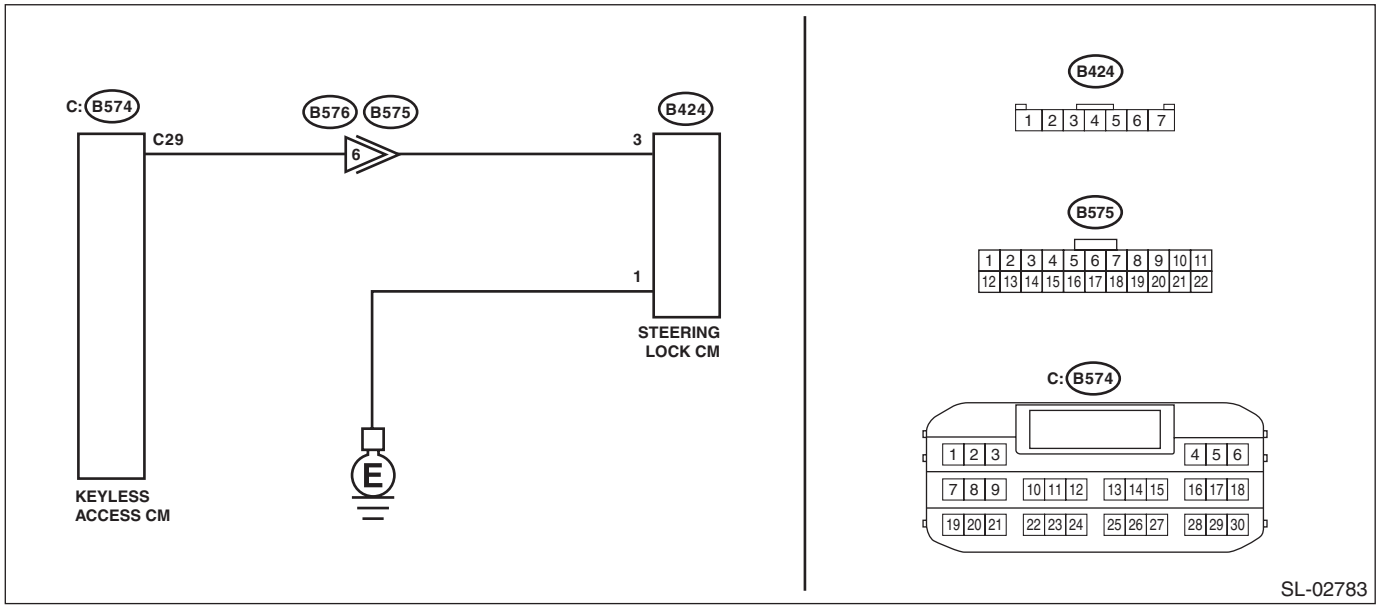

	Step	Check	Yes	No
1	**CHECK HARNESS (OPEN CIRCUIT).** 1) Disconnect the steering lock CM connector. 2) Using a tester, measure the resistance between the steering lock CM connector and chassis ground. ***Connector & terminal*** ***(B424) No. 1 — Chassis ground:***	Is the resistance less than 1 Ω?	Go to step **2**.	Repair or replace the open circuit of harness.
2	**CHECK STEERING LOCK CM.** 1) Connect the steering lock CM connector. 2) Set to ACC OFF, IGN OFF, and shift position P. 3) Using a tester, open the door, and measure the voltage between terminals of steering lock CM connector when the steering lock motor is driven. ***Connector & terminal*** ***(B424) No. 3 (+) — (B424) No. 1 (–):***	Does the voltage change as follows? 1 V or less (steering lock motor in operation) → 11 — 14 V (steering lock motor not in operation)	Go to step **3**.	Go to step **4**.

	Step	Check	Yes	No
3	**CHECK DTC.** 1) Turn the ignition switch to ON. 2) Using the Subaru Select Monitor, clear the memory. <Ref. to KPS(diag)-33, Clear Memory Mode.> 3) Turn the ignition switch to OFF. 4) Disconnect the battery ground cable and reconnect it, and then clear the abnormal information displayed on the data monitor. 5) Turn the ignition switch to ON. 6) Read the DTC using Subaru Select Monitor. <Ref. to KPS(diag)-26, Read Diagnostic Trouble Code (DTC).>	Is DTC B2782 displayed?	Replace the steering lock CM. <Ref. to SL-104, Steering Lock CM.>	Even if DTC is displayed, the circuit has returned to a normal condition at this time. Reproduce the failure, and then perform the diagnosis again. NOTE: In this case, temporary poor contact of connector, temporary open or short circuit of harness may be the cause.
4	**CHECK CONNECTOR.** 1) Disconnect the steering lock CM connector. 2) Disconnect the keyless access CM connector. 3) Check each connector.	Is the check result OK?	Go to step **5**.	Repair or replace the connector.
5	**CHECK HARNESS (OPEN CIRCUIT).** Using a tester, measure the resistance between steering lock CM connector and keyless access CM connector. ***Connector & terminal*** ***(B574) No. 29 — (B424) No. 3:***	Is the resistance less than 1 Ω?	Go to step **6**.	Repair or replace the open circuit of harness.
6	**CHECK HARNESS (GROUND SHORT CIRCUIT).** Using a tester, measure the resistance between steering lock CM connector and chassis ground, and between keyless access CM connector and chassis ground. ***Connector & terminal*** ***(B424) No. 3 — Chassis ground:*** ***(B574) No. 29 — Chassis ground:***	Is the resistance 10 kΩ or more?	Replace the keyless access CM. <Ref. to SL-100, Keyless Access CM.>	Repair or replace the short circuit of the harness.

W: DTC B2784 ANTENNA CIRCUIT (PUSH ENGINE SWITCH)

DTC DETECTING CONDITION:
When open or short circuit occurs in the antenna coil.
TROUBLE SYMPTOM:
The keyless access function may not be operable.

CAUTION:
For replacement procedure of keyless access CM and steering lock CM, refer to the "REGISTRATION MANUAL FOR IMMOBILIZER" provided as a separate volume.
WIRING DIAGRAM:
Immobilizer system <Ref. to WI-244, WIRING DIAGRAM, Immobilizer System.>

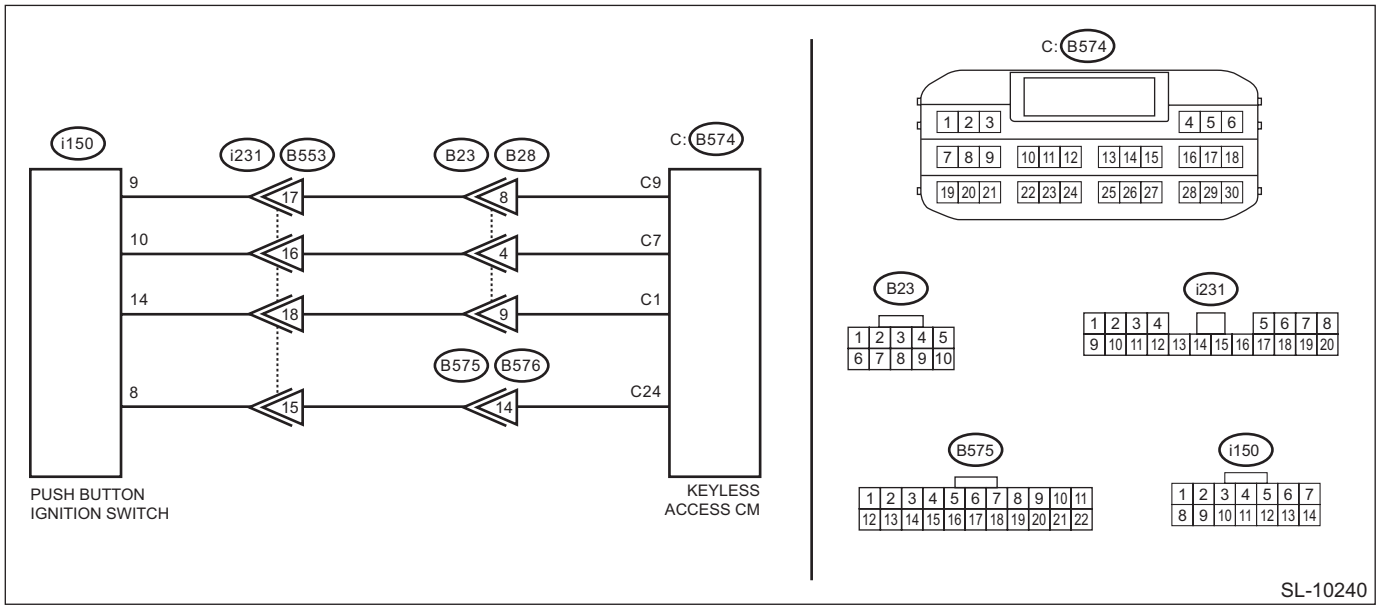

Step		Check	Yes	No
1	**CHECK STEERING LOCK CM.** 1) Disconnect the push button ignition switch connector. 2) Disconnect the keyless access CM connector. 3) Using a tester, measure the resistance between the push button ignition switch connector and the keyless access CM connector terminals. ***Connector & terminal*** ***(i150) No. 14 — (B574) No. 1:*** ***(i150) No. 9 — (B574) No. 9:*** ***(i150) No. 10 — (B574) No. 7:*** ***(i150) No. 8 — (B574) No. 24:***	Is the resistance less than 1 Ω?	Go to step **2**.	Repair or replace the open circuit of harness.
2	**CHECK HARNESS (GROUND SHORT CIRCUIT).** Using a tester, measure the resistance between the push button ignition switch connector and chassis ground terminals. ***Connector & terminal*** ***(i150) No. 14 — Chassis ground:*** ***(i150) No. 9 — Chassis ground:*** ***(i150) No. 10 — Chassis ground:***	Is the resistance 10 kΩ or more?	Go to step **3**.	Repair or replace the short circuit of the harness.

	Step	Check	Yes	No
3	**CHECK PUSH BUTTON IGNITION SWITCH.** 1) Replace the push button ignition switch. <Ref. to SL-106, Push Button Ignition Switch.> 2) Using the Subaru Select Monitor, clear the memory. <Ref. to KPS(diag)-33, Clear Memory Mode.> 3) Read the DTC using Subaru Select Monitor. <Ref. to KPS(diag)-26, Read Diagnostic Trouble Code (DTC).>	Is DTC B2784 displayed?	Replace the keyless access CM. <Ref. to SL-100, Keyless Access CM.>	Malfunction occurred in the push button ignition switch.

X: DTC B2785 LIN COMMUNICATION

DTC DETECTING CONDITION:

When the keyless access CM detected the collation system LIN bus communication error three times in a row.

TROUBLE SYMPTOM:

The keyless access function may not be operable.

CAUTION:

For replacement procedure of keyless access CM and steering lock CM, refer to the "REGISTRATION MANUAL FOR IMMOBILIZER" provided as a separate volume.

WIRING DIAGRAM:

Push button start system <Ref. to WI-303, WIRING DIAGRAM, Push Button Start System.>

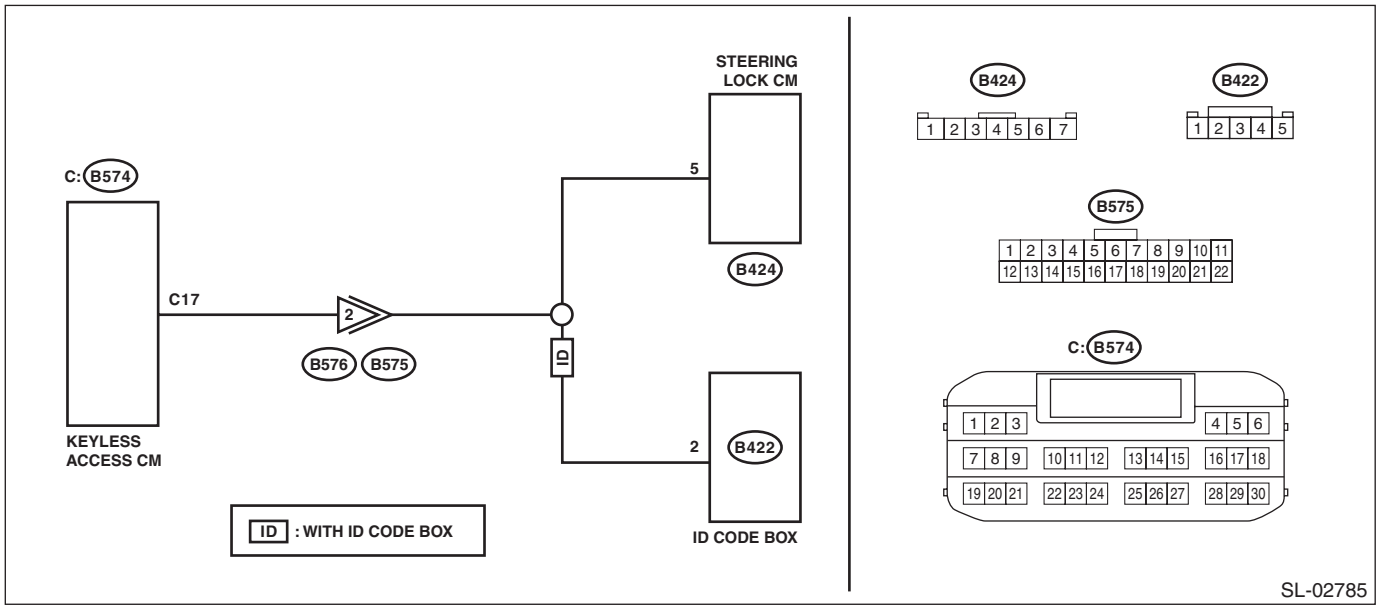

Step		Check	Yes	No
1	**CHECK DTC.** 1) Using the Subaru Select Monitor, clear the memory. <Ref. to KPS(diag)-33, Clear Memory Mode.> 2) Read the DTC using Subaru Select Monitor. <Ref. to KPS(diag)-26, Read Diagnostic Trouble Code (DTC).>	Is DTC B2785 displayed?	Go to step **2**.	Even if DTC is displayed, the circuit has returned to a normal condition at this time. Reproduce the failure, and then perform the diagnosis again. NOTE: In this case, temporary poor contact of connector, temporary open or short circuit of harness may be the cause.

	Step	Check	Yes	No
2	**CHECK HARNESS.** 1) Disconnect the keyless access CM connector. 2) Disconnect the steering lock CM connector. 3) Disconnect the ID code box connector. (With ID code box) 4) Using the tester, measure the resistance between terminals. ***Connector & terminal*** ***(B574) No. 17 — (B424) No. 5:*** ***(B574) No. 17 — (B422) No. 2: (with ID code box)***	Is the resistance less than 1 Ω?	Go to step **3**.	Repair or replace the open circuit of harness.
3	**CHECK HARNESS (GROUND SHORT CIRCUIT).** Using the tester, measure the resistance between terminals. ***Connector & terminal*** ***(B424) No. 5 — Chassis ground:*** ***(B574) No. 17 — Chassis ground:*** ***(B422) No. 2 — Chassis ground: (with ID code box)***	Is the resistance 10 kΩ or more?	Go to step **4**.	Repair or replace the short circuit of the harness.
4	**CHECK HARNESS.** 1) Connect the keyless access CM connector only. 2) Read the DTC using Subaru Select Monitor. <Ref. to KPS(diag)-26, Read Diagnostic Trouble Code (DTC).>	Is DTC B2785 displayed?	Replace the keyless access CM. <Ref. to SL-100, Keyless Access CM.>	Go to step **5**.
5	**CHECK ID CODE BOX.** NOTE: For model without ID code box, go to the next step. 1) Connect only the ID code box. 2) Read the DTC using Subaru Select Monitor. <Ref. to KPS(diag)-26, Read Diagnostic Trouble Code (DTC).>	Is DTC B2785 displayed?	Replace the ID code box. <Ref. to SL-103, ID Code Box.>	Go to step **6**.
6	**CHECK STEERING LOCK CM.** 1) Replace the steering lock CM, and then connect it. <Ref. to SL-104, Steering Lock CM.> 2) Using the Subaru Select Monitor, clear the memory. <Ref. to KPS(diag)-33, Clear Memory Mode.> 3) Read the DTC using Subaru Select Monitor. <Ref. to KPS(diag)-26, Read Diagnostic Trouble Code (DTC).>	Is DTC B2785 displayed?	Replace the steering lock CM. <Ref. to SL-104, Steering Lock CM.>	Even if DTC is displayed, the circuit has returned to a normal condition at this time. Reproduce the failure, and then perform the diagnosis again. NOTE: In this case, temporary poor contact of connector, temporary open or short circuit of harness may be the cause.

Y: DTC B2786 STEERING LOCK CM COMMUNICATION

DTC DETECTING CONDITION:

When communication between keyless access CM and steering lock CM is interrupted for a set amount of time.

TROUBLE SYMPTOM:

The steering lock cannot be released.

CAUTION:

For replacement procedure of keyless access CM and steering lock CM, refer to the "REGISTRATION MANUAL FOR IMMOBILIZER" provided as a separate volume.

WIRING DIAGRAM:

Push button start system <Ref. to WI-303, WIRING DIAGRAM, Push Button Start System.>

- Engine type: FA

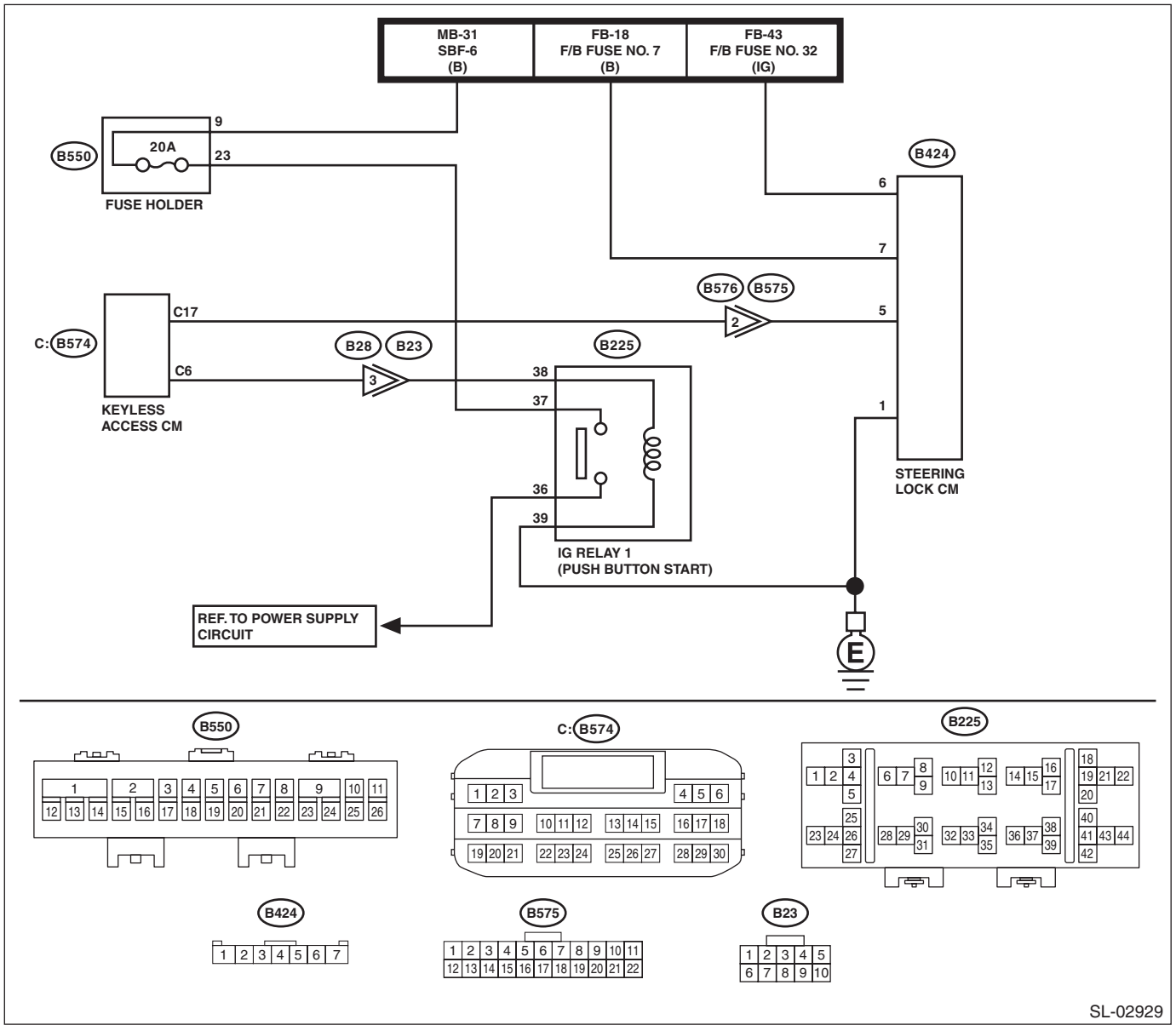

- Engine type: EJ

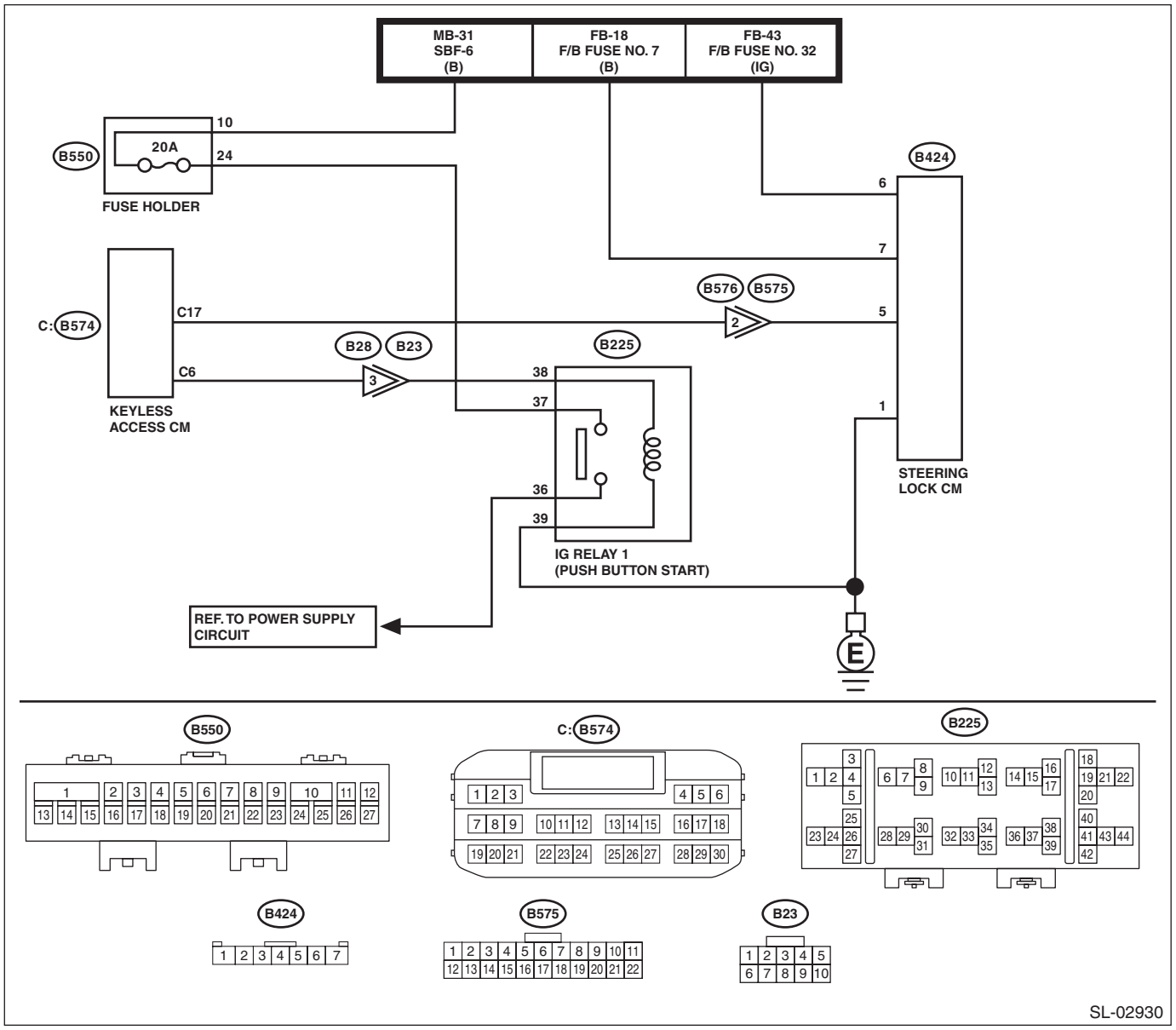

Step		Check	Yes	No
1	**CHECK DTC.** Read the DTC using Subaru Select Monitor. <Ref. to KPS(diag)-26, Read Diagnostic Trouble Code (DTC).>	Are DTCs other than DTC B2786 displayed?	Perform the diagnosis of DTCs other than B2786.	Go to step **2**.
2	**CHECK HARNESS (OPEN CIRCUIT).** 1) Disconnect the keyless access CM connector. 2) Disconnect the steering lock CM connector. 3) Using the tester, measure the resistance between terminals. ***Connector & terminal*** ***(B574) No. 17 — (B424) No. 5:***	Is the resistance less than 1 Ω?	Go to step **3**.	Repair or replace the open circuit of harness.

	Step	Check	Yes	No
3	**CHECK HARNESS (GROUND SHORT CIRCUIT).** Using a tester, measure the resistance between the keyless access CM and chassis ground. ***Connector & terminal*** ***(B574) No. 17 — Chassis ground:***	Is the resistance 10 kΩ or more?	Go to step **4**.	Repair or replace the short circuit of the harness.
4	**CHECK HARNESS (OPEN CIRCUIT).** Using a tester, measure the resistance between the steering lock CM connector and chassis ground. ***Connector & terminal*** ***(B424) No. 1 — Chassis ground:***	Is the resistance less than 1 Ω?	Go to step **5**.	Repair or replace the open circuit of harness.
5	**CHECK HARNESS.** 1) Turn the ignition switch to ON. 2) Using a tester, measure the voltage between the steering lock CM connector and chassis ground. ***Connector & terminal*** ***(B424) No. 6 (+) — Chassis ground (–):*** ***(B424) No. 7 (+) — Chassis ground (–):***	Is the voltage 11 — 14 V?	Go to step **6**.	Repair or replace the faulty portion of the power supply circuit.
6	**CHECK STEERING LOCK CM.** 1) Turn the ignition switch to ON. 2) Using the Subaru Select Monitor, clear the memory. <Ref. to KPS(diag)-33, Clear Memory Mode.> 3) Read the DTC using Subaru Select Monitor. <Ref. to KPS(diag)-26, Read Diagnostic Trouble Code (DTC).>	Is DTC B2785 displayed?	Replace the keyless access CM. <Ref. to SL-100, Keyless Access CM.>	Go to step **7**.
7	**CHECK STEERING LOCK CM.** 1) Turn the ignition switch to ON. 2) Using the Subaru Select Monitor, clear the memory. <Ref. to KPS(diag)-33, Clear Memory Mode.> 3) Read the DTC using Subaru Select Monitor. <Ref. to KPS(diag)-26, Read Diagnostic Trouble Code (DTC).>	Is DTC B2786 displayed?	Replace the steering lock CM. <Ref. to SL-104, Steering Lock CM.>	Even if DTC is displayed, the circuit has returned to a normal condition at this time. Reproduce the failure, and then perform the diagnosis again. NOTE: In this case, temporary poor contact of connector, temporary open or short circuit of harness may be the cause.

Z: DTC B2788 IGN SIGNAL CORRELATION (STEERING LOCK CM)

DTC DETECTING CONDITION:

When mismatch occurs in the IG1 input of the steering lock CM for both LIN communication line input (IG1 input value of keyless access CM) and solid line input.

TROUBLE SYMPTOM:

The steering lock cannot be released.

CAUTION:

For replacement procedure of steering lock CM, refer to the "REGISTRATION MANUAL FOR IMMOBILIZER" provided as a separate volume.

WIRING DIAGRAM:

Push button start system <Ref. to WI-303, WIRING DIAGRAM, Push Button Start System.>

- Engine type: FA

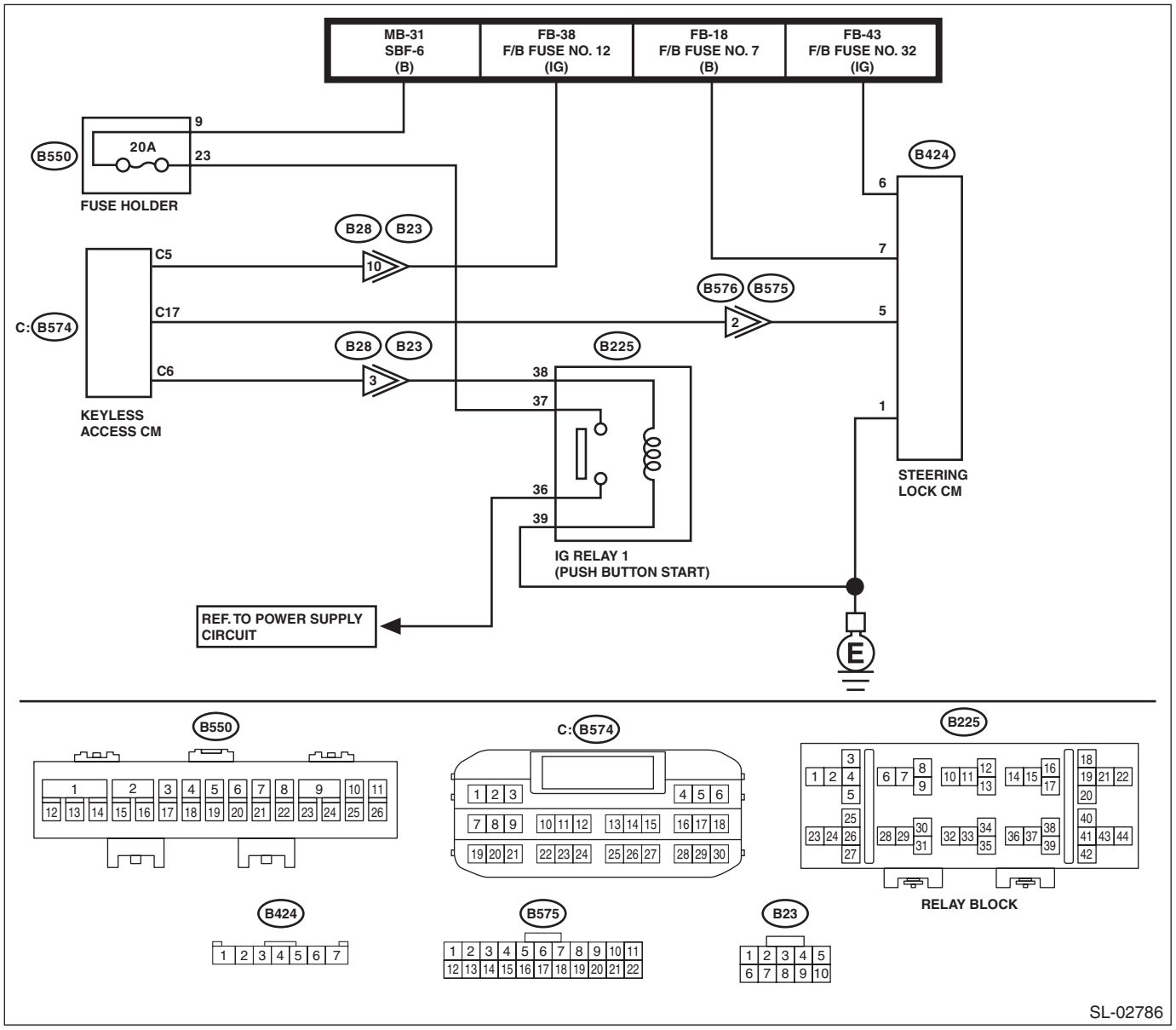

- Engine type: EJ

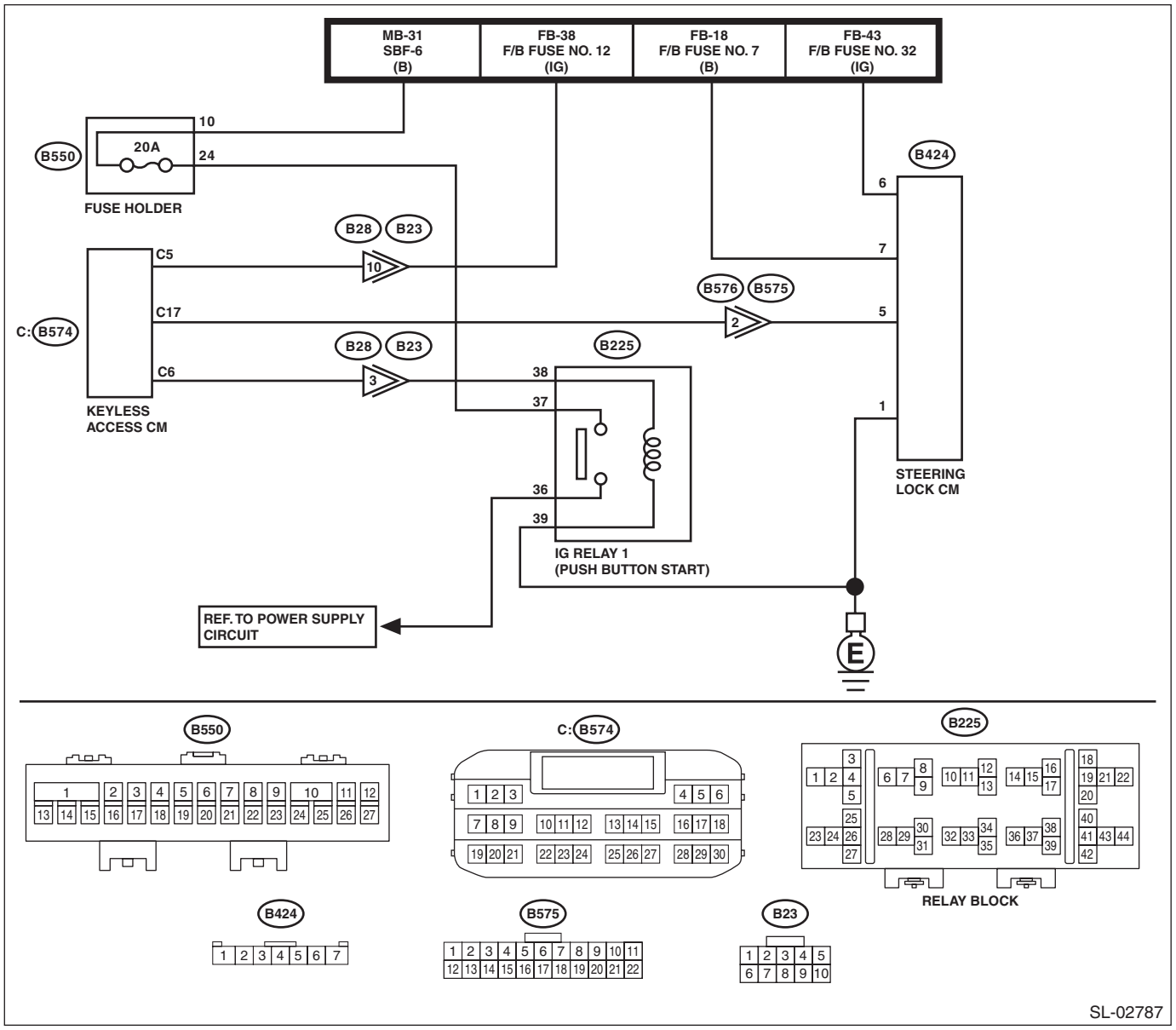

Step		Check	Yes	No
1	**CHECK FUSE.** Check the fuse. <Ref. to SL-8, Relay and Fuse.>	Is the check result OK?	Go to step **2**.	Replace the fuse. When the replaced fuse is blown immediately, check the power supply circuit for short-circuited.
2	**CHECK CURRENT DATA.** Check the current data display of «Keyless Access with Push Button Start» using Subaru Select Monitor. <Ref. to KPS(diag)-27, Read Current Data.> • IGN SW	Is the display normal according to the ignition switch operation?	Go to step **3**.	Go to step **5**.

	Step	Check	Yes	No
3	**CHECK HARNESS (OPEN CIRCUIT).** 1) Disconnect the steering lock CM connector. 2) Using a tester, measure the resistance between the steering lock CM connector and chassis ground. ***Connector & terminal*** ***(B424) No. 1 — Chassis ground:***	Is the resistance less than 1 Ω?	Go to step **4**.	Repair or replace the open circuit of harness.
4	**CHECK HARNESS.** 1) Connect the steering lock CM connector. 2) Using a tester, measure the voltage between the steering lock CM connector terminals. ***Connector & terminal*** ***(B424) No. 6 (+) — (B424) No. 1 (–):***	Is the voltage 11 — 14 V with IG ON? Is the voltage less than 1 V with IG OFF?	Replace the steering lock CM. <Ref. to SL-104, REMOVAL, Steering Lock CM.>	Check the DC power supply circuit.
5	**CHECK DTC.** Read the DTC using Subaru Select Monitor. <Ref. to KPS(diag)-26, Read Diagnostic Trouble Code (DTC).>	Is DTC B2271 displayed?	Perform the diagnosis of DTC B2271. <Ref. to KPS(diag)-46, DTC B2271 IGN RELAY CONTROL CIRCUIT, Diagnostic Procedure with Diagnostic Trouble Code (DTC).>	Replace the keyless access CM. <Ref. to SL-100, REMOVAL, Keyless Access CM.>

AA:DTC B2789 ID CODE BOX COMMUNICATION

DTC DETECTING CONDITION:

- When communication between keyless access CM and ID code box is interrupted for a set amount of time.
- Open or short circuit in the wiring harness between keyless access CM and ID code box

TROUBLE SYMPTOM:

Engine will not start.

CAUTION:

For replacement procedure of keyless access CM and ID code box, refer to the "REGISTRATION MANUAL FOR IMMOBILIZER" provided as a separate volume.

WIRING DIAGRAM:

Push button start system <Ref. to WI-303, WIRING DIAGRAM, Push Button Start System.>

- Engine type: FA

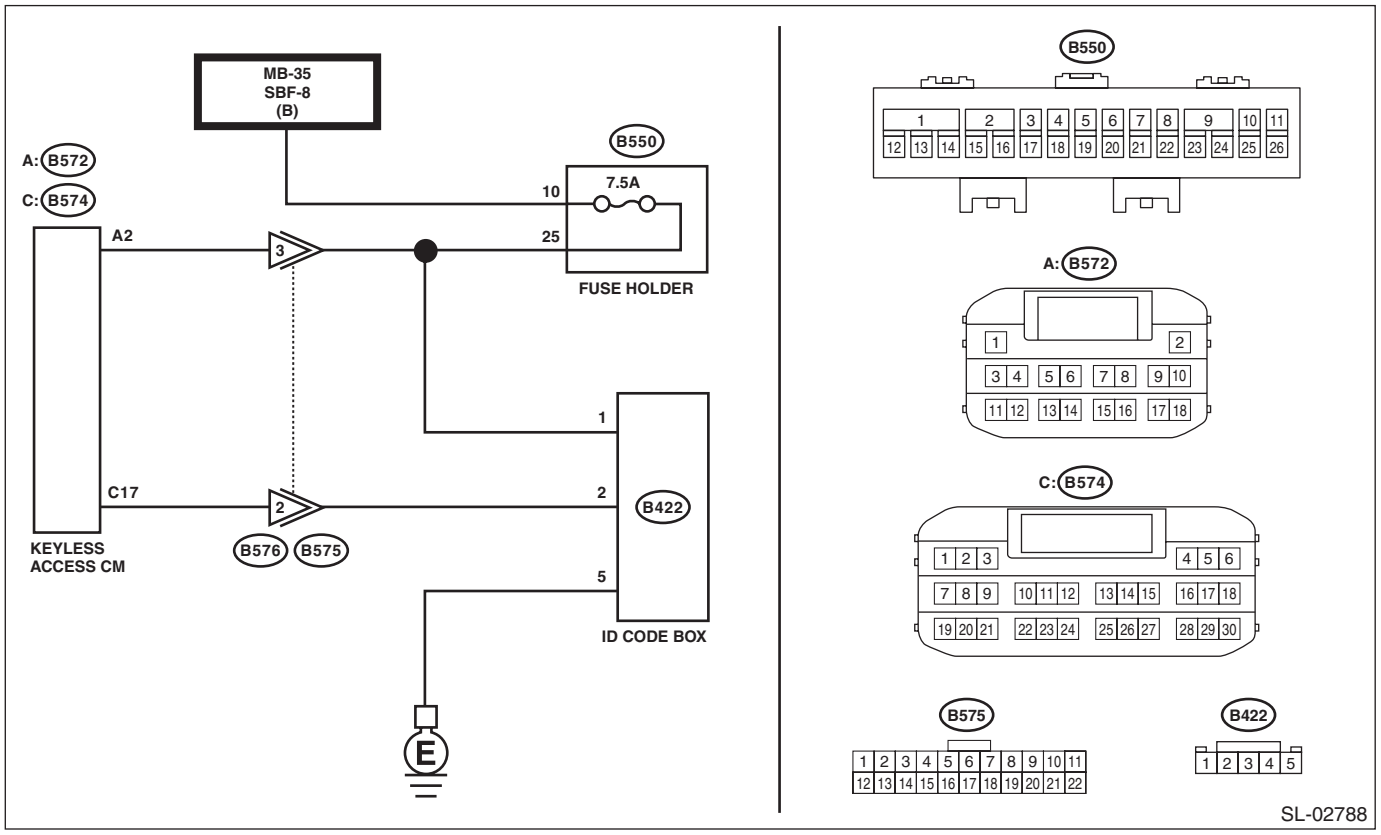

- Engine type: EJ

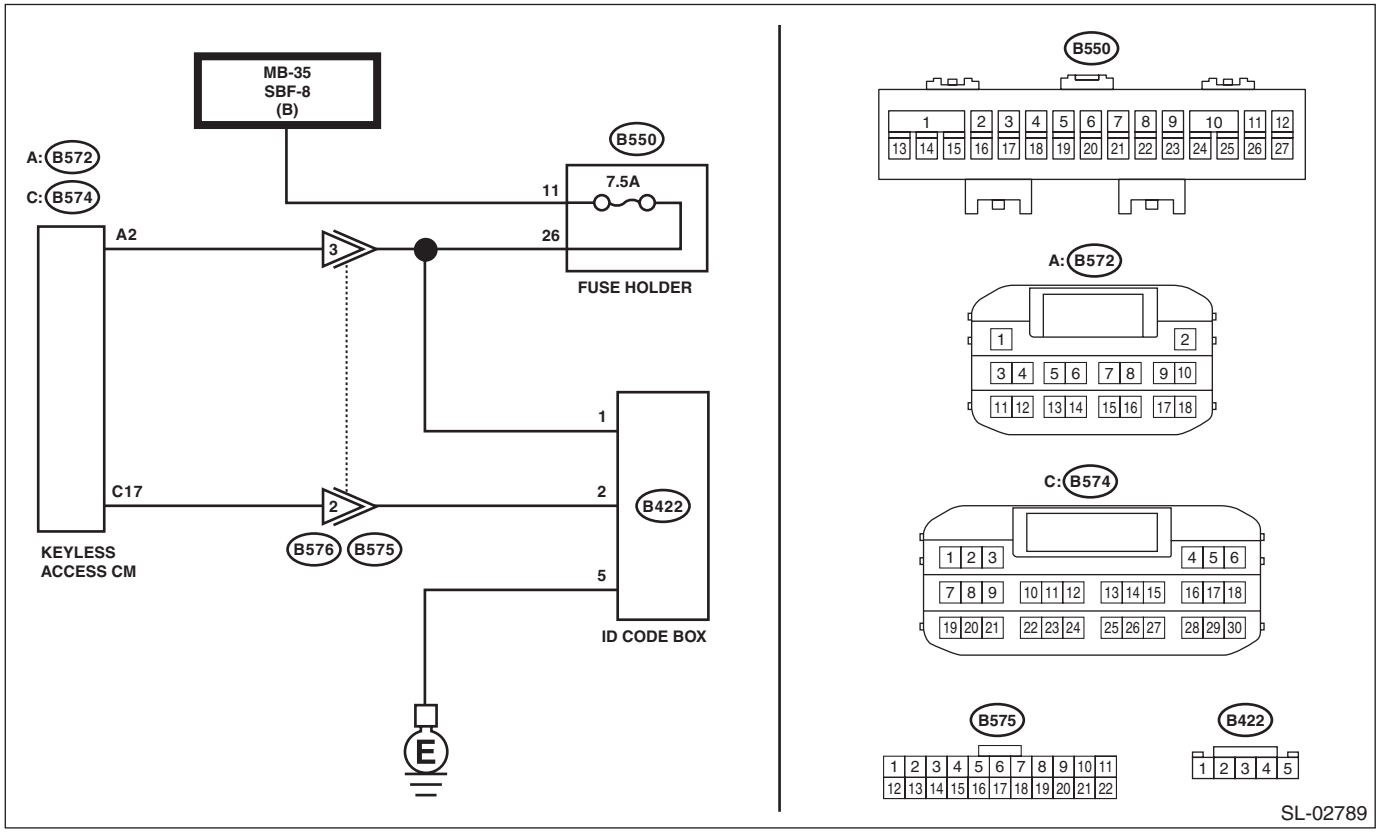

Step		Check	Yes	No
1	**CHECK DTC.** 1) Using the Subaru Select Monitor, clear the memory. <Ref. to KPS(diag)-33, Clear Memory Mode.> 2) Read the DTC using Subaru Select Monitor. <Ref. to KPS(diag)-26, Read Diagnostic Trouble Code (DTC).>	Is DTC B2789 displayed?	Go to step **2**.	Even if DTC is displayed, the circuit has returned to a normal condition at this time. Reproduce the failure, and then perform the diagnosis again. NOTE: In this case, temporary poor contact of connector, temporary open or short circuit of harness may be the cause.
2	**CHECK HARNESS (OPEN CIRCUIT).** 1) Disconnect the keyless access CM connector. 2) Disconnect the steering lock CM connector. 3) Disconnect the ID code box connector. 4) Using the tester, measure the resistance between terminals. ***Connector & terminal*** ***(B574) No. 17 — (B422) No. 2:***	Is the resistance less than 1 Ω?	Go to step **3**.	Repair or replace the open circuit of harness.

	Step	Check	Yes	No
3	**CHECK HARNESS (GROUND SHORT CIRCUIT).** Using a tester, measure the resistance between the keyless access CM connector and chassis ground. ***Connector & terminal*** ***(B574) No. 17 — Chassis ground:***	Is the resistance 10 kΩ or more?	Go to step **4**.	Repair or replace the short circuit of the harness.
4	**CHECK HARNESS (OPEN CIRCUIT).** Using a tester, measure the resistance between ID code box connector and chassis ground. ***Connector & terminal*** ***(B422) No. 5 — Chassis ground:***	Is the resistance less than 1 Ω?	Go to step **5**.	Repair or replace the open circuit of harness.
5	**CHECK HARNESS.** Using a tester, measure the voltage between ID code box connector and chassis ground. ***Connector & terminal*** ***(B422) No. 1 (+) — Chassis ground (–):***	Is the voltage 11 — 14 V?	Go to step **6**.	Repair or replace the faulty portion of the power supply circuit.
6	**CHECK ID CODE BOX.** 1) Using the Subaru Select Monitor, clear the memory. <Ref. to KPS(diag)-33, Clear Memory Mode.> 2) Read the DTC using Subaru Select Monitor. <Ref. to KPS(diag)-26, Read Diagnostic Trouble Code (DTC).>	Is DTC B2785 displayed?	Replace the keyless access CM. <Ref. to SL-100, Keyless Access CM.>	Go to step **7**.
7	**CHECK STEERING LOCK CM.** 1) Turn the ignition switch to ON. 2) Using the Subaru Select Monitor, clear the memory. <Ref. to KPS(diag)-33, Clear Memory Mode.> 3) Read the DTC using Subaru Select Monitor. <Ref. to KPS(diag)-26, Read Diagnostic Trouble Code (DTC).>	Is DTC B2789 displayed?	Replace the ID code box. <Ref. to SL-103, ID Code Box.>	Even if DTC is displayed, the circuit has returned to a normal condition at this time. Reproduce the failure, and then perform the diagnosis again. NOTE: In this case, temporary poor contact of connector, temporary open or short circuit of harness may be the cause.

AB:DTC B278A PUSH ENGINE SWITCH POWER SUPPLY CIRCUIT

DTC DETECTING CONDITION:

When the power supply circuit of the push button ignition switch is shorted to ground.

TROUBLE SYMPTOM:

- Engine will not start.
- The keyless access system function does not operate.

CAUTION:

For replacement procedure of keyless access CM, refer to the "REGISTRATION MANUAL FOR IMMOBILIZER" provided as a separate volume.

WIRING DIAGRAM:

Immobilizer system <Ref. to WI-244, WIRING DIAGRAM, Immobilizer System.>

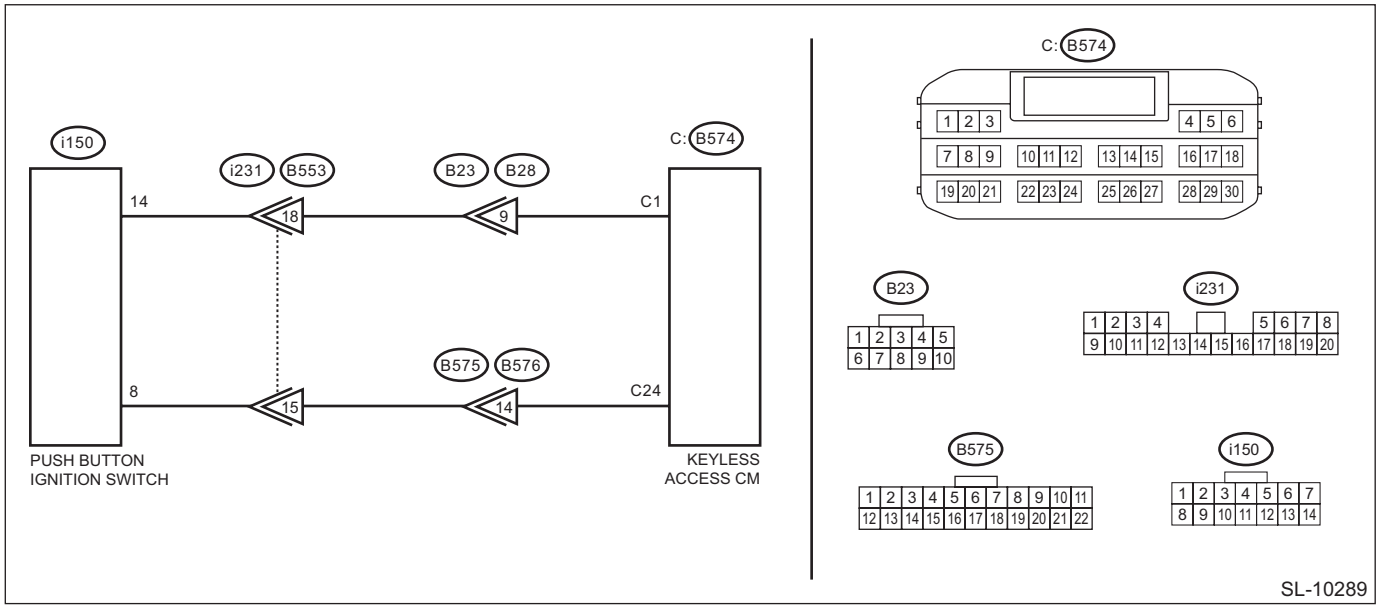

Step		Check	Yes	No
1	**CHECK KEYLESS ACCESS CM.** 1) Turn the ignition switch to OFF. 2) Take the access key out of the passenger room. 3) Push the push button ignition switch. Within 30 seconds, use oscilloscope to measure the waveform between connectors. ***Connector & terminal*** ***(i150) No. 14 — (i150) No. 8:*** 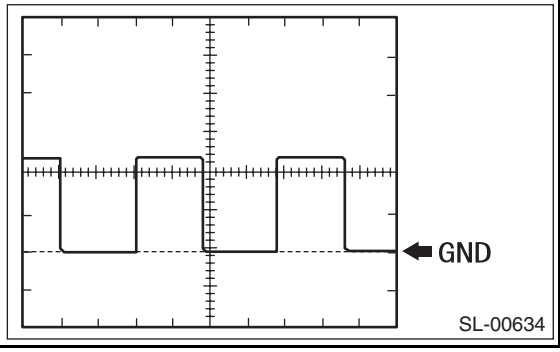	Is a waveform displayed as indicated on the left?	Go to step **2**.	Replace the push button ignition switch. <Ref. to SL-106, Push Button Ignition Switch.>

	Step	Check	Yes	No
2	**CHECK HARNESS (OPEN CIRCUIT).** 1) Disconnect the keyless access CM connector. 2) Disconnect the push button ignition switch connector. 3) Using a tester, measure the resistance between the push button ignition switch connector and the keyless access CM connector. ***Connector & terminal*** ***(i150) No. 14 — (B574) No. 1:*** ***(i150) No. 8 — (B574) No. 24:***	Is the resistance less than 1 Ω?	Go to step **3**.	Repair or replace the open circuit of harness.
3	**CHECK HARNESS (GROUND SHORT CIRCUIT).** Using a tester, measure the resistance between the keyless access CM connector and chassis ground. ***Connector & terminal*** ***(B574) No. 1 — Chassis ground:*** ***(B574) No. 24 — Chassis ground:***	Is the resistance 10 kΩ or more?	Go to step **4**.	Repair or replace the short circuit of the harness.
4	**CHECK DTC.** 1) Using the Subaru Select Monitor, clear the memory. <Ref. to KPS(diag)-33, Clear Memory Mode.> 2) Read the DTC using Subaru Select Monitor. <Ref. to KPS(diag)-26, Read Diagnostic Trouble Code (DTC).>	Is DTC B278A displayed?	Replace the keyless access CM. <Ref. to SL-100, Keyless Access CM.>	Even if DTC is displayed, the circuit has returned to a normal condition at this time. Reproduce the failure, and then perform the diagnosis again. NOTE: In this case, temporary poor contact of connector, temporary open or short circuit of harness may be the cause.

AC:DTC B278D ID CODE BOX JUDGMENT CIRCUIT

DTC DETECTING CONDITION:

- When ID code box setting is set to OFF, ID code box ON input is detected.
- When ID code box setting is set to OFF, ID code box LIN signal is received.

TROUBLE SYMPTOM:

Engine will not start.

CAUTION:

For replacement procedure of keyless access CM, refer to the "REGISTRATION MANUAL FOR IMMOBILIZER" provided as a separate volume.

WIRING DIAGRAM:

Push button start system <Ref. to WI-303, WIRING DIAGRAM, Push Button Start System.>

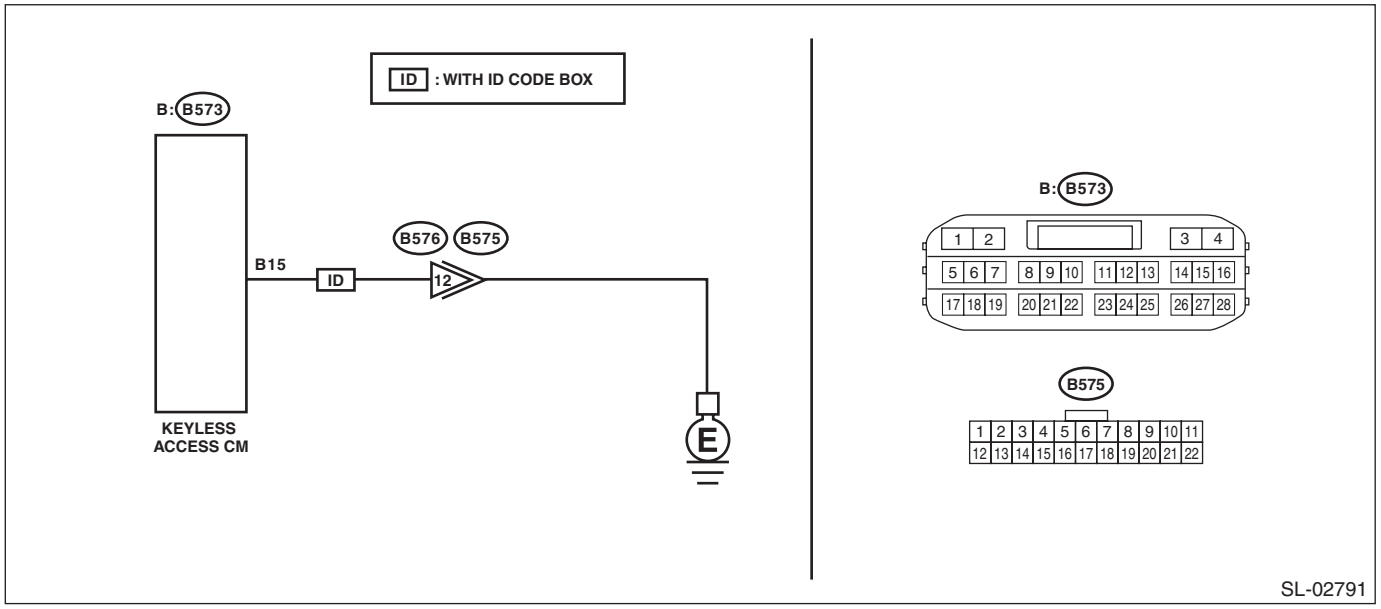

	Step	Check	Yes	No
1	**CHECK DTC.** 1) Turn the ignition switch to OFF. 2) Using the Subaru Select Monitor, clear the keyless access system memory. <Ref. to KPS(diag)-33, Clear Memory Mode.> 3) Turn the ignition switch to OFF → ON. 4) Read the DTC using Subaru Select Monitor. <Ref. to KPS(diag)-26, Read Diagnostic Trouble Code (DTC).>	Is DTC B278D displayed?	Go to step **2**.	Even if DTC is displayed, the circuit has returned to a normal condition at this time. Reproduce the failure, and then perform the diagnosis again. NOTE: In this case, temporary poor contact of connector, temporary open or short circuit of harness may be the cause.
2	**CHECK HARNESS (GROUND SHORT CIRCUIT).** 1) Disconnect the keyless access CM connector. 2) Measure the resistance between keyless access CM connector and chassis ground. ***Connector & terminal*** ***(B573) No. 15 — Chassis ground:***	Is the resistance 10 kΩ or more?	Replace the keyless access CM. <Ref. to SL-100, Keyless Access CM.>	Repair or replace the short circuit of the harness.

AD:DTC B2790 ID CODE BOX CIRCUIT

DTC DETECTING CONDITION:
An error has occurred inside the ID code box.
TROUBLE SYMPTOM:
Engine will not start.

CAUTION:
For replacement procedure of ID code box, refer to the "REGISTRATION MANUAL FOR IMMOBILIZER" provided as a separate volume.

	Step	Check	Yes	No
1	**CHECK DTC.** 1) Turn the ignition switch to OFF. 2) Using the Subaru Select Monitor, clear the keyless access system memory. <Ref. to KPS(diag)-33, Clear Memory Mode.> 3) Turn the ignition switch to OFF → ON. 4) Register the ID code box. Refer to the "REGISTRATION MANUAL FOR IMMOBILIZER" provided as a separate volume. 5) Read the DTC using Subaru Select Monitor. <Ref. to KPS(diag)-26, Read Diagnostic Trouble Code (DTC).>	Is DTC B2790 displayed?	Replace the ID code box. <Ref. to SL-103, ID Code Box.>	ID code box registration was not performed properly.

AE:DTC B27A1 DRIVER SIDE EXTERNAL ANTENNA OPEN

DTC DETECTING CONDITION:

When open circuit occurs in the harness between keyless access CM and driver's side front door outer handle.

TROUBLE SYMPTOM:

Keyless access system does not function.

CAUTION:

For replacement procedure of keyless access CM, refer to the "REGISTRATION MANUAL FOR IMMOBILIZER" provided as a separate volume.

WIRING DIAGRAM:

Keyless access system <Ref. to WI-255, WIRING DIAGRAM, Keyless Access System.>

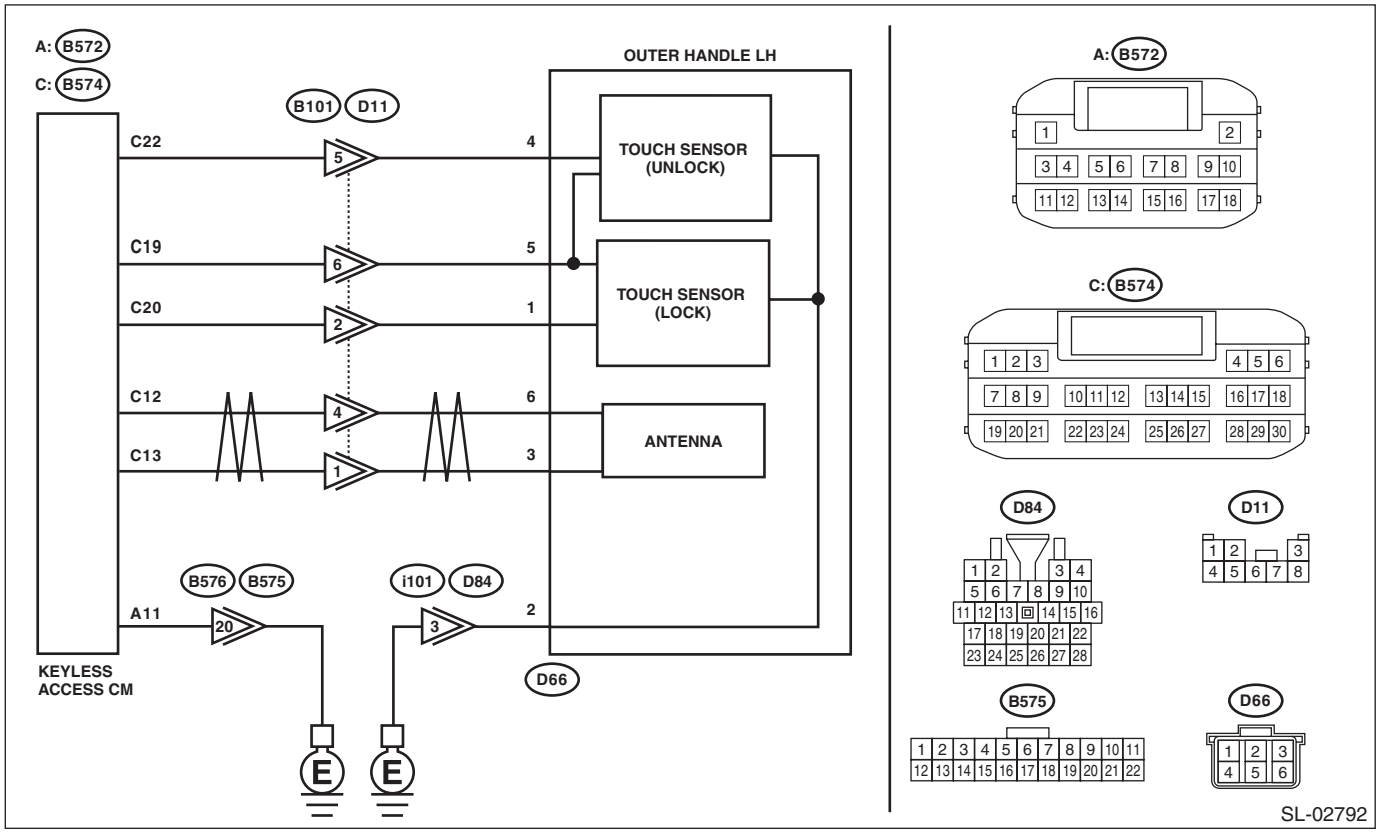

Step		Check	Yes	No
1	**CHECK LAN SYSTEM.** Inspect LAN system. <Ref. to LAN(diag)-2, PROCEDURE, Basic Diagnostic Procedure.>	Is the check result OK?	Go to step **2**.	Perform the inspection according to the diagnosis for LAN system.
2	**CHECK CONNECTOR.** 1) Disconnect the keyless access CM connector. 2) Disconnect the front door outer handle connector. 3) Check the connector.	Is the check result OK?	Go to step **3**.	Repair or replace the connector.

	Step	Check	Yes	No
3	**CHECK HARNESS (OPEN CIRCUIT).** Using a tester, measure the resistance between the keyless access CM connector and front door outer handle connector, and between front door outer handle connector, keyless access CM connector and chassis ground. ***Connector & terminal*** ***(B574) No. 12 — (D66) No. 6:*** ***(B574) No. 13 — (D66) No. 3:*** ***(D66) No. 2 — Chassis ground:*** ***(B572) No. 11 — Chassis ground:***	Is the resistance less than 1 Ω?	Go to step **4**.	Repair or replace the open circuit of harness.
4	**CHECK HARNESS (GROUND SHORT CIRCUIT).** Using a tester, measure the resistance between the keyless access CM connector and chassis ground. ***Connector & terminal*** ***(B574) No. 12 — Chassis ground:*** ***(B574) No. 13 — Chassis ground:***	Is the resistance 10 kΩ or more?	Go to step **5**.	Repair or replace the short circuit of the harness.
5	**CHECK DTC.** 1) Connect the keyless access CM connector. 2) Using the Subaru Select Monitor, clear the memory. <Ref. to KPS(diag)-33, Clear Memory Mode.> 3) Read the DTC using Subaru Select Monitor. <Ref. to KPS(diag)-26, Read Diagnostic Trouble Code (DTC).>	Is DTC B27A1 displayed?	Go to step **6**.	Even if DTC is displayed, the circuit has returned to a normal condition at this time. Reproduce the failure, and then perform the diagnosis again. NOTE: In this case, temporary poor contact of connector, temporary open or short circuit of harness may be the cause.
6	**CHECK FRONT DOOR OUTER HANDLE.** 1) Replace the driver's front door outer handle with the passenger's front door outer handle. <Ref. to SL-33, Front Outer Handle.> 2) Using the Subaru Select Monitor, clear the memory. <Ref. to KPS(diag)-33, Clear Memory Mode.> 3) Read the DTC using Subaru Select Monitor. <Ref. to KPS(diag)-26, Read Diagnostic Trouble Code (DTC).>	Is DTC B27A1 displayed?	Replace the keyless access CM. <Ref. to SL-100, Keyless Access CM.>	Replace the driver's front door outer handle. <Ref. to SL-33, Front Outer Handle.>

AF:DTC B27A2 PASSENGER SIDE EXTERNAL ANTENNA OPEN

DTC DETECTING CONDITION:
When open circuit occurs in the harness between keyless access CM and passenger's side front door outer handle.

TROUBLE SYMPTOM:
Keyless access system does not function.

CAUTION:
For replacement procedure of keyless access CM, refer to the "REGISTRATION MANUAL FOR IMMOBILIZER" provided as a separate volume.

WIRING DIAGRAM:
Keyless access system <Ref. to WI-255, WIRING DIAGRAM, Keyless Access System.>

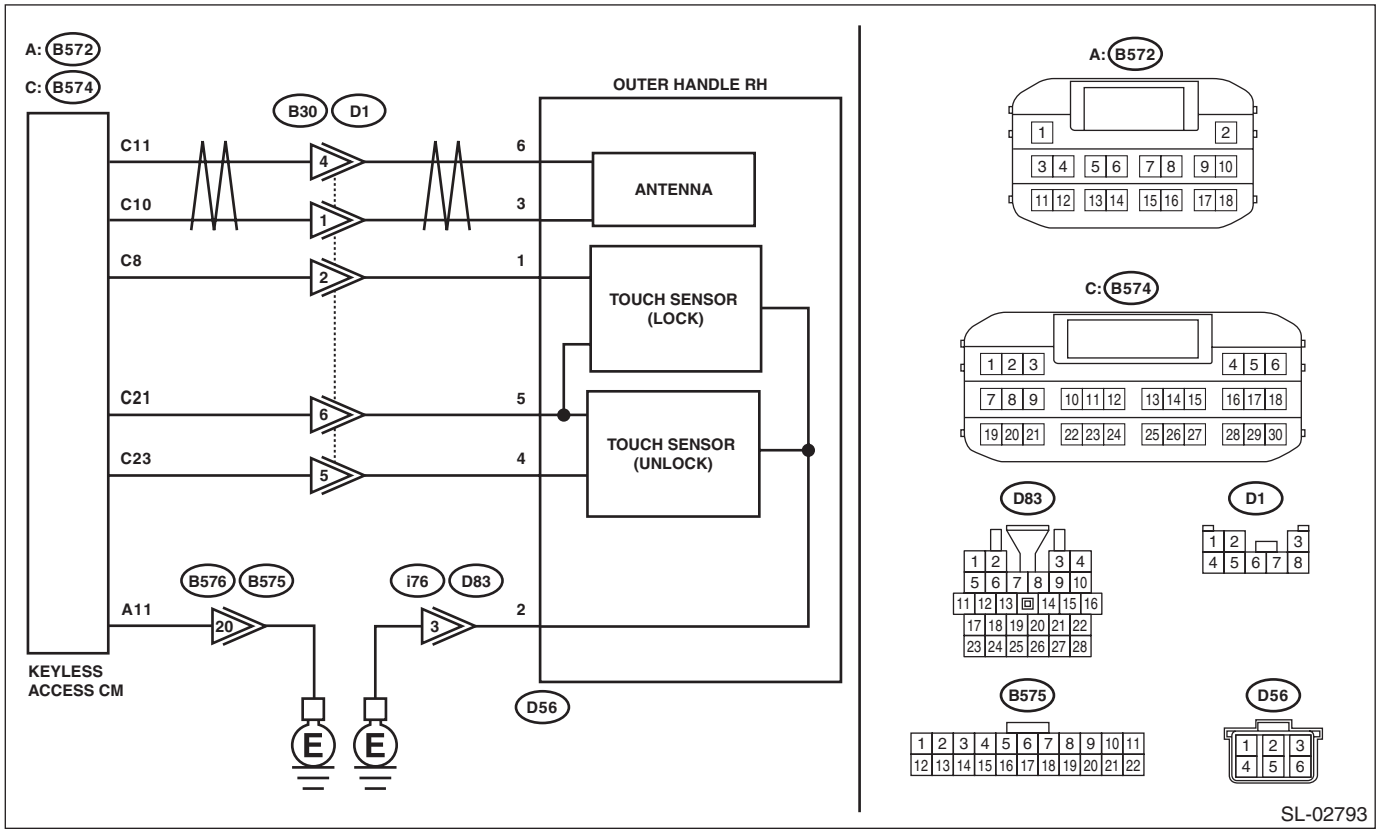

	Step	Check	Yes	No
1	**CHECK LAN SYSTEM.** Inspect LAN system. <Ref. to LAN(diag)-2, PROCEDURE, Basic Diagnostic Procedure.>	Is the check result OK?	Go to step **2**.	Perform the inspection according to the diagnosis for LAN system.
2	**CHECK CONNECTOR.** 1) Disconnect the keyless access CM connector. 2) Disconnect the front door outer handle connector. 3) Check the connector.	Is the check result OK?	Go to step **3**.	Repair or replace the connector.

	Step	Check	Yes	No
3	**CHECK HARNESS (OPEN CIRCUIT).** Using a tester, measure the resistance between the keyless access CM connector and front door outer handle connector, and between front door outer handle connector, keyless access CM connector and chassis ground. ***Connector & terminal*** ***(B574) No. 11 — (D56) No. 6:*** ***(B574) No. 10 — (D56) No. 3:*** ***(D56) No. 2 — Chassis ground:*** ***(B572) No. 11 — Chassis ground:***	Is the resistance less than 1 Ω?	Go to step **4**.	Repair or replace the open circuit of harness.
4	**CHECK HARNESS (GROUND SHORT CIRCUIT).** Using a tester, measure the resistance between the keyless access CM connector and chassis ground. ***Connector & terminal*** ***(B574) No. 11 — Chassis ground:*** ***(B574) No. 10 — Chassis ground:***	Is the resistance 10 kΩ or more?	Go to step **5**.	Repair or replace the short circuit of the harness.
5	**CHECK DTC.** 1) Connect the keyless access CM connector. 2) Using the Subaru Select Monitor, clear the memory. <Ref. to KPS(diag)-33, Clear Memory Mode.> 3) Read the DTC using Subaru Select Monitor. <Ref. to KPS(diag)-26, Read Diagnostic Trouble Code (DTC).>	Is DTC B27A2 displayed?	Go to step **6**.	Even if DTC is displayed, the circuit has returned to a normal condition at this time. Reproduce the failure, and then perform the diagnosis again. NOTE: In this case, temporary poor contact of connector, temporary open or short circuit of harness may be the cause.
6	**CHECK FRONT DOOR OUTER HANDLE.** 1) Replace the passenger's front door outer handle with the driver's front door outer handle. <Ref. to SL-33, Front Outer Handle.> 2) Using the Subaru Select Monitor, clear the memory. <Ref. to KPS(diag)-33, Clear Memory Mode.> 3) Read the DTC using Subaru Select Monitor. <Ref. to KPS(diag)-26, Read Diagnostic Trouble Code (DTC).>	Is DTC B27A2 displayed?	Replace the keyless access CM. <Ref. to SL-100, Keyless Access CM.>	Replace the passenger's front door outer handle. <Ref. to SL-33, Front Outer Handle.>

AG:DTC B27A5 FRONT INTERNAL ANTENNA OPEN

DTC DETECTING CONDITION:
When open circuit occurs in the harness between keyless access CM and front interior antenna.
TROUBLE SYMPTOM:
Keyless access system does not function. (When the access key is in the front area of the passenger room)

CAUTION:
For replacement procedure of keyless access CM, refer to the "REGISTRATION MANUAL FOR IMMOBILIZER" provided as a separate volume.
WIRING DIAGRAM:
Keyless access system <Ref. to WI-255, WIRING DIAGRAM, Keyless Access System.>

- Engine type: FA

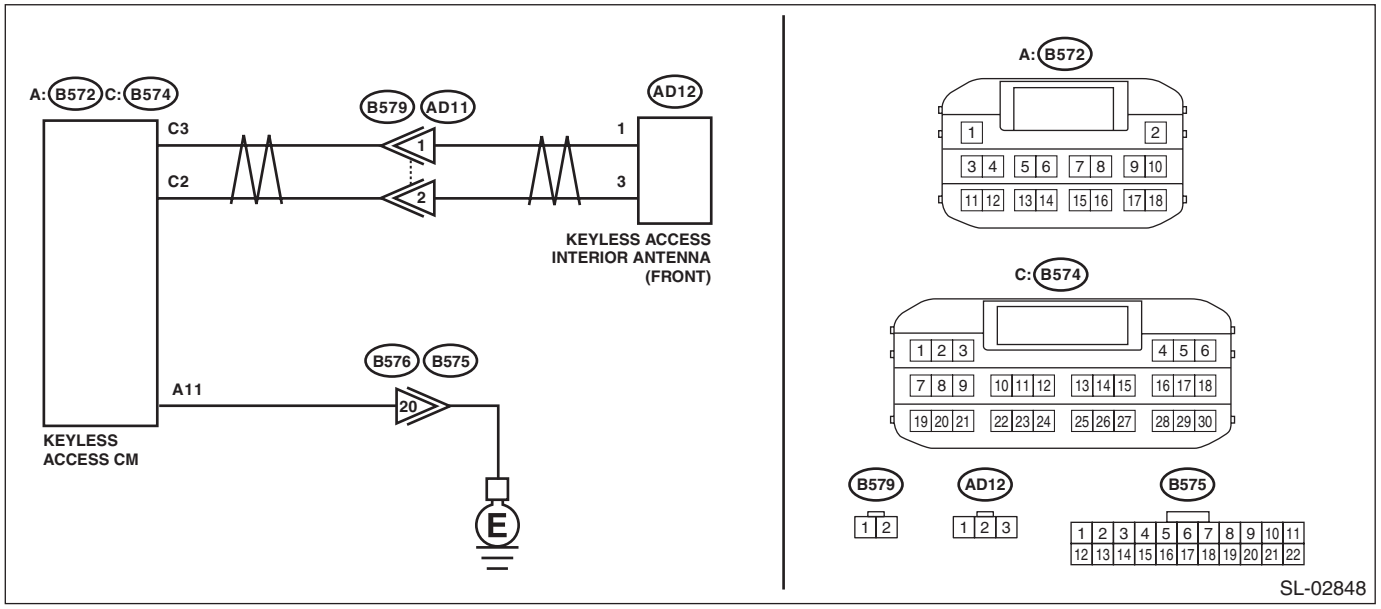

- Engine type: EJ

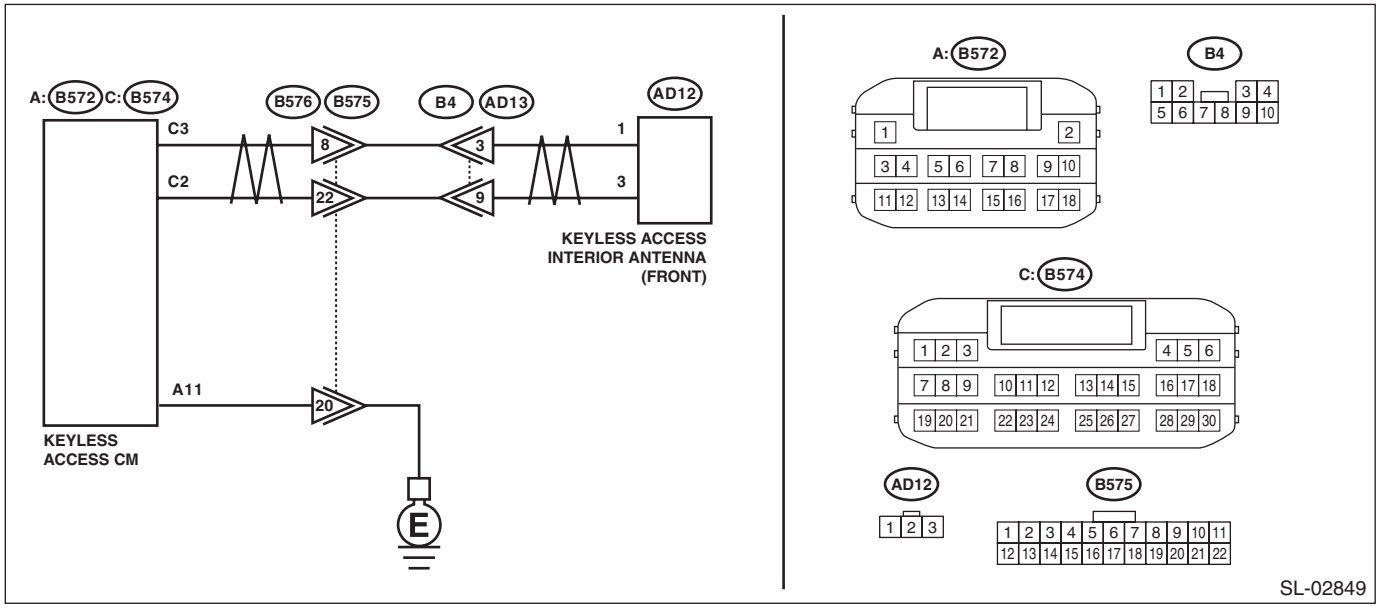

Step		Check	Yes	No
1	**CHECK LAN SYSTEM.** Inspect LAN system. <Ref. to LAN(diag)-2, PROCEDURE, Basic Diagnostic Procedure.>	Is the check result OK?	Go to step **2**.	Perform the inspection according to the diagnosis for LAN system.

	Step	Check	Yes	No
2	**CHECK CONNECTOR.** 1) Disconnect the keyless access CM connector. 2) Disconnect the front interior antenna connector. 3) Check the connector.	Is the check result OK?	Go to step **3**.	Repair or replace the connector.
3	**CHECK HARNESS (OPEN CIRCUIT).** Using a tester, measure the resistance between the keyless access CM connector and front interior antenna connector, and between keyless access CM connector and chassis ground. ***Connector & terminal*** ***(B574) No. 3 — (AD12) No. 1:*** ***(B574) No. 2 — (AD12) No. 3:*** ***(B572) No. 11 — Chassis ground:***	Is the resistance less than 1 Ω?	Go to step **4**.	Repair or replace the open circuit of harness.
4	**CHECK HARNESS (GROUND SHORT CIRCUIT).** Using a tester, measure the resistance between the keyless access CM connector and chassis ground. ***Connector & terminal*** ***(B574) No. 3 — Chassis ground:*** ***(B574) No. 2 — Chassis ground:***	Is the resistance 10 kΩ or more?	Go to step **5**.	Repair or replace the short circuit of the harness.
5	**CHECK DTC.** 1) Connect the keyless access CM connector. 2) Using the Subaru Select Monitor, clear the memory. <Ref. to KPS(diag)-33, Clear Memory Mode.> 3) Read the DTC using Subaru Select Monitor. <Ref. to KPS(diag)-26, Read Diagnostic Trouble Code (DTC).>	Is DTC B27A5 displayed?	Go to step **6**.	Even if DTC is displayed, the circuit has returned to a normal condition at this time. Reproduce the failure, and then perform the diagnosis again. NOTE: In this case, temporary poor contact of connector, temporary open or short circuit of harness may be the cause.
6	**CHECK FRONT INTERIOR ANTENNA.** 1) Replace the rear interior antenna with the front interior antenna. <Ref. to SL-92, Keyless Access Indoor Antenna.> 2) Using the Subaru Select Monitor, clear the memory. <Ref. to KPS(diag)-33, Clear Memory Mode.> 3) Read the DTC using Subaru Select Monitor. <Ref. to KPS(diag)-26, Read Diagnostic Trouble Code (DTC).>	Is DTC B27A5 displayed?	Replace the keyless access CM. <Ref. to SL-100, Keyless Access CM.>	Malfunction occurred in the front interior antenna.

AH:DTC B27A6 REAR INTERNAL ANTENNA OPEN

DTC DETECTING CONDITION:
When open circuit occurs in the harness between keyless access CM and center interior antenna.
TROUBLE SYMPTOM:
Keyless access system does not function. (When the access key is in the rear area of the passenger room (near the seat))

CAUTION:
For replacement procedure of keyless access CM, refer to the "REGISTRATION MANUAL FOR IMMOBILIZER" provided as a separate volume.
WIRING DIAGRAM:
Keyless access system <Ref. to WI-255, WIRING DIAGRAM, Keyless Access System.>

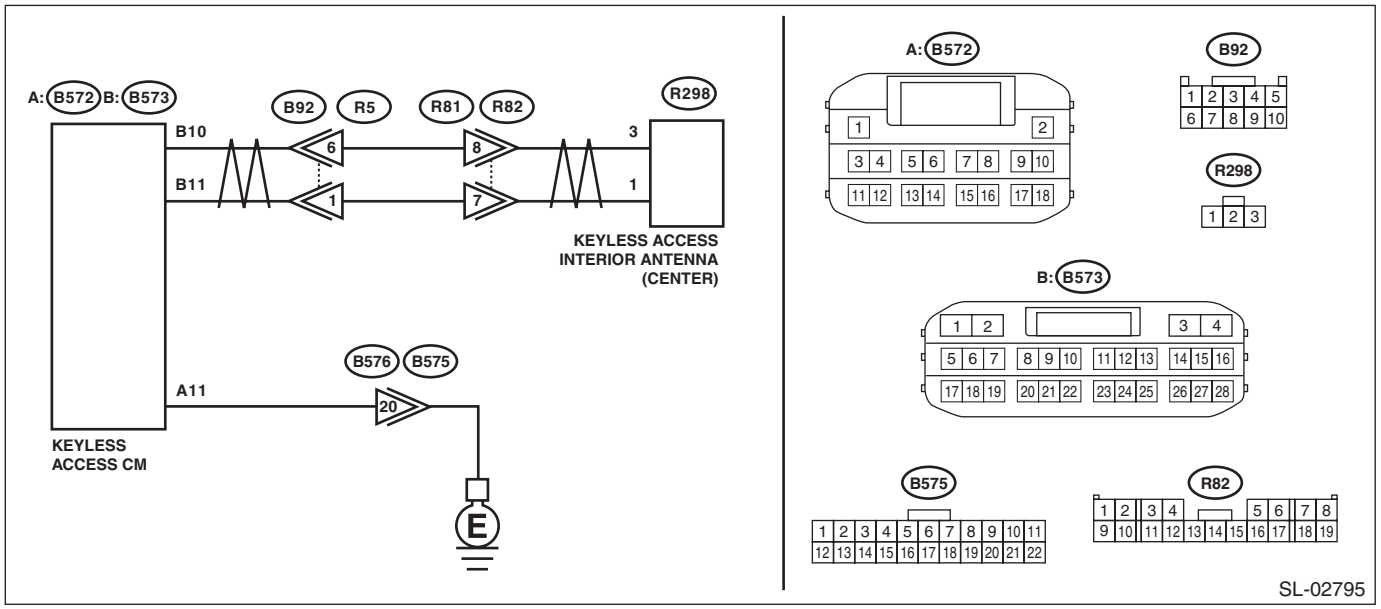

Step		Check	Yes	No
1	**CHECK LAN SYSTEM.** Inspect LAN system. <Ref. to LAN(diag)-2, PROCEDURE, Basic Diagnostic Procedure.>	Is the check result OK?	Go to step **2**.	Perform the inspection according to the diagnosis for LAN system.
2	**CHECK CONNECTOR.** 1) Disconnect the keyless access CM connector. 2) Disconnect the center interior antenna connector. 3) Check the connector.	Is the check result OK?	Go to step **3**.	Repair or replace the connector.
3	**CHECK HARNESS (OPEN CIRCUIT).** Using a tester, measure the resistance between the keyless access CM connector and center interior antenna connector, and between keyless access CM connector and chassis ground. ***Connector & terminal*** ***(B573) No. 10 — (R298) No. 3:*** ***(B573) No. 11 — (R298) No. 1:*** ***(B572) No. 11 — Chassis ground:***	Is the resistance less than 1 Ω?	Go to step **4**.	Repair or replace the open circuit of harness.

	Step	Check	Yes	No
4	**CHECK HARNESS (GROUND SHORT CIRCUIT).** Using a tester, measure the resistance between the keyless access CM connector and chassis ground. ***Connector & terminal*** ***(B573) No. 10 — Chassis ground:*** ***(B573) No. 11 — Chassis ground:***	Is the resistance 10 kΩ or more?	Go to step **5**.	Repair or replace the short circuit of the harness.
5	**CHECK DTC.** 1) Connect the keyless access CM connector. 2) Using the Subaru Select Monitor, clear the memory. <Ref. to KPS(diag)-33, Clear Memory Mode.> 3) Read the DTC using Subaru Select Monitor. <Ref. to KPS(diag)-26, Read Diagnostic Trouble Code (DTC).>	Is DTC B27A6 displayed?	Go to step **6**.	Even if DTC is displayed, the circuit has returned to a normal condition at this time. Reproduce the failure, and then perform the diagnosis again. NOTE: In this case, temporary poor contact of connector, temporary open or short circuit of harness may be the cause.
6	**CHECK CENTER INTERIOR ANTENNA.** 1) Replace the center interior antenna with the front interior antenna. <Ref. to SL-92, Keyless Access Indoor Antenna.> 2) Using the Subaru Select Monitor, clear the memory. <Ref. to KPS(diag)-33, Clear Memory Mode.> 3) Read the DTC using Subaru Select Monitor. <Ref. to KPS(diag)-26, Read Diagnostic Trouble Code (DTC).>	Is DTC B27A6 displayed?	Replace the keyless access CM. <Ref. to SL-100, Keyless Access CM.>	Malfunction occurred in the center interior antenna.

AI: DTC B27A7 TRUNK/REAR GATE INTERNAL ANTENNA OPEN

DTC DETECTING CONDITION:
When open circuit occurs in the harness between keyless access CM and rear interior antenna.
TROUBLE SYMPTOM:
Keyless access system does not function. (When the access key is in the rear area of the passenger room (in the luggage room or trunk))

CAUTION:
For replacement procedure of keyless access CM, refer to the "REGISTRATION MANUAL FOR IMMOBILIZER" provided as a separate volume.
WIRING DIAGRAM:
Keyless access system <Ref. to WI-255, WIRING DIAGRAM, Keyless Access System.>

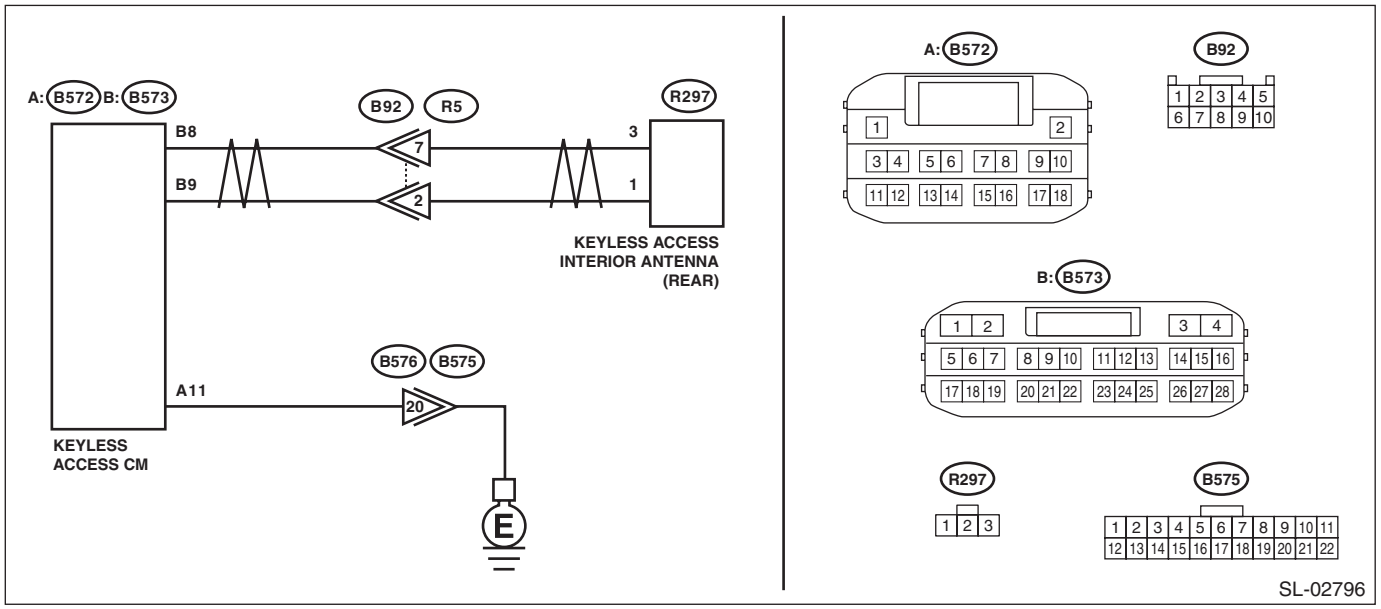

Step		Check	Yes	No
1	**CHECK LAN SYSTEM.** Inspect LAN system. <Ref. to LAN(diag)-2, PROCEDURE, Basic Diagnostic Procedure.>	Is the check result OK?	Go to step **2**.	Perform the inspection according to the diagnosis for LAN system.
2	**CHECK CONNECTOR.** 1) Disconnect the keyless access CM connector. 2) Disconnect the rear interior antenna connector. 3) Check the connector.	Is the check result OK?	Go to step **3**.	Repair or replace the connector.
3	**CHECK HARNESS (OPEN CIRCUIT).** Using a tester, measure the resistance between the keyless access CM connector and rear interior antenna connector, and between keyless access CM connector and chassis ground. ***Connector & terminal*** ***(B573) No. 8 — (R297) No. 3:*** ***(B573) No. 9 — (R297) No. 1:*** ***(B572) No. 11 — Chassis ground:***	Is the resistance less than 1 Ω?	Go to step **4**.	Repair or replace the open circuit of harness.

	Step	Check	Yes	No
4	**CHECK HARNESS (GROUND SHORT CIRCUIT).** Using a tester, measure the resistance between the keyless access CM connector and chassis ground. ***Connector & terminal*** ***(B573) No. 8 — Chassis ground:*** ***(B573) No. 9 — Chassis ground:***	Is the resistance 10 kΩ or more?	Go to step **5**.	Repair or replace the short circuit of the harness.
5	**CHECK DTC.** 1) Connect the keyless access CM connector. 2) Using the Subaru Select Monitor, clear the memory. <Ref. to KPS(diag)-33, Clear Memory Mode.> 3) Read the DTC using Subaru Select Monitor. <Ref. to KPS(diag)-26, Read Diagnostic Trouble Code (DTC).>	Is DTC B27A7 displayed?	Go to step **6**.	Even if DTC is displayed, the circuit has returned to a normal condition at this time. Reproduce the failure, and then perform the diagnosis again. NOTE: In this case, temporary poor contact of connector, temporary open or short circuit of harness may be the cause.
6	**CHECK REAR INTERIOR ANTENNA.** 1) Replace the rear interior antenna with the front interior antenna. <Ref. to SL-92, Keyless Access Indoor Antenna.> 2) Using the Subaru Select Monitor, clear the memory. <Ref. to KPS(diag)-33, Clear Memory Mode.> 3) Read the DTC using Subaru Select Monitor. <Ref. to KPS(diag)-26, Read Diagnostic Trouble Code (DTC).>	Is DTC B27A7 displayed?	Replace the keyless access CM. <Ref. to SL-100, Keyless Access CM.>	Malfunction occurred in the rear interior antenna.

AJ:DTC B27A8 TRUNK/REAR GATE EXTERNAL ANTENNA OPEN

DTC DETECTING CONDITION:
When open circuit occurs in the harness between keyless access CM and rear exterior antenna.
TROUBLE SYMPTOM:
Keyless access system does not function.
(Cannot unlock using rear gate opener button.)

CAUTION:
For replacement procedure of keyless access CM, refer to the "REGISTRATION MANUAL FOR IMMOBILIZER" provided as a separate volume.
WIRING DIAGRAM:
Keyless access system <Ref. to WI-255, WIRING DIAGRAM, Keyless Access System.>

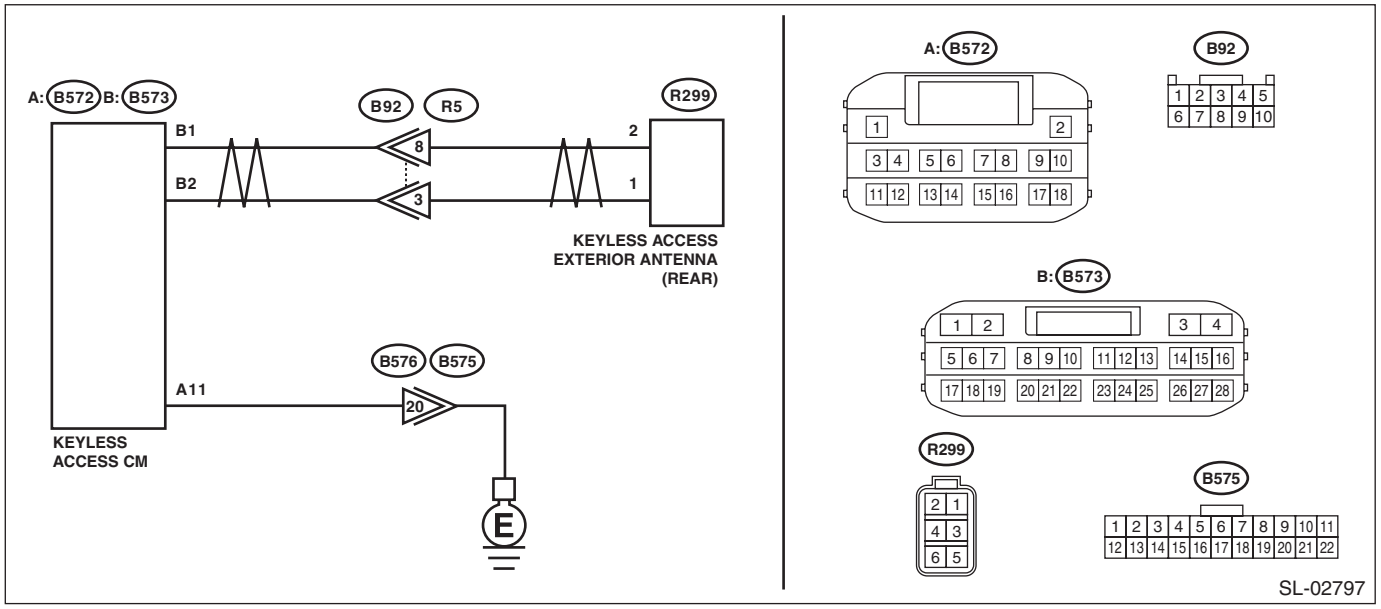

	Step	Check	Yes	No
1	**CHECK LAN SYSTEM.** Inspect LAN system. <Ref. to LAN(diag)-2, PROCEDURE, Basic Diagnostic Procedure.>	Is the check result OK?	Go to step **2**.	Perform the inspection according to the diagnosis for LAN system.
2	**CHECK CONNECTOR.** 1) Disconnect the keyless access CM connector. 2) Disconnect the rear exterior antenna connector. 3) Check the connector.	Is the check result OK?	Go to step **3**.	Repair or replace the connector.
3	**CHECK HARNESS (OPEN CIRCUIT).** Using a tester, measure the resistance between the keyless access CM connector and rear external antenna connector. ***Connector & terminal*** ***(B573) No. 2 — (AD23) No. 1:*** ***(B573) No. 1 — (AD23) No. 2:***	Is the resistance less than 1 Ω?	Go to step **4**.	Repair or replace the open circuit of harness.
4	**CHECK HARNESS (GROUND SHORT CIRCUIT).** Using a tester, measure the resistance between the keyless access CM connector and chassis ground. ***Connector & terminal*** ***(B573) No. 2 — Chassis ground:*** ***(B573) No. 1 — Chassis ground:***	Is the resistance 10 kΩ or more?	Go to step **5**.	Repair or replace the short circuit of the harness.

	Step	Check	Yes	No
5	**CHECK DTC.** 1) Connect the keyless access CM connector. 2) Using the Subaru Select Monitor, clear the memory. <Ref. to KPS(diag)-33, Clear Memory Mode.> 3) Read the DTC using Subaru Select Monitor. <Ref. to KPS(diag)-26, Read Diagnostic Trouble Code (DTC).>	Is DTC B27A8 displayed?	Go to step **6**.	Even if DTC is displayed, the circuit has returned to a normal condition at this time. Reproduce the failure, and then perform the diagnosis again. NOTE: In this case, temporary poor contact of connector, temporary open or short circuit of harness may be the cause.
6	**CHECK REAR EXTERIOR ANTENNA.** 1) Replace the rear exterior antenna with the rear interior antenna. <Ref. to SL-92, Keyless Access Indoor Antenna.> <Ref. to SL-95, Keyless Access Outdoor Antenna.> 2) Using the Subaru Select Monitor, clear the memory. <Ref. to KPS(diag)-33, Clear Memory Mode.> 3) Read the DTC using Subaru Select Monitor. <Ref. to KPS(diag)-26, Read Diagnostic Trouble Code (DTC).>	Is DTC B27A8 displayed?	Replace the keyless access CM. <Ref. to SL-100, Keyless Access CM.>	Malfunction occurred in the rear external antenna.

AK:DTC B1571 REFERENCE CODE INCOMPATIBILITY

DTC DETECTING CONDITION:

Incompatibility of reference code between keyless access CM (model without ID code box) or ID code box (model with ID code box) and ECM occurs.

TROUBLE SYMPTOM:

Engine will not start.

	Step	Check	Yes	No
1	**CHECK ECM.** Perform ECM registration. Refer to the "REGISTRATION MANUAL FOR IMMOBILIZER" provided as a separate volume.	Is ECM registration finished? And does the engine start?	ECM registration was not performed properly.	Go to step **2**.
2	**REPLACE ECM.** 1) Install the ECM from other normal operating vehicle (with push button start) which use same ECM to the vehicle to be diagnosed. 2) Perform ECM registration. Refer to the "REGISTRATION MANUAL FOR IMMOBILIZER" provided as a separate volume.	Is ECM registration finished? And does the engine start?	Replace the ECM. <Ref. to FU(w/o STI)-124, REMOVAL, Engine Control Module (ECM).> <Ref. to FU(STI)-56, REMOVAL, Engine Control Module (ECM).> Install the ECM from other vehicle to the original vehicle.	Replace Keyless access CM (model without ID code box), <Ref. to SL-100, Keyless Access CM.> or replace ID code box (model with ID code box). <Ref. to SL-103, NOTE, ID Code Box.>

AL:DTC B1572 IMM CIRCUIT EXCEPT ANTENNA CIRCUIT

1. EXCEPT FOR C0 MODEL

DTC DETECTING CONDITION:
Communication error between keyless access CM and ECM
TROUBLE SYMPTOM:
Engine will not start.
WIRING DIAGRAM:
Push button start system <Ref. to WI-303, WIRING DIAGRAM, Push Button Start System.>

- Engine type: FA

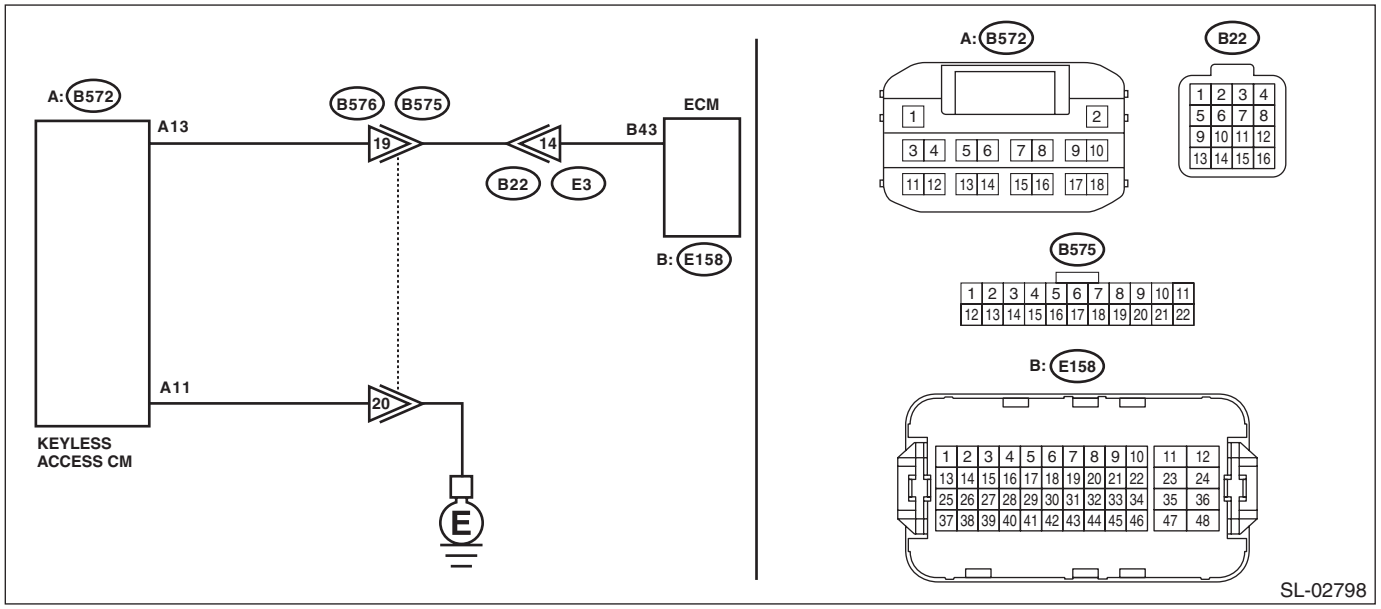

- Engine type: EJ

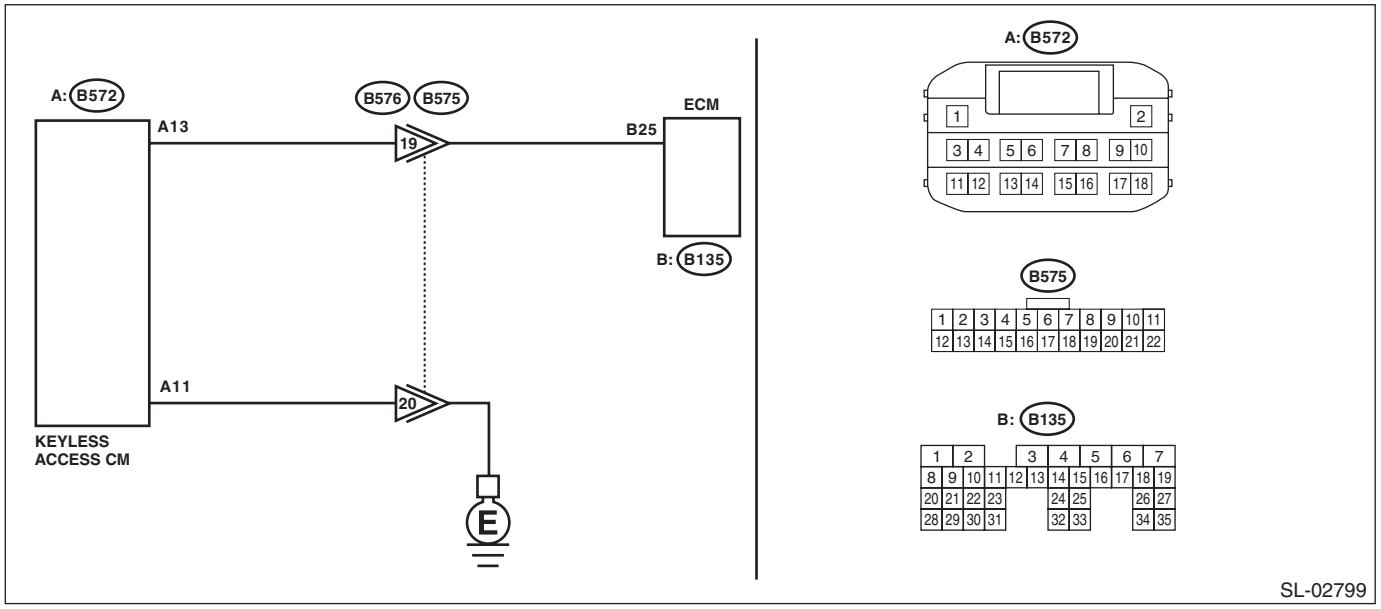

	Step	Check	Yes	No
1	**CHECK GROUNDING POINT.** Check the grounding point of the engine ground and chassis ground.	Are there any loose connections, any foreign objects caught in the ground lines or contact surface, or any fluid stains?	Remove the foreign matters, and tighten to the specified torque. Then start the engine, and check that the fault was removed. Check DTC <Ref. to KPS(diag)-26, Read Diagnostic Trouble Code (DTC).>, and when DTC B1572 is still displayed, Go to step **2**.	Go to step **2**.
2	**CHECK CURRENT DATA.** 1) Turn the ignition switch to ON. 2) Using the Subaru Select Monitor, check the data of «Keyless Access with Push Button Start». <Ref. to KPS(diag)-27, Read Current Data.> 3) Display the next data. “Immobilizer” “Engine start” “Unlock confirmation” ***Data*** ***Immobilizer = Unset:*** ***Engine start = Engine start permission:*** ***Unlock confirmation = Confirmed:***	Is the data displayed as indicated on the left?	Go to step **3**.	Perform diagnostics with phenomenon. <Ref. to KPS(diag)-141, ENGINE DOES NOT START, INSPECTION, Diagnostics with Phenomenon.>
3	**CHECK CURRENT DATA.** Use the Subaru Select Monitor to check the data of «Keyless Access with Push Button Start» when holding down the push button ignition switch while depressing the brake pedal (CVT model) or the clutch pedal (MT model). <Ref. to KPS(diag)-27, Read Current Data.> ***Data*** ***EGI code reception status = Reception:*** NOTE: If “Reception” is displayed, the status changes to “Not yet received” in 10 seconds. When performing the check again, perform the check after turning the ignition to OFF.	Is the data displayed as indicated on the left?	Go to step **4**.	Repair or replace the harness between keyless access CM and ECM.
4	**CHECK WIRING HARNESS.** 1) Turn the ignition switch to OFF. 2) Disconnect the keyless access CM connector and ECM connector. 3) Using a tester, measure the resistance between the keyless access CM connector and ECM connector. ***Connector & terminal*** ***Engine type: FA*** ***(B572) No. 13 — (E158) No. 43:*** ***Engine type: EJ*** ***(B572) No. 13 — (B135) No. 25:***	Is the resistance less than 10 Ω?	Go to step **5**.	Repair or replace the open circuit of harness.
5	**CHECK WIRING HARNESS.** Using a tester, measure the resistance between the keyless access CM connector and chassis ground. ***Connector & terminal*** ***(B572) No. 11 — Chassis ground:***	Is the resistance less than 10 Ω?	Go to step **6**.	Repair or replace the open circuit of harness.

Step		Check	Yes	No
6	**CHECK ECM.** 1) Install the ECM from other normal operating vehicle (with push button start) which use same ECM to the vehicle to be diagnosed. 2) Perform ECM registration. Refer to the "REGISTRATION MANUAL FOR IMMOBILIZER" provided as a separate volume.	Is ECM registration finished? And does the engine start?	Replace the ECM. <Ref. to FU(w/o STI)-124, REMOVAL, Engine Control Module (ECM).> <Ref. to FU(STI)-56, REMOVAL, Engine Control Module (ECM).> Install the ECM from other vehicle to the original vehicle.	Replace the keyless access CM. <Ref. to SL-100, Keyless Access CM.>

2. C0 MODEL

DTC DETECTING CONDITION:
Communication error between ID code box and ECM
TROUBLE SYMPTOM:
Engine will not start.
WIRING DIAGRAM:
Push button start system <Ref. to WI-303, WIRING DIAGRAM, Push Button Start System.>

- Engine type: FA

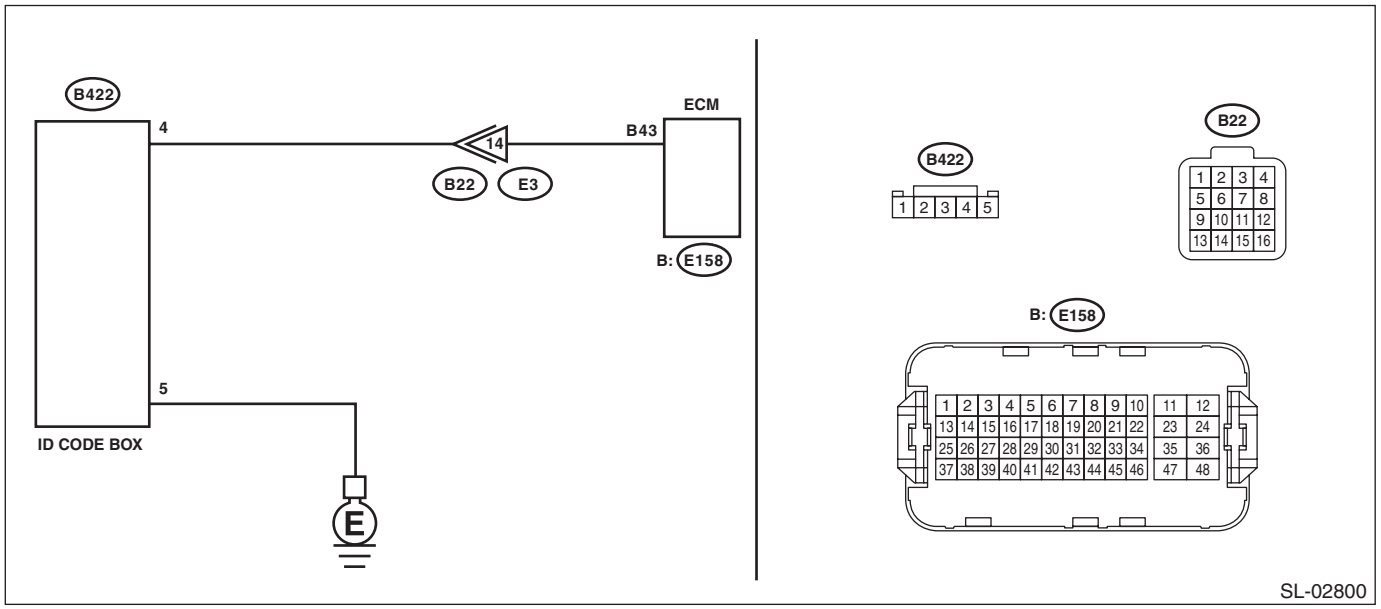

- Engine type: EJ

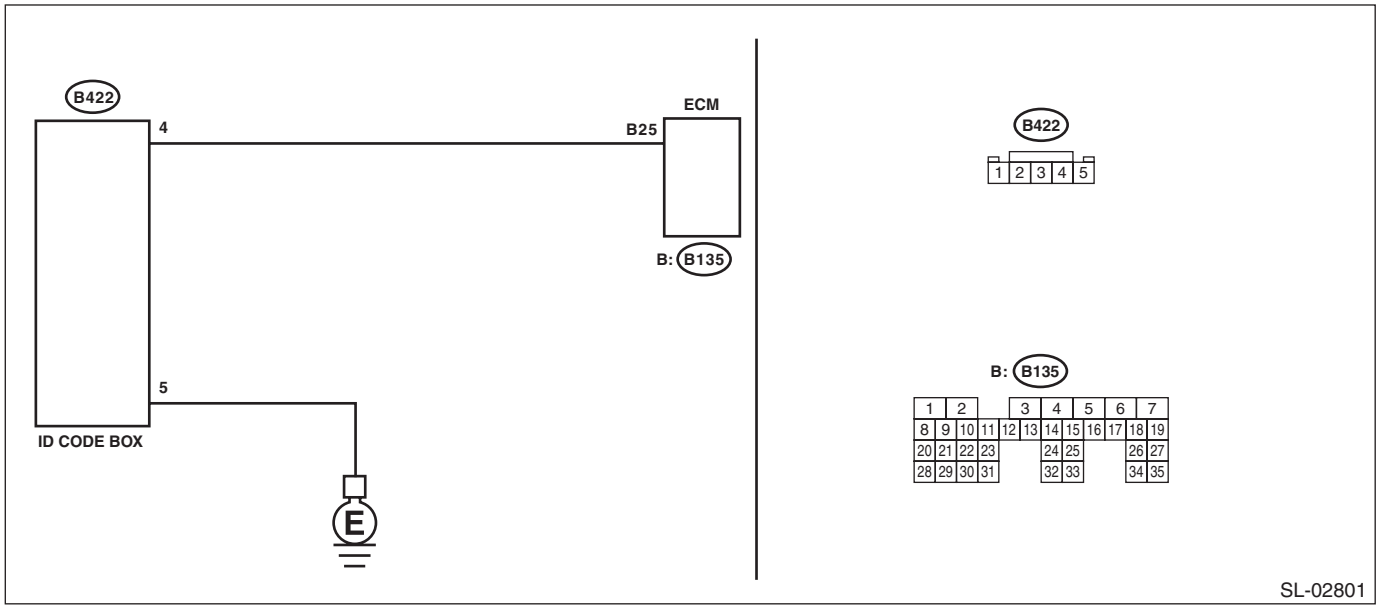

	Step	Check	Yes	No
1	**CHECK GROUNDING POINT.** Check the grounding point of the engine ground and chassis ground.	Are there any loose connections, any foreign objects caught in the ground lines or contact surface, or any fluid stains?	Remove the foreign matters, and tighten to the specified torque. Then start the engine, and check that the fault was removed. Check DTC <Ref. to KPS(diag)-26, Read Diagnostic Trouble Code (DTC).>, and when DTC B1572 is still displayed, Go to step **2**.	Go to step **2**.
2	**CHECK CURRENT DATA.** 1) Turn the ignition switch to ON. 2) Using the Subaru Select Monitor, check the data of «Keyless Access with Push Button Start». <Ref. to KPS(diag)-27, Read Current Data.> 3) Display the next data. “Immobilizer” “Engine start” “Unlock confirmation” ***Data*** ***Immobilizer = Unset:*** ***Engine start = Engine start permission:*** ***Unlock confirmation = Confirmed:***	Is the data displayed as indicated on the left?	Go to step **3**.	Perform diagnostics with phenomenon. <Ref. to KPS(diag)-141, ENGINE DOES NOT START, INSPECTION, Diagnostics with Phenomenon.>

	Step	Check	Yes	No
3	**CHECK CURRENT DATA.** Use the Subaru Select Monitor to check the data of «Keyless Access with Push Button Start» when holding down the push button ignition switch while depressing the brake pedal (CVT model) or the clutch pedal (MT model). <Ref. to KPS(diag)-27, Read Current Data.> ***Data*** ***EGI code reception status = Reception:*** NOTE: If “Reception” is displayed, the status changes to “Not yet received” in 10 seconds. When performing the check again, perform the check after turning the ignition to OFF.	Is the data displayed as indicated on the left?	Go to step **4**.	Repair or replace the harness between ID code box and ECM.
4	**CHECK WIRING HARNESS.** 1) Turn the ignition switch to OFF. 2) Disconnect the ID code box connector and the ECM connector. 3) Using a tester, measure the resistance between ID code box connector and ECM connector. ***Connector & terminal*** ***Engine type: FA*** ***(B422) No. 4 — (E158) No. 43:*** ***Engine type: EJ*** ***(B422) No. 4 — (B135) No. 25:***	Is the resistance less than 10 Ω?	Go to step **5**.	Repair or replace the open circuit of harness.
5	**CHECK WIRING HARNESS.** Using a tester, measure the resistance between ID code box connector and chassis ground. ***Connector & terminal*** ***(B422) No. 5 — Chassis ground:***	Is the resistance less than 10 Ω?	Go to step **6**.	Repair or replace the open circuit of harness.
6	**CHECK ECM.** 1) Install the ECM from other normal operating vehicle (with push button start) which use same ECM to the vehicle to be diagnosed. 2) Perform ECM registration. Refer to the “REGISTRATION MANUAL FOR IMMOBILIZER” provided as a separate volume.	Is ECM registration finished? And does the engine start?	Replace the ECM. <Ref. to FU(w/o STI)-124, REMOVAL, Engine Control Module (ECM).> <Ref. to FU(STI)-56, REMOVAL, Engine Control Module (ECM).> Install the ECM from other vehicle to the original vehicle.	Replace the ID code box. <Ref. to SL-103, NOTE, ID Code Box.>

AM:DTC B1576 EGI CONTROL MODULE EEPROM

DTC DETECTING CONDITION:

- ECM malfunctioning
- When the ROM in ECM was inaccessible during registration.

Step		Check	Yes	No
1	**PERFORM ECM REGISTRATION.** Perform ECM registration. Refer to the “REGISTRATION MANUAL FOR IMMOBILIZER” provided as a separate volume.	Is ECM registration complete?	Make sure that the engine can start. This completes the work.	Go to step **2**.
2	**PERFORM ECM REGISTRATION.** Perform ECM registration. Refer to the “REGISTRATION MANUAL FOR IMMOBILIZER” provided as a separate volume.	Is ECM registration complete?	Make sure that the engine can start. This completes the work.	Go to step **3**.
3	**PERFORM ECM REGISTRATION.** Perform ECM registration. Refer to the “REGISTRATION MANUAL FOR IMMOBILIZER” provided as a separate volume.	Is ECM registration complete?	Make sure that the engine can start. This completes the work.	Replace the ECM. <Ref. to FU(w/o STI)-124, REMOVAL, Engine Control Module (ECM).> <Ref. to FU(STI)-56, REMOVAL, Engine Control Module (ECM).>

AN:DTC B1577 IMM CONTROL MODULE EEPROM

1. EXCEPT FOR C0 MODEL

DTC DETECTING CONDITION:

- Defective keyless access CM
- When inaccessible to ROM in keyless access CM.

	Step	Check	Yes	No
1	**CHECK DTC.** 1) Turn the ignition switch to ON. 2) Perform the clear memory operation of ECM. <Ref. to EN(STI)(diag)-68, Clear Memory Mode.> <Ref. to EN(w/o STI)(diag)-82, Clear Memory Mode.> 3) Turn the ignition switch to OFF. 4) Remove and install the battery. 5) Turn the ignition switch to ON. 6) After 5 seconds or more, read DTC. <Ref. to KPS(diag)-26, Read Diagnostic Trouble Code (DTC).>	Is DTC B1577 displayed?	Replace the keyless access CM. <Ref. to SL-100, Keyless Access CM.>	Even if DTC is displayed, the circuit has returned to a normal condition at this time. Reproduce the failure, and then perform the diagnosis again. NOTE: In this case, temporary poor contact of connector, temporary open or short circuit of harness may be the cause.

2. C0 MODEL

DTC DETECTING CONDITION:

- ID code box malfunction
- When inaccessible to ROM in ID code box.

	Step	Check	Yes	No
1	**CHECK DTC.** 1) Turn the ignition switch to ON. 2) Perform the clear memory operation of ECM. <Ref. to EN(STI)(diag)-68, Clear Memory Mode.> <Ref. to EN(w/o STI)(diag)-82, Clear Memory Mode.> 3) Turn the ignition switch to OFF. 4) Register the ID code box. 5) Read the DTC again. <Ref. to KPS(diag)-26, Read Diagnostic Trouble Code (DTC).>	Is DTC B1577 displayed?	Replace the ID code box. <Ref. to SL-103, ID Code Box.>	Even if DTC is displayed, the circuit has returned to a normal condition at this time. Reproduce the failure, and then perform the diagnosis again. NOTE: In this case, temporary poor contact of connector, temporary open or short circuit of harness may be the cause.

15.General Diagnostic Table

A: INSPECTION

1. IMMOBILIZER SYSTEM

Symptoms	Note
Engine does not start	<Ref. to KPS(diag)-141, ENGINE DOES NOT START, INSPECTION, Diagnostics with Phenomenon.>
	<Ref. to KPS(diag)-75, DTC B2784 ANTENNA CIRCUIT (PUSH ENGINE SWITCH), Diagnostic Procedure with Diagnostic Trouble Code (DTC).>
	<Ref. to KPS(diag)-88, DTC B278A PUSH ENGINE SWITCH POWER SUPPLY CIRCUIT, Diagnostic Procedure with Diagnostic Trouble Code (DTC).>
	<Ref. to KPS(diag)-77, DTC B2785 LIN COMMUNICATION, Diagnostic Procedure with Diagnostic Trouble Code (DTC).>
	<Ref. to KPS(diag)-85, DTC B2789 ID CODE BOX COMMUNICATION, Diagnostic Procedure with Diagnostic Trouble Code (DTC).>
	<Ref. to KPS(diag)-91, DTC B2790 ID CODE BOX CIRCUIT, Diagnostic Procedure with Diagnostic Trouble Code (DTC).>
	Check the brake switch for CVT model. <Ref. to BR-101, INSPECTION, Stop Light Switch.> Check the clutch switch for MT model. <Ref. to CL-36, INSPECTION, Clutch Switch.>
	Check the parking switch signal. <Ref. to CS-53, INSPECTION, AT Shift Lock Solenoid and “P” Range Switch.>
	Check DTC of ECM.
Cannot register the immobilizer.	Refer to the “REGISTRATION MANUAL FOR IMMOBILIZER”.
Engine does not start with the remote engine starter.	<Ref. to KPS(diag)-72, DTC B2779 REMOTE CONTROL ENGINE STARTER COLLATION, Diagnostic Procedure with Diagnostic Trouble Code (DTC).>

2. KEYLESS ACCESS SYSTEM

Symptoms	Reference
All doors cannot be locked/unlocked with keyless access.	<Ref. to KPS(diag)-114, KEYLESS ACCESS LOCK/UNLOCK CANNOT BE PERFORMED FROM ANY OF THE DOORS, INSPECTION, Diagnostics with Phenomenon.>
Cannot lock with keyless access from the driver’s door.	<Ref. to KPS(diag)-115, CANNOT LOCK WITH KEYLESS ACCESS FROM THE DRIVER’S DOOR, INSPECTION, Diagnostics with Phenomenon.>
Cannot lock/unlock from the driver’s door with keyless access.	<Ref. to KPS(diag)-116, CANNOT LOCK/UNLOCK WITH KEYLESS ACCESS FROM THE DRIVER’S DOOR, INSPECTION, Diagnostics with Phenomenon.>
Cannot unlock from the driver’s door with keyless access.	<Ref. to KPS(diag)-117, CANNOT UNLOCK WITH KEYLESS ACCESS FROM THE DRIVER’S DOOR, INSPECTION, Diagnostics with Phenomenon.>
Cannot unlock from the passenger’s door with keyless access.	<Ref. to KPS(diag)-120, CANNOT UNLOCK WITH KEYLESS ACCESS FROM THE PASSENGER’S DOOR, INSPECTION, Diagnostics with Phenomenon.>
Cannot lock/unlock from the passenger’s door with keyless access.	<Ref. to KPS(diag)-119, CANNOT LOCK/UNLOCK WITH KEYLESS ACCESS FROM THE PASSENGER’S DOOR, INSPECTION, Diagnostics with Phenomenon.>
Cannot lock from the passenger’s door with keyless access.	<Ref. to KPS(diag)-118, CANNOT LOCK WITH KEYLESS ACCESS FROM THE PASSENGER’S DOOR, INSPECTION, Diagnostics with Phenomenon.>
Keyless access passenger room buzzer does not sound.	<Ref. to KPS(diag)-121, THE KEYLESS ACCESS PASSENGER ROOM BUZZER DOES NOT SOUND, INSPECTION, Diagnostics with Phenomenon.>
Keyless access external buzzer does not beep.	<Ref. to KPS(diag)-121, THE KEYLESS ACCESS EXTERNAL BUZZER DOES NOT BEEP, INSPECTION, Diagnostics with Phenomenon.>
Interior collation does not function.	<Ref. to KPS(diag)-123, INTERNAL COLLATION DOES NOT FUNCTION, INSPECTION, Diagnostics with Phenomenon.>
Trunk does not open with the trunk opener button.	<Ref. to KPS(diag)-125, TRUNK WILL NOT OPEN WITH KEYLESS ACCESS, INSPECTION, Diagnostics with Phenomenon.>
Access key lockout protection function in the trunk does not operate.	<Ref. to KPS(diag)-127, ACCESS KEY LOCKOUT PROTECTION FUNCTION IN THE TRUNK DOES NOT OPERATE, INSPECTION, Diagnostics with Phenomenon.>

3. STEERING LOCK SYSTEM

Symptoms	Index
The steering lock cannot be released (cannot start the engine)	<Ref. to KPS(diag)-129, THE STEERING LOCK IS NOT RELEASED, INSPECTION, Diagnostics with Phenomenon.>
The steering lock does not operate	<Ref. to KPS(diag)-131, THE STEERING LOCK DOES NOT OPERATE, INSPECTION, Diagnostics with Phenomenon.>

4. POWER SUPPLY SWITCHING SYSTEM

Symptoms	Index
Power will not turn ON (both accessory and ignition)	<Ref. to KPS(diag)-132, POWER WILL NOT TURN ON (BOTH ACCESSORY AND IGNITION), INSPECTION, Diagnostics with Phenomenon.>
Power will not turn ON (accessory only)	<Ref. to KPS(diag)-135, POWER WILL NOT TURN ON (ACCESSORY DOES NOT TURN ON, BUT IGNITION TURNS ON), INSPECTION, Diagnostics with Phenomenon.>
Power will not turn ON (ignition only)	<Ref. to KPS(diag)-138, POWER WILL NOT TURN ON (ACCESSORY TURNS ON, BUT IGNITION DOES NOT TURN ON), INSPECTION, Diagnostics with Phenomenon.>

16.Diagnostics with Phenomenon

A: INSPECTION

1. KEYLESS ACCESS LOCK/UNLOCK CANNOT BE PERFORMED FROM ANY OF THE DOORS

CAUTION:
• Check that there are no other registered access keys inside the vehicle.
• Inspect LAN system according to the basic diagnostic procedure, and make sure that there is no fault.
• Check that the keyless access function is not stopped.
• When the access key or keyless access CM is replaced, registration of the immobilizer is required. For the relevant procedures, refer to the "REGISTRATION MANUAL FOR IMMOBILIZER" provided as a separate volume.

	Step	Check	Yes	No
1	**CHECK OPERATION OF KEYLESS DOOR LOCK.** Using the keyless function of the access key, check the operation of the door lock.	Does it lock/unlock normally?	Check the exterior antenna, oscillator, touch sensor, lock/unlock buttons.	Go to step **2**.
2	**CHECK ACCESS KEY.** Check for whether lock and unlock is possible with the registered access key.	Is there any access key which can lock/unlock when the touch sensor is operated?	Check the access key that does not operate. Go to step **3**.	Go to step **4**.
3	**CHECK ACCESS KEY.** Measure the battery voltage of the access key that does not operate.	Is the voltage 2.5 — 3.2 V?	Replace the access key.	Replace the battery.
4	**CHECK DOOR LOCK.** Operate the driver's center door lock switch.	Does the door lock operate?	Go to step **5**.	Check the door lock control system. <Ref. to SL-10, INSPECTION, Door Lock Control System.>
5	**CHECK HARNESS (OPEN CIRCUIT).** 1) Disconnect the receiver connector (R296). 2) Using a tester, measure the resistance between receiver and chassis ground. ***Connector & terminal*** ***(R296) No. 1 — Chassis ground:***	Is the resistance less than 10 Ω?	Go to step **6**.	Repair or replace the open circuit of harness.
6	**CHECK HARNESS (OPEN CIRCUIT).** 1) Disconnect the keyless access CM connector. 2) Using a tester, measure the resistance between receiver and keyless access CM. ***Connector & terminal*** ***(R296) No. 4 — (B573) No. 5:*** ***(R296) No. 5 — (B573) No. 17:*** ***(R296) No. 2 — (B573) No. 19:***	Is the resistance less than 10 Ω?	Go to step **7**.	Repair or replace the open circuit of harness.
7	**CHECK RECEIVER.** Replace with a receiver that is operating normally. <Ref. to SL-98, REMOVAL, Receiver.>	When the front unlock sensor and the rear gate opener button / trunk opener button are operated, does it lock/unlock?	Malfunction occurred in receiver.	Go to step **8**.
8	**CHECK HARNESS.** Using a tester, measure the voltage between the keyless access CM connector and chassis ground. ***Connector & terminal*** ***(B572) No. 2 (+) — Chassis ground (–):***	Is the voltage 10 V or more when the ignition switch is turned to ON?	Go to step **9**.	Check the keyless access CM power supply circuit.

	Step	Check	Yes	No
9	**CHECK HARNESS (OPEN CIRCUIT).** Using a tester, measure the resistance between the keyless access CM connector and chassis ground. ***Connector & terminal*** ***(B572) No. 11 — Chassis ground:***	Is the resistance less than 10 Ω?	Replace the keyless access CM. <Ref. to SL-100, REMOVAL, Keyless Access CM.>	Repair or replace the open circuit of harness.

2. CANNOT LOCK WITH KEYLESS ACCESS FROM THE DRIVER'S DOOR

CAUTION:
• Check that there are no other registered access keys inside the vehicle.
• Inspect LAN system according to the basic diagnostic procedure, and make sure that there is no fault.
• Check that the keyless access function is not stopped.
• When the access key or keyless access CM is replaced, registration of the immobilizer is required. For the relevant procedures, refer to the "REGISTRATION MANUAL FOR IMMOBILIZER" provided as a separate volume.

	Step	Check	Yes	No
1	**CHECK DOOR LOCK SWITCH.** Check that the lock/unlock operates with the driver's door lock switch.	Does it lock/unlock normally?	Go to step **2**.	Check the door lock circuit. <Ref. to SL-10, SYMPTOM CHART, INSPECTION, Door Lock Control System.>
2	**CHECK CURRENT DATA.** 1) Display the current data «Driver's seat lock status SW input» of «Body Control» using Subaru Select Monitor. <Ref. to BC(diag)-17, Read Current Data.> 2) Read the data when locking/unlocking the driver's side lock actuator.	Does the data change from ON/OFF?	Go to step **3**.	Check the door lock switch circuit.
3	**CHECK CURRENT DATA.** 1) Display the current data «Driver's lock touch sensor SW» of «Keyless Access with Push Button Start» using Subaru Select Monitor. <Ref. to KPS(diag)-27, Read Current Data.> 2) Read the data when operating the touch sensor (lock) of the door outer handle.	Does the data change from ON/OFF according to the sensor operation?	Replace the keyless access CM. <Ref. to SL-100, Keyless Access CM.>	Go to step **4**.
4	**CHECK HARNESS (OPEN CIRCUIT).** 1) Disconnect the keyless access CM connector. 2) Disconnect the front outer handle connector. 3) Using a tester, measure the resistance between the keyless access CM connector and front outer handle connector. ***Connector & terminal*** ***(B574) No. 20 — (D66) No. 1:***	Is the resistance less than 1 Ω?	Go to step **5**.	Repair or replace the open circuit of harness.
5	**CHECK HARNESS (GROUND SHORT CIRCUIT).** Using a tester, measure the resistance between the keyless access CM connector and chassis ground. ***Connector & terminal*** ***(B574) No. 20 — Chassis ground:***	Is the resistance 10 kΩ or more?	Go to step **6**.	Repair or replace the short circuit of the harness.

	Step	Check	Yes	No
6	**REPLACE FRONT DOOR OUTER HANDLE.** Replace the driver's side front outer handle with the passenger's side front outer handle.	Does it operate properly?	Replace the driver's front outer handle. <Ref. to SL-33, REMOVAL, Front Outer Handle.>	Replace the keyless access CM. <Ref. to SL-100, Keyless Access CM.>

3. CANNOT LOCK/UNLOCK WITH KEYLESS ACCESS FROM THE DRIVER'S DOOR

CAUTION:
• Check that there are no other registered access keys inside the vehicle.
• Inspect LAN system according to the basic diagnostic procedure, and make sure that there is no fault.
• Check that the keyless access function is not stopped.
• When the access key or keyless access CM is replaced, registration of the immobilizer is required. For the relevant procedures, refer to the "REGISTRATION MANUAL FOR IMMOBILIZER" provided as a separate volume.

	Step	Check	Yes	No
1	**CHECK DOOR LOCK SWITCH.** Check that the lock/unlock operates with the driver's door lock switch.	Does it lock/unlock normally?	Go to step **2**.	Check the door lock circuit. <Ref. to SL-10, SYMPTOM CHART, INSPECTION, Door Lock Control System.>
2	**CHECK FUSE.** Check the fuse. <Ref. to SL-8, Relay and Fuse.>	Is the check result OK?	Go to step **3**.	Replace the fuse.
3	**CHECK HARNESS (OPEN CIRCUIT).** 1) Disconnect the keyless access CM connector. 2) Disconnect the front outer handle connector. 3) Using a tester, measure the resistance between the keyless access CM connector and front outer handle connector, and between front outer handle connector and chassis ground. ***Connector & terminal*** ***(B574) No. 12 — (D66) No. 6:*** ***(B574) No. 13 — (D66) No. 3:*** ***(B574) No. 19 — (D66) No. 5:*** ***(D66) No. 2 — Chassis ground:***	Is the resistance less than 1 Ω?	Go to step **4**.	Repair or replace the open circuit of harness.
4	**CHECK HARNESS (GROUND SHORT CIRCUIT).** Using a tester, measure the resistance between the keyless access CM connector and chassis ground. ***Connector & terminal*** ***(B574) No. 12 — Chassis ground:*** ***(B574) No. 13 — Chassis ground:***	Is the resistance 10 kΩ or more?	Go to step **5**.	Repair or replace the short circuit of the harness.

	Step	Check	Yes	No
5	**CHECK KEYLESS ACCESS CM.** 1) Connect the keyless access CM connector. 2) Turn the ignition switch to OFF, close all doors and take the access key out of passenger room. 3) Using the Subaru Select Monitor, measure the waveform between the front outer handle connector. ***Connector & terminal*** ***(D66) No. 6 — (D66) No. 3:***	Does pulse output change from pulse output OFF → pulse output ON by the lock operation using access key?	Go to step **6**.	Replace the keyless access CM. <Ref. to SL-100, Keyless Access CM.>
6	**REPLACE FRONT DOOR OUTER HANDLE.** Replace the driver's side front outer handle with the passenger's side front outer handle.	Does it operate properly?	Replace the driver's front outer handle. <Ref. to SL-33, Front Outer Handle.>	Replace the keyless access CM. <Ref. to SL-100, Keyless Access CM.>

4. CANNOT UNLOCK WITH KEYLESS ACCESS FROM THE DRIVER'S DOOR

CAUTION:
- **Check that there are no other registered access keys inside the vehicle.**
- **Inspect LAN system according to the basic diagnostic procedure, and make sure that there is no fault.**
- **Check that the keyless access function is not stopped.**
- **When the access key or keyless access CM is replaced, registration of the immobilizer is required. For the relevant procedures, refer to the "REGISTRATION MANUAL FOR IMMOBILIZER" provided as a separate volume.**

	Step	Check	Yes	No
1	**CHECK DOOR LOCK SWITCH.** Check that the lock/unlock operates with the driver's door lock switch.	Does it lock/unlock normally?	Go to step **2**.	Check the door lock circuit. <Ref. to SL-10, SYMPTOM CHART, INSPECTION, Door Lock Control System.>
2	**CHECK CURRENT DATA.** 1) Display the current data «Driver's seat lock status SW input» of «Body Control» using Subaru Select Monitor. <Ref. to BC(diag)-17, Read Current Data.> 2) Read the data when locking/unlocking the driver's side lock actuator.	Does the data change from ON/OFF?	Go to step **3**.	Check the door lock switch circuit.
3	**CHECK CURRENT DATA.** 1) Display the current data «Driver's unlock touch sensor switch» of «Keyless Access with Push Button Start» using Subaru Select Monitor. <Ref. to KPS(diag)-27, Read Current Data.> 2) Read the data when operating the touch sensor (unlock) of the door outer handle.	Does the data change from ON/OFF according to the sensor operation?	Replace the keyless access CM. <Ref. to SL-100, Keyless Access CM.>	Go to step **4**.
4	**CHECK HARNESS (OPEN CIRCUIT).** 1) Disconnect the keyless access CM connector. 2) Disconnect the front outer handle connector. 3) Using a tester, measure the resistance between the keyless access CM connector and front outer handle connector. ***Connector & terminal*** ***(B574) No. 22 — (D66) No. 4:***	Is the resistance less than 1 Ω?	Go to step **5**.	Repair or replace the open circuit of harness.

	Step	Check	Yes	No
5	**CHECK HARNESS (GROUND SHORT CIRCUIT).** Using a tester, measure the resistance between the keyless access CM connector and chassis ground. ***Connector & terminal*** ***(B574) No. 22 — Chassis ground:***	Is the resistance 10 kΩ or more?	Go to step **6**.	Repair or replace the short circuit of the harness.
6	**REPLACE FRONT DOOR OUTER HANDLE.** Replace the driver's side front outer handle with the passenger's side front outer handle.	Does it operate properly?	Replace the driver's front outer handle. <Ref. to SL-33, REMOVAL, Front Outer Handle.>	Replace the keyless access CM. <Ref. to SL-100, Keyless Access CM.>

5. CANNOT LOCK WITH KEYLESS ACCESS FROM THE PASSENGER'S DOOR

CAUTION:
• Check that there are no other registered access keys inside the vehicle.
• Inspect LAN system according to the basic diagnostic procedure, and make sure that there is no fault.
• Check that the keyless access function is not stopped.
• When the access key or keyless access CM is replaced, registration of the immobilizer is required. For the relevant procedures, refer to the "REGISTRATION MANUAL FOR IMMOBILIZER" provided as a separate volume.

	Step	Check	Yes	No
1	**CHECK DOOR LOCK SWITCH.** Check that the lock/unlock operates with the driver's door lock switch.	Does it lock/unlock normally?	Go to step **2**.	Check the door lock circuit. <Ref. to SL-10, SYMPTOM CHART, INSPECTION, Door Lock Control System.>
2	**CHECK CURRENT DATA.** 1) Display the current data «Passenger's seat lock status SW input» of «Body Control» using Subaru Select Monitor. <Ref. to BC(diag)-17, Read Current Data.> 2) Read the data when locking/unlocking the passenger's side lock actuator.	Does the data change from ON/OFF?	Go to step **3**.	Check the door lock switch circuit.
3	**CHECK CURRENT DATA.** 1) Display the current data «Passenger's lock touch sensor SW» of «Keyless Access with Push Button Start» using Subaru Select Monitor. <Ref. to KPS(diag)-27, Read Current Data.> 2) Read the data when operating the touch sensor (lock) of the door outer handle.	Does the data change from ON/OFF according to the sensor operation?	Replace the keyless access CM. <Ref. to SL-100, Keyless Access CM.>	Go to step **4**.
4	**CHECK HARNESS (OPEN CIRCUIT).** 1) Disconnect the keyless access CM connector. 2) Disconnect the front outer handle connector. 3) Using a tester, measure the resistance between the keyless access CM connector and front outer handle connector. ***Connector & terminal*** ***(B574) No. 8 — (D56) No. 1:***	Is the resistance less than 1 Ω?	Go to step **5**.	Repair or replace the open circuit of harness.

	Step	Check	Yes	No
5	**CHECK HARNESS (GROUND SHORT CIRCUIT).** Using a tester, measure the resistance between the keyless access CM connector and chassis ground. ***Connector & terminal*** ***(B574) No. 8 — Chassis ground:***	Is the resistance 10 kΩ or more?	Go to step **6**.	Repair or replace the short circuit of the harness.
6	**REPLACE FRONT DOOR OUTER HANDLE.** Replace the passenger's side front outer handle with the driver's side front outer handle.	Does it operate properly?	Replace the passenger's front outer handle. <Ref. to SL-33, REMOVAL, Front Outer Handle.>	Replace the keyless access CM. <Ref. to SL-100, Keyless Access CM.>

6. CANNOT LOCK/UNLOCK WITH KEYLESS ACCESS FROM THE PASSENGER'S DOOR

CAUTION:
• Check that there are no other registered access keys inside the vehicle.
• Inspect LAN system according to the basic diagnostic procedure, and make sure that there is no fault.
• Check that the keyless access function is not stopped.
• When the access key or keyless access CM is replaced, registration of the immobilizer is required. For the relevant procedures, refer to the "REGISTRATION MANUAL FOR IMMOBILIZER" provided as a separate volume.

	Step	Check	Yes	No
1	**CHECK DOOR LOCK SWITCH.** Check that the lock/unlock operates with the driver's door lock switch.	Does it lock/unlock normally?	Go to step **2**.	Check the door lock circuit. <Ref. to SL-10, SYMPTOM CHART, INSPECTION, Door Lock Control System.>
2	**CHECK FUSE.** Check the fuse. <Ref. to SL-8, Relay and Fuse.>	Is the check result OK?	Go to step **3**.	Replace the fuse.
3	**CHECK HARNESS (OPEN CIRCUIT).** 1) Disconnect the keyless access CM connector. 2) Disconnect the front outer handle connector. 3) Using a tester, measure the resistance between the keyless access CM connector and front outer handle connector, and between front outer handle connector and chassis ground. ***Connector & terminal*** ***(B574) No. 11 — (D56) No. 6:*** ***(B574) No. 10 — (D56) No. 3:*** ***(B574) No. 21 — (D56) No. 5:*** ***(D56) No. 2 — Chassis ground:***	Is the resistance less than 1 Ω?	Go to step **4**.	Repair or replace the open circuit of harness.
4	**CHECK HARNESS (GROUND SHORT CIRCUIT).** Using a tester, measure the resistance between the keyless access CM connector and chassis ground. ***Connector & terminal*** ***(B574) No. 11 — Chassis ground:*** ***(B574) No. 10 — Chassis ground:***	Is the resistance 10 kΩ or more?	Go to step **5**.	Repair or replace the short circuit of the harness.

	Step	Check	Yes	No
5	**CHECK KEYLESS ACCESS CM.** 1) Connect the keyless access CM connector. 2) Turn the ignition switch to OFF, close all doors and take the access key out of passenger room. 3) Using the Subaru Select Monitor, measure the waveform between the front outer handle connector. ***Connector & terminal*** ***(D56) No. 6 — (D56) No. 3:***	Does pulse output change from pulse output OFF → pulse output ON by the lock operation using access key?	Go to step **6**.	Replace the keyless access CM. <Ref. to SL-100, Keyless Access CM.>
6	**REPLACE FRONT DOOR OUTER HANDLE.** Replace the passenger's side front outer handle with the driver's side front outer handle.	Does it operate properly?	Replace the passenger's front outer handle. <Ref. to SL-33, Front Outer Handle.>	Replace the keyless access CM. <Ref. to SL-100, Keyless Access CM.>

7. CANNOT UNLOCK WITH KEYLESS ACCESS FROM THE PASSENGER'S DOOR

CAUTION:
- **Check that there are no other registered access keys inside the vehicle.**
- **Inspect LAN system according to the basic diagnostic procedure, and make sure that there is no fault.**
- **Check that the keyless access function is not stopped.**
- **When the access key or keyless access CM is replaced, registration of the immobilizer is required. For the relevant procedures, refer to the "REGISTRATION MANUAL FOR IMMOBILIZER" provided as a separate volume.**

	Step	Check	Yes	No
1	**CHECK DOOR LOCK SWITCH.** Check that the lock/unlock operates with the driver's door lock switch.	Does it lock/unlock normally?	Go to step **2**.	Check the door lock circuit. <Ref. to SL-10, SYMPTOM CHART, INSPECTION, Door Lock Control System.>
2	**CHECK CURRENT DATA.** 1) Display the current data «Passenger's seat lock status SW input» of «Body Control» using Subaru Select Monitor. <Ref. to BC(diag)-17, Read Current Data.> 2) Read the data when locking/unlocking the passenger's side lock actuator.	Does the data change from ON/OFF?	Go to step **3**.	Check the door lock switch circuit.
3	**CHECK CURRENT DATA.** 1) Display the current data «Passenger's unlock touch sensor switch» of «Keyless Access with Push Button Start» using Subaru Select Monitor. <Ref. to KPS(diag)-27, Read Current Data.> 2) Read the data when operating the touch sensor (unlock) of the door outer handle.	Does the data change from ON/OFF according to the sensor operation?	Replace the keyless access CM. <Ref. to SL-100, Keyless Access CM.>	Go to step **4**.
4	**CHECK HARNESS (OPEN CIRCUIT).** 1) Disconnect the keyless access CM connector. 2) Disconnect the front outer handle connector. 3) Using a tester, measure the resistance between the keyless access CM connector and front outer handle connector. ***Connector & terminal*** ***(B574) No. 23 — (D56) No. 4:***	Is the resistance less than 1 Ω?	Go to step **5**.	Repair or replace the open circuit of harness.

	Step	Check	Yes	No
5	**CHECK HARNESS (GROUND SHORT CIRCUIT).** Using a tester, measure the resistance between the keyless access CM connector and chassis ground. ***Connector & terminal*** ***(B574) No. 23 — Chassis ground:***	Is the resistance 10 kΩ or more?	Go to step **6**.	Repair or replace the short circuit of the harness.
6	**REPLACE FRONT DOOR OUTER HANDLE.** Replace the passenger's side front outer handle with the driver's side front outer handle.	Does it operate properly?	Replace the passenger's front outer handle. <Ref. to SL-33, REMOVAL, Front Outer Handle.>	Replace the keyless access CM. <Ref. to SL-100, Keyless Access CM.>

8. THE KEYLESS ACCESS PASSENGER ROOM BUZZER DOES NOT SOUND

CAUTION:
• Inspect LAN system according to the basic diagnostic procedure, and make sure that there is no fault.
• Check that the keyless access function is not stopped.
• When the access key or keyless access CM is replaced, registration of the immobilizer is required. For the relevant procedures, refer to the "REGISTRATION MANUAL FOR IMMOBILIZER" provided as a separate volume.

	Step	Check	Yes	No
1	**CHECK COMBINATION METER.** Check the combination meter.	Is the check result OK?	Replace the keyless access CM. <Ref. to SL-100, Keyless Access CM.>	Replace the combination meter. <Ref. to IDI-13, REMOVAL, Combination Meter.>

9. THE KEYLESS ACCESS EXTERNAL BUZZER DOES NOT BEEP

	Step	Check	Yes	No
1	**CHECK BODY INTEGRATED UNIT SETTING.** Using the Subaru Select Monitor, check the current data «Answer-back Buzzer» of «Body Control».	Is the setting «ON»?	Go to step **2**.	Change the setting to «ON».
2	**CHECK BUZZER OPERATION.** Use the Subaru Select Monitor to perform the function check «Keyless Buzzer Output» under «Body Control». <Ref. to BC(diag)-30, OPERATION, Function Check.>	Does the buzzer sound?	Go to step **3**.	Go to step **5**.
3	**CHECK KEYLESS ACCESS SYSTEM.** 1) Turn to IGN ON. 2) With all doors closed and the access key carried, touch the touch sensor (lock) on the driver's door handle.	Does the door lock?	Go to step **4**.	Refer to "CANNOT LOCK WITH KEYLESS ACCESS FROM THE DRIVER'S DOOR" and perform inspection. <Ref. to KPS(diag)-115, CANNOT LOCK WITH KEYLESS ACCESS FROM THE DRIVER'S DOOR, INSPECTION, Diagnostics with Phenomenon.>

	Step	Check	Yes	No
4	**CHECK KEYLESS ACCESS SYSTEM.** 1) Open the door glass. 2) Place the access key on the driver's seat, and close the door. 3) Touch the touch sensor (lock) on the driver's door handle.	Does the buzzer sound? (Lock-out protection warning)	System is normal.	Replace the keyless access CM. <Ref. to SL-100, REMOVAL, Keyless Access CM.>
5	**CHECK HARNESS (OPEN CIRCUIT).** 1) Turn to IGN OFF. 2) Disconnect the connectors of the body integrated unit and keyless buzzer. 3) Measure the resistance between body integrated unit connector and keyless buzzer connector. ***Connector & terminal*** ***(B280) No. 20 — (B164) No. 1:***	Is the resistance less than 10 Ω?	Go to step **6**.	Repair or replace the open circuit of harness.
6	**CHECK HARNESS (GROUND SHORT CIRCUIT).** Measure the resistance between keyless buzzer connector and chassis ground. ***Connector & terminal*** ***(B164) No. 1 — Chassis ground:***	Is the resistance 10 kΩ or more?	Go to step **7**.	Repair or replace the short circuit of the harness.
7	**CHECK HARNESS (OPEN CIRCUIT).** Measure the resistance between keyless buzzer connector and chassis ground. ***Connector & terminal*** ***(B164) No. 2 — Chassis ground:***	Is the resistance less than 10 Ω?	Go to step **8**.	Repair or replace the open circuit of harness.
8	**CHECK BODY INTEGRATED UNIT.** 1) Connect the connector of body integrated unit. 2) Use the Subaru Select Monitor to perform the function check «Keyless Buzzer Output» under «Body Control». <Ref. to BC(diag)-30, OPERATION, Function Check.> 3) Measure the voltage between body integrated unit connector and chassis ground using an oscilloscope. ***Connector & terminal*** ***(B280) No. 20 (+) — Chassis ground (–):***	Is the frequency 2kHz, voltage 9 V or more?	Replace the keyless buzzer. <Ref. to SL-79, REMOVAL, Keyless Buzzer.>	Replace the body integrated unit. <Ref. to SL-81, Body Integrated Unit.>

10.INTERNAL COLLATION DOES NOT FUNCTION

CAUTION:
When the access key or keyless access CM is replaced, registration of the immobilizer is required. For the relevant procedures, refer to the "REGISTRATION MANUAL FOR IMMOBILIZER" provided as a separate volume.

	Step	Check	Yes	No
1	**CHECK ACCESS KEY.** Check the battery of the access key. <Ref. to SL-87, INSPECTION, Access Key.>	Is the check result OK?	Go to step **2**.	Replace the battery.
2	**CHECK INTERIOR ANTENNA.** 1) Using the Subaru Select Monitor, select the system check «Front interior transmitter + interior tuner» under «Keyless Access with Push Button Start». <Ref. to KPS(diag)-37, Keyless Access System Check.> 2) Using a tester, check the output between keyless access CM connector terminals while performing the Keyless access system check. ***Connector & terminal*** ***(B574) No. 2 — (B574) No. 3:***	Is a pulse output?	Go to step **3**.	Replace the keyless access CM. <Ref. to SL-100, Keyless Access CM.>
3	**CHECK INTERIOR ANTENNA.** 1) Using the Subaru Select Monitor, select the system check «Rear interior transmitter + interior tuner» under «Keyless Access with Push Button Start». <Ref. to KPS(diag)-37, Keyless Access System Check.> 2) Using a tester, check the output between keyless access CM connector terminals while performing the Keyless access system check. ***Connector & terminal*** ***(B573) No. 10 — (B573) No. 11:***	Is a pulse output?	Go to step **4**.	Replace the keyless access CM. <Ref. to SL-100, Keyless Access CM.>
4	**CHECK INTERIOR ANTENNA.** 1) Using the Subaru Select Monitor, select the system check «Trunk internal transmitter + interior tuner» or «Rear gate internal transmitter + interior tuner» under «Keyless Access with Push Button Start». <Ref. to KPS(diag)-37, Keyless Access System Check.> 2) Using a tester, check the output between keyless access CM connector terminals while performing the Keyless access system check. ***Connector & terminal*** ***(B573) No. 8 — (B573) No. 9:***	Is a pulse output?	Go to step **5**.	Replace the keyless access CM. <Ref. to SL-100, Keyless Access CM.>
5	**CHECK WIRING HARNESS (OPEN).** 1) Disconnect the front interior antenna connector and the keyless access CM connector. 2) Using a tester, check continuity between the front interior antenna connector and the keyless access CM connector. ***Connector & terminal*** ***(AD12) No. 1 — (B574) No. 3:*** ***(AD12) No. 3 — (B574) No. 2:***	Is there continuity?	Go to step **6**.	Repair or replace the open circuit of harness.

	Step	Check	Yes	No
6	**CHECK WIRING HARNESS (OPEN).** 1) Disconnect the center interior antenna connector and the keyless access CM connector. 2) Using a tester, check continuity between the center interior antenna connector and the keyless access CM connector. ***Connector & terminal*** ***(R298) No. 1 — (B573) No. 11:*** ***(R298) No. 3 — (B573) No. 10:***	Is there continuity?	Go to step **7**.	Repair or replace the open circuit of harness.
7	**CHECK WIRING HARNESS (OPEN).** 1) Disconnect the rear interior antenna connector and the keyless access CM connector. 2) Using a tester, check continuity between the rear interior antenna connector and the keyless access CM connector. ***Connector & terminal*** ***(R297) No. 1 — (B573) No. 9:*** ***(R297) No. 3 — (B573) No. 8:***	Is there continuity?	Go to step **8**.	Repair or replace the open circuit of harness.
8	**CHECK ANTENNA.** Replace the front interior antenna with a new or properly functioning part.	Does it operate properly?	Replace the front interior antenna. <Ref. to SL-92, REMOVAL, Keyless Access Indoor Antenna.>	Go to step **9**.
9	**CHECK ANTENNA.** Replace the center interior antenna with a new or properly functioning part.	Does it operate properly?	Replace the center interior antenna. <Ref. to SL-92, REMOVAL, Keyless Access Indoor Antenna.>	Go to step **10**.
10	**CHECK ANTENNA.** Replace the rear interior antenna with a new or properly functioning part.	Does it operate properly?	Replace the rear interior antenna. <Ref. to SL-92, REMOVAL, Keyless Access Indoor Antenna.>	Go to step **11**.
11	**CHECK WIRING HARNESS (OPEN).** 1) Disconnect the receiver connector and the keyless access CM connector. 2) Using a tester, check continuity between the receiver connector and keyless access CM connector. ***Connector & terminal*** ***(R296) No. 4 — (B573) No. 5:*** ***(R296) No. 5 — (B573) No. 17:*** ***(R296) No. 2 — (B573) No. 19:***	Is there continuity?	Go to step **12**.	Repair or replace the open circuit of harness.
12	**CHECK RECEIVER.** Replace the receiver with a new or properly functioning part.	Does it operate properly?	Replace the receiver. <Ref. to SL-98, REMOVAL, Receiver.>	Go to step **13**.
13	**CHECK KEYLESS ACCESS SYSTEM CHECK.** 1) Using the Subaru Select Monitor, select the system check «Front interior transmitter + interior tuner» under «Keyless Access with Push Button Start». <Ref. to KPS(diag)-37, Keyless Access System Check.> 2) Hold the access key 1 m or more away from the audio panel, then come closer to within 0.8 m.	Does the buzzer sound?	Go to step **14**.	Replace the keyless access CM. <Ref. to SL-100, Keyless Access CM.>

	Step	Check	Yes	No
14	**CHECK KEYLESS ACCESS SYSTEM CHECK.** 1) Using the Subaru Select Monitor, select the system check «Rear interior transmitter + interior tuner» under «Keyless Access with Push Button Start». <Ref. to KPS(diag)-37, Keyless Access System Check.> 2) Hold the access key 1 m or more away from the center of the second row seats, then come closer to within 0.8 m.	Does the buzzer sound?	Go to step **15**.	Replace the keyless access CM. <Ref. to SL-100, Keyless Access CM.>
15	**CHECK KEYLESS ACCESS SYSTEM CHECK.** 1) Using the Subaru Select Monitor, select the system check «Trunk internal transmitter + interior tuner» under «Keyless Access with Push Button Start». <Ref. to KPS(diag)-37, Keyless Access System Check.> 2) Hold the access key 1 m or more away from the back of the rear seat, then come closer to within 0.8 m.	Does the buzzer sound?	System is normal.	Replace the keyless access CM. <Ref. to SL-100, Keyless Access CM.>

11.TRUNK WILL NOT OPEN WITH KEYLESS ACCESS

CAUTION:
• Check that there are no other registered access keys inside the trunk.
• Inspect LAN system according to the basic diagnostic procedure, and make sure that there is no fault.
• Check that the keyless access function is not stopped.
• When the access key or keyless access CM is replaced, registration of the immobilizer is required. For the relevant procedures, refer to the "REGISTRATION MANUAL FOR IMMOBILIZER" provided as a separate volume.

	Step	Check	Yes	No
1	**CHECK TRUNK OPENER BUTTON.** Check that the trunk opens with the driver's seat trunk opener button.	Does it open normally?	Go to step **2**.	Check the door lock circuit. <Ref. to SL-10, SYMPTOM CHART, INSPECTION, Door Lock Control System.>
2	**CHECK KEYLESS OPERATION.** Check that the trunk opens when the trunk opener button of the access key is operated.	Does it open normally?	Go to step **7**.	Go to step **3**.
3	**CHECK TRUNK UNLOCK OPERATION.** 1) Using the Subaru Select Monitor, select the function check «R gate/trunk UNLK output» under «Body Control». <Ref. to BC(diag)-30, Function Check.> 2) Check that the trunk opens when the R gate/trunk UNLK signal is output.	Does it open normally?	Go to step **7**.	Go to step **4**.
4	**CHECK WIRING HARNESS (OPEN).** 1) Disconnect the body integrated unit connector and trunk lid lock actuator connector. 2) Check the continuity between body integrated unit connector and trunk lid lock actuator connector. ***Connector & terminal*** ***(i171) No. 7 — (R186) No. 1:***	Is there continuity?	Go to step **5**.	Repair or replace the open circuit of harness.

Step		Check	Yes	No
5	**CHECK WIRING HARNESS (OPEN).** Check the continuity between the trunk lid lock actuator connector and chassis ground. ***Connector & terminal*** ***(R186) No. 2 — Chassis ground:***	Is there continuity?	Go to step **6**.	Repair or replace the open circuit of harness.
6	**CHECK TRUNK LID LOCK ACTUATOR.** Check the trunk lid lock actuator. <Ref. to SL-49, Trunk Lid Latch and Actuator Assembly.>	Is the check result OK?	Replace the body integrated unit. <Ref. to SL-81, Body Integrated Unit.>	Replace the trunk lid latch & actuator assembly. <Ref. to SL-49, Trunk Lid Latch and Actuator Assembly.>
7	**CHECK ACCESS KEY.** Check the access key LED when the trunk opener button of the access key is operated.	Does the access key LED illuminate?	Go to step **8**.	Replace the access key. <Ref. to SL-87, REPLACEMENT, Access Key.>
8	**CHECK ACCESS KEY.** 1) Prepare all access keys registered to the vehicle. 2) Check that the trunk opens with each access key.	Does it open normally?	Go to step **9**.	Replace the access key. <Ref. to SL-87, REPLACEMENT, Access Key.>
9	**CHECK CURRENT DATA.** 1) Display the current data «Trunk Request SW» of «Keyless Access with Push Button Start» using Subaru Select Monitor. <Ref. to KPS(diag)-27, Read Current Data.> 2) Read the data when pressing the trunk opener button.	Does the data display ON?	Go to step **13**.	Go to step **10**.
10	**CHECK WIRING HARNESS (OPEN).** 1) Disconnect the trunk opener button connector and the keyless access CM connector. 2) Using a tester, check continuity between the trunk opener button connector and keyless access CM connector. ***Connector & terminal*** ***(R294) No. 1 — (B573) No. 27:***	Is there continuity?	Go to step **11**.	Repair or replace the open circuit of harness.
11	**CHECK WIRING HARNESS (OPEN).** 1) Using a tester, check the continuity between the trunk opener button connector and chassis ground. ***Connector & terminal*** ***(R294) No. 2 — Chassis ground:***	Is there continuity?	Go to step **12**.	Repair or replace the open circuit of harness.
12	**CHECK TRUNK OPENER BUTTON.** Using a tester, check the continuity between trunk opener button connector terminals. ***Connector & terminal*** ***(R294) No. 1 — No. 2:***	Is there continuity when pressing the switch?	Go to step **13**.	Replace the trunk opener button. <Ref. to SL-97, REMOVAL, Trunk Opener Button.>
13	**CHECK WIRING HARNESS (OPEN).** 1) Disconnect the exterior rear antenna connector and the keyless access CM connector. 2) Using a tester, check continuity between the exterior rear antenna connector and keyless access CM connector. ***Connector & terminal*** ***(R299) No. 1 — (B573) No. 2:*** ***(R299) No. 2 — (B573) No. 1:***	Is there continuity?	Go to step **14**.	Repair or replace the open circuit of harness.

	Step	Check	Yes	No
14	**CHECK OUTSIDE REAR ANTENNA.** Replace the outside rear antenna with new or properly working parts.	Does it operate properly?	Replace the outside rear antenna. <Ref. to SL-95, REMOVAL, Keyless Access Outdoor Antenna.>	Go to step **15**.
15	**CHECK KEYLESS ACCESS SYSTEM CHECK.** 1) Using the Subaru Select Monitor, select the system check «Out of trunk transmitter + room tuner» under «Keyless Access with Push Button Start». <Ref. to KPS(diag)-37, Keyless Access System Check.> 2) Hold the access key 1 m or more away from the trunk, then come closer to within 0.8 m.	Does the outside buzzer sound?	The circuit has returned to a normal condition at this time. Reproduce the failure, and then perform the diagnosis again. NOTE: In this case, temporary poor contact of connector, temporary open or short circuit of harness may be the cause.	Replace the keyless access CM. <Ref. to SL-100, REMOVAL, Keyless Access CM.>

12.ACCESS KEY LOCKOUT PROTECTION FUNCTION IN THE TRUNK DOES NOT OPERATE

CAUTION:
• Inspect LAN system according to the basic diagnostic procedure, and make sure that there is no fault.
• Check that the keyless access function is not stopped.
• When the access key or keyless access CM is replaced, registration of the immobilizer is required. For the relevant procedures, refer to the "REGISTRATION MANUAL FOR IMMOBILIZER" provided as a separate volume.

	Step	Check	Yes	No
1	**CHECK TRUNK OPENER BUTTON.** Check that the trunk opens with the driver's seat trunk opener button.	Does it open normally?	Go to step **2**.	Check the door lock circuit. <Ref. to SL-10, INSPECTION, Door Lock Control System.>
2	**CHECK KEYLESS OPERATION.** Check that the trunk opens when the trunk opener button of the access key is operated.	Does it open normally?	Go to step **7**.	Go to step **3**.
3	**CHECK TRUNK UNLOCK OPERATION.** 1) Using the Subaru Select Monitor, select the function check «R gate/trunk UNLK output» under «Body Control». <Ref. to BC(diag)-30, Function Check.> 2) Check that the trunk opens when the R gate/trunk UNLK signal is output.	Does it open normally?	Go to step **7**.	Go to step **4**.
4	**CHECK WIRING HARNESS (OPEN).** 1) Disconnect the body integrated unit connector and trunk lid lock actuator connector. 2) Check the continuity between body integrated unit connector and trunk lid lock actuator connector. ***Connector & terminal*** ***(i171) No. 7 — (R186) No. 1:***	Is there continuity?	Go to step **5**.	Repair or replace the open circuit of harness.

	Step	Check	Yes	No
5	**CHECK WIRING HARNESS (OPEN).** Check the continuity between the trunk lid lock actuator connector and chassis ground. ***Connector & terminal*** ***(R186) No. 2 — Chassis ground:***	Is there continuity?	Go to step **6**.	Repair or replace the open circuit of harness.
6	**CHECK TRUNK LID LOCK ACTUATOR.** Check the trunk lid lock actuator. <Ref. to SL-49, Trunk Lid Latch and Actuator Assembly.>	Is the check result OK?	Replace the body integrated unit. <Ref. to SL-81, Body Integrated Unit.>	Replace the trunk lid latch & actuator assembly. <Ref. to SL-49, Trunk Lid Latch and Actuator Assembly.>
7	**CHECK ACCESS KEY.** 1) Prepare all access keys registered to the vehicle. 2) Check that the trunk opens with each access key.	Does it open normally?	Go to step **8**.	Replace the access key. <Ref. to SL-87, REPLACEMENT, Access Key.>
8	**CHECK WIRING HARNESS (OPEN).** 1) Disconnect the interior rear antenna connector and the keyless access CM connector. 2) Using a tester, check continuity between the interior rear antenna connector and keyless access CM connector. ***Connector & terminal*** ***(R297) No. 1 — (B573) No. 9:*** ***(R297) No. 3 — (B573) No. 8:***	Is there continuity?	Go to step **9**.	Repair or replace the open circuit of harness.
9	**CHECK PASSENGER ROOM REAR ANTENNA.** Replace the passenger room rear antenna with a new or properly functioning part. <Ref. to SL-92, REMOVAL, Keyless Access Indoor Antenna.>	Does it operate properly?	Replace the passenger room rear antenna. <Ref. to SL-92, REMOVAL, Keyless Access Indoor Antenna.>	Go to step **10**.
10	**CHECK RECEIVER.** Replace the receiver with a new or properly functioning part. <Ref. to SL-98, REMOVAL, Receiver.>	Does it operate properly?	Replace the receiver. <Ref. to SL-98, REMOVAL, Receiver.>	Go to step **11**.
11	**CHECK WIRING HARNESS (OPEN).** 1) Disconnect the receiver connector and the keyless access CM connector. 2) Using a tester, check continuity between the receiver connector and keyless access CM connector. ***Connector & terminal*** ***(R296) No. 4 — (B573) No. 5:*** ***(R296) No. 5 — (B573) No. 17:*** ***(R296) No. 2 — (B573) No. 19:***	Is there continuity?	Go to step **12**.	Repair or replace the open circuit of harness.

	Step	Check	Yes	No
12	**CHECK KEYLESS ACCESS SYSTEM CHECK.** 1) Using the Subaru Select Monitor, select the system check «Trunk internal transmitter + interior tuner» under «Keyless Access with Push Button Start». <Ref. to KPS(diag)-37, Keyless Access System Check.> 2) Hold the access key 1 m or more away from the center of inside the trunk, then come closer to within 0.8 m.	Does the outside buzzer sound?	The circuit has returned to a normal condition at this time. Reproduce the failure, and then perform the diagnosis again. NOTE: In this case, temporary poor contact of connector, temporary open or short circuit of harness may be the cause.	Replace the keyless access CM. <Ref. to SL-100, REMOVAL, Keyless Access CM.>

13.THE STEERING LOCK IS NOT RELEASED

CAUTION:
When the steering lock CM is replaced, registration of the immobilizer is required. For the relevant procedures, refer to the "REGISTRATION MANUAL FOR IMMOBILIZER" provided as a separate volume.

	Step	Check	Yes	No
1	**CHECK OPERATION.** 1) Depress the brake pedal (CVT model) or clutch pedal (MT model). 2) While turning the steering wheel lightly to the left and right, press the push button ignition switch. 3) Confirm that the steering lock is released and the engine start.	Does the engine fail to start with the steering lock released?	Perform the diagnosis for engine system. <Ref. to EN(w/o STI)(diag)-87, Diagnostics for Engine Starting Failure.> <Ref. to EN(STI)(diag)-77, Diagnostics for Engine Starting Failure.>	Go to step **2**.
2	**CHECK DTC.** Read the DTC using Subaru Select Monitor. <Ref. to KPS(diag)-26, Read Diagnostic Trouble Code (DTC).>	Is DTC displayed?	Perform the diagnosis for the displayed DTCs.	Go to step **3**.
3	**CHECK CURRENT DATA.** 1) Using the Subaru Select Monitor, display the current data «Steering lock unlock request reception status» and «Steering lock lock/unlock command reception history» under «Keyless Access with Push Button Start». <Ref. to KPS(diag)-27, Read Current Data.> 2) Read the data when the push button ignition switch is pressed while in possession of the access key. (Maintain for 10 seconds after switch operation)	Does the data change from "Not yet received" to "Reception", and from "OFF" to "ON"?	Go to step **4**.	Go to step **7**.
4	**CHECK STEERING LOCK CM.** 1) Disconnect the steering lock CM connector. 2) Using a tester, measure the voltage between the steering lock CM connector and chassis ground. ***Connector & terminal*** ***(B424) No. 7 (+) — Chassis ground (–):***	Is the voltage 10 V or more?	Go to step **5**.	Repair or replace the open circuit of harness.

	Step	Check	Yes	No
5	**CHECK STEERING LOCK CM.** Using a tester, check continuity between the steering lock CM connector and chassis ground. ***Connector & terminal*** ***(B424) No. 1 — Chassis ground:***	Is there continuity?	Go to step **6**.	Repair or replace the open circuit of harness.
6	**CHECK STEERING LOCK CM.** 1) Connect the disconnected connectors. 2) Using a tester, measure the voltage between steering lock CM terminals right after the ignition switch is turned to ON. ***Connector & terminal*** ***(B424) No. 3 (+) — (B424) No. 1 (–):***	Does the voltage remain 1 V or less immediately after the ignition ON?	Replace the steering lock CM. <Ref. to SL-104, REMOVAL, Steering Lock CM.>	Repair or replace the open circuit of harness.
7	**CHECK CURRENT DATA.** Using the Subaru Select Monitor, display the current data «Code collation result between smart ECM and ID code box» under «Keyless Access with Push Button Start». <Ref. to KPS(diag)-27, Read Current Data.>	Is data displayed as being normal?	Go to step **9**.	Go to step **8**.
8	**CHECK CURRENT DATA.** 1) Replace with a properly functioning or new ID code box. <Ref. to SL-103, NOTE, ID Code Box.> 2) Using the Subaru Select Monitor, display the current data «Code collation result between smart ECM and ID code box» under «Keyless Access with Push Button Start». <Ref. to KPS(diag)-27, Read Current Data.>	Is data displayed as being normal?	System is normal.	Replace the keyless access CM. <Ref. to SL-100, Keyless Access CM.>
9	**CHECK CURRENT DATA.** Using the Subaru Select Monitor, display the current data «Code collation result between steering locked ECM and ID code box» under «Keyless Access with Push Button Start». <Ref. to KPS(diag)-27, Read Current Data.>	Is data displayed as being normal?	System is normal.	Go to step **10**.
10	**CHECK ID CODE BOX.** 1) Replace with a properly functioning or new ID code box. <Ref. to SL-103, NOTE, ID Code Box.> 2) Using the Subaru Select Monitor, display the current data «Code collation result between steering locked ECM and ID code box» under «Keyless Access with Push Button Start». <Ref. to KPS(diag)-27, Read Current Data.>	Is data displayed as being normal?	System is normal.	Go to step **11**.
11	**CHECK STEERING LOCK CM.** 1) Replace with a properly functioning or new steering lock CM. <Ref. to SL-104, REMOVAL, Steering Lock CM.> 2) After registering, the steering lock operates when the ignition is turned to OFF and the driver's door is opened and closed. 3) Turn the ignition to ON. 4) Operate the steering and check for whether the steering lock is released.	Is the steering lock released, and does the engine start?	Replace the steering lock CM. <Ref. to SL-104, REMOVAL, Steering Lock CM.>	Replace the keyless access CM. <Ref. to SL-100, Keyless Access CM.>

14.THE STEERING LOCK DOES NOT OPERATE

CAUTION:
When the keyless access CM or steering lock CM is replaced, registration of the immobilizer is required. For the relevant procedures, refer to the "REGISTRATION MANUAL FOR IMMOBILIZER" provided as a separate volume.

	Step	Check	Yes	No
1	**CHECK DTC.** Read the DTC using Subaru Select Monitor. <Ref. to KPS(diag)-26, Read Diagnostic Trouble Code (DTC).>	Is DTC displayed?	Perform the diagnosis for the displayed DTCs.	Go to step **2**.
2	**CHECK CURRENT DATA.** 1) Display the current data «Driver's door SW input» of «Body Control» using Subaru Select Monitor. <Ref. to BC(diag)-17, Read Current Data.> 2) Read the data when opening and closing the driver's door.	Does the data change from ON to OFF according to the opening and closing?	Go to step **3**.	Inspect door switch circuit.
3	**CHECK CURRENT DATA.** Display the current data «Shift P Signal» of «Keyless Access with Push Button Start» using Subaru Select Monitor. <Ref. to KPS(diag)-27, Read Current Data.>	Is the status displayed correctly when the shift lever is shifted from P to other than P?	Go to step **4**.	Check the P range switch and harness.
4	**CHECK CURRENT DATA.** Using the Subaru Select Monitor, display the current data of «Keyless Access with Push Button Start»: «Code collation result between smart ECM and ID code box». <Ref. to KPS(diag)-27, Read Current Data.>	Is the status normal?	Go to step **5**.	Replace the keyless access CM. <Ref. to SL-100, REMOVAL, Keyless Access CM.>
5	**CHECK CURRENT DATA.** Using the Subaru Select Monitor, display the current data of «Keyless Access with Push Button Start»: «Code collation result between steering locked ECM and ID code box». <Ref. to KPS(diag)-27, Read Current Data.>	Is the status normal?	Go to step **6**.	Replace the steering lock CM. <Ref. to SL-104, REMOVAL, Steering Lock CM.>
6	**CHECK CURRENT DATA.** 1) Display the current data «Steering lock lock/unlock command reception history» of «Keyless Access with Push Button Start» using Subaru Select Monitor. <Ref. to KPS(diag)-27, Read Current Data.> 2) While in possession of the access key, perform engine start operations, and read data within 10 seconds after starting.	Is data displayed as ON?	Go to step **7**.	Replace the keyless access CM. <Ref. to SL-100, REMOVAL, Keyless Access CM.>
7	**CHECK STEERING LOCK CM.** Using a tester, measure the waveform between steering lock CM terminals immediately after the following operations. Perform ignition ON, driver's side door close → shift lever "P" range, ignition OFF, and close → open the driver's side door. ***Connector & terminal*** ***(B424) No. 3 — (B424) No. 1:***	Is the waveform immediately after opening the driver's side door abnormal?	Replace the steering lock CM. <Ref. to SL-104, REMOVAL, Steering Lock CM.>	Go to step **8**.

	Step	Check	Yes	No
8	**CHECK WIRING HARNESS (OPEN).** 1) Disconnect the keyless access CM connector and the steering lock CM connector. 2) Using a tester, check continuity between the keyless access CM connector and steering lock CM connector. ***Connector & terminal*** ***(B424) No. 3 — (B574) No. 29:***	Is there continuity?	Go to step **9**.	Repair or replace the open circuit of harness.
9	**CHECK WIRING HARNESS (OPEN).** Using a tester, check continuity between the keyless access CM connector and chassis ground. ***Connector & terminal*** ***(B572) No. 11 — Chassis ground:***	Is there continuity?	Replace the keyless access CM. <Ref. to SL-100, REMOVAL, Keyless Access CM.>	Repair or replace the open circuit of harness.

15.POWER WILL NOT TURN ON (BOTH ACCESSORY AND IGNITION)

CAUTION:
• When the keyless access CM is replaced with a new unit, and the battery ground terminal is connected, it will become ignition ON. Also, if the battery is disconnected, it will resume to a condition with the battery cut off.
• When the keyless access CM is replaced, registration of the immobilizer is required. For the relevant procedures, refer to the "REGISTRATION MANUAL FOR IMMOBILIZER" provided as a separate volume.

	Step	Check	Yes	No
1	**CHECK FUSE.** Check the fuse. <Ref. to SL-8, Relay and Fuse.>	Is the check result OK?	Go to step **2**.	Replace the fuse.
2	**CHECK POWER SUPPLY.** 1) Remove IG relay 1 (push button start), IG relay 2 (push button start) and accessory relay (push button start). 2) Using a tester, measure the voltage between the relay block connector and chassis ground.	Is the voltage 10 V or more?	Go to step **3**.	Check the DC power supply circuit.
3	**CHECK CONNECTOR.** Check the engagement of each connector and for any deformation or looseness.	Is the check result OK?	Go to step **4**.	Repair the connector, or replace harness.
4	**CHECK WIRING HARNESS.** 1) Disconnect the keyless access CM connector. 2) Using a tester, measure the voltage between the keyless access CM connector and chassis ground. ***Connector & terminal*** ***(B572) No. 2 (+) — Chassis ground (–):***	Is the voltage between 8 V and 16 V?	Go to step **5**.	Repair or replace the open circuit of harness.
5	**CHECK WIRING HARNESS (OPEN).** Using a tester, check continuity between the keyless access CM connector and chassis ground. ***Connector & terminal*** ***(B572) No. 11 — Chassis ground:***	Is there continuity?	Go to step **6**.	Repair or replace the open circuit of harness.

	Step	Check	Yes	No
6	**CHECK DTC.** 1) Connect the keyless access CM connector. 2) Carrying the access key, depress the brake pedal (CVT model) or clutch pedal (MT model), and push the push button ignition switch. 3) Read the DTC using Subaru Select Monitor. <Ref. to KPS(diag)-26, Read Diagnostic Trouble Code (DTC).>	Are any DTCs displayed?	Perform the diagnosis for the displayed DTCs.	Go to step **7**.
7	**CHECK CURRENT DATA.** 1) Display the current data «Push start SW 1» and «Push start SW 2» of «Keyless Access with Push Button Start» using Subaru Select Monitor. <Ref. to KPS(diag)-27, Read Current Data.> 2) Read the data when pressing the push button ignition switch.	Does it change from OFF to ON along with the operation?	Go to step **8**.	Go to step **15**.
8	**CHECK RELAY (PUSH BUTTON START).** Check IG relay 1 and 2 (push button start), and accessory relay (push button start). <Ref. to SL-111, INSPECTION, IG Relay1 (Push Button Start).>	Is the check result OK?	Go to step **9**.	Replace the faulty relay.
9	**CHECK WIRING HARNESS (OPEN).** 1) Disconnect the keyless access CM connector, IG relay 1 (push button start), IG relay 2 (push button start) and accessory relay (push button start). 2) Using a tester, check continuity between terminals of keyless access CM connector, IG relay 1 (push button start), IG relay 2 (push button start) and accessory relay (push button start). ***Connector & terminal*** ***(B574) No. 6 — (B225) No. 38:*** ***(B572) No. 9 — (B225) No. 34:*** ***(B574) No. 4 — (B426) No. 1:***	Is there continuity?	Go to step **10**.	Repair or replace the open circuit of harness.
10	**CHECK WIRING HARNESS (GROUND SHORT CIRCUIT).** Using a tester, check continuity between the keyless access CM connector and chassis ground. ***Connector & terminal*** ***(B572) No. 9 — Chassis ground:*** ***(B574) No. 4 — Chassis ground:*** ***(B574) No. 6 — Chassis ground:***	Is there continuity?	Repair or replace the short circuit of the harness.	Go to step **11**.
11	**CHECK WIRING HARNESS (OPEN).** Using a tester, check the continuity between the IG relay 2 (push button start) connector and chassis ground. ***Connector & terminal*** ***(B225) No. 39 — Chassis ground:***	Is there continuity?	Go to step **12**.	Repair or replace the open circuit of harness.
12	**CHECK WIRING HARNESS (OPEN).** Using a tester, check the continuity between the IG relay 1 (push button start) connector and chassis ground. ***Connector & terminal*** ***(B225) No. 35 — Chassis ground:***	Is there continuity?	Go to step **13**.	Repair or replace the open circuit of harness.

	Step	Check	Yes	No
13	**CHECK WIRING HARNESS (OPEN).** Using a tester, check continuity between the accessory relay (push button start) connector and chassis ground. ***Connector & terminal*** ***(B426) No. 2 — Chassis ground:***	Is there continuity?	Go to step **14**.	Repair or replace the open circuit of harness.
14	**CHECK KEYLESS ACCESS CM.** 1) Connect all the disconnected connectors. 2) Using a tester, measure the voltage between the keyless access CM connector and chassis ground when the ignition is turned from OFF to ON. ***Connector & terminal*** ***(B572) No. 9 (+) — Chassis ground (–):*** ***(B574) No. 4 (+) — Chassis ground (–):*** ***(B574) No. 6 (+) — Chassis ground (–):***	Did the voltage change from 1 V or less to +B-2 V or more?	Go to step **15**.	Replace the keyless access CM. <Ref. to SL-100, Keyless Access CM.>
15	**CHECK PUSH BUTTON IGNITION SWITCH.** 1) Disconnect the push button ignition switch connector. 2) Using a tester, check the continuity between the push button ignition switch connector terminals. ***Terminals*** ***No. 7 — No. 5:*** ***No. 2 — No. 5:***	When the button was pressed, did it change to continuity exists? (No continuity when button is released)	Go to step **16**.	Replace the push button ignition switch. <Ref. to SL-106, REMOVAL, Push Button Ignition Switch.>
16	**CHECK WIRING HARNESS (OPEN).** Using a tester, check the continuity between the push button ignition switch connector and chassis ground. ***Connector & terminal*** ***(i150) No. 4 — Chassis ground:*** ***(i150) No. 5 — Chassis ground:***	Is there continuity?	Go to step **17**.	Repair or replace the open circuit of harness.
17	**CHECK WIRING HARNESS (OPEN).** 1) Disconnect the keyless access CM connector. 2) Using a tester, check continuity between the keyless access CM connector and the push button ignition switch connector. ***Connector & terminal*** ***(i150) No. 7 — (B574) No. 28:*** ***(i150) No. 2 — (B574) No. 30:***	Is there continuity?	System is normal.	Repair or replace the open circuit of harness.

16.POWER WILL NOT TURN ON (ACCESSORY DOES NOT TURN ON, BUT IGNITION TURNS ON)

CAUTION:

- **When the keyless access CM is replaced with a new unit, and the battery ground terminal is connected, it will become ignition ON. Also, if the battery is disconnected, it will resume to a condition with the battery cut off.**
- **When the keyless access CM is replaced, registration of the immobilizer is required. For the relevant procedures, refer to the "REGISTRATION MANUAL FOR IMMOBILIZER" provided as a separate volume.**

WIRING DIAGRAM:

Push button start system <Ref. to WI-303, WIRING DIAGRAM, Push Button Start System.>

- Engine type: FA

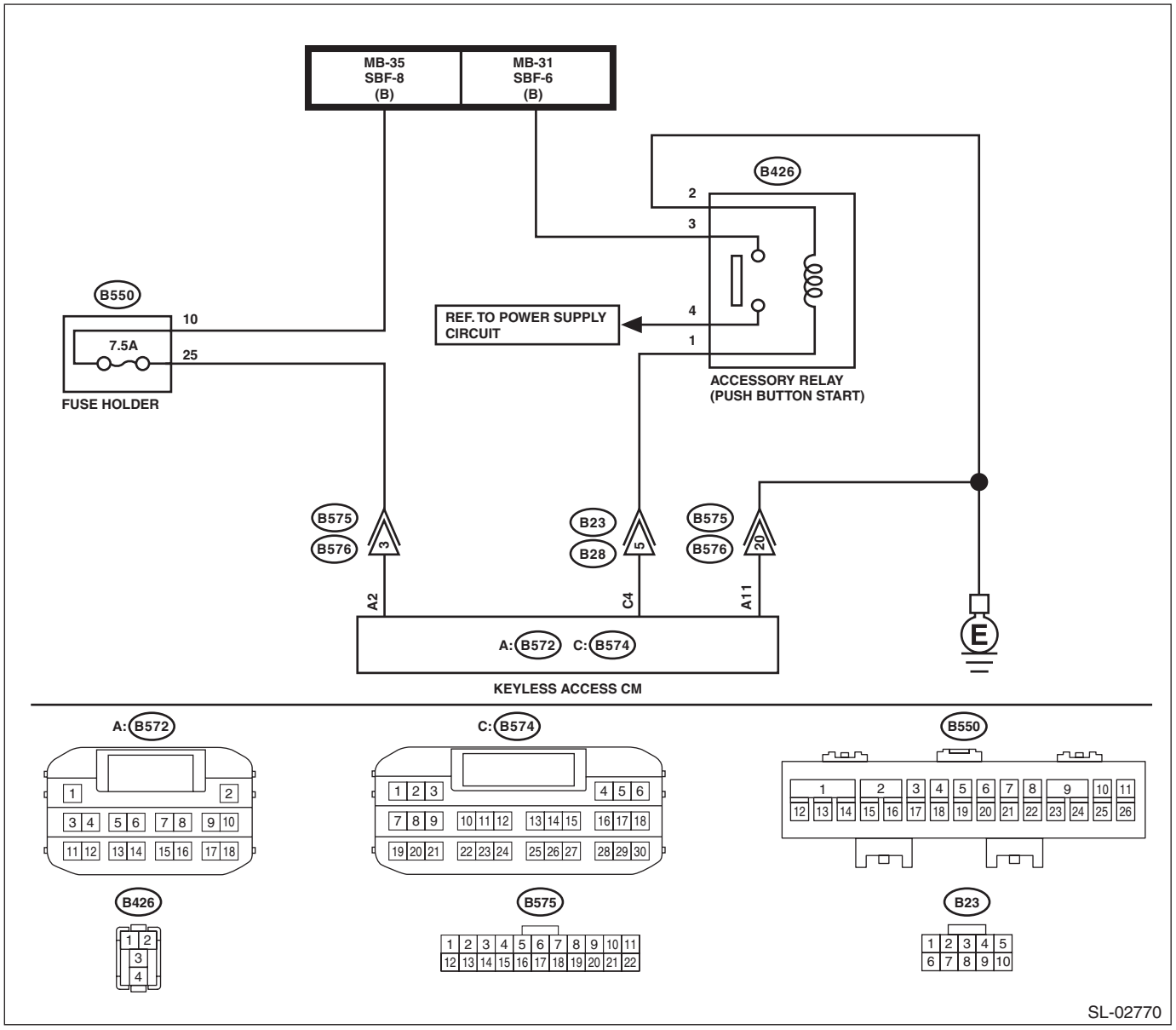

- Engine type: EJ

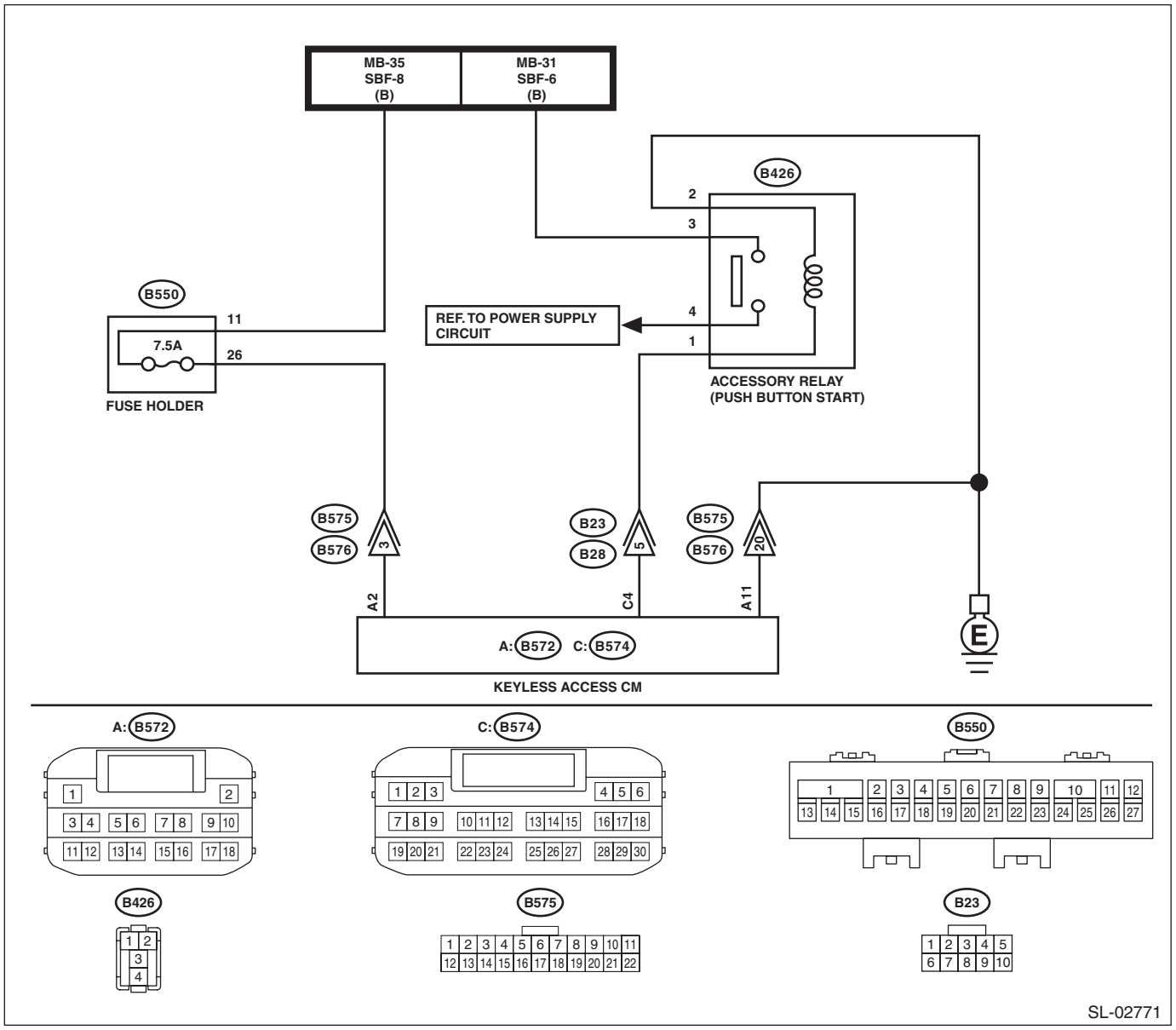

Step		Check	Yes	No
1	**CHECK FUSE.** Check the fuse. <Ref. to SL-8, Relay and Fuse.>	Is the check result OK?	Go to step **2**.	Replace the fuse.
2	**CHECK CONNECTOR.** Check the engagement of each connector and for any deformation or looseness.	Is the check result OK?	Go to step **3**.	Repair the connector, or replace harness.
3	**CHECK WIRING HARNESS.** 1) Disconnect the keyless access CM connector. 2) Using a tester, measure the voltage between the keyless access CM connector and chassis ground. ***Connector & terminal*** ***(B572) No. 2 (+) — Chassis ground (–):***	Is the voltage between 8 V and 16 V?	Go to step **4**.	Repair or replace the open circuit of harness.

Step		Check	Yes	No
4	**CHECK WIRING HARNESS (OPEN).** Using a tester, check continuity between the keyless access CM connector and chassis ground. ***Connector & terminal*** ***(B572) No. 11 — Chassis ground:***	Is there continuity?	Go to step **5**.	Repair or replace the open circuit of harness.
5	**CHECK ACCESSORY RELAY (PUSH BUTTON START).** Check the accessory relay (push button start). <Ref. to SL-115, INSPECTION, Accessory Relay (Push Button Start).>	Is the check result OK?	Go to step **6**.	Replace the relay.
6	**CHECK WIRING HARNESS (OPEN).** 1) Disconnect the keyless access CM connector and the accessory relay (push button start). 2) Using a tester, check continuity between the keyless access CM connector and the accessory relay (push button start) connector. ***Connector & terminal*** ***(B574) No. 4 — (B426) No. 1:***	Is there continuity?	Go to step **7**.	Repair or replace the open circuit of harness.
7	**CHECK WIRING HARNESS (OPEN).** Using a tester, check continuity between the keyless access CM connector and chassis ground. ***Connector & terminal*** ***(B574) No. 4 — Chassis ground:***	Is there continuity?	Repair or replace the short circuit of the harness.	Go to step **8**.
8	**CHECK KEYLESS ACCESS CM.** 1) Connect the keyless access CM connector. 2) Using a tester, measure the voltage between the keyless access CM connector and chassis ground when the ignition is turned from OFF to ON. ***Connector & terminal*** ***(B574) No. 4 (+) — Chassis ground (–):***	Did the voltage change from 1 V or less → +B-2 V or more?	System is normal.	Replace the keyless access CM. <Ref. to SL-100, Keyless Access CM.>

17.POWER WILL NOT TURN ON (ACCESSORY TURNS ON, BUT IGNITION DOES NOT TURN ON)

CAUTION:
When the keyless access CM is replaced with a new unit, and the battery ground terminal is connected, it will become ignition ON. Also, if the battery is disconnected, it will resume to a condition with the battery cut off.

WIRING DIAGRAM:

Push button start system <Ref. to WI-303, WIRING DIAGRAM, Push Button Start System.>

- Engine type: FA

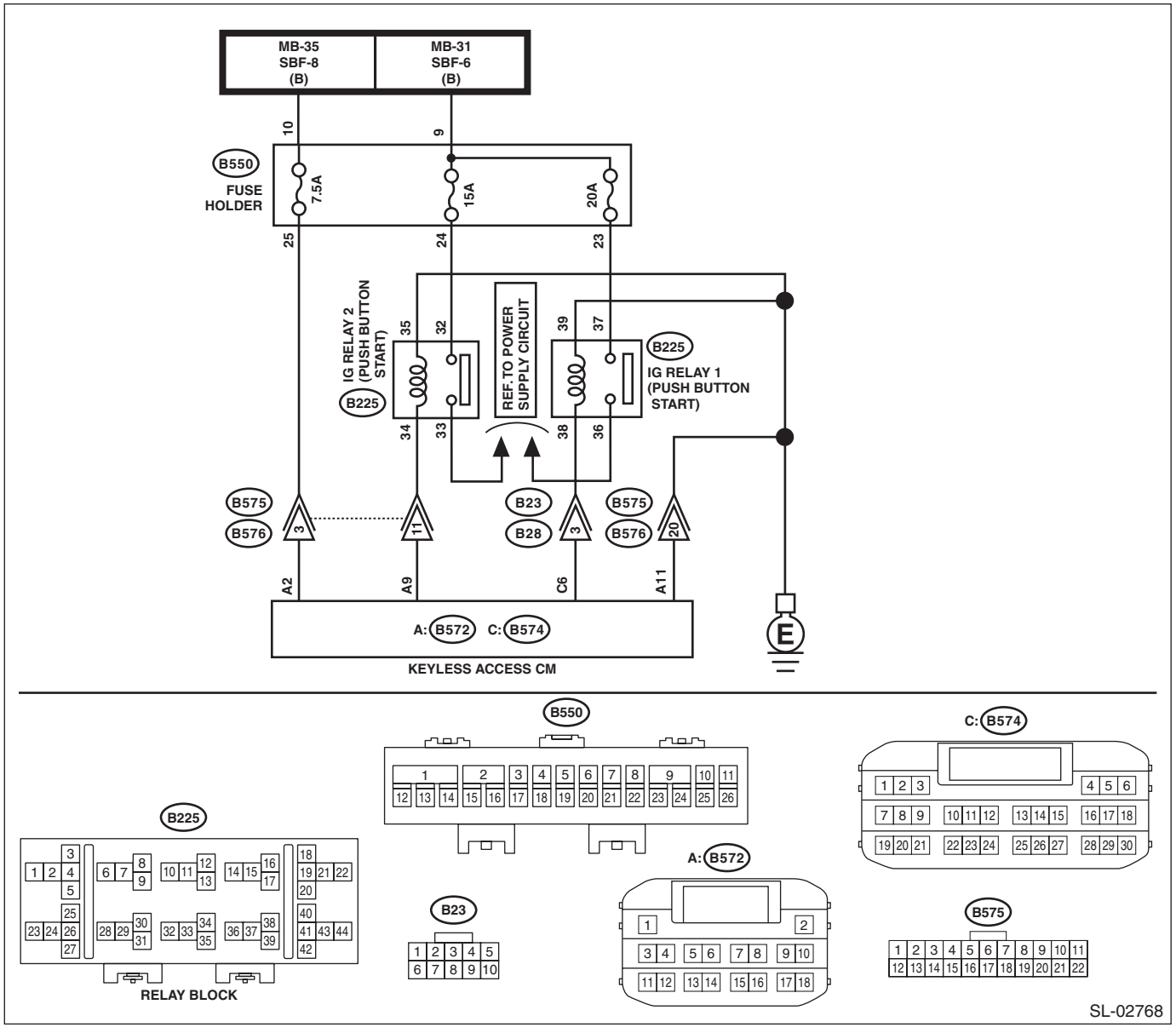

- Engine type: EJ

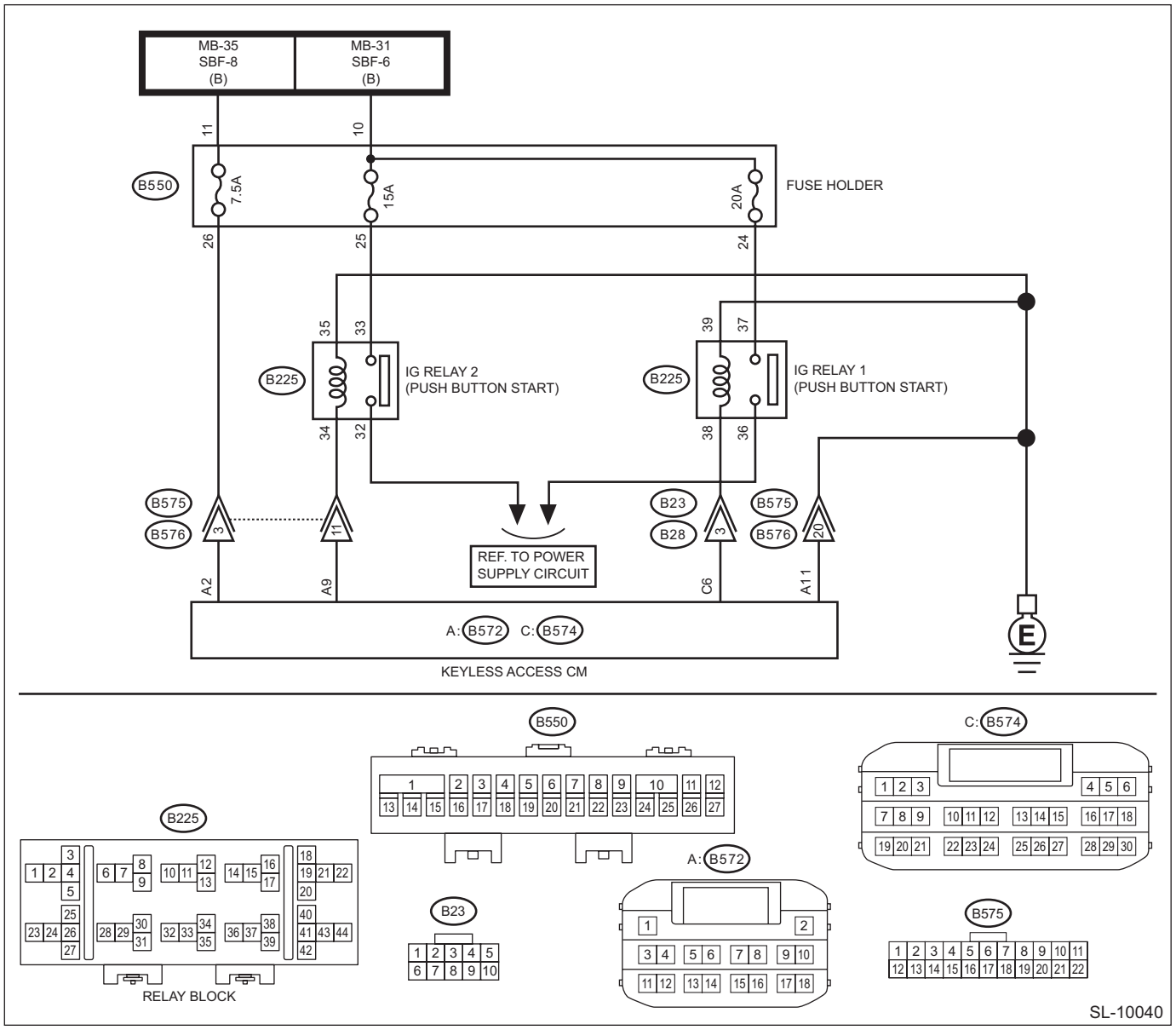

Step		Check	Yes	No
1	**CHECK FUSE.** Check the fuse. <Ref. to SL-8, Relay and Fuse.>	Is the check result OK?	Go to step **2**.	Replace the fuse.
2	**CHECK CONNECTOR.** Check the engagement of each connector and for any deformation or looseness.	Is the check result OK?	Go to step **3**.	Repair the connector, or replace harness.
3	**CHECK WIRING HARNESS.** 1) Disconnect the keyless access CM connector. 2) Using a tester, measure the voltage between the keyless access CM connector and chassis ground. ***Connector & terminal*** ***(B572) No. 2 (+) — Chassis ground (–):***	Is the voltage between 8 V and 16 V?	Go to step **4**.	Repair or replace the open circuit of harness.

	Step	Check	Yes	No
4	**CHECK WIRING HARNESS (OPEN).** Using a tester, check continuity between the keyless access CM connector and chassis ground. ***Connector & terminal*** ***(B572) No. 11 — Chassis ground:***	Is there continuity?	Go to step **5**.	Repair or replace the open circuit of harness.
5	**CHECK IG RELAY 1 AND 2 (PUSH BUTTON START).** Check IG relay 1 (push button start) and IG relay 2 (push button start). <Ref. to SL-111, INSPECTION, IG Relay1 (Push Button Start).>	Is the check result OK?	Go to step **6**.	Replace the relay.
6	**CHECK WIRING HARNESS (OPEN).** 1) Disconnect the keyless access CM connector and the IG relay 1 and 2 (push button start). 2) Using a tester, check continuity between the keyless access CM connector and the IG relay 1 (push button start) connector or IG relay 2 (push button start) connector. ***Connector & terminal*** ***(B572) No. 9 — (B225) No. 34:*** ***(B574) No. 6 — (B225) No. 38:***	Is there continuity?	Go to step **7**.	Repair or replace the open circuit of harness.
7	**CHECK WIRING HARNESS (GROUND SHORT CIRCUIT).** Using a tester, check continuity between the keyless access CM connector and chassis ground. ***Connector & terminal*** ***(B572) No. 9 — Chassis ground:*** ***(B574) No. 6 — Chassis ground:***	Is there continuity?	Repair or replace the short circuit of the harness.	Go to step **8**.
8	**CHECK KEYLESS ACCESS CM.** 1) Connect the keyless access CM connector. 2) Using a tester, measure the voltage between the keyless access CM connector and chassis ground when the ignition is turned from OFF to ON. ***Connector & terminal*** ***(B572) No. 9 (+) — Chassis ground (–):*** ***(B574) No. 6 (+) — Chassis ground (–):***	Did the voltage change from 1 V or less → +B-2 V or more?	System is normal.	Replace the keyless access CM. <Ref. to SL-100, Keyless Access CM.>

18.ENGINE DOES NOT START

CAUTION:
• When the keyless access CM is replaced with a new unit, and the battery ground terminal is connected, it will become ignition ON. Also, if the battery is disconnected, it will resume to a condition with the battery cut off.
• When the keyless access CM or ID code box is replaced, registration of the immobilizer is required. For the relevant procedures, refer to the "REGISTRATION MANUAL FOR IMMOBILIZER" provided as a separate volume.

	Step	Check	Yes	No
1	**INITIALIZE STEERING LOCK.** 1) Shift the shift lever to parking for CVT model, or to neutral for MT model. 2) Operate the driver's door switch ON/OFF with the ignition switch OFF. 3) Wait for 10 seconds. 4) Place the access key on the driver's seat. 5) With depressing the brake pedal (CVT model) or clutch pedal (MT model), push the push button ignition switch.	Can the engine start?	System is normal.	Go to step **2**.
2	**CHECK DTC.** Read DTCs of the keyless access system using the Subaru Select Monitor. <Ref. to KPS(diag)-26, Read Diagnostic Trouble Code (DTC).>	Is DTC displayed?	Perform the diagnosis for the displayed DTCs. <Ref. to KPS(diag)-39, LIST, List of Diagnostic Trouble Code (DTC).>	Go to step **3**.
3	**CHECK POWER SUPPLY SWITCHING.** 1) Place the access key on the driver's seat. 2) Without depressing the brake pedal (CVT model) or clutch pedal (MT model), push the push button ignition switch.	When the switch is operated, does the <IG-OFF> → <ACC-ON> → <IG-ON> → <IG-OFF> change occur?	Go to step **4**.	Perform the diagnostics according to the symptom for power supply switching system in General Diagnostic Table. <Ref. to KPS(diag)-113, POWER SUPPLY SWITCHING SYSTEM, INSPECTION, General Diagnostic Table.>
4	**CHECK CURRENT DATA.** 1) Place the access key on the driver's seat. 2) With depressing the brake pedal (CVT model) or clutch pedal (MT model), push the push button ignition switch. 3) Using the Subaru Select Monitor, confirm the current data «STSW signal monitor» of «Keyless Access with Push Button Start», when pressing the push button ignition switch. <Ref. to KPS(diag)-27, Read Current Data.> NOTE: If it is difficult to confirm, press the push button ignition switch for approximately five seconds longer.	Does the data change from OFF → ON?	Go to step **10**.	CVT model: Go to step **5**. MT model: Go to step **7**.
5	**CHECK CURRENT DATA.** Check the current data «Shift P Signal» of «Keyless Access with Push Button Start» using Subaru Select Monitor. <Ref. to KPS(diag)-27, Read Current Data.>	Is ON displayed in parking position, and OFF displayed in other positions?	Go to step **6**.	Go to step **11**.

	Step	Check	Yes	No
6	**CHECK CURRENT DATA.** Display the current data «Stop Light Switch» of «Keyless Access with Push Button Start» using Subaru Select Monitor. <Ref. to KPS(diag)-27, Read Current Data.>	Is ON displayed when brake pedal depressed, and OFF displayed when brake pedal not depressed?	Go to step **7**.	Go to step **13**.
7	**CHECK CURRENT DATA.** Display the current data «Neutral SW/Clutch SW» of «Keyless Access with Push Button Start» using Subaru Select Monitor. <Ref. to KPS(diag)-27, Read Current Data.>	For CVT model, is ON displayed in parking and neutral position and OFF displayed in other positions? For MT model, is ON displayed when clutch pedal is depressed and OFF displayed when the pedal not depressed?	Go to step **8**.	CVT model: Go to step **15**. MT model: Go to step **16**.
8	**CHECK STEERING LOCK.** Operate the push button ignition switch to perform the power supply switching and check steering lock condition during ACC-ON condition.	Is the steering lock in unlocked condition?	Go to step **9**.	Perform the diagnostics according to the symptom for steering lock system in General Diagnostic Table. <Ref. to KPS(diag)-113, STEERING LOCK SYSTEM, INSPECTION, General Diagnostic Table.>
9	**CHECK KEYLESS ACCESS CM.** 1) Turn the ignition switch to OFF. 2) Disconnect the ECM connector. 3) Using a tester, measure the voltage between the ECM connector and chassis ground in the following procedures. 1. Press the push button ignition switch with the brake pedal depressed (MT model: clutch pedal depressed). (Measure within 10 seconds.) 2. Release the push button ignition switch from the condition of step 1. above. ***Connector & terminal*** ***(B572) No. 13 (+) — Chassis ground (–):***	Does the value change from 1 V or less to +B-2 V or more in the step 1, and return to 1 V or less in the step 2?	Perform the diagnosis for engine system. <Ref. to EN(w/o STI)(diag)-87, Diagnostics for Engine Starting Failure.> <Ref. to EN(STI)(diag)-77, PROCEDURE, Diagnostics for Engine Starting Failure.>	Replace the keyless access CM. <Ref. to SL-100, Keyless Access CM.>
10	**CHECK CURRENT DATA.** 1) Connect the disconnected connectors. 2) Display the current data «Engine start permission request reception status» of «Keyless Access with Push Button Start» using Subaru Select Monitor. <Ref. to KPS(diag)-27, Read Current Data.>	Is “Reception” displayed with ignition switch ON, and “Not yet received” displayed in other positions?	Perform the diagnosis for engine system. <Ref. to EN(w/o STI)(diag)-87, Diagnostics for Engine Starting Failure.> <Ref. to EN(STI)(diag)-77, PROCEDURE, Diagnostics for Engine Starting Failure.>	Replace the keyless access CM. <Ref. to SL-100, Keyless Access CM.>
11	**CHECK “P” RANGE SWITCH.** 1) Turn the ignition switch to OFF. 2) Disconnect the AT shift lever connector. 3) Using a tester, check the continuity of “P” range switch. ***Terminals*** ***No. 1 — 2:***	Does it change from Continuity ←→ No continuity according to shift lever operation?	Go to step **12**.	Replace the “P” range switch. <Ref. to CS-51, REMOVAL, AT Shift Lock Solenoid and “P” Range Switch.>

	Step	Check	Yes	No
12	**CHECK HARNESS.** 1) Turn the ignition switch to OFF. 2) Disconnect the keyless access CM connector. 3) Using a tester, check continuity between the keyless access CM connector and the AT select lever connector, and between the AT select lever connector and chassis ground. ***Connector & terminal*** ***(B116) No. 1 — (B574) No. 25:*** ***(B116) No. 2 — Chassis ground:***	Is there continuity?	Replace the keyless access CM. <Ref. to SL-100, Keyless Access CM.>	Repair or replace the harness.
13	**CHECK STOP LIGHT SWITCH.** 1) Turn the ignition switch to OFF. 2) Disconnect the stop light switch connector. 3) Using a tester, check continuity of the stop light switch connector. ***Terminals*** ***No. 1 — No. 2:***	Does it change from Continuity ←→ No continuity according to brake pedal operation?	Go to step **14**.	Replace the stop light switch. <Ref. to BR-100, REMOVAL, Stop Light Switch.>
14	**CHECK HARNESS.** 1) Turn the ignition switch to OFF. 2) Using a tester, check continuity between the keyless access CM connector and the stop light switch connector, and between the stop light switch connector and fuse. ***Connector & terminal*** ***(B572) No. 18 — (B65) No. 2:*** ***(B65) No. 1 — F/B fuse No. 8:***	Is there continuity?	Replace the keyless access CM. <Ref. to SL-100, Keyless Access CM.>	Repair or replace the harness.
15	**CHECK INHIBITOR SWITCH.** Check the inhibitor switch. <Ref. to CVT(TR690)-93, INSPECTION, Inhibitor Switch.>	Is the check result OK?	Go to step **17**.	Replace the inhibitor switch. <Ref. to CVT(TR690)-96, REMOVAL, Inhibitor Switch.>
16	**CHECK CLUTCH SWITCH.** Check the clutch switch. <Ref. to CL-36, INSPECTION, Clutch Switch.>	Is the check result OK?	Go to step **18**.	Replace the clutch switch. <Ref. to CL-35, REMOVAL, Clutch Switch.>
17	**CHECK HARNESS.** 1) Turn the ignition switch to OFF. 2) Disconnect the inhibitor switch connector. 3) Using a tester, check continuity between the keyless access CM connector and inhibitor switch connector. ***Connector & terminal*** ***(B572) No. 5 — (B12) No. 12:*** ***(B12) No. 11 — Starter motor:***	Is there continuity?	Replace the keyless access CM. <Ref. to SL-100, Keyless Access CM.>	Repair or replace the harness.
18	**CHECK HARNESS.** 1) Turn the ignition switch to OFF. 2) Disconnect the clutch switch connector. 3) Using a tester, check continuity between the keyless access CM connector and clutch switch connector. ***Connector & terminal*** ***(B572) No. 10 — (B106) No. 2:*** ***(B106) No. 1 — F/B fuse No. 21:***	Is there continuity?	Replace the keyless access CM. <Ref. to SL-100, Keyless Access CM.>	Repair or replace the harness.

BODY CONTROL SYSTEM (DIAGNOSTICS)

BC(diag)

		Page
1.	Basic Diagnostic Procedure	2
2.	Check List for Interview	3
3.	General Description	4
4.	Electrical Component Location	5
5.	Control Module I/O Signal	6
6.	Read Diagnostic Trouble Code (DTC)	11
7.	Clear Memory Mode	12
8.	Inspection Mode	13
9.	Read Current Data	17
10.	User Customizing	24
11.	Registration Body Integrated Unit	26
12.	Function Check	30
13.	List of Diagnostic Trouble Code (DTC)	31
14.	Diagnostic Procedure with Diagnostic Trouble Code (DTC)	33
15.	General Diagnostic Table	54

1. Basic Diagnostic Procedure

A: PROCEDURE

CAUTION:
• Subaru Select Monitor is required for reading DTC, performing diagnosis and reading current data.
• Remove foreign matter (dust, water, oil, etc.) from the body integrated unit connector during removal and installation.
• Registration of immobilizer may be needed after the replacement of control modules, etc. For detailed procedure, refer to the "REGISTRATION MANUAL FOR IMMOBILIZER" provided as a separate volume.

NOTE:
• To check harness for open or short circuits, shake the suspected trouble spot or connector.
• Check List for Interview <Ref. to BC(diag)-3, Check List for Interview.>

Step		Check	Yes	No
1	**CHECK PRE-INSPECTION.** Ask the customer when and how the trouble occurred using the interview check list. <Ref. to BC(diag)-3, Check List for Interview.>	Did you interview the customer?	Go to step **2**.	Interview the customer.
2	**BASIC INSPECTION.** Check components which might affect body control. <Ref. to BC(diag)-4, INSPECTION, General Description.>	Is the check result of the component that might influence the body control problem OK?	Go to step **3**.	Repair or replace each component.
3	**CHECK DTC.** 1) Read the DTC. <Ref. to BC(diag)-11, OPERATION, Read Diagnostic Trouble Code (DTC).> NOTE: If the communication function of the Subaru Select Monitor cannot be executed properly, check the communication circuit. <Ref. to LAN(diag)-12, COMMUNICATION FOR INITIALIZING IMPOSSIBLE, Subaru Select Monitor.> 2) Record all DTCs, time stamp and freeze frame data. NOTE: For time stamp, refer to "LAN SYSTEM". <Ref. to LAN(diag)-6, TIME STAMP, CAUTION, General Description.>	Is DTC displayed on Subaru Select Monitor?	Perform the diagnosis for the displayed DTCs. <Ref. to BC(diag)-31, List of Diagnostic Trouble Code (DTC).> Go to step **5**.	Go to step **4**.
4	**PERFORM GENERAL DIAGNOSTICS.** Inspect using the "General Diagnostic Table". <Ref. to BC(diag)-54, General Diagnostic Table.>	Is the check result OK?	The body control system is normal.	Go to step **5**.
5	**PERFORM DIAGNOSIS.** 1) Perform the Clear Memory Mode. <Ref. to BC(diag)-12, OPERATION, Clear Memory Mode.> 2) Perform the Inspection Mode. <Ref. to BC(diag)-13, Inspection Mode.>	Is DTC displayed on Subaru Select Monitor?	Perform the diagnosis for the displayed DTCs. <Ref. to BC(diag)-31, List of Diagnostic Trouble Code (DTC).>	Finish the diagnosis.

2. Check List for Interview

A: CHECK

Inspect the following items regarding the vehicle's state.

Body Control System Check List for Interview		Date of Vehicle Bring-in Year Month Day	
Customer's name		Registration No.	Initial year of registration Year Month Date
		Vehicle model	Frame number
Interviewer	Inspector	Engine type	Odometer reading
Customer specified content			
Date and time when the trouble occurred		Frequency of trouble occurrence	
Condition of trouble occurrence		Weather	
Road conditions		Occurrence location	
Accessory installation condition			
Trouble condition			
❑ Diagnostic code		❑ ( )	

3. General Description

A: CAUTION

1. SRS AIRBAG SYSTEM

Airbag system wiring harness is routed near the body integrated unit and body control circuits.

CAUTION:
- **Do not use the electrical test equipment on all airbag system wiring harnesses and connectors.**
- **Be careful not to damage the airbag system wiring harness, when servicing the body control system.**

B: INSPECTION

Before performing diagnosis, check the following items which might affect body control system problems.
1) Check the battery. <Ref. to SC(w/o STI)-51, INSPECTION, Battery.> <Ref. to SC(STI)-24, INSPECTION, Battery.>
2) Check the fuse condition.
Make sure that ampere of the fuse is setting value, and it is not blown out.
3) Check the connecting condition of harness and harness connector.
4) Confirm settings of body integrated unit are corresponded to vehicle equipment. <Ref. to BC(diag)-26, OPERATION, Registration Body Integrated Unit.>
5) Make sure that the User Customizing of the body integrated unit matches the vehicle equipment. <Ref. to BC(diag)-24, OPERATION, User Customizing.>
6) Confirm “Factory initial setting” of body integrated unit registrations is “Market”.

C: PREPARATION TOOL

1. SPECIAL TOOL

ILLUSTRATION	TOOL NUMBER	DESCRIPTION	REMARKS
 STSSM4	—	SUBARU SELECT MONITOR 4	Used for setting of each function and trouble-shooting for electrical system. NOTE: For detailed operation procedures of Subaru Select Monitor 4, refer to “Application help”.

2. GENERAL TOOL

TOOL NAME	REMARKS
Circuit tester	Used for measuring resistance, voltage and current.
DST-i	Used together with Subaru Select Monitor 4.

4. Electrical Component Location

A: LOCATION

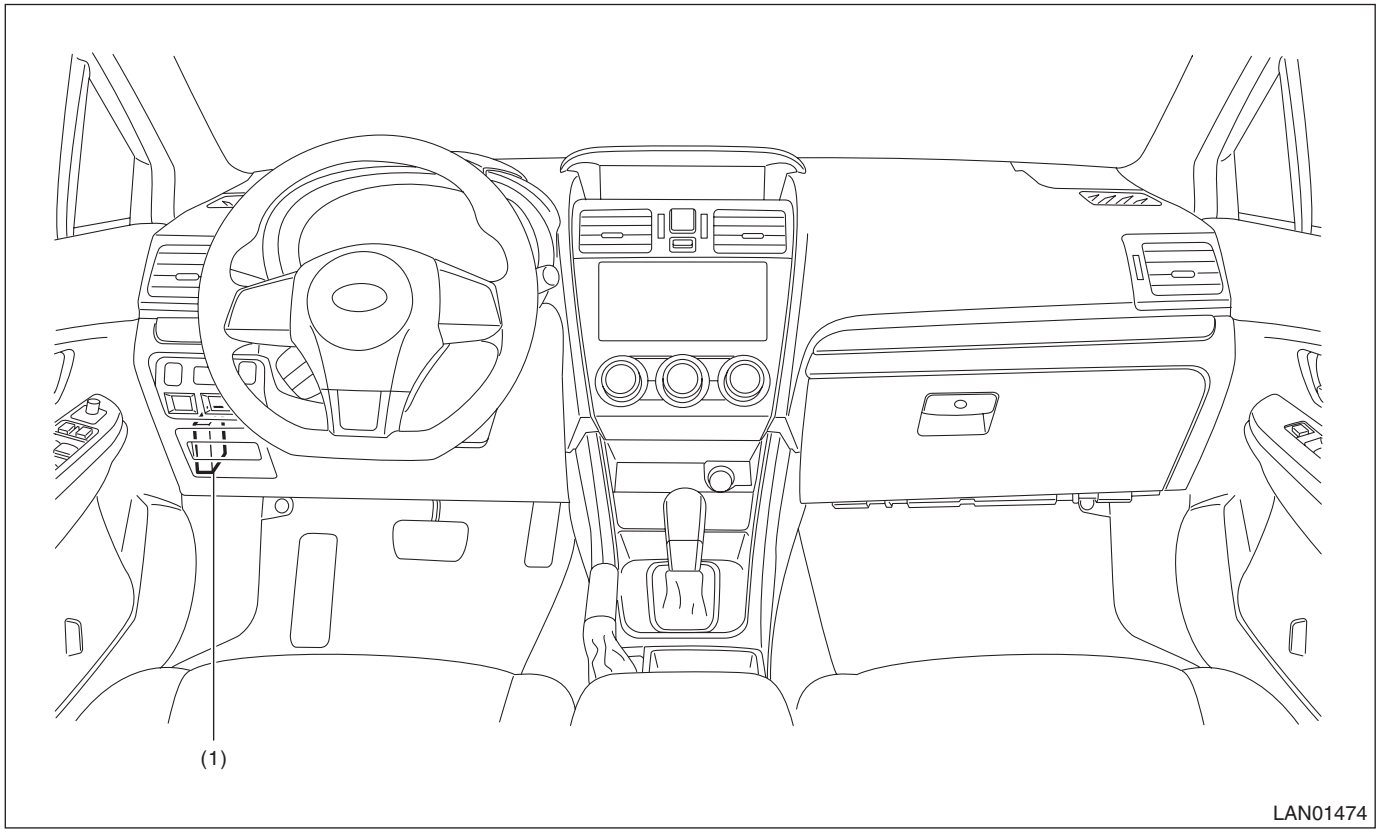

(1) Body integrated unit

5. Control Module I/O Signal

A: ELECTRICAL SPECIFICATION

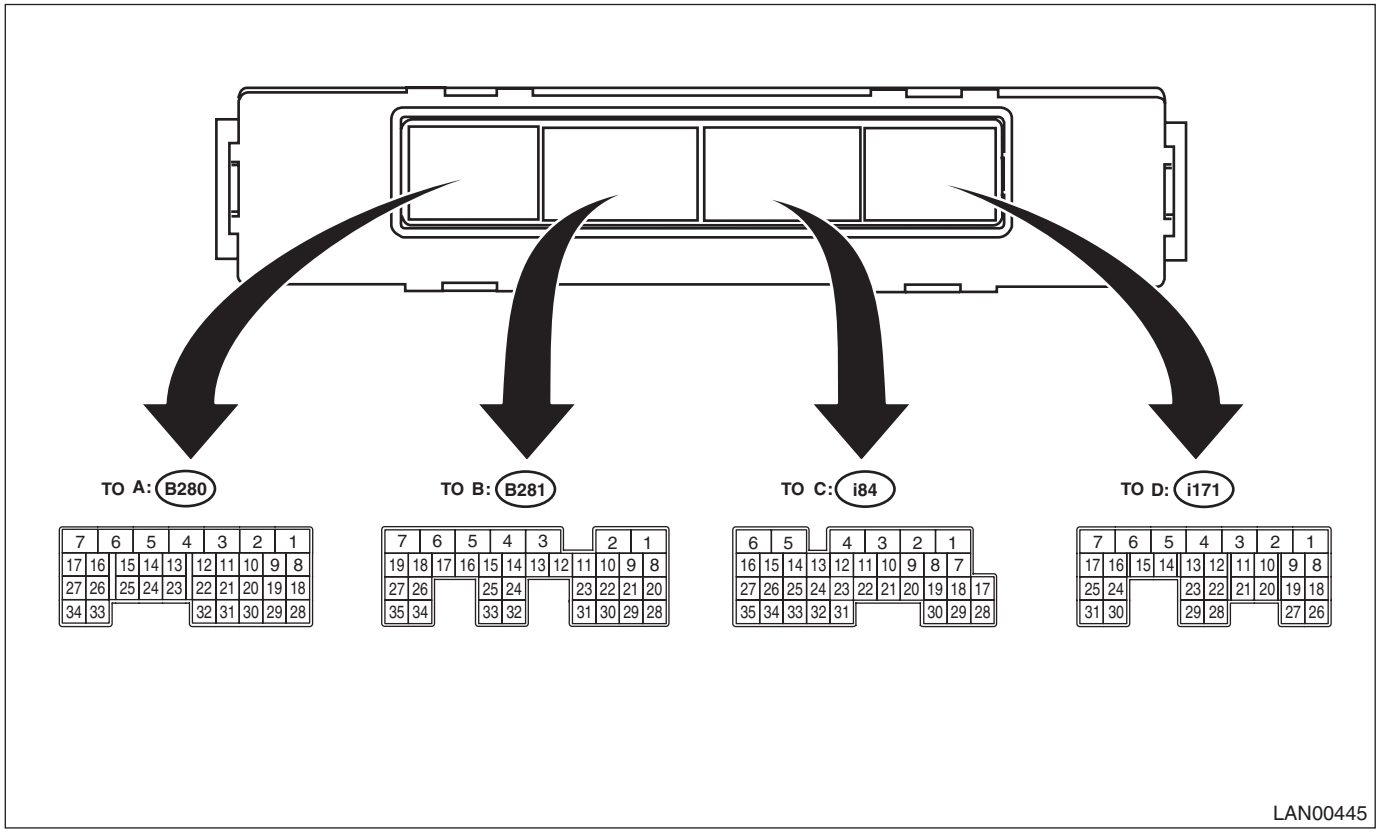

Terminal No.	Content	Measuring condition	Standard
(B280) No. 1 ←→ Chassis ground	GND	Always	Less than 1.5 V
(B280) No. 2 ←→ Chassis ground	Front wiper return	When front wiper is reversed	Less than 1 V → 9 V or more
(B280) No. 3 ←→ Chassis ground	Lighting relay power supply (redundant circuit)	ACC or key-in switch ON	10 — 13 V
(B280) No. 4 ←→ Chassis ground	ACC input	ACC ON (model with the keyless access with push button start system)	Less than 1.5 V → 10 — 13 V
(B280) No. 4 ←→ Chassis ground	Key-in switch	When key is inserted (model without the keyless access with push button start system)	Less than 1.5 V → 10 — 13 V
(B280) No. 5	—	—	—
(B280) No. 6	—	—	—
(B280) No. 7	—	—	—
(B280) No. 8	—	—	—
(B280) No. 9	—	—	—
(B280) No. 10 ←→ Chassis ground	Stop light SW	Stop light switch OFF → ON	Less than 1.5 V → 8 V or more
(B280) No. 11 ←→ Chassis ground	Impact sensor	Apply an impact	8 V or more
(B280) No. 12	—	—	—
(B280) No. 13	—	—	—
(B280) No. 14	—	—	—

Terminal No.	Content	Measuring condition	Standard
(B280) No. 15 ←→ Chassis ground	Front fog light output	Front fog light switch at ON position	9 V or more → less than 1.0 V
(B280) No. 16 ←→ Chassis ground	Lighting relay I output	Lighting I switch at ON position	9 V or more → less than 1.0 V
(B280) No. 17 ←→ Chassis ground	Lighting Hi relay output	Dimmer switch at Hi position	9 V or more → less than 1.0 V
(B280) No. 18	—	—	—
(B280) No. 19 ←→ Chassis ground	Illumination sensor signal	Ignition switch OFF → ON	0.2 — 4.5 V
(B280) No. 20 ←→ Chassis ground	Answer-back buzzer output	When answer-back operates	Less than 1.0 V → 9 V or more
(B280) No. 21	Security UART	(Models without the keyless access with push button start system)	Serial communication
(B280) No. 22	—	—	—
(B280) No. 23	—	—	—
(B280) No. 24 ←→ Chassis ground	Security horn output	When security is operating	8 V or more → less than 1.0 V
(B280) No. 25 ←→ Chassis ground	Key ring illumination	Illumination ON (models without the keyless access with push button start system)	Pulse output
(B280) No. 26 ←→ Chassis ground	Rear defogger relay output	Rear defogger switch ON	9 V or more → less than 1.0 V
(B280) No. 27 ←→ Chassis ground	Lighting Lo relay output (redundant circuit)	Lighting II switch at ON position	9 V or more → less than 1.0 V
(B280) No. 28	—	—	—
(B280) No. 29	Illumination sensor GND	—	—
(B280) No. 30	—	—	—
(B280) No. 31 ←→ Chassis ground	ECM immobilizer communication	Communicating with ECM (model without keyless access with push button start system)	Serial communication
(B280) No. 32 ←→ Chassis ground	ACC power supply	ACC ON	Less than 1.5 V → 10 — 13 V
(B280) No. 33	—	—	—
(B280) No. 34 ←→ Chassis ground	Lighting II switch (redundant circuit)	Switch at II position	8 V or more → less than 1.5 V
(B281) No. 1 ←→ (B280) No. 29	Illumination sensor power supply	Ignition switch OFF → ON	Less than 1.5 V → 4.5 V or more
(B281) No. 2 ←→ (B281) No. 30	Immobilizer antenna amplifier power supply	Communicating with ignition key (model without keyless access with push button start system)	4.5 V — 5.5 V
(B281) No. 3 ←→ Chassis ground	Ignition power supply	Ignition switch ON	Less than 1.5 V → 10 — 13 V
(B281) No. 4 ←→ Chassis ground	Key lock solenoid output	LOCK status is ON (CVT model without the keyless access with push button start system)*2	Less than 1.0 V → 9 V or more
(B281) No. 5 ←→ Chassis ground	Shift lock solenoid output	When shift lock is operating (CVT models)	Less than 1.0 V → 9 V or more
(B281) No. 6 ←→ Chassis ground	Battery power supply (shift lock/key lock)	Always (CVT model)	10 — 13 V
(B281) No. 7 ←→ Chassis ground	Battery power supply (back-up)	Always	10 — 13 V
(B281) No. 8	Illumination output	Illumination ON	Pulse output

Terminal No.	Content	Measuring condition	Standard
(B281) No. 9 ←→ Chassis ground	Turn signal RH input/output	When turn signal switch (RH) is operating	9 V or more → less than 1.5 V
(B281) No. 10 ←→ Chassis ground	Immobilizer antenna (A)	Communicating with ignition key (model without keyless access with push button start system)	Serial communication
(B281) No. 11	—	—	—
(B281) No. 12 ←→ Chassis ground	MT reverse switch	Reverse switch ON (MT model)	Less than 1.5 V → 8 V or more
(B281) No. 13	—	—	—
(B281) No. 14	—	—	—
(B281) No. 15 ←→ Chassis ground	Dimmer Hi beam switch	Switch at Hi beam position	8 V or more → less than 1.5 V
(B281) No. 16 ←→ Chassis ground	Lighting AUTO switch	Switch at AUTO position	8 V or more → less than 1.5 V
(B281) No. 17 ←→ Chassis ground	Lighting I switch	Switch at I position	8 V or more → less than 1.5 V
(B281) No. 18 ←→ Chassis ground	P range switch	Shift lever shifted from P range to other than P range	8 V or more → less than 1.5 V
(B281) No. 19 ←→ Chassis ground	Lighting relay power supply (control)	ACC or key-in switch ON	10 — 13 V
(B281) No. 20	Driving system CAN communication circuit 1 (Hi)	Except for sleep status*1	Serial communication
(B281) No. 21 ←→ Chassis ground	Turn signal LH input/output	When turn signal switch (LH) is operating	9 V or more → less than 1.5 V
(B281) No. 22	Immobilizer antenna (B)	Communicating with ignition key (model without keyless access with push button start system)	Serial communication
(B281) No. 23	—	—	—
(B281) No. 24	—	—	—
(B281) No. 25 ←→ Chassis ground	Dimmer passing switch	Switch at passing position	8 V or more → less than 1.5 V
(B281) No. 26 ←→ Chassis ground	Front fog light switch	Front fog light switch ON	8 V or more → less than 1.5 V
(B281) No. 27	—	—	—
(B281) No. 28	Driving system CAN communication circuit 1 (Lo)	Except for sleep status*1	Serial communication
(B281) No. 29	Accessory connector	—	—
(B281) No. 30 ←→ Chassis ground	Immobilizer antenna amplifier GND	Always (models without the keyless access with push button start system)	Less than 1.5 V
(B281) No. 31 ←→ Chassis ground	GND	Always	Less than 1.5 V
(B281) No. 32	—	—	—
(B281) No. 33	—	—	—
(B281) No. 34 ←→ Chassis ground	Lighting II switch (control)	Switch at II position	8 V or more → less than 1.5 V
(B281) No. 35 ←→ Chassis ground	Lighting Lo relay output (control)	Lighting II switch at ON position	9 V or more → less than 1.0 V
(i84) No. 1 ←→ Chassis ground	GND	Always	Less than 1.5 V
(i84) No. 2	—	—	—
(i84) No. 3 ←→ Chassis ground	Luggage/trunk light output	Luggage/trunk in open state	Pulse output

Terminal No.	Content	Measuring condition	Standard
(i84) No. 4 ←→ Chassis ground	Room light output	Room light ON (doors interlocked)	Pulse output
(i84) No. 5	—	—	—
(i84) No. 6 ←→ Chassis ground	Battery power supply (control)	Always	10 — 13 V
(i84) No. 7	—	—	—
(i84) No. 8	—	—	—
(i84) No. 9 ←→ Chassis ground	Manual switch (LOCK)	Driver's door lock switch ON	8 V or more → less than 1.5 V
(i84) No. 10 ←→ Chassis ground	Opener switch (trunk/rear gate)	Rear gate/trunk opener switch ON	8 V or more → less than 1.5 V
(i84) No. 11	—	—	—
(i84) No. 12 ←→ Chassis ground	Door lock status switch (driver's)	Door in UNLOCK state (models with the keyless access with push button start system)	8 V or more → less than 1.5 V
(i84) No. 13 ←→ Chassis ground	Door switch (passenger's seat)	With passenger's door closed → opened	8 V or more → less than 1.5 V
(i84) No. 14 ←→ Chassis ground	Door switch (driver's seat)	With driver's door closed → opened	8 V or more → less than 1.5 V
(i84) No. 15	—	—	—
(i84) No. 16 ←→ Chassis ground	Illumination output 2	Illumination ON	Pulse output
(i84) No. 17	—	—	—
(i84) No. 18	—	—	—
(i84) No. 19	—	—	—
(i84) No. 20 ←→ Chassis ground	Manual switch (UNLOCK)	Door unlock switch ON	8 V or more → less than 1.5 V
(i84) No. 21 ←→ Chassis ground	Bright switch	When bright (dimmer cancel) function is ON	8 V or more → less than 1.5 V
(i84) No. 22	—	—	—
(i84) No. 23 ←→ Chassis ground	Door lock status switch (passenger's)	Door in UNLOCK state (models with the keyless access with push button start system)	8 V or more → less than 1.5 V
(i84) No. 24 ←→ Chassis ground	Door switch (rear seat LH)	Rear left door closed → open	8 V or more → less than 1.5 V
(i84) No. 25 ←→ Chassis ground	Door switch (rear seat RH)	Rear right door closed → open	8 V or more → less than 1.5 V
(i84) No. 26	—	—	—
(i84) No. 27	Driving system CAN communication circuit 2 (Hi)	Except for sleep status*1	Serial communication
(i84) No. 28	—	—	—
(i84) No. 29	—	—	—
(i84) No. 30	—	—	—
(i84) No. 31	—	—	—
(i84) No. 32 ←→ Chassis ground	Parking brake switch	When parking brake is OFF	Less than 1.5 V → 8 V or more
(i84) No. 33 ←→ Chassis ground	Rear gate/trunk switch	Rear gate/trunk closed → open	8 V or more → less than 1.5 V
(i84) No. 34	—	—	—
(i84) No. 35	Driving system CAN communication circuit 2 (Lo)	Except for sleep status*1	Serial communication
(i171) No. 1 ←→ Chassis ground	Battery power supply (door lock)	Always	10 — 13 V

Terminal No.	Content	Measuring condition	Standard
(i171) No. 2 ←→ Chassis ground	Door lock (all seats LOCK)	When LOCK signal is output	Less than 1.0 V → 9 V or more
(i171) No. 3 ←→ Chassis ground	Door lock (all seats UNLOCK)	When UNLOCK signal is output	Less than 1.0 V → 9 V or more
(i171) No. 4 ←→ Chassis ground	Door lock (driver's seat UNLOCK)	When driver's side door lock is output	Less than 0.5 V → 8 V or more
(i171) No. 5	—	—	—
(i171) No. 6	—	—	—
(i171) No. 7 ←→ Chassis ground	Door lock (rear gate/trunk UNLOCK)	When UNLOCK signal is output	Less than 1.0 V → 9 V or more
(i171) No. 8 ←→ Chassis ground	Map light output	Map light ON (keyless answer-back, etc.)	Pulse output
(i171) No. 9 ←→ Chassis ground	Wiper deicer relay output	Wiper deicer switch ON	9 V or more → less than 1.0 V
(i171) No. 10 ←→ Chassis ground	DRL cancel output	Headlight switch ON or Hi beam ON, passing switch ON	9 V or more → less than 1.0 V
(i171) No. 11 ←→ Chassis ground	Keyless entry / TPMS communication circuit	When door lock/unlock is operated with the keyless transmitter, or when TPMS is operated	Serial communication
(i171) No. 12 ←→ Chassis ground	Illumination switch (Vi1)	While clearance light illuminates	Approx. 5 V
(i171) No. 13	—	—	—
(i171) No. 14 ←→ Chassis ground	SRF OFF SW input	When SRF OFF SW is pressed	8 V or more → less than 1.5 V
(i171) No. 15	—	—	—
(i171) No. 16	—	—	—
(i171) No. 17	—	—	—
(i171) No. 18 ←→ Chassis ground	Turn/hazard output	When answer-back is output	9 V or more → less than 1.0 V
(i171) No. 19	—	—	—
(i171) No. 20 ←→ Chassis ground	SRF relay output (R)	When SRF RH FOG is operating	9 V or more → less than 1.0 V
(i171) No. 21 ←→ Chassis ground	SRF relay output (L)	When SRF LH FOG is operating	9 V or more → less than 1.0 V
(i171) No. 22 ←→ Chassis ground	Illumination switch (Vi2)	While clearance light illuminates	0.5 — 4.8 V
(i171) No. 23	—	—	—
(i171) No. 24	—	—	—
(i171) No. 25	—	—	—
(i171) No. 26 ←→ Chassis ground	Security light	When security light is illuminating	9 V or more → less than 1.0 V
(i171) No. 27	—	—	—
(i171) No. 28 ←→ Chassis ground	Illumination switch (Vi3)	Always	Less than 1.5 V
(i171) No. 29 ←→ Chassis ground	GND	Always	Less than 1.5 V
(i171) No. 30	—	—	—
(i171) No. 31	—	—	—

*1: For CAN sleep state, hold on for approx. one minute with ignition OFF and the doors, trunk, and rear gate all closed.
*2: Use an oscilloscope for measurement due to short output time.

6. Read Diagnostic Trouble Code (DTC)

A: OPERATION

1) On «Start» display, select «Diagnosis».
2) On «Vehicle selection» display, input the target vehicle information and select «Confirmed».
3) On «Main Menu» display, select «Each System».
4) On «Select System» display, select «Body Control» and then select «Enter».
5) On «Select Function» display, select «DTC».

NOTE:
- For detailed operation procedures, refer to “Application help”.
- For details concerning DTC, refer to List of Diagnostic Trouble Code (DTC). <Ref. to BC(diag)-31, List of Diagnostic Trouble Code (DTC).>

7. Clear Memory Mode

A: OPERATION

1) On «Start» display, select «Diagnosis».
2) On «Vehicle selection» display, input the target vehicle information and select «Confirmed».
3) On «Main Menu» display, select «Each System».
4) On «Select System» display, select «Body Control» and then select «Enter».
5) On «Select Function» display, select «DTC».
6) On «DTC» display, select «Clear Memory».

NOTE:
For detailed operation procedures, refer to “Application help”.

8. Inspection Mode

A: PROCEDURE

It is possible to diagnose the DTC by performing the indicated inspection mode. After correcting the DTC, perform a necessary inspection mode and make sure that the function is resumed correctly and the DTC is recorded.

1. INSPECTION MODE 1

DTC	Item	Note
B1010	BODY CONTROL SYSTEM (BIU) MALFUNCTION	—
B1011	BATTERY CONTROL POWER SUPPLY	—

Diagnostic procedure:
1) Perform the Clear Memory Mode. <Ref. to BC(diag)-12, Clear Memory Mode.>
2) Read the DTC and check that the DTC is not displayed. <Ref. to BC(diag)-11, Read Diagnostic Trouble Code (DTC).>

NOTE:
If the DTC is displayed on the screen, the trouble is still present. Perform the diagnosis for the displayed DTCs. After solving the DTC, repeat from step 1).
3) Disconnect and reconnect the battery, and then wait for one minute or more.
4) Read the DTC and check that the DTC is not displayed. <Ref. to BC(diag)-11, Read Diagnostic Trouble Code (DTC).>

NOTE:
If the DTC is displayed on the screen, the trouble is still present. Perform the diagnosis for the displayed DTCs.

2. INSPECTION MODE 2

DTC	Item	Note
B1012	BATTERY BACKUP POWER SUPPLY	—

Diagnostic procedure:
1) Perform the Clear Memory Mode. <Ref. to BC(diag)-12, Clear Memory Mode.>
2) Read the DTC and check that the DTC is not displayed. <Ref. to BC(diag)-11, Read Diagnostic Trouble Code (DTC).>

NOTE:
If the DTC is displayed on the screen, the trouble is still present. Perform the diagnosis for the displayed DTCs. After solving the DTC, repeat from step 1).
3) Disconnect and reconnect the back-up fuse, and then wait for one minute or more.
4) Read the DTC and check that the DTC is not displayed. <Ref. to BC(diag)-11, Read Diagnostic Trouble Code (DTC).>

NOTE:
If the DTC is displayed on the screen, the trouble is still present. Perform the diagnosis for the displayed DTCs.

3. INSPECTION MODE 3

DTC	Item	Note
B1013	IGNITION POWER	—

Diagnostic procedure:
1) Perform the Clear Memory Mode. <Ref. to BC(diag)-12, Clear Memory Mode.>
2) Read the DTC and check that the DTC is not displayed. <Ref. to BC(diag)-11, Read Diagnostic Trouble Code (DTC).>

NOTE:
If the DTC is displayed on the screen, the trouble is still present. Perform the diagnosis for the displayed DTCs. After solving the DTC, repeat from step 1).
3) After the ignition switch is ON, wait for one minute or more.
4) Read the DTC and check that the DTC is not displayed. <Ref. to BC(diag)-11, Read Diagnostic Trouble Code (DTC).>

NOTE:
If the DTC is displayed on the screen, the trouble is still present. Perform the diagnosis for the displayed DTCs.

4. INSPECTION MODE 4

DTC	Item	Note
B1014	ACC POWER	—

Diagnostic procedure:
1) Perform the Clear Memory Mode. <Ref. to BC(diag)-12, Clear Memory Mode.>
2) Read the DTC and check that the DTC is not displayed. <Ref. to BC(diag)-11, Read Diagnostic Trouble Code (DTC).>

NOTE:
If the DTC is displayed on the screen, the trouble is still present. Perform the diagnosis for the displayed DTCs. After solving the DTC, repeat from step 1).
3) After ACC is ON, wait for one minute or more.
4) Read the DTC and check that the DTC is not displayed. <Ref. to BC(diag)-11, Read Diagnostic Trouble Code (DTC).>

NOTE:
If the DTC is displayed on the screen, the trouble is still present. Perform the diagnosis for the displayed DTCs.

5. INSPECTION MODE 5

DTC	Item	Note
B1015	KEY INTERLOCK CIRCUIT	—

Diagnostic procedure:
1) Perform the Clear Memory Mode. <Ref. to BC(diag)-12, Clear Memory Mode.>
2) Read the DTC and check that the DTC is not displayed. <Ref. to BC(diag)-11, Read Diagnostic Trouble Code (DTC).>

NOTE:
If the DTC is displayed on the screen, the trouble is still present. Perform the diagnosis for the displayed DTCs. After solving the DTC, repeat from step 1).
3) After the ignition switch is ON, press the shift knob switch and wait for 10 seconds or more.
4) Read the DTC and check that the DTC is not displayed. <Ref. to BC(diag)-11, Read Diagnostic Trouble Code (DTC).>

NOTE:
If the DTC is displayed on the screen, the trouble is still present. Perform the diagnosis for the displayed DTCs.

6. INSPECTION MODE 6

DTC	Item	Note
B1016	SHIFT LOCK CIRCUIT	—

Diagnostic procedure:
1) Perform the Clear Memory Mode. <Ref. to BC(diag)-12, Clear Memory Mode.>
2) Read the DTC and check that the DTC is not displayed. <Ref. to BC(diag)-11, Read Diagnostic Trouble Code (DTC).>

NOTE:
If the DTC is displayed on the screen, the trouble is still present. Perform the diagnosis for the displayed DTCs. After solving the DTC, repeat from step 1).
3) After the ignition switch is ON, wait for 10 seconds or more without depressing the brake pedal. Or, after the ignition switch is ON, press the shift knob switch with the brake pedal depressed and wait for 10 seconds or more.
4) Read the DTC and check that the DTC is not displayed. <Ref. to BC(diag)-11, Read Diagnostic Trouble Code (DTC).>

NOTE:
If the DTC is displayed on the screen, the trouble is still present. Perform the diagnosis for the displayed DTCs.

7. INSPECTION MODE 7

DTC	Item	Note
B1401	METER COLLATION	—
B1402	IMMOBILIZER KEY COLLATION	—
B1407	MET COMMUNICATION	—
B1408	METER NON-VOLATILE MEMORY	—
B1410	TRANSPONDER COMMUNICATION	—
B1411	IMMOBILIZER ANTENNA	—
U1201	CAN-HS COUNTER ABNORMAL	—
U0073	CONTROL MODULE COMMUNICATION BUS OFF	—
U0100	LOST COMMUNICATION WITH ECM/PCM “A”	—
U0122	LOST COMMUNICATION WITH VEHICLE DYNAMICS CONTROL MODULE	—
U0155	LOST COMMUNICATION WITH INSTRUMENT PANEL CLUSTER (IPC) CONTROL MODULE	—
U0327	SOFTWARE INCOMPATIBILITY WITH VEHICLE SECURITY CONTROL MODULE	—
U0401	INVALID DATA RECEIVED FROM ECM/PCM “A”	—
U0416	INVALID DATA RECEIVED FROM VEHICLE DYNAMICS CONTROL MODULE	—
U0423	INVALID DATA RECEIVED FROM INSTRUMENT PANEL CLUSTER CONTROL MODULE	—
U0427	INVALID DATA RECEIVED FROM VEHICLE SECURITY CONTROL MODULE	—

Diagnostic procedure:
1) Perform the Clear Memory Mode. <Ref. to BC(diag)-12, Clear Memory Mode.>
2) Read the DTC and check that the DTC is not displayed. <Ref. to BC(diag)-11, Read Diagnostic Trouble Code (DTC).>

NOTE:
If the DTC is displayed on the screen, the trouble is still present. Perform the diagnosis for the displayed DTCs. After solving the DTC, repeat from step 1).
3) Turn the ignition switch OFF → ON, and wait for 10 seconds or more.
4) Read the DTC and check that the DTC is not displayed. <Ref. to BC(diag)-11, Read Diagnostic Trouble Code (DTC).>

NOTE:
If the DTC is displayed on the screen, the trouble is still present. Perform the diagnosis for the displayed DTCs.

8. INSPECTION MODE 8

DTC	Item	Note
U1500	KEYLESS UART COM. MALFUNCTION	—

Diagnostic procedure:
1) Perform the Clear Memory Mode. <Ref. to BC(diag)-12, Clear Memory Mode.>
2) Read the DTC and check that the DTC is not displayed. <Ref. to BC(diag)-11, Read Diagnostic Trouble Code (DTC).>

NOTE:
If the DTC is displayed on the screen, the trouble is still present. Perform the diagnosis for the displayed DTCs. After solving the DTC, repeat from step 1).
3) Disconnect and reconnect the battery and wait for one minute or more. Then turn the ignition switch OFF → ON and wait for 10 seconds or more.
4) Read the DTC and check that the DTC is not displayed. <Ref. to BC(diag)-11, Read Diagnostic Trouble Code (DTC).>

NOTE:
If the DTC is displayed on the screen, the trouble is still present. Perform the diagnosis for the displayed DTCs.

9. INSPECTION MODE 9

DTC	Item	Note
B1405	SCU COLLATION	—
B1406	SCU_EEPROM	—
B1409	SCU COMMUNICATION	—
U0101	LOST COMMUNICATION WITH TCM	—
U0164	LOST COMMUNICATION WITH HVAC CONTROL MODULE	—
U0402	INVALID DATA RECEIVED FROM TCM	—
U0424	INVALID DATA RECEIVED FROM HVAC CONTROL MODULE	—
U123C	LOST COMMUNICATION WITH HIGH BEAM ASSIST CONTROL MODULE	—
U153D	INVALID DATA RECEIVED FROM HIGH BEAM ASSIST CONTROL MODULE	—

Diagnostic procedure:
1) Perform the Clear Memory Mode. <Ref. to BC(diag)-12, Clear Memory Mode.>
2) Read the DTC and check that the DTC is not displayed. <Ref. to BC(diag)-11, Read Diagnostic Trouble Code (DTC).>

NOTE:
If the DTC is displayed on the screen, the trouble is still present. Perform the diagnosis for the displayed DTCs. After solving the DTC, repeat from step 1).
3) Make sure that the reading of {Customized Setting} in body integrated unit corresponds to the vehicle. <Ref. to BC(diag)-24, User Customizing.>
4) Turn the ignition switch OFF → ON, and wait for 10 seconds or more.
5) Read the DTC and check that the DTC is not displayed. <Ref. to BC(diag)-11, Read Diagnostic Trouble Code (DTC).>

NOTE:
If the DTC is displayed on the screen, the trouble is still present. Perform the diagnosis for the displayed DTCs.

9. Read Current Data

A: OPERATION

1) On «Start» display, select «Diagnosis».
2) On «Vehicle selection» display, input the target vehicle information and select «Confirmed».
3) On «Main Menu» display, select «Each System».
4) On «Select System» display, select «Body Control» and then select «Enter».
5) On «Select Function» display, select «Data Monitor».

NOTE:
For detailed operation procedures, refer to “Application help”.

B: LIST

Items to be displayed	Unit of measure	Content	Note
BATT voltage (control)	10 — 15 V	Body integrated unit input value	Always
BATT voltage (BACKUP)	10 — 15 V	Body integrated unit input value	Always
IGN Voltage	10 — 15 V	Body integrated unit input value	Ignition switch ON
ACC voltage	10 — 15 V	Body integrated unit input value	Ignition switch ACC
Illumination VR Voltage	0 — 5 V	Body integrated unit input value	Input value from illumination volume
Illumination output d-ratio	0 — 100%	Body integrated unit output value	Small light ON Illumination volume is other than bright.
number of regist.	0 — 4	Number of keyless key registered	
Front Wheel Speed	km/h	CAN data input value	Reception from VDC module
Fuel consumption	cc/s	CAN data input value	Reception from ECM
Engine Coolant Temperature	–40 — 215°C	CAN data input value	Reception from ECM
Shift Position	1 — 3, D-S, D, N, R, P	CAN data input value	Reception from TCM
Buzzer beeping request	Status for ’beeping deactivated’ Reverse warning Key warning buzzer Light Remained Buzzer Customize 1 Customize 2 Registration completed 1 Registration completed 2 Registered Registration NG	CAN data output value	Reception from body integrated unit
Destination Code	JPN U4, U5, U6 C0 EC, EA, E2, EL K4, C4, C6 KS EK ER, EN KA, KC EH C6	CAN data input value	—
Illumination Sensor Output	0 — 5 V	CAN data input value	—

Items to be displayed	Unit of measure	Content	Note
Off delay time	OFF 10 Sec 20 Sec 30 Sec	Body integrated unit setting value	Customize setting
Auto Light Sensitivity Adjustment	Dull Normal Sensitive Very sensitive	Body integrated unit setting value	Customize setting
key-lock warning SW Input	ON/OFF	Body integrated unit input value	ON when ignition key inserted (Model without keyless access with push button start system)
ACC Input	ON/OFF	Body integrated unit input value	ON when ACC switch is ON (model with keyless access with push button start system)
Stop Light Switch	ON/OFF	Body integrated unit input value	ON when brake pedal is depressed
Front Fog Light SW input	ON/OFF	Body integrated unit input value	When front fog light switch is ON
Driver's door SW input	ON/OFF	Body integrated unit input value	ON when driver's door is open
P-door SW input	ON/OFF	Body integrated unit input value	ON when passenger's door is open
Rear right door SW input	ON/OFF	Body integrated unit input value	ON when rear right door is open
Rear left door SW input	ON/OFF	Body integrated unit input value	ON when rear left door is open
R Gate SW input	ON/OFF	Body integrated unit input value	ON when rear gate/trunk open
Manual lock SW input	ON/OFF	Body integrated unit input value	Manual lock switch ON
Manual unlock SW input	ON/OFF	Body integrated unit input value	Manual unlock switch ON
Bright SW input	ON/OFF	Body integrated unit input value	Bright switch ON
P SW	ON/OFF	Body integrated unit input value	ON when shift range is in parking Shift lever P switch signal
MT Reverse Switch	ON/OFF	Body integrated unit input value	Reverse switch ON (for MT vehicle only)
R wiper ON SW input	ON/OFF	Body integrated unit input value	Rear wiper switch ON
R wiper INT SW input	ON/OFF	Body integrated unit input value	Rear wiper switch (INT ON)
R washer SW input	ON/OFF	Body integrated unit input value	Rear washer switch ON
Rr Defogger SW	ON/OFF	Body integrated unit input value	Rear defogger switch ON
Fr wiper input	ON/OFF	Body integrated unit input value	ON when front wiper is operating
Parking Brake SW	ON/OFF	Body integrated unit input value	Parking brake ON
Driver's seat lock status SW input	ON/OFF	Body integrated unit input value	Displays latch state, ON when locked (Model with keyless access with push button start system)
Passenger's seat lock status SW input	ON/OFF	Body integrated unit input value	Displays latch state, ON when locked (Model with keyless access with push button start system)

Items to be displayed	Unit of measure	Content	Note
R gate lock status SW input	ON/OFF	Body integrated unit input value	Displays latch state, ON when locked
R Gate Release SW input	ON/OFF	Body integrated unit input value	Rear gate release switch ON
Rr Defogger output	ON/OFF	Body integrated unit output value	ON when rear defogger relay is operating
lock actuator LOCK output	ON/OFF	Body integrated unit output value	ON when LOCK signal is output
All seat UNLOCK output	ON/OFF	Body integrated unit output value	ON when unlock signal is output
D-seat UNLOCK output	ON/OFF	Body integrated unit output value	ON when unlock signal is output
R gate/trunk UNLOCK output	ON/OFF	Body integrated unit output value	ON when rear gate/trunk unlock signal is output
Rear Wiper Output	ON/OFF	Body integrated unit output value	ON when rear wiper motor is operating
Shift lock solenoid output	ON/OFF	Body integrated unit output value	ON when shift lock solenoid is operating (only AT)
Key lock solenoid output	Lock/Unlock	Body integrated unit output value	LOCK when the key is locked (Model without keyless access with push button start system)
wiper deicer output	ON/OFF	Body integrated unit output value	ON when wiper deicer relay is operating
Hazard Output	ON/OFF	Body integrated unit output value	ON when answer-back signal is received or when hazard is operating
Keyless Buzzer Output	ON/OFF	Body integrated unit output value	ON when lock/unlock signal is received
Horn Output	ON/OFF	Body integrated unit output value	ON when security warning is operating
Illumination lamp O/P	ON/OFF	Body integrated unit output value	ON when illumination is illuminated
Room lamp output	ON/OFF	Body integrated unit output value	ON when keyless lock/unlock signal is received, or when opening or closing the door
key illumination lamp o/p	ON/OFF	Body integrated unit output value	ON when key illumination light is illuminated
Immobilizer lamp output	ON/OFF	Body integrated unit output value	ON when immobilizer pilot light blinks
Keyless operation 1	Register/Normal	Body integrated unit input value	When keyless registration connector connected
Keyless operation 2	Deletion/Normal	Body integrated unit input value	When keyless registration is deleted
Small Light SW	ON/OFF	Body integrated unit input value	ON when small light is illuminated
Headlamp	ON/OFF	Body integrated unit input value	ON when headlight Lo is illuminated
High Beam	ON/OFF	Body integrated unit input value	ON when headlight Hi is illuminated
Blower fan information	ON/OFF	CAN data input value	Reception from ECM
Lane change signal setting	ON/OFF	Body integrated unit setting value	Customize setting
Rear wiper auto setting	ON/OFF	Body integrated unit setting value	Customize setting
Left turn signal input	ON/OFF	Body integrated unit input value	ON when turn signal switch is ON

Items to be displayed	Unit of measure	Content	Note
Right turn signal input	ON/OFF	Body integrated unit input value	ON when turn signal switch is ON
Left turn signal output	ON/OFF	Body integrated unit setting value	ON when turn signal is output
Right turn signal output	ON/OFF	Body integrated unit setting value	ON when turn signal is output
TPMS Setting	TPMS/No TPMS	Body integrated unit setting value	Customize setting
Driver's Door Unlock Setting	Selection/ALL	Body integrated unit setting value	Customize setting
Rear Gate Unlock Setting	Selection/ALL	Body integrated unit setting value	Customize setting
Steering Responsive Fog Lamp Setting	ON/OFF	Body integrated unit setting value	Customize setting
Steering Responsive Fog Lamp OFF SW Input	ON/OFF	Body integrated unit input value	ON when SRF OFF switch is ON
Steering Angle Sensor	–3276.8 — 3276.8deg	CAN data input value	Reception from VDC module
Steering Responsive Fog Lamp Mode	OFF/ON/Fail	SRF status	OFF in SRF OFF mode ON in SRF ON mode Fail at the time of SRF failure
Steering Responsive Fog Lamp (Right) Output	ON/OFF	Body integrated unit output value	ON when SRF (R) is illuminated
Steering Responsive Fog Lamp (Left) Output	ON/OFF	Body integrated unit output value	ON when SRF (L) is illuminated
Steering Responsive Fog Lamp (Right) CAN Output	ON/OFF	CAN data output value	ON when SRF (R) is illuminated
Steering Responsive Fog Lamp (Left) CAN Output	ON/OFF	CAN data output value	ON when SRF (L) is illuminated
Steering Responsive Fog Lamp Indicator Signal	OFF/ON/Blink	CAN data output value	Lights off in SRF ON mode Lights on in SRF OFF mode Blinks at the time of SRF failure
High Beam Assist Function	ON/OFF	Body integrated unit setting value	Customize setting
Head Lamp Low Beam Specification	Halogen/HID/LED	Body integrated unit setting value	Customize setting
Head Lamp High Beam Specification	Halogen/HID/LED	Body integrated unit setting value	Customize setting
High Beam Assist Current Setting	ON/OFF	Body integrated unit setting value	Customize setting
HBA indicator	OFF/ON	CAN data output value	Lights on when HBA is activated
High Beam Assist Failure Indicator	OFF/ON	CAN data output value	Lights on at the time of HBA failure
High Beam Assist Failure Message	No Display/HALT/Fail	CAN data output value	Sends display status of HBA related words.
<HBA>High Beam Request Status	Non Request/Request	High beam assist module output value	When high beam is requested for high beam assist module, set to lighting request
<HBA>R Range Signal	ON/OFF	High beam assist module CAN data input value	ON when shift lever is at reverse position
<HBA>Head Lamp Low Beam Signal	ON/OFF	High beam assist module CAN data input value	ON when headlight Lo beam is illuminated
<HBA>Head Lamp High Beam Signal	ON/OFF	High beam assist module CAN data input value	ON when headlight Hi beam is illuminated

Items to be displayed	Unit of measure	Content	Note
<HBA>High Beam Assist Status	Initialization/Poor Visibility/Nothing Sensed/Head light Detect/Tail light Detect/Speed Under Threshold/Day Detect/Village Mode/Yaw Not Used/Abnormal/Delay/SAE Mode/Temp Malfunction	High beam assist module output value	High beam assist module internal status
<HBA>Yaw Rate & Speed Signal	ON/OFF	High beam assist module output value	ON during high beam suppression when rounding a curve
<HBA>Brightness & Color Detection	Not Detect/Detect	High beam assist module output value	When a tunnel is detected, set to Detect
<HBA>Street Lamp & Surrounding Detection	Not Detect/Detect	High beam assist module output value	When an urban area is detected, set to Detect
<HBA>High Speed Signal	ON/OFF	High beam assist module output value	ON in high speed mode
<HBA>High Beam Assist Camera	Normal/Abnormal	High beam assist module output value	When camera is faulty, set to Abnormal
<HBA> ECU	Normal/Abnormal	High beam assist module output value	When ECM is faulty, set to Abnormal
<HBA>Camera Position Correlation	Normal/Abnormal	High beam assist module output value	When camera's angle of view is outside the tolerance, set to Abnormal
<HBA> Adjustment	incomplete/Complete	High beam assist module output value	When high beam assist operation becomes enabled, set to Completed
<HBA> Registration	Normal/Abnormal	High beam assist module output value	When specifications are not confirmed, set to Abnormal
<HBA>Lost Communication with VDC	Normal/Abnormal	High beam assist module output value	When VDC data has not yet arrived, set to Abnormal
<HBA>Invalid Data Received from VDC	Normal/Abnormal	High beam assist module output value	When VDC data is abnormal, set to Abnormal
<HBA>Lost Communication with Body Integrated Unit(BIU)	Normal/Abnormal	High beam assist module output value	When body integrated unit data has not yet arrived, set to Abnormal
<HBA>Invalid Data Received from Body Integrated Unit(BIU)	Normal/Abnormal	High beam assist module output value	When body integrated unit data is abnormal, set to Abnormal
<HBA>Lost Communication with Combination Meter (MET)	Normal/Abnormal	High beam assist module output value	When combination meter data has not yet arrived, set to Abnormal
<HBA>Invalid Data Received from Combination Meter (MET)	Normal/Abnormal	High beam assist module output value	When combination meter data is abnormal, set to Abnormal
<HBA>Head Lamp Low Beam Specification	Halogen/HID/LED	High beam assist module CAN data input value	Body integrated unit customized value
<HBA>Head Lamp High Beam Specification	Halogen/HID/LED	High beam assist module CAN data input value	Body integrated unit customized value
<HBA>Lane Recognition Status	RIGHT/LEFT	High beam assist module output value	High beam assist module lane recognition status
<HBA>Street Lamp & Surrounding Status	Disable/Enable	High beam assist module output value	When Street Lamp & Surrounding Status mode is activated, set to Enable
<HBA>Vehicle Yaw Direction	CENTER/RIGHT/LEFT	High beam assist module output value	Vehicle input in the yaw direction

Items to be displayed	Unit of measure	Content	Note
<HBA>Destination Code	JPN U4, U5, U6 C0 EC, EA, E2, EL K4, C4, C6 KS EK ER, EN KA, KC EH C6	High beam assist module CAN data input value	Vehicle destination
<HBA>Vehicle Model Information	Impreza Type / WRX Type / Legacy/Outback Type / Forester Type	High beam assist module CAN data input value	Vehicle model
<HBA>Vehicle Speed	—	High beam assist module CAN data input value	Vehicle speed (resolution: low)
Camera X direction Coordinate	—	High beam assist module output value	High beam assist module, correction value of the angle of view center position (X coordinate)
Camera Y direction Coordinate	—	High beam assist module output value	High beam assist module, correction value of the angle of view center position (Y coordinate)
Lighting I Switch Input	ON/OFF	Body integrated unit input value	Small light switch ON
Lighting II Switch Input	ON/OFF	Body integrated unit input value	Headlight switch ON
Lighting AUTO input	ON/OFF	Body integrated unit input value	Headlight AUTO switch ON
Dimmer Hi Switch Input	ON/OFF	Body integrated unit input value	Dimmer Hi switch ON
Dimmer Passing Switch Input	ON/OFF	Body integrated unit input value	Dimmer Pass switch ON
Illumination sensor flag	ON/OFF	Body integrated unit setting value	Shows the existence of illumination sensor
Lighting I Lamp Output	ON/OFF	Relay drive	ON when small light is illuminated
Lighting II Lamp Output	ON/OFF	Relay drive	ON when headlight is illuminated
Lighting Hi Light Output	ON/OFF	Relay drive	ON when headlight Hi is illuminated
Front Fog Lamp Output	ON/OFF	Relay drive	When front fog light relay ON output
DRL Cancel Output	ON/OFF	Relay drive	When DRL cancel relay ON output
Power Supply Transistor	ON/OFF	Inner Tr drive	Headlight auxiliary power supply ON
Map lamp output	ON/OFF	Body integrated unit output value	ON when map light is illuminated
Luggage/Trunk lamp output	ON/OFF	Body integrated unit output value	ON when luggage/trunk light is illuminated
Front wiper AUTO switch input	ON/OFF	Body integrated unit input value	Front wiper Auto switch ON
Front wiper Low switch input	ON/OFF	Body integrated unit input value	Front wiper Lo switch ON
Front wiper High switch input	ON/OFF	Body integrated unit input value	Front wiper Hi switch ON
Front washer switch input	ON/OFF	Body integrated unit input value	Front wiper washer switch ON
Front wiper Low output	ON/OFF	Body integrated unit output value	ON when front wiper Lo is operating
Front wiper High output	ON/OFF	Body integrated unit output value	ON when front wiper Hi is operating

Items to be displayed	Unit of measure	Content	Note
Rear defogger operation mode	Continuous/Normal	Body integrated unit setting value	Customize setting
Security Alarm Setup	ON/OFF	Body integrated unit setting value	Customize setting
Impact Sensor Setup	ON/OFF	Body integrated unit setting value	Customize setting
Alarm delay setup	ON/OFF	Body integrated unit setting value	Customize setting
Lockout prevention	ON/OFF	Body integrated unit setting value	Customize setting
Impact sensor	ON/OFF	Body integrated unit setting value	Customize setting
Buzzer sounding setting	ON/OFF	Body integrated unit setting value	Customize setting
Abnormal warning lamp flashing setting	ON/OFF	Body integrated unit setting value	Customize setting
Answer-back Buzzer	ON/OFF	Body integrated unit setting value	Customize setting
Passive Alarm	ON/OFF	Body integrated unit setting value	Customize setting
Door open warning	ON/OFF	Body integrated unit setting value	Customize setting
Dome Light Alarm Setting	ON/OFF	Body integrated unit setting value	Customize setting
Auto A/C ECU Setting	ON/OFF	Body integrated unit setting value	Customize setting
Wiper Deicer setting	ON/OFF	Body integrated unit setting value	Customize setting
Illumination Control On/Off	ON/OFF	Body integrated unit setting value	Customize setting
Sedan/Wagon Setting	Sedan/Wagon	Body integrated unit setting value	Customize setting
MT/AT Setting	MT/AT	Body integrated unit setting value	Customize setting
Destination Setting	JPN KA, KC KS EU LHD Other than KS C0,C5 U4, U5, U6, C6 EK, ER	Body integrated unit setting value	Displays body integrated unit customizing
Seat Memory Setting	ON/OFF	Body integrated unit setting value	Customize setting
Illumination Sensor Setting	ON/OFF	Body integrated unit setting value	Customize setting
Factory initial setting	Market/Factory	Body integrated unit setting value	Displays body integrated unit customizing
Welcome Light (Exit)	OFF/30 Sec/60 Sec/ 90 Sec	Body integrated unit setting value	Customize setting
Welcome Light Off Delay Time(Approaching)	OFF/30 Sec/60 Sec/ 90 Sec	Body integrated unit setting value	Customize setting
Keyless Buzzer Volume	1 — 7	Body integrated unit setting value	Customize setting

10.User Customizing

A: OPERATION

1) On «Start» display, select «Diagnosis».
2) On «Vehicle selection» display, input the target vehicle information and select «Confirmed».
3) On «Main Menu» display, select «Each System».
4) On «Select System» display, select «Body Control» and then select «Enter».
5) On «Select Function» display, select «Customize».

NOTE:
For detailed operation procedures, refer to “Application help”.
List of User Customizing item

Data	Initial setting value	Customize setting	Remarks
Off delay time	30 Sec	OFF	Room light off delay time can be selected.
		10 Sec	
		20 Sec	
		30 Sec	
Auto Light Sensitivity Adjustment	Normal	Dull	Slow response
		Normal	Standard
		Sensitive	Quick response
		Very sensitive	Fairly quick response
Lane change signal setting	OFF	ON	One-touch blinker control is performed.
		OFF	One-touch blinker control is not performed.
Rear wiper auto setting	OFF	ON	Existence of rear wiper linked with reverse operation can be set.
		OFF	
TPMS Setting	— (*1)	TPMS	Set to “ON” for model with TPMS.
		No TPMS	
Driver’s Door Unlock Setting	Selection	Selection	When the touch sensor (unlock) on the driver’s side is touched, only the driver’s door is unlocked. When the touch sensor (unlock) on the passenger’s side is touched, all doors are unlocked.
		ALL	When the touch sensor (unlock) on the driver’s side is touched, all doors are unlocked. When the touch sensor (unlock) on the passenger’s side is touched, all doors are unlocked.
Rear Gate Unlock Setting	Selection	Selection	When the rear gate opener button is pressed, only the rear gate is unlocked.
		ALL	When the rear gate opener button is pressed, all doors are unlocked.
Steering Responsive Fog Lamp Setting	— (*1)	ON	SRF control is performed.
		OFF	SRF control is not performed.
High Beam Assist Function	— (*1)	ON	Set to “ON” for model with HBA.
		OFF	
Head Lamp Low Beam Specification	— (*1)	Halogen	Set according to the headlight type.
		HID	
		LED	
Head Lamp High Beam Specification	— (*1)	Halogen	
		HID	
		LED	
High Beam Assist Current Setting	— (*1)	ON	Fixed to ON. (However, HBA will not function.)
		OFF	
Rear defogger operation mode	Normal	Normal	Automatically stops in 15 minutes after the switch is turned to ON.
		Continuous	Repeats activated for 15 minutes and deactivated for 2 minutes until the switch is turned to OFF.

Data	Initial setting value	Customize setting	Remarks
Security Alarm Setup	OFF	ON	Security alarm (hazard, horn or siren) becomes activated.
		OFF	Security alarm becomes deactivated.
Impact Sensor Setup	OFF	ON	Workable when the Impact Sensor Setup is set to “ON”. Impact sensor function becomes activated.
		OFF	Impact sensor function becomes deactivated. (Be sure to set to “OFF” for models without sensors.)
Alarm delay setup	ON		After the keyless lock operation, the alarm monitor starts after the following delay time has passed.
		ON	Delay time is 30 seconds.
		OFF	Delay time is 0 seconds.
Lockout prevention	ON	ON	key lockout prevention function is activated. (The function does not operate if safety knob is locked by hand.)
		OFF	Key lockout prevention function is deactivated.
Impact sensor	OFF	ON	Vehicle is controlled in impact sensor equipped mode. (Make sure to set to “OFF” for models without the impact sensor. When “ON”, hazard, horn or siren become activated by keyless lock (alarm monitor start).)
		OFF	Vehicle is controlled in impact sensor non-equipped mode.
Buzzer sounding setting	ON	ON	Buzzer operates when lock/unlock is selected by keyless entry system operation.
		OFF	Buzzer does not operate when lock/unlock is selected by keyless entry system operation.
Abnormal warning lamp flashing setting	ON	ON	Hazard blinks when lock/unlock is selected by keyless entry system operation.
		OFF	Hazard is not interlocked when lock/unlock is selected by keyless entry system operation.
Initial keyless setting	—	—	—
		Operate	—
Initial button setting	—	—	—
		Operate	—
Passive Alarm	OFF	ON	
		OFF	
Door open warning	ON	ON	If a door stays half shut for 20 minutes, room light, map light, and key ring illumination related to doors are turned off to prevent battery run-out.
		OFF	Room light, map light, key illumination and door warning light are not turned off.
Dome Light Alarm Setting	OFF	ON	Room light illuminates interlocking with alarm.
		OFF	Room light does not illuminate interlocking with alarm.
Welcome Light (Exit)	30 Sec	OFF/30 Sec/ 60 Sec/90 Sec	Length of the lighting time can be set.
Welcome Light Off Delay Time(Approaching)	30 Sec	OFF/30 Sec/ 60 Sec/90 Sec	Length of the lighting time can be set.
Keyless Buzzer Volume	5	1 — 7	Buzzer volume can be set.

*1: Customization item according to the actual vehicle equipment

6) When the setting is complete, see «Data monitor» to make sure that the alterations are consistent with the actual equipment on the vehicle.

CAUTION:
- **the above settings must match the actual vehicle equipment.**
- **Do not change settings except for setting above while setting the functions.**
- **Be sure not to change Factory initial setting except when installing a new body integrated unit.**

NOTE:
For detailed operation procedures, refer to “Application help”.

11.Registration Body Integrated Unit

A: OPERATION

1. CONFIRM CURRENT SETTING

1) On «Start» display, select «Diagnosis».
2) On «Vehicle selection» display, input the target vehicle information and select «Confirmed».
3) On «Main Menu» display, select «Each System».
4) On «Select System» display, select «Body Control» and then select «Enter».
5) On «Select Function» display, select «Customize».
6) Save the setting.

Required items for new registration. (Except for system not equipped)

Item	Item to confirm				Remarks
number of regist.	1	2	3	4	Number of registered ID
Off delay time	OFF	10 Sec	20 Sec	30 Sec	Setting for lighting off time
Auto Light Sensitivity Adjustment	Dull	Normal	Sensitive	Very sensitive	1st (slow) — 4th (fairly quick)
Lane change signal setting	ON		OFF		—
Rear wiper auto setting	ON		OFF		—
TPMS Setting	TPMS		No TPMS		—
Driver's Door Unlock Setting	ALL		Selection		—
Rear Gate Unlock Setting	ALL		Selection		—
Steering Responsive Fog Lamp Setting	ON		OFF		—
High Beam Assist Function	ON		OFF		—
Head Lamp Low Beam Specification	Halogen/HID/LED				—
Head Lamp High Beam Specification	Halogen/HID/LED				—
High Beam Assist Current Setting	ON		OFF		—
Rear defogger operation mode	Normal		Continuous		—
Security Alarm Setup	ON		OFF		—
Impact Sensor Setup	ON		OFF		Option setting
Alarm delay setup	ON		OFF		—
Lockout prevention	ON		OFF		—
Impact sensor	ON		OFF		Option setting
Buzzer sounding setting	ON		OFF		—
Abnormal warning lamp flashing setting	ON		OFF		—
Passive Alarm	ON		OFF		—
Door open warning	ON		OFF		—
Dome Light Alarm Setting	ON		OFF		—
Auto A/C ECU Setting	ON		OFF		—
Wiper Deicer setting	ON		OFF		Option setting
Illumination Control On/Off	ON		OFF		—
Sedan/Wagon Setting	WAGON		SEDAN		—
MT/AT Setting	MT		AT		—
Seat Memory Setting	ON		OFF		N/A
Illumination Sensor Setting	ON		OFF		Option setting
Factory initial setting	Factory		Market		Do not change to factory mode.
Welcome Light (Exit)	OFF/30 Sec/60 Sec/90 Sec				Option setting
Welcome Light Off Delay Time(Approaching)	OFF/30 Sec/60 Sec/90 Sec				Option setting
Keyless Buzzer Volume	1 2 3 4 5 6 7				—

2. REGISTRATION BODY INTEGRATED UNIT (FUNCTION SETTING)

CAUTION:
For the body integrated unit, function selection is available to control the entire vehicle systems. It is possible to control the original functions of vehicle when registrations of body integrated unit and function setting are corresponded to vehicle equipment.
If registrations and function setting are different from vehicle equipment, vehicle system does not operate normally and diagnosis cannot be performed correctly. Pay attention to following item.
- **Be sure to correspond registrations, or User Customizing settings to vehicle equipment.**
- **Do not change the settings of vehicle improperly.**
- **Make sure that the key illumination does not blink with ignition switch ON, or that the body integrated unit registration item "Factory initial setting" is set to "Market". If "Factory initial setting" is set to "Factory", key illumination blinks when the ignition switch is turned ON, to notify that the settings are not confirmed. (If the vehicle is a model with the keyless access with push button start system, check by the current data display function of Subaru Select Monitor because no key illumination is available.)**
- **Key illumination does not blink with ignition switch turned to ON and go off with door closed. (Except for model with the keyless access with push button start system)**
- **Be sure to register immobilizer if body integrated unit is replaced with a new part. (Except for model with the keyless access with push button start system)**
- **Make a registration of immobilizer when the parts related to immobilizer have been replaced. Refer to the "REGISTRATION MANUAL FOR IMMOBILIZER" provided as a separate volume.**

1) On «Start» display, select «Diagnosis».
2) On «Vehicle selection» display, input the target vehicle information and select «Confirmed».
3) On «Main Menu» display, select «Each System».
4) On «Select System» display, select «Body Control» and then select «Enter».
5) On «Select Function» display, select «Customize».

NOTE:
For the vehicle requiring the destination setting, if the destination setting is not finished, display can not be shifted into customizing screen. <Ref. to BC(diag)-28, DESTINATION SETTING, OPERATION, Registration Body Integrated Unit.>
6) Change the setting to the contents saved at confirmation of current setting.

CAUTION:
- **To perform normal operation of vehicle and diagnosis, the above settings must match the actual vehicle equipment.**
- **When the body integrated unit is new or in Factory mode, the key illumination blinks, and user customizing is incomplete. Check the user customizing settings. (For models with keyless access with push button start system, the room light illuminates.)**
- **Be sure not to change Factory initial setting except when installing a new body integrated unit.**

NOTE:
"Factory" mode:
- Body integrated unit has not been set yet. It can be recognized by key illumination blinking with ignition switch turned to ON. (Except for model with the keyless access with push button start system)
- All replacement body integrated units are set to "Factory" mode. When replacing a body integrated unit, be sure to perform the registration operation.

"Market" mode:
- Each settings have been set. It can be recognized by key ring illumination coming on in concocting with room light and going off with ignition switch turned to ON. (Except for model with the keyless access with push button start system)

7) Perform the factory initial setting. Select «Factory initial setting» in the «Customize» screen of the Subaru Select Monitor.
8) Change the mode from Factory to Market.
9) Turn the ignition switch to OFF to settle the setting.
10) Perform the User Customizing. <Ref. to BC(diag)-24, OPERATION, User Customizing.>

11) Change the system selection to «Immobilizer» on Subaru Select Monitor, and perform registration of immobilizer. (Models without the keyless access with push button start system)
12) Follow the procedure of the “REGISTRATION MANUAL FOR IMMOBILIZER” provided as a separate volume.
13) When key registration is completed, “Do you want to register remote engine start?” is displayed. Perform registration only for equipped models. (Displayed only on models without the keyless access with push button start system)

NOTE:
For detailed operation procedures, refer to “Application help”.

3. DESTINATION SETTING

NOTE:
For the vehicle requiring the destination setting, if the destination setting is not finished, display can not be shifted into customizing screen.

Step		Check	Yes	No
1	**CONFIRM CURRENT SETTING.** Always perform confirmation of current setting before replacing the module. Record the contents of the “Destination Setting”. NOTE: Refer to the “Read Current Data” and “CONFIRMATION OF CURRENT SETTING” to confirm the current setting. <Ref. to BC(diag)-26, CONFIRM CURRENT SETTING, OPERATION, Registration Body Integrated Unit.> <Ref. to BC(diag)-17, OPERATION, Read Current Data.>	Is the current setting recorded?	Go to step **2**.	Confirm the current setting. Go to step **1**.
2	**CONFIRM DESTINATION SETTING.** 1) Connect the Subaru Select Monitor, and run the application. 2) On «Start» display, select «Diagnosis». 3) On «Vehicle selection» display, input the target vehicle information and select «Confirmed». 4) On «Main Menu» display, select «Each System». 5) On «Select System» display, select «Body Control» and then select «Enter». 6) On «Select Function» display, select «Customize». 7) The vehicle destination screen is displayed.	Is the vehicle destination setting screen displayed?	Go to step **3**.	Go to step **4**.
3	**CONFIRM DESTINATION SETTING.** Confirm the screen displayed on Subaru Select Monitor and the actual vehicle destination.	Is it necessary to change the destination setting?	Select [Yes], Go to step **4**.	Select [No], Go to step **5**.
4	**ENTER DESTINATION CODE.** Enter the appropriate code in the screen. JPN: JP00 KA, KC: KA00 KS: KS00 U4, U5, U6, C6 and C0, C5 (with the keyless access with push button start system): U400 C0, C5 (without the keyless access with push button start system): C000 EK, ER: EK00 Except above: EC00	Is the appropriate code entered?	Select [OK]. Go to step **5**.	Enter the destination code. Go to step **5**.

	Step	Check	Yes	No
5	**REGISTER VEHICLE EQUIPMENT.** Customizing screen is displayed. NOTE: Match the each item setting of body integrated unit registration item list with the vehicle equipment.	Do all setting contents match with the vehicle equipment specification?	Go to step **6**.	Change the items until each content setting match with the vehicle equipment specification. Go to step **6**.
6	**CONFIRM MARKET MODE.** 1) Customizing screen, select the {Factory initial setting} to change the setting from "Factory" mode to "Market" mode. 2) Turn the ignition switch to OFF. NOTE: When the setting is changed from "Factory" mode to "Market" mode, turning the ignition switch from ON → OFF confirms the setting. 3) Turn the ignition switch to ON, and check the contents of settings.	Is the mode changed to "Market" mode?	Go to step **7**.	Perform the destination setting from the first step. Go to step **1**.
7	**CONFIRM MARKET MODE.** Check the following. Make sure that the "Destination Setting" in the current data display is the same as the one you confirmed in step 1.	Is the display the same as indicated?	Registration of body integrated unit is finished.	It is possible that harness malfunction may occur. Perform the diagnosis.

12.Function Check

A: OPERATION

1) On «Start» display, select «Diagnosis».
2) On «Vehicle selection» display, input the target vehicle information and select «Confirmed».
3) On «Main Menu» display, select «Each System».
4) On «Select System» display, select «Body Control» and then select «Enter».
5) On «Select Function» display, select «Active Test».

NOTE:
- In order to check the body integrated unit function, inspect the body integrated unit and actuator using Subaru Select Monitor without operating switches.
- For detailed operation procedures, refer to “Application help”.

B: LIST

Item	Display	Note
lock actuator LOCK output	ON/OFF	—
All seat UNLOCK output	ON/OFF	—
R gate/trunk UNLOCK output	ON/OFF	—
Shift lock solenoid output	ON/OFF	—
Key lock solenoid output	ON/OFF	—
Keyless Buzzer Output	ON/OFF	—
Horn Output	ON/OFF	—

NOTE:
If not equipped (depending on destination area or vehicle equipment condition), process will not go on.

13.List of Diagnostic Trouble Code (DTC)

A: LIST

DTC	Item	Note
None	COMMUNICATION FOR INITIALIZING IMPOSSIBLE	<Ref. to LAN(diag)-12, COMMUNICATION FOR INITIALIZING IMPOSSIBLE, Subaru Select Monitor.>
B1010	BODY CONTROL SYSTEM (BIU) MALFUNCTION	<Ref. to BC(diag)-33, DTC B1010 BODY CONTROL SYSTEM (BIU) MALFUNCTION, Diagnostic Procedure with Diagnostic Trouble Code (DTC).>
B1011	BATTERY CONTROL POWER SUPPLY	<Ref. to BC(diag)-34, DTC B1011 BATTERY CONTROL POWER SUPPLY, Diagnostic Procedure with Diagnostic Trouble Code (DTC).>
B1012	BATTERY BACKUP POWER SUPPLY	<Ref. to BC(diag)-36, DTC B1012 BATTERY BACKUP POWER SUPPLY, Diagnostic Procedure with Diagnostic Trouble Code (DTC).>
B1013	IGNITION POWER	<Ref. to BC(diag)-38, DTC B1013 IGNITION POWER, Diagnostic Procedure with Diagnostic Trouble Code (DTC).>
B1014	ACC POWER	<Ref. to BC(diag)-40, DTC B1014 ACC POWER, Diagnostic Procedure with Diagnostic Trouble Code (DTC).>
B1015	KEY INTERLOCK CIRCUIT	<Ref. to BC(diag)-42, DTC B1015 KEY INTERLOCK CIRCUIT, Diagnostic Procedure with Diagnostic Trouble Code (DTC).>
B1016	SHIFT LOCK CIRCUIT	<Ref. to BC(diag)-45, DTC B1016 SHIFT LOCK CIRCUIT, Diagnostic Procedure with Diagnostic Trouble Code (DTC).>
B1401	METER COLLATION	<Ref. to BC(diag)-47, DTC B1401 METER COLLATION, Diagnostic Procedure with Diagnostic Trouble Code (DTC).>
B1402	IMMOBILIZER KEY COLLATION	<Ref. to BC(diag)-47, DTC B1402 IMMOBILIZER KEY COLLATION, Diagnostic Procedure with Diagnostic Trouble Code (DTC).>
B1405	SCU COLLATION	<Ref. to BC(diag)-47, DTC B1405 SCU COLLATION, Diagnostic Procedure with Diagnostic Trouble Code (DTC).>
B1406	SCU_EEPROM	<Ref. to BC(diag)-47, DTC B1406 SCU_EEPROM, Diagnostic Procedure with Diagnostic Trouble Code (DTC).>
B1407	MET COMMUNICATION	<Ref. to BC(diag)-47, DTC B1407 MET COMMUNICATION, Diagnostic Procedure with Diagnostic Trouble Code (DTC).>
B1408	METER NON-VOLATILE MEMORY	<Ref. to BC(diag)-47, DTC B1408 METER NON-VOLATILE MEMORY, Diagnostic Procedure with Diagnostic Trouble Code (DTC).>
B1409	SCU COMMUNICATION	<Ref. to BC(diag)-47, DTC B1409 SCU COMMUNICATION, Diagnostic Procedure with Diagnostic Trouble Code (DTC).>
B1410	TRANSPONDER COMMUNICATION	<Ref. to BC(diag)-47, DTC B1410 TRANSPONDER COMMUNICATION, Diagnostic Procedure with Diagnostic Trouble Code (DTC).>
B1411	IMMOBILIZER ANTENNA	<Ref. to BC(diag)-47, DTC B1411 IMMOBILIZER ANTENNA, Diagnostic Procedure with Diagnostic Trouble Code (DTC).>
U1201	CAN-HS COUNTER ABNORMAL	<Ref. to BC(diag)-47, DTC U1201 CAN-HS COUNTER ABNORMAL, Diagnostic Procedure with Diagnostic Trouble Code (DTC).>
U0073	CONTROL MODULE COMMUNICATION BUS OFF	<Ref. to BC(diag)-47, DTC U0073 CONTROL MODULE COMMUNICATION BUS OFF, Diagnostic Procedure with Diagnostic Trouble Code (DTC).>
U0100	LOST COMMUNICATION WITH ECM/PCM “A”	<Ref. to BC(diag)-47, DTC U0100 LOST COMMUNICATION WITH ECM/PCM “A”, Diagnostic Procedure with Diagnostic Trouble Code (DTC).>
U0101	LOST COMMUNICATION WITH TCM	<Ref. to BC(diag)-47, DTC U0101 LOST COMMUNICATION WITH TCM, Diagnostic Procedure with Diagnostic Trouble Code (DTC).>
U0122	LOST COMMUNICATION WITH VEHICLE DYNAMICS CONTROL MODULE	<Ref. to BC(diag)-48, DTC U0122 LOST COMMUNICATION WITH VEHICLE DYNAMICS CONTROL MODULE, Diagnostic Procedure with Diagnostic Trouble Code (DTC).>
U0128	LOST COMMUNICATION WITH PARK BRAKE CONTROL MODULE	<Ref. to BC(diag)-48, DTC U0128 LOST COMMUNICATION WITH PARK BRAKE CONTROL MODULE, Diagnostic Procedure with Diagnostic Trouble Code (DTC).>
U0155	LOST COMMUNICATION WITH INSTRUMENT PANEL CLUSTER (IPC) CONTROL MODULE	<Ref. to BC(diag)-48, DTC U0155 LOST COMMUNICATION WITH INSTRUMENT PANEL CLUSTER (IPC) CONTROL MODULE, Diagnostic Procedure with Diagnostic Trouble Code (DTC).>

DTC	Item	Note
U0164	LOST COMMUNICATION WITH HVAC CONTROL MODULE	<Ref. to BC(diag)-48, DTC U0164 LOST COMMUNICATION WITH HVAC CONTROL MODULE, Diagnostic Procedure with Diagnostic Trouble Code (DTC).>
U0327	SOFTWARE INCOMPATIBILITY WITH VEHICLE SECURITY CONTROL MODULE	<Ref. to BC(diag)-48, DTC U0327 SOFTWARE INCOMPATIBILITY WITH VEHICLE SECURITY CONTROL MODULE, Diagnostic Procedure with Diagnostic Trouble Code (DTC).>
U0401	INVALID DATA RECEIVED FROM ECM/PCM “A”	<Ref. to BC(diag)-48, DTC U0401 INVALID DATA RECEIVED FROM ECM/PCM “A”, Diagnostic Procedure with Diagnostic Trouble Code (DTC).>
U0402	INVALID DATA RECEIVED FROM TCM	<Ref. to BC(diag)-48, DTC U0402 INVALID DATA RECEIVED FROM TCM, Diagnostic Procedure with Diagnostic Trouble Code (DTC).>
U0416	INVALID DATA RECEIVED FROM VEHICLE DYNAMICS CONTROL MODULE	<Ref. to BC(diag)-48, DTC U0416 INVALID DATA RECEIVED FROM VEHICLE DYNAMICS CONTROL MODULE, Diagnostic Procedure with Diagnostic Trouble Code (DTC).>
U0417	INVALID DATA RECEIVED FROM PARK BRAKE CONTROL MODULE	<Ref. to BC(diag)-48, DTC U0417 INVALID DATA RECEIVED FROM PARK BRAKE CONTROL MODULE, Diagnostic Procedure with Diagnostic Trouble Code (DTC).>
U0423	INVALID DATA RECEIVED FROM INSTRUMENT PANEL CLUSTER CONTROL MODULE	<Ref. to BC(diag)-49, DTC U0423 INVALID DATA RECEIVED FROM INSTRUMENT PANEL CLUSTER CONTROL MODULE, Diagnostic Procedure with Diagnostic Trouble Code (DTC).>
U0424	INVALID DATA RECEIVED FROM HVAC CONTROL MODULE	<Ref. to BC(diag)-49, DTC U0424 INVALID DATA RECEIVED FROM HVAC CONTROL MODULE, Diagnostic Procedure with Diagnostic Trouble Code (DTC).>
U0427	INVALID DATA RECEIVED FROM VEHICLE SECURITY CONTROL MODULE	<Ref. to BC(diag)-49, DTC U0427 INVALID DATA RECEIVED FROM VEHICLE SECURITY CONTROL MODULE, Diagnostic Procedure with Diagnostic Trouble Code (DTC).>
U123C	LOST COMMUNICATION WITH HIGH BEAM ASSIST CONTROL MODULE	<Ref. to BC(diag)-49, DTC U123C LOST COMMUNICATION WITH HIGH BEAM ASSIST CONTROL MODULE, Diagnostic Procedure with Diagnostic Trouble Code (DTC).>
U1500	KEYLESS UART COM. MALFUNCTION	<Ref. to BC(diag)-50, DTC U1500 KEYLESS UART COM. MALFUNCTION, Diagnostic Procedure with Diagnostic Trouble Code (DTC).>
U153D	INVALID DATA RECEIVED FROM HIGH BEAM ASSIST CONTROL MODULE	<Ref. to BC(diag)-53, DTC U153D INVALID DATA RECEIVED FROM HIGH BEAM ASSIST CONTROL MODULE, Diagnostic Procedure with Diagnostic Trouble Code (DTC).>

14.Diagnostic Procedure with Diagnostic Trouble Code (DTC)

A: DTC B1010 BODY CONTROL SYSTEM (BIU) MALFUNCTION

DTC DETECTING CONDITION:
System error in body integrated unit
TROUBLE SYMPTOM:
LAN communication immobilizer function may not be executed normally.

	Step	Check	Yes	No
1	**CHECK DTC.** Check DTC indicated by body integrated unit. <Ref. to BC(diag)-11, Read Diagnostic Trouble Code (DTC).>	Is DTC B1010 a current malfunction?	Go to step **2**.	Temporary EEPROM access error occurred.
2	**CHECK CONNECTOR.** 1) Turn the ignition switch to OFF. 2) Disconnect the body integrated unit connector. 3) Connect the disconnected connectors. 4) Read the DTC of body integrated unit using Subaru Select Monitor. <Ref. to BC(diag)-11, Read Diagnostic Trouble Code (DTC).>	Is DTC B1010 displayed? (Current malfunction)	Replace the body integrated unit. <Ref. to SL-81, Body Integrated Unit.>	Temporary EEPROM access error occurred.

B: DTC B1011 BATTERY CONTROL POWER SUPPLY

DTC DETECTING CONDITION:

- Voltage failure caused by poor contact of battery power supply control circuit
- Battery voltage of body integrated unit is not within the range of 8.5 — 16.5 V.

TROUBLE SYMPTOM:

Functions of body integrated unit stop.

NOTE:

When B1012 «BATTERY BACKUP POWER SUPPLY» is output at the same time, all the function of body integrated unit may not operate.

WIRING DIAGRAM:

Immobilizer system <Ref. to WI-244, WIRING DIAGRAM, Immobilizer System.>

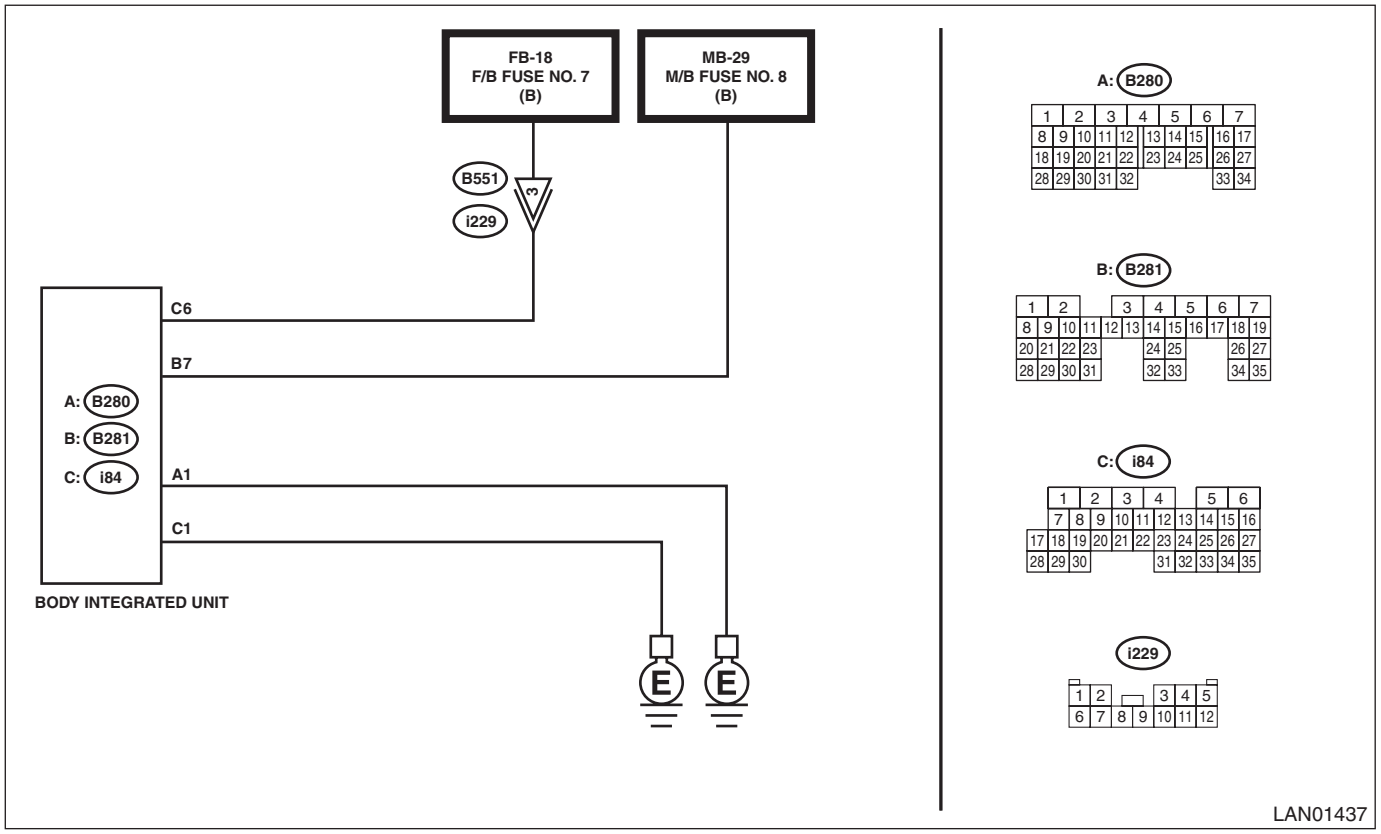

Step		Check	Yes	No
1	**CHECK DTC.** Read the DTC of body integrated unit using Subaru Select Monitor. <Ref. to BC(diag)-11, Read Diagnostic Trouble Code (DTC).>	Is DTC B1011 displayed? (Current malfunction)	Go to step **2**.	Go to step **5**.
2	**CHECK DTC.** 1) Turn the ignition switch to OFF. 2) Disconnect and then connect the body integrated unit connector. 3) Wait approx. 2 minutes. 4) Turn the ignition switch to ON. 5) Read the DTC of body integrated unit using Subaru Select Monitor. <Ref. to BC(diag)-11, Read Diagnostic Trouble Code (DTC).>	Is DTC B1011 displayed? (Current malfunction)	Go to step **3**.	Go to step **5**.
3	**CHECK FUSE.** 1) Turn the ignition switch to OFF. 2) Check the fuse.	Is the check result OK?	Go to step **4**.	Replace the defective fuse.

	Step	Check	Yes	No
4	**CHECK HARNESS.** 1) Disconnect the body integrated unit connector. 2) Using the tester, measure the voltage between terminals. ***Connector & terminal*** ***(i84) No. 6 (+) — Chassis ground (–):***	Is the voltage 8.5 — 16.5 V?	Replace the body integrated unit. <Ref. to SL-81, Body Integrated Unit.>	Repair the harness between body integrated unit and fuse.
5	**CHECK CONNECTOR.** 1) Turn the ignition switch to OFF. 2) Disconnect the body integrated unit connector.	Is there poor contact of connector?	Repair or replace the poor contact of connector.	Even if DTC is displayed, the circuit has returned to a normal condition at this time. Reproduce the failure, and then perform the diagnosis again. NOTE: In this case, temporary poor contact of connector, temporary open or short circuit of harness may be the cause.

C: DTC B1012 BATTERY BACKUP POWER SUPPLY

DTC DETECTING CONDITION:
Voltage failure caused by poor contact of battery power supply backup circuits

TROUBLE SYMPTOM:
Illuminations for the keyless entry, map light, luggage light, trunk light, room light, and ignition switch do not turn on.

NOTE:
When B1011 «BATTERY P/SUPPLY MALFUNCTION CONT» is output at the same time, all the function of body integrated unit may not operate.

WIRING DIAGRAM:
Immobilizer system <Ref. to WI-244, WIRING DIAGRAM, Immobilizer System.>

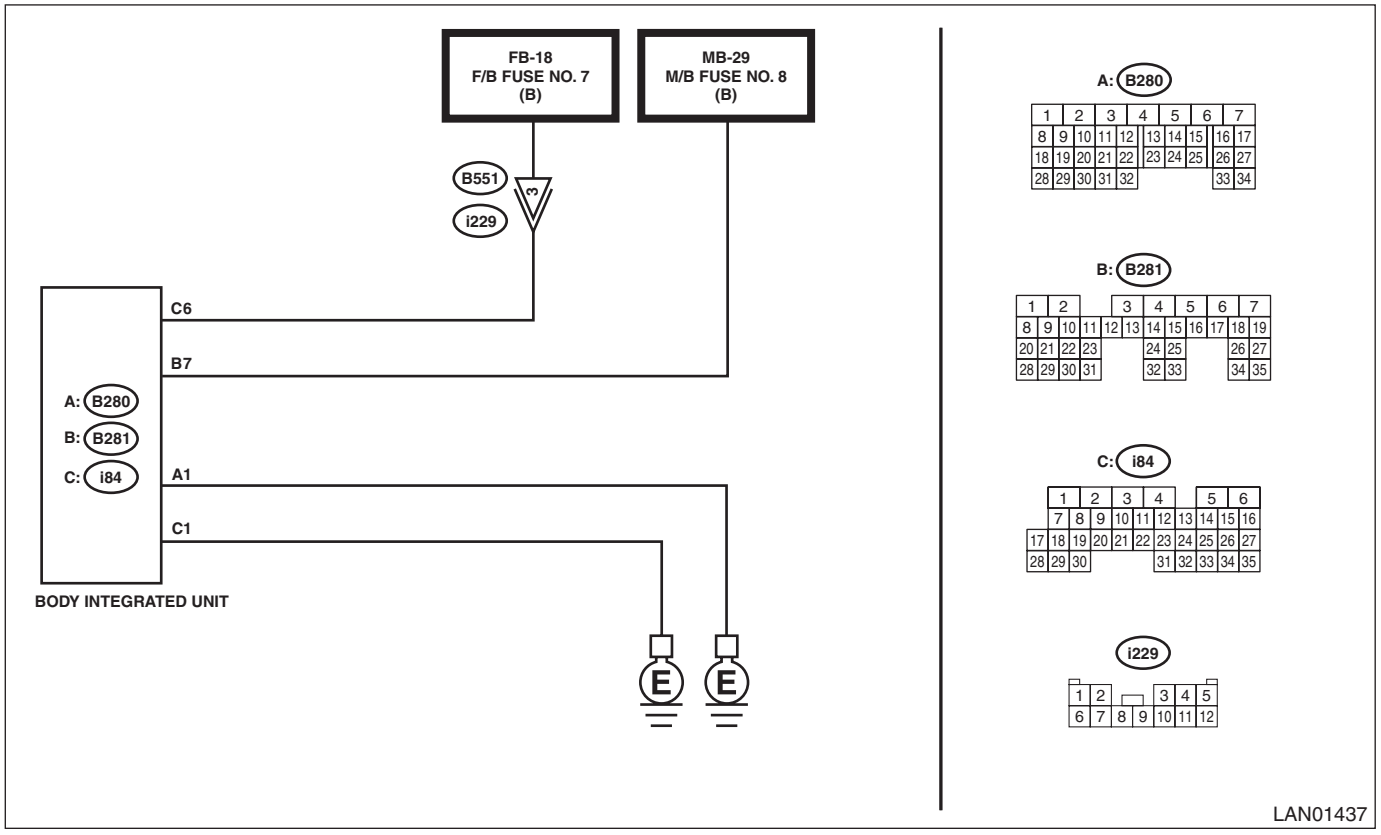

Step		Check	Yes	No
1	**CHECK DTC.** Read the DTC of body integrated unit using Subaru Select Monitor. <Ref. to BC(diag)-11, Read Diagnostic Trouble Code (DTC).>	Is DTC B1012 displayed? (Current malfunction)	Go to step **2**.	Go to step **5**.
2	**CHECK DTC.** 1) Turn the ignition switch to OFF. 2) Disconnect and then connect the body integrated unit connector. 3) Wait approx. 2 minutes. 4) Turn the ignition switch to ON. 5) Read the DTC of body integrated unit using Subaru Select Monitor. <Ref. to BC(diag)-11, Read Diagnostic Trouble Code (DTC).>	Is DTC B1012 displayed? (Current malfunction)	Go to step **3**.	Go to step **5**.
3	**CHECK FUSE.** 1) Turn the ignition switch to OFF. 2) Check the fuse.	Is the check result OK?	Go to step **4**.	Replace the defective fuse.

	Step	Check	Yes	No
4	**CHECK HARNESS.** 1) Disconnect the body integrated unit connector. 2) Using the tester, measure the voltage between terminals. ***Connector & terminal*** ***(B281) No. 7 (+) — Chassis ground (–):***	Is the voltage 8.5 — 16.5 V?	Replace the body integrated unit. <Ref. to SL-81, Body Integrated Unit.>	Repair the harness between body integrated unit and fuse.
5	**CHECK CONNECTOR.** 1) Turn the ignition switch to OFF. 2) Disconnect the body integrated unit connector.	Is there poor contact of connector?	Repair or replace the poor contact of connector.	Even if DTC is displayed, the circuit has returned to a normal condition at this time. Reproduce the failure, and then perform the diagnosis again. NOTE: In this case, temporary poor contact of connector, temporary open or short circuit of harness may be the cause.

D: DTC B1013 IGNITION POWER

DTC DETECTING CONDITION:
Voltage failure caused by poor contact of IGN power supply circuits
TROUBLE SYMPTOM:
Symptoms such as shift lock or wiper not operating may occur.
WIRING DIAGRAM:
Shift lock control system <Ref. to WI-344, WIRING DIAGRAM, Shift Lock Control System.>

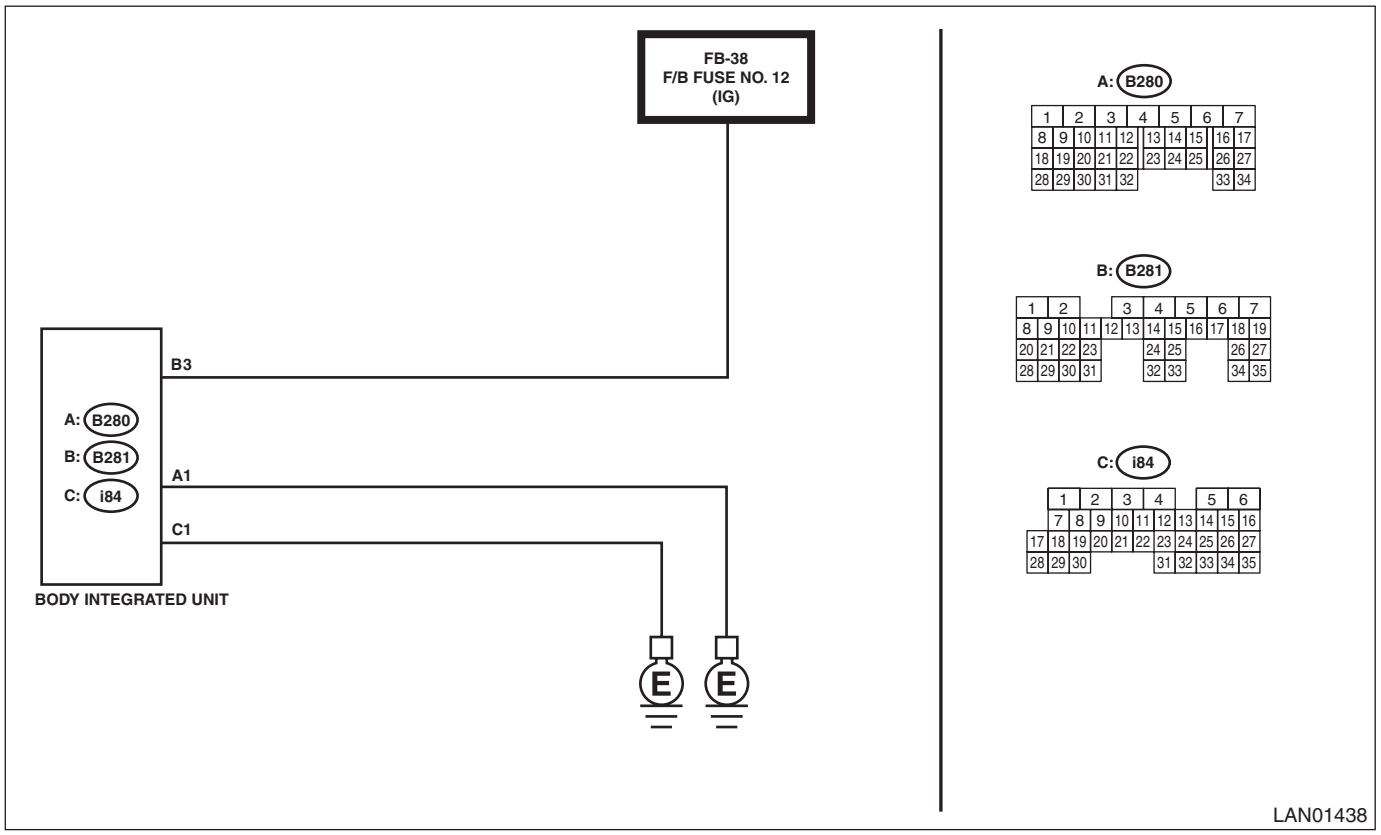

Step		Check	Yes	No
1	**CHECK DTC.** Read the DTC of body integrated unit using Subaru Select Monitor. <Ref. to BC(diag)-11, Read Diagnostic Trouble Code (DTC).>	Is DTC B1013 displayed? (Current malfunction)	Go to step **2**.	Go to step **5**.
2	**CHECK DTC.** 1) Turn the ignition switch to OFF. 2) Disconnect and then connect the body integrated unit connector. 3) Wait approx. 2 minutes. 4) Turn the ignition switch to ON. 5) Read the DTC of body integrated unit using Subaru Select Monitor. <Ref. to BC(diag)-11, Read Diagnostic Trouble Code (DTC).>	Is DTC B1013 displayed? (Current malfunction)	Go to step **3**.	Go to step **5**.
3	**CHECK FUSE.** 1) Turn the ignition switch to OFF. 2) Check the fuse.	Is the check result OK?	Go to step **4**.	Replace the defective fuse.
4	**CHECK HARNESS.** 1) Disconnect the body integrated unit connector. 2) Using the tester, measure the voltage between terminals. ***Connector & terminal*** ***(B281) No. 3 (+) — Chassis ground (–):***	Is the voltage 8.5 — 16.5 V?	Replace the body integrated unit. <Ref. to SL-81, Body Integrated Unit.>	Repair the harness between body integrated unit and fuse.

	Step	Check	Yes	No
5	**CHECK CONNECTOR.** 1) Turn the ignition switch to OFF. 2) Disconnect the body integrated unit connector.	Is there poor contact of connector?	Repair or replace the poor contact of connector.	Even if DTC is displayed, the circuit has returned to a normal condition at this time. Reproduce the failure, and then perform the diagnosis again. NOTE: In this case, temporary poor contact of connector, temporary open or short circuit of harness may be the cause.

E: DTC B1014 ACC POWER

DTC DETECTING CONDITION:
Voltage failure caused by poor contact of ACC power supply circuit
TROUBLE SYMPTOM:
DRL may not illuminate.
WIRING DIAGRAM:
Shift lock control system <Ref. to WI-344, WIRING DIAGRAM, Shift Lock Control System.>

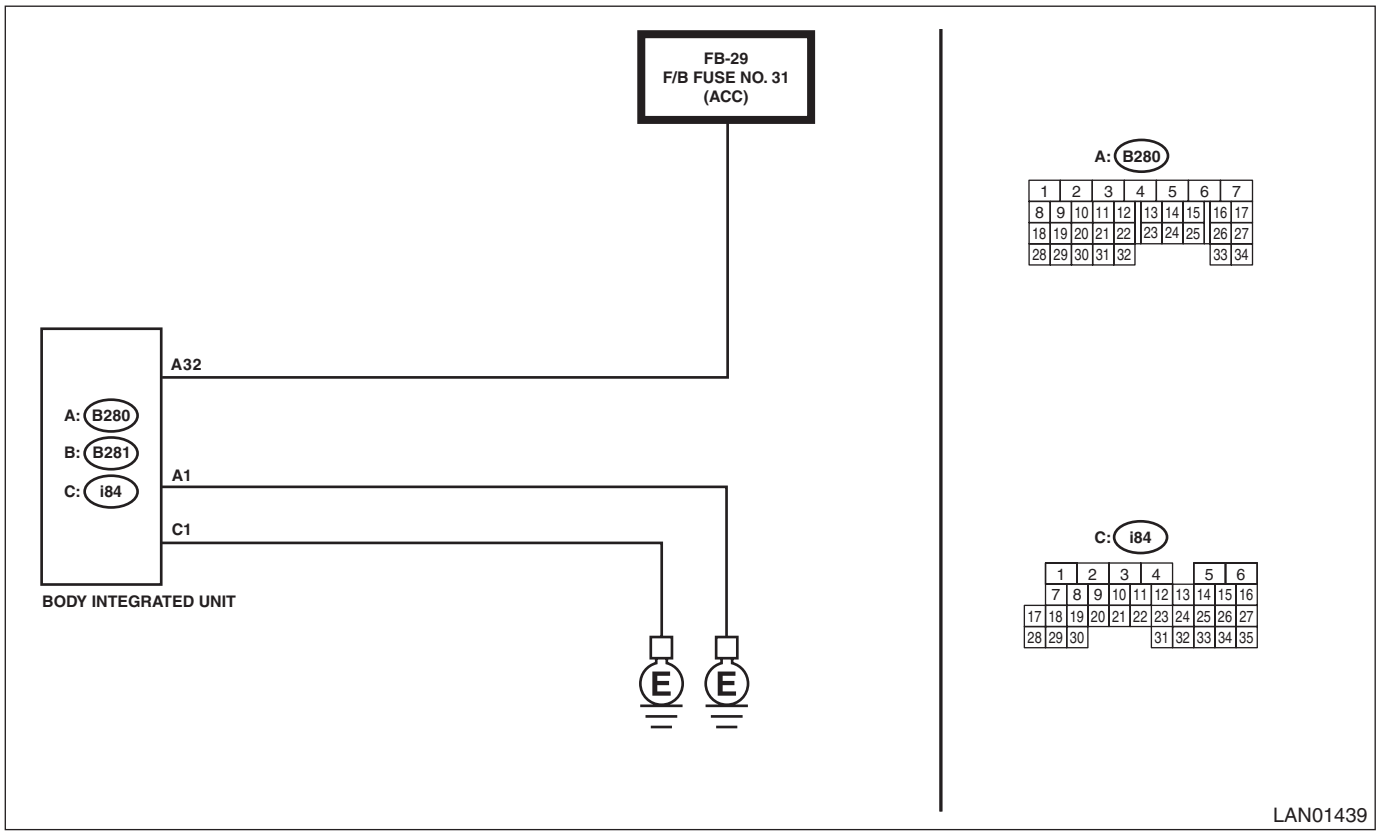

Step		Check	Yes	No
1	**CHECK DTC.** Read the DTC of body integrated unit using Subaru Select Monitor. <Ref. to BC(diag)-11, Read Diagnostic Trouble Code (DTC).>	Is DTC B1014 displayed? (Current malfunction)	Go to step **2**.	Go to step **5**.
2	**CHECK DTC.** 1) Turn the ignition switch to OFF. 2) Disconnect and then connect the body integrated unit connector. 3) Wait approx. 2 minutes. 4) Turn the ignition switch to ON. 5) Read the DTC of body integrated unit using Subaru Select Monitor. <Ref. to BC(diag)-11, Read Diagnostic Trouble Code (DTC).>	Is DTC B1014 displayed? (Current malfunction)	Go to step **3**.	Go to step **5**.
3	**CHECK FUSE.** 1) Turn the ignition switch to OFF. 2) Check the fuse.	Is the check result OK?	Go to step **4**.	Replace the defective fuse.
4	**CHECK HARNESS.** 1) Disconnect the body integrated unit connector. 2) Using the tester, measure the voltage between terminals. ***Connector & terminal*** ***(B280) No. 32 (+) — Chassis ground (–):***	Is the voltage 8.5 — 16.5 V?	Replace the body integrated unit. <Ref. to SL-81, Body Integrated Unit.>	Repair the harness between body integrated unit and fuse.

	Step	Check	Yes	No
5	**CHECK CONNECTOR.** 1) Turn the ignition switch to OFF. 2) Disconnect the body integrated unit connector.	Is there poor contact of connector?	Repair or replace the poor contact of connector.	Even if DTC is displayed, the circuit has returned to a normal condition at this time. Reproduce the failure, and then perform the diagnosis again. NOTE: In this case, temporary poor contact of connector, temporary open or short circuit of harness may be the cause.

F: DTC B1015 KEY INTERLOCK CIRCUIT

DTC DETECTING CONDITION:
Short to ground in key interlock circuit
TROUBLE SYMPTOM:
Key interlock does not keep lock condition.
WIRING DIAGRAM:
Shift lock control system <Ref. to WI-344, WIRING DIAGRAM, Shift Lock Control System.>

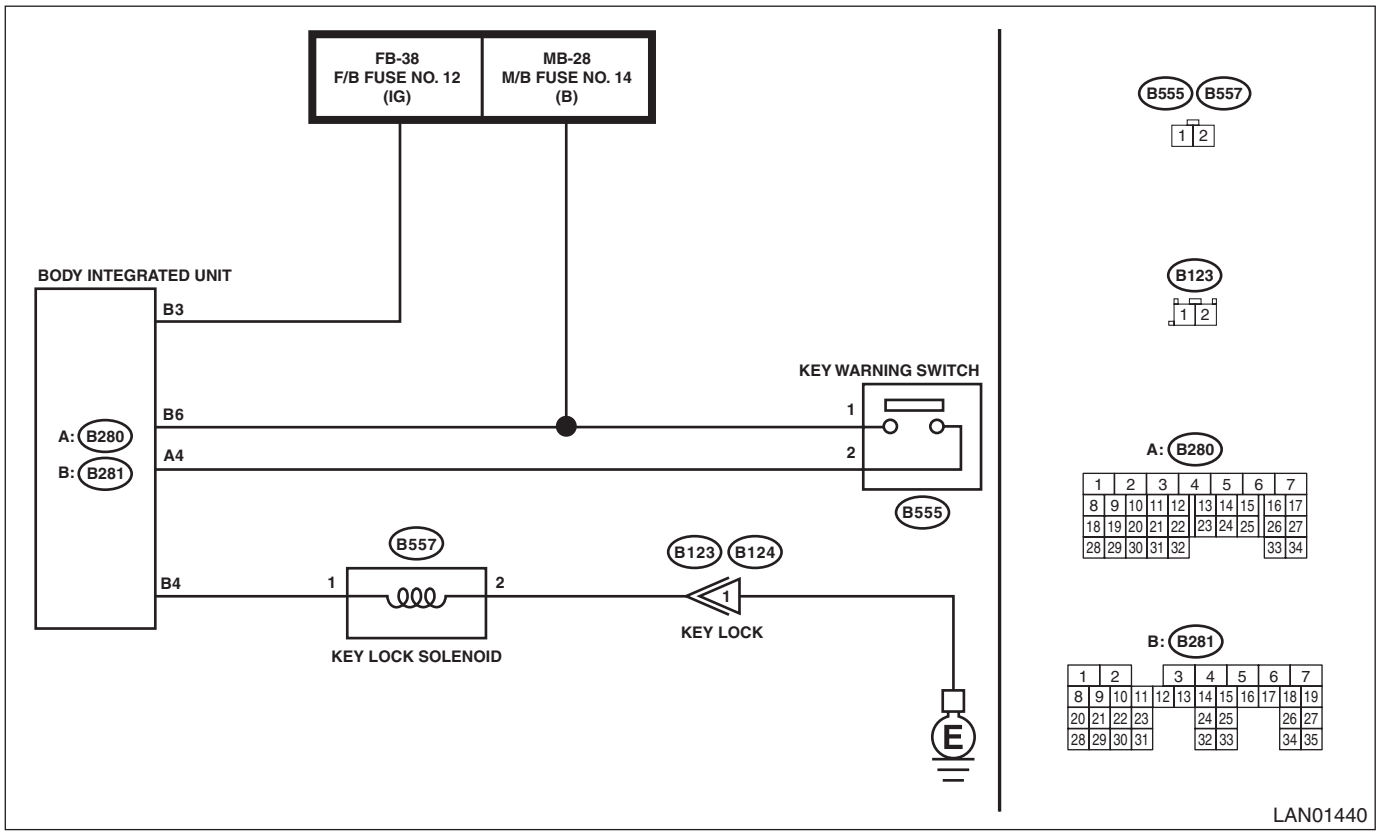

Step		Check	Yes	No
1	**CHECK DTC.** 1) Insert the ignition key. 2) Turn the ignition switch to ON. 3) Shift to the Neutral range. 4) Shift into P range. 5) Shift to the Neutral range. 6) Shift into P range. 7) Shift to the Neutral range. 8) Read the DTC of body integrated unit using Subaru Select Monitor. <Ref. to BC(diag)-11, Read Diagnostic Trouble Code (DTC).>	Is DTC B1015 displayed? (Current malfunction)	Go to step **2**.	Go to step **8**.

	Step	Check	Yes	No
2	**CHECK DTC.** 1) Shift the select lever to P range. 2) Remove the ignition key. 3) Disconnect the key actuator connector (B557) and body integrated unit connector (B281). 4) Connect the disconnected connectors. 5) Insert the ignition key. 6) Turn the ignition switch to ON and shift into Neutral. 7) Read the DTC of body integrated unit using Subaru Select Monitor. <Ref. to BC(diag)-11, Read Diagnostic Trouble Code (DTC).>	Is DTC B1015 displayed? (Current malfunction)	Go to step **3**.	Go to step **8**.
3	**CHECK KEY ACTUATOR.** 1) Turn the ignition switch to OFF. 2) Disconnect the key actuator connector (B557). 3) Measure the resistance between key actuator connectors. ***Terminals*** ***Key actuator*** ***No. 1 — No. 2:***	Is the resistance 103 — 115 Ω?	Go to step **4**.	Replace the key actuator. <Ref. to SL-69, Key Lock Cylinders.>
4	**CHECK KEY ACTUATOR.** Connect the battery terminals to the key actuator. ***Terminals*** ***Key actuator*** ***No. 1 — Positive terminal:*** ***No. 2 — Ground terminal:***	Is the actuator activated and then key locked?	Go to step **5**.	Replace the key actuator. <Ref. to SL-69, Key Lock Cylinders.>
5	**CHECK HARNESS.** 1) Disconnect the body integrated unit connector (B281). 2) Measure the resistance between body integrated unit and key actuator using tester. ***Connector & terminal*** ***(B557) No. 1 — (B281) No. 4:***	Is the resistance less than 10 Ω?	Go to step **6**.	Repair or replace the open circuit of harness.
6	**CHECK HARNESS (GROUND SHORT CIRCUIT).** Measure the resistance between body integrated unit and chassis ground using tester. ***Connector & terminal*** ***(B281) No. 4 — Chassis ground:***	Is the resistance 1 MΩ or more?	Go to step **7**.	Repair or replace the short circuit of the harness.
7	**CHECK HARNESS.** 1) Connect the body integrated unit. 2) Turn the ignition switch to ON. 3) Measure the voltage between body integrated unit and chassis ground using tester. ***Connector & terminal*** ***(B281) No. 4 (+) — Chassis ground (–):***	Is the voltage 6 V or more?	Go to step **8**.	Replace the body integrated unit. <Ref. to SL-81, Body Integrated Unit.>

	Step	Check	Yes	No
8	**CHECK CONNECTOR.** 1) Turn the ignition switch to OFF. 2) Disconnect the body integrated unit connector (B281) and key actuator connector (B557).	Is there poor contact at disconnected connector terminal?	Repair the terminal where poor contact exists, or replace harness.	Even if DTC is displayed, the circuit has returned to a normal condition at this time. Reproduce the failure, and then perform the diagnosis again. NOTE: In this case, temporary poor contact of connector, temporary open or short circuit of harness may be the cause.

G: DTC B1016 SHIFT LOCK CIRCUIT

DTC DETECTING CONDITION:
Shift lock circuit is open, or shorted to power or ground.
TROUBLE SYMPTOM:
Shift lock does not be released or remain locked.
WIRING DIAGRAM:
Shift lock control system <Ref. to WI-344, WIRING DIAGRAM, Shift Lock Control System.>

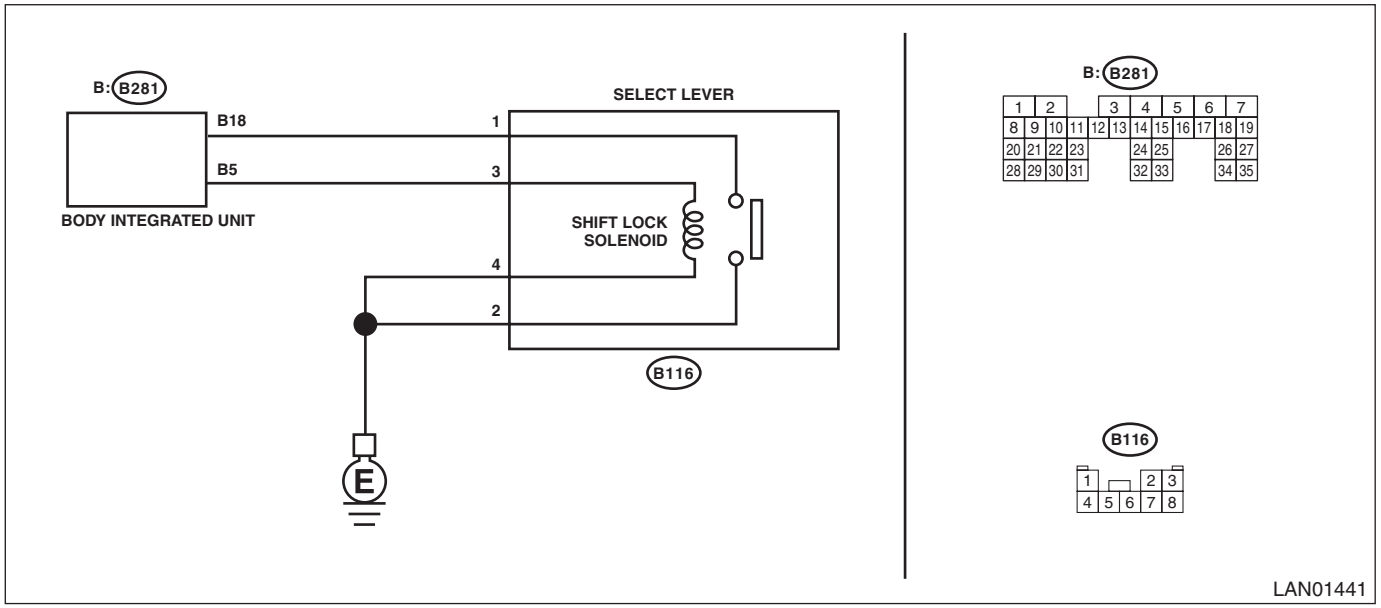

Step		Check	Yes	No
1	**CHECK DTC.** 1) Turn the ignition switch to ON. 2) Keep the Parking range for approx. 5 seconds. 3) Read the DTC of body integrated unit using Subaru Select Monitor. <Ref. to BC(diag)-11, Read Diagnostic Trouble Code (DTC).>	Is DTC B1016 displayed? (Current malfunction)	Go to step **6**.	Go to step **2**.
2	**CHECK DTC.** 1) Turn the ignition switch to OFF. 2) Disconnect the shift lock solenoid connector. 3) Connect the disconnected connectors. 4) Turn the ignition switch to ON, then keep the Parking range for approx. 5 seconds. 5) Read the DTC of body integrated unit using Subaru Select Monitor. <Ref. to BC(diag)-11, Read Diagnostic Trouble Code (DTC).>	Is DTC B1016 displayed? (Current malfunction)	Go to step **3**.	Go to step **7**.
3	**CHECK HARNESS (OPEN CIRCUIT).** 1) Turn the ignition switch to OFF. 2) Disconnect the shift lock solenoid connector. 3) Using the tester, measure the resistance between terminals. ***Connector & terminal*** ***(B116) No. 4 — Chassis ground:***	Is the resistance less than 10 Ω?	Go to step **4**.	Repair or replace the open circuit of harness.

	Step	Check	Yes	No
4	**CHECK SHIFT LOCK SOLENOID.** Using a tester, measure the resistance between shift lock solenoid terminals. ***Terminals*** ***Shift lock solenoid*** ***No. 4 — No. 3:***	Is the resistance between 27 — 31 Ω?	Go to step **5**.	Replace the shift lock solenoid. <Ref. to CS-51, REMOVAL, AT Shift Lock Solenoid and "P" Range Switch.>
5	**CHECK SHIFT LOCK SOLENOID.** Connect the battery terminal to shift lock solenoid. ***Terminals*** ***Shift lock solenoid*** ***No. 3 — Positive terminal:*** ***No. 4 — Ground terminal:***	Does the shift lock solenoid operate and then release the lock?	Go to step **6**.	Replace the shift lock solenoid. <Ref. to CS-51, REMOVAL, AT Shift Lock Solenoid and "P" Range Switch.>
6	**CHECK HARNESS (OPEN CIRCUIT).** Use a tester to measure the resistance between harness terminals. ***Connector & terminal*** ***(B116) No. 3 — (B281) No. 5:*** NOTE: If body integrated unit and shift lock connector are not disconnected, disconnect them first and then perform measurement.	Is the resistance less than 10 Ω?	Replace the body integrated unit. <Ref. to SL-81, Body Integrated Unit.>	Repair or replace the open circuit of harness.
7	**CHECK DTC.** 1) Depress the brake pedal at the parking range. 2) Read the DTC of body integrated unit using Subaru Select Monitor. <Ref. to BC(diag)-11, Read Diagnostic Trouble Code (DTC).>	Is DTC B1016 displayed? (Current malfunction)	Go to step **8**.	Go to step **9**.
8	**CHECK DTC.** 1) Turn the ignition switch to OFF. 2) Disconnect the body integrated unit connector and shift lock connector. 3) Connect the disconnected connectors. 4) Turn the ignition switch to ON. 5) Depress the brake pedal at the parking range. 6) Read the DTC of body integrated unit using Subaru Select Monitor. <Ref. to BC(diag)-11, Read Diagnostic Trouble Code (DTC).>	Is DTC B1016 displayed? (Current malfunction)	Go to step **4**.	Go to step **9**.
9	**CHECK CONNECTOR.** 1) Turn the ignition switch to OFF. 2) Disconnect the body integrated unit connector and shift lock connector.	Is there poor contact of connector terminal?	Repair or replace the poor contact of terminal.	Even if DTC is displayed, the circuit has returned to a normal condition at this time. Reproduce the failure, and then perform the diagnosis again. NOTE: In this case, temporary poor contact of connector, temporary open or short circuit of harness may be the cause.

H: DTC B1401 METER COLLATION

For detailed diagnosis procedure, refer to IMMOBILIZER (DIAG). <Ref. to IM(diag)-27, DTC B1401 METER COLLATION, Diagnostic Procedure with Diagnostic Trouble Code (DTC).>

I: DTC B1402 IMMOBILIZER KEY COLLATION

For detailed diagnosis procedure, refer to IMMOBILIZER (DIAG). <Ref. to IM(diag)-27, DTC B1402 IMMOBILIZER KEY COLLATION, Diagnostic Procedure with Diagnostic Trouble Code (DTC).>

J: DTC B1405 SCU COLLATION

For detailed diagnosis procedure, refer to IMMOBILIZER (DIAG). <Ref. to IM(diag)-28, DTC B1405 SCU COLLATION, Diagnostic Procedure with Diagnostic Trouble Code (DTC).>

K: DTC B1406 SCU_EEPROM

For detailed diagnosis procedure, refer to IMMOBILIZER (DIAG). <Ref. to IM(diag)-28, DTC B1406 SCU_EEPROM, Diagnostic Procedure with Diagnostic Trouble Code (DTC).>

L: DTC B1407 MET COMMUNICATION

For detailed diagnosis procedure, refer to IMMOBILIZER (DIAG). <Ref. to IM(diag)-29, DTC B1407 MET COMMUNICATION, Diagnostic Procedure with Diagnostic Trouble Code (DTC).>

M: DTC B1408 METER NON-VOLATILE MEMORY

For detailed diagnosis procedure, refer to IMMOBILIZER (DIAG). <Ref. to IM(diag)-29, DTC B1408 METER NON-VOLATILE MEMORY, Diagnostic Procedure with Diagnostic Trouble Code (DTC).>

N: DTC B1409 SCU COMMUNICATION

For detailed diagnosis procedure, refer to IMMOBILIZER (DIAG). <Ref. to IM(diag)-30, DTC B1409 SCU COMMUNICATION, Diagnostic Procedure with Diagnostic Trouble Code (DTC).>

O: DTC B1410 TRANSPONDER COMMUNICATION

For detailed diagnosis procedure, refer to IMMOBILIZER (DIAG). <Ref. to IM(diag)-32, DTC B1410 TRANSPONDER COMMUNICATION, Diagnostic Procedure with Diagnostic Trouble Code (DTC).>

P: DTC B1411 IMMOBILIZER ANTENNA

For detailed diagnosis procedure, refer to IMMOBILIZER (DIAG). <Ref. to IM(diag)-32, DTC B1411 IMMOBILIZER ANTENNA, Diagnostic Procedure with Diagnostic Trouble Code (DTC).>

Q: DTC U1201 CAN-HS COUNTER ABNORMAL

Malfunction of high-speed CAN communication.

NOTE:
Perform the diagnosis for LAN system. <Ref. to LAN(diag)-2, PROCEDURE, Basic Diagnostic Procedure.>

R: DTC U0073 CONTROL MODULE COMMUNICATION BUS OFF

Detected when malfunction occurs in CAN line. (Bus off)

NOTE:
Perform the diagnosis for LAN system. <Ref. to LAN(diag)-2, PROCEDURE, Basic Diagnostic Procedure.>

S: DTC U0100 LOST COMMUNICATION WITH ECM/PCM “A”

No data is received from ECM.

NOTE:
Perform the diagnosis for LAN system. <Ref. to LAN(diag)-2, PROCEDURE, Basic Diagnostic Procedure.>

T: DTC U0101 LOST COMMUNICATION WITH TCM

No data is received from TCM.

NOTE:
Perform the diagnosis for LAN system. <Ref. to LAN(diag)-2, PROCEDURE, Basic Diagnostic Procedure.>

U: DTC U0122 LOST COMMUNICATION WITH VEHICLE DYNAMICS CONTROL MODULE

No data is received from VDC.

NOTE:
Perform the diagnosis for LAN system. <Ref. to LAN(diag)-2, PROCEDURE, Basic Diagnostic Procedure.>

V: DTC U0128 LOST COMMUNICATION WITH PARK BRAKE CONTROL MODULE

No data is received from VDC.

NOTE:
Perform the diagnosis for LAN system. <Ref. to LAN(diag)-2, PROCEDURE, Basic Diagnostic Procedure.>

W: DTC U0155 LOST COMMUNICATION WITH INSTRUMENT PANEL CLUSTER (IPC) CONTROL MODULE

Not received data from meter.

NOTE:
Perform the diagnosis for LAN system. <Ref. to LAN(diag)-2, PROCEDURE, Basic Diagnostic Procedure.>

X: DTC U0164 LOST COMMUNICATION WITH HVAC CONTROL MODULE

No data is received from A/C control panel.

NOTE:
Perform the diagnosis for LAN system. <Ref. to LAN(diag)-2, PROCEDURE, Basic Diagnostic Procedure.>

Y: DTC U0327 SOFTWARE INCOMPATIBILITY WITH VEHICLE SECURITY CONTROL MODULE

No data is received from keyless access CM.

NOTE:
Perform the diagnosis for LAN system. <Ref. to LAN(diag)-2, PROCEDURE, Basic Diagnostic Procedure.>

Z: DTC U0401 INVALID DATA RECEIVED FROM ECM/PCM “A”

Received error data from ECM.

NOTE:
Perform the diagnosis for LAN system. <Ref. to LAN(diag)-2, PROCEDURE, Basic Diagnostic Procedure.>

AA:DTC U0402 INVALID DATA RECEIVED FROM TCM

Received error data from TCM.

NOTE:
Perform the diagnosis for LAN system. <Ref. to LAN(diag)-2, PROCEDURE, Basic Diagnostic Procedure.>

AB:DTC U0416 INVALID DATA RECEIVED FROM VEHICLE DYNAMICS CONTROL MODULE

Received error data from VDC.

NOTE:
Perform the diagnosis for LAN system. <Ref. to LAN(diag)-2, PROCEDURE, Basic Diagnostic Procedure.>

AC:DTC U0417 INVALID DATA RECEIVED FROM PARK BRAKE CONTROL MODULE

Received error data from VDC.

NOTE:
Perform the diagnosis for LAN system. <Ref. to LAN(diag)-2, PROCEDURE, Basic Diagnostic Procedure.>

AD:DTC U0423 INVALID DATA RECEIVED FROM INSTRUMENT PANEL CLUSTER CONTROL MODULE

Received error data from meter.

NOTE:
Perform the diagnosis for LAN system. <Ref. to LAN(diag)-2, PROCEDURE, Basic Diagnostic Procedure.>

AE:DTC U0424 INVALID DATA RECEIVED FROM HVAC CONTROL MODULE

Received error data from A/C control panel.

NOTE:
Perform the diagnosis for LAN system. <Ref. to LAN(diag)-2, PROCEDURE, Basic Diagnostic Procedure.>

AF:DTC U0427 INVALID DATA RECEIVED FROM VEHICLE SECURITY CONTROL MODULE

Received error data from keyless access CM.

NOTE:
Perform the diagnosis for LAN system. <Ref. to LAN(diag)-2, PROCEDURE, Basic Diagnostic Procedure.>

AG:DTC U123C LOST COMMUNICATION WITH HIGH BEAM ASSIST CONTROL MODULE

NOTE:
When the customize setting for the high beam assist is not the same as the actual setting on the vehicle, DTC is detected. <Ref. to BC(diag)-24, User Customizing.>

AH:DTC U1500 KEYLESS UART COM. MALFUNCTION

1. MODEL WITHOUT KEYLESS ACCESS WITH PUSH BUTTON START SYSTEM

DTC DETECTING CONDITION:

UART between the TPMS & keyless entry CM or keyless entry CM and the body integrated unit is open or shorted, or has communication failure.

TROUBLE SYMPTOM:

- Door lock does not operate with keyless.
- TPMS does not operate. (With the indicator blinking)

WIRING DIAGRAM:

Keyless entry system <Ref. to WI-271, WIRING DIAGRAM, Keyless Entry System.>

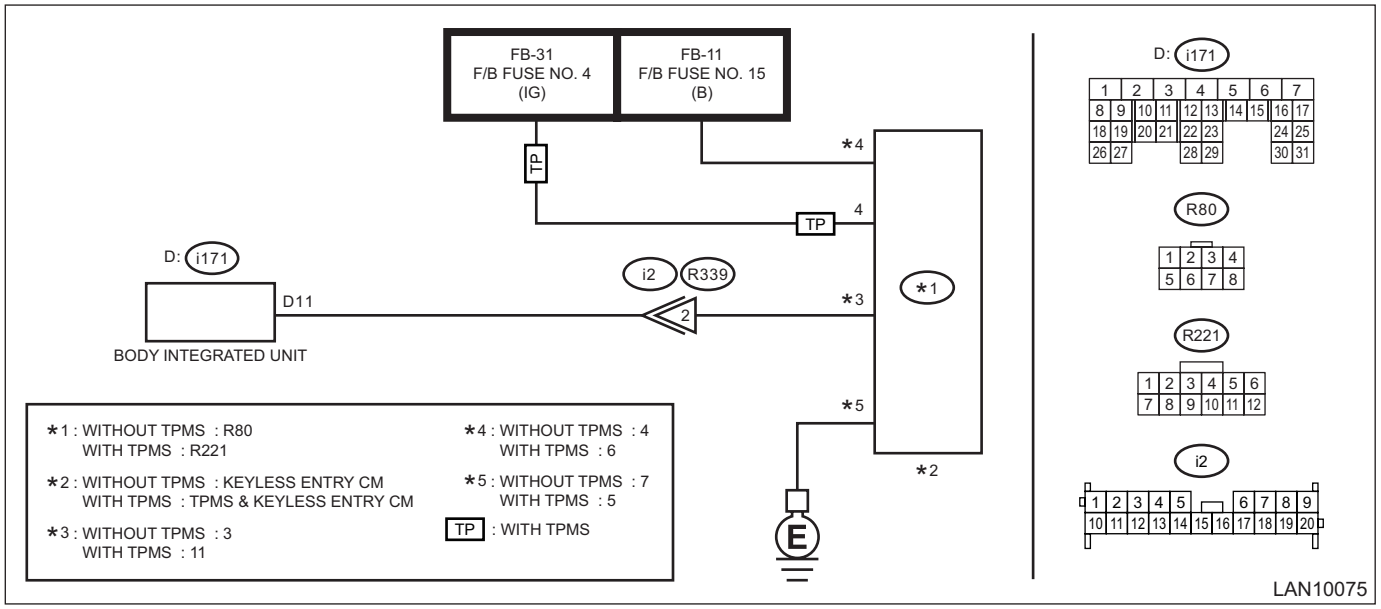

Step		Check	Yes	No
1	**CHECK DTC.** 1) Insert the ignition key to the ignition key cylinder and remove. 2) Read the DTC of body integrated unit using Subaru Select Monitor. <Ref. to BC(diag)-11, Read Diagnostic Trouble Code (DTC).>	Is DTC U1500 displayed? (Current malfunction)	Go to step **2**.	Go to step **7**.
2	**CHECK DTC.** 1) Turn the ignition switch to OFF. 2) Disconnect the body integrated unit and the TPMS & keyless entry CM or keyless entry CM connector. 3) Connect the disconnected connectors. 4) Insert the ignition key to the ignition key cylinder and remove. 5) Read the DTC of body integrated unit using Subaru Select Monitor. <Ref. to BC(diag)-11, Read Diagnostic Trouble Code (DTC).>	Is DTC U1500 displayed? (Current malfunction)	Go to step **3**.	Go to step **7**.

	Step	Check	Yes	No
3	**CHECK HARNESS (OPEN CIRCUIT).** 1) Turn the ignition switch to OFF. 2) Disconnect the body integrated unit and the TPMS & keyless entry CM or keyless entry CM connector. 3) Using the tester, measure the resistance between terminals. ***Connector & terminal*** ***With TPMS*** ***(i171) No. 11 — (R221) No. 11:*** ***Without TPMS*** ***(i171) No. 11 — (R80) No. 3:***	Is the resistance 10 Ω or less?	Go to step **4**.	Repair the open circuit of harness or replace harness.
4	**CHECK POWER SUPPLY CIRCUIT.** 1) Turn the ignition switch to ON. 2) Use a tester to measure the voltage between the terminals. ***Connector & terminal*** ***With TPMS*** ***(R221) No. 6 (+) — Chassis ground (–):*** ***(R221) No. 4 (+) — Chassis ground (–):*** ***Without TPMS*** ***(R80) No. 4 (+) — Chassis ground (–):***	Is the voltage 10 V or more?	Go to step **5**.	Repair the power supply circuit.
5	**CHECK HARNESS (OPEN CIRCUIT).** Using the tester, measure the resistance between terminals. ***Connector & terminal*** ***With TPMS*** ***(R221) No. 5 — Chassis ground:*** ***Without TPMS*** ***(R80) No. 7 — Chassis ground:***	Is the resistance 10 Ω or less?	Go to step **6**.	Repair the ground circuit.
6	**CHECK CONTROL MODULE.** 1) Turn the ignition switch to OFF. 2) Remove the TPMS & keyless entry CM or the keyless entry CM. 3) Install a TPMS & keyless entry CM or keyless entry CM that was operating normally on another vehicle.	Does it operate with the remote control key of another vehicle?	Replace the TPMS & keyless entry CM or keyless entry CM. <Ref. to SL-78, REMOVAL, Keyless Entry Control Module.> <Ref. to WT-8, REMOVAL, Tire Pressure Monitoring System.>	Replace the body integrated unit. <Ref. to SL-81, Body Integrated Unit.>
7	**CHECK CONNECTOR.** Check the connector used for keyless communication for poor contact.	Is there poor contact of connector?	Repair the connector that has poor contact, or replace harness.	It is possible that temporary poor communication occurs. Delete the DTC. <Ref. to BC(diag)-12, Clear Memory Mode.>

2. MODEL WITH KEYLESS ACCESS WITH PUSH BUTTON START SYSTEM

DTC DETECTING CONDITION:

UART between the TPMS CM and the body integrated unit is open or shorted, or has communication failure.

TROUBLE SYMPTOM:

TPMS does not operate. (With the indicator blinking)

WIRING DIAGRAM:

Tire Pressure Monitoring System <Ref. to WI-362, WIRING DIAGRAM, Tire Pressure Monitoring System.>

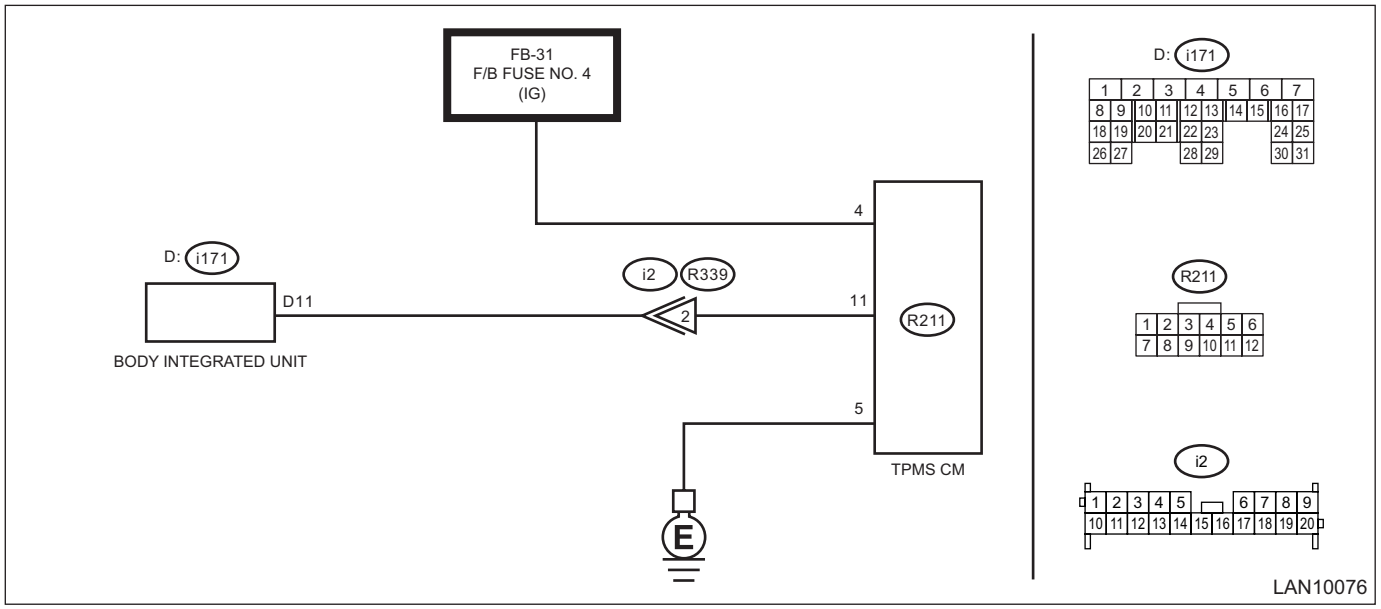

Step		Check	Yes	No
1	**CHECK DTC.** 1) With the access key in the vehicle, press the push button ignition switch twice without depressing the brake to turn the ignition switch to ON. 2) Read the DTC of body integrated unit using Subaru Select Monitor. <Ref. to BC(diag)-11, Read Diagnostic Trouble Code (DTC).>	Is DTC U1500 displayed? (Current malfunction)	Go to step **2**.	Go to step **7**.
2	**CHECK DTC.** 1) Turn the ignition switch to OFF. 2) Disconnect the body integrated unit and the TPMS CM connector. 3) Connect the disconnected connectors. 4) With the access key in the vehicle, press the push button ignition switch twice without depressing the brake to turn the ignition switch to ON. 5) Read the DTC of body integrated unit using Subaru Select Monitor. <Ref. to BC(diag)-11, Read Diagnostic Trouble Code (DTC).>	Is DTC U1500 displayed? (Current malfunction)	Go to step **3**.	Go to step **7**.
3	**CHECK HARNESS (OPEN CIRCUIT).** 1) Turn the ignition switch to OFF. 2) Disconnect the body integrated unit and the TPMS CM connector. 3) Using the tester, measure the resistance between terminals. ***Connector & terminal*** ***(i171) No. 11 — (R211) No. 11:***	Is the resistance 10 Ω or less?	Go to step **4**.	Repair the open circuit of harness or replace harness.

	Step	Check	Yes	No
4	**CHECK POWER SUPPLY CIRCUIT.** 1) Turn the ignition switch to ON. 2) Use a tester to measure the voltage between the terminals. ***Connector & terminal*** ***(R211) No. 4 (+) — Chassis ground (–):***	Is the voltage 10 V or more?	Go to step **5**.	Repair the power supply circuit.
5	**CHECK HARNESS (OPEN CIRCUIT).** Using the tester, measure the resistance between terminals. ***Connector & terminal*** ***(R211) No. 5 — Chassis ground:***	Is the resistance 10 Ω or less?	Go to step **6**.	Repair the ground circuit.
6	**CHECK CURRENT DATA.** 1) Turn the ignition switch to OFF. 2) Remove the TPMS CM. 3) Install a TPMS CM that was operating normally on another vehicle. 4) Display the current data of TPMS using Subaru Select Monitor.	Is the current data of TPMS displayed?	Replace the TPMS CM. <Ref. to WT-9, TPMS CM, REMOVAL, Tire Pressure Monitoring System.>	Replace the body integrated unit. <Ref. to SL-81, Body Integrated Unit.>
7	**CHECK CONNECTOR.** Check the connector used for keyless communication for poor contact.	Is there poor contact of connector?	Repair the connector that has poor contact, or replace harness.	It is possible that temporary poor communication occurs. Delete the DTC. <Ref. to BC(diag)-12, Clear Memory Mode.>

AI: DTC U153D INVALID DATA RECEIVED FROM HIGH BEAM ASSIST CONTROL MODULE

NOTE:
When the customize setting for the high beam assist is not the same as the actual setting on the vehicle, DTC is detected. <Ref. to BC(diag)-24, User Customizing.>

15.General Diagnostic Table

A: INSPECTION

Read the DTC using Subaru Select Monitor. <Ref. to BC(diag)-11, Read Diagnostic Trouble Code (DTC).> Or check the following data under the current data display screen. <Ref. to BC(diag)-17, Read Current Data.>

Item	Operation	Specifications		Note
		YES	NO	
Diagnostic Trouble Code	DTC is not displayed when inspecting all DTCs.	DTC is not displayed.	Perform the diagnosis for the displayed DTCs.	—
Clearance light (Low beam) (High beam)	Clearance light and low/high beams illuminate normally when the switch is operated. Indicator in the meter illuminates at the same time.	System is normal.	Check the lighting system, combination meter system and LAN system.	—
Auto light	When the area around the light control sensor is darkened after the ignition switch and the lighting switch (AUTO) are turned to ON, the clearance light and the low beam illuminate after 15 seconds. Indicator in the combination meter illuminates at the same time.	System is normal.	Check the lighting system, combination meter system and LAN system.	—
	When the ignition switch and the lighting switch (AUTO) are turned to ON after the area around the light control sensor is darkened, the clearance light and the low beam illuminate immediately. Indicator in the combination meter illuminates at the same time.			—
Fog light	Front and rear fog lights illuminate when the switch is operated. Indicator in the meter illuminates at the same time.	System is normal.	Check the lighting system, combination meter system and LAN system.	Rear fog light operates when “Rear fog light setting” of the body integrated unit is set to on.
Rear defogger	Rear defogger operates when the switch is operated. The indicator illuminates at the same time.	System is normal.	Check the rear window defogger system and A/C system.	—
Wiper deicer	Wiper deicer operates by operating the switch. The indicator illuminates at the same time. When the ambient temperature is 5°C (41°F) or higher, press the switch 3 seconds or more to forcibly activate the system.	System is normal.	Check the wiper deicer system and A/C system.	Wiper deicer operates when “Wiper deicer setting” of the body integrated unit is set to on.
DRL	After starting the engine and releasing the parking brake, the DRL illuminates.	System is normal.	Check the lighting system and LAN system.	—
Rear wiper	Rear wiper operates when the switch is operated.	System is normal.	Check wiper or washer system.	Depending on user customizing “Sedan/Wagon Setting” of the body integrated unit, vehicle sensory time varies.
Key interlock	• Key cannot be removed in other than P range. • Key can be removed in other than P range.	System is normal.	Check the body control system.	—

Item	Operation	Specifications		Note
		YES	NO	
Shift lock	The select lever can be moved from the P range to other ranges only when the brake pedal is depressed with IG ON.	System is normal.	Check the body control system.	—
Key warning switch alarm	When the driver's door is open without the key removed, the buzzer sounds.	System is normal.	Check the combination meter and body control system.	—
Door lock	The doors lock/unlock when the door switch is operated. Rear gate/ trunk opens when the rear gate/ trunk release switch is operated.	System is normal.	Check the security & lock and body control system.	If user customizing "Sedan/Wagon Setting" is different, trunk and rear gate do not open.
Keyless entry	The lock locks/unlocks when the keyless transmitter is operated. Trunk/rear gate unlocks when trunk/ rear gate unlock button is operated.	System is normal.	Check the keyless entry and body control system.	—
Keyless access with push button start system	The lock locks/unlocks when the access key is operated. With the access key held, the touch sensor (lock) operation locks/touch sensor (unlock) operation unlocks. Rear gate unlocks by operating the rear gate unlock button.	System is normal.	Check the keyless access with push button start system and the body control system.	—
Answer back	Answer-back operates when the keyless entry / keyless access with push button start system locks/ unlocks.	System is normal.	Check the security & lock, keyless access with push button start system, and LAN system.	—
Room light	Turns ON/OFF according to the door open/close operation, the lock/ unlock operation with the keyless entry/keyless access with push button start system, and the ignition operation.	System is normal.	Check the room light system, security & lock, keyless access with push button start system, and LAN system.	For vehicle with the keyless access with push button start system, the room light blinks when "Factory mode" is selected. For vehicles with the keyless entry, the room light blinks when the keyless registration mode connector is connected.
Map light	Turns ON/OFF according to the door open/close operation, the lock/ unlock operation with the keyless entry/keyless access with push button start system, and the ignition operation. (Except for rear gate)	System is normal.	Check the spot map light, security & lock, keyless access with push button start system, and LAN system.	For vehicle with the keyless access with push button start system, the map light blinks when "Factory mode" is selected. For vehicles with the keyless entry, the map light blinks when the keyless registration mode connector is connected.
Key illumination	The light illuminates/goes off according to the driver's door open/ close. The light goes off, when the doors are locked with the keyless entry/ keyless access with push button start system and the ignition is turned ON while illuminating.	System is normal.	Check the ignition switch illumination, security & lock, and LAN system.	For vehicles with keyless entry, the key illumination blinks when "Factory" mode is selected.

Item	Operation	Specifications		Note
		YES	NO	
Illumination control	Illumination volume control is available.	System is normal.	Check the illumination control switch, combination meter, and body control system.	Illumination volume control is not available when user customizing “Illumination Control On/Off” of the body integrated unit is set to off.
Engine start	Engine starts.	System is normal.	Check the engine system, immobilizer, and LAN system.	—
Vehicle security	Security monitoring/security canceling can be performed by operating the keyless entry/keyless access with push button start system.	System is normal.	Check the security & lock, keyless access with push button start system, and LAN system.	Security monitoring starts and at the same time the warning buzzer sounds, when impact sensor is not connected and user customizing “Impact Sensor” of the body integrated unit is set to on.
Welcome lighting (enter)	When dimming out around the light control sensor after turning the lighting switch (AUTO) to ON, use keyless transmitter or access key to unlock. At this time, the clearance light and headlight low beam illuminates for the preset time. And, use keyless transmitter or access key to lock. At this time, the clearance light and headlight low beam go off.	System is normal.	Check the lighting system (auto light), security & lock (keyless entry) or keyless access with push button start system.	Operates when user customization item “Illumination Sensor Setting” in body integrated unit is set to ON and “Welcome Light Off Delay Time(Approaching)” is set to other than OFF.
Welcome lighting (exit)	The clearance light and headlight low beam continues to illuminate, when the ignition switch is OFF (or when the key is removed for vehicles without keyless access with push button start system) while the auto light function is operating. Use keyless transmitter or access key to lock two consecutive times. At this time, the clearance light and headlight low beam go off.	System is normal.	Check the lighting system (auto light), security & lock (keyless entry) or keyless access with push button start system.	Operates when user customization item “Illumination Sensor Setting” in body integrated unit is set to ON and “Welcome Light Off Delay Time(Exiting)” is set to other than OFF.

TELEMATICS SYSTEM (DIAGNOSTICS)

TEL(diag)

		Page
1.	Basic Diagnostic Procedure	2
2.	Check List for Interview	3
3.	General Description	5
4.	Electrical Component Location	6
5.	Control Module I/O Signal	8
6.	Subaru Select Monitor	10
7.	Read Current Data	13
8.	Diagnostic Code(s) Display	16
9.	Clear Memory Mode	18
10.	Inspection Mode	19
11.	System Operation Check Mode	22
12.	Diagnostic Procedure with Diagnostic Trouble Code (DTC)	23
13.	Diagnostics with Phenomenon	53

1. Basic Diagnostic Procedure

A: PROCEDURE

	Step	Check	Yes	No
1	**PERFORM CUSTOMER INTERVIEW.** Using the Check List for Interview, ask the customer the condition of how the trouble occurred. <Ref. to TEL(diag)-3, CHECK, Check List for Interview.>	Did you interview the customer?	Go to step **2**.	Interview the customer. <Ref. to TEL(diag)-3, CHECK, Check List for Interview.>
2	**CHECK SUBARU SELECT MONITOR COMMUNICATION.** Using the Subaru Select Monitor, check whether communication to the telematics system can be executed. NOTE: If the communication function of the Subaru Select Monitor cannot be executed properly, check the communication circuit. (Refer to "Communication for initializing impossible".) <Ref. to TEL(diag)-11, INSPECTION, Subaru Select Monitor.>	Is communication possible?	Go to step **3**.	Check the communication circuit.
3	**CHECK TELEMATICS.** Using the Subaru Select Monitor, read DTC of the telematics system. <Ref. to TEL(diag)-16, OPERATION, Diagnostic Code(s) Display.> NOTE: If DTC is detected, only RED LED will illuminate. For details, refer to "LED operation status list". <Ref. to TEL(diag)-4, LED ILLUMINATION STATUS LIST, CHECK, Check List for Interview.>	Is DTC displayed?	Perform the diagnosis for the displayed DTCs. <Ref. to TEL(diag)-16, LIST, Diagnostic Code(s) Display.>	Go to step **4**.
4	**CHECK DIAGNOSTICS WITH PHENOMENON.** Check the list of Diagnostics with Phenomenon. <Ref. to TEL(diag)-53, Diagnostics with Phenomenon.>	Does the symptom apply?	Perform diagnosis according to the procedures in the diagnostics with phenomenon.	Go to step **5**.
5	**CHECK TROUBLE PHENOMENON.** 1) Perform the basic inspection and function check. <Ref. to TEL(diag)-5, INSPECTION, General Description.> 2) Check the data communication module. <Ref. to TEL(diag)-8, Control Module I/O Signal.> 3) Perform check of current data. <Ref. to TEL(diag)-13, Read Current Data.> 4) Perform a unit check.	Was the trouble cause found?	Perform the Clear Memory after repairing or replacing the cause of trouble. <Ref. to TEL(diag)-18, Clear Memory Mode.>	System is normal.

2. Check List for Interview

A: CHECK

1. CHECK LIST FOR INTERVIEW

- Inspect the following items regarding the vehicle's state.
- Print out this page for interviewing customers.

<table>
<tr><td colspan="2">Telematics Check List for Interview</td><td colspan="3">Received Year Month Date</td></tr>
<tr><td colspan="2" rowspan="2">Customer's name</td><td colspan="3">Registration No. Initial year of registration
Year Month Date</td></tr>
<tr><td colspan="3">Vehicle model Frame number</td></tr>
<tr><td colspan="2">Interviewer
( )</td><td>Inspector
( )</td><td>Engine type
( )</td><td>Odometer reading
( )</td></tr>
<tr><td colspan="5">Customer specified content
•
•
•</td></tr>
<tr><td>Date when problem occurred</td><td>Year Month Date</td><td>Frequency of trouble occurrence</td><td colspan="2">Always occurs
Sometimes occurs
(times per day, times per month)</td></tr>
<tr><td rowspan="4">Conditions at event</td><td colspan="4">Weather ❑ Fine ❑ Cloudy ❑ Rainy ❑ Snowy ❑ Others ( )</td></tr>
<tr><td colspan="4">Temperature °C (°F)</td></tr>
<tr><td colspan="4">How often ❑ Always ❑ Once before
❑ Sometimes (times a day / times a week / times a month)</td></tr>
<tr><td colspan="4">When and how</td></tr>
<tr><td rowspan="2">Situations at event</td><td colspan="4">In what situations did it occur?
❑ Fast Driving ❑ Rough Roads ❑ Parked ❑ Unknown ❑ Other</td></tr>
<tr><td colspan="4">In what operations did it occur?
❑ ACC On ❑ Press Icall Button or SOS Button
❑ Operating door lock function with mobile phone
❑ Operating door unlock function with mobile phone
❑ Operating horn and hazard function with mobile phone
❑ Operating own vehicle positioning function
❑ Unknown ❑ Other</td></tr>
<tr><td>Situations at restoration</td><td colspan="4">What helped the status return to normal?
❑ Recover on its own ❑ ACC Off and On ❑ Does not recover ❑ Other</td></tr>
<tr><td>Location at event</td><td colspan="4">❑ Unknown ❑ Any Place
❑ Driving around open areas like in the country
❑ Driving around hills or mountains
❑ Driving around cities with large buildings
❑ Driving around residential areas or no large buildings
❑ Driving around areas with power lines
❑ Driving around rough roads or railway tracks</td></tr>
<tr><td>Error message</td><td colspan="4">Error message displayed</td></tr>
<tr><td rowspan="3">Mobile phone</td><td colspan="4">Mobile phone carrier (example: Docomo)</td></tr>
<tr><td colspan="4">Mobile phone model (example: Apple iPhone 6)</td></tr>
<tr><td colspan="4">Mobile phone OS version (software version information)</td></tr>
</table>

Telematics subscription status	❑ Subscription (Year Month Date) ❑ Non-contract
LED illumination status <Ref. to TEL(diag)-4, LED ILLUMINATION STATUS LIST, CHECK, Check List for Interview.>	RED LED ❑ OFF ❑ ON ❑ Blink GREEN LED ❑ OFF ❑ ON ❑ Blink
Check result	Reproductivity ❑ Reproduced ❑ Always ❑ Sometimes ❑ Cannot be reproduced Condition ❑ Cold ❑ Warm ❑ At starting ❑ Immediately after starting ❑ During warm-up ❑ At idle ❑ When start driving ❑ While driving ❑ At acceleration ❑ At deceleration ❑ When applying brake
MSISDN No. of SIM	* Confirm on data monitor. <Ref. to TEL(diag)-13, Read Current Data.>
Diagnostic code	

2. LED ILLUMINATION STATUS LIST

LED	Light OFF	Blink	Light ON
RED	Communication with the server and DCM are operating normally (communication failure with the STAR-LINK server. DTCs are not found within the vehicle unit.)	It is possible that communication with the server/DCM are malfunctioning.	It is possible that communication with the server/DCM are malfunctioning.
GREEN	—	Connection to the server is being attempted and in progress.	Communication status with the server is READY.
RED and GREEN	Telematics function is not activated.	Collation with the server is in progress.	Collation with the server failed. It is possible that the server/DCM are malfunctioning.

3. General Description

A: CAUTION

1. AIRBAG SYSTEM

CAUTION:
- **Do not use the electrical test equipment on all airbag harnesses and connector circuits.**
- **Be careful not to damage the airbag harness.**

B: INSPECTION

1. BASIC INSPECTION

Before performing the diagnosis, check the following items which may affect the problems relating to the telematics system.
1) Check the battery. <Ref. to SC(w/o STI)-51, INSPECTION, Battery.> <Ref. to SC(STI)-24, INSPECTION, Battery.>
2) Check the relay and fuse condition. <Ref. to ET-10, Relay and Fuse.>
3) Check the connecting condition of harness and harness connector.

C: PREPARATION TOOL

1. SPECIAL TOOL

ILLUSTRATION	TOOL NUMBER	DESCRIPTION	REMARKS
 STSSM4	—	SUBARU SELECT MONITOR 4	Used for setting of each function and trouble-shooting for electrical system. NOTE: For detailed operation procedures of Subaru Select Monitor 4, refer to “Application help”.

2. GENERAL TOOL

TOOL NAME	REMARKS
Circuit tester	Used for measuring resistance, voltage and current.
DST-i	Used together with Subaru Select Monitor 4.

4. Electrical Component Location

A: LOCATION

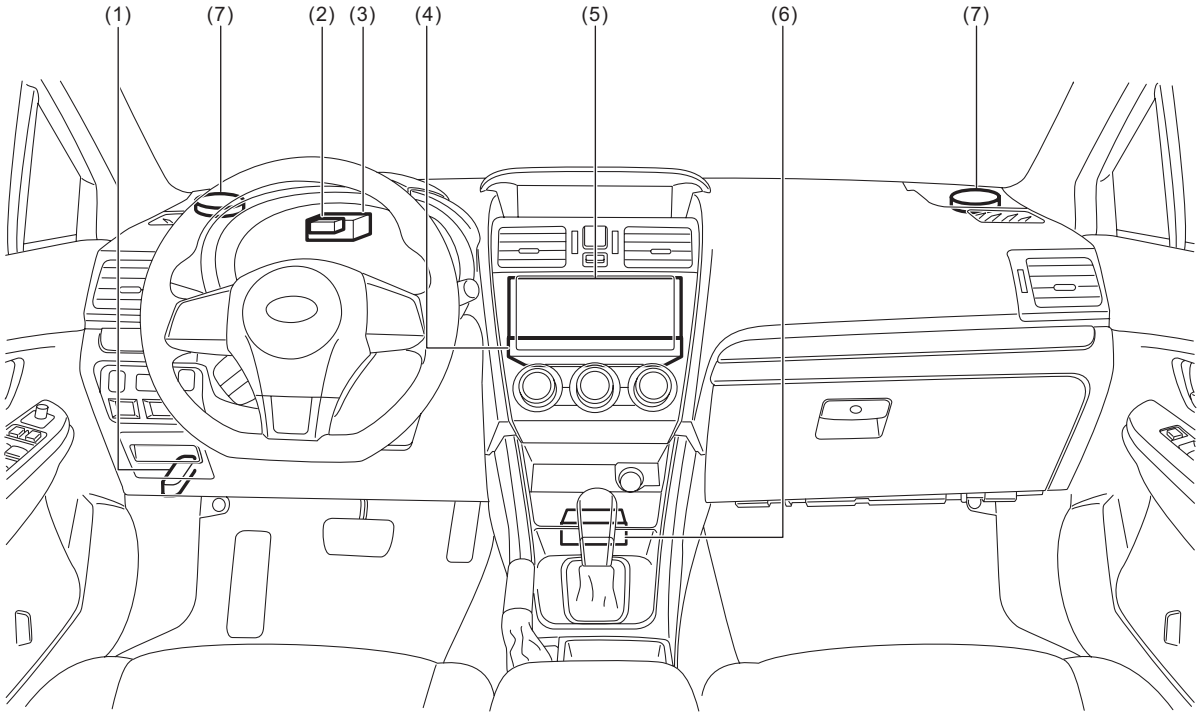

(1) Data link connector
(2) GPS antenna
(3) Telematics sub antenna
(4) Data communication module (DCM)
(5) Audio or navigation
(6) Airbag CM
(7) Instrument panel speaker (standard and H/K specifications)

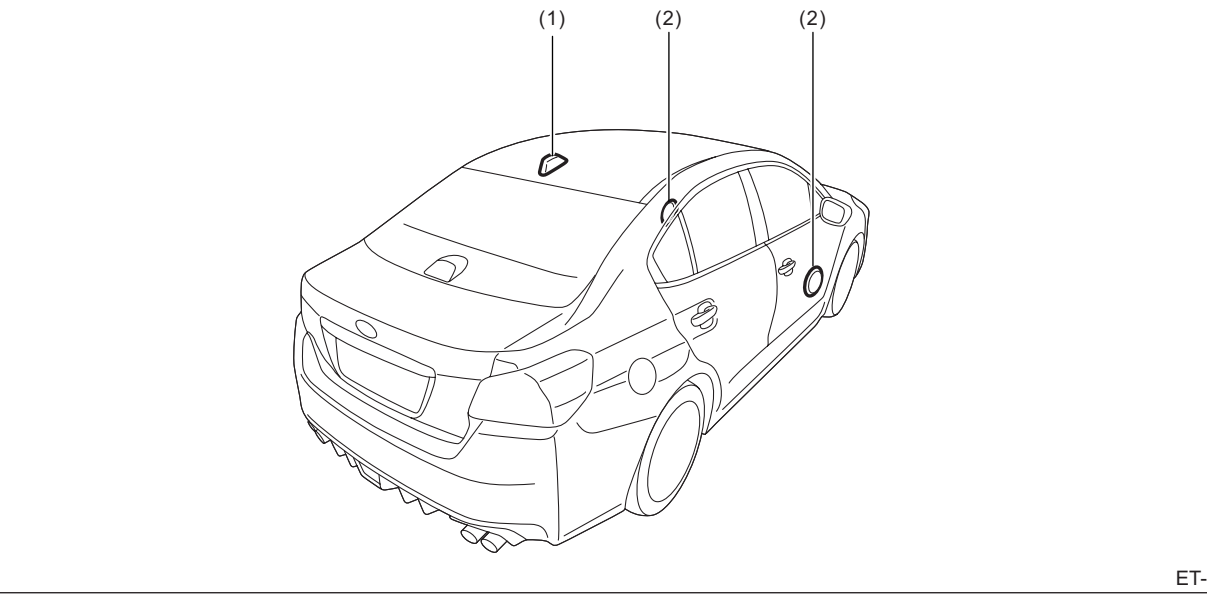

(1) Telematics antenna
(2) Door speaker (standard specification)

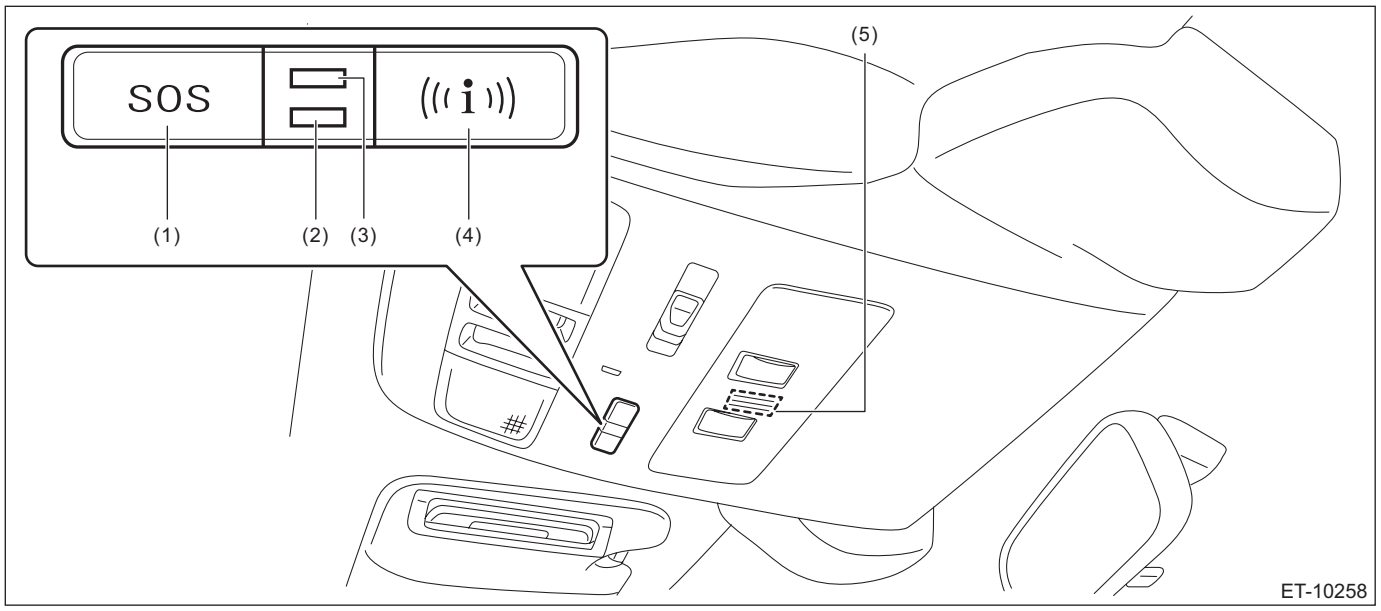

(1) SOS button
(2) RED LED
(3) GREEN LED
(4) i-button
(5) Microphone

NOTE:
For the LED operation condition, refer to "LED operation condition" in "Check List for Interview". <Ref. to TEL(diag)-4, LED ILLUMINATION STATUS LIST, CHECK, Check List for Interview.>

5. Control Module I/O Signal

A: SPECIFICATION

1. DATA COMMUNICATION MODULE (DCM)

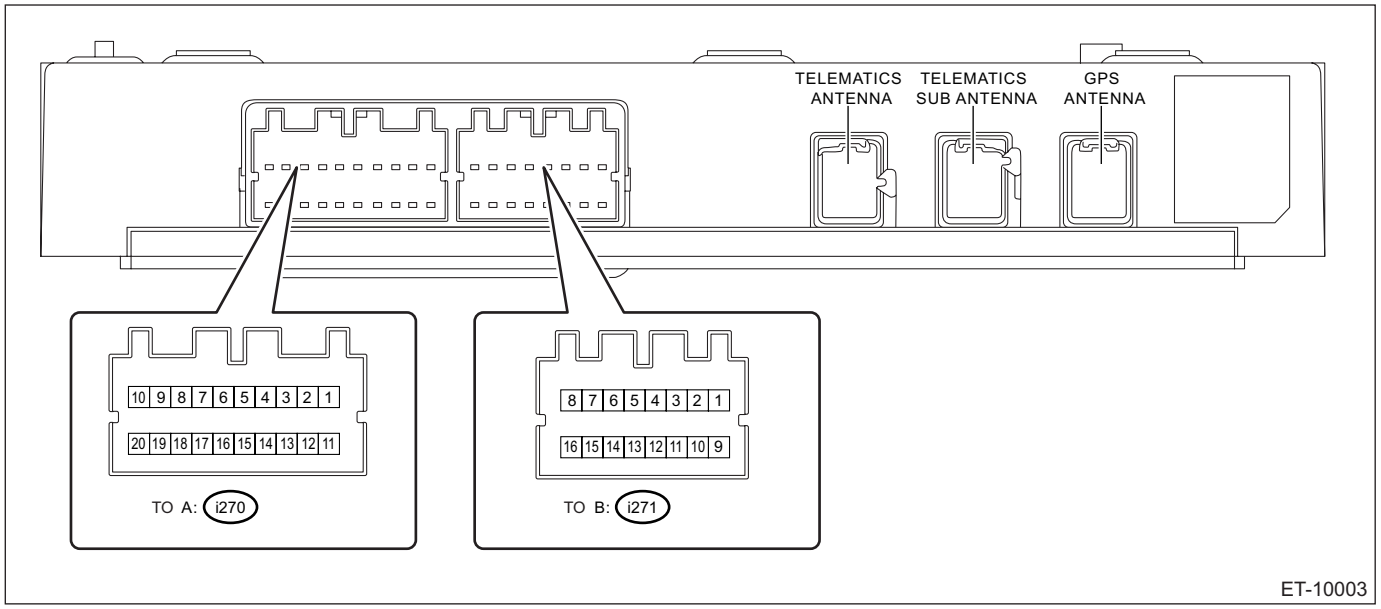

Terminal No.	Contents	Measuring condition	Standard
A1	—	—	—
A2	—	—	—
A3	LED GREEN	—	—
A4 ←→ Chassis ground	i-button	i-button OFF → ON	1 MΩ or more → less than 1 Ω
A5 ←→ Chassis ground	SOS button	SOS button OFF → ON	1 MΩ or more → less than 1 Ω
A6	—	—	—
A7	CAN L	—	—
A8	Ignition power supply	Ignition switch OFF → ON	Less than 1 V → 9 — 16 V
A9	—	—	—
A10	Battery power supply	Always	9 — 16 V
A11	—	—	—
A12	—	—	—
A13	LED RED	—	—
A14 ←→ Chassis ground	GND	Always	Less than 1 Ω
A15	—	—	—
A16	—	—	—
A17	CAN H	—	—
A18	Collision detection signal	—	—
A19	MUTE	—	—
A20 ←→ Chassis ground	ACC	Ignition switch OFF → ACC ON	Less than 1 V → 9 — 16 V
B1	Front speaker input LH –	—	—
B2	Front speaker output LH –	—	—
B3	Front speaker input RH –	—	—
B4	Front speaker output RH –	—	—
B5	MIC signal OUT	—	—
B6	MIC signal	—	—
B7	MIC DET	—	—

Terminal No.	Contents	Measuring condition	Standard
B8	MIC 5 V	—	—
B9	Front speaker input LH +	—	—
B10	Front speaker output LH +	—	—
B11	Front speaker input RH +	—	—
B12	Front speaker output RH +	—	—
B13 ←→ Chassis ground	MIC GND OUT	Always	Less than 1 Ω
B14	MIC GND IN	—	—
B15	—	—	—
B16	—	—	—

B: WIRING DIAGRAM

Refer to “TELEMATICS SYSTEM” in the wiring diagram. <Ref. to WI-356, WIRING DIAGRAM, Telematics System.>

C: SYSTEM BLOCK DIAGRAM

Main signals used between DCM and relevant CM

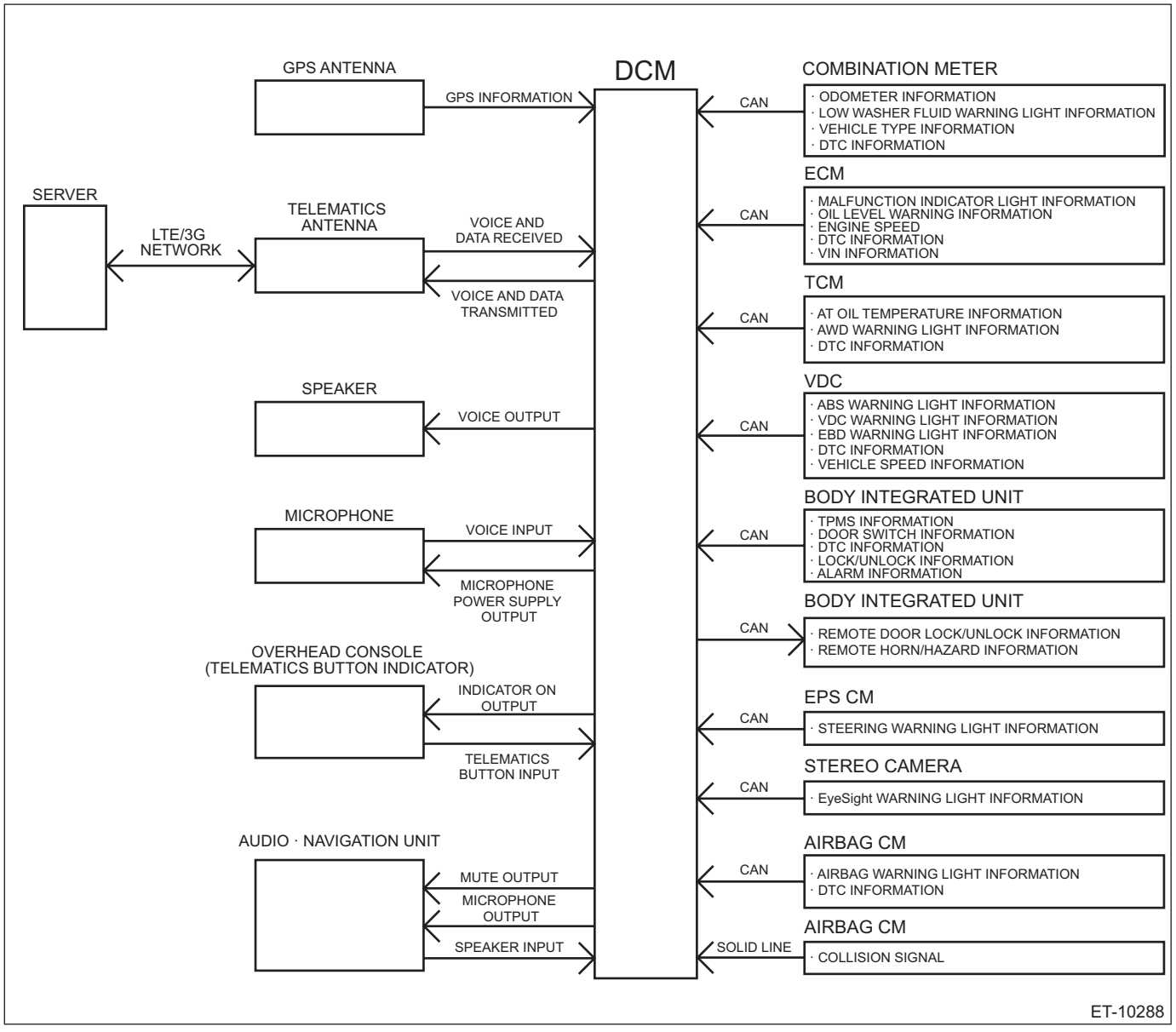

6. Subaru Select Monitor

A: OPERATION

- For detailed operation procedures, refer to “Application help”.
- When DCM cannot establish communication with Subaru Select Monitor, perform “COMMUNICATION FOR INITIALIZING IMPOSSIBLE”. <Ref. to TEL(diag)-11, INSPECTION, Subaru Select Monitor.>

B: INSPECTION

1. COMMUNICATION FOR INITIALIZING IMPOSSIBLE

When communication with DCM is impossible

DETECTING CONDITION:

- Defective harness connector
- Power supply circuit malfunction
- Defective DCM
- Defective CAN communication circuit
- Defective Subaru Select Monitor

TROUBLE SYMPTOM:

Communication is impossible between DCM and Subaru Select Monitor.

CAUTION:

CommCheck is required after replacing the DCM. <Ref. to ET-34, REGISTRATION (COMM CHECK), OPERATION, TELEMATICS SYSTEM.>

WIRING DIAGRAM:

Telematics <Ref. to WI-356, WIRING DIAGRAM, Telematics System.>

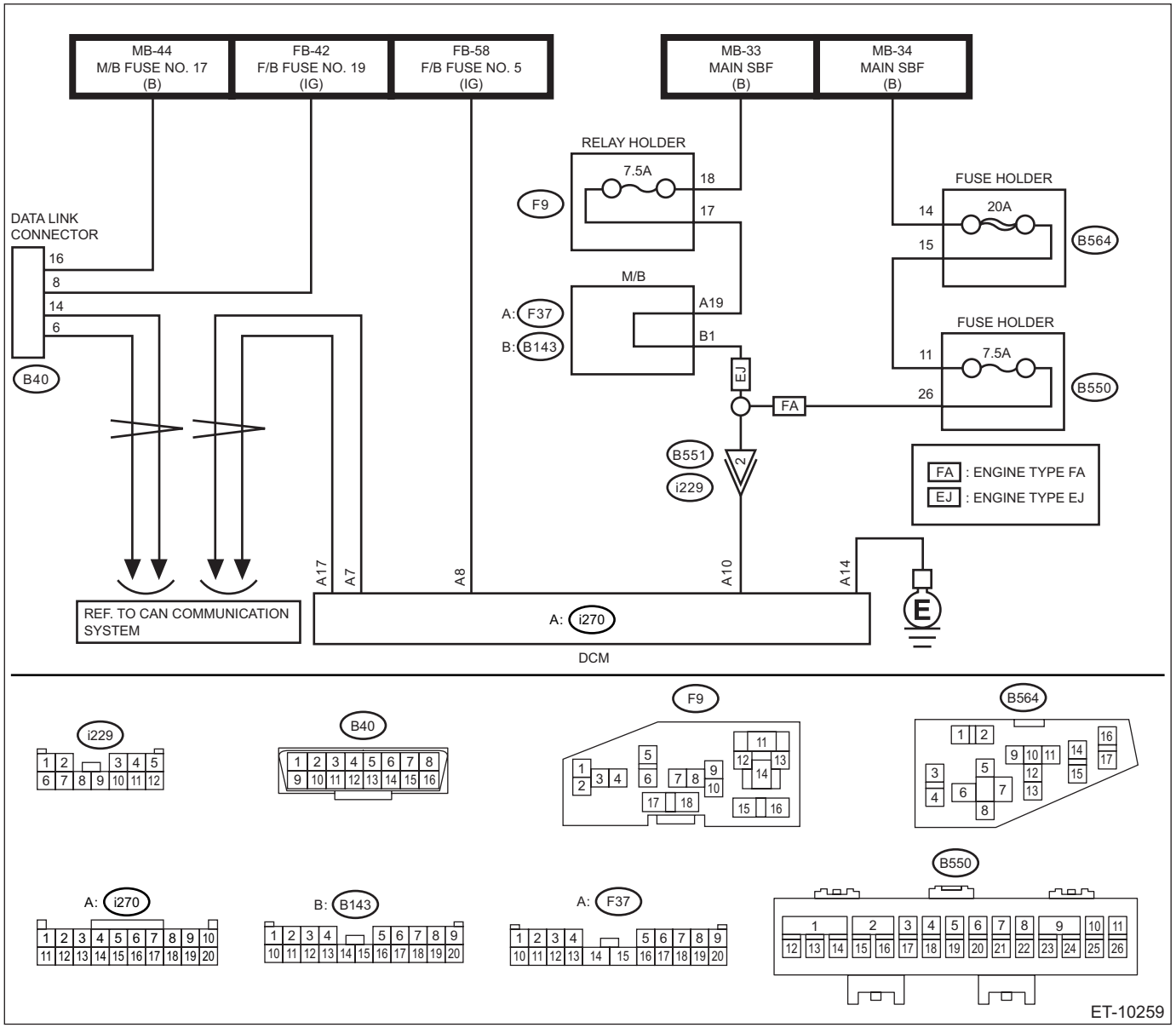

	Step	Check	Yes	No
1	**CHECK FUSE.** 1) Turn the ignition switch to OFF. 2) Check the fuse of the DCM.	Is the check result OK?	Go to step **2**.	Replace the fuse. If the replaced fuse blows out easily, repair the ground short circuit in harness between the fuse — DCM connector.
2	**CHECK HARNESS (OPEN CIRCUIT).** 1) Disconnect the DCM connector. 2) Turn the ignition switch to ON. 3) Using a tester, measure the voltage between DCM connector (harness side) and the chassis ground. ***Connector & terminal*** ***(i270) No. 8 (+) — Chassis ground (–):*** ***(i270) No. 10 (+) — Chassis ground (–):***	Is the voltage 10 V or more?	Go to step **3**.	Repair the open circuit in the wiring harness between fuse and DCM connector.
3	**CHECK HARNESS (OPEN CIRCUIT).** 1) Turn the ignition switch to OFF. 2) Using a tester, measure the resistance between DCM connector (harness side) and the chassis ground. ***Connector & terminal*** ***(i270) No. 14 — Chassis ground:***	Is the resistance 1 Ω or less?	Go to step **4**.	Repair the open circuit in the wiring harness between fuse and DCM connector.
4	**CHECK LAN SYSTEM.** Inspect LAN system. <Ref. to LAN(diag)-2, Basic Diagnostic Procedure.>	Is the check result OK?	Go to step **5**.	Perform the inspection according to the diagnosis for LAN system.
5	**CHECK TELEMATICS.** Using the Subaru Select Monitor, communicate with the telematics system.	Is communication possible?	The circuit has returned to a normal condition at this time. Reproduce the failure, and then perform the diagnosis again. In this case, temporary poor contact of connector, temporary open or short circuit of harness may be the cause.	Replace the DCM. <Ref. to ET-53, DATA COMMUNICATION MODULE.>

7. Read Current Data

A: OPERATION

1) On «Start» display, select «Diagnosis».
2) On «Vehicle selection» display, input the target vehicle information and select «Confirmed».
3) On «Main Menu» display, select «Each System».
4) On «Select System» display, select «Telematics» and then select «Enter».
5) On «Select Function» display, select «Data Monitor».

NOTE:
For detailed operation procedures, refer to “Application help”.

B: LIST

Display	Contents	Reference value	Unit
Trip Count	Refer to “LAN SYSTEM (DIAGNOSTICS)”. <Ref. to LAN(diag)-6, TIME STAMP, CAUTION, General Description.>	—	—
Count		—	—
Time Count [msec]		—	—
Current GPS Data	Current GPS information	—	—
Signal Strength	Current signal strength	—	—
MSISDN	Phone number of DCM built-in SIM	—	—
GPS Data at ACN Event	GPS information at ACN event occurrence	—	—
TimeStamp at ACN Event	Time stamp information at ACN event occurrence	NOTE: The time stamp is displayed in the Coordinated Universal Time (UTC), which is different from actual time at each location. Therefore, time difference needs to be corrected for use. Example: [12/22 01:30 in UTC time] is corrected as [12/21 20:30 in New York time].	—
Call Type at ACN Event	Information of ACN event occurrence	No Attempt ACN	—
RSSI at ACN Event	Signal strength at ACN event occurrence	—	%
Call Status at ACN Event	Result of call connection at ACN event occurrence	call not started service not provisioned no network service call ended by Agero call ended by driver call ended by exhausted retry call started call connected	—
ACN Active	Subscription information on ACN function	FALSE TRUE	—
SOS Active	Subscription information on SOS function	FALSE TRUE	—
ICALL Active	Subscription information on I-CALL function	FALSE TRUE	—
Security Alarm Active	Subscription information on Security Alarm function	FALSE TRUE	—
Maintenance Alert Active	Subscription information on Maintenance Alert function	FALSE TRUE	—
MVR Active	Subscription information on MVR function	FALSE TRUE	—
Diagnostic Alert Active	Subscription information on Diagnostic Alert function	FALSE TRUE	—

Display	Contents	Reference value	Unit
Account Status	Basic subscription information	FALSE TRUE	—
Power Source Status	Operation power supply information (main battery or DCM built-in BUB)	DCM currently running on BUB DCM currently running on VBATT	—
Subscription Status	DCM mode information	Factory Mode Comm Check Unsubscribed subscribed	—
Battery voltage	Voltage information on main battery	—	V
Stored VIN	VIN information stored in DCM	—	—
GPS Data at Time of Button Push(1)	GPS information at SOS/I-CALL event occurrence (latest record)	—	—
Timestamp at Time of Button Push(1)	Time stamp information at SOS/I-CALL event occurrence (latest record)	NOTE: The time stamp is displayed in the Coordinated Universal Time (UTC), which is different from actual time at each location. Therefore, time difference needs to be corrected for use. Example: [12/22 01:30 in UTC time] is corrected as [12/21 20:30 in New York time].	—
Call Type at SOS/ICALL Event(1)	Information of SOS/I-CALL event occurrence (latest record)	no call SOS I-Call	—
RSSI at SOS/ICALL(1)	Signal strength at SOS/I-CALL event occurrence (latest record)	—	%
Call status at SOS/ICALL Event(1)	Result of call connection at SOS/I-CALL event occurrence (latest record)	call not started service not provisioned no network service call ended by Agero call ended by driver call ended by exhausted retry call started call connected	—
GPS Data at Time of Button Push(2)	GPS information at SOS/I-CALL event occurrence (second last record)	—	—
Timestamp at Time of Button Push(2)	Time stamp information at SOS/I-CALL event occurrence (second last record)	NOTE: The time stamp is displayed in the Coordinated Universal Time (UTC), which is different from actual time at each location. Therefore, time difference needs to be corrected for use. Example: [12/22 01:30 in UTC time] is corrected as [12/21 20:30 in New York time].	—
Call Type at SOS/ICALL Event(2)	Information of SOS/I-CALL event occurrence (second last record)	no call SOS I-Call	—
RSSI at SOS/ICALL(2)	Signal strength at SOS/I-CALL event occurrence (second last record)	—	%

Display	Contents	Reference value	Unit
Call Type at SOS/ICALL Event(2)	Result of call connection at SOS/I-CALL event occurrence (second last record)	call not started service not provisioned no network service call ended by Agero call ended by driver call ended by exhausted retry call started call connected	—
GPS Data at Time of Button Push(3)	GPS information at SOS/I-CALL event occurrence (third last record)	—	—
Timestamp at Time of Button Push(3)	Time stamp information at SOS/I-CALL event occurrence (third last record)	NOTE: The time stamp is displayed in the Coordinated Universal Time (UTC), which is different from actual time at each location. Therefore, time difference needs to be corrected for use. Example: [12/22 01:30 in UTC time] is corrected as [12/21 20:30 in New York time].	—
Call Type at SOS/ICALL Event(3)	Information of SOS/I-CALL event occurrence (third last record)	no call SOS I-Call	—
RSSI at SOS/ICALL(3)	Signal strength at SOS/I-CALL event occurrence (third last record)	—	%
Call status at SOS/ICALL Event(3)	Result of call connection at SOS/I-CALL event occurrence (third last record)	call not started service not provisioned no network service call ended by Agero call ended by driver call ended by exhausted retry call started call connected	—
Speaker Gain Level	Speaker specification information (standard or H/K)	standard radio/2 speakers premium radio/4 speakers	—
GREEN LED Voltage	GREEN LED voltage information	—	V
RED LED Voltage	RED LED voltage information	—	V
Left Speaker Status	Left speaker connection status	No Speaker Diagnostic Faults Detected (Default) Output Short to PVDD is Present Output Short to Ground is Present Open Load is Present Shorted Load is Present Fault Condition Present Load Diagnostics in Present Speaker Muted Speaker in Play Mode	—
Right Speaker Status	Right speaker connection status	No Speaker Diagnostic Faults Detected (Default) Output Short to PVDD is Present Output Short to Ground is Present Open Load is Present Shorted Load is Present Fault Condition Present Load Diagnostics in Present Speaker Muted Speaker in Play Mode	—

8. Diagnostic Code(s) Display

A: OPERATION

1) On «Start» display, select «Diagnosis».
2) On «Vehicle selection» display, input the target vehicle information and select «Confirmed».
3) On «Main Menu» display, select «Each System».
4) On «Select System» display, select «Telematics» and then select «Enter».
5) On «Select Function» display, select «DTC».

NOTE:
- For detailed operation procedures, refer to “Application help”.
- For details concerning DTC, refer to the List of Diagnostic Trouble Codes (DTC). <Ref. to TEL(diag)-16, LIST, Diagnostic Code(s) Display.>

B: LIST

DTC	Item	Note
U0073	CONTROL MODULE COMMUNICATION BUS OFF	<Ref. to TEL(diag)-23, DTC U0073 CONTROL MODULE COMMUNICATION BUS OFF, Diagnostic Procedure with Diagnostic Trouble Code (DTC).>
U0100	LOST COMMUNICATION WITH ECM/PCM “A”	<Ref. to TEL(diag)-23, DTC U0100 LOST COMMUNICATION WITH ECM/PCM “A”, Diagnostic Procedure with Diagnostic Trouble Code (DTC).>
U0122	LOST COMMUNICATION WITH VEHICLE DYNAMICS CONTROL MODULE	<Ref. to TEL(diag)-23, DTC U0122 LOST COMMUNICATION WITH VEHICLE DYNAMICS CONTROL MODULE, Diagnostic Procedure with Diagnostic Trouble Code (DTC).>
U0140	LOST COMMUNICATION WITH BODY CONTROL MODULE	<Ref. to TEL(diag)-23, DTC U0140 LOST COMMUNICATION WITH BODY CONTROL MODULE, Diagnostic Procedure with Diagnostic Trouble Code (DTC).>
U0151	LOST COMMUNICATION WITH RESTRAINTS CONTROL MODULE	<Ref. to TEL(diag)-23, DTC U0151 LOST COMMUNICATION WITH RESTRAINTS CONTROL MODULE, Diagnostic Procedure with Diagnostic Trouble Code (DTC).>
U0155	LOST COMMUNICATION WITH INSTRUMENT PANEL CLUSTER (IPC) CONTROL MODULE	<Ref. to TEL(diag)-23, DTC U0155 LOST COMMUNICATION WITH INSTRUMENT PANEL CLUSTER (IPC) CONTROL MODULE, Diagnostic Procedure with Diagnostic Trouble Code (DTC).>
U0401	INVALID DATA RECEIVED FROM ECM/PCM “A”	<Ref. to TEL(diag)-23, DTC U0401 INVALID DATA RECEIVED FROM ECM/PCM “A”, Diagnostic Procedure with Diagnostic Trouble Code (DTC).>
U0416	INVALID DATA RECEIVED FROM VEHICLE DYNAMICS CONTROL MODULE	<Ref. to TEL(diag)-23, DTC U0416 INVALID DATA RECEIVED FROM VEHICLE DYNAMICS CONTROL MODULE, Diagnostic Procedure with Diagnostic Trouble Code (DTC).>
U0452	INVALID DATA RECEIVED FROM RESTRAINTS CONTROL MODULE	<Ref. to TEL(diag)-23, DTC U0452 INVALID DATA RECEIVED FROM RESTRAINTS CONTROL MODULE, Diagnostic Procedure with Diagnostic Trouble Code (DTC).>
B2A00	VIN READING	<Ref. to TEL(diag)-24, DTC B2A00 VIN READING, Diagnostic Procedure with Diagnostic Trouble Code (DTC).>
B2A01	LTE1 ANTENNA CIRCUIT	<Ref. to TEL(diag)-25, DTC B2A01 LTE1 ANTENNA CIRCUIT, Diagnostic Procedure with Diagnostic Trouble Code (DTC).>
B2A02	LTE2 ANTENNA CIRCUIT	<Ref. to TEL(diag)-27, DTC B2A02 LTE2 ANTENNA CIRCUIT, Diagnostic Procedure with Diagnostic Trouble Code (DTC).>

DTC	Item	Note
B2A03	GPS ANTENNA CIRCUIT	<Ref. to TEL(diag)-28, DTC B2A03 GPS ANTENNA CIRCUIT, Diagnostic Procedure with Diagnostic Trouble Code (DTC).>
B2A04	MIC CIRCUIT	<Ref. to TEL(diag)-29, DTC B2A04 MIC CIRCUIT, Diagnostic Procedure with Diagnostic Trouble Code (DTC).>
B2A05	LEFT SPEAKER/AUDIO CIRCUIT	<Ref. to TEL(diag)-31, DTC B2A05 LEFT SPEAKER/AUDIO CIRCUIT, Diagnostic Procedure with Diagnostic Trouble Code (DTC).>
B2A06	RIGHT SPEAKER/AUDIO CIRCUIT	<Ref. to TEL(diag)-34, DTC B2A06 RIGHT SPEAKER/AUDIO CIRCUIT, Diagnostic Procedure with Diagnostic Trouble Code (DTC).>
B2A07	BACKUP BATTERY CHARGE SYSTEM PERFORMANCE	<Ref. to TEL(diag)-37, DTC B2A07 BACKUP BATTERY CHARGE SYSTEM PERFORMANCE, Diagnostic Procedure with Diagnostic Trouble Code (DTC).>
B2A08	SOS BUTTON CIRCUIT	<Ref. to TEL(diag)-38, DTC B2A08 SOS BUTTON CIRCUIT, Diagnostic Procedure with Diagnostic Trouble Code (DTC).>
B2A09	I-CALL BUTTON CIRCUIT	<Ref. to TEL(diag)-40, DTC B2A09 I-CALL BUTTON CIRCUIT, Diagnostic Procedure with Diagnostic Trouble Code (DTC).>
B2A0A	RED LED CIRCUIT	<Ref. to TEL(diag)-42, DTC B2A0A RED LED CIRCUIT, Diagnostic Procedure with Diagnostic Trouble Code (DTC).>
B2A0B	GREEN LED CIRCUIT	<Ref. to TEL(diag)-44, DTC B2A0B GREEN LED CIRCUIT, Diagnostic Procedure with Diagnostic Trouble Code (DTC).>
B2A0C	DCM INTERNAL FAULT	<Ref. to TEL(diag)-46, DTC B2A0C DCM INTERNAL FAULT, Diagnostic Procedure with Diagnostic Trouble Code (DTC).>
B2A0D	AIRBAG SIGNAL	<Ref. to TEL(diag)-47, DTC B2A0D AIRBAG SIGNAL, Diagnostic Procedure with Diagnostic Trouble Code (DTC).>
B2A0E	MUTE LINE CIRCUIT	<Ref. to TEL(diag)-49, DTC B2A0E MUTE LINE CIRCUIT, Diagnostic Procedure with Diagnostic Trouble Code (DTC).>
B2A0F	BACKUP BATTERY DEGRADATION	<Ref. to TEL(diag)-51, DTC B2A0F BACKUP BATTERY DEGRADATION, Diagnostic Procedure with Diagnostic Trouble Code (DTC).>
B2A10	BATTERY VOLTAGE HIGH	<Ref. to TEL(diag)-52, DTC B2A10 BATTERY VOLTAGE HIGH, Diagnostic Procedure with Diagnostic Trouble Code (DTC).>

9. Clear Memory Mode

A: OPERATION

1) On «Start» display, select «Diagnosis».
2) On «Vehicle selection» display, input the target vehicle information and select «Confirmed».
3) On «Main Menu» display, select «Each System».
4) On «Select System» display, select «Telematics» and then select «Enter».
5) On «Select Function» display, select «DTC».
6) On «DTC» display, select «Clear Memory».

NOTE:
For detailed operation procedures, refer to “Application help”.

10.Inspection Mode

A: PROCEDURE

It is possible to diagnose the DTC by performing the indicated inspection mode.
After correcting the DTC, perform a necessary inspection mode and make sure that the function is resumed correctly and the DTC is recorded.

1. INSPECTION MODE 1

DTC	Item	Note
U0073	CONTROL MODULE COMMUNICATION BUS OFF	<Ref. to TEL(diag)-23, DTC U0073 CONTROL MODULE COMMUNICATION BUS OFF, Diagnostic Procedure with Diagnostic Trouble Code (DTC).>
U0100	LOST COMMUNICATION WITH ECM/PCM “A”	<Ref. to TEL(diag)-23, DTC U0100 LOST COMMUNICATION WITH ECM/PCM “A”, Diagnostic Procedure with Diagnostic Trouble Code (DTC).>
U0122	LOST COMMUNICATION WITH VEHICLE DYNAMICS CONTROL MODULE	<Ref. to TEL(diag)-23, DTC U0122 LOST COMMUNICATION WITH VEHICLE DYNAMICS CONTROL MODULE, Diagnostic Procedure with Diagnostic Trouble Code (DTC).>
U0140	LOST COMMUNICATION WITH BODY CONTROL MODULE	<Ref. to TEL(diag)-23, DTC U0140 LOST COMMUNICATION WITH BODY CONTROL MODULE, Diagnostic Procedure with Diagnostic Trouble Code (DTC).>
U0151	LOST COMMUNICATION WITH RESTRAINTS CONTROL MODULE	<Ref. to TEL(diag)-23, DTC U0151 LOST COMMUNICATION WITH RESTRAINTS CONTROL MODULE, Diagnostic Procedure with Diagnostic Trouble Code (DTC).>
U0155	LOST COMMUNICATION WITH INSTRUMENT PANEL CLUSTER (IPC) CONTROL MODULE	<Ref. to TEL(diag)-23, DTC U0155 LOST COMMUNICATION WITH INSTRUMENT PANEL CLUSTER (IPC) CONTROL MODULE, Diagnostic Procedure with Diagnostic Trouble Code (DTC).>
U0401	INVALID DATA RECEIVED FROM ECM/PCM “A”	<Ref. to TEL(diag)-23, DTC U0401 INVALID DATA RECEIVED FROM ECM/PCM “A”, Diagnostic Procedure with Diagnostic Trouble Code (DTC).>
U0416	INVALID DATA RECEIVED FROM VEHICLE DYNAMICS CONTROL MODULE	<Ref. to TEL(diag)-23, DTC U0416 INVALID DATA RECEIVED FROM VEHICLE DYNAMICS CONTROL MODULE, Diagnostic Procedure with Diagnostic Trouble Code (DTC).>
U0452	INVALID DATA RECEIVED FROM RESTRAINTS CONTROL MODULE	<Ref. to TEL(diag)-23, DTC U0452 INVALID DATA RECEIVED FROM RESTRAINTS CONTROL MODULE, Diagnostic Procedure with Diagnostic Trouble Code (DTC).>
B2A00	VIN READING	<Ref. to TEL(diag)-24, DTC B2A00 VIN READING, Diagnostic Procedure with Diagnostic Trouble Code (DTC).>
B2A01	LTE1 ANTENNA CIRCUIT	<Ref. to TEL(diag)-25, DTC B2A01 LTE1 ANTENNA CIRCUIT, Diagnostic Procedure with Diagnostic Trouble Code (DTC).>
B2A02	LTE2 ANTENNA CIRCUIT	<Ref. to TEL(diag)-27, DTC B2A02 LTE2 ANTENNA CIRCUIT, Diagnostic Procedure with Diagnostic Trouble Code (DTC).>
B2A03	GPS ANTENNA CIRCUIT	<Ref. to TEL(diag)-28, DTC B2A03 GPS ANTENNA CIRCUIT, Diagnostic Procedure with Diagnostic Trouble Code (DTC).>
B2A07	BACKUP BATTERY CHARGE SYSTEM PERFORMANCE	<Ref. to TEL(diag)-37, DTC B2A07 BACKUP BATTERY CHARGE SYSTEM PERFORMANCE, Diagnostic Procedure with Diagnostic Trouble Code (DTC).>

DTC	Item	Note
B2A08	SOS BUTTON CIRCUIT	<Ref. to TEL(diag)-38, DTC B2A08 SOS BUTTON CIRCUIT, Diagnostic Procedure with Diagnostic Trouble Code (DTC).>
B2A09	I-CALL BUTTON CIRCUIT	<Ref. to TEL(diag)-40, DTC B2A09 I-CALL BUTTON CIRCUIT, Diagnostic Procedure with Diagnostic Trouble Code (DTC).>
B2A0C	DCM INTERNAL FAULT	<Ref. to TEL(diag)-46, DTC B2A0C DCM INTERNAL FAULT, Diagnostic Procedure with Diagnostic Trouble Code (DTC).>
B2A0D	AIRBAG SIGNAL	<Ref. to TEL(diag)-47, DTC B2A0D AIRBAG SIGNAL, Diagnostic Procedure with Diagnostic Trouble Code (DTC).>
B2A0E	MUTE LINE CIRCUIT	<Ref. to TEL(diag)-49, DTC B2A0E MUTE LINE CIRCUIT, Diagnostic Procedure with Diagnostic Trouble Code (DTC).>
B2A0F	BACKUP BATTERY DEGRADATION	<Ref. to TEL(diag)-51, DTC B2A0F BACKUP BATTERY DEGRADATION, Diagnostic Procedure with Diagnostic Trouble Code (DTC).>
B2A10	BATTERY VOLTAGE HIGH	<Ref. to TEL(diag)-52, DTC B2A10 BATTERY VOLTAGE HIGH, Diagnostic Procedure with Diagnostic Trouble Code (DTC).>

Inspection steps:
1) Perform the Clear Memory Mode. <Ref. to TEL(diag)-18, Clear Memory Mode.>
2) Read the DTC and check that the DTC is not displayed. <Ref. to TEL(diag)-16, Diagnostic Code(s) Display.>

NOTE:
If the DTC is displayed on the screen, the trouble is still present. Perform the diagnosis for the displayed DTCs. After solving the DTC, repeat from step 1).
3) Turn the ignition switch to OFF.
4) Turn the ignition switch to ON, and wait for 5 seconds or more.
5) Read the DTC and check that the DTC is not displayed.

NOTE:
If the DTC is displayed on the screen, the trouble is still present. Perform the diagnosis for the displayed DTCs.

2. INSPECTION MODE 2

DTC	Item	Note
B2A04	MIC CIRCUIT	<Ref. to TEL(diag)-29, DTC B2A04 MIC CIRCUIT, Diagnostic Procedure with Diagnostic Trouble Code (DTC).>
B2A05	LEFT SPEAKER/AUDIO CIRCUIT	<Ref. to TEL(diag)-31, DTC B2A05 LEFT SPEAKER/AUDIO CIRCUIT, Diagnostic Procedure with Diagnostic Trouble Code (DTC).>
B2A06	RIGHT SPEAKER/AUDIO CIRCUIT	<Ref. to TEL(diag)-34, DTC B2A06 RIGHT SPEAKER/AUDIO CIRCUIT, Diagnostic Procedure with Diagnostic Trouble Code (DTC).>
B2A0A	RED LED CIRCUIT	<Ref. to TEL(diag)-42, DTC B2A0A RED LED CIRCUIT, Diagnostic Procedure with Diagnostic Trouble Code (DTC).>
B2A0B	GREEN LED CIRCUIT	<Ref. to TEL(diag)-44, DTC B2A0B GREEN LED CIRCUIT, Diagnostic Procedure with Diagnostic Trouble Code (DTC).>

Inspection steps:
1) Perform the Clear Memory Mode. <Ref. to TEL(diag)-18, Clear Memory Mode.>
2) Read the DTC and check that the DTC is not displayed. <Ref. to TEL(diag)-16, Diagnostic Code(s) Display.>

NOTE:
If the DTC is displayed on the screen, the trouble is still present. Perform the diagnosis for the displayed DTCs. After solving the DTC, repeat from step 1).
3) Turn the ignition switch to OFF.
4) Close all doors. (The vehicle enters CAN sleep state.)
5) Wait for approx. 1 minute. After the indicator goes off, wait for another 1 minute. (DCM standby mode)
6) Turn the ignition switch to ON, and wait for 5 seconds or more.
7) Read the DTC and check that the DTC is not displayed.

NOTE:
If the DTC is displayed on the screen, the trouble is still present. Perform the diagnosis for the displayed DTCs.

11.System Operation Check Mode

A: OPERATION

1) On «Start» display, select «Diagnosis».
2) On «Vehicle selection» display, input the target vehicle information and select «Confirmed».
3) On «Main Menu» display, select «Each System».
4) On «Select System» display, select «Telematics» and then select «Enter».
5) On «Select Function» display, select «Active Test».

NOTE:
For detailed operation procedures, refer to “Application help”.

B: LIST

System operation check mode	Note
GREEN LED Lighting	GREEN LED illuminates/flashes/goes off.
GREEN LED Flashing	
GREEN LED OFF	
RED LED Lighting	RED LED illuminates/flashes/goes off.
RED LED Flashing	
RED LED OFF	
Speaker ON	Outputs to speaker.

12.Diagnostic Procedure with Diagnostic Trouble Code (DTC)

A: DTC U0073 CONTROL MODULE COMMUNICATION BUS OFF

Detected when CAN line abnormality is detected.

NOTE:
Perform the diagnosis for LAN system. <Ref. to LAN(diag)-2, PROCEDURE, Basic Diagnostic Procedure.>

B: DTC U0100 LOST COMMUNICATION WITH ECM/PCM “A”

Detected when CAN data from ECM does not arrive.

NOTE:
Perform the diagnosis for LAN system. <Ref. to LAN(diag)-2, PROCEDURE, Basic Diagnostic Procedure.>

C: DTC U0122 LOST COMMUNICATION WITH VEHICLE DYNAMICS CONTROL MODULE

Detected when CAN data from VDC does not arrive.

NOTE:
Perform the diagnosis for LAN system. <Ref. to LAN(diag)-2, PROCEDURE, Basic Diagnostic Procedure.>

D: DTC U0140 LOST COMMUNICATION WITH BODY CONTROL MODULE

Detected when CAN data is not received from body integrated unit.

NOTE:
Perform the diagnosis for LAN system. <Ref. to LAN(diag)-2, PROCEDURE, Basic Diagnostic Procedure.>

E: DTC U0151 LOST COMMUNICATION WITH RESTRAINTS CONTROL MODULE

Detected when CAN data is not received from airbag CM.

NOTE:
Perform the diagnosis for LAN system. <Ref. to LAN(diag)-2, PROCEDURE, Basic Diagnostic Procedure.>

F: DTC U0155 LOST COMMUNICATION WITH INSTRUMENT PANEL CLUSTER (IPC) CONTROL MODULE

Detected when CAN data from combination meter does not arrive.

NOTE:
Perform the diagnosis for LAN system. <Ref. to LAN(diag)-2, PROCEDURE, Basic Diagnostic Procedure.>

G: DTC U0401 INVALID DATA RECEIVED FROM ECM/PCM “A”

Detected when CAN data from ECM is abnormal.

NOTE:
Perform the diagnosis for LAN system. <Ref. to LAN(diag)-2, PROCEDURE, Basic Diagnostic Procedure.>

H: DTC U0416 INVALID DATA RECEIVED FROM VEHICLE DYNAMICS CONTROL MODULE

This is detected when CAN data from VDC is abnormal.

NOTE:
Perform the diagnosis for LAN system. <Ref. to LAN(diag)-2, PROCEDURE, Basic Diagnostic Procedure.>

I: DTC U0452 INVALID DATA RECEIVED FROM RESTRAINTS CONTROL MODULE

Detected when CAN data from airbag CM is abnormal.

NOTE:
Perform the diagnosis for LAN system. <Ref. to LAN(diag)-2, PROCEDURE, Basic Diagnostic Procedure.>

J: DTC B2A00 VIN READING

DIAGNOSIS START CONDITION:
When ignition switch is ON.
DTC DETECTING CONDITION:
When ignition switch is ON, VIN information (CAN) sent from ECM cannot be read.
TROUBLE SYMPTOM:
- Telematics function cannot be used.
- RED LED illuminates.

CAUTION:
CommCheck is required after replacing the DCM. <Ref. to ET-34, REGISTRATION (COMM CHECK), OPERATION, TELEMATICS SYSTEM.>

	Step	Check	Yes	No
1	**CHECK DTC.** Read the DTC. <Ref. to TEL(diag)-16, Diagnostic Code(s) Display.>	Is DTC B2A00 displayed? (Current malfunction)	Go to step **2**.	Even if DTC is displayed, the circuit has returned to a normal condition at this time. Reproduce the failure, and then perform the diagnosis again. In this case, temporary poor contact of connector, temporary open or short circuit of harness may be the cause.
2	**CHECK DTC.** Check DTCs in the following systems. • Telematics <Ref. to TEL(diag)-16, Diagnostic Code(s) Display.> • Engine <Ref. to EN(w/o STI)(diag)-63, Read Diagnostic Trouble Code (DTC).> <Ref. to EN(STI)(diag)-47, Read Diagnostic Trouble Code (DTC).>	Is DTC U**** displayed? (Current malfunction)	Perform the diagnosis for LAN system. <Ref. to LAN(diag)-2, Basic Diagnostic Procedure.>	Go to step **3**.
3	**CHECK CURRENT DATA.** Confirm VIN information from the engine OBD mode. <Ref. to EN(w/o STI)(diag)-41, General Scan Tool.> <Ref. to EN(STI)(diag)-31, General Scan Tool.>	Is VIN information displayed?	Replace the DCM. <Ref. to ET-53, DATA COMMUNICATION MODULE.>	Replace the ECM. <Ref. to FU(w/o STI)-124, Engine Control Module (ECM).> <Ref. to FU(STI)-56, Engine Control Module (ECM).>

K: DTC B2A01 LTE1 ANTENNA CIRCUIT

DIAGNOSIS START CONDITION:
When ignition switch is ON.
DTC DETECTING CONDITION:
Any of the followings continues for 5 seconds or more.
- LTE1 impedance is more than 1 MΩ. (Detached antenna, etc.)
- LTE1 impedance is less than 1 kΩ. (Short-circuited antenna, etc.)

TROUBLE SYMPTOM:
- Telematics function cannot be used.
- RED LED illuminates.

WIRING DIAGRAM:
Telematics <Ref. to WI-356, WIRING DIAGRAM, Telematics System.>

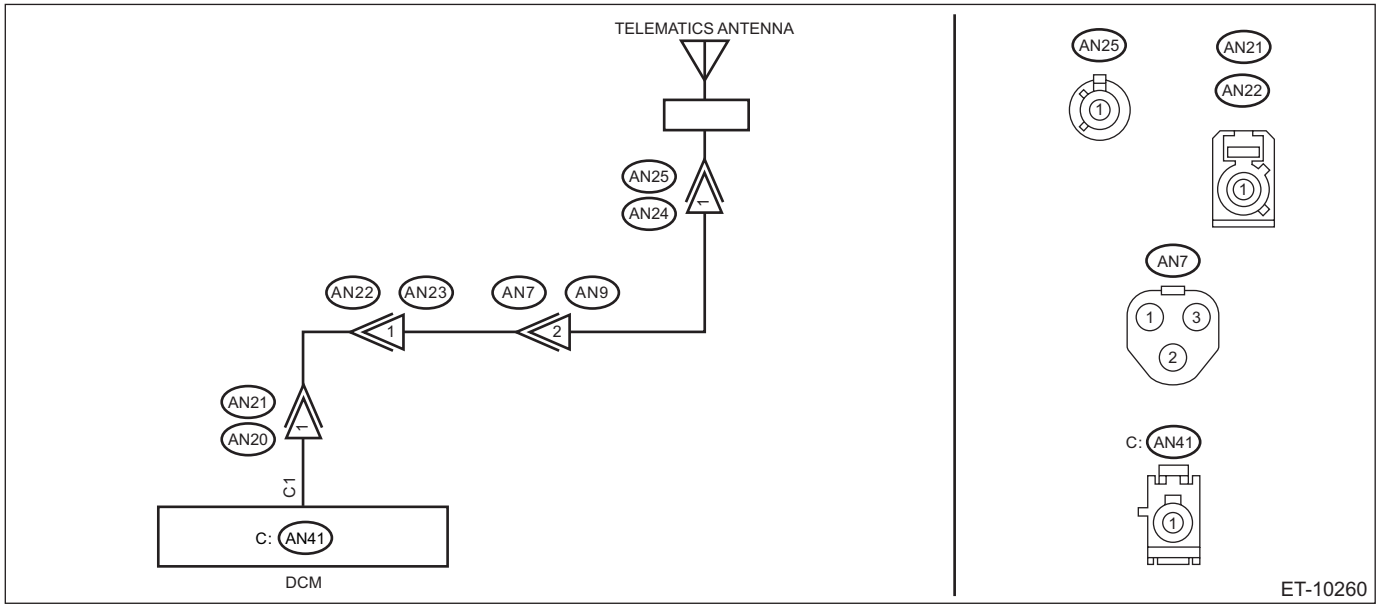

CAUTION:
CommCheck is required after replacing the DCM. <Ref. to ET-34, REGISTRATION (COMM CHECK), OPERATION, TELEMATICS SYSTEM.>

	Step	Check	Yes	No
1	**CHECK DTC.** Read the DTC. <Ref. to TEL(diag)-16, Diagnostic Code(s) Display.>	Is DTC B2A01 displayed? (Current malfunction)	Go to step **2**.	Even if DTC is displayed, the circuit has returned to a normal condition at this time. Reproduce the failure, and then perform the diagnosis again. In this case, temporary poor contact of connector, temporary open or short circuit of harness may be the cause.

	Step	Check	Yes	No
2	**CHECK HARNESS (OPEN CIRCUIT).** 1) Turn the ignition switch to OFF. 2) Disconnect the antenna connector. 3) Disconnect the DCM connector. 4) Disconnect the PRG DU connector. 5) Measure the resistance between antenna connector and DCM connector. ***Connector & terminal*** ***(AN41) No. 1 — (AN24) No. 1:***	Is the resistance less than 1 Ω?	Go to step **3**.	Repair or replace the open circuit of harness.
3	**CHECK HARNESS (GROUND SHORT CIRCUIT).** Measure the resistance between DCM connector and chassis ground. ***Connector & terminal*** ***(AN41) No. 1 — Chassis ground:***	Is the resistance 1 MΩ or more?	Go to step **4**.	Repair or replace the short circuit of the harness.
4	**CHECK HARNESS (SHORT CIRCUIT TO POWER SUPPLY).** 1) Turn the ignition switch to ON. 2) Measure the voltage between DCM connector and chassis ground. ***Connector & terminal*** ***(AN41) No. 1 (+) — Chassis ground (–):***	Is the voltage less than 1 V?	Go to step **5**.	Repair or replace the short circuit of the harness.
5	**CHECK ANTENNA.** Check the telematics antenna. <Ref. to ET-43, Antenna.>	Is the check result OK?	Replace the DCM. <Ref. to ET-53, DATA COMMUNICATION MODULE.>	Replace the telematics antenna. <Ref. to ET-43, Antenna.>

L: DTC B2A02 LTE2 ANTENNA CIRCUIT

DIAGNOSIS START CONDITION:
When ignition switch is ON.
DTC DETECTING CONDITION:
Any of the followings continues for 5 seconds or more.
- LTE2 impedance is more than 1 MΩ. (Detached antenna, etc.)
- LTE2 impedance is less than 1 kΩ. (Short-circuited antenna, etc.)

TROUBLE SYMPTOM:
- Telematics function cannot be used.
- RED LED illuminates.

CAUTION:
CommCheck is required after replacing the DCM. <Ref. to ET-34, REGISTRATION (COMM CHECK), OPERATION, TELEMATICS SYSTEM.>

	Step	Check	Yes	No
1	**CHECK DTC.** Read the DTC. <Ref. to TEL(diag)-16, Diagnostic Code(s) Display.>	Is DTC B2A02 displayed? (Current malfunction)	Go to step **2**.	Even if DTC is displayed, the circuit has returned to a normal condition at this time. Reproduce the failure, and then perform the diagnosis again. In this case, temporary poor contact of connector, temporary open or short circuit of harness may be the cause.
2	**CHECK ANTENNA.** Visually check the telematics sub antenna. <Ref. to ET-43, Antenna.>	Is the check result OK?	Replace the DCM. <Ref. to ET-53, DATA COMMUNICATION MODULE.>	Replace the telematics sub antenna. <Ref. to ET-43, Antenna.>

M: DTC B2A03 GPS ANTENNA CIRCUIT

DIAGNOSIS START CONDITION:
When ignition switch is ON.
DTC DETECTING CONDITION:
Any of the followings continues for 5 seconds or more.
- GPS antenna impedance is more than 1 MΩ. (Detached antenna, etc.)
- GPS antenna impedance is less than 10 Ω. (Short-circuited antenna, etc.)

TROUBLE SYMPTOM:
- Telematics function cannot be used.
- RED LED illuminates.

CAUTION:
CommCheck is required after replacing the DCM. <Ref. to ET-34, REGISTRATION (COMM CHECK), OPERATION, TELEMATICS SYSTEM.>

	Step	Check	Yes	No
1	**CHECK DTC.** Read the DTC. <Ref. to TEL(diag)-16, Diagnostic Code(s) Display.>	Is DTC B2A03 displayed? (Current malfunction)	Go to step **2**.	Even if DTC is displayed, the circuit has returned to a normal condition at this time. Reproduce the failure, and then perform the diagnosis again. In this case, temporary poor contact of connector, temporary open or short circuit of harness may be the cause.
2	**CHECK GPS ANTENNA.** Visually check the GPS antenna. <Ref. to ET-51, GPS Antenna.>	Is the check result OK?	Replace the DCM. <Ref. to ET-53, DATA COMMUNICATION MODULE.>	Replace the GPS antenna. <Ref. to ET-51, GPS Antenna.>

N: DTC B2A04 MIC CIRCUIT

DIAGNOSIS START CONDITION:
When ACC is ON.

DTC DETECTING CONDITION:
Any of the followings continues for 1 second or more.
- MIC impedance is more than 10 kΩ. (Detached MIC, etc.)
- MIC impedance is less than 10 Ω. (Short-circuited MIC, etc.)

TROUBLE SYMPTOM:
- Call function cannot be used.
- RED LED illuminates.

WIRING DIAGRAM:
Telematics <Ref. to WI-356, WIRING DIAGRAM, Telematics System.>

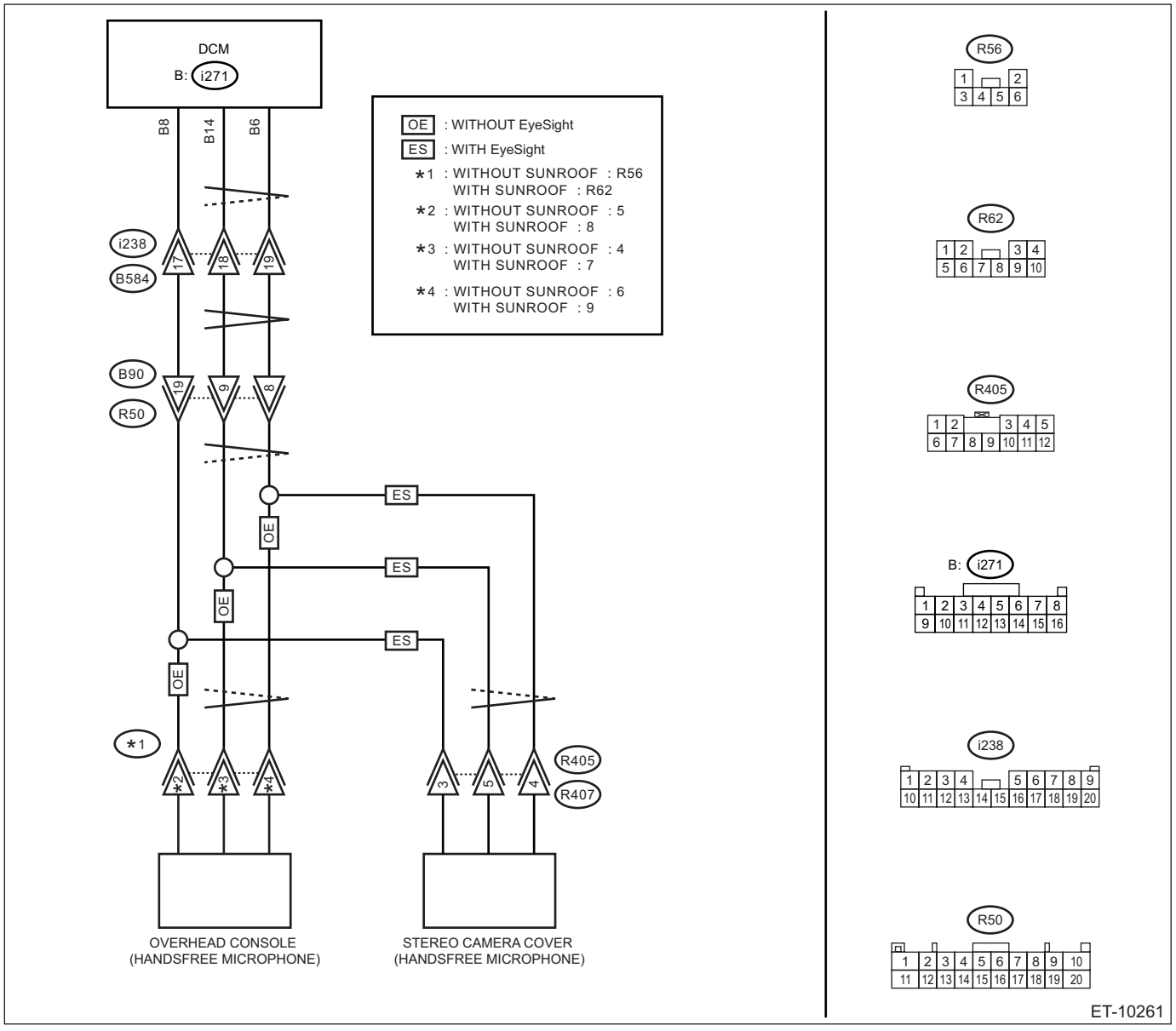

CAUTION:
CommCheck is required after replacing the DCM. <Ref. to ET-34, REGISTRATION (COMM CHECK), OPERATION, TELEMATICS SYSTEM.>

	Step	Check	Yes	No
1	**CHECK DTC.** Read the DTC. <Ref. to TEL(diag)-16, Diagnostic Code(s) Display.>	Is DTC B2A04 displayed? (Current malfunction)	Go to step **2**.	Even if DTC is displayed, the circuit has returned to a normal condition at this time. Reproduce the failure, and then perform the diagnosis again. In this case, temporary poor contact of connector, temporary open or short circuit of harness may be the cause.
2	**CHECK HARNESS (OPEN CIRCUIT).** 1) Turn the ignition switch to OFF. 2) Disconnect the microphone connector. 3) Disconnect the DCM connector. 4) Measure the resistance between microphone connector and DCM connector. ***Connector & terminal*** ***Without EyeSight and without sunroof*** ***(R56) No. 5 — (i271) No. 8:*** ***(R56) No. 4 — (i271) No. 14:*** ***(R56) No. 6 — (i271) No. 6:*** ***Without EyeSight and with sunroof*** ***(R62) No. 8 — (i271) No. 8:*** ***(R62) No. 7 — (i271) No. 14:*** ***(R62) No. 9 — (i271) No. 6:*** ***With EyeSight*** ***(R405) No. 3 — (i271) No. 8:*** ***(R405) No. 5 — (i271) No. 14:*** ***(R405) No. 4 — (i271) No. 6:***	Is the resistance 1 Ω or less?	Go to step **3**.	Repair or replace the open circuit of harness.
3	**CHECK HARNESS (GROUND SHORT CIRCUIT).** Measure the resistance between DCM connector and chassis ground. ***Connector & terminal*** ***(i271) No. 8 — Chassis ground:*** ***(i271) No. 14 — Chassis ground:*** ***(i271) No. 6 — Chassis ground:***	Is the resistance 1 MΩ or more?	Go to step **4**.	Repair or replace the open circuit of harness.
4	**CHECK THE CONNECTOR (SHORT CIRCUIT TO POWER SUPPLY).** Measure the voltage between DCM connector and chassis ground. ***Connector & terminal*** ***(i271) No. 8 (+) — Chassis ground (–):*** ***(i271) No. 14 (+) — Chassis ground (–):*** ***(i271) No. 6 (+) — Chassis ground (–):***	Is the voltage less than 1 V?	Go to step **5**.	Repair or replace the short circuit of the harness.
5	**CHECK MICROPHONE.** Confirm the microphone voice input.	Is the voice input OK?	Replace the DCM. <Ref. to ET-53, DATA COMMUNICATION MODULE.>	Replace the microphone. <Ref. to ET-49, Microphone.>

O: DTC B2A05 LEFT SPEAKER/AUDIO CIRCUIT

DIAGNOSIS START CONDITION:
When ACC is ON.
DTC DETECTING CONDITION:
Speaker impedance is more than 10 kΩ for 100 ms. (Detached speaker connection, etc.)
TROUBLE SYMPTOM:
- Call function cannot be used.
- RED LED illuminates.

WIRING DIAGRAM:
Telematics <Ref. to WI-356, WIRING DIAGRAM, Telematics System.>
- Without audio amplifier

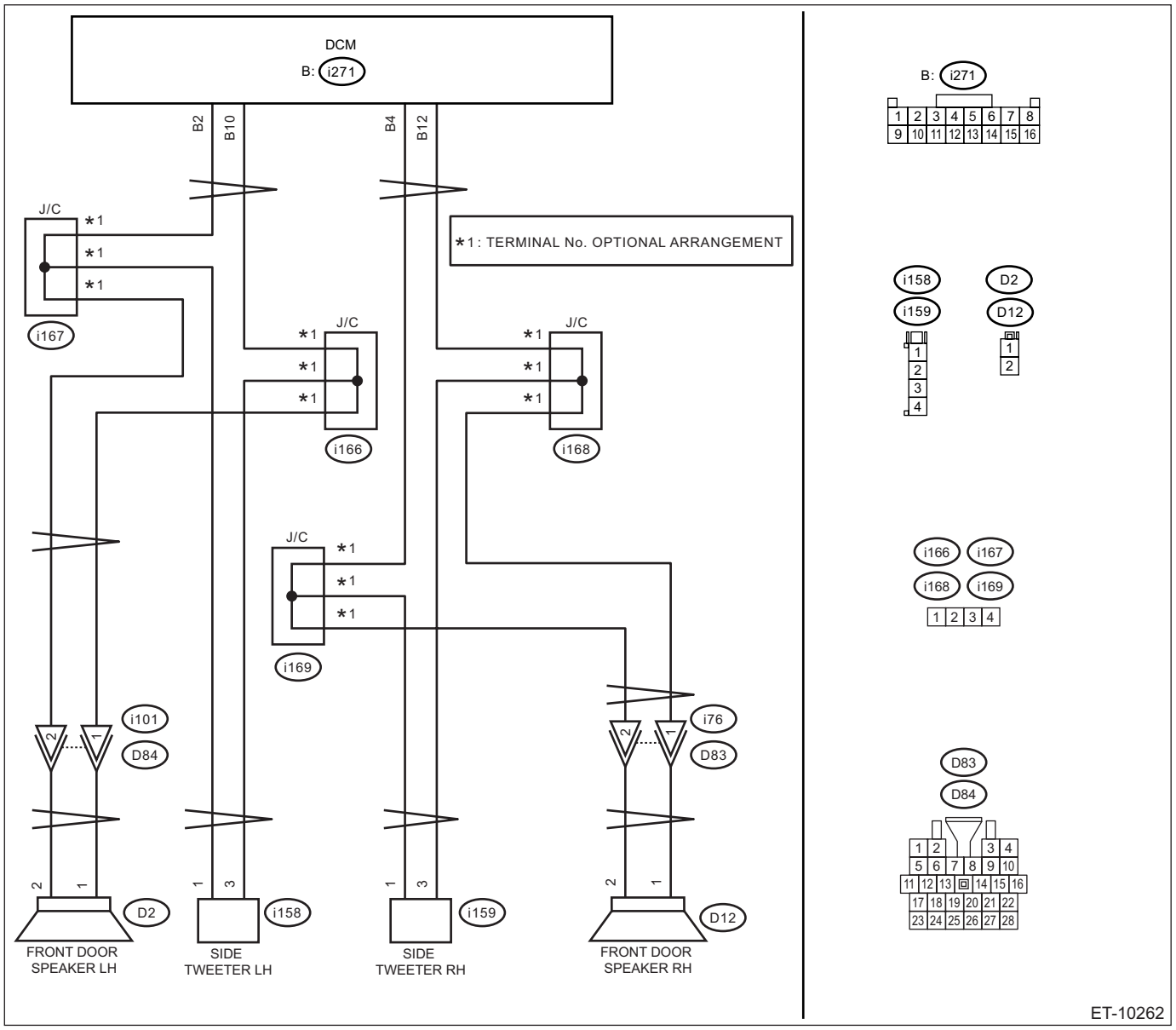

- With audio amplifier

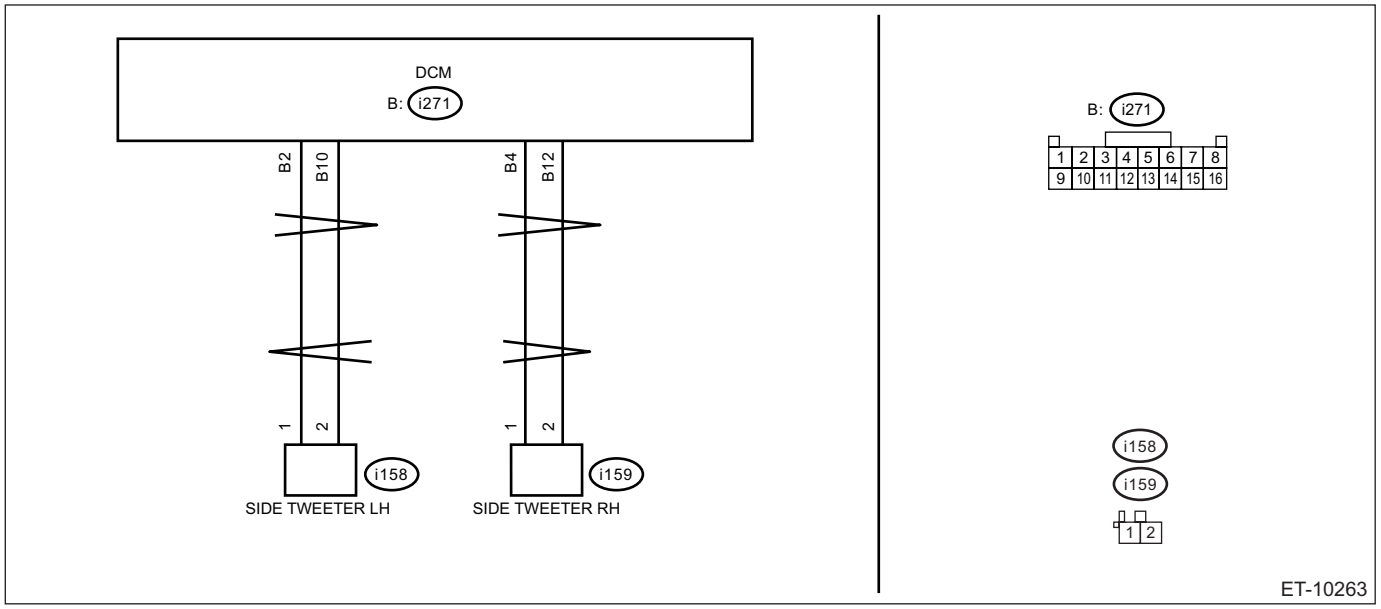

CAUTION:
CommCheck is required after replacing the DCM. <Ref. to ET-34, REGISTRATION (COMM CHECK), OPERATION, TELEMATICS SYSTEM.>

	Step	Check	Yes	No
1	**CHECK DTC.** Read the DTC. <Ref. to TEL(diag)-16, Diagnostic Code(s) Display.>	Is DTC B2A05 displayed? (Current malfunction)	Go to step **2**.	Even if DTC is displayed, the circuit has returned to a normal condition at this time. Reproduce the failure, and then perform the diagnosis again. In this case, temporary poor contact of connector, temporary open or short circuit of harness may be the cause.
2	**PERFORM THE SYSTEM OPERATION CHECK.** Perform the System Operation Check Mode «Speaker ON». <Ref. to TEL(diag)-22, System Operation Check Mode.>	Does it sound?	Go to step **3**.	Even if DTC is displayed, the circuit has returned to a normal condition at this time. Reproduce the failure, and then perform the diagnosis again. In this case, temporary poor contact of connector, temporary open or short circuit of harness may be the cause.

	Step	Check	Yes	No
3	**CHECK HARNESS (OPEN CIRCUIT).** 1) Turn the ignition switch to OFF. 2) Disconnect the speaker connector and tweeter connector. 3) Disconnect the DCM connector. 4) Measure the resistance between speaker connector and tweeter connector and DCM connector. ***Connector & terminal*** ***Without audio amplifier*** ***(i271) No. 2 — (D2) No. 2:*** ***(i271) No. 2 — (i158) No. 1:*** ***(i271) No. 10 — (D2) No. 1:*** ***(i271) No. 10 — (i158) No. 3:*** ***With audio amplifier*** ***(i271) No. 2 — (i158) No. 1:*** ***(i271) No. 10 — (i158) No. 2:***	Is the resistance 1 Ω or less?	Go to step **4**.	Repair or replace the open circuit of harness.
4	**CHECK HARNESS (GROUND SHORT CIRCUIT).** Measure the resistance between DCM connector and chassis ground. ***Connector & terminal*** ***(i271) No. 2 — Chassis ground:*** ***(i271) No. 10 — Chassis ground:***	Is the resistance 1 MΩ or more?	Go to step **5**.	Repair or replace the open circuit of harness.
5	**CHECK THE CONNECTOR (SHORT CIRCUIT TO POWER SUPPLY).** Measure the voltage between DCM connector and chassis ground. ***Connector & terminal*** ***(i271) No. 2 (+) — Chassis ground (–):*** ***(i271) No. 10 (+) — Chassis ground (–):***	Is the voltage less than 1 V?	Go to step **6**.	Repair or replace the short circuit of the harness.
6	**CHECK THE SPEAKER.** Perform the inspection of speaker unit and tweeter unit. <Ref. to ET-38, Front Speaker.> <Ref. to ET-40, Rear Speaker.>	Is the check result OK?	Replace the DCM. <Ref. to ET-53, DATA COMMUNICATION MODULE.>	Replace the speaker and tweeter. <Ref. to ET-38, Front Speaker.> <Ref. to ET-40, Rear Speaker.>

P: DTC B2A06 RIGHT SPEAKER/AUDIO CIRCUIT

DIAGNOSIS START CONDITION:
When ACC is ON.
DTC DETECTING CONDITION:
Speaker impedance is more than 10 kΩ for 100 ms. (Detached speaker connection, etc.)
TROUBLE SYMPTOM:
- Call function cannot be used.
- RED LED illuminates.

WIRING DIAGRAM:
Telematics <Ref. to WI-356, WIRING DIAGRAM, Telematics System.>
- Without audio amplifier

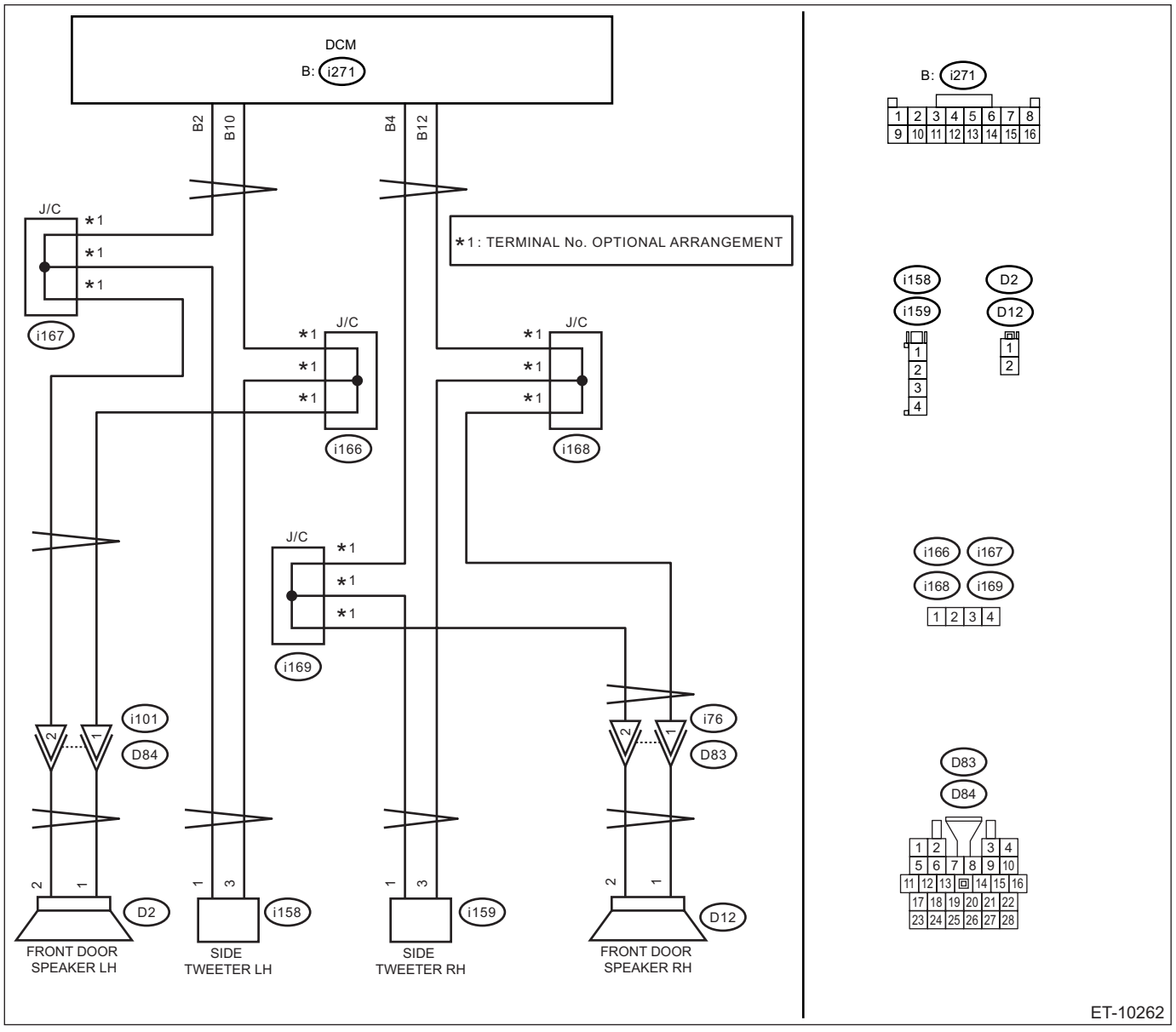

- With audio amplifier

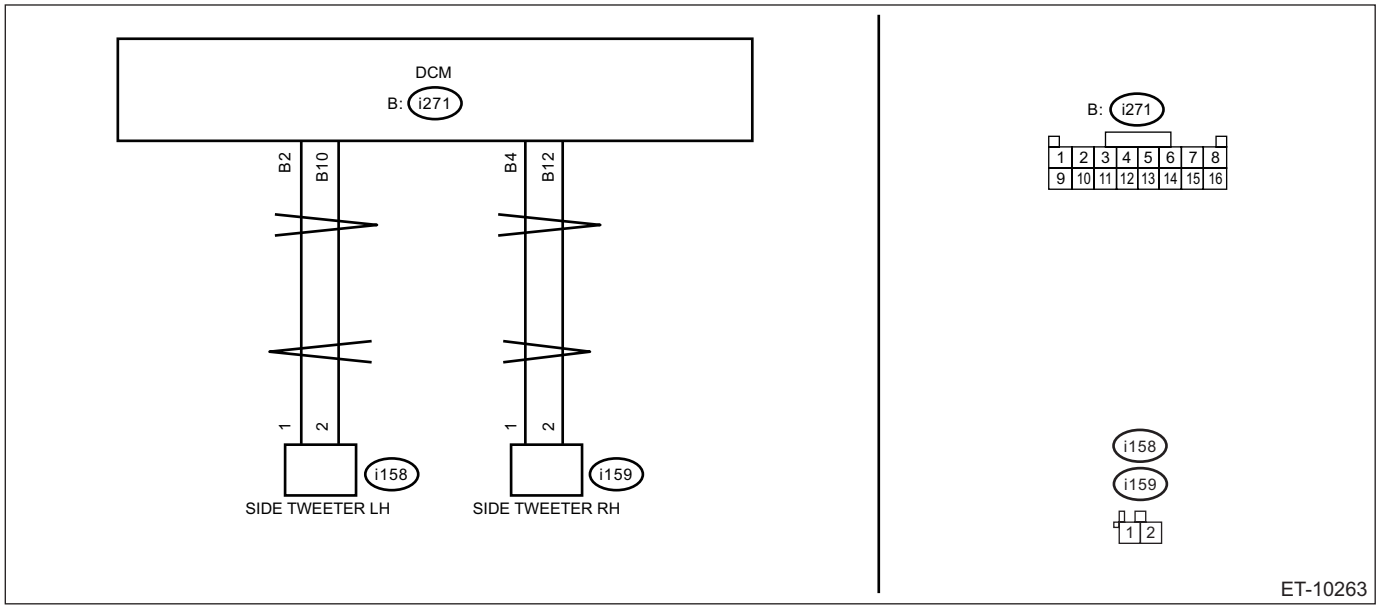

CAUTION:
CommCheck is required after replacing the DCM. <Ref. to ET-34, REGISTRATION (COMM CHECK), OPERATION, TELEMATICS SYSTEM.>

	Step	Check	Yes	No
1	**CHECK DTC.** Read the DTC. <Ref. to TEL(diag)-16, Diagnostic Code(s) Display.>	Is DTC B2A06 displayed? (Current malfunction)	Go to step **2**.	Even if DTC is displayed, the circuit has returned to a normal condition at this time. Reproduce the failure, and then perform the diagnosis again. In this case, temporary poor contact of connector, temporary open or short circuit of harness may be the cause.
2	**PERFORM THE SYSTEM OPERATION CHECK.** Perform the System Operation Check Mode «Speaker ON». <Ref. to TEL(diag)-22, System Operation Check Mode.>	Does it sound?	Go to step **3**.	Even if DTC is displayed, the circuit has returned to a normal condition at this time. Reproduce the failure, and then perform the diagnosis again. In this case, temporary poor contact of connector, temporary open or short circuit of harness may be the cause.

	Step	Check	Yes	No
3	**CHECK HARNESS (OPEN CIRCUIT).** 1) Turn the ignition switch to OFF. 2) Disconnect the speaker connector and tweeter connector. 3) Disconnect the DCM connector. 4) Measure the resistance between speaker connector and tweeter connector and DCM connector. ***Connector & terminal*** ***Without audio amplifier*** ***(i271) No. 4 — (D12) No. 2:*** ***(i271) No. 4 — (i159) No. 1:*** ***(i271) No. 12 — (D12) No. 1:*** ***(i271) No. 12 — (i159) No. 3:*** ***With audio amplifier*** ***(i271) No. 4 — (i159) No. 1:*** ***(i271) No. 12 — (i159) No. 2:***	Is the resistance 1 Ω or less?	Go to step **4**.	Repair or replace the open circuit of harness.
4	**CHECK HARNESS (GROUND SHORT CIRCUIT).** Measure the resistance between DCM connector and chassis ground. ***Connector & terminal*** ***(i271) No. 4 — Chassis ground:*** ***(i271) No. 12 — Chassis ground:***	Is the resistance 1 MΩ or more?	Go to step **5**.	Repair or replace the open circuit of harness.
5	**CHECK THE CONNECTOR (SHORT CIRCUIT TO POWER SUPPLY).** Measure the voltage between DCM connector and chassis ground. ***Connector & terminal*** ***(i271) No. 4 (+) — Chassis ground (–):*** ***(i271) No. 12 (+) — Chassis ground (–):***	Is the voltage less than 1 V?	Go to step **6**.	Repair or replace the short circuit of the harness.
6	**CHECK THE SPEAKER.** Perform the inspection of speaker unit and tweeter unit. <Ref. to ET-38, Front Speaker.> <Ref. to ET-40, Rear Speaker.>	Is the check result OK?	Replace the DCM. <Ref. to ET-53, DATA COMMUNICATION MODULE.>	Replace the speaker and tweeter. <Ref. to ET-38, Front Speaker.> <Ref. to ET-40, Rear Speaker.>

Q: DTC B2A07 BACKUP BATTERY CHARGE SYSTEM PERFORMANCE

DIAGNOSIS START CONDITION:
When ignition switch is ON.
DTC DETECTING CONDITION:
Backup battery is disconnected for at least 5 seconds when the ignition switch is turned ON. (Detached back-up battery connection, etc.)
TROUBLE SYMPTOM:
- ACN/SOS function cannot be used when the main battery is disconnected.
- RED LED illuminates.

CAUTION:
CommCheck is required after replacing the DCM. <Ref. to ET-34, REGISTRATION (COMM CHECK), OPERATION, TELEMATICS SYSTEM.>

	Step	Check	Yes	No
1	**CHECK DTC.** Read the DTC. <Ref. to TEL(diag)-16, Diagnostic Code(s) Display.>	Is DTC B2A07 displayed? (Current malfunction)	Go to step **2**.	Even if DTC is displayed, the circuit has returned to a normal condition at this time. Reproduce the failure, and then perform the diagnosis again. In this case, temporary poor contact of connector, temporary open or short circuit of harness may be the cause.
2	**CHECK THE BACKUP BATTERY.** 1) Remove the DCM. <Ref. to ET-53, DATA COMMUNICATION MODULE.> 2) Remove the backup battery cover. 3) Disconnect the backup battery connector. 4) Measure the backup battery voltage.	Is the voltage 2.0 V or more?	Replace the DCM. <Ref. to ET-53, DATA COMMUNICATION MODULE.>	Replace the backup battery. <Ref. to ET-53, DATA COMMUNICATION MODULE.>

R: DTC B2A08 SOS BUTTON CIRCUIT

DIAGNOSIS START CONDITION:
When ignition switch is ON.
DTC DETECTING CONDITION:
The following conditions occur for at least 50 ms.
- SOS button impedance is more than 10 kΩ.
- SOS button is stuck for at least 60 seconds.

TROUBLE SYMPTOM:
- SOS function cannot be used.
- RED LED illuminates.

WIRING DIAGRAM:
Telematics <Ref. to WI-356, WIRING DIAGRAM, Telematics System.>

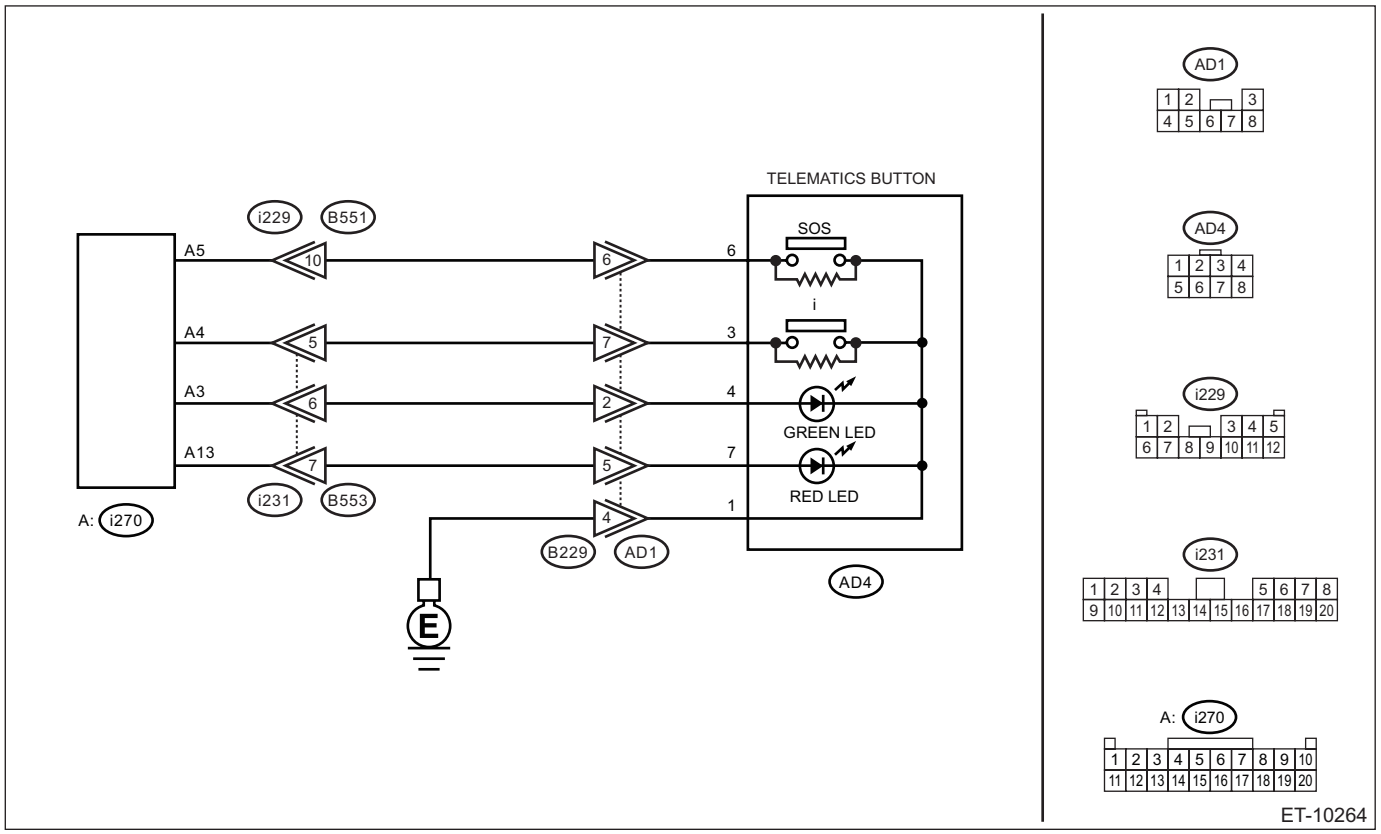

CAUTION:
CommCheck is required after replacing the DCM. <Ref. to ET-34, REGISTRATION (COMM CHECK), OPERATION, TELEMATICS SYSTEM.>

	Step	Check	Yes	No
1	**CHECK DTC.** Read the DTC. <Ref. to TEL(diag)-16, Diagnostic Code(s) Display.>	Is DTC B2A08 displayed? (Current malfunction)	Go to step **2**.	Even if DTC is displayed, the circuit has returned to a normal condition at this time. Reproduce the failure, and then perform the diagnosis again. In this case, temporary poor contact of connector, temporary open or short circuit of harness may be the cause.
2	**CHECK HARNESS (OPEN CIRCUIT).** 1) Turn the ignition switch to OFF. 2) Disconnect the telematics button connector. 3) Disconnect the DCM connector. 4) Measure the resistance between telematics button connector and DCM connector. ***Connector & terminal*** ***(i270) No. 5 — (AD4) No. 6:*** ***(AD4) No. 1 — Chassis ground:***	Is the resistance 1 Ω or less?	Go to step **3**.	Repair or replace the open circuit of harness.
3	**CHECK HARNESS (GROUND SHORT CIRCUIT).** Measure the resistance between DCM connector and chassis ground. ***Connector & terminal*** ***(i270) No. 5 — Chassis ground:***	Is the resistance 1 MΩ or more?	Go to step **4**.	Repair or replace the open circuit of harness.
4	**CHECK THE CONNECTOR (SHORT CIRCUIT TO POWER SUPPLY).** Measure the voltage between DCM connector and chassis ground. ***Connector & terminal*** ***(i270) No. 5 (+) — Chassis ground (–):*** ***(AD4) No. 1 (+) — Chassis ground (–):***	Is the voltage less than 1 V?	Go to step **5**.	Repair or replace the short circuit of the harness.
5	**CHECK THE SOS BUTTON UNIT.** Measure the resistance of the SOS button unit. ***Terminals*** ***No. 6 — No. 1:***	Is the resistance 1 Ω or less when SOS button is ON, and 1.6 (±5%) kΩ or more when SOS button is OFF?	Replace the DCM. <Ref. to ET-53, DATA COMMUNICATION MODULE.>	Replace the telematics button. <Ref. to ET-46, Switches and Harness.>

S: DTC B2A09 I-CALL BUTTON CIRCUIT

DIAGNOSIS START CONDITION:
When ignition switch is ON.
DTC DETECTING CONDITION:
The following conditions occur for at least 50 ms.
- i-button impedance is more than 10 kΩ.
- i-button is stuck for at least 60 seconds.

TROUBLE SYMPTOM:
- i-Call function cannot be used.
- RED LED illuminates.

WIRING DIAGRAM:
Telematics <Ref. to WI-356, WIRING DIAGRAM, Telematics System.>

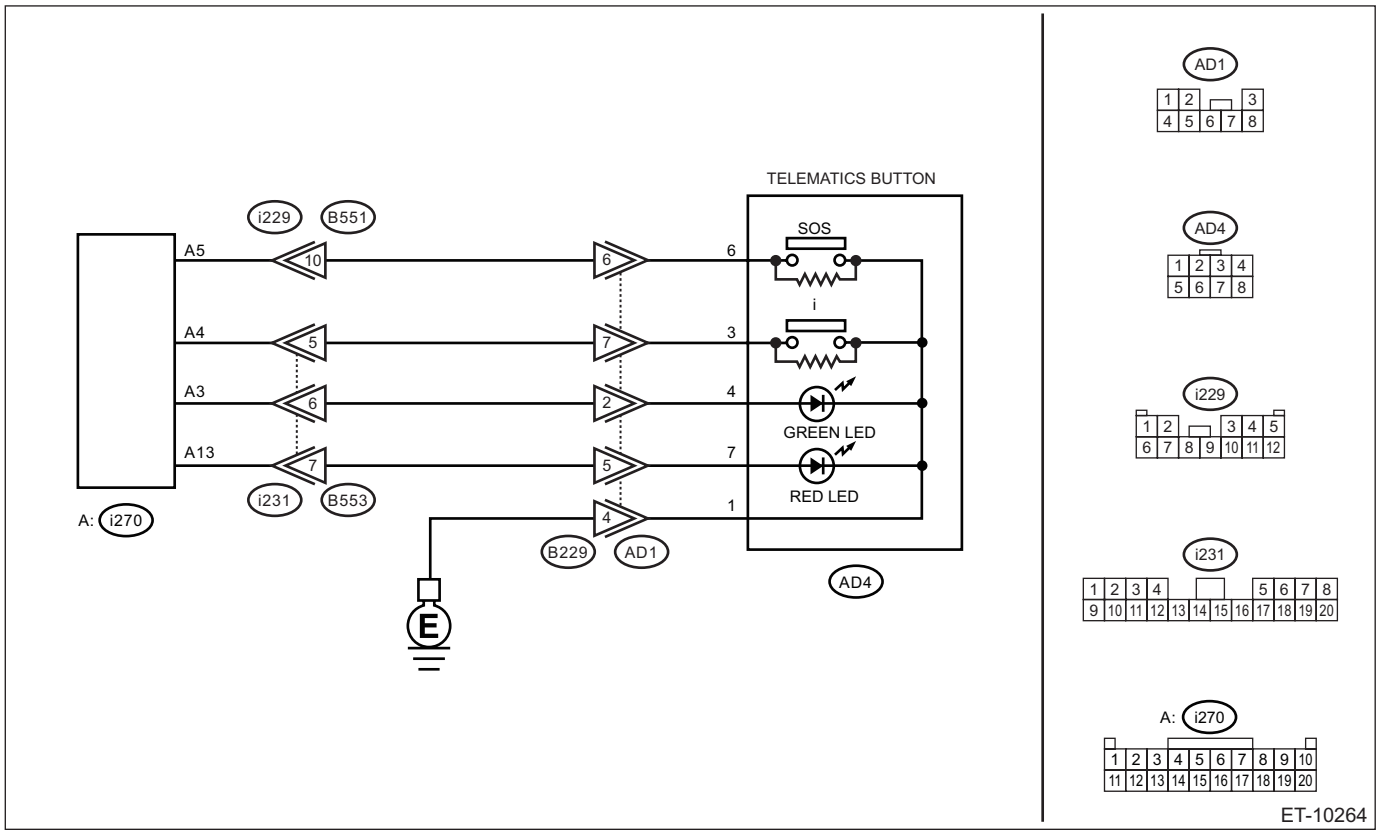

CAUTION:
CommCheck is required after replacing the DCM. <Ref. to ET-34, REGISTRATION (COMM CHECK), OPERATION, TELEMATICS SYSTEM.>

	Step	Check	Yes	No
1	**CHECK DTC.** Read the DTC. <Ref. to TEL(diag)-16, Diagnostic Code(s) Display.>	Is DTC B2A09 displayed? (Current malfunction)	Go to step **2**.	Even if DTC is displayed, the circuit has returned to a normal condition at this time. Reproduce the failure, and then perform the diagnosis again. In this case, temporary poor contact of connector, temporary open or short circuit of harness may be the cause.
2	**CHECK HARNESS (OPEN CIRCUIT).** 1) Turn the ignition switch to OFF. 2) Disconnect the telematics button connector. 3) Disconnect the DCM connector. 4) Measure the resistance between telematics button connector and DCM connector. ***Connector & terminal*** ***(i270) No. 4 — (AD4) No. 3:*** ***(AD4) No. 1 — Chassis ground:***	Is the resistance 1 Ω or less?	Go to step **3**.	Repair or replace the open circuit of harness.
3	**CHECK HARNESS (GROUND SHORT CIRCUIT).** Measure the resistance between DCM connector and chassis ground. ***Connector & terminal*** ***(i270) No. 4 — Chassis ground:***	Is the resistance 1 MΩ or more?	Go to step **4**.	Repair or replace the open circuit of harness.
4	**CHECK THE CONNECTOR (SHORT CIRCUIT TO POWER SUPPLY).** Measure the voltage between DCM connector and chassis ground. ***Connector & terminal*** ***(i270) No. 4 (+) — Chassis ground (–):*** ***(AD4) No. 1 (+) — Chassis ground (–):***	Is the voltage less than 1 V?	Go to step **5**.	Repair or replace the short circuit of the harness.
5	**CHECK THE I-BUTTON.** Measure the resistance of the i-button unit. ***Terminals*** ***No. 3 — No. 1:***	Is the resistance 1 Ω or less when i-button is ON, and 1.6 (±5%) kΩ or more when i-button is OFF?	Replace the DCM. <Ref. to ET-53, DATA COMMUNICATION MODULE.>	Replace the telematics button. <Ref. to ET-46, Switches and Harness.>

T: DTC B2A0A RED LED CIRCUIT

DIAGNOSIS START CONDITION:
When ACC is ON.
DTC DETECTING CONDITION:
- Current in LED is less than 1 mA. (Improper LED connection, etc.)
- Current is more than 200 mA for at least 50 ms. (Short-circuited LED, etc.)

TROUBLE SYMPTOM:
LED does not illuminate.
WIRING DIAGRAM:
Telematics <Ref. to WI-356, WIRING DIAGRAM, Telematics System.>

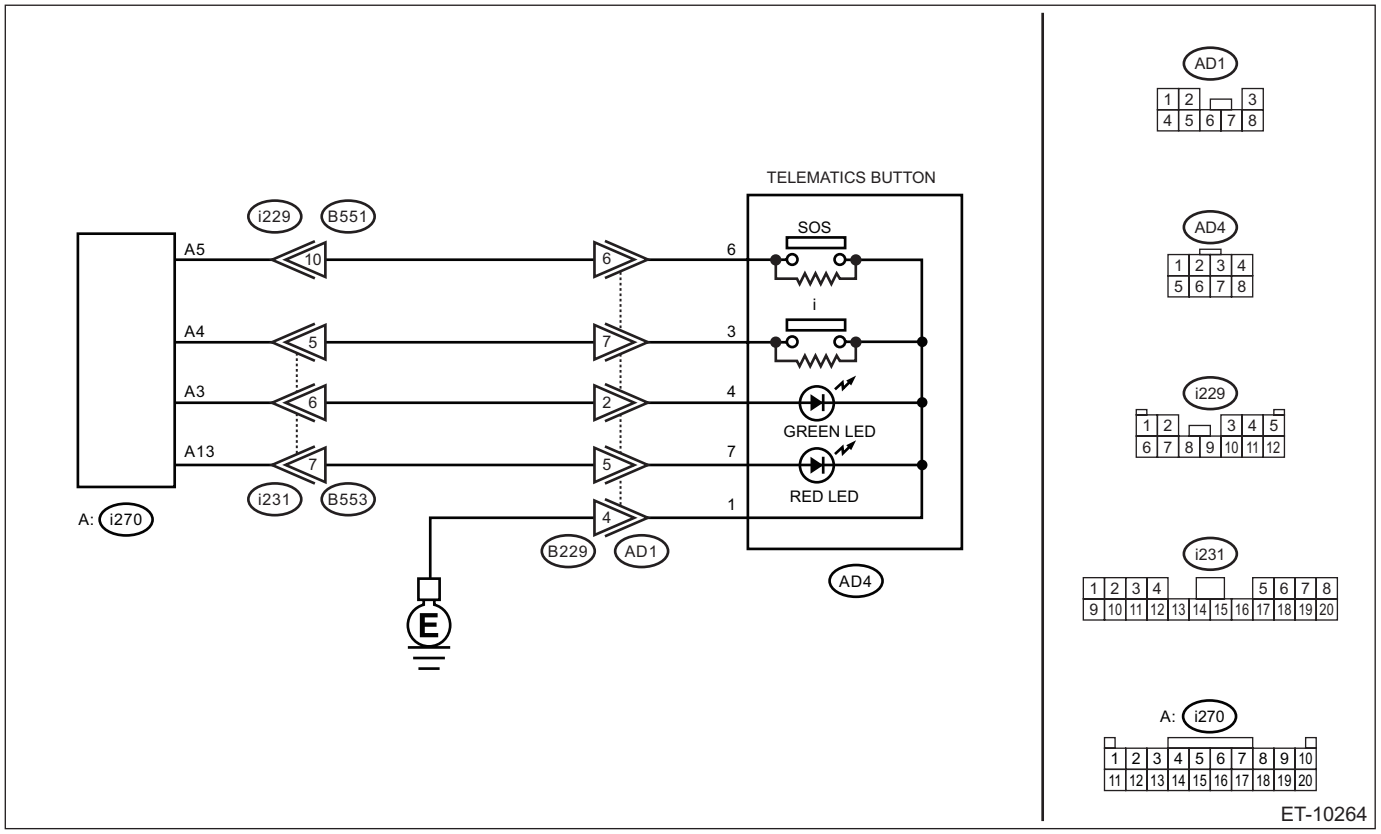

CAUTION:
CommCheck is required after replacing the DCM. <Ref. to ET-34, REGISTRATION (COMM CHECK), OPERATION, TELEMATICS SYSTEM.>

	Step	Check	Yes	No
1	**CHECK DTC.** Read the DTC. <Ref. to TEL(diag)-16, Diagnostic Code(s) Display.>	Is DTC B2A0A displayed? (Current malfunction)	Go to step **2**.	Even if DTC is displayed, the circuit has returned to a normal condition at this time. Reproduce the failure, and then perform the diagnosis again. In this case, temporary poor contact of connector, temporary open or short circuit of harness may be the cause.

	Step	Check	Yes	No
2	**PERFORM THE SYSTEM OPERATION CHECK.** Perform «RED LED Lighting» in the system operation check mode. <Ref. to TEL(diag)-22, System Operation Check Mode.>	Does it sound?	Go to step **3**.	Even if DTC is displayed, the circuit has returned to a normal condition at this time. Reproduce the failure, and then perform the diagnosis again. In this case, temporary poor contact of connector, temporary open or short circuit of harness may be the cause.
3	**CHECK HARNESS (OPEN CIRCUIT).** 1) Turn the ignition switch to OFF. 2) Disconnect the telematics button connector. 3) Disconnect the DCM connector. 4) Measure the resistance between telematics button connector and DCM connector. ***Connector & terminal*** ***(i270) No. 13 — (AD4) No. 7:*** ***(AD4) No. 1 — Chassis ground:***	Is the resistance 1 Ω or less?	Go to step **4**.	Repair or replace the open circuit of harness.
4	**CHECK HARNESS (GROUND SHORT CIRCUIT).** Measure the resistance between DCM connector and chassis ground. ***Connector & terminal*** ***(i270) No. 13 — Chassis ground:***	Is the resistance 1 MΩ or more?	Go to step **5**.	Repair or replace the open circuit of harness.
5	**CHECK THE CONNECTOR (SHORT CIRCUIT TO POWER SUPPLY).** Measure the voltage between DCM connector and chassis ground. ***Connector & terminal*** ***(i270) No. 13 (+) — Chassis ground (–):*** ***(AD4) No. 1 (+) — Chassis ground (–):***	Is the voltage less than 1 V?	Go to step **6**.	Repair or replace the short circuit of the harness.
6	**CHECK THE TELEMATICS BUTTON (LED) UNIT.** Measure the resistance of the telematics button (LED) unit. ***Terminals*** ***No. 7 — No. 1:***	Is there continuity?	Replace the DCM. <Ref. to ET-53, DATA COMMUNICATION MODULE.>	Replace the telematics button. <Ref. to ET-46, Switches and Harness.>

U: DTC B2A0B GREEN LED CIRCUIT

DIAGNOSIS START CONDITION:
When ACC is ON.
DTC DETECTING CONDITION:
- Current in LED is less than 1 mA. (Improper LED connection, etc.)
- Current is more than 200 mA for at least 50 ms. (Short-circuited LED, etc.)

TROUBLE SYMPTOM:
RED LED illuminates.
WIRING DIAGRAM:
Telematics <Ref. to WI-356, WIRING DIAGRAM, Telematics System.>

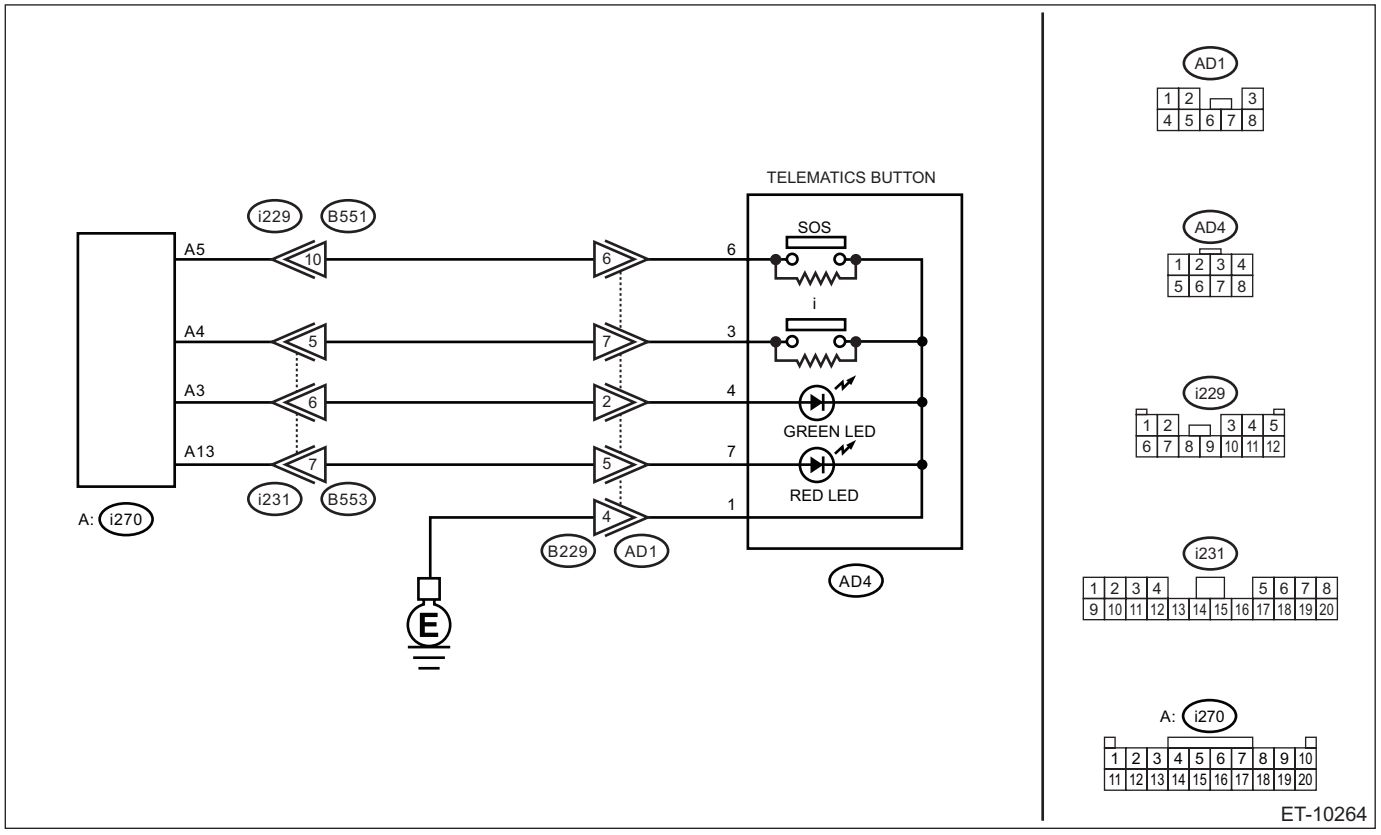

CAUTION:
CommCheck is required after replacing the DCM. <Ref. to ET-34, REGISTRATION (COMM CHECK), OPERATION, TELEMATICS SYSTEM.>

	Step	Check	Yes	No
1	**CHECK DTC.** Read the DTC. <Ref. to TEL(diag)-16, Diagnostic Code(s) Display.>	Is DTC B2A0B displayed? (Current malfunction)	Go to step **2**.	Even if DTC is displayed, the circuit has returned to a normal condition at this time. Reproduce the failure, and then perform the diagnosis again. In this case, temporary poor contact of connector, temporary open or short circuit of harness may be the cause.

	Step	Check	Yes	No
2	**PERFORM THE SYSTEM OPERATION CHECK.** Perform «GREEN LED Lighting» in the system operation check mode. <Ref. to TEL(diag)-22, System Operation Check Mode.>	Does it sound?	Go to step **3**.	Even if DTC is displayed, the circuit has returned to a normal condition at this time. Reproduce the failure, and then perform the diagnosis again. In this case, temporary poor contact of connector, temporary open or short circuit of harness may be the cause.
3	**CHECK HARNESS (OPEN CIRCUIT).** 1) Turn the ignition switch to OFF. 2) Disconnect the telematics button connector. 3) Disconnect the DCM connector. 4) Measure the resistance between telematics button connector and DCM connector. ***Connector & terminal*** ***(i270) No. 3 — (AD4) No. 4:*** ***(AD4) No. 1 — Chassis ground:***	Is the resistance 1 Ω or less?	Go to step **4**.	Repair or replace the open circuit of harness.
4	**CHECK HARNESS (GROUND SHORT CIRCUIT).** Measure the resistance between DCM connector and chassis ground. ***Connector & terminal*** ***(i270) No. 3 — Chassis ground:***	Is the resistance 1 MΩ or more?	Go to step **5**.	Repair or replace the open circuit of harness.
5	**CHECK THE CONNECTOR (SHORT CIRCUIT TO POWER SUPPLY).** Measure the voltage between DCM connector and chassis ground. ***Connector & terminal*** ***(i270) No. 3 (+) — Chassis ground (–):*** ***(AD4) No. 1 (+) — Chassis ground (–):***	Is the voltage less than 1 V?	Go to step **6**.	Repair or replace the short circuit of the harness.
6	**CHECK THE TELEMATICS BUTTON (LED) UNIT.** Measure the resistance of the telematics button (LED) unit. ***Terminals*** ***No. 4 — No. 1:***	Is there continuity?	Replace the DCM. <Ref. to ET-53, DATA COMMUNICATION MODULE.>	Replace the telematics button. <Ref. to ET-46, Switches and Harness.>

V: DTC B2A0C DCM INTERNAL FAULT

DIAGNOSIS START CONDITION:
When ignition switch is ON.
DTC DETECTING CONDITION:
- Main microcomputer and communication circuit IC cannot communicate. (Defective IPC)
- SIM (communication chip) cannot be read. (Defective SIM)

TROUBLE SYMPTOM:
- Telematics function cannot be used.
- RED LED illuminates.

CAUTION:
CommCheck is required after replacing the DCM. <Ref. to ET-34, REGISTRATION (COMM CHECK), OPERATION, TELEMATICS SYSTEM.>

	Step	Check	Yes	No
1	**CHECK DTC.** Read the DTC. <Ref. to TEL(diag)-16, Diagnostic Code(s) Display.>	Is DTC B2A0C displayed? (Current malfunction)	Replace the DCM. <Ref. to ET-53, DATA COMMUNICATION MODULE.>	Even if DTC is displayed, the circuit has returned to a normal condition at this time. Reproduce the failure, and then perform the diagnosis again. In this case, temporary poor contact of connector, temporary open or short circuit of harness may be the cause.

W: DTC B2A0D AIRBAG SIGNAL

DIAGNOSIS START CONDITION:
When ignition switch is ON.
DTC DETECTING CONDITION:
Either the regular signal or collision detection signal cannot be detected from the airbag CM for at least 30 seconds.
TROUBLE SYMPTOM:
- ACN function does not operate.
- RED LED illuminates.

WIRING DIAGRAM:
Telematics <Ref. to WI-356, WIRING DIAGRAM, Telematics System.>

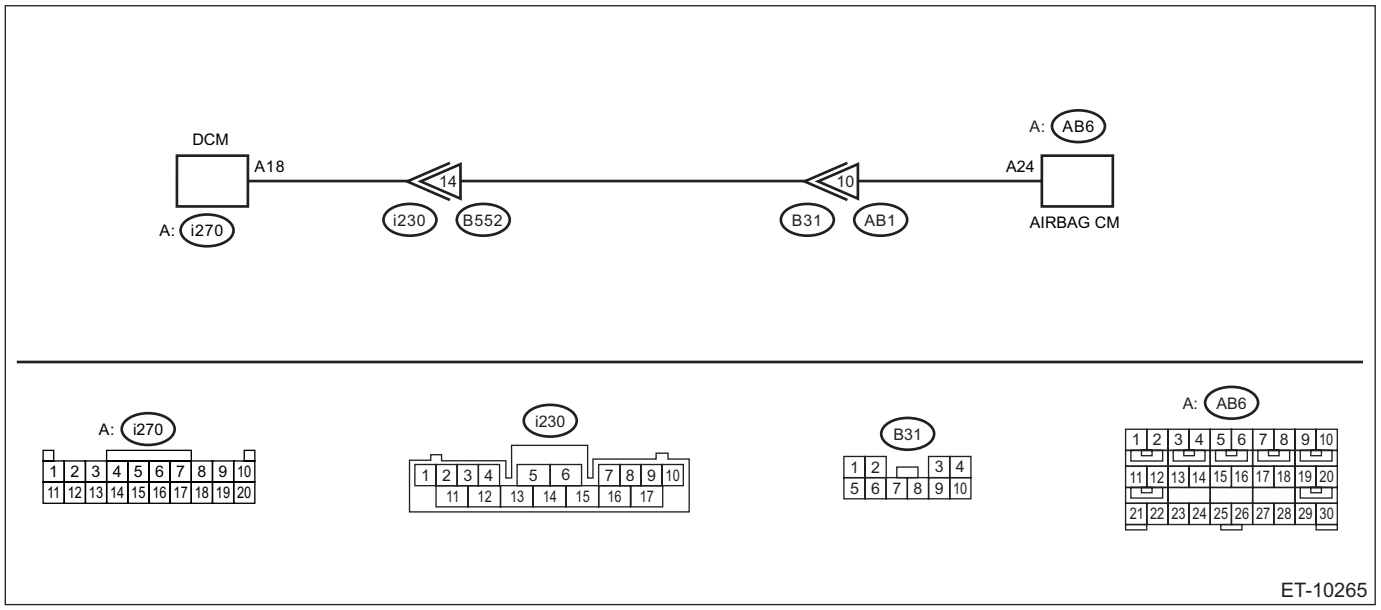

CAUTION:
CommCheck is required after replacing the DCM. <Ref. to ET-34, REGISTRATION (COMM CHECK), OPERATION, TELEMATICS SYSTEM.>

	Step	Check	Yes	No
1	**CHECK DTC.** Read the DTC. <Ref. to TEL(diag)-16, Diagnostic Code(s) Display.>	Is DTC B2A0D displayed? (Current malfunction)	Go to step **2**.	Even if DTC is displayed, the circuit has returned to a normal condition at this time. Reproduce the failure, and then perform the diagnosis again. In this case, temporary poor contact of connector, temporary open or short circuit of harness may be the cause.
2	**CHECK DTC.** Read DTC of the airbag. <Ref. to AB(diag)-22, Read Diagnostic Trouble Code (DTC).>	Are any DTCs displayed? (Current malfunction)	Perform the diagnosis for the displayed DTCs of airbag.	Go to step **3**.

	Step	Check	Yes	No
3	**CHECK HARNESS (OPEN CIRCUIT).** 1) Turn the ignition switch to OFF. 2) Disconnect the airbag CM connector. 3) Disconnect the DCM connector. 4) Measure the resistance between airbag CM connector and DCM connector. **CAUTION:** **To measure the voltage and resistance of airbag system component, be sure to use the specified test harness. <Ref. to AB(diag)-4, General Description.>** ***Connector & terminal*** ***(i270) No. 18 — (AB6) No. 24:***	Is the resistance 1 Ω or less?	Go to step **4**.	Repair or replace the open circuit of harness.
4	**CHECK HARNESS (GROUND SHORT CIRCUIT).** Measure the resistance between DCM connector and chassis ground. ***Connector & terminal*** ***(i270) No. 18 — Chassis ground:***	Is the resistance 1 MΩ or more?	Go to step **5**.	Repair or replace the open circuit of harness.
5	**CHECK THE CONNECTOR (SHORT CIRCUIT TO POWER SUPPLY).** Measure the voltage between DCM connector and chassis ground. ***Connector & terminal*** ***(i270) No. 18 (+) — Chassis ground (–):***	Is the voltage less than 1 V?	Replace the DCM. <Ref. to ET-53, DATA COMMUNICATION MODULE.>	Repair or replace the short circuit of the harness.

X: DTC B2A0E MUTE LINE CIRCUIT

DIAGNOSIS START CONDITION:
When ignition switch is ON.
DTC DETECTING CONDITION:
Any of the following conditions occurs continuously for five seconds or more after the ignition switch is turned to ON when DCM does not mute the audio or navigation system.
- Current in the mute line is less than 1 mA. (Improper line connection, etc.)
- Current exceeds 50 mA. (Short-circuited line, etc.)

TROUBLE SYMPTOM:
- The mute function of audio or navigation system does not operate.
- RED LED illuminates.

WIRING DIAGRAM:
Telematics <Ref. to WI-356, WIRING DIAGRAM, Telematics System.>

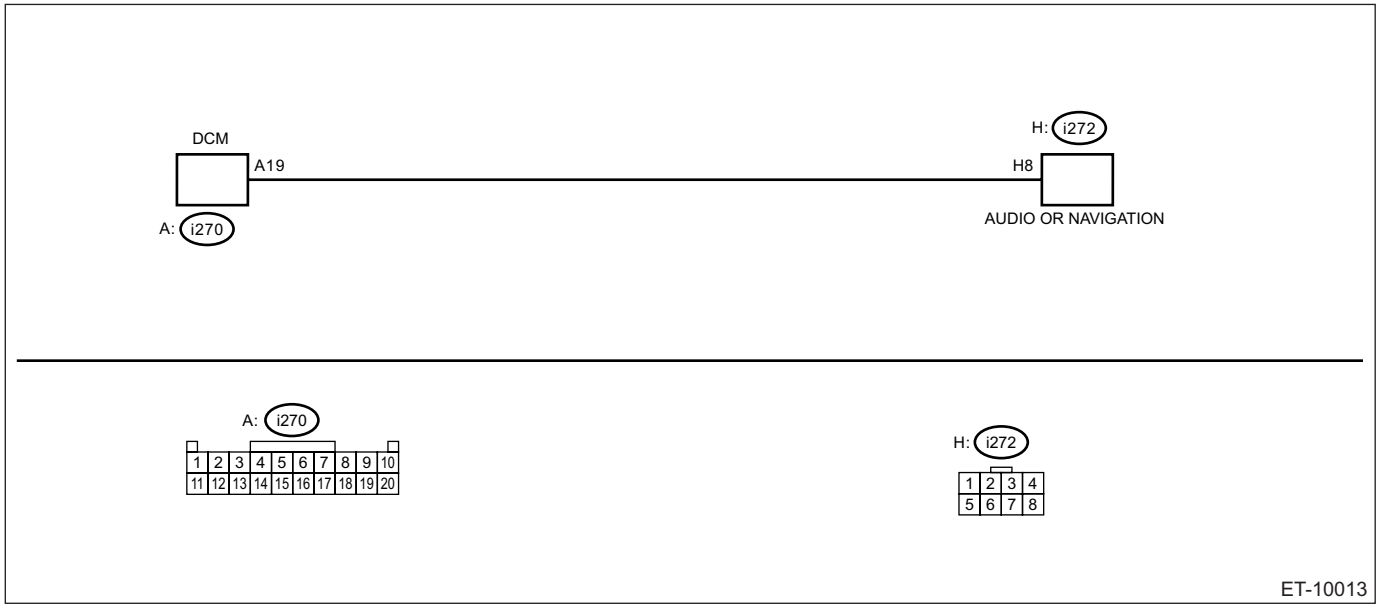

CAUTION:
CommCheck is required after replacing the DCM. <Ref. to ET-34, REGISTRATION (COMM CHECK), OPERATION, TELEMATICS SYSTEM.>

	Step	Check	Yes	No
1	**CHECK DTC.** Read the DTC. <Ref. to TEL(diag)-16, Diagnostic Code(s) Display.>	Is DTC B2A0E displayed? (Current malfunction)	Go to step **2**.	Even if DTC is displayed, the circuit has returned to a normal condition at this time. Reproduce the failure, and then perform the diagnosis again. In this case, temporary poor contact of connector, temporary open or short circuit of harness may be the cause.

	Step	Check	Yes	No
2	**CHECK HARNESS (OPEN CIRCUIT).** 1) Turn the ignition switch to OFF. 2) Disconnect the audio or navigation connector. 3) Disconnect the DCM connector. 4) Measure the resistance between audio or navigation connector and DCM connector. ***Connector & terminal*** ***(i270) No. 19 — (i272) No. 8:***	Is the resistance 1 Ω or less?	Go to step **3**.	Repair or replace the open circuit of harness.
3	**CHECK HARNESS (GROUND SHORT CIRCUIT).** Measure the resistance between DCM connector and chassis ground. ***Connector & terminal*** ***(i270) No. 19 — Chassis ground:***	Is the resistance 1 MΩ or more?	Go to step **4**.	Repair or replace the open circuit of harness.
4	**CHECK THE CONNECTOR (SHORT CIRCUIT TO POWER SUPPLY).** Measure the voltage between DCM connector and chassis ground. ***Connector & terminal*** ***(i270) No. 19 (+) — Chassis ground (–):***	Is the voltage less than 1 V?	Replace the DCM. <Ref. to ET-53, DATA COMMUNICATION MODULE.>	Repair or replace the short circuit of the harness.

Y: DTC B2A0F BACKUP BATTERY DEGRADATION

DIAGNOSIS START CONDITION:
When ignition switch is ON.
DTC DETECTING CONDITION:
- Backup battery voltage of charger is low.
- Charging attempt of 2 V or more fails after the backup battery has been charged for 1 hour continuously.
- Full charging is not achieved after the backup battery is charged for 7 hours in total (not continuously).

TROUBLE SYMPTOM:
RED LED illuminates.

CAUTION:
CommCheck is required after replacing the DCM. <Ref. to ET-34, REGISTRATION (COMM CHECK), OPERATION, TELEMATICS SYSTEM.>

	Step	Check	Yes	No
1	**CHECK DTC.** Read the DTC. <Ref. to TEL(diag)-16, Diagnostic Code(s) Display.>	Is DTC B2A0F displayed? (Current malfunction)	Go to step **2**.	Even if DTC is displayed, the circuit has returned to a normal condition at this time. Reproduce the failure, and then perform the diagnosis again. In this case, temporary poor contact of connector, temporary open or short circuit of harness may be the cause.
2	**CHECK THE BACKUP BATTERY.** Check the backup battery unit. <Ref. to ET-53, DATA COMMUNICATION MODULE.>	Is the check result OK?	Replace the DCM. <Ref. to ET-53, DATA COMMUNICATION MODULE.>	Replace the backup battery. <Ref. to ET-53, DATA COMMUNICATION MODULE.>

Z: DTC B2A10 BATTERY VOLTAGE HIGH

DIAGNOSIS START CONDITION:
When ignition switch is ON.
DTC DETECTING CONDITION:
DCM battery power supply input of 16 V or more continues for 5 seconds.
TROUBLE SYMPTOM:
RED LED illuminates.

CAUTION:
CommCheck is required after replacing the DCM. <Ref. to ET-34, REGISTRATION (COMM CHECK), OPERATION, TELEMATICS SYSTEM.>

	Step	Check	Yes	No
1	**CHECK DTC.** Read the DTC. <Ref. to TEL(diag)-16, Diagnostic Code(s) Display.>	Is DTC B2A10 displayed? (Current malfunction)	Go to step **2**.	Even if DTC is displayed, the circuit has returned to a normal condition at this time. Reproduce the failure, and then perform the diagnosis again. In this case, temporary poor contact of connector, temporary open or short circuit of harness may be the cause.
2	**CHECK CURRENT DATA.** Check the current data «Battery Voltage» of the Telematics. <Ref. to TEL(diag)-13, Read Current Data.>	Is «Battery Voltage» OK?	Replace the DCM. <Ref. to ET-53, DATA COMMUNICATION MODULE.>	Go to step **3**.
3	**CHECK BATTERY.** Check the battery unit. <Ref. to SC(STI)-24, Battery.> <Ref. to SC(w/o STI)-50, Battery.>	Is the check result OK?	Replace the DCM. <Ref. to ET-53, DATA COMMUNICATION MODULE.>	Replace the battery. <Ref. to SC(STI)-24, Battery.> <Ref. to SC(w/o STI)-50, Battery.>

13.Diagnostics with Phenomenon

A: LIST

No.	Symptoms	Reference
1	The system does not notify the Telematics Service Provider Center automatically after collision.	<Ref. to TEL(diag)-54, THE SYSTEM DOES NOT NOTIFY THE TELEMATICS SERVICE PROVIDER CENTER AUTOMATICALLY AFTER COLLISION, INSPECTION, Diagnostics with Phenomenon.>
2	The system does not notify the center even if the SOS button is pressed.	<Ref. to TEL(diag)-56, THE SYSTEM DOES NOT NOTIFY THE CENTER EVEN IF THE SOS BUTTON IS PRESSED, INSPECTION, Diagnostics with Phenomenon.>
3	The system places an SOS call unintentionally during driving.	<Ref. to TEL(diag)-57, THE SYSTEM PLACES AN SOS CALL UNINTENTIONALLY DURING DRIVING, INSPECTION, Diagnostics with Phenomenon.>
4	The system places an I-CALL unintentionally during driving.	<Ref. to TEL(diag)-57, THE SYSTEM PLACES AN I-CALL UNINTENTIONALLY DURING DRIVING, INSPECTION, Diagnostics with Phenomenon.>
5	The system does not notify the center even if the i-button is pressed upon vehicle malfunction.	<Ref. to TEL(diag)-57, THE SYSTEM DOES NOT NOTIFY THE CENTER EVEN IF THE I-BUTTON IS PRESSED UPON VEHICLE MALFUNCTION, INSPECTION, Diagnostics with Phenomenon.>
6	Remote Vehicle Locator cannot locate the vehicle.	<Ref. to TEL(diag)-58, REMOTE VEHICLE LOCATOR CANNOT LOCATE THE VEHICLE, INSPECTION, Diagnostics with Phenomenon.>
7	Remote Vehicle Locator indicates an incorrect location and therefore the vehicle cannot be located.	<Ref. to TEL(diag)-60, REMOTE VEHICLE LOCATOR INDICATES AN INCORRECT LOCATION FOR THE VEHICLE, INSPECTION, Diagnostics with Phenomenon.>
8	Remote Door Lock does not lock the doors of the vehicle.	<Ref. to TEL(diag)-60, REMOTE DOOR LOCK DOES NOT LOCK THE DOORS OF THE VEHICLE, INSPECTION, Diagnostics with Phenomenon.>
9	The doors lock unintentionally.	<Ref. to TEL(diag)-62, THE DOORS LOCK UNINTENTIONALLY, INSPECTION, Diagnostics with Phenomenon.>
10	The doors unlock unintentionally.	<Ref. to TEL(diag)-62, THE DOORS UNLOCK UNINTENTIONALLY, INSPECTION, Diagnostics with Phenomenon.>
11	Remote Horn & HAZARD Lights do not operate upon request.	<Ref. to TEL(diag)-63, REMOTE HORN & HAZARD LIGHTS DO NOT OPERATE UPON REQUEST, INSPECTION, Diagnostics with Phenomenon.>
12	When the Vehicle Security Alarm is activated, notification is not sent.	<Ref. to TEL(diag)-64, WHEN THE VEHICLE SECURITY ALARM IS ACTIVATED, NOTIFICATION IS NOT SENT, INSPECTION, Diagnostics with Phenomenon.>
13	When a Malfunction indicator light/warning light is lit, notification is not sent.	<Ref. to TEL(diag)-65, WHEN A MALFUNCTION INDICATOR LIGHT/WARNING LIGHT IS LIT, NOTIFICATION IS NOT SENT, INSPECTION, Diagnostics with Phenomenon.>
14	Maintenance Notifications are not sent.	<Ref. to TEL(diag)-67, MAINTENANCE NOTIFICATIONS ARE NOT SENT, INSPECTION, Diagnostics with Phenomenon.>
15	The LED does not display the status. (LED malfunction)	<Ref. to TEL(diag)-68, THE LED DOES NOT DISPLAY THE STATUS. (LED MALFUNCTION), INSPECTION, Diagnostics with Phenomenon.>
16	Phone conversation is not possible. (The microphone does not respond to a voice. No sound is heard from the speaker.)	<Ref. to TEL(diag)-70, PHONE CONVERSATION IS NOT POSSIBLE. (THE MICROPHONE DOES NOT RESPOND TO A VOICE. NO SOUND IS HEARD FROM THE SPEAKER.), INSPECTION, Diagnostics with Phenomenon.>

B: INSPECTION

1. THE SYSTEM DOES NOT NOTIFY THE TELEMATICS SERVICE PROVIDER CENTER AUTOMATICALLY AFTER COLLISION

NOTE:
Perform the diagnostics for "Phone conversation is not possible. (The microphone does not respond to a voice. No sound is heard from the speaker.)". <Ref. to TEL(diag)-70, PHONE CONVERSATION IS NOT POSSIBLE. (THE MICROPHONE DOES NOT RESPOND TO A VOICE. NO SOUND IS HEARD FROM THE SPEAKER.), INSPECTION, Diagnostics with Phenomenon.>

CAUTION:
CommCheck is required after replacing the DCM. <Ref. to ET-34, REGISTRATION (COMM CHECK), OPERATION, TELEMATICS SYSTEM.>

	Step	Check	Yes	No
1	**CHECK COLLISION TYPE.** Check the type of collision of the vehicle.	Is it a frontal collision, or a side collision, or a rollover?	Go to step **2**.	For rear collision, Go to step **3**.
2	**CHECK DTCS.** Read DTC of the airbag. <Ref. to AB(diag)-22, Read Diagnostic Trouble Code (DTC).>	If no DTC is displayed, go to A. If any DTC of «Front Impact Deployment», «Side Impact Deployment» or «Rollover Ignition» is displayed, go to A. If DTC other than «Front Impact Deployment», «Side Impact Deployment» or «Rollover Ignition» is displayed, go to B.	A: There is no malfunction in the airbag system. Go to step **6**. B: Perform the diagnosis for the airbag system. <Ref. to AB(diag)-2, Basic Diagnostic Procedure.> At the same time, Go to step **6**.	—
3	**CHECK COLLISION DETECTION SIGNAL RECEPTION STATUS.** Display the current data «Timestamp at Emergency Notification Event» of the Telematics. <Ref. to TEL(diag)-13, Read Current Data.>	Is a time stamp recorded?	Go to step **6**. (Rear collision detection was activated)	Go to step **4**.
4	**CHECK DTCS.** Read DTCs of the Telematics. <Ref. to TEL(diag)-16, Diagnostic Code(s) Display.>	Is DTC displayed?	Perform the diagnosis for the displayed DTCs. <Ref. to TEL(diag)-16, LIST, Diagnostic Code(s) Display.>	Go to step **5**.
5	**CHECK DTCS.** Read DTC of the airbag. <Ref. to AB(diag)-22, Read Diagnostic Trouble Code (DTC).>	Is DTC displayed?	Perform the diagnosis for the airbag system. <Ref. to AB(diag)-2, Basic Diagnostic Procedure.> At the same time, Go to step **6**.	There is no malfunction in the airbag system. Go to step **6**.
6	**CHECK MODE STATUS.** Display the current data «Subscription Status» of the Telematics. <Ref. to TEL(diag)-13, Read Current Data.>	Is the data «Normal Mode»?	Go to step **7**. NOTE: If step 4 is in progress, Go to step **8**.	This is not a malfunction because the function is limited in other than normal mode. Press and hold the SOS button for two seconds to enter normal mode.

	Step	Check	Yes	No
7	**CHECK DTCS.** Read DTCs of the Telematics. <Ref. to TEL(diag)-16, Diagnostic Code(s) Display.>	Is DTC displayed?	Perform the diagnosis for the displayed DTCs. <Ref. to TEL(diag)-16, LIST, Diagnostic Code(s) Display.>	Go to step **8**.
8	**CHECK THE RECEIVED SIGNAL STRENGTH AT THE TIME OF THE ACCIDENT. (CHECK THE CURRENT DATA.).** Display the current data «Signal Strength at Emergency Notification Event» of the Telematics. <Ref. to TEL(diag)-13, Read Current Data.>	Is the data 26% or more?	Go to step **10**.	Go to step **9**.
9	**CHECK SPECIFIED AREA.** 1) Check whether the collision occurred within the specified area. 2) Display the current data «GPS Data at ACN Event» of the Telematics. <Ref. to TEL(diag)-13, Read Current Data.>	Is the displayed positional data located within the AT&T coverage area? (For the AT&T coverage area, refer to the AT&T website. This system operates on 3G and 4G mobile communication technology.)	Go to step **10**.	The collision occurred outside the specified area.
10	**CHECK THE COMMUNICATION STATUS AT THE TIME OF THE ACCIDENT. (CHECK THE CURRENT DATA.).** Display the current data «Call Status at Emergency Notification Event» of the Telematics. <Ref. to TEL(diag)-13, Read Current Data.>	If the data shows «Call Started» or «Call Connected»; Go to A. If the data shows «Call Not Started»; Go to B. If the data shows «No Network Service»; Go to C. If the data shows «Call Ended by SXM»; Go to D.	A: Go to step **11**. B: Replace the DCM. <Ref. to ET-53, DATA COMMUNICATION MODULE.> C: Replace the antenna. <Ref. to ET-43, Antenna.> D: The connection ended due to a server-side reason; therefore, there is no failure on the vehicle.	—
11	**CHECK THE TIME OF THE ACCIDENT. (CHECK THE CURRENT DATA.).** Display the current data «Timestamp at Emergency Notification Event» of the Telematics. <Ref. to TEL(diag)-13, Read Current Data.> NOTE: The time stamp is displayed in the Coordinated Universal Time (UTC), which is different from actual time at each location. Therefore, time difference needs to be corrected for use. Example: [12/22 01:30 in UTC time] is corrected as [12/21 20:30 in New York time].	Does the time of the accident match with the data?	Replace the antenna. <Ref. to ET-43, Antenna.>	Replace the DCM. <Ref. to ET-53, DATA COMMUNICATION MODULE.>

2. THE SYSTEM DOES NOT NOTIFY THE CENTER EVEN IF THE SOS BUTTON IS PRESSED

NOTE:
Perform the diagnostics for "Phone conversation is not possible. (The microphone does not respond to a voice. No sound is heard from the speaker.)". <Ref. to TEL(diag)-70, PHONE CONVERSATION IS NOT POSSIBLE. (THE MICROPHONE DOES NOT RESPOND TO A VOICE. NO SOUND IS HEARD FROM THE SPEAKER.), INSPECTION, Diagnostics with Phenomenon.>

CAUTION:
CommCheck is required after replacing the DCM. <Ref. to ET-34, REGISTRATION (COMM CHECK), OPERATION, TELEMATICS SYSTEM.>

	Step	Check	Yes	No
1	**CHECK THE SUBSCRIPTION STATUS.** Display the current data «SOS Active» of the Telematics. <Ref. to TEL(diag)-13, Read Current Data.>	Is the data «TRUE»?	Go to step **2**.	The user does not have a service subscription; therefore, it is not a failure.
2	**CHECK DTCS.** Read DTCs of the Telematics. <Ref. to TEL(diag)-16, Diagnostic Code(s) Display.>	Is DTC displayed?	Perform the diagnosis for the displayed DTCs. <Ref. to TEL(diag)-16, LIST, Diagnostic Code(s) Display.>	Go to step **3**.
3	**CHECK THE RECEIVED SIGNAL STRENGTH WHEN THE SOS BUTTON WAS PRESSED. (CHECK THE CURRENT DATA.).** Display the current data «RSSI at SOS/ ICALL(1)» of the Telematics. <Ref. to TEL(diag)-13, Read Current Data.>	Is the data 26% or more?	Go to step **5**.	Go to step **4**.
4	**CHECK THE AT&T CELLULAR COVERAGE AREA.** 1) Check whether the SOS button was pressed within the cellular coverage area. 2) Display the current data «GPS Data at Time of Button Push(1)» of the Telematics. <Ref. to TEL(diag)-13, Read Current Data.>	Is the displayed positional data located within the AT&T coverage area? (For the AT&T coverage area, refer to the AT&T website. This system operates on 3G and 4G mobile communication technology.)	Go to step **5**.	The SOS button was pressed outside the cellular coverage area.
5	**CHECK THE COMMUNICATION STATUS OF WHEN THE SOS BUTTON WAS PRESSED. (CHECK THE CURRENT DATA.).** Display the current data «Call status at SOS/ ICALL Event(1)» of the Telematics. <Ref. to TEL(diag)-13, Read Current Data.>	If the data shows «Call Started» or «Call Connected»; Go to A. If the data shows «Call Not Started»; Go to B. If the data shows «No Network Service»; Go to C. If the data shows «Call Ended by SXM»; Go to D.	A: Go to step **6**. B: Go to step **7**. C: Replace the antenna. <Ref. to ET-43, Antenna.> D: The connection ended due to a server-side reason; therefore, there is no failure on the vehicle.	—
6	**CHECK THE TIME OF WHEN THE SOS BUTTON WAS PRESSED. (CHECK THE CURRENT DATA.).** Display the current data «Timestamp at Time of Button Push(1)» of the Telematics. <Ref. to TEL(diag)-13, Read Current Data.> NOTE: The time stamp is displayed in the Coordinated Universal Time (UTC), which is different from actual time at each location. Therefore, time difference needs to be corrected for use. Example: [12/22 01:30 in UTC time] is corrected as [12/21 20:30 in New York time].	Does the time of the SOS button operation match with the data?	Go to step **7**.	Replace the DCM. <Ref. to ET-53, DATA COMMUNICATION MODULE.>

	Step	Check	Yes	No
7	**CHECK THE SOS BUTTON.** Check the SOS button. <Ref. to TEL(diag)-38, DTC B2A08 SOS BUTTON CIRCUIT, Diagnostic Procedure with Diagnostic Trouble Code (DTC).>	Is the check result OK?	Replace the DCM. <Ref. to ET-53, DATA COMMUNICATION MODULE.>	Replace the SOS button. <Ref. to ET-46, Switches and Harness.>

3. THE SYSTEM PLACES AN SOS CALL UNINTENTIONALLY DURING DRIVING

	Step	Check	Yes	No
1	**CHECK DTCS.** Read DTCs of the Telematics. <Ref. to TEL(diag)-16, Diagnostic Code(s) Display.>	Is DTC displayed?	Perform the diagnosis for the displayed DTCs. <Ref. to TEL(diag)-16, LIST, Diagnostic Code(s) Display.>	Check the SOS button. <Ref. to ET-46, Switches and Harness.>

4. THE SYSTEM PLACES AN I-CALL UNINTENTIONALLY DURING DRIVING

	Step	Check	Yes	No
1	**CHECK DTCS.** Read DTCs of the Telematics. <Ref. to TEL(diag)-16, Diagnostic Code(s) Display.>	Is DTC displayed?	Perform the diagnosis for the displayed DTCs. <Ref. to TEL(diag)-16, LIST, Diagnostic Code(s) Display.>	Check the i-button. <Ref. to ET-46, Switches and Harness.>

5. THE SYSTEM DOES NOT NOTIFY THE CENTER EVEN IF THE I-BUTTON IS PRESSED UPON VEHICLE MALFUNCTION

NOTE:
Perform the diagnostics for "Phone conversation is not possible. (The microphone does not respond to a voice. No sound is heard from the speaker.)".

CAUTION:
CommCheck is required after replacing the DCM. <Ref. to ET-34, REGISTRATION (COMM CHECK), OPERATION, TELEMATICS SYSTEM.>

	Step	Check	Yes	No
1	**CHECK THE SUBSCRIPTION STATUS.** Display the current data «ICALL Active» of the Telematics. <Ref. to TEL(diag)-13, Read Current Data.>	Is the data «TRUE»?	Go to step **2**.	The user does not have a service subscription; therefore, it is not a failure.
2	**CHECK DTCS.** Read DTCs of the Telematics. <Ref. to TEL(diag)-16, Diagnostic Code(s) Display.>	Is DTC displayed?	Perform the diagnosis for the displayed DTCs. <Ref. to TEL(diag)-16, LIST, Diagnostic Code(s) Display.>	Go to step **3**.
3	**CHECK THE RECEIVED SIGNAL STRENGTH WHEN THE I-BUTTON WAS PRESSED. (CHECK THE CURRENT DATA.).** Display the current data «RSSI at SOS/ICALL(1)» of the Telematics. <Ref. to TEL(diag)-13, Read Current Data.>	Is the data 26% or more?	Go to step **5**.	Go to step **4**.

	Step	Check	Yes	No
4	**CHECK THE AT&T CELLULAR COVERAGE AREA.** 1) Check whether the i-button was pressed within the cellular coverage area. 2) Display the current data «GPS Data at Time of Button Push(1)» of the Telematics. <Ref. to TEL(diag)-13, Read Current Data.>	Is the displayed positional data located within the AT&T coverage area? (For the AT&T coverage area, refer to the AT&T website. This system operates on 3G and 4G mobile communication technology.)	Go to step **5**.	The i-button was pressed outside the cellular coverage area.
5	**CHECK THE COMMUNICATION STATUS OF WHEN THE I-BUTTON WAS PRESSED. (CHECK THE CURRENT DATA.).** Display the current data «Call status at SOS/ICALL Event(1)» of the Telematics. <Ref. to TEL(diag)-13, Read Current Data.>	If the data shows «Call Started» or «Call Connected»; Go to A. If the data shows «Call Not Started»; Go to B. If the data shows «No Network Service»; Go to C. If the data shows «Call Ended by SXM»; Go to D.	A: Go to step **6**. B: Go to step **7**. C: Replace the antenna. <Ref. to ET-43, Antenna.> D: The connection ended due to a server-side reason; therefore, there is no failure on the vehicle.	—
6	**CHECK THE COMMUNICATION STATUS OF WHEN THE I-BUTTON WAS PRESSED. (CHECK THE CURRENT DATA.).** Display the current data «Timestamp at Time of Button Push(1)» of the Telematics. <Ref. to TEL(diag)-13, Read Current Data.> NOTE: The time stamp is displayed in the Coordinated Universal Time (UTC), which is different from actual time at each location. Therefore, time difference needs to be corrected for use. Example: [12/22 01:30 in UTC time] is corrected as [12/21 20:30 in New York time].	Does the time of the i-button operation match with the data?	Go to step **7**.	Replace the DCM. <Ref. to ET-53, DATA COMMUNICATION MODULE.>
7	**CHECK THE I-BUTTON.** Check the i-button. <Ref. to TEL(diag)-40, DTC B2A09 I-CALL BUTTON CIRCUIT, Diagnostic Procedure with Diagnostic Trouble Code (DTC).>	Is the check result OK?	Replace the DCM. <Ref. to ET-53, DATA COMMUNICATION MODULE.>	Replace the i-button. <Ref. to ET-46, Switches and Harness.>

6. REMOTE VEHICLE LOCATOR CANNOT LOCATE THE VEHICLE

	Step	Check	Yes	No
1	**CHECK THE SUBSCRIPTION STATUS.** Display the current data «Account Status» of the Telematics. <Ref. to TEL(diag)-13, Read Current Data.>	Is the data «TRUE»?	Go to step **2**.	The user does not have a service subscription; therefore, it is not a failure.
2	**CHECK THE CURRENT COMMUNICATION ENVIRONMENT OF THE USER'S SMARTPHONE.** Check that the user's smartphone can be connected to the Internet.	Can it be connected to the Internet?	Go to step **3**.	The user's smartphone or the Internet environment has a problem.
3	**CHECK THE CURRENT COMMUNICATION ENVIRONMENT OF THE USER'S SMARTPHONE.** Check that the user's smartphone can display the current location.	Is the current location displayed?	Currently no failure is found. If the current location is not displayed, the user's Internet environment (radio waves, etc.) possibly had a problem.	Go to step **4**.

Step		Check	Yes	No
4	**CHECK THE CURRENT RECEIVED SIGNAL STRENGTH. (CHECK THE CURRENT DATA.).** Display the current data «Signal Strength» of the Telematics. <Ref. to TEL(diag)-13, Read Current Data.>	Is the data 26% or more?	Go to step **6**.	Go to step **5**.
5	**CHECK THE AT&T CELLULAR COVERAGE AREA.** Ask the user where he/she operated the remote control.	Is the location of the remote control operation located within the AT&T coverage area? (For the AT&T coverage area, refer to the AT&T website. This system operates on 3G and 4G mobile communication technology.)	Go to step **6**.	The location of the remote control operation was outside the cellular coverage area.
6	**CHECK DTCS.** Check DTCs in the following systems. • Body control <Ref. to BC(diag)-11, Read Diagnostic Trouble Code (DTC).> • Telematics <Ref. to TEL(diag)-16, Diagnostic Code(s) Display.>	Is DTC displayed?	Perform the diagnosis for the displayed DTCs of body control, or of telematics. <Ref. to BC(diag)-31, LIST, List of Diagnostic Trouble Code (DTC).> <Ref. to TEL(diag)-16, LIST, Diagnostic Code(s) Display.>	Check the Starlink Server report to verify that there was no server outage that coincides with the day/time the customer reported that the issue occurred. (Refer to STARLINK Server Maintenance/Down Report under Reports and Starlink section in Subarunet.) If no outage exists for that time frame, it is possible that there was environmental interference (radio waves, etc.) when the user performed the operation. No further actions are recommended.

7. REMOTE VEHICLE LOCATOR INDICATES AN INCORRECT LOCATION FOR THE VEHICLE

CAUTION:
CommCheck is required after replacing the DCM. <Ref. to ET-34, REGISTRATION (COMM CHECK), OPERATION, TELEMATICS SYSTEM.>

	Step	Check	Yes	No
1	**CHECK DTCS.** Read DTCs of the Telematics. <Ref. to TEL(diag)-16, Diagnostic Code(s) Display.>	Is DTC displayed?	Perform the diagnosis for the displayed DTCs. <Ref. to TEL(diag)-16, LIST, Diagnostic Code(s) Display.>	Go to step **2**.
2	**CHECK THE CURRENT COMMUNICATION ENVIRONMENT OF THE USER'S SMARTPHONE.** Check that the user's smartphone can display the current location.	Can the current location be displayed correctly? (Is the deviation range 100 m (328 ft) or less?)	Currently no failure is found. When the user had a problem, there was a failure with the GPS antenna reception environment, etc.	Go to step **3**.
3	**CHECK THE CURRENT COMMUNICATION ENVIRONMENT OF THE USER'S SMARTPHONE.** Check again that the user's smartphone can display the current location in a place where the sky is open.	Can the current location be displayed correctly? (Is the deviation range 100 m (328 ft) or less?)	Currently no failure is found. When the user had a problem, there was a failure with the GPS antenna reception environment, etc.	Replace the DCM. <Ref. to ET-53, DATA COMMUNICATION MODULE.>

8. REMOTE DOOR LOCK DOES NOT LOCK THE DOORS OF THE VEHICLE

	Step	Check	Yes	No
1	**CHECK THE SUBSCRIPTION STATUS.** Display the current data «Account Status» of the Telematics. <Ref. to TEL(diag)-13, Read Current Data.>	Is the data «TRUE»?	Go to step **2**.	The user does not have a service subscription; therefore, it is not a failure.
2	**CHECK THE CURRENT COMMUNICATION ENVIRONMENT OF THE USER'S SMARTPHONE.** Check that the user's smartphone can be connected to the Internet.	Can it be connected to the Internet?	Go to step **3**.	The user's smartphone or the Internet environment has a problem.
3	**CHECK THE DOOR LOCK FUNCTION.** Check that the user' smartphone can lock the doors in the current situation.	Are the doors locked?	Currently no failure is found. When the user had a problem, there was a failure with the Internet connection environment, etc.	Go to step **4**.
4	**CHECK THE CURRENT RECEIVED SIGNAL STRENGTH. (CHECK THE CURRENT DATA.).** Display the current data «Signal Strength» of the Telematics. <Ref. to TEL(diag)-13, Read Current Data.>	Is the data 26% or more?	Go to step **6**.	Go to step **5**.

	Step	Check	Yes	No
5	**CHECK THE AT&T CELLULAR COVERAGE AREA.** Ask the user where he/she operated the remote control.	Is the location of the remote control operation located within the AT&T coverage area? (For the AT&T coverage area, refer to the AT&T website. This system operates on 3G and 4G mobile communication technology.)	Go to step **6**.	The location of the remote control operation was outside the cellular coverage area.
6	**CHECK THE DOOR LOCK FUNCTION.** Check that the keyless transmitter can lock the doors of the vehicle.	Are the doors locked?	Go to step **7**.	Perform the diagnosis according to the inspection for the door lock control system. <Ref. to SL-10, INSPECTION, Door Lock Control System.>
7	**CHECK DTCS.** Check DTCs in the following systems. • Body control <Ref. to BC(diag)-11, Read Diagnostic Trouble Code (DTC).> • Telematics <Ref. to TEL(diag)-16, Diagnostic Code(s) Display.>	Is DTC displayed?	Perform the diagnosis for the displayed DTCs of body control, or of telematics. <Ref. to BC(diag)-31, LIST, List of Diagnostic Trouble Code (DTC).> <Ref. to TEL(diag)-16, LIST, Diagnostic Code(s) Display.>	Check the Starlink Server report to verify that there was no server outage that coincides with the day/time the customer reported that the issue occurred. (Refer to STARLINK Server Maintenance/Down Report under Reports and Starlink section in Subarunet.) If no outage exists for that time frame, it is possible that there was environmental interference (radio waves, etc.) when the user performed the operation. No further actions are recommended.

9. THE DOORS LOCK UNINTENTIONALLY

Step		Check	Yes	No
1	**CHECK DOOR LOCK SWITCH.** Check the door lock switch. <Ref. to SL-10, INSPECTION, Door Lock Control System.>	Is the check result OK?	Check the Starlink Server report to verify that there was no server outage that coincides with the day/time the customer reported that the issue occurred. (Refer to STARLINK Server Maintenance/Down Report under Reports and Starlink section in Subarunet.) If no outage exists for that time frame, it is possible that there was environmental interference (radio waves, etc.) when the user performed the operation. No further actions are recommended.	Perform the diagnosis according to the inspection for the door lock switch. <Ref. to SL-10, INSPECTION, Door Lock Control System.>

10.THE DOORS UNLOCK UNINTENTIONALLY

Step		Check	Yes	No
1	**CHECK DOOR LOCK SWITCH.** Check the door unlock switch. <Ref. to SL-10, INSPECTION, Door Lock Control System.>	Is the check result OK?	Check the Starlink Server report to verify that there was no server outage that coincides with the day/time the customer reported that the issue occurred. (Refer to STARLINK Server Maintenance/Down Report under Reports and Starlink section in Subarunet.) If no outage exists for that time frame, it is possible that there was environmental interference (radio waves, etc.) when the user performed the operation. No further actions are recommended.	Perform the diagnosis according to the inspection for the door lock switch. <Ref. to SL-10, INSPECTION, Door Lock Control System.>

11.REMOTE HORN & HAZARD LIGHTS DO NOT OPERATE UPON REQUEST

	Step	Check	Yes	No
1	**CHECK THE SUBSCRIPTION STATUS.** Display the current data «Account Status» of the Telematics. <Ref. to TEL(diag)-13, Read Current Data.>	Is the data displayed as «TRUE»?	Go to step **2**.	The user does not have a service subscription; therefore, it is not a failure.
2	**CHECK THE CURRENT COMMUNICATION ENVIRONMENT OF THE USER'S SMARTPHONE.** Check that the user's smartphone can be connected to the Internet.	Can it be connected to the Internet?	Go to step **3**.	The user's smartphone or the Internet environment has a problem.
3	**CHECK THE HORN AND HAZARD LIGHT FUNCTIONS.** Check that the horn and hazard light currently operate by the user's smartphone.	Do the horn and hazard light operate?	Currently no failure is found. When the user had a problem, there was a failure with the Internet connection environment, etc.	Go to step **4**.
4	**CHECK THE CURRENT RECEIVED SIGNAL STRENGTH. (CHECK THE CURRENT DATA.).** Display the current data «Signal Strength» of the Telematics. <Ref. to TEL(diag)-13, Read Current Data.>	Does the data indicate 26% or more?	Go to step **6**.	Go to step **5**.
5	**CHECK THE AT&T CELLULAR COVERAGE AREA.** Ask the user where he/she operated the remote control.	Is the location of the remote control operation located within the AT&T coverage area? (For the AT&T coverage area, refer to the AT&T website. This system operates on 3G and 4G mobile communication technology.)	Go to step **6**.	The location of the remote control operation was outside the cellular coverage area.
6	**CHECK THE HORN AND HAZARD LIGHT FUNCTIONS.** Check that the horn and hazard light operate by the keyless transmitter. (Press the lock button three times.)	Do the horn and hazard light operate?	Go to step **8**.	Go to step **7**.
7	**CHECK HORN OPERATION.** Activate the function check «Horn Output» of the body integrated unit. <Ref. to BC(diag)-30, Function Check.>	Does the horn sound?	Check the keyless transmitter. <Ref. to SL-84, Keyless Transmitter.><Ref. to SL-86, Access Key.>	Check the horn circuit. <Ref. to WI-243, Horn System.>

	Step	Check	Yes	No
8	**CHECK DTCS.** Check DTCs in the following systems. • Body control <Ref. to BC(diag)-11, Read Diagnostic Trouble Code (DTC).> • Telematics <Ref. to TEL(diag)-16, Diagnostic Code(s) Display.>	Is DTC displayed?	Perform the diagnosis for the displayed DTCs of body control, or of telematics. <Ref. to BC(diag)-31, LIST, List of Diagnostic Trouble Code (DTC).> <Ref. to TEL(diag)-16, LIST, Diagnostic Code(s) Display.>	Check the Starlink Server report to verify that there was no server outage that coincides with the day/time the customer reported that the issue occurred. (Refer to STARLINK Server Maintenance/Down Report under Reports and Starlink section in Subarunet.) If no outage exists for that time frame, it is possible that there was environmental interference (radio waves, etc.) when the user performed the operation. No further actions are recommended.

12.WHEN THE VEHICLE SECURITY ALARM IS ACTIVATED, NOTIFICATION IS NOT SENT

	Step	Check	Yes	No
1	**CHECK THE SUBSCRIPTION STATUS.** Display the current data «Account Status» of the Telematics. <Ref. to TEL(diag)-13, Read Current Data.>	Is the data displayed as «TRUE»?	Go to step **2**.	The user does not have a service subscription; therefore, it is not a failure.
2	**CHECK THE CURRENT COMMUNICATION ENVIRONMENT OF THE USER'S SMARTPHONE.** Check that the user's smartphone can be connected to the Internet.	Can it be connected to the Internet?	Go to step **3**.	The user's smartphone or the Internet environment has a problem.
3	**CHECK THE SECURITY ALERT SYSTEM.** Operate the security alert system.	Does it operate?	Go to step **4**.	Check the security alert system. <Ref. to SL-28, INSPECTION, Security System.>
4	**CHECK THE CURRENT COMMUNICATION ENVIRONMENT OF THE USER'S SMARTPHONE.** Check that a notification is sent to the user's smartphone after the security alert is activated.	Does the smartphone receive a notification?	Currently no failure is found.	Go to step **5**.
5	**CHECK THE CURRENT RECEIVED SIGNAL STRENGTH. (CHECK THE CURRENT DATA.).** Display the current data «Signal Strength» of the Telematics. <Ref. to TEL(diag)-13, Read Current Data.>	Does the data indicate 26% or more?	Go to step **7**.	Go to step **6**.

	Step	Check	Yes	No
6	**CHECK THE AT&T CELLULAR COVERAGE AREA.** Ask the user where he/she operated the remote control.	Is the location of the remote control operation located within the AT&T coverage area? (For the AT&T coverage area, refer to the AT&T website. This system operates on 3G and 4G mobile communication technology.)	Go to step **7**.	The location of the remote control operation was outside the cellular coverage area.
7	**CHECK DTCS.** Check DTCs in the following systems. • Body control <Ref. to BC(diag)-11, Read Diagnostic Trouble Code (DTC).> • Telematics <Ref. to TEL(diag)-16, Diagnostic Code(s) Display.>	Is DTC displayed?	Perform the diagnosis for the displayed DTCs of body control, or of telematics. <Ref. to BC(diag)-31, LIST, List of Diagnostic Trouble Code (DTC).> <Ref. to TEL(diag)-16, LIST, Diagnostic Code(s) Display.>	Check the Starlink Server report to verify that there was no server outage that coincides with the day/time the customer reported that the issue occurred. (Refer to STARLINK Server Maintenance/Down Report under Reports and Starlink section in Subarunet.) If no outage exists for that time frame, it is possible that there was environmental interference (radio waves, etc.) when the user performed the operation. No further actions are recommended.

13.WHEN A MALFUNCTION INDICATOR LIGHT/WARNING LIGHT IS LIT, NOTIFICATION IS NOT SENT

	Step	Check	Yes	No
1	**CHECK THE SUBSCRIPTION STATUS.** Display the current data «Diagnostic Alert Active» of the Telematics. <Ref. to TEL(diag)-13, Read Current Data.>	Is the data displayed as «TRUE»?	Go to step **2**.	The user does not have a service subscription; therefore, it is not a failure.
2	**CHECK WARNING LIGHT.** Check if the warning light illuminates.	Does it Illuminate?	Go to step **3**.	Currently no failure is found. Since the warning light is not lit, notification is not sent.
3	**CHECK DTCS.** Check the DTC of telematics. <Ref. to TEL(diag)-16, Diagnostic Code(s) Display.>	Is DTC displayed?	Perform the diagnosis for the displayed DTCs. <Ref. to TEL(diag)-16, LIST, Diagnostic Code(s) Display.>	Go to step **4**.

Step		Check	Yes	No
4	**CHECK THE AT&T CELLULAR COVERAGE AREA.** Ask the user where he/she turned the ignition switch to OFF after the warning light was lit.	After the warning light comes on, is the location where the user turned the ignition switch to OFF located within the AT&T coverage area? (For the AT&T coverage area, refer to the AT&T website. This system operates on 3G and 4G mobile communication technology.)	Check the Starlink Server report to verify that there was no server outage that coincides with the day/time the customer reported that the issue occurred. (Refer to STARLINK Server Maintenance/Down Report under Reports and Starlink section in Subarunet.) If no outage exists for that time frame, it is possible that there was environmental interference (radio waves, etc.) when the user performed the operation. No further actions are recommended.	The location where the ignition switch was turned to OFF (where warning light illumination information was sent) was outside the cellular coverage area.

14.MAINTENANCE NOTIFICATIONS ARE NOT SENT

	Step	Check	Yes	No
1	**CHECK THE SUBSCRIPTION STATUS.** Display the current data «Maintenance Alert Active» of the Telematics. <Ref. to TEL(diag)-13, Read Current Data.>	Is the data displayed as «TRUE»?	Go to step **2**.	The user does not have a service subscription; therefore, it is not a failure.
2	**CHECK DTCS.** Read DTCs of the Telematics. <Ref. to TEL(diag)-16, Diagnostic Code(s) Display.>	Is DTC displayed?	Perform the diagnosis for the displayed DTCs. <Ref. to TEL(diag)-16, LIST, Diagnostic Code(s) Display.>	Check the Starlink Server report to verify that there was no server outage that coincides with the day/time the customer reported that the issue occurred. (Refer to STARLINK Server Maintenance/Down Report under Reports and Starlink section in Subarunet.) If no outage exists for that time frame, it is possible that there was environmental interference (radio waves, etc.) when the user performed the operation. No further actions are recommended.

15.THE LED DOES NOT DISPLAY THE STATUS. (LED MALFUNCTION)

WIRING DIAGRAM:

Telematics <Ref. to WI-356, WIRING DIAGRAM, Telematics System.>

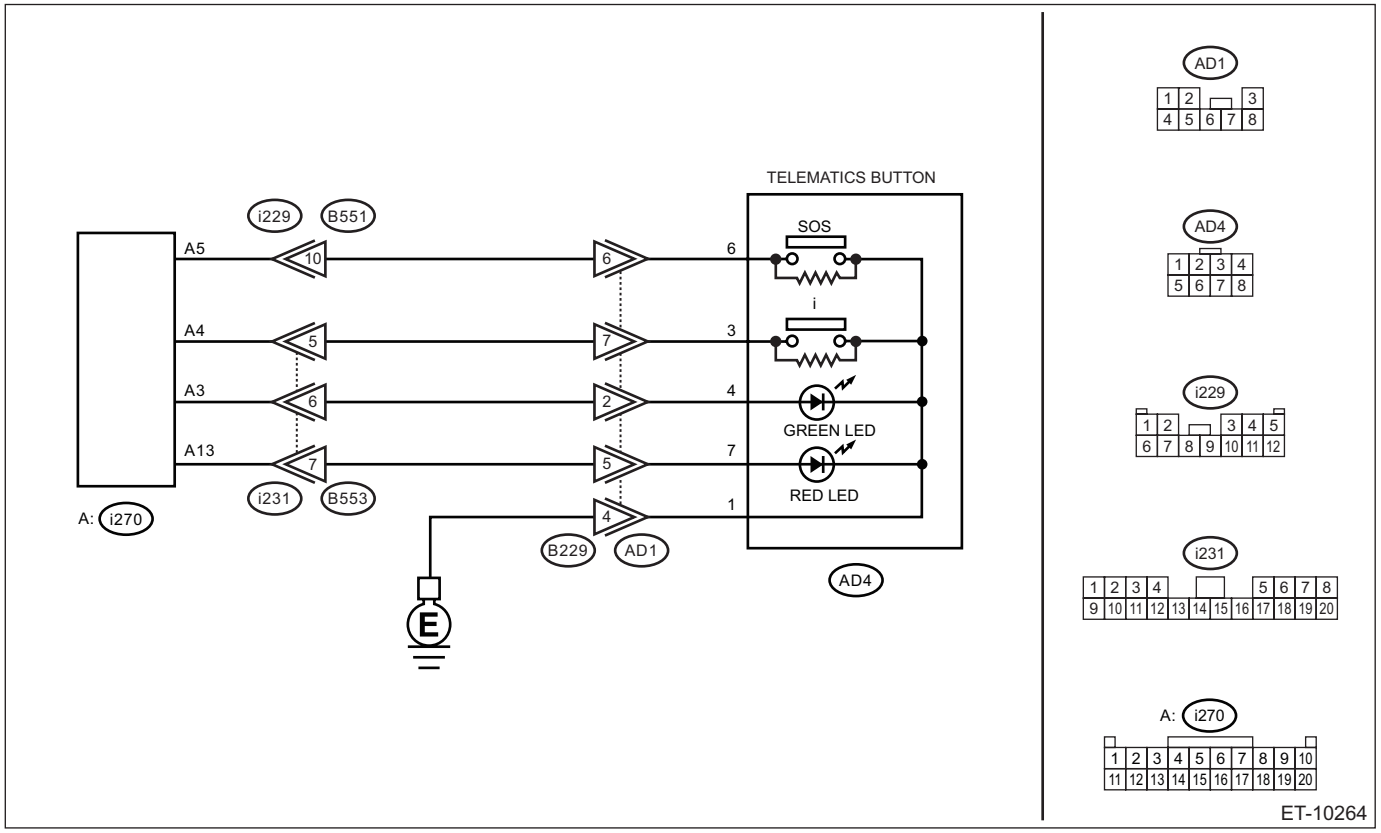

CAUTION:

CommCheck is required after replacing the DCM. <Ref. to ET-34, REGISTRATION (COMM CHECK), OPERATION, TELEMATICS SYSTEM.>

	Step	Check	Yes	No
1	**CHECK THE SUBSCRIPTION STATUS.** Display the current data «Account Status» of the Telematics. <Ref. to TEL(diag)-13, Read Current Data.>	Is the data «TRUE»?	Go to step **2**.	The user does not have a service subscription; therefore, it is not a failure. (Both LEDs are turned off.)
2	**CHECK THE LED.** 1) Turn the ignition switch to ON. 2) Check the LED condition.	Does the RED LED go off and the GREEN LED illuminate?	The circuit has returned to a normal condition at this time. Reproduce the failure, and then perform the diagnosis again. NOTE: In this case, temporary poor contact of connector, temporary open or short circuit of harness may be the cause.	Go to step **3**.

	Step	Check	Yes	No
3	**CHECK DTCS.** Read DTCs of the Telematics. <Ref. to TEL(diag)-16, Diagnostic Code(s) Display.>	Is DTC B2A0A or B2A0B displayed?	Perform the diagnosis for the displayed DTC B2A0A or B2A0B. <Ref. to TEL(diag)-42, DTC B2A0A RED LED CIRCUIT, Diagnostic Procedure with Diagnostic Trouble Code (DTC).> <Ref. to TEL(diag)-44, DTC B2A0B GREEN LED CIRCUIT, Diagnostic Procedure with Diagnostic Trouble Code (DTC).>	Go to step **4**.
4	**CHECK THE LED ILLUMINATION CONDITION.** Perform the telematics system operation check. <Ref. to TEL(diag)-22, System Operation Check Mode.>	Is the LED turned on or off?	Go to step **5**.	Go to step **6**.
5	**CHECK THE LED.** 1) Turn the ignition switch to ON. 2) Check the LED condition.	Does the RED LED go off and the GREEN LED illuminate?	The circuit has returned to a normal condition at this time. Reproduce the failure, and then perform the diagnosis again. NOTE: In this case, temporary poor contact of connector, temporary open or short circuit of harness may be the cause.	Replace the DCM. <Ref. to ET-53, DATA COMMUNICATION MODULE.>
6	**CHECK THE LED.** Measure the continuity of the telematics button (LED) unit. ***Terminals*** ***No. 7 — No. 1:*** ***No. 4 — No. 1:***	Is there continuity?	Replace the DCM. <Ref. to ET-53, DATA COMMUNICATION MODULE.>	Replace the telematics button. <Ref. to ET-46, Switches and Harness.>

16.PHONE CONVERSATION IS NOT POSSIBLE. (THE MICROPHONE DOES NOT RESPOND TO A VOICE. NO SOUND IS HEARD FROM THE SPEAKER.)

Step		Check	Yes	No
1	**CHECK DTCS.** Read DTCs of the Telematics. <Ref. to TEL(diag)-16, Diagnostic Code(s) Display.>	Is DTC B2A04, B2A05 or B2A06 displayed?	Perform the diagnosis for the displayed DTC B2A04, B2A05 or B2A06. <Ref. to TEL(diag)-29, DTC B2A04 MIC CIRCUIT, Diagnostic Procedure with Diagnostic Trouble Code (DTC).> <Ref. to TEL(diag)-31, DTC B2A05 LEFT SPEAKER/AUDIO CIRCUIT, Diagnostic Procedure with Diagnostic Trouble Code (DTC).> <Ref. to TEL(diag)-34, DTC B2A06 RIGHT SPEAKER/AUDIO CIRCUIT, Diagnostic Procedure with Diagnostic Trouble Code (DTC).>	Go to step **2**.
2	**CHECK THE SPEAKER OPERATION.** Perform [Speaker ON] in the telematics system operation check. <Ref. to TEL(diag)-22, System Operation Check Mode.>	Does it sound?	Go to step **3**.	Go to step **4**.
3	**CHECK MICROPHONE.** Perform the microphone voice input.	Is the voice recognized?	Go to step **4**.	Replace the microphone.
4	**CHECK THE SPEAKER.** Check the speaker.	Is the check result OK?	Go to step **5**.	Replace the speaker.
5	**CHECK THE TELEPHONE CALL.** 1) Place the mobile phone in the vehicle. 2) Establish a Bluetooth connection between the mobile phone in the vehicle and the vehicle unit. 3) Make a call from outside to the mobile phone in the vehicle. 4) Check that a telephone call is available through the in-vehicle microphone with the hands-free function.	Is a telephone call successful?	The circuit has returned to a normal condition at this time. Reproduce the failure, and then perform the diagnosis again. NOTE: In this case, temporary poor contact of connector, temporary open or short circuit of harness may be the cause.	Perform the diagnosis of DTC B2A04 MIC CIRCUIT. <Ref. to TEL(diag)-29, DTC B2A04 MIC CIRCUIT, Diagnostic Procedure with Diagnostic Trouble Code (DTC).>

WIRING SYSTEM SECTION

WIRING SYSTEM WI

This service manual has been prepared to provide SUBARU service personnel with the necessary information and data for the correct maintenance and repair of SUBARU vehicles.
This manual includes the procedures for maintenance, disassembling, reassembling, inspection and adjustment of components and diagnostics for guidance of experienced mechanics.
Please peruse and utilize this manual fully to ensure complete repair work for satisfying our customers by keeping their vehicle in optimum condition. When replacement of parts during repair work is needed, be sure to use SUBARU genuine parts.

All information, illustration and specifications contained in this manual are based on the latest product information available at the time of publication approval.

FUJI HEAVY INDUSTRIES LTD. G1270BE7

WIRING SYSTEM

WI

		Page
1.	Basic Diagnostic Procedure	3
2.	Working Precautions	17
3.	Fuse And Relay	19
4.	Power Supply Circuit	31
5.	Ground Circuit	59
6.	Airbag System	69
7.	Air Conditioning System	74
8.	Audio System	78
9.	Back-up Light System	106
10.	Blind Spot Detection/Rear Cross Traffic Alert	110
11.	CAN Communication System	113
12.	Charging System	116
13.	Clearance Light and Illumination Light System	117
14.	Combination Meter System	127
15.	Coolant Temperature System	133
16.	Cruise Control System	135
17.	CVT Control System	144
18.	Driver's Control Center Differential Control System	151
19.	Electric Power Steering System	153
20.	Engine Electrical System	154
21.	EyeSight System	222
22.	Front Accessory Power Supply Socket System	227
23.	Front Fog Light System	228
24.	Front Wiper and Washer System	233
25.	Fuel Gauge System	237
26.	Headlight Beam Leveler System	238
27.	Headlight System	240
28.	Horn System	243
29.	Immobilizer System	244
30.	Interior Light System	252
31.	Keyless Access System	255
32.	Keyless Entry System	271
33.	Multi-function Display (MFD) System	275
34.	Navigation System	277
35.	Occupant Detection System	292
36.	Oil Pressure Warning Light System	294
37.	Parking Brake / Brake Fluid Level Warning Light System	295
38.	Power Seat System	298
39.	Power Window System	299
40.	Push Button Start System	303
41.	Radiator Fan System	312
42.	Rear Accessory Power Supply Socket System	314
43.	Rear Defogger System	316
44.	Rear Differential Oil Temperature Warning Light System	317
45.	Rearview Camera System	318

46. Rearview Mirror System 320
47. Remote Control Mirror System 322
48. Remote Engine Start System 323
49. Reverse Automatic Braking 329
50. Seat Belt Warning System 331
51. Seat Heater System 333
52. Security System 336
53. Shift Lock Control System 344
54. Speedometer System 346
55. Starter System 347
56. Stop Light System 351
57. Sunroof Control System 355
58. Telematics System 356
59. Tire Pressure Monitoring System 362
60. Turn Signal Light and Hazard Light System 364
61. Vacuum Pump Control System 366
62. Vehicle Dynamics Control System 368
63. Wiper Deicer System 376
64. Harness Components Location 377
65. Front Wiring Harness 378
66. Bulkhead Wiring Harness (In Engine Compartment) RH 382
67. Bulkhead Wiring Harness (In Engine Compartment) LH 386
68. Bulkhead Wiring Harness (In Compartment) RH 390
69. Bulkhead Wiring Harness (In Compartment) LH 394
70. Engine Wiring Harness and Transmission Cord 399
71. Instrument Panel Wiring Harness RH 404
72. Instrument Panel Wiring Harness LH 406
73. Roof Cord 408
74. Rear Wiring Harness RH 410
75. Rear Wiring Harness LH 412
76. Door Cord RH 414
77. Door Cord LH 416
78. Rear Wiring Harness and Trunk Lid Cord 418
79. Antenna Cord 421

1. Basic Diagnostic Procedure

A: BASIC PROCEDURES

1. GENERAL DESCRIPTION

The most important purpose of diagnostics is to quickly determine which fault is the root cause of the symptom, to save time and labor.

2. IDENTIFICATION OF TROUBLE CAUSE

1) Using the diagnostics, narrow down the causes.
2) Refer to the wiring diagram and check the system's circuit. If necessary, use a voltmeter, ohmmeter, etc.
3) Before replacing component parts, check for fuse blowout, open wiring harness on the power supply circuit and the ground circuit, and poor connectors, switches, relays, etc. If no problem is encountered, check the component parts.

3. SYSTEM OPERATION CHECK

After inspection and repair, ensure that the system operates properly.

B: BASIC INSPECTION

1. VOLTAGE MEASUREMENT

1) Using a voltmeter, connect the negative lead to a good ground point or negative battery terminal. Connect the positive lead to the connector or component terminal.
2) Contact the positive lead of the voltmeter on connector (A). The voltmeter will indicate a voltage.
3) Shift the positive lead contacting the connector (A) to the connector (B). The voltmeter will indicate no voltage.
4) Turn the switch to ON with the positive lead contacting the connector (B).
The voltmeter will indicate a voltage and, at the same time, the light will illuminate.
5) The circuit is normal. If a problem such as a light failing to illuminate occurs, use the procedures above to track down the malfunction.

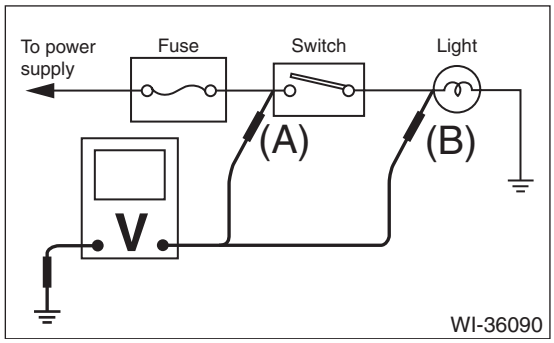

2. CONTINUITY CHECK

1) Disconnect the battery terminal or connector so there is no voltage between the check points.
Contact the leads of an ohmmeter between the check points, and check that there is continuity.
2) When checking the diode continuity using an ohmmeter, allow the positive lead to contact the diode positive side and the negative lead to the negative side. At this time, there must be continuity. Also, when contacting the leads in reverse, there should be no continuity.

NOTE:
Some testers have reverse polarity, therefore, refer to the instruction manual of the tester.

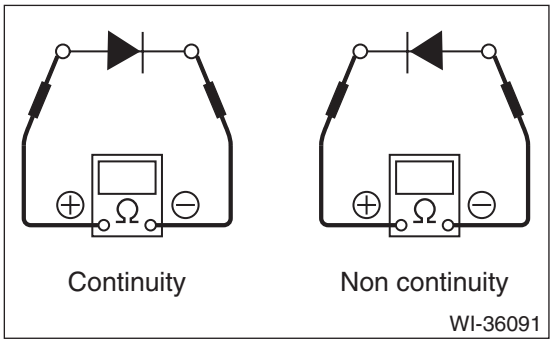

3) When checking switch continuity using an ohmmeter, perform the check while the switch operates. For example, when a switch position is at 3, continuity exists among terminals 1, 3 and 6, as shown below.

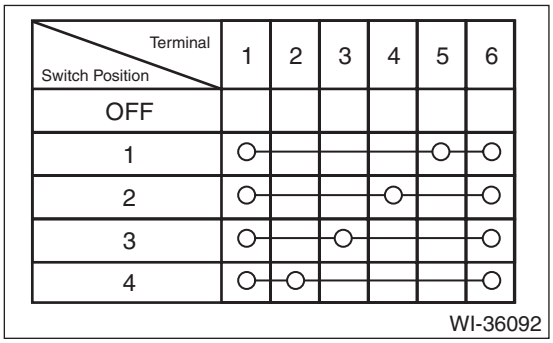

3. HOW TO IDENTIFY AN OPEN CIRCUIT

1) With voltmeter:
An open circuit is determined by measuring the voltage between respective connectors and ground using a voltmeter, starting with the connector closest to the power supply. The power supply must be turned ON so that current flows in the circuit. If voltage is not present between a particular connector and ground, the circuit between that connector and the previously checked point is open.

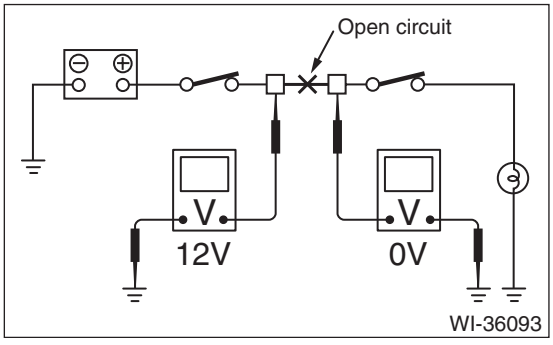

2) With ohmmeter:
Disconnect all connectors affected, and check continuity in the harness between adjacent connectors. When the ohmmeter indicates “infinite”, the harness is open.

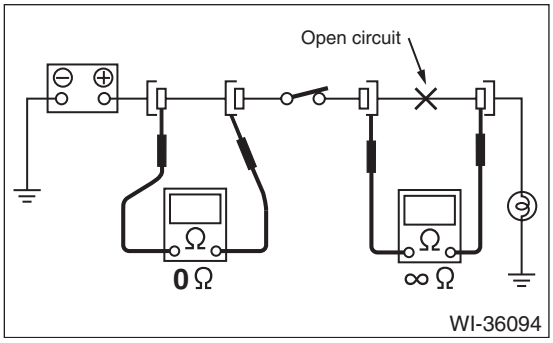

4. HOW TO DETERMINE A SHORT CIRCUIT

1) With test light:
Connect a test light (rated at approx. 3 watts) in place of the blown fuse and allow current to flow through the circuit. Disconnect one connector at a time. At that time, always start with the connector located farthest from the power supply. If the test light goes out when a connector is disconnected, the harness between that connector and the next connector (farther from the power supply) is shorted.

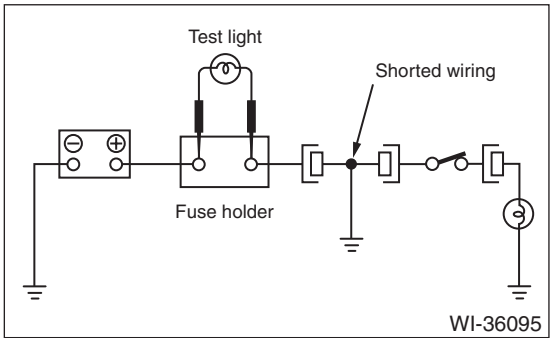

2) With ohmmeter:
Disconnect all affected connectors, and check continuity between each connector and ground. When the ohmmeter indicates continuity between a particular connector and a ground, that connector is shorted.

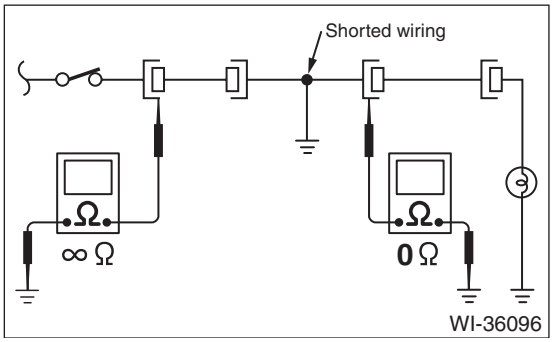

C: HOW TO READ WIRING DIAGRAMS

1. POWER SUPPLY CIRCUIT

Circuits are described to indicate the power supply in the wiring diagram of each system. “MB-5”, “MB-6”, etc., which are used as power-supply symbols throughout the text, correspond with those shown in the “DC POWER SUPPLY CIRCUIT” in the wiring diagram of each system. Accordingly, using the DC power supply circuit and the wiring diagram of each system permits service personnel to understand the entire electrical arrangement of the system.

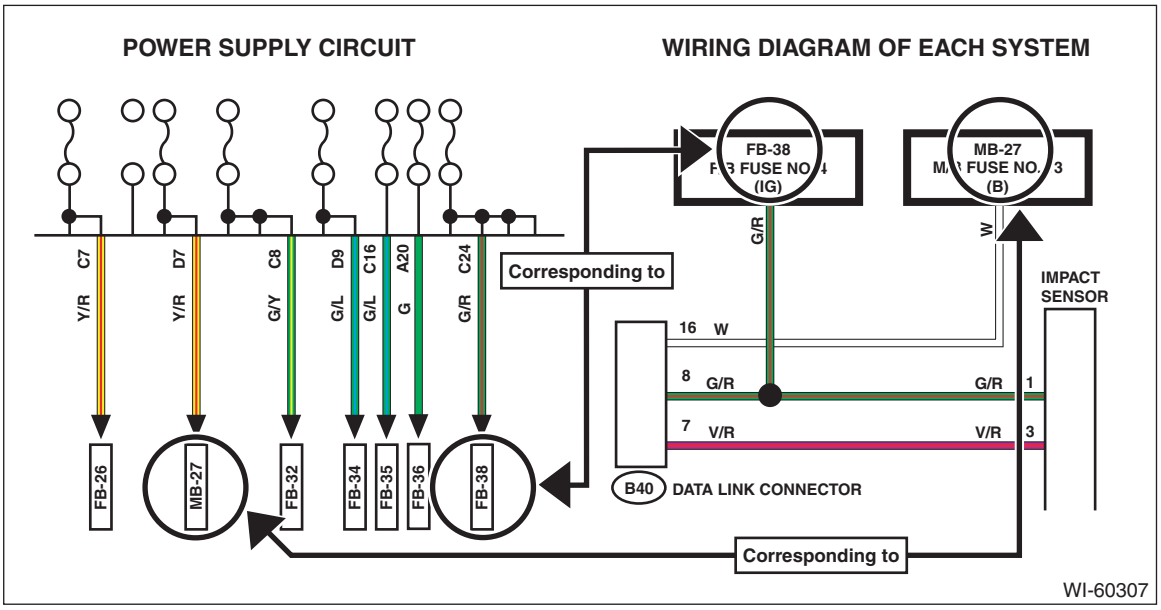

2. WIRING DIAGRAM OF EACH SYSTEM

1. **Fuse No. & rating**

The “Fuse No. & rating” is the same description as that in the DC power supply circuit, and corresponds with that used in the vehicle.

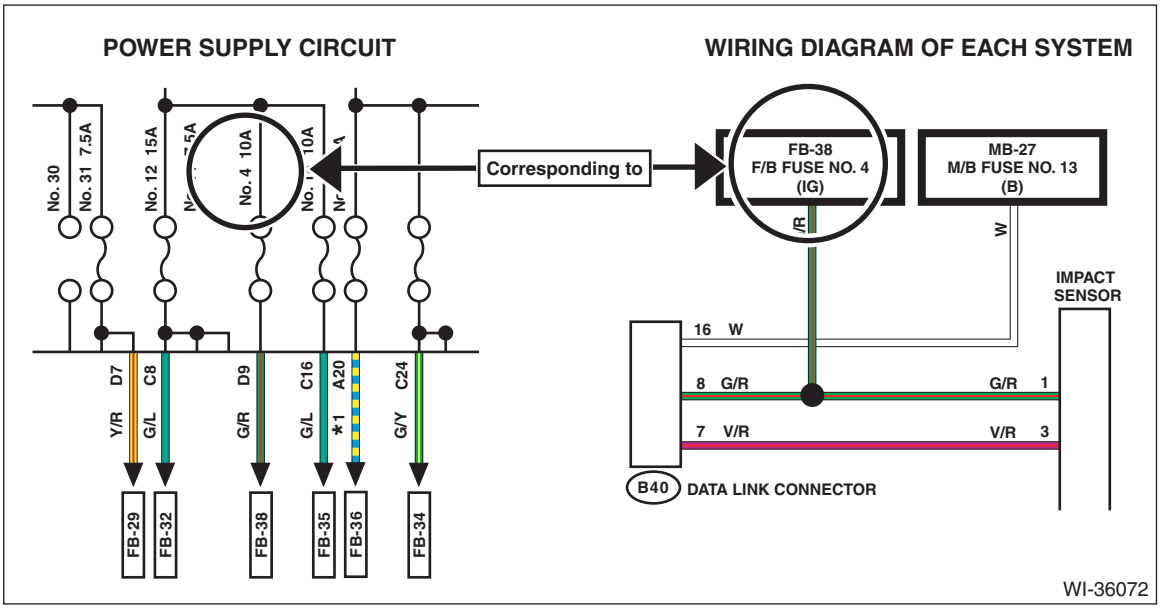

2. **Wiring diagram of each system**

To help figure out the route from the DC power supply circuit, wiring diagrams are classified and described in each system.

NOTE:

This manual includes harness information. Information of parts that are not routed via harness and adapter code is described as a reference. If no information is described in this manual, refer to each section.

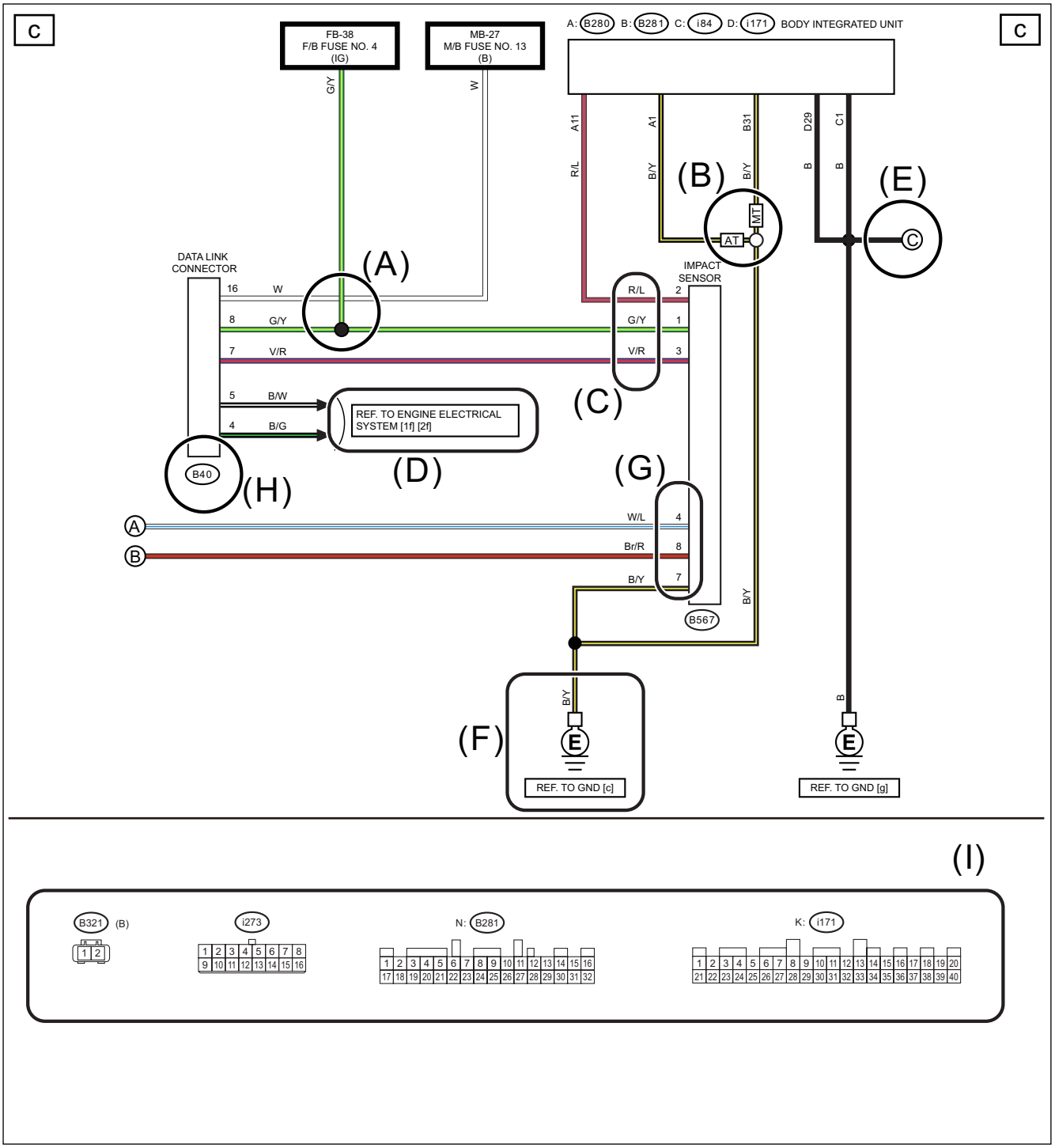

WI-62491

- (A):Wire connection and crossing in a circuit

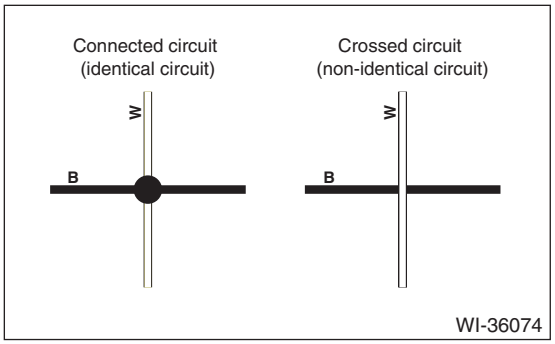

- (B):Classification by specifications

If a circuit differs from another circuit according to vehicle specifications, the specification difference is indicated with abbreviations.

- (C):Color code

Indicates the color of harness and connector housing.

Color code	Color	Color code	Color	Color code	Color
B	Black	S	Shield line	Gr	Gray
G	Green	V	Violet	Lg	Light green
L	Blue	W	White	Sb	Light blue
Or	Orange	Y	Yellow	★	White or natural color
P	Pink	Be	Beige		
R	Red	Br	Brown		

(Color code of harness)

Single color is indicated with a color code, and double colors are indicated with “standard color / marking color”.

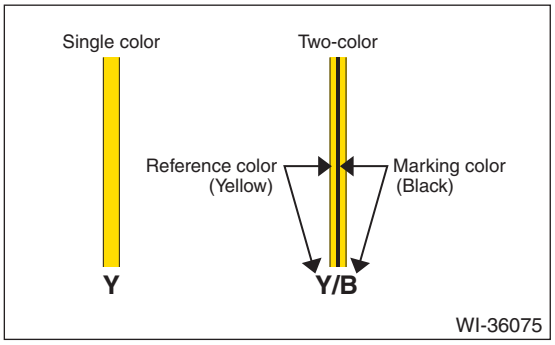

(Color code of connector housing)
Used in the connector sketch and the locations.

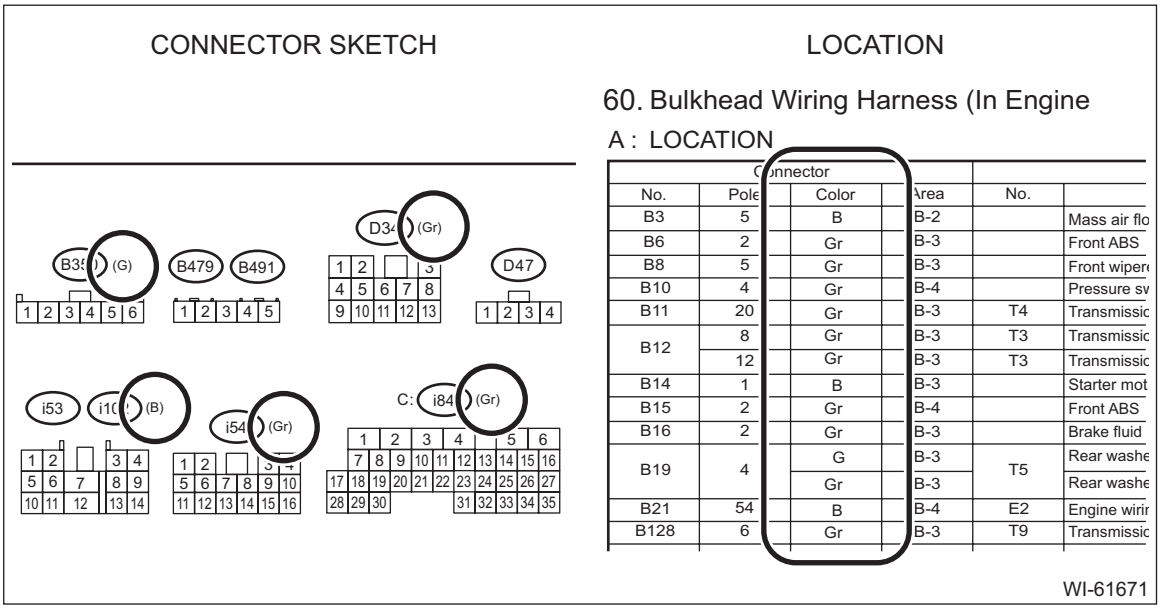

Connector No.	Pole	Color	Area	No.	
B3	5	B	B-2		Mass air flo
B6	2	Gr	B-3		Front ABS
B8	5	Gr	B-3		Front wiper
B10	4	Gr	B-4		Pressure sv
B11	20	Gr	B-3	T4	Transmissic
B12	8	Gr	B-3	T3	Transmissic
	12	Gr	B-3	T3	Transmissic
B14	1	B	B-3		Starter mot
B15	2	Gr	B-4		Front ABS
B16	2	Gr	B-3		Brake fluid
B19	4	G	B-3	T5	Rear washe
		Gr	B-3		Rear washe
B21	54	B	B-4	E2	Engine wirir
B128	6	Gr	B-3	T9	Transmissic

- (D):Connection to another system in the same circuit

Indicates the connecting to with alphanumeric characters, which correspond to the descriptions shown on the upper section of each page.

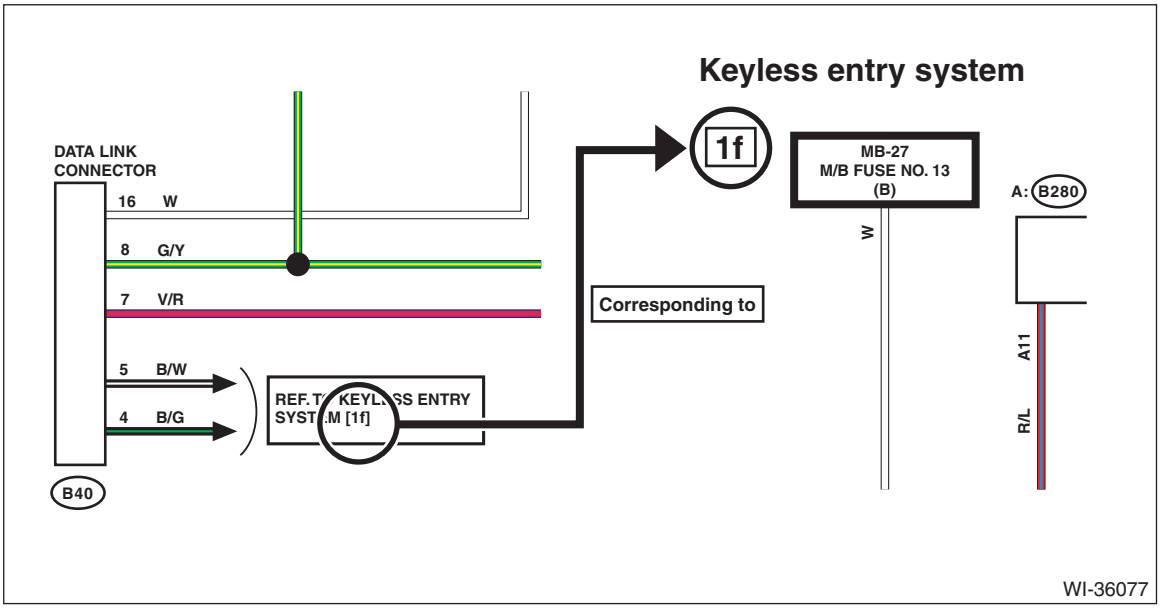

- (E):Connections in the system

Indicates with alphabetic characters, which correspond to the same alphabetic characters shown in the following pages.

- (F):Ground

The ground points shown in the ground circuit refer to the following, which correspond to the locations.

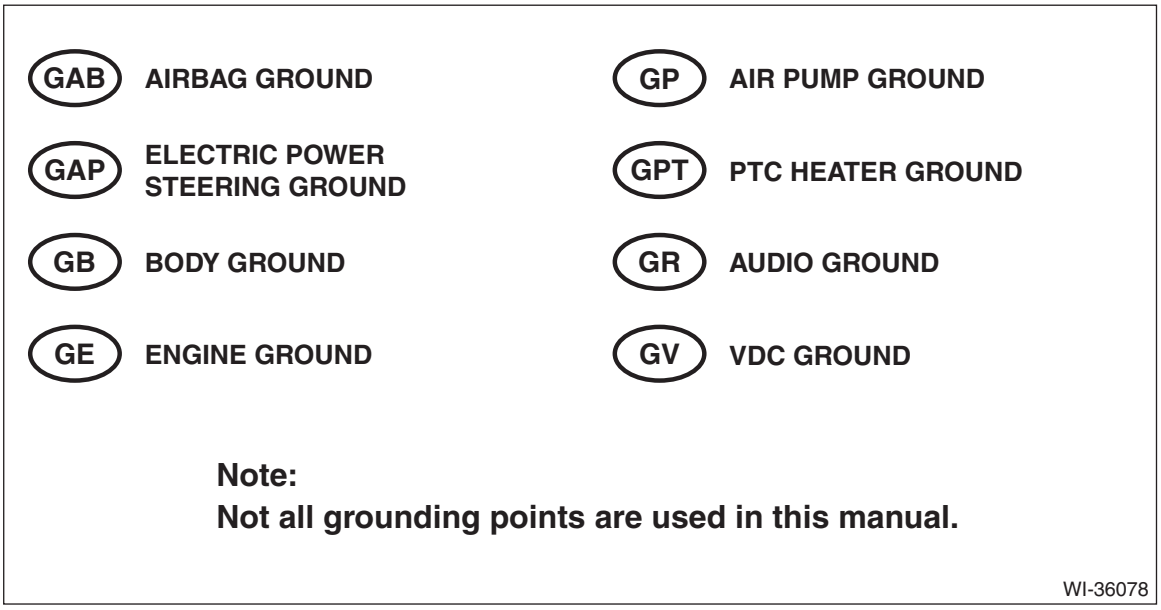

- (G):Terminal No.

Indicates the terminal number of the connector to be connected. If several connectors are connected to a component, they are identified with alphabetic characters.

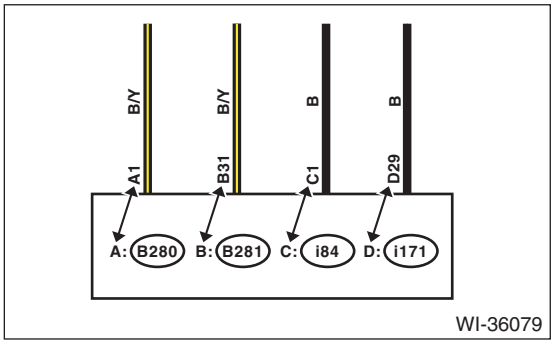

- (H):Connector No.

The first alphabetic characters of the connector number correspond with the following symbols that indicate harnesses or systems.

Symbol	Harness/cord	Symbol	Harness/cord
AB	Airbag wiring harness	F	Front wiring harness
AD	Adapter cord		Generator cord
AT/T	Transmission cord	i	Instrument panel Wiring harness
B	Bulkhead wiring harness		
D	Door cord / Rear gate code	R	Rear wiring harness
E	Engine wiring harness		Fuel cord / Roof cord
	Oxygen sensor cord		Rear gate cord / Trunk lid cord
ST	Steering cord		

- (I):Connector sketch

The connector sketch at the bottom shows the connectors used in the wiring diagram.

3. **Connector**

The following shows the connector shape, lock position, connection and terminal number that are used in this manual.

For connector shape, refer to the connector sketch.

Connector used in vehicle	Connector shown in wiring diagram		
	Connector sketch	Wiring diagram symbol	Terminal arrangement order
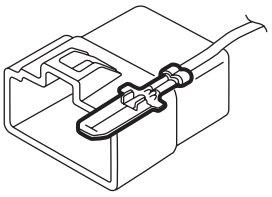 Male connector	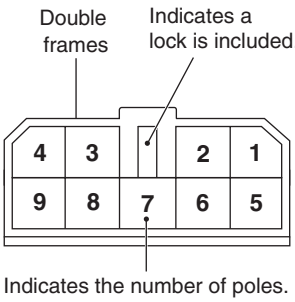		Numbered in order from upper right to lower left.
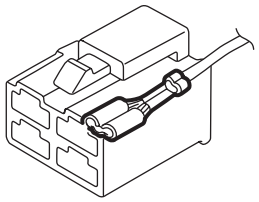 Female connector	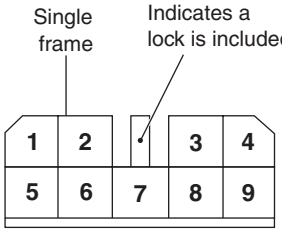		Numbered in order from upper left to lower right.

WI-41116

• The sketch of the connector and the terminal number are indicated in a disconnected state which is viewed from the terminal side.

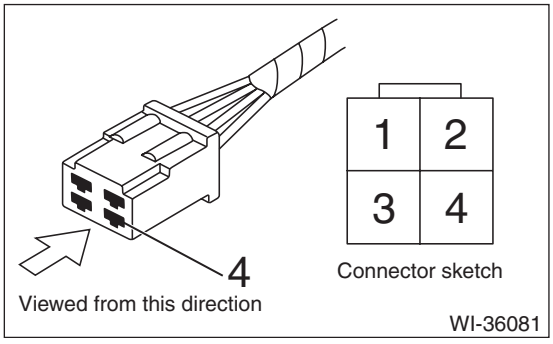

WI-36081

- The connector sketch usually indicates a female connector.
- The connector used in the wiring diagram of the system indicates only the intermediate connection, therefore, no parts, J/Cs and grounds are described. In addition, if the different circuits are connected with the same connector, a dot line is used to indicate that these are the same.

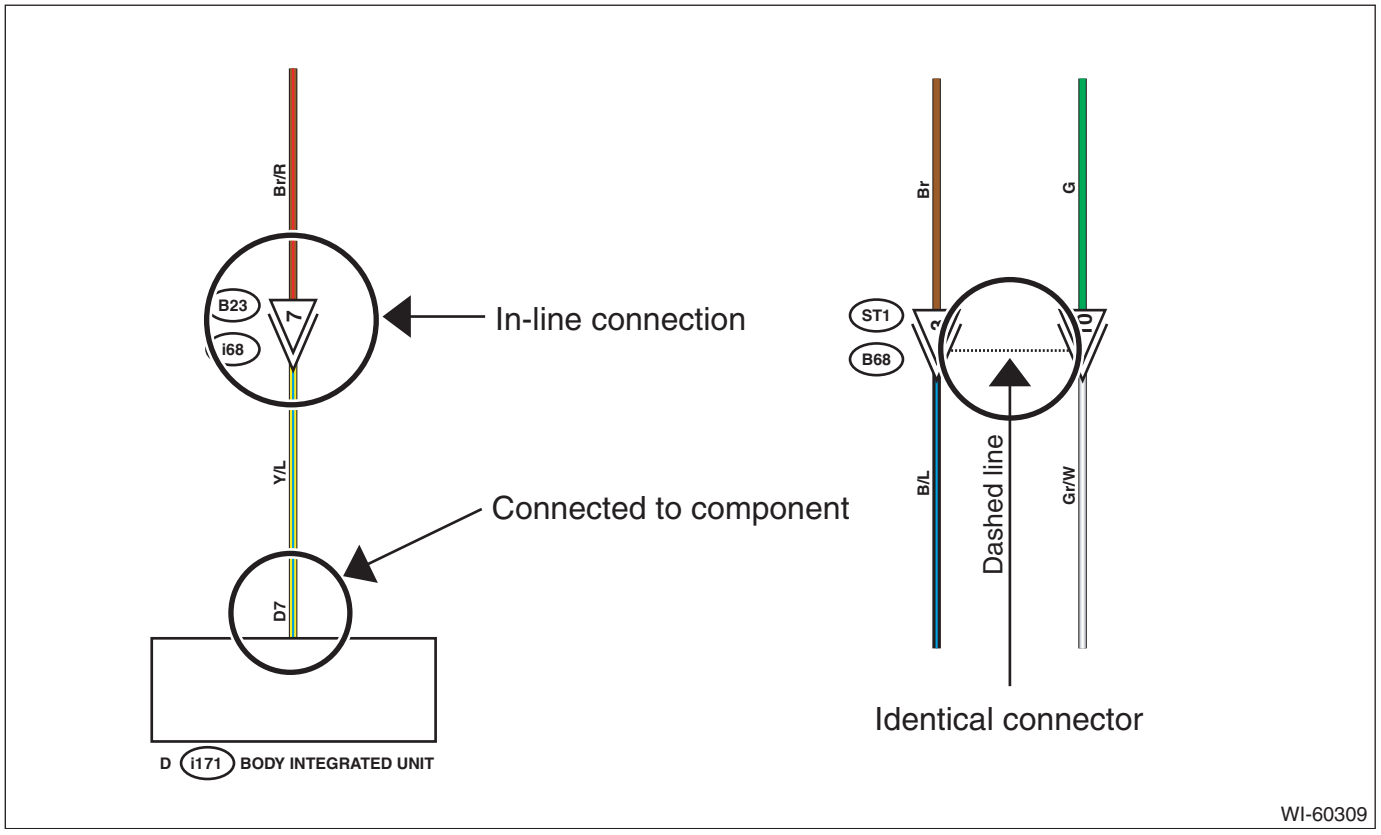

- When connecting the connector, the terminals with the same number are jointed. When the connector is disconnected, the terminal location is symmetrical.

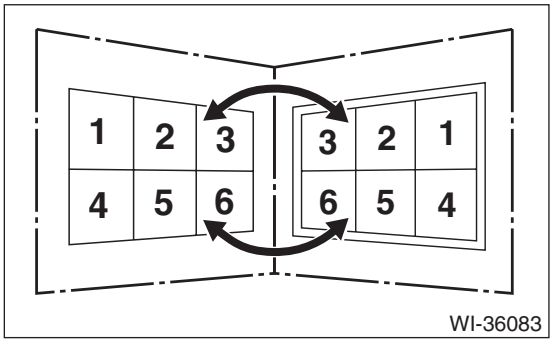

3. LOCATION

In this manual, the location is classified in each harness, and the connector location is indicated using coordinates.

CONNECTOR LOCATION CHART

60. Bulkhead Wiring Harness (In Engine Com

A : LOCATION

Connector					
No.	Pole	Color	Area	No.	
B3	5	B	B-2		Mass air fl
B6	2	Gr	B-3		Front ABS
B8	5	Gr	B-3		Front wiper
B10	4	Gr	B-4		Pressure s
B11	20	Gr	B-3	T4	Transmissi
B12	8	Gr	B-3	T3	Transmissi
	12	Gr	B-3	T3	Transmissi
B14	1	B	B-3		Starter mo
B15	2	Gr	B-3		Front ABS
B16	2	Gr	B-3		Brake fluid
B19	4	G	B-3	T5	Rear wash
		Gr	B-3		Rear wash
B21	54	B	B-4	E2	Engine wir
B128	6	Gr	B-3	T9	Transmissi

Letters in "Area" corresponds with connector location view.
"B" indicates vertical line and "3" indicates horizontal line in above chart.

CONNECTOR LOCATION VIEW

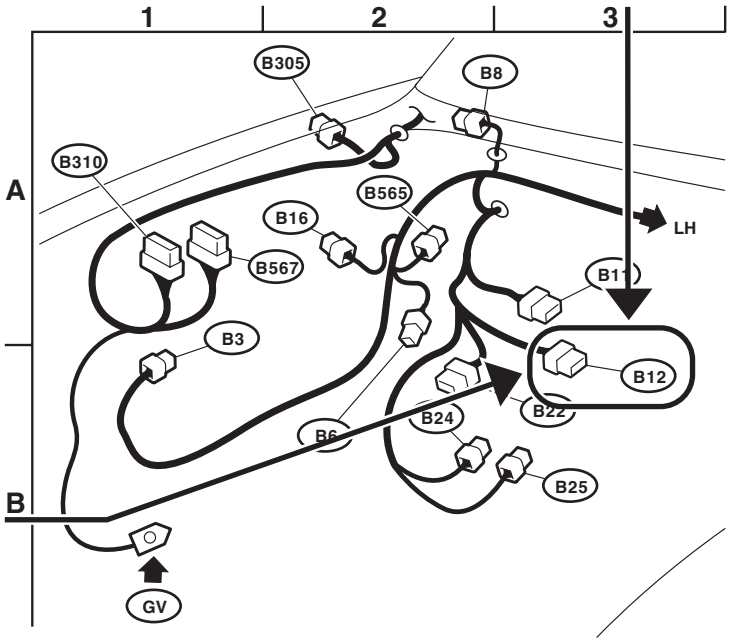

WI-60310

- The following connector symbols are used to easily identify the connectors.

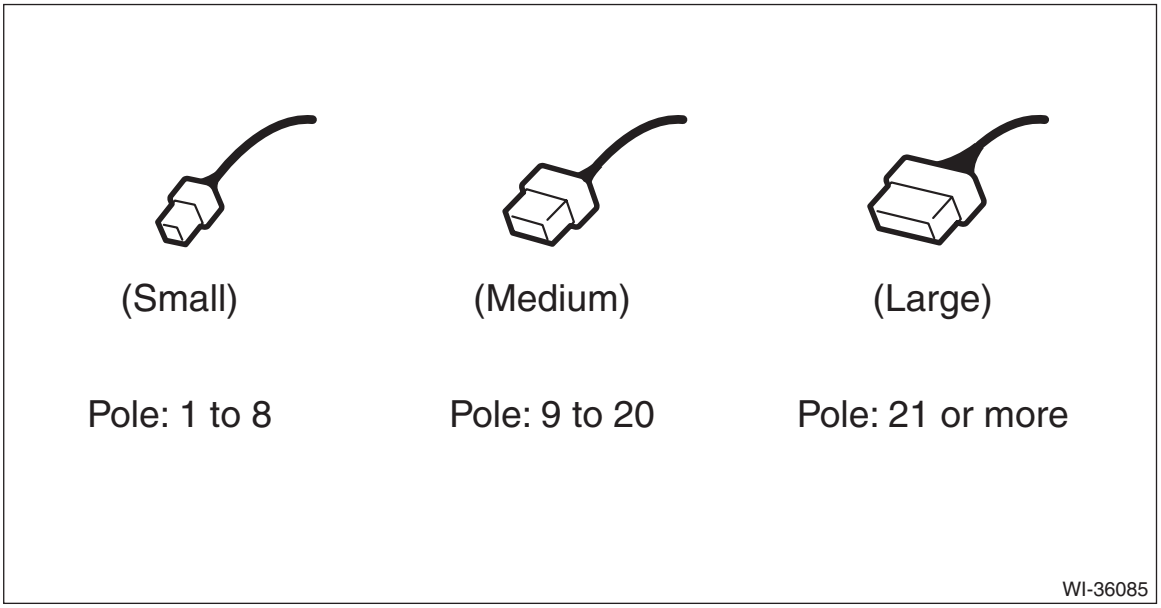

WI-36085

- The ground point is indicated as follows.

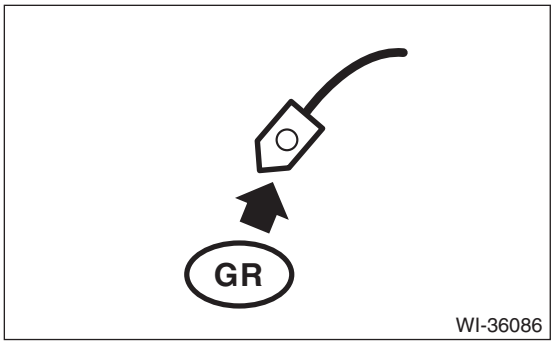

4. SYMBOLS IN WIRING DIAGRAMS

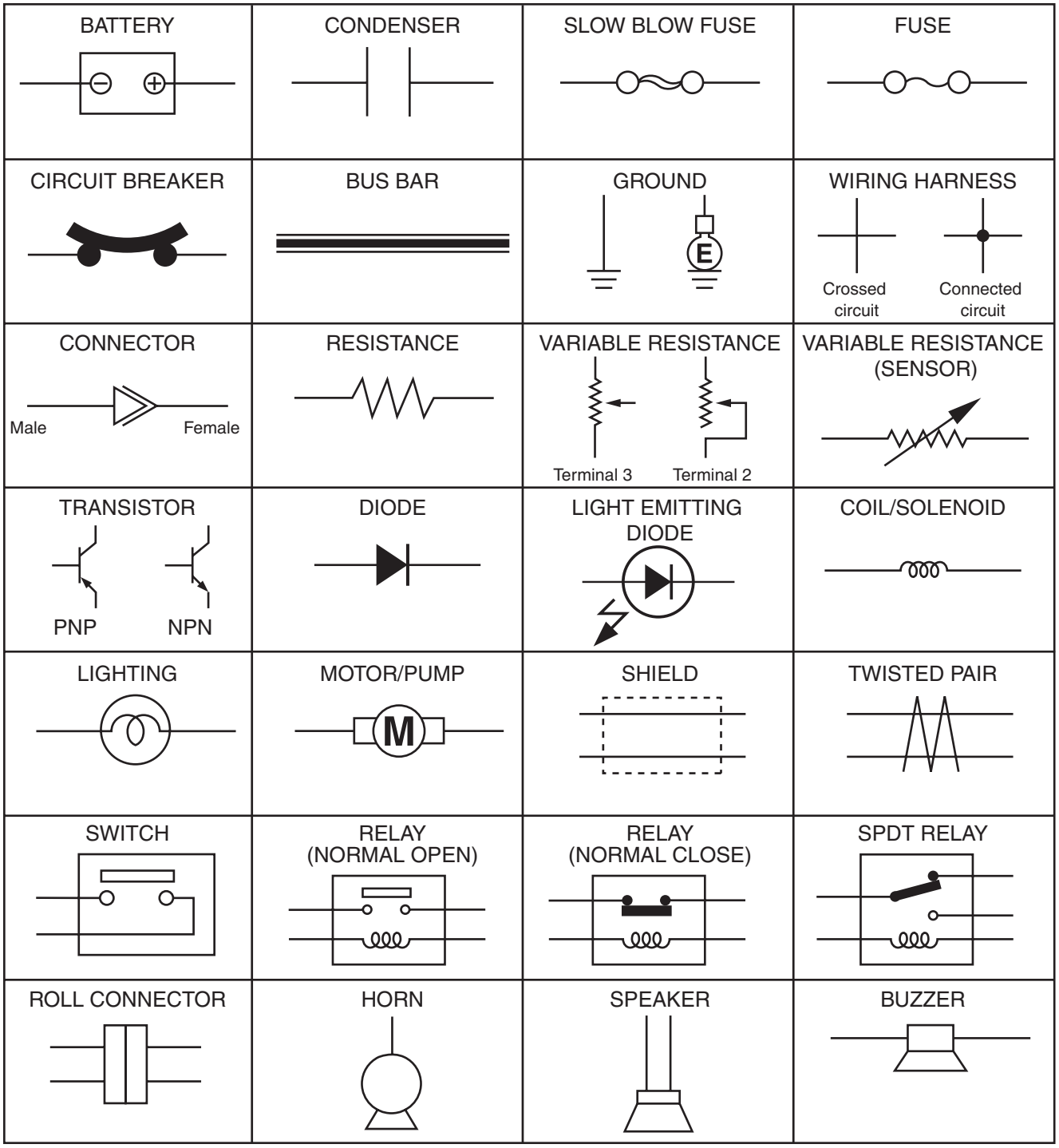

WI-36087

5. ABBREVIATIONS IN THIS MANUAL

Abbr.	Full name
ABS	Anti-lock Brake System
ACC	Accessory
A/C	Air Conditioner
ASSY	Assembly
A/F	Air/Fuel (air fuel ratio sensor)
ATF	Automatic Transmission Fluid
AUX	Auxiliary Audio Input Terminal
AWD	All Wheel Drive
B, BAT	Battery
BSD/RCTA	Blind Spot Detection/Rear Cross Traffic Alert
CAN	Controller Area Network
CL	Close
CM	Control Module
CVT	Continuously Variable Transmission
D	Drive range or Down
DC/DC	Direct Current / Direct Current (converter)
DCCD	Driver's Control Center Differential
DN	Down
E	Ground
ECM	Engine Control Module
EEPROM	Electrically Erasable Programmable Read-Only Memory
EGR	Exhaust Gas Recirculation
EPB	Electronic Parking Brake
F	Front
F/B	Fuse & Relay Box
FL	Front Left
FR	Front Right
G	Gravity (G sensor)
H/L	Headlight
HI	High
I/F	Interface
IG	Ignition
INT	Intermittent
ISO	International Organization for Standardization
J/C	Joint Connector
LCD	Liquid Crystal Display
L, LH	Left Hand
LO	Low
LWR	Lower
M	Motor
M/B	Main Fuse Box
MFD	Multi Function Display
MIST	Wiper for mist
MT	Manual Transmission
N	Neutral Range
OP	Optional Parts or Open
P	Parking or Parking range
PASS	Passing

Abbr.	Full name
R	Reverse Range
RAB	Reverse Automatic Braking
RES	Reset
R, RH	Rear or Right Hand
RL	Rear Left
RR	Rear Right
SBF	Slow Blow Fuse
SI-DRIVE	SUBARU Intelligent Drive
SRF	Steering Responsive Fog Lights
ST	Starter
SW	Switch
TCM	Transmission Control Module
TEL	Telephone
TFT	Thin Film Transistor
TPMS	Tire Pressure Monitor System
UP	Up
UPR	Upper
VDC	Vehicle Dynamics Control
WASH	Washer

2. Working Precautions

A: PRECAUTIONS WHEN WORKING WITH THE PARTS MOUNTED ON THE VEHICLE

1) Always refer to “CAUTION” and “NOTE” of “General Description” in the same model’s service manual before starting the service.
2) When working under a vehicle which is jacked-up, always be sure to use rigid rack.
3) The parking brake must always be applied during working. Also, in automatic transmission vehicles, keep the select lever set to the P (Parking) range.
4) Be sure the workshop is properly ventilated when running the engine.
5) Be careful not to touch the rotating parts such as a belt or a fan while the engine is operating.
6) Be careful not to touch hot metal parts immediately after the engine has been turned on or off.

B: PRECAUTIONS IN TROUBLE DIAGNOSIS AND REPAIR OF ELECTRIC PARTS

1) Always refer to “CAUTION” and “NOTE” of “General Description” in the same models service manual before starting the diagnostics and repair.
2) Always refer to the cautions of each section when diagnosing and repairing each system and component.
3) The battery cable must be disconnected from the negative terminal after the ignition switch is set to the OFF position, unless otherwise required by the diagnostics.
4) When disconnecting a connector, do not pull the harness, but pull while holding the connector housing.

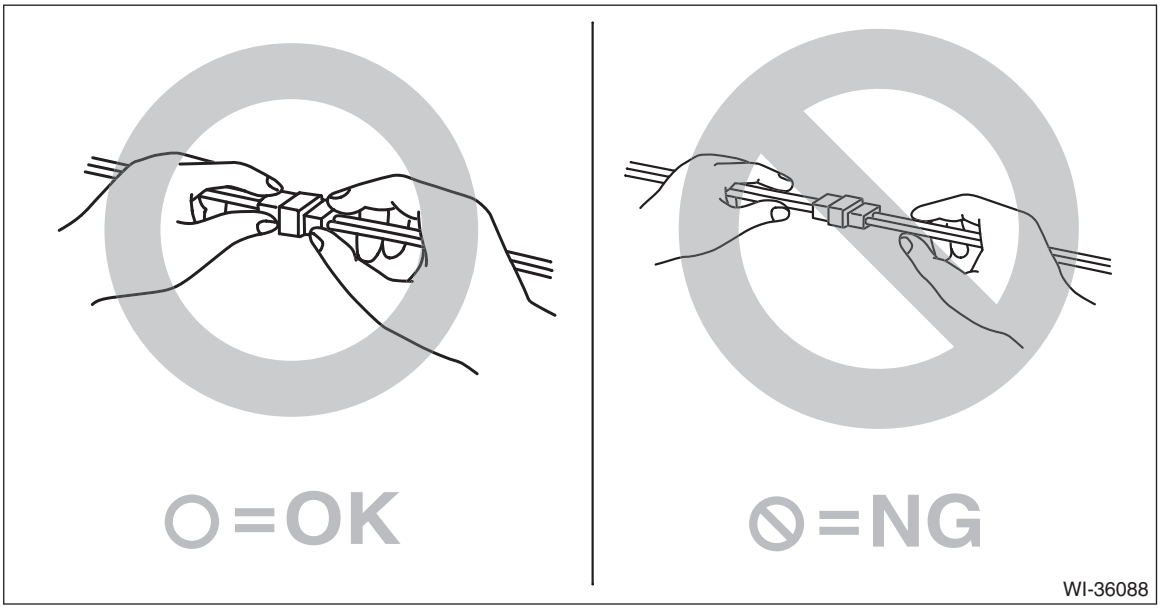

5) Confirm the locking shape completely before disconnecting a connector. In addition, firmly push in the connector until a click sounds when connecting a connector.
6) When checking continuity between connector terminals, or measuring voltage across the terminal and ground, always touch tester probe (s) to terminals from the harness side.
If the probe is too thick to gain access to the terminal, do not push it in forcibly but use a mini test lead.
7) When measuring the voltage or resistance of individual sensor or all electrical control modules, use a tapered pin with a diameter of 0.6 mm (0.024 in) or less and touch it to the tip of terminal. Never insert the tapered pin into the terminal at this time. Doing so may cause internal deformation and a malfunction can occur.

8) To check water-proof connectors (which are not measurable from the harness side), touch tester probes on the terminal side and be very careful not to bend or damage the terminals.

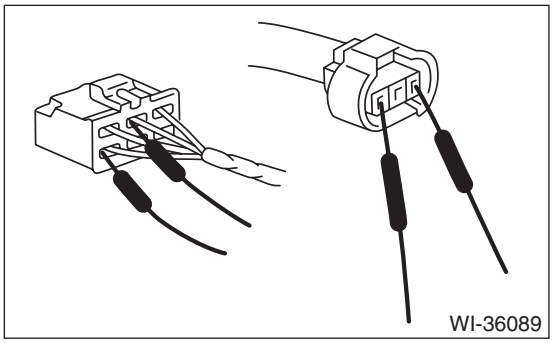

9) Securely fasten the harness with clamps and clips so that the harness does not interfere with the body end parts, edges, bolts or screws.
10) When installing a harness and a component, be careful not to catch them on the harness.
11) Sensors, relays, units, etc., are sensitive to strong impacts. Handle them with extra care so that they are not dropped or mishandled.
12) Because the HID headlight uses high voltage, be sure to confirm that the power supply is turned off before diagnostics and repair. Furthermore, do not perform diagnostics and repair with wet hands because there is a possibility of electrical shock.
13) When inspecting the airbag system, in order to avoid malfunction, always refer to “CAUTION” of “General Description” of the airbag system in the same model’s service manual.

3. Fuse And Relay

A: LOCATION

1. ENGINE TYPE FA (WITHOUT PUSH BUTTON START, ENGINE COMPARTMENT SIDE)

1a 1a

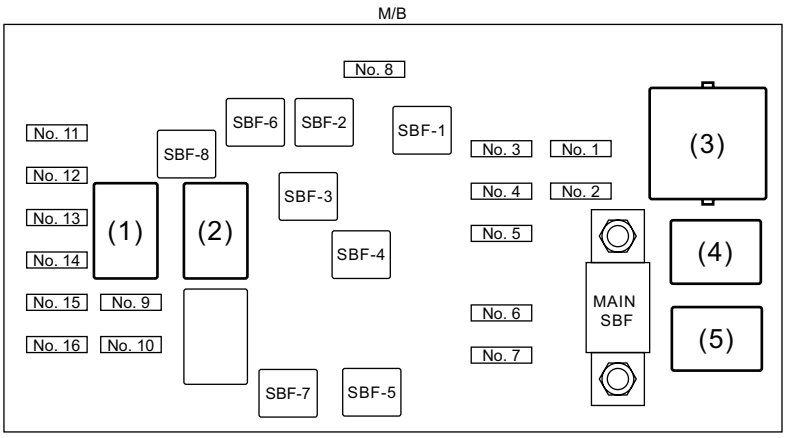

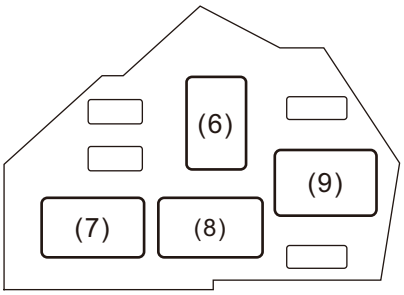

F27 RELAY HOLDER

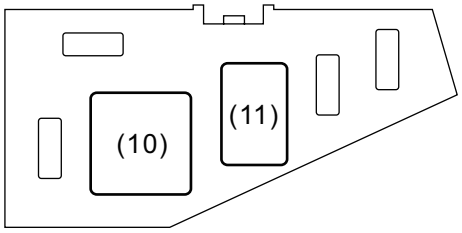

B564 RELAY HOLDER

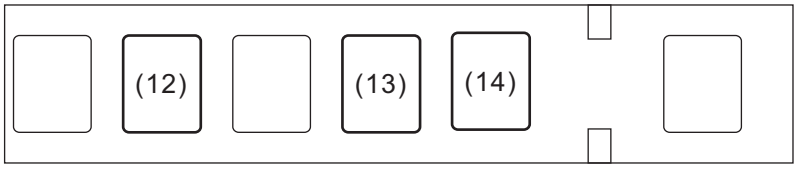

B567 RELAY HOLDER

(1) HORN RELAY
(2) REAR DEFOGGER RELAY
(3) MAIN FAN RELAY 1
(4) HEADLIGHT RELAY LO
(5) HEADLIGHT RELAY HI
(6) DAYTIME RUNNING LIGHT RELAY
(7) SUB FAN RELAY
(8) A/C RELAY
(9) MAIN FAN RELAY 2
(10) BRAKE PUMP RELAY
(11) FUEL INJECTOR RELAY
(12) STOP LIGHT RELAY
(13) FRONT FOG LIGHT RELAY RH (SRF)
(14) FRONT FOG LIGHT RELAY LH (SRF)

WI-66610

2. ENGINE TYPE FA (WITHOUT PUSH BUTTON START, PASSENGER ROOM SIDE)

2a 2a

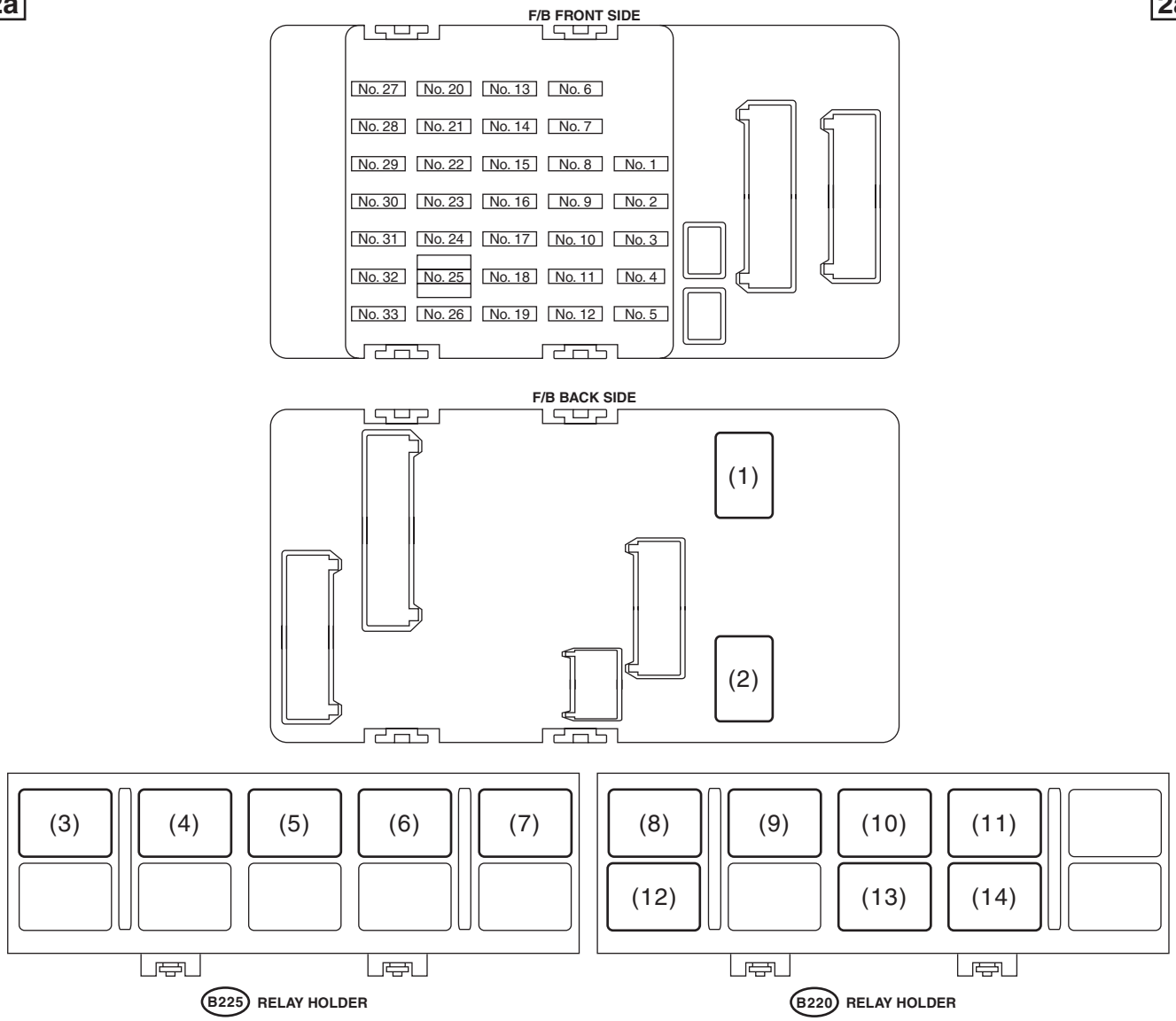

(1) IG 2 RELAY
(2) ACCESSORY RELAY
(3) STARTER RELAY 1
(4) POWER WINDOW RELAY
(5) TAIL & ILLUMINATION RELAY
(6) ELECTRONIC THROTTLE CONTROL RELAY
(7) A/F, OXYGEN SENSOR RELAY
(8) FUEL PUMP RELAY
(9) IG RELAY
(10) MAIN RELAY
(11) SELF SHUT RELAY
(12) FRONT FOG LIGHT RELAY
(13) WIPER DEICER RELAY
(14) SEAT HEATER RELAY

WI-44239

2b

2b

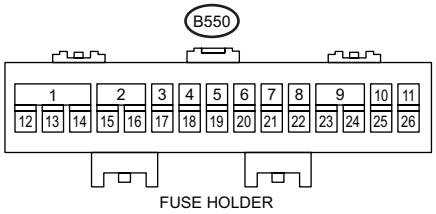

Pole	Fuse rating	Connecting to
1・12	30A	Combination switch
		Front wiper motor
1・13	-	-
1・14	15A	Front washer motor
2・15	15A	Main relay
2・16	15A	IG relay
3・17	15A	Electronic throttle control relay
4・18	15A	A/F, oxygen sensor relay
5・19	-	-
6・20	7.5A	Primary speed sensor
		Secondary speed sensor
		Front wheel speed sensor
7・21	10A	ECM
8・22	10A	ECM
9・23	-	-
9・24	-	-
10・25	7.5A	Keyless access CM
		ID code box
11・26	7.5A	Data communication module

WI-71842

3. ENGINE TYPE FA (WITH PUSH BUTTON START, ENGINE COMPARTMENT SIDE)

3a 3a

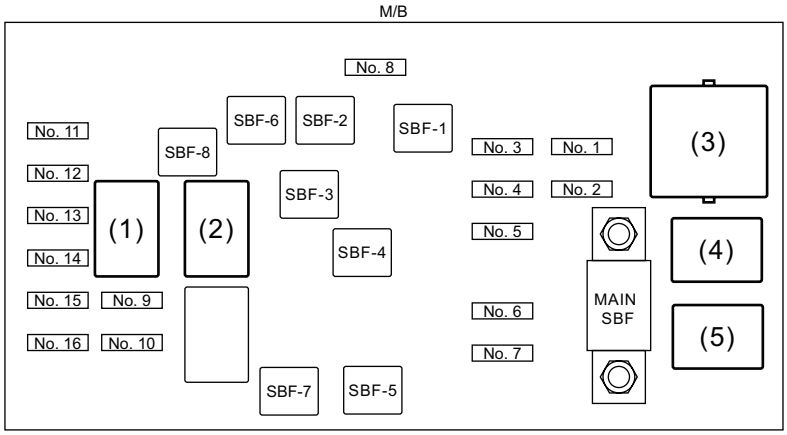

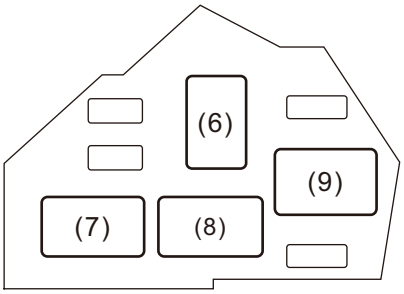

F27 RELAY HOLDER

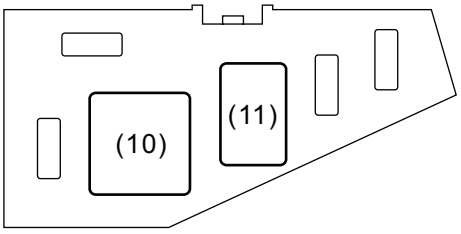

B564 RELAY HOLDER

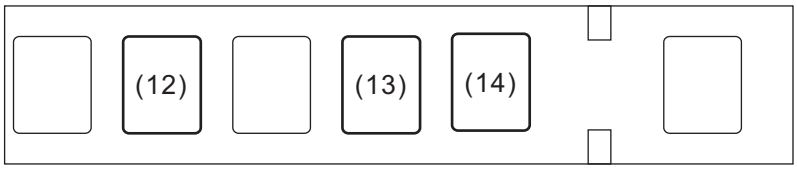

B567 RELAY HOLDER

(1) HORN RELAY
(2) REAR DEFOGGER RELAY
(3) MAIN FAN RELAY 1
(4) HEADLIGHT RELAY LO
(5) HEADLIGHT RELAY HI
(6) DAYTIME RUNNING LIGHT RELAY
(7) SUB FAN RELAY
(8) A/C RELAY
(9) MAIN FAN RELAY 2
(10) BRAKE PUMP RELAY
(11) FUEL INJECTOR RELAY
(12) STOP LIGHT RELAY
(13) FRONT FOG LIGHT RELAY RH (SRF)
(14) FRONT FOG LIGHT RELAY LH (SRF)

WI-66611

4. ENGINE TYPE FA (WITH PUSH BUTTON START, PASSENGER ROOM SIDE)

4a 4a

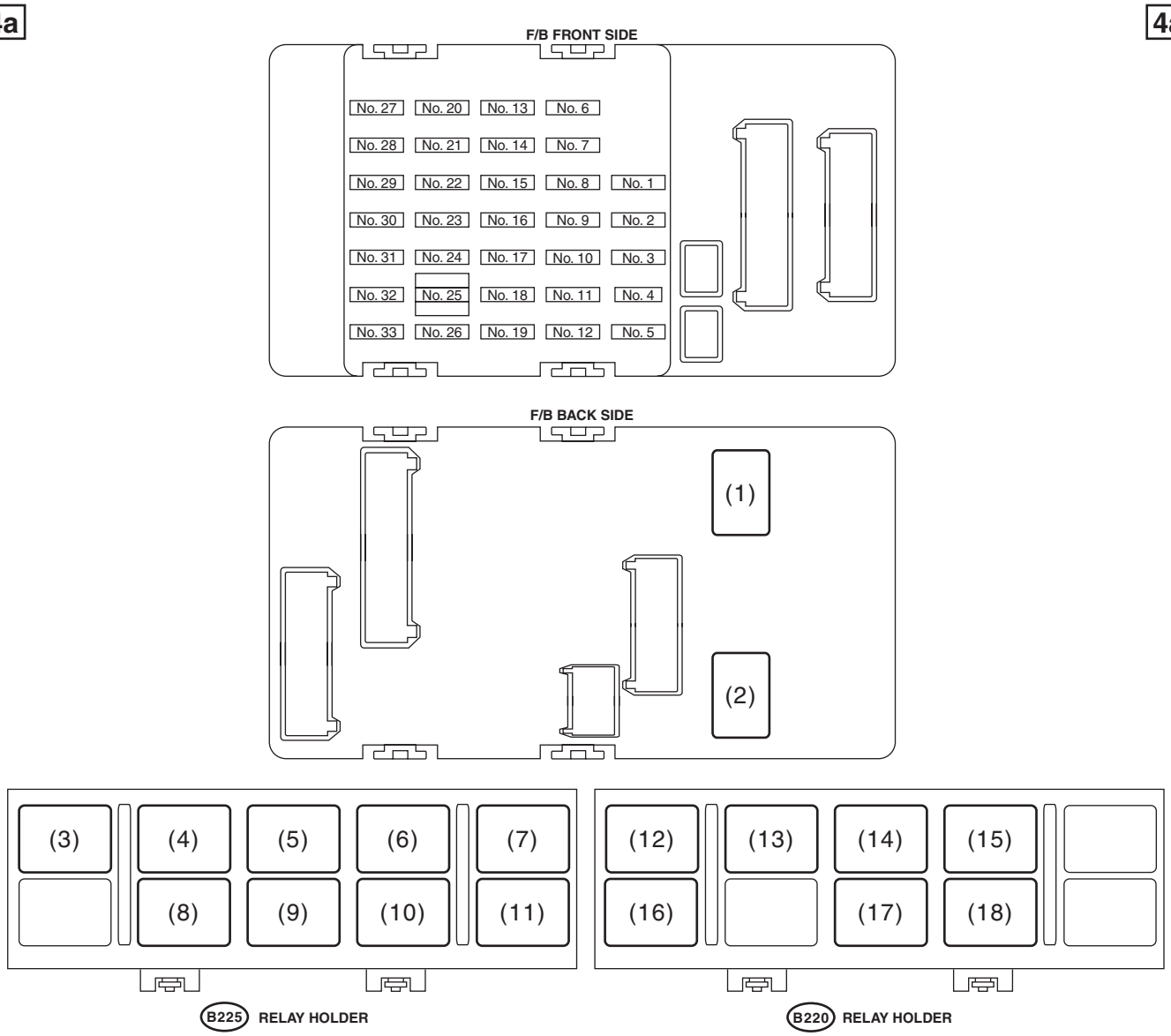

(1) IG 2 RELAY
(2) ACCESSORY RELAY
(3) STARTER RELAY 1
(4) POWER WINDOW RELAY
(5) TAIL & ILLUMINATION RELAY
(6) ELECTRONIC THROTTLE CONTROL RELAY
(7) A/F, OXYGEN SENSOR RELAY
(8) STARTER RELAY (PUSH BUTTON START)
(9) IG RELAY 2
(10) IG RELAY 1
(11) STARTER CUT RELAY
(12) FUEL PUMP RELAY
(13) IG RELAY
(14) MAIN RELAY
(15) SELF SHUT RELAY
(16) FRONT FOG LIGHT RELAY
(17) WIPER DEICER RELAY
(18) SEAT HEATER RELAY

WI-44241

4b 4b

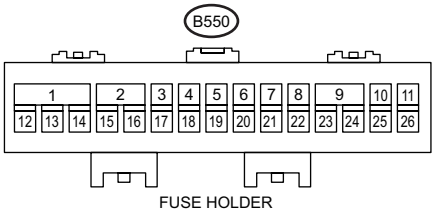

Pole	Fuse rating	Connecting to
1・12	30A	Combination switch
		Front wiper motor
1・13	-	-
1・14	15A	Front washer motor
2・15	15A	Main relay
2・16	15A	IG relay
3・17	15A	Electronic throttle control relay
4・18	15A	A/F, oxygen sensor relay
5・19	-	-
6・20	7.5A	Primary speed sensor
		Secondary speed sensor
		Front wheel speed sensor
7・21	10A	ECM
8・22	10A	ECM
9・23	20A	IG relay 1 (push button start)
9・24	15A	IG relay 2 (push button start)
10・25	7.5A	Keyless access CM
		ID code box
11・26	7.5A	Data communication module

WI-71843

5. ENGINE TYPE EJ (WITHOUT PUSH BUTTON START, ENGINE COMPARTMENT SIDE)

5a 5a

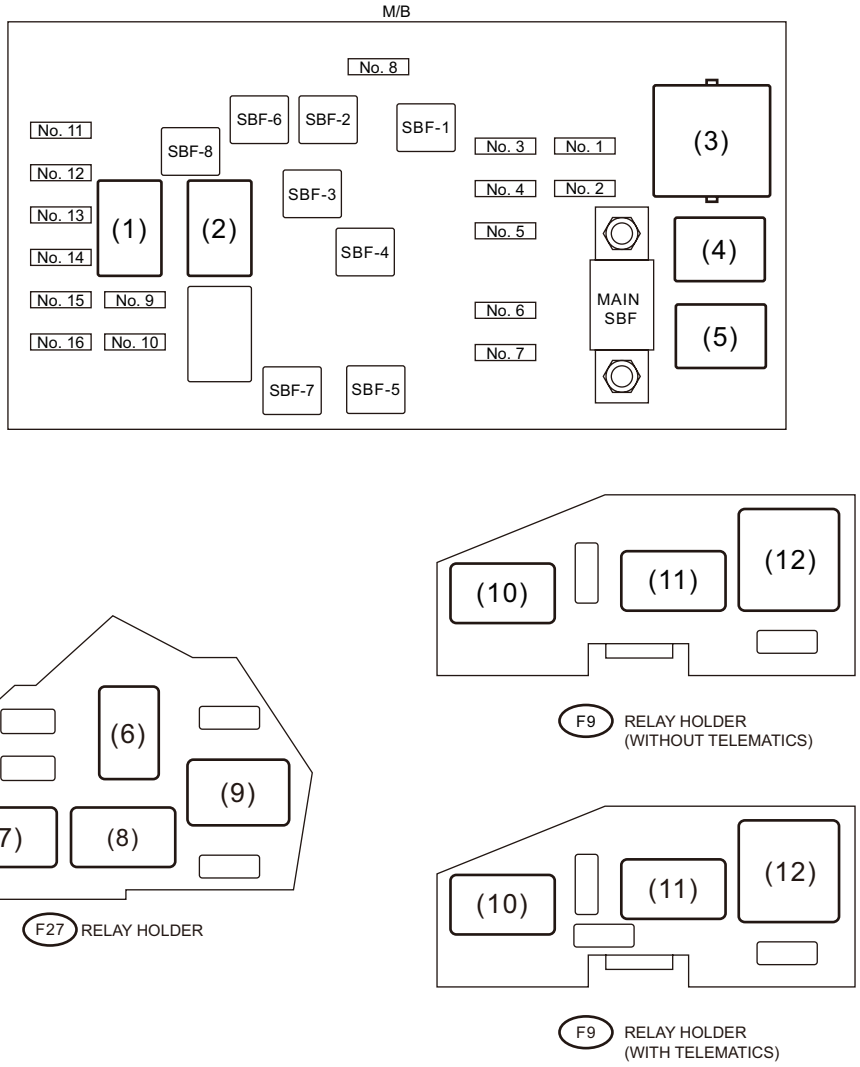

(1) HORN RELAY
(2) REAR DEFOGGER RELAY
(3) MAIN FAN RELAY 1
(4) HEADLIGHT RELAY LO
(5) HEADLIGHT RELAY HI
(6) DAYTIME RUNNING LIGHT RELAY
(7) SUB FAN RELAY
(8) A/C RELAY
(9) MAIN FAN RELAY 2
(10) SECONDARY AIR COMBINATION VALVE RELAY 1
(11) SECONDARY AIR COMBINATION VALVE RELAY 2
(12) SECONDARY AIR PUMP RELAY

WI-66612

6. ENGINE TYPE EJ (WITHOUT PUSH BUTTON START, PASSENGER ROOM SIDE)

6a 6a

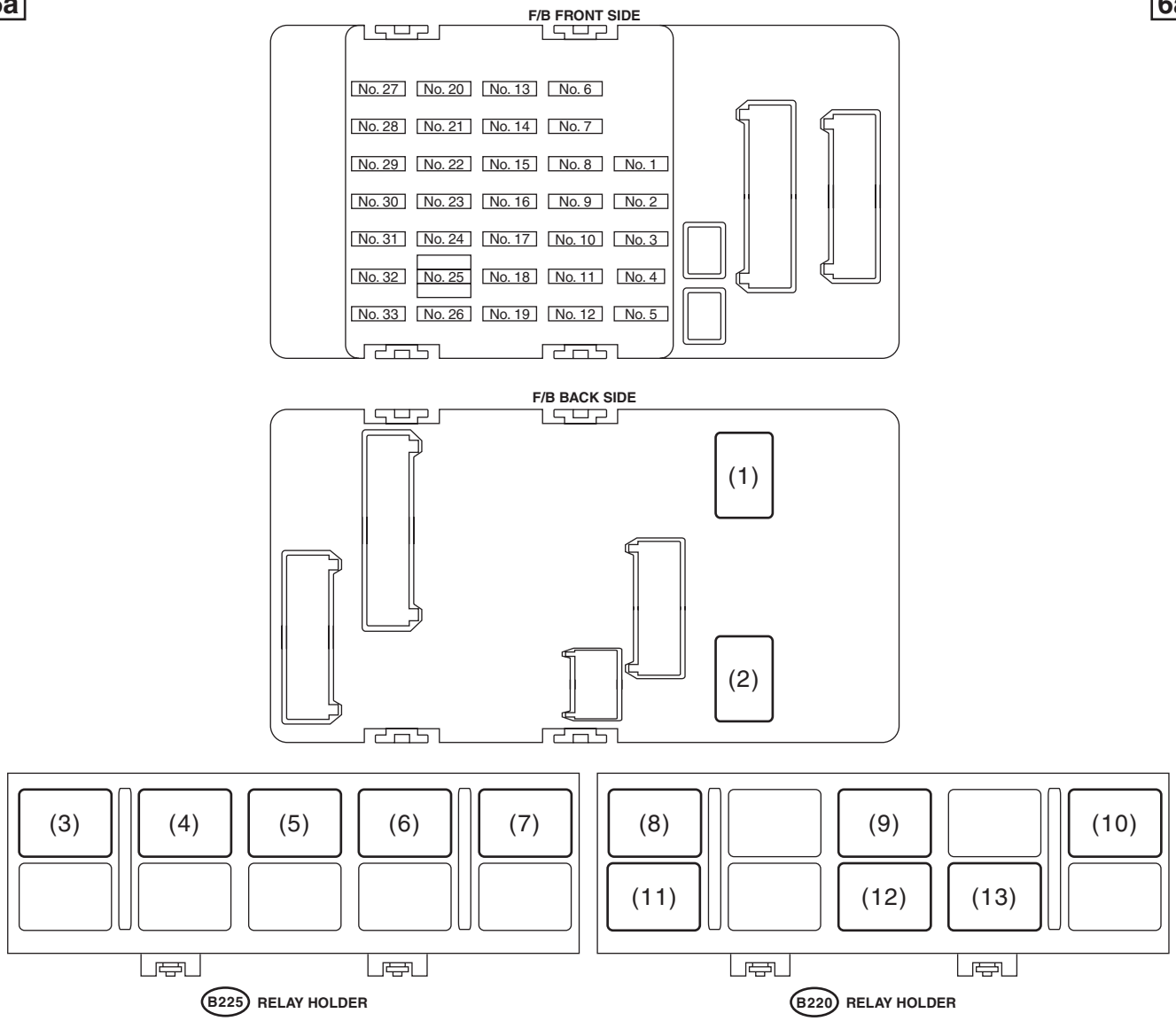

(1) IG 2 RELAY
(2) ACCESSORY RELAY
(3) STARTER RELAY 1
(4) POWER WINDOW RELAY
(5) TAIL & ILLUMINATION RELAY
(6) ELECTRONIC THROTTLE CONTROL RELAY
(7) A/F, OXYGEN SENSOR RELAY
(8) FUEL PUMP RELAY
(9) MAIN RELAY
(10) DCCD RELAY
(11) FRONT FOG LIGHT RELAY
(12) WIPER DEICER RELAY
(13) SEAT HEATER RELAY

WI-44243

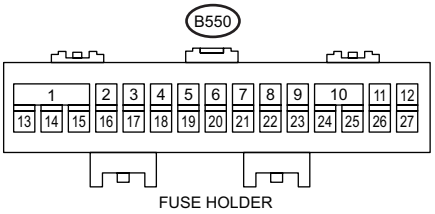

Pole	Fuse rating	Connecting to
1・13	30A	Combination switch
		Front wiper motor
1・14	-	-
1・15	15A	Front washer motor
2・16	15A	Main relay
		A/F, oxygen sensor relay
3・17	-	-
4・18	15A	Electronic throttle control relay
5・19	15A	A/F, oxygen sensor relay
6・20	-	-
7・21	-	-
8・22	10A	ECM
9・23	-	-
10・24	20A	IG relay 1 (push button start)
10・25	15A	IG relay 2 (push button start)
11・26	7.5A	Keyless access CM
		ID code box
12・27	-	-

WI-71840

7. ENGINE TYPE EJ (WITH PUSH BUTTON START, ENGINE COMPARTMENT SIDE)

7a 7a

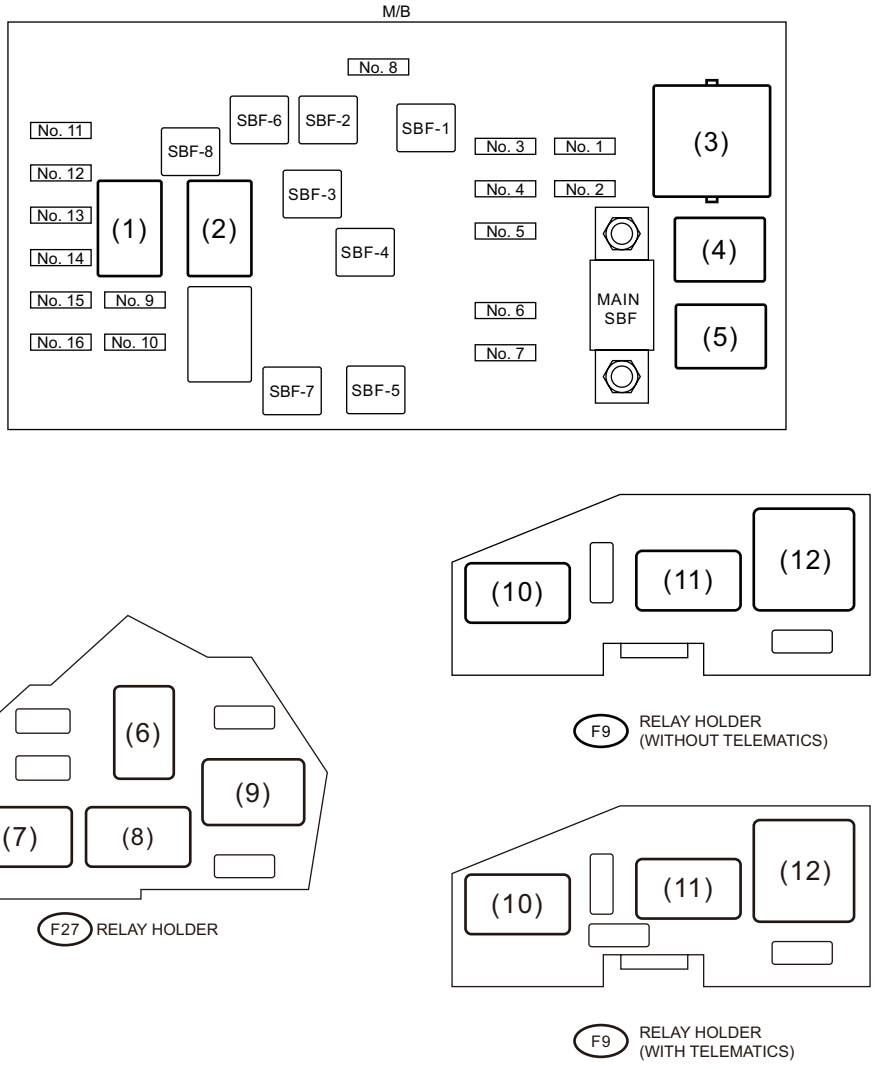

(1) HORN RELAY
(2) REAR DEFOGGER RELAY
(3) MAIN FAN RELAY 1
(4) HEADLIGHT RELAY LO
(5) HEADLIGHT RELAY HI
(6) DAYTIME RUNNING LIGHT RELAY
(7) SUB FAN RELAY
(8) A/C RELAY
(9) MAIN FAN RELAY 2
(10) SECONDARY AIR COMBINATION VALVE RELAY 1
(11) SECONDARY AIR COMBINATION VALVE RELAY 2
(12) SECONDARY AIR PUMP RELAY

WI-66613

8. ENGINE TYPE EJ (WITH PUSH BUTTON START, PASSENGER ROOM SIDE)

8a 8a

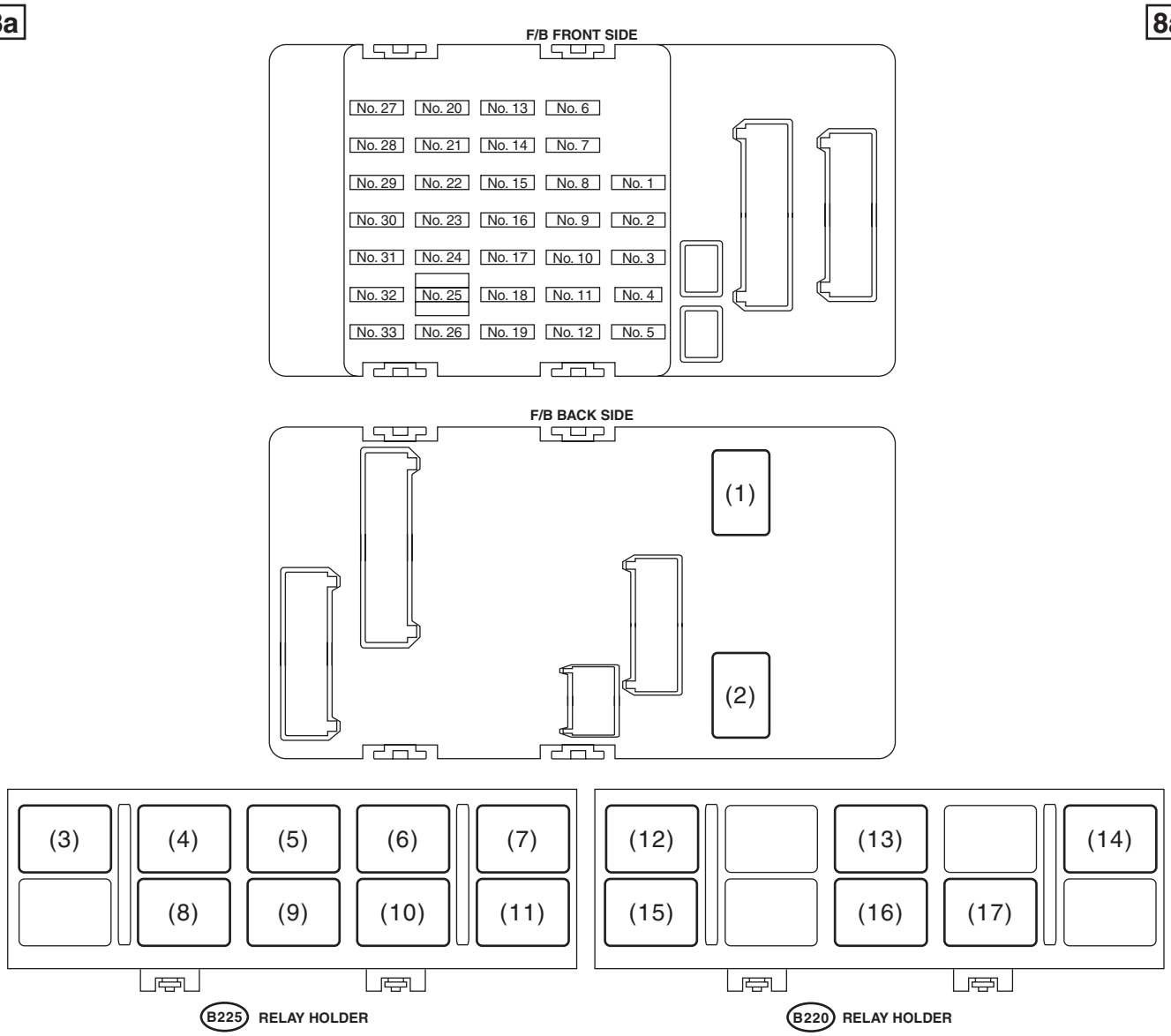

(1) IG 2 RELAY
(2) ACCESSORY RELAY
(3) STARTER RELAY 1
(4) POWER WINDOW RELAY
(5) TAIL & ILLUMINATION RELAY
(6) ELECTRONIC THROTTLE CONTROL RELAY
(7) A/F, OXYGEN SENSOR RELAY
(8) STARTER RELAY (PUSH BUTTON START)
(9) IG RELAY 2
(10) IG RELAY 1
(11) STARTER CUT RELAY
(12) FUEL PUMP RELAY
(13) MAIN RELAY
(14) DCCD RELAY
(15) FRONT FOG LIGHT RELAY
(16) WIPER DEICER RELAY
(17) SEAT HEATER RELAY

WI-44245

8b 8b

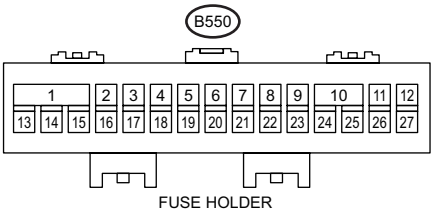

Pole	Fuse rating	Connecting to
1・13	30A	Combination switch
		Front wiper motor
1・14	-	-
1・15	15A	Front washer motor
2・16	15A	Main relay
		A/F, oxygen sensor relay
3・17	-	-
4・18	15A	Electronic throttle control relay
5・19	15A	A/F, oxygen sensor relay
6・20	-	-
7・21	-	-
8・22	10A	ECM
9・23	-	-
10・24	-	-
10・25	-	-
11・26	7.5A	Keyless access CM
		ID code box
12・27	-	-

WI-71841

4. Power Supply Circuit

A: WIRING DIAGRAM

1. ENGINE TYPE FA (WITHOUT PUSH BUTTON START)

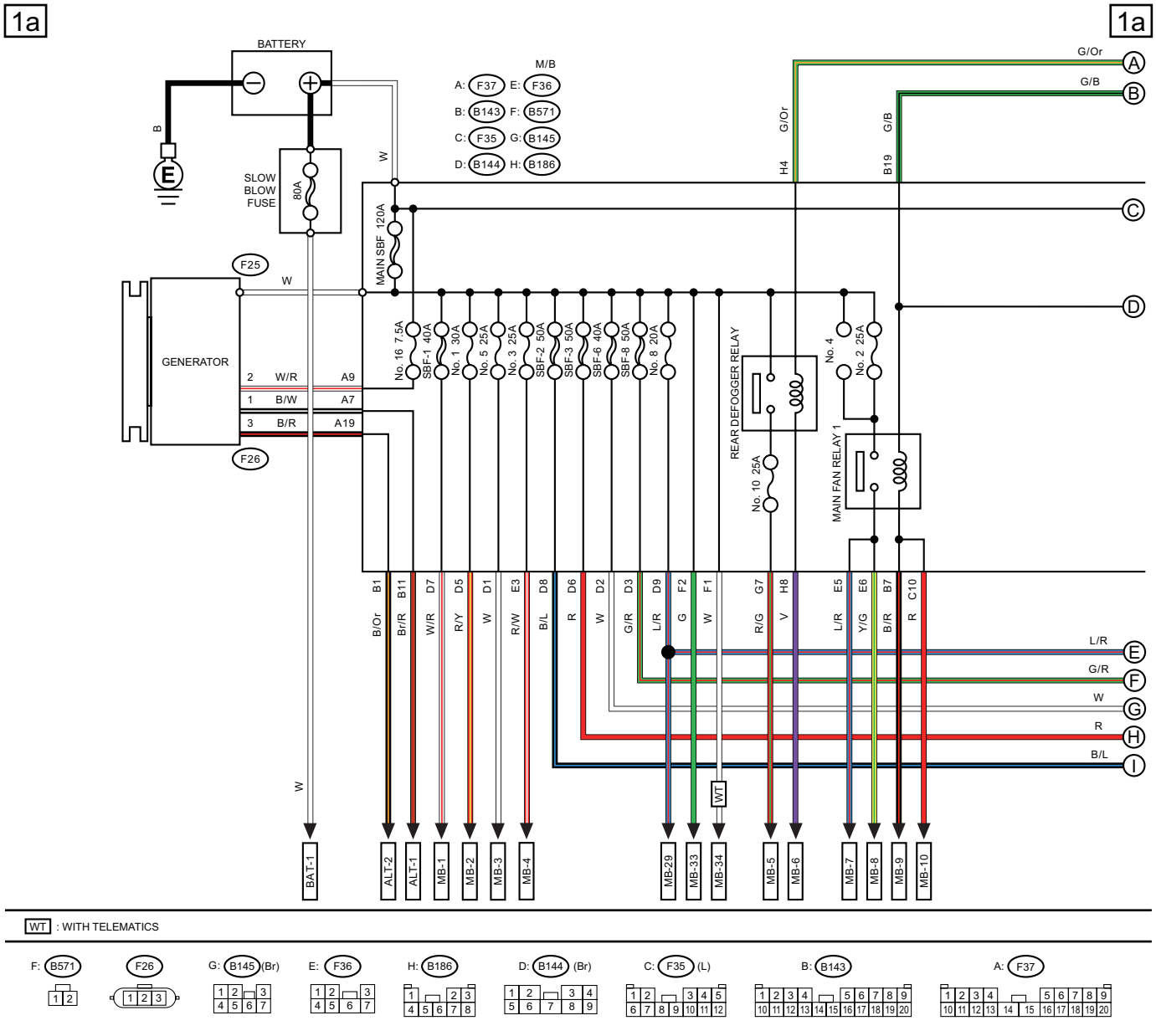

WI-66614

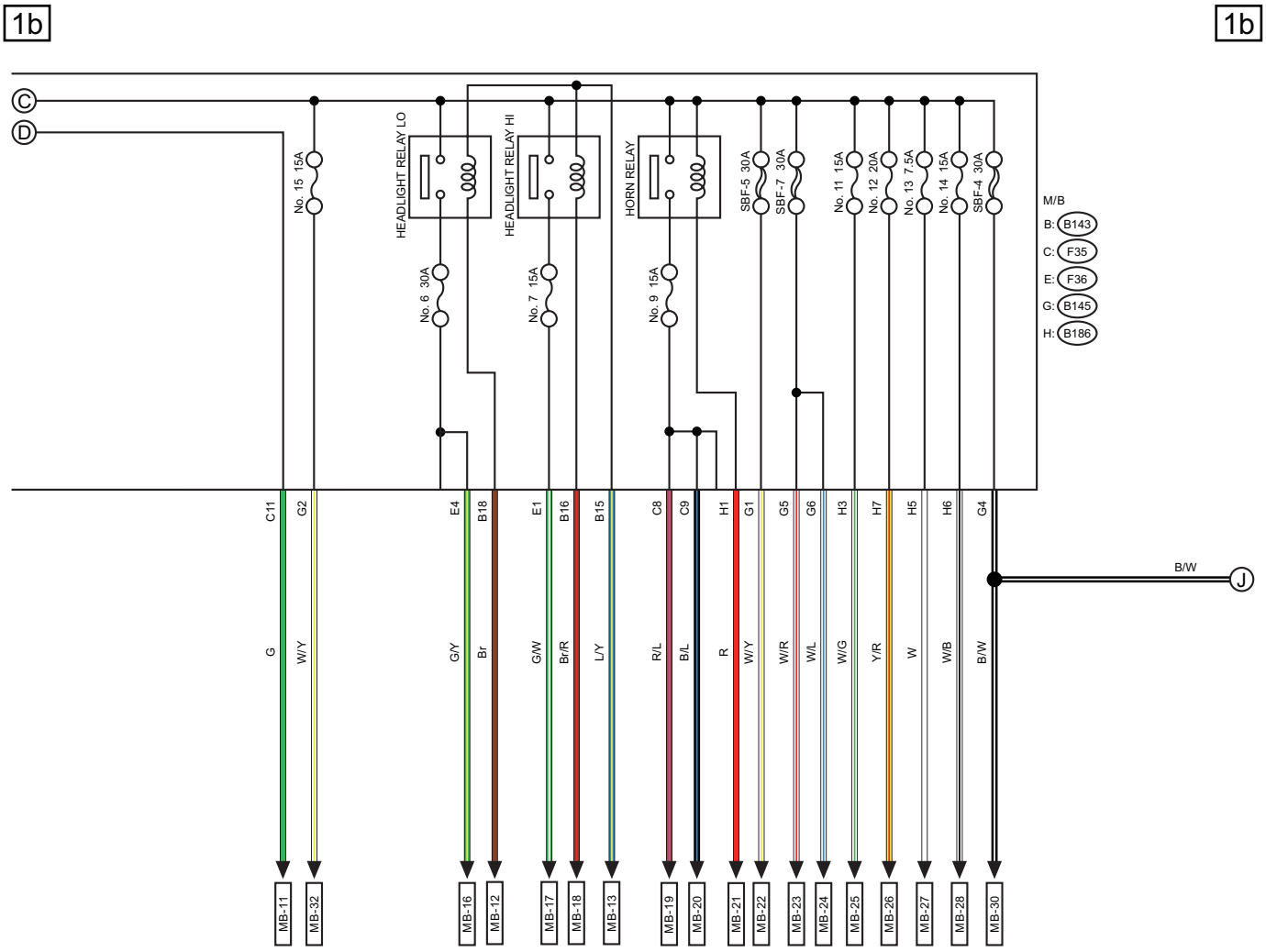
1b
1b
C
D
No. 15 15A
HEADLIGHT RELAY LO
HEADLIGHT RELAY HI
HORN RELAY
No. 6 30A
No. 7 15A
No. 9 15A
SBF-5 30A
SBF-7 30A
No. 11 15A
No. 12 20A
No. 13 7.5A
No. 14 15A
SBF-4 30A
M/B
B: B143
C: F35
E: F36
G: B145
H: B186
C11
G2
E4
B18
E1
B16
B15
C8
C9
H1
G1
G5
G6
H3
H7
H5
H6
G4
B/W
J
G
W/Y
G/Y
Br
G/W
Br/R
L/Y
R/L
B/L
R
W/Y
W/R
W/L
W/G
Y/R
W
W/B
B/W
MB-11
MB-32
MB-16
MB-12
MB-17
MB-18
MB-13
MB-19
MB-20
MB-21
MB-22
MB-23
MB-24
MB-25
MB-26
MB-27
MB-28
MB-30

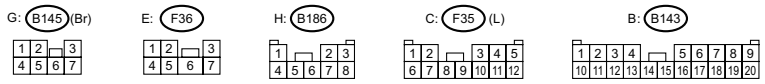
G: B145 (Br)
E: F36
H: B186
C: F35 (L)
B: B143

WI-67157

Power Supply Circuit

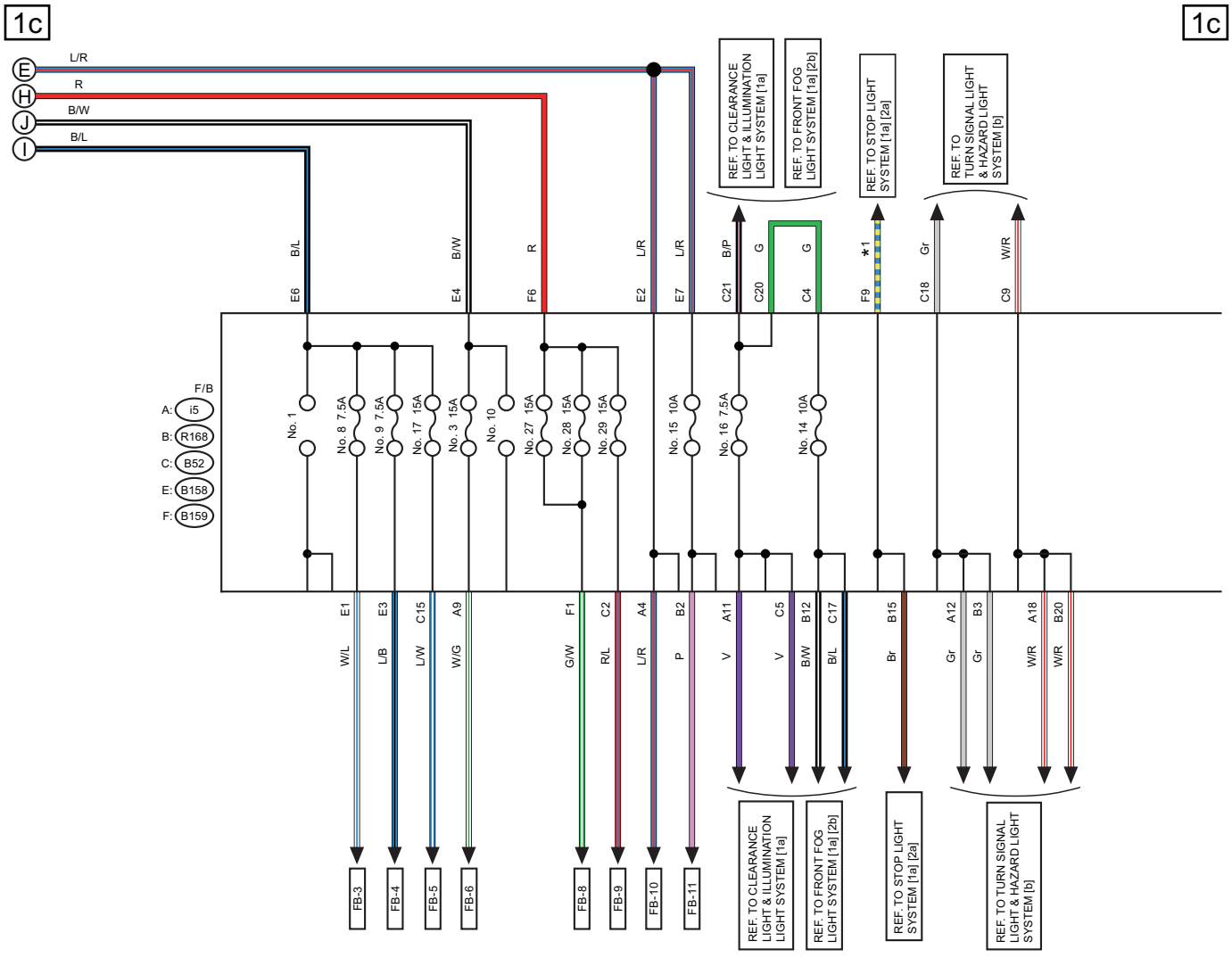

*1 : WITHOUT EyeSight : Br/W
WITH EyeSight : Br/R

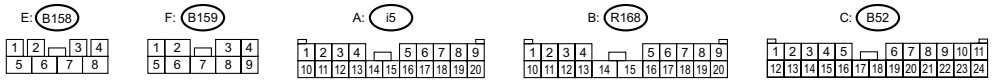

WI-67158

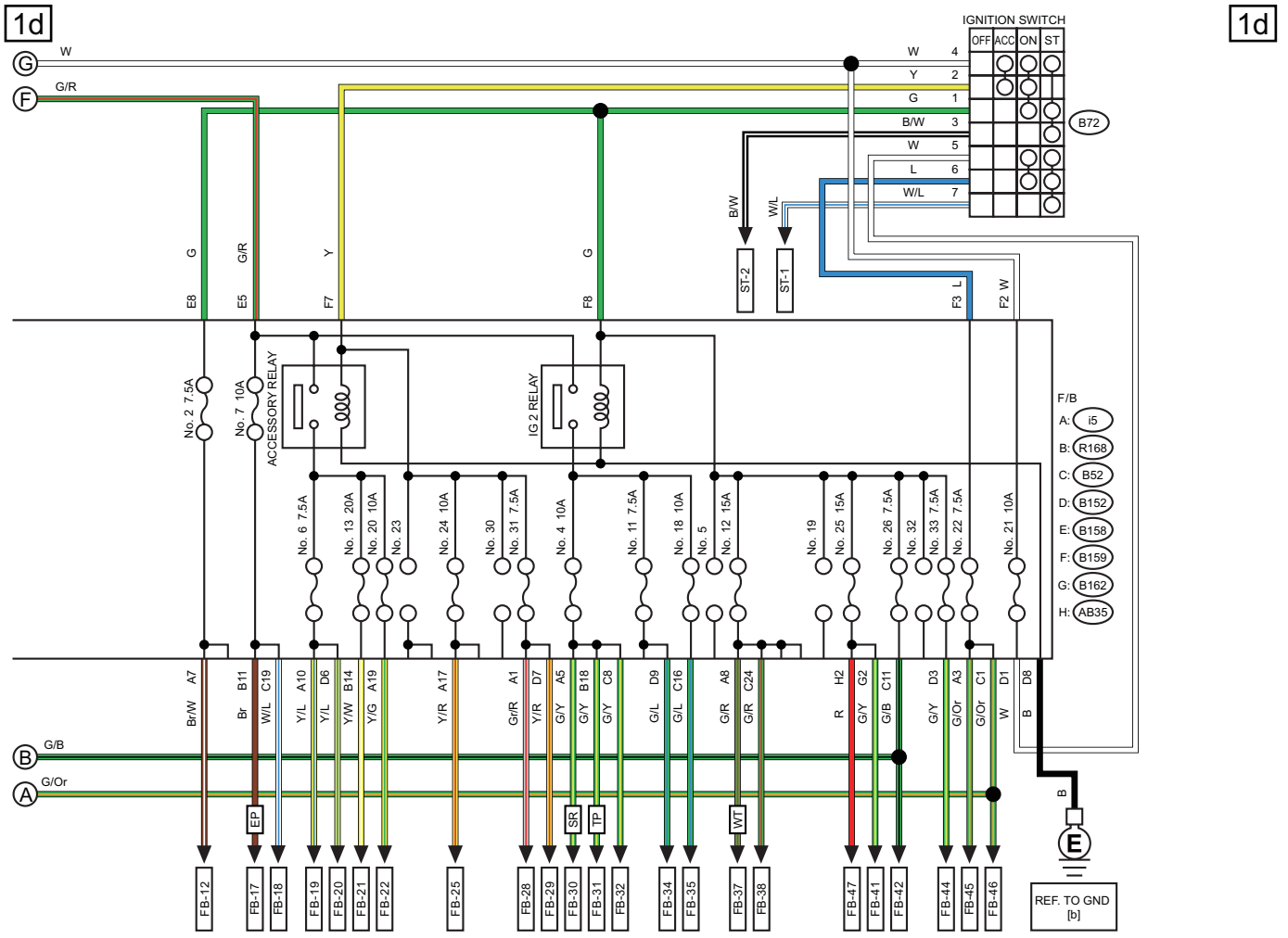

EP : WITH EPB
SR : WITH BSD/RCTA
TP : WITH TPMS
WT : WITH TELEMATICS

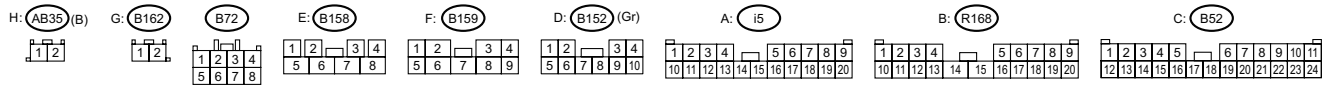

WI-66615

No.	Load
MB-1	VDC CM
MB-2	VDC CM
MB-3	Audio amplifier
MB-4	Sub fan relay
MB-5	Mirror heater LH
	Mirror heater RH
	Rear defogger
MB-6	Body integrated unit
MB-7	Main fan relay 2
MB-8	Main fan motor
MB-9	ECM
MB-10	Main fan relay 2
MB-11	Main fan relay 2
MB-12	Body integrated unit
MB-13	Body integrated unit
MB-16	Front combination light LH
	Front combination light RH
MB-17	Daytime running light relay
MB-18	Body integrated unit
MB-19	Horn
MB-20	Horn
MB-21	Horn switch
	Body integrated unit
MB-22	A/F, oxygen sensor relay
	Fuel injector relay
MB-23	Main relay
	IG relay
MB-24	Electronic throttle control relay
MB-25	Fuel pump relay
MB-26	TCM
	Self shut relay
MB-27	ECM
	Data link connector
	Battery sensor
MB-28	Turn signal and hazard unit
	Body integrated unit
	Key warning switch
MB-29	Body integrated unit
	Immobilizer antenna
	Room light
	Spot map light
	Vanity mirror light LH
	Vanity mirror light RH
MB-30	Power window circuit breaker
MB-32	Tail & Illumination relay
	Daytime running light relay
MB-33	Wiper relay
	Brake pump relay
MB-34	Data communication module
ALT-2	ECM

No.	Load
ST-1	Clutch start switch
	Starter relay 1
ST-2	Starter relay 1
FB-3	Stop light and brake switch
	Stop light relay
FB-4	Wiper deicer relay
FB-5	Seat heater relay
FB-6	Body integrated unit
FB-8	Blower motor relay
FB-9	Front fog light relay
	Front fog light relay LH (SRF)
	Front fog light relay RH (SRF)
FB-10	Navigation unit
	MFD
	Audio
FB-11	Trunk room light
	TPMS & keyless entry CM
	Keyless entry CM
FB-12	MFD
	Combination meter
FB-17	EPB control switch
	RAB CM
FB-18	Security CM
	Combination meter
	Impact sensor
	Air mix door actuator LH
	Air mix door actuator RH
	Mode door actuator
	Body integrated unit
	Stereo camera
FB-19	Remote control mirror switch
FB-20	Seat heater relay
	Rear view mirror
FB-21	Rear accessory power supply socket
FB-22	Front accessory power supply socket
FB-25	Audio
	Navigation unit
	Aux input terminal
	Audio amplifier
	Data communication module
FB-28	A/C control panel
FB-29	Body integrated unit
FB-30	BSD/RCTA OFF switch
	Radar sensor LH (master)
	Radar sensor RH (slave)
FB-31	TPMS & keyless entry CM
	RAB CM

No.	Load
FB-32	Sunroof switch
	Clutch switch
	Sunroof unit
	Data link connector
	Stop light and brake switch
	Wiper deicer relay
	Impact sensor
	Stereo camera
FB-34	Turn signal and hazard unit
FB-35	Inhibitor switch
	Back-up light switch
	Auto headlight beam leveler CM
FB-37	Data communication module
FB-38	ECM
	TCM
	Body integrated unit
	Fuel pump relay
FB-41	Airbag CM
FB-42	Power window relay
	Wiper relay
FB-44	VDC CM
	Steering angle sensor
	Power steering CM
	Stop light relay
	Hill hold switch
FB-45	A/C control panel
FB-46	A/C relay
	Sub fan relay
	Pressure switch
	Blower motor relay
FB-47	Occupant detection control module
BAT-1	Power steering CM

2. ENGINE TYPE FA (WITH PUSH BUTTON START)

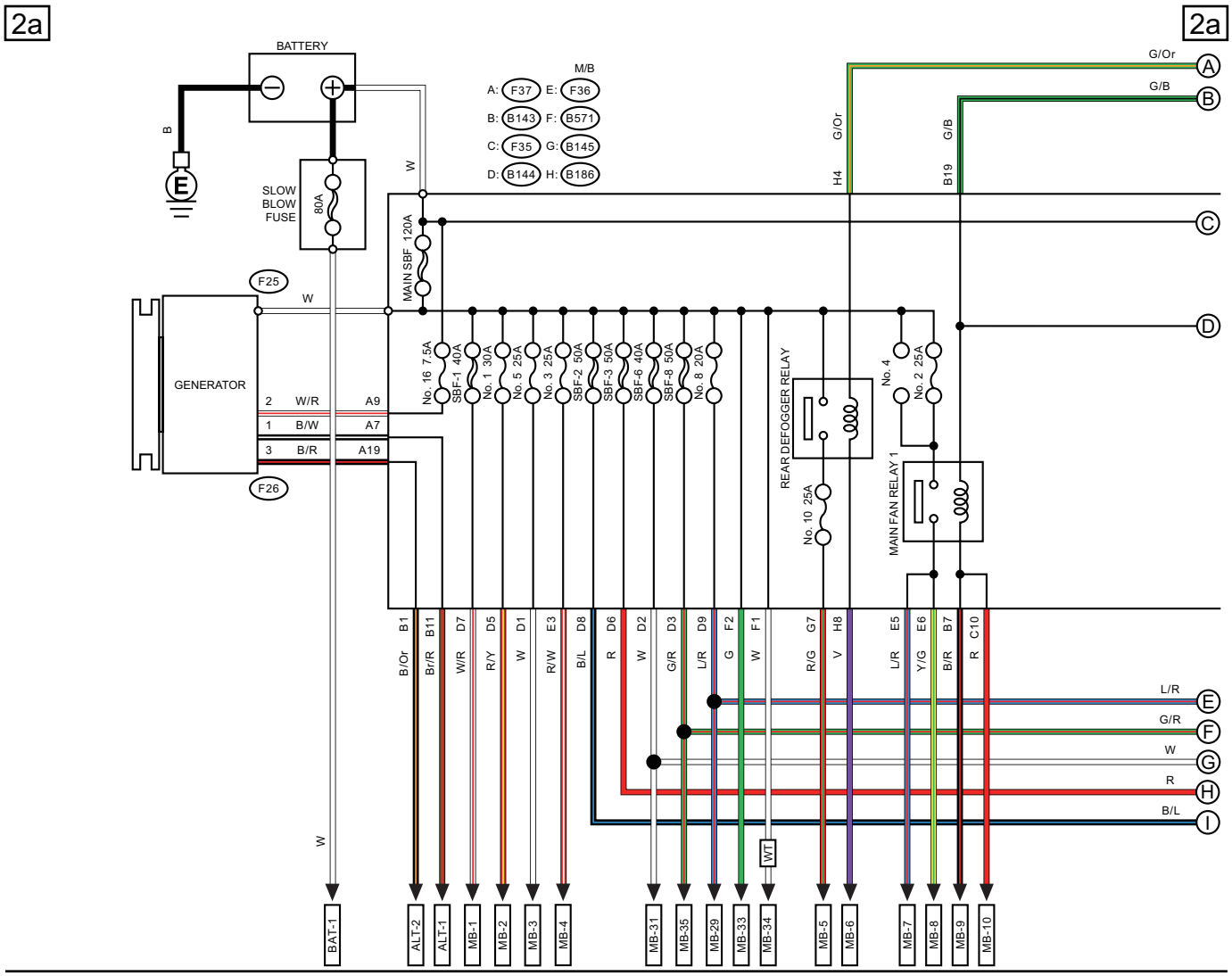

WT : WITH TELEMATICS

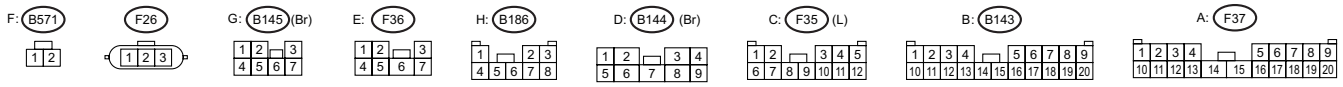

WI-66616

2b

2b

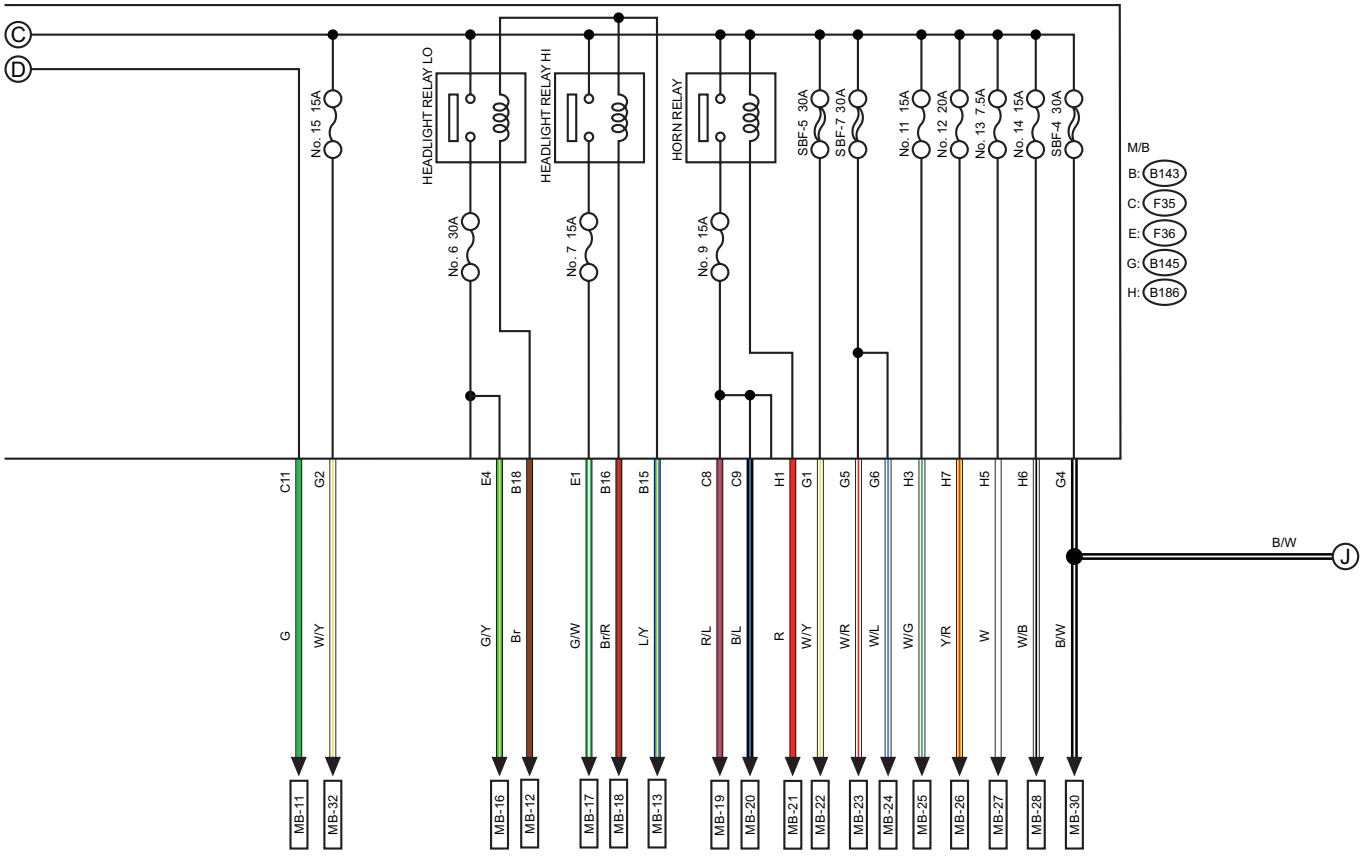

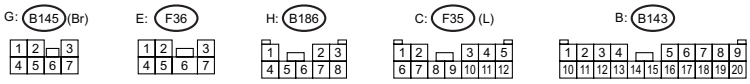

WI-67159

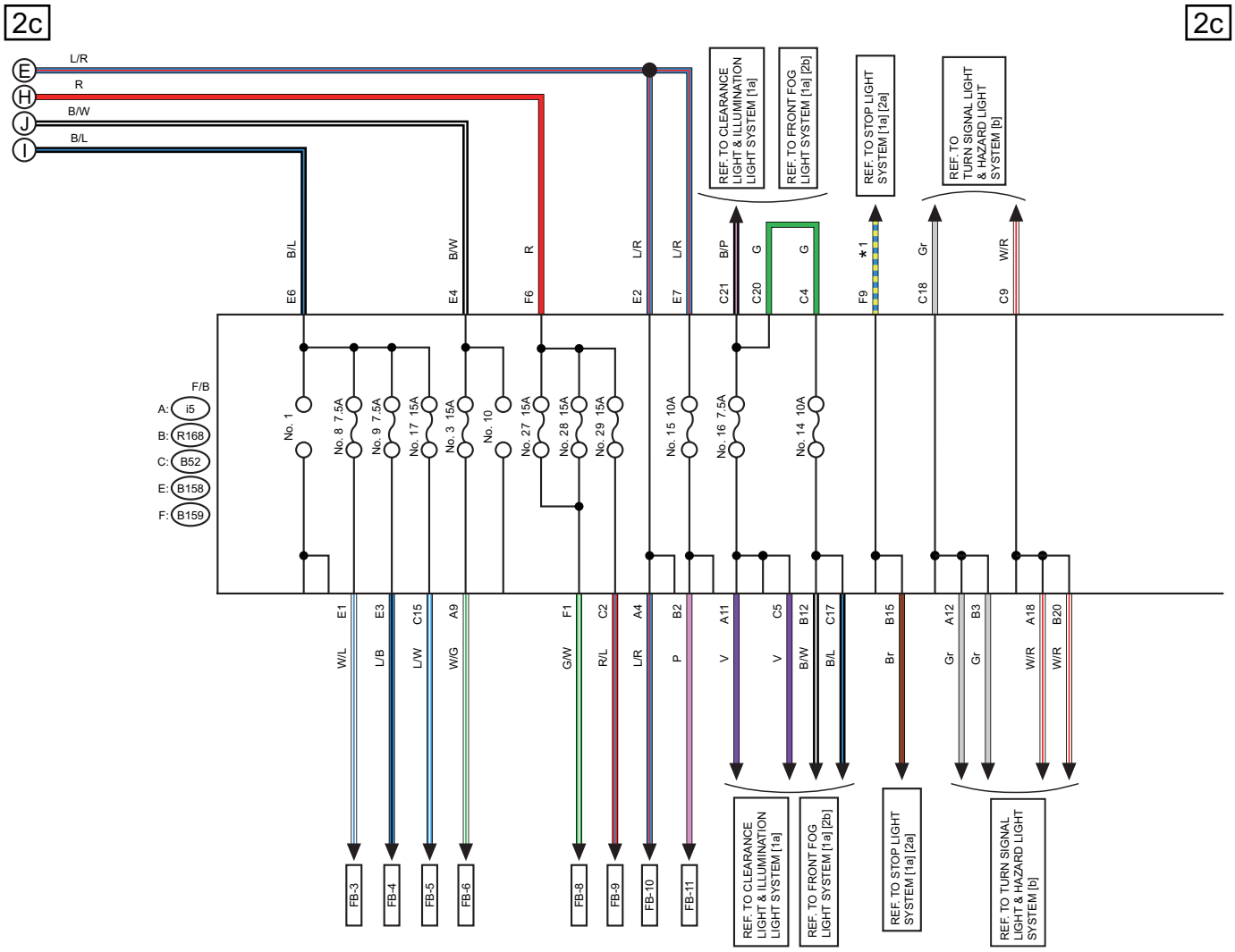

*1 : WITHOUT EyeSight : Br/W
WITH EyeSight : Br/R

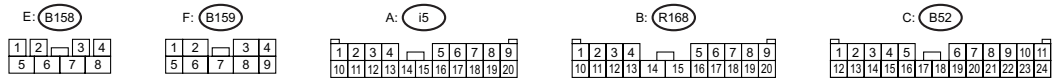

WI-67160

Power Supply Circuit

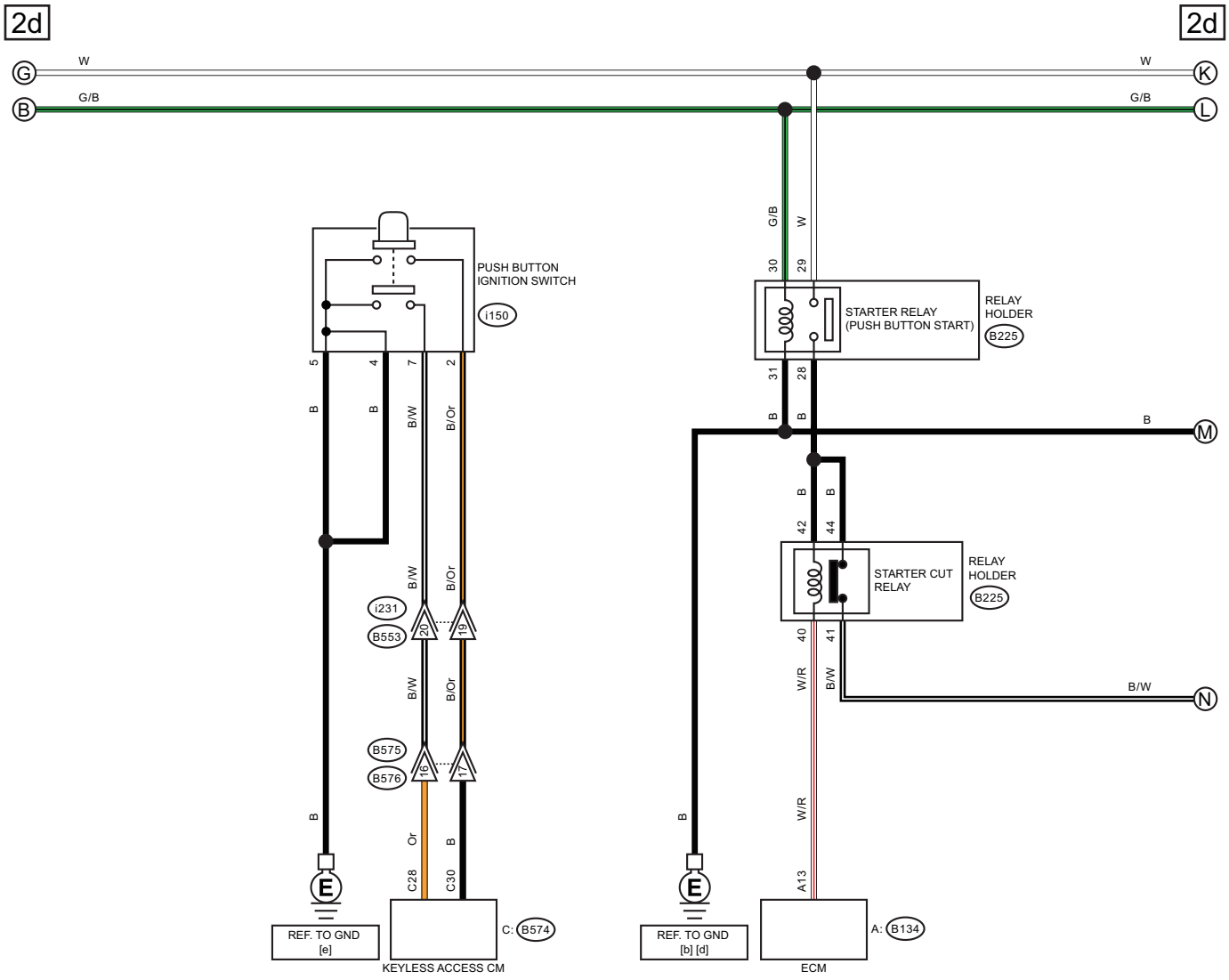

WI-67161

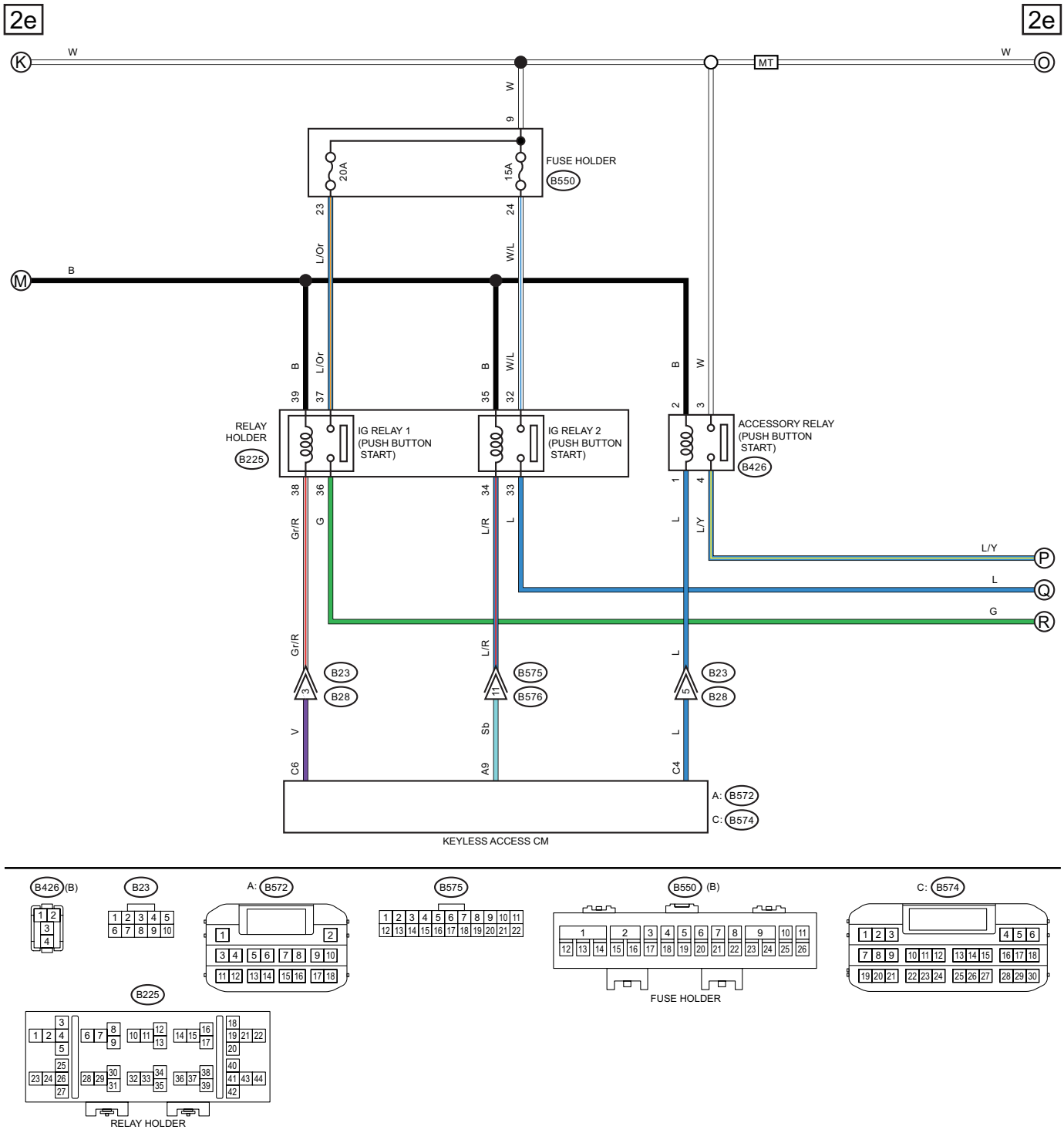
2e
2e
K
W
MT
W
O
W
9
FUSE HOLDER
B550
20A
15A
23
24
L/Or
W/L
M
B
B
L/Or
B
W/L
B
W
39
37
35
32
2
3
RELAY HOLDER
B225
IG RELAY 1 (PUSH BUTTON START)
IG RELAY 2 (PUSH BUTTON START)
ACCESSORY RELAY (PUSH BUTTON START)
B426
38
36
34
33
1
4
Gr/R
G
L/R
L
L
L/Y
L/Y
P
L
Q
G
R
Gr/R
L/R
L
3
11
5
B23
B28
B575
B576
B23
B28
V
Sb
L
C6
A9
C4
A: B572
C: B574
KEYLESS ACCESS CM

B426 (B)
B23
A: B572
B575
B550 (B)
C: B574
B225
RELAY HOLDER
FUSE HOLDER

WI-67162

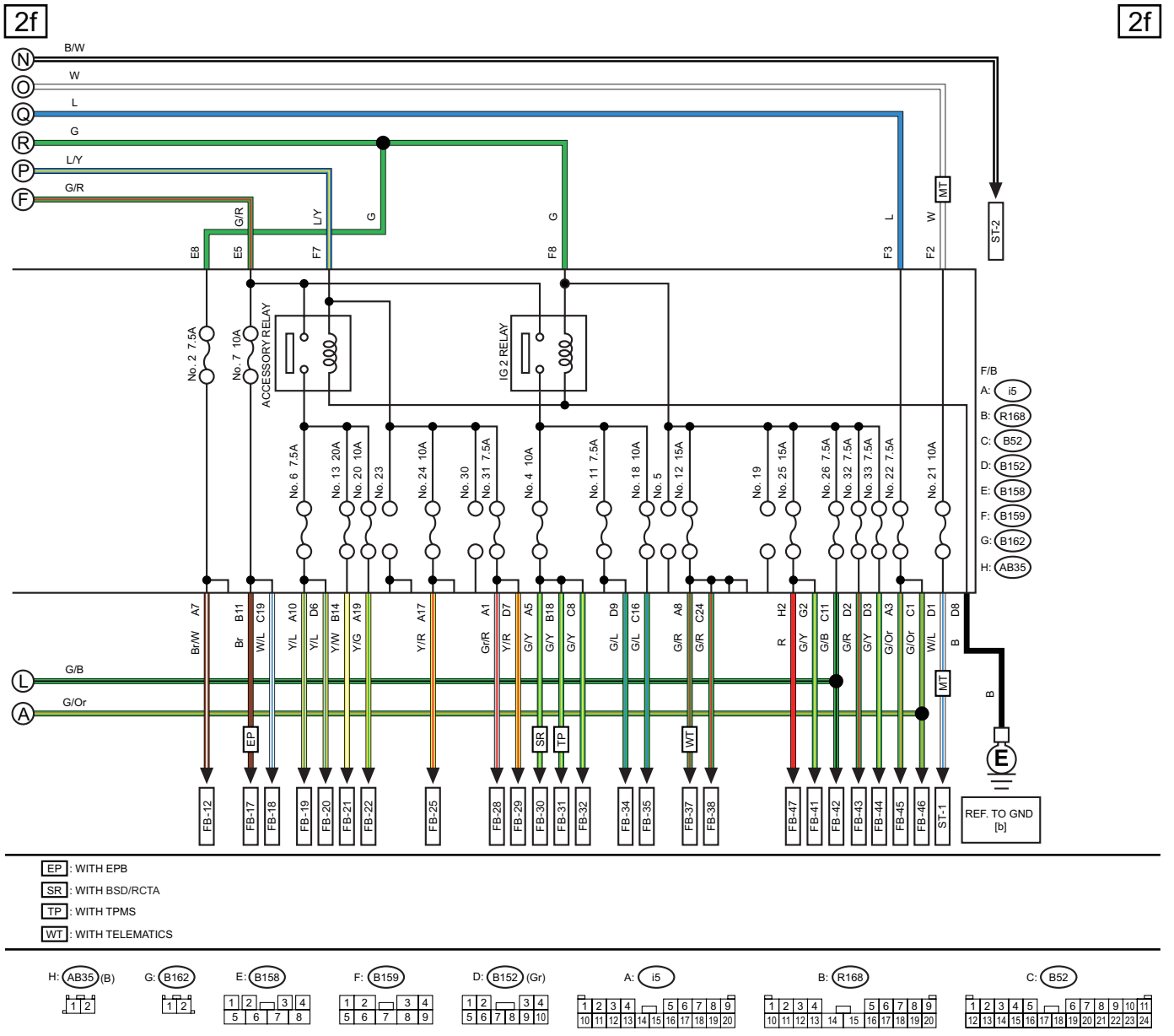

EP : WITH EPB
SR : WITH BSD/RCTA
TP : WITH TPMS
WT : WITH TELEMATICS

WI-66617

No.	Load
MB-1	VDC CM
MB-2	VDC CM
MB-3	Audio amplifier
MB-4	Sub fan relay
MB-5	Mirror heater LH
	Mirror heater RH
	Rear defogger
MB-6	Body integrated unit
MB-7	Main fan relay 2
MB-8	Main fan motor
MB-9	ECM
MB-10	Main fan relay 2
MB-11	Main fan relay 2
MB-12	Body integrated unit
MB-13	Body integrated unit
MB-16	Front combination light LH
	Front combination light RH
MB-17	Daytime running light relay
MB-18	Body integrated unit
MB-19	Horn
MB-20	Horn
MB-21	Horn switch
	Body integrated unit
MB-22	A/F, oxygen sensor relay
	Fuel injector relay
MB-23	Main relay
	IG relay
MB-24	Electronic throttle control relay
MB-25	Fuel pump relay
MB-26	TCM
	Self shut relay
MB-27	ECM
	Battery sensor
	Data link connector
MB-28	Turn signal and hazard unit
	Body integrated unit
MB-29	Room light
	Spot map light
	Body integrated unit
	Remote engine start CM
	Vanity mirror light LH
	Vanity mirror light RH
MB-30	Power window circuit breaker
MB-31	Accessory relay
	IG relay 1
	IG relay 2
MB-32	Tail & Illumination relay
	Daytime running light relay
MB-33	Wiper relay
	Brake pump relay

No.	Load
MB-34	Data communication module
MB-35	Keyless access CM
	ID code box
ALT-2	ECM
ST-1	Clutch start switch
ST-2	Starter relay 1
FB-3	Stop light and brake switch
	Stop light relay
FB-4	Wiper deicer relay
FB-5	Seat heater relay
FB-6	Body integrated unit
FB-8	Blower motor relay
FB-9	Front fog light relay
	Front fog light relay LH (SRF)
	Front fog light relay RH (SRF)
FB-10	Navigation unit
	MFD
	Audio
FB-11	Trunk room light
FB-12	MFD
	Combination meter
FB-17	EPB control switch
	RAB CM
FB-18	Impact sensor
	Combination meter
	Air mix door actuator LH
	Air mix door actuator RH
	Mode door actuator
	Steering lock CM
	Body integrated unit
	Stereo camera
FB-19	Remote control mirror switch
FB-20	Seat heater relay
	Rear view mirror
FB-21	Rear accessory power supply socket
FB-22	Front accessory power supply socket
FB-25	Audio
	Navigation unit
	Aux input terminal
	Audio amplifier
	Data communication module
FB-28	A/C control panel
FB-29	Body integrated unit
FB-30	BSD/RCTA OFF switch
	Radar sensor LH (master)
	Radar sensor RH (slave)
FB-31	TPMS CM
	RAB CM

No.	Load
FB-32	Sunroof switch
	Sunroof unit
	Data link connector
	Stop light and brake switch
	Wiper deicer relay
	Impact sensor
	Clutch switch
	Remote engine start CM
	Stereo camera
FB-34	Turn signal and hazard unit
FB-35	Inhibitor switch
	Back-up light switch
	Auto headlight beam leveler CM
FB-37	Data communication module
FB-38	ECM
	TCM
	Body integrated unit
	Fuel pump relay
	Keyless access CM
FB-41	Airbag CM
FB-42	Power window relay
	Wiper relay
FB-43	Steering lock CM
FB-44	VDC CM
	Steering angle sensor
	Power steering CM
	Stop light relay
	Hill hold switch
FB-45	A/C control panel
FB-46	A/C relay
	Sub fan relay
	Pressure switch
	Blower motor relay
FB-47	Occupant detection control module
BAT-1	Power steering CM

3. ENGINE TYPE EJ (WITHOUT PUSH BUTTON START)

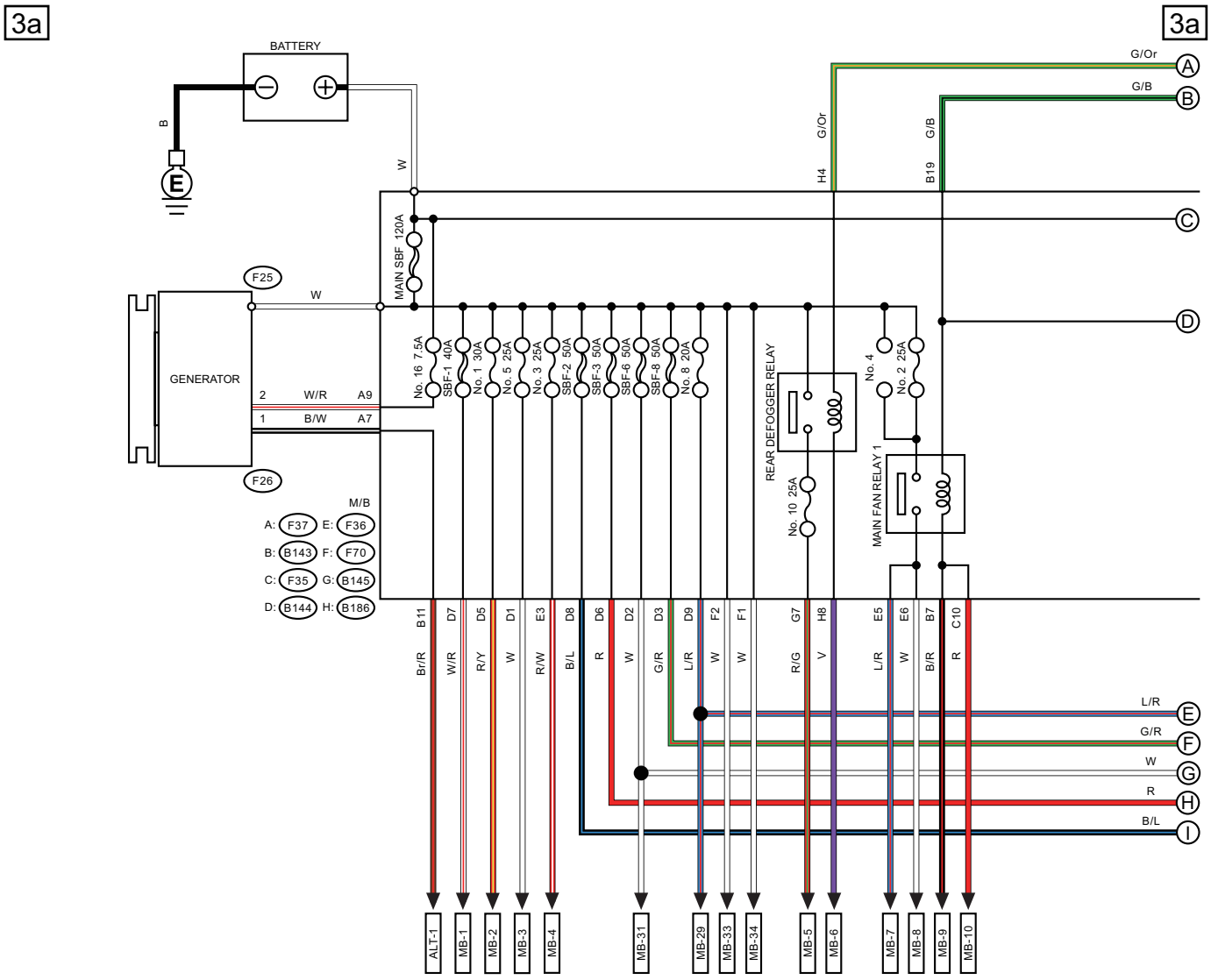

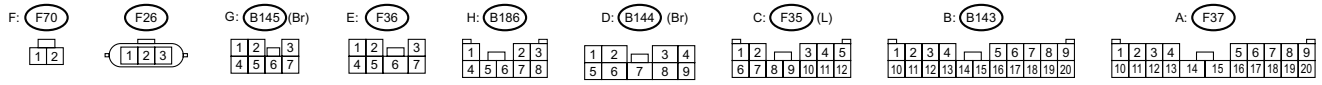

WI-66619

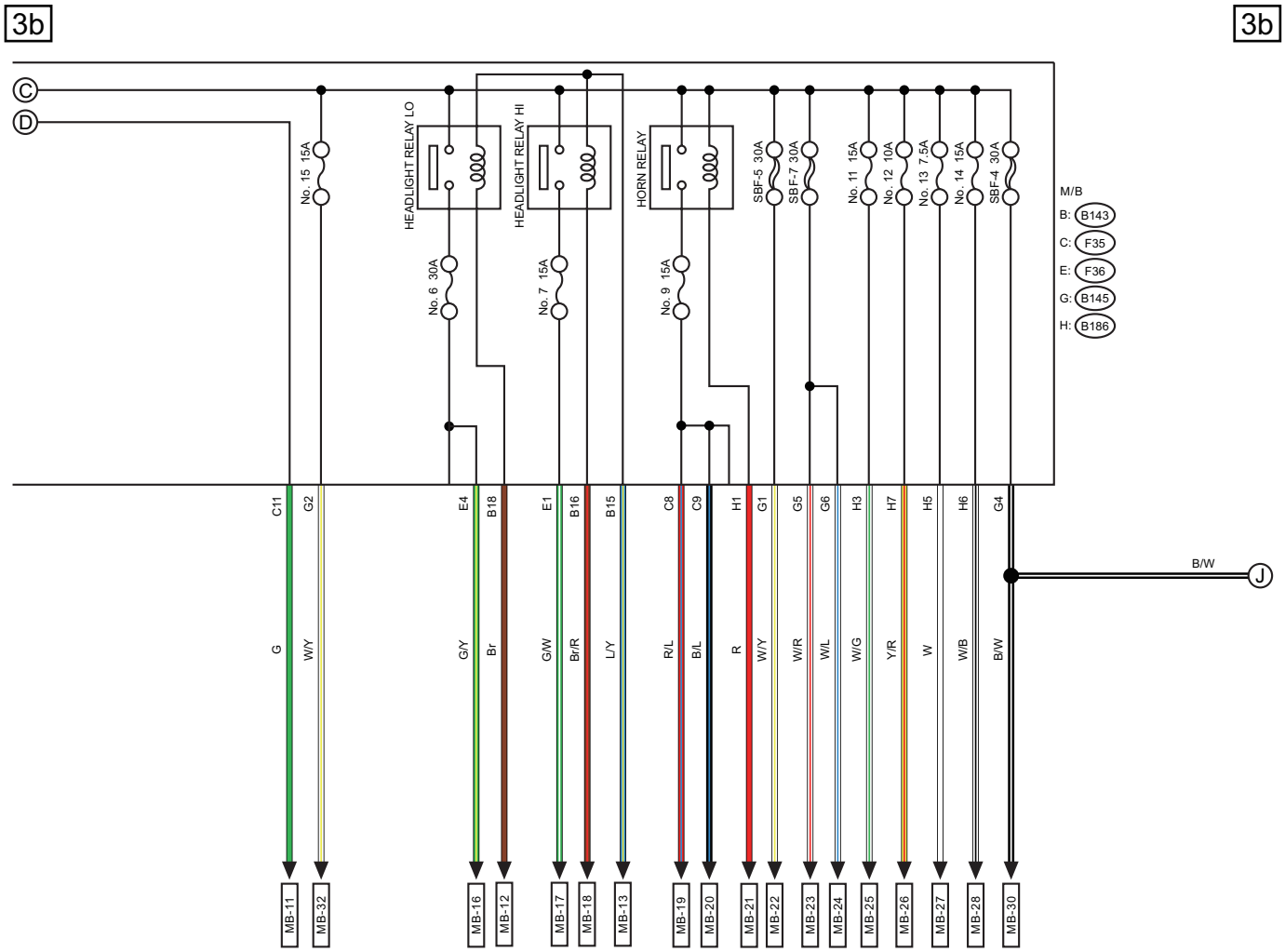
3b
3b
C
D
No. 15 15A
HEADLIGHT RELAY LO
HEADLIGHT RELAY HI
HORN RELAY
No. 6 30A
No. 7 15A
No. 9 15A
SBF-5 30A
SBF-7 30A
SBF-4 30A
No. 11 15A
No. 12 10A
No. 13 7.5A
No. 14 15A
M/B
B: B143
C: F35
E: F36
G: B145
H: B186
C11
G2
E4
B18
E1
B16
B15
C8
C9
H1
G1
G5
G6
H3
H7
H5
H6
G4
B/W
J
G
W/Y
G/Y
Br
G/W
Br/R
L/Y
R/L
B/L
R
W/Y
W/R
W/L
W/G
Y/R
W
W/B
B/W
MB-11
MB-32
MB-16
MB-12
MB-17
MB-18
MB-13
MB-19
MB-20
MB-21
MB-22
MB-23
MB-24
MB-25
MB-26
MB-27
MB-28
MB-30

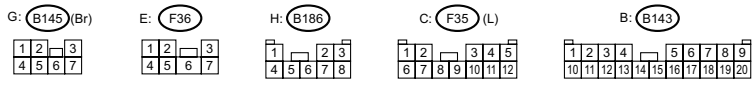
G: B145 (Br)
E: F36
H: B186
C: F35 (L)
B: B143

WI-67163

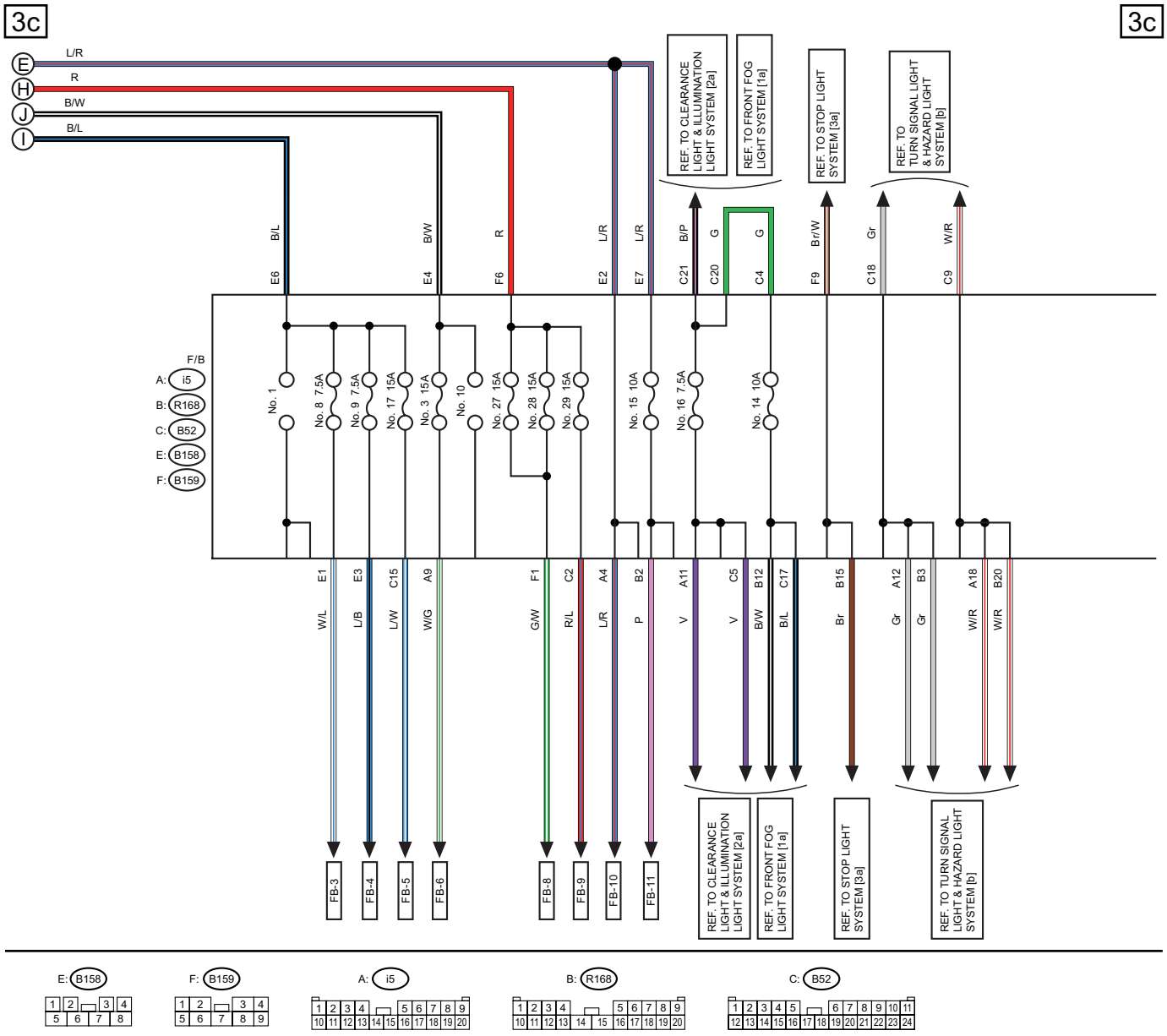
3c
3c
E
H
J
I
L/R
R
B/W
B/L
REF. TO CLEARANCE LIGHT & ILLUMINATION LIGHT SYSTEM [2a]
REF. TO FRONT FOG LIGHT SYSTEM [1a]
REF. TO STOP LIGHT SYSTEM [3a]
REF. TO TURN SIGNAL LIGHT & HAZARD LIGHT SYSTEM [b]
F/B
A: i5
B: R168
C: B52
E: B158
F: B159
No. 1
No. 8 7.5A
No. 9 7.5A
No. 17 15A
No. 3 15A
No. 10
No. 27 15A
No. 28 15A
No. 29 15A
No. 15 10A
No. 16 7.5A
No. 14 10A
FB-3
FB-4
FB-5
FB-6
FB-8
FB-9
FB-10
FB-11

E: B158
F: B159
A: i5
B: R168
C: B52

WI-67164

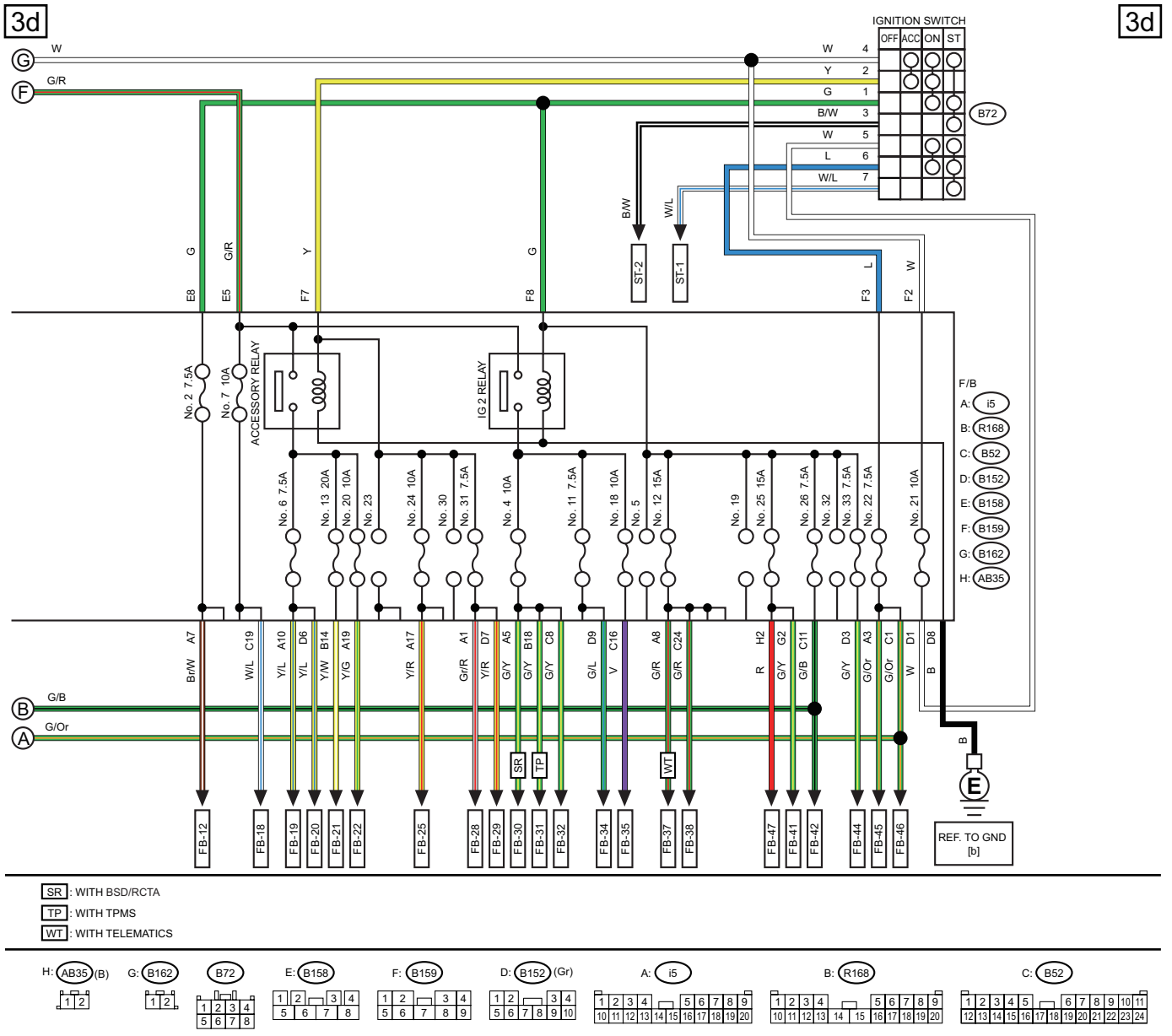

SR : WITH BSD/RCTA
TP : WITH TPMS
WT : WITH TELEMATICS

WI-66620

No.	Load
MB-1	VDC CM
MB-2	VDC CM
MB-3	Audio amplifier
MB-4	Sub fan relay
MB-5	Mirror heater LH
	Mirror heater RH
	Rear defogger
MB-6	Body integrated unit
MB-7	Main fan relay 2
MB-8	Main fan motor
MB-9	ECM
MB-10	Main fan relay 2
MB-11	Main fan relay 2
MB-12	Body integrated unit
MB-13	Body integrated unit
MB-16	Front combination light LH
	Front combination light RH
MB-17	Daytime running light relay
MB-18	Body integrated unit
MB-19	Horn
MB-20	Horn
MB-21	Horn switch
	Body integrated unit
MB-22	A/F, oxygen sensor relay
MB-23	Main relay
	A/F, oxygen sensor relay
MB-24	Electronic throttle control relay
MB-25	Fuel pump relay
MB-26	DCCD CM
	DCCD relay
MB-27	ECM
	Data link connector
MB-28	Turn signal and hazard unit
	Body integrated unit
	Key warning switch
MB-29	Body integrated unit
	Immobilizer antenna
	Room light
	Spot map light
	Vanity mirror light LH
	Vanity mirror light RH
MB-30	Power window circuit breaker
MB-31	Wiper relay
MB-32	Tail & Illumination relay
	Daytime running light relay
MB-33	Secondary air combination valve relay 1
	Secondary air combination valve relay 2
	Brake pump relay
	Data communication module
MB-34	Secondary air pump relay

No.	Load
ST-1	Clutch start switch
ST-2	Starter relay 1
FB-3	Stop light and brake switch
FB-4	Wiper deicer relay
FB-5	Seat heater relay
FB-6	Body integrated unit
FB-8	Blower motor relay
FB-9	Front fog light relay
FB-10	Navigation unit
	MFD
	Audio
FB-11	Trunk room light
	TPMS & keyless entry CM
	Keyless entry CM
FB-12	MFD
	Combination meter
FB-18	Security CM
	Combination meter
	Impact sensor
	Air mix door actuator LH
	Air mix door actuator RH
	Mode door actuator
	Body integrated unit
FB-19	Remote control mirror switch
FB-20	Seat heater relay
	Rear view mirror
FB-21	Rear accessory power supply socket
FB-22	Front accessory power supply socket
FB-25	Audio
	Navigation unit
	Aux input terminal
	Audio amplifier
	Data communication module
FB-28	A/C control panel
FB-29	Body integrated unit
FB-30	BSD/RCTA OFF switch
	Radar sensor LH (master)
	Radar sensor RH (slave)
FB-31	TPMS & keyless entry CM
FB-32	Sunroof switch
	Clutch switch
	Sunroof unit
	Data link connector
	Stop light and brake switch
	Wiper deicer relay
FB-34	Turn signal and hazard unit
FB-35	Back-up light switch
	Auto headlight beam leveler CM
FB-37	Data communication module

No.	Load
FB-38	ECM
	Body integrated unit
	Fuel pump relay
	Ignition coil No. 1
	Ignition coil No. 2
	Ignition coil No. 3
	Ignition coil No. 4
	DCCD CM
	DCCD relay
FB-41	Airbag CM
FB-42	Power window relay
	Wiper relay
FB-44	VDC CM
	Steering angle sensor
FB-45	A/C control panel
FB-46	A/C relay
	Sub fan relay
	Pressure switch
	Blower motor relay
FB-47	Occupant detection control module

4. ENGINE TYPE EJ (WITH PUSH BUTTON START)

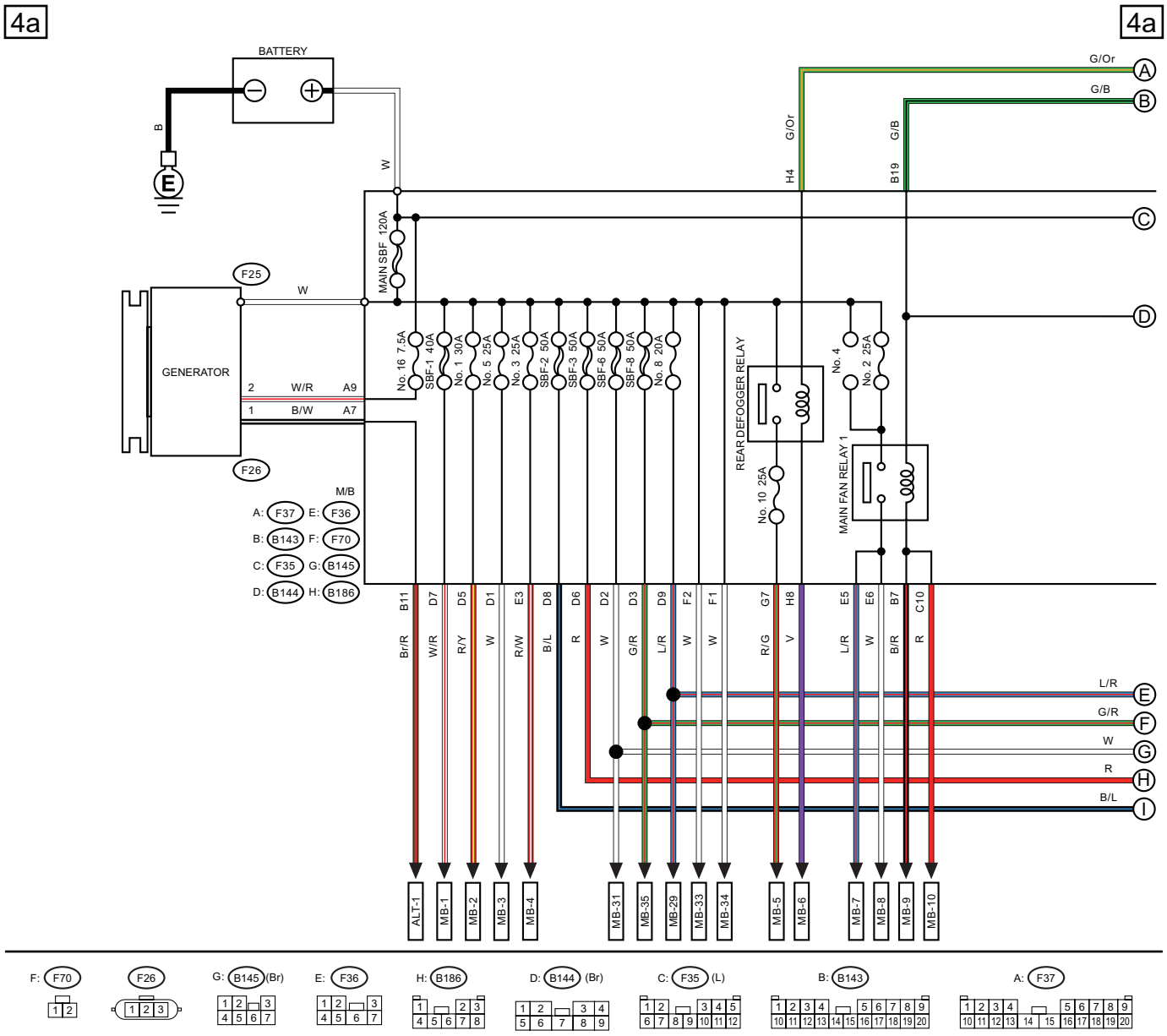

WI-66621

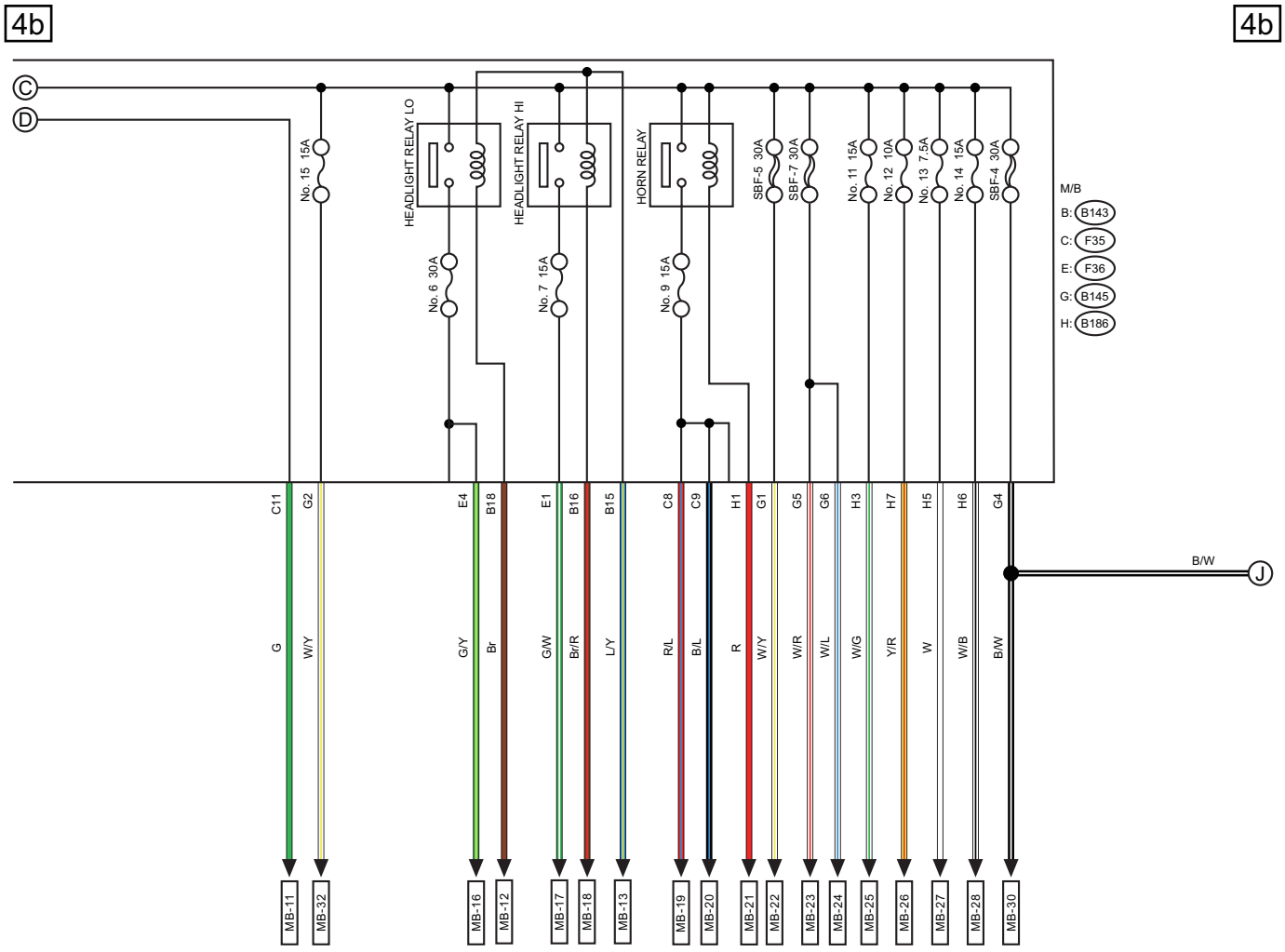
4b
4b
C
D
No. 15 15A
HEADLIGHT RELAY LO
HEADLIGHT RELAY HI
HORN RELAY
SBF-5 30A
SBF-7 30A
No. 11 15A
No. 12 10A
No. 13 7.5A
No. 14 15A
SBF-4 30A
No. 6 30A
No. 7 15A
No. 9 15A
M/B
B: B143
C: F35
E: F36
G: B145
H: B186
B/W
J
C11
G2
E4
B18
E1
B16
B15
C8
C9
H1
G1
G5
G6
H3
H7
H5
H6
G4
G
W/Y
G/Y
Br
G/W
Br/R
L/Y
R/L
B/L
R
W/Y
W/R
W/L
W/G
Y/R
W
W/B
B/W
MB-11
MB-32
MB-16
MB-12
MB-17
MB-18
MB-13
MB-19
MB-20
MB-21
MB-22
MB-23
MB-24
MB-25
MB-26
MB-27
MB-28
MB-30

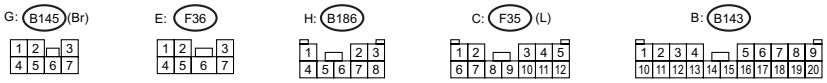
G: B145 (Br)
E: F36
H: B186
C: F35 (L)
B: B143

WI-67165

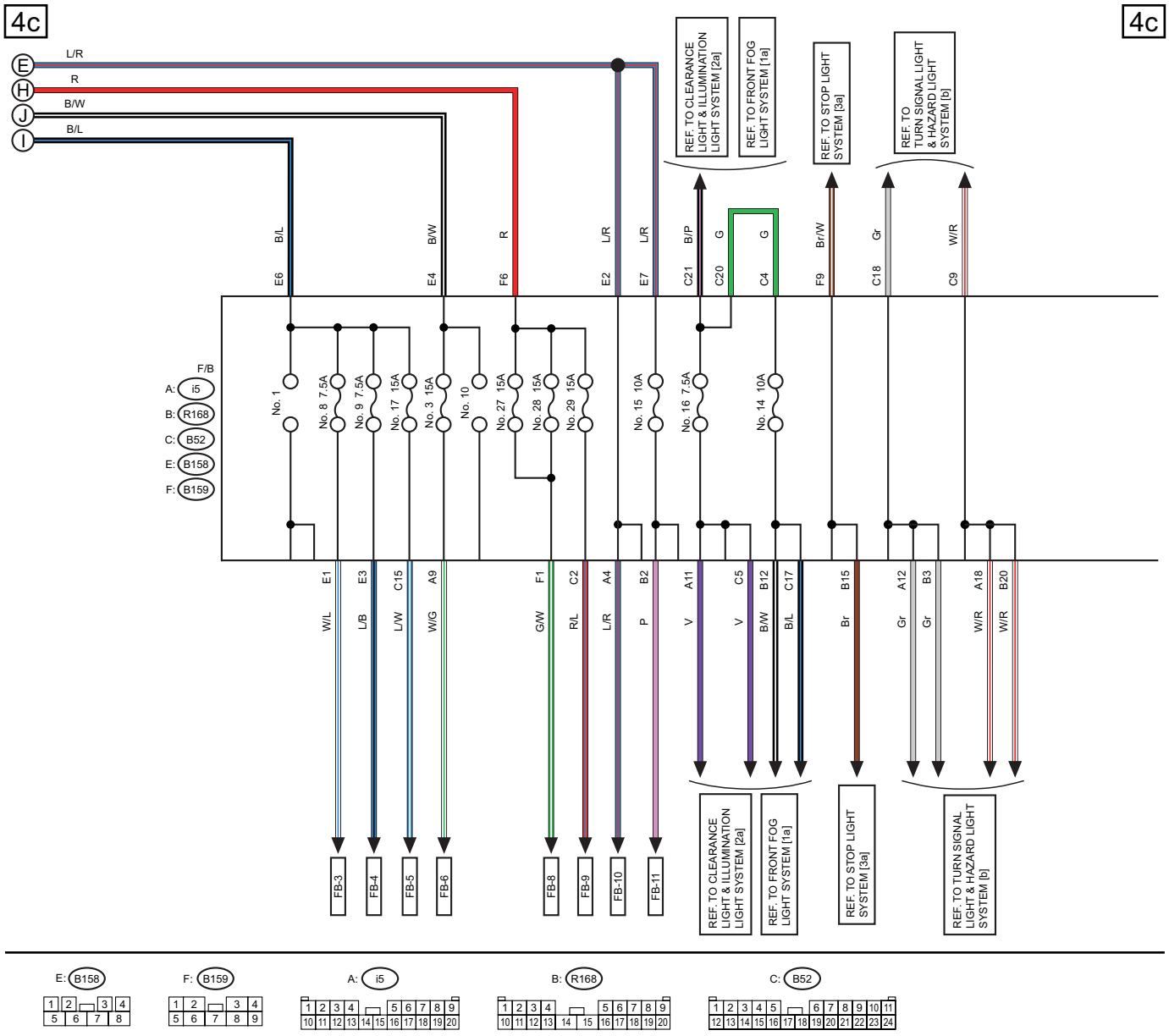
4c
4c
E
H
J
I
L/R
R
B/W
B/L
F/B
A: i5
B: R168
C: B52
E: B158
F: B159
No. 1
No. 8 7.5A
No. 9 7.5A
No. 17 15A
No. 3 15A
No. 10
No. 27 15A
No. 28 15A
No. 29 15A
No. 15 10A
No. 16 7.5A
No. 14 10A
E6 B/L
E4 B/W
F6 R
E2 L/R
E7 L/R
C21 B/P
C20 G
C4 G
F9 Br/W
C18 Gr
C9 W/R
REF. TO CLEARANCE LIGHT & ILLUMINATION LIGHT SYSTEM [2a]
REF. TO FRONT FOG LIGHT SYSTEM [1a]
REF. TO STOP LIGHT SYSTEM [3a]
REF. TO TURN SIGNAL LIGHT & HAZARD LIGHT SYSTEM [b]
E1 W/L
E3 L/B
C15 L/W
A9 W/G
F1 G/W
C2 R/L
A4 L/R
B2 P
A11 V
C5 V
B12 B/W
C17 B/L
B15 Br
A12 Gr
B3 Gr
A18 W/R
B20 W/R
FB-3
FB-4
FB-5
FB-6
FB-8
FB-9
FB-10
FB-11
REF. TO CLEARANCE LIGHT & ILLUMINATION LIGHT SYSTEM [2a]
REF. TO FRONT FOG LIGHT SYSTEM [1a]
REF. TO STOP LIGHT SYSTEM [3a]
REF. TO TURN SIGNAL LIGHT & HAZARD LIGHT SYSTEM [b]

E: B158
F: B159
A: i5
B: R168
C: B52

WI-67166

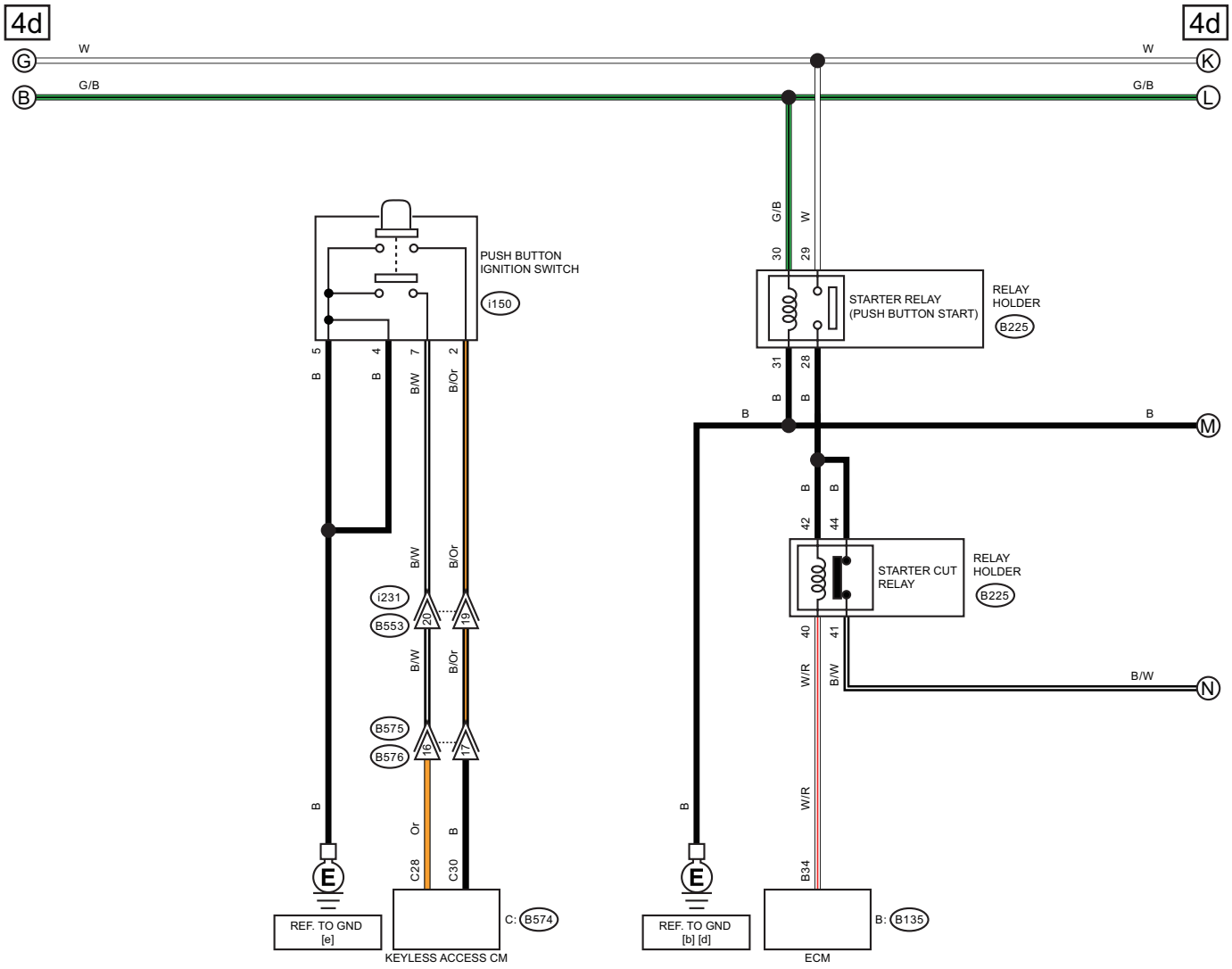
4d
4d
W
G/B
W
G/B
G
B
K
L
PUSH BUTTON IGNITION SWITCH
i150
STARTER RELAY (PUSH BUTTON START)
RELAY HOLDER
B225
STARTER CUT RELAY
RELAY HOLDER
B225
i231
B553
B575
B576
M
N
B/W
B/Or
W/R
B
Or
REF. TO GND [e]
REF. TO GND [b] [d]
C: B574
KEYLESS ACCESS CM
B: B135
ECM

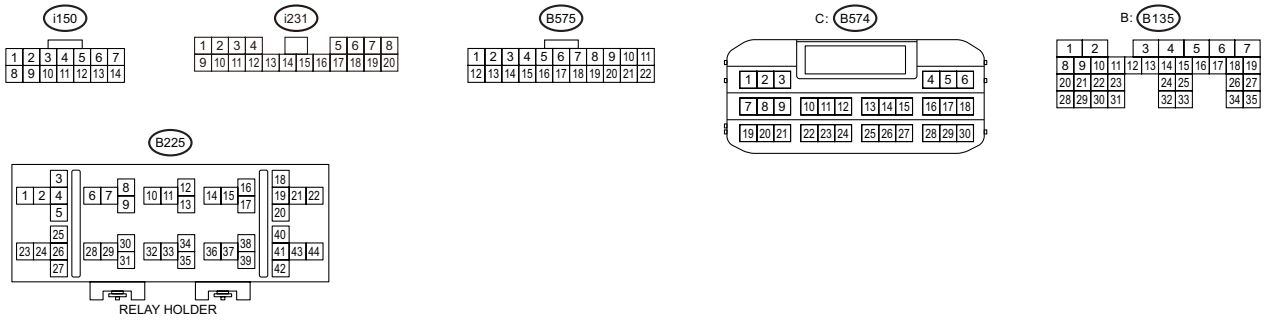
i150
i231
B575
C: B574
B: B135
B225
RELAY HOLDER

WI-67167

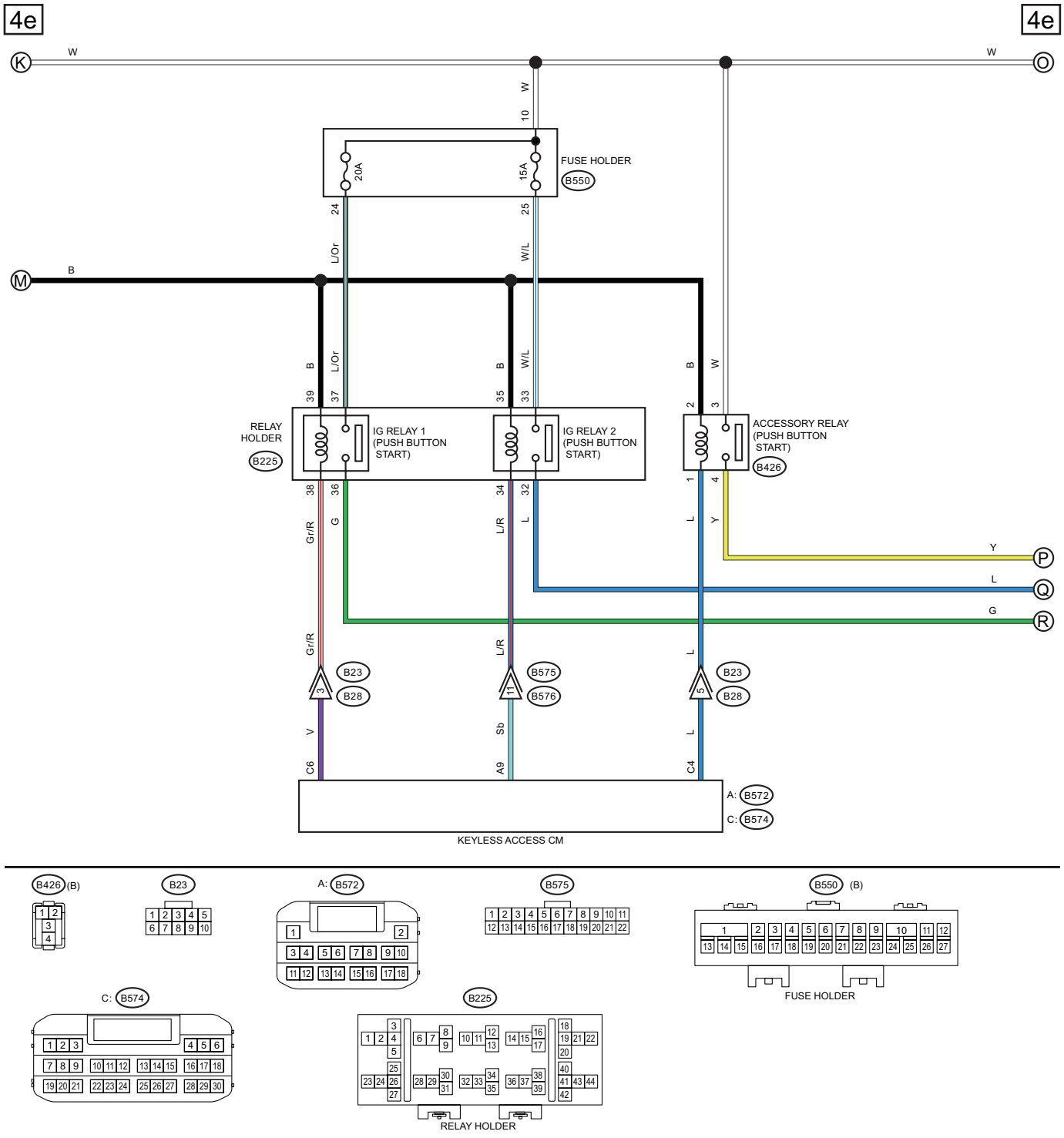
4e
4e
K
W
W
O
10
FUSE HOLDER
B550
20A
15A
24
25
L/Or
W/L
M
B
B
L/Or
B
W/L
B
W
39
37
35
33
2
3
RELAY HOLDER
B225
IG RELAY 1 (PUSH BUTTON START)
IG RELAY 2 (PUSH BUTTON START)
ACCESSORY RELAY (PUSH BUTTON START)
B426
38
36
34
32
1
4
Gr/R
G
L/R
L
L
Y
Y
P
L
Q
G
R
Gr/R
L/R
L
3
11
5
B23
B28
B575
B576
B23
B28
V
Sb
L
C6
A9
C4
A: B572
C: B574
KEYLESS ACCESS CM

B426 (B)
B23
A: B572
B575
B550 (B)
C: B574
B225
FUSE HOLDER
RELAY HOLDER

WI-67168

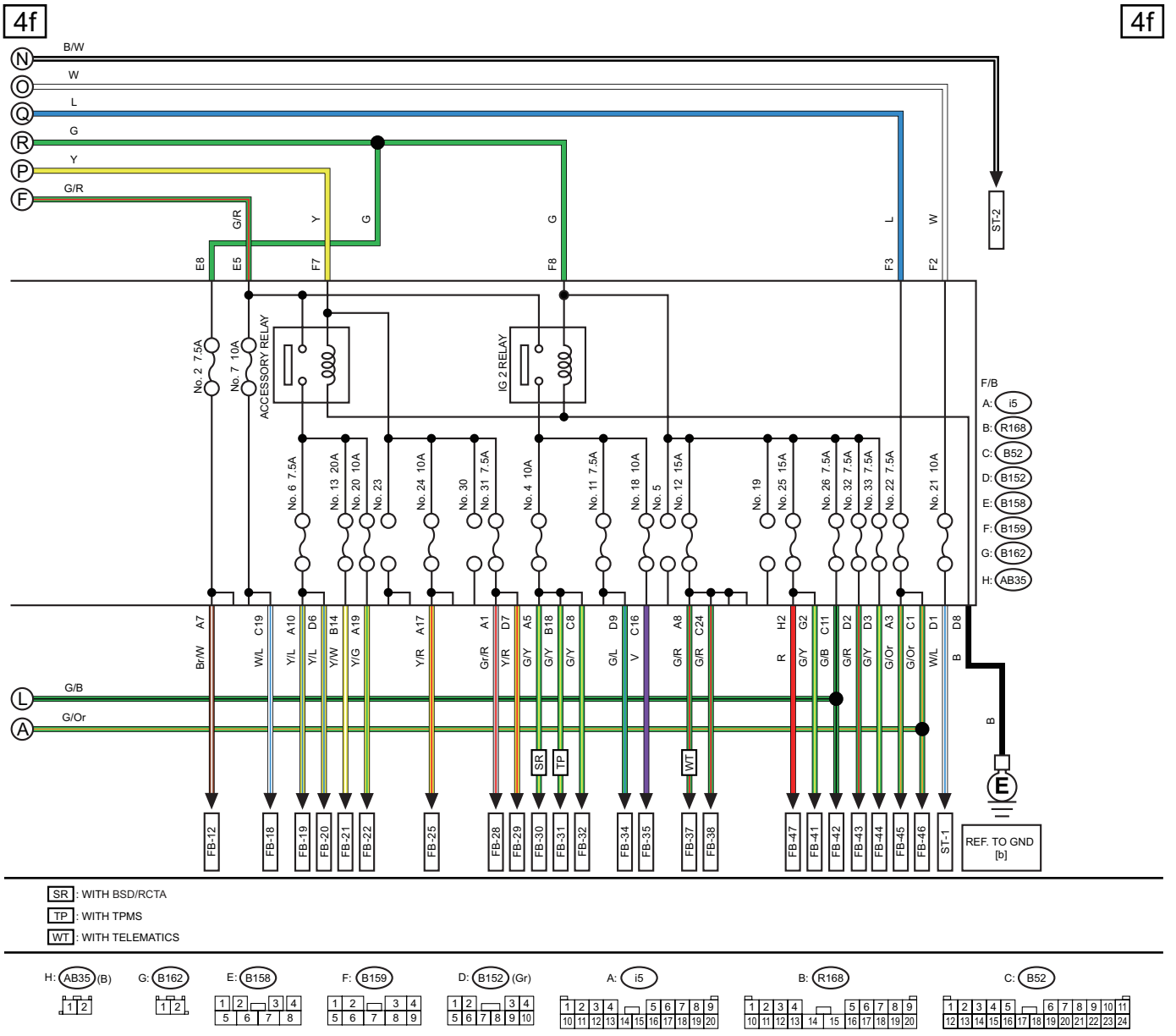
4f
4f
B/W
W
L
G
Y
G/R
N
O
Q
R
P
F
E8
E5
F7
F8
F3
F2
ST-2
No. 2 7.5A
No. 7 10A
ACCESSORY RELAY
IG 2 RELAY
No. 6 7.5A
No. 13 20A
No. 20 10A
No. 23
No. 24 10A
No. 30
No. 31 7.5A
No. 4 10A
No. 11 7.5A
No. 18 10A
No. 5
No. 12 15A
No. 19
No. 25 15A
No. 26 7.5A
No. 32 7.5A
No. 33 7.5A
No. 22 7.5A
No. 21 10A
F/B
A: i5
B: R168
C: B52
D: B152
E: B158
F: B159
G: B162
H: AB35
A7
C19
A10
D6
B14
A19
A17
A1
D7
A5
B18
C8
D9
C16
A8
C24
H2
G2
C11
D2
D3
A3
C1
D1
D8
Br/W
W/L
Y/L
Y/W
Y/G
Y/R
Gr/R
G/Y
G/L
V
G/R
R
G/B
G/Or
L
A
SR
TP
WT
B
E
FB-12
FB-18
FB-19
FB-20
FB-21
FB-22
FB-25
FB-28
FB-29
FB-30
FB-31
FB-32
FB-34
FB-35
FB-37
FB-38
FB-47
FB-41
FB-42
FB-43
FB-44
FB-45
FB-46
ST-1
REF. TO GND [b]
SR : WITH BSD/RCTA
TP : WITH TPMS
WT : WITH TELEMATICS
H: AB35 (B)
G: B162
E: B158
F: B159
D: B152 (Gr)
A: i5
B: R168
C: B52

WI-66622

No.	Load
MB-1	VDC CM
MB-2	VDC CM
MB-3	Audio amplifier
MB-4	Sub fan relay
MB-5	Mirror heater LH
	Mirror heater RH
	Rear defogger
MB-6	Body integrated unit
MB-7	Main fan relay 2
MB-8	Main fan motor
MB-9	ECM
MB-10	Main fan relay 2
MB-11	Main fan relay 2
MB-12	Body integrated unit
MB-13	Body integrated unit
MB-16	Front combination light LH
	Front combination light RH
MB-17	Daytime running light relay
MB-18	Body integrated unit
MB-19	Horn
MB-20	Horn
MB-21	Horn switch
	Body integrated unit
MB-22	A/F, oxygen sensor relay
MB-23	Main relay
	A/F, oxygen sensor relay
MB-24	Electronic throttle control relay
MB-25	Fuel pump relay
MB-26	DCCD CM
	DCCD relay
MB-27	ECM
	Data link connector
MB-28	Key warning switch
	Turn signal and hazard unit
	Body integrated unit
MB-29	Body integrated unit
	Remote engine start CM
	Room light
	Spot map light
	Vanity mirror light LH
	Vanity mirror light RH
MB-30	Power window circuit breaker
MB-31	Wiper relay
	Accessory relay
	IG relay 1
	IG relay 2
MB-32	Tail & Illumination relay
	Daytime running light relay

No.	Load
MB-33	Secondary air combination valve relay 1
	Secondary air combination valve relay 2
	Brake pump relay
	Data communication module
MB-34	Secondary air pump relay
MB-35	ID code box
	Keyless access CM
ST-1	Clutch start switch
ST-2	Starter relay 1
FB-3	Stop light and brake switch
FB-4	Wiper deicer relay
FB-5	Seat heater relay
FB-6	Body integrated unit
FB-8	Blower motor relay
FB-9	Front fog light relay
FB-10	Navigation unit
	MFD
	Audio
FB-11	Trunk room light
FB-12	MFD
	Combination meter
FB-18	Impact sensor
	Combination meter
	Air mix door actuator LH
	Air mix door actuator RH
	Mode door actuator
	Body integrated unit
	Steering lock CM
FB-19	Remote control mirror switch
FB-20	Seat heater relay
	Rear view mirror
FB-21	Rear accessory power supply socket
FB-22	Front accessory power supply socket
FB-25	Audio
	Navigation unit
	Aux input terminal
	Audio amplifier
	Data communication module
FB-28	A/C control panel
FB-29	Body integrated unit
FB-30	BSD/RCTA OFF switch
	Radar sensor LH (master)
	Radar sensor RH (slave)
FB-31	TPMS CM

No.	Load
FB-32	Sunroof switch
	Clutch switch
	Sunroof unit
	Data link connector
	Stop light and brake switch
	Wiper deicer relay
	Impact sensor
	Remote engine start CM
FB-34	Turn signal and hazard unit
FB-35	Back-up light switch
	Auto headlight beam leveler CM
FB-37	Data communication module
FB-38	ECM
	Body integrated unit
	Fuel pump relay
	Keyless access CM
	Ignition coil No. 1
	Ignition coil No. 2
	Ignition coil No. 3
	Ignition coil No. 4
	DCCD CM
	DCCD relay
FB-41	Airbag CM
FB-42	Power window relay
	Wiper relay
FB-43	Steering lock CM
FB-44	VDC CM
	Steering angle sensor
FB-45	A/C control panel
FB-46	A/C relay
	Sub fan relay
	Pressure switch
	Blower motor relay
FB-47	Occupant detection control module

5. Ground Circuit

A: WIRING DIAGRAM

a

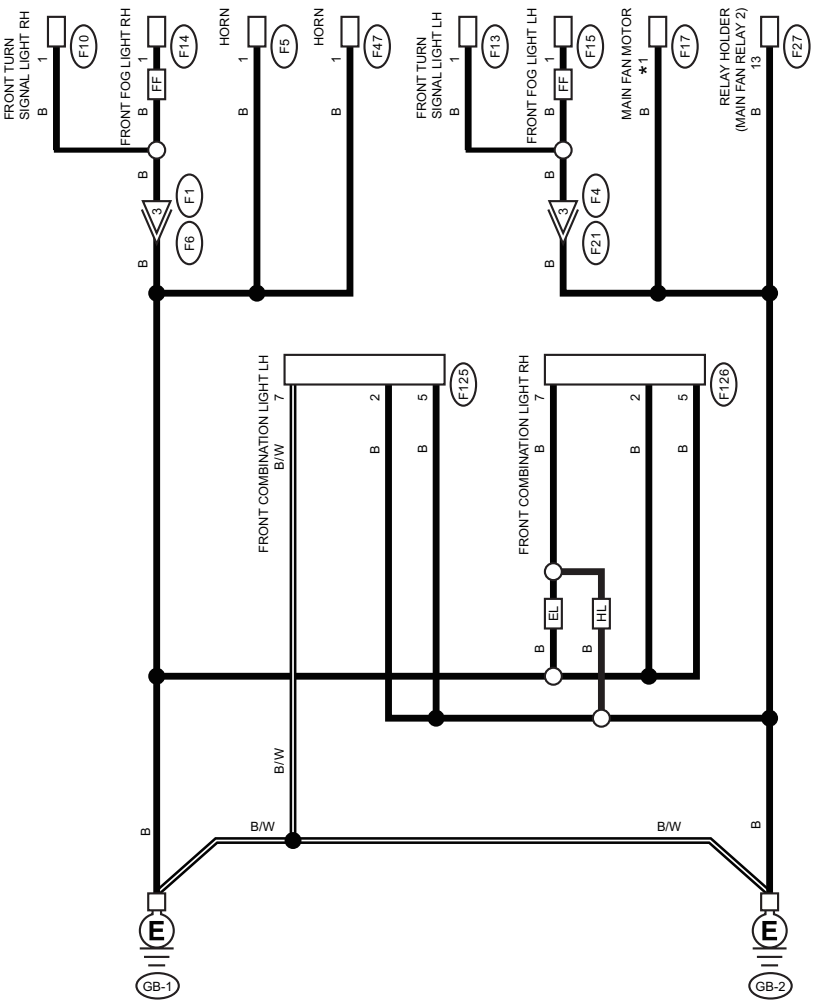

a

HL : HALOGEN MODEL
EL : EXCEPT FOR HALOGEN MODEL
FA : ENGINE TYPE FA
EJ : ENGINE TYPE EJ

FF : WITH FRONT FOG LIGHT
*1 : ENGINE TYPE FA : 2
ENGINE TYPE EJ : 1

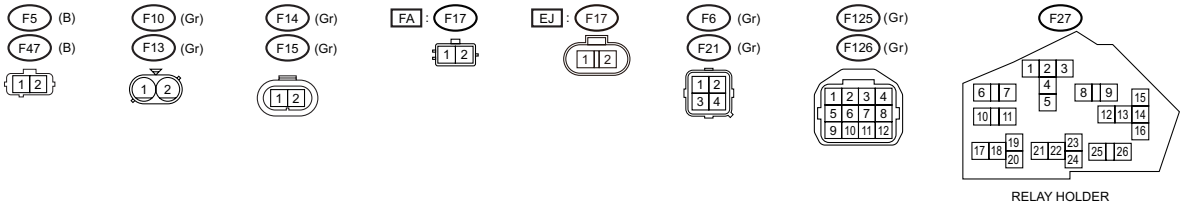

WI-66624

Ground Circuit

WIRING SYSTEM

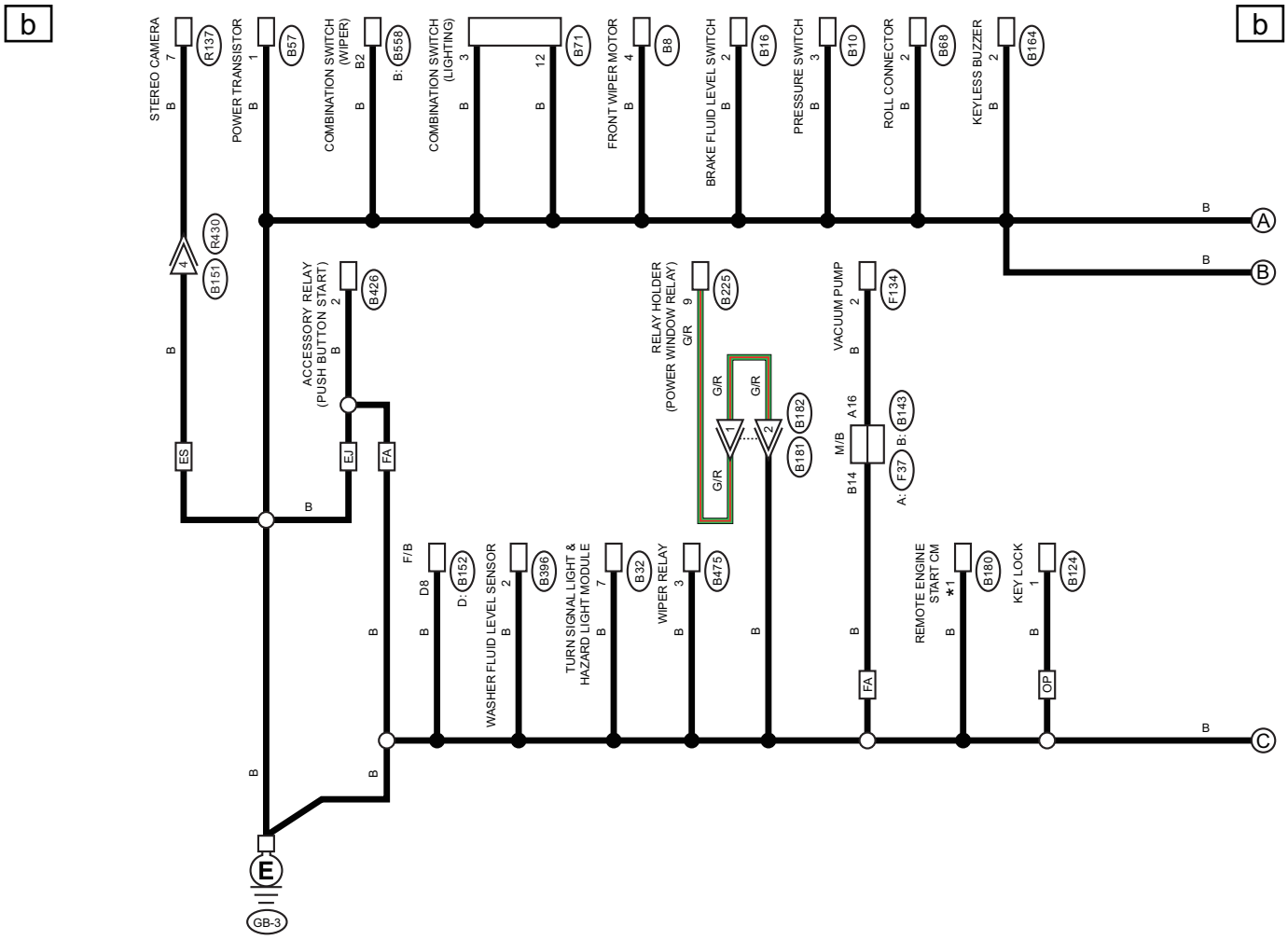

FA : ENGINE TYPE FA
EJ : ENGINE TYPE EJ
OP : WITHOUT PUSH BUTTON START
WP : WITH PUSH BUTTON START

ES : WITH EyeSight

*1 : WITHOUT PUSH BUTTON START : 3
WITH PUSH BUTTON START : 4

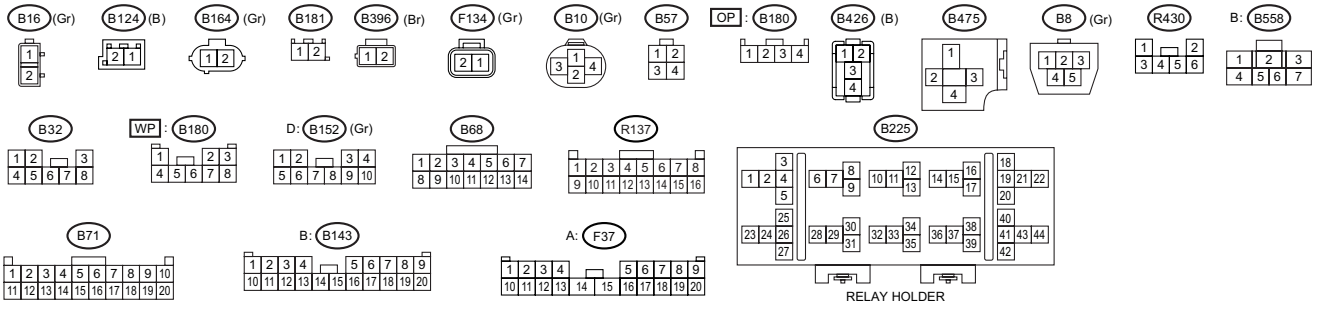

WI-67169

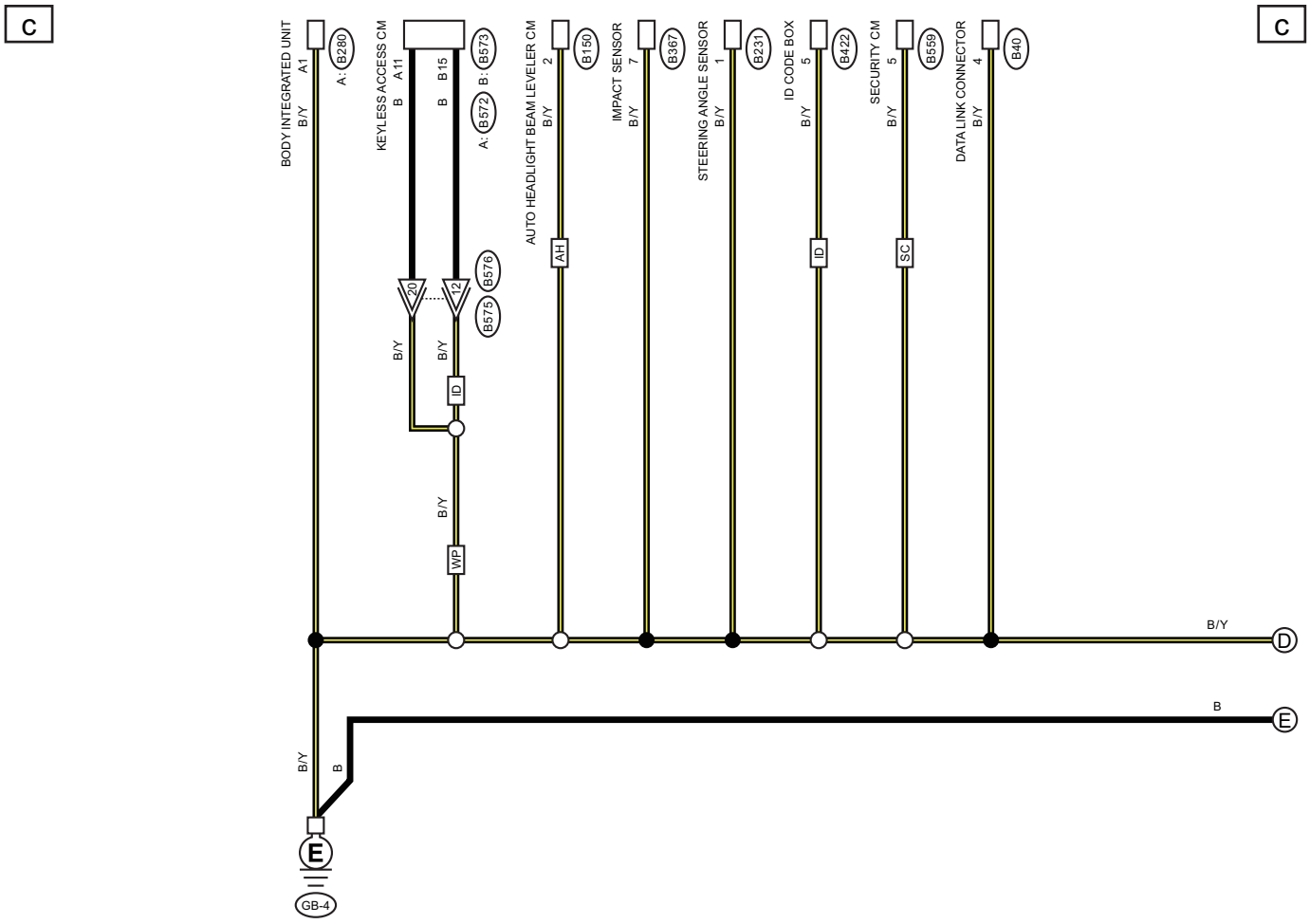

WP : WITH PUSH BUTTON START
SC : WITH SECURITY CM
ID : WITH ID CODE BOX
AH : WITH AUTO HEADLIGHT BEAM LEVELER

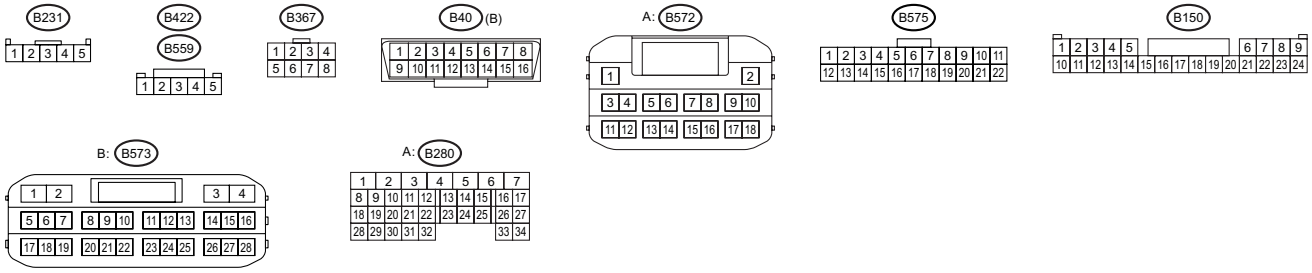

WI-67170

WIRING SYSTEM

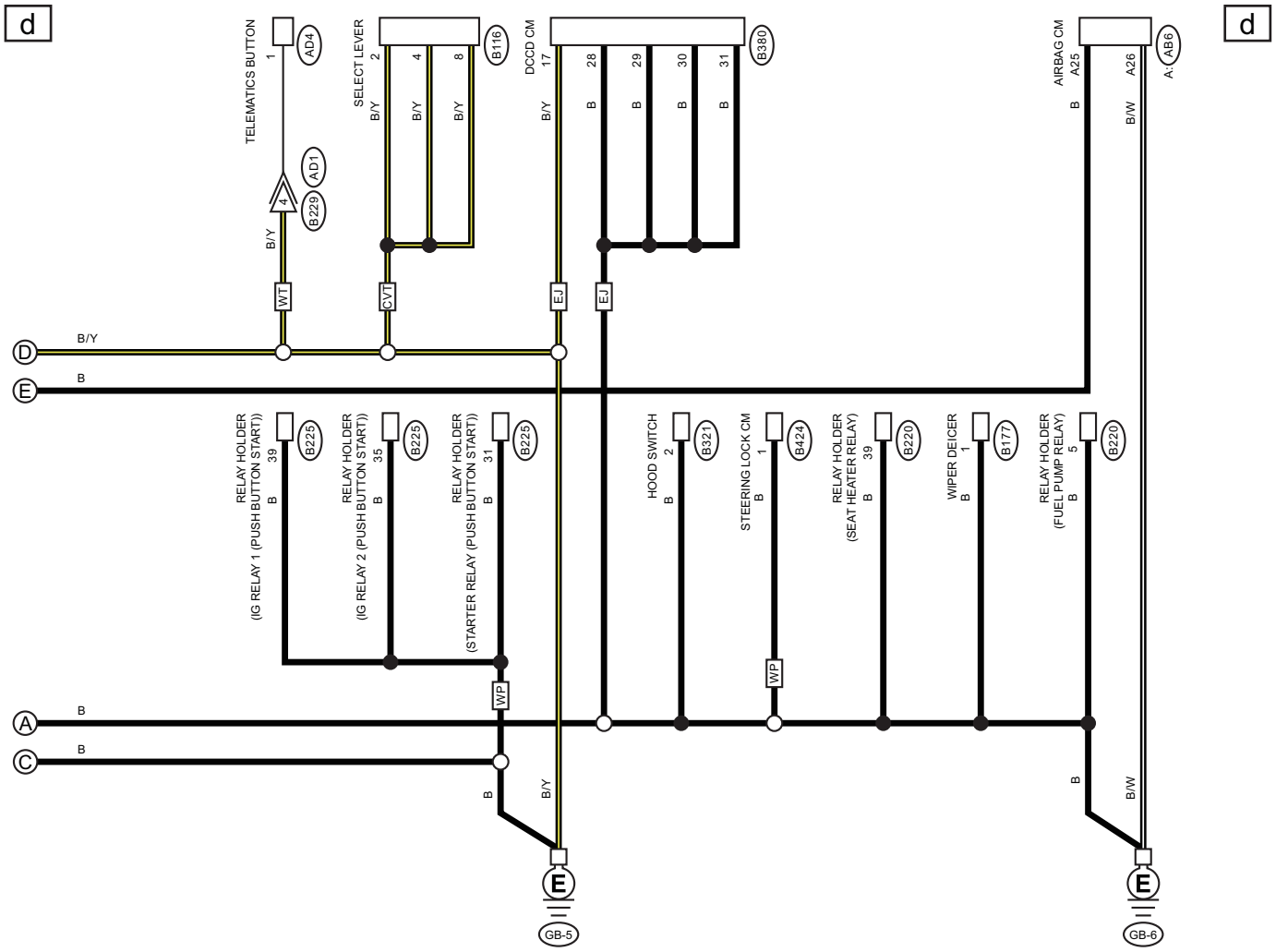

WP : WITH PUSH BUTTON START
EJ : ENGINE TYPE EJ
WT : WITH TELEMATICS

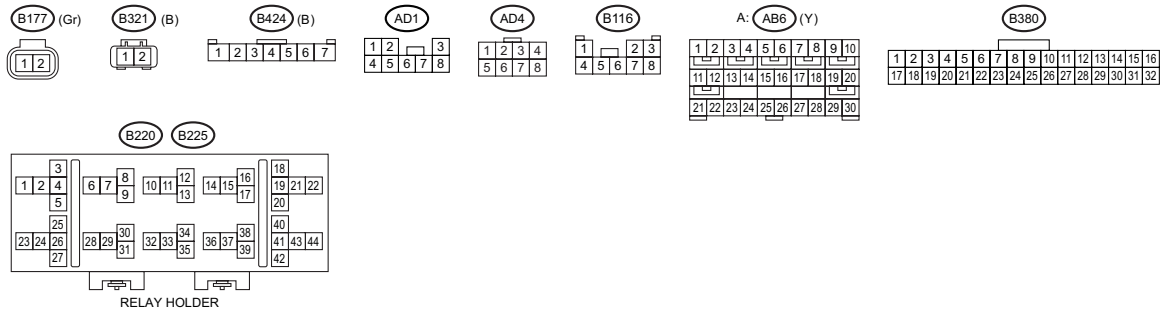

WI-66625

Ground Circuit

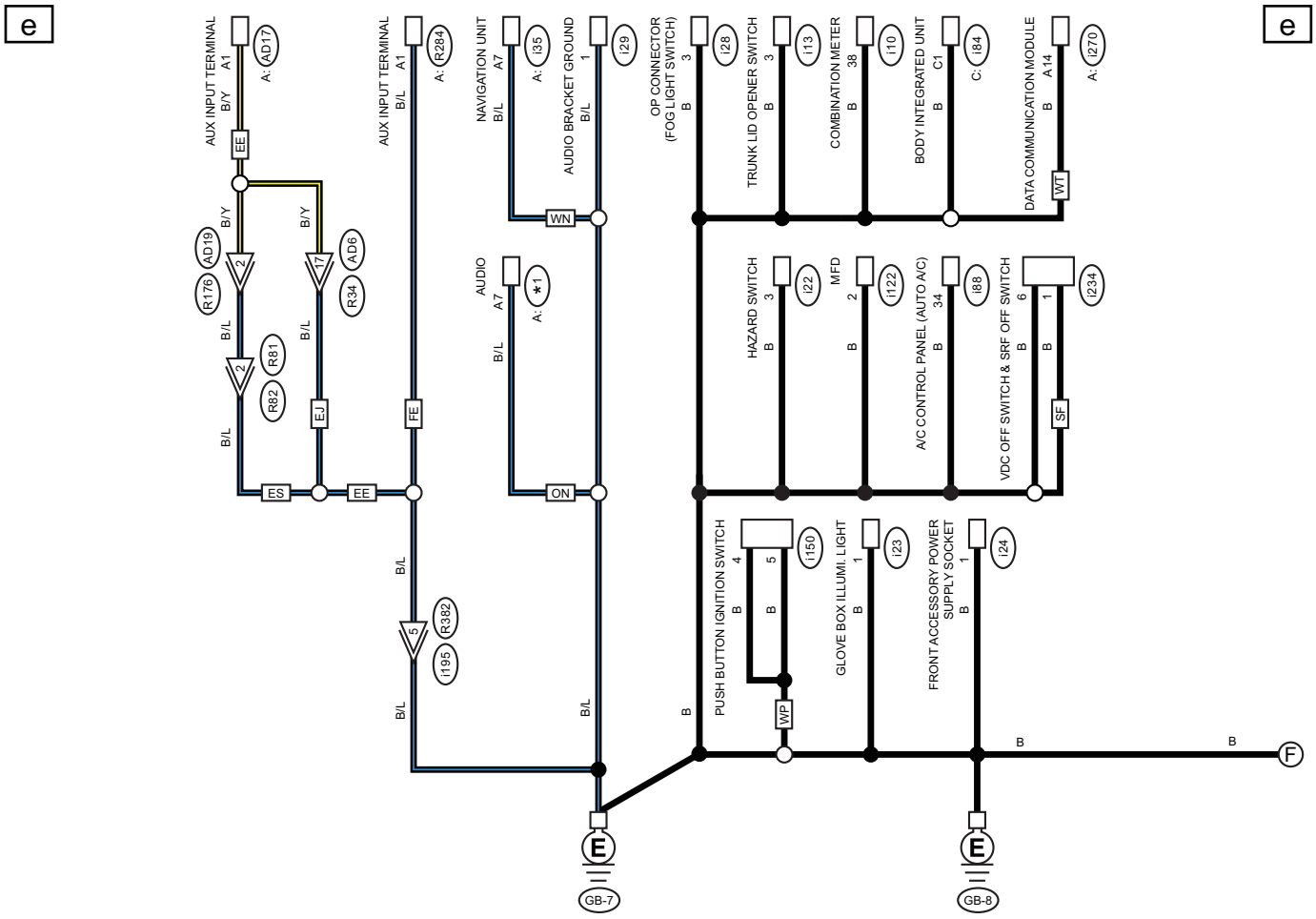

ON : WITHOUT NAVIGATION	EE : EXCEPT FOR ENGINE TYPE FA WITHOUT EyeSight
WN : WITH NAVIGATION	EJ : ENGINE TYPE EJ
WP : WITH PUSH BUTTON START	ES : WITH EyeSight
FE : ENGINE TYPE FA WITHOUT EyeSight	SF : WITH SRF
WT : WITH TELEMATICS	*1 : WITHOUT AUDIO AMPLIFIER : i85 WITH AUDIO AMPLIFIER : i35

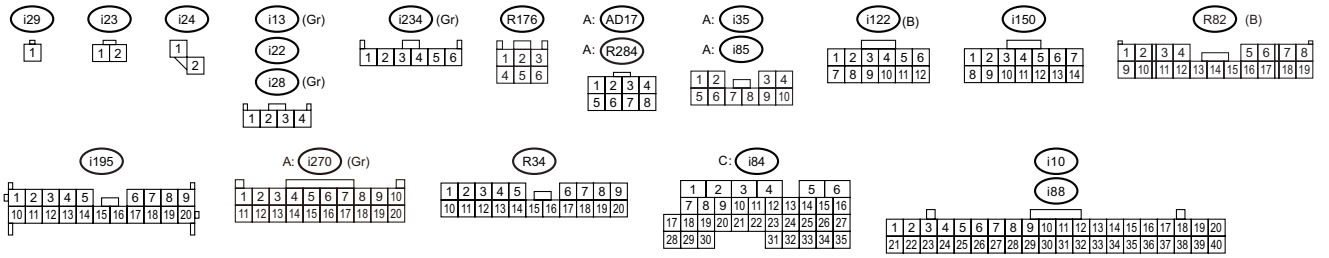

WI-66626

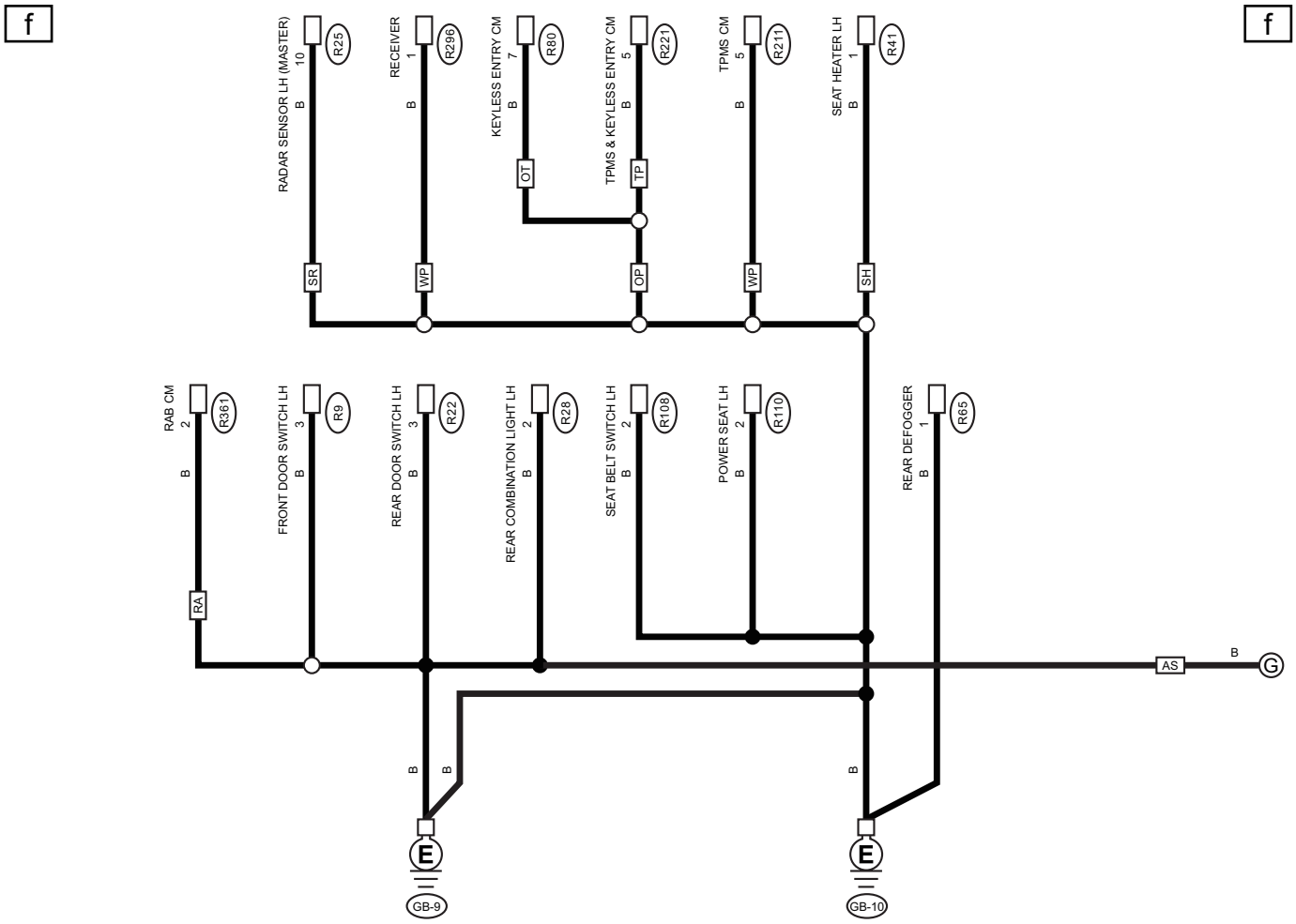

OT : WITHOUT TPMS	OP : WITHOUT PUSH BUTTON START
TP : WITH TPMS	WP : WITH PUSH BUTTON START
SR : WITH BSD/RCTA	AS : ENGINE TYPE FA WITH EyeSight
SH : WITH SEAT HEATER	RA : WITH REVERSE AUTOMATIC BRAKING

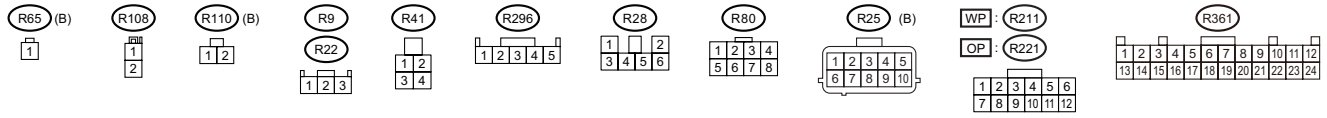

WI-66627

Ground Circuit

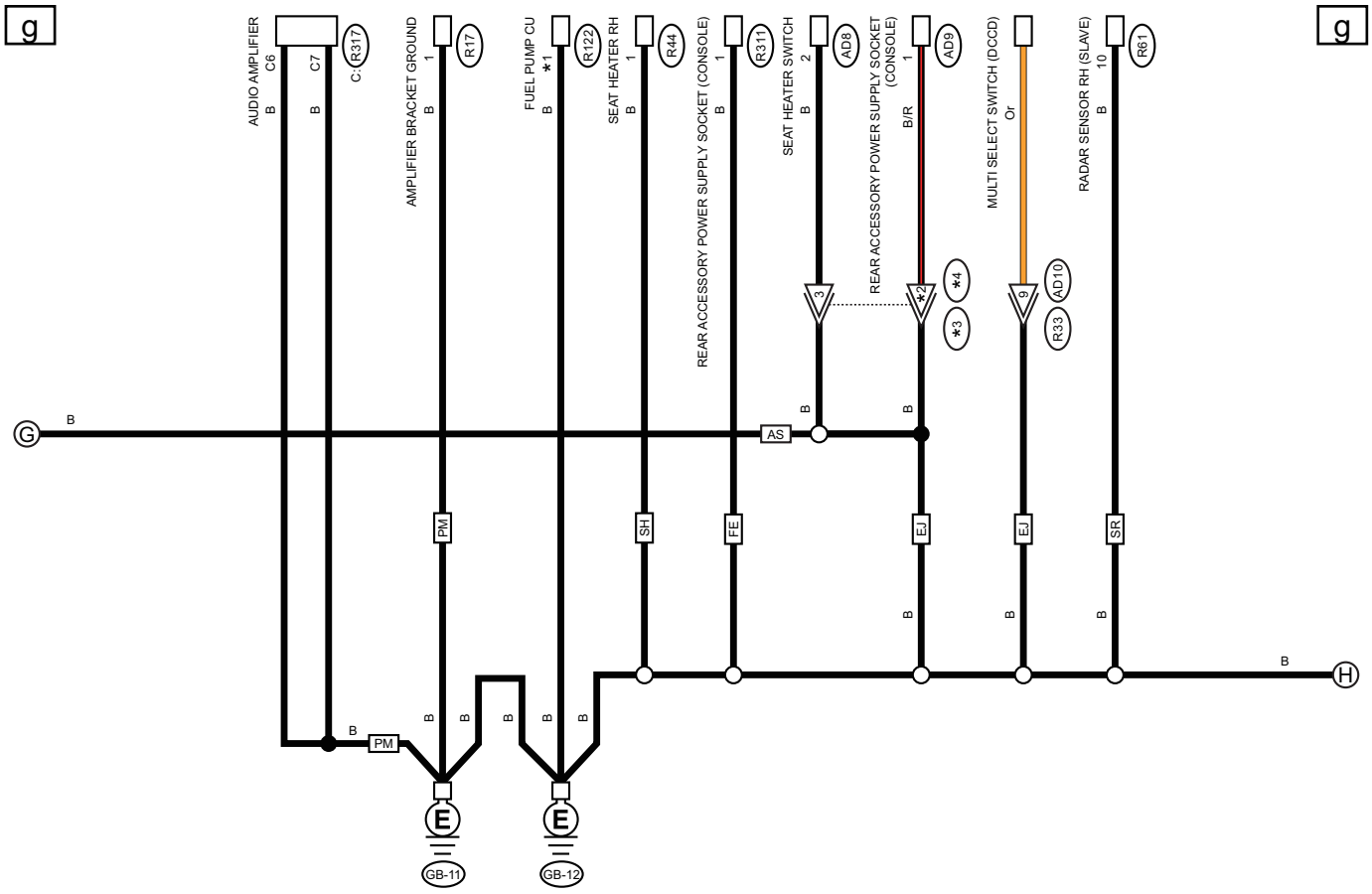

PM : PREMIUM MODEL
SH : WITH SEAT HEATER
FE : ENGINE TYPE FA WITHOUT EyeSight
AS : ENGINE TYPE FA WITH EyeSight
FA : ENGINE TYPE FA
EJ : ENGINE TYPE EJ
SR : WITH BSD/RCTA

*1 : ENGINE TYPE FA : 4
ENGINE TYPE EJ : 5
*2 : ENGINE TYPE FA WITH EyeSight : 9
ENGINE TYPE EJ : 14
*3 : ENGINE TYPE FA : R175
ENGINE TYPE EJ : R34
*4 : ENGINE TYPE FA : AD18
ENGINE TYPE EJ : AD19

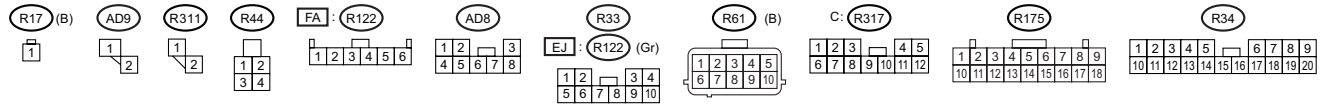

WI-67171

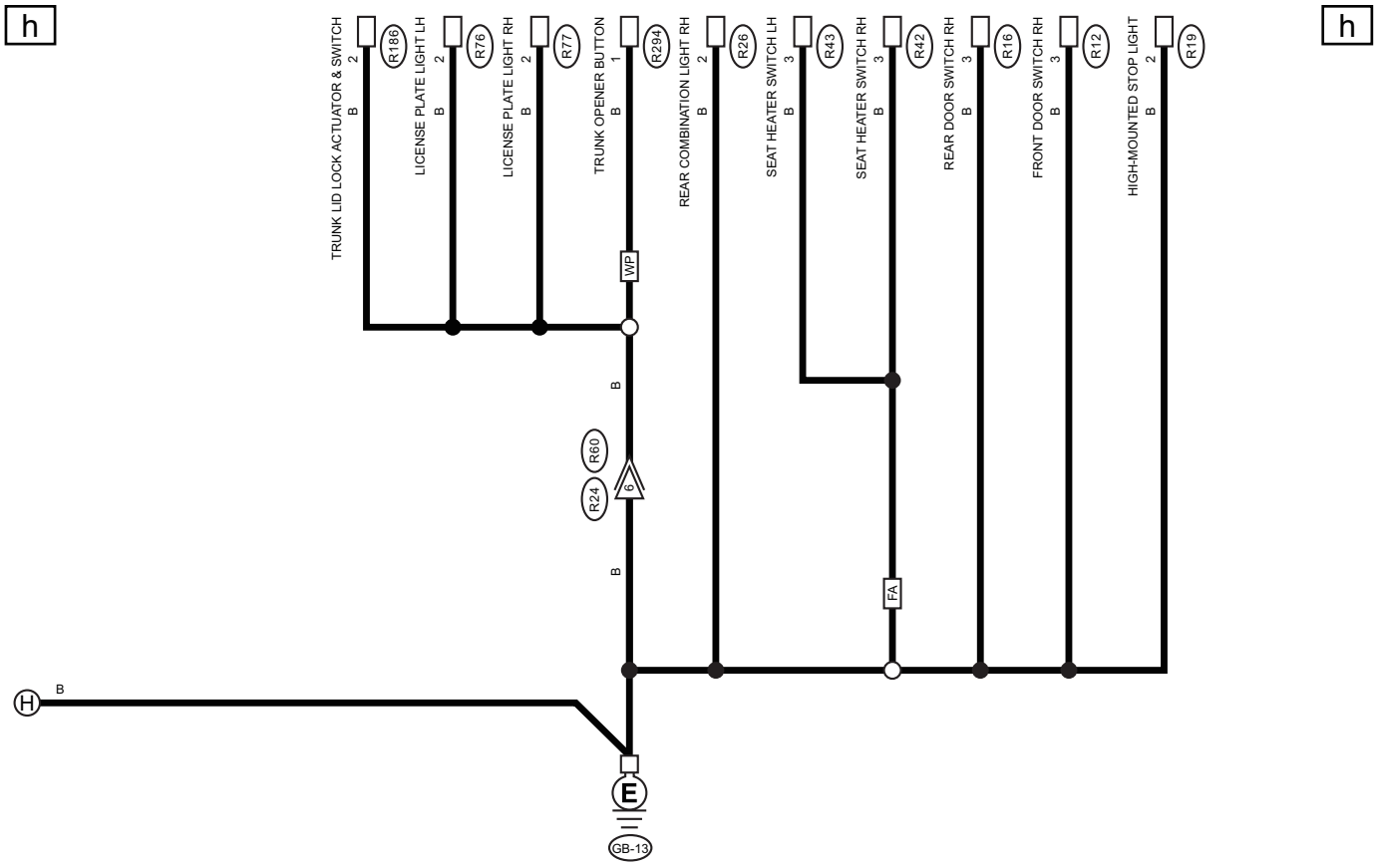

WP : WITH PUSH BUTTON START

FA : ENGINE TYPE FA

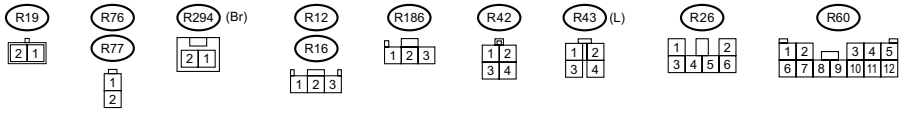

WI-67172

Ground Circuit

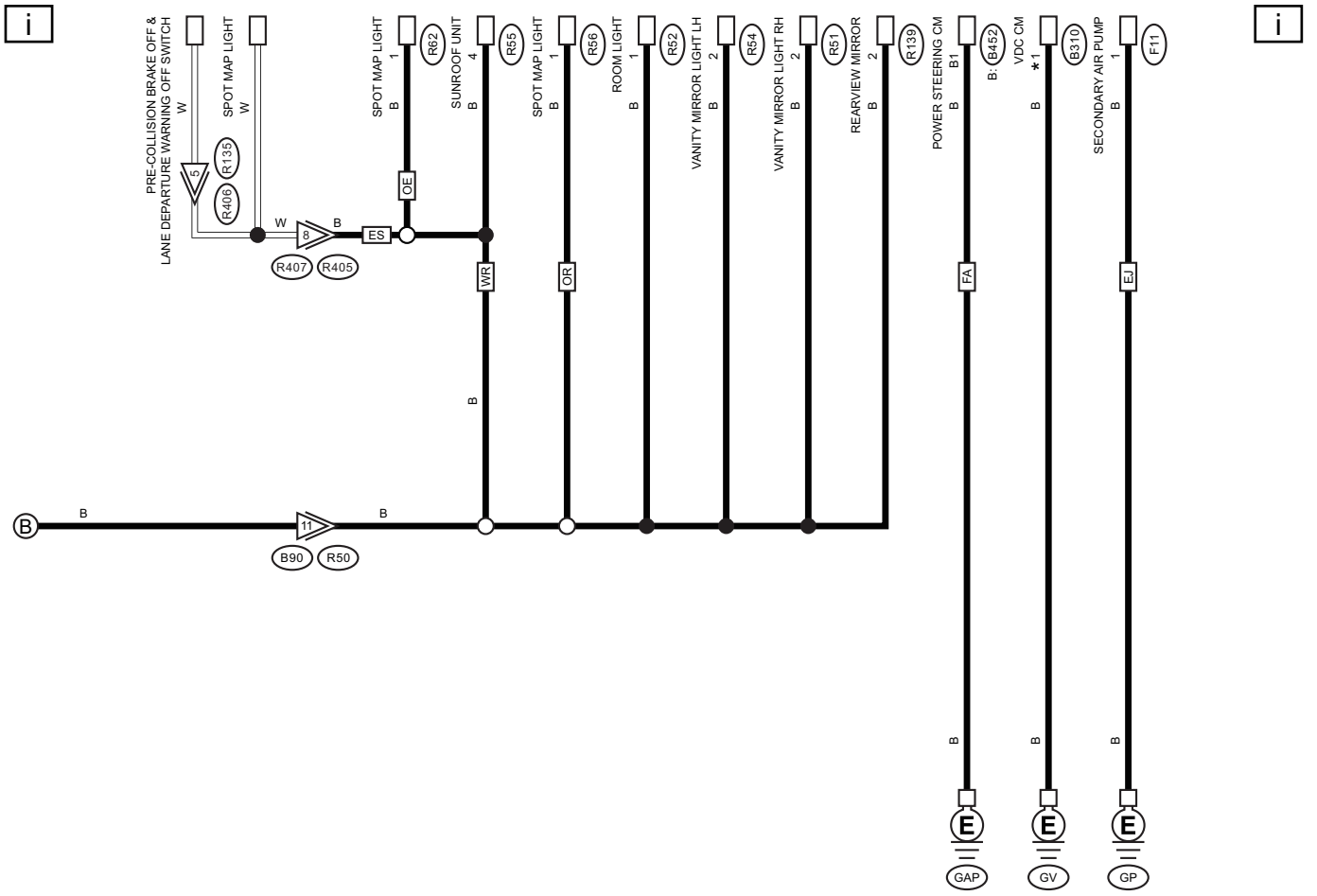

OR : WITHOUT SUNROOF
WR : WITH SUNROOF
FA : ENGINE TYPE FA
EJ : ENGINE TYPE EJ
OE : WITHOUT EyeSight
ES : WITH EyeSight

*1 : WITHOUT EyeSight : 38
WITH EyeSight : 34

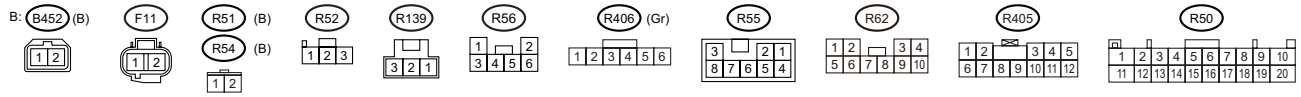

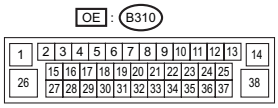

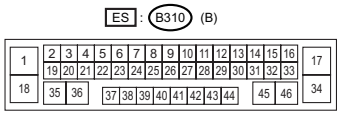

WI-66628

WIRING SYSTEM

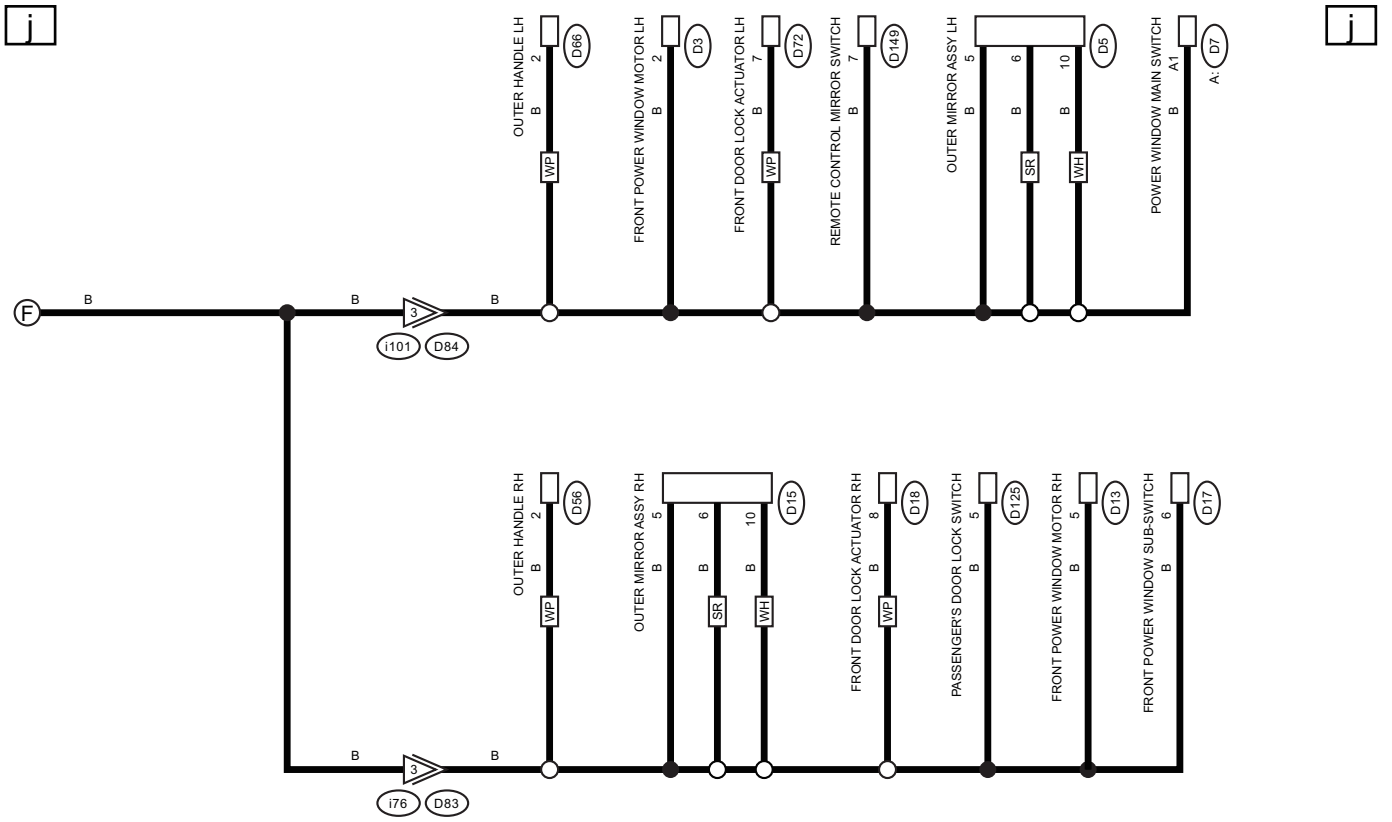

WP : WITH PUSH BUTTON START
SR : WITH BSD/RCTA
WH : WITH MIRROR HEATER

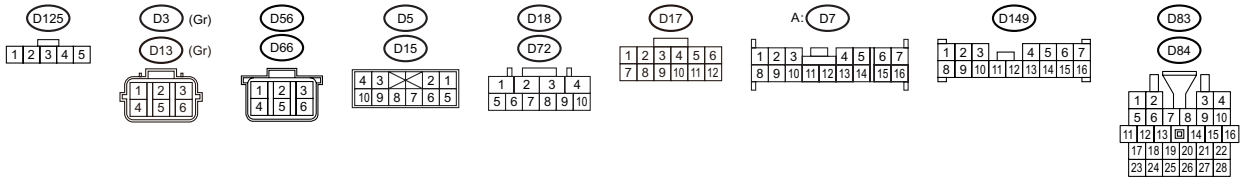

WI-66629

6. Airbag System

A: WIRING DIAGRAM

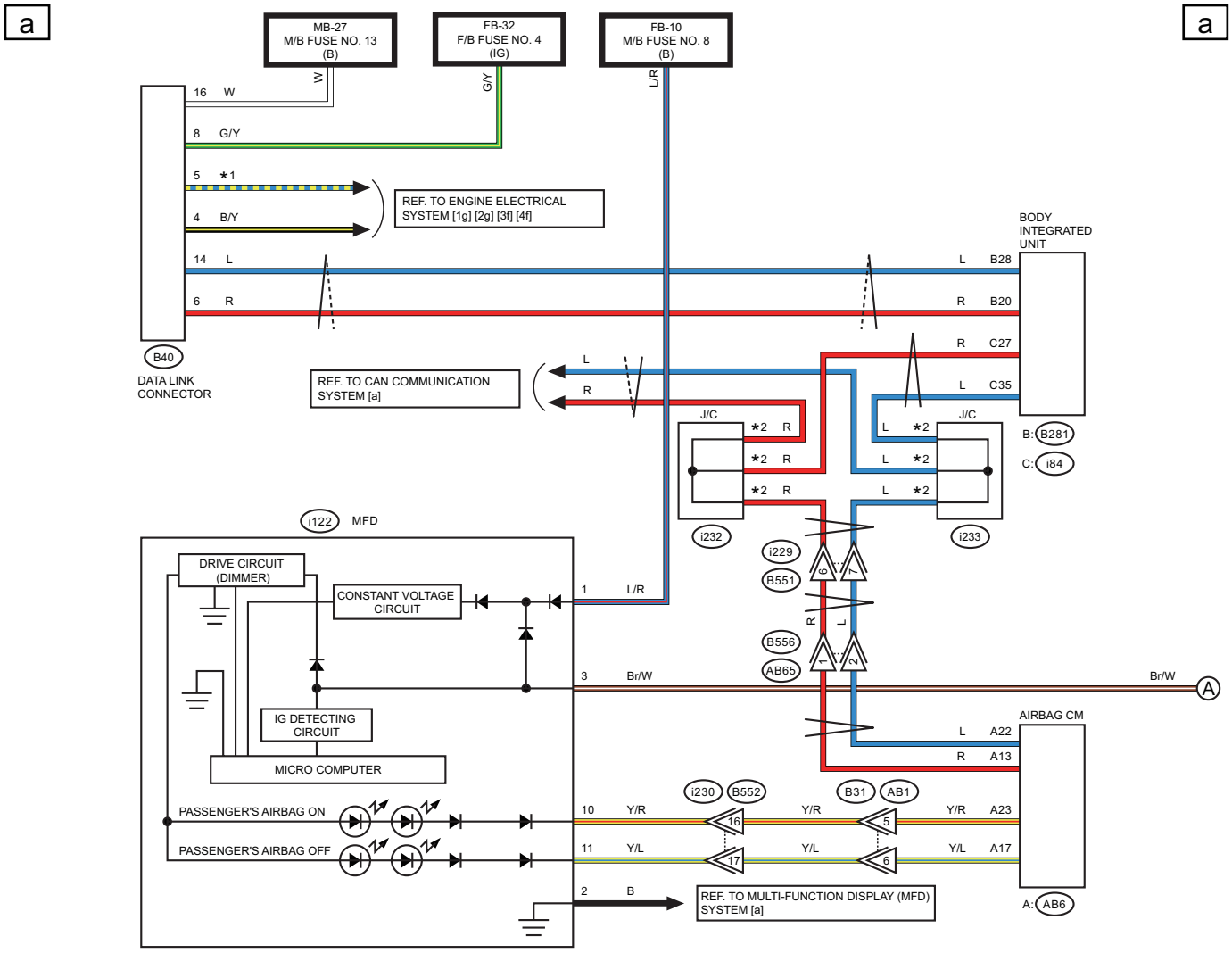

✶1 : ENGINE TYPE FA : B/R
ENGINE TYPE EJ : B/W

✶2 : TERMINAL No. OPTIONAL ARRANGEMENT

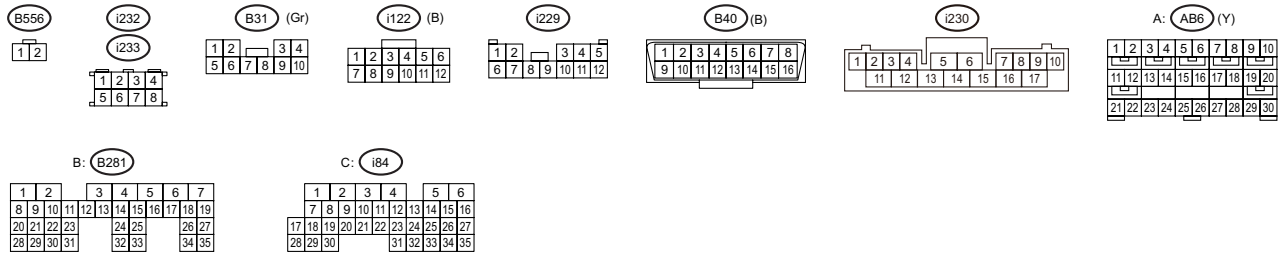

WI-66633

WIRING SYSTEM

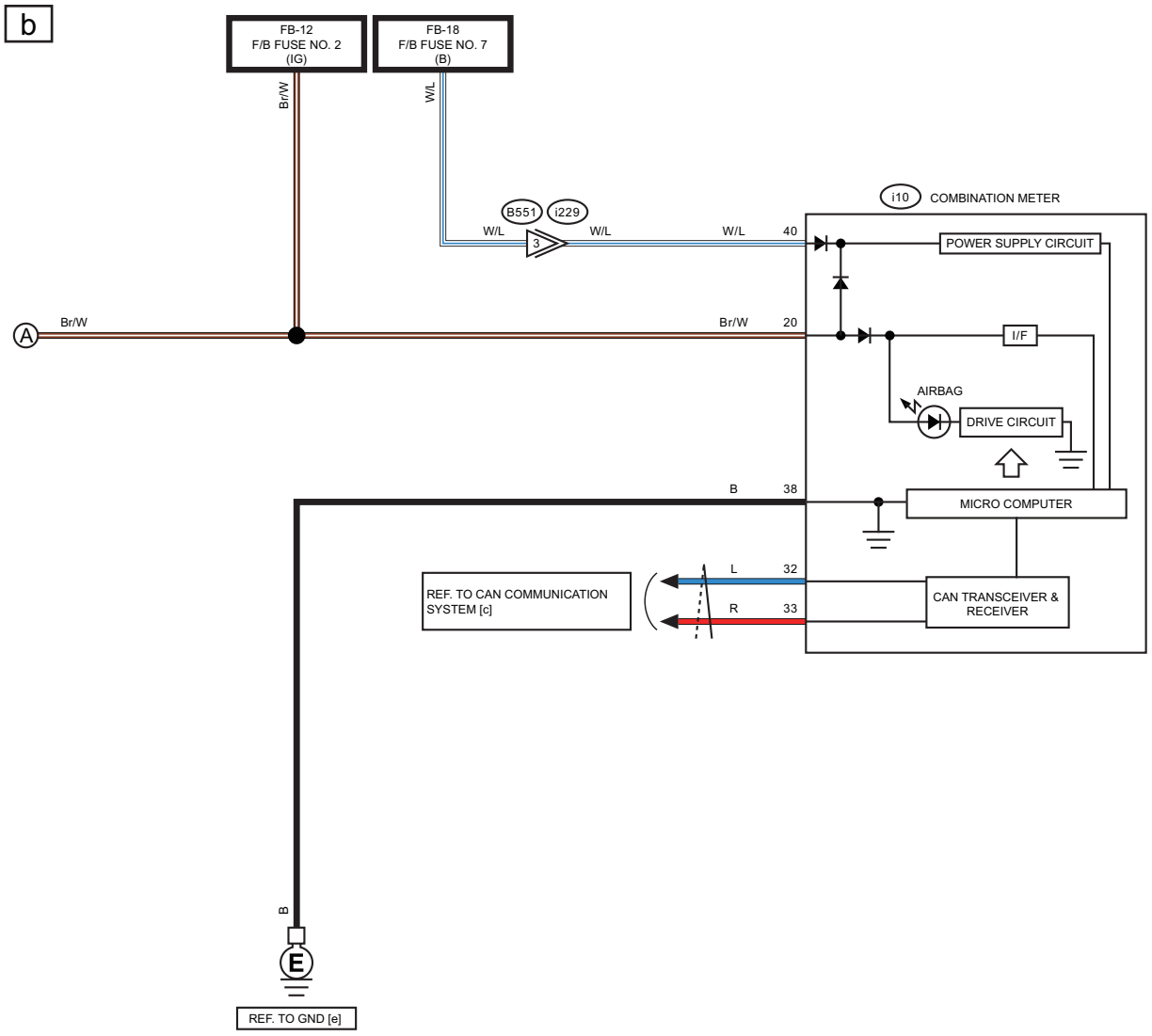

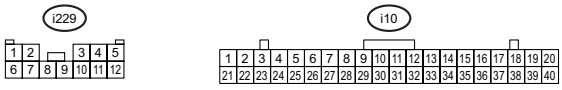

WI-66634

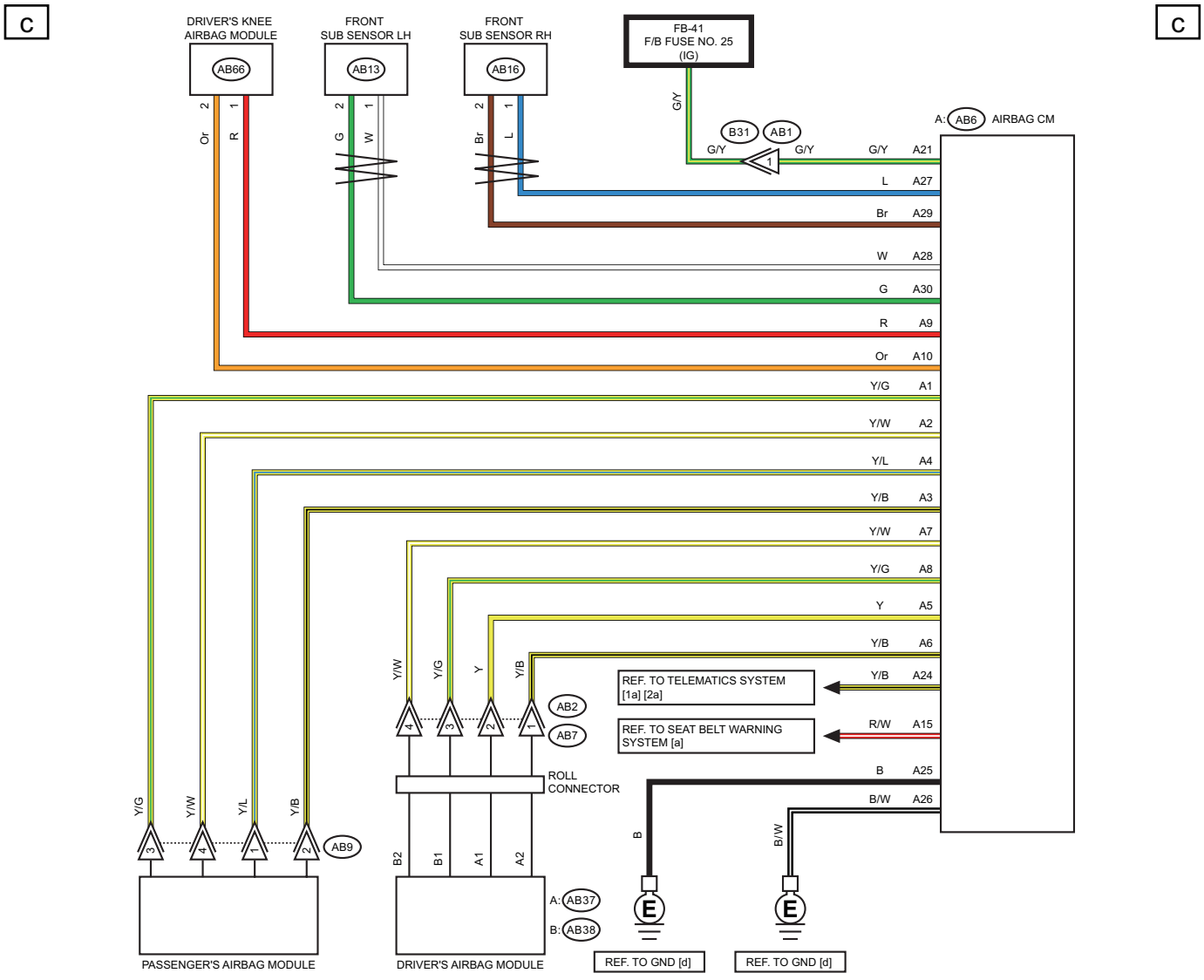
C
C
DRIVER'S KNEE AIRBAG MODULE
AB66
FRONT SUB SENSOR LH
AB13
FRONT SUB SENSOR RH
AB16
FB-41 F/B FUSE NO. 25 (IG)
A: AB6 AIRBAG CM
B31
AB1
Or
R
G
W
Br
L
G/Y
A21
L
A27
Br
A29
W
A28
G
A30
R
A9
Or
A10
Y/G
A1
Y/W
A2
Y/L
A4
Y/B
A3
Y/W
A7
Y/G
A8
Y
A5
Y/B
A6
Y/B
A24
R/W
A15
B
A25
B/W
A26
REF. TO TELEMATICS SYSTEM [1a] [2a]
REF. TO SEAT BELT WARNING SYSTEM [a]
AB2
AB7
ROLL CONNECTOR
AB9
A: AB37
B: AB38
REF. TO GND [d]
REF. TO GND [d]
PASSENGER'S AIRBAG MODULE
DRIVER'S AIRBAG MODULE

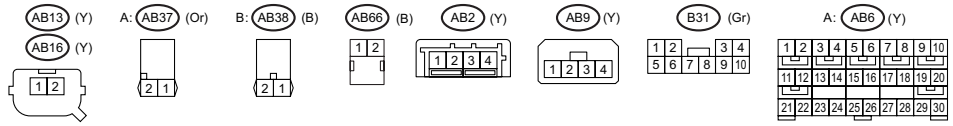
AB13 (Y)
AB16 (Y)
A: AB37 (Or)
B: AB38 (B)
AB66 (B)
AB2 (Y)
AB9 (Y)
B31 (Gr)
A: AB6 (Y)

WI-66635

WIRING SYSTEM

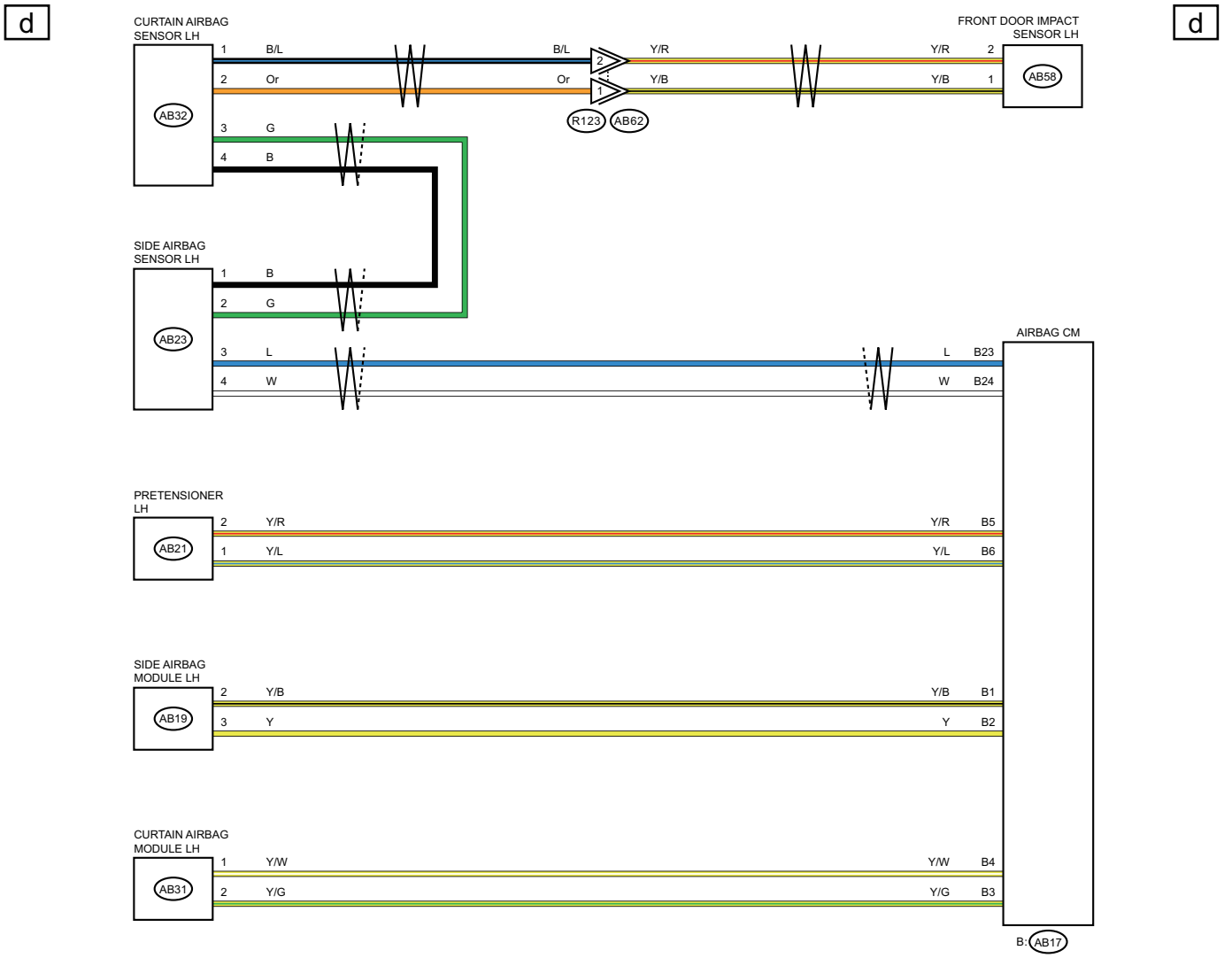

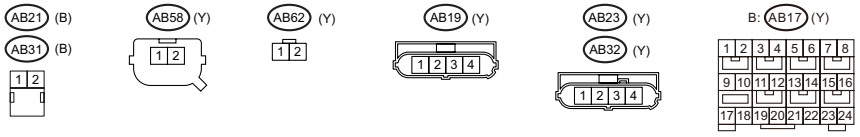

WI-66636

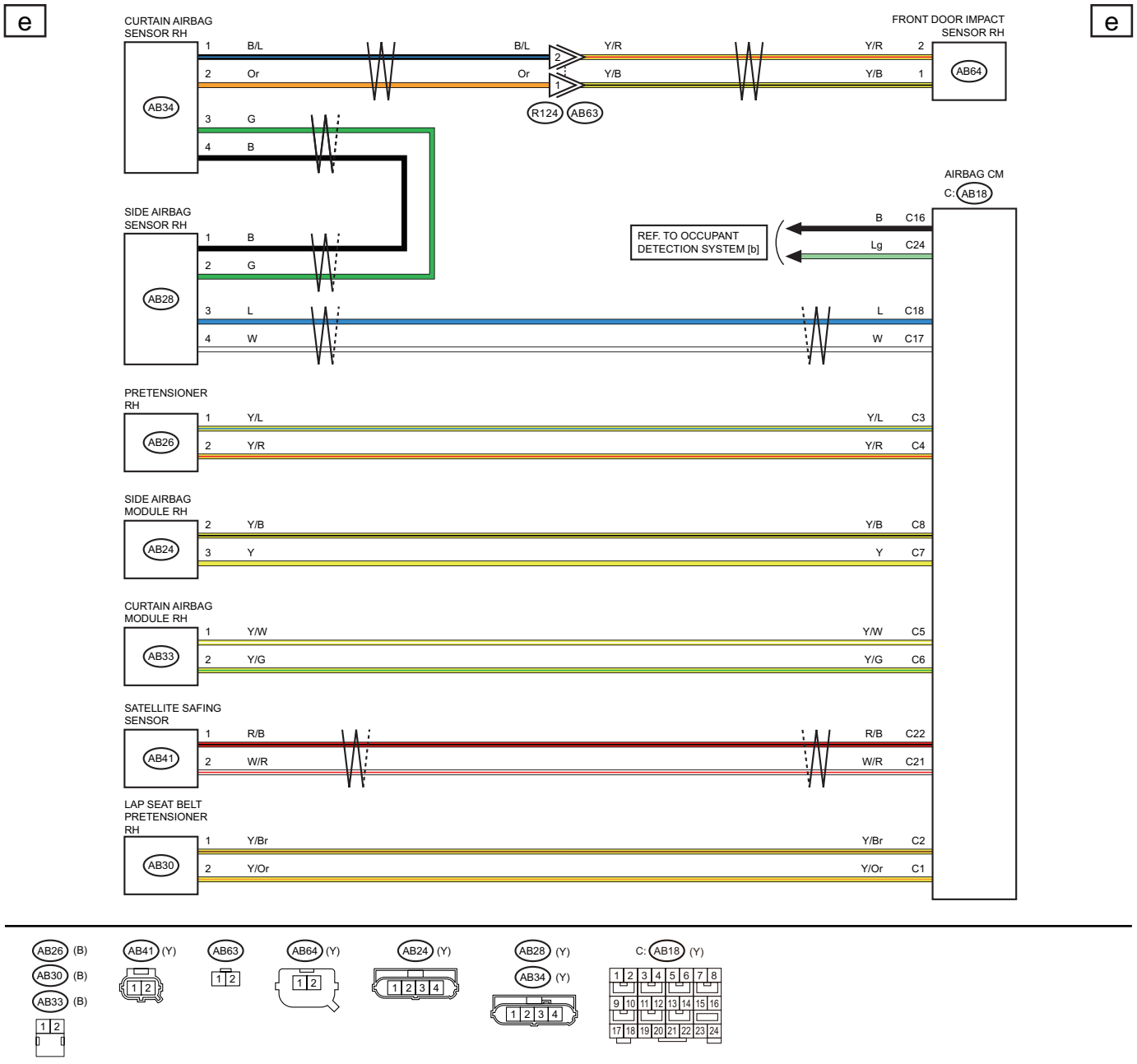
e
e
CURTAIN AIRBAG SENSOR RH
AB34
1 B/L
2 Or
3 G
4 B
B/L
Or
2
1
R124
AB63
Y/R
Y/B
FRONT DOOR IMPACT SENSOR RH
AB64
Y/R 2
Y/B 1
AIRBAG CM
C: AB18
SIDE AIRBAG SENSOR RH
AB28
1 B
2 G
3 L
4 W
REF. TO OCCUPANT DETECTION SYSTEM [b]
B C16
Lg C24
L C18
W C17
PRETENSIONER RH
AB26
1 Y/L
2 Y/R
Y/L C3
Y/R C4
SIDE AIRBAG MODULE RH
AB24
2 Y/B
3 Y
Y/B C8
Y C7
CURTAIN AIRBAG MODULE RH
AB33
1 Y/W
2 Y/G
Y/W C5
Y/G C6
SATELLITE SAFING SENSOR
AB41
1 R/B
2 W/R
R/B C22
W/R C21
LAP SEAT BELT PRETENSIONER RH
AB30
1 Y/Br
2 Y/Or
Y/Br C2
Y/Or C1
AB26 (B)
AB30 (B)
AB33 (B)
AB41 (Y)
AB63
AB64 (Y)
AB24 (Y)
AB28 (Y)
AB34 (Y)
C: AB18 (Y)

WI-66637

7. Air Conditioning System

A: WIRING DIAGRAM

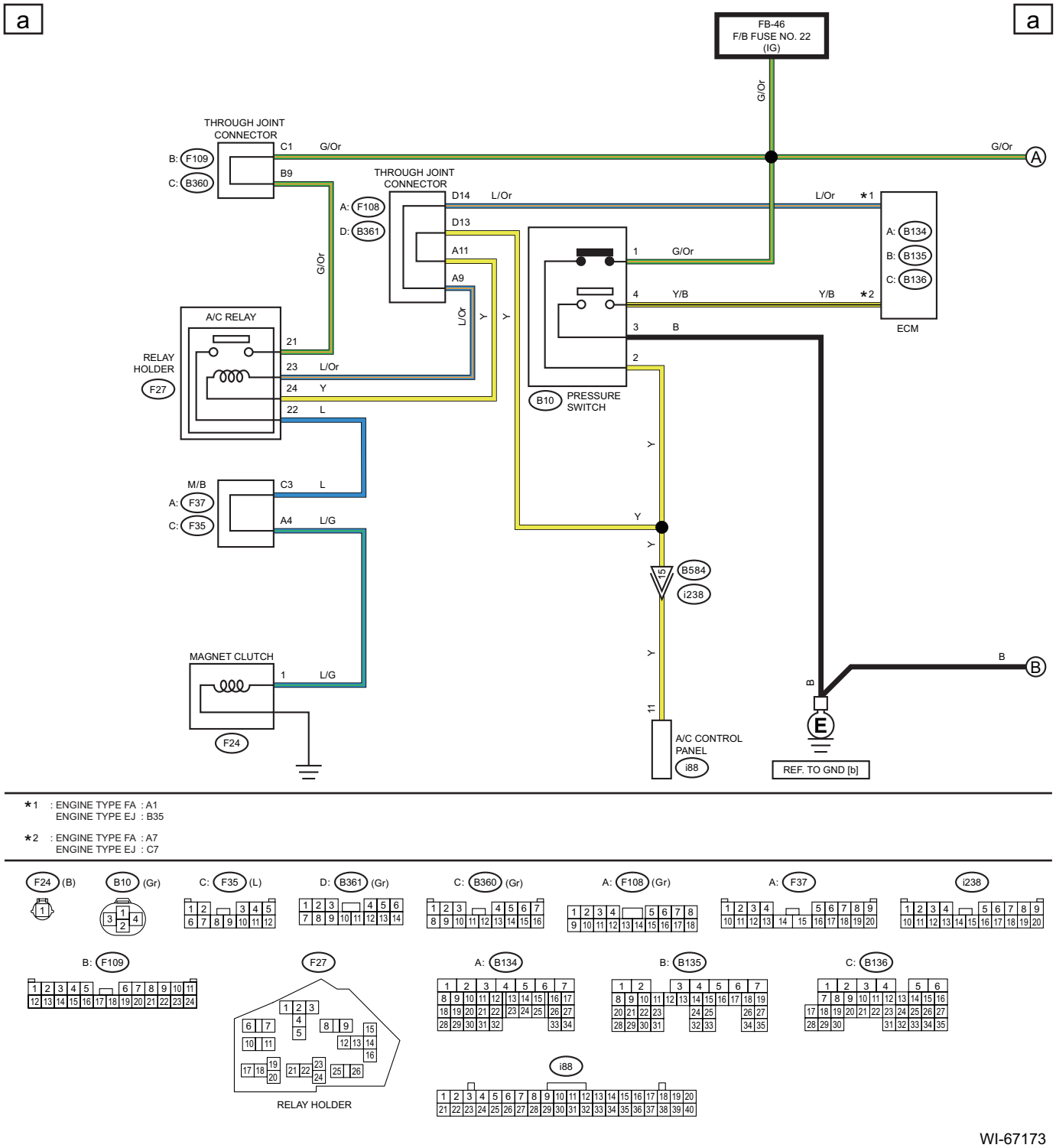

*1 : ENGINE TYPE FA : A1
ENGINE TYPE EJ : B35

*2 : ENGINE TYPE FA : A7
ENGINE TYPE EJ : C7

WI-67173

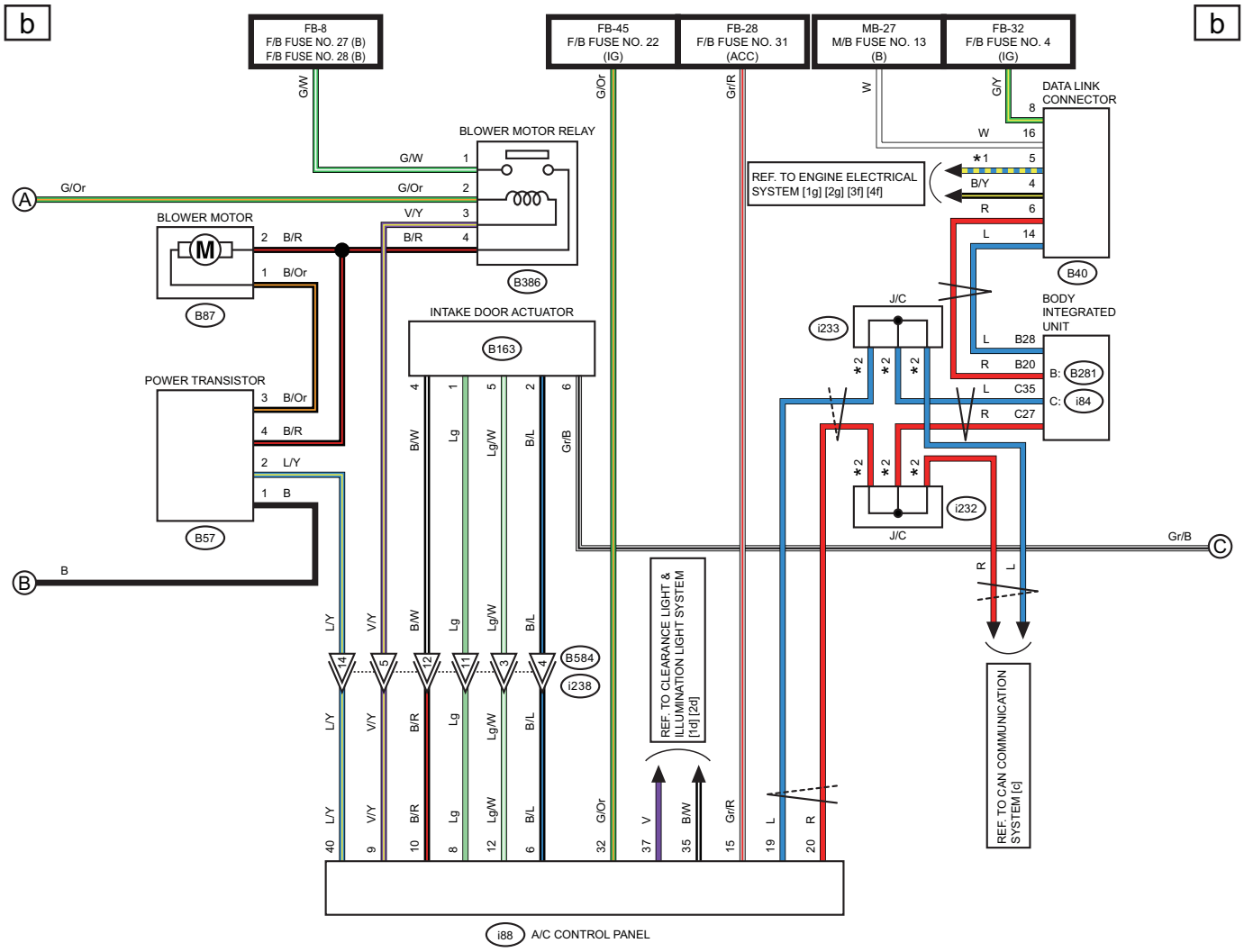

★1 : ENGINE TYPE FA : B/R
ENGINE TYPE EJ : B/W
★2 : TERMINAL No. OPTIONAL ARRANGEMENT

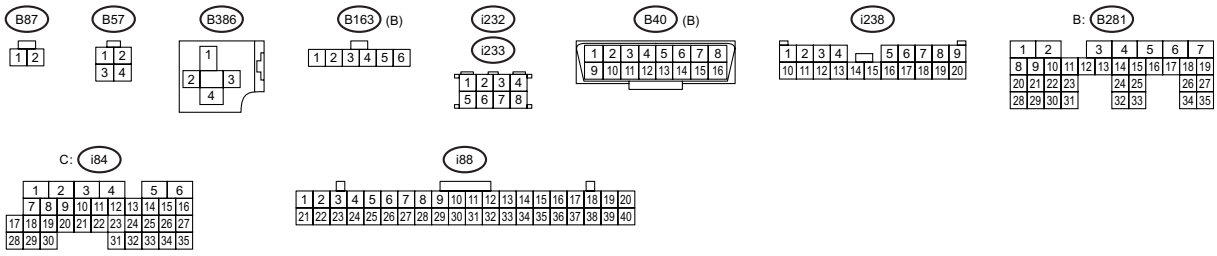

WI-66639

WIRING SYSTEM

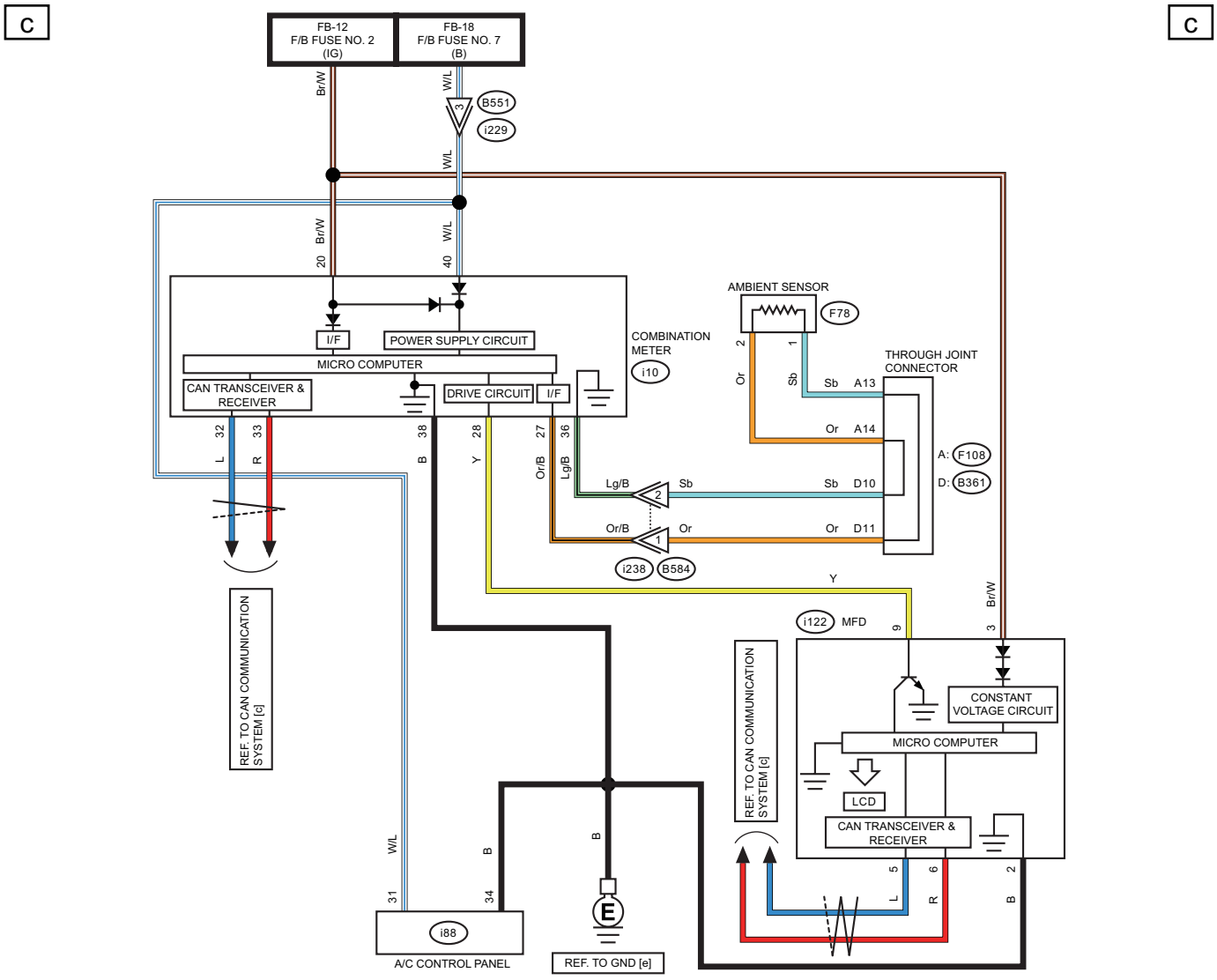

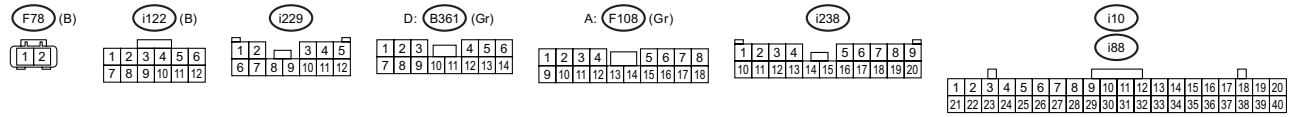

WI-66640

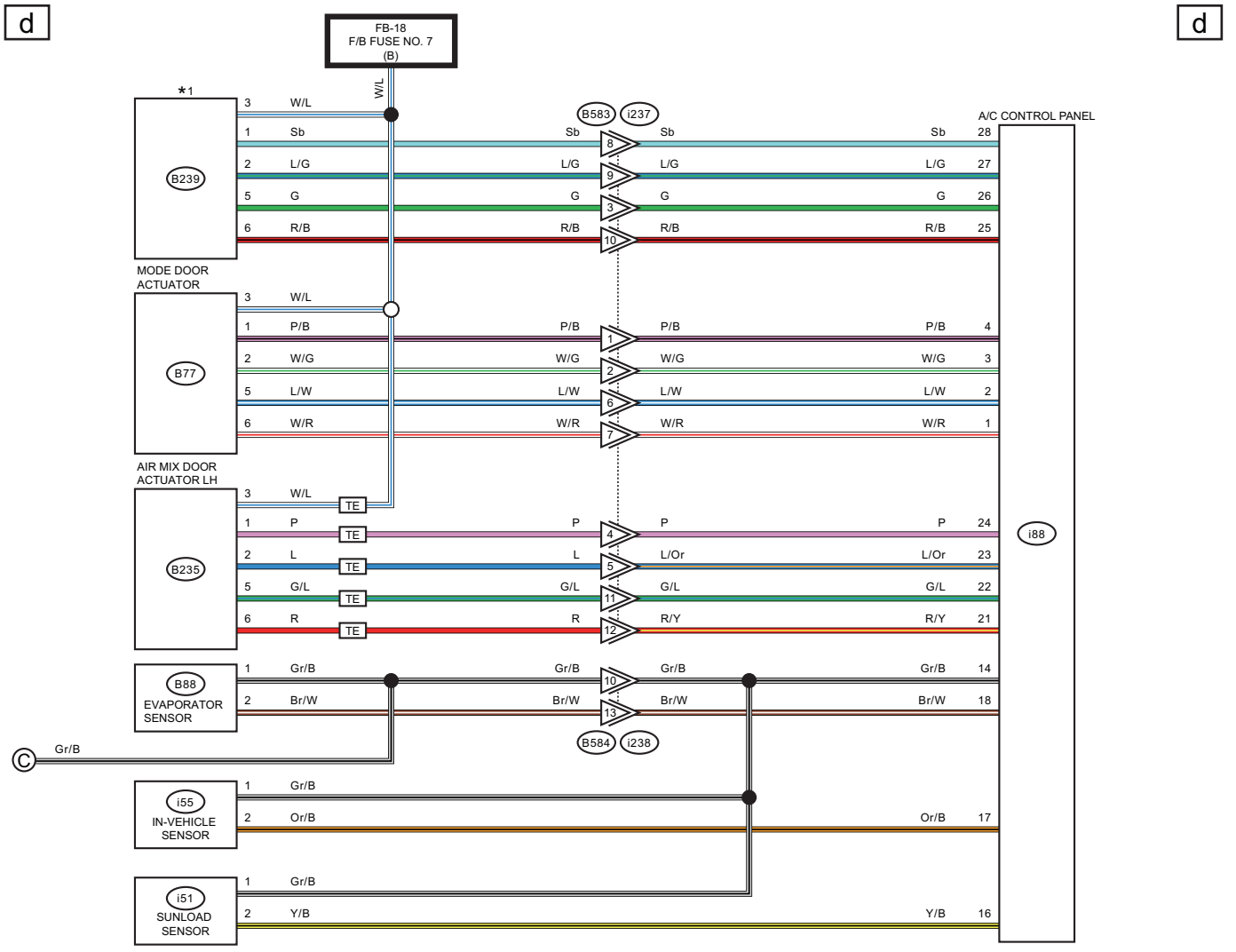

TE : WITH L/R INDEPENDENT AIR CONDITIONER

*1 : WITHOUT L/R INDEPENDENT AIR CONDITIONER : AIR MIX DOOR ACTUATOR
WITH L/R INDEPENDENT AIR CONDITIONER : AIR MIX DOOR ACTUATOR RH

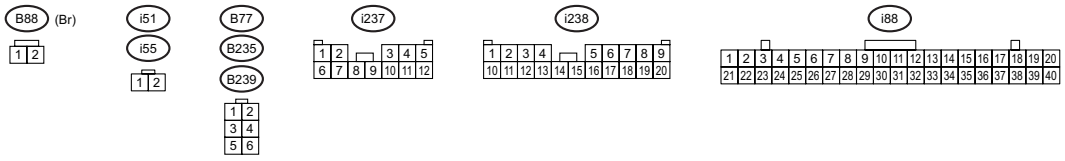

WI-67174

8. Audio System

A: WIRING DIAGRAM

1. 6.2 INCH DISPLAY

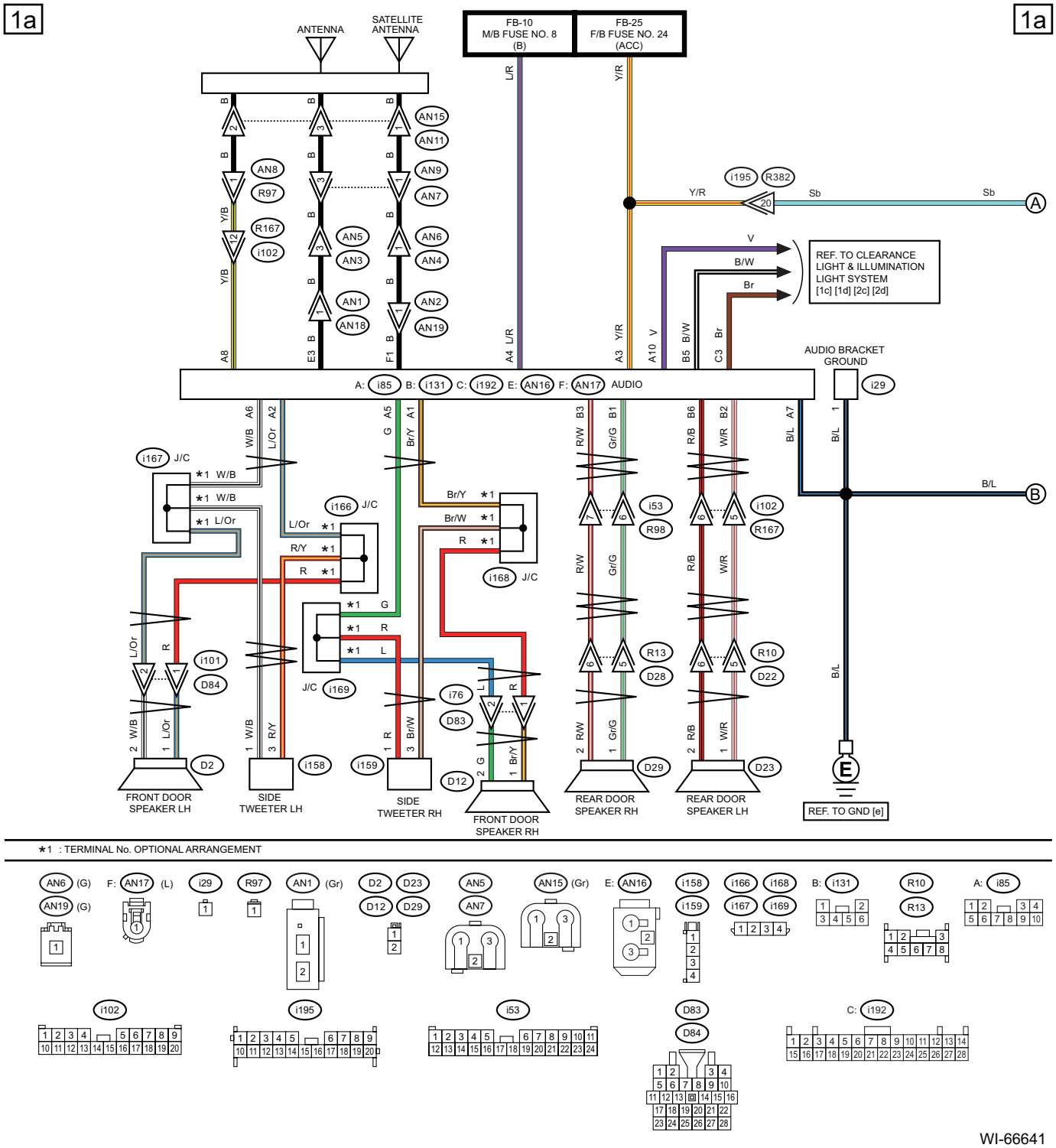

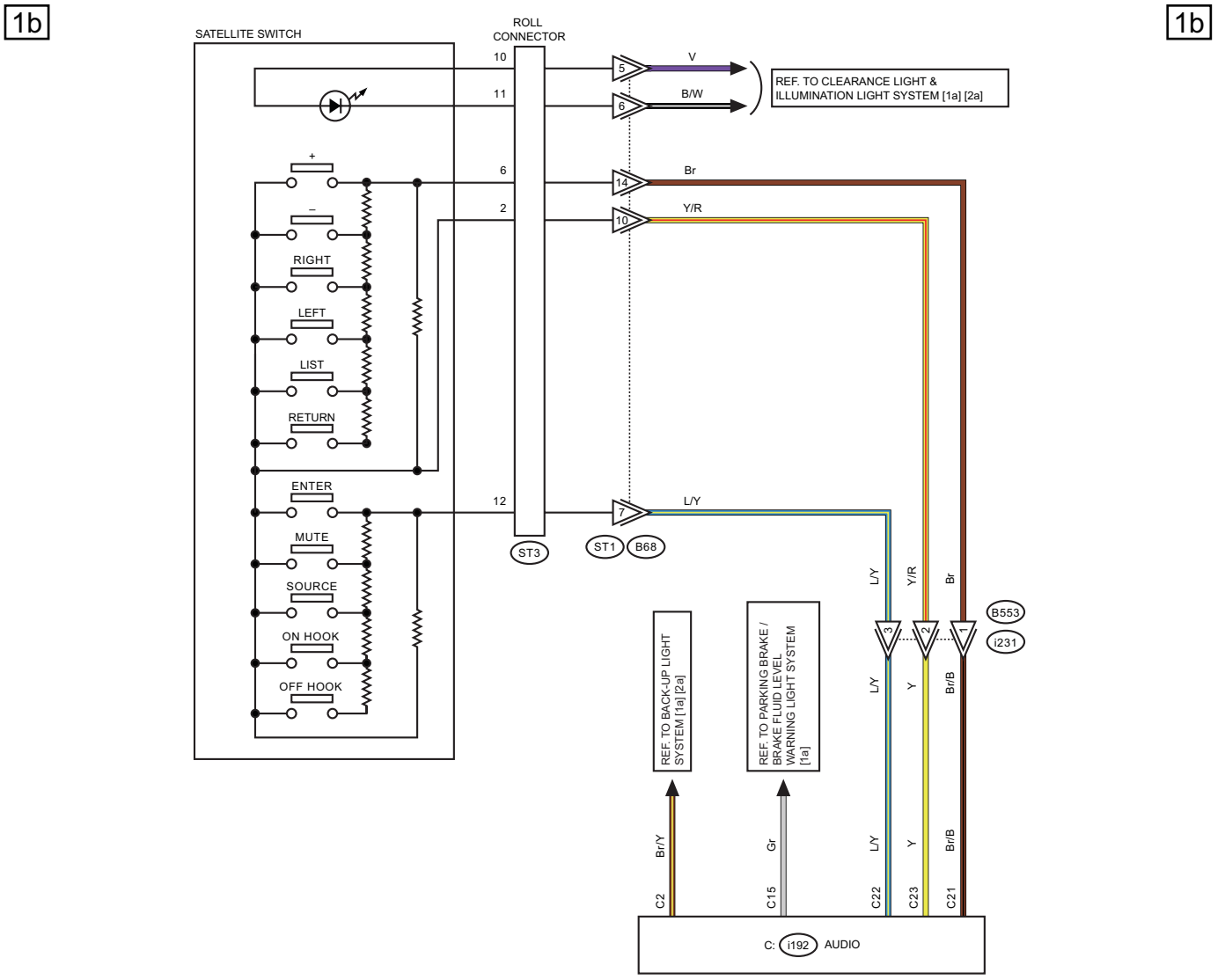
1b
1b
SATELLITE SWITCH
ROLL CONNECTOR
10
11
6
2
12
V
B/W
Br
Y/R
L/Y
REF. TO CLEARANCE LIGHT & ILLUMINATION LIGHT SYSTEM [1a] [2a]
+
–
RIGHT
LEFT
LIST
RETURN
ENTER
MUTE
SOURCE
ON HOOK
OFF HOOK
ST3
ST1
B68
B553
i231
REF. TO BACK-UP LIGHT SYSTEM [1a] [2a]
REF. TO PARKING BRAKE / BRAKE FLUID LEVEL WARNING LIGHT SYSTEM [1a]
Br/Y
Gr
L/Y
Y
Br/B
C2
C15
C22
C23
C21
C: i192 AUDIO

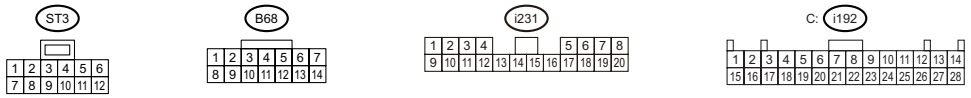
ST3
B68
i231
C: i192

WI-66642

WIRING SYSTEM

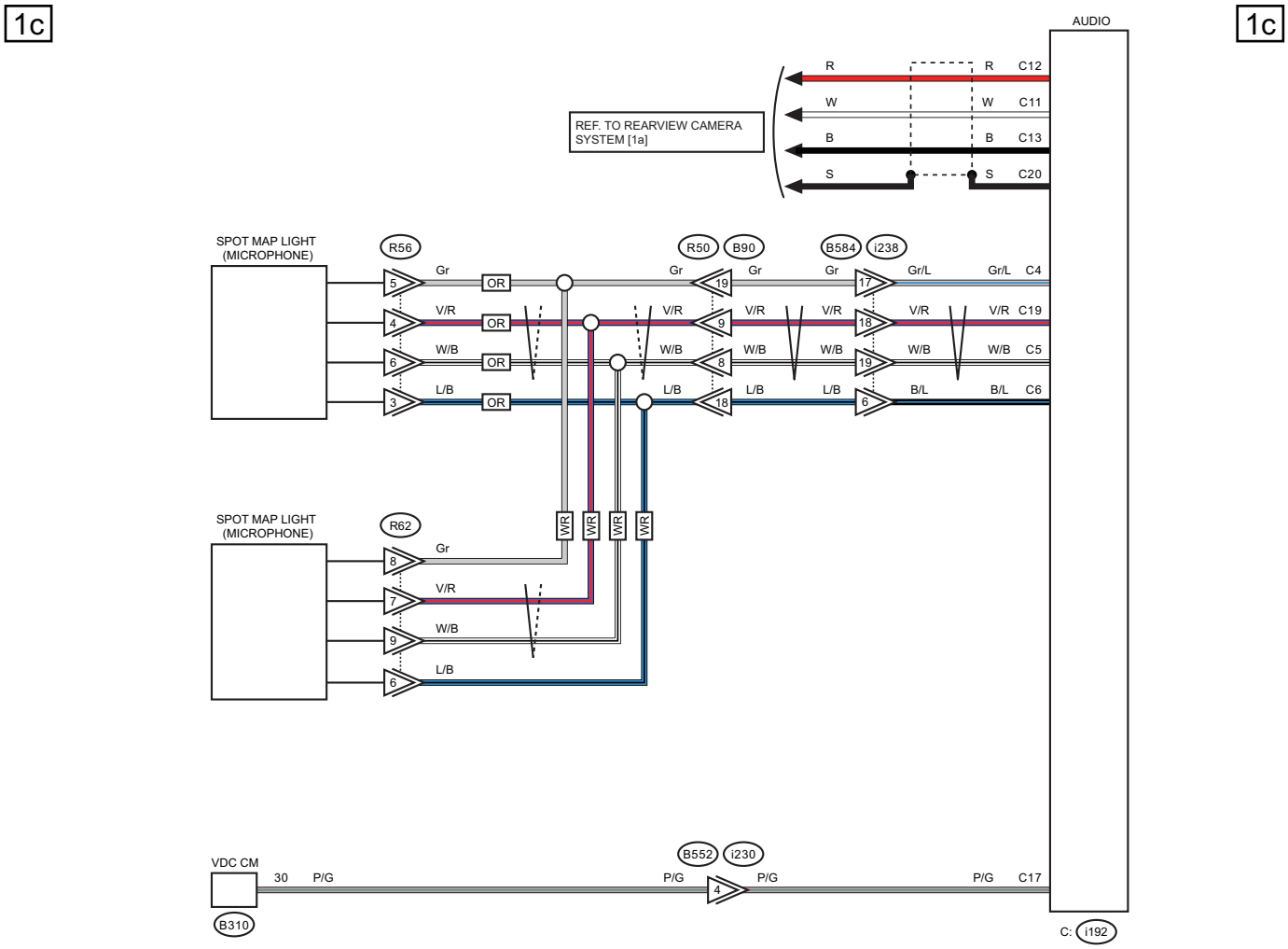

OR : WITHOUT SUNROOF
WR : WITH SUNROOF

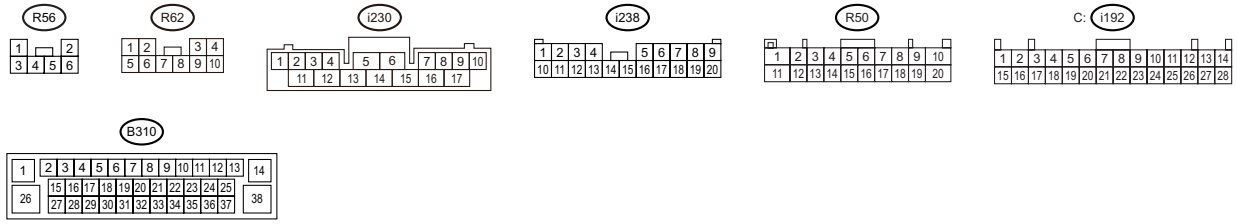

WI-66643

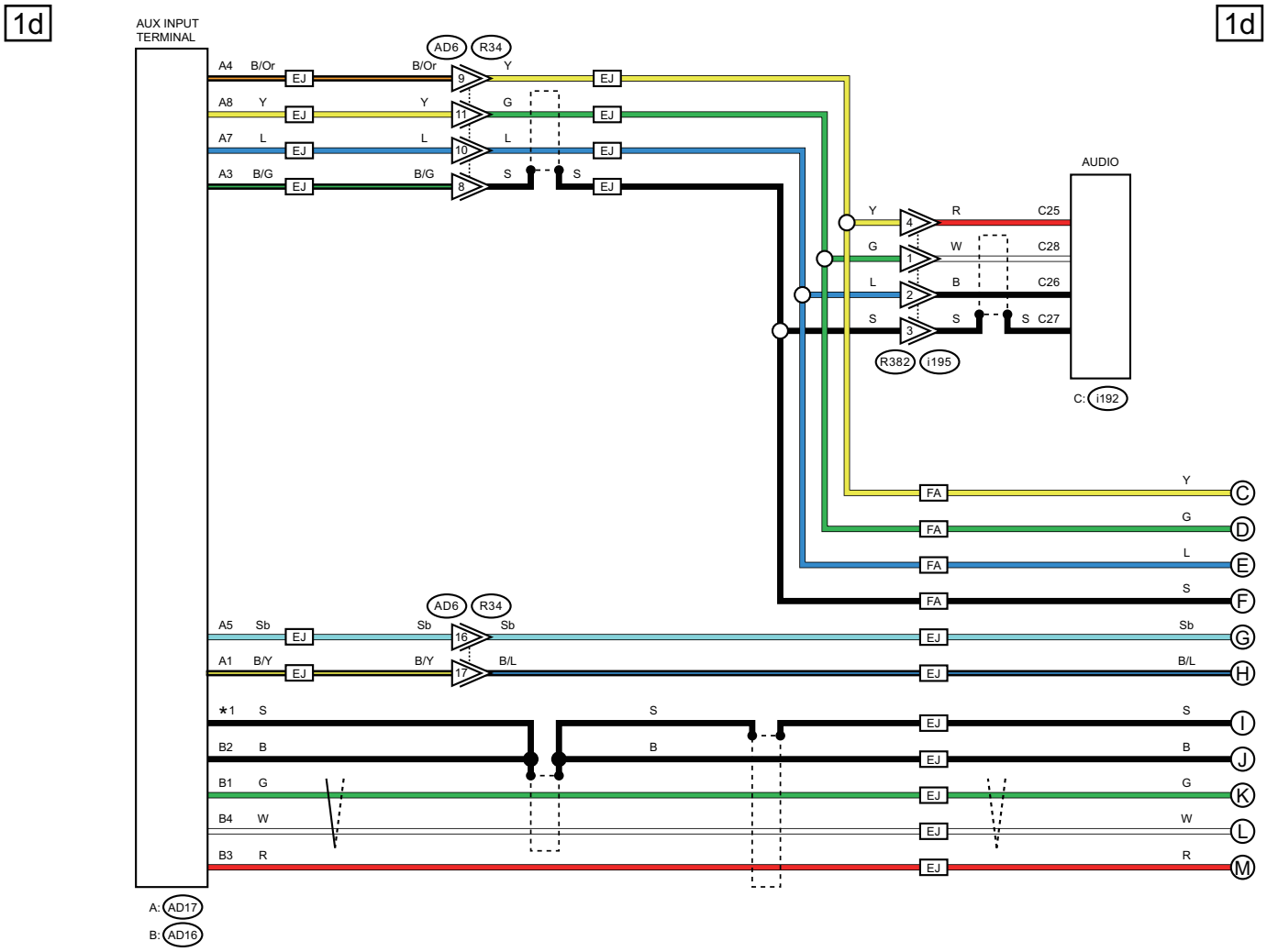

FA : ENGINE TYPE FA

EJ : ENGINE TYPE EJ

*1 : SHIELD CONNECTOR

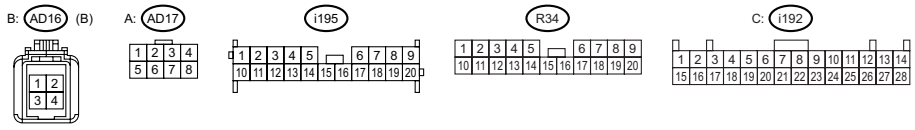

WI-66644

WIRING SYSTEM

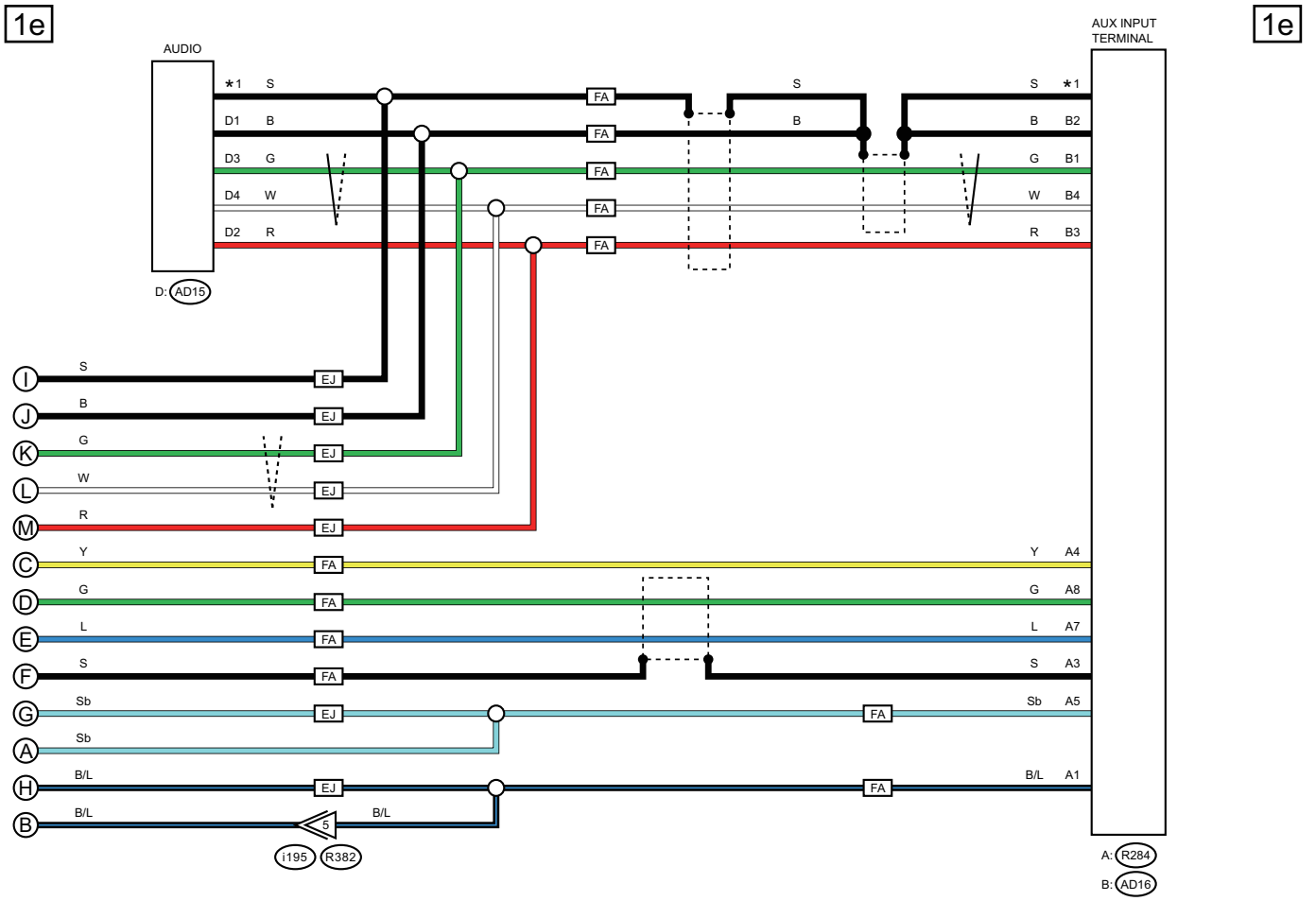

FA : ENGINE TYPE FA
EJ : ENGINE TYPE EJ

*1 : SHIELD CONNECTOR

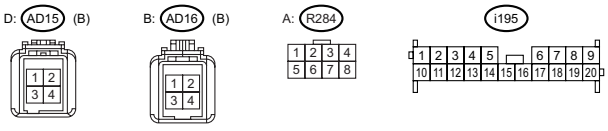

WI-66645

2. 7 INCH DISPLAY (WITHOUT AUDIO AMPLIFIER, WITHOUT TELEMATICS)

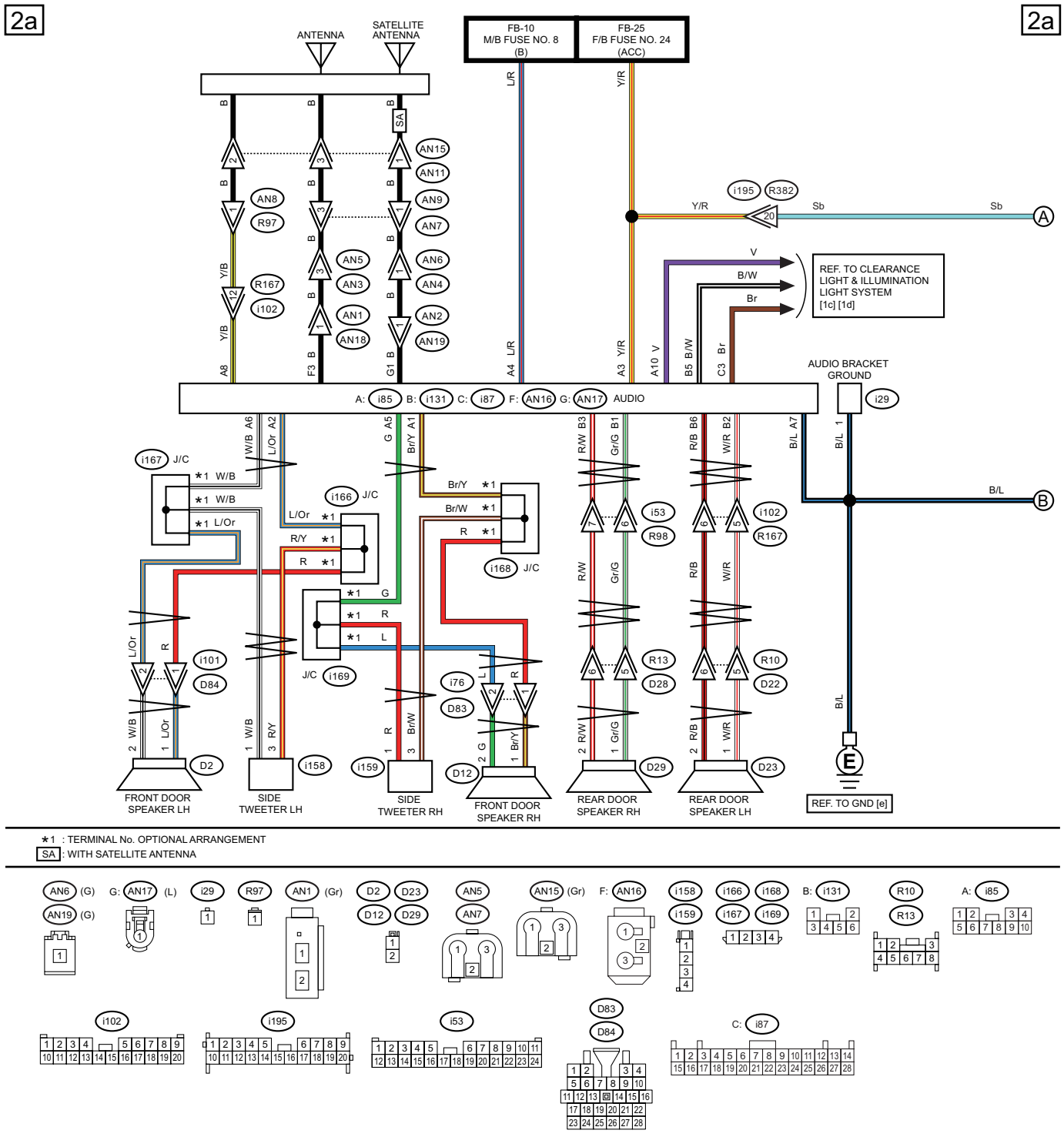

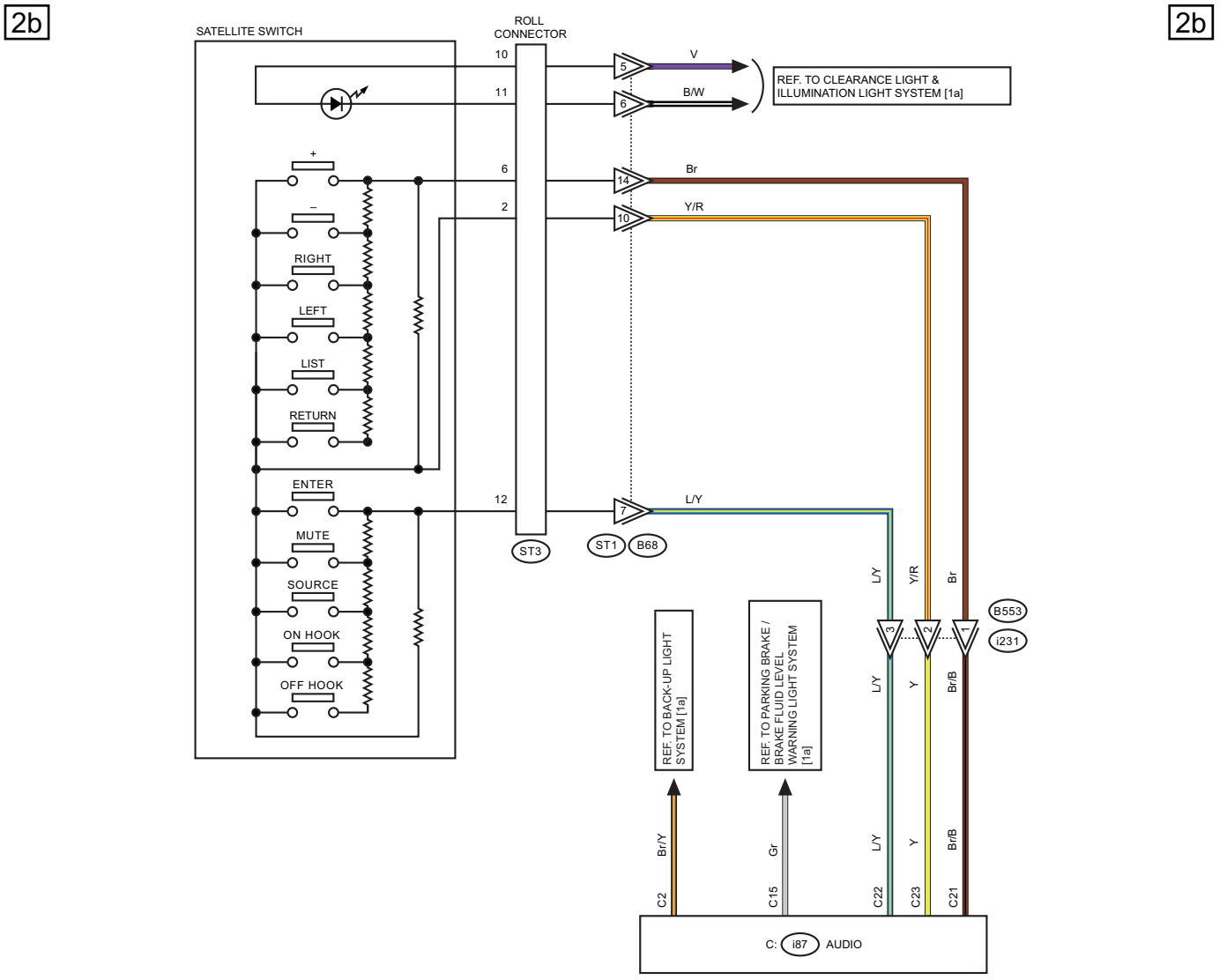
2b
2b
SATELLITE SWITCH
ROLL CONNECTOR
10
11
6
2
12
V
B/W
Br
Y/R
L/Y
REF. TO CLEARANCE LIGHT & ILLUMINATION LIGHT SYSTEM [1a]
+
–
RIGHT
LEFT
LIST
RETURN
ENTER
MUTE
SOURCE
ON HOOK
OFF HOOK
ST3
ST1
B68
B553
i231
REF. TO BACK-UP LIGHT SYSTEM [1a]
REF. TO PARKING BRAKE / BRAKE FLUID LEVEL WARNING LIGHT SYSTEM [1a]
Br/Y
Gr
L/Y
Y
Br/B
C2
C15
C22
C23
C21
C: i87 AUDIO

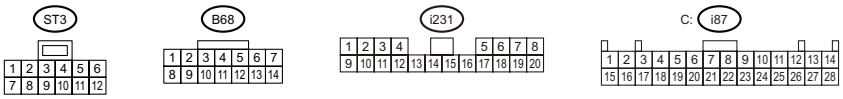
ST3
B68
i231
C: i87

WI-66648

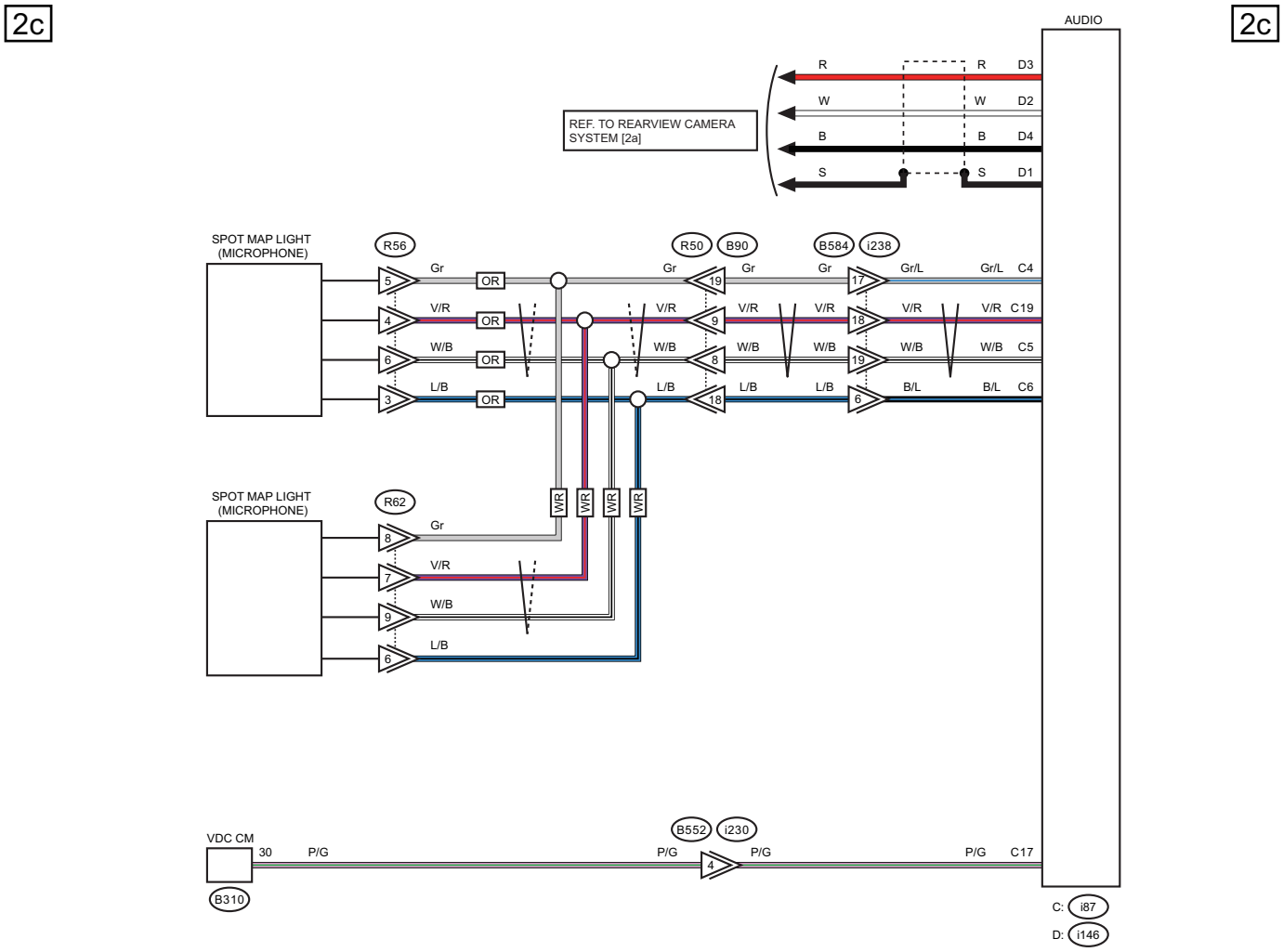

OR : WITHOUT SUNROOF

WR : WITH SUNROOF

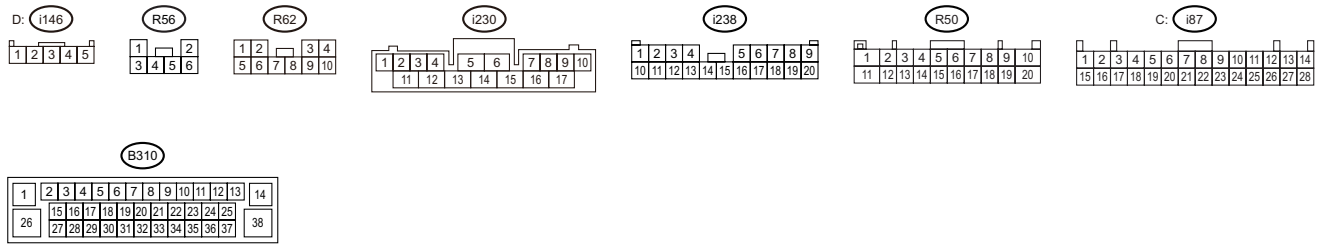

WI-66649

2d 2d

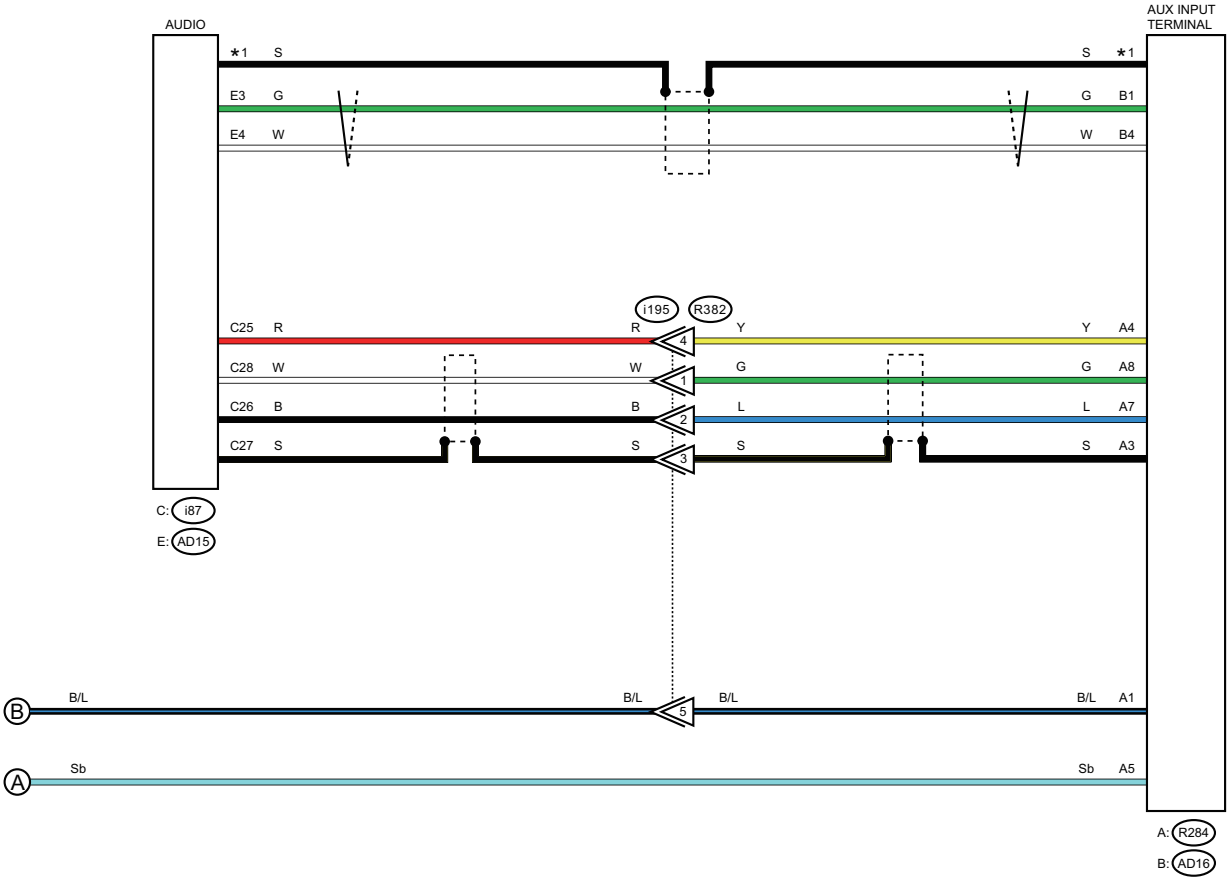

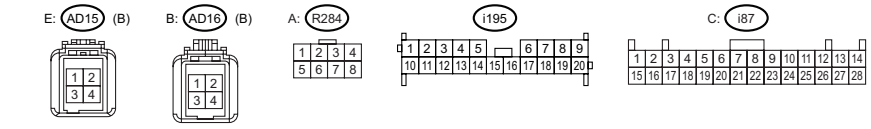

WI-66650

3. 7 INCH DISPLAY (WITHOUT AUDIO AMPLIFIER, WITH TELEMATICS)

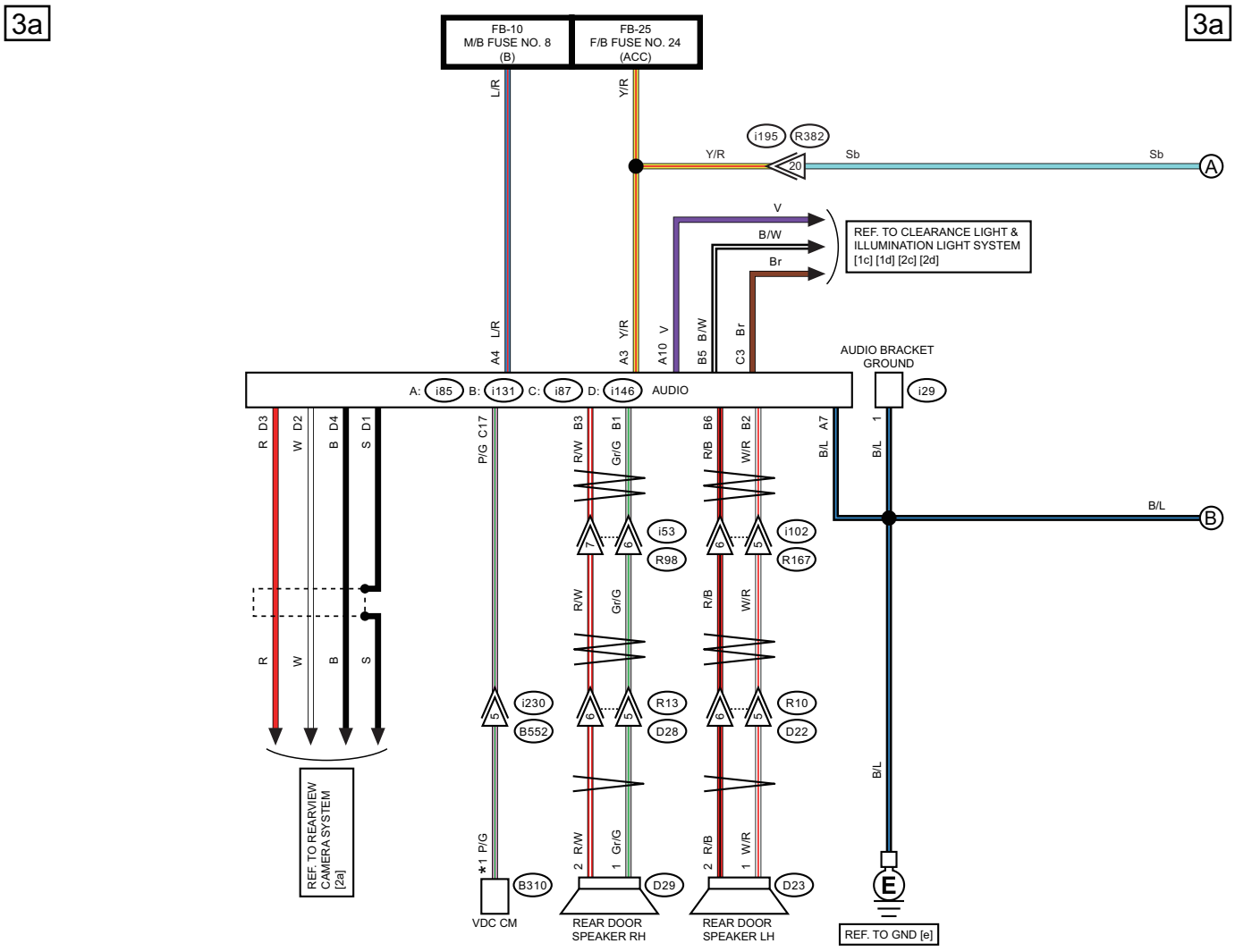

OE : WITHOUT EyeSight
ES : WITH EyeSight

*1 : WITHOUT EyeSight : 30
WITH EyeSight : 26

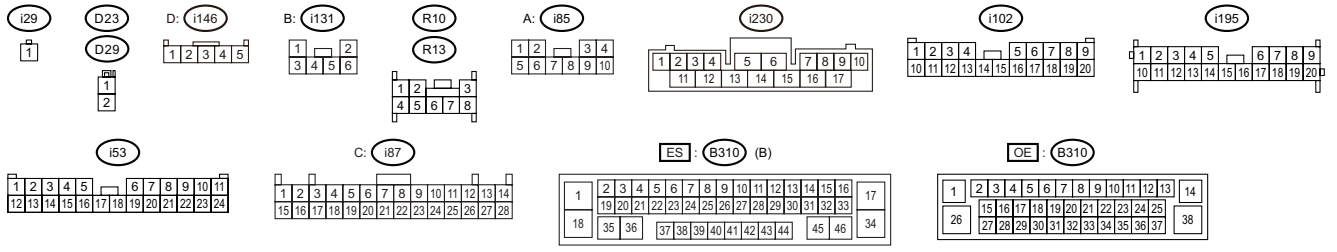

WI-66652

WIRING SYSTEM

3b

3b

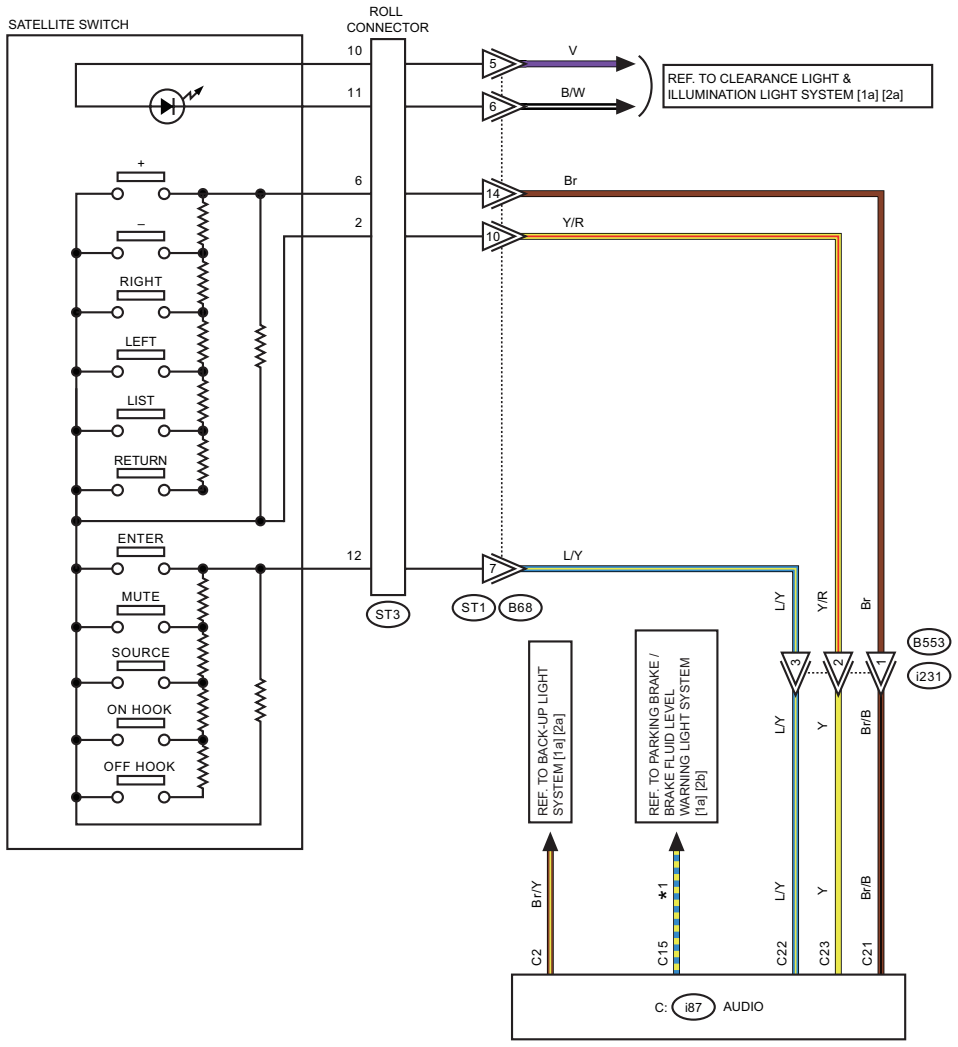

*1 : WITHOUT EyeSight : Gr
WITH EyeSight : Y/G

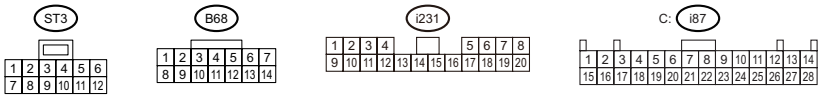

WI-66653

3c

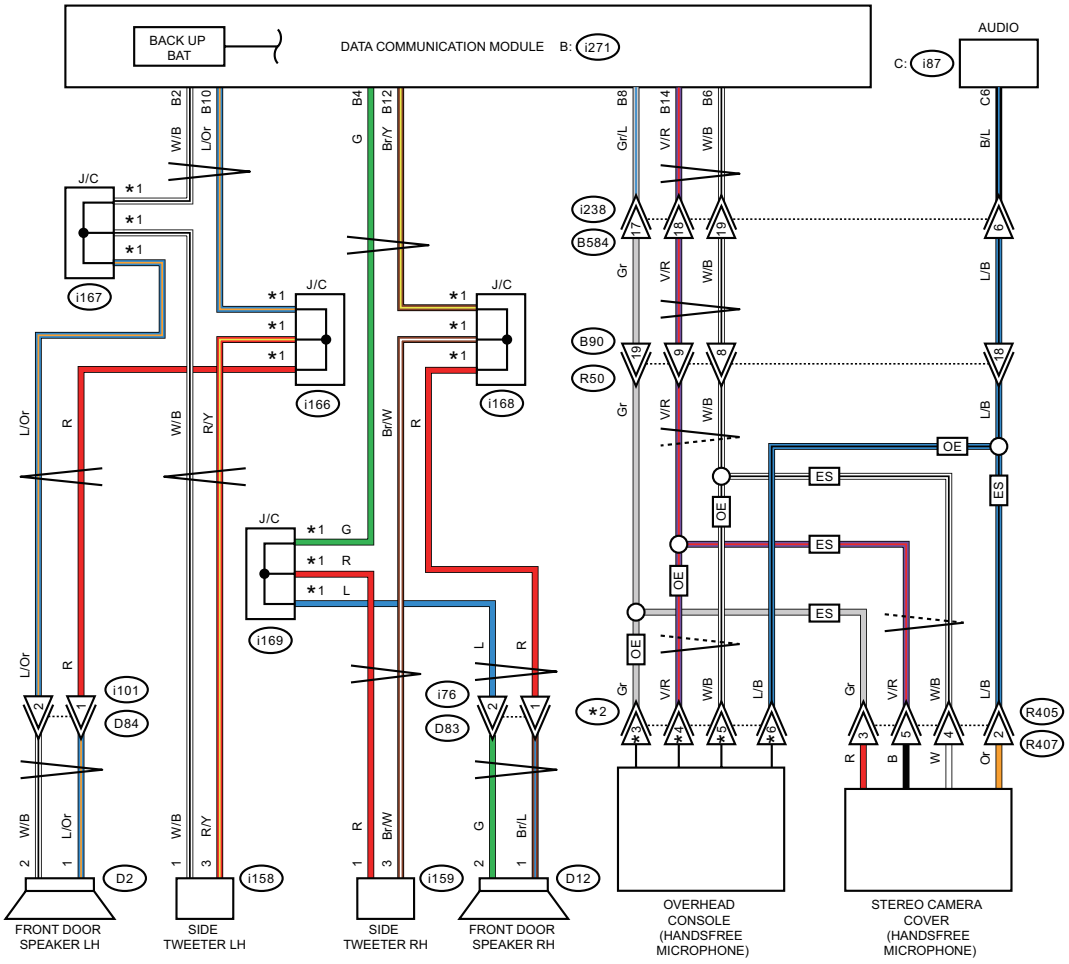

3c

OE : WITHOUT EyeSight

ES : WITH EyeSight

★1 : TERMINAL No. OPTIONAL ARRANGEMENT

★2 : WITHOUT SUNROOF : R56
WITH SUNROOF : R62

★3 : WITHOUT SUNROOF : 5
WITH SUNROOF : 8

★4 : WITHOUT SUNROOF : 4
WITH SUNROOF : 7

★5 : WITHOUT SUNROOF : 6
WITH SUNROOF : 9

★6 : WITHOUT SUNROOF : 3
WITH SUNROOF : 6

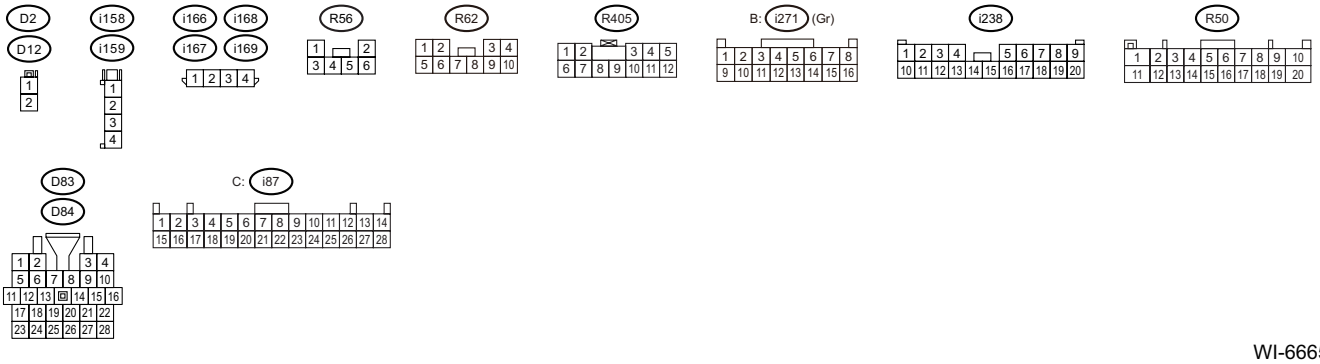

WI-66654

WIRING SYSTEM

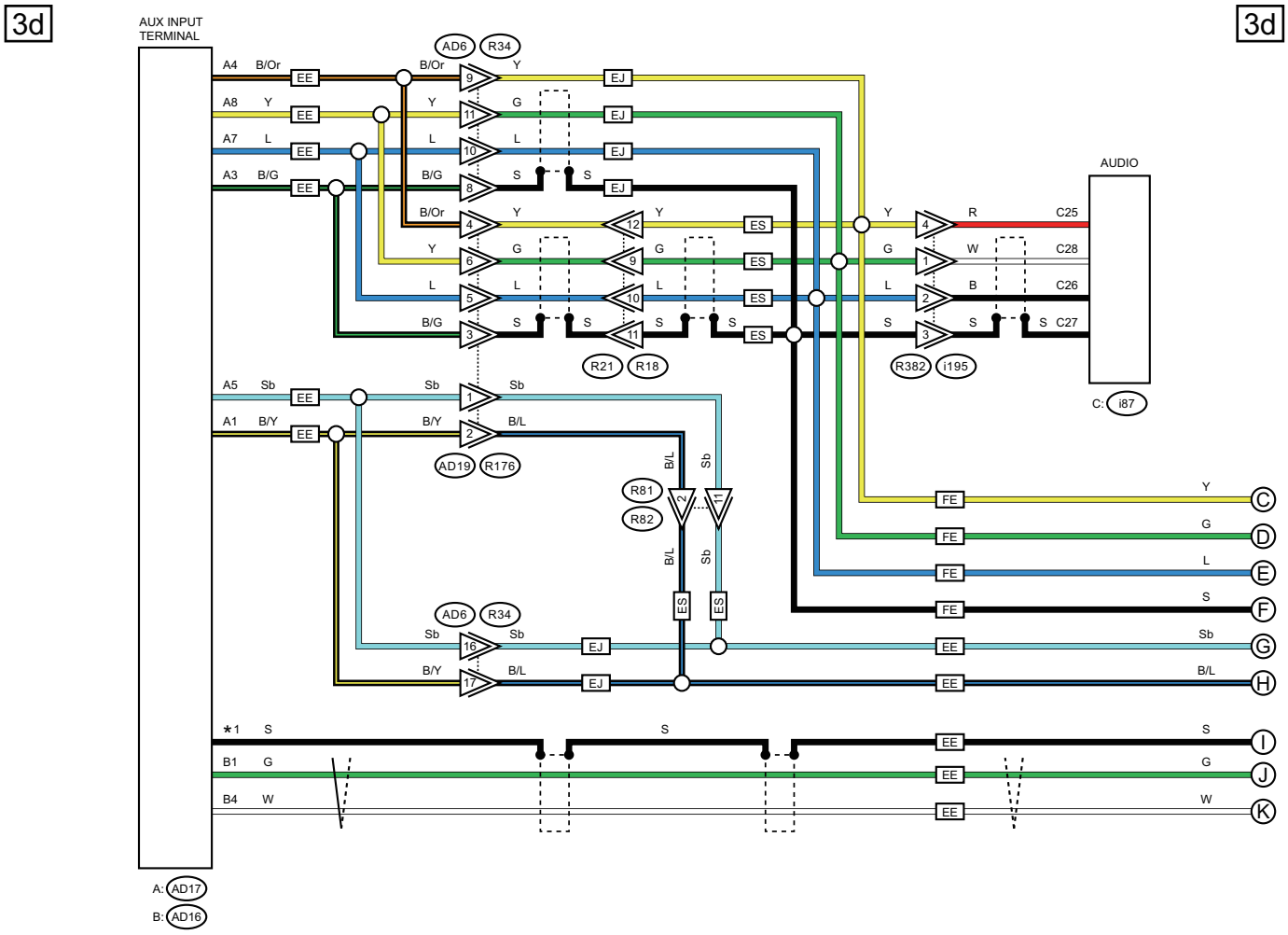

FE : ENGINE TYPE FA WITHOUT EyeSight
EE : EXCEPT FOR ENGINE TYPE FA WITHOUT EyeSight
EJ : ENGINE TYPE EJ
ES : WITH EyeSight

*1 : SHIELD CONNECTOR

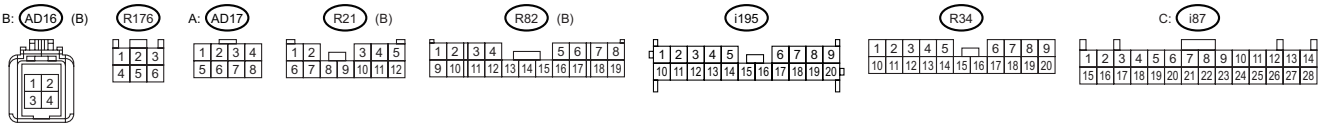

WI-66655

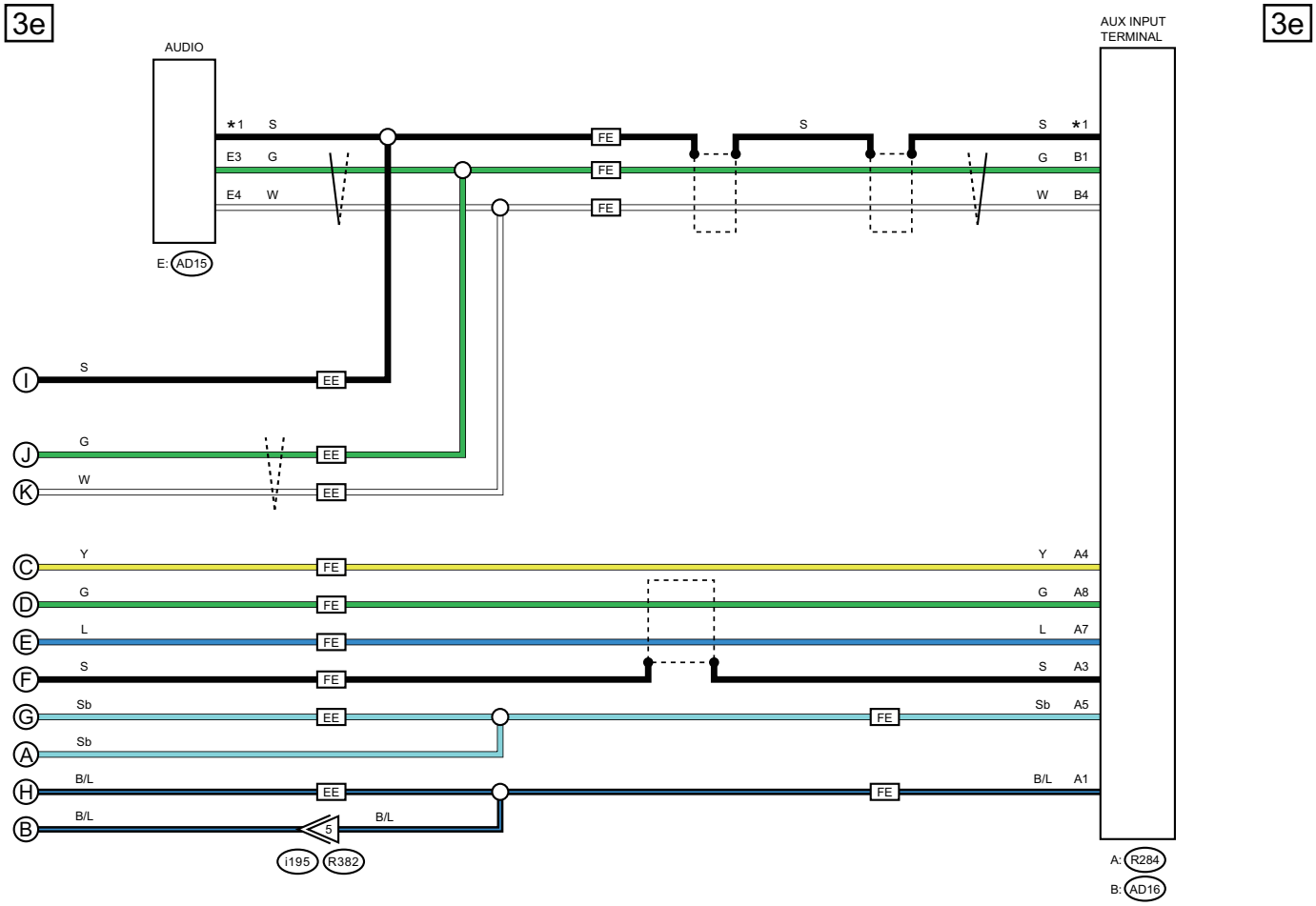

FE : ENGINE TYPE FA WITHOUT EyeSight

EE : EXCEPT FOR ENGINE TYPE FA WITHOUT EyeSight

*1 : SHIELD CONNECTOR

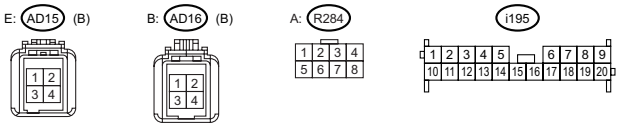

WI-66656

WIRING SYSTEM

3f

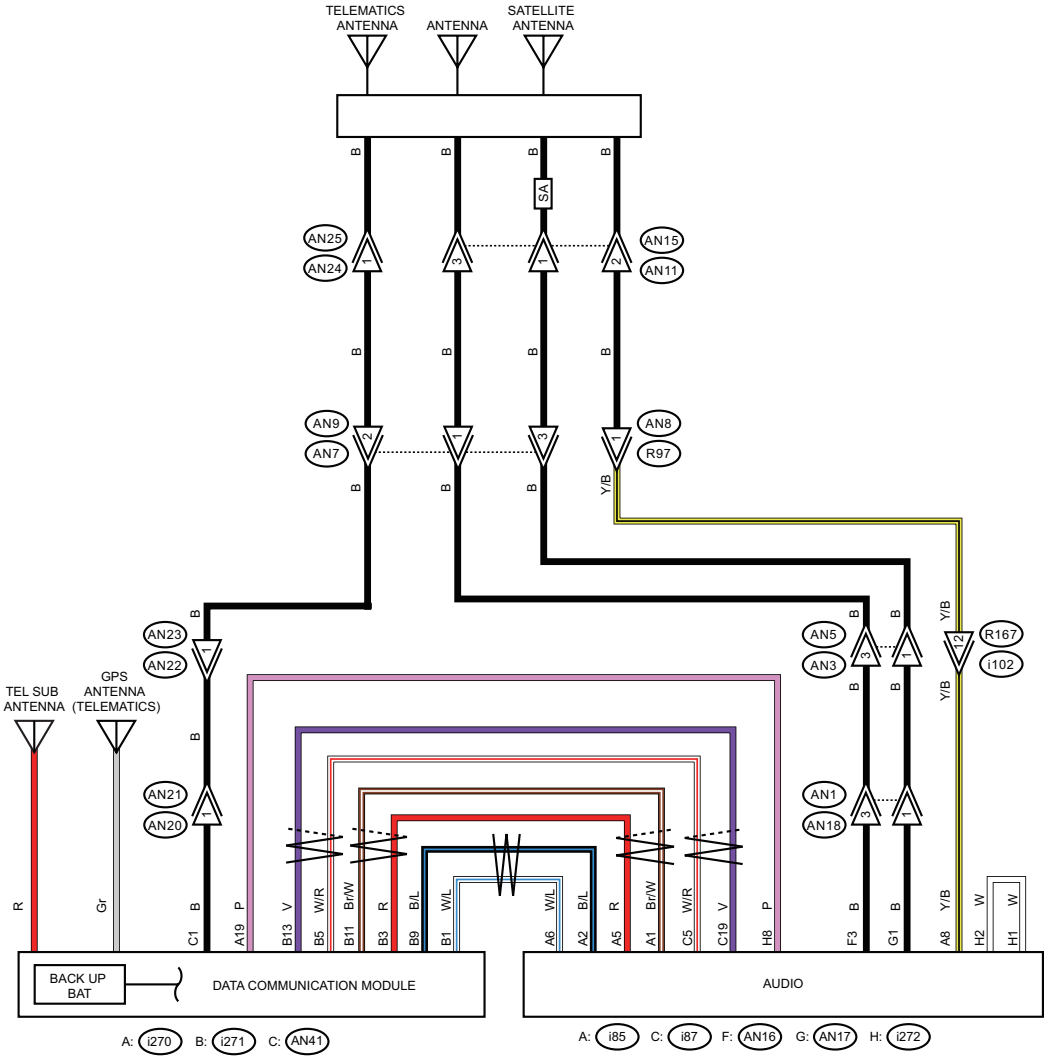

SA : WITH SATELLITE ANTENNA

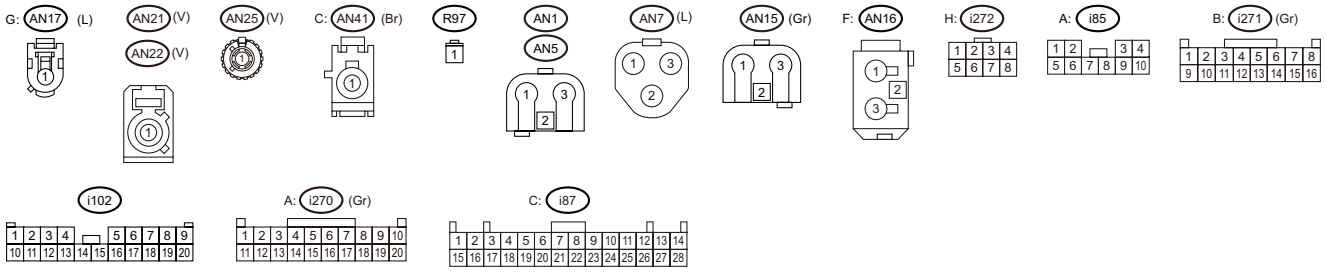

WI-66657

4. 7 INCH DISPLAY (WITH AUDIO AMPLIFIER, WITHOUT TELEMATICS)

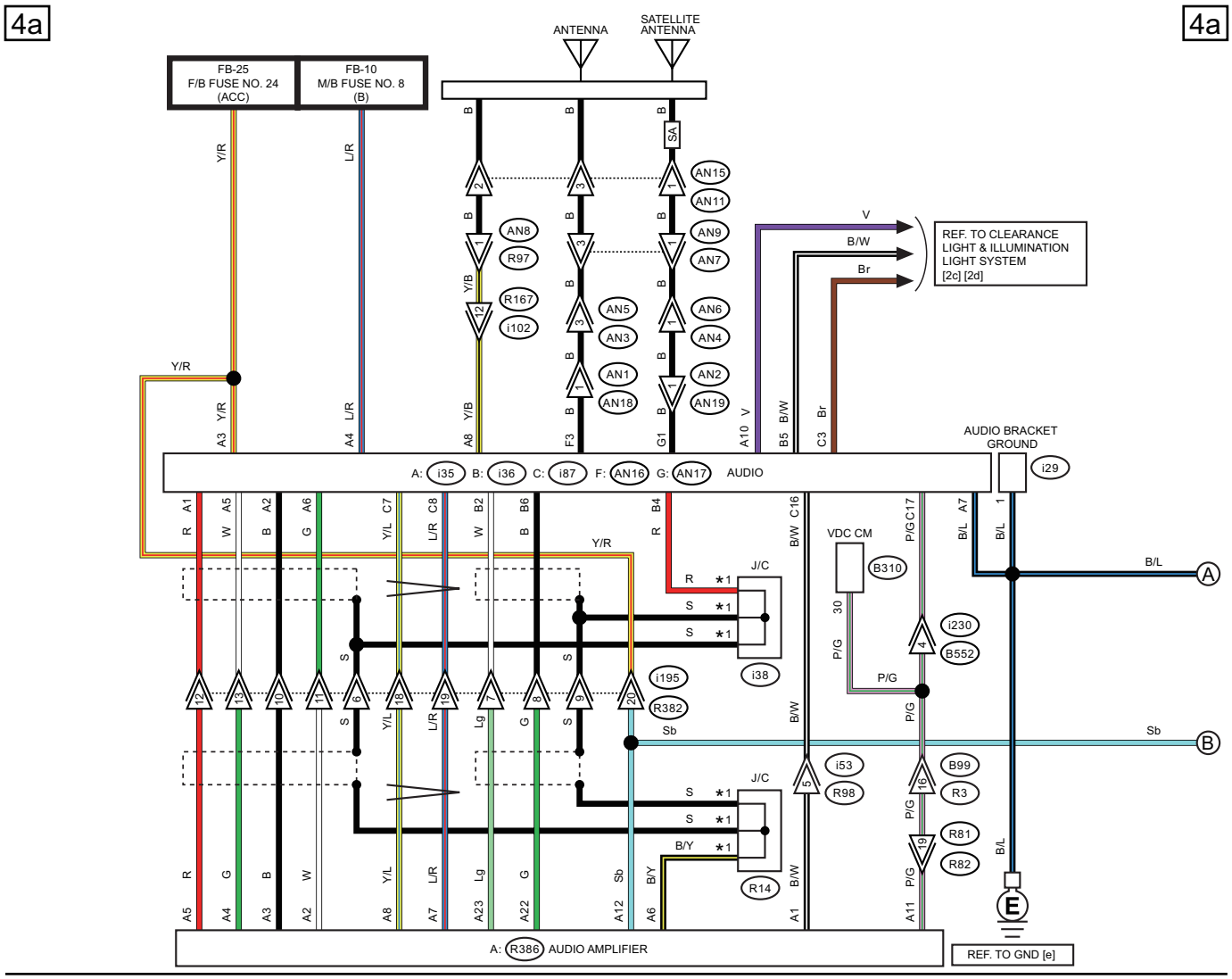

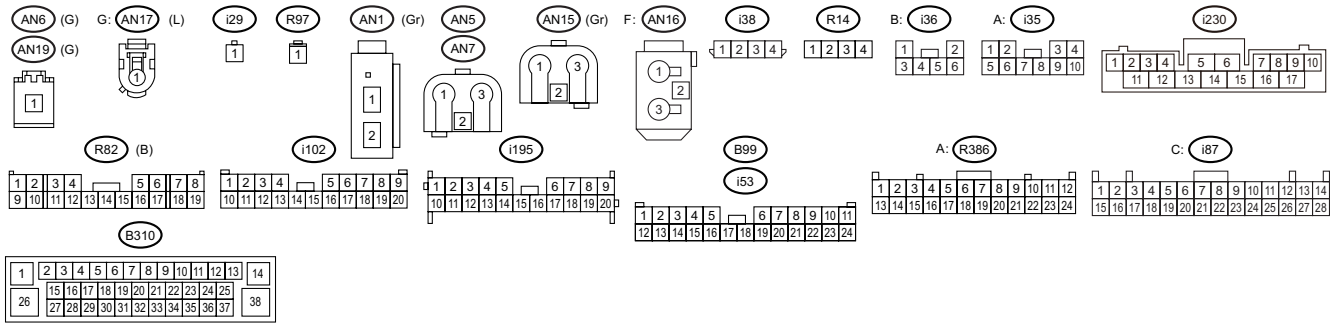

WI-66659

WIRING SYSTEM

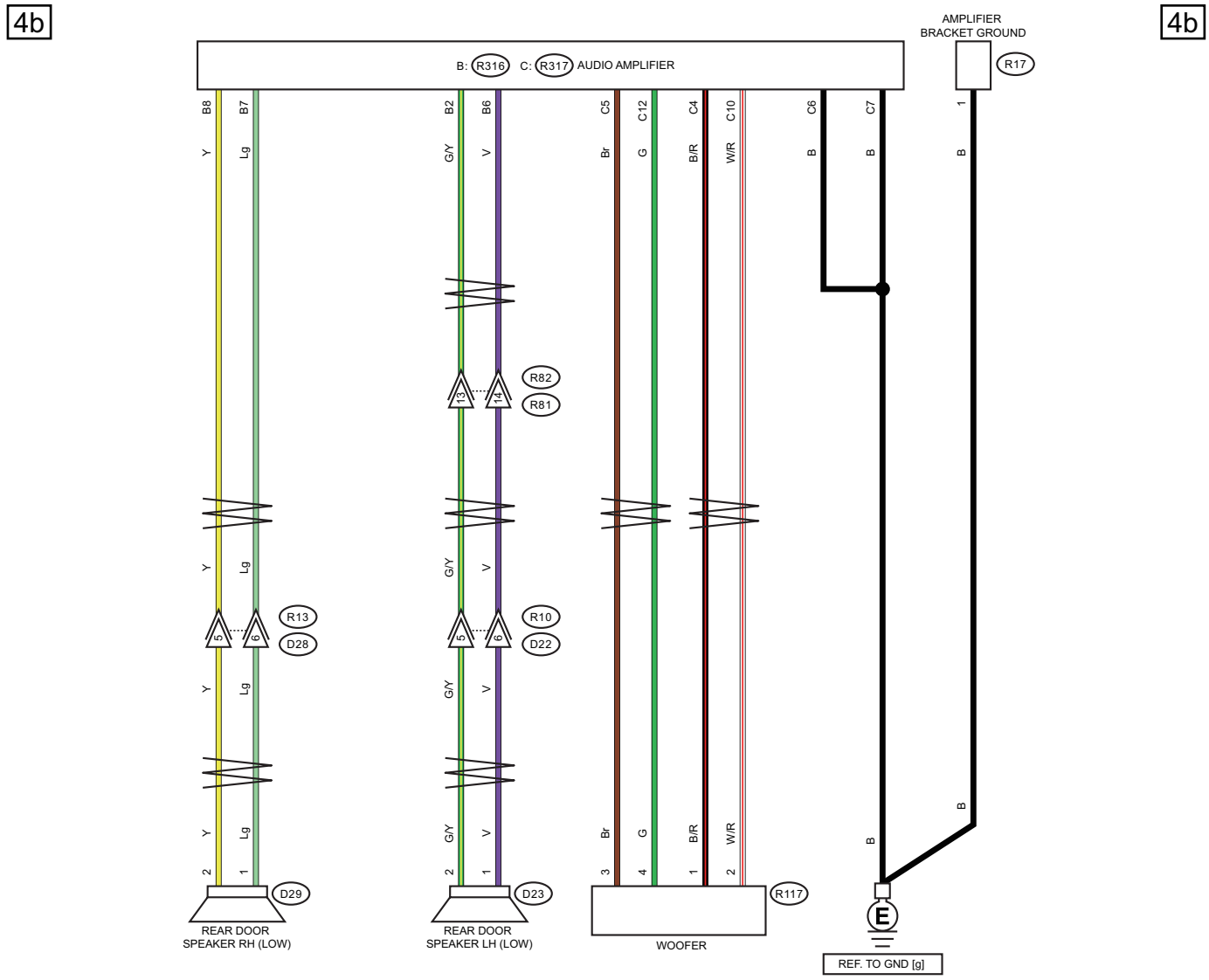

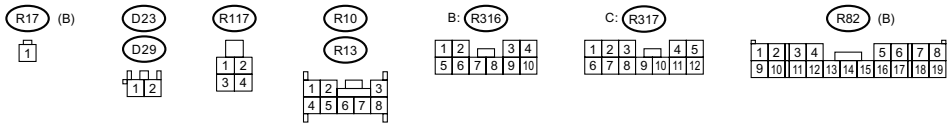

WI-66660

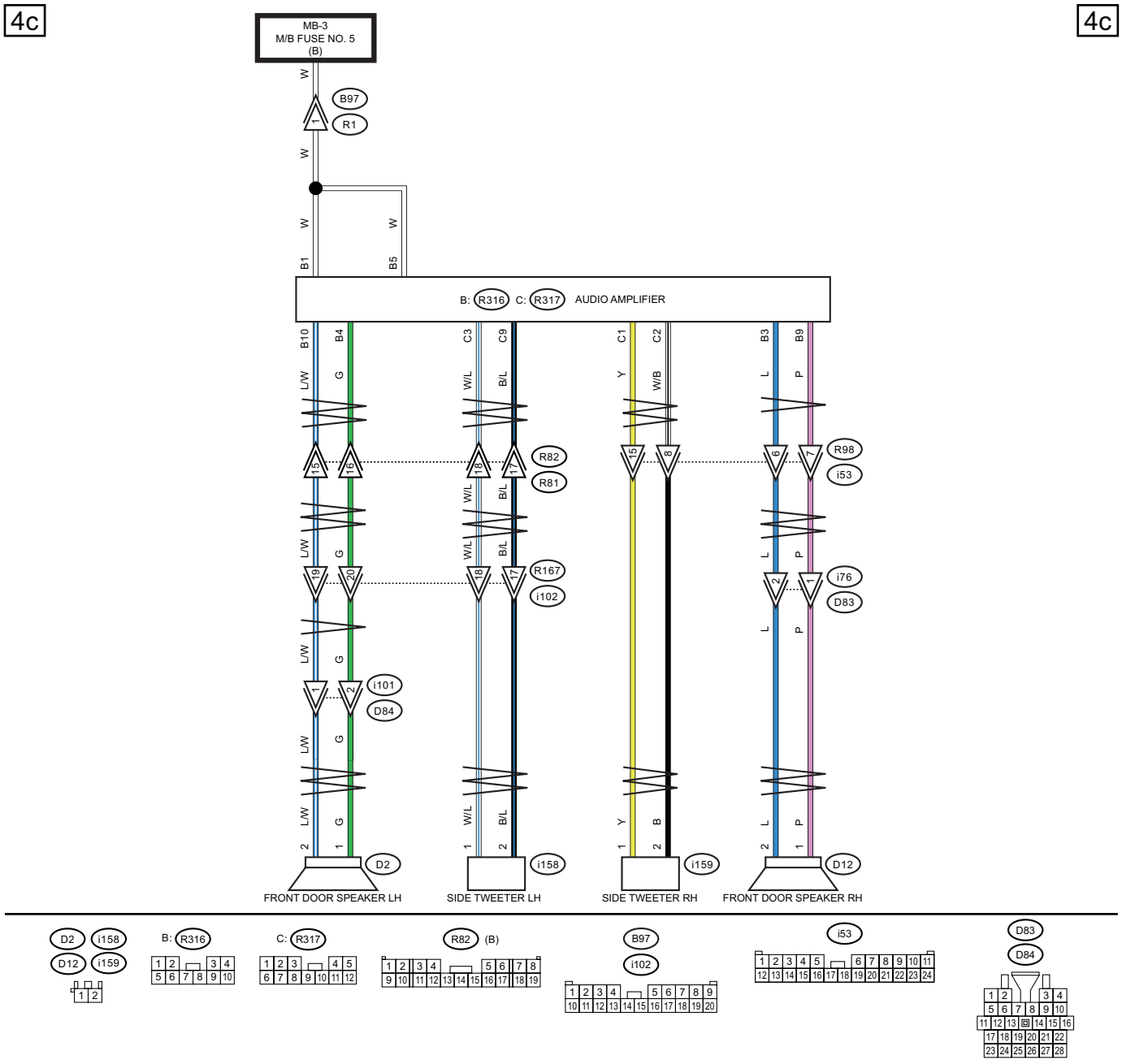
4c
4c
MB-3
M/B FUSE NO. 5
(B)
B97
R1
B: R316 C: R317 AUDIO AMPLIFIER
R82
R81
R167
i102
R98
i53
i76
D83
i101
D84
D2
i158
i159
D12
FRONT DOOR SPEAKER LH
SIDE TWEETER LH
SIDE TWEETER RH
FRONT DOOR SPEAKER RH
R82 (B)

WI-66661

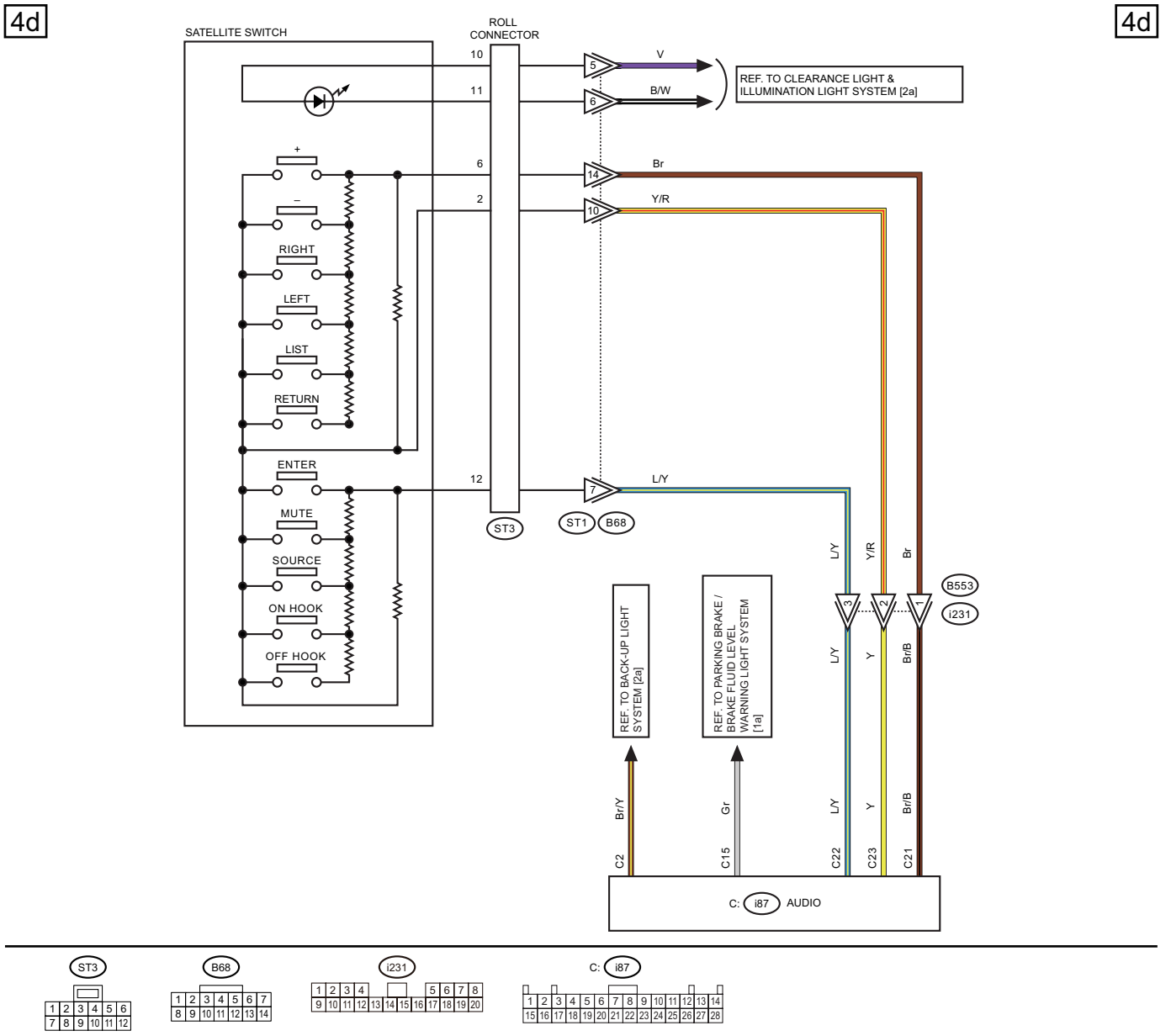
4d
4d
SATELLITE SWITCH
ROLL CONNECTOR
10
11
6
2
12
V
B/W
Br
Y/R
L/Y
REF. TO CLEARANCE LIGHT & ILLUMINATION LIGHT SYSTEM [2a]
+
–
RIGHT
LEFT
LIST
RETURN
ENTER
MUTE
SOURCE
ON HOOK
OFF HOOK
ST3
ST1
B68
REF. TO BACK-UP LIGHT SYSTEM [2a]
REF. TO PARKING BRAKE / BRAKE FLUID LEVEL WARNING LIGHT SYSTEM [1a]
B553
i231
Br/Y
Gr
L/Y
Y
Br/B
C2
C15
C22
C23
C21
C: i87 AUDIO

ST3
B68
i231
C: i87

WI-66662

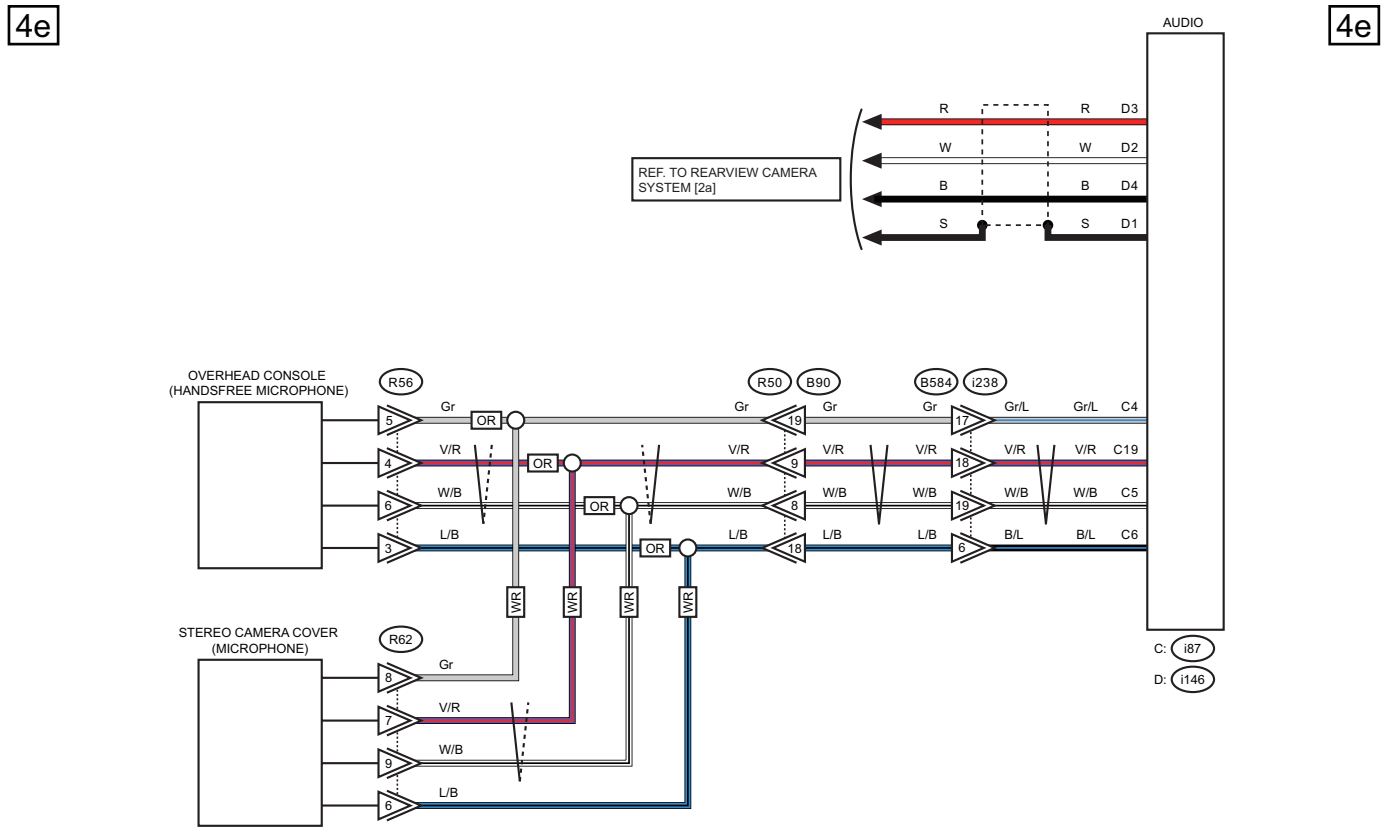

OR : WITHOUT SUNROOF
WR : WITH SUNROOF

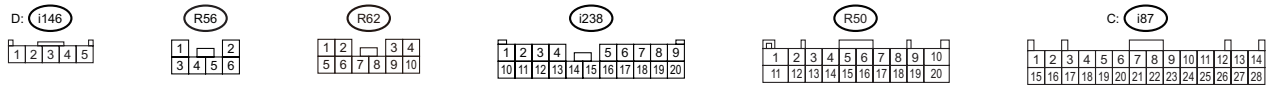

WI-66663

WIRING SYSTEM

4f

4f

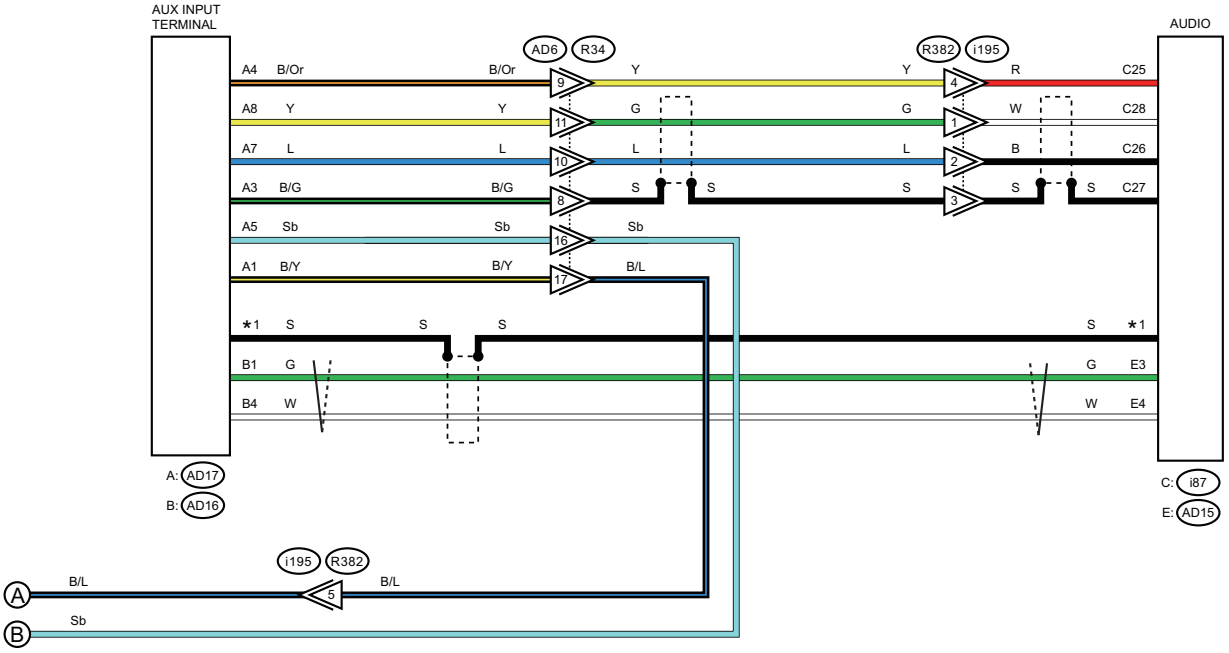

*1 : SHIELD CONNECTOR

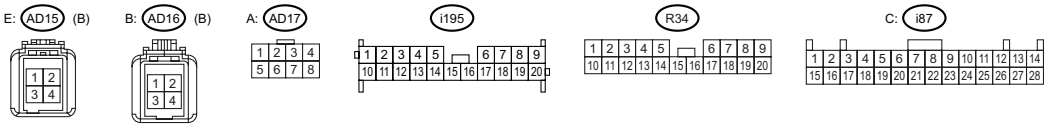

WI-66664

5. 7 INCH DISPLAY (WITH AUDIO AMPLIFIER, WITH TELEMATICS)

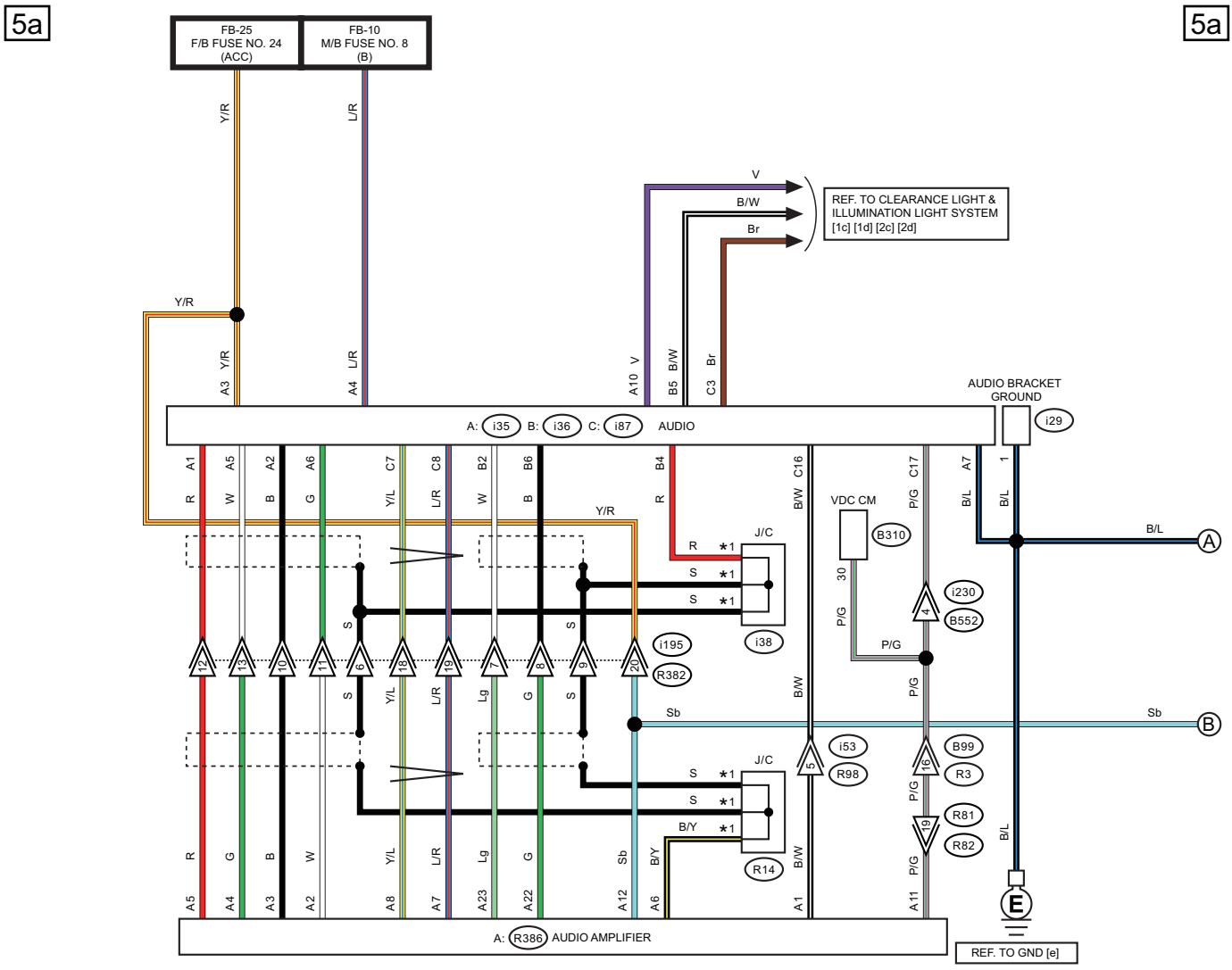

*1 : TERMINAL No. OPTIONAL ARRANGEMENT

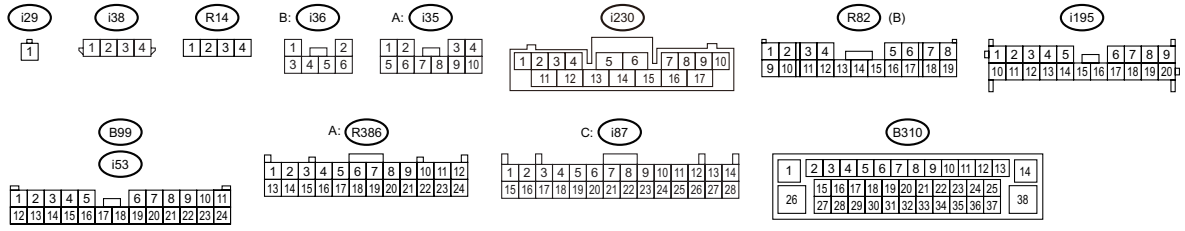

WI-66666

WIRING SYSTEM

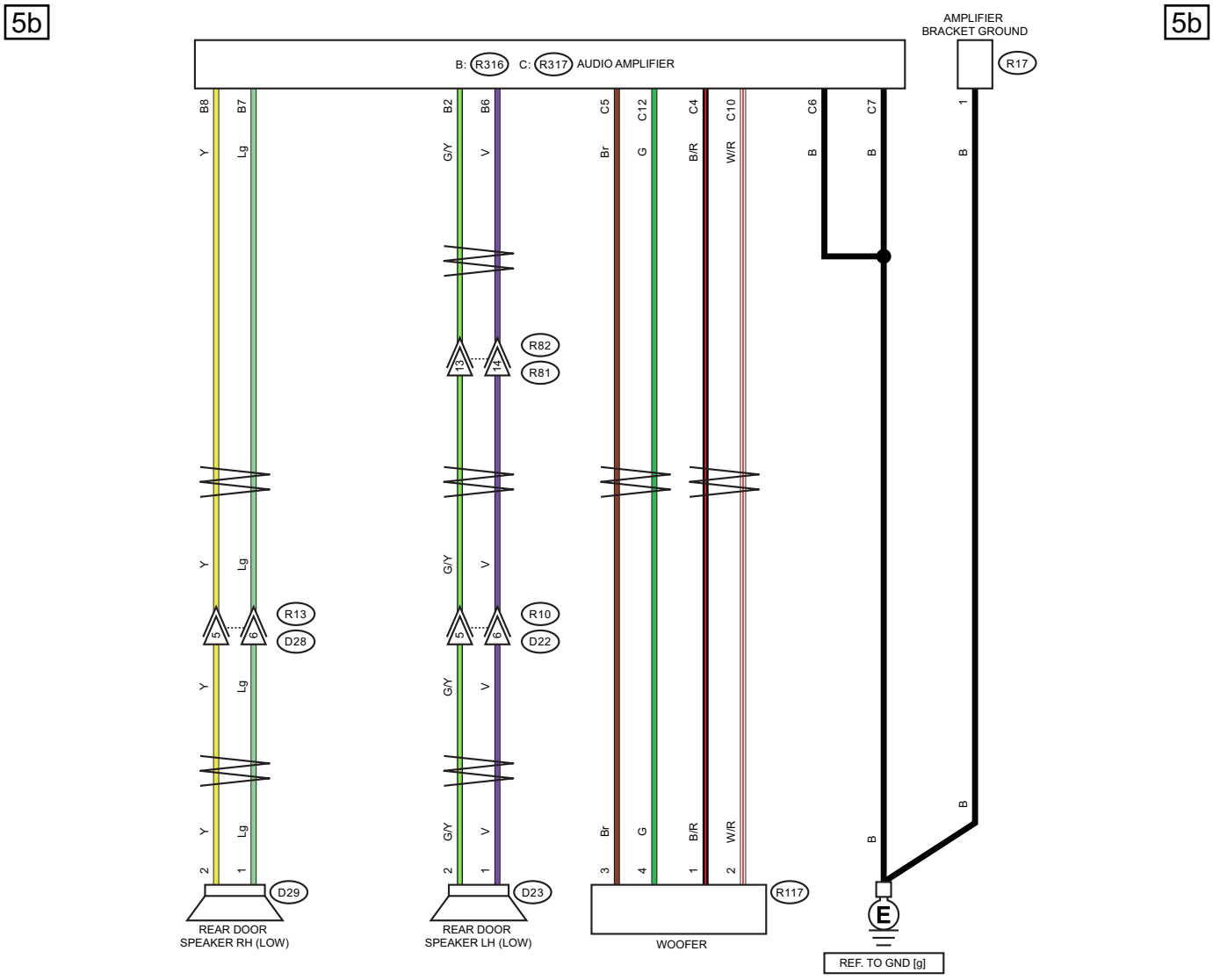

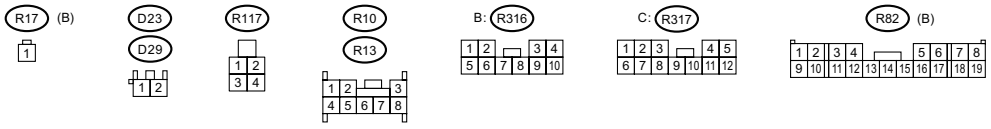

WI-66667

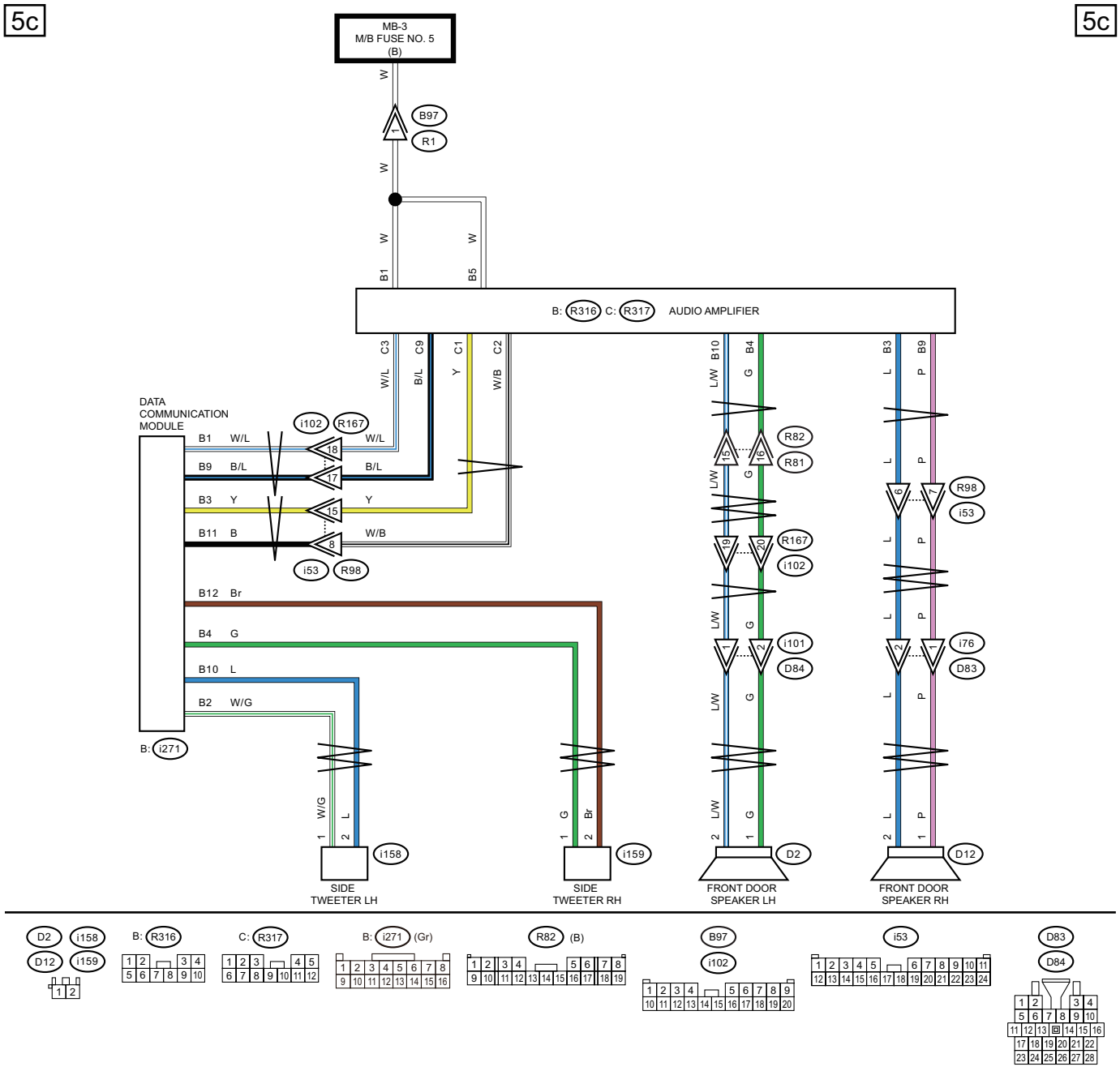
5c
5c
MB-3
M/B FUSE NO. 5
(B)
B97
R1
B: R316 C: R317 AUDIO AMPLIFIER
DATA
COMMUNICATION
MODULE
B: i271
i102
R167
i53
R98
B1 W/L
B9 B/L
B3 Y
B11 B
B12 Br
B4 G
B10 L
B2 W/G
SIDE
TWEETER LH
SIDE
TWEETER RH
R82
R81
i101
D84
FRONT DOOR
SPEAKER LH
R98
i53
i76
D83
FRONT DOOR
SPEAKER RH
D2
i158
D12
i159
B: R316
C: R317
B: i271 (Gr)
R82 (B)
B97
i102
i53
D83
D84

WI-66668

WIRING SYSTEM

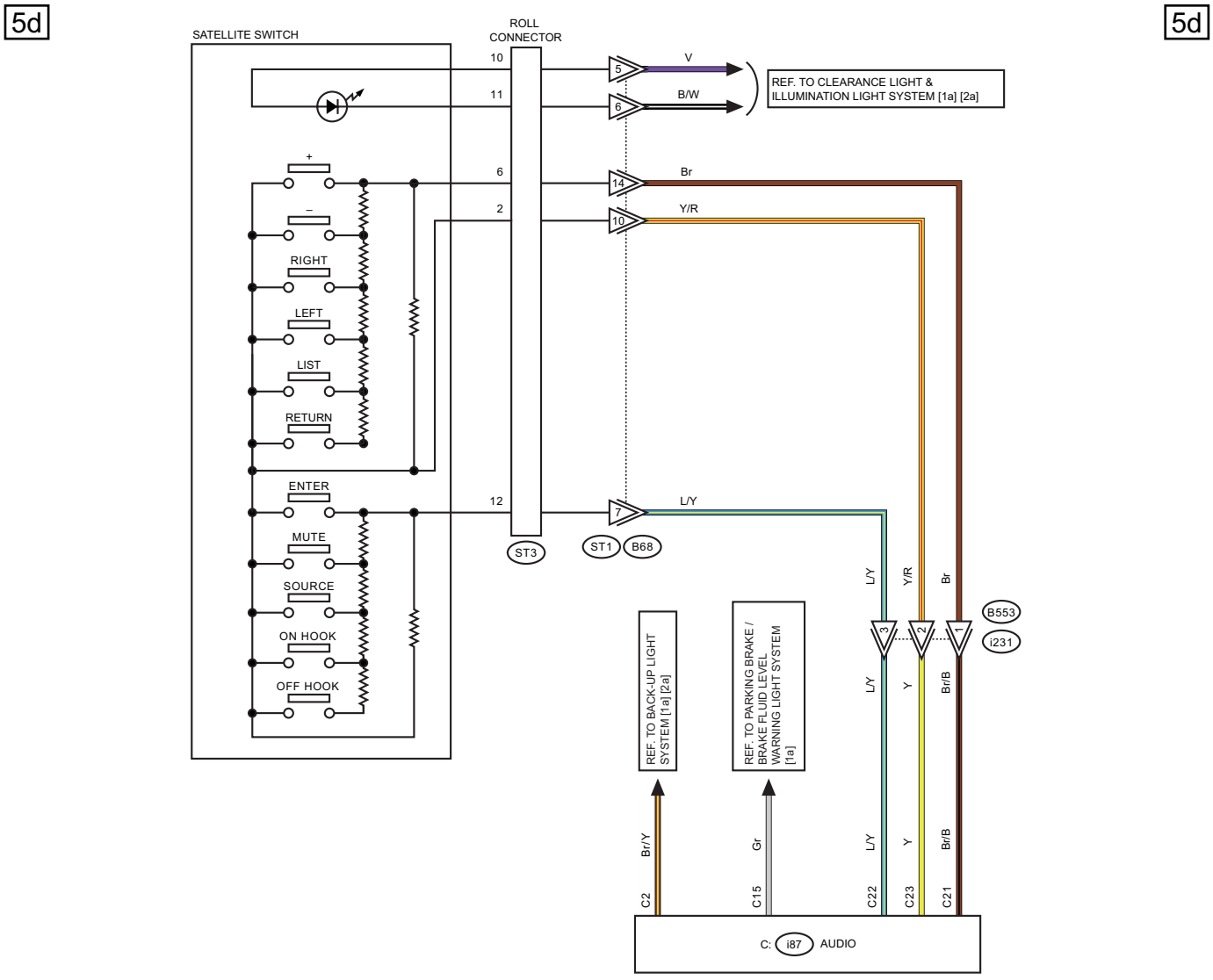

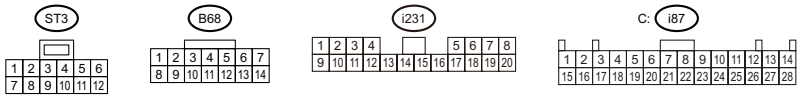

WI-66669

5e

5e

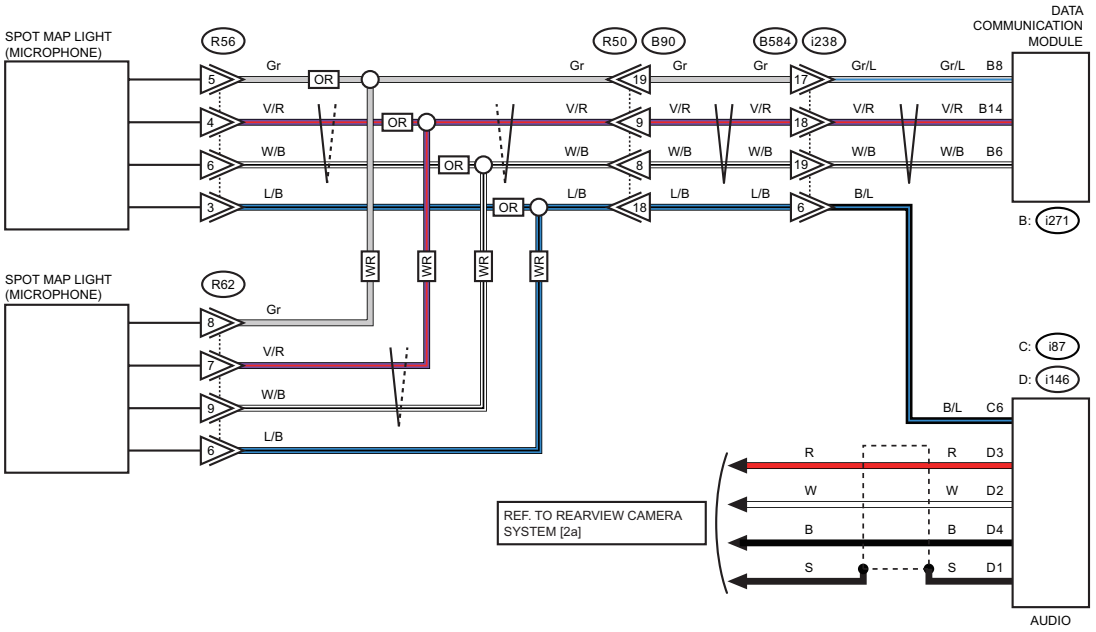

OR : WITHOUT SUNROOF

WR : WITH SUNROOF

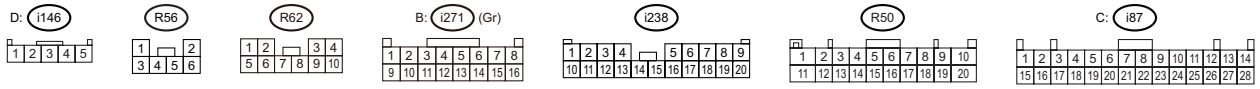

WI-66670

WIRING SYSTEM

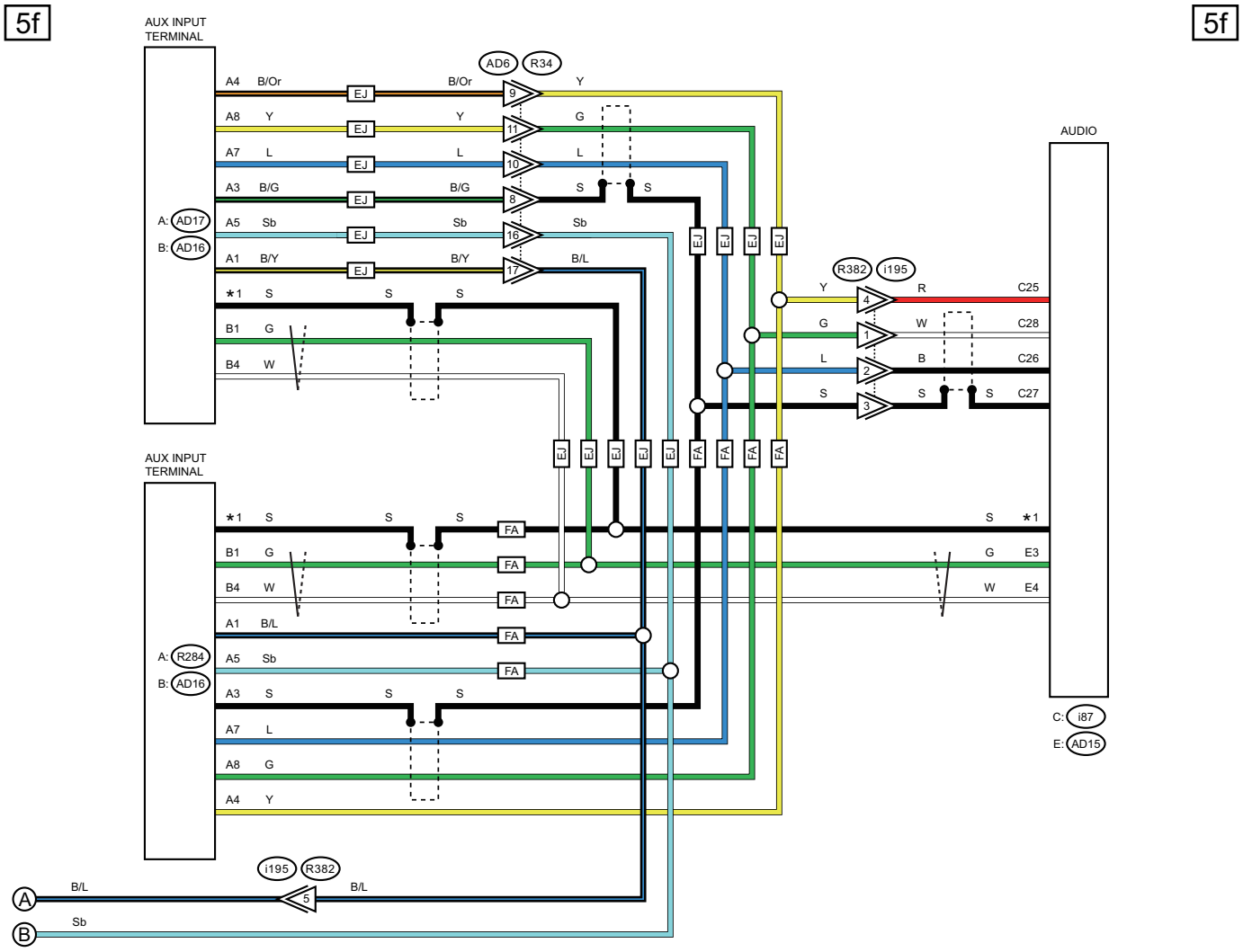

WI-66671

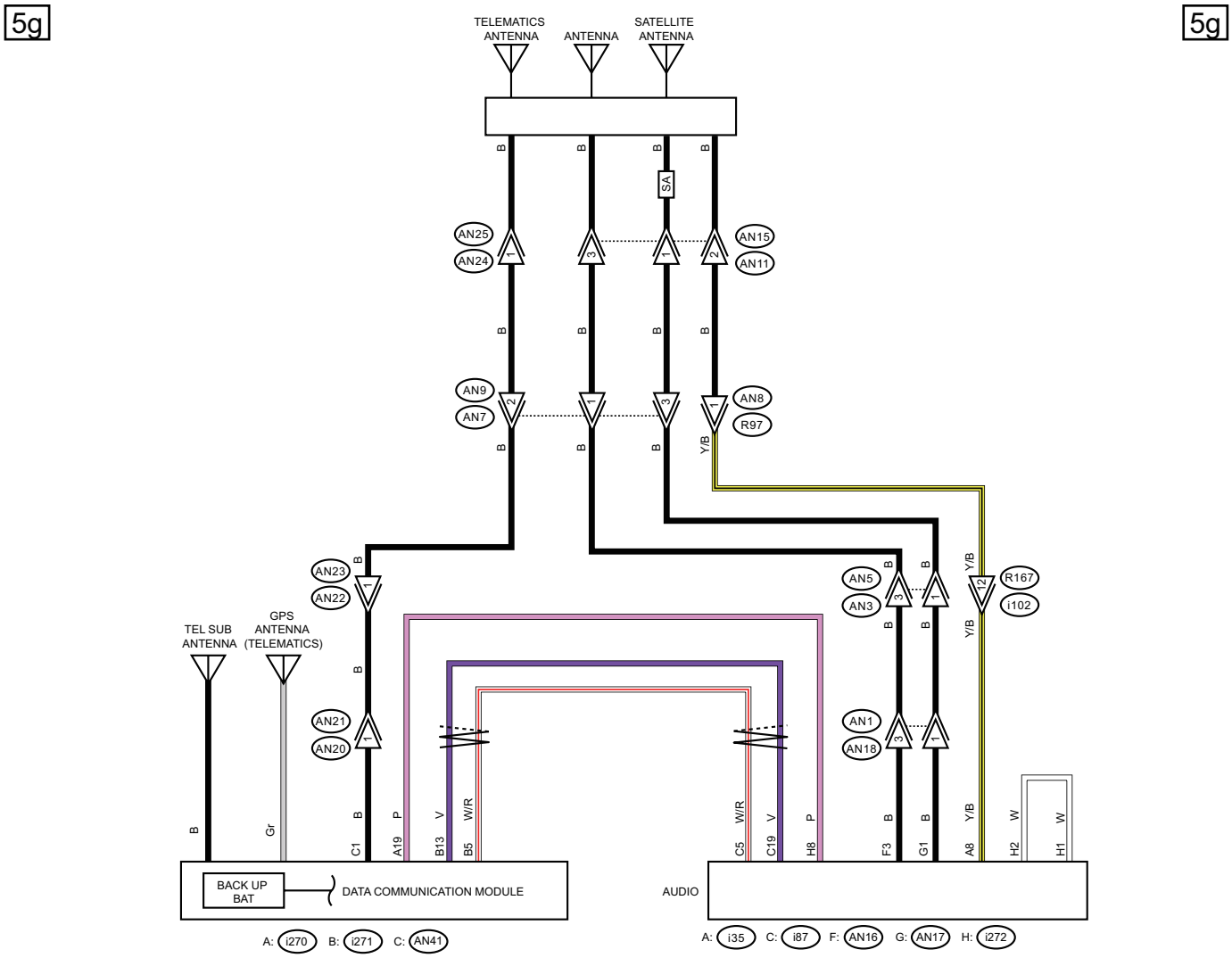

SA : WITH SATELLITE ANTENNA

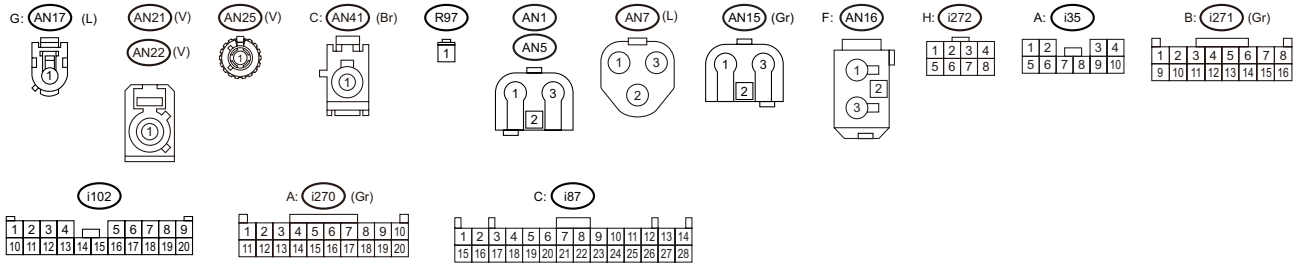

WI-66672

9. Back-up Light System

A: WIRING DIAGRAM

1. ENGINE TYPE FA

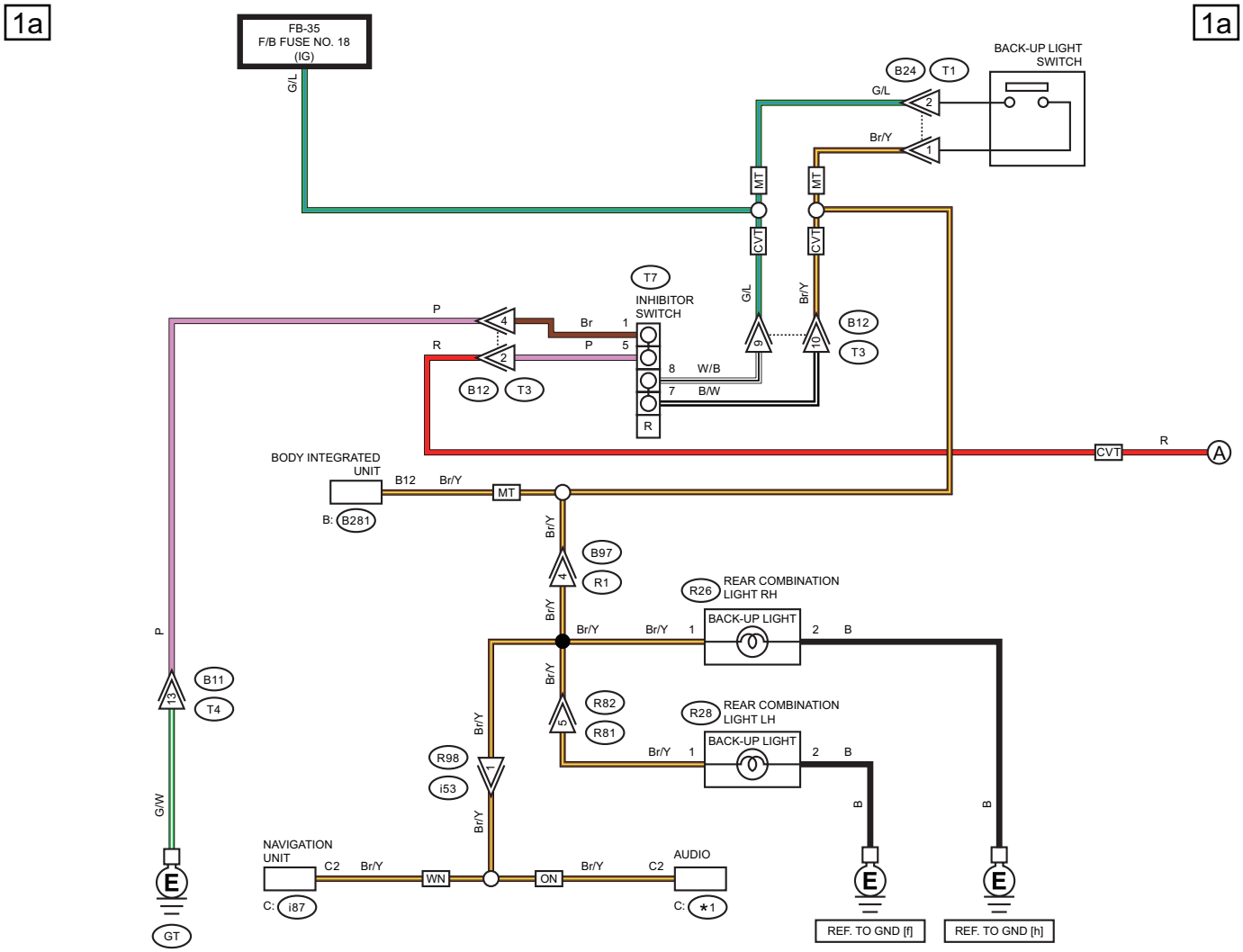

ON : WITHOUT NAVIGATION
WN : WITH NAVIGATION

*1 : 6.2 INCH DISPLAY : i192
7 INCH DISPLAY : i87

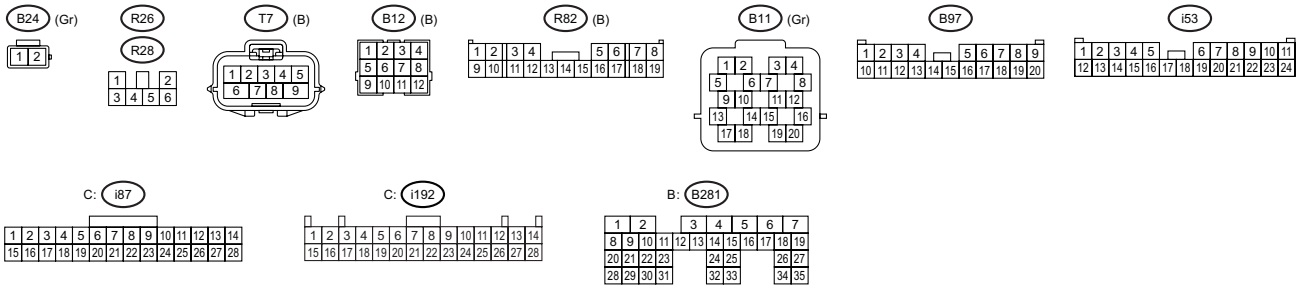

WI-67175

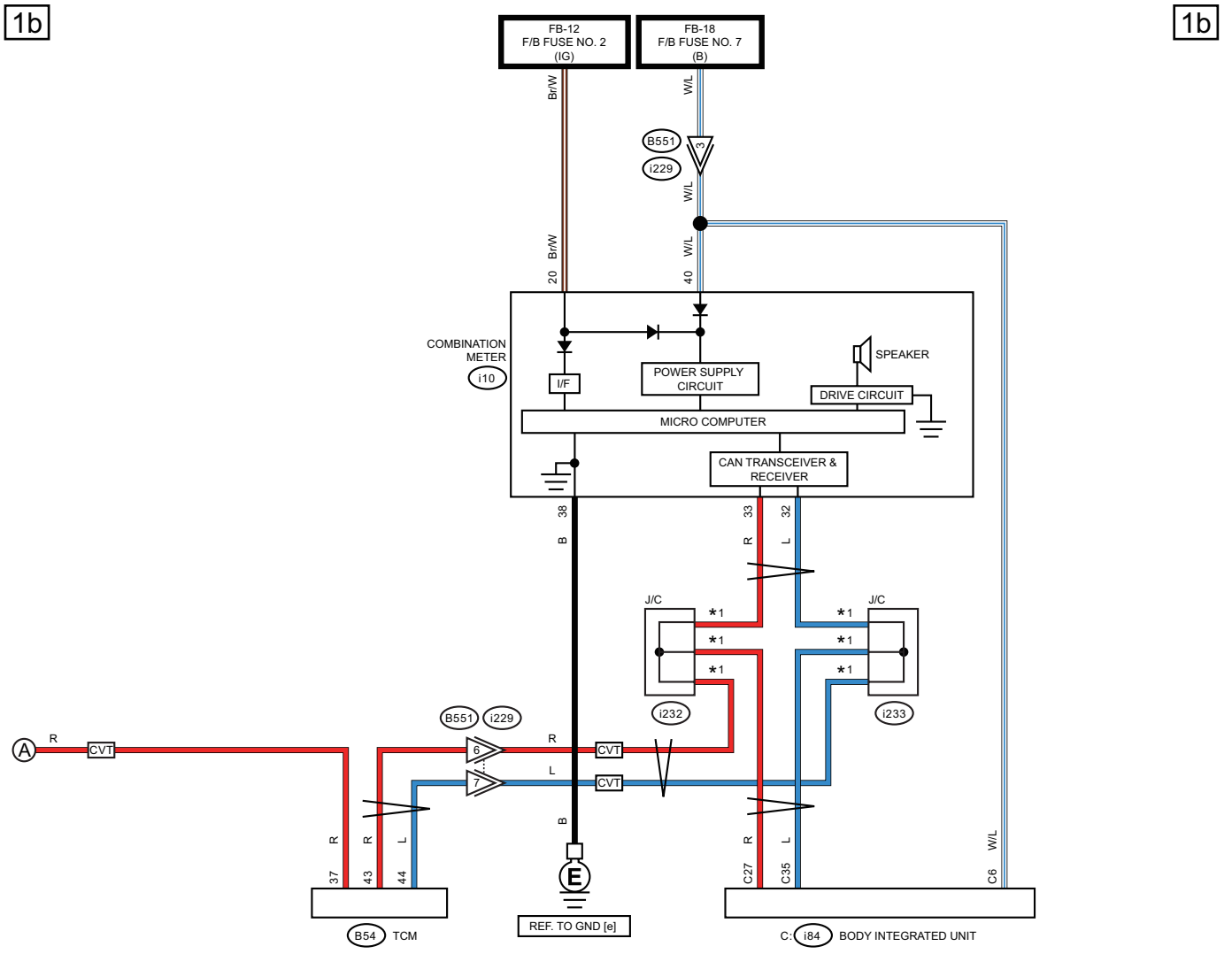

*1 : TERMINAL No. OPTIONAL ARRANGEMENT

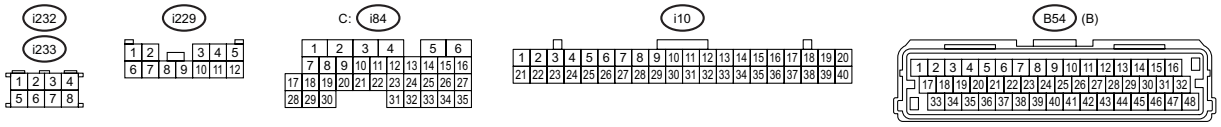

WI-67176

2. ENGINE TYPE EJ

2a

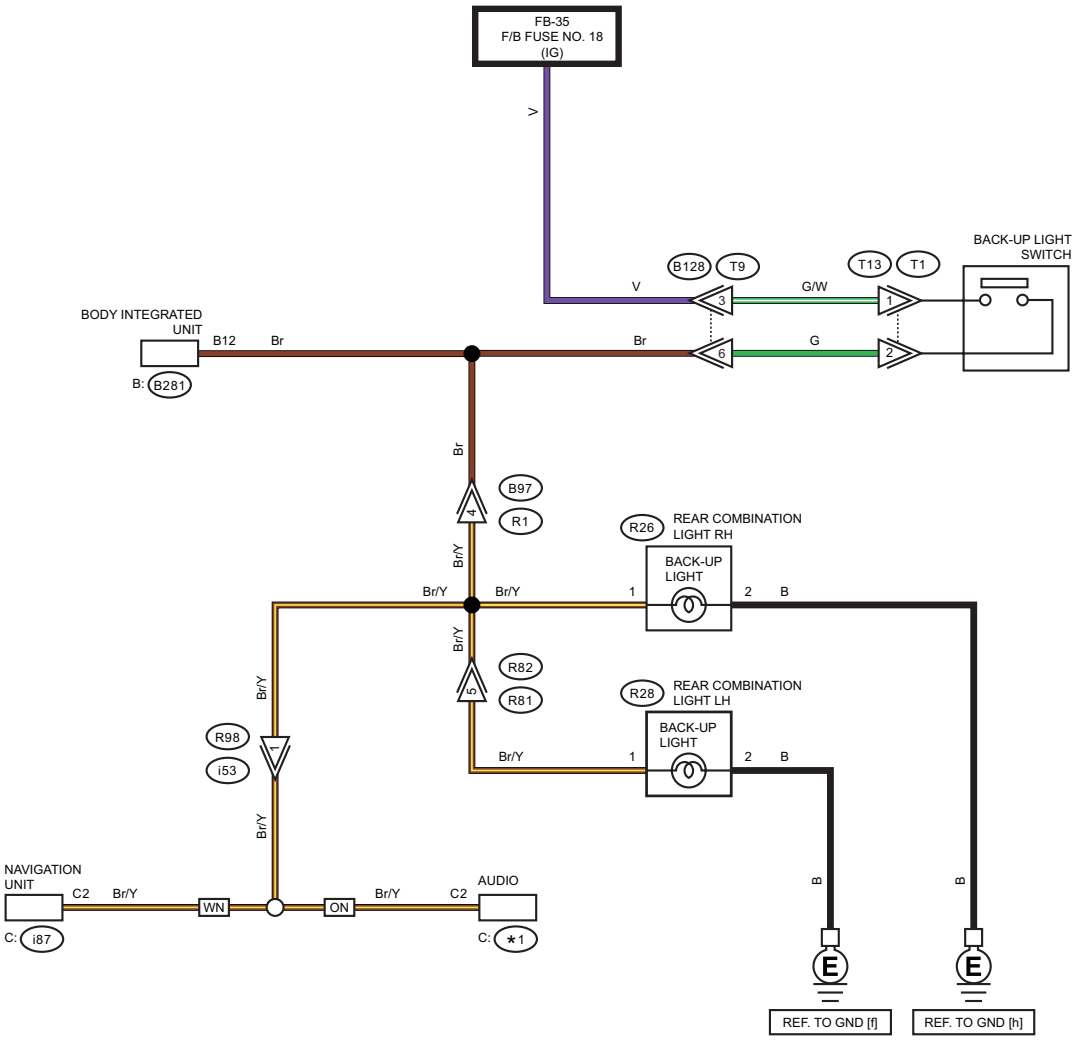

ON : WITHOUT NAVIGATION
WN : WITH NAVIGATION

*1 : 6.2 INCH DISPLAY : i192
7 INCH DISPLAY : i87

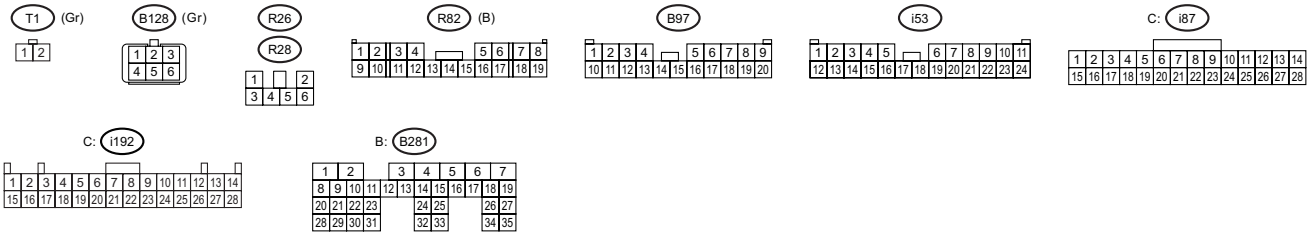

WI-67177

2b

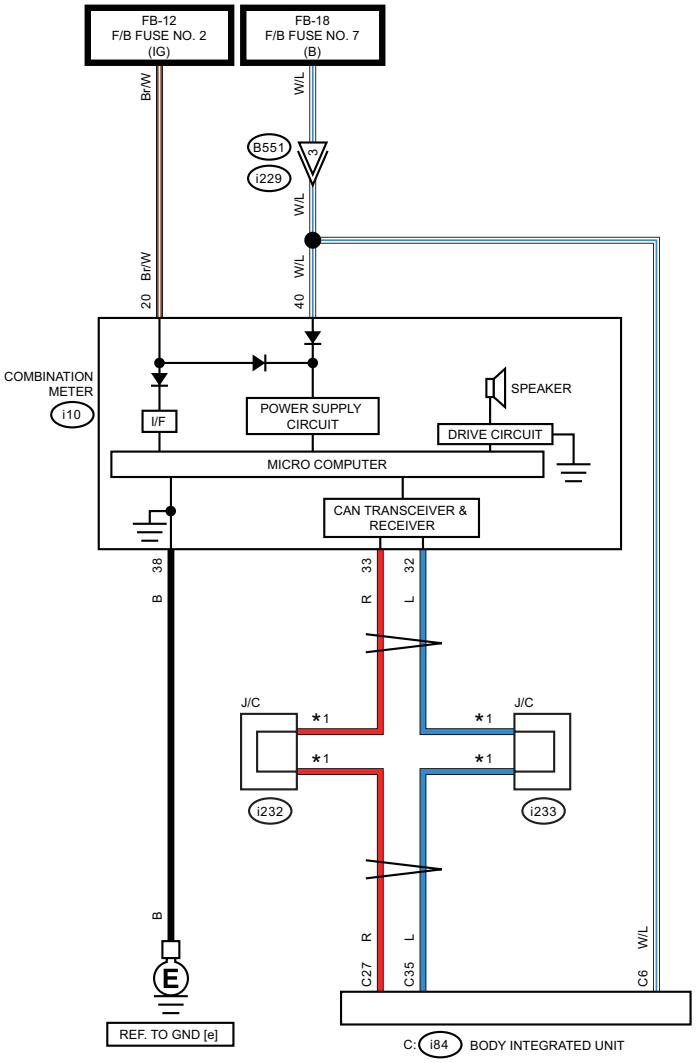

*1 : TERMINAL No. OPTIONAL ARRANGEMENT

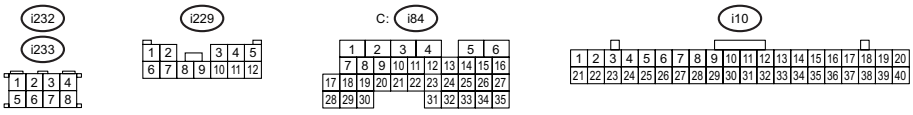

WI-67178

10.Blind Spot Detection/Rear Cross Traffic Alert

A: WIRING DIAGRAM

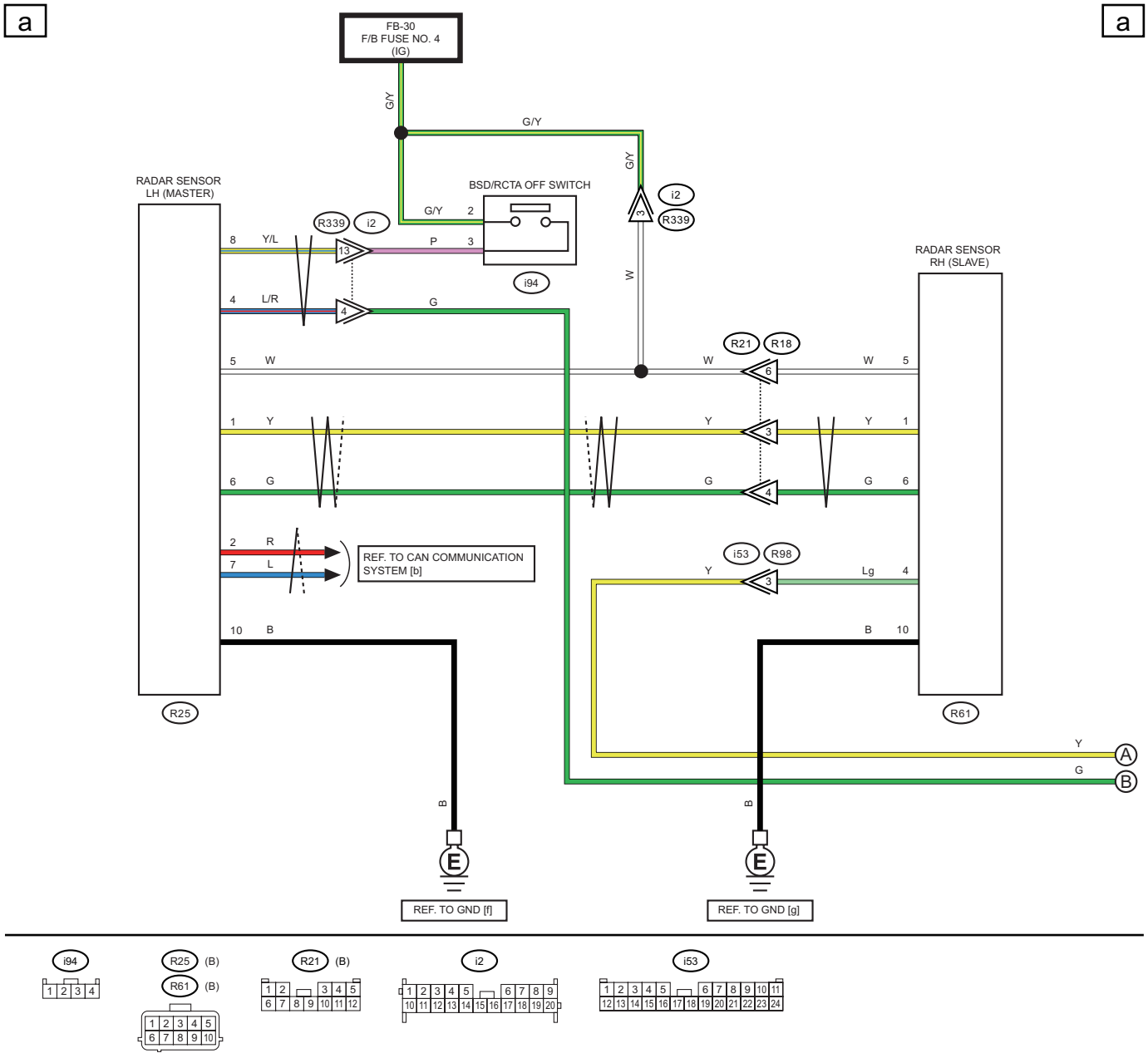

WI-66674

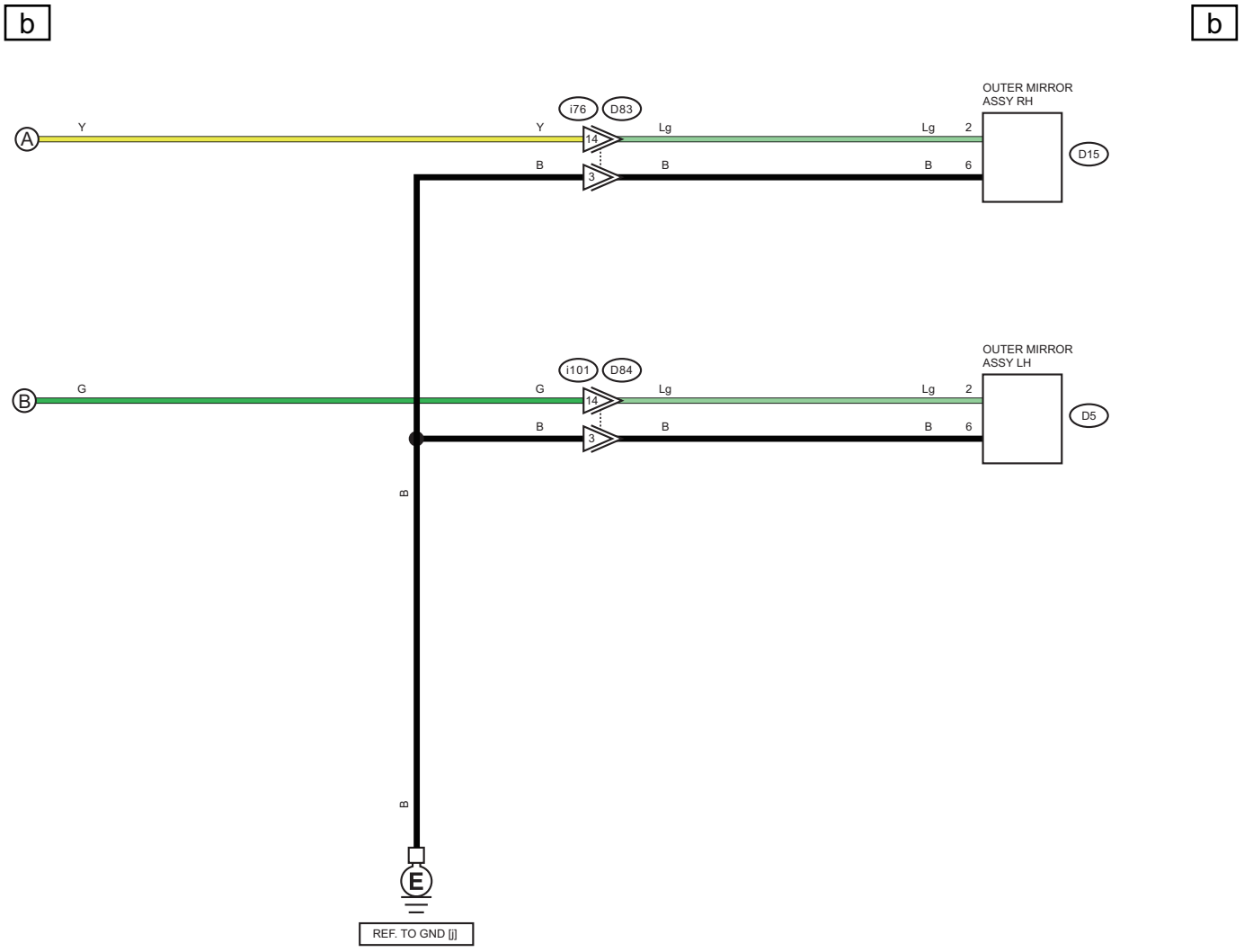
b
b
OUTER MIRROR ASSY RH
i76
D83
A
Y
Y
14
Lg
Lg
2
D15
B
B
3
B
B
6
OUTER MIRROR ASSY LH
i101
D84
B
G
G
14
Lg
Lg
2
D5
B
B
3
B
B
6
B
B
E
REF. TO GND [j]

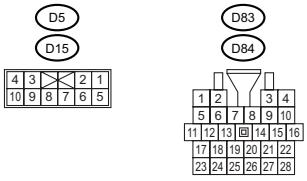
D5
D15
4 3 2 1
10 9 8 7 6 5
D83
D84
1 2 3 4
5 6 7 8 9 10
11 12 13 14 15 16
17 18 19 20 21 22
23 24 25 26 27 28

WI-67179

C

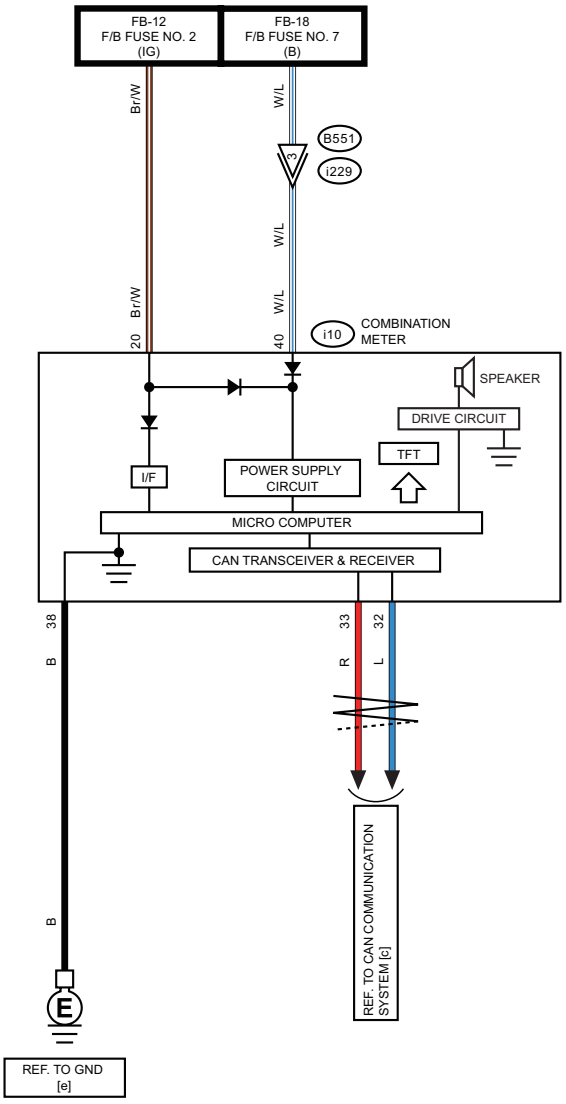
FB-12
F/B FUSE NO. 2
(IG)
FB-18
F/B FUSE NO. 7
(B)
Br/W
W/L
B551
i229
W/L
Br/W
W/L
20
40
i10
COMBINATION
METER
SPEAKER
DRIVE CIRCUIT
TFT
I/F
POWER SUPPLY
CIRCUIT
MICRO COMPUTER
CAN TRANSCEIVER & RECEIVER
38
B
33
R
32
L
B
REF. TO CAN COMMUNICATION
SYSTEM [c]
REF. TO GND
[e]

C

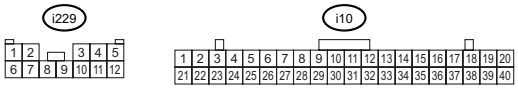
i229
1 2 3 4 5
6 7 8 9 10 11 12
i10
1 2 3 4 5 6 7 8 9 10 11 12 13 14 15 16 17 18 19 20
21 22 23 24 25 26 27 28 29 30 31 32 33 34 35 36 37 38 39 40

WI-66675

11.CAN Communication System

A: WIRING DIAGRAM

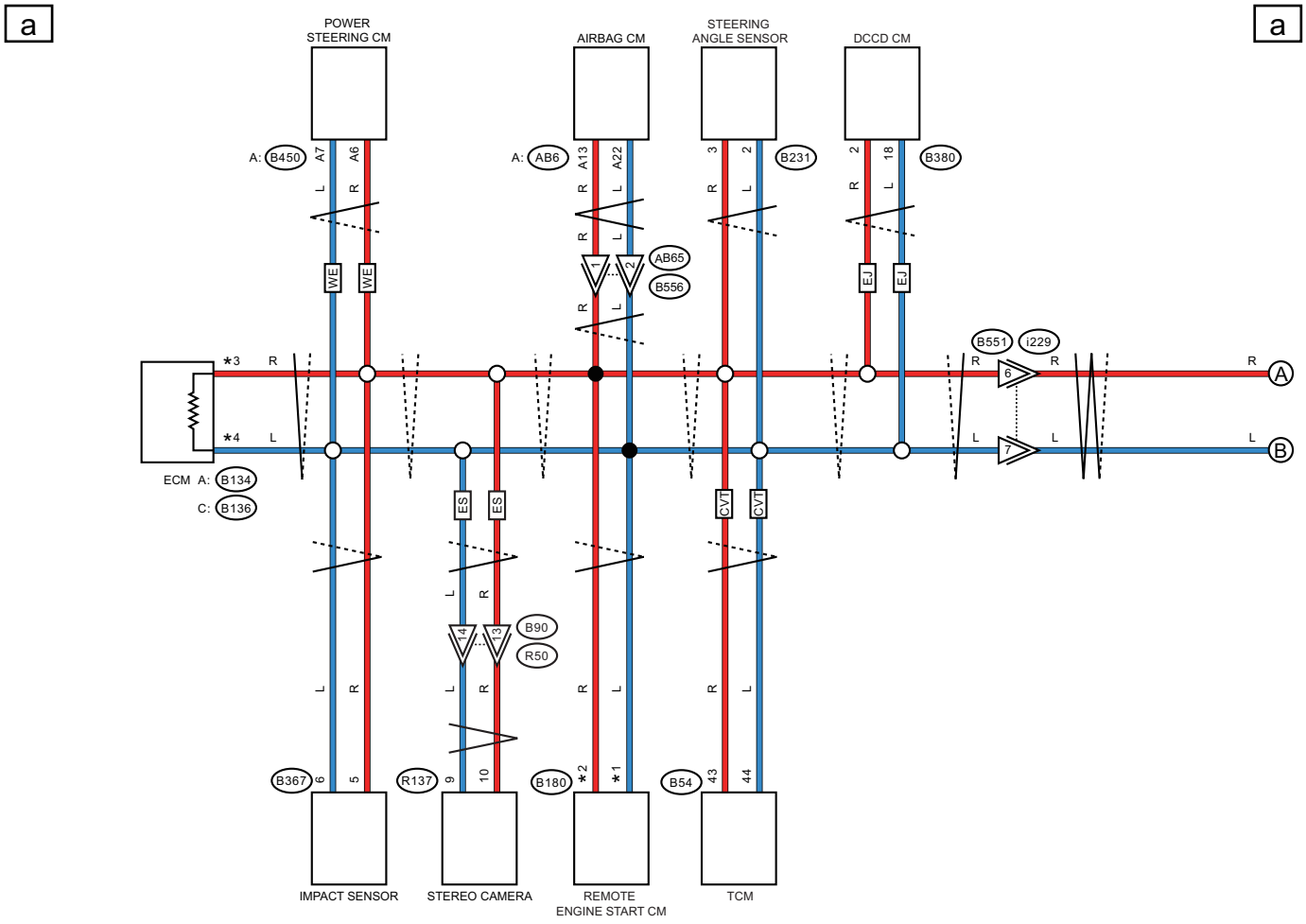

WE : WITH ELECTRIC POWER STEERING
EJ : ENGINE TYPE EJ
ES : WITH EyeSight
OP : WITHOUT PUSH BUTTON START
WP : WITH PUSH BUTTON START

∗1 : WITHOUT PUSH BUTTON START : 2
WITH PUSH BUTTON START : 3
∗2 : WITHOUT PUSH BUTTON START : 1
WITH PUSH BUTTON START : 2
∗3 : ENGINE TYPE FA : A10
ENGINE TYPE EJ : C17
∗4 : ENGINE TYPE FA : A9
ENGINE TYPE EJ : C28

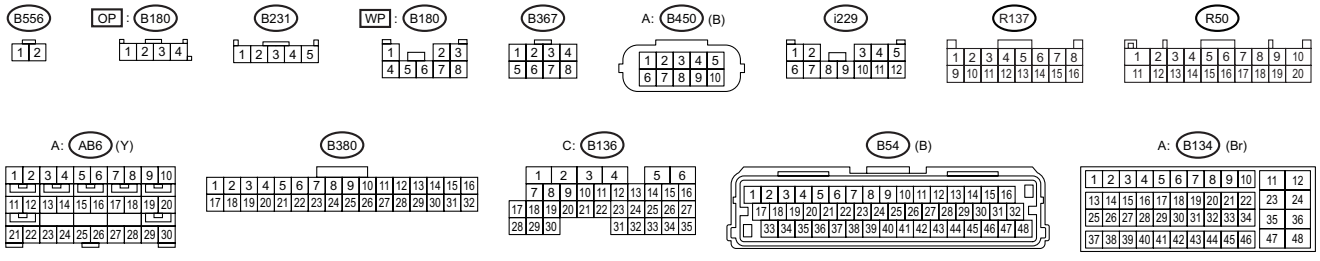

WI-66676

WIRING SYSTEM

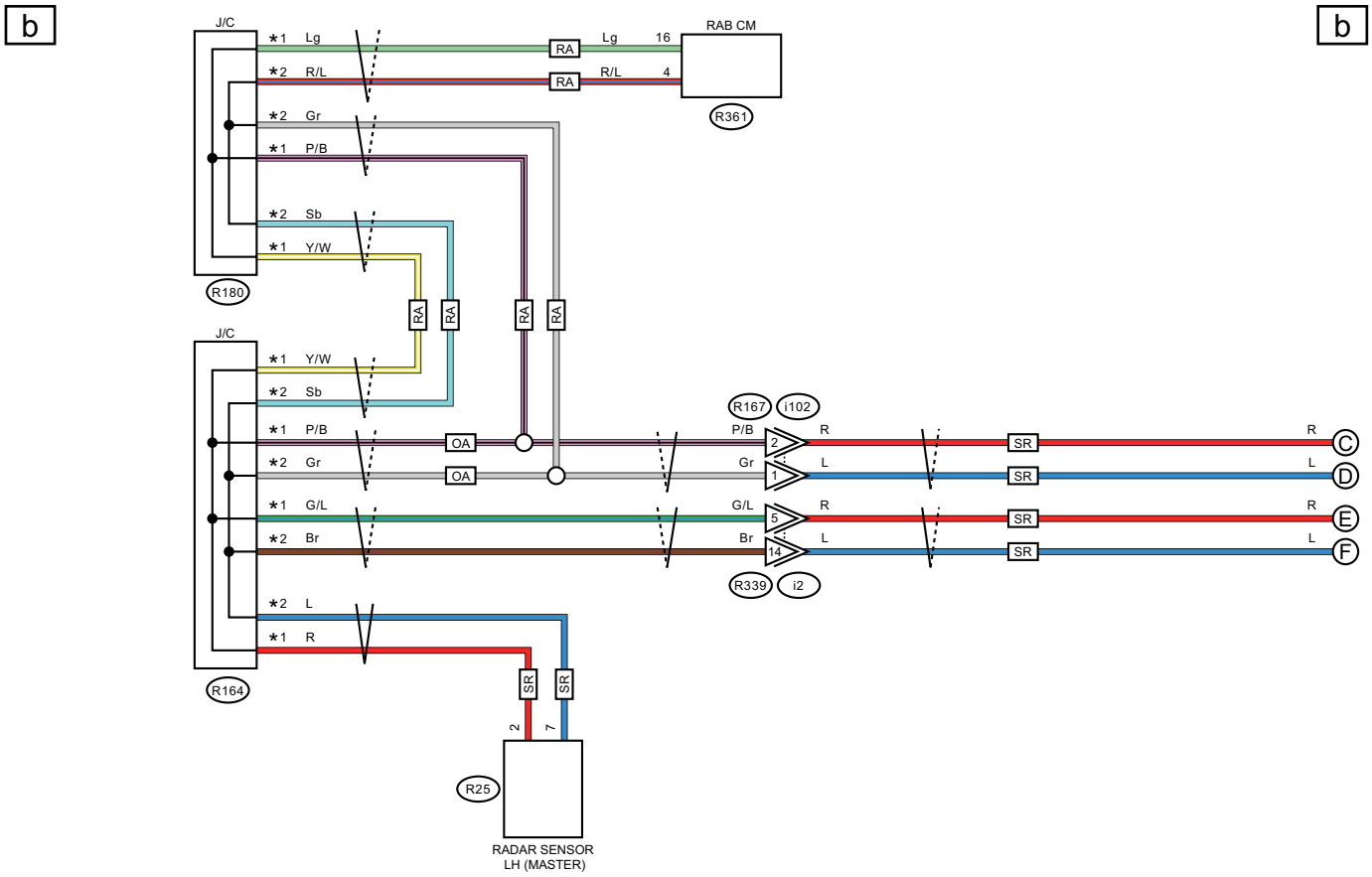

OA : WITHOUT REVERSE AUTOMATIC BRAKING
RA : WITH REVERSE AUTOMATIC BRAKING
SR : WITH BSD/RCTA

★1 : TERMINAL No. OPTIONAL ARRANGEMENT AMONG 1, 2, 3, 4 AND 5
★2 : TERMINAL No. OPTIONAL ARRANGEMENT AMONG 6, 7, 8, 9 AND 10

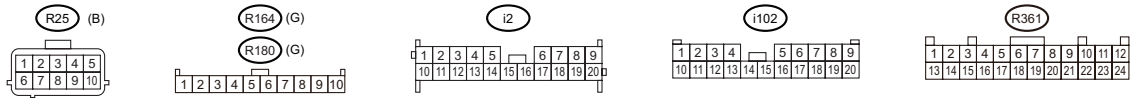

WI-66677

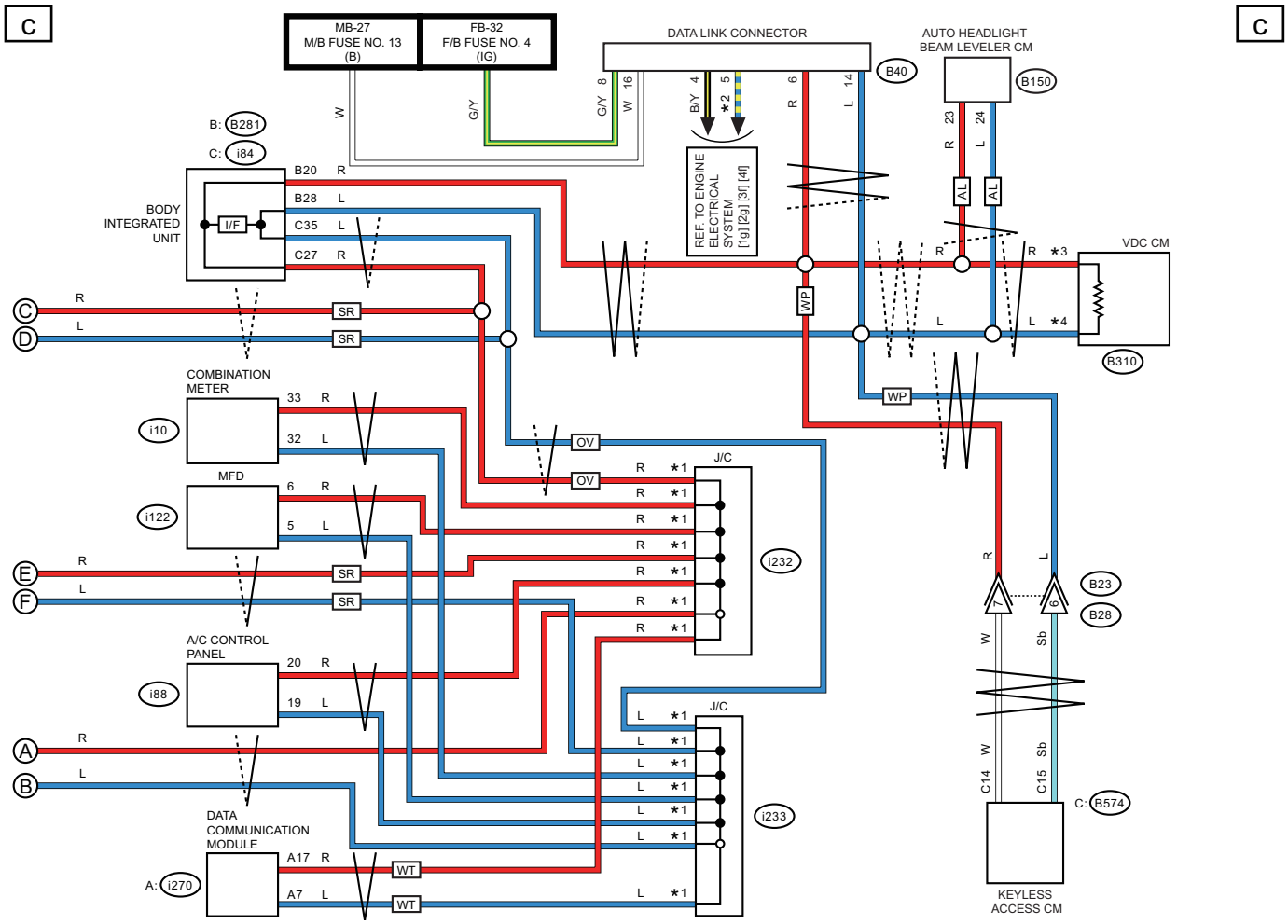

WP : WITH PUSH BUTTON START	WT : WITH TELEMATICS	★2 : ENGINE TYPE FA : B/R ENGINE TYPE EJ : B/W
AL : WITH AUTO HEADLIGHT BEAM LEVELER	OE : WITHOUT EyeSight	★3 : WITHOUT EyeSight : 36 WITH EyeSight : 13
OV : WITHOUT BSD/RCTA	ES : WITH EyeSight	★4 : WITHOUT EyeSight : 35 WITH EyeSight : 14
SR : WITH BSD/RCTA	★1 : TERMINAL No. OPTIONAL ARRANGEMENT	

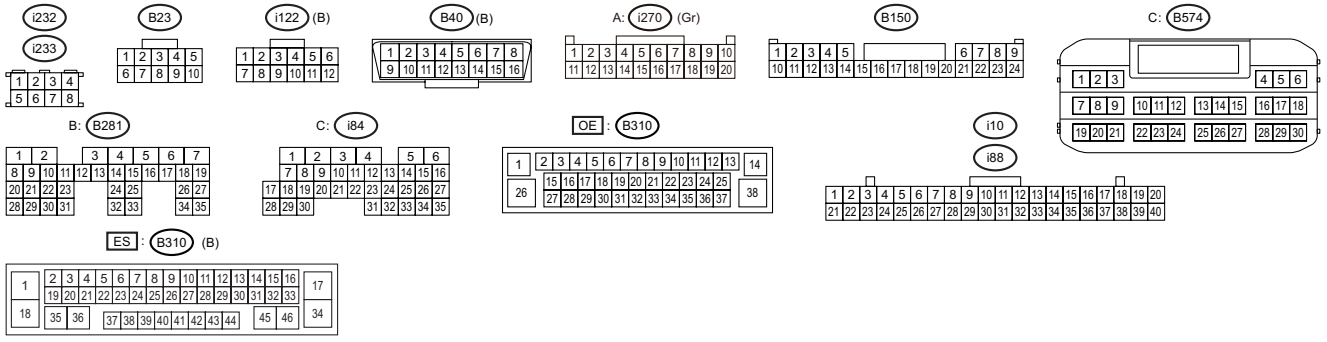

WI-66678

12.Charging System

A: WIRING DIAGRAM

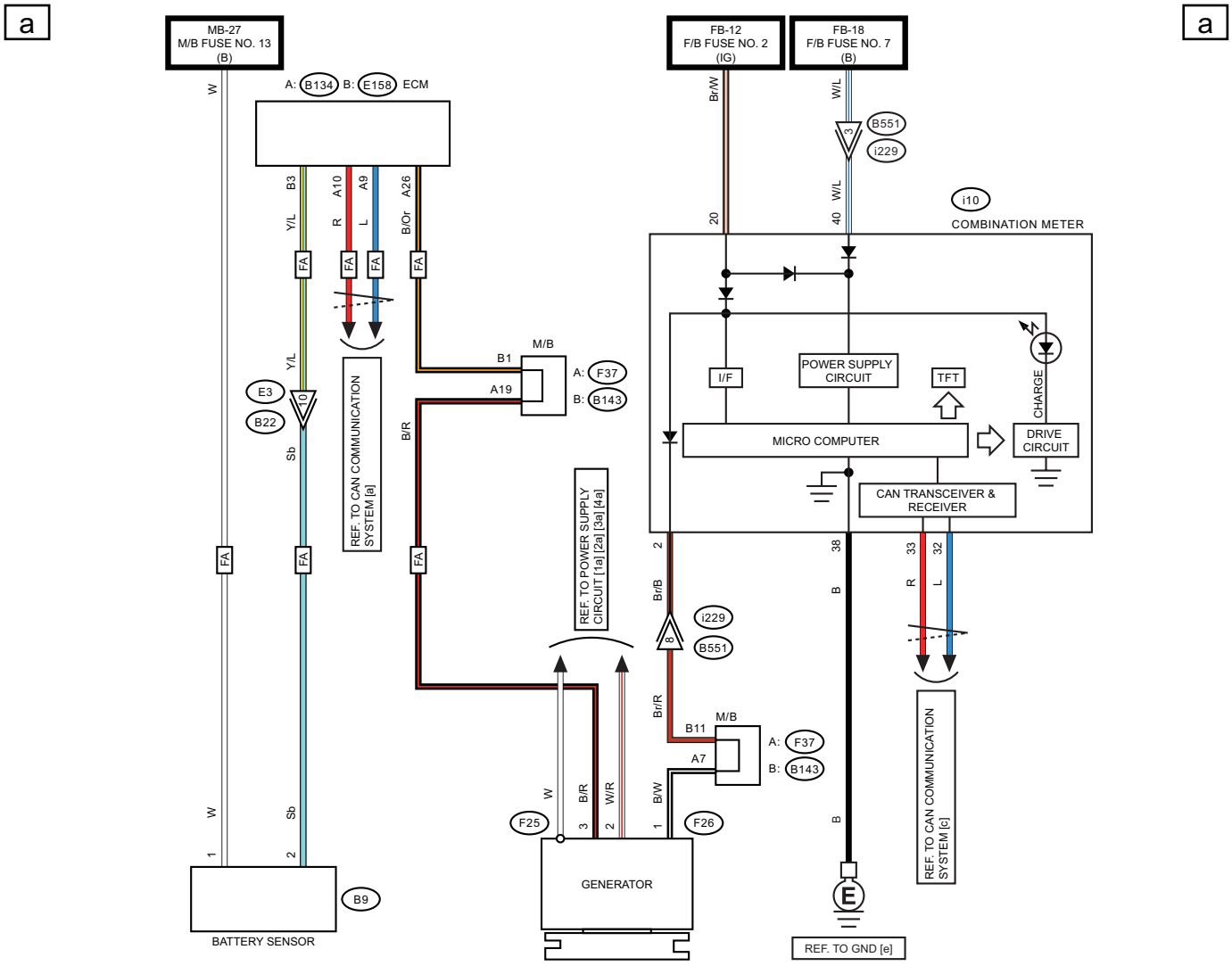

FA : ENGINE TYPE FA

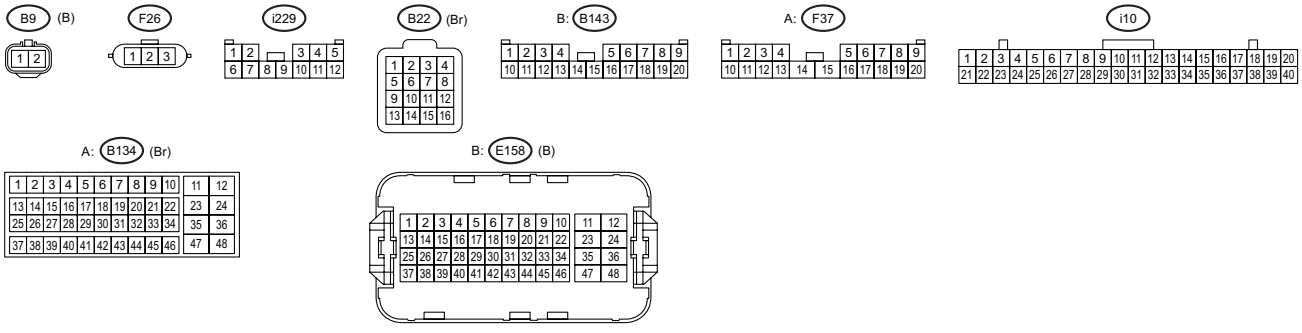

WI-66680

13.Clearance Light and Illumination Light System

A: WIRING DIAGRAM

1. ENGINE TYPE FA

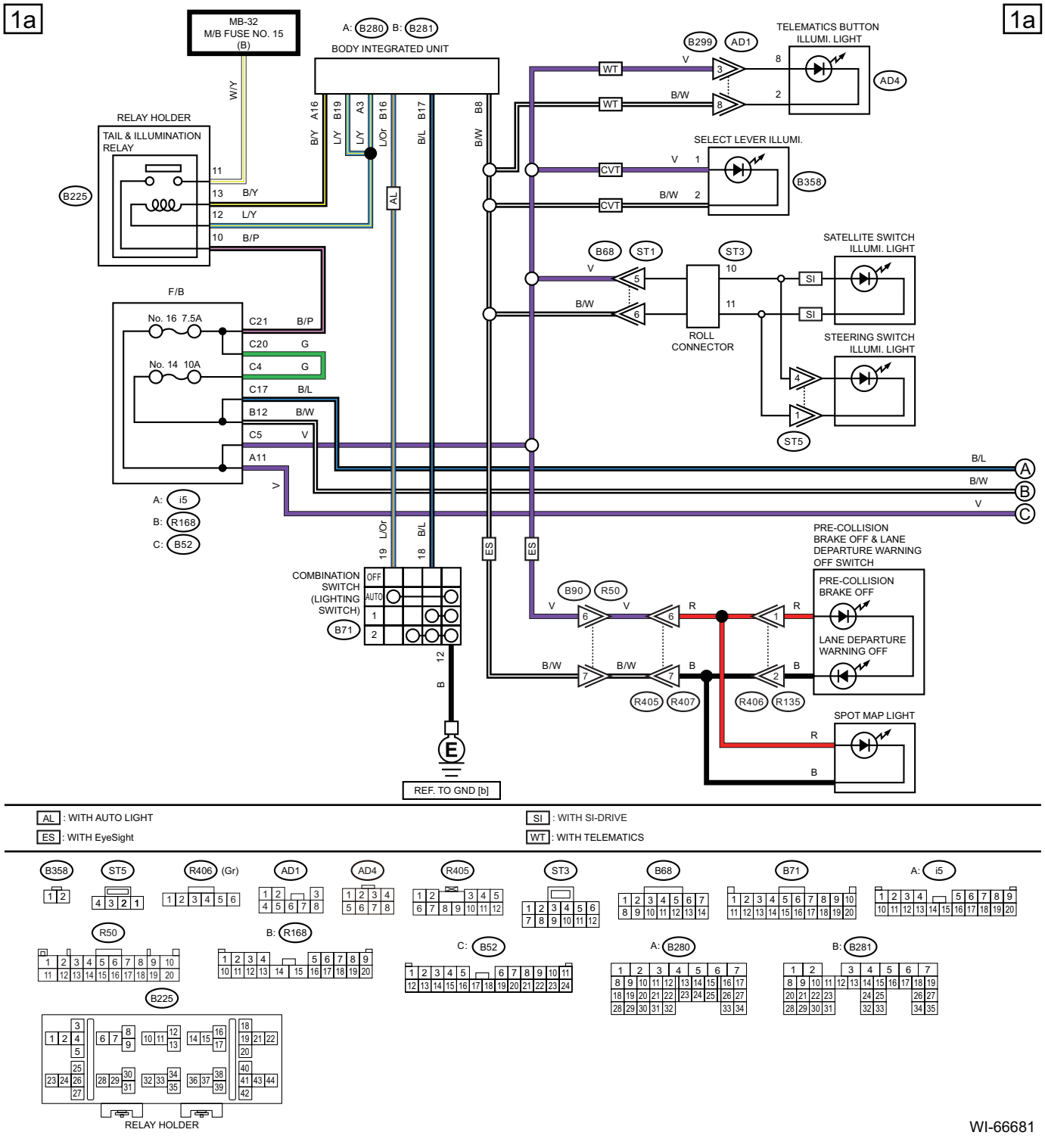

AL : WITH AUTO LIGHT
ES : WITH EyeSight
SI : WITH SI-DRIVE
WT : WITH TELEMATICS

WI-66681

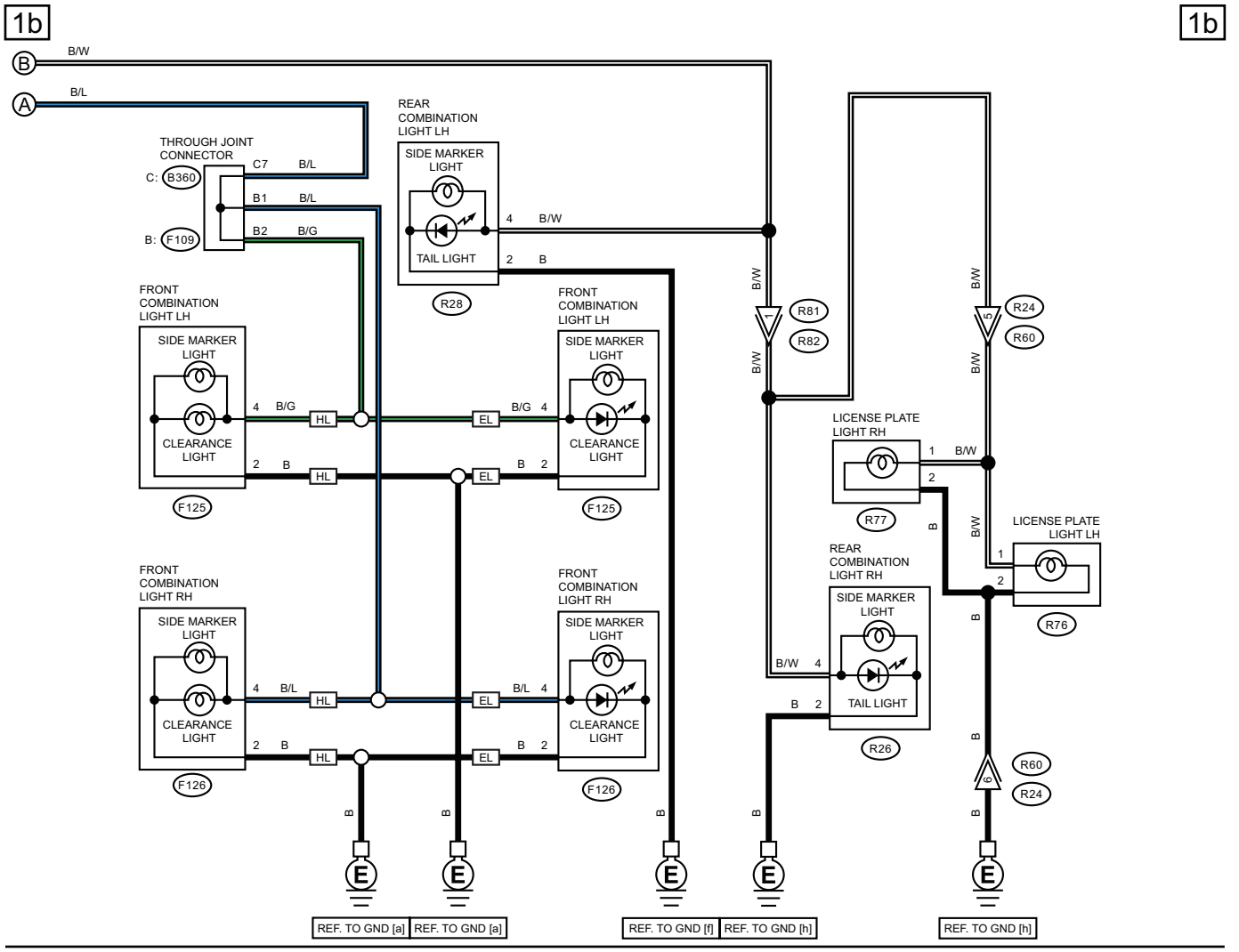

HL : HALOGEN MODEL

EL : EXCEPT FOR HALOGEN MODEL

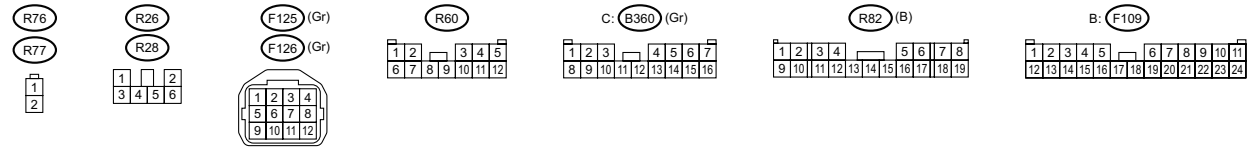

WI-67180

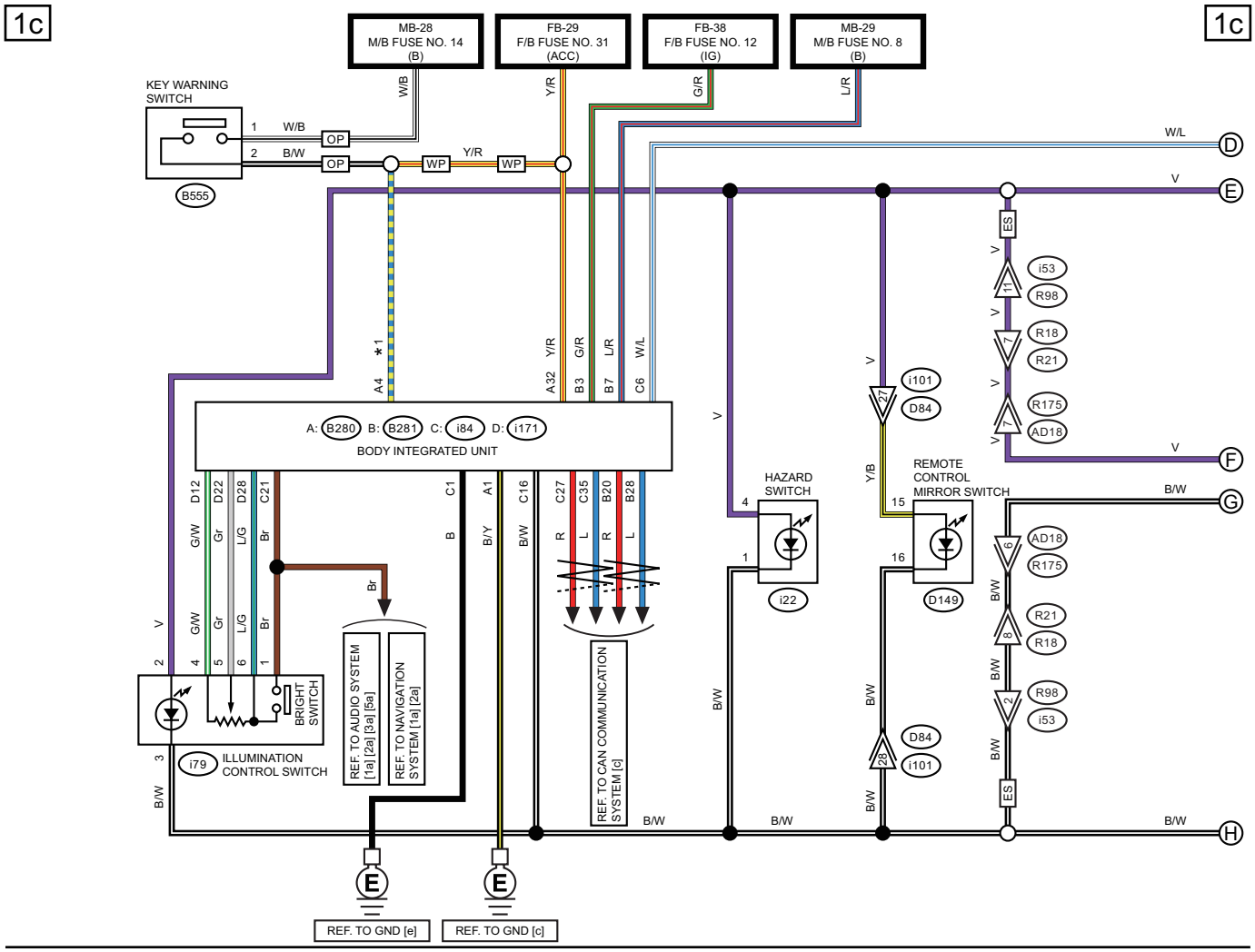

OP : WITHOUT PUSH BUTTON START
WP : WITH PUSH BUTTON START
ES : WITH EyeSight

✱1 : WITHOUT PUSH BUTTON START : B/W
WITH PUSH BUTTON START : Y/R

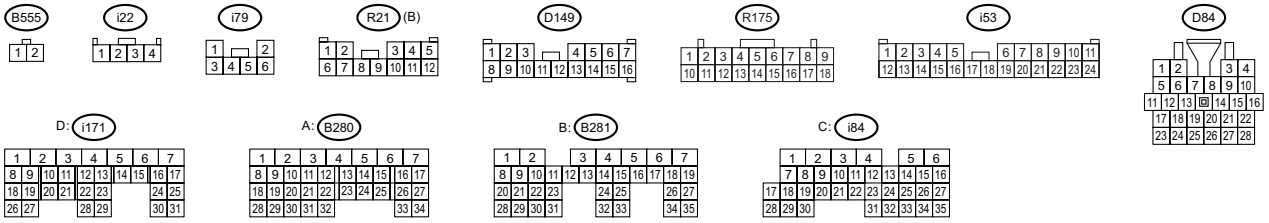

WI-66682

WIRING SYSTEM

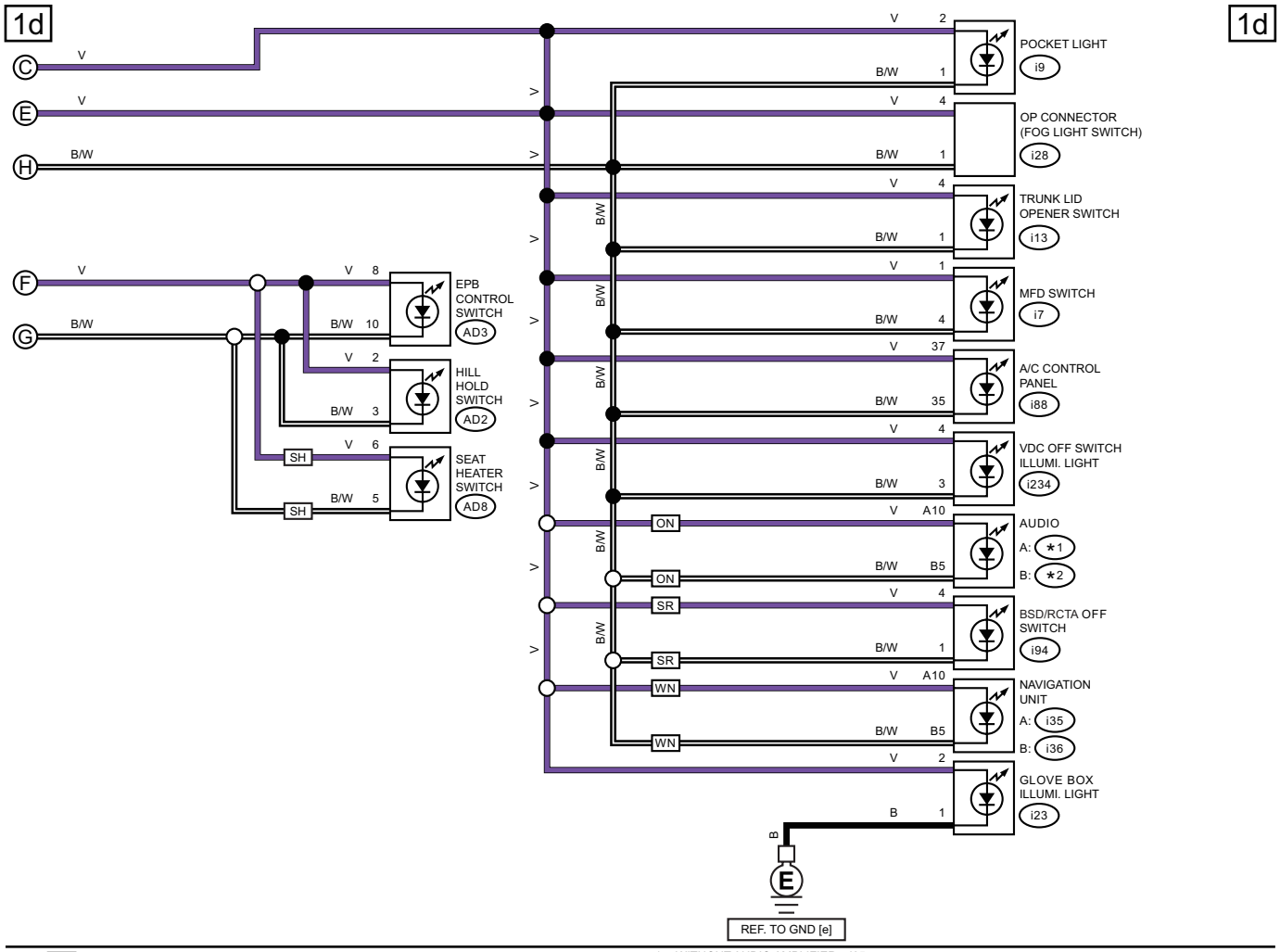

ON : WITHOUT NAVIGATION
WN : WITH NAVIGATION
SR : WITH BSD/RCTA
SH : WITH SEAT HEATER

★1 : WITHOUT AUDIO AMPLIFIER : i85
WITH AUDIO AMPLIFIER : i35
★2 : WITHOUT AUDIO AMPLIFIER : i131
WITH AUDIO AMPLIFIER : i36

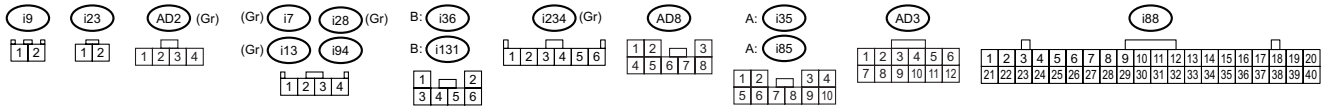

WI-66683

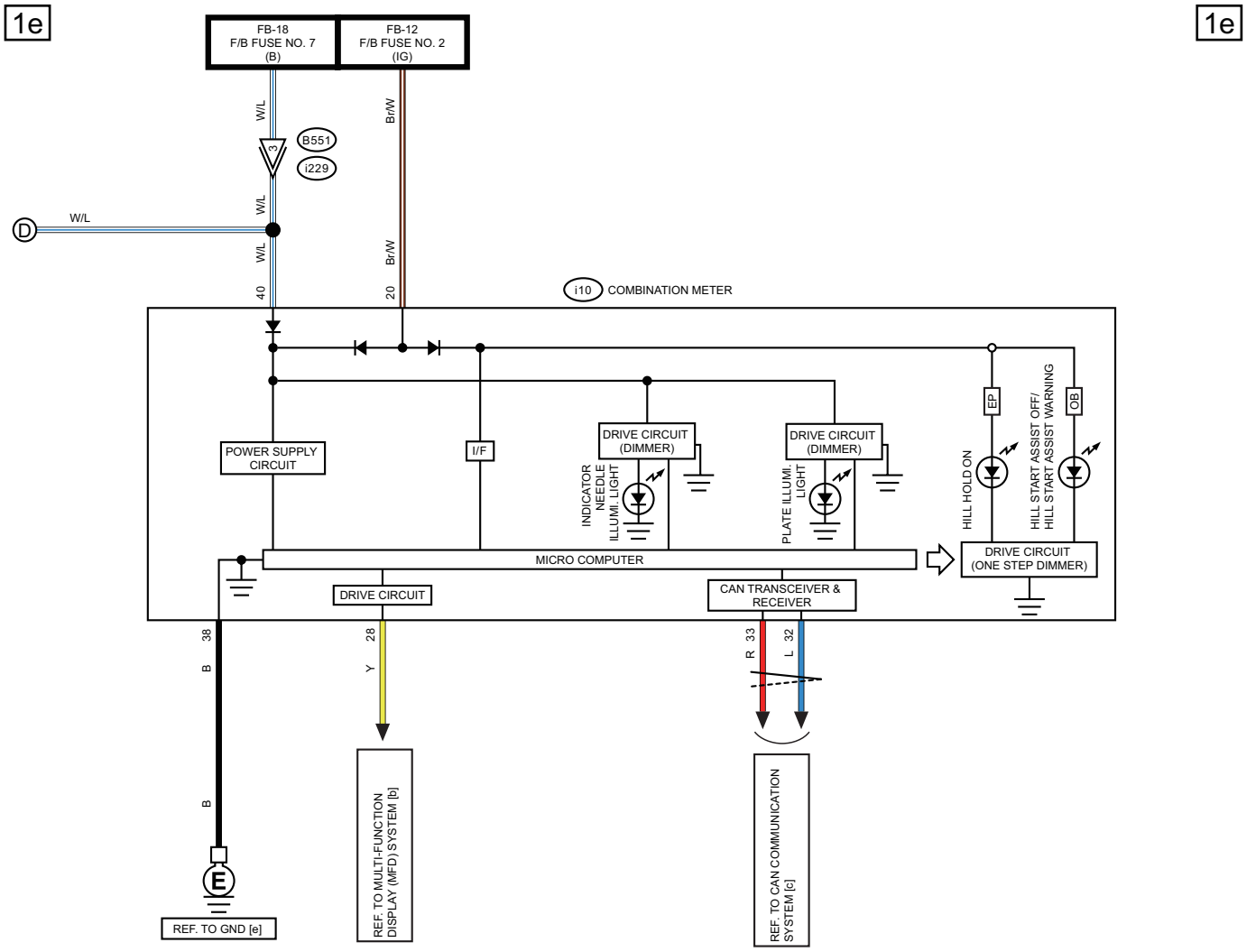

OB : WITHOUT EPB

EP : WITH EPB

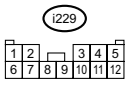

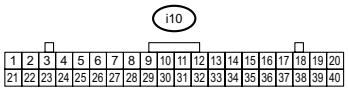

WI-66684

2. ENGINE TYPE EJ

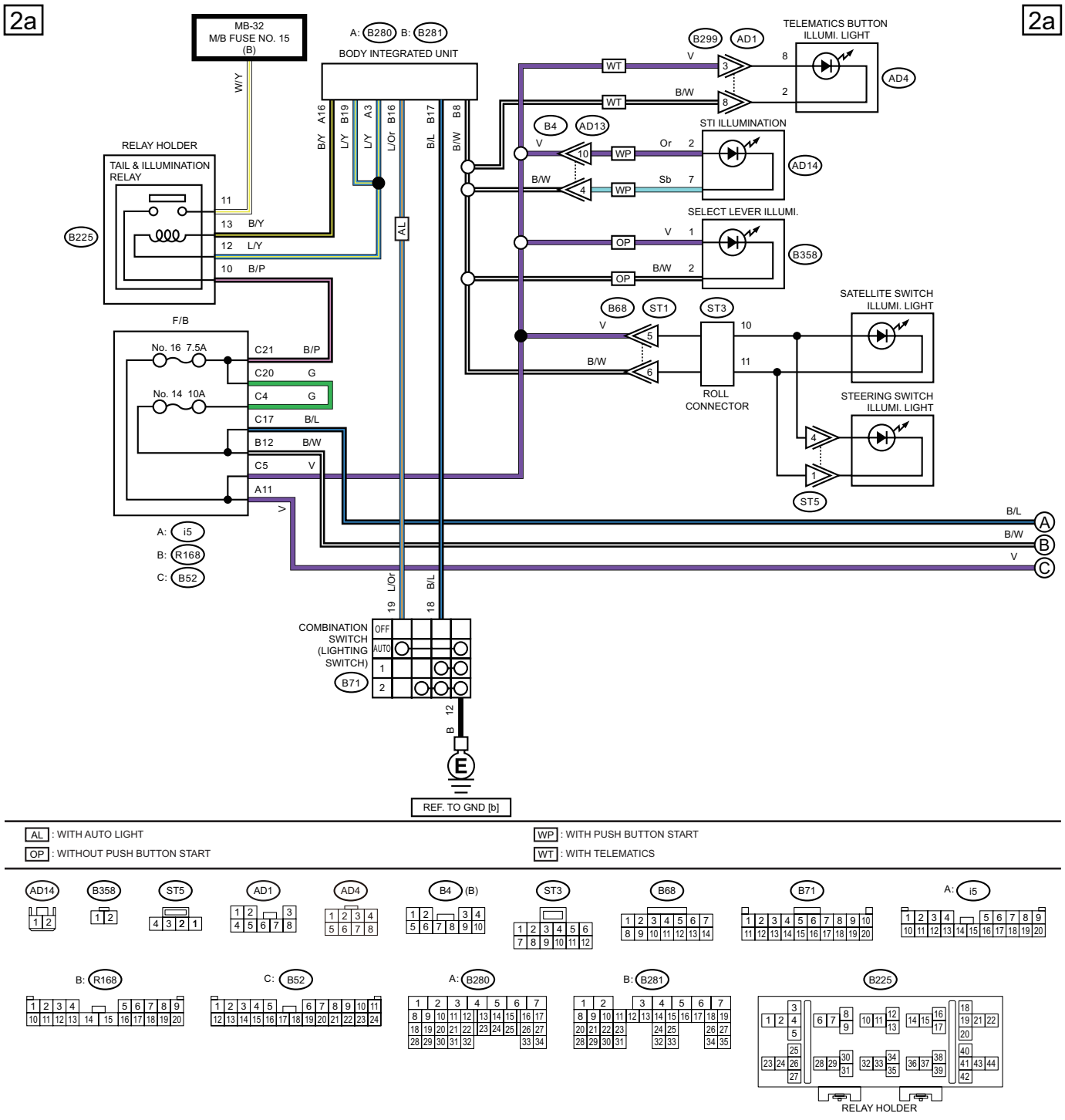

WI-66686

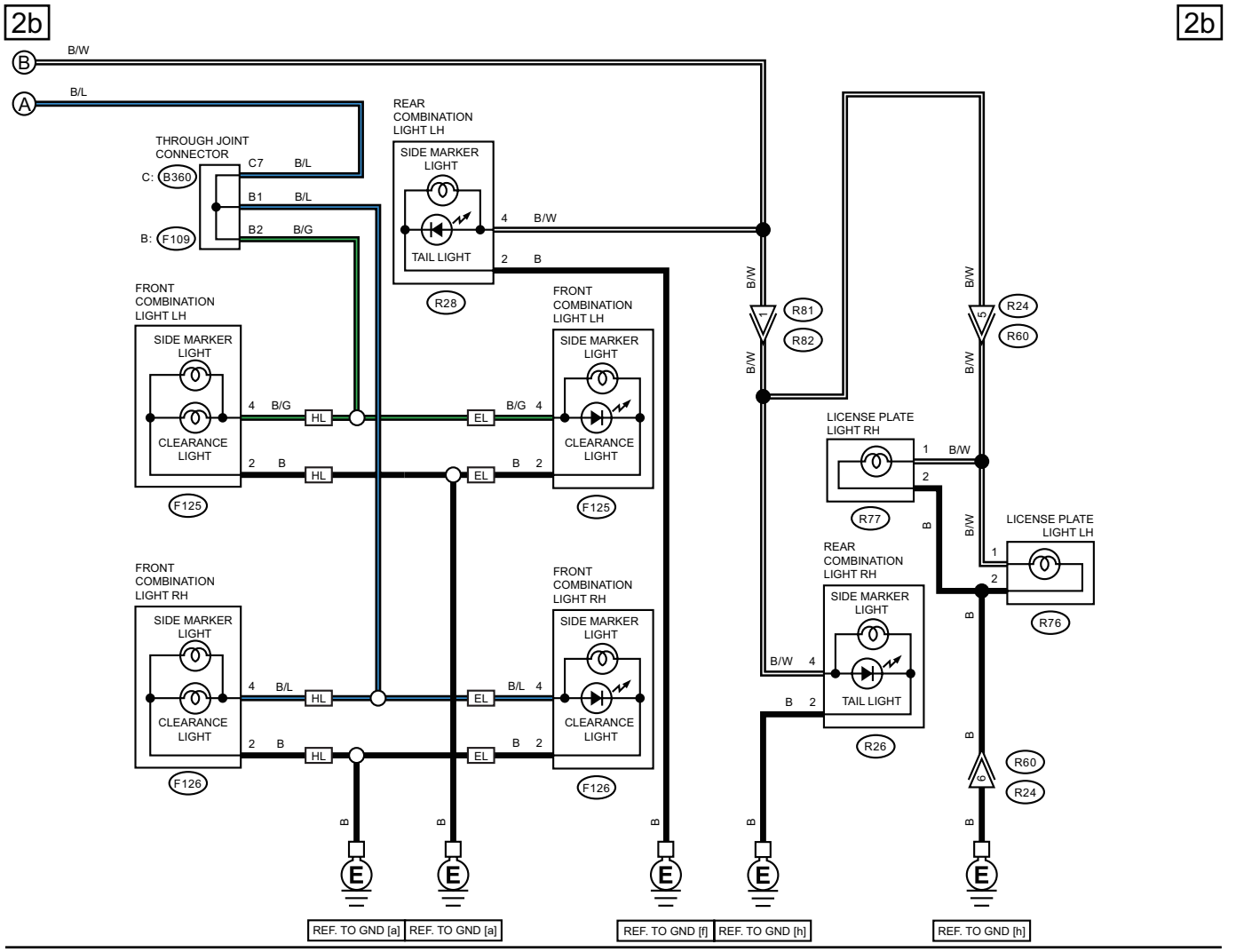

HL : HALOGEN MODEL

EL : EXCEPT FOR HALOGEN MODEL

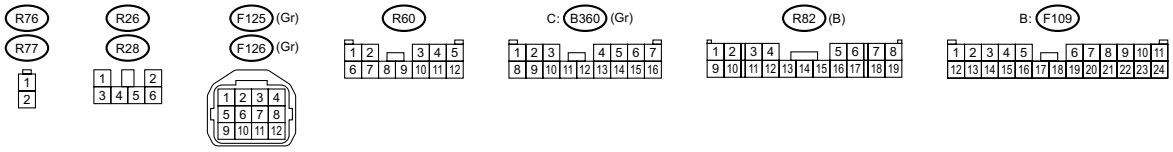

WI-67181

WIRING SYSTEM

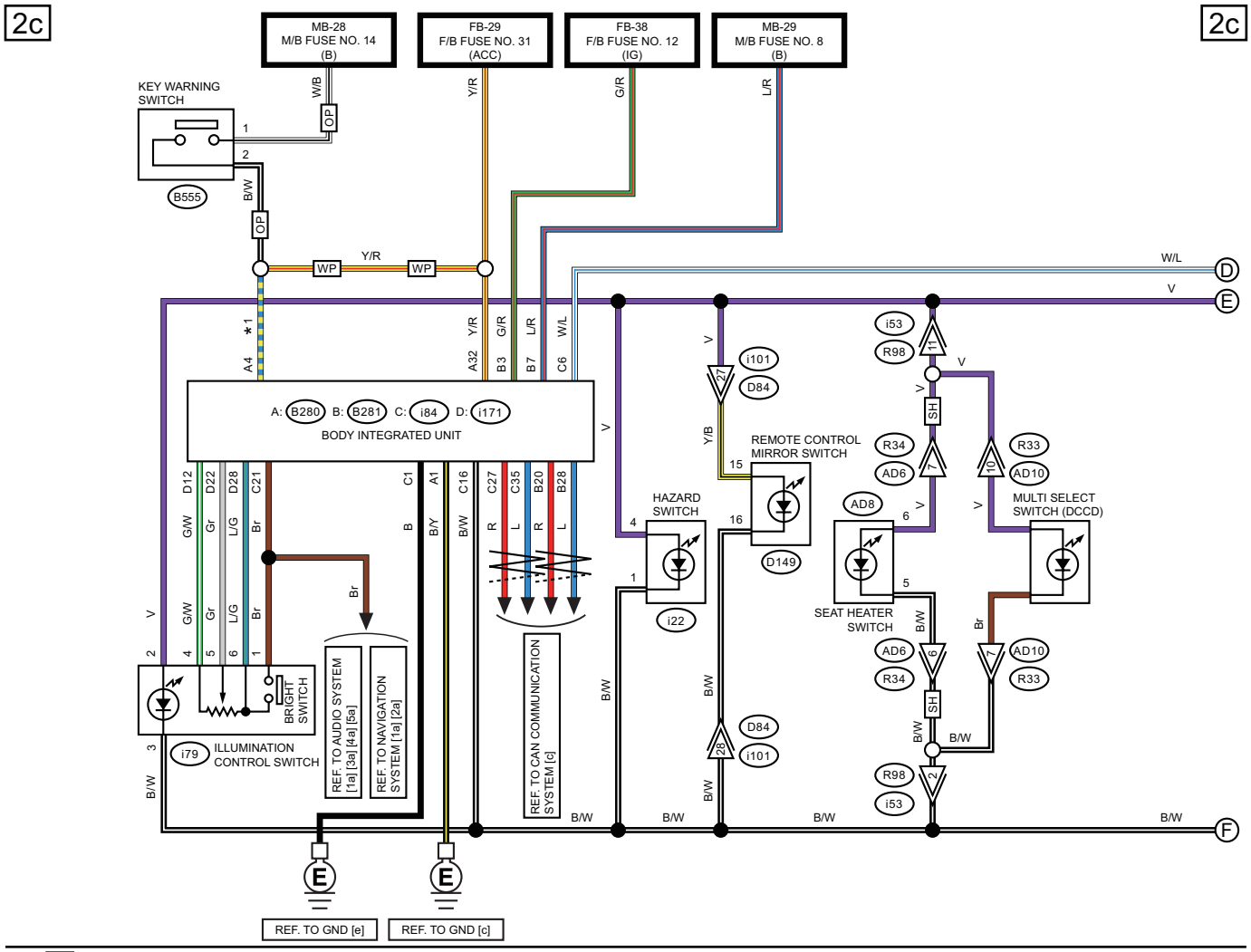

SH : WITH SEAT HEATER
OP : WITHOUT PUSH BUTTON START
WP : WITH PUSH BUTTON START

*1 : WITHOUT PUSH BUTTON START : B/W
WITH PUSH BUTTON START : Y/R

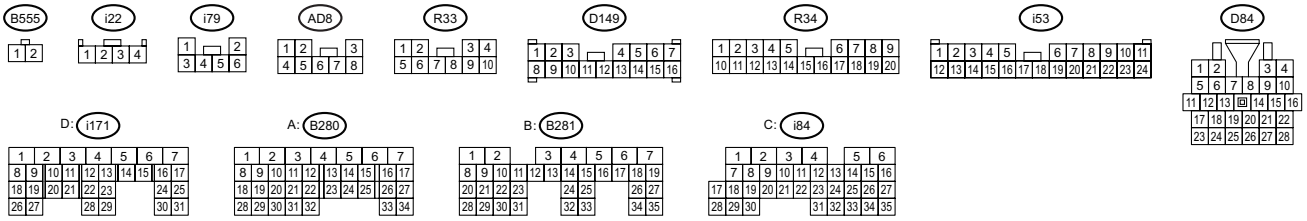

WI-66687

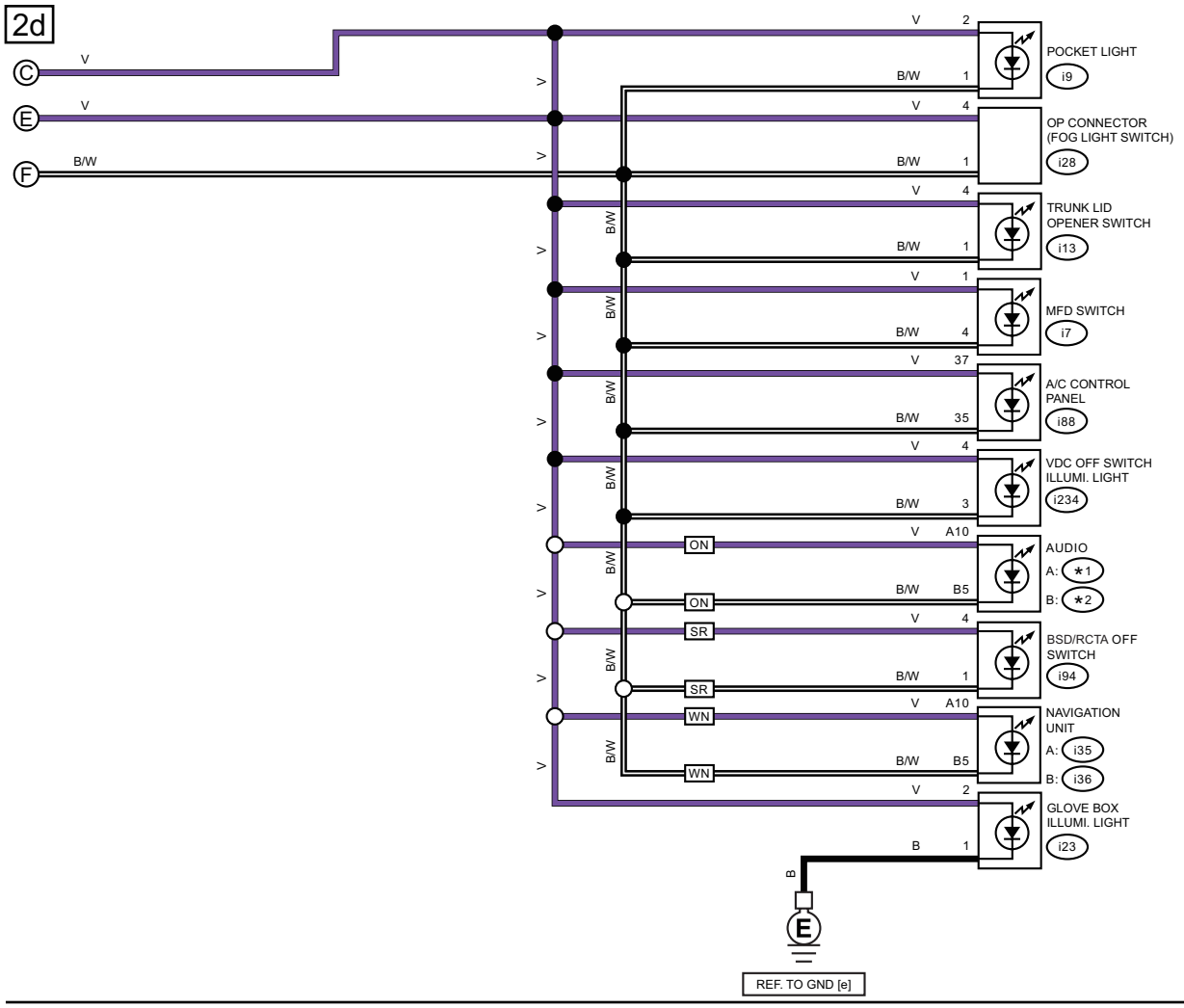

ON : WITHOUT NAVIGATION
WN : WITH NAVIGATION
SR : WITH BSD/RCTA

∗1 : WITHOUT AUDIO AMPLIFIER : i85
WITH AUDIO AMPLIFIER : i35
∗2 : WITHOUT AUDIO AMPLIFIER : i131
WITH AUDIO AMPLIFIER : i36

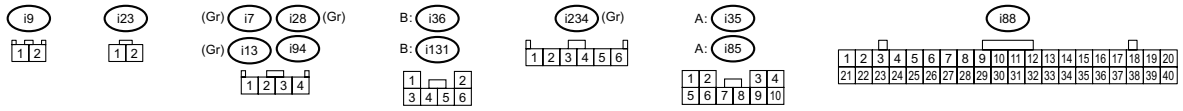

WI-66688

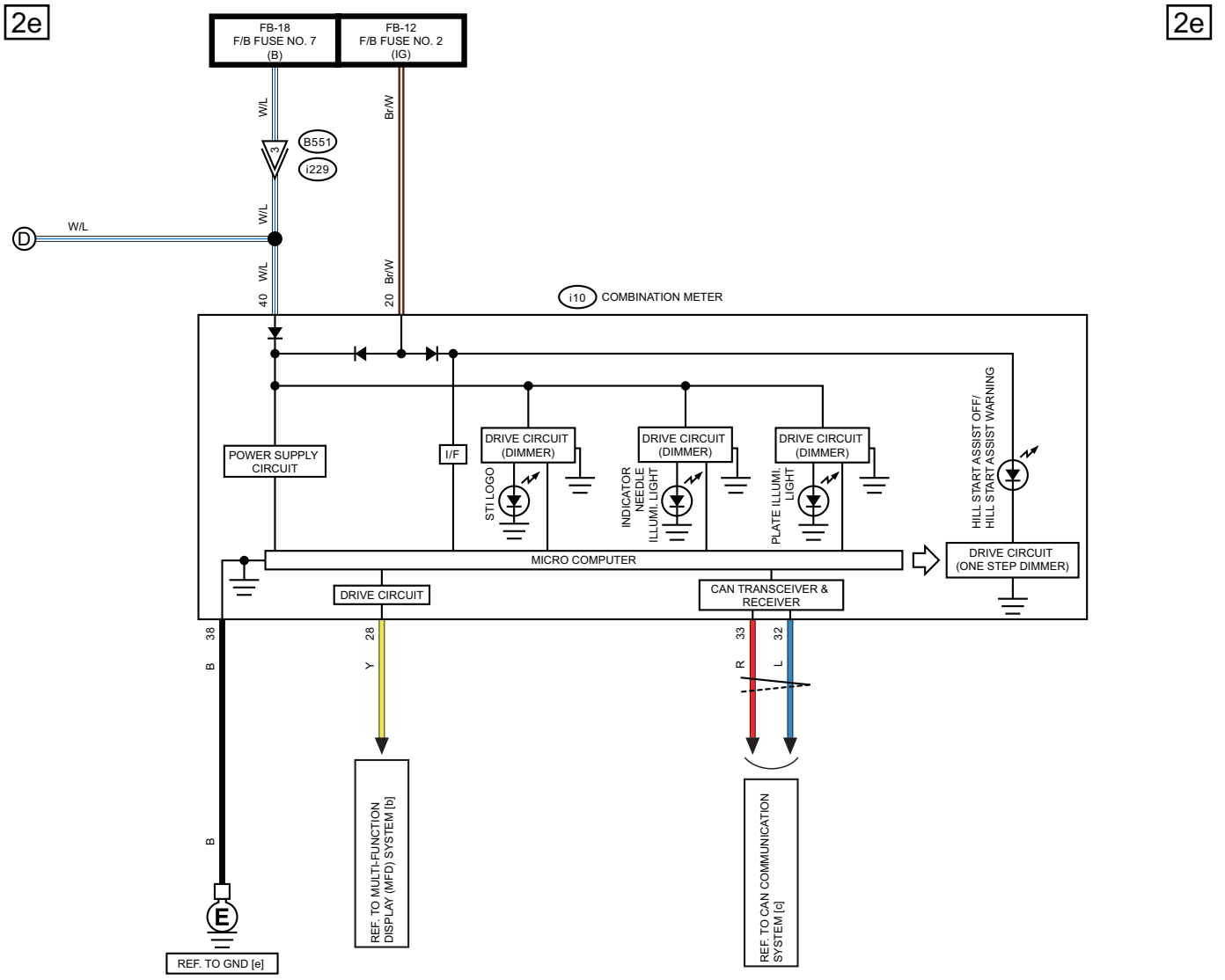
2e
2e
FB-18
F/B FUSE NO. 7
(B)
FB-12
F/B FUSE NO. 2
(IG)
W/L
Br/W
B551
i229
W/L
W/L
D
W/L
40
Br/W
20
i10 COMBINATION METER
POWER SUPPLY CIRCUIT
I/F
DRIVE CIRCUIT (DIMMER)
STI LOGO
DRIVE CIRCUIT (DIMMER)
INDICATOR NEEDLE ILLUMI. LIGHT
DRIVE CIRCUIT (DIMMER)
PLATE ILLUMI. LIGHT
HILL START ASSIST OFF/ HILL START ASSIST WARNING
MICRO COMPUTER
DRIVE CIRCUIT (ONE STEP DIMMER)
DRIVE CIRCUIT
CAN TRANSCEIVER & RECEIVER
38
B
28
Y
33
R
32
L
B
E
REF. TO GND [e]
REF. TO MULTI-FUNCTION DISPLAY (MFD) SYSTEM [b]
REF. TO CAN COMMUNICATION SYSTEM [c]

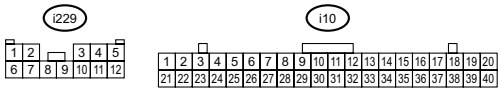
i229
1 2 3 4 5
6 7 8 9 10 11 12
i10
1 2 3 4 5 6 7 8 9 10 11 12 13 14 15 16 17 18 19 20
21 22 23 24 25 26 27 28 29 30 31 32 33 34 35 36 37 38 39 40

WI-66689

14.Combination Meter System

A: WIRING DIAGRAM

a

a

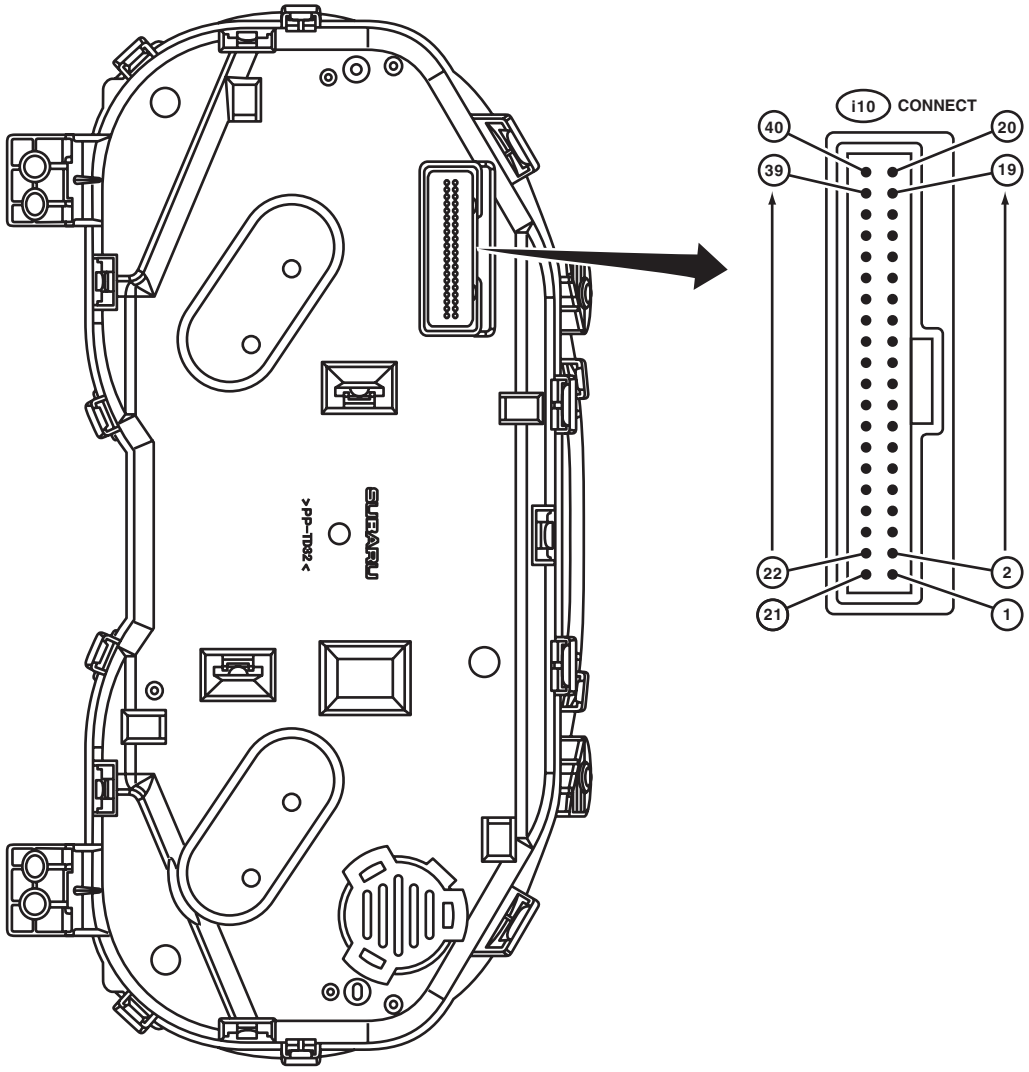

WI-44329

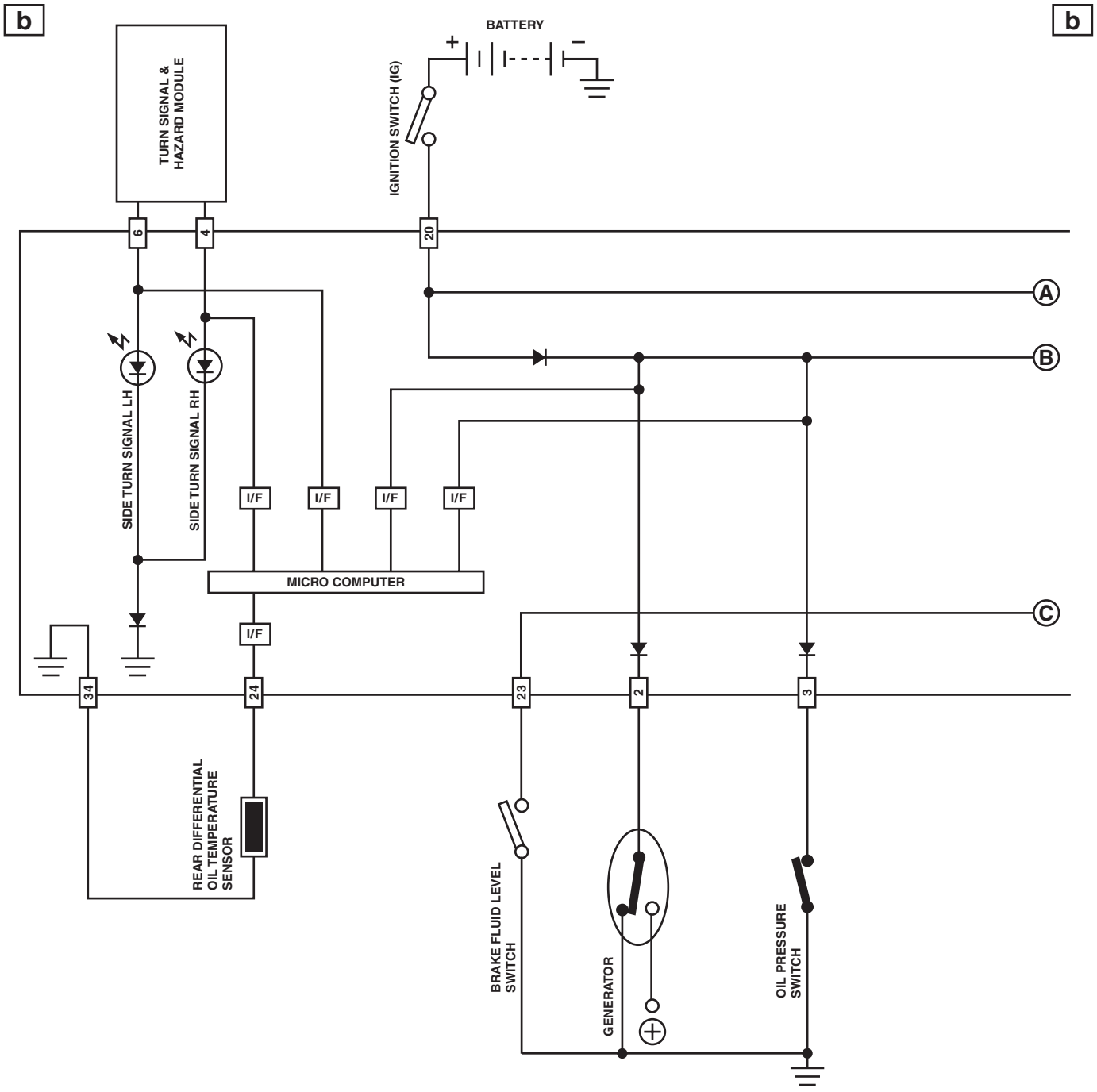
b
b
BATTERY
+
−
TURN SIGNAL & HAZARD MODULE
IGNITION SWITCH (IG)
6
4
20
A
B
C
SIDE TURN SIGNAL LH
SIDE TURN SIGNAL RH
I/F
I/F
I/F
I/F
MICRO COMPUTER
I/F
34
24
23
2
3
REAR DIFFERENTIAL OIL TEMPERATURE SENSOR
BRAKE FLUID LEVEL SWITCH
GENERATOR
OIL PRESSURE SWITCH

WI-44330

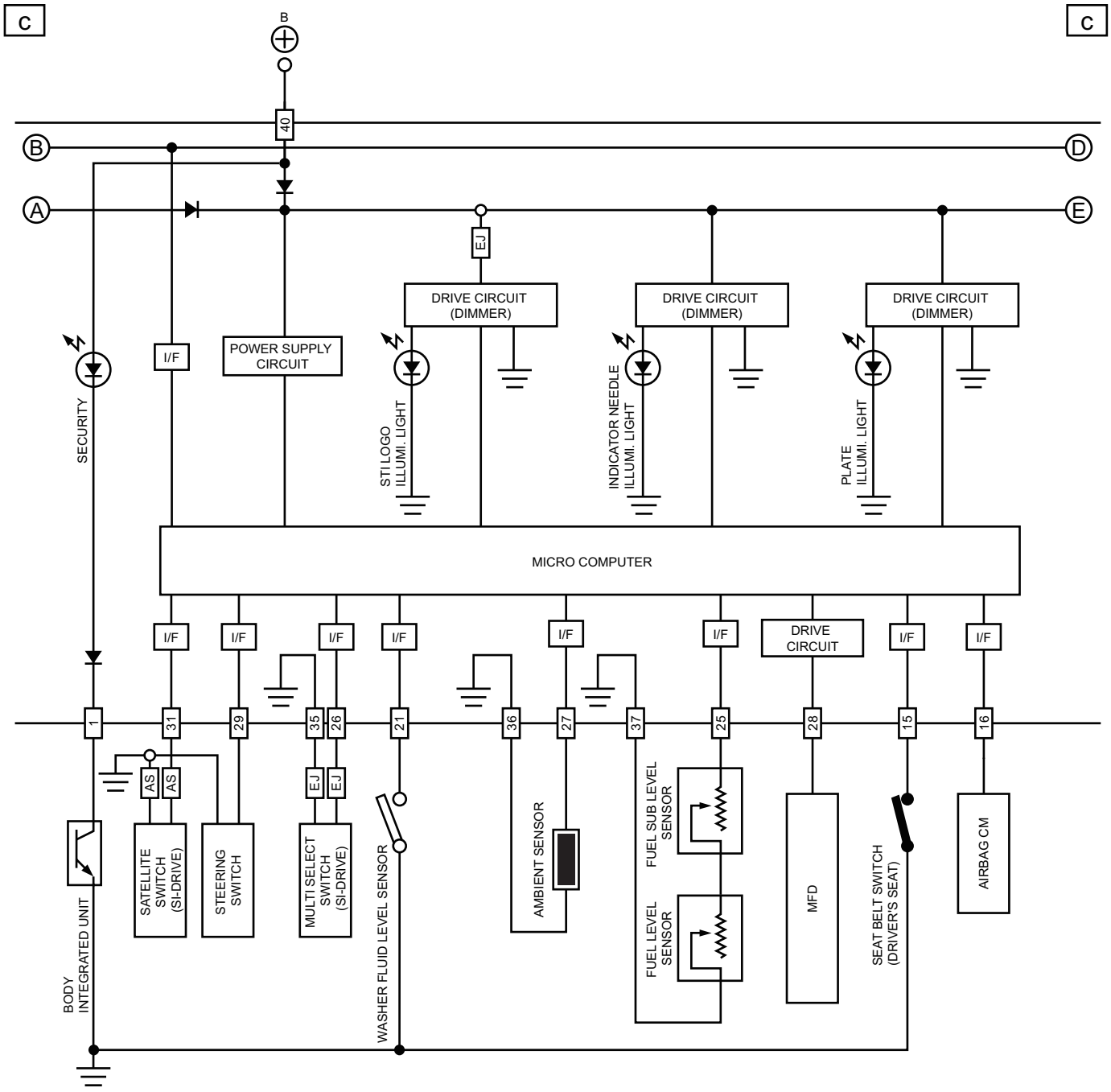

AS : ENGINE TYPE FA WITH SI-DRIVE

EJ : ENGINE TYPE EJ

WI-66691

d d

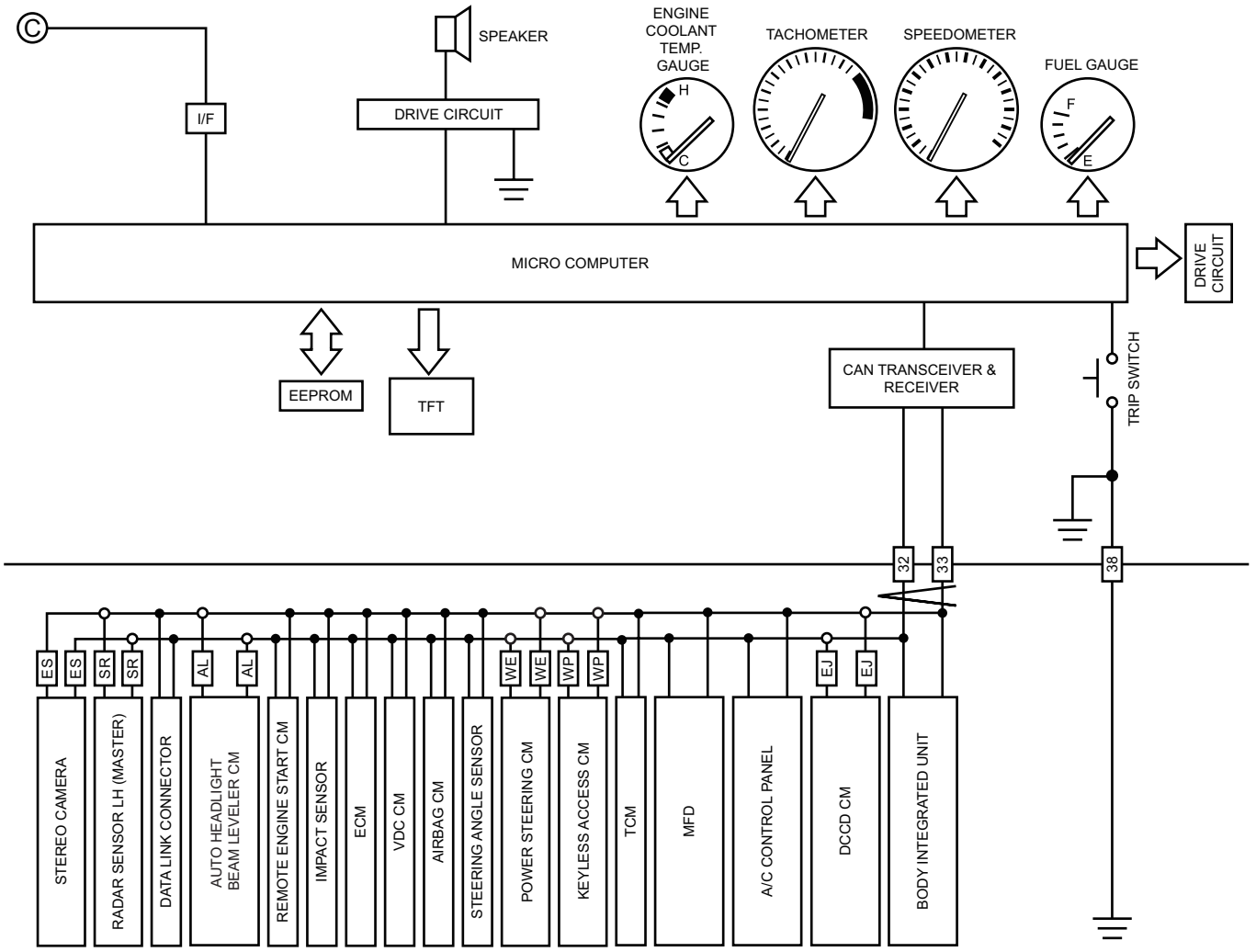

WP : WITH PUSH BUTTON START
WE : WITH ELECTRIC POWER STEERING
EJ : ENGINE TYPE EJ
AL : WITH AUTO HEADLIGHT BEAM LEVELER
SR : WITH BSD/RCTA
ES : WITH EyeSight

WI-66692

e

e

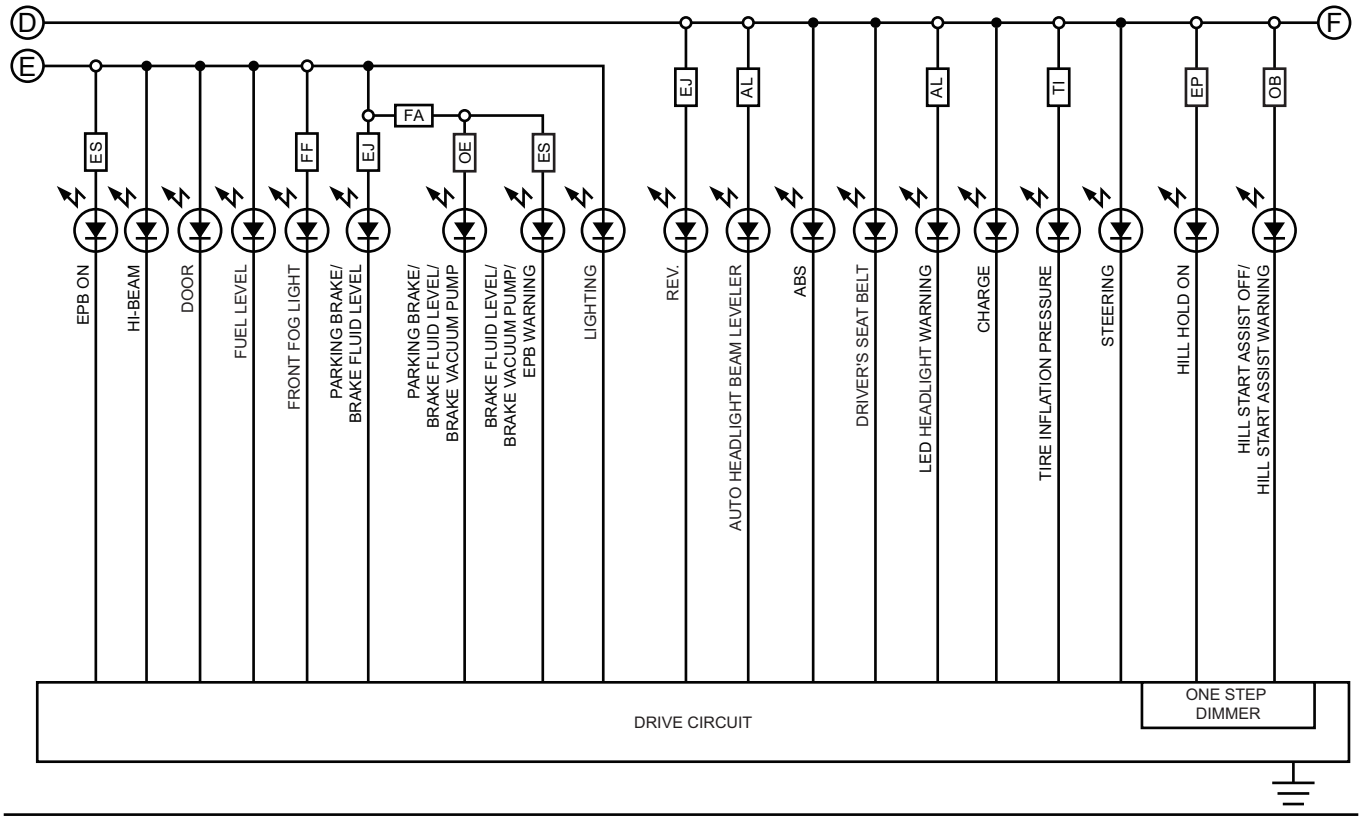

FA : ENGINE TYPE FA

EJ : ENGINE TYPE EJ

TI : WITH TIRE INFLATION PRESSURE

OE : WITHOUT EyeSight

FF : WITH FRONT FOG LIGHT

ES : WITH EyeSight

OB : WITHOUT EPB

EP : WITH EPB

AL : WITH AUTO HEADLIGHT BEAM LEVELER

WI-66693

f f

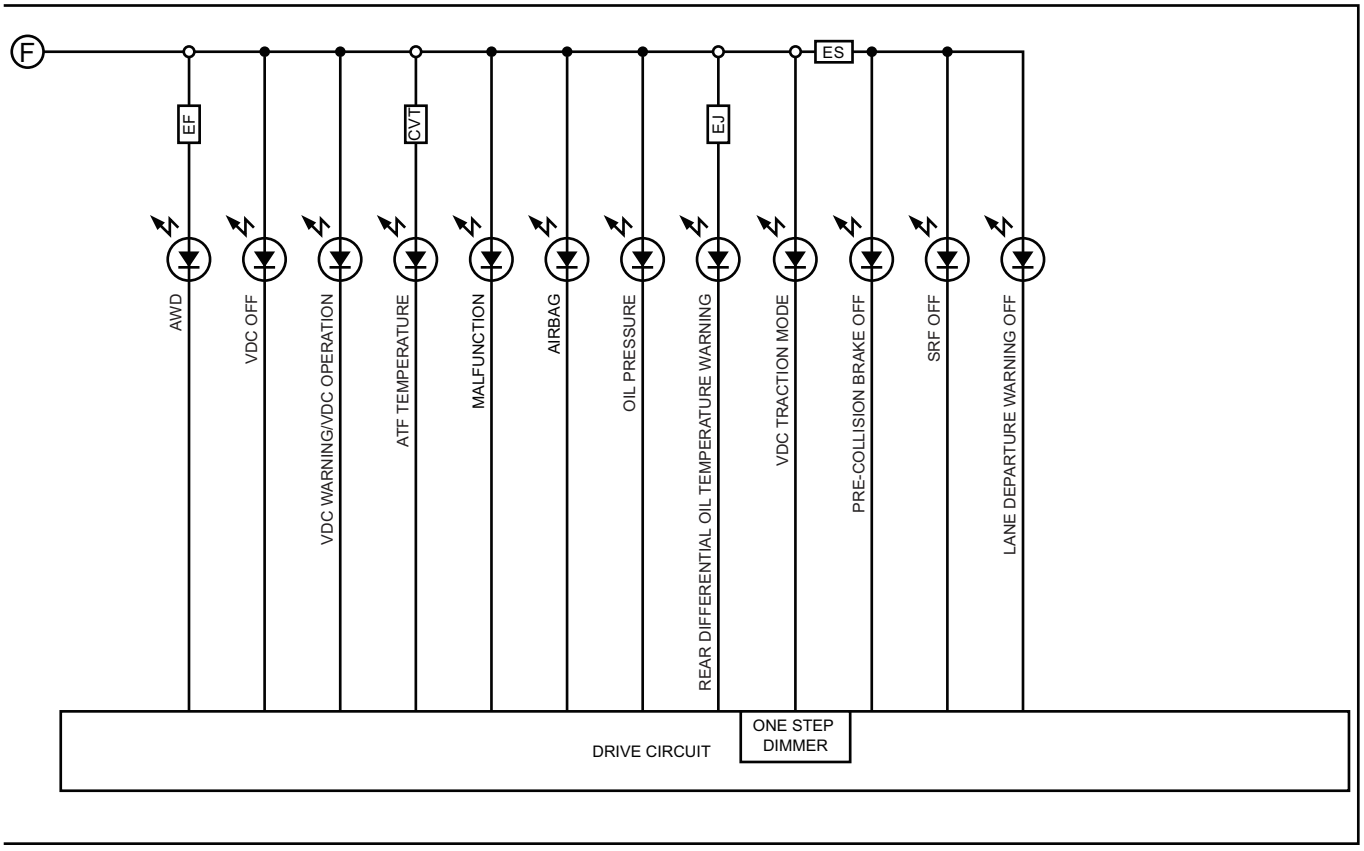

EF : EXCEPT MT MODEL ENGINE TYPE FA

EJ : ENGINE TYPE EJ

ES : WITH EyeSight

WI-66694

15.Coolant Temperature System

A: WIRING DIAGRAM

1. ENGINE TYPE FA

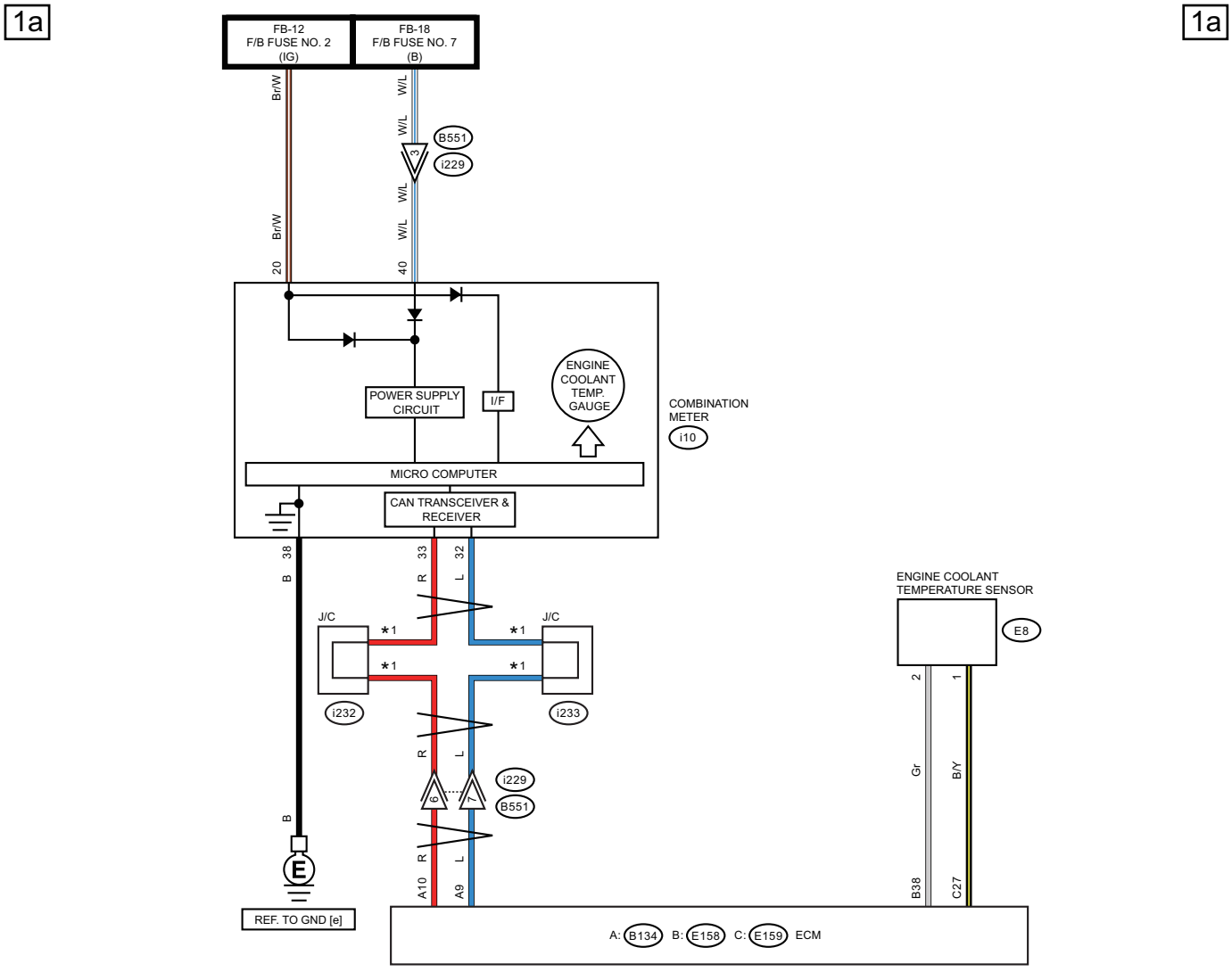

*1 : TERMINAL No. OPTIONAL ARRANGEMENT

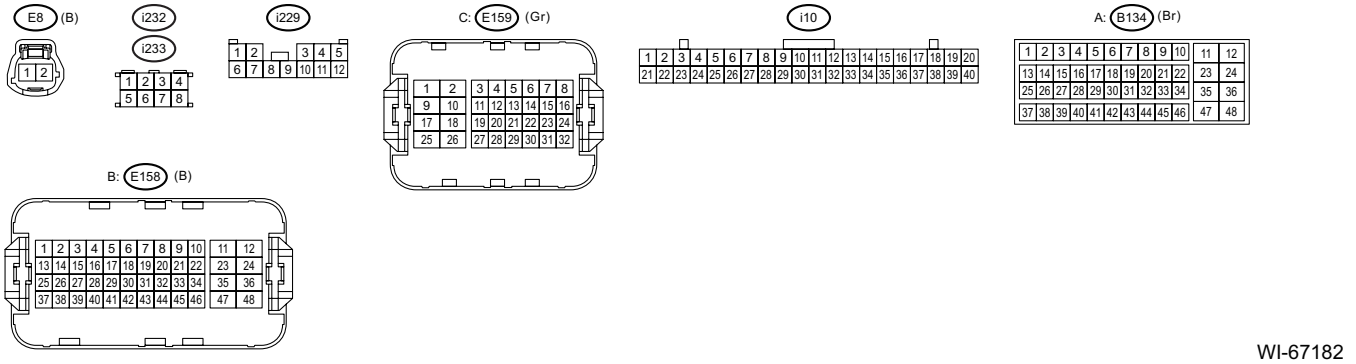

WI-67182

2. ENGINE TYPE EJ

2a

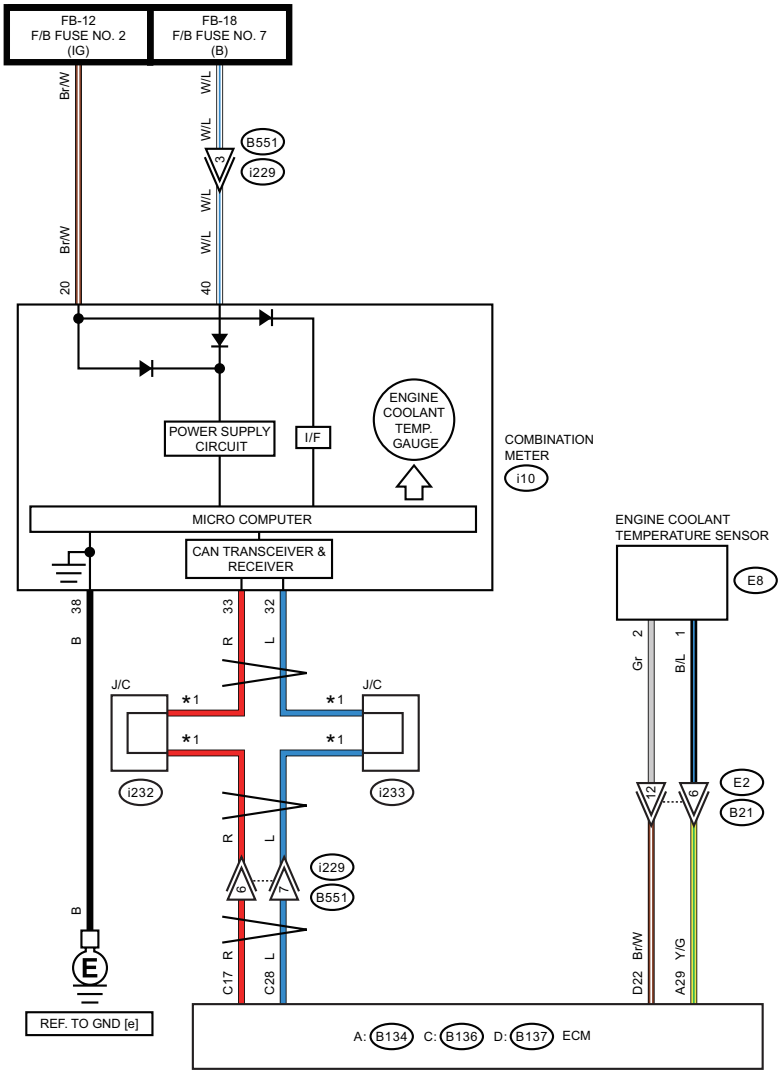

*1 : TERMINAL No. OPTIONAL ARRANGEMENT

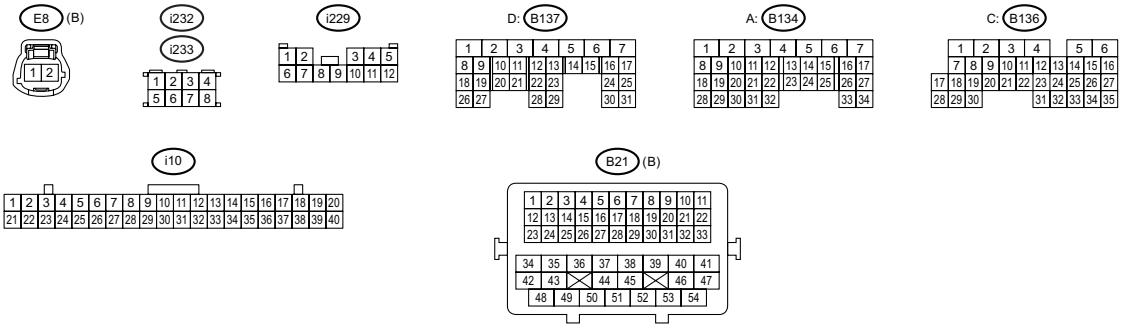

WI-67183

16.Cruise Control System

A: WIRING DIAGRAM

1. ENGINE TYPE FA

1a

1a

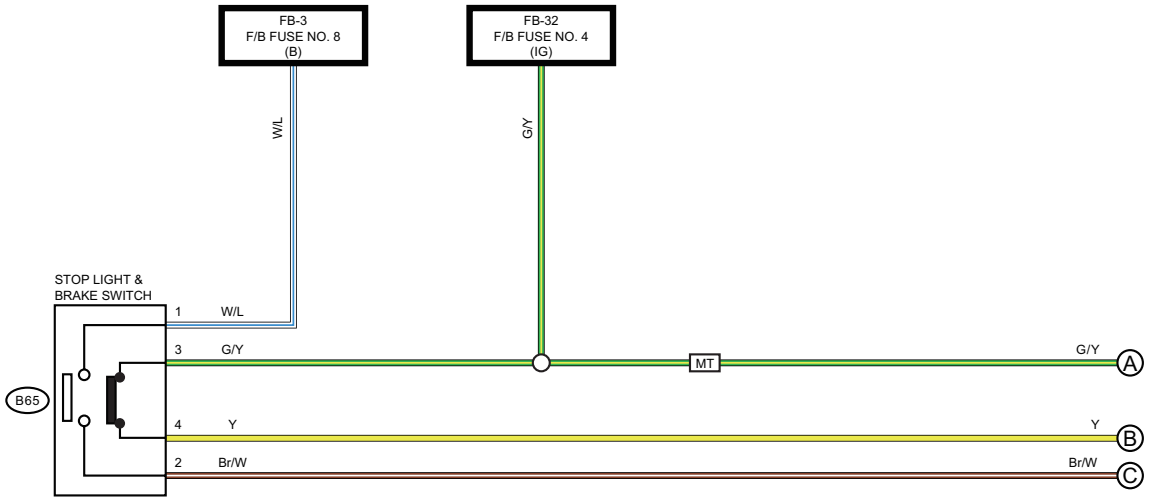



WI-67184

WIRING SYSTEM

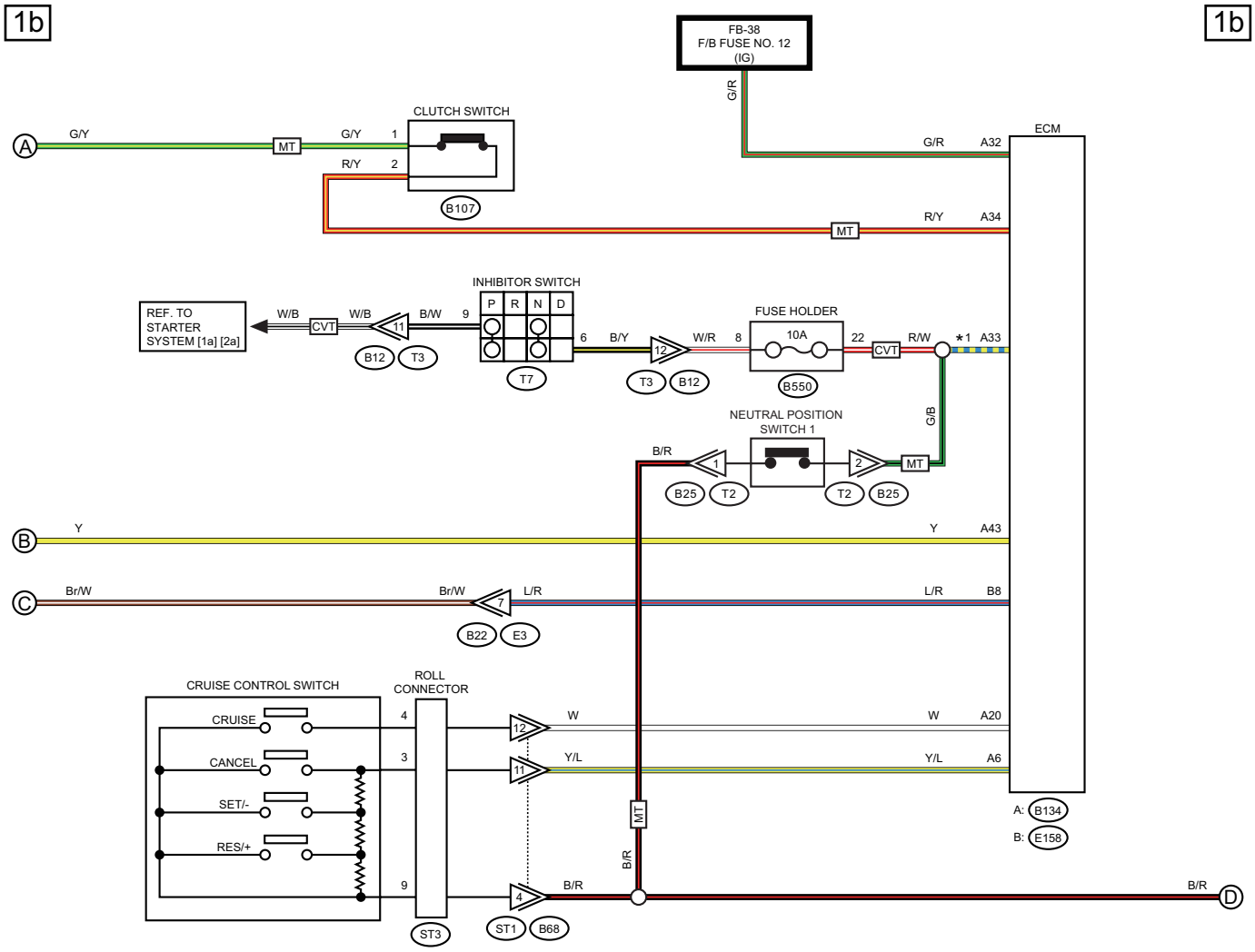

*1 : MT MODEL : G/B
CVT MODEL : R/W

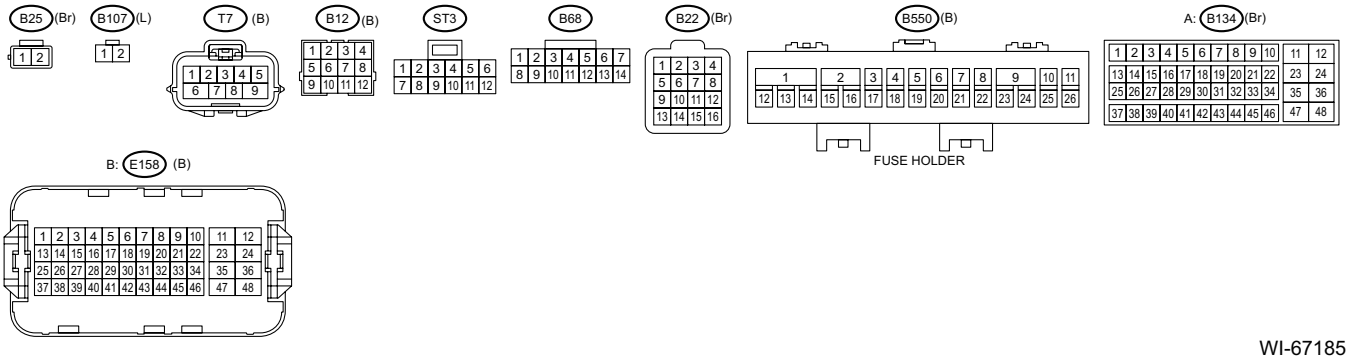

WI-67185

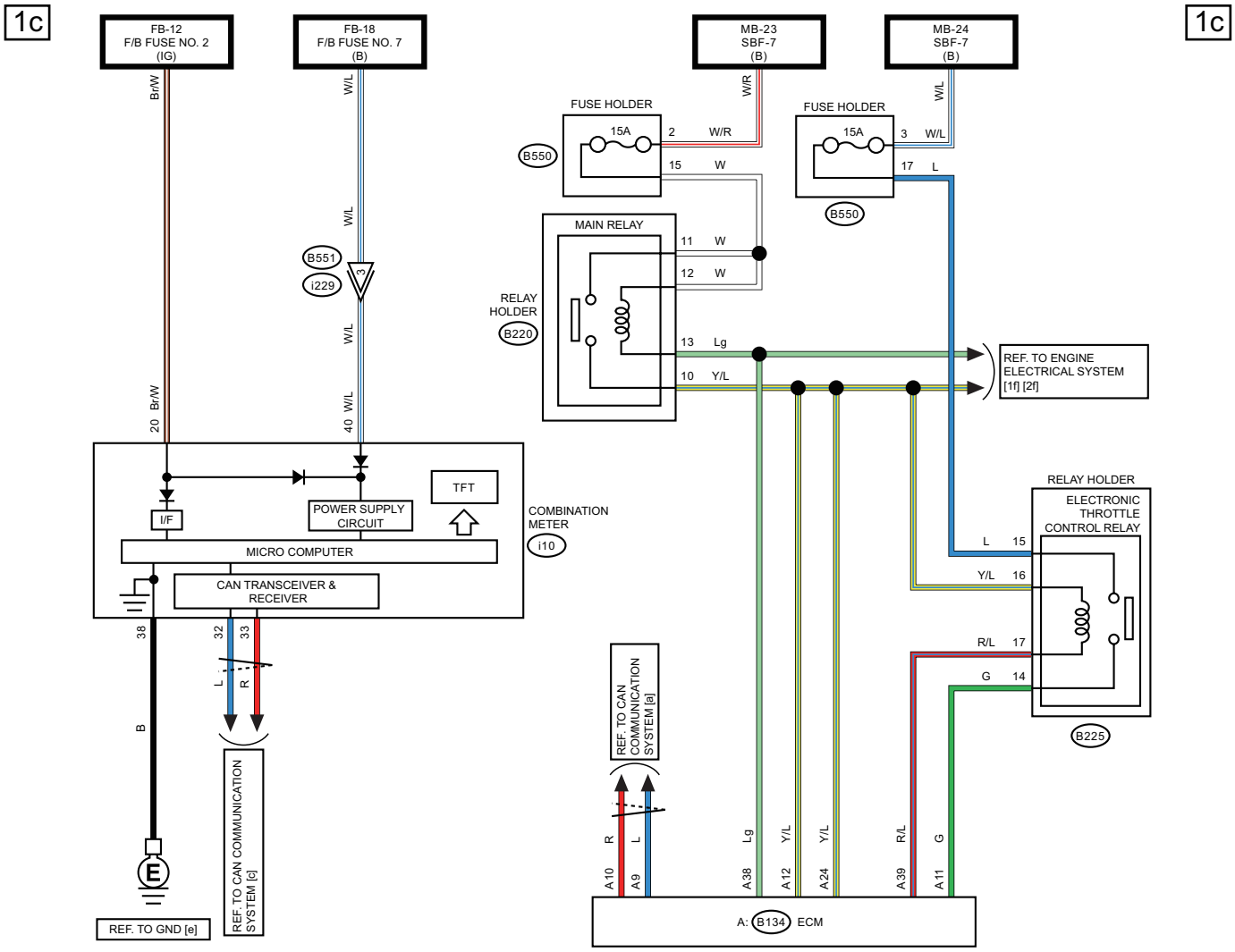
1c
1c
FB-12
F/B FUSE NO. 2
(IG)
FB-18
F/B FUSE NO. 7
(B)
MB-23
SBF-7
(B)
MB-24
SBF-7
(B)
Br/W
W/L
W/R
FUSE HOLDER
15A
B550
2 W/R
15 W
3 W/L
17 L
B551
i229
3
MAIN RELAY
RELAY HOLDER
B220
11 W
12 W
13 Lg
10 Y/L
REF. TO ENGINE
ELECTRICAL SYSTEM
[1f] [2f]
20 Br/W
40 W/L
TFT
I/F
POWER SUPPLY
CIRCUIT
COMBINATION
METER
i10
MICRO COMPUTER
CAN TRANSCEIVER &
RECEIVER
RELAY HOLDER
ELECTRONIC
THROTTLE
CONTROL RELAY
L 15
Y/L 16
R/L 17
G 14
B225
38
32
33
L
R
B
REF. TO CAN
COMMUNICATION
SYSTEM [a]
REF. TO CAN COMMUNICATION
SYSTEM [c]
A10
A9
A38
A12
A24
A39
A11
Lg
Y/L
R/L
G
A: B134 ECM
REF. TO GND [e]

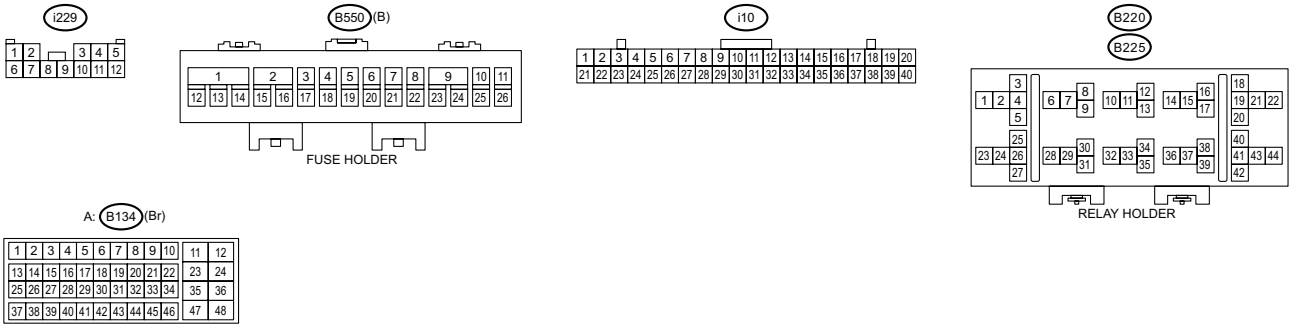
i229
B550 (B)
i10
B220
B225
FUSE HOLDER
RELAY HOLDER
A: B134 (Br)

WI-66695

WIRING SYSTEM

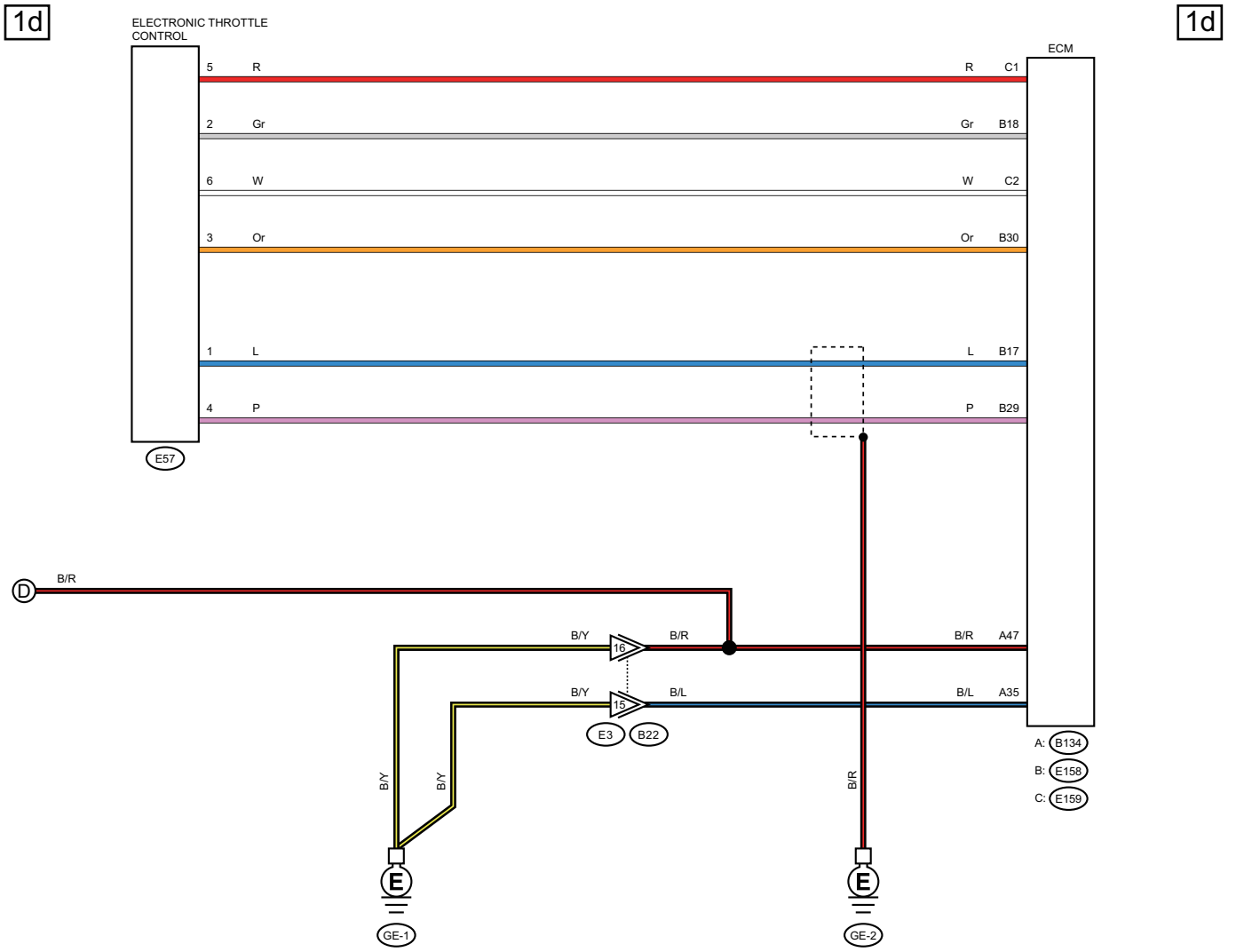

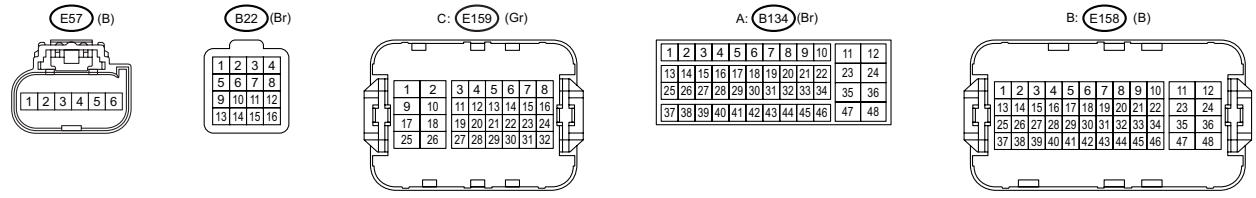

WI-67186

2. ENGINE TYPE EJ

2a 2a

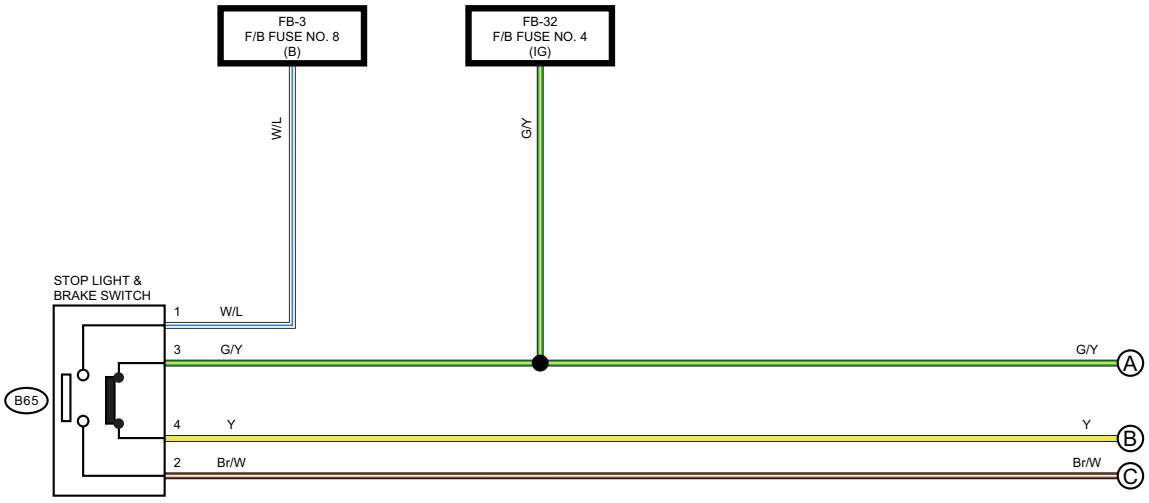

B65 (B)



WI-67187

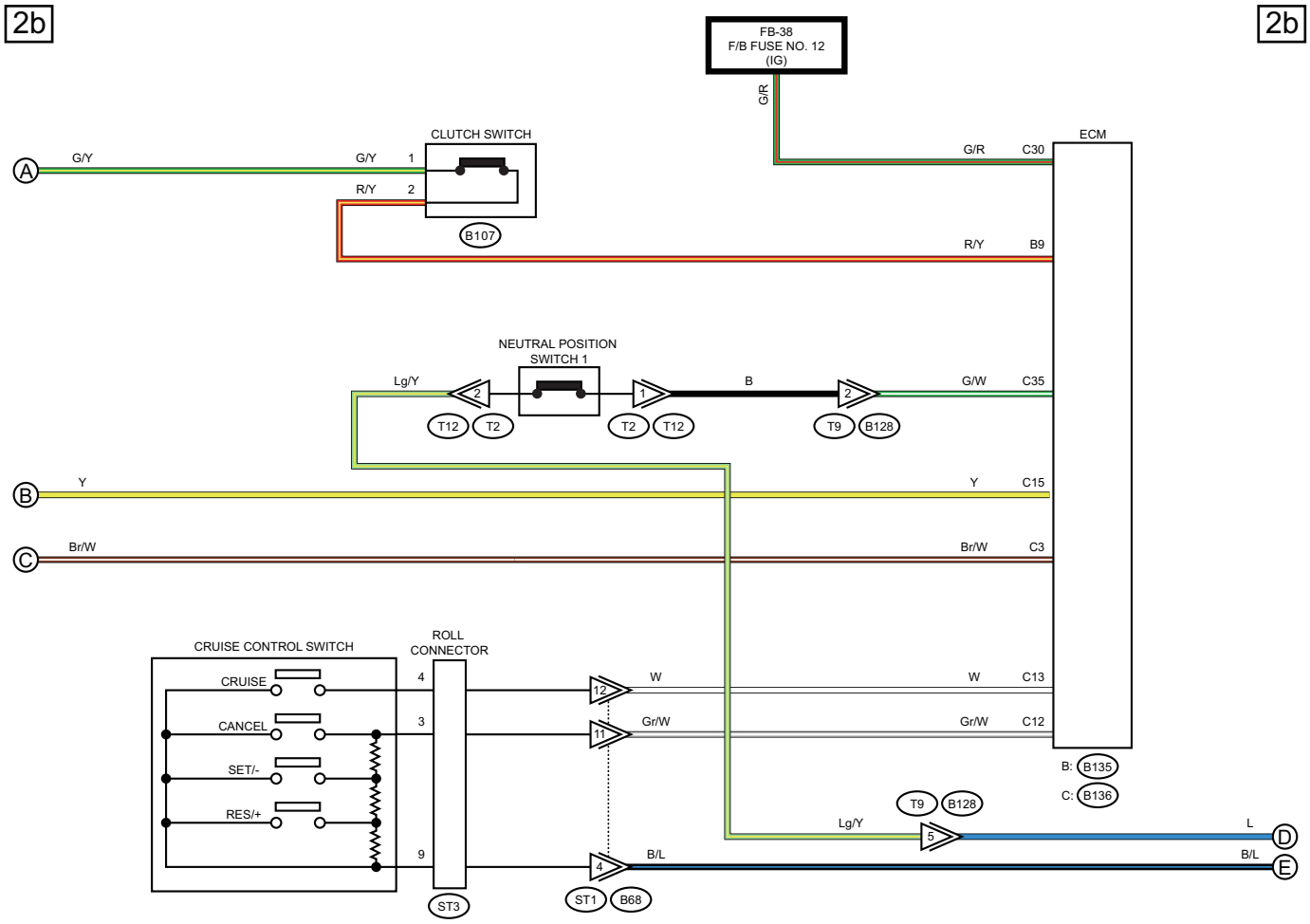
2b
2b
FB-38
F/B FUSE NO. 12
(IG)
G/R
ECM
CLUTCH SWITCH
G/Y
G/Y
1
R/Y
2
B107
G/R
C30
R/Y
B9
NEUTRAL POSITION
SWITCH 1
Lg/Y
B
G/W
C35
T12
T2
T2
T12
T9
B128
Y
Y
C15
Br/W
Br/W
C3
CRUISE CONTROL SWITCH
ROLL
CONNECTOR
CRUISE
CANCEL
SET/-
RES/+
4
3
9
W
W
C13
Gr/W
Gr/W
C12
B: B135
C: B136
T9
B128
Lg/Y
5
L
B/L
B/L
ST3
ST1
B68

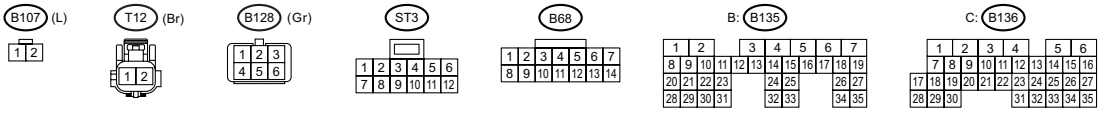
B107 (L)
T12 (Br)
B128 (Gr)
ST3
B68
B: B135
C: B136

WI-67188

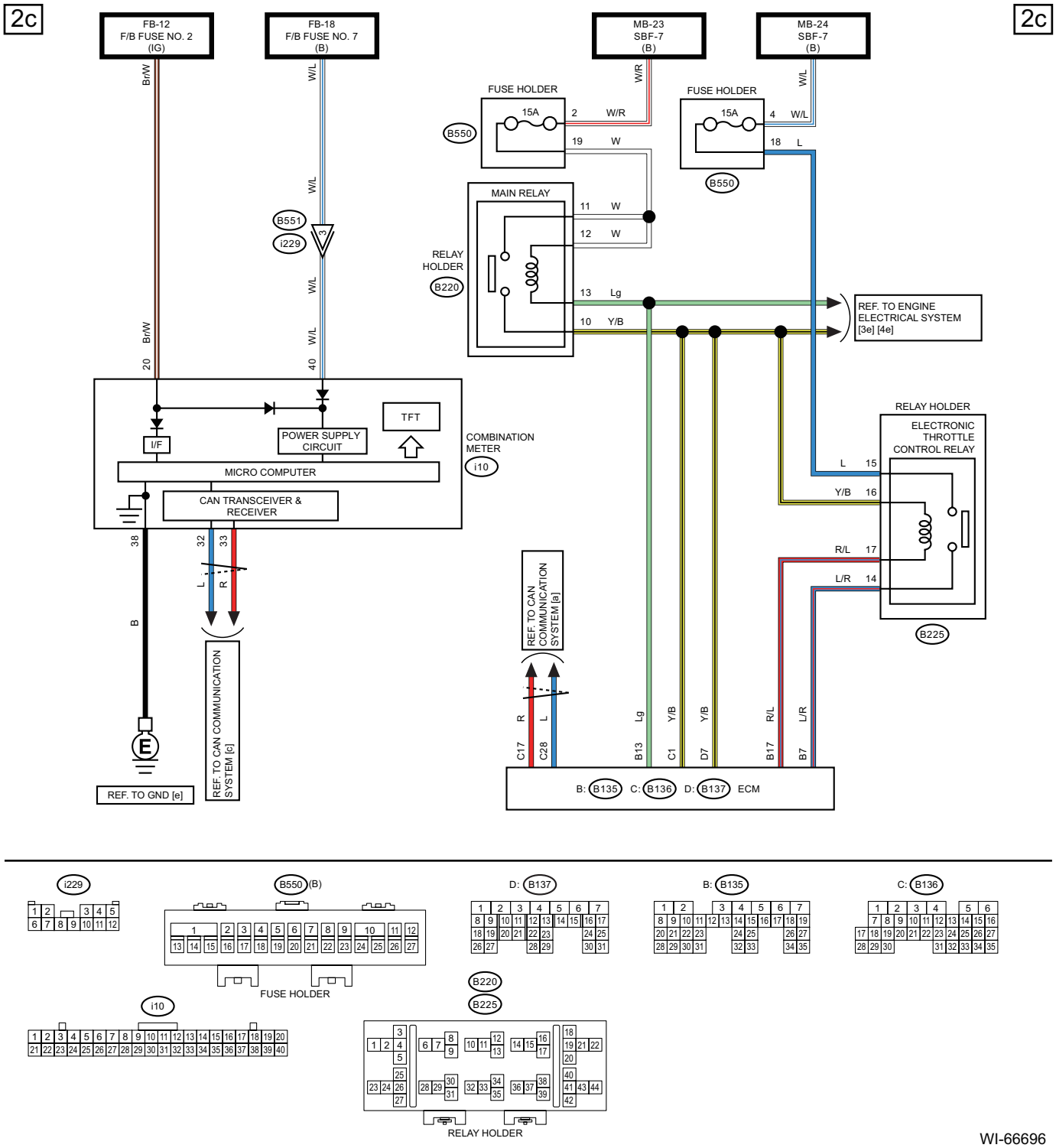
2c
2c
FB-12
F/B FUSE NO. 2
(IG)
FB-18
F/B FUSE NO. 7
(B)
MB-23
SBF-7
(B)
MB-24
SBF-7
(B)
Br/W
W/L
W/R
FUSE HOLDER
15A
B550
2 W/R
19 W
4 W/L
18 L
B551
i229
MAIN RELAY
11 W
12 W
RELAY HOLDER
B220
13 Lg
10 Y/B
REF. TO ENGINE ELECTRICAL SYSTEM [3e] [4e]
RELAY HOLDER
ELECTRONIC THROTTLE CONTROL RELAY
L 15
Y/B 16
R/L 17
L/R 14
B225
TFT
I/F
POWER SUPPLY CIRCUIT
MICRO COMPUTER
CAN TRANSCEIVER & RECEIVER
COMBINATION METER
i10
REF. TO CAN COMMUNICATION SYSTEM [a]
REF. TO CAN COMMUNICATION SYSTEM [c]
REF. TO GND [e]
B: B135 C: B136 D: B137 ECM

i229
B550 (B)
D: B137
B: B135
C: B136
FUSE HOLDER
i10
B220
B225
RELAY HOLDER

WI-66696

WIRING SYSTEM

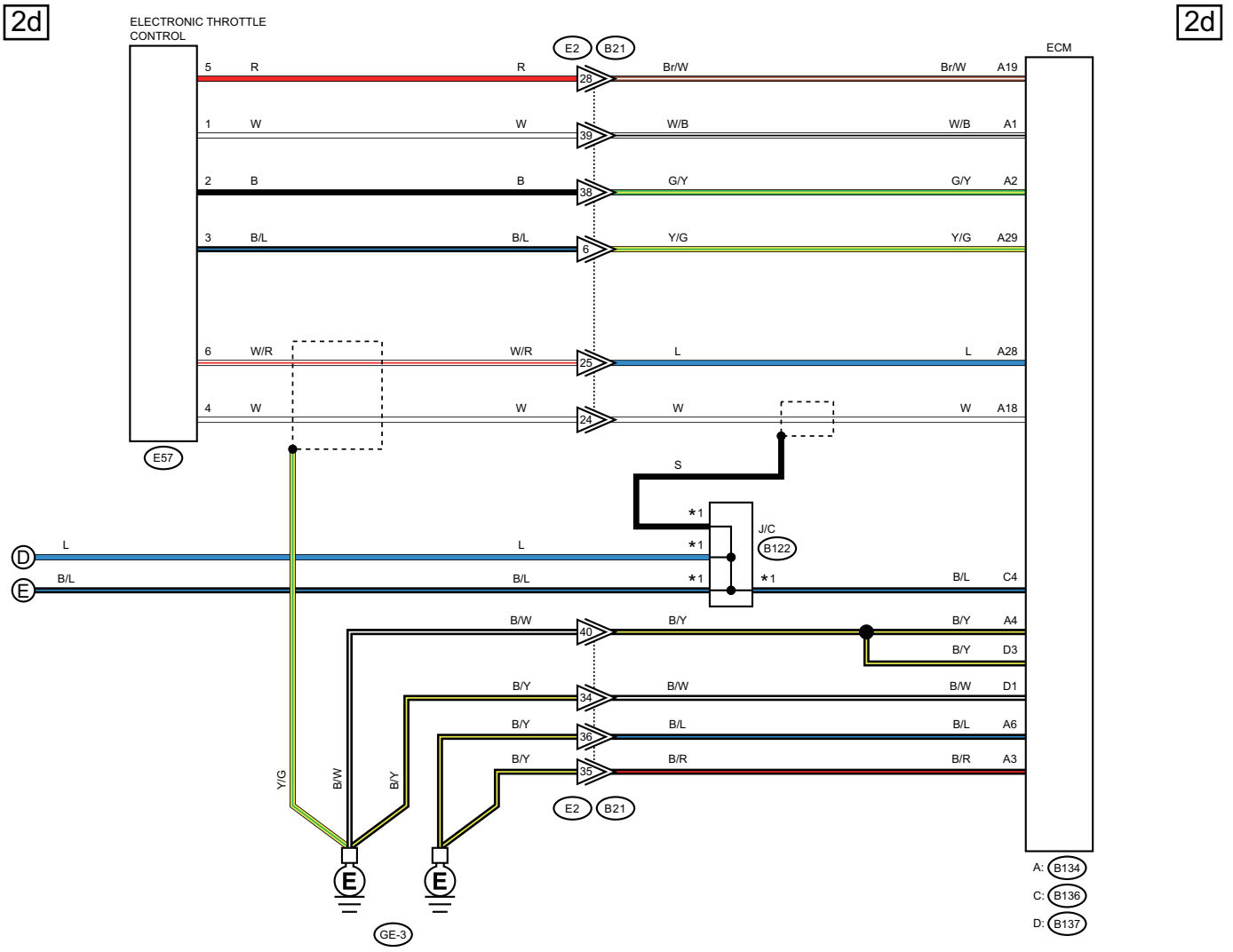

*1 : TERMINAL No. OPTIONAL ARRANGEMENT

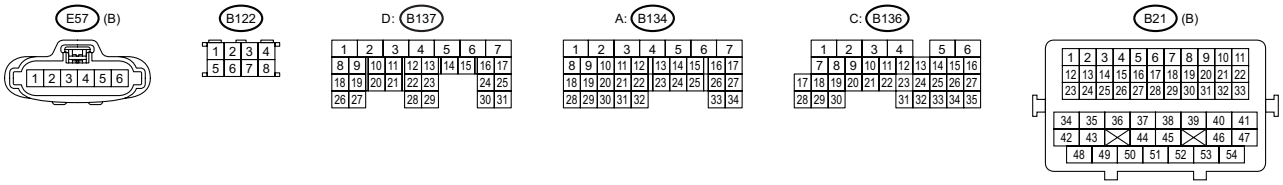

WI-67189

17.CVT Control System

A: WIRING DIAGRAM

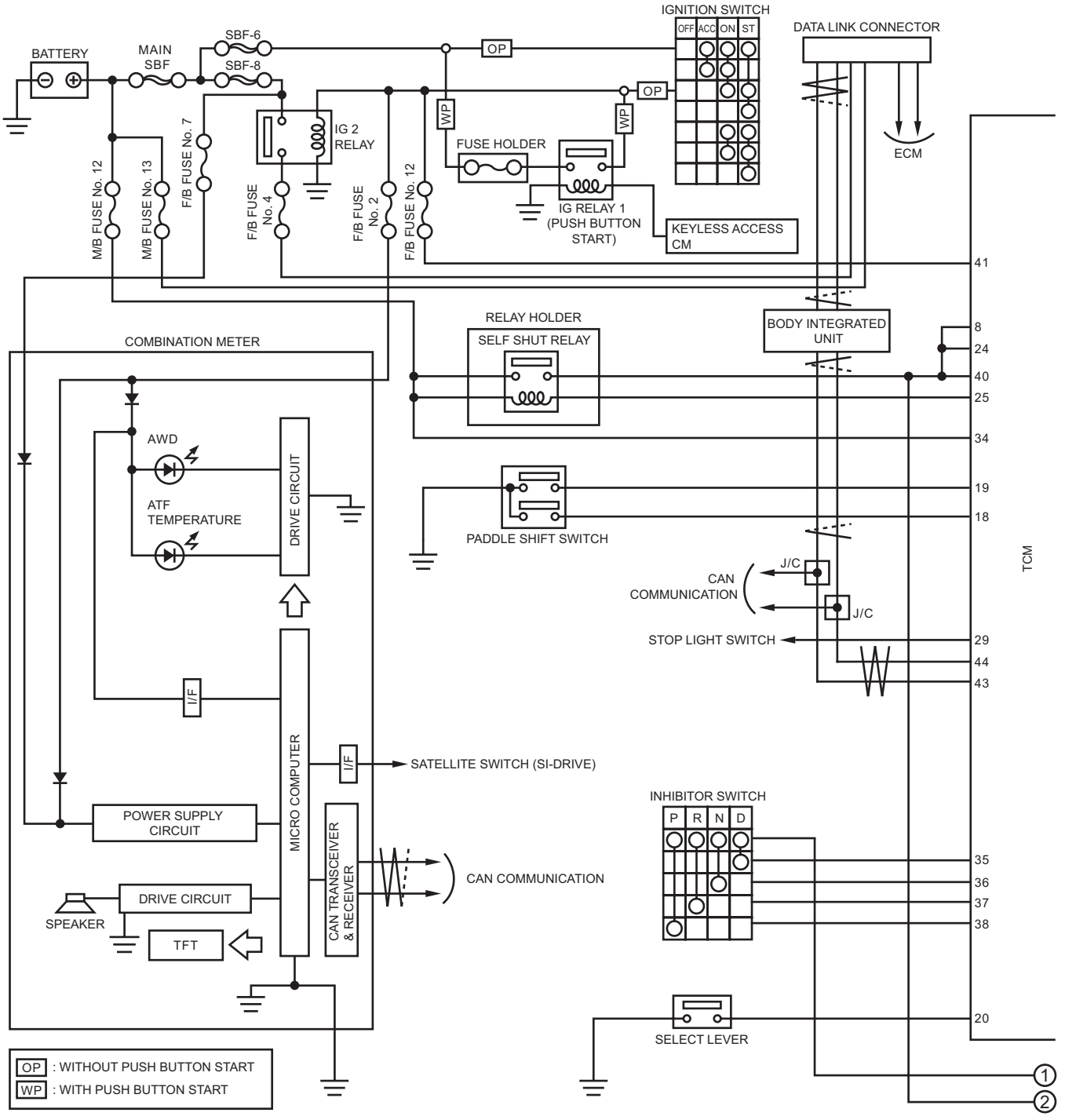

WI-67639

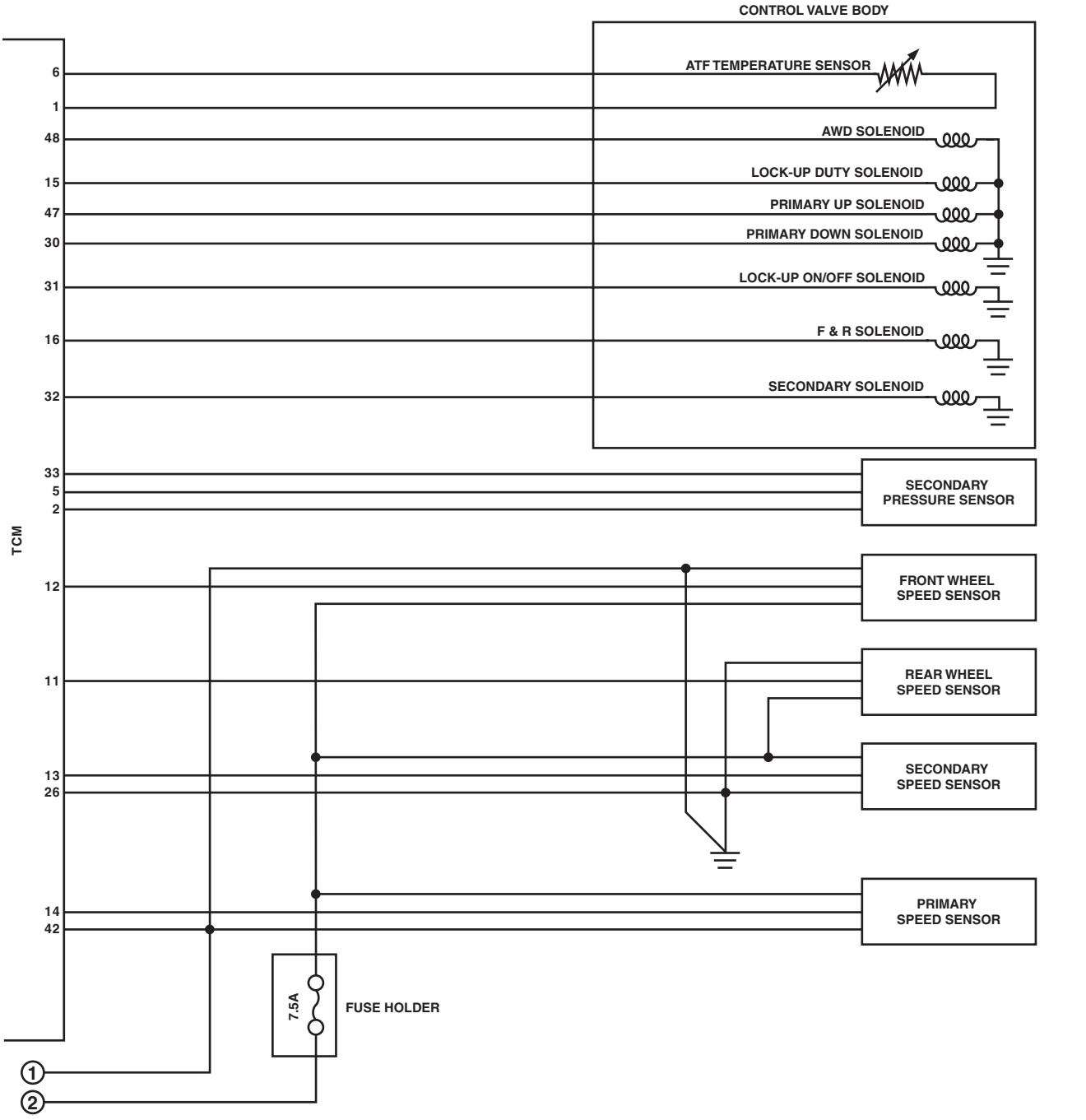
CONTROL VALVE BODY
ATF TEMPERATURE SENSOR
AWD SOLENOID
LOCK-UP DUTY SOLENOID
PRIMARY UP SOLENOID
PRIMARY DOWN SOLENOID
LOCK-UP ON/OFF SOLENOID
F & R SOLENOID
SECONDARY SOLENOID
TCM
6
1
48
15
47
30
31
16
32
33
5
2
12
11
13
26
14
42
SECONDARY PRESSURE SENSOR
FRONT WHEEL SPEED SENSOR
REAR WHEEL SPEED SENSOR
SECONDARY SPEED SENSOR
PRIMARY SPEED SENSOR
7.5A
FUSE HOLDER
1
2

WI-44350

WIRING SYSTEM

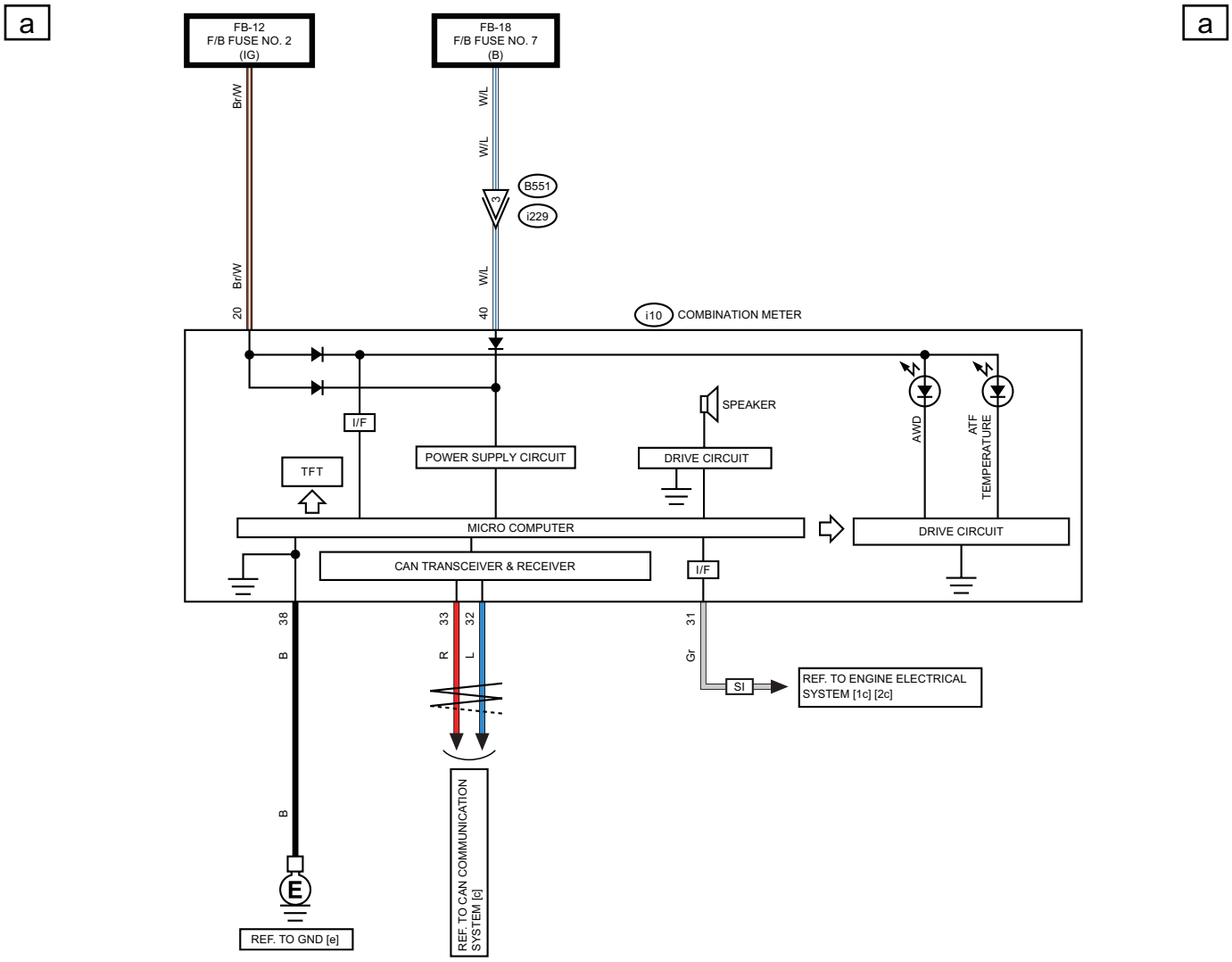

SI : WITH SI-DRIVE

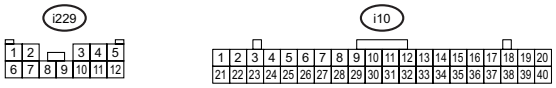

WI-66697

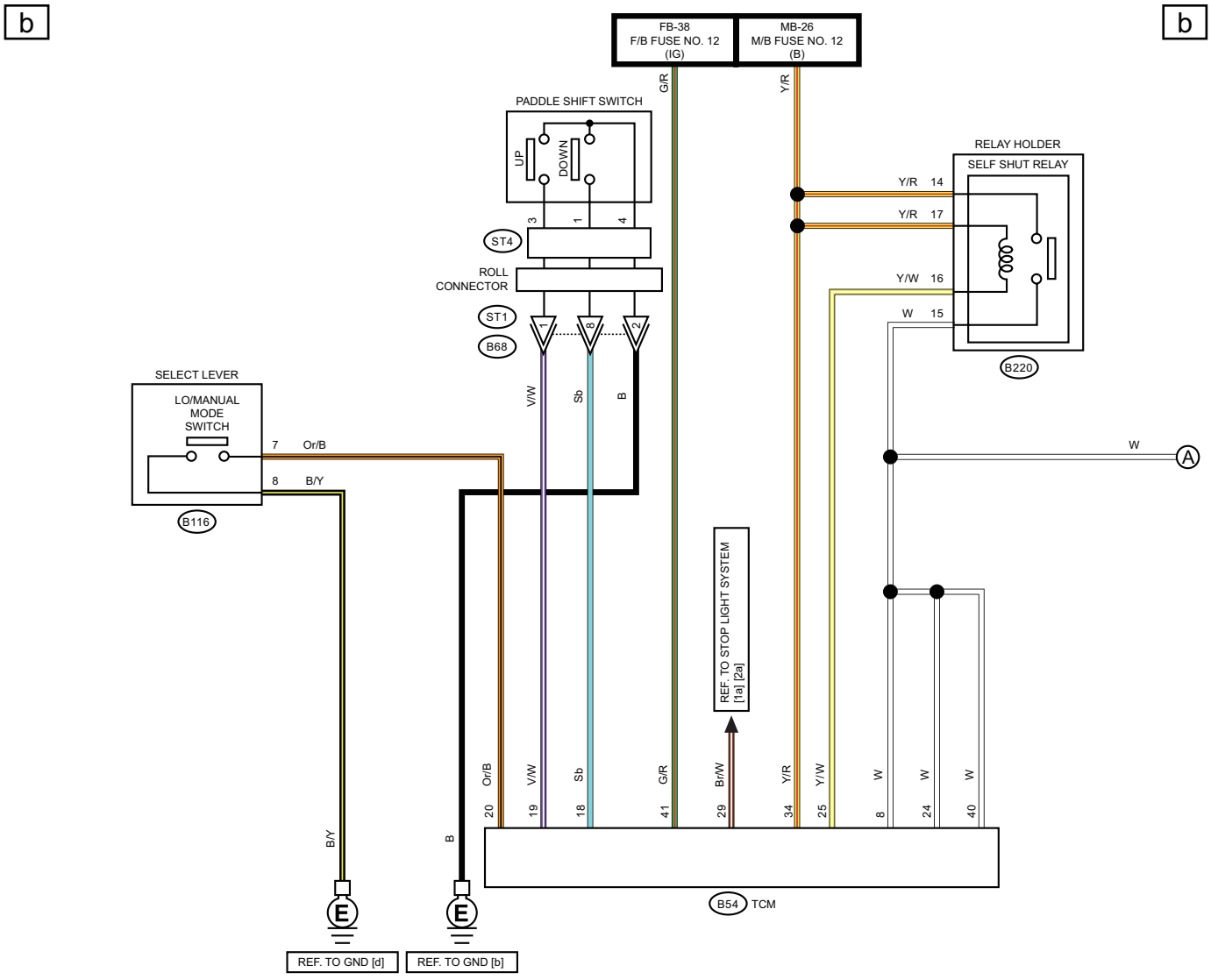
b
b
FB-38
F/B FUSE NO. 12
(IG)
MB-26
M/B FUSE NO. 12
(B)
G/R
Y/R
PADDLE SHIFT SWITCH
UP
DOWN
3
1
4
ST4
ROLL
CONNECTOR
ST1
B68
1
8
2
RELAY HOLDER
SELF SHUT RELAY
Y/R 14
Y/R 17
Y/W 16
W 15
B220
SELECT LEVER
LO/MANUAL
MODE
SWITCH
7 Or/B
8 B/Y
B116
V/W
Sb
B
W
A
REF. TO STOP LIGHT SYSTEM
[1a] [2a]
Or/B
V/W
Sb
G/R
Br/W
Y/R
Y/W
W
W
W
20
19
18
41
29
34
25
8
24
40
B/Y
B
B54
TCM
REF. TO GND [d]
REF. TO GND [b]

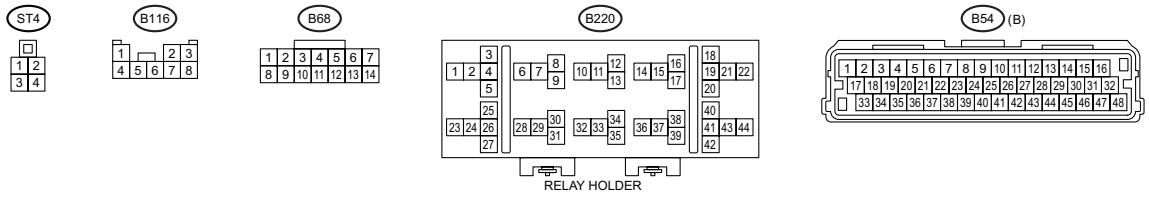
ST4
B116
B68
B220
B54 (B)
RELAY HOLDER

WI-67190

WIRING SYSTEM

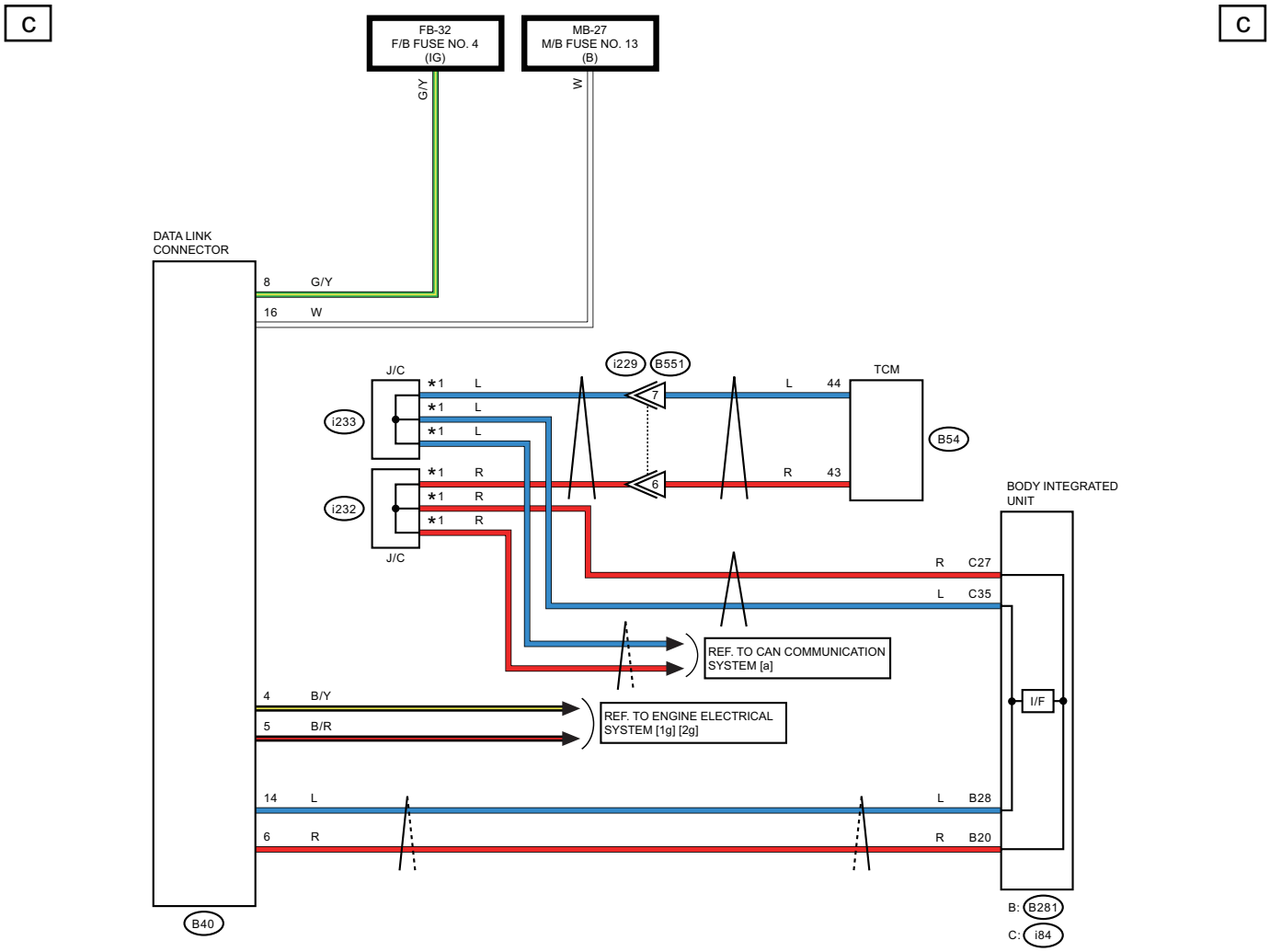

*1 : TERMINAL No. OPTIONAL ARRANGEMENT

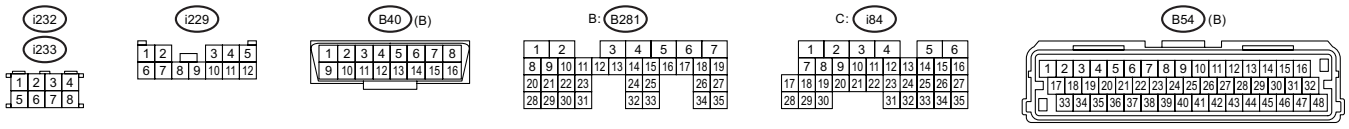

WI-66698

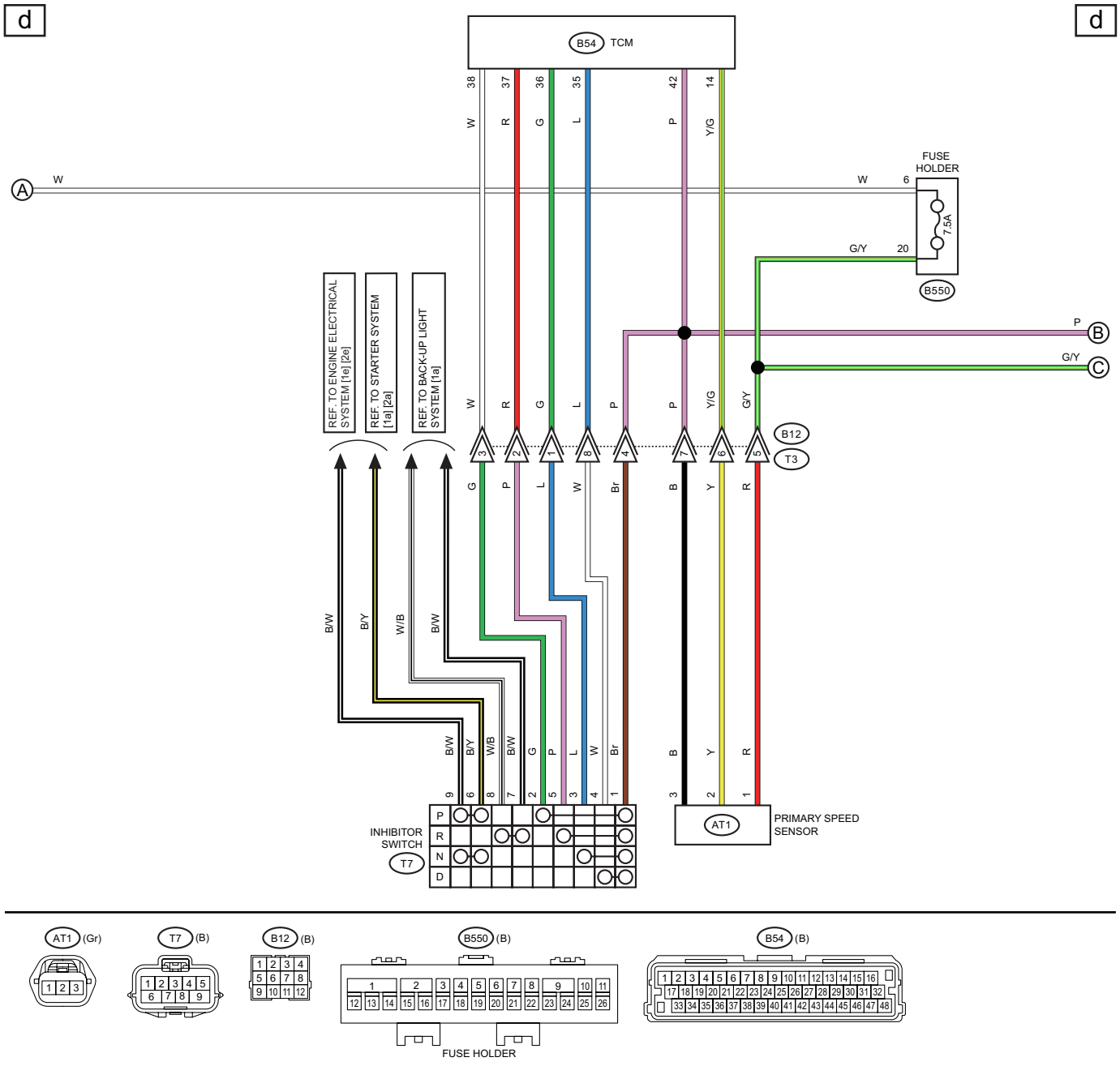
d
d
B54 TCM
38 37 36 35 42 14
W R G L P Y/G
FUSE HOLDER
A
W
W 6
7.5A
G/Y 20
B550
P
B
G/Y
C
REF. TO ENGINE ELECTRICAL SYSTEM [1e] [2e]
REF. TO STARTER SYSTEM [1a] [2a]
REF. TO BACK-UP LIGHT SYSTEM [1a]
W R G L P P Y/G G/Y
B12
T3
G P L W Br B Y R
B/W B/Y W/B B/W B/W G P L W Br B Y R
9 6 8 7 2 5 3 4 1 3 2 1
P
R
N
D
INHIBITOR SWITCH
T7
AT1
PRIMARY SPEED SENSOR

AT1 (Gr)
T7 (B)
B12 (B)
B550 (B)
B54 (B)
FUSE HOLDER

WI-67191

WIRING SYSTEM

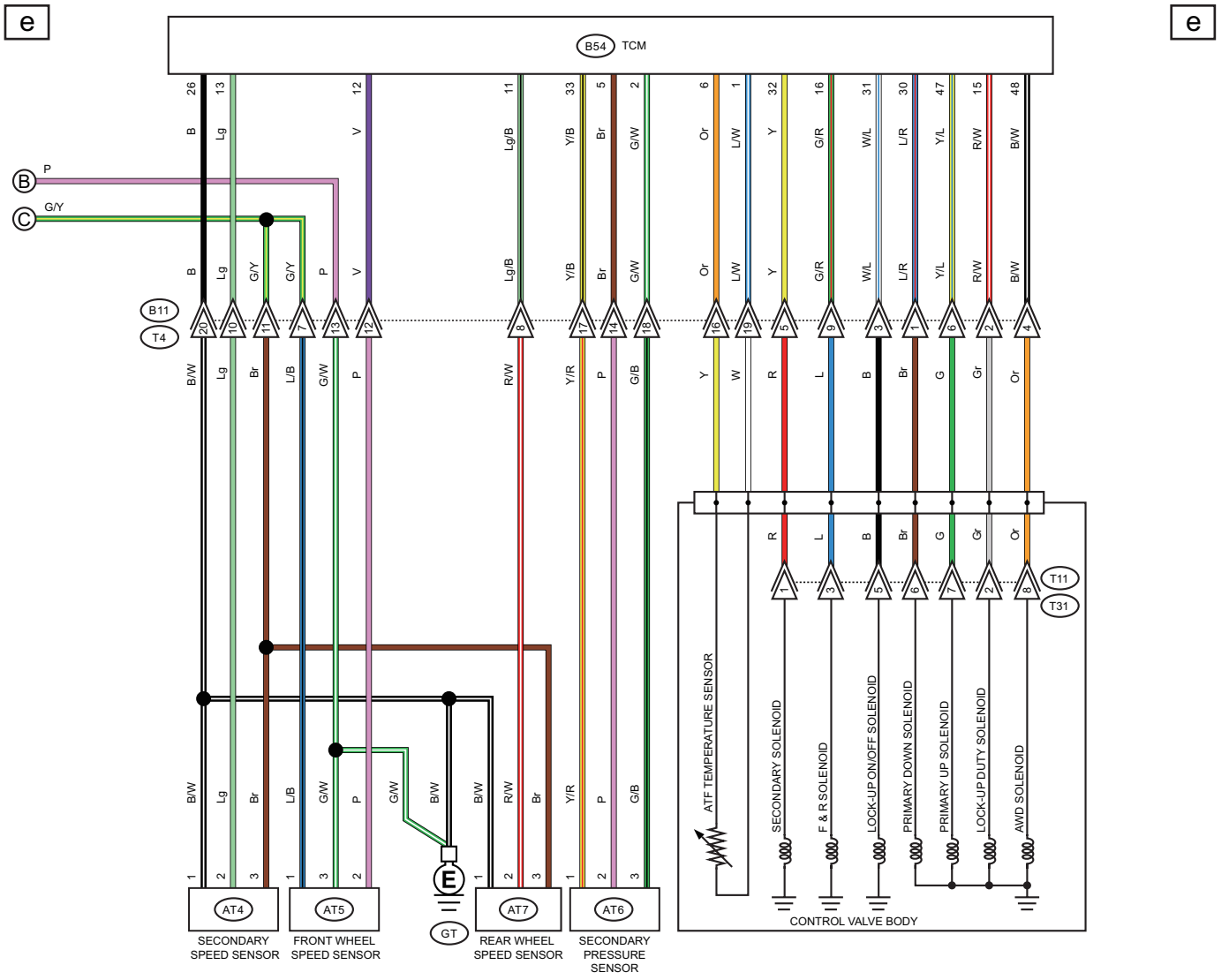

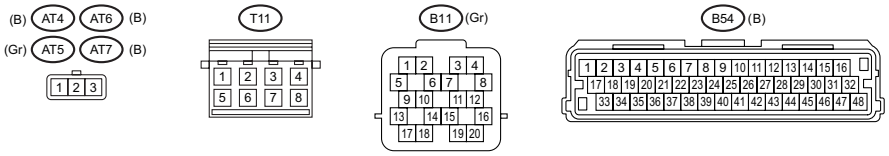

WI-67192

18.Driver's Control Center Differential Control System

A: WIRING DIAGRAM

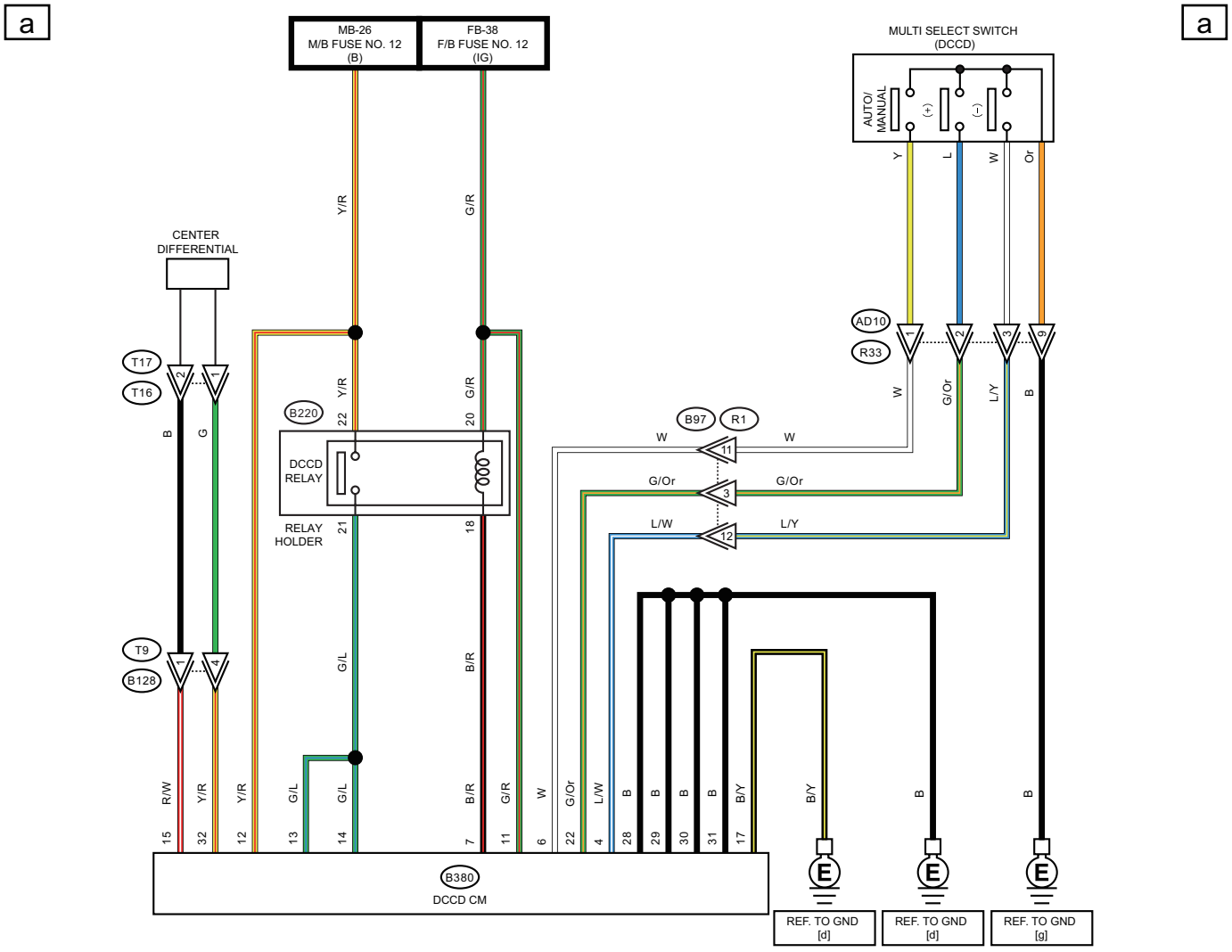

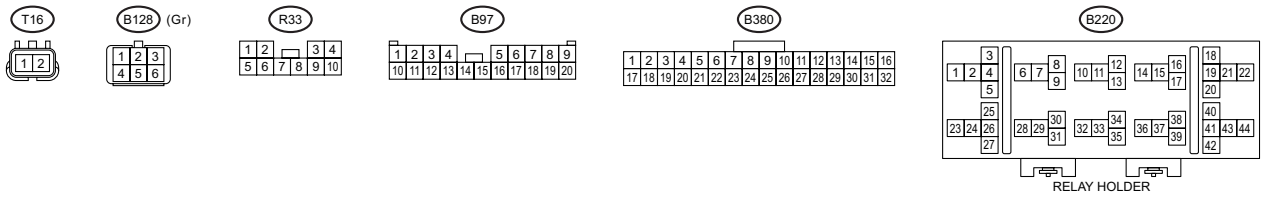

WI-67193

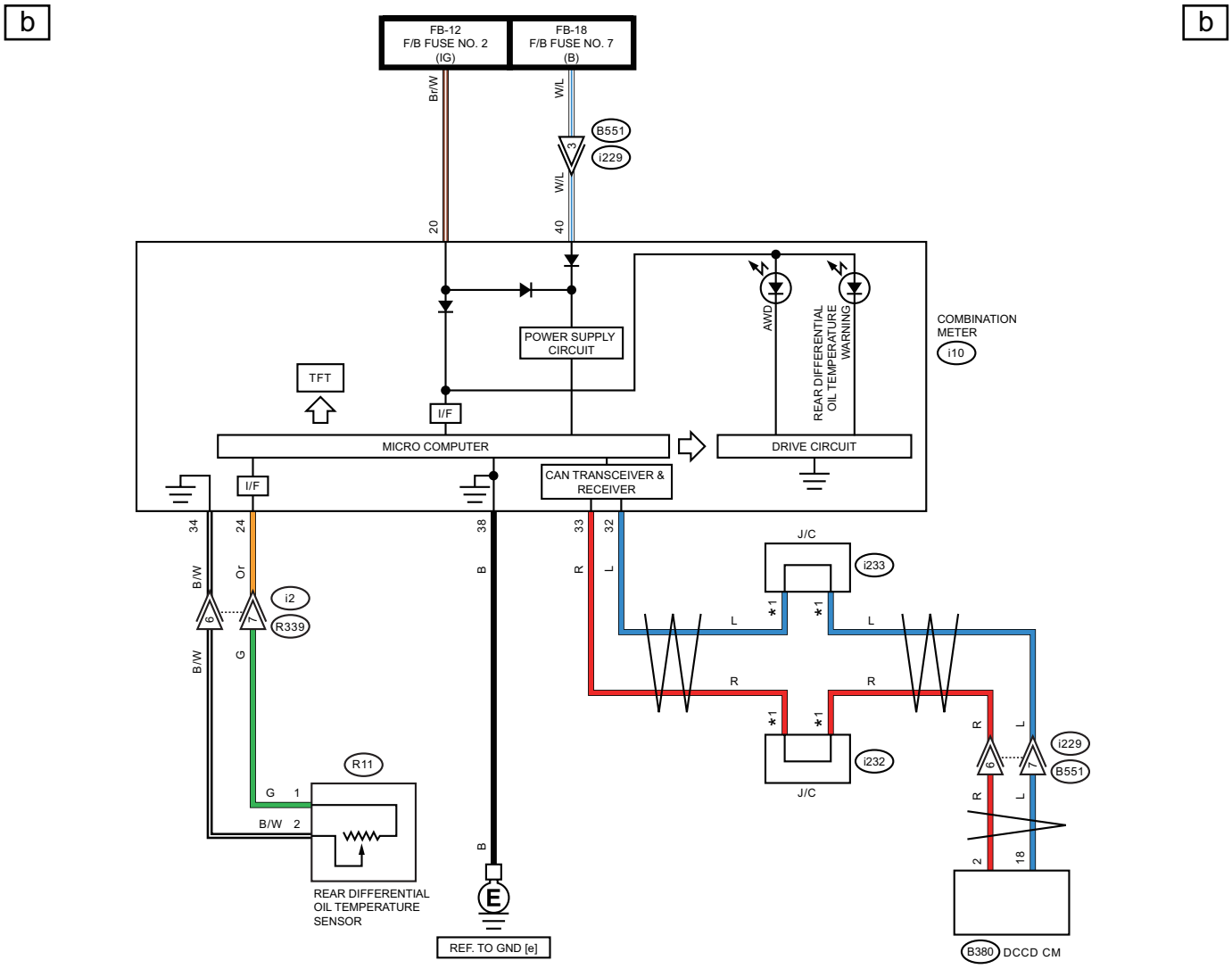

*1 : TERMINAL No. OPTIONAL ARRANGEMENT

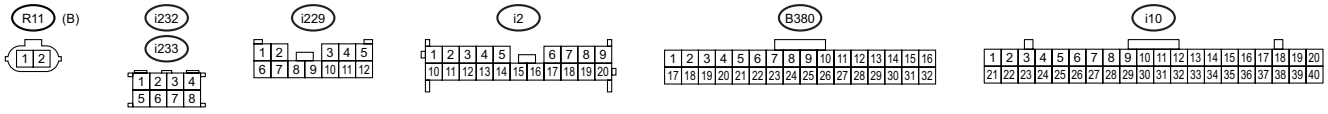

WI-67194

19.Electric Power Steering System

A: WIRING DIAGRAM

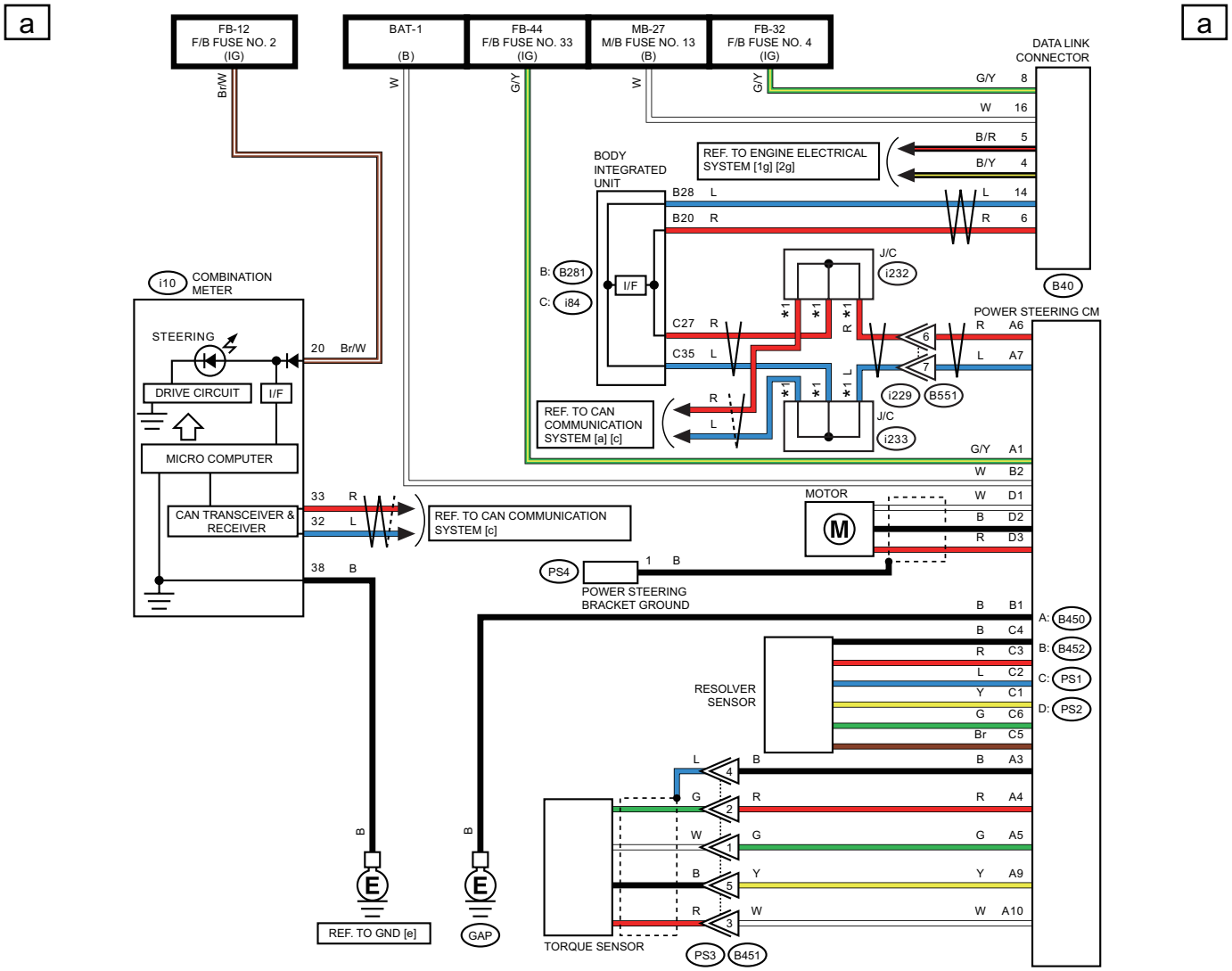

*1 : TERMINAL No. OPTIONAL ARRANGEMENT

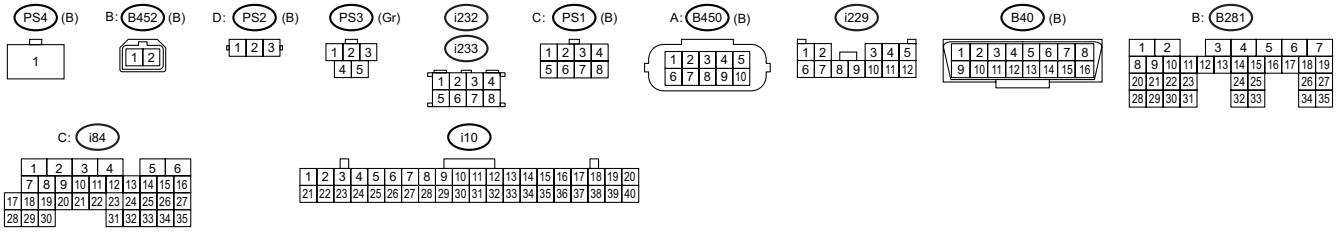

WI-66699

20.Engine Electrical System

A: WIRING DIAGRAM

1. ENGINE TYPE FA (WITHOUT PUSH BUTTON START)

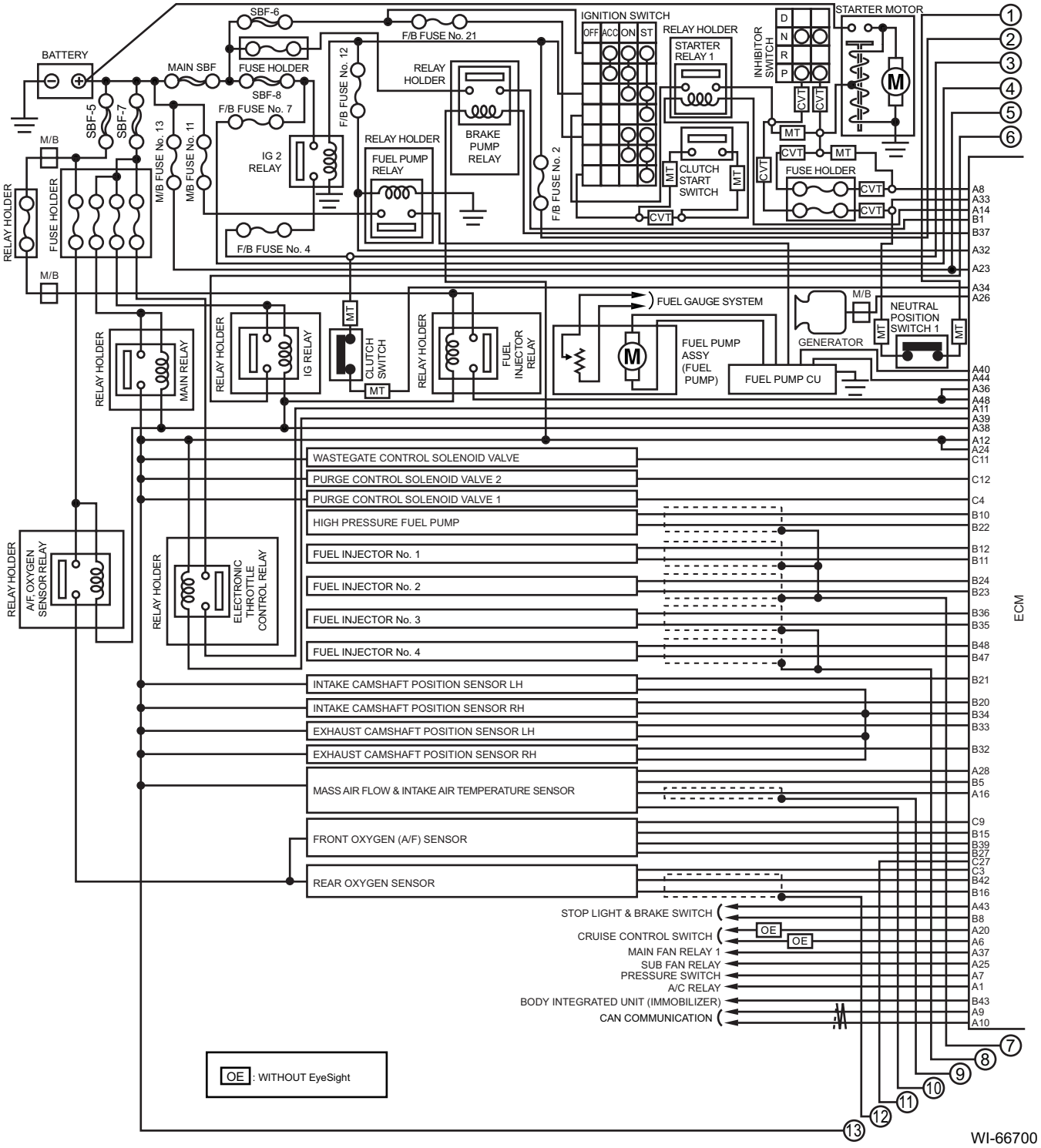

WI-66700

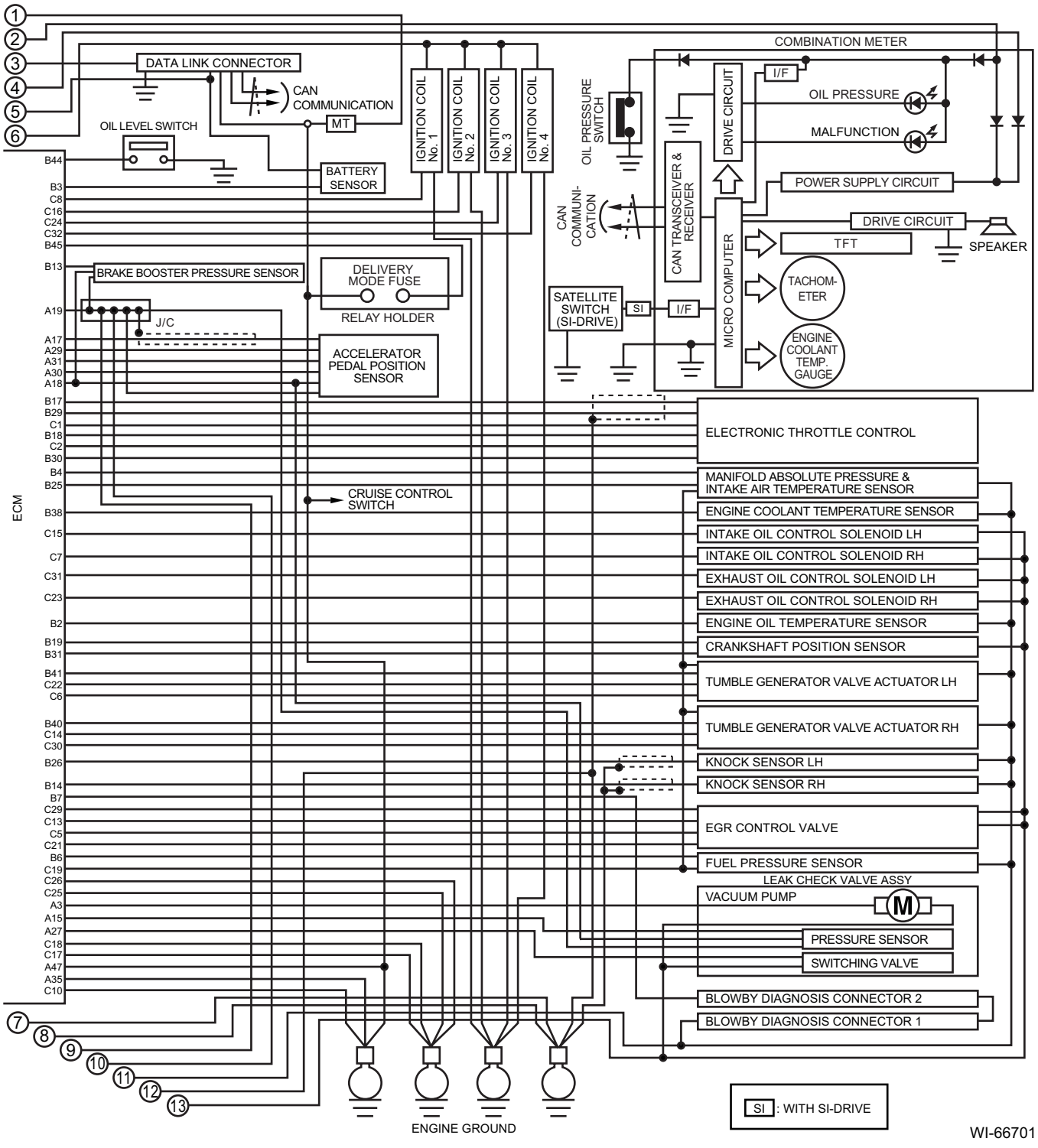
COMBINATION METER
DATA LINK CONNECTOR
CAN COMMUNICATION
MT
OIL LEVEL SWITCH
BATTERY SENSOR
IGNITION COIL No. 1
IGNITION COIL No. 2
IGNITION COIL No. 3
IGNITION COIL No. 4
OIL PRESSURE SWITCH
CAN COMMUNI-CATION
CAN TRANSCEIVER & RECEIVER
DRIVE CIRCUIT
I/F
OIL PRESSURE
MALFUNCTION
POWER SUPPLY CIRCUIT
DRIVE CIRCUIT
SPEAKER
TFT
TACHOM-ETER
ENGINE COOLANT TEMP. GAUGE
MICRO COMPUTER
SATELLITE SWITCH (SI-DRIVE)
SI
I/F
BRAKE BOOSTER PRESSURE SENSOR
DELIVERY MODE FUSE
RELAY HOLDER
J/C
ACCELERATOR PEDAL POSITION SENSOR
CRUISE CONTROL SWITCH
ECM
B44
B3
C8
C16
C24
C32
B45
B13
A19
A17
A29
A31
A30
A18
B17
B29
C1
B18
C2
B30
B4
B25
B38
C15
C7
C31
C23
B2
B19
B31
B41
C22
C6
B40
C14
C30
B26
B14
B7
C29
C13
C5
C21
B6
C19
C26
C25
A3
A15
A27
C18
C17
A47
A35
C10
ELECTRONIC THROTTLE CONTROL
MANIFOLD ABSOLUTE PRESSURE & INTAKE AIR TEMPERATURE SENSOR
ENGINE COOLANT TEMPERATURE SENSOR
INTAKE OIL CONTROL SOLENOID LH
INTAKE OIL CONTROL SOLENOID RH
EXHAUST OIL CONTROL SOLENOID LH
EXHAUST OIL CONTROL SOLENOID RH
ENGINE OIL TEMPERATURE SENSOR
CRANKSHAFT POSITION SENSOR
TUMBLE GENERATOR VALVE ACTUATOR LH
TUMBLE GENERATOR VALVE ACTUATOR RH
KNOCK SENSOR LH
KNOCK SENSOR RH
EGR CONTROL VALVE
FUEL PRESSURE SENSOR
LEAK CHECK VALVE ASSY
VACUUM PUMP
M
PRESSURE SENSOR
SWITCHING VALVE
BLOWBY DIAGNOSIS CONNECTOR 2
BLOWBY DIAGNOSIS CONNECTOR 1
1
2
3
4
5
6
7
8
9
10
11
12
13
ENGINE GROUND
SI : WITH SI-DRIVE
WI-66701

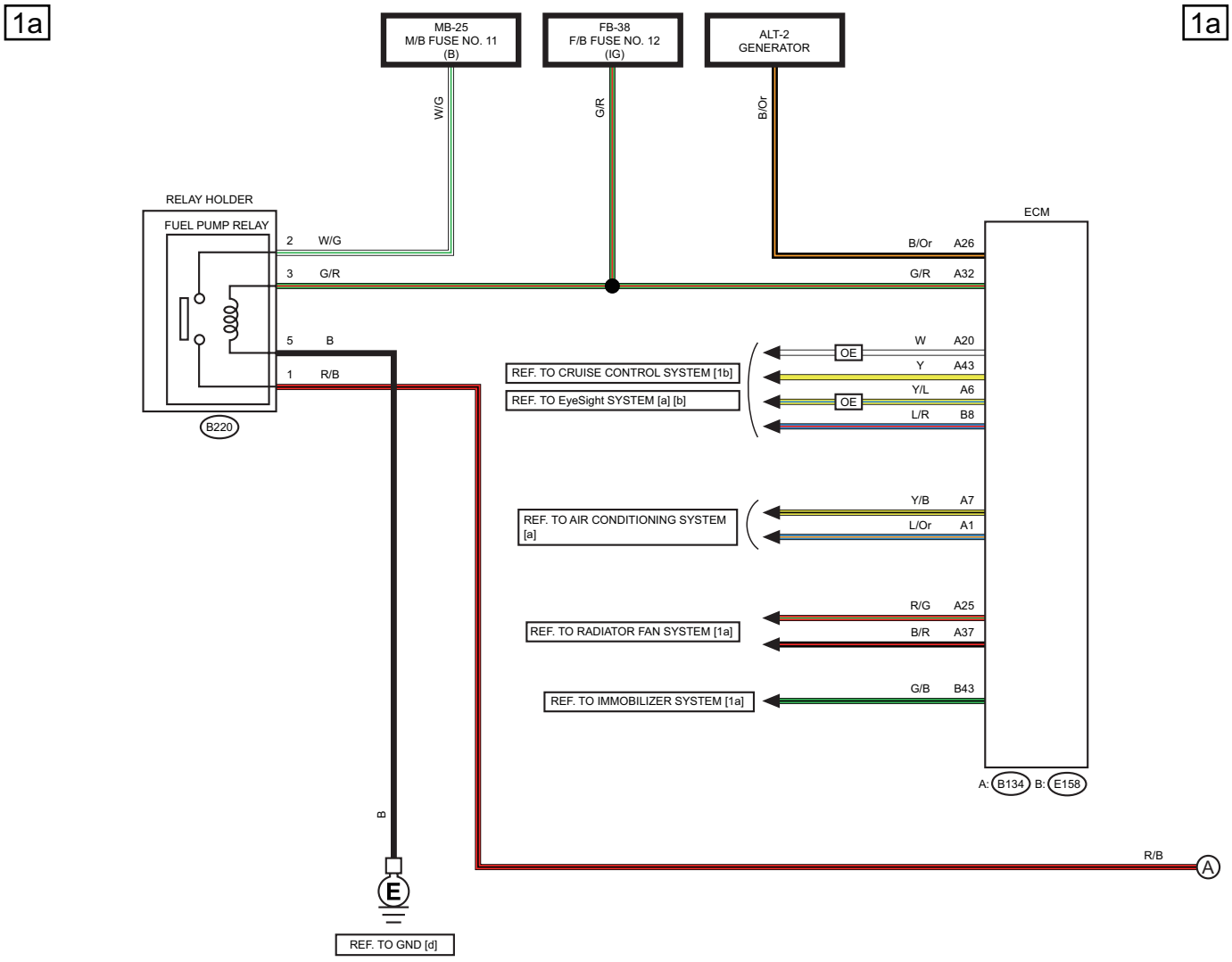

OE : WITHOUT EyeSight

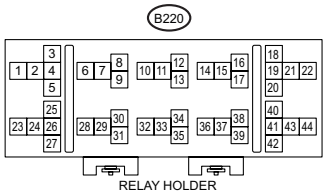

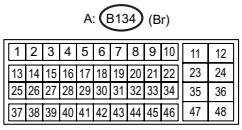

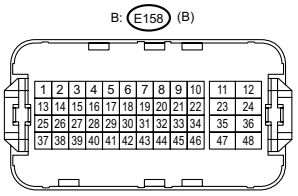

WI-67195

1b 1b

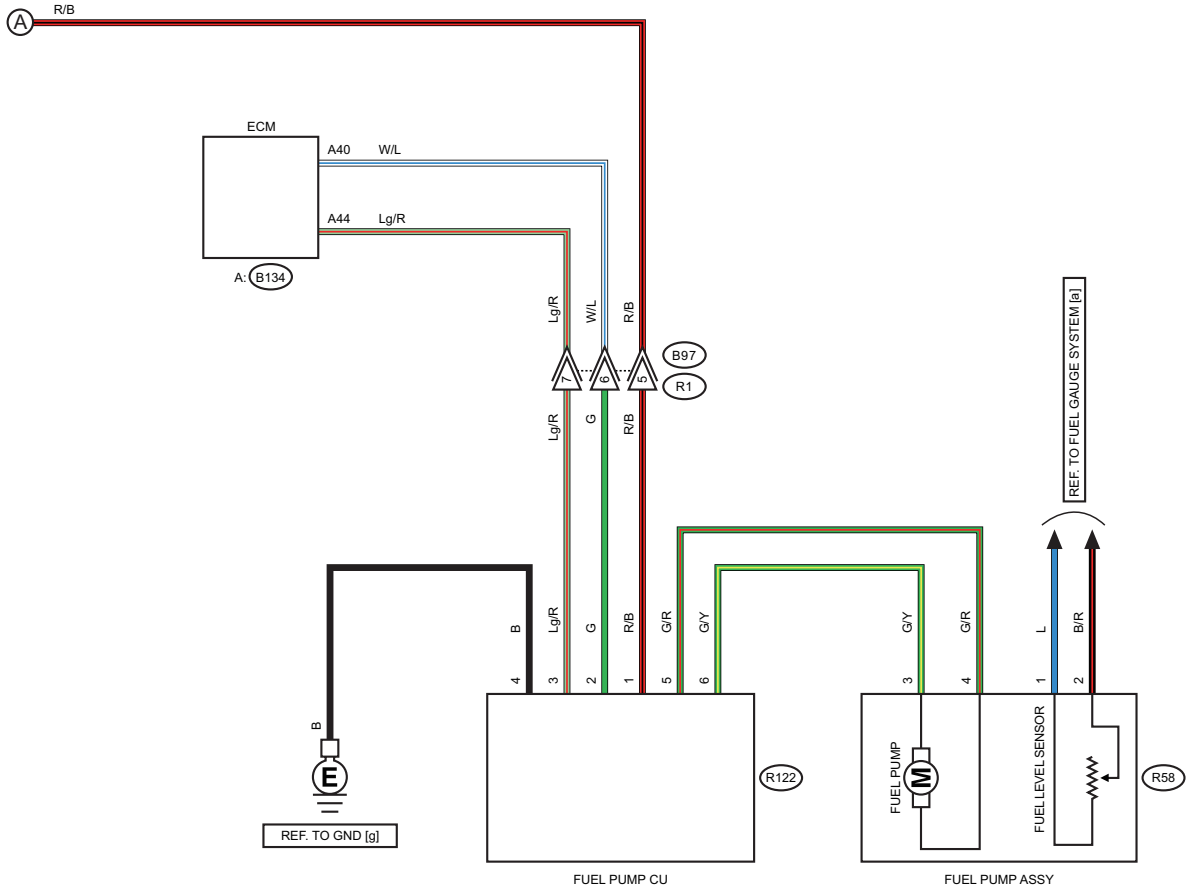

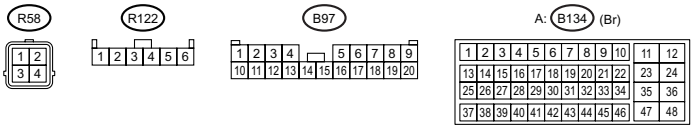

WI-67196

WIRING SYSTEM

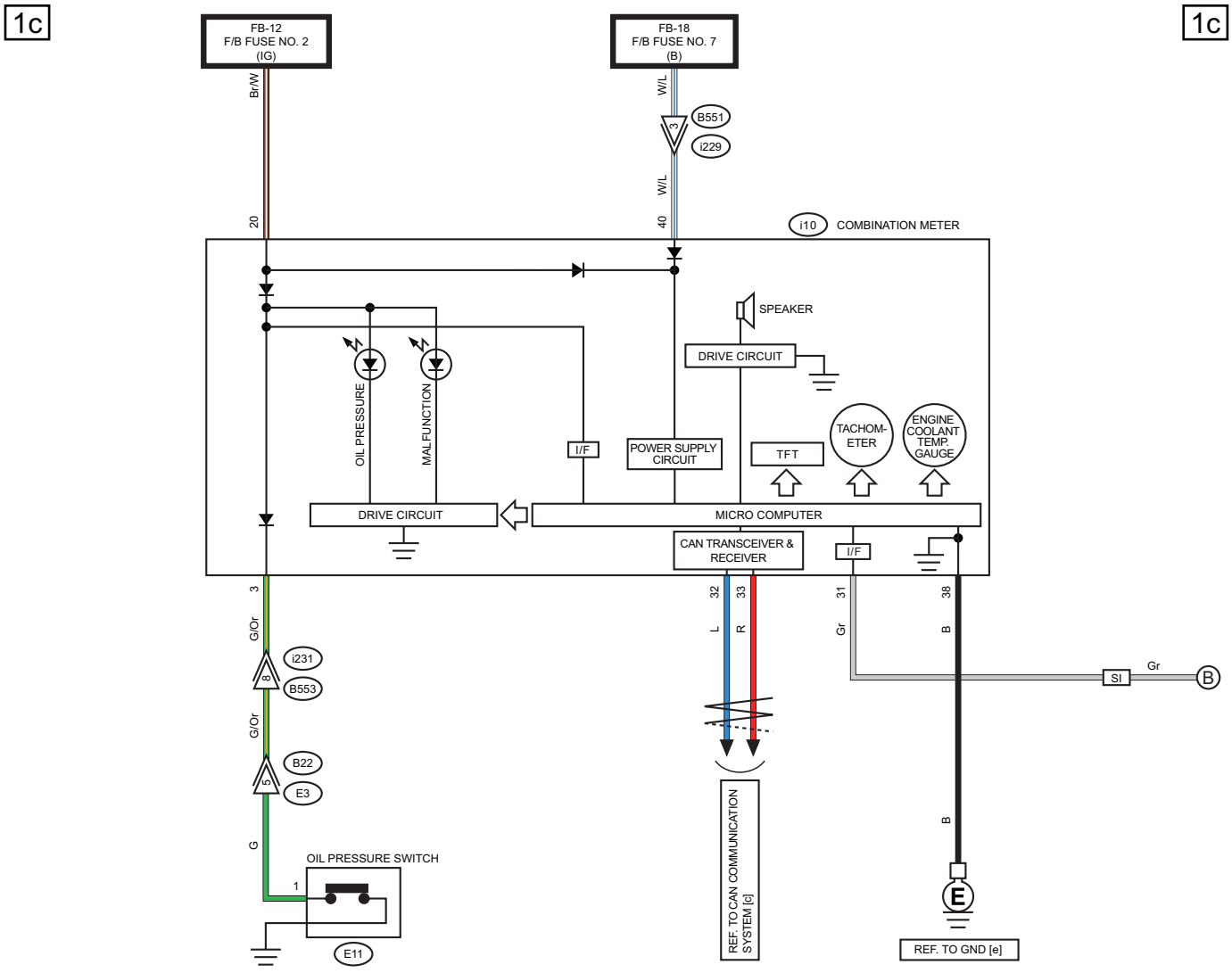

SI : WITH SI-DRIVE

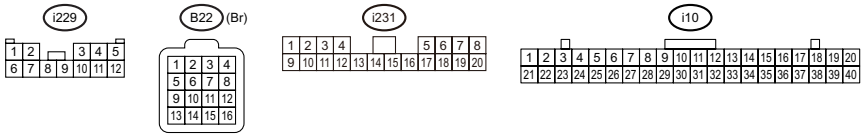

WI-66702

1d

1d

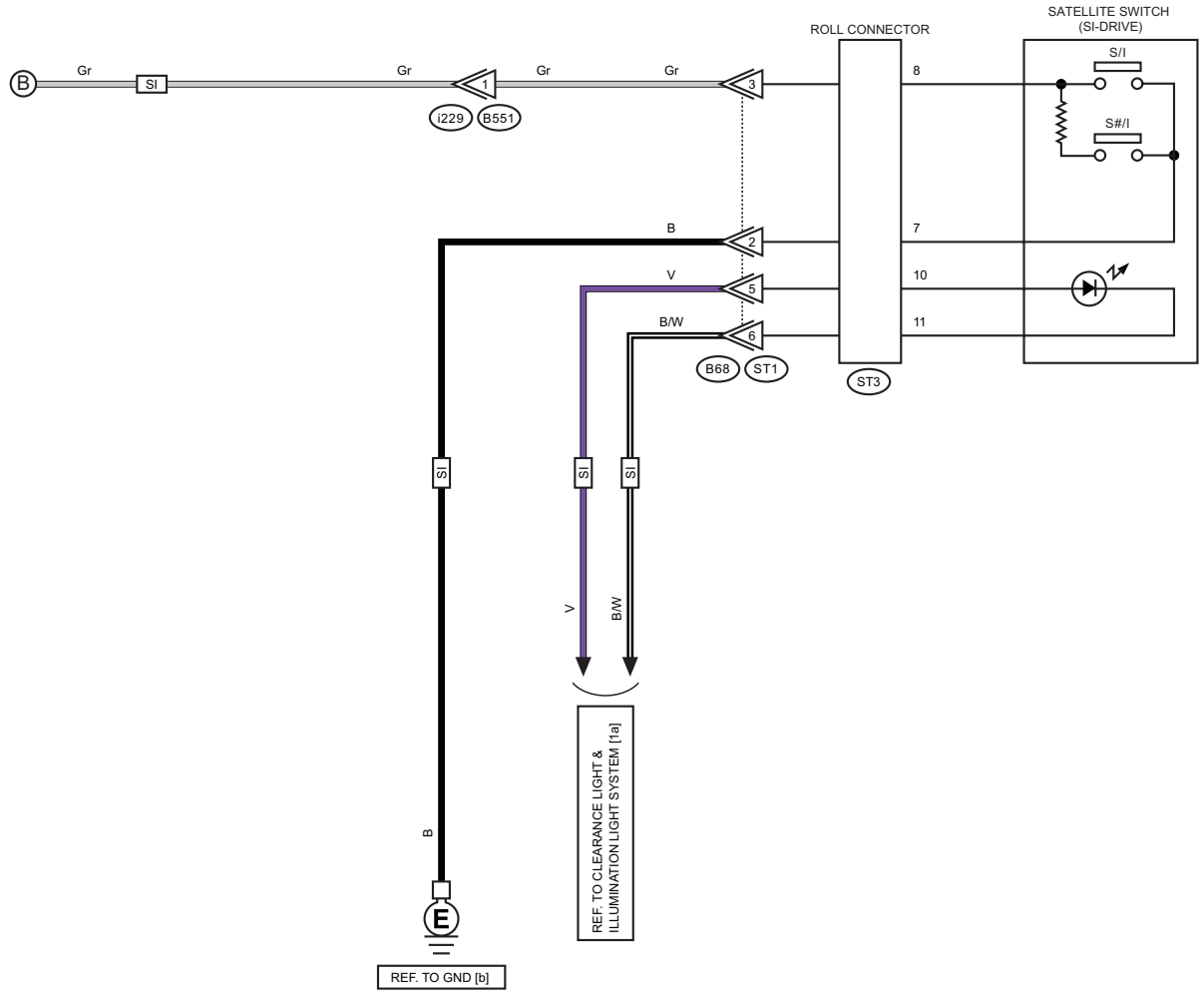

SI : WITH SI-DRIVE

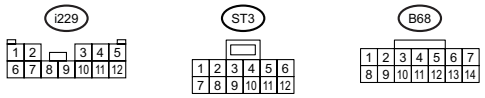

WI-67197

WIRING SYSTEM

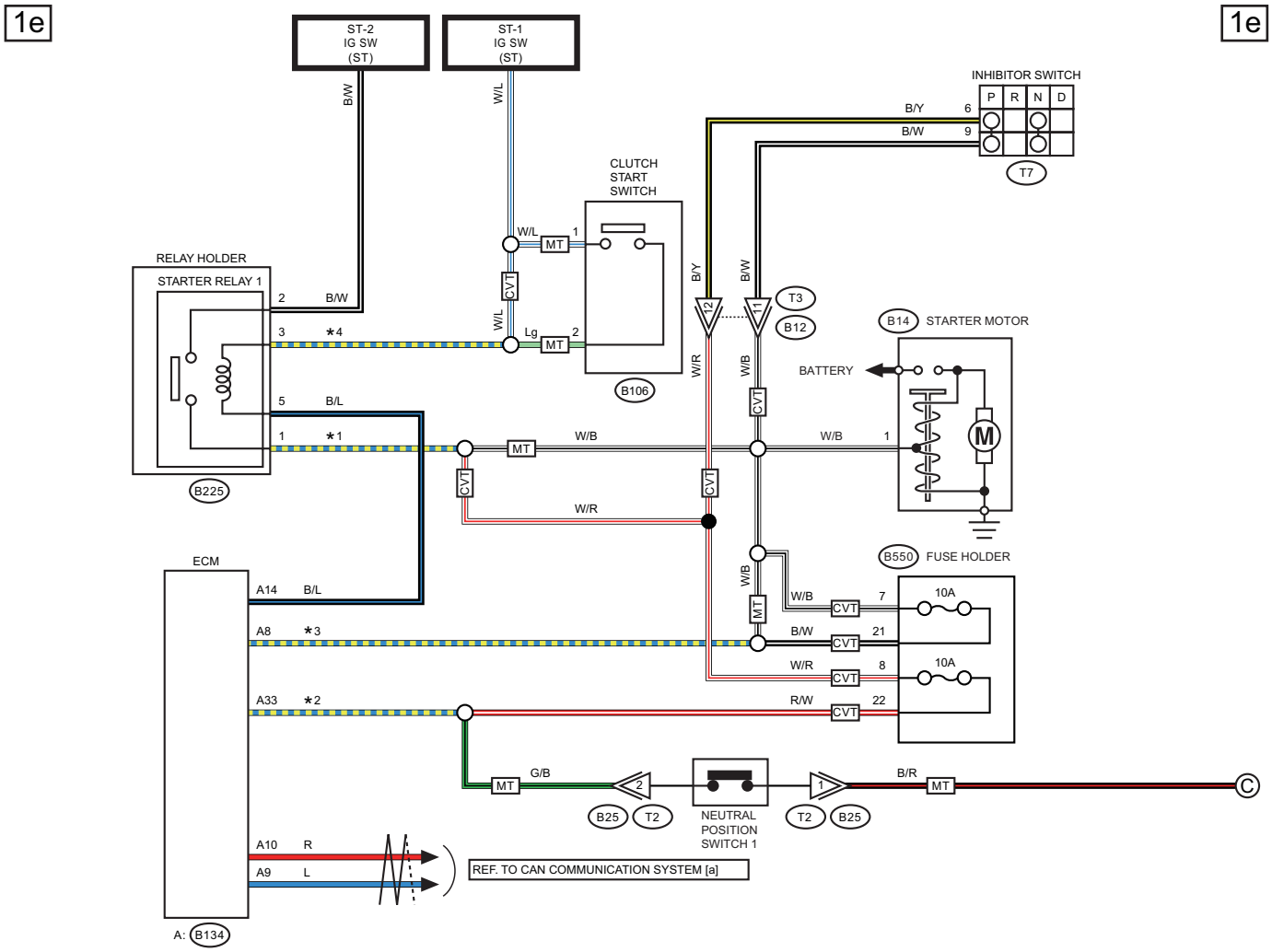

★1 : MT MODEL : W/B
CVT MODEL : W/R
★2 : MT MODEL : G/B
CVT MODEL : R/W
★3 : MT MODEL : W/B
CVT MODEL : B/W
★4 : MT MODEL : Lg
CVT MODEL : W/L

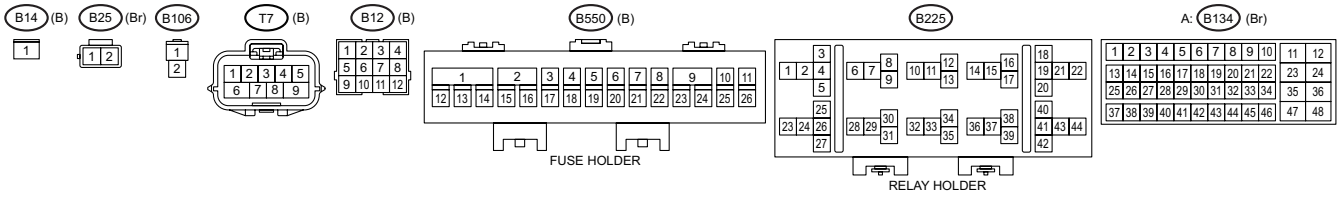

WI-66703

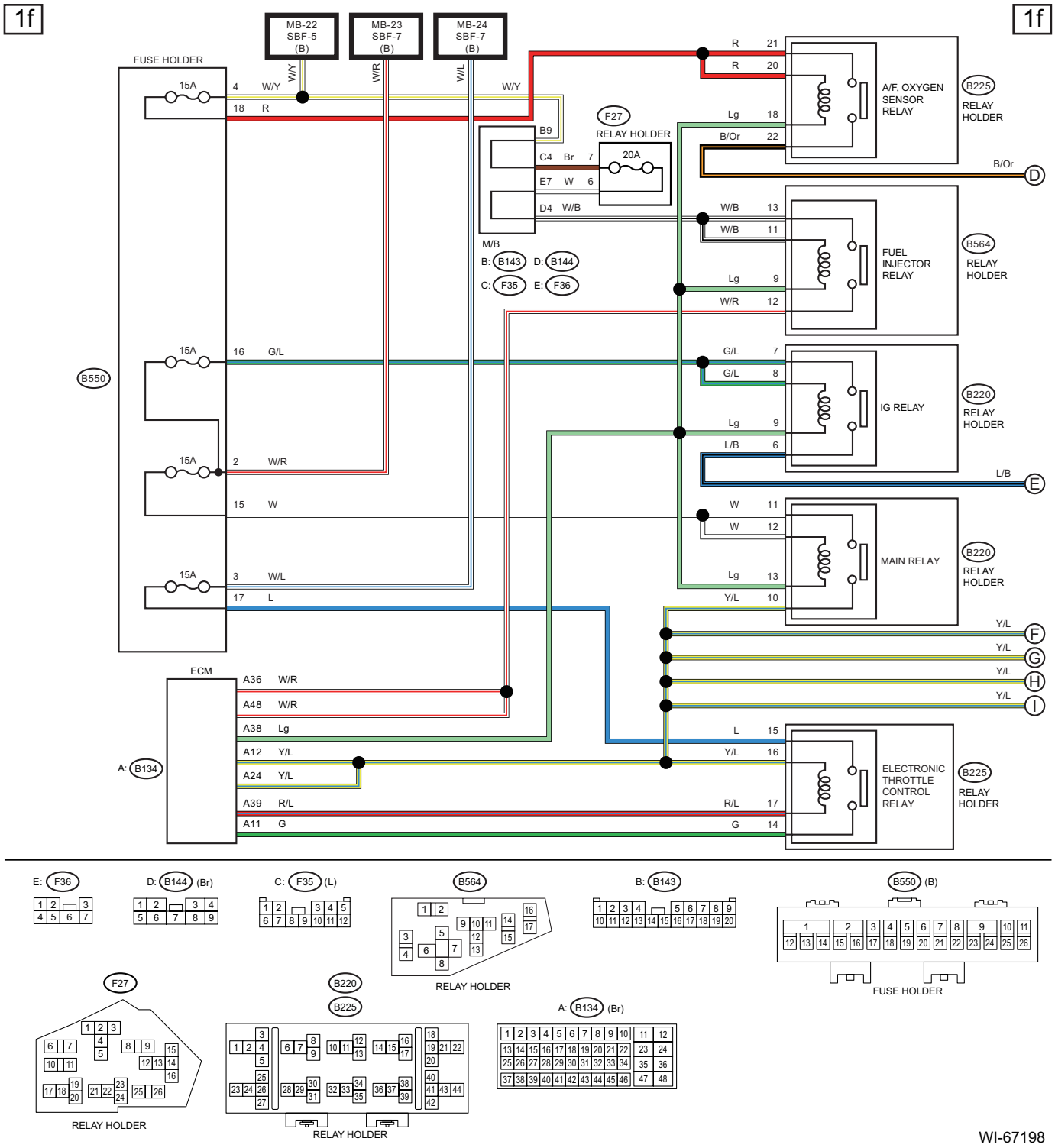
1f
1f
MB-22 SBF-5 (B)
MB-23 SBF-7 (B)
MB-24 SBF-7 (B)
FUSE HOLDER
15A
W/Y
W/R
W/L
R
Lg
B/Or
W/B
G/L
L/B
W
Y/L
L
G
B9
F27
RELAY HOLDER
20A
C4 Br 7
E7 W 6
D4 W/B
M/B
B: B143 D: B144
C: F35 E: F36
A/F, OXYGEN SENSOR RELAY
B225
RELAY HOLDER
FUEL INJECTOR RELAY
B564
IG RELAY
B220
MAIN RELAY
ELECTRONIC THROTTLE CONTROL RELAY
B550
ECM
A: B134
A36 W/R
A48 W/R
A38 Lg
A12 Y/L
A24 Y/L
A39 R/L
A11 G
D
E
F
G
H
I

E: F36
D: B144 (Br)
C: F35 (L)
B564
B: B143
B550 (B)
RELAY HOLDER
FUSE HOLDER
F27
B220
B225
A: B134 (Br)
RELAY HOLDER
RELAY HOLDER

WI-67198

WIRING SYSTEM

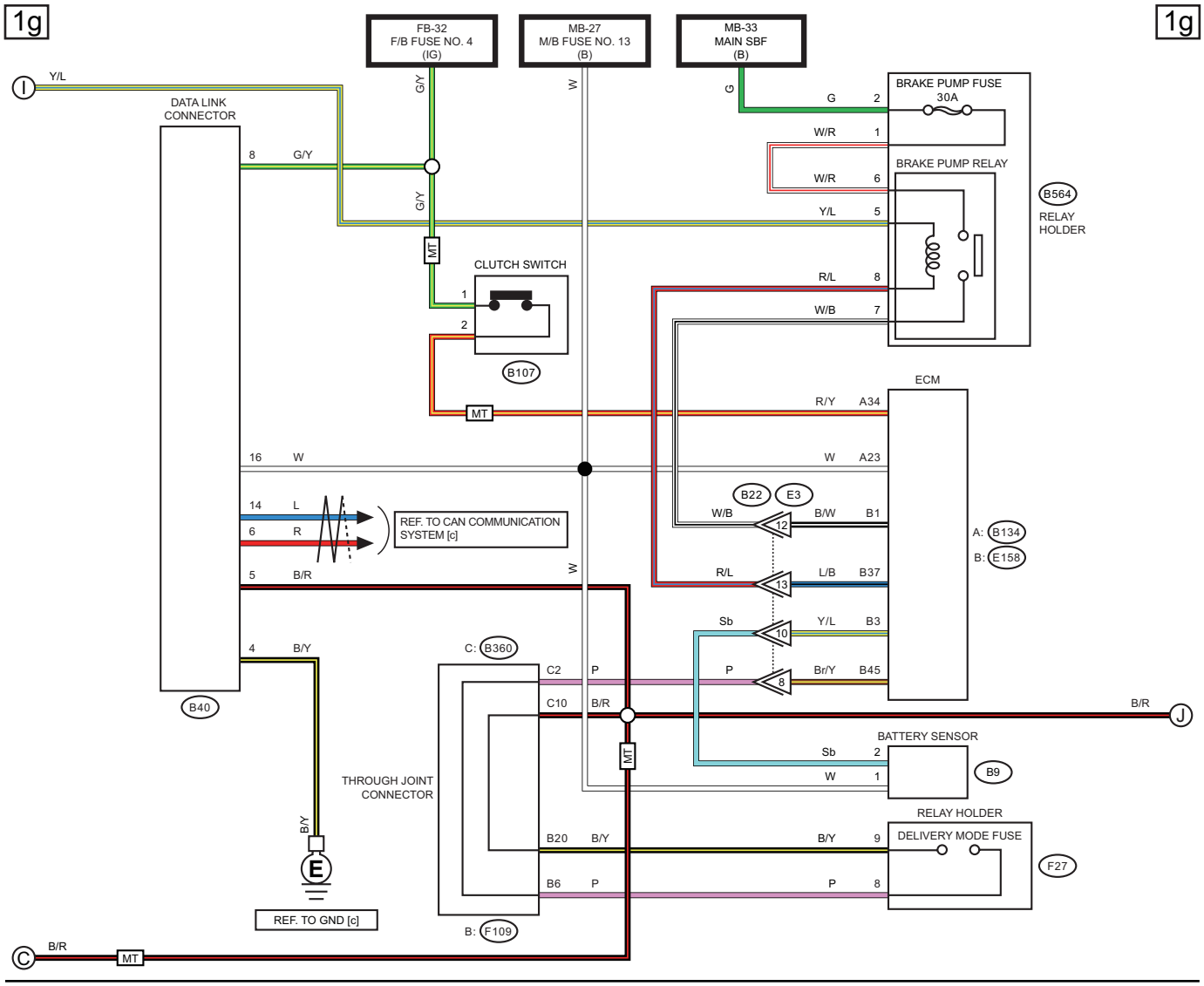

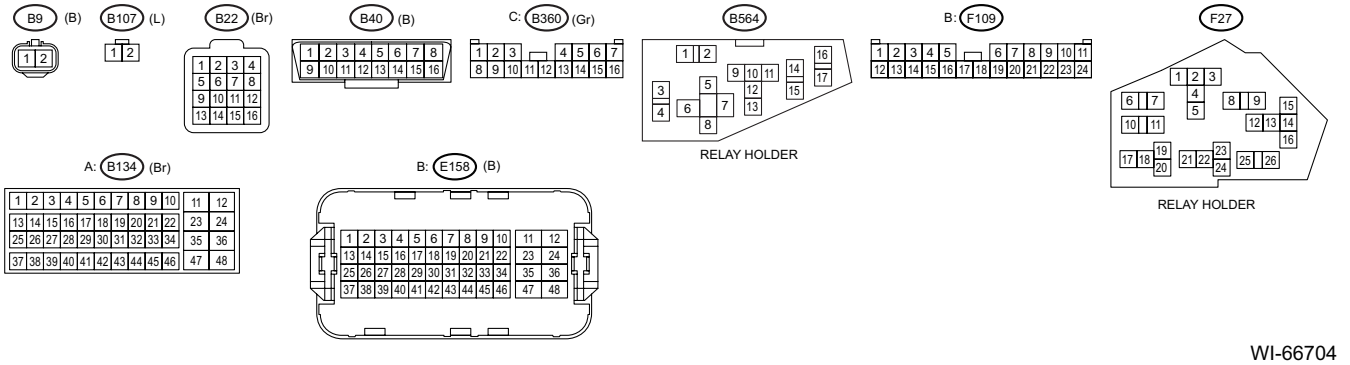

WI-66704

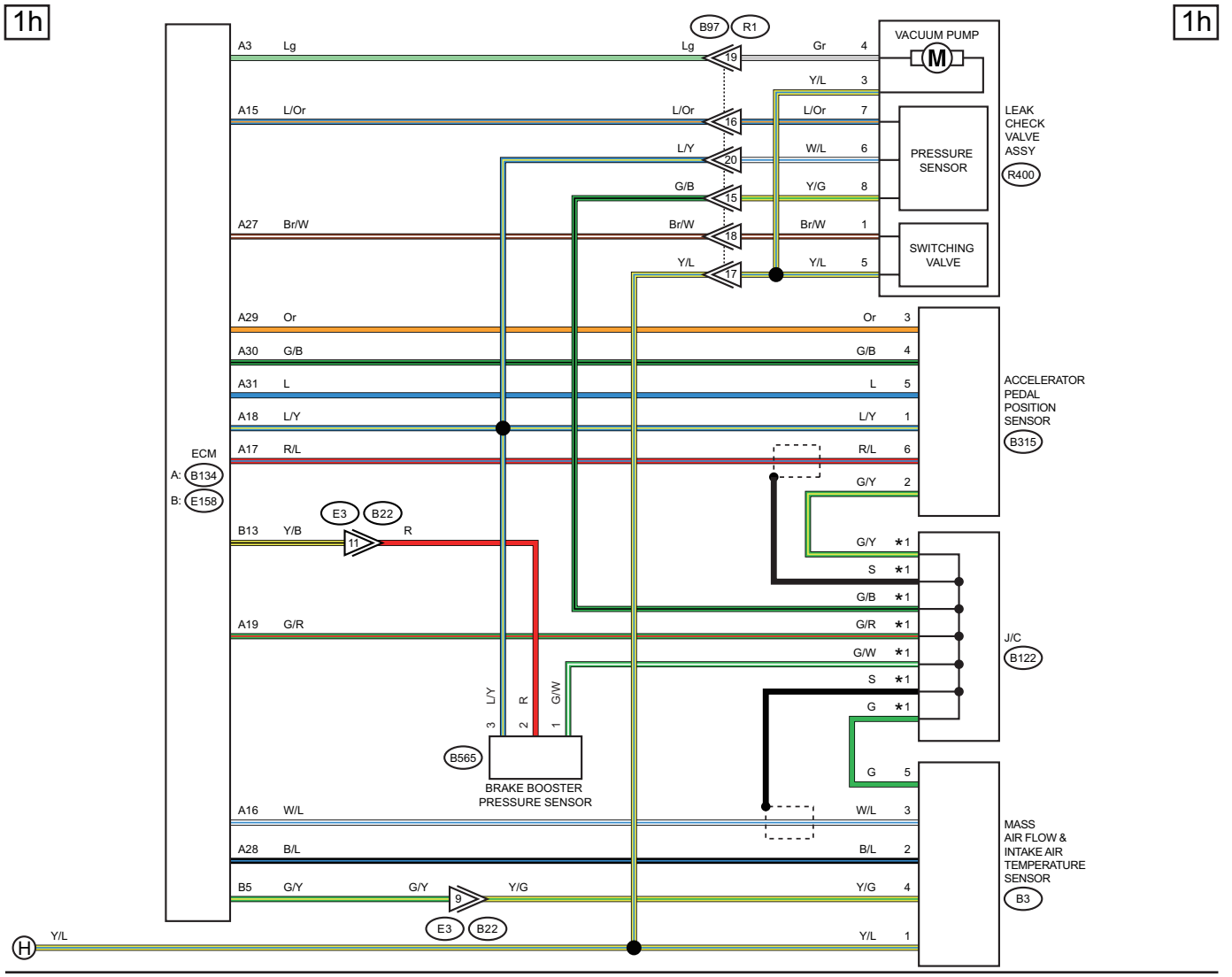
1h
1h
B97
R1
VACUUM PUMP
M
LEAK CHECK VALVE ASSY
R400
PRESSURE SENSOR
SWITCHING VALVE
A3 Lg
A15 L/Or
A27 Br/W
Y/L
Gr 4
Y/L 3
L/Or 7
W/L 6
Y/G 8
Br/W 1
Y/L 5
19
16
20
15
18
17
A29 Or
A30 G/B
A31 L
A18 L/Y
A17 R/L
Or 3
G/B 4
L 5
L/Y 1
R/L 6
G/Y 2
ACCELERATOR PEDAL POSITION SENSOR
B315
ECM
A: B134
B: E158
E3
B22
B13 Y/B
11
R
G/Y ★1
S ★1
G/B ★1
G/R ★1
G/W ★1
S ★1
G ★1
G 5
A19 G/R
J/C
B122
L/Y
R
G/W
3
2
1
B565
BRAKE BOOSTER PRESSURE SENSOR
A16 W/L
A28 B/L
W/L 3
B/L 2
MASS AIR FLOW & INTAKE AIR TEMPERATURE SENSOR
B3
B5 G/Y
G/Y
9
Y/G
Y/G 4
E3
B22
H
Y/L
Y/L 1
★1 : TERMINAL No. OPTIONAL ARRANGEMENT
B565 (B)
B3 (B)
B315 (B)
B122 (Gr)
R400
B22 (Br)
B97
A: B134 (Br)
B: E158 (B)

WI-67199

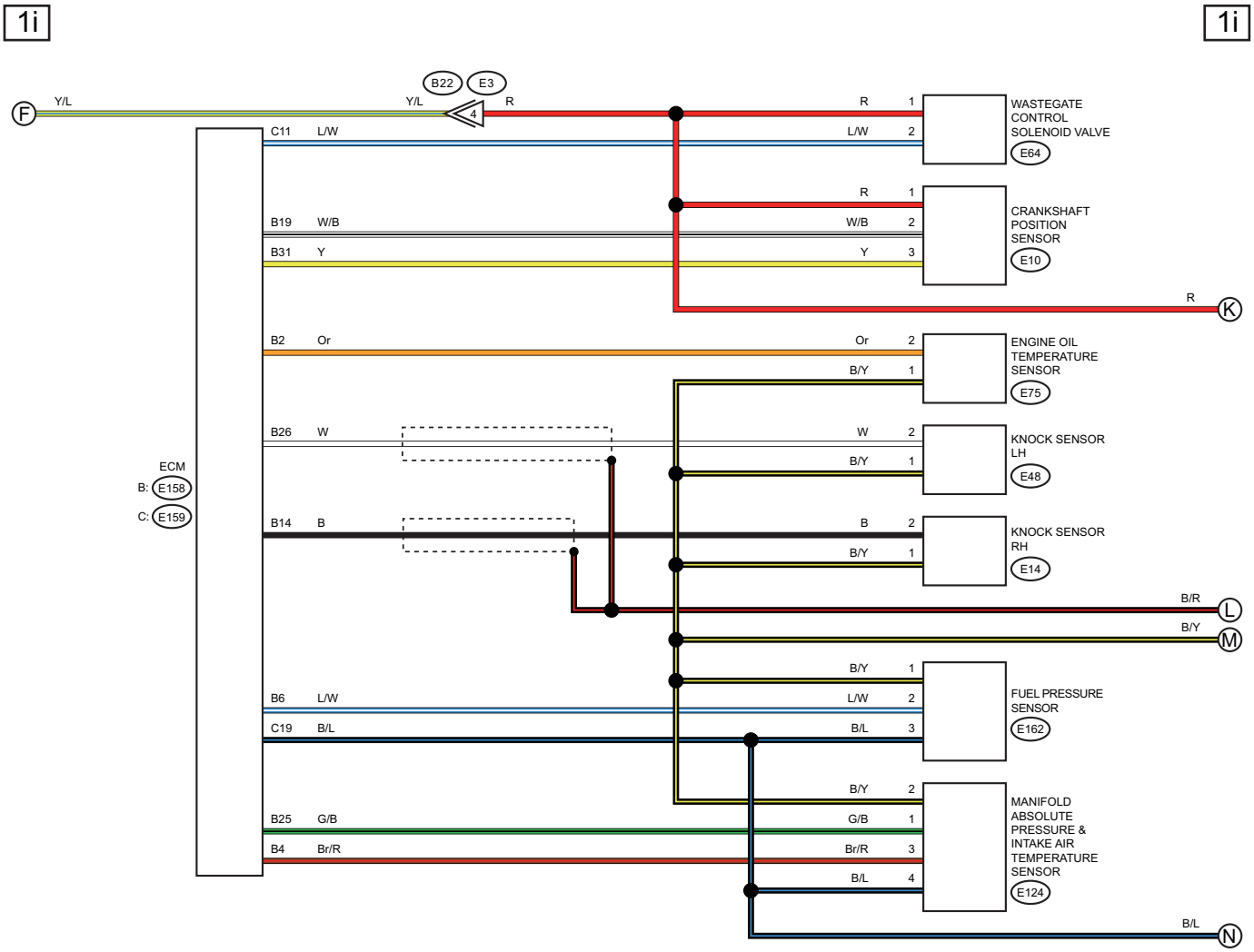
1i
1i
B22
E3
F
Y/L
Y/L
4
R
C11
L/W
B19
W/B
B31
Y
B2
Or
B26
W
B14
B
B6
L/W
C19
B/L
B25
G/B
B4
Br/R
ECM
B: E158
C: E159
R 1
L/W 2
WASTEGATE CONTROL SOLENOID VALVE
E64
R 1
W/B 2
Y 3
CRANKSHAFT POSITION SENSOR
E10
R
K
Or 2
B/Y 1
ENGINE OIL TEMPERATURE SENSOR
E75
W 2
B/Y 1
KNOCK SENSOR LH
E48
B 2
B/Y 1
KNOCK SENSOR RH
E14
B/R
L
B/Y
M
B/Y 1
L/W 2
B/L 3
FUEL PRESSURE SENSOR
E162
B/Y 2
G/B 1
Br/R 3
B/L 4
MANIFOLD ABSOLUTE PRESSURE & INTAKE AIR TEMPERATURE SENSOR
E124
B/L
N

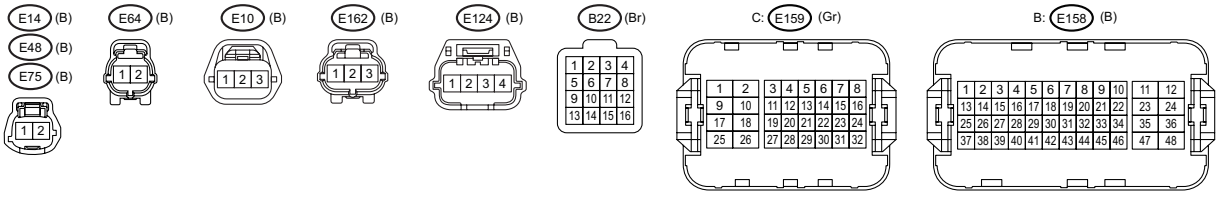
E14 (B)
E48 (B)
E75 (B)
E64 (B)
E10 (B)
E162 (B)
E124 (B)
B22 (Br)
C: E159 (Gr)
B: E158 (B)

WI-67200

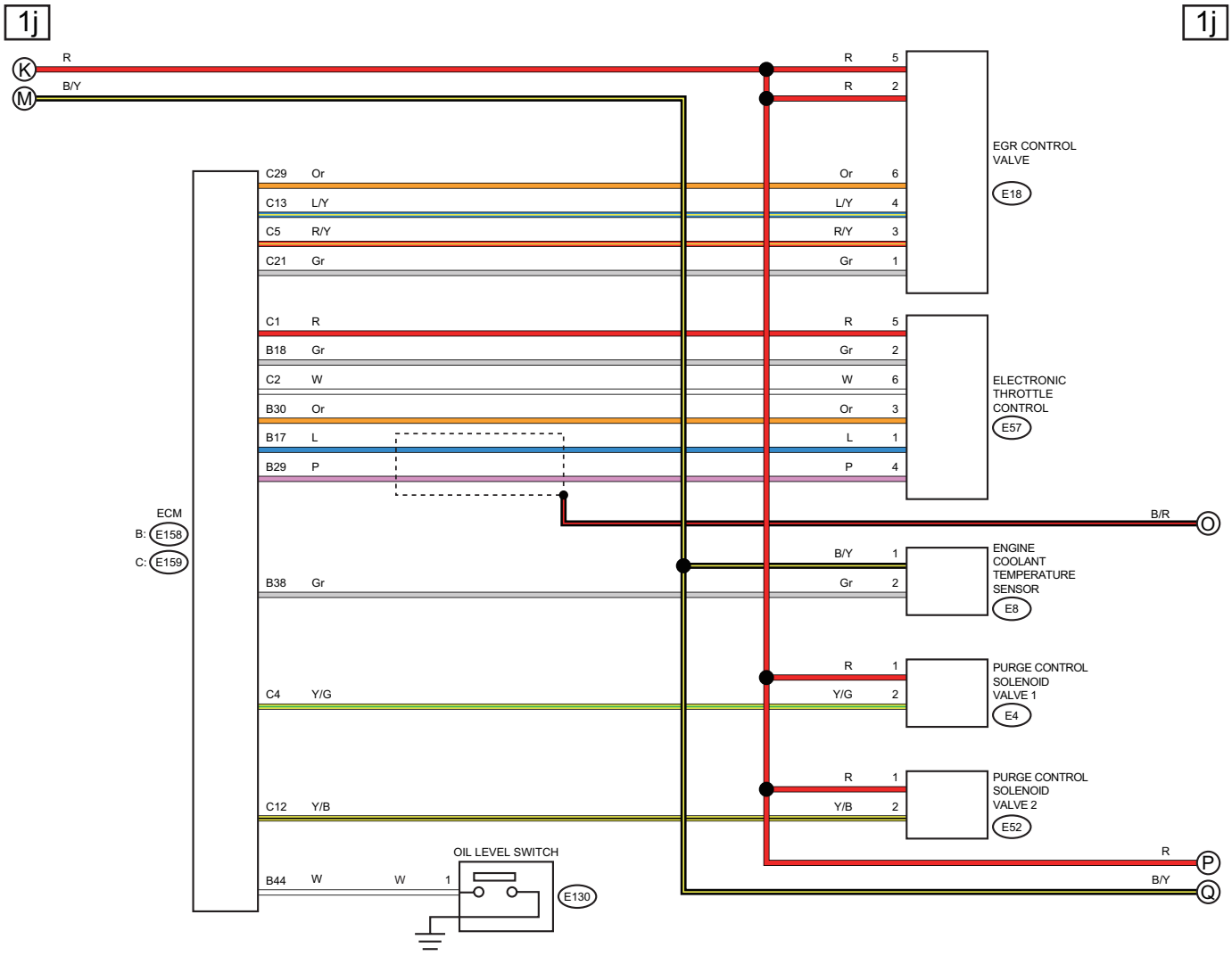
1j
1j
K
M
R
B/Y
C29 Or
C13 L/Y
C5 R/Y
C21 Gr
C1 R
B18 Gr
C2 W
B30 Or
B17 L
B29 P
B38 Gr
C4 Y/G
C12 Y/B
B44 W
W 1
ECM
B: E158
C: E159
OIL LEVEL SWITCH
E130
R 5
R 2
Or 6
L/Y 4
R/Y 3
Gr 1
EGR CONTROL VALVE
E18
R 5
Gr 2
W 6
Or 3
L 1
P 4
ELECTRONIC THROTTLE CONTROL
E57
B/R
O
B/Y 1
Gr 2
ENGINE COOLANT TEMPERATURE SENSOR
E8
R 1
Y/G 2
PURGE CONTROL SOLENOID VALVE 1
E4
R 1
Y/B 2
PURGE CONTROL SOLENOID VALVE 2
E52
R
P
B/Y
Q

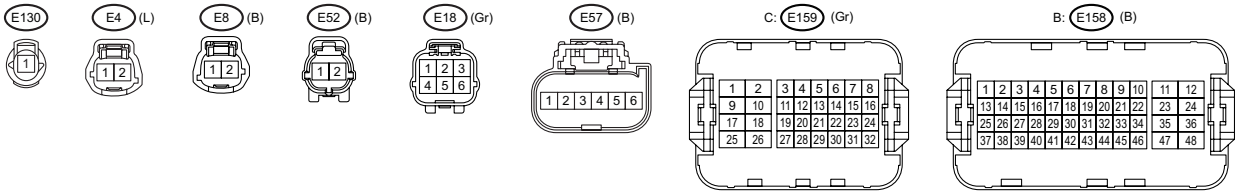
E130
E4 (L)
E8 (B)
E52 (B)
E18 (Gr)
E57 (B)
C: E159 (Gr)
B: E158 (B)

WI-67201

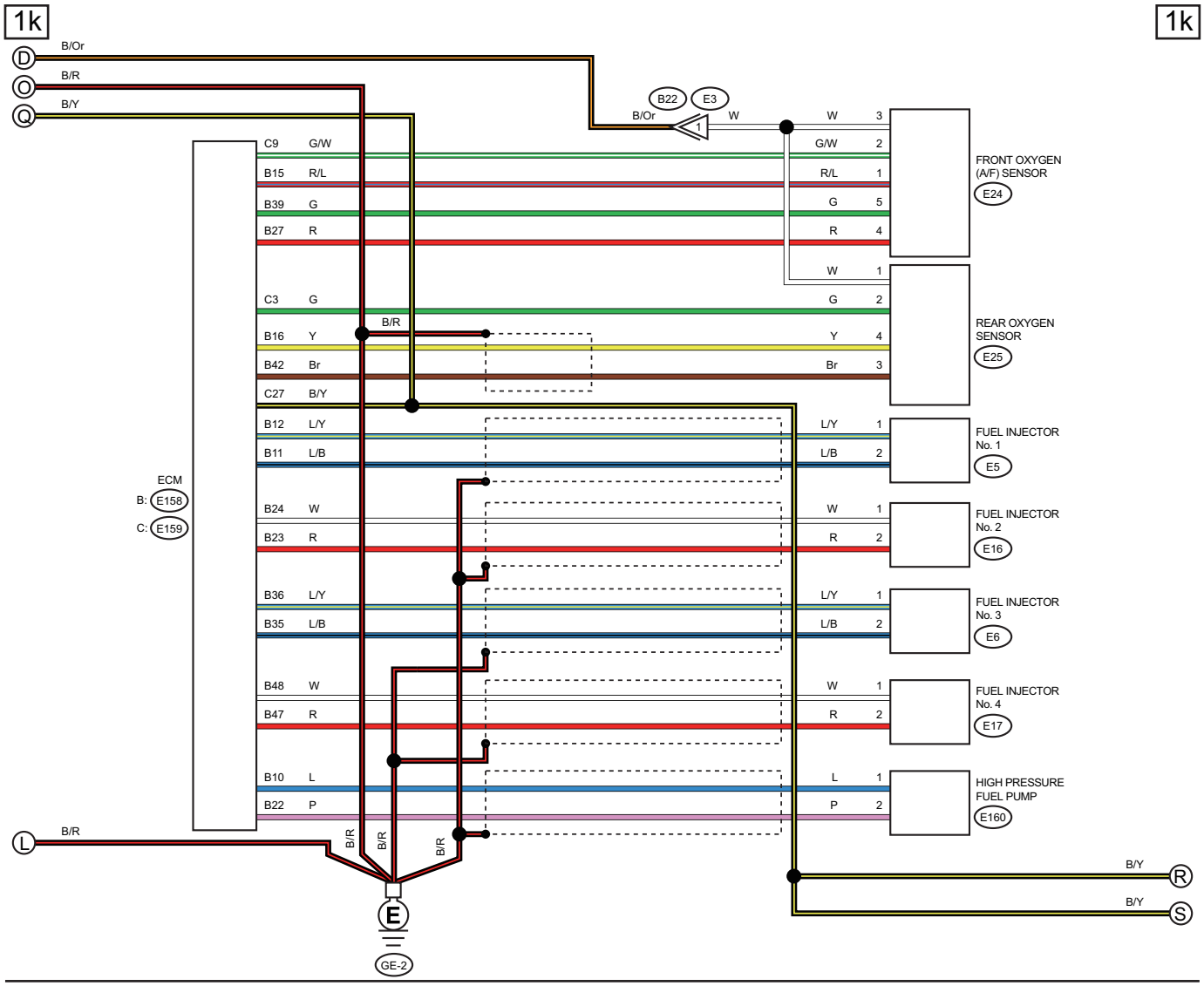
1k
1k
B/Or
B/R
B/Y
D
O
Q
B22
E3
B/Or
W
W
C9 G/W
B15 R/L
B39 G
B27 R
G/W 2
R/L 1
G 5
R 4
FRONT OXYGEN (A/F) SENSOR
E24
W 1
C3 G
B16 Y
B42 Br
G 2
Y 4
Br 3
B/R
REAR OXYGEN SENSOR
E25
C27 B/Y
B12 L/Y
B11 L/B
L/Y 1
L/B 2
FUEL INJECTOR No. 1
E5
ECM
B: E158
C: E159
B24 W
B23 R
W 1
R 2
FUEL INJECTOR No. 2
E16
B36 L/Y
B35 L/B
L/Y 1
L/B 2
FUEL INJECTOR No. 3
E6
B48 W
B47 R
W 1
R 2
FUEL INJECTOR No. 4
E17
B10 L
B22 P
L 1
P 2
HIGH PRESSURE FUEL PUMP
E160
B/R
L
B/R
B/R
B/R
B/Y
R
B/Y
S
E
GE-2

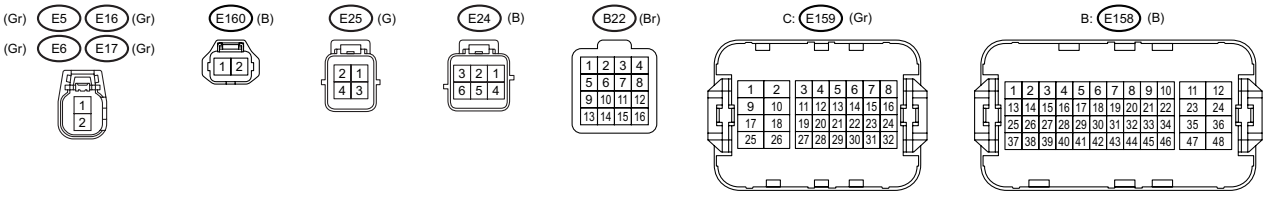
(Gr) E5 E16 (Gr)
(Gr) E6 E17 (Gr)
E160 (B)
E25 (G)
E24 (B)
B22 (Br)
C: E159 (Gr)
B: E158 (B)

WI-66705

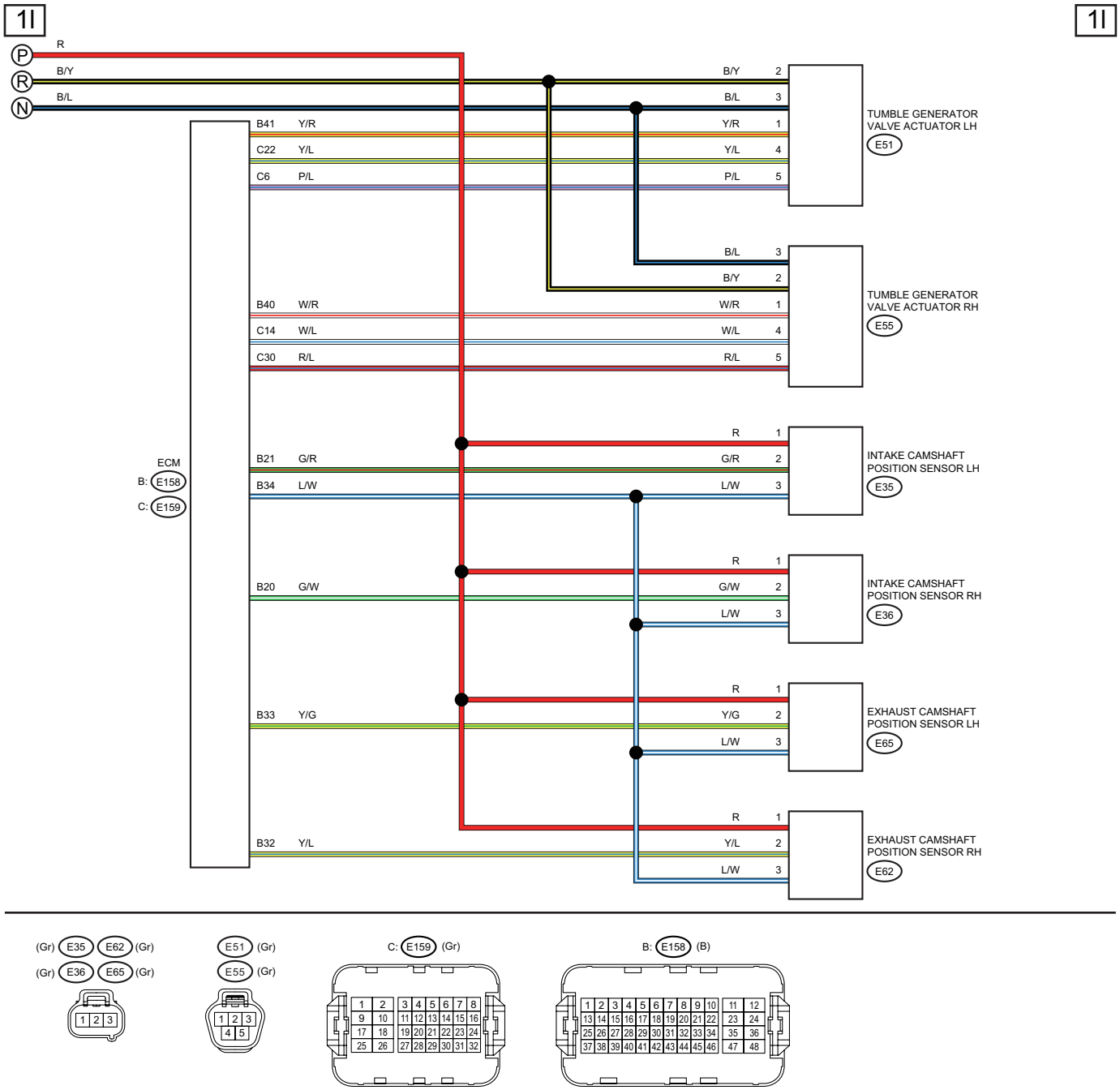
1I
1I
P
R
N
R
B/Y
B/L
B41 Y/R
C22 Y/L
C6 P/L
B40 W/R
C14 W/L
C30 R/L
B21 G/R
B34 L/W
B20 G/W
B33 Y/G
B32 Y/L
ECM
B: E158
C: E159
B/Y 2
B/L 3
Y/R 1
Y/L 4
P/L 5
TUMBLE GENERATOR VALVE ACTUATOR LH
E51
B/L 3
B/Y 2
W/R 1
W/L 4
R/L 5
TUMBLE GENERATOR VALVE ACTUATOR RH
E55
R 1
G/R 2
L/W 3
INTAKE CAMSHAFT POSITION SENSOR LH
E35
R 1
G/W 2
L/W 3
INTAKE CAMSHAFT POSITION SENSOR RH
E36
R 1
Y/G 2
L/W 3
EXHAUST CAMSHAFT POSITION SENSOR LH
E65
R 1
Y/L 2
L/W 3
EXHAUST CAMSHAFT POSITION SENSOR RH
E62

(Gr) E35 E62 (Gr)
(Gr) E36 E65 (Gr)
E51 (Gr)
E55 (Gr)
C: E159 (Gr)
B: E158 (B)

WI-67202

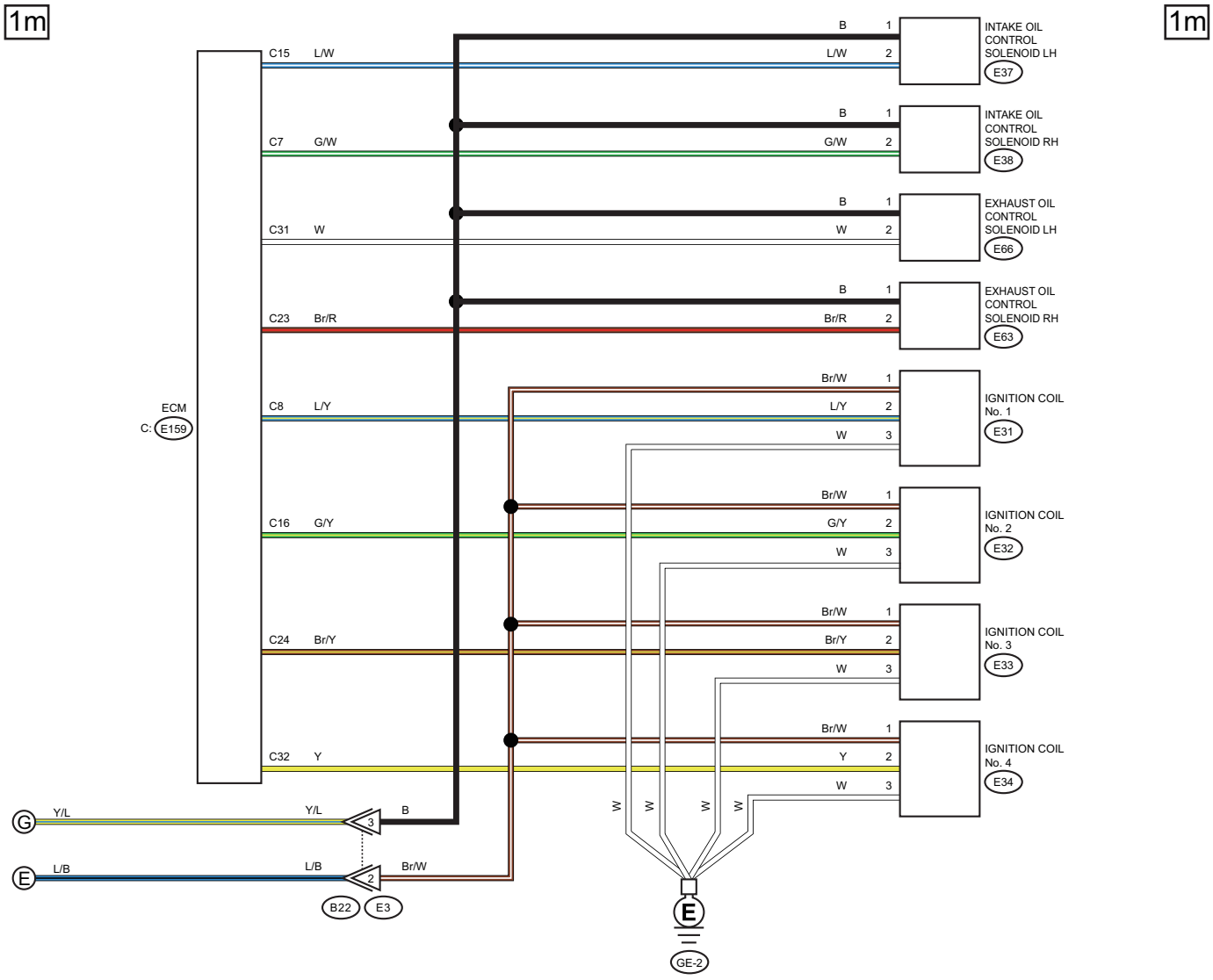
1m
1m
ECM
C: E159
C15 L/W
C7 G/W
C31 W
C23 Br/R
C8 L/Y
C16 G/Y
C24 Br/Y
C32 Y
B 1
L/W 2
INTAKE OIL CONTROL SOLENOID LH
E37
B 1
G/W 2
INTAKE OIL CONTROL SOLENOID RH
E38
B 1
W 2
EXHAUST OIL CONTROL SOLENOID LH
E66
B 1
Br/R 2
EXHAUST OIL CONTROL SOLENOID RH
E63
Br/W 1
L/Y 2
W 3
IGNITION COIL No. 1
E31
Br/W 1
G/Y 2
W 3
IGNITION COIL No. 2
E32
Br/W 1
Br/Y 2
W 3
IGNITION COIL No. 3
E33
Br/W 1
Y 2
W 3
IGNITION COIL No. 4
E34
G
Y/L
Y/L
3
B
E
L/B
L/B
2
Br/W
B22
E3
W
W
W
W
E
GE-2

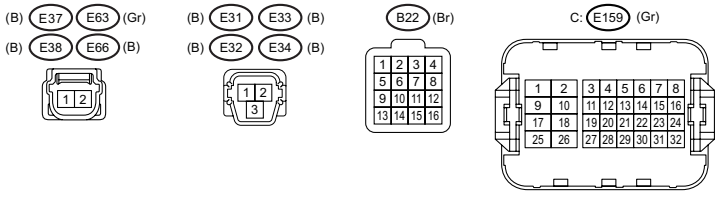
(B) E37 E63 (Gr)
(B) E38 E66 (B)
(B) E31 E33 (B)
(B) E32 E34 (B)
B22 (Br)
C: E159 (Gr)

WI-67203

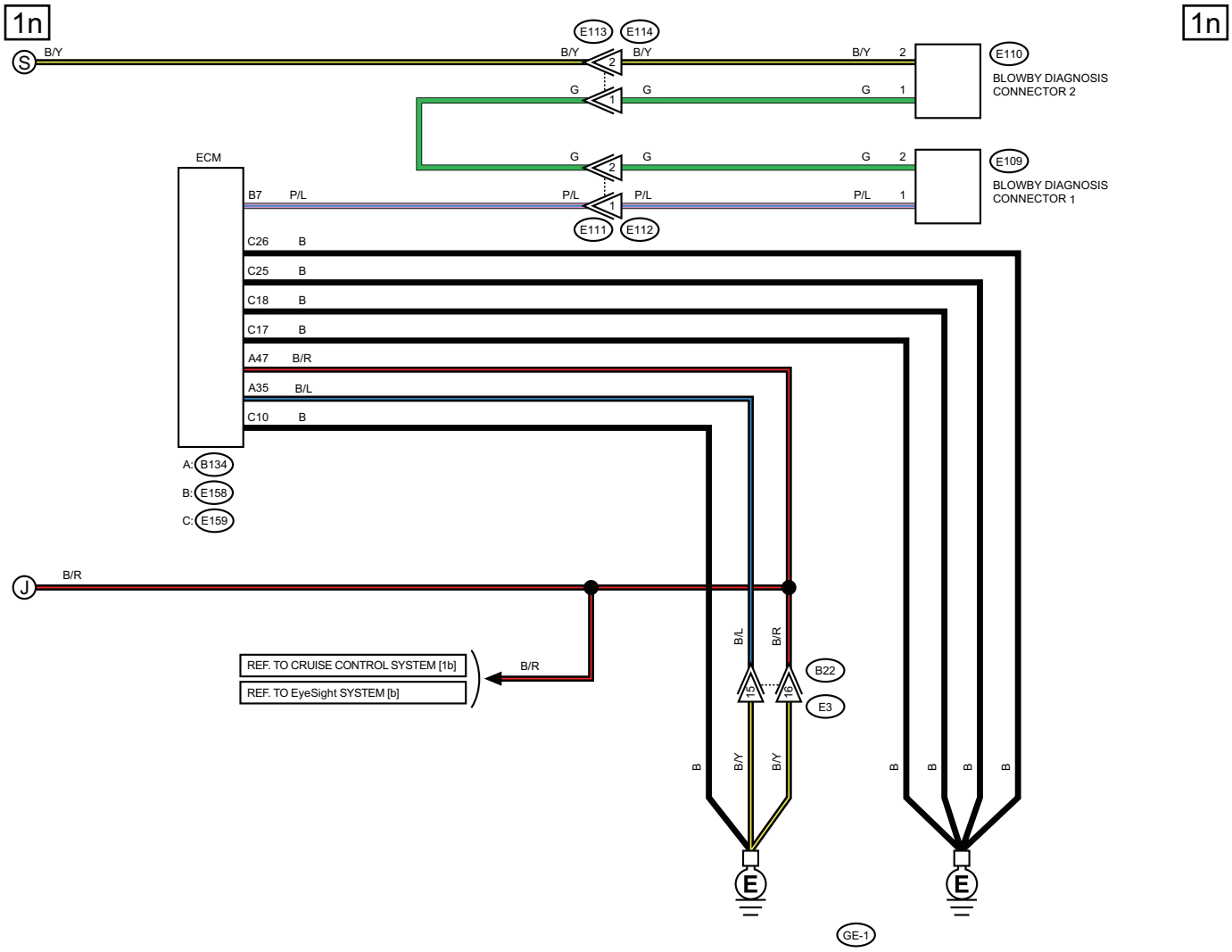

OE : WITHOUT EyeSight

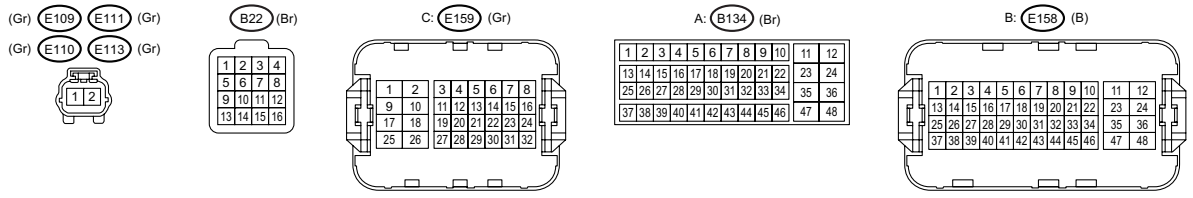

WI-66706

2. ENGINE TYPE FA (WITH PUSH BUTTON START)

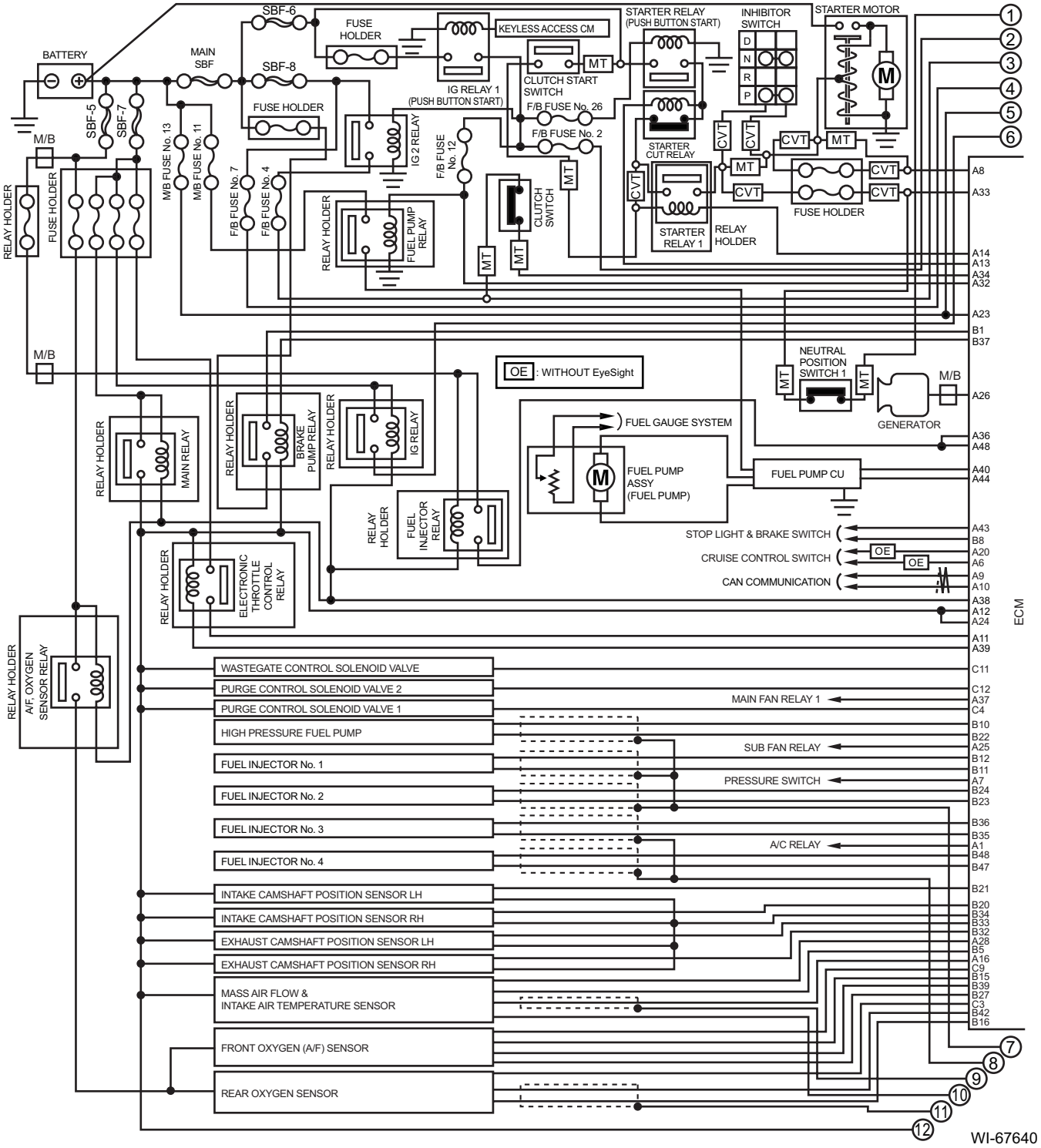

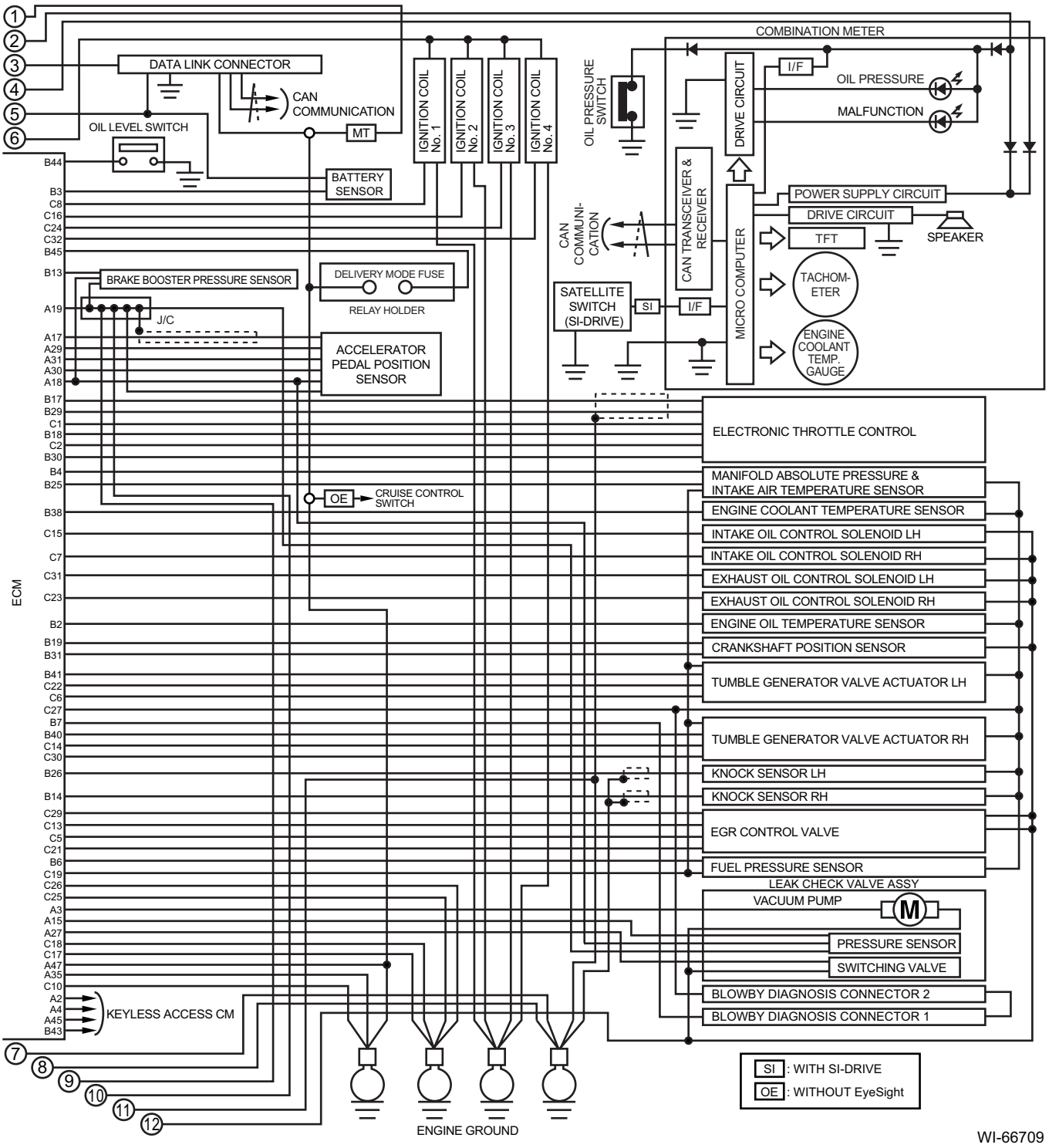
COMBINATION METER
DATA LINK CONNECTOR
CAN COMMUNICATION
MT
OIL LEVEL SWITCH
BATTERY SENSOR
IGNITION COIL No. 1
IGNITION COIL No. 2
IGNITION COIL No. 3
IGNITION COIL No. 4
OIL PRESSURE SWITCH
DRIVE CIRCUIT
I/F
OIL PRESSURE
MALFUNCTION
POWER SUPPLY CIRCUIT
DRIVE CIRCUIT
TFT
SPEAKER
CAN COMMUNI-CATION
CAN TRANSCEIVER & RECEIVER
MICRO COMPUTER
TACHOM-ETER
ENGINE COOLANT TEMP. GAUGE
SATELLITE SWITCH (SI-DRIVE)
SI
I/F
BRAKE BOOSTER PRESSURE SENSOR
DELIVERY MODE FUSE
RELAY HOLDER
J/C
ACCELERATOR PEDAL POSITION SENSOR
OE
CRUISE CONTROL SWITCH
ECM
ELECTRONIC THROTTLE CONTROL
MANIFOLD ABSOLUTE PRESSURE & INTAKE AIR TEMPERATURE SENSOR
ENGINE COOLANT TEMPERATURE SENSOR
INTAKE OIL CONTROL SOLENOID LH
INTAKE OIL CONTROL SOLENOID RH
EXHAUST OIL CONTROL SOLENOID LH
EXHAUST OIL CONTROL SOLENOID RH
ENGINE OIL TEMPERATURE SENSOR
CRANKSHAFT POSITION SENSOR
TUMBLE GENERATOR VALVE ACTUATOR LH
TUMBLE GENERATOR VALVE ACTUATOR RH
KNOCK SENSOR LH
KNOCK SENSOR RH
EGR CONTROL VALVE
FUEL PRESSURE SENSOR
LEAK CHECK VALVE ASSY
VACUUM PUMP
M
PRESSURE SENSOR
SWITCHING VALVE
BLOWBY DIAGNOSIS CONNECTOR 2
BLOWBY DIAGNOSIS CONNECTOR 1
KEYLESS ACCESS CM
ENGINE GROUND
SI : WITH SI-DRIVE
OE : WITHOUT EyeSight
WI-66709

WIRING SYSTEM

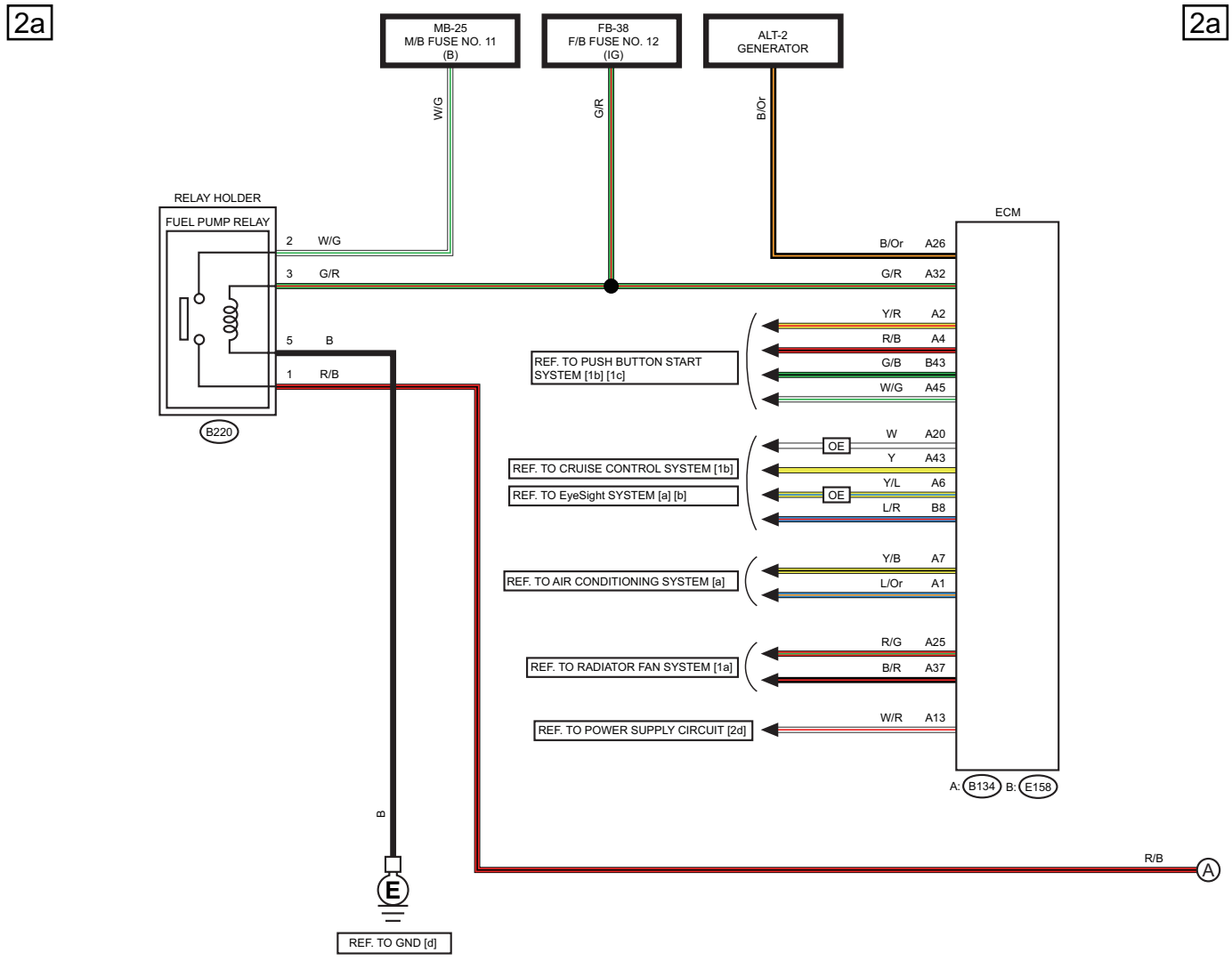

OE : WITHOUT EyeSight

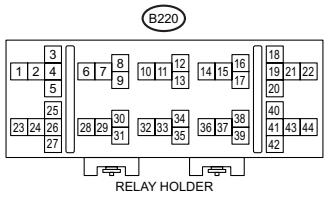

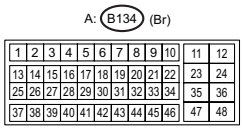

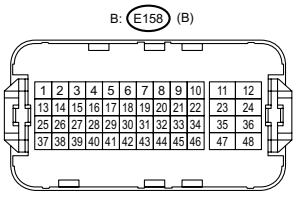

WI-67204

2b

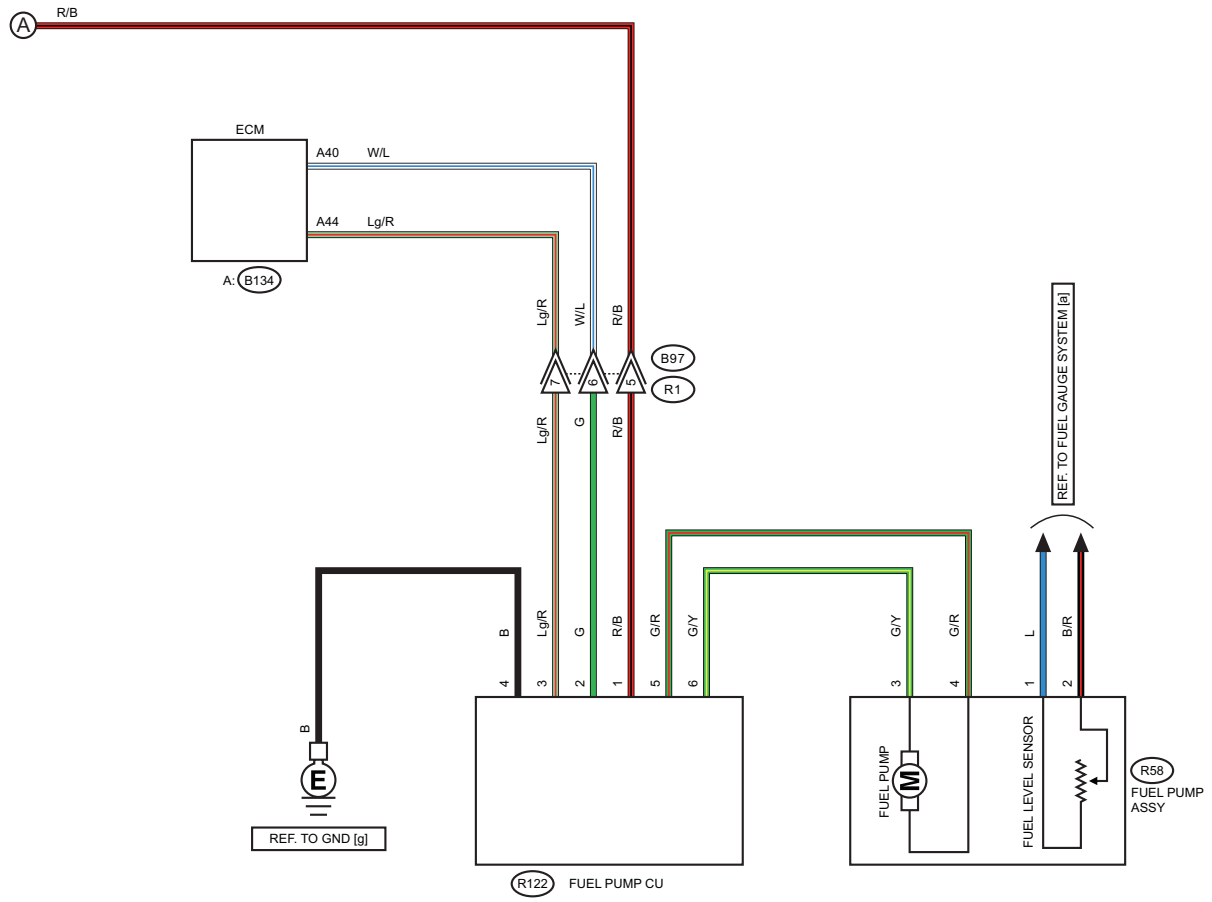
A
R/B
ECM
A40
W/L
A44
Lg/R
A: B134
Lg/R
W/L
R/B
B97
R1
REF. TO FUEL GAUGE SYSTEM [a]
B
E
REF. TO GND [g]
R122
FUEL PUMP CU
FUEL PUMP
FUEL LEVEL SENSOR
R58
FUEL PUMP ASSY

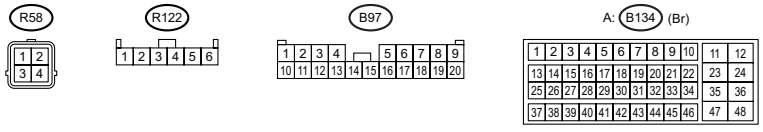
R58
R122
B97
A: B134 (Br)

WI-67205

WIRING SYSTEM

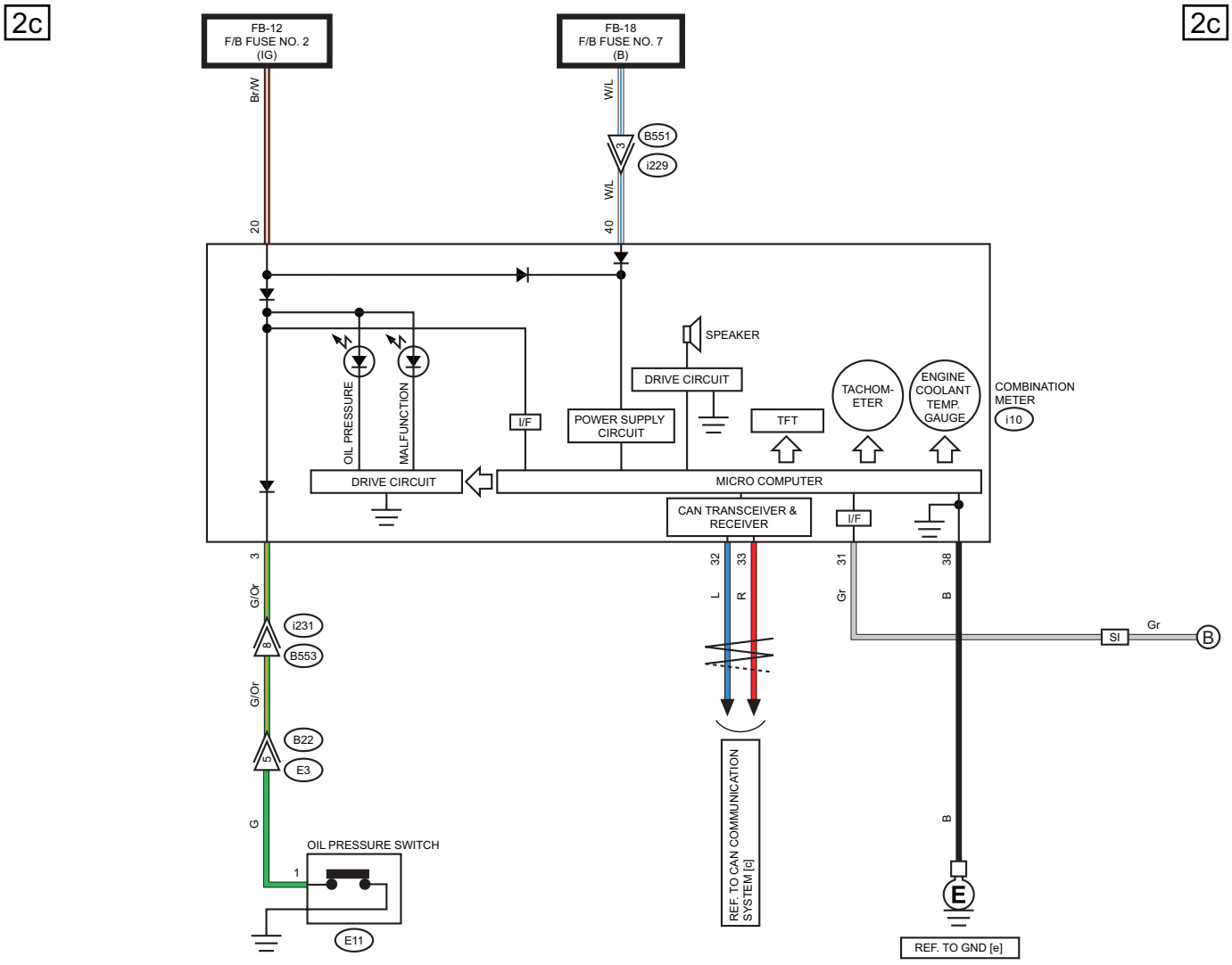

WI-66710

2d

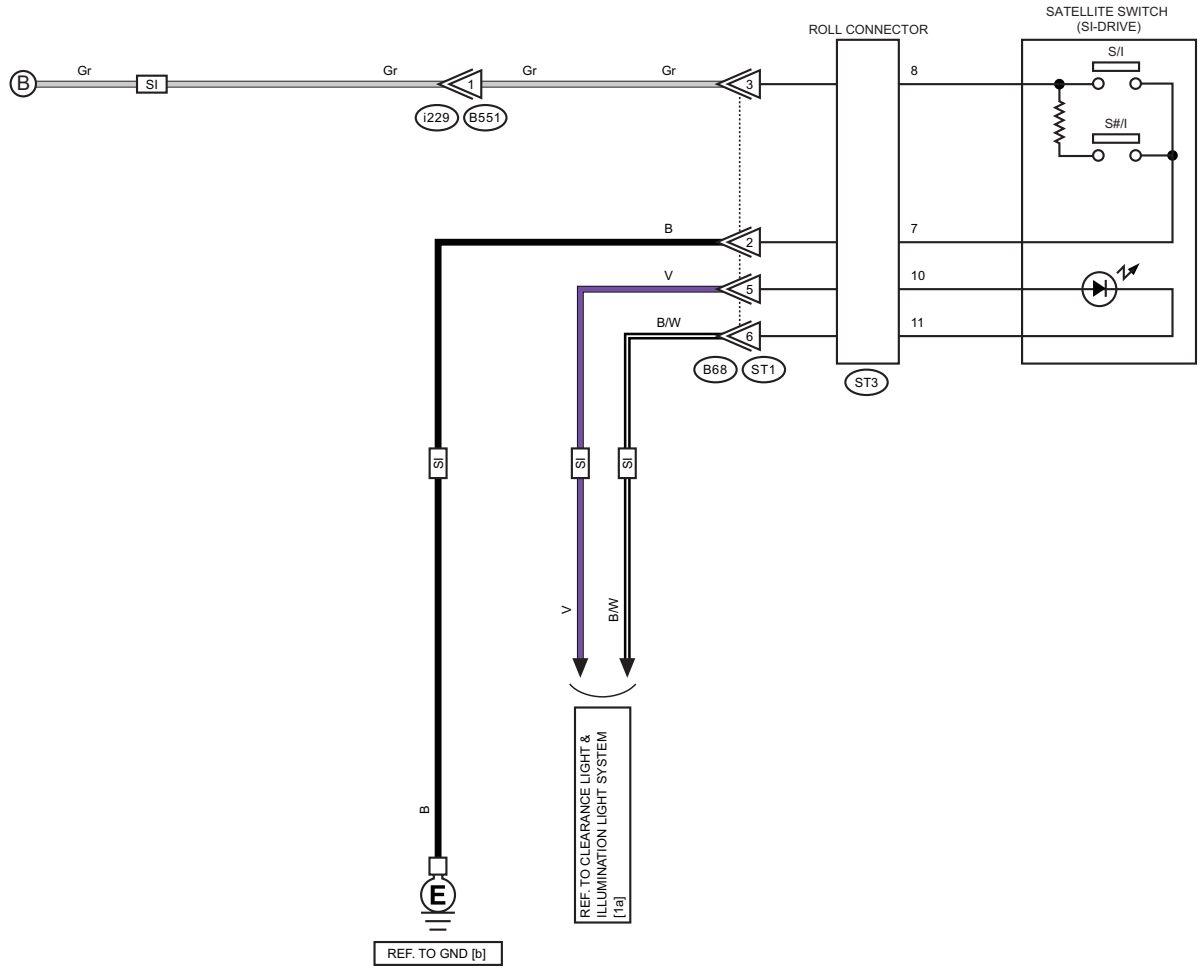

SI : WITH SI-DRIVE

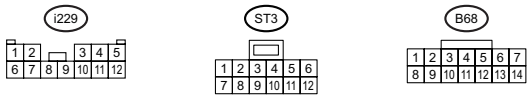

WI-67206

WIRING SYSTEM

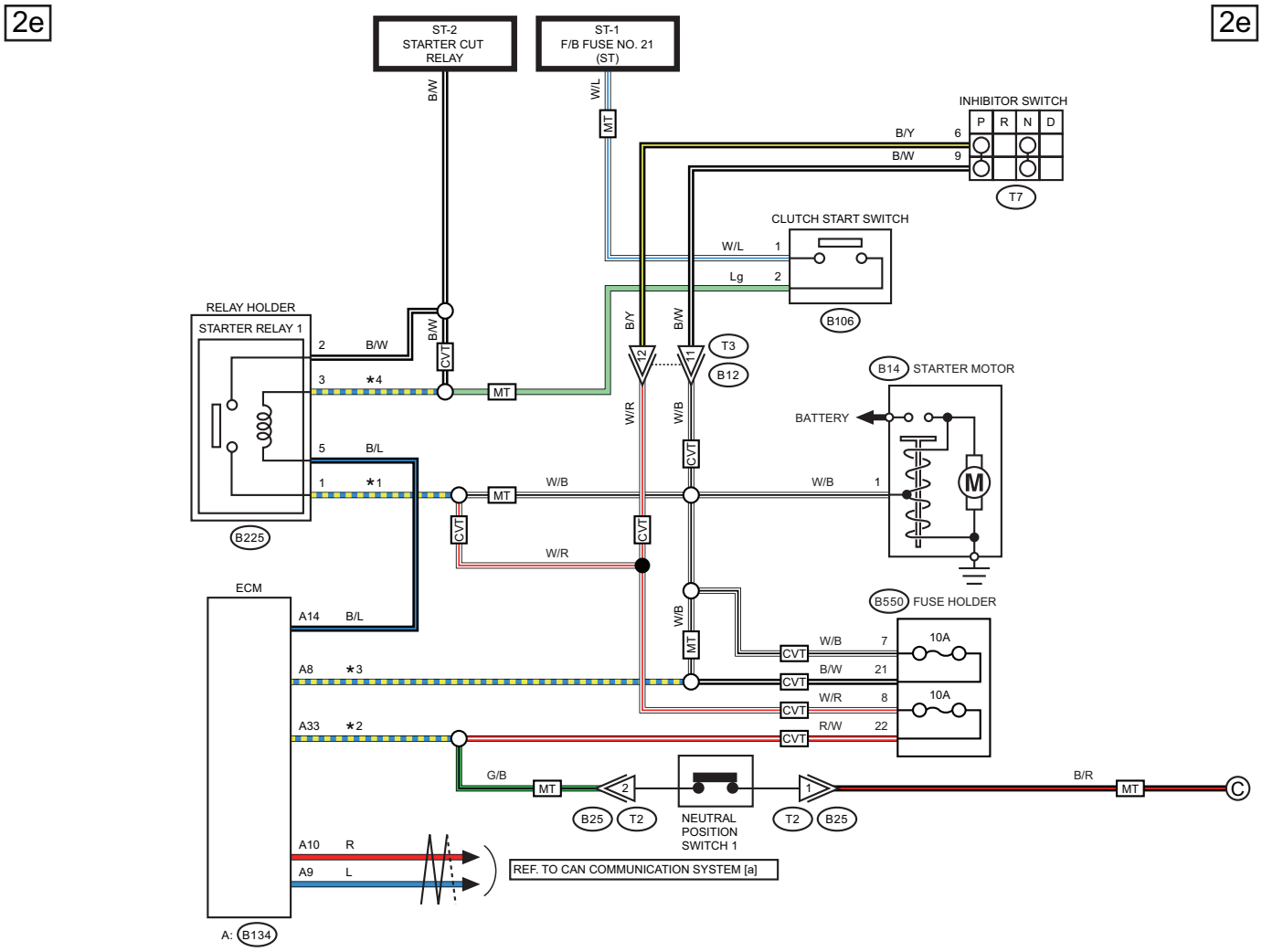

★1 : MT MODEL : W/B
CVT MODEL : W/R
★2 : MT MODEL : G/B
CVT MODEL : R/W
★3 : MT MODEL : W/B
CVT MODEL : B/W
★4 : MT MODEL : Lg
CVT MODEL : B/W

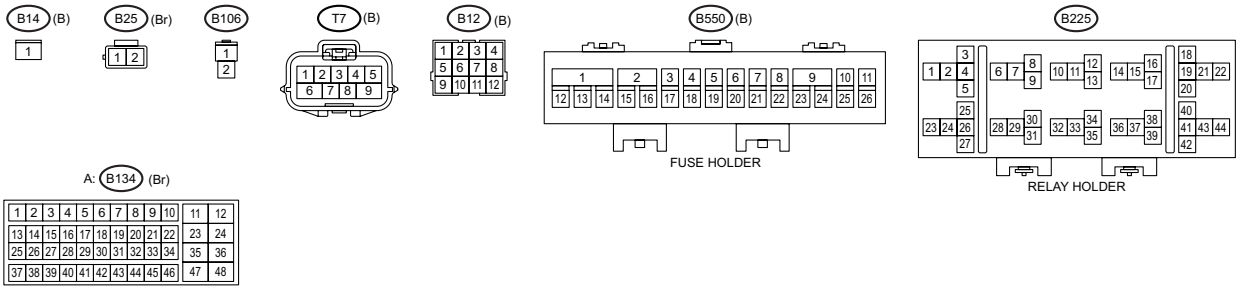

WI-67207

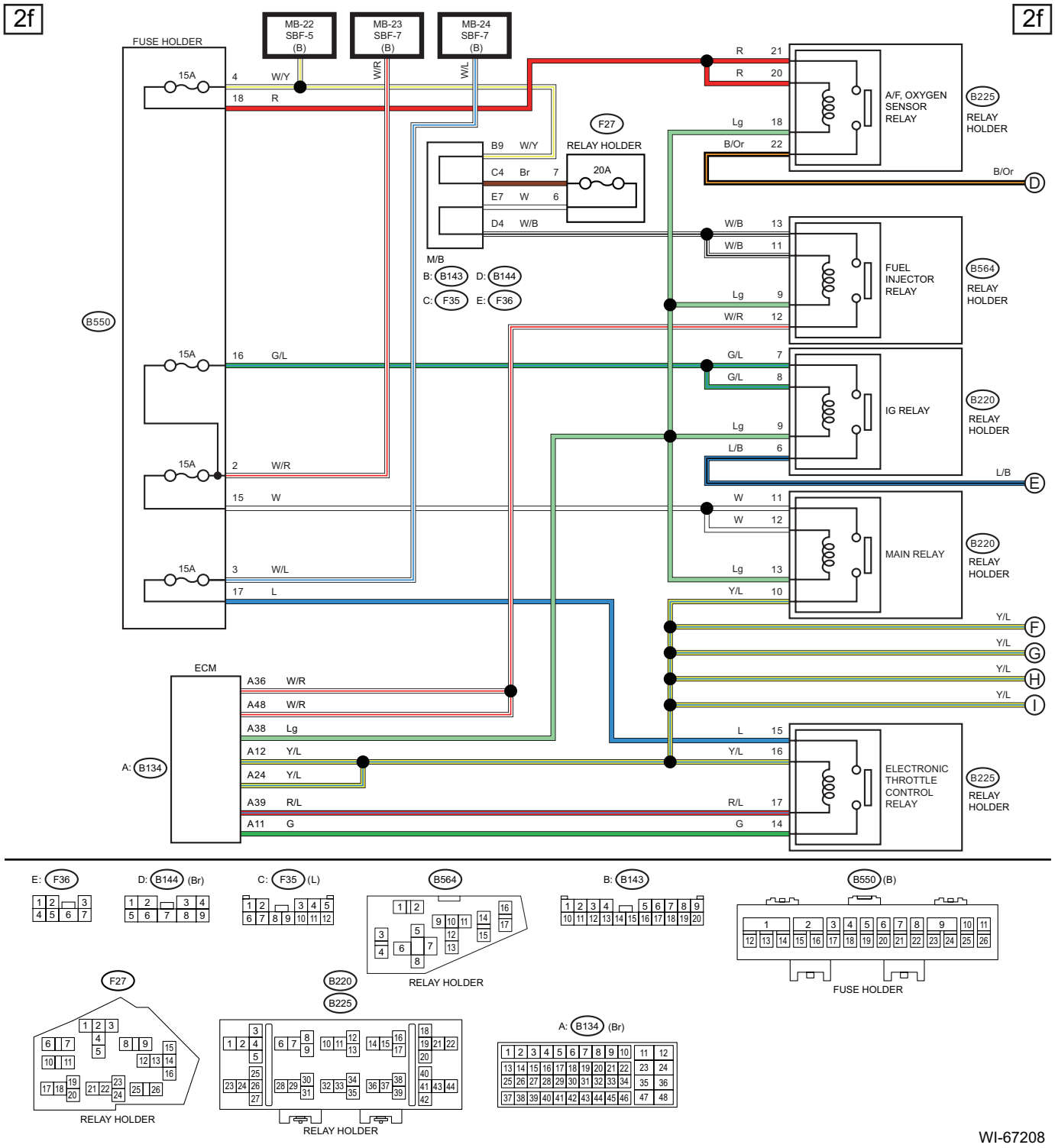
2f
2f
FUSE HOLDER
MB-22
SBF-5
(B)
MB-23
SBF-7
(B)
MB-24
SBF-7
(B)
15A
4 W/Y
18 R
W/R
W/L
F27
RELAY HOLDER
20A
B9 W/Y
C4 Br 7
E7 W 6
D4 W/B
M/B
B: B143 D: B144
C: F35 E: F36
B550
15A
16 G/L
15A
2 W/R
15 W
15A
3 W/L
17 L
R 21
R 20
A/F, OXYGEN SENSOR RELAY
B225
RELAY HOLDER
Lg 18
B/Or 22
B/Or
D
W/B 13
W/B 11
FUEL INJECTOR RELAY
B564
RELAY HOLDER
Lg 9
W/R 12
G/L 7
G/L 8
IG RELAY
B220
RELAY HOLDER
Lg 9
L/B 6
L/B
E
W 11
W 12
MAIN RELAY
B220
RELAY HOLDER
Lg 13
Y/L 10
Y/L
F
Y/L
G
Y/L
H
Y/L
I
ECM
A36 W/R
A48 W/R
A38 Lg
A12 Y/L
A24 Y/L
A39 R/L
A11 G
A: B134
L 15
Y/L 16
R/L 17
G 14
ELECTRONIC THROTTLE CONTROL RELAY
B225
RELAY HOLDER
E: F36
D: B144 (Br)
C: F35 (L)
B564
B: B143
B550 (B)
FUSE HOLDER
F27
RELAY HOLDER
B220
B225
RELAY HOLDER
A: B134 (Br)

WI-67208

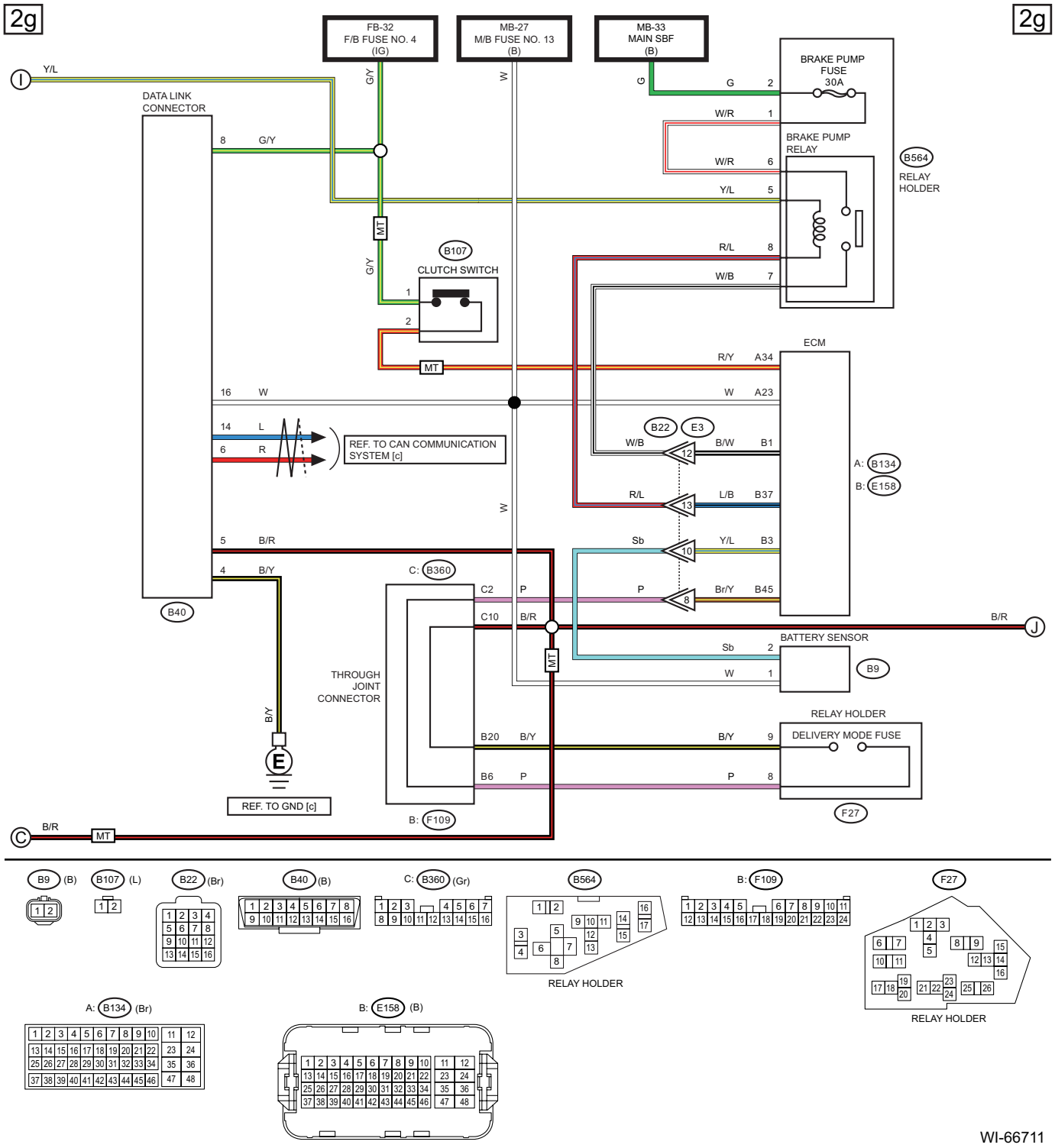
2g
2g
FB-32
F/B FUSE NO. 4
(IG)
MB-27
M/B FUSE NO. 13
(B)
MB-33
MAIN SBF
(B)
BRAKE PUMP
FUSE
30A
BRAKE PUMP
RELAY
B564
RELAY
HOLDER
DATA LINK
CONNECTOR
B107
CLUTCH SWITCH
MT
ECM
A34
A23
B1
B37
B3
B45
A: B134
B: E158
B22
E3
B40
C: B360
C2
C10
B/R
P
Br/Y
B/Y
B/W
L/B
Sb
Y/L
W/R
W/B
R/L
R/Y
G/Y
G
W
L
R
REF. TO CAN COMMUNICATION
SYSTEM [c]
REF. TO GND [c]
THROUGH
JOINT
CONNECTOR
BATTERY SENSOR
B9
RELAY HOLDER
DELIVERY MODE FUSE
F27
B20
B6
B: F109
B
C
J
I

B9 (B)
B107 (L)
B22 (Br)
B40 (B)
C: B360 (Gr)
B564
RELAY HOLDER
B: F109
F27
RELAY HOLDER
A: B134 (Br)
B: E158 (B)

WI-66711

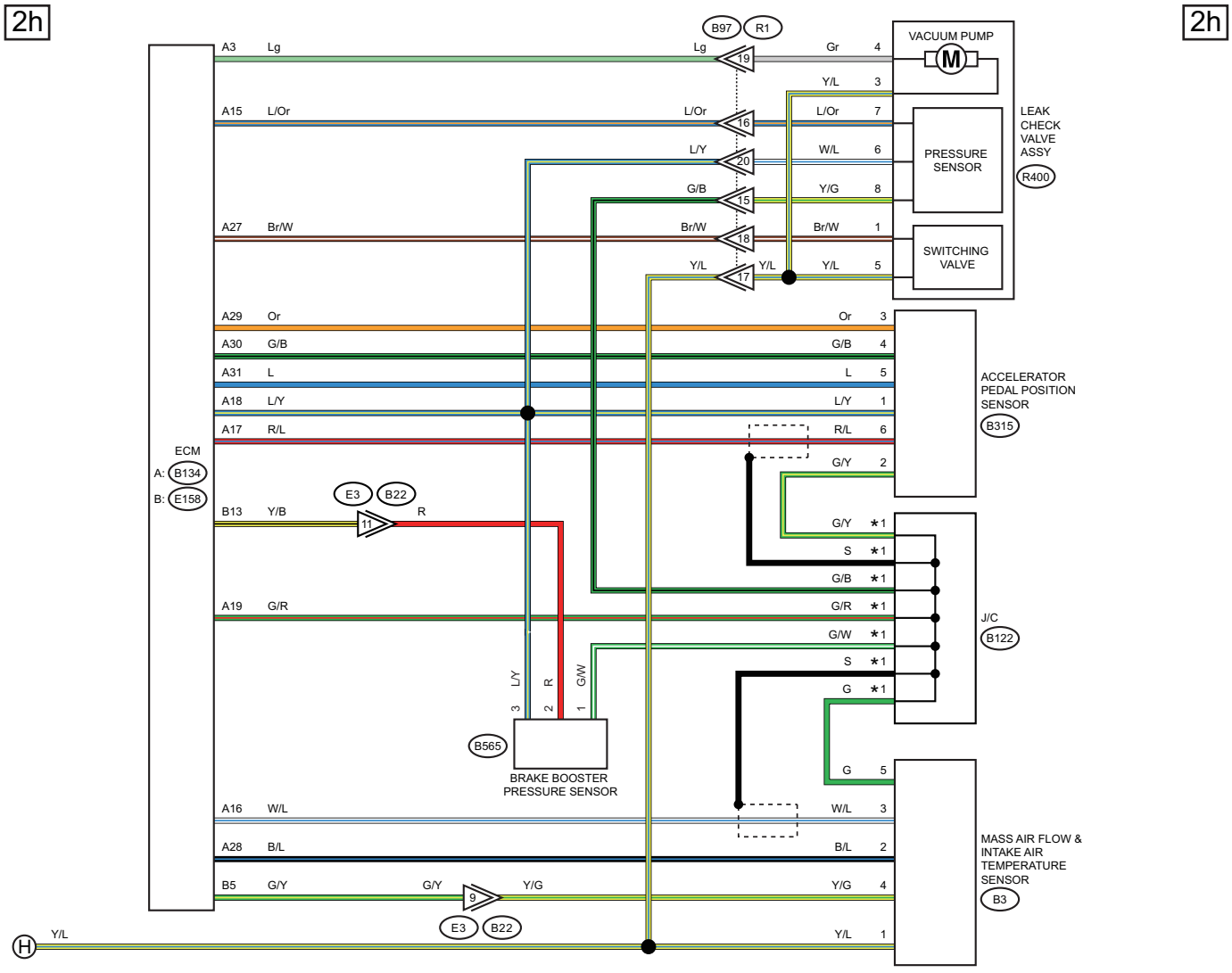

✱1 : TERMINAL No. OPTIONAL ARRANGEMENT

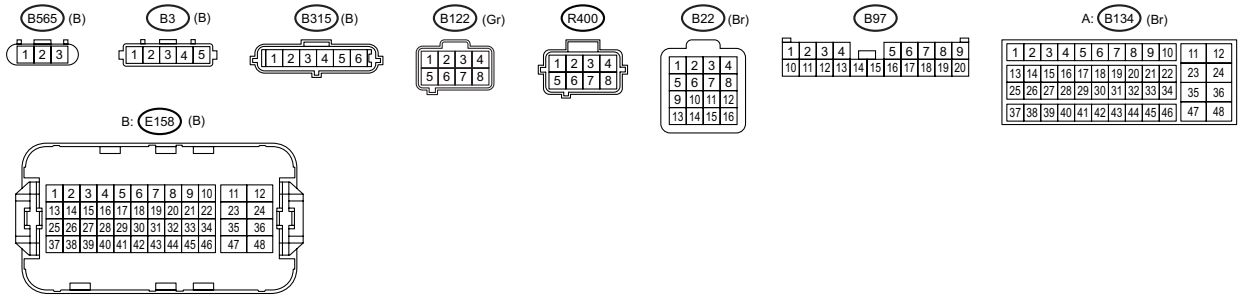

WI-67209

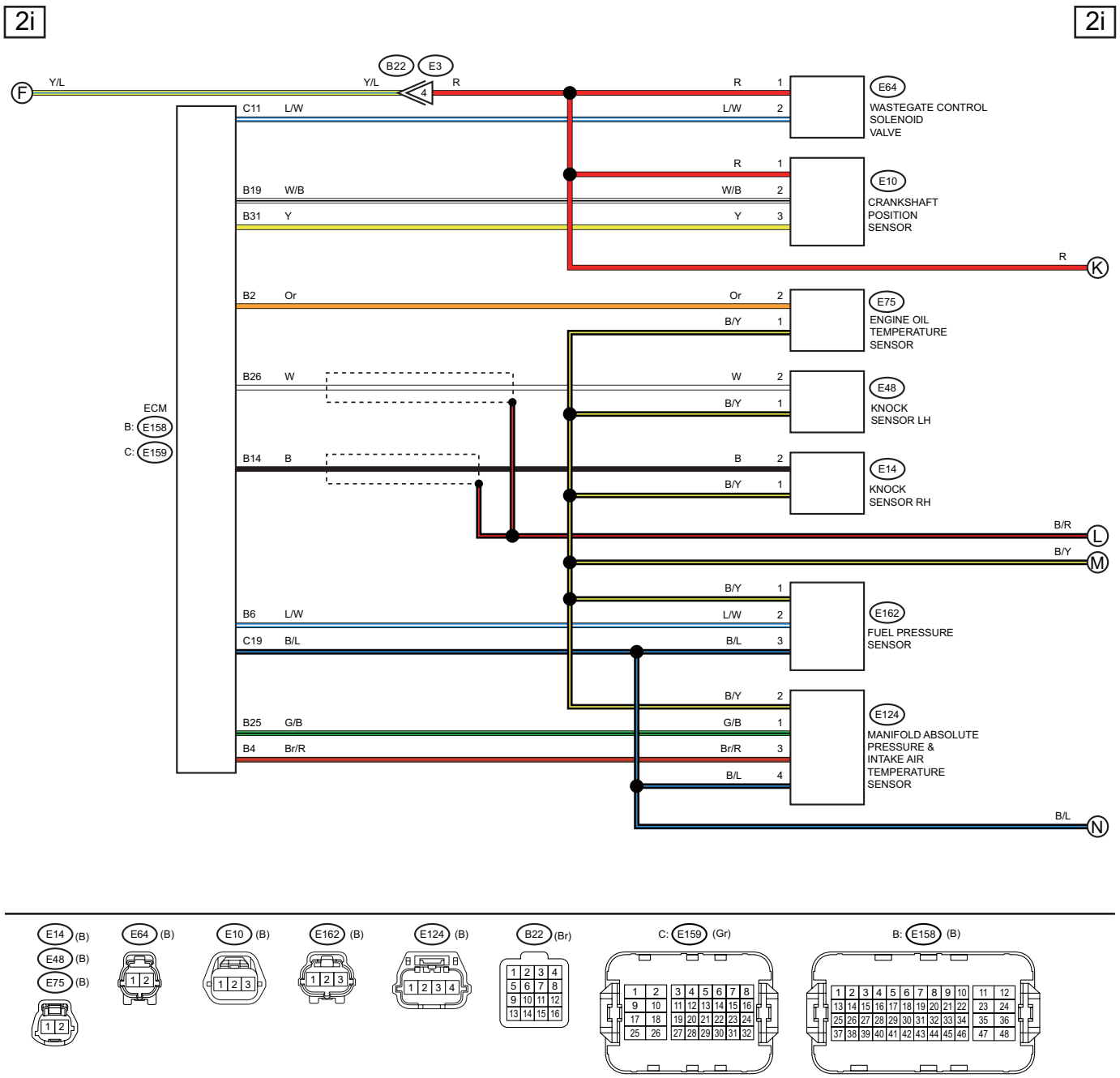
2i
2i
B22
E3
F
Y/L
Y/L
R
4
R 1
L/W 2
E64
WASTEGATE CONTROL SOLENOID VALVE
C11 L/W
R 1
W/B 2
Y 3
E10
CRANKSHAFT POSITION SENSOR
B19 W/B
B31 Y
R
K
B2 Or
Or 2
B/Y 1
E75
ENGINE OIL TEMPERATURE SENSOR
B26 W
W 2
B/Y 1
E48
KNOCK SENSOR LH
ECM
B: E158
C: E159
B14 B
B 2
B/Y 1
E14
KNOCK SENSOR RH
B/R
L
B/Y
M
B/Y 1
L/W 2
B/L 3
E162
FUEL PRESSURE SENSOR
B6 L/W
C19 B/L
B/Y 2
G/B 1
Br/R 3
B/L 4
E124
MANIFOLD ABSOLUTE PRESSURE & INTAKE AIR TEMPERATURE SENSOR
B25 G/B
B4 Br/R
B/L
N
E14 (B)
E48 (B)
E75 (B)
E64 (B)
E10 (B)
E162 (B)
E124 (B)
B22 (Br)
C: E159 (Gr)
B: E158 (B)

WI-67210

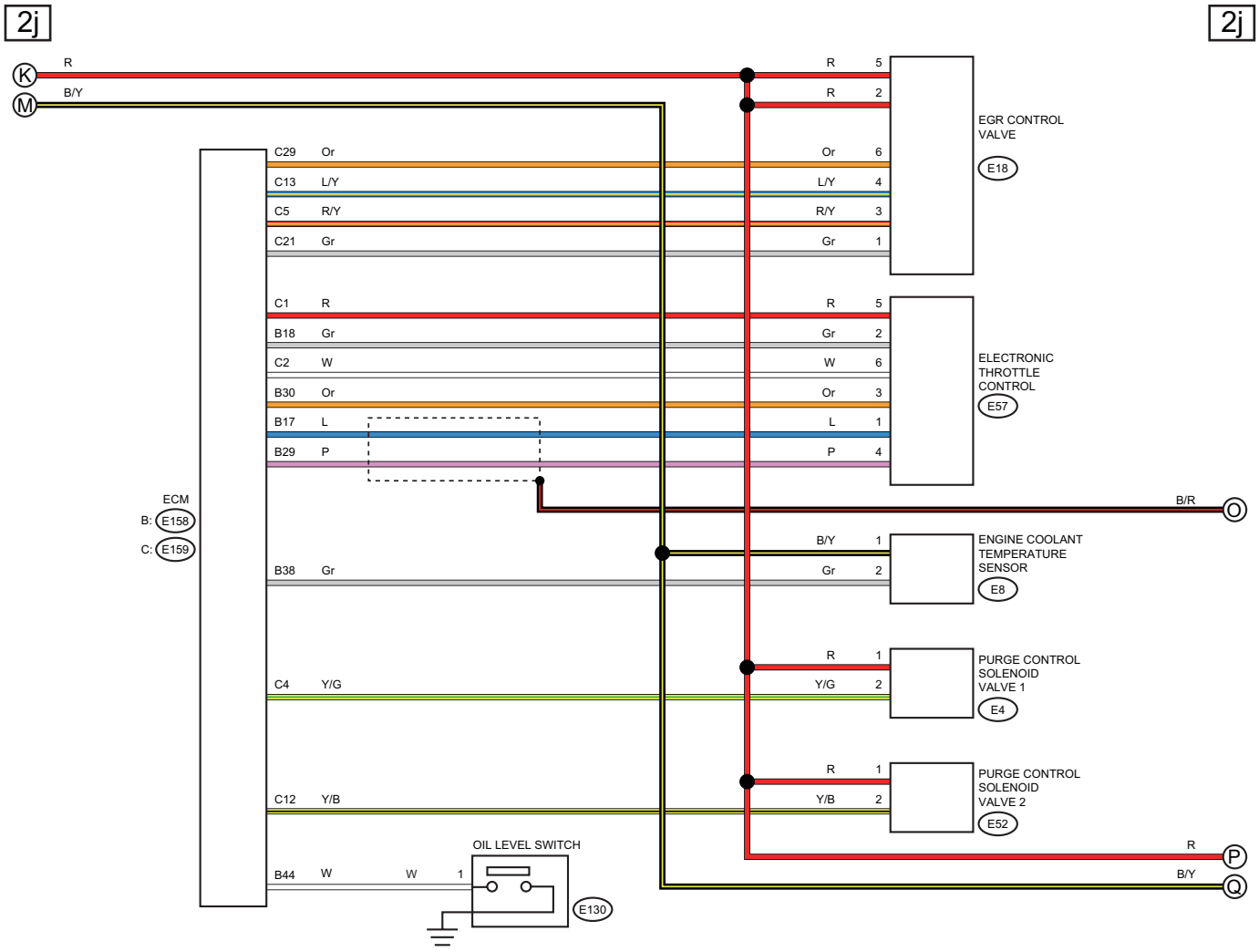
2j
2j
K
M
R
B/Y
C29 Or
C13 L/Y
C5 R/Y
C21 Gr
C1 R
B18 Gr
C2 W
B30 Or
B17 L
B29 P
B38 Gr
C4 Y/G
C12 Y/B
B44 W
ECM
B: E158
C: E159
R 5
R 2
Or 6
L/Y 4
R/Y 3
Gr 1
EGR CONTROL VALVE
E18
R 5
Gr 2
W 6
Or 3
L 1
P 4
ELECTRONIC THROTTLE CONTROL
E57
B/R
O
B/Y 1
Gr 2
ENGINE COOLANT TEMPERATURE SENSOR
E8
R 1
Y/G 2
PURGE CONTROL SOLENOID VALVE 1
E4
R 1
Y/B 2
PURGE CONTROL SOLENOID VALVE 2
E52
OIL LEVEL SWITCH
W 1
E130
R
P
B/Y
Q

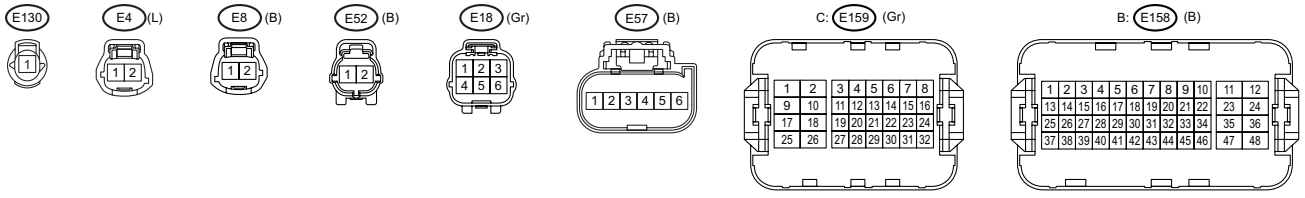
E130
E4 (L)
E8 (B)
E52 (B)
E18 (Gr)
E57 (B)
C: E159 (Gr)
B: E158 (B)

WI-67211

WIRING SYSTEM

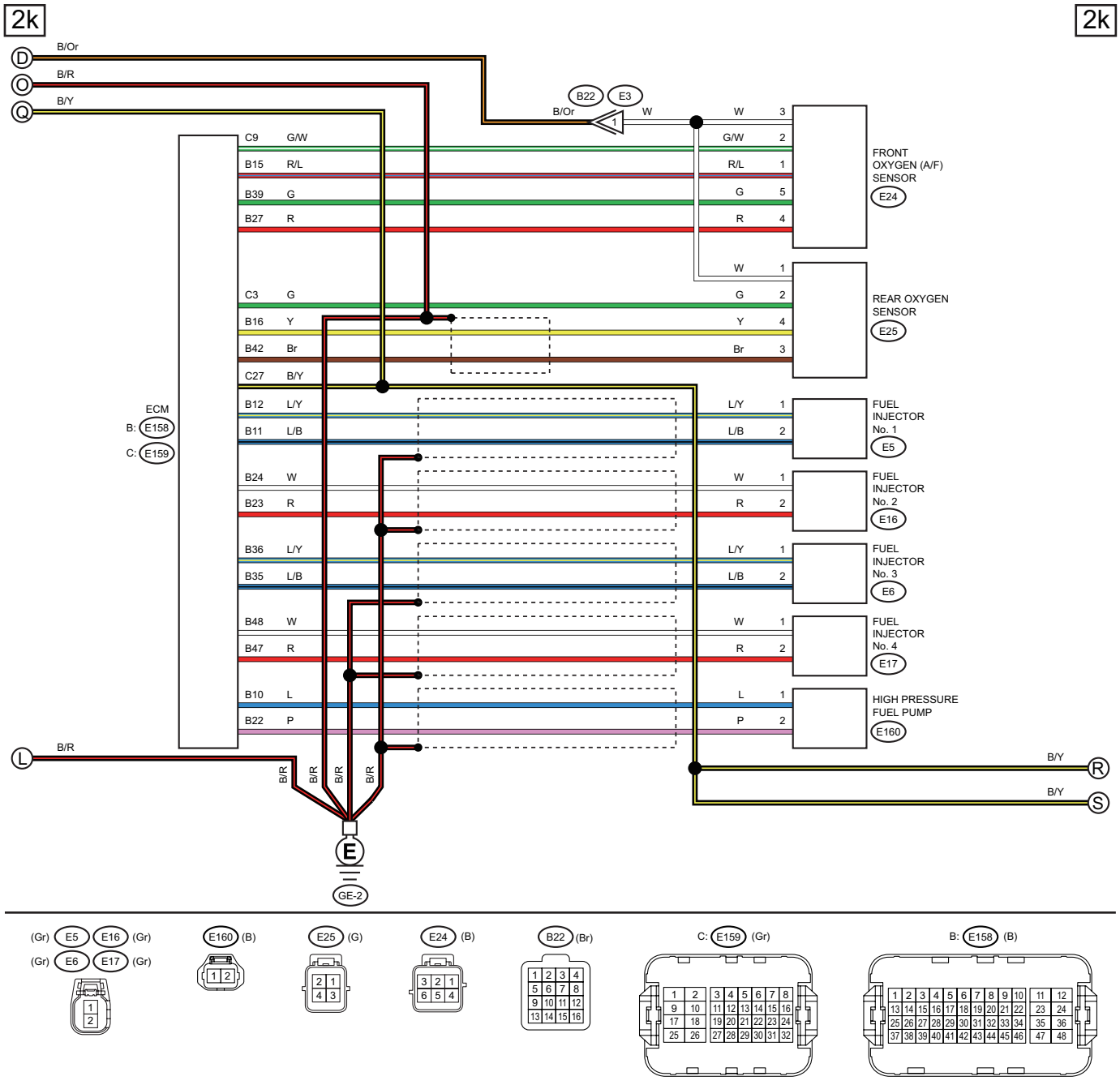

WI-66712

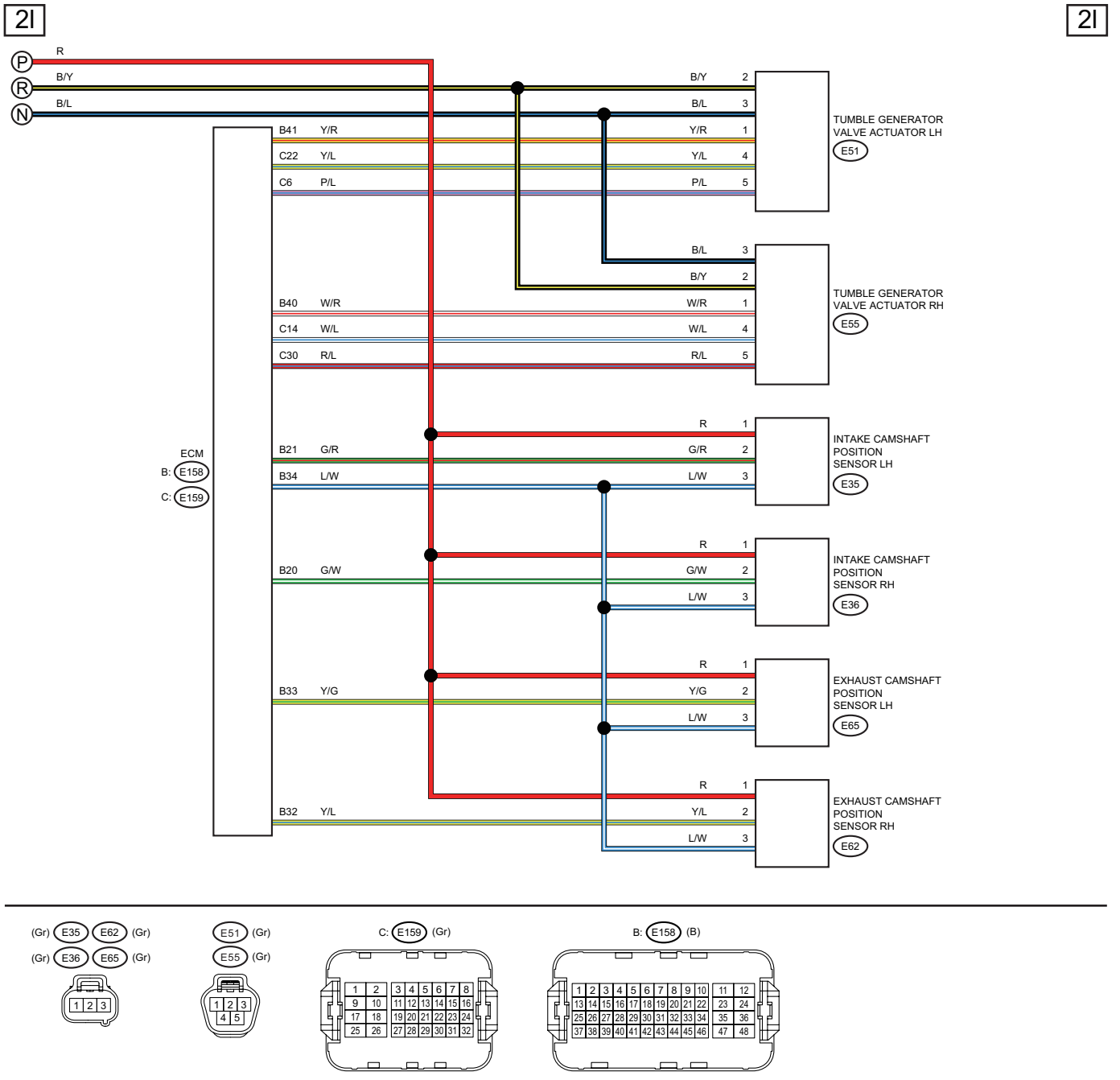
2I
2I
P
R
N
R
B/Y
B/L
B41 Y/R
C22 Y/L
C6 P/L
B40 W/R
C14 W/L
C30 R/L
B21 G/R
B34 L/W
B20 G/W
B33 Y/G
B32 Y/L
ECM
B: E158
C: E159
B/Y 2
B/L 3
Y/R 1
Y/L 4
P/L 5
TUMBLE GENERATOR VALVE ACTUATOR LH
E51
B/L 3
B/Y 2
W/R 1
W/L 4
R/L 5
TUMBLE GENERATOR VALVE ACTUATOR RH
E55
R 1
G/R 2
L/W 3
INTAKE CAMSHAFT POSITION SENSOR LH
E35
R 1
G/W 2
L/W 3
INTAKE CAMSHAFT POSITION SENSOR RH
E36
R 1
Y/G 2
L/W 3
EXHAUST CAMSHAFT POSITION SENSOR LH
E65
R 1
Y/L 2
L/W 3
EXHAUST CAMSHAFT POSITION SENSOR RH
E62

(Gr) E35 E62 (Gr)
(Gr) E36 E65 (Gr)
E51 (Gr)
E55 (Gr)
C: E159 (Gr)
B: E158 (B)

WI-67212

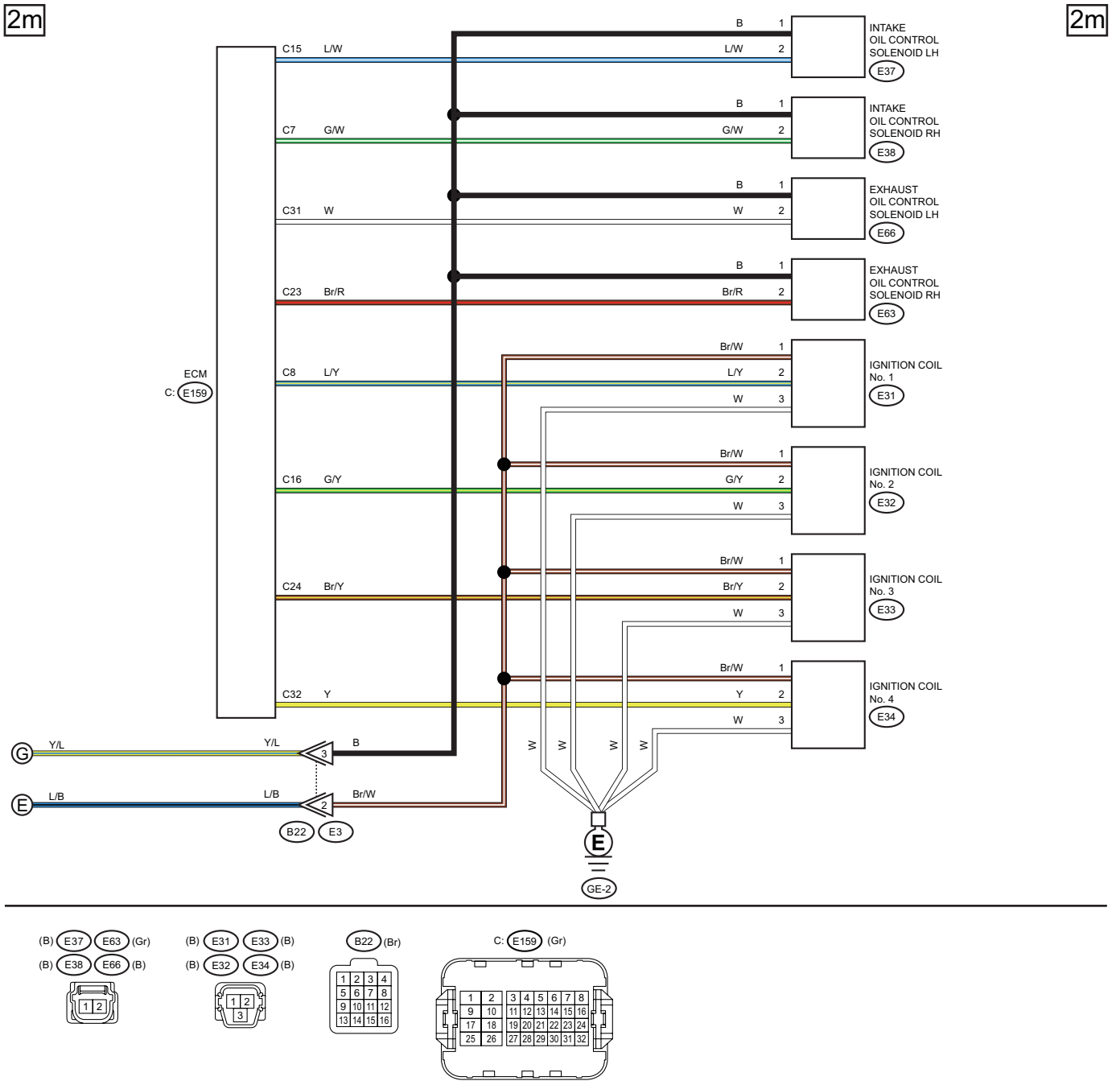
2m
2m
ECM
C: E159
C15 L/W
C7 G/W
C31 W
C23 Br/R
C8 L/Y
C16 G/Y
C24 Br/Y
C32 Y
B 1
L/W 2
INTAKE OIL CONTROL SOLENOID LH
E37
G/W 2
INTAKE OIL CONTROL SOLENOID RH
E38
W 2
EXHAUST OIL CONTROL SOLENOID LH
E66
Br/R 2
EXHAUST OIL CONTROL SOLENOID RH
E63
Br/W 1
L/Y 2
W 3
IGNITION COIL No. 1
E31
G/Y 2
IGNITION COIL No. 2
E32
Br/Y 2
IGNITION COIL No. 3
E33
Y 2
IGNITION COIL No. 4
E34
G
Y/L
E
L/B
B22
E3
GE-2

(B) E37 E63 (Gr)
(B) E38 E66 (B)
(B) E31 E33 (B)
(B) E32 E34 (B)
B22 (Br)
C: E159 (Gr)

WI-67213

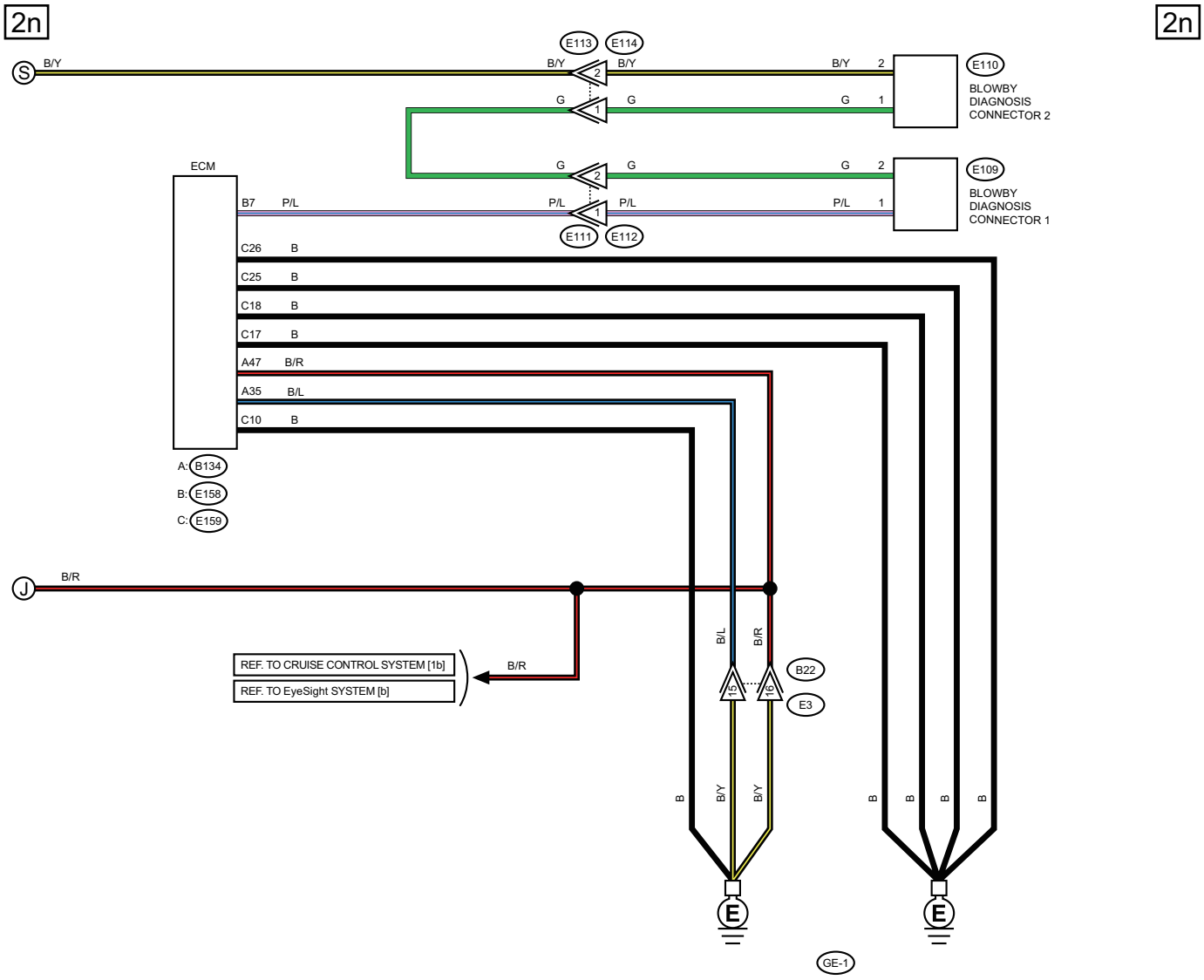
2n
2n
S
B/Y
E113
E114
B/Y
2
B/Y
B/Y
2
E110
BLOWBY DIAGNOSIS CONNECTOR 2
G
1
G
G
1
G
2
G
G
2
E109
BLOWBY DIAGNOSIS CONNECTOR 1
ECM
B7
P/L
P/L
1
P/L
P/L
1
E111
E112
C26
B
C25
B
C18
B
C17
B
A47
B/R
A35
B/L
C10
B
A: B134
B: E158
C: E159
J
B/R
REF. TO CRUISE CONTROL SYSTEM [1b]
REF. TO EyeSight SYSTEM [b]
B/R
B/L
B/R
B22
E3
15
16
B
B/Y
B/Y
B
B
B
B
E
E
GE-1

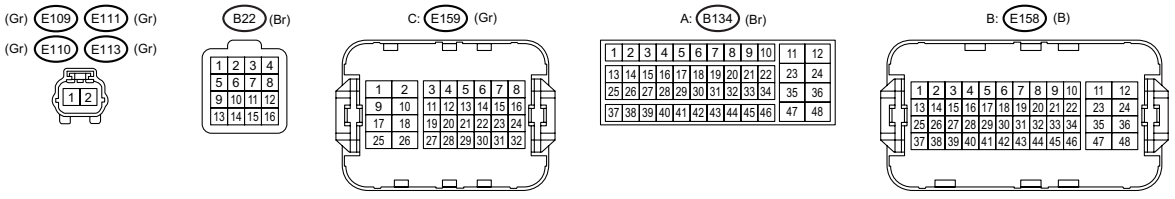
(Gr) E109 E111 (Gr)
(Gr) E110 E113 (Gr)
B22 (Br)
C: E159 (Gr)
A: B134 (Br)
B: E158 (B)

WI-66713

3. ENGINE TYPE EJ (WITHOUT PUSH BUTTON START)

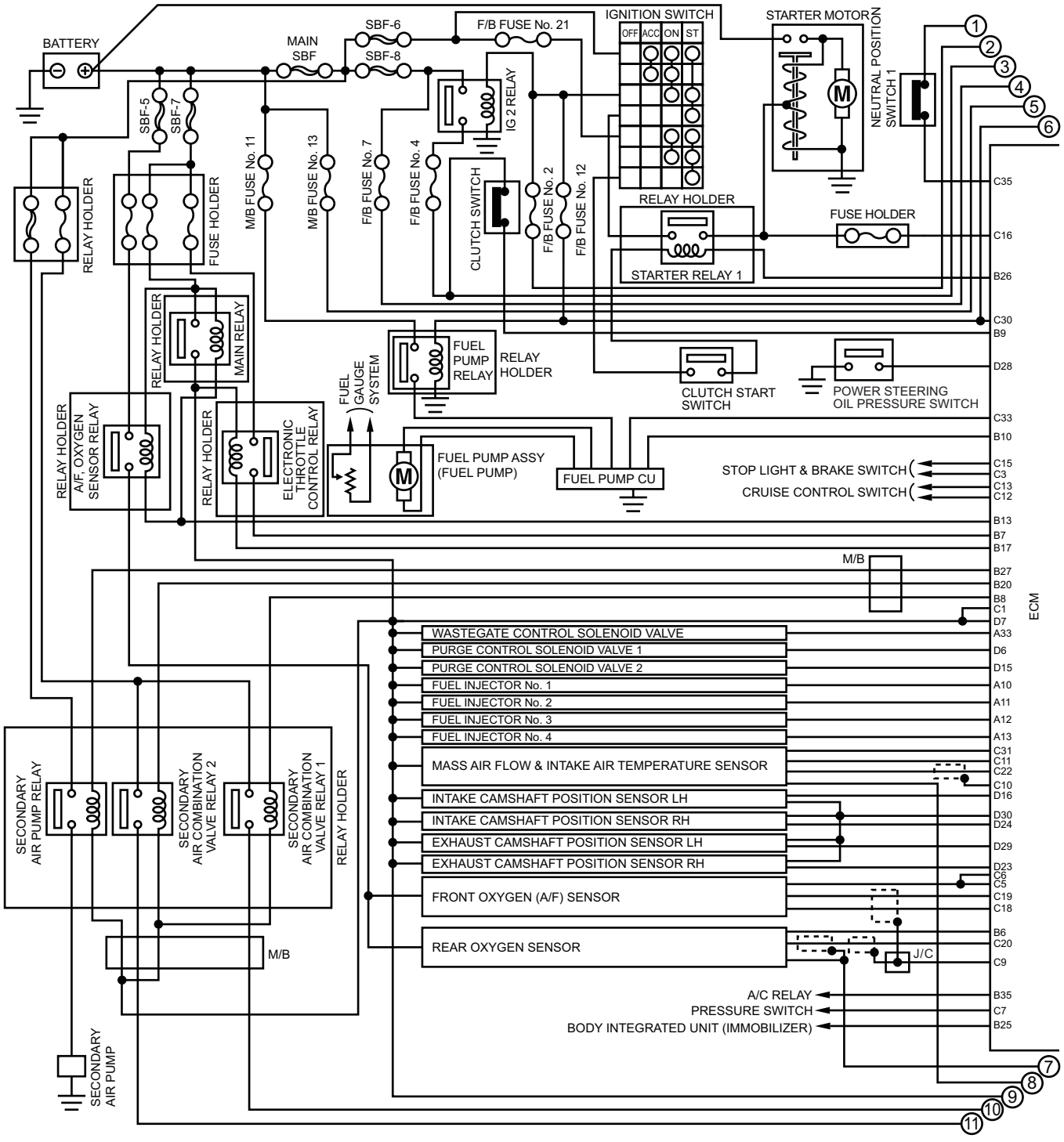

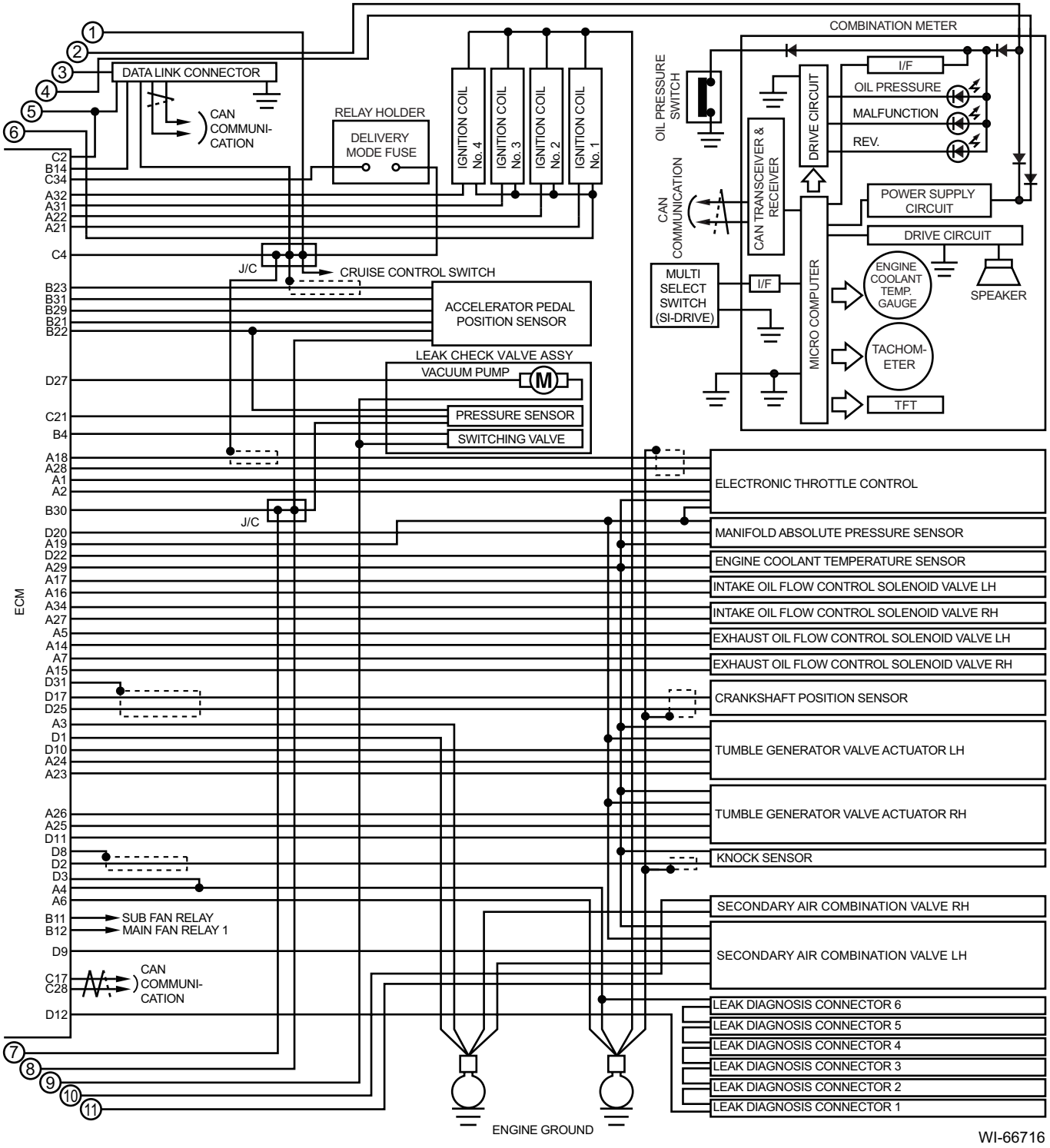
COMBINATION METER
DATA LINK CONNECTOR
CAN COMMUNI-CATION
RELAY HOLDER
DELIVERY MODE FUSE
IGNITION COIL No. 4
IGNITION COIL No. 3
IGNITION COIL No. 2
IGNITION COIL No. 1
OIL PRESSURE SWITCH
CAN COMMUNICATION
CAN TRANSCEIVER & RECEIVER
DRIVE CIRCUIT
I/F
OIL PRESSURE
MALFUNCTION
REV.
POWER SUPPLY CIRCUIT
DRIVE CIRCUIT
MULTI SELECT SWITCH (SI-DRIVE)
MICRO COMPUTER
ENGINE COOLANT TEMP. GAUGE
SPEAKER
TACHOM-ETER
TFT
J/C
CRUISE CONTROL SWITCH
ACCELERATOR PEDAL POSITION SENSOR
LEAK CHECK VALVE ASSY
VACUUM PUMP
PRESSURE SENSOR
SWITCHING VALVE
ECM
C2
B14
C34
A32
A31
A22
A21
C4
B23
B31
B29
B21
B22
D27
C21
B4
A18
A28
A1
A2
B30
D20
A19
D22
A29
A17
A16
A34
A27
A5
A14
A7
A15
D31
D17
D25
A3
D1
D10
A24
A23
A26
A25
D11
D8
D2
D3
A4
A6
B11
B12
SUB FAN RELAY
MAIN FAN RELAY 1
D9
C17
C28
CAN COMMUNI-CATION
D12
ELECTRONIC THROTTLE CONTROL
MANIFOLD ABSOLUTE PRESSURE SENSOR
ENGINE COOLANT TEMPERATURE SENSOR
INTAKE OIL FLOW CONTROL SOLENOID VALVE LH
INTAKE OIL FLOW CONTROL SOLENOID VALVE RH
EXHAUST OIL FLOW CONTROL SOLENOID VALVE LH
EXHAUST OIL FLOW CONTROL SOLENOID VALVE RH
CRANKSHAFT POSITION SENSOR
TUMBLE GENERATOR VALVE ACTUATOR LH
TUMBLE GENERATOR VALVE ACTUATOR RH
KNOCK SENSOR
SECONDARY AIR COMBINATION VALVE RH
SECONDARY AIR COMBINATION VALVE LH
LEAK DIAGNOSIS CONNECTOR 6
LEAK DIAGNOSIS CONNECTOR 5
LEAK DIAGNOSIS CONNECTOR 4
LEAK DIAGNOSIS CONNECTOR 3
LEAK DIAGNOSIS CONNECTOR 2
LEAK DIAGNOSIS CONNECTOR 1
ENGINE GROUND
WI-66716

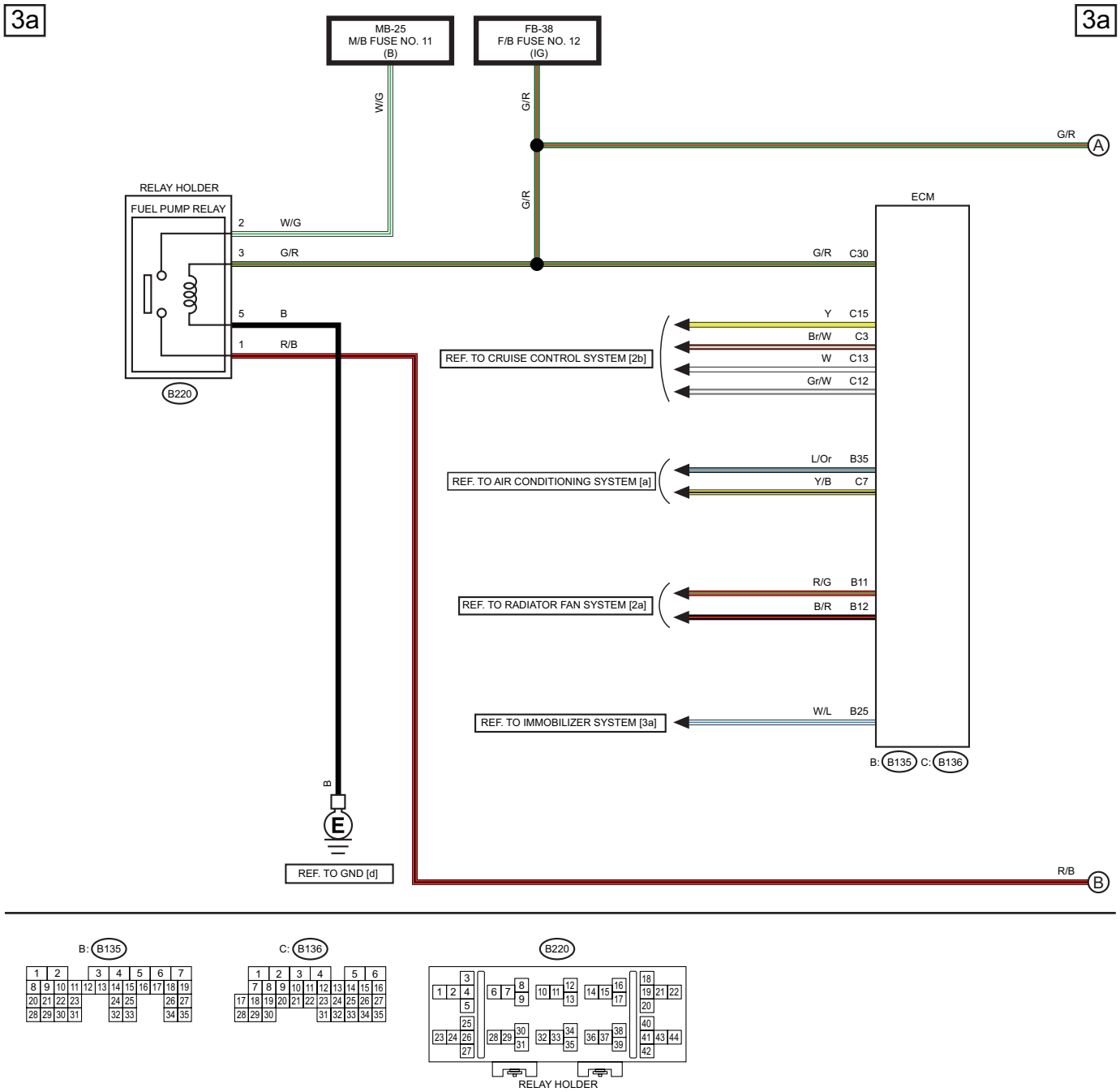
3a
3a
MB-25
M/B FUSE NO. 11
(B)
FB-38
F/B FUSE NO. 12
(IG)
W/G
G/R
G/R
A
RELAY HOLDER
FUEL PUMP RELAY
2 W/G
3 G/R
5 B
1 R/B
B220
ECM
G/R C30
Y C15
Br/W C3
W C13
Gr/W C12
REF. TO CRUISE CONTROL SYSTEM [2b]
L/Or B35
Y/B C7
REF. TO AIR CONDITIONING SYSTEM [a]
R/G B11
B/R B12
REF. TO RADIATOR FAN SYSTEM [2a]
W/L B25
REF. TO IMMOBILIZER SYSTEM [3a]
B: B135 C: B136
B
REF. TO GND [d]
R/B
B

B: B135

C: B136

B220
RELAY HOLDER

WI-67214

3b

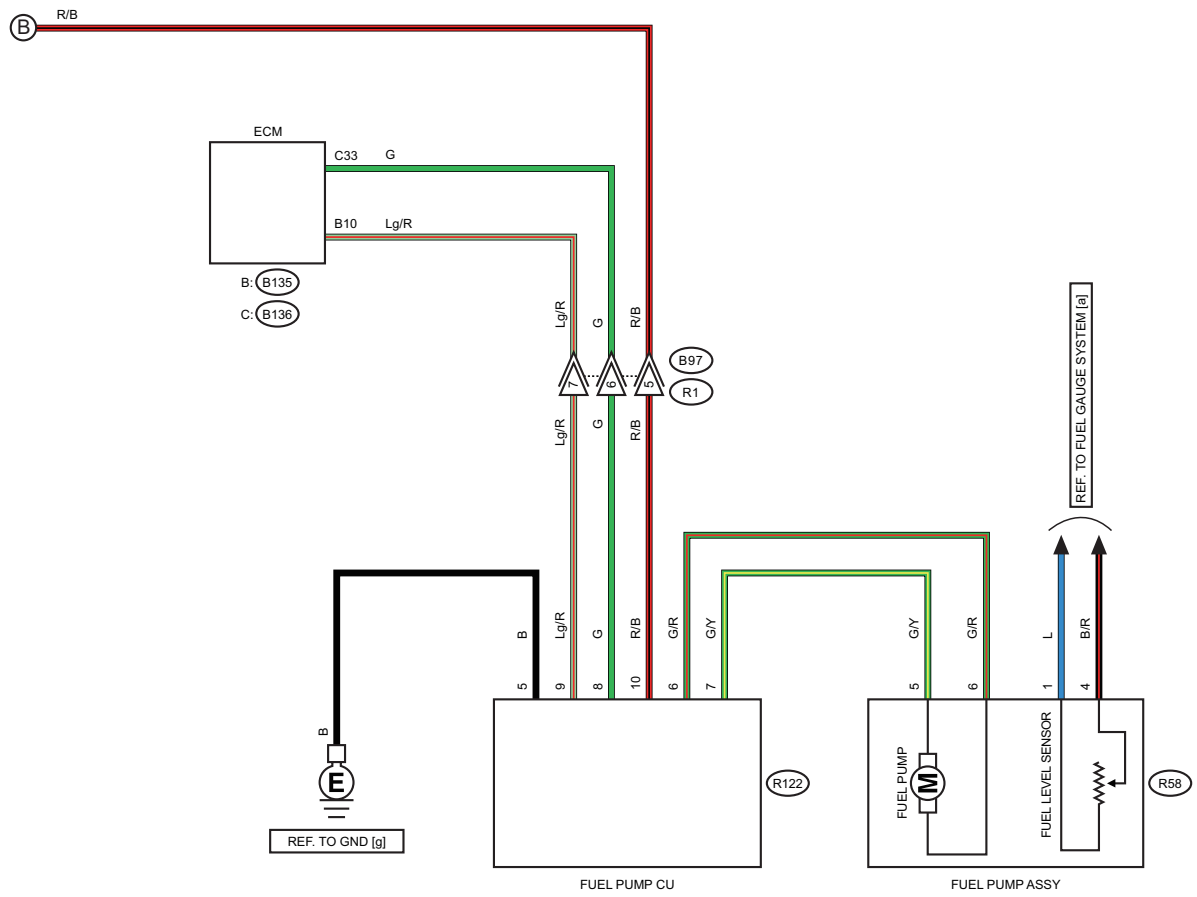
R/B
ECM
C33 G
B10 Lg/R
B: B135
C: B136
Lg/R
G
R/B
B97
R1
REF. TO FUEL GAUGE SYSTEM [a]
B
Lg/R
G
R/B
G/R
G/Y
G/Y
G/R
L
B/R
5
9
8
10
6
7
5
6
1
4
B
E
REF. TO GND [g]
R122
FUEL PUMP
M
FUEL LEVEL SENSOR
R58
FUEL PUMP CU
FUEL PUMP ASSY

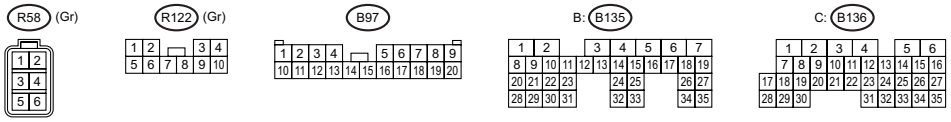
R58 (Gr)
R122 (Gr)
B97
B: B135
C: B136

WI-67215

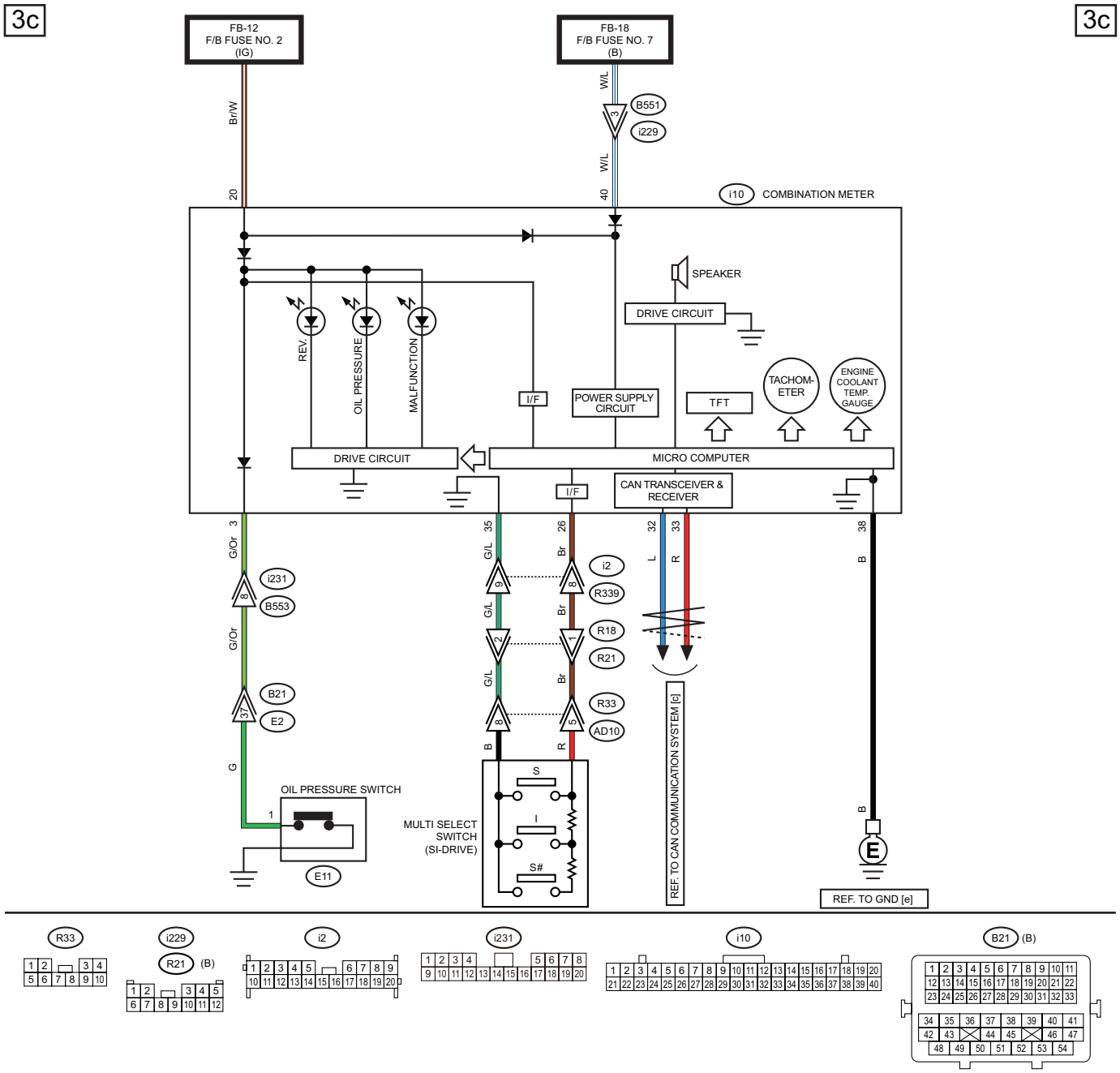
3c
3c
FB-12
F/B FUSE NO. 2
(IG)
FB-18
F/B FUSE NO. 7
(B)
Br/W
20
W/L
40
B551
i229
i10
COMBINATION METER
SPEAKER
DRIVE CIRCUIT
REV.
OIL PRESSURE
MALFUNCTION
I/F
POWER SUPPLY CIRCUIT
TFT
TACHOM-ETER
ENGINE COOLANT TEMP. GAUGE
DRIVE CIRCUIT
MICRO COMPUTER
I/F
CAN TRANSCEIVER & RECEIVER
G/Or
3
i231
B553
B21
E2
G
OIL PRESSURE SWITCH
1
E11
G/L
35
Br
26
i2
R339
R18
R21
R33
AD10
B
R
MULTI SELECT SWITCH (SI-DRIVE)
S
I
S#
L
32
R
33
REF. TO CAN COMMUNICATION SYSTEM [c]
B
38
REF. TO GND [e]
R33
i229
R21
(B)
i2
i231
i10
B21
(B)

WI-66717

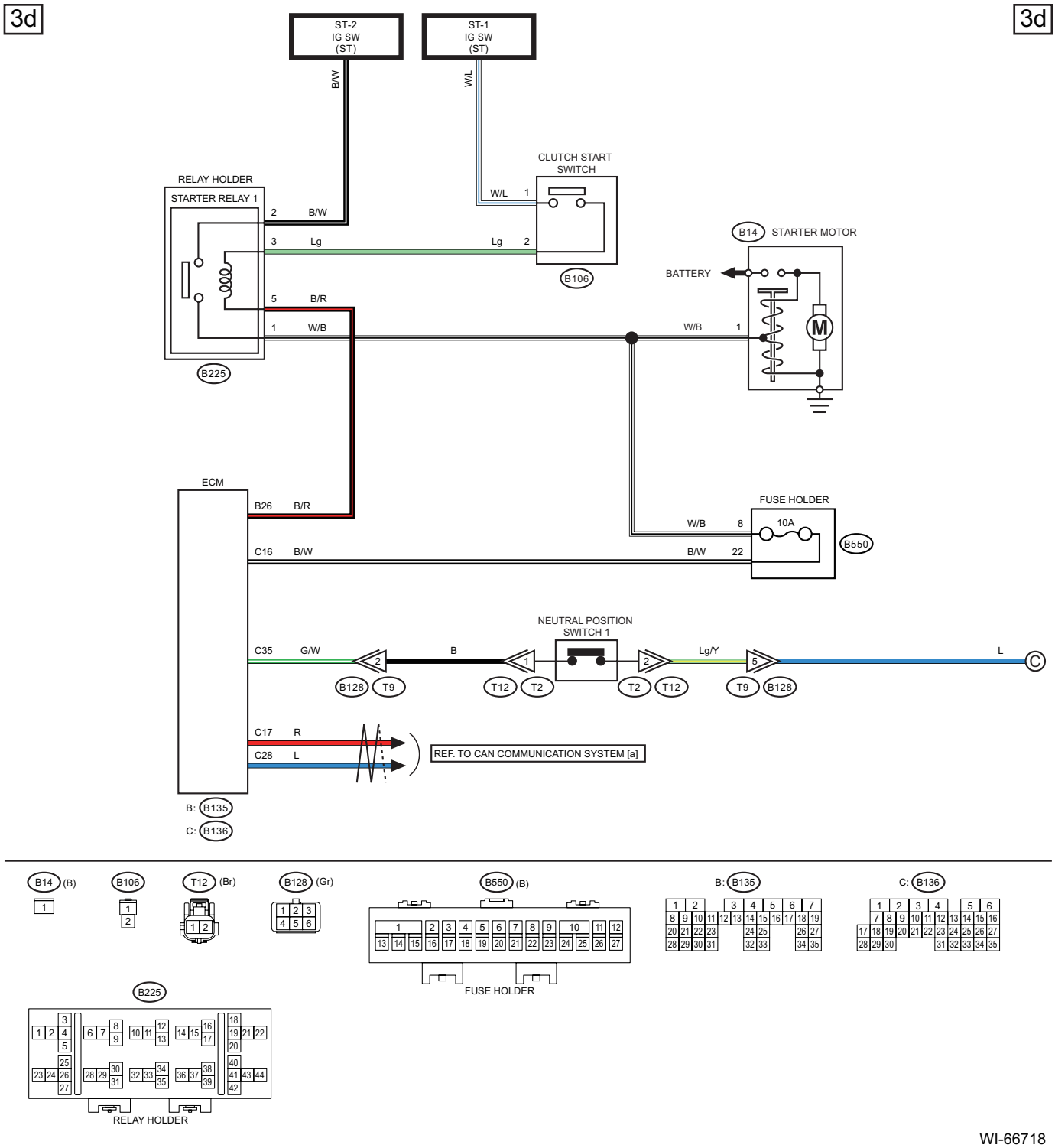
3d
3d
ST-2
IG SW
(ST)
ST-1
IG SW
(ST)
B/W
W/L
CLUTCH START
SWITCH
RELAY HOLDER
STARTER RELAY 1
W/L 1
2 B/W
3 Lg
Lg 2
B106
B14 STARTER MOTOR
BATTERY
5 B/R
1 W/B
W/B 1
M
B225
ECM
B26 B/R
FUSE HOLDER
W/B 8
10A
B550
C16 B/W
B/W 22
NEUTRAL POSITION
SWITCH 1
C35 G/W
B
Lg/Y
L
C
B128 T9
T12 T2
T2 T12
T9 B128
C17 R
C28 L
REF. TO CAN COMMUNICATION SYSTEM [a]
B: B135
C: B136

B14 (B)
B106
T12 (Br)
B128 (Gr)
B550 (B)
FUSE HOLDER
B: B135
C: B136
B225
RELAY HOLDER

WI-66718

WIRING SYSTEM

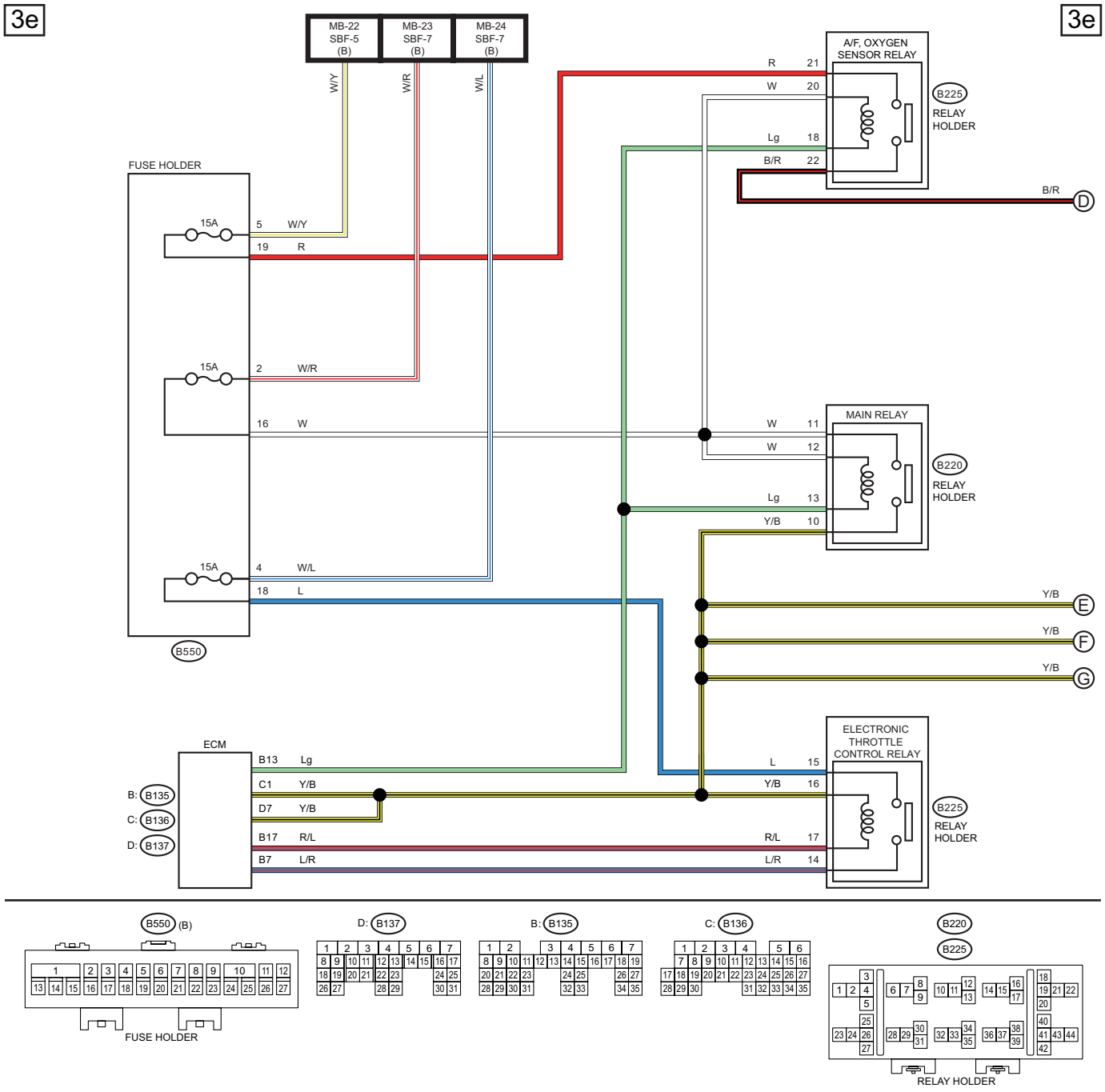

WI-67216

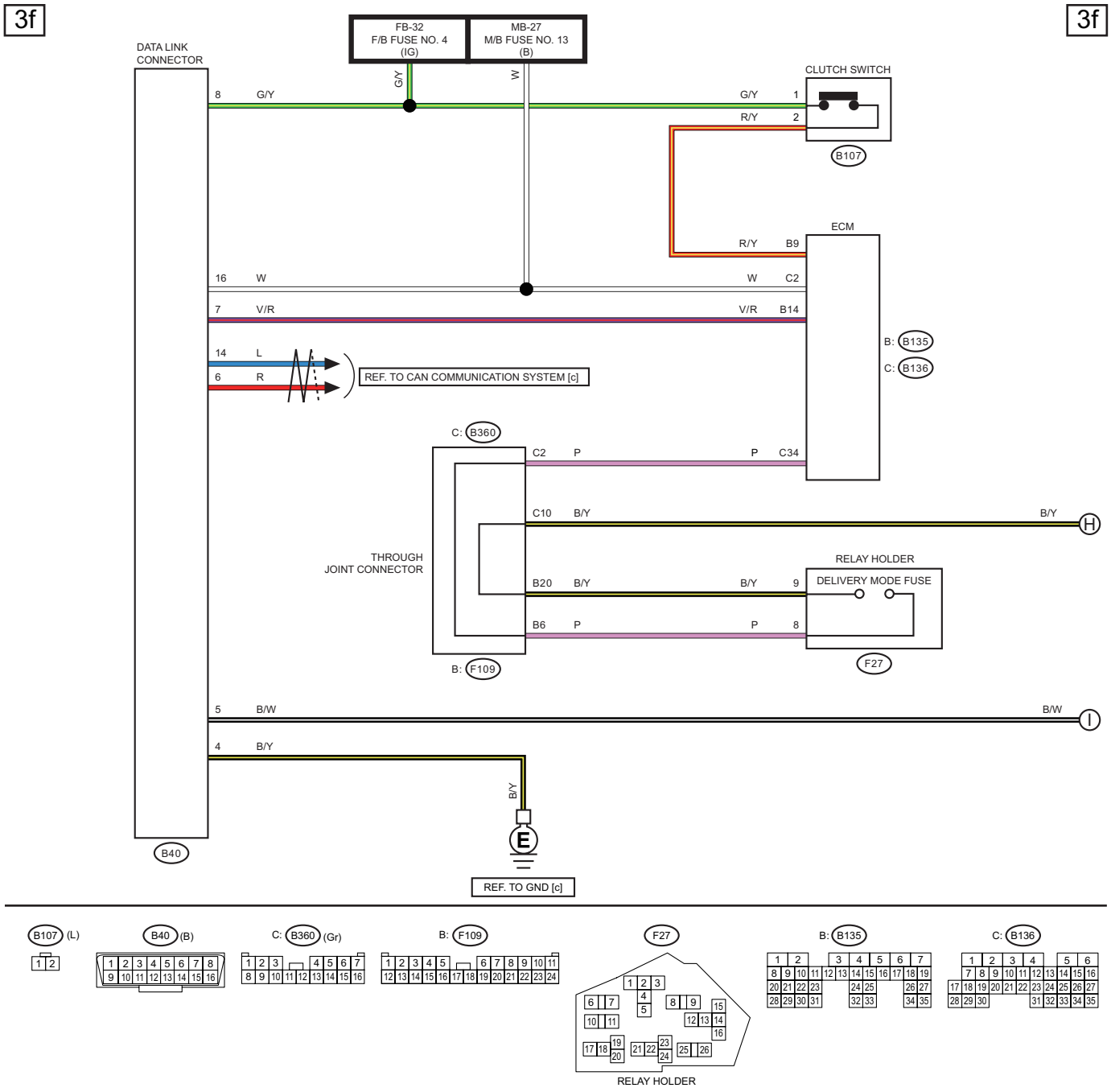
3f
3f
FB-32
F/B FUSE NO. 4
(IG)
MB-27
M/B FUSE NO. 13
(B)
G/Y
W
DATA LINK
CONNECTOR
CLUTCH SWITCH
8 G/Y
G/Y 1
R/Y 2
B107
ECM
R/Y B9
16 W
W C2
7 V/R
V/R B14
B: B135
C: B136
14 L
6 R
REF. TO CAN COMMUNICATION SYSTEM [c]
C: B360
C2 P
P C34
C10 B/Y
B/Y
H
THROUGH
JOINT CONNECTOR
RELAY HOLDER
B20 B/Y
B/Y 9
DELIVERY MODE FUSE
B6 P
P 8
B: F109
F27
5 B/W
B/W
I
4 B/Y
B/Y
E
B40
REF. TO GND [c]

B107 (L)
B40 (B)
C: B360 (Gr)
B: F109
F27
RELAY HOLDER
B: B135
C: B136

WI-66719

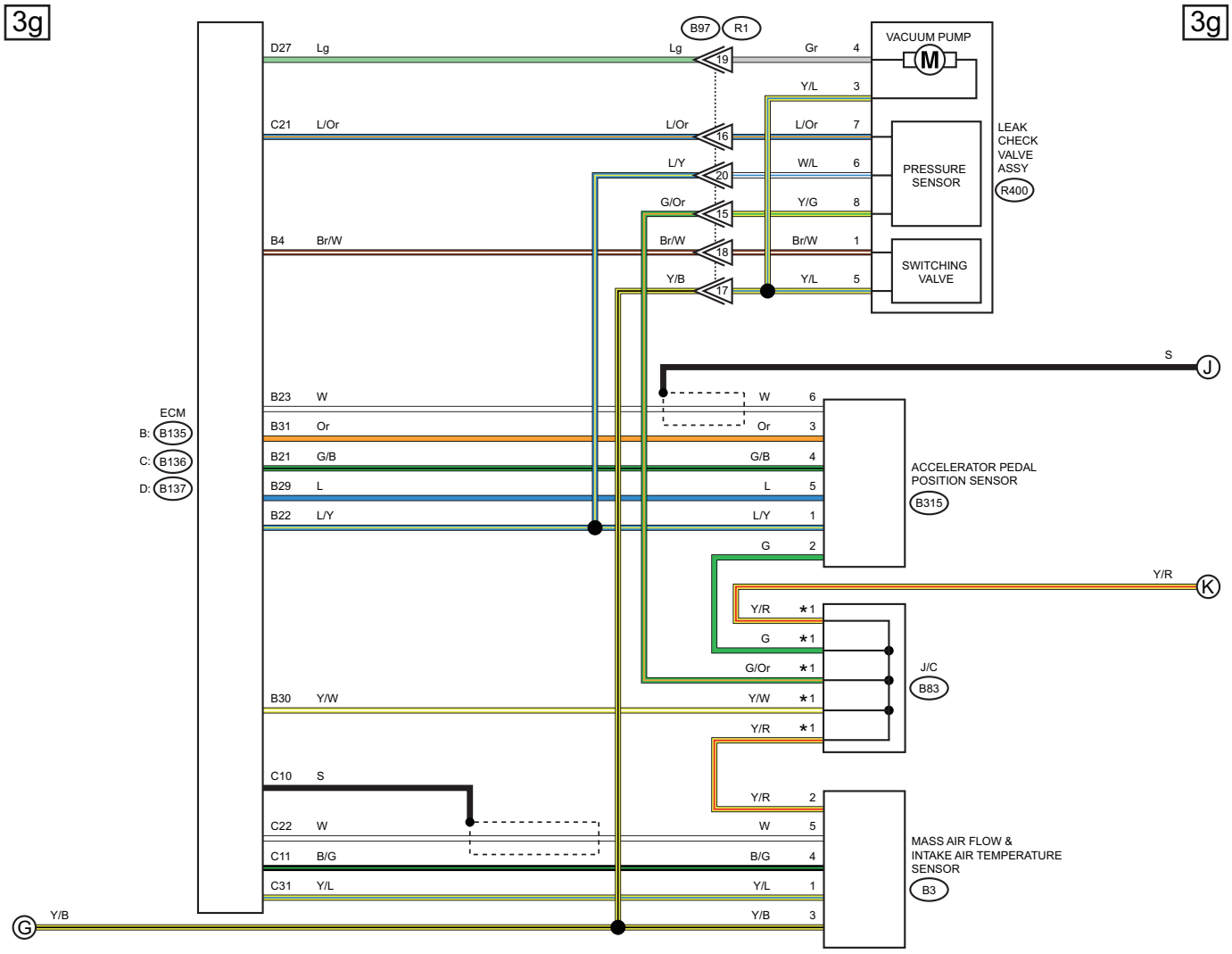

*1 : TERMINAL No. OPTIONAL ARRANGEMENT

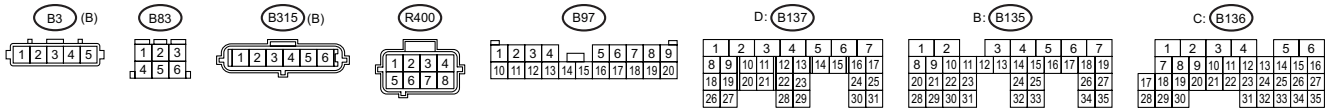

WI-67217

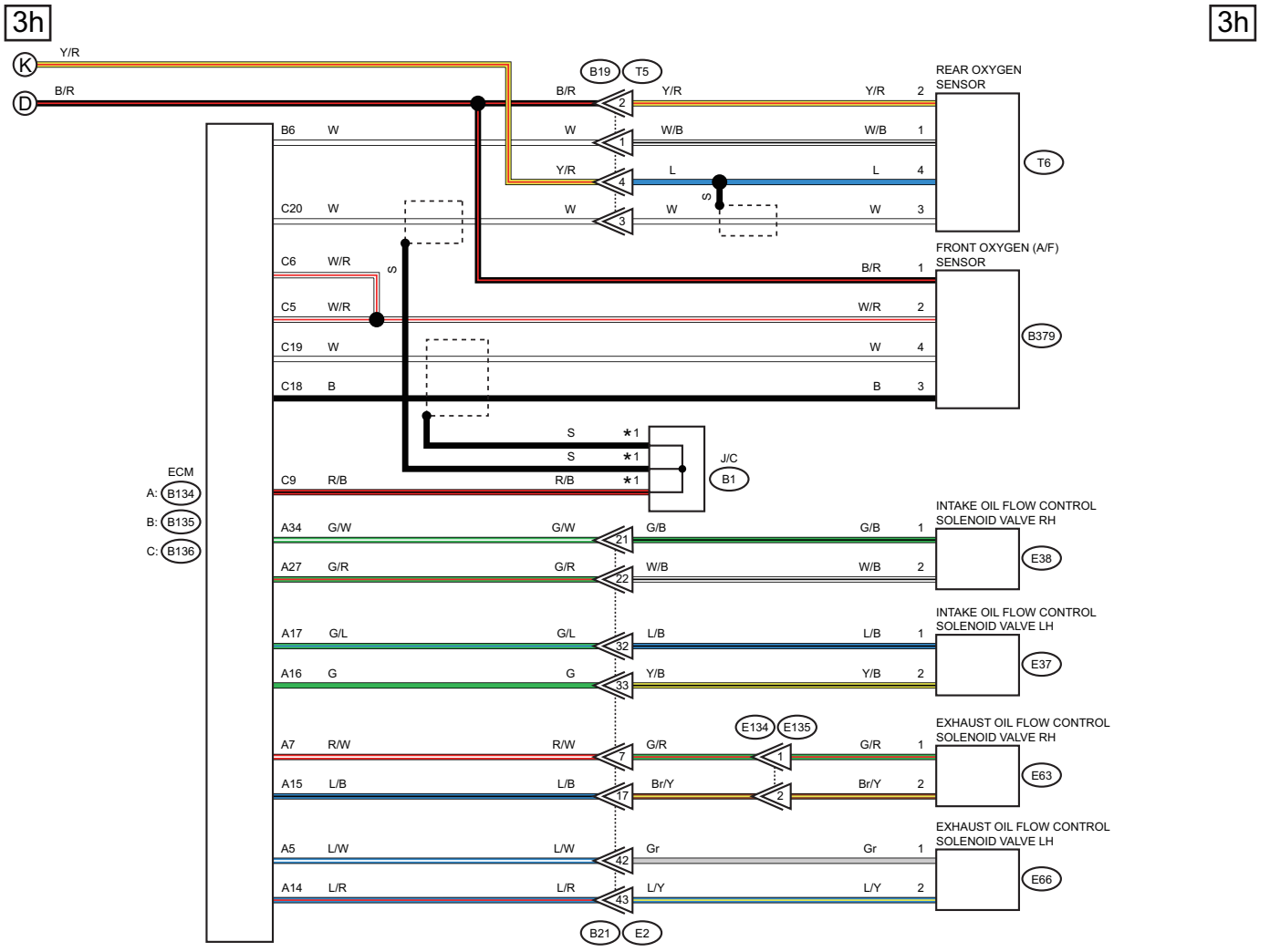

*1 : TERMINAL No. OPTIONAL ARRANGEMENT

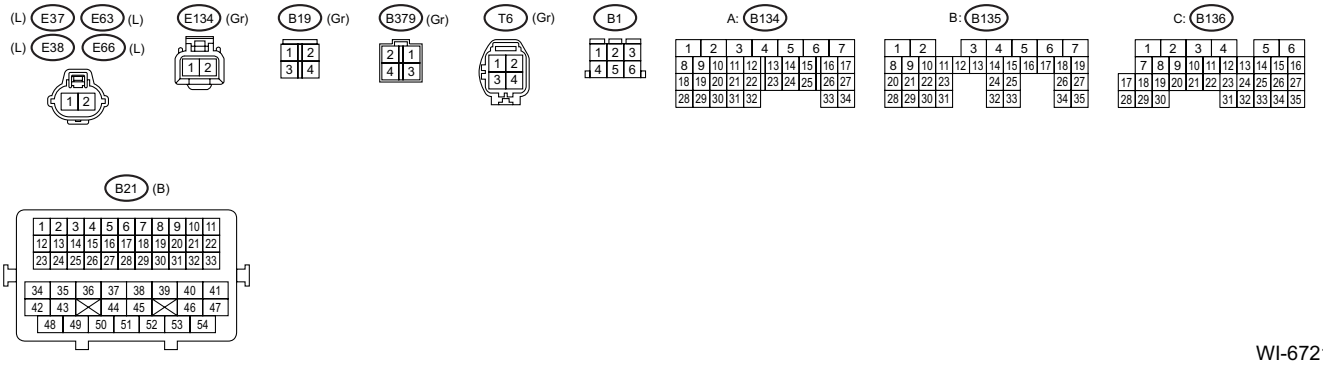

WI-67218

3i 3i

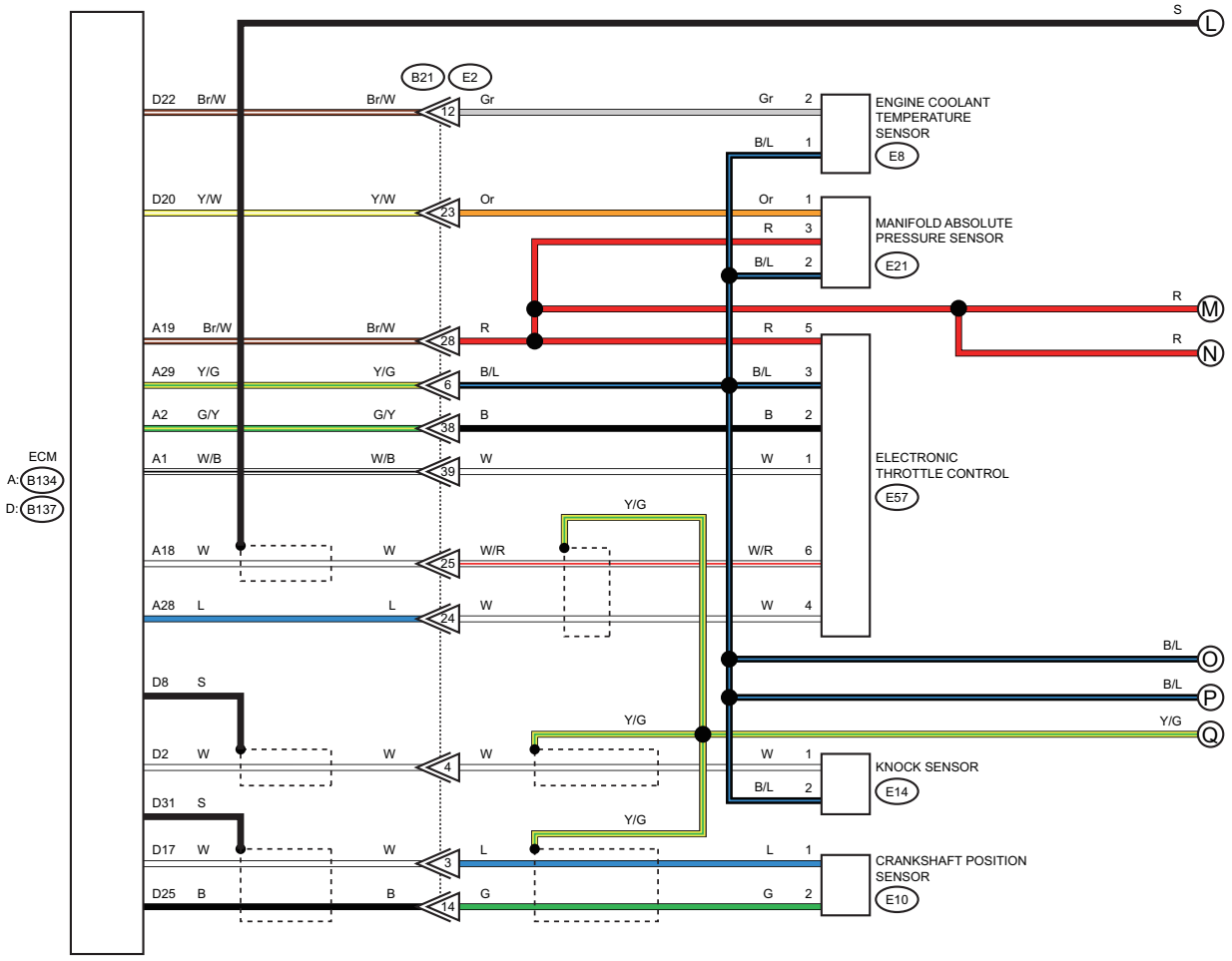

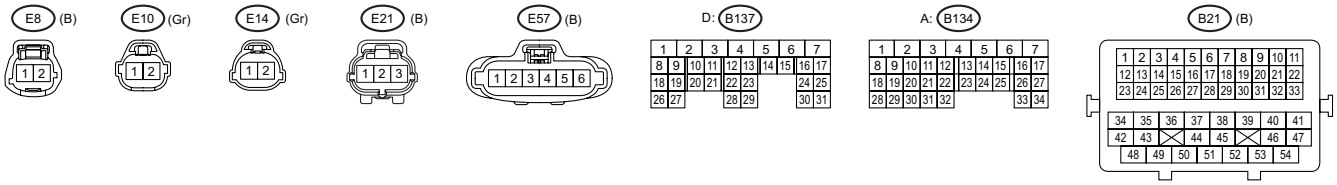

WI-67219

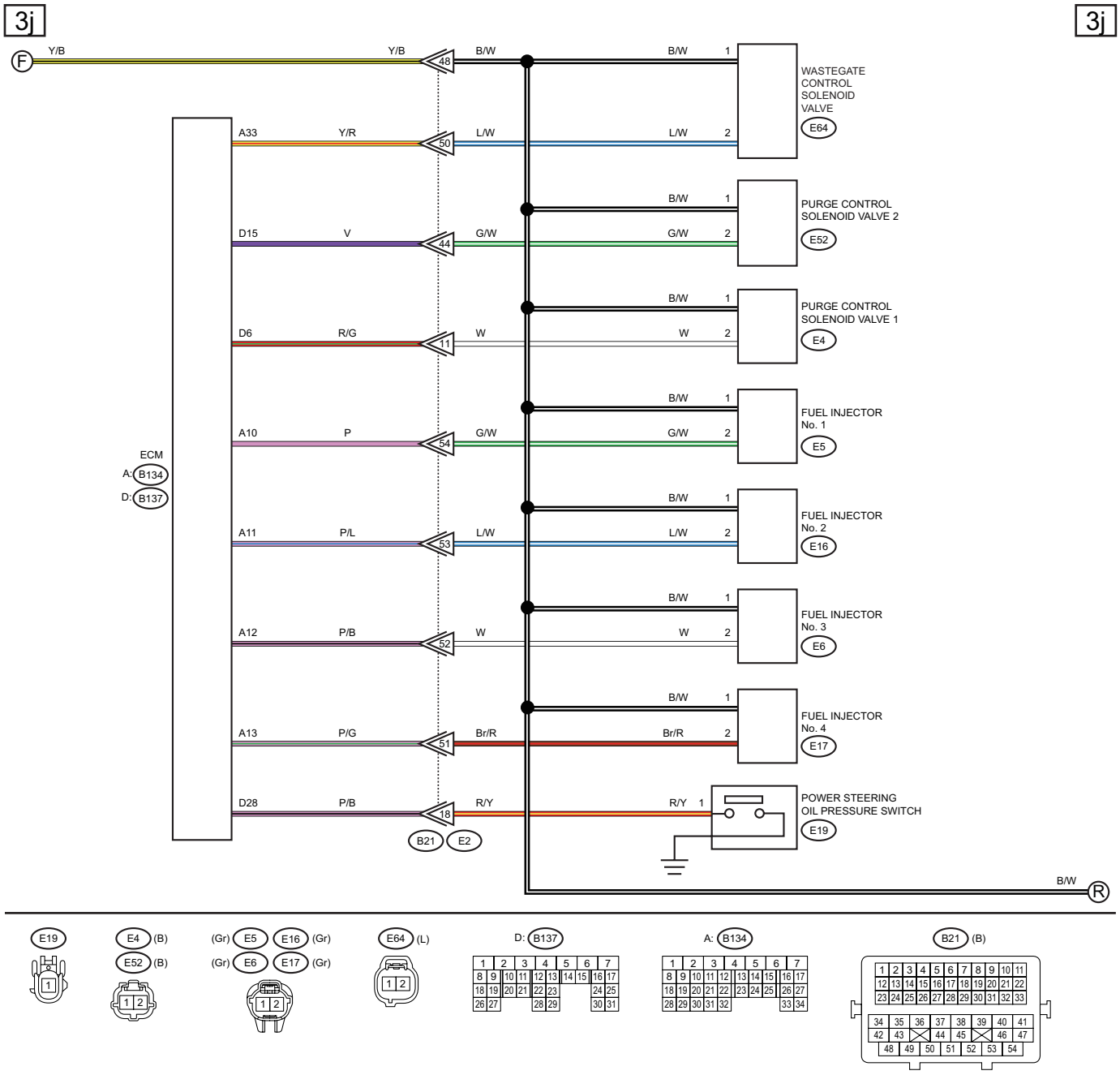
3j
3j
F
Y/B
Y/B
48
B/W
B/W 1
WASTEGATE CONTROL SOLENOID VALVE
E64
A33
Y/R
50
L/W
L/W 2
D15
V
44
G/W
G/W 2
PURGE CONTROL SOLENOID VALVE 2
E52
D6
R/G
11
W
W 2
PURGE CONTROL SOLENOID VALVE 1
E4
A10
P
54
G/W
G/W 2
FUEL INJECTOR No. 1
E5
ECM
A: B134
D: B137
A11
P/L
53
L/W
L/W 2
FUEL INJECTOR No. 2
E16
A12
P/B
52
W
W 2
FUEL INJECTOR No. 3
E6
A13
P/G
51
Br/R
Br/R 2
FUEL INJECTOR No. 4
E17
D28
P/B
18
R/Y
R/Y 1
POWER STEERING OIL PRESSURE SWITCH
E19
B21
E2
R
B/W

E19
E4 (B)
E52 (B)
(Gr) E5 E16 (Gr)
(Gr) E6 E17 (Gr)
E64 (L)
D: B137
A: B134
B21 (B)

WI-67220

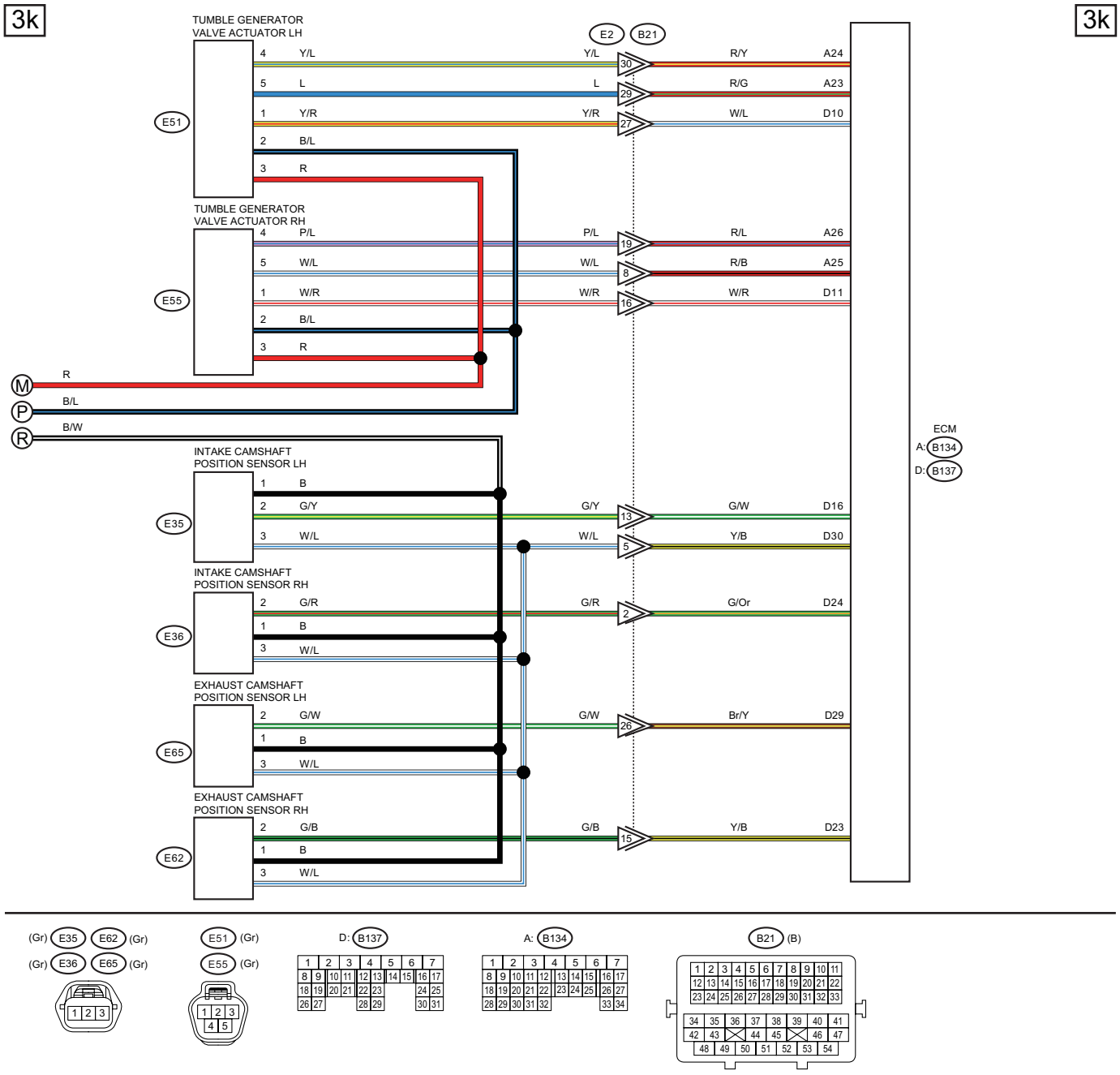
3k
3k
TUMBLE GENERATOR VALVE ACTUATOR LH
E51
4 Y/L
5 L
1 Y/R
2 B/L
3 R
TUMBLE GENERATOR VALVE ACTUATOR RH
E55
4 P/L
5 W/L
1 W/R
2 B/L
3 R
M R
P B/L
R B/W
INTAKE CAMSHAFT POSITION SENSOR LH
E35
1 B
2 G/Y
3 W/L
INTAKE CAMSHAFT POSITION SENSOR RH
E36
2 G/R
1 B
3 W/L
EXHAUST CAMSHAFT POSITION SENSOR LH
E65
2 G/W
1 B
3 W/L
EXHAUST CAMSHAFT POSITION SENSOR RH
E62
2 G/B
1 B
3 W/L
E2 B21
Y/L 30
L 29
Y/R 27
P/L 19
W/L 8
W/R 16
G/Y 13
W/L 5
G/R 2
G/W 26
G/B 15
R/Y A24
R/G A23
W/L D10
R/L A26
R/B A25
W/R D11
G/W D16
Y/B D30
G/Or D24
Br/Y D29
Y/B D23
ECM
A: B134
D: B137

(Gr) E35 E62 (Gr)
(Gr) E36 E65 (Gr)
1 2 3
E51 (Gr)
E55 (Gr)
1 2 3
4 5
D: B137
1 2 3 4 5 6 7
8 9 10 11 12 13 14 15 16 17
18 19 20 21 22 23 24 25
26 27 28 29 30 31
A: B134
1 2 3 4 5 6 7
8 9 10 11 12 13 14 15 16 17
18 19 20 21 22 23 24 25 26 27
28 29 30 31 32 33 34
B21 (B)
1 2 3 4 5 6 7 8 9 10 11
12 13 14 15 16 17 18 19 20 21 22
23 24 25 26 27 28 29 30 31 32 33
34 35 36 37 38 39 40 41
42 43 44 45 46 47
48 49 50 51 52 53 54

WI-67221

3I

3I

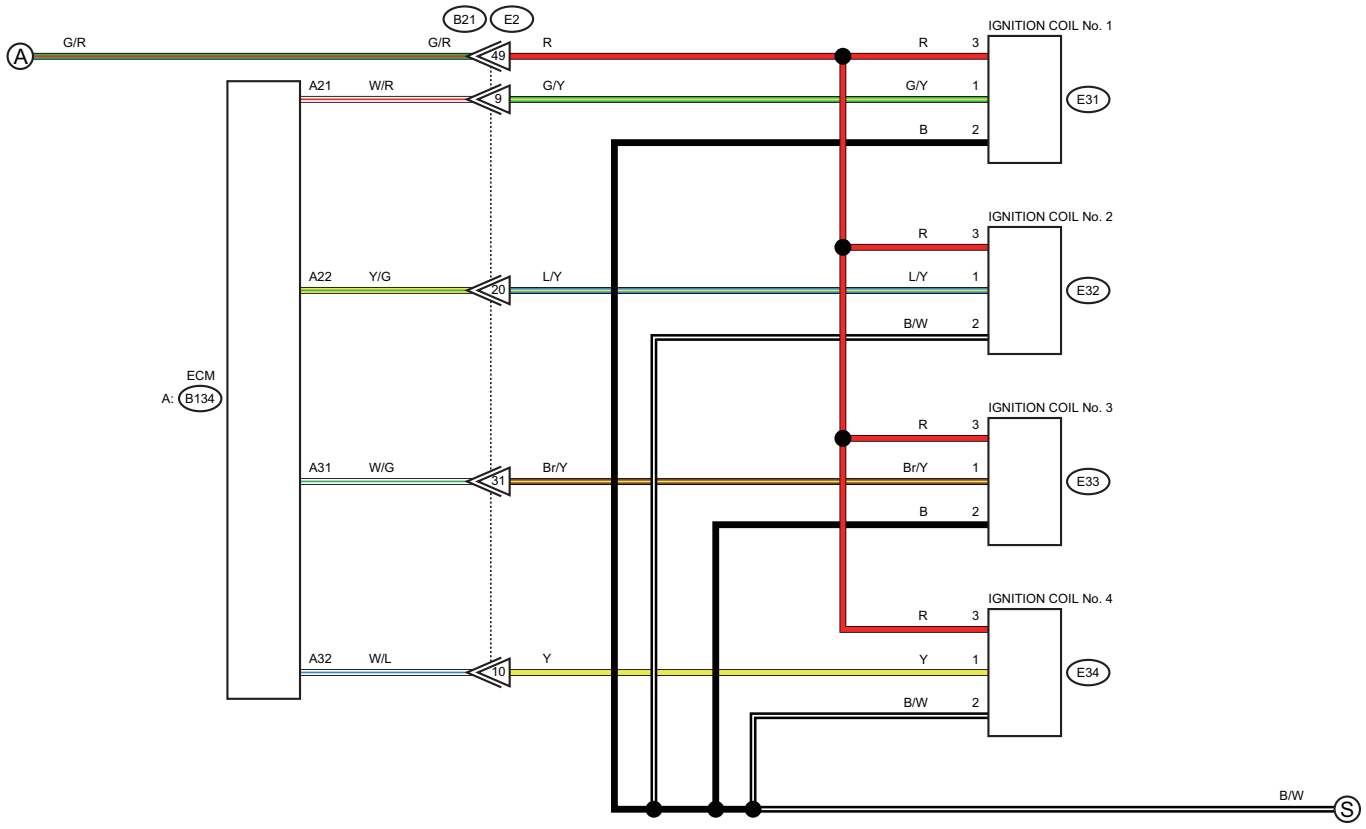

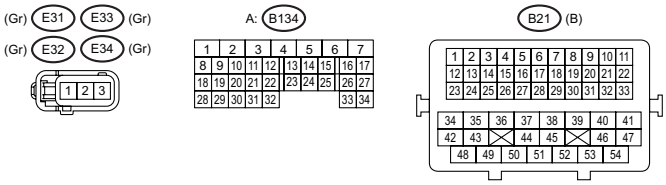

WI-66720

3m

3m

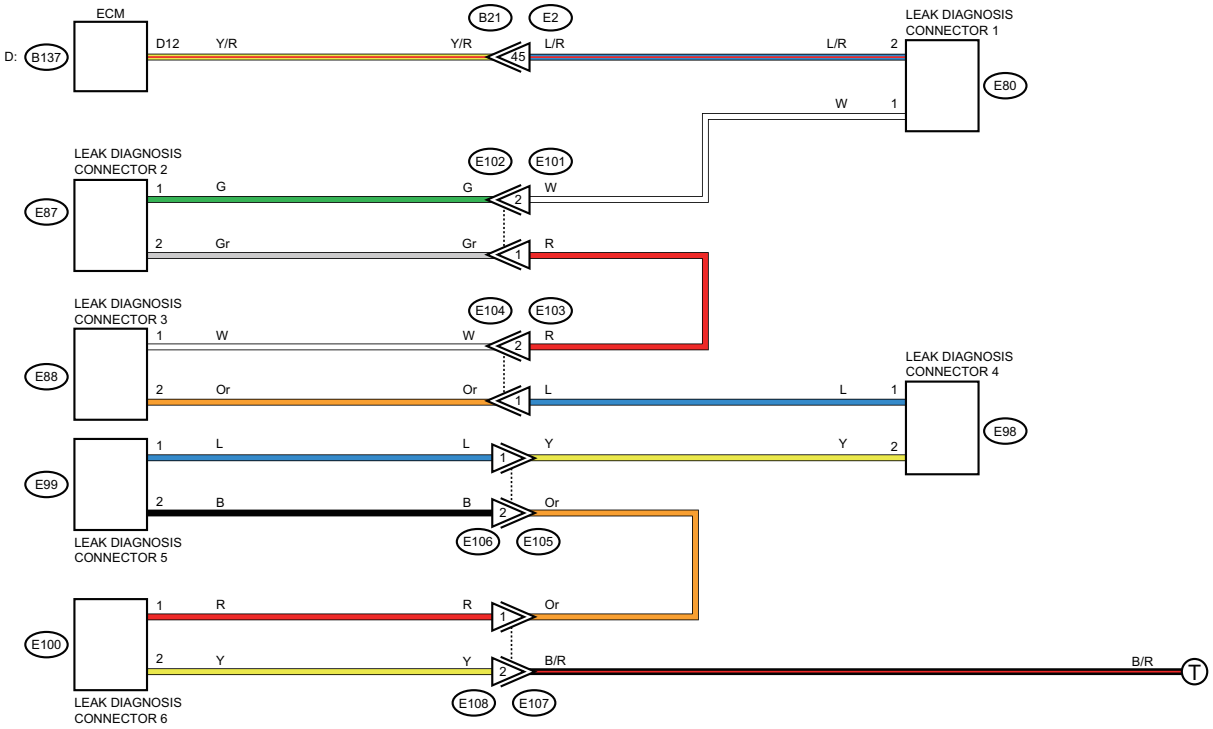

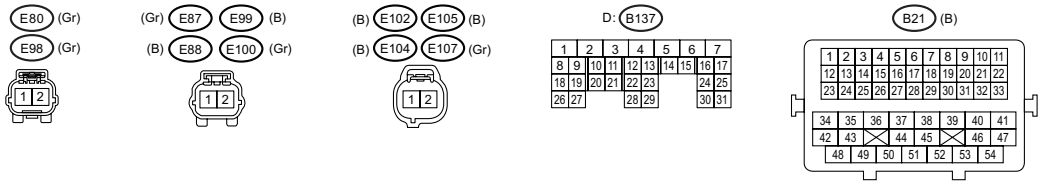

WI-66721

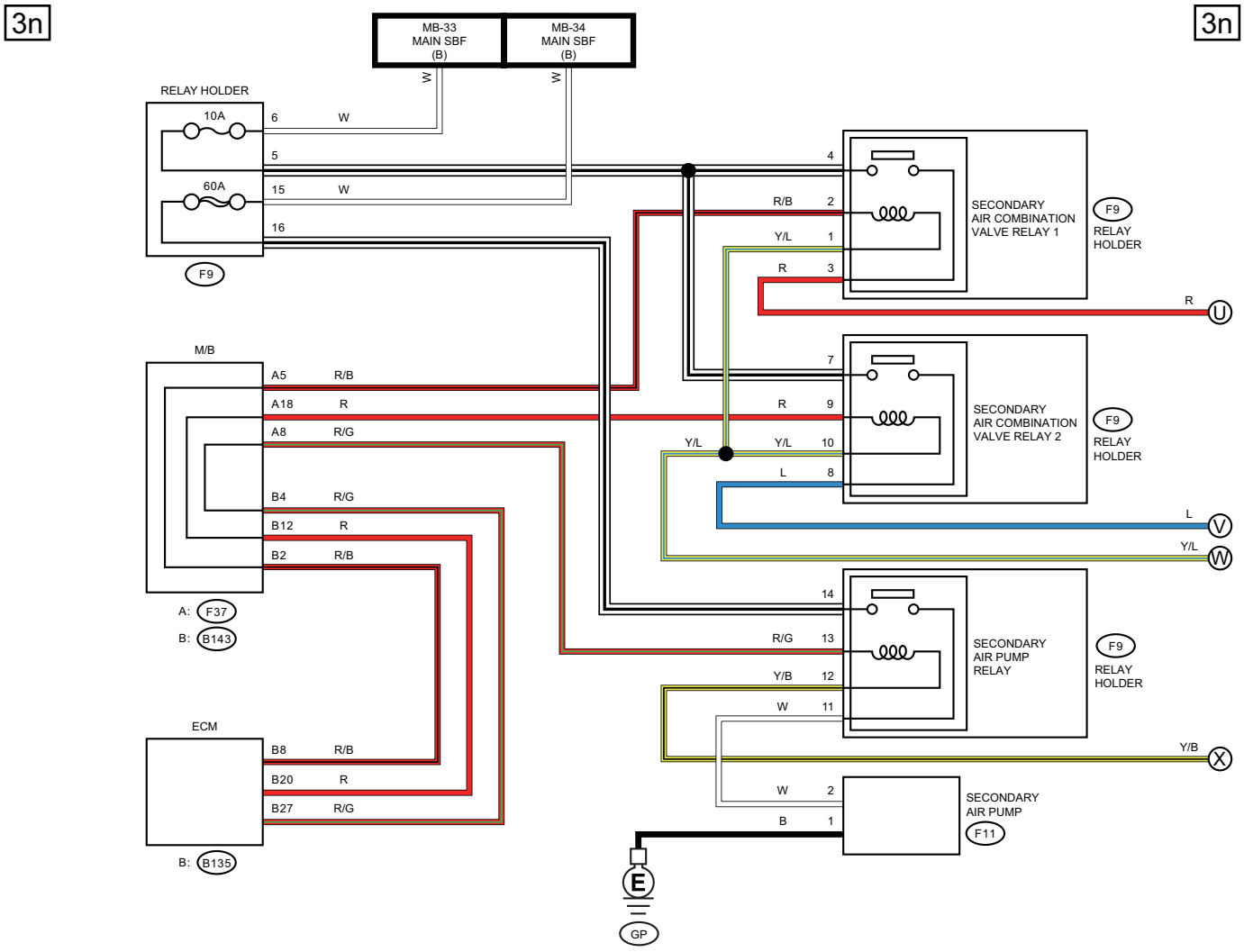

OL : WITHOUT TELEMATICS
WT : WITH TELEMATICS

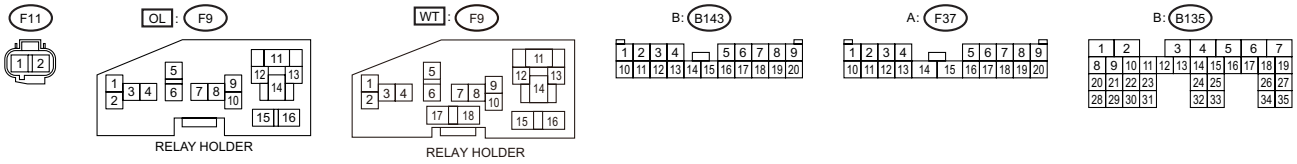

WI-66722

WIRING SYSTEM

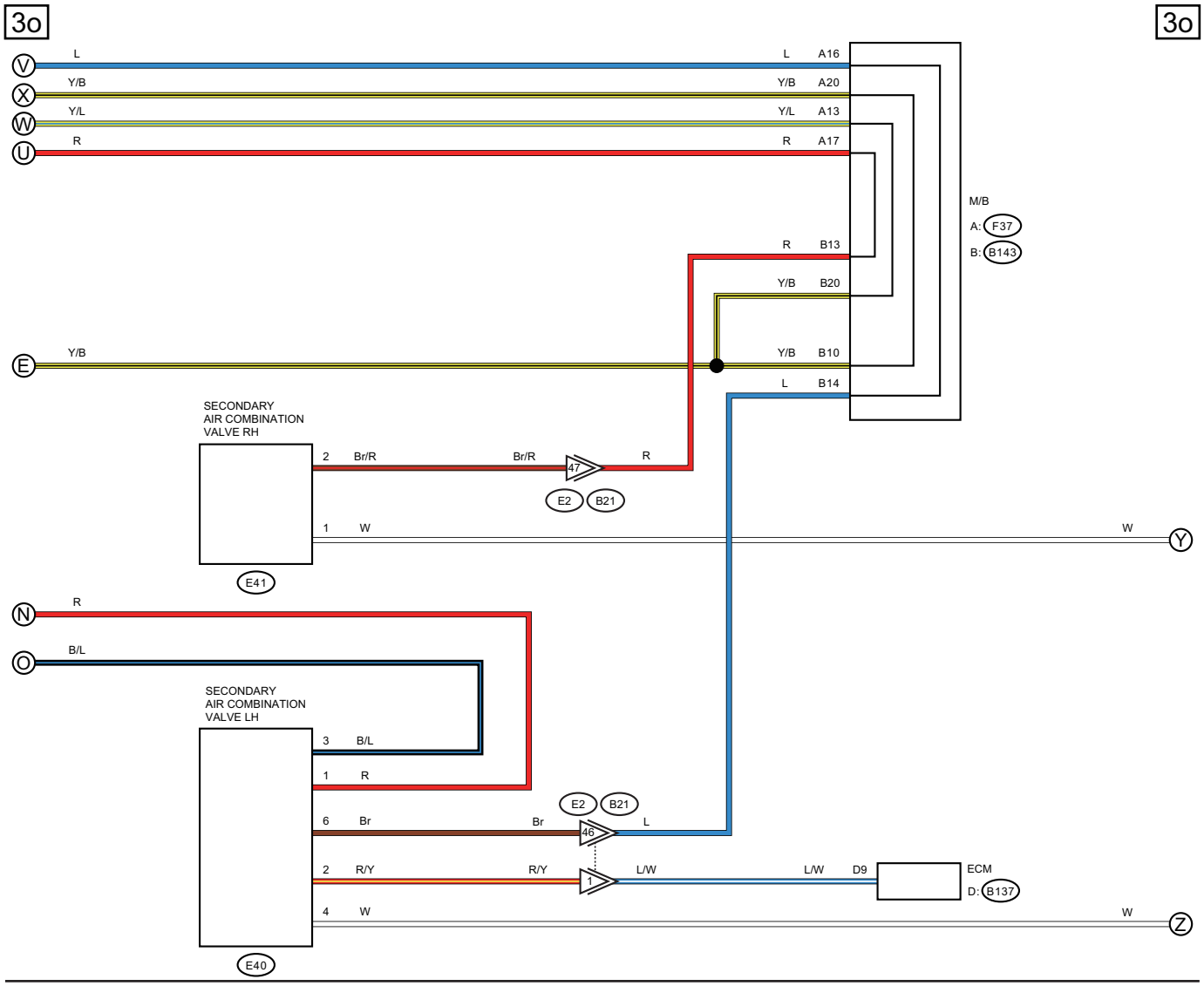

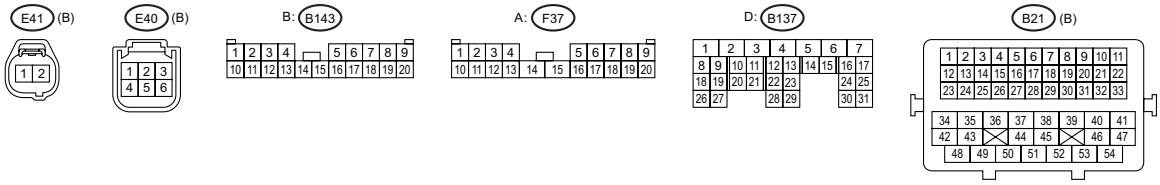

WI-66723

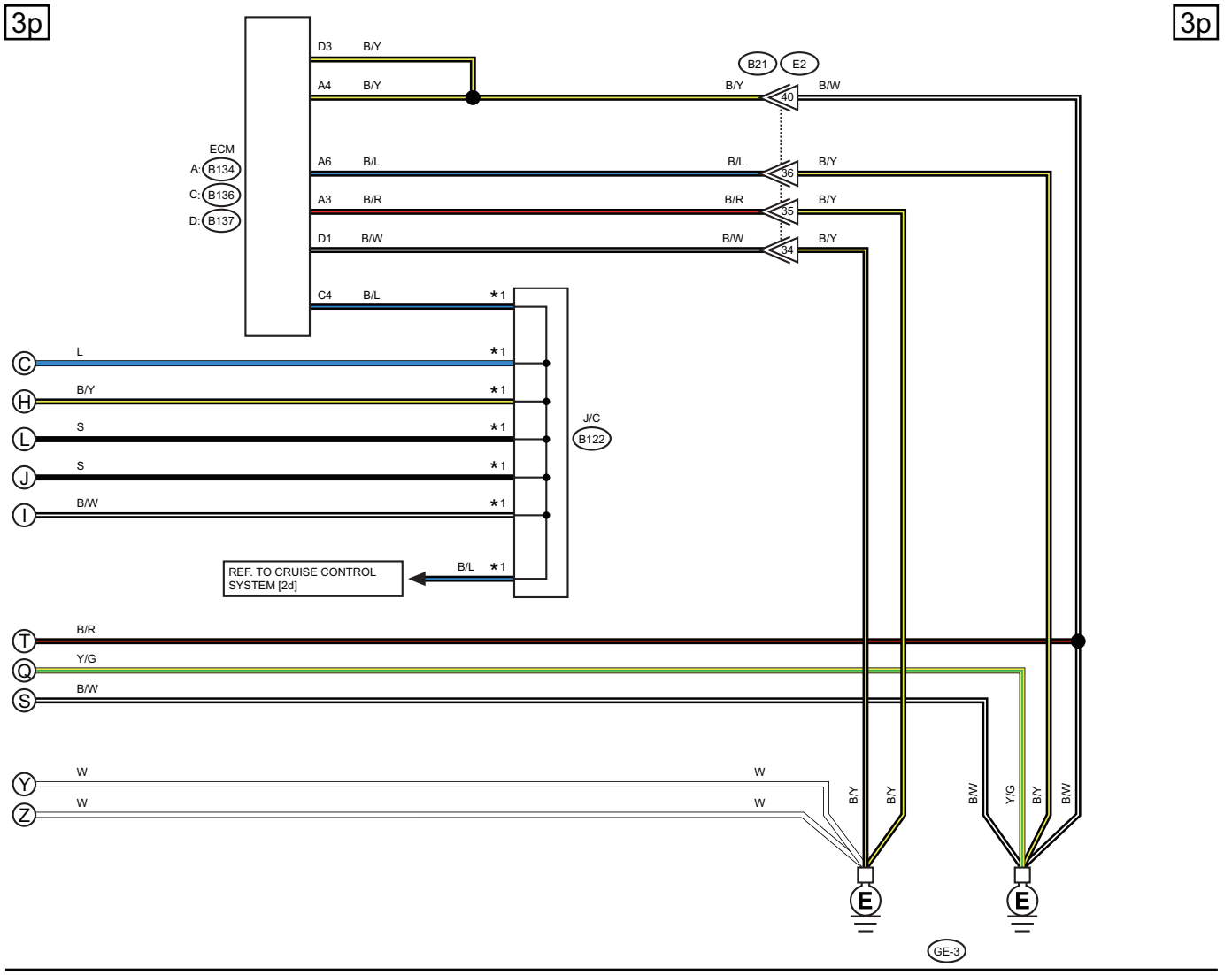

*1 : TERMINAL No. OPTIONAL ARRANGEMENT

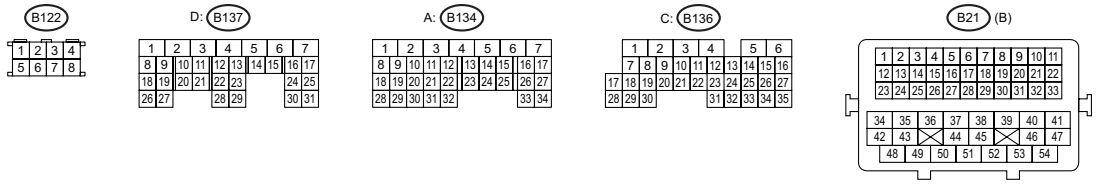

WI-66724

4. ENGINE TYPE EJ (WITH PUSH BUTTON START)

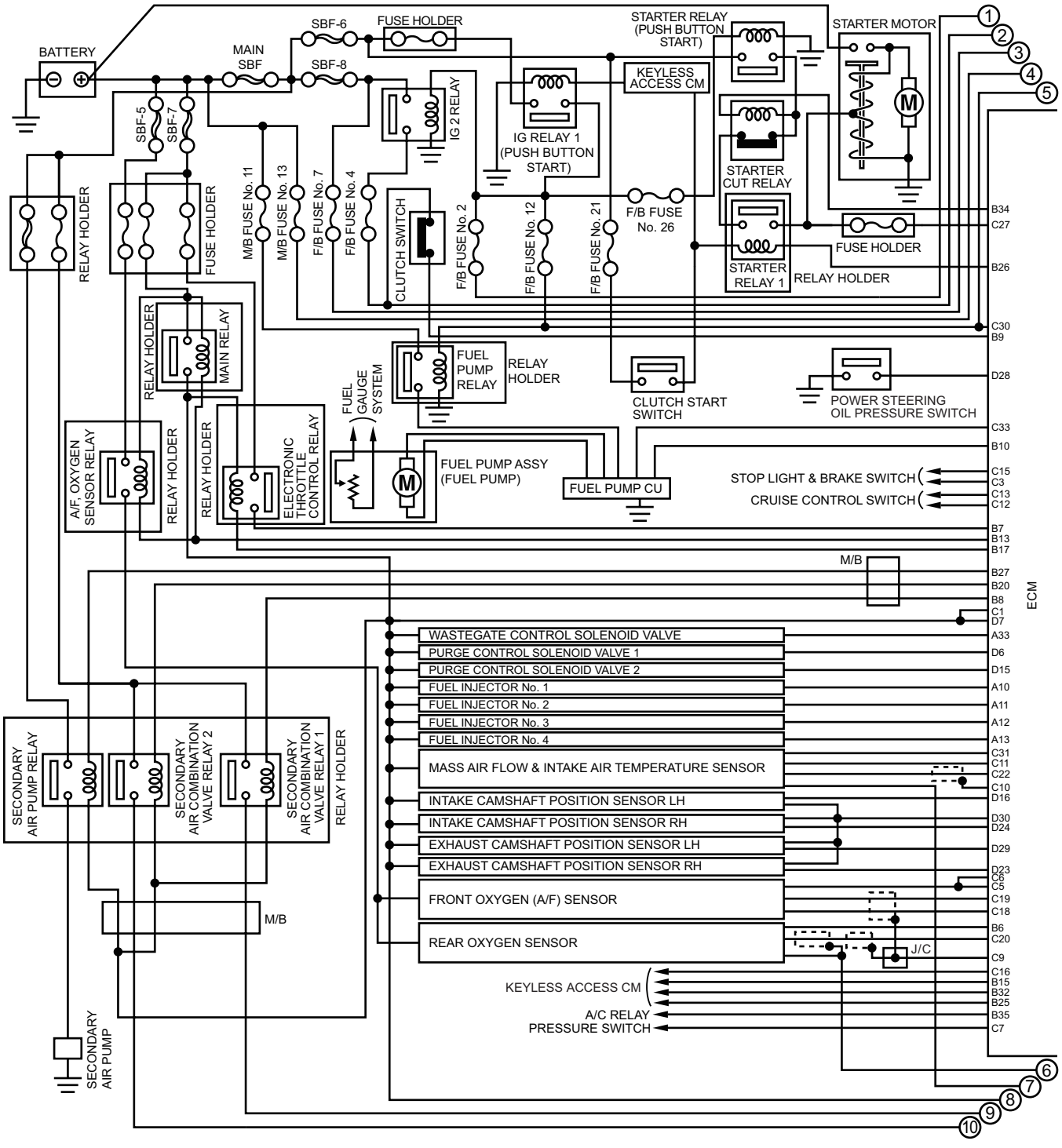

WI-67641

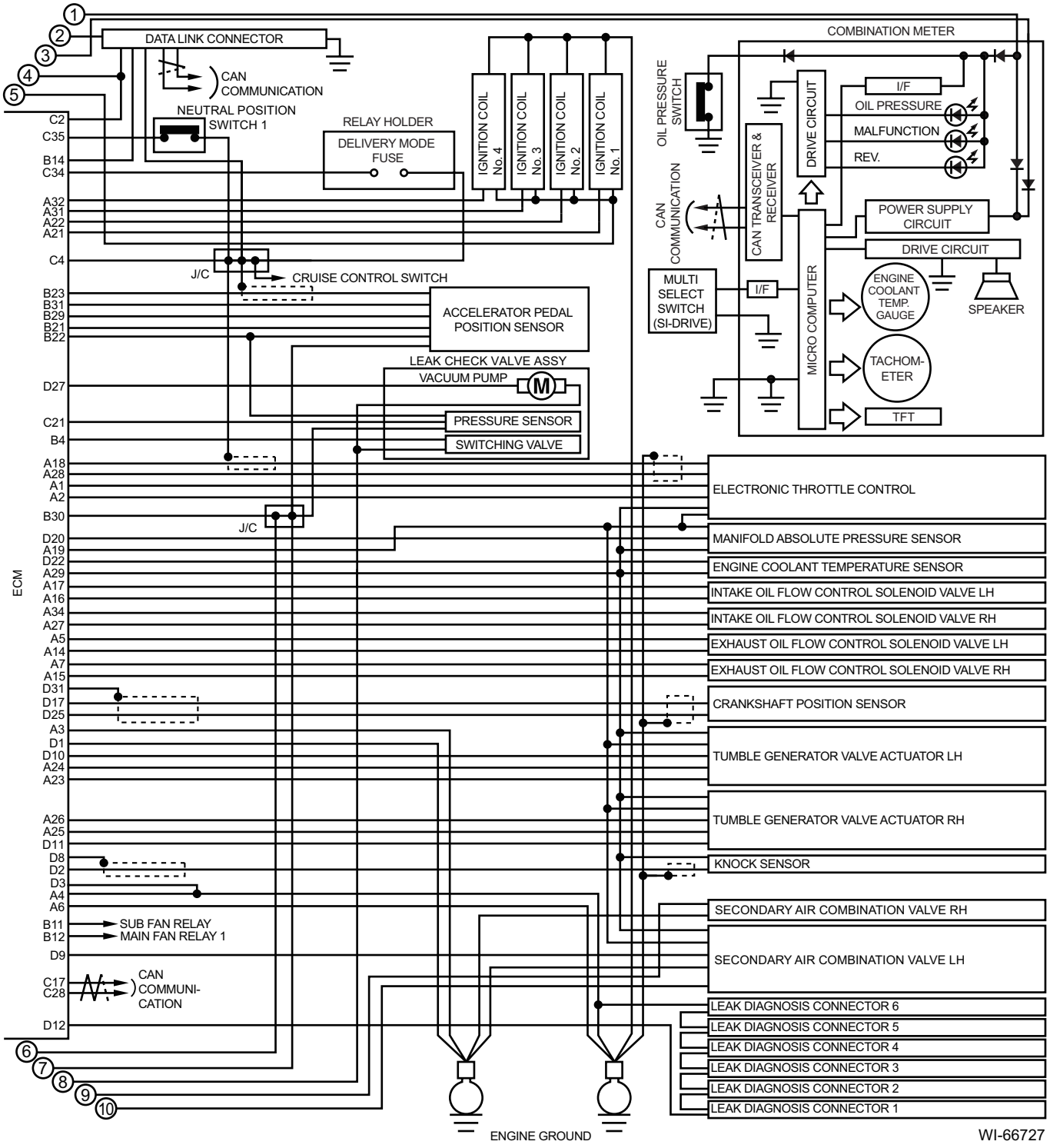
DATA LINK CONNECTOR
CAN COMMUNICATION
NEUTRAL POSITION SWITCH 1
RELAY HOLDER
DELIVERY MODE FUSE
IGNITION COIL No. 4
IGNITION COIL No. 3
IGNITION COIL No. 2
IGNITION COIL No. 1
COMBINATION METER
OIL PRESSURE SWITCH
CAN COMMUNICATION
CAN TRANSCEIVER & RECEIVER
DRIVE CIRCUIT
I/F
OIL PRESSURE
MALFUNCTION
REV.
POWER SUPPLY CIRCUIT
DRIVE CIRCUIT
MULTI SELECT SWITCH (SI-DRIVE)
MICRO COMPUTER
ENGINE COOLANT TEMP. GAUGE
SPEAKER
TACHOM-ETER
TFT
J/C
CRUISE CONTROL SWITCH
ACCELERATOR PEDAL POSITION SENSOR
LEAK CHECK VALVE ASSY
VACUUM PUMP
PRESSURE SENSOR
SWITCHING VALVE
ECM
ELECTRONIC THROTTLE CONTROL
MANIFOLD ABSOLUTE PRESSURE SENSOR
ENGINE COOLANT TEMPERATURE SENSOR
INTAKE OIL FLOW CONTROL SOLENOID VALVE LH
INTAKE OIL FLOW CONTROL SOLENOID VALVE RH
EXHAUST OIL FLOW CONTROL SOLENOID VALVE LH
EXHAUST OIL FLOW CONTROL SOLENOID VALVE RH
CRANKSHAFT POSITION SENSOR
TUMBLE GENERATOR VALVE ACTUATOR LH
TUMBLE GENERATOR VALVE ACTUATOR RH
KNOCK SENSOR
SECONDARY AIR COMBINATION VALVE RH
SECONDARY AIR COMBINATION VALVE LH
SUB FAN RELAY
MAIN FAN RELAY 1
CAN COMMUNI-CATION
LEAK DIAGNOSIS CONNECTOR 6
LEAK DIAGNOSIS CONNECTOR 5
LEAK DIAGNOSIS CONNECTOR 4
LEAK DIAGNOSIS CONNECTOR 3
LEAK DIAGNOSIS CONNECTOR 2
LEAK DIAGNOSIS CONNECTOR 1
ENGINE GROUND
WI-66727

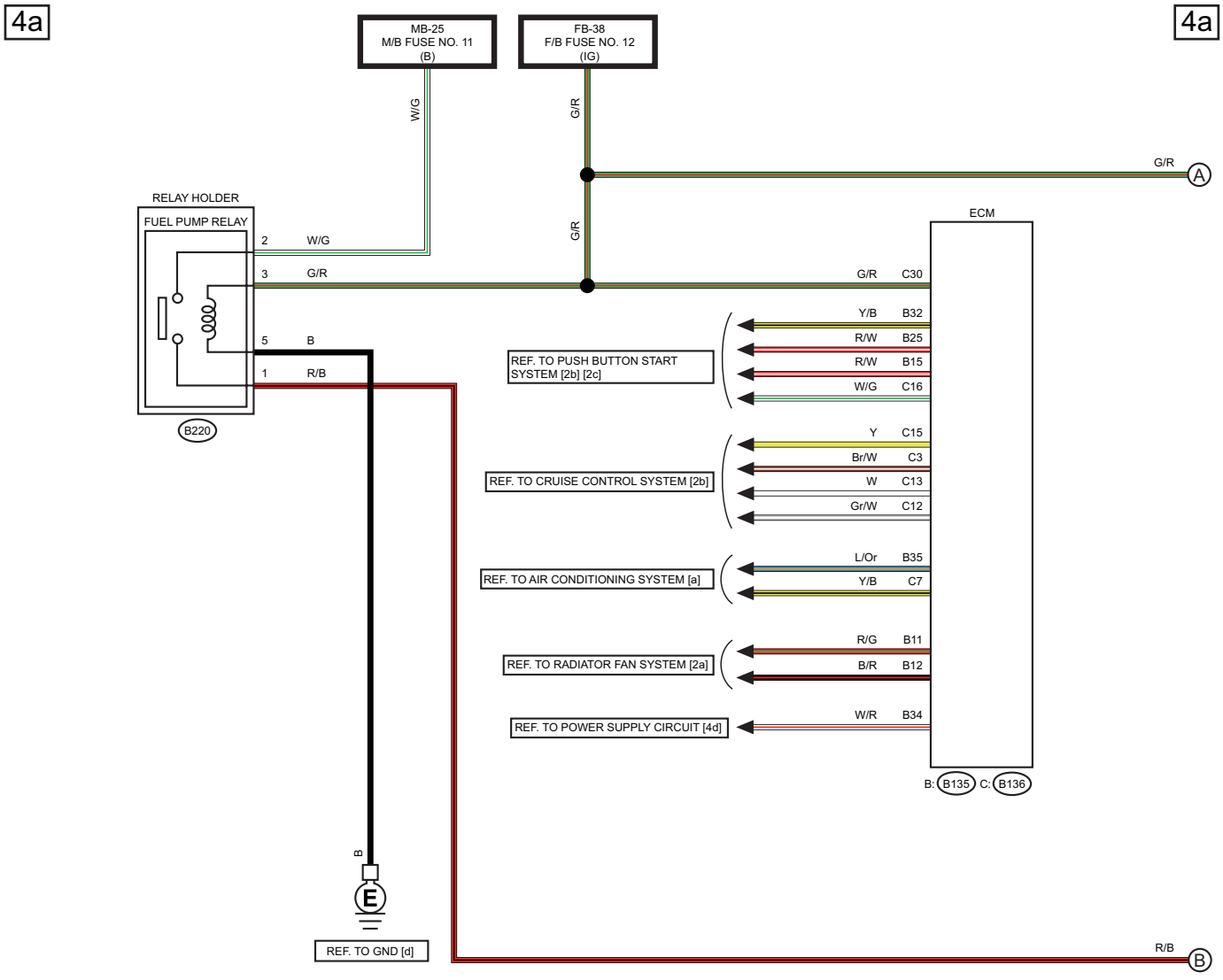
4a
4a
MB-25
M/B FUSE NO. 11
(B)
FB-38
F/B FUSE NO. 12
(IG)
W/G
G/R
G/R
A
RELAY HOLDER
FUEL PUMP RELAY
2 W/G
3 G/R
5 B
1 R/B
B220
ECM
G/R C30
Y/B B32
R/W B25
R/W B15
W/G C16
REF. TO PUSH BUTTON START SYSTEM [2b] [2c]
Y C15
Br/W C3
W C13
Gr/W C12
REF. TO CRUISE CONTROL SYSTEM [2b]
L/Or B35
Y/B C7
REF. TO AIR CONDITIONING SYSTEM [a]
R/G B11
B/R B12
REF. TO RADIATOR FAN SYSTEM [2a]
W/R B34
REF. TO POWER SUPPLY CIRCUIT [4d]
B: B135 C: B136
B
E
REF. TO GND [d]
R/B
B

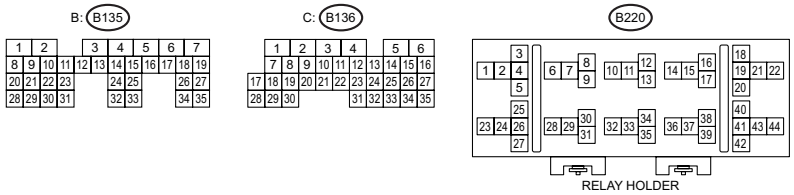
B: B135
C: B136
B220
RELAY HOLDER

WI-67222

4b

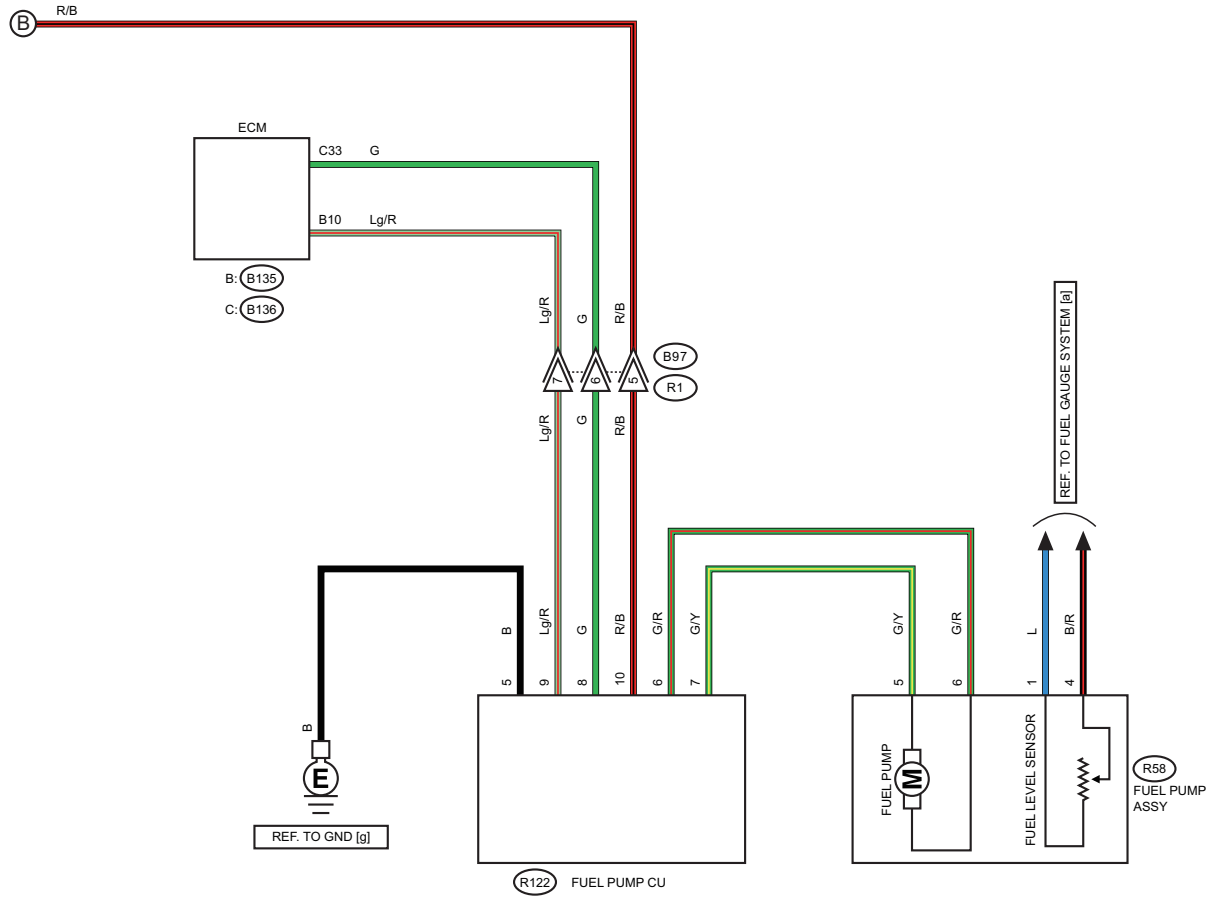
R/B
ECM
C33 G
B10 Lg/R
B: B135
C: B136
Lg/R
G
R/B
B97
R1
REF. TO FUEL GAUGE SYSTEM [a]
B
REF. TO GND [g]
R122 FUEL PUMP CU
FUEL PUMP
FUEL LEVEL SENSOR
R58
FUEL PUMP ASSY
G/R
G/Y
L
B/R

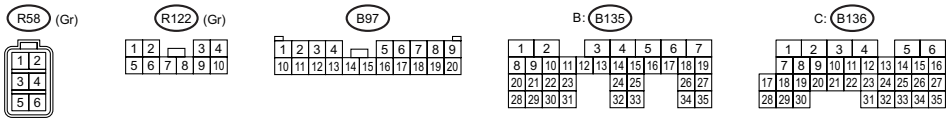
R58 (Gr)
R122 (Gr)
B97
B: B135
C: B136

WI-67223

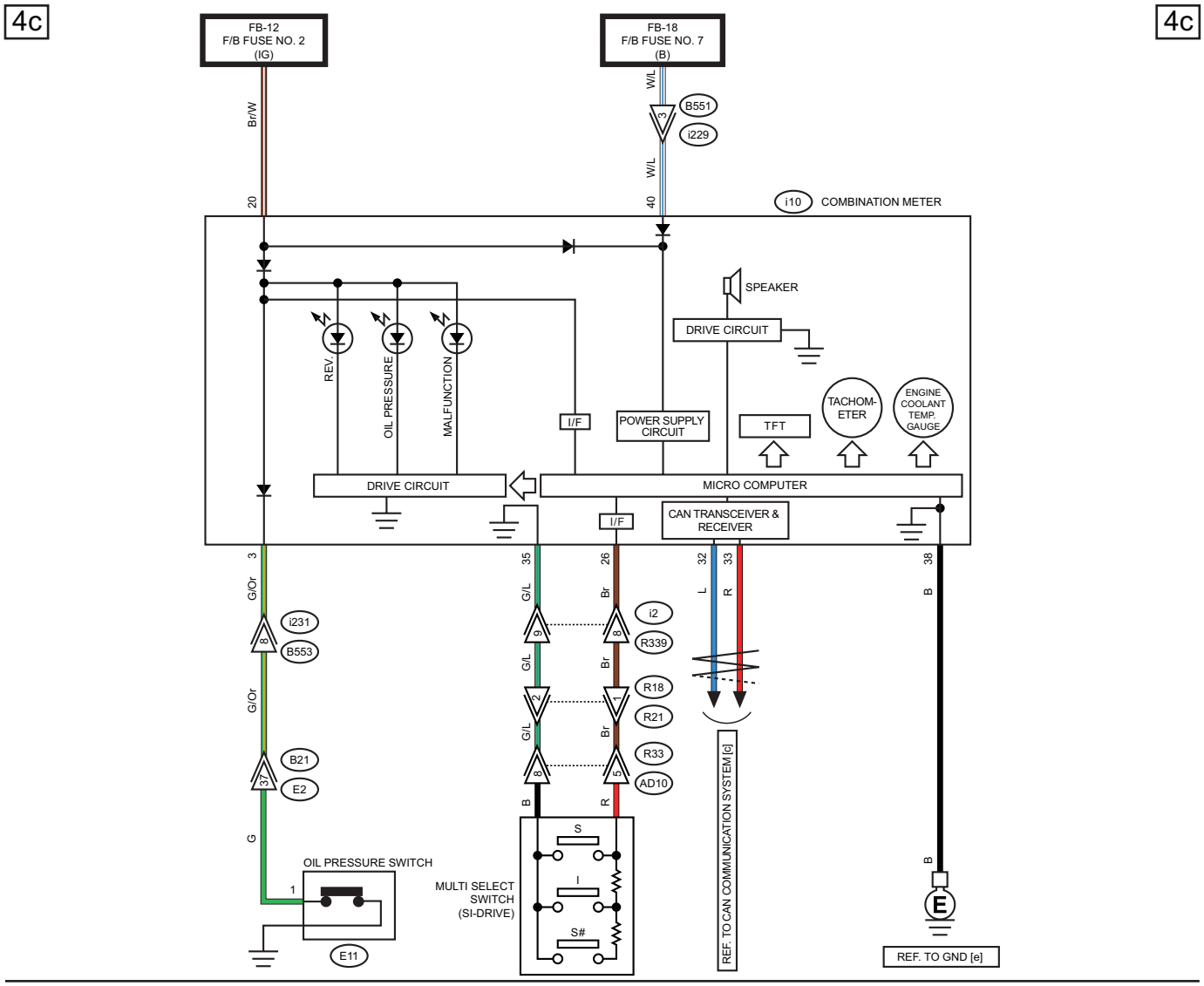
4c
4c
FB-12
F/B FUSE NO. 2
(IG)
FB-18
F/B FUSE NO. 7
(B)
Br/W
W/L
W/L
B551
i229
20
40
i10 COMBINATION METER
SPEAKER
DRIVE CIRCUIT
REV.
OIL PRESSURE
MALFUNCTION
I/F
POWER SUPPLY CIRCUIT
TFT
TACHOM-ETER
ENGINE COOLANT TEMP. GAUGE
DRIVE CIRCUIT
MICRO COMPUTER
I/F
CAN TRANSCEIVER & RECEIVER
3
G/Or
35
G/L
26
Br
32
L
33
R
38
B
i231
B553
i2
R339
R18
R21
R33
AD10
B21
E2
G
B
R
OIL PRESSURE SWITCH
MULTI SELECT SWITCH (SI-DRIVE)
S
I
S#
E11
REF. TO CAN COMMUNICATION SYSTEM [c]
REF. TO GND [e]
R33
i229
R21
(B)
i2
i231
i10
B21
(B)

WI-66728

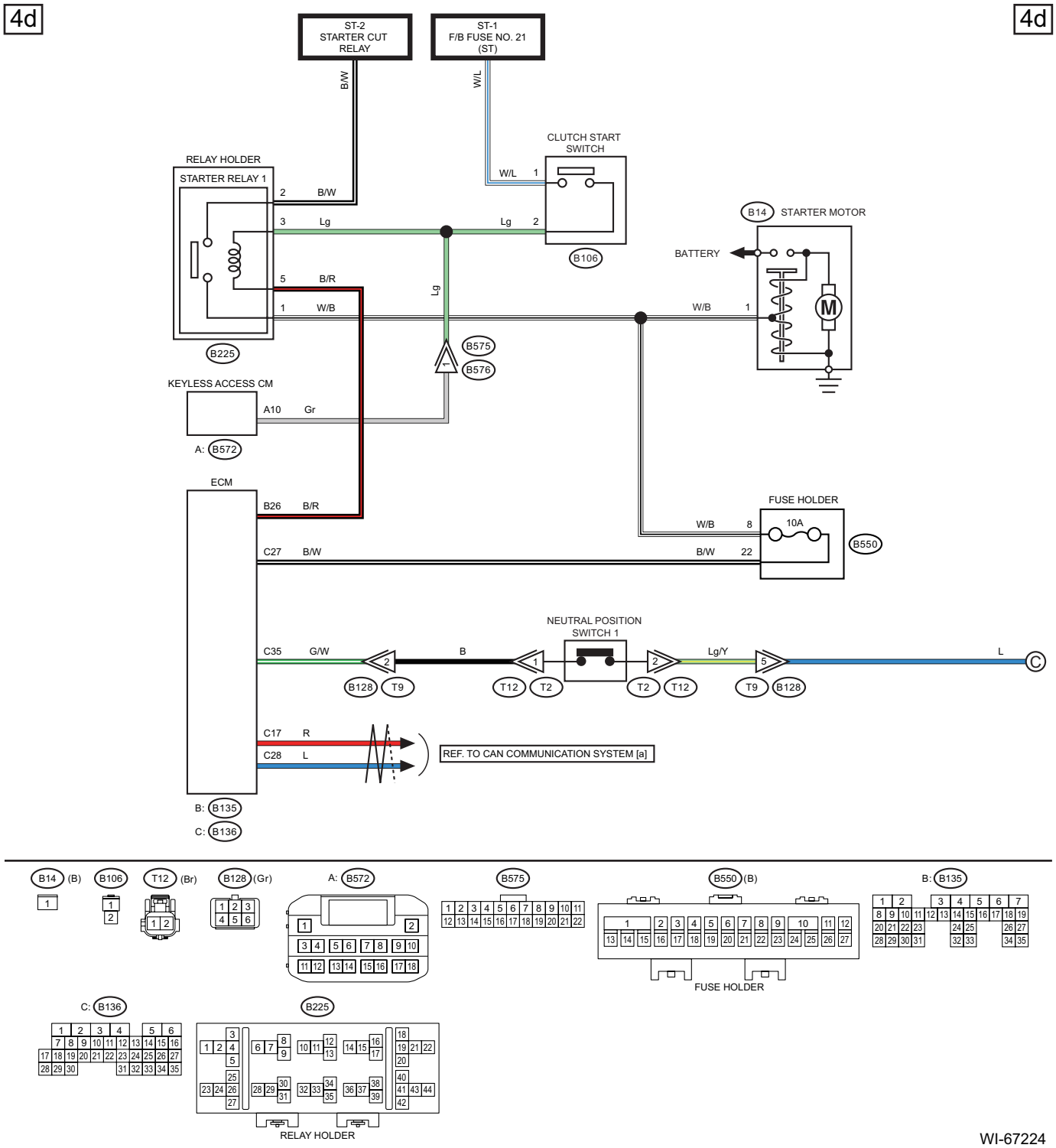
4d
4d
ST-2
STARTER CUT
RELAY
ST-1
F/B FUSE NO. 21
(ST)
B/W
W/L
CLUTCH START
SWITCH
RELAY HOLDER
STARTER RELAY 1
2 B/W
W/L 1
3 Lg
Lg 2
B106
B14 STARTER MOTOR
BATTERY
5 B/R
1 W/B
Lg
W/B 1
M
B225
B575
B576
KEYLESS ACCESS CM
A10 Gr
A: B572
ECM
B26 B/R
FUSE HOLDER
W/B 8
10A
B550
C27 B/W
B/W 22
NEUTRAL POSITION
SWITCH 1
C35 G/W
B
Lg/Y
L
C
B128 T9
T12 T2
T2 T12
T9 B128
C17 R
C28 L
REF. TO CAN COMMUNICATION SYSTEM [a]
B: B135
C: B136

B14 (B)
B106
T12 (Br)
B128 (Gr)
A: B572
B575
B550 (B)
B: B135
FUSE HOLDER
C: B136
B225
RELAY HOLDER

WI-67224

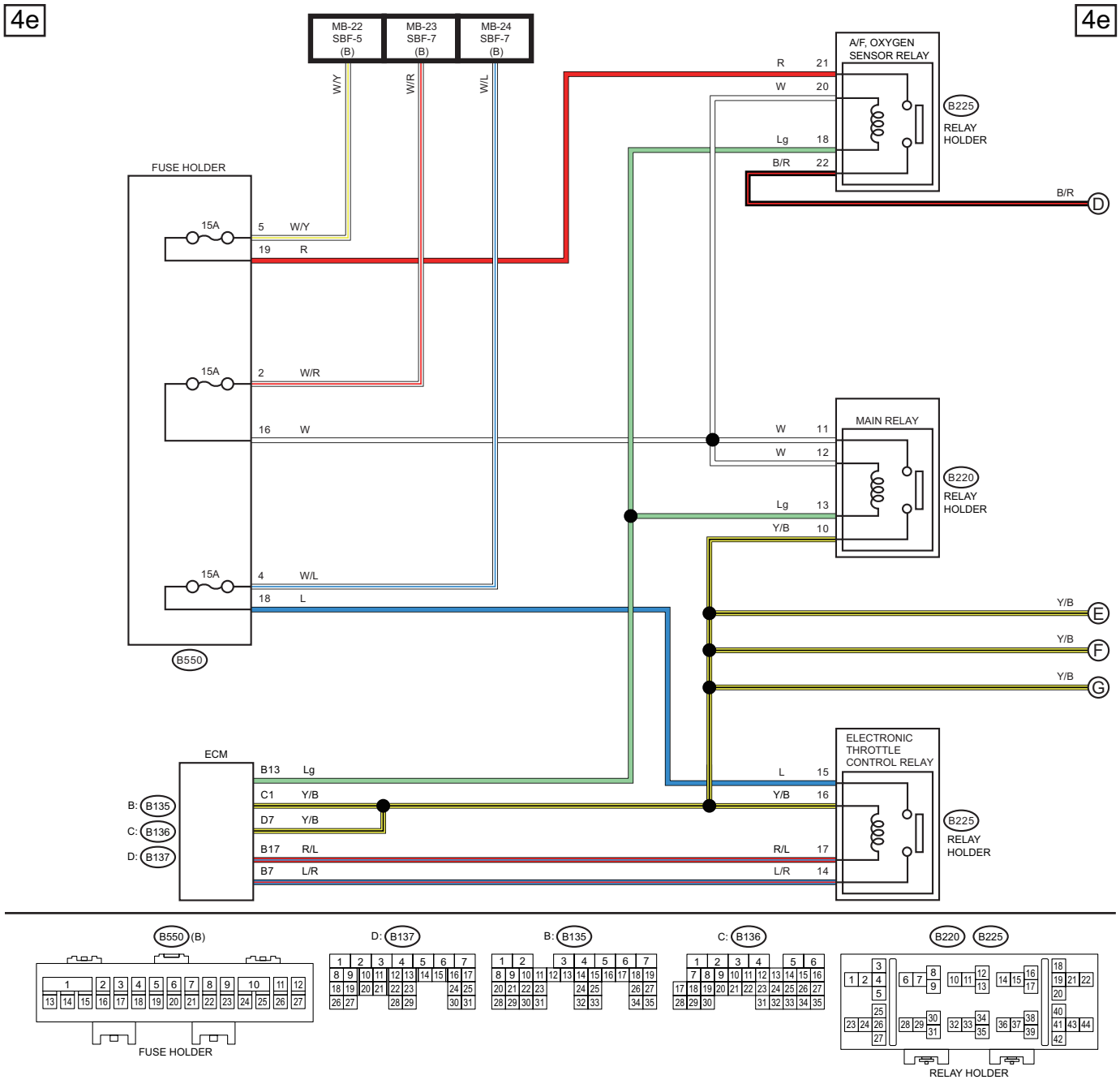
4e
4e
MB-22 SBF-5 (B)
MB-23 SBF-7 (B)
MB-24 SBF-7 (B)
W/Y
W/R
W/L
A/F, OXYGEN SENSOR RELAY
B225
RELAY HOLDER
R 21
W 20
Lg 18
B/R 22
B/R
D
FUSE HOLDER
15A
5 W/Y
19 R
15A
2 W/R
16 W
MAIN RELAY
B220
RELAY HOLDER
W 11
W 12
Lg 13
Y/B 10
15A
4 W/L
18 L
B550
Y/B
E
Y/B
F
Y/B
G
ECM
B: B135
C: B136
D: B137
B13 Lg
C1 Y/B
D7 Y/B
B17 R/L
B7 L/R
ELECTRONIC THROTTLE CONTROL RELAY
L 15
Y/B 16
R/L 17
L/R 14
B225
RELAY HOLDER
B550 (B)
FUSE HOLDER
D: B137
B: B135
C: B136
B220
B225
RELAY HOLDER

WI-67225

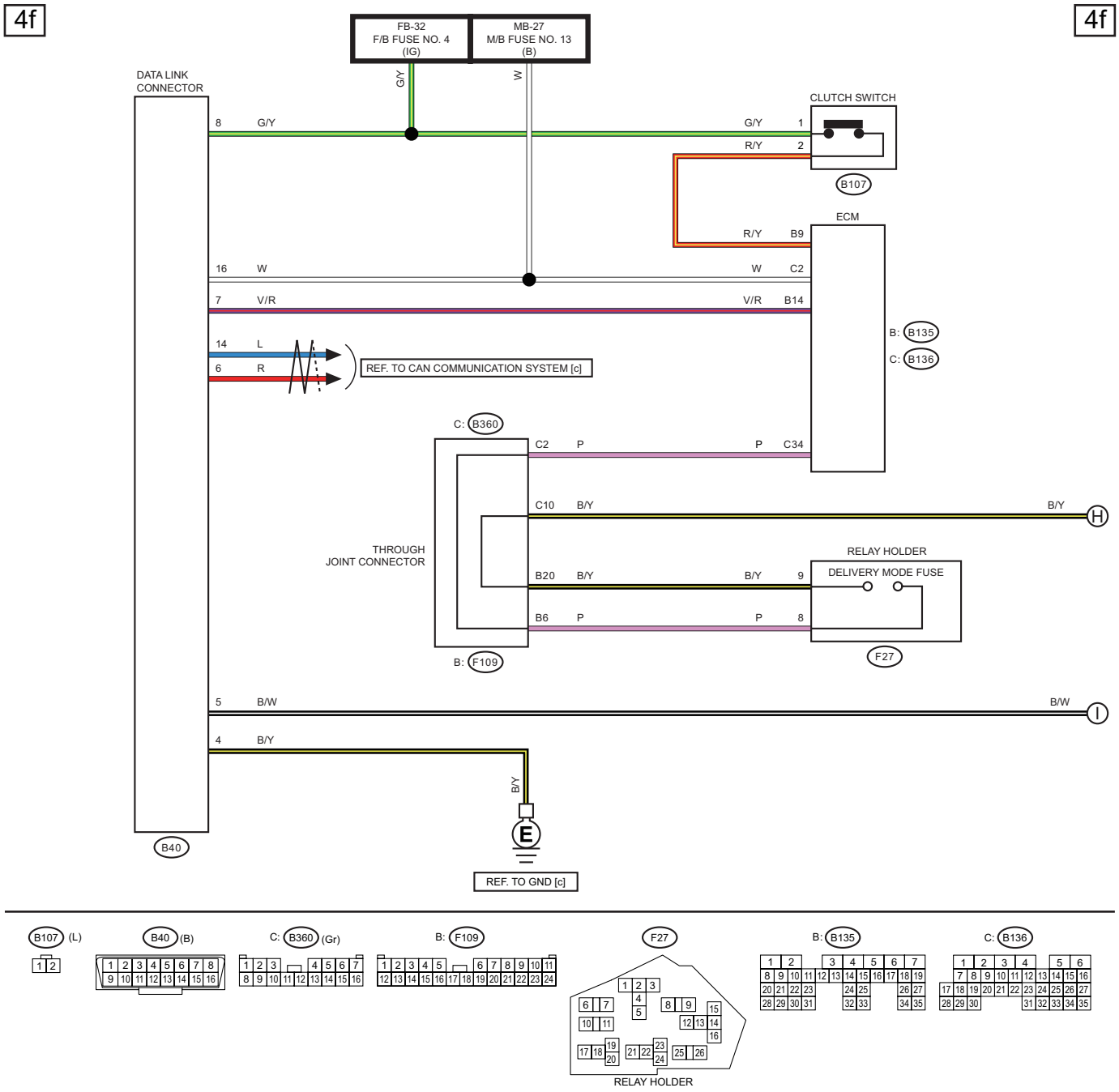
4f
4f
FB-32
F/B FUSE NO. 4
(IG)
MB-27
M/B FUSE NO. 13
(B)
G/Y
W
DATA LINK
CONNECTOR
CLUTCH SWITCH
8 G/Y
G/Y 1
R/Y 2
B107
ECM
R/Y B9
16 W
W C2
7 V/R
V/R B14
B: B135
C: B136
14 L
6 R
REF. TO CAN COMMUNICATION SYSTEM [c]
C: B360
C2 P
P C34
C10 B/Y
B/Y
H
THROUGH
JOINT CONNECTOR
RELAY HOLDER
B20 B/Y
B/Y 9
DELIVERY MODE FUSE
B6 P
P 8
F27
B: F109
5 B/W
B/W
I
4 B/Y
B/Y
E
B40
REF. TO GND [c]

B107 (L)
B40 (B)
C: B360 (Gr)
B: F109
F27
RELAY HOLDER
B: B135
C: B136

WI-66729

WIRING SYSTEM

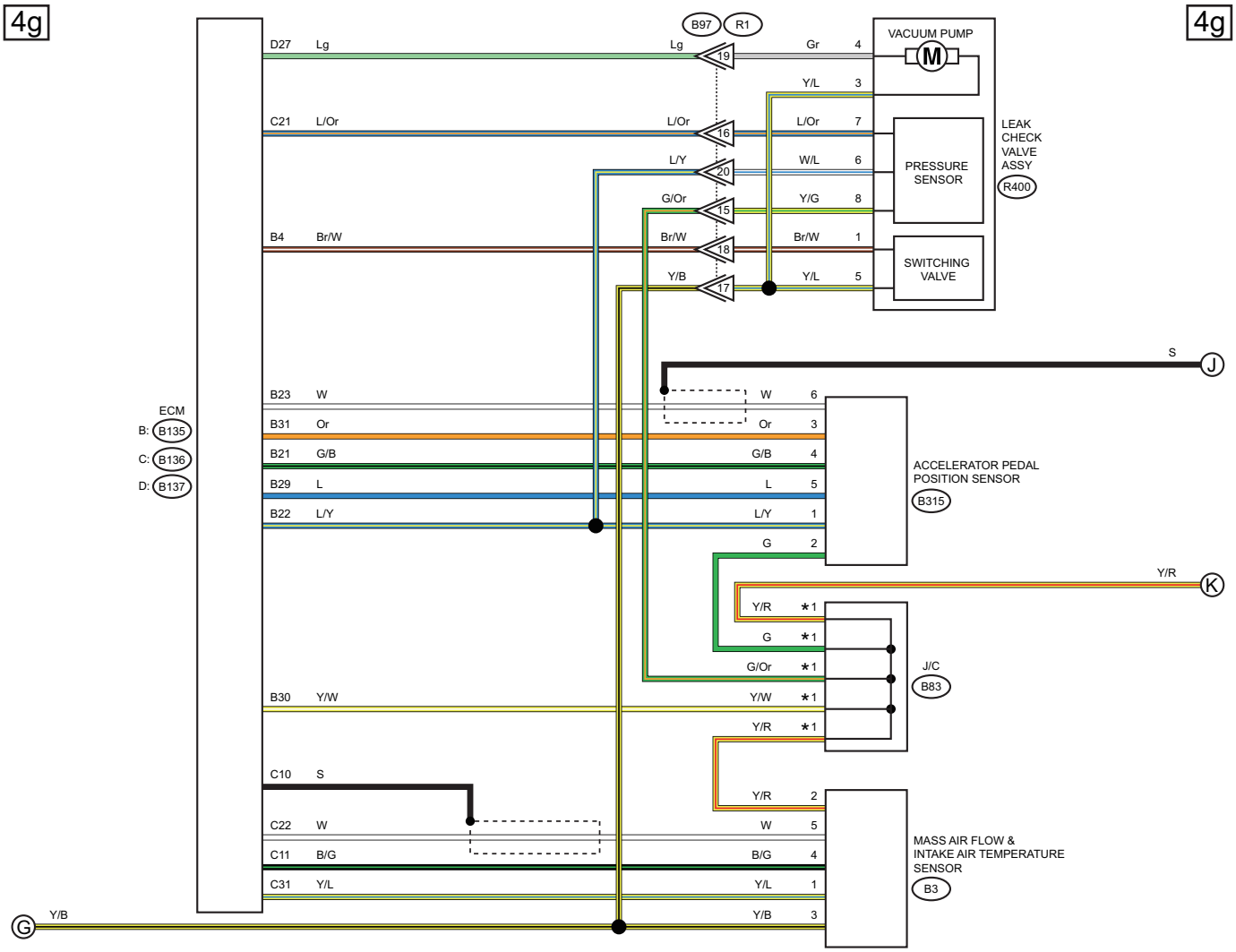

*1 : TERMINAL No. OPTIONAL ARRANGEMENT

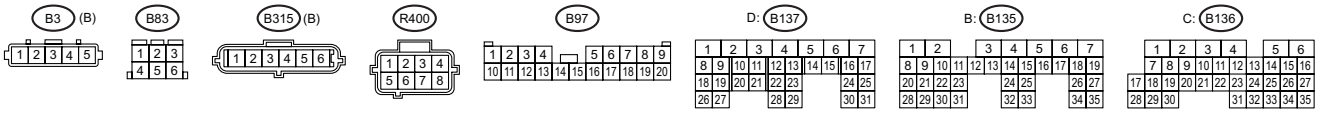

WI-67226

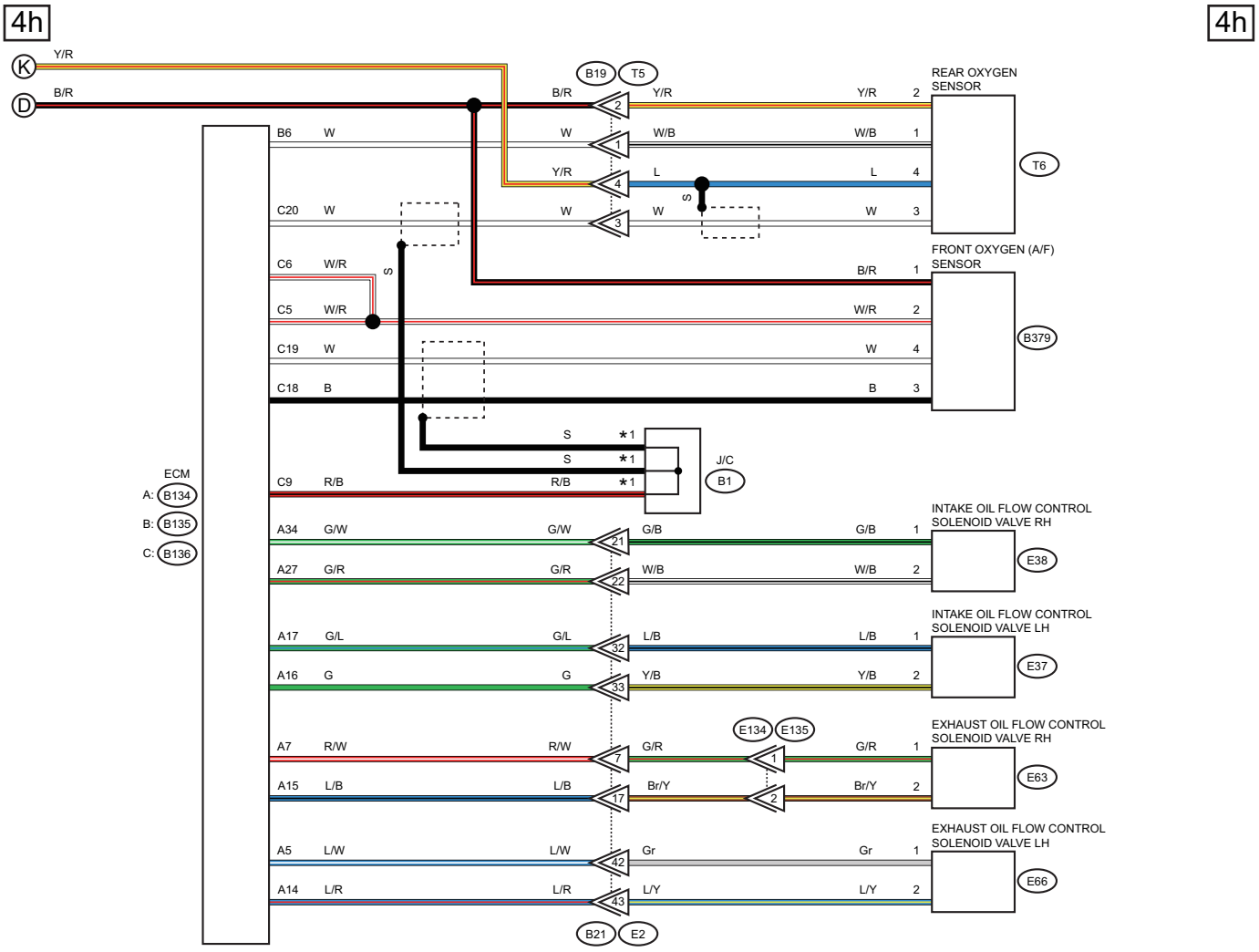

*1 : TERMINAL No. OPTIONAL ARRANGEMENT

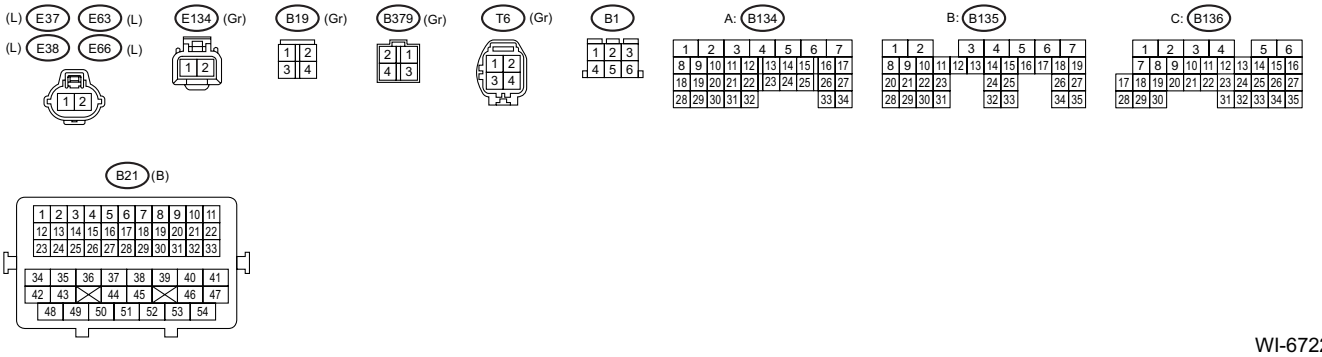

WI-67227

4i

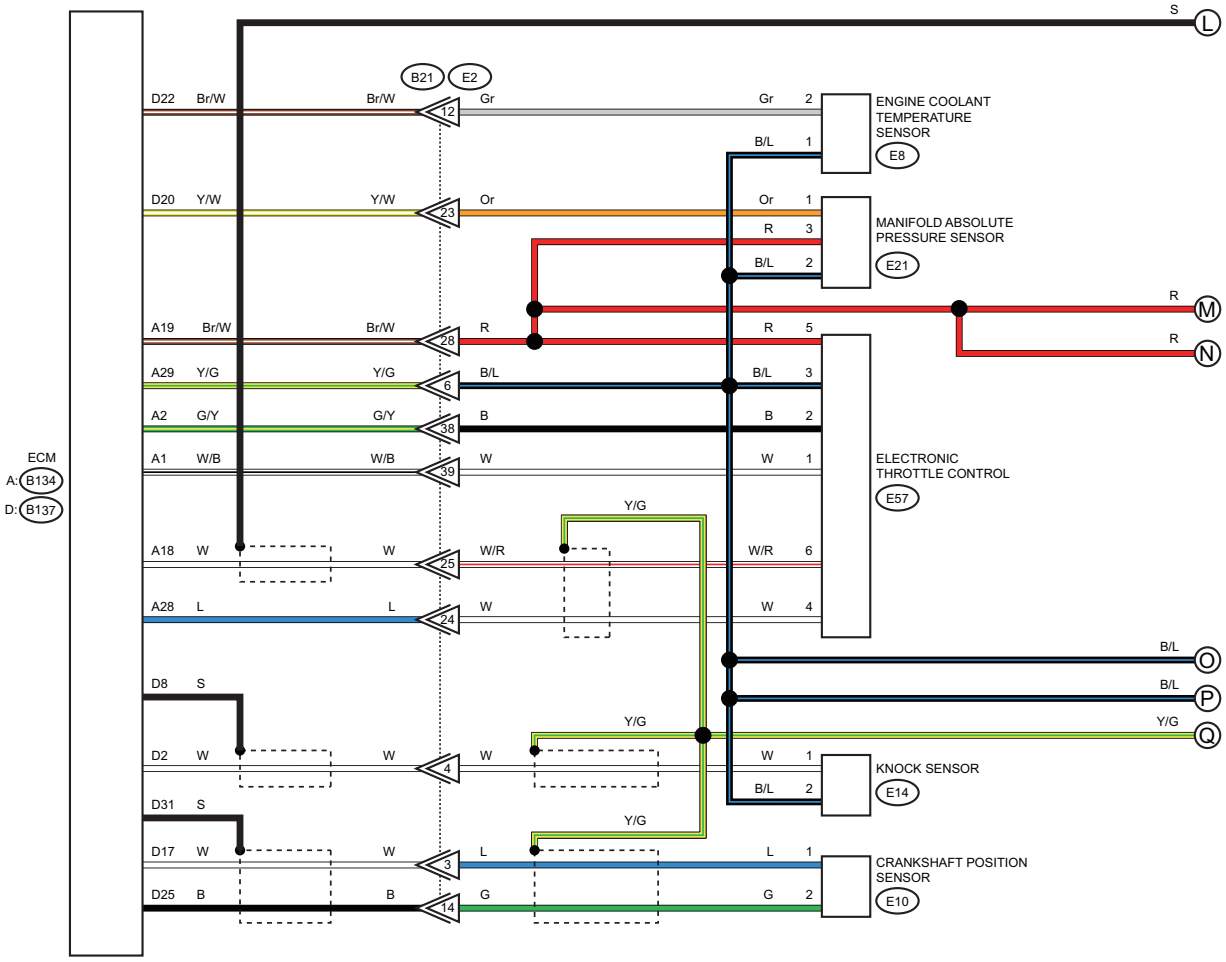
S
L
B21
E2
D22 Br/W
Br/W
12
Gr
Gr 2
ENGINE COOLANT TEMPERATURE SENSOR
B/L 1
E8
D20 Y/W
Y/W
23
Or
Or 1
MANIFOLD ABSOLUTE PRESSURE SENSOR
R 3
B/L 2
E21
R
M
A19 Br/W
Br/W
28
R
R 5
R
N
A29 Y/G
Y/G
6
B/L
B/L 3
A2 G/Y
G/Y
38
B
B 2
ECM
A: B134
D: B137
A1 W/B
W/B
39
W
W 1
ELECTRONIC THROTTLE CONTROL
E57
Y/G
A18 W
W
25
W/R
W/R 6
A28 L
L
24
W
W 4
B/L
O
B/L
P
D8 S
Y/G
Y/G
Q
D2 W
W
4
W
W 1
KNOCK SENSOR
B/L 2
E14
D31 S
Y/G
D17 W
W
3
L
L 1
CRANKSHAFT POSITION SENSOR
D25 B
B
14
G
G 2
E10

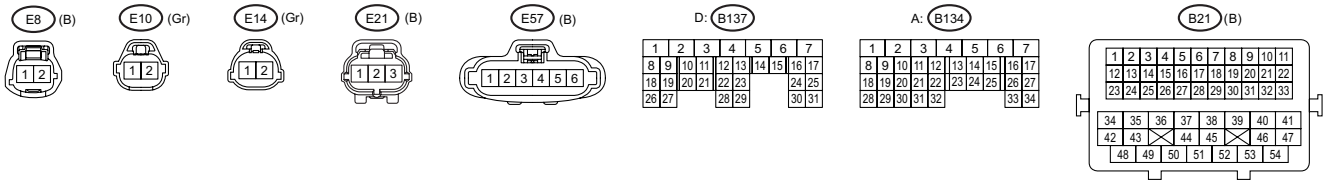
E8 (B)
E10 (Gr)
E14 (Gr)
E21 (B)
E57 (B)
D: B137
A: B134
B21 (B)

WI-67228

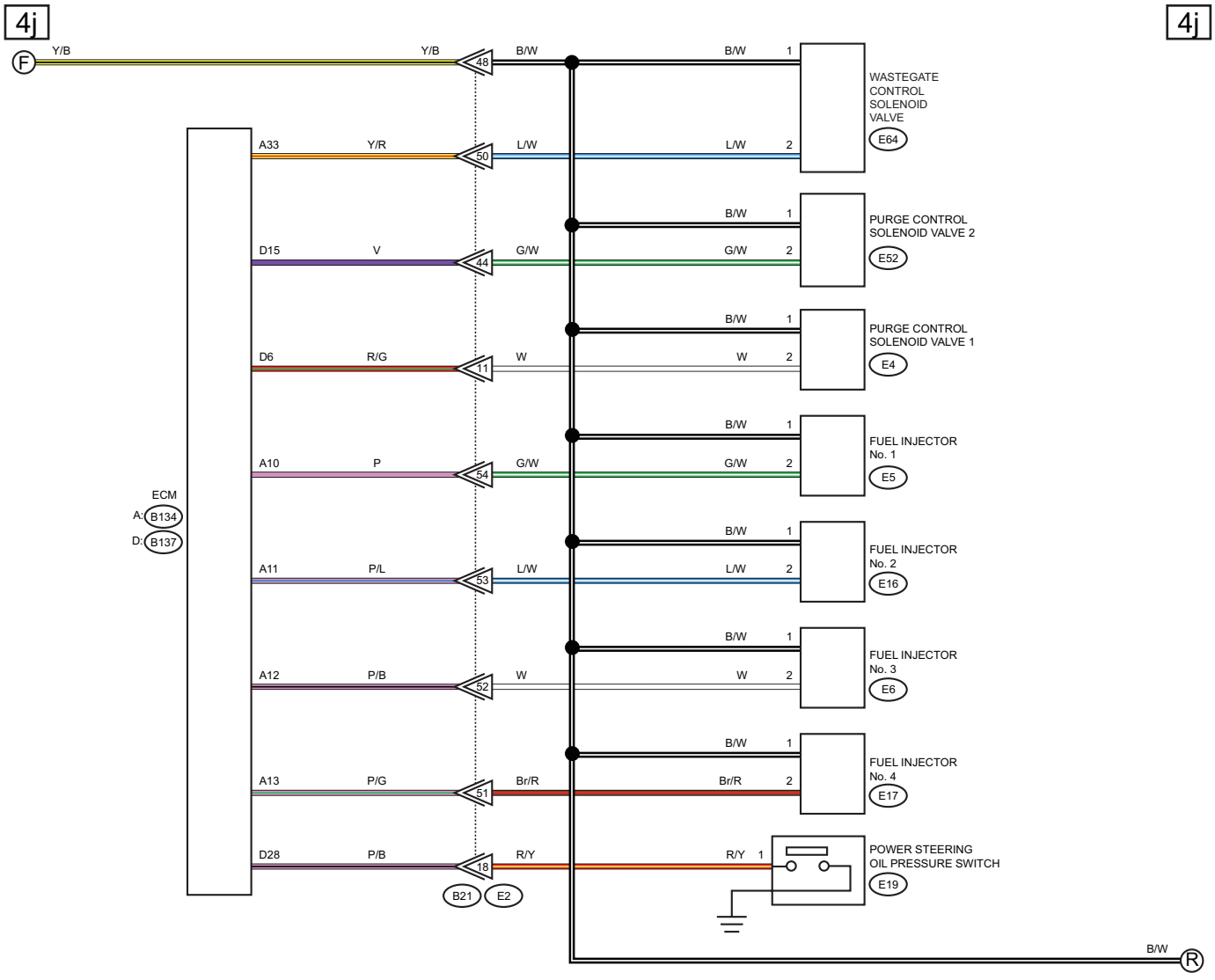
4j
4j
F
Y/B
Y/B
48
B/W
B/W
1
WASTEGATE CONTROL SOLENOID VALVE
E64
A33
Y/R
50
L/W
L/W
2
D15
V
44
G/W
G/W
2
PURGE CONTROL SOLENOID VALVE 2
E52
D6
R/G
11
W
W
2
PURGE CONTROL SOLENOID VALVE 1
E4
A10
P
54
G/W
G/W
2
FUEL INJECTOR No. 1
E5
ECM
A: B134
D: B137
A11
P/L
53
L/W
L/W
2
FUEL INJECTOR No. 2
E16
A12
P/B
52
W
W
2
FUEL INJECTOR No. 3
E6
A13
P/G
51
Br/R
Br/R
2
FUEL INJECTOR No. 4
E17
D28
P/B
18
R/Y
R/Y
1
POWER STEERING OIL PRESSURE SWITCH
E19
B21
E2
R
B/W

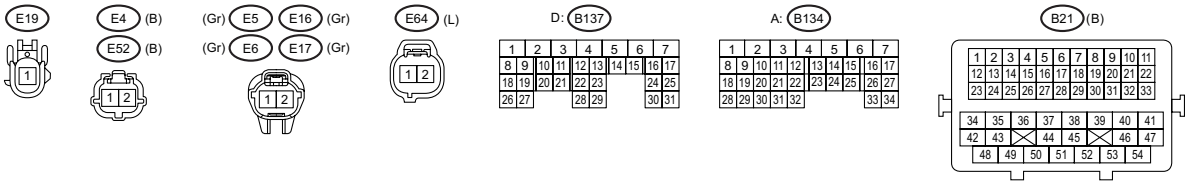
E19
E4 (B)
E52 (B)
(Gr) E5 E16 (Gr)
(Gr) E6 E17 (Gr)
E64 (L)
D: B137
A: B134
B21 (B)

WI-67229

WIRING SYSTEM

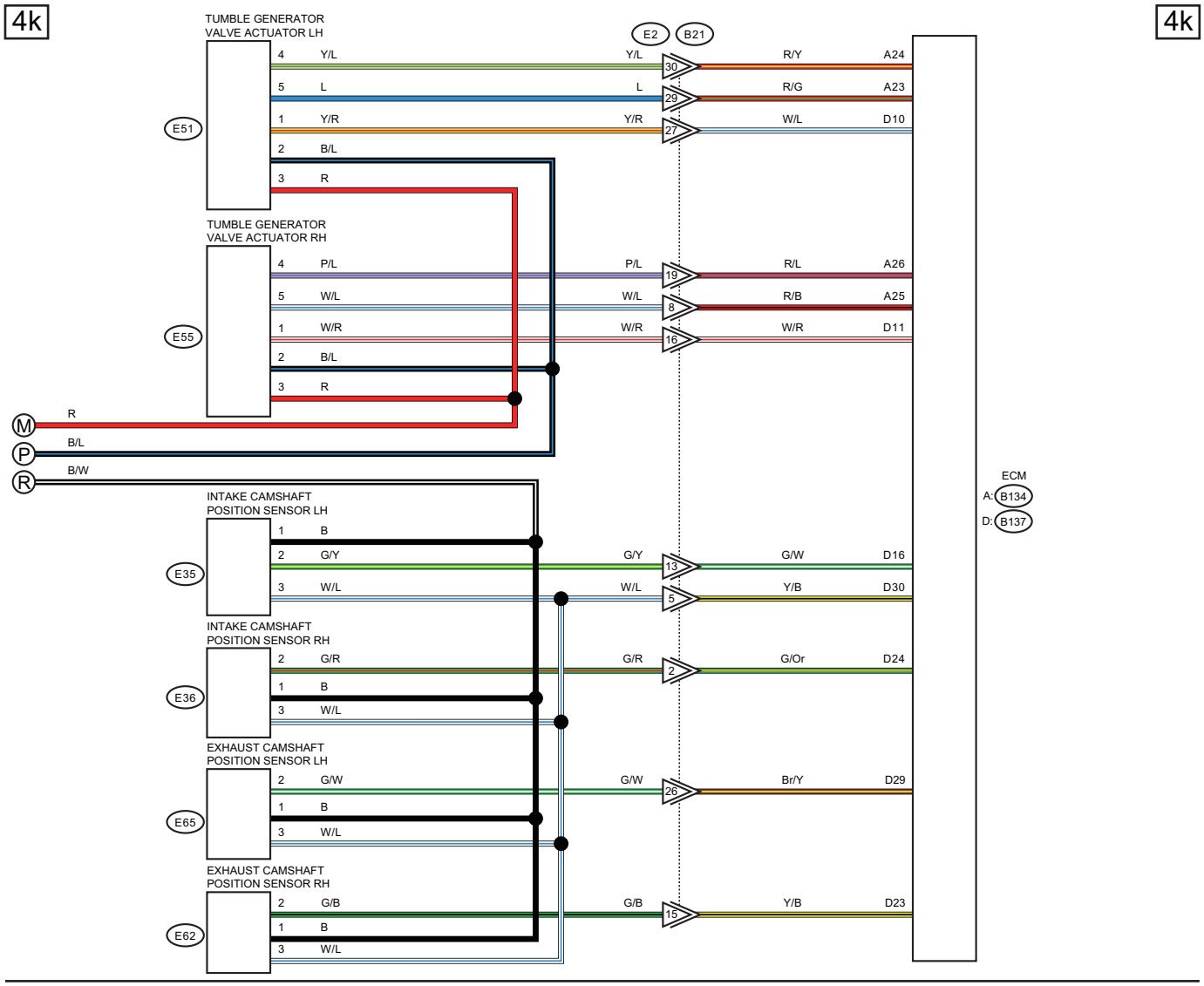

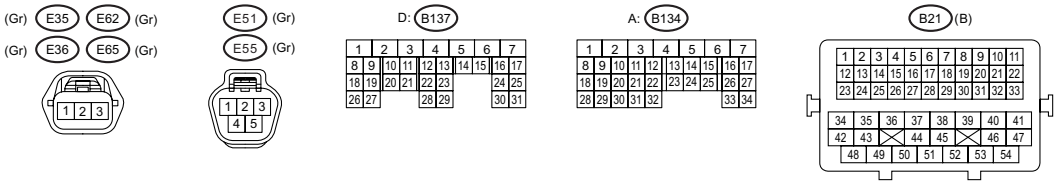

WI-67230

4I

4I

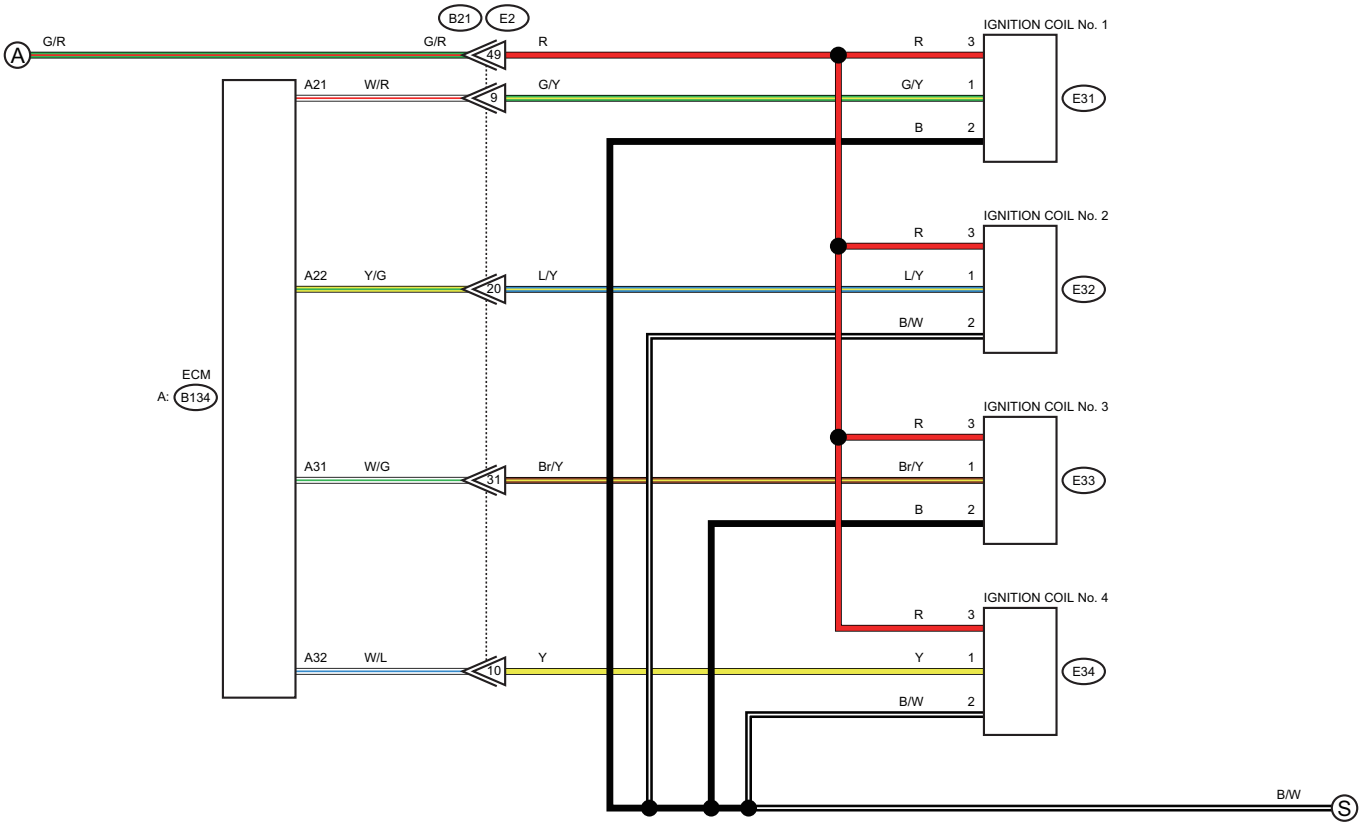

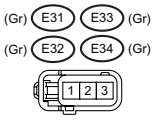

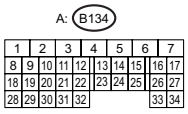

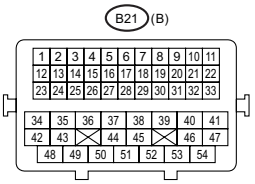

WI-66730

4m

4m

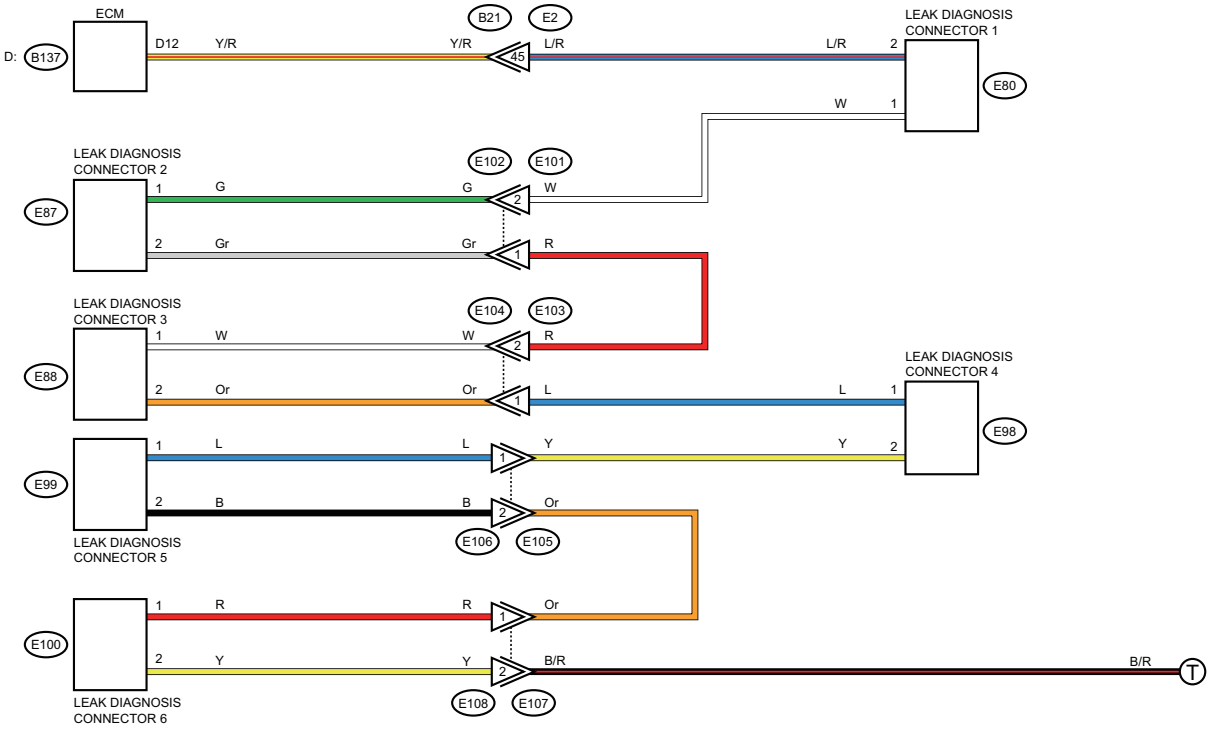

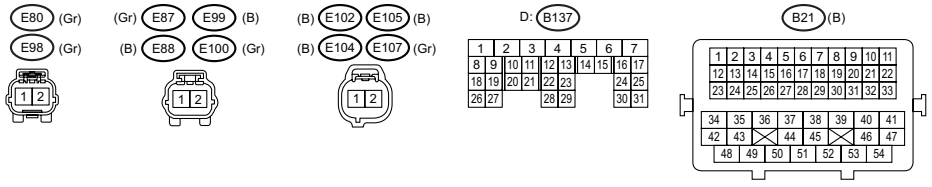

WI-66731

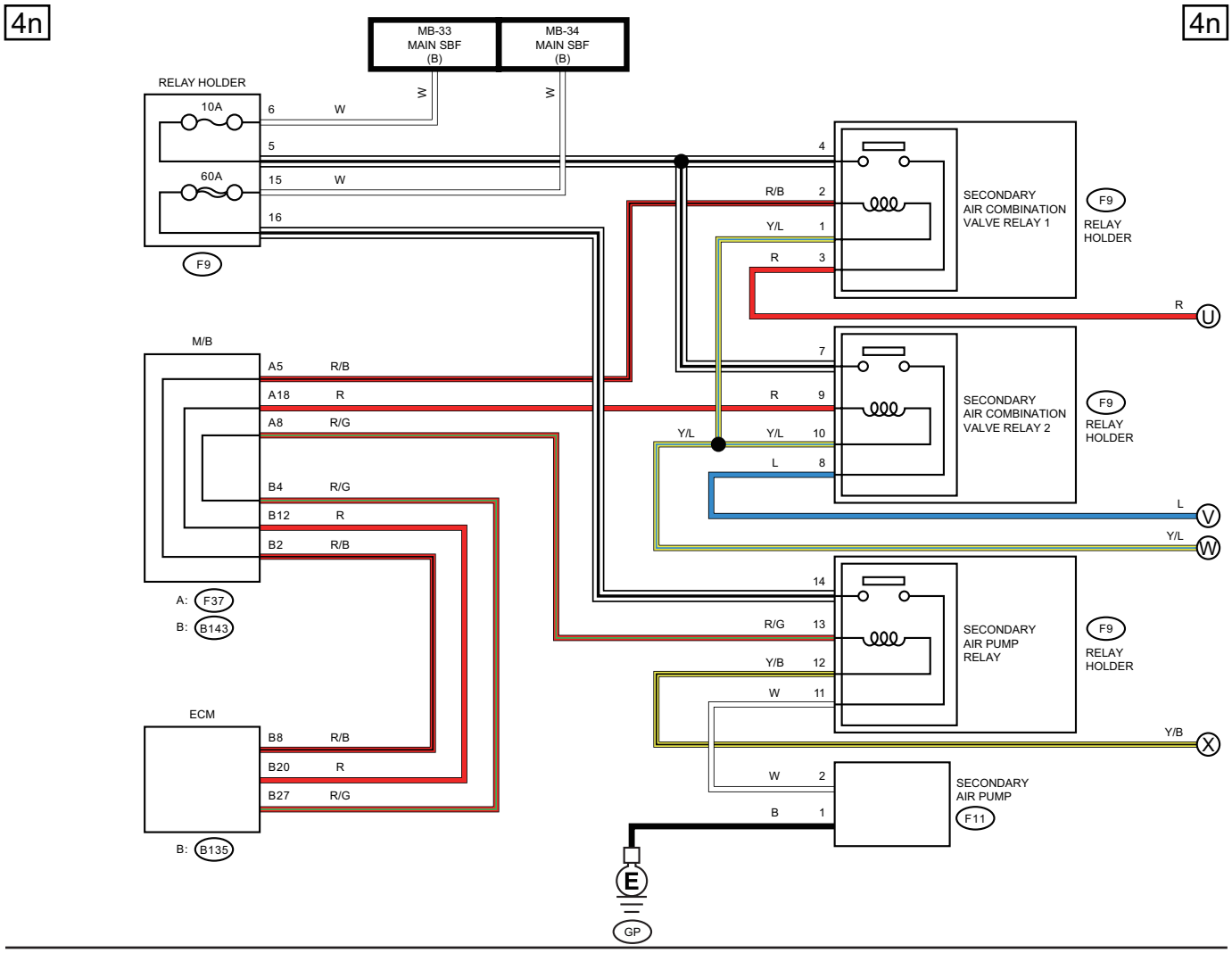

OL : WITHOUT TELEMATICS

WT : WITH TELEMATICS

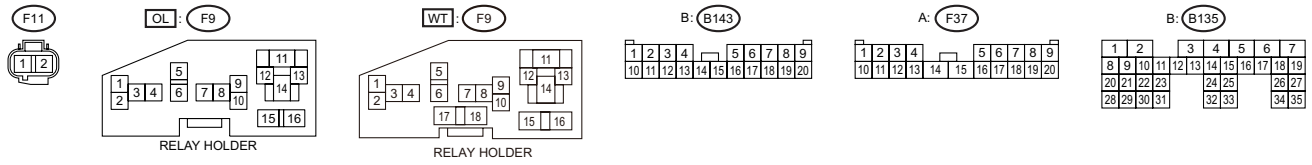

WI-66732

WIRING SYSTEM

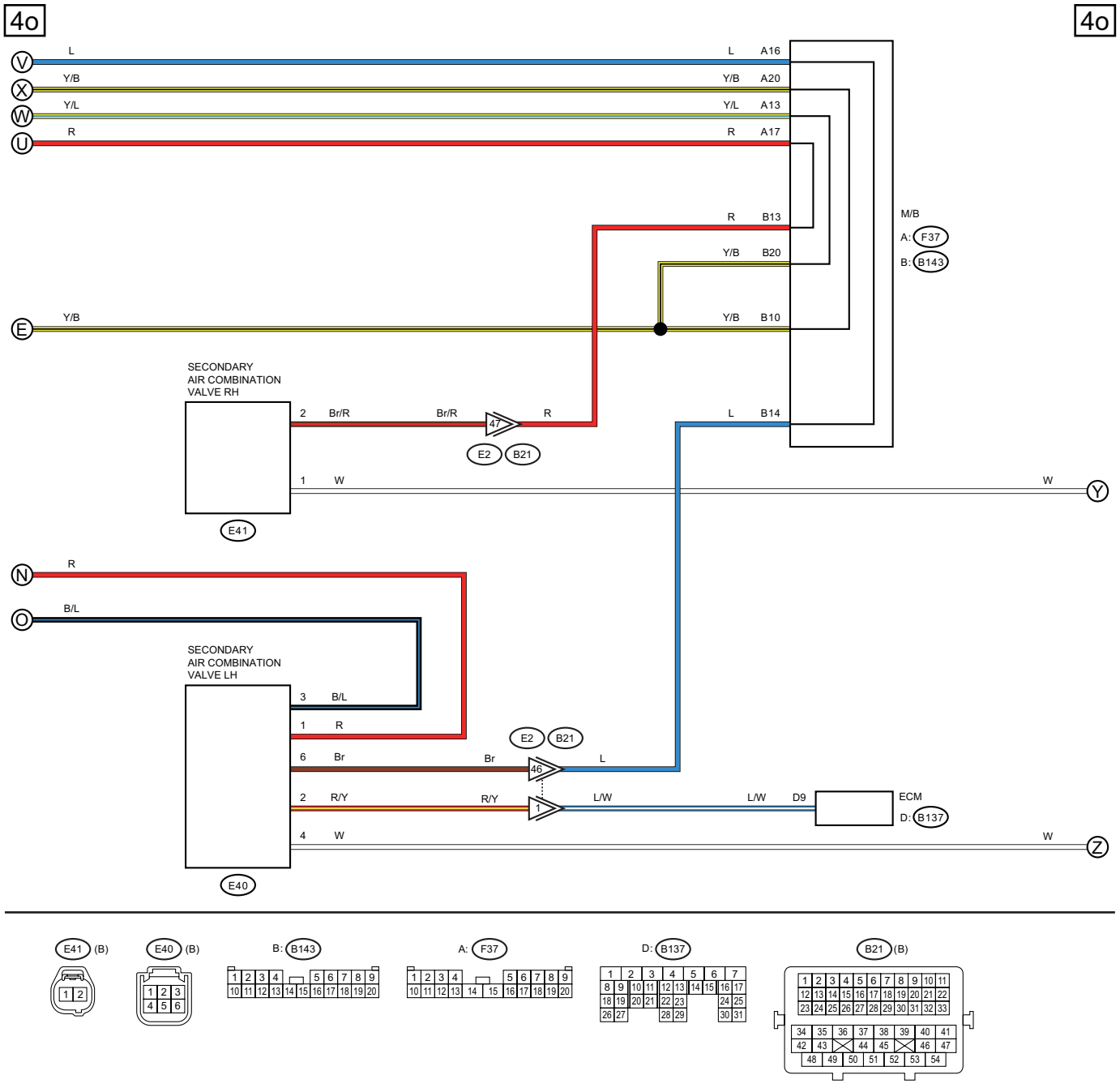

WI-66733

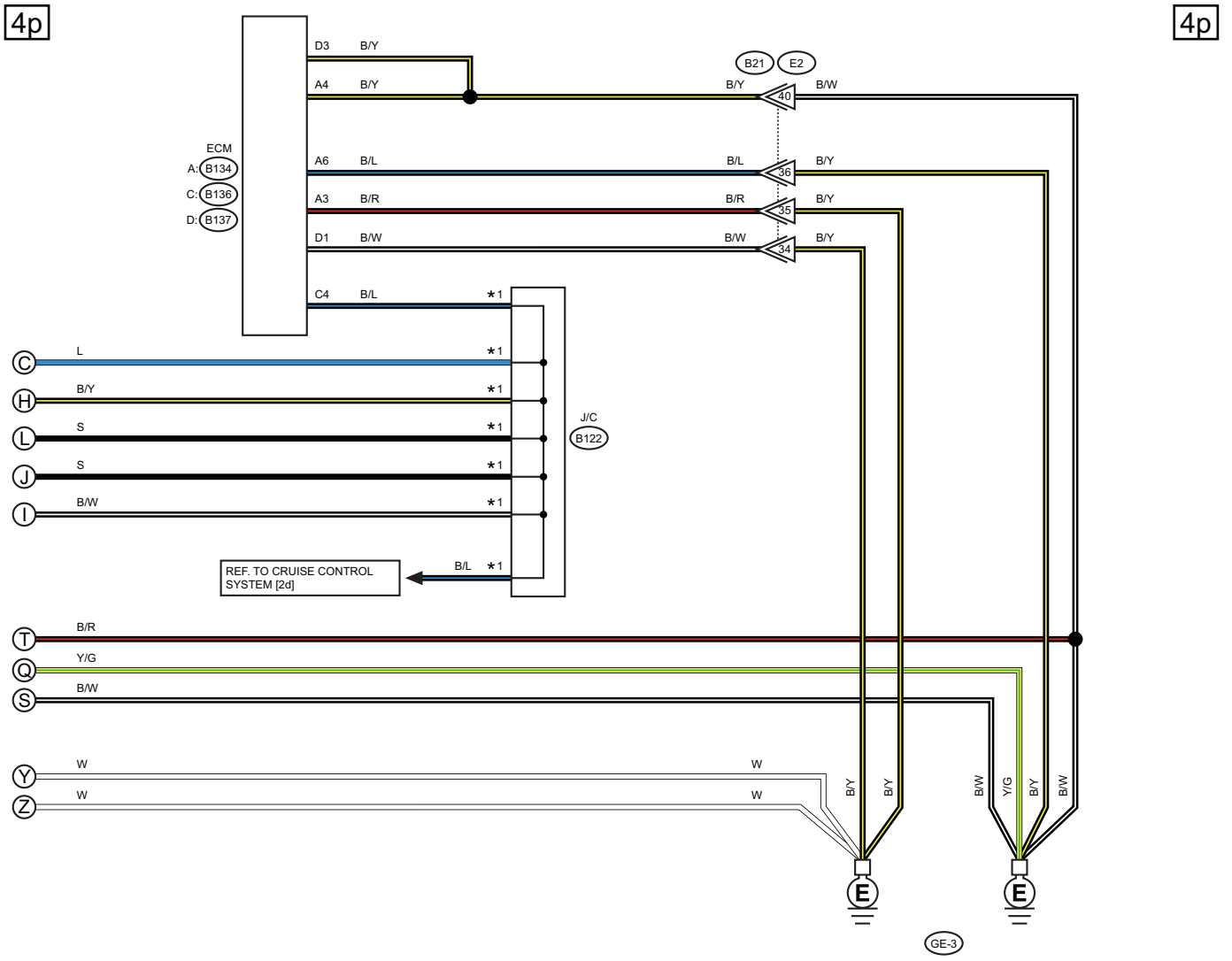

*1 : TERMINAL No. OPTIONAL ARRANGEMENT

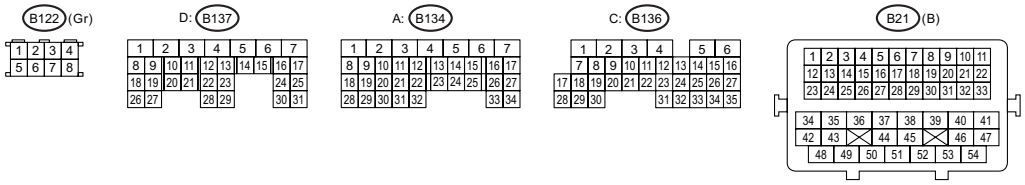

WI-66734

21.EyeSight System

A: WIRING DIAGRAM

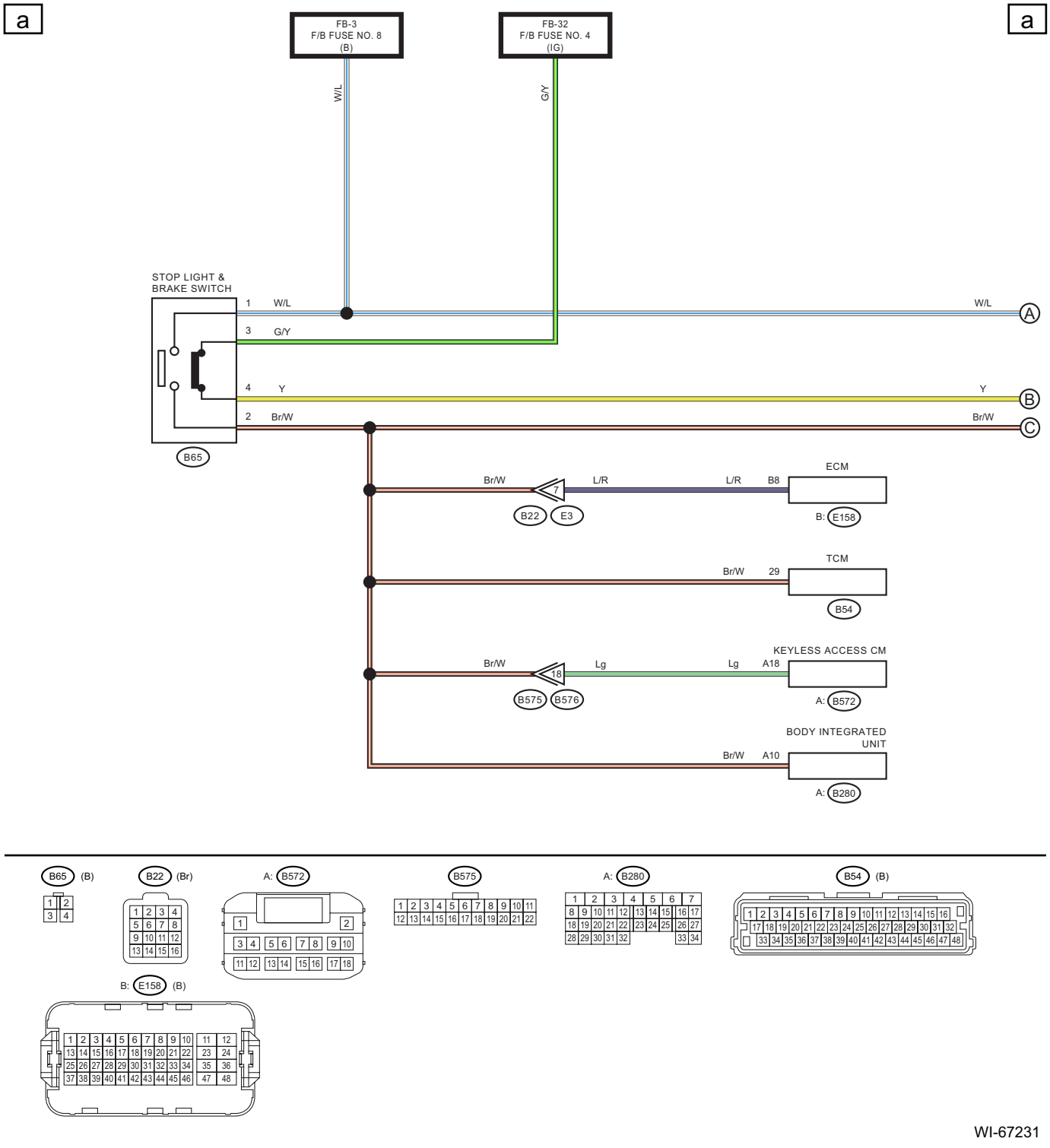

WI-67231

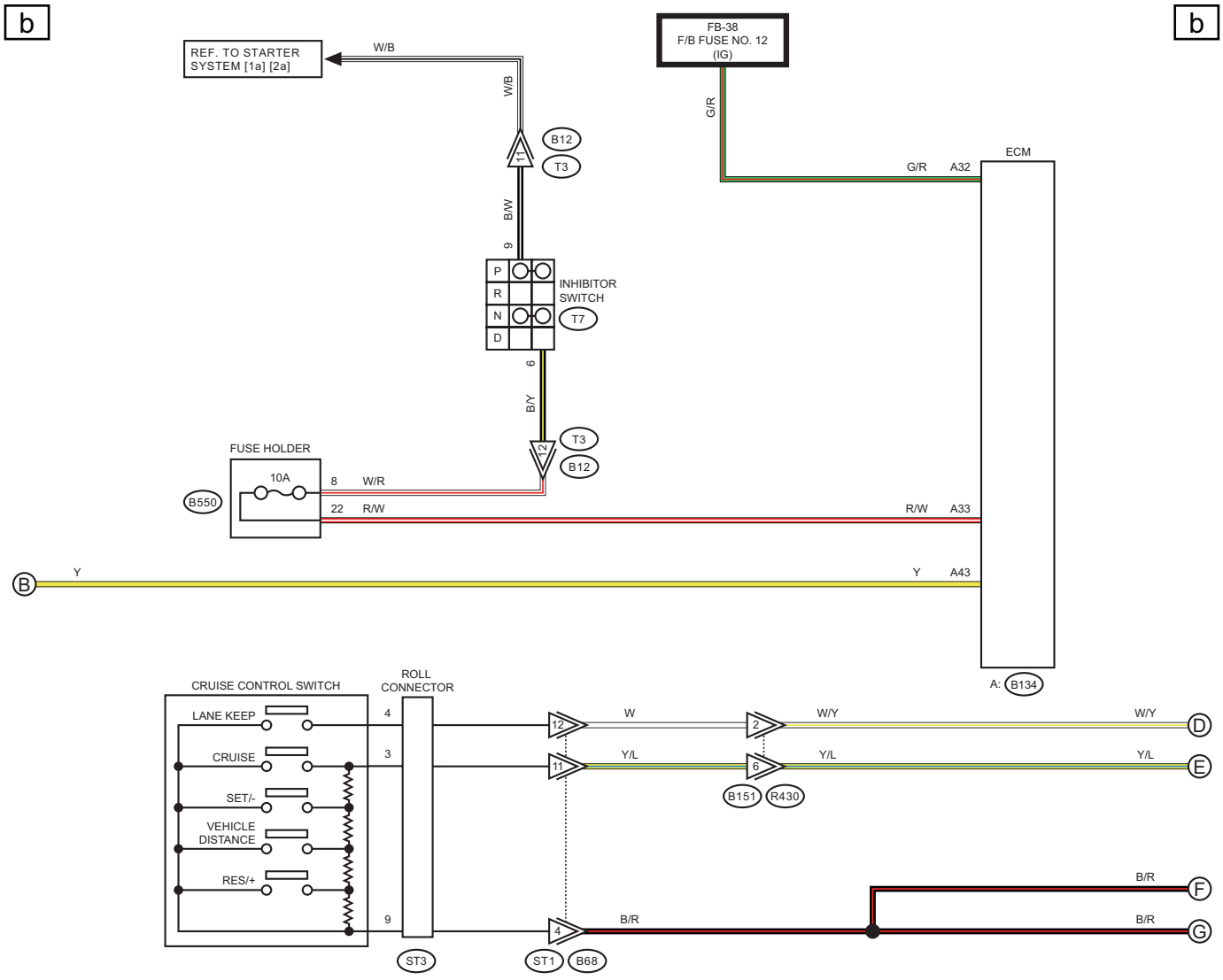
b
b
REF. TO STARTER SYSTEM [1a] [2a]
W/B
W/B
B12
T3
B/W
9
P
R
N
D
INHIBITOR SWITCH
T7
6
B/Y
T3
B12
FUSE HOLDER
10A
B550
8
W/R
22
R/W
FB-38
F/B FUSE NO. 12
(IG)
G/R
ECM
G/R
A32
R/W
A33
B
Y
Y
A43
A: B134
CRUISE CONTROL SWITCH
ROLL CONNECTOR
LANE KEEP
CRUISE
SET/-
VEHICLE DISTANCE
RES/+
4
3
9
ST3
12
W
2
W/Y
W/Y
D
11
Y/L
6
Y/L
Y/L
E
B151
R430
B/R
F
B/R
B/R
G
4
ST1
B68

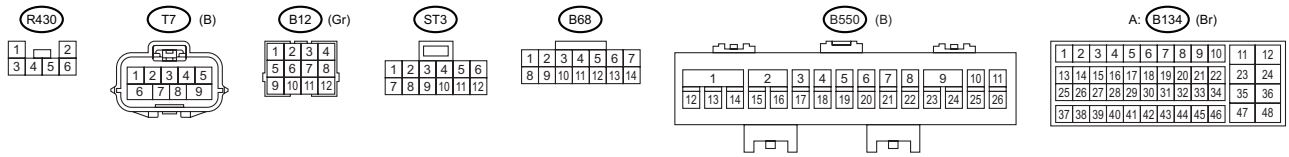
R430
T7 (B)
B12 (Gr)
ST3
B68
B550 (B)
A: B134 (Br)

WI-67232

WIRING SYSTEM

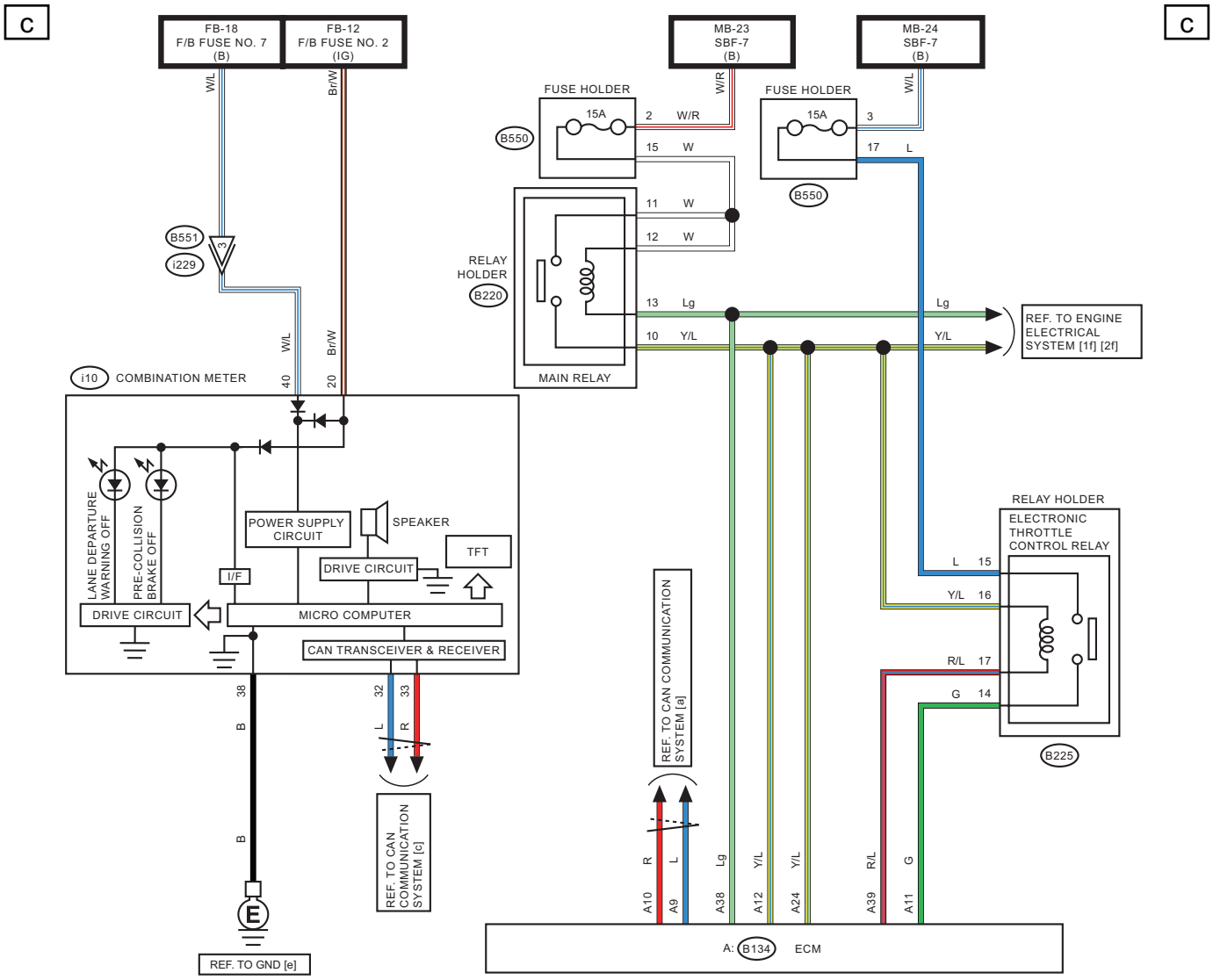

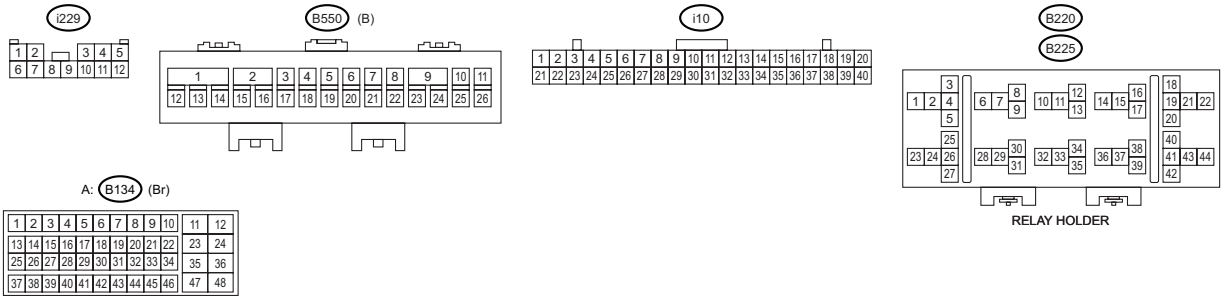

WI-66737

d

d

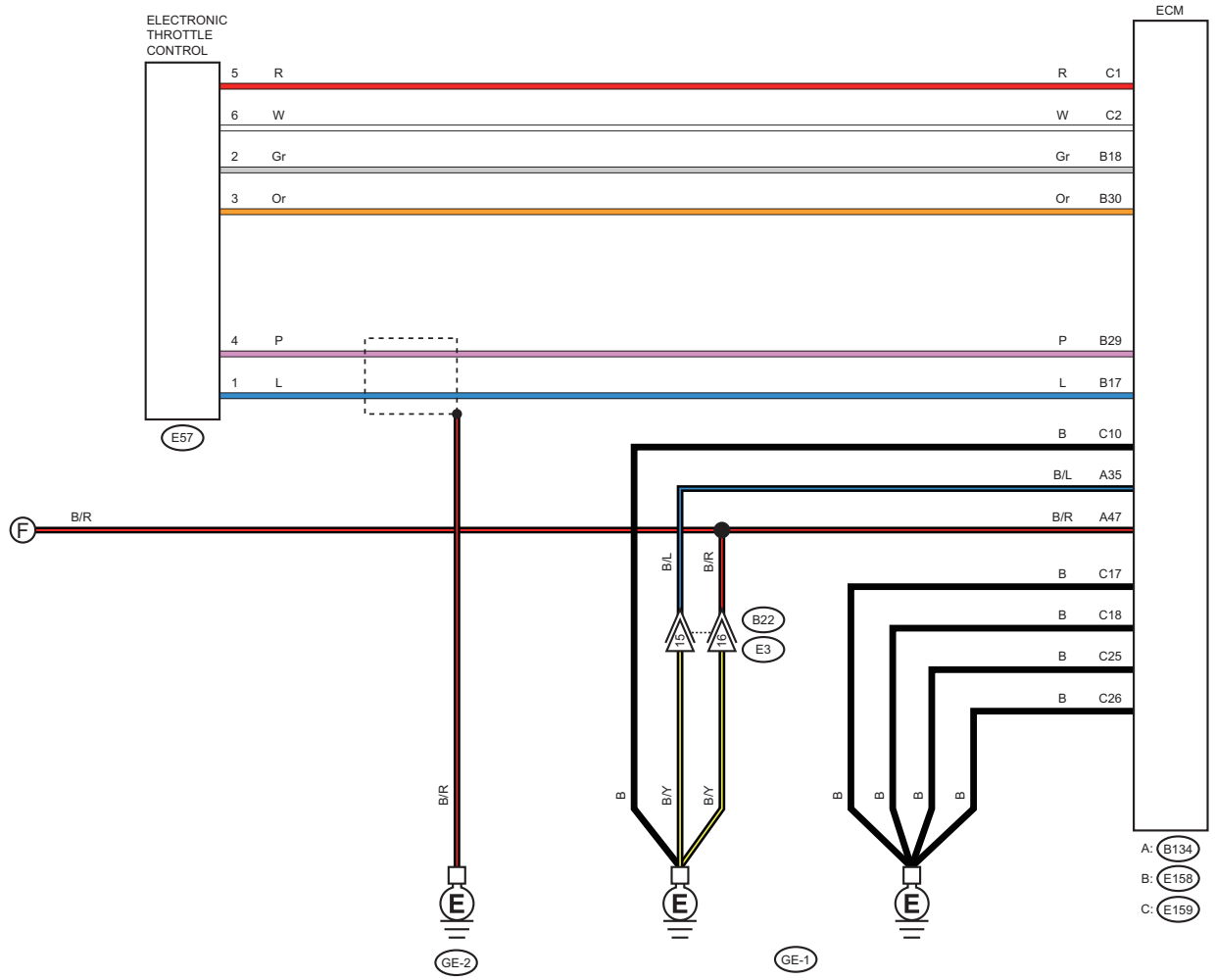
ELECTRONIC THROTTLE CONTROL
ECM
5 R
6 W
2 Gr
3 Or
4 P
1 L
R C1
W C2
Gr B18
Or B30
P B29
L B17
E57
B C10
B/L A35
B/R A47
B C17
B C18
B C25
B C26
F
B/R
B/L
B/R
B/Y
B/Y
B
B
B
B
B
B22
E3
A: B134
B: E158
C: E159
GE-2
GE-1

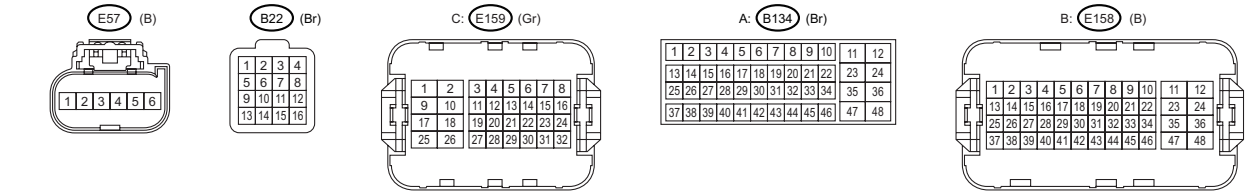
E57 (B)
B22 (Br)
C: E159 (Gr)
A: B134 (Br)
B: E158 (B)

WI-67233

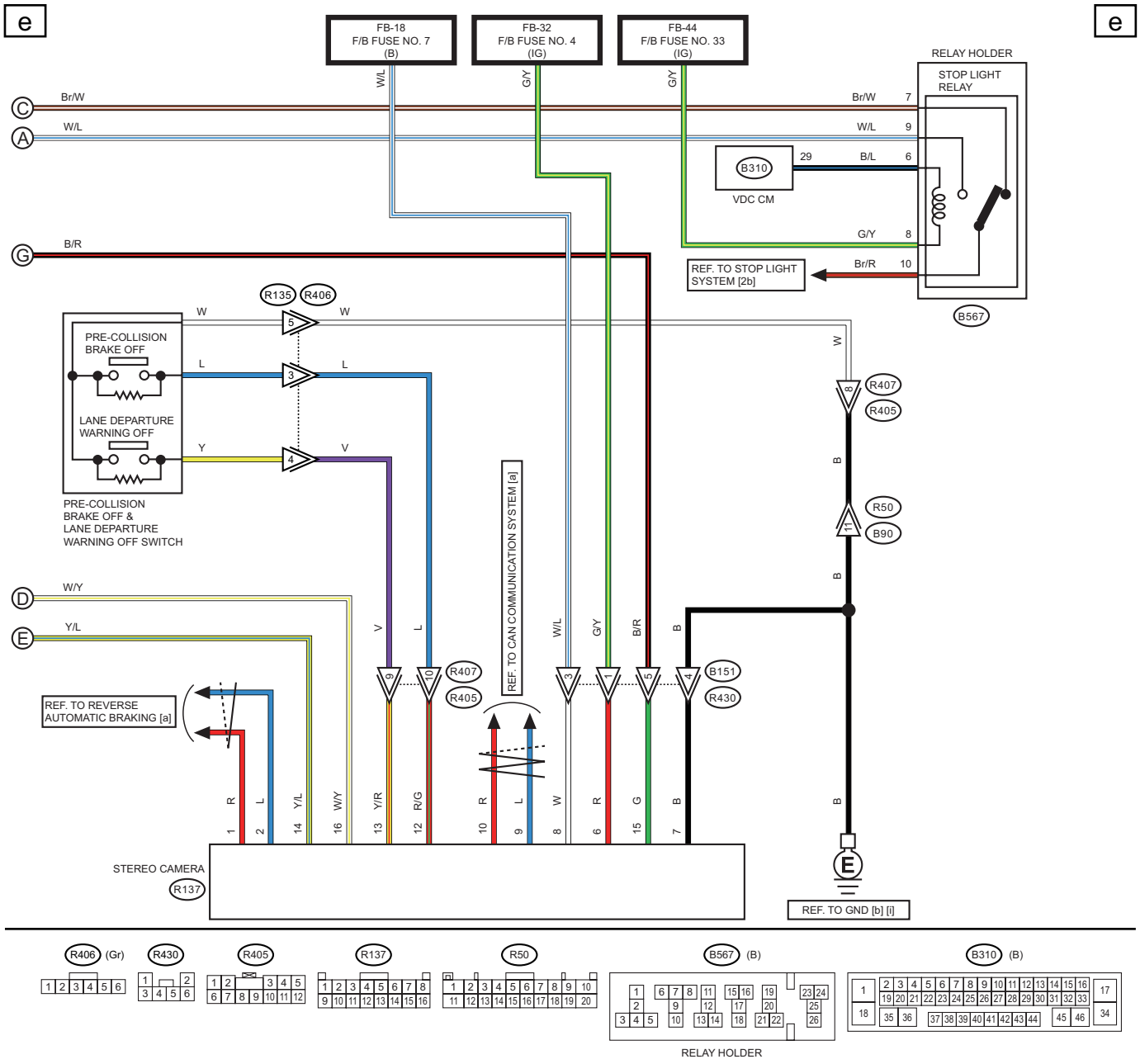
e
e
FB-18
F/B FUSE NO. 7
(B)
FB-32
F/B FUSE NO. 4
(IG)
FB-44
F/B FUSE NO. 33
(IG)
RELAY HOLDER
STOP LIGHT
RELAY
Br/W
W/L
B310
VDC CM
B/L
G/Y
Br/R
REF. TO STOP LIGHT
SYSTEM [2b]
B567
B/R
R135
R406
PRE-COLLISION
BRAKE OFF
LANE DEPARTURE
WARNING OFF
PRE-COLLISION
BRAKE OFF &
LANE DEPARTURE
WARNING OFF SWITCH
R407
R405
R50
B90
W/Y
Y/L
REF. TO CAN COMMUNICATION SYSTEM [a]
B151
R430
REF. TO REVERSE
AUTOMATIC BRAKING [a]
STEREO CAMERA
R137
REF. TO GND [b] [i]

R406 (Gr)
R430
R405
R137
R50
B567 (B)
B310 (B)
RELAY HOLDER

WI-67234

22.Front Accessory Power Supply Socket System

A: WIRING DIAGRAM

a

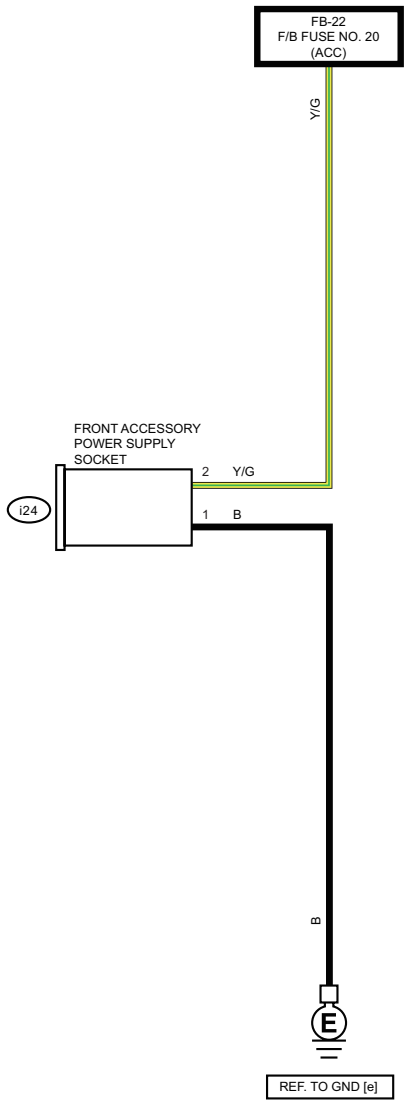

a

i24
1
2

WI-67235

23.Front Fog Light System

A: WIRING DIAGRAM

1. WITHOUT SRF

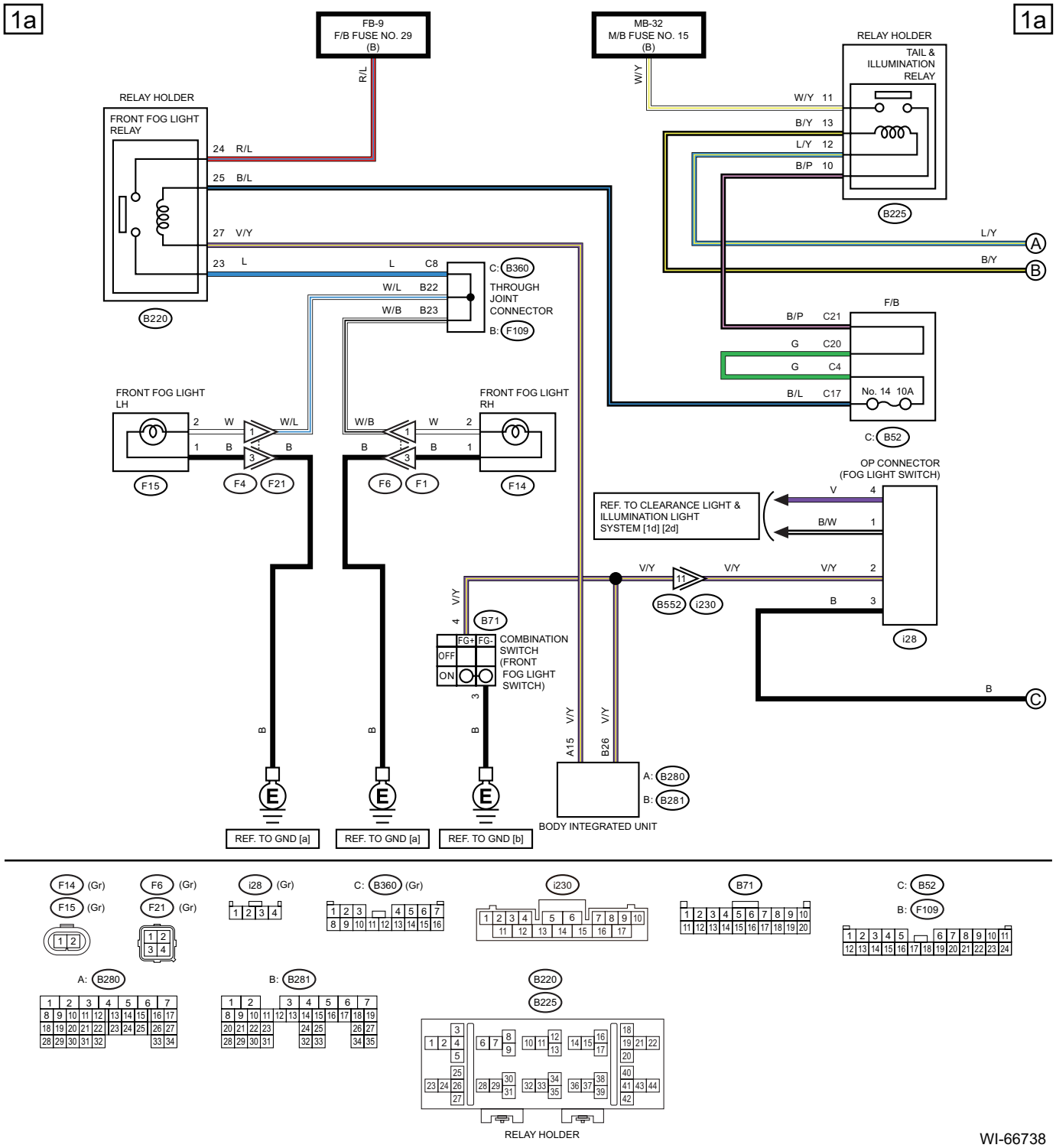

WI-66738

Front Fog Light System

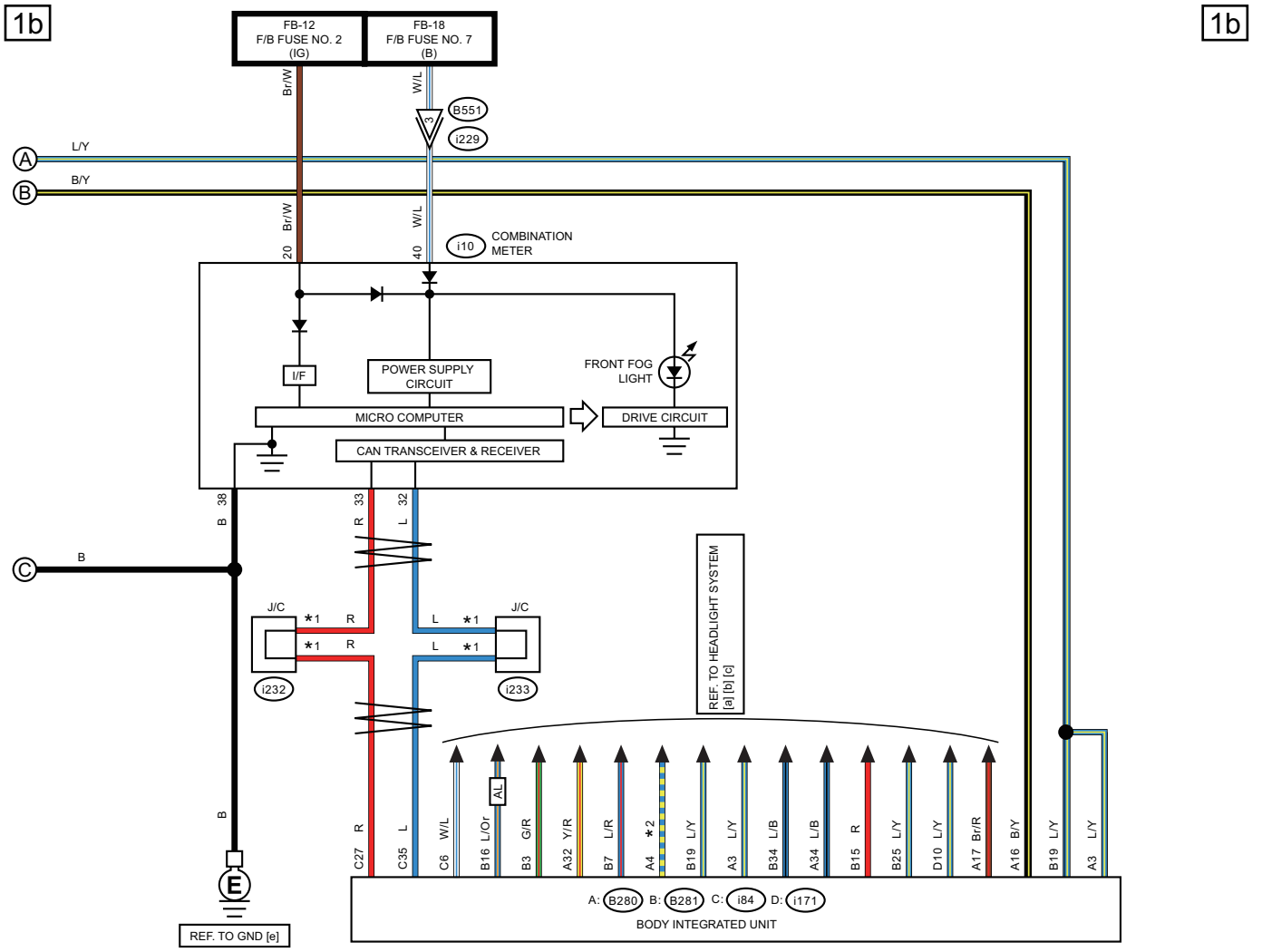

*1 : TERMINAL No. OPTIONAL ARRANGEMENT

*2 : WITHOUT PUSH BUTTON START : B/W
WITH PUSH BUTTON START : Y/R

AL : WITH AUTO LIGHT

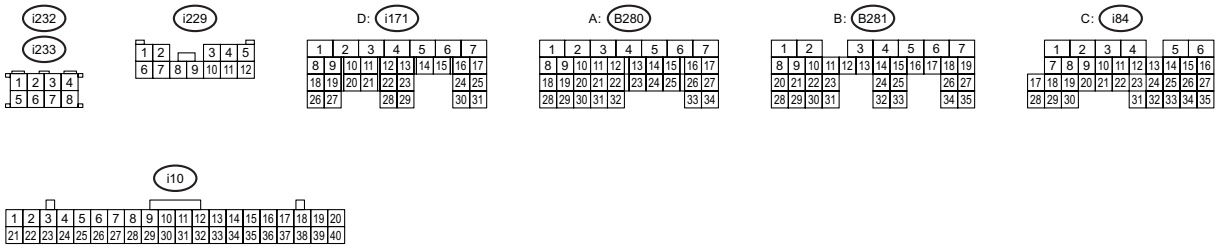

WI-67236

2. WITH SRF

2a 2a

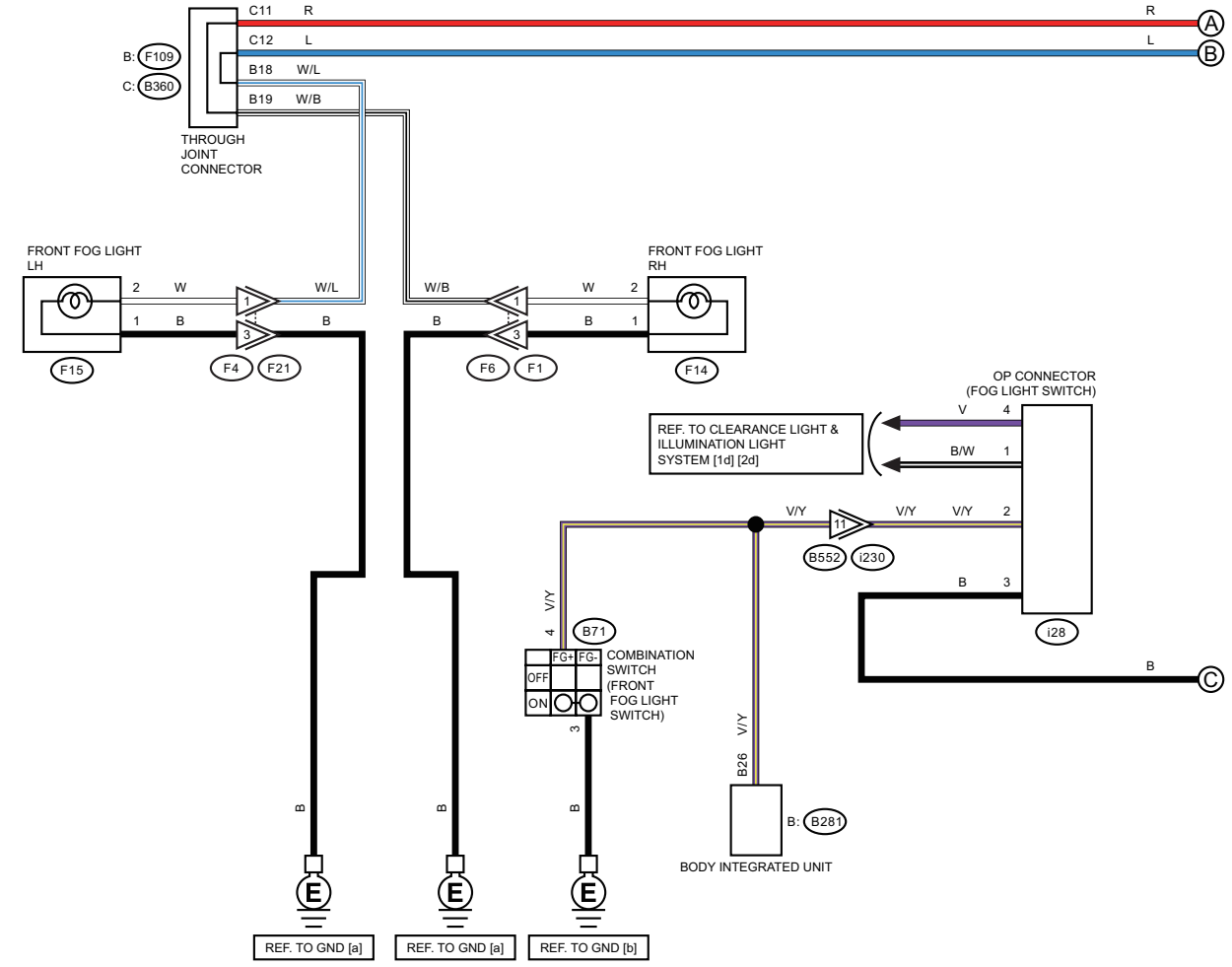

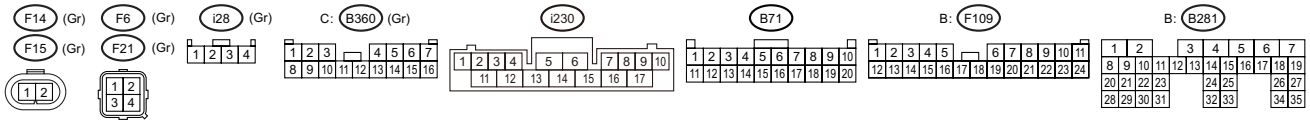

WI-66740

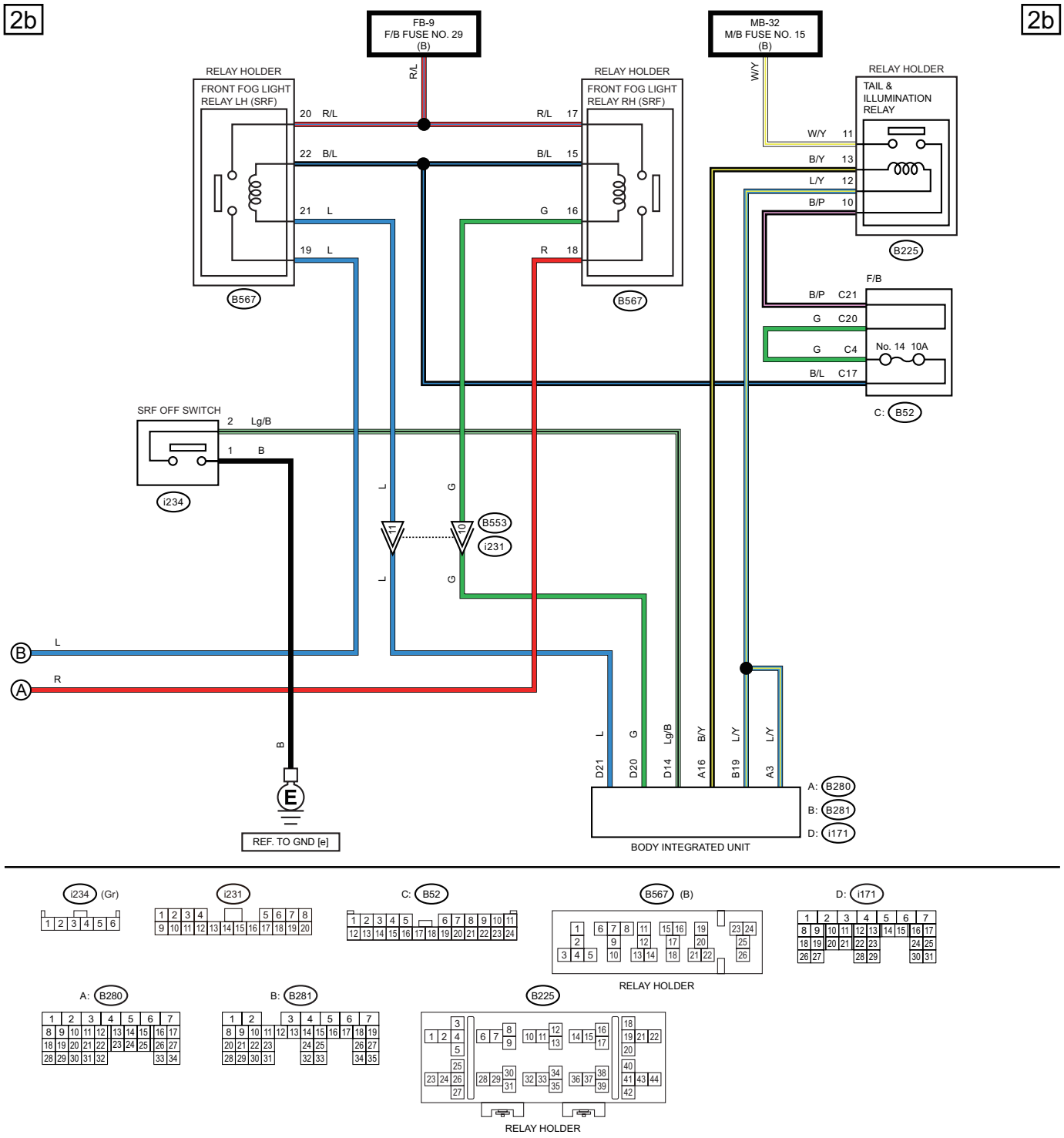
2b
2b
FB-9
F/B FUSE NO. 29
(B)
MB-32
M/B FUSE NO. 15
(B)
RELAY HOLDER
FRONT FOG LIGHT
RELAY LH (SRF)
RELAY HOLDER
FRONT FOG LIGHT
RELAY RH (SRF)
RELAY HOLDER
TAIL &
ILLUMINATION
RELAY
R/L
W/Y
20 R/L
R/L 17
22 B/L
B/L 15
21 L
G 16
19 L
R 18
W/Y 11
B/Y 13
L/Y 12
B/P 10
B225
B567
B567
F/B
B/P C21
G C20
G C4
No. 14 10A
B/L C17
C: B52
SRF OFF SWITCH
2 Lg/B
1 B
i234
L
G
B553
i231
L
G
B
L
A
R
B
E
REF. TO GND [e]
D21 L
D20 G
D14 Lg/B
A16 B/Y
B19 L/Y
A3 L/Y
A: B280
B: B281
D: i171
BODY INTEGRATED UNIT

i234 (Gr)
i231
C: B52
B567 (B)
D: i171
RELAY HOLDER
A: B280
B: B281
B225
RELAY HOLDER

WI-67237

Front Fog Light System

WIRING SYSTEM

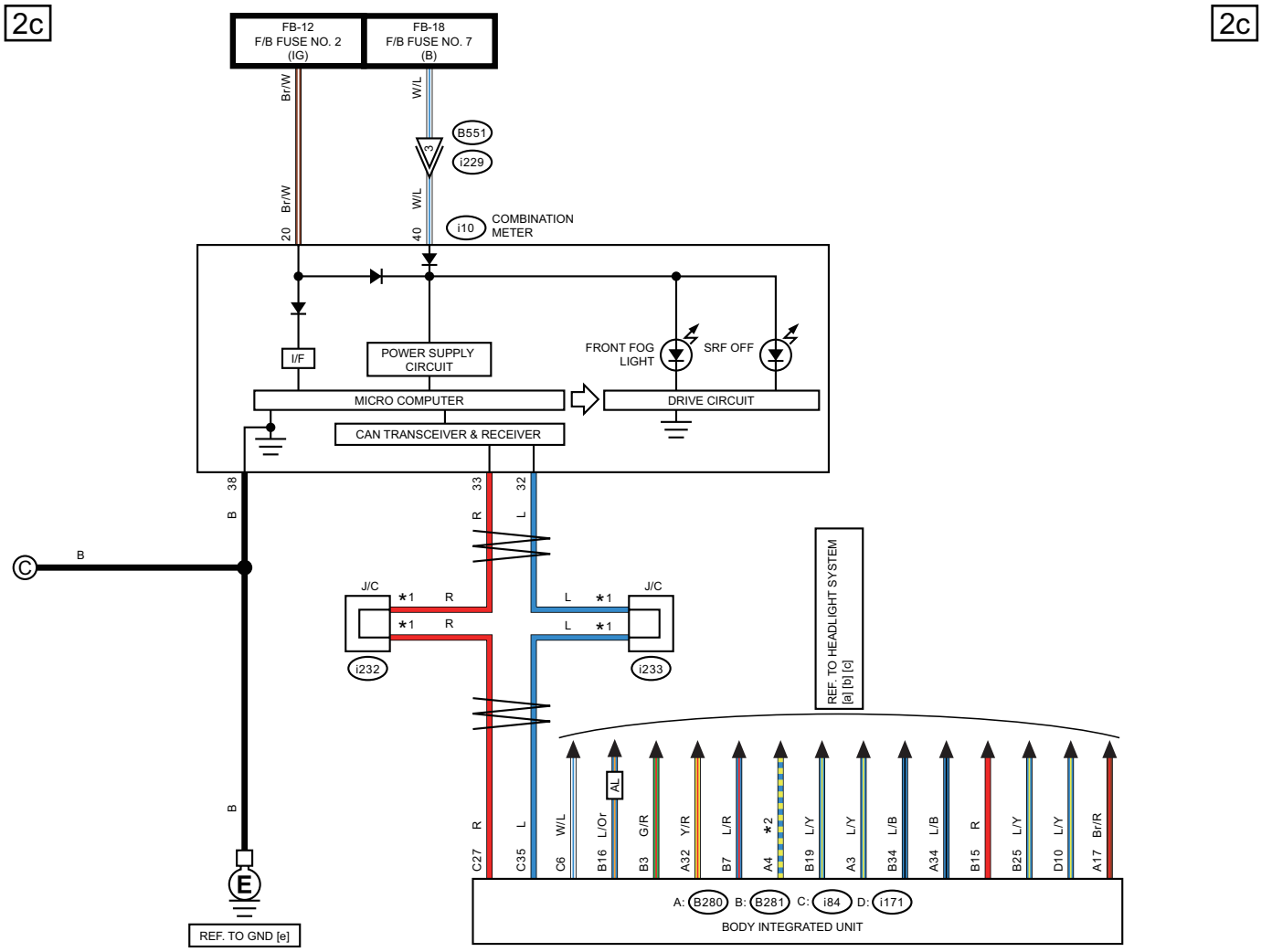

*1 : TERMINAL No. OPTIONAL ARRANGEMENT

*2 : WITHOUT PUSH BUTTON START : B/W
WITH PUSH BUTTON START : Y/R

AL : WITH AUTO LIGHT

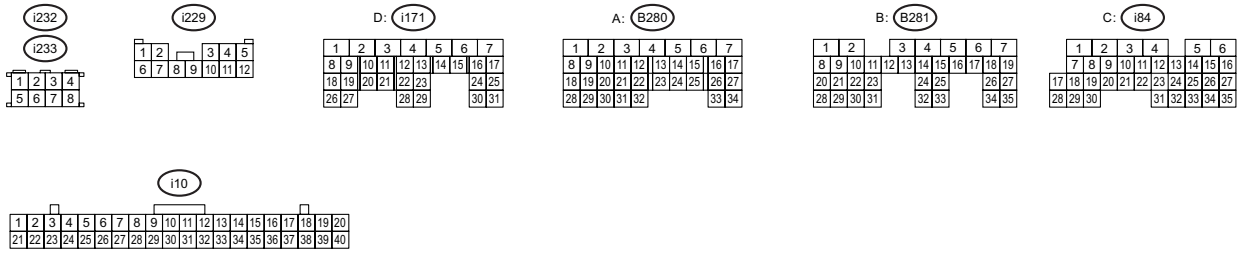

WI-67238

24.Front Wiper and Washer System

A: WIRING DIAGRAM

1. ENGINE TYPE FA

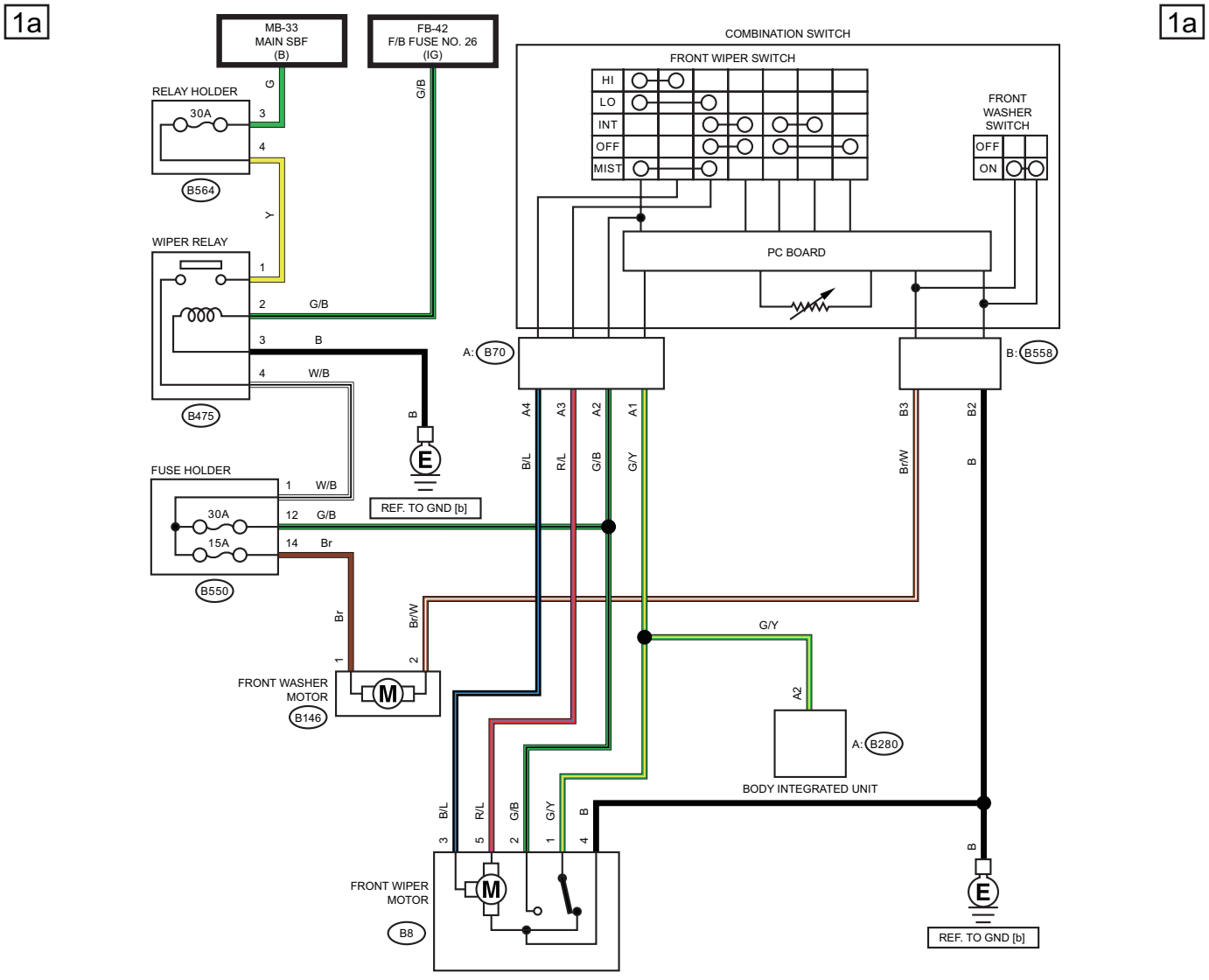

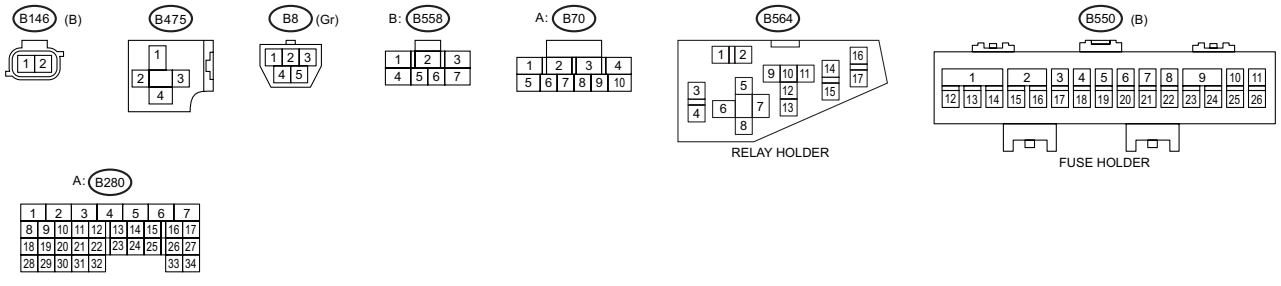

WI-67239

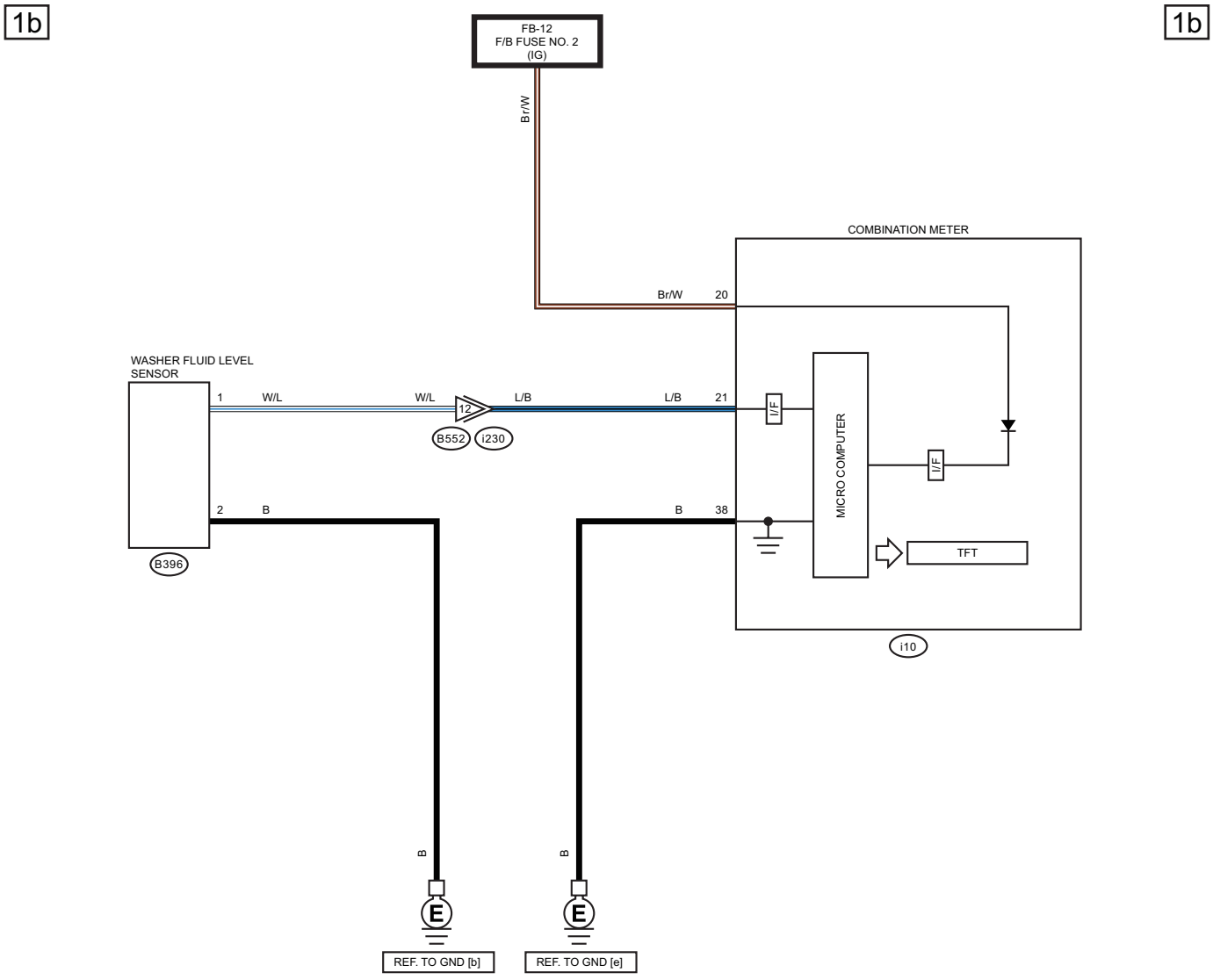
1b
1b
FB-12
F/B FUSE NO. 2
(IG)
Br/W
COMBINATION METER
Br/W
20
WASHER FLUID LEVEL
SENSOR
1
W/L
W/L
12
L/B
L/B
21
B552
i230
I/F
MICRO COMPUTER
I/F
2
B
B
38
B396
TFT
i10
B
B
REF. TO GND [b]
REF. TO GND [e]

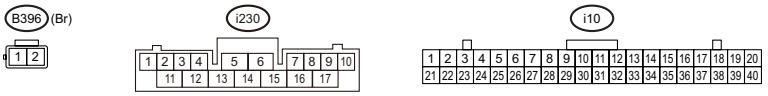
B396 (Br)
1 2
i230
1 2 3 4 5 6 7 8 9 10
11 12 13 14 15 16 17
i10
1 2 3 4 5 6 7 8 9 10 11 12 13 14 15 16 17 18 19 20
21 22 23 24 25 26 27 28 29 30 31 32 33 34 35 36 37 38 39 40

WI-66742

2. ENGINE TYPE EJ

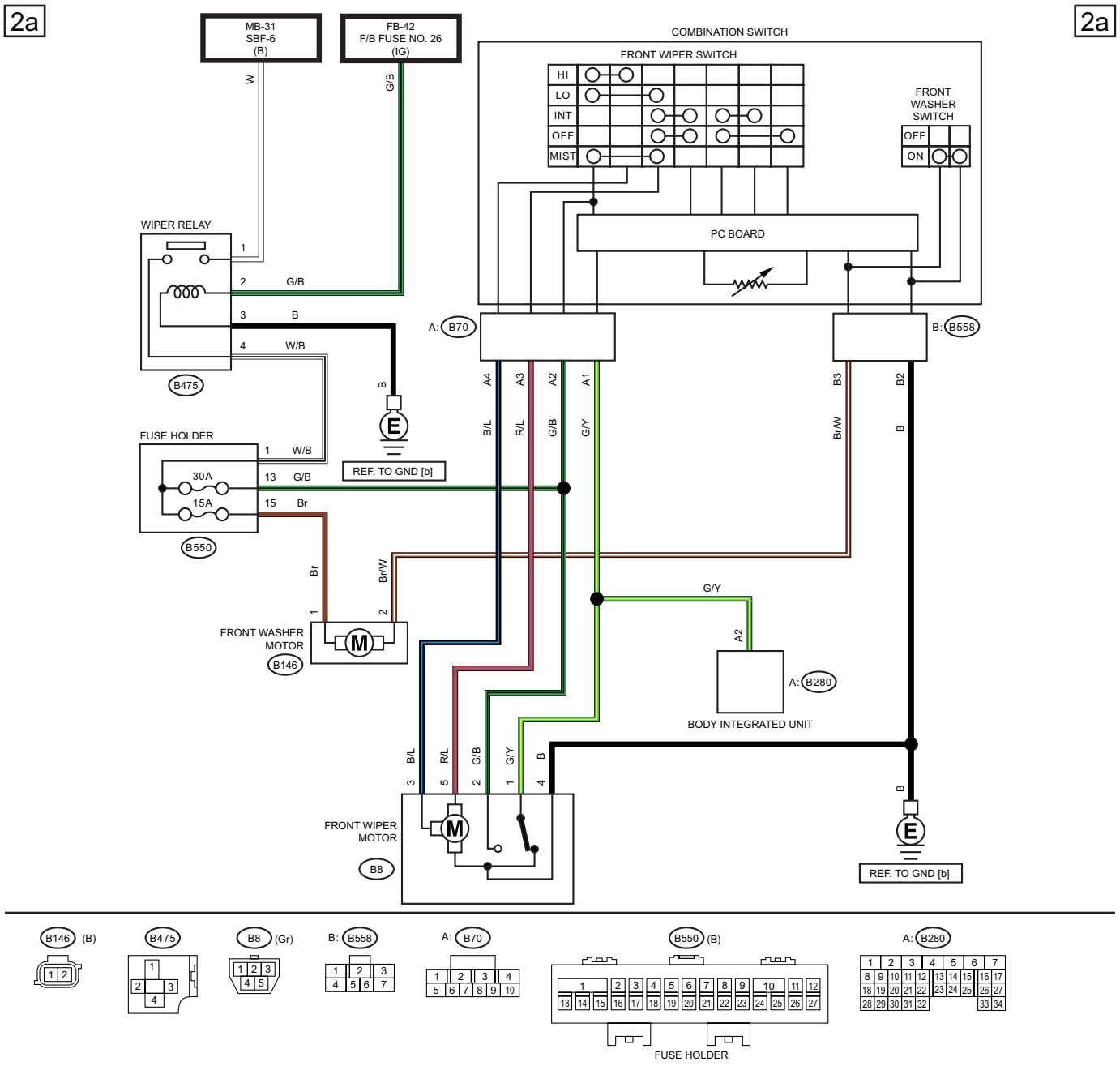

WI-67240

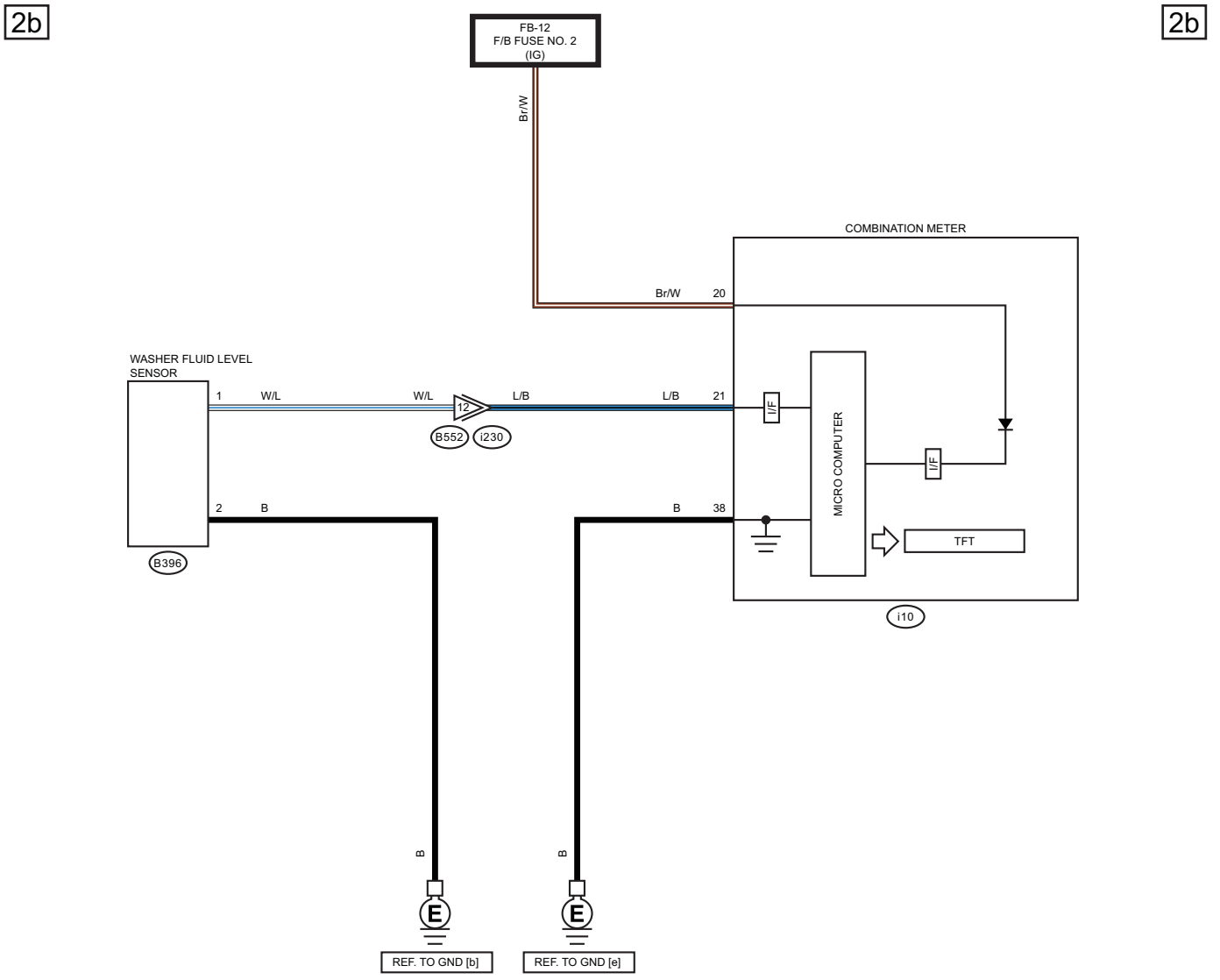
2b
2b
FB-12
F/B FUSE NO. 2
(IG)
Br/W
COMBINATION METER
Br/W
20
WASHER FLUID LEVEL
SENSOR
1
W/L
W/L
12
L/B
L/B
21
B552
i230
I/F
MICRO COMPUTER
I/F
TFT
2
B
B
38
B396
i10
B
B
REF. TO GND [b]
REF. TO GND [e]

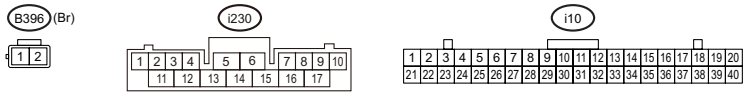
B396 (Br)
1 2
i230
1 2 3 4 5 6 7 8 9 10
11 12 13 14 15 16 17
i10
1 2 3 4 5 6 7 8 9 10 11 12 13 14 15 16 17 18 19 20
21 22 23 24 25 26 27 28 29 30 31 32 33 34 35 36 37 38 39 40

WI-66744

25.Fuel Gauge System

A: WIRING DIAGRAM

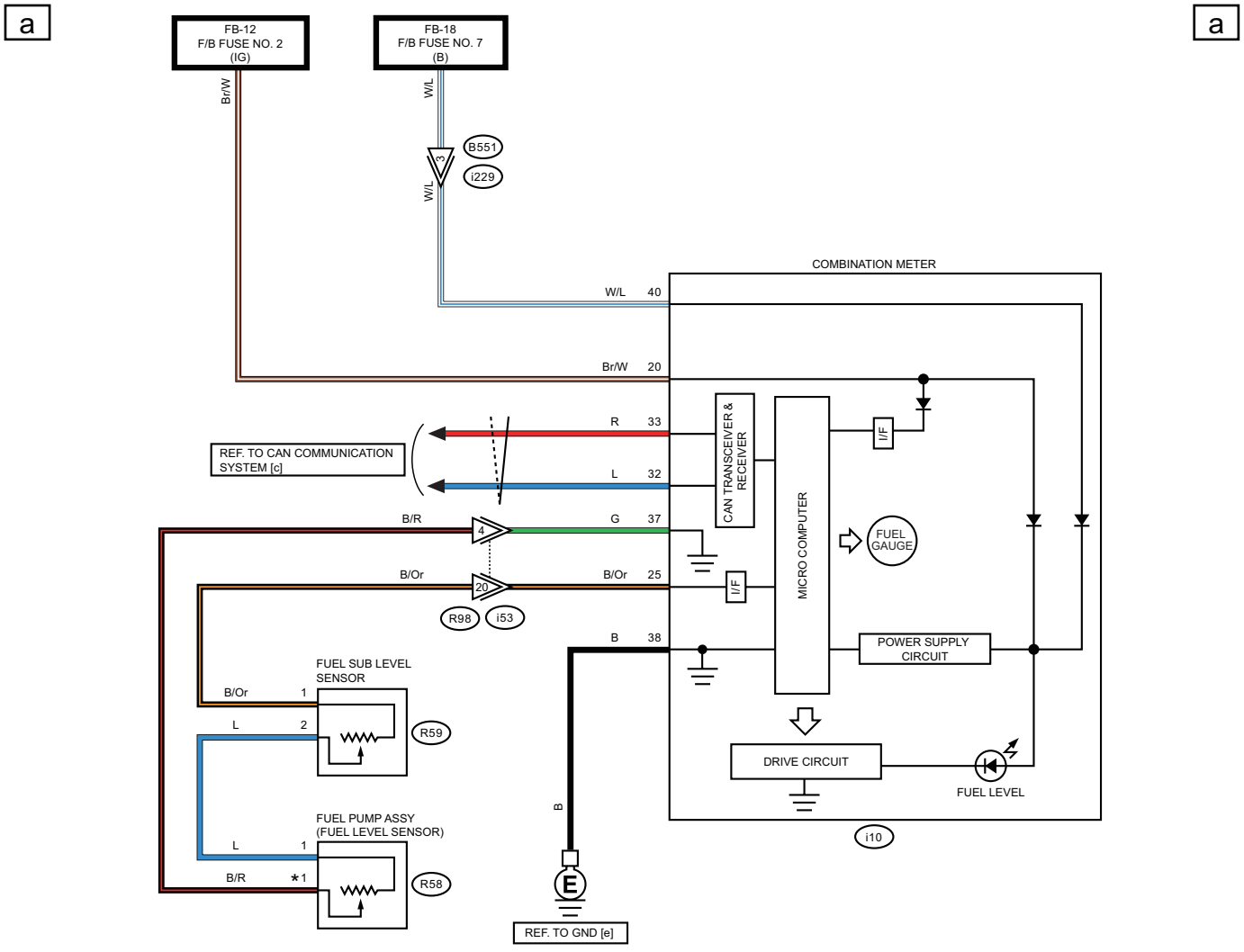

EJ : ENGINE TYPE EJ
FA : ENGINE TYPE FA

*1 : ENGINE TYPE FA : 2
ENGINE TYPE EJ : 4

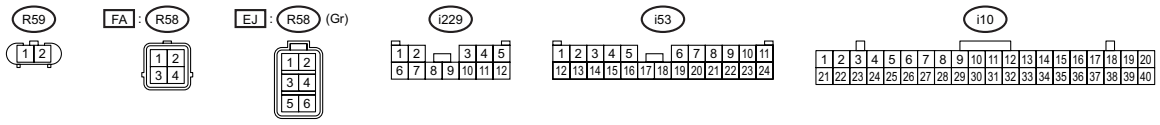

WI-66746

26.Headlight Beam Leveler System

A: WIRING DIAGRAM

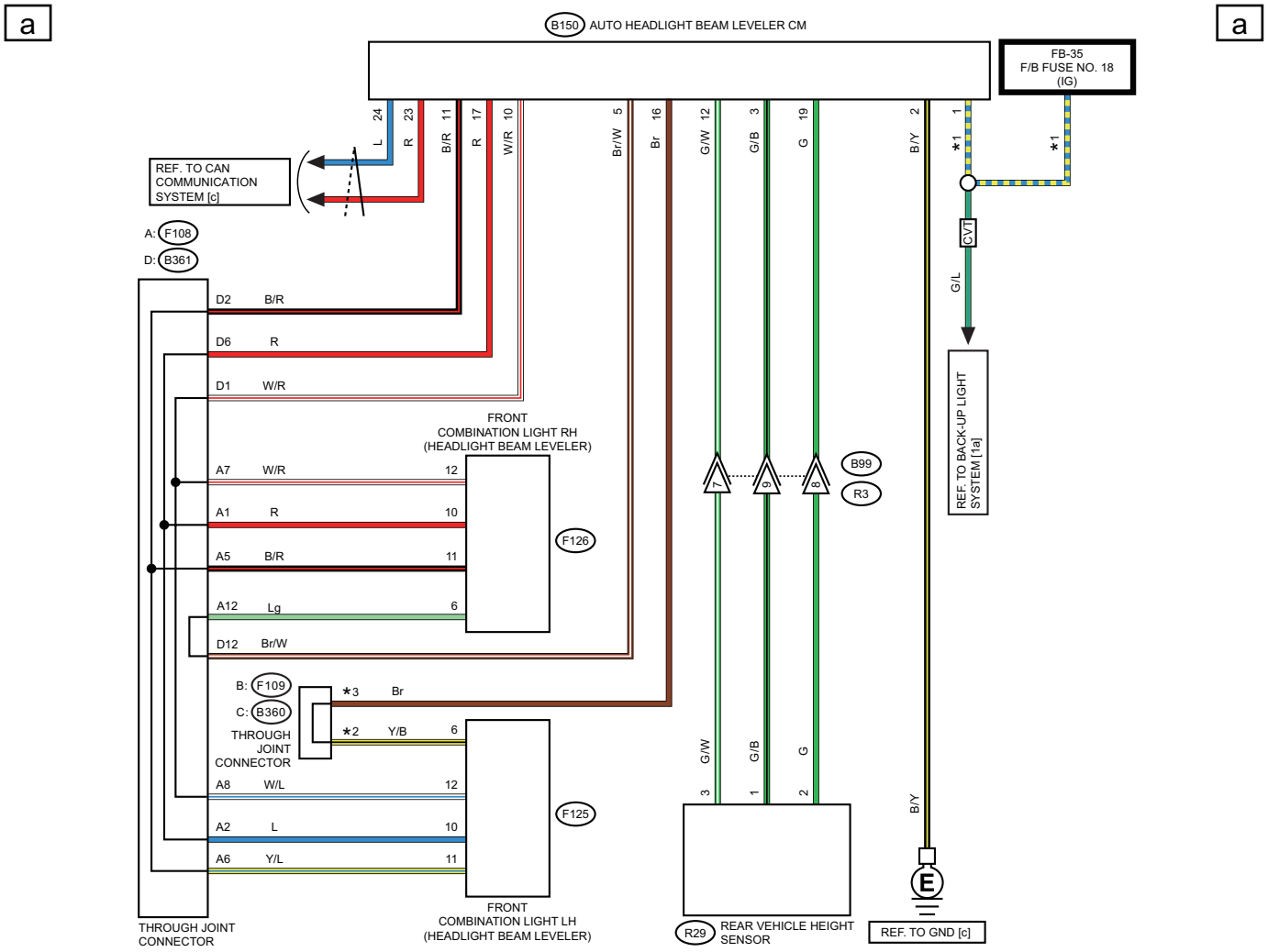

*1 : ENGINE TYPE FA : G/L
ENGINE TYPE EJ : V
*2 : WITHOUT SRF : B18
WITH SRF : B22
*3 : WITHOUT SRF : C12
WITH SRF : C8

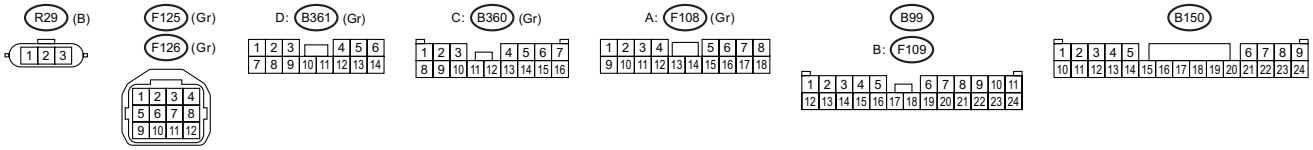

WI-66747

b

b

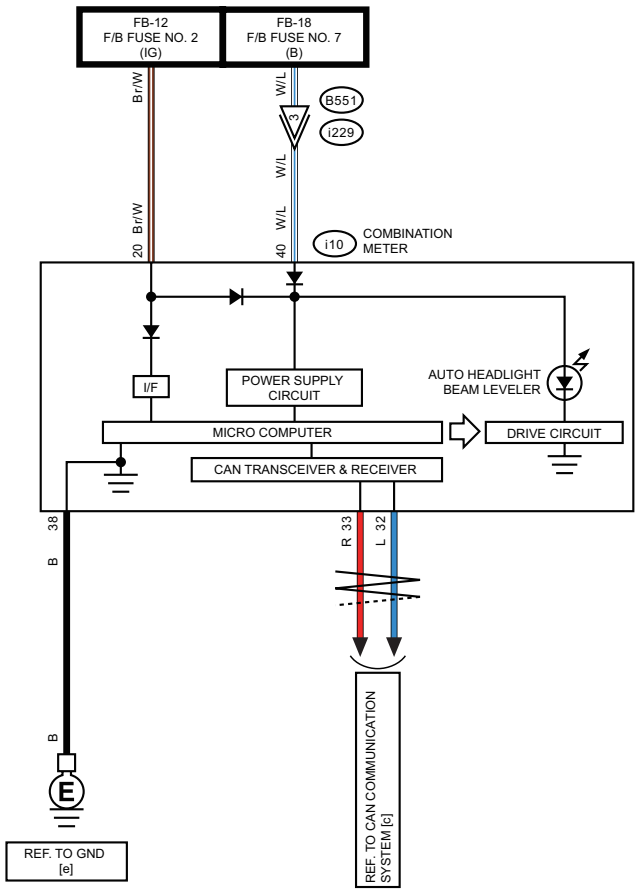
FB-12
F/B FUSE NO. 2
(IG)
FB-18
F/B FUSE NO. 7
(B)
Br/W
W/L
B551
i229
W/L
Br/W
20
40
W/L
i10
COMBINATION
METER
I/F
POWER SUPPLY
CIRCUIT
AUTO HEADLIGHT
BEAM LEVELER
MICRO COMPUTER
DRIVE CIRCUIT
CAN TRANSCEIVER & RECEIVER
38
B
R 33
L 32
B
E
REF. TO GND
[e]
REF. TO CAN COMMUNICATION
SYSTEM [c]

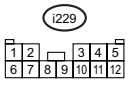
i229
1 2 3 4 5
6 7 8 9 10 11 12

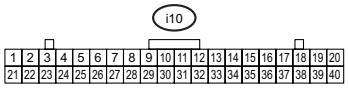
i10
1 2 3 4 5 6 7 8 9 10 11 12 13 14 15 16 17 18 19 20
21 22 23 24 25 26 27 28 29 30 31 32 33 34 35 36 37 38 39 40

WI-66748

27.Headlight System

A: WIRING DIAGRAM

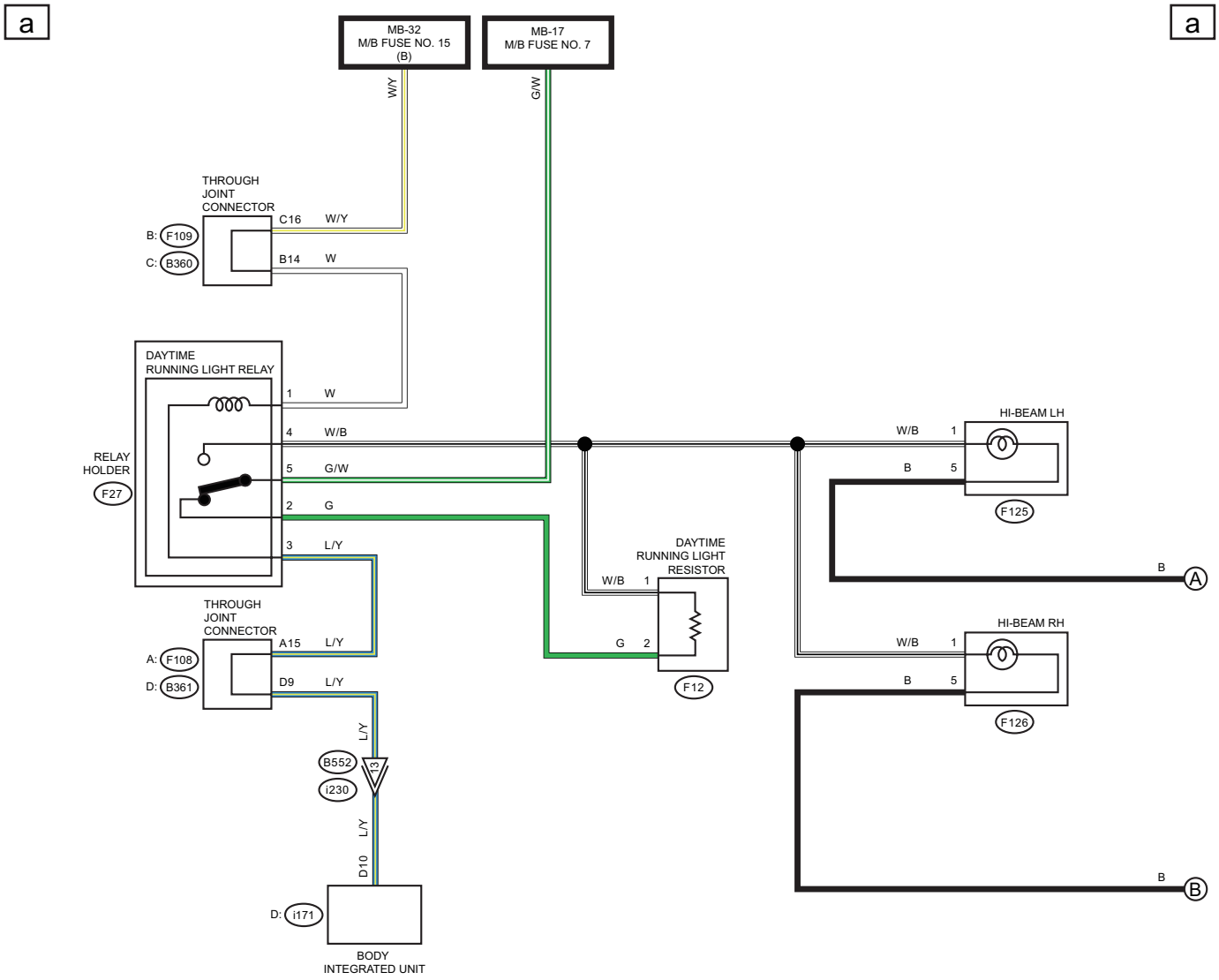

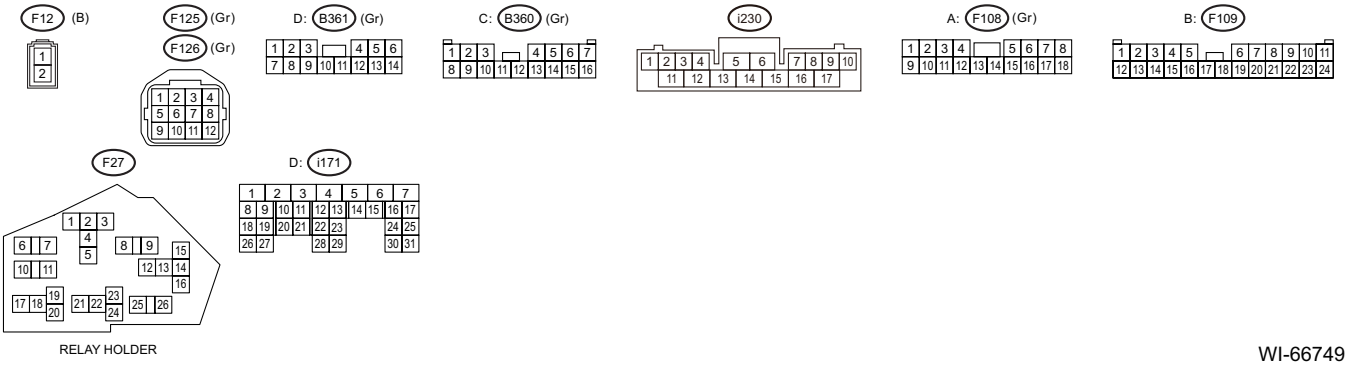

WI-66749

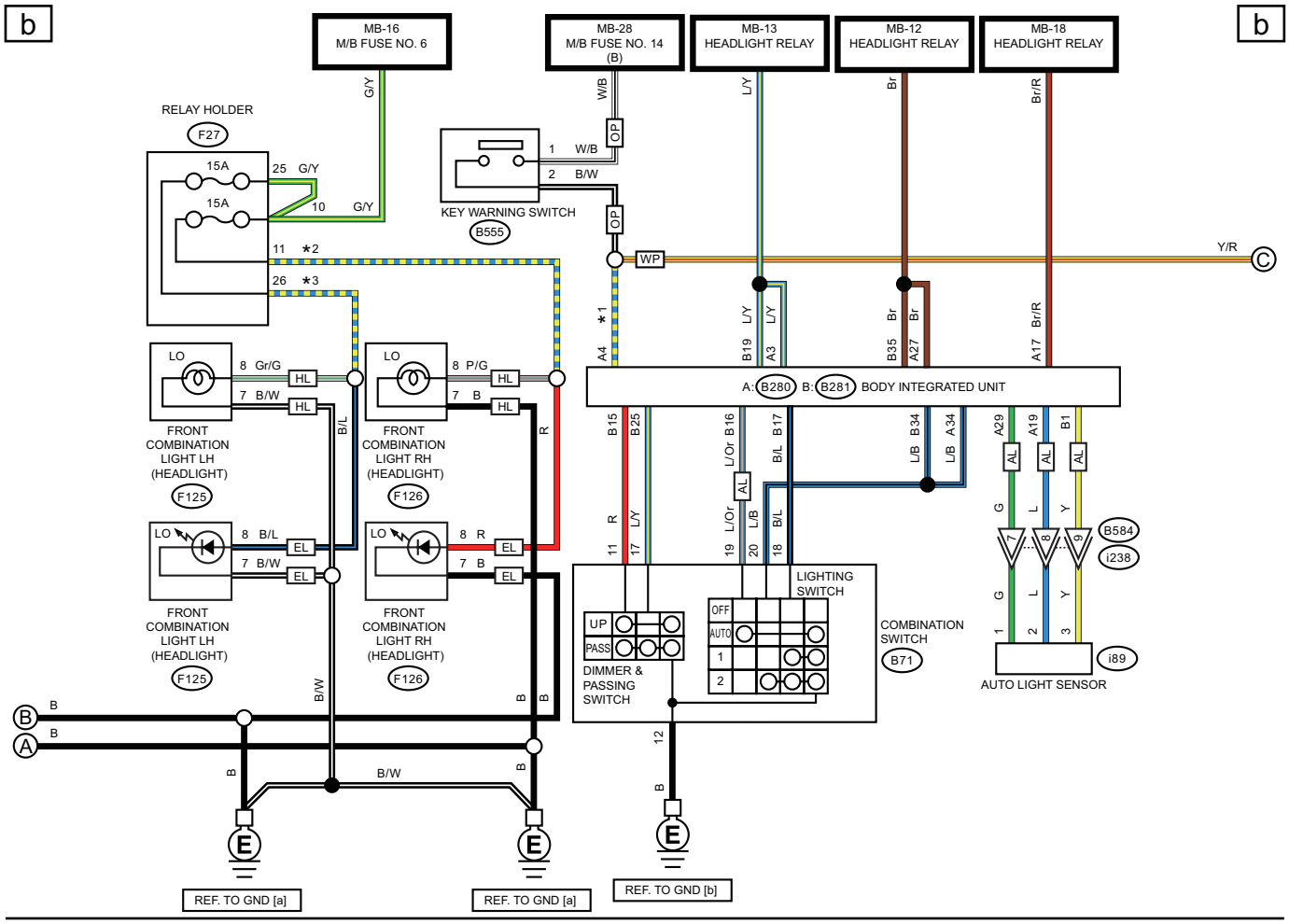

AL : WITH AUTO LIGHT
HL : HALOGEN MODEL
EL : EXCEPT FOR HALOGEN MODEL
OP : WITHOUT PUSH BUTTON START
WP : WITH PUSH BUTTON START

★1 : WITHOUT PUSH BUTTON START : B/W
WITH PUSH BUTTON START : Y/R
★2 : HALOGEN MODEL : P/G
EXCEPT FOR HALOGEN MODEL : R
★3 : HALOGEN MODEL : Gr/G
EXCEPT FOR HALOGEN MODEL : B/L

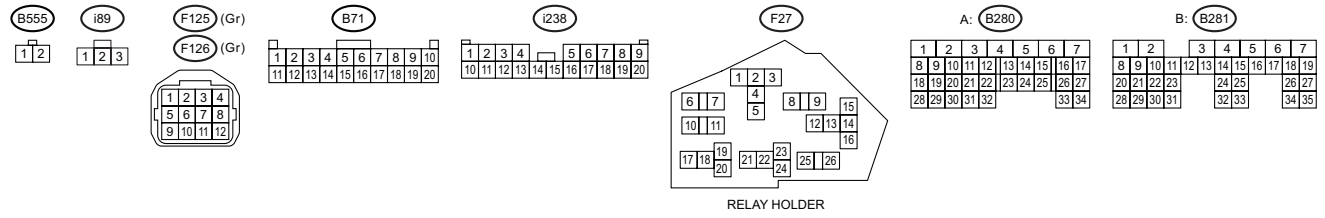

WI-67241

WIRING SYSTEM

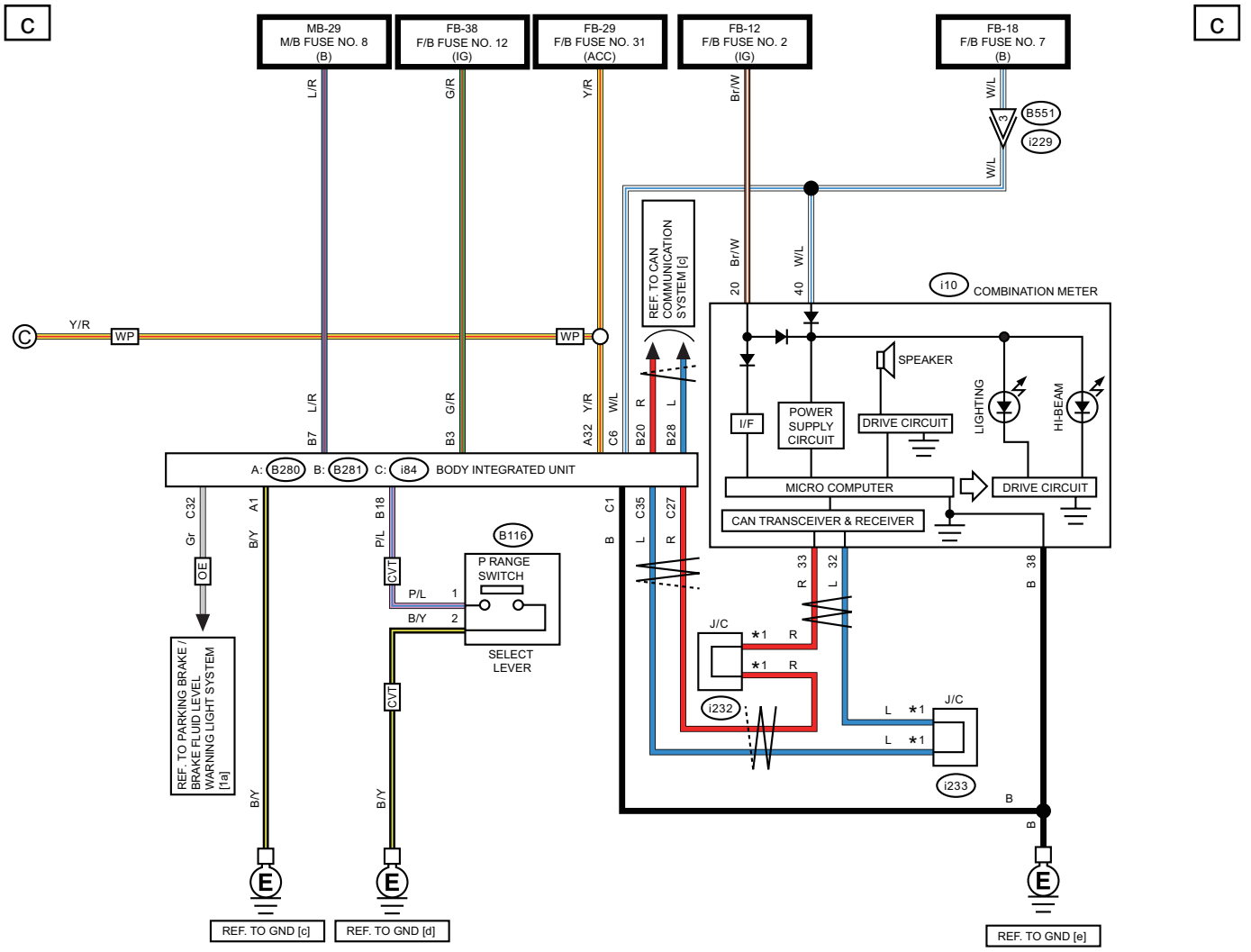

WP : WITH PUSH BUTTON START
OE : WITHOUT EyeSight
*1 : TERMINAL No. OPTIONAL ARRANGEMENT

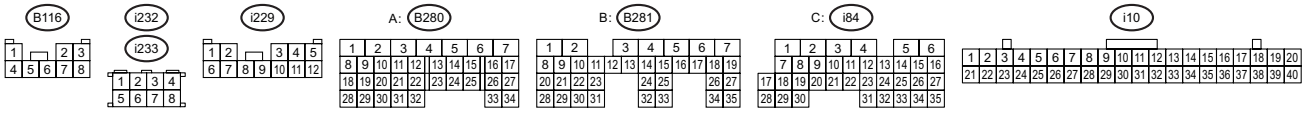

WI-66750

28.Horn System

A: WIRING DIAGRAM

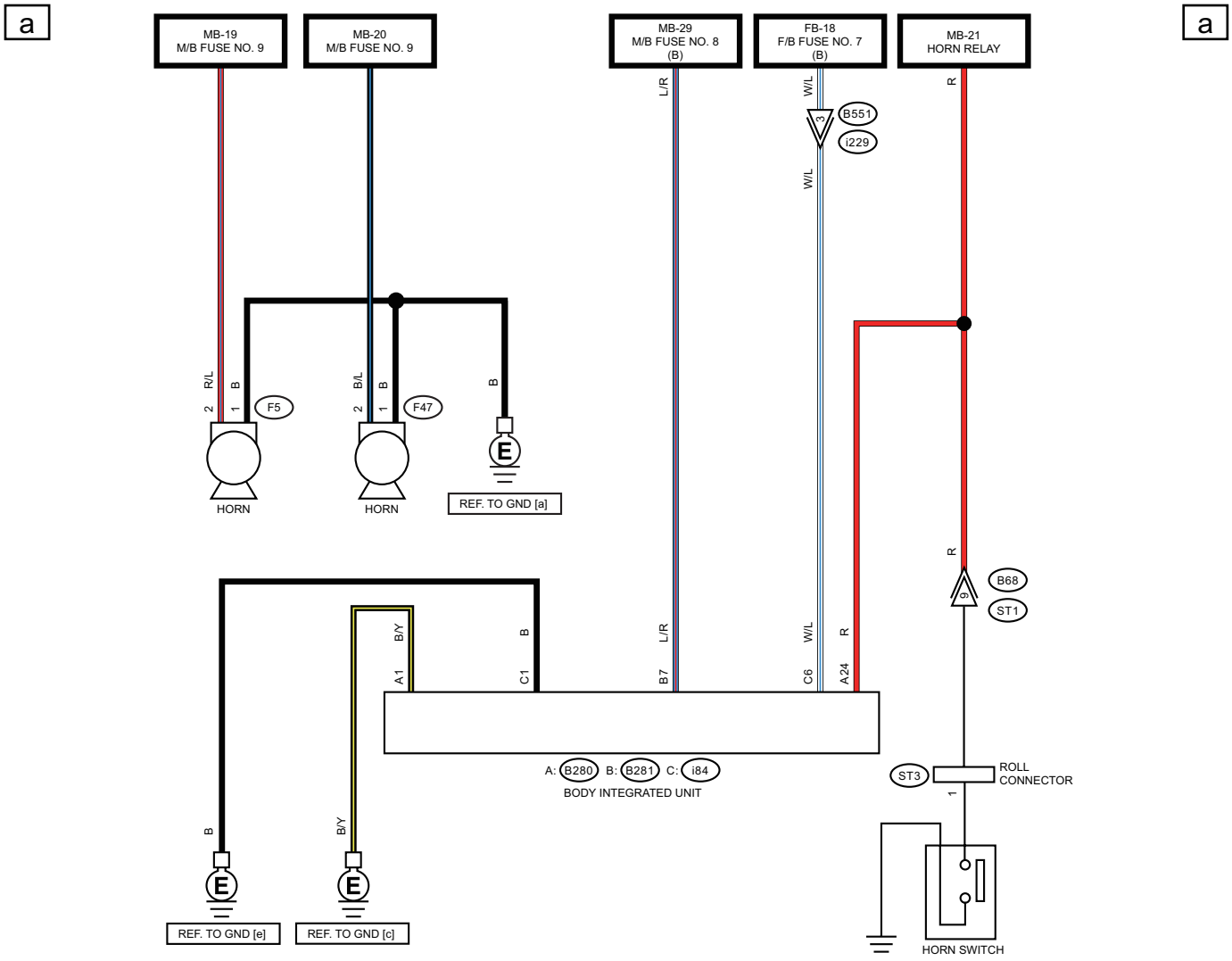

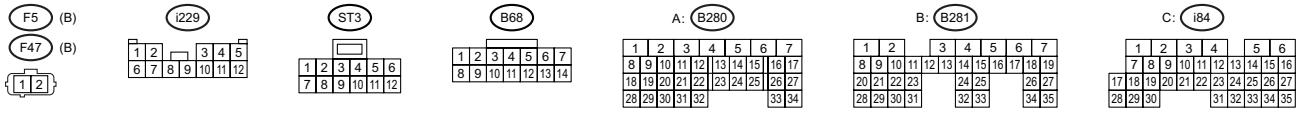

WI-67242

29.Immobilizer System

A: WIRING DIAGRAM

1. ENGINE TYPE FA (WITHOUT PUSH BUTTON START)

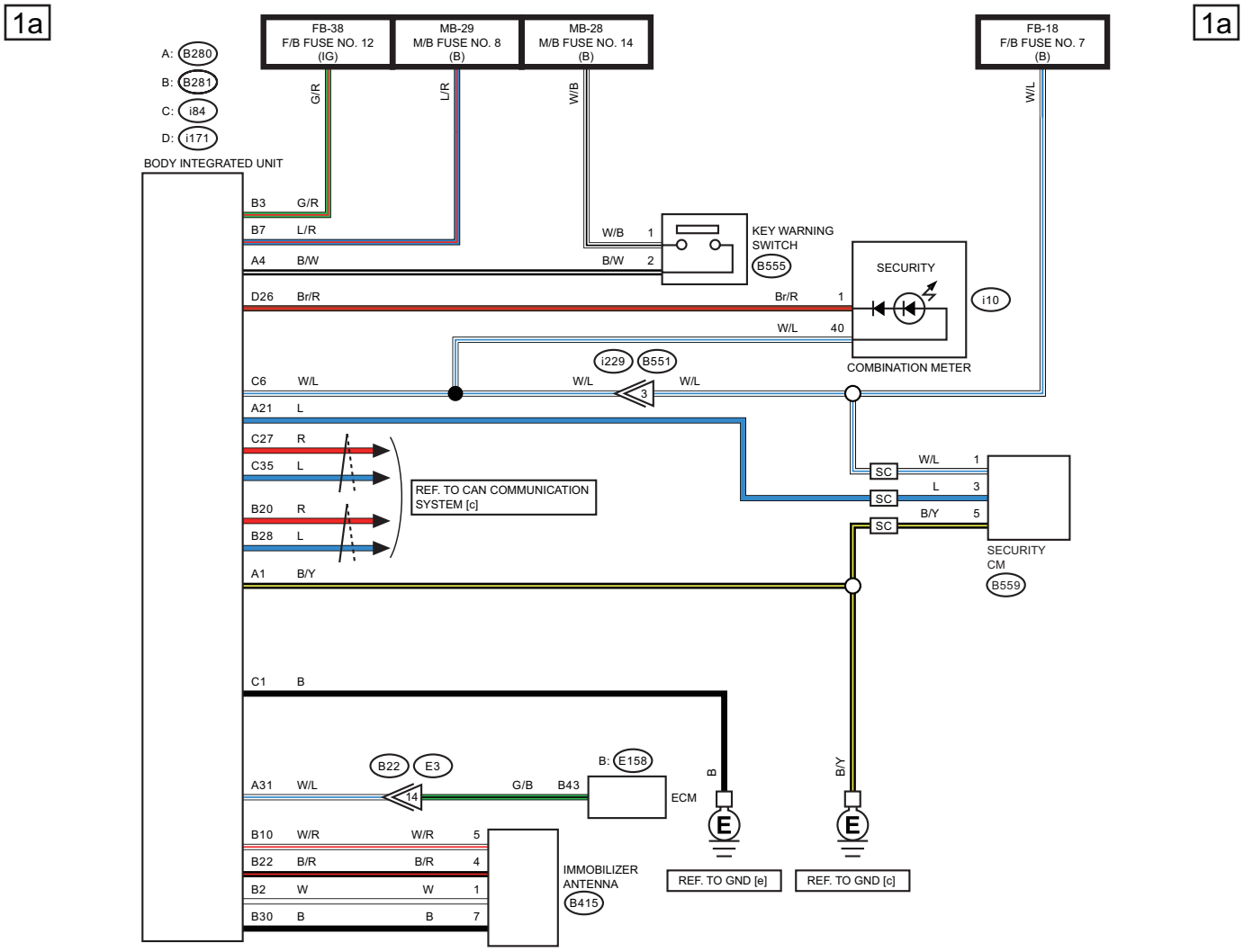

SC : WITH SECURITY CM

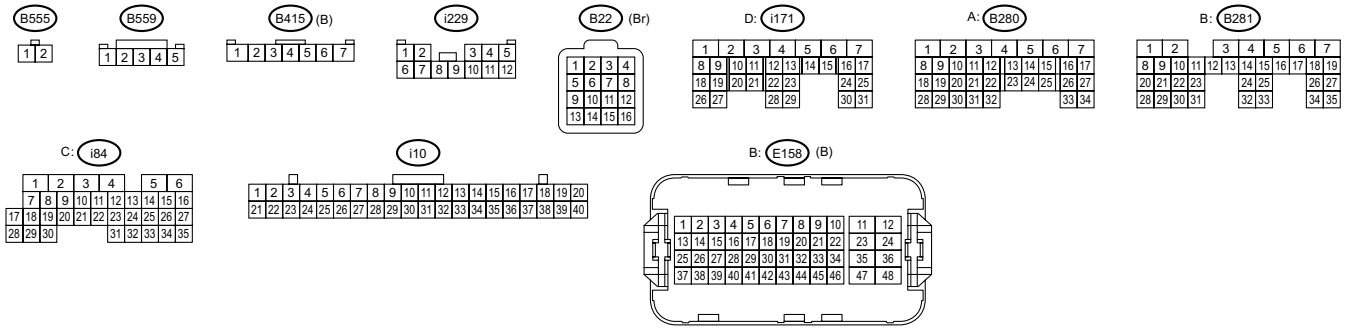

WI-66752

2. ENGINE TYPE FA (WITH PUSH BUTTON START)

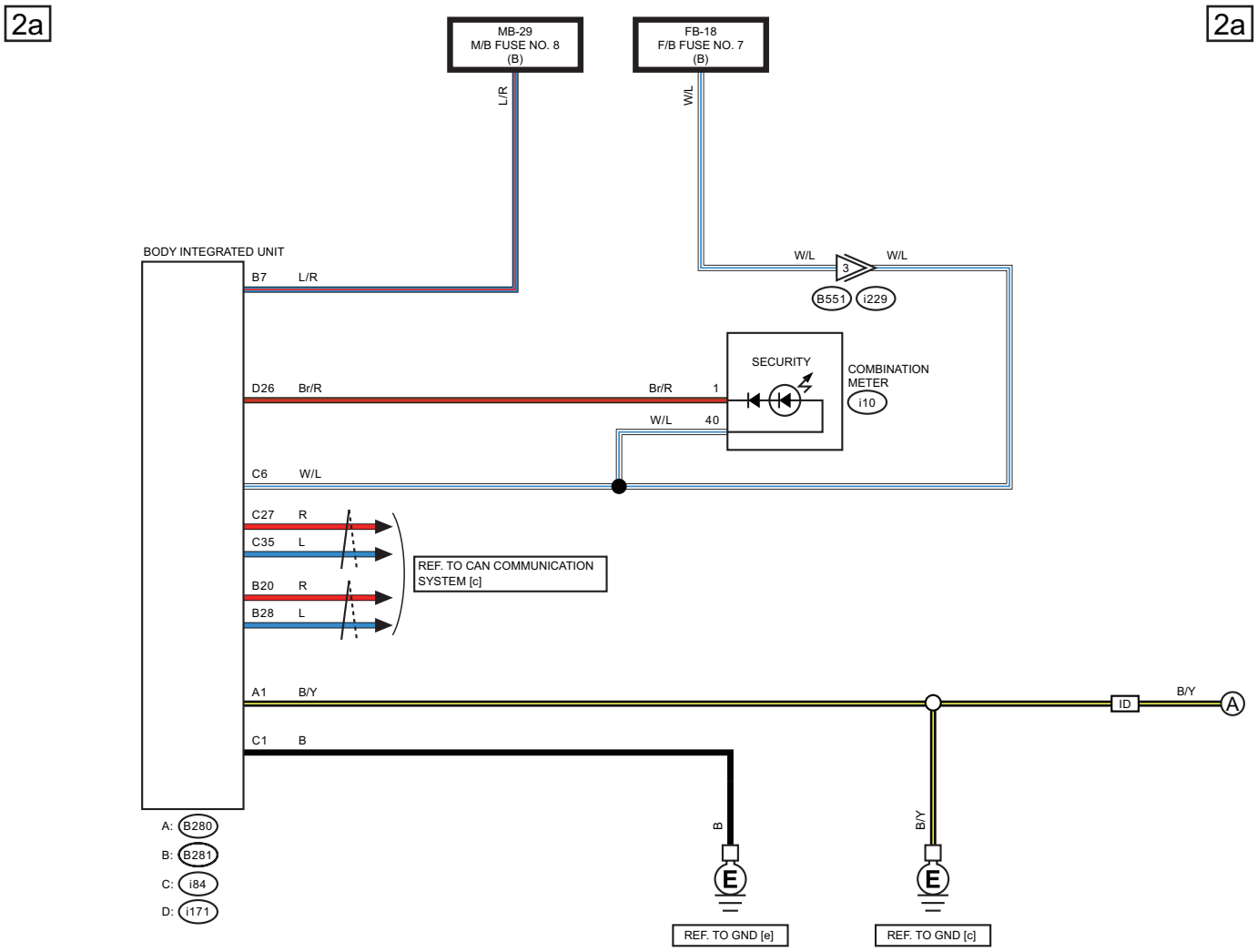

ID : WITH ID CODE BOX

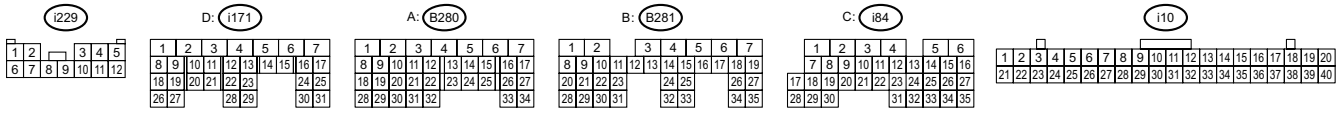

WI-66753

WIRING SYSTEM

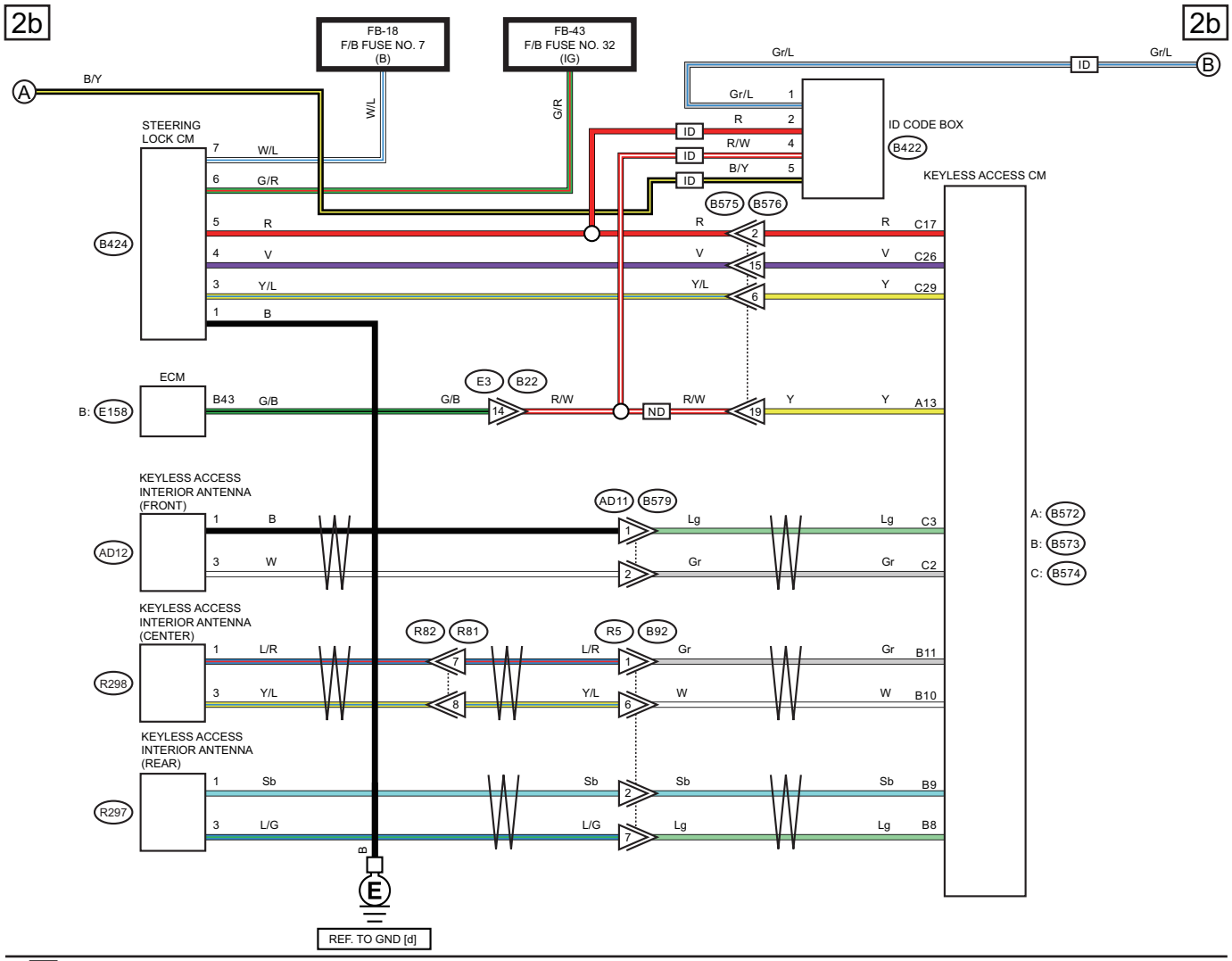

ND : WITHOUT ID CODE BOX

ID : WITH ID CODE BOX

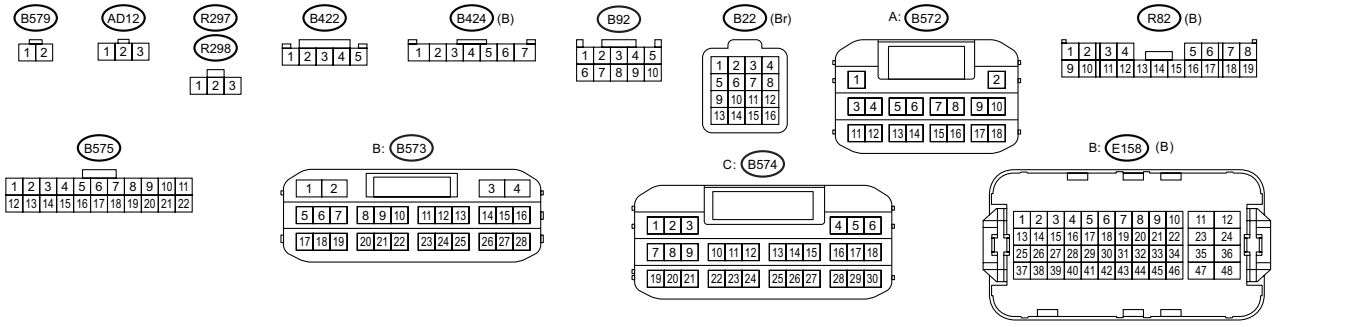

WI-67243

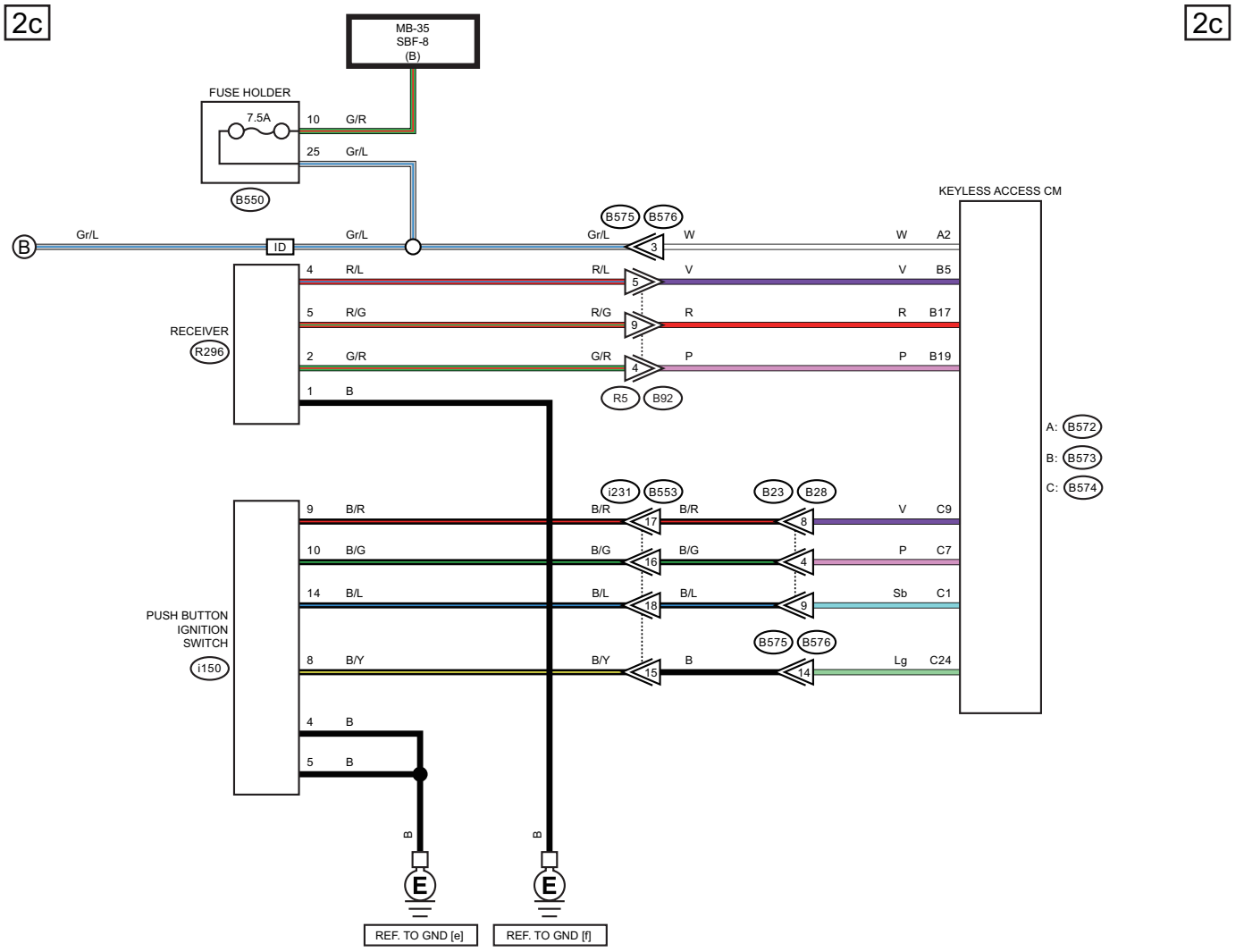

ID : WITH ID CODE BOX

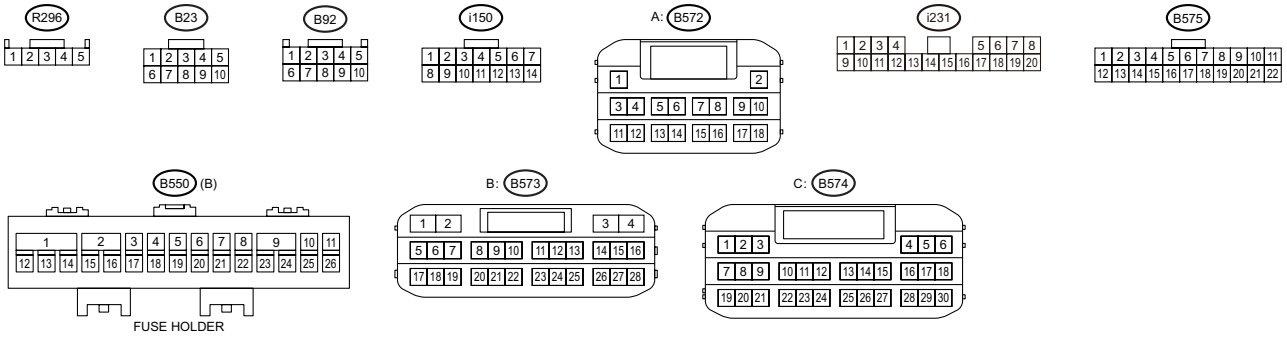

WI-67244

3. ENGINE TYPE EJ (WITHOUT PUSH BUTTON START)

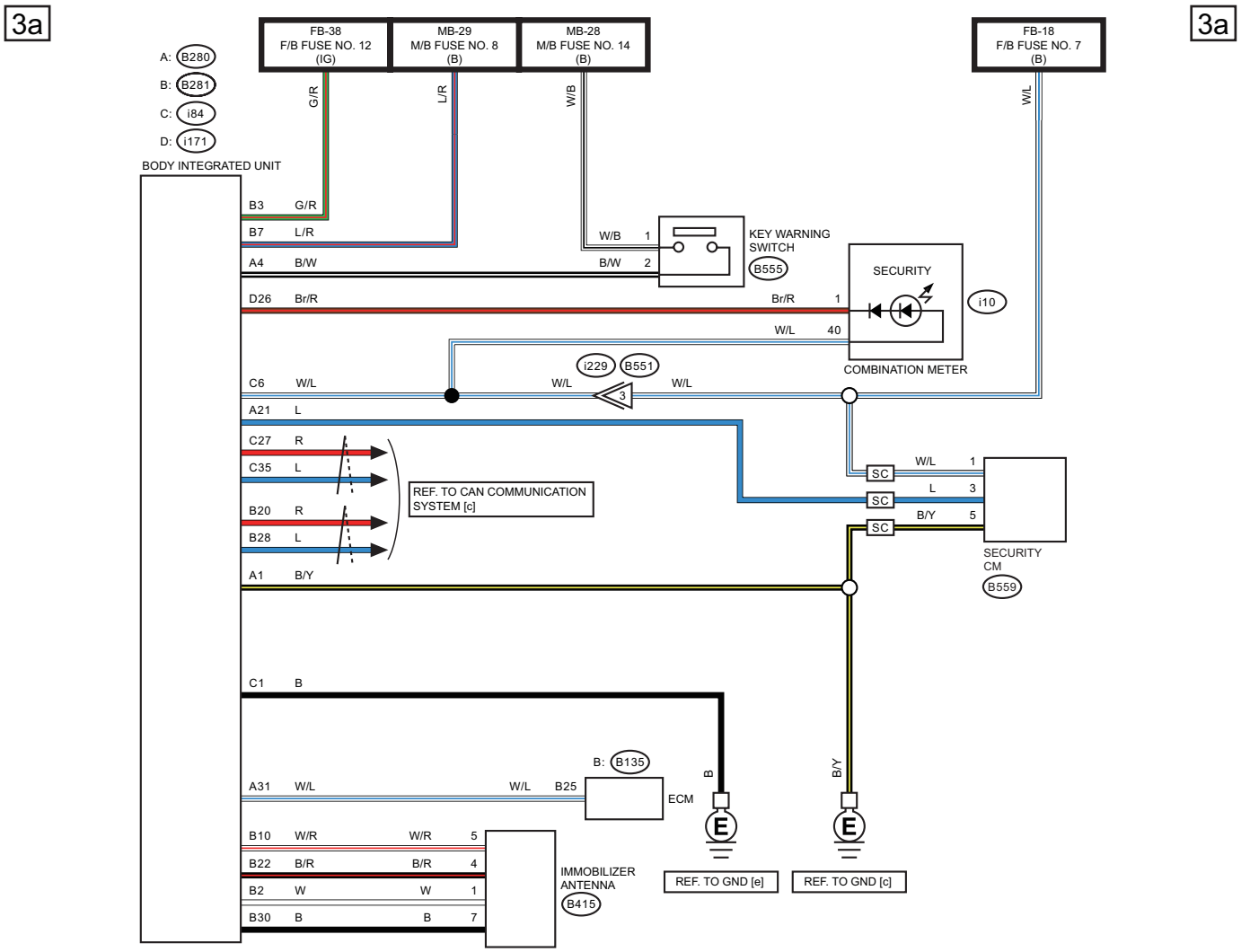

SC : WITH SECURITY CM

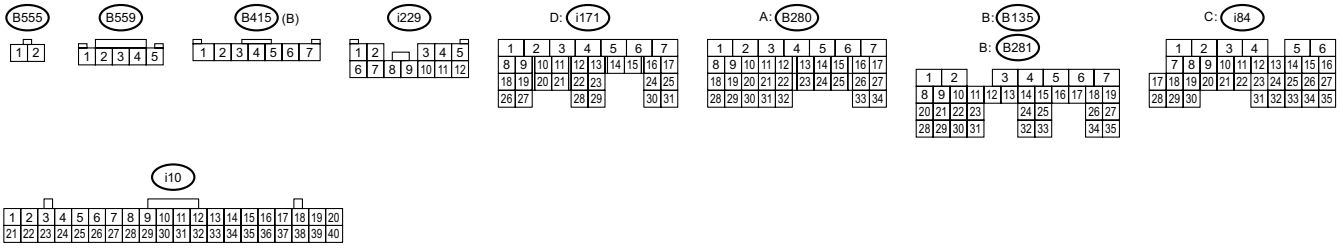

WI-66755

4. ENGINE TYPE EJ (WITH PUSH BUTTON START)

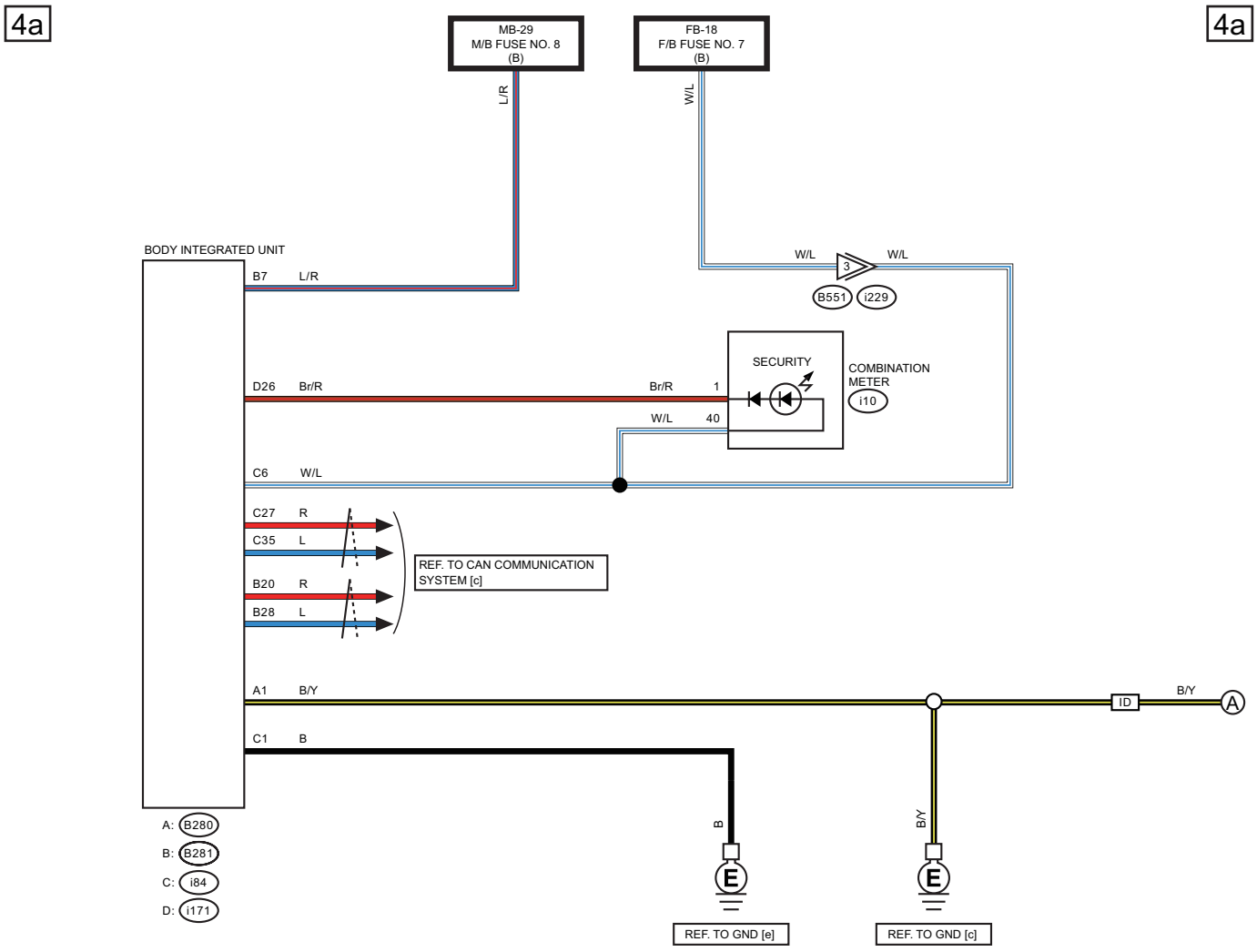

ID : WITH ID CODE BOX

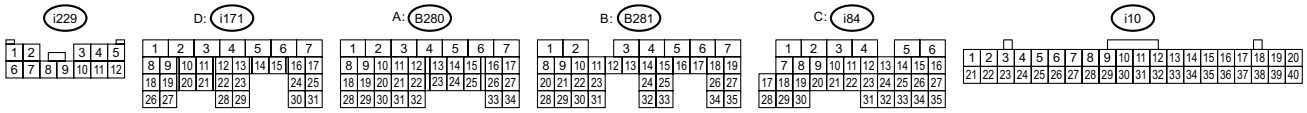

WI-66756

WIRING SYSTEM

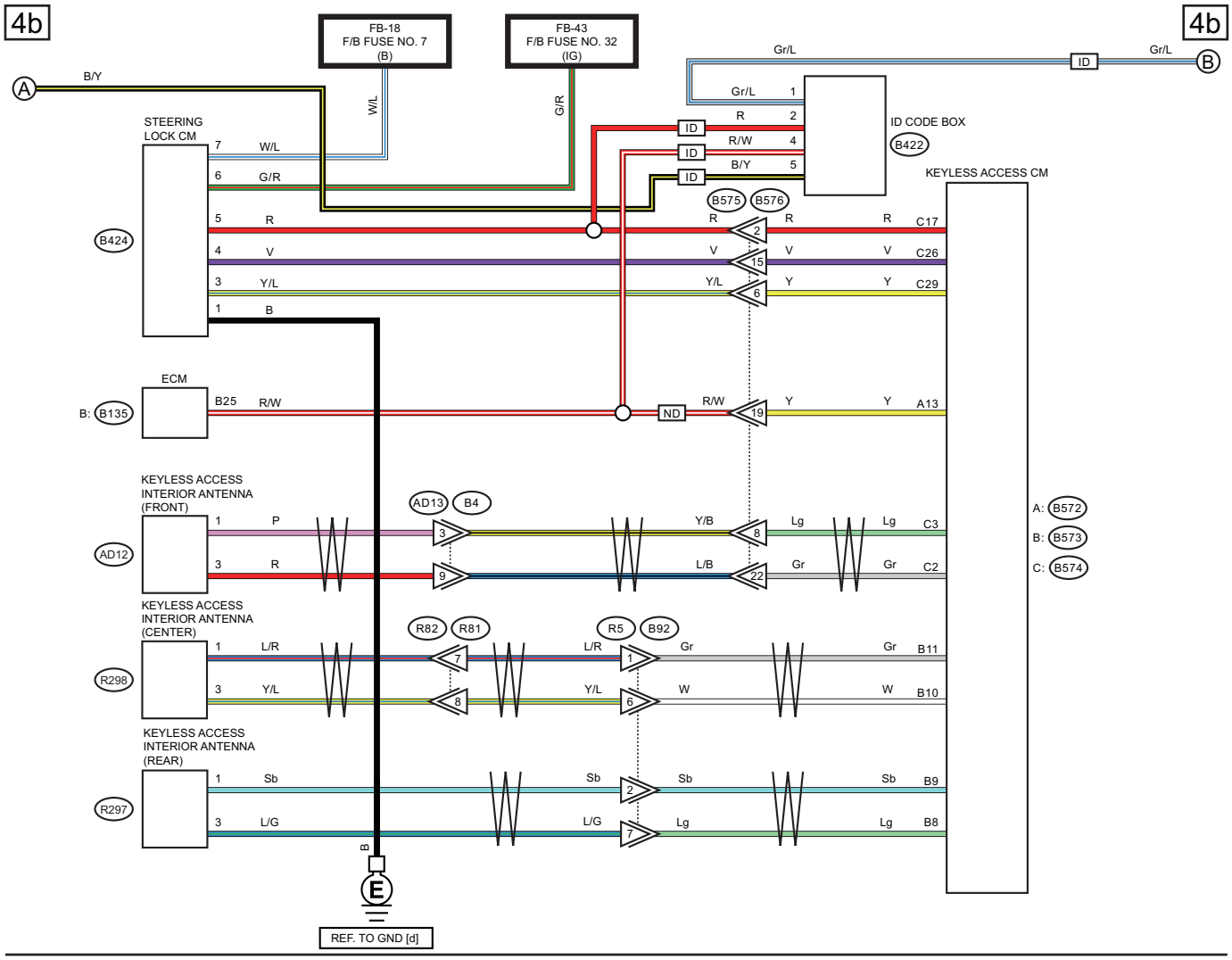

ND : WITHOUT ID CODE BOX

ID : WITH ID CODE BOX

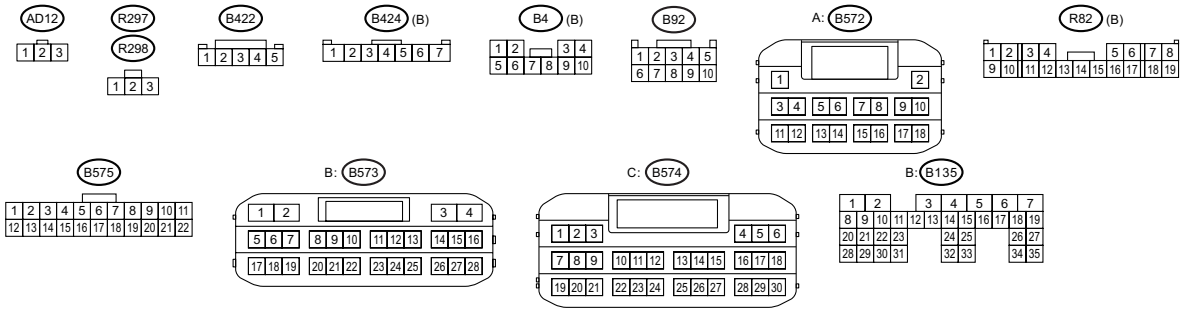

WI-67245

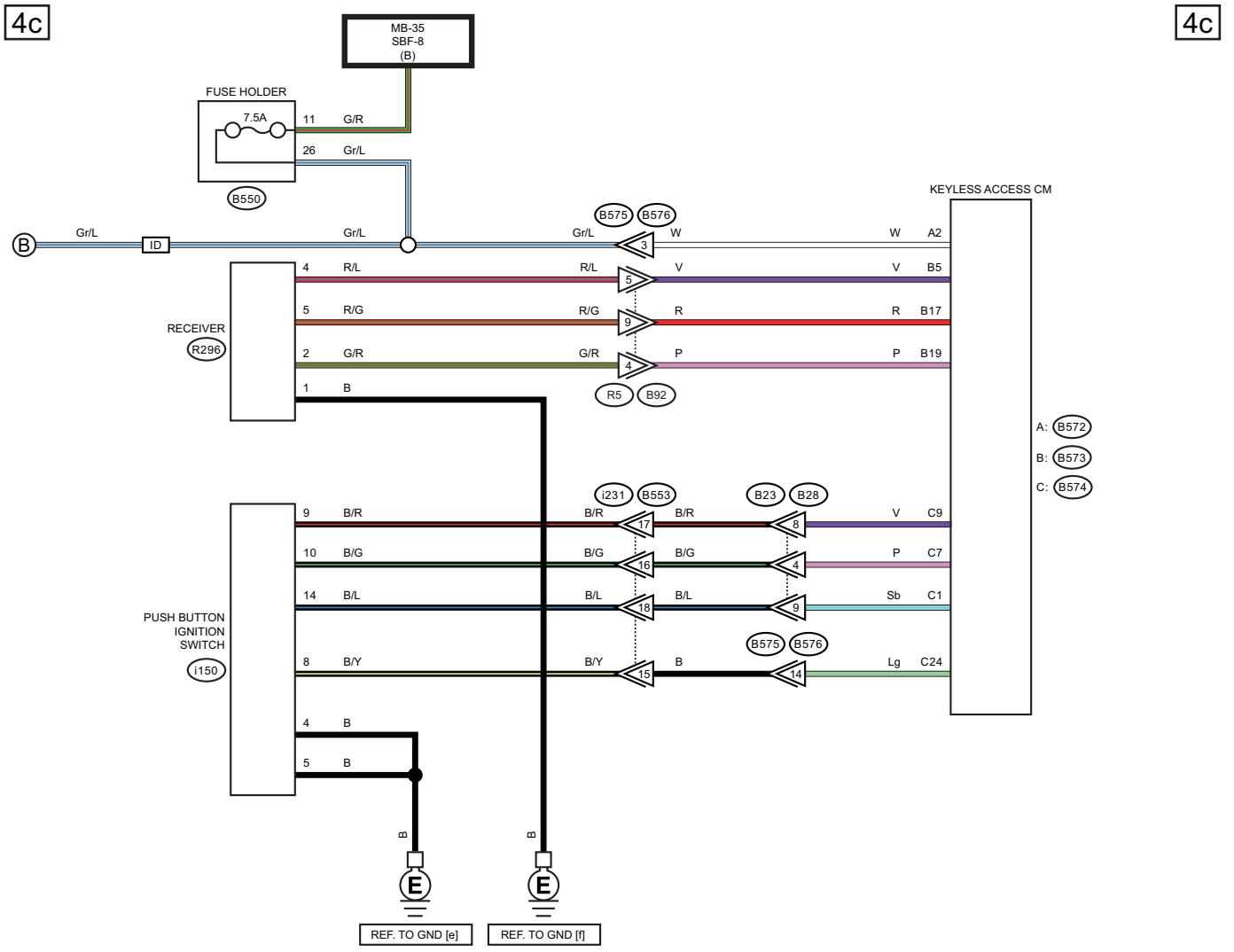

ID : WITH ID CODE BOX

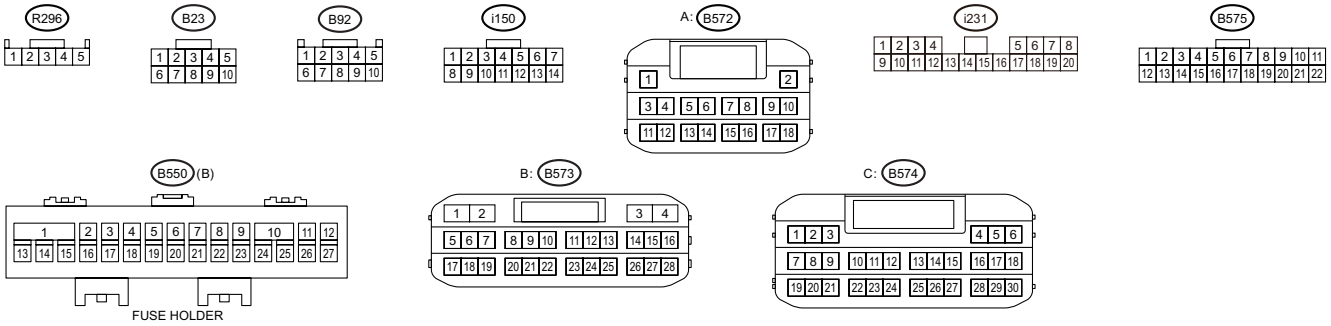

WI-67246

30.Interior Light System

A: WIRING DIAGRAM

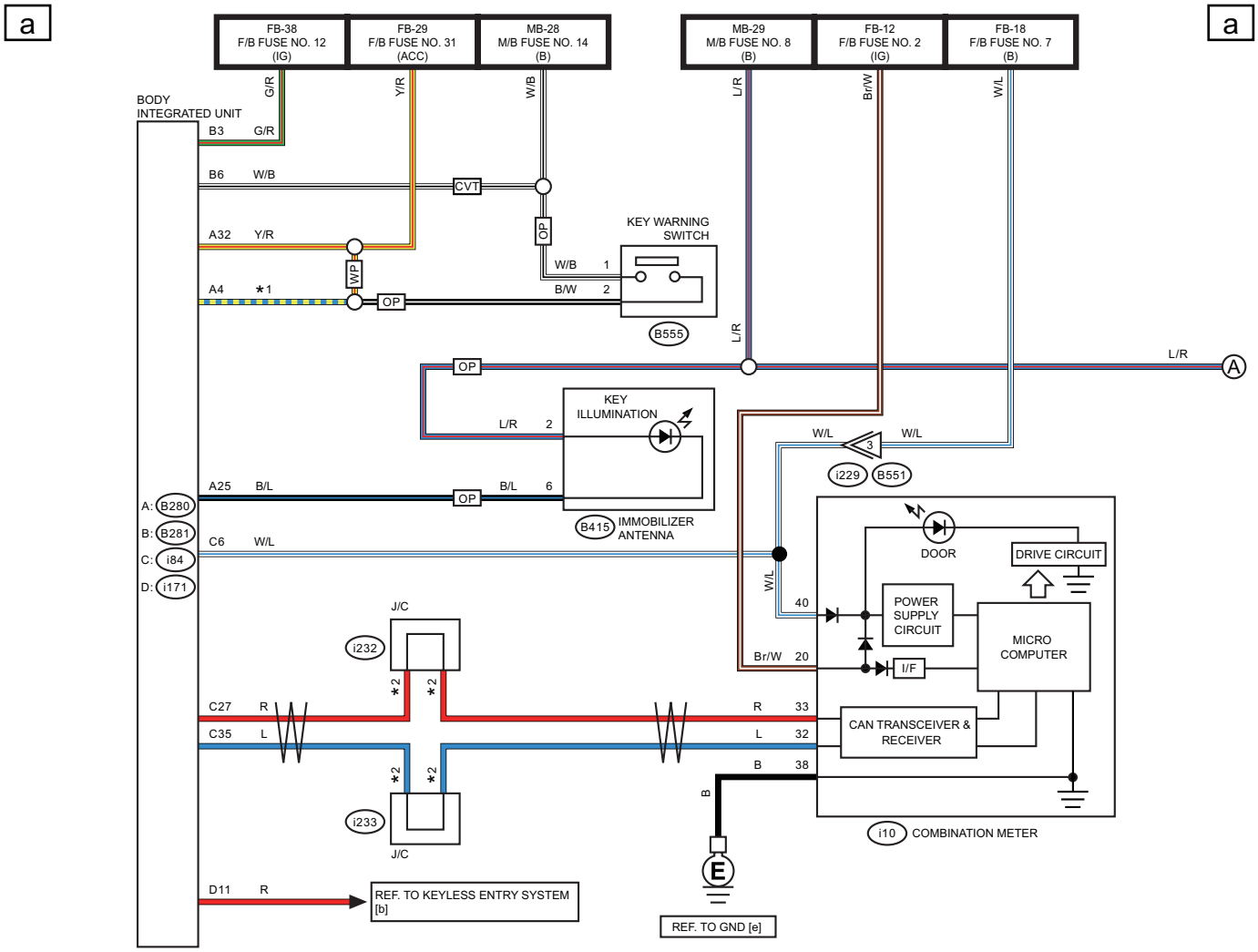

OP : WITHOUT PUSH BUTTON START
WP : WITH PUSH BUTTON START

★1 : WITHOUT PUSH BUTTON START : B/W
WITH PUSH BUTTON START : Y/R
★2 : TERMINAL No. OPTIONAL ARRANGEMENT

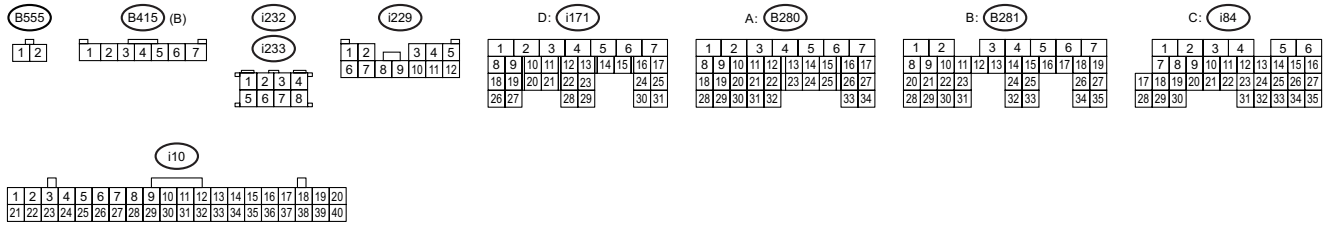

WI-67247

Interior Light System

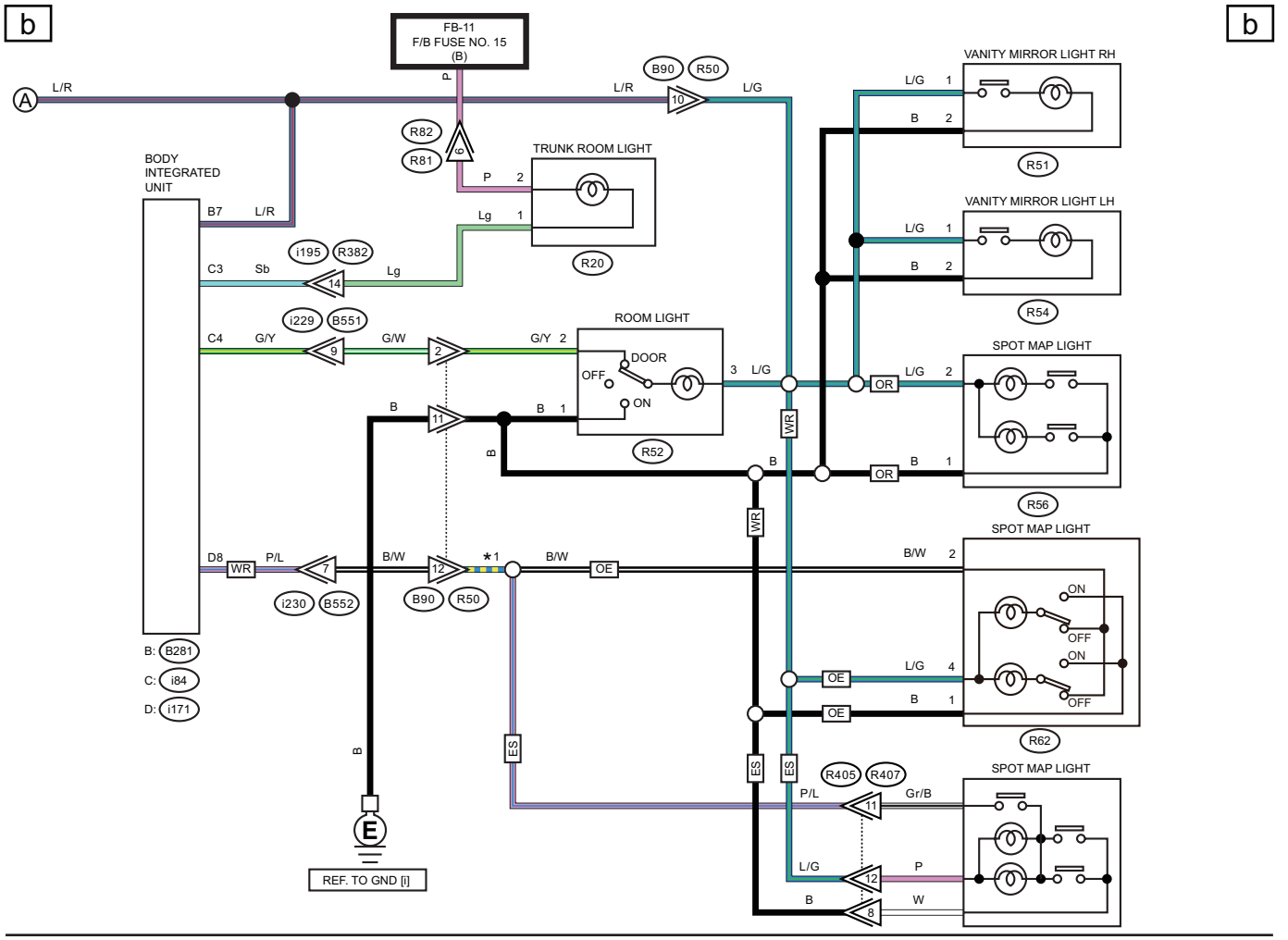

OR : WITHOUT SUNROOF
WR : WITH SUNROOF
OE : WITHOUT EyeSight
ES : WITH EyeSight

*1 : WITHOUT EyeSight : B/W
WITH EyeSight : P/L

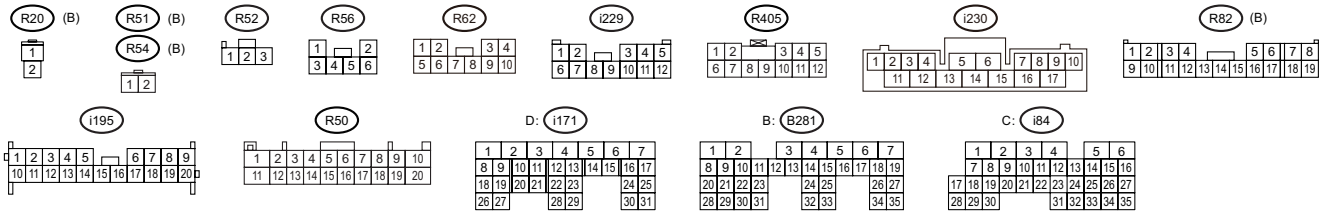

WI-66758

C

C

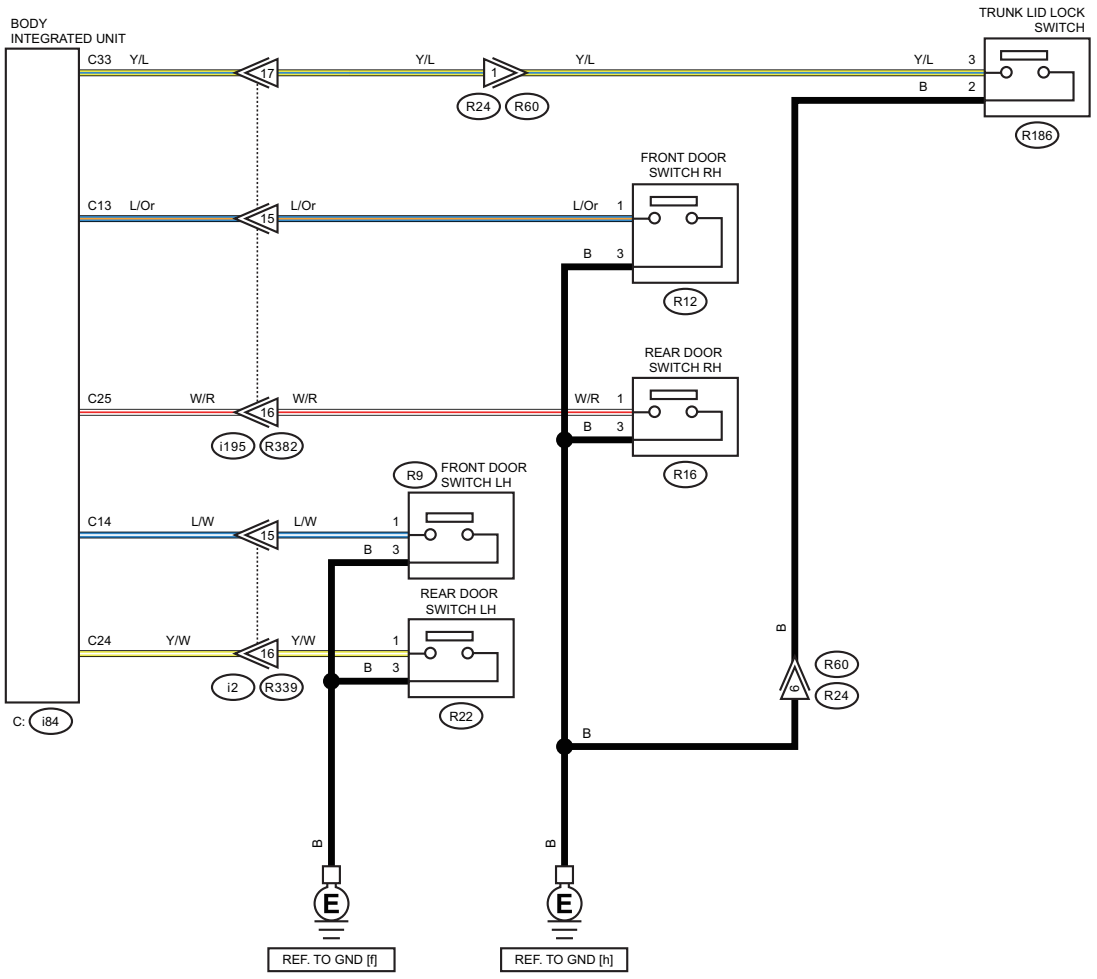
BODY
INTEGRATED UNIT
C33 Y/L
17
Y/L
1
Y/L
R24
R60
Y/L 3
B 2
TRUNK LID LOCK
SWITCH
R186
FRONT DOOR
SWITCH RH
C13 L/Or
15
L/Or
L/Or 1
B 3
R12
REAR DOOR
SWITCH RH
C25 W/R
16
W/R
W/R 1
B 3
i195
R382
R16
R9
FRONT DOOR
SWITCH LH
C14 L/W
15
L/W
1
B 3
REAR DOOR
SWITCH LH
C24 Y/W
16
Y/W
1
B 3
i2
R339
R22
B
6
R60
R24
C: i84
B
B
E
E
REF. TO GND [f]
REF. TO GND [h]

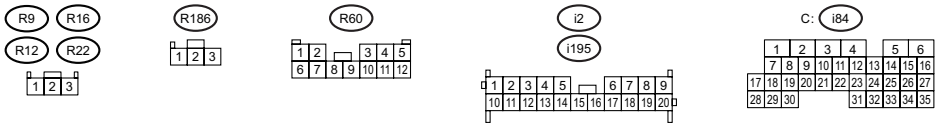
R9
R16
R12
R22
1 2 3
R186
1 2 3
R60
1 2 3 4 5
6 7 8 9 10 11 12
i2
i195
1 2 3 4 5 6 7 8 9
10 11 12 13 14 15 16 17 18 19 20
C: i84
1 2 3 4 5 6
7 8 9 10 11 12 13 14 15 16
17 18 19 20 21 22 23 24 25 26 27
28 29 30 31 32 33 34 35

WI-67248

31.Keyless Access System

A: WIRING DIAGRAM

1. ENGINE TYPE FA

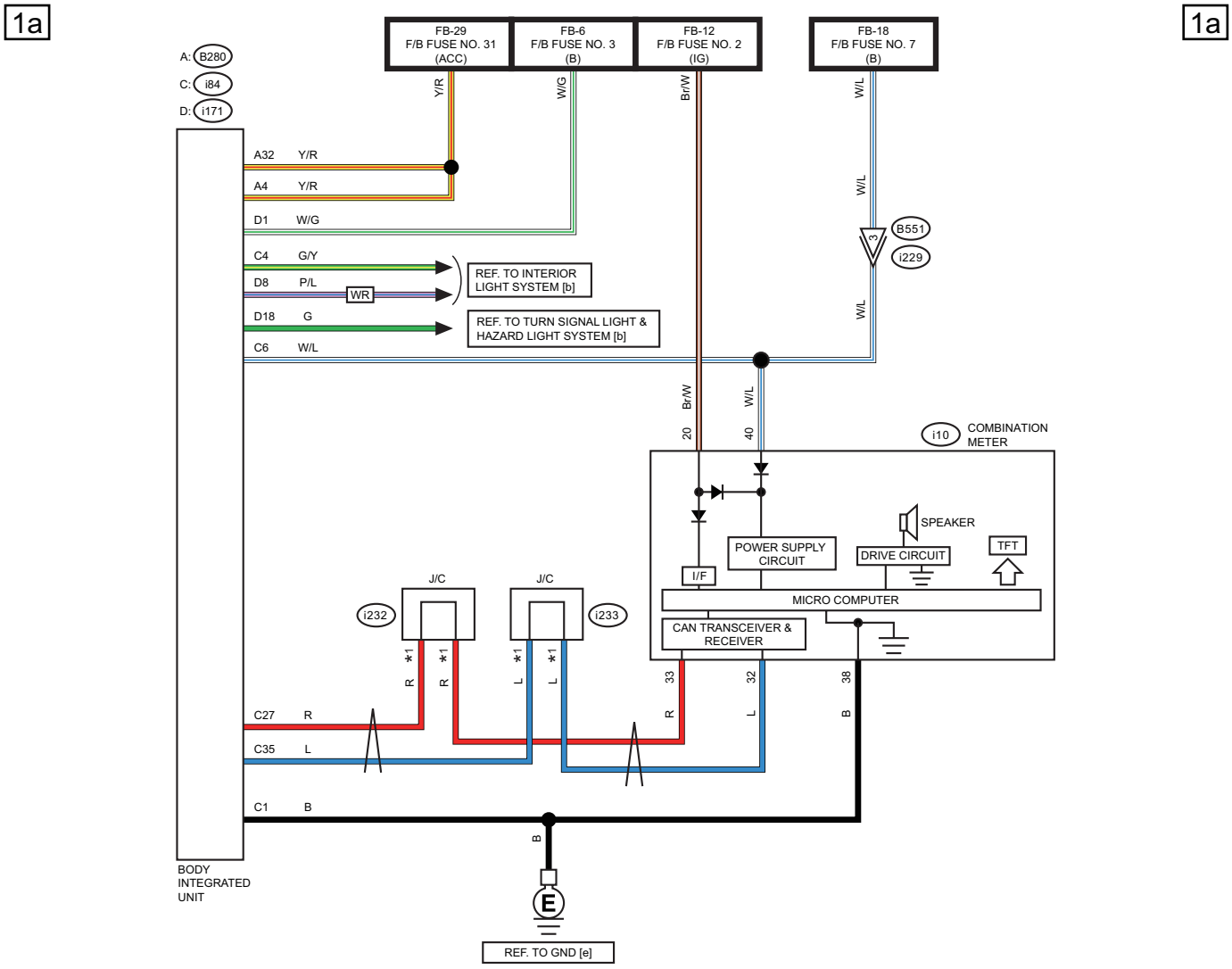

WR : WITH SUNROOF

*1 : TERMINAL No. OPTIONAL ARRANGEMENT

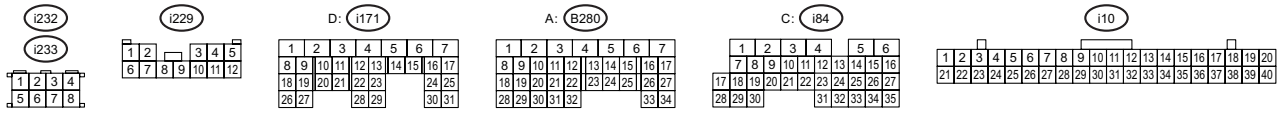

WI-67249

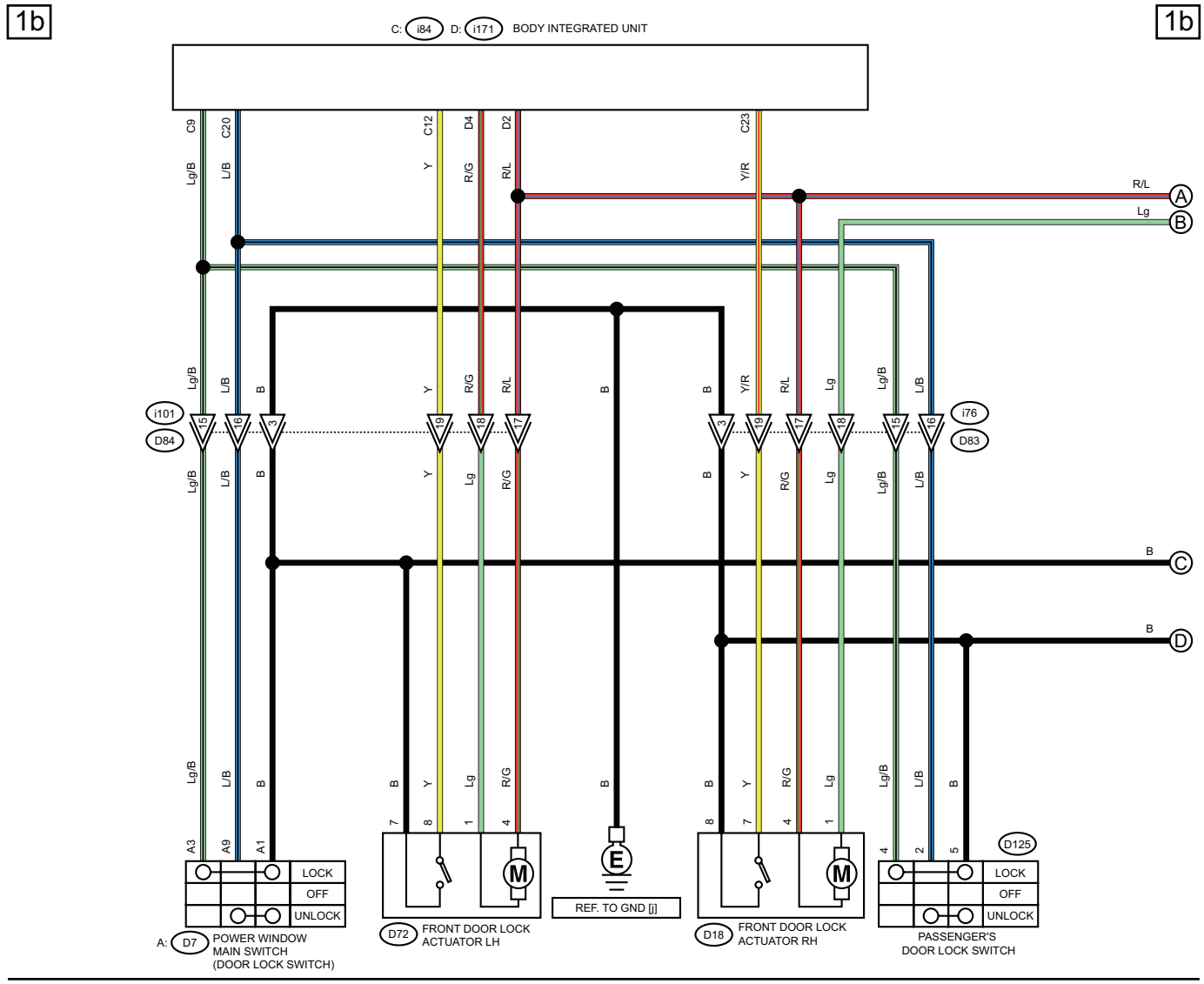
1b
1b
C: i84 D: i171 BODY INTEGRATED UNIT
C9
C20
C12
D4
D2
C23
Lg/B
L/B
Y
R/G
R/L
Y/R
R/L
A
Lg
B
i101
D84
i76
D83
LOCK
OFF
UNLOCK
A: D7 POWER WINDOW MAIN SWITCH (DOOR LOCK SWITCH)
D72 FRONT DOOR LOCK ACTUATOR LH
REF. TO GND [j]
D18 FRONT DOOR LOCK ACTUATOR RH
D125
PASSENGER'S DOOR LOCK SWITCH
C
D

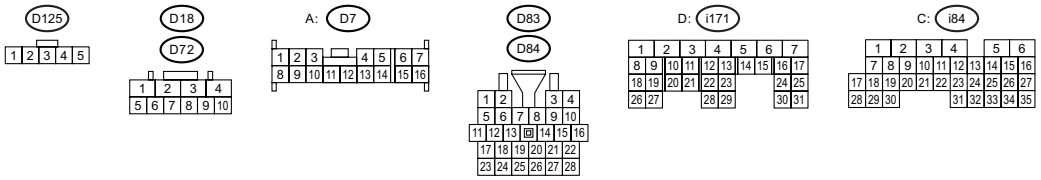
D125
D18
D72
A: D7
D83
D84
D: i171
C: i84

WI-67250

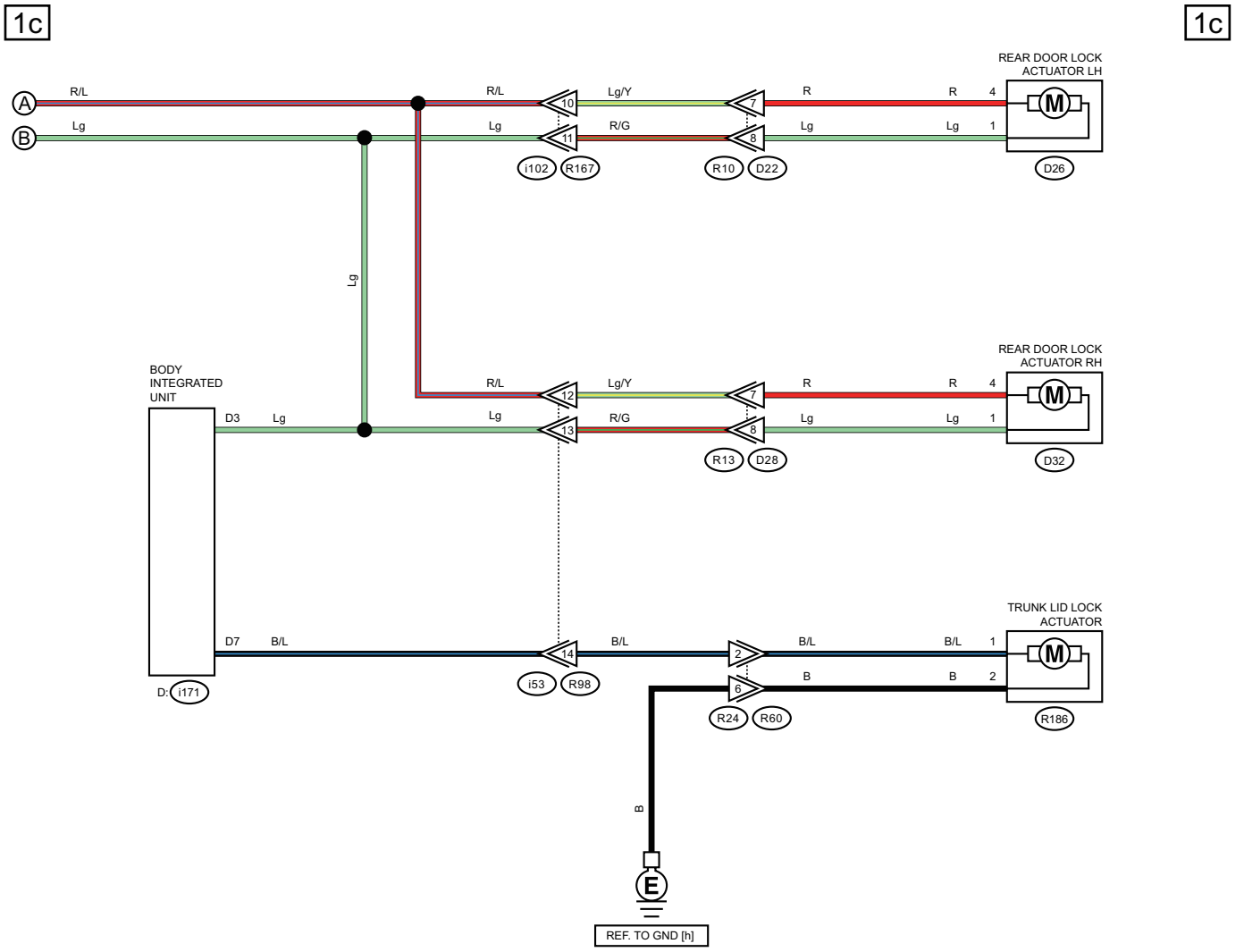
1c
1c
REAR DOOR LOCK ACTUATOR LH
A
B
R/L
Lg
R/L
Lg
10
11
Lg/Y
R/G
7
8
R
Lg
R
Lg
4
1
M
i102
R167
R10
D22
D26
Lg
BODY INTEGRATED UNIT
D3
Lg
REAR DOOR LOCK ACTUATOR RH
R/L
Lg
12
13
Lg/Y
R/G
7
8
R
Lg
R
Lg
4
1
M
R13
D28
D32
TRUNK LID LOCK ACTUATOR
D7
B/L
14
B/L
2
B/L
B/L
1
M
i53
R98
B
B
2
6
R24
R60
R186
D:
i171
B
E
REF. TO GND [h]

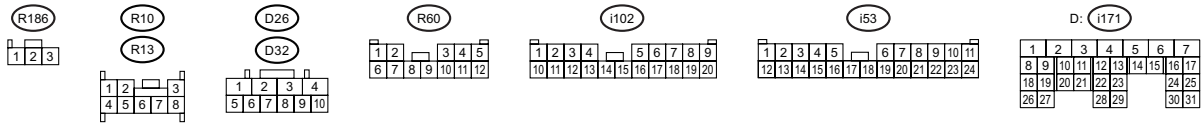
R186
R10
R13
D26
D32
R60
i102
i53
D:
i171

WI-67251

WIRING SYSTEM

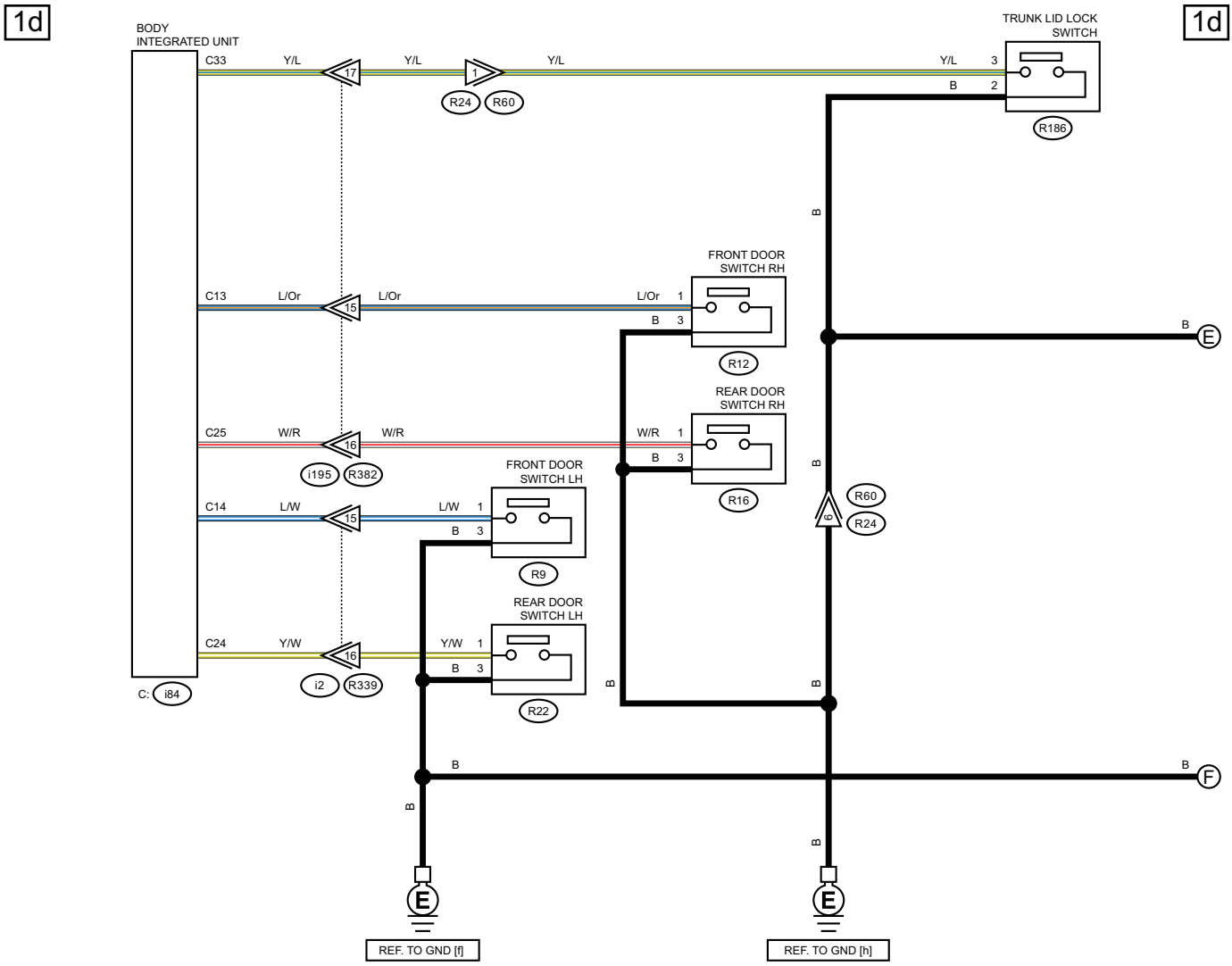

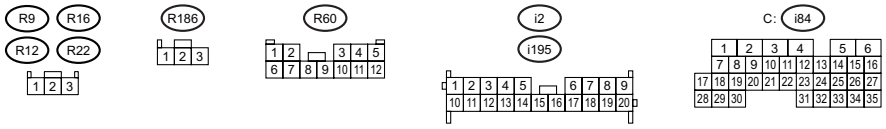

WI-67252

1e

1e

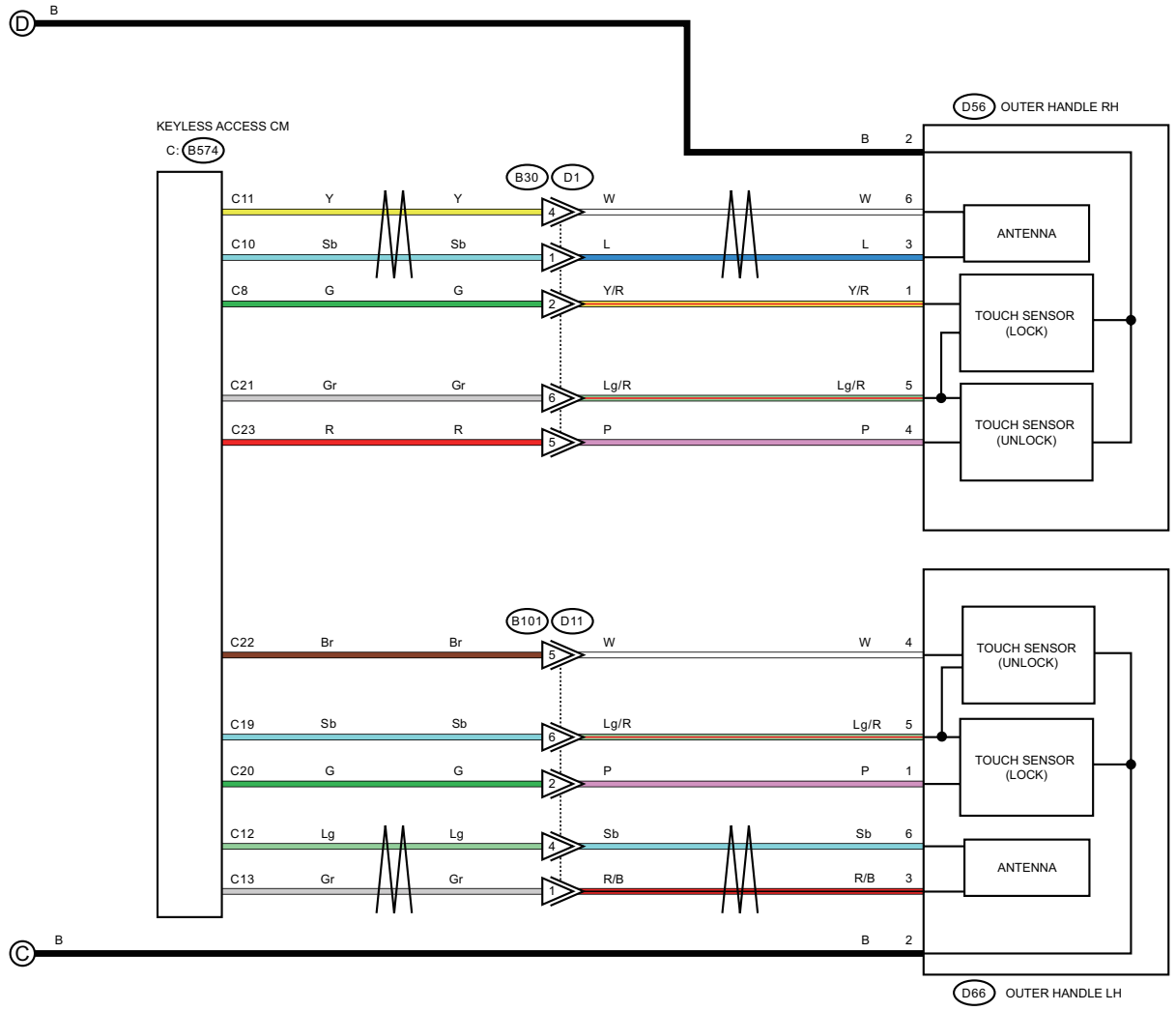

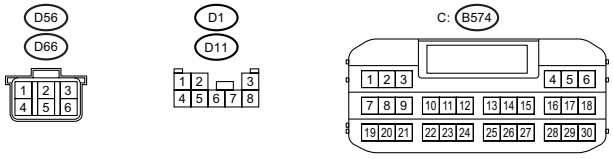

WI-67253

1f 1f

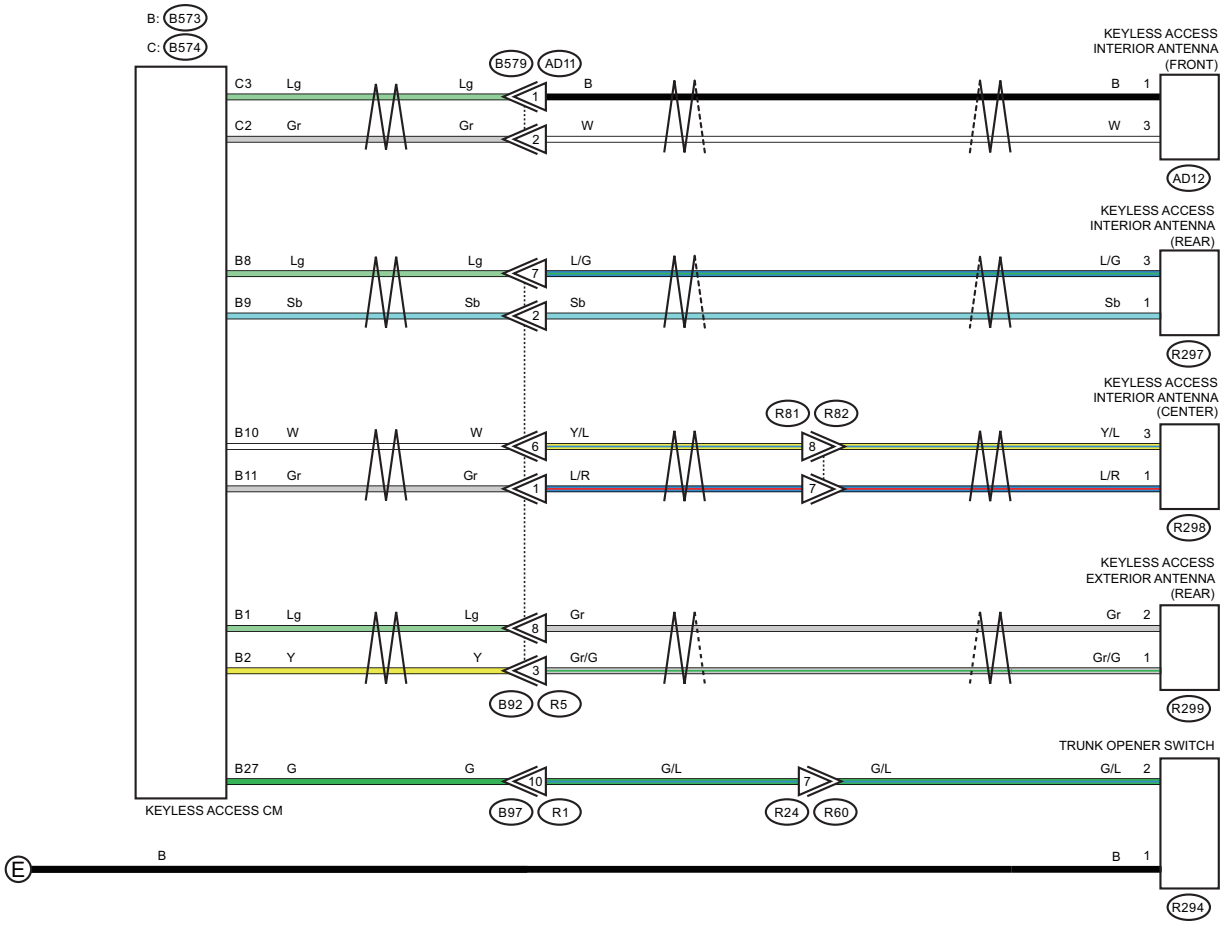

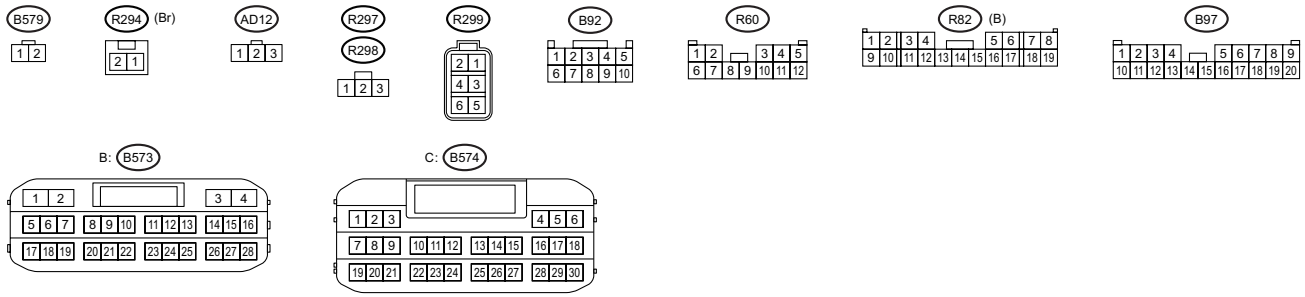

WI-67254

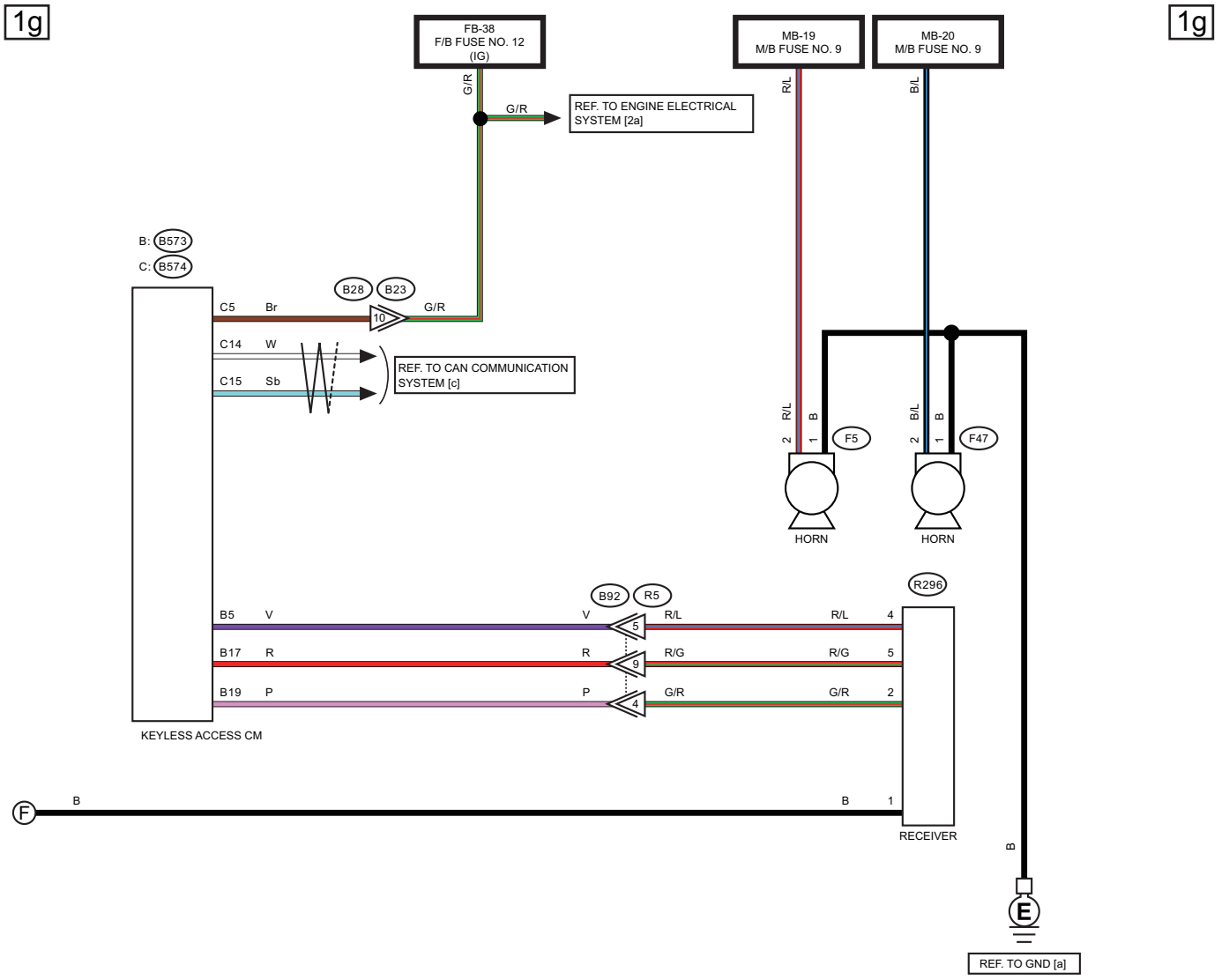
1g
1g
FB-38
F/B FUSE NO. 12
(IG)
MB-19
M/B FUSE NO. 9
MB-20
M/B FUSE NO. 9
G/R
R/L
B/L
REF. TO ENGINE ELECTRICAL SYSTEM [2a]
B: B573
C: B574
B28
B23
C5 Br
10
G/R
C14 W
C15 Sb
REF. TO CAN COMMUNICATION SYSTEM [c]
R/L
B
F5
B/L
F47
HORN
HORN
B92
R5
R296
B5 V
V
5
R/L
R/L 4
B17 R
R
9
R/G
R/G 5
B19 P
P
4
G/R
G/R 2
KEYLESS ACCESS CM
RECEIVER
F
B
B 1
B
E
REF. TO GND [a]

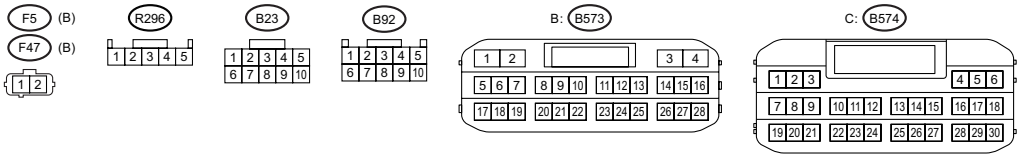
F5 (B)
F47 (B)
R296
B23
B92
B: B573
C: B574

WI-66760

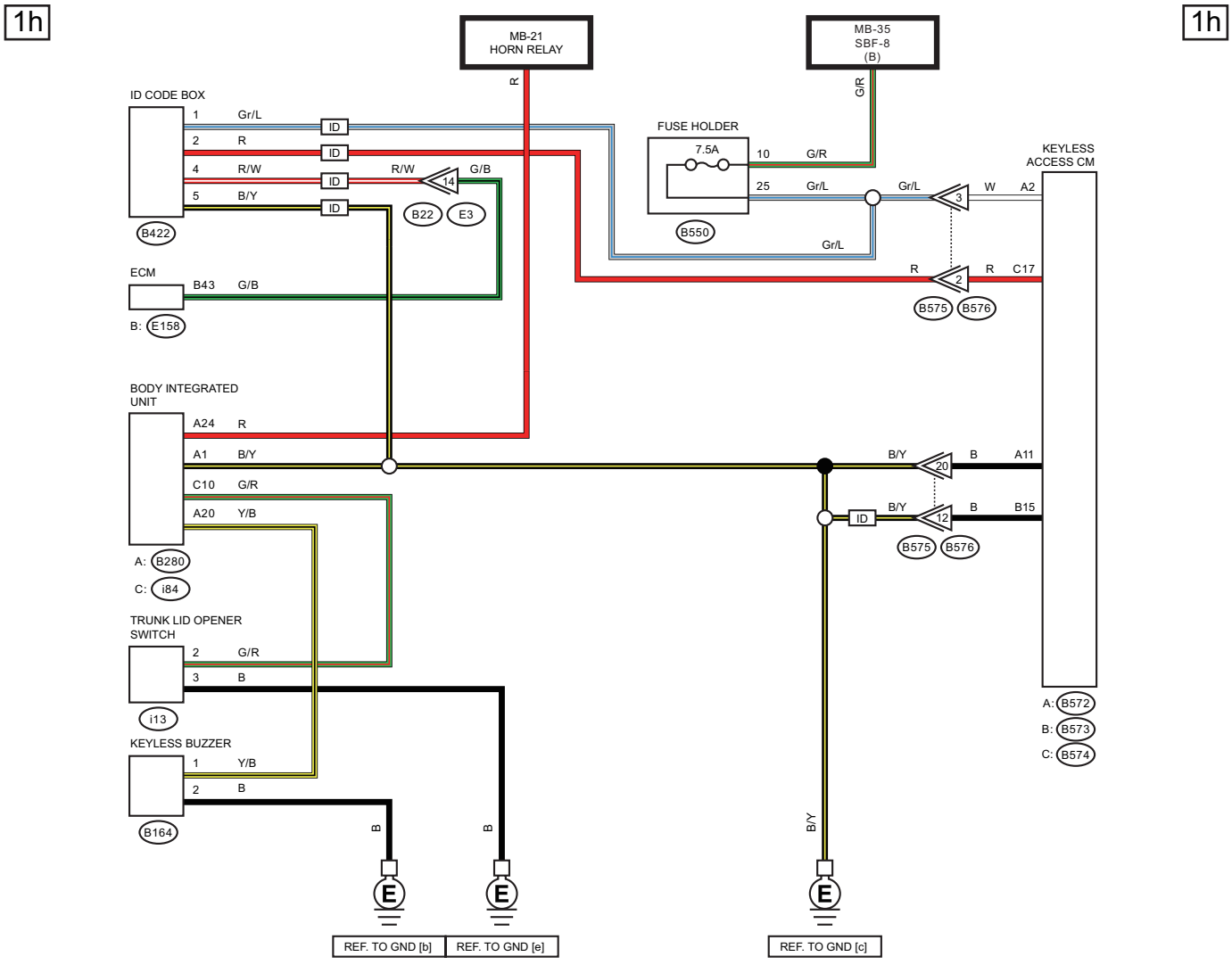

ID : WITH ID CODE BOX

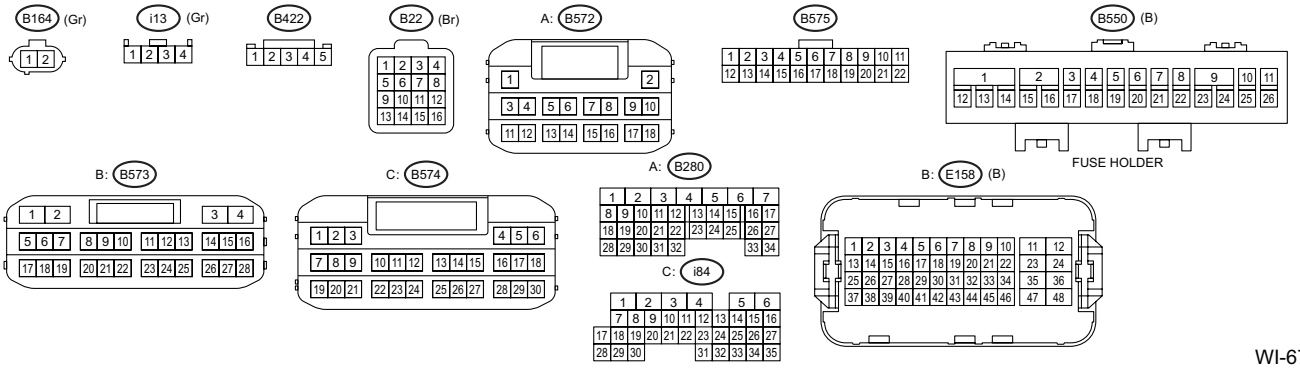

WI-67255

2. ENGINE TYPE EJ

2a

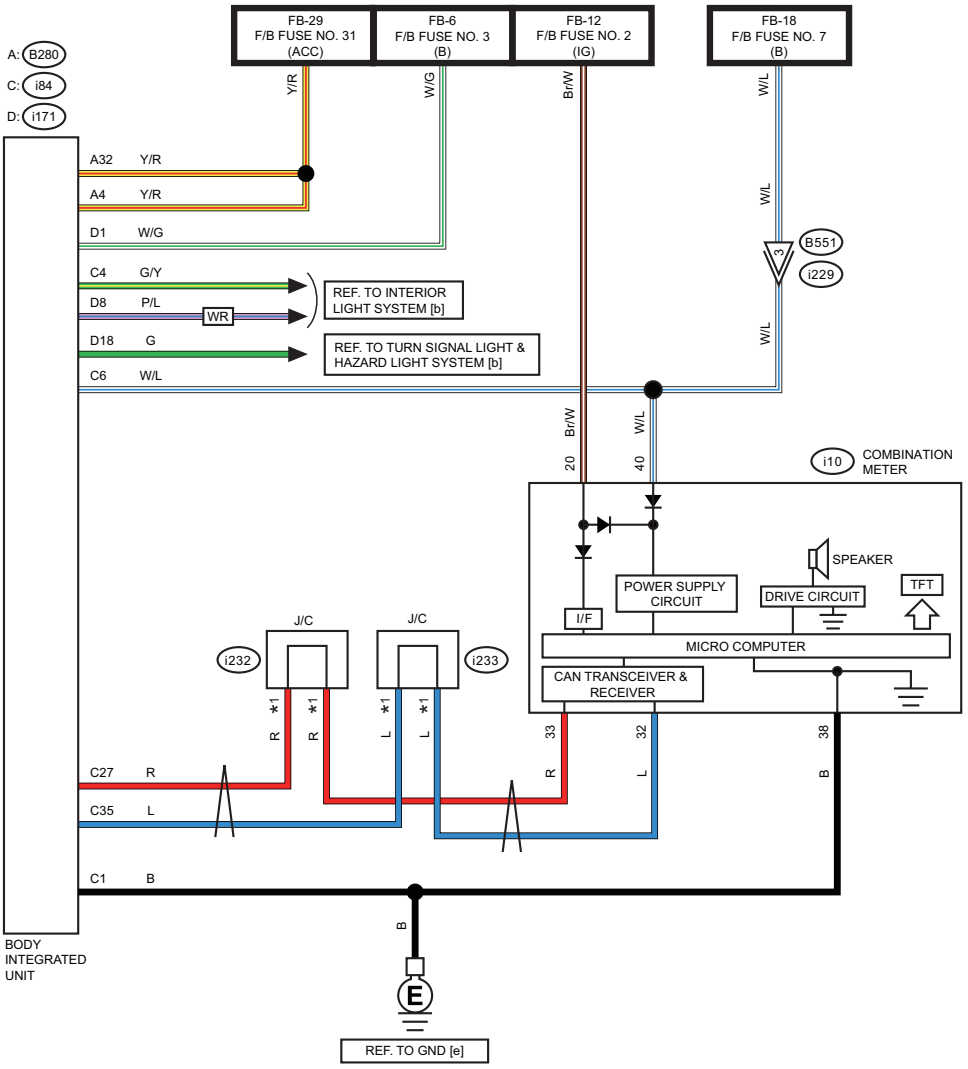

WR : WITH SUNROOF

*1 : TERMINAL No. OPTIONAL ARRANGEMENT

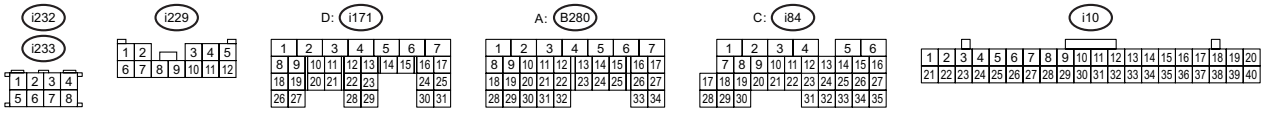

WI-67256

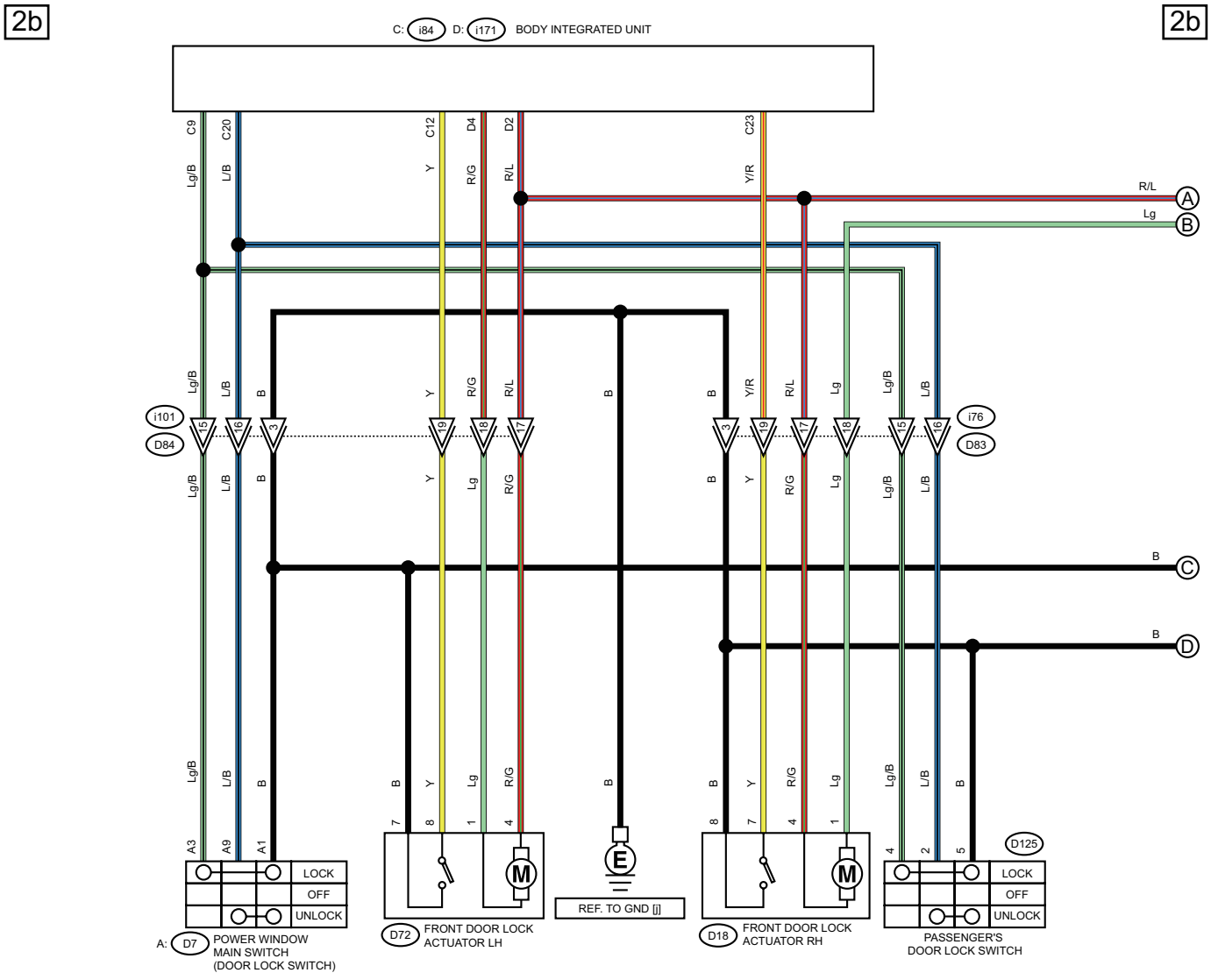
2b
2b
C: i84 D: i171 BODY INTEGRATED UNIT
C9
C20
C12
D4
D2
C23
Lg/B
L/B
Y
R/G
R/L
Y/R
R/L
Lg
A
B
i101
D84
i76
D83
i5
i6
i3
i19
i18
i17
i3
i19
i17
i18
i5
i6
B
C
D
A3
A9
A1
7
8
1
4
8
7
4
1
4
2
5
D125
LOCK
OFF
UNLOCK
M
E
REF. TO GND [j]
A: D7 POWER WINDOW MAIN SWITCH (DOOR LOCK SWITCH)
D72 FRONT DOOR LOCK ACTUATOR LH
D18 FRONT DOOR LOCK ACTUATOR RH
PASSENGER'S DOOR LOCK SWITCH

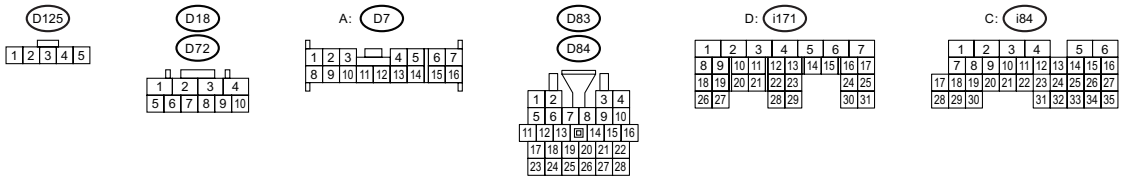
D125
D18
D72
A: D7
D83
D84
D: i171
C: i84

WI-67257

2c

2c

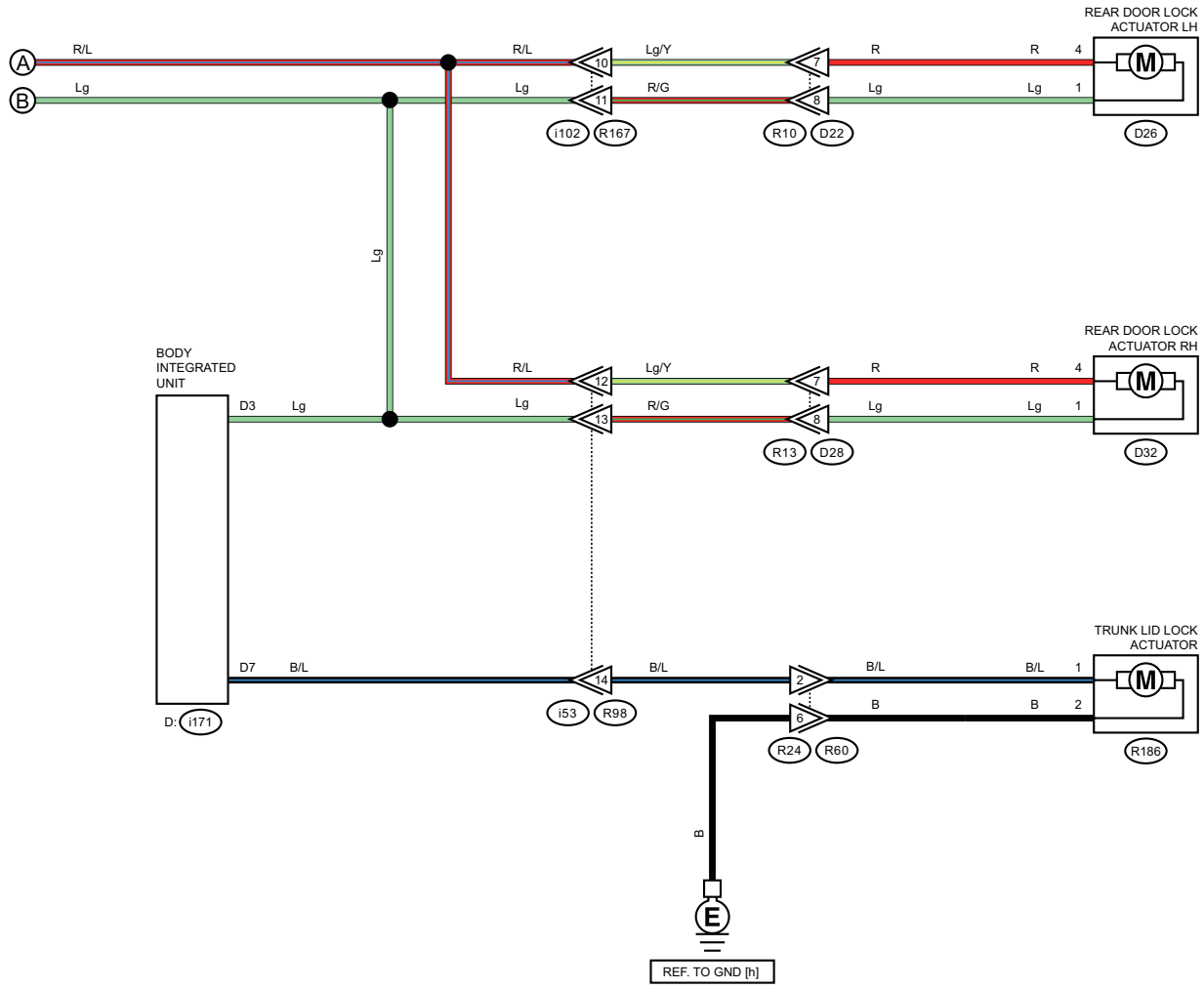

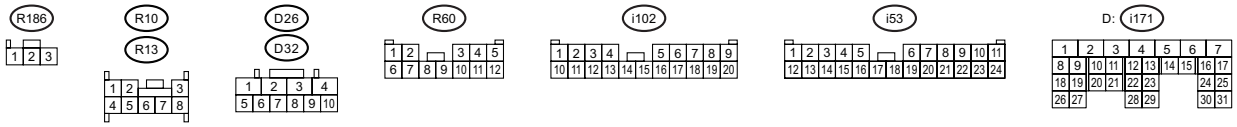

WI-67258

WIRING SYSTEM

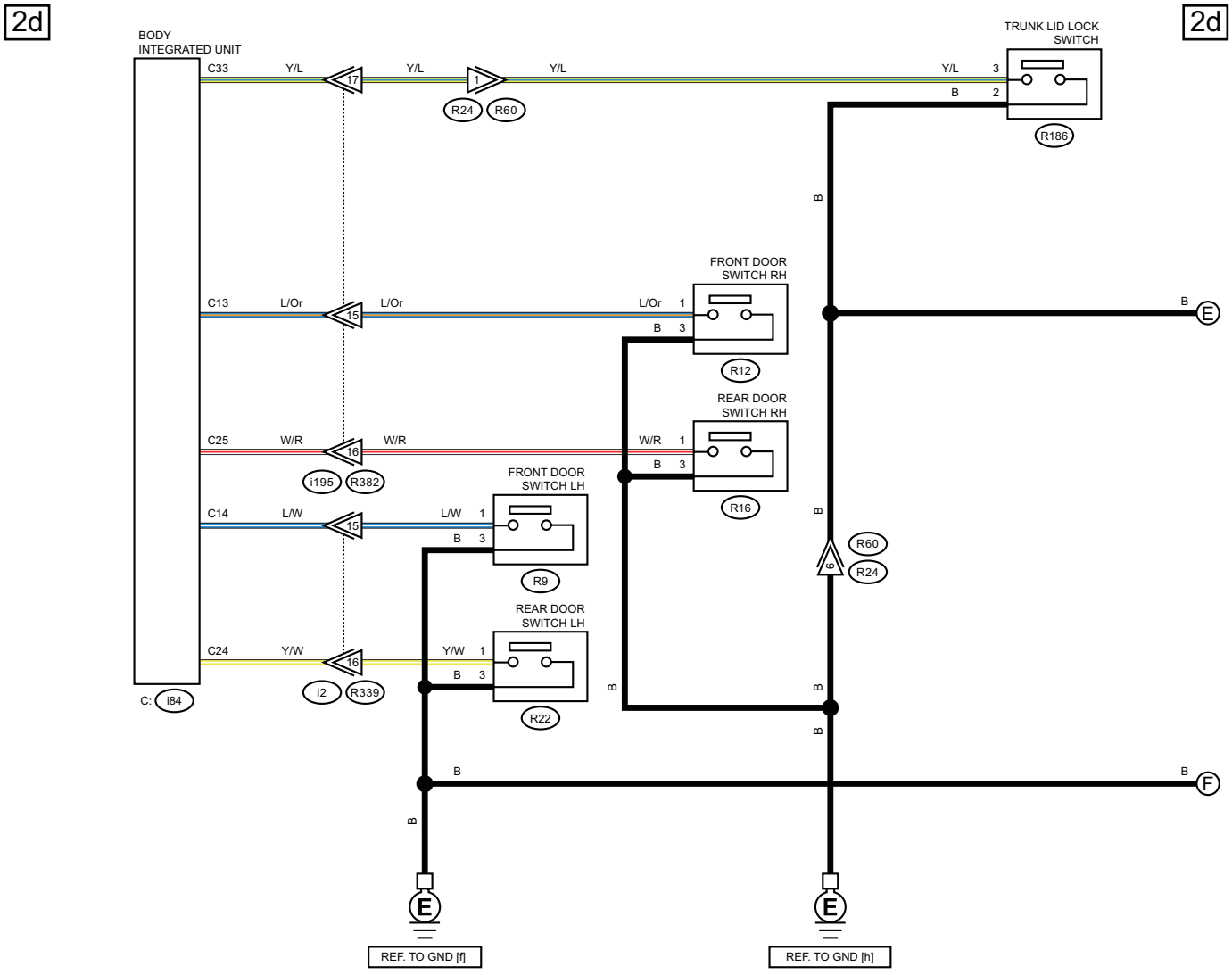

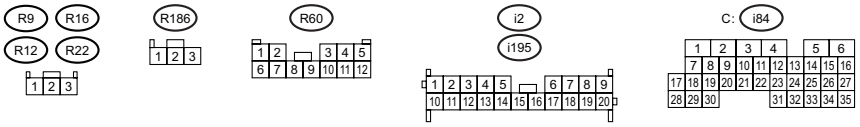

WI-67259

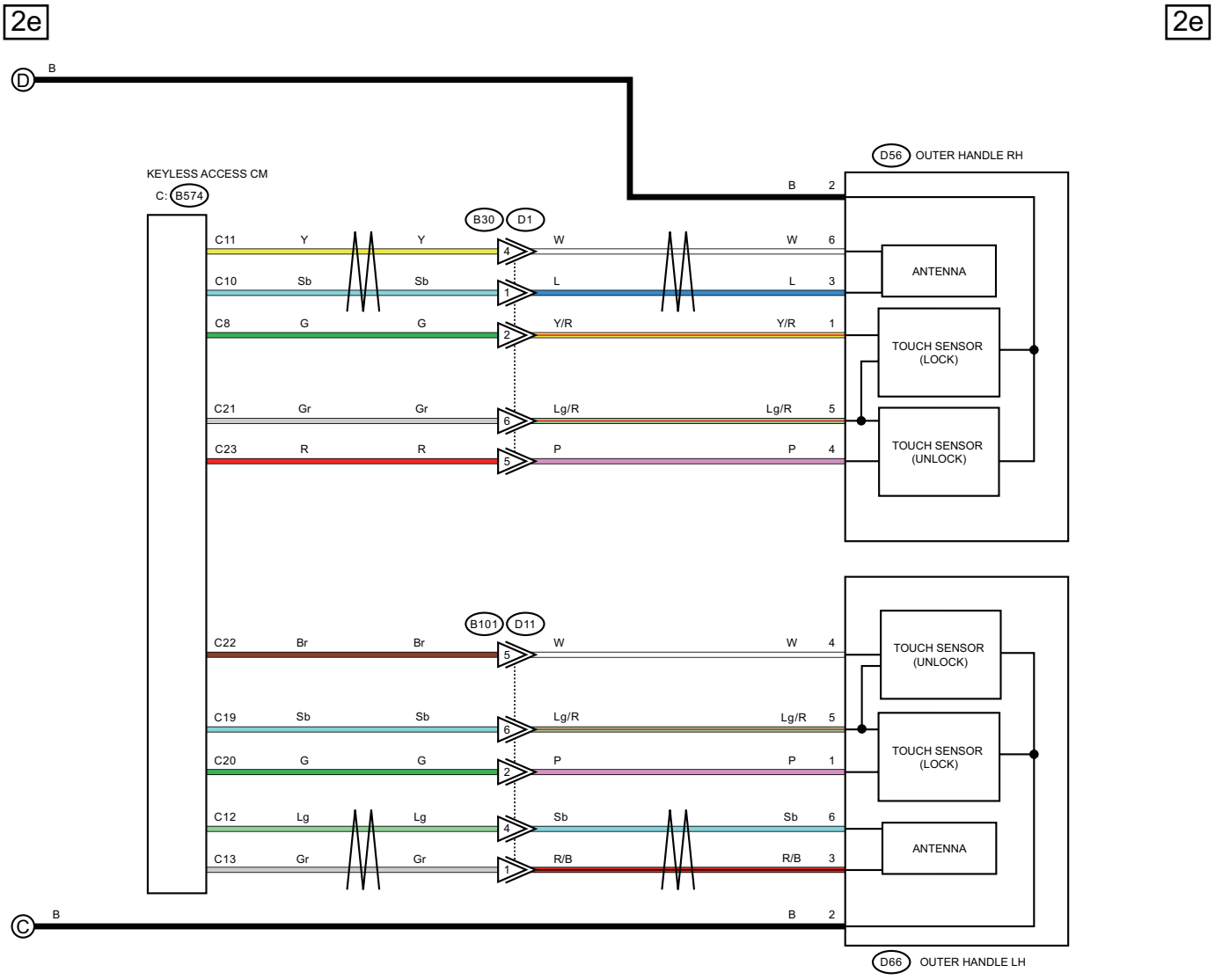
2e
2e
D
B
KEYLESS ACCESS CM
C: B574
D56 OUTER HANDLE RH
B 2
B30 D1
C11 Y Y 4 W W 6
C10 Sb Sb 1 L L 3
C8 G G 2 Y/R Y/R 1
C21 Gr Gr 6 Lg/R Lg/R 5
C23 R R 5 P P 4
ANTENNA
TOUCH SENSOR (LOCK)
TOUCH SENSOR (UNLOCK)
B101 D11
C22 Br Br 5 W W 4
C19 Sb Sb 6 Lg/R Lg/R 5
C20 G G 2 P P 1
C12 Lg Lg 4 Sb Sb 6
C13 Gr Gr 1 R/B R/B 3
TOUCH SENSOR (UNLOCK)
TOUCH SENSOR (LOCK)
ANTENNA
C
B
B 2
D66 OUTER HANDLE LH

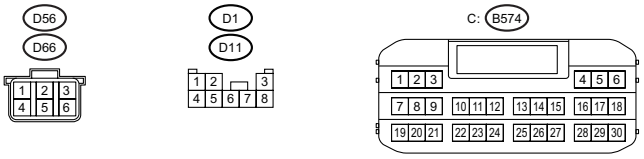
D56
D66
1 2 3
4 5 6
D1
D11
1 2 3
4 5 6 7 8
C: B574
1 2 3 4 5 6
7 8 9 10 11 12 13 14 15 16 17 18
19 20 21 22 23 24 25 26 27 28 29 30

WI-67260

2f 2f

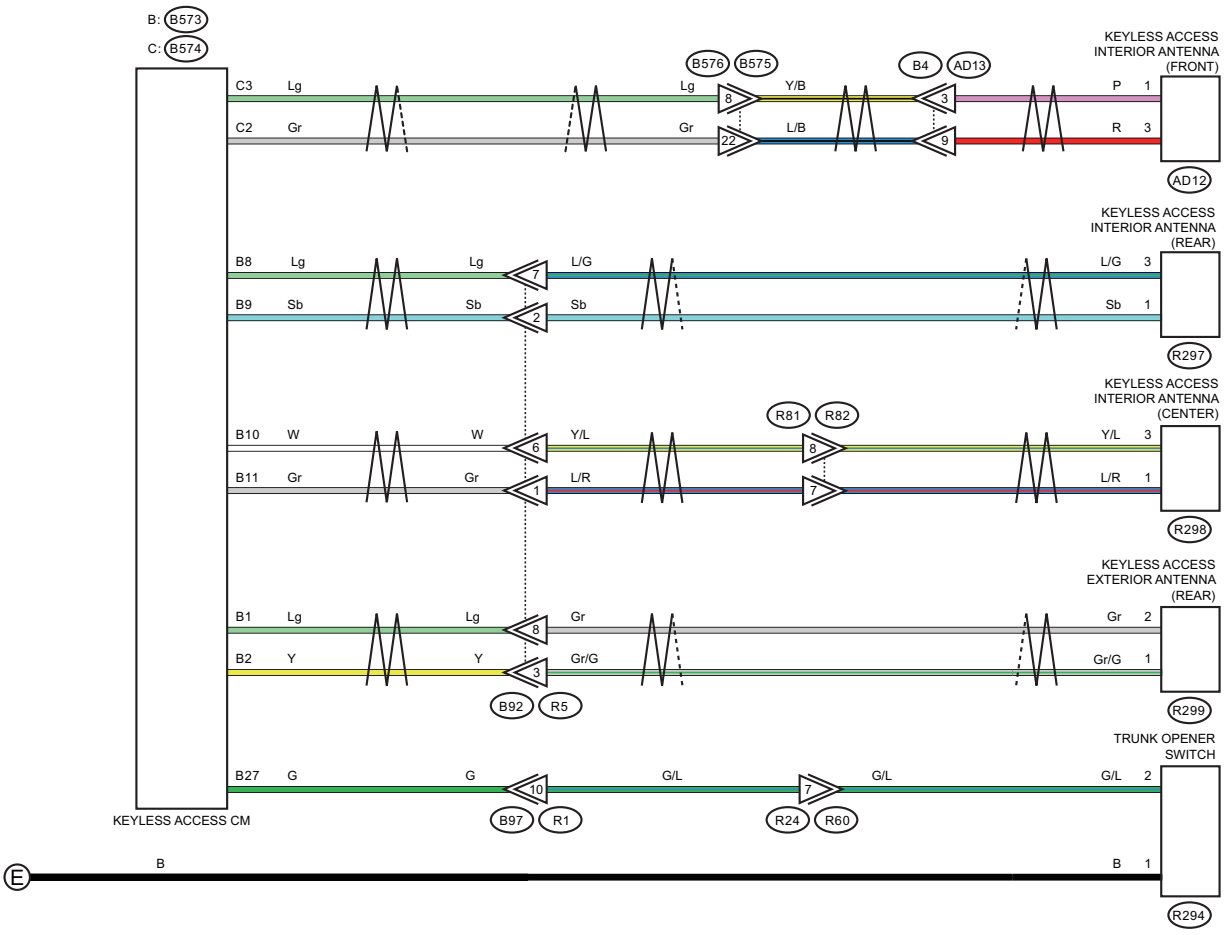

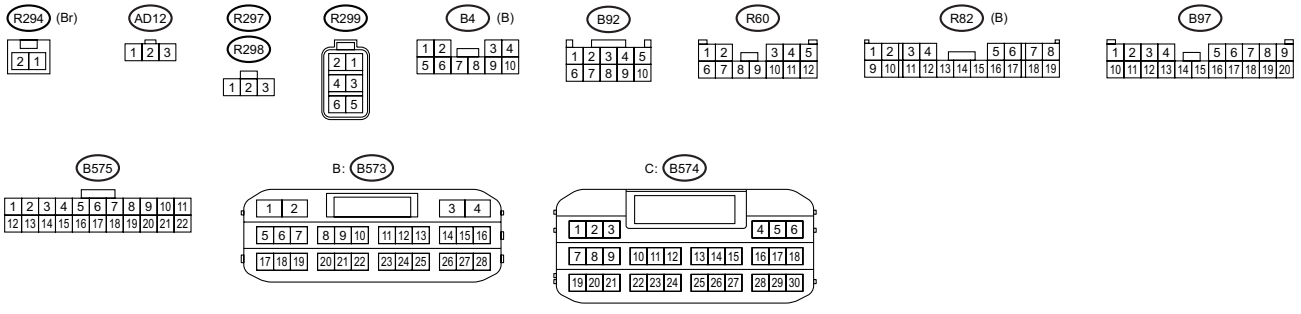

WI-67261

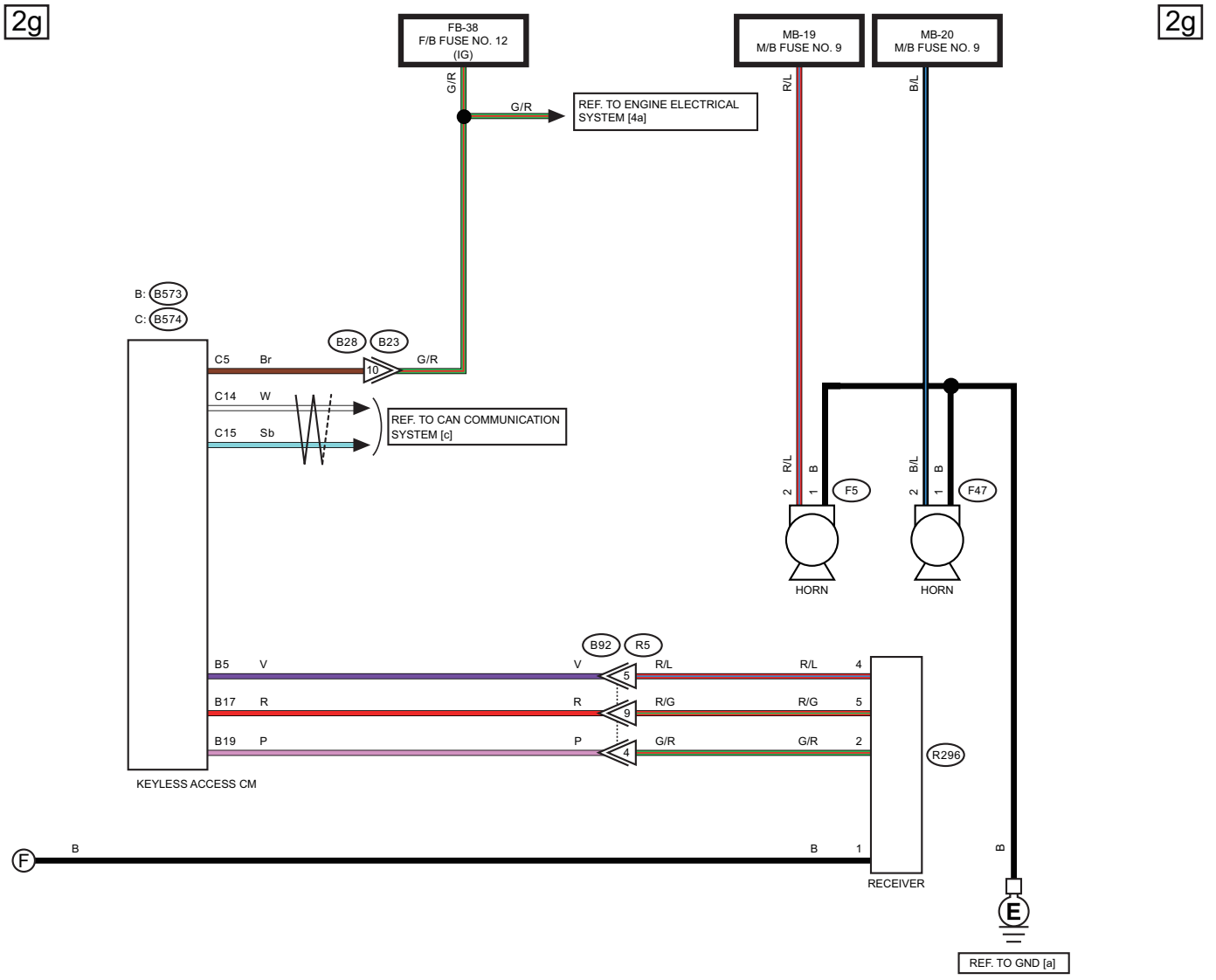
2g
2g
FB-38
F/B FUSE NO. 12
(IG)
MB-19
M/B FUSE NO. 9
MB-20
M/B FUSE NO. 9
G/R
G/R
REF. TO ENGINE ELECTRICAL SYSTEM [4a]
R/L
B/L
B: B573
C: B574
B28
B23
C5 Br
10
G/R
C14 W
C15 Sb
REF. TO CAN COMMUNICATION SYSTEM [c]
R/L
B
F5
B/L
F47
HORN
HORN
B92
R5
B5 V
V
R/L
R/L 4
B17 R
R
R/G
R/G 5
B19 P
P
G/R
G/R 2
R296
KEYLESS ACCESS CM
F
B
B 1
RECEIVER
B
E
REF. TO GND [a]

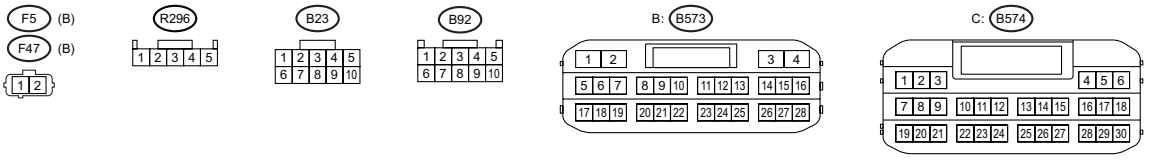
F5 (B)
F47 (B)
R296
B23
B92
B: B573
C: B574

WI-66761

WIRING SYSTEM

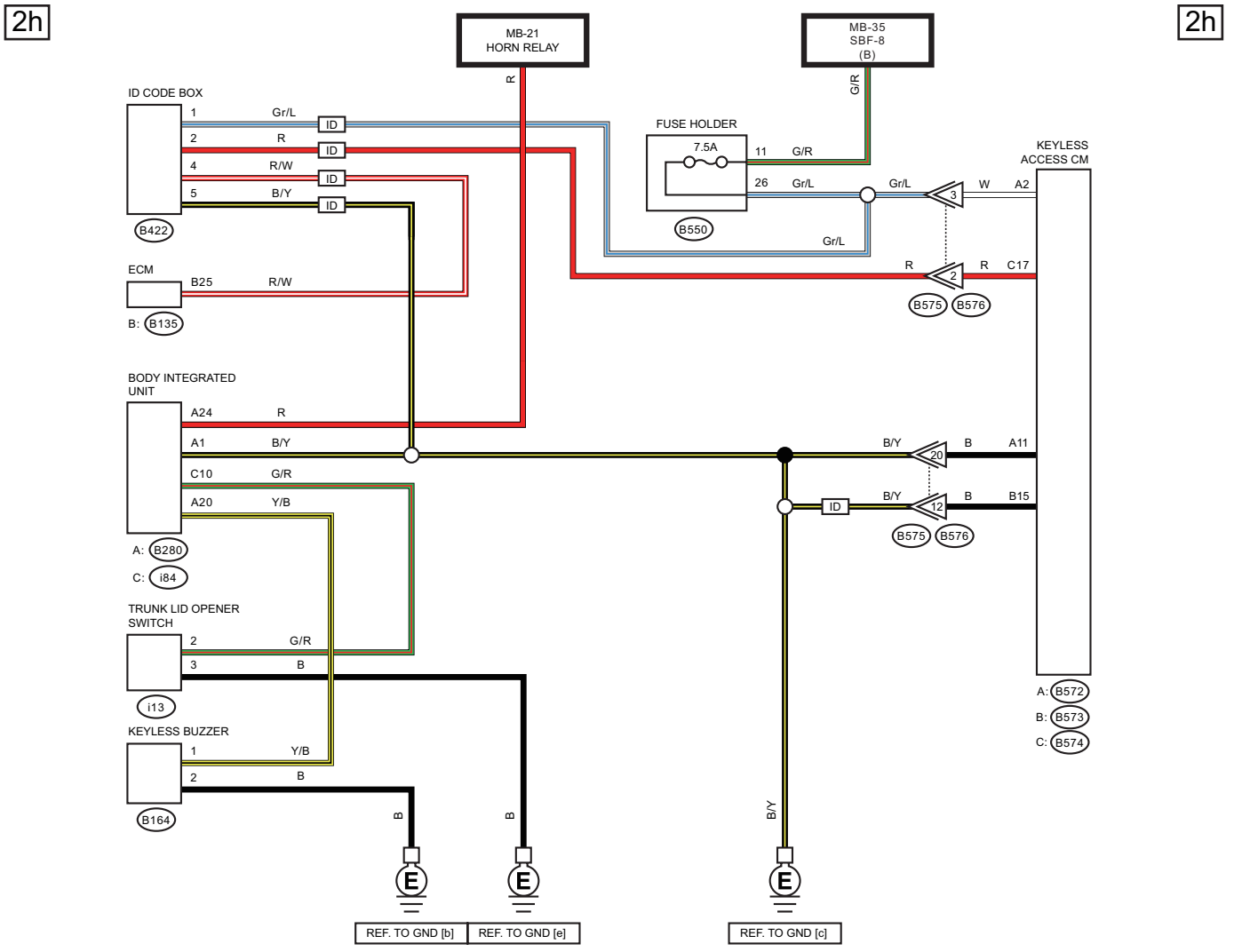

ID : WITH ID CODE BOX

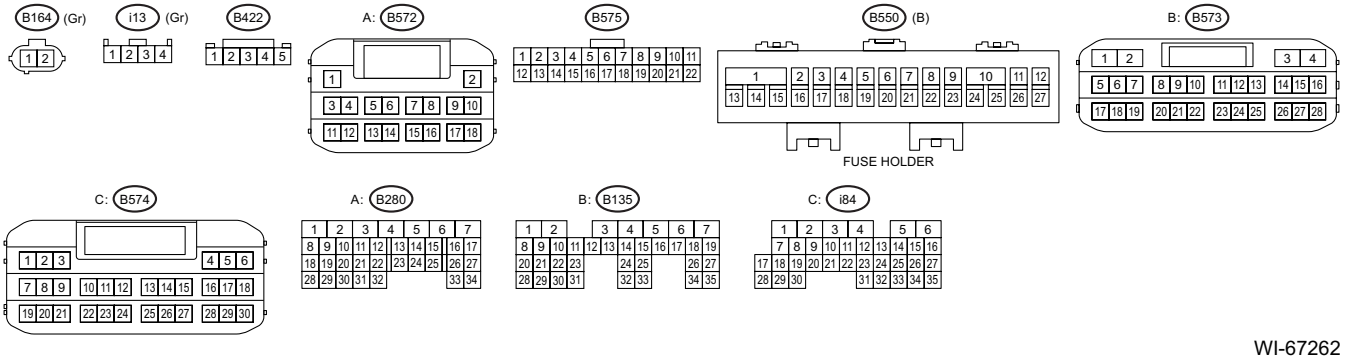

WI-67262

32.Keyless Entry System

A: WIRING DIAGRAM

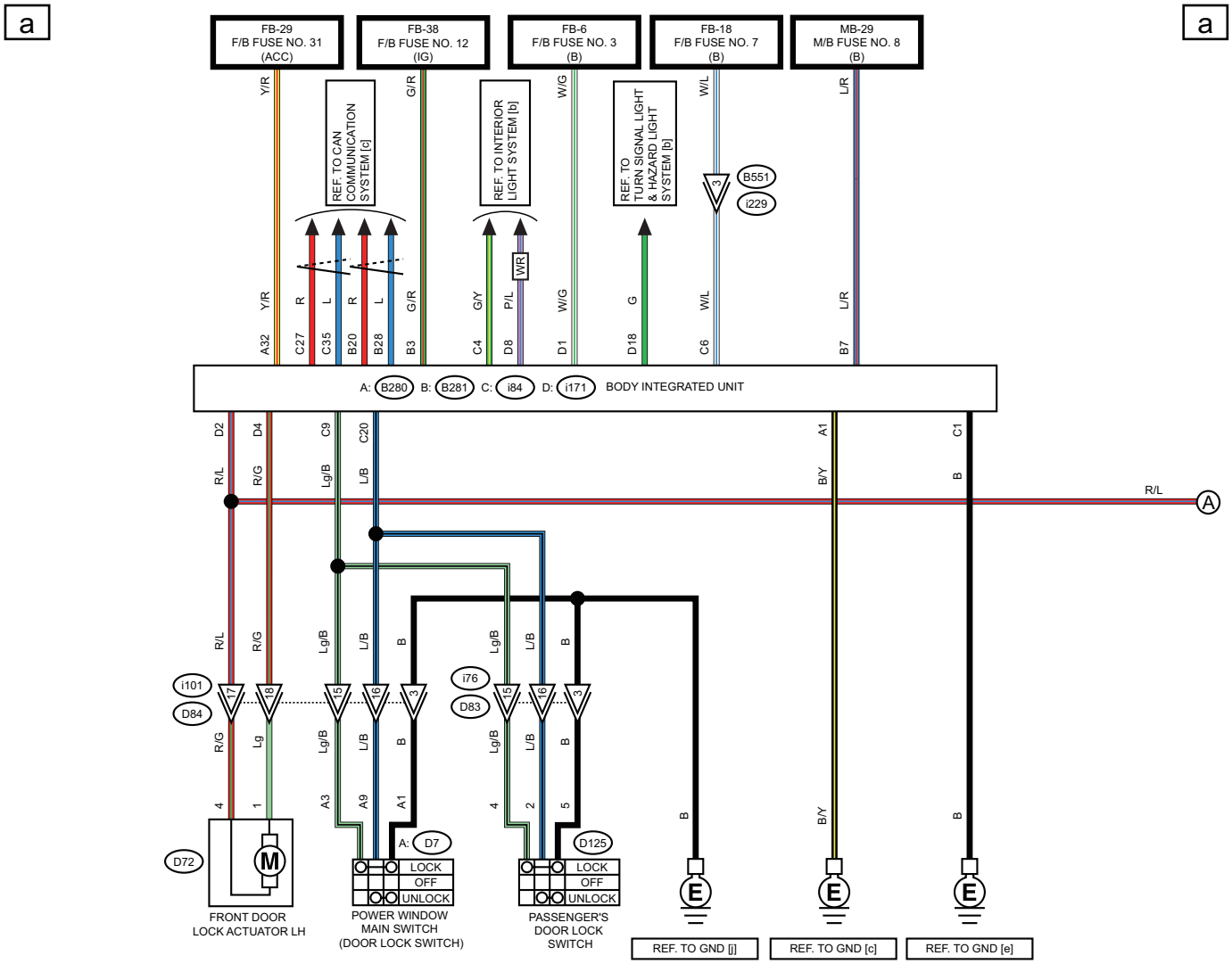

WR : WITH SUNROOF

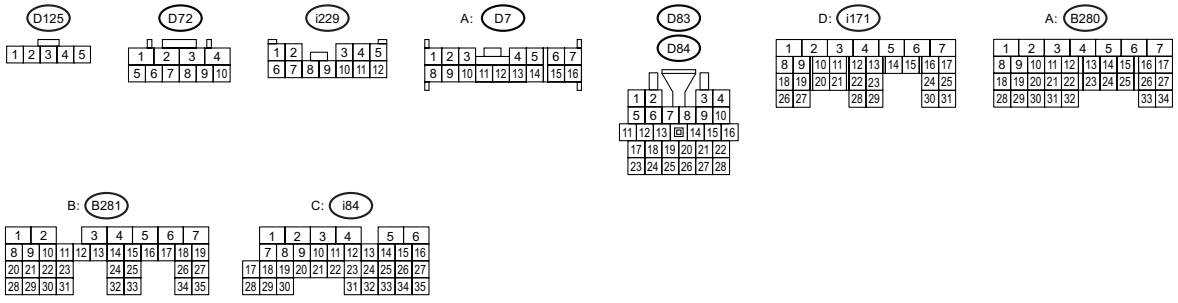

WI-66762

WIRING SYSTEM

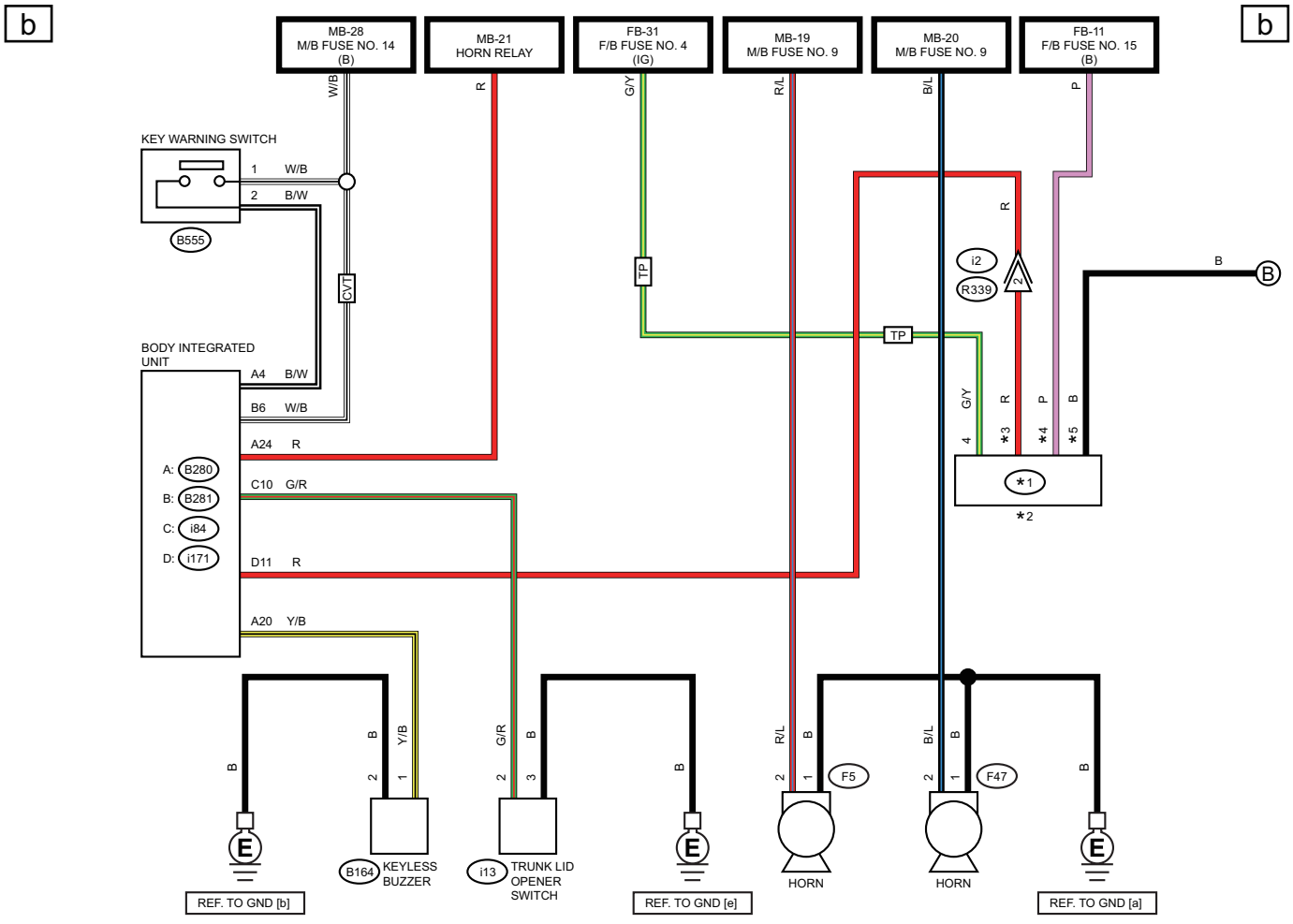

TP : WITH TPMS

*1 : WITHOUT TPMS : R80
WITH TPMS : R221

*2 : WITHOUT TPMS : KEYLESS ENTRY CM
WITH TPMS : TPMS & KEYLESS ENTRY CM

*3 : WITHOUT TPMS : 3
WITH TPMS : 11

*4 : WITHOUT TPMS : 4
WITH TPMS : 6

*5 : WITHOUT TPMS : 7
WITH TPMS : 5

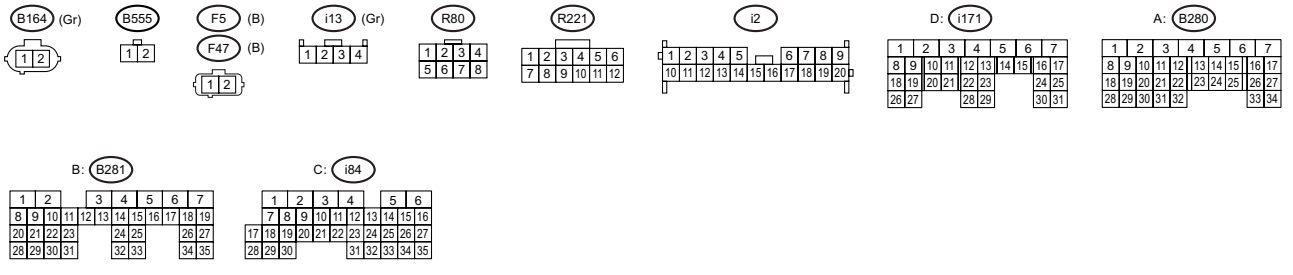

WI-67263

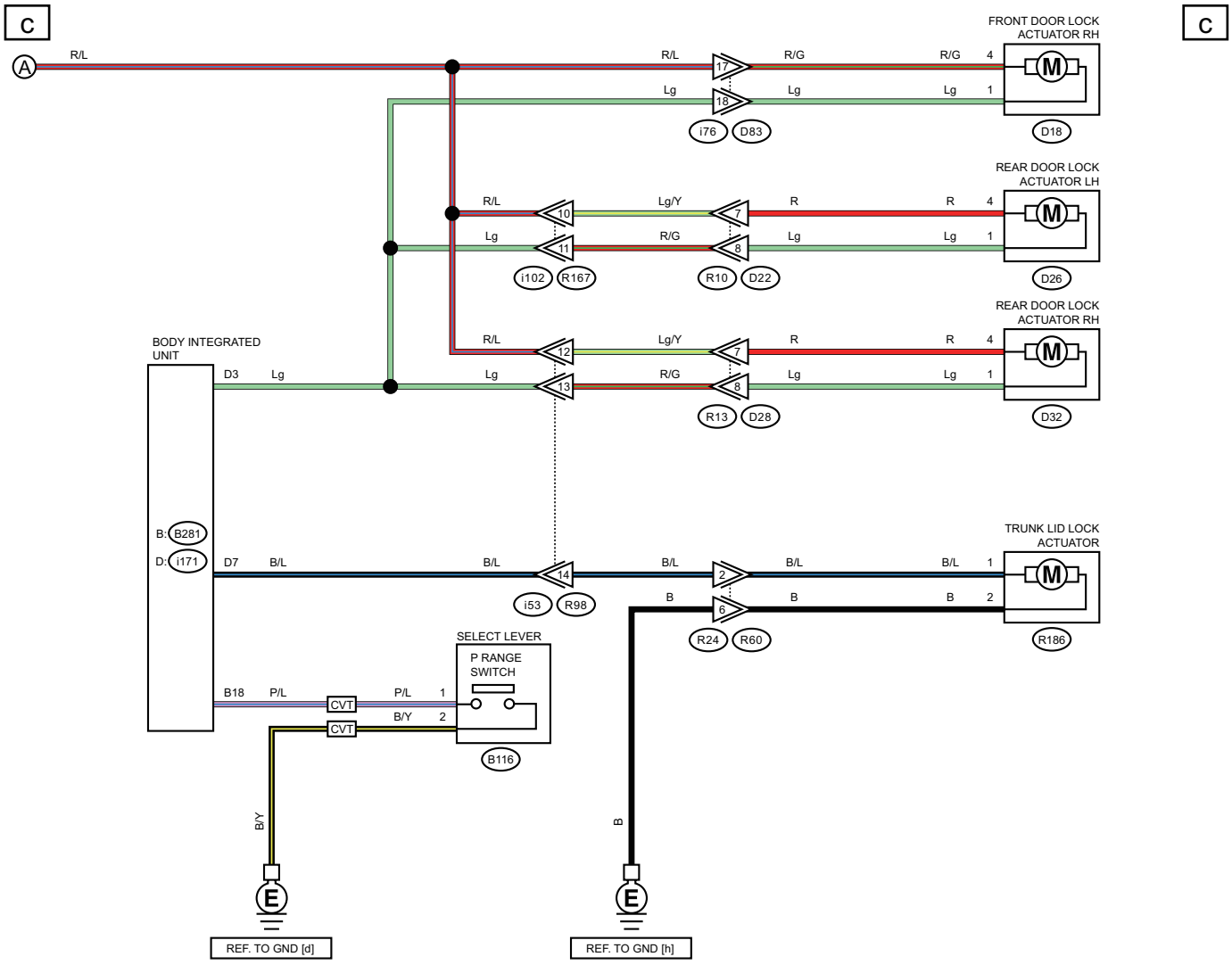
C
C
A
R/L
FRONT DOOR LOCK ACTUATOR RH
R/L
17
R/G
R/G
4
Lg
18
Lg
Lg
1
i76
D83
D18
REAR DOOR LOCK ACTUATOR LH
R/L
10
Lg/Y
7
R
R
4
Lg
11
R/G
8
Lg
Lg
1
i102
R167
R10
D22
D26
REAR DOOR LOCK ACTUATOR RH
BODY INTEGRATED UNIT
R/L
12
Lg/Y
7
R
R
4
D3
Lg
Lg
13
R/G
8
Lg
Lg
1
R13
D28
D32
B: B281
D: i171
D7
B/L
B/L
14
B/L
2
B/L
B/L
1
i53
R98
B
6
B
B
2
R24
R60
R186
TRUNK LID LOCK ACTUATOR
SELECT LEVER
P RANGE SWITCH
B18
P/L
CVT
P/L
1
CVT
B/Y
2
B116
B/Y
B
E
E
REF. TO GND [d]
REF. TO GND [h]

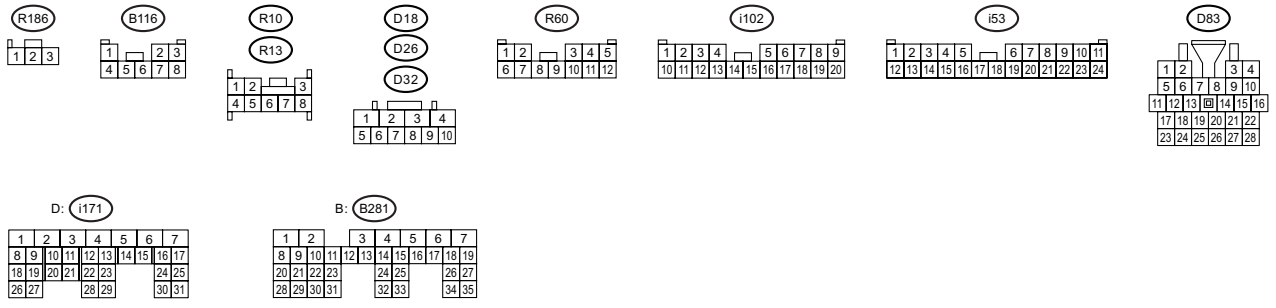
R186
B116
R10
R13
D18
D26
D32
R60
i102
i53
D83
D: i171
B: B281

WI-67264

d d

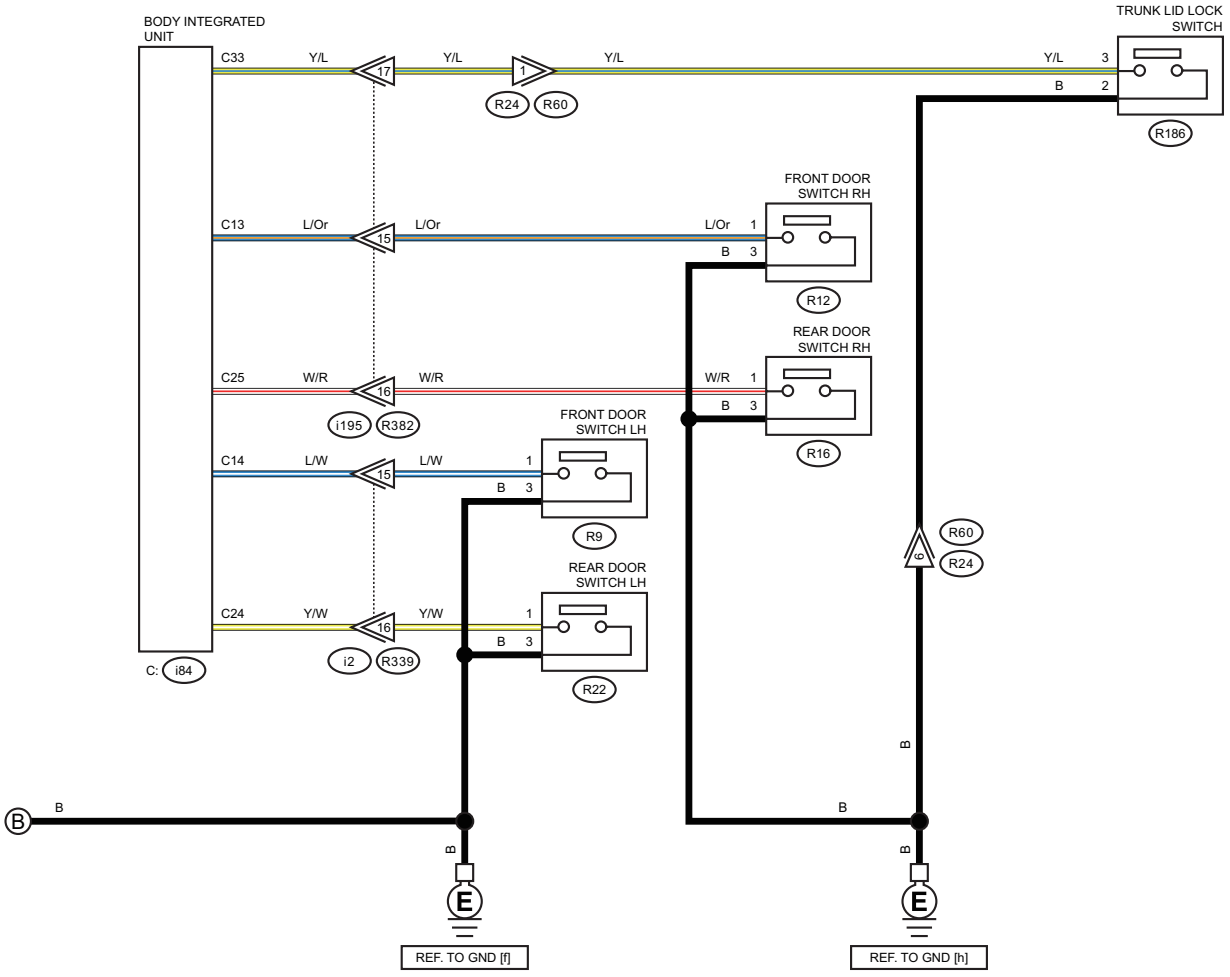
BODY INTEGRATED UNIT
C33
Y/L
17
1
R24
R60
TRUNK LID LOCK SWITCH
R186
FRONT DOOR SWITCH RH
R12
C13
L/Or
15
REAR DOOR SWITCH RH
R16
C25
W/R
16
i195
R382
FRONT DOOR SWITCH LH
R9
C14
L/W
15
REAR DOOR SWITCH LH
R22
C24
Y/W
16
i2
R339
C: i84
R60
R24
6
B
REF. TO GND [f]
REF. TO GND [h]

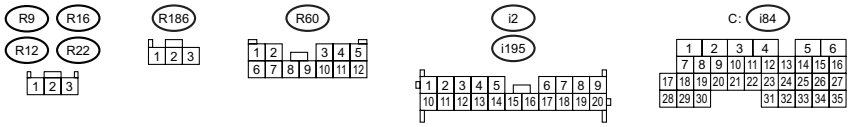
R9
R16
R12
R22
R186
R60
i2
i195
C: i84

WI-67265

33.Multi-function Display (MFD) System

A: WIRING DIAGRAM

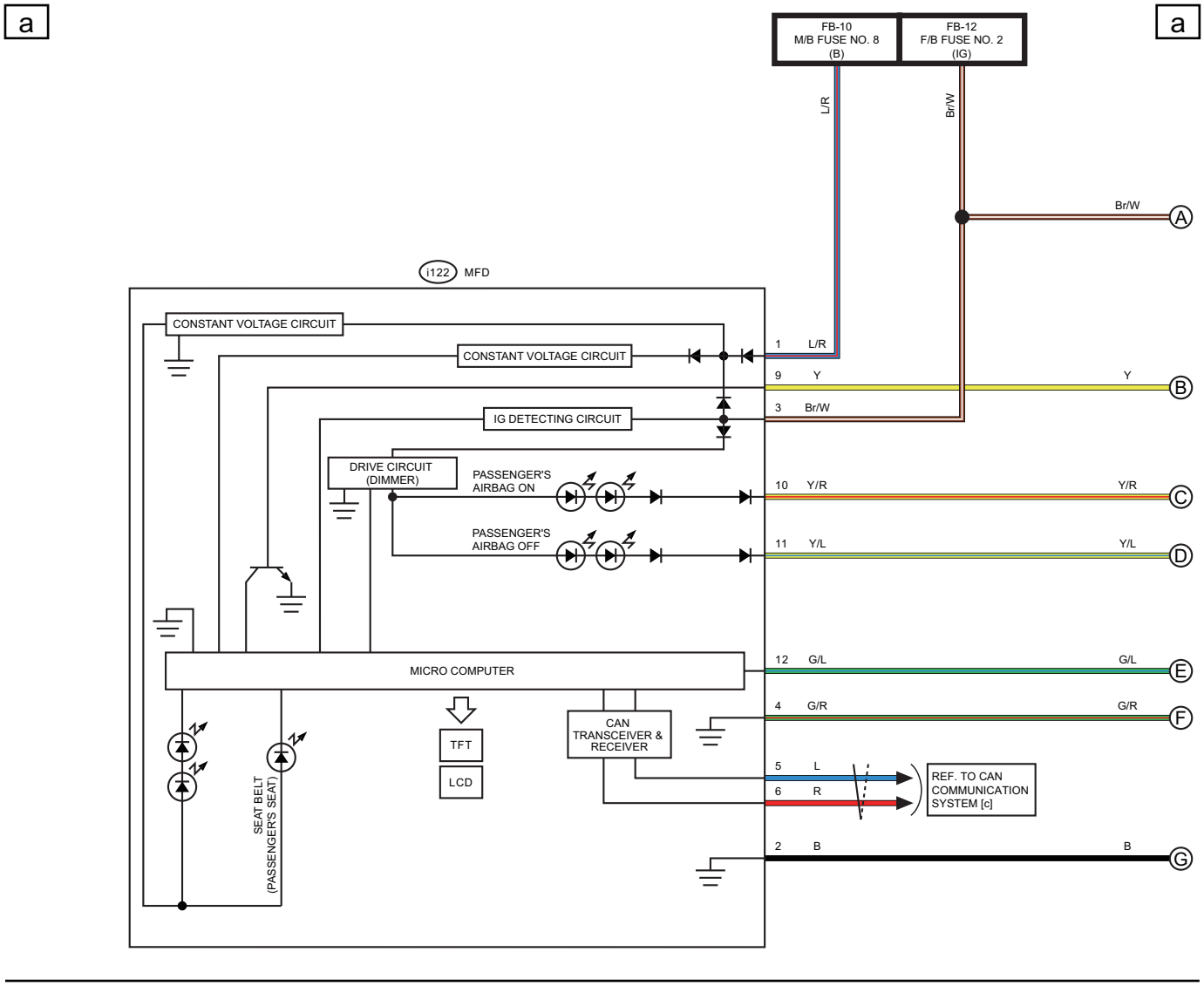

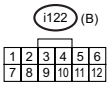

WI-66763

WIRING SYSTEM

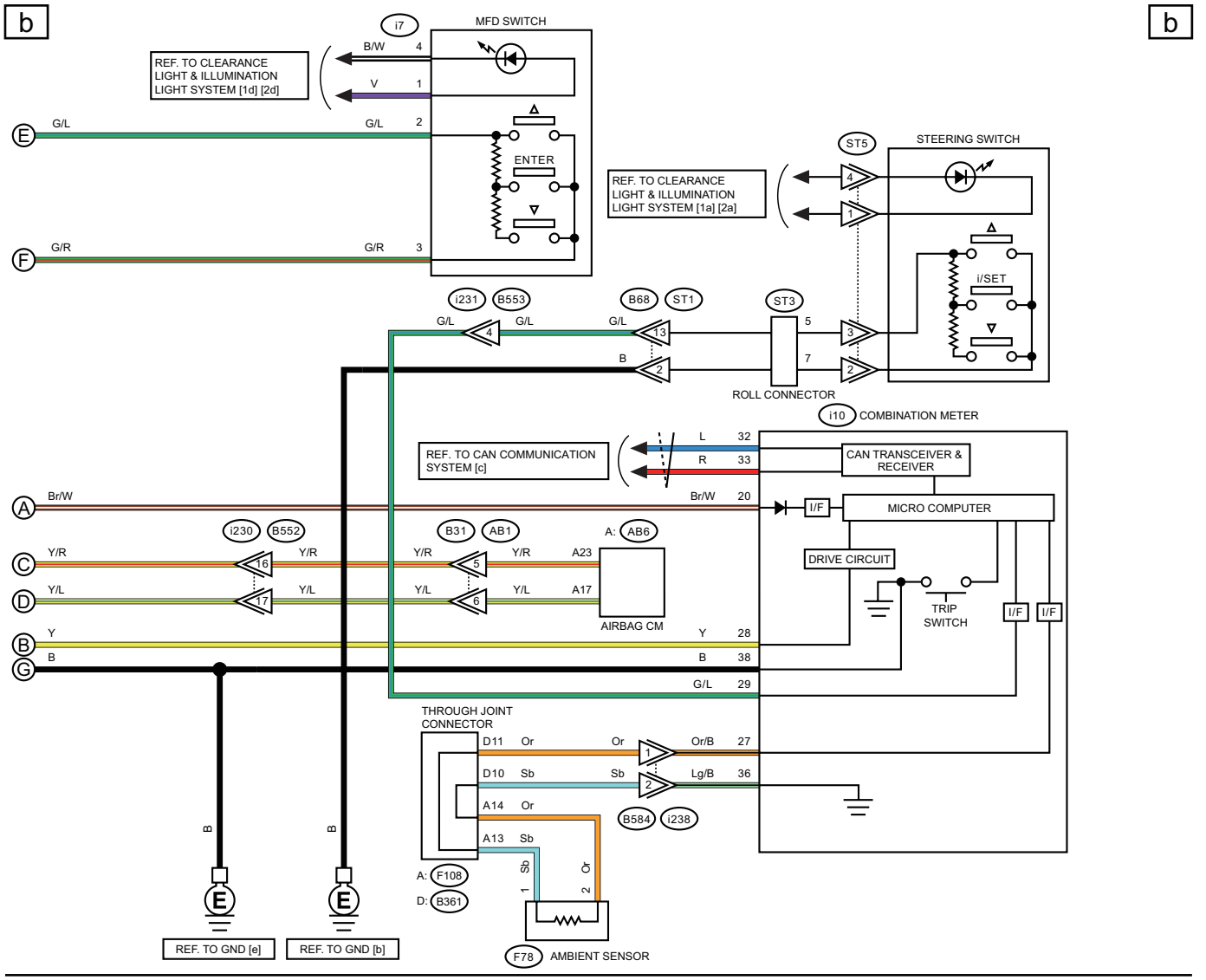

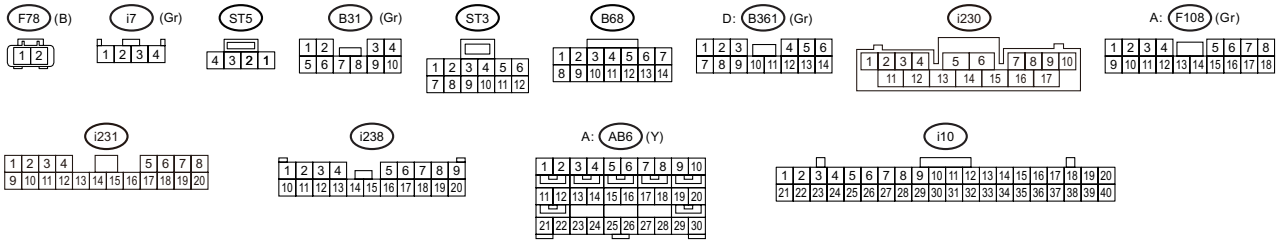

WI-66764

34.Navigation System

A: WIRING DIAGRAM

1. WITHOUT TELEMATICS

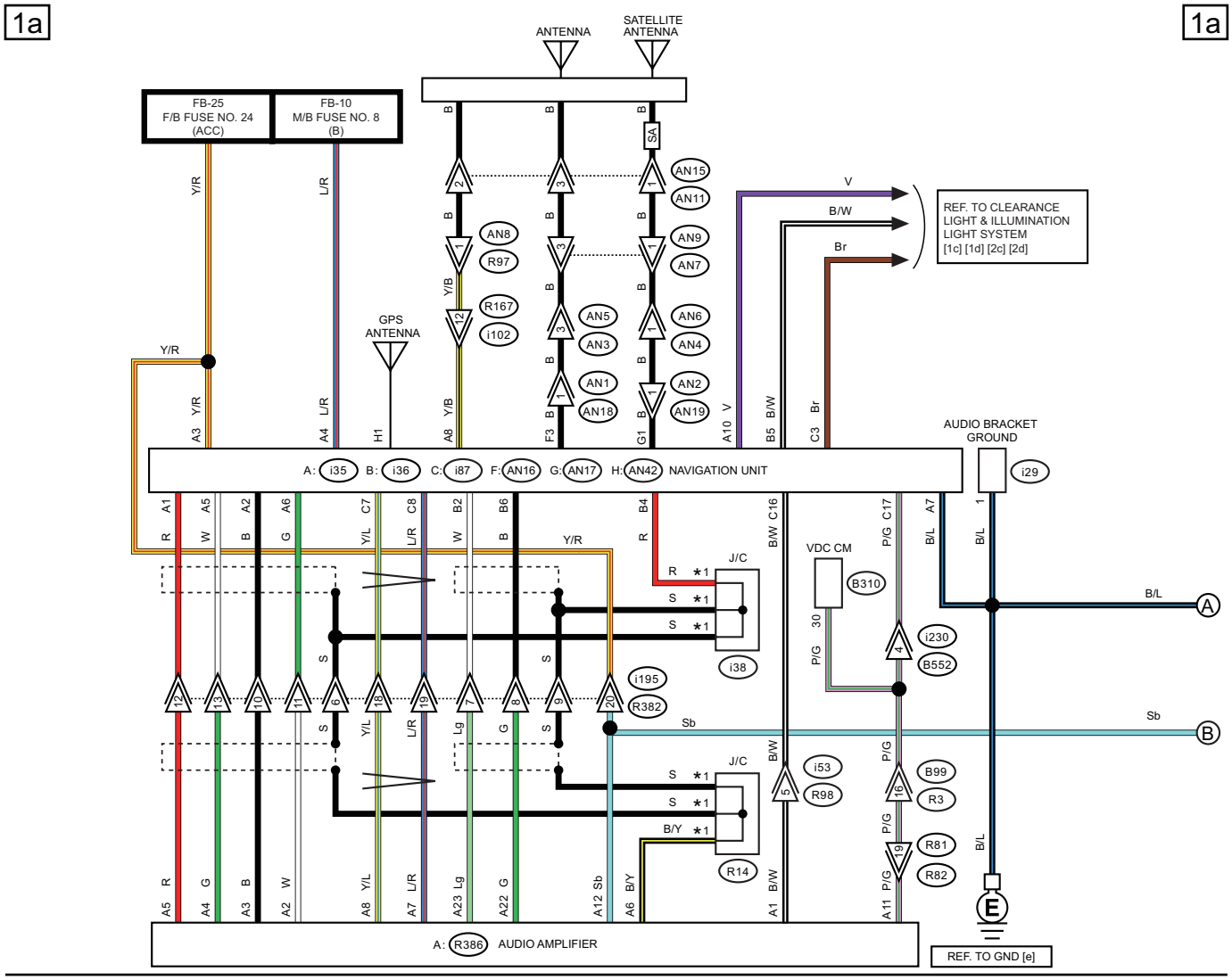

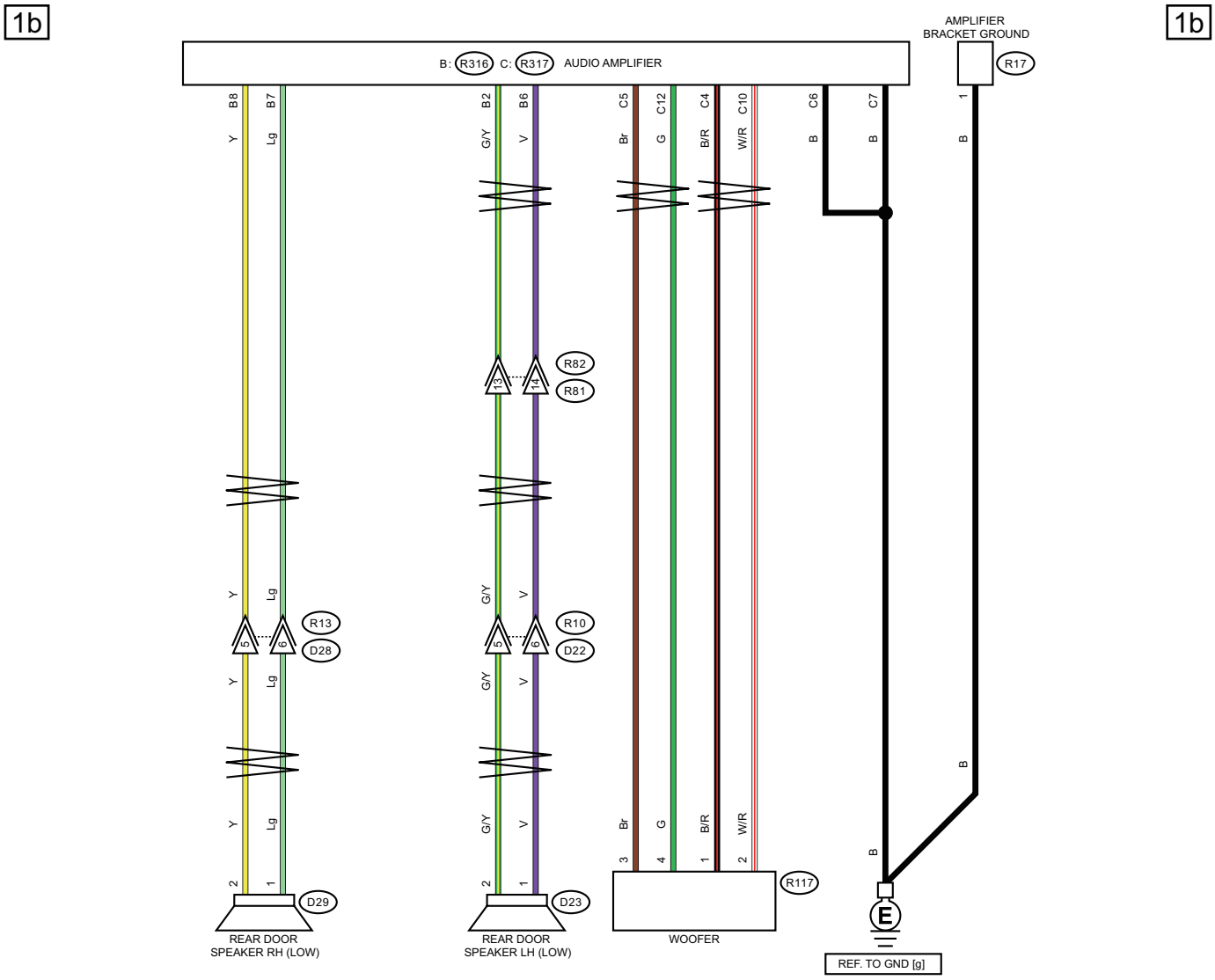
1b
1b
B: R316 C: R317 AUDIO AMPLIFIER
AMPLIFIER BRACKET GROUND
R17
B8 B7 B2 B6 C5 C12 C4 C10 C6 C7 1
Y Lg G/Y V Br G B/R W/R B B B
R82
R81
R13
D28
R10
D22
D29
D23
R117
REAR DOOR SPEAKER RH (LOW)
REAR DOOR SPEAKER LH (LOW)
WOOFER
REF. TO GND [g]

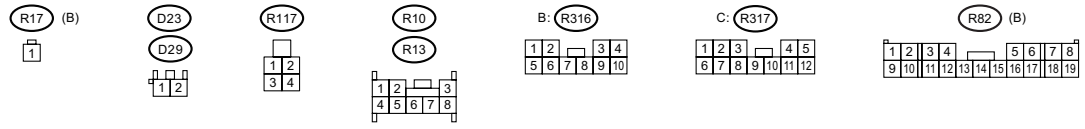
R17 (B)
D23
D29
R117
R10
R13
B: R316
C: R317
R82 (B)

WI-66767

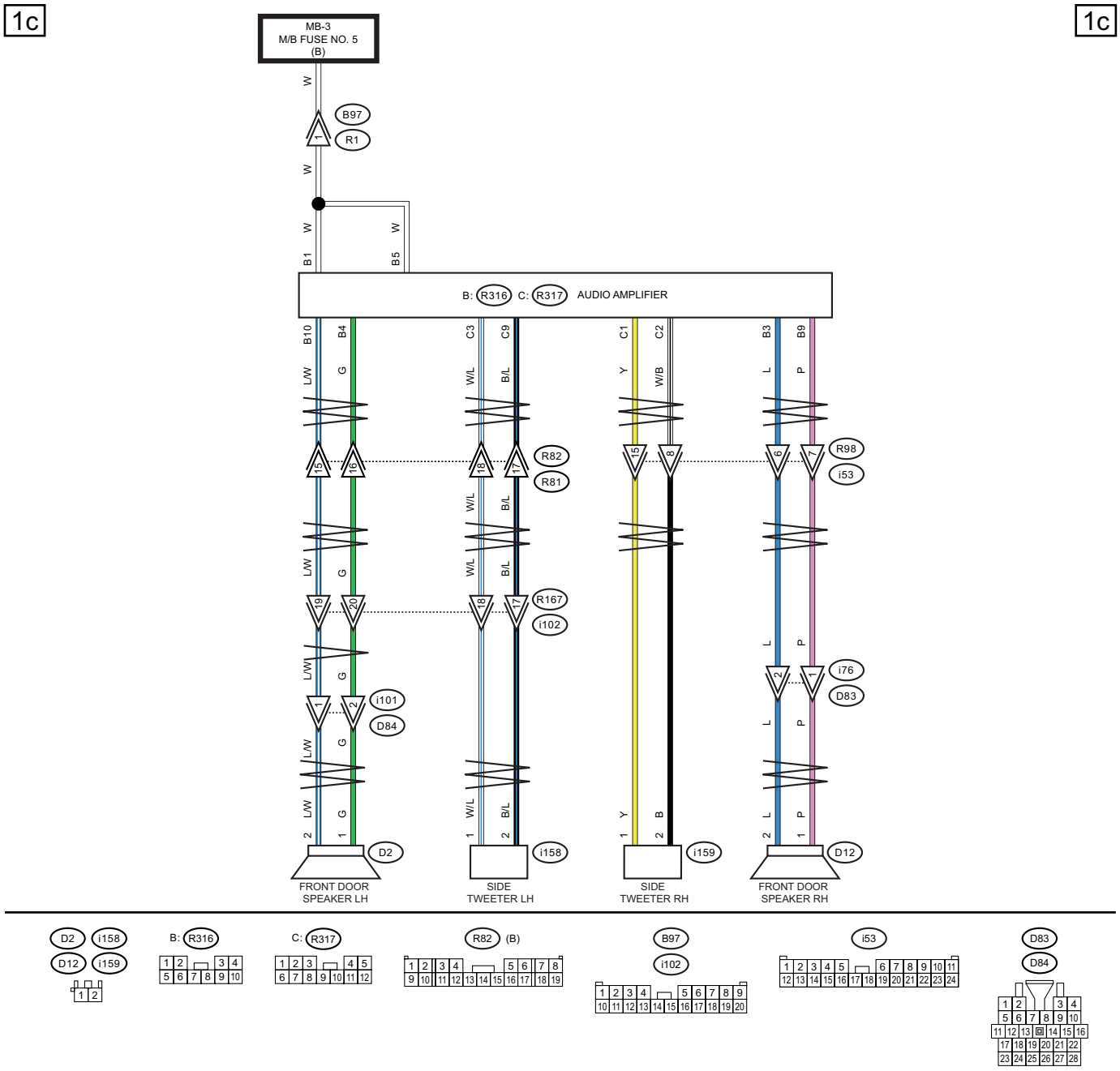
1c
1c
MB-3
M/B FUSE NO. 5
(B)
W
B97
R1
W
W
W
B1
B5
B: R316 C: R317 AUDIO AMPLIFIER
B10
B4
C3
C9
C1
C2
B3
B9
L/W
G
W/L
B/L
Y
W/B
L
P
15
16
18
17
15
8
6
7
R82
R81
R98
i53
L/W
G
W/L
B/L
W/L
B/L
19
20
18
17
R167
i102
L/W
G
L
P
2
1
i76
D83
1
2
i101
D84
L/W
G
L
P
L/W
G
W/L
B/L
Y
B
L
P
2
1
1
2
1
2
2
1
D2
i158
i159
D12
FRONT DOOR
SPEAKER LH
SIDE
TWEETER LH
SIDE
TWEETER RH
FRONT DOOR
SPEAKER RH

D2
i158
D12
i159
B: R316
C: R317
R82 (B)
B97
i102
i53
D83
D84

WI-66768

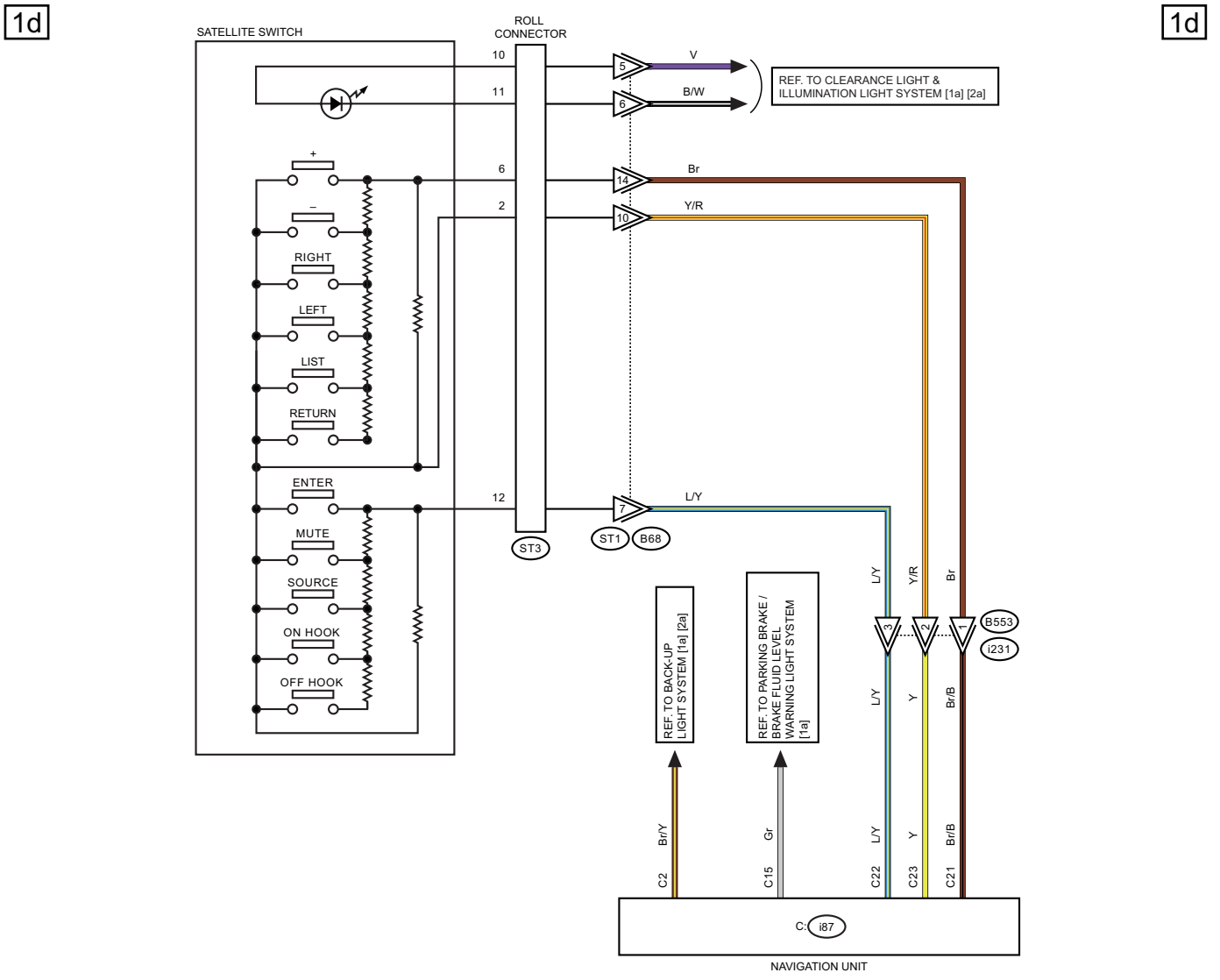
1d
1d
SATELLITE SWITCH
ROLL CONNECTOR
10
11
6
2
12
+
–
RIGHT
LEFT
LIST
RETURN
ENTER
MUTE
SOURCE
ON HOOK
OFF HOOK
ST3
5
6
14
10
7
V
B/W
Br
Y/R
L/Y
ST1
B68
REF. TO CLEARANCE LIGHT & ILLUMINATION LIGHT SYSTEM [1a] [2a]
REF. TO BACK-UP LIGHT SYSTEM [1a] [2a]
REF. TO PARKING BRAKE / BRAKE FLUID LEVEL WARNING LIGHT SYSTEM [1a]
C7
C2
C1
B553
i231
L/Y
Y/R
Br
L/Y
Y
Br/B
Br/Y
Gr
L/Y
Y
Br/B
C2
C15
C22
C23
C21
C:
i87
NAVIGATION UNIT

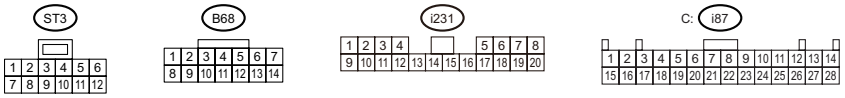
ST3
B68
i231
C: i87

WI-66769

1e

1e

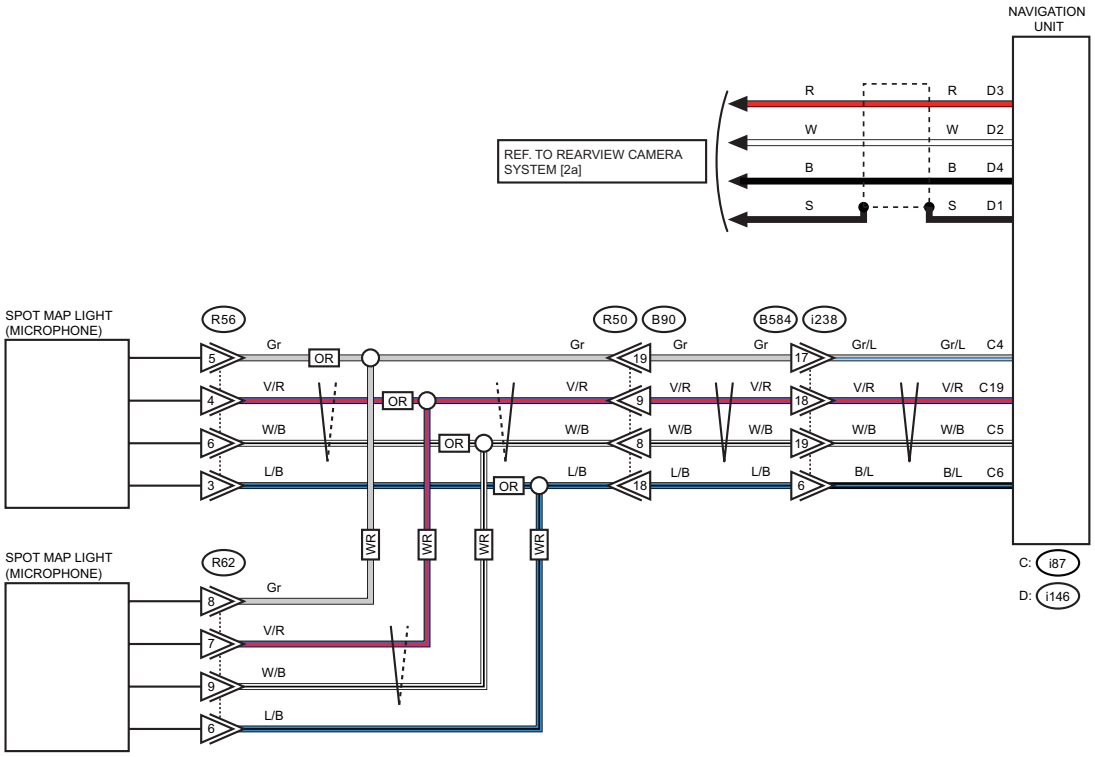

OR : WITHOUT SUNROOF

WR : WITH SUNROOF

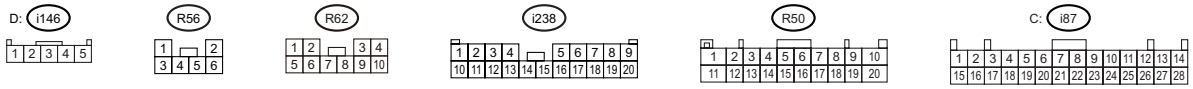

WI-66770

WIRING SYSTEM

1f

1f

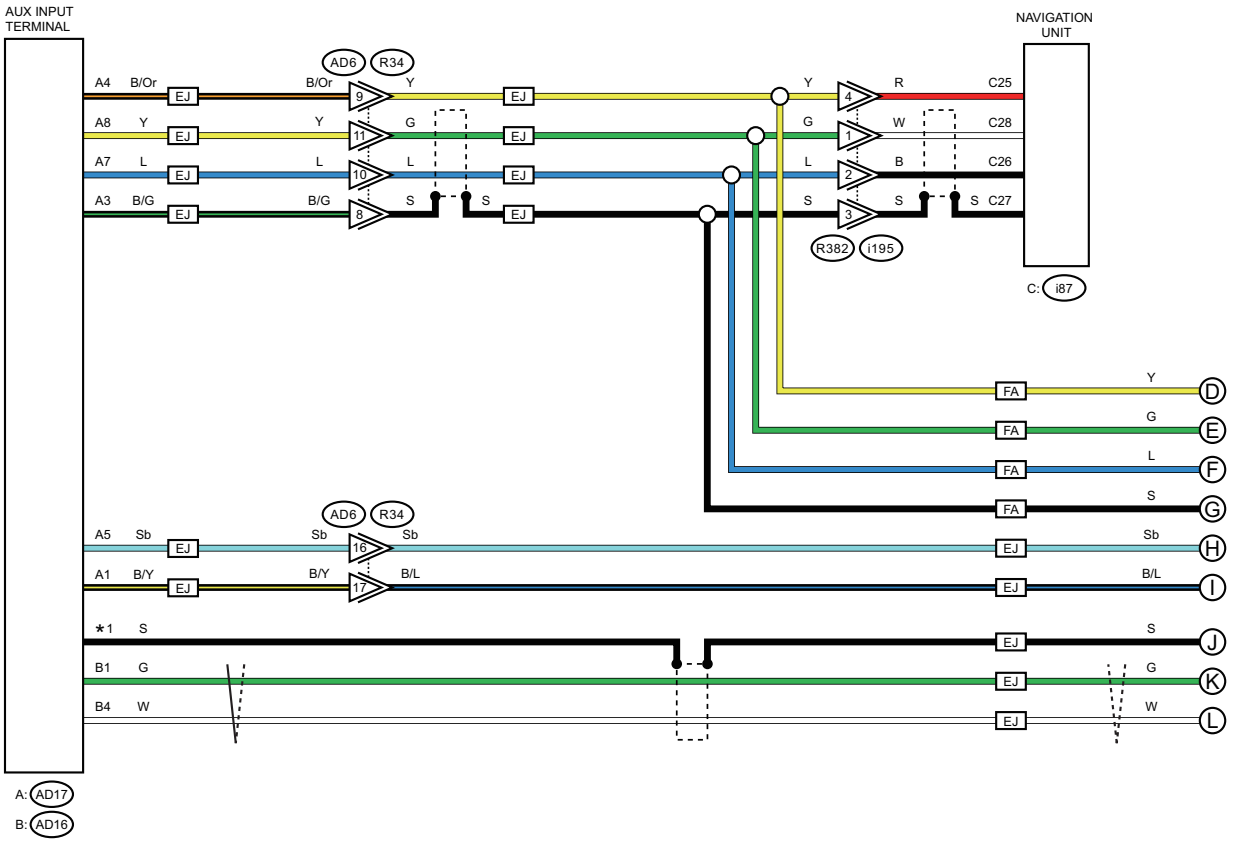

FA : ENGINE TYPE FA
EJ : ENGINE TYPE EJ
*1 : SHIELD CONNECTOR

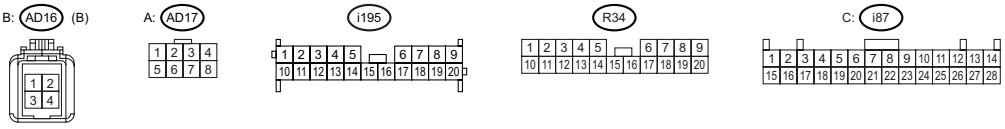

WI-66771

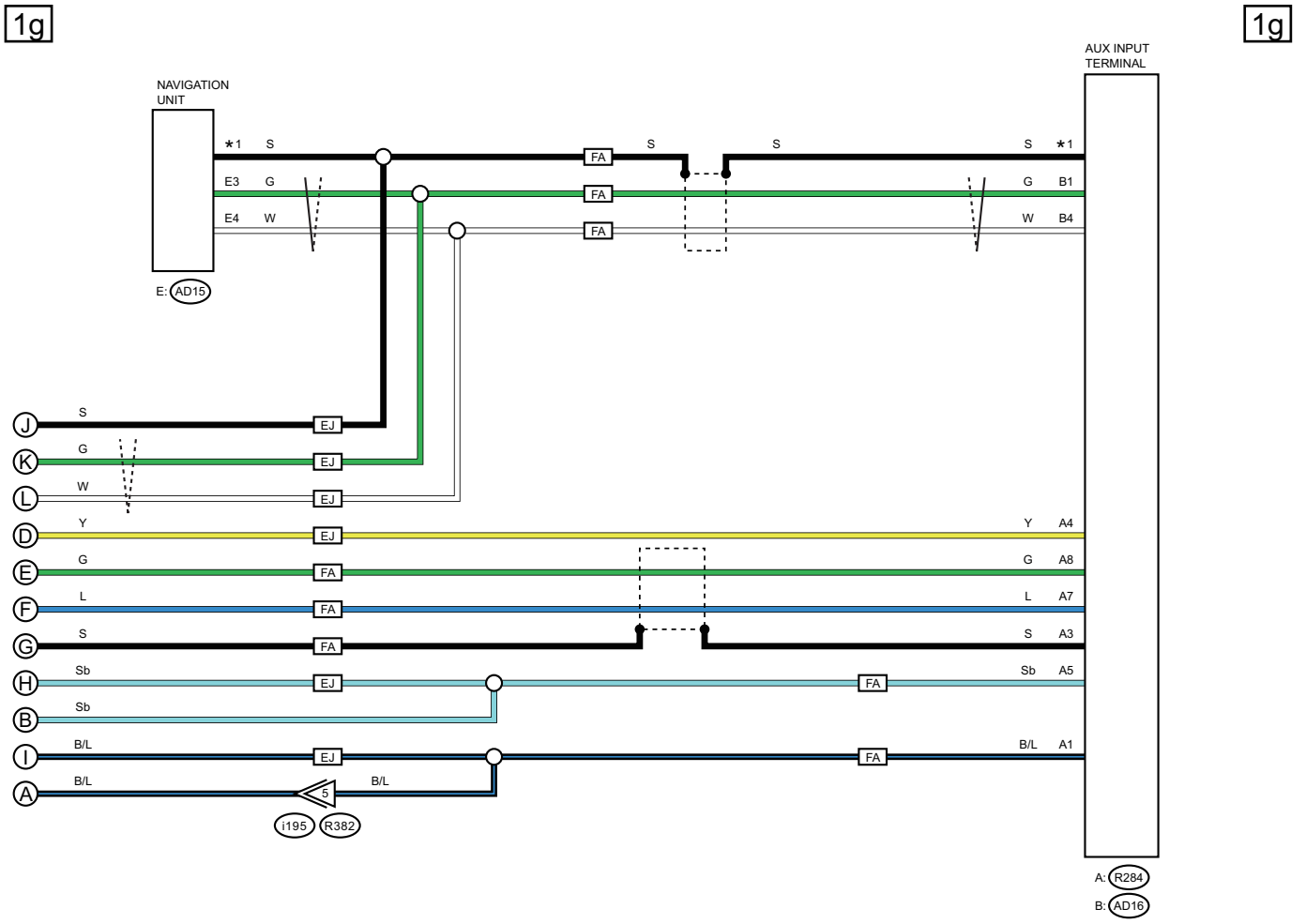

FA : ENGINE TYPE FA

EJ : ENGINE TYPE EJ

★1 : SHIELD CONNECTOR

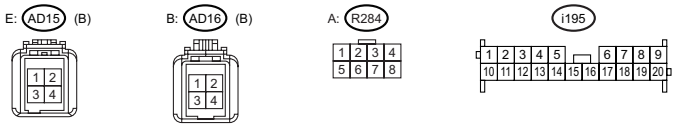

WI-66772

2. WITH TELEMATICS

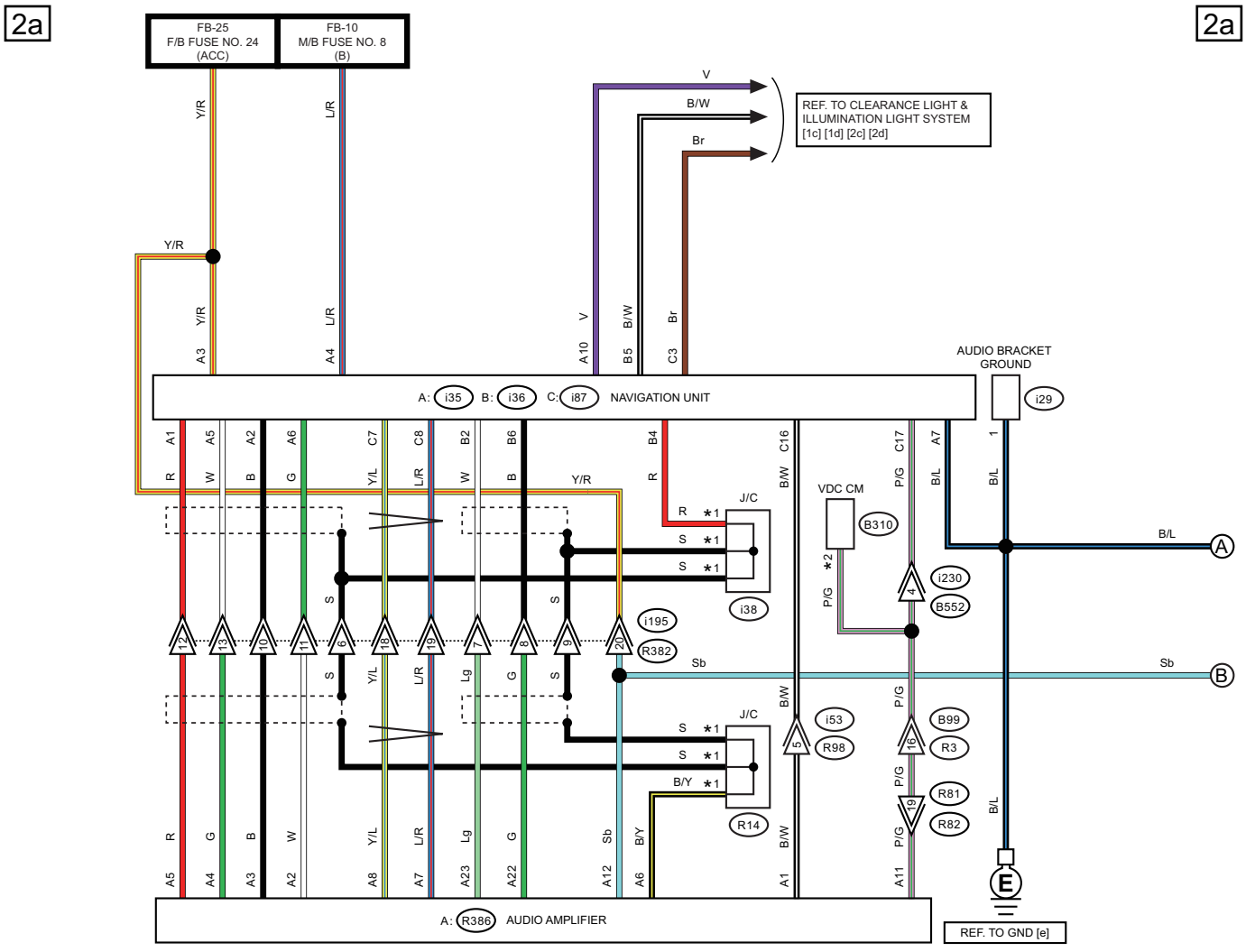

WI-66775

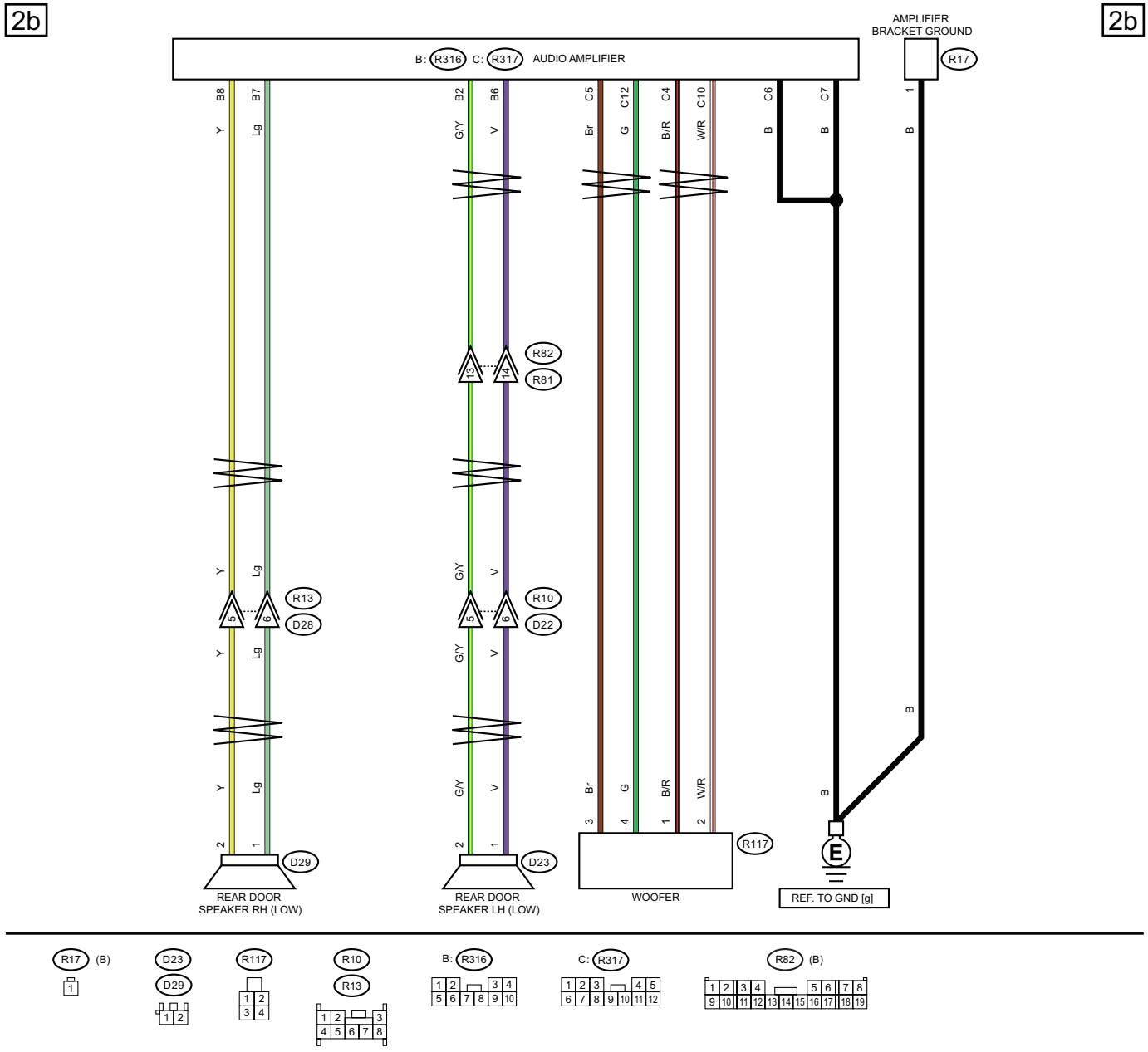
2b
2b
AMPLIFIER BRACKET GROUND
B: R316 C: R317 AUDIO AMPLIFIER
R17
B8 B7 B2 B6 C5 C12 C4 C10 C6 C7 1
Y Lg G/Y V Br G B/R W/R B B B
R82
R81
R13
D28
R10
D22
D29
D23
R117
REAR DOOR SPEAKER RH (LOW)
REAR DOOR SPEAKER LH (LOW)
WOOFER
REF. TO GND [g]

R17 (B)
D23
D29
R117
R10
R13
B: R316
C: R317
R82 (B)

WI-66776

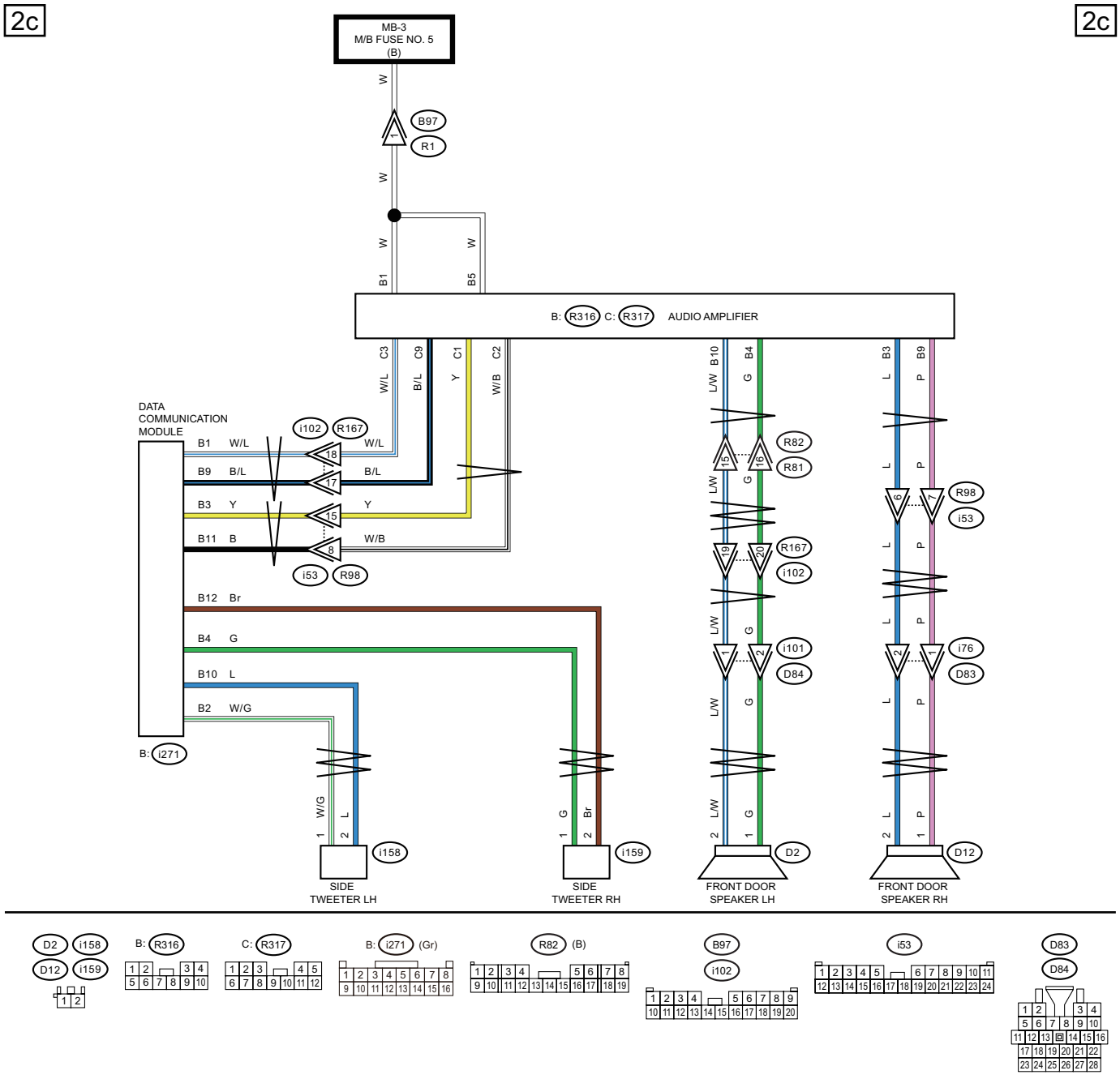
2c
2c
MB-3
M/B FUSE NO. 5
(B)
B97
R1
B: R316 C: R317 AUDIO AMPLIFIER
DATA
COMMUNICATION
MODULE
i102
R167
B1 W/L
B9 B/L
B3 Y
B11 B
B12 Br
B4 G
B10 L
B2 W/G
i53
R98
B: i271
i158
i159
SIDE
TWEETER LH
SIDE
TWEETER RH
R82
R81
R167
i102
i101
D84
D2
FRONT DOOR
SPEAKER LH
R98
i53
i76
D83
D12
FRONT DOOR
SPEAKER RH

D2
i158
D12
i159
B: R316
C: R317
B: i271 (Gr)
R82 (B)
B97
i102
i53
D83
D84

WI-66777

2d

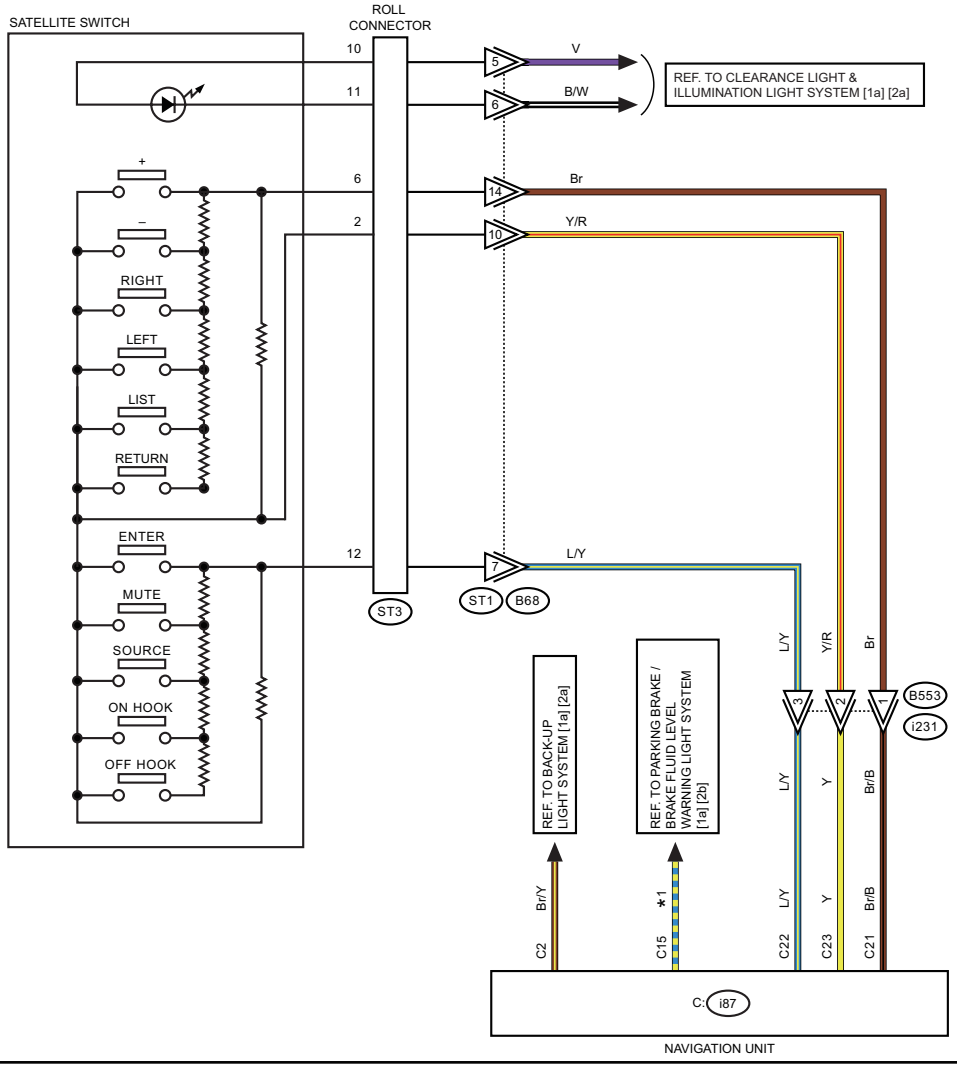

2d

*1 : WITHOUT EyeSight : Gr
WITH EyeSight : Y/G

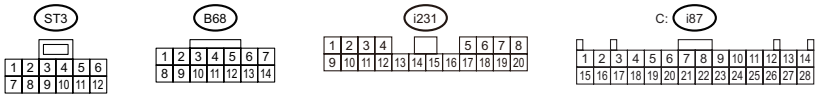

WI-66778

2e 2e

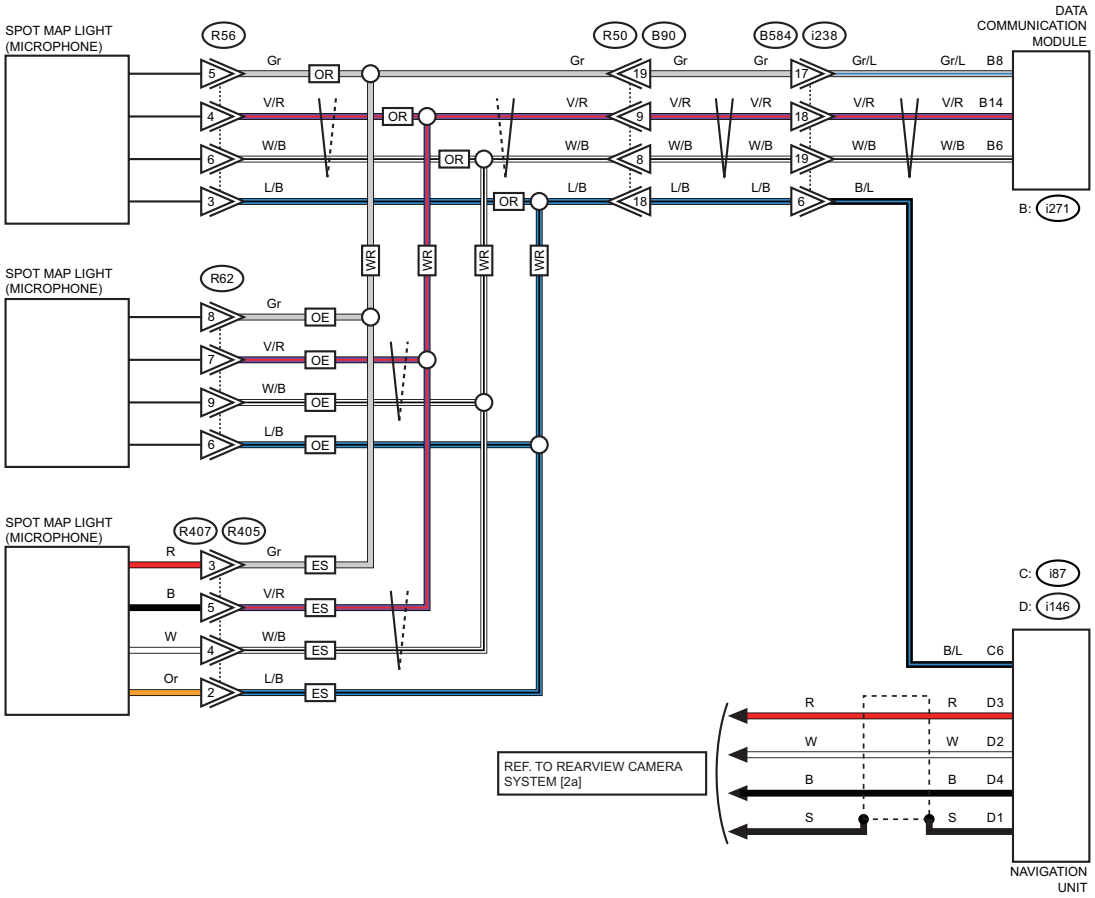

OR : WITHOUT SUNROOF
WR : WITH SUNROOF
OE : WITHOUT EyeSight
ES : WITH EyeSight

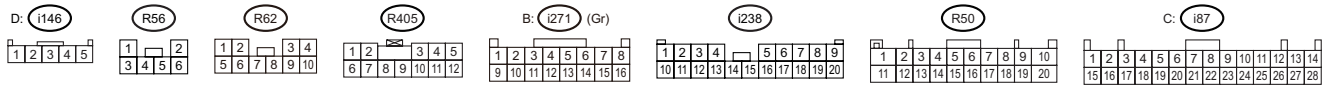

WI-66779

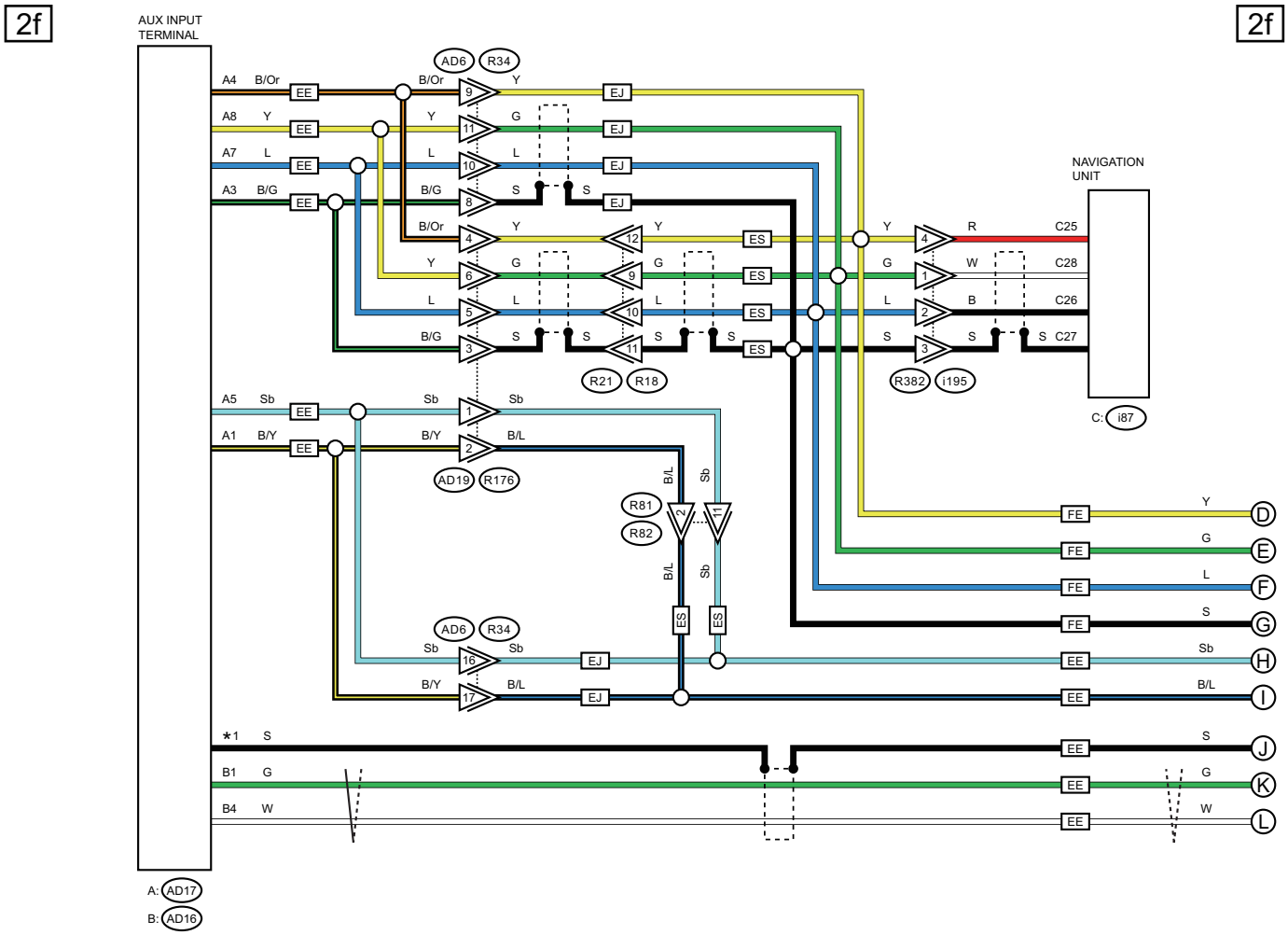

FE : ENGINE TYPE FA WITHOUT EyeSight

EE : EXCEPT FOR ENGINE TYPE FA WITHOUT EyeSight

EJ : ENGINE TYPE EJ

ES : WITH EyeSight

*1 : SHIELD CONNECTOR

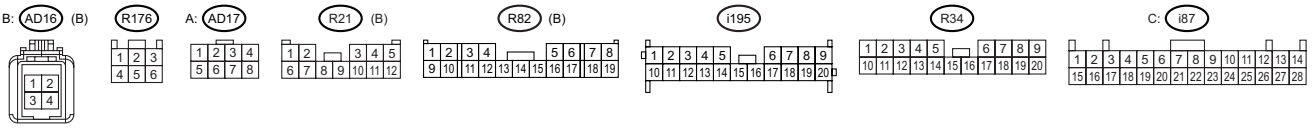

WI-66780

WIRING SYSTEM

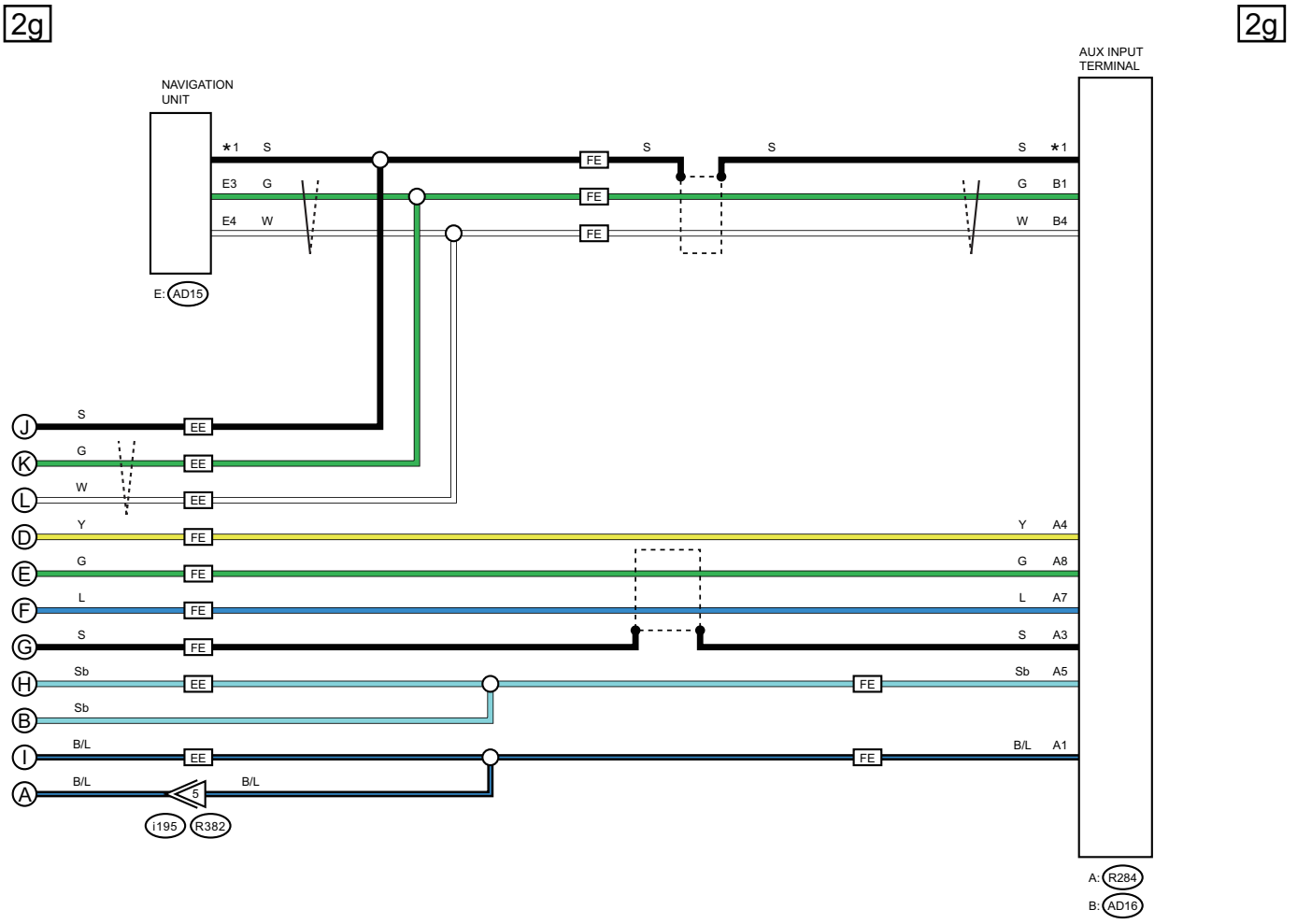

FE : ENGINE TYPE FA WITHOUT EyeSight

EE : EXCEPT FOR ENGINE TYPE FA WITHOUT EyeSight

*1 : SHIELD CONNECTOR

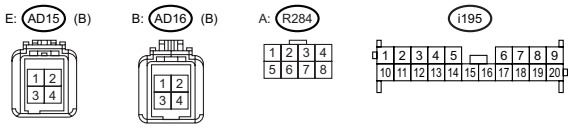

WI-66781

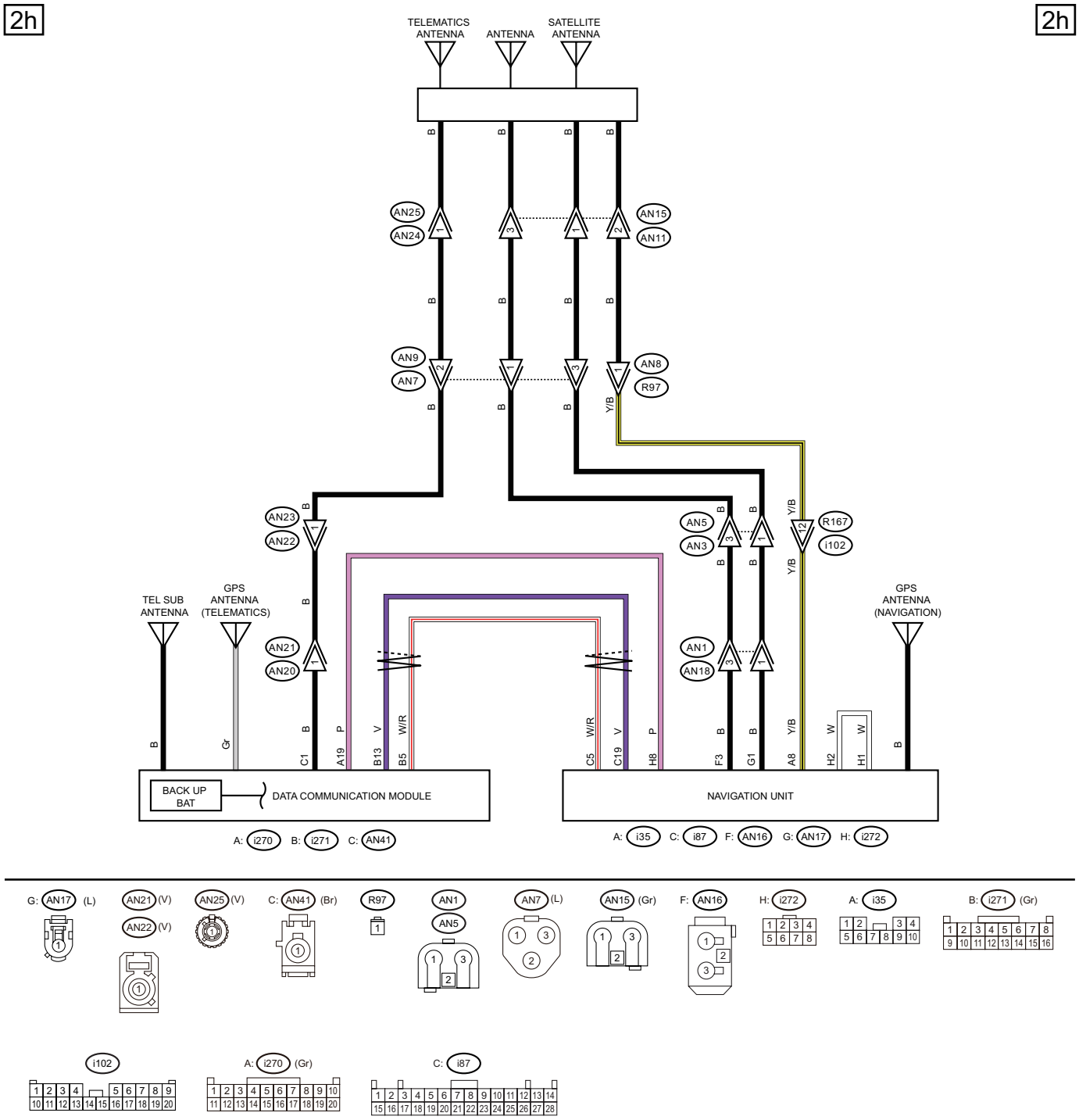
2h
2h
TELEMATICS ANTENNA
ANTENNA
SATELLITE ANTENNA
AN25
AN24
AN15
AN11
AN9
AN7
AN8
R97
Y/B
AN23
AN22
AN5
AN3
R167
i102
TEL SUB ANTENNA
GPS ANTENNA (TELEMATICS)
AN21
AN20
AN1
AN18
GPS ANTENNA (NAVIGATION)
BACK UP BAT
DATA COMMUNICATION MODULE
NAVIGATION UNIT
A: i270 B: i271 C: AN41
A: i35 C: i87 F: AN16 G: AN17 H: i272
G: AN17 (L)
AN21 (V)
AN22 (V)
AN25 (V)
C: AN41 (Br)
R97
AN1
AN5
AN7 (L)
AN15 (Gr)
F: AN16
H: i272
A: i35
B: i271 (Gr)
i102
A: i270 (Gr)
C: i87

WI-66782

35.Occupant Detection System

A: WIRING DIAGRAM

a

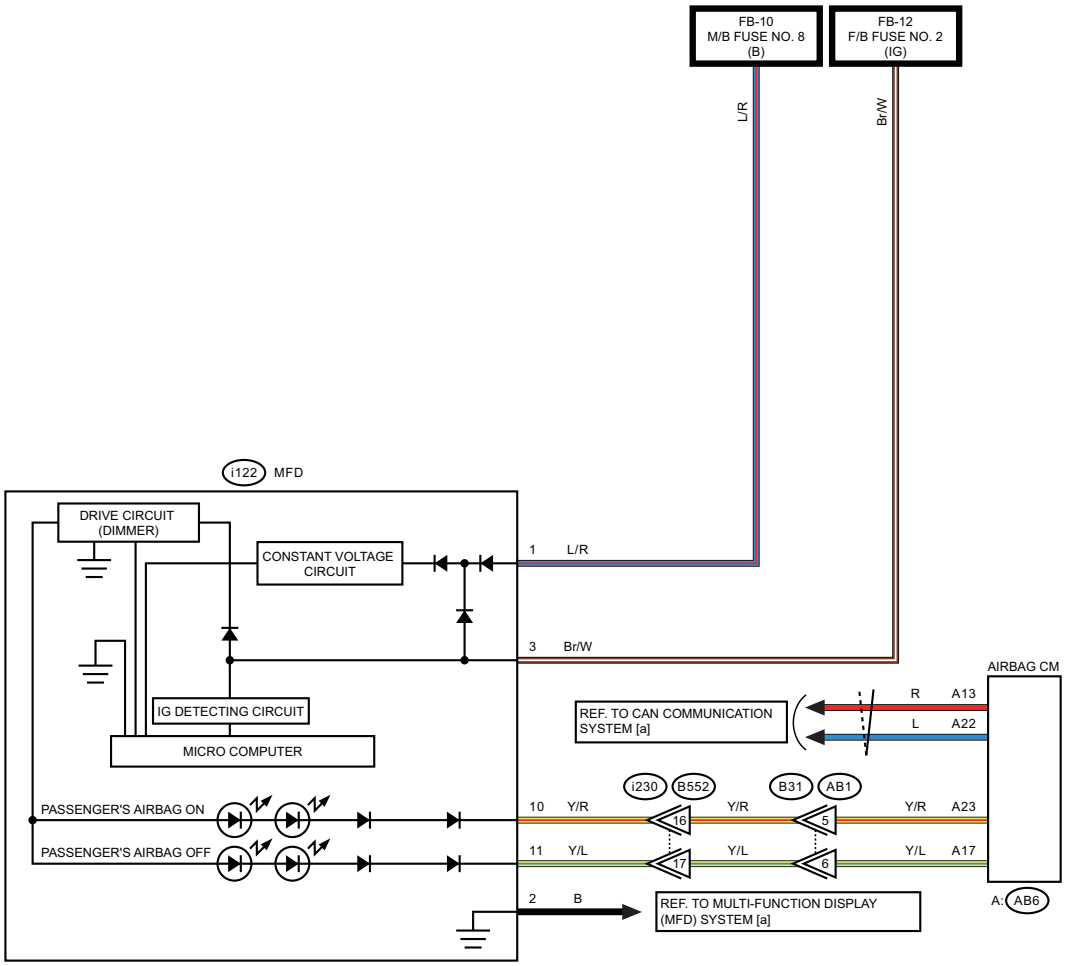

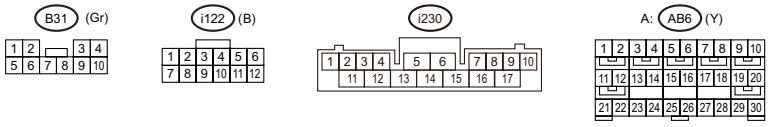

WI-66785

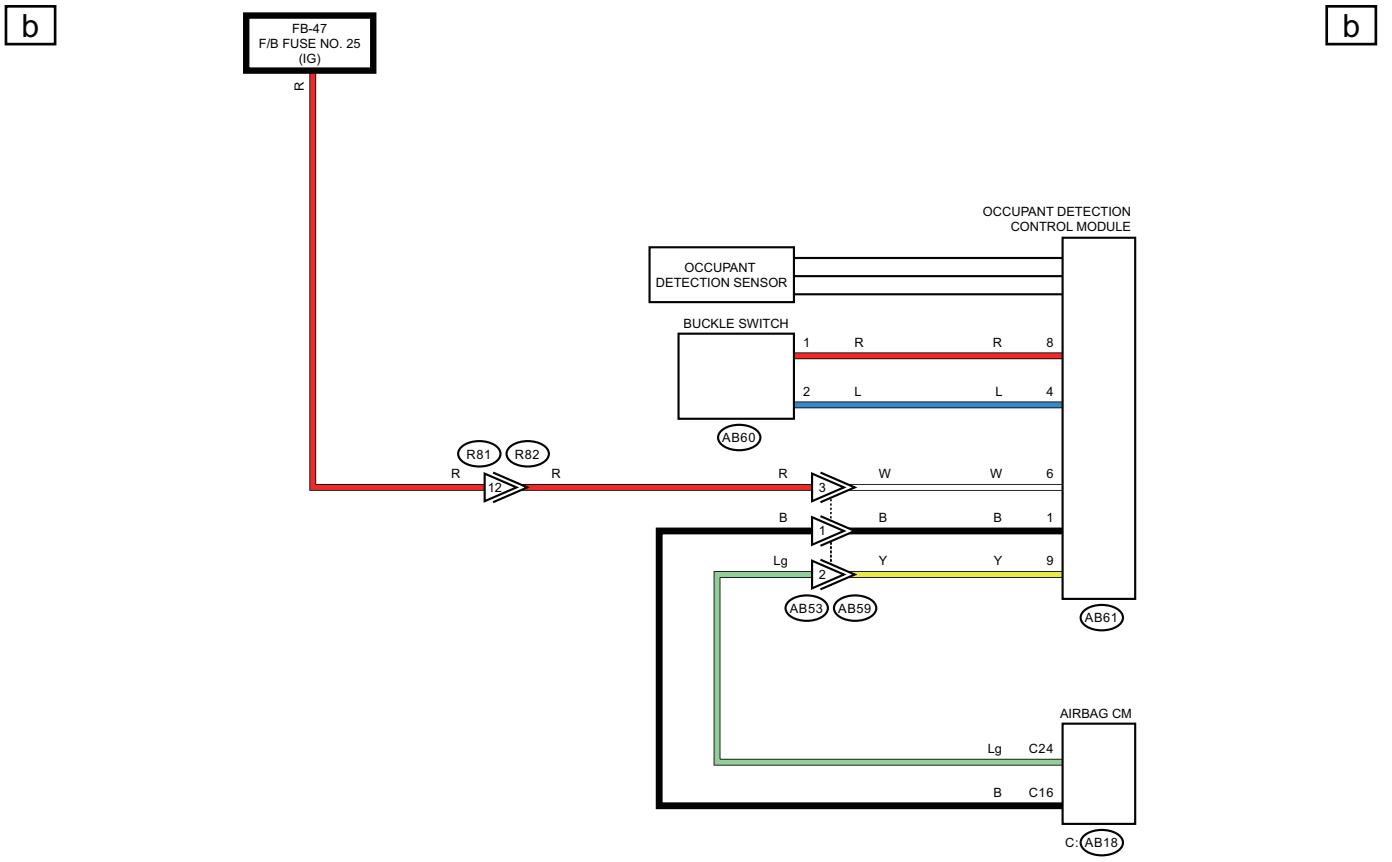
b
b
FB-47
F/B FUSE NO. 25
(IG)
R
OCCUPANT DETECTION
CONTROL MODULE
OCCUPANT
DETECTION SENSOR
BUCKLE SWITCH
1 R R 8
2 L L 4
AB60
R81 R82
R 12 R
R 3 W W 6
B 1 B B 1
Lg 2 Y Y 9
AB53 AB59
AB61
AIRBAG CM
Lg C24
B C16
C: AB18

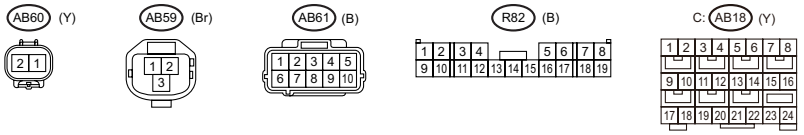
AB60 (Y)
AB59 (Br)
AB61 (B)
R82 (B)
C: AB18 (Y)

WI-66786

36.Oil Pressure Warning Light System

A: WIRING DIAGRAM

a

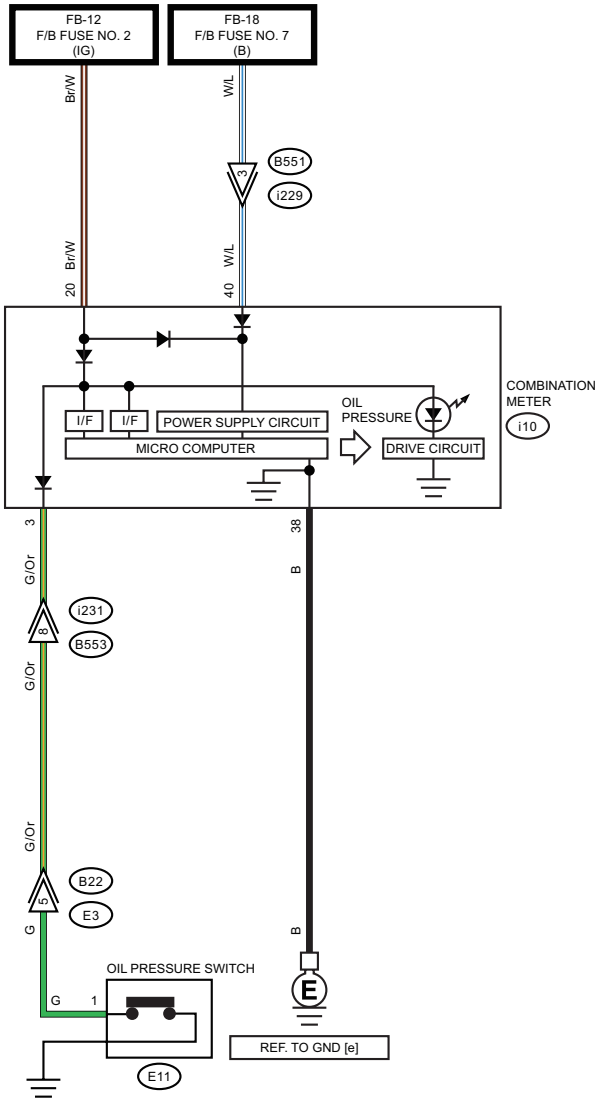

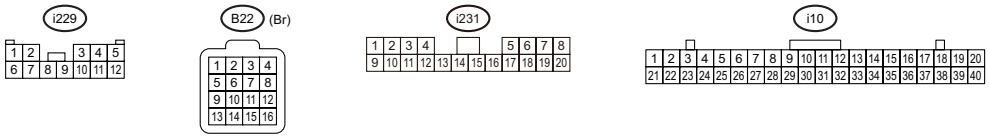

WI-67266

37.Parking Brake / Brake Fluid Level Warning Light System

A: WIRING DIAGRAM

1. WITHOUT EyeSight

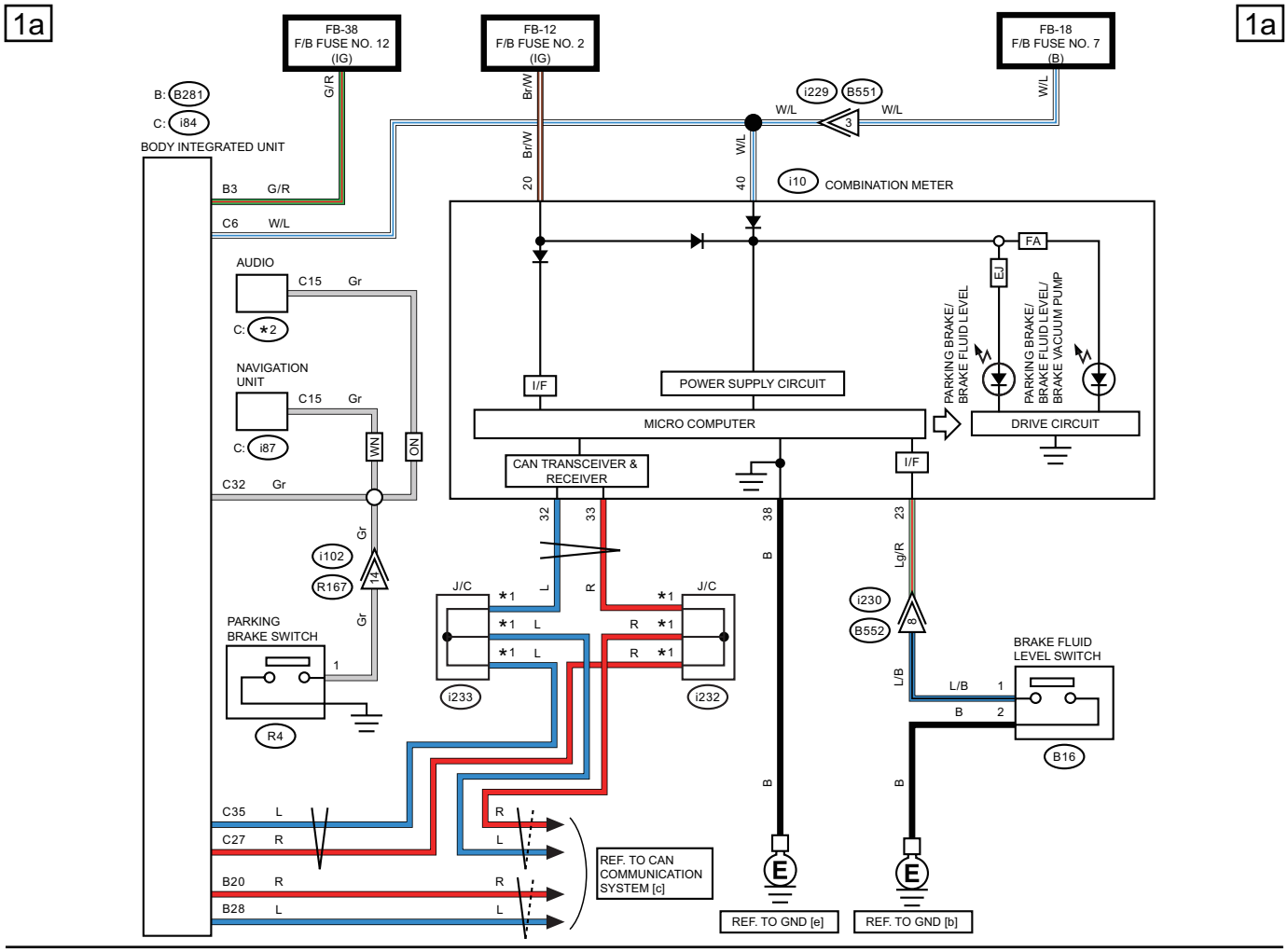

FA : ENGINE TYPE FA
EJ : ENGINE TYPE EJ
ON : WITHOUT NAVIGATION
WN : WITH NAVIGATION

*1 : TERMINAL No. OPTIONAL ARRANGEMENT
*2 : 6.2 INCH DISPLAY : i192
7 INCH DISPLAY : i87

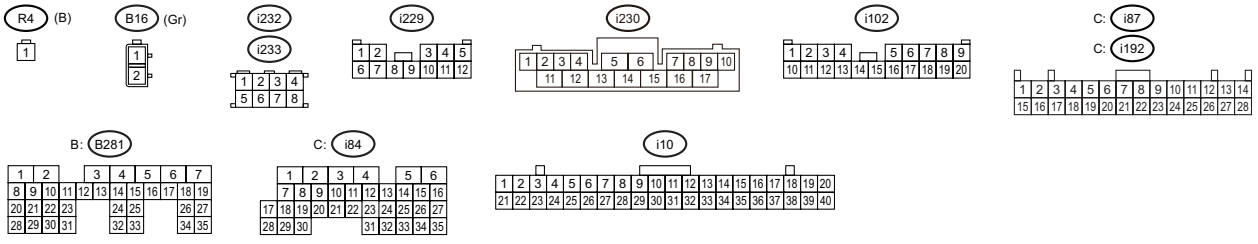

WI-66789

2. WITH EyeSight

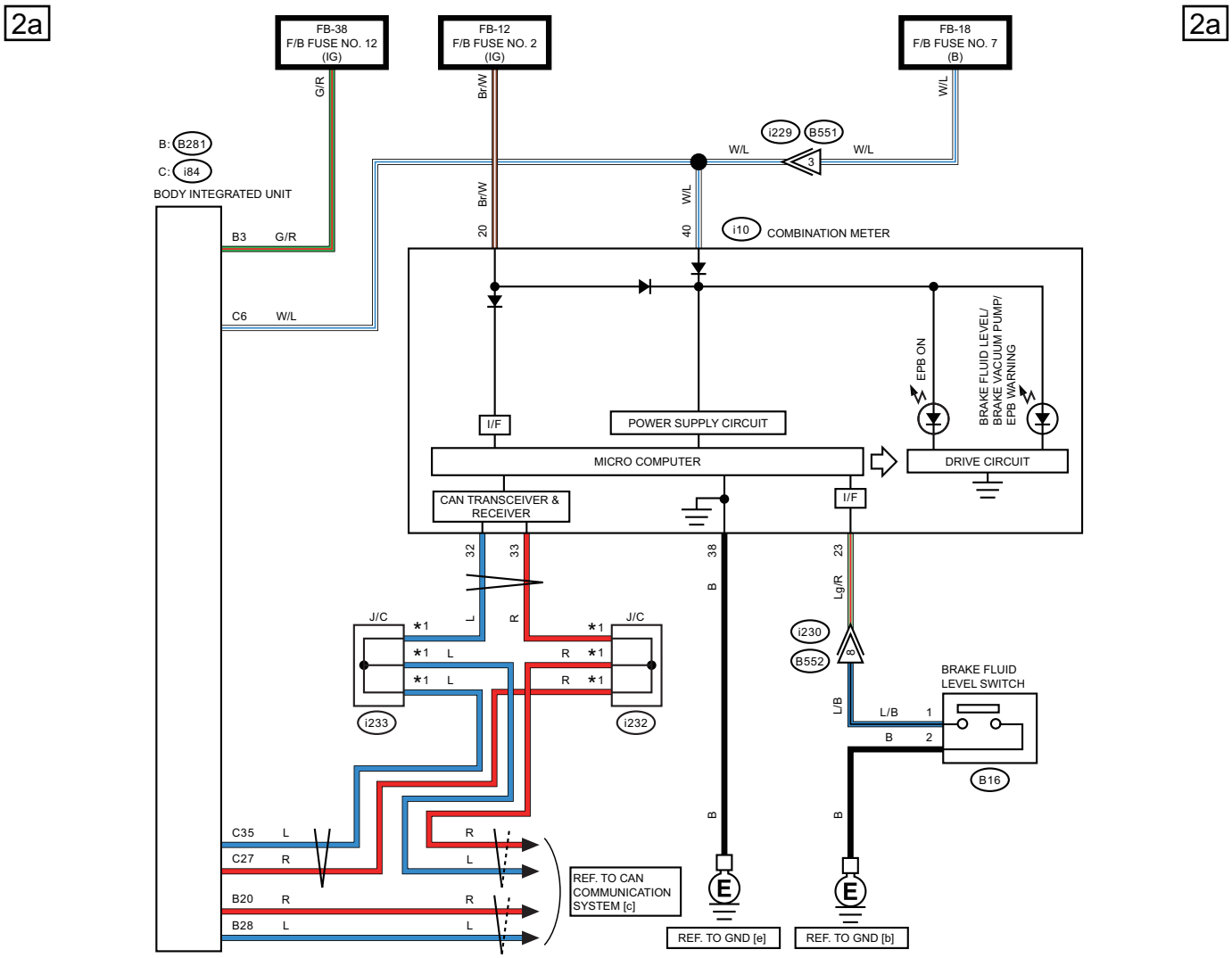

*1 : TERMINAL No. OPTIONAL ARRANGEMENT

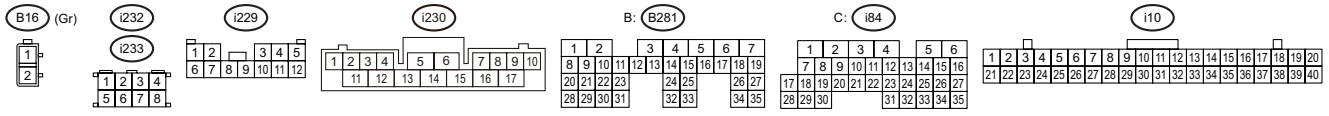

WI-66791

2b

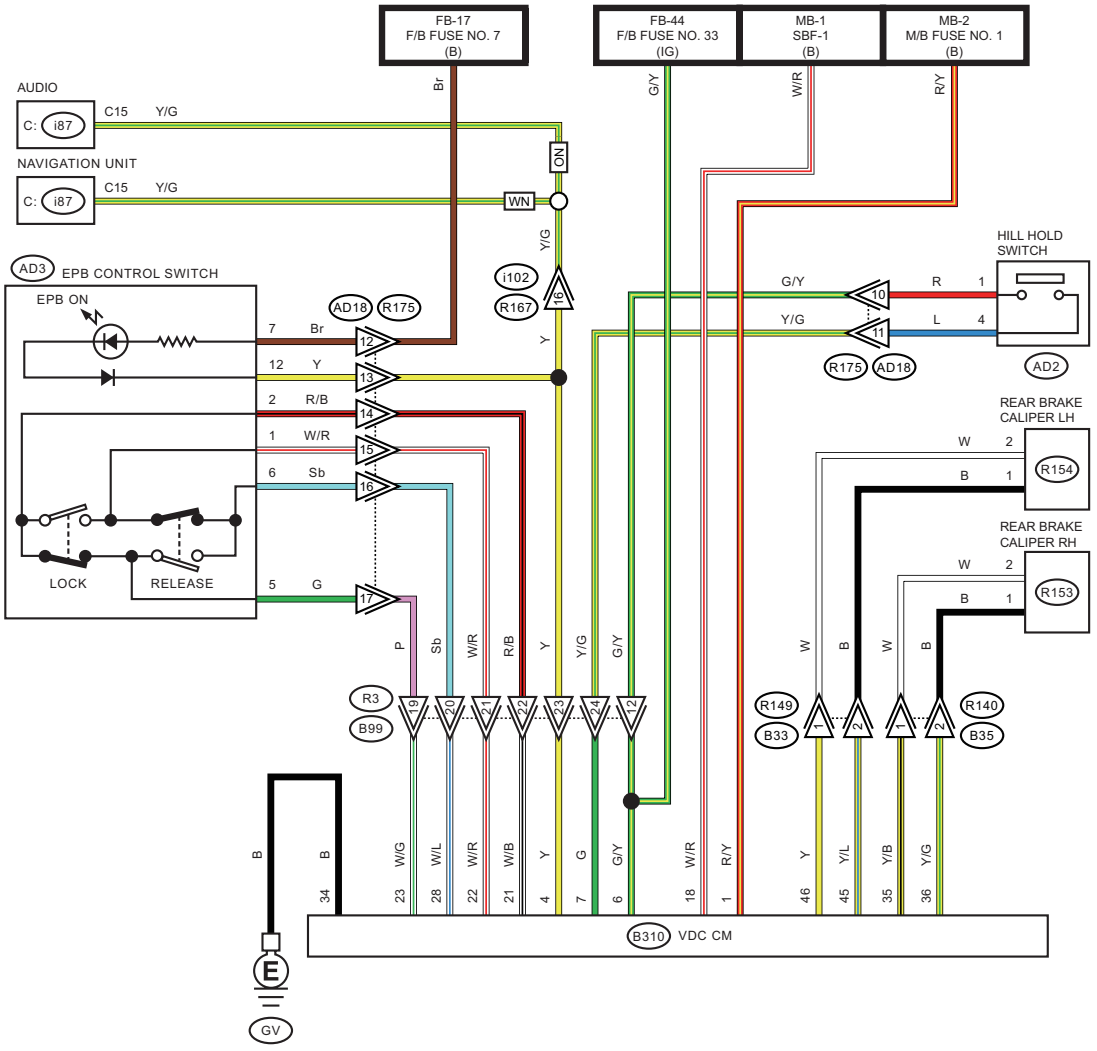

ON : WITHOUT NAVIGATION

WN : WITH NAVIGATION

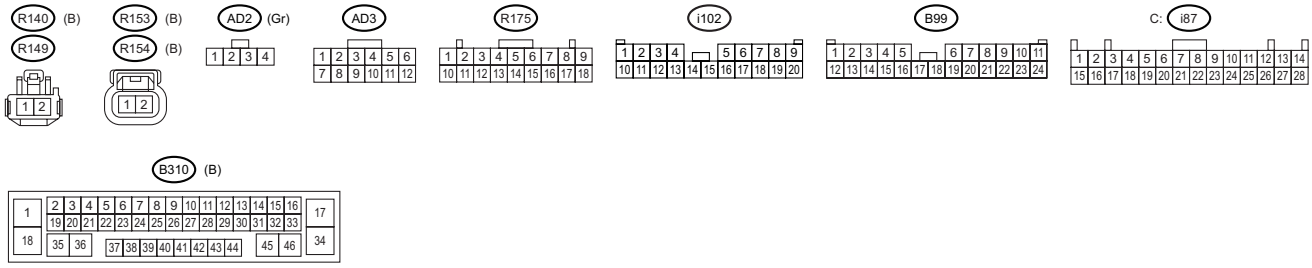

WI-66792

38.Power Seat System

A: WIRING DIAGRAM

a

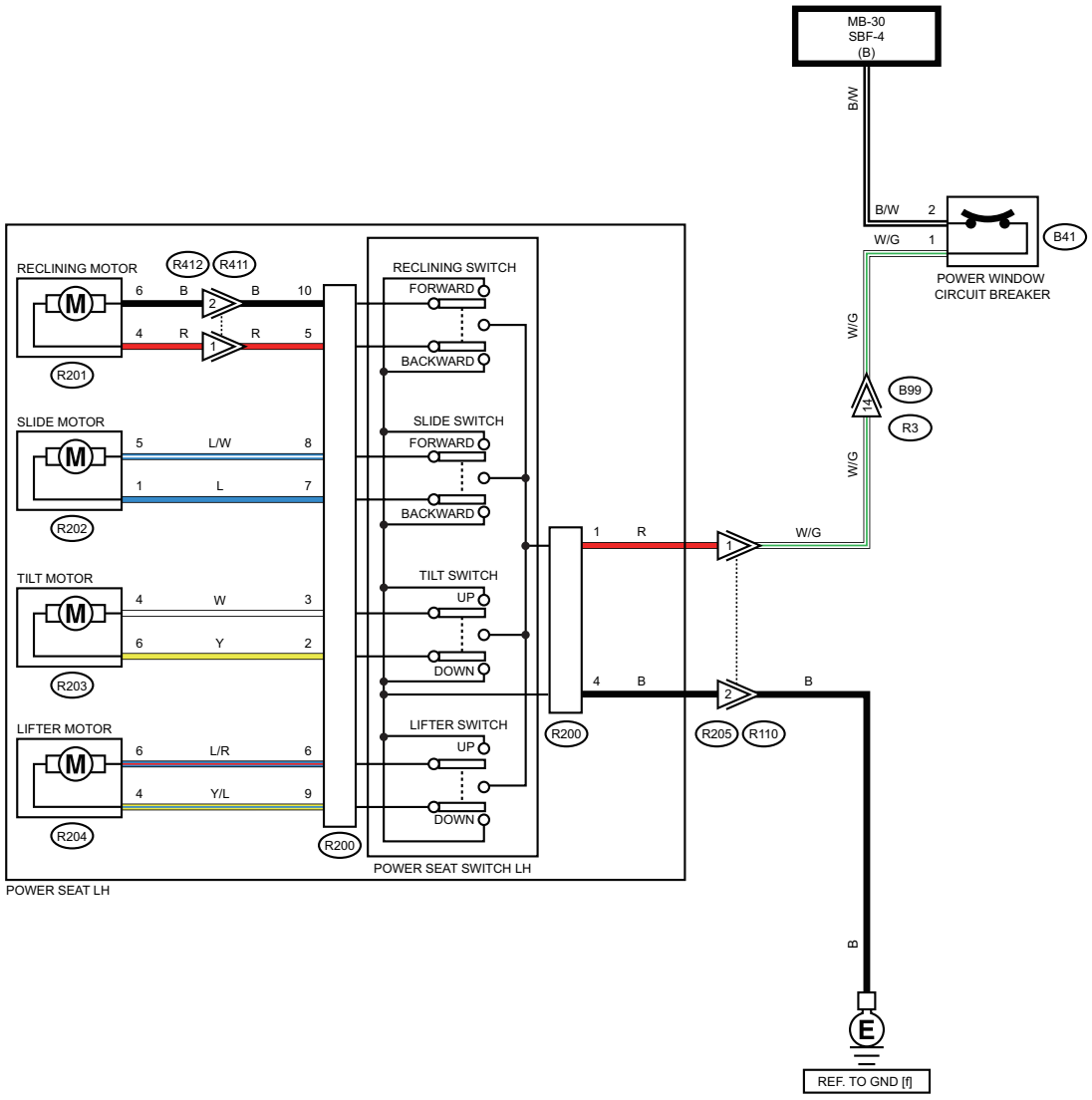

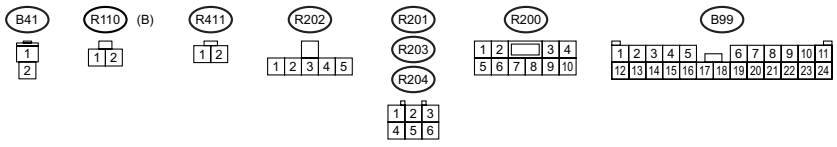

WI-67267

39.Power Window System

A: WIRING DIAGRAM

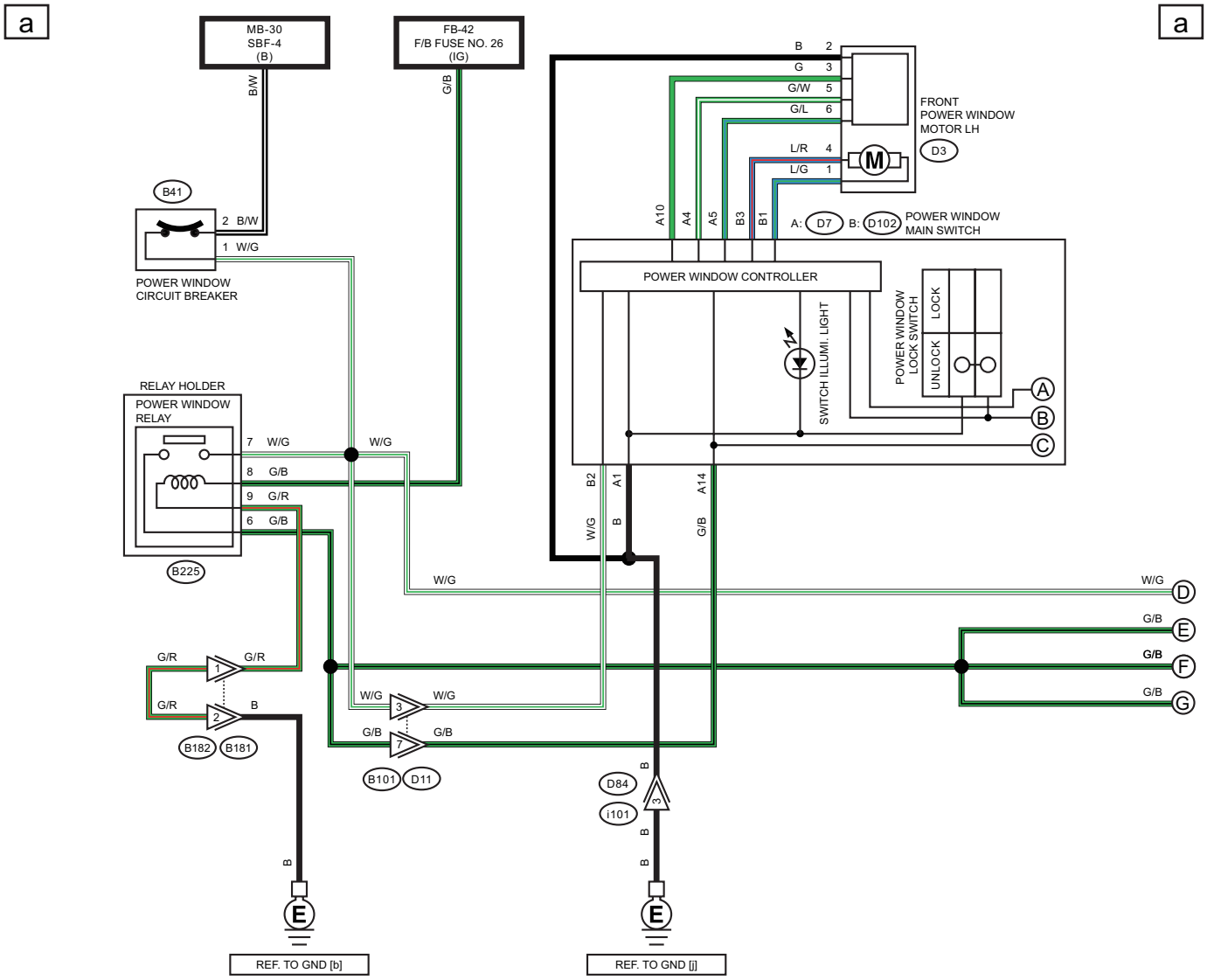

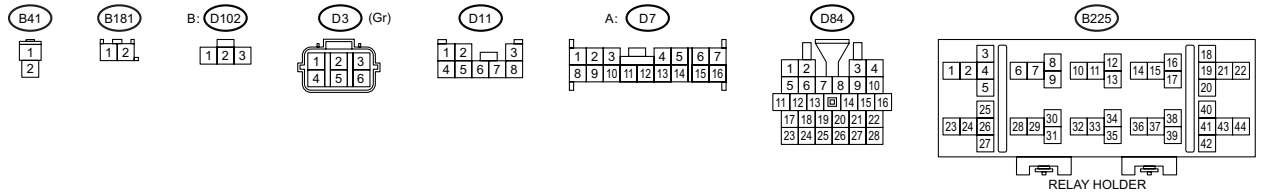

WI-71023

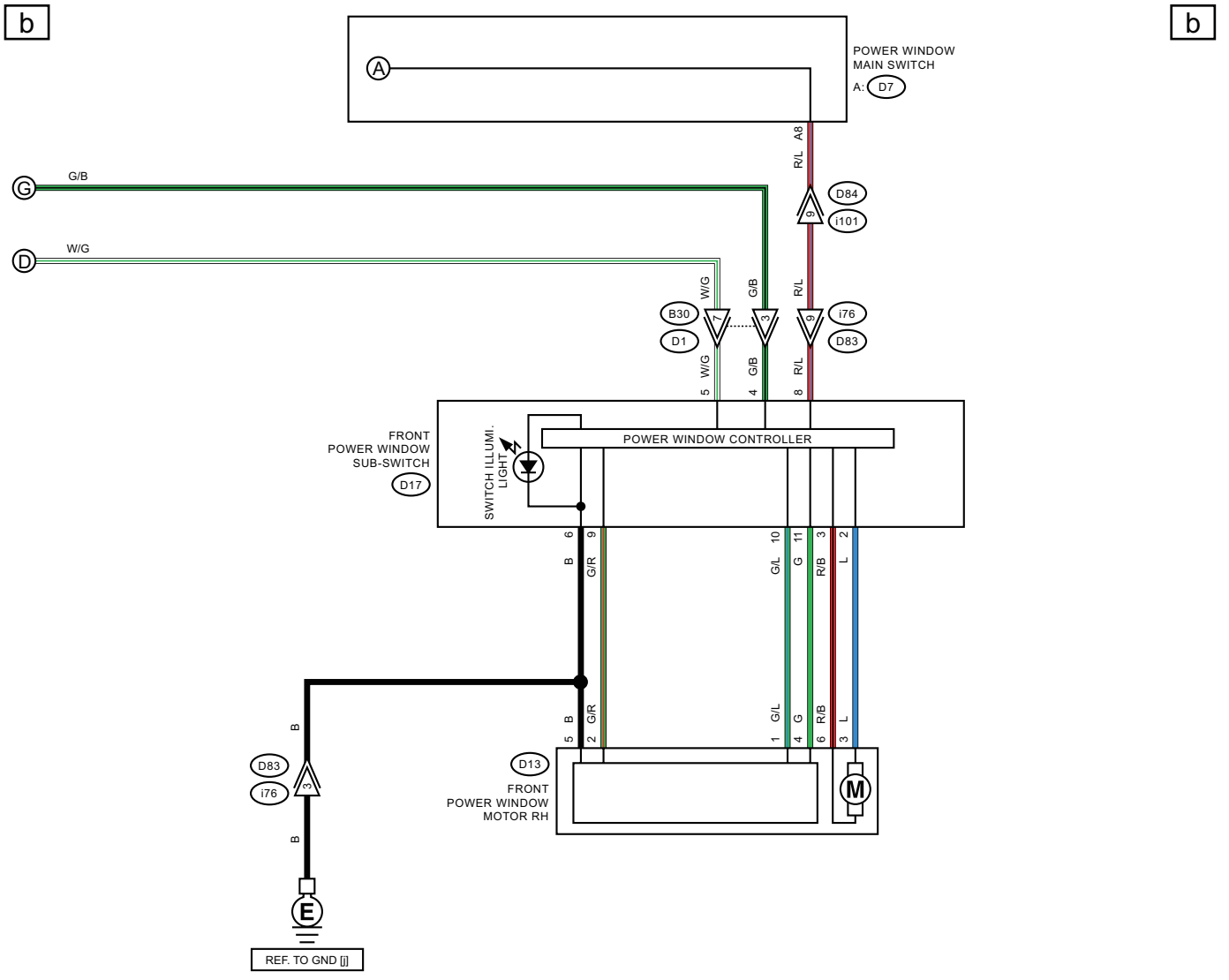
b
b
POWER WINDOW MAIN SWITCH
A: D7
A
R/L A8
G/B
W/G
D84
i101
9
B30
D1
W/G 7
G/B 3
R/L 9
i76
D83
5 W/G
4 G/B
8 R/L
FRONT POWER WINDOW SUB-SWITCH
D17
SWITCH ILLUMI. LIGHT
POWER WINDOW CONTROLLER
B 6
G/R 9
G/L 10
G 11
R/B 3
L 2
B 5
G/R 2
G/L 1
G 4
R/B 6
L 3
D83
i76
3
B
B
D13
FRONT POWER WINDOW MOTOR RH
M
E
REF. TO GND [j]

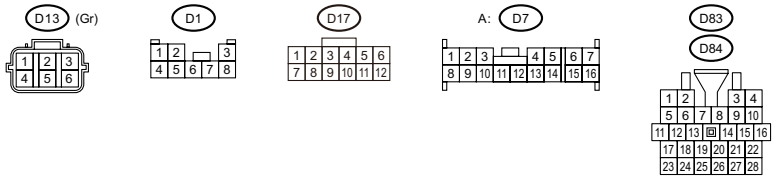
D13 (Gr)
D1
D17
A: D7
D83
D84

WI-71024

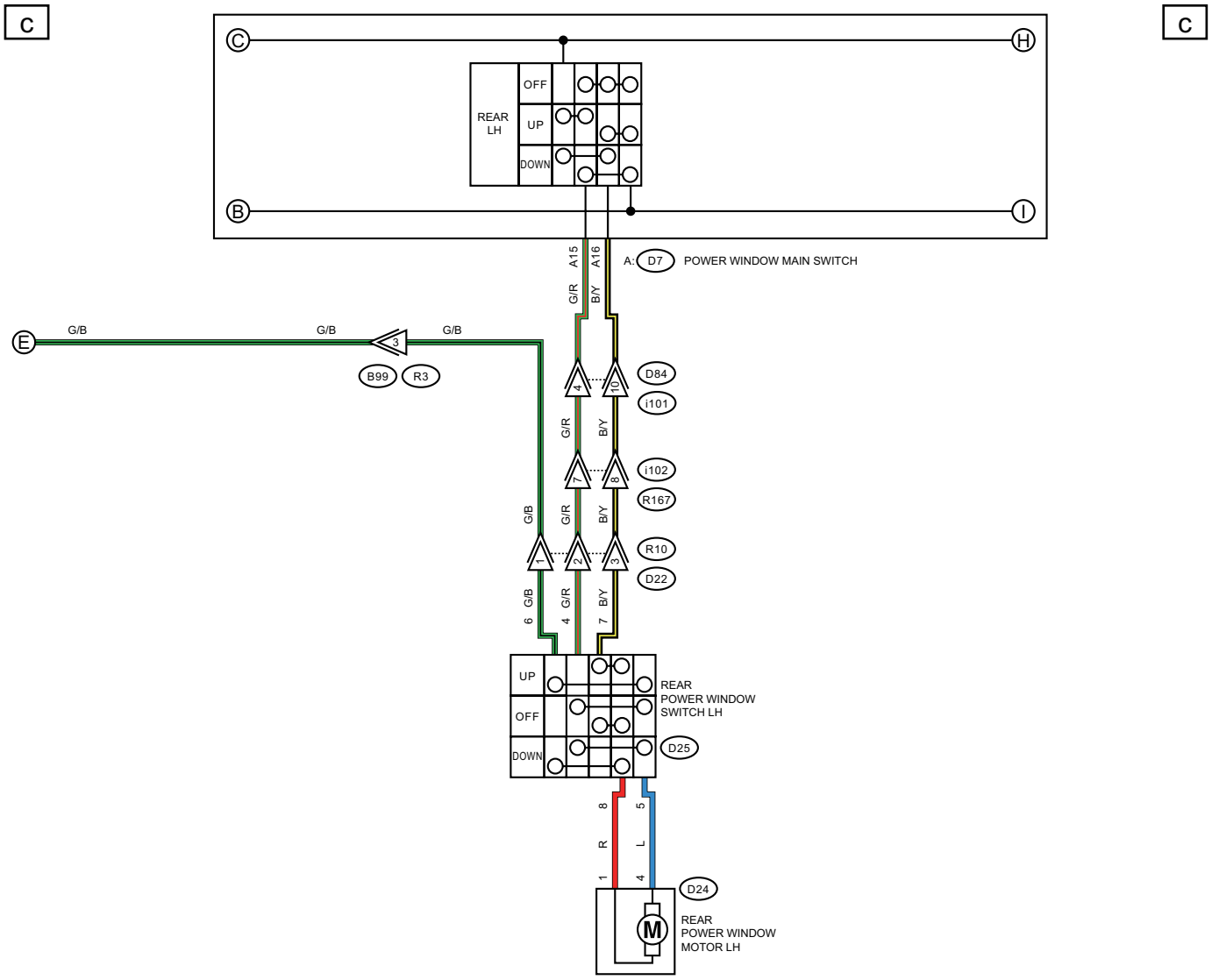
C
C
REAR LH
OFF
UP
DOWN
A15
A16
G/R
B/Y
A: D7 POWER WINDOW MAIN SWITCH
E
G/B
G/B
G/B
3
B99
R3
D84
i101
i102
R167
R10
D22
UP
OFF
DOWN
REAR POWER WINDOW SWITCH LH
D25
R
L
D24
M
REAR POWER WINDOW MOTOR LH

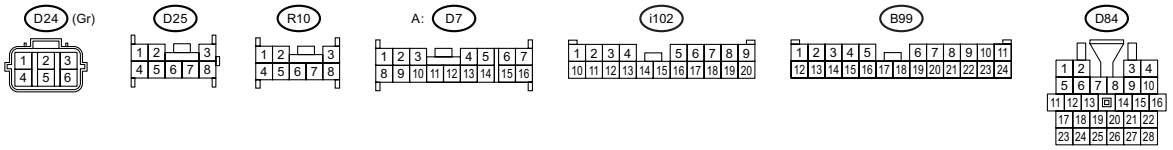
D24 (Gr)
D25
R10
A: D7
i102
B99
D84

WI-71025

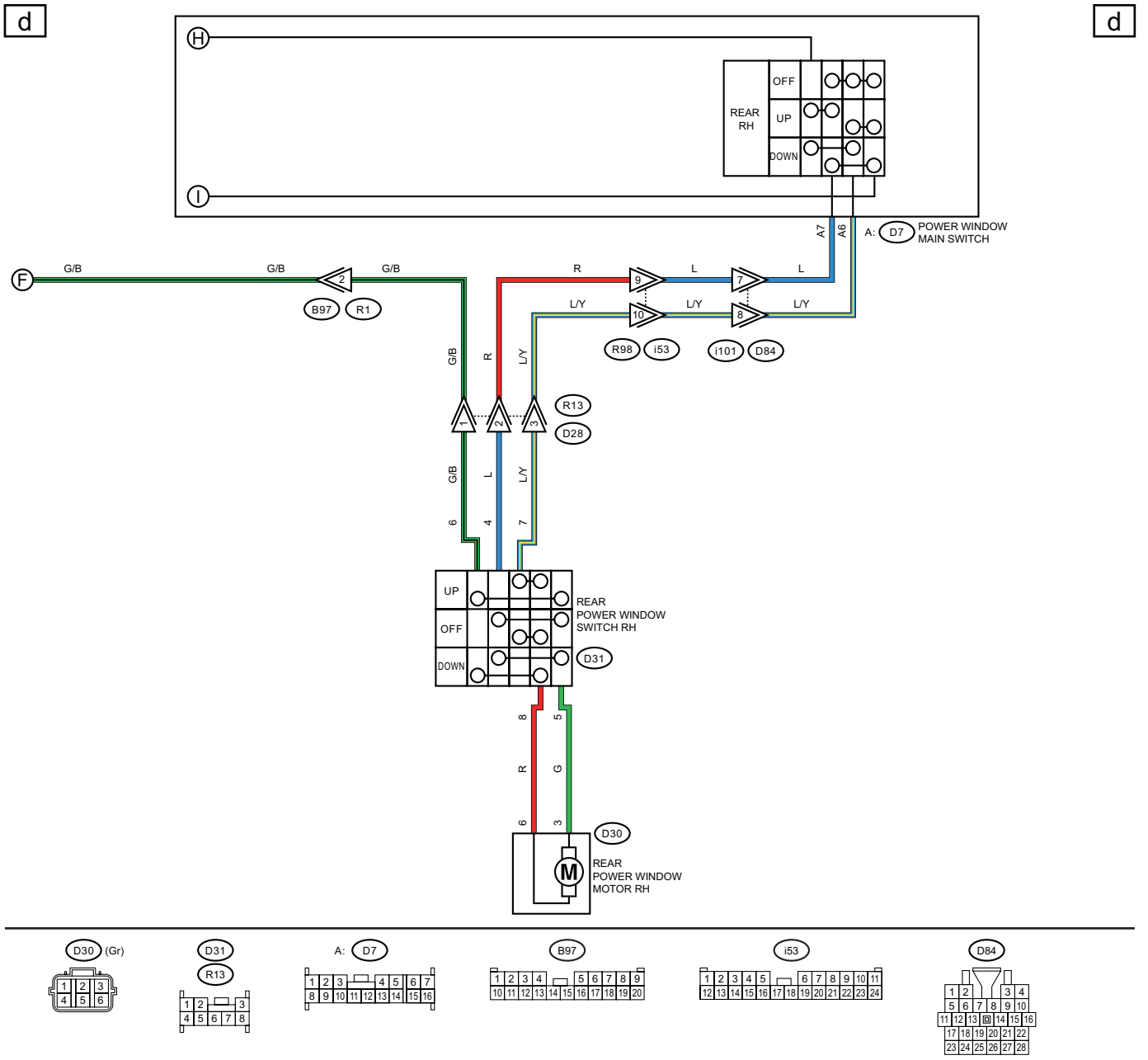
d
d
H
I
REAR RH
OFF
UP
DOWN
A: D7 POWER WINDOW MAIN SWITCH
A7
A6
F
G/B
G/B
G/B
2
B97
R1
R
9
L
7
L
L/Y
10
L/Y
8
L/Y
R98
i53
i101
D84
G/B
R
L/Y
1
2
3
R13
D28
G/B
L
L/Y
6
4
7
UP
OFF
DOWN
REAR POWER WINDOW SWITCH RH
D31
8
5
R
G
6
3
D30
M
REAR POWER WINDOW MOTOR RH

D30 (Gr)
D31
R13
A: D7
B97
i53
D84

WI-71026

40.Push Button Start System

A: WIRING DIAGRAM

1. ENGINE TYPE FA

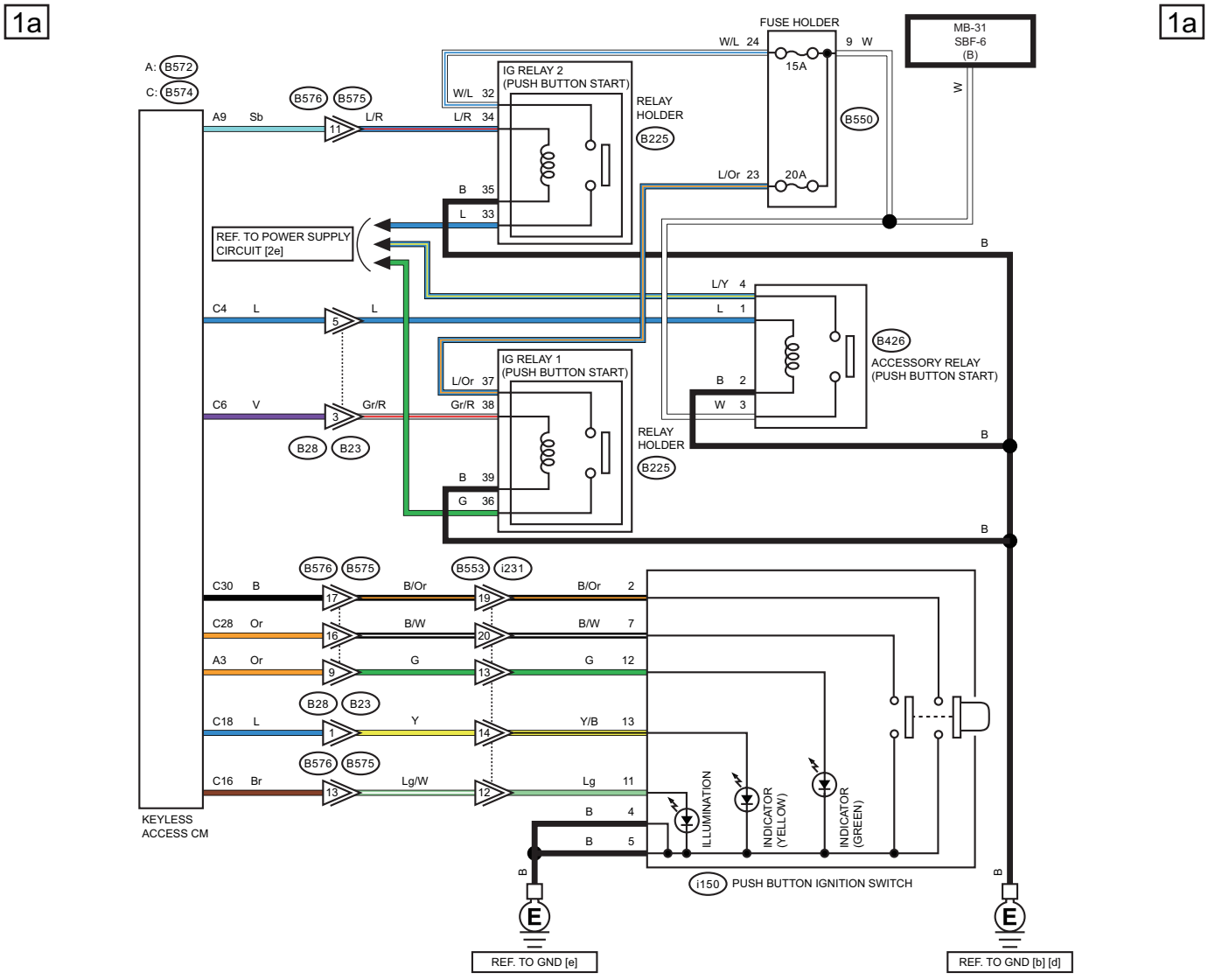

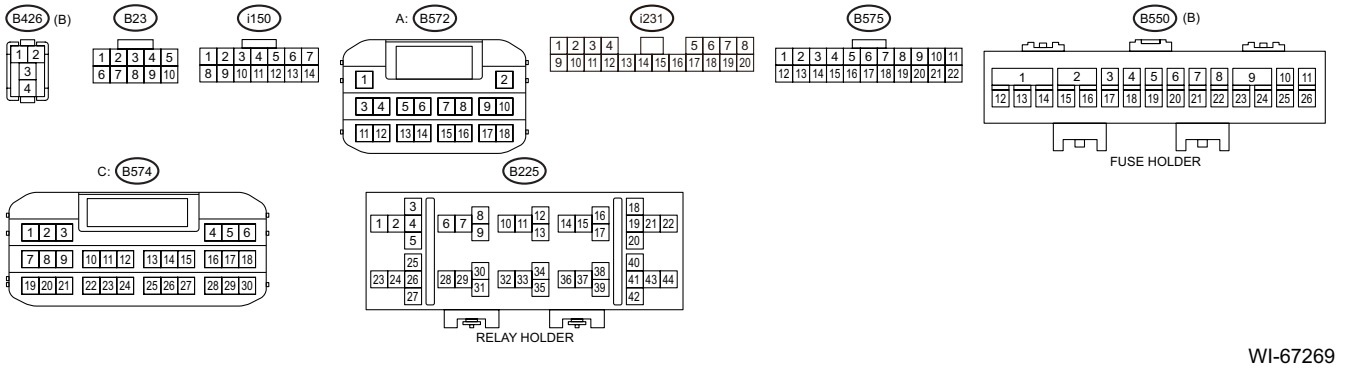

WI-67269

WIRING SYSTEM

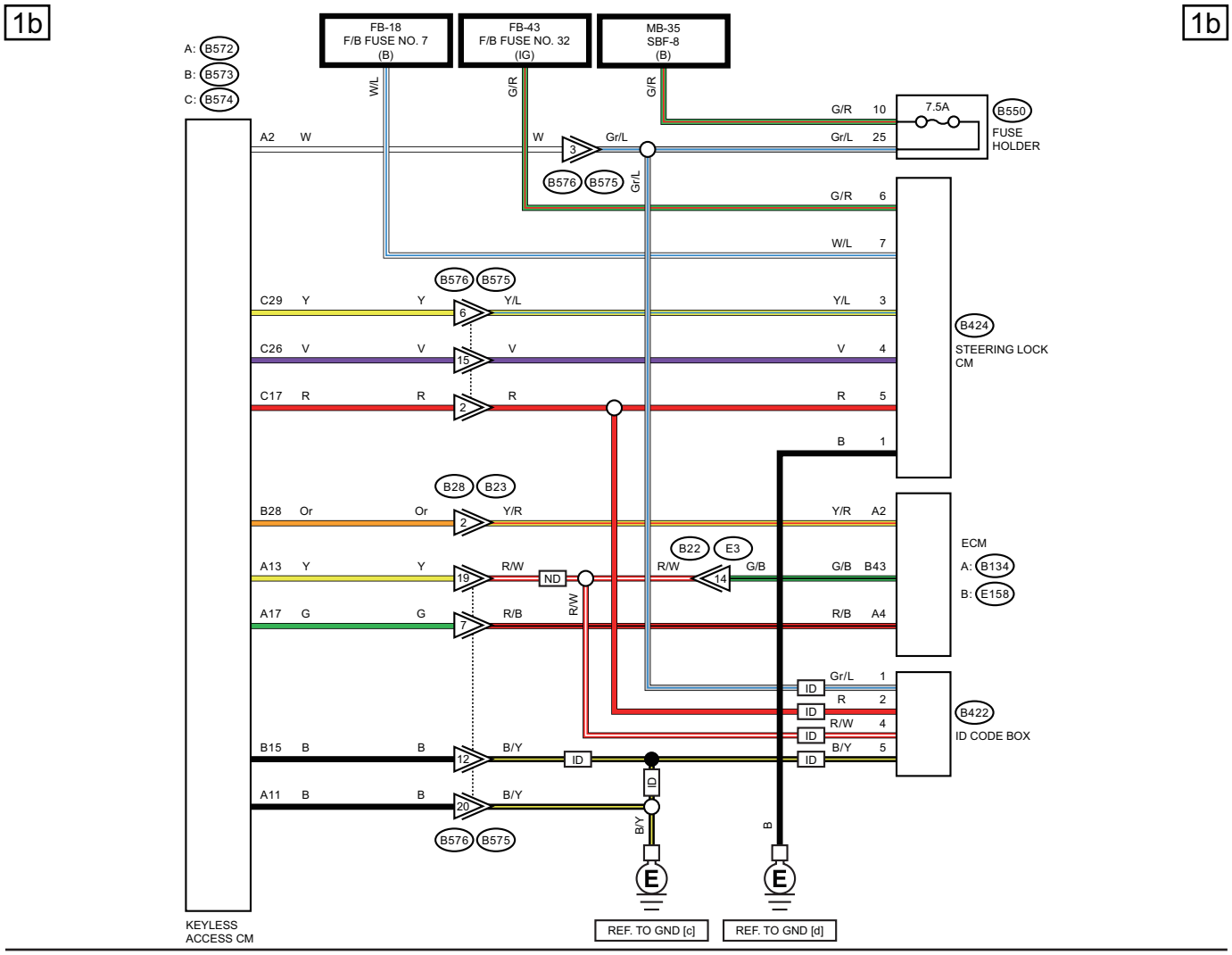

ND : WITHOUT ID CODE BOX
ID : WITH ID CODE BOX

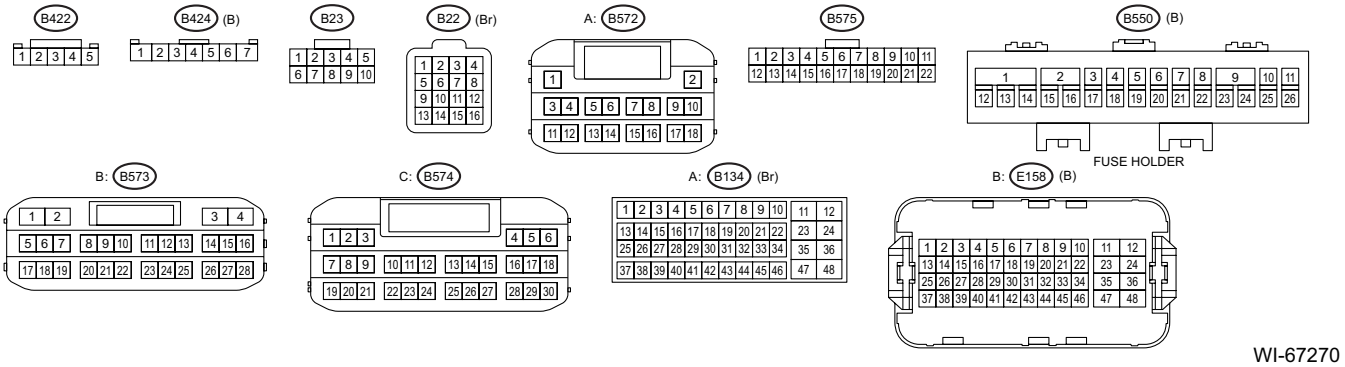

WI-67270

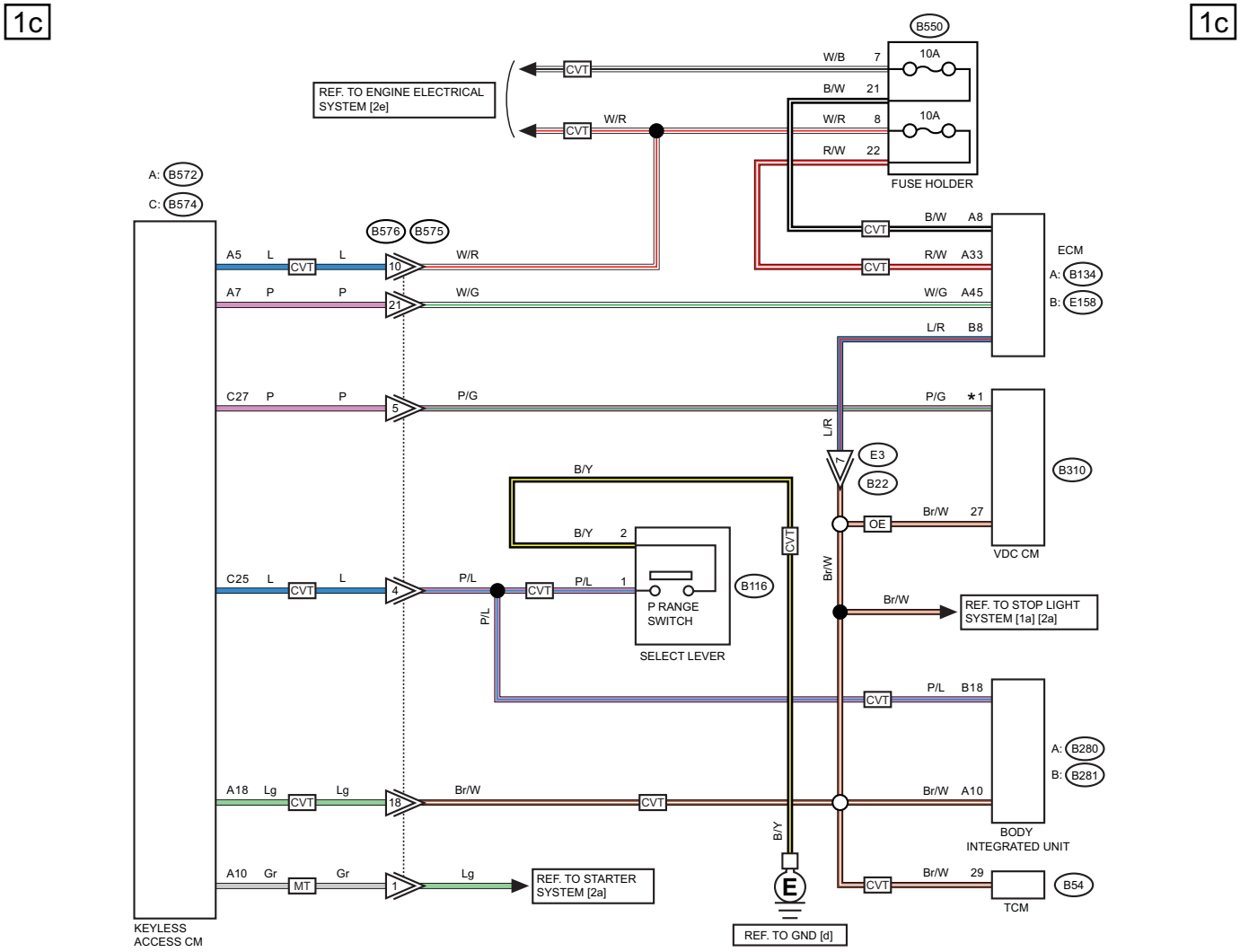

OE : WITHOUT EyeSight
ES : WITH EyeSight

✶1 : WITHOUT EyeSight : 30
WITH EyeSight : 26

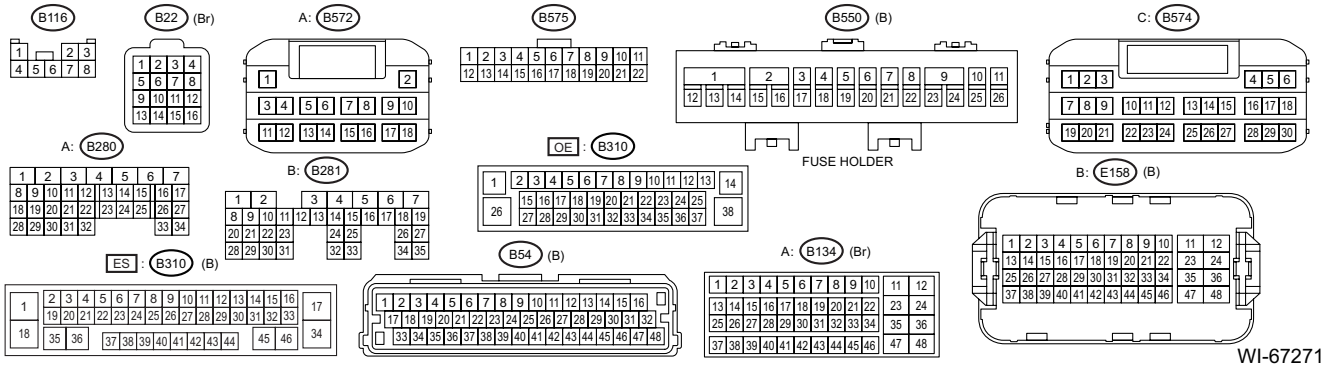

WI-67271

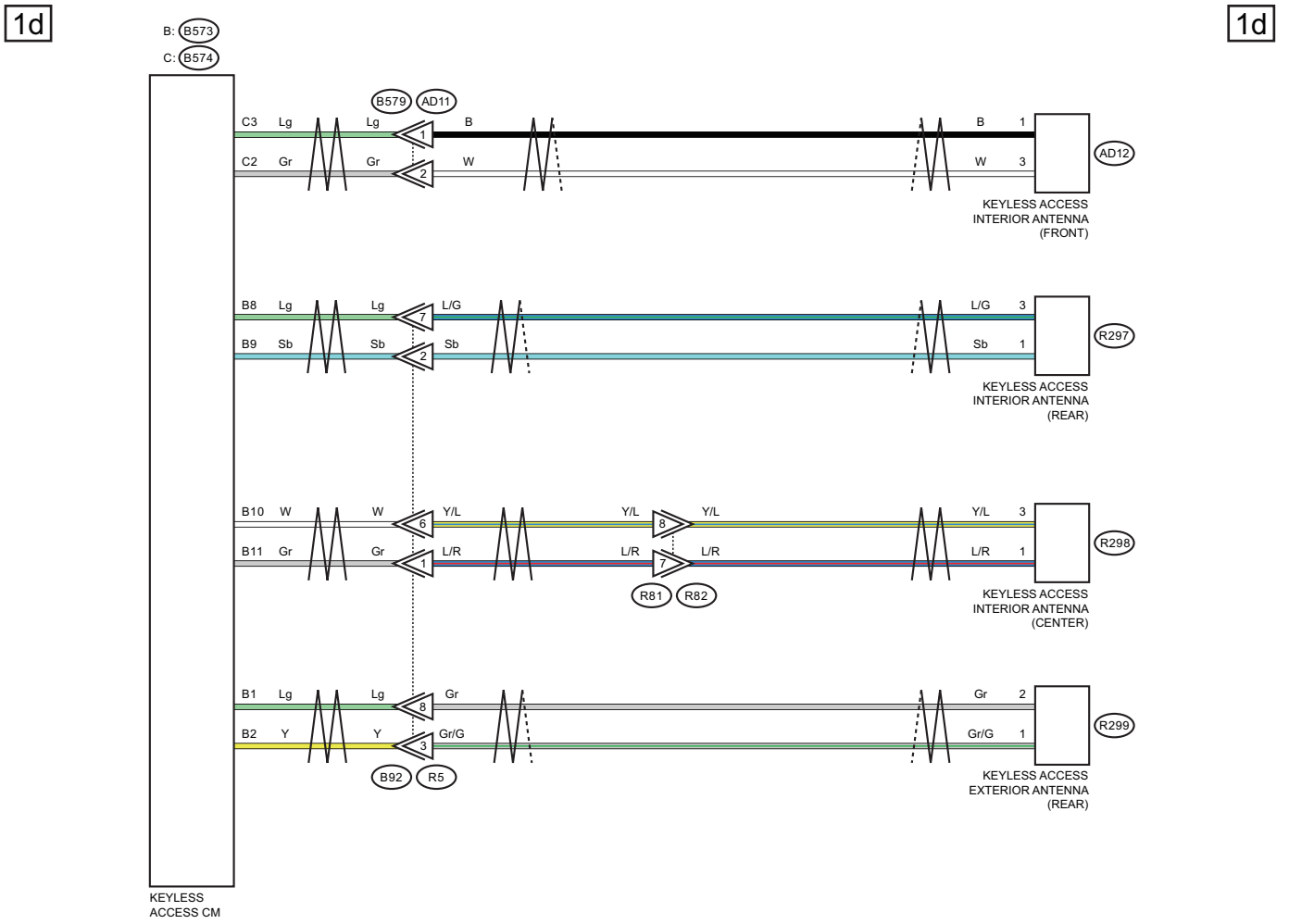
1d
1d
B: B573
C: B574
B579
AD11
C3 Lg Lg 1 B
C2 Gr Gr 2 W
B 1
W 3
AD12
KEYLESS ACCESS INTERIOR ANTENNA (FRONT)
B8 Lg Lg 7 L/G
B9 Sb Sb 2 Sb
L/G 3
Sb 1
R297
KEYLESS ACCESS INTERIOR ANTENNA (REAR)
B10 W W 6 Y/L
B11 Gr Gr 1 L/R
Y/L 8 Y/L
L/R 7 L/R
R81
R82
Y/L 3
L/R 1
R298
KEYLESS ACCESS INTERIOR ANTENNA (CENTER)
B1 Lg Lg 8 Gr
B2 Y Y 3 Gr/G
Gr 2
Gr/G 1
R299
KEYLESS ACCESS EXTERIOR ANTENNA (REAR)
B92
R5
KEYLESS ACCESS CM

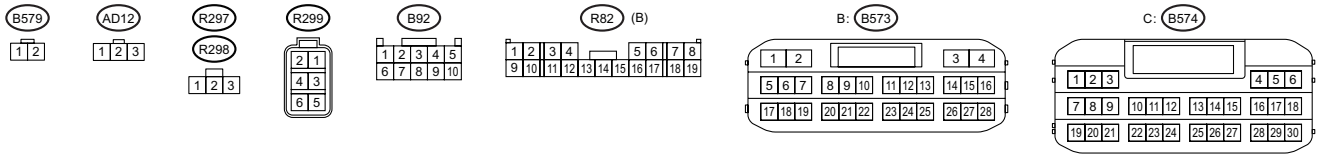
B579
AD12
R297
R298
R299
B92
R82 (B)
B: B573
C: B574

WI-67272

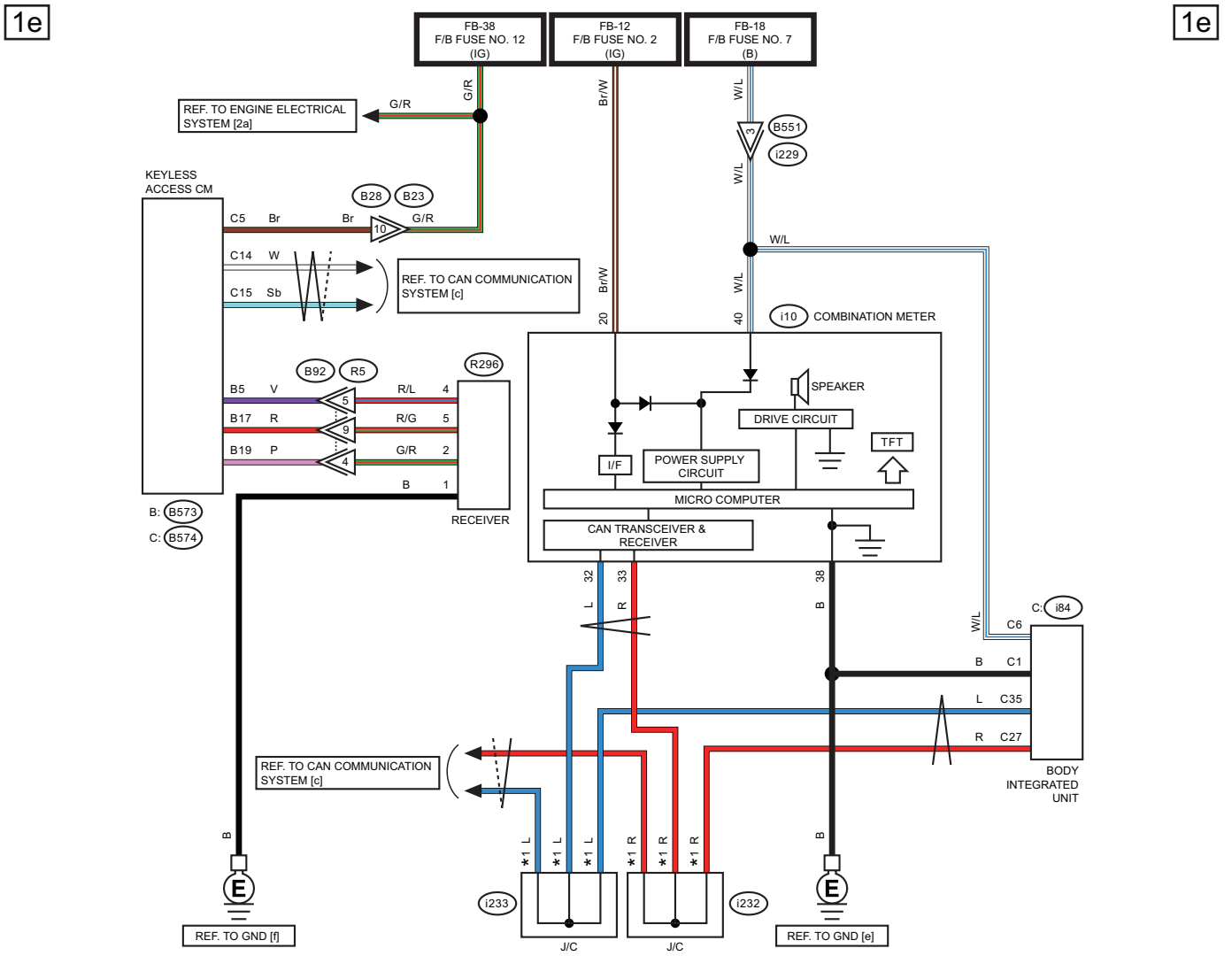

*1 : TERMINAL No. OPTIONAL ARRANGEMENT

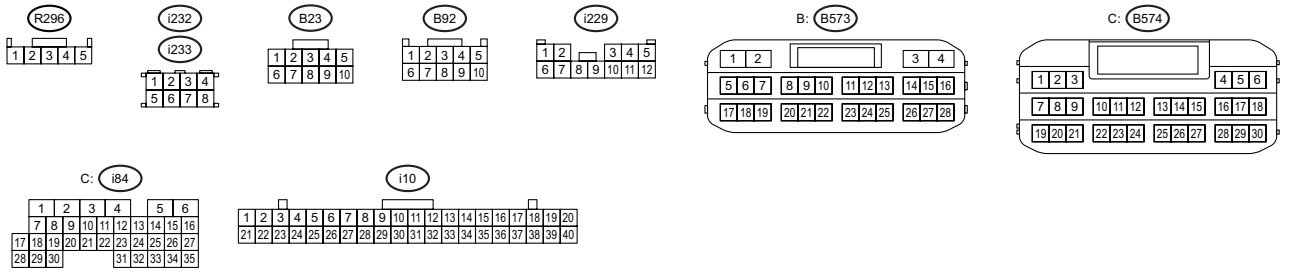

WI-66798

2. ENGINE TYPE EJ

2a

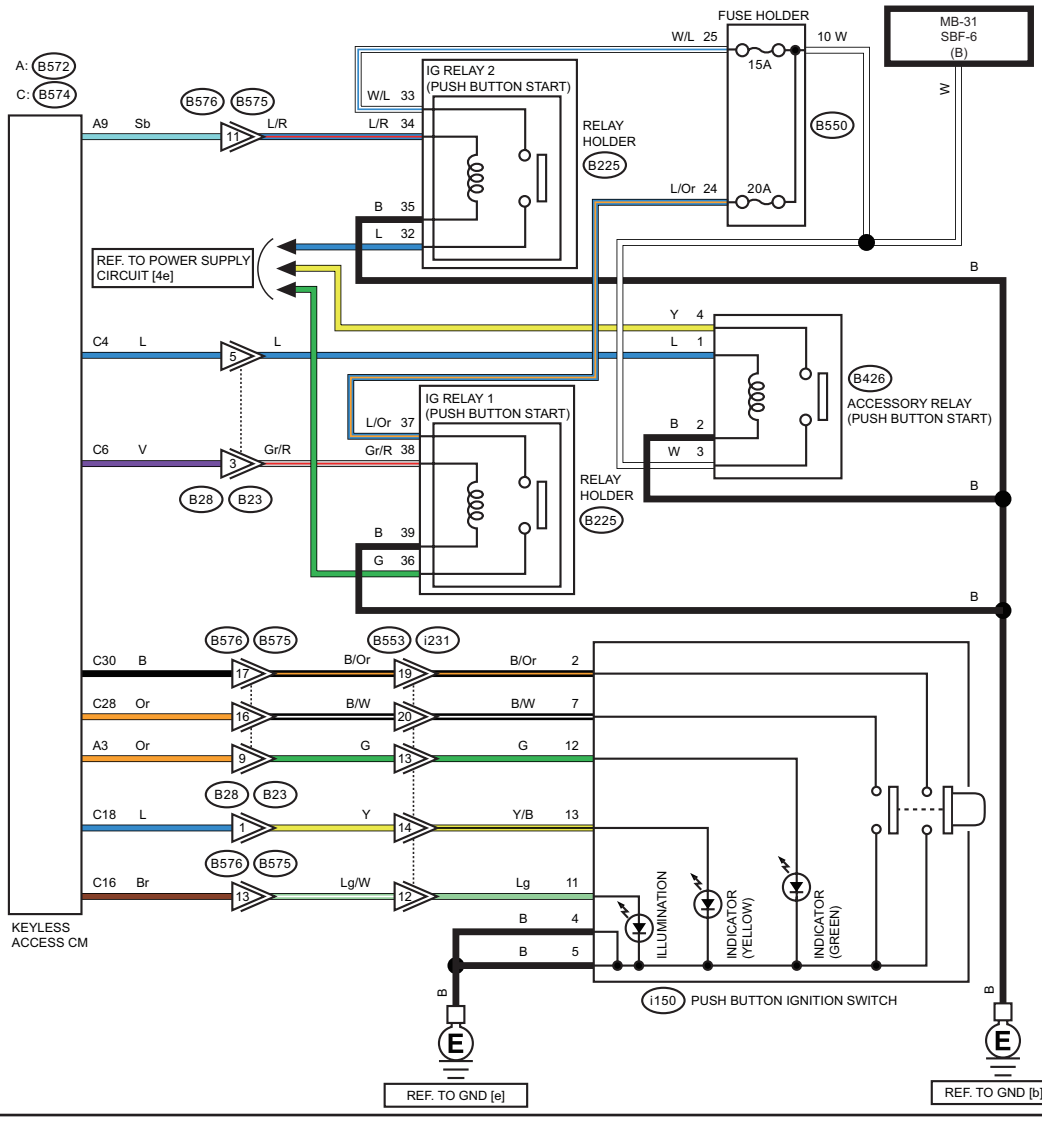

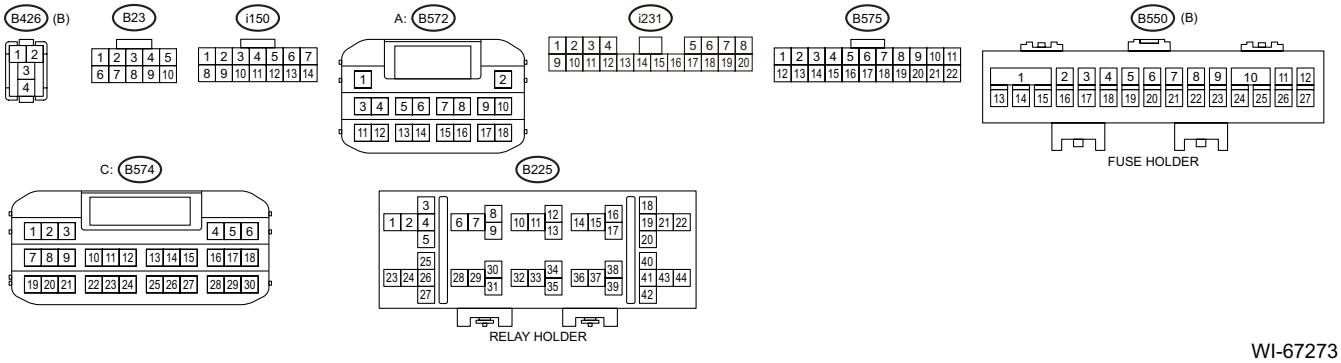

WI-67273

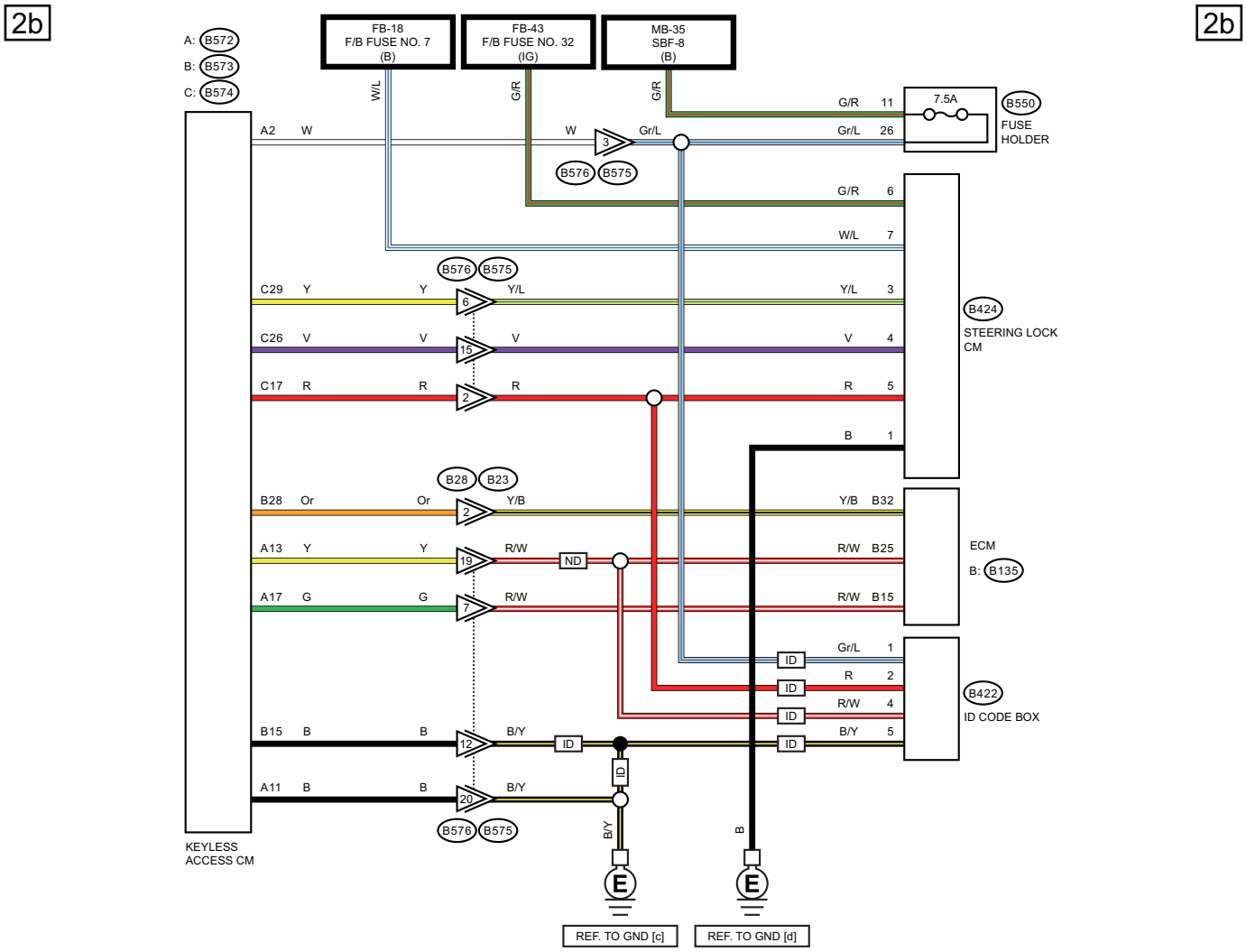

ND : WITHOUT ID CODE BOX

ID : WITH ID CODE BOX

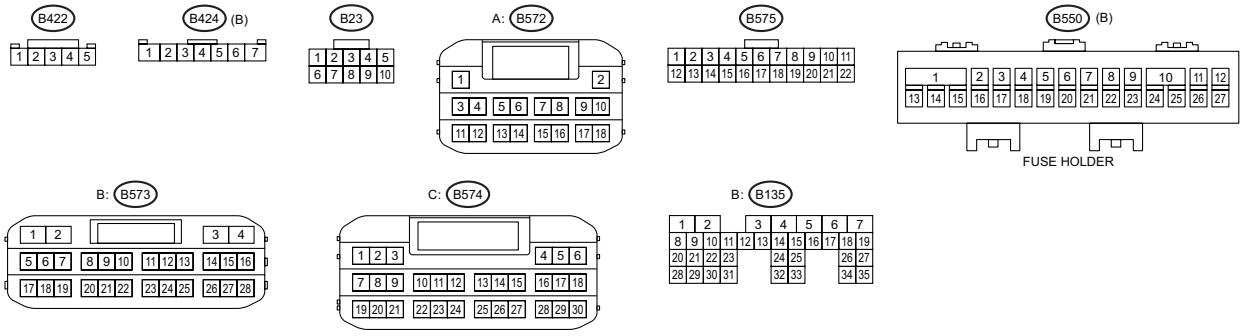

WI-67274

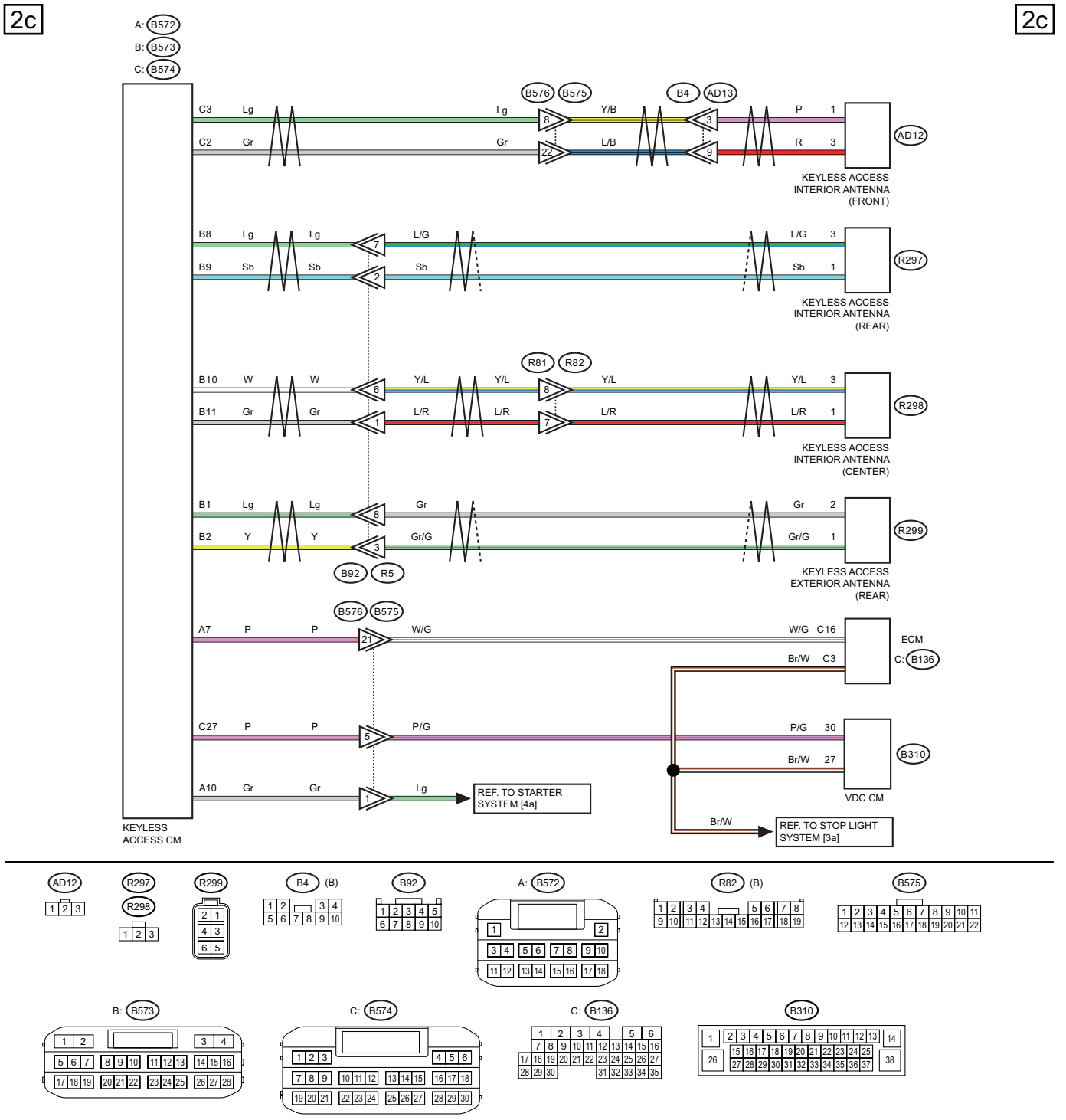
2c
2c
A: B572
B: B573
C: B574
KEYLESS ACCESS CM
B576 B575
B4 AD13
C3 Lg Lg 8 Y/B 3 P 1
C2 Gr Gr 22 L/B 9 R 3
AD12
KEYLESS ACCESS INTERIOR ANTENNA (FRONT)
B8 Lg Lg 7 L/G L/G 3
B9 Sb Sb 2 Sb Sb 1
R297
KEYLESS ACCESS INTERIOR ANTENNA (REAR)
R81 R82
B10 W W 6 Y/L Y/L 8 Y/L Y/L 3
B11 Gr Gr 1 L/R L/R 7 L/R L/R 1
R298
KEYLESS ACCESS INTERIOR ANTENNA (CENTER)
B1 Lg Lg 8 Gr Gr 2
B2 Y Y 3 Gr/G Gr/G 1
R299
B92 R5
KEYLESS ACCESS EXTERIOR ANTENNA (REAR)
B576 B575
A7 P P 21 W/G W/G C16
ECM
C: B136
Br/W C3
C27 P P 5 P/G P/G 30
Br/W 27
B310
VDC CM
A10 Gr Gr 1 Lg
REF. TO STARTER SYSTEM [4a]
Br/W
REF. TO STOP LIGHT SYSTEM [3a]
AD12
R297
R298
R299
B4 (B)
B92
A: B572
R82 (B)
B575
B: B573
C: B574
C: B136
B310

WI-67275

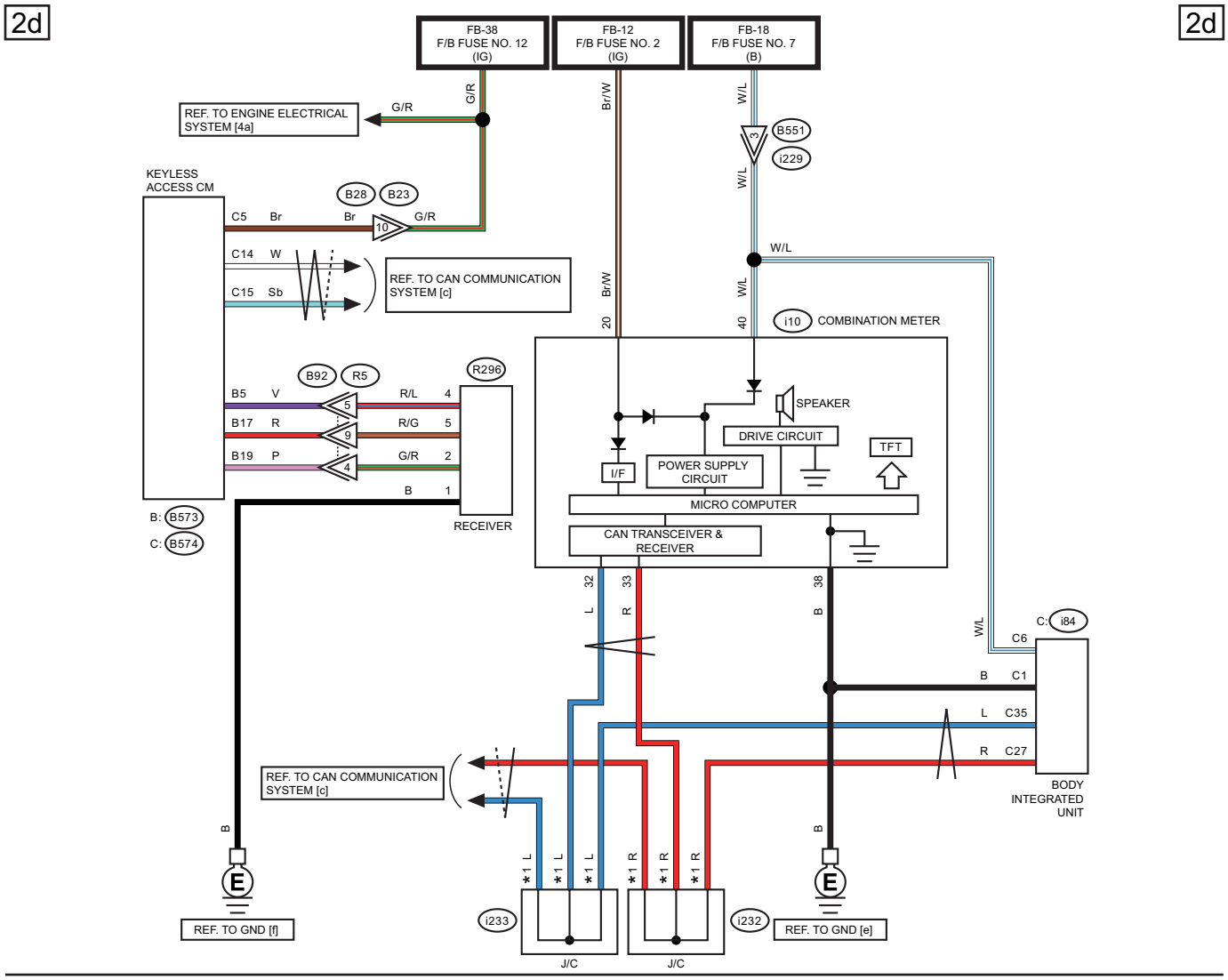

*1 : TERMINAL No. OPTIONAL ARRANGEMENT

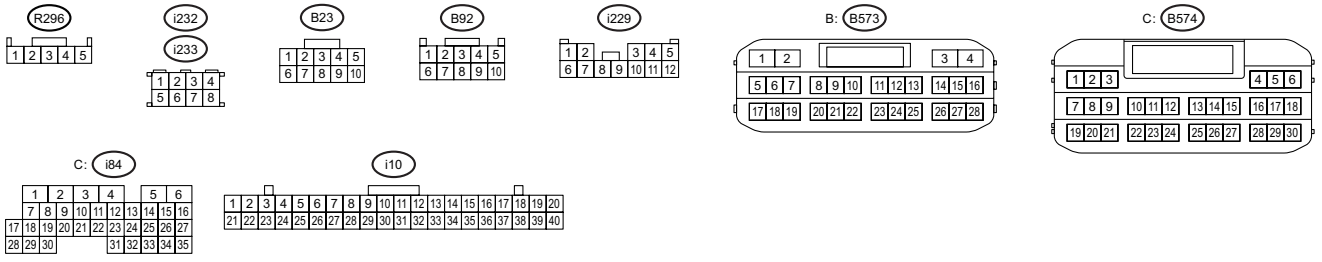

WI-66800

41.Radiator Fan System

A: WIRING DIAGRAM

1. ENGINE TYPE FA

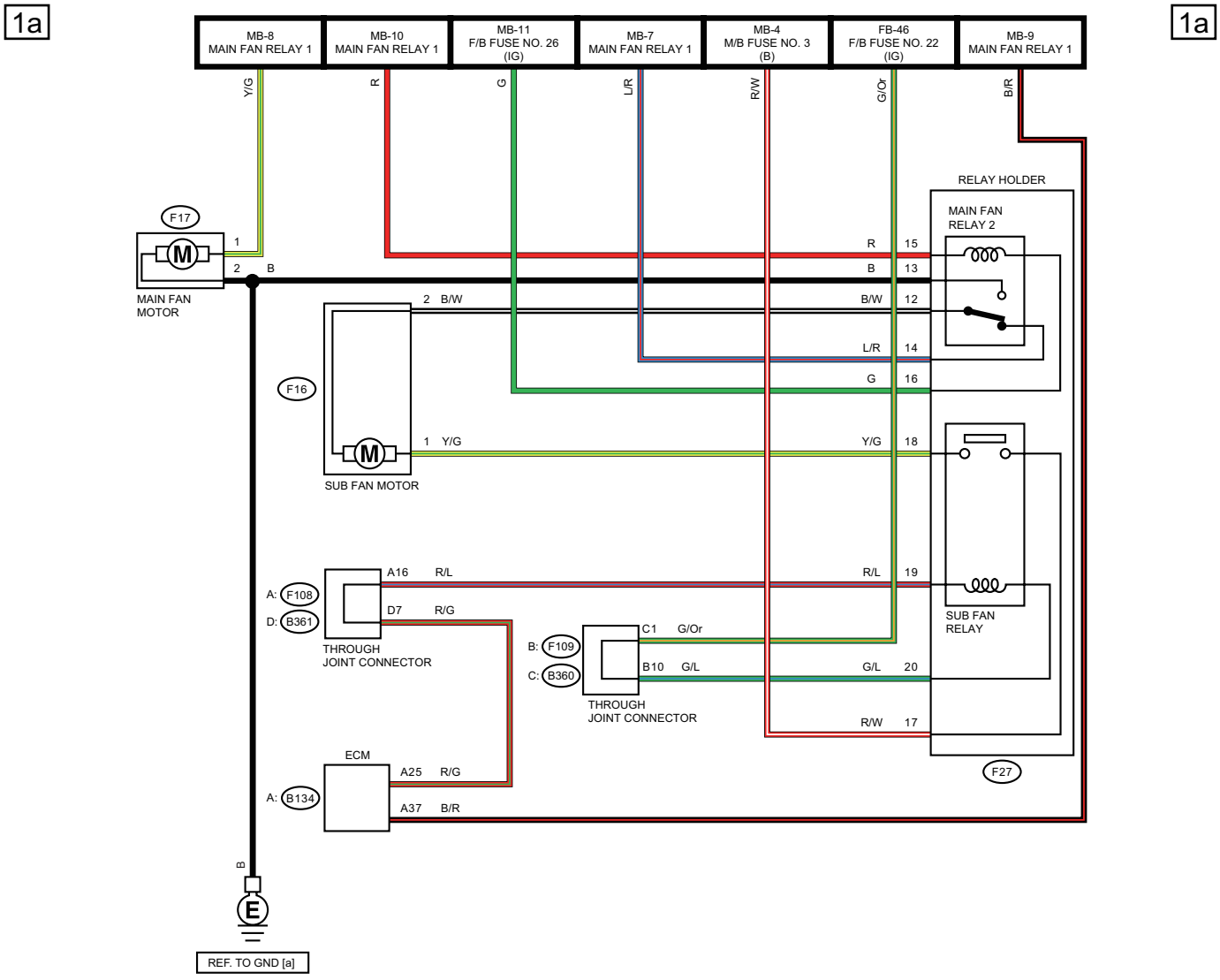

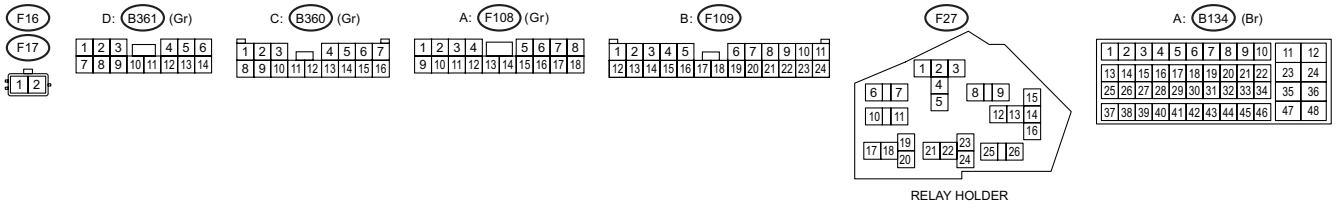

WI-67276

2. ENGINE TYPE EJ

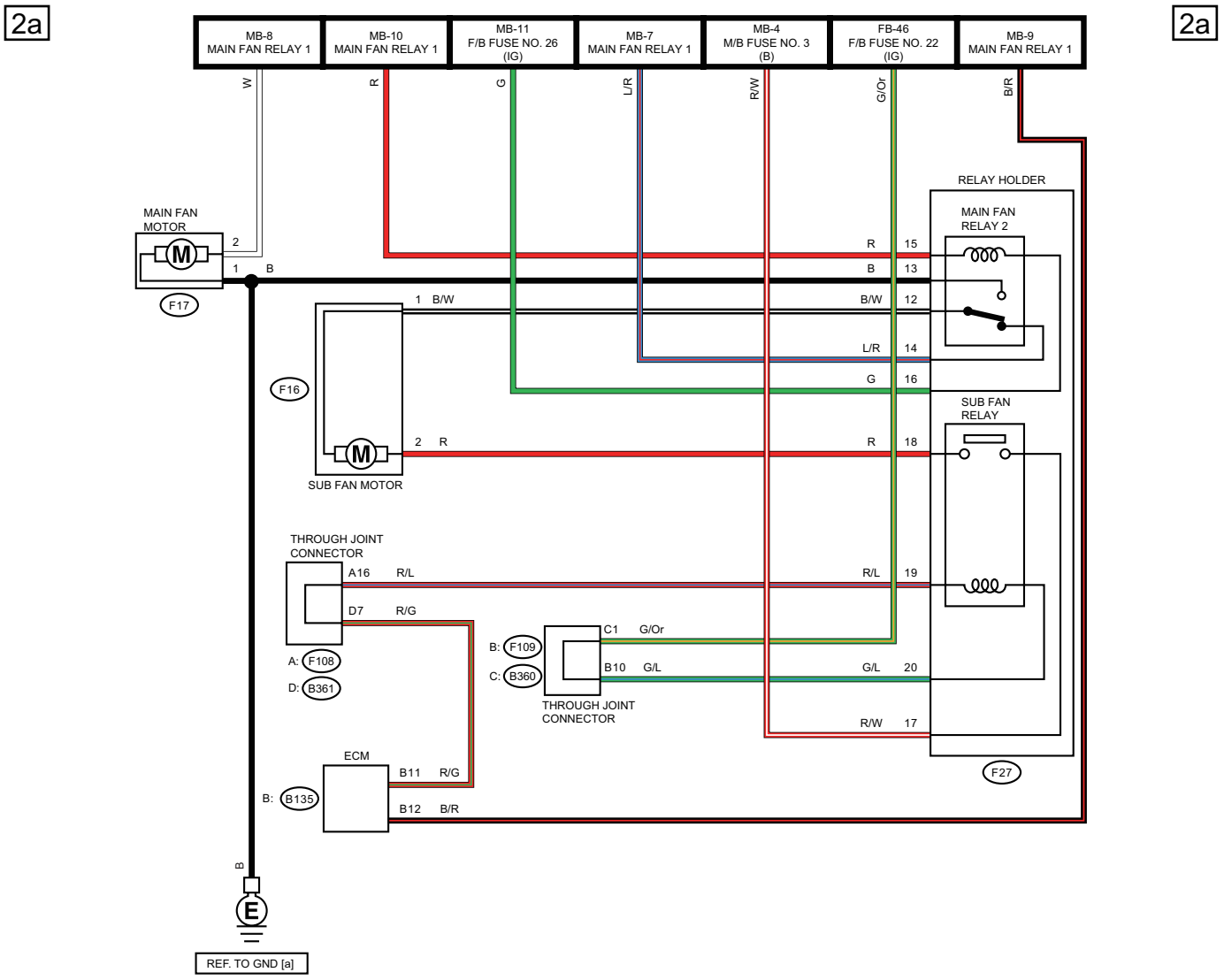

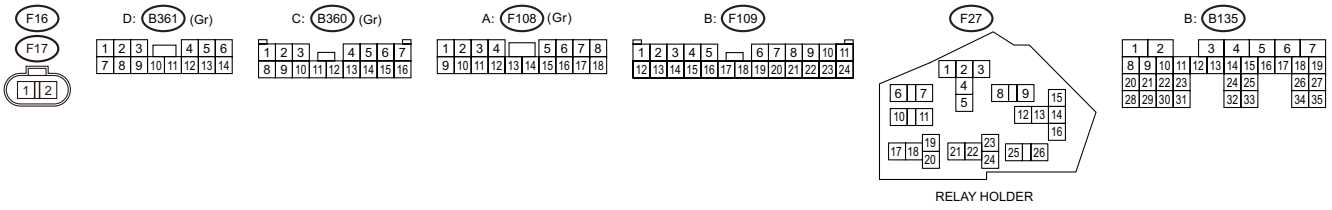

WI-66802

42.Rear Accessory Power Supply Socket System

A: WIRING DIAGRAM

1. ENGINE TYPE FA

1a

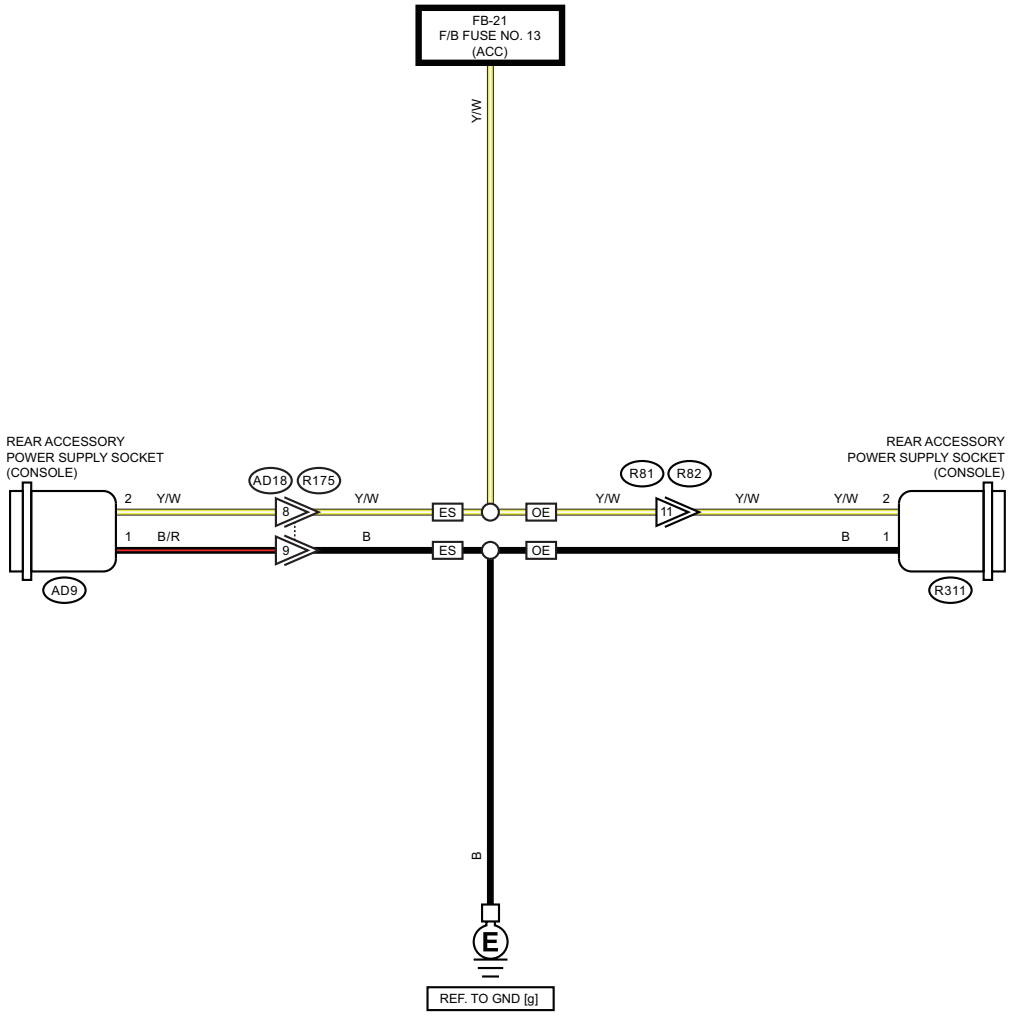

1a

OE : WITHOUT EyeSight
ES : WITH EyeSight

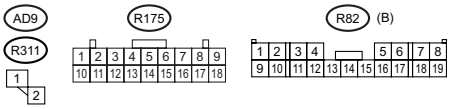

WI-67277

2. ENGINE TYPE EJ

2a

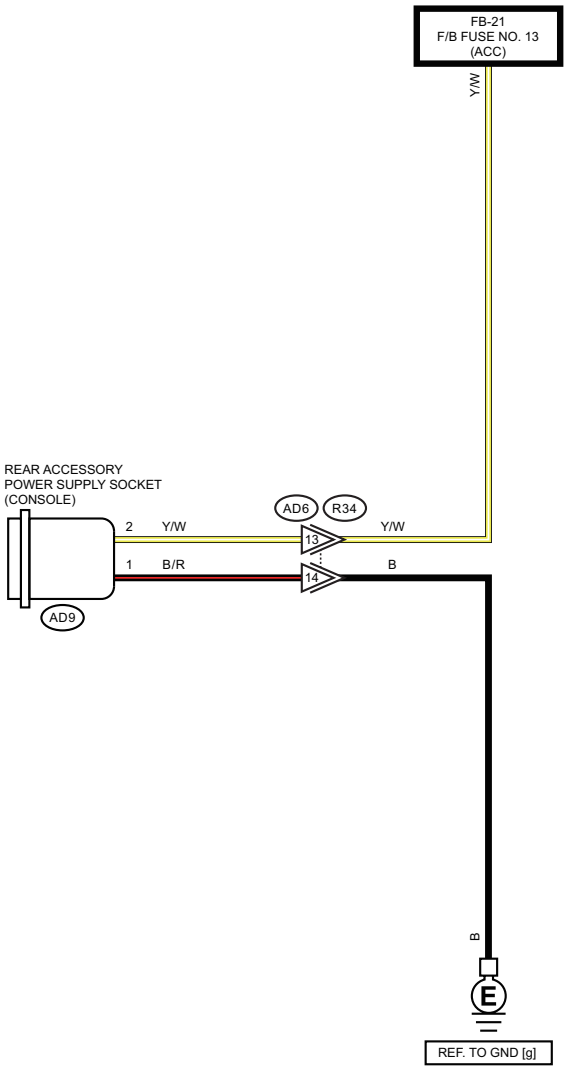

2a

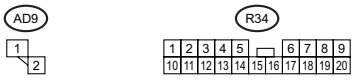

WI-67278

43.Rear Defogger System

A: WIRING DIAGRAM

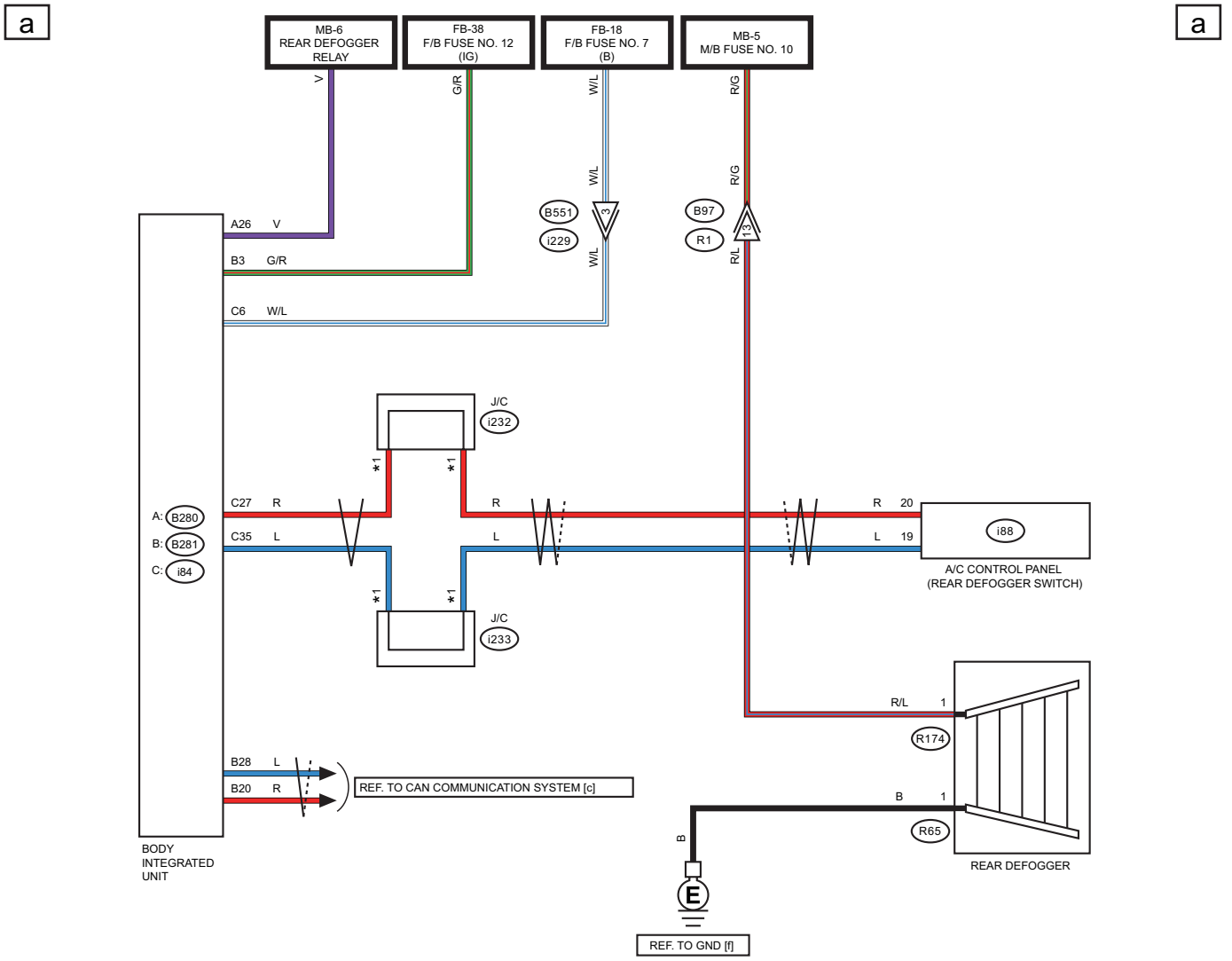

*1 : TERMINAL No. OPTIONAL ARRANGEMENT

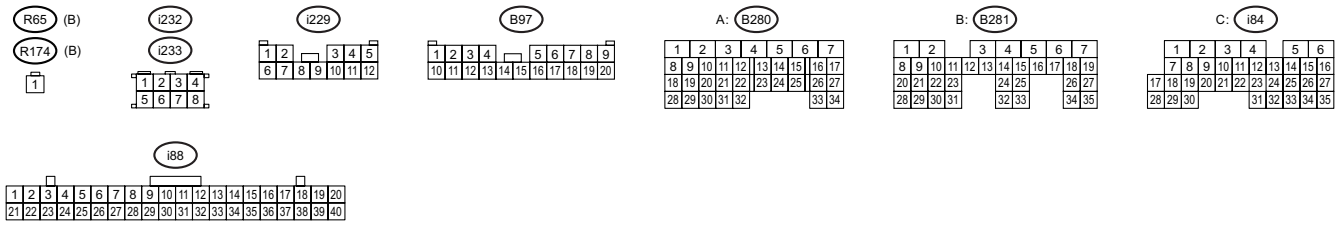

WI-66804

44.Rear Differential Oil Temperature Warning Light System

A: WIRING DIAGRAM

a

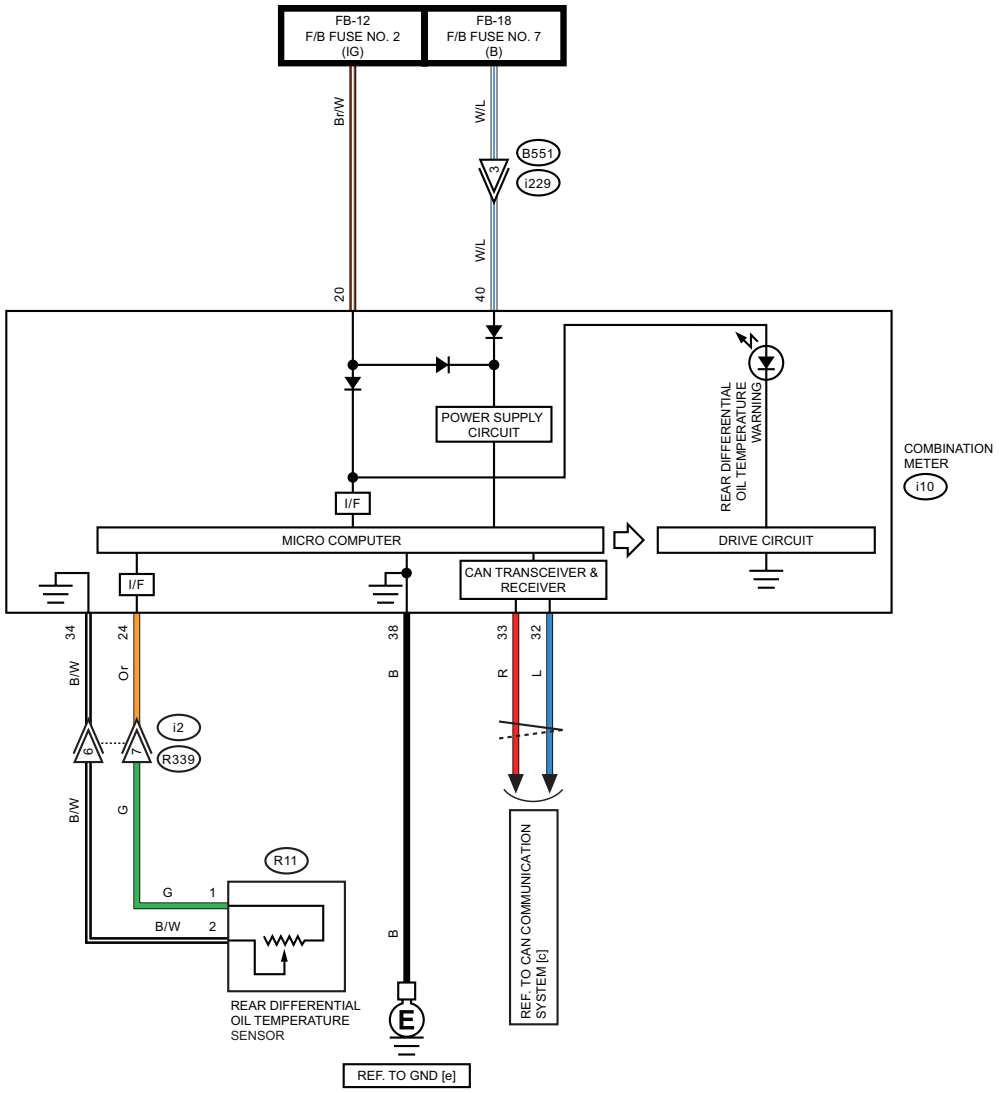

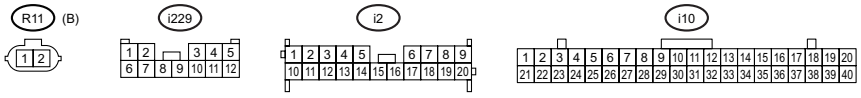

WI-66805

45.Rearview Camera System

A: WIRING DIAGRAM

1. 6.2 INCH DISPLAY

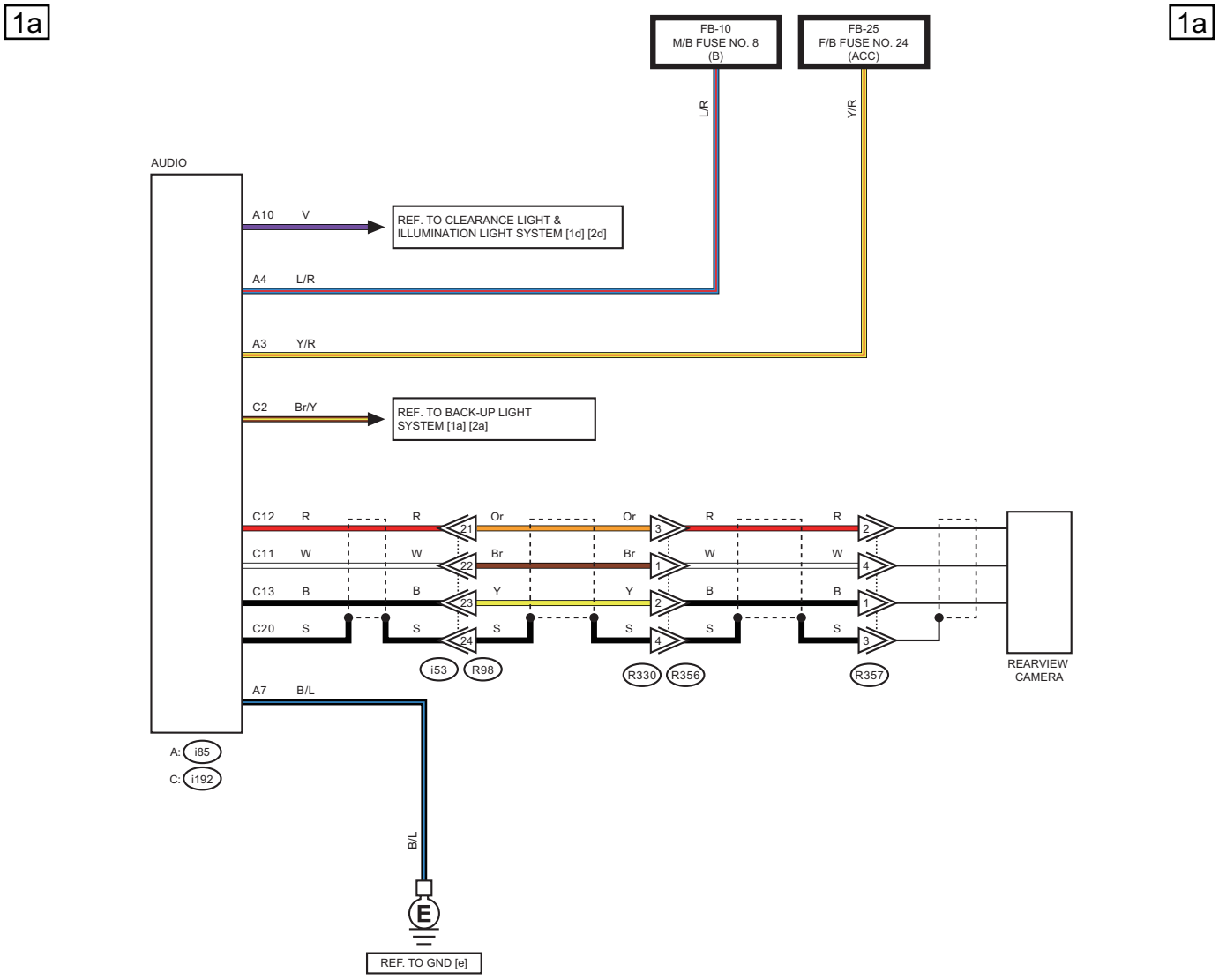

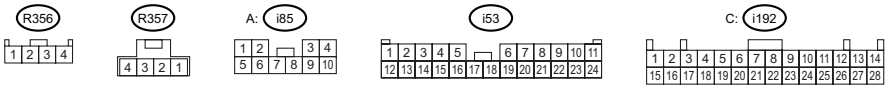

WI-67279

2. 7 INCH DISPLAY

2a

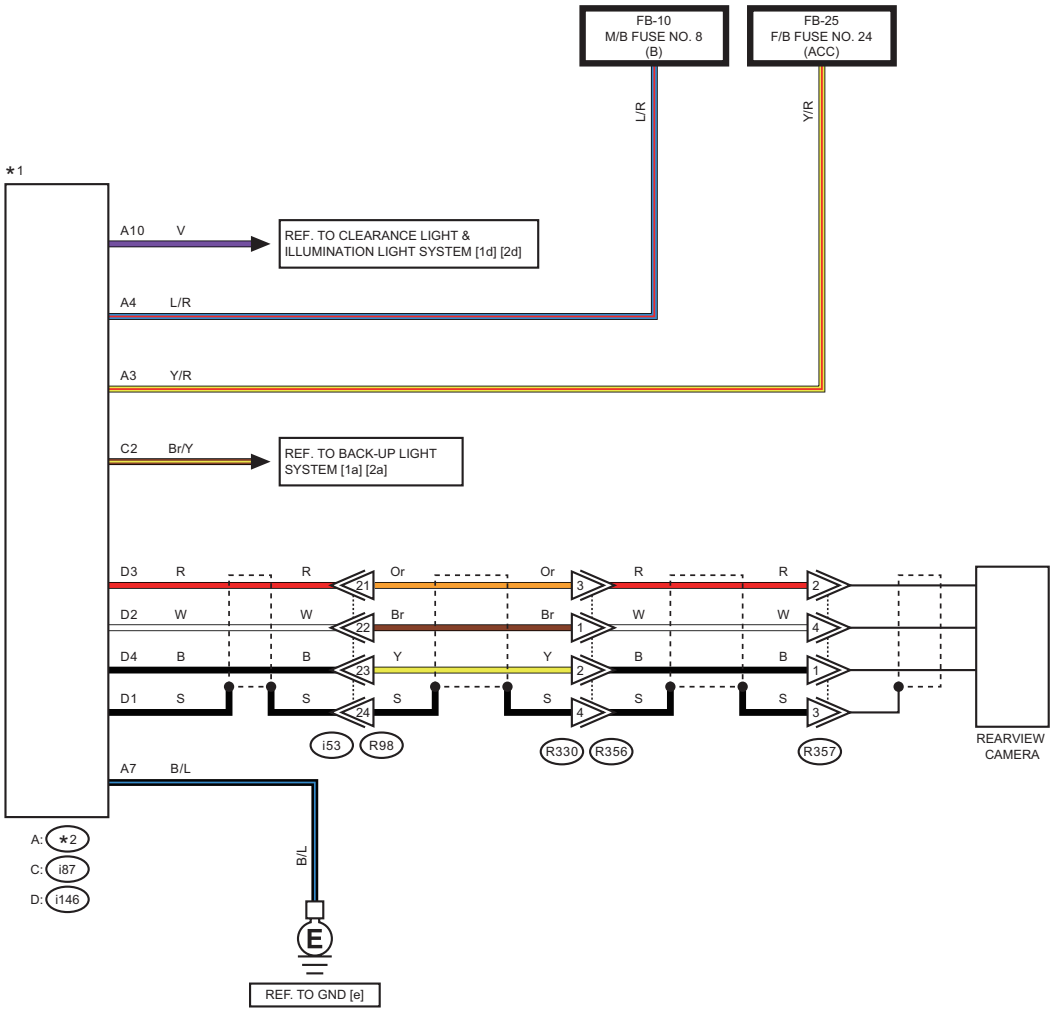

2a

*1 : WITHOUT NAVIGATION : AUDIO
WITH NAVIGATION : NAVIGATION UNIT

*2 : WITHOUT AUDIO AMPLIFIER : i85
WITH AUDIO AMPLIFIER : i35

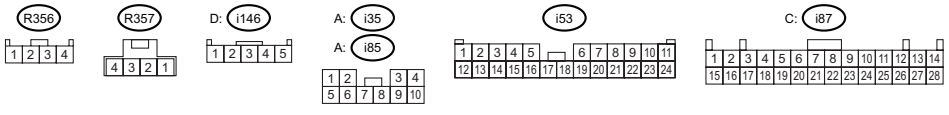

WI-66806

46.Rearview Mirror System

A: WIRING DIAGRAM

1. ENGINE TYPE FA

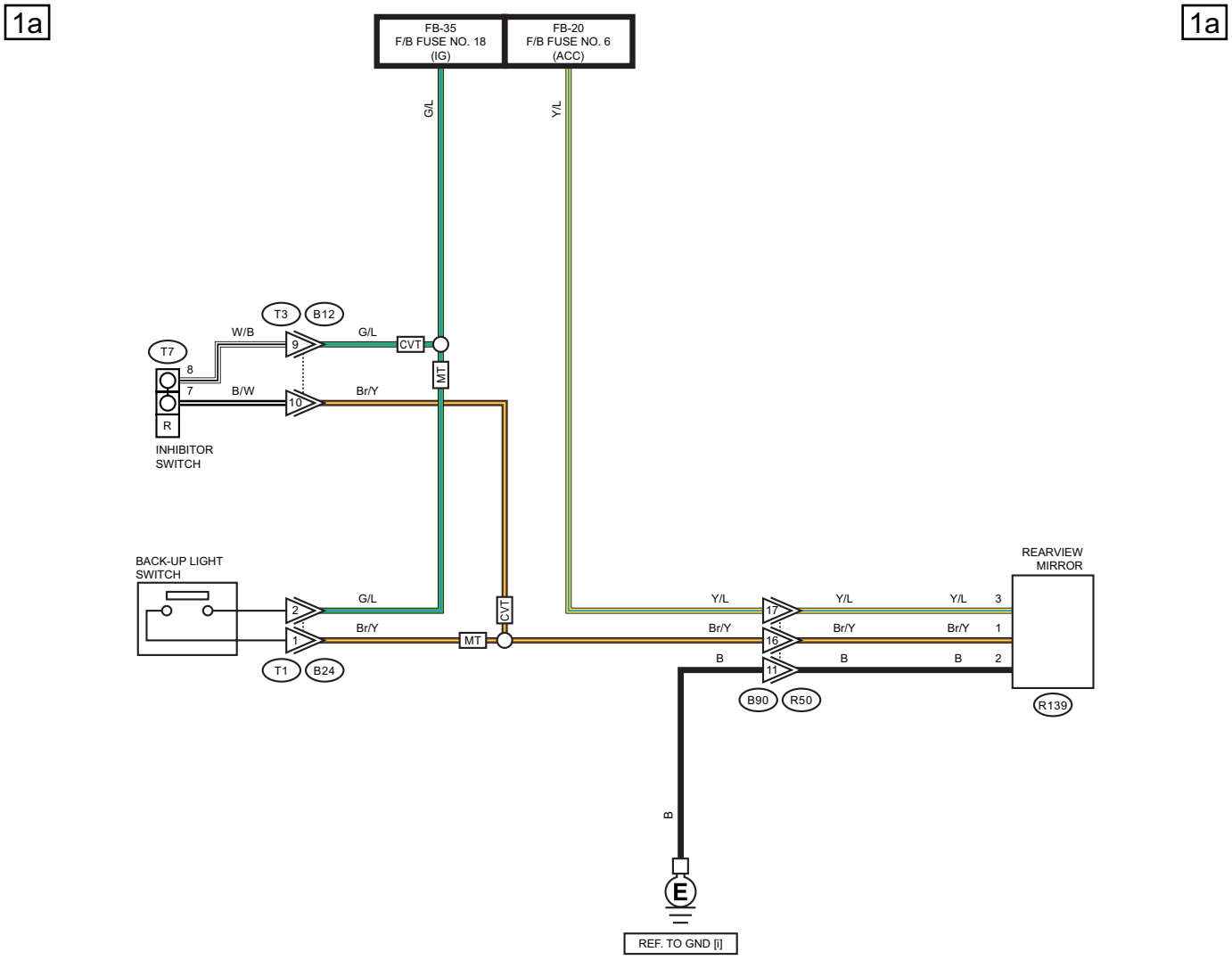

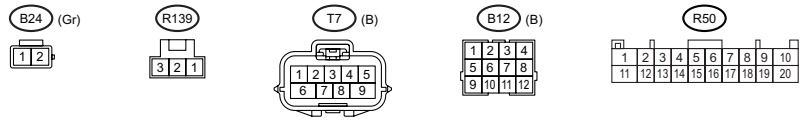

WI-67280

2. ENGINE TYPE EJ

2a

2a

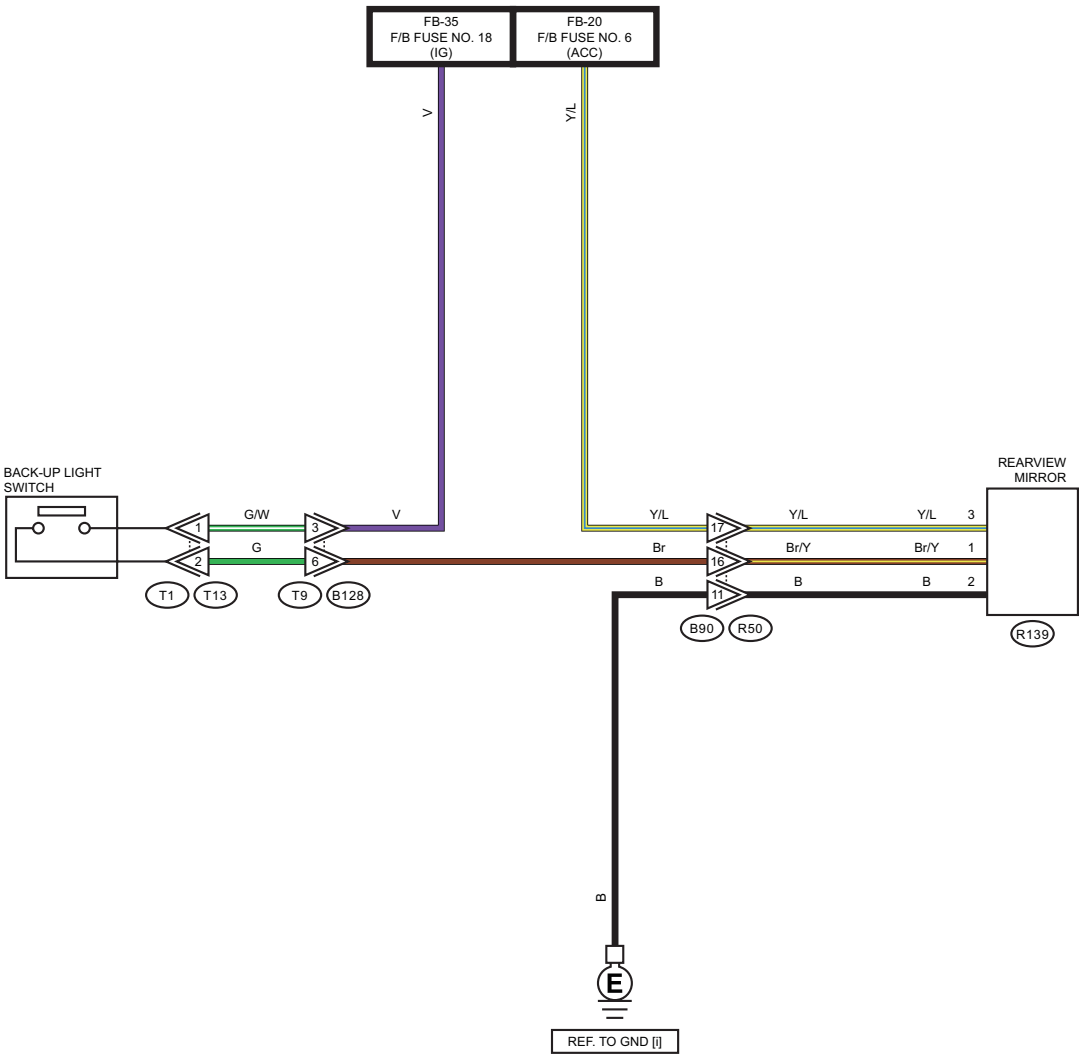

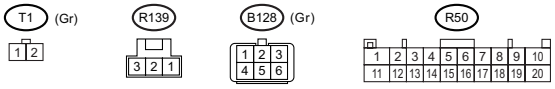

WI-67281

47.Remote Control Mirror System

A: WIRING DIAGRAM

a

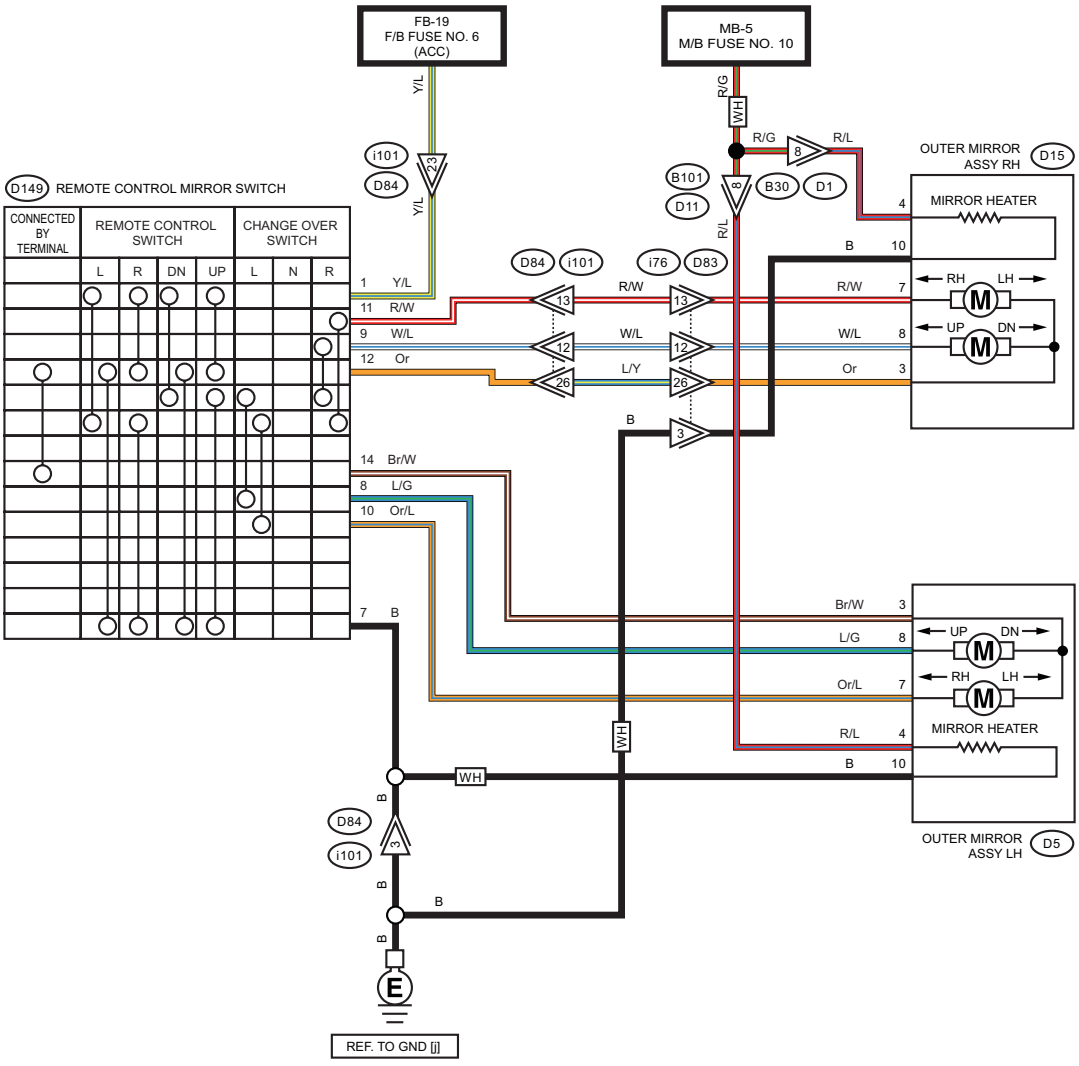

WH : WITH MIRROR HEATER

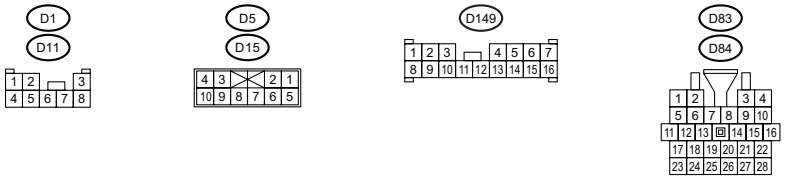

WI-67282

48.Remote Engine Start System

A: WIRING DIAGRAM

1. ENGINE TYPE FA

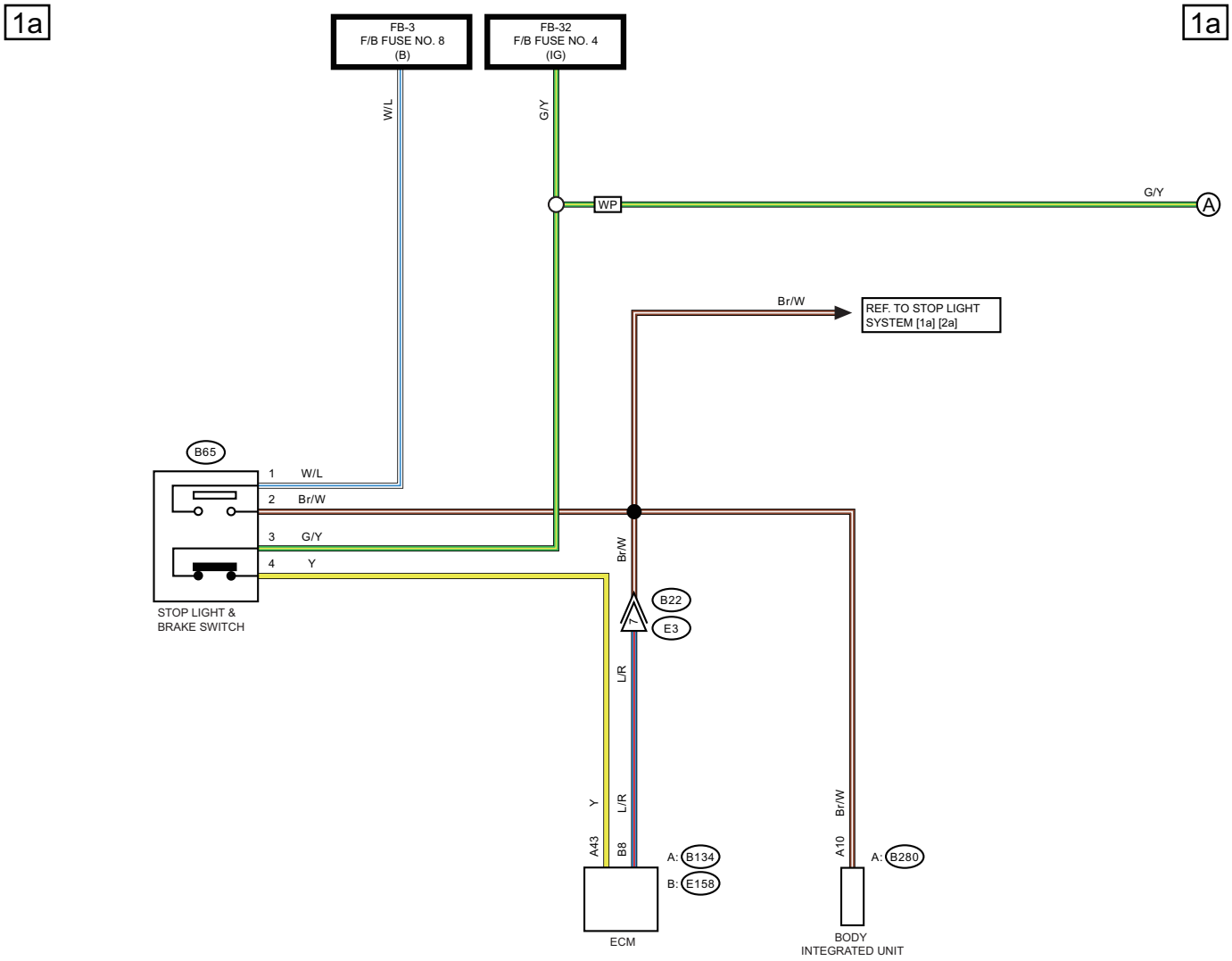

WP : WITH PUSH BUTTON START

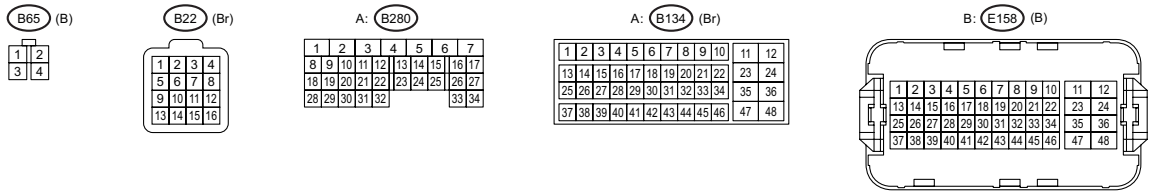

WI-67283

WIRING SYSTEM

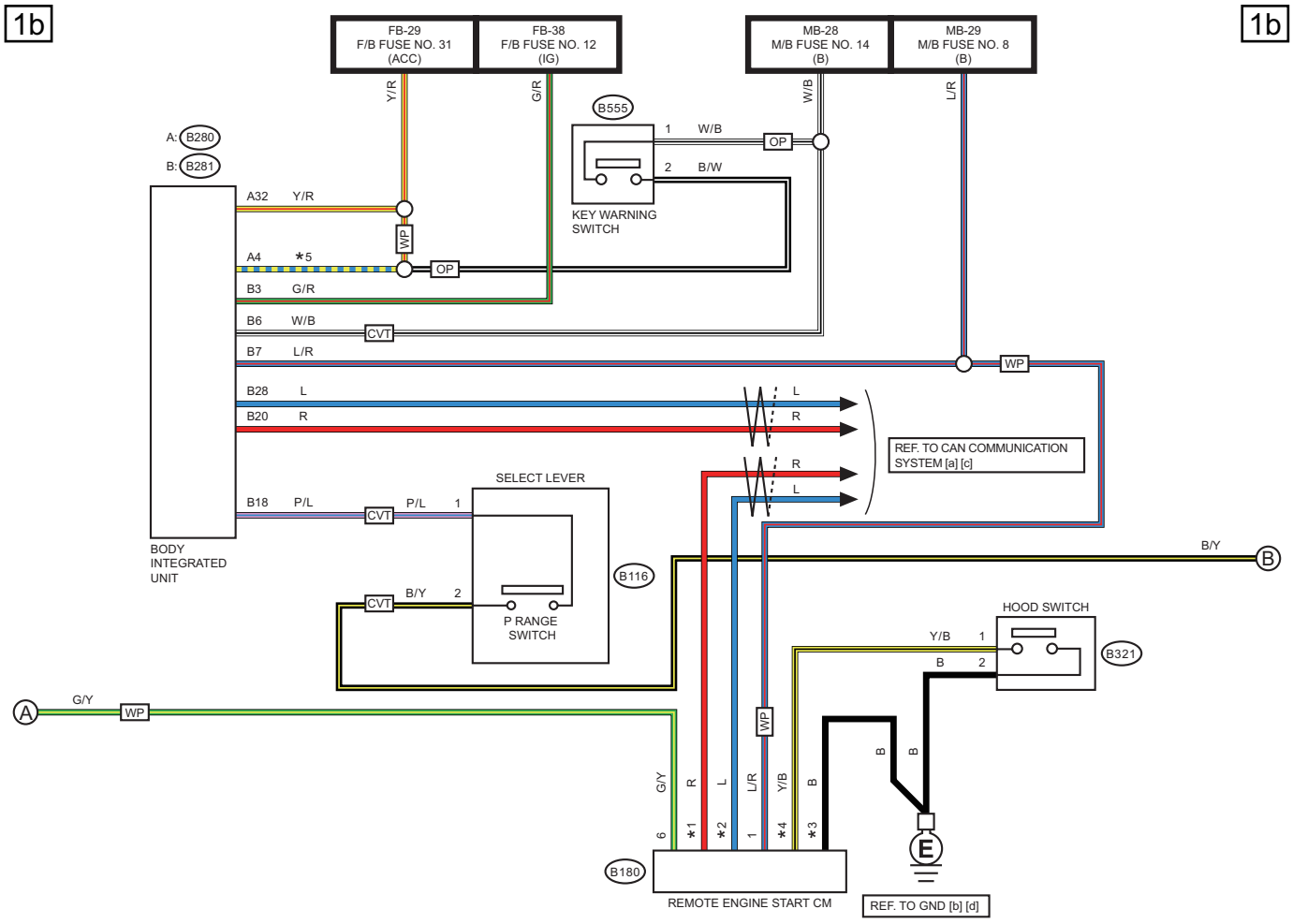

OP : WITHOUT PUSH BUTTON START
WP : WITH PUSH BUTTON START
*1 : WITHOUT PUSH BUTTON START : 1
WITH PUSH BUTTON START : 2
*2 : WITHOUT PUSH BUTTON START : 2
WITH PUSH BUTTON START : 3
*3 : WITHOUT PUSH BUTTON START : 3
WITH PUSH BUTTON START : 4
*4 : WITHOUT PUSH BUTTON START : 4
WITH PUSH BUTTON START : 5
*5 : WITHOUT PUSH BUTTON START : B/W
WITH PUSH BUTTON START : Y/R

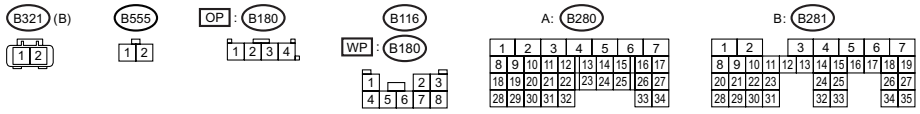

WI-66808

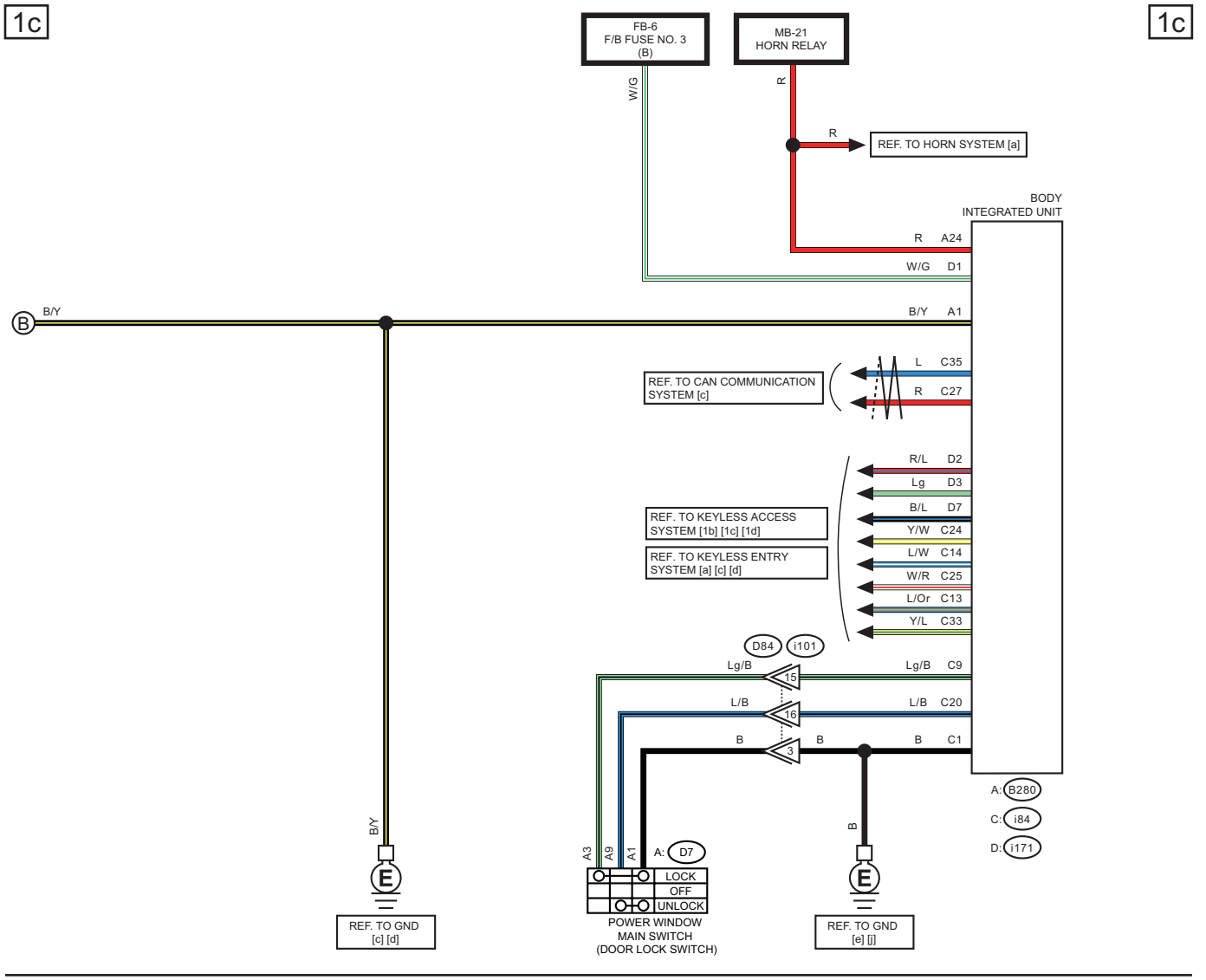
1c
1c
FB-6
F/B FUSE NO. 3
(B)
MB-21
HORN RELAY
W/G
R
R
REF. TO HORN SYSTEM [a]
BODY
INTEGRATED UNIT
R A24
W/G D1
B
B/Y
B/Y A1
L C35
R C27
REF. TO CAN COMMUNICATION
SYSTEM [c]
R/L D2
Lg D3
B/L D7
Y/W C24
L/W C14
W/R C25
L/Or C13
Y/L C33
REF. TO KEYLESS ACCESS
SYSTEM [1b] [1c] [1d]
REF. TO KEYLESS ENTRY
SYSTEM [a] [c] [d]
D84
i101
Lg/B
Lg/B C9
L/B
L/B C20
B
B
B C1
15
16
3
A: B280
C: i84
D: i171
B/Y
B
A3
A9
A1
A: D7
LOCK
OFF
UNLOCK
POWER WINDOW
MAIN SWITCH
(DOOR LOCK SWITCH)
REF. TO GND
[c] [d]
REF. TO GND
[e] [j]

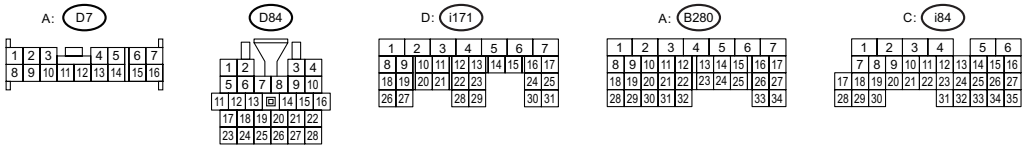
A: D7
D84
D: i171
A: B280
C: i84

WI-66809

2. ENGINE TYPE EJ

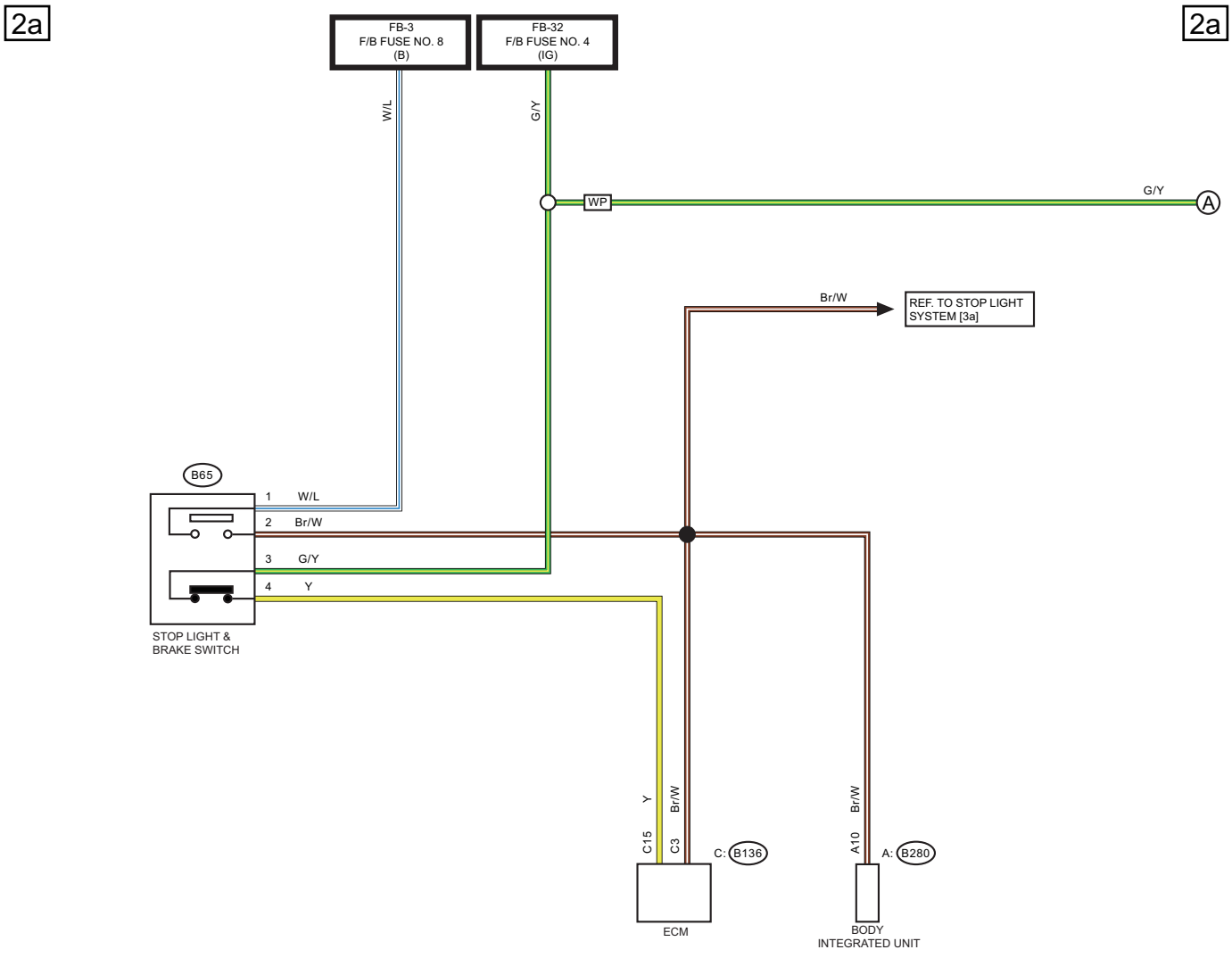

WP : WITH PUSH BUTTON START

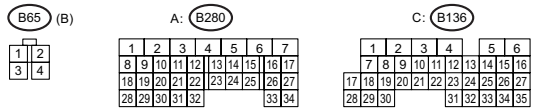

WI-67284

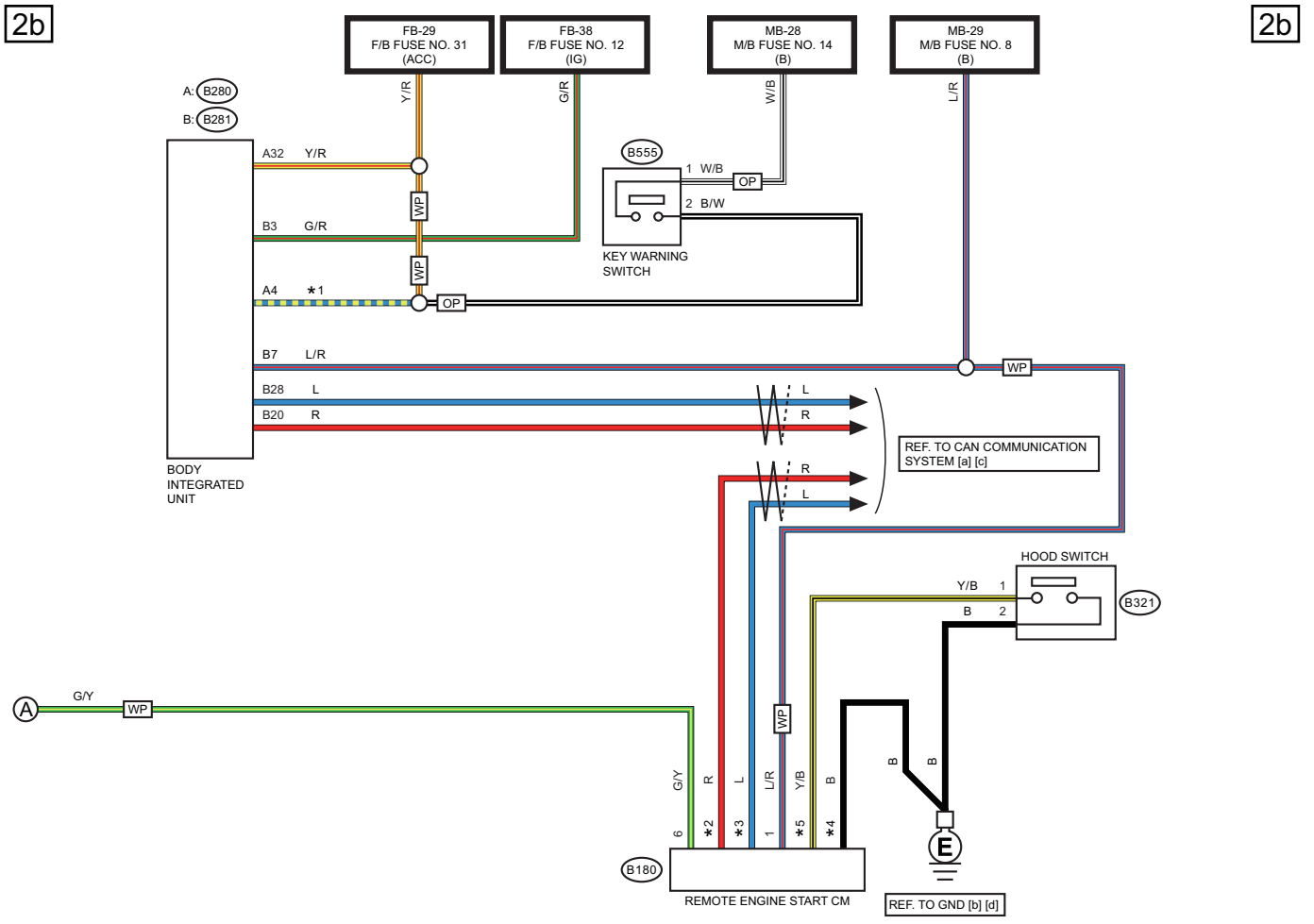

OP : WITHOUT PUSH BUTTON START

WP : WITH PUSH BUTTON START

*1 : WITHOUT PUSH BUTTON START : B/W
WITH PUSH BUTTON START : Y/R

*2 : WITHOUT PUSH BUTTON START : 1
WITH PUSH BUTTON START : 2

*3 : WITHOUT PUSH BUTTON START : 2
WITH PUSH BUTTON START : 3

*4 : WITHOUT PUSH BUTTON START : 3
WITH PUSH BUTTON START : 4

*5 : WITHOUT PUSH BUTTON START : 4
WITH PUSH BUTTON START : 5

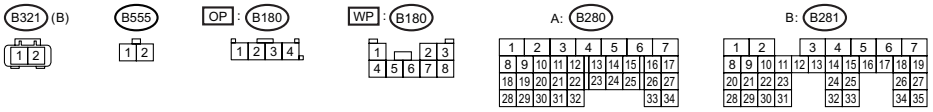

WI-66810

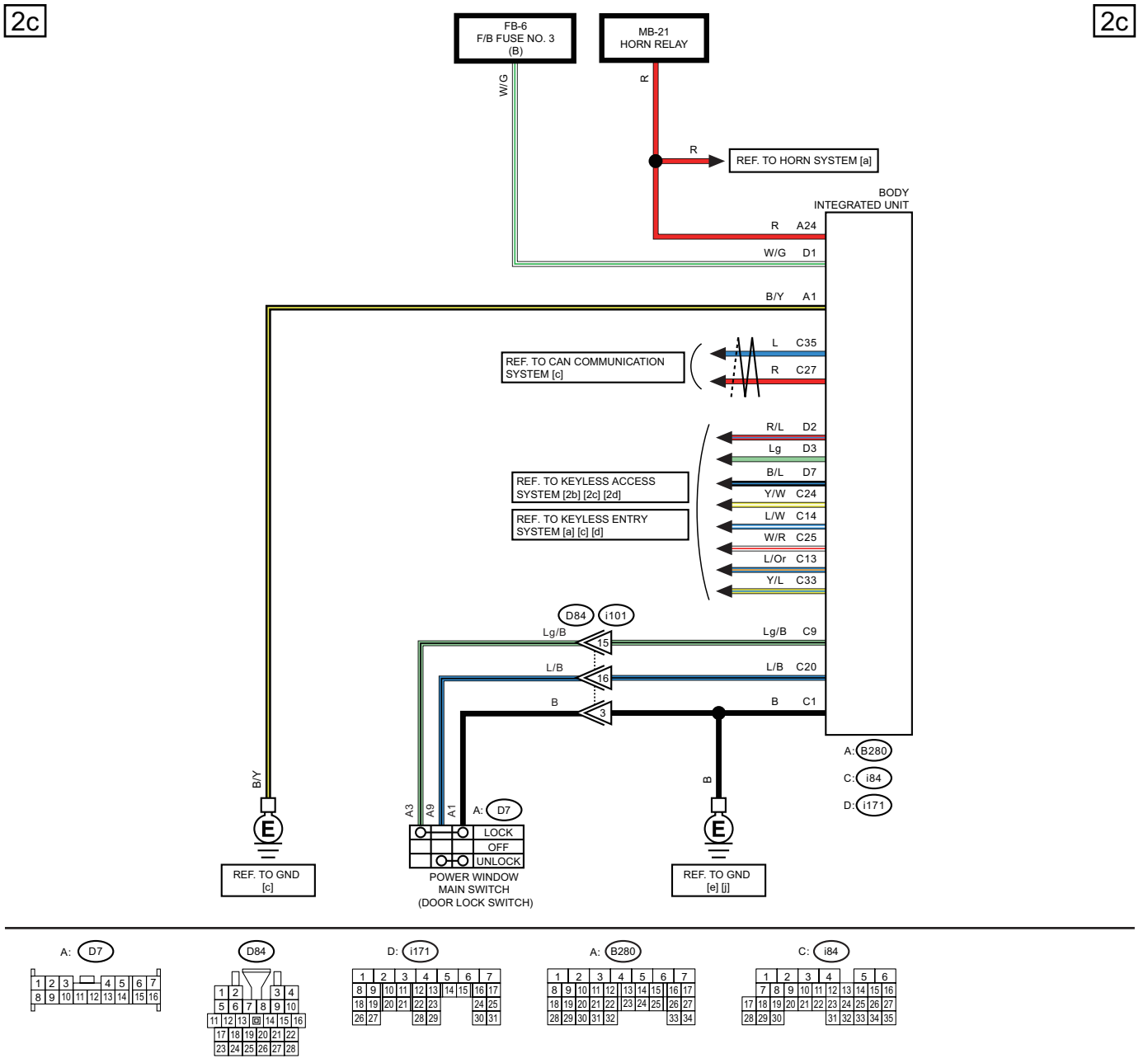
2c
2c
FB-6
F/B FUSE NO. 3
(B)
MB-21
HORN RELAY
W/G
R
R
REF. TO HORN SYSTEM [a]
BODY
INTEGRATED UNIT
R A24
W/G D1
B/Y A1
L C35
R C27
REF. TO CAN COMMUNICATION
SYSTEM [c]
R/L D2
Lg D3
B/L D7
Y/W C24
L/W C14
W/R C25
L/Or C13
Y/L C33
REF. TO KEYLESS ACCESS
SYSTEM [2b] [2c] [2d]
REF. TO KEYLESS ENTRY
SYSTEM [a] [c] [d]
D84
i101
Lg/B
Lg/B C9
15
L/B
L/B C20
16
B
B C1
3
A: B280
C: i84
D: i171
B/Y
B
A3
A9
A1
A: D7
LOCK
OFF
UNLOCK
POWER WINDOW
MAIN SWITCH
(DOOR LOCK SWITCH)
REF. TO GND
[c]
REF. TO GND
[e] [j]

A: D7
D84
D: i171
A: B280
C: i84

WI-66811

49.Reverse Automatic Braking

A: WIRING DIAGRAM

a

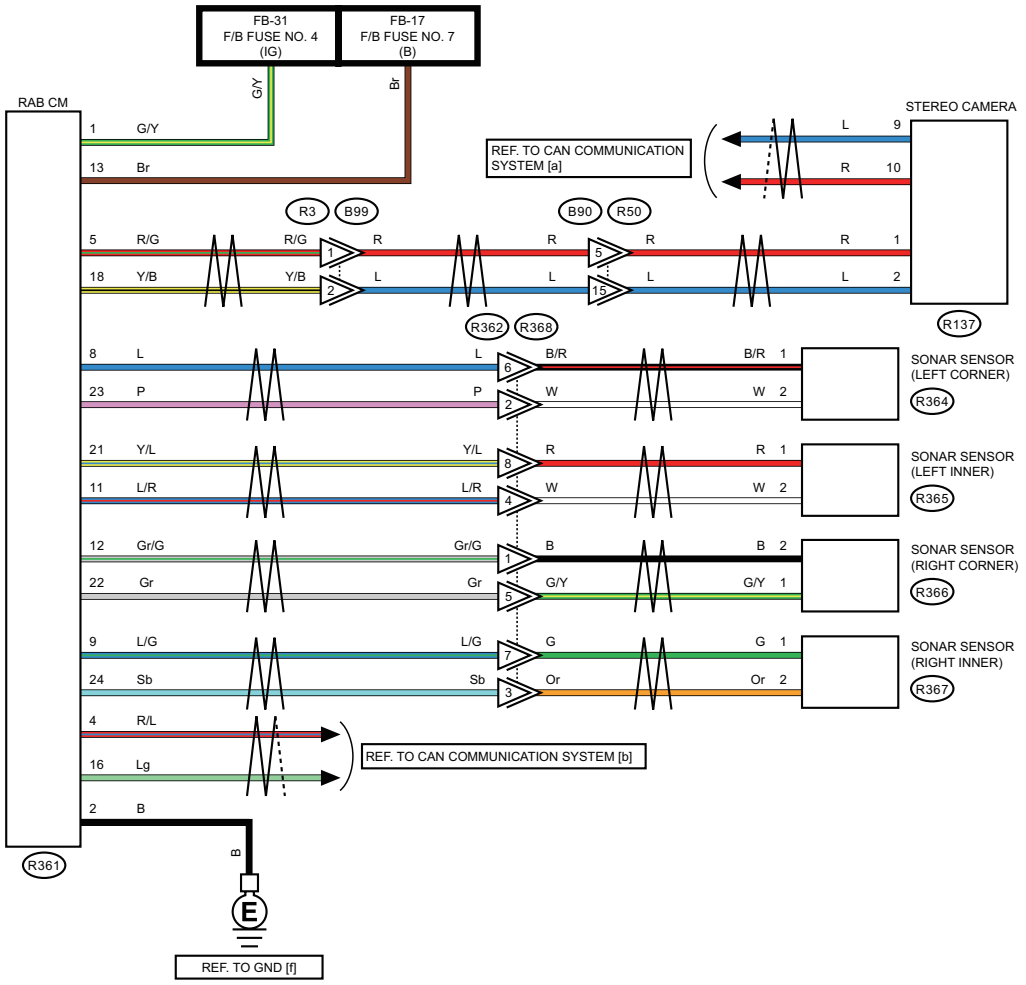

a

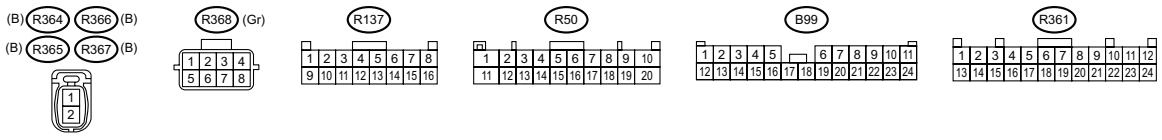

WI-66812

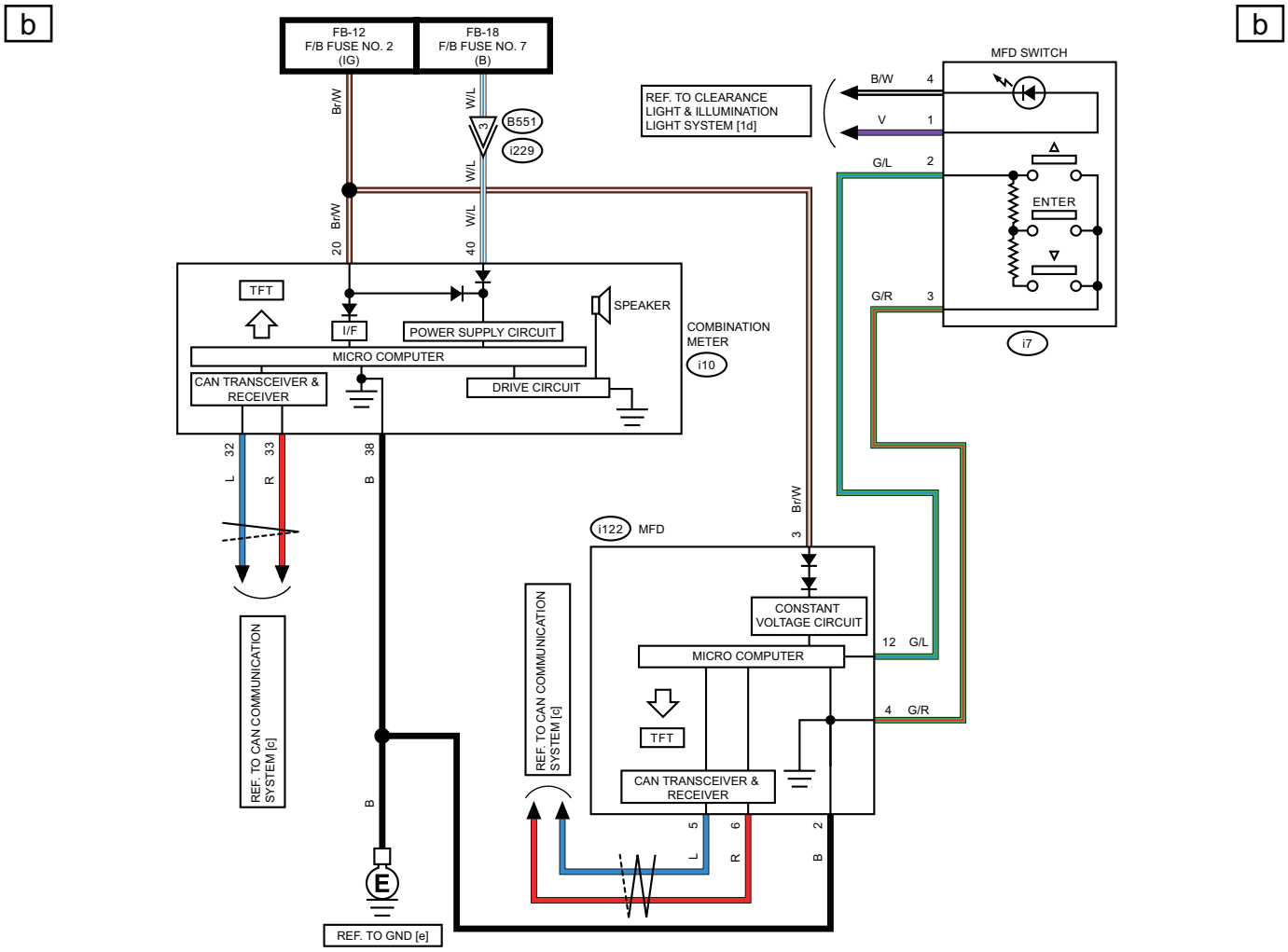
b
b
FB-12
F/B FUSE NO. 2
(IG)
FB-18
F/B FUSE NO. 7
(B)
Br/W
W/L
B551
i229
3
20
40
MFD SWITCH
REF. TO CLEARANCE LIGHT & ILLUMINATION LIGHT SYSTEM [1d]
B/W
4
V
1
G/L
2
ENTER
G/R
3
i7
TFT
I/F
POWER SUPPLY CIRCUIT
SPEAKER
COMBINATION METER
i10
MICRO COMPUTER
CAN TRANSCEIVER & RECEIVER
DRIVE CIRCUIT
32
33
38
L
R
B
REF. TO CAN COMMUNICATION SYSTEM [c]
i122
MFD
Br/W
CONSTANT VOLTAGE CIRCUIT
12
G/L
MICRO COMPUTER
4
G/R
TFT
CAN TRANSCEIVER & RECEIVER
5
6
2
L
R
B
REF. TO GND [e]

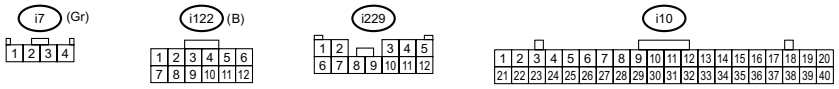
i7
(Gr)
i122
(B)
i229
i10

WI-66813

50.Seat Belt Warning System

A: WIRING DIAGRAM

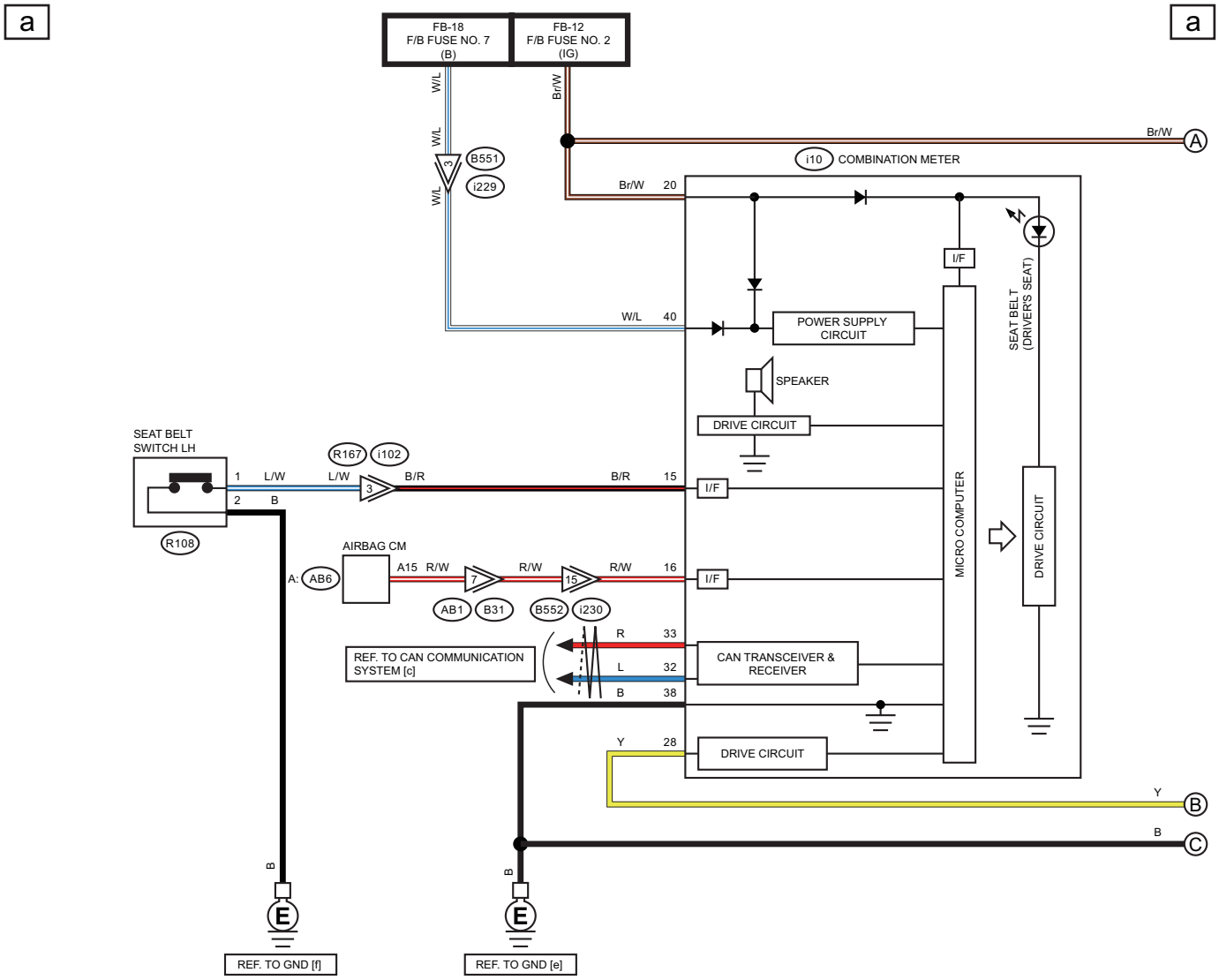

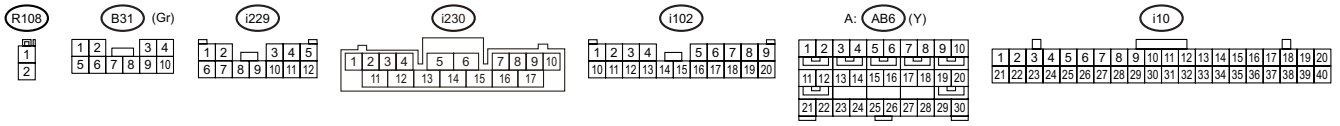

WI-66815

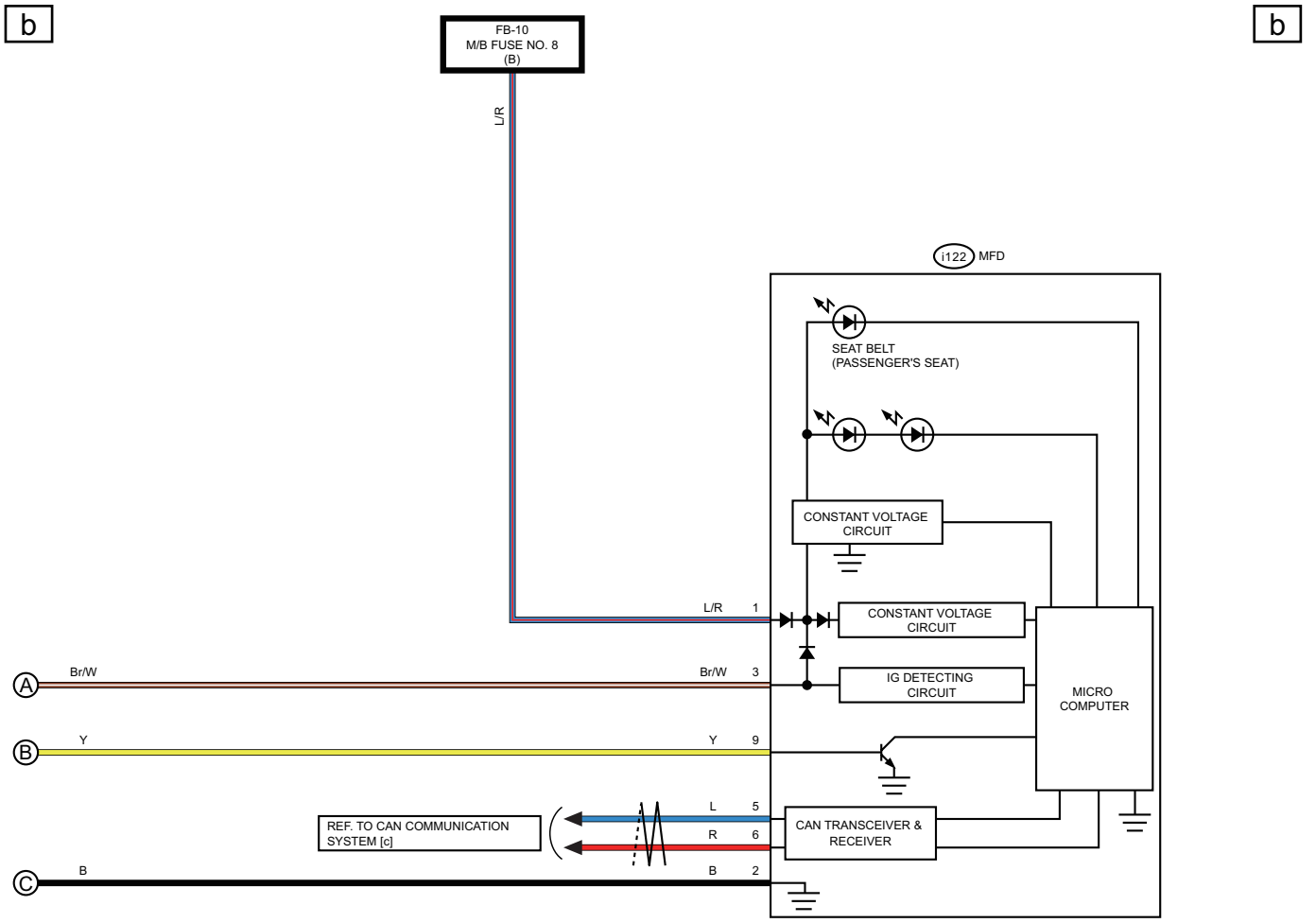
b
b
FB-10
M/B FUSE NO. 8
(B)
L/R
i122 MFD
SEAT BELT
(PASSENGER'S SEAT)
CONSTANT VOLTAGE
CIRCUIT
L/R 1
CONSTANT VOLTAGE
CIRCUIT
A
Br/W
Br/W 3
IG DETECTING
CIRCUIT
MICRO
COMPUTER
B
Y
Y 9
REF. TO CAN COMMUNICATION
SYSTEM [c]
L 5
R 6
CAN TRANSCEIVER &
RECEIVER
C
B
B 2

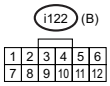
i122 (B)
1 2 3 4 5 6
7 8 9 10 11 12

WI-66816

51.Seat Heater System

A: WIRING DIAGRAM

1. ENGINE TYPE FA (WITHOUT EyeSight)

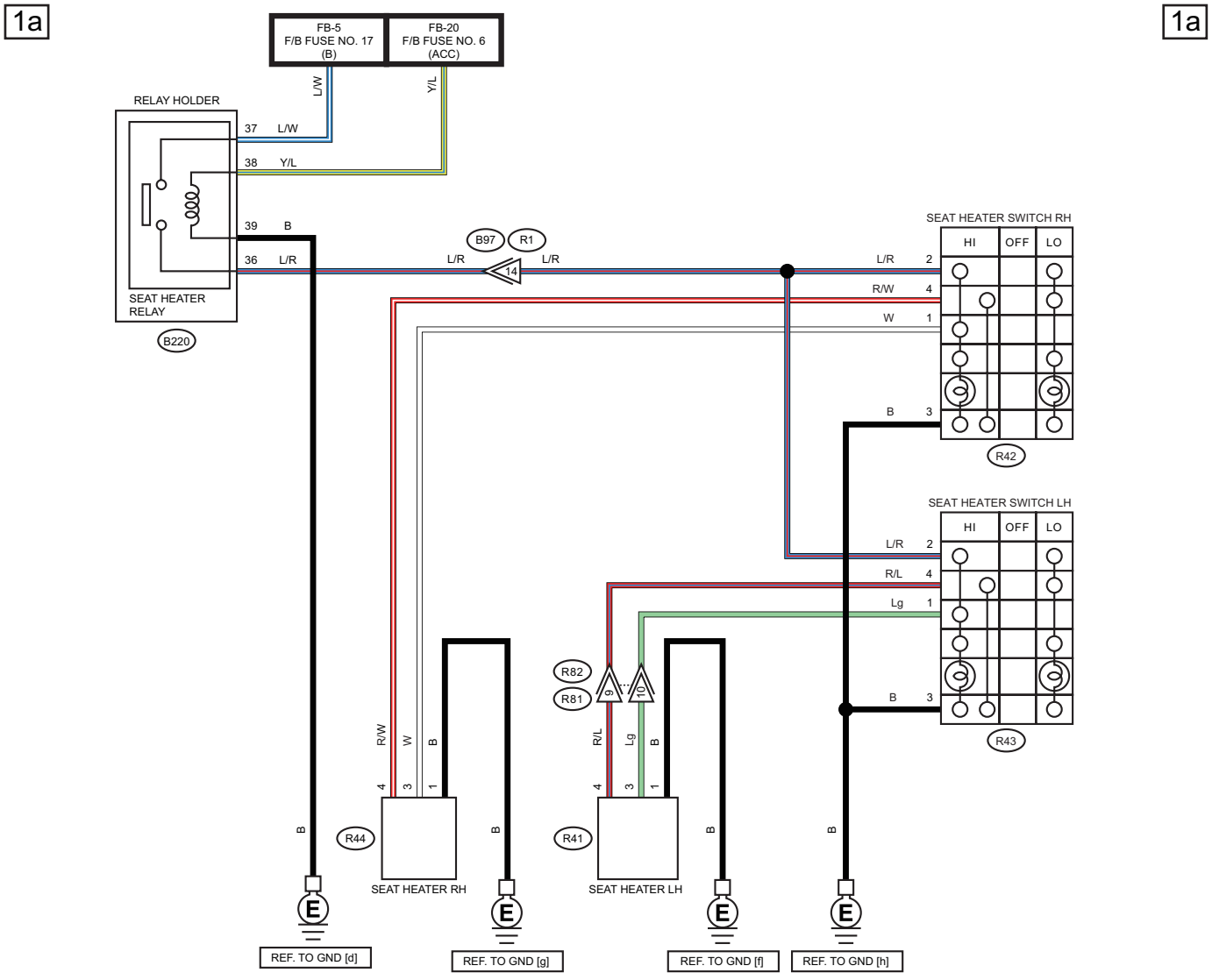

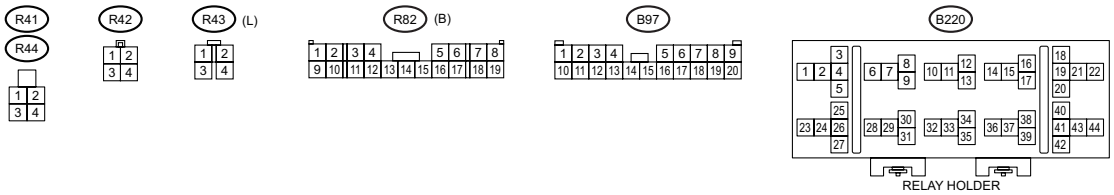

WI-67285

2. ENGINE TYPE FA (WITH EyeSight)

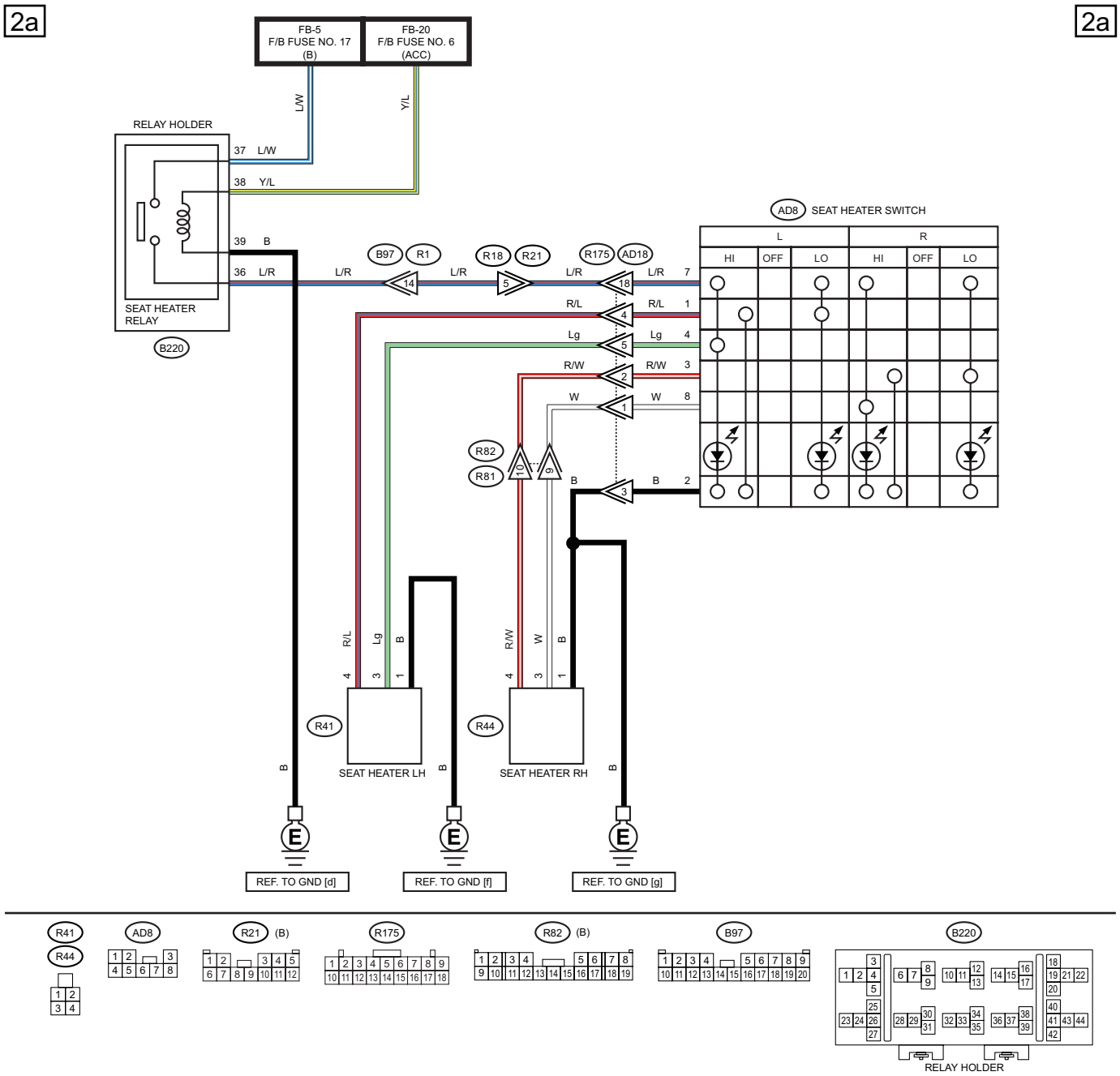

WI-67286

3. ENGINE TYPE EJ

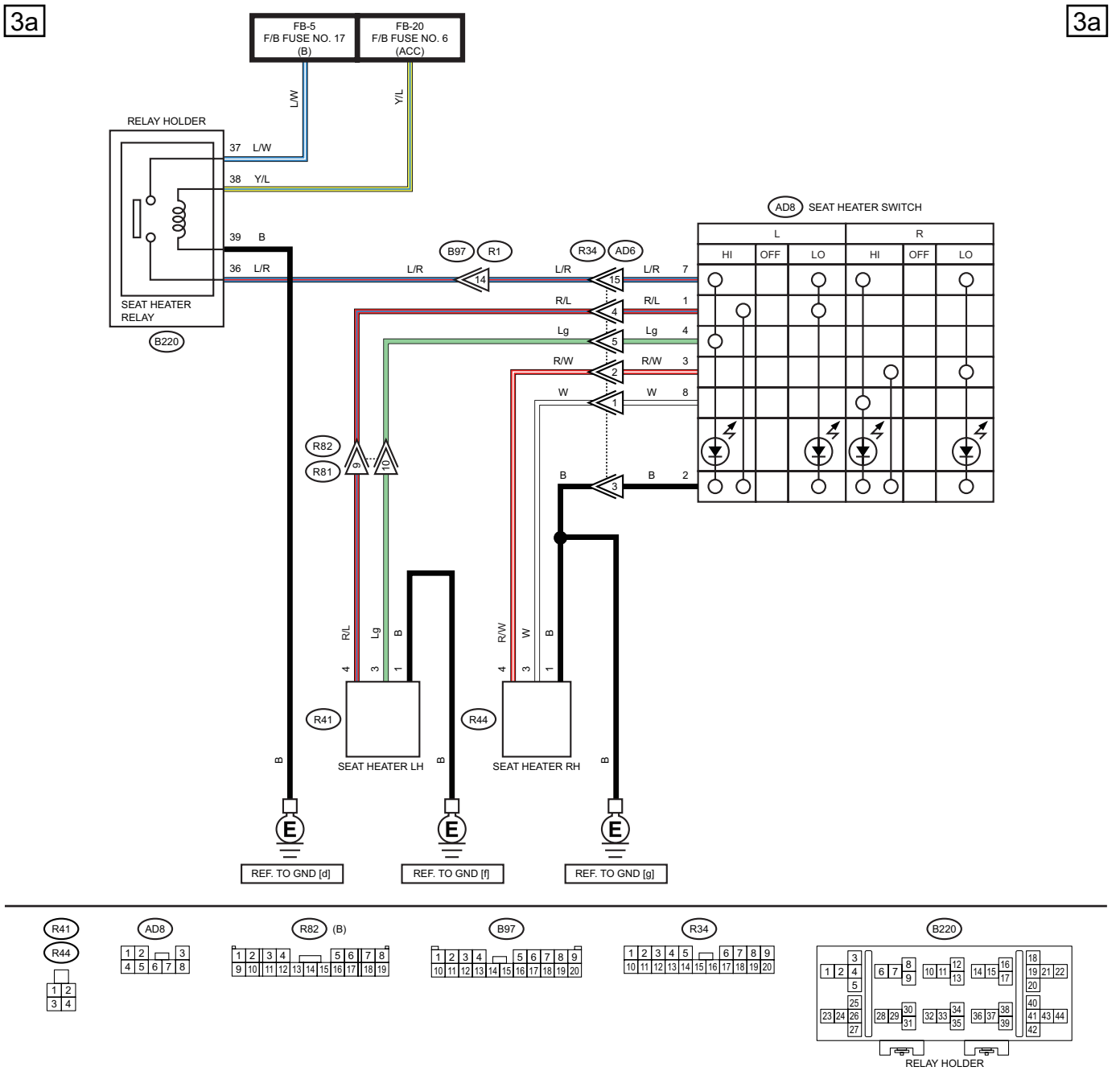

WI-67287

52.Security System

A: WIRING DIAGRAM

1. WITHOUT PUSH BUTTON START

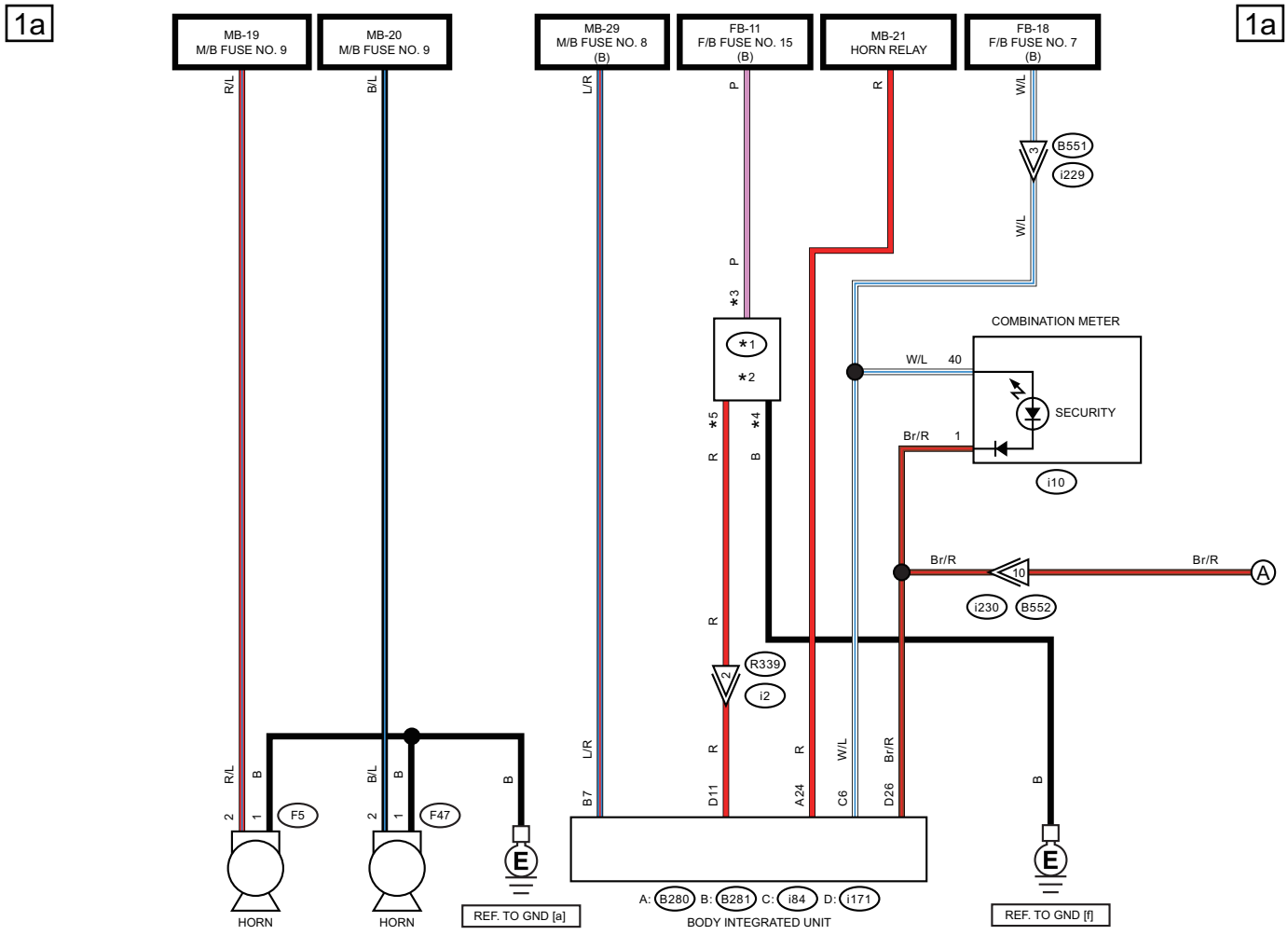

★1 : WITHOUT TPMS : R80
WITH TPMS : R221

★2 : WITHOUT TPMS : KEYLESS ENTRY CM
WITH TPMS : TPMS & KEYLESS ENTRY CM

★3 : WITHOUT TPMS : 4
WITH TPMS : 6

★4 : WITHOUT TPMS : 7
WITH TPMS : 5

★5 : WITHOUT TPMS : 3
WITH TPMS : 11

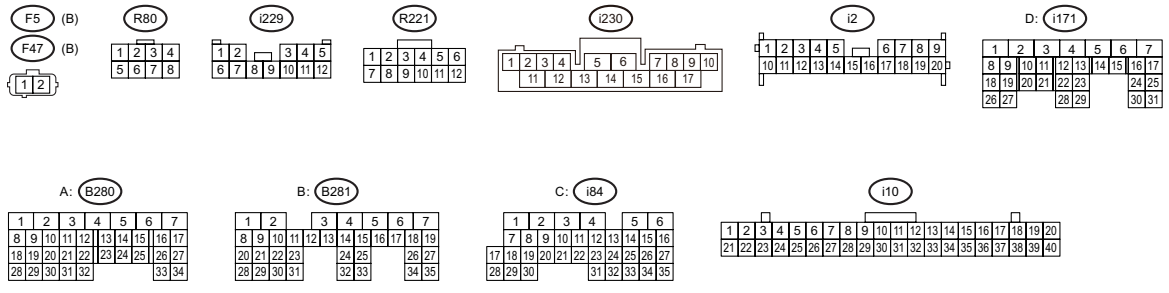

WI-66818

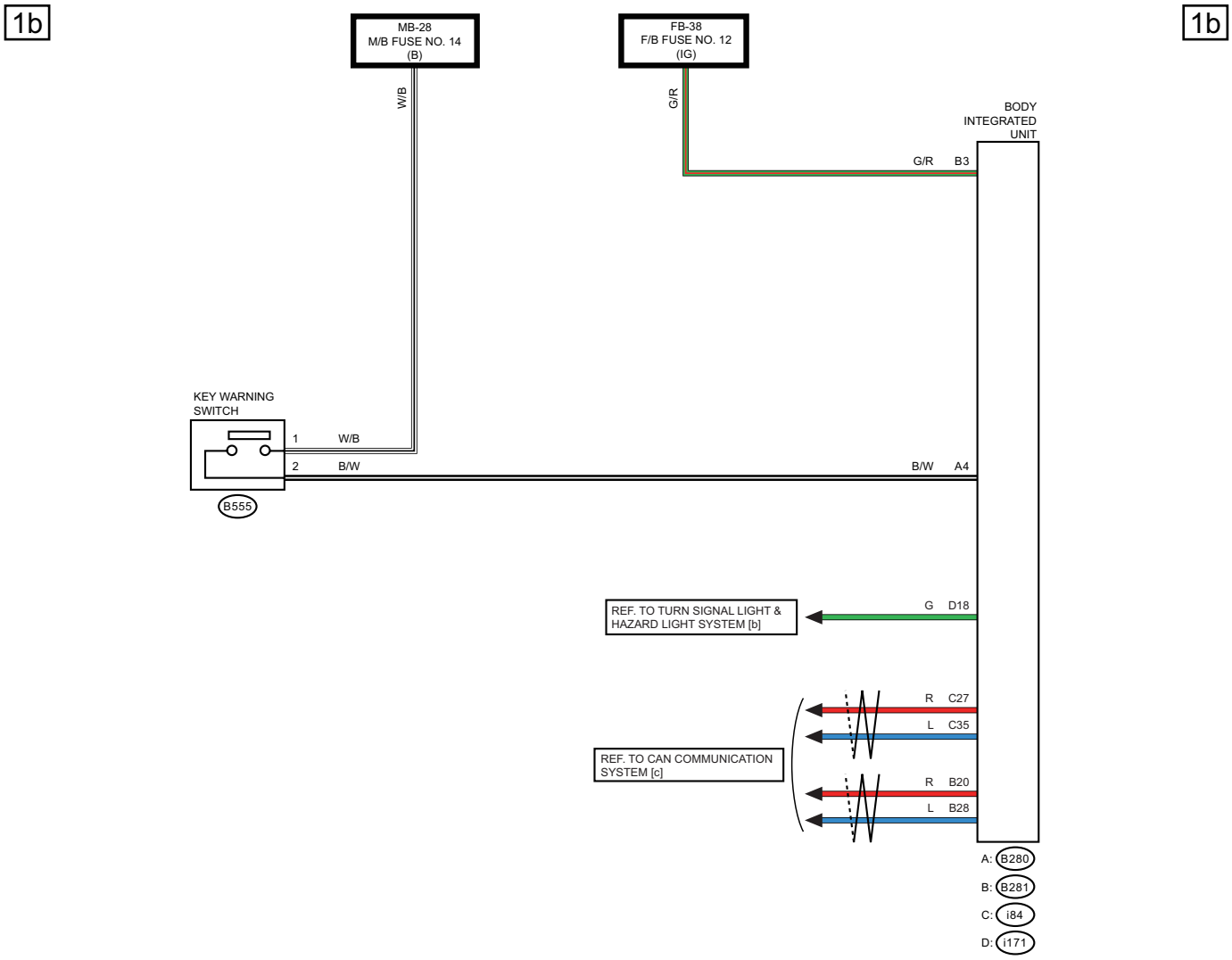
1b
1b
MB-28
M/B FUSE NO. 14
(B)
FB-38
F/B FUSE NO. 12
(IG)
W/B
G/R
BODY
INTEGRATED
UNIT
G/R B3
KEY WARNING
SWITCH
1 W/B
2 B/W
B/W A4
B555
REF. TO TURN SIGNAL LIGHT &
HAZARD LIGHT SYSTEM [b]
G D18
R C27
L C35
REF. TO CAN COMMUNICATION
SYSTEM [c]
R B20
L B28
A: B280
B: B281
C: i84
D: i171

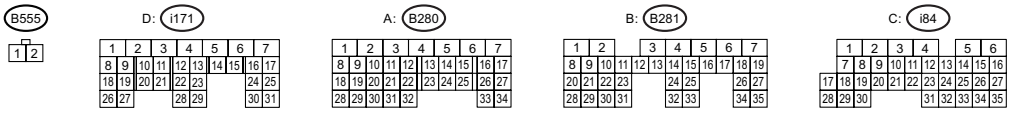
B555
1 2
D: i171
A: B280
B: B281
C: i84

WI-66819

WIRING SYSTEM

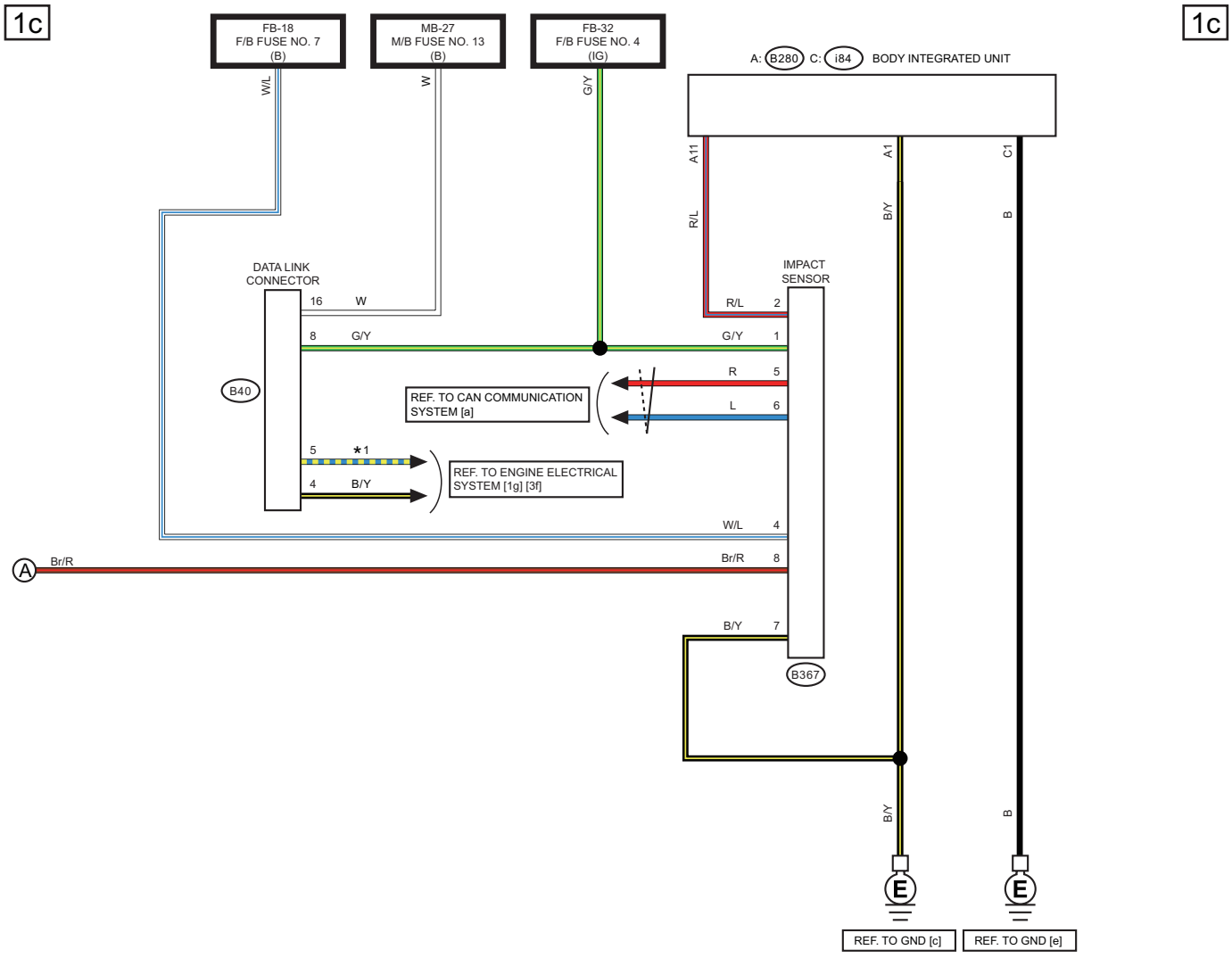

*1 : ENGINE TYPE FA : B/R
ENGINE TYPE EJ : B/W

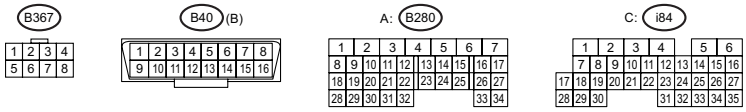

WI-67288

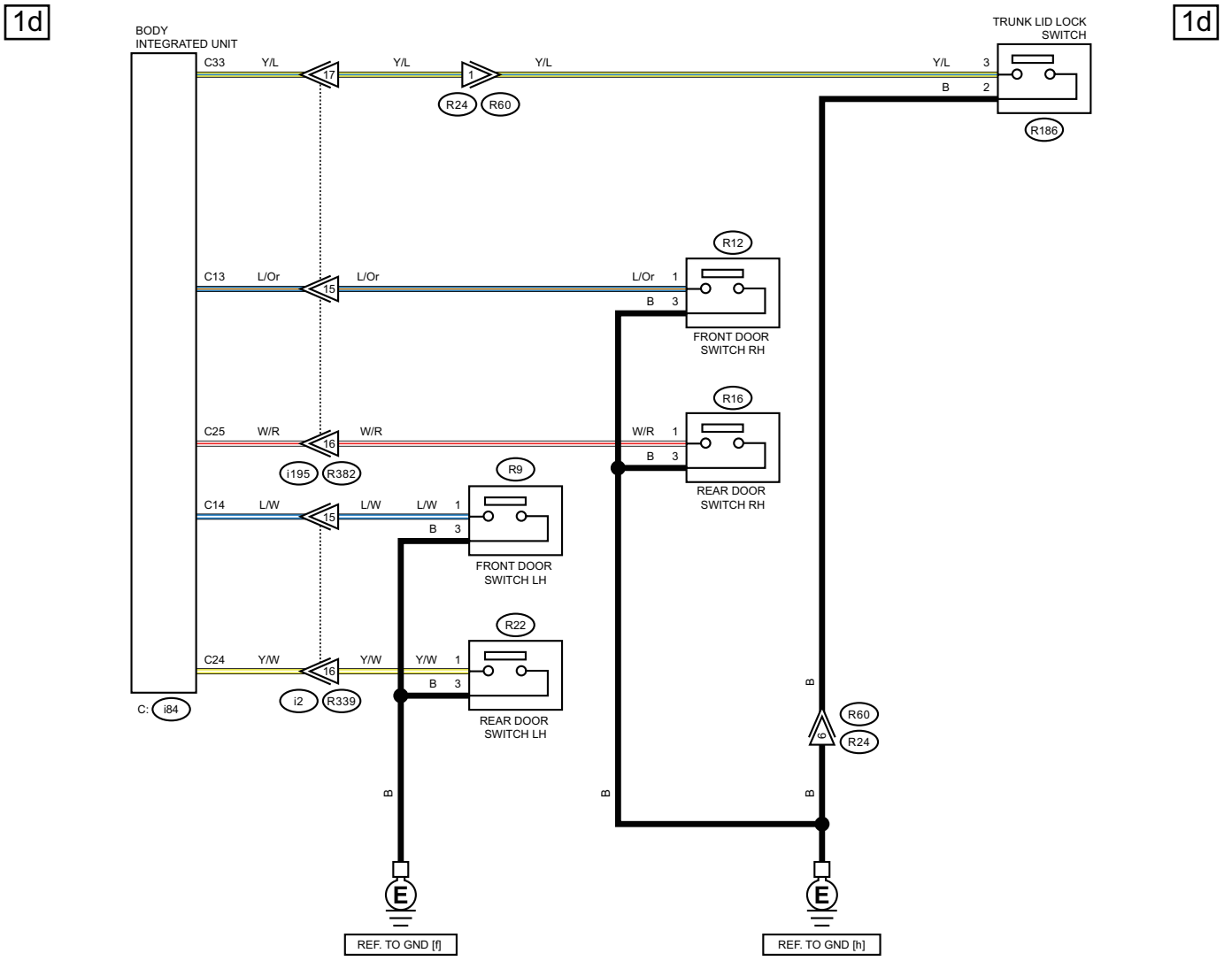
1d
1d
BODY INTEGRATED UNIT
C33 Y/L
17
Y/L
1
Y/L
R24
R60
TRUNK LID LOCK SWITCH
Y/L 3
B 2
R186
C13 L/Or
15
L/Or
L/Or 1
B 3
R12
FRONT DOOR SWITCH RH
C25 W/R
16
W/R
W/R 1
B 3
R16
REAR DOOR SWITCH RH
i195
R382
C14 L/W
15
L/W
L/W 1
B 3
R9
FRONT DOOR SWITCH LH
C24 Y/W
16
Y/W
Y/W 1
B 3
R22
REAR DOOR SWITCH LH
i2
R339
C: i84
B
B
B
6
R60
R24
E
REF. TO GND [f]
E
REF. TO GND [h]

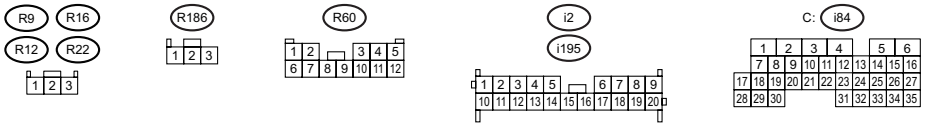
R9
R16
R12
R22
R186
R60
i2
i195
C: i84

WI-67289

2. WITH PUSH BUTTON START

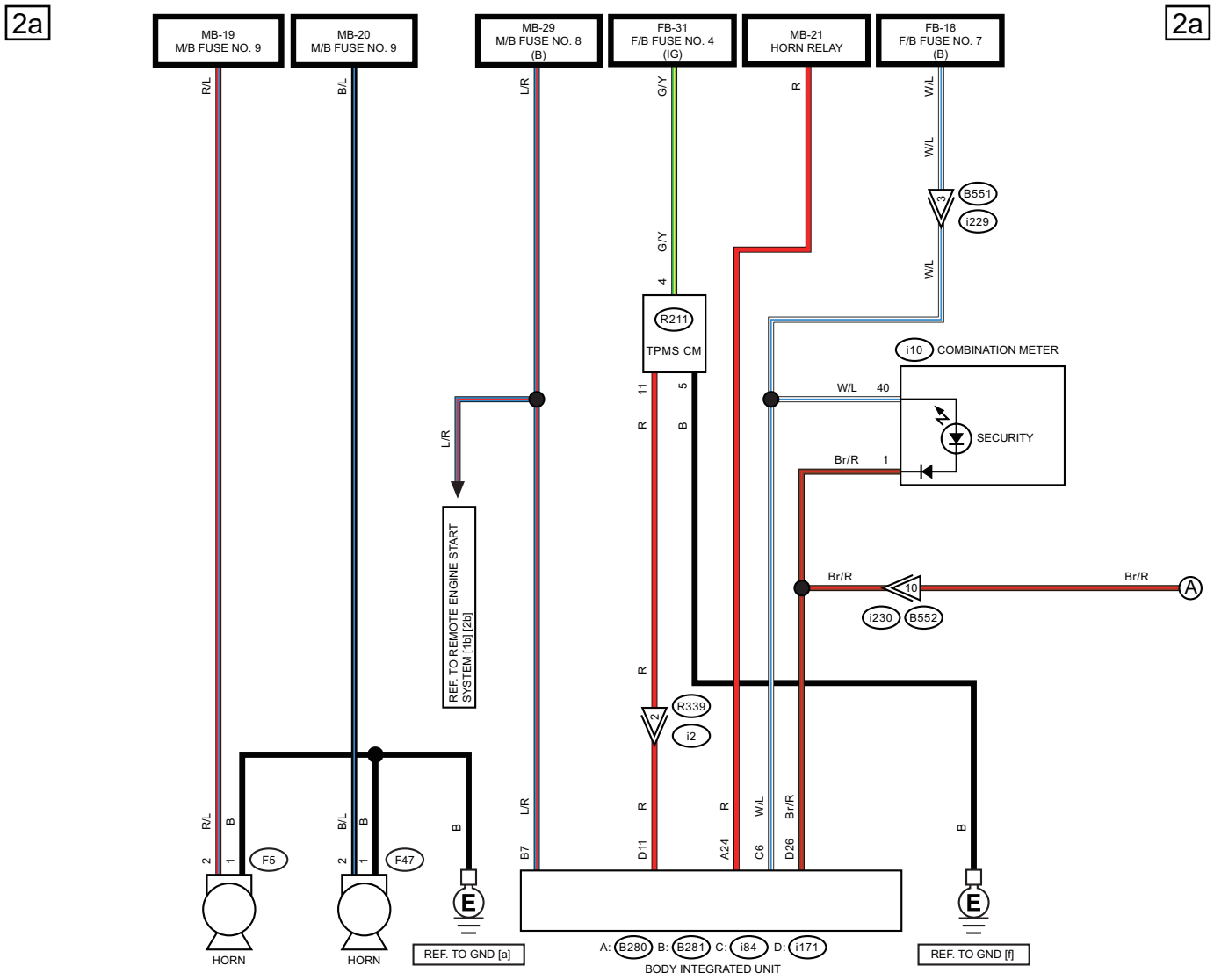

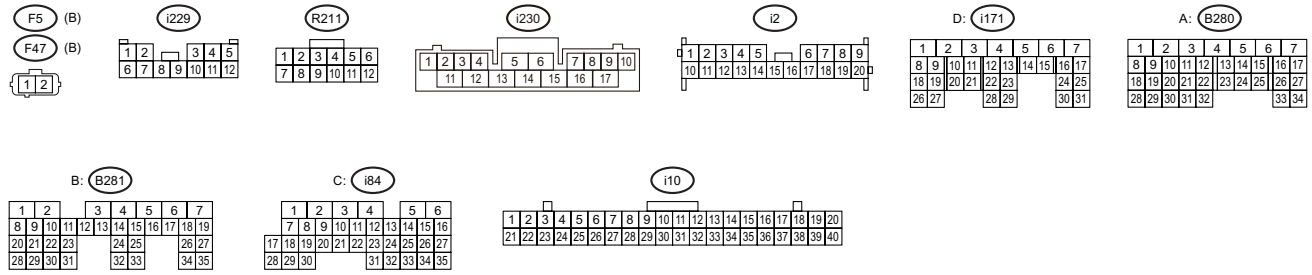

WI-66821

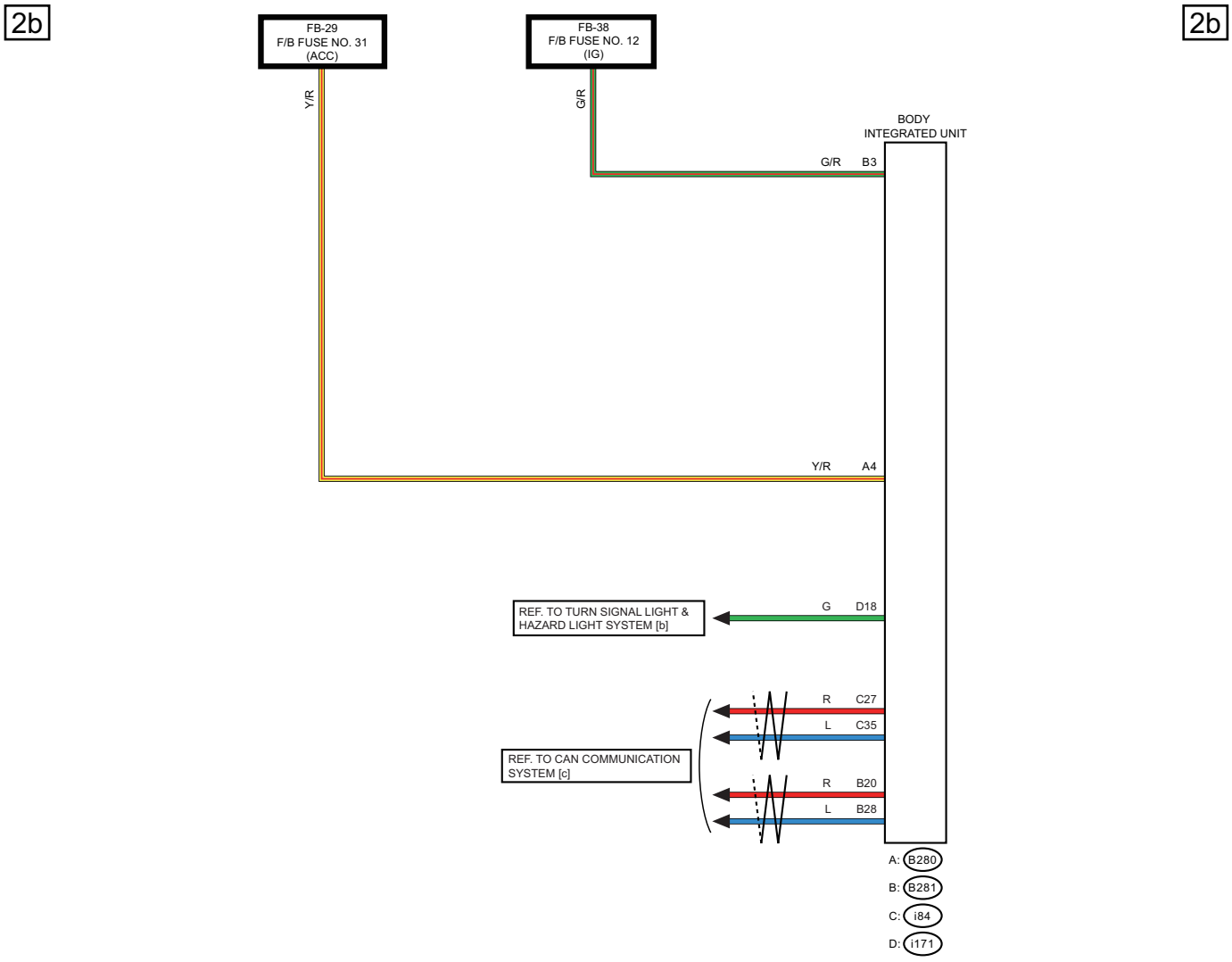
2b
2b
FB-29
F/B FUSE NO. 31
(ACC)
FB-38
F/B FUSE NO. 12
(IG)
Y/R
G/R
BODY
INTEGRATED UNIT
G/R B3
Y/R A4
REF. TO TURN SIGNAL LIGHT &
HAZARD LIGHT SYSTEM [b]
G D18
REF. TO CAN COMMUNICATION
SYSTEM [c]
R C27
L C35
R B20
L B28
A: B280
B: B281
C: i84
D: i171

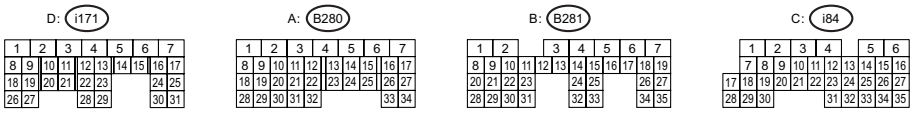
D: i171
A: B280
B: B281
C: i84

WI-66822

WIRING SYSTEM

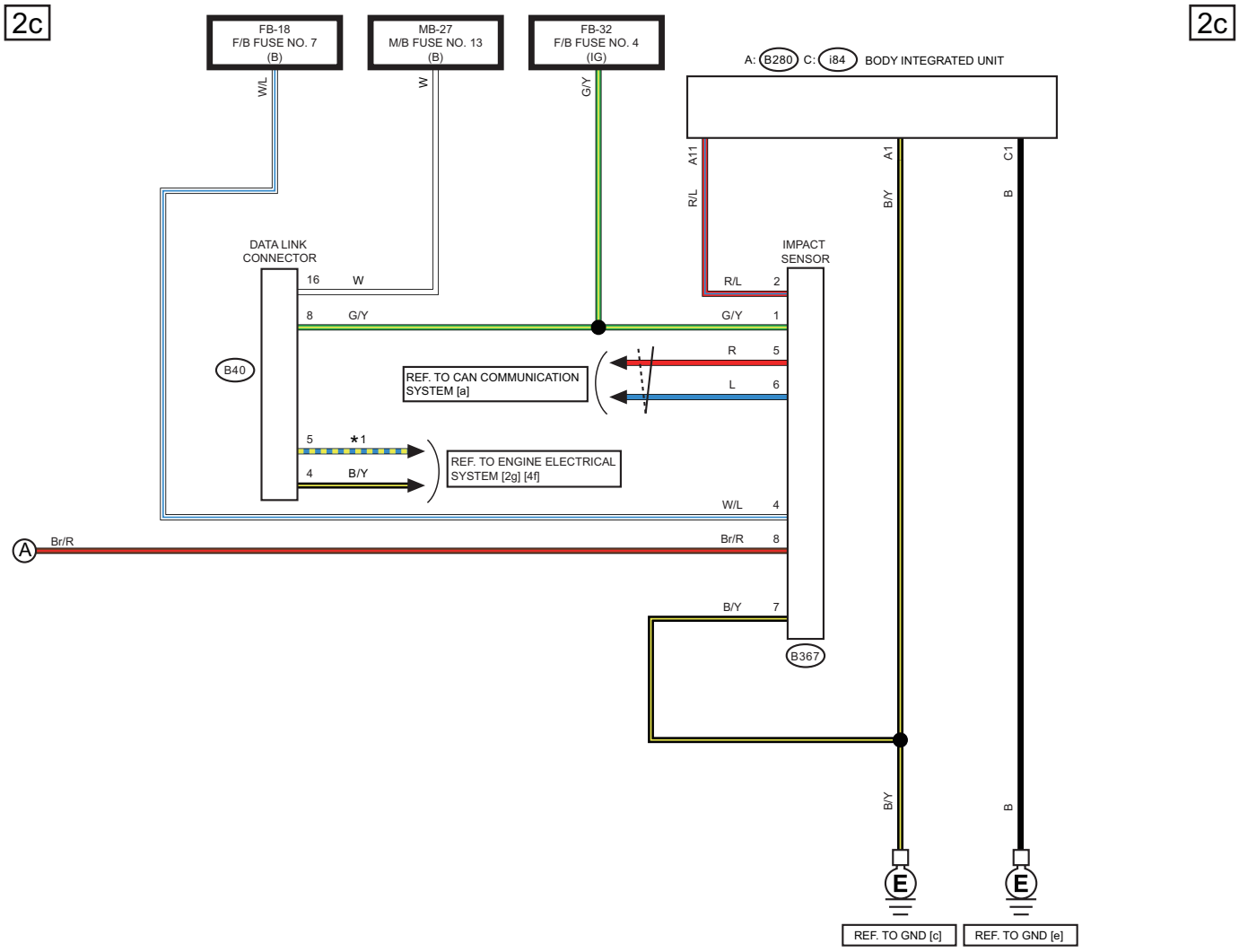

*1 : ENGINE TYPE FA : B/R
ENGINE TYPE EJ : B/W

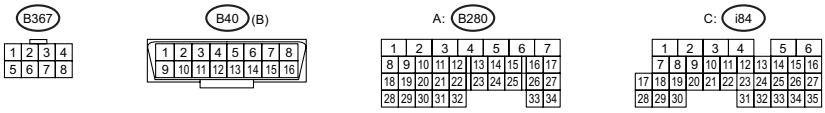

WI-67290

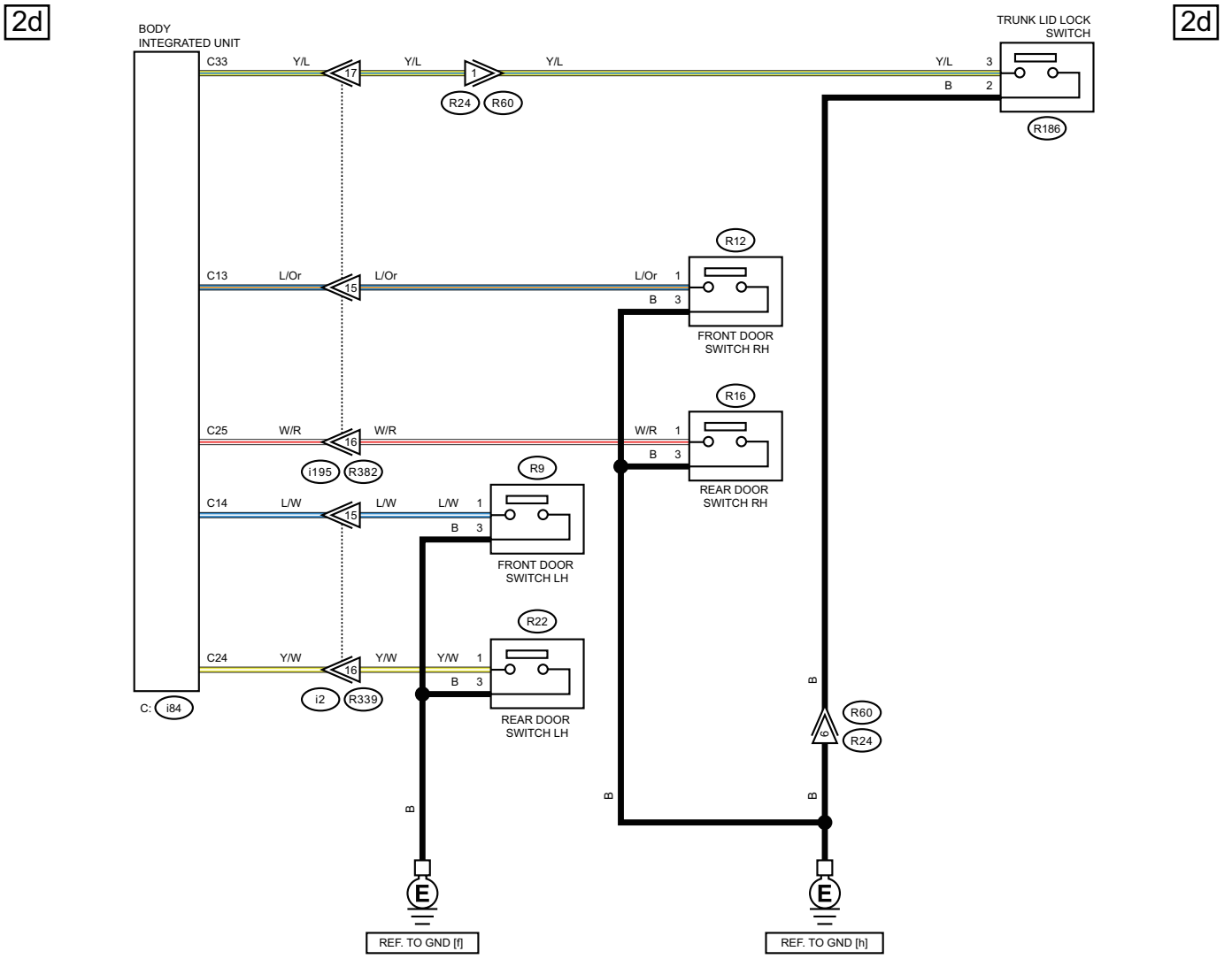
2d
2d
BODY
INTEGRATED UNIT
C33
Y/L
17
Y/L
1
R24
R60
Y/L
Y/L
3
B
2
TRUNK LID LOCK
SWITCH
R186
R12
C13
L/Or
15
L/Or
L/Or
1
B
3
FRONT DOOR
SWITCH RH
R16
C25
W/R
16
W/R
W/R
1
B
3
i195
R382
REAR DOOR
SWITCH RH
R9
C14
L/W
15
L/W
L/W
1
B
3
FRONT DOOR
SWITCH LH
R22
C24
Y/W
16
Y/W
Y/W
1
B
3
i2
R339
REAR DOOR
SWITCH LH
C:
i84
B
B
B
B
6
R60
R24
E
E
REF. TO GND [f]
REF. TO GND [h]

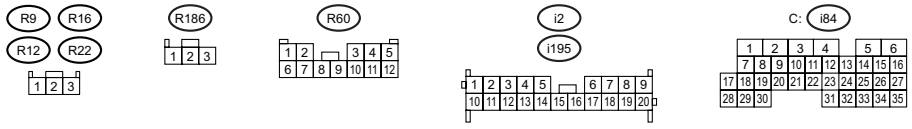
R9
R16
R12
R22
R186
R60
i2
i195
C:
i84

WI-67291

53.Shift Lock Control System

A: WIRING DIAGRAM

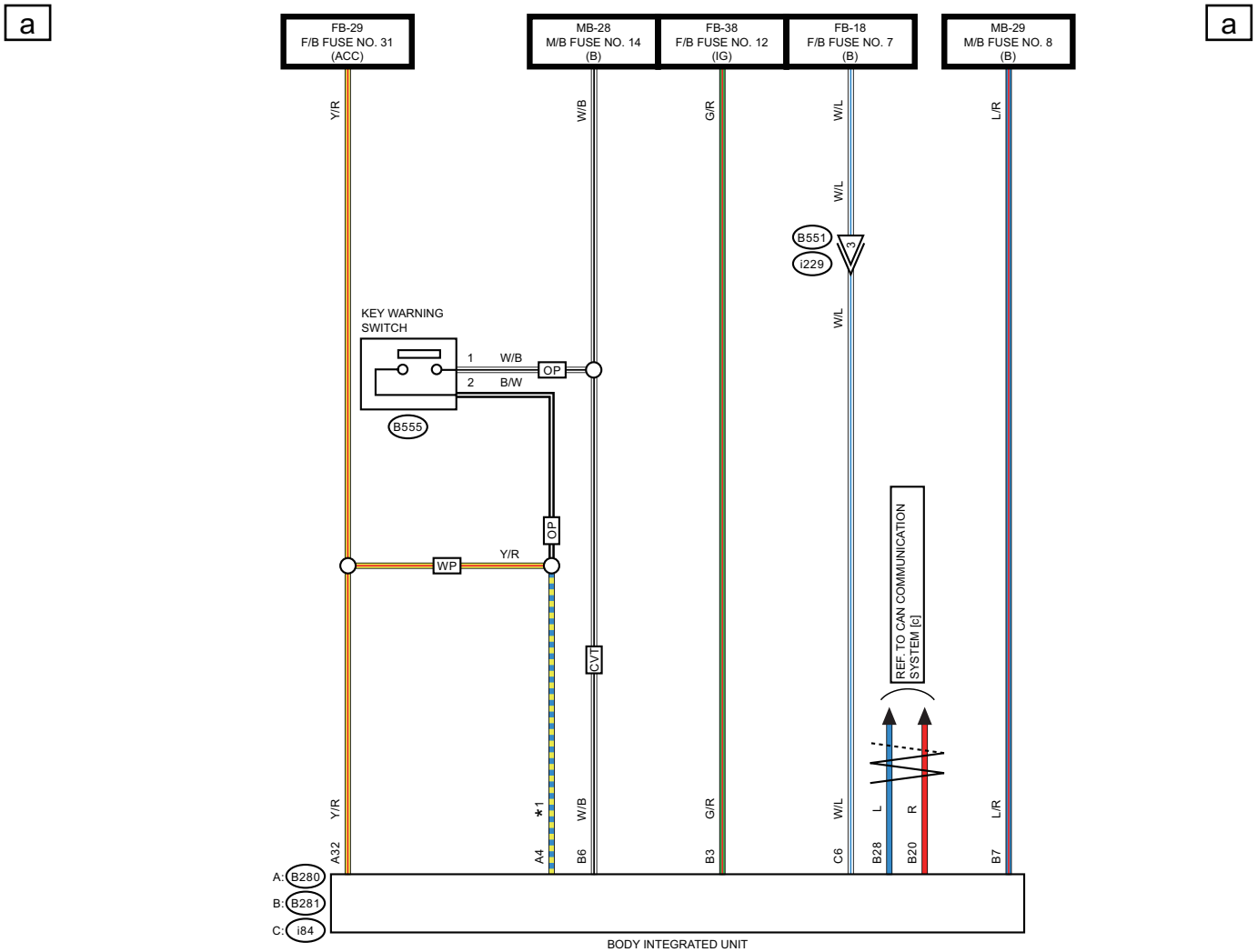

OP : WITHOUT PUSH BUTTON START
WP : WITH PUSH BUTTON START

*1 : WITHOUT PUSH BUTTON START : B/W
WITH PUSH BUTTON START : Y/R

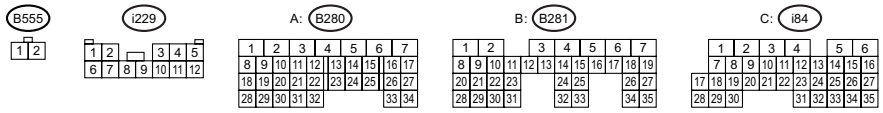

WI-66824

Shift Lock Control System

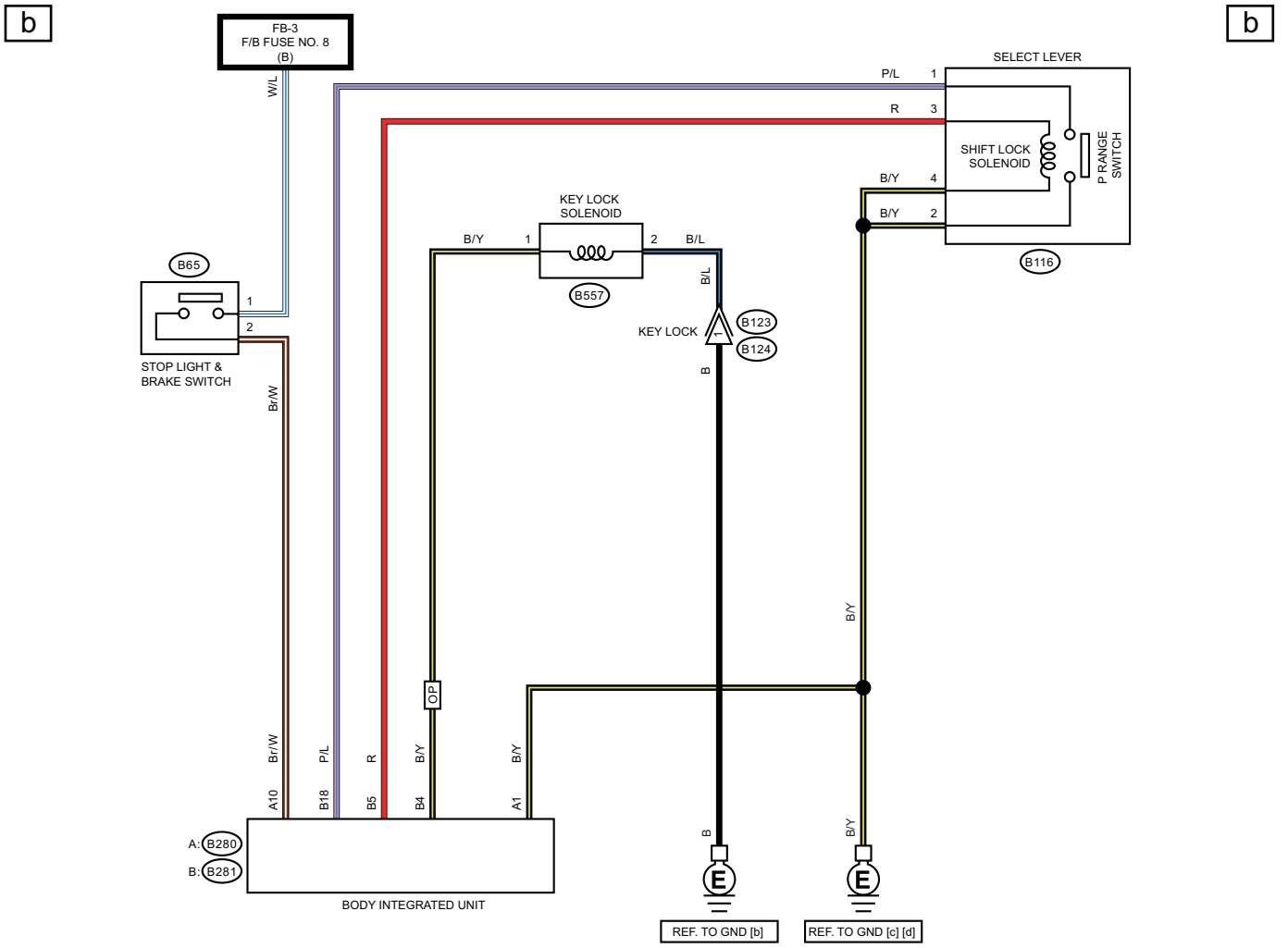

OP : WITHOUT PUSH BUTTON START

B123 (B)



B557



B65 (B)



B116



A: B280



B: B281

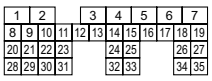

WI-67292

54.Speedometer System

A: WIRING DIAGRAM

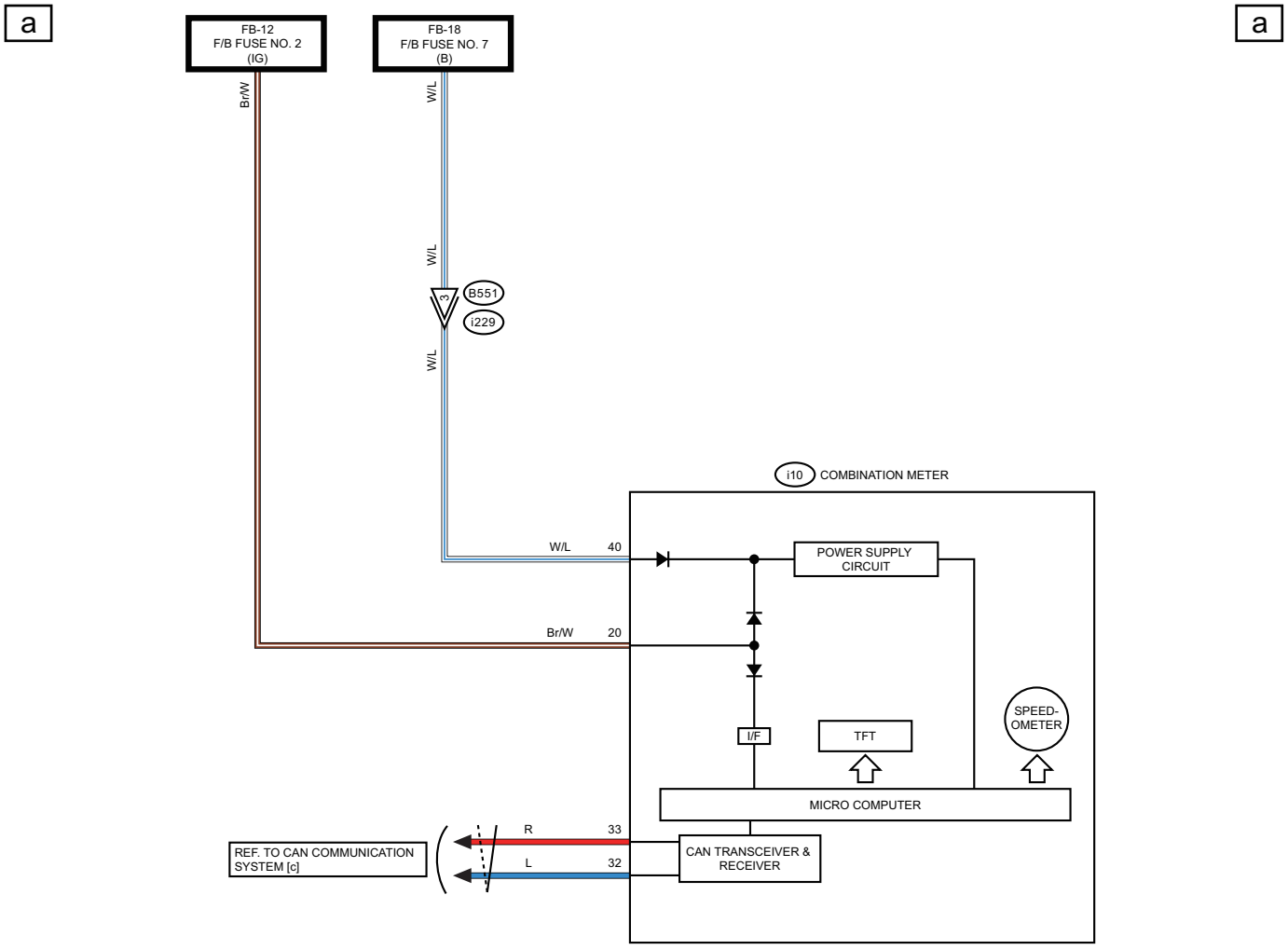

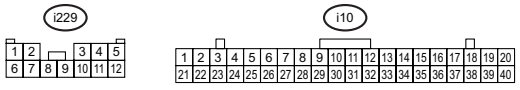

WI-66825

55.Starter System

A: WIRING DIAGRAM

1. ENGINE TYPE FA (WITHOUT PUSH BUTTON START)

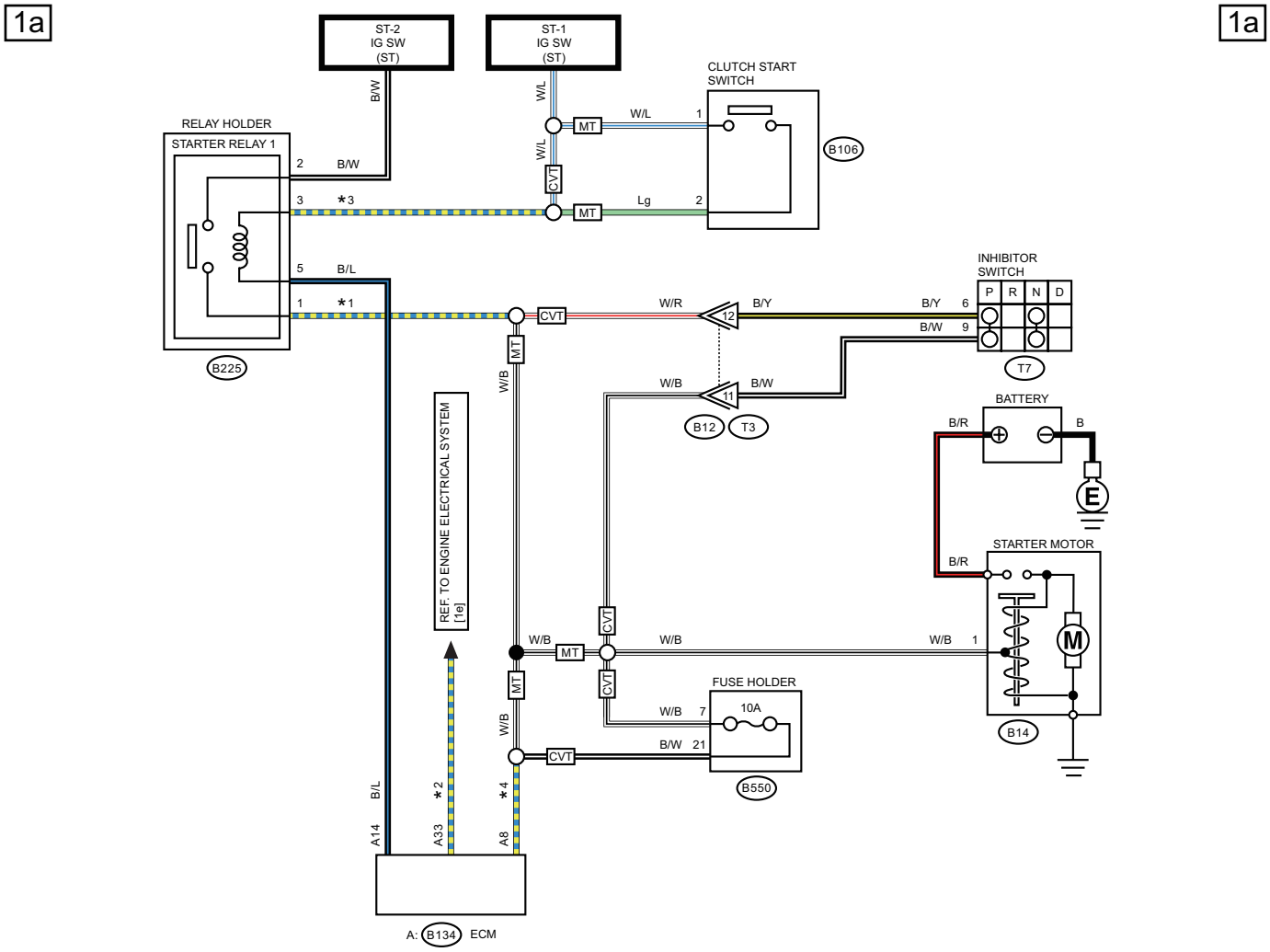

*1 : MT MODEL : W/B
CVT MODEL : W/R

*2 : MT MODEL : G/B
CVT MODEL : R/W

*3 : MT MODEL : Lg
CVT MODEL : W/L

*4 : MT MODEL : W/B
CVT MODEL : B/W

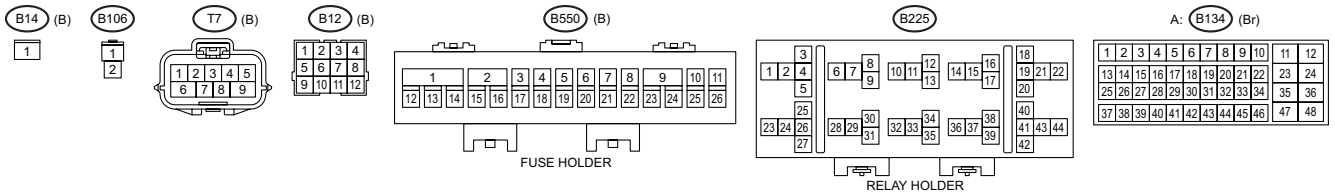

WI-66826

2. ENGINE TYPE FA (WITH PUSH BUTTON START)

2a

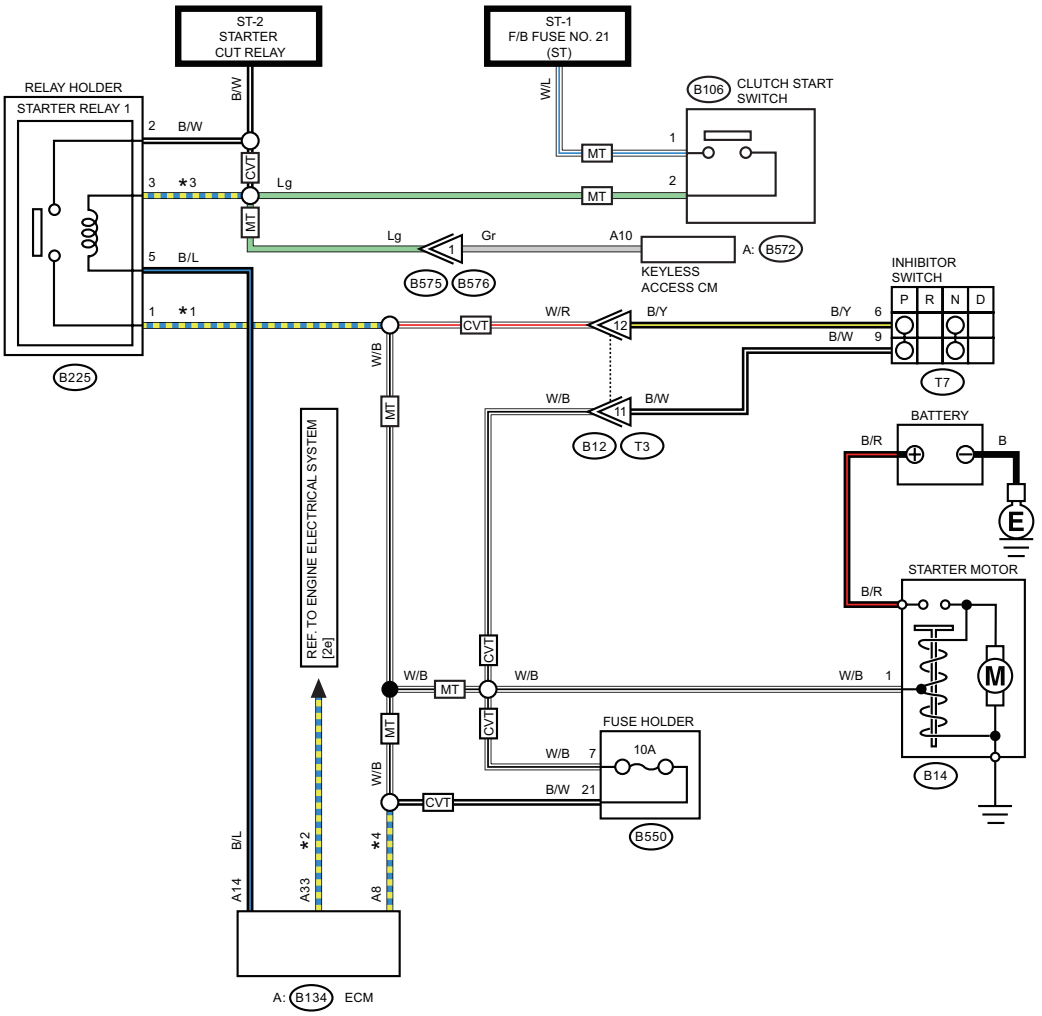

*1 : MT MODEL : W/B
CVT MODEL : W/R

*2 : MT MODEL : G/B
CVT MODEL : R/W

*3 : MT MODEL : Lg
CVT MODEL : B/W

*4 : MT MODEL : W/B
CVT MODEL : B/W

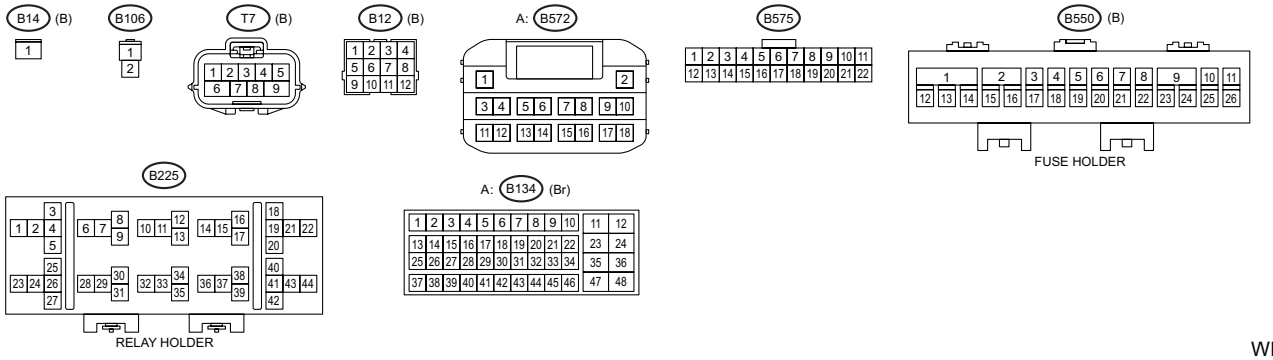

WI-67293

3. ENGINE TYPE EJ (WITHOUT PUSH BUTTON START)

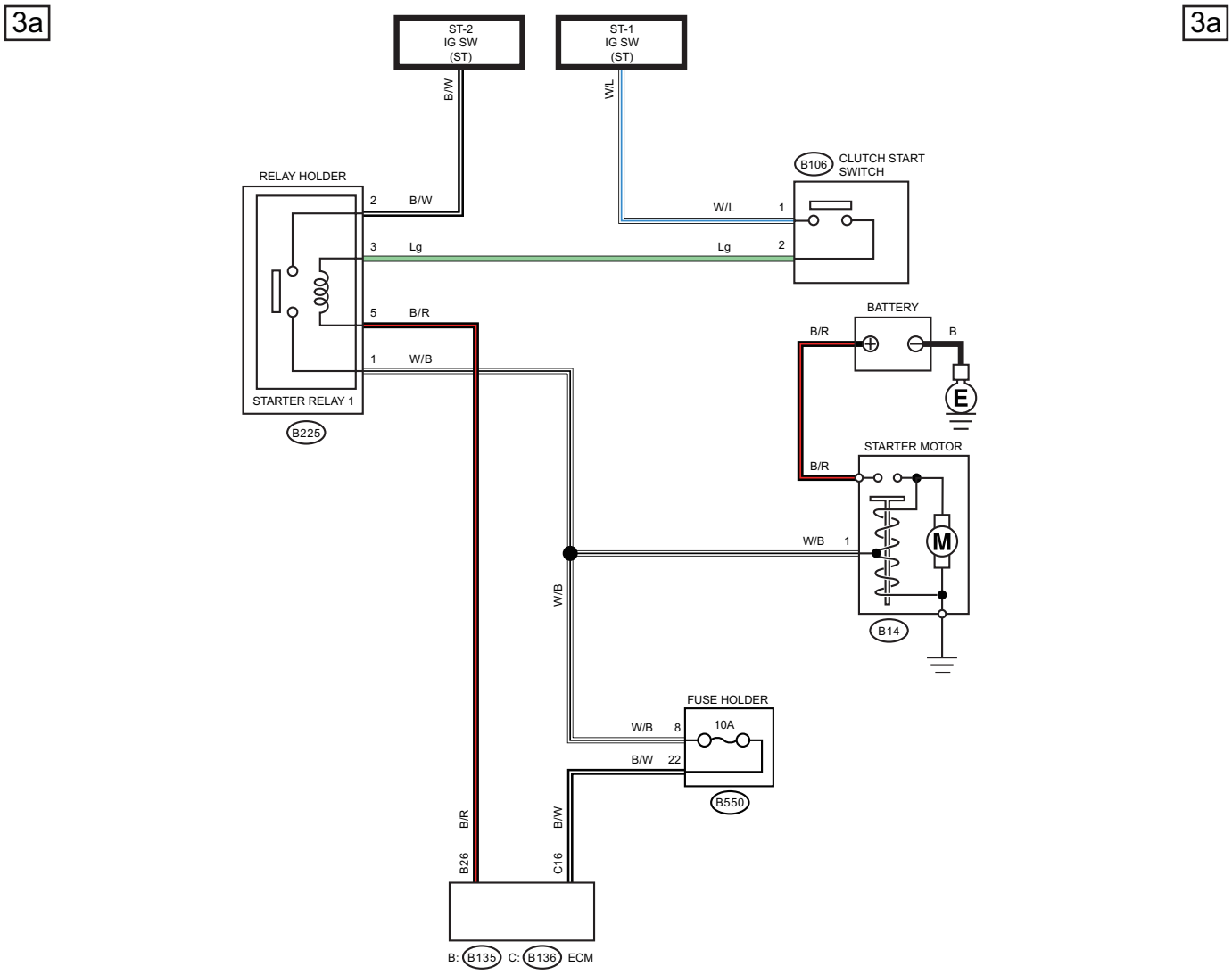

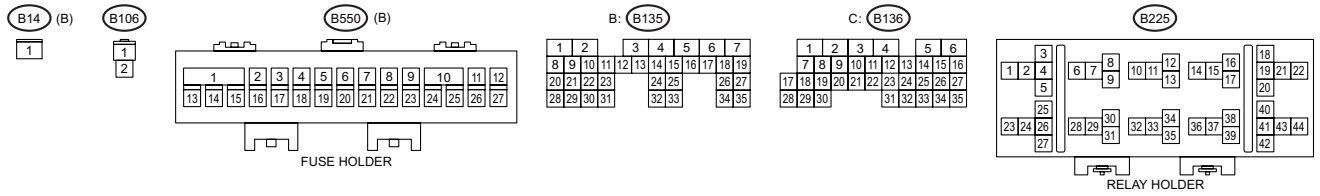

WI-66827

4. ENGINE TYPE EJ (WITH PUSH BUTTON START)

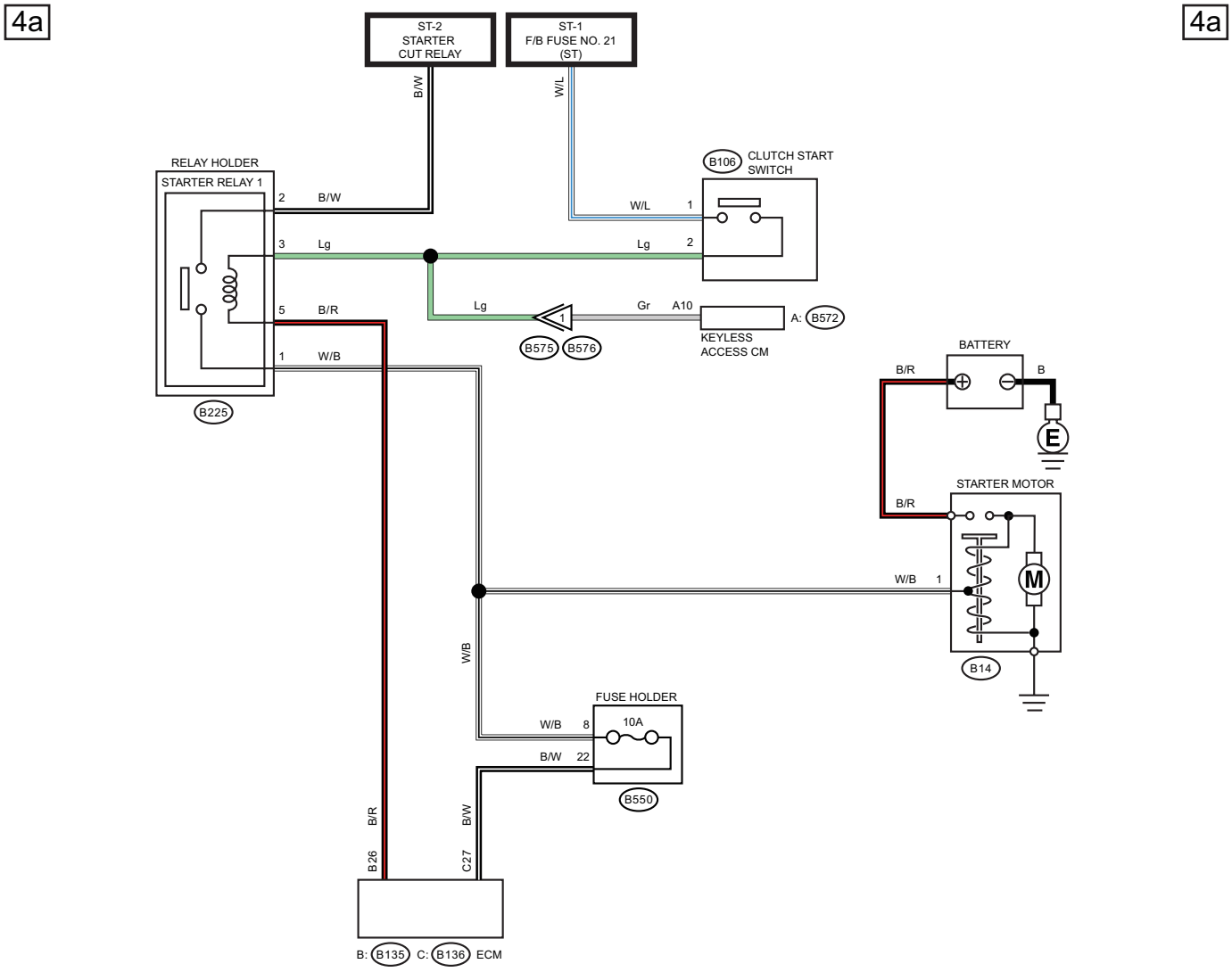

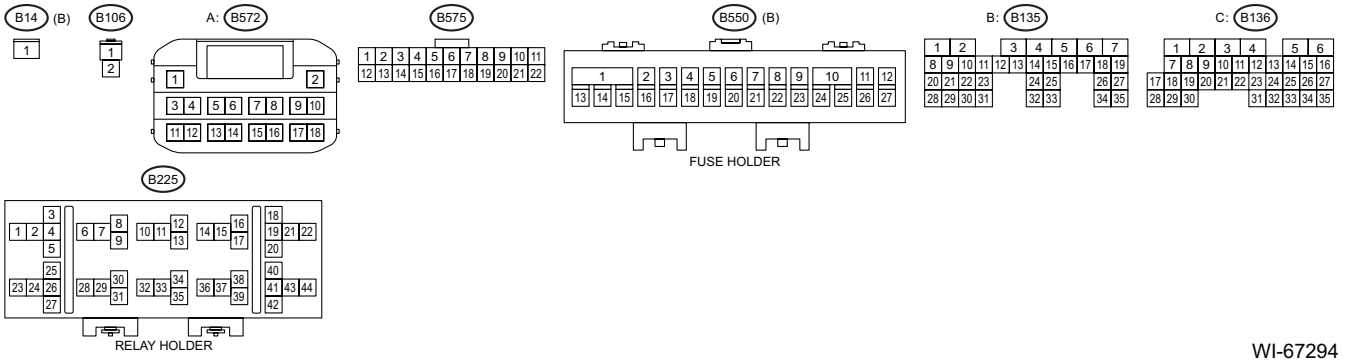

WI-67294

56.Stop Light System

A: WIRING DIAGRAM

1. ENGINE TYPE FA (WITHOUT EyeSight)

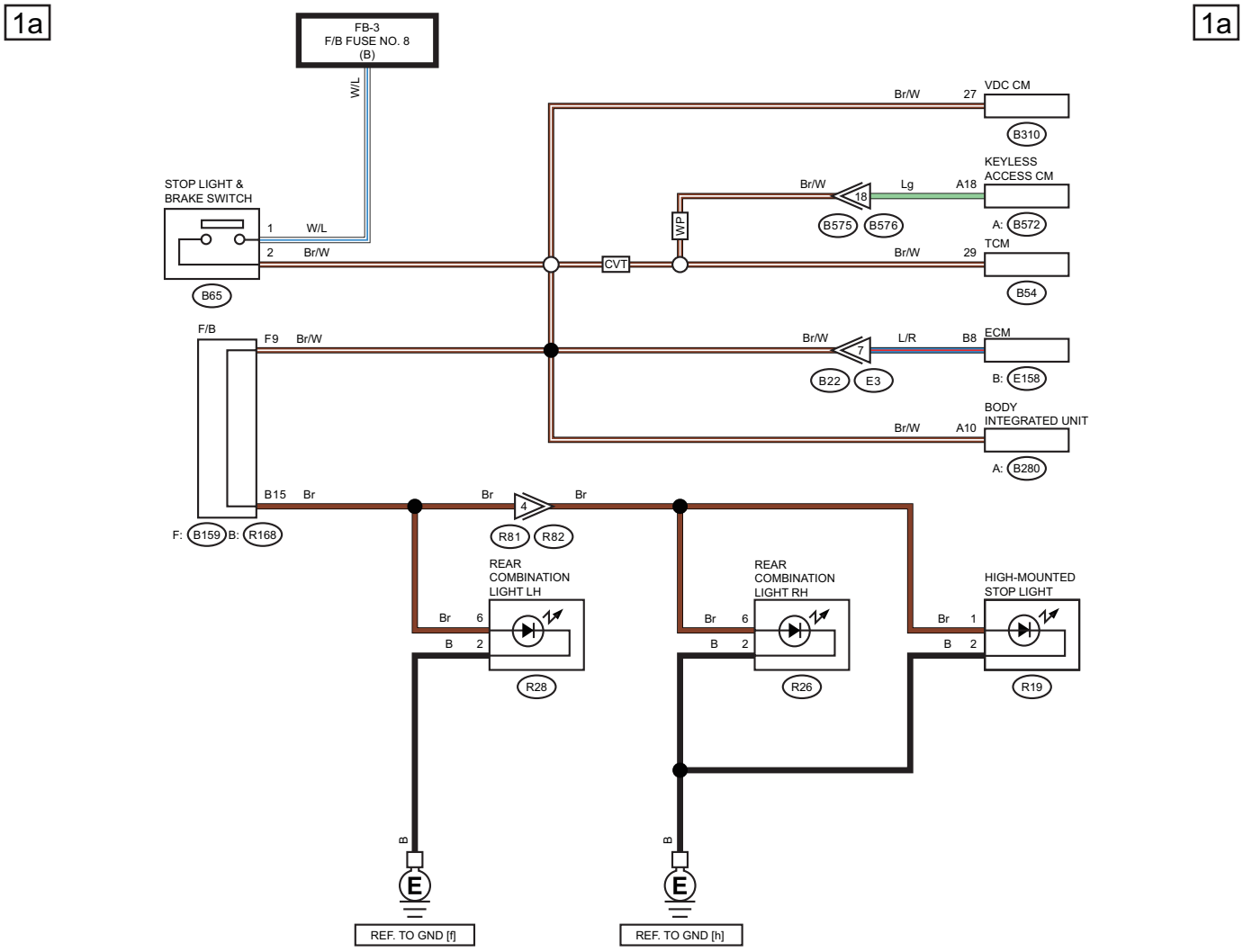

WP : WITH PUSH BUTTON START

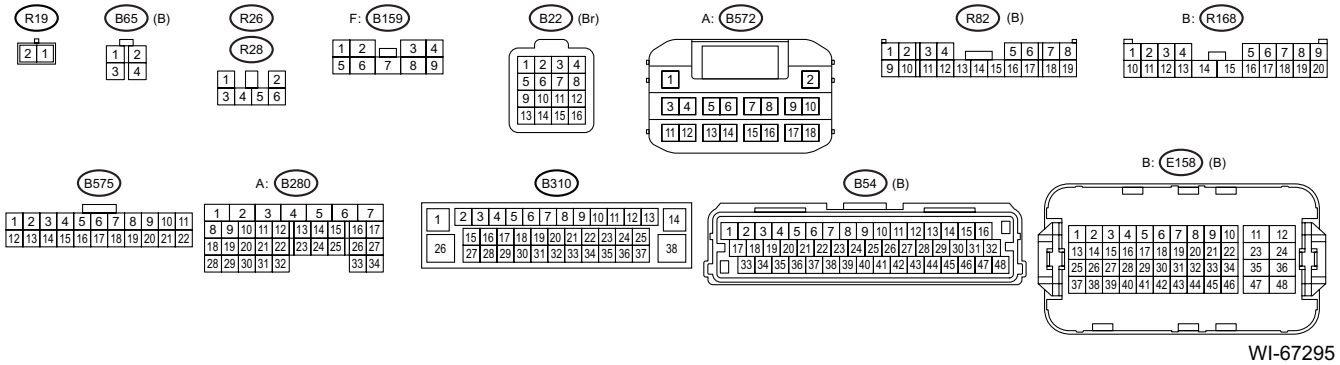

WI-67295

2. ENGINE TYPE FA (WITH EyeSight)

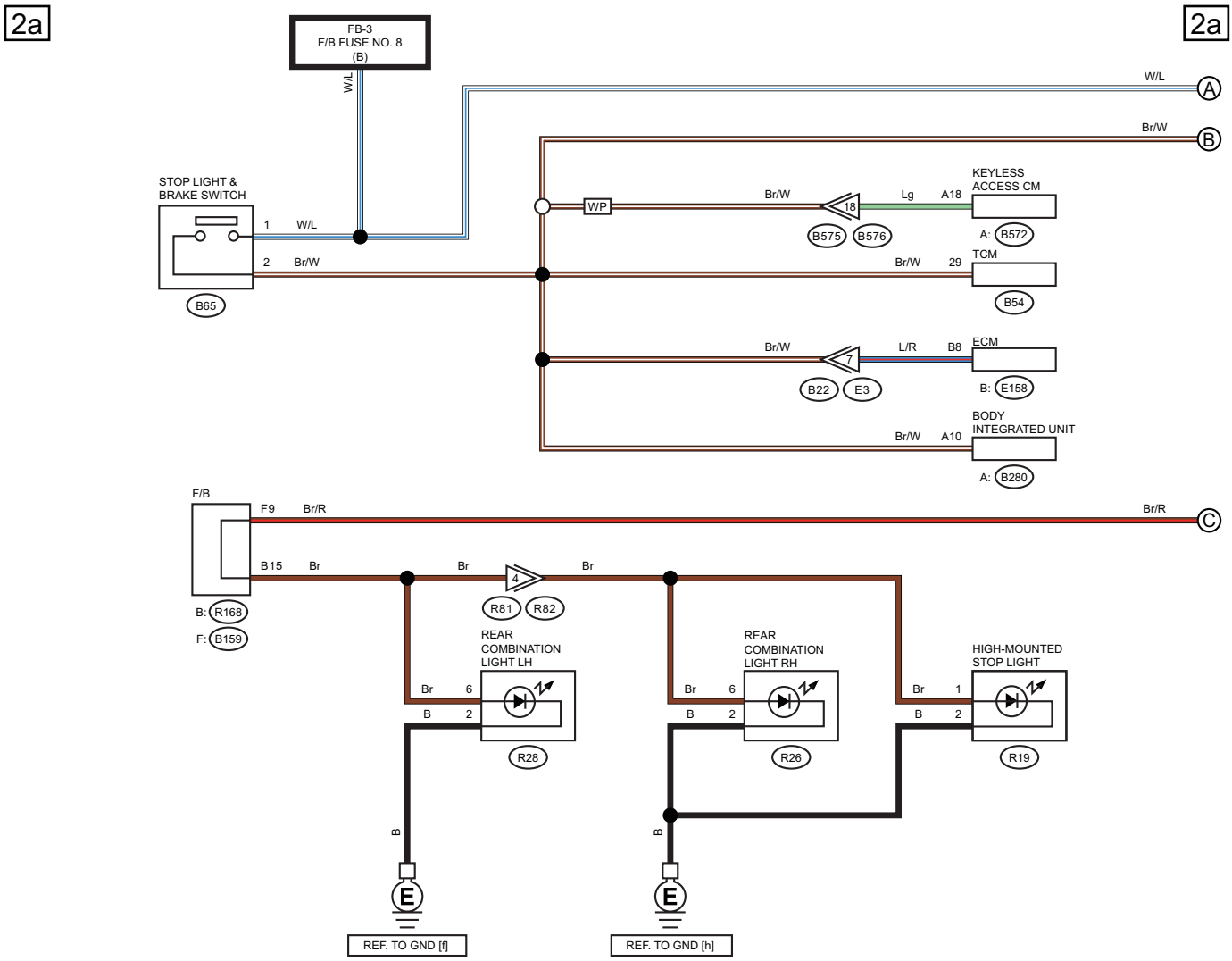

WP: WITH PUSH BUTTON START

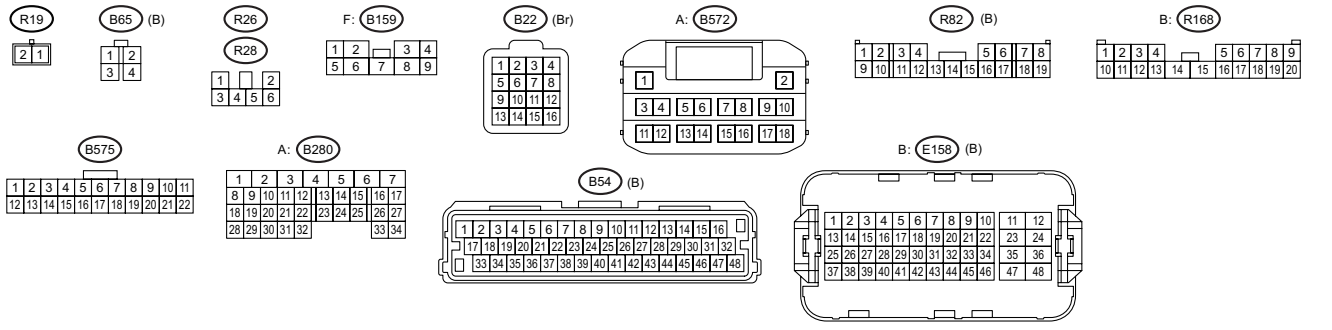

WI-67296

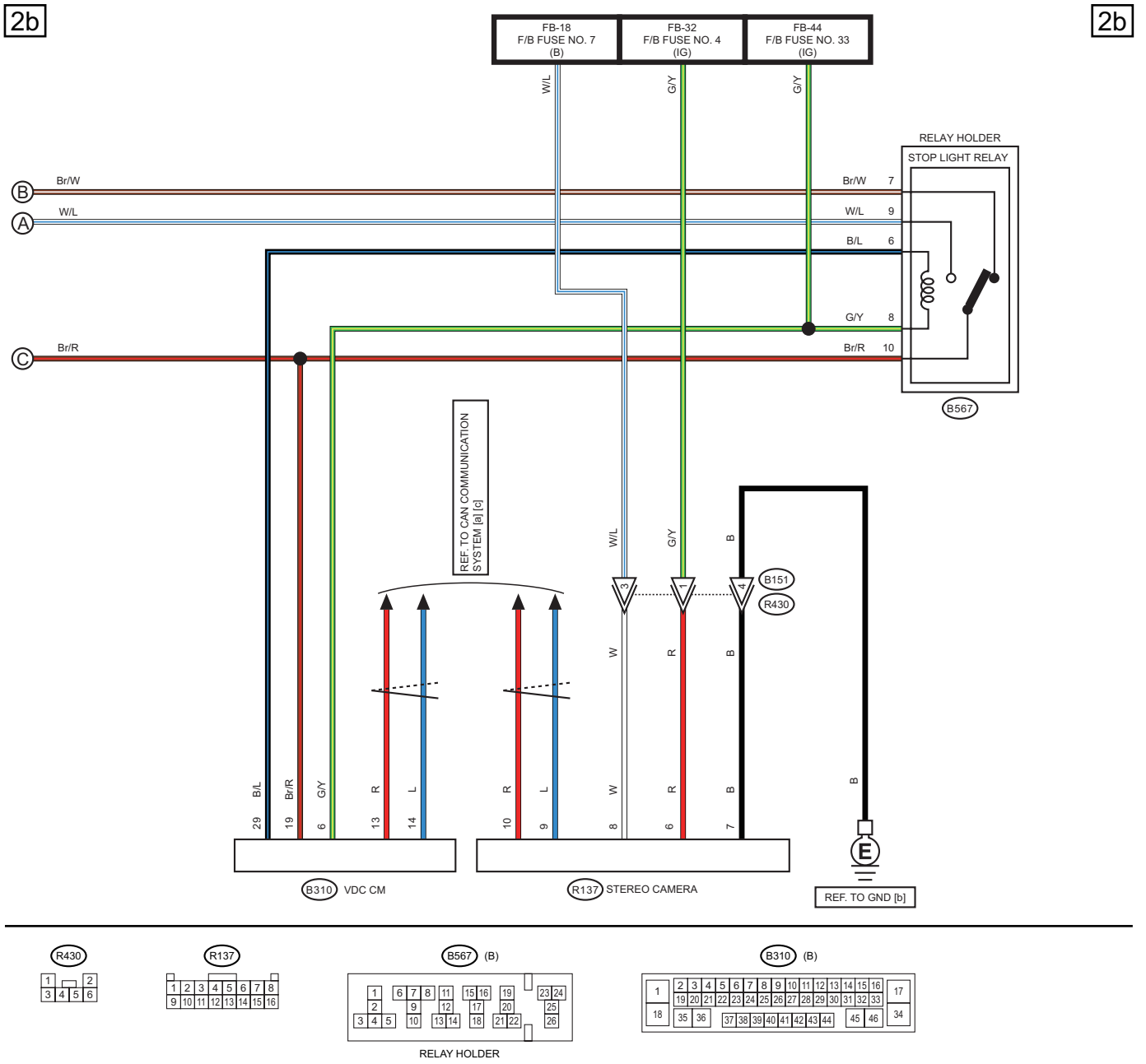
2b
2b
FB-18
F/B FUSE NO. 7
(B)
FB-32
F/B FUSE NO. 4
(IG)
FB-44
F/B FUSE NO. 33
(IG)
W/L
G/Y
G/Y
RELAY HOLDER
STOP LIGHT RELAY
B
A
C
Br/W
W/L
Br/R
Br/W 7
W/L 9
B/L 6
G/Y 8
Br/R 10
B567
REF. TO CAN COMMUNICATION SYSTEM [a] [c]
B151
R430
B/L 29
Br/R 19
G/Y 6
R 13
L 14
R 10
L 9
W 8
R 6
B 7
B
B310 VDC CM
R137 STEREO CAMERA
REF. TO GND [b]

R430
R137
B567 (B)
B310 (B)
RELAY HOLDER

WI-66828

3. ENGINE TYPE EJ

3a

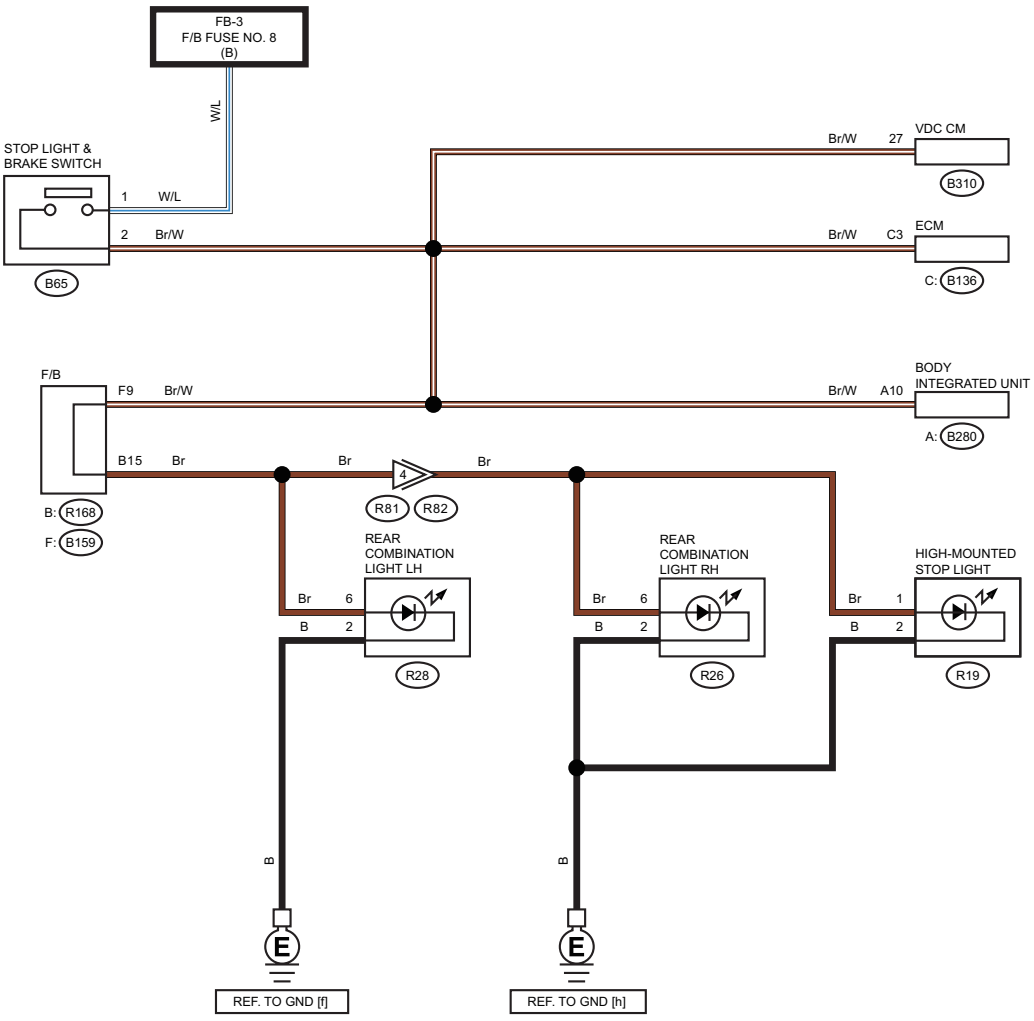

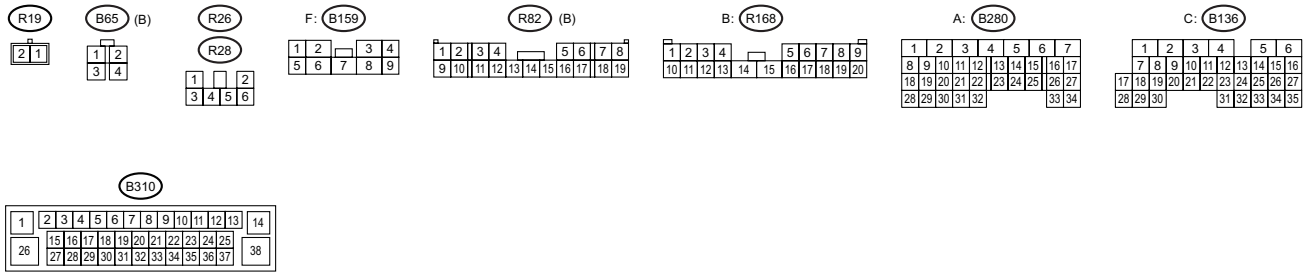

WI-67297

57.Sunroof Control System

A: WIRING DIAGRAM

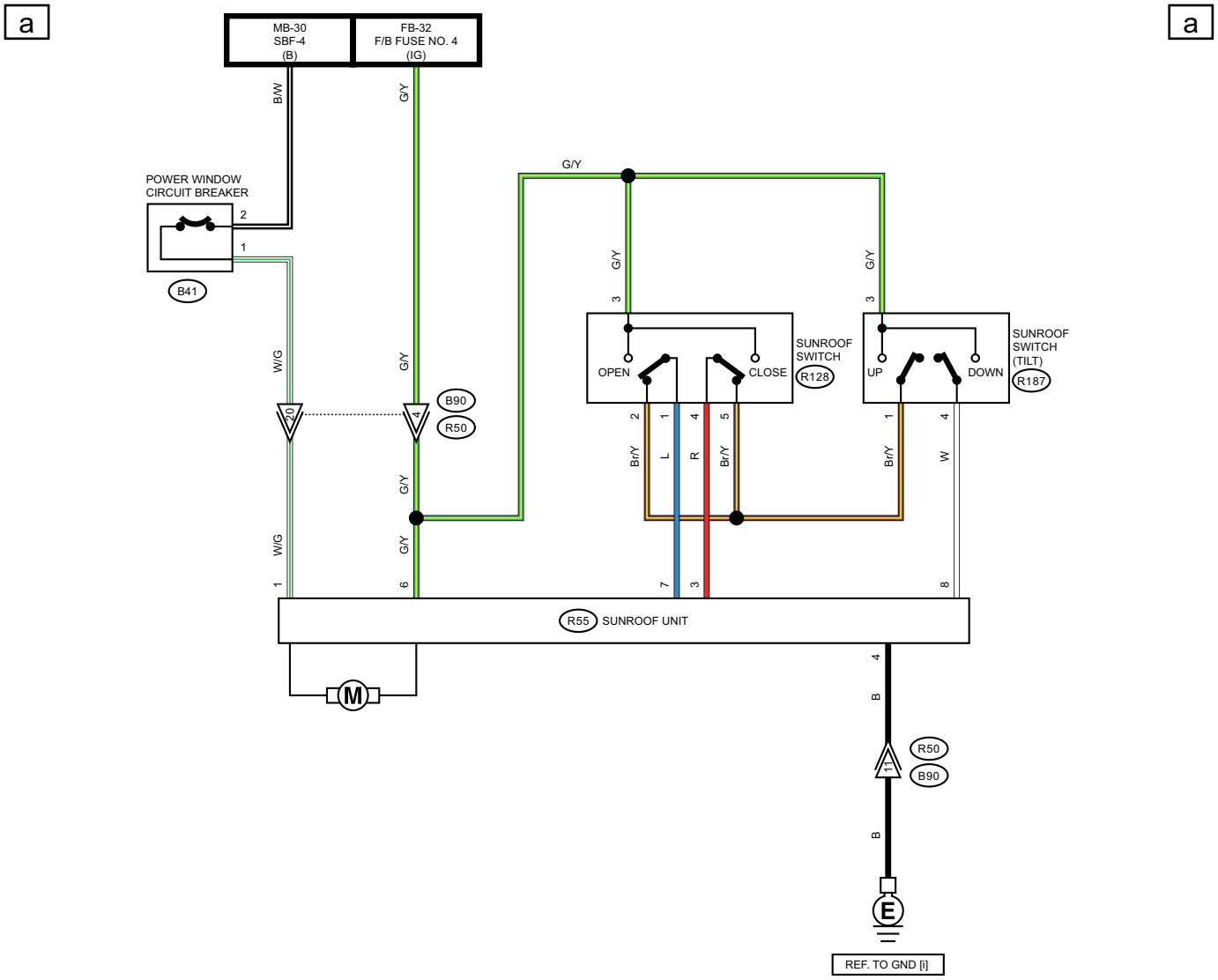

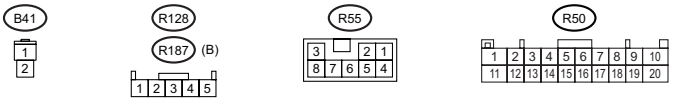

WI-67298

58.Telematics System

A: WIRING DIAGRAM

1. WITHOUT AUDIO AMPLIFIER

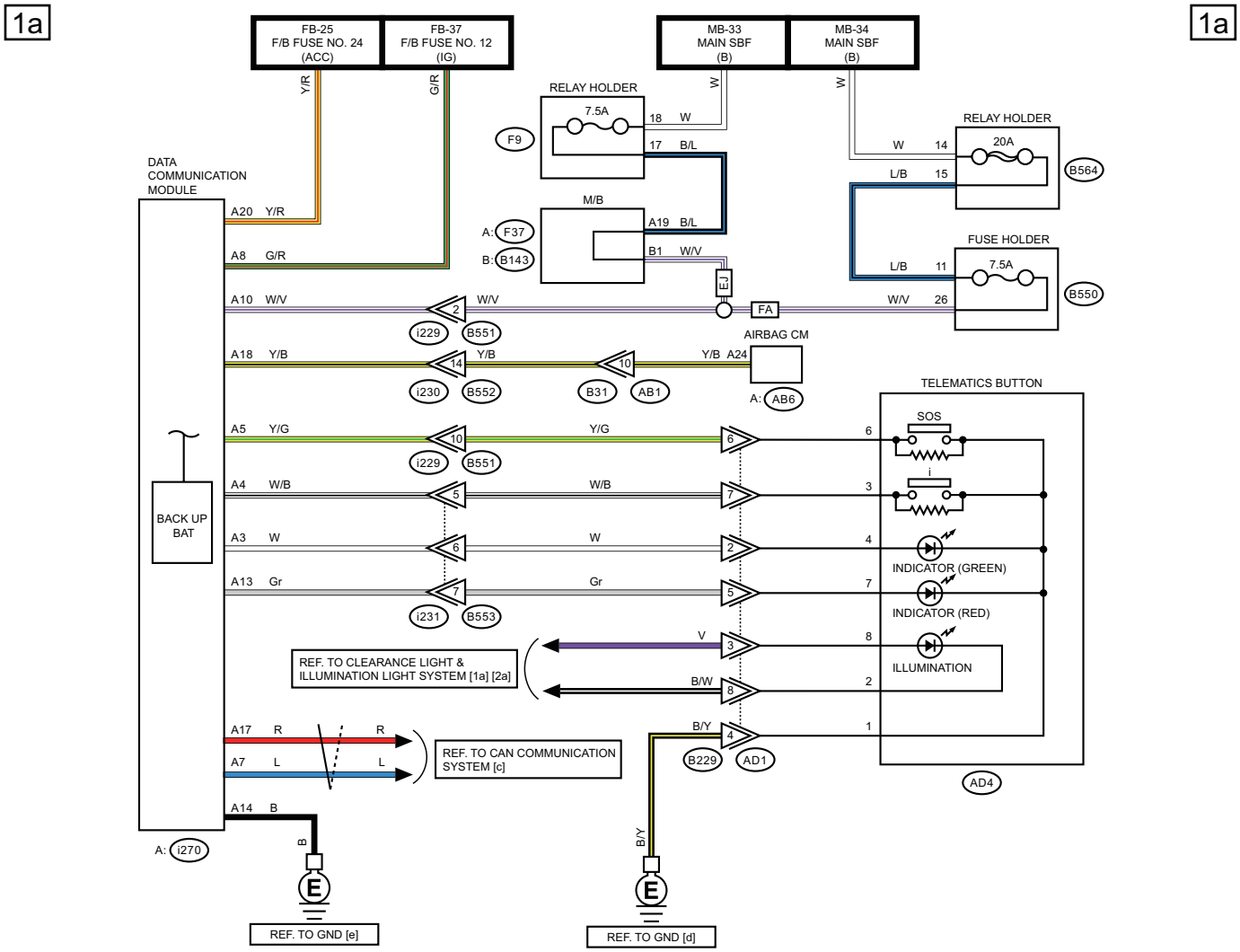

FA : ENGINE TYPE FA
EJ : ENGINE TYPE EJ

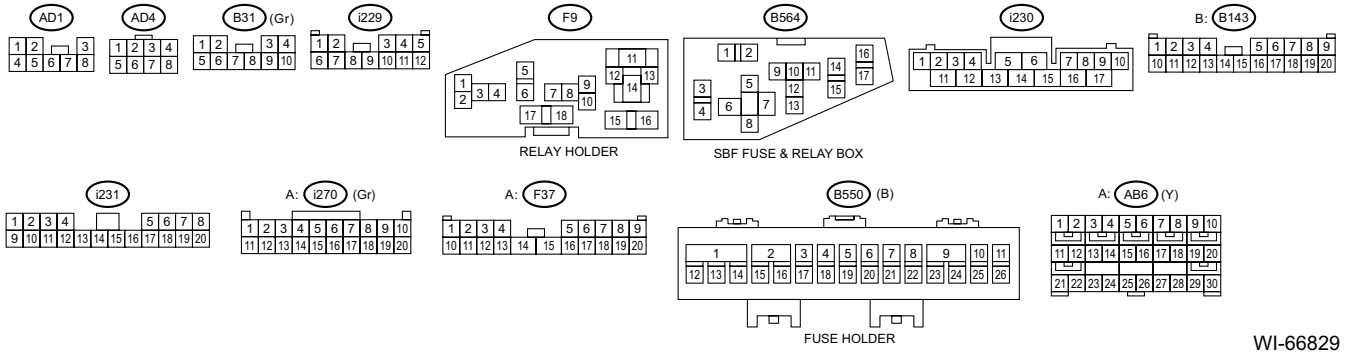

WI-66829

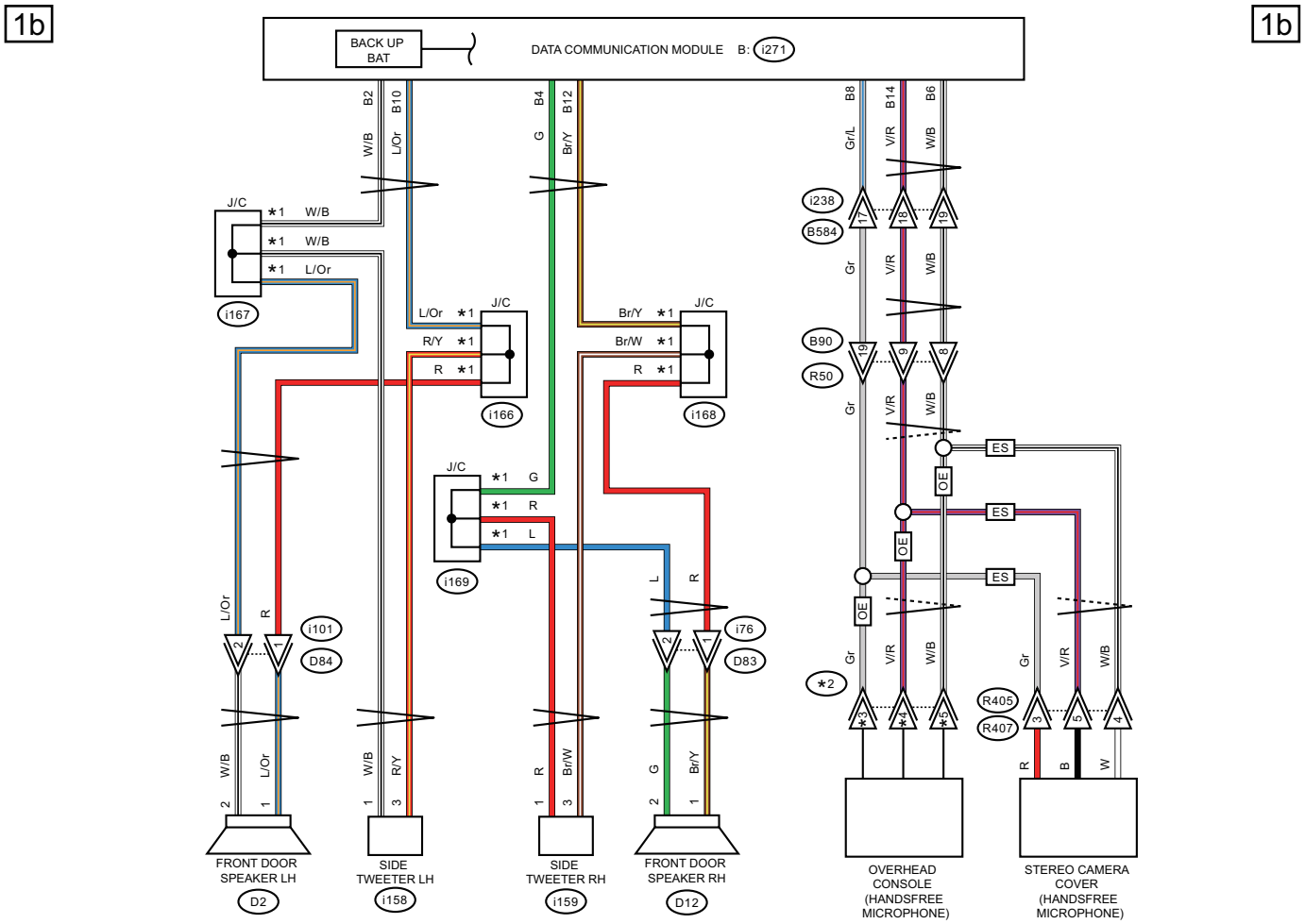

OE : WITHOUT EyeSight

ES : WITH EyeSight

∗1 : TERMINAL No. OPTIONAL ARRANGEMENT

∗2 : WITHOUT SUNROOF : R56
WITH SUNROOF : R62

∗3 : WITHOUT SUNROOF : 5
WITH SUNROOF : 8

∗4 : WITHOUT SUNROOF : 4
WITH SUNROOF : 7

∗5 : WITHOUT SUNROOF : 6
WITH SUNROOF : 9

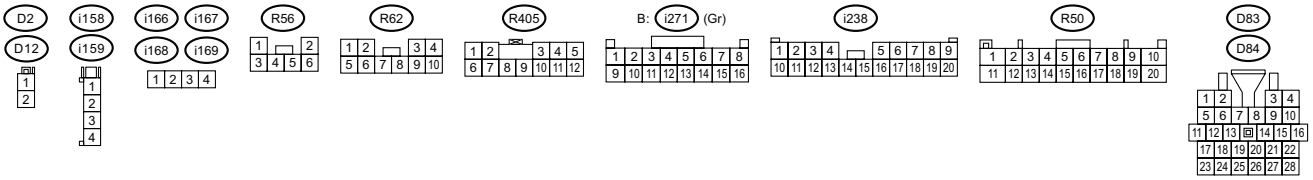

WI-66830

1c

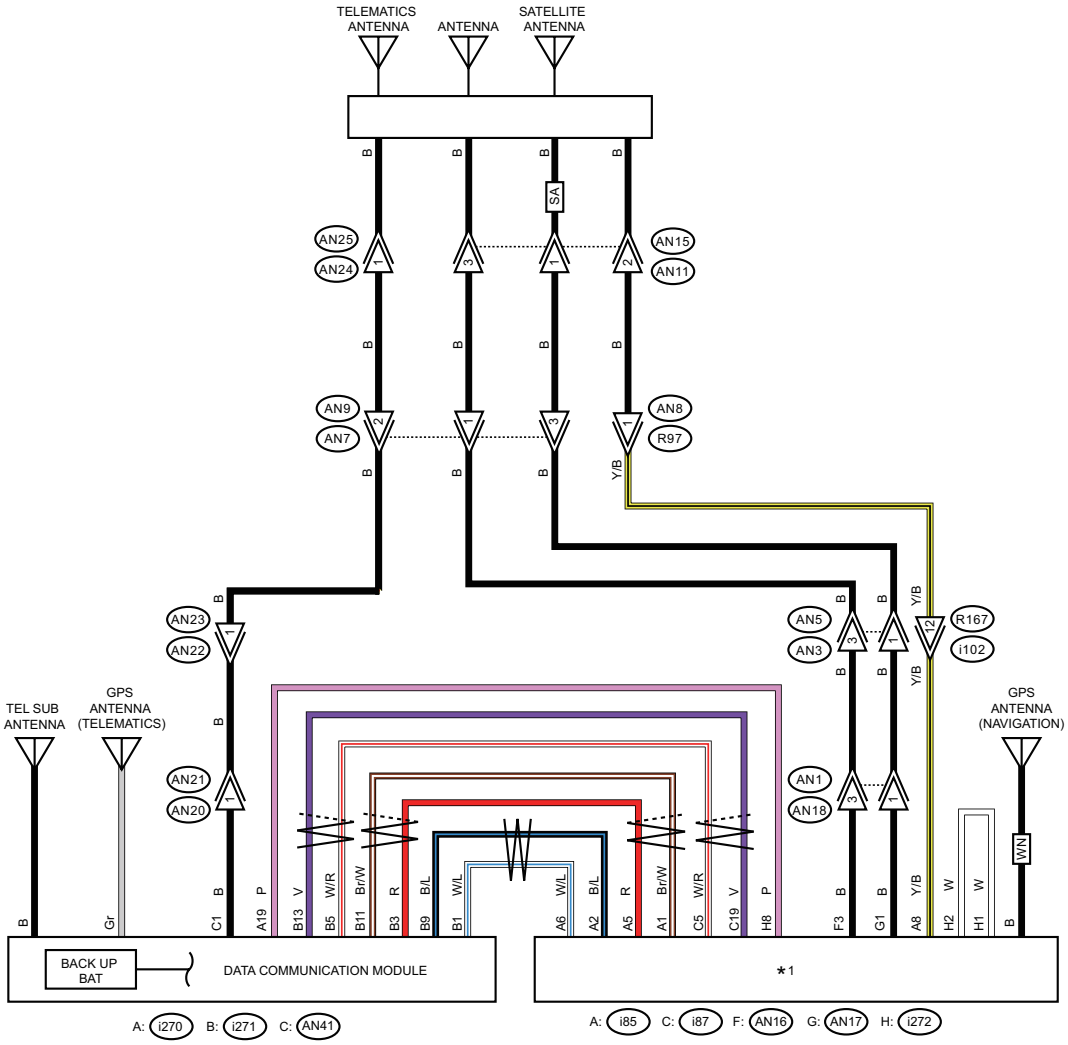

SA : WITH SATELLITE ANTENNA
WN : WITH NAVIGATION

*1 : WITHOUT NAVIGATION : AUDIO
WITH NAVIGATION : NAVIGATION UNIT

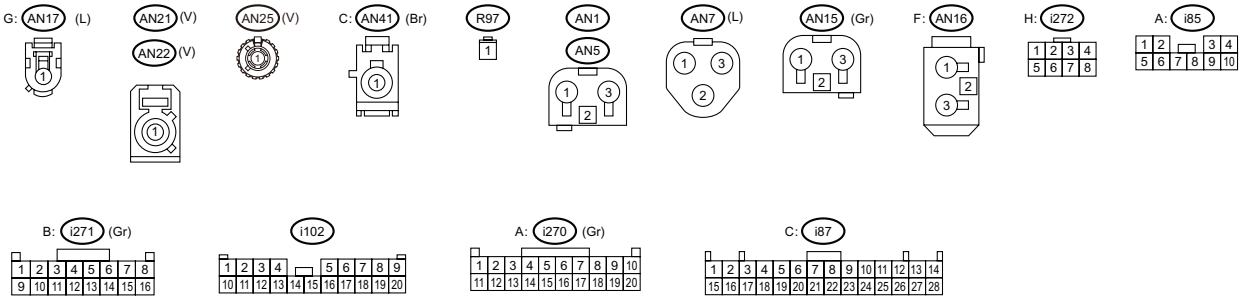

WI-66831

2. WITH AUDIO AMPLIFIER

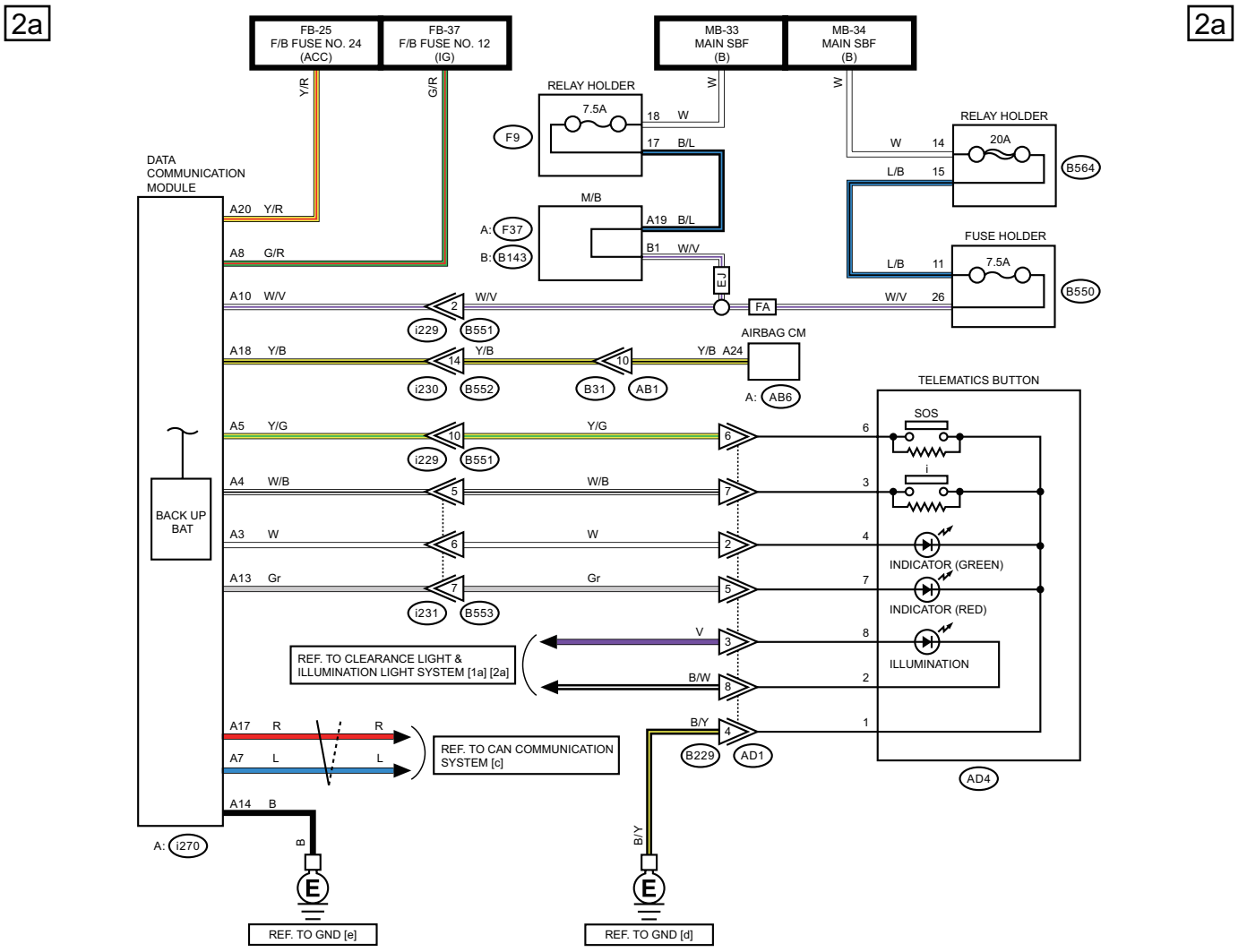

FA : ENGINE TYPE FA

EJ : ENGINE TYPE EJ

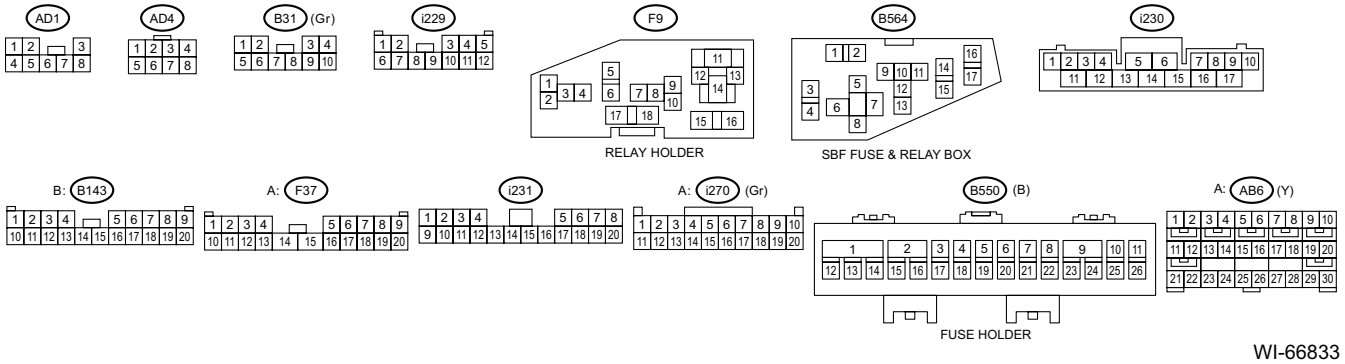

WI-66833

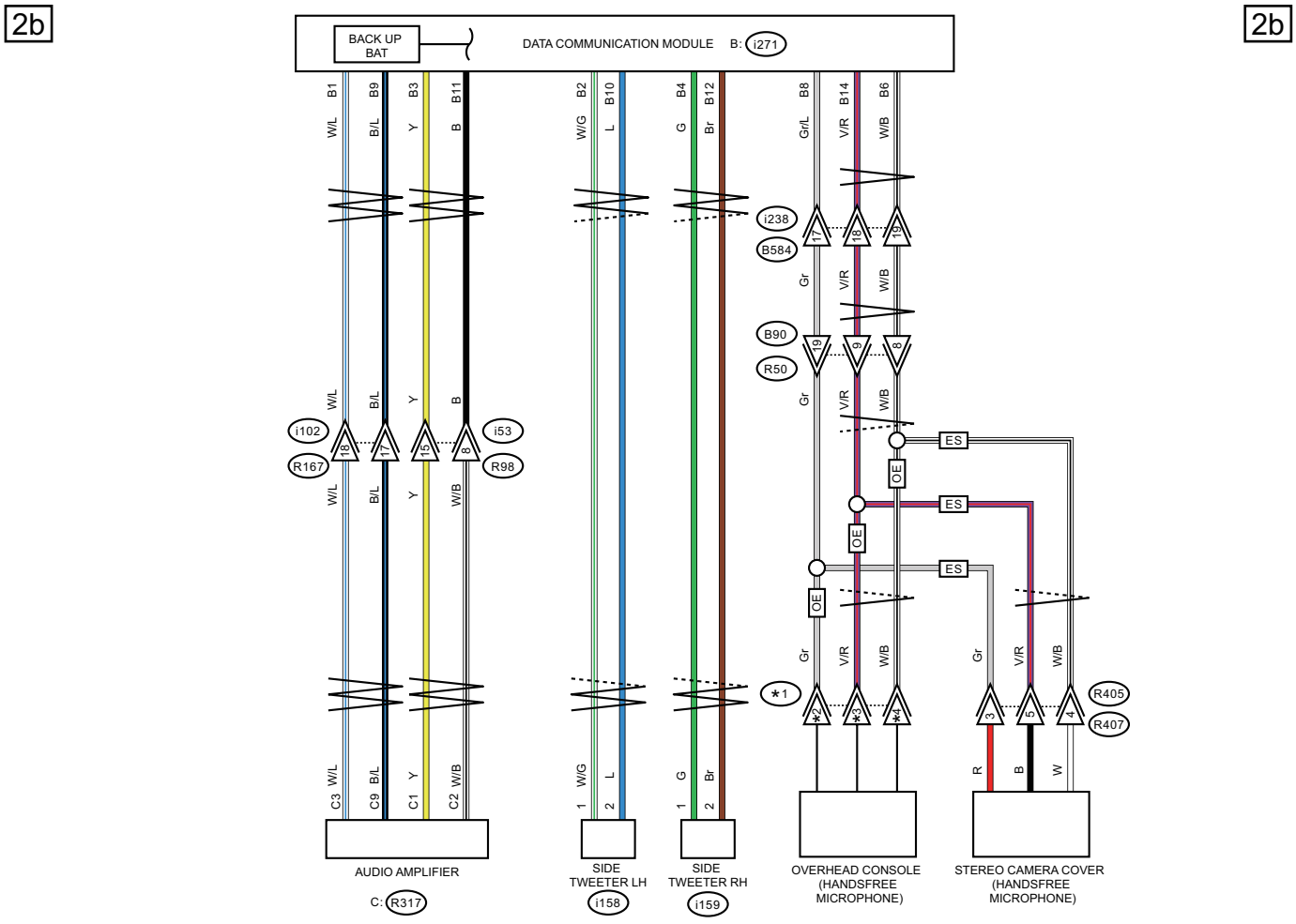

OE : WITHOUT EyeSight
ES : WITH EyeSight
*1 : WITHOUT SUNROOF : R56
WITH SUNROOF : R62
*2 : WITHOUT SUNROOF : 5
WITH SUNROOF : 8
*3 : WITHOUT SUNROOF : 4
WITH SUNROOF : 7
*4 : WITHOUT SUNROOF : 6
WITH SUNROOF : 9

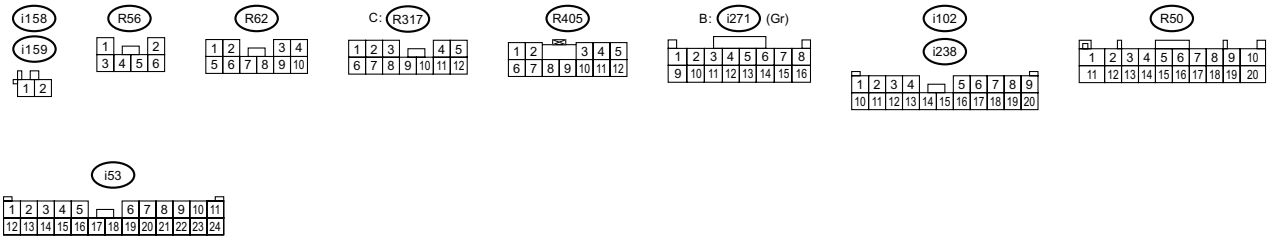

WI-66834

2c

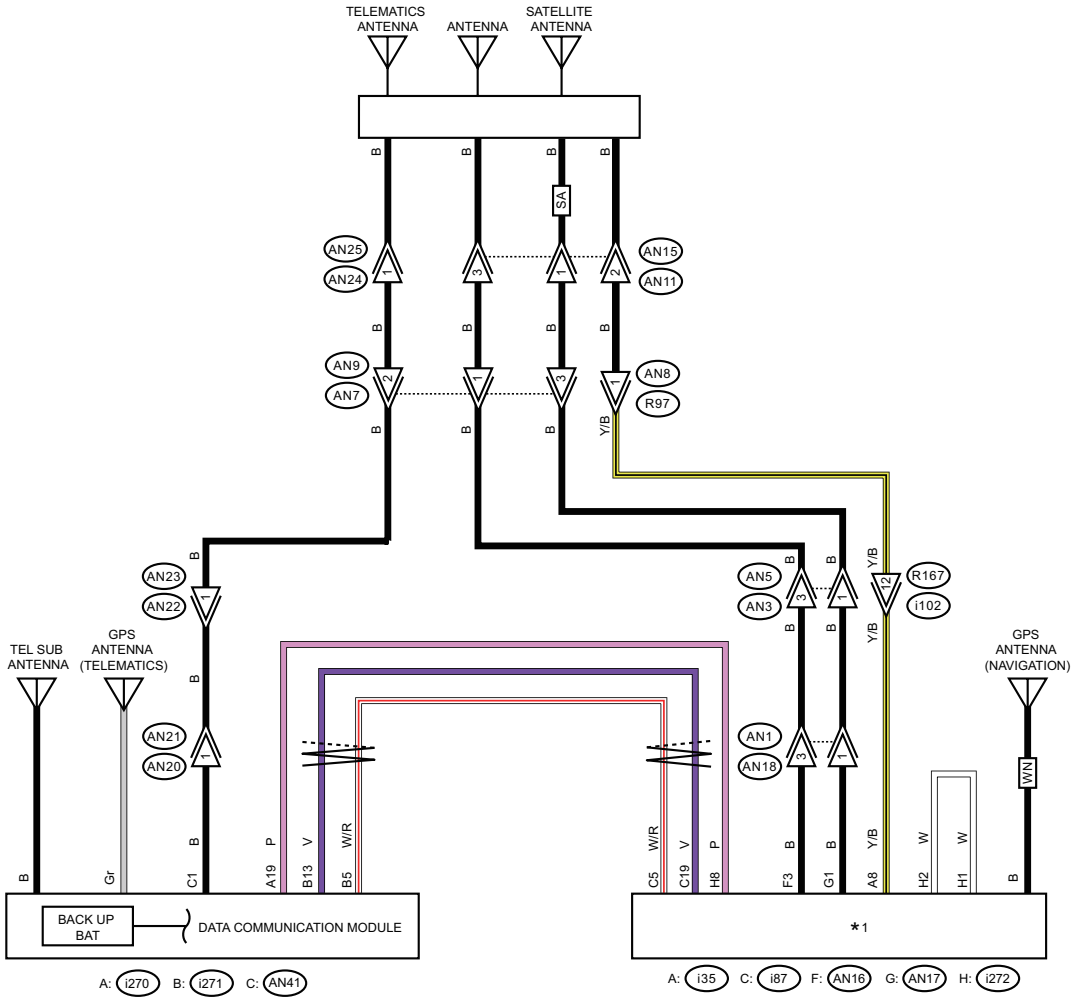

SA : WITH SATELLITE ANTENNA

WN : WITH NAVIGATION

*1 : WITHOUT NAVIGATION : AUDIO
WITH NAVIGATION : NAVIGATION UNIT

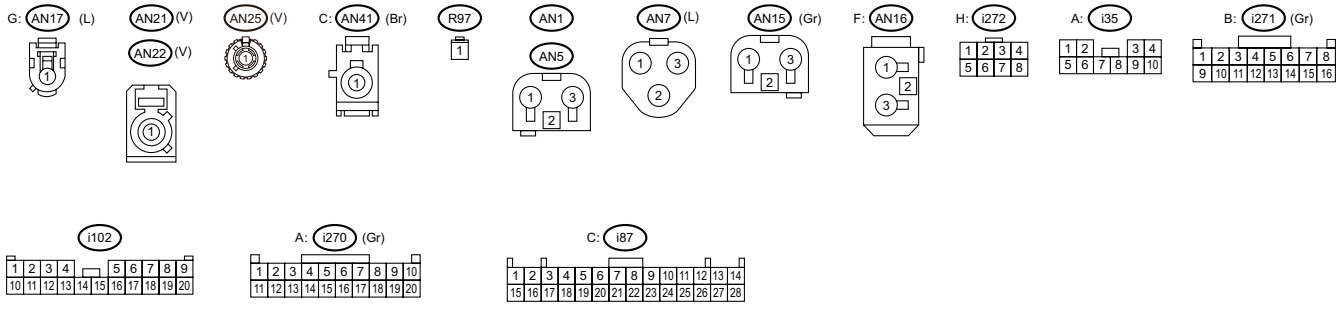

WI-66835

59.Tire Pressure Monitoring System

A: WIRING DIAGRAM

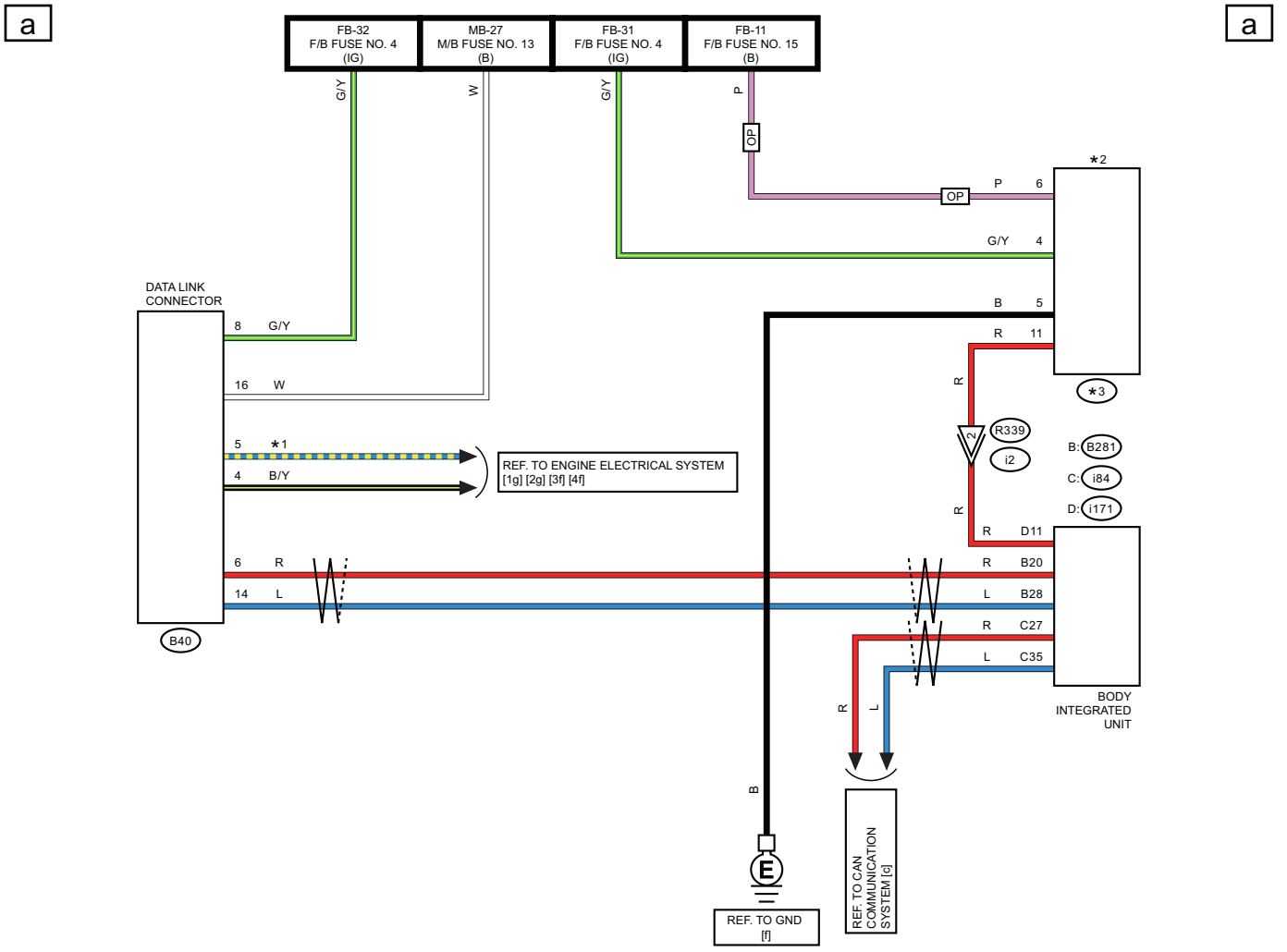

OP : WITHOUT PUSH BUTTON START
WP : WITH PUSH BUTTON START
*1 : ENGINE TYPE FA : B/R
ENGINE TYPE EJ : B/W
*2 : WITHOUT PUSH BUTTON START : TPMS & KEYLESS ENTRY CM
WITH PUSH BUTTON START : TPMS CM
*3 : WITHOUT PUSH BUTTON START : R221
WITH PUSH BUTTON START : R211

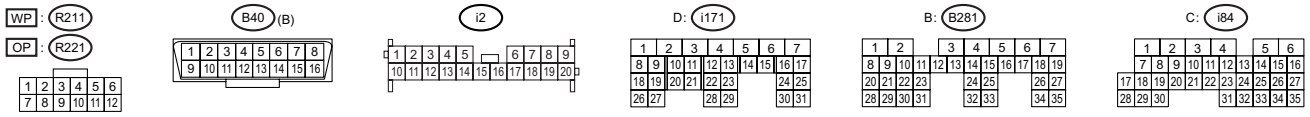

WI-66837

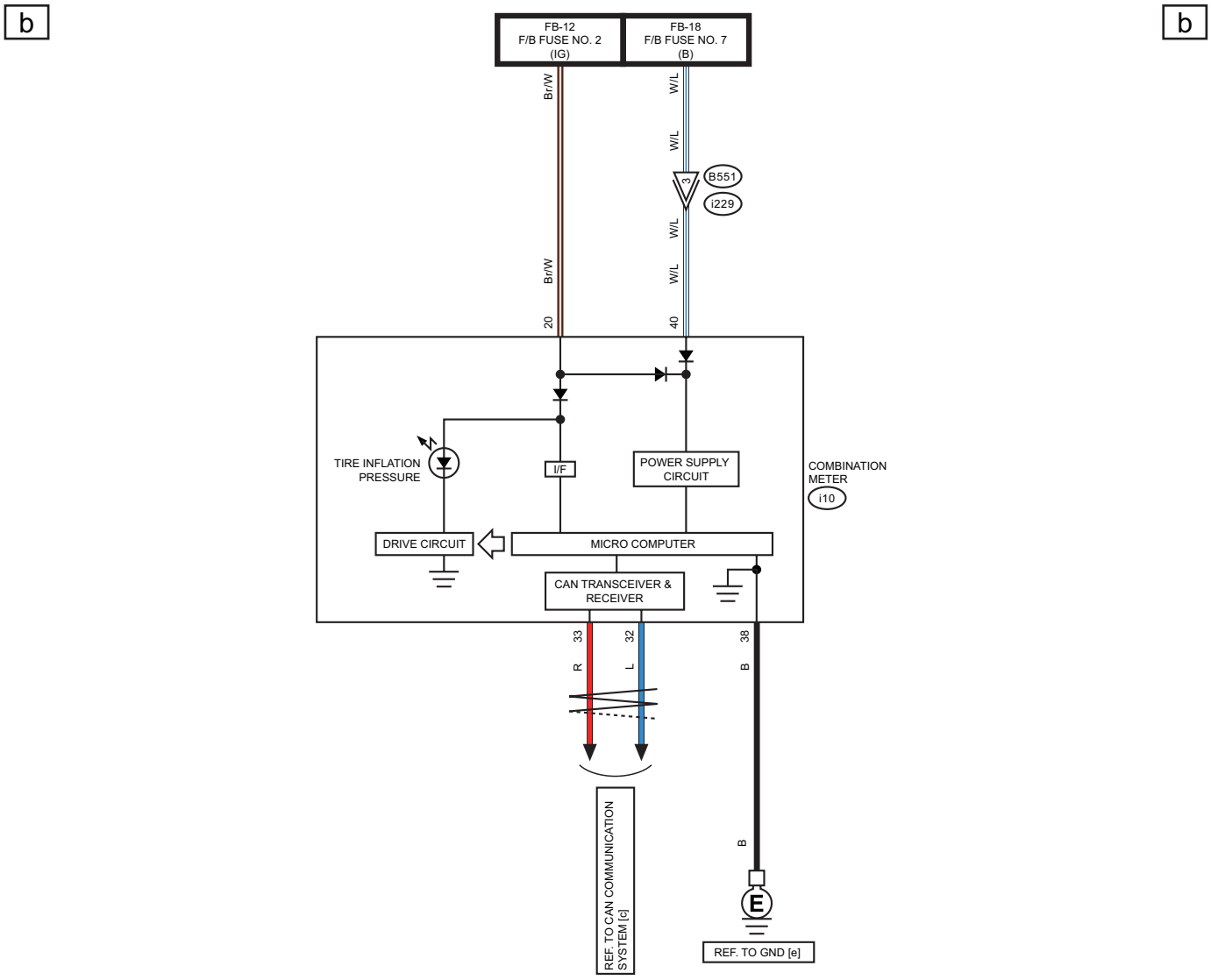
b
b
FB-12
F/B FUSE NO. 2
(IG)
FB-18
F/B FUSE NO. 7
(B)
Br/W
W/L
W/L
B551
3
i229
W/L
Br/W
W/L
20
40
TIRE INFLATION PRESSURE
I/F
POWER SUPPLY CIRCUIT
COMBINATION METER
i10
DRIVE CIRCUIT
MICRO COMPUTER
CAN TRANSCEIVER & RECEIVER
33
32
38
R
L
B
B
REF. TO CAN COMMUNICATION SYSTEM [c]
E
REF. TO GND [e]

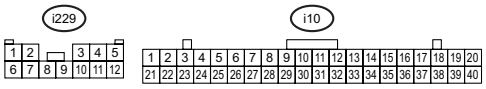
i229
1 2 3 4 5
6 7 8 9 10 11 12
i10
1 2 3 4 5 6 7 8 9 10 11 12 13 14 15 16 17 18 19 20
21 22 23 24 25 26 27 28 29 30 31 32 33 34 35 36 37 38 39 40

WI-66838

60.Turn Signal Light and Hazard Light System

A: WIRING DIAGRAM

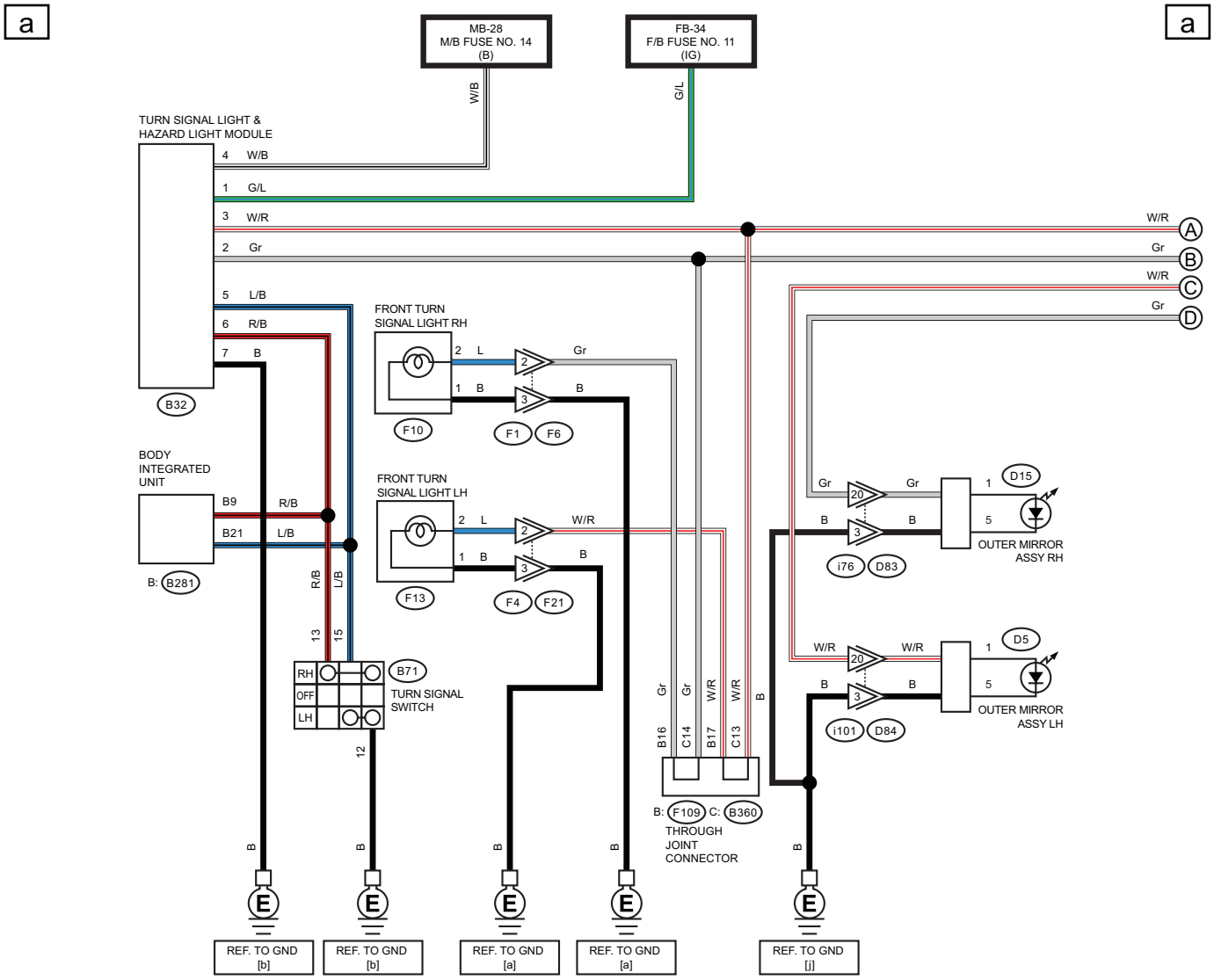

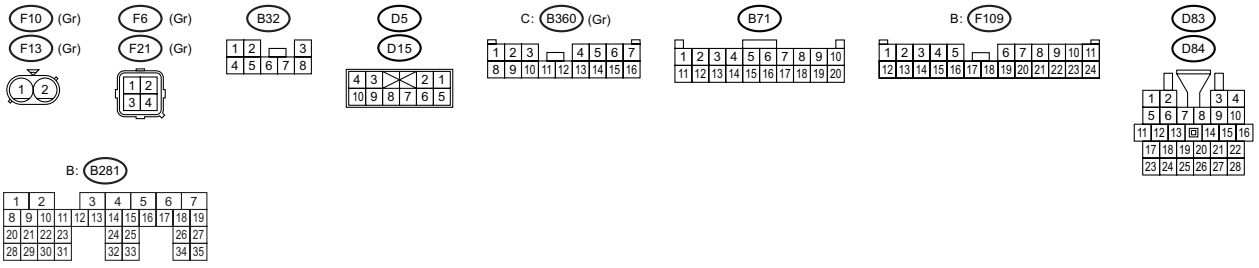

WI-67299

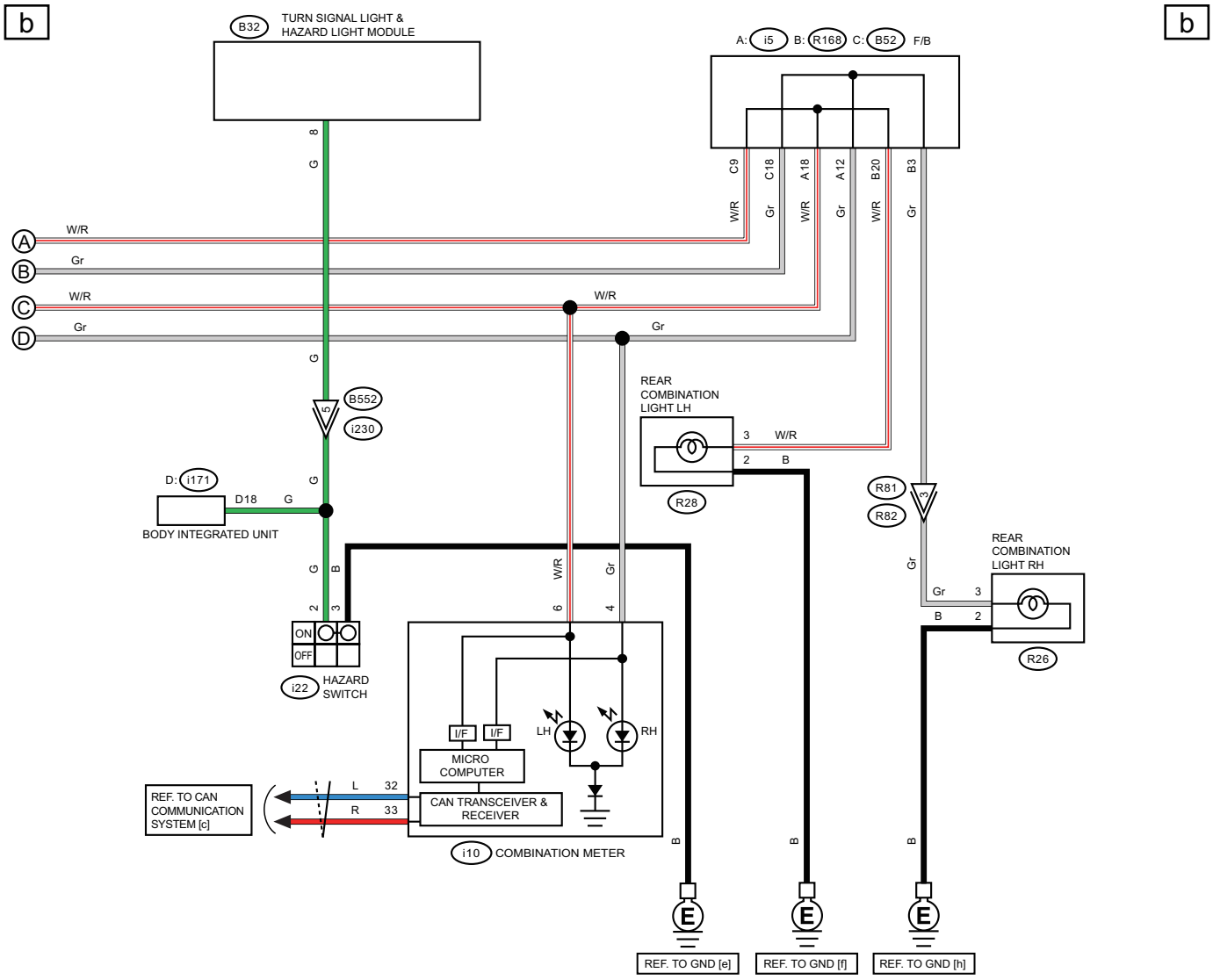
b
b
B32
TURN SIGNAL LIGHT & HAZARD LIGHT MODULE
A: i5 B: R168 C: B52 F/B
C9
C18
A18
A12
B20
B3
W/R
Gr
W/R
Gr
W/R
Gr
A
B
C
D
W/R
Gr
W/R
Gr
8
G
G
5
B552
i230
D: i171
D18
G
BODY INTEGRATED UNIT
G
B
2
3
ON
OFF
i22
HAZARD SWITCH
W/R
Gr
6
4
REAR COMBINATION LIGHT LH
3
W/R
2
B
R28
R81
R82
3
Gr
REAR COMBINATION LIGHT RH
Gr
3
B
2
R26
I/F
I/F
LH
RH
MICRO COMPUTER
CAN TRANSCEIVER & RECEIVER
REF. TO CAN COMMUNICATION SYSTEM [c]
L
32
R
33
i10
COMBINATION METER
B
B
B
E
E
E
REF. TO GND [e]
REF. TO GND [f]
REF. TO GND [h]

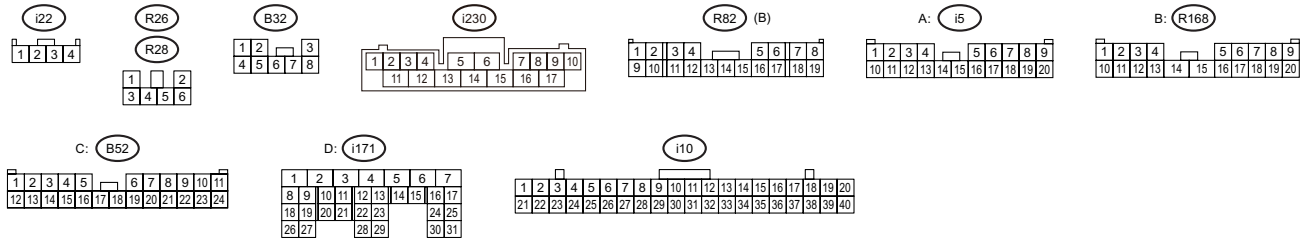
i22
R26
R28
B32
i230
R82
(B)
A: i5
B: R168
C: B52
D: i171
i10

WI-66839

61.Vacuum Pump Control System

A: WIRING DIAGRAM

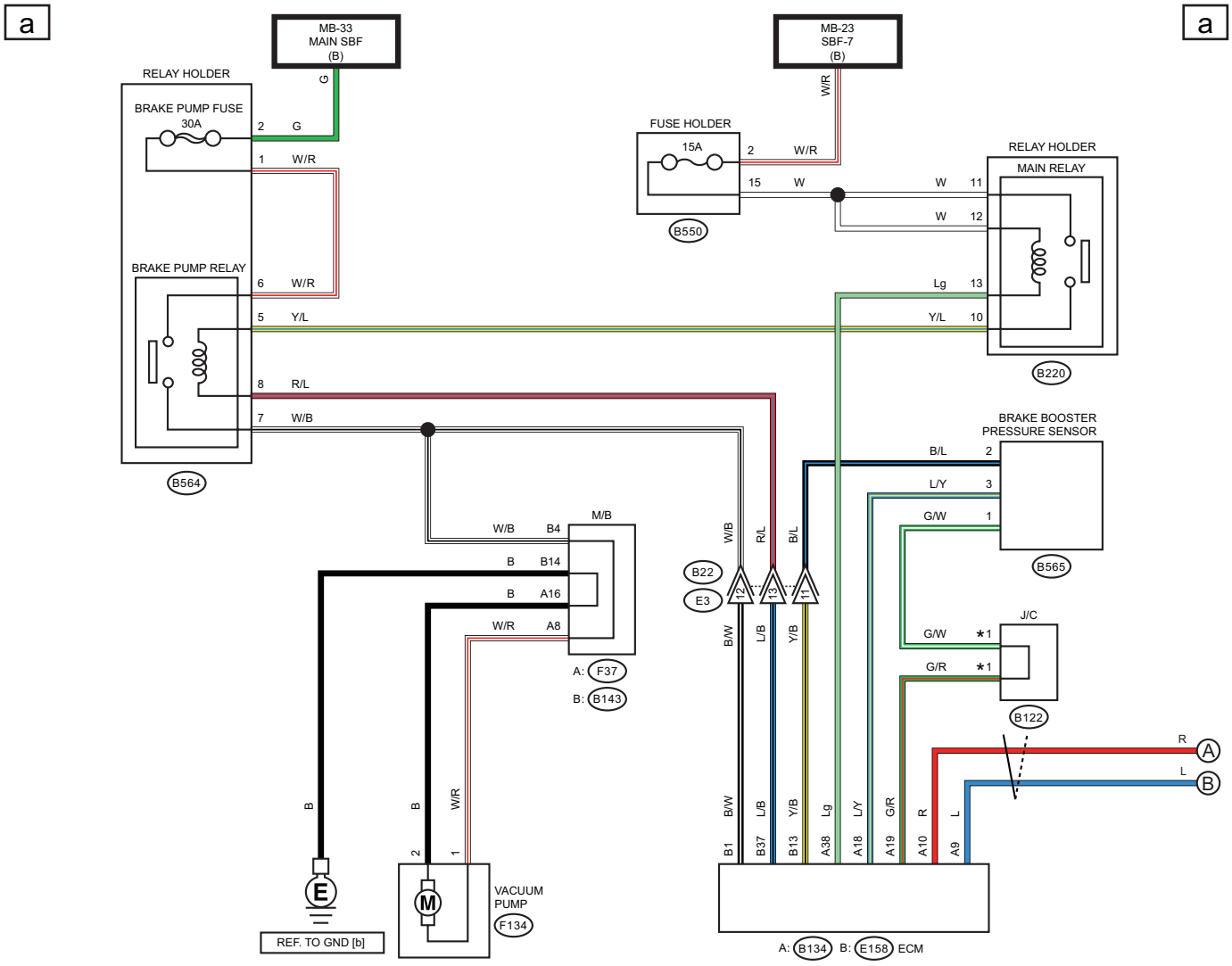

*1 : TERMINAL No. OPTIONAL ARRANGEMENT

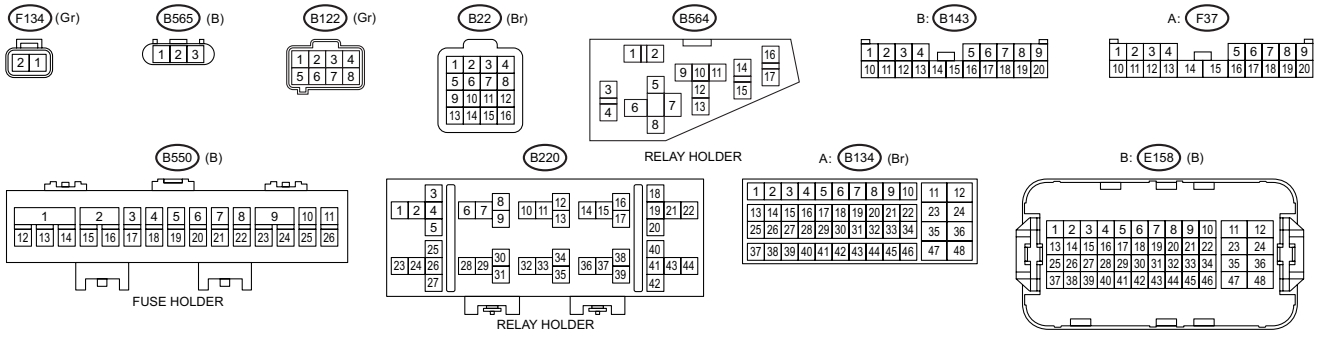

WI-67300

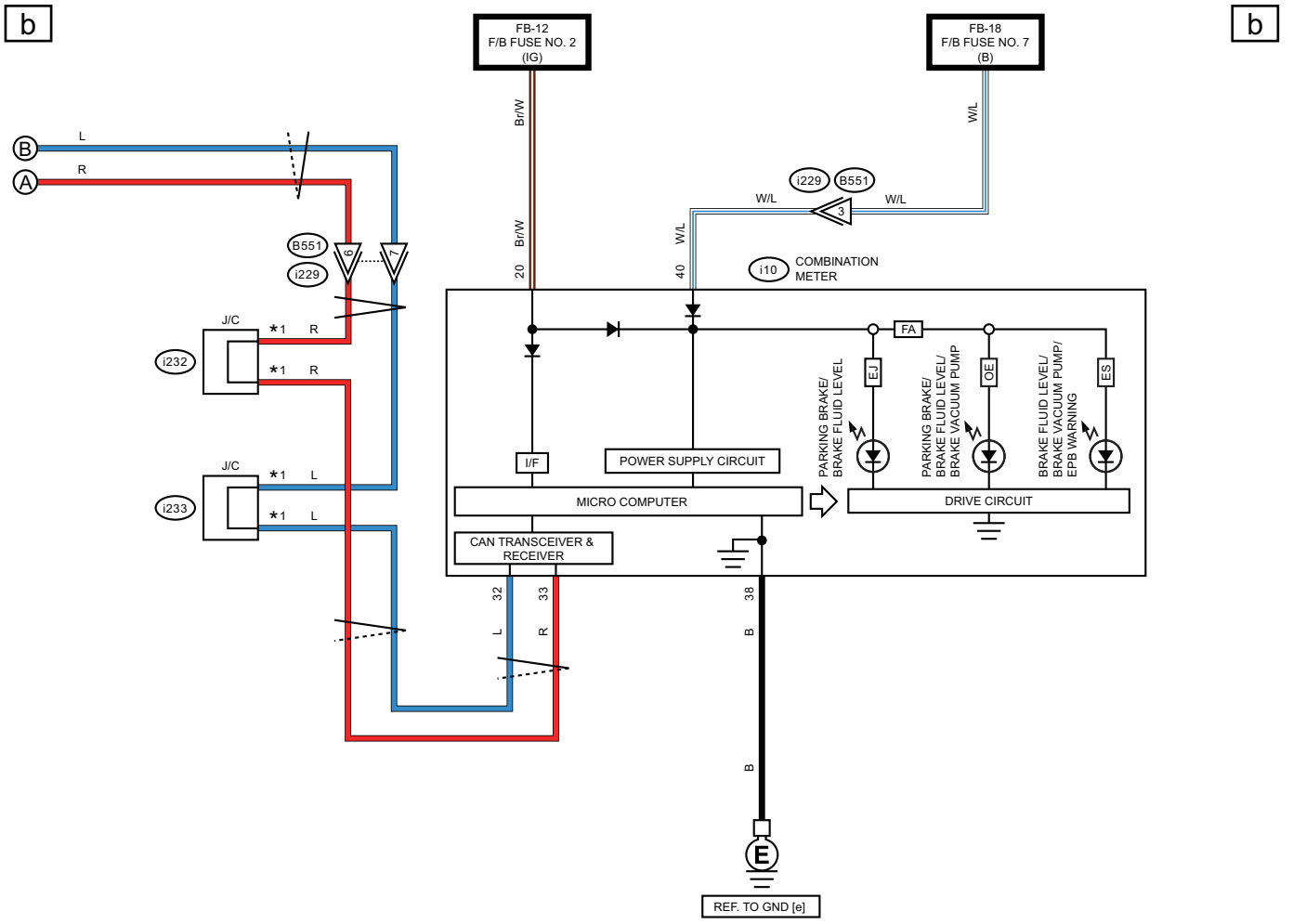

FA : ENGINE TYPE FA
EJ : ENGINE TYPE EJ
OE : WITHOUT EyeSight
ES : WITH EyeSight

*1 : TERMINAL No. OPTIONAL ARRANGEMENT

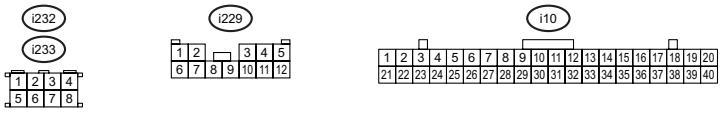

WI-67301

62.Vehicle Dynamics Control System

A: WIRING DIAGRAM

1. WITHOUT EyeSight

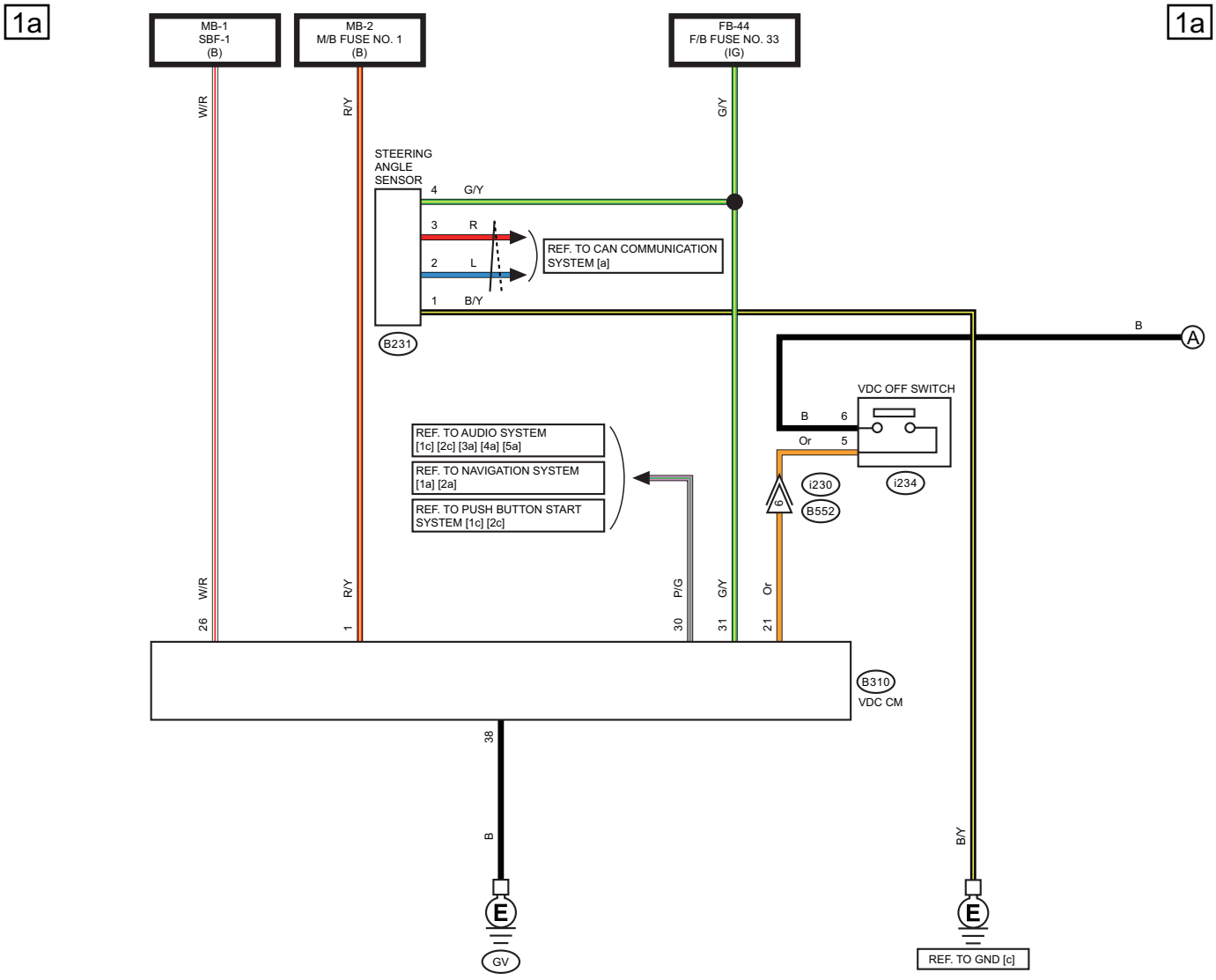

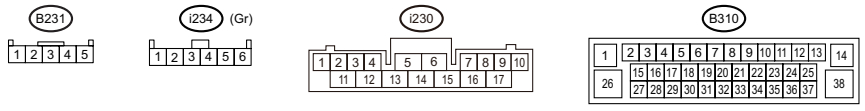

WI-66841

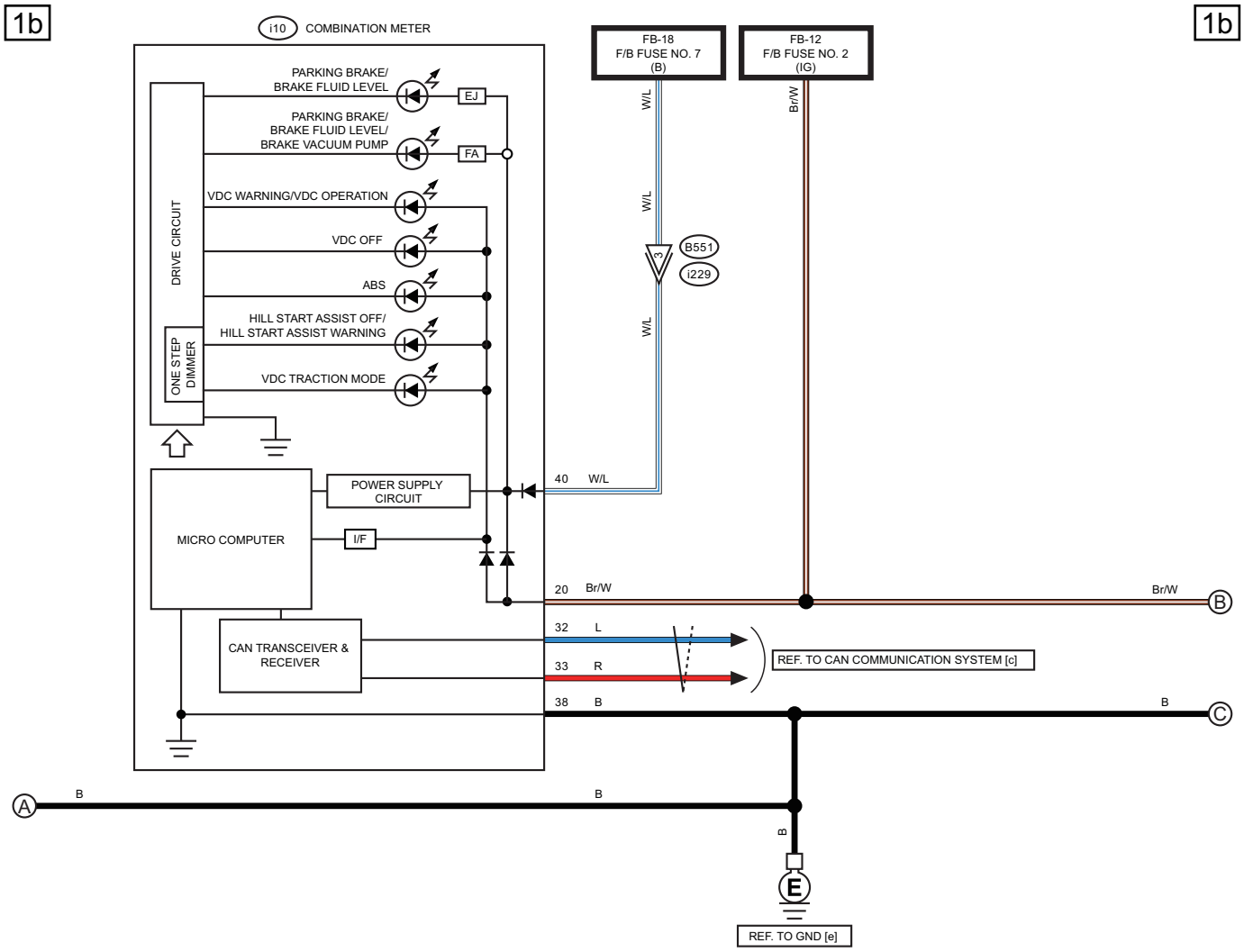

FA : ENGINE TYPE FA

EJ : ENGINE TYPE EJ

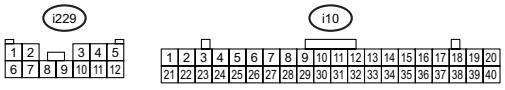

WI-66842

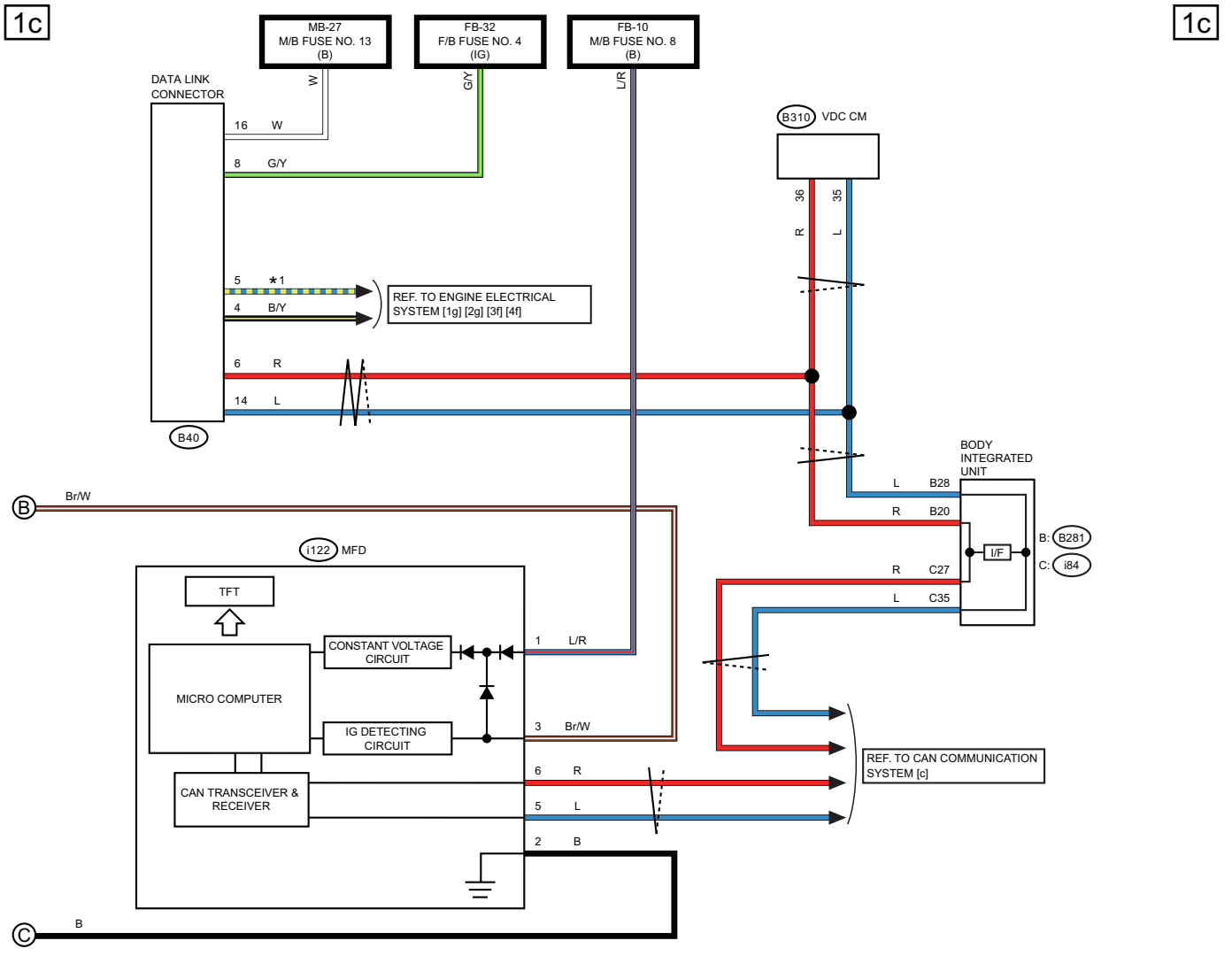

*1 : ENGINE TYPE FA : B/R
ENGINE TYPE EJ : B/W

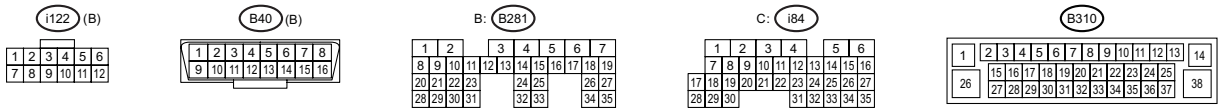

WI-66843

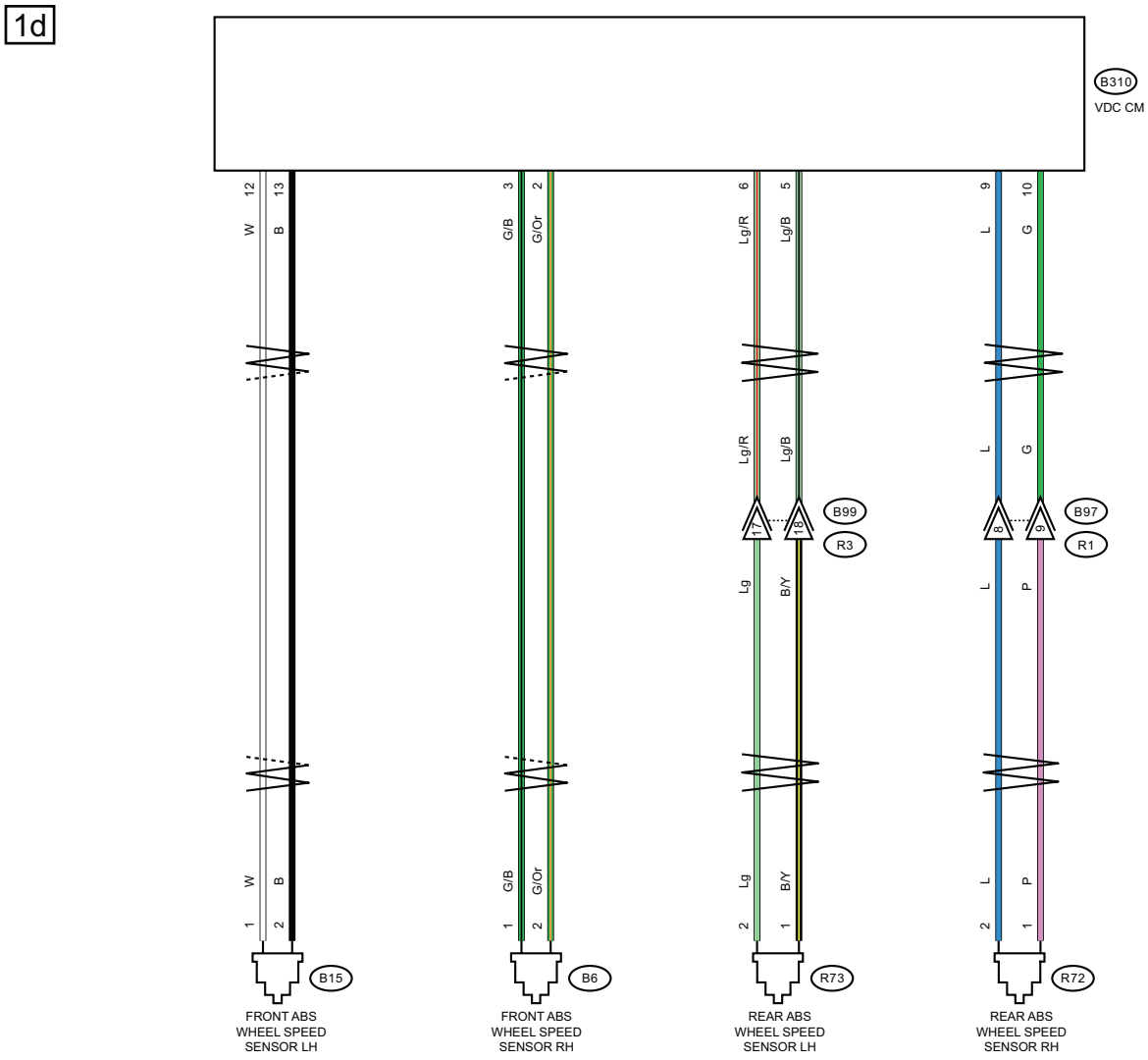
1d
1d
B310
VDC CM
12 13
W B
3 2
G/B G/Or
6 5
Lg/R Lg/B
9 10
L G
Lg/R Lg/B
17 18
B99
R3
L G
8 9
B97
R1
Lg B/Y
L P
W B
1 2
G/B G/Or
Lg B/Y
L P
B15
B6
R73
R72
FRONT ABS WHEEL SPEED SENSOR LH
FRONT ABS WHEEL SPEED SENSOR RH
REAR ABS WHEEL SPEED SENSOR LH
REAR ABS WHEEL SPEED SENSOR RH

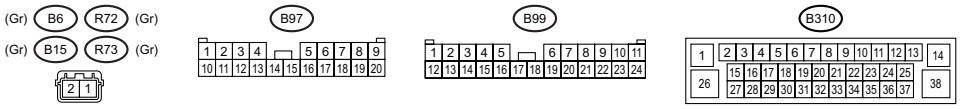
(Gr) B6 R72 (Gr)
(Gr) B15 R73 (Gr)
2 1
B97
1 2 3 4 5 6 7 8 9
10 11 12 13 14 15 16 17 18 19 20
B99
1 2 3 4 5 6 7 8 9 10 11
12 13 14 15 16 17 18 19 20 21 22 23 24
B310
1 2 3 4 5 6 7 8 9 10 11 12 13 14
15 16 17 18 19 20 21 22 23 24 25
26 27 28 29 30 31 32 33 34 35 36 37 38

WI-67302

2. WITH EyeSight

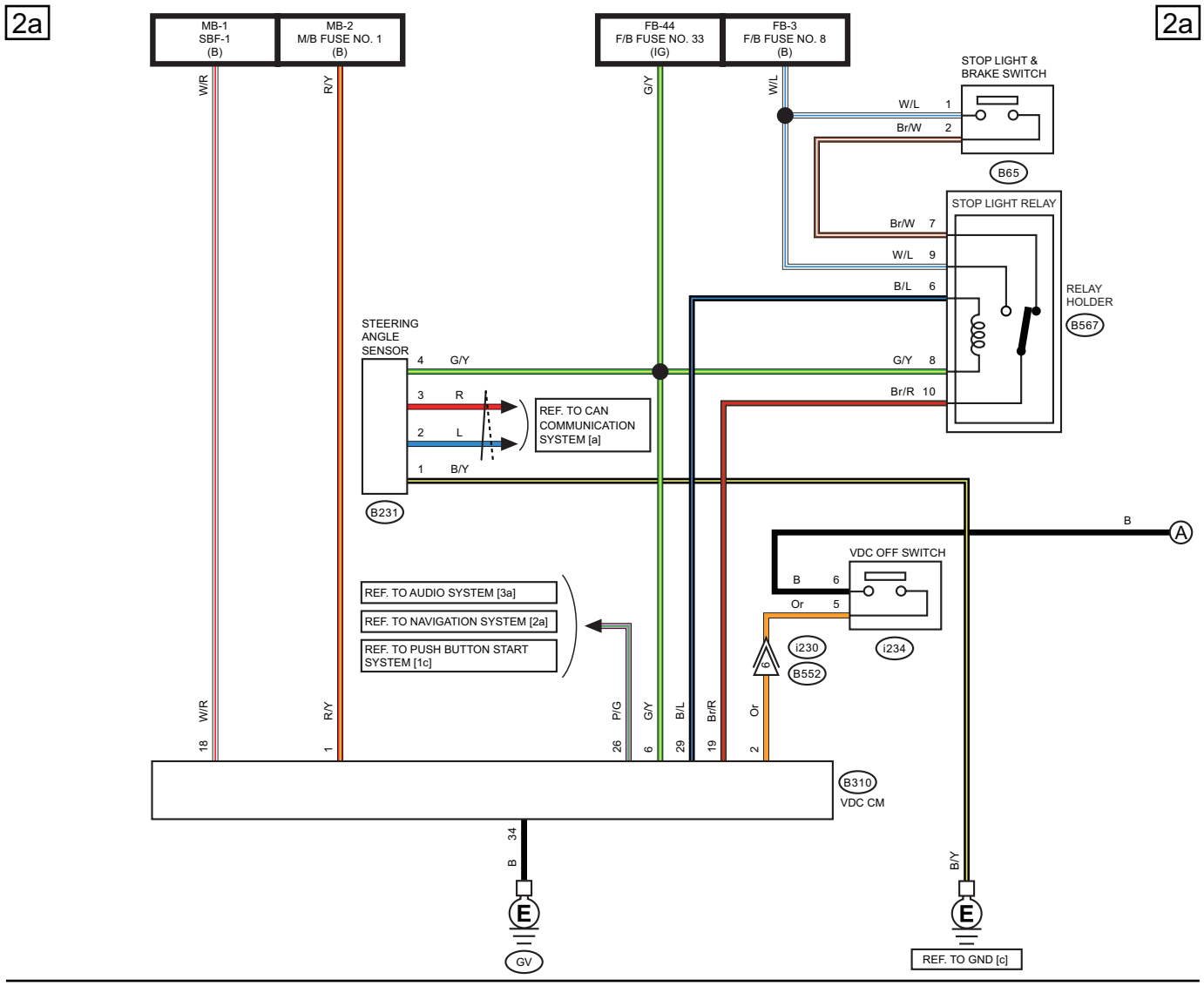

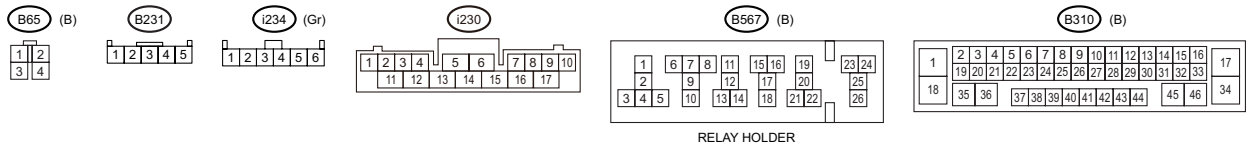

WI-66845

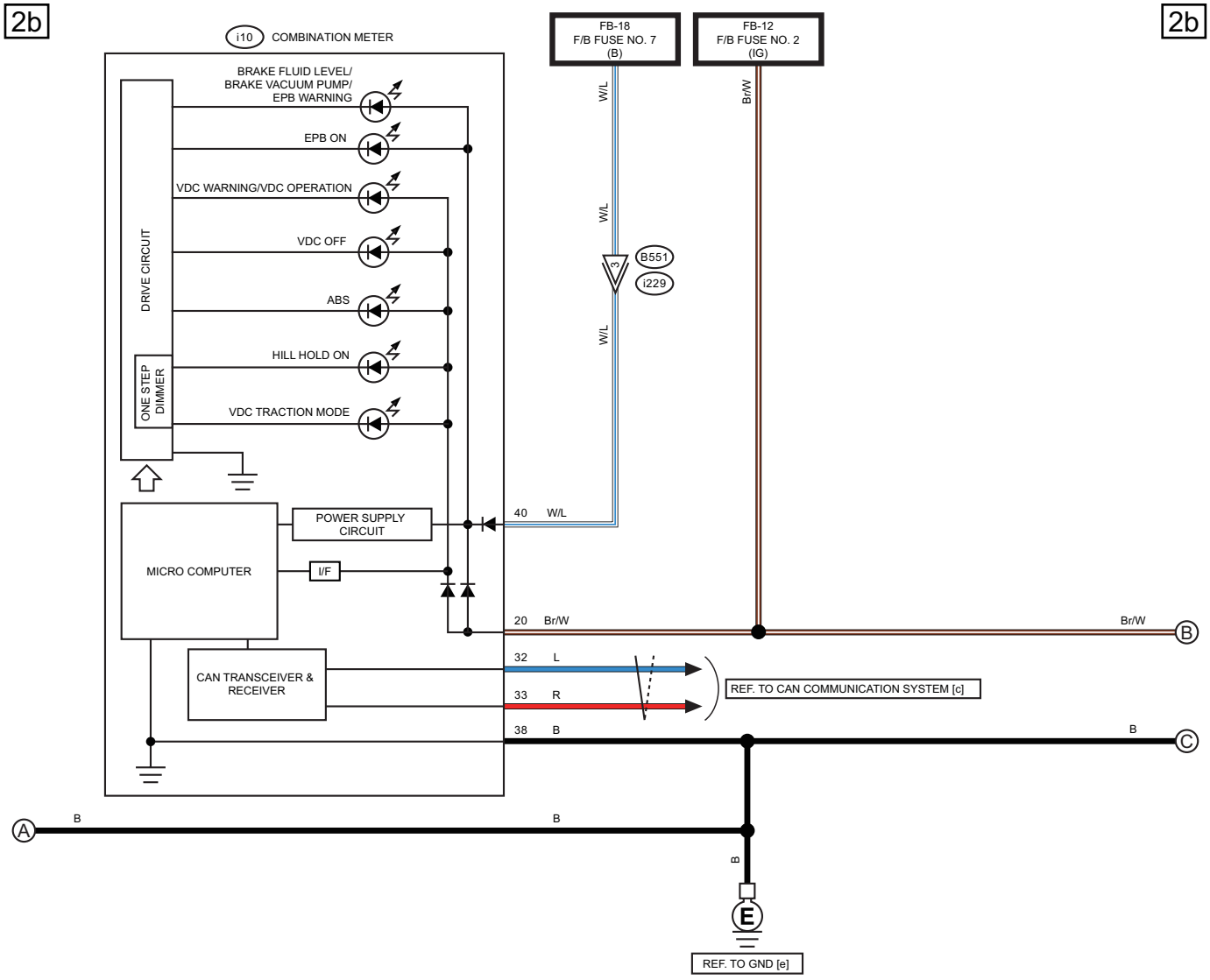
2b
2b
i10 COMBINATION METER
BRAKE FLUID LEVEL/
BRAKE VACUUM PUMP/
EPB WARNING
EPB ON
VDC WARNING/VDC OPERATION
VDC OFF
ABS
HILL HOLD ON
VDC TRACTION MODE
DRIVE CIRCUIT
ONE STEP DIMMER
MICRO COMPUTER
POWER SUPPLY CIRCUIT
I/F
CAN TRANSCEIVER & RECEIVER
FB-18
F/B FUSE NO. 7
(B)
FB-12
F/B FUSE NO. 2
(IG)
W/L
Br/W
B551
i229
40 W/L
20 Br/W
32 L
33 R
38 B
REF. TO CAN COMMUNICATION SYSTEM [c]
REF. TO GND [e]
A
B
C
E

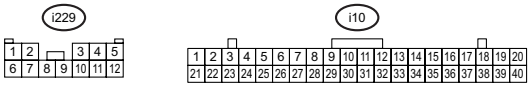
i229
1 2 3 4 5
6 7 8 9 10 11 12
i10
1 2 3 4 5 6 7 8 9 10 11 12 13 14 15 16 17 18 19 20
21 22 23 24 25 26 27 28 29 30 31 32 33 34 35 36 37 38 39 40

WI-66846

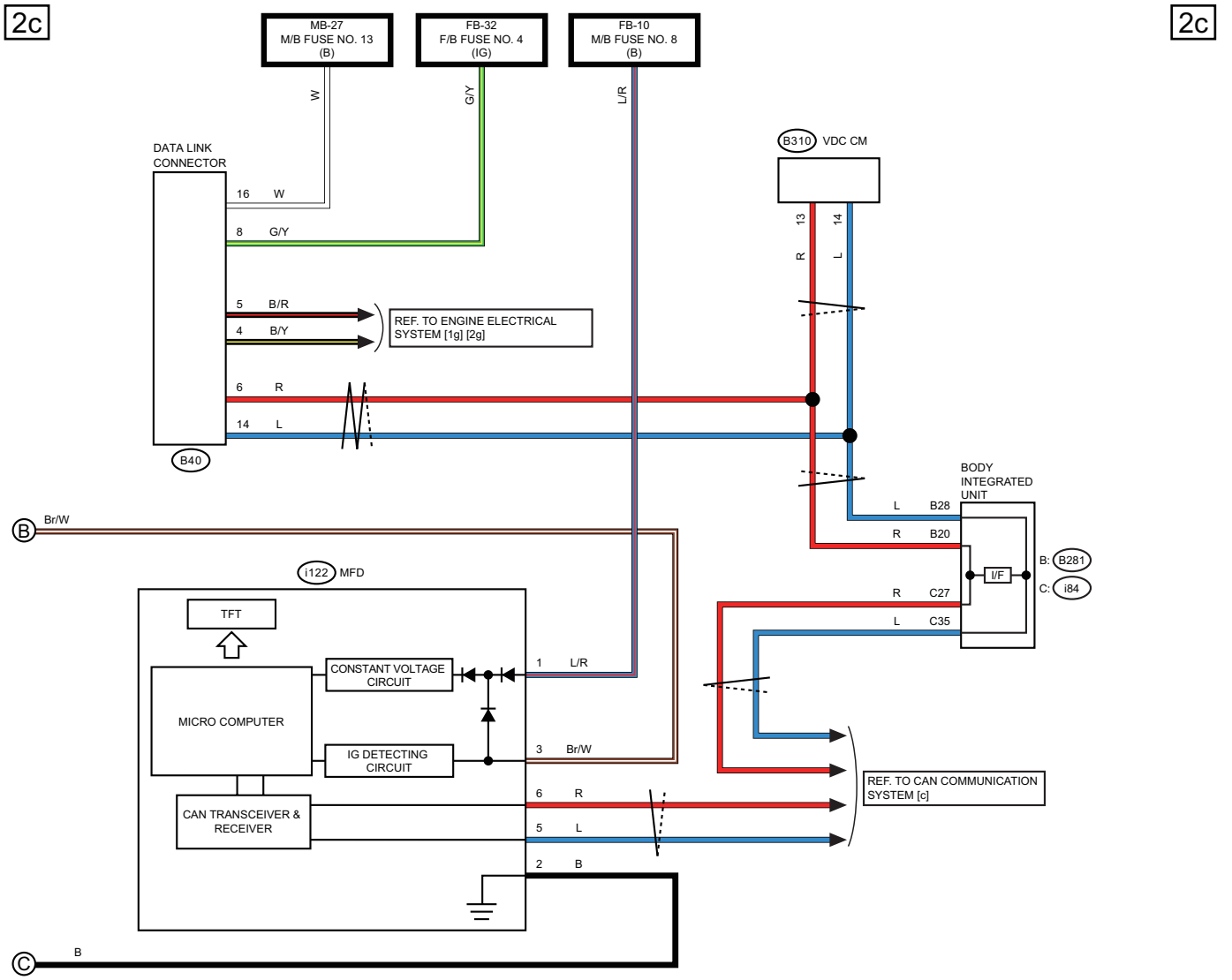
2c
2c
MB-27
M/B FUSE NO. 13
(B)
FB-32
F/B FUSE NO. 4
(IG)
FB-10
M/B FUSE NO. 8
(B)
W
G/Y
L/R
DATA LINK
CONNECTOR
16 W
8 G/Y
5 B/R
4 B/Y
REF. TO ENGINE ELECTRICAL SYSTEM [1g] [2g]
6 R
14 L
B40
B310 VDC CM
13 R
14 L
BODY
INTEGRATED
UNIT
L B28
R B20
B: B281
C: i84
I/F
R C27
L C35
B Br/W
i122 MFD
TFT
MICRO COMPUTER
CONSTANT VOLTAGE
CIRCUIT
IG DETECTING
CIRCUIT
CAN TRANSCEIVER &
RECEIVER
1 L/R
3 Br/W
6 R
5 L
2 B
REF. TO CAN COMMUNICATION
SYSTEM [c]
C B

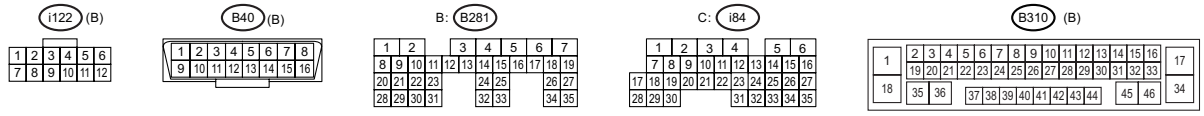
i122 (B)
B40 (B)
B: B281
C: i84
B310 (B)

WI-66847

2d

2d

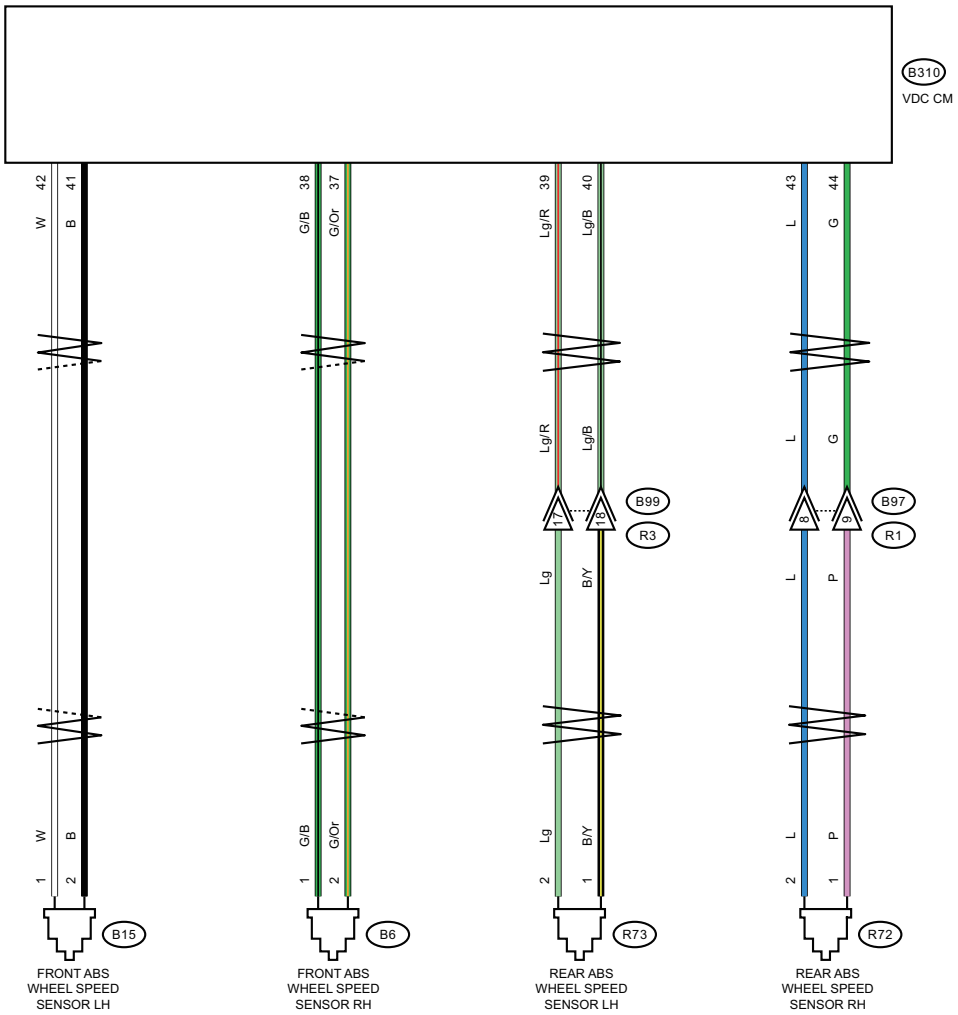

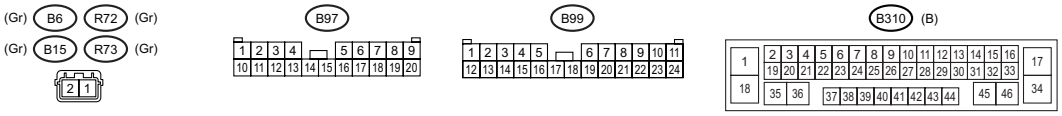

WI-67303

63.Wiper Deicer System

A: WIRING DIAGRAM

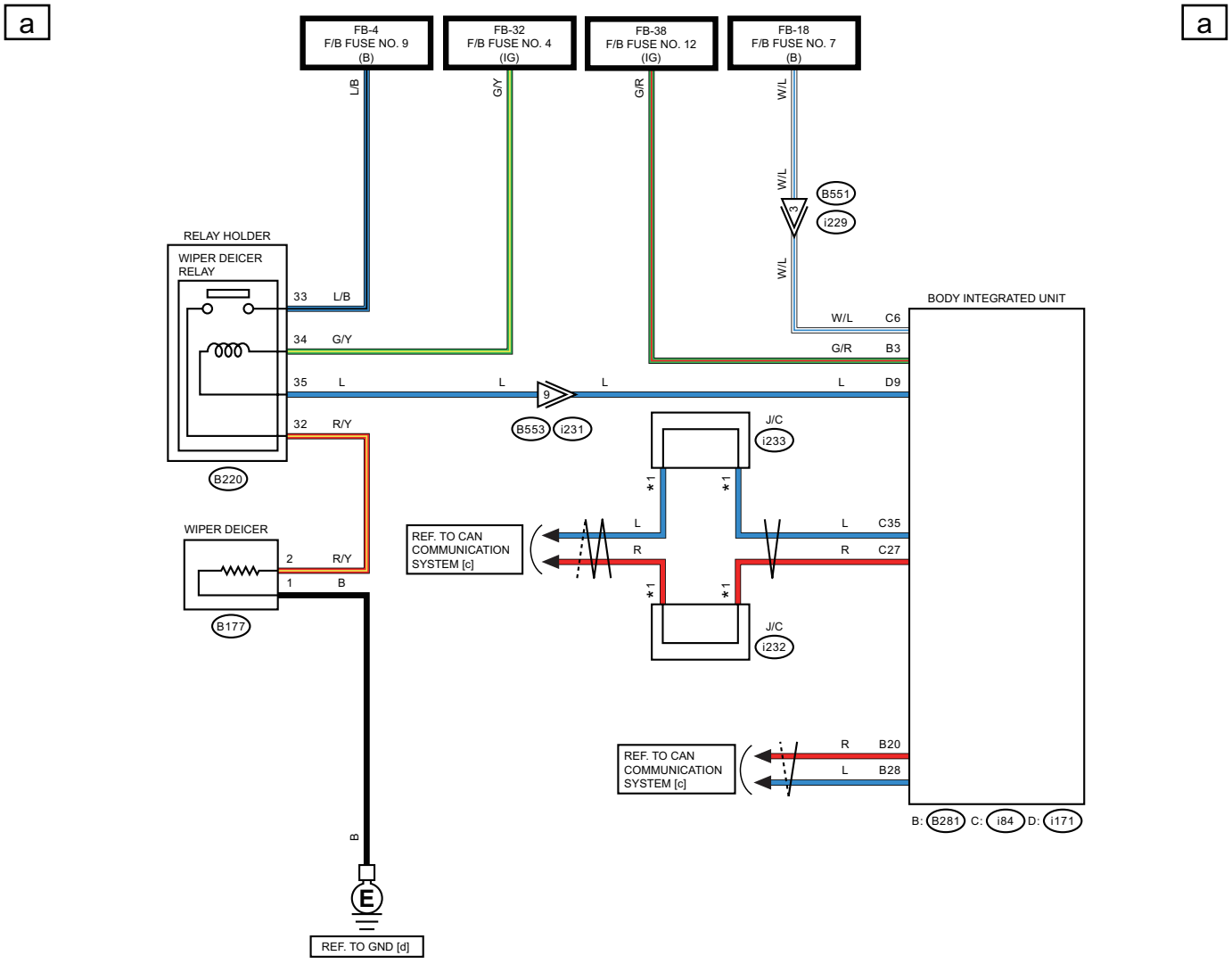

*1 : TERMINAL No. OPTIONAL ARRANGEMENT

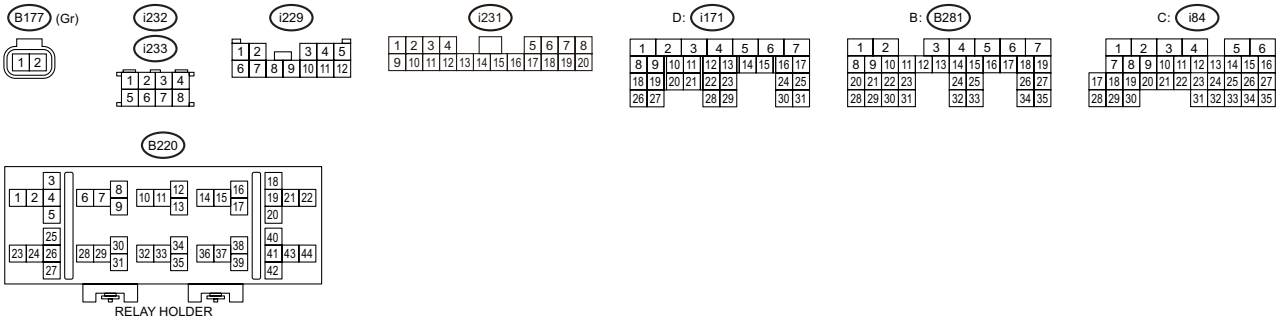

WI-66849

64.Harness Components Location

A: LOCATION

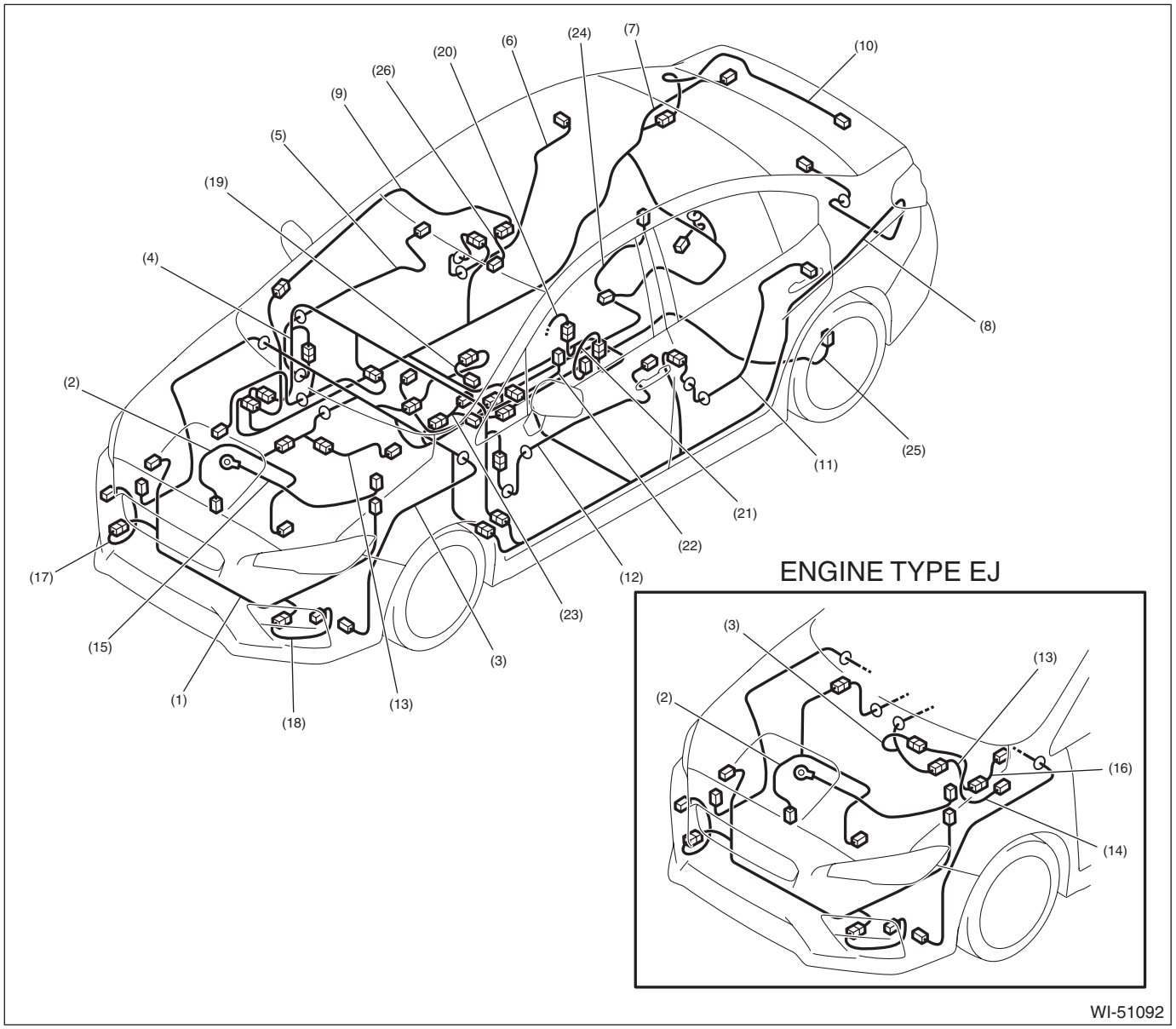

(1)	Front wiring harness	(10)	Trunk lid cord	(19)	Occupant detection wiring harness
(2)	Engine wiring harness	(11)	Rear door cord LH	(20)	Adapter cord RH
(3)	Bulkhead wiring harness	(12)	Front door cord LH	(21)	Adapter cord LH
(4)	Instrument panel wiring harness	(13)	Transmission cord	(22)	AUX adapter cord
(5)	Front door cord RH	(14)	Rear oxygen sensor cord	(23)	Keyless access interior antenna adapter cord
(6)	Rear door cord RH	(15)	Generator cord	(24)	Parking brake sub wiring harness RH
(7)	Rear wiring harness RH	(16)	Center differential wiring harness	(25)	Parking brake sub wiring harness LH
(8)	Rear wiring harness LH	(17)	Bumper light cord RH	(26)	Stereo camera cover adapter cord
(9)	Roof cord	(18)	Bumper light cord LH		

65.Front Wiring Harness

A: LOCATION

1. ENGINE TYPE FA

Connector				Connecting to	
No.	Pole	Color	Area	No.	Description
F1	4	Gr	C-1	F6	Front wiring harness
F4	4	Gr	D-3	F21	
F5	2	B	B-1		Horn
F6	4	Gr	C-1	F1	Bumper light cord RH
F10	2	Gr	B-1		Front turn signal light RH
F12	2	B	B-1		Daytime running light resistor
F13	2	Gr	D-4		Front turn signal light LH
F14	2	Gr	B-1		Front fog light RH
F15	2	Gr	D-4		Front fog light LH
F16	2	★	C-2		Sub fan motor
F17	2	★	C-3		Main fan motor
F21	4	Gr	D-3	F4	Bumper light cord LH
F24	1	B	B-3		Magnet clutch
F25	1	★	B-3		Generator terminal B
F26	3	★	B-3		Generator
F27	26	★	B-5		Relay holder
F35	12	L	B-5		M/B
F36	7	★	B-5		
F37	20	★	B-5		
F47	2	B	C-2		Horn
F78	2	B	C-3		Ambient sensor
F108	18	Gr	B-4	B361	Through joint connector
F109	24	★	B-4	B360	
F125	12	Gr	C-3		Front combination light LH
F126	12	Gr	B-2		Front combination light RH
F134	2	Gr	B-2		Vacuum pump
★:White or natural color					

Front Wiring Harness

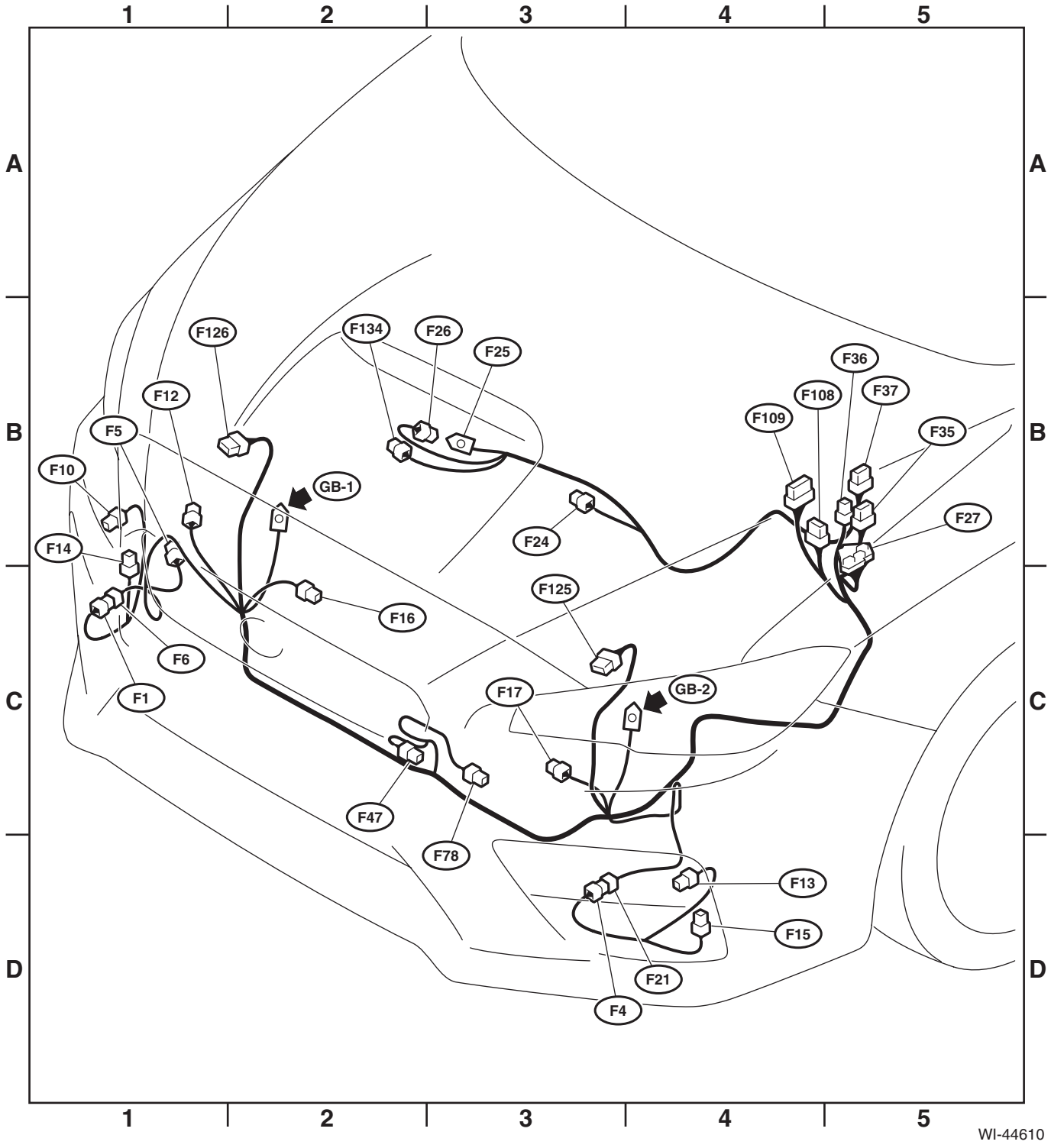

2. ENGINE TYPE EJ

Connector				Connecting to	
No.	Pole	Color	Area	No.	Description
F1	4	Gr	C-1	F6	Front wiring harness
F4	4	Gr	D-3	F21	
F5	2	B	B-1		Horn
F6	4	Gr	C-1	F1	Front wiring harness
F9	16	★	B-4		Relay holder (without Telematics)
	18	★	B-4		Relay holder (with Telematics)
F10	2	Gr	B-1		Front turn signal light RH
F11	2	★	B-4		Secondary air pump
F12	2	B	B-1		Daytime running light resistor
F13	2	Gr	D-4		Front turn signal light LH
F14	2	Gr	B-1		Front fog light RH
F15	2	Gr	D-4		Front fog light LH
F16	2	★	C-2		Sub fan motor
F17	2	★	C-3		Main fan motor
F21	4	Gr	D-3	F4	Front wiring harness
F24	1	B	B-3		Magnet clutch
F25	1	★	B-3		Generator terminal B
F26	3	★	B-3		Generator
F27	26	★	B-5		Relay holder
F35	12	L	B-5		M/B
F36	7	★	B-5		
F37	20	★	B-5		
F47	2	B	C-2		Horn
F70	2	★	C-4		M/B
F78	2	B	C-3		Ambient sensor
F108	18	Gr	B-4	B361	Through joint connector
F109	24	★	B-4	B360	
F125	12	Gr	C-3		Front combination light LH
F126	12	Gr	B-2		Front combination light RH
★:White or natural color					

Front Wiring Harness

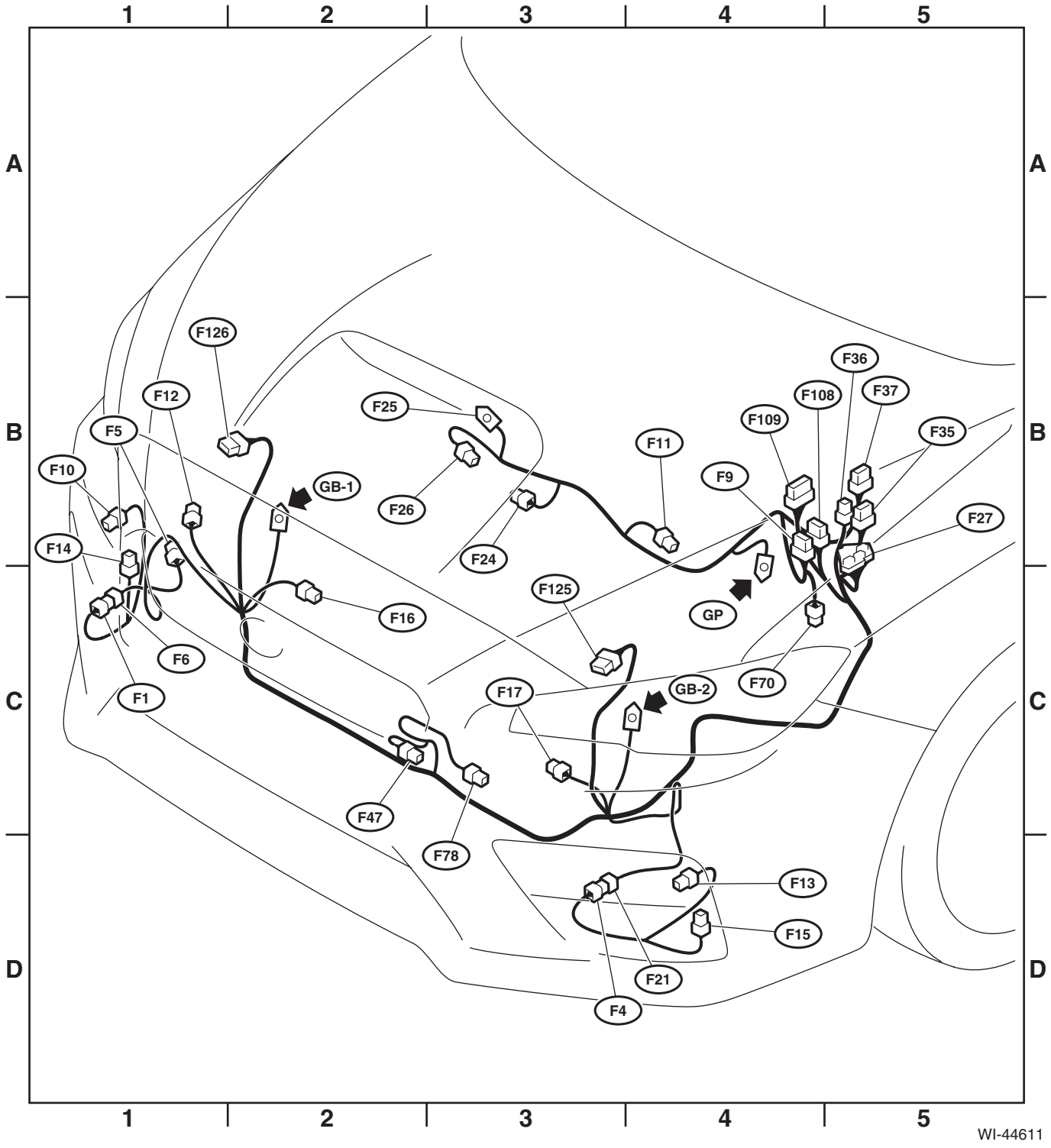

66.Bulkhead Wiring Harness (In Engine Compartment) RH

A: LOCATION

1. ENGINE TYPE FA

Connector				Connecting to	
No.	Pole	Color	Area	No.	Description
AB16	2	Y	D-1		Front sub sensor RH
B3	5	B	C-2		Mass air flow and intake air temperature sensor
B6	2	Gr	C-3		Front ABS wheel speed sensor RH
B11	20	Gr	C-5	T4	Transmission cord (CVT model)
B12	12	B	C-4	T3	
B14	1	B	C-5		Starter motor
B22	16	Br	C-4	E3	Engine wiring harness
B24	2	Gr	C-4	T1	Back-up light switch (MT model)
B25	2	Br	C-4	T2	Neutral position switch 1 (MT model)
B122	8	Gr	B-3		J/C
B134	48	Br	C-3		ECM
B164	2	Gr	C-1		Keyless buzzer
B177	2	Gr	B-5		Wiper deicer
B310	38	★	B-2		VDC CM (without EyeSight)
	46	B	B-2		VDC CM (with EyeSight)
B321	2	B	C-3		Hood switch
B450	10	B	B-3		Power steering CM
B451	5	Gr	B-3		Torque sensor
B452	2	B	B-3		Power steering CM
B567	26	B	B-2		Relay holder
★:White or natural color					

Bulkhead Wiring Harness (In Engine Compartment) RH

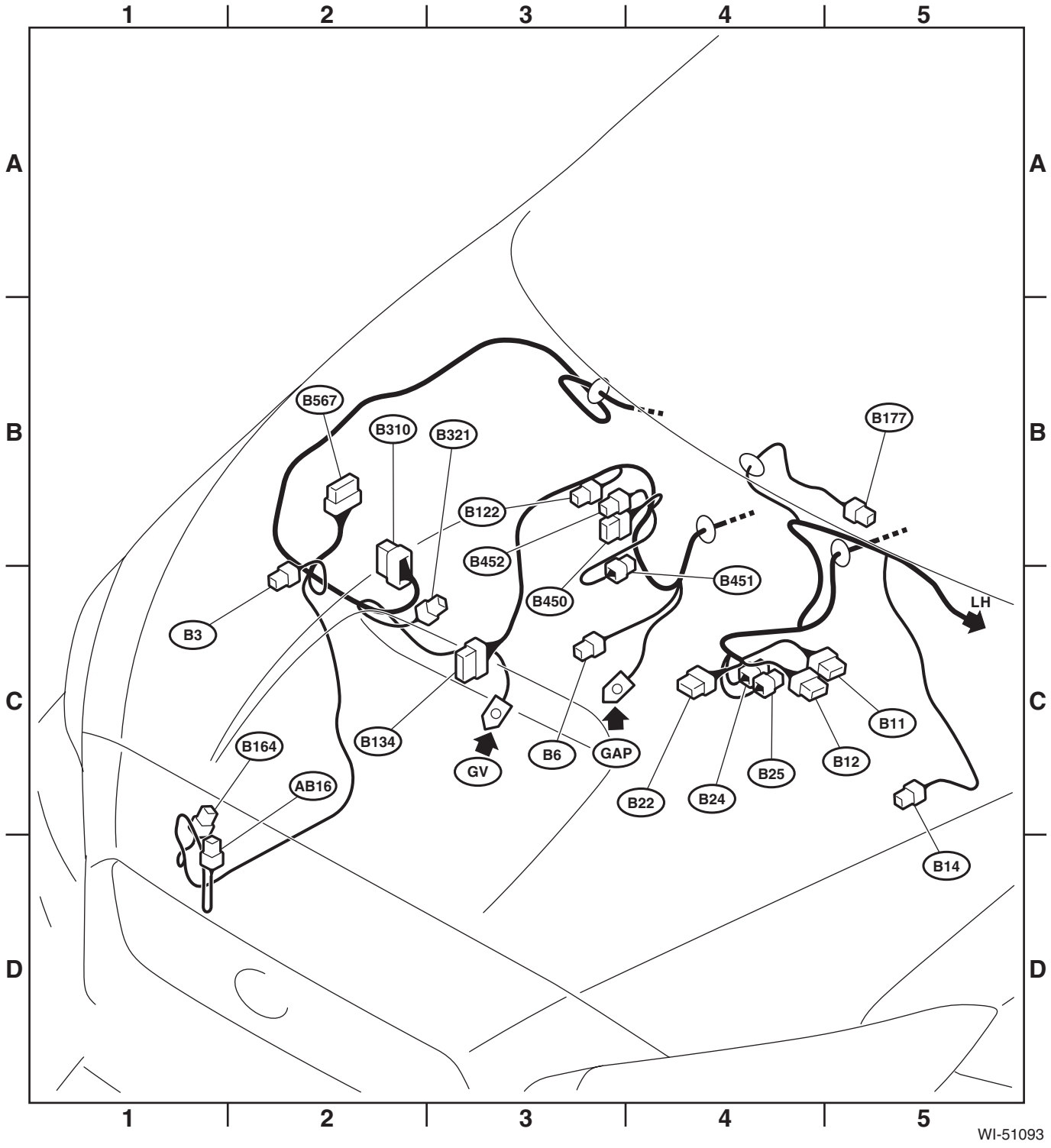

2. ENGINE TYPE EJ

Connector				Connecting to	
No.	Pole	Color	Area	No.	Description
AB16	2	Y	D-1		Front sub sensor RH
B3	5	B	C-2		Mass air flow and intake air temperature sensor
B6	2	Gr	C-3		Front ABS wheel speed sensor RH
B14	1	B	C-5		Starter motor
B19	4	Gr	C-4	T5	Transmission cord
B21	54	B	B-3	E2	Engine wiring harness
B128	6	Gr	C-5	T9	Transmission cord
B164	2	Gr	C-1		Keyless buzzer
B177	2	Gr	B-5		Wiper deicer
B310	38	★	B-2		VDC CM
B321	2	B	C-3		Hood switch
B379	4	Gr	B-3		Front oxygen (A/F) sensor
★:White or natural color					

Bulkhead Wiring Harness (In Engine Compartment) RH

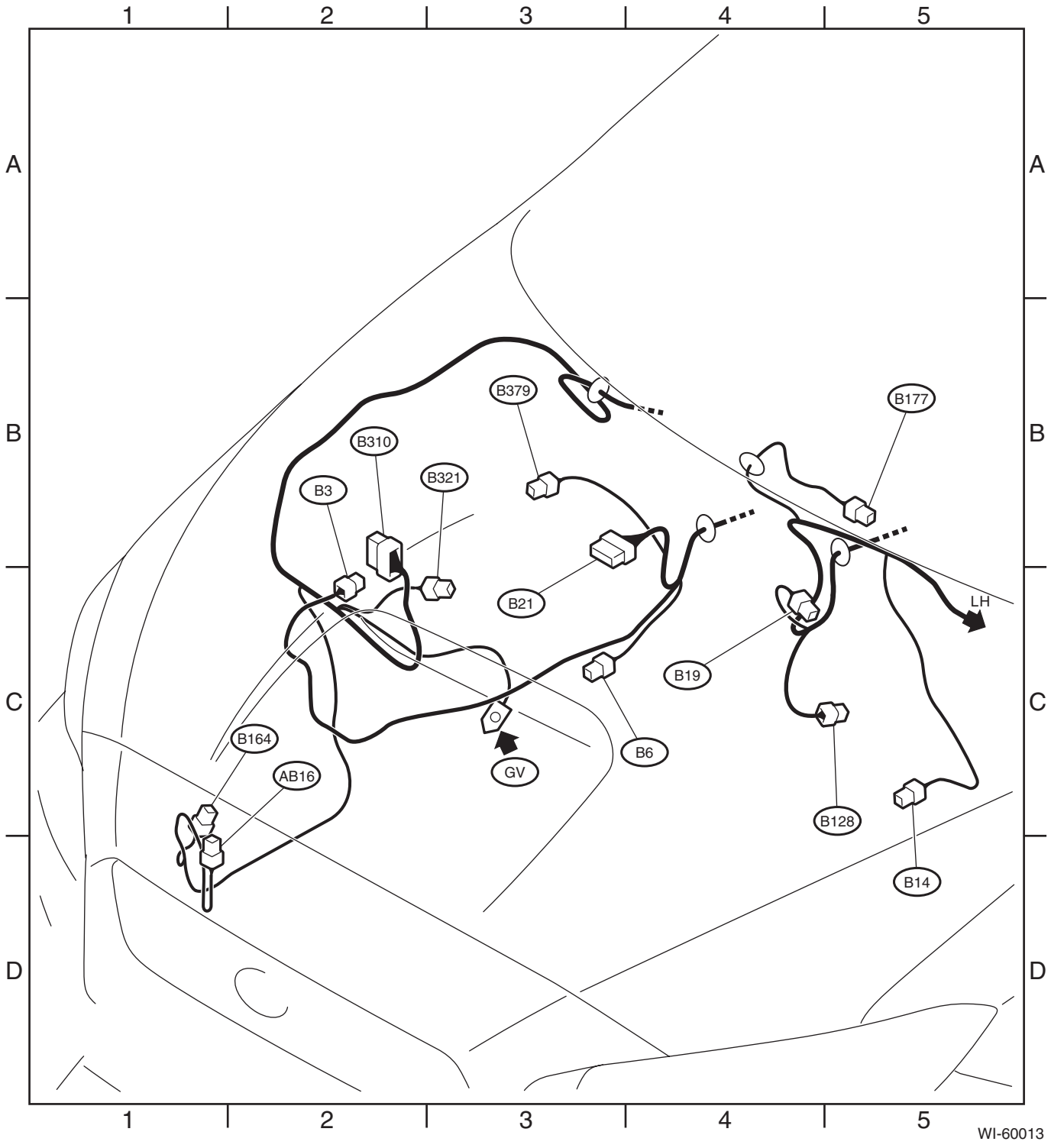

67.Bulkhead Wiring Harness (In Engine Compartment) LH

A: LOCATION

1. ENGINE TYPE FA

Connector				Connecting to	
No.	Pole	Color	Area	No.	Description
AB13	2	Y	C-2		Front sub sensor LH
B8	5	Gr	A-4		Front wiper motor
B9	2	B	C-3		Battery sensor
B10	4	Gr	C-3		Pressure switch
B15	2	Gr	B-3		Front ABS wheel speed sensor LH
B16	2	Gr	B-3		Brake fluid level switch
B143	20	★	B-3		M/B
B144	9	Br	B-3		
B145	7	Br	B-3		
B146	2	B	D-3		Front washer motor
B186	8	★	B-3		M/B
B360	16	Gr	B-3	F109	Through joint connector
B361	14	Gr	B-3	F108	
B396	2	Br	C-3		Washer fluid level sensor
B564	17	★	B-3		Relay holder
B565	3	B	B-3		Brake booster pressure sensor
B571	2	★	B-3		M/B
★:White or natural color					

Bulkhead Wiring Harness (In Engine Compartment) LH

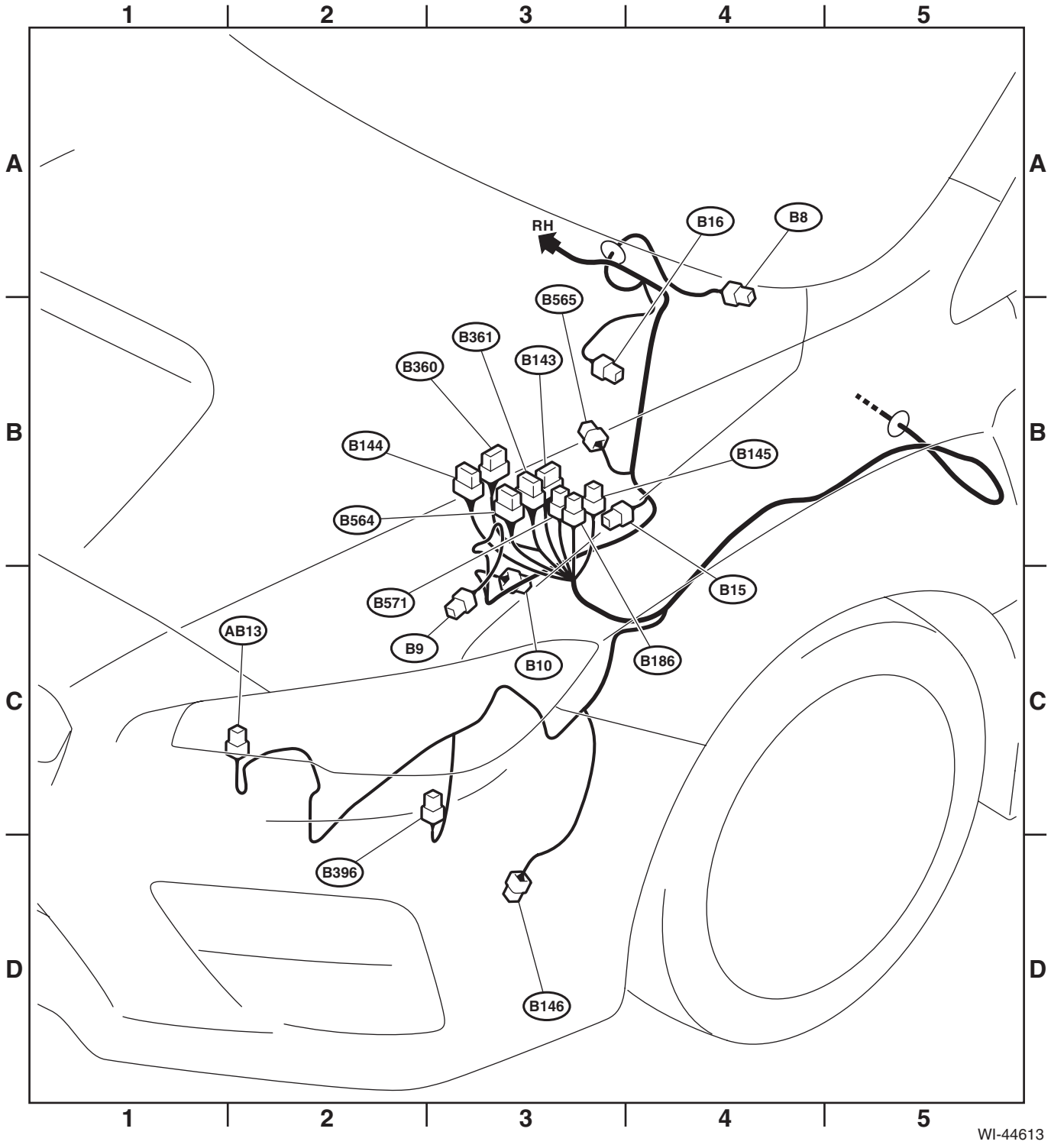

2. ENGINE TYPE EJ

Connector				Connecting to	
No.	Pole	Color	Area	No.	Description
AB13	2	Y	C-2		Front sub sensor LH
B8	5	Gr	A-4		Front wiper motor
B10	4	Gr	C-3		Pressure switch
B15	2	Gr	B-3		Front ABS wheel speed sensor LH
B16	2	Gr	B-3		Brake fluid level switch
B143	20	★	B-3		M/B
B144	9	Br	B-3		
B145	7	Br	B-3		
B146	2	B	D-3		Front washer motor
B186	8	★	B-3		M/B
B360	16	Gr	B-3	F109	Through joint connector
B361	14	Gr	B-3	F108	
B396	2	Br	C-3		Washer fluid level sensor
★:White or natural color					

Bulkhead Wiring Harness (In Engine Compartment) LH

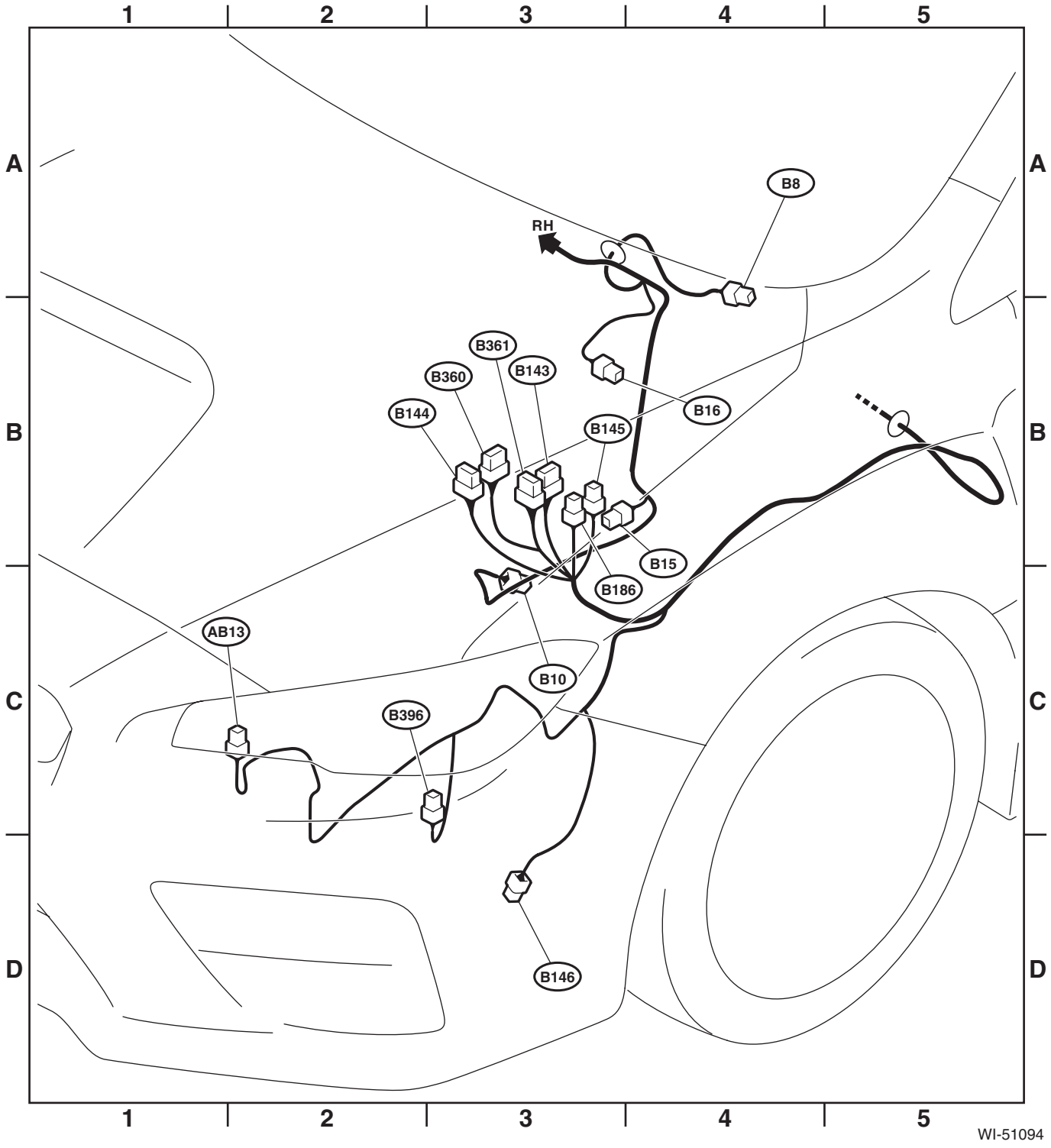

68.Bulkhead Wiring Harness (In Compartment) RH

A: LOCATION

1. ENGINE TYPE FA

Connector				Connecting to	
No.	Pole	Color	Area	No.	Description
AB6	30	Y	D-2		Airbag CM
AB9	4	Y	C-2		Passenger's airbag module
AB65	2	★	C-3	B556	Bulkhead wiring harness
AD11	2	★	C-3	B579	
AD12	3	★	D-3		Keyless access interior antenna (front)
B30	8	B	C-5	D1	Front door cord RH
B33	2	★	D-3	R149	Rear wiring harness LH
B35	2	B	D-3	R140	Rear wiring harness RH
B57	4	★	B-2		Power transistor
B87	2	★	B-4		Blower motor
B88	2	Br	B-2		Evaporator sensor
B90	20	★	A-5	R50	Roof cord
B97	20	★	C-5	R1	Rear wiring harness RH
B116	8	★	D-3		Select lever
B151	6	★	A-5	R430	Roof cord
B163	6	B	B-4		Intake door actuator
B220	44	★	B-3		Relay holder
B239	6	★	B-2		Air mix door actuator RH
B358	2	★	D-3		Select lever illumination
B386	4	★	B-4		Blower motor relay
B556	2	★	C-3	AB65	Airbag wiring harness
B579	2	★	C-3	AD11	Keyless access interior antenna adapter cord
B583	12	★	B-3	i237	Instrument panel wiring harness
B584	20	★	B-3	i238	
★:White or natural color					

Bulkhead Wiring Harness (In Compartment) RH

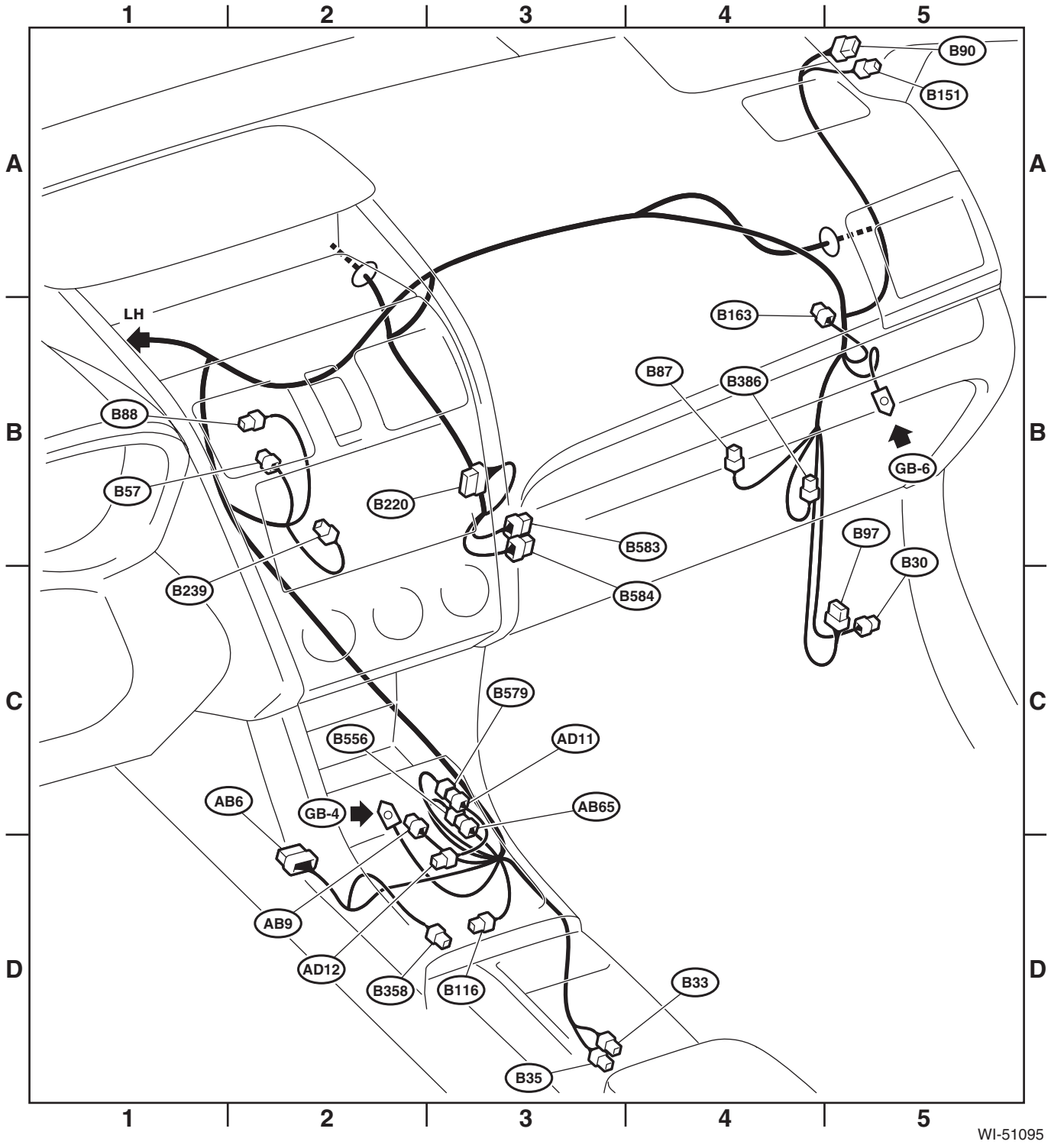

2. ENGINE TYPE EJ

Connector				Connecting to	
No.	Pole	Color	Area	No.	Description
AB6	30	Y	D-2		Airbag CM
AB9	4	Y	D-2		Passenger's airbag module
AB65	2	★	D-3	B556	Bulkhead wiring harness
AD12	3	★	D-3		Keyless access interior antenna (front)
AD13	10	Gr	D-2	B4	Bulkhead wiring harness
AD14	2	★	D-3		STI illumination
B1	6	★	B-3		J/C
B4	10	B	D-2	AD13	Inside front antenna adapter cord
B30	8	B	C-5	D1	Front door cord RH
B57	4	★	B-2		Power transistor
B83	6	★	B-2		J/C
B87	2	★	B-4		Blower motor
B88	2	Br	B-2		Evaporator sensor
B90	20	★	A-5	R50	Roof cord
B97	20	★	C-5	R1	Rear wiring harness RH
B122	8	★	B-3		J/C
B134	34	★	B-3		ECM
B135	35	★	B-3		
B136	35	★	B-2		
B137	31	★	B-2		
B163	6	B	B-4		Intake door actuator
B220	44	★	B-3		Relay holder
B239	6	★	C-2		Air mix door actuator RH
B358	2	★	D-3		Select lever illumination
B380	32	★	C-2		DCCD CM
B386	4	★	C-4		Blower motor relay
B556	2	★	D-3	AB65	Airbag wiring harness
B583	12	★	C-3	i237	Instrument panel wiring harness
B584	20	★	C-3	i238	
★:White or natural color					

Bulkhead Wiring Harness (In Compartment) RH

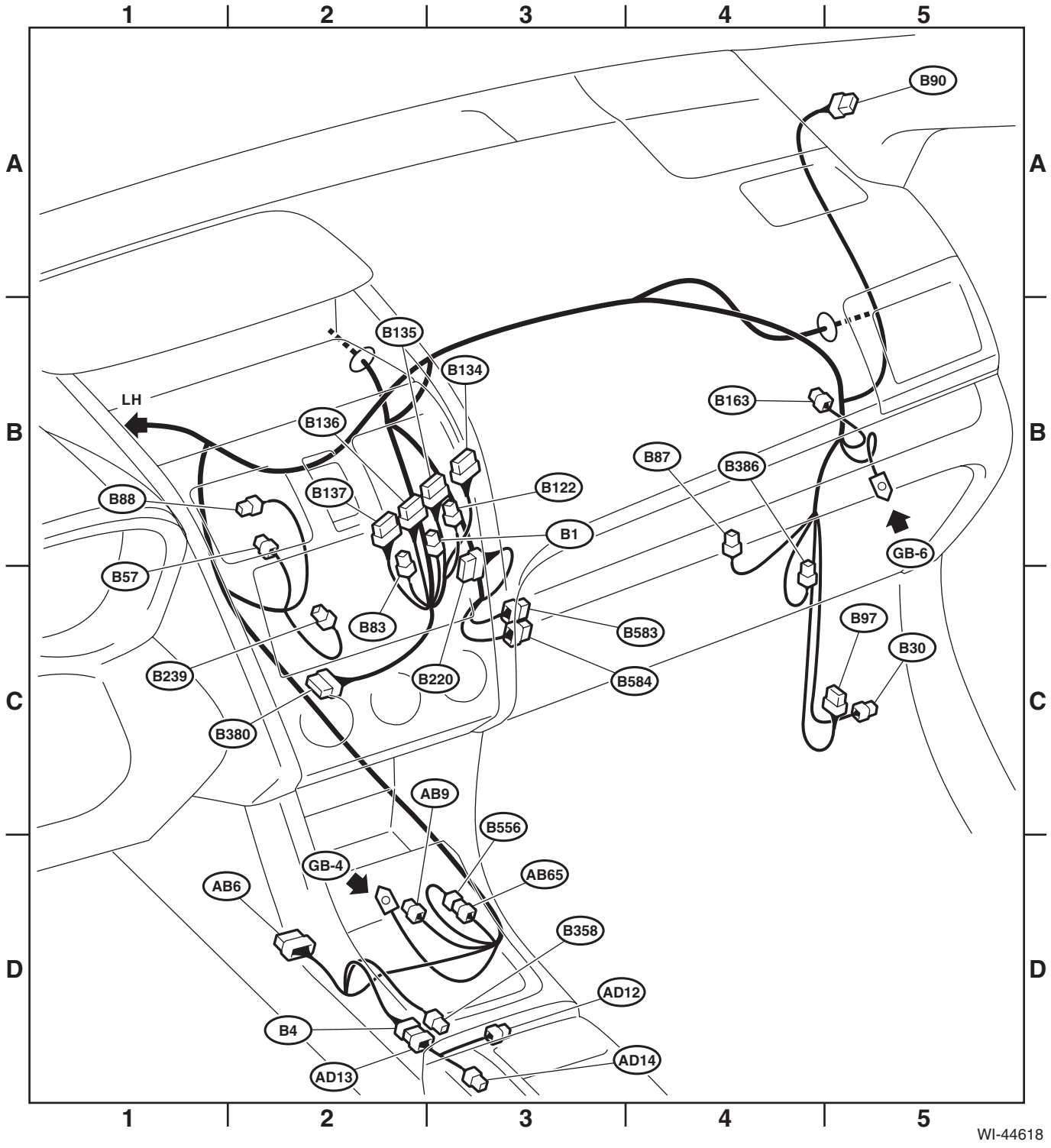

69.Bulkhead Wiring Harness (In Compartment) LH

A: LOCATION

1. ENGINE TYPE FA

Connector				Connecting to	
No.	Pole	Color	Area	No.	Description
AB1	10	Gr	D-1	B31	Bulkhead wiring harness
AB2	4	Y	C-5	AB7	Driver's airbag module
AB66	2	B	C-3		Driver's knee airbag module
B23	10	★	B-2	B28	Bulkhead wiring harness (with push button start)
B28	10	★	B-2	B23	
B31	10	Gr	D-1	AB1	Airbag wiring harness
B32	8	★	B-3		Turn signal and hazard unit
B40	16	B	C-2		Data link connector
B41	2	★	C-2		Power window circuit breaker
B52	24	★	C-2		F/B
B54	48	B	C-2		TCM
B65	4	B	B-3		Stop light and brake switch
B68	14	★	C-5	ST1	Roll connector
B70	10	★	C-5		Combination switch
B71	20	★	C-4		
B72	8	★	C-4		Ignition switch (without push button start)
B77	6	★	C-3		Mode door actuator
B92	10	★	D-2	R5	Rear wiring harness LH
B99	24	★	D-1	R3	
B101	8	B	D-2	D11	Front door cord LH
B106	2	★	B-2		Clutch start switch
B107	2	L	C-2		Clutch switch
B123	2	★	D-2		Key lock (without push button start)
B124	2	★	D-2		
B150	24	★	B-2		Auto headlight beam leveler CM
B152	10	Gr	C-2		F/B
B158	8	★	C-2		
B159	9	★	C-2		
B162	2	★	C-2		
B180	4	★	B-2		Remote engine start CM (without push button start)
	8	★	B-2		Remote engine start CM (with push button start)
B181	2	★	C-2	B182	Bulkhead wiring harness
B182	2	★	C-2	B181	
B225	44	★	C-2		Relay holder
B229	8	★	B-1		Telematics button adapter cord
B231	5	★	C-5		Steering angle sensor
B235	6	★	B-4		Air mix door actuator LH
B280	34	★	B-2		Body integrated unit
B281	35	★	B-2		
B315	6	B	B-4		Accelerator pedal position sensor
B367	8	★	B-3		Impact sensor
B415	7	B	C-5		Immobilizer antenna (without push button start)
B422	5	★	A-4		ID code box
B424	7	B	C-4		Steering lock CM (with push button start)

Bulkhead Wiring Harness (In Compartment) LH

Connector				Connecting to	
No.	Pole	Color	Area	No.	Description
B426	4	B	C-3		Accessory relay (with push button start)
B475	4	★	C-3		Wiper relay unit
B550	26	B	C-3		Fuse holder
B551	12	★	C-3	i229	Instrument panel wiring harness
B552	17	Gr	C-3	i230	
B553	20	★	C-3	i231	
B555	2	★	C-5		Key warning switch (without push button start)
B557	2	★	C-4		Key lock solenoid (without push button start)
B558	7	★	C-5		Combination switch
B559	5	★	A-4		Security CM
B572	18	★	C-2		Keyless access CM
B573	28	★	B-2		
B574	30	★	B-2		
B575	22	★	B-1	B576	Bulkhead wiring harness (with push button start)
B576	22	★	B-1	B575	
★:White or natural color					

Bulkhead Wiring Harness (In Compartment) LH

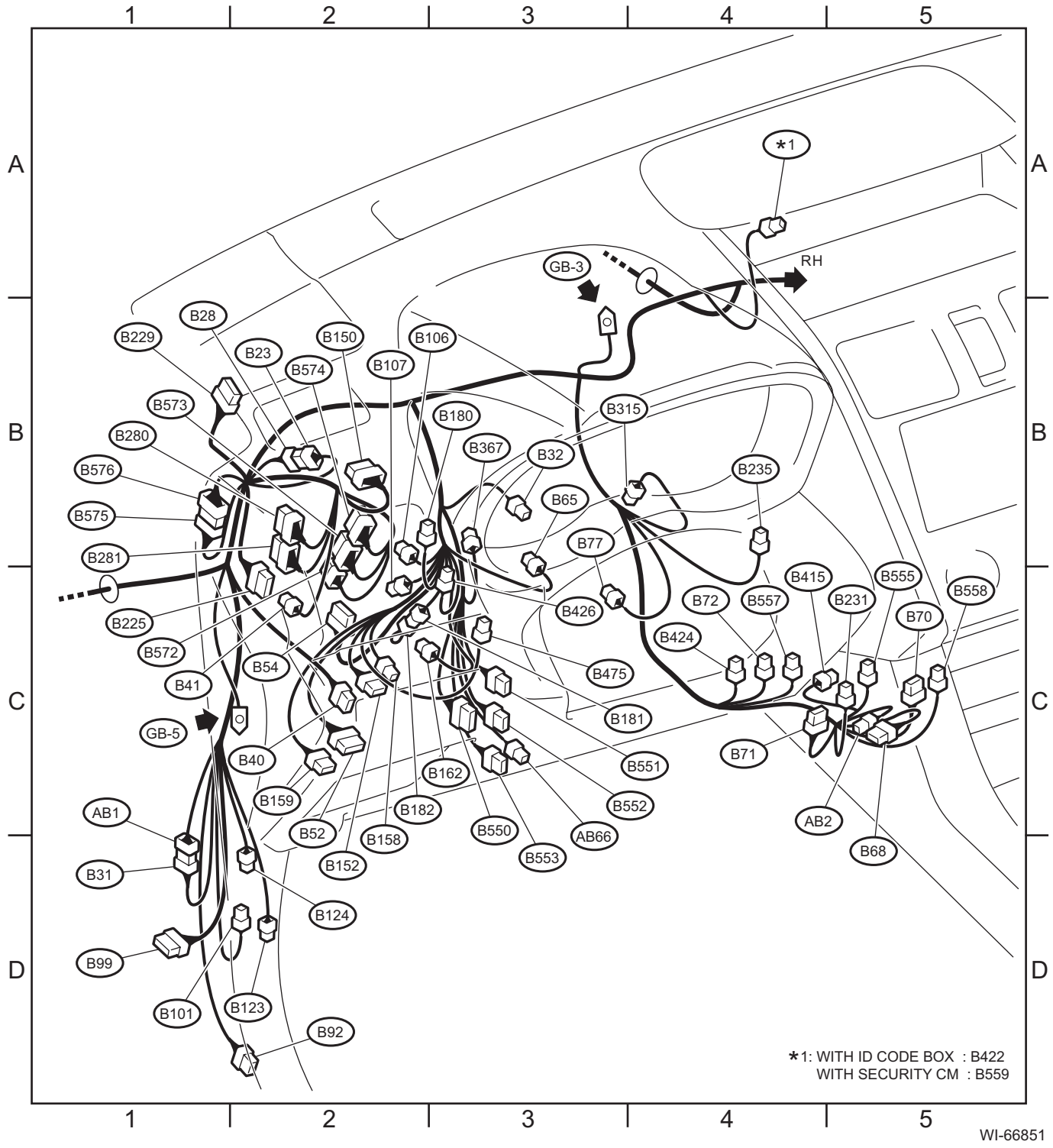

2. ENGINE TYPE EJ

Connector				Connecting to	
No.	Pole	Color	Area	No.	Description
AB1	10	Gr	D-1	B31	Bulkhead wiring harness
AB2	4	Y	C-5	AB7	Driver's airbag module
AB66	2	B	C-3		Driver's knee airbag module
B23	10	★	B-2	B28	Bulkhead wiring harness (with push button start)
B28	10	★	B-2	B23	
B31	10	Gr	D-1	AB1	Airbag wiring harness
B32	8	★	B-3		Turn signal and hazard unit
B40	16	B	C-2		Data link connector
B41	2	★	C-2		Power window circuit breaker
B52	24	★	C-2		F/B
B65	4	B	B-3		Stop light and brake switch
B68	14	★	C-5	ST1	Roll connector
B70	10	★	C-5		Combination switch
B71	20	★	C-4		
B72	8	★	C-4		Ignition switch (without push button start)
B77	6	★	C-3		Mode door actuator
B92	10	★	D-2	R5	Rear wiring harness LH
B99	24	★	D-1	R3	
B101	8	B	D-2	D11	Front door cord LH
B106	2	★	B-2		Clutch start switch
B107	2	L	C-2		Clutch switch
B150	24	★	B-2		Auto headlight beam leveler CM
B152	10	Gr	C-2		F/B
B158	8	★	C-2		
B159	9	★	C-2		
B162	2	★	C-2		
B180	4	★	B-2		Remote engine start CM (without push button start)
	8	★	B-2		Remote engine start CM (with push button start)
B181	2	★	C-2	B182	Bulkhead wiring harness
B182	2	★	C-2	B181	
B225	44	★	C-2		Relay holder
B229	8	★	B-1		Telematics button adapter cord
B231	5	★	C-5		Steering angle sensor
B235	6	★	B-4		Air mix door actuator LH
B280	34	★	B-2		Body integrated unit
B281	35	★	B-2		
B315	6	B	B-4		Accelerator pedal position sensor
B367	8	★	B-3		Impact sensor
B415	7	B	C-5		Immobilizer antenna (without push button start)
B422	5	★	A-4		ID code box
B424	7	B	C-4		Steering lock CM (with push button start)
B426	4	B	C-3		Accessory relay (with push button start)
B475	4	★	C-3		Wiper relay unit
B550	27	B	C-3		Fuse holder
B551	12	★	C-3	i229	Instrument panel wiring harness
B552	17	Gr	C-3	i230	
B553	20	★	C-3	i231	
B555	2	★	C-5		Key warning switch (without push button start)
B558	7	★	C-5		Combination switch

Bulkhead Wiring Harness (In Compartment) LH

Connector				Connecting to	
No.	Pole	Color	Area	No.	Description
B559	5	★	A-4		Security CM
B572	18	★	C-2		Keyless access CM
B573	28	★	B-2		
B574	30	★	B-2		
B575	22	★	B-1	B576	Bulkhead wiring harness (with push button start)
B576	22	★	B-1	B575	
★:White or natural color					

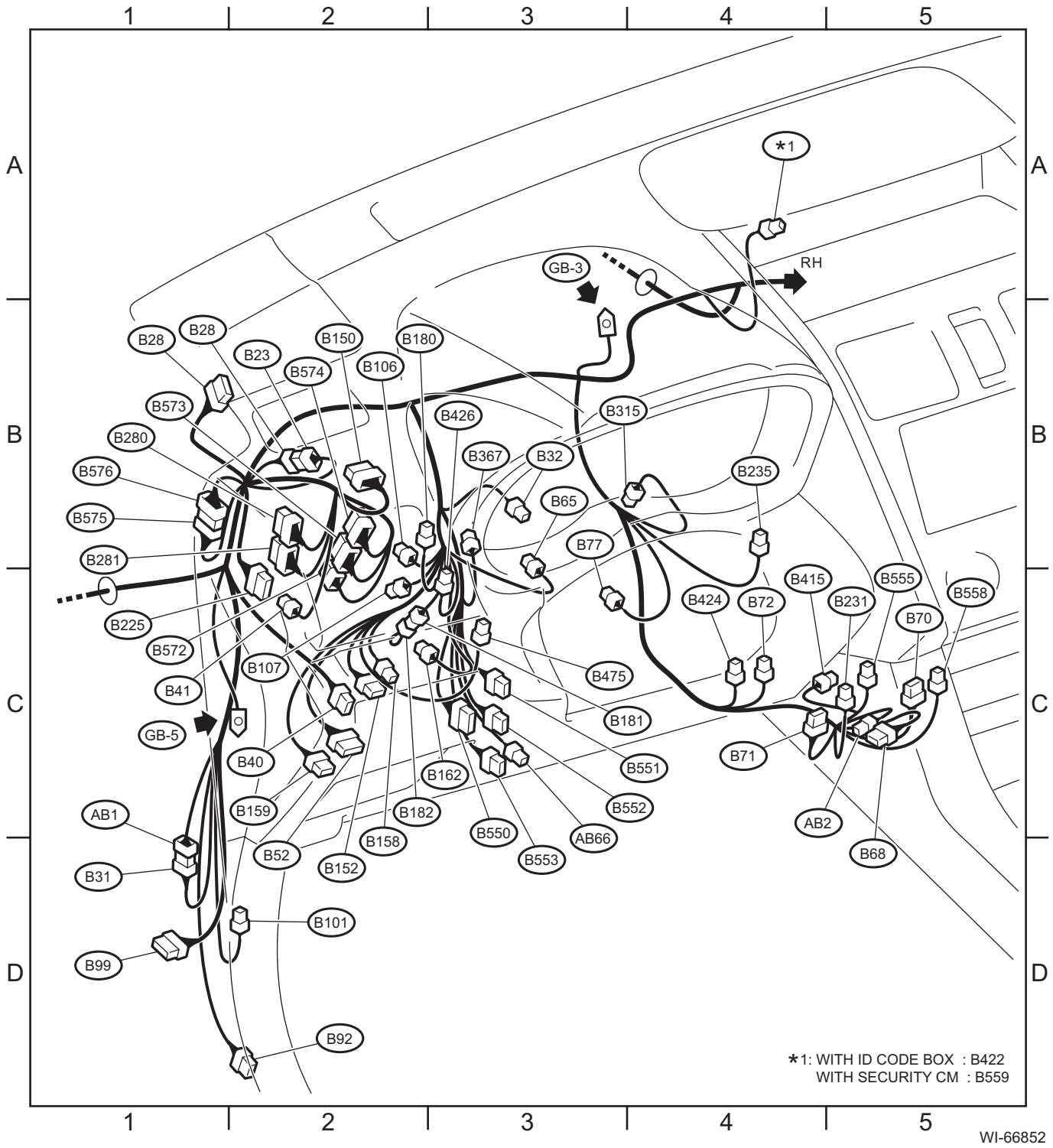

70.Engine Wiring Harness and Transmission Cord

A: LOCATION

1. ENGINE TYPE FA

Connector				Connecting to	
No.	Pole	Color	Area	No.	Description
AT1	3	Gr	D-4		Primary speed sensor
AT4	3	B	D-5		Secondary speed sensor
AT5	3	Gr	D-5		Front wheel speed sensor
AT6	3	B	D-4		Secondary pressure sensor
AT7	3	B	C-5		Rear wheel speed sensor
E3	16	Br	A-4	B22	Bulkhead wiring harness
E4	2	L	A-3		Purge control solenoid valve 1
E5	2	Gr	B-2		Fuel injector No. 1
E6	2	Gr	B-3		Fuel injector No. 3
E8	2	B	B-3		Engine coolant temperature sensor
E10	3	B	B-4		Crankshaft position sensor
E11	1	—	B-3		Oil pressure switch
E14	2	B	B-3		Knock sensor RH
E16	2	Gr	B-4		Fuel injector No. 2
E17	2	Gr	B-4		Fuel injector No. 4
E18	6	Gr	A-3		EGR control valve
E24	6	B	C-3		Front oxygen (A/F) sensor
E25	4	G	C-4		Rear oxygen sensor
E31	3	B	B-2		Ignition coil No. 1
E32	3	B	B-4		Ignition coil No. 2
E33	3	B	B-3		Ignition coil No. 3
E34	3	B	B-5		Ignition coil No. 4
E35	3	Gr	B-4		Intake camshaft position sensor LH
E36	3	Gr	B-2		Intake camshaft position sensor RH
E37	2	B	B-4		Intake oil control solenoid LH
E38	2	B	B-2		Intake oil control solenoid RH
E48	2	B	B-4		Knock sensor LH
E51	5	Gr	B-5		Tumble generator valve actuator LH
E52	2	B	A-3		Purge control solenoid valve 2
E55	5	Gr	A-3		Tumble generator valve actuator RH
E57	6	B	B-4		Electronic throttle control
E62	3	Gr	B-2		Exhaust camshaft position sensor RH
E63	2	B	B-2		Exhaust oil control solenoid RH
E64	2	B	B-2		Wastegate control solenoid valve
E65	3	Gr	C-4		Exhaust camshaft position sensor LH
E66	2	B	C-4		Exhaust oil control solenoid LH
E75	2	B	B-3		Engine oil temperature sensor
E109	2	Gr	B-2		Blowby diagnosis connector 1
E110	2	Gr	B-2		Blowby diagnosis connector 2
E111	2	Gr	B-2	E112	Blowby diagnosis connector harness
E112	2	Gr	B-2	E111	Engine wiring harness
E113	2	Gr	B-2	E114	Blowby diagnosis connector harness
E114	2	Gr	B-2	E113	Engine wiring harness
E124	4	B	A-4		Manifold absolute pressure and intake air temperature sensor

Connector				Connecting to	
No.	Pole	Color	Area	No.	Description
E130	1	★	C-3		Oil level switch
E158	48	B	A-2		ECM
E159	32	Gr	A-2		
E160	2	B	B-4		High-pressure fuel pump
E162	3	B	A-3		Fuel pressure sensor
T1	2	Gr	C-1	B24	Bulkhead wiring harness
T2	2	Br	C-1	B25	
T3	12	B	C-4	B12	
T4	20	Gr	D-4	B11	
T7	9	B	D-4		Inhibitor switch
T11	8	★	D-4	T31	Control valve body
T31	8	★	D-4	T11	Transmission cord
★:White or natural color					

Engine Wiring Harness and Transmission Cord

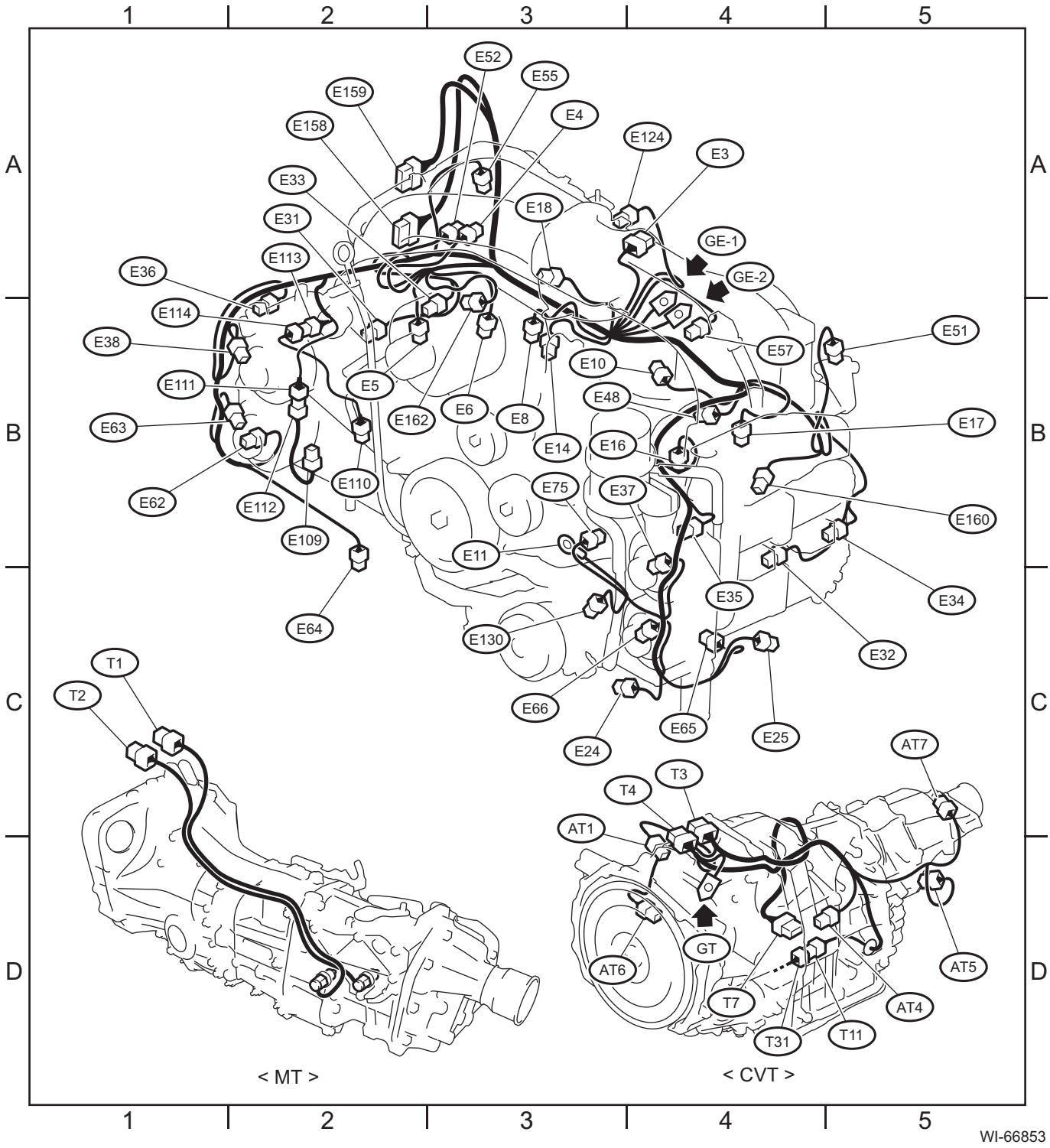

2. ENGINE TYPE EJ

Connector				Connecting to	
No.	Pole	Color	Area	No.	Description
E2	54	B	A-3	B21	Bulkhead wiring harness
E4	2	B	B-3		Purge control solenoid valve 1
E5	2	Gr	A-2		Fuel injector No. 1
E6	2	Gr	A-2		Fuel injector No. 3
E8	2	B	B-3		Engine coolant temperature sensor
E10	2	Gr	B-3		Crankshaft position sensor
E11	1	—	B-3		Oil pressure switch
E14	2	Gr	A-4		Knock sensor
E16	2	Gr	B-4		Fuel injector No. 2
E17	2	Gr	B-4		Fuel injector No. 4
E19	1	★	B-2		Power steering oil pressure switch
E21	3	B	A-3		Manifold absolute pressure sensor
E31	3	Gr	B-2		Ignition coil No. 1
E32	3	Gr	C-4		Ignition coil No. 2
E33	3	Gr	B-2		Ignition coil No. 3
E34	3	Gr	B-4		Ignition coil No. 4
E35	3	Gr	B-4		Intake camshaft position sensor LH
E36	3	Gr	A-3		Intake camshaft position sensor RH
E37	2	L	B-4		Intake oil flow control solenoid valve LH
E38	2	L	A-2		Intake oil flow control solenoid valve RH
E40	6	B	A-4		Secondary air combination valve LH
E41	2	B	B-4		Secondary air combination valve RH
E51	5	Gr	B-5		Tumble generator valve actuator LH
E52	2	B	A-3		Purge control solenoid valve 2
E55	5	Gr	A-2		Tumble generator valve actuator RH
E57	6	B	A-3		Electronic throttle control
E62	3	Gr	B-2		Exhaust camshaft position sensor RH
E63	2	L	B-2		Exhaust oil flow control solenoid valve RH
E64	2	L	A-3		Wastegate control solenoid valve
E65	3	Gr	C-4		Exhaust camshaft position sensor LH
E66	2	L	C-4		Exhaust oil flow control solenoid valve LH
E80	2	Gr	A-3		Leak diagnosis connector 1
E87	2	Gr	A-3		Leak diagnosis connector 2
E88	2	B	A-3		Leak diagnosis connector 3
E98	2	Gr	A-2		Leak diagnosis connector 4
E99	2	B	B-5		Leak diagnosis connector 5
E100	2	Gr	A-4		Leak diagnosis connector 6
E101	2	B	A-2	E102	Leak diagnosis connector harness
E102	2	B	A-2	E101	Engine wiring harness
E103	2	B	A-3	E104	Leak diagnosis connector harness
E104	2	B	A-3	E103	Engine wiring harness
E105	2	B	A-5	E106	Leak diagnosis connector harness
E106	2	B	A-5	E105	Engine wiring harness
E107	2	Gr	A-4	E108	Leak diagnosis connector harness
E108	2	Gr	A-4	E107	Engine wiring harness
E134	2	Gr	B-2	E135	Exhaust oil flow control solenoid valve harness
E135	2	Gr	B-2	E134	Engine wiring harness
T1	2	Gr	D-4	T13	Transmission cord
T2	2	Br	D-4	T12	
T5	4	Gr	D-3	B19	Bulkhead wiring harness

Engine Wiring Harness and Transmission Cord

Connector				Connecting to	
No.	Pole	Color	Area	No.	Description
T6	4	Gr	D-4		Rear oxygen sensor
T9	6	Gr	D-3	B128	Bulkhead wiring harness
T12	2	Br	D-3	T2	Neutral position switch 1
T13	2	Gr	D-3	T1	Back-up light switch
T16	2	★	D-3	T17	Center differential
T17	2	★	D-4	T16	Transmission cord
★ White or natural color					

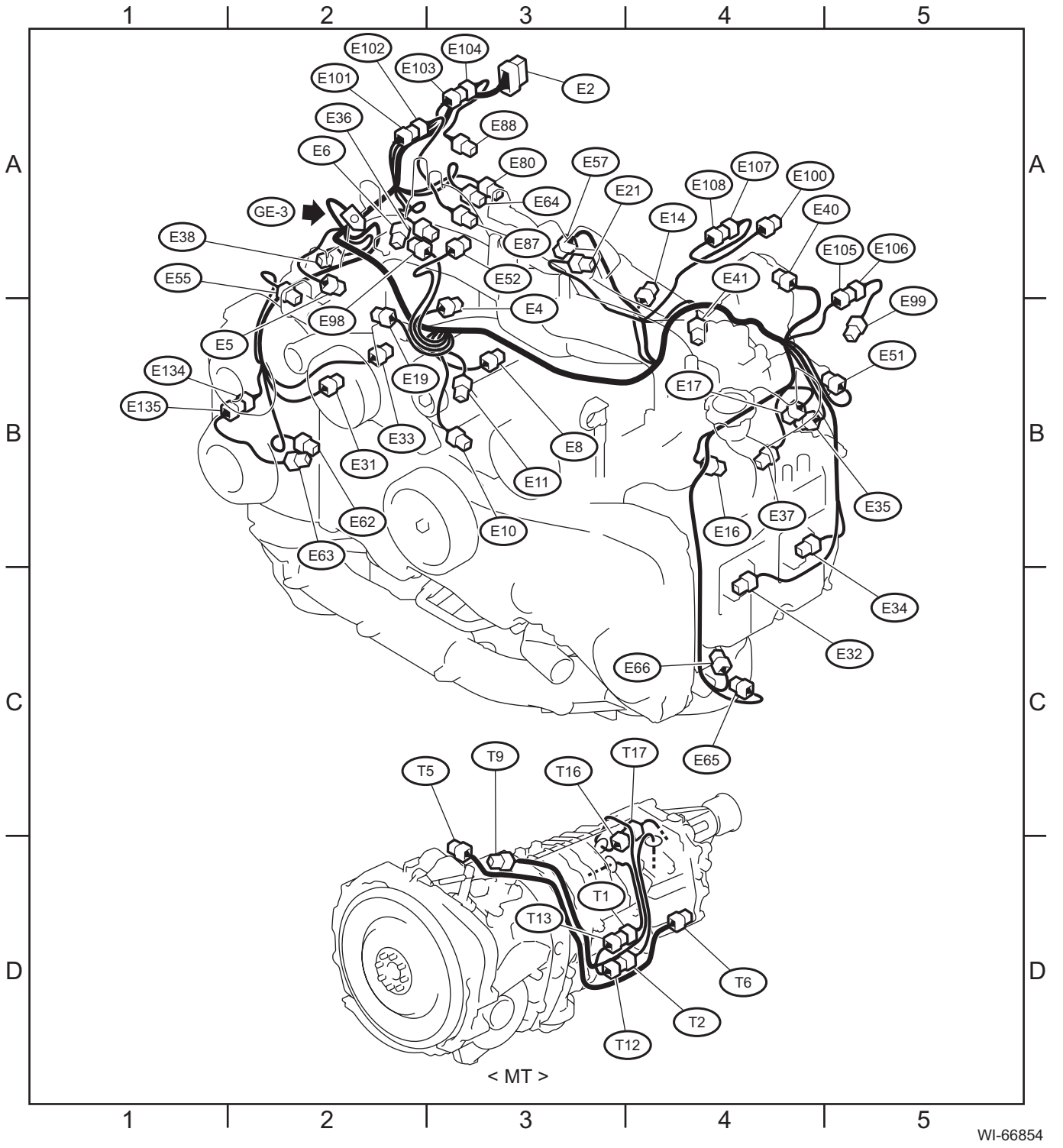

71.Instrument Panel Wiring Harness RH

A: LOCATION

Connector				Connecting to	
No.	Pole	Color	Area	No.	Description
AD15	4	Gr	C-2		Audio (without navigation)
			B-2		Navigation unit (with navigation)
AD16	4	Gr	D-4		AUX input terminal (USB)
i7	4	Gr	B-2		MFD switch
i9	2	★	C-2		Pocket light
i22	4	★	B-2		Hazard switch
i23	2	★	B-4		Glove box illumi. light
i24	2	★	C-2		Front accessory power supply socket
i29	1	★	B-2		Audio bracket ground
i35	10	★	B-2		Audio (without navigation)
					Navigation unit (with navigation)
i36	6	★	B-2		Audio (without navigation)
					Navigation unit (with navigation)
i38	4	★	B-1		J/C
i53	24	★	C-4	R98	Rear wiring harness RH
i76	28	★	B-4	D83	Front door cord RH
i85	10	★	B-2		Audio
i87	28	★	B-2		Audio (without navigation)
					Navigation unit (with navigation)
i88	40	★	C-2		A/C control panel (auto A/C)
i89	3	★	A-3		Auto light sensor
i131	6	★	B-2		Audio
i146	5	★	B-2		Audio (without navigation)
					Navigation unit (with navigation)
i159	4	★	A-4		Side tweeter RH (without audio amplifier)
	2	★	A-4		Side tweeter RH (with audio amplifier)
i168	4	★	B-3		J/C
i169	4	★	B-3		
i192	28	★	B-2		Audio
i195	20	★	C-4	R382	Rear wiring harness RH
i237	12	★	B-3	B583	Bulkhead wiring harness
i238	20	★	B-3	B584	
i270	20	Gr	B-2		Data communication module
i271	16	Gr	B-2		Data communication module
i272	8	★	B-2		Audio (without navigation)
					Navigation unit (with navigation)
★ White or natural color					

Instrument Panel Wiring Harness RH

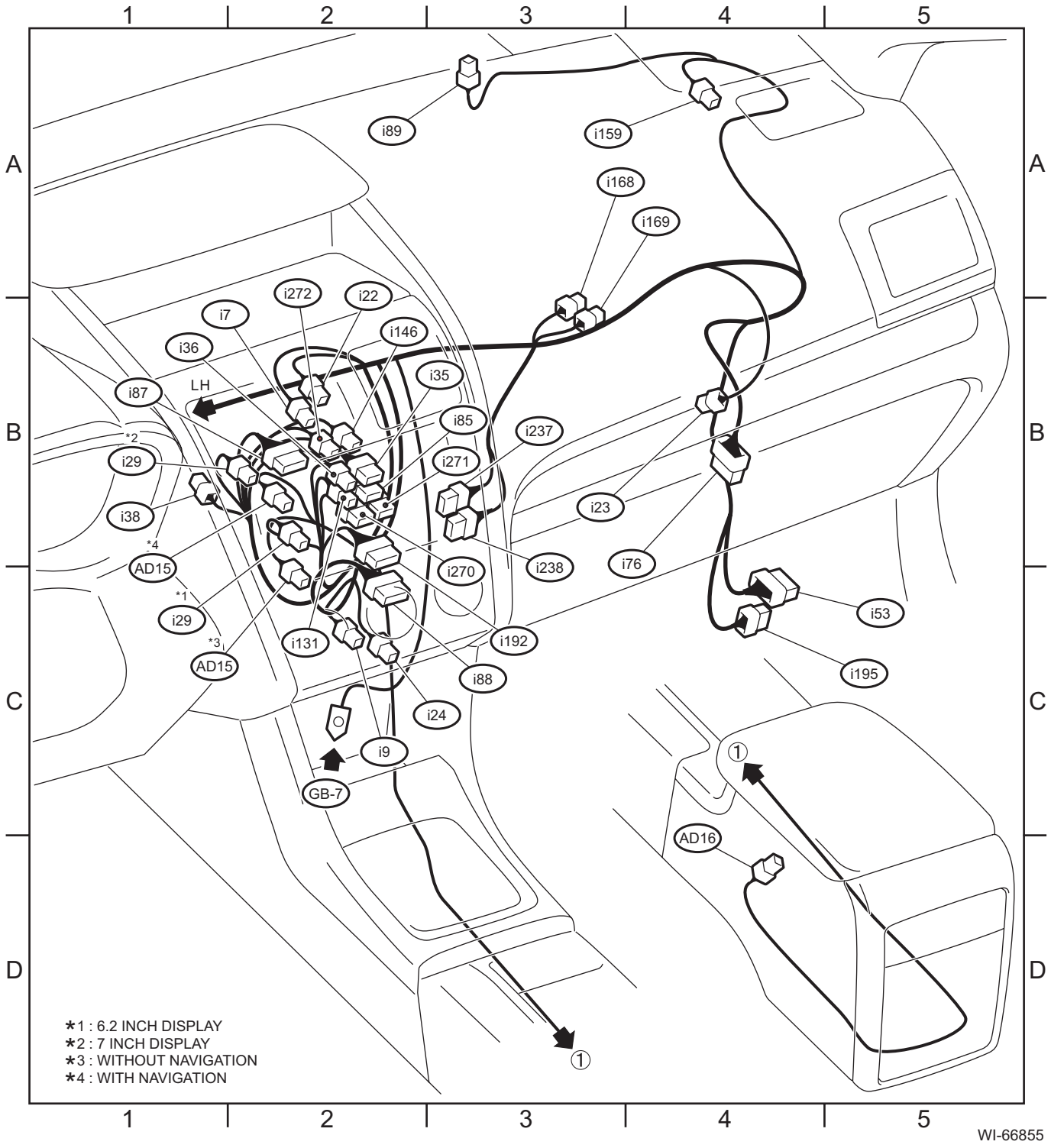

72.Instrument Panel Wiring Harness LH

A: LOCATION

Connector				Connecting to	
No.	Pole	Color	Area	No.	Description
i2	20	★	D-1	R339	Rear wiring harness LH
i5	20	★	C-2		F/B
i10	40	★	B-3		Combination meter
i13	4	Gr	C-3		Trunk lid opener switch
i28	4	Gr	C-2		OP connector (fog light switch)
i51	2	★	A-4		Sunload sensor
i55	2	★	B-4		In-vehicle sensor
i79	6	★	C-2		Illumination control switch
i84	35	★	C-2		Body integrated unit
i94	4	★	C-2		BSD/RCTA OFF switch
i101	28	★	D-2	D84	Front door cord LH
i102	20	★	D-1	R167	Rear wiring harness LH
i122	12	B	A-5		MFD
i150	14	★	B-4		Push button ignition switch
i158	4	★	B-2		Side tweeter LH (without audio amplifier)
	2	★	B-2		Side tweeter LH (with audio amplifier)
i166	4	★	B-2		J/C
i167	4	★	B-2		
i171	31	★	C-2		Body integrated unit
i229	12	★	C-2	B551	Bulkhead wiring harness
i230	17		C-2	B552	
i231	20		C-2	B553	
i232	8	★	B-4		J/C
i233	8	★	B-4		
i234	6	Gr	C-2		VDC OFF switch & SRF OFF switch
★:White or natural color					

Instrument Panel Wiring Harness LH

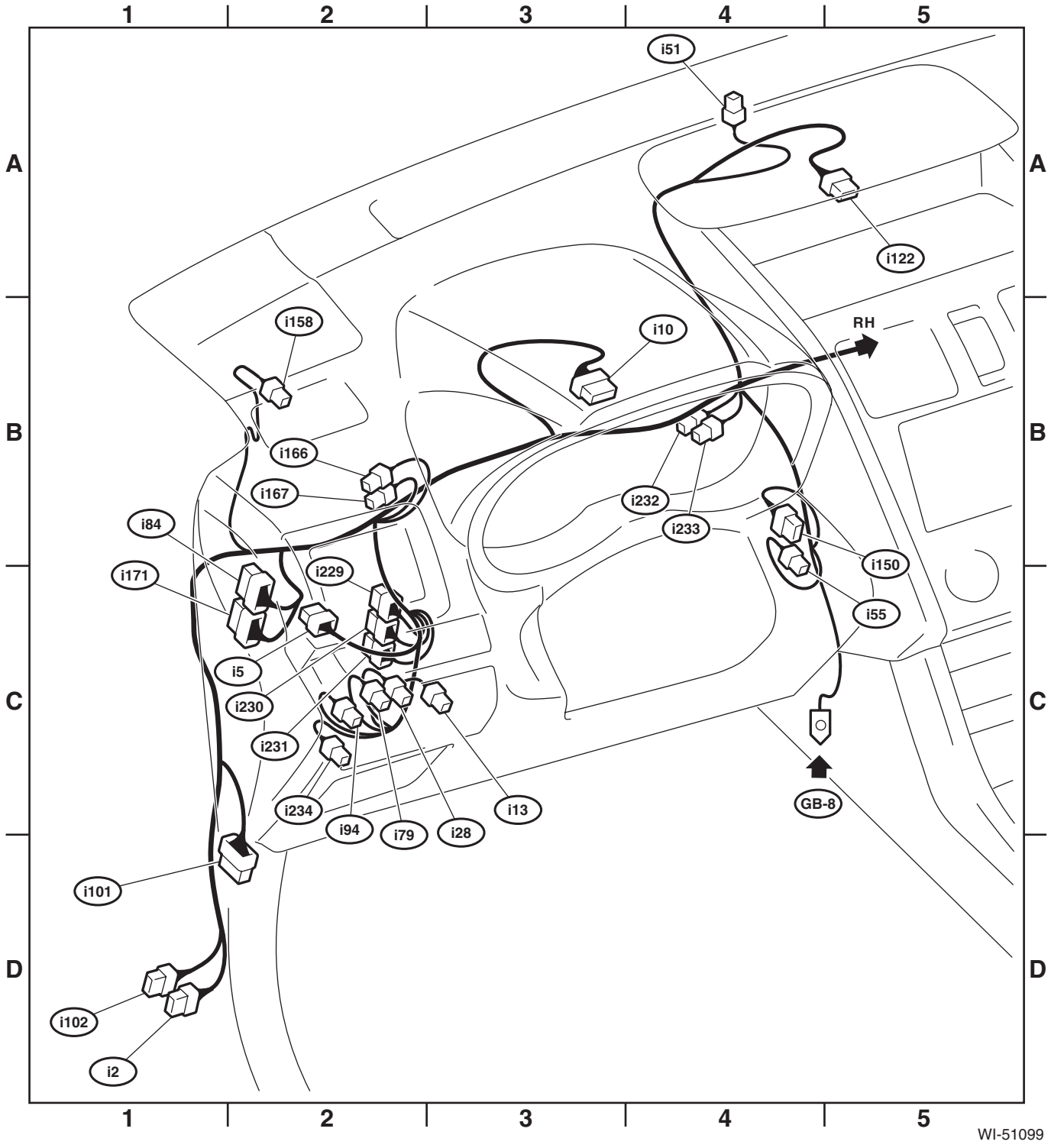

73.Roof Cord

A: LOCATION

Connector				Connecting to	
No.	Pole	Color	Area	No.	Description
AD1	8	★	C-4		Bulkhead wiring harness
AD4	8	★	B-4		Telematics button
R50	20	★	B-2	B90	Bulkhead wiring harness
R51	2	B	B-3		Vanity mirror light RH
R52	3	★	B-4		Room light
R54	2	B	B-4		Vanity mirror light LH
R55	8	★	B-4		Sunroof unit
R56	6	★	B-3		Spot map light (without sunroof)
R62	10	★	B-3		Spot map light (with sunroof)
R128	5	★	B-4		Sunroof switch
R135	5	Gr	B-4	R406	Stereo camera cover adapter cord
R137	16	★	B-3		Stereo camera
R139	3	★	B-3		Rear view mirror
R187	5	B	B-4		Sunroof switch (tilt)
R405	12	★	B-4	R407	Stereo camera cover adapter cord
R406	5	Gr	B-4	R135	Pre-collision brake OFF & lane departure warning OFF switch
R407	12	★	B-4	R405	Roof cord
R430	6	★	B-2	B151	Bulkhead wiring harness
★:White or natural color					

Roof Cord

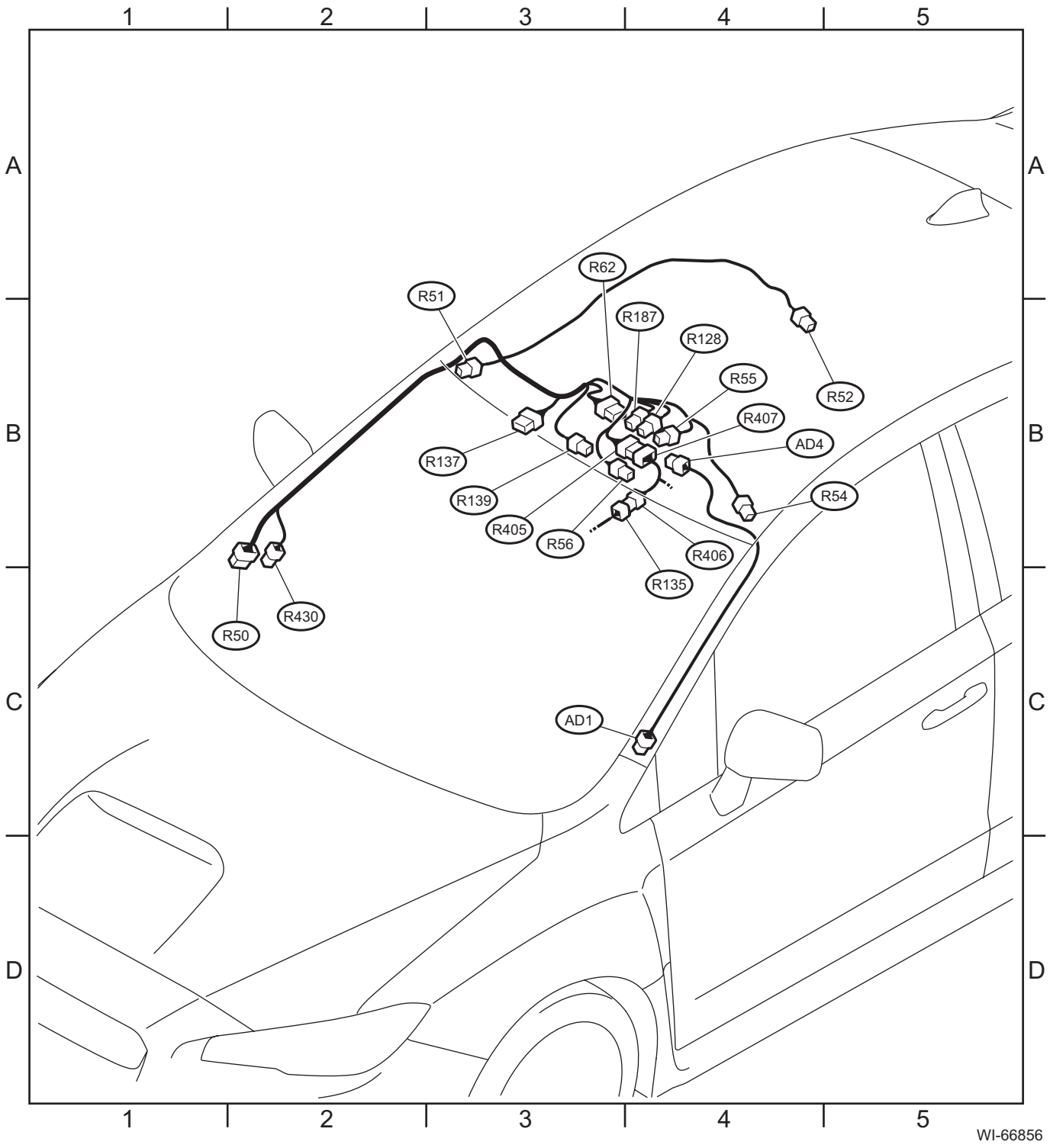
1
2
3
4
5
A
B
C
D
R62
R51
R187
R128
R55
R52
R407
AD4
R137
R139
R405
R56
R406
R54
R135
R50
R430
AD1
WI-66856

74.Rear Wiring Harness RH

A: LOCATION

Connector				Connecting to	
No.	Pole	Color	Area	No.	Description
AB18	24	Y	C-3		Airbag CM
AB24	4	Y	B-3		Side airbag module RH
AB26	2	B	B-3		Pretensioner RH
AB28	4	Y	B-3		Side airbag sensor RH
AB30	2	B	B-3		Lap seat belt pretensioner RH
AB53	3	Gr	B-3	AB59	Occupant detection wiring harness
AB59	3	Br	B-3	AB53	Rear wiring harness
AB60	2	Y	B-3		Buckle switch
AB61	10	B	C-3		Occupant detection control module
AD6	20	★	D-5	R34	Rear wiring harness LH
AD8	8	★	D-4		Seat heater switch
AD9	2	★	D-4		Rear accessory power supply socket (console)
AD10	10	★	D-4	R33	Rear wiring harness LH
AD17	8	★	D-4		AUX input terminal
R1	20	★	C-1	B97	Bulkhead wiring harness
R12	3	★	A-3		Front door switch RH
R13	8	★	A-3	D28	Rear door cord RH
R18	12	B	B-4	R21	Rear wiring harness LH
R33	10	★	D-4	AD10	Multi select switch
R34	20	★	D-5	AD6	Adapter cord LH
R42	4	★	B-4		Seat heater switch RH
R43	4	L	B-4		Seat heater switch LH (without SI-DRIVE)
R44	4	★	B-3		Seat heater RH
R82	19	B	B-4	R81	Rear wiring harness LH
R98	24	★	C-1	i53	Instrument panel wiring harness
R124	2	★	C-1	AB63	Airbag wiring harness
R284	8	★	B-5		AUX input terminal
R311	2	★	B-5		Rear accessory power supply socket (console)
R382	20	★	C-1	i195	Instrument panel wiring harness
★:White or natural color					

Rear Wiring Harness RH

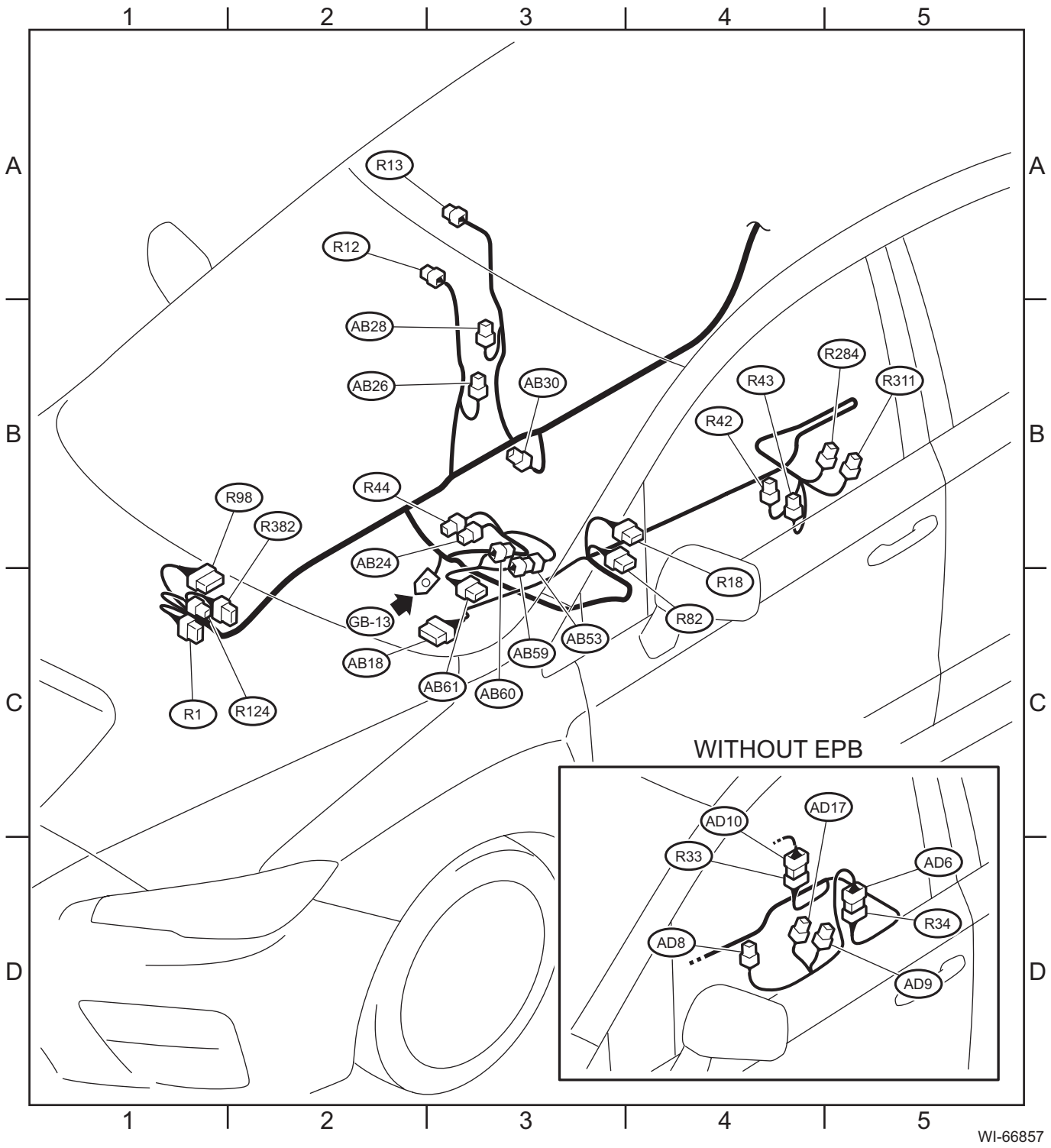

75.Rear Wiring Harness LH

A: LOCATION

Connector				Connecting to	
No.	Pole	Color	Area	No.	Description
AB17	24	Y	B-1		Airbag CM
AB19	4	Y	B-3		Side airbag module LH
AB21	2	B	B-4		Pretensioner LH
AB23	4	Y	B-4		Side airbag sensor LH
AB35	2	B	C-2		F/B
AD2	4	Gr	B-3		Hill hold switch
AD3	12	★	B-3		EPB control switch
AD8	8	★	B-3		Seat heater switch
AD9	2	★	B-4		Rear accessory power supply socket (console)
AD17	8	★	B-4		AUX input terminal
AD18	18	★	B-3	R175	Rear wiring harness LH
AD19	6	★	B-3	R176	Rear wiring harness LH
R3	24	★	C-2	B99	Bulkhead wiring harness
R4	1	B	B-3		Parking brake switch
R5	10	★	C-2	B92	Bulkhead wiring harness
R9	3	★	B-4		Front door switch LH
R10	8	★	B-4	D22	Rear door cord LH (without audio amplifier)
R21	12	B	B-2	R18	Rear wiring harness RH
R41	4	★	B-3		Seat heater LH
R81	19	B	B-2	R82	Rear wiring harness RH
R108	2	★	C-3		Seat belt switch LH
R110	2	B	C-3	R205	Power seat LH
R123	2	★	C-2	AB62	Airbag wiring harness
R167	20	★	C-2	i102	Instrument panel wiring harness
R168	20	★	C-2		F/B
R175	18	★	B-3	AD18	Adapter cord LH
R176	6	★	B-3	AD19	Adapter cord LH
R361	24	★	C-3		RAB CM
R339	20	★	C-2	i2	Instrument panel wiring harness
★:White or natural color					

Rear Wiring Harness LH

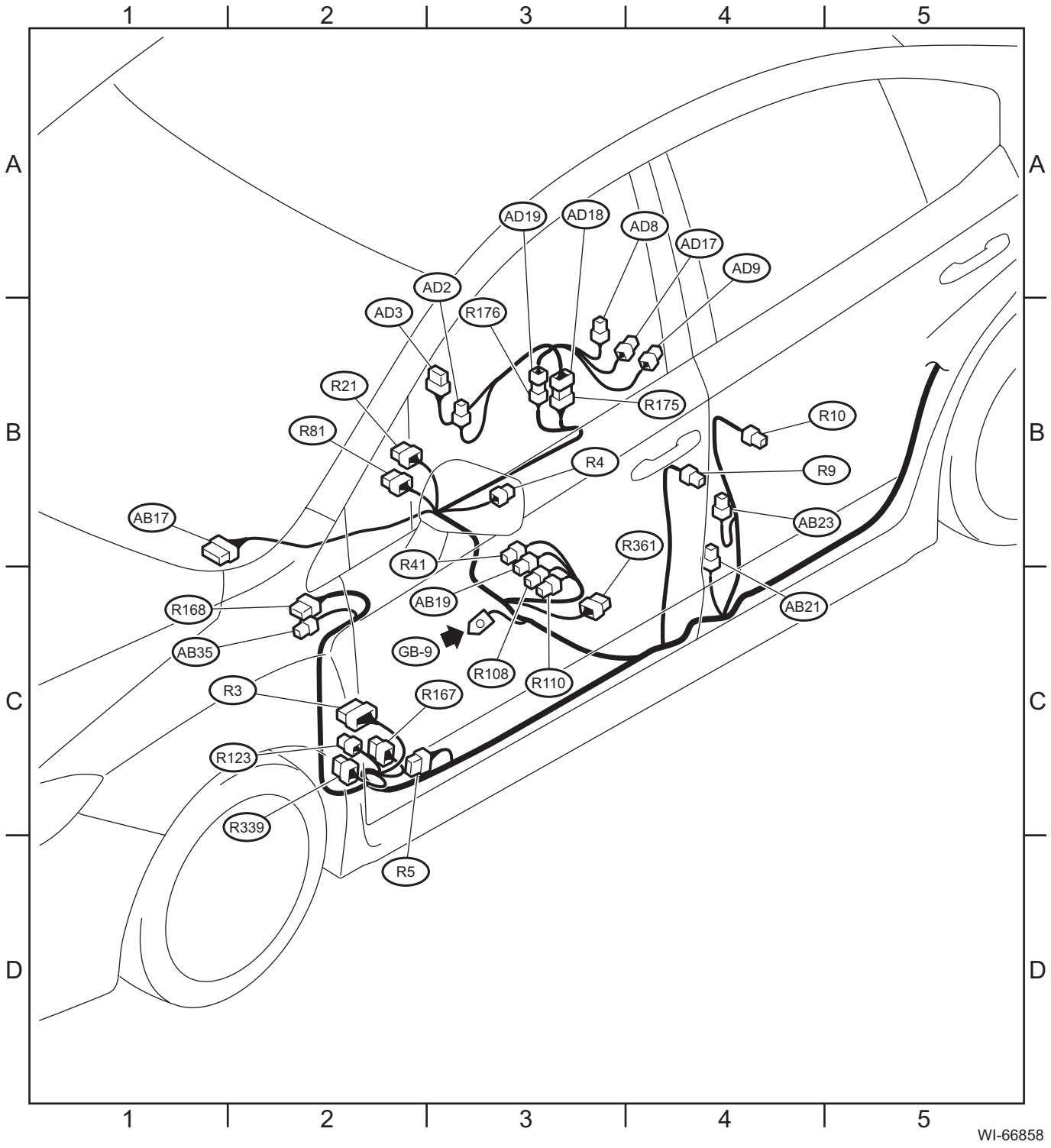

76.Door Cord RH

A: LOCATION

Connector				Connecting to	
No.	Pole	Color	Area	No.	Description
AB63	2	★	C-2	R124	Rear wiring harness RH
AB64	2	Y	C-3		Front door impact sensor RH
D1	8	★	C-1	B30	Bulkhead wiring harness
D12	2	★	C-2		Front door speaker RH (standard model)
	2	★	C-2		Front door speaker RH (premium model)
D13	6	Gr	C-2		Front power window motor RH
D15	10	★	C-2		Outer mirror assembly RH
D17	12	★	C-2		Front power window sub-switch
D18	10	★	B-3		Front door lock actuator RH
D28	8	★	B-3	R13	Rear wiring harness RH
D29	2	★	C-3		Rear door speaker RH (standard model)
	2	★	C-3		Rear door speaker RH (premium model)
D30	6	Gr	B-4		Rear power window motor RH
D31	8	★	B-4		Rear power window switch RH
D32	10	★	A-4		Rear door lock actuator RH
D56	6	★	B-3		Outer handle RH
D83	28	★	C-2	i76	Instrument panel wiring harness
D125	5	★	C-2		Passenger's seat door lock switch
★:White or natural color					

Door Cord RH

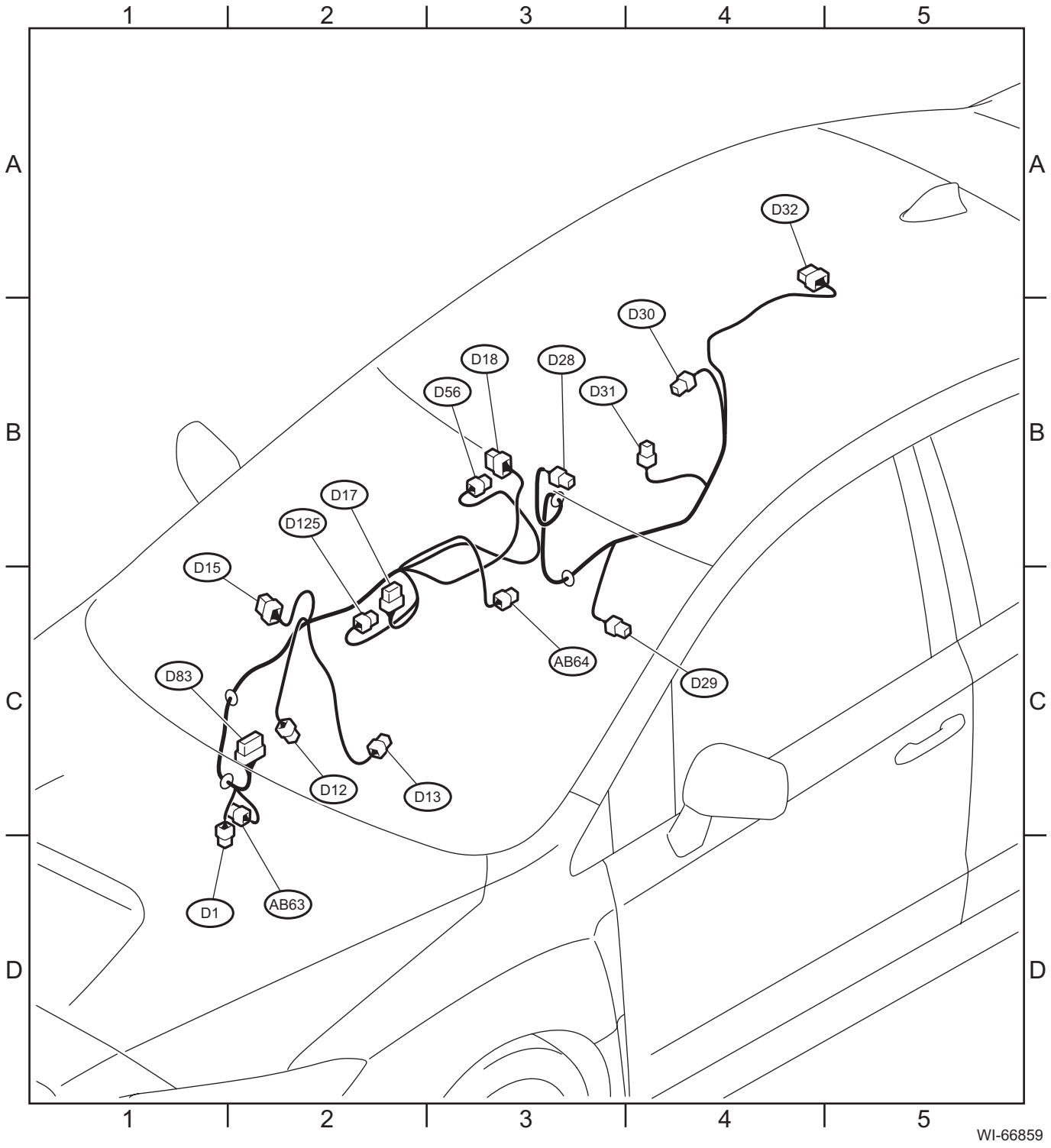
1
2
3
4
5
A
B
C
D
D32
D30
D18
D28
D56
D31
D17
D125
D15
AB64
D29
D83
D12
D13
D1
AB63
WI-66859

77.Door Cord LH

A: LOCATION

Connector				Connecting to	
No.	Pole	Color	Area	No.	Description
AB58	2	Y	C-3		Front door impact sensor LH
AB62	2	Y	D-2	R123	Rear wiring harness LH
D2	2	★	C-2		Front door speaker LH (standard model)
	2	★	C-2		Front door speaker LH (premium model)
D3	6	Gr	C-3		Front power window motor LH
D5	10	★	C-2		Outer mirror assembly LH
D7	16	★	C-3		Power window main switch
D11	8	★	D-2	B101	Bulkhead wiring harness
D22	8	★	B-3	R10	Rear wiring harness LH
D23	2	★	C-4		Rear door speaker LH (standard model)
	2	★	C-4		Rear door speaker LH (premium model)
D24	6	Gr	B-4		Rear power window motor LH
D25	8	★	B-4		Rear power window switch LH
D26	10	★	B-5		Rear door lock actuator LH
D66	6	★	B-3		Outer handle LH
D72	10	★	B-3		Front door lock actuator LH
D84	28	★	C-2	i101	Instrument panel wiring harness
D102	3	★	C-2		Power window main switch
D149	16	★	C-2		Remote control mirror switch
★:White or natural color					

Door Cord LH

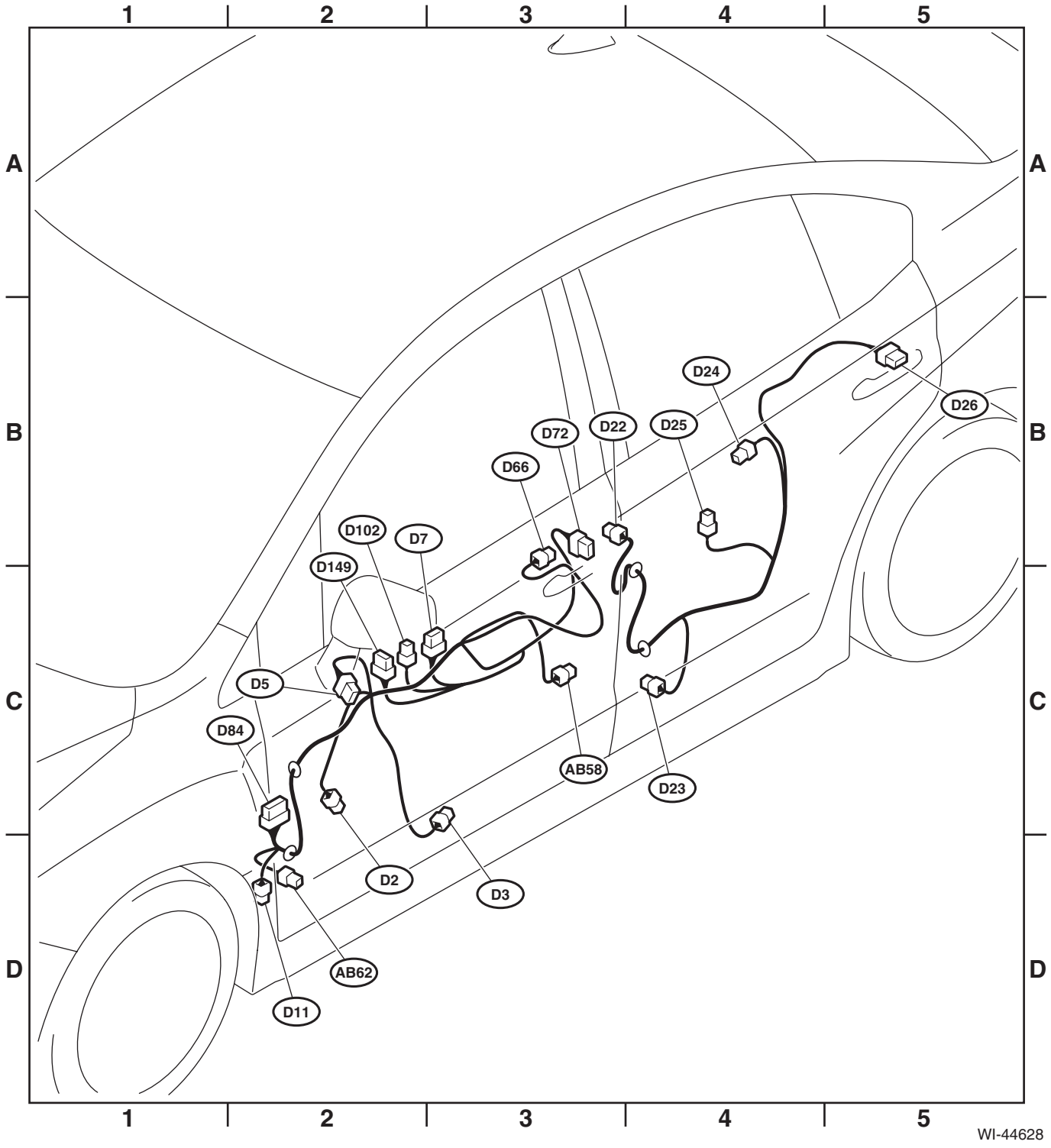
1
2
3
4
5
A
B
C
D
D24
D26
D72
D22
D25
D66
D102
D7
D149
D5
D84
AB58
D23
D2
D3
AB62
D11
WI-44628

78.Rear Wiring Harness and Trunk Lid Cord

A: LOCATION

Connector				Connecting to	
No.	Pole	Color	Area	No.	Description
AB31	2	B	B-2		Curtain airbag module LH
AB32	4	Y	C-1		Curtain airbag sensor LH
AB33	2	B	A-4		Curtain airbag module RH
AB34	4	Y	B-4		Curtain airbag sensor RH
AB41	2	Y	B-2		Satellite safing sensor
R11	2	B	C-3		Rear differential oil temperature sensor
R14	4	★	B-3		J/C
R16	3	★	B-4		Rear door switch RH
R17	1	B	B-4		Amplifier bracket ground
R19	2	★	B-4		High-mounted stop light
R20	2	B	B-4		Trunk room light
R22	3	★	C-2		Rear door switch LH
R24	12	★	B-4	R60	Trunk lid cord
R25	10	B	C-3		Radar sensor LH (master)
R26	6	★	B-5		Rear combination light RH
R28	6	★	C-3		Rear combination light LH
R29	3	B	C-3		Rear vehicle height sensor
R58	6	Gr	B-2		Fuel pump assembly (engine type EJ)
	4	★	B-2		Fuel pump assembly (engine type FA)
R59	2	★	B-2		Fuel sub level sensor
R60	12	★	B-5	R24	Rear wiring harness RH
R61	10	B	B-5		Radar sensor RH (slave)
R65	1	B	B-2		Rear defogger (–)
R72	2	Gr	B-3		Rear ABS wheel speed sensor RH
R73	2	Gr	C-2		Rear ABS wheel speed sensor LH
R76	2	★	C-4		License plate light LH
R77	2	★	B-4		License plate light RH
R80	8	★	B-3		Keyless entry CM (without push button start)
R97	1	★	B-2	AN8	Antenna cord
R117	4	★	B-3		Woofer
R122	6	★	B-4		Fuel pump CU (engine type FA)
	10	Gr	B-4		Fuel pump CU (engine type EJ)
R140	2	B	B-1	B35	Bulkhead wiring harness
R149	2	★	B-1	B33	
R153	2	B	B-4		Rear brake caliper RH
R154	2	B	C-2		Rear brake caliper LH
R164	10	G	C-3		J/C
R174	1	B	A-4		Rear defogger (+)
R180	10	G	C-2		CAN J/C
R186	3	★	C-4		Trunk lid lock actuator & switch
R211	12	★	C-2		TPMS CM
R221	12	★	B-3		TPMS & keyless entry CM
R294	2	Br	B-4		Trunk opener button
R296	5	★	B-3		Receiver (with push button start)
R297	3	★	B-3		Keyless access interior antenna (rear)
R298	3	★	B-3		Keyless access interior antenna (center)

Connector				Connecting to	
No.	Pole	Color	Area	No.	Description
R299	6	★	C-4		Keyless access exterior antenna (rear)
R316	10	★	B-3		Audio amplifier
R317	12	★	B-3		
R330	4	★	B-5	R356	Trunk lid cord
R356	4	★	B-5	R330	Rear wiring harness RH
R357	4	★	C-4		Rearview camera
R362	8	Gr	C-3	R368	Sonar sensor cord
R364	2	B	C-4		Sonar sensor (Left corner)
R365	2	B	C-4		Sonar sensor (Left inner)
R366	2	B	C-5		Sonar sensor (Right corner)
R367	2	B	C-5		Sonar sensor (Right inner)
R368	8	Gr	C-3	R362	Rear wiring harness
R386	24	★	B-3		Audio amplifier
R400	8	★	B-3		Leak check valve assy
★:White or natural color					

Rear Wiring Harness and Trunk Lid Cord

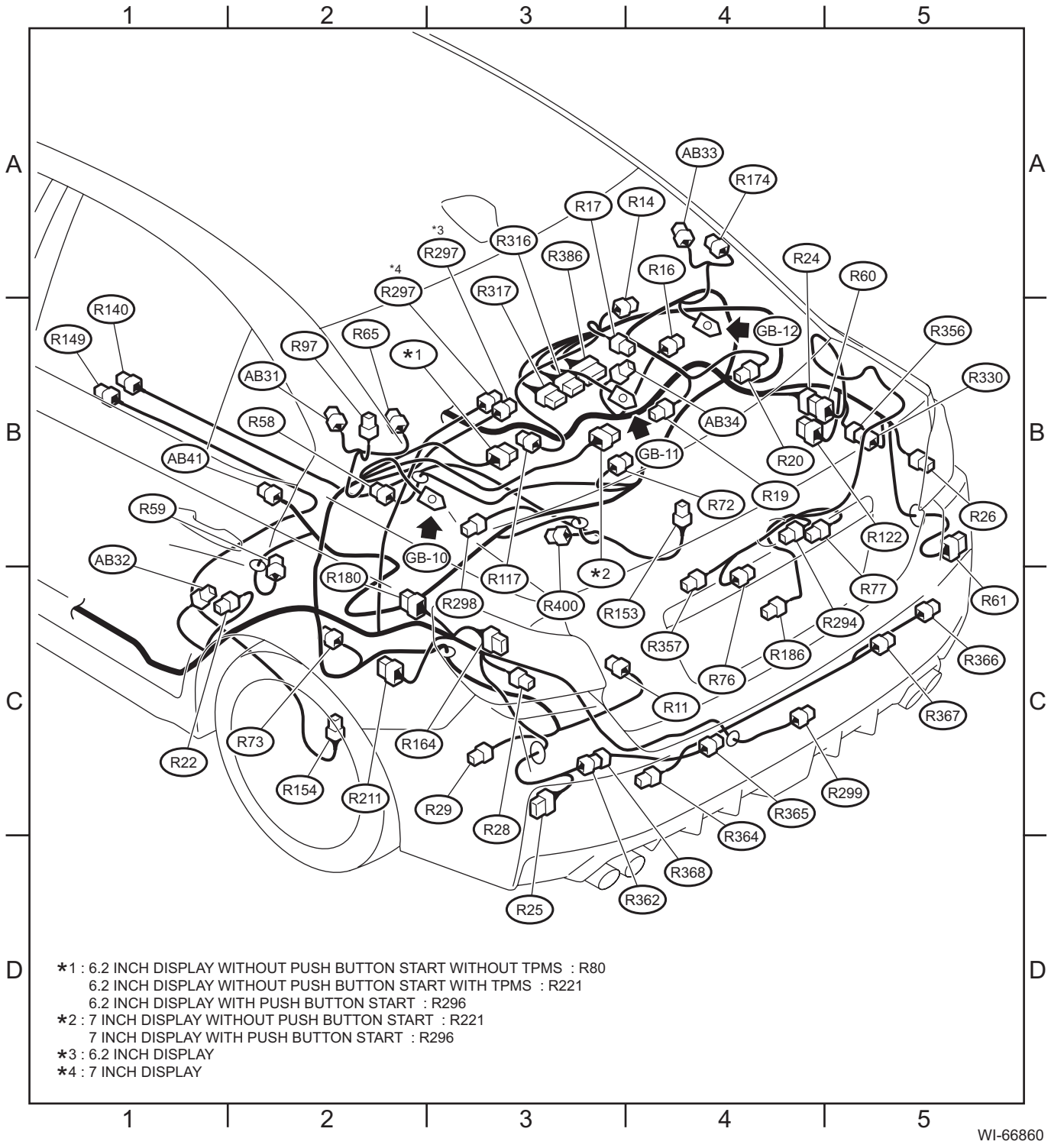

*1 : 6.2 INCH DISPLAY WITHOUT PUSH BUTTON START WITHOUT TPMS : R80
6.2 INCH DISPLAY WITHOUT PUSH BUTTON START WITH TPMS : R221
6.2 INCH DISPLAY WITH PUSH BUTTON START : R296
*2 : 7 INCH DISPLAY WITHOUT PUSH BUTTON START : R221
7 INCH DISPLAY WITH PUSH BUTTON START : R296
*3 : 6.2 INCH DISPLAY
*4 : 7 INCH DISPLAY

79.Antenna Cord

A: LOCATION

1. WITHOUT TELEMATICS

Connector				Connecting to	
No.	Pole	Color	Area	No.	Description
AN1	3	Gr	B-3	AN18	Antenna cord
AN2	1	G	B-3	AN19	
AN3	3	★	B-2	AN5	
AN4	1	G	B-2	AN6	
AN5	3	★	B-2	AN3	
AN6	1	G	B-2	AN4	
AN7	3	★	B-5	AN9	
AN8	1	★	C-5	R97	Rear wiring harness LH
AN9	3	★	C-5	AN7	Antenna cord
AN11	3	Gr	B-5	AN15	Antenna
AN15	3	Gr	B-5	AN11	Antenna cord
AN16	3	★	B-3		Audio (without navigation)
	3	★	B-3		Navigation unit (with navigation)
AN17	1	L	B-2		Audio (without navigation)
	1	L	B-2		Navigation unit (with navigation)
AN18	2	Gr	B-3	AN1	Antenna cord
AN19	1	G	B-3	AN2	
★:White or natural color					

Antenna Cord

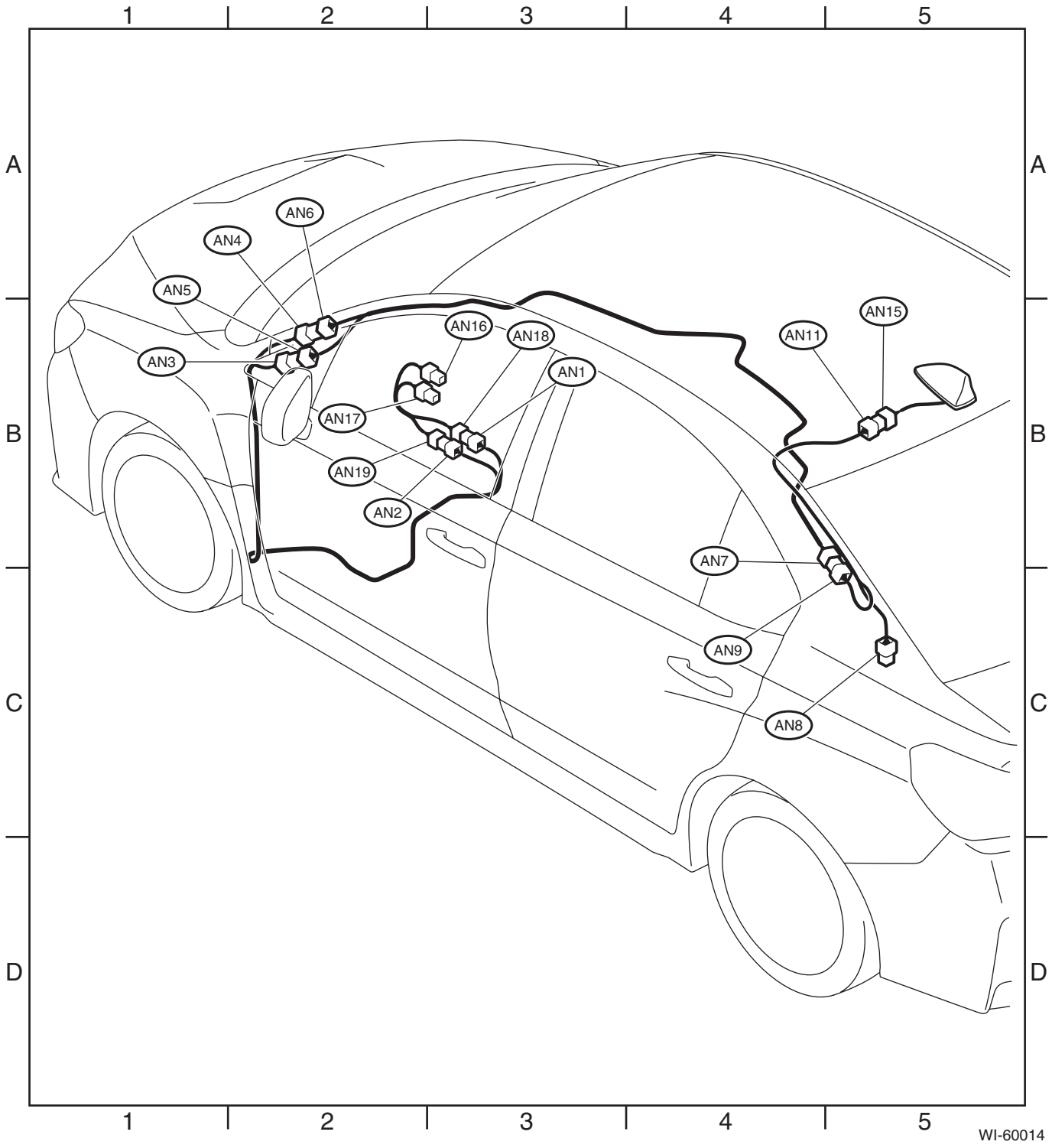

2. WITH TELEMATICS

Connector				Connecting to	
No.	Pole	Color	Area	No.	Description
AN1	3	★	B-3	AN18	Antenna cord
AN3	3	★	B-2	AN5	
AN5	3	★	B-2	AN3	
AN7	3	L	B-4	AN9	
AN8	1	★	C-5	R97	Rear wiring harness LH
AN9	3	L	C-5	AN7	Antenna cord
AN11	3	Gr	B-5	AN15	Antenna
AN15	3	Gr	B-5	AN11	Antenna cord
AN16	3	★	B-3		Audio (without navigation)
	3	★	B-3		Navigation unit (with navigation)
AN17	1	L	B-2		Audio (without navigation)
	1	L	B-2		Navigation unit (with navigation)
AN18	3	★	B-3	AN1	Antenna cord
AN20	1	V	B-3	AN21	
AN21	1	V	B-3	AN20	
AN22	1	V	B-2	AN23	
AN23	1	V	B-2	AN22	
AN24	1	V	B-5	AN25	Antenna
AN25	1	V	B-5	AN24	Antenna cord
AN41	1	Br	B-2		Data communication module
★:White or natural color					

Antenna Cord

