34.Remote Control Mirror System

A: WIRING DIAGRAM

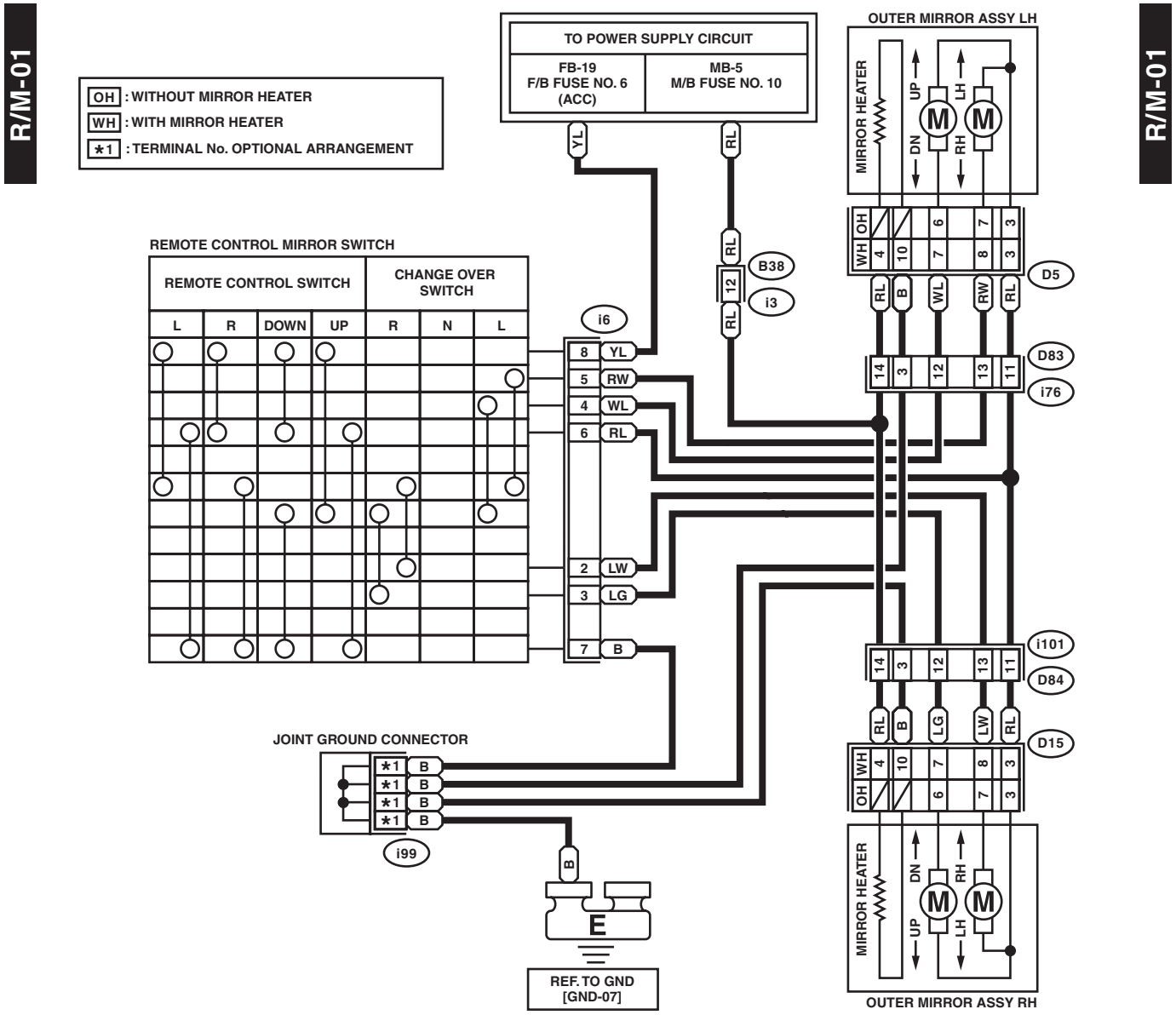

WI-30462