NEW CAR INFORMATION SECTION

FOREWORD

This manual has been prepared to provide information for the construction, operation and other technical details of SUBARU vehicles.
Read this manual thoroughly and make the most of it to give better service to your customers and improve your knowledge of vehicle maintenance.

All information, illustration and specifications contained in this manual are based on the latest product information available at the time of publication approval.

FUJI HEAVY INDUSTRIES LTD.

QUICK REFERENCE INDEX

Specifications	SPC
Fuel Injection (Fuel System)	FU (SOHC)
Fuel Injection (Fuel System)	FU (DOHC TURBO)
Emission Control (Aux. Emission Control Devices)	EC (SOHC)
Emission Control (Aux. Emission Control Devices)	EC (DOHC TURBO)
Intake (Induction)	IN (SOHC)
Intake (Induction)	IN (DOHC TURBO)
Mechanical	ME (SOHC)
Mechanical	ME (DOHC TURBO)
Exhaust	EX (SOHC)
Exhaust	EX (DOHC TURBO)
Cooling	CO
Lubrication	LU
Speed Control System	SP
Ignition	IG (SOHC)
Ignition	IG (DOHC TURBO)
Starting/Charging	SC
Control System	CS

W1830BE

QUICK REFERENCE INDEX

Automatic Transmission	AT
Manual Transmission and Differential	MT
Clutch	CL
Front Suspension	FS
Rear Suspension	RS
Differentials	DI
Drive Shaft System	DS
ABS	ABS
Brakes	BR
Parking Brake	PB
Power Assisted System (Power Steering)	PS
HVAC System (Heater, Ventilator and A/C)	AC
Airbag System	AB
Seat Belt System	SB
Wiper and Washer Systems	WW
Glass/Windows/Mirrors	GW
Body Structure	BS
Instrumentation/Driver Info	IDI

QUICK REFERENCE INDEX

Seats	SE
Security and Locks	SL
Exterior/Interior Trim	EI
Exterior Body Panels	EB
Cruise Control System	CC

FOREWORD

All right reserved. This book may not be reproduced or copied, in whole or in part, without the written permission of FUJI HEAVY INDUSTRIES LTD., TOKYO JAPAN

SUBARU, and ⓪ are trademarks of FUJI HEAVY INDUSTRIES LTD.

© **Copyright 2001 FUJI HEAVY INDUSTRIES LTD.**

SPECIFICATIONS SPC

Page

1. Impreza 2

1. Impreza

A: DIMENSIONS

Model			Sedan	Wagon	OUTBACK
Overall length		mm (in)	4,405 (173.4)		
Overall width		mm (in)	1,730 (68.1)	1,695 (66.7)	1,710 (67.3)
Overall height (at CW)		mm (in)	1,440 (56.7)	1,465 (57.7), 1,485 (58.5)★2	1,475 (58.1), 1,495 (58.9)★2
Compartment	Length	mm (in)	1,890 (74.4)	1,845 (72.6)	
	Width	mm (in)	1,380 (54.3)		
	Height	mm (in)	1,180 (46.5)	1,200 (47.2), 1,150 (45.3)★3	1,200 (47.2), 1,150 (45.3)★3
Wheelbase		mm (in)	2,525 (99.4)		
Tread	Front	mm (in)	1,485 (58.5)	1,465 (57.7)	1,460 (57.5)
	Rear	mm (in)	1,475 (58.1), 1,480 (58.3)★1	1,455 (57.3)	1,455 (57.3)
Minimum road clearance		mm (in)	150 (5.9), 155 (6.1)★1	150 (5.9), 155 (6.1)★1	160 (6.3)

★1:WRX
★2:With roof rail
★3:With sun roof

B: ENGINE

Model		Turbo 2.0 L	2.5 L
Engine type		Horizontally opposed, liquid cooled, 4-cylinder, 4-stroke gasoline engine	
Valve arrangement		Overhead camshaft type	
Bore x Stroke	mm (in)	92 x 75 (3.62 x 2.95)	99.5 x 79.0 (3.917 x 3.110)
Displacement	cm^3 (cu in)	1,994 (121.67)	2,457 (149.9)
Compression ratio		8.0	10.0
Firing order		1 — 3 — 2 — 4	
Idle speed at Park/Neutral position (A/C OFF)	rpm	750	650 (MT) 700 (AT)
Maximum output	kW (HP)/rpm	160 (215)/6,000	123 (165)/5,600
Maximum torque	N.m (kgf-m, ft-lb)/rpm	294 (30.0, 217)/4,000	226 (23.0, 166)/4,000

C: ELECTRICAL

Model			Turbo 2.0 L	2.5 L
Ignition timing at idling speed		BTDC/rpm	12° ± 10°/750	MT: 10° ± 10°/650 AT: 10° ± 10°/700
Spark plug			NGK: PFR6G	CHAMPION: RC10YC4 (standard) NGK: BKR5E-11 NGK: BKR6E-11
Generator			12V — 75A	12V — 90A
Battery	Type		MT: 12V — 48AH (55D23L) AT: 12V — 52AH (65D23L)	MT: 12V — 48AH (55D23L) AT: 12V — 52AH (75D23L)
	Reserve capacity	min	MT: 99 AT: 111	MT: 99 AT: 118
	Cold cranking amperes	amp	MT: 356 AT: 420	MT: 356 AT: 520

D: TRANSMISSION

Model			Turbo 2.0 L	
Transmission type			5MT★1	4AT★2
Clutch type			DSPD	TCC
Gear ratio		1st	3.454	2.785
		2nd	1.947	1.545
		3rd	1.366	1.000
		4th	0.972	0.694
		5th	0.738	—
		Reverse	3.333	2.272
Reduction gear (Front drive)	1st reduction	Type of gear	—	Helical
		Gear ratio	—	1.000
	Final reduction	Type of gear	Hypoid	Hypoid
		Gear ratio	3.900	4.111
Reduction gear (Rear drive)	Transfer reduction	Type of gear	Helical	—
		Gear ratio	1.100	—
	Final reduction	Type of gear	Hypoid	Hypoid
		Gear ratio	3.545	4.111

5MT★1:5 forward speeds with synchromesh and 1-reverse
4AT★2:Electronically controlled fully-automatic, 4-forward speeds and 1-reverse
DSPD:Dry Single Plate Diaphragm
TCC:Torque Converter Clutch

Model			2.5 L			
			RS		OTHERS	
Transmission type			5MT★1	4AT★2	5MT★1	4AT★2
Clutch type			DSPD	TCC	DSPD	TCC
Gear ratio		1st	3.454	3.027	3.454	2.785
		2nd	2.062	1.619	2.062	1.545
		3rd	1.448	1.000	1.448	1.000
		4th	1.088	0.694	1.088	1.694
		5th	0.780	—	0.780	—
		Reverse	3.333	2.272	3.333	2.272
		Dual range	—	—	—	—
Reduction gear (Front drive)	1st reduction	Type of gear	—	Helical	—	Helical
		Gear ratio	—	1.000	—	1.000
	Final reduction	Type of gear	Hypoid	Hypoid	Hypoid	Hypoid
		Gear ratio	4.111	4.444	3.900	4.111
Reduction gear (Rear drive)	Transfer reduction	Type of gear	Helical	—	Helical	—
		Gear ratio	1.000	—	1.000	—
	Final reduction	Type of gear	Hypoid	Hypoid	Hypoid	Hypoid
		Gear ratio	4.111	4.444	3.900	4.111

E: STEERING

Model		TS	OTHERS
Type		Rack and Pinion	
Turns, lock to lock		3.2	3
Minimum turning circle m (ft)	Curb to curb	10.2 (33.5)	10.8 (35.4)
	Wall to wall	11.1 (36.3)	11.7(38.3)

F: SUSPENSION

Front	Macpherson strut type, Independent, Coil spring
Rear	Dual link type, Independent, Coil spring

G: BRAKE

Model	SEDAN	WAGON
Service brake system	Dual circuit hydraulic with vacuum suspended power unit	
Front	Ventilated disc brake	
Rear	Disc brake	Drum brake, Disc brake★1
Parking brake	Mechanical on rear brakes	

★1:WRX

H: TIRE

Model	TS	OTHERS
Rim size	15 x 6JJ	16 x 6 $^1/_2$ JJ
Tire size	P195/60R15 87H	P205/55R16 89V
Type	Steel belted radial, Tubeless	

I: CAPACITY

Model			Turbo 2.0 L		2.5 L	
			5MT	4AT	5MT	4AT
Fuel tank		ℓ (US gal, Imp gal)	60 (15.9, 13.2)		60 (15.9, 13.2)	
Engine oil	Upper level	ℓ (US qt, Imp qt)	4.5 (4.8, 4.0)		4.0 (4.2, 3.5)	
	Lower level	ℓ (US qt, Imp qt)	3.5 (3.7, 3.1)		3.0 (3.2, 2.6)	
Transmission gear oil		ℓ (US qt, Imp qt)	3.5 (3.7, 3.1)	—	3.5 (3.7, 3.1)	—
Automatic transmission fluid		ℓ (US qt, Imp qt)	—	9.3 (9.8, 8.2)	—	9.5 (10.0, 8.4)
AT differential gear oil		ℓ (US qt, Imp qt)	—	1.2 (1.3, 1.1)	—	1.2 (1.3, 1.1)
AWD rear differential gear oil		ℓ (US qt, Imp qt)	0.8 (0.8, 0.6)			
Power steering fluid		ℓ (US qt, Imp qt)	0.7 (0.7, 0.6)			
Engine coolant		ℓ (US qt, Imp qt)	7.7 (8.1, 6.8)	7.6 (8.0, 6.7)	7.0 (7.4, 6.2)	6.9 (7.3, 6.1)

J: WEIGHT

1. U.S. SPEC. VEHICLE

Sedan

Model			AWD			
			Turbo 2.0 L		2.5 L	
			WRX		RS	
			5MT★1	4AT★1	5MT	4AT
Curb weight (C.W.)	Front	kgf (lb)	826 (1,820)	851 (1,875)	778 (1,715)	803 (1,770)
	Rear	kgf (lb)	569 (1,255)	569 (1,255)	567 (1,250)	567 (1,250)
	Total	kgf (lb)	1,395 (3,075)	1,420 (3,130)	1,345 (2,965)	1,370 (3,020)
Gross vehicle weight (G.V.W.)	Front	kgf (lb)	998 (2,200)	998 (2,200)	939 (2,070)	939 (2,070)
	Rear	kgf (lb)	857 (1,890)	857 (1,890)	857 (1,890)	857 (1,890)
	Total	kgf (lb)	1,837 (4,050)	1,837 (4,050)	1,778 (3,920)	1,778 (3,920)

★1:Excludes weight of side air bag.

Wagon

Model			AWD					
			Turbo 2.0 L		2.5 L			
			WRX		TS		OUTBACK	
			5MT★1	4AT★1	5MT★2	4AT★2	5MT	4AT
Curb weight (C.W.)	Front	kgf (lb)	825 (1,820)	851 (1,875)	773 (1,705)	796 (1,755)	783 (1,725)	805 (1,775)
	Rear	kgf (lb)	606 (1,335)	605 (1,335)	603 (1,330)	606 (1,335)	601 (1,325)	603 (1,330)
	Total	kgf (lb)	1,431 (3,155)	1,458 (3,210)	1,376 (3,035)	1,402 (3,090)	1,384 (3,050)	1,408 (3,105)
Gross vehicle weight (G.V.W.)	Front	kgf (lb)	998 (2,200)	998 (2,200)	939 (2,070)	939 (2,070)	939 (2,070)	939 (2,070)
	Rear	kgf (lb)	925 (2,040)	925 (2,040)	925 (2,040)	925 (2,040)	925 (2,040)	925 (2,040)
	Total	kgf (lb)	1,901 (4,190)	1,901 (4,109)	1,833 (4,040)	1,833 (4,040)	1,833 (4,040)	1,833 (4,040)

★1:Excludes weight of side air bag.
★2:Excludes weight of ABS, cruise control.

2. CANADA SPEC. VEHICLE

Sedan

Model			AWD			
			Turbo 2.0 L		2.5 L	
			WRX		RS	
			5MT	4AT	5MT	4AT
Curb weight (C.W.)	Front	kgf (lb)	826 (1,820)	851 (1,875)	778 (1,715)	803 (1,770)
	Rear	kgf (lb)	573 (1,265)	573 (1,265)	567 (1,250)	567 (1,250)
	Total	kgf (lb)	1,399 (3,085)	1,424 (3,140)	1,345 (2,965)	1,370 (3,020)
Gross vehicle weight (G.V.W.)	Front	kgf (lb)	998 (2,200)	998 (2,200)	939 (2,070)	939 (2,070)
	Rear	kgf (lb)	857 (1,890)	857 (1,890)	857 (1,890)	857 (1,890)
	Total	kgf (lb)	1,837 (4,050)	1,837 (4,050)	1,778 (3,920)	1,778 (3,920)

Wagon

Model			AWD					
			Turbo 2.0 L		2.5 L			
			WRX		TS		OUTBACK	
			5MT★1	4AT	5MT★1	4AT★1	5MT	4AT
Curb weight (C.W.)	Front	kgf (lb)	826 (1,820)	851 (1,875)	758 (1,670)	780 (1,720)	783 (1,725)	805 (1,775)
	Rear	kgf (lb)	610 (1,345)	610 (1,345)	594 (1,310)	597 (1,315)	601 (1,325)	603 (1,330)
	Total	kgf (lb)	1,436 (3,165)	1,461 (3,220)	1,352 (2,980)	1,377 (3,035)	1,384 (3,050)	1,408 (3,105)
Gross vehicle weight (G.V.W.)	Front	kgf (lb)	998 (2,200)	998 (2,200)	939 (2,070)	939 (2,070)	939 (2,070)	939 (2,040)
	Rear	kgf (lb)	925 (2,040)	925 (2,040)	925 (2,040)	925 (2,040)	925 (2,040)	925 (2,040)
	Total	kgf (lb)	1,901 (4,190)	1,901 (4,190)	1,833 (4,040)	1,833 (4,040)	1,833 (4,040)	1,833 (4,040)

★1:Excludes weight of air conditioner.

MEMO

FUEL INJECTION (FUEL SYSTEM) FU (SOHC)

		Page
1.	General	2
2.	Air Line	3
3.	Fuel Line	8
4.	Sensors and Switches	16
5.	Control System	26
6.	On-board Diagnosis System	34

1. General

• The Multipoint Fuel Injection (MFI) system supplies optimum air-fuel mixture under every engine operating condition through the use of the latest electronic control technology.

This system pressurizes the fuel to a constant pressure and injects it into each intake air port in the cylinder head. The injection quantity of fuel is controlled by an intermittent injection system where an electro-magnetic injection valve or injector opens for a short period that is precisely controlled depending on the quantity of air appropriate for each condition of operation. In actual control, an optimum fuel injection quantity is achieved by varying the duration of an electric pulse applied to the injector. This way of control enables simple, yet highly precise metering of the fuel.

• The engine control module (ECM) that controls the fuel injection system corrects the fuel injection amount depending on the vehicle speed, throttle opening, coolant temperature and other vehicle-operation-related information. The ECM receives the information in the form of electric signals from the corresponding sensors and switches.

The MFI system also has the following features:

• Reduced exhaust emissions

• Reduced fuel consumption

• Increased engine output

• Quick response to accelerator and brake pedal operation

• Superior startability and warm-up performance in cold weather due to corrective controls made according to coolant and intake air temperatures

2. Air Line

A: GENERAL

The air filtered by the air cleaner enters the throttle body where it is regulated in the volume by the throttle valve and then enters the intake manifold. It is then distributed to each cylinder where the air is mixed with fuel injected by the injector. During idling operation, air flows into the cylinder through the idle air control solenoid valve, bypassing the throttle valve. This enables controlling the engine idling speed properly.

B: INTAKE MANIFOLD PRESSURE AND AIR TEMPERATURE SENSORS

The intake manifold pressure sensor and the intake air temperature sensor are integrated into a single unit. The unit is mounted on the intake manifold and measures the absolute air pressure in the intake manifold as well as the temperature of the intake air.
The measured pressure and temperature are converted into electrical signals and sent to the ECM. The ECM uses these signals to control injection and ignition timing as well as the fuel injection amount.

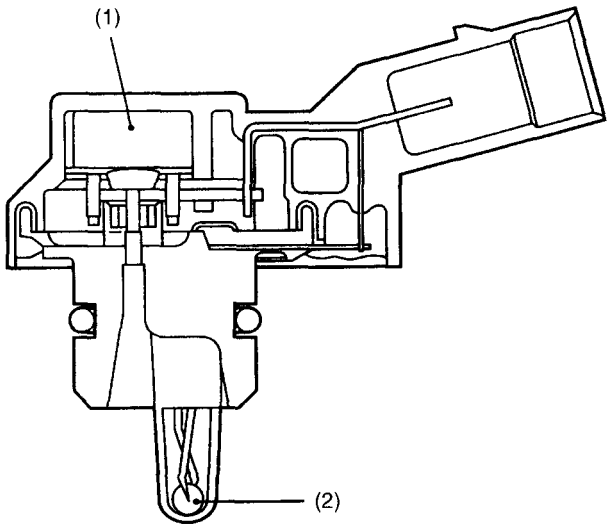

H2H2825B

(1) Pressure sensor
(2) Intake air temperature sensor

C: ATMOSPHERIC PRESSURE SENSOR

The atmospheric pressure sensor converts pressure values into electric signals, and sends the signals to the ECM.

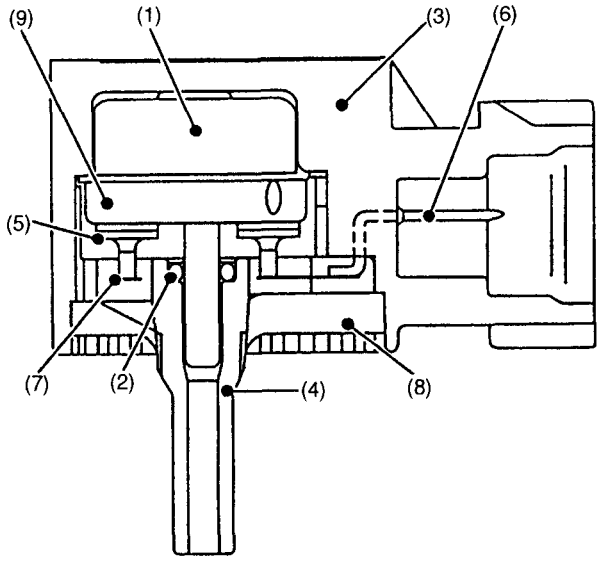

NF0007

(1) Sensor unit
(2) O-ring
(3) Case
(4) Pipe
(5) Through capacity
(6) Terminal
(7) Inner lead
(8) Resin
(9) Metal lid

D: THROTTLE BODY

- In response to operation of the accelerator pedal, the throttle valve in the throttle body opens/closes to regulate the volume of the air drawn into the combustion chamber.
- During idling, the throttle valve is almost fully closed and the volume of air passing through the throttle body is less than that passing through the idle air control solenoid valve.
- More than half of the air necessary for idling is supplied to the intake manifold via the idle air control solenoid valve which controls properly the engine idling speed, so the idling speed needs not be adjusted.

E: THROTTLE POSITION SENSOR

- The throttle position sensor is mounted in the throttle body and linked to the throttle valve.
- The throttle position sensor sends the ECM voltage signal corresponding to the opening of the throttle valve. When the sensor's output voltage exceeds a predetermined level, the ECM interprets it as complete closure of the throttle valve. When the output voltage is at another predetermined level, the ECM recognizes that the throttle valve is at a wide open position. Since the output characteristics of the sensor change over years, the ECM is provided with a learning function to be able to interpret signals into throttle valve angles always correctly.

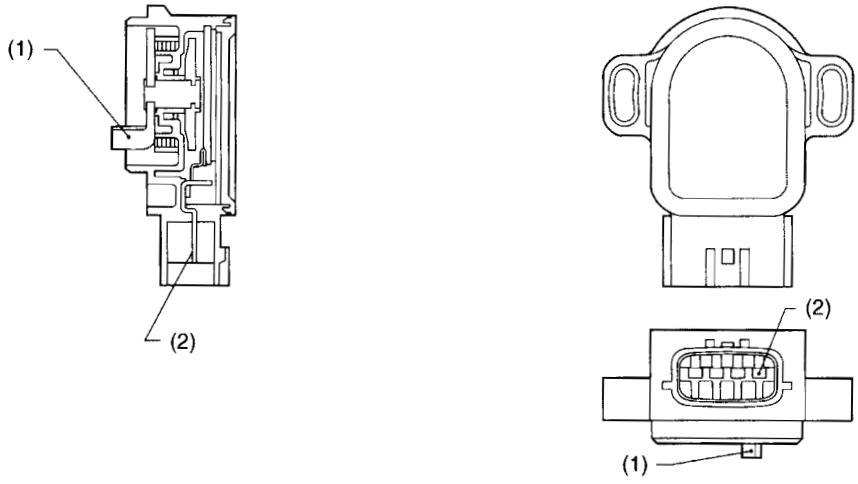

B2H2004B

(1) Lever
(2) Terminal

F: IDLE AIR CONTROL SOLENOID VALVE

- The idle air control solenoid valve is located in the throttle body and regulates the amount of intake air that flows bypassing the throttle valve into the intake manifold during engine idling. It is activated by a signal from the ECM in order to maintain the engine idling speed at a target speed.
- The idle air control solenoid valve is a stepping motor type solenoid-actuated valve which consists of coils, a shaft, a permanent magnet, a spring and a housing. The housing is an integral part of the throttle body.
- The stepping motor consists of two paired coils, the coils of each pair being arranged face to face with a shaft in between.
- The shaft has a screw at the end around which the permanent magnets are arranged.
- As current flows in the form of pulses through the paired coils sequentially while alternating the polarity, the N and S poles of the permanent magnets around the shaft are repelled by the same poles of the magnetism generated by the coils. This causes a nut externally fixed to the magnets and internally engaging with the screw of the shaft to turn.
The shaft then goes upward or downward.
- This upward and downward motions of the shaft open or close the valve port, adjusting the amount of bypass air.

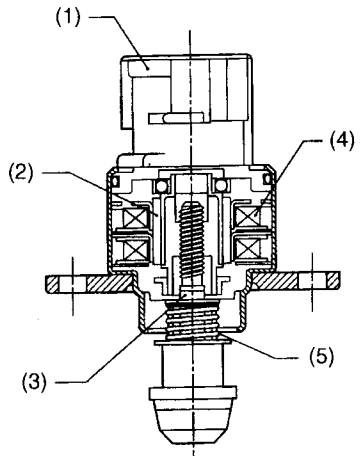

B2H2005B

(1) Connector
(2) Permanent magnet
(3) Shaft
(4) Coil
(5) Spring

G: AIR ASSIST INJECTOR SOLENOID VALVE

The air assist injector solenoid valve is located in the piping between the throttle body and the injector and secured to the intake manifold.
This solenoid valve is opened or closed by the signals from the ECM, adjusting the flow rate of air supplied to the injector.

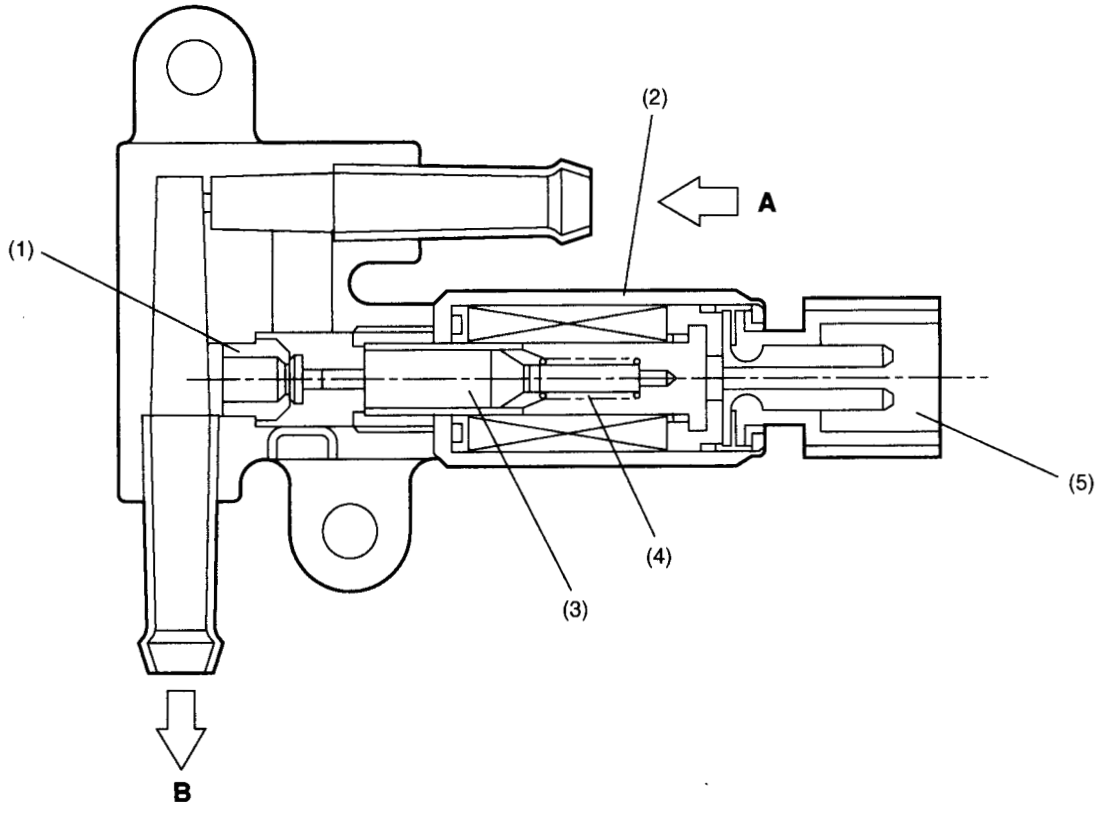

B2H3447B

(1) Valve sheet
(2) Solenoid
(3) Plunger and valve
(4) Spring
(5) Connector

A: From idle air control solenoid valve
B: To injector

3. Fuel Line

A: GENERAL

- The fuel pressurized by the fuel tank inside pump is delivered to each fuel injector by way of the fuel pipe and fuel filter. Fuel injection pressure is regulated to an optimum level by the pressure regulator.
- Each injector injects fuel into the intake port of the corresponding cylinder where the fuel is mixed with air. The mixture then enters the cylinder.

Fuel injection amount and timing are regulated by the ECM.

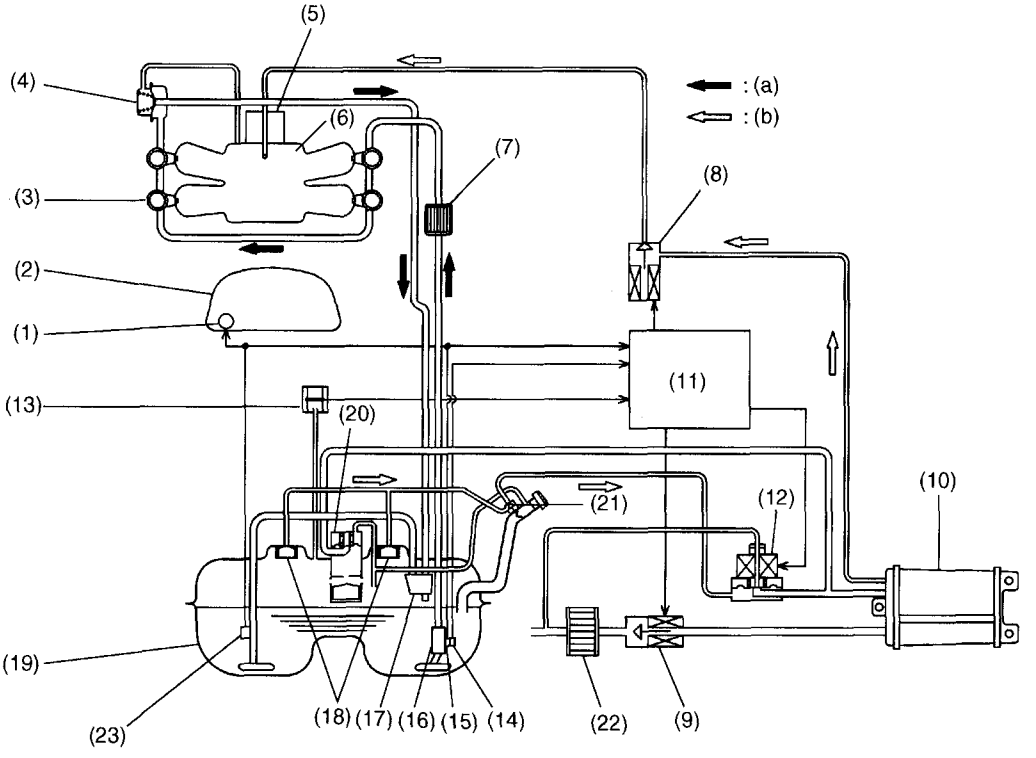

NF0477

(1)	Fuel gauge	(10)	Canister	(19)	Fuel tank
(2)	Combination meter	(11)	ECM	(20)	Vent valve
(3)	Fuel injector	(12)	Pressure control solenoid valve	(21)	Shut-off valve
(4)	Pressure regulator	(13)	Fuel tank pressure sensor	(22)	Drain filter
(5)	Throttle body	(14)	Fuel temperature sensor	(23)	Fuel sub level sensor
(6)	Intake manifold	(15)	Fuel level sensor		
(7)	Fuel filter	(16)	Fuel pump		
(8)	Purge control solenoid valve	(17)	Jet pump	(a)	Fuel line
(9)	Drain valve	(18)	Fuel cut valve	(b)	Evaporation line

B: PRESSURE REGULATOR

The pressure regulator is installed at the injector end of the fuel supply line. It has a fuel chamber and spring chamber separated by a diaphragm. Fuel chamber is connected to the fuel supply line and the spring chamber is connected to the intake manifold. Fuel chamber also has a relief valve connected to the fuel return line through which fuel returns to the fuel tank. When the intake manifold vacuum increases, the diaphragm is pulled and the relief valve opens to decrease the fuel supply line pressure (or fuel injection pressure). When the intake manifold vacuum decreases, the diaphragm is pushed by the spring to increase the fuel supply line pressure. Thus, the difference between the fuel injection pressure and the intake manifold vacuum is kept at a constant level of 299.1 kPa (3.05 kgf/cm^2, 43.4 psi) to precisely control the amount of injected fuel.

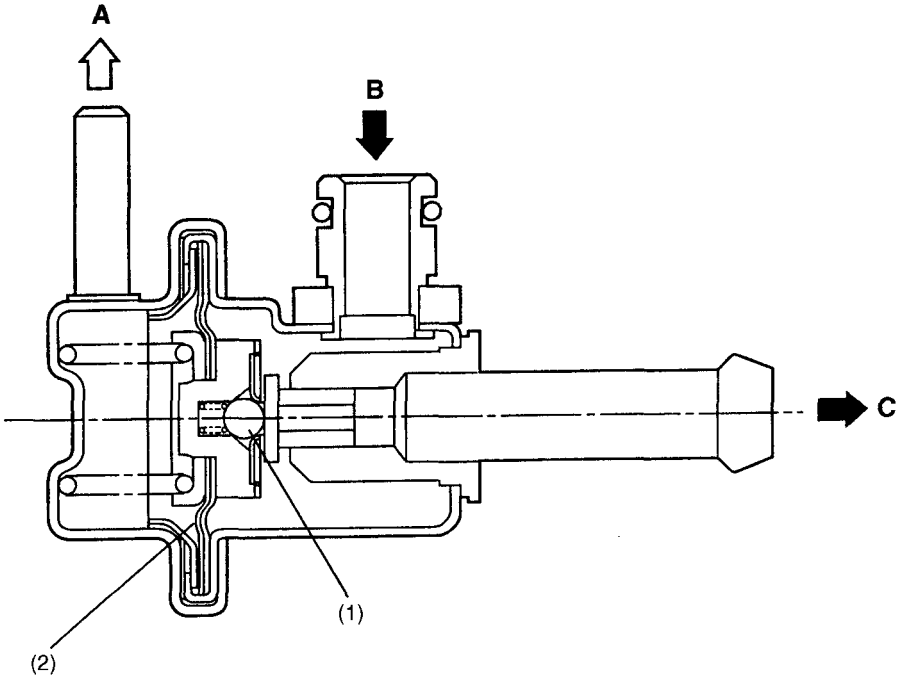

S2H0623C

(1) Relief valve
(2) Diaphragm

A: To intake manifold
B: Fuel IN
C: Fuel OUT

C: FUEL INJECTORS

- The MFI system employs top feed type fuel injectors with an air assist feature.
- Each injector is installed in the fuel pipe in such a way that the injector is cooled by fuel.
- The features of this type of fuel injector are as follows:

1) High heat resistance
2) Low driving noise
3) Easy to service
4) Small size

- The injector injects fuel according to the valve open signal from the ECM. The needle valve is lifted by the solenoid which is energized on arrival of the valve open signal.
- Since the injector's nozzle hole area, the lift of valve and the fuel pressure are kept constant, the amount of fuel injected is controlled only by varying the duration of the valve open signal from the ECM.
- Fuel atomization is enhanced using assist air supplied from the idle air control solenoid valve passing through the passage formed in the intake manifold at the area in which each injector is installed. This contributes not only to higher combustion efficiency and higher output but also to cleaner exhaust emissions.

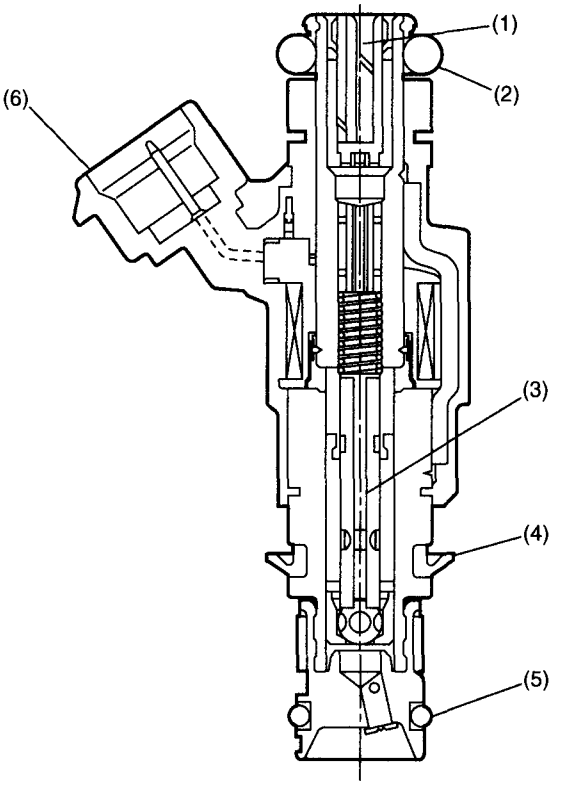

S2H1943A

(1) Filter
(2) O-ring
(3) Plunger
(4) Seal
(5) O-ring
(6) Connector

D: FUEL TANK

The fuel tank utilizes a two-compartment design to ensure sufficient capacity without interfering with the rear differential. It is provided with a suction jet pump (included in the fuel pump and fuel level sensor assembly) which transfers fuel from one compartment to the other. Each compartment has an individual fuel level sensor.

The fuel tank is located under the rear seat and secured with hold-down bands.

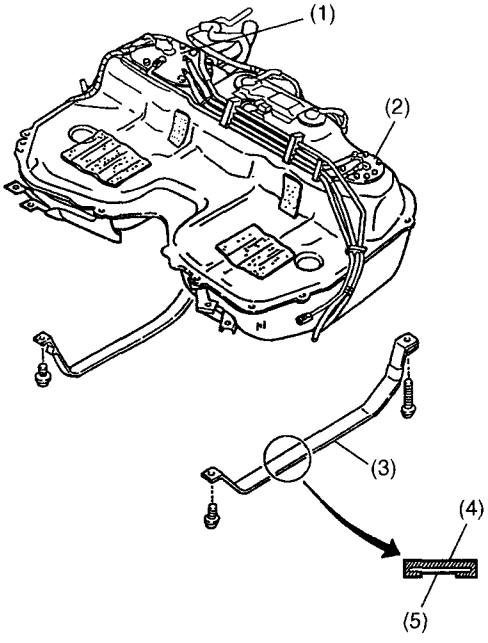

NF0473

(1) Fuel pump and fuel level sensor assembly
(2) Fuel sub level sensor
(3) Band
(4) Cushion
(5) Steel

E: FUEL PUMP AND FUEL LEVEL SENSOR ASSEMBLY

1. FUEL PUMP

The fuel pump consists of a motor, impeller, pump casing, pump cover, check valve and filter. It is located in the fuel tank and combined with the fuel level sensor into a single unit. The operation of this impeller type pump is very quiet.

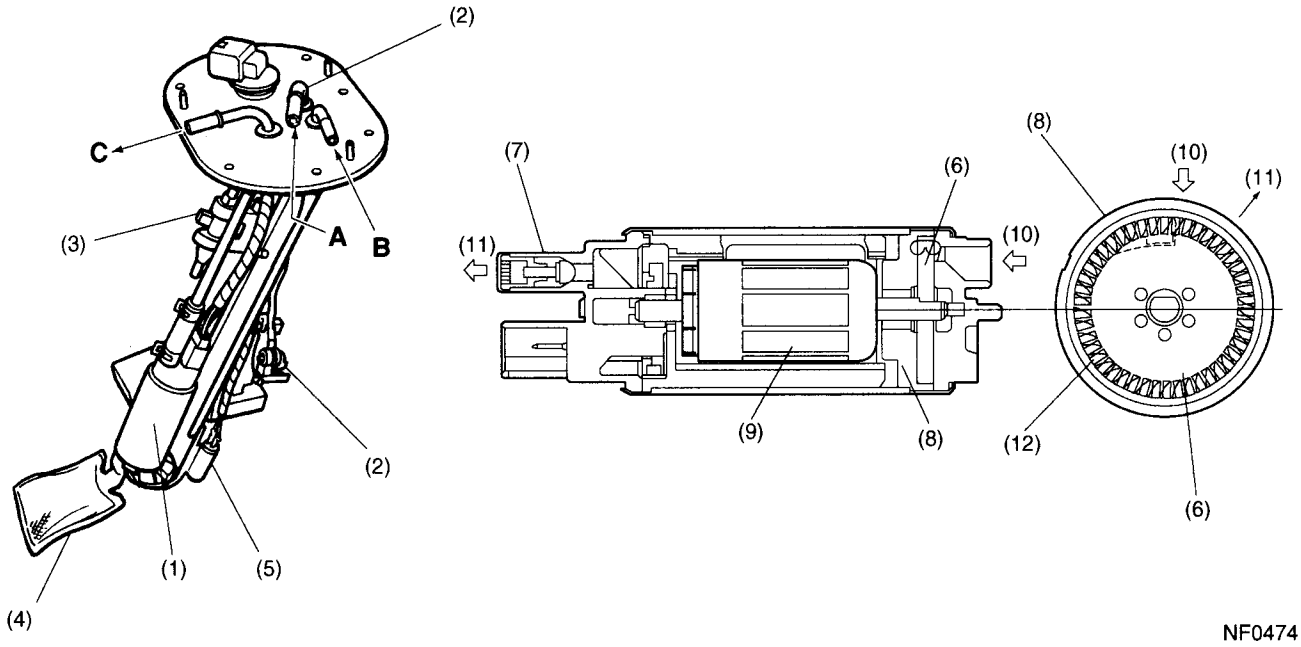

(1) Fuel pump
(2) Fuel level sensor
(3) Jet pump
(4) Mesh filter
(5) Fuel temperature sensor
(6) Impeller
(7) Check valve
(8) Pump casing
(9) Motor armature
(10) Suction
(11) Discharge
(12) Vane groove

A: From engine (return line)
B: From sub tank
C: To engine (delivery line)

- When the ignition switch is turned ON, fuel pump relay is activated. Then the motor operates to rotate the impeller.
- As the impeller rotates, fuel in a vane groove of the impeller flows along the fuel passage into the next vane groove by centrifugal force. When fuel flows from one groove to the next, a pressure difference occurs due to friction. This creates a pumping effect.
- The fuel pushed up by rotation of the impeller then passes through the clearance between the armature and the magnet of the motor and is discharged through the check valve.
- When the fuel discharge pressure reaches the specified level, the relief valve opens and excess fuel is released into the fuel tank. In this manner, the relief valve prevents an abnormal increase in fuel pressure.
- When the engine and the fuel pump stop, spring force acts on the check valve to close the discharge port, so that the fuel pressure in the fuel delivery line is retained.

2. FUEL LEVEL SENSOR

The fuel level sensor forms part of the fuel pump and located in the fuel tank. The sensor outputs an electric resistance signal that varies with movement of its float to indicate the level of the fuel remaining in the tank.

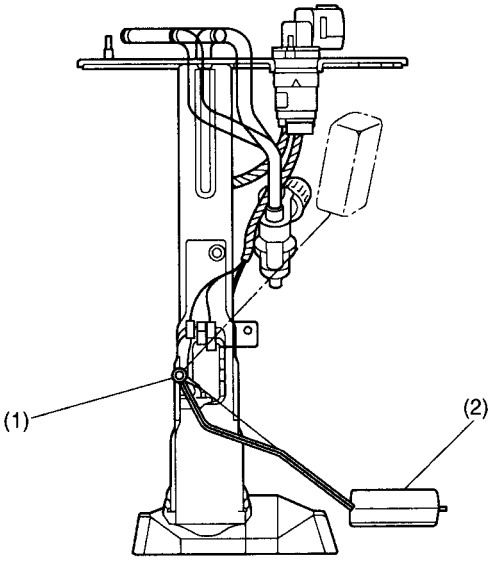

NF0327

(1) Fuel level sensor
(2) Float

3. JET PUMP

- The jet pump utilizes the velocity of fuel returning from the engine to produce negative pressure in it.
- Using the pumping effect produced by the negative pressure, the jet pump transfers fuel from the sub-compartment to the main compartment of the fuel tank.
- When the return line nozzle is clogged, the fuel sent back through the return line flows back into the fuel tank via the relief valve.

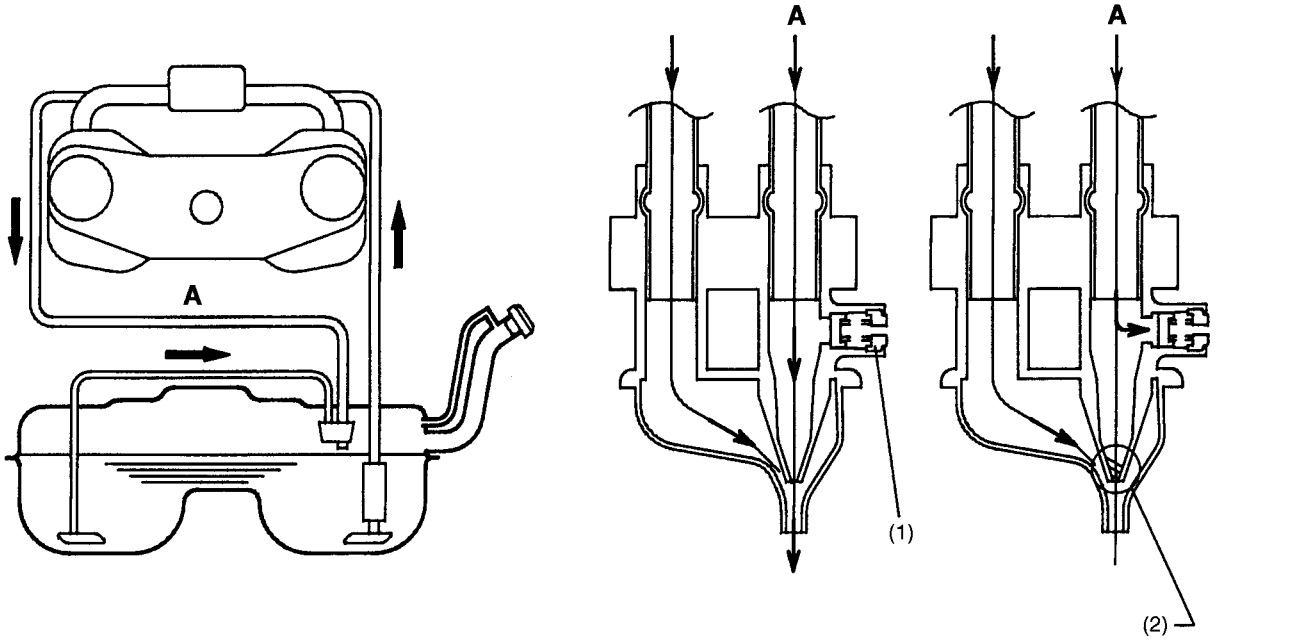

(1) Relief valve
(2) Nozzle

A: Return line

F: SUB-COMPARTMENT FUEL LEVEL SENSOR

This sensor detects the level of the fuel in the sub-compartment (the compartment in which the fuel pump is not located) and acts as part of the fuel transfer line when the jet pump is in operation to maintain the fuel in both compartments at the same level.

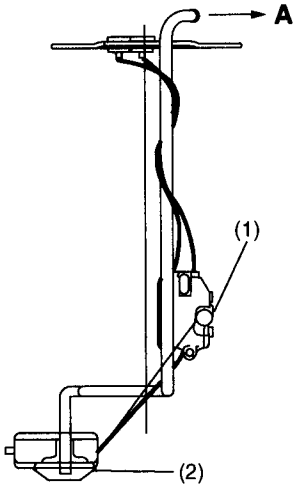

NF0396

(1) Fuel level sensor
(2) Float

A: To jet pump

G: FUEL FILTER

The fuel filter located in the engine compartment is a pressure-withstanding, cartridge type. It has a filter element in a metal case. The fuel entering the filter flows from the perimeter of the element to the center of the filter and goes out from there.

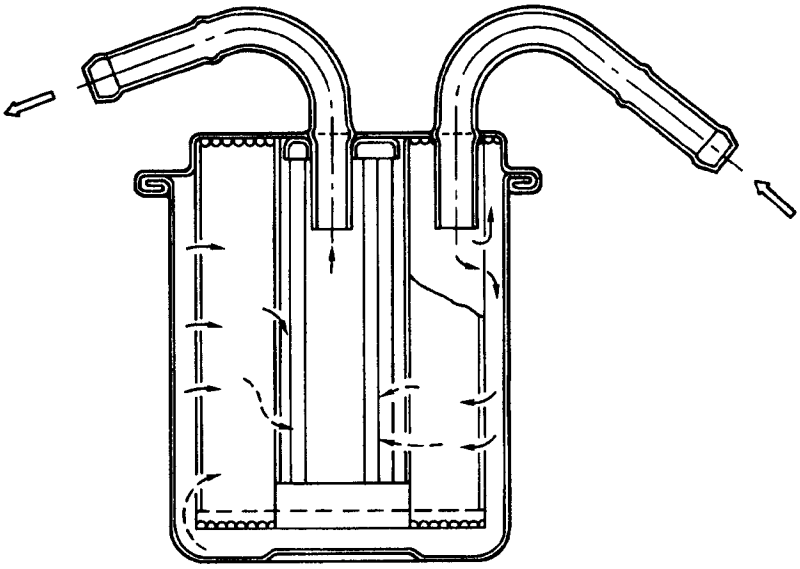

NF0018

4. Sensors and Switches

A: FRONT OXYGEN (A/F) SENSOR

- The front oxygen sensor uses zirconium oxide (ZrO_2) which is a solid electrolyte, at portions exposed to exhaust gas.
- The zirconium oxide has the property of generating electromotive force when its both sides are exposed to oxygen ions of different concentration and the magnitude of this electromotive force depends on how much the difference is.
- The front oxygen sensor detects the amount of oxygen in exhaust gases by making use of this property of the zirconium oxide material.
- The zirconium oxide material is formed into a closed end tube and its external surface is exposed to exhaust gases with smaller oxygen ion concentration, whereas its internal surface is exposed to atmospheric air. The external surface has a porous platinum coating. The sensor housing is grounded to the exhaust pipe and the inside is connected to the ECM through the harness to be able to use the current output from the sensor.
- The sensor incorporates a ceramic heater to improve its performance at low temperatures.

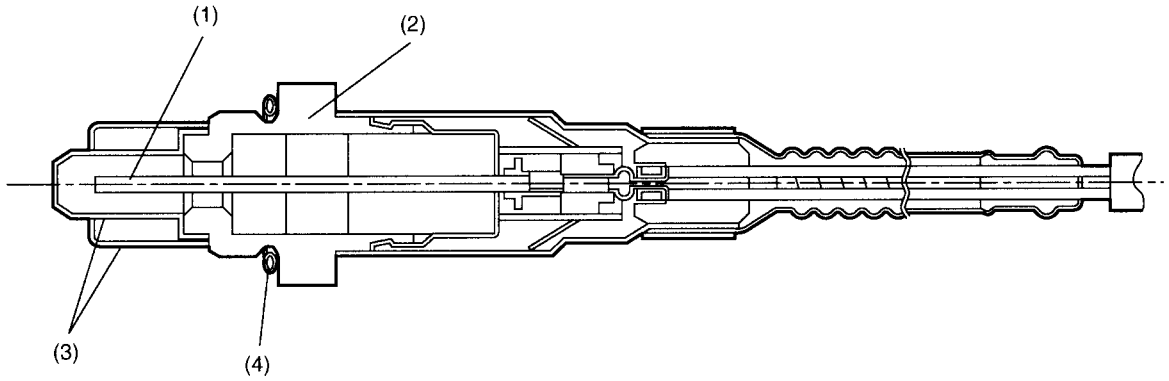

S2H1791B

(1) Sensor element
(2) Sensor housing
(3) Protection tube
(4) Gasket

- When rich air-fuel mixture is burnt in the cylinder, the oxygen in the exhaust gases is almost completely used in the catalytic reaction by the platinum coating on the external surface of the zirconia tube. This results in a very large difference in the oxygen ion concentration between the inside and outside of the tube, and the electromotive force generated is large.
- When a lean air-fuel mixture is burnt in the cylinder, relatively large amount of oxygen remains in the exhaust gases even after the catalytic action, and this results in a small difference in the oxygen ion concentration between the tube's internal and external surfaces. The electromotive force in this case is very small.
- The difference in oxygen concentration changes drastically in the vicinity of the stoichiometric air-fuel ratio, and hence the change in the electromotive force is also large. By using this information, the ECM can determine the air-fuel ratio of the supplied mixture easily. The front oxygen sensor does not generate much electromotive force when the temperature is low. The output characteristics of the sensor stabilize at a temperature of approximately 700°C (1,292°F).

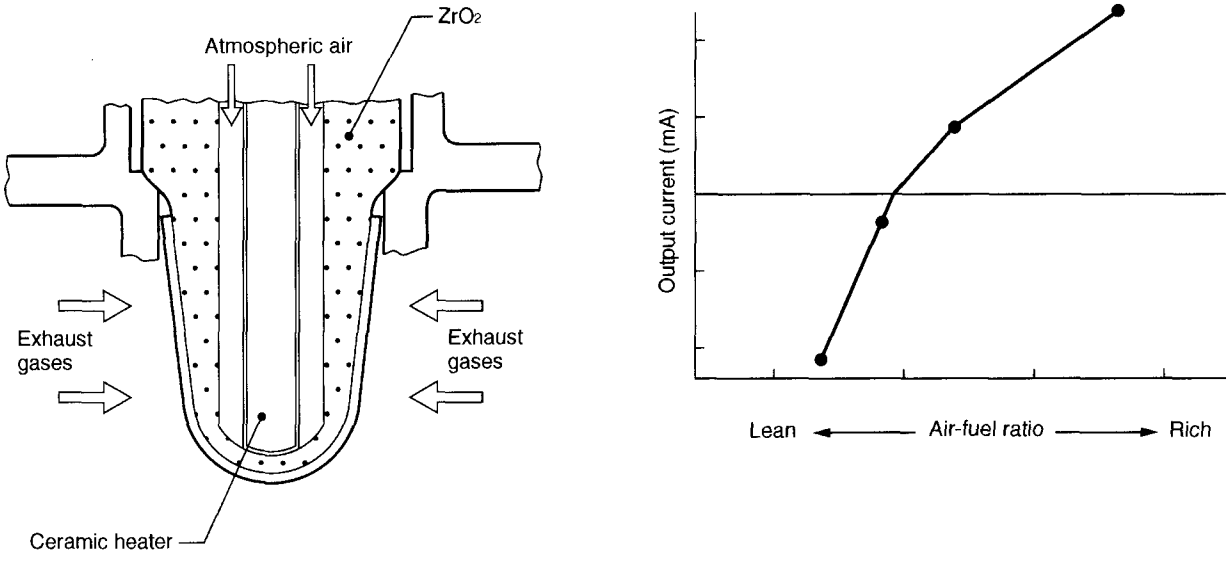

NF0331

B: REAR OXYGEN SENSOR

- The rear oxygen sensor is used to sense oxygen concentration in the exhaust gas. If the air-fuel ratio is leaner than the stoichiometric ratio in the mixture (i.e., excessive amount of air), the exhaust gas contains more oxygen. To the contrary, if the fuel ratio is richer than the stoichiometric ratio, the exhaust gas contains almost no oxygen.
- Detecting the oxygen concentration in exhaust gas using the oxygen sensor makes it possible to determine whether the air-fuel ratio is leaner or richer than the stoichiometry.
- The rear oxygen sensor has a zirconia tube (ceramic) which generates voltage if there is a difference in oxygen ion concentration between the inside and outside of the tube. Platinum is coated on the inside and outside of the zirconia tube as a catalysis and electrode material. The sensor housing is grounded to the exhaust pipe and the inside is connected to the ECM through the harness.
- A ceramic heater is employed to improve performance at low temperatures.

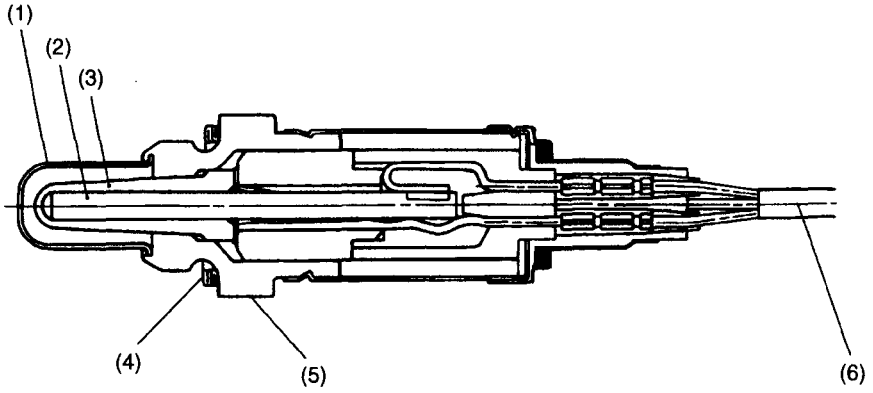

B2H3810C

(1) Protection tube
(2) Ceramic heater
(3) Zirconia tube
(4) Gasket
(5) Sensor housing
(6) Harness

- When rich air-fuel mixture is burnt in the cylinder, the oxygen in the exhaust gases is almost completely used in the catalytic reaction by the platinum coating on the external surface of the zirconia tube. This results in a very large difference in the oxygen ion concentration between the inside and outside of the tube, and the electromotive force generated is large.
- When a lean air-fuel mixture is burnt in the cylinder, relatively large amount of oxygen remains in the exhaust gases even after the catalytic action, and this results in a small difference in the oxygen ion concentration between the tube's internal and external surfaces. The electromotive force in this case is very small.
- The difference in oxygen concentration changes drastically in the vicinity of the stoichiometric air-fuel ratio, and hence the change in the electromotive force is also large. By using this information, the ECM can determine the air-fuel ratio of the supplied mixture easily. The rear oxygen sensor does not generate much electromotive force when the temperature is low. The output characteristics of the sensor stabilize at a temperature of approximately 300 to 400°C (572 to 752°F).

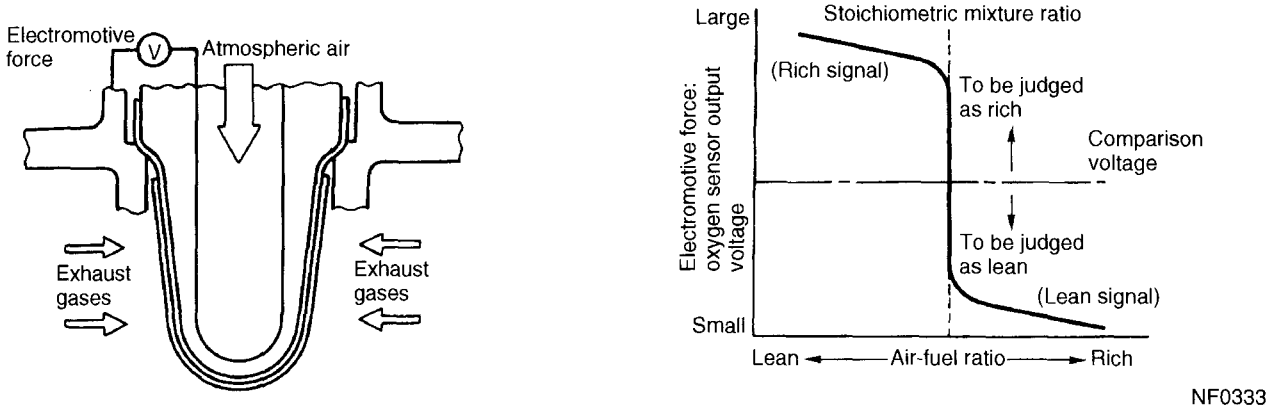

C: ENGINE COOLANT TEMPERATURE SENSOR

The engine coolant temperature sensor is located on the engine coolant pipe. The sensor uses a thermistor whose resistance changes inversely with temperature. Resistance signals as engine coolant temperature information are transmitted to the ECM to make fuel injection, ignition timing, purge control solenoid valve and other controls.

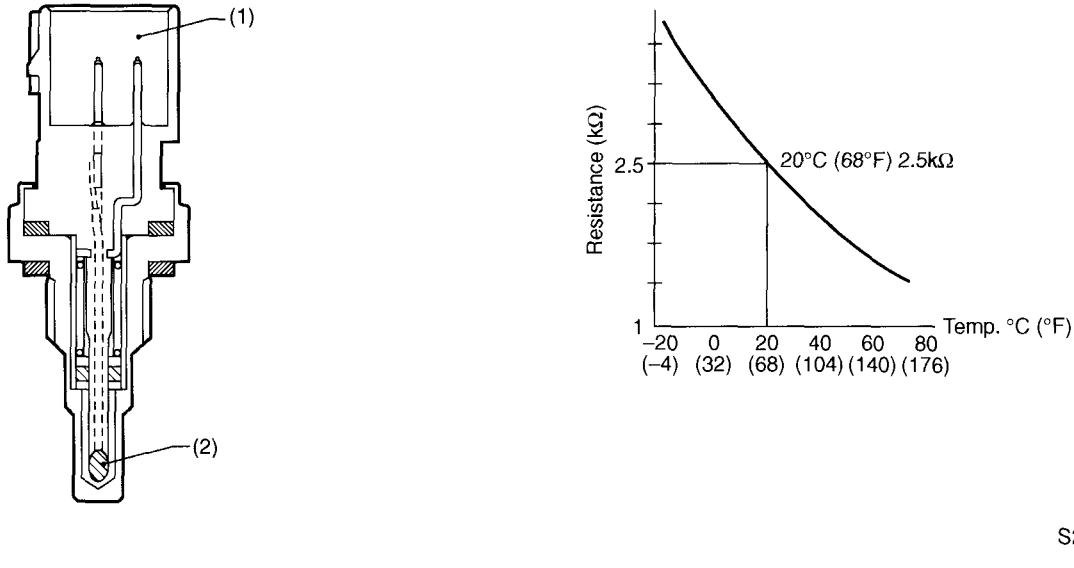

(1) Connector

(2) Thermistor element

D: CRANKSHAFT POSITION SENSOR

- The crankshaft position sensor is installed on the oil pump which is located in the front center portion of the cylinder block. The sensor generates a pulse when one of the teeth on the perimeter of the crankshaft sprocket (rotating together with the crankshaft) passes in front of it. The ECM determines the crankshaft angular position by counting the number of pulses.
- The crankshaft position sensor is a molded type which consists of a magnet, core, coil, terminals and other components as illustrated below.

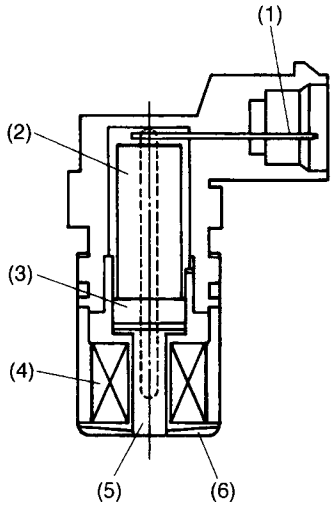

NF0024

(1) Terminal
(2) Yoke core
(3) Magnet
(4) Coil
(5) Core
(6) Cover

- As the crankshaft rotates, each tooth aligns with the crankshaft position sensor. At that time, the magnetic flux in the sensor's coil changes since the air gap between the sensor pickup and the sprocket changes. This change in magnetic flux induces a voltage pulse in the sensor and the pulse is transmitted to the ECM.

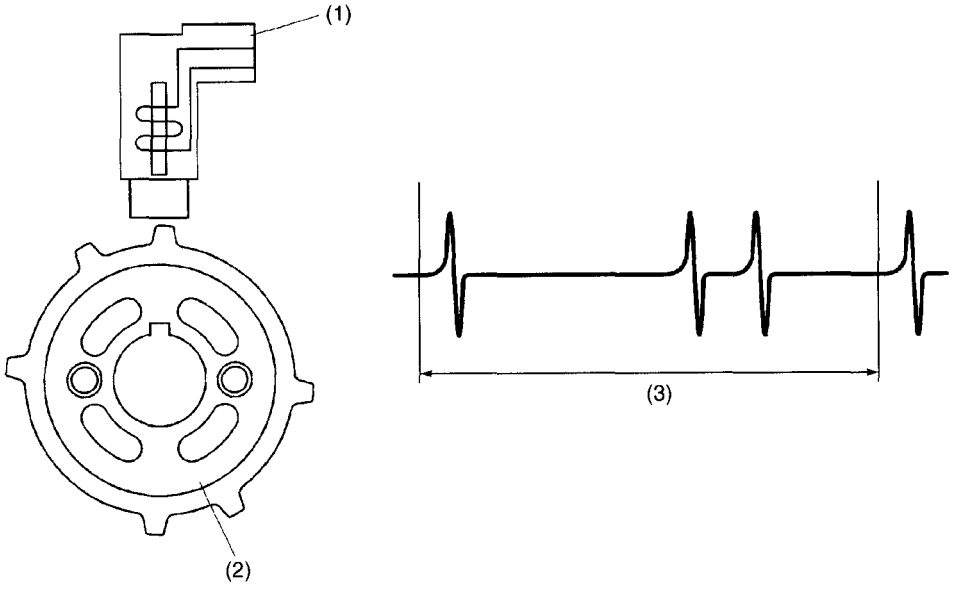

NF0398

(1) Crankshaft position sensor
(2) Crankshaft sprocket
(3) Crankshaft half rotation

E: CAMSHAFT POSITION SENSOR

- The camshaft position sensor is located on the left-hand camshaft support. It detects the combustion cylinder at any given moment.

- The sensor generates a pulse when one of the bosses on the back of the left-hand camshaft drive sprocket passes in front of the sensor. The ECM determines the camshaft angular position by counting the number of pulses.

Internal construction and the basic operating principle of the camshaft position sensor are similar to those of the crankshaft position sensor. A total of seven bosses are arranged at equally spaced four locations (one each at two locations, two at one location, and three at one location) of the sprocket as shown below.

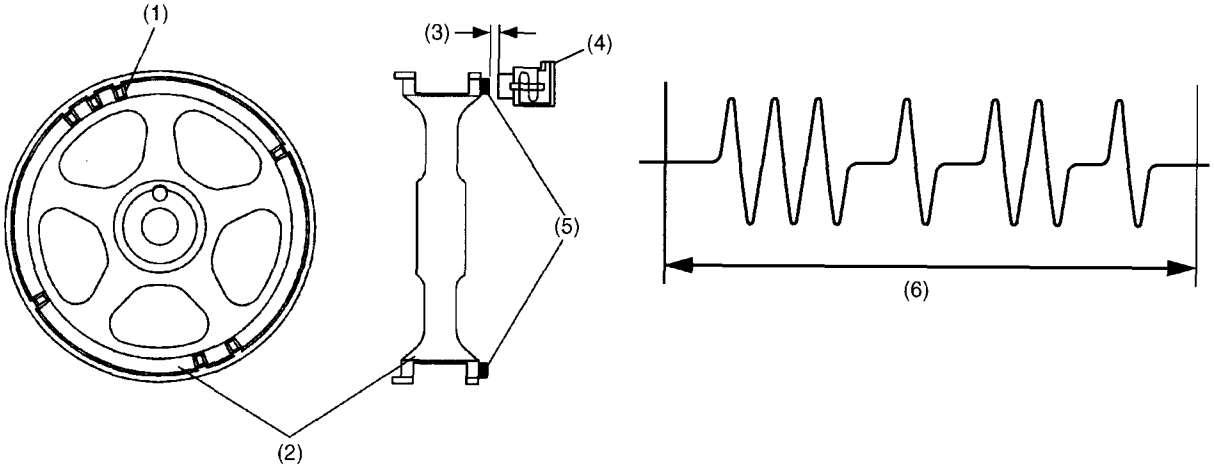

S2H1813A

(1) Boss
(2) Camshaft sprocket
(3) Air gap
(4) Camshaft position sensor
(5) Boss
(6) Camshaft one rotation (Crankshaft two rotations)

F: KNOCK SENSOR

- The knock sensor is installed on the cylinder block, and senses knocking that occurs in the engine.
- The sensor is a piezo-electric type which converts vibration resulting from knocking into electric signals.
- In addition to a piezo-electric element, the sensor has a weight and case as its components. If knocking occurs in the engine, the weight in the case moves causing the piezo-electric element to generate a voltage.
- The knock sensor harness is connected to the bulkhead harness.

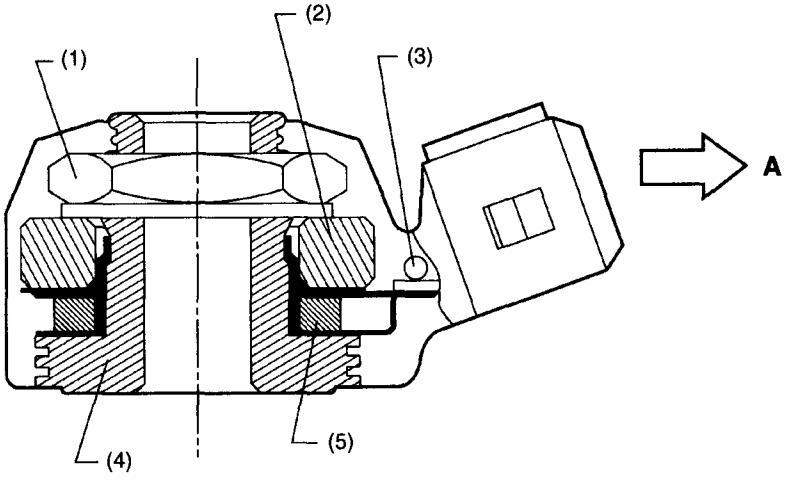

B2H1998B

(1) Nut
(2) Weight
(3) Resistor
(4) Housing
(5) Piezo-electric element

A: To knock sensor harness

G: VEHICLE SPEED SENSOR

1. MT VEHICLES

- The vehicle speed sensor is mounted on the transmission.
- The vehicle speed sensor generates a 4-pulse signal for every rotation of the front differential and send it to the ECM and the combination meter.

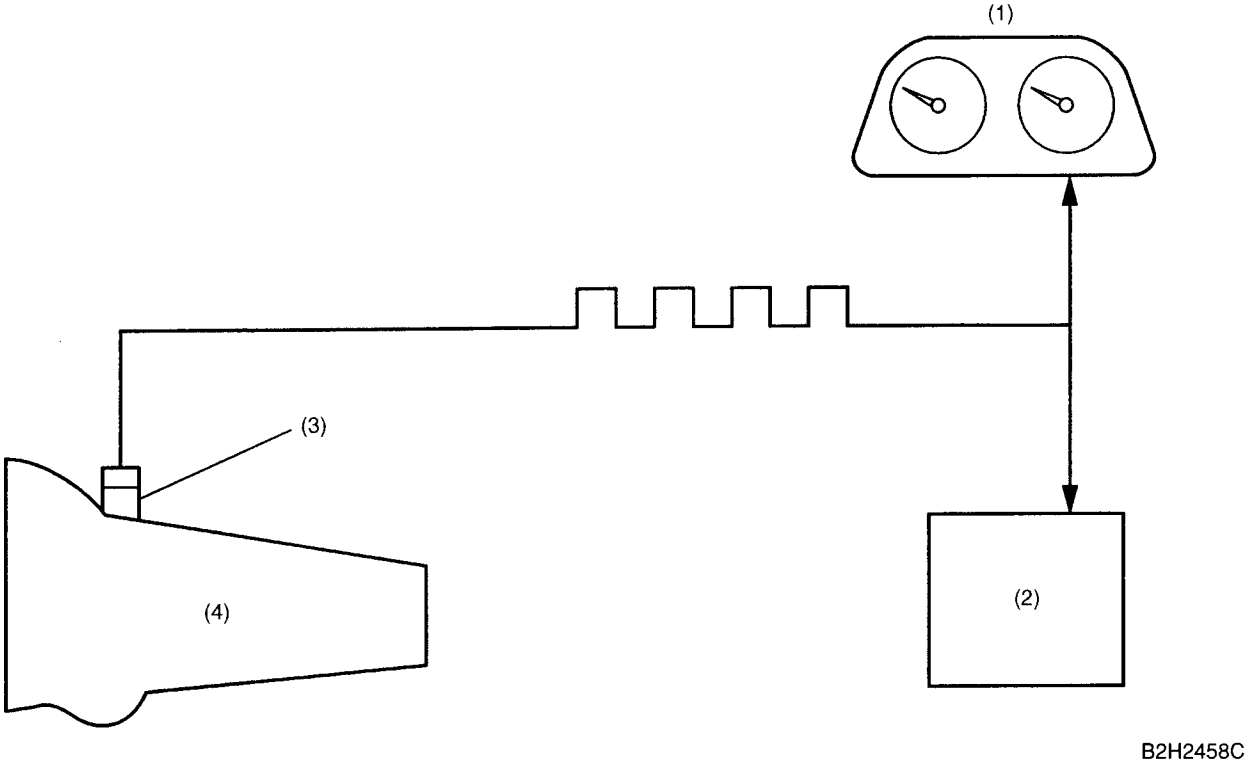

(1) Combination meter
(2) ECM
(3) Vehicle speed sensor
(4) Transmission

2. AT VEHICLES

- The vehicle speed sensor is mounted on the transmission.
- The vehicle speed sensor generates a 16-pulse signal for every rotation of the front differential and send it to the transmission control module (TCM). The signal sent to the TCM is converted there into a 4-pulse signal, and then sent to the ECM and the combination meter.

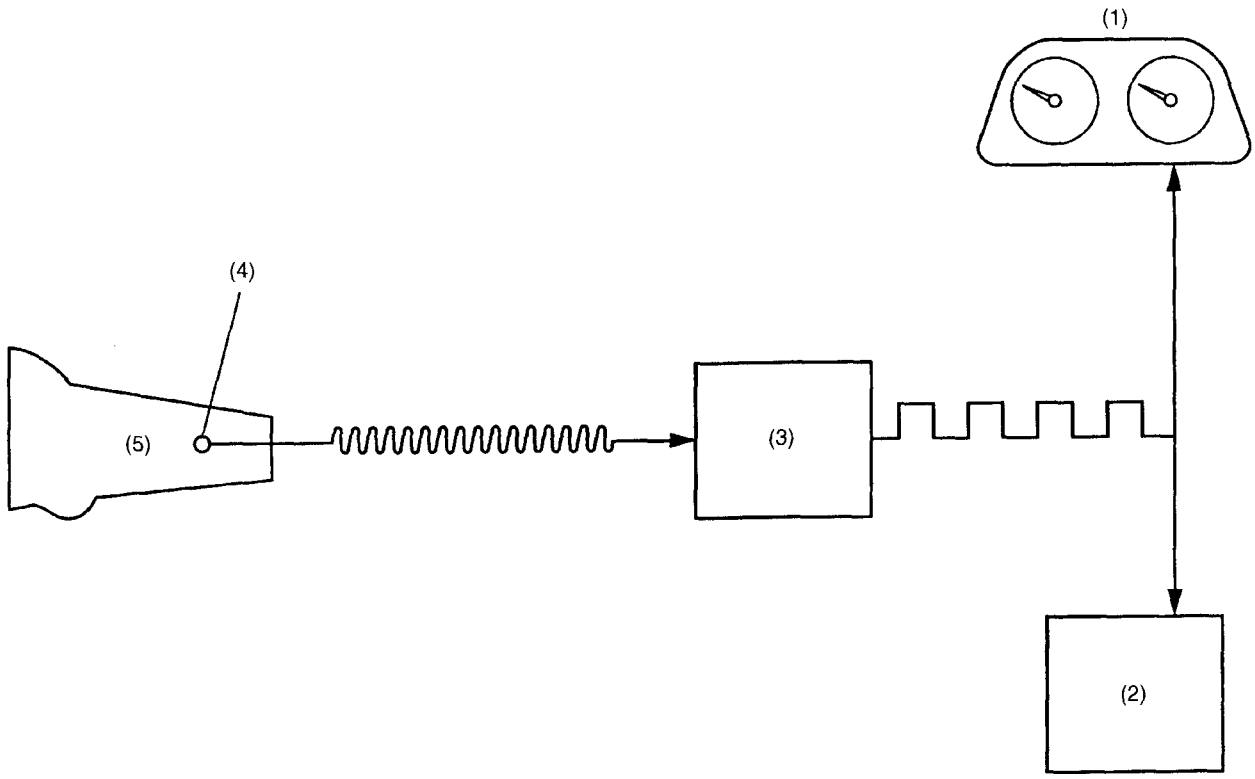

B2H2459B

(1) Combination meter
(2) ECM
(3) TCM
(4) Vehicle speed sensor
(5) Transmission

5. Control System

A: GENERAL

The ECM receives signals from various sensors, switches, and other control modules. Using these signals, it determines the engine operating conditions and if necessary, emits signals to one or more systems to control them for optimum operation.

Major control items of the ECM are as follow:

- Fuel injection control
- Ignition system control
- Idle air control
- Fuel pump control
- Canister purge control*1
- Radiator fan control*2
- On-board diagnosis function

*1: Canister purge control is described under "EC (SOHC) – Emission Control (Aux. Emission Control Devices) Evaporative Emission Control System".

*2: Radiator fan control is described under "CO – Cooling".

B: INPUT AND OUTPUT SIGNALS

Signal	Unit	Function
Input signals	Intake air temperature and pressure sensor	Detects the temperature of intake and amount of intake air (Measures the absolute pressure).
	Atmospheric pressure sensor	Detects the amount of intake air (Measure the atmospheric pressure).
	Throttle position sensor	Detects the throttle valve position.
	Front oxygen (A/F) sensor	Detects the density of oxygen in exhaust gases at the upstream of the front catalytic converter.
	Rear oxygen sensor	Detects the density of oxygen in exhaust gases at the downstream of the front catalytic converter.
	Crankshaft position sensor	Detects the crankshaft angular position.
	Camshaft position sensor	Detects the combustion cylinder.
	Engine coolant temperature sensor	Detects the engine coolant temperature.
	Knock sensor	Detects engine knocking.
	Vehicle speed sensor	Detects the vehicle speed.
	Ignition switch	Detects operation of the ignition switch.
	Starter switch	Detects the condition of engine cranking.
	Neutral position switch (MT)	Detects that the gear is in neutral.
	Park/Neutral position switch (AT)	Detects shift positions.
	Torque control signal (AT)	Controls engine torque.
	Heater circuit of front and rear oxygen sensor	Detects abnormality in the heater circuit of the front and rear oxygen sensors.
	Diagnostics of TCM (AT)	Detects the self-diagnostics of the TCM.
	A/C switch	Detects ON-OFF operation of the A/C switch.
	Fuel temperature sensor	Detects the temperature of the fuel in the fuel tank.
	Fuel level sensor	Detects the level of the fuel in the fuel tank.
	Fuel tank pressure sensor	Detects the evaporation gas pressure in the fuel tank.
	Small light switch	Detects ON-OFF operation of the small light switch.
	Blower fan switch	Detects ON-OFF operation of the blower fan switch.
	Rear defogger switch	Detects ON-OFF operation of the rear defogger switch.
Output signals	Fuel Injector	Activates an injector.
	Ignition signal	Turns the primary ignition current ON or OFF.
	Fuel pump relay	Turns the fuel pump relay ON or OFF.
	A/C control relay	Turns the A/C control relay ON or OFF.
	Radiator fan control relay	Turns the radiator fan control relay ON or OFF.
	Idle air control solenoid valve	Adjusts the amount of air flowing through the bypass line in the throttle body.
	Malfunction indicator lamp	Indicates existence of abnormality.
	Purge control solenoid valve	Controls purge of evaporative gas absorbed by the canister.
	Power supply	Control ON/OFF of the main power supply relay.
	Pressure control solenoid valve	Controls evaporation gas pressure in the fuel tank.
	Drain valve	Closes the evaporation line between the fuel tank and canister to detect leakage of evaporation gases.

C: FUEL INJECTION CONTROL

• The ECM receives signals from various sensors and based on them, it determines the amount of fuel injected and the fuel injection timing. It performs the sequential fuel injection control over the entire engine operating range except during start-up of the engine.

• The amount of fuel injected depends upon the length of time the injector stays open. The fuel injection duration is determined according to varying operating condition of the engine. For the purpose of achieving highly responsive and accurate fuel injection duration control, the ECM performs a new feedback control that incorporates a learning feature as detailed later.

• The sequential fuel injection control is performed such that fuel is injected accurately at the time when the maximum air intake efficiency can be achieved for each cylinder (i.e., fuel injection is completed just before the intake valve begins to open).

1. FUEL INJECTION DURATION

Fuel injection duration is basically determined as indicated below:

• During engine start-up:
The duration defined below is used.
  • Duration of fuel injection during engine start-up ..... Determined according to the engine coolant temperature detected by the engine coolant temperature sensor.

• During normal operation:
The duration is determined as follows:

  Basic duration of fuel injection x Correction factors + Voltage correction time

  • Basic duration of fuel injection ..... The basic length of time fuel is injected. This is determined by two factors – the amount of intake air detected by the manifold pressure sensor and the engine speed monitored by the crankshaft position sensor.
  • Correction factors ..... See the next section.
  • Voltage correction time ..... This is added to compensate for the time lag before operation of injector that results from variation in the battery voltage.

2. CORRECTION FACTORS

The following factors are used to correct the basic duration of fuel injection in order to make the air-fuel ratio meet the requirements of varying engine operating conditions:

- Air-fuel ratio feedback factor:
This factor is used to correct the basic duration of fuel injection in relation to the actual engine speed. (See the next section for more detail.)

- Start increment factor:
This factor is used to increase the fuel injection duration only while the engine is being cranked to improve its startability.

- Coolant-temperature-dependent increment factor:
This factor is used to increase the fuel injection duration depending on engine coolant temperature signals to facilitate cold starting. The lower the coolant temperature, the greater the increment.

- After-start increment factor:
  - This factor is used to increase the fuel injection duration for a certain period immediately after start of the engine to stabilize engine operation.
  - The increment depends on the coolant temperature at the start of the engine.

- Wide-open-throttle increment factor:
This factor is used to increase the fuel injection duration depending on the relationship between the throttle position sensor signal and manifold pressure sensor signal.

- Acceleration increment factor:
This factor is used to increase the fuel injection duration to compensate for a time lag between air flow measurement and fuel injection control for better engine response to driver's pedal operation during acceleration.

3. AIR-FUEL RATIO FEEDBACK FACTOR

The ECM creates this factor utilizing the front oxygen sensor signal. When the signal voltage is low, the air-fuel ratio is richer than the stoichiometric ratio. The ECM then makes the fuel injection duration shorter by modifying the factor. When the voltage is high showing that the mixture is lean, the ECM modifies the factor to make the injection duration longer. In this way, the air-fuel ratio is maintained at a level close to the stoichiometric ratio at which the three-way catalyst acts most effectively.

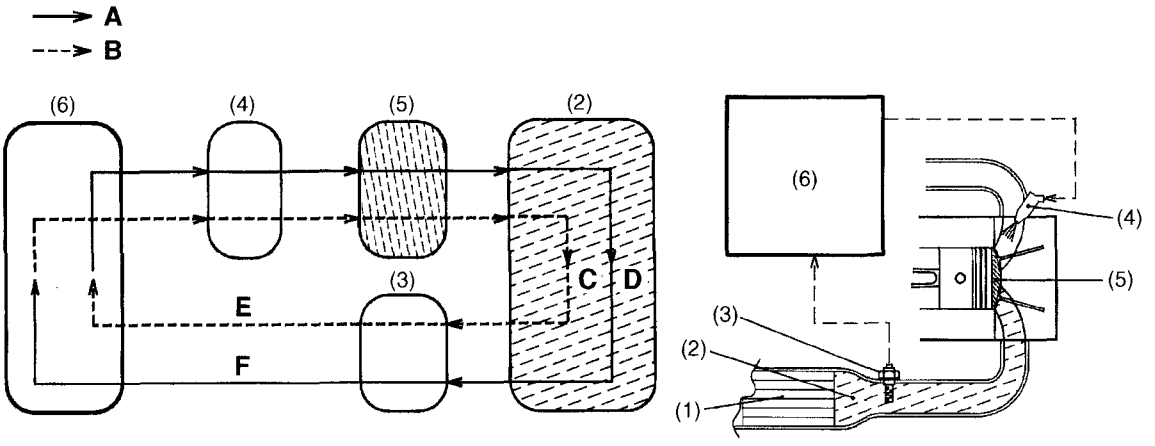

B2H0989B

(1) Front catalyst
(2) Exhaust gas
(3) Front oxygen (A/F) sensor
(4) Fuel injector
(5) Combustion chamber
(6) ECM

A: Injection duration increment signal
B: Injection duration decrement signal
C: High oxygen density
D: Low oxygen density
E: Lean signal
F: Rich signal

4. LEARNING FEATURE

The air-fuel ratio feedback control includes a learning feature which contributes to more accurate and responsive control.

- In the air-fuel ratio feedback control, the ECM calculates the necessary amount of correction based on data from the oxygen sensor and adds the result to the basic duration (which is stored in the ECM's memory for each condition defined by the engine speed and various loads.)
- Without a learning feature, the ECM carries out the above-mentioned process every time. This means that if the amount of necessary correction is large, the air-fuel ratio feedback control becomes less responsive and less accurate.
- The learning feature enables the ECM to store the amount of correction into memory and add it to the basic fuel injection duration to create a new reference fuel injection duration. Using the reference duration as the basic duration for the injection a few times later, the ECM can reduce the amount of correction and thus make its feedback control more accurate and responsive to changes in the air-fuel ratio due to difference in driving condition and sensor/actuator characteristics that may result from unit-to-unit variation or aging over time.

D: IGNITION SYSTEM CONTROL

- The ECM determines operating condition of the engine based on signals from the pressure sensor, engine coolant temperature sensor, intake air temperature sensor, crankshaft position sensor and other sources. It then selects the ignition timing most appropriate for the condition thus determined from those stored in its memory and outputs at that timing a primary current OFF signal to the ignitor to initiate ignition.
- This control uses a quick-to-response learning feature by which the data stored in the ECM memory is processed in comparison with information from various sensors and switches.
- Thus, the ECM can always perform optimum ignition timing taking into account the output, fuel consumption, exhaust gas, and other factors for every engine operating condition.
- Ignition control during start-up

Engine speed fluctuates during start of the engine, so the ECM cannot control the ignition timing. During that period, the ignition timing is fixed at 10° BTDC by using the 10° signal from the crankshaft position sensor.

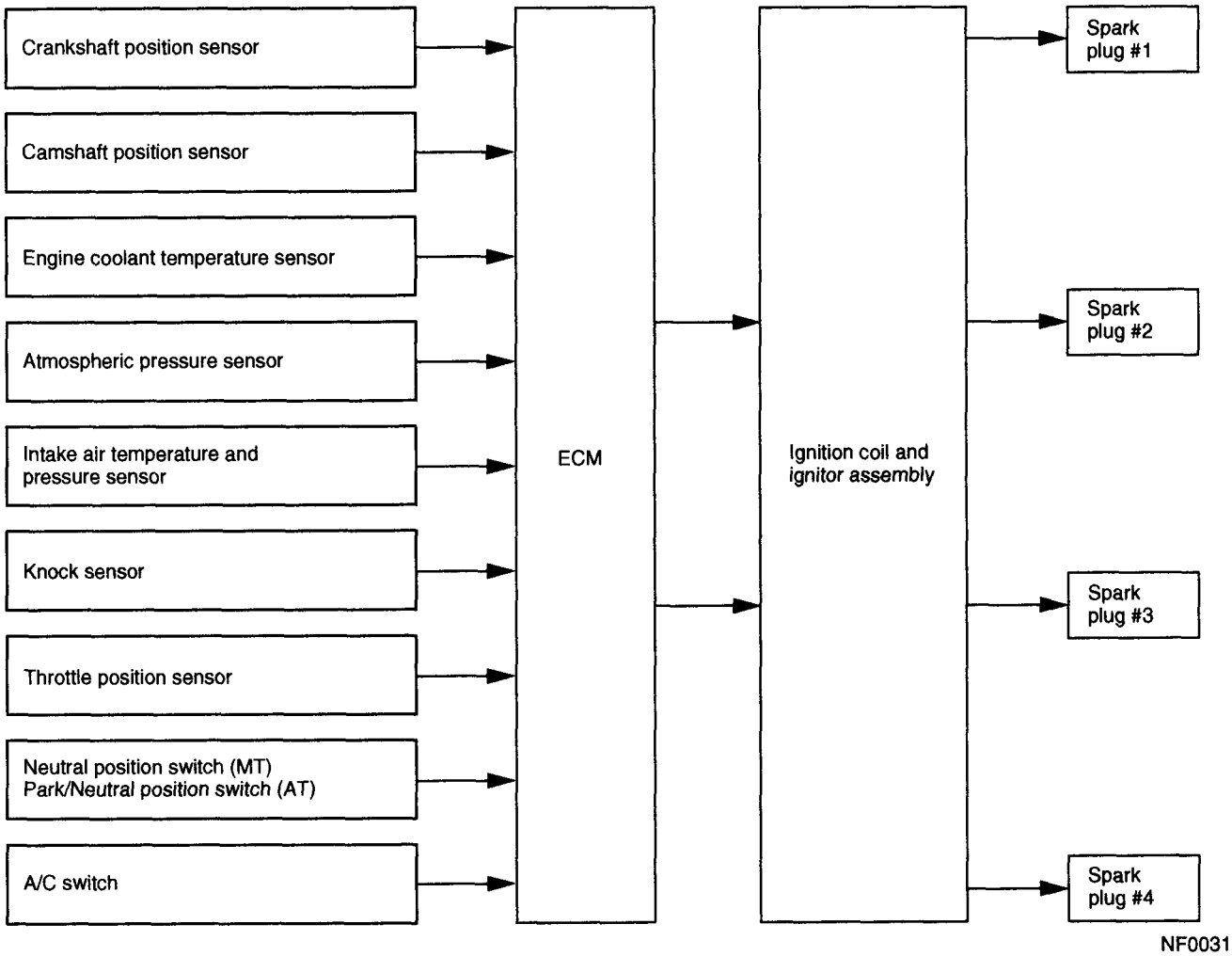

- Ignition control after start of engine

Between the 97° and 65° crank angle signal, the ECM measures the engine speed, and by using this data it decides the dwell set timing and ignition timing according to the engine condition.

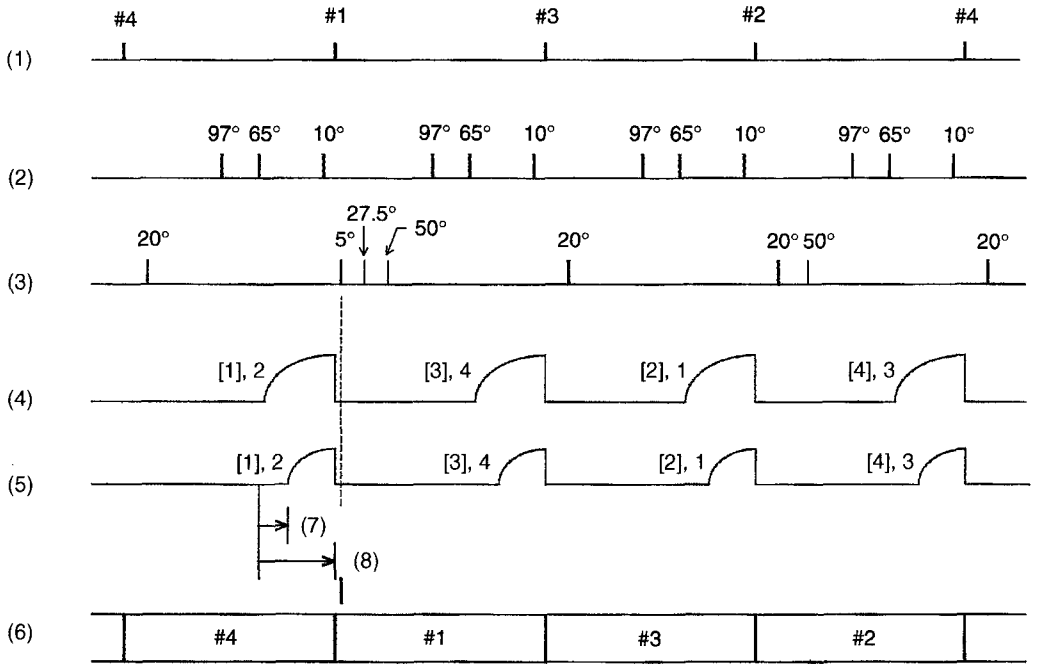

B2H0410D

(1) Cylinder number
(2) Crank angle pulse (BTDC)
(3) Cam angle pulse (ATDC)
(4) Ignition timing at starting
(5) Ignition timing at normal condition
(6) Burning cylinder
(7) Dwell set
(8) Ignite

E: IDLE AIR CONTROL

- The ECM activates the idle air control solenoid valve to control the bypass air flowing through the bypass passage in the throttle body depending on signals from the crankshaft position sensor, engine coolant temperature sensor, pressure sensor and A/C switch so that the proper idle speed for each engine load is achieved.
- The idle air control solenoid valve uses a duty-ratio-controlled solenoid which can continuously vary the opening area of the rotary valve. As the ECM increases the duty ratio, opening of the rotary valve increases so that the bypass air flow increases, and the engine idling speed becomes higher as a result.
- The bypass air control is necessary for:
  - Increasing idling speed when the air conditioning system and/or electrical loads are turned on.
  - Increasing idling speed during early stage of warm up period.
  - Obtaining dashpot function when the throttle valve is quickly closed.
  - Prevention of engine speed variation during idling.

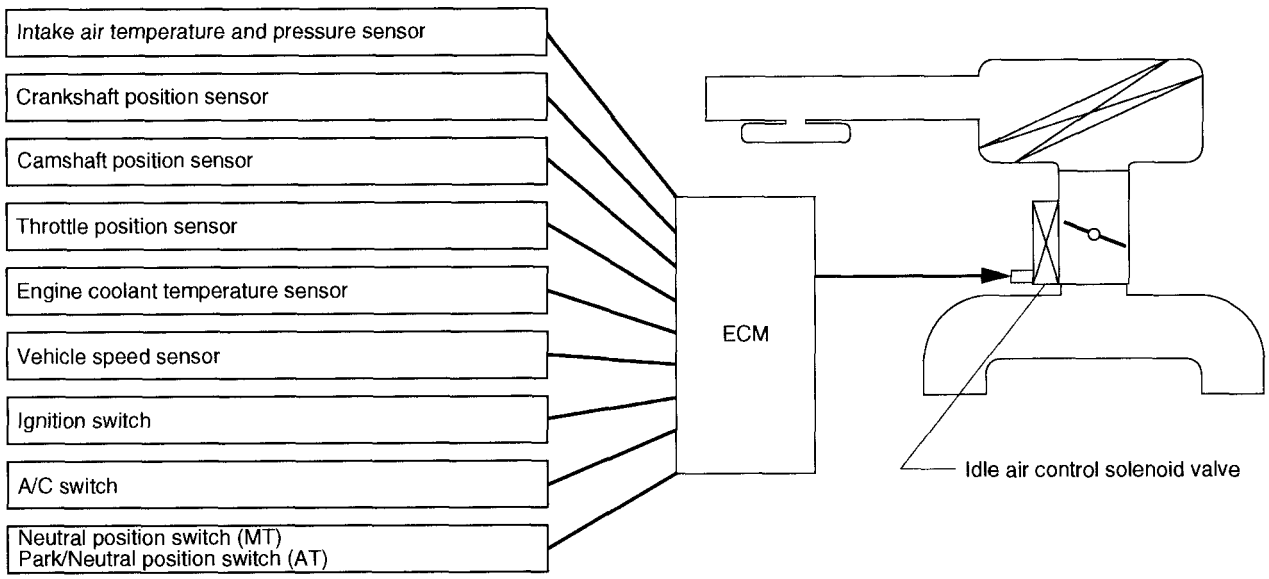

NF0033

F: FUEL PUMP CONTROL

Using the signal from the crankshaft position sensor, the ECM controls operation of the fuel pump by turning its relay ON or OFF. To improve safety, the fuel pump is stopped if the engine stalls with the ignition switch ON.

Ignition switch ON	Fuel pump relay	Fuel pump
A certain period of time after ignition switch is turned ON	ON	Operates
While cranking the engine	ON	Operates
While engine is operating	ON	Operates
When engine stops	OFF	Does not operate

6. On-board Diagnosis System

A: GENERAL

- The on-board diagnosis system detects and indicates a fault by generating a code corresponding to each fault location. The malfunction indicator lamp (CHECK ENGINE light) on the combination meter indicates occurrence of a fault or abnormality.
- When the malfunction indicator lamp comes on as a result of detection of a fault by the ECM, the corresponding diagnostic trouble code (DTC) and freeze frame engine condition are stored in the ECM.
- On the OBD-II conformable car, it is necessary to connect the Subaru Select Monitor (SSM) or General Scan Tool (GST) to the data link connector in order to check the DTC.
- The SSM and GST can read and erase DTCs. They can also read freeze frame data in addition to other pieces of engine data.
- If there is a failure involving sensors which may affect drive control of the vehicle, the fail-safe function ensures minimum level of driveability.

B: FAIL-SAFE FUNCTION

For a sensor or switch which has been judged faulty in the on-board diagnosis, the ECM, if appropriate, generates an associated pseudo signal to keep the vehicle operational. (The control becomes degraded.)

FUEL INJECTION (FUEL SYSTEM) FU (DOHC TURBO)

		Page
1.	General	2
2.	Air Line	3
3.	Fuel Line	8
4.	Sensors and Switches	16
5.	Control System	27
6.	On-board Diagnosis System	36

1. General

• The Multipoint Fuel Injection (MFI) system supplies optimum air-fuel mixture under every engine operating condition through the use of the latest electronic control technology.

This system pressurizes the fuel to a constant pressure and injects it into each intake air port in the cylinder head. The injection quantity of fuel is controlled by an intermittent injection system where an electro-magnetic injection valve or injector opens for a short period that is precisely controlled depending on the quantity of air appropriate for each condition of operation. In actual control, an optimum fuel injection quantity is achieved by varying the duration of an electric pulse applied to the injector. This way of control enables simple, yet highly precise metering of the fuel.

• The engine control module (ECM) that controls the fuel injection system corrects the fuel injection amount depending on the vehicle speed, throttle opening, coolant temperature and other vehicle-operation-related information. The ECM receives the information in the form of electric signals from the corresponding sensors and switches.

The MFI system also has the following features:

- Reduced exhaust emissions
- Reduced fuel consumption
- Increased engine output
- Quick response to accelerator and brake pedal operation
- Superior startability and warm-up performance in cold weather due to corrective controls made according to coolant and intake air temperatures

2. Air Line

A: GENERAL

The air filtered by the air cleaner enters the throttle body where it is regulated in the volume by the throttle valve and then enters the intake manifold. It is then distributed to each cylinder where the air is mixed with fuel injected by the injector. During idling operation, air flows into the cylinder through the idle air control solenoid valve, bypassing the throttle valve. This enables controlling the engine idling speed properly.

B: PRESSURE SENSOR

The pressure sensor is attached to the top of the throttle body, and continuously sends to the engine control module (ECM) voltage signals that are proportional to intake manifold absolute pressures. The ECM controls the fuel injection and ignition timing based on the intake manifold absolute pressure signals in addition to other signals from many sensors and other control modules.

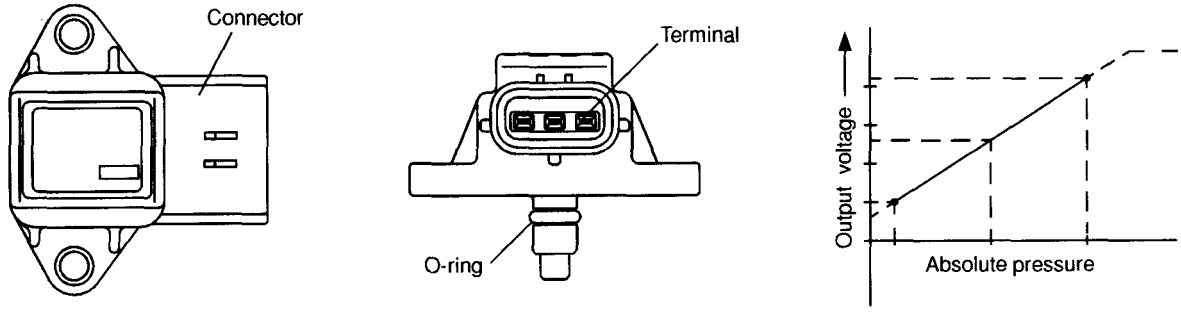

NF0318

C: THROTTLE BODY

- In response to operation of the accelerator pedal, the throttle valve in the throttle body opens/closes to regulate the volume of the air drawn into the combustion chamber.
- During idling, the throttle valve is almost fully closed and the volume of air passing through the throttle body is less than that passing through the idle air control solenoid valve.
- More than half of the air necessary for idling is supplied to the intake manifold via the idle air control solenoid valve which controls properly the engine idling speed, so the idling speed needs not be adjusted.

D: THROTTLE POSITION SENSOR

- The throttle position sensor is mounted in the throttle body and linked to the throttle valve.
- The throttle position sensor sends the ECM voltage signal corresponding to the opening of the throttle valve. When the sensor's output voltage exceeds a predetermined level, the ECM interprets it as complete closure of the throttle valve. When the output voltage is at another predetermined level, the ECM recognizes that the throttle valve is at a wide open position. Since the output characteristics of the sensor change over years, the ECM is provided with a learning function to be able to interpret signals into throttle valve angles always correctly.

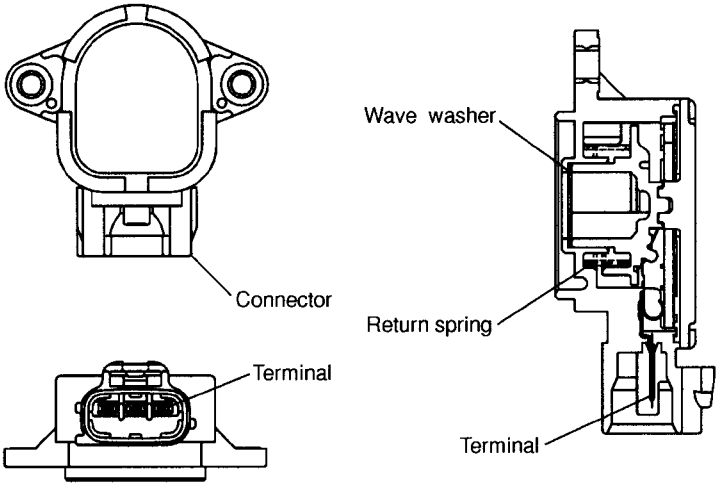

NF0319

E: IDLE AIR CONTROL SOLENOID VALVE

- The idle air control solenoid valve is located in the throttle body and regulates the amount of intake air that flows bypassing the throttle valve into the intake manifold during engine idling. It is activated by a signal from the ECM in order to maintain the engine idling speed at a target speed.
- The idle air control solenoid valve is a solenoid-actuated rotary valve consisting of a coil, rotary valve, spring and housing. The housing is an integral part of the throttle body and provided with a bypass air port whose opening area is changed by the rotary valve.

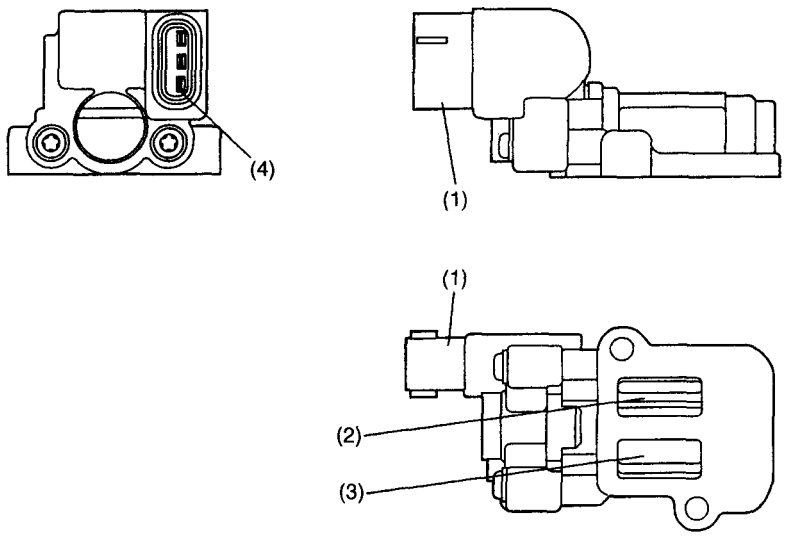

NF0397

(1) Connector
(2) Air outlet port
(3) Air inlet port
(4) Terminal

F: MASS AIR FLOW AND INTAKE AIR TEMPERATURE SENSOR

The mass air flow and the intake air temperature sensors are integrated into a single unit. The unit is mounted on the air cleaner case and measures the amount as well as the temperature of the intake air.
The measured amount and temperature are converted into electrical signals and sent to the ECM. The ECM uses these signals to control injection and ignition timing as well as the fuel injection amount.

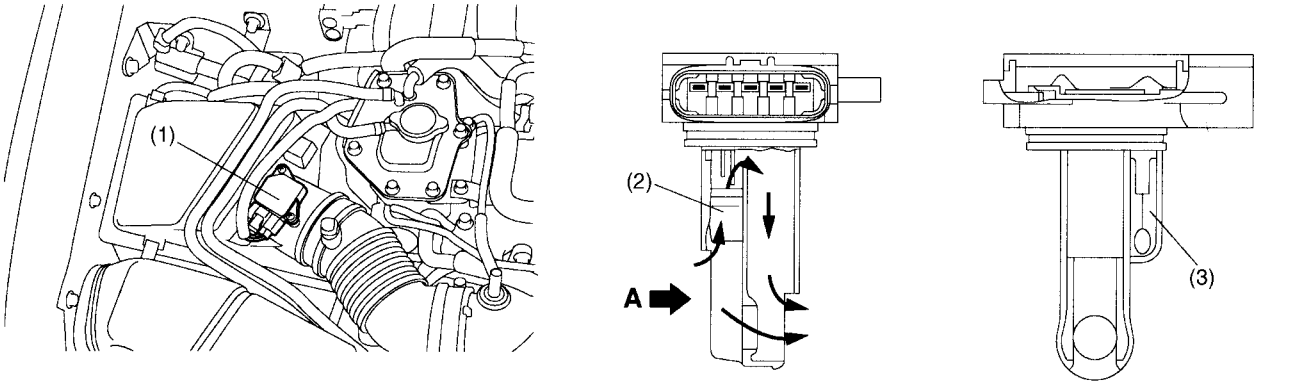

NF0321

(1) Mass air flow and the intake air temperature sensor unit

(2) Mass air flow sensor

(3) Intake air temperature sensor

A: Air

G: TUMBLE GENERATOR VALVES

- A tumble generator valve is provided on each engine bank, between the intake manifold and intake air ports. The right bank tumble generator valve has butterfly valves for the #1 and #3 cylinders and the left bank tumble generator valve has those for the #2 and #4 cylinders. The two butterfly valves in each tumble generator valve are fitted on a single shaft that is driven by an actuator.
- The tumble generator valves are controlled by the ECM according to the coolant temperature and the time elapsed after start of the engine. When the engine is started, the butterfly valves are moved to the closing ends. In this state, the intake air flows at very high speeds passing through narrowed passages in the directions determined by the individual intake air ports in the cylinder head. This creates tumbling air motions in the cylinders, which enables lean mixtures to be ignited and thus harmful exhaust emissions to be reduced during engine start. The tumble generator valves are fully open when the engine is operating at an ordinary driving speed, allowing intake air to flow without being changed in direction and velocity.

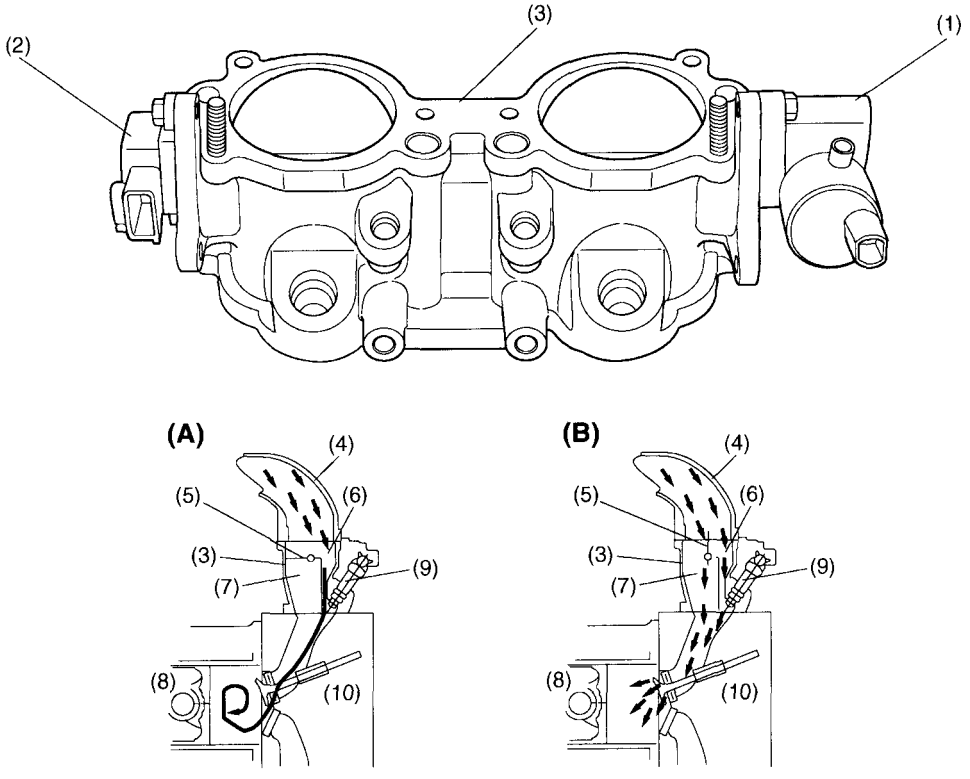

NF0322

(A) Activated
(B) Not activated
(1) Actuator
(2) Tumble generator valve position sensor
(3) Tumble generator housing
(4) Intake manifold
(5) Tumble generator valve
(6) Tumble generating air passage
(7) Intake main air passage
(8) Piston
(9) Injector
(10) Cylinder head

3. Fuel Line

A: GENERAL

- The fuel pressurized by the fuel tank inside pump is delivered to each fuel injector by way of the fuel pipe and fuel filter. Fuel injection pressure is regulated to an optimum level by the pressure regulator.
- Each injector injects fuel into the intake port of the corresponding cylinder where the fuel is mixed with air. The mixture then enters the cylinder.

Fuel injection amount and timing are regulated by the ECM.

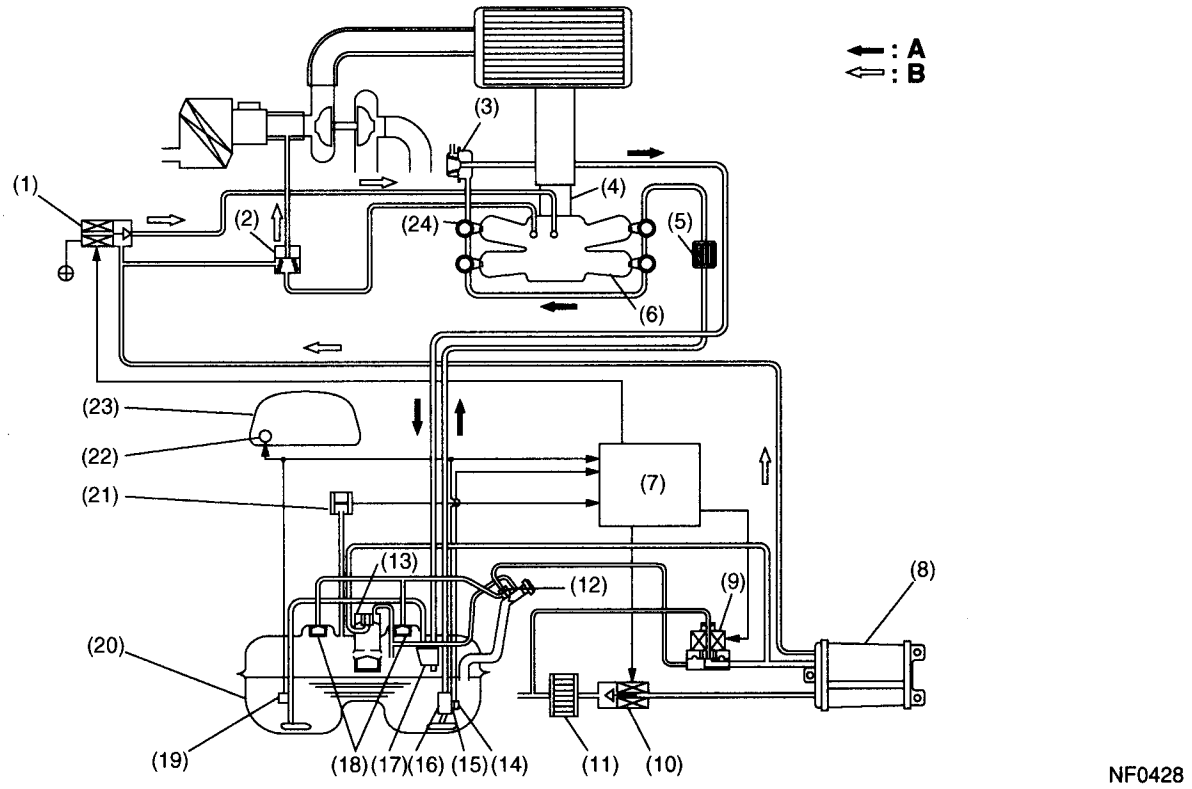

(1)	Purge control solenoid valve	(11)	Drain filter	(21)	Fuel tank pressure sensor
(2)	Purge valve	(12)	Shut-off valve	(22)	Fuel gauge
(3)	Pressure regulator	(13)	Vent valve	(23)	Combination meter
(4)	Throttle body	(14)	Fuel temperature sensor	(24)	Fuel injector
(5)	Fuel filter	(15)	Fuel level sensor		
(6)	Intake manifold	(16)	Fuel pump	**A:**	Fuel line
(7)	ECM	(17)	Jet pump	**B:**	Evaporation line
(8)	Canister	(18)	Fuel cut valve		
(9)	Pressure control solenoid valve	(19)	Fuel sub level sensor		
(10)	Drain valve	(20)	Fuel tank		

B: PRESSURE REGULATOR

The pressure regulator is installed at the injector end of the fuel supply line. It has a fuel chamber and spring chamber separated by a diaphragm. Fuel chamber is connected to the fuel supply line and the spring chamber is connected to the intake manifold. Fuel chamber also has a relief valve connected to the fuel return line through which fuel returns to the fuel tank. When the intake manifold vacuum increases, the diaphragm is pulled and the relief valve opens to decrease the fuel supply line pressure (or fuel injection pressure). When the intake manifold vacuum decreases, the diaphragm is pushed by the spring to increase the fuel supply line pressure. Thus, the difference between the fuel injection pressure and the intake manifold vacuum is kept at a constant level of 294 kPa (3.00 kgf/cm^2, 43.0 psi) to precisely control the amount of injected fuel.

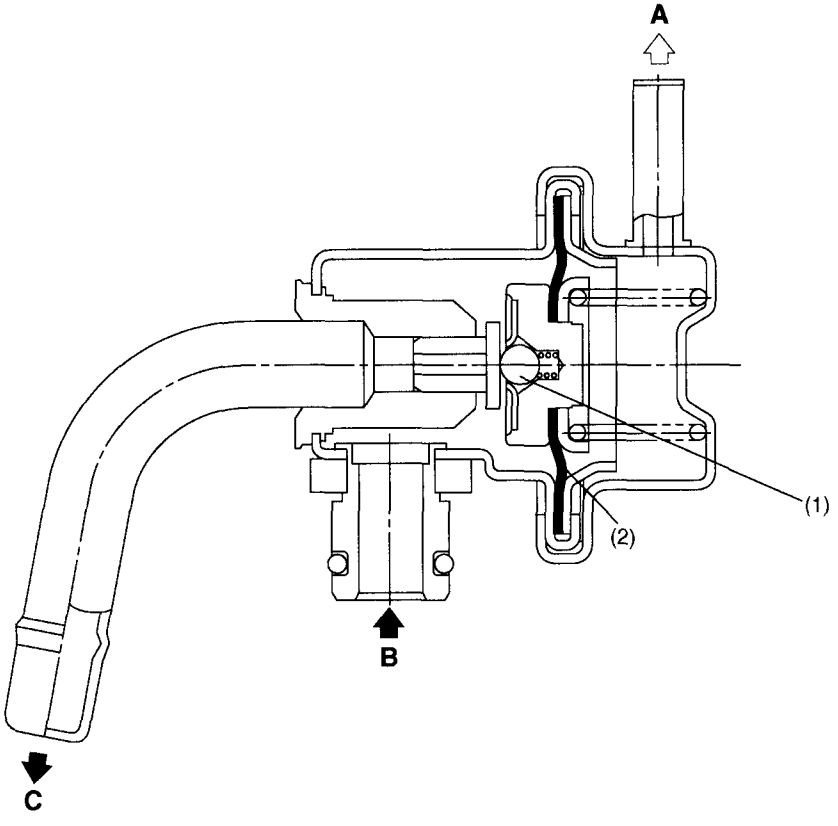

NF0387

A: To intake manifold
B: Fuel IN
C: Fuel OUT

(1) Relief valve
(2) Diaphragm

C: FUEL INJECTORS

- The MFI system employs top feed type fuel injectors.
- Each injector is installed in the fuel pipe in such a way that the injector is cooled by fuel.
- The features of this type of fuel injector are as follows:

1) High heat resistance
2) Low driving noise
3) Easy to service
4) Small size

- The injector injects fuel according to the valve open signal from the ECM. The needle valve is lifted by the solenoid which is energized on arrival of the valve open signal.
- Since the injector's nozzle hole area, the lift of valve and the fuel pressure are kept constant, the amount of fuel injected is controlled only by varying the duration of the valve open signal from the ECM.
- The multi-hole nozzle makes it possible for the injector to produce fire fuel particles, which enhances the combustion efficiency and output performance of the engine.

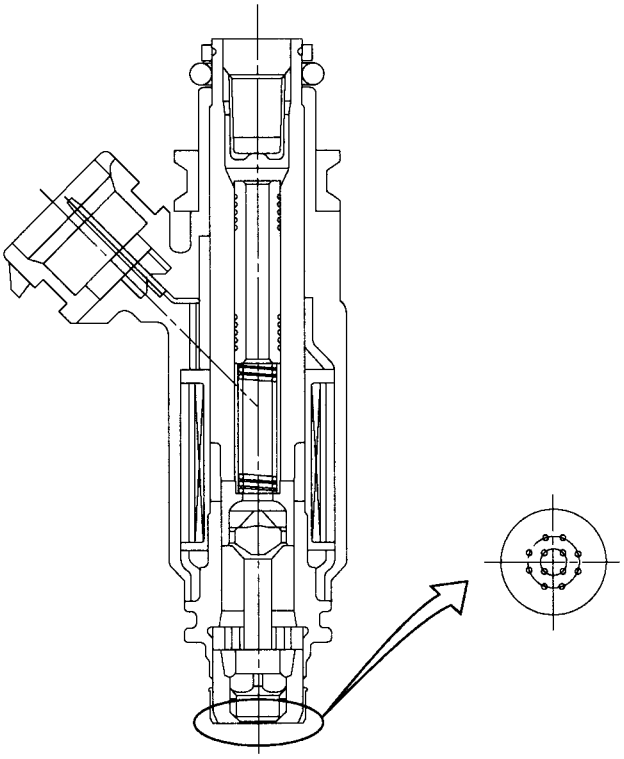

NF0388

D: FUEL TANK

The fuel tank utilizes a two-compartment design to ensure sufficient capacity without interfering with the rear differential. It is provided with a suction jet pump (included in the fuel pump and fuel level sensor assembly) which transfers fuel from one compartment to the other. Each compartment has an individual fuel level sensor.

The fuel tank is located under the rear seat and secured with hold-down bands.

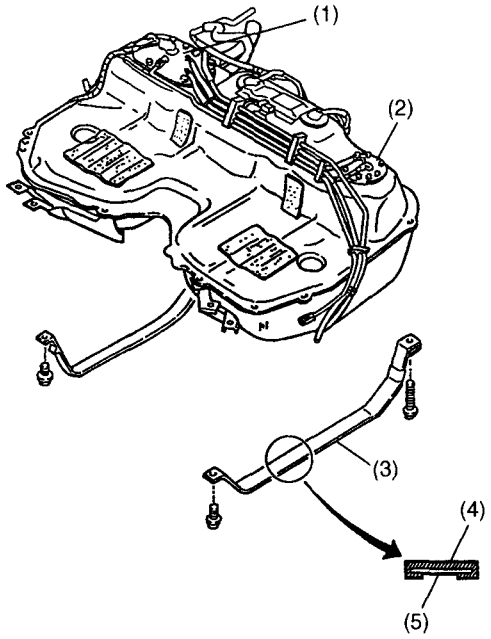

NF0473

(1) Fuel pump and fuel level sensor assembly
(2) Fuel sub level sensor
(3) Band
(4) Cushion
(5) Steel

E: FUEL PUMP AND FUEL LEVEL SENSOR ASSEMBLY

1. FUEL PUMP

The fuel pump consists of a motor, impeller, pump casing, pump cover, check valve and filter. It is located in the fuel tank and combined with the fuel level sensor into a single unit. The operation of this impeller type pump is very quiet.

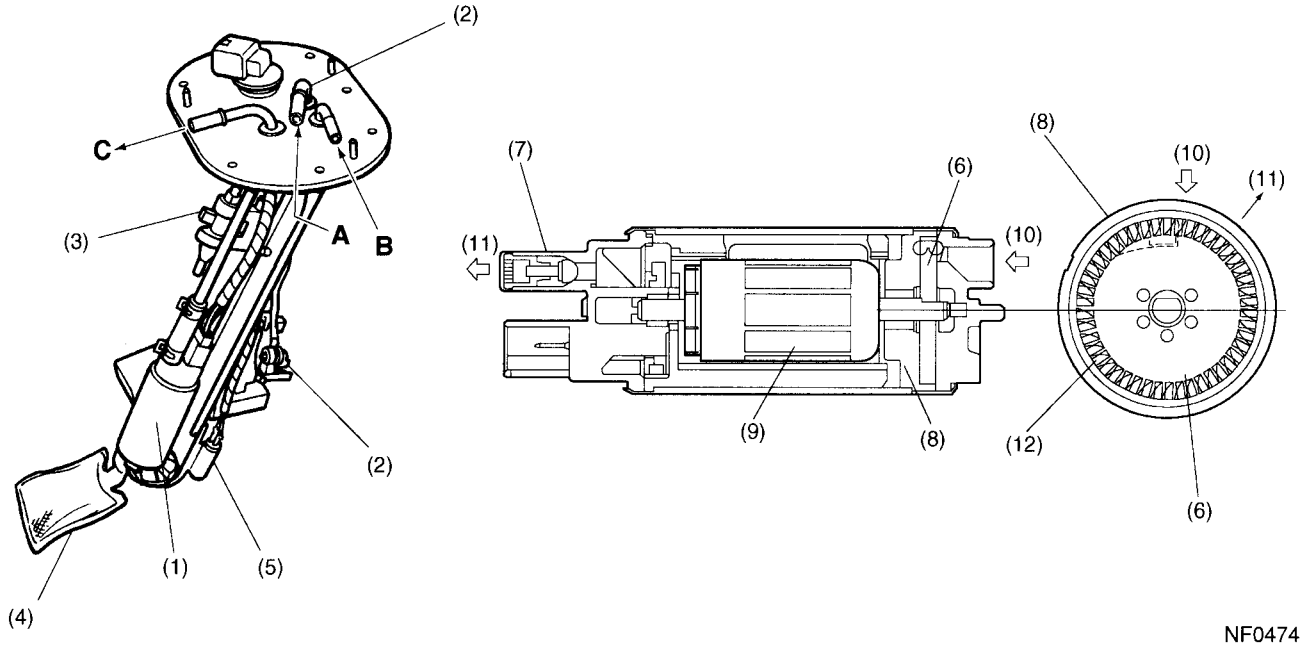

(1) Fuel pump
(2) Fuel level sensor
(3) Jet pump
(4) Mesh filter
(5) Fuel temperature sensor
(6) Impeller
(7) Check valve
(8) Pump casing
(9) Motor armature
(10) Suction
(11) Discharge
(12) Vane groove

A: From engine (return line)
B: From sub tank
C: To engine (delivery line)

- When the ignition switch is turned ON, fuel pump relay is activated. Then the motor operates to rotate the impeller.
- As the impeller rotates, fuel in a vane groove of the impeller flows along the fuel passage into the next vane groove by centrifugal force. When fuel flows from one groove to the next, a pressure difference occurs due to friction. This creates a pumping effect.
- The fuel pushed up by rotation of the impeller then passes through the clearance between the armature and the magnet of the motor and is discharged through the check valve.
- When the fuel discharge pressure reaches the specified level, the relief valve opens and excess fuel is released into the fuel tank. In this manner, the relief valve prevents an abnormal increase in fuel pressure.
- When the engine and the fuel pump stop, spring force acts on the check valve to close the discharge port, so that the fuel pressure in the fuel delivery line is retained.

2. FUEL LEVEL SENSOR

The fuel level sensor forms part of the fuel pump and located in the fuel tank. The sensor outputs an electric resistance signal that varies with movement of its float to indicate the level of the fuel remaining in the tank.

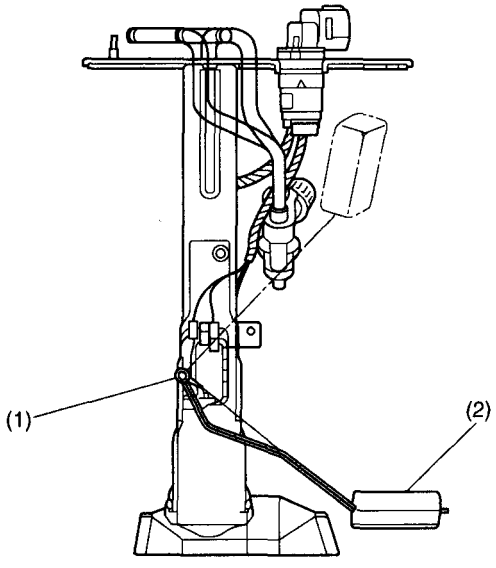

NF0327

(1) Fuel level sensor
(2) Float

3. JET PUMP

- The jet pump utilizes the velocity of fuel returning from the engine to produce negative pressure in it.
- Using the pumping effect produced by the negative pressure, the jet pump transfers fuel from the sub-compartment to the main compartment of the fuel tank.
- When the return line nozzle is clogged, the fuel sent back through the return line flows back into the fuel tank via the relief valve.

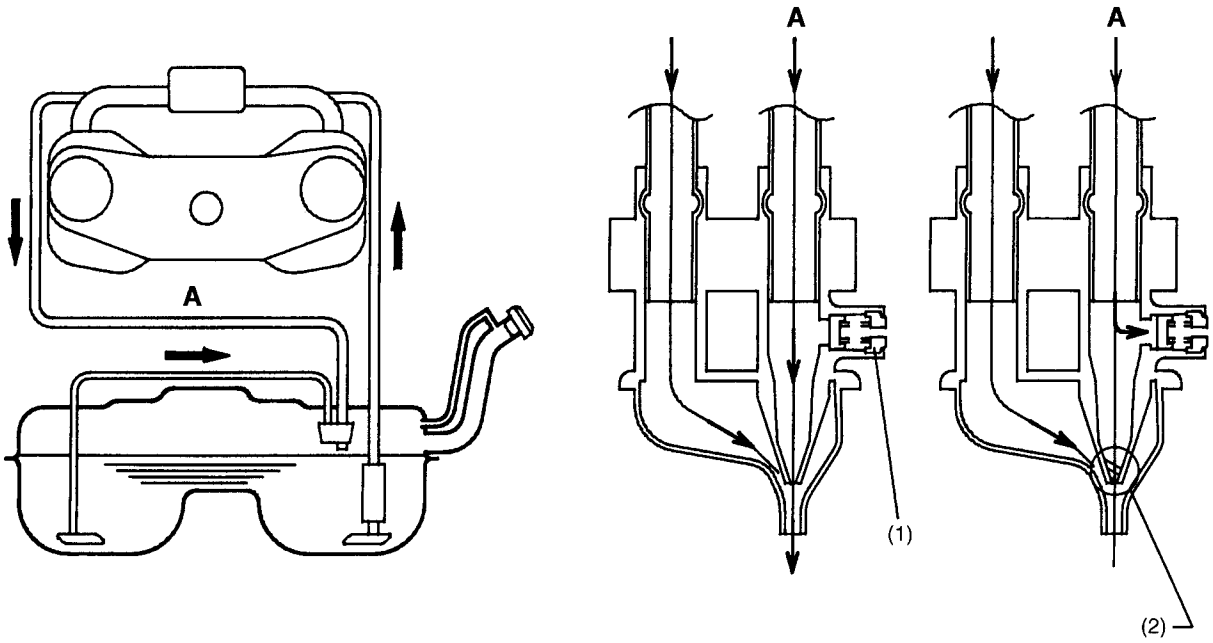

NF0328

(1) Relief valve
(2) Nozzle

A: Return line

F: SUB-COMPARTMENT FUEL LEVEL SENSOR

This sensor detects the level of the fuel in the sub-compartment (the compartment in which the fuel pump is not located) and acts as part of the fuel transfer line when the jet pump is in operation to maintain the fuel in both compartments at the same level.

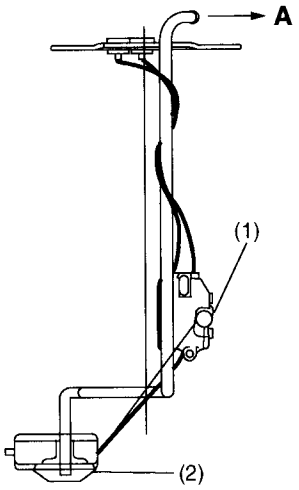

NF0396

(1) Fuel level sensor
(2) Float

A: To jet pump

G: FUEL FILTER

The fuel filter located in the engine compartment is a pressure-withstanding, cartridge type. It has a filter element in a metal case. The fuel entering the filter flows from the perimeter of the element to the center of the filter and goes out from there.

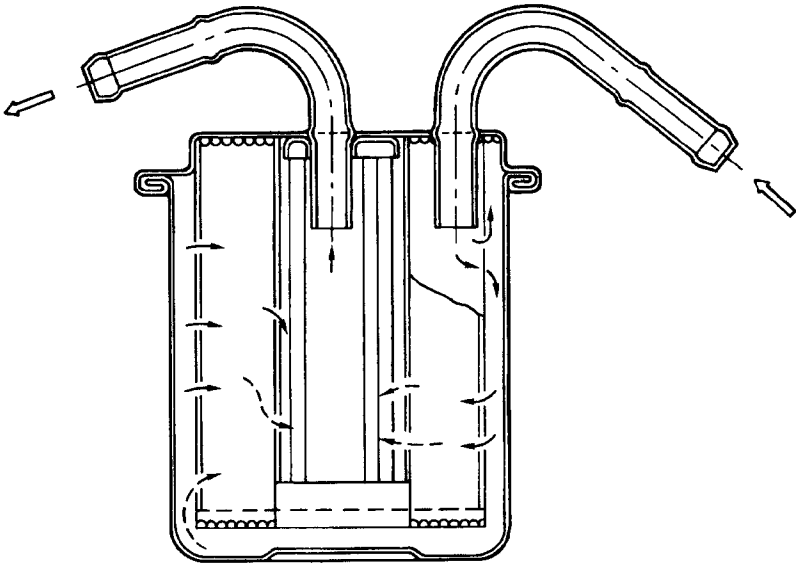

NF0018

4. Sensors and Switches

A: FRONT OXYGEN (A/F) SENSOR

- The front oxygen sensor uses zirconium oxide (ZrO_2) which is a solid electrolyte, at portions exposed to exhaust gas.
- The zirconium oxide has the property of generating electromotive force when its both sides are exposed to oxygen ions of different concentration and the magnitude of this electromotive force depends on how much the difference is.
- The front oxygen sensor detects the amount of oxygen in exhaust gases by making use of this property of the zirconium oxide material.
- The zirconium oxide material is formed into a closed end tube and its external surface is exposed to exhaust gases with smaller oxygen ion concentration, whereas its internal surface is exposed to atmospheric air. The external surface has a porous platinum coating. The sensor housing is grounded to the exhaust pipe and the inside is connected to the ECM through the harness to be able to use the current output from the sensor.
- The sensor incorporates a ceramic heater to improve its performance at low temperatures.

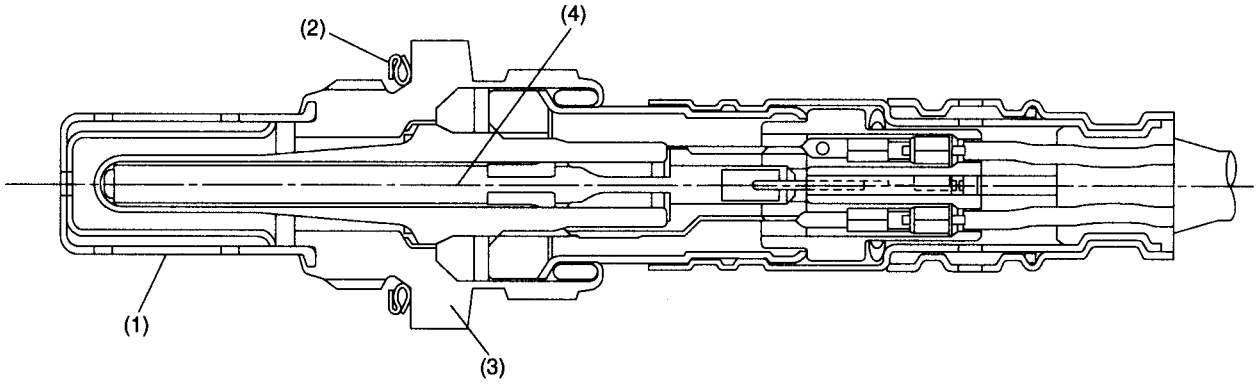

NF0389

(1) Protection tube
(2) Gasket
(3) Sensor housing
(4) Ceramic heater

- When rich air-fuel mixture is burnt in the cylinder, the oxygen in the exhaust gases is almost completely used in the catalytic reaction by the platinum coating on the external surface of the zirconia tube. This results in a very large difference in the oxygen ion concentration between the inside and outside of the tube, and the electromotive force generated is large.
- When a lean air-fuel mixture is burnt in the cylinder, relatively large amount of oxygen remains in the exhaust gases even after the catalytic action, and this results in a small difference in the oxygen ion concentration between the tube's internal and external surfaces. The electromotive force in this case is very small.
- The difference in oxygen concentration changes drastically in the vicinity of the stoichiometric air-fuel ratio, and hence the change in the electromotive force is also large. By using this information, the ECM can determine the air-fuel ratio of the supplied mixture easily. The front oxygen sensor does not generate much electromotive force when the temperature is low. The output characteristics of the sensor stabilize at a temperature of approximately 700°C (1,292°F).

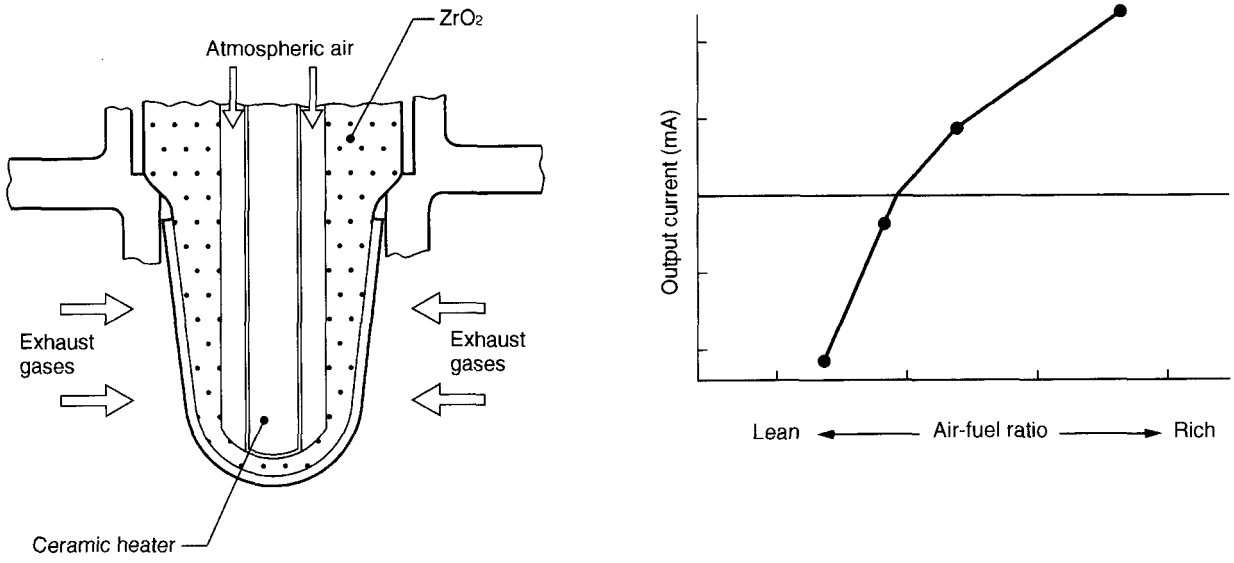

NF0331

B: REAR OXYGEN SENSOR

- The rear oxygen sensor is used to sense oxygen concentration in the exhaust gas. If the air-fuel ratio is leaner than the stoichiometric ratio in the mixture (i.e., excessive amount of air), the exhaust gas contains more oxygen. To the contrary, if the fuel ratio is richer than the stoichiometric ratio, the exhaust gas contains almost no oxygen.
- Detecting the oxygen concentration in exhaust gas using the oxygen sensor makes it possible to determine whether the air-fuel ratio is leaner or richer than the stoichiometry.
- The rear oxygen sensor has a zirconia tube (ceramic) which generates voltage if there is a difference in oxygen ion concentration between the inside and outside of the tube. Platinum is coated on the inside and outside of the zirconia tube as a catalysis and electrode material. The sensor housing is grounded to the exhaust pipe and the inside is connected to the ECM through the harness.
- A ceramic heater is employed to improve performance at low temperatures.

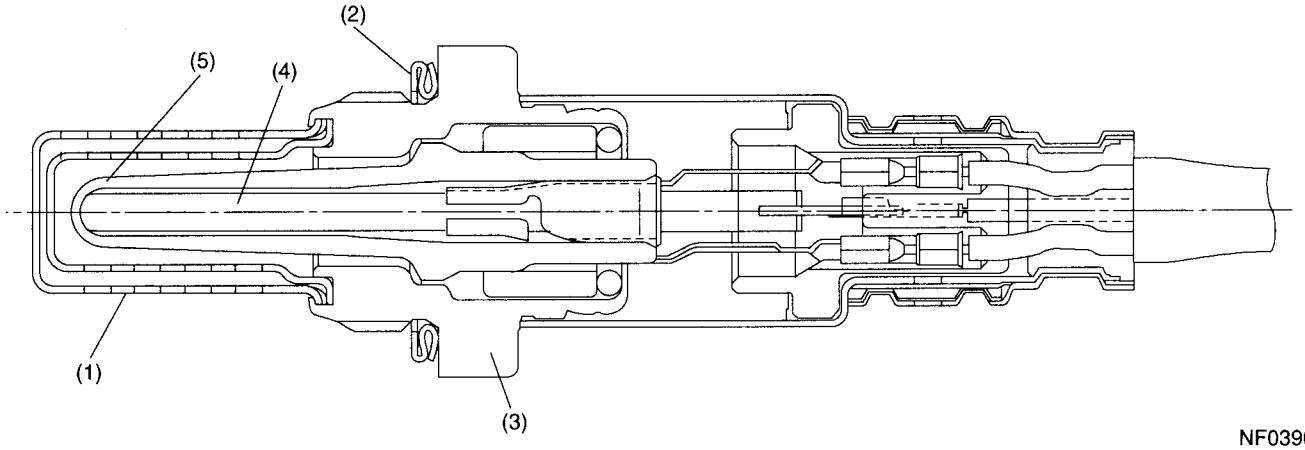

NF0390

(1) Protection tube
(2) Gasket
(3) Sensor housing
(4) Ceramic heater
(5) Zirconia tube

- When rich air-fuel mixture is burnt in the cylinder, the oxygen in the exhaust gases is almost completely used in the catalytic reaction by the platinum coating on the external surface of the zirconia tube. This results in a very large difference in the oxygen ion concentration between the inside and outside of the tube, and the electromotive force generated is large.
- When a lean air-fuel mixture is burnt in the cylinder, relatively large amount of oxygen remains in the exhaust gases even after the catalytic action, and this results in a small difference in the oxygen ion concentration between the tube's internal and external surfaces. The electromotive force in this case is very small.
- The difference in oxygen concentration changes drastically in the vicinity of the stoichiometric air-fuel ratio, and hence the change in the electromotive force is also large. By using this information, the ECM can determine the air-fuel ratio of the supplied mixture easily. The rear oxygen sensor does not generate much electromotive force when the temperature is low. The output characteristics of the sensor stabilize at a temperature of approximately 300 to 400°C (572 to 752°F).

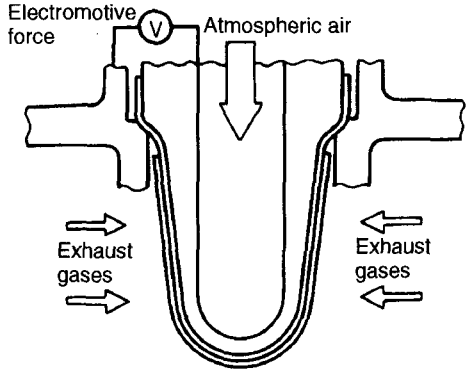

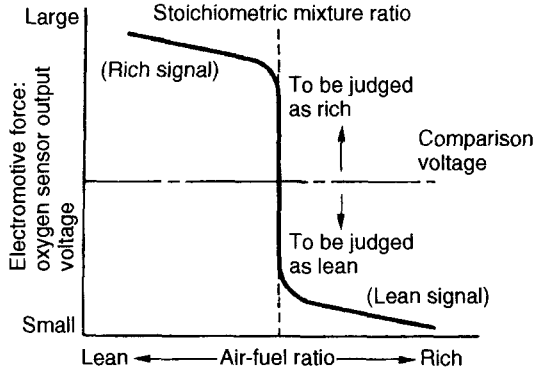

NF0333

C: ENGINE COOLANT TEMPERATURE SENSOR

The engine coolant temperature sensor is located on the engine coolant pipe. The sensor uses a thermistor whose resistance changes inversely with temperature. Resistance signals as engine coolant temperature information are transmitted to the ECM to make fuel injection, ignition timing, purge control solenoid valve and other controls.

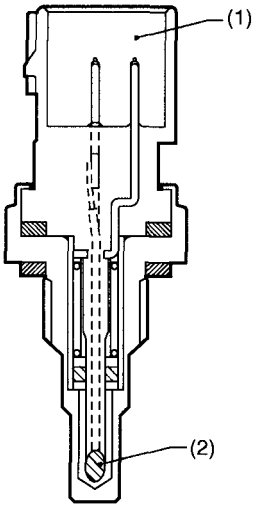

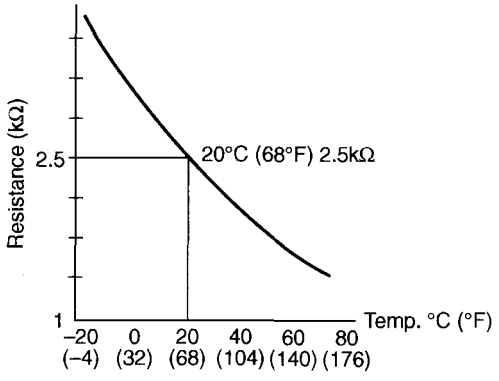

S2H1113B

(1) Connector

(2) Thermistor element

D: EXHAUST GAS TEMPERATURE SENSOR

The exhaust gas temperature sensor is located on the joint pipe and used to monitor the condition of the precatalytic converter.

E: CRANKSHAFT POSITION SENSOR

- The crankshaft position sensor is installed on the oil pump which is located in the front center portion of the cylinder block. The sensor generates a pulse when one of the teeth on the perimeter of the crankshaft sprocket (rotating together with the crankshaft) passes in front of it. The ECM determines the crankshaft angular position by counting the number of pulses.
- The crankshaft position sensor is a molded type which consists of a magnet, core, coil, terminals and other components as illustrated below.

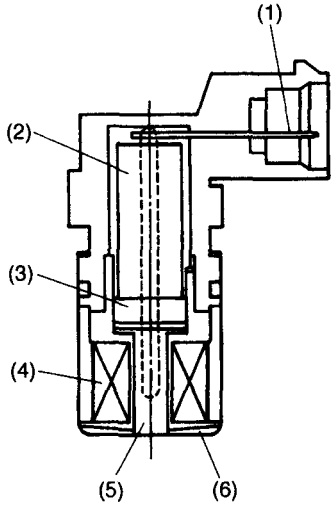

NF0024

(1) Terminal
(2) Yoke core
(3) Magnet
(4) Coil
(5) Core
(6) Cover

- As the crankshaft rotates, each tooth aligns with the crankshaft position sensor. At that time, the magnetic flux in the sensor's coil changes since the air gap between the sensor pickup and the sprocket changes. This change in magnetic flux induces a voltage pulse in the sensor and the pulse is transmitted to the ECM.

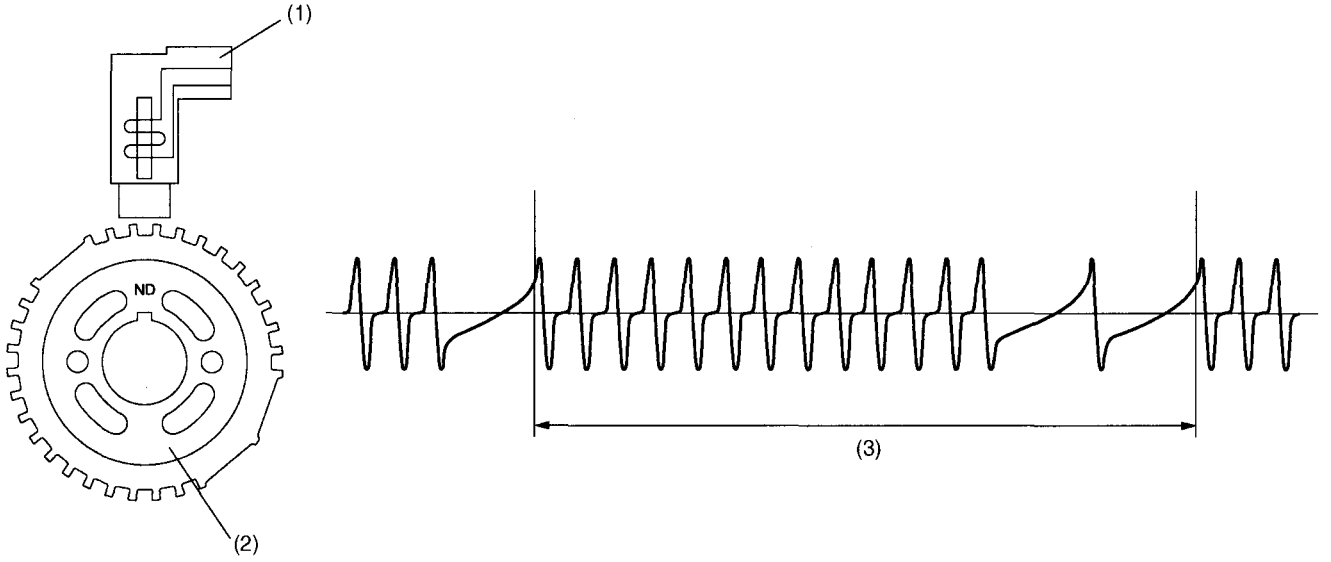

NF0429

(1) Crankshaft position sensor
(2) Crankshaft sprocket
(3) Crankshaft half rotation

F: CAMSHAFT POSITION SENSOR

- The camshaft position sensor is located on the left-hand camshaft support. It detects the combustion cylinder at any given moment.
- The sensor generates a pulse when one of the bosses on the back of the left-hand camshaft drive sprocket passes in front of the sensor. The ECM determines the camshaft angular position by counting the number of pulses.

Internal construction and the basic operating principle of the camshaft position sensor are similar to those of the crankshaft position sensor. Two bosses are provided on the sprocket as shown below.

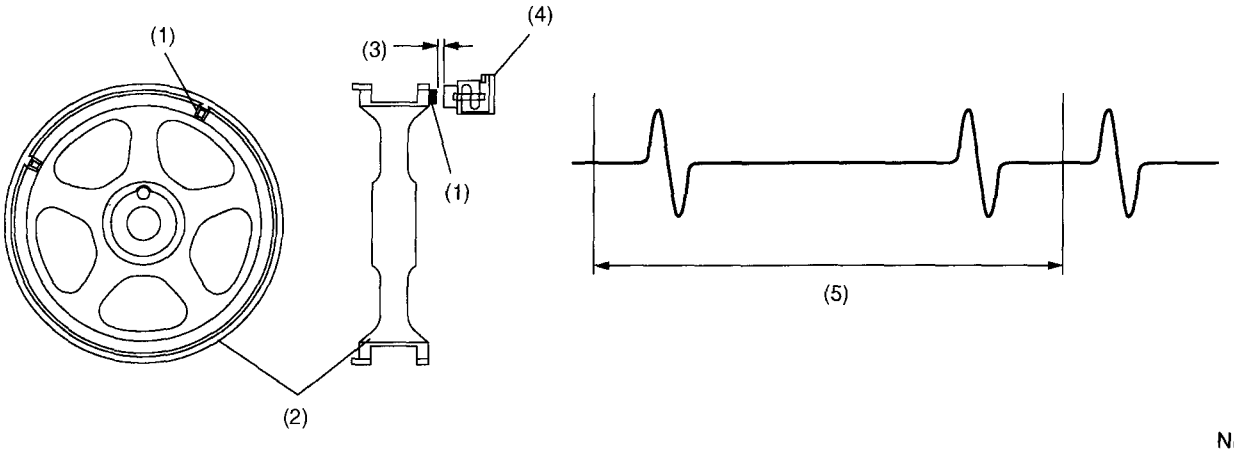

NF0478

(1) Boss
(2) Camshaft sprocket
(3) Air gap
(4) Camshaft position sensor
(5) Camshaft one rotation (Crankshaft two rotations)

G: KNOCK SENSOR

- The knock sensor is installed on the cylinder block, and senses knocking that occurs in the engine.
- The sensor is a piezo-electric type which converts vibration resulting from knocking into electric signals.
- In addition to a piezo-electric element, the sensor has a weight and case as its components. If knocking occurs in the engine, the weight in the case moves causing the piezo-electric element to generate a voltage.
- The knock sensor harness is connected to the bulkhead harness.

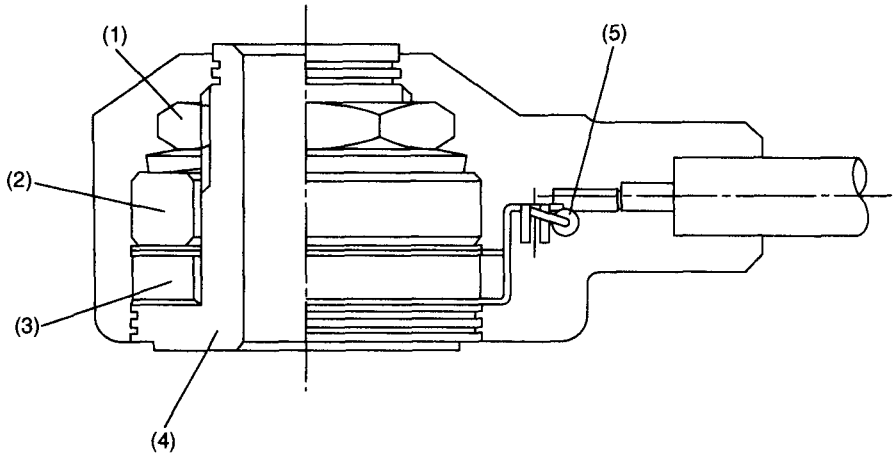

NF0391

(1) Nut
(2) Weight
(3) Piezo-electric element
(4) Housing
(5) Resistor

H: VEHICLE SPEED SENSOR

1. MT VEHICLES

- The vehicle speed sensor is mounted on the transmission.
- The vehicle speed sensor generates a 4-pulse signal for every rotation of the front differential and send it to the ECM and the combination meter.

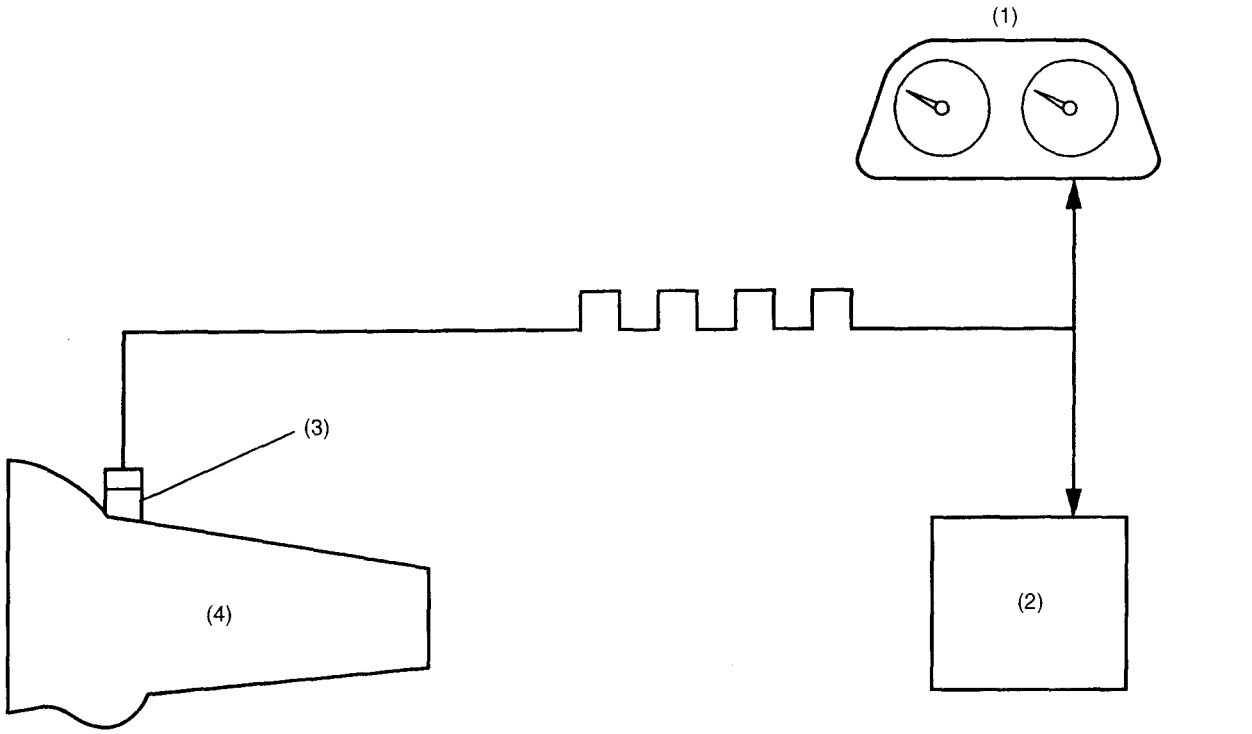

(1) Combination meter
(2) ECM
(3) Vehicle speed sensor
(4) Transmission

2. AT VEHICLES

- The vehicle speed sensor is mounted on the transmission.
- The vehicle speed sensor generates a 16-pulse signal for every rotation of the front differential and send it to the transmission control module (TCM). The signal sent to the TCM is converted there into a 4-pulse signal, and then sent to the ECM and the combination meter.

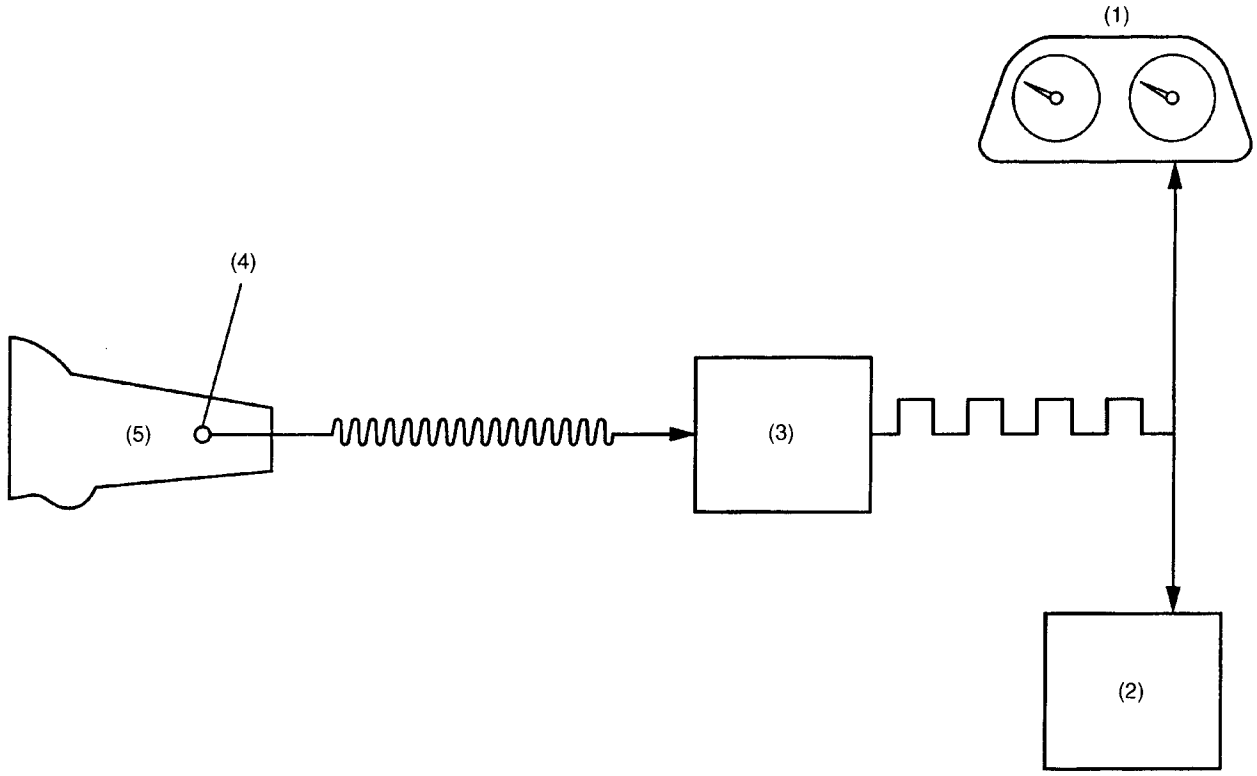

B2H2459B

(1) Combination meter
(2) ECM
(3) TCM
(4) Vehicle speed sensor
(5) Transmission

5. Control System

A: GENERAL

The ECM receives signals from various sensors, switches, and other control modules. Using these signals, it determines the engine operating conditions and if necessary, emits signals to one or more systems to control them for optimum operation.

Major control items of the ECM are as follow:

- Fuel injection control
- Ignition system control
- Idle air control
- Fuel pump control
- Canister purge control*1
- Radiator fan control*2
- On-board diagnosis function

*1: Canister purge control is described under "EC (DOHC TURBO) – Emission Control (Aux. Emission Control Devices) Evaporative Emission Control System".

*2: Radiator fan control is described under "CO – Cooling".

B: INPUT AND OUTPUT SIGNALS

Signal	Unit	Function
Input signals	Pressure sensor	Detects the amount of intake air (Measures the absolute pressure).
	Mass air flow and intake air temperature sensor	Detects the temperature and amount of intake air.
	Throttle position sensor	Detects the throttle valve position.
	Front oxygen (A/F) sensor	Detects the density of oxygen in exhaust gases at the upstream of the front catalytic converter.
	Rear oxygen sensor	Detects the density of oxygen in exhaust gases at the downstream of the rear catalytic converter.
	Exhaust gas temperature sensor	Detects the exhaust gas temperature.
	Tumble generator valve position sensor	Detects the tumble generator valve position.
	Crankshaft position sensor	Detects the crankshaft angular position.
	Camshaft position sensor	Detects the combustion cylinder.
	Engine coolant temperature sensor	Detects the engine coolant temperature.
	Knock sensor	Detects engine knocking.
	Vehicle speed sensor	Detects the vehicle speed.
	Ignition switch	Detects operation of the ignition switch.
	Starter switch	Detects the condition of engine cranking.
	Neutral position switch (MT)	Detects that the gear is in neutral.
	Park/Neutral position sensor (AT)	Detects shift positions.
	Heater circuit of front and rear oxygen sensor	Detects the abnormality in heater circuit of front and rear oxygen sensor.
	Diagnostics of TCM (AT)	Detects the self-diagnostics of the TCM.
	Torque control signal (AT)	Controls engine torque.
	A/C switch	Detects ON-OFF operation of the A/C switch.
	Fuel level sensor	Detects the level of the fuel in the fuel tank.
	Fuel temperature sensor	Detects the temperature of the fuel in the fuel tank.
	Fuel tank pressure sensor	Detects the evaporation gas pressure in the fuel tank.
	Small light switch	Detects ON-OFF operation of the small light switch.
	Blower fan switch	Detects ON-OFF operation of the blower fan switch.
	Rear defogger switch	Detects ON-OFF operation of the rear defogger switch.

Signal	Unit	Function
Output signals	Fuel Injector	Activates an injector.
	Ignition signal	Turns the primary ignition current ON or OFF.
	Fuel pump controller	Controls the fuel pump.
	A/C control relay	Turns the A/C control relay ON or OFF.
	Radiator fan control relay	Turns the radiator fan control relay ON or OFF.
	Idle air control solenoid valve	Adjusts the amount of air flowing through the bypass line in the throttle body.
	Tumble generator valve actuator	Operates the tumble generator valve.
	Wastegate control solenoid valve	Controls supercharging pressure.
	Malfunction indicator lamp	Indicates existence of abnormality.
	Purge control solenoid valve	Controls purge of evaporative gas absorbed by the canister.
	Pressure control solenoid valve	Controls evaporation gas pressure in the fuel tank.
	Drain valve	Close the evaporation line between the fuel tank and canister to detect leakage of evaporation gases.
	Power supply	Controls ON/OFF of the main power supply relay.

C: FUEL INJECTION CONTROL

• The ECM receives signals from various sensors and based on them, it determines the amount of fuel injected and the fuel injection timing. It performs the sequential fuel injection control over the entire engine operating range except during start-up of the engine.

• The amount of fuel injected depends upon the length of time the injector stays open. The fuel injection duration is determined according to varying operating condition of the engine. For the purpose of achieving highly responsive and accurate fuel injection duration control, the ECM performs a new feedback control that incorporates a learning feature as detailed later.

• The sequential fuel injection control is performed such that fuel is injected accurately at the time when the maximum air intake efficiency can be achieved for each cylinder (i.e., fuel injection is completed just before the intake valve begins to open).

1. FUEL INJECTION DURATION

Fuel injection duration is basically determined as indicated below:

• During engine start-up:
The duration defined below is used.
  • Duration of fuel injection during engine start-up ..... Determined according to the engine coolant temperature detected by the engine coolant temperature sensor.

• During normal operation:
The duration is determined as follows:

Basic duration of fuel injection x Correction factors + Voltage correction time

  • Basic duration of fuel injection ..... The basic length of time fuel is injected. This is determined by two factors – the amount of intake air detected by the manifold pressure sensor and the engine speed monitored by the crankshaft position sensor.
  • Correction factors ..... See the next section.
  • Voltage correction time ..... This is added to compensate for the time lag before operation of injector that results from variation in the battery voltage.

2. CORRECTION FACTORS

The following factors are used to correct the basic duration of fuel injection in order to make the air-fuel ratio meet the requirements of varying engine operating conditions:

- Air-fuel ratio feedback factor:
This factor is used to correct the basic duration of fuel injection in relation to the actual engine speed. (See the next section for more detail.)

- Start increment factor:
This factor is used to increase the fuel injection duration only while the engine is being cranked to improve its startability.

- Coolant-temperature-dependent increment factor:
This factor is used to increase the fuel injection duration depending on engine coolant temperature signals to facilitate cold starting. The lower the coolant temperature, the greater the increment.

- After-start increment factor:
  - This factor is used to increase the fuel injection duration for a certain period immediately after start of the engine to stabilize engine operation.
  - The increment depends on the coolant temperature at the start of the engine.

- Wide-open-throttle increment factor:
This factor is used to increase the fuel injection duration depending on the relationship between the throttle position sensor signal and manifold pressure sensor signal.

- Acceleration increment factor:
This factor is used to increase the fuel injection duration to compensate for a time lag between air flow measurement and fuel injection control for better engine response to driver's pedal operation during acceleration.

3. AIR-FUEL RATIO FEEDBACK FACTOR

The ECM creates this factor utilizing the front oxygen sensor signal. When the signal voltage is low, the air-fuel ratio is richer than the stoichiometric ratio. The ECM then makes the fuel injection duration shorter by modifying the factor. When the voltage is high showing that the mixture is lean, the ECM modifies the factor to make the injection duration longer. In this way, the air-fuel ratio is maintained at a level close to the stoichiometric ratio at which the three-way catalyst acts most effectively.

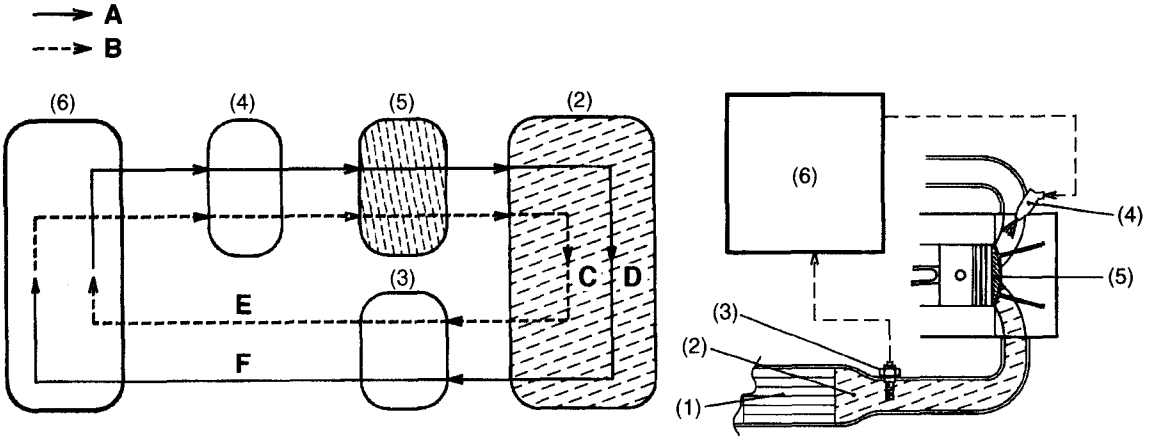

B2H0989B

(1) Front catalyst
(2) Exhaust gas
(3) Front oxygen (A/F) sensor
(4) Fuel injector
(5) Combustion chamber
(6) ECM

A: Injection duration increment signal
B: Injection duration decrement signal
C: High oxygen density
D: Low oxygen density
E: Lean signal
F: Rich signal

4. LEARNING FEATURE

The air-fuel ratio feedback control includes a learning feature which contributes to more accurate and responsive control.

- In the air-fuel ratio feedback control, the ECM calculates the necessary amount of correction based on data from the oxygen sensor and adds the result to the basic duration (which is stored in the ECM's memory for each condition defined by the engine speed and various loads.)
- Without a learning feature, the ECM carries out the above-mentioned process every time. This means that if the amount of necessary correction is large, the air-fuel ratio feedback control becomes less responsive and less accurate.
- The learning feature enables the ECM to store the amount of correction into memory and add it to the basic fuel injection duration to create a new reference fuel injection duration. Using the reference duration as the basic duration for the injection a few times later, the ECM can reduce the amount of correction and thus make its feedback control more accurate and responsive to changes in the air-fuel ratio due to difference in driving condition and sensor/actuator characteristics that may result from unit-to-unit variation or aging over time.

D: IGNITION SYSTEM CONTROL

- The ECM determines operating condition of the engine based on signals from the pressure sensor, engine coolant temperature sensor, intake air temperature sensor, crankshaft position sensor and other sources. It then selects the ignition timing most appropriate for the condition thus determined from those stored in its memory and outputs at that timing a primary current OFF signal to the ignitor to initiate ignition.
- This control uses a quick-to-response learning feature by which the data stored in the ECM memory is processed in comparison with information from various sensors and switches.
- Thus, the ECM can always perform optimum ignition timing taking into account the output, fuel consumption, exhaust gas, and other factors for every engine operating condition.
- Ignition control during start-up

Engine speed fluctuates during start of the engine, so the ECM cannot control the ignition timing. During that period, the ignition timing is fixed at 10° BTDC by using the 10° signal from the crankshaft position sensor.

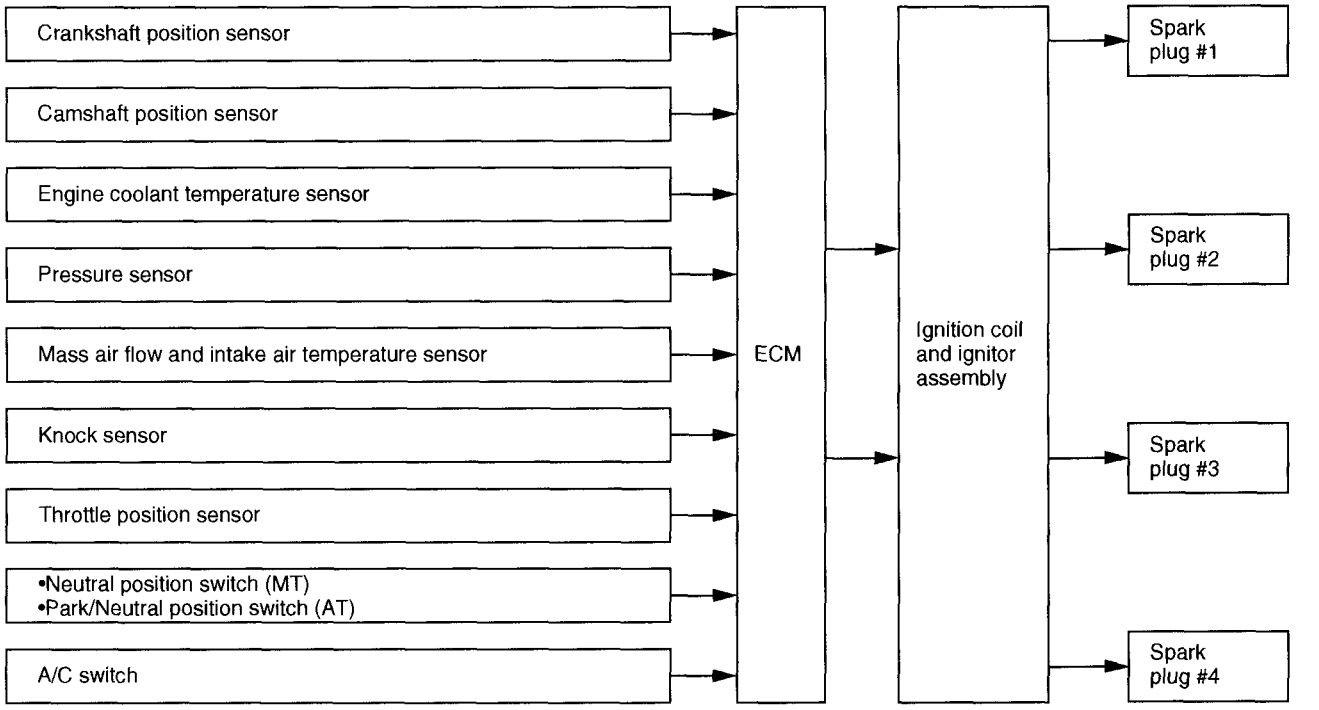

NF0432

- The ECM identifies cylinders at TDC and determines ignition timing as follows:
  - Within the range (A), the crank angle signal is input every 10° rotation of the crankshaft.
  - The ECM discriminates a TDC cylinder group from the other by detecting the ranges (B) and (C) where no signals are input.
  - The ECM judges that the No. 1 and No. 2 cylinders are at TDC when it detects the range (B), and that the No. 3 and No. 4 cylinders are at TDC when it detects the range (C).

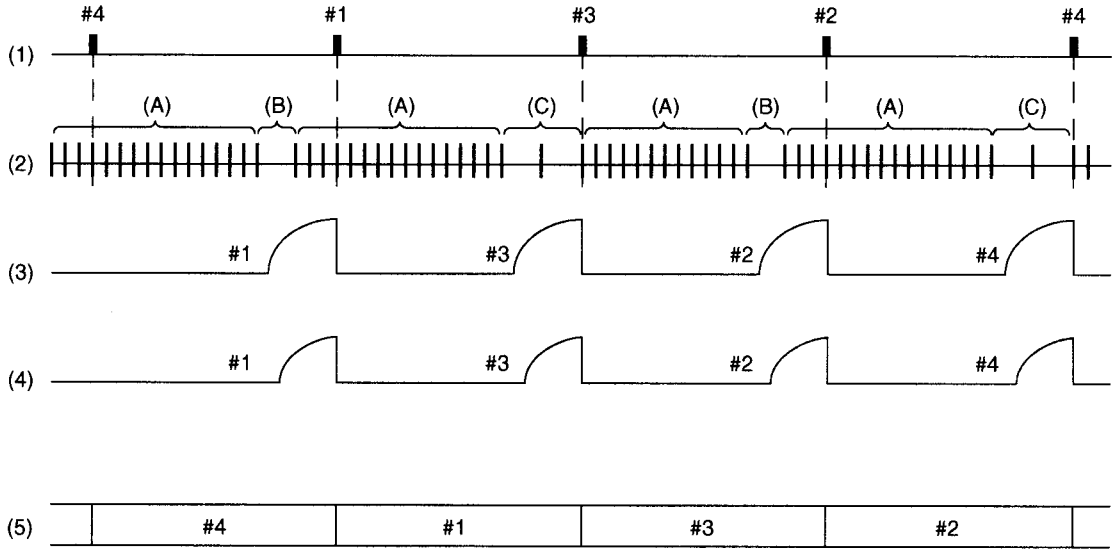

NF0430

(1) Cylinder number (TDC)
(2) Crank angle pulse
(3) Ignition timing at starting
(4) Ignition timing at normal condition
(5) Burning cylinder

E: IDLE AIR CONTROL

- The ECM activates the idle air control solenoid valve to control the bypass air flowing through the bypass passage in the throttle body depending on signals from the crankshaft position sensor, engine coolant temperature sensor, pressure sensor and A/C switch so that the proper idle speed for each engine load is achieved.
- The idle air control solenoid valve uses a duty-ratio-controlled solenoid which can continuously vary the opening area of the rotary valve. As the ECM increases the duty ratio, opening of the rotary valve increases so that the bypass air flow increases, and the engine idling speed becomes higher as a result.
- The bypass air control is necessary for:
  - Increasing idling speed when the air conditioning system and/or electrical loads are turned on.
  - Increasing idling speed during early stage of warm up period.
  - Obtaining dashpot function when the throttle valve is quickly closed.
  - Prevention of engine speed variation during idling.

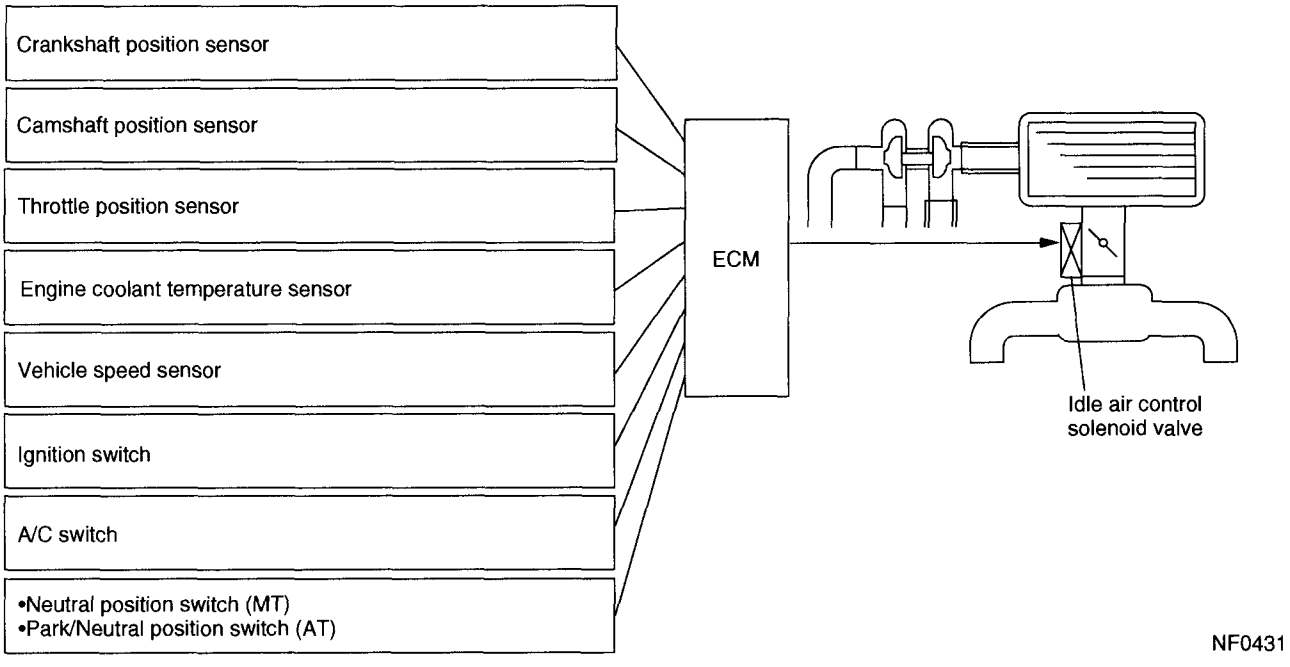

F: FUEL PUMP CONTROL

Using the signal from the crankshaft position sensor, the ECM controls operation of the fuel pump by turning its relay ON or OFF. To improve safety, the fuel pump is stopped if the engine stalls with the ignition switch ON.

Ignition switch ON	Fuel pump relay	Fuel pump
A certain period of time after ignition switch is turned ON	ON	Operates
While cranking the engine	ON	Operates
While engine is operating	ON	Operates
When engine stops	OFF	Does not operate

6. On-board Diagnosis System

A: GENERAL

- The on-board diagnosis system detects and indicates a fault by generating a code corresponding to each fault location. The malfunction indicator lamp (CHECK ENGINE light) on the combination meter indicates occurrence of a fault or abnormality.
- When the malfunction indicator lamp comes on as a result of detection of a fault by the ECM, the corresponding diagnostic trouble code (DTC) and freeze frame engine condition are stored in the ECM.
- On the OBD-II conformable car, it is necessary to connect the Subaru Select Monitor (SSM) or General Scan Tool (GST) to the data link connector in order to check the DTC.
- The SSM and GST can read and erase DTCs. They can also read freeze frame data in addition to other pieces of engine data.
- If there is a failure involving sensors which may affect drive control of the vehicle, the fail-safe function ensures minimum level of driveability.

B: FAIL-SAFE FUNCTION

For a sensor or switch which has been judged faulty in the on-board diagnosis, the ECM, if appropriate, generates an associated pseudo signal to keep the vehicle operational. (The control becomes degraded.)

EMISSION CONTROL (AUX. EMISSION CONTROL DEVICES) EC (SOHC)

Page

1. System Overview 2
2. Schematic Diagrams 4
3. Crankcase Emission Control System 6
4. Three-way Catalyst 8
5. A/F Control System 9
6. Ignition Control System 10
7. Evaporative Emission Control System 11
8. On-board Refueling Vapor Recovery (ORVR) System 20
9. Vacuum Connections 22

1. System Overview

There are three emission control systems which are as follows:

- Crankcase emission control system
- Exhaust emission control system
  - Three-way catalyst system
  - Air/fuel (A/F) control system
  - Ignition control system
- Evaporative emission control system
  - On-board refueling vapor recovery (ORVR) system

Item			Main components	Function
Crankcase emission control system			Positive crankcase ventilation (PCV) valve	Draws blow-by gas into intake manifold from crankcase and burns it together with air-fuel mixture. Amount of blow-by gas to be drawn in is controlled by intake manifold pressure.
Exhaust emission control system	Catalyst system	Front	Three-way catalyst	Oxidizes HC and CO contained in exhaust gases as well as reducing NOx.
		Rear		
	A/F control system		Engine control module (ECM)	Receives input signals from various sensors, compares signals with stored data, and emits a signal for optimal control of air-fuel mixture ratio.
			Front oxygen (A/F) sensor	Detects quantity of oxygen contained exhaust gases.
			Rear oxygen sensor	Detects density of oxygen contained exhaust gases.
			Throttle position sensor	Detects throttle position.
			Intake air temperature and pressure sensor	Detects absolute pressure of intake manifold.
				Detects intake air temperature of intake manifold.
	Ignition control system		ECM	Receives various signals, compares signals with basic data stored in memory, and emits a signal for optimal control of ignition timing.
			Crankshaft position sensor	Detects engine speed (Revolution).
			Camshaft position sensor	Detects reference signal for combustion cylinder discrimination.
			Engine coolant temperature sensor	Detects coolant temperature.
			Knock sensor	Detects engine knocking.
Evaporative emission control system			Canister	Absorbs evaporative gas which occurs in fuel tank when engine stops, and releases it to combustion chambers for a complete burn when engine is started. This prevents HC from being discharged into atmosphere.
			Purge control solenoid valve	Receives a signal from ECM and controls purge of evaporative gas absorbed by canister.
			Pressure control solenoid valve	Receives a signal from ECM and controls evaporative gas pressure in fuel tank.
ORVR system			Vent valve	Controls evaporation pressure in fuel tank.
			Drain valve	Closes the evaporation line by receiving a signal from ECM to check the evaporation gas leak.

MEMO

2. Schematic Diagrams

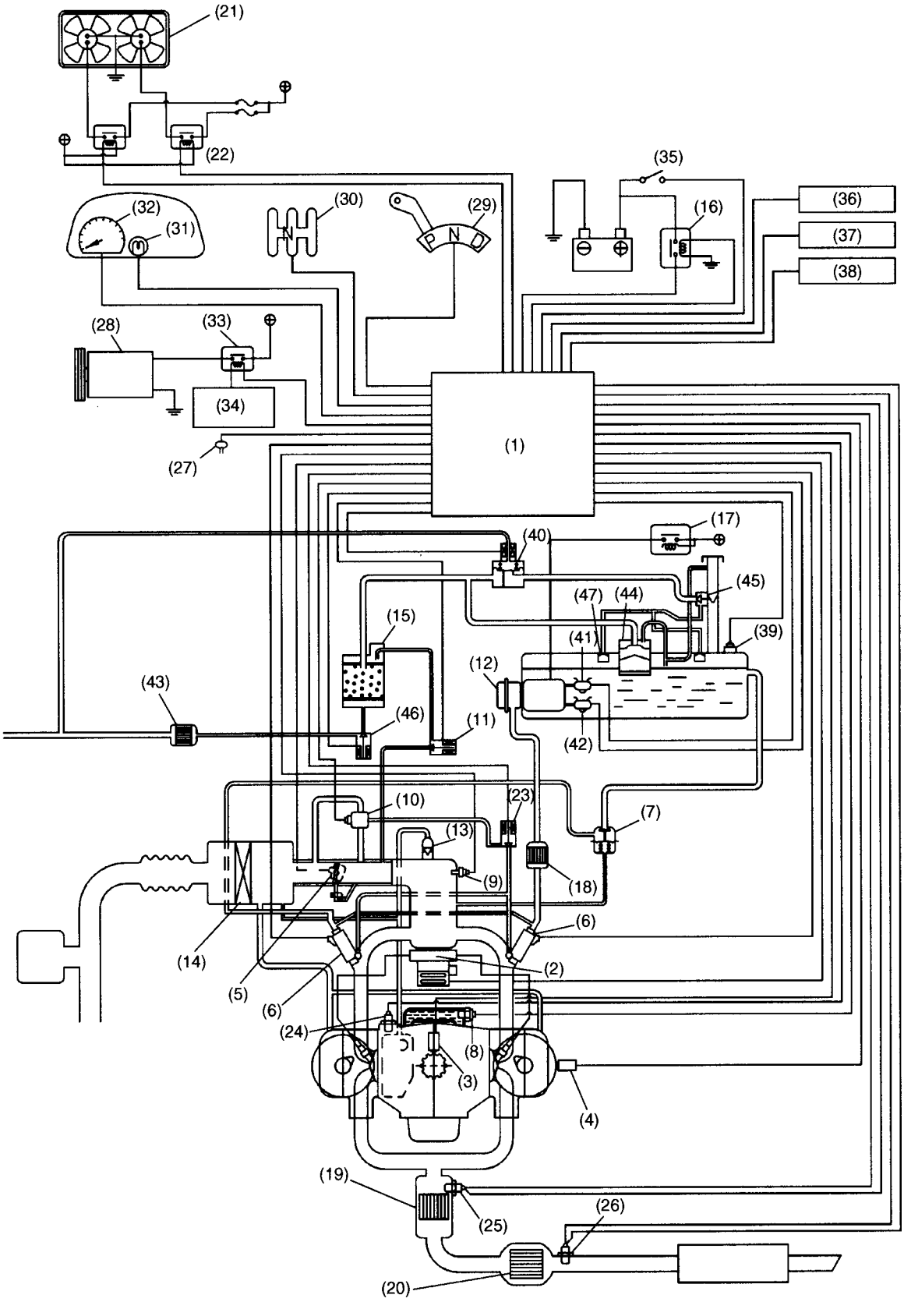

NF0475

(1) Engine control module (ECM)
(2) Ignition coil and ignitor assembly
(3) Crankshaft position sensor
(4) Camshaft position sensor
(5) Throttle position sensor
(6) Fuel injectors
(7) Pressure regulator
(8) Engine coolant temperature sensor
(9) Intake air temperature and pressure sensor
(10) Idle air control solenoid valve
(11) Purge control solenoid valve
(12) Fuel pump
(13) PCV valve
(14) Air cleaner element
(15) Canister
(16) Main relay
(17) Fuel pump relay
(18) Fuel filter
(19) Front catalytic converter
(20) Rear catalytic converter
(21) Radiator fan
(22) Radiator fan relay
(23) Air assist injector solenoid valve
(24) Knock sensor
(25) Front oxygen (A/F) sensor
(26) Rear oxygen sensor
(27) Atmospheric pressure sensor
(28) A/C compressor
(29) Inhibitor switch (AT vehicles only)
(30) Neutral switch (MT vehicles only)
(31) CHECK ENGINE malfunction indicator lamp (MIL)
(32) Tachometer
(33) A/C relay
(34) A/C control module
(35) Ignition switch
(36) Transmission control module (TCM) (AT vehicles only)
(37) Vehicle speed sensor
(38) Data link connector
(39) Fuel tank pressure sensor
(40) Pressure control solenoid valve
(41) Fuel temperature sensor
(42) Fuel level sensor
(43) Drain filter
(44) Vent valve
(45) Shut-off valve
(46) Drain valve
(47) Fuel cut valve

3. Crankcase Emission Control System

- The positive crankcase ventilation (PCV) system prevents air pollution which will be caused by blow-by gas being emitted from the crankcase.
The system consists of a sealed oil filler cap, rocker covers with fresh air inlet, connecting hoses, a PCV valve and an air intake duct.

- In a part-throttle condition, the blow-by gas in the crankcase flows into the intake manifold through the connecting hose of crankcase and PCV valve by the strong vacuum created in the intake manifold. Under this condition, fresh air is introduced into the crankcase through the connecting hose of the rocker cover.

- In a wide-open-throttle condition, a part of blow-by gas flows into the air intake duct through the connecting hose and is drawn into the throttle chamber, because under this is condition, the intake manifold vacuum is not strong enough to introduce through the PCV valve all blow-by gases that increase in the amount with engine speed.

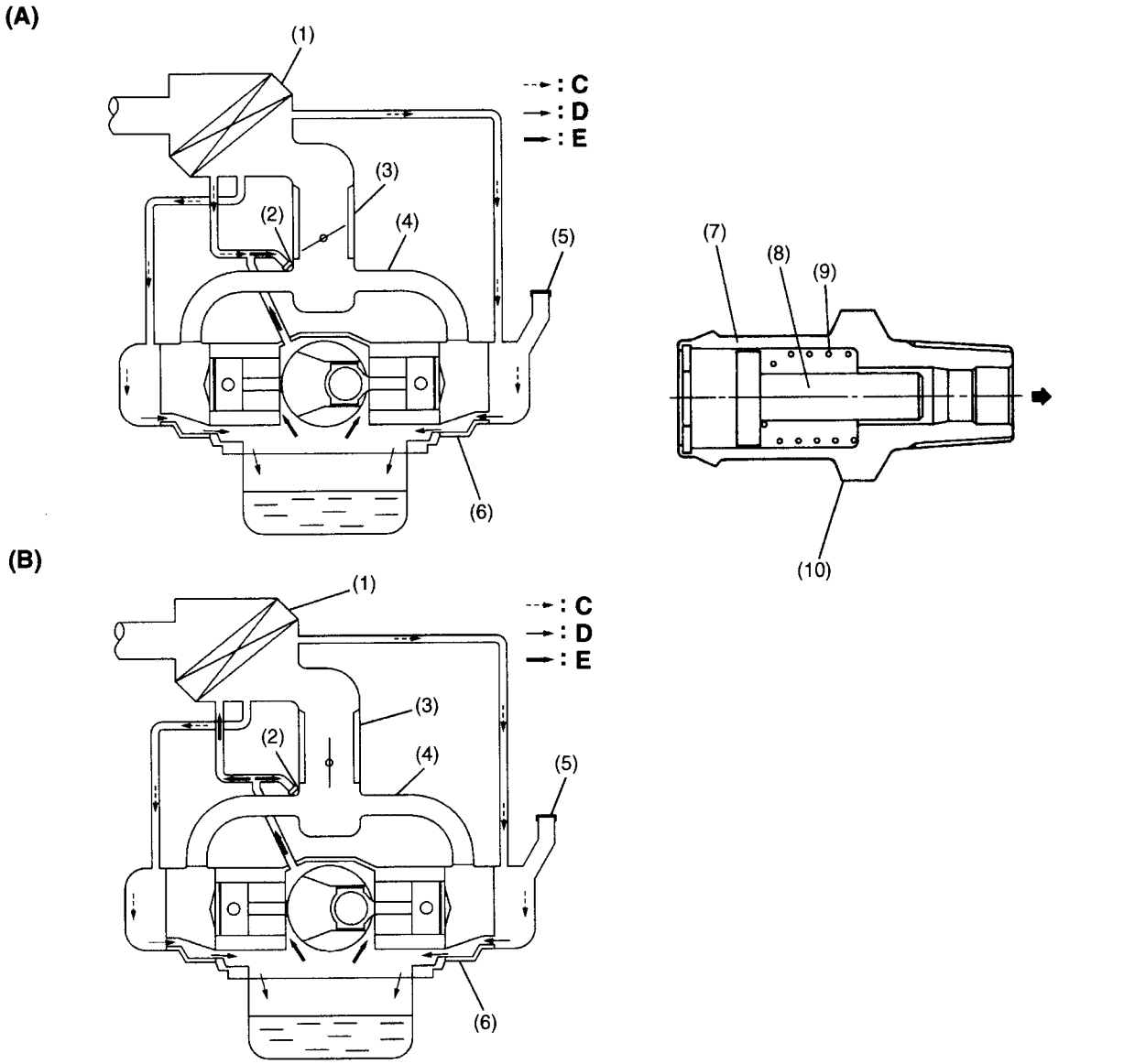

B2H3534D

(1) Air cleaner case
(2) PCV valve
(3) Throttle body
(4) Intake manifold
(5) Oil filler cap
(6) Crankcase
(7) Case
(8) Valve
(9) Spring
(10) PCV valve

(A) Part-throttle condition
(B) Wide-open-throttle condition
C: Fresh air
D: Mixture of air and blow-by gas
E: Blow-by gas

4. Three-way Catalyst

- The basic material of three-way catalyst is platinum (Pt), rhodium (Rh) and palladium (Pd), and a thin coat of their mixture is applied onto honeycomb or porous ceramics of an oval shape (carrier). To avoid damaging the catalyst, only unleaded gasoline should be used.
- The catalyst reduces HC, CO and NOx in exhaust gases through chemical reactions (oxidation and reduction). These harmful components are reduced most efficiently when their concentrations are in a certain balance. These concentrations vary with the air-fuel ratio. The ideal air-fuel ratio for reduction of these components is the stoichiometric ratio.
- Therefore, the air-fuel ratio needs to be controlled to around the stoichiometric ratio to purify the exhaust gases most efficiently.

5. A/F Control System

- The air/fuel (A/F) control system makes a correction to the basic fuel injection duration in accordance with the signal from the front oxygen sensor so that the stoichiometric ratio is maintained, thus ensuring most effective exhaust gas purification by the three-way catalyst. Different basic fuel injection durations are preset for various engine speeds and loads, as well as the amount of intake air.

- This system also has a "learning" control function which stores the corrected data in relation to the basic fuel injection in the memory map. This allows an appropriate air-fuel ratio correction to be added automatically in quick response to any situation that requires such an effect. Thus, the air-fuel ratio is optimally maintained under various conditions while purifying exhaust gases most effectively, improving driving performance and compensating for changes in sensors' performance over time.

6. Ignition Control System

- The ignition system is controlled by the ECM.

The ECM monitors the operating condition of the engine using the signals from the sensors and switches shown below and determines the ignition timing most appropriate for each engine operating condition. Then it sends a signal to the ignitor, commanding generation of a spark at that timing.

- The ECM uses a preprogrammed map for a "closed-loop" control which provides its ignition timing control with excellent transient characteristics, i.e., highly responsive ignition timing control.

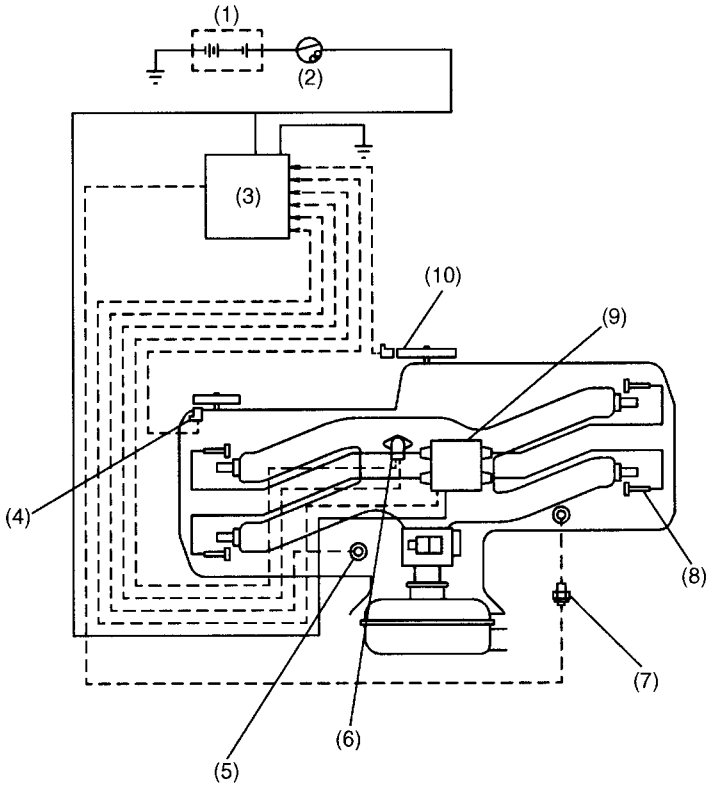

B2H3536D

(1) Battery
(2) Ignition switch
(3) ECM
(4) Camshaft position sensor
(5) Knock sensor
(6) Intake air temperature and pressure sensor
(7) Engine coolant temperature sensor
(8) Spark plug
(9) Ignition coil and ignitor assembly
(10) Crankshaft position sensor

7. Evaporative Emission Control System

A: GENERAL

- The evaporative emission control system prevents fuel vapors from escaping into atmosphere. This system includes a canister, purge control solenoid valve, fuel cut valve, and the lines connecting them.
- Fuel vapors in the fuel tank is introduced into the canister through the evaporation line, and are absorbed by activated carbon in it. The fuel cut valve is also incorporated in the fuel tank line.
- The purge control solenoid valve is controlled optimally by the ECM according to the engine condition.
- The pressure control solenoid valve incorporated in the fuel tank evaporation line regulates the pressure/vacuum in the fuel tank under the control of the ECM which uses the signal from the fuel tank pressure sensor.

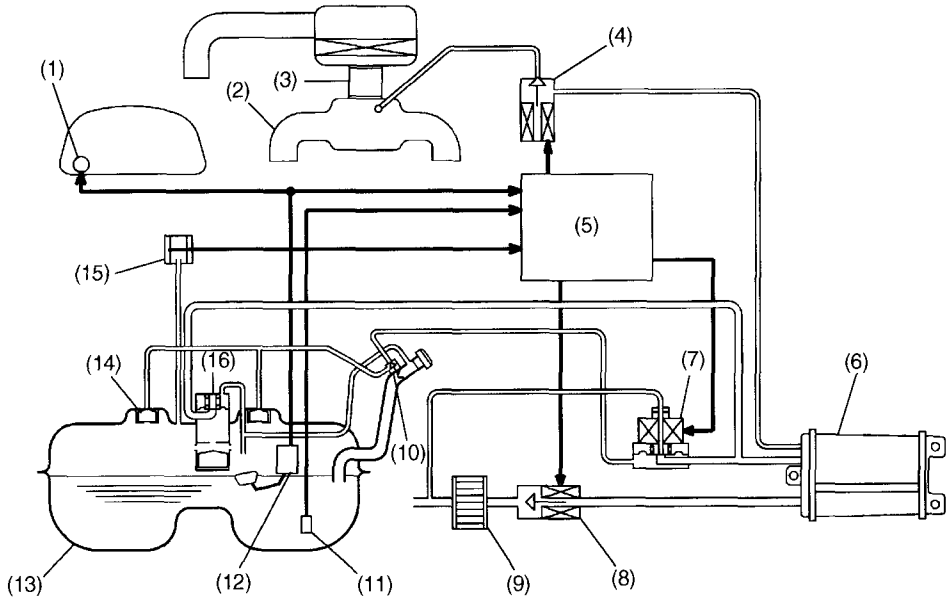

NF0476

(1)	Fuel gauge	(7)	Pressure control solenoid valve	(13)	Fuel tank
(2)	Intake manifold	(8)	Drain valve	(14)	Fuel cut valve
(3)	Throttle body	(9)	Drain filter	(15)	Fuel tank pressure sensor
(4)	Purge control solenoid valve	(10)	Shut-off valve	(16)	Vent valve
(5)	Engine control module (ECM)	(11)	Fuel temperature sensor		
(6)	Canister	(12)	Fuel level sensor		

B: FUEL CUT VALVE

The fuel cut valve is built onto the evaporation pipe of the fuel tank cap. The rising level of the fuel in the fuel tank causes the float to move up and close the cap hole so that no fuel can enter the evaporation line.

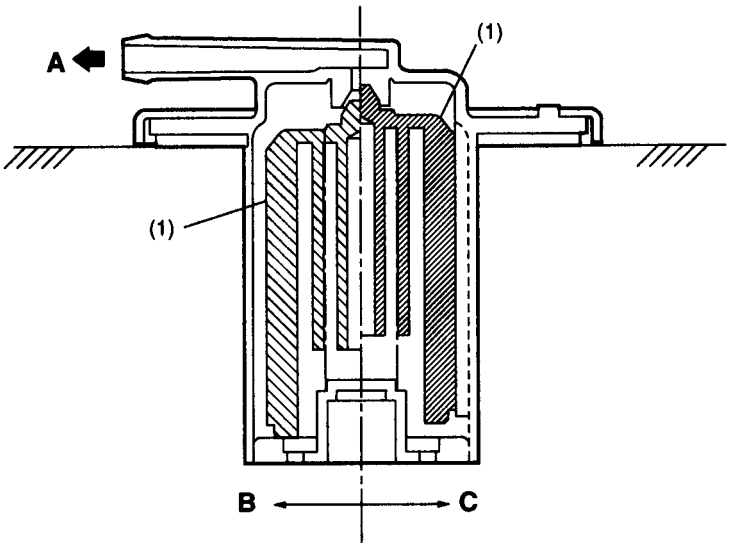

NF0469

(1) Float

A: To canister
B: Valve open
C: Valve closed

C: FUEL TANK CAP

The fuel tank cap has a relief valve which prevents development of vacuum in the fuel tank in the event of a problem with the fuel vapor line.

When there is no problem with the fuel vapor line, the filler pipe is sealed at the portion (A) and by the seal pressed against the filler pipe end. If vacuum develops in the fuel tank, the atmospheric pressure forces the spring down to open the valve; consequently outside air flows into the fuel tank, thus controlling the inside pressure.

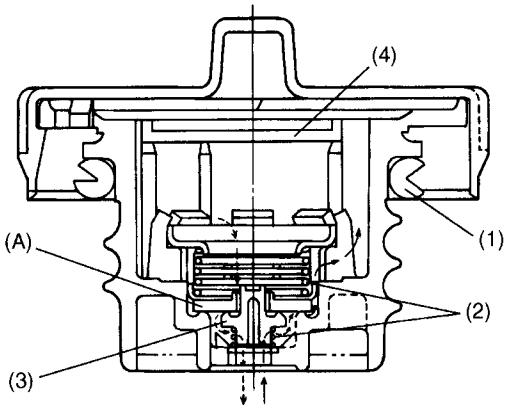

NF0470

(1) Seal
(2) Spring
(3) Valve
(4) Filter

D: CANISTER

The charcoal filled in the canister temporarily stores fuel vapors. When the purge control solenoid valve is opened by a signal from the ECM, the external fresh air entering the canister carries the fuel vapors into the collector chamber.

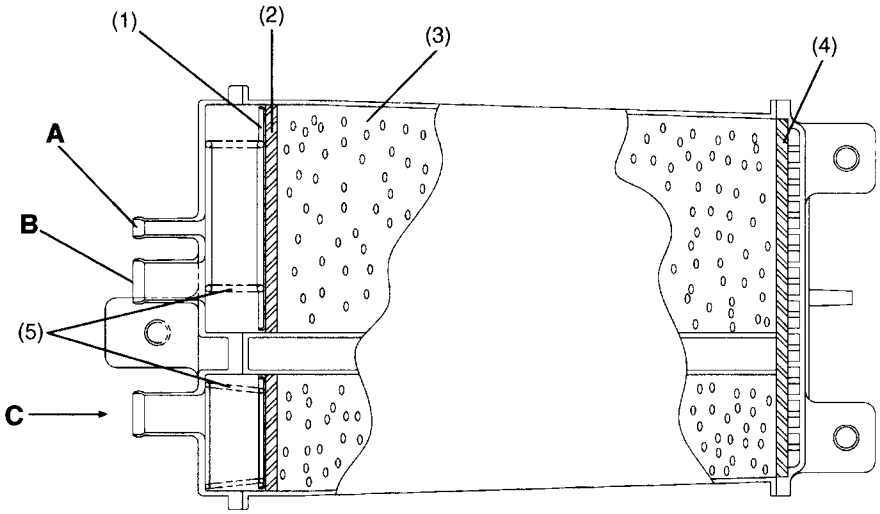

H2H3223B

(1) Grid
(2) Filter
(3) Charcoal
(4) Filter
(5) Spring

A: To purge control solenoid valve
B: From fuel tank
C: Air

E: PURGE CONTROL SOLENOID VALVE

The purge control solenoid valve is on the evaporation line between the canister and intake manifold. It is installed at the underside of intake manifold.

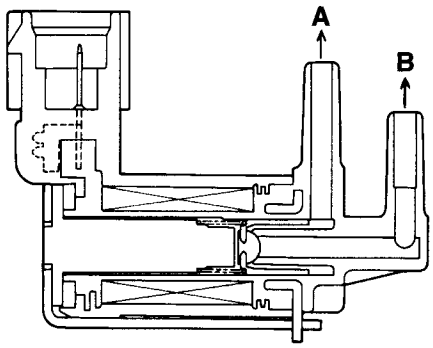

B2H0426B

A: To canister
B: To intake manifold

F: PRESSURE CONTROL SOLENOID VALVE

The fuel tank pressure control solenoid valve is located in the evaporation line between the shut-off valve on fuel filler pipe and the fuel tank. It adjusts the fuel tank inside pressure under the control of the ECM.
When the tank inside pressure becomes higher than the atmospheric pressure, the valve is opened allowing fuel vapors to be introduced into the canister.
On the other hand, when the tank inside pressure becomes lower than the atmospheric pressure, external air is taken from the drain valve into the canister.
The pressure control solenoid valve can also be electrically closed for the system diagnosis purposes.

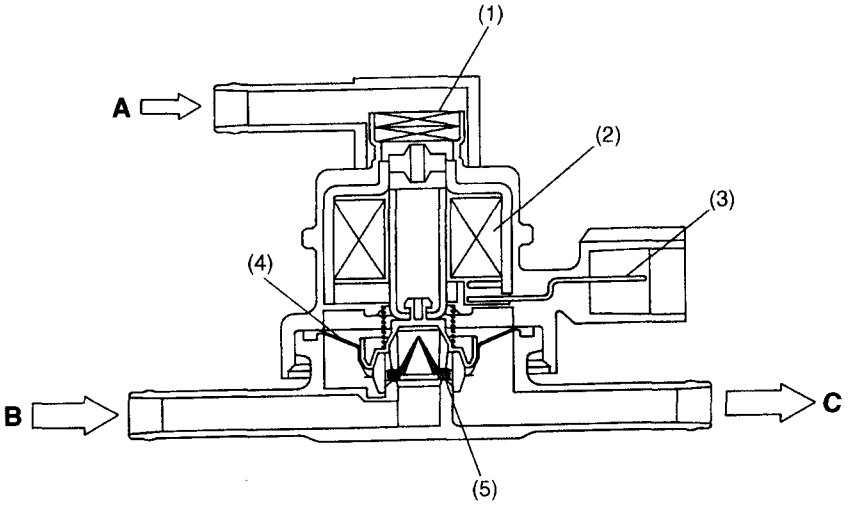

B2H1719C

(1) Filter
(2) Coil
(3) Connector terminal
(4) Diaphragm
(5) Valve

A: Atmospheric pressure
B: From shut-off valve
C: To fuel tank

G: DRAIN FILTER

The drain filter is installed at the air inlet port of the vent control solenoid valve. It cleans the air taken in the canister through the vent control solenoid valve.

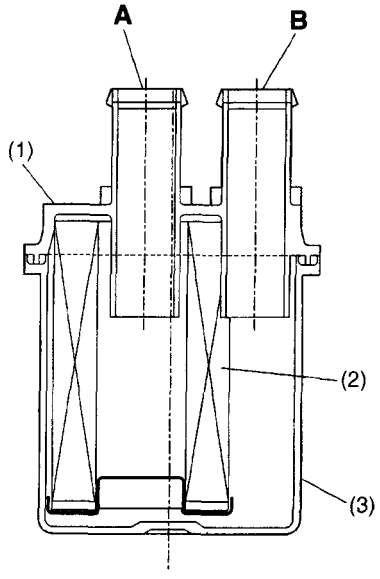

S2H0874B

(1) Cap
(2) Element
(3) Case

A: To drain valve
B: To atmosphere

H: VENT VALVE

The vent valve is located on the fuel tank. During filling the fuel tank, fuel vapors are introduced into the canister through the vent valve.
When the fuel vapor pressure becomes higher than the atmospheric pressure and overcomes the spring force which is applied to the back side of the diaphragm, the port toward the canister is opened. The vent valve also has a float which blocks the fuel vapor passage when the tank is filled up. Increasing fuel level raises the float to close the port toward the canister.

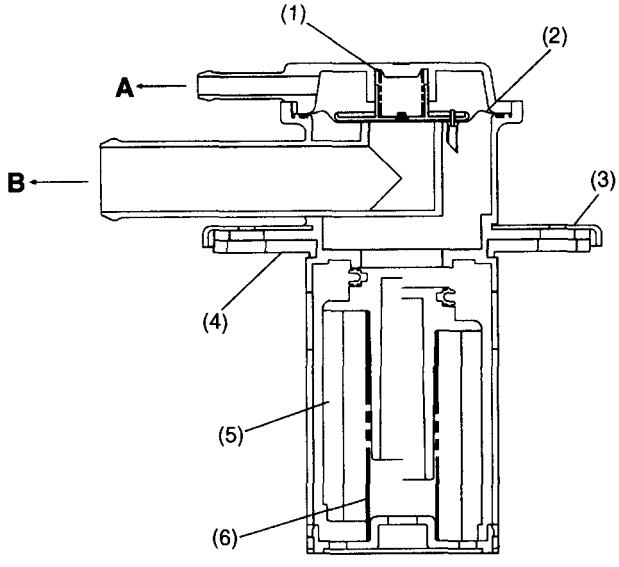

H2H3224B

(1) Spring
(2) Diaphragm
(3) Plate cover
(4) Packing
(5) Float
(6) Float spring

A: To filler pipe
B: To canister

I: SHUT-OFF VALVE

The shut-off valve is located at the top of the fuel filler pipe. When a filler gun is inserted into the filler pipe, the shut-off valve closes the evaporation line.

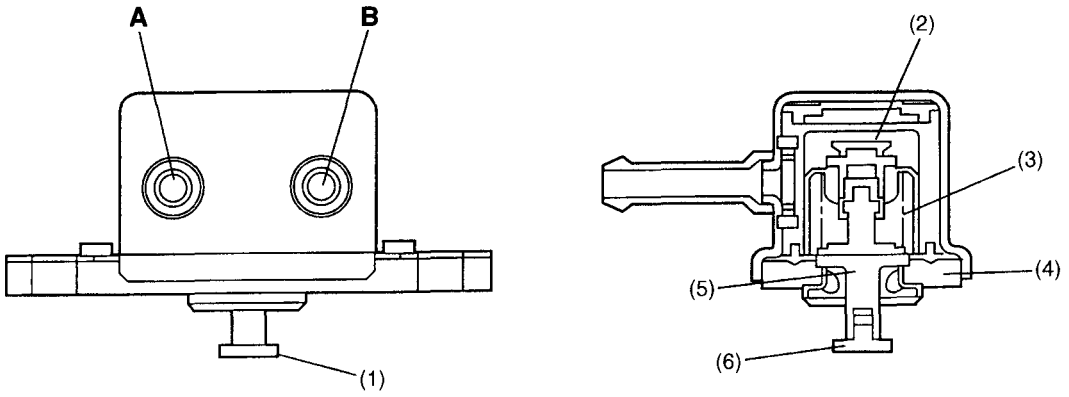

B2H1769B

(1) Pin
(2) Valve
(3) Spring
(4) Plate
(5) Shaft
(6) Pin

A: To canister
B: To fuel tank

J: DRAIN VALVE

The drain valve is located on the line connecting the drain filter and canister, just below the drain filter. The drain valve is forcibly closed by a signal from the ECM while the evaporation system diagnosis is being conducted.

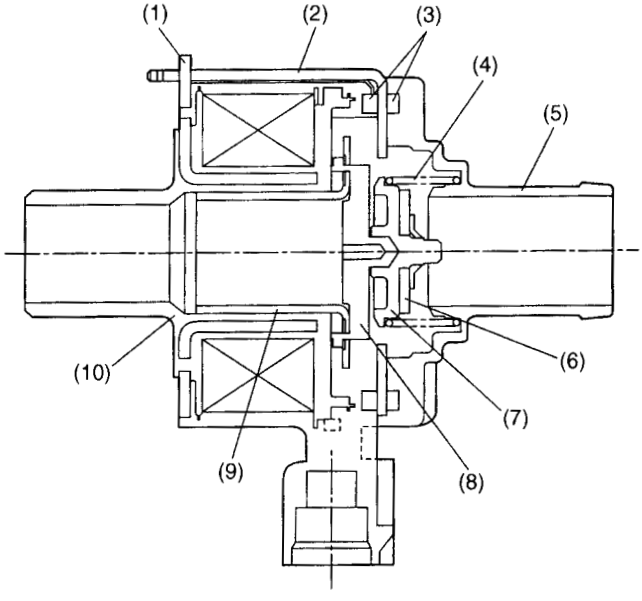

B2H1770A

(1) Magnetic plate
(2) Yoke
(3) Packing
(4) Spring
(5) Valve seat
(6) Valve
(7) Plate
(8) Retainer
(9) Moving core
(10) Bobin

8. On-board Refueling Vapor Recovery (ORVR) System

A: GENERAL

The on-board refueling vapor recovery system allows the fuel vapors in the fuel tank to be introduced directly into the canister through the vent valve when the fuel tank inside pressure increases as a result of refueling.
The diagnosis of the system is performed by monitoring the fuel tank inside pressure data from the fuel tank pressure sensor while forcibly closing the drain valve.

B: OPERATION

- While driving

Since the back side of the diaphragm in the pressure control solenoid valve is open to the atmosphere, the diaphragm is held pressed by the atmospheric pressure in the position where only the external air is introduced into the canister. When the fuel vapor pressure acting on the other side of the diaphragm increases and overcomes the atmospheric pressure, it pushes the diaphragm and opens the port through which the fuel vapors make their way to the canister.

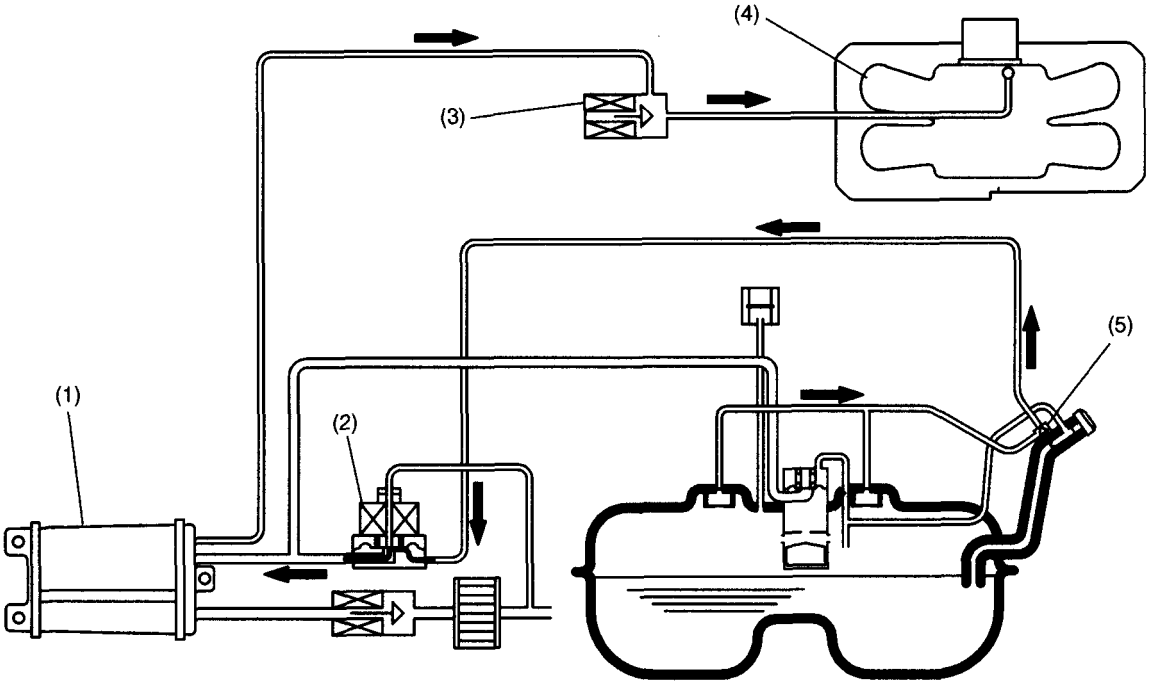

NF0471

(1) Canister
(2) Pressure control solenoid valve
(3) Purge control solenoid valve
(4) Intake manifold
(5) Shut-off valve: opened

- While refueling

As the fuel enters the fuel tank, the tank inside pressure increases. When the inside pressure becomes higher than the atmospheric pressure, the port of the vent valve opens, allowing the fuel vapors to be introduced into the canister through the vent line. The fuel vapors are absorbed by charcoal in the canister, so the air discharged from the drain valve contains no fuel. When a filler gun is inserted, the shut-off valve closes the evaporation line.

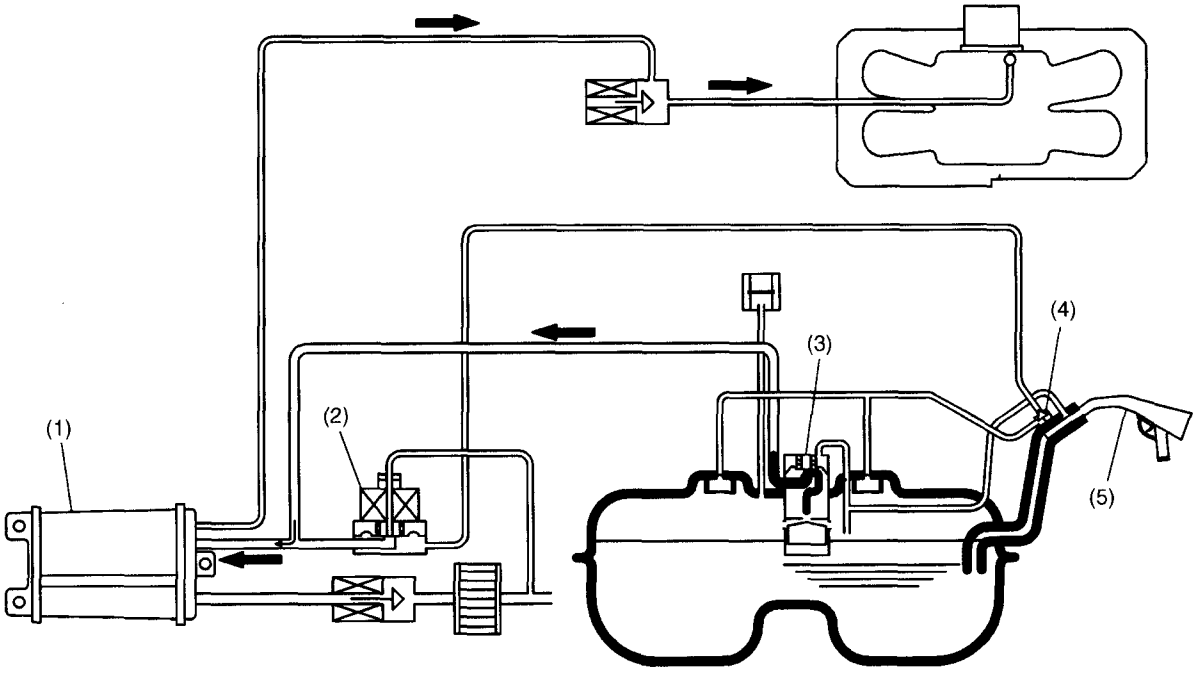

NF0472

(1) Canister
(2) Pressure control solenoid valve
(3) Vent valve
(4) Shut-off valve: closed
(5) Filler gun

9. Vacuum Connections

The hose and pipe connections of the intake manifold, throttle body and other related parts are as shown in the illustration.

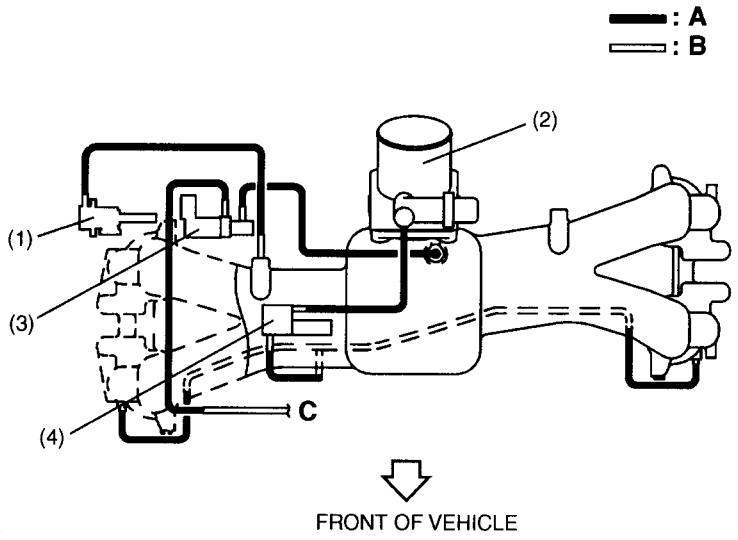

B2H3540B

(1) Pressure regulator
(2) Throttle body
(3) Purge control solenoid valve
(4) Air assist injector solenoid valve

A: HOSE
B: PIPE
C: To canister

EMISSION CONTROL (AUX. EMISSION CONTROL DEVICES)

EC (DOHC TURBO)

		Page
1.	System Overview	2
2.	Schematic Diagrams	4
3.	Crankcase Emission Control System	6
4.	Three-way Catalyst	7
5.	A/F Control System	8
6.	Ignition Control System	9
7.	Evaporative Emission Control System	10
8.	On-board Refueling Vapor Recovery (ORVR) System	20
9.	Vacuum Connections	22

1. System Overview

There are three emission control systems which are as follows:

- Crankcase emission control system
- Exhaust emission control system
  - Three-way catalyst system
  - Air/fuel (A/F) control system
  - Ignition control system
- Evaporative emission control system
  - On-board refueling vapor recovery (ORVR) system

Item			Main components	Function
Crankcase emission control system			Positive crankcase ventilation (PCV) valve	Draws blow-by gas into intake manifold from crankcase and burns it together with air-fuel mixture. Amount of blow-by gas to be drawn in is controlled by intake manifold pressure.
Exhaust emission control system	Catalyst system	Pre	Three-way catalyst	Oxidizes HC and CO contained in exhaust gases as well as reducing NOx.
		Front		
		Rear		
	A/F control system		Engine control module (ECM)	Receives input signals from various sensors, compares signals with stored data, and emits a signal for optimal control of air-fuel mixture ratio.
			Front oxygen (A/F) sensor	Detects quantity of oxygen contained exhaust gases.
			Rear oxygen sensor	Detects density of oxygen contained exhaust gases.
			Throttle position sensor	Detects throttle position.
			Mass air flow sensor and intake air temperature sensor	Detects amount of intake air.
				Detects intake air temperature of air cleaner case.
	Ignition control system		ECM	Receives various signals, compares signals with basic data stored in memory, and emits a signal for optimal control of ignition timing.
			Crankshaft position sensor	Detects engine speed (Revolution).
			Camshaft position sensor	Detects reference signal for combustion cylinder discrimination.
			Engine coolant temperature sensor	Detects coolant temperature.
			Knock sensor	Detects engine knocking.
Evaporative emission control system			Canister	Absorbs evaporative gas which occurs in fuel tank when engine stops, and releases it to combustion chambers for a complete burn when engine is started. This prevents HC from being discharged into atmosphere.
			Purge control solenoid valve	Receives a signal from ECM and controls purge of evaporative gas absorbed by canister.
ORVR system			Vent valve	Controls evaporation pressure in fuel tank.
			Drain valve	Closes the evaporation line by receiving a signal from ECM to check the evaporation gas leak.

MEMO

2. Schematic Diagrams

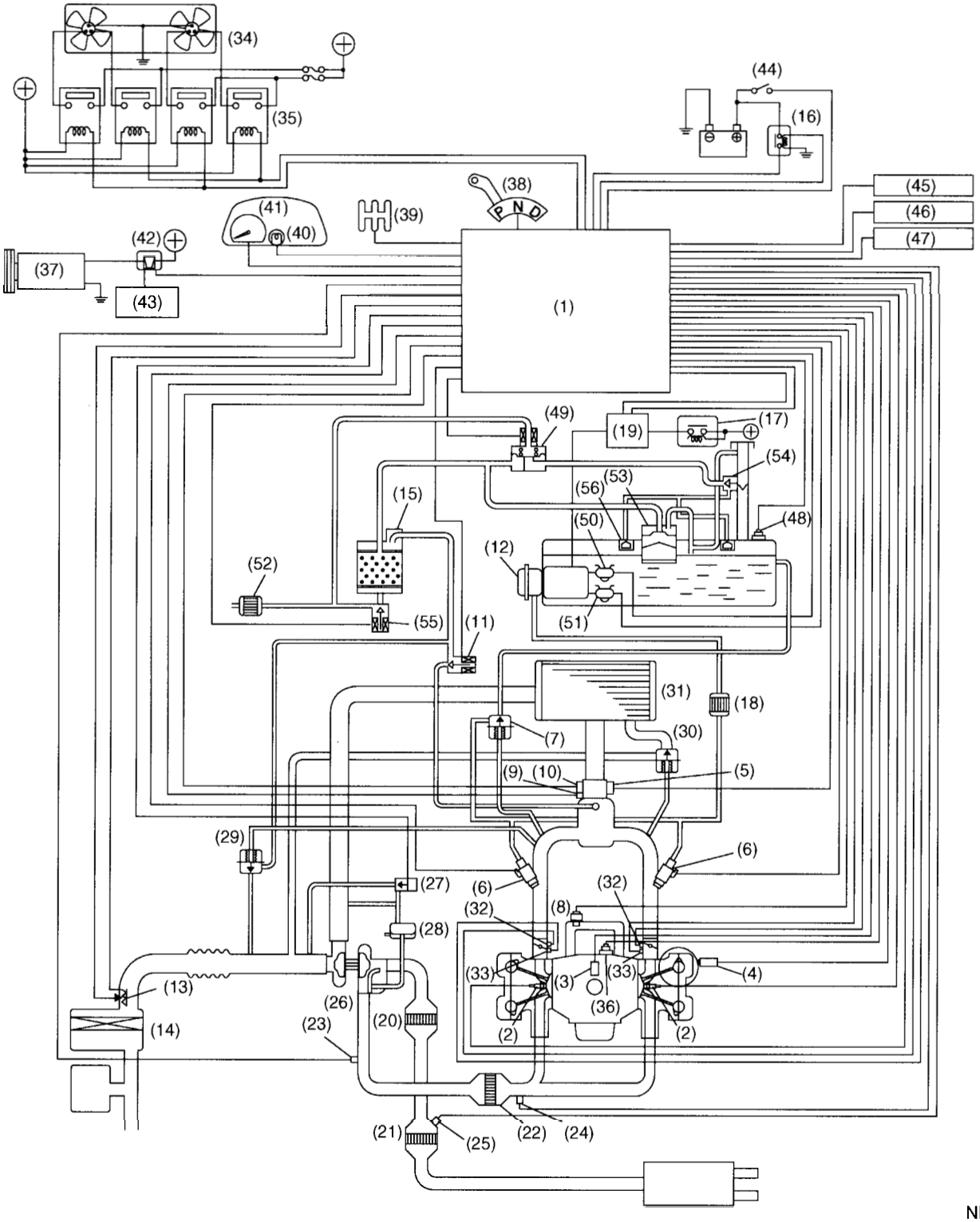

NF0435

(1) Engine control module (ECM)
(2) Ignition coil and ignitor assembly
(3) Crankshaft position sensor
(4) Camshaft position sensor
(5) Throttle position sensor
(6) Fuel injectors
(7) Pressure regulator
(8) Engine coolant temperature sensor
(9) Pressure sensor
(10) Idle air control solenoid valve
(11) Purge control solenoid valve
(12) Fuel pump
(13) Mass air flow and intake air temperature sensor
(14) Air cleaner element
(15) Canister
(16) Main relay
(17) Fuel pump relay
(18) Fuel filter
(19) Fuel pump controller
(20) Front catalytic converter
(21) Rear catalytic converter
(22) Precatalytic converter
(23) Exhaust temperature sensor
(24) Front oxygen (A/F) sensor
(25) Rear oxygen sensor
(26) Turbocharger
(27) Wastegate control solenoid valve
(28) Wastegate controller
(29) Purge valve
(30) Air bypass valve
(31) Intercooler
(32) Tumble generator valve position sensor
(33) Tumble generator valve actuator
(34) Radiator fan
(35) Radiator fan relay
(36) Knock sensor
(37) A/C compressor
(38) Inhibitor switch (AT vehicles only)
(39) Neutral switch (MT vehicles only)
(40) CHECK ENGINE malfunction indicator lamp (MIL)
(41) Tachometer
(42) A/C relay
(43) A/C control module
(44) Ignition switch
(45) Transmission control module (TCM) (AT vehicles only)
(46) Vehicle speed sensor
(47) Data link connector
(48) Fuel tank pressure sensor
(49) Pressure control solenoid valve
(50) Fuel temperature sensor
(51) Fuel level sensor
(52) Drain filter
(53) Vent valve
(54) Shut-off valve
(55) Drain valve
(56) Fuel cut valve

3. Crankcase Emission Control System

- The positive crankcase ventilation (PCV) system prevents air pollution which will be caused by blow-by gas being emitted from the crankcase.
The system consists of a sealed oil filler cap, rocker covers with fresh air inlet, connecting hoses, a PCV valve and an air intake duct.

- In a part-throttle condition, the blow-by gas in the crankcase flows into the intake manifold through the connecting hose of crankcase and PCV valve by the strong vacuum created in the intake manifold. Under this condition, fresh air is introduced into the crankcase through the connecting hose of the rocker cover.

- In a wide-open-throttle condition, a part of blow-by gas flows into the air intake duct through the connecting hose and is drawn into the throttle chamber, because under this is condition, the intake manifold vacuum is not strong enough to introduce through the PCV valve all blow-by gases that increase in the amount with engine speed.

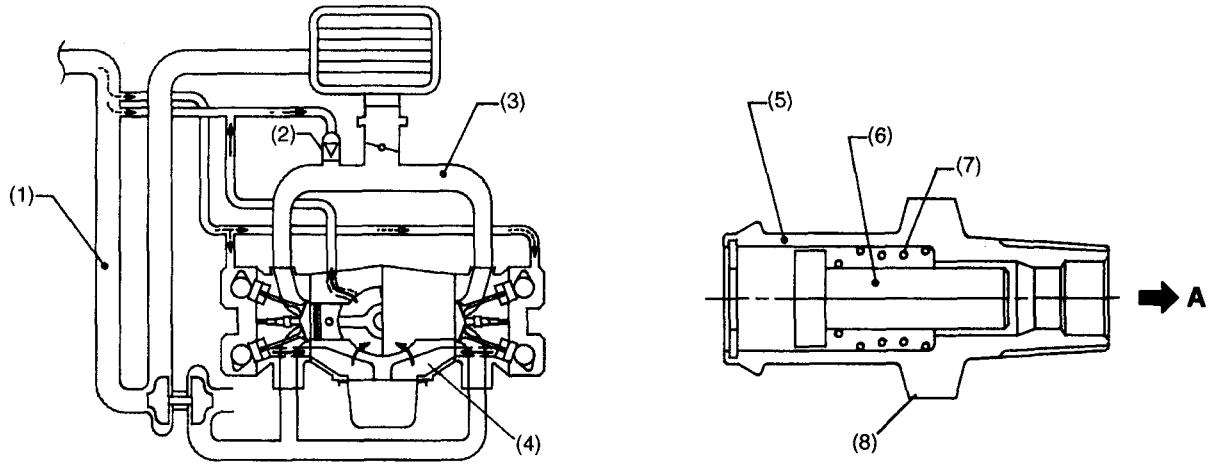

NF0307

(1) Air intake duct
(2) PCV valve
(3) Intake manifold
(4) Crankcase
(5) Case
(6) Valve
(7) Spring
(8) PCV valve

A: To intake manifold

4. Three-way Catalyst

- The basic material of three-way catalyst is platinum (Pt), rhodium (Rh) and palladium (Pd), and a thin coat of their mixture is applied onto honeycomb or porous ceramics of an oval shape (carrier). To avoid damaging the catalyst, only unleaded gasoline should be used.
- The catalyst reduces HC, CO and NOx in exhaust gases through chemical reactions (oxidation and reduction). These harmful components are reduced most efficiently when their concentrations are in a certain balance. These concentrations vary with the air-fuel ratio. The ideal air-fuel ratio for reduction of these components is the stoichiometric ratio.
- Therefore, the air-fuel ratio needs to be controlled to around the stoichiometric ratio to purify the exhaust gases most efficiently.

5. A/F Control System

- The air/fuel (A/F) control system makes a correction to the basic fuel injection duration in accordance with the signal from the front oxygen sensor so that the stoichiometric ratio is maintained, thus ensuring most effective exhaust gas purification by the three-way catalyst. Different basic fuel injection durations are preset for various engine speeds and loads, as well as the amount of intake air.

- This system also has a "learning" control function which stores the corrected data in relation to the basic fuel injection in the memory map. This allows an appropriate air-fuel ratio correction to be added automatically in quick response to any situation that requires such an effect. Thus, the air-fuel ratio is optimally maintained under various conditions while purifying exhaust gases most effectively, improving driving performance and compensating for changes in sensors' performance over time.

6. Ignition Control System

- The ignition system is controlled by the ECM.

The ECM monitors the operating condition of the engine using the signals from the sensors and switches shown below and determines the ignition timing most appropriate for each engine operating condition. Then it sends a signal to the ignitor, commanding generation of a spark at that timing.

- The ECM uses a preprogrammed map for a "closed-loop" control which provides its ignition timing control with excellent transient characteristics, i.e., highly responsive ignition timing control.

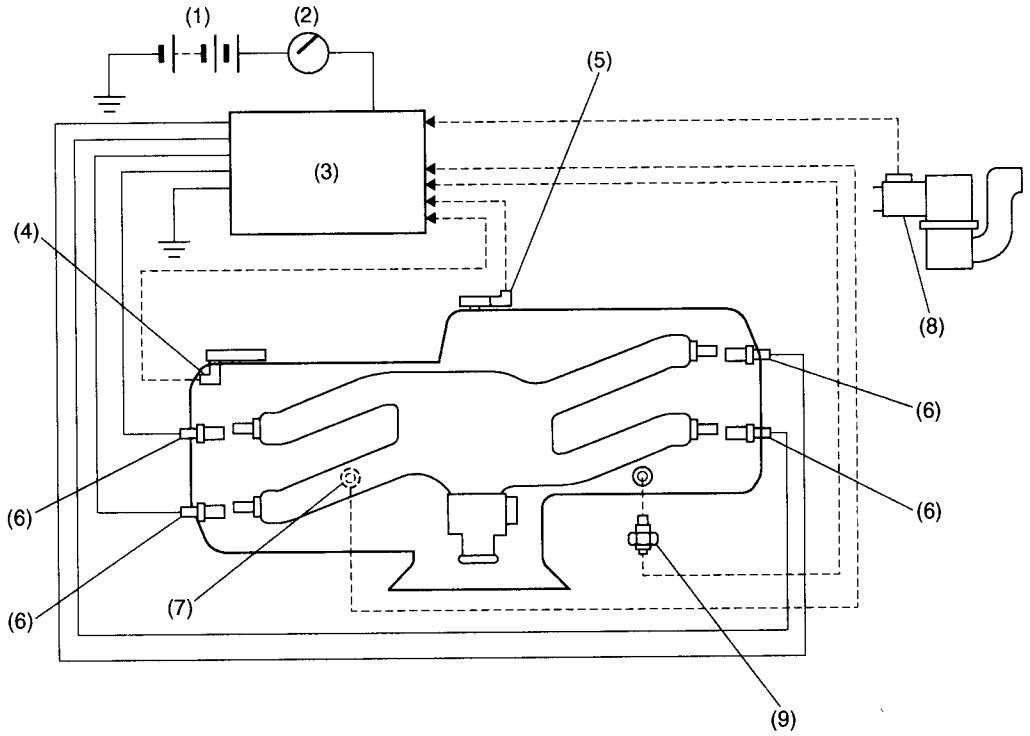

NF0308

(1) Battery
(2) Ignition switch
(3) ECM
(4) Camshaft position sensor
(5) Crankshaft position sensor
(6) Ignition coil and ignitor assembly
(7) Knock sensor
(8) Mass air flow and intake air temperature sensor
(9) Engine coolant temperature sensor

7. Evaporative Emission Control System

A: GENERAL

- The evaporative emission control system prevents fuel vapors from escaping into atmosphere. This system includes a canister, purge control solenoid valve, fuel cut valve, and the lines connecting them.
- Fuel vapors in the fuel tank is introduced into the canister through the evaporation line, and are absorbed by activated carbon in it. The fuel cut valve is also incorporated in the fuel tank line.
- The purge control solenoid valve is controlled optimally by the ECM according to the engine condition.
- The pressure control solenoid valve incorporated in the fuel tank evaporation line regulates the pressure/vacuum in the fuel tank under the control of the ECM which uses the signal from the fuel tank pressure sensor.

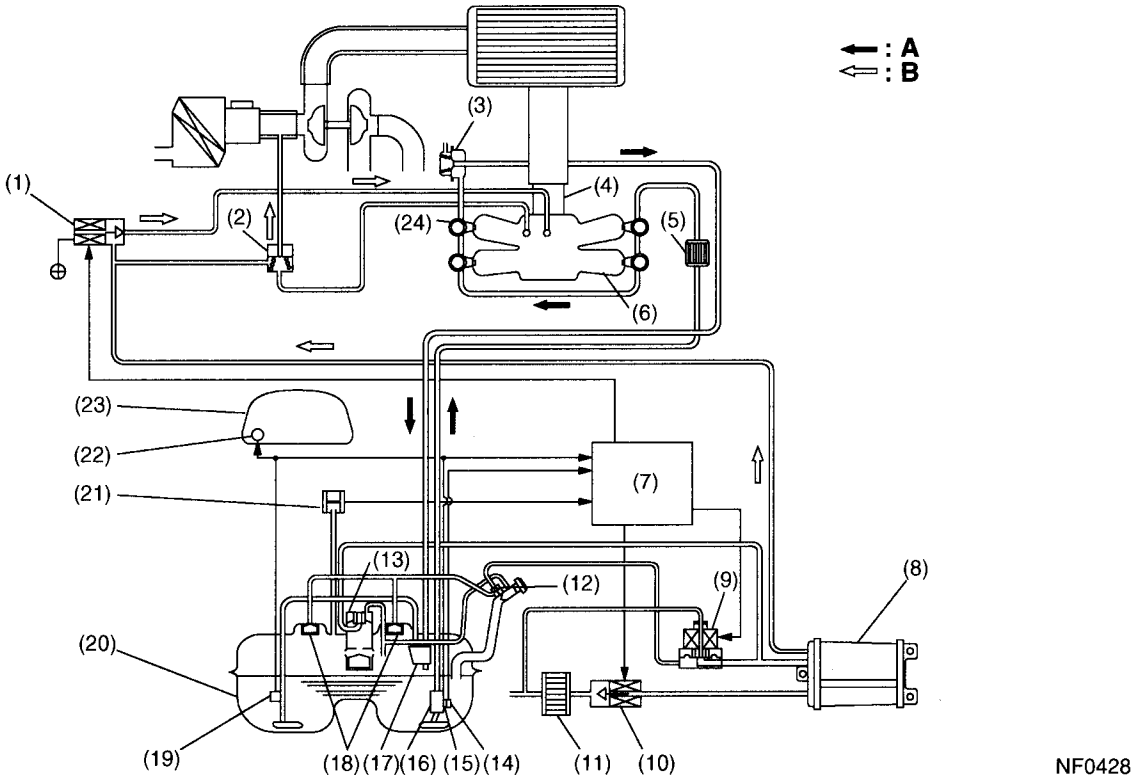

(1)	Purge control solenoid valve	(11)	Drain filter	(21)	Fuel tank pressure sensor
(2)	Purge valve	(12)	Shut-off valve	(22)	Fuel gauge
(3)	Pressure regulator	(13)	Vent valve	(23)	Combination meter
(4)	Throttle body	(14)	Fuel temperature sensor	(24)	Fuel injector
(5)	Fuel filter	(15)	Fuel level sensor		
(6)	Intake manifold	(16)	Fuel pump	**A:**	Fuel line
(7)	ECM	(17)	Jet pump	**B:**	Evaporation line
(8)	Canister	(18)	Fuel cut valve		
(9)	Pressure control solenoid valve	(19)	Fuel sub level sensor		
(10)	Drain valve	(20)	Fuel tank		

B: FUEL CUT VALVE

The fuel cut valve is built onto the evaporation pipe of the fuel tank cap. The rising level of the fuel in the fuel tank causes the float to move up and close the cap hole so that no fuel can enter the evaporation line.

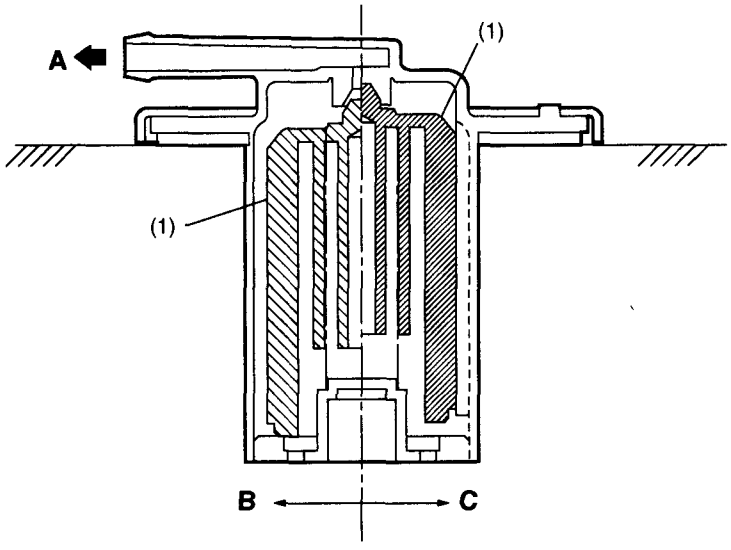

NF0469

(1) Float

A: To canister
B: Valve open
C: Valve closed

C: FUEL TANK CAP

The fuel tank cap has a relief valve which prevents development of vacuum in the fuel tank in the event of a problem with the fuel vapor line.

When there is no problem with the fuel vapor line, the filler pipe is sealed at the portion (A) and by the seal pressed against the filler pipe end. If vacuum develops in the fuel tank, the atmospheric pressure forces the spring down to open the valve; consequently outside air flows into the fuel tank, thus controlling the inside pressure.

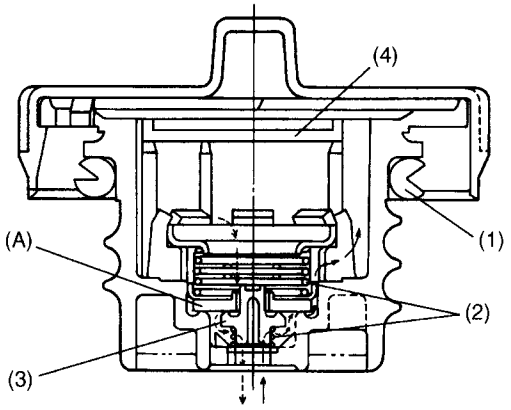

NF0470

(1) Seal
(2) Spring
(3) Valve
(4) Filter

D: CANISTER

The charcoal filled in the canister temporarily stores fuel vapors. When the purge control solenoid valve is opened by a signal from the ECM, the external fresh air entering the canister carries the fuel vapors into the collector chamber.

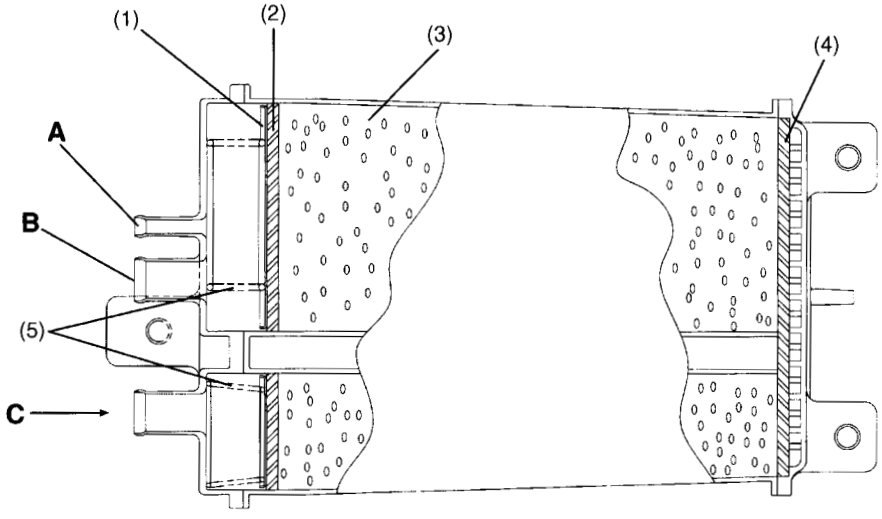

H2H3223B

(1) Grid
(2) Filter
(3) Charcoal
(4) Filter
(5) Spring

A: To purge control solenoid valve
B: From fuel tank
C: Air

E: PURGE CONTROL SOLENOID VALVE

The purge control solenoid valve is on the evaporation line between the canister and intake manifold. It is installed at the underside of intake manifold.

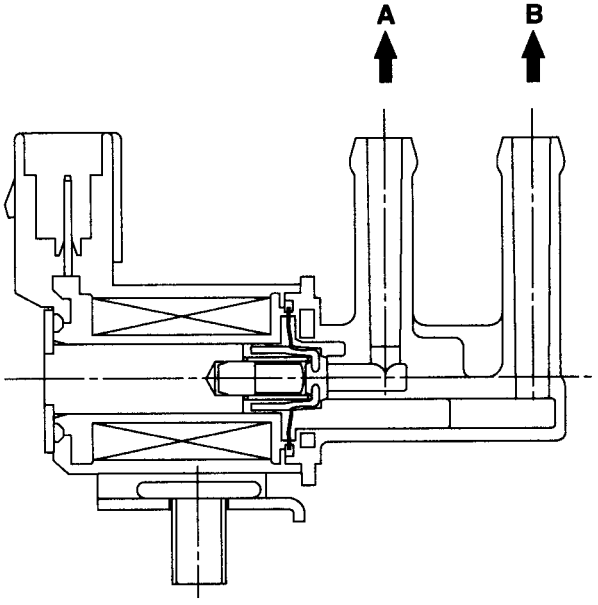

NF0386

A: To canister

B: To intake manifold

F: PRESSURE CONTROL SOLENOID VALVE

The fuel tank pressure control solenoid valve is located in the evaporation line between the shut-off valve on fuel filler pipe and the fuel tank. It adjusts the fuel tank inside pressure under the control of the ECM.
When the tank inside pressure becomes higher than the atmospheric pressure, the valve is opened allowing fuel vapors to be introduced into the canister.
On the other hand, when the tank inside pressure becomes lower than the atmospheric pressure, external air is taken from the drain valve into the canister.
The pressure control solenoid valve can also be electrically closed for the system diagnosis purposes.

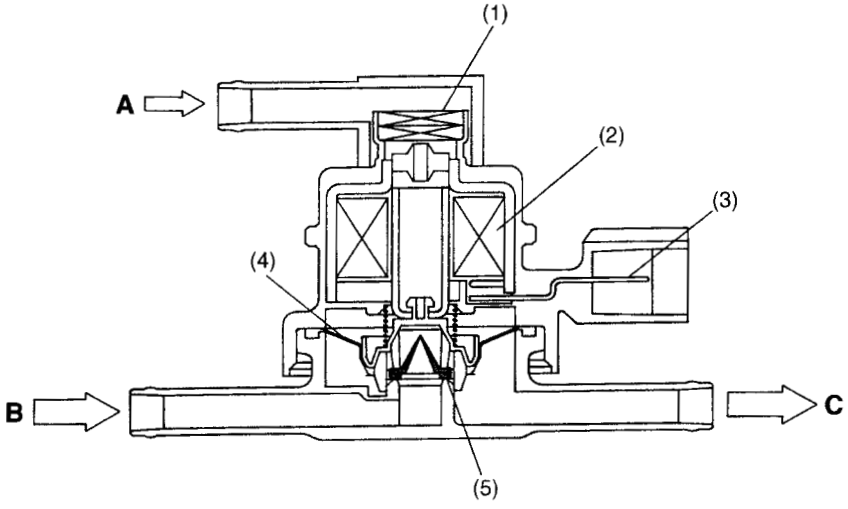

B2H1719C

(1) Filter
(2) Coil
(3) Connector terminal
(4) Diaphragm
(5) Valve

A: Atmospheric pressure
B: From shut-off valve
C: To fuel tank

G: DRAIN FILTER

The drain filter is installed at the air inlet port of the vent control solenoid valve. It cleans the air taken in the canister through the vent control solenoid valve.

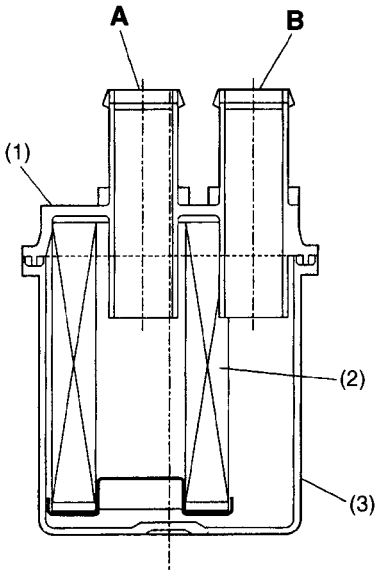

S2H0874B

(1) Cap
(2) Element
(3) Case

A: To drain valve
B: To atmosphere

H: VENT VALVE

The vent valve is located on the fuel tank. During filling the fuel tank, fuel vapors are introduced into the canister through the vent valve.
When the fuel vapor pressure becomes higher than the atmospheric pressure and overcomes the spring force which is applied to the back side of the diaphragm, the port toward the canister is opened. The vent valve also has a float which blocks the fuel vapor passage when the tank is filled up. Increasing fuel level raises the float to close the port toward the canister.

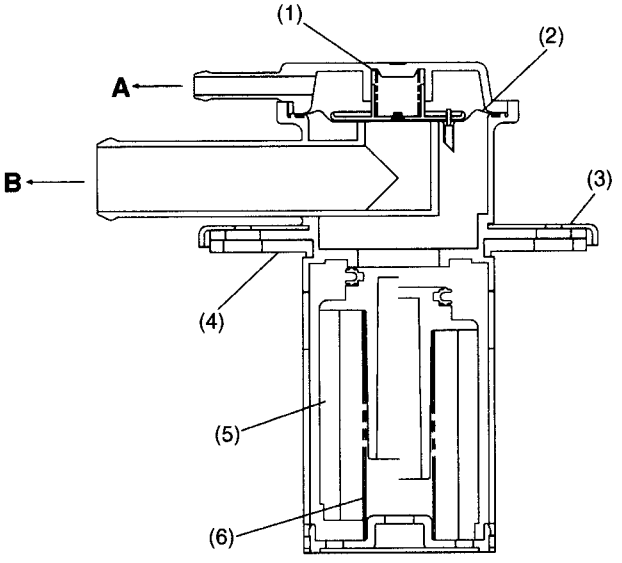

H2H3224B

(1) Spring
(2) Diaphragm
(3) Plate cover
(4) Packing
(5) Float
(6) Float spring

A: To filler pipe
B: To canister

I: SHUT-OFF VALVE

The shut-off valve is located at the top of the fuel filler pipe. When a filler gun is inserted into the filler pipe, the shut-off valve closes the evaporation line.

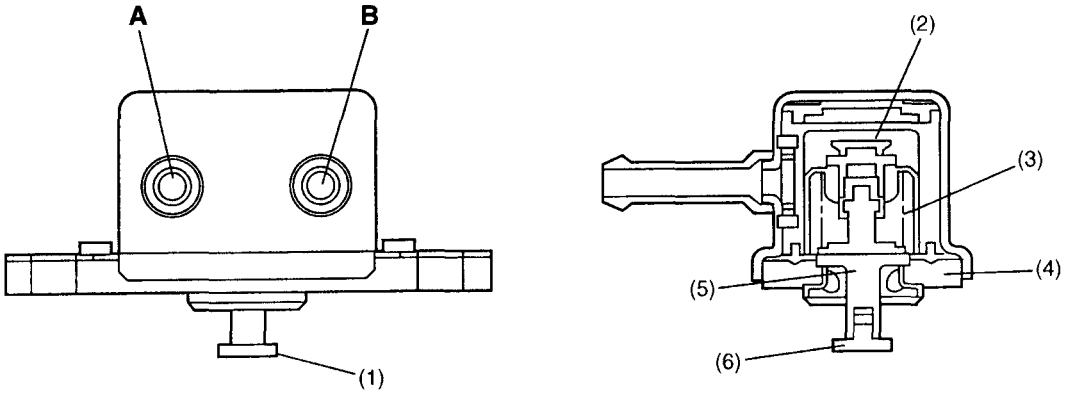

B2H1769B

(1) Pin
(2) Valve
(3) Spring
(4) Plate
(5) Shaft
(6) Pin

A: To canister
B: To fuel tank

J: DRAIN VALVE

The drain valve is located on the line connecting the drain filter and canister, just below the drain filter. The drain valve is forcibly closed by a signal from the ECM while the evaporation system diagnosis is being conducted.

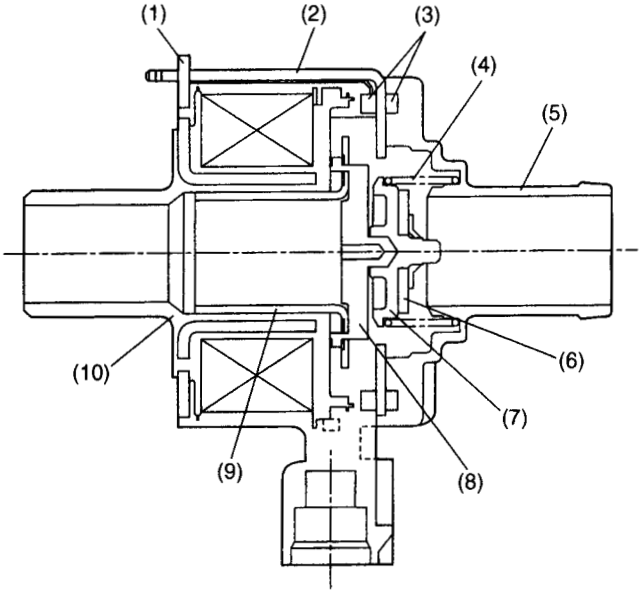

B2H1770A

(1) Magnetic plate
(2) Yoke
(3) Packing
(4) Spring
(5) Valve seat
(6) Valve
(7) Plate
(8) Retainer
(9) Moving core
(10) Bobin

8. On-board Refueling Vapor Recovery (ORVR) System

A: GENERAL

The on-board refueling vapor recovery system allows the fuel vapors in the fuel tank to be introduced directly into the canister through the vent valve when the fuel tank inside pressure increases as a result of refueling.
The diagnosis of the system is performed by monitoring the fuel tank inside pressure data from the fuel tank pressure sensor while forcibly closing the drain valve.

B: OPERATION

- While driving

Since the back side of the diaphragm in the pressure control solenoid valve is open to the atmosphere, the diaphragm is held pressed by the atmospheric pressure in the position where only the external air is introduced into the canister. When the fuel vapor pressure acting on the other side of the diaphragm increases and overcomes the atmospheric pressure, it pushes the diaphragm and opens the port through which the fuel vapors make their way to the canister.

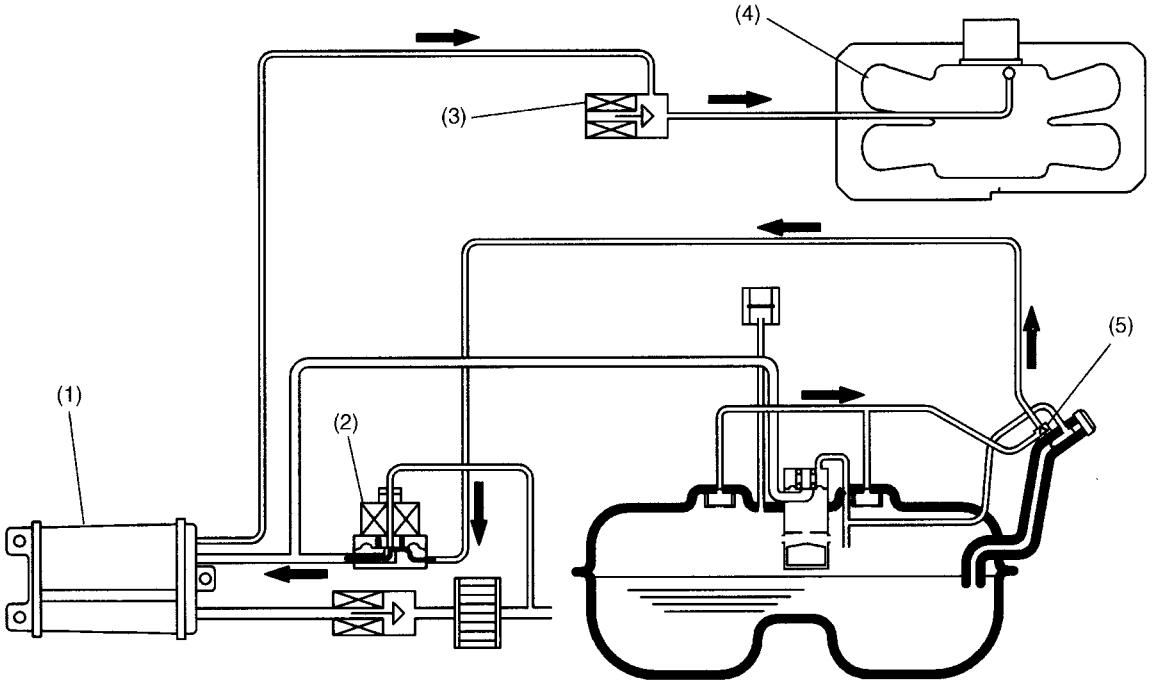

NF0471

(1) Canister
(2) Pressure control solenoid valve
(3) Purge control solenoid valve
(4) Intake manifold
(5) Shut-off valve: opened

- While refueling

As the fuel enters the fuel tank, the tank inside pressure increases. When the inside pressure becomes higher than the atmospheric pressure, the port of the vent valve opens, allowing the fuel vapors to be introduced into the canister through the vent line. The fuel vapors are absorbed by charcoal in the canister, so the air discharged from the drain valve contains no fuel. When a filler gun is inserted, the shut-off valve closes the evaporation line.

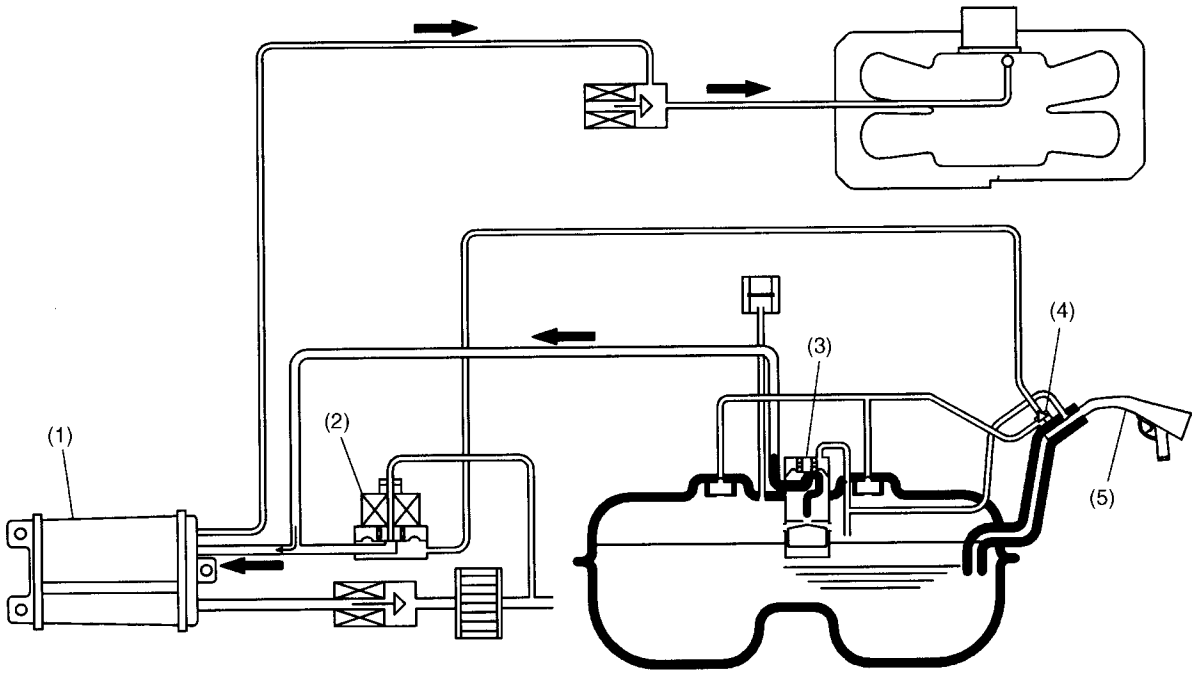

NF0472

(1) Canister
(2) Pressure control solenoid valve
(3) Vent valve
(4) Shut-off valve: closed
(5) Filler gun

9. Vacuum Connections

The hose and pipe connections of the intake manifold, throttle body and other related parts are as shown in the illustration.

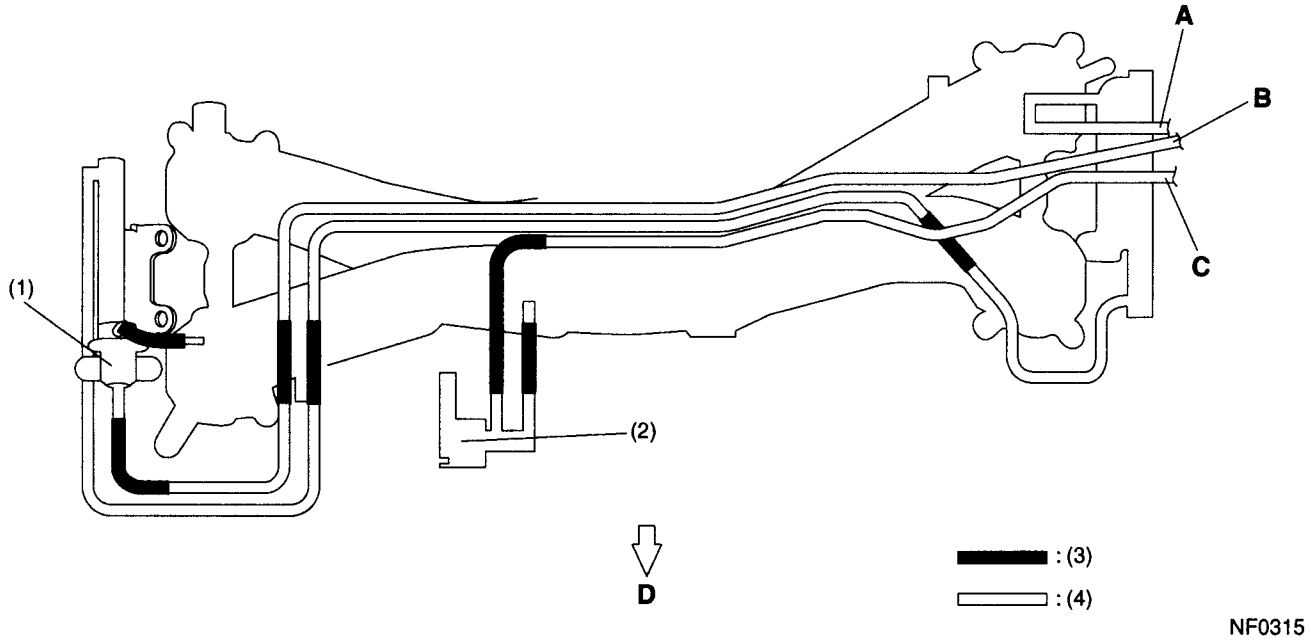

(1) Pressure regulator
(2) Purge control solenoid valve
(3) Hose
(4) Pipe

A: IN
B: OUT
C: To canister
D: Front of vehicle

INTAKE (INDUCTION) *IN* *(SOHC)*

Page
1. General 2

1. General

The intake system consists of an air intake duct, a resonator chamber, and an air cleaner element housed in its case. The resonator, located upstream of the air cleaner case, effectively reduces the intake noise level.

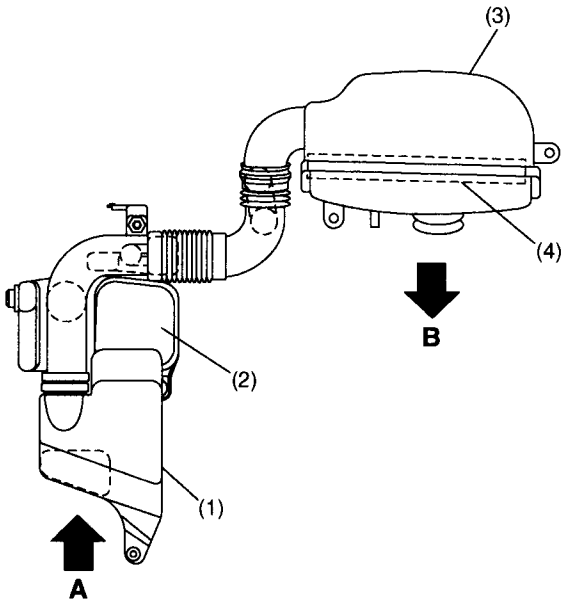

NF0450

(1) Air intake duct
(2) Resonator chamber
(3) Air cleaner case
(4) Air cleaner element

A: Fresh air
B: To throttle body

INTAKE (INDUCTION) IN (DOHC TURBO)

	Page
1. Intake System	2
2. Turbocharger System	3

1. Intake System

A: GENERAL

The intake system consists of an air intake duct, a resonator chamber, and an air cleaner element housed in its case. The resonator, located upstream of the air cleaner case, effectively reduces the intake noise level.

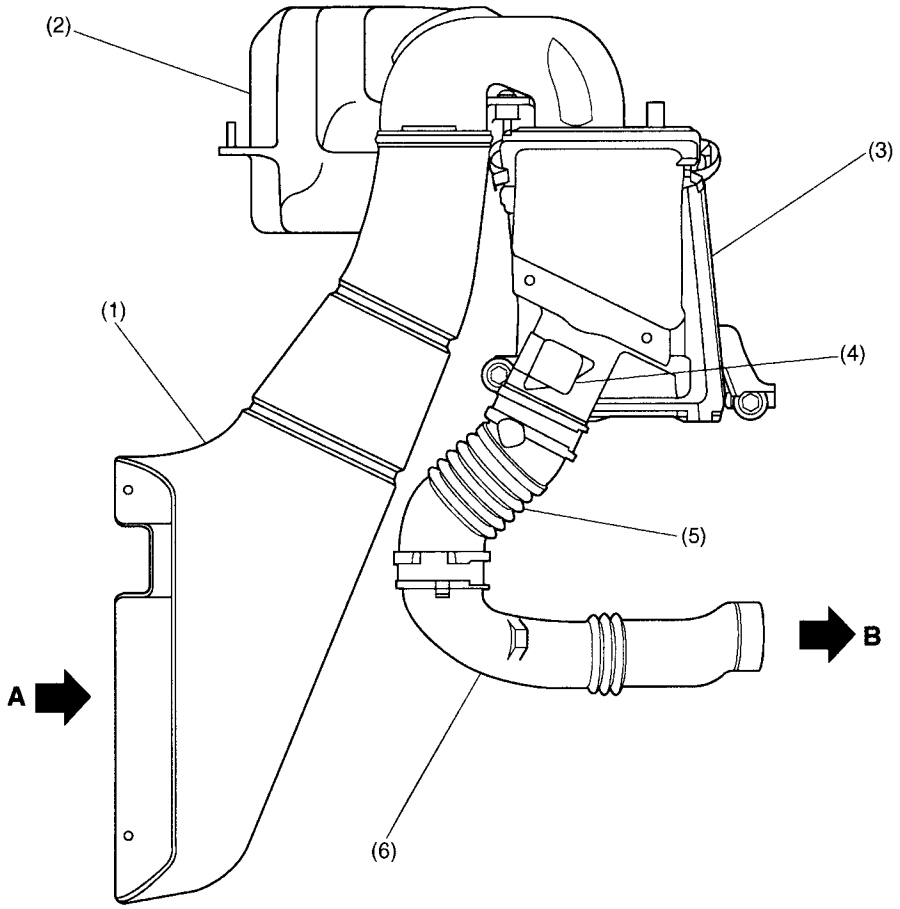

NF0342

(1) Air intake duct
(2) Resonator chamber
(3) Air cleaner case
(4) Mass air flow and intake air temperature sensor
(5) Intake boot
(6) Intake duct

A: Fresh air
B: To turbocharger

2. Turbocharger System

A: GENERAL

- The turbocharger system consists of a water-cooled turbocharger, air-cooled intercooler, wastegate control solenoid valve, etc.
- The outlet side turbine, rotated by exhaust gas pressure, rotates the inlet side turbine. As a result, the inlet side turbine compresses the intake air before it is delivered to the intake manifold.
- The intake air is heated when it passes through the turbocharger unit. The air is cooled as it passes through the intercooler.
- This turbocharger system controls the supercharging pressure according to changes in the atmospheric pressure. Even at a high altitude, therefore, the system offers stable performance without being affected by variations in atmospheric pressure.

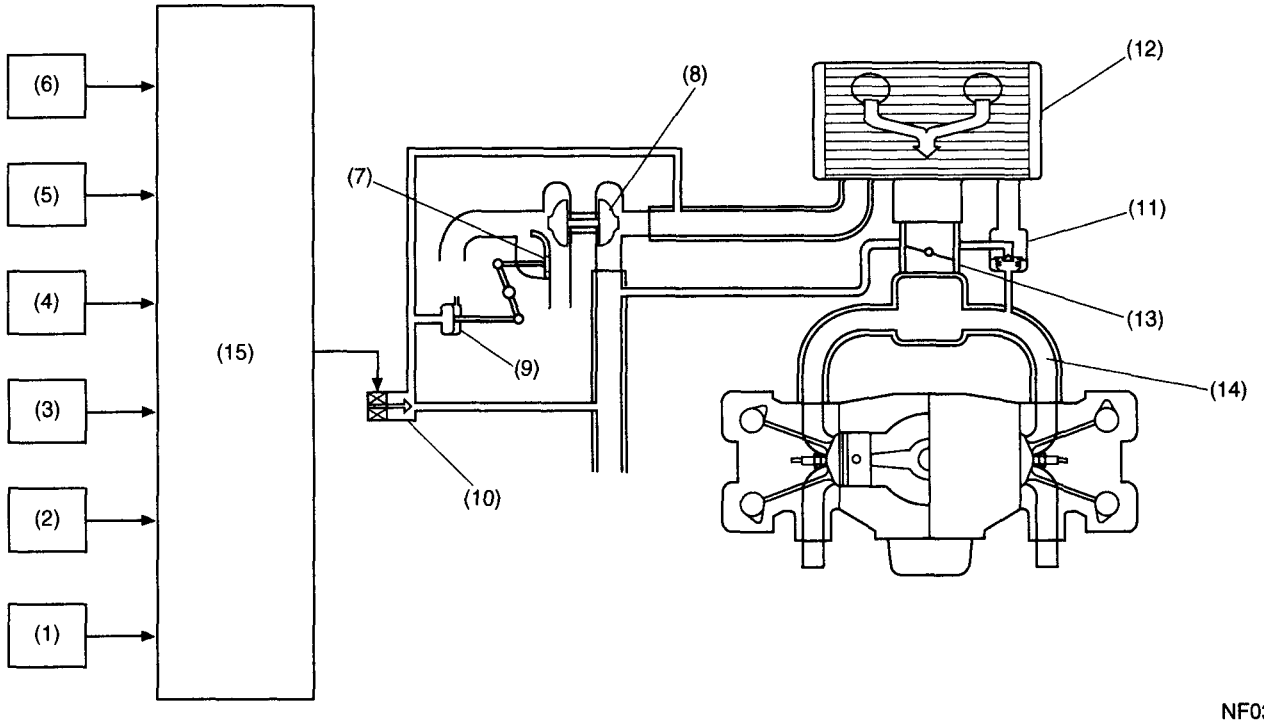

NF0343

(1) Pressure sensor
(2) Crankshaft position sensor
(3) Camshaft position sensor
(4) Throttle position sensor
(5) Engine coolant temperature sensor
(6) Mass air flow and intake air temperature sensor
(7) Wastegate valve
(8) Turbocharger unit
(9) Wastegate controller
(10) Wastegate control solenoid valve
(11) Air bypass valve
(12) Intercooler
(13) Throttle body
(14) Intake manifold
(15) ECM

B: TURBOCHARGER UNIT

The turbocharger is water-cooled. It utilizes a wastegate valve to adjust its supercharging pressure to an optimum level. The turbine is housed in a lightweight, thin-wall, heat-resistant casting. The compressor housing is made of thin-wall, aluminum alloy casting. The shaft for turbine and compressor is supported by a full-floating metal bearing system.

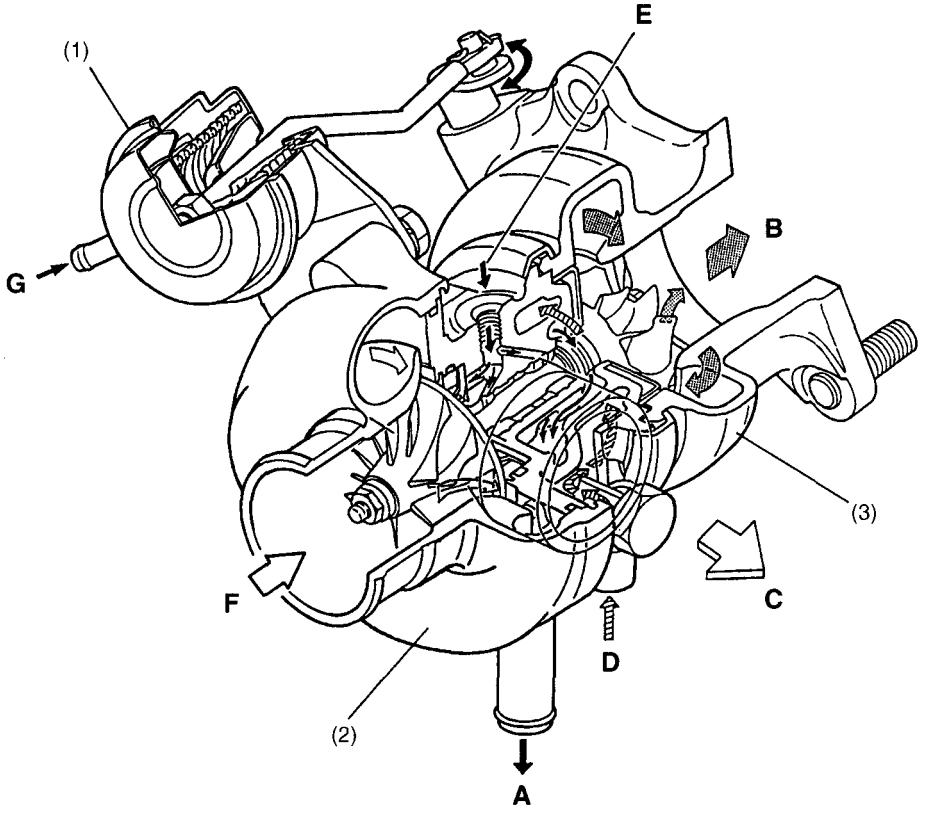

NF0344

(1) Wastegate controller
(2) Compressor housing
(3) Turbine housing

A: Lubricating oil outlet
B: Exhaust gas outlet
C: Air outlet
D: Engine coolant inlet

E: Lubricating oil inlet
F: Air inlet
G: Wastegate valve operating pressure

C: LUBRICATION OF TURBOCHARGER

The turbocharger is lubricated by engine oil branched out from the oil pump. To cope with very high speed of the turbocharger turbine and the compressor shaft which may reach a maximum of several hundred thousands of rpm, full-floating type bearings are used which can form adequate oil films on their inside and outside during running.

Further the oil supplied to the turbocharger also plays a role of cooling the turbine so that heat from exhaust gas does not transmitted to the bearings.

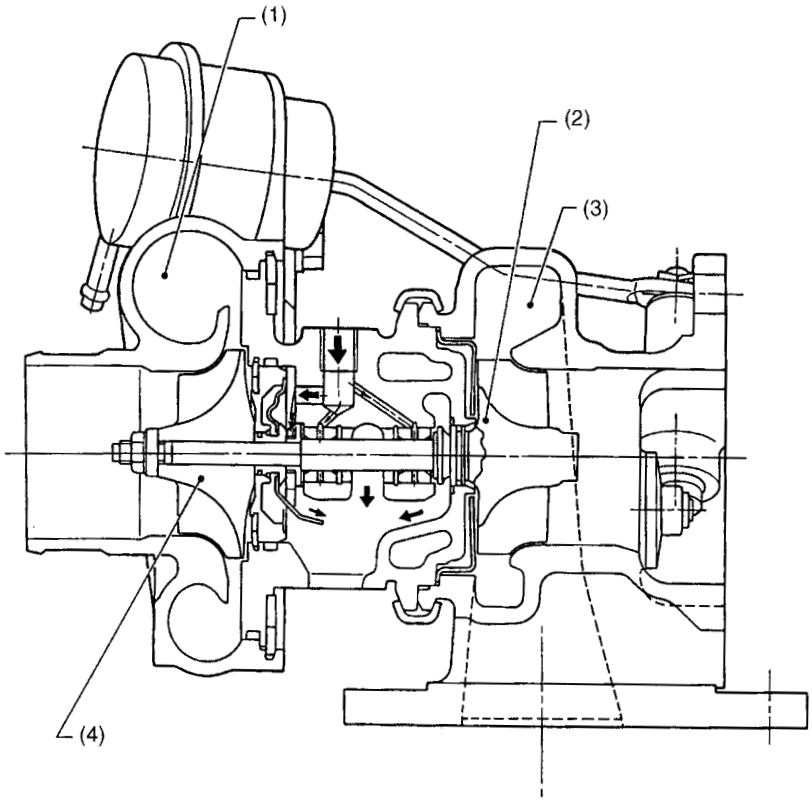

NF0345

(1) Compressor housing
(2) Turbine wheel
(3) Turbine housing
(4) Compressor impeller

D: COOLING OF TURBOCHARGER

The turbocharger unit is cooled by engine coolant, which enhances the reliability and durability of the unit. The engine coolant from the coolant drain hose located under the cylinder head is led by a pipe to the coolant passage provided in the turbocharger bearing housing. After cooling the bearing housing, the engine coolant is led into the coolant filler tank through a pipe.

E: WASTEGATE CONTROL SOLENOID VALVE

The wastegate control solenoid valve switches the intake air pressure passages to the wastegate controller in response to signals from the ECM. When the solenoid valve is closed, the intake air pressure upstream of the turbocharger unit is applied to the wastegate controller. When the solenoid valve is opened, the intake air pressure downstream of the turbocharger unit (supercharged air pressure) is applied to the wastegate controller.

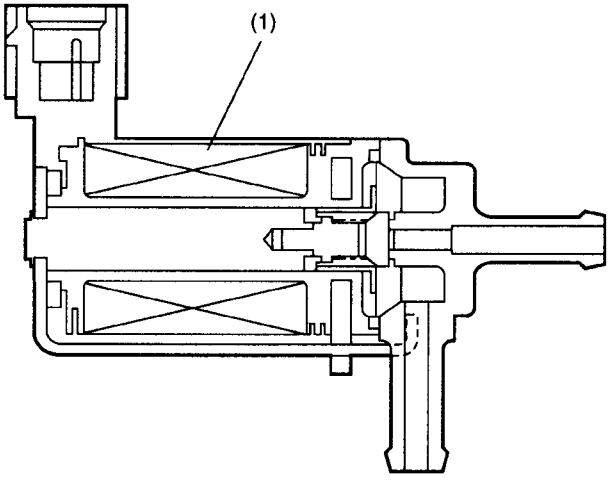

NF0346

(1) Coil

F: REGULATION OF SUPERCHARGING PRESSURE

1. BASIC FUNCTION OF THE WASTEGATE VALVE

When the engine speed increases as the throttle valve opens, the amount of exhaust gas increases. This increases the speed of the turbine (approx. 20,000 to 150,000 rpm), the supercharging pressure and the engine output.

If the resultant supercharging pressure is extremely high, however, it may cause knocking and an excessively high thermal load on such engine components as pistons. In the worst case, the engine may be damaged or broken. To prevent this, the wastegate valve and its controller are provided. By sensing the supercharging pressure, the wastegate valve controller controls the operation of the wastegate valve to maintain the supercharging pressure below a predetermined level.

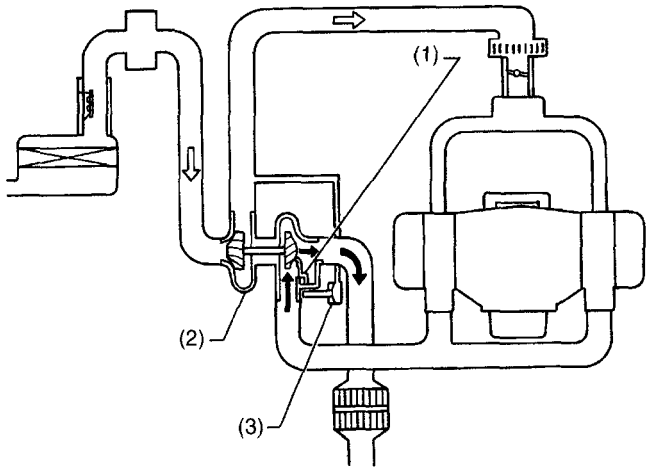

NF0347

(1) Wastegate valve
(2) Turbocharger
(3) Wastegate valve controller

While the supercharging pressure is lower than the predetermined level, the wastegate valve is closed so that entire exhaust gas is directed to the turbine.

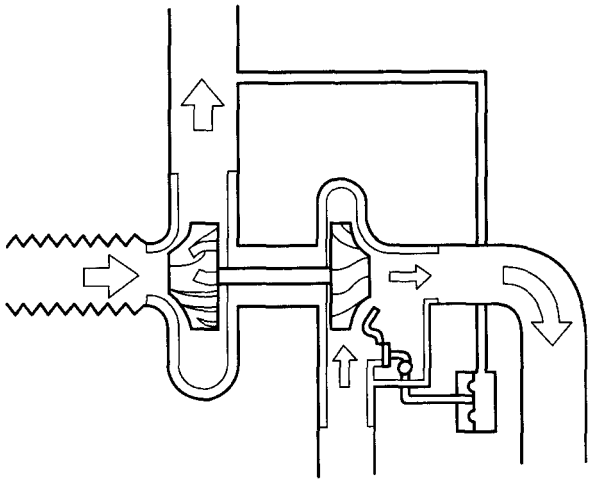

NF0348

When the supercharging pressure reaches the predetermined level, the wastegate controller lets the supercharging pressure press the diaphragm. This causes the wastegate valve to open through a linkage. With the wastegate valve open, part of the exhaust gas is allowed to flow into the exhaust gas pipe that bypasses the passage to the turbine.

This decreases the exhaust gas pressure that rotates the turbine and keeps the supercharging pressure constant.

- It means $P_2 - P_1$ = constant.

P_1: Atmospheric pressure
P_2: Supercharging pressure

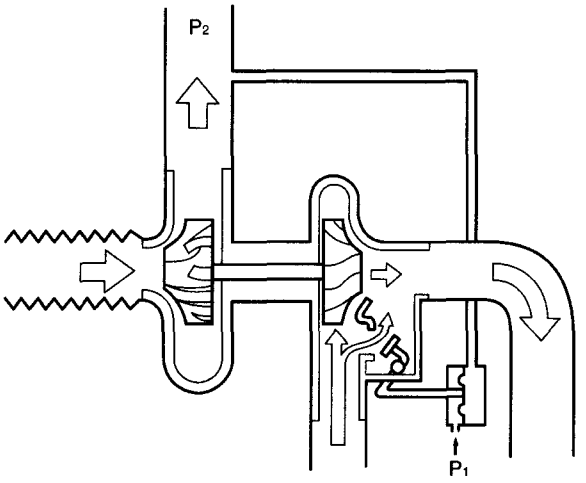

NF0349

2. CONCEPT OF THE WASTEGATE VALVE CONTROL

At high altitudes, the atmospheric pressure (P_1) is low, so that the supercharging pressure (P_2) is also low in a conventional system. The wastegate solenoid valve operates in such a way that a constant supercharging pressure (P_2) is maintained by acting in response to change in the atmospheric pressure.

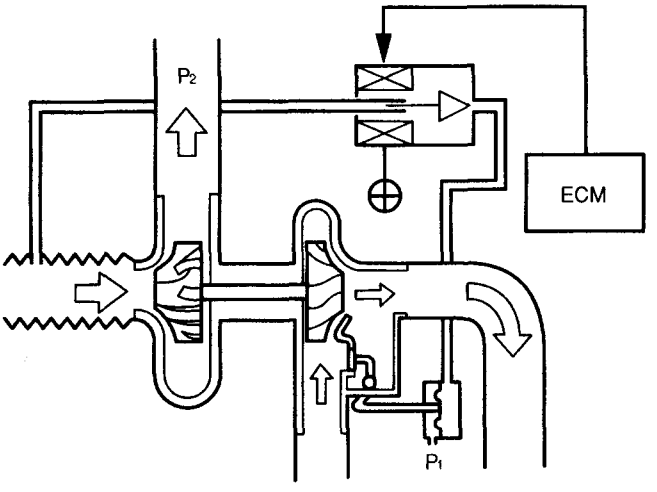

NF0350

G: INTERCOOLER

- Since the intake air having passed through the turbocharger unit is heated to a very high temperature, the air itself is expanded, resulting in a lower supercharging charging efficiency. The intercooler is provided just before the throttle body to cool down the intake air and improve the supercharging efficiency.
- The intercooler is an air cooled type. The air delivered from the air duct provided at the engine hood flows through the core and cools the intake air passing through the intercooler.

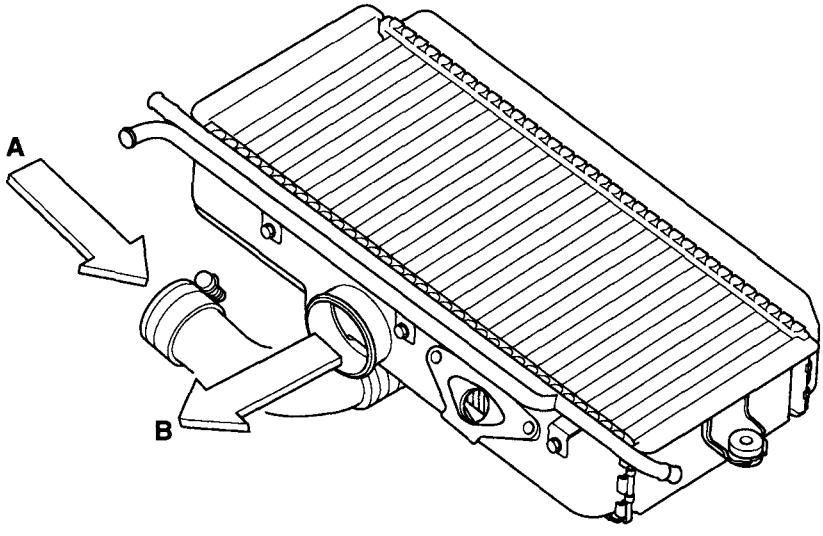

NF0351

A: From turbocharger

B: To throttle body

H: AIR BYPASS VALVE

When a throttle valve is suddenly closed, low air suction noise may occur due to a sudden rise of the air pressure in the passage between the turbocharger and throttle body. To prevent this, an air bypass valve and air passage are provided. The air bypass valve, actuated by the vacuum created by a sudden closure of the throttle valve, allows the suction air to bypass the turbocharger and flow directly upstream, thus lowering the pressure in the air passage.

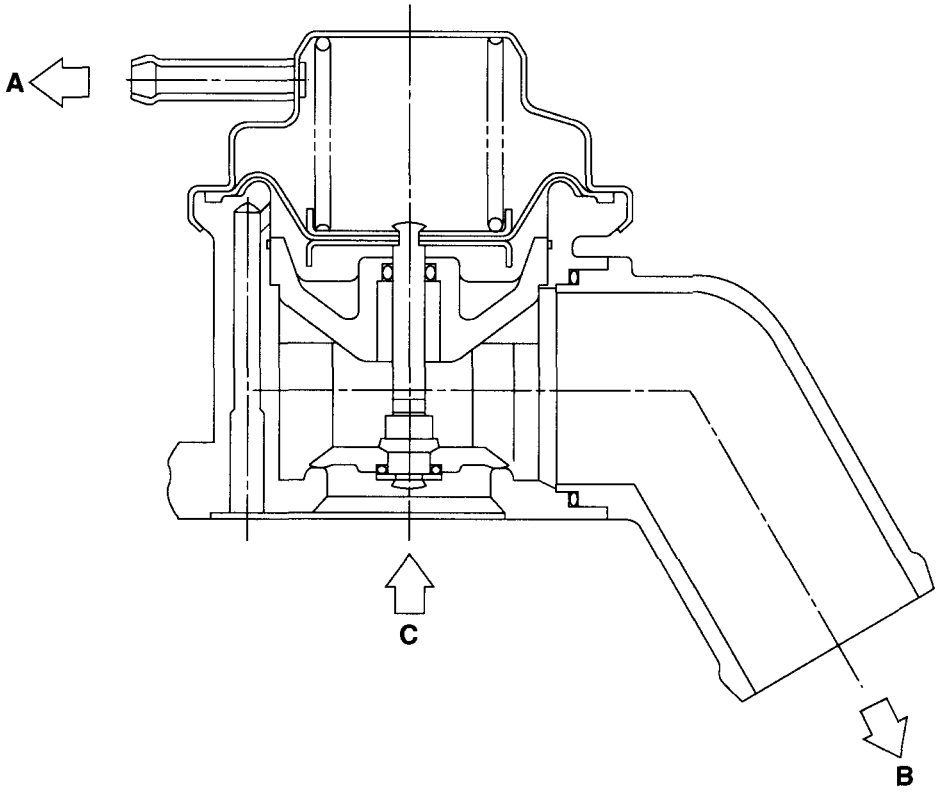

NF0393

A: To intake manifold

B: To turbocharger inlet duct

C: From intercooler

MECHANICAL ME (SOHC)

		Page
1.	General	2
2.	Timing Belt	3
3.	Automatic Belt Tension Adjuster	4
4.	Belt Cover	6
5.	Valve Rocker Assembly	7
6.	Camshaft	8
7.	Cylinder Head	9
8.	Cylinder Block	10
9.	Crankshaft	11
10.	Piston	12
11.	Engine Mounting	13

1. General

The engine used in this vehicle is of a horizontally opposed, four-cylinder design. This four-stroke-cycle, water-cooled, SOHC engine uses a total of 16 valves and its main components are made of aluminum alloy. It is fueled by a multiple fuel injection system.

The engine's major structural and functional features are as follows:

- The cylinder head forms pentroof combustion chambers, each having a spark plug located at its center and two each of intake and exhaust valves (four valves per cylinder). The intake and exhaust ports are located in a cross-flow arrangement.
- There are a screw and nut at the valve end of each rocker arm. They are used for adjusting the valve clearance.
- A single timing belt drives two camshafts on the left and right banks and the engine coolant pump on the left bank. Belt tension is automatically adjusted by a belt tension adjuster, eliminating need for a manual adjustment.
- The crankshaft is supported by five bearings with high rigidity and strength.
- The cylinder block is an aluminum die casting fitted with iron die-cast cylinder liners.

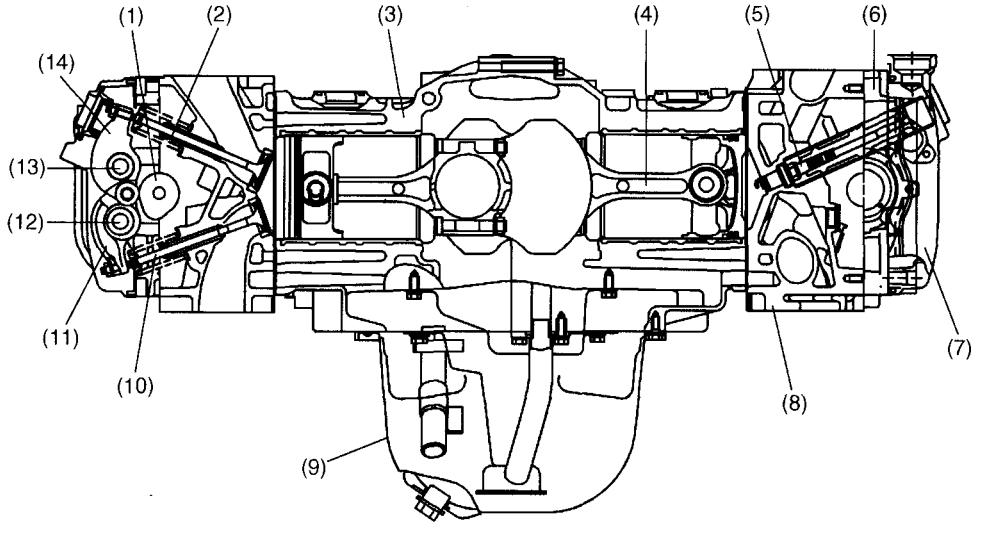

NF0039

(1)	Camshaft	(6)	Camshaft cap	(11)	Exhaust rocker arm
(2)	Intake valve	(7)	Valve rocker cover	(12)	Exhaust rocker shaft
(3)	Cylinder block	(8)	Cylinder head	(13)	Intake rocker shaft
(4)	Connecting rod	(9)	Oil pan	(14)	Intake rocker arm
(5)	Spark plug	(10)	Exhaust valve		

2. Timing Belt

- A single timing belt drives two camshafts (one in the left bank and one in the right bank). The belt also drives the water pump by its non-toothed side.
- The timing belt teeth have a specially designed round profile which contributes to quiet operation. The timing belt is made of strong and inflexible core cords, wear-resistant canvas and heat-resistant rubber material.
- A hydraulic automatic belt tension adjuster always keeps the belt taut to the specified tension. Any manual belt tension adjustment is unnecessary.

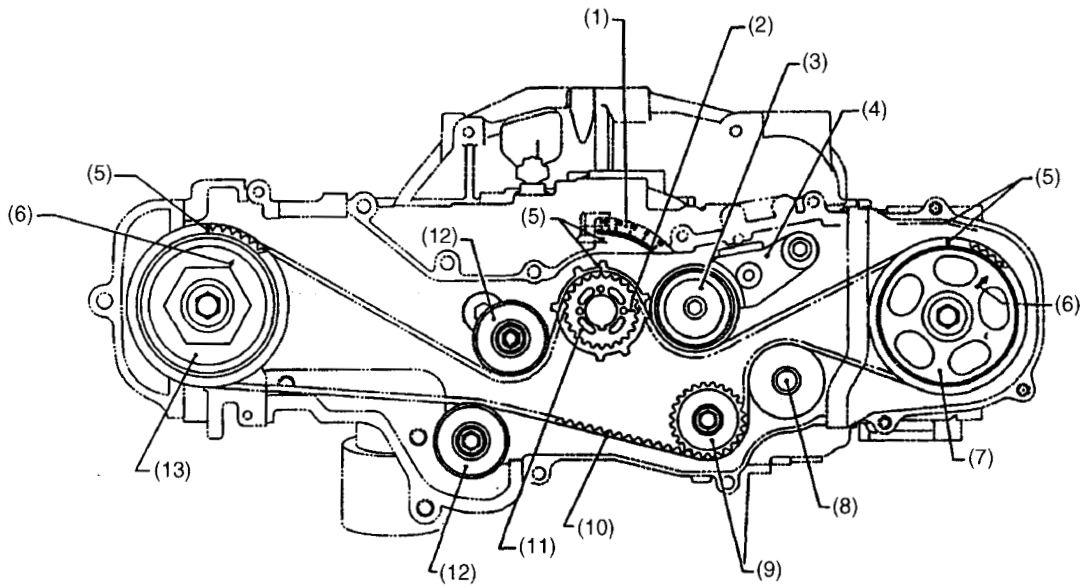

NF0040

(1) Timing indicator (For timing mark of crankshaft pulley)
(2) *Piston position mark
(3) Belt tension pulley
(4) Automatic belt tension adjuster
(5) Alignment mark
(6) **Piston position mark
(7) Camshaft sprocket LH
(8) Water pump pulley
(9) Idler No. 2
(10) Timing belt
(11) Crankshaft sprocket
(12) Idler
(13) Camshaft sprocket RH

NOTE:
*: The #1 piston is at TDC when the piston position mark on the crankshaft sprocket is aligned with the timing mark on the cylinder block.
**: The #1 piston is at TDC on the compression stroke when the piston position mark on the camshaft sprocket is aligned with the timing mark on the belt cover.

3. Automatic Belt Tension Adjuster

The automatic belt tension adjuster consists of a tensioner unit and a bracket. It maintains the timing belt tension automatically at a specified level to enable the belt to transmit power correctly, reduce operating noise and increase the life of the belt.
The cylinder of the tensioner unit incorporates an adjuster rod, wear ring, plunger spring, return spring, check ball and silicone oil.
The automatic belt tension adjuster gives tension to the belt by a levering action which is produced by the push force of the tensioner unit's adjuster rod. It operates in the process detailed below.

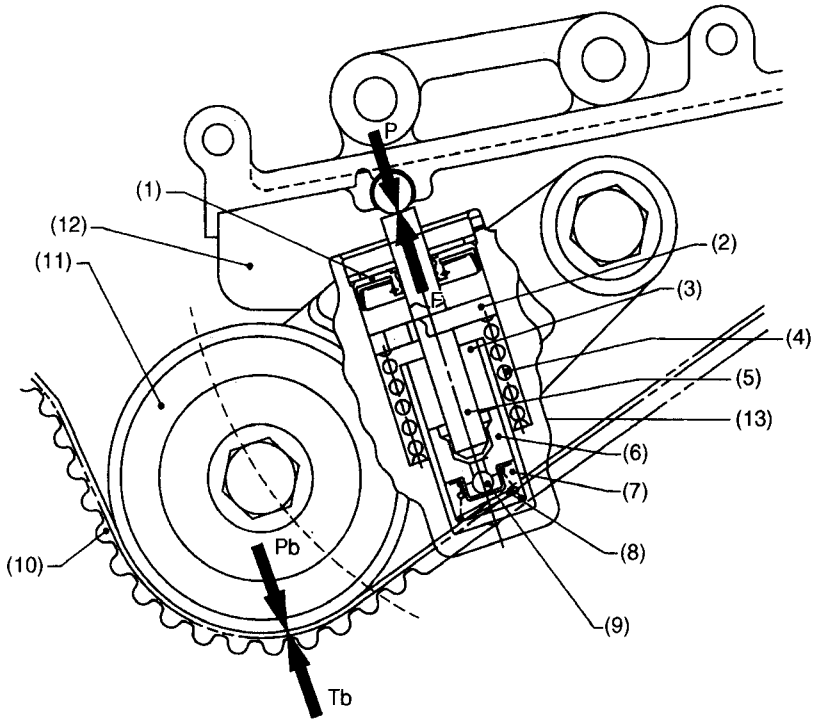

NF0368

(1) Oil seal
(2) Wear ring
(3) Oil reservoir chamber
(4) Return spring
(5) Adjuster rod
(6) Plunger
(7) Oil pressure chamber
(8) Plunger spring
(9) Check ball
(10) Timing belt
(11) Belt tension pulley
(12) Tensioner bracket
(13) Cylinder

- Timing belt tensioning action

When the belt becomes slack, the adjuster rod is pushed upward by the return spring. The oil in the reservoir chamber, which is pressurized by the plunger spring to a certain level, pushes open the check ball and flows into the oil pressure chamber to keep the pressure constant.
The thrust force F resulting from extension of the adjuster rod applies a counterclockwise torque to the tensioner bracket, which causes the belt tension pulley at its end to turn in the same direction. This applies tensioning pressure Pb to the timing belt.

- Timing belt tension balancing action

When the belt tension pulley is pushed against the timing belt with pressure Pb, reaction force Tb of the timing belt generates the reaction force P at the point on which the adjustor rod force is acting.
This force P pushes the adjuster rod until it balances with the sum of the thrust force F and the pressure of the oil in the oil pressure chamber. Therefore, the timing belt tension is kept constant.

- Overtension correction action

If the tension of the timing belt increases excessively, the force P becomes larger than the thrust force F and silicone oil is returned from the oil pressure chamber to the reservoir chamber little by little until the force P balances again with the thrust force F. Thus the timing belt tension is maintained at the specified level at all times.

4. Belt Cover

- The belt cover is made of lightweight, heat resistant synthetic resin molding. It constitutes a totally enclosed housing with its cylinder block mating edges sealed with rubber gaskets. This effectively protects the inside components from dust and liquid.
- Rubber seals used between the cylinder block and the belt cover effectively reduces transmission of noise and vibration.
- The front belt cover has a line mark for ignition-timing checking.

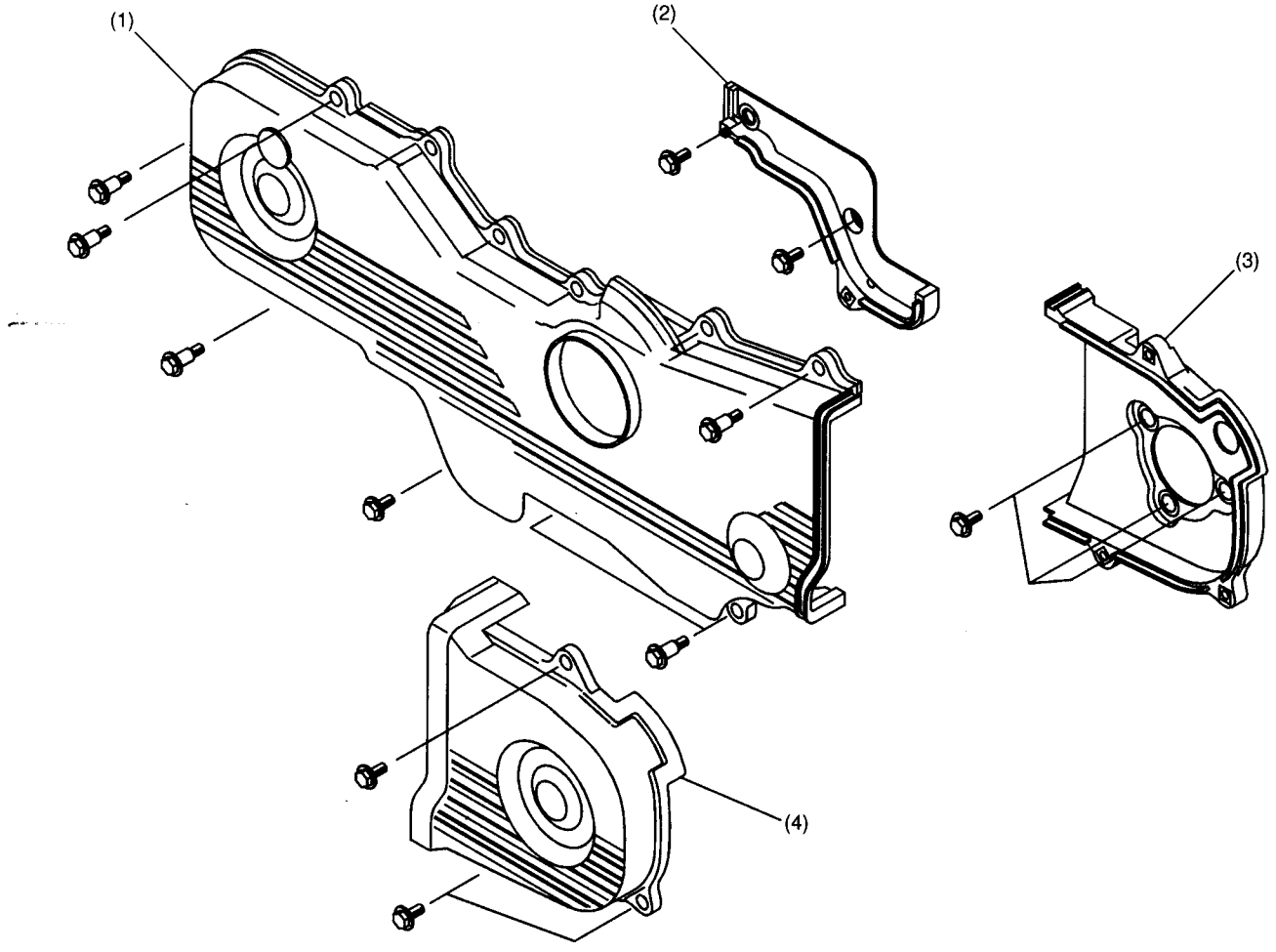

NF0042

(1) Front belt cover
(2) Belt cover No. 2 (RH)
(3) Belt cover No. 2 (LH)
(4) Belt cover (LH)

5. Valve Rocker Assembly

- The intake valve rocker arms and the exhaust valve rocker arms are installed on their own rocker shafts both of which are retained by the camshaft caps.
- The valve end of each rocker arm is provided with valve rocker adjusting screw and nut. Turning of this screw adjusts the valve clearance.
- The exhaust valve rocker arms are Y-shaped, and each arm operates two exhaust valves simultaneously.
- Each rocker shaft has an oil passage in it.

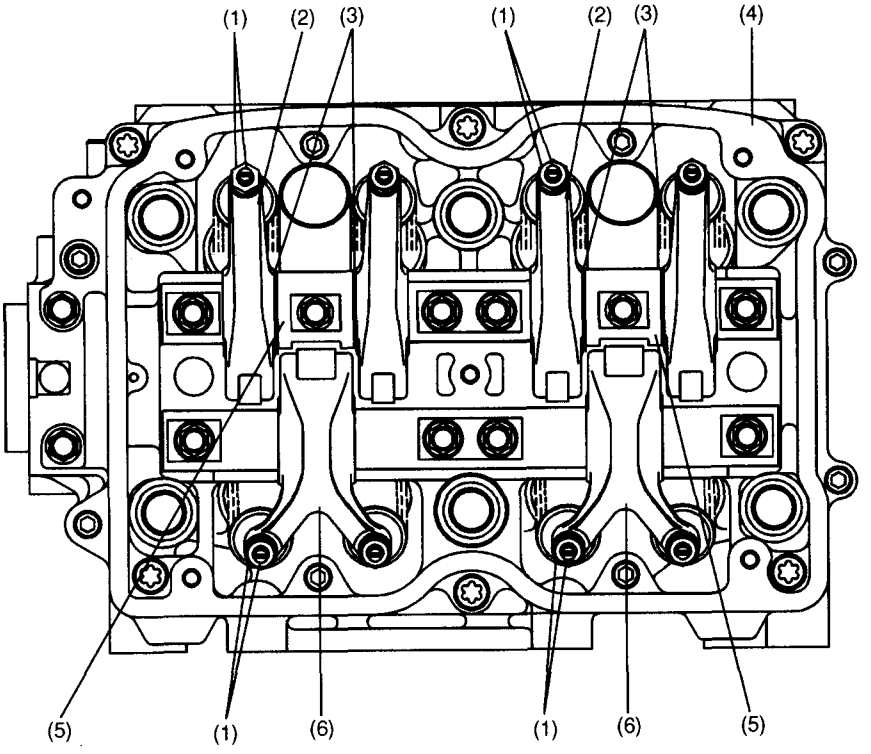

NF0043

(1) Valve rocker adjusting screw and nut
(2) Intake valve rocker arm
(3) Wave washer
(4) Camshaft cap
(5) Supporter
(6) Exhaust valve rocker arm

6. Camshaft

- The camshaft is supported inside the cylinder head at four journals.
- The two flanges on each camshaft supports thrust forces to limit the end play of the camshaft within the tolerance.
- Each camshaft has an oil passage in it.

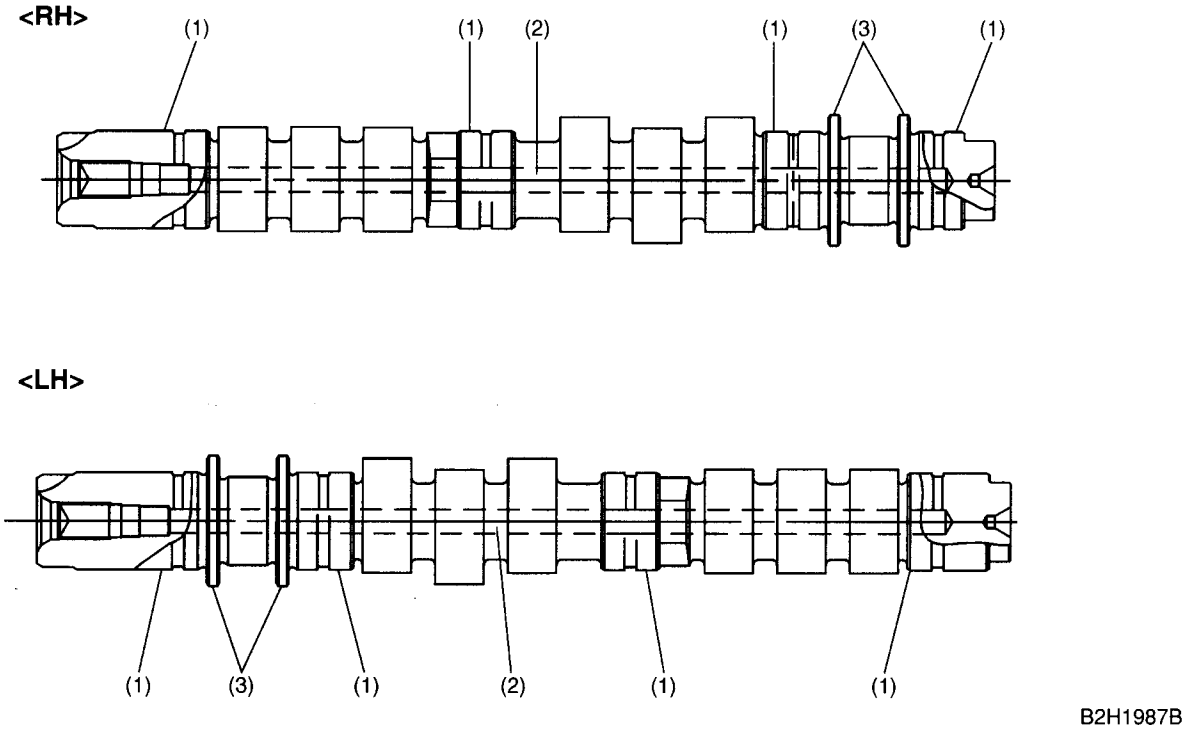

(1) Journal
(2) Oil passage
(3) Shaft flange

7. Cylinder Head

- The cylinder head is made of aluminium die casting.
- Each combustion chamber in the cylinder head is a compact, pentroof design. The spark plug is located at the center of the combustion chamber, which contributes to creation of a wide "squish area" for increased combustion efficiency.
- The two intake and two exhaust valves are arranged on opposite sides for a cross-flow feature.
- The cylinder head gasket is a metallic gasket consisting of three layers of the stainless steel sheets. It is highly resistant to heat and maintains high level of sealing performance for a long period.

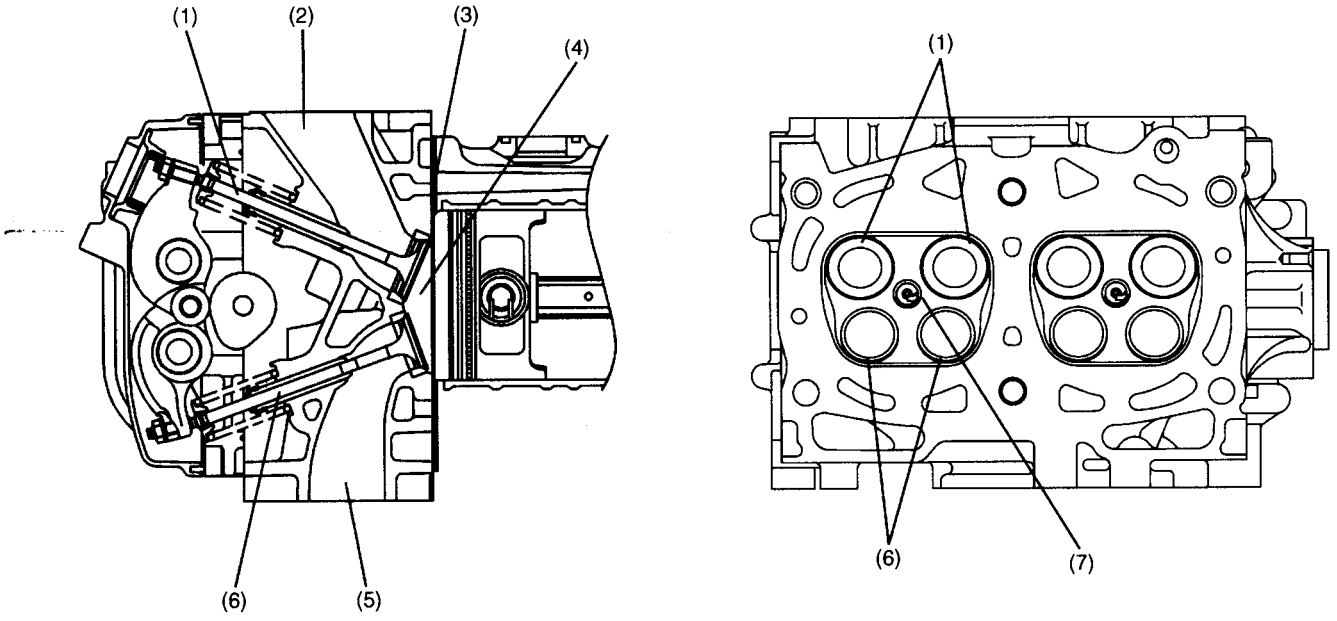

NF0045

(1) Intake valve
(2) Intake port
(3) Squish area
(4) Combustion chamber
(5) Exhaust port
(6) Exhaust valve
(7) Spark plug

8. Cylinder Block

- The cylinder block is made of aluminum die casting. Its open-deck design provides it with such advantageous features as relatively small weight, high rigidity and excellent cooling efficiency.
- The cylinder liners are made of cast iron. They are dry type which means their outer surfaces are entirely in contact with the cylinder block.
- The cylinder block supports the crankshaft at its five journals. The journal supporting portions are designed such that sufficient stiffness and quiet operation are ensured.
- The oil pump is located in the front center of the cylinder block and the engine coolant pump is located at the front of the left-cylinder bank. At the rear of the right-cylinder bank is an oil separator which removes oil mist contained in blow-by gas.

9. Crankshaft

The crankshaft is supported in the cylinder block by five bearings. Each corner formed by a journal or pin and a web is finished by fillet-rolling method which increases strength of that area. The five crankshaft bearings are made of aluminum alloy and the No. 5 bearing is provided with a flanged metal to support thrust forces.

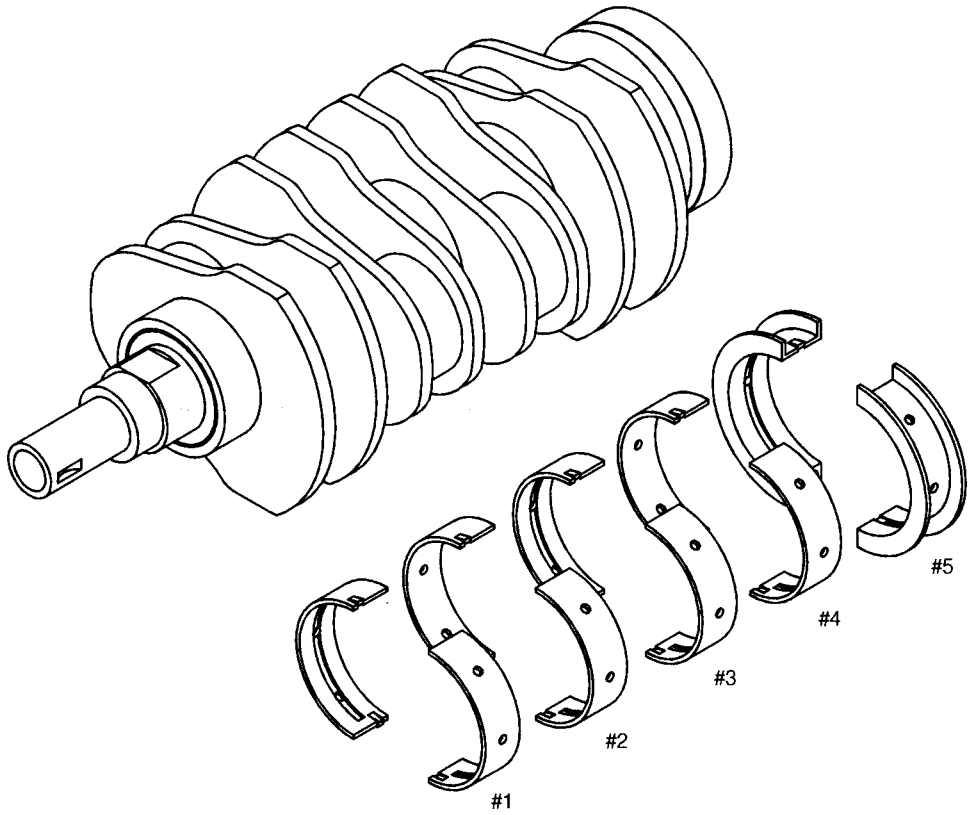

NF0372

10. Piston

- The pistons are of a slipper skirt design for reduced weight and friction. The oil control ring groove utilizes a thermal design.
- The piston pin is offset either downward (Nos. 1 and 3 pistons) or upward (Nos. 2 and 4 pistons).
- The piston head has recesses to prevent interference with the intake and exhaust valves. It also has engraved marks to identify the piston size and the direction of installation. All the pistons are common in their design.
- Three piston rings are used for each piston – two compression rings and one oil control ring. The top piston ring has inner bevels and the second piston ring has an interrupt (cut) on the bottom outside to reduce oil consumption.

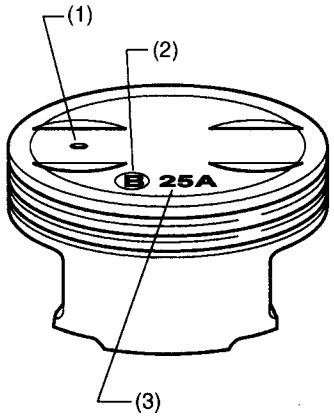

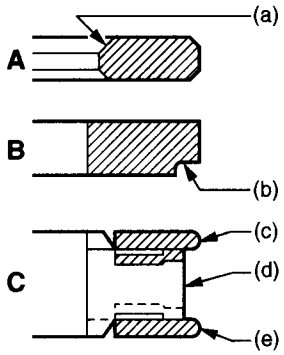

NF0449

(1) Location mark (Engine front side)
(2) Identification mark (Piston size)
(3) Engine capacity (2500 cc)

A: Top ring
B: Second ring
C: Oil ring

(a) Inner-bevel
(b) Interrupt (cut)
(c) Upper rail
(d) Spacer
(e) Lower rail

11. Engine Mounting

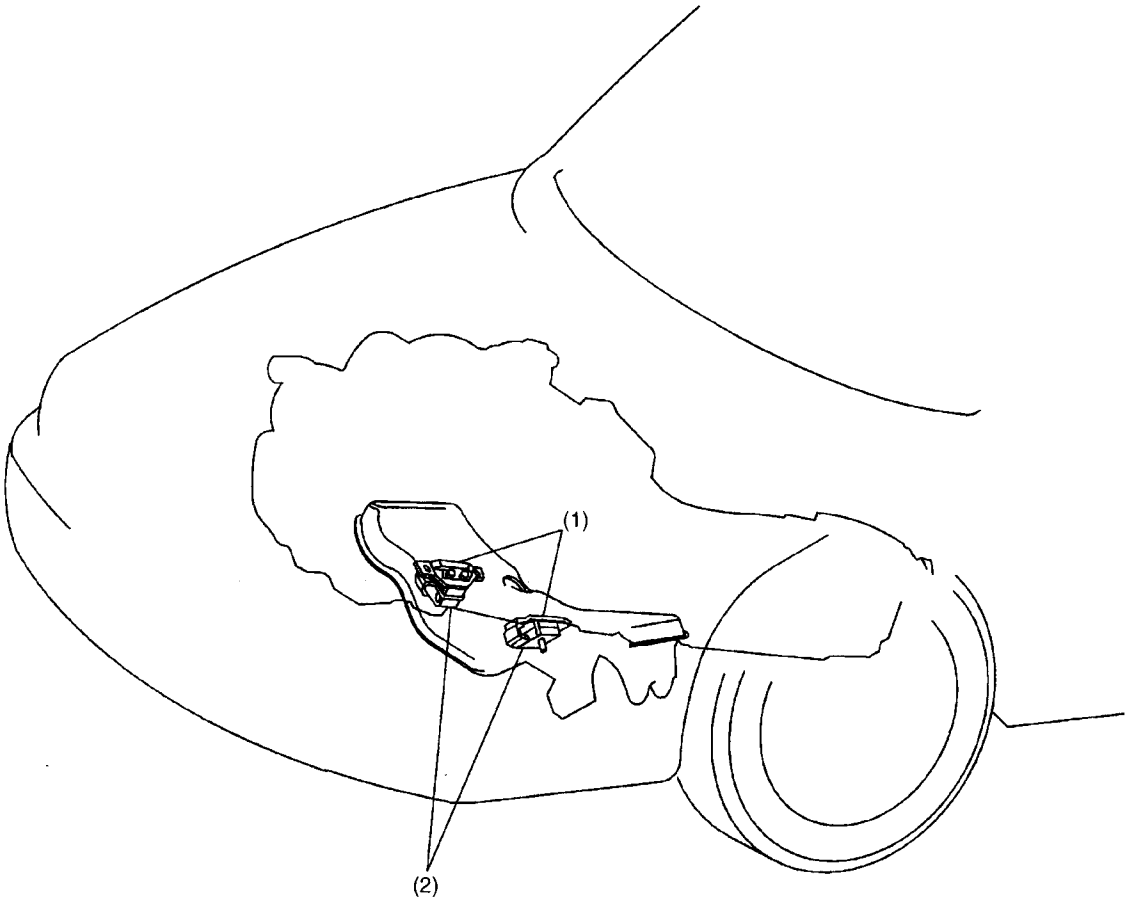

NF0374

(1) Bracket
(2) Cushion rubber

MEMO

MECHANICAL ME (DOHC TURBO)

		Page
1.	General	2
2.	Timing Belt	3
3.	Automatic Belt Tension Adjuster	4
4.	Belt Cover	6
5.	Camshaft	7
6.	Cylinder Head	8
7.	Cylinder Block	9
8.	Crankshaft	10
9.	Piston	11
10.	Engine Mounting	12

1. General

The engine used in this vehicle is of a horizontally opposed, four-cylinder design. This four-stroke-cycle, water-cooled, DOHC turbocharged engine uses a total of 16 valves and its main components are made of aluminum alloy. It is fueled by a multiple fuel injection system.

The engine's major structural and functional features are as follows:

- The cylinder head forms pentroof combustion chambers, each having a spark plug located at its center and two each of intake and exhaust valves (four valves per cylinder). The intake and exhaust ports are located in a cross-flow arrangement.
- A single timing belt drives four camshafts on the left and right banks and the engine coolant pump on the left bank. Belt tension is automatically adjusted by a belt tension adjuster, eliminating need for a manual adjustment.
- The crankshaft is supported by five bearings with high rigidity and strength.
- The cylinder block is an aluminum die casting fitted with iron die-cast cylinder liners.

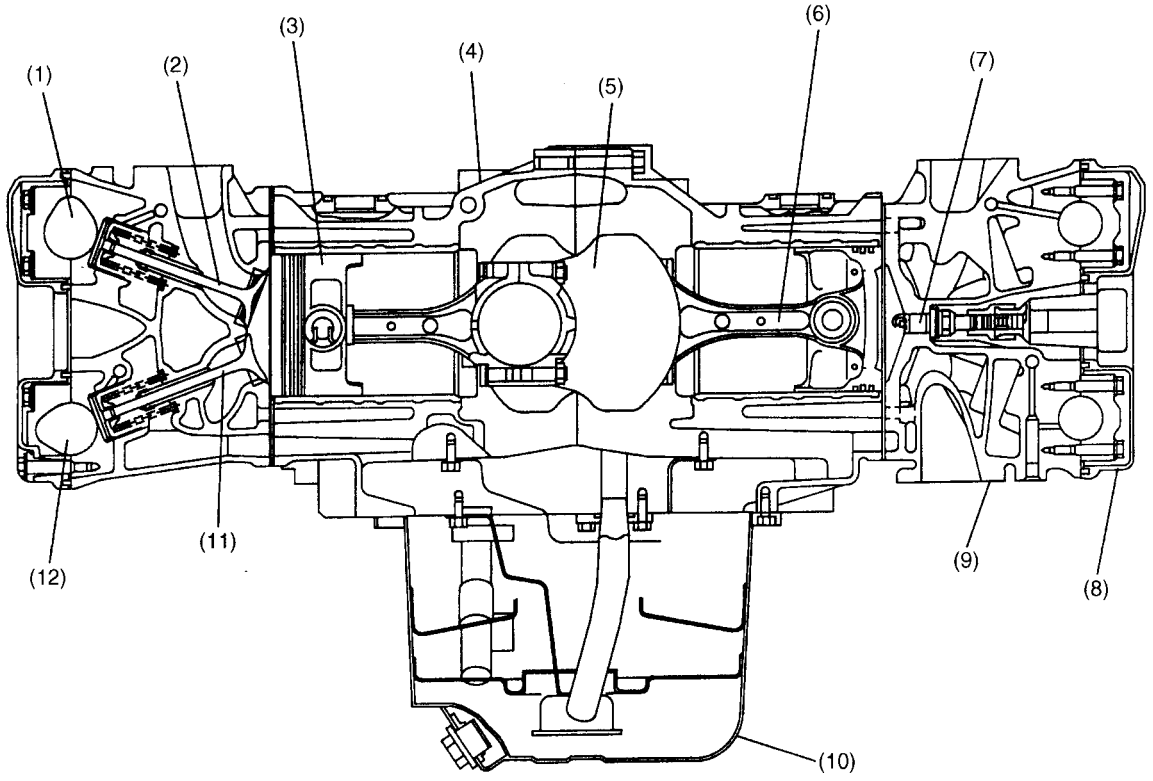

NF0366

(1)	Intake camshaft	(5)	Crankshaft	(9)	Cylinder head
(2)	Intake valve	(6)	Connecting rod	(10)	Oil pan
(3)	Piston	(7)	Spark plug	(11)	Exhaust valve
(4)	Cylinder block	(8)	Valve rocker cover	(12)	Exhaust camshaft

2. Timing Belt

- A single timing belt drives four camshafts (intake and exhaust camshafts on each bank). The belt also drives the water pump by its non-toothed side.
- The timing belt teeth have a specially designed round profile which contributes to quiet operation. The timing belt is made of strong and inflexible core cords, wear-resistant canvas and heat-resistant rubber material.
- A hydraulic automatic belt tension adjuster always keeps the belt taut to the specified tension. Any manual belt tension adjustment is unnecessary.

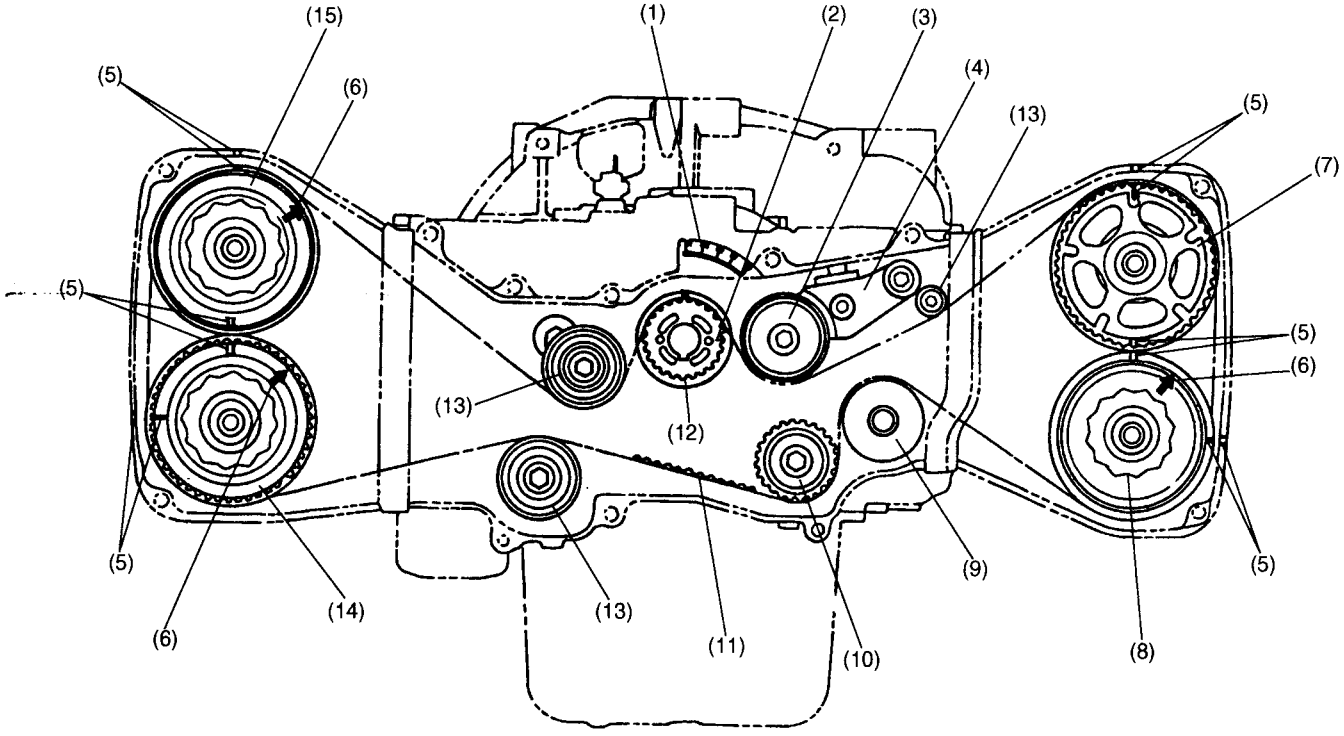

NF0367

(1) Timing indicator (For timing mark of crankshaft pulley)
(2) *Piston position mark
(3) Belt tension pulley
(4) Automatic belt tension adjuster assembly
(5) Alignment mark
(6) **Piston position mark
(7) Intake camshaft sprocket LH
(8) Exhaust camshaft sprocket LH
(9) Water pump pulley
(10) Idler No. 2
(11) Timing belt
(12) Crankshaft sprocket
(13) Idler
(14) Exhaust camshaft sprocket RH
(15) Intake camshaft sprocket RH

NOTE:
*: The #1 piston is set at the top dead center (TDC) when the piston-position mark on the crankshaft sprocket is aligned with the mark on cylinder block.
**: The #1 piston is set at TDC on the compression stroke when the piston-position mark on the camshaft sprocket is facing directly upward.

3. Automatic Belt Tension Adjuster

The automatic belt tension adjuster consists of a tensioner unit and a bracket. It maintains the timing belt tension automatically at a specified level to enable the belt to transmit power correctly, reduce operating noise and increase the life of the belt.
The cylinder of the tensioner unit incorporates an adjuster rod, wear ring, plunger spring, return spring, check ball and silicone oil.
The automatic belt tension adjuster gives tension to the belt by a levering action which is produced by the push force of the tensioner unit's adjuster rod. It operates in the process detailed below.

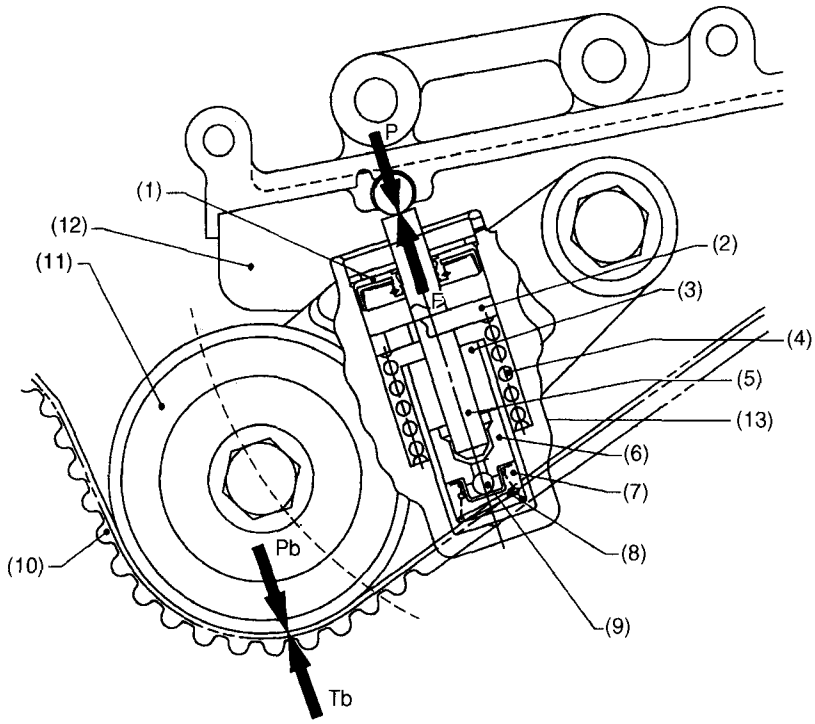

NF0368

(1) Oil seal
(2) Wear ring
(3) Oil reservoir chamber
(4) Return spring
(5) Adjuster rod
(6) Plunger
(7) Oil pressure chamber
(8) Plunger spring
(9) Check ball
(10) Timing belt
(11) Belt tension pulley
(12) Tensioner bracket
(13) Cylinder

- Timing belt tensioning action

When the belt becomes slack, the adjuster rod is pushed upward by the return spring. The oil in the reservoir chamber, which is pressurized by the plunger spring to a certain level, pushes open the check ball and flows into the oil pressure chamber to keep the pressure constant.
The thrust force F resulting from extension of the adjuster rod applies a counterclockwise torque to the tensioner bracket, which causes the belt tension pulley at its end to turn in the same direction. This applies tensioning pressure Pb to the timing belt.

- Timing belt tension balancing action

When the belt tension pulley is pushed against the timing belt with pressure Pb, reaction force Tb of the timing belt generates the reaction force P at the point on which the adjustor rod force is acting.
This force P pushes the adjuster rod until it balances with the sum of the thrust force F and the pressure of the oil in the oil pressure chamber. Therefore, the timing belt tension is kept constant.

- Overtension correction action

If the tension of the timing belt increases excessively, the force P becomes larger than the thrust force F and silicone oil is returned from the oil pressure chamber to the reservoir chamber little by little until the force P balances again with the thrust force F. Thus the timing belt tension is maintained at the specified level at all times.

4. Belt Cover

- The belt cover is made of lightweight, heat resistant synthetic resin molding. It constitutes a totally enclosed housing with its cylinder block mating edges sealed with rubber gaskets. This effectively protects the inside components from dust and liquid.
- Rubber seals used between the cylinder block and the belt cover effectively reduces transmission of noise and vibration.
- The front belt cover has a line mark for ignition-timing checking.

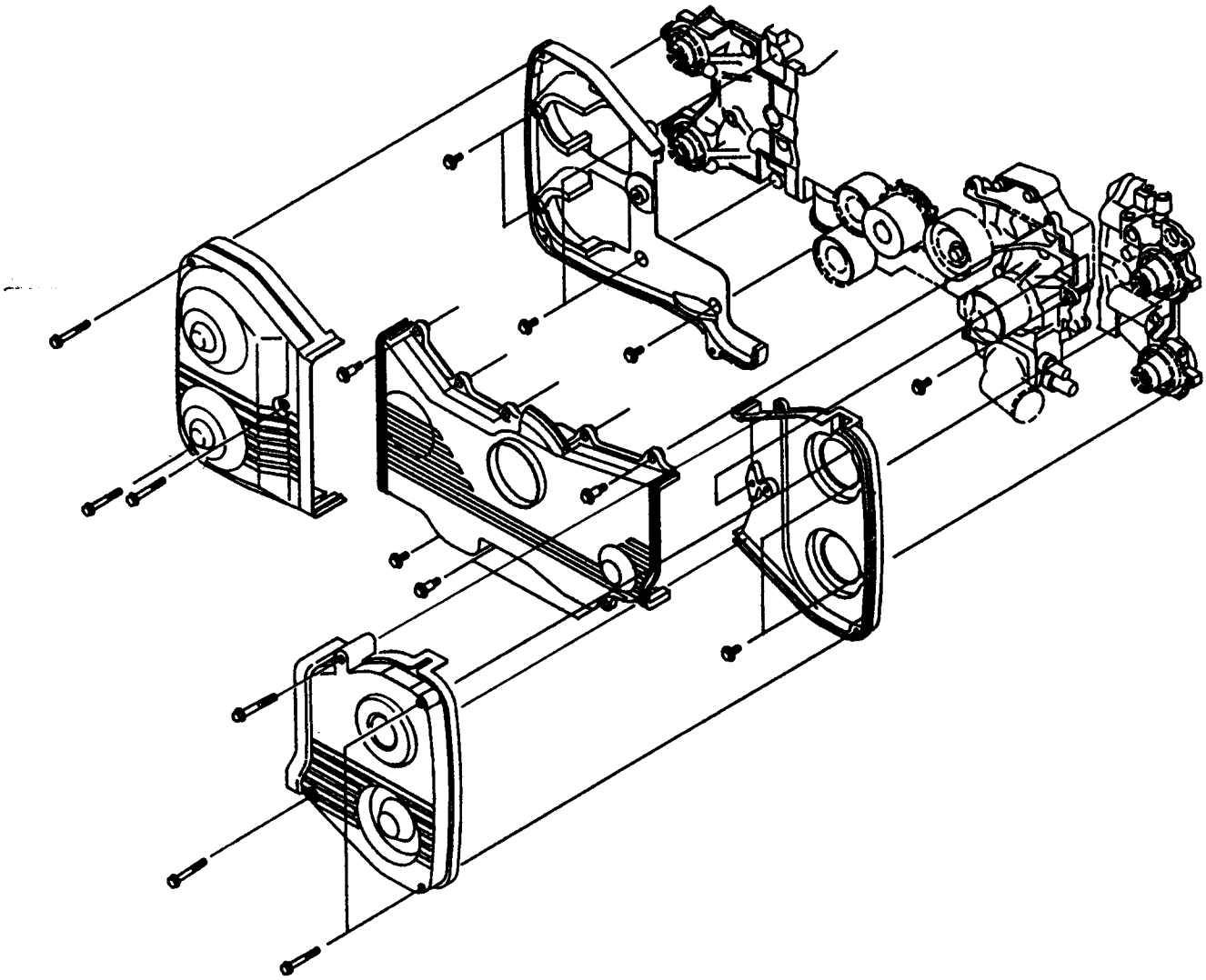

NF0369

5. Camshaft

The DOHC engine uses four camshafts in all; intake and exhaust camshafts on each of the right and left banks.

The cam lobe noses are finished by "chill" treatment to increase wear resistance and anti-scuffing properties.

Each camshaft is supported at its three journals and held in position by three camshaft caps. Each camshaft has a flange which fits in the corresponding groove in the cylinder head to receive thrust forces generated in the camshaft.

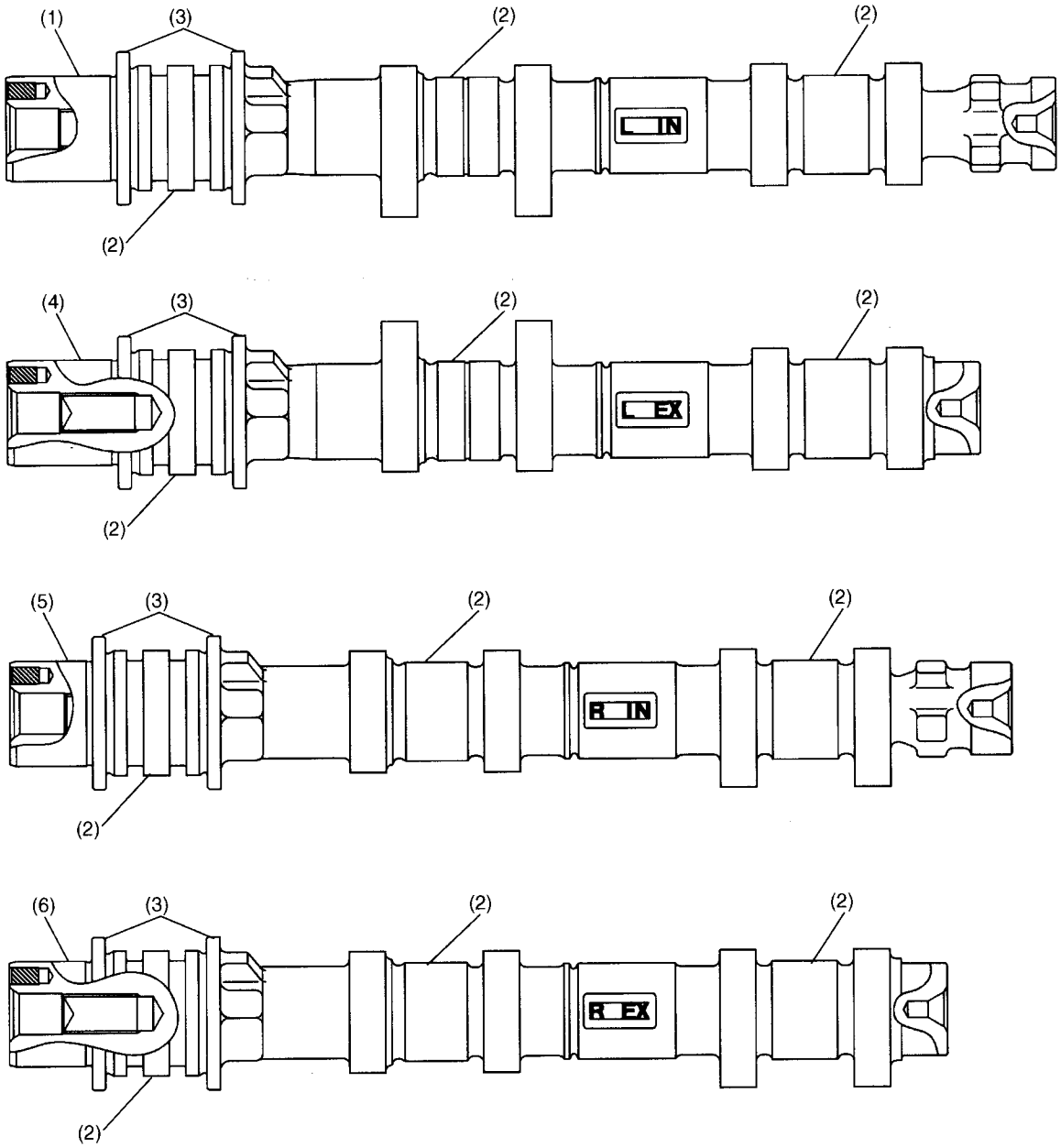

NF0370

(1) Left intake camshaft
(2) Journal
(3) Flange
(4) Left exhaust camshaft
(5) Right intake camshaft
(6) Right exhaust camshaft

6. Cylinder Head

- The cylinder head is made of aluminium die casting.
- Each combustion chamber in the cylinder head is a compact, pentroof design. The spark plug is located at the center of the combustion chamber, which contributes to creation of a wide "squish area" for increased combustion efficiency.
- The two intake and two exhaust valves are arranged on opposite sides for a cross-flow feature.
- The cylinder head gasket is a metallic gasket consisting of three layers of the stainless steel sheets. It is highly resistant to heat and maintains high level of sealing performance for a long period.

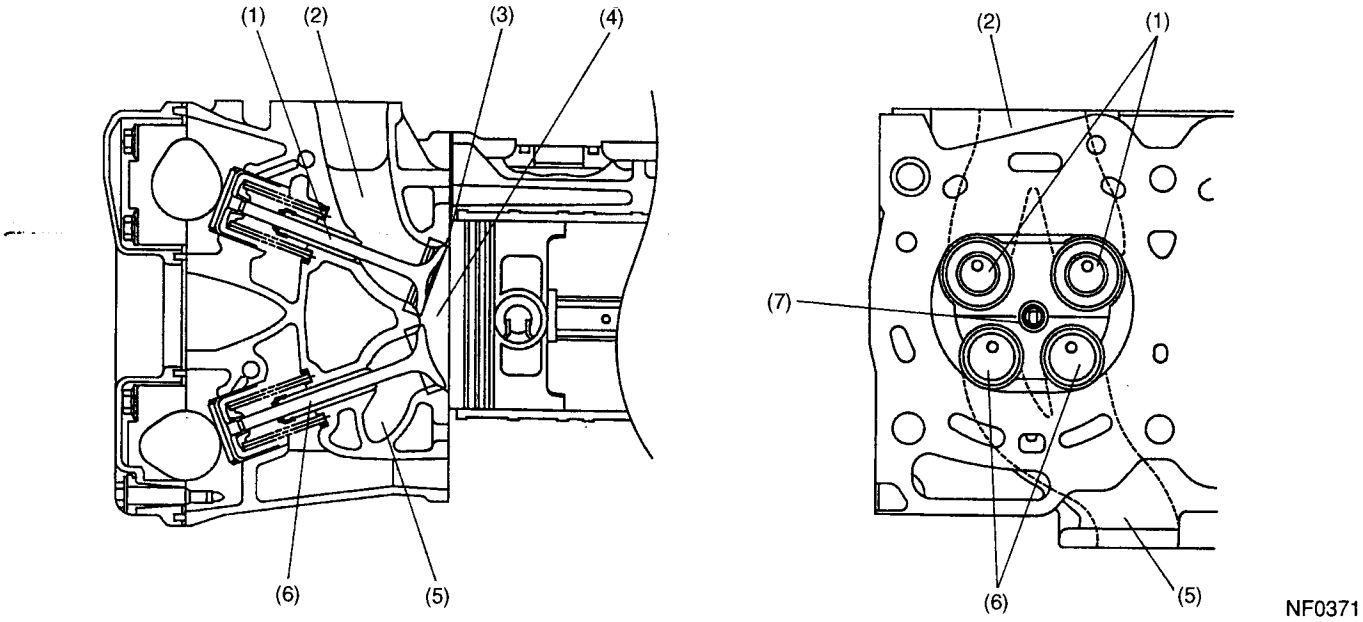

(1) Intake valve
(2) Intake port
(3) Squish area
(4) Combustion chamber
(5) Exhaust port
(6) Exhaust valve
(7) Spark plug

7. Cylinder Block

- The cylinder block is made of aluminum die casting. Its open-deck design provides it with such advantageous features as relatively small weight, high rigidity and excellent cooling efficiency.
- The cylinder liners are made of cast iron. They are dry type which means their outer surfaces are entirely in contact with the cylinder block.
- The cylinder block supports the crankshaft at its five journals. The journal supporting portions are designed such that sufficient stiffness and quiet operation are ensured.
- The oil pump is located in the front center of the cylinder block and the engine coolant pump is located at the front of the left-cylinder bank. At the rear of the right-cylinder bank is an oil separator which removes oil mist contained in blow-by gas.

8. Crankshaft

The crankshaft is supported in the cylinder block by five bearings. Each corner formed by a journal or pin and a web is finished by fillet-rolling method which increases strength of that area. The five crankshaft bearings are made of aluminum alloy and the No. 5 bearing is provided with a flanged metal to support thrust forces.

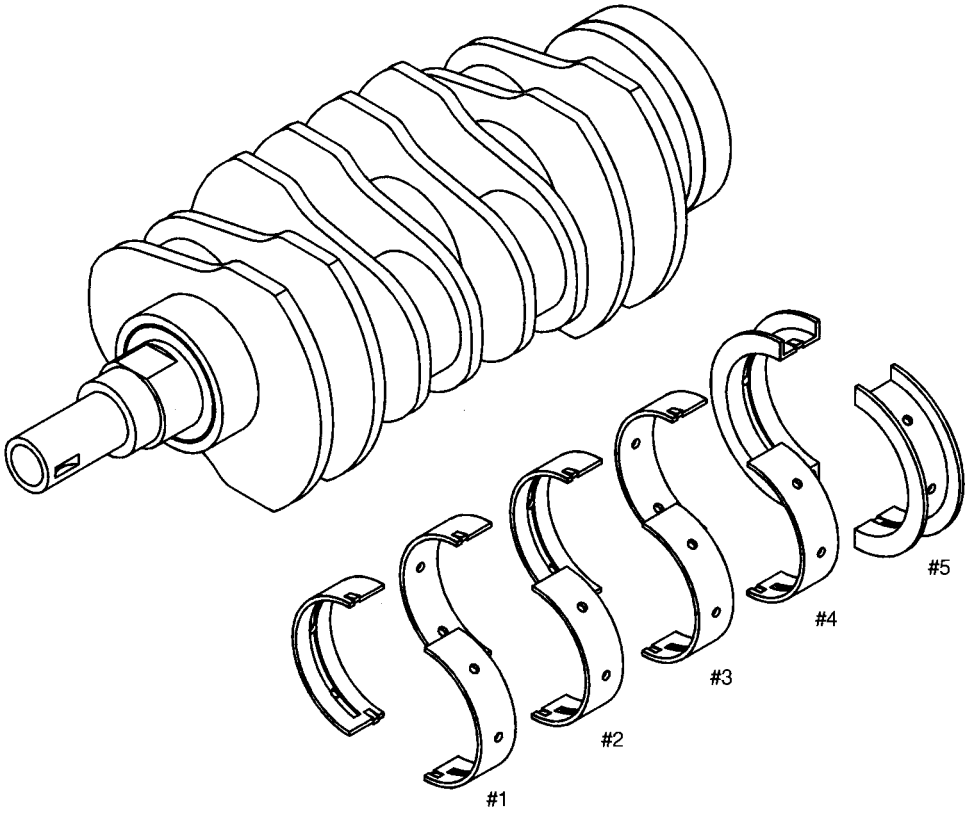

NF0372

9. Piston

- The pistons are of a slipper skirt design for reduced weight and friction. The oil control ring groove utilizes a thermal design.
- The piston pin is offset either downward (Nos. 1 and 3 pistons) or upward (Nos. 2 and 4 pistons).
- The piston head has recesses to prevent interference with the intake and exhaust valves. It also has engraved marks to identify the piston size and the direction of installation. All the pistons are common in their design.
- Three piston rings are used for each piston – two compression rings and one oil control ring. The top piston ring has inner bevels and the second piston ring has a cut on the bottom outside to reduce oil consumption.

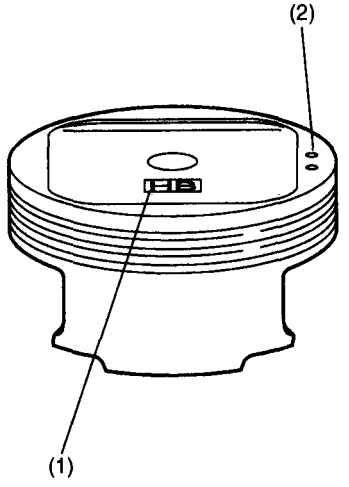

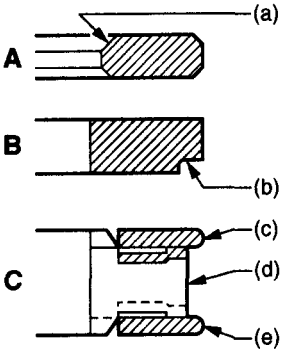

NF0373

(1) Identification mark
(2) Location mark (Engine front side)

A: Top ring
B: Second ring
C: Oil ring

(a) Inner-bevel
(b) Cut
(c) Upper rail
(d) Spacer
(e) Lower rail

10. Engine Mounting

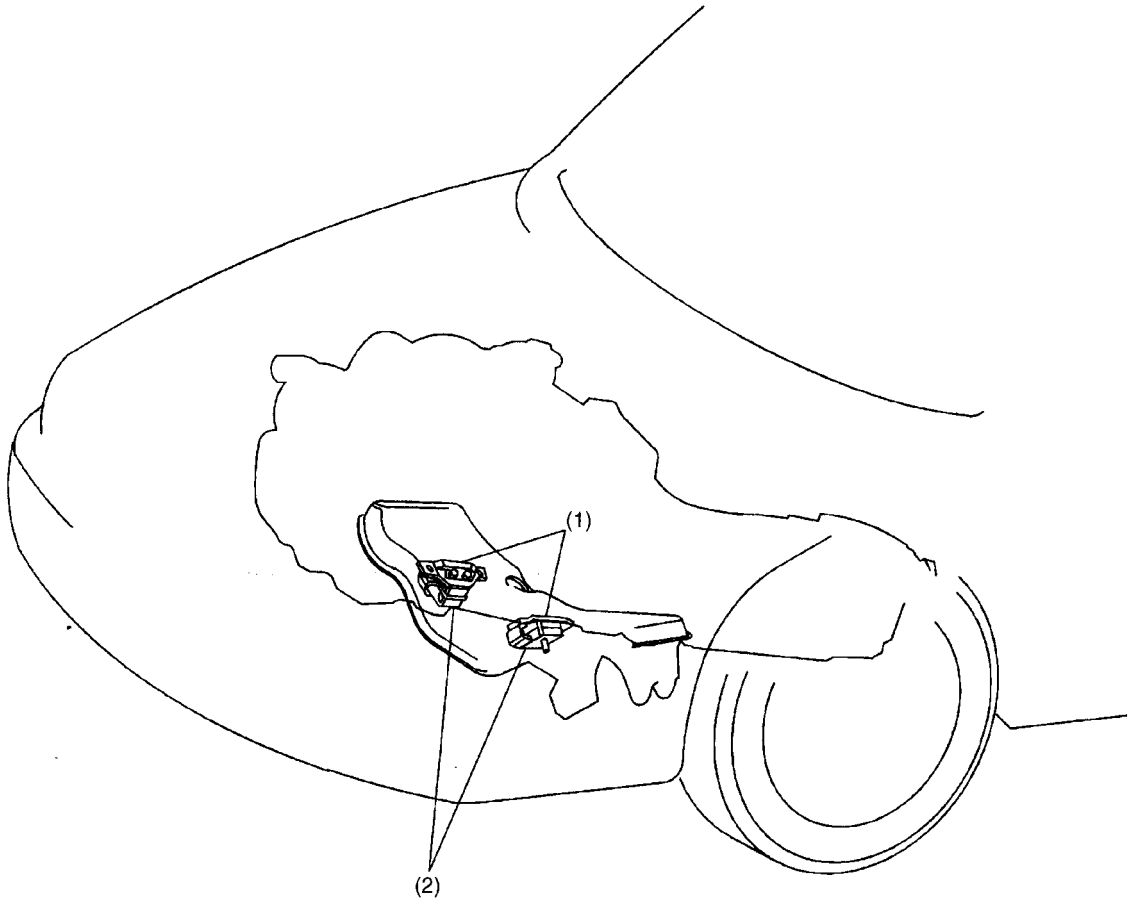

NF0374

(1) Bracket
(2) Cushion rubber

EXHAUST EX (SOHC)

	Page
1. General	2
2. Composition	3

1. General

- The exhaust system consists of front exhaust pipes, catalytic converters, a center exhaust pipe, a rear exhaust pipe and a muffler. The front catalytic converter is located immediately behind the front exhaust pipe, and the rear catalytic converter is incorporated in the center exhaust pipe.
- The exhaust system features an improved sound suppression design; the two branches of the front exhaust pipe join at a point almost equal in distance from the engine's exhaust ports and the rear exhaust pipe has resonance chambers in addition to a large capacity muffler.

2. Composition

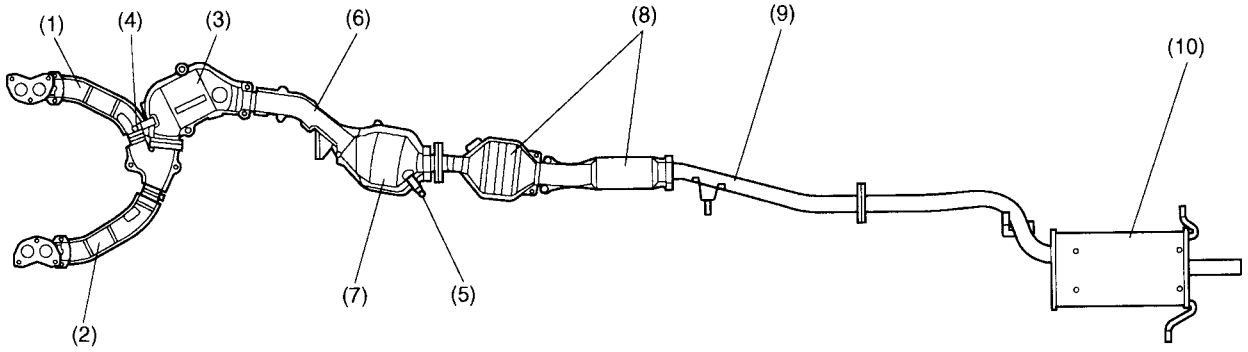

NF0441

(1) Right front exhaust pipe
(2) Left front exhaust pipe
(3) Front catalytic converter
(4) Front oxygen (A/F) sensor
(5) Rear oxygen sensor
(6) Center exhaust pipe
(7) Rear catalytic converter
(8) Resonance chamber
(9) Rear exhaust pipe
(10) Muffler

MEMO

EXHAUST EX (DOHC TURBO)

	Page
1. General	2
2. Construction	3

1. General

- The exhaust system consists of left and right exhaust manifolds, a front joint pipe, a turbocharger joint pipe, a center exhaust pipe, a rear exhaust pipe and a muffler. The turbocharger joint pipe incorporates the precatalytic converter, the center exhaust pipe incorporates the front catalytic converter, and the rear exhaust pipe incorporates the rear catalytic converter.
- The exhaust system features an improved sound suppression design; the rear exhaust pipe has a resonance chamber in addition to a large capacity muffler.

2. Construction

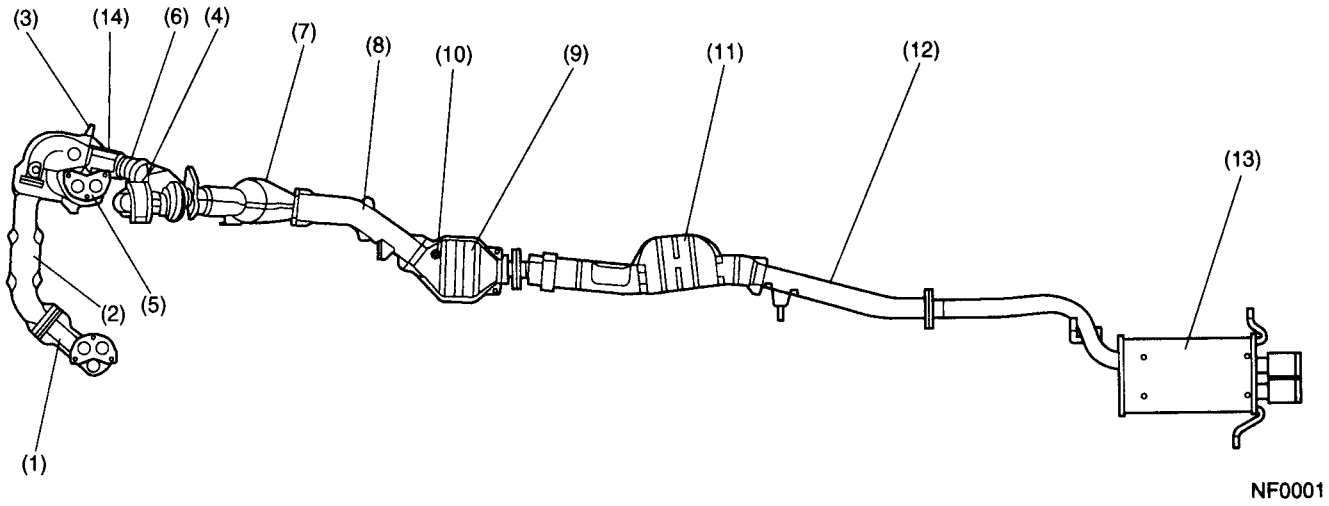

(1) Left exhaust manifold
(2) Front joint pipe
(3) Front oxygen (A/F) sensor
(4) Exhaust temperature sensor
(5) Right exhaust manifold
(6) Precatalytic converter
(7) Front catalytic converter
(8) Center exhaust pipe
(9) Rear catalytic converter
(10) Rear oxygen sensor
(11) Chamber
(12) Rear exhaust pipe
(13) Muffler
(14) Turbocharger joint pipe

MEMO

COOLING CO

		Page
1.	General	2
2.	Cooling Circuits	3
3.	Water Pump	5
4.	Mechanical Seal	7
5.	Thermostat	8
6.	Radiator Fan	9

1. General

- The engine cooling system consists of a down-flow radiator which features high heat-dissipation performance, an electric-motor-driven fan, a water pump, a thermostat, and an engine coolant temperature sensor.
- The engine coolant reservoir tank is designed to minimize the need for replenishing coolant.
- The ECM controls the operation of the radiator main fan and sub fan depending on the signals from the engine coolant temperature sensor, vehicle speed sensor and A/C switch.

2. Cooling Circuits

A: NON-TURBO MODEL

The cooling system operates in three different phases depending on the temperature of the engine coolant.

- 1st phase (thermostat closed)

When the engine coolant temperature is below 76°C (169°F), the thermostat remains closed. The coolant flows through the bypass and heater circuits.
This permits the engine to warm up quickly.

- 2nd phase (thermostat open)

When the engine coolant temperature is above 76 – 80°C (169 – 176°F), the thermostat opens. The coolant flows through the radiator where it is cooled.

- 3rd phase (thermostat open and radiator fan operating)

When the engine coolant temperature sensor sends a signal indicating a temperature above 95°C (203°F) to the ECM, it causes the radiator fan (or fans) to operate.

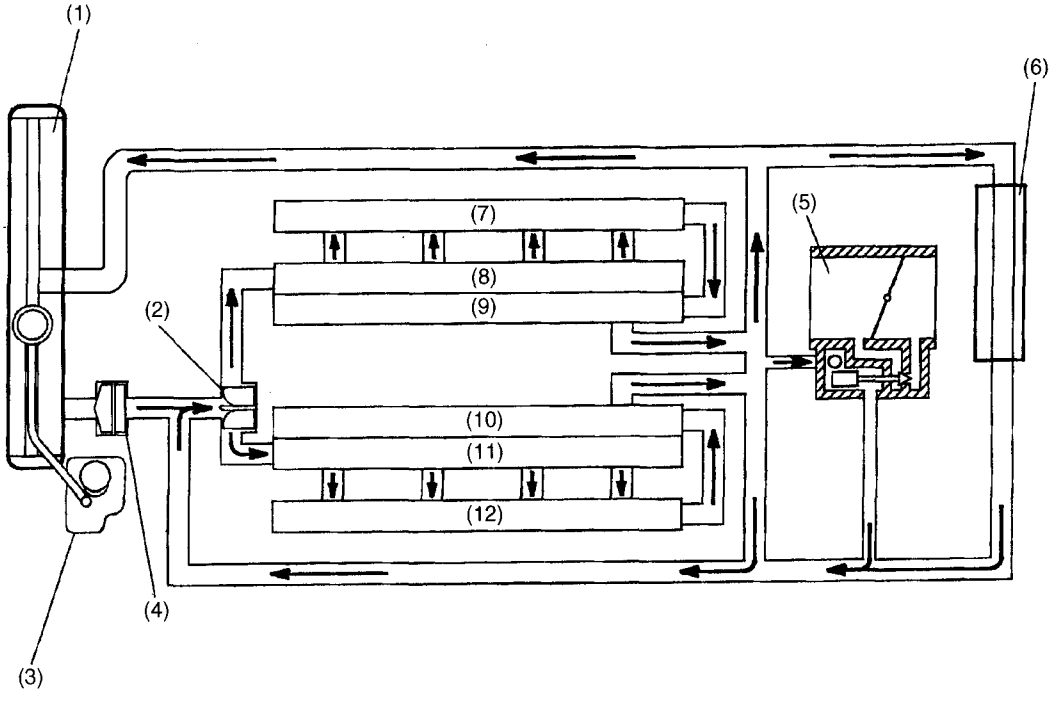

B2H2915C

(1) Radiator
(2) Water pump
(3) Engine coolant reservoir tank
(4) Thermostat
(5) Throttle body
(6) Heater core
(7) Cylinder head RH
(8) Cylinder jacket RH
(9) Cylinder block RH
(10) Cylinder block LH
(11) Cylinder jacket LH
(12) Cylinder head LH

B: TURBO MODEL

The cooling system operates in three different phases depending on the temperature of the engine coolant.

- 1st phase (thermostat closed)

When the engine coolant temperature is below 76°C (169°F), the thermostat remains closed. The coolant flows through the bypass and heater circuits.
This permits the engine to warm up quickly.

- 2nd phase (thermostat open)

When the engine coolant temperature is above 76 – 80°C (169 – 176°F), the thermostat opens. The coolant flows through the radiator where it is cooled.

- 3rd phase (thermostat open and radiator fan operating)

When the engine coolant temperature sensor sends a signal indicating a temperature above 95°C (203°F) to the ECM, it causes the radiator fan (or fans) to operate.
When the engine is stopped after high-speed operation, vapor produced in the turbocharger cooling section flows from the coolant filler tank to the reservoir tank where it condenses back into water.
Water is then absorbed by the coolant filler tank as the engine cools down.

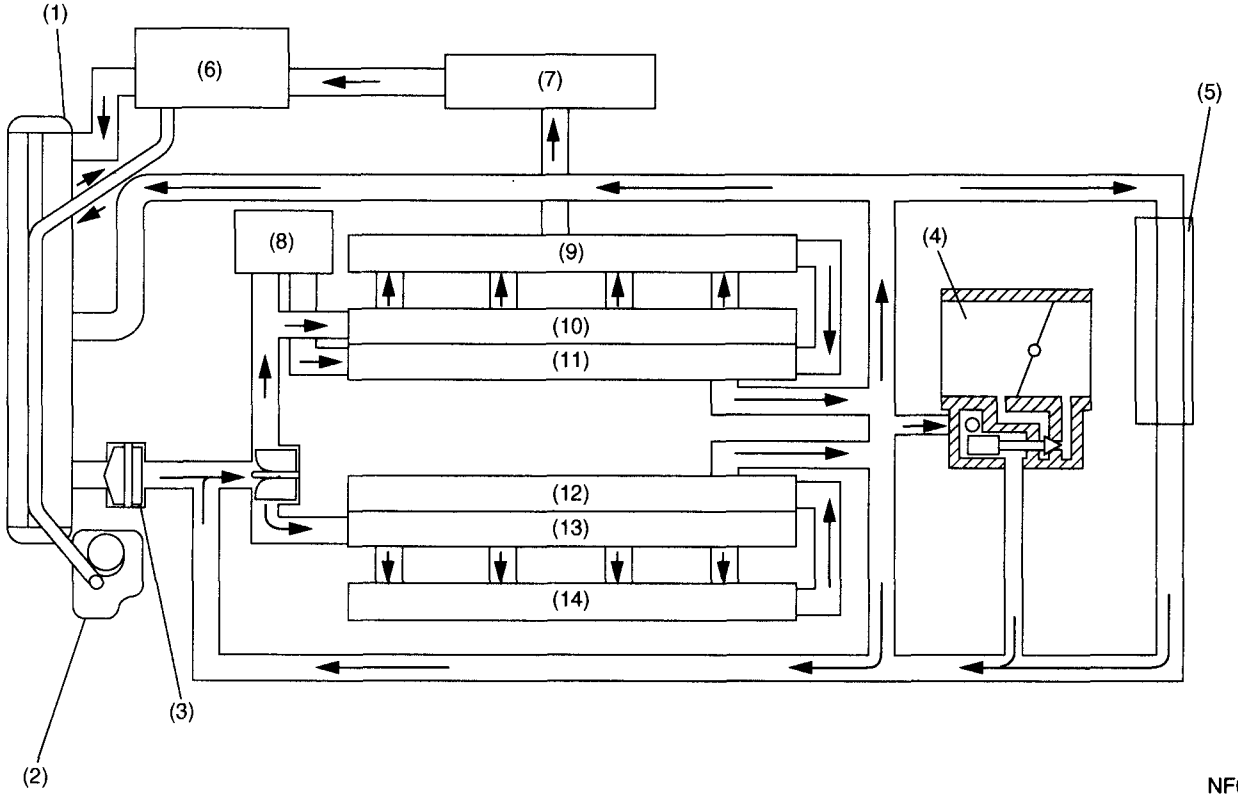

(1) Radiator
(2) Engine coolant reservoir tank
(3) Thermostat
(4) Throttle body
(5) Heater core
(6) Coolant filler tank
(7) Turbocharger
(8) Oil cooler
(9) Cylinder head RH
(10) Cylinder jacket RH
(11) Cylinder block RH
(12) Cylinder block LH
(13) Cylinder jacket LH
(14) Cylinder head LH

3. Water Pump

The water pump is located in the front portion of the left bank cylinder block and is driven by the engine through the timing belt. The thermostat is fitted into the coolant inlet at the bottom of the water pump. When the pump's impeller rotates, the coolant is drawn into the pump from the lower pipe (which is connected to the radiator hose) via the thermostat. It then flows along the perimeter of the impeller and then is discharged for circulation through a circuit depending on the coolant temperature.

A: NON-TURBO MODEL

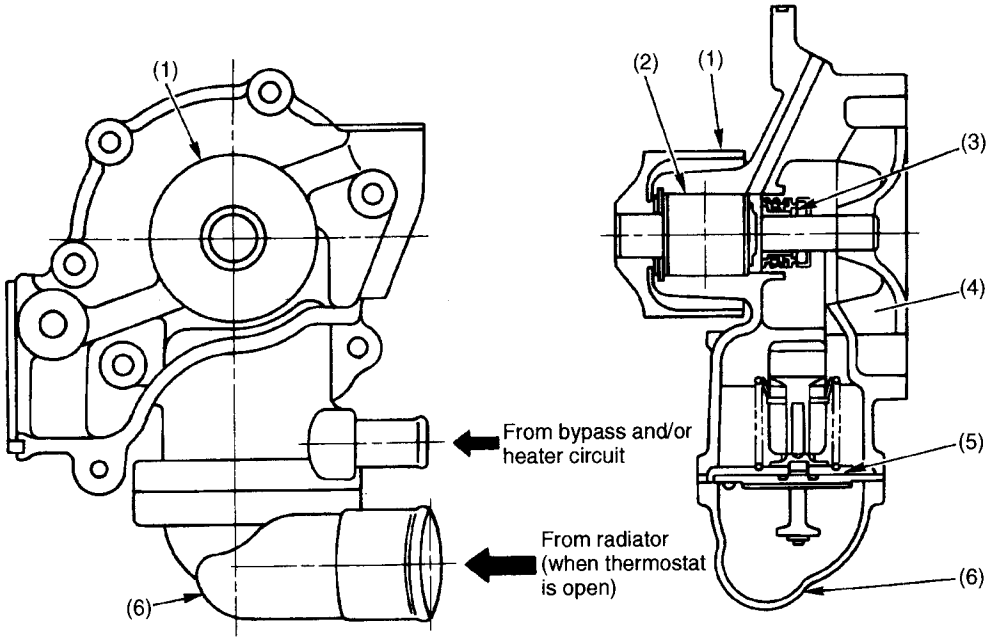

NF0050

(1) Pulley
(2) Ball bearing
(3) Mechanical seal
(4) Impeller
(5) Thermostat
(6) Thermostat case

B: TURBO MODEL

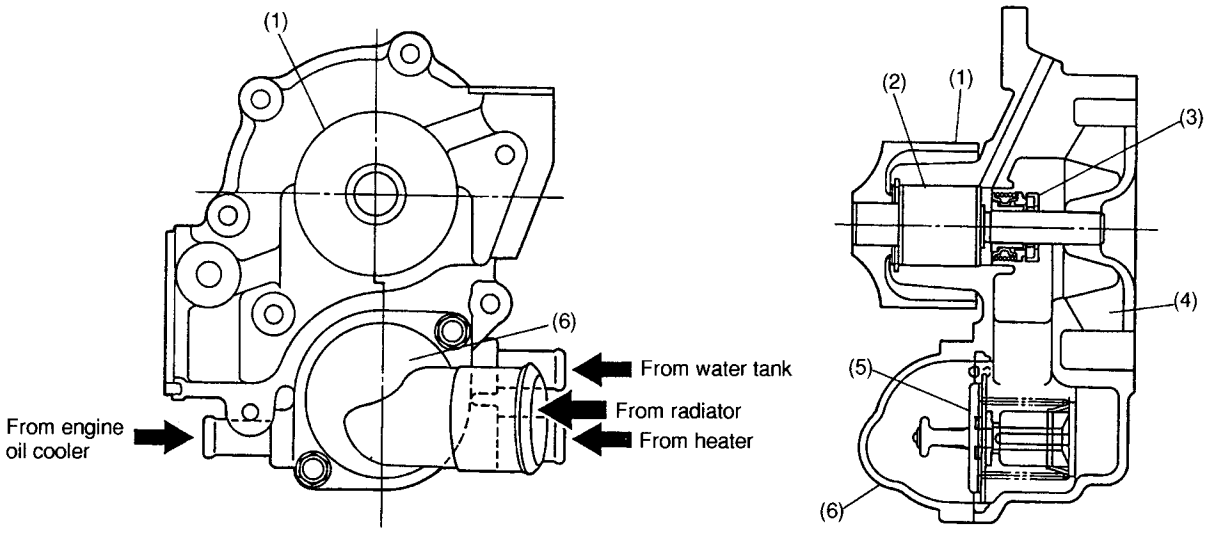

NF0051

(1) Pulley
(2) Ball bearing
(3) Mechanical seal
(4) Impeller
(5) Thermostat
(6) Thermostat case

4. Mechanical Seal

The mechanical seal has its seat tightly fitted on the water pump shaft. Since it is a hermetic seal forming an integral part of the water pump, the water pump cannot be disassembled.

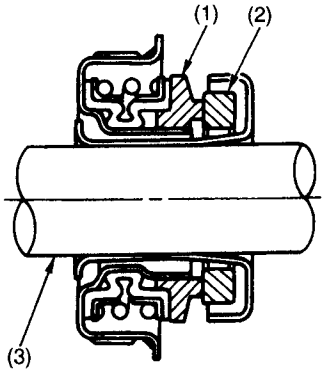

NF0052

(1) Carbon seal
(2) Ceramics seat
(3) Water pump shaft

5. Thermostat

The thermostat has a totally-enclosed wax pellet which expands as the coolant temperature increases. It opens and closes accurately at the preset temperatures and features high durability.

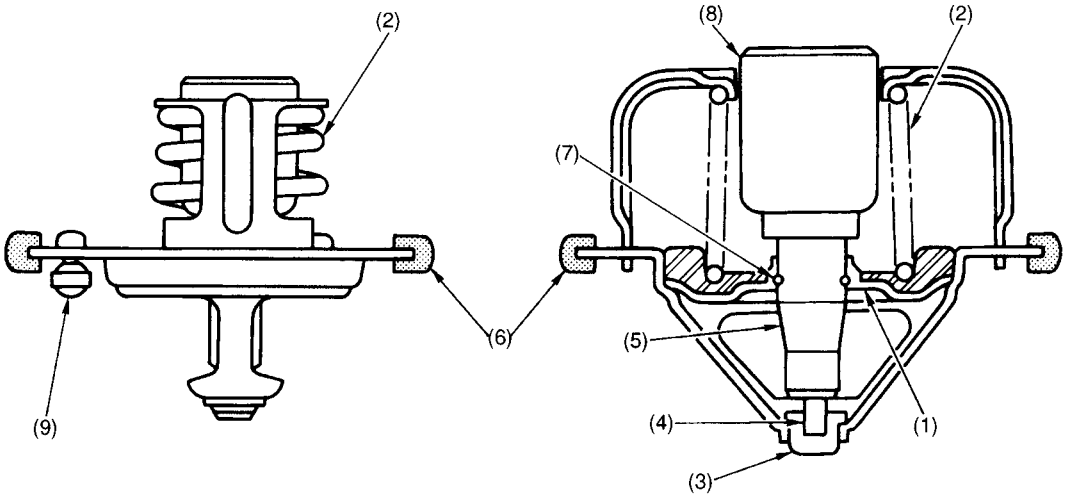

NF0053

(1) Valve	(4) Piston	(7) Stop ring
(2) Spring	(5) Guide	(8) Wax element
(3) Stopper	(6) Rubber packing	(9) Jiggle valve

6. Radiator Fan

A: DESCRIPTION

Each radiator fan is made of plastic. It is driven by an electric motor which is retained on a shroud.

1. NON-TURBO MODEL

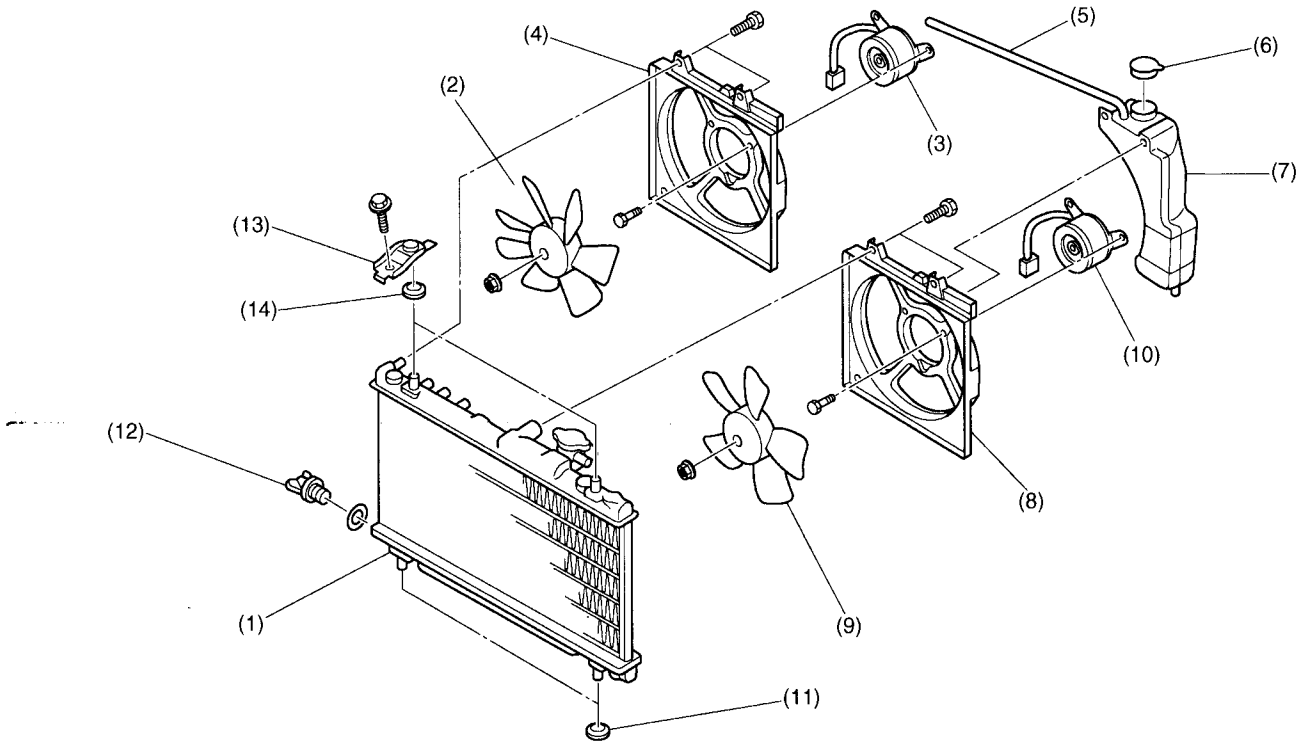

NF0054

(1) Radiator
(2) Radiator sub fan (model with A/C)
(3) Radiator sub fan motor (model with A/C)
(4) Radiator sub fan shroud (model with A/C)
(5) Overflow hose
(6) Engine coolant reservoir tank cap
(7) Engine coolant reservoir tank
(8) Radiator main fan shroud
(9) Radiator main fan
(10) Radiator main fan motor
(11) Lower cushion
(12) Radiator drain plug
(13) Upper bracket
(14) Upper cushion

A/C : Air conditioning system

2. TURBO MODEL

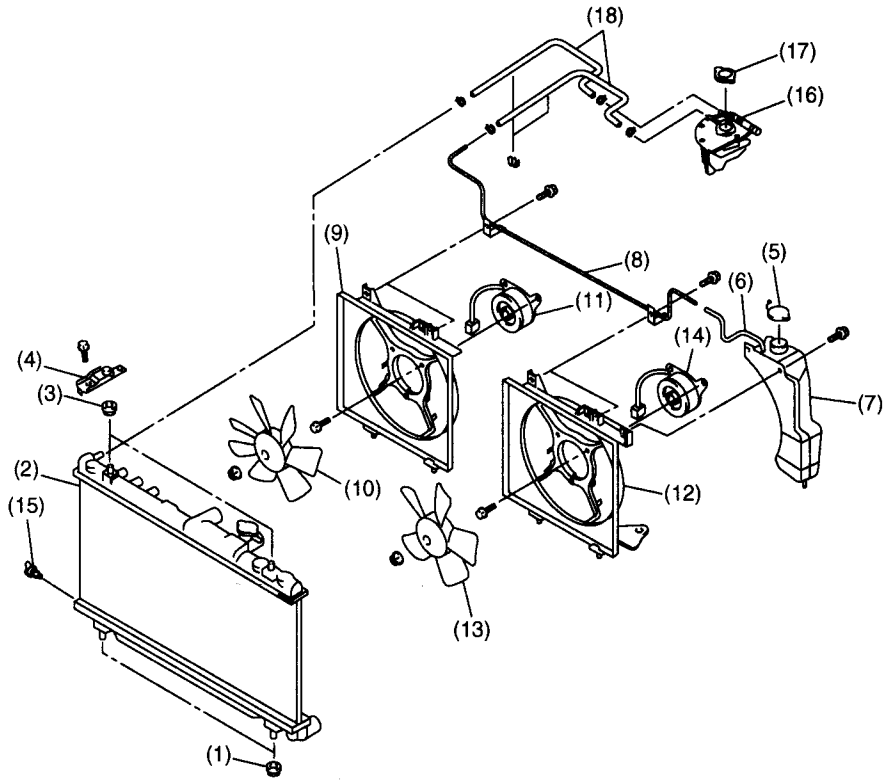

NF0437

(1)	Radiator lower cushion	(7)	Engine coolant reservoir tank	(13)	Radiator main fan
(2)	Radiator	(8)	Overflow pipe	(14)	Radiator main fan motor
(3)	Radiator upper cushion	(9)	Sub fan shroud	(15)	Radiator drain plug
(4)	Radiator upper bracket	(10)	Radiator sub fan	(16)	Engine coolant filler tank
(5)	Engine coolant reservoir tank cap	(11)	Radiator sub fan motor	(17)	Engine coolant filler tank cap
(6)	Overflow hose	(12)	Main fan shroud	(18)	Engine coolant hose

B: FUNCTION

1. MODELS WITHOUT A/C

The ON-OFF control of the radiator fan is performed by the ECM which receives signals from the engine coolant temperature and vehicle speed sensors.

Vehicle speed	Engine coolant temperature		
	Lower than 95°C (203°F)	Between 95 and 99°C (203 and 210°F)	Higher than 100°C (212°F)
	Operation of radiator fan	Operation of radiator fan	Operation of radiator fan
Lower than 19 km/h (12 MPH)	OFF	ON	ON
Between 20 and 69 km/h (12 and 43 MPH)	OFF	ON	ON
Between 70 and 89 km/h (43 and 55 MPH)	OFF	OFF	ON
Higher than 90 km/h (56 MPH)	OFF	OFF	ON

2. MODELS WITH A/C

On models equipped with an air conditioning system, the ECM receives signals from the engine coolant temperature sensor, vehicle speed sensor and A/C switch. According to these signals, the ECM turns ON or OFF the radiator main fan and sub fan simultaneously (and also selects the Hi or Low fan speed in turbo model).

• Non-turbo model

Vehicle speed	A/C compressor	Engine coolant temperature					
		Lower than 95°C (203°F)		Between 95 and 99°C (203 and 210°F)		Higher than 100°C (212°F)	
		Operation of radiator fans		Operation of radiator fans		Operation of radiator fans	
		Main fan	sub fan	Main fan	sub fan	Main fan	sub fan
Lower than 19 km/h (12 MPH)	OFF	OFF	OFF	ON	OFF	ON	ON
	ON	ON	ON	ON	ON	ON	ON
Between 20 and 69 km/h (12 and 43 MPH)	OFF	OFF	OFF	ON	OFF	ON	ON
	ON	ON	ON	ON	ON	ON	ON
Between 70 and 89 km/h (43 and 55 MPH)	OFF	OFF	OFF	OFF	OFF	ON	ON
	ON	ON	OFF	ON	ON	ON	ON
Higher than 90 km/h (56 MPH)	OFF	OFF	OFF	OFF	OFF	ON	ON
	ON	OFF	OFF	ON	OFF	ON	ON

• Turbo model

Vehicle speed	A/C compressor	Engine coolant temperature					
		Lower than 90°C (194°F)		Between 90 and 95°C (194 and 203°F)		Higher than 96°C (205°F)	
		Operation of radiator fans		Operation of radiator fans		Operation of radiator fans	
		Main fan	sub fan	Main fan	sub fan	Main fan	sub fan
Lower than 19 km/h (12 MPH)	OFF	OFF	OFF	OFF	OFF	Low-speed	Low-speed
	ON	Low-speed*1 High-speed*2	Low-speed*1 High-speed*2	Hi-speed	Hi-speed	Hi-speed	Hi-speed
Between 20 and 69 km/h (12 and 43 MPH)	OFF	OFF	OFF	OFF	OFF	Hi-speed	Hi-speed
	ON	Hi-speed	Hi-speed	Hi-speed	Hi-speed	Hi-speed	Hi-speed
Between 70 and 105 km/h (43 and 65 MPH)	OFF	OFF	OFF	OFF	OFF	Hi-speed	Hi-speed
	ON	Low-speed	Low-speed	Low-speed	Low-speed	Hi-speed	Hi-speed
Higher than 106 km/h (66 MPH)	OFF	OFF	OFF	OFF	OFF	Hi-speed	Hi-speed
	ON	OFF	OFF	Low-speed	OFF	Hi-speed	Hi-speed

*1: When the intake air temperature is 76°C (169°F).
*2: When the intake air temperature is 78°C (172°F) or higher, the radiator fans perform "Hi-speed" operation for 10 minutes.

LUBRICATION LU

		Page
1.	General	2
2.	Engine Oil Flow	5
3.	Oil Pump	7
4.	Oil Filter	8
5.	Oil Pan and Oil Strainer	9
6.	Oil Pressure Switch	11
7.	Oil Cooler (Turbo Model Only)	12

1. General

- The lubrication system force-circulates engine oil throughout the engine using an oil pump. The oil pressure is regulated by the relief valve built into the oil pump.
- The oil pump is a thin, large-diameter trochoid rotor type which can accommodate the engine's high output. The pump is directly driven by the crankshaft.
- The engine oil is cleaned by a full-flow, paper element type oil filter. The filter has a bypass valve which allows the engine oil to flow bypassing the filter if it is clogged.
- The inside of the oil pan is fitted with a baffle plate which reduces changes in the oil level due to movement of the vehicle, thus ensuring uninterrupted suction of oil.
- The engine oil discharged from the oil pump is delivered to the journal bearings, connecting rod bearings, and other parts requiring lubrication and cooling via the vertical passage in the right bank of the cylinder block, the oil filter, and the oil galleries in the right and left banks of the cylinder block.
- The engine oil is also distributed to each cylinder head valve mechanism at a proper flow rate achieved by metering by the orifice provided in each oil gallery.
- A water-cooled oil cooler is located between the oil filter and cylinder block to keep the engine oil in an optimum temperature range and prevent degradation of lubrication performance (Turbo model).

A: NON-TURBO MODEL

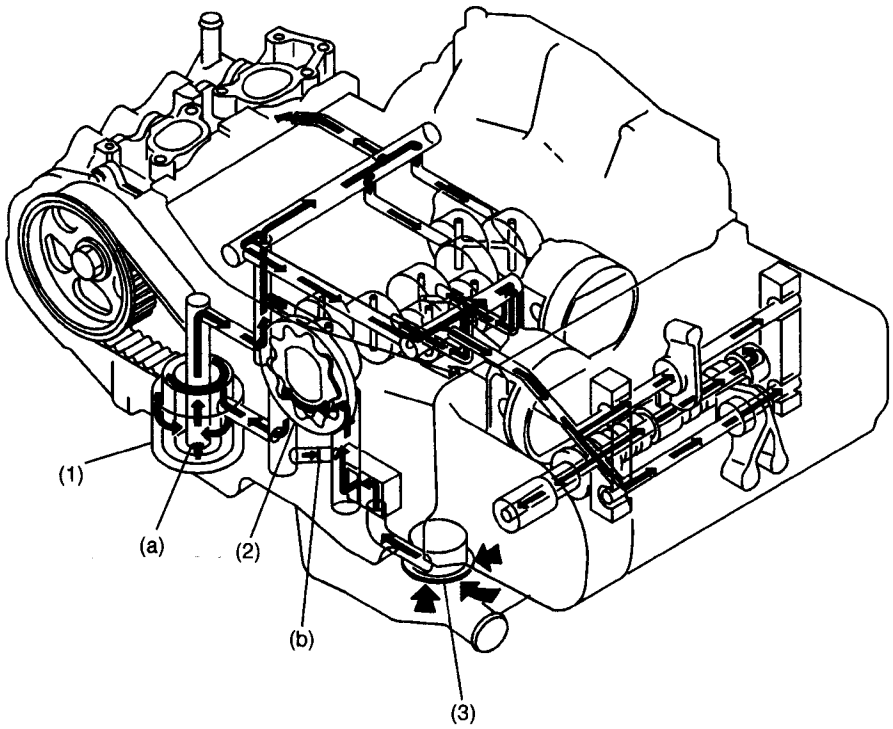

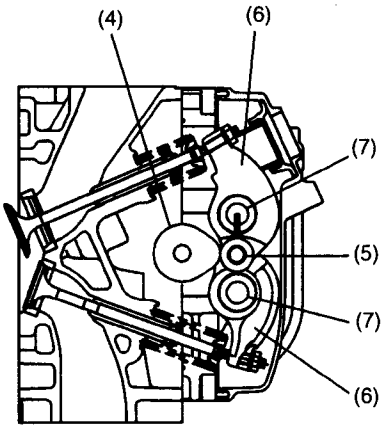

NF0057

(1) Oil filter
(2) Oil pump
(3) Oil strainer
(4) Camshaft
(5) Roller
(6) Rocker arm
(7) Rocker shaft

(a) Bypass valve opening pressure: 157 kPa (1.6 kgf/cm^2, 23 psi)
(b) Relief valve opening pressure: 490 kPa (5.0 kgf/cm^2, 71 psi)

B: TURBO MODEL

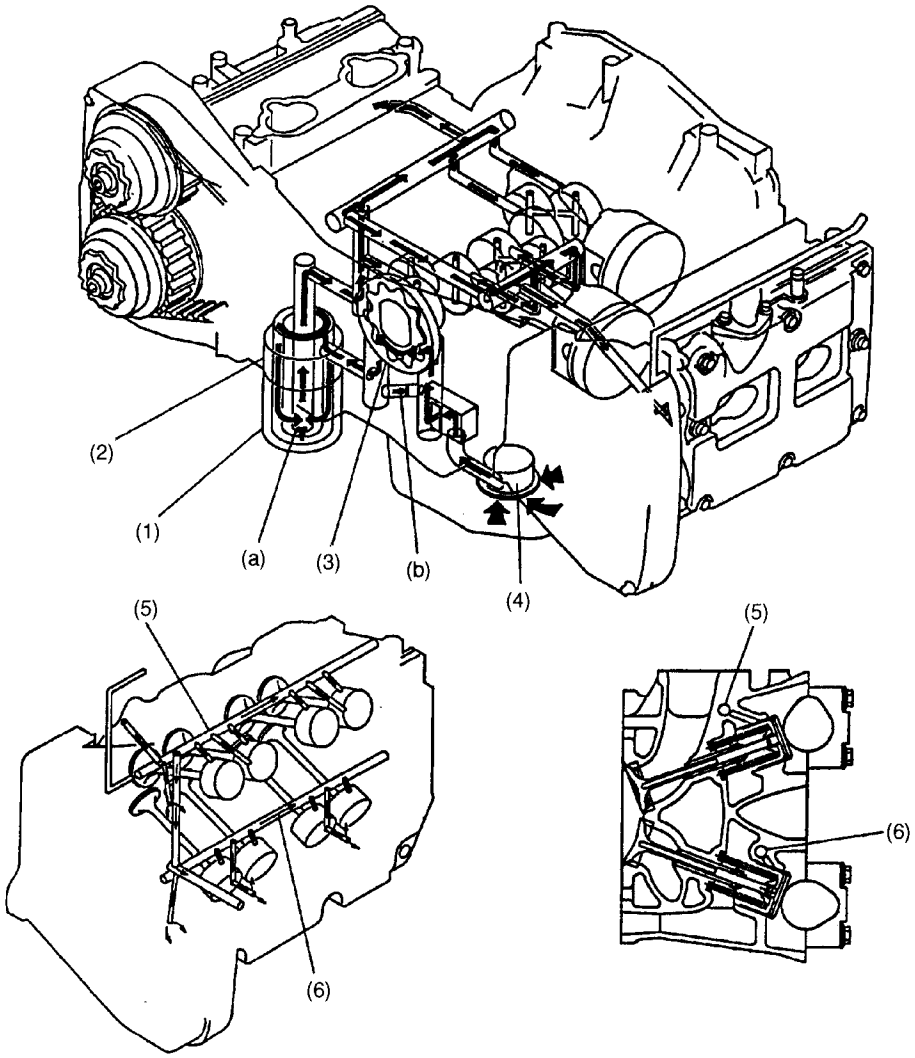

NF0058

(1) Oil filter
(2) Oil cooler
(3) Oil pump
(4) Oil strainer
(5) Intake gallery
(6) Exhaust gallery
(a) Bypass valve opening pressure: 157 kPa (1.6 kgf/cm^2, 23 psi)
(b) Relief valve opening pressure: 588 kPa (6.0 kgf/cm^2, 85 psi)

2. Engine Oil Flow

A: NON-TURBO MODEL

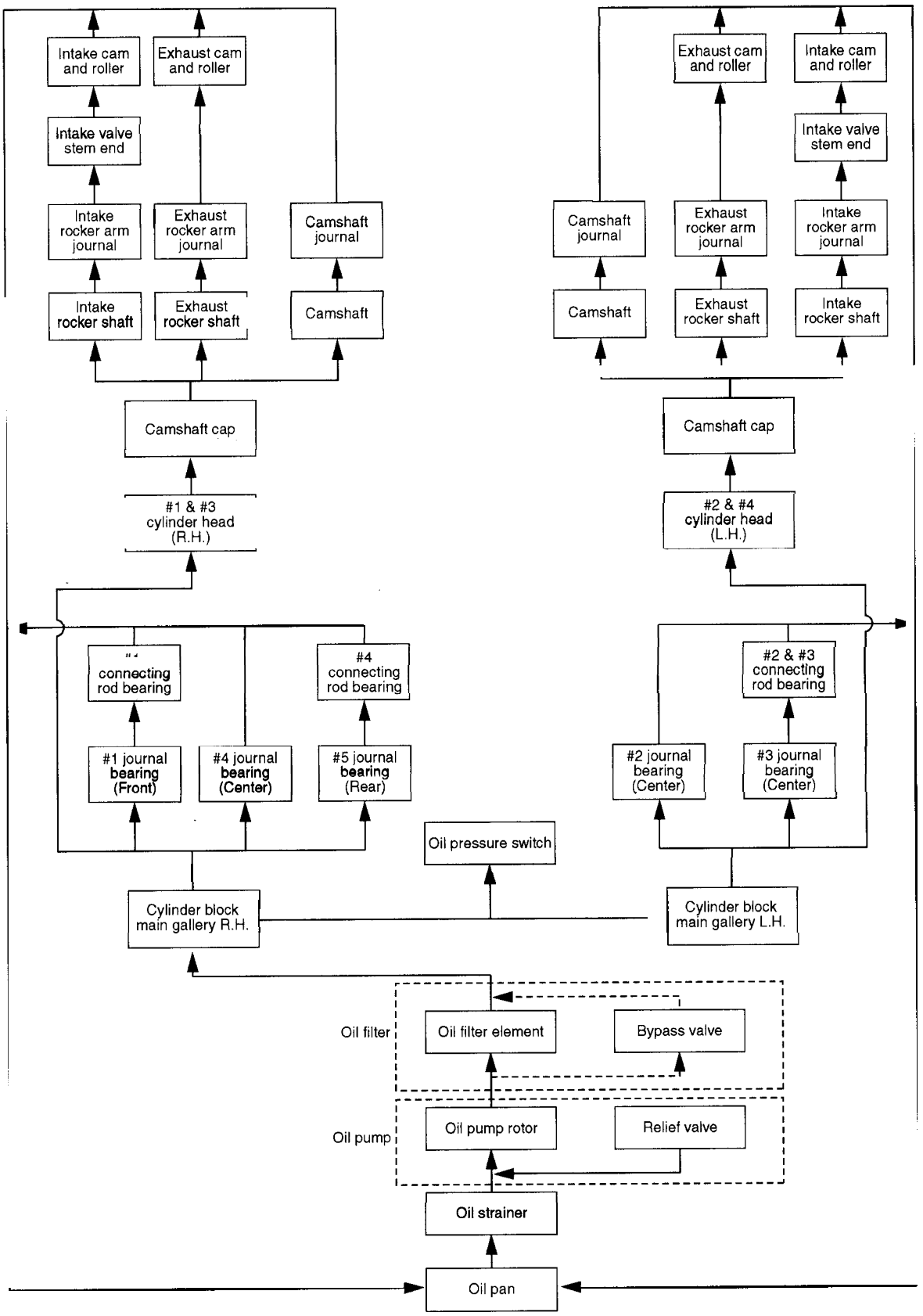

NF0059

B: TURBO MODEL

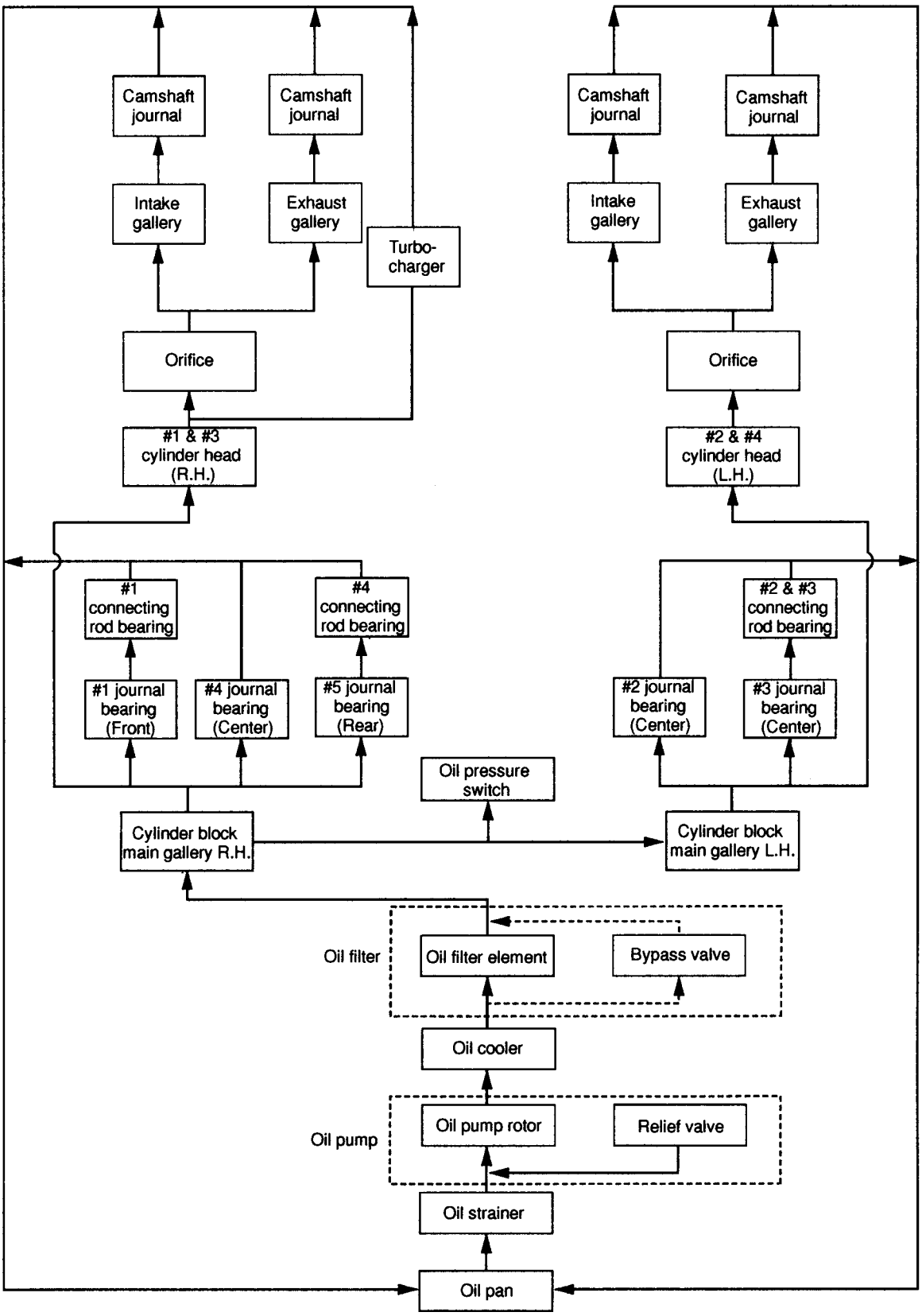

NF0060

3. Oil Pump

- The oil pump is a trochoid rotor type consisting of an inner rotor and outer rotor assembled with each other in a pump body. When the inner rotor is driven by the crankshaft, the outer rotor is rotated, changing the space between it and the inner rotor. The change in the space occurs because of the difference in the number of teeth between the rotors.
- Engine oil is drawn into the large space created near the inlet of the pump. It is then carried to the discharge port. As the pump rotates, the space carrying the oil becomes smaller, thus the oil is pressurized and discharged from the outlet port. Oil pressure is regulated by the relief valve built into the pump. Excess oil is directly returned to the inlet port.

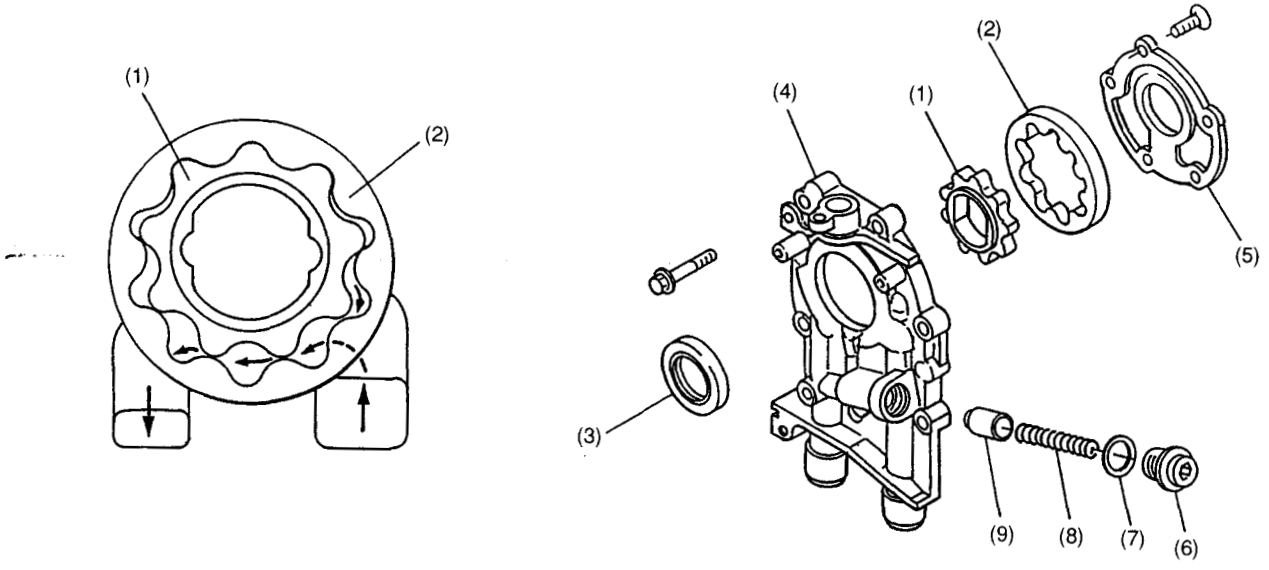

NF0061

(1) Inner rotor
(2) Outer rotor
(3) Oil seal
(4) Oil pump case
(5) Oil pump cover
(6) Plug
(7) Gasket
(8) Relief valve spring
(9) Relief valve

4. Oil Filter

The oil filter is a full-flow filtering, cartridge type that utilizes a paper element. It also has a built-in bypass valve. The filter element has a special pleat design to increase the effective filtering area.

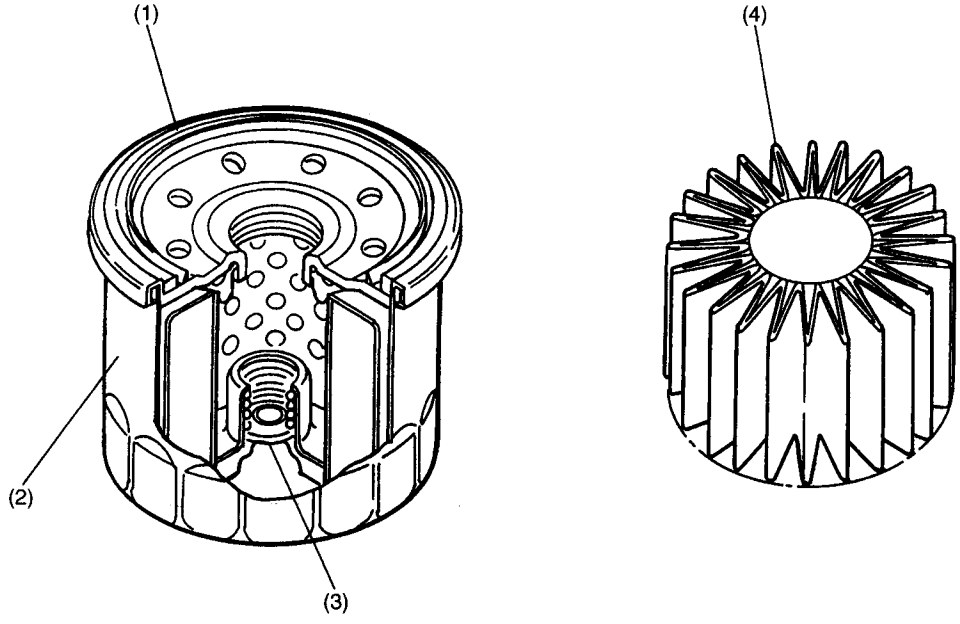

(1) Oil seal
(2) Filter body
(3) Bypass valve
(4) Pleated element

5. Oil Pan and Oil Strainer

- The oil pan is attached to the cylinder block using liquid gasket for sealing. The oil strainer is a metal net type and removes large foreign particles from the engine oil. It is located in the middle of the oil pan. The pipe from the strainer is connected to the suction port of the oil pump in the left bank of the cylinder block.
- There is a baffle plate in the oil pan, near the bottom of the cylinder block. It stabilizes the oil level and reinforces the oil pan.

A: NON-TURBO MODEL

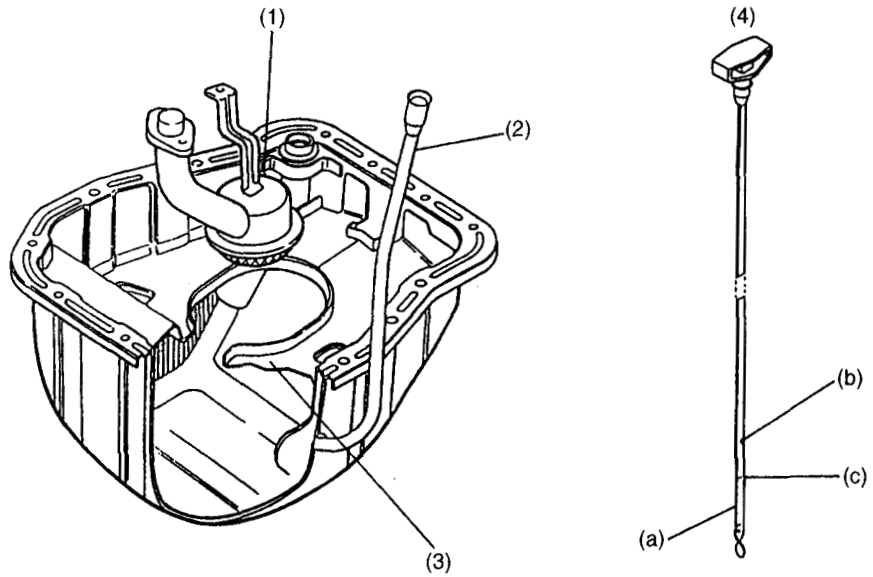

S2H0852B

(1) Oil strainer
(2) Level gauge guide
(3) Baffle plate
(4) Oil level gauge

(a) LOW level
(b) FULL level (Engine HOT condition)
(c) FULL level (Engine COLD condition)

B: TURBO MODEL

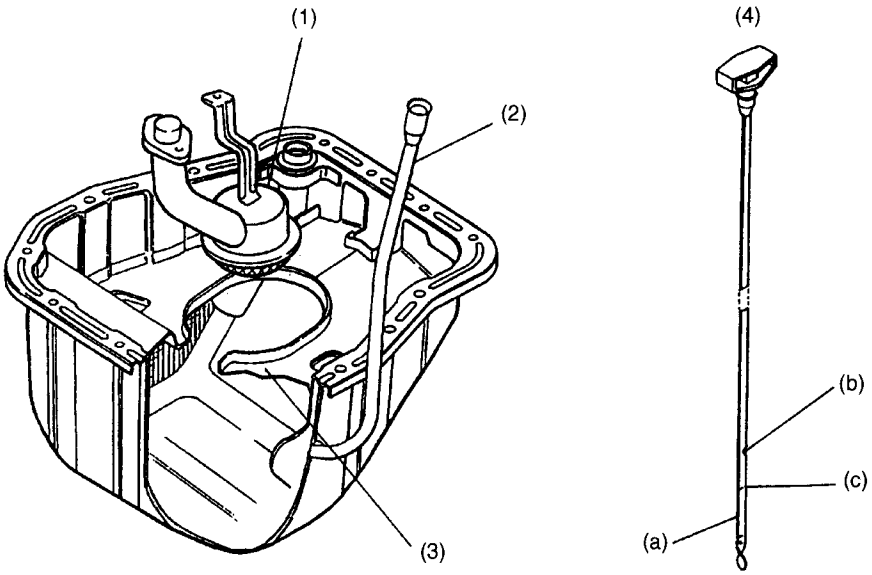

NF0468

(1) Oil strainer
(2) Level gauge guide
(3) Baffle plate
(4) Oil level gauge

(a) LOW level
(b) FULL level (Engine HOT condition)
(c) FULL level (Engine COLD condition)

6. Oil Pressure Switch

The oil pressure switch is located in the front upper portion of the right cylinder block bank. The purpose of this switch is to monitor the operation of the oil pump as well as the lubricating oil pressure when the engine is running.

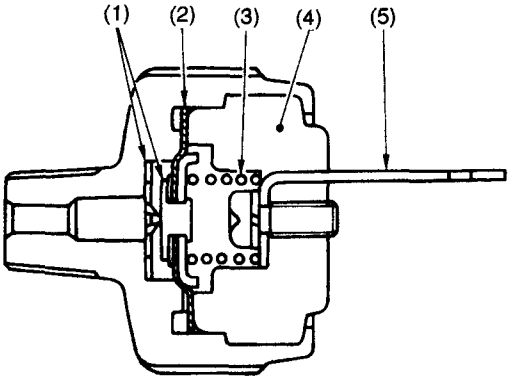

NF0065

(1) Contact point
(2) Diaphragm
(3) Spring
(4) Molded portion
(5) Terminal

1) When oil pressure does not build up (immediately after ignition switch is turned ON):
The diaphragm is pushed toward the cylinder block by the spring force (a force equivalent to the specified oil pressure). This closes the contact points, causing the oil pressure warning light in the combination meter to illuminate.

2) When oil pressure reaches the specified value (after engine starts):
After reaching the specified value of 14.7 kPa (0.15 kgf/cm^2, 2.1 psi), the oil pressure pushes the diaphragm overcoming the spring force. This opens the contact points and the oil pressure warning light goes out.

7. Oil Cooler (Turbo Model Only)

The oil cooler used in models is of a water cooled type. It serves to maintain engine oil in proper temperature range and so prevent degradation of lubricating oil performance.

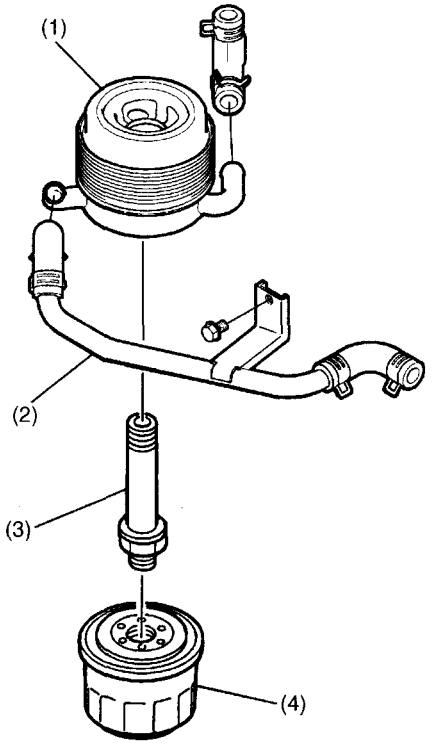

NF0360

(1) Oil cooler
(2) Water pipe
(3) Connector
(4) Oil filter

SPEED CONTROL SYSTEM SP

Page

1. General 2

1. General

The accelerator outer cable is secured to the accelerator pedal bracket rather than to the toeboard. Securing the outer cable in this way has a merit of making the ratio of throttle valve movement to cable stroke less variable. This arrangement is also effective to prevent unsmooth cable return movement that may result from deformation of the toeboard or improper installation of the accelerator pedal and, therefore, to improve safety.

In addition, the floating type casing cap through which the cable is attached to the bracket reduces vibration of the pedal, thus improving quietness.

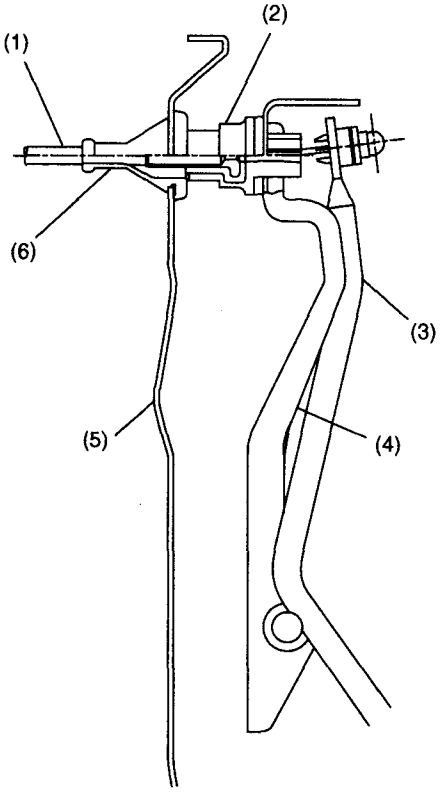

NF0438

(1) Accelerator cable
(2) Casing cap (floating type)
(3) Accelerator pedal
(4) Bracket
(5) Toeboard
(6) Grommet

IGNITION *IG* *(SOHC)*

	Page
1. Ignition Coil	2
2. Spark Plug	4

1. Ignition Coil

Ignition coils are made integral with an ignitor.

The ignition system is of a dual-ignition-coil design, each coil causing two plugs to generate sparks simultaneously. In response to the signal from the ECM, the ignitor supplies current to an ignition coil and the ignition coil supplies high-voltage current to a pair of spark plugs (#1 and #2 or #3 and #4) simultaneously.

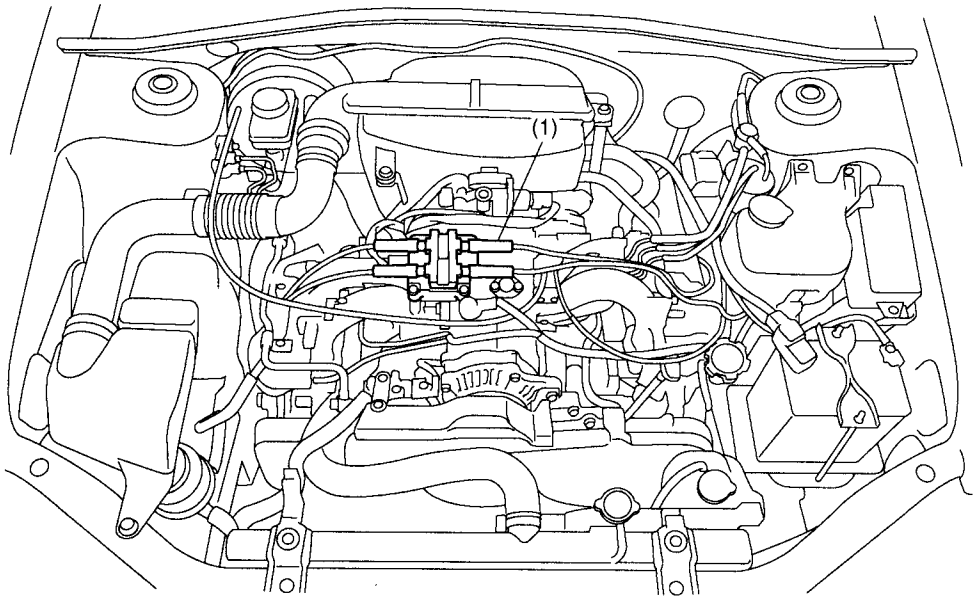

NF0034

(1) Ignition coil and ignitor assembly

IGNITION COIL

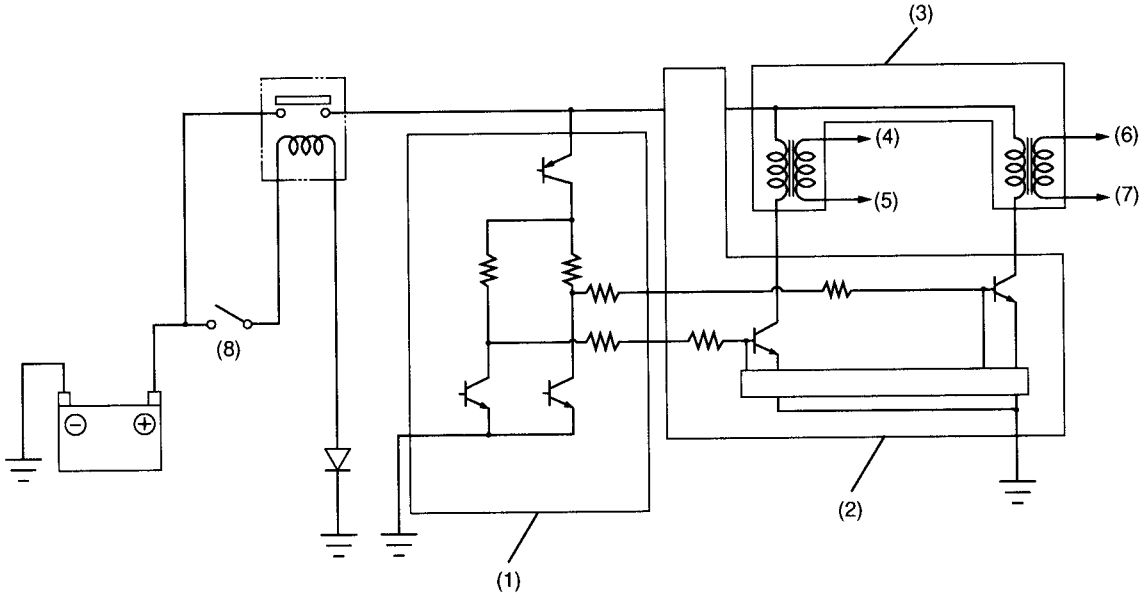

NF0035

(1) ECM
(2) Ignitor
(3) Ignition coil
(4) Spark plug #1
(5) Spark plug #2
(6) Spark plug #3
(7) Spark plug #4
(8) Ignition switch

2. Spark Plug

The spark plug's thread diameter is 14 mm (0.551 in) and the gap is controlled to a value between 1.0 and 1.1 mm (0.039 and 0.043 in).

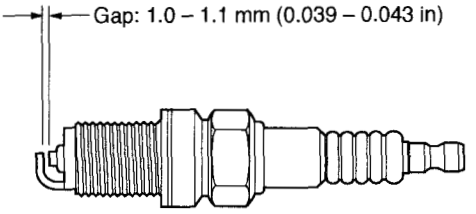

NF0036

IGNITION IG (DOHC TURBO)

		Page
1.	Ignition Coil	2
2.	Spark Plug	3

1. Ignition Coil

The engine uses a direct ignition system with one ignition coil mounted for each cylinder (or spark plug).
The secondary terminal of the ignition coil is in contact with the spark plug terminal nut.
Since no spark plug cable is used, secondary voltage drop, leaks, or other problems that are inherent in a system using spark plug cables do not occur. The result is high performance and high reliability.

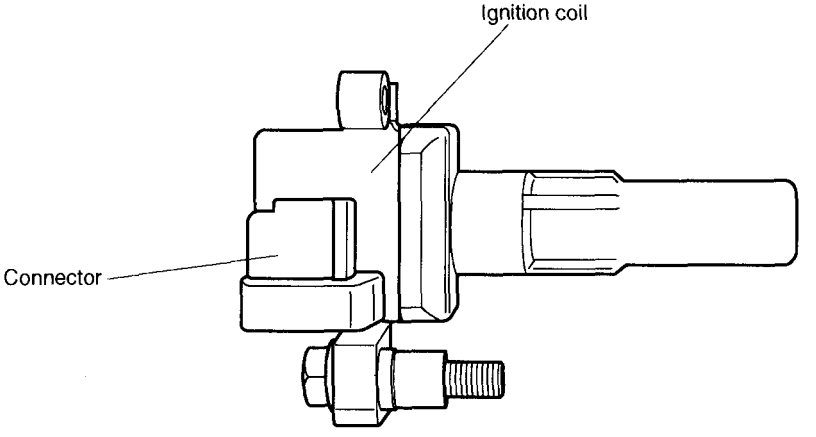

NF0316

2. Spark Plug

The spark plug has a platinum tipped electrode. The thread diameter is 14 mm (0.551 in) and the gap is controlled to a value between 0.7 and 0.8 mm (0.028 and 0.031 in).

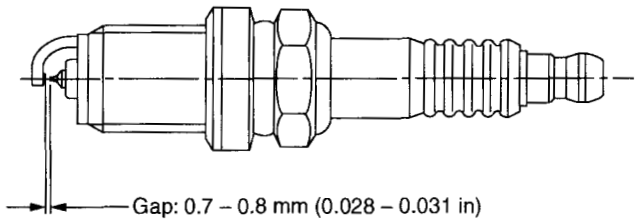

NF0317

MEMO

STARTING/CHARGING SC

		Page
1.	Starter	2
2.	Generator	3
3.	Battery	4

1. Starter

The starter is of a reduction type. Its output is 1.0 kW on the MT model and 1.4 kW on the AT model.

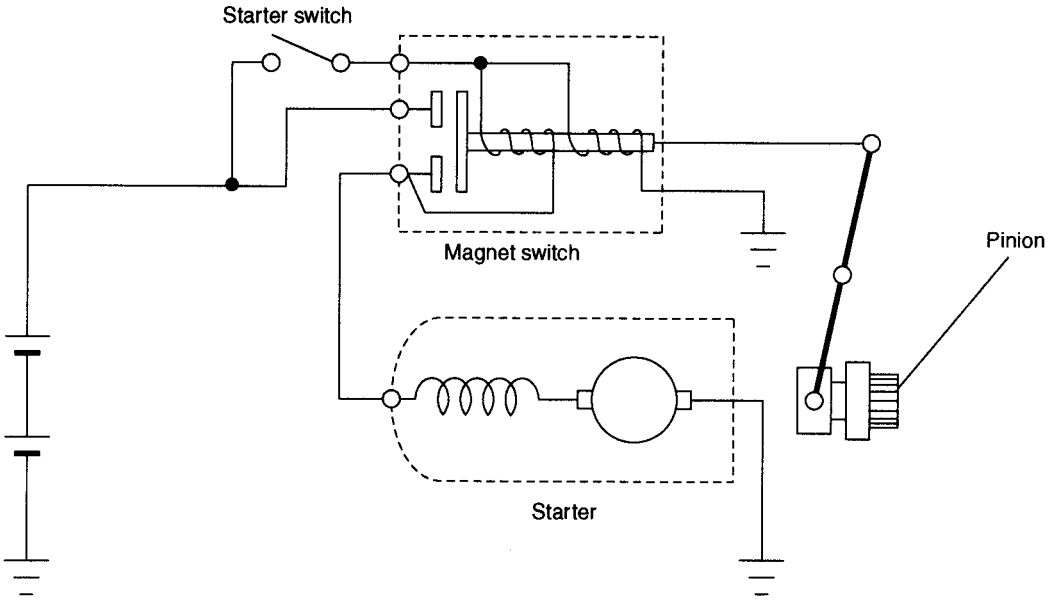

NF0364

2. Generator

The generator has a built-in regulator which provides diagnostic functions in addition to a voltage regulating function as follows:

1) Voltage regulation

The on-off operation of transistor Tr_1 connects and disconnects the field current circuit, providing a constant level of output voltage.

2) Diagnosis warning

When any of the following problems occur, the charge lamp illuminates.

a. No voltage generation
   Brush wear exceeds specified wear limits, field coil circuit is broken, etc.
b. Excessive output
   Output voltage is greater than 16 volts (approx).
c. Terminal B disconnection
   Harness is disconnected from alternator terminal B.
d. Terminal S disconnection
   Harness is disconnected from alternator terminal S. In this case, voltage is slightly greater than specified regulated voltage; however, voltage regulation is still controlled and the battery is prevented from becoming overcharged.

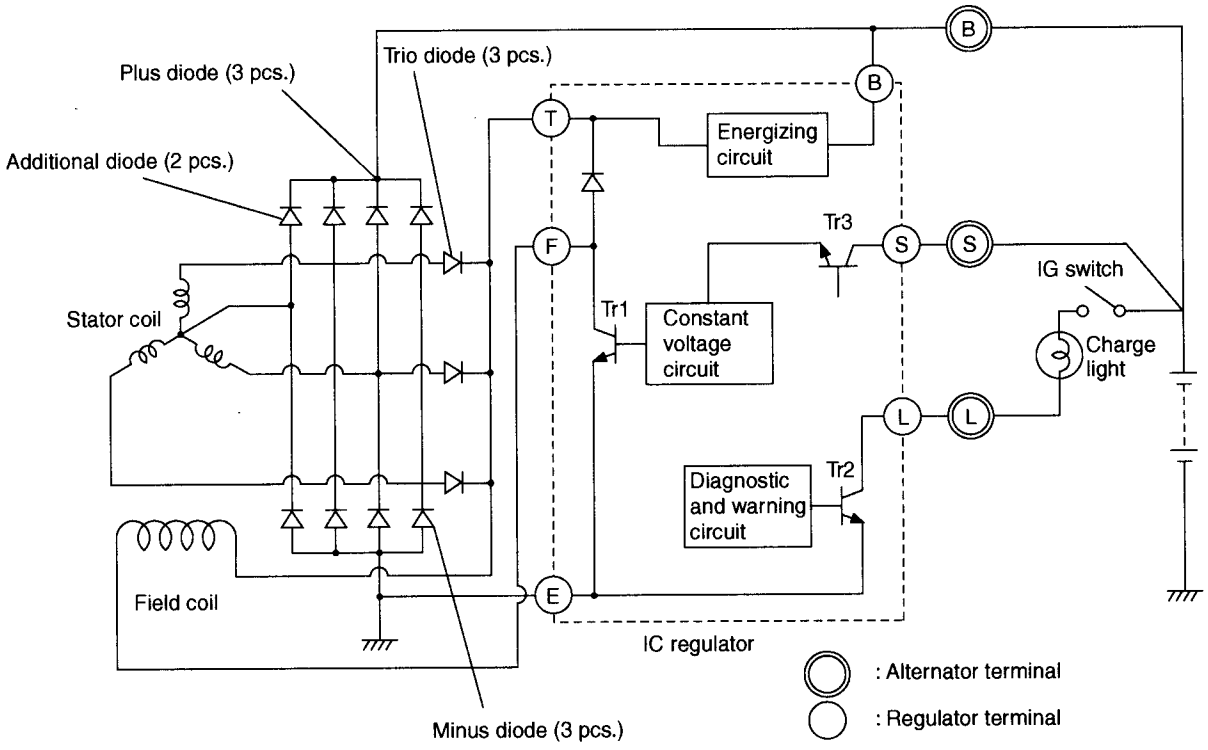

NF0365

3. Battery

The battery is located in the left front part of the engine compartment. It is held on a tray by the battery holder.

CONTROL SYSTEM CS

		Page
1.	Gear Shift Lever	2
2.	Select Lever	3
3.	Sift Lock System	4

1. Gear Shift Lever

The manual transmission's gear shift lever system is a parallel link type whose stay is mounted through a cushion rubber.

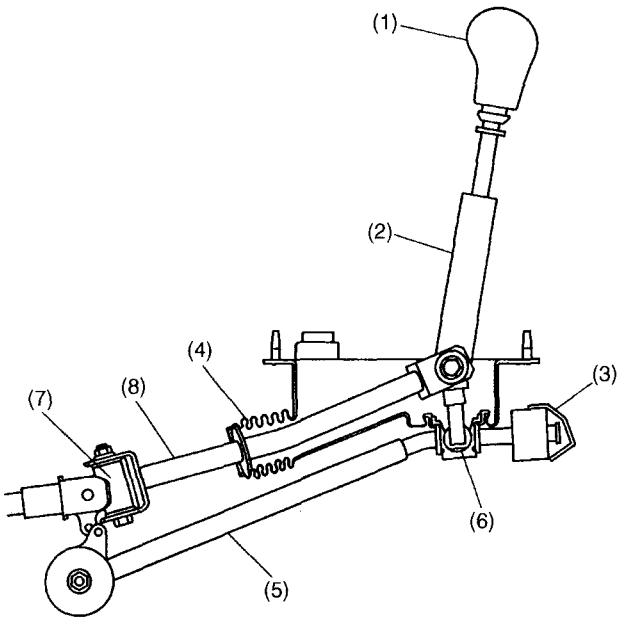

NF0103

(1) Knob
(2) Gear shift lever
(3) Cushion rubber
(4) Boot
(5) Stay
(6) Bush
(7) Joint
(8) Rod

2. Select Lever

- The automatic transmission's select lever moves through seven positions.
- The select lever makes shift direction (longitudinal) movements as well as select direction (lateral) movements. The select lever is guided by a gate to make these movements.
- To transmit movements of the select lever to the transmission, a push-pull cable is used.
- The detent arm is a new addition to the select lever mechanism. It ensures more precise positioning of the select lever.
- A plastic select lever base plate is used.

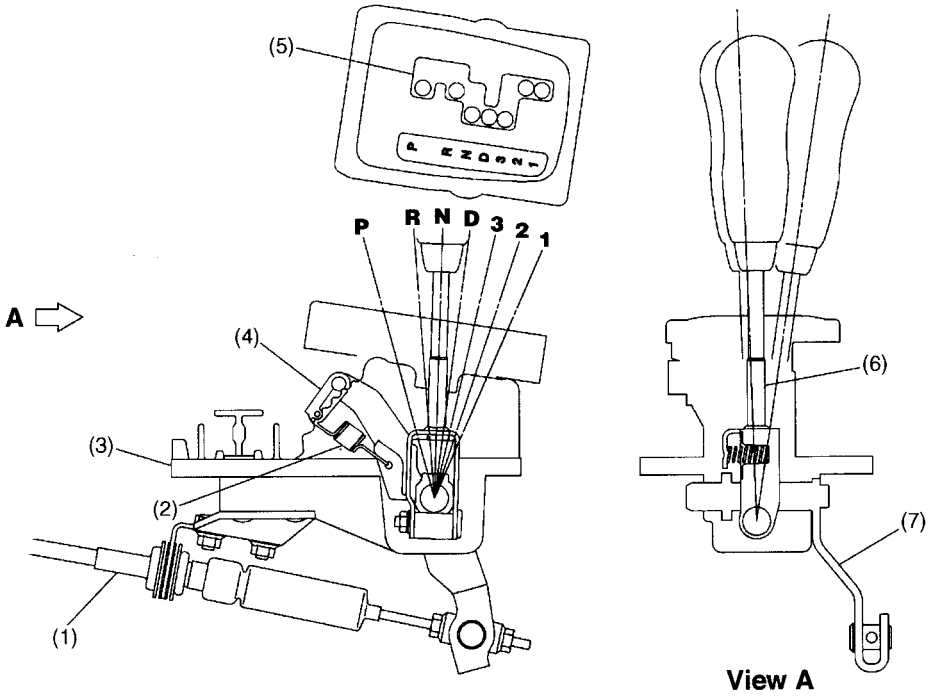

NF0104

(1) Push-pull cable
(2) Detent spring
(3) Base plate
(4) Detent arm
(5) Gate
(6) Select lever
(7) Arm

3. Shift Lock System

A: GENERAL

To increase safety during standing start, the shift lock system prevents movement of the select lever from the "P" position to any other position unless the brake pedal is depressed. This system is also provided with a key interlock function which prevents removal of the ignition key from the key cylinder unless the selector lever is placed in the "P" position.

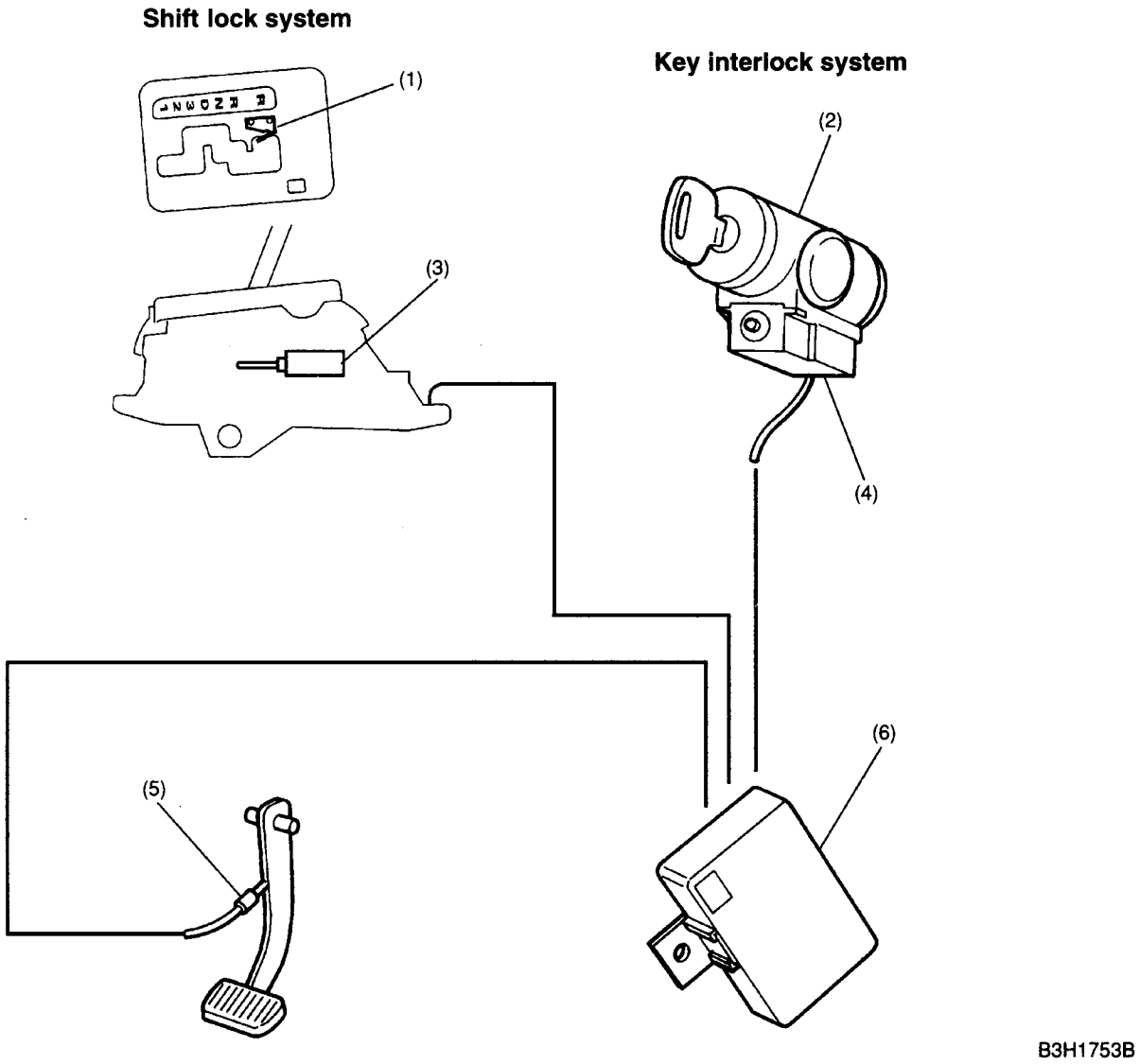

(1) "P" position switch
(2) Key cylinder
(3) Shift lock solenoid
(4) Key lock solenoid
(5) Brake pedal switch
(6) Integrated module

B: SHIFT LOCK SYSTEM OPERATION

The shift lock system has a solenoid-operated plunger (1). With the select lever in the "P" position, the plunger remains extended, holding the lock arm (2) in its raised (locking) position. When the brake pedal is depressed with the ignition switch in either the ON or START position, the solenoid is energized and the plunger is retracted. This causes the lock arm to tilt forward to the select lever release position. The select lever now can be moved to any other position.
The "P" position of the select lever is detected by the "P" position switch (3).

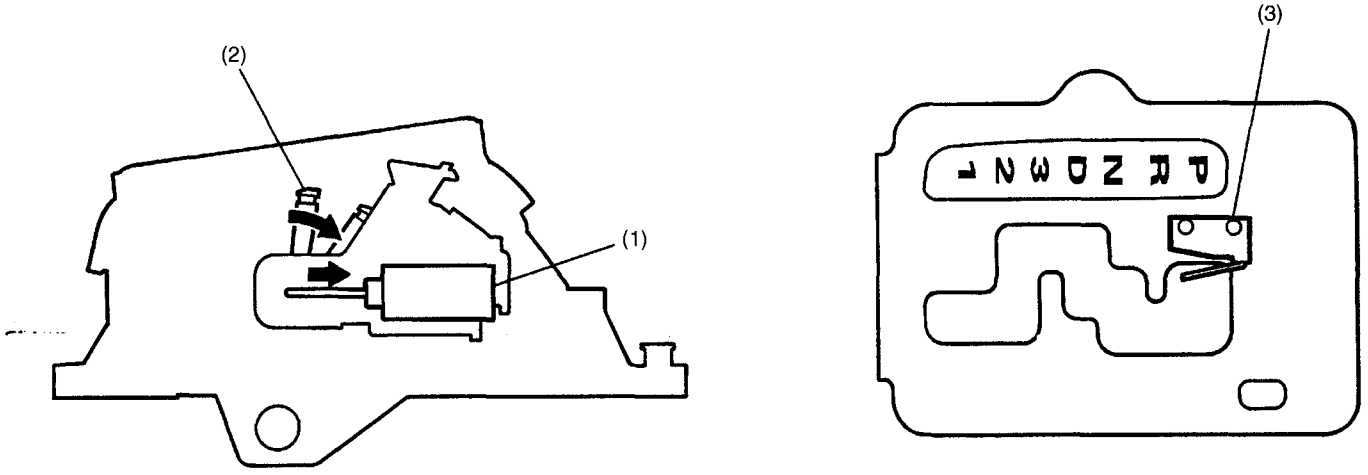

B3H1754A

(1) Solenoid
(2) Lock arm
(3) "P" position switch

C: KEY INTERLOCK FUNCTION

- When the select lever is at any position other than "P", the solenoid is energized and its pin is held extended. Being caused to stay in its upright position by extension of the pin, the interlock lever interferes with the stopper portion of the rotator which turns together with the ignition key. Thus, the ignition key cannot be rotated to the "LOCK" position.

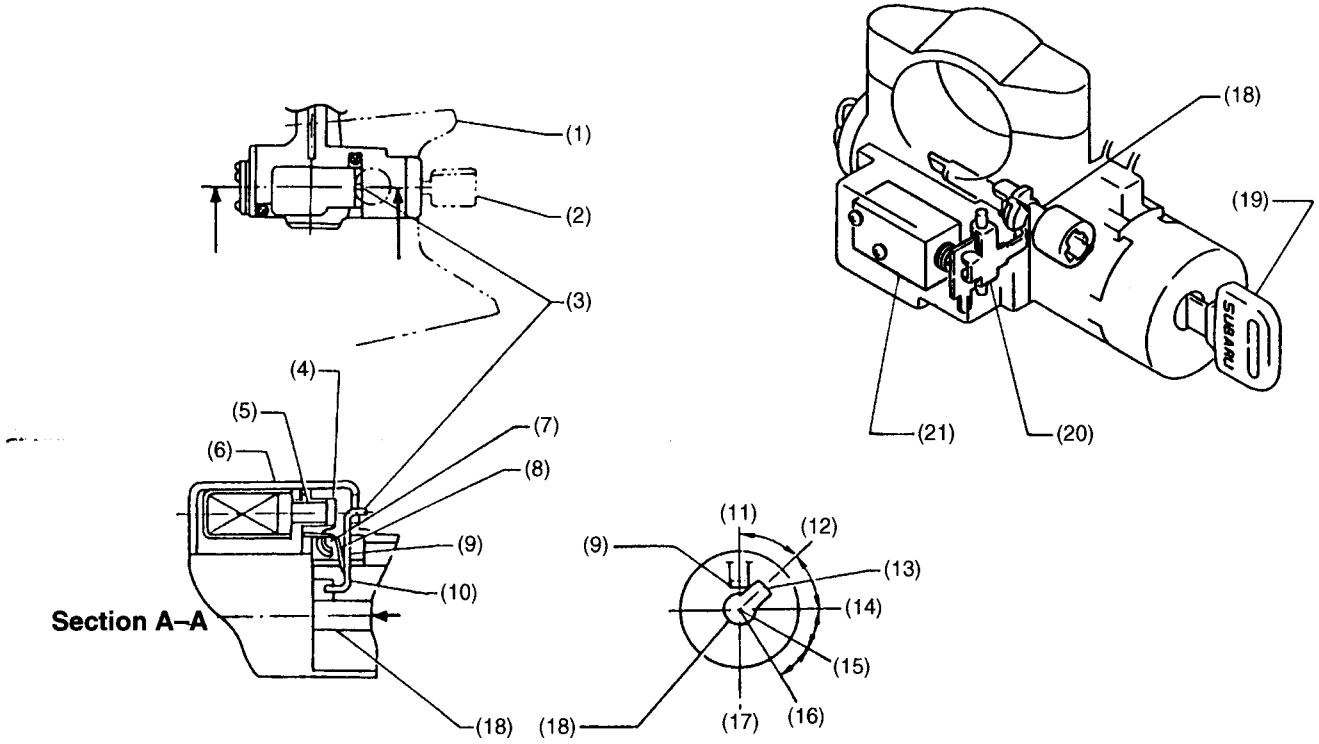

S3H0575A

(1) Column cover
(2) Key
(3) Push button
(4) Extended
(5) Solenoid pin
(6) Solenoid unit
(7) Lever fulcrum
(8) Lever spring
(9) Interlock lever
(10) Interlock activated
(11) LOCK
(12) Interlock position
(13) Stopper
(14) ACC
(15) ON
(16) START
(17) View B
(18) Rotator
(19) Key
(20) Interlock lever
(21) Solenoid

- When the select lever is moved to "P", the "P" position switch in the select lever assembly operates, deenergizing the solenoid. As the push force of the solenoid pin is removed, the lever spring causes the interlock lever to tilt and become clear of the rotator's stopper. Then the key can be rotated to the "LOCK" position and removed from the ignition switch.

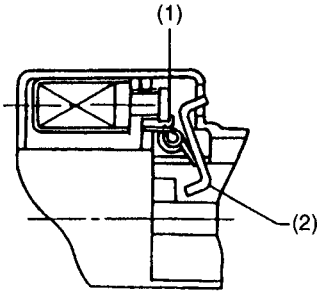

S3H0576A

(1) Retracted
(2) Interlock deactivated

MEMO

AUTOMATIC TRANSMISSION AT

		Page
1.	Electrohydraulic Control System	2
2.	Transmission Control Module (TCM)	14
3.	On-board Diagnostics System	34
4.	Fail-safe Function	36
5.	Transmission Mounting	38

1. Electrohydraulic Control System

A: GENERAL

The electrohydraulic control system for the transmission and transfer consists of various sensors and switches, a transmission control module (TCM) and the hydraulic controlling units including solenoid valves. The system controls the automatic transmission operation, including gear shifting, lock-up clutch operation, line pressure, automatic control pattern selection ("Base" and "Power"), and gear-shift timing. It also controls the operation of the transfer clutch. The TCM determines vehicle operating conditions from various input signals and controls a total of eight solenoids (shift solenoids 1 and 2, low clutch timing solenoid, 2-4 brake timing solenoid, line pressure duty solenoid, lock-up duty solenoid, transfer duty solenoid, and 2-4 brake duty solenoid) by sending appropriate signals to them.

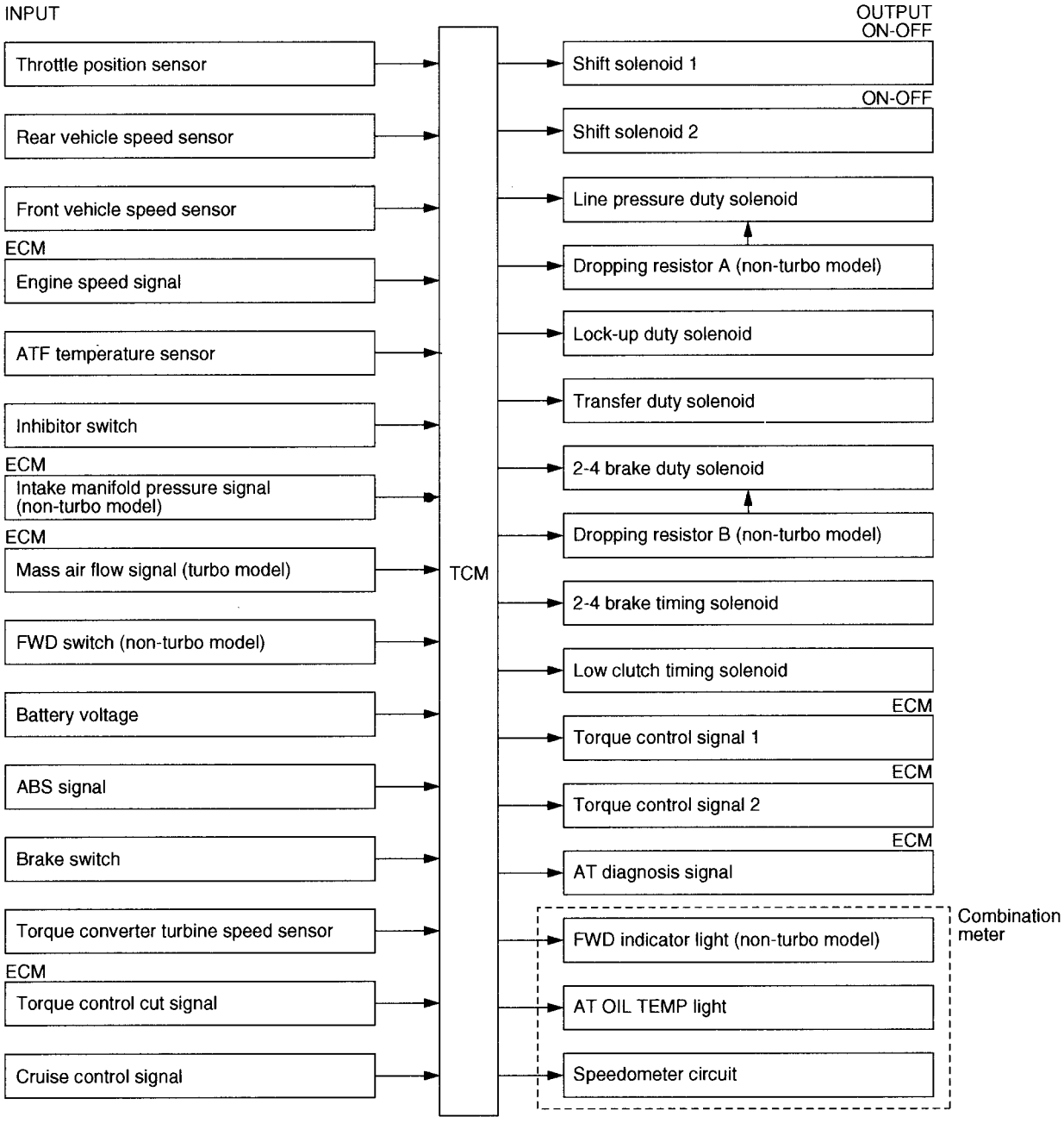

NF0464

B: INPUT SIGNALS

Signal name	Major function
Throttle position sensor	Indicates the throttle valve position. This signal is used to determine shift point, line pressure, and lock-up engaging vehicle speed, which vary with engine load.
Front vehicle speed sensor (located on transmission case)	Indicates the vehicle speed. This signal is used for control of gear shifting, lock-up engaging, line pressure, and transfer clutch operation.
Rear vehicle speed sensor (located on extension case)	Used to control transfer clutch, and also as backup signal in case of failure of front vehicle speed sensor.
Engine speed signal	Indicates the engine speed. This signal is used for control of lock-up clutch to ensure smooth engagement.
Inhibitor switch	Used to determine gears and line pressures in each of ranges "P", "R", "N", "D", "3", "2" and "1".
ATF temperature sensor	Indicates the ATF temperature. This signal is used for inhibition of lock-up, release of OD and determination of ATF temperature.
FWD switch (non-turbo model)	Used to change the mode from AWD to FWD. Also used to adapt the vehicle to FWD tester roller. Changeover from AWD to FWD can be made by inserting a fuse into the fuse holder.
ABS signal	Used when ABS is operating to optimize ABS control. In this control, transfer clutch torque load capacity is adjusted to eliminate the influence of engine braking and reduce the degree of coupling between front and rear wheels.
Cruise control signal	Indicates operation of cruise control system. It is used to expand "4th" operating range.
Torque converter turbine speed sensor	Tells the rotation speed of the input shaft. The proportion of this speed to the vehicle speed determines whether shifting should be made or not.
Torque control cut signal	Sent from engine control module (ECM) to TCM to inhibit the torque control.
Intake manifold pressure signal (non-turbo model)	Used to determine line pressure of gear shifting.
Mass air flow signal (turbo model)	Used to determine line pressure of gear shifting.
Brake switch	If this signal is issued during downhill driving, TCM makes shift down control, causing the vehicle speed to be reduced.

C: OUTPUT SIGNALS

Signal name	Function
Shift solenoid 1, 2	Each of these signals controls shift step by turning the corresponding solenoid ON/OFF. Activating timing is controlled for each solenoid to reduce shift shock.
Line pressure duty solenoid	Regulates the line pressure according to driving conditions.
Lock-up duty solenoid	Regulates the hydraulic pressure of the lock-up clutch to operate it in three modes (open, smooth and lock-up).
Transfer duty solenoid	Regulates the hydraulic pressure of the transfer clutch to control the driving force to the rear drive shaft.
AT OIL TEMP light	Causes the light to illuminate when ATF becomes excessively hot (exceeds a set temperature level). This light is also used for on-board diagnostics.
2-4 brake duty solenoid	Regulates 2-4 brake operating pressure to reduce shifting shocks.
2-4 brake timing solenoid	Switches on or off the pressure acting on 2-4 brake timing valve B to control the release timing of the 2-4 brake.
Low clutch timing solenoid	Switches on or off the pressure acting on the low clutch timing valve B to control the release timing of the low clutch. Also switches on or off the pressure acting on the reverse inhibit valve to control the reverse inhibit function.
Torque control signal 1	Reduces engine torque during range selection and gear change.
Torque control signal 2	Reduces engine torque during range selection and gear change.

D: CONTROL ITEMS

Control item			Description of control
Transmission control	Gear shift control	Base shift control • Base pattern • Power pattern	Upshifting and downshifting are set for each range, gear and pattern according to throttle position and vehicle speed.
		ABS-in-operation control	Gear is locked in 3rd when ABS signal enters.
		ATF-low-temperature control	Shifting into 4th gear is prevented when ATF temperature is below the preset value.
	Automatic pattern select control	Power pattern control	Power pattern is selected when throttle opening is changed at a speed exceeding the preset value.
		Base pattern control	When throttle opening is changed at a speed less than the preset value, Base pattern is resumed.
	Lock-up control	Base lock-up control	Lock-up ON is set for D-range 4th gear; ON/OFF is set for all gears (except D-range 4th) and patterns. Lock-up control is performed according to throttle position and vehicle speed. (Basically lock-up is OFF during gear shifting.)
		Smooth control	Smooth lock-up is performed when lock-up is switched on.
	Line pressure control	Ordinary control	Line pressure is regulated according to throttle position, vehicle speed and range signals.
		Shifting control	Line pressure is regulated when shifting to lessen shifting shock.
		Starting control	Line pressure is lowered to a minimum so as to reduce engine cranking load.
	Shift timing control	Shift step control	ON/OFF timing for shift solenoid is controlled.
		Lock-up control	When shifting, the lock-up clutch is temporarily released.
		Line pressure control	When shifting, line pressure is controlled to the optimum level so as to reduce shifting shock.
AWD transfer clutch control (non-turbo model)	Ordinary transfer control		Transfer clutch pressure is regulated according to the throttle valve angle and vehicle speed.
	1 range control		Transfer clutch pressure is increased.
	Slip control		Immediately after detecting a slip, transfer clutch pressure is controlled to the same pressure as 1 range. (This control is canceled if V ≧ 60 km/h (37 MPH), or when throttle valve is closed fully.)
	Control in turns		Transfer clutch pressure is reduced after detecting a turn.
	ABS-in-operation control		Transfer clutch pressure is adjusted to a set level immediately after reception of ABS signal.
AWD multi-plate clutch control (LSD) (turbo model)	Ordinary transfer control		Multi-plate clutch (LSD) pressure is regulated according to the torque input to the transfer and the driving condition.
	Start control		When starting, the LSD pressure is adjusted proportionately to the throttle value angle.
	Control in turns		When the front and rear wheel speed ratio is less than the set value for a vehicle speed, the LSD pressure is decreased.
	Slip control		When a front or rear wheel starts slipping, the LSD pressure is decreased.
	ABS-in-operation control		The LSD pressure is adjusted to the set level immediately after reception of ABS signal.
	Base brake control		When the brake switch is ON and throttle valve is fully closed, the LSD pressure is lowered.
	1 range control		The LSD pressure is increased to improve driveability.

E: THROTTLE POSITION SENSOR

The throttle position sensor provides electrical signals corresponding to throttle valve positions. The throttle valve angular position and accelerator depressing speed are detected by this throttle position sensor.

F: REAR VEHICLE SPEED SENSOR

1. NON-TURBO MODEL

This vehicle speed sensor (output shaft speed sensor) is externally mounted on the extension case. It detects the rear wheel speed in terms of the peripheral speed of the transfer clutch drum and sends sine wave signals (30 pulses per rotation) to the TCM.

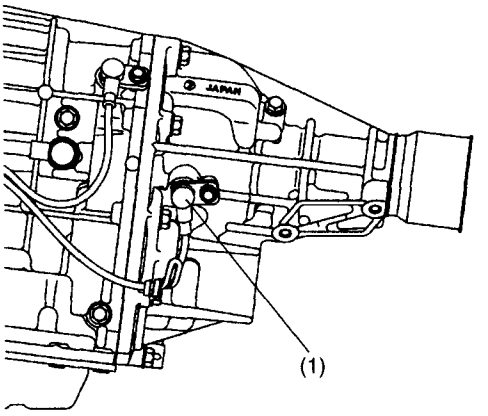

NF0068

(1) Rear vehicle speed sensor

2. TURBO MODEL

This vehicle speed sensor (output shaft speed sensor) is externally mounted on the extension case. It detects the rear wheel speed in terms of the peripheral speed of the rear drive shaft and sends sine wave signals (22 pulses per rotation) to the TCM.

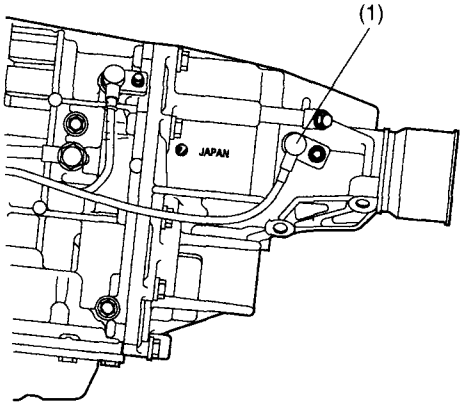

H3H1818C

(1) Rear vehicle speed sensor

G: FRONT VEHICLE SPEED SENSOR

This vehicle speed sensor (output shaft speed sensor) is externally mounted on the transmission case. It detects the front wheel speed and sends sine wave signals (16 pulses per rotation) to the TCM.

The TCM converts the signals into pulse signals and outputs them to both the engine control module (ECM) and the combination meter.

1. NON-TURBO MODEL

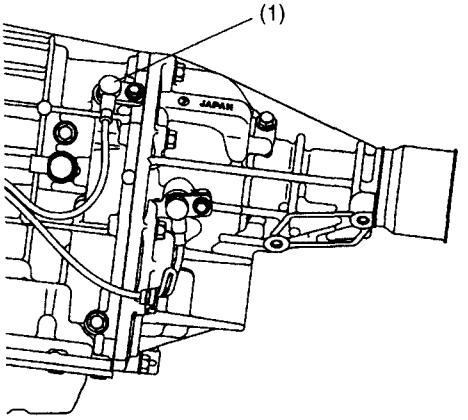

NF0069

(1) Front vehicle speed sensor

2. TURBO MODEL

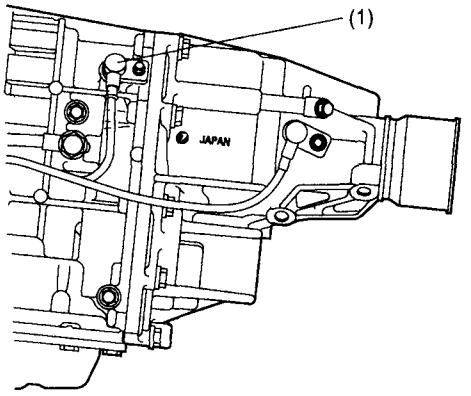

H3H1818D

(1) Front vehicle speed sensor

H: ATF TEMPERATURE SENSOR

This sensor is located in the hydraulic control valve of the transmission. It detects the temperature of ATF and outputs it as an electrical resistance signal. The output characteristics of the sensor are shown below.

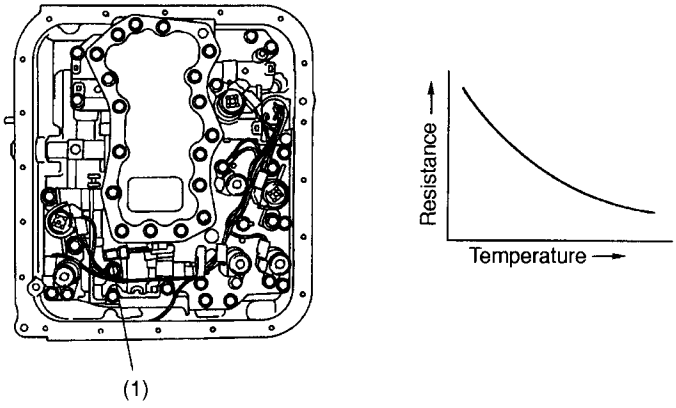

NF0071

(1) ATF temperature sensor

I: TORQUE CONVERTER TURBINE SPEED SENSOR

The torque converter turbine speed sensor (output shaft speed sensor) is externally mounted on the transmission case.
The sensor detects the torque converter turbine speed in terms of the rotation speed of the periphery of the high clutch drum coupled to the input shaft, and sends sine wave signals (32 pulses per rotation) to the TCM. The TCM calculates the proportion of the input shaft speed to the vehicle speed and determines whether the shifting is to be made or not.

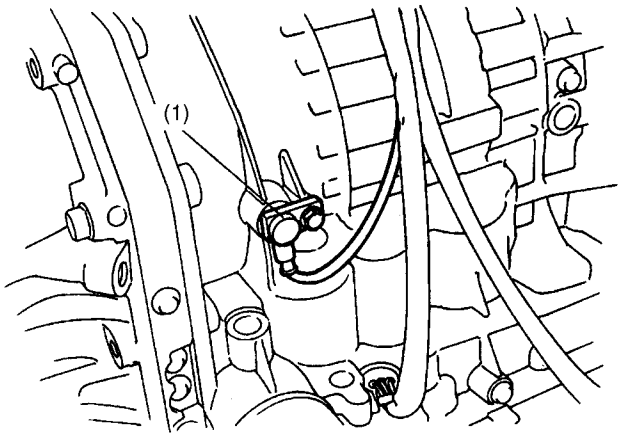

NF0072

(1) Torque converter turbine speed sensor

J: INHIBITOR SWITCH

The inhibitor switch assures safety when starting the engine. This switch is mounted on the right side of the transmission case, and is operated by the selector lever.

When the selector lever is set to P or N, the electrical circuit in the inhibitor switch is closed and the starter circuit is completed for cranking the engine.

When the selector lever is in the R, D, 3, 2 or 1 range, the electrical circuit in the inhibitor switch is open. Hence engine cranking is disabled. In the R range, the backup light circuit is completed in the switch, and the backup lights come on.

In addition to the above function, the inhibitor switch incorporates a circuit for detecting the selected range position and sending the range signal to the TCM.

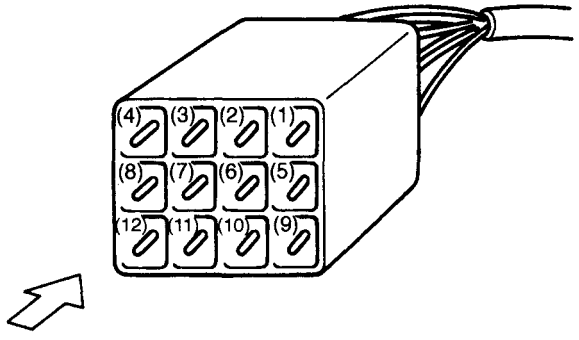

NF0073

Range position	Pin No.
P	(4) – (3) (12) – (11)
R	(4) – (2) (10) – (9)
N	(4) – (1) (12) – (11)
D	(4) – (8)
3	(4) – (7)
2	(4) – (6)
1	(4) – (5)

K: SHIFT SOLENOIDS 1 AND 2

These solenoids are located in the transmission hydraulic control valve. They are turned ON or OFF according to signals from the TCM. The gear positions are changed according to the ON and OFF condition of these solenoids.

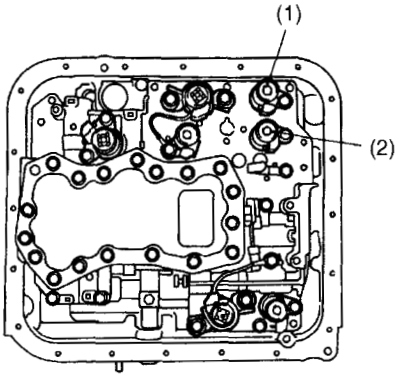

NF0074

(1) Shift solenoid 2
(2) Shift solenoid 1

L: LOW CLUTCH TIMING SOLENOID

This solenoid is located in the transmission hydraulic control valve. It is turned ON or OFF according to signals from the TCM. It then controls the low clutch timing valve B and reverse inhibitor valve.

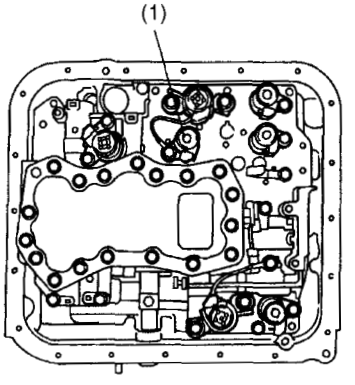

NF0075

(1) Low clutch timing solenoid

M: 2-4 BRAKE TIMING SOLENOID

This solenoid is located in the transmission hydraulic control valve. It is turned ON or OFF according to signals from the TCM. It then controls the 2-4 brake timing valve B to decrease the change gear shock.

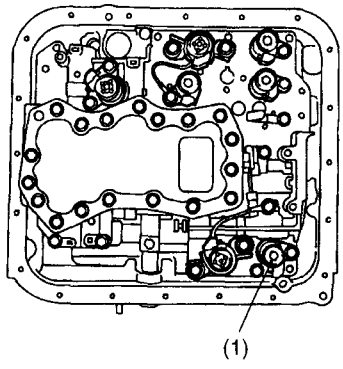

NF0076

(1) 2-4 brake timing solenoid

N: LINE PRESSURE DUTY SOLENOID

This solenoid is located in the transmission hydraulic control valve. Its duty ratio is controlled by signals from the TCM. This solenoid then controls the pressure modifier valve and accumulator control valve A to adjust the line pressure to an optimum pressure level suitable for operating conditions.

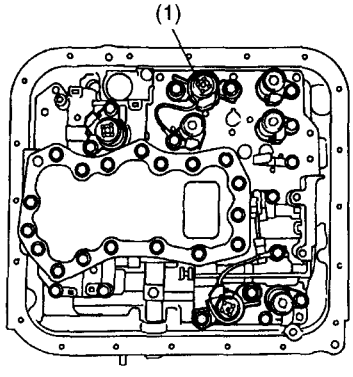

NF0077

(1) Line pressure duty solenoid

O: LOCK-UP DUTY SOLENOID

This solenoid is located in the transmission hydraulic control valve. Its duty ratio is controlled by signals from the TCM. It then controls the lock-up control valve to provide smooth engagement and disengagement of the lock-up clutch.

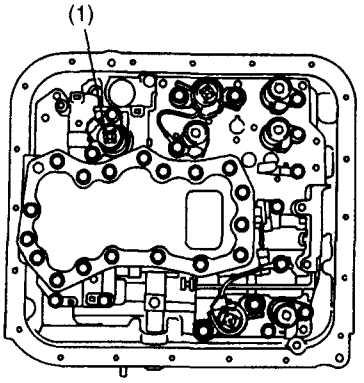

NF0078

(1) Lock-up duty solenoid

P: 2-4 BRAKE DUTY SOLENOID

This solenoid is located in the transmission hydraulic control valve. Its duty ratio is controlled by signals from the TCM. It modulates the 2-4 brake pressure when the 2-4 brake is operated, reducing shifting shocks.

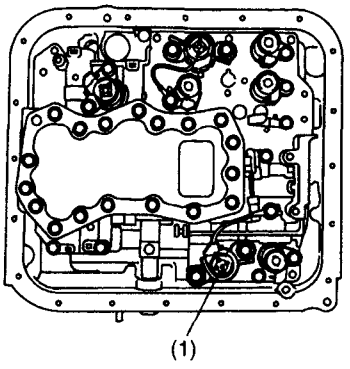

NF0079

(1) 2-4 brake duty solenoid

Q: TRANSFER DUTY SOLENOID

This solenoid is located in the transfer hydraulic pressure control unit on the rear end of transmission case. Its duty ratio is controlled by signals from the TCM. It then controls the transfer clutch/control valve to control the pressure applied to the transfer clutch.

1. NON-TURBO MODEL

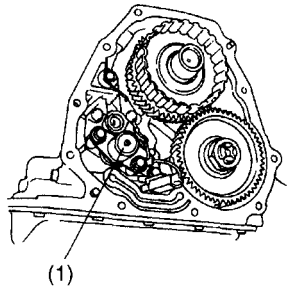

NF0080

(1) Transfer duty solenoid

2. TURBO MODEL

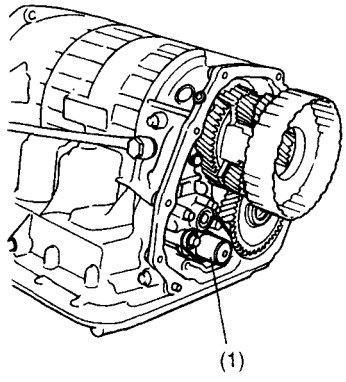

H3H1929C

(1) Transfer duty solenoid

2. Transmission Control Module (TCM)

The TCM receives various sensor signals and determines the running conditions of the vehicle. It then sends control signals to each solenoid according to the preset gearshift characteristic data, lock-up operation data, and transfer clutch torque data (duty ratios).

A: CONTROL SYSTEM

Control item		Input signal
Shift control	Ordinary shift control	Throttle position sensor Rear vehicle speed sensor Front vehicle speed sensor Engine speed Inhibitor switch
	ABS-in-operation control	ABS signal Throttle position sensor Rear vehicle speed sensor Front vehicle speed sensor Brake switch
	Hydraulic oil temperature control	ATF temperature sensor
	Reverse inhibiting control	Throttle position sensor Rear vehicle speed sensor Front vehicle speed sensor Inhibitor switch
	Shift pattern (Base/Power) select control	Throttle position sensor Rear vehicle speed sensor Front vehicle speed sensor Inhibitor switch
	Grade control	Throttle position sensor Rear vehicle speed sensor Front vehicle speed sensor Brake switch Inhibitor switch Engine speed Intake manifold pressure
Lock-up control	Ordinary lock-up control	Throttle position sensor Rear vehicle speed sensor Front vehicle speed sensor Engine speed Inhibitor switch
	Smooth control	Throttle position sensor
	Hydraulic oil temperature control	ATF temperature sensor

Control item		Input signal
Oil pressure control	Ordinary pressure control	Throttle position sensor Rear vehicle speed sensor Front vehicle speed sensor Engine speed Inhibitor switch ATF temperature sensor
	Shifting control	Throttle position sensor Rear vehicle speed sensor Front vehicle speed sensor Engine speed Torque converter turbine speed sensor Inhibitor switch ATF temperature sensor
	Starting control	Engine speed ATF temperature sensor Inhibitor switch
	Learning control	Shift solenoid A Shift solenoid B Rear vehicle speed sensor Front vehicle speed sensor Throttle position sensor Torque converter turbine speed sensor ATF temperature sensor
AWD transfer clutch control (non-turbo model)	Ordinary transfer control	Throttle position sensor Rear vehicle speed sensor Front vehicle speed sensor Inhibitor switch ATF temperature sensor FWD switch
	1 range control	Throttle position sensor Rear vehicle speed sensor Front vehicle speed sensor Inhibitor switch
	Slip detection control	Throttle position sensor Rear vehicle speed sensor Front vehicle speed sensor
	Steering control	Throttle position sensor Rear vehicle speed sensor Front vehicle speed sensor
	ABS-in-operation control	ABS signal Throttle position sensor Rear vehicle speed sensor Front vehicle speed sensor Brake switch

Control item		Input signal
AWD multi-plate clutch (LSD) control (turbo model)	Ordinary transfer control	Throttle position sensor Rear vehicle speed sensor Front vehicle speed sensor Inhibitor switch ATF temperature sensor
	1 range control	Throttle position sensor Rear vehicle speed sensor Front vehicle speed sensor Inhibitor switch
	Slip detection control	Throttle position sensor Rear vehicle speed sensor Front vehicle speed sensor
	Steering control	Throttle position sensor Rear vehicle speed sensor Front vehicle speed sensor
	ABS-in-operation control	ABS signal Throttle position sensor Rear vehicle speed sensor Front vehicle speed sensor Brake switch
	Base brake operating control	Throttle position sensor Front vehicle speed sensor Brake switch

B: SYSTEM DIAGRAM

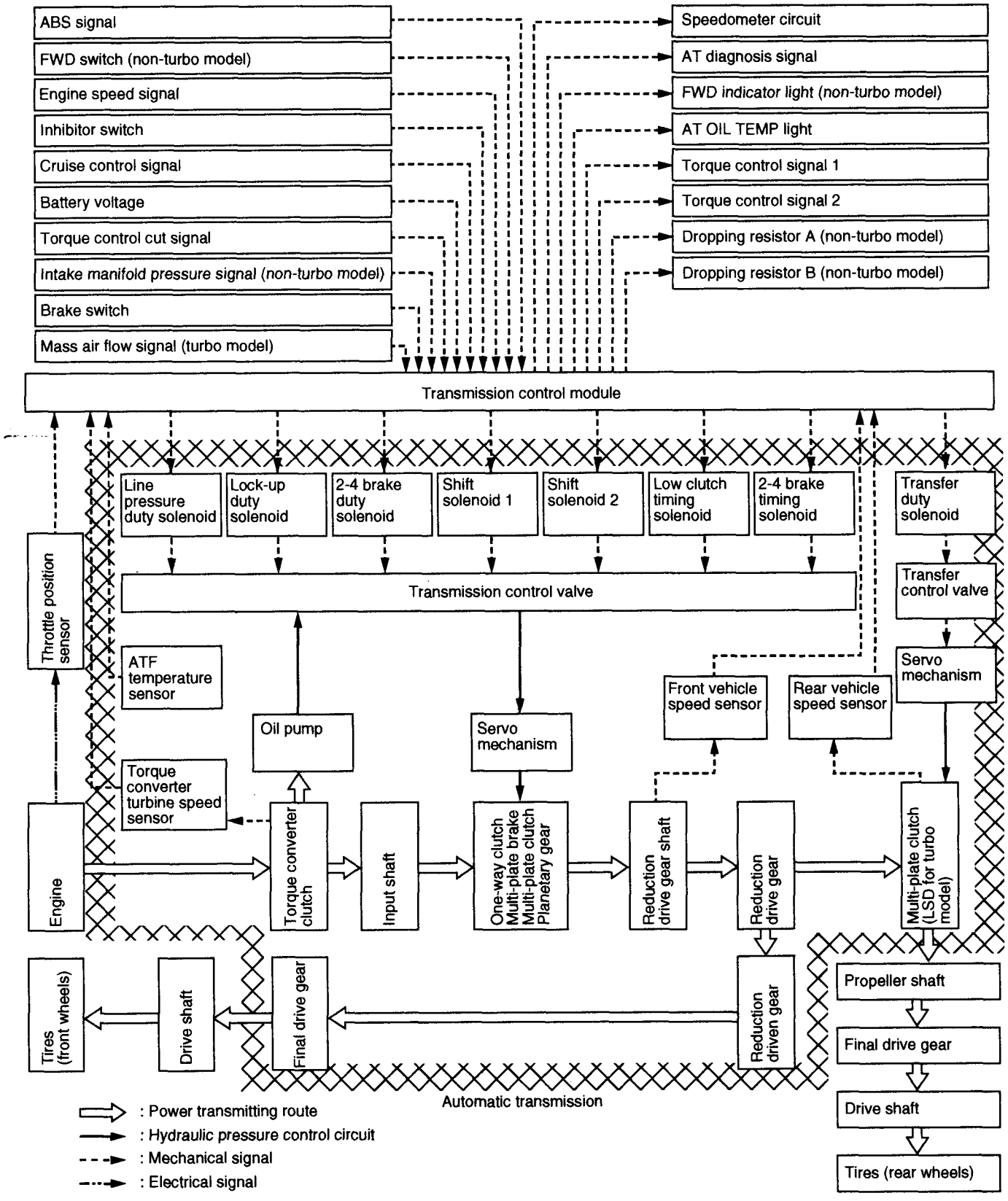

NF0465

C: SHIFT CONTROL

The TCM performs gear shifting control according to driving conditions by using the shift point characteristic data stored in its memory. Appropriate solenoids are operated at the proper timing corresponding to the shift pattern, throttle position, and vehicle speed for smooth shifting.

NOTE:
When the ATF temperature is below approximately 10°C (50°F), the gear cannot be shifted to the 4th speed.

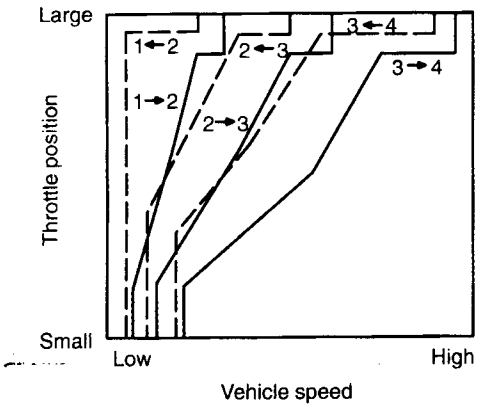

	Solenoid 1	Solenoid 2
1st	ON	ON
2nd	OFF	ON
3rd	OFF	OFF
4th	ON	OFF

NF0082

- The TCM activates both solenoids 1 and 2 in response to throttle and vehicle speed signals.
- Shift valves move in response to operation of the solenoids, supplying or interrupting the line pressure to each clutch.
- A shift to each gear takes place according to ON-OFF operation of both the solenoids as indicated in the table above.

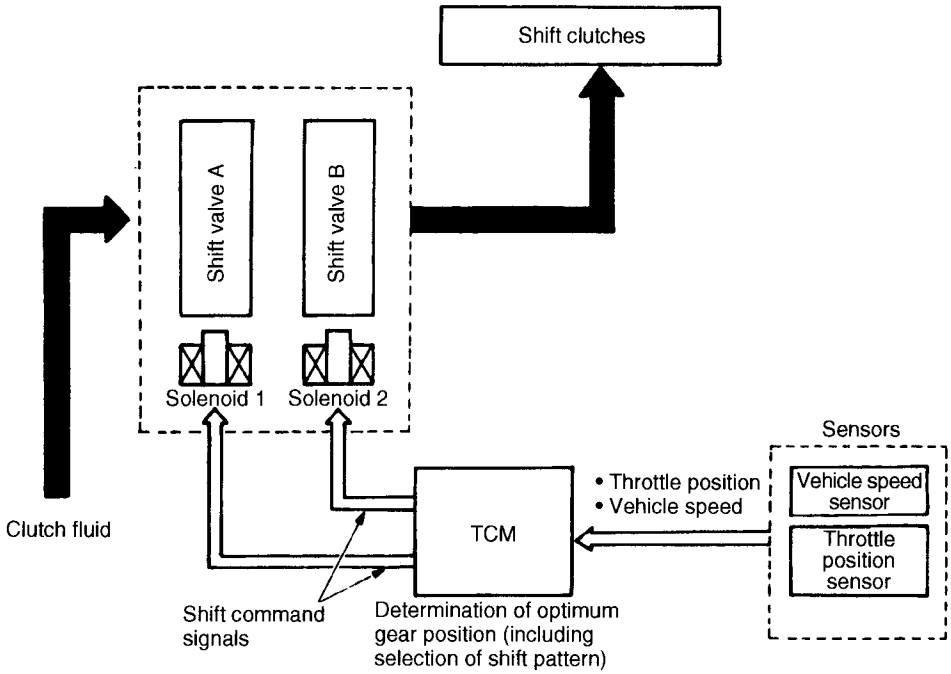

NF0083

D: LOCK-UP CONTROL

• The TCM has pre-programmed lock-up clutch engagement and disengagement conditions for each gear and shift pattern. In addition, it specifies engagement of the clutch whenever the 4th gear is selected in the D range. The engagement and disengagement conditions are defined in terms of the throttle valve position and vehicle speed.

• The TCM controls the operation of the lock-up clutch by means of the duty solenoid which in turn controls the lock-up control valve as described below:

1. NON-LOCK-UP OPERATION

The duty solenoid allows the pilot pressure (supplied from the pilot valve) to be applied to the "disengaging" end of the lock-up control valve spool. The lock-up control valve then opens the clutch disengaging circuit port to allow the lock-up operating pressure (torque converter clutch regular pressure) to build up in the circuit. On the other hand, the valve opens the clutch engaging circuit's port and allows the fluid in the circuit to flow to the ATF cooler, thus lowering the pressure in the circuit. As a result, the lock-up clutch is disengaged due to difference in pressure between both circuits.

This operation is performed for all the speed gears except the 4th gear of the D range.

2. LOCK-UP OPERATION

The duty solenoid allows the pilot pressure to be applied to the "engaging" end of the lock-up control valve spool. The lock-up control valve then opens the clutch engaging circuit's port that communicates to the torque converter's impeller chamber, allowing high pressure fluid to flow to the lock-up clutch. The clutch then engages.

• The TCM controls the current to the duty solenoid by gradually changing the duty ratio. As a result, the lock-up control valve also moves gradually, so the clutch engagement pressure increases smoothly. This causes the lock-up clutch to become initially in a half-engaged state and then in a fully engaged state, thus preventing shock during engagement.

This operation is performed for all the speed gears and always when the 4th gear is selected in the D range.

E: LINE-PRESSURE CONTROL

- The oil pump delivery pressure (line pressure) is regulated to a constant pressure by the pilot valve. This pressure is used as the pilot pressure for controlling spool valves.
- The pilot pressure applied to the pressure modifier valve is modulated by the line pressure duty solenoid into the pressure modifier pressure.
- The pressure modifier valve is an auxiliary valve for the pressure regulator valve, and it creates a signal pressure (pressure modifier pressure). The pressure modifier pressure is used to regulate the line pressure to a level optimum for a particular driving condition.
- This pressure modifier pressure is applied to the pressure regulator valve which controls the oil pump delivery pressure.
- The pressure modifier pressure from the pressure modifier valve is cushioned by the pressure modifier accumulator to remove pulsation of the pressure.

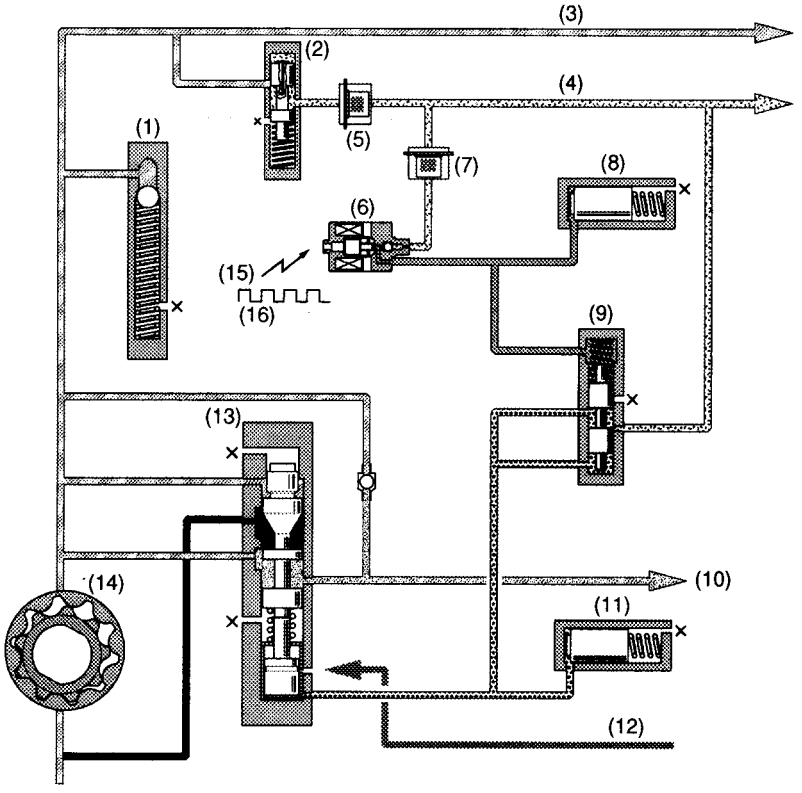

NF0084

(1) Relief valve
(2) Pilot valve
(3) Line pressure
(4) Pilot pressure
(5) Filter
(6) Line pressure duty solenoid
(7) Filter
(8) Accumulator
(9) Pressure modifier valve
(10) To ATF cooler circuit
(11) Accumulator
(12) From R range pressure circuit
(13) Pressure regulator valve
(14) Oil pump
(15) ON
(16) OFF

F: LINE-PRESSURE CONTROL DURING SHIFTING

The line pressure which engages shift clutches to create 1st to 4th speeds is controlled by the TCM to meet varying operating conditions.

During gear shifting, the TCM decreases the line pressure to a level that matches the selected gear in order to minimize shifting shock loads.

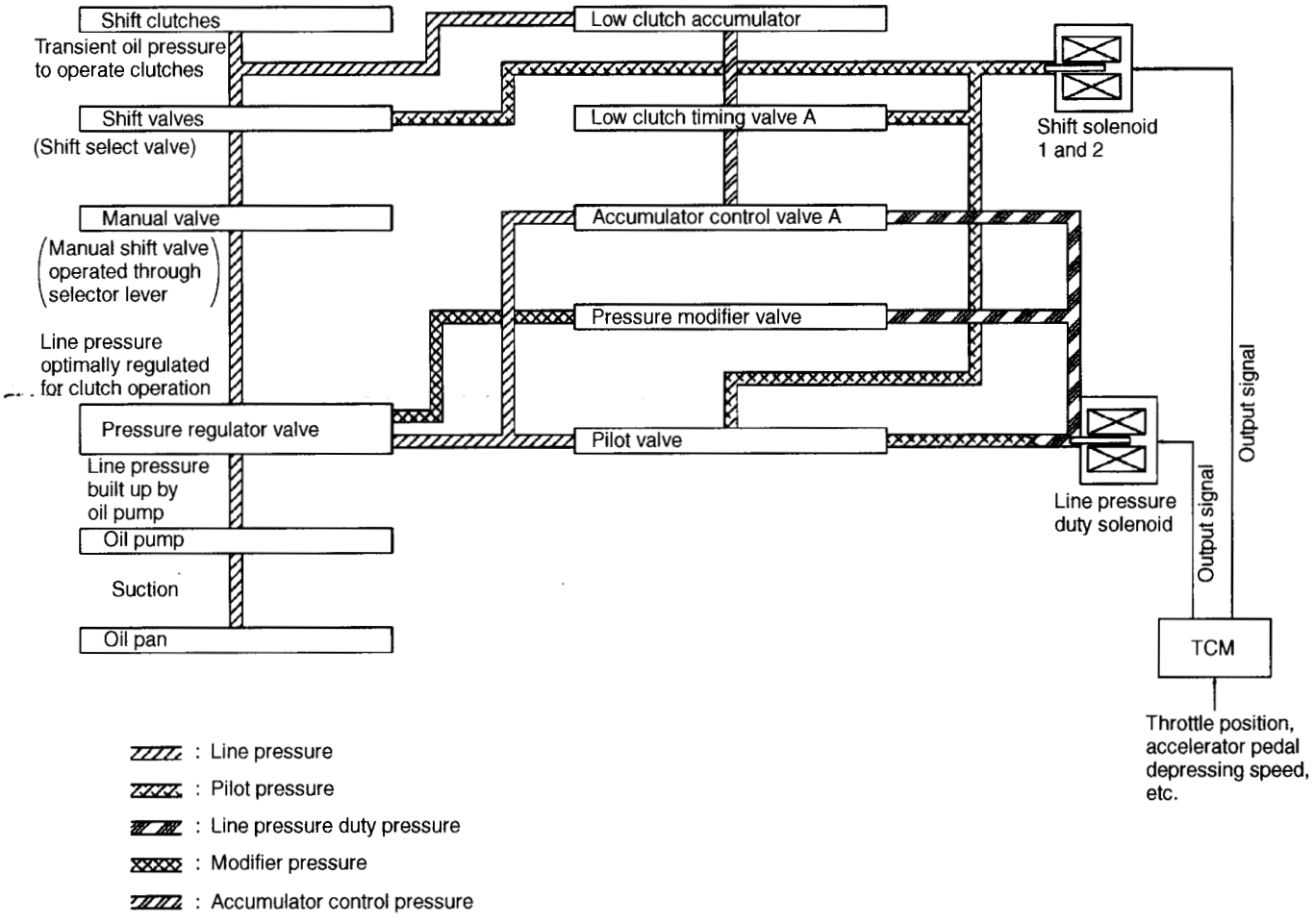

NF0085

During gear shifting, the TCM controls the line pressure as follows:

- The TCM receives signals such as throttle position signal and accelerator pedal speed signal. Based on these input signals, it issues a control signal to the line pressure duty solenoid.
- The pressure from the line pressure duty solenoid (line pressure duty pressure) is converted by the pressure modifier valve into a modifier pressure, and the modifier pressure is applied to the pressure regulator valve.
- The pressure regulator valve adjusts the oil-pump-generated line pressure according to the modifier pressure to make the line pressure matched to the driving condition.

G: SHIFT PATTERN SELECTION CONTROL

The TCM changes its gear shift control pattern automatically between the Base pattern suitable for ordinary economy driving and the Power pattern suitable for climbing uphill or rapid acceleration.

In the Power pattern, the downshift point and upshift point are set higher than those of the Base pattern.

Selector lever position	Changeover from Base to Power pattern
D and 3 ranges	Performed automatically according to accelerator pedal depression speed.

"D" range (Base pattern)

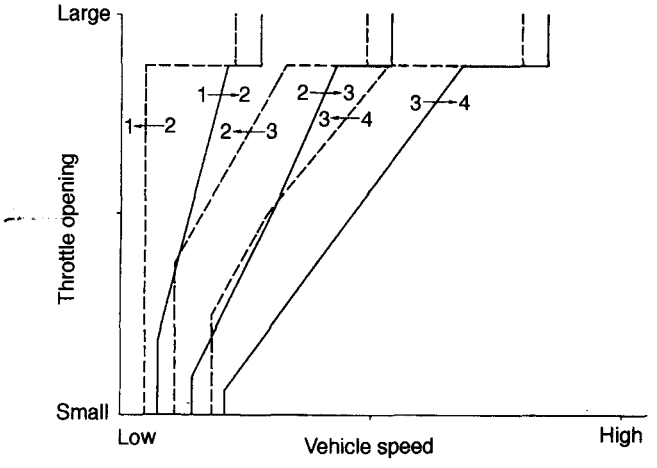

"D" range (Power pattern)

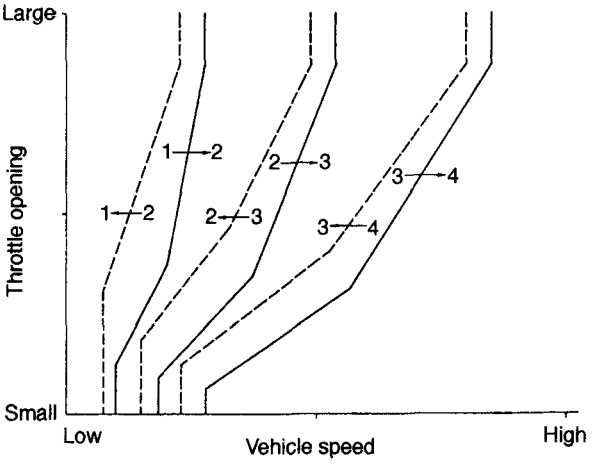

H3H1231A

H: GRADE CONTROL

While the vehicle is driving up a hill, the gear is fixed to the 3rd to avoid repeated gear shift between the 3rd and 4th gears.
When the vehicle is descending a steep slope at a speed of approximately 80 km/hour (50 miles/hour), a 4th to 3rd downshift occurs automatically when the brake pedal is depressed.
This gearshift control is cancelled when the accelerator pedal is depressed.
The TCM performs these controls based mainly on the throttle opening, engine speed and vehicle speed.

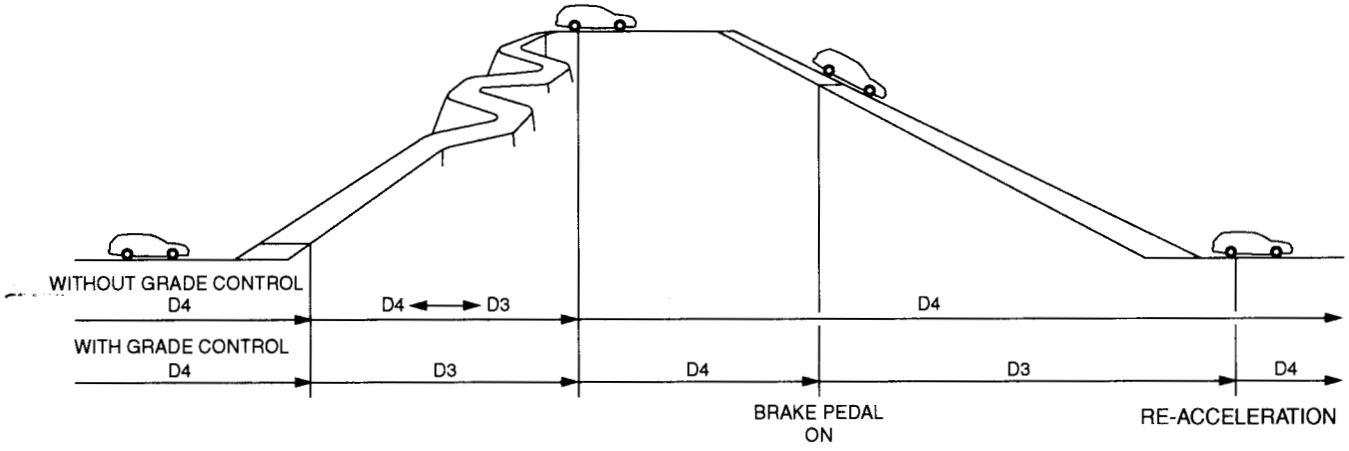

NF0087

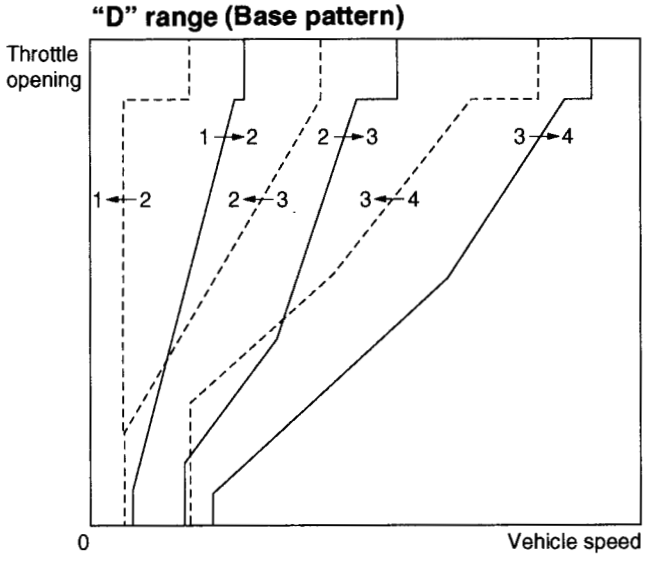

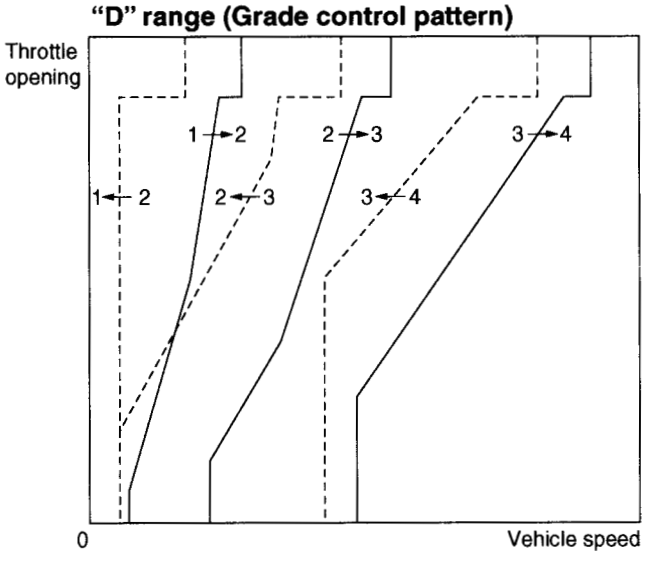

NF0088

I: LEARNING CONTROL

The TCM has a learning control function with which it can adapt gear shift timing optimally to the current vehicle conditions by updating correction factors in the memory.
For this reason, gear shift shock may become larger after the power supply is interrupted (disconnection of battery, flat battery, etc.) or immediately after the ATF is replaced.
Larger gear shift shock after power supply interruption occurs because the correction data is reset to those for the new vehicle condition.
The TCM starts learning function again as soon as the power supply is restored. After driving for a while, therefore, the transmission will become able to make gear shifts at the optimum timing.
Larger shift shock immediately after ATF change is caused by change in friction characteristics of the transmission internal parts. Also in this case, the transmission recovers shockless gear shifting after driving for a while.

J: REVERSE INHIBITION CONTROL

This control prevents the transmission from shifting into the reverse gear when the select lever is accidentally placed in the R position, thus protecting the components such as reverse clutch from being damaged.

If the selector lever is moved to the R position during driving at a speed faster than the predetermined speed, the low clutch timing solenoid is energized. Then, the pilot pressure is supplied to the reverse inhibitor valve. This causes the reverse inhibitor valve to move downward, closing the low & reverse brake port.
In this condition, the low & reverse brake does not engage since the ATF flowing from the manual valve is blocked by the reverse inhibitor valve.
As a result, the transmission is put into the neutral state, and the shifting into the reverse gear is inhibited.

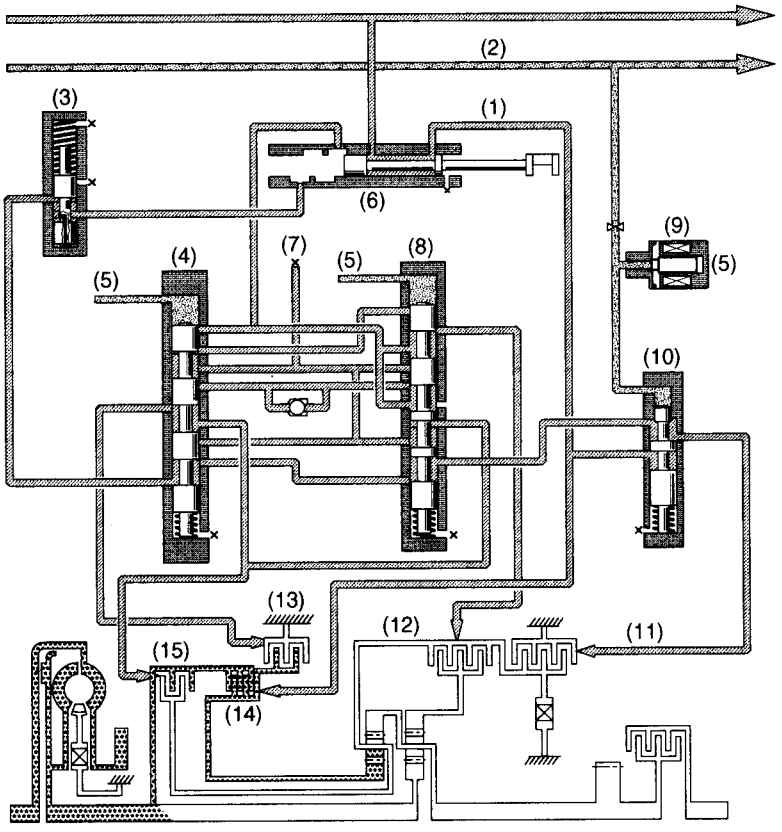

NF0089

(1) Line pressure
(2) Pilot pressure
(3) 1st reducing valve
(4) Shift valve A
(5) ON
(6) Manual valve (P range)
(7) Drain
(8) Shift valve B
(9) Low clutch timing solenoid
(10) Reverse inhibitor valve
(11) Low & reverse brake (Release)
(12) Low clutch
(13) 2-4 brake
(14) Reverse clutch
(15) High clutch

K: AWD TRANSFER CLUTCH CONTROL (NON-TURBO MODEL)

Control item		Type of control	Gear position	Remarks
1	Basic control	Regulates transfer clutch pressure in response to throttle position and vehicle speed.	1st thru 4th and reverse	Normal control Transfer clutch capacity 0 50 100 Duty ratio (%) NF0361
2	1 range control	Increases transfer clutch pressure above basic control pressure.	1st	–
3	Slip control	Increases transfer clutch pressure to the same level as in the 1 range immediately after a slip is detected.	1st thru 4th and reverse	Release: When running faster than the set vehicle speed with fully closed throttle
4	Turning control	Decreases transfer clutch pressure upon detection of a turn.	1st thru 4th and reverse	–
5	ABS control	Regulates to the specified transfer clutch pressure quickly when the ABS signal is input.	1st thru 4th and reverse	–
6	P and N range control	Regulates to the specified transfer clutch pressure quickly when shifted to the P or N range.	P and N	–

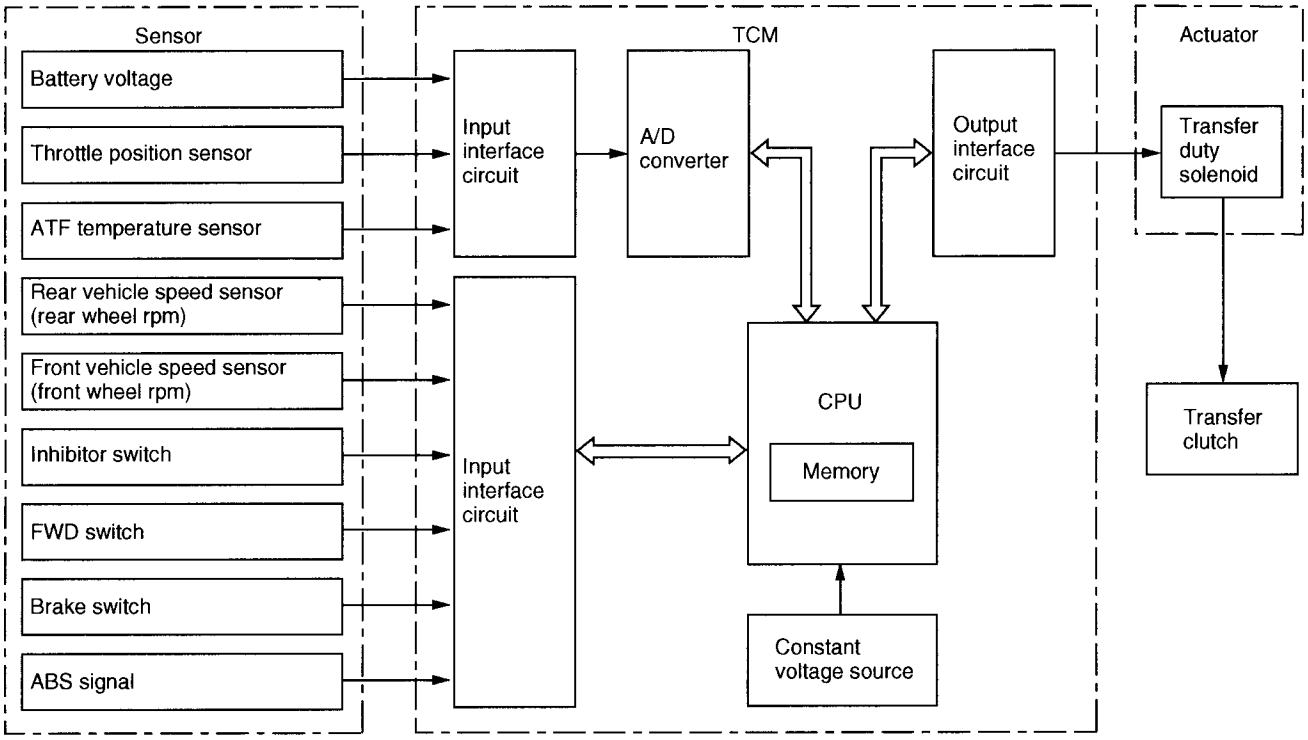

NF0466

L: AWD CENTER DIFFERENTIAL CONTROL (TURBO MODEL)

1. CONTROL DESCRIPTION

The TCM controls the engagement of the center differential's multi-plate clutch (LSD) using maps that are pre-programmed based on the throttle opening and engine speed. It selects a map according to driving conditions and use it as the control basis.

2. ORDINARY CONTROL

A specific map is given to each of the 1st to 4th gears and the reverse gear for use by the TCM to control the torque distribution appropriately during ordinary driving conditions.

The maps are programmed in such a way that the differential action limiting torque decreases as the throttle valve opening decreases and as the vehicle speed increases. This way of control is employed in order to reduce internal circulation of torque and also to improve steering performance and stability of the vehicle's behavior when the accelerator pedal is released or when a downshift is performed, thus upgrading the stability achieved by the AWD system.

3. START CONTROL

When the vehicle speed is 0 km/h (0 MPH), the TCM makes control to generate differential action limiting torque that is proportional to the throttle angle.

This enables the vehicle to start smoothly without swerving even on a slippery road.

4. TURNING CONTROL

The TCM makes a correction such that the input torque to the multi-plate clutch is reduced as the steering angle increases.

This function is performed to improves turning performance at certain vehicle speed range.

5. SLIP CONTROL

When front or rear wheels start slipping with the vehicle running slower than the predetermined speed, the TCM makes control to increase the differential action limiting torque.

This function maintains traction and improves driving stability.

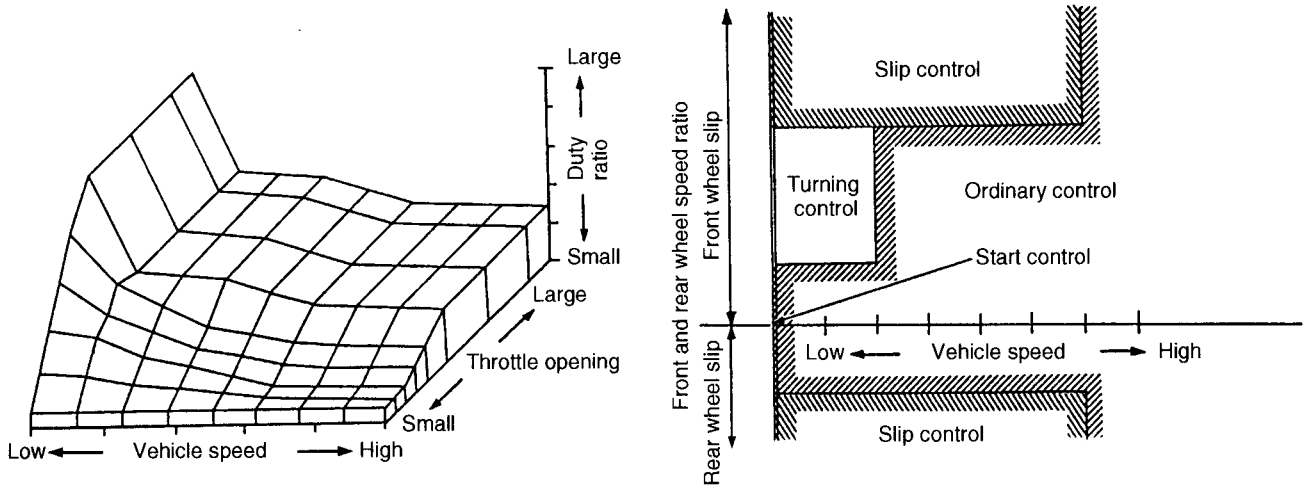

NF0489

6. ABS CONTROL

When the TCM receives an ABS operation signal from the ABS unit, it adjusts the differential action limiting torque to the predetermined level and selects the 3rd gear in which the one-way clutch is freewheeling.

This function improves ABS control.

7. BASE BRAKE CONTROL

When the brake switch is ON and the throttle valve is fully closed, the TCM makes control to decrease the differential action limiting torque. The ABS control has priority over this control.

This function improves stability during braking.

8. 1 RANGE CONTROL

When the 1 range is selected, the TCM makes control to increase the differential action limiting torque.

This function improves driving performance and traction.

9. CONTROL SYSTEM

The TCM is constantly monitoring the driving conditions of the vehicle using the eleven input signals. Based on the conditions it has determined, the TCM adjusts the duty ratio of current to the transfer duty solenoid thus changing the engagement of the multi-plate clutch. The input signals are used also for automatic transmission control.

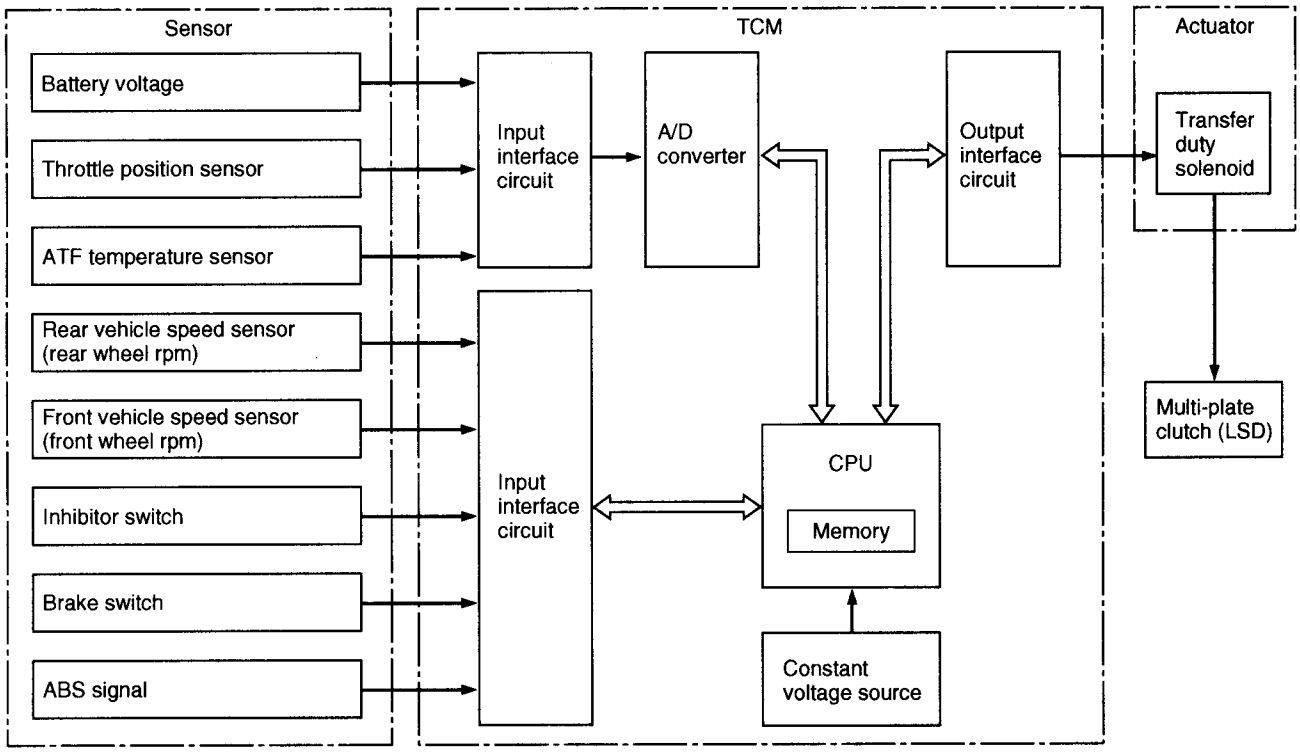

NF0493

MEMO

M: TRANSFER CONTROL

1. NON-TURBO MODEL

The transfer hydraulic pressure control unit includes a valve body attached to the side of the extension case through a gasket and separator plate.

The pressurized fluids for the transfer hydraulic pressure control (line pressure and pilot pressure) are supplied from the oil pump by way of the passages formed in the transmission case and then the passages in the extension case that lead to the hydraulic circuit in the transfer valve body.

The line pressure is regulated by the transfer control valve whose opening is controlled by the transfer pressure created by the transfer duty solenoid.

- The transfer duty solenoid is controlled by the TCM. The TCM changes the solenoid controlling duty ratio according to the driving conditions.
- The transfer duty solenoid creates the transfer pressure from the pilot pressure. The transfer pressure is applied to the transfer control valve and adjusts the valve's opening.
- The line pressure directly led to the transfer control valve, on the other hand, is regulated by the transfer control valve and becomes the transfer clutch pressure.
- The transfer clutch pressure is applied to the transfer clutch and engages the clutch to a controlled degree.

In this way, the degree of transfer clutch engagement is varied so that optimum torque is distributed to the rear wheels according to vehicle driving conditions.

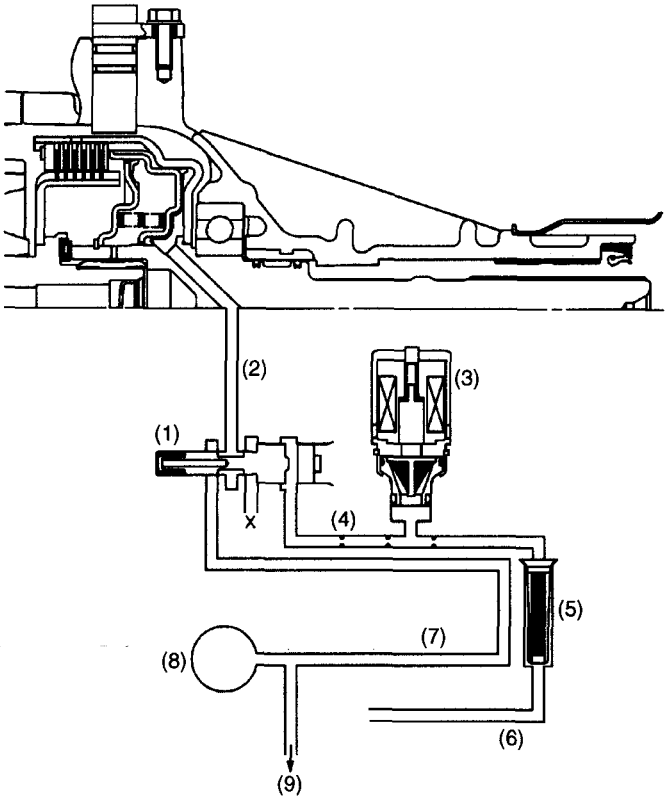

NF0091

(1) Transfer control valve
(2) Transfer clutch pressure
(3) Transfer duty solenoid
(4) Transfer pressure
(5) Filter
(6) Pilot pressure
(7) Line pressure
(8) Oil pump
(9) Control valve

2. TURBO MODEL

The drive power distribution system includes a valve body attached to the side of the extension case through a gasket and separator plate.

The pressurized fluids for the drive power distribution system (line pressure and pilot pressure) are supplied from the oil pump by way of the passages formed in the transmission case and then the passages in the extension case that lead to the hydraulic circuit in the transfer valve body.

The line pressure is regulated by the transfer control valve whose opening is controlled by the transfer pressure created by the transfer duty solenoid.

- The pilot pressure created by passing through the pilot valve in the transmission's hydraulic control assembly is further regulated into the transfer pressure by the transfer duty solenoid.
- The transfer duty solenoid is controlled by the TCM. The TCM changes the solenoid controlling duty ratio according to driving conditions.
- The transfer pressure thus created is applied to the transfer control valve and adjusts the valve's opening.
- The line pressure directly led to the transfer control valve, on the other hand, is regulated by the transfer control valve and becomes the transfer clutch pressure.
- The transfer clutch pressure is applied to the multi-plate clutch (LSD) and engages the clutch to a controlled degree.

In this way, the degree of multi-plate clutch engagement is varied so that optimum torque is distributed to the rear wheels.

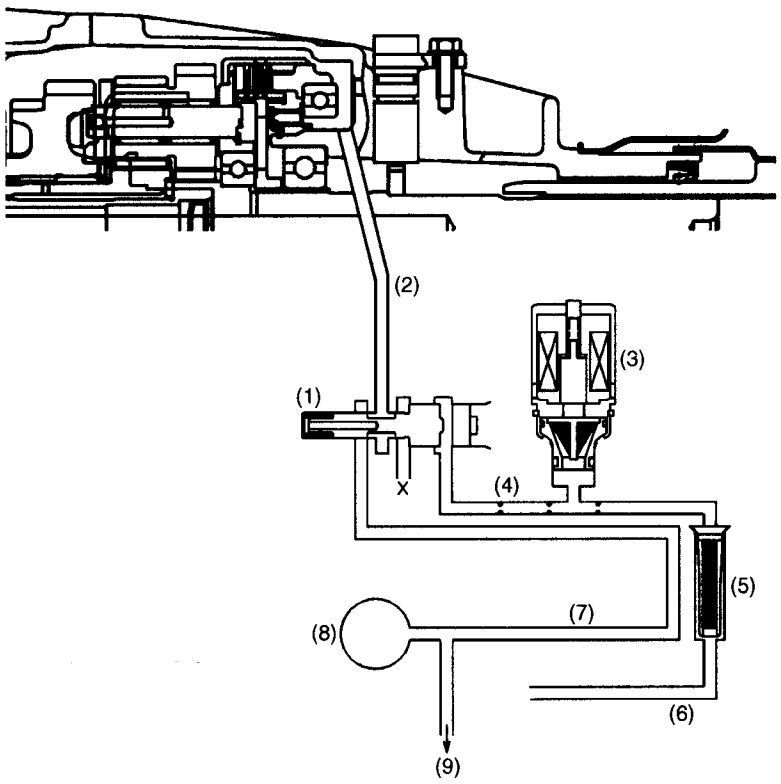

(1) Transfer control valve
(2) Transfer clutch pressure
(3) Transfer duty solenoid
(4) Transfer pressure
(5) Filter
(6) Pilot pressure
(7) Line pressure
(8) Oil pump
(9) Control valve

3. On-board Diagnostics System

A: FUNCTION

The on-board diagnostics system detects and stores in the form of a code a fault that has occurred in any of the following input and output signal systems.

Rear vehicle speed sensor	Transfer duty solenoid	Low clutch timing solenoid
Front vehicle speed sensor	ATF temperature sensor	Torque converter turbine speed sensor
Throttle position sensor	Engine speed signal circuit	–
Shift solenoid 1	Line pressure duty solenoid	–
Shift solenoid 2	AT load signal circuit	–
2-4 brake timing solenoid	Torque control signal circuit	–
Lock-up duty solenoid	2-4 brake duty solenoid	–

If a fault has been detected, the system tells the fault by causing the AT OIL TEMP warning light to operate as follows:

- Repeated flashing at 4 Hz frequency ...Errors such as battery trouble
- Repeated flashing at 2 Hz frequency ...No faults in the system
- Flashing at different intervals and frequencies ...Diagnostic trouble codes of corresponding faults
- Continued illumination of light ...Fault in inhibitor switch, idle switch, or wiring

B: OPERATION OF AT OIL TEMP WARNING LIGHT

On starting the engine, the AT OIL TEMP warning light illuminates and then goes out as shown in the "Normal" diagram below.
If any problem exists, the light continues flashing as shown in the "Abnormal" diagram below.

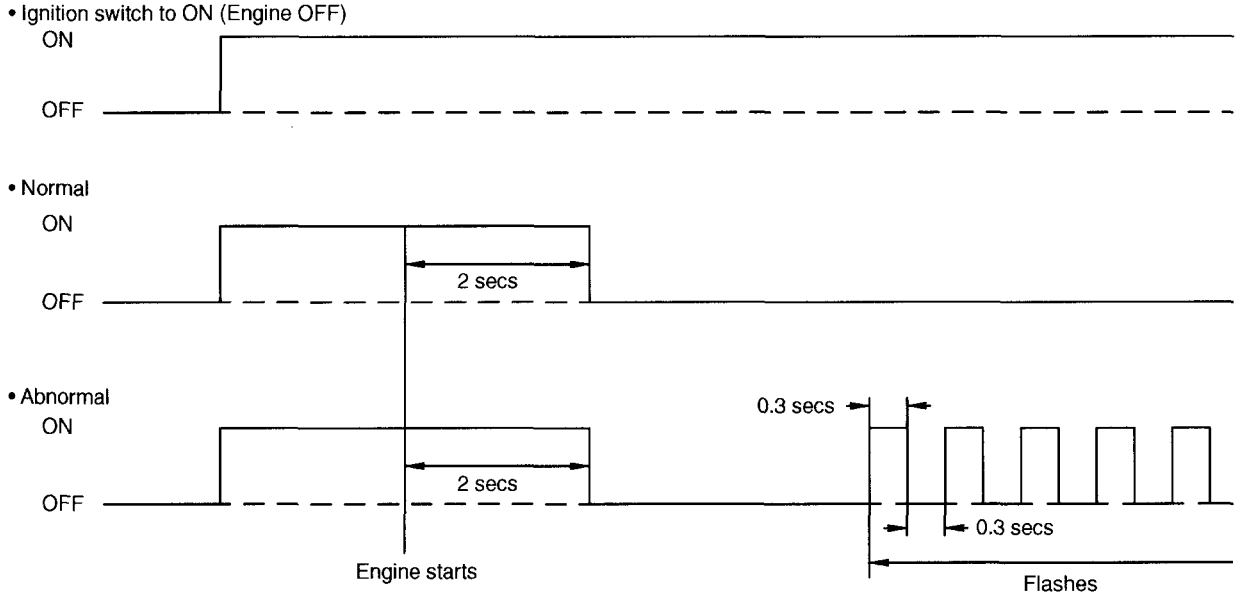

S3H0227B

C: DIAGNOSTIC TROUBLE CODE (DTC)

DTC	Faulty component
11	Engine speed signal circuit
23	Mass air flow signal circuit
27	ATF temperature sensor
31	Throttle position sensor
33	Front vehicle speed sensor
36	Torque converter turbine speed sensor
38	Torque control signal circuit
45	Intake manifold pressure signal circuit
71	Shift solenoid 1
72	Shift solenoid 2
73	Low clutch timing solenoid
74	2-4 brake timing solenoid
75	Line pressure duty solenoid
76	2-4 brake duty solenoid
77	Lock-up duty solenoid
79	Transfer duty solenoid
93	Rear vehicle speed sensor

D: SELECT MONITOR

Various sensor and switch data as well as diagnostic trouble codes for faults that are currently present and occurred in the past can be monitored by connecting the select monitor to the select monitor terminal located under the instrument panel.

4. Fail-safe Function

The fail-safe control function ensures minimum level of driveability even if a fault should occur in the vehicle speed sensors, throttle position sensor, inhibitor switch, or any of the solenoids.

- FRONT AND REAR VEHICLE SPEED SENSORS

A dual speed-sensing system is used. The speed signal is taken from the transmission (by the output shaft speed sensor). Even if one sensor system fails, the vehicle can be controlled normally with the other normally operating sensor system.

If both the front and rear vehicle speed sensors become faulty, the vehicle is made to operate only in the 1st and 3rd speeds.

- THROTTLE POSITION SENSOR

If the throttle position sensor becomes faulty, the throttle opening is fixed at the predetermined angle.

- INHIBITOR SWITCH

If the TCM receives different signals simultaneously from a faulty inhibitor switch, it selects a range in the following priority:

D > N (P) > R > 3 > 2 > 1 >

- SHIFT SOLENOID 1 AND 2

If a fault occurs in either of solenoids 1 and 2, both the solenoids are de-energized, and the gear is held in the 3rd.

If both the solenoids should fail, the TCM invariably selects and keeps the 3rd gear.

- LINE PRESSURE DUTY SOLENOID

If the line pressure duty solenoid fails, the solenoid is de-energized and the line pressure is raised to the maximum to enable the vehicle to operate.

In this condition, the usable gears are limited to the 1st and 3rd.

- LOCK-UP DUTY SOLENOID

If the lock-up duty solenoid fails, the solenoid is de-energized and the lock-up clutch is disengaged.

- TRANSFER DUTY SOLENOID

When the transfer duty solenoid becomes faulty, it is de-energized. This causes maximum oil pressure to be applied to the transfer clutch so that the power is always transmitted to the rear axle (direct-coupled AWD condition).

- 2-4 BRAKE DUTY SOLENOID

If a fault occurs in the 2-4 brake duty solenoid, the solenoid is de-energized and the usable gears are limited to the 1st and 3rd.

- LOW-CLUTCH TIMING SOLENOID

If a fault occurs in the low clutch timing solenoid, the solenoid is de-energized and the usable gears are limited to the 1st and 3rd.

- 2-4 BRAKE TIMING SOLENOID

If a fault occurs in the 2-4 brake timing solenoid, the solenoid is de-energized and the usable gears are limited to the 1st and 3rd.

- TORQUE CONVERTOR TURBINE SPEED SENSOR

If a fault occurs in the torque converter turbine speed sensor, the usable gears are limited to the 1st and 3rd.

5. Transmission Mounting

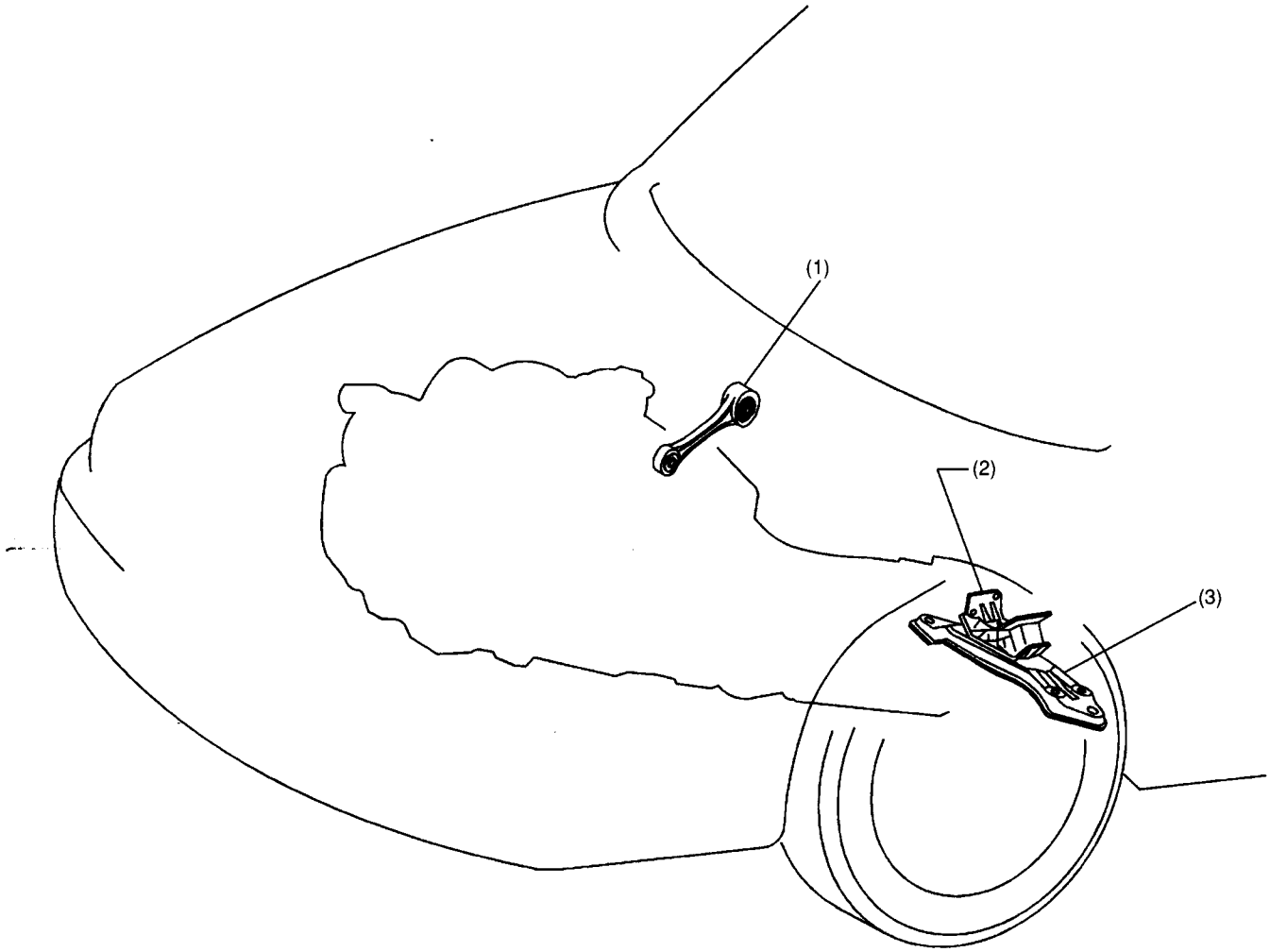

B2H3145B

(1) Pitching stopper
(2) Cushion rubber
(3) Cross member

MANUAL TRANSMISSION AND DIFFERENTIAL

MT

		Page
1.	General	2
2.	Reverse Check Mechanism	4
3.	Center Differential	10
4.	Transmission Mounting	15

1. General

The Impreza's single-range manual transmission is of a full-time all-wheel-drive design integrating a transmission assembly, front differential, and transfer gear assembly with center differential into a single unit. The transmission creates five forward speeds and one reverse using the corresponding gears all provided with inertia lock-key type synchronizers.

The transmission and front differential are housed in an aluminum case which is split into right and left halves and constitutes also a clutch housing. Located at the rear and joined each other are the transfer case and extension case which house the transfer gears and center differential as well as part of the transmission assembly.

The major features of the transmission are as follows:

- The forward speed gears are helical gears featuring high tooth face strength, large tooth contact areas, and quiet operation.
- Reversing rotation is achieved by making a slidable reverse idler gear engage with both the reverse drive gear on the mainshaft and the reverse driven gear integral with the 1st-2nd synchronizer hub on the drive pinion shaft.

The center differential compensates for the difference in front and rear axle speeds. It consists of a bevel gear set and a viscous coupling located at its rear end which are housed in a single case. The center differential, together with a pair of transfer gears, transmits the power from the transmission to the drive pinion shaft (front wheel drive shaft) and the rear drive shaft. The viscous coupling functions as a differential-action-control element.

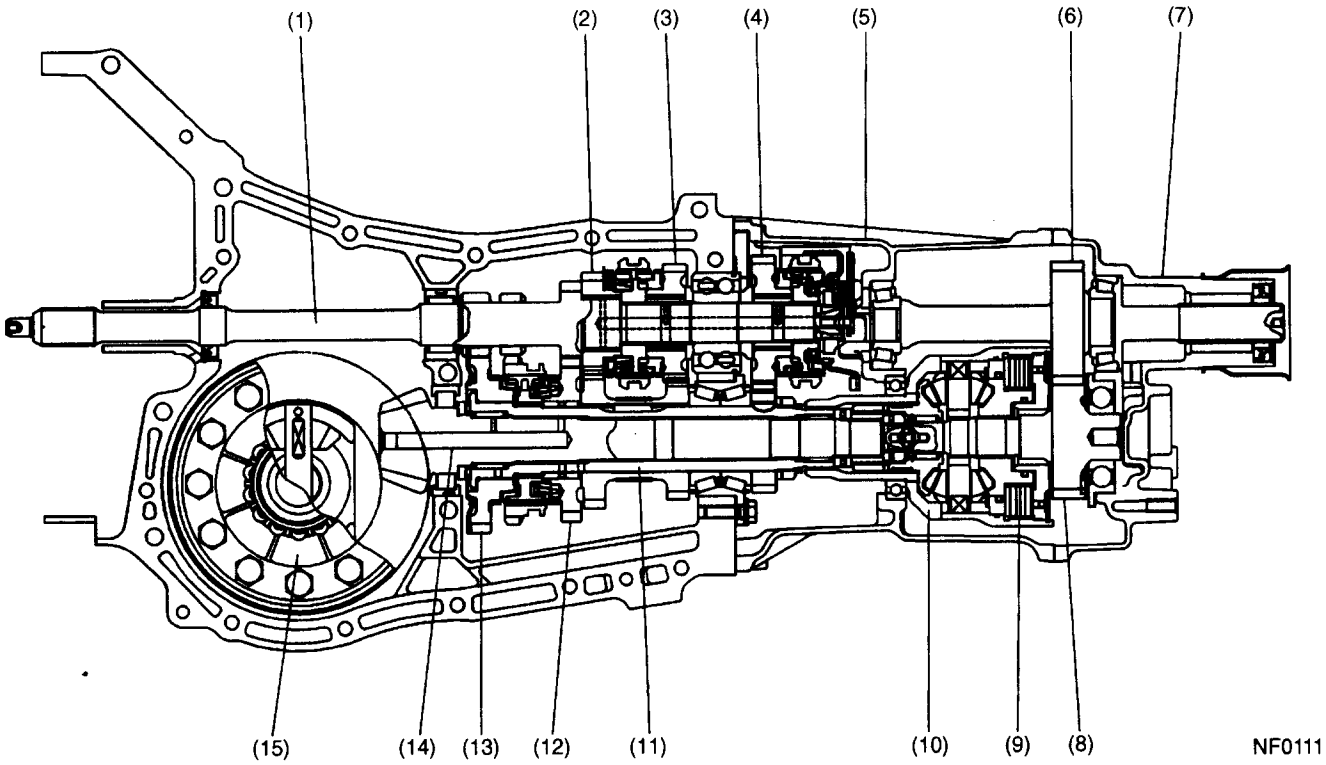

(1) Mainshaft
(2) 3rd drive gear
(3) 4th drive gear
(4) 5th drive gear
(5) Transfer case
(6) Transfer driven gear
(7) Extension case
(8) Transfer drive gear
(9) Viscous coupling
(10) Center differential assembly
(11) Driven shaft (countershaft)
(12) 2nd driven gear
(13) 1st driven gear
(14) Drive pinion shaft
(15) Front differential assembly

2. Reverse Check Mechanism

Located in the transfer case, the reverse check mechanism prevents a direct 5th-to-reverse shift by using a selector arm and cam combination which allows the gear to be shifted into the reverse only after it has been returned once into the neutral.

A: CONSTRUCTION

The construction of the reverse check mechanism is as shown in the drawing on the opposing page.

The reverse check sleeve is bolted to the transfer case and houses the mechanism's main components.

The reverse accent shaft is slidable inside the reverse check sleeve and its smaller-diameter end is fitted with the reverse check cam. The cam is rotatable and axially movable on the shaft but its leftward movement is restricted by a step formed on the sleeve's inner wall.

The reverse accent shaft has hollows in both ends. In the left end hollow are the 1st return spring and its cap and in the right end hollow is the reverse return spring which pushes the shaft leftward.

Around the check cam is the reverse check spring whose left end applies simultaneous leftward and rotational forces to the cam.

Both the reverse check spring and reverse return spring are retained at their right ends by the reverse check plate which is held in place by the snap ring.

The reverse accent shaft has a V-groove in which the detent ball is pressed by the reverse accent spring fitted through the hole in the reverse check sleeve.

The reverse check sleeve and reverse accent shaft have a slot and a notch at their bottoms, respectively, and the selector arm is inserted in the notch through the slot.

REVERSE CHECK MECHANISM

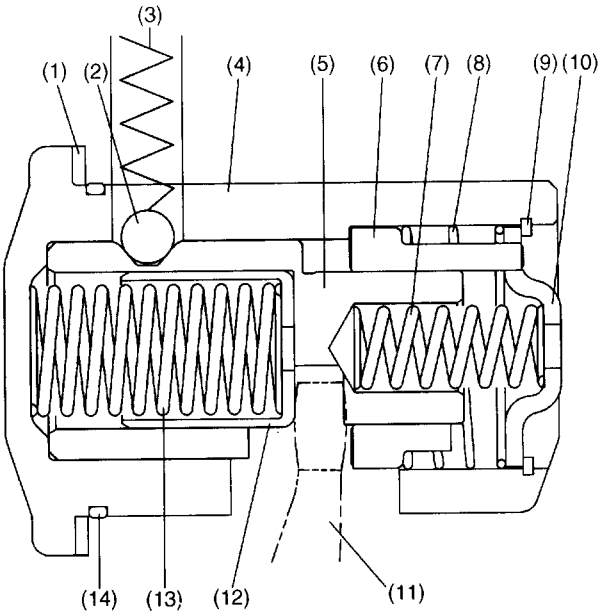

NF0114

(1) Select adjust shim
(2) Detent ball
(3) Reverse accent spring
(4) Reverse check sleeve
(5) Reverse accent shaft
(6) Reverse check cam
(7) Reverse return spring
(8) Reverse check spring
(9) Snap ring
(10) Reverse check plate
(11) Selector arm
(12) Spring cap
(13) 1st return spring
(14) O-ring

B: OPERATION

The drawing below shows the state of the reverse check mechanism when the selector arm is in the neutral position. The 1st and 2nd gears will be selected if the selector arm is moved leftward from this point to a stop and then turned in either way. A rightward movement of the arm to a stop will enable selection of the 5th and reverse gears. In the neutral position, the selector arm receives a rightward force (force toward the 5th and reverse gear side) from the 1st return spring and a leftward force (force toward the 1st and 2nd gear side) from the reverse return spring to stay in that position.

The following explanation describes how the selector arm and reverse check mechanism operate when the driver selects the 5th gear and then selects the reverse gear.

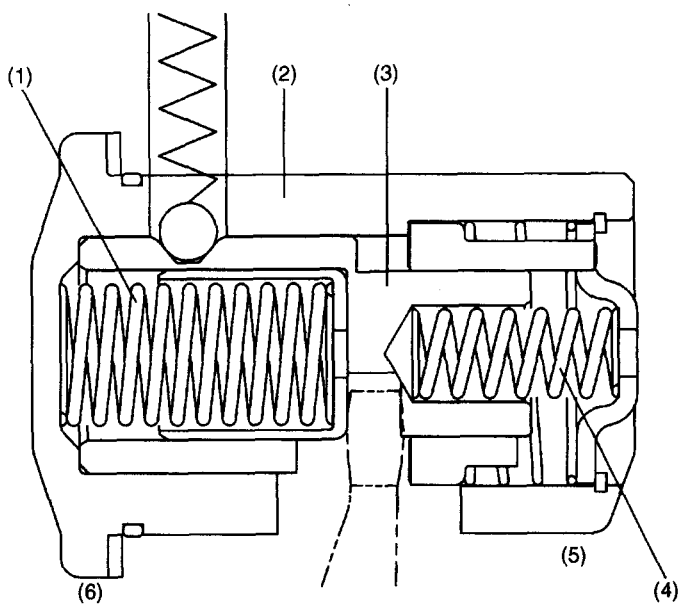

NF0115

(1) 1st return spring
(2) Reverse check sleeve
(3) Reverse accent shaft
(4) Reverse return spring
(5) 5th and reverse gear side
(6) 1st and 2nd gear side

1. WHEN SELECTOR ARM IS MOVED TOWARD 5TH AND REVERSE GEAR SIDE

The selector arm moves rightward while pushing both the reverse accent shaft and reverse check cam simultaneously.

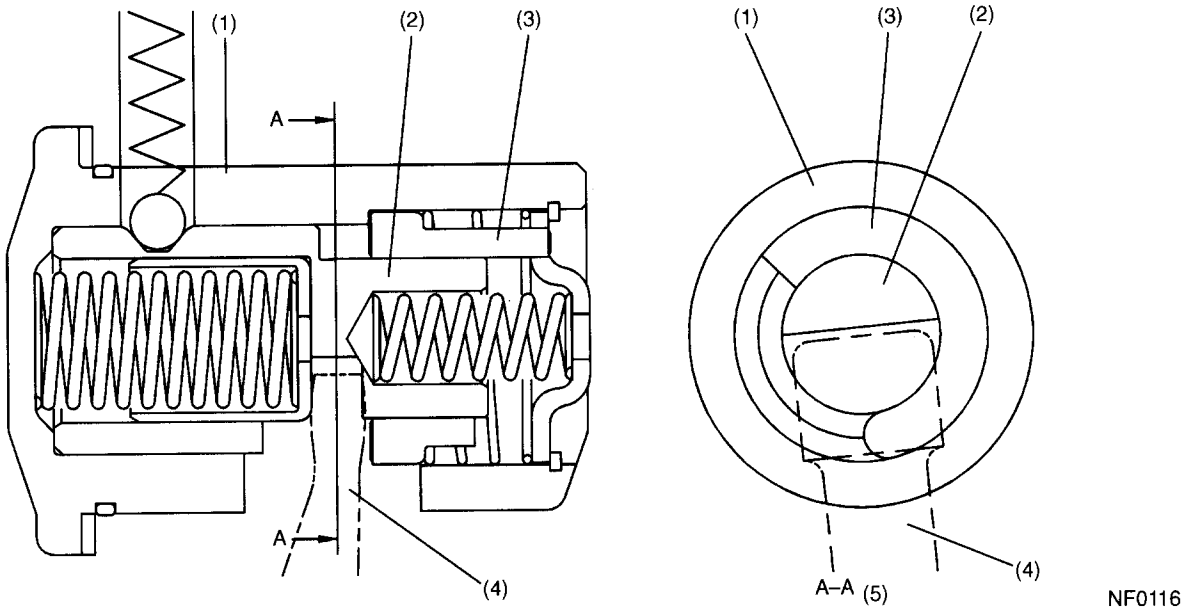

(1) Reverse check sleeve
(2) Reverse accent shaft
(3) Reverse check cam
(4) Selector arm
(5) Neutral position

2. WHEN SHIFT IS MADE TO 5TH GEAR

The selector arm is turned toward the 5th gear selection direction. When the arm clears the edge of the reverse check cam as it turns, the cam becomes free of the selector arm's pressure and returns to its original position by the force of the reverse check spring.

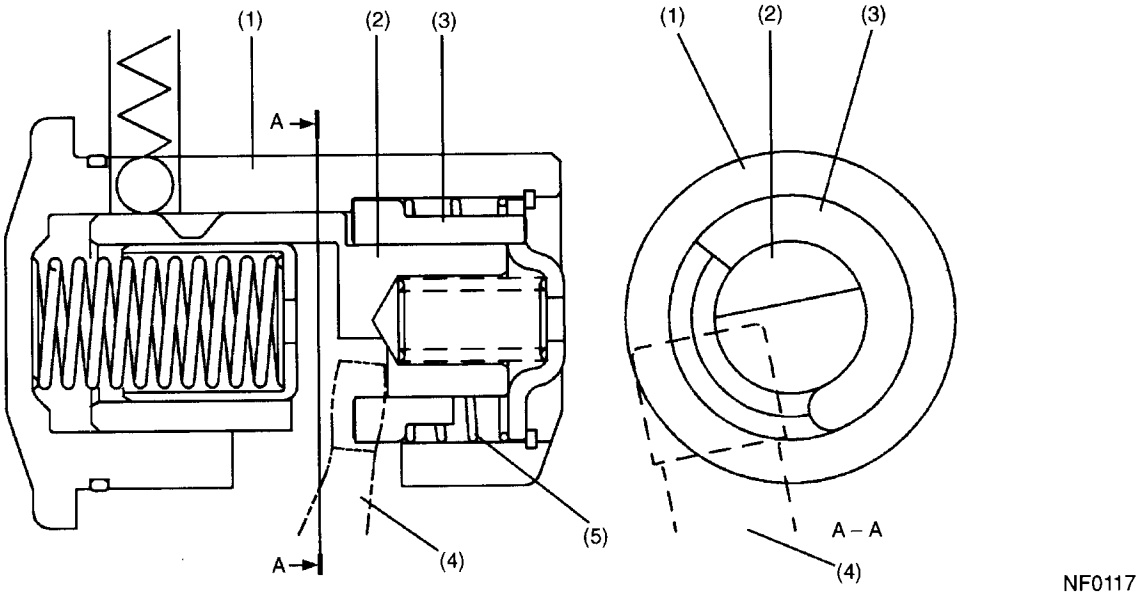

(1) Reverse check sleeve
(2) Reverse accent shaft
(3) Reverse check cam
(4) Selector arm
(5) Reverse check spring

3. WHEN A SHIFT FROM 5TH TO REVERSE IS ATTEMPTED

The selector arm turns toward the reverse gear while pushing the reverse accent shaft rightward and the reverse check cam counterclockwise (as viewed in the direction of arrows A).

The reverse check cam, however, stops to rotate at a point where its stopper hits against the reverse check plate (this point corresponds to the neutral position in terms of the angle) and prevents the selector arm from moving toward the reverse gear selection direction. The selector arm is then axially pushed to the neutral position by the reverse accent shaft which is given a leftward force by the reverse return spring.

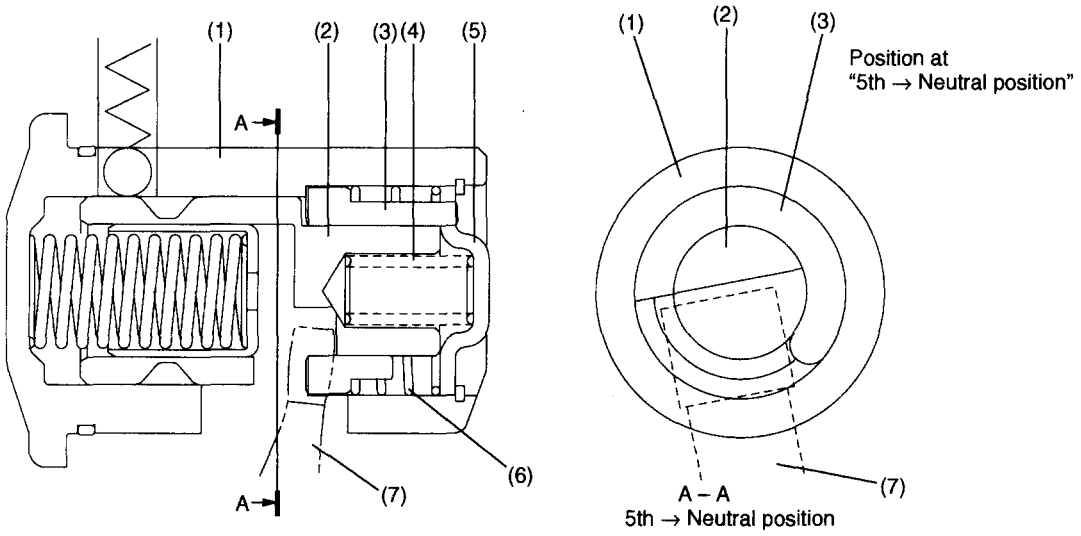

NF0118

(1) Reverse check sleeve
(2) Reverse accent shaft
(3) Reverse check cam
(4) Reverse return spring
(5) Reverse check plate
(6) Snap ring
(7) Selector arm

4. WHEN A SHIFT TO REVERSE IS MADE AFTER RETURN OF SELECTOR ARM TO NEUTRAL

As the ends of the reverse accent shaft and the reverse check cam are on the same plane, the selector arm now can turn toward the reverse gear selection direction after pushing leftward both the shaft and cam simultaneously.

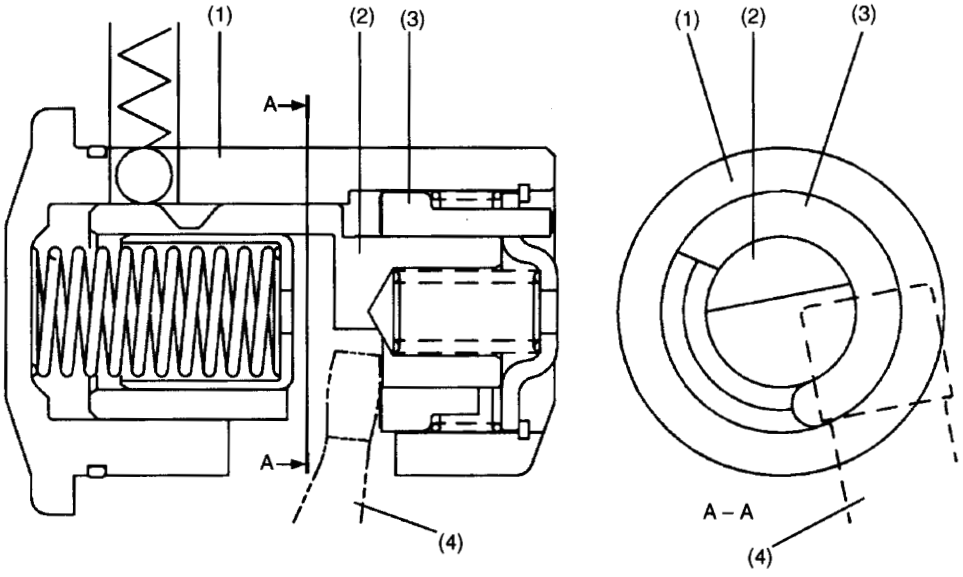

NF0119

(1) Reverse check sleeve
(2) Reverse accent shaft
(3) Reverse check cam
(4) Selector arm

3. Center Differential

A: CONSTRUCTION

The center differential consists of a set of bevel gears and a viscous coupling.

The center differential has the following two functions: distributing the engine torque to the front and rear wheel drive shafts and absorbing the difference in rotating speed between the front and rear wheels.

The engine torque enters the center differential case from the transmission's driven shaft. The torque is then distributed through the bevel gear set directly to the drive pinion shaft and via the transfer drive and driven gears to the rear drive shaft.

The viscous coupling limits the bevel gear set's differential action when either front or rear wheels spin so that adequate torques are transmitted to the front and rear wheels and proper traction is obtained.

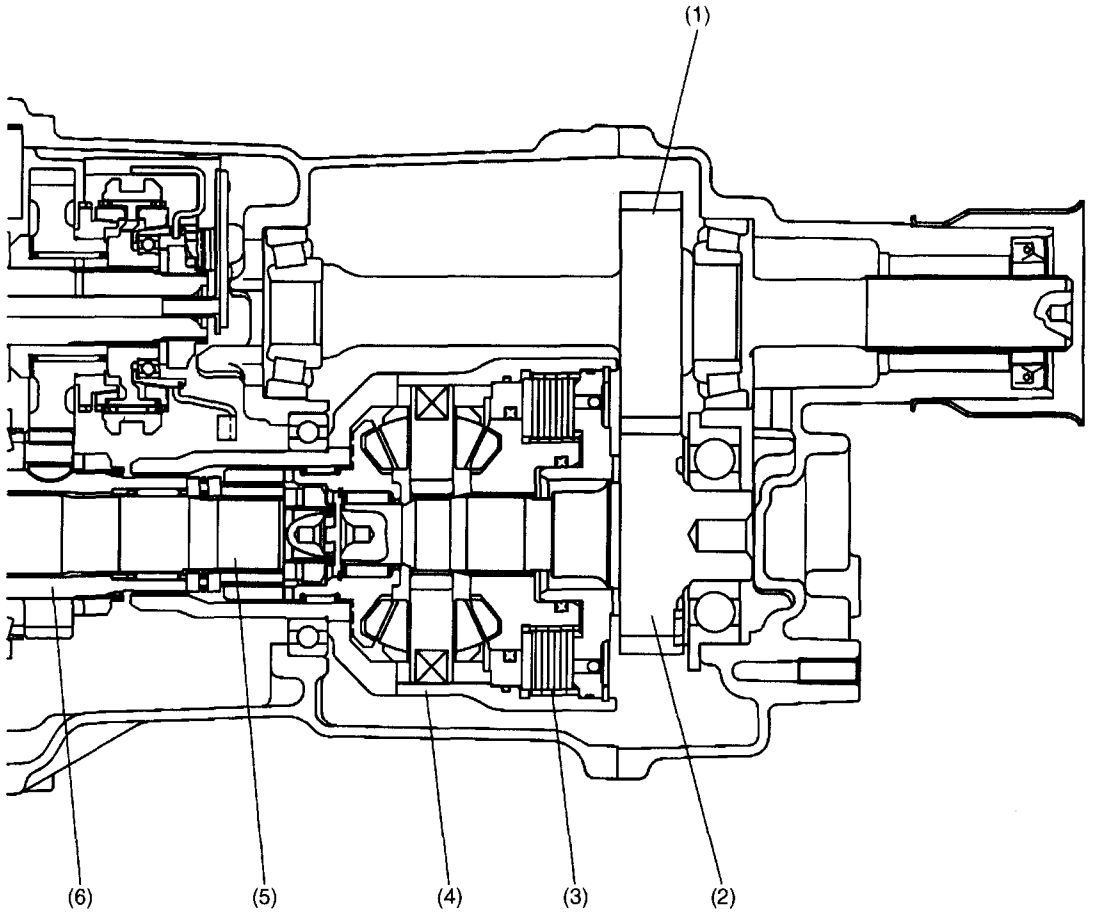

NF0120

(1) Transfer driven gear
(2) Transfer drive gear
(3) Viscous coupling
(4) Center differential assembly (with viscous coupling)
(5) Drive pinion shaft
(6) Driven shaft

B: MECHANISM OF VISCOUS COUPLING

The viscous coupling consists of a number of alternately arranged inner and outer plates and air-and-silicone oil mixture filled into a sealed space that is formed by the center differential case and the rear side gear of the differential gear set. The inner plates have their inner perimeters splined to the side gear and the outer plates have their outer perimeters splined to the center differential case. The outer plates are held apart by spacer rings. There are no spacer rings between the inner rings, so the inner rings are movable slightly in axial directions. X-section rings are used to prevent leakage of silicone oil which would otherwise occur if the oil is pressurized due to large difference in front and rear axle speeds.

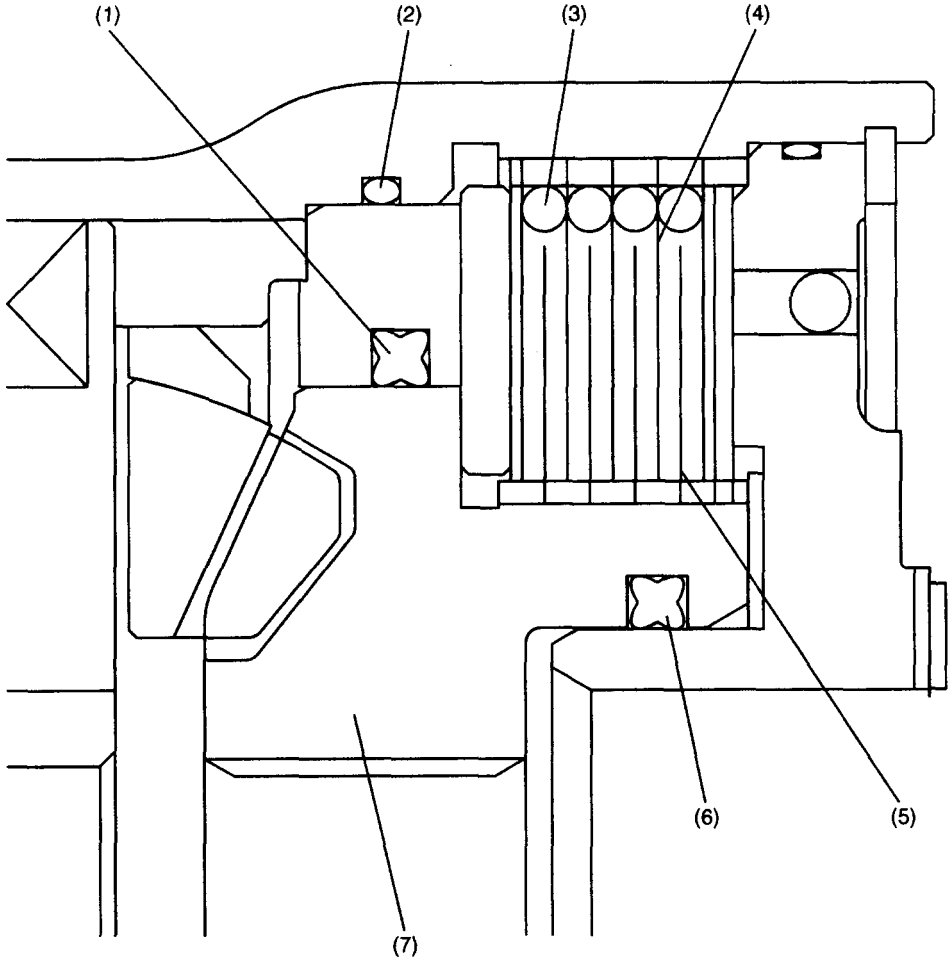

NF0121

(1) X-section ring
(2) O-ring
(3) Spacer ring
(4) Outer plate
(5) Inner plate
(6) X-section ring
(7) Side gear (rear)

1. TORQUE CHARACTERISTICS

When a speed difference occurs between the center differential case and the rear side gear, a shear force is generated in the silicone oil placed between the outer and inner plates. The torque is then transmitted by the silicone oil between the center differential case and the rear side gear.

The greater the speed difference, the greater the shear force generated in the silicone oil. The relationship between the torque transmission and the speed difference is shown in the figure below. As can be seen from the figure, the smaller the speed difference, the smaller the torque transmission and the differential action.

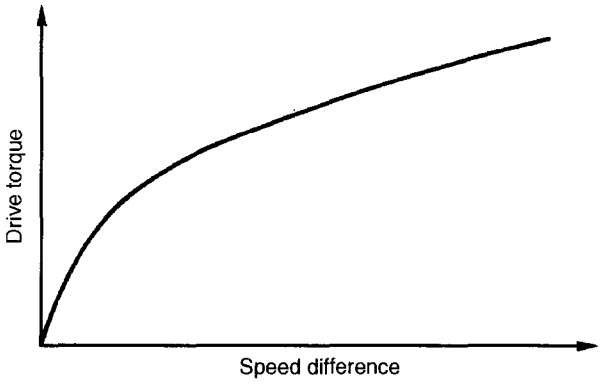

NF0122

2. HUMP PHENOMENON

Silicone oil is heated and expanded as differential action continues. This causes the pressure of air inside the viscous coupling to increase and the pressure of oil between plates to decrease. As a result, the inner and outer plates are pushed together. This direct plate-to-plate contact causes a non-viscous operation to occur, and this phenomenon is called "hump".

The hump eliminates the rotating speed difference between the center differential case and the rear side gear (or locks the differential), so soon after it has occurred, the internal pressure and temperature drop. The viscous coupling then returns to the normal shear torque transmitting operation. (The hump phenomenon does not occur under normal operating conditions.)

C: FUNCTION

When there is no speed difference between the front and rear wheels, the center differential delivers the engine torque to the front and rear wheels at a ratio of 50:50.

When a rotating speed difference occurs between the front and rear wheels, the center differential operates to absorb it in a controlled way by the function of the viscous coupling.

1. DURING NORMAL DRIVING

During straight-line driving on a flat road at a constant speed, all the four wheels rotate at the same speed. The center differential delivers engine torque evenly to the front and rear drive axles. The viscous coupling does not generate shear torque because there is no relative movements between the inner and outer plates.

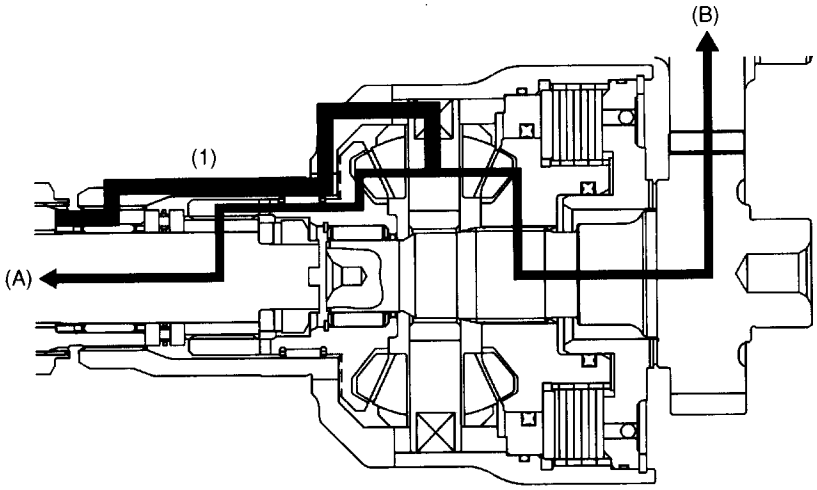

NF0123

(1) Engine torque (A) To front differential (B) To rear differential

2. DURING TURNS AT LOW SPEEDS

During turns at low speeds, rotating speed difference occurs between the front and rear wheels, as well as between the left and right wheels. More particularly, the front wheels rotate faster than the rear wheels. The center differential then acts to absorb the speed difference to enable smooth driving.

Although the speed difference is small under this condition, operation of the viscous coupling causes more torque to be transmitted to the rear than to the front.

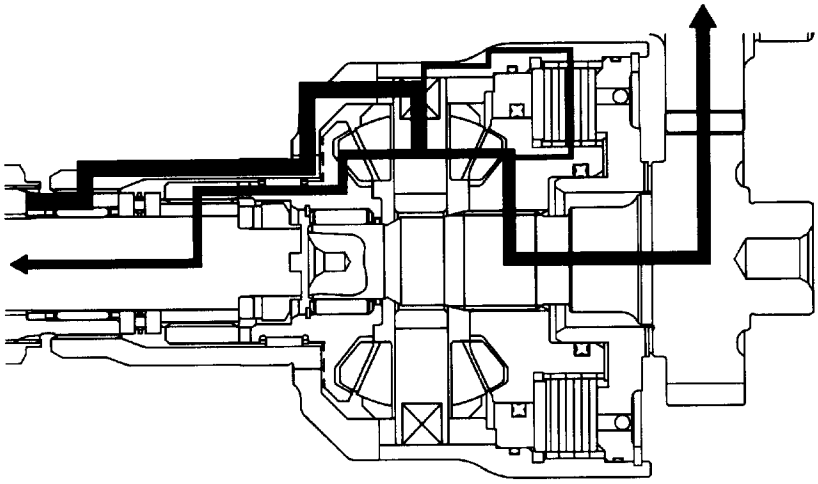

NF0124

3. DRIVING ON ROUGH OR SLIPPERY ROADS

- When front wheels are on a slippery surface

When the front wheels begin to spin, the resulting speed difference between the front and rear drive shafts causes the viscous coupling to generate significant amount of shear torque. As a result, the torque distributed to the rear wheels becomes much larger than that distributed to the spinning front wheels. The traction and driving stability are thus ensured on a rough or slippery road.

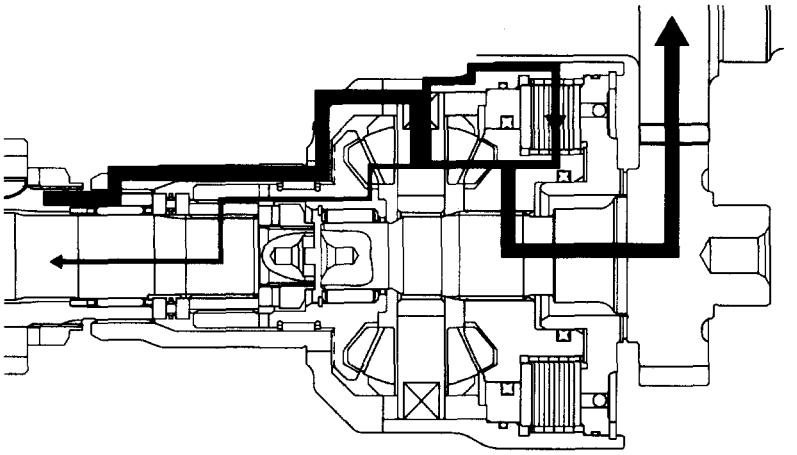

NF0125

- When rear wheels are on a slippery surface

When the vehicle is accelerated quickly from a standing start with the rear wheels on a slippery surface, the distribution of the vehicle weight on the front and rear wheels changes and the rear wheels start spinning. Due to the resulting speed difference between the front and rear drive shafts, the viscous coupling generates a significant amount of shear torque, now in the direction opposite to that generated when the front wheels are on a slippery surface. As a result, the torque distributed to the front wheels becomes much larger than that distributed to the rear wheels.

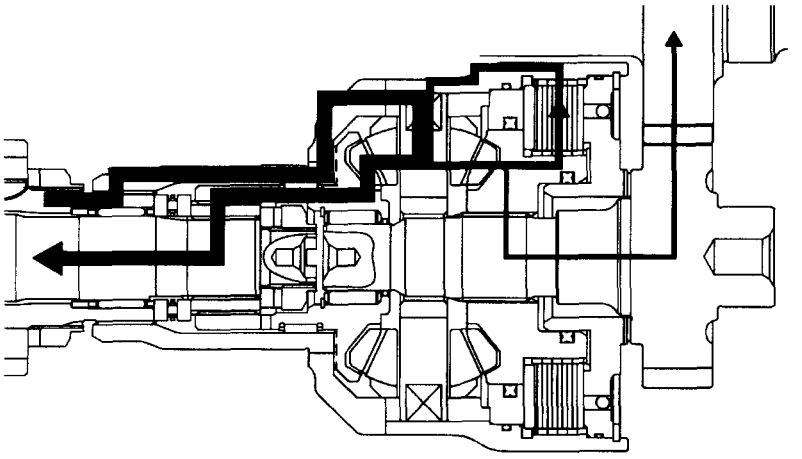

NF0126

4. Transmission Mounting

A: GENERAL

The pitching stopper is made of resin. It is a non-adjusting type and has a slot on the transmission end as a bolt hole.

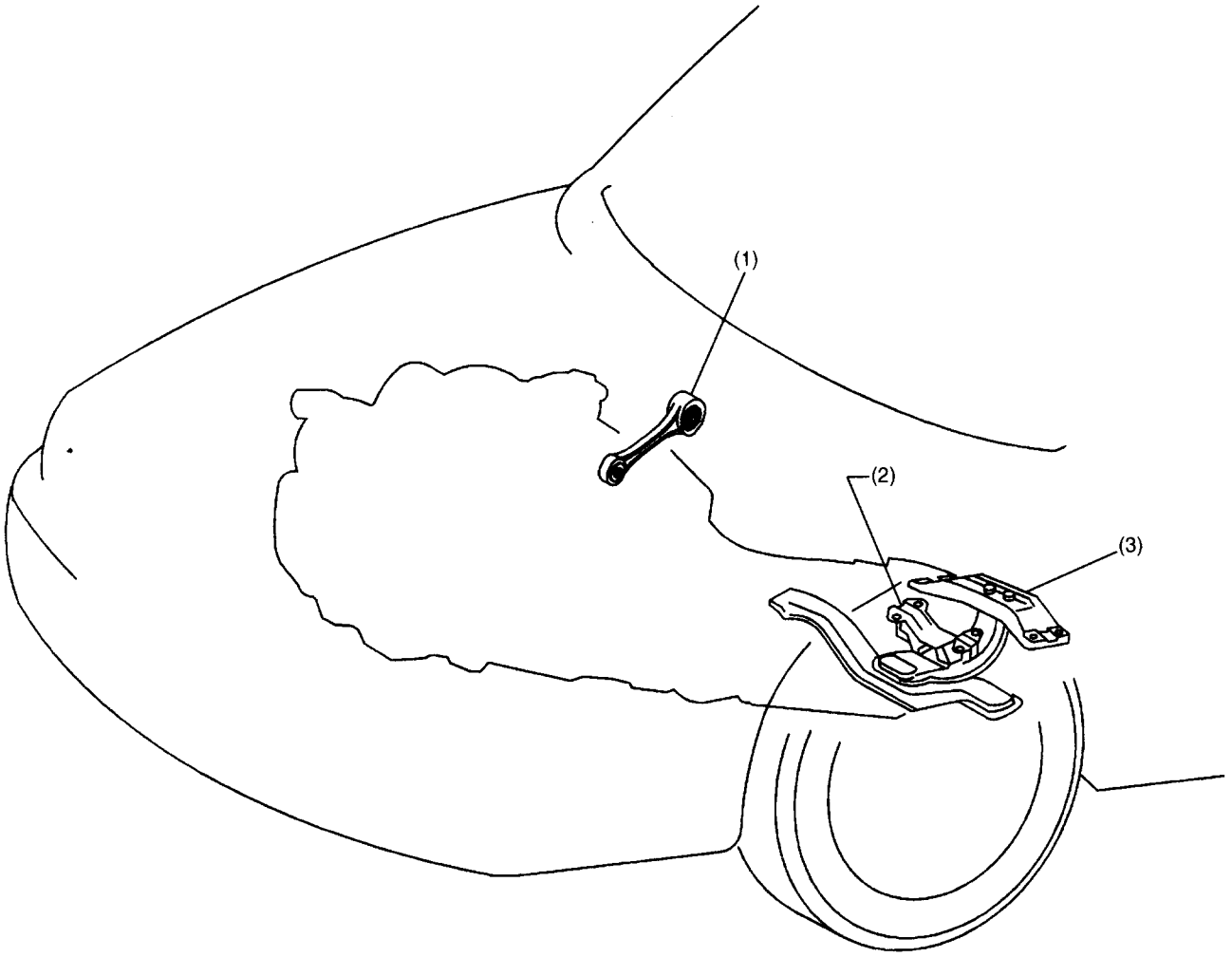

NF0128

(1) Pitching stopper
(2) Cushion rubber
(3) Cross member

MEMO

CLUTCH CL

		Page
1.	Outline	2
2.	Operation	3
3.	Cross Sectional View	4
4.	Flywheel	6
5.	Hydraulic Clutch Pedal System	7

1. Outline

A: NON-TURBO MODEL

- The clutch control operates the release fork using the hydraulic pressure generated in the master cylinder when the pedal is depressed. This ensures smooth and reliable clutch control with minimum frictional resistance.

- The clutch itself is a push type clutch. When the clutch pedal is depressed, the self-aligning release bearing is caused to slide on a guide pressing the center of the diaphragm spring. The warped diaphragm spring disengages the pressure plate from the clutch disc.
The clutch using a diaphragm spring has the advantage of little variation in push load even when the clutch disc facing is worn.
The diaphragm spring is located inside the clutch cover.

- The clutch has a clutch disc between the flywheel and the pressure plate.

- Inside the clutch cover, there is a diaphragm spring and a pressure plate combined with each other by means of strap plates, which also serve to prevent the pressure plate from turning.

B: TURBO MODEL

- The turbo model adopts a hydraulic control which is appropriate for increased clutch load.

- The clutch control system operates the release fork using the hydraulic pressure that is generated in the master cylinder when the clutch pedal is depressed.

- The clutch itself is a pull type clutch. When the clutch pedal is depressed, the self-aligning release bearing is caused to slide on a guide pulling the center of the diaphragm spring. The warped diaphragm spring disengages the pressure plate from the clutch disc.
The clutch using a diaphragm spring has the advantage of little variation in push load even when the clutch disc facing is worn.
The diaphragm spring is located inside the clutch cover.

- The clutch has a clutch disc between the flywheel and the pressure plate.

- Inside the clutch cover, there is a diaphragm spring and a pressure plate combined with each other by means of strap plates, which also serve to prevent the pressure plate from turning with respect to the clutch cover.

2. Operation

A: NON-TURBO MODEL

Applying foot pressure to the clutch pedal moves the release lever. This causes the release bearing to slide on the guide, pressing the center of the diaphragm spring. The spring is warped and the force having pressed the pressure plate is lost. As a result, the flywheel, clutch disc and pressure plate are disengaged, disconnecting the driving power.

The push type clutch has the point of action at the tips of the diaphragm spring fingers, through which the pressure plate is pressed to the clutch disc. When the power transmission is to be interrupted, the diaphragm spring is forced to warp using the pivots established on the inward side of the spring finger tips (on the principle of the lever and fulcrum) to disengage the pressure plate from the clutch disc.

B: TURBO MODEL

Applying foot pressure to the clutch pedal moves the release lever. This causes the release bearing to slide on the guide, pulling the center of the diaphragm spring. The spring is warped and the force having pressed the pressure plate is lost. As a result, the flywheel, clutch disc and pressure plate are disengaged, disconnecting the driving power.

In the pull type clutch, the diaphragm spring has the point of action located inward from the tip, through which the pressure plate is pressed against the clutch disc. When the power transmission is to be interrupted, the diaphragm spring is forced to pivot on the tip and warp away from the pressure plate (on the principle of lever and fulcrum).

3. Cross Sectional View

A: NON-TURBO MODEL

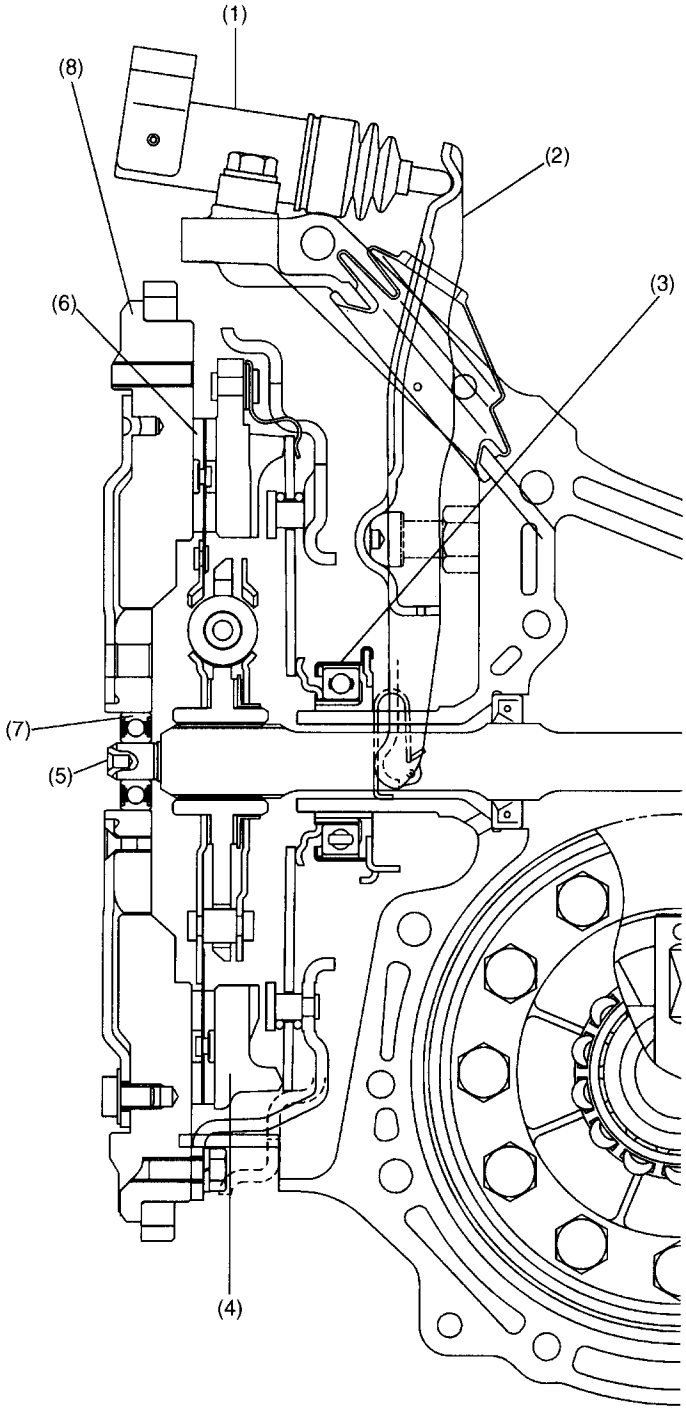

NF0451

(1) Operating cylinder
(2) Release lever
(3) Release bearing
(4) Clutch cover
(5) Transmission main shaft
(6) Clutch disc
(7) Ball bearing
(8) Flywheel

B: TURBO MODEL

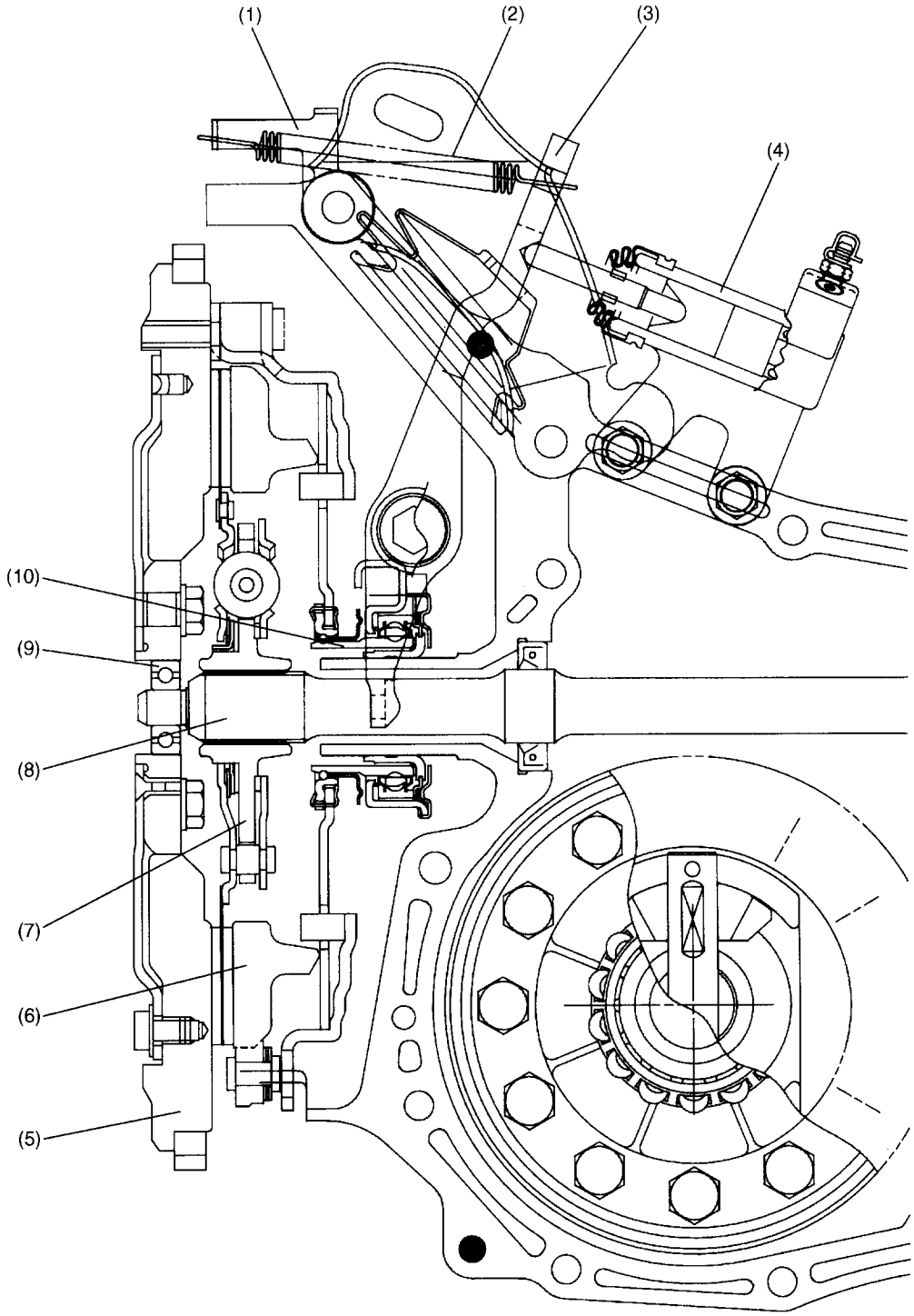

NF0211

(1) Spring bracket
(2) Spring
(3) Release lever
(4) Operating cylinder
(5) Flywheel
(6) Clutch cover
(7) Clutch disc
(8) Transmission main shaft
(9) Ball bearing
(10) Release bearing

4. Flywheel

A: OUTLINE

The flywheel is of a flexible type, consisting of a drive plate, reinforcement and mass flywheel.

This type of flywheel is characterized by less vibration and less noise, since it transmits the engine power from the crankshaft to the clutch disc through the drive plate and mass flywheel.

5. Hydraulic Clutch Pedal System

A: CONSTRUCTION

- The hydraulic clutch pedal is connected to the master cylinder via a rod.
- The clutch pedal and brake pedal are mounted on the same bracket.
- The clutch pedal has a mechanism that reduces the initial force required to depress the clutch pedal.

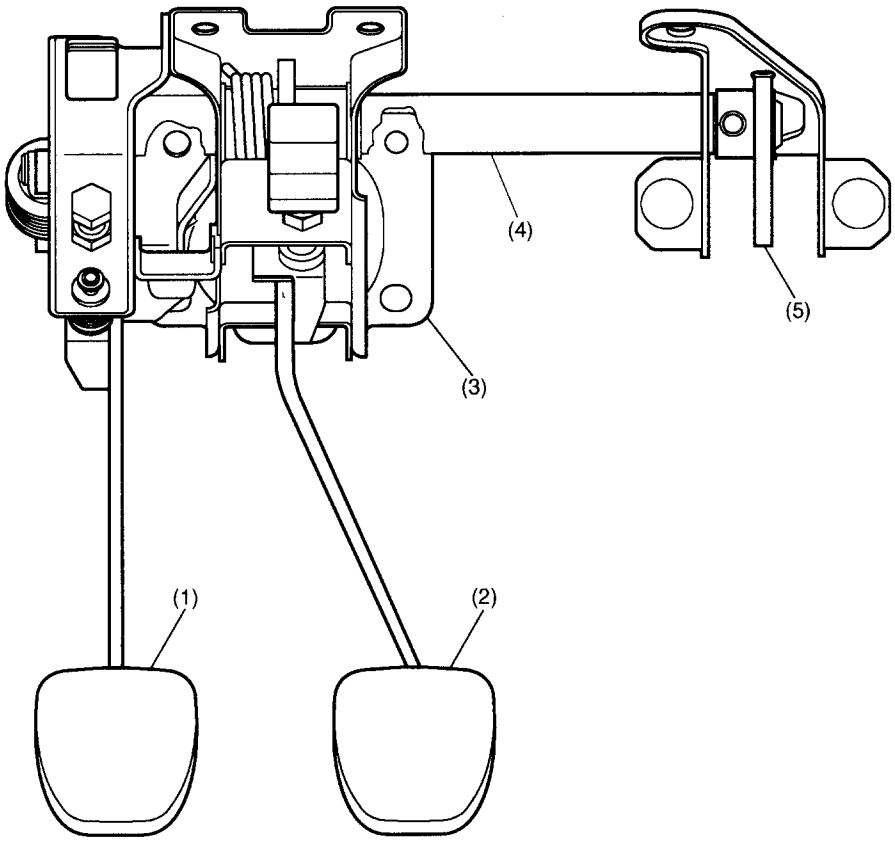

NF0213

(1) Clutch pedal
(2) Brake pedal
(3) Brake and clutch pedal bracket
(4) Rod
(5) Lever

B: OPERATION

The clutch pedal used with the hydraulic clutch control system is similar to that for a mechanical clutch control system except that it has a spring that returns it to the original position.

MEMO

FRONT SUSPENSION FS

Page
1. Front Suspension 2

1. Front Suspension

A: OUTLINE

The front suspension is a strut-type independent suspension, with cylindrical double-acting, low-pressure-gas-filled dampers and coil springs. The top of each strut assembly is attached to the body through a rubber cushion. Used in combination with other rubber cushions, this rubber cushion effectively insulate vibration and shock and thus improves ride comfort. This type also maintains a wide distance between the upper and lower supporting points and makes adjustment of the caster unnecessary.

The transverse link is an "L" shaped arm design to increase steering stability and reduce road noise. The transverse link has a maintenance-free ball joint fitted by a castle nut at its outer end. The front of the link's inner end is fitted to the front crossmember through a rubber cushion and the rear of the inner end is bolted to the vehicle body through a fluid-filled bushing.

The front crossmember is bolted to the vehicle body.

The stabilizer is attached to the front crossmember through rubber cushions and its right and left ends are connected to the stabilizer links through rubber bushings.

The lower end of the stabilizer link is connected to the transverse link through rubber bushings.

A camber angle adjustment mechanism, which uses eccentric bolts, is provided at the joint of the damper strut and axle housing.

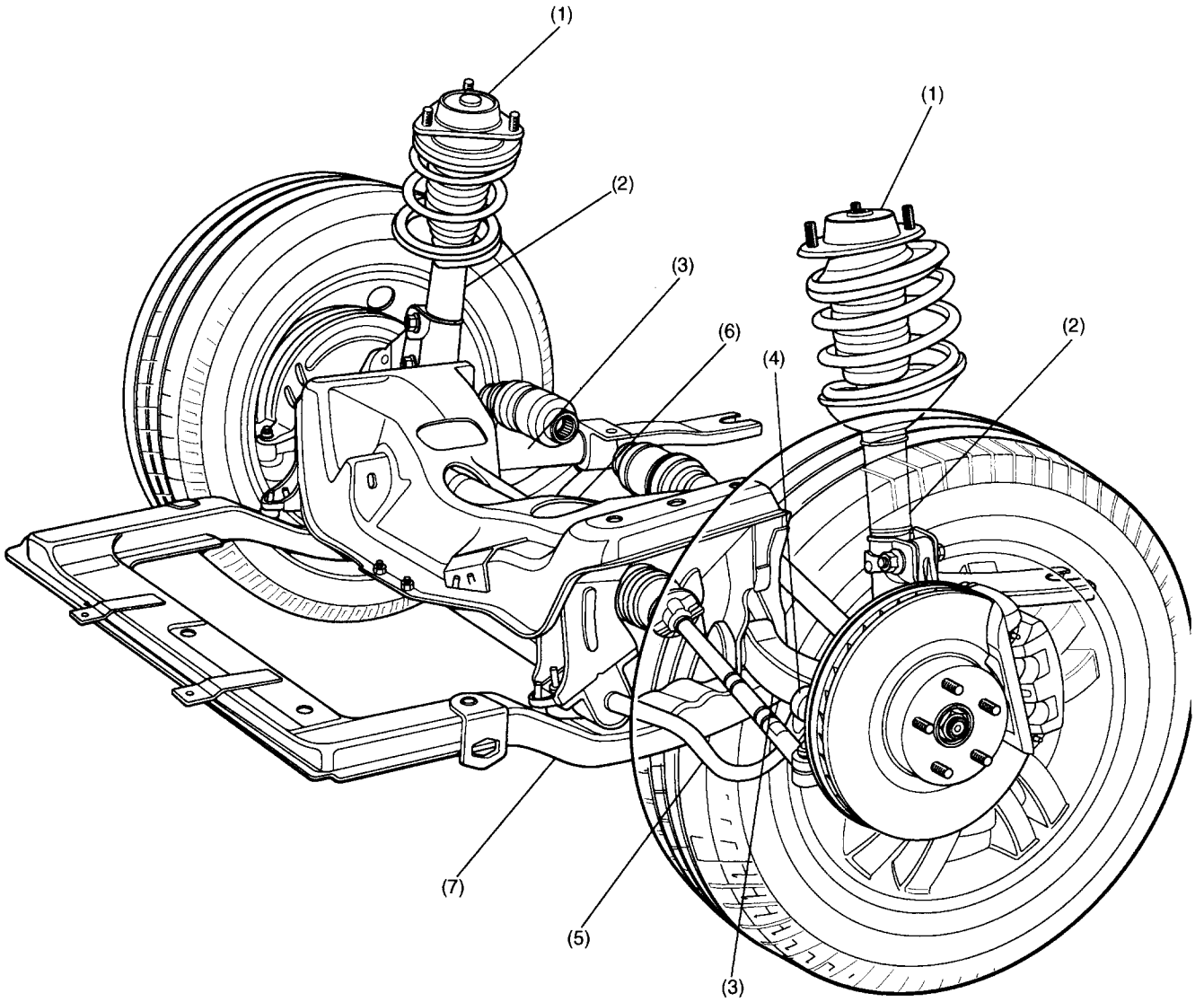

NF0129

(1) Strut mount
(2) Strut
(3) Transverse link
(4) Stabilizer link
(5) Stabilizer
(6) Front crossmember
(7) Sub frame

B: CONSTRUCTION

1. TRANSVERSE LINK

All the Sedans have larger tread than the previous model for enhanced handling stability.

2. STRUTS

- All models use struts with low-pressure-gas-filled dampers that feature stable shock attenuating performance. They improve ride quality and reduce vibration and noise.
- The coil spring of each strut is arranged in an "S" form so that friction generated in the strut is minimized and riding comfort is improved.

REAR SUSPENSION RS

Page

1. Rear Suspension 2

1. Rear Suspension

A: OUTLINE

The rear suspension is an independent, dual link strut type. The suspension on each side consists of two parallelly arranged lateral links, a trailing link, and a strut assembly. The strut assembly consists of a cylindrical double-acting low pressure gas- and oil-filled damper and coil spring.

The respective component parts of this suspension are optimally designed to act in response to vertical, lateral and longitudinal loads transmitted from the tires. Thus, riding comfort and steering stability are substantially enhanced.

- Longitudinal loads act on each trailing link.
- Vertical loads act on each coil spring, strut and rubber mount (which is located on the top of each strut).
- Lateral loads act on the two lateral links on each side.

The crossmember is installed on the body frame via bushings. (AWD model)

The stabilizer that extends to the rear of the crossmember, is installed on the body frame via a bracket and to the wheel side end of each rear lateral link via a stabilizer link.

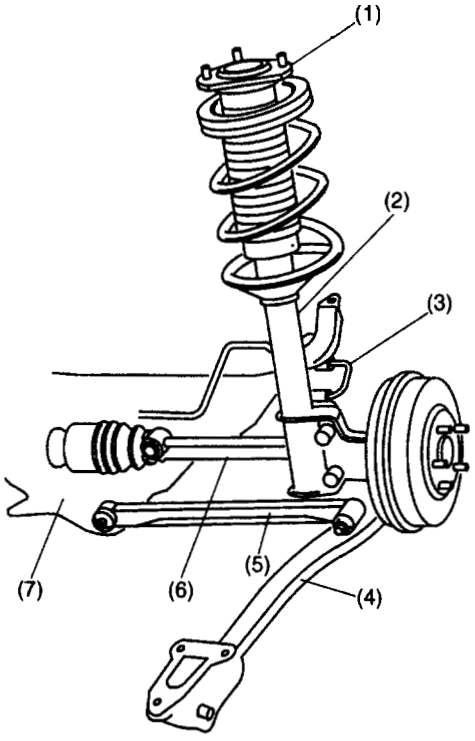

NF0094

(1) Strut mount
(2) Strut
(3) Stabilizer
(4) Trailing link
(5) Front lateral link
(6) Rear lateral link
(7) Rear crossmember

B: CONSTRUCTION

1. LATERAL LINKS

- All the Sedans have larger tread than the previous model for enhanced handling stability.
- Unsprung weight of the Impreza has been made smaller than the previous model by using a pair of steel-pipe lateral links on each side. This enhances both handling stability and riding comfort.

2. STRUTS

- The camber angle of the Impreza has been made more negative than in the earlier model to improve cornering performance.
- The dampers used in the struts are of a gas-filled type that features stable shock attenuating performance. They improve ride quality and reduce vibration and noise.
- Each strut has at its top a new type strut mount. The strut mounts effectively disperse input forces from coil springs and struts so that vibration and noise are reduced and riding comfort is improved. The body attaching flange of each strut mount is adequately rigid, which helps improve handling stability.
- The helper made of highly durable urethane enhances handling stability when the vehicle is loaded. It also satisfies riding comfort and anti-roll rigidity requirements simultaneously.

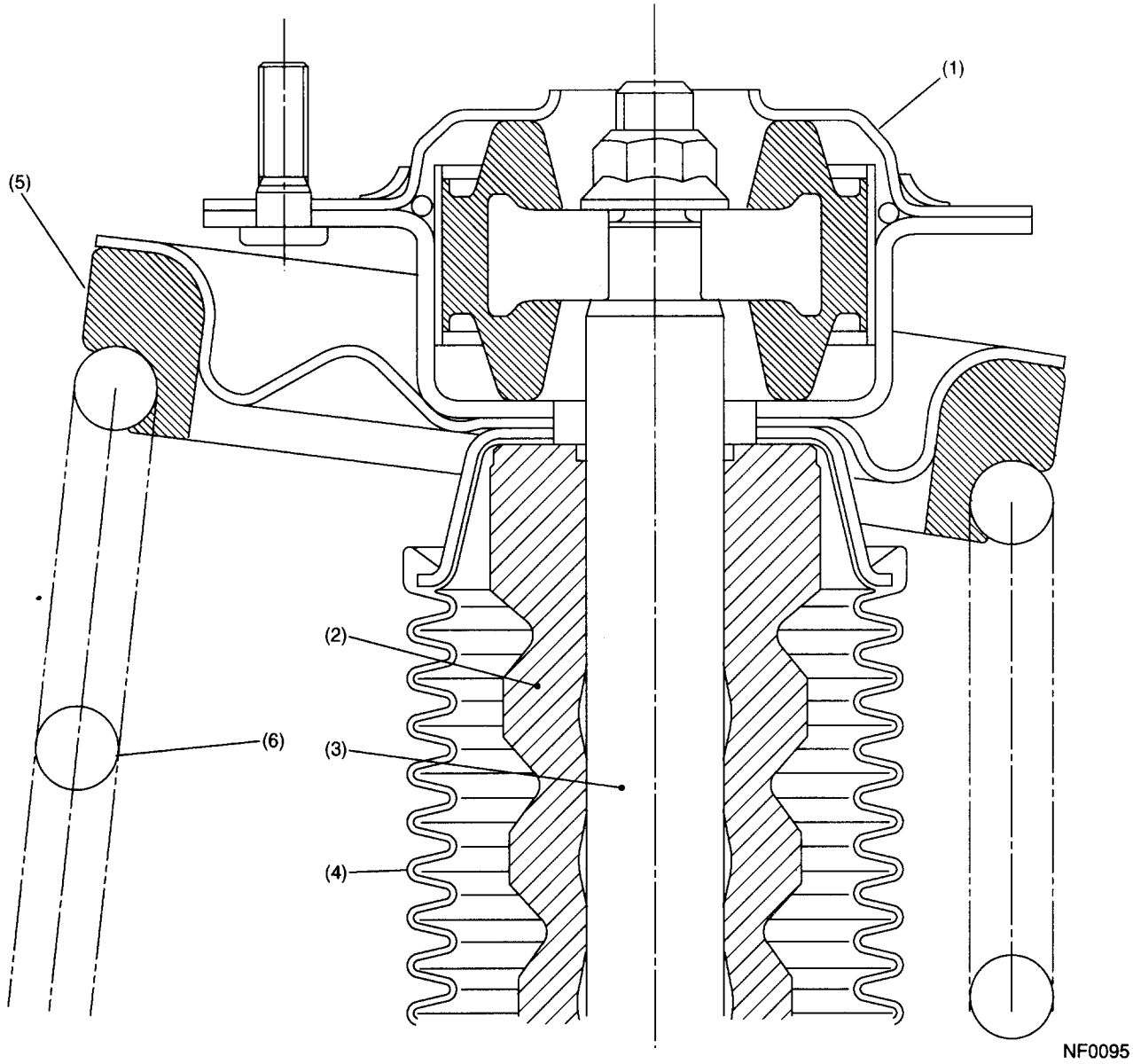

(1) Strut mount
(2) Helper
(3) Damper strut
(4) Dust cover
(5) Rubber seat
(6) Coil spring

DIFFERENTIALS DI

	Page
1. Rear Differential	2
2. Limited Slip Differential (LSD)	3

1. Rear Differential

The drive gear is a hypoid gear with a nominal diameter of 160 mm (6.30 in). The drive pinion shaft is supported by three bearings. The bearing preload is adjusted by selecting a spacer and washer combination of a proper thickness. The drive pinion height is adjusted by properly selecting the thickness of the washers located at the drive pinion neck using Dummy Shaft and Gauge.

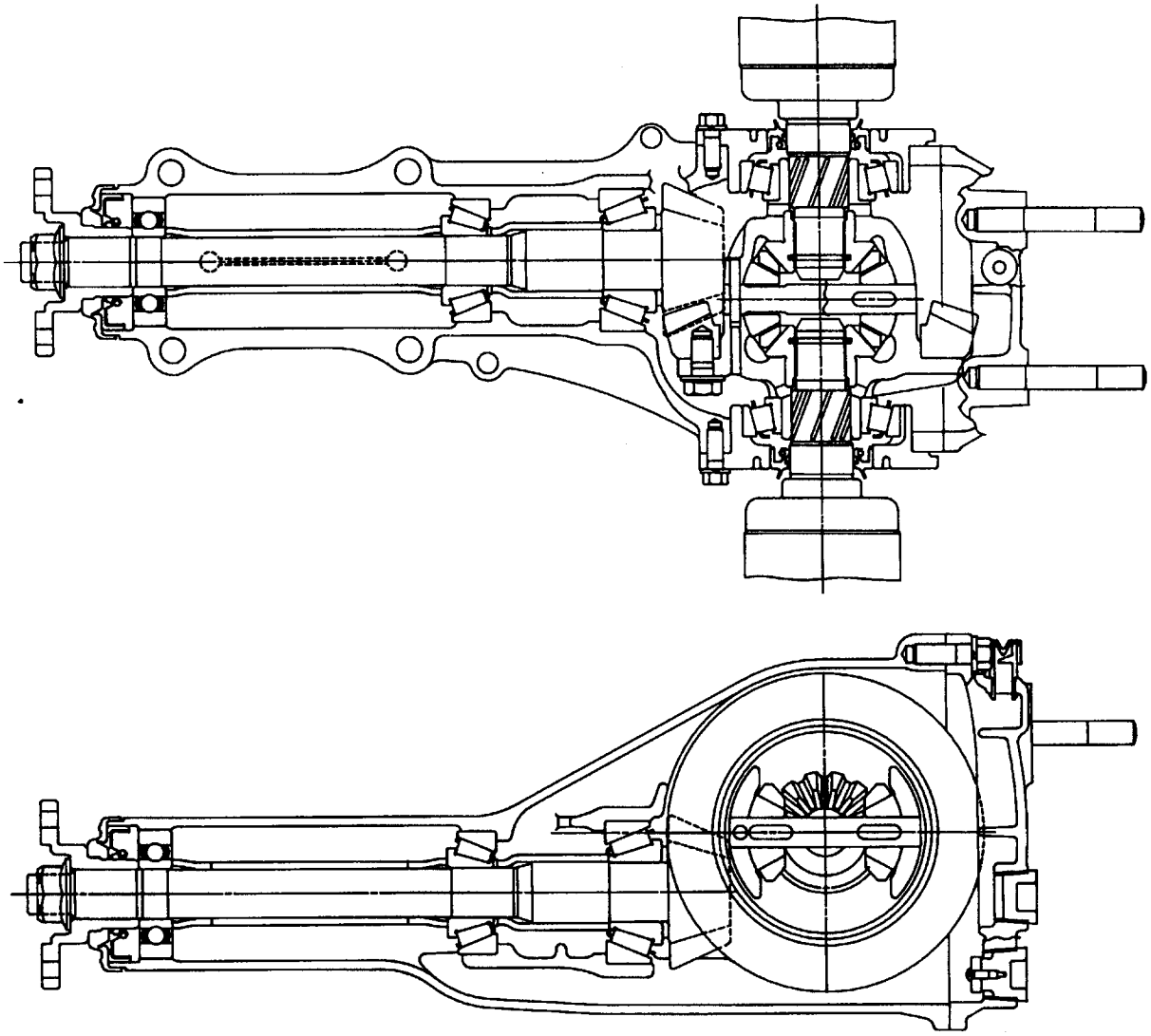

NF0097

2. Limited Slip Differential (LSD)

A: OUTLINE

The limited slip differential is of a viscous coupling (V/C) type which automatically limits the differential action and distributes torque to the left and right wheels adequately to enhance driving stability when the left and right wheels are rotating at speeds different from each other during driving on a slippery road (muddy, snow-covered or slushy road) or cornering.

B: STRUCTURE

The V/C type LSD has outer plates and inner plates arranged alternately. Each outer plate is splined to the inside of the differential case at its outer periphery and each inner plate is splined to the outer circumference of the left side gear at its inner periphery.
The inner plates are held in position by spacer rings while the outer rings can slide in the axial direction along the spline teeth.
The space between the differential case and the left side gear is filled with a mixture of high viscosity silicone oil and air and hermetically sealed with X-rings.

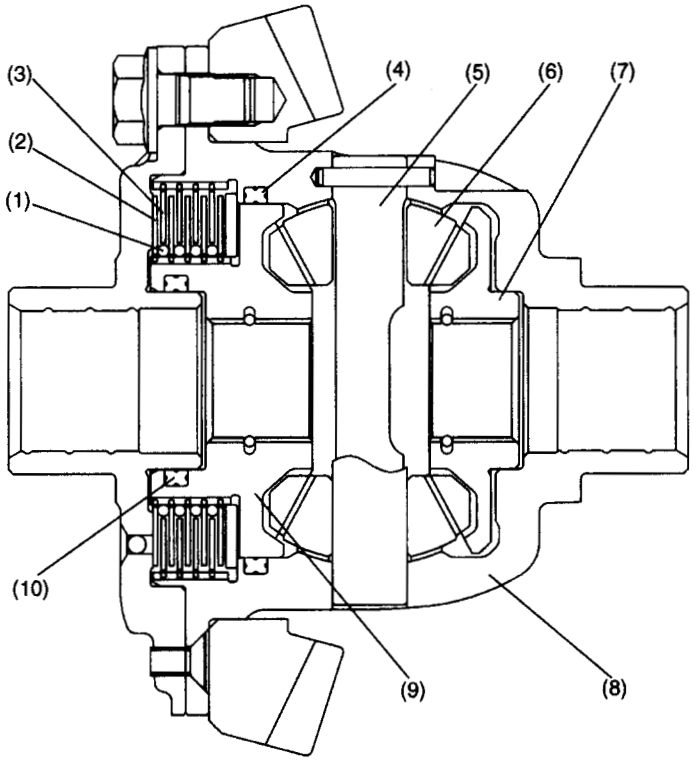

NF0098

(1) Spacer ring
(2) Inner plate
(3) Outer plate
(4) X-ring
(5) Pinion shaft
(6) Pinion gear
(7) Side gear (right)
(8) Differential case
(9) Side gear (left)
(10) X-ring

C: OPERATION

1. WHEN RIGHT AND LEFT WHEELS ROTATE AT THE SAME SPEED

During normal straight-ahead driving where the right and left wheels rotate at the same speed, the differential case and side gears rotate together, just as in conventional differentials. As a result, driving torque is distributed equally to the right and left side gears.

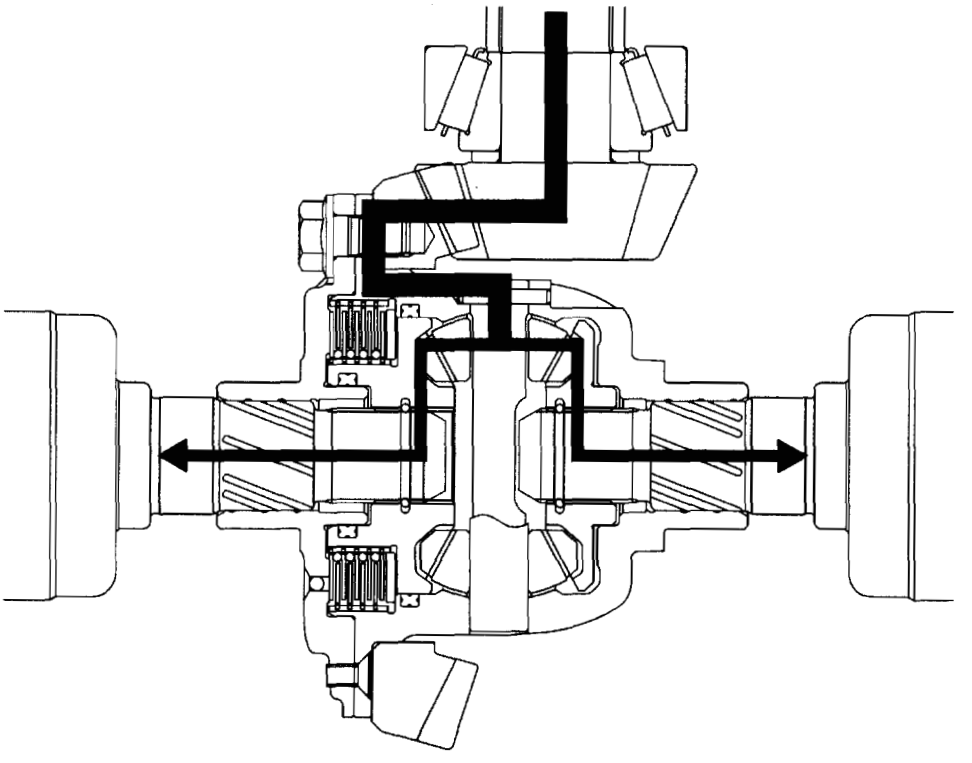

NF0099

2. WHEN RIGHT AND LEFT WHEELS ROTATE AT DIFFERENT SPEEDS

When a speed difference occurs between the right and left wheels, the differential case and the left side gear do not rotate at the same speed any more. The speed difference between them corresponds to that between both the wheels. Because of the shear force caused in the silicone oil, a differential torque is then generated, which limits differential action.
For example, if the left wheel spins due to small road resistance, a speed difference occurs between the right and left wheels. Since there is the V/C between the differential case and left side gear, a differential torque corresponding to the speed difference is generated in the V/C. This differential torque is transferred from the left wheel to the right wheel. As a result, a greater driving torque is distributed to the right wheel which is rotating at a lower speed.
When the right wheel spins, the differential torque is transferred from the right wheel to the left wheel. Also in this case, a torque greater by the differential torque than the torque to the spinning wheel is transmitted to the wheel rotating at the lower speed.

When left wheel spins

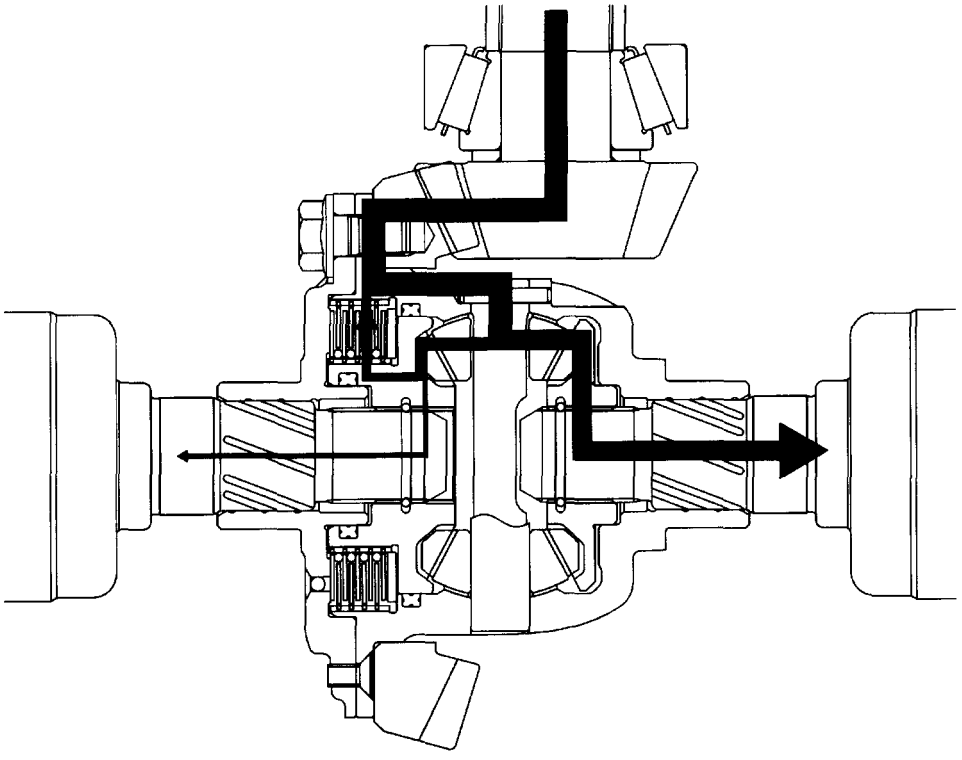

NF0100

When right wheel spins

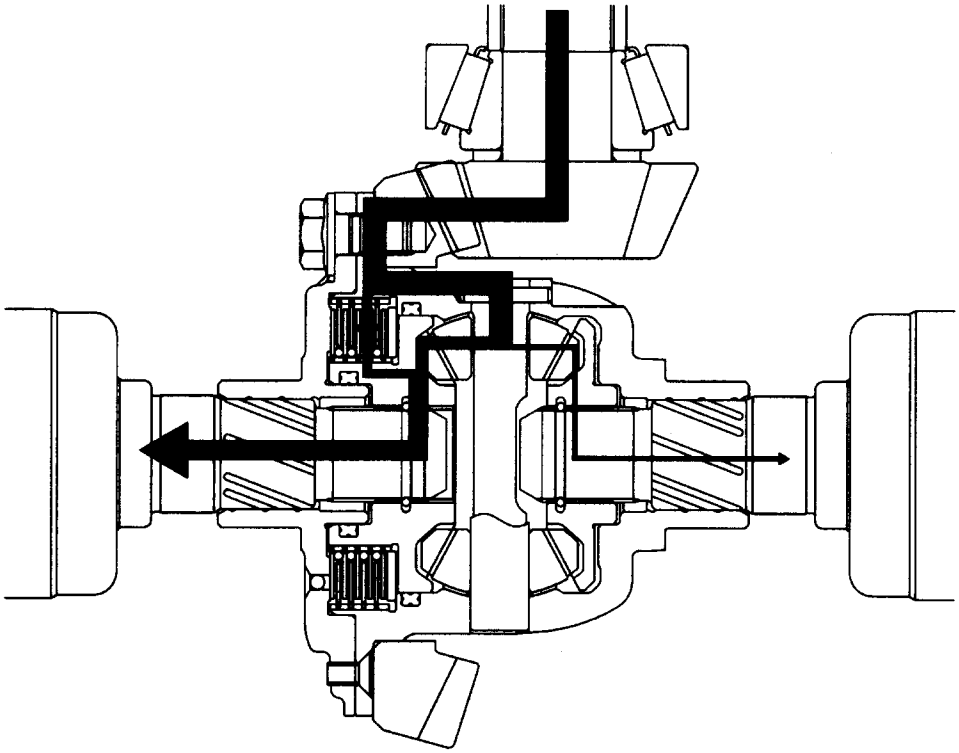

NF0101

D: SERVICE PROCEDURES FOR LSD

It is not recommended to disassemble the LSD assembly as component parts of LSD assembly are not available individually.

DRIVE SHAFT SYSTEM DS

		Page
1.	Propeller Shaft	2
2.	Front Axle	4
3.	Rear Axle	6

1. Propeller Shaft

A: NON-TURBO MODELS

The propeller shaft is of a two-piece design that uses three joints.

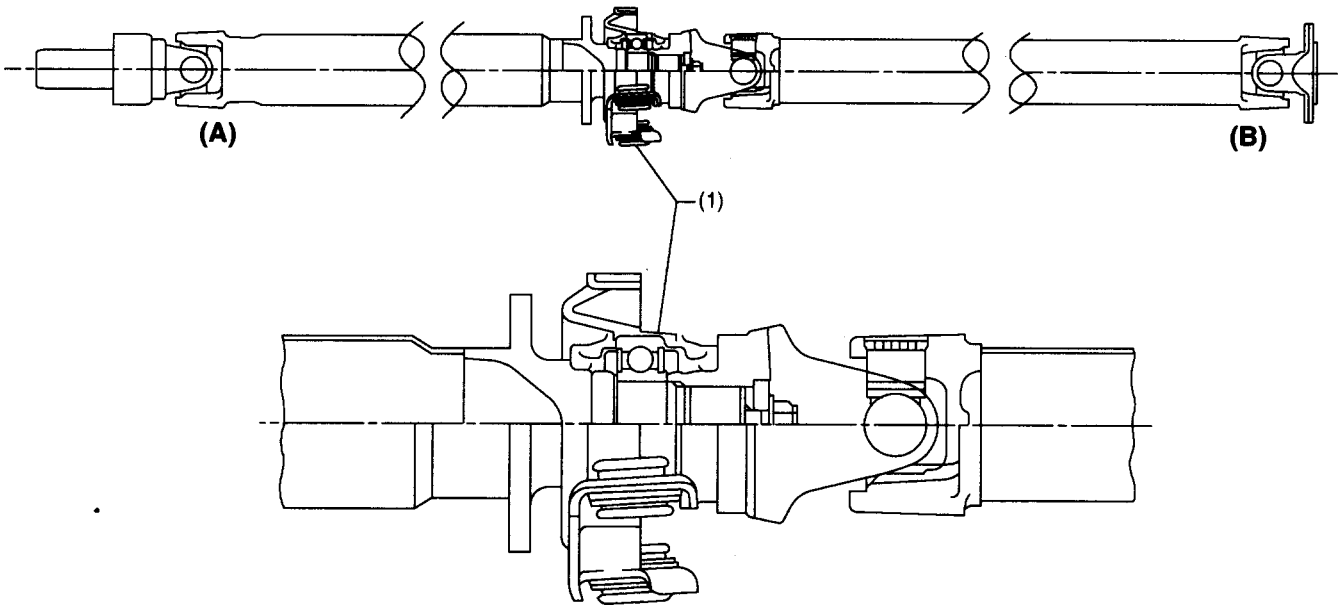

NF0150

(1) Center bearing

(A) Transmission side
(B) Rear differential side

B: TURBO MODELS

The propeller shaft uses constant velocity joints for quiet operation of the driveline components. The center joint is a double offset joint (DOJ) type which can extend and retract in the axial directions.

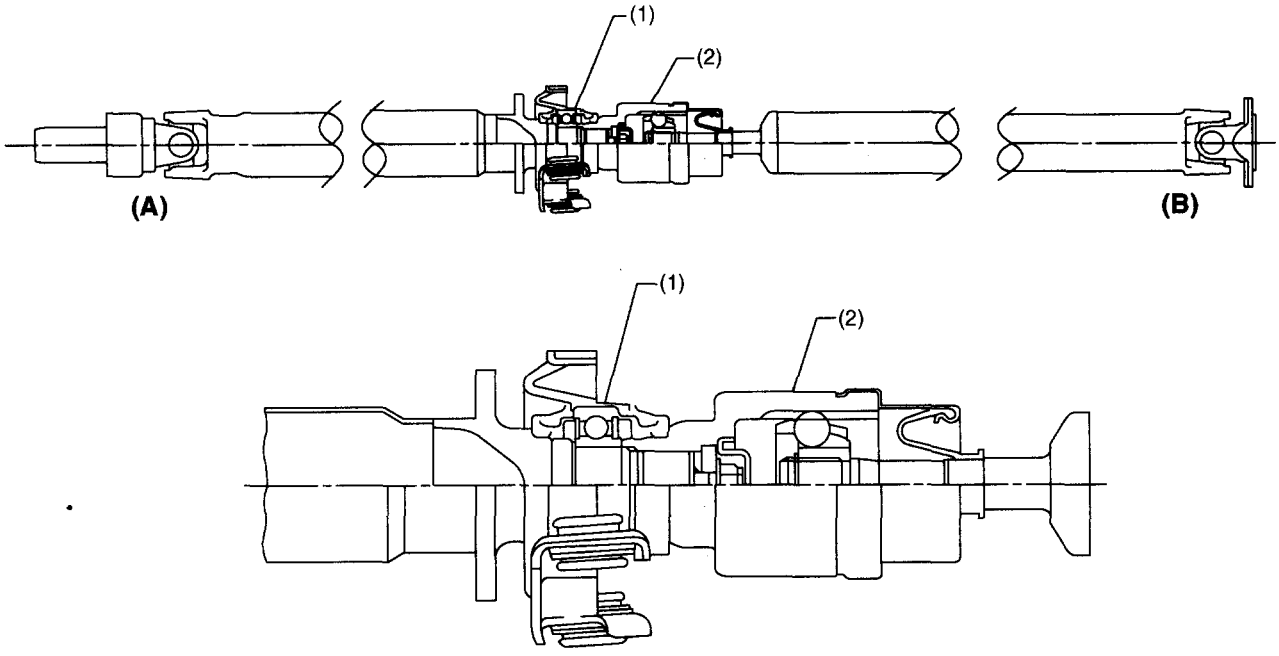

NF0149

(1) Center bearing
(2) DOJ

(A) Transmission side
(B) Rear differential side

2. Front Axle

A: GENERAL

- The inboard end of the axle shaft is connected to the transmission via a constant velocity joint (shudder-less freering tripod joint: SFJ) which is flexible in the axial directions, while the outboard end is connected via a high efficiency compact ball fixed joint (EBJ) to the wheel hub which is supported by a taper roller bearing located inside the axle housing. The EBJ features a large operating angle.

Both the constant velocity joints (SFJ and EBJ) ensure smooth, regular rotation of the drive wheels with minimum vibration.

- The bearing is a preloaded, non-adjustable tapered roller unit bearing.

Each hub is fitted in the axle housing via the tapered roller bearing.

- The EBJ's spindle is splined to the hub and is secured with an axle nut clinched to it.
- The disc rotor is an external mounting type. It is secured to the disc wheel using hub bolts to facilitate maintenance of the disc rotor.

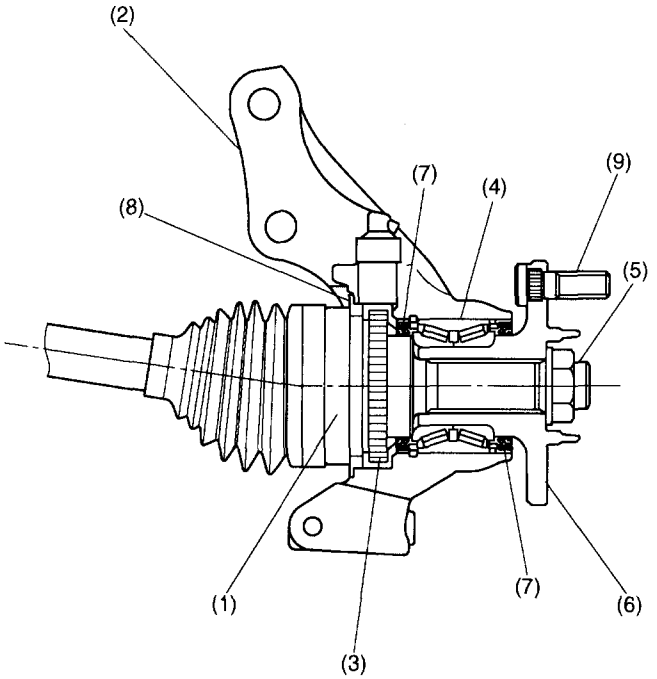

NF0151

(1) EBJ	(4) Bearing	(7) Oil seal
(2) Axle housing	(5) Axle nut	(8) Baffle plate
(3) Tone wheel	(6) Hub	(9) Hub bolt

B: FRONT DRIVE SHAFT

- A shudder-less freering tripod joint (SFJ) is used on the differential side of each front drive shaft. The SFJ can be disassembled for maintenance. It provides a maximum operating angle of 25° and can be moved in the axial directions.
- A high efficiency compact ball fixed joint (EBJ) is used on the wheel side of each front drive shaft. The EBJ's maximum operating angle is 46.5°.

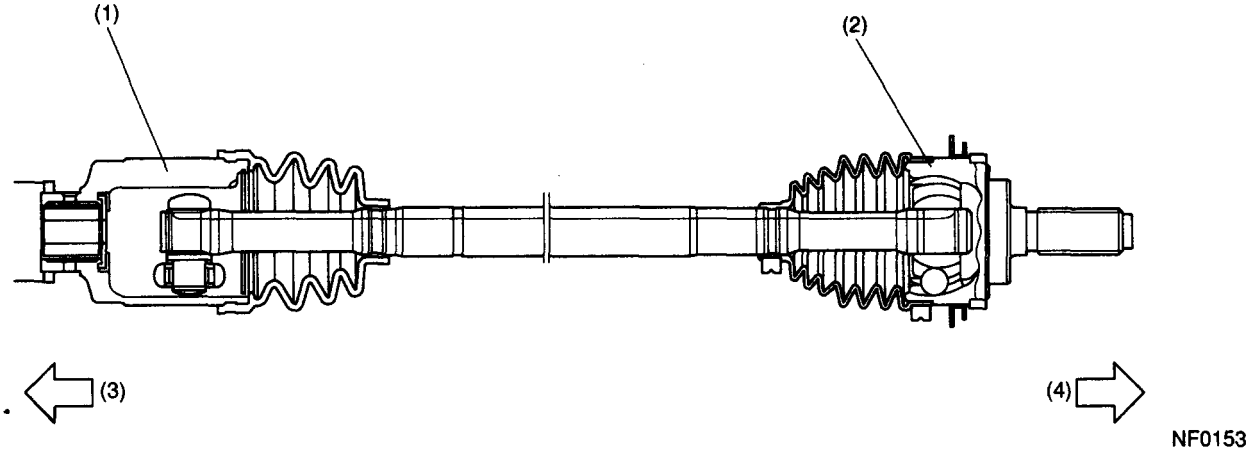

(1) SFJ
(2) EBJ
(3) Transmission side
(4) Wheel side

3. Rear Axle

A: NON-TURBO MODELS

- The inboard end of each axle shaft is connected to the transmission via a double offset joint: DOJ which can extend and retract in the axial directions.
- The outboard end is supported by angular contact ball bearings located inside the axle housing via a bell joint (BJ) which features a large operating angle. Both the constant velocity joints (DOJ and BJ) ensure smooth, regular rotation of the drive wheels with minimum vibration.
- The bearing is a preloaded, non-adjustable angular contact ball unit type.
Each hub is fitted in the axle housing via the angular contact ball bearing.
- The BJ's spindle is splined to the hub and secured with an axle nut clinched to it.
- The disc rotor or brake drum is held in position by the hub bolts and wheel nuts together with the wheel. This facilitates removal and installation of the disc rotor or brake drum and thus improves serviceability.

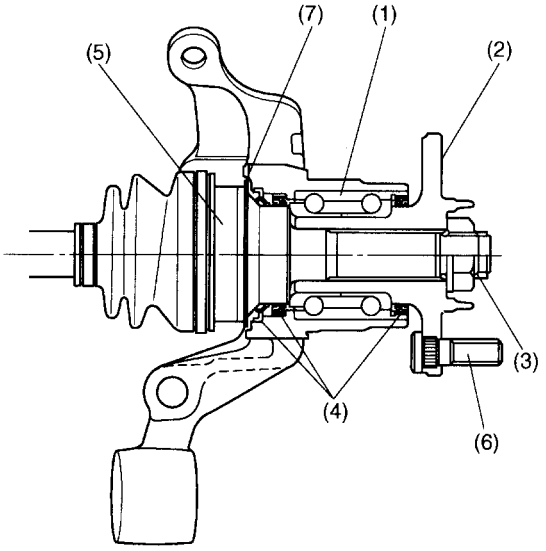

S3H0644A

(1) Bearing
(2) Hub
(3) Axle nut
(4) Oil seal
(5) BJ
(6) Hub bolt
(7) Baffle plate

B: TURBO MODELS

- The inboard end of each axle shaft is connected to the transmission via a double offset joint (DOJ) which can extend and retract in the axial directions.
- The outboard end is supported by taper roller bearings located inside the axle housing via a high efficiency compact ball fixes joint (EBJ) which features a large operating angle. Both the constant velocity joint (DOJ and EBJ) ensure smooth, regular rotation of the drive wheels with minimum vibration.
- The bearing is a preloaded, non-adjustable taper roller unit type.
Each hub is fitted in the axle housing via the taper roller bearing.
- The EBJ's spindle is splined to the hub and secured with an axle nut clinched to it.
- The disc rotor is held in position by the hub bolts and wheel nuts together with the wheel. This facilitates removal and installation of the disc rotor and thus improves serviceability.

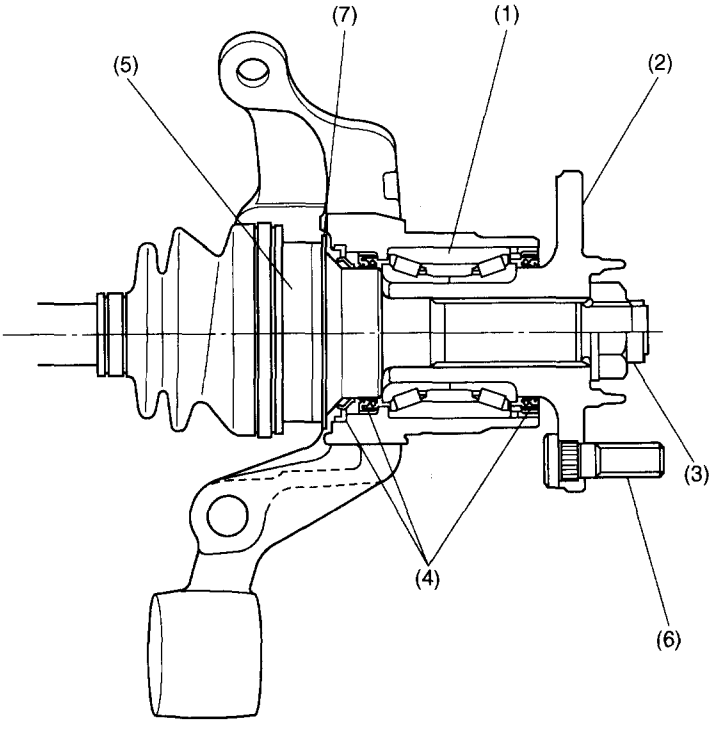

S3H0645A

(1) Tapered roller bearing
(2) Hub
(3) Axle nut
(4) Oil seal
(5) EBJ
(6) Hub bolt
(7) Baffle plate

C: REAR DRIVE SHAFT

1. NON-TURBO MODELS

- A double offset joint (DOJ) is used on the differential side of each rear drive shaft. The DOJ can be disassembled for maintenance. It provides a maximum operating angle of 23° and can be moved in the axial directions.
- A bell joint (BJ) is used on the wheel side of each rear drive shaft. Its maximum operating angle is 42°.

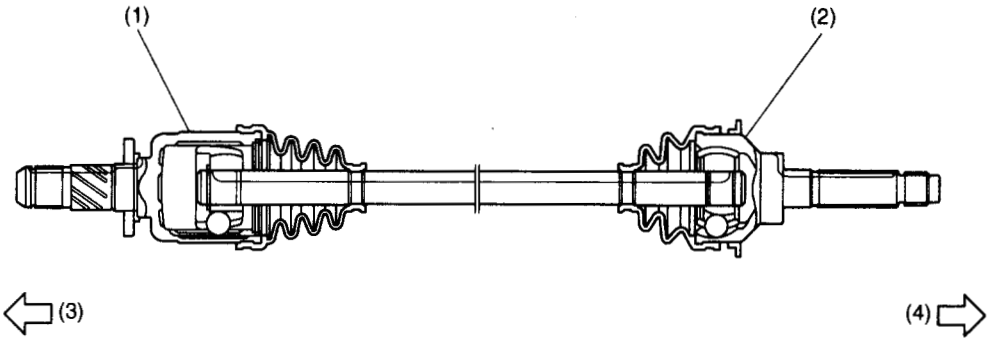

NF0156

(1) DOJ
(2) BJ
(3) Differential side
(4) Wheel side

2. TURBO MODELS

- A double offset joint (DOJ) is used on the differential side of each rear drive shaft. The DOJ can be disassembled for maintenance. It provides a maximum operating angle of 23° and can be moved in the axial directions.
- A high efficiency compact ball fixed joint (EBJ) is used on the wheel side of each rear drive shaft. Its maximum operating angle is 42°.

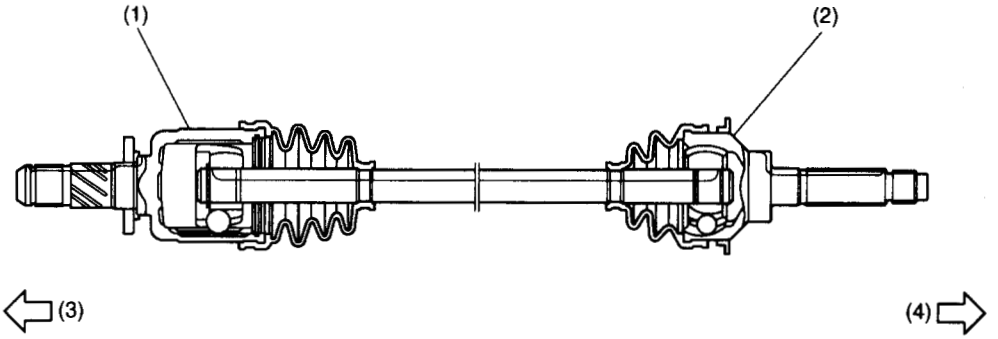

NF0157

(1) DOJ
(2) EBJ
(3) Differential side
(4) Wheel side

ABS ABS

Page

1. Anti-lock Brake System (ABS) 2

1. Anti-lock Brake System (ABS)

A: FEATURE

- The 5.3i type ABS used in the Impreza has a hydraulic control unit, an ABS control module, a valve relay and a motor relay integrated into a single unit (called "ABSCM & H/U") for circuit simplicity and reduced weight.
- The ABS electrically controls the brake fluid pressure to each wheel to prevent the wheel from locking during braking on slippery road surfaces, thereby enabling the driver to maintain the directional control.
- If the ABS becomes inoperative, a fail-safe system is activated to ensure same level of braking performance as with a conventional brake system. In that case, the warning light comes on to indicate that the ABS is malfunctioning.
- The ABS is a 4-sensor, 4-channel system; the front wheel system is an independent control design*1, while the rear wheel system is a select-low control design*2.

*1: A system which controls the front wheel brakes individually.
*2: A system which applies the same fluid pressure to both the rear wheels if either wheel starts to lock. The pressure is determined based on the lower of the frictional coefficients of both wheels.

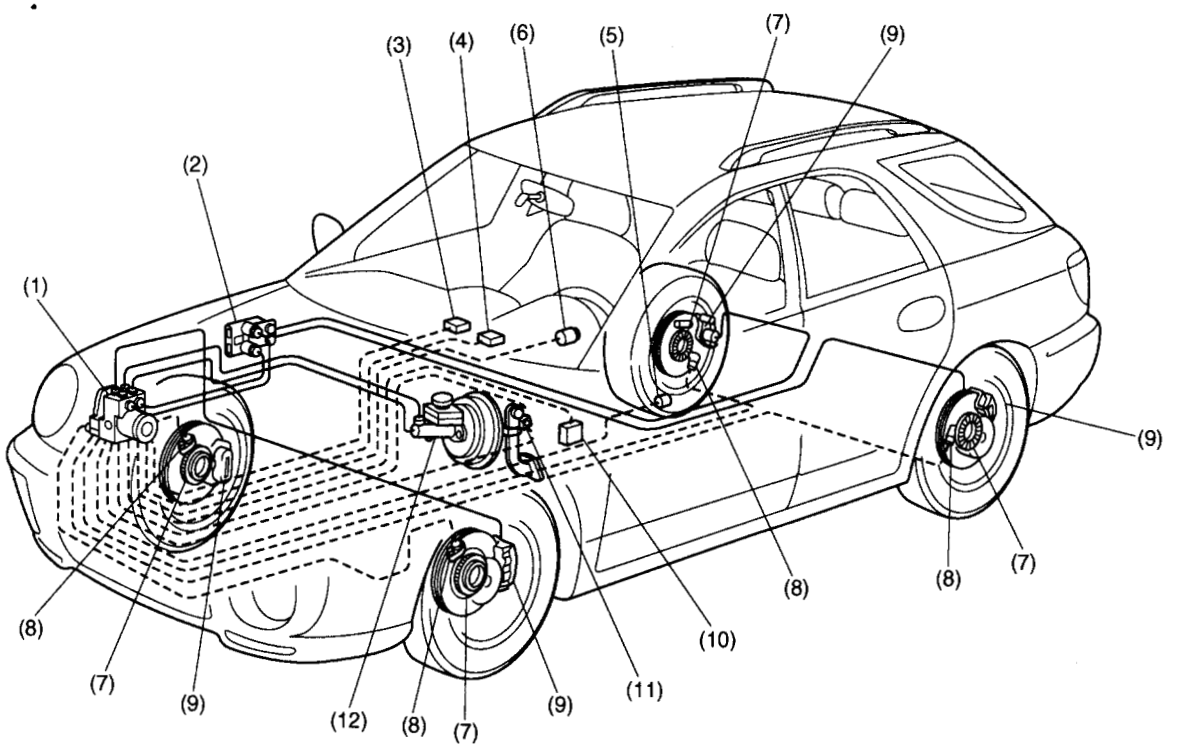

(1)	ABS control module and hydraulic control unit (ABSCM & H/U)	(5)	G sensor	(9)	Wheel cylinder
(2)	Proportioning valve	(6)	ABS warning light	(10)	Automatic transmission control module
(3)	Diagnosis connector	(7)	Tone wheel	(11)	Brake switch
(4)	Data link connector (for SUBARU select monitor)	(8)	ABS sensor	(12)	Master cylinder

B: FUNCTIONS OF SENSORS AND ACTUATORS

Name		Function
ABS control module and hydraulic control unit (ABSCM & H/U)	ABSCM section	• It determines the conditions of the wheels and the vehicle body from the wheel speed data and controls the hydraulic unit depending on the result. • When the ABS is active, the ABSCM provides the automatic transmission control module with control signals which are used by the module for cooperative control of the vehicle with the ABSCM. • Whenever the ignition switch is placed at ON, the module performs a self diagnosis sequence. If anything wrong is detected, the module cuts off the system. • It communicates with the SUBARU select monitor.
	H/U section	• When the ABS is active, the H/U changes fluid passages to the wheel cylinders in response to commands from the ABSCM. • It constitutes the brake fluid passage from the master cylinder to the wheel cylinders together with the piping.
	Valve relay section	It serves as a power switch for the solenoid valves and motor relay coil. It operates in response to a command from the ABSCM.
	Motor relay section	It serves as a power switch for the pump motor. It operates in response to a command from the ABSCM.
ABS sensors (wheel speed sensors)		They detect the wheel speed in terms of a change in the density of the magnetic flux passing through them and convert it into an electrical signal. The electrical signal is sent to the ABSCM.
Tone wheels		They give a change in the magnetic flux density by the teeth around themselves to let the ABS sensors generate electrical signals.
G sensor		It detects a change in acceleration in the longitudinal direction of the vehicle and outputs it to the ABSCM as a voltage signal.
Stop light switch		It provides information on whether the brake pedal is depressed or not to the ABSCM. The ABSCM uses it to determine ABS operation.
ABS warning light		It alerts the driver to an ABS fault. When the diagnosis connector and diagnosis terminal are connected, the light flashes to indicate a trouble code stored in the ABSCM.
Automatic transmission control module		It provides gear controls (fixing the speed at 3rd or changing power transmission to front and rear wheels) in response to control signals from the ABSCM.

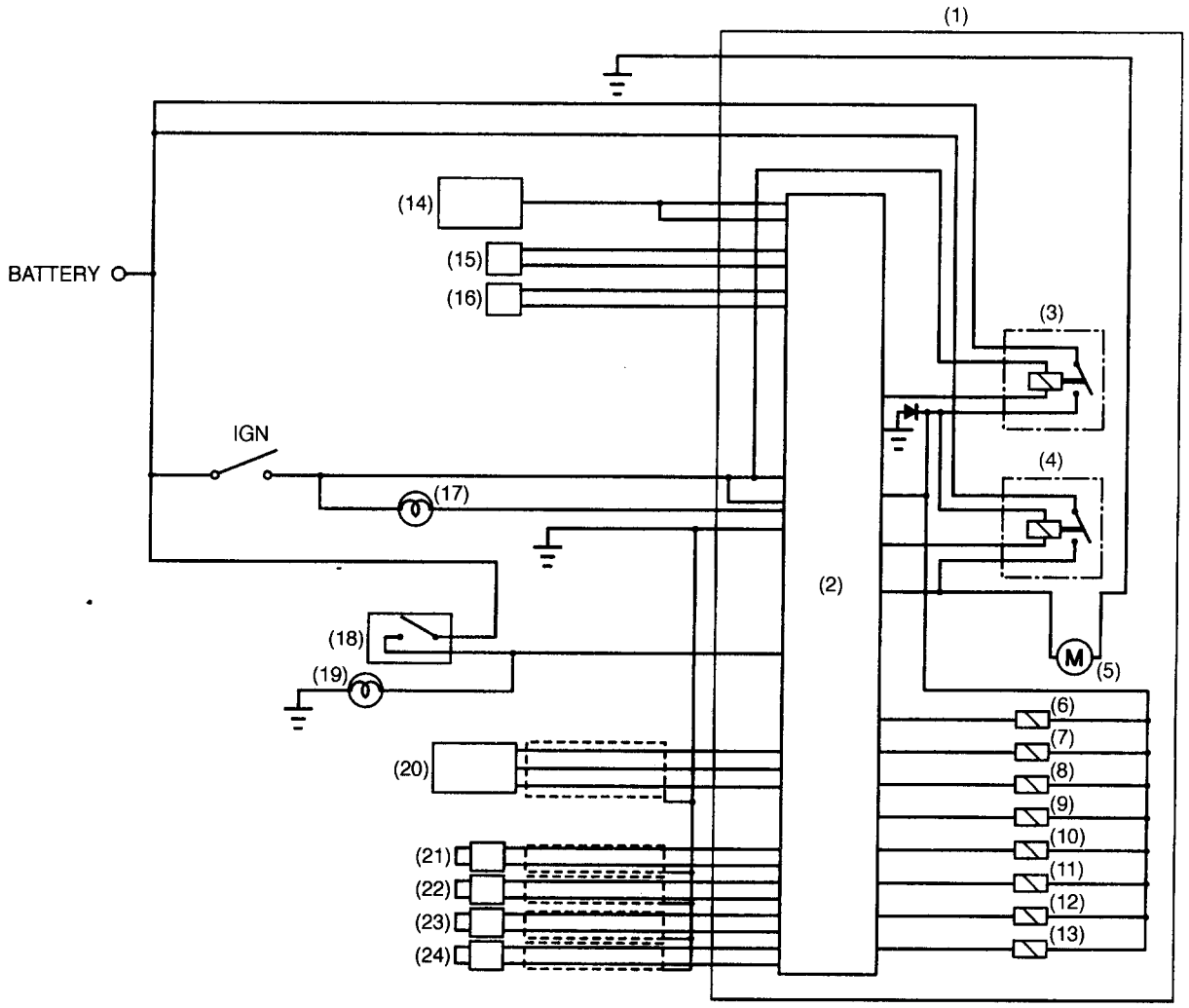

NF0198

(1)	ABS control module and hydraulic control unit	(9)	Front right outlet solenoid valve	(17)	ABS warning light
(2)	ABS control module section	(10)	Rear left inlet solenoid valve	(18)	Stop light switch
(3)	Valve relay	(11)	Rear left outlet solenoid valve	(19)	Stop light
(4)	Motor relay	(12)	Rear right inlet solenoid valve	(20)	G sensor
(5)	Motor	(13)	Rear right outlet solenoid valve	(21)	Front left ABS sensor
(6)	Front left inlet solenoid valve	(14)	Automatic transmission control module	(22)	Front right ABS sensor
(7)	Front left outlet solenoid valve	(15)	Diagnosis connector	(23)	Rear left ABS sensor
(8)	Front right inlet solenoid valve	(16)	Data link connector	(24)	Rear right ABS sensor

C: PRINCIPLE OF ABS CONTROL

When the brake pedal is depressed during driving, the wheel speed decreases and the vehicle speed does as well. The decrease in the vehicle speed, however, is not always proportional to the decrease in the wheel speed. The non-correspondence between the wheel speed and vehicle speed is called "slip" and the magnitude of the slip is expressed by the "slip ratio" which is defined as follows:

Slip ratio = Vehicle speed – Wheel speed/Vehicle speed x 100%

When the slip ratio is 0%, the vehicle speed corresponds exactly to the wheel speed; when it is 100%, the wheels are completely locking (rotating at a zero speed) while the vehicle is moving.

The braking effectiveness is represented by the "coefficient of friction" between the tire and road surface. The larger the coefficient, the higher the braking effectiveness. The diagram below shows the relationship between the coefficient of friction and the slip ratio for two different road surface conditions (asphalt-paved road and icy road), assuming that the same tires are used for both the conditions and the vehicles are moving forward. Although the braking effectiveness (coefficient of friction) depends on the road surface condition as shown and also on the type of the tire, its peak range generally corresponds to the 8 – 30% range of the slip ratio.

The ABS controls the fluid pressure to each wheel so that a coefficient of friction corresponding to this slip ratio range is maintained.

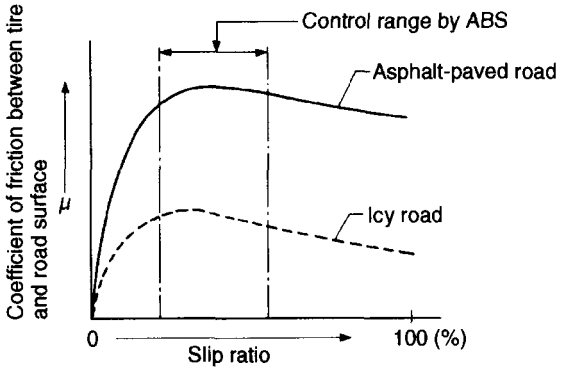

NF0199

D: ABS SENSORS

Each of the ABS sensors detects the speed of the corresponding wheel. The sensor consists of a permanent magnet, coil and tone wheel. The magnetic flux produced by the permanent magnet changes as each tooth of the tone wheel (which rotates together with the wheel) passes in front of the magnet's pole piece. The changing magnetic flux induces voltages at a frequency corresponding to the wheel speed.

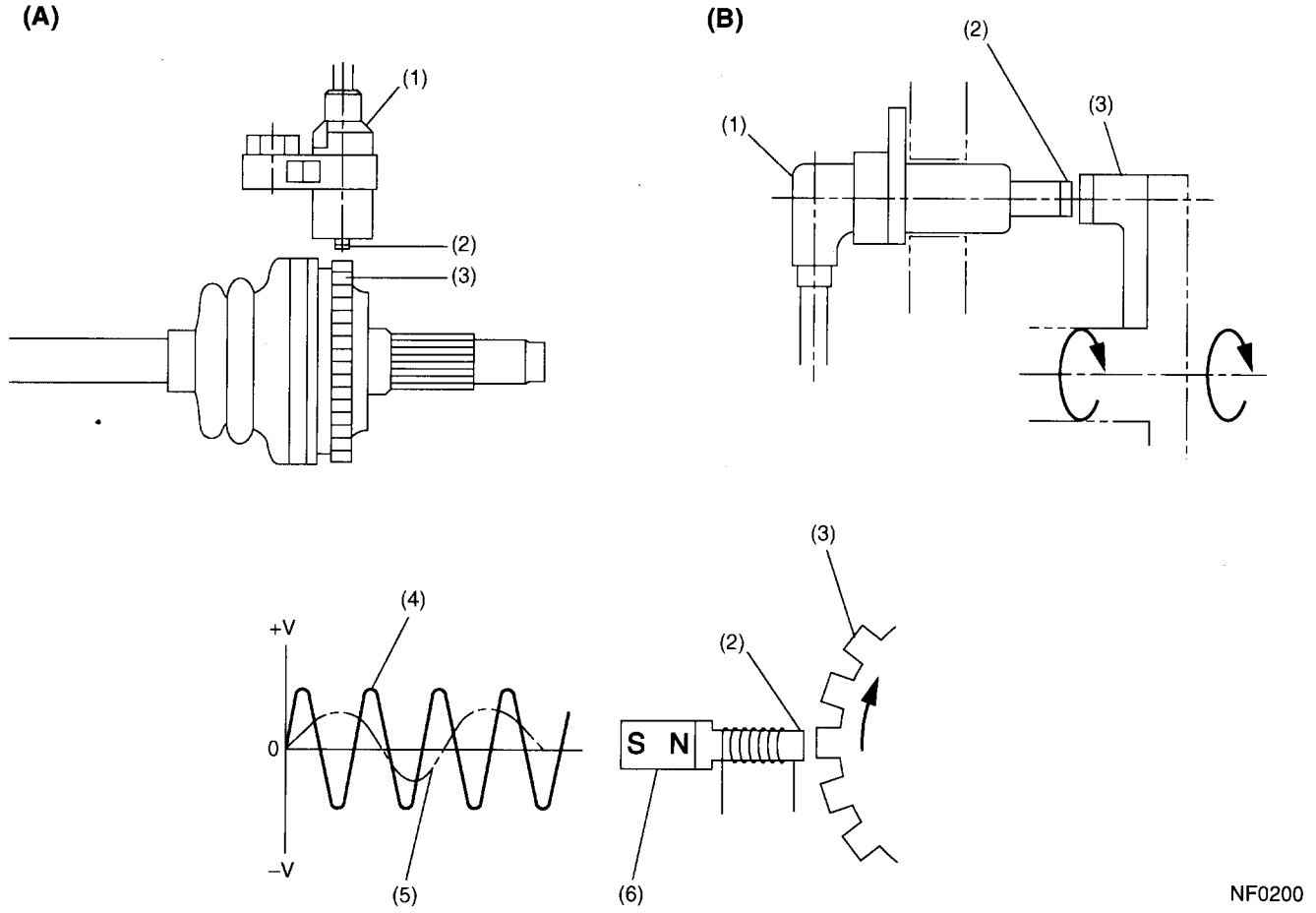

(A) Front
(B) Rear

(1) Sensor body
(2) Pole piece
(3) Tone wheel

(4) Full speed
(5) Low speed
(6) Permanent magnet

E: ABS CONTROL MODULE AND HYDRAULIC CONTROL UNIT (ABSCM & H/U)

• ABS CONTROL MODULE SECTION (ABSCM)

The ABSCM contains two microcontrol modules (MCMs): master and slave. Both the MCMs process the same program and each MCM monitors the other's outputs. If a mismatch occurs between their outputs, the ABSCM cuts off the system and activate the fail-safe function.

The ABSCM can store a maximum of 3 trouble codes in an EEP ROM. If more than 3 faults have occurred, only the 3 most recent failures are stored and others are erased. Trouble codes remain stored until they are internally or externally erased.
The ABSCM has a test routine (sequence control pattern) which facilitates checking of the hydraulic control unit.

• ABS control
Using primarily the wheel speed data from each ABS sensor and secondarily the vehicle deceleration rate data from the G sensor as parameters, the ABSCM generates a simulated vehicle speed when there is a risk of wheel lock-up. Using the simulated vehicle speed (called "dummy" vehicle speed) as a reference, the ABSCM determines the state of the wheel in terms of the tendency toward lock-up. If the result shows that the wheels are about to lock, the ABSCM issues commands to energize or de-energize the solenoid valves and activate the motor pump of the H/U to modulate the brake fluid pressures that act on the wheel cylinders, thereby preventing the wheels from locking.
The ABSCM controls the right and left front wheel fluid pressures independently and the rear wheel fluid pressures based on the wheel which is the most likely to lock (select-low control).

• Functions available using SUBARU select monitor
When the SUBARU select monitor is connected, the ABSCM allows it
- To read out analog data
- To read out ON/OFF data
- To read out or erase trouble code
- To read out data showing conditions under which a trouble code has been stored (Freeze frame data)
- To initiate ABS sequence control pattern

• Indication functions
Under the control of the ABSCM, the ABS warning light provides the following three indication function:
- ABS fault alerting
- Trouble code indication (by flashing in the diagnosis mode)
- Valve ON/OFF indication (when sequence control pattern is initiated)

• HYDRAULIC CONTROL UNIT SECTION (H/U)

The H/U is a fluid pressure controller consisting of, among others, a motor, solenoid valves, a housing and relays. It also constitutes passage of the two diagonally split brake circuits.

• The pump motor drives an eccentric cam which in turn moves the plunger pump to generate hydraulic pressure.

• The housing accommodates the pump motor, solenoid valve and reservoir. It also constitutes a brake fluid passage.

• The plunger pump, when operated, draws the brake fluid from the reservoir, lets the fluid in a wheel cylinder drain into the reservoir, and/or forces the fluid into the master cylinder.

• The outlet solenoid valve is a 2-position type. It opens or closes the brake fluid passage between a wheel cylinder and the reservoir according to commands from the ABSCM.

• The inlet solenoid valve is duty-controlled to reduce brake fluid pulsation for minimum ABS operation noise.

• The reservoir temporarily stores the brake fluid drained from a wheel cylinder when pressure "decrease" control is performed.

• The damper chamber suppresses brake fluid pulsation which would occur during pressure "decrease" control in the fluid discharged from the plunger pump to minimize kickbacks of the brake pedal.

• The valve relay controls power supply to the solenoid valves and motor relay in response to a command from the ABSCM. In normal (IG ON) condition, the relay is closed to supply power to the solenoid valves and motor relay. When an error occurs in the system, the valve relay is turned OFF to keep the fluid pressure circuit in the normal mode (non-ABS mode).

• The motor relay closes and supplies power to the pump motor in response to a command from the ABSCM during the ABS drive mode operations.

The H/U has four operating modes; normal mode (non-ABS mode), and three ABS active modes, i.e., "increase", "hold" and "decrease" modes.

MEMO

1. DURING NORMAL BRAKING (ABS NOT ACTIVE)

Both the inlet and outlet solenoid valves are not energized.
This means that the inlet port of the inlet solenoid valve is open, whereas the outlet port of the outlet solenoid valve is closed. So the fluid pressure generated in the master cylinder is transmitted to the wheel cylinder, producing a brake force.

NOTE:
For simplicity of explanation, operation of the hydraulic control unit is represented by operation of a single wheel circuit.

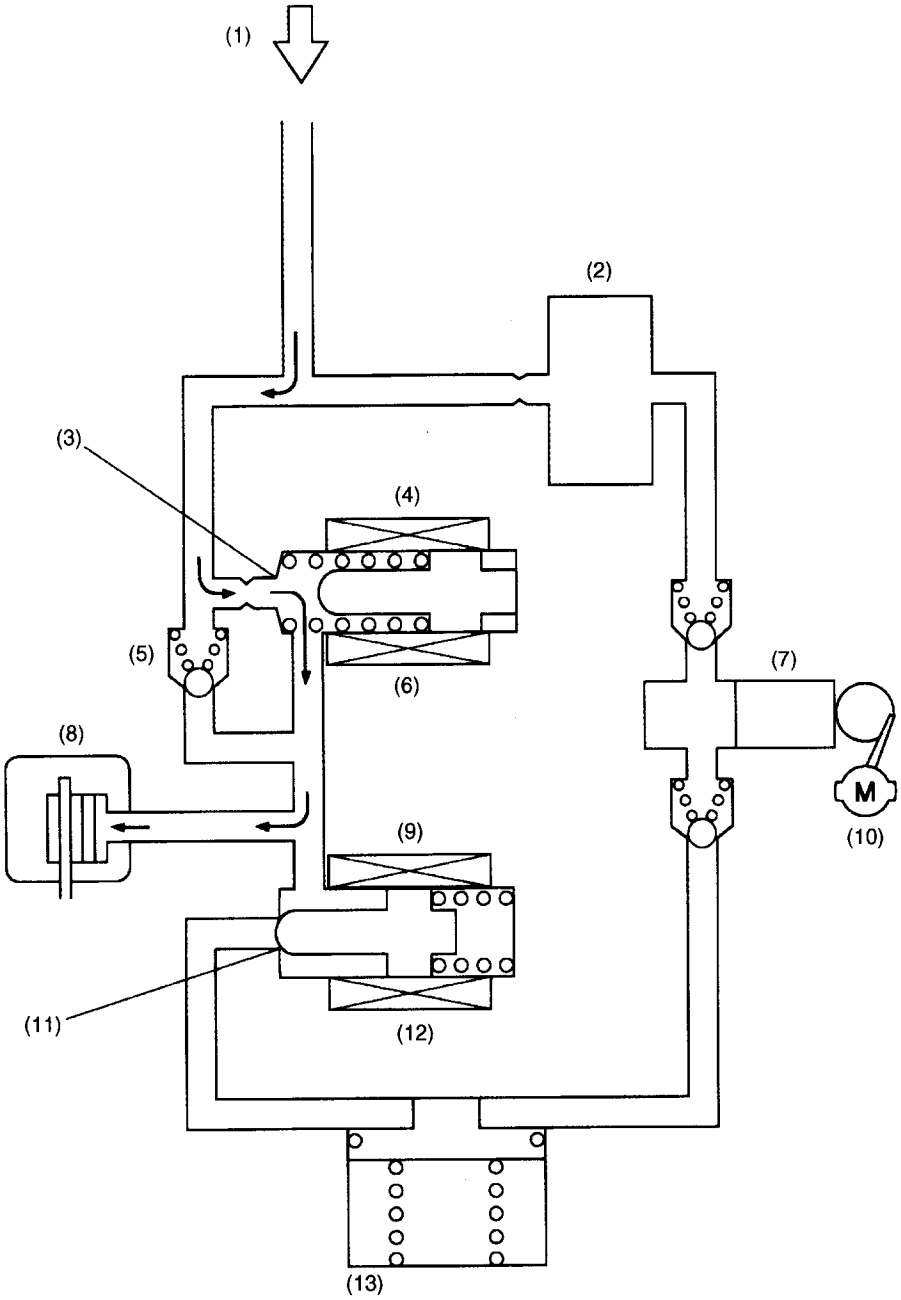

NF0201

(1) From master cylinder
(2) Damper chamber
(3) Inlet port open
(4) Inlet solenoid valve
(5) Check valve
(6) De-energized
(7) Pump
(8) Wheel cylinder
(9) Outlet solenoid valve
(10) Motor
(11) Outlet port closed
(12) De-energized
(13) Reservoir

2. PRESSURE "DECREASE" CONTROL (ABS ACTIVE)

Both the inlet and outlet solenoid valves are energized, which means that the inlet port is closed and the outlet port is open.
In this state, the wheel cylinder is isolated from the master cylinder but open to the reservoir, so the brake fluid in it can be drained into the reservoir, decreasing its pressure and reducing the braking force of the wheel.
The brake fluid collected in the reservoir is forced into the master cylinder by the pump.
During this phase of ABS operation, the pump motor continues operating.

NOTE:
For simplicity of explanation, operation of the hydraulic control unit is represented by operation of a single wheel circuit.

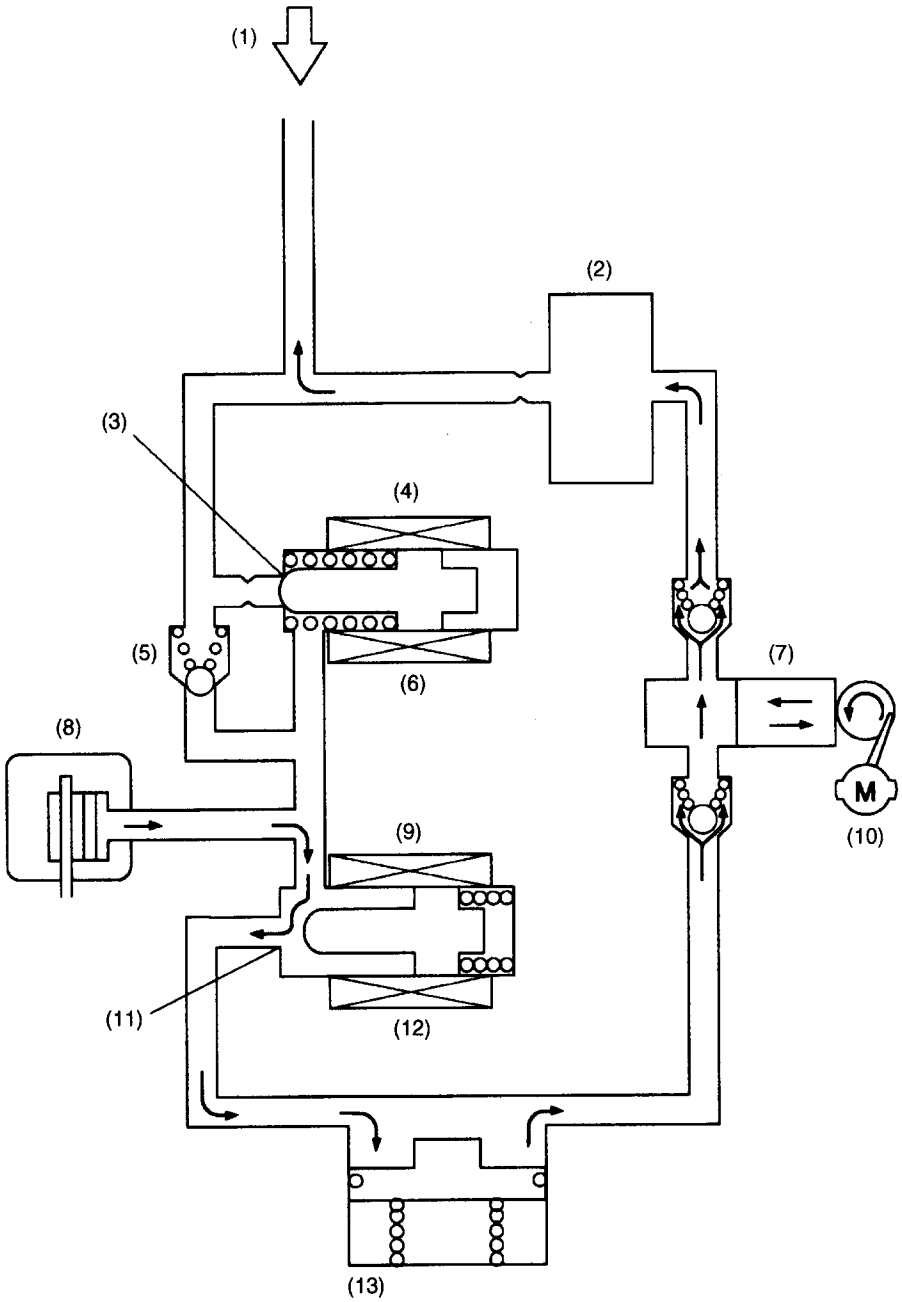

NF0202

(1) From master cylinder
(2) Damper chamber
(3) Inlet port closed
(4) Inlet solenoid valve
(5) Check valve
(6) Energized
(7) Pump
(8) Wheel cylinder
(9) Outlet solenoid valve
(10) Motor
(11) Outlet port open
(12) Energized
(13) Reservoir

3. PRESSURE "HOLD" CONTROL (ABS ACTIVE)

The inlet solenoid valve is energized, so the inlet port is closed.
On the other hand, the outlet solenoid valve is de-energized, so the output port is also closed. In this state, all the passages connecting the wheel cylinder, master cylinder and reservoir are blocked. As a result, the fluid pressure in the wheel cylinder is held unchanged.
During this phase of ABS operation, the pump motor continues operating.

NOTE:
For simplicity of explanation, operation of the hydraulic control unit is represented by operation of a single wheel circuit.

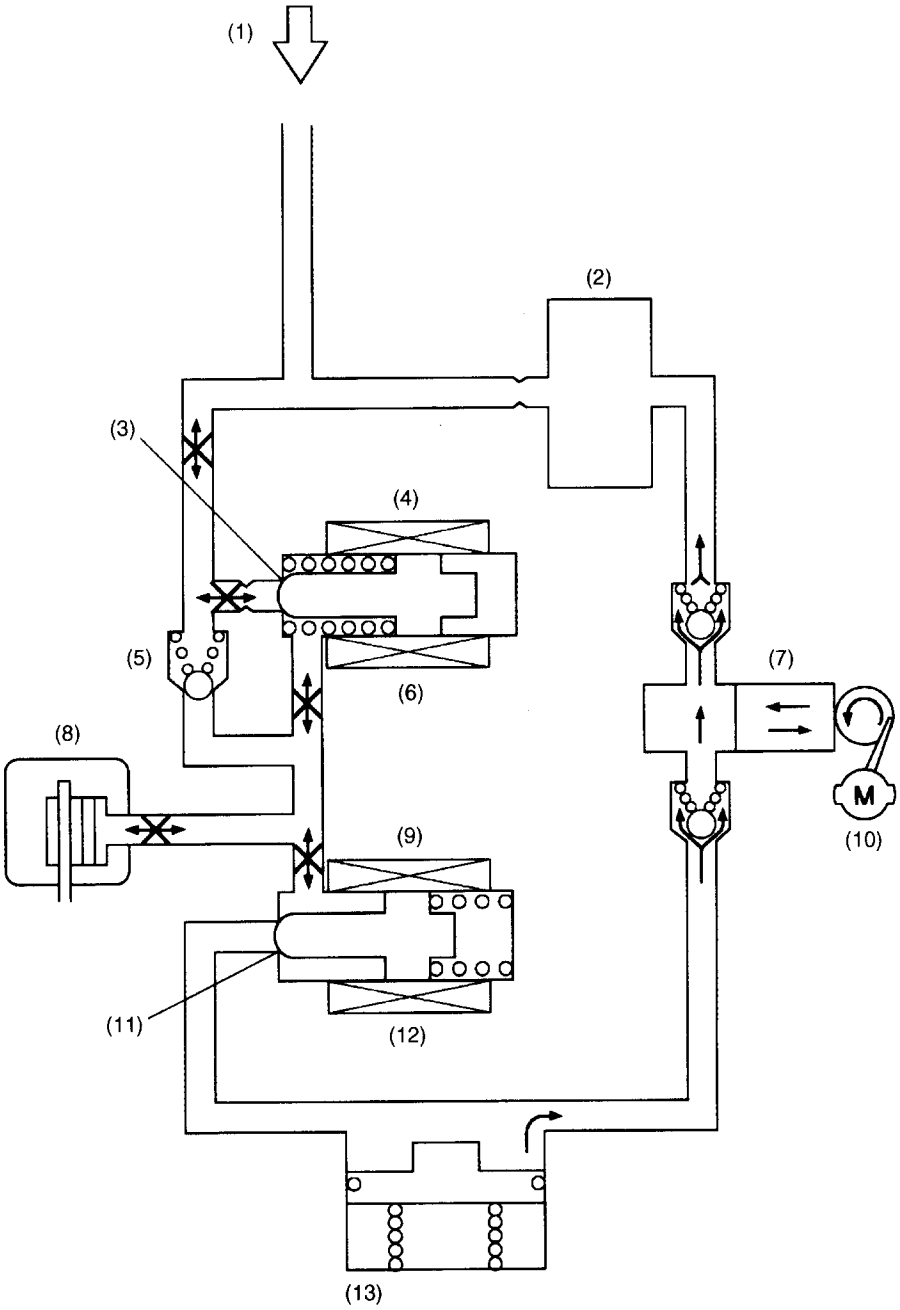

NF0203

(1) From master cylinder
(2) Damper chamber
(3) Inlet port closed
(4) Inlet solenoid valve
(5) Check valve
(6) Energized
(7) Pump
(8) Wheel cylinder
(9) Outlet solenoid valve
(10) Motor
(11) Outlet port closed
(12) De-energized
(13) Reservoir

4. PRESSURE "INCREASE" CONTROL (ABS ACTIVE)

Both the inlet and outlet solenoid valves are de-energized, which means that the inlet port of the inlet solenoid valve is open, whereas the outlet port of the outlet solenoid valve is closed. So the fluid pressure generated in the master cylinder is transmitted to the wheel cylinder and increased fluid pressure in the wheel cylinder applies the brake with a larger force.
During this phase of ABS operation, the pump motor continues operating.

NOTE:
For simplicity of explanation, operation of the hydraulic control unit is represented by operation of a single wheel circuit.

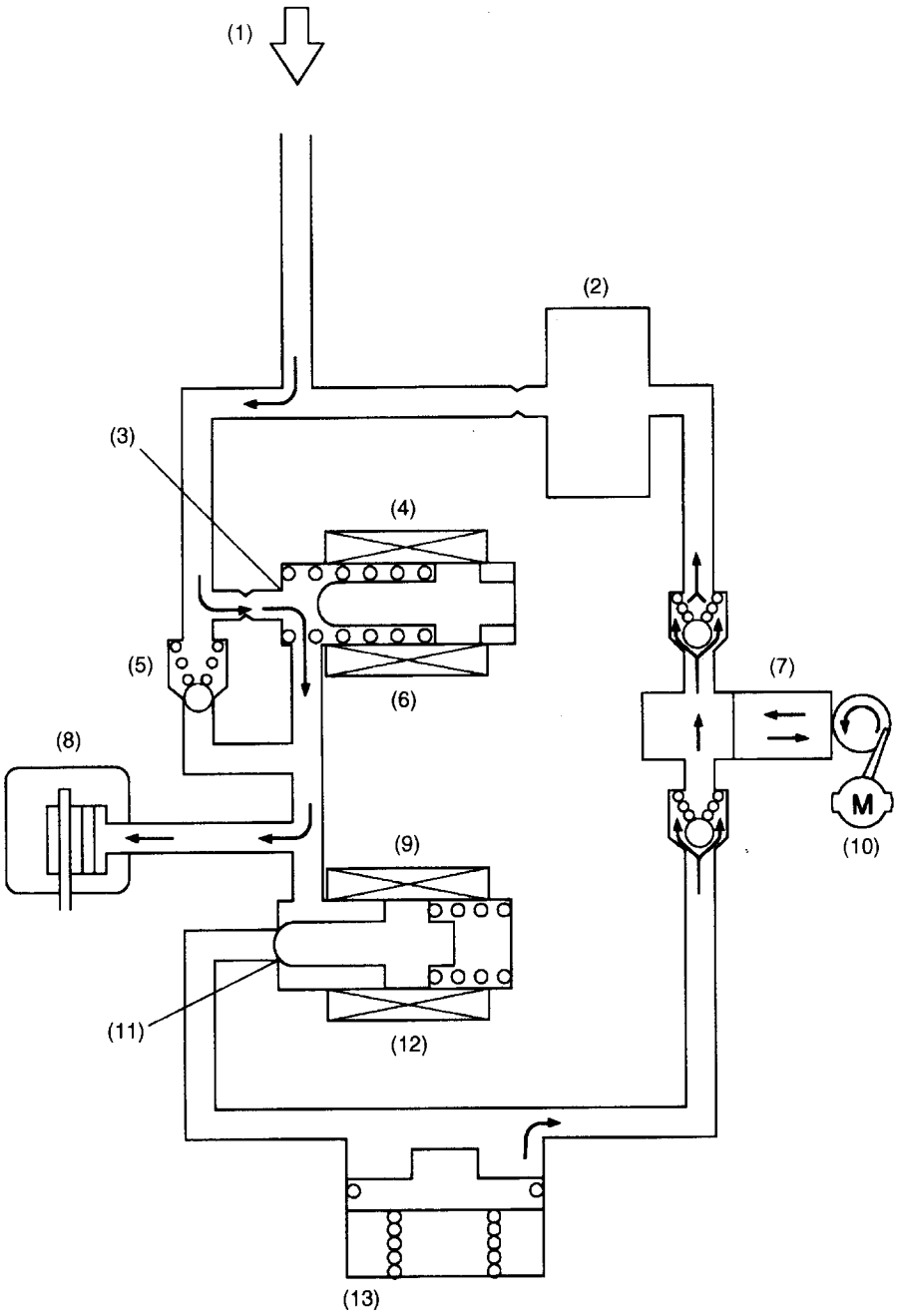

NF0204

(1) From master cylinder
(2) Damper chamber
(3) Inlet port open
(4) Inlet solenoid valve
(5) Check valve
(6) De-energized
(7) Pump
(8) Wheel cylinder
(9) Outlet solenoid valve
(10) Motor
(11) Outlet port closed
(12) De-energized
(13) Reservoir

F: ABS CONTROL CYCLE CURVES

Depressing the brake pedal increases the brake fluid pressure in each wheel cylinder, which in turn decreases the wheel speed (or increases the wheel deceleration rate). When the brake fluid pressure is increased to a level of point "A" of the brake fluid pressure curve in the diagram below (at which the wheel deceleration rate exceeds threshold "$-b_0$"), the ABSCM makes a pressure "hold" control. At the same time, the ABSCM calculates a "dummy" vehicle speed which is a reference speed it uses in the next stage of control.

When the wheel speed then drops below the slip ratio setting, i.e., a speed lower than the "dummy" vehicle speed by the predetermined value (at point "B" of the pressure curve), the ABSCM makes a control to prevent the wheel from locking, or a pressure "decrease" control.

As the wheel cylinder pressure decreases, the wheel speed starts increasing (or the wheel acceleration rate starts rising). When the wheel acceleration rate exceeds threshold "$+b_{10}$" (at point "C" of the pressure curve), the ABSCM makes a pressure "hold" control. When the wheel acceleration rate exceeds threshold "$+b_{20}$" (at point "D" of the pressure curve), the ABSCM recognizes that wheel lock-up will not occur and then makes a pressure "increase" control.

When the wheel acceleration rate drops below threshold "$+b_{20}$", (at point "E" of the pressure curve), the ABSCM starts pressure "hold" and "increase" control cycles at a given interval. When the wheel deceleration rate then exceeds threshold "$-b_0$" (at point "F" of the pressure curve), the ABSCM immediately makes a pressure "decrease" control.

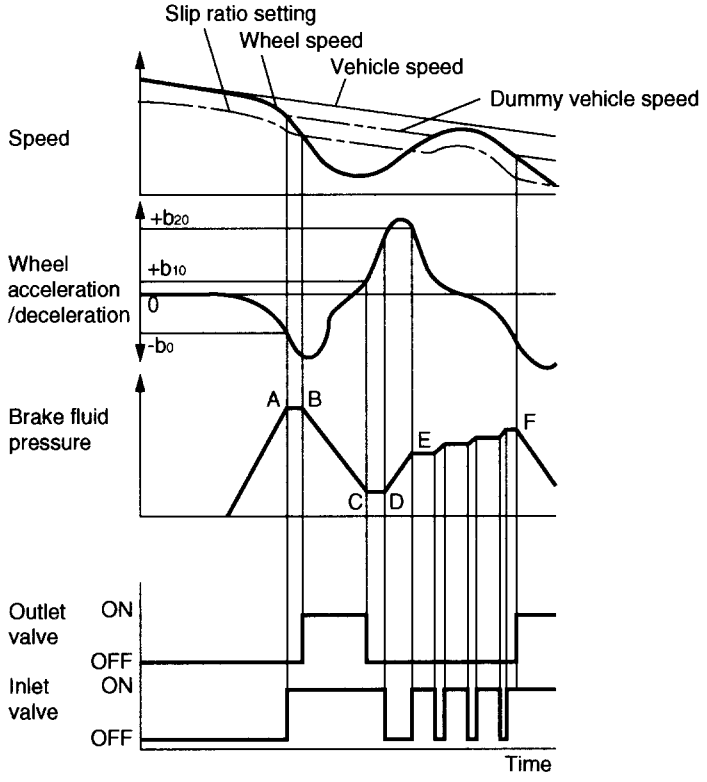

NF0205

Brake fluid Pressure	Inlet valve	Outlet valve
Increase	OFF	OFF
Hold	ON	OFF
Decrease	ON	ON

G: ABS WARNING LIGHT

When a fault occurs in the signal transmission system or the ABSCM, the ABS warning light in the combination meter comes on. At the same time, the current to the hydraulic control unit is interrupted. The brake system then functions in the same manner as a system without ABS. The warning light utilizes a dual circuit design.

If the warning light comes on, one or more trouble codes should be stored in the control module. They must be identified using the warning light's code indicating function.

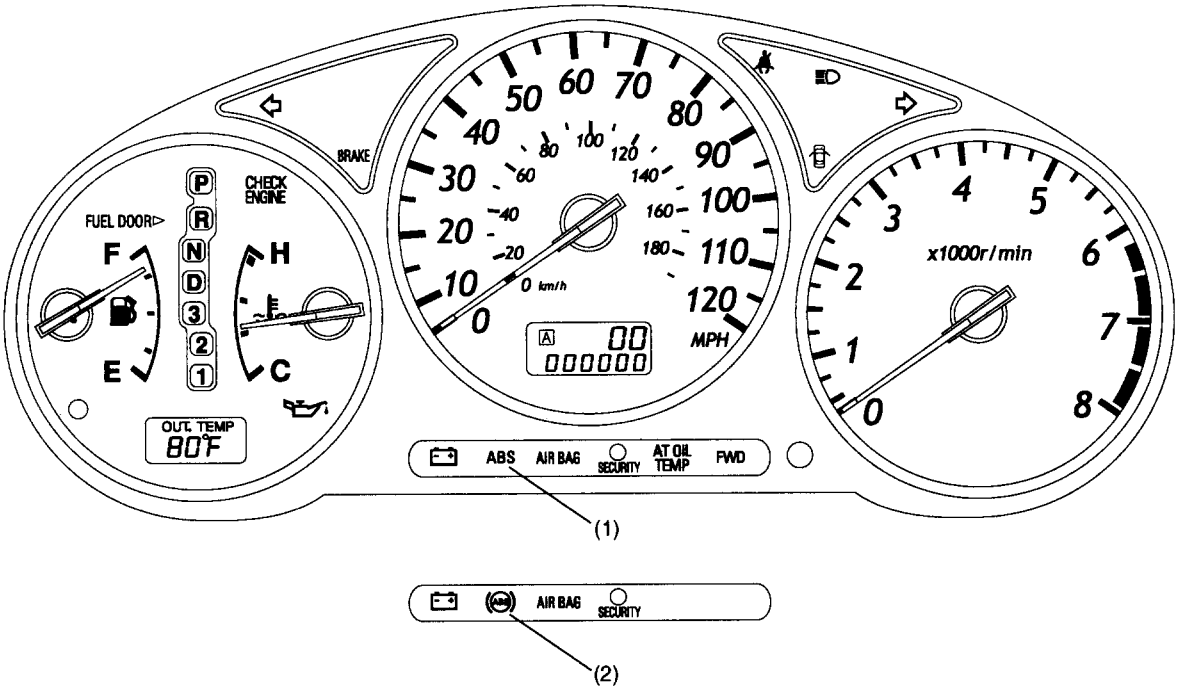

NF0467

(1) ABS warning light (U.S. spec. vehicles)

(2) ABS warning light (Canada spec. vehicles)

H: G SENSOR

The G sensor detects changes in the vehicle's acceleration/deceleration rate in the longitudinal direction.
The moving electrode of a capacitor in the sensor moves away from or close to the fixed electrode as the vehicle accelerates or decelerates and the resulting change in the capacitance of the capacitor is outputs to the ABSCM as a change in the voltage.

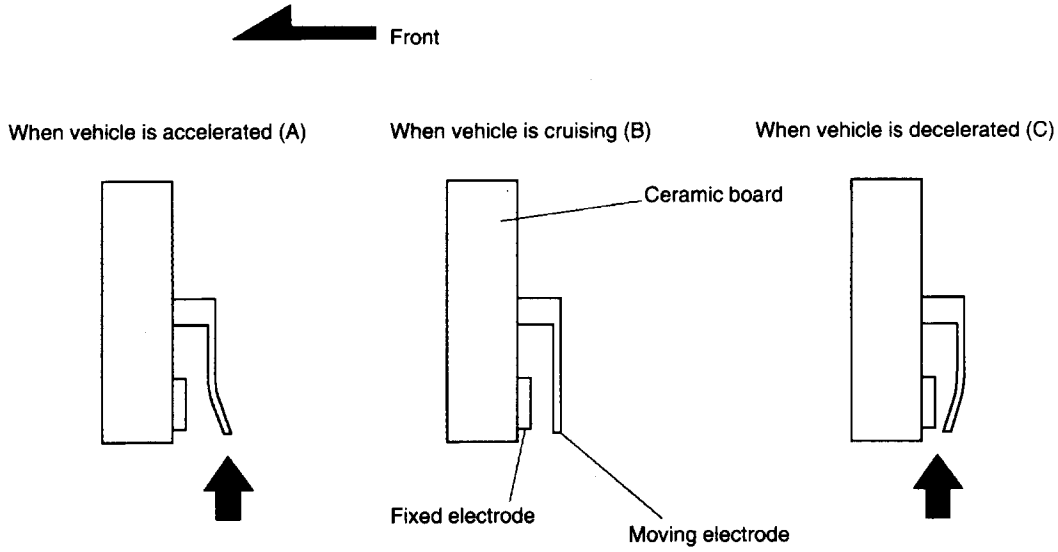

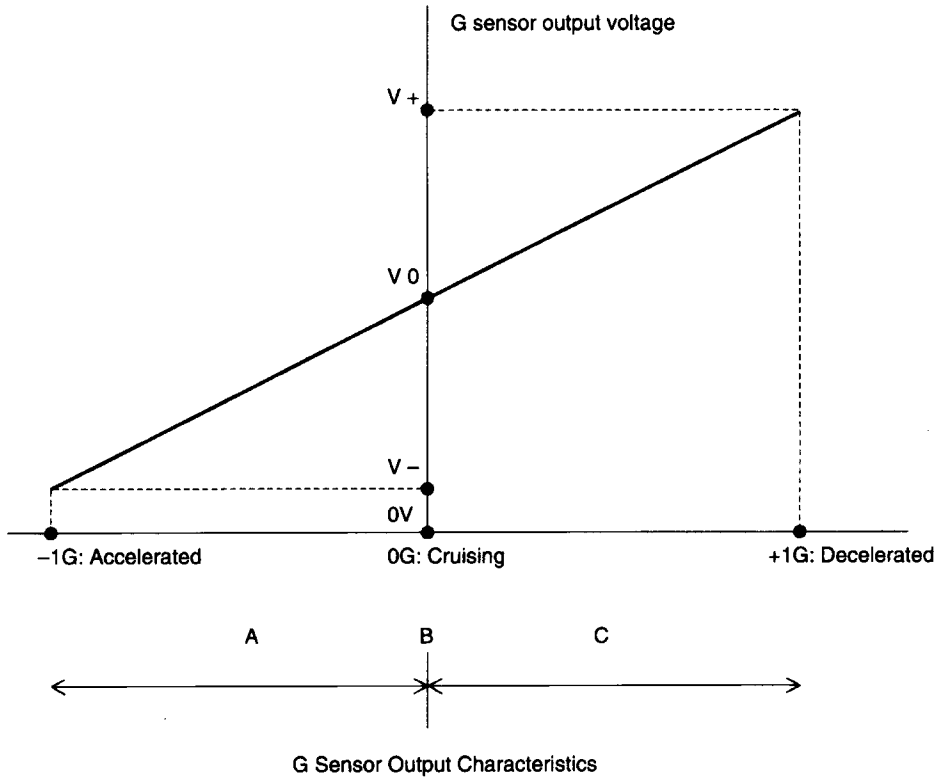

G Sensor Output Characteristics

NF0207

BRAKES BR

		Page
1.	Front and Rear Disc Brakes	2
2.	Rear Drum Brakes	4
3.	Master Cylinder	6
4.	Brake Booster	9
5.	Proportioning Valve	10

1. Front and Rear Disc Brakes

- The disc brakes are of a ventilated disc type which features high heat dissipation and superb braking stability. In addition, the front brakes quickly restores their original braking performance even when they get wet.
- Ventilated discs are used only on the front wheels.
- Each disc rotor, which is fitted on the outside of the hub, is secured together with the wheel using the hub bolts. This facilitates its removal and installation.
- The inner brake pad is provided with a wear indicator.

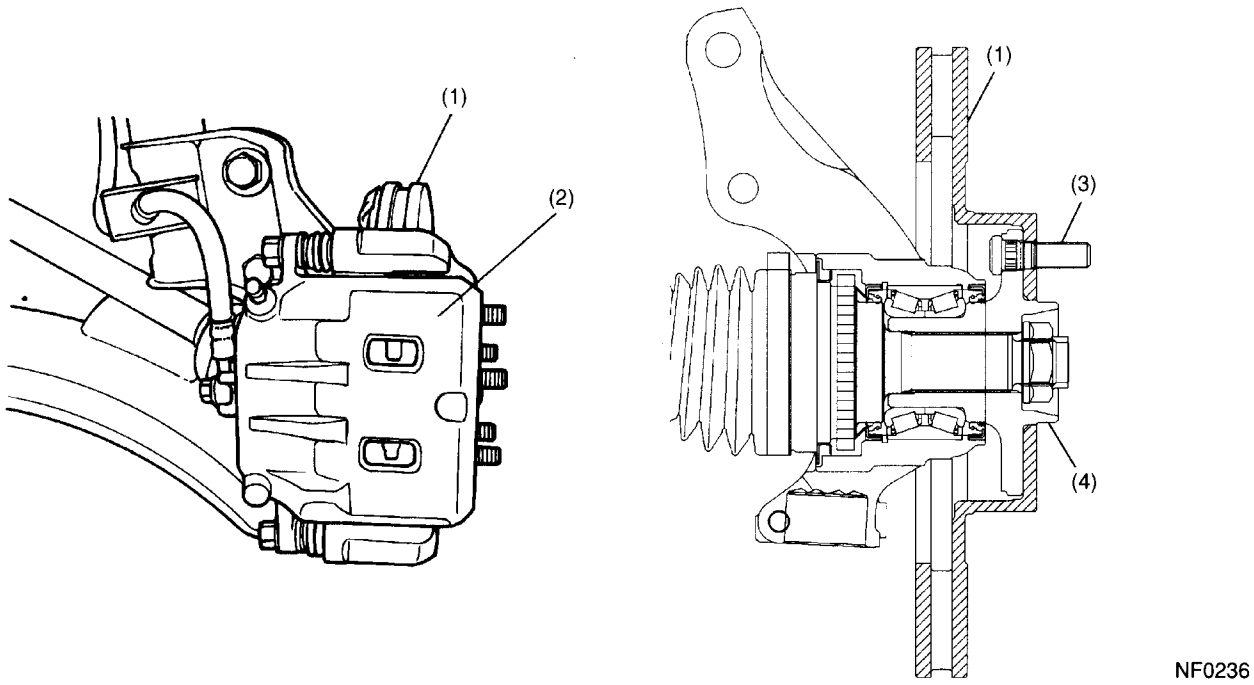

(1) Disc rotor
(2) Caliper body
(3) Hub bolt
(4) Hub

A: PAD WEAR INDICATOR

A wear indicator is provided on the inner disc brake pads. When the pad wears down to 1.5 mm (0.059 in) the tip of the wear indicator comes into contact with the disc rotor, and makes a squeaking sound as the wheel rotates. This alerts the driver to the situation.

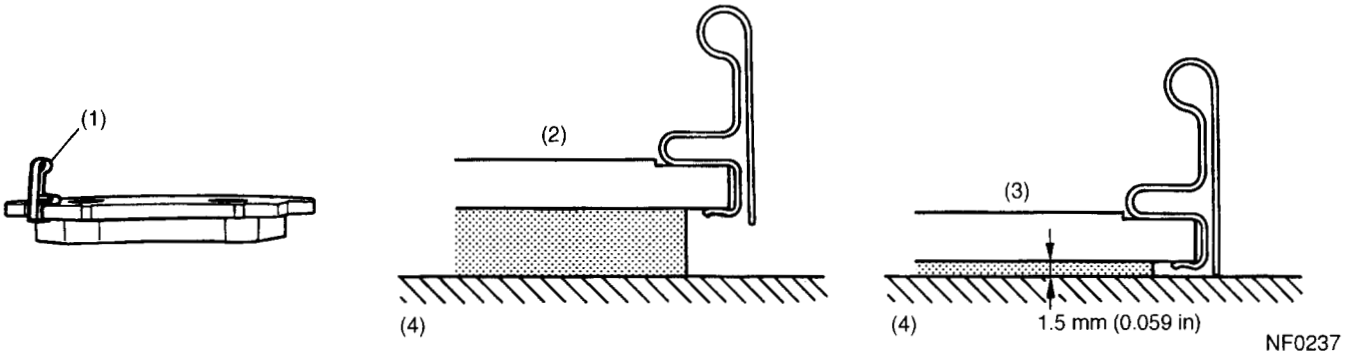

(1) Wear indicator
(2) New pad
(3) Worn pad
(4) Disc rotor

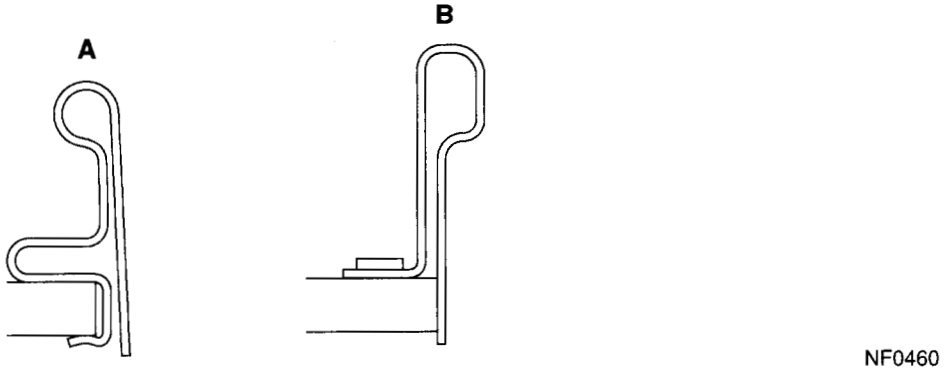

A: TURBO MODEL
B: NON-TURBO MODEL

B: FRICTIONAL MATERIAL OF BRAKE PADS

The brake pads materials do not contain any asbestos which is harmful to human body.

2. Rear Drum Brakes

• The rear drum brakes are of a leading-trailing shoe type. When fluid pressure is applied to each wheel cylinder, the piston expands the leading and trailing shoes. During expansion of the shoes, the lower shoe return spring joint acts as a pivot. The shoes come in contact with the inner surface of the drum, producing braking action.

• When brakes are applied during the forward movement, the tip of the brake leading shoe lining is pressed against the inner surface of the drum so as to oppose the drum's rotating force. This increases the braking force. The trailing shoe, however, undergoes a force that pushes it back so that braking force applied to the trailing shoe decreases.
The above shoe actions are reverse while the vehicle is moving backward; the braking force exerted on the trailing shoe is greater than that on the leading shoe. This means that there is no difference in braking force between when the vehicle is moving forward and when it is reversing.

• An inspection hole is provided in the backing plate for easier inspection of the linings for wear. The hole is closed with a rubber cap.

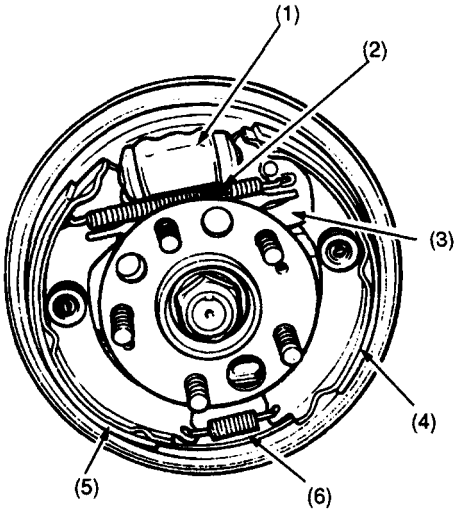

NF0238

(1) Wheel cylinder
(2) Upper shoe return spring
(3) Adjuster lever
(4) Trailing shoe
(5) Leading shoe
(6) Lower shoe return spring

A: AUTOMATIC ADJUSTER

The brake lining-to-drum clearance is automatically adjusted by the automatic adjuster. When the brake shoe is contracting after expansion, the adjuster lever rotates the adjuster assembly's screw to lengthen the adjuster assembly so that the clearance is maintained at the specified value.

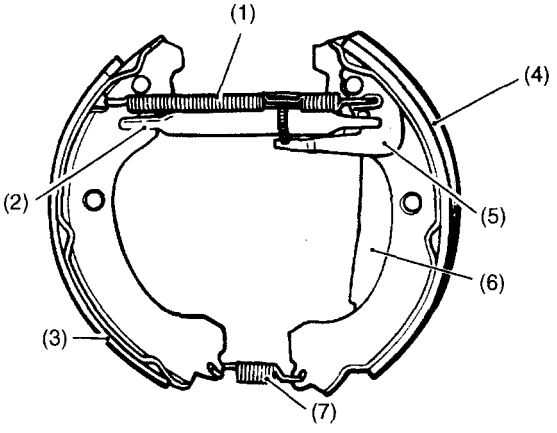

NF0239

(1) Upper shoe return spring
(2) Adjuster assembly
(3) Leading shoe
(4) Trailing shoe
(5) Adjuster lever
(6) Parking lever
(7) Lower shoe return spring

3. Master Cylinder

- There is a brake fluid reservoir tank on the master cylinder. The reservoir is completely sealed for extended service life of the brake fluid.

With ABS model

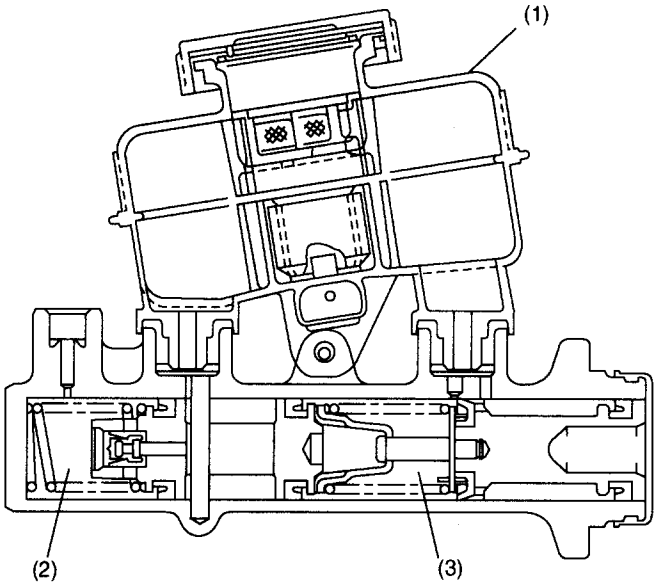

NF0461

(1) Reservoir tank
(2) Secondary hydraulic chamber (chamber S)
(3) Primary hydraulic chamber (chamber P)

Without ABS model

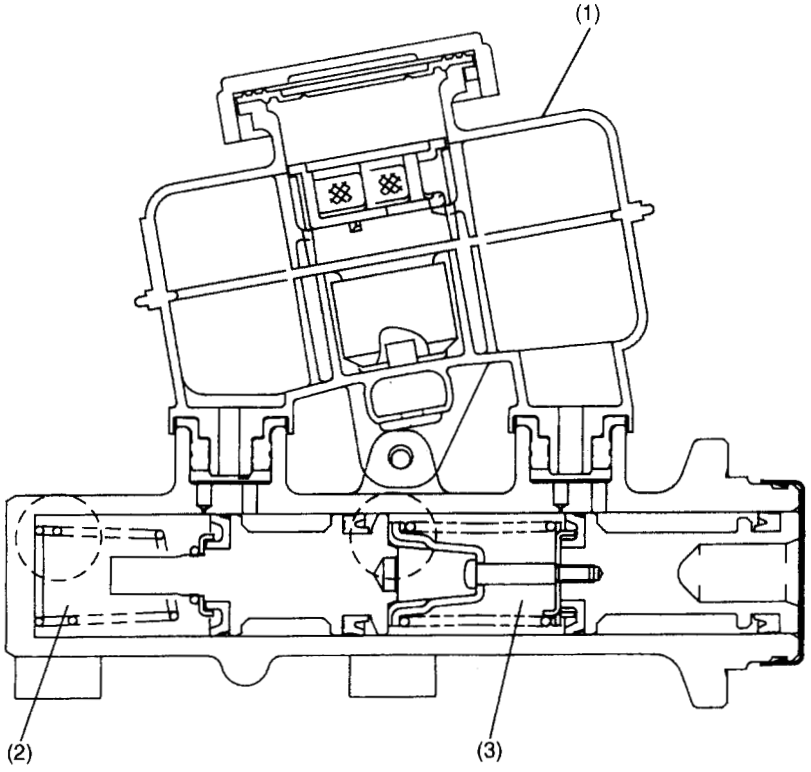

NF0241

(1) Reservoir tank
(2) Secondary hydraulic chamber (chamber S)
(3) Primary hydraulic chamber (chamber P)

A: BRAKE FLUID LEVEL SWITCH

The brake fluid level switch is located inside the brake fluid reservoir tank and causes the brake system warning light on the combination meter to come on when the fluid level has dropped below the predetermined level.

The switch assembly consists of a reed switch (normally open) and a permanent magnet that is incorporated in a float.
When the brake fluid level is normal, the float is far above the reed switch, so the force of the magnet is unable to act on the reed switch. The warning light circuit, therefore, remains open.
When the brake fluid level drops to a level approximately 30 mm (1.18 in) below the maximum level and the float lowers accordingly, the magnet aligns with the reed switch, activating the reed switch contact. The warning light then comes on to warn the driver of the situation.
The warning light may, although momentarily, illuminate even when the brake fluid level is normal if the vehicle tilts or swing largely.

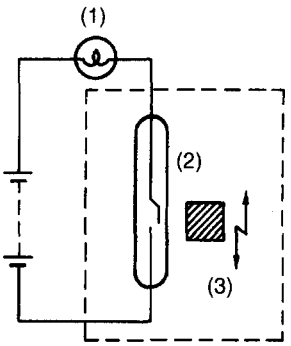

NF0242

(1) Warning light
(2) Reed switch
(3) Permanent magnet

4. Brake Booster

The brake booster is a tandem type that uses two diaphragms. This design provides high brake boosting effects in spite of a reduced diameter.

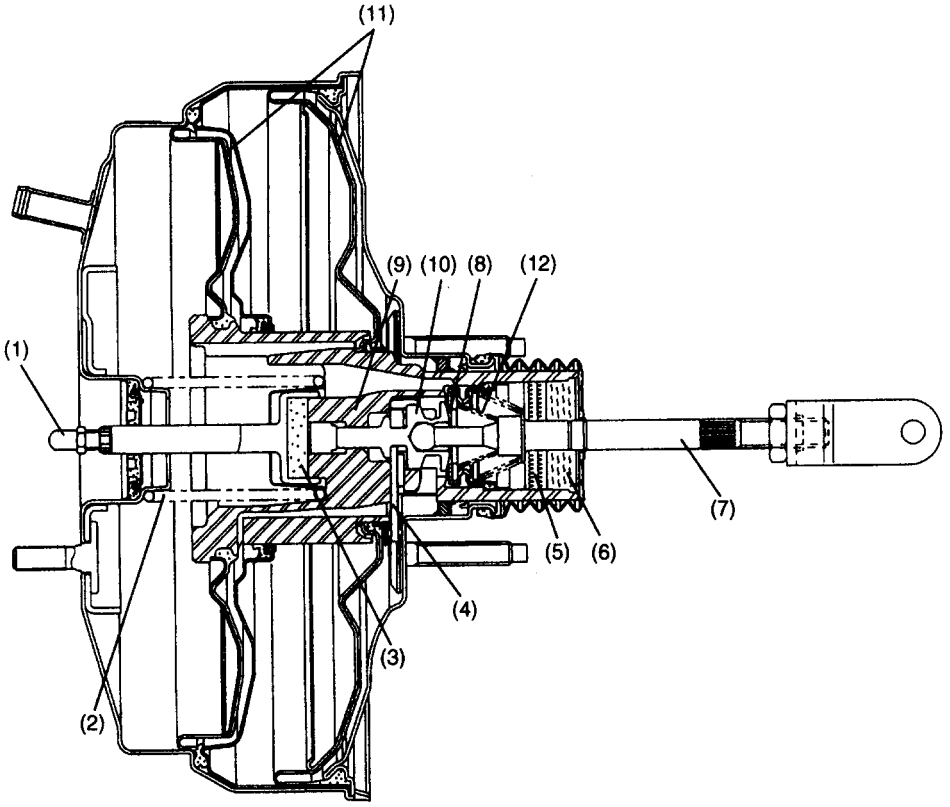

NF0243

(1)	Push rod	(5)	Filter	(9)	Valve body
(2)	Return spring	(6)	Silencer	(10)	Plunger valve
(3)	Reaction disc	(7)	Operating rod	(11)	Diaphragm plate
(4)	Key	(8)	Poppet valve	(12)	Valve return spring

5. Proportioning Valve

The proportioning valve prevents the rear wheels from locking and resultant skidding that would occur during hard braking due to transfer of vehicle weight toward the front wheels. The valve distributes a reduced pressure to the rear wheel brakes as compared with the pressure to the front wheel brakes when a specified master cylinder fluid pressure (called "split point") is exceeded as shown in the diagrams below.

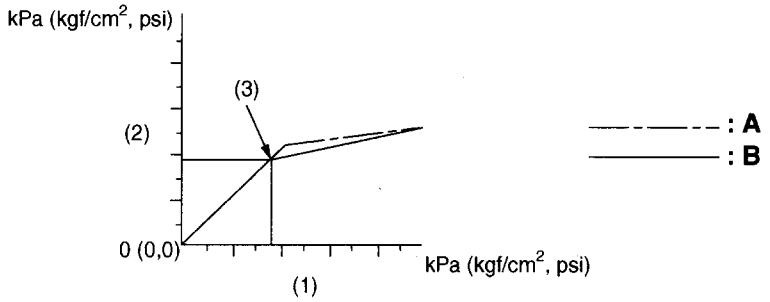

NF0248

(1) Master cylinder fluid pressure
(2) Rear wheel cylinder fluid pressure
(3) Split point

A: Brakes released
B: Brakes kept applied

A: OPERATION

1) Operation before the split point

The piston is held pressed toward the left by the spring so that the piston is kept away from its lip seal.

Under this condition, fluid pressure "P_3" to the rear wheel cylinders is equal to fluid pressure "P_2" from the master cylinder.

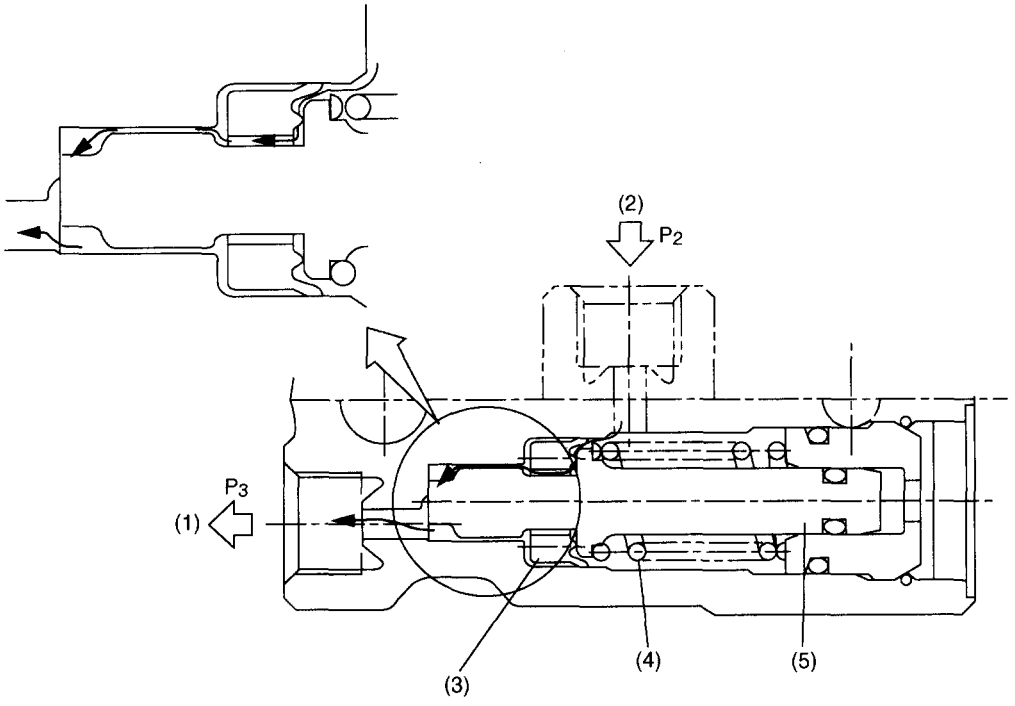

NF0250

(1) To rear wheel cylinder
(2) From master cylinder
(3) Lip seal
(4) Spring
(5) Piston

2) Operation at the split point pressure

When pressure "P_2" increases to the split point pressure, force "f_2" is generated. (Piston's cross sectional area "A" has been selected so that the force is generated starting with the split point pressure.) The pressure pushes the piston rightward, overcoming spring force "F". As a result, the piston moves rightward and comes in contact with the lip seal, blocking the passage toward the rear wheel cylinders.

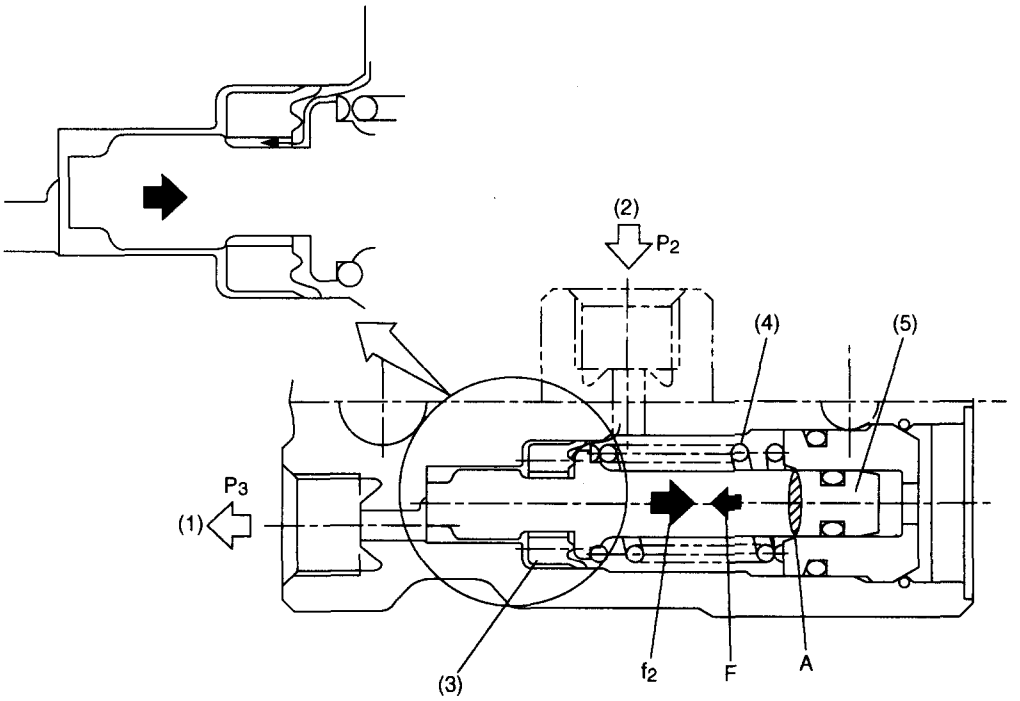

NF0251

(1) To rear wheel cylinder
(2) From master cylinder
(3) Lip seal
(4) Spring
(5) Piston

3) Operation after reaching the split point pressure

Immediately before the fluid passage toward the rear wheel cylinders is closed, pressure "P_2" is slightly higher than pressure "P_3". So the piston can move in the spring force acting direction and the fluid can flow to the wheel cylinders. However, as soon as pressure "P_2" becomes equal to "P_3", the passage closes.

This cycle is repeated as long as the pedal is depressed further, but pressure increasing rate of the rear wheel cylinders is smaller than that of the front wheel cylinders.

PARKING BRAKE PB

Page

1. Parking Brake (Rear Disc Brakes) 2
2. Parking Brake (Rear Drum Brakes) 5

1. Parking Brake (Rear Disc Brakes)

The parking brake uses a drum housed in the disc rotor of each rear disc brake. The shoes are mechanically controlled through linkage and cables.

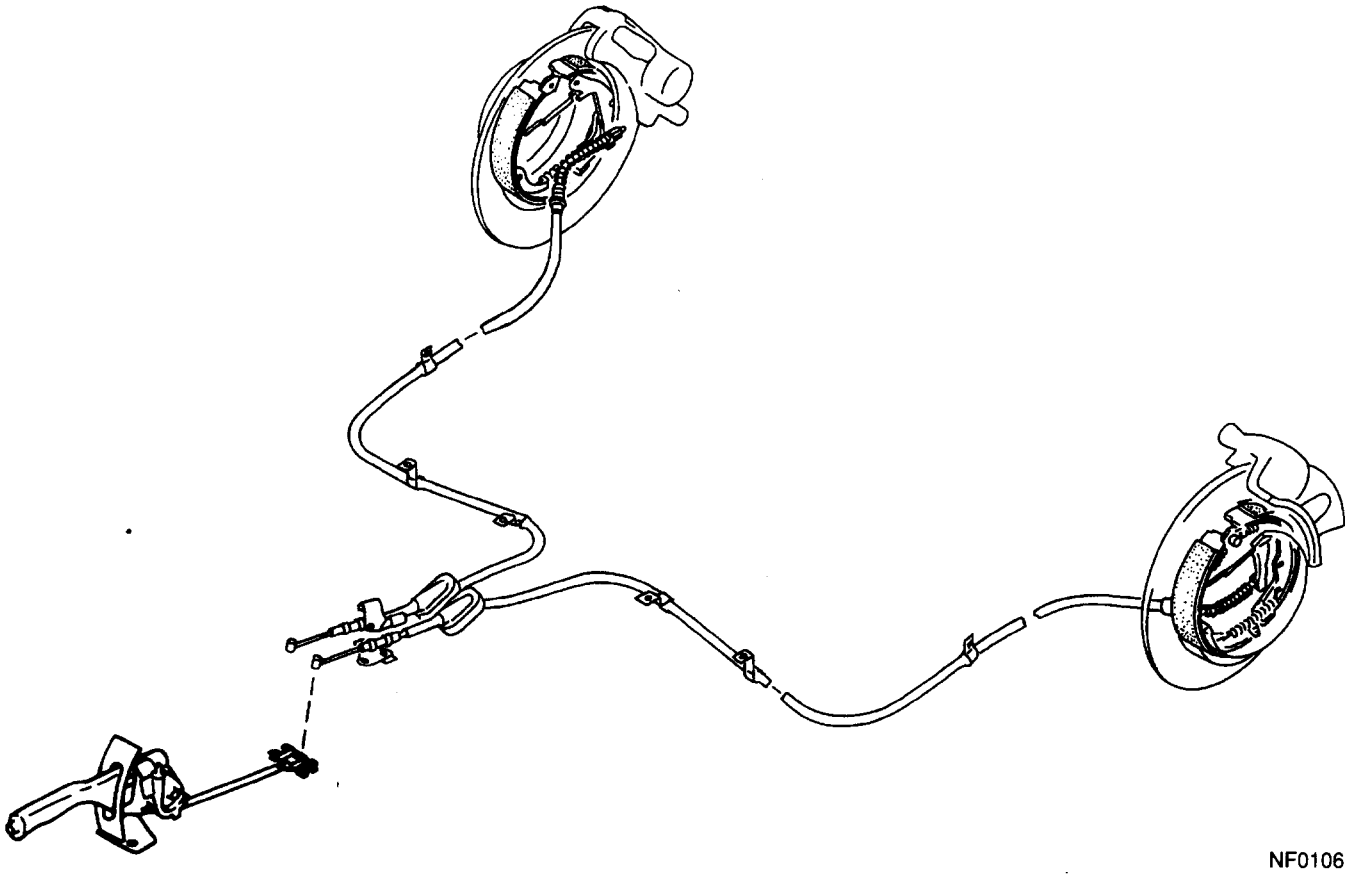

A: OPERATION

1. SETTING

When the parking brake lever is pulled, the shoe actuating lever to which the end of the parking brake cable is connected turns the strut in direction "F" around point "P".

The strut then presses the brake shoes A and B against the drum. These brake shoes utilize a floating design and are movably supported by hold-down pins. The force applied to brake shoe A and the reaction force "F" applied to the brake shoe B via point "P" press them against the brake drum.

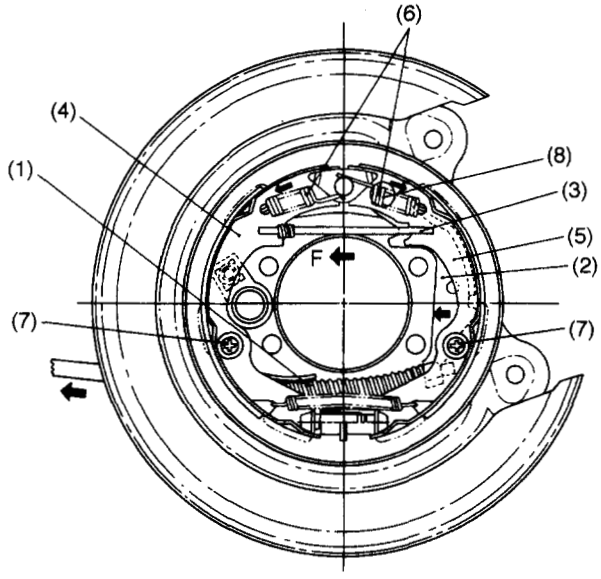

NF0107

(1) Parking brake cable
(2) Lever
(3) Strut
(4) Brake shoe A
(5) Brake shoe B
(6) Shoe return spring
(7) Shoe hold down pin
(8) Point "P"

2. RELEASING

When the parking brake lever is returned to the release position and the parking brake cables are slackened, the brake shoes A and B are moved back to their original positions by the tension of return springs, so that the parking brake is released.

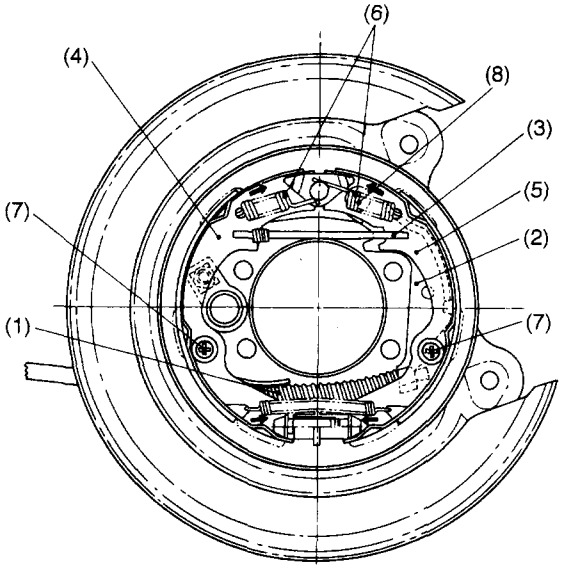

NF0108

(1) Parking brake cable
(2) Lever
(3) Strut
(4) Brake shoe A
(5) Brake shoe B
(6) Shoe return spring
(7) Shoe hold down pin
(8) Point "P"

2. Parking Brake (Rear Drum Brakes)

When the parking brake lever is moved up, the parking lever in each rear drum brake moves around point "A" so that the trailing shoe expands. The leading shoe also expands by way of the adjuster assembly. The shoes are thus pressed against the drum to generate a wheel locking force.

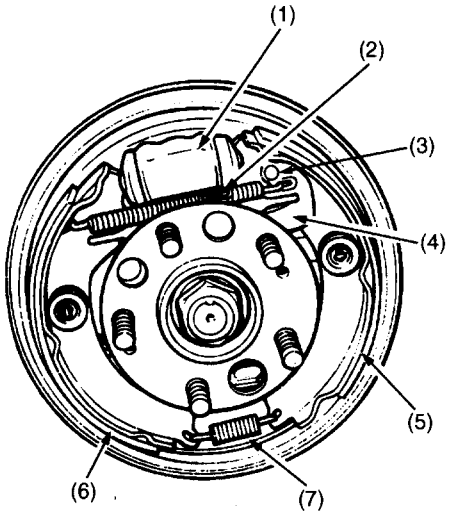

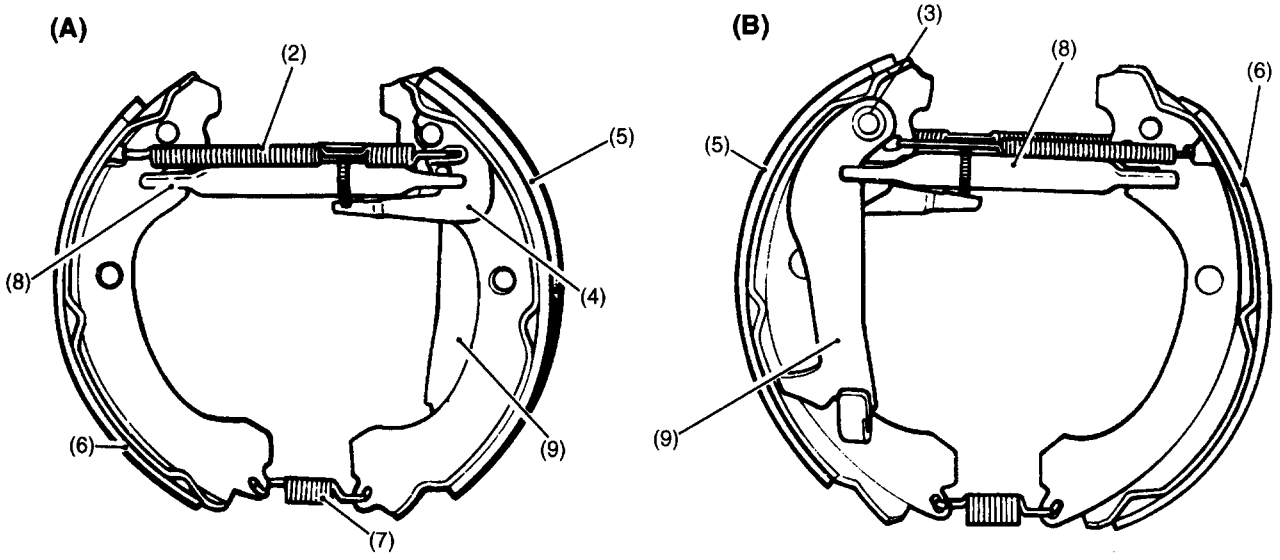

NF0109

(1) Wheel cylinder
(2) Upper shoe return spring
(3) Point "A"
(4) Adjuster lever
(5) Trailing shoe
(6) Leading shoe
(7) Lower shoe return spring
(8) Adjuster assembly
(9) Parking lever

(A) Automatic brake lining clearance adjustment mechanism
(B) Parking brake mechanism

MEMO

POWER ASSISTED SYSTEM (POWER STEERING) PS

	Page
1. Tilt Steering Column	2
2. Power Steering System	5

1. Tilt Steering Column

A: TILT MECHANISM

- The steering wheel vertical position can be adjusted within a 50 mm (1.97 in) range by using the tilt lever to unlock the steering column and lock it again at the desired position.

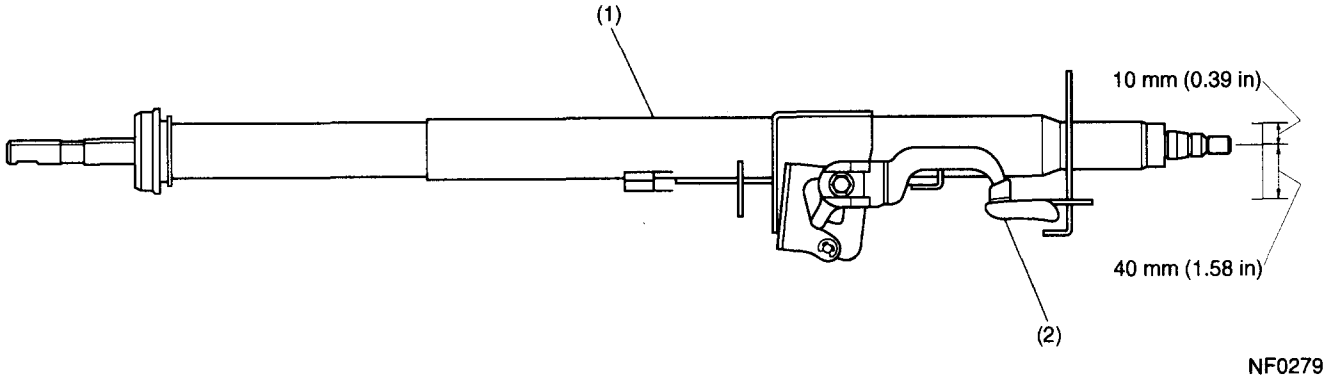

(1) Tilt steering column
(2) Tilt lever

B: ENERGY-ABSORBING MECHANISM

- To absorb the backward movement energy generated in the engine in the event of a frontal collision, a cylindrical fitting type steering column pipe has been adopted. When an impact load exceeding a certain level is applied to the steering column, the shaft moves in the jacket. Since the shaft is press-fitted in the jacket, friction generated between them during the above-mentioned movement absorbs impact. The column bending load is supported by the fittings.
- Another measure to alleviate impact on the driver in the event of a collision is the wire which is located between the tilt pin and the distance plate attached to the steering support beam. When a large impact load is applied to the steering column, the wire is deformed progressively. The impact energy is absorbed during this process.

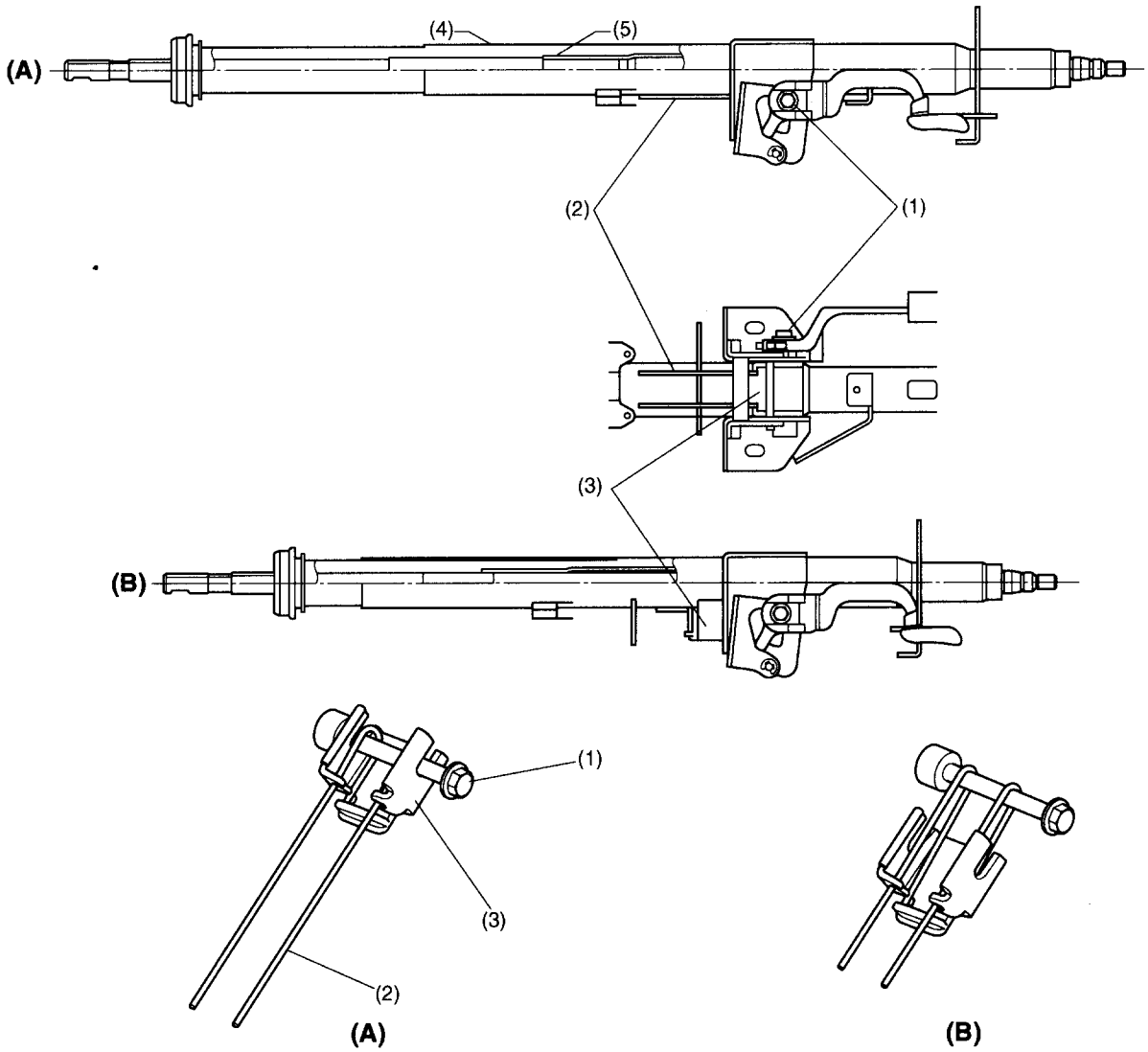

NF0447

(A) Before absorption of impact energy
(B) After absorption of impact energy

(1) Tilt pin
(2) Wire
(3) Distance plate
(4) Jacket
(5) Shaft

C: STEERING SUPPORT BEAM

The steering column is held in position by a support beam which is installed crosswise in the vehicle body at a level close to the steering wheel to reduce the overhang distance of the steering wheel from the supporting point of the column. The steering shaft upper bearing is also located close to the steering wheel to increase supporting efficiency as well as to minimize vibration of the steering wheel.

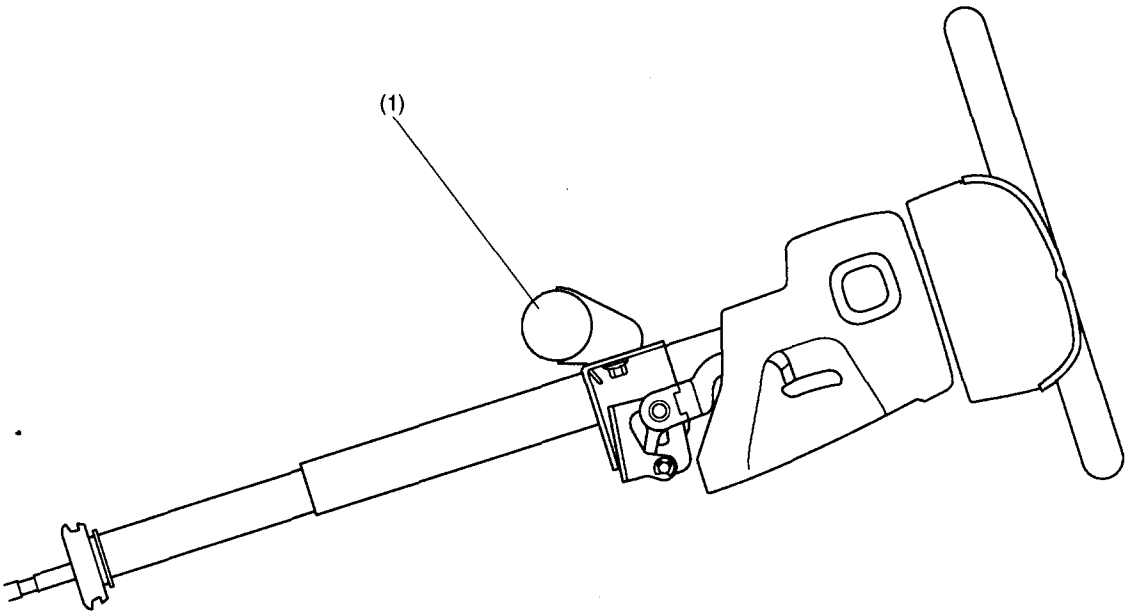

NF0281

(1) Steering support beam

2. Power Steering System

A: HYDRAULIC SYSTEM

- The fluid pump is directly driven by the engine through a belt.
- When the steering wheel is not being turned, the pressure-sensitive valve in the pump opens to drain the fluid into the fluid reservoir tank (Turbo model).
- The fluid pressure is maintained almost constant regardless of change in the engine speed by the function of the flow control valve. The pressure-regulated fluid is delivered to the control valve via hose A.
- When the steering wheel is turned, the rotary control valve connected to the pinion shaft opens the hydraulic circuit corresponding to the direction in which the steering wheel is turned. The fluid then flows into chamber A or B via pipe A or B.
- The fluid pressure in chamber A or B acts on the rack piston in the same direction as that in which the rack shaft is moved by rotation of the steering wheel. This helps reduce the effort required of the driver to operate the steering wheel.
- Movement of the rack piston causes the fluid in the other chamber to return to the reservoir tank via pipe A or B, control valve, and hose B.
  - As the steering shaft is connected to the pinion shaft mechanically via the rotary control valve, the steering system can operate as a manual system even if the hydraulic system becomes inoperative.
  - To control the maximum fluid pressure, a relief valve is built into the fluid pump to prevent build-up of an excessive fluid pressure.

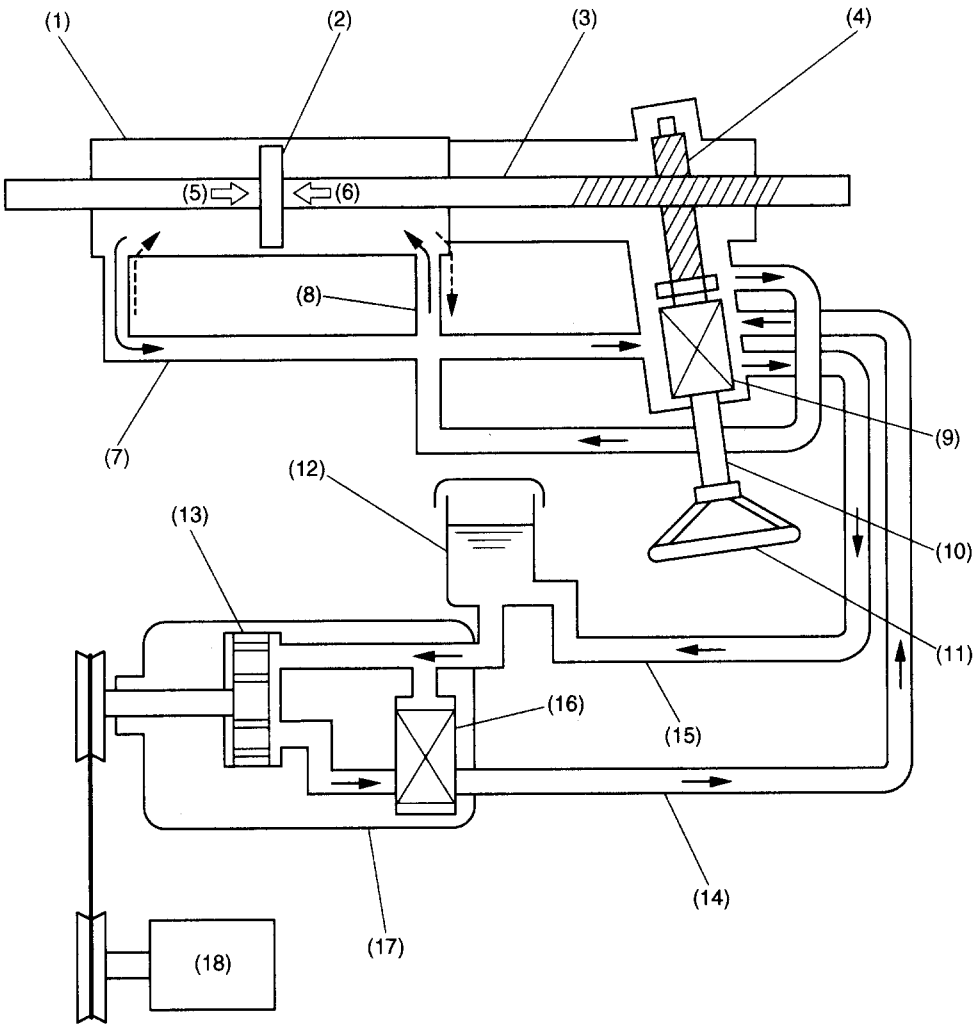

NF0283

(1) Power cylinder
(2) Rack piston
(3) Rack shaft
(4) Pinion shaft
(5) Chamber A
(6) Chamber B
(7) Pipe A
(8) Pipe B
(9) Control valve
(10) Steering shaft
(11) Steering wheel
(12) Tank
(13) Vane pump
(14) Hose A
(15) Hose B
(16) Turbo model: flow control, energy-saving and pressure sensitive valve assembly
Non-turbo model: flow control and relief valve assembly
(17) Fluid pump
(18) Engine

B: GEARBOX ASSEMBLY

1. POWER CYLINDER

The gearbox integrates the control valve and power cylinder into a single unit. The rack shaft serves as a power cylinder piston. The rotary control valve is located around the pinion shaft.

The rotary control valve and power cylinder are connected to each other by two pipes through which hydraulic fluid flows.

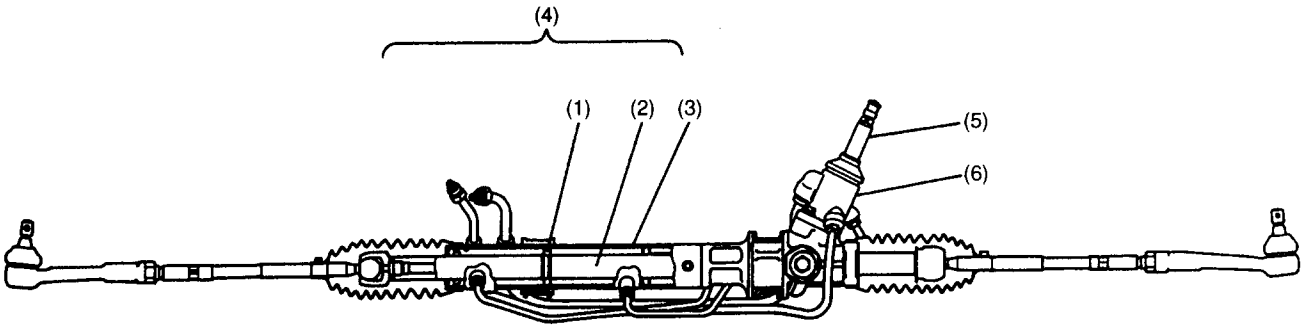

NF0284

(1) Piston
(2) Rack shaft
(3) Cylinder
(4) Power cylinder
(5) Pinion shaft
(6) Control valve

2. ROTARY CONTROL VALVE

The rotary control valve consists of a rotor (which rotates together with the steering shaft), a pinion (which is connected to the rotor and torsion bar), and a sleeve (which rotates together with the pinion). The rotor and sleeve have grooves C and D, respectively, which form fluid passages V_1 through V_4.

The pinion is in mesh with the rotor with adequate clearance, which enable the rack to be moved manually by rotating the steering shaft (fail-safe feature).

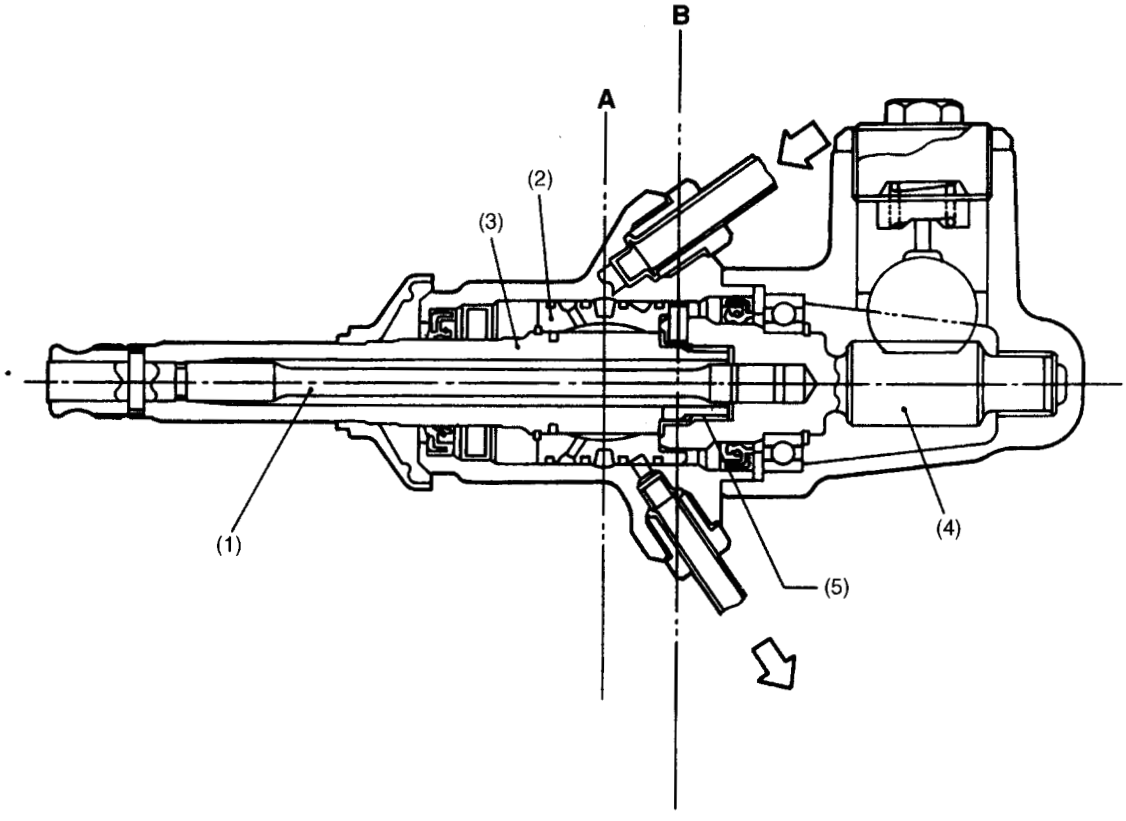

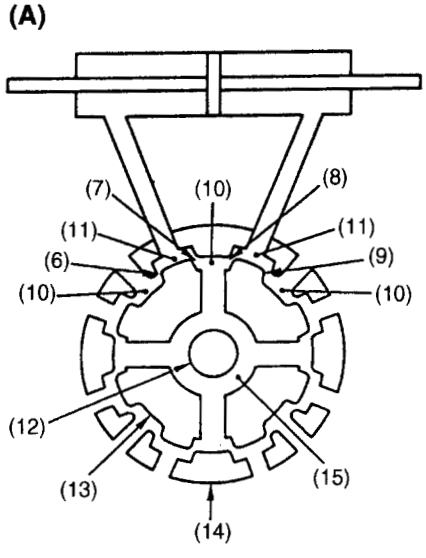

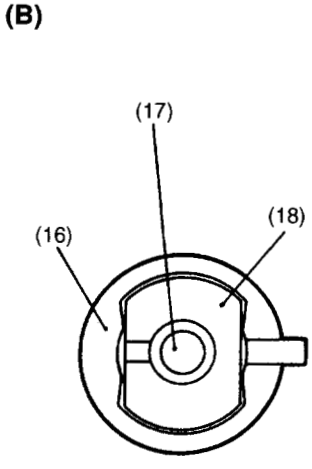

NF0286

(1) Torsion bar
(2) Sleeve
(3) Rotor
(4) Pinion
(5) Pinion-to-rotor engagement (fail-safe feature)
(6) Fluid passage V_1
(7) Fluid passage V_2
(8) Fluid passage V_3
(9) Fluid passage V_4
(10) Groove C
(11) Groove D
(12) Torsion bar
(13) Rotor
(14) Sleeve
(15) Fluid return line (to reservoir tank)
(16) Pinion
(17) Torsion bar
(18) Rotor

(A) Cross-sectional view A (fluid passage switching circuit)
(B) Cross-sectional view B (pinion-to-rotor engagement)

- Principle of operation

When the torsion bar is twisted by a rotational force applied to the steering wheel, the relative position between the rotor and sleeve changes. This changes the cross-sectional area of fluid passages V_1, V_2, V_3 and V_4. The fluid passages are thus switched and the fluid pressure is controlled in accordance with the operation of the steering wheel.

- When no steering force is applied:
  The rotor and sleeve are held at the neutral position. Fluid passages V_1, V_2, V_3 and V_4, which are formed by grooves C and D are open equally. Under this condition, the fluid from the pump returns to the reservoir tank so that neither fluid pressure builds up nor the rack piston moves in the power cylinder.

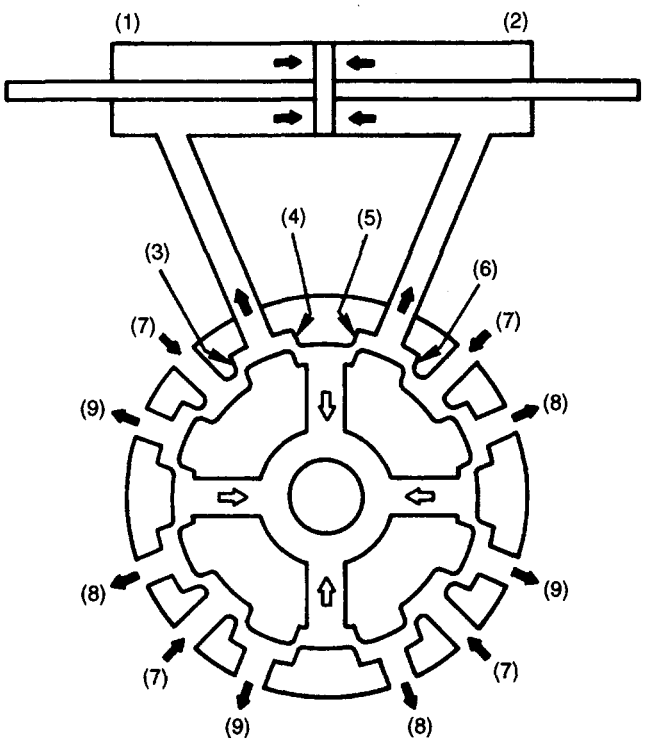

NF0288

(1) Chamber A
(2) Chamber B
(3) V_1
(4) V_2
(5) V_3
(6) V_4
(7) From fluid pump
(8) To A
(9) To B

- When steering force is applied:

When the steering wheel is turned to the right, for example, fluid passages V_1 and V_3 are opened while fluid passages V_2 and V_4 are nearly closed.
At this point, the fluid pressure in chamber A of the power cylinder increases depending on the degree of closure of fluid passages V_2 and V_4 so that the rack piston moves to the right. The fluid in chamber B, on the other hand, is drained through fluid passage V_3 into the reservoir tank.

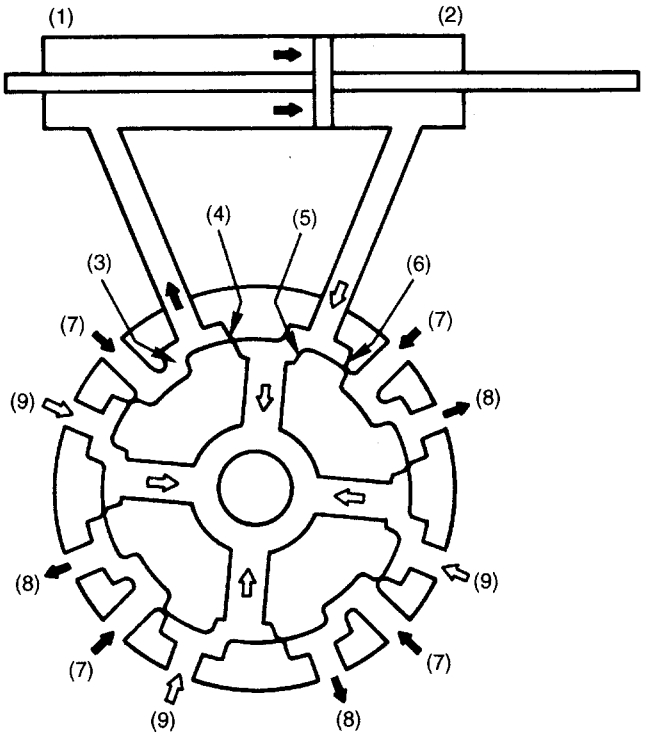

NF0290

(1) Chamber A	(4) V_2	(7) From fluid pump
(2) Chamber B	(5) V_3	(8) To A
(3) V_1	(6) V_4	(9) From B

- Fail-safe feature

If fluid pressure fails to build up due to, for example, a broken fluid pump drive belt, the steering wheel rotating torque is transmitted from the valve rotor to the pinion through mechanical engagement between them.

C: FLUID PUMP AND RESERVOIR TANK

1. NON-TURBO MODEL

The fluid pump is a vane type driven by the engine via belt.

The reservoir tank is mounted on the vehicle body.

The fluid pump incorporates the flow control valve and relief valve, each performing the following functions:

- The flow control valve regulates the flow rate of discharged fluid to a constant level irrespective of the engine speed.
- The relief valve protects the system from an excessively high pressure which may occur, for example, when the steering wheel is turned all the way.

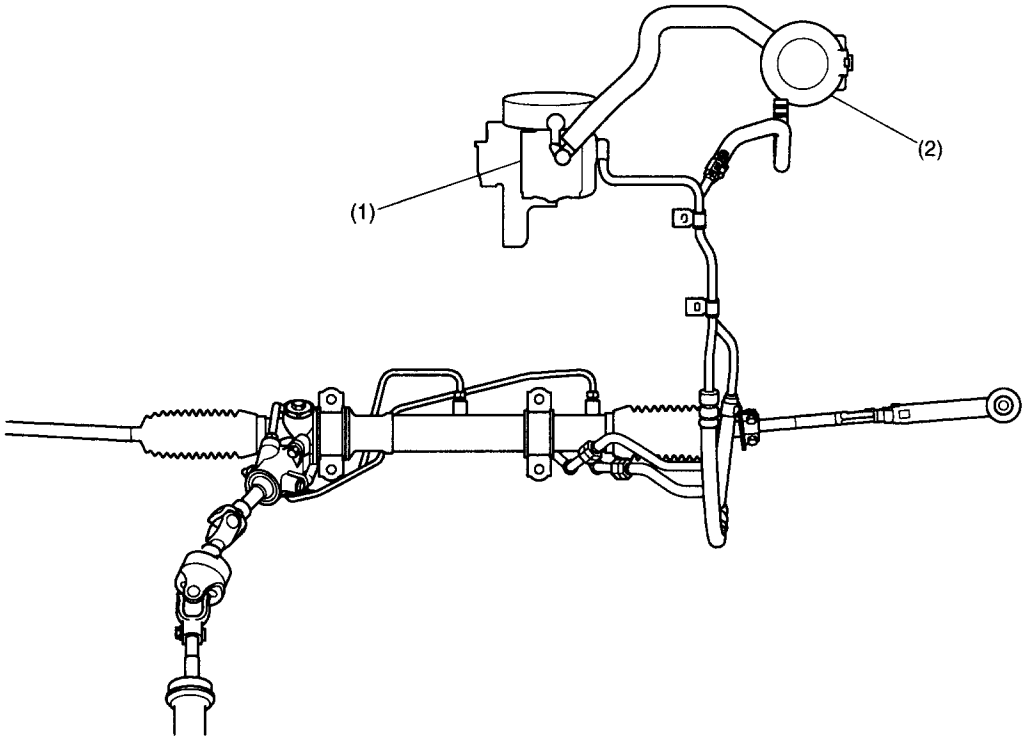

NF0292

(1) Fluid pump
(2) Reservoir tank

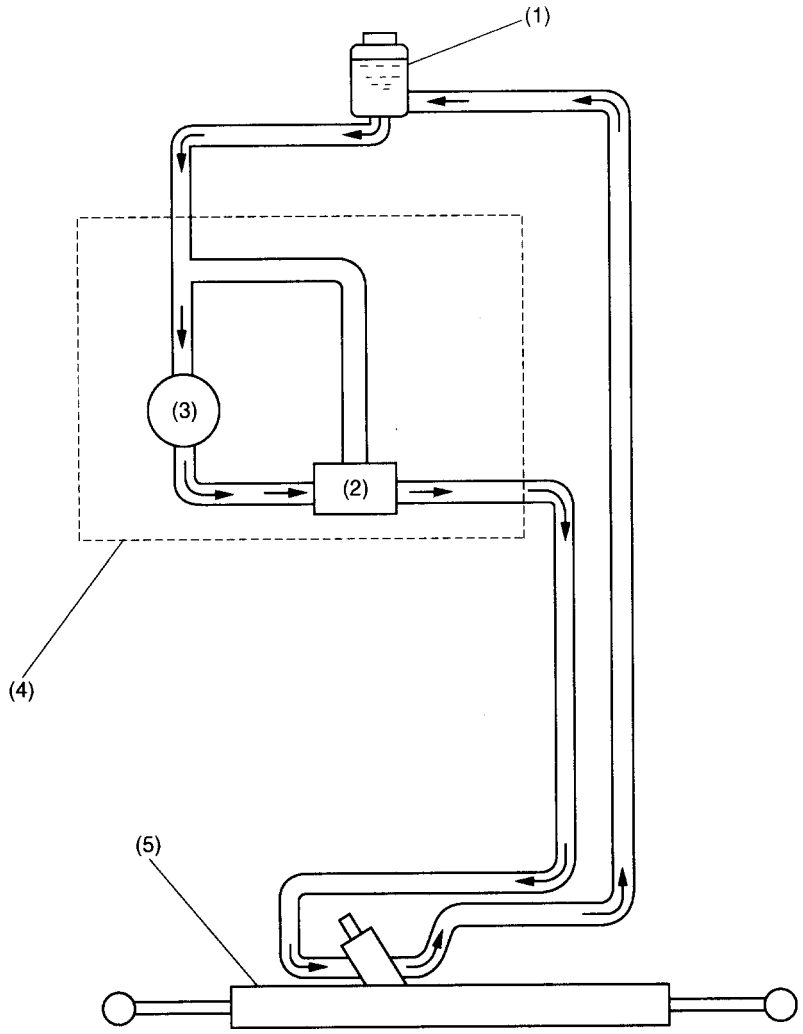

NF0299

(1) Reservoir tank
(2) Flow control and relief valve assembly
(3) Vane pump
(4) Fluid pump assembly
(5) Steering gearbox

• VANE PUMP

The vane pump consists of a rotor, a cam ring, and ten vanes.

When the rotor rotates, the vane movably fitted in each slot of the rotor is radially moved out by centrifugal force and pressed against the inside wall of the cam ring. Since the inside of the cam ring is oval-shaped, the fluid from the suction port is confined and pressurized in the chamber formed between two adjacent vanes as the rotor rotates and is delivered through the discharge port. The pressurized fluid circulates through the hydraulic circuit.

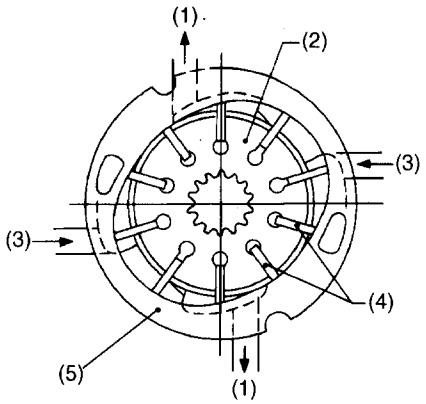

NF0381

(1) Discharge
(2) Rotor
(3) Suction
(4) Vane
(5) Cam ring

• FLOW CONTROL VALVE

The flow control valve regulates flow rate of fluid which otherwise would increase as pump speed increases and deliver dangerously high pressure to the gearbox. It consists of orifices 1 and 2, valve spool, return port and flow control spring. When a pressure difference occurs between the front and rear of orifice 2 as a result of an increase in discharge rate, the valve spool moves against the tension of the flow control spring in such a way that the oil flow rate is controlled by opening and closing of the return port and orifice 2.

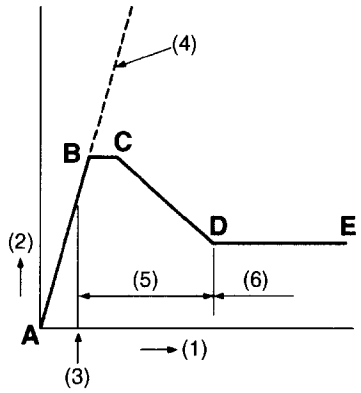

NF0382

(1) Pump speed
(2) Oil flow
(3) Idling
(4) When oil flow is not controlled
(5) Low and mid-range speeds
(6) High speeds

- When the pump begins to rotate, pressure P increases, causing the valve spool to move to the right. If the pump is operating in the A-to-B speed range, the fluid delivered by the pump is sent to the gear box in its whole amount through orifice 1.

Pump speed range: A to B

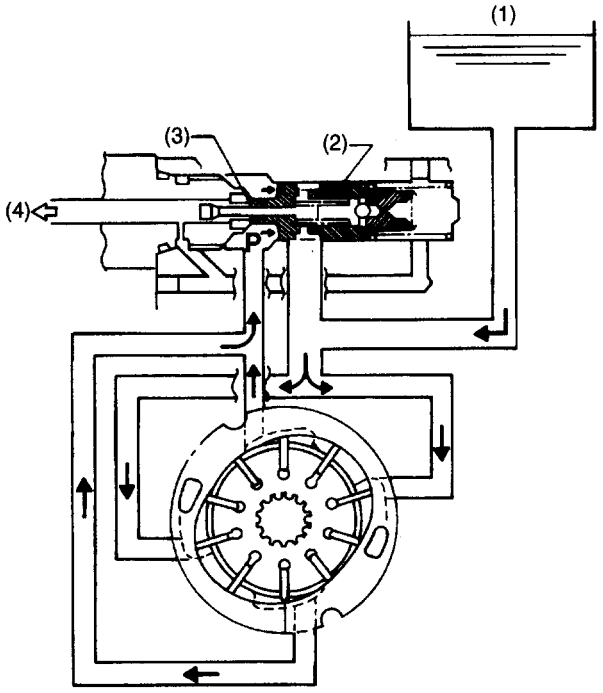

NF0448

(1) Oil reservoir tank
(2) Valve spool
(3) Orifice 1
(4) To gear box

- As the pump speed increases, pressure P increases further, pushing the valve spool further to the right. As a result, orifice 2 opens allowing part of fluid to return to the pump circuit. Accordingly, a constant flow of oil is maintained.

Pump speed range: B to D

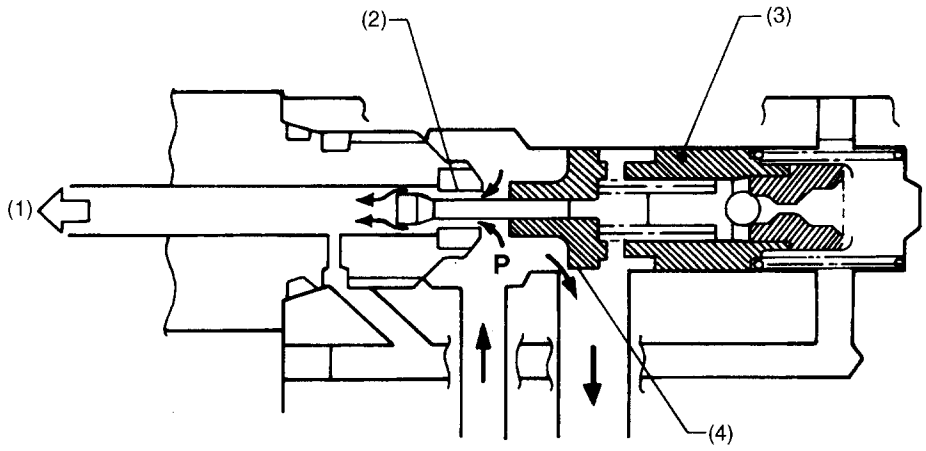

NF0384

(1) To gear box
(2) Orifice 1
(3) Valve spool
(4) Orifice 2

- When the pump speed further increases, the valve spool is pushed fully to the right. Now, orifice 1 is restricted while orifice 2 opens wide. Oil flow to the gear box is thus maintained at a low rate.

Pump speed range: D to E

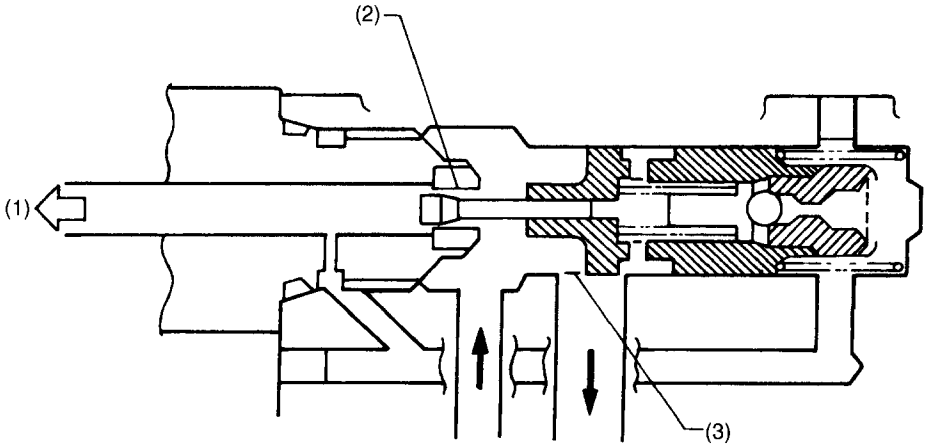

NF0385

(1) To gear box
(2) Orifice 1
(3) Orifice 2

2. TURBO MODEL

- The reservoir tank is mounted on the vehicle body.
- The fluid pump is belt-driven by the engine. The fluid pump for the turbo models is different from that for the non-turbo models in that it has additionally an energy-saving valve mechanism. This valve mechanism reduces the rate of fluid recirculation during straight-ahead driving, which helps reduce engine load.

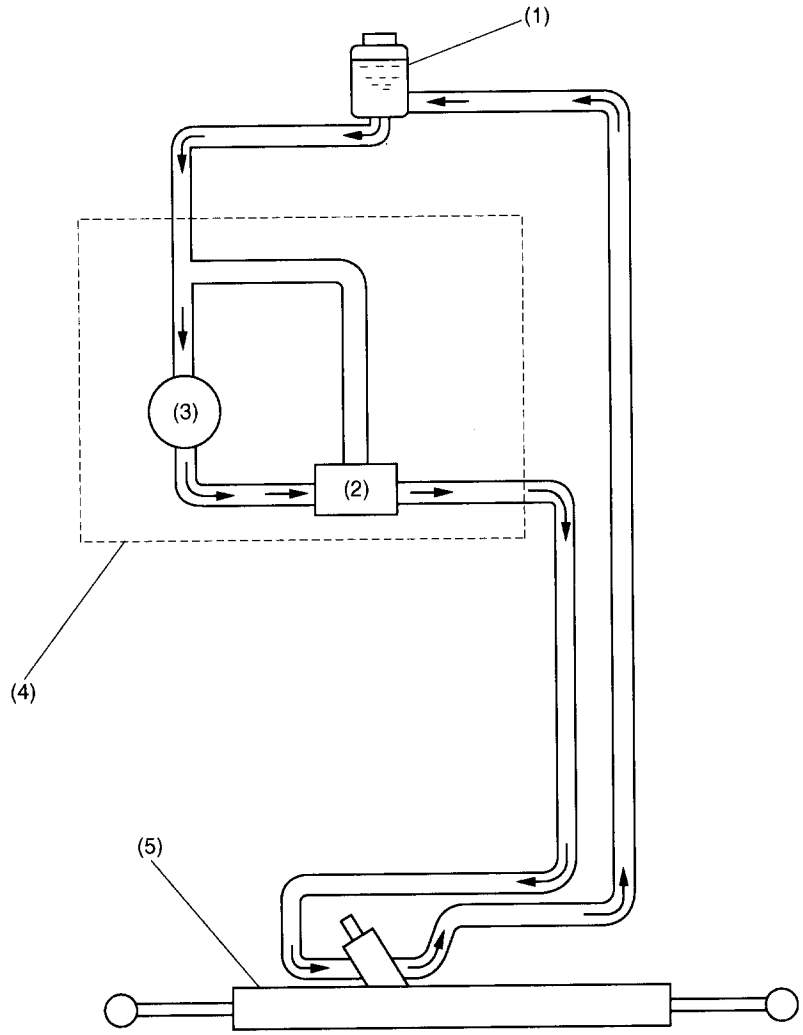

NF0299

(1) Reservoir tank
(2) Flow control, energy-serving and pressure sensitive valve assembly
(3) Vane pump
(4) Fluid pump assembly
(5) Steering gearbox

• VANE PUMP

The vane pump consists of a rotor, a cam ring, and ten vanes.

When the rotor rotates, the vane movably fitted in each slot of the rotor is radially moved out by centrifugal force and pressed against the inside wall of the cam ring. Since the inside of the cam ring is oval-shaped, the fluid from the suction port is confined and pressurized in the chamber formed between two adjacent vanes as the rotor rotates and is delivered through the discharge port. The pressurized fluid circulates through the hydraulic circuit.

• FLOW CONTROL AND ENERGY-SAVING VALVE ASSEMBLY

- During engine idling

When the engine is idling, the fluid pump speed is low. As the delivery rate of the pump is small, the metering orifice allows whole fluid to flow passing through it. So, there is no difference in the fluid pressure between the right and left of the metering orifice. This means that pressure P_1 acting on the left end of the flow control valve is equal to pressure P_2 (pressure of the fluid flowing through the pressure sensing holes in the valve body) acting on the right end of the valve. As a result, the flow control valve is held pressed leftward by the force of the control valve spring. With the flow control valve in this position, the passage to the fluid pump suction port is closed, so that the whole fluid delivered from the pump flows toward the power steering gear box.

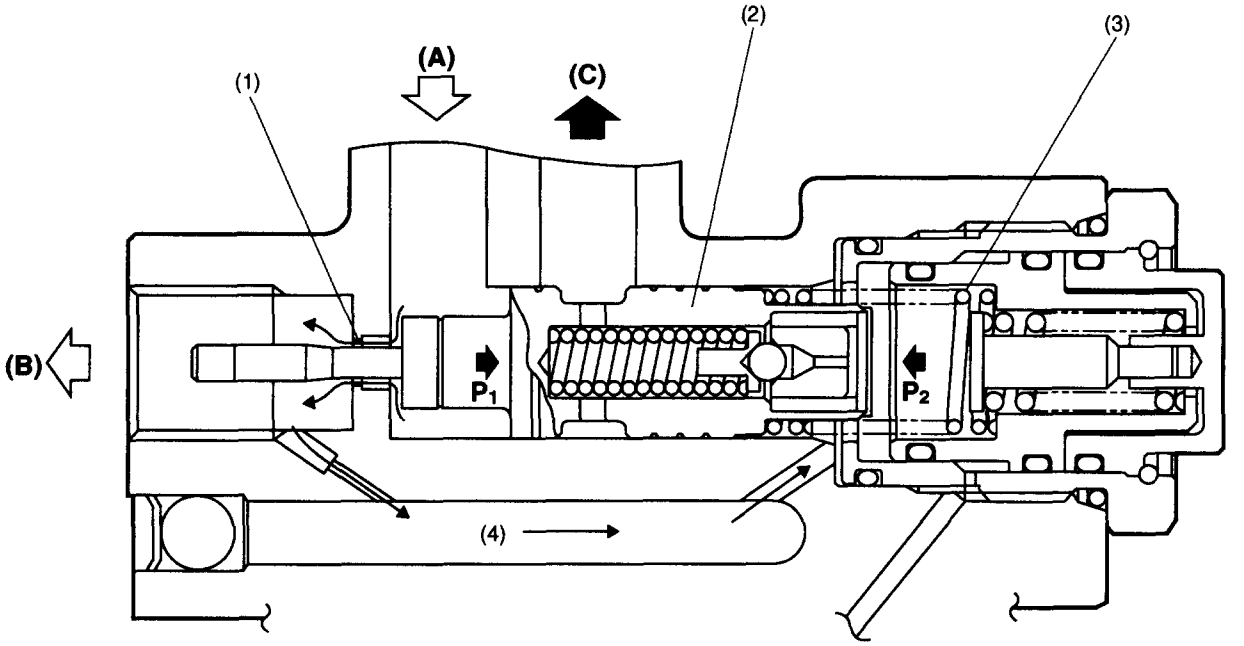

NF0301

(A) From fluid pump delivery port
(B) To steering gear box
(C) To fluid pump suction port

(1) Metering orifice
(2) Flow control valve
(3) Flow control valve spring
(4) Pressure sensing hole in valve body

- During straight-ahead driving

The speed of the fluid pump increases and the fluid pressure becomes high. The metering orifice does not allow whole fluid to pass through it any longer.
Since the amount of the fluid flowing toward the left end of the flow control valve is larger than the amount of the fluid flowing toward the right end of the valve passing through the pressure sensing holes, pressure P_1 becomes larger than pressure P_2.
As a result, pressure P_1 overcomes the force of the flow control valve spring and pushes the valve rightward. This keeps the passage to the fluid pump suction port open, allowing part of the fluid to return to the pump suction port and thus reducing flow of fluid to the steering gear box.
The energy-saving valve mechanism reduces the fluid pump delivery pressure in this way when steering power assistance is unnecessary, thus reducing load on the engine.

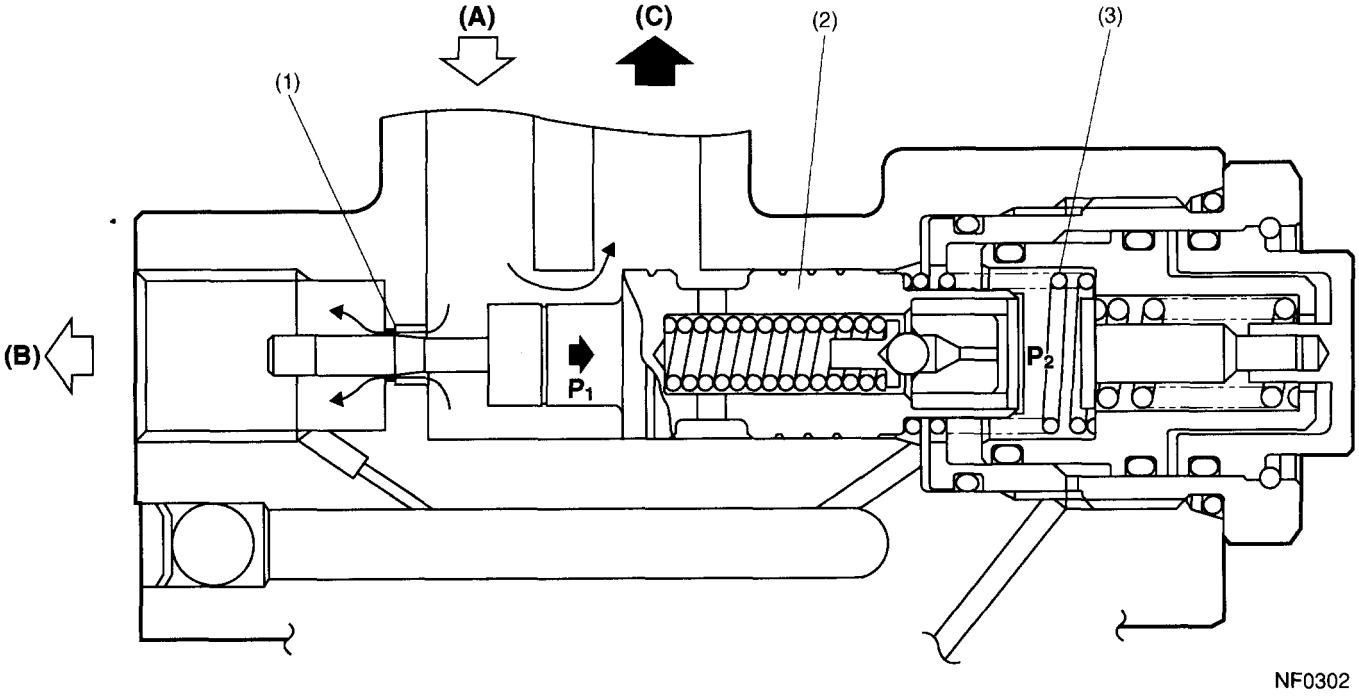

(A) From fluid pump delivery port
(B) To steering gear box
(C) To fluid pump suction port
(1) Metering orifice
(2) Flow control valve
(3) Flow control valve spring

- During a turn

When the steering wheel is turned, the power steering system starts the steering assist function and the fluid pressure increases.
Although the pressure of the fluid entering chamber B through the pressure sensing holes in the valve body increases, the pump delivery pressure is still higher than the chamber B pressure. So, the flow control valve cannot move leftward.
The fluid in chamber B then enters chamber A at the right end of energy-saving valve piston and increase the pressure of chamber A.
Since the pressure in chambers A and B is higher than the pressure (ambient pressure) in chamber C at the left end of the energy-saving valve piston, the energy-saving valve piston moves leftward, overcoming the force of the energy-saving valve spring.
Leftward movement of the energy-saving valve piston compresses the flow control valve spring. The combination of the tension of the spring and the pressure in chamber B now causes the flow control valve to move leftward, overcoming the fluid pump delivery pressure. As a result, the flow control valve closes the passage to the fluid pump suction port and the passage in the metering orifice opens wider. This enables the fluid delivered by the pump to be supplied to the steering gear box at the same rate as in the system without an energy-saving valve mechanism.

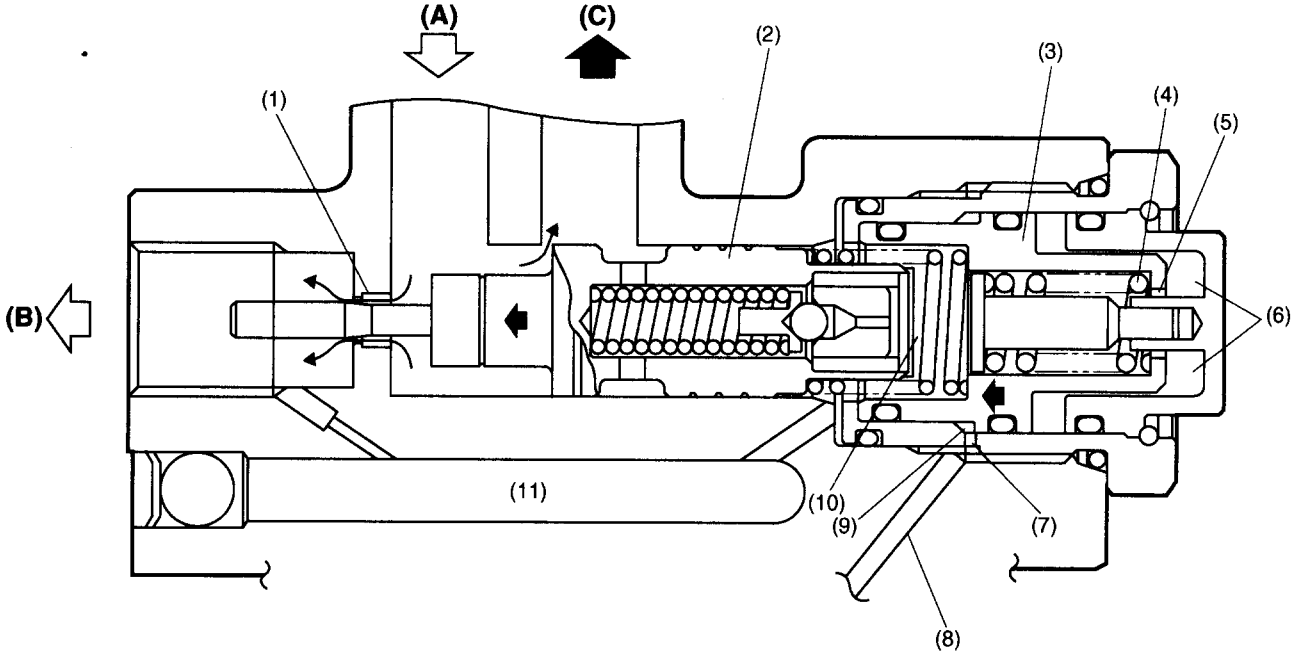

(A) From fluid pump delivery port

(B) To steering gear box

(C) To fluid pump suction port

(1) Metering orifice

(2) Flow control valve

(3) Energy-saving valve piston

(4) Energy-saving valve spring

(5) Pressure sensing hole in piston

(6) Chamber A

(7) Low-pressure hole in energy-saving valve

(8) Low-pressure hole in valve body

(9) Chamber C

(10) Chamber B

(11) Pressure sensing holes in the valve body

HVAC SYSTEM (HEATER, VENTILATOR AND A/C)

AC

Page

1. Heater System 2
2. Air Conditioner 10

1. Heater System

A: GENERAL

• The Impreza's HVAC system uses an integral air conditioning unit with thin-wall, high-performance heater core at the front and evaporator core at the rear. Being compact in size, this unit enables providing sufficient front passenger's legroom while ensuring a high air-distribution efficiency by minimizing air flow resistance in all air passages. Overall, the system can create comfortable interior air conditions quietly and in all seasons by its excellent heating, cooling, ventilating, and defrosting performances.

• There are three ventilation grilles in the dashboard; a trapezoidal grille at the center and round grilles at both sides. The side grilles are rotatable for air flow direction adjustments.

• To ensure adequate ventilation, large-size air outlets are provided behind the side portions of the rear bumper where high-level vacuums are generated during driving.

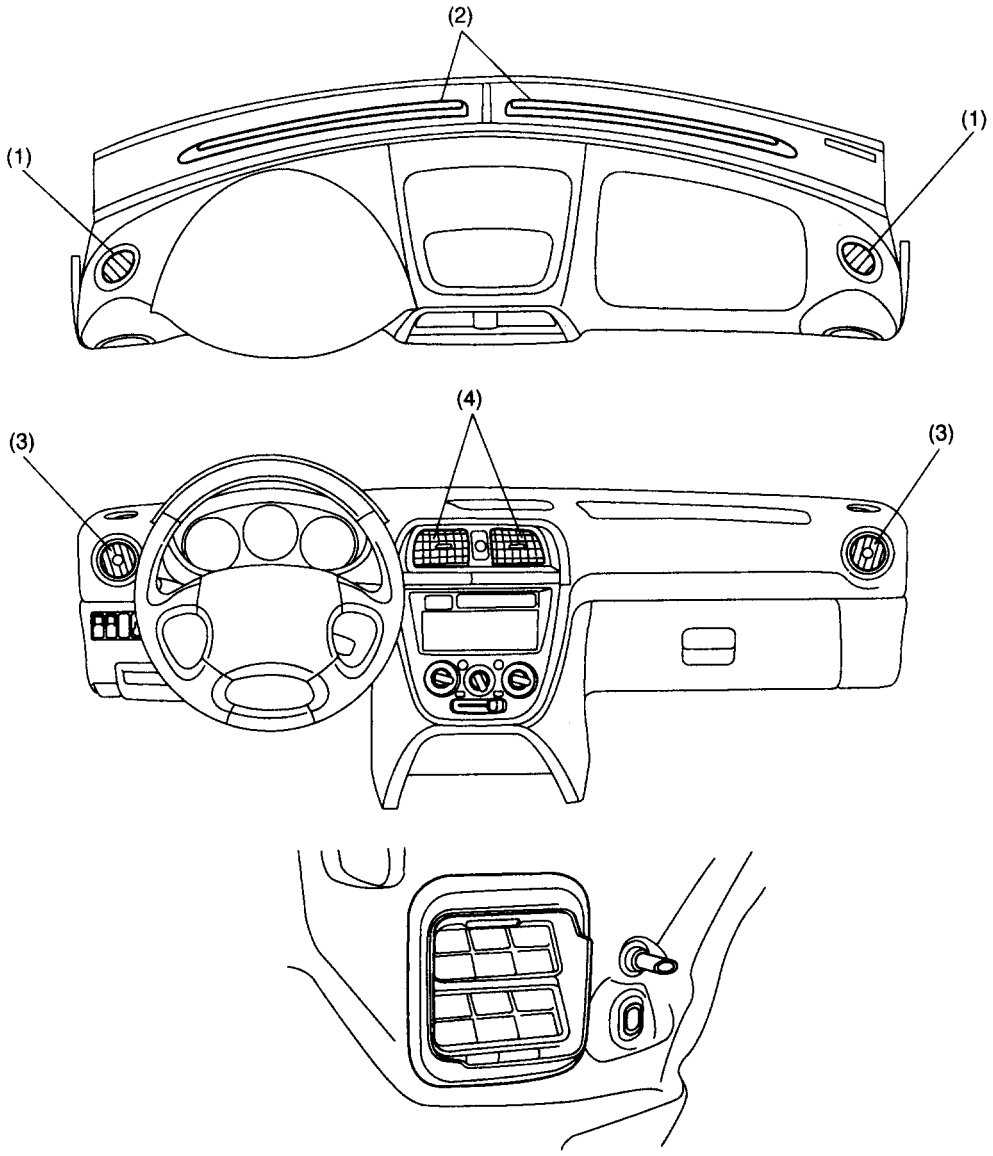

NF0158

(1) Side defroster
(2) Front defroster
(3) Side ventilation grille
(4) Center ventilation grille

1. SPECIFICATIONS

Heating type	Heating performance (W)	Blower power consumption (W)	Maximum blower capacity (m^3/h)		
			VENT	HEAT	DEF
Coolant-heated air / outside air mixing type ("full-air-mix" type)	5000	200	450	280	300

B: AIR FLOW MODES

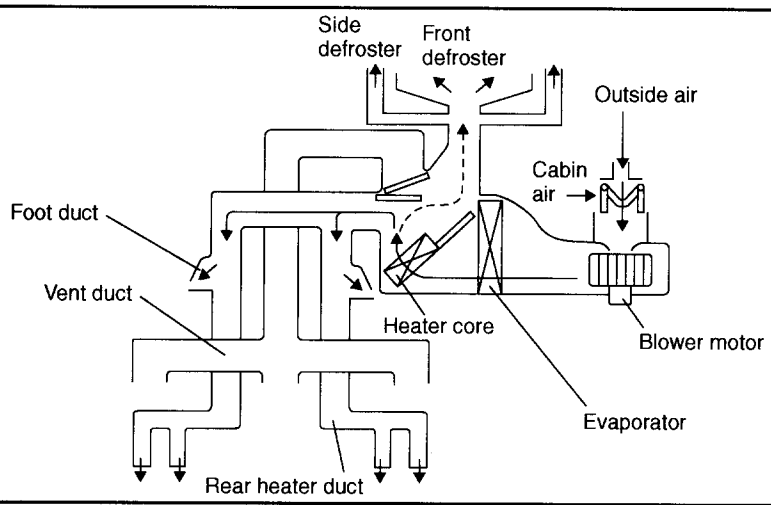

	Position	Heater unit door positions		Position	Heater unit door positions
Air flow control dial	DEF	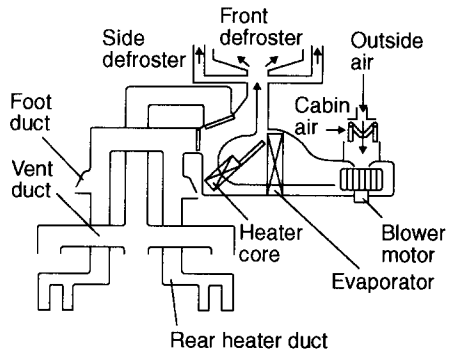	Air flow control dial	BILEVEL	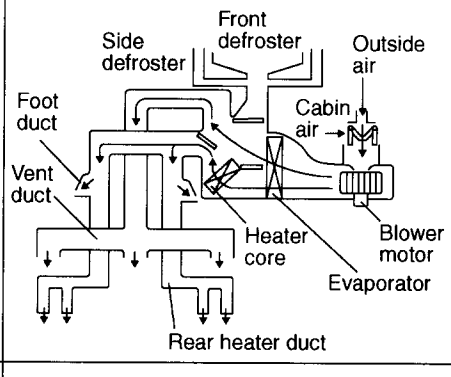
Air flow control dial	DEF/HEAT	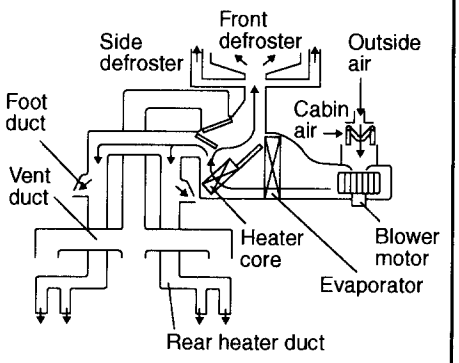	Air flow control dial	VENT	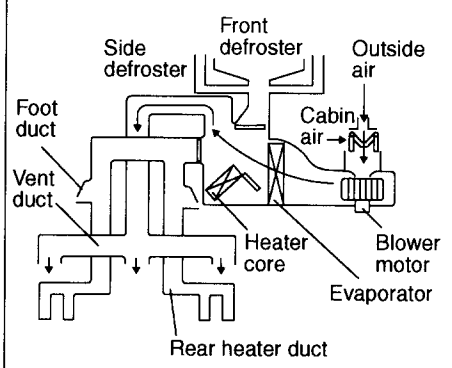
Air flow control dial	HEAT	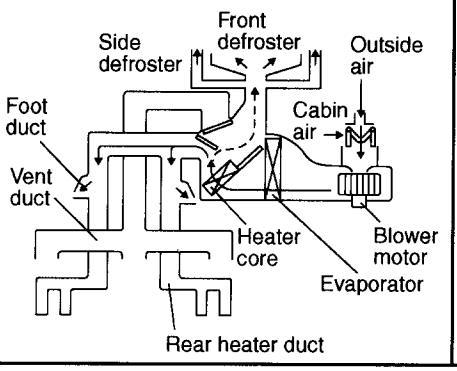	FRESH/RECIRC lever		This lever allows selecting either cabin-air-recirculation or outside-air-introduction. Cabin air recirculation or outside air introduction is selected when the lever switch is moved to the corresponding position.

NF0452

C: CONTROL PANEL

- The HVAC control panel is incorporated into the center panel.
- A rear window defogger switch is located in the control panel.

1. MODELS WITH AIR CONDITIONER

- The control panel uses three large-diameter, dial type switches for easy operation and good visual recognition.

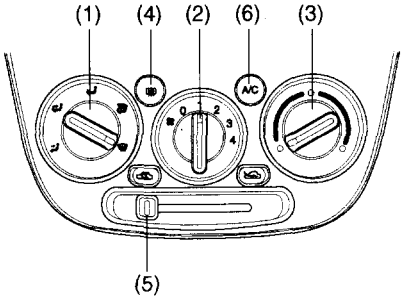

NF0453

(1) Air flow control dial:
This switch allows selecting any of the five air flow modes.

NF0376

(2) Fan speed control dial:
This switch allows turning on/off the blower and selecting any of the four blower speeds.

0 1 2 3 4

NF0377

(3) Temperature control dial:
This switch allows adjusting the temperature of air delivered through ventilators steplessly.

(4) Rear window defogger switch:
This switch activates the rear defogger. When the switch is left on, a timer keeps the defogger activated for 15 minutes and then turns it off automatically.

(5) FRESH/RECIRC lever:
This lever allows selecting either cabin-air-recirculation or outside-air-introduction.

(6) Air conditioner switch:
This switch turns on or off the air conditioner compressor.

D: HEATER AND COOLING UNIT

- Having an evaporator core at the front and a heater core at the rear, this single unit combines both heating and cooling functions.
- The heater and cooling unit incorporates doors for creating different air flow modes and a door for mixing heated air and outside air.
- The air flow mode switching doors and air mixing door are moved by cables through corresponding linkages.

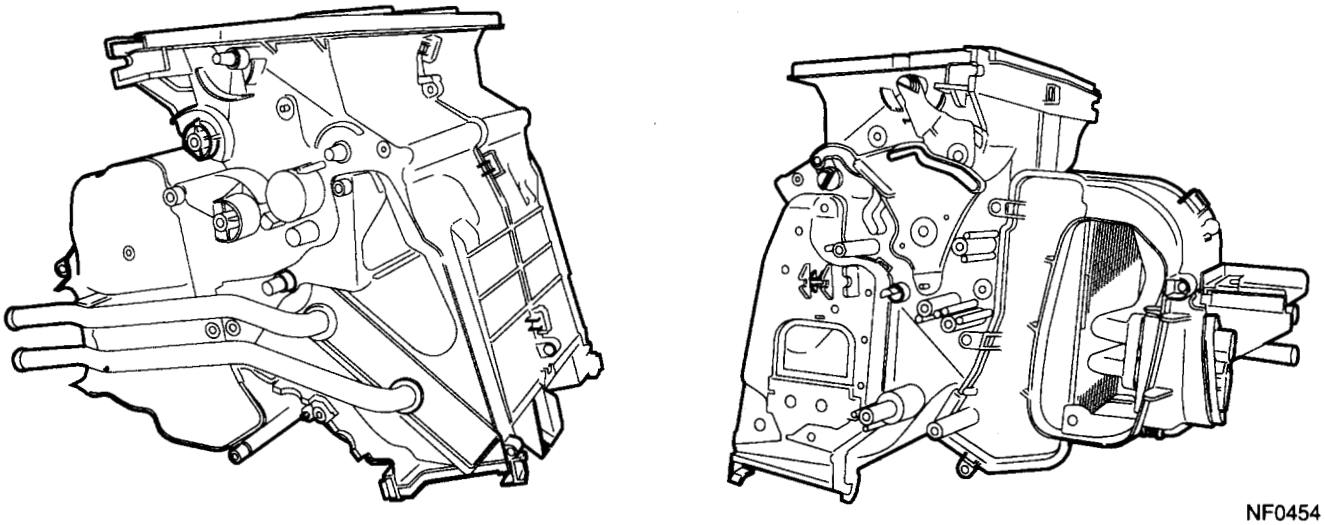

NF0454

1. SPECIFICATIONS

Heater core size	Heat output
163.9 x 200 x 25	5000W

2. DESIGN FEATURES FOR EACH AIR FLOW MODE

1) Ventilation (VENT) mode

- The passage leading air from the evaporator to the ventilation outlet (VENT) is made straight to reduce air flow resistance.
- When the air temperature is necessary to be adjusted, heated air is blown at right angles against the flow of cool air from the evaporator. This allows the airs to mix thoroughly.

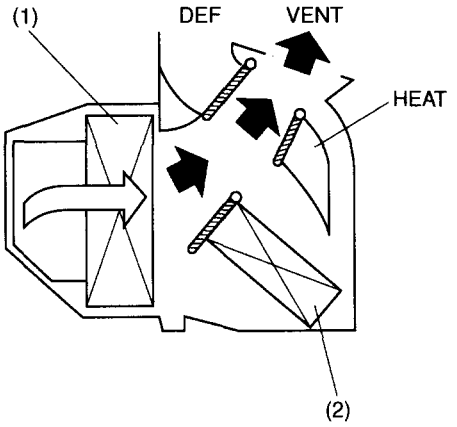

NF0163

(1) Evaporator
(2) Heater core

2) Foot/face (BILEVEL) mode

- Warm and cool air flows are created by structural means, namely, by forming sealing surface for air toward leg area on the heated air passage side and that for air toward the ventilation outlet (VENT) on the cooled air passage side.

To prevent an excessive difference in the temperature between the two air flows, a bypass passage is provided to allow part of heated air to flow toward the ventilation (VENT) outlet.

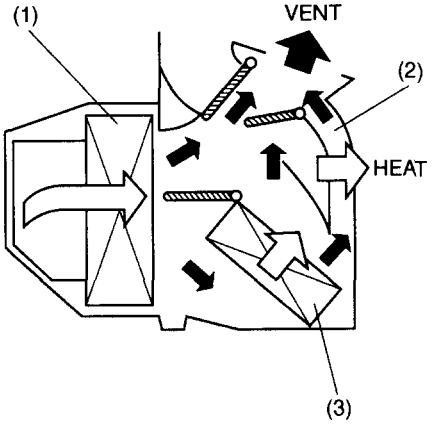

NF0164

(1) Evaporator
(2) Bypass passage
(3) Heater core

3) Heating (HEAT) mode

• Warm and cool air flows are created by structural means, namely, by forming sealing surface for air toward leg area on the heated air passage side and that for air toward the defroster (DEF) outlet on the cooled air passage side.
To prevent an excessive difference in the temperature between the two air flows, a bypass passage is provided to allow part of heated air to flow toward the ventilation (VENT) outlet.

• To maintain the passage toward the defroster (DEF) outlet even during the heating mode operation, the door of the passage toward leg area is fully opened to the make the passage also serve as a passage toward the defroster (DEF) outlet.

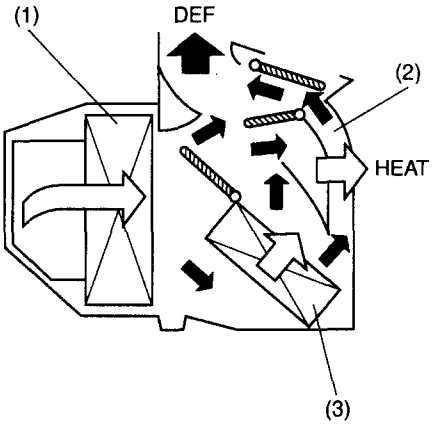

NF0165

(1) Evaporator
(2) Bypass passage
(3) Heater core

4) Defroster (DEF) mode

• Air passages are designed in such a way that air flow resistance is minimized and defrosting performance is maximized.

• The air passages toward the defroster (DEF) outlet is long enough to ensure a same airflow rate at all defroster outlets.

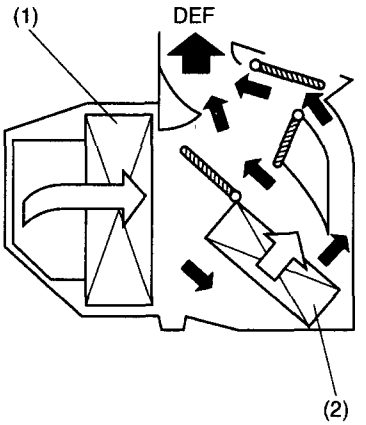

NF0166

(1) Evaporator
(2) Heater core

E: BLOWER UNIT

- The blower unit uses a low-noise-type motor.

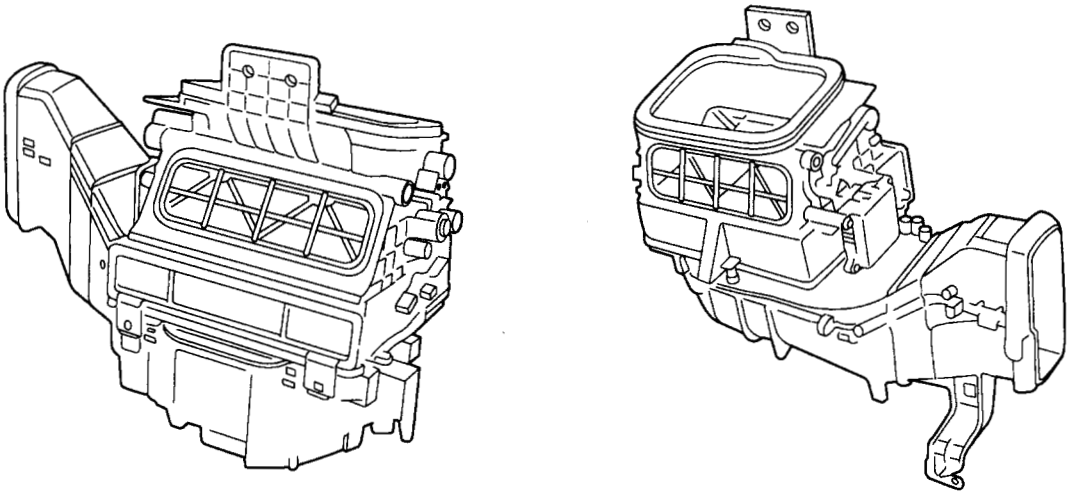

NF0455

F: DUCTS

- The ventilation duct and defroster duct are located behind the instrument panel. Both the ducts have been modified in the shape to reduce air flow resistance.
- Defrosting air flow is divided at the center, so that air can flow out evenly through a wide center defroster as well as right and left side defrosters.

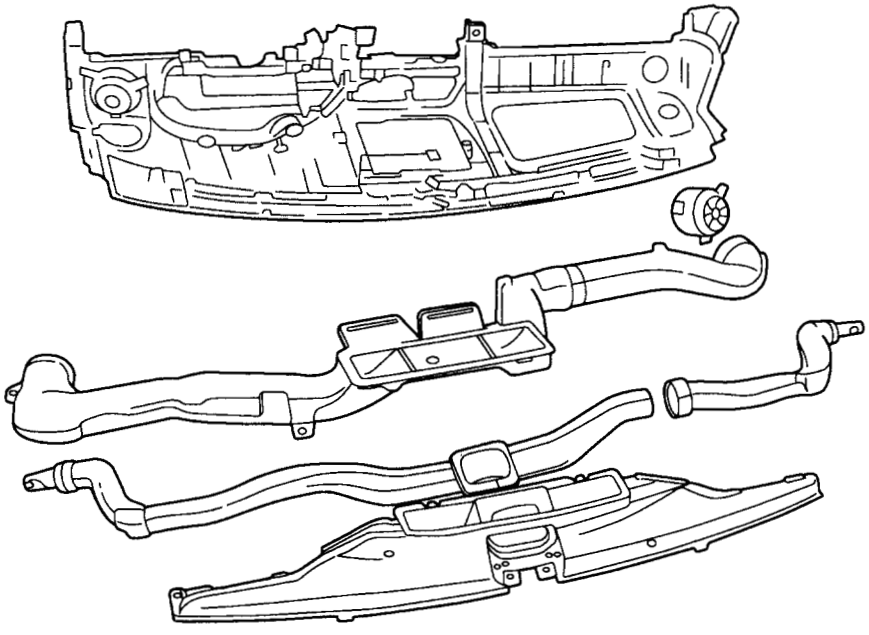

NF0457

2. Air Conditioner

A: GENERAL

The air conditioner has a newly-developed subcool condenser for improved heat-exchange efficiency.

As with the previous model's air conditioner, the refrigerant employed is the chlorine-free HFC-134a (R134a), which does not contribute to ozone-layer damage.

A simple system structure is realized by incorporation of the receiver dryer into the condenser.

1. SPECIFICATIONS

Item	Specification			Remarks
Air conditioner	"Full-air-mix" type			
Cooling performance	Cooling capacity (W)		5100	
	Air flow rate (m^3/h)		450	
Refrigerant quantity	HFC-134a (g)		500 ± 50	
Compressor	Type		Rotary type with vanes	Calsonic CR14
	Capacity (g/revolution)		144	
	Maximum permissible speed (rpm)		7000	
	Lubricant (amount contained in compressor in g)		DH-PR	
Magnetic clutch	Type		Dry, single disc	
	Power consumption (W)		47	
	Pulley ratio		1:1.064 (crankshaft pulley diameter: 133 mm; compressor pulley diameter: 125 mm)	
	Belt		Polyurethane V-belt with four ribs	
Condenser	Type		Multi-flow type (with built-in liquid tank capatible with sub-cooling)	
	Fan	Type	Electric-motor-driven axial flow fan	
		Fan diameter	320 mm (7+5 blades)	
		Power consumption (W)	120 x 2 (turbo model), 70 x 2 (non-turbo model)	
Evaporator	Type		Laminated	
	Expansion valve		External pressure equalizing type	
	Temperature control sensor		Thermistor	
Other controls	Fast idle control		Performed by engine control module (ECM)	
	High and low pressure limit control		Low-pressure switch: turns off compressor at a pressure lower than 0.278 MPa High-pressure switch: turns off compressor at a pressure lower than 2.8 MPa	
	High-speed limit control		Performed by ECM	
	Radiator and condenser fan control		Performed by ECM	

B: COMPRESSOR

The rotary type compressor consists of an integrally formed rotor and shaft, five vanes, and a cylinder.

As the rotor turns, the vanes that are movally fitted in the rotor slide over the wall of the oval-shaped cylinder while drawing, compressing, and discharging refrigerant gas.

The compressor shell has at its rear end an oil separator. High-pressure refrigerant gas having entered this chamber is separated from the oil it contains before flowing out through the compressor's delivery port.

There is a check valve in the front housing to avoid reverse rotation of the compressor which would otherwise occur when the compressor is stopped.

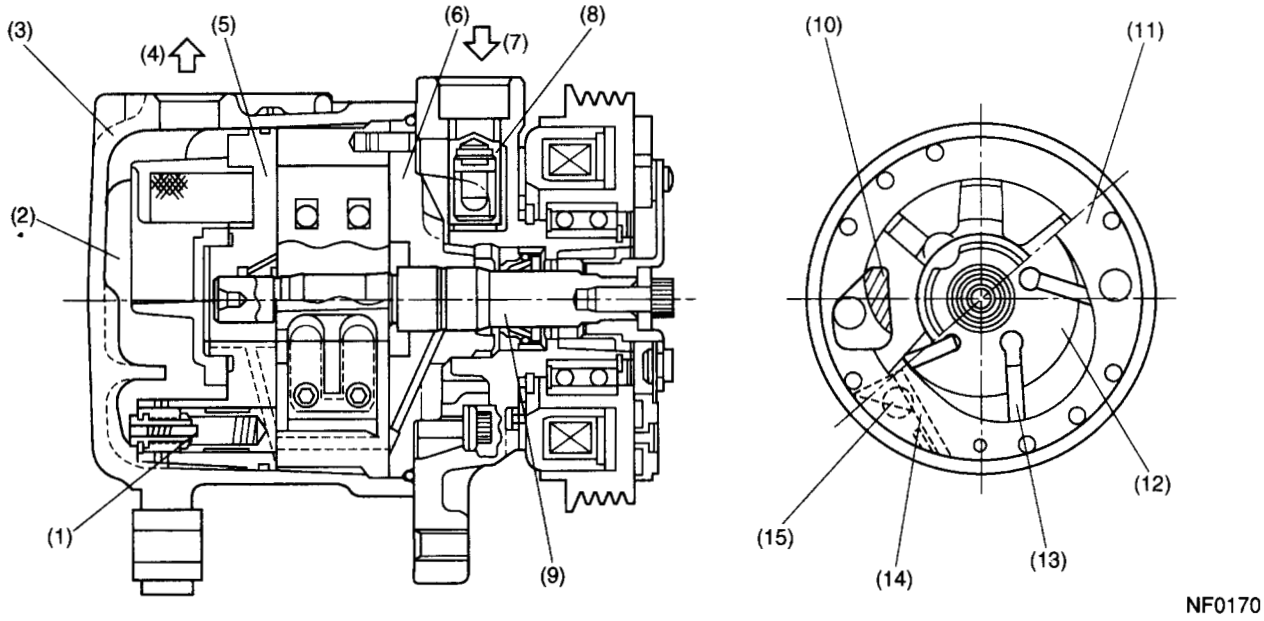

(1) Oil cut-off valve
(2) Oil separator chamber
(3) Shell
(4) Discharge
(5) Rear side plate
(6) Front side plate
(7) Suction
(8) Check valve
(9) Shaft
(10) Suction port
(11) Cylinder
(12) Rotor
(13) Vane
(14) Discharge valve
(15) Discharge port

1. PRESSURE RELIEF VALVE

This valve opens if the pressure of the high-pressure refrigerant gas rises to a dangerously high level to release part of refrigerant into the atmosphere, thus protecting the compressor. The valve is designed to limit the amount of released gas to the necessary minimum.

Valve opening pressure: 3.72 MPa (38 kgf/cm^2)
Valve closing pressure: 1.8 MPa (17.5 kgf/cm^2)

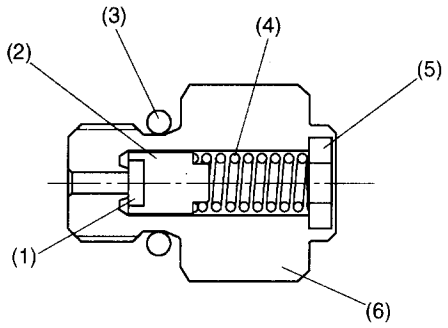

NF0380

(1) Seat rubber
(2) Seat cover
(3) O-ring
(4) Spring
(5) Cap
(6) Body

Operating characteristic

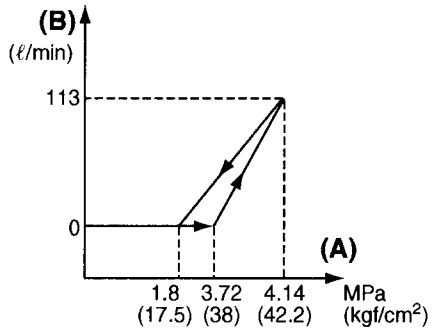

NF0172

(A) Pressure
(B) Leakage

C: COOLING UNIT

The heater unit and cooling unit are integrated into a single "heater and cooling unit".

The cooling section components of this unit include an evaporator, expansion valve, and case.

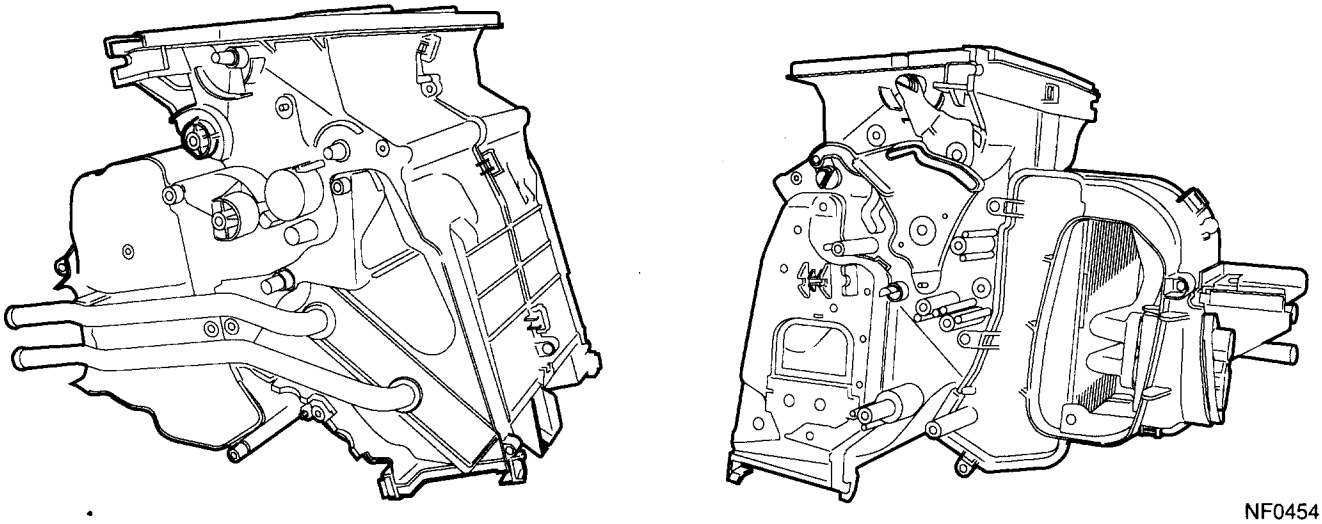

NF0454

1. EVAPORATOR

The evaporator is a laminated type.

When a low-pressure, low-temperature refrigerant is sprayed by the expansion valve into the evaporator, it evaporates and cools the evaporator surfaces.

The cabin air is drawn by the blower and cooled down as it flows over the evaporator. The cooled air then flows passing through the heater unit and delivered into the cabin through versions outlets.

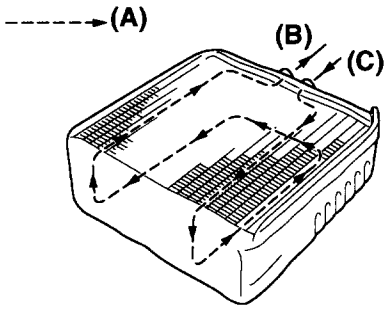

NF0174

(A) Flow of refrigerant

(B) Outlet

(C) Inlet

2. EXPANSION VALVE

The expansion valve regulates the flow of refrigerant such that heat exchange takes place optimally.

The expansion valve performs two functions; it sprays the high-pressure refrigerant from the condenser using a throttle valve, and it regulates the amount of the spray by changing opening of the throttle valve.

The expansion valve consists of such main components as a heat sensing cylinder, diaphragm, ball valve, spring, and adjusting screw.

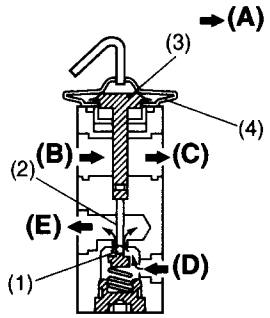

NF0175

(1) Ball valve
(2) Shaft
(3) Heat sensing part
(4) Diaphragm

(A) Flow of refrigerant
(B) From evaporator (low-pressure side)
(C) To compressor
(D) From condenser
(E) To evaporator (high-pressure side)

The heat (temperature) sensing cylinder is held in contact with the evaporator outlet pipe so that a pressure corresponding to the sensed temperature may be applied to the chamber above the diaphragm. There is a pressure equalizing hole which communicates with the chamber below the diaphragm to transmit changes in the refrigerant pressure to the chamber. The ball valve is linked with the diaphragm and moves according to changes in the balance between the force applied to the diaphragm and the tension of the spring.

D: CONDENSER

The condenser used in the Impreza's air conditioning system is the newly developed "subcooling condenser" that integrates a multi-flow type condenser and a modulator (gas-liquid separator) into a single unit. The condenser has a high heat-exchange efficiency.

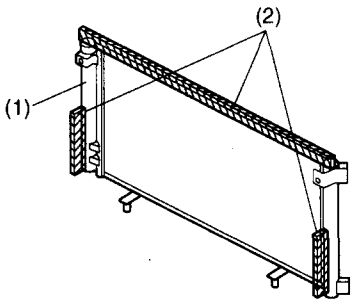

NF0177

(1) Liquid tank
(2) Gasket

1. SUBCOOLING CONDENSER

The new subcooling condenser has a subcooling section where part of the refrigerant that remains in gas form is cooled and reduced into liquid form. This enables almost 100% of the refrigerant to be requefied.

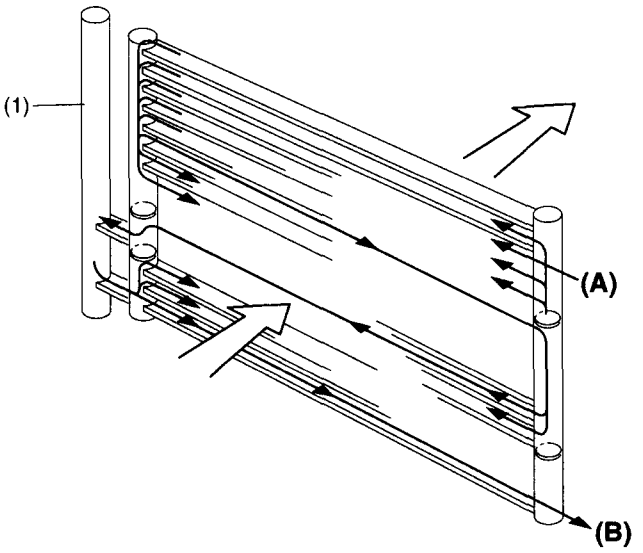

NF0488

(1) Liquid tank

(A) Inlet
(B) Outlet

E: PRESSURE SWITCH

The pressure switch is a high-pressure side component of the refrigeration cycle (cooling cycle). It consists of a diaphragm that receives refrigerant gas pressure, a snap plate, a rod, and contacts that open both when the gas pressure is too low and when it is too high.

The pressure switch plays the following roles:
- Preventing "no-gas" operation due to leakage (when gas pressure is too low)
- Protecting the cooling system against abnormally high refrigerant pressure (when gas pressure is too high)

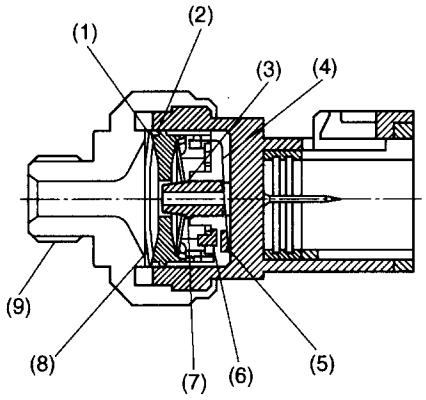

NF0378

(1) Snap plate (high pressure)
(2) Disc
(3) Rod
(4) Leaf spring
(5) Contact
(6) Contact
(7) Snap plate (low pressure)
(8) Diaphragm
(9) Housing

ON-OFF pressures

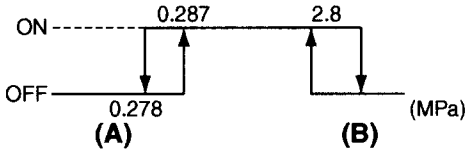

NF0179

(A) Low pressures
(B) High pressures

1. SPECIFICATIONS

Low limit pressure	OFF	0.278 MPa (2.8 kgf/cm^2) or lower
Normal pressure	ON	0.287 – 2.8 MPa (2.8 – 28 kgf/cm^2)
High limit pressure	OFF	2.8 MPa (28 kgf/cm^2) or higher

AIRBAG SYSTEM AB

		Page
1.	Airbag System	2
2.	Construction	5

1. Airbag System

A: INSTALLATION

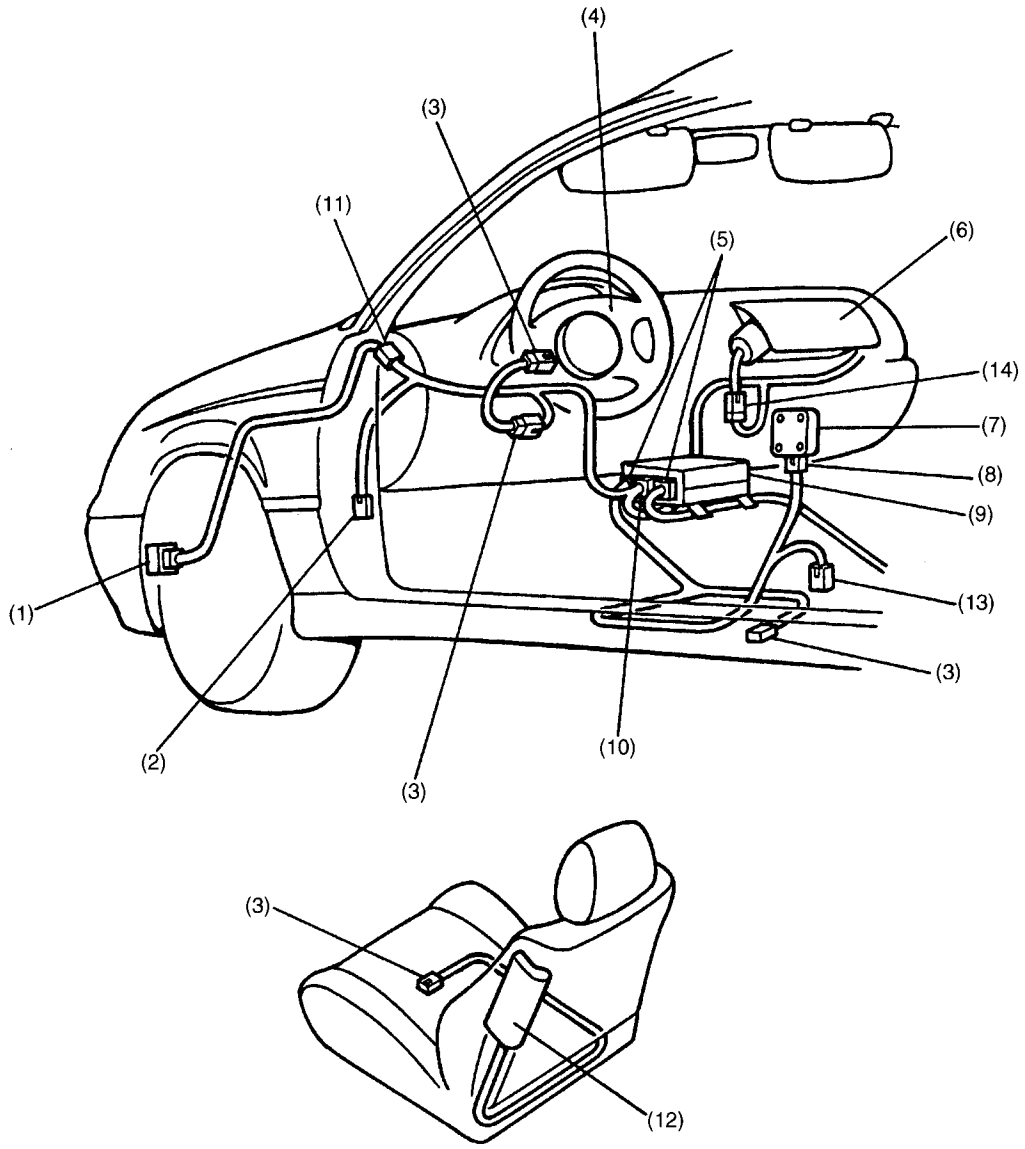

NF0224

(1) Front sub sensor
(2) 7-pin connector (Yellow)
(3) 2-pin connector (Yellow)
(4) Airbag module (Driver)
(5) 12-pin connector (Yellow)
(6) Airbag module (Passenger)
(7) Side airbag sensor
(8) 4-pin connector (Yellow)
(9) Airbag control module
(10) 28-pin connector (Yellow)
(11) 2-pin connector (Blue)
(12) Airbag module (Side)
(13) 2-pin connector (Yellow) (To seat belt pretensioner)
(14) 2-pin connector (Yellow)

B: FUNCTION

1. FRONT AIRBAGS

The airbag system is provided as a driver and front passenger restraint system supplementary to the seat belts. When an impact greater than a set level is applied to the front of the vehicle, the sensors generate an electrical pulse to inflate the airbags in the airbag modules, thus preventing the driver's and passenger's upper bodies from directly hitting against the steering wheel, instrument panel and/or windshield.

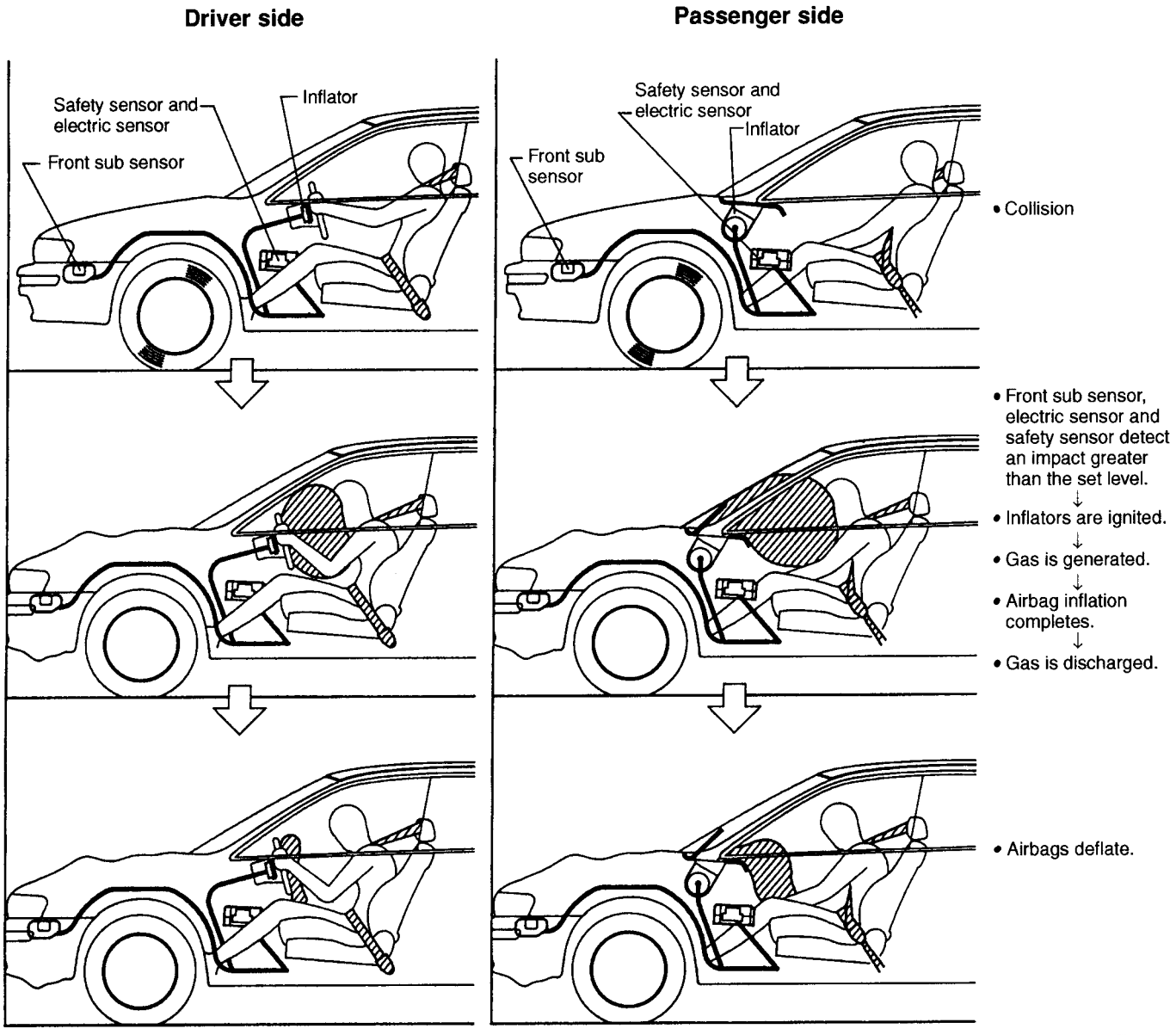

NF0225

2. SIDE AIRBAGS

The side airbags provide the driver and front passenger with a restraint supplementary to that by the seat belts in the event of a side-on collision. When an impact greater than the set level is applied to either side of the vehicle, the relevant side airbag sensor sends an ignition signal to the corresponding airbag control module. The side airbag module operates to inflate the airbag, thus reducing the shock inflicted in the outside upper body (chest) of the driver or front passenger.

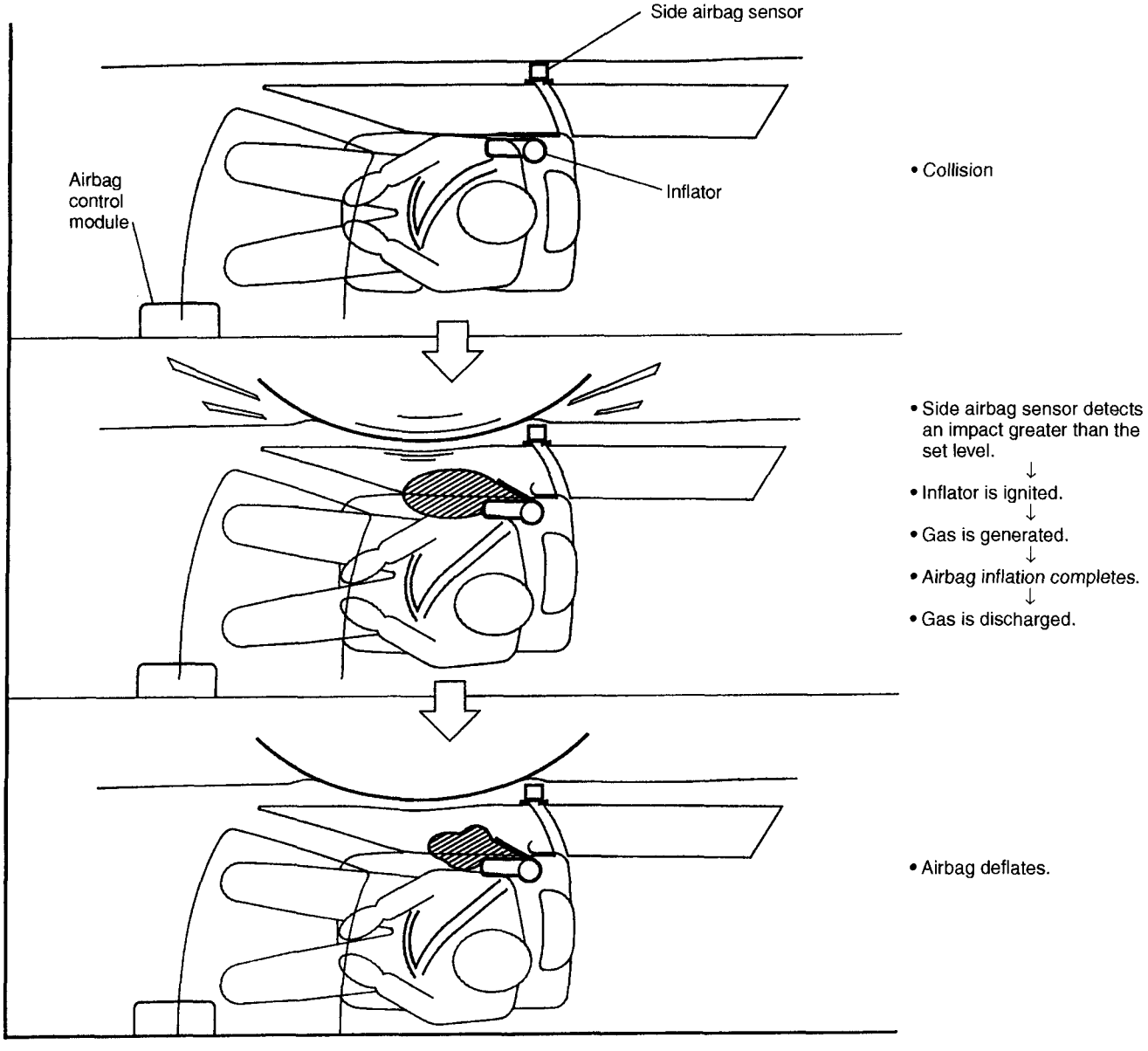

NF0226

2. Construction

A: GENERAL

- The airbag system consists of an airbag control module, left and right front sub sensors, an electric sensor and safety sensor built into the control module, driver's and passenger's airbag modules each containing an inflator and airbag, and side airbag sensors and modules each containing an inflator and airbag (Side airbag equipped model).

- FRONT AIRBAG SYSTEM:

A frontal impact exceeding the set level causes the safety sensor, electric sensor and one or both front sub sensors to input impact signals to the CPU. The CPU determines whether the airbags should be inflated or not based on these signals.

- SIDE AIRBAG SYSTEM:

Input of a side impact signal showing shock energy greater than the set level causes the airbag on the corresponding side to inflate.

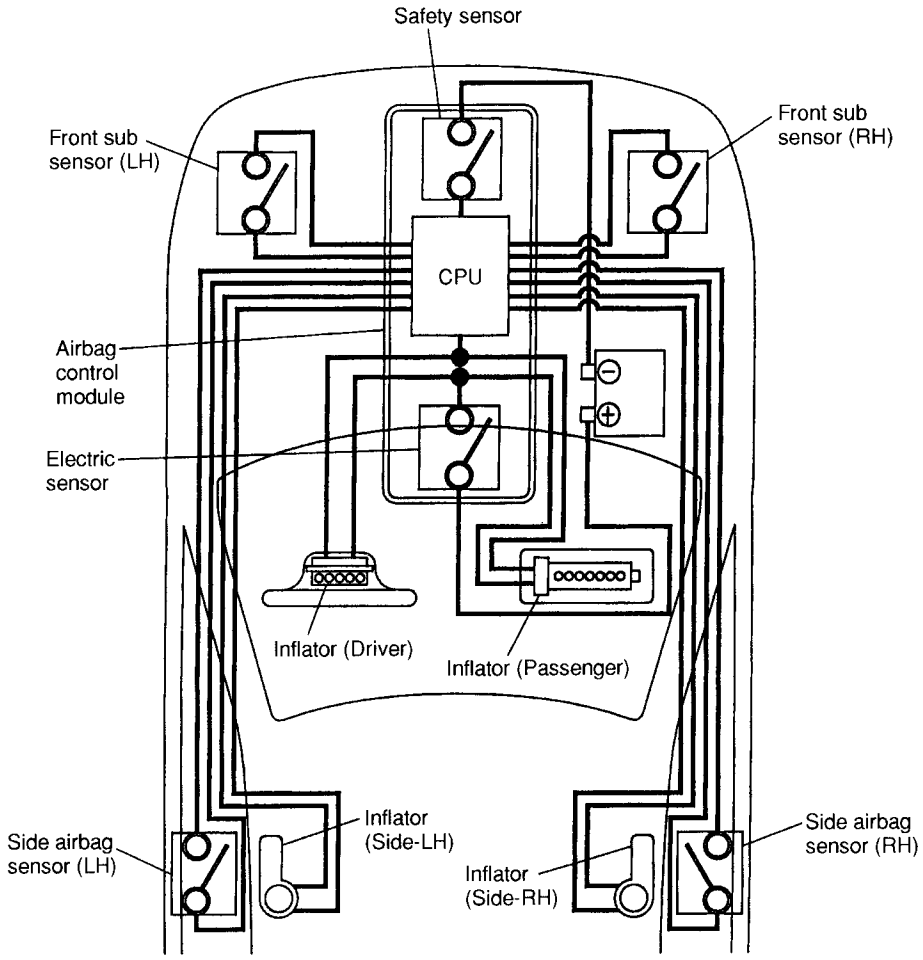

NF0227

B: AIRBAG CONTROL MODULE

The airbag control module is installed in front of the front floor tunnel. It detects the vehicle's deceleration by receiving electrical signals from its inside safety and electric sensors as well as the front sub sensors and judges whether to inflate the airbags. This control module has a built-in self-diagnosis function. If a fault occurs inside the system, it lights up the airbag warning light in the combination meter. The fault data is stored in the module. A back-up power supply is provided for possible damage to the battery during an accident, and a boosting circuit is built into the module in case of a battery voltage drop.

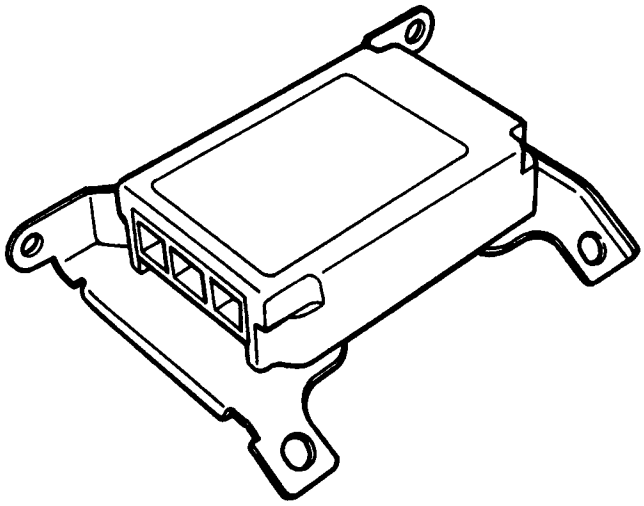

NF0228

C: FRONT SUB SENSOR

One front sub sensor is installed on each side, in front of the front wheel apron wall. The front sub sensor is a pendulum type sensor. If the sensor receives a frontal impact exceeding a certain limit, the mass in the sensor rotates forward to turn the switch ON.

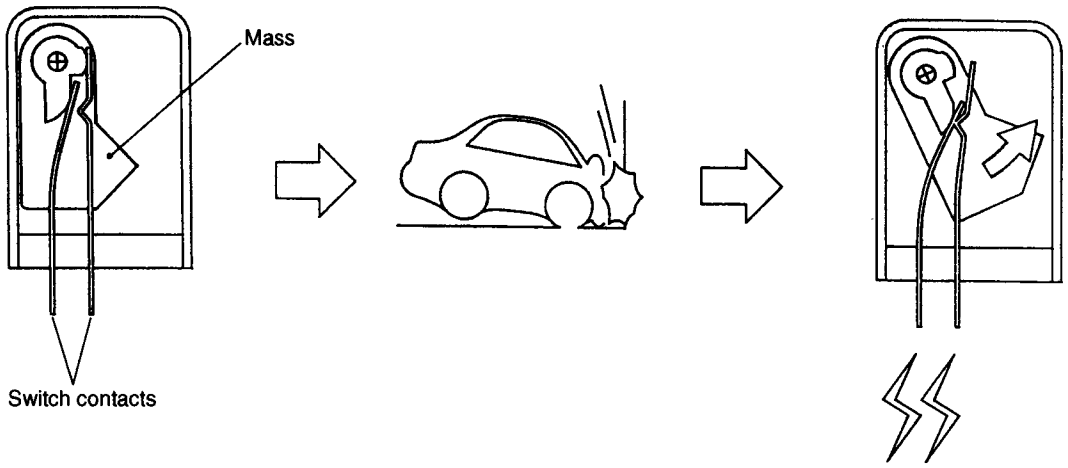

NF0229

D: AIRBAG SENSOR

The safety sensor and electric sensor are incorporated into the airbag control module and the side airbag sensors.

The safety sensor is also a pendulum type sensor. If the sensor receives a frontal or side impact exceeding a certain limit, the mass in the sensor moves in the direction opposite to the impact direction to turn the switch ON.

The electric sensor consists of a semiconductor type sensor which senses the deceleration caused by collision in terms of change in the electrical resistance of the impact sensing circuit.

SAFETY SENSOR

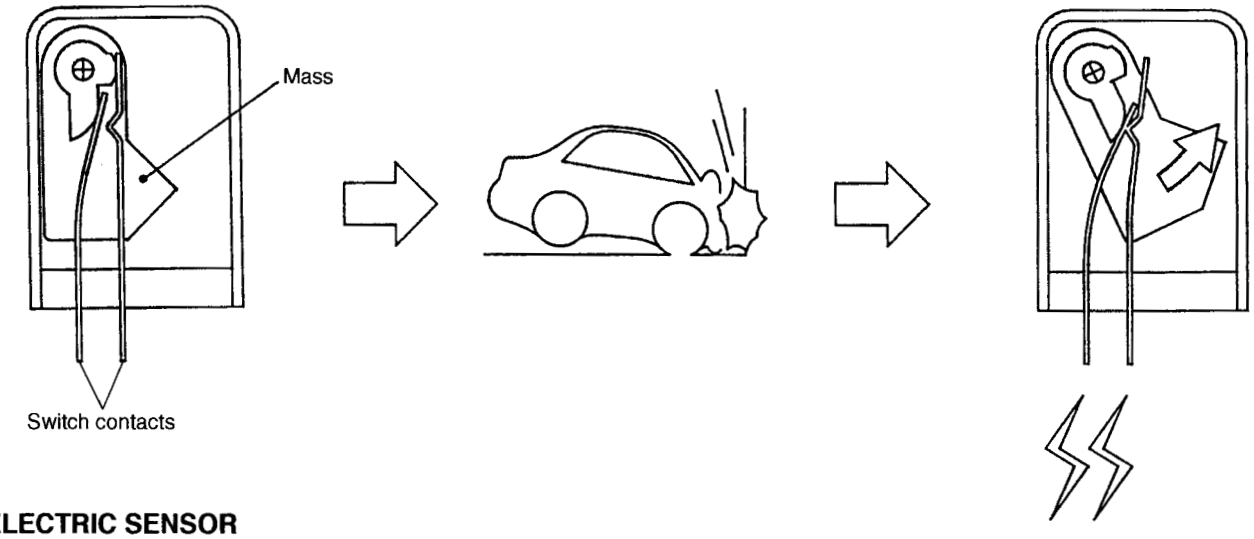

ELECTRIC SENSOR

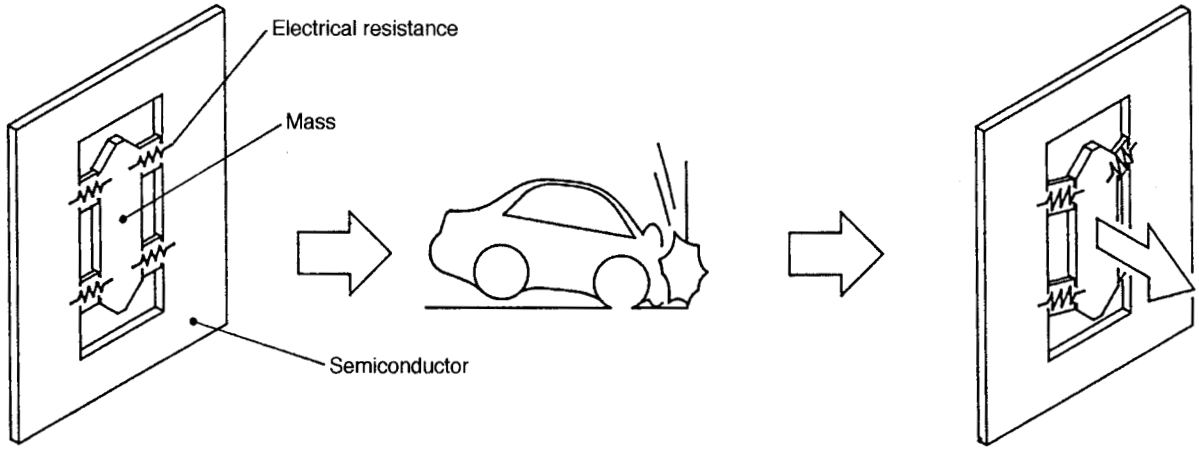

NF0230

E: AIRBAG MODULE

1. FRONT AIRBAG

The driver's airbag module is located at the center of the steering wheel and the passenger's airbag module is located at upper portion of instrument panel. Each module contains an airbag and an inflator. If a collision occurs, the inflator produces a large volume of gas to inflate the airbag in a very short time.

Driver's module

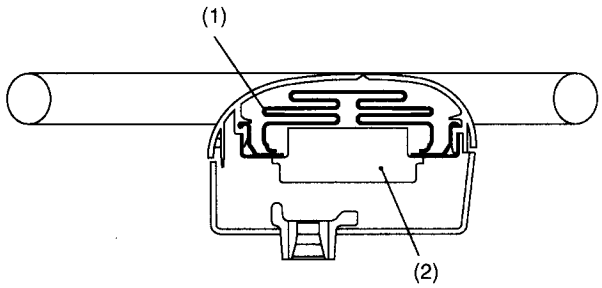

Passenger's module

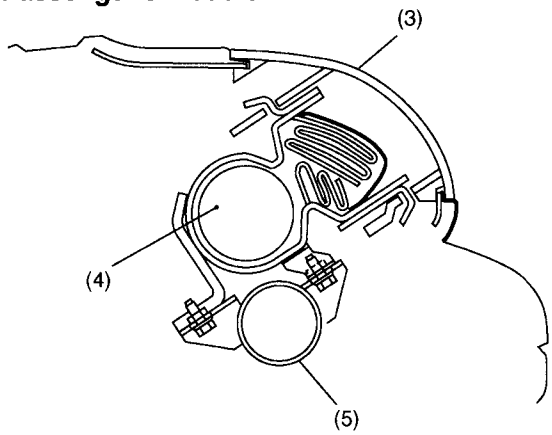

NF0231

(1) Airbag
(2) Inflator (Driver)
(3) Airbag module lid
(4) Inflator (Passenger)
(5) Steering support beam

2. SIDE AIRBAG

A side airbag module is located at the outer side of each front seat backrest, and it contains an airbag and an inflator.
If a side-on collision occurs, the inflator produces a large volume of gas to inflate the airbag in a very short time.

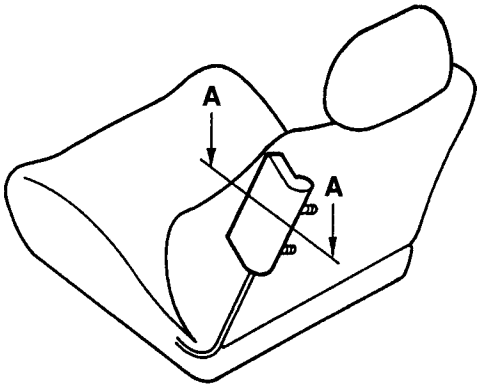

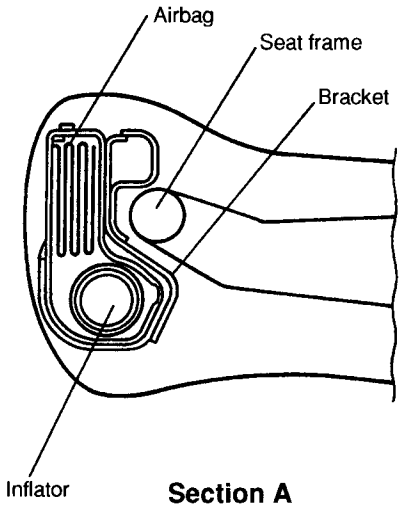

Section A

NF0232

F: AIRBAG CONNECTORS

1. DESCRIPTION

The airbag system uses connectors with a double lock mechanism and an incomplete coupling detection mechanism for enhanced reliability. If coupling is incomplete, the airbag warning light comes on in the combination meter.

2. AIRBAG HARNESS-TO-AIRBAG HARNESS CONNECTOR

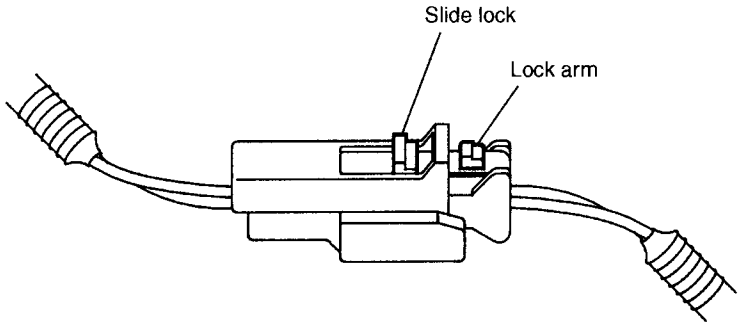

NF0304

Disconnection:

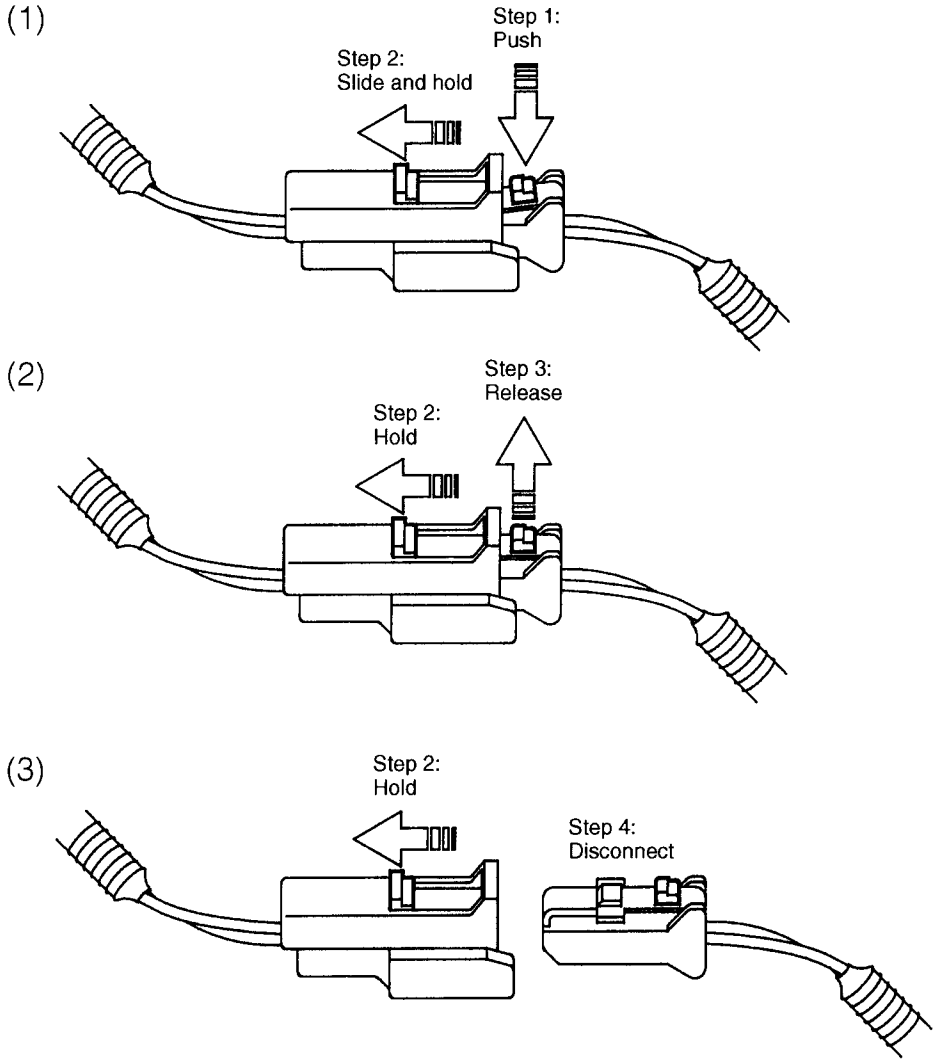

NF0305

Connection:
Insert the male side connector half into the other until a "click" is heard.

3. AIRBAG HARNESS-TO-BODY HARNESS CONNECTOR

Disconnection:
Hold the slide lock (A) moved in the direction of the arrow, then pull the female connector in the direction of the arrow.

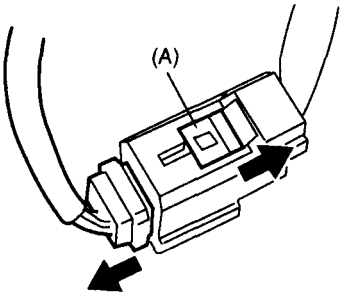

NF0130

Connection:
Push the connector (A) into the male connector carefully until a click is heard.

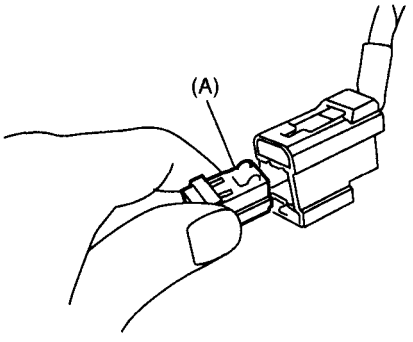

NF0131

4. FRONT SUB SENSOR AND SIDE AIRBAG SENSOR CONNECTORS

Disconnection:
Holding the outer part (A), pull the connector in the direction of the arrow.

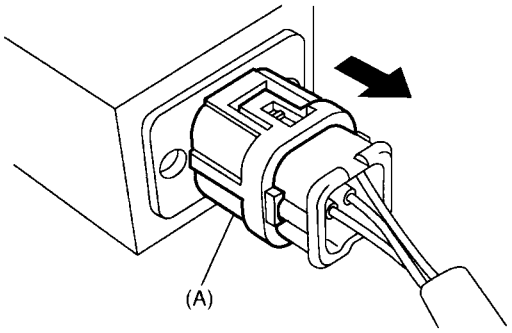

NF0132

Connection:
Holding the inner part, push the connector into the socket carefully until a click is heard.
Do not hold the outer part (A) as it moves back during connection of the connector.

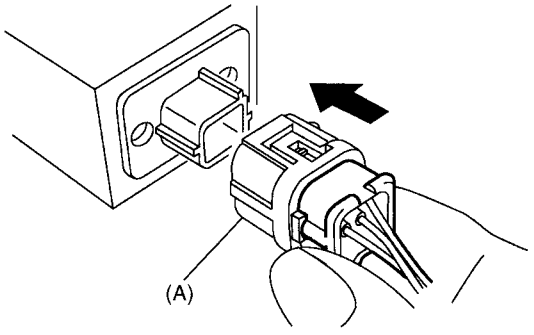

NF0133

G: STEERING ROLL CONNECTOR

The steering roll connector is located between the steering column and steering wheel. The connector contains a spirally wound flat cable. The cable can follow rotational movements of the steering wheel and ensures connection between the airbag module in the steering wheel and the airbag harness through which electrical signals are transmitted from the airbag control module.

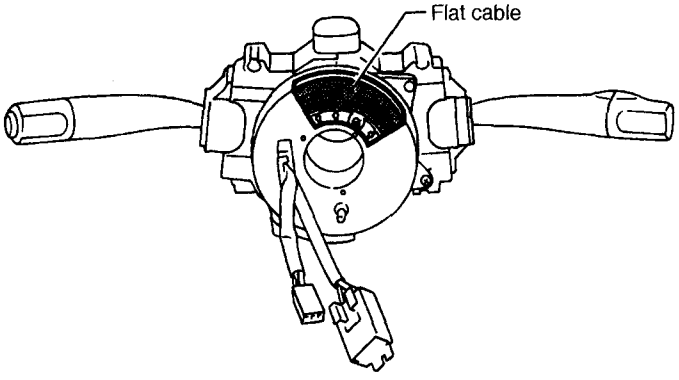

NF0234

H: AIRBAG WARNING LIGHT

The airbag warning light is located inside the combination meter. It illuminates if a poor connection in the airbag circuit occurs, or if the airbag control module detects an abnormal condition. When the airbag system is normal, this light comes on when the ignition switch is turned ON and then goes out about 7 seconds later.

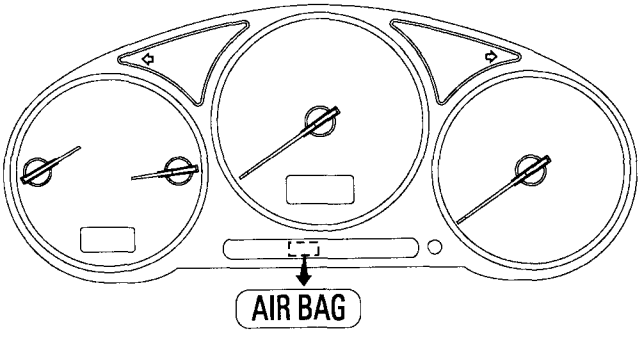

NF0134

I: WIRE HARNESS

The airbag harnesses are integrated into the body harness as follows:

- Front sub sensor harness: Integrated into the front harness.
- Airbag main harness: Integrated into the bulkhead harness.
- Pretensioner and side airbag harnesses: Integrated into the rear harness.

J: LOCATIONS OF WARNING AND CAUTION LABELS

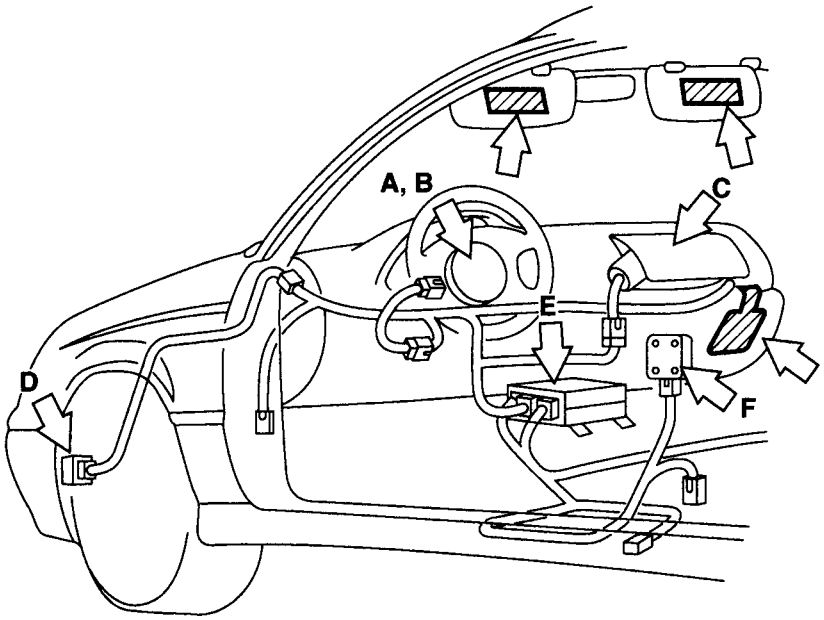

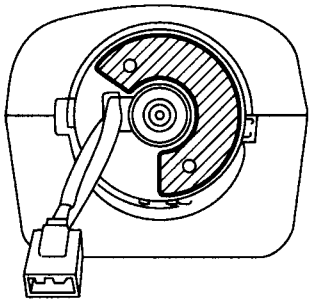

View A

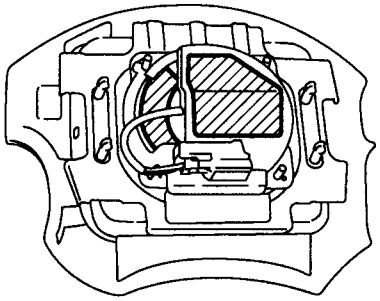

View B

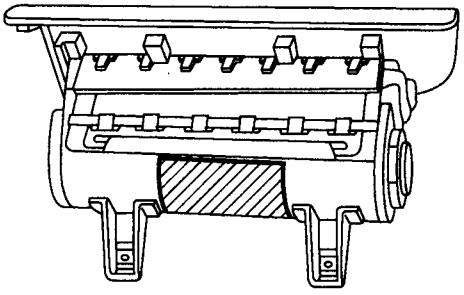

View C

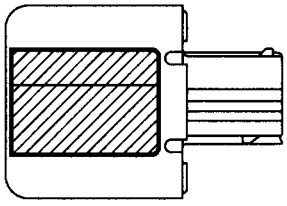

View D

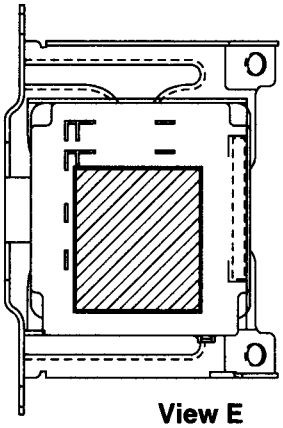

View E

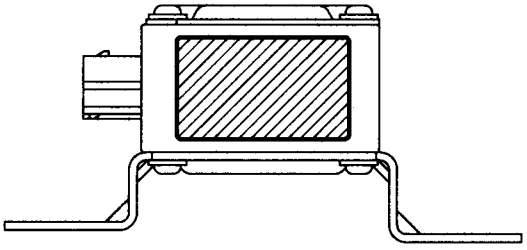

View F

NF0490

SEAT BELT SYSTEM SB

Page
1. Seat Belt 2

1. Seat Belt

A: ADJUSTABLE SHOULDER BELT ANCHOR

1. FRONT

Each front seat belt system has an adjustable shoulder belt anchor which allows the occupant to select the most appropriate anchor height from among the five positions in a 100 mm (3.94 in) range.

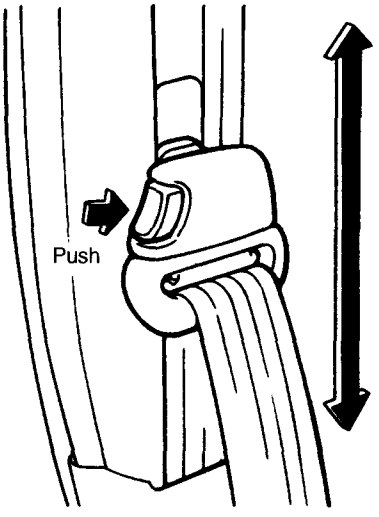

NF0217

2. REAR

The side rear seat belt system has an adjustable shoulder belt anchor which allows the occupant to select the most appropriate anchor height from among the three positions in a 36 mm (1.4 in) range.

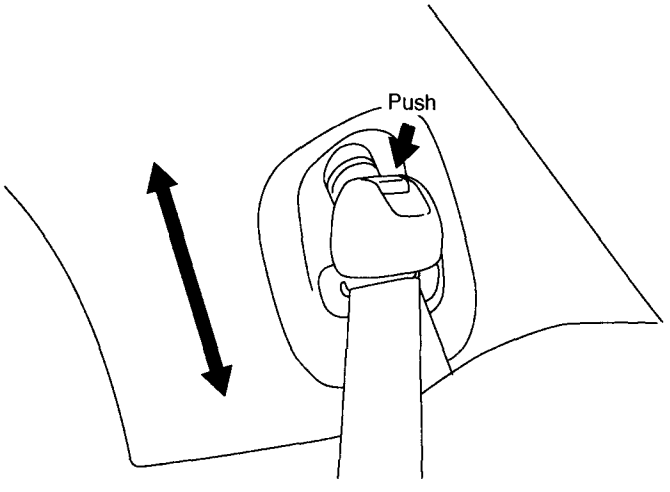

NF0459

B: REAR CENTER THREE-POINT TYPE SEAT BELT

1. SEDAN

A three-point type seat belt is available for the center seating position of the rear seat.
The retractor for the seat belt is installed on the luggage shelf behind the seating position.

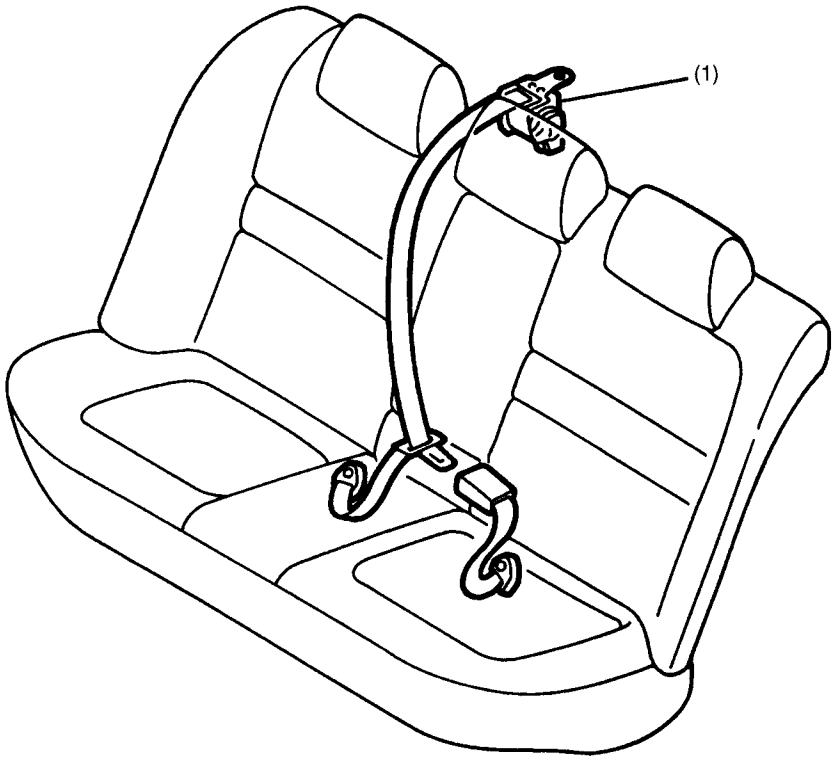

NF0218

(1) Retractor

2. WAGON

A three-point type seat belt is available for the center seating position of the rear seat. The retractor is installed inside the right rear quarter panel.

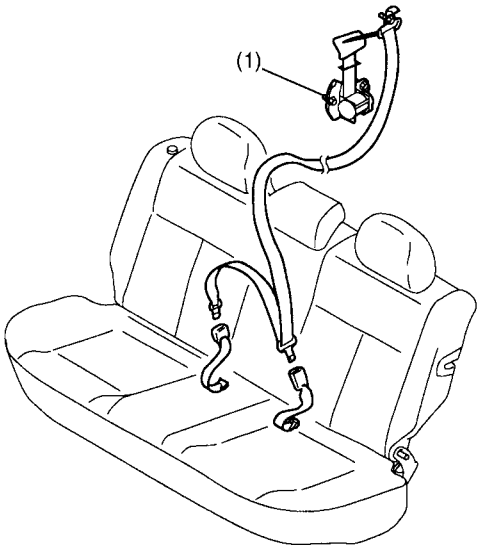

NF0142

(1) Retractor

C: AUTOMATIC RETRACTOR

When the front passenger's seat belt and all the rear seat belts are drawn out completely, their retractors are placed in the automatic locking mode which is used when installing a child restraint system. In this mode, the belt can be retracted but cannot be extended. When the belt is retracted to a certain length, this mode is cancelled and normal operation is restored.

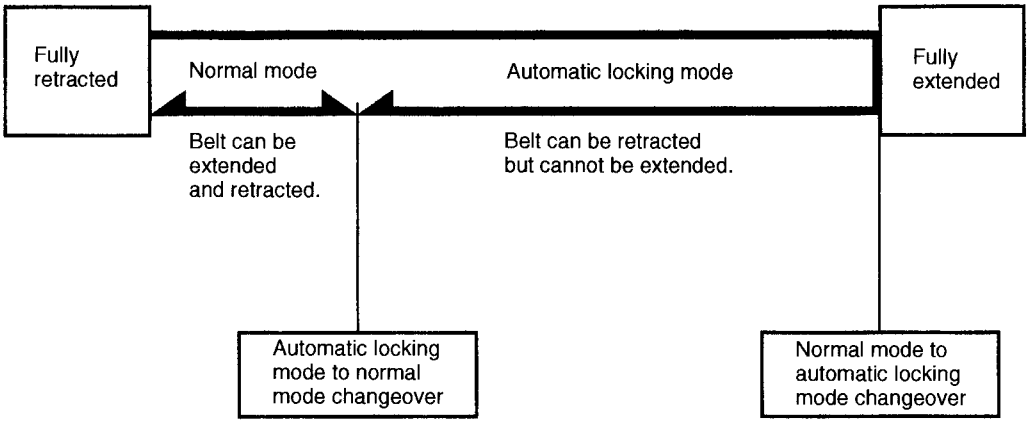

NF0219

D: PRETENSIONER

1. CONSTRUCTION

The driver's and front passenger's seat belts are equipped with seat belt pretensioners.
The pretensioners use the front sub sensors and the airbag control module inside sensors to control their operation. If the sensors detect an impact exceeding the predetermined level during a frontal or front-angled collision, the front seat belts are quickly rewound by the retractors to take up slacks for maximum restraining of the seat occupants. If the load placed on a seat belt exceeds the predetermined level, the torsion bar twists to allow the belt to be payed out, thus lessening the load imposed on the belt wearer's chest. Once the seat belt pretensioner has been activated, the seat belt retractor remains locked.

- **Driver's pretensioner**

The gas generator is activated.
The generated gas pushes the steel balls.
Moving steel balls cause the ring gear to rotate.

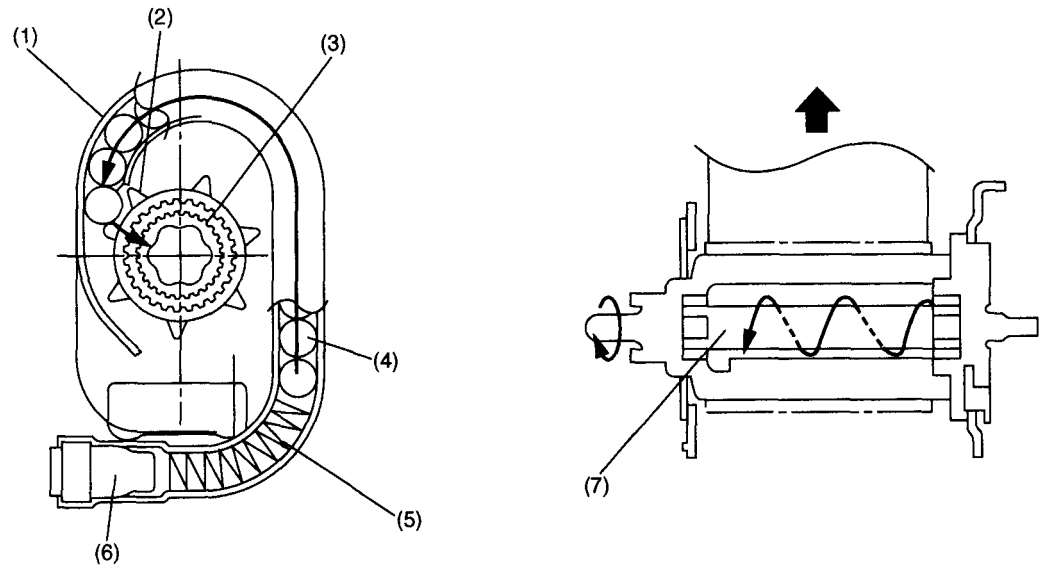

NF0481

(1) Tube
(2) Ring gear
(3) Pinion
(4) Steel ball
(5) Spring
(6) Gas generator
(7) Torsion bar

- **Front passenger's pretensioner**

The strip is wrapped onto the clutch shaft.
The gas generator is activated.
The generated gas pushes the strip.
A pull given at the strip rotates the clutch shaft.

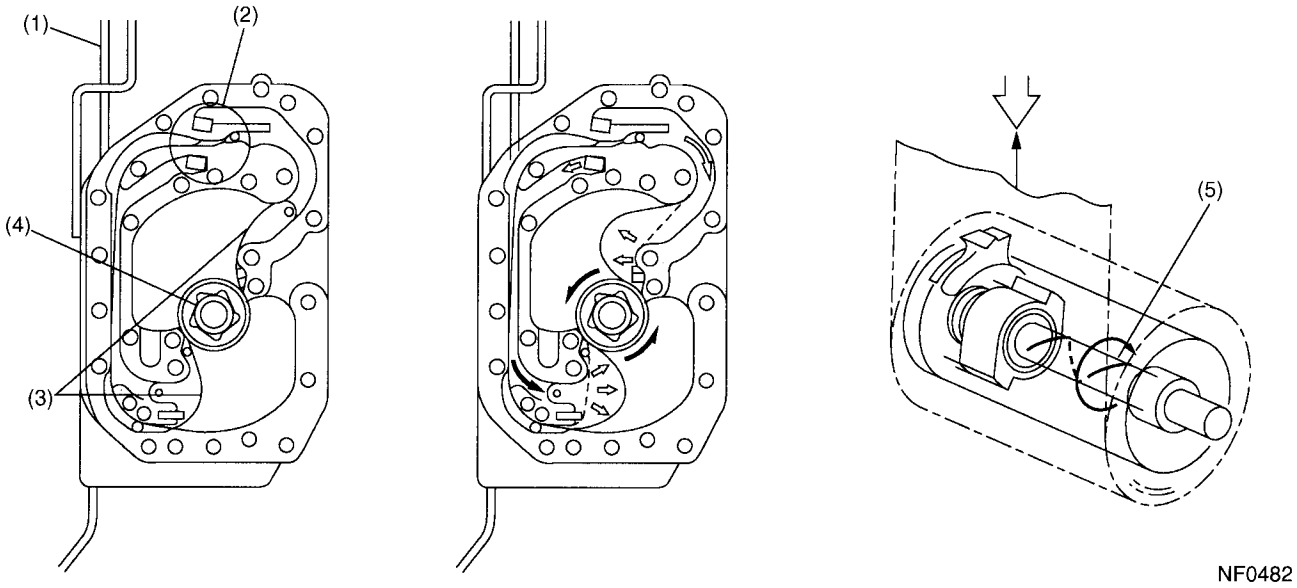

(1) Webbing
(2) Gas generator
(3) Strip
(4) Clutch
(5) Torsion bar

2. FUNCTION

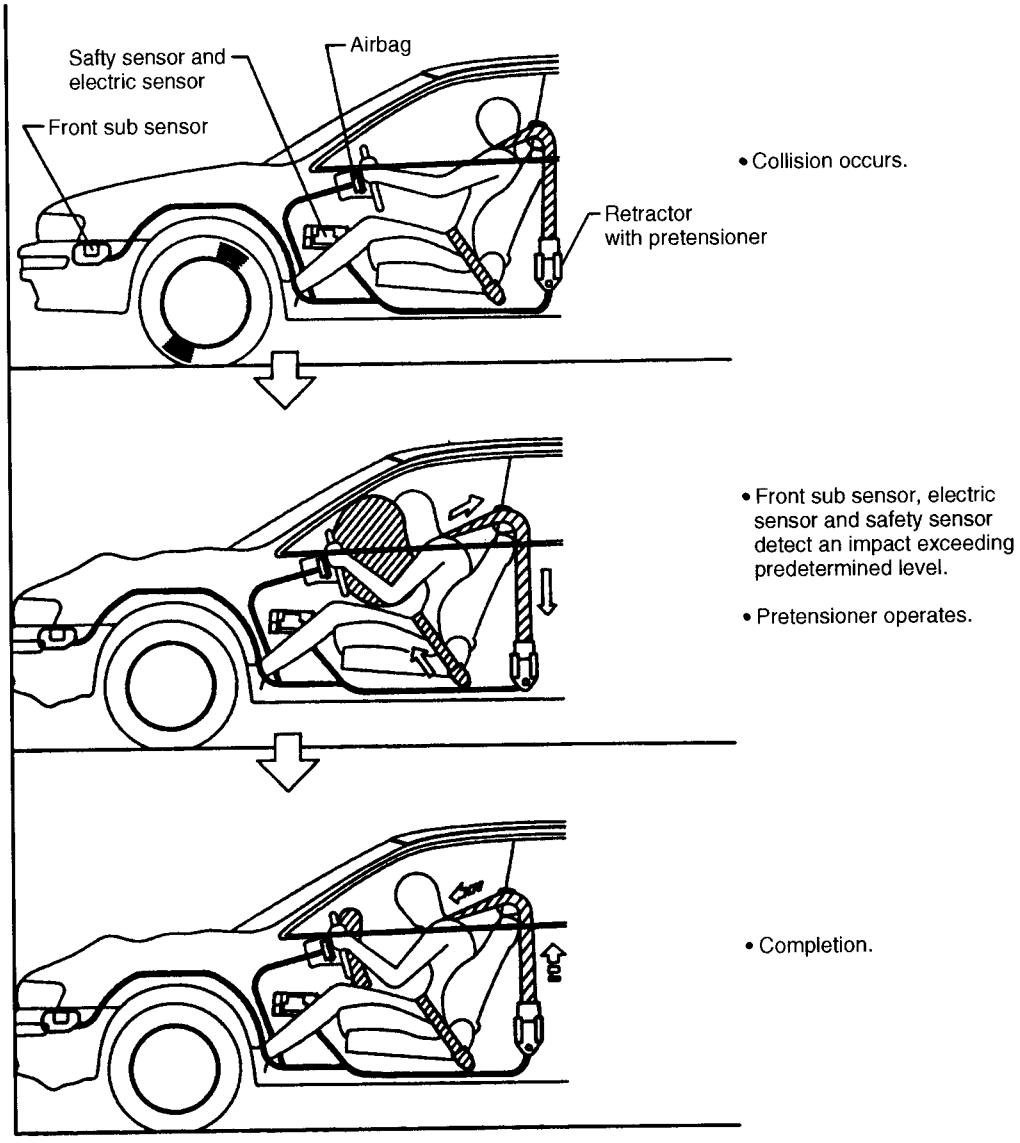

NF0221

3. PRETENSIONER CONNECTOR

Disconnection:
Hold slide lock (A) moved in the direction of the arrow, then pull the connector (B) in the direction of the arrow.

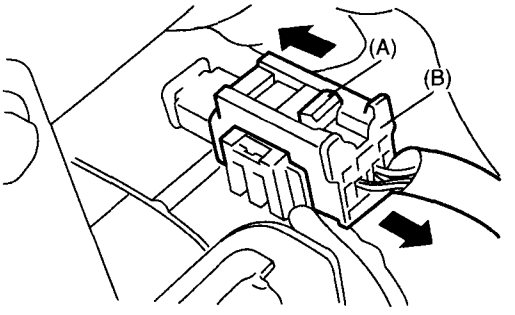

NF0135

Connection:
Push the connector (A) into the male connector carefully until a click is heard.

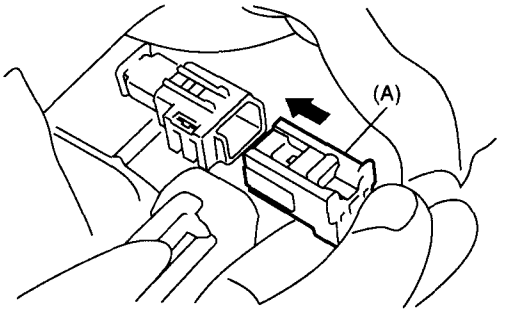

NF0136

WIPER AND WASHER SYSTEMS

WW

		Page
1.	Front Wiper and Washer	2
2.	Rear Wiper and Washer	4

1. Front Wiper and Washer

A: DESCRIPTION

1. FRONT WIPER

1) The front wiper is of a tandem type featuring wide wiping area. The blade is installed to the arm by means of U-hook joint to improve serviceability.

2) The front wiper operates in the HI and LOW speed modes and the INTERMITTENT mode.

The operation modes can be selected by turning the wiper switch incorporated in the combination switch.

3) In the INTERMITTENT mode, the intermittent unit installed behind the combination switch controls the front wiper operation interval.

4) The front wiper system uses a modular construction in which the wiper motor forms an integral part of the linkage. The motor is installed on the body through rubber mounting.

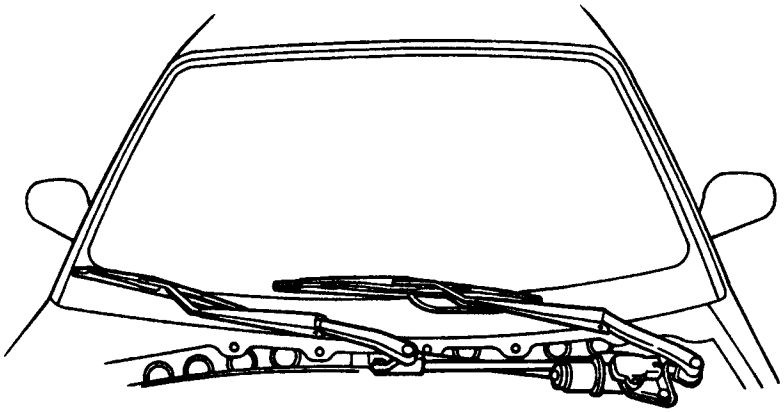

NF0223

2. FRONT WASHER SYSTEM

1) The washer system consists of a washer tank, a motor and pump unit and a pair of nozzles.

2) The washer tank is installed at the front of the strut mount on the left side of the engine compartment.

3) The washer motor and pump unit is installed at the bottom of the washer tank.

4) The washer nozzles are installed on the hood. Each nozzle has a diffusion jet hole.

5) Each washer nozzle is provided with a check valve which is located just below it.

3. SPECIFICATIONS

Washer Tank	Capacity			4.0 liters (4.2 US qt, 3.5 Imp qt)
Wiper Motor	Rated voltage			12 V
	No-load current			4 A or less
	Speed [at 2.0 N·m (20 kg-cm, 17 in-lb)]		HIGH	66 ± 6 rpm
			LOW	43 ± 5 rpm
	Locked rotor characteristics	HIGH	Torque	29.4 N·m (300 kg-cm, 2.2 ft-lb) or more
			Current	36.0 A or less
		LOW	Torque	34.3 N·m (350 kg-cm, 2.5 ft-lb)
			Current	31.5 A or less
Wiper Blade	Length	Driver side		550 mm (21.65 in)
		Passenger side		425 mm (19.69 in)

2. Rear Wiper and Washer

A: DESCRIPTION

1. REAR WIPER

1) The rear wiper operates intermittently at a 10-second interval.

2) The rear wiper operates over a 168-degree angle.

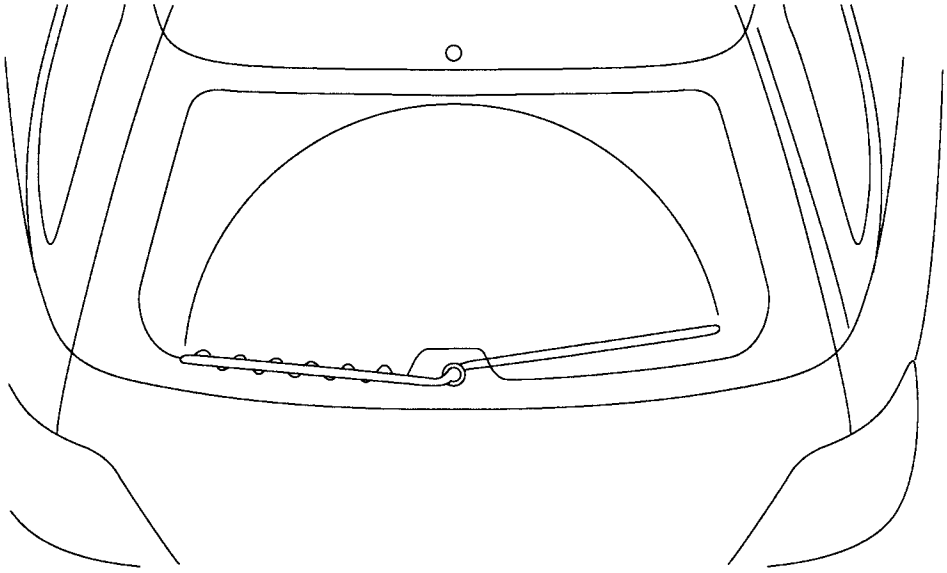

NF0141

3) The wiper blade is attached to the arm by means of a U-hook joint in the same way as with the front wipers.

2. REAR WASHER SYSTEM

1) The same washer tank is shared by the front and rear washer systems.

2) The washer motor and pump unit is installed at the bottom of the washer tank, adjacent to the front washer's unit.

3) The washer nozzle is installed on the upper portion of rear gate panel. The nozzle has two spray holes.

4) The washer nozzle is provided with a check valve which is located just below it.

3. SPECIFICATIONS

Wiper Motor	Rated voltage	12 V
	No-load current	2 A or less
	Speed [at 0.5 N·m (5 kg-cm, 4.3 in-lb)]	25 rpm or more
	Locked rotor current	13 A or less
Wiper Blade	Length	375 mm (14.76 in)

GLASS/WINDOWS/MIRRORS GW

Page
1. Power Window 2

1. Power Window

A: CONSTRUCTION

- The power window system consists of regulator motors and switches for individual doors, relays and a circuit breaker unit.
- Each door window opens/closes by pushing down/pulling up the switch.
- Only the driver's door window switch has a 2-stage mechanism:
  - When the switch is pushed lightly and held in the pushed position, the window continues to lower until the switch is released.
  - When the switch is pushed down fully, the window lowers to the end position automatically.

NOTE:
For the sake of safety, the power window system is designed to operate only when the ignition switch is in the ON position.

B: CIRCUIT DIAGRAM

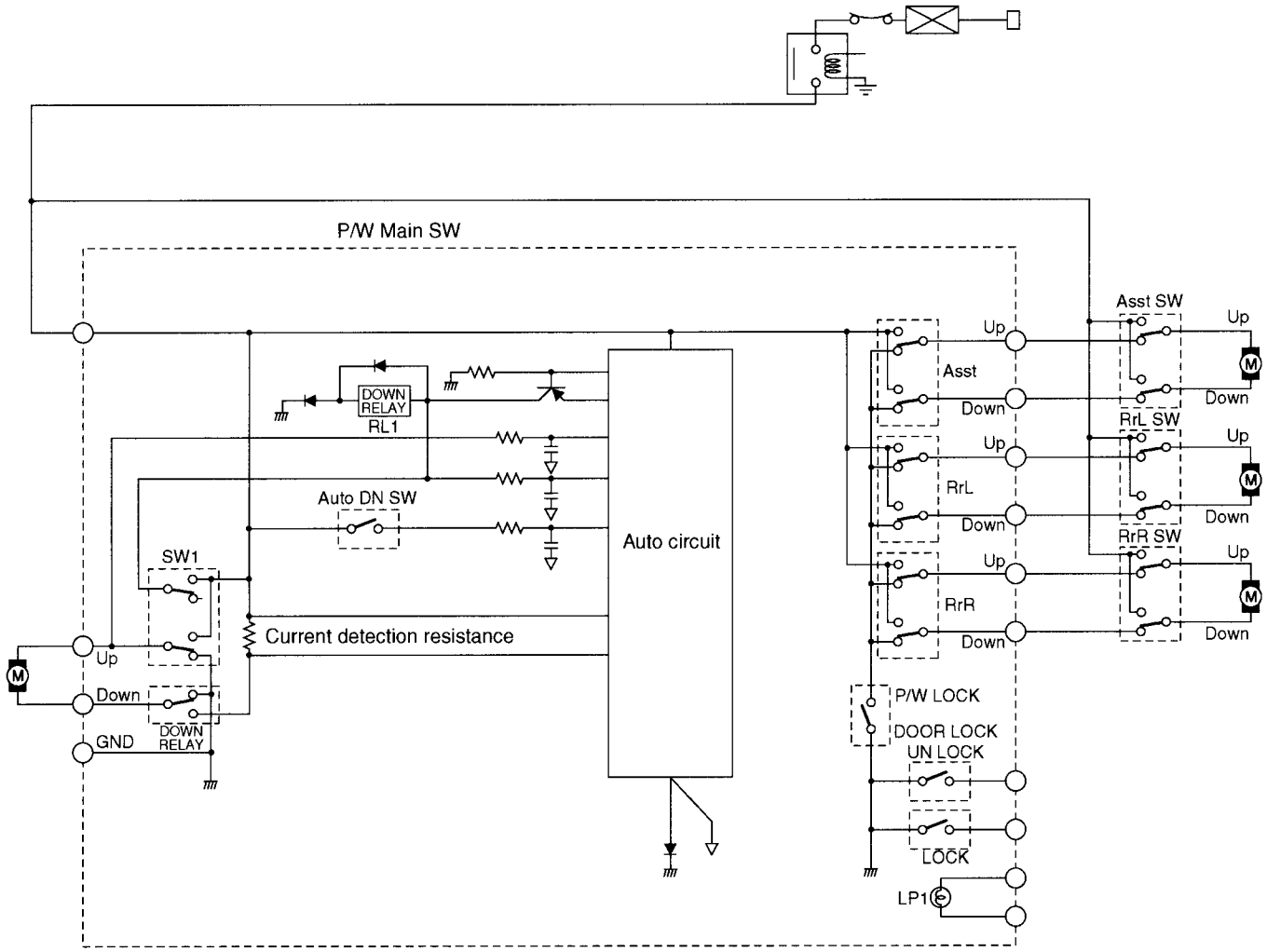

NF0222

BODY STRUCTURE BS

Page

Refer to G1831BE SUPPLEMENT for this section.

BODY STRUCTURE BS

		Page
1.	Steering Support Beam	2
2.	Quietness	3
3.	Body Sealing	5
4.	Painting	6
5.	Anti Chipping Coat (ACC) Application	7
6.	Stone Guard Coat (SGC) Application	8
7.	Sealer Application	9
8.	Anti-rust Wax (Bitumen Wax) Application	16
9.	Polyvinyl Chloride (PVC) Application	19
10.	Hot Wax Application	20
11.	Galvanized Sheet Metal Application	22
12.	Aluminium Sheet Metal Application	23
13.	Ventilation	24
14.	Child Seat Anchors	25

1. Steering Support Beam

A steering support beam is provided between the left and right front pillars for reinforced support of the steering column. It also minimizes vibration of the steering column and limits its extension to a minimum in the event of a collision.

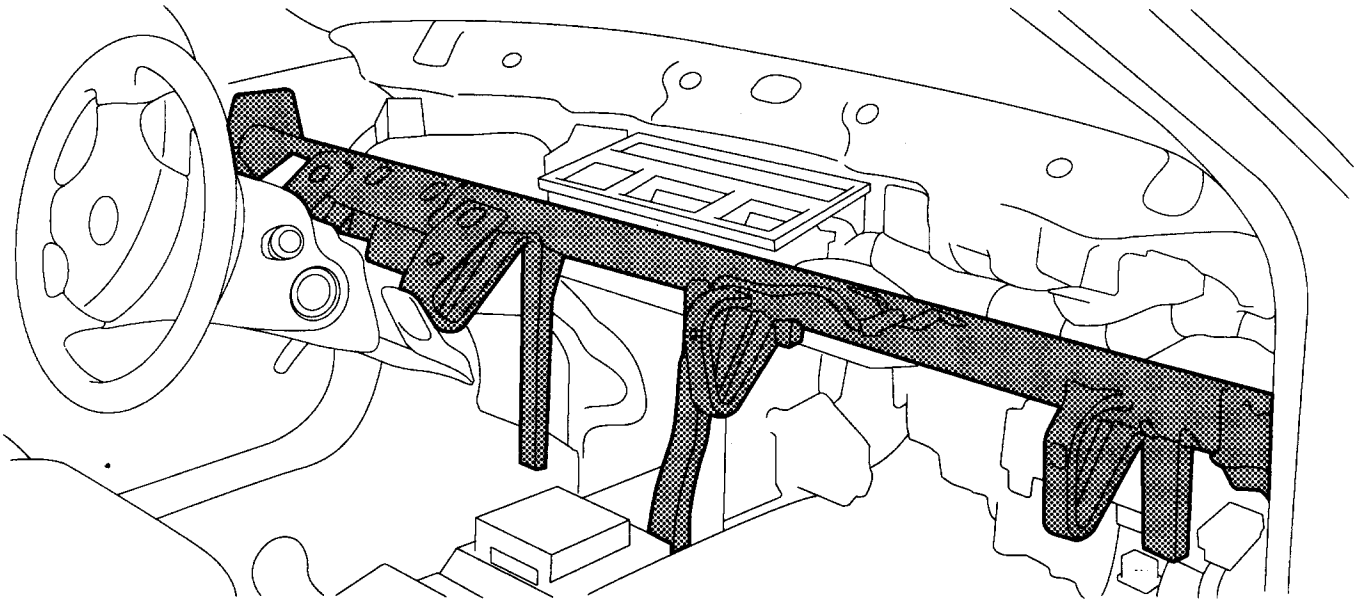

NF0498

2. Quietness

Silencers, dual-wall panels, sound-absorbing materials, etc. are utilized in conjunction with a high-rigidity and vibration/noise-proof body structure in order to ensure quietness of the passenger compartment.

A: SILENCERS

Silencers (= asphalt sheets) minimize transmission of noise/vibration into the passenger compartment.

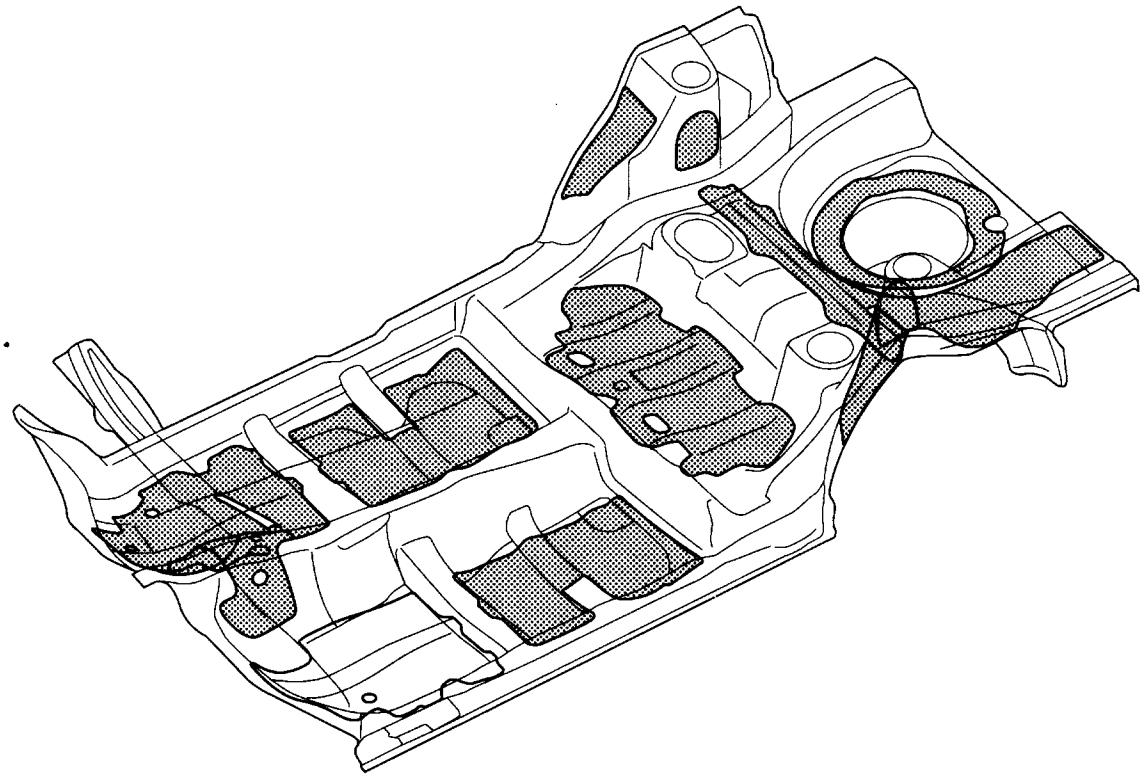

NF0527

B: DUAL-WALL TOEBOARD

The toeboard is a dual-wall design consisting of an asphalt sheet placed between two steel panels to reduce the transmission of noise and vibration from the engine compartment to the passenger compartment.

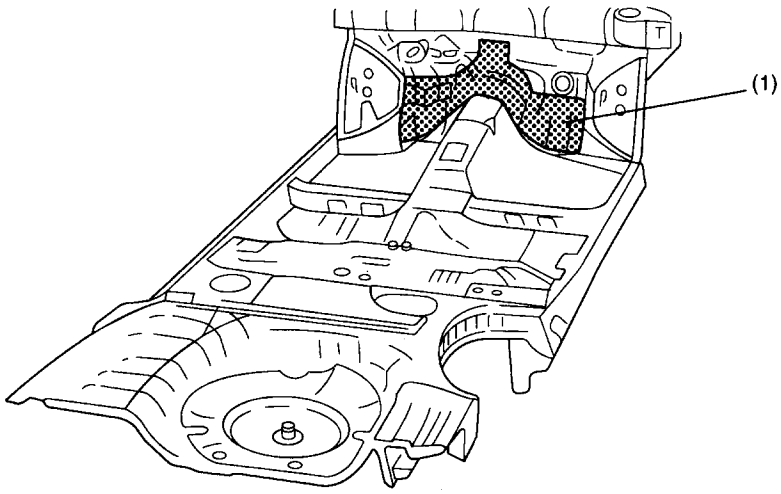

NF0499

(1) Dual-wall toeboard

3. Body Sealing

A: SEALED PARTS

All gauge holes and other holes used during the body manufacturing process are plugged to prevent entry of water and dust.

Any time the vehicle body has been repaired, the affected holes should be properly plugged with the use of the specified plugs.

4. Painting

A: SPECIFICATION

Color name	Color code
PURE WHITE	51E
PREMIUM SILVER (M)	01G
GREEN (M)	07V
RED MICA (M)	94H
DEEP BLUE MICA	95H
BLUE BLACK MICA	08V
WR BLUE MICA	02C
SPORTS YELLOW	797
PURE WHITE / GRAY (M)	0G5 (51E / 09V)
RED MICA (M) / GRAY (M)	0L1 (94H / 09V)
PREMIUM SILVER (M) / GRAY (M)	0T9 (01G / 09V)
GREEN (M) / GRAY (M)	0A6 (07V / 09V)
BLUE BLACK MICA / GRAY (M)	0A9 (08V / 09V)

(M): Metallic

B: PAINT FILM STRUCTURE

Color name	Paint film structure
• PURE WHITE • SPORTS YELLOW	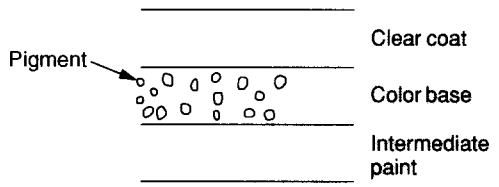 NF0521
• PREMIUM SILVER (M) • GREEN (M) • GRAY (M)	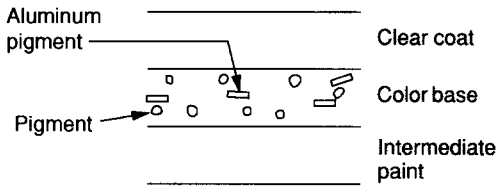 NF0522
• RED MICA (M) • DEEP BLUE MICA • BLUE BLACK MICA • WR BLUE MICA	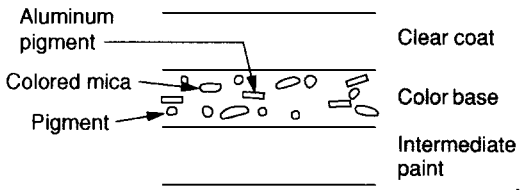 NF0523

(M): Metallic

5. Anti Chipping Coat (ACC) Application

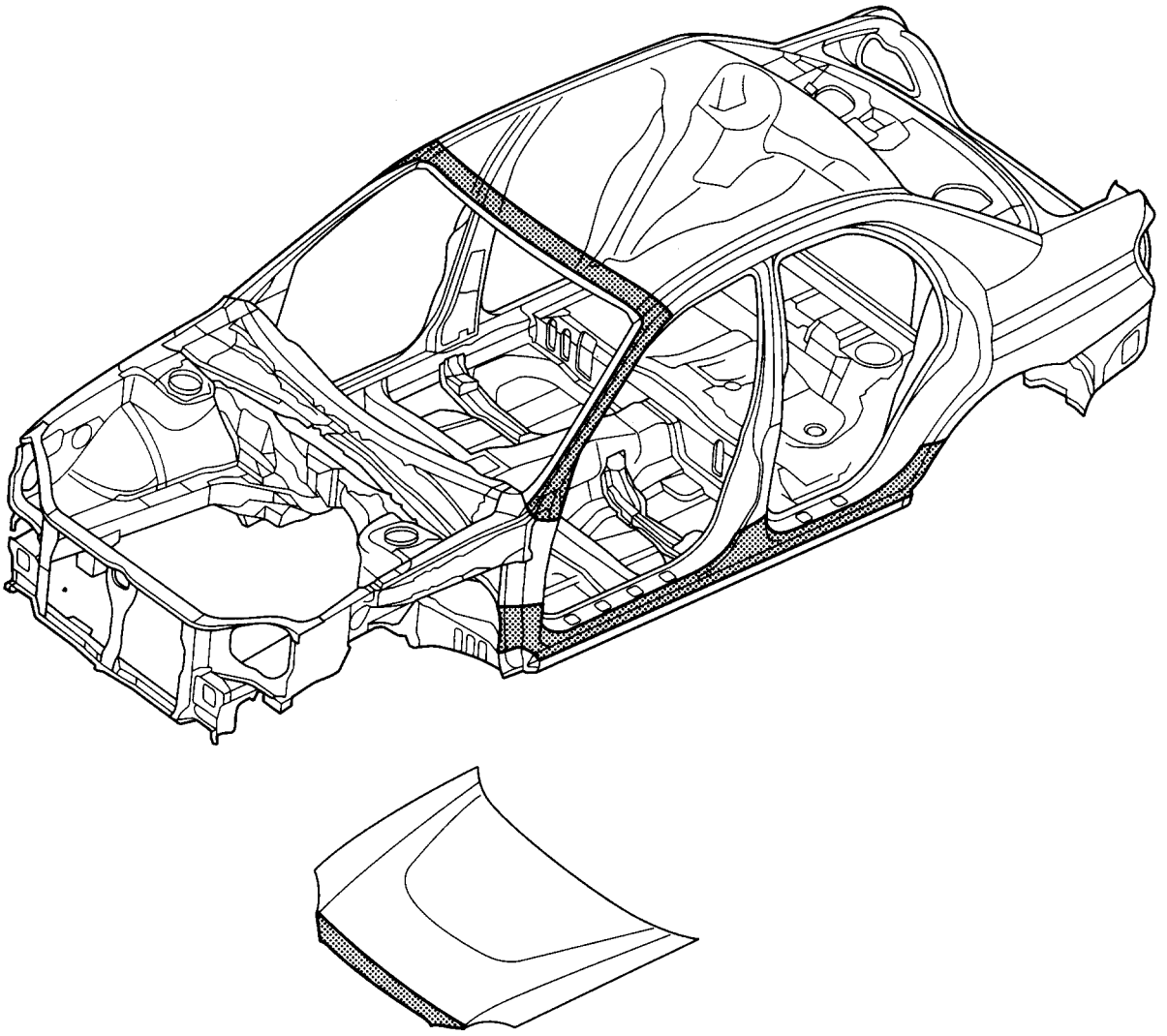

NF0500

6. Stone Guard Coat (SGC) Application

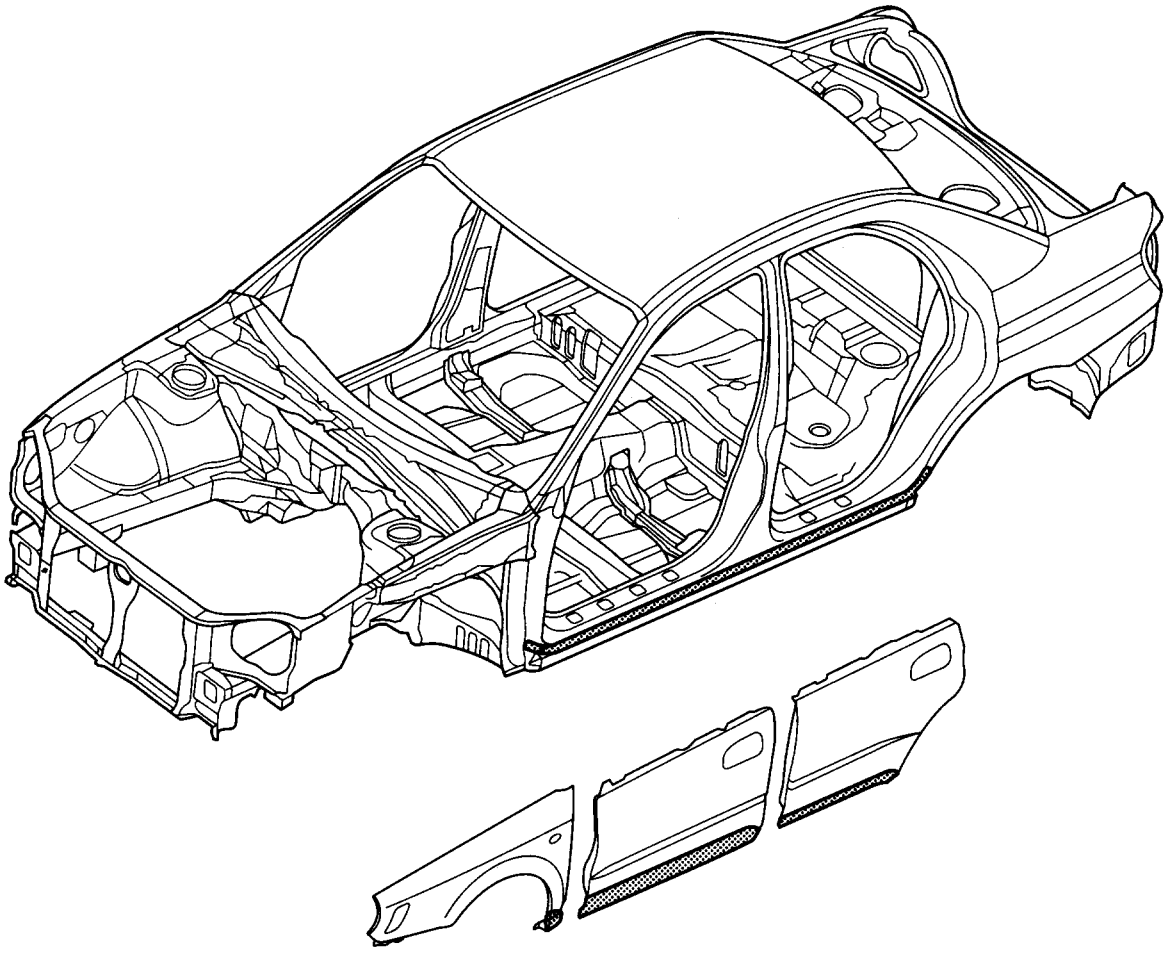

NF0533

7. Sealer Application

A: ENGINE COMPARTMENT

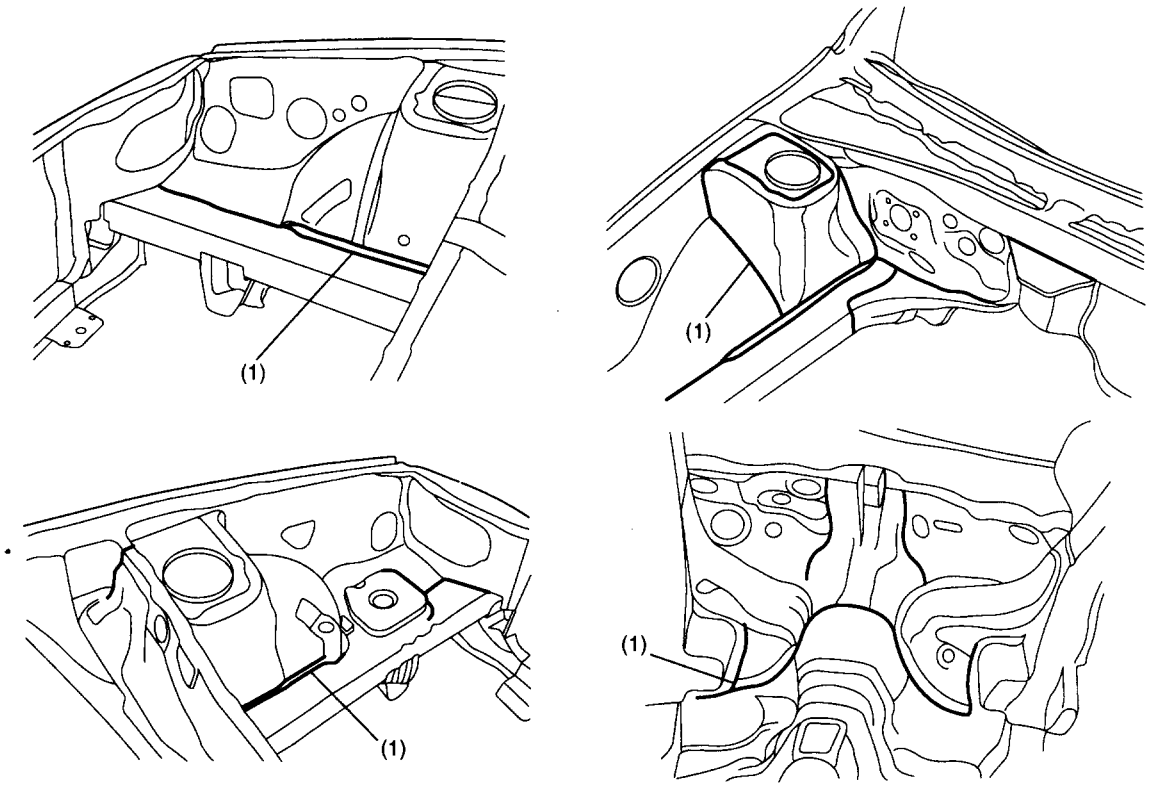

NF0501

(1) Sealer

B: ENGINE HOOD

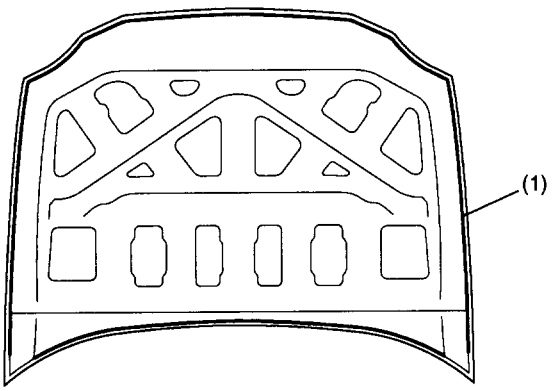

NF0502

(1) Sealer

C: DOOR

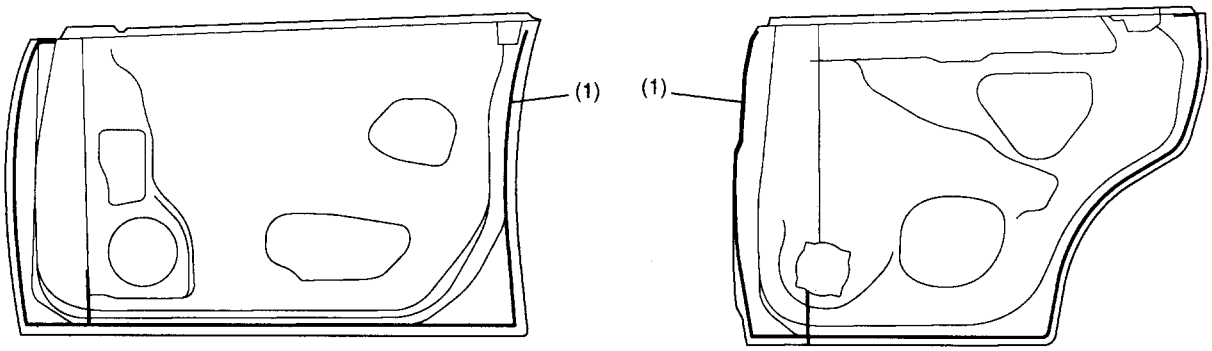

NF0503

(1) Sealer

D: REAR GATE

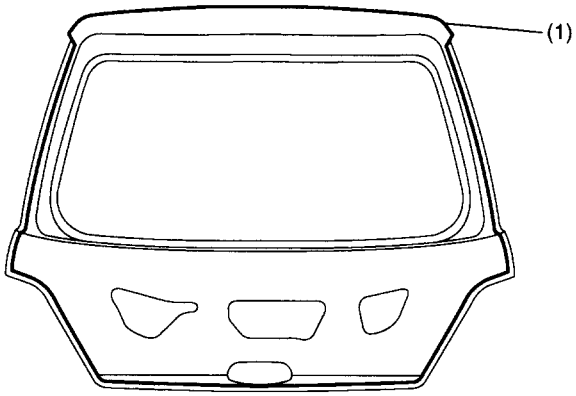

NF0504

(1) Sealer

E: TRUNK LID

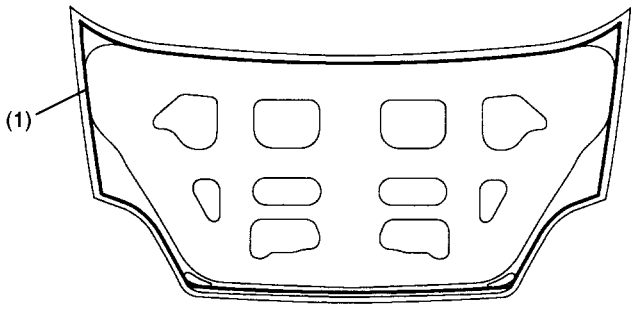

NF0505

(1) Sealer

F: REAR END (WAGON)

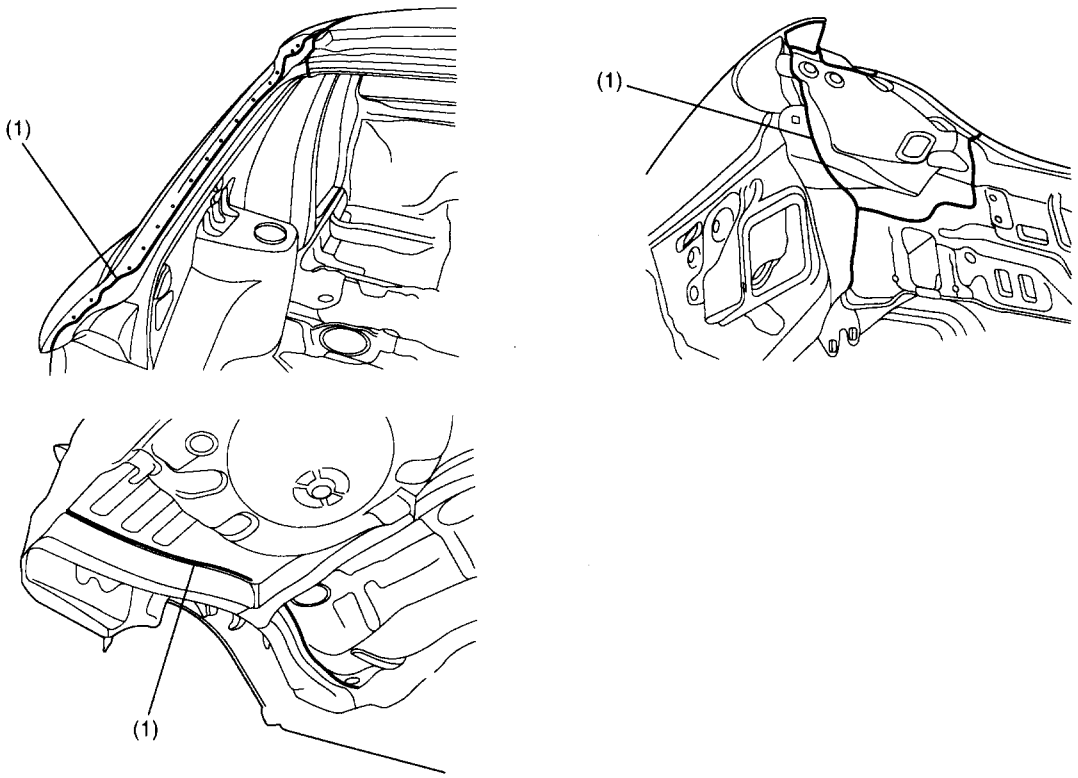

NF0506

(1) Sealer

G: REAR END (SEDAN)

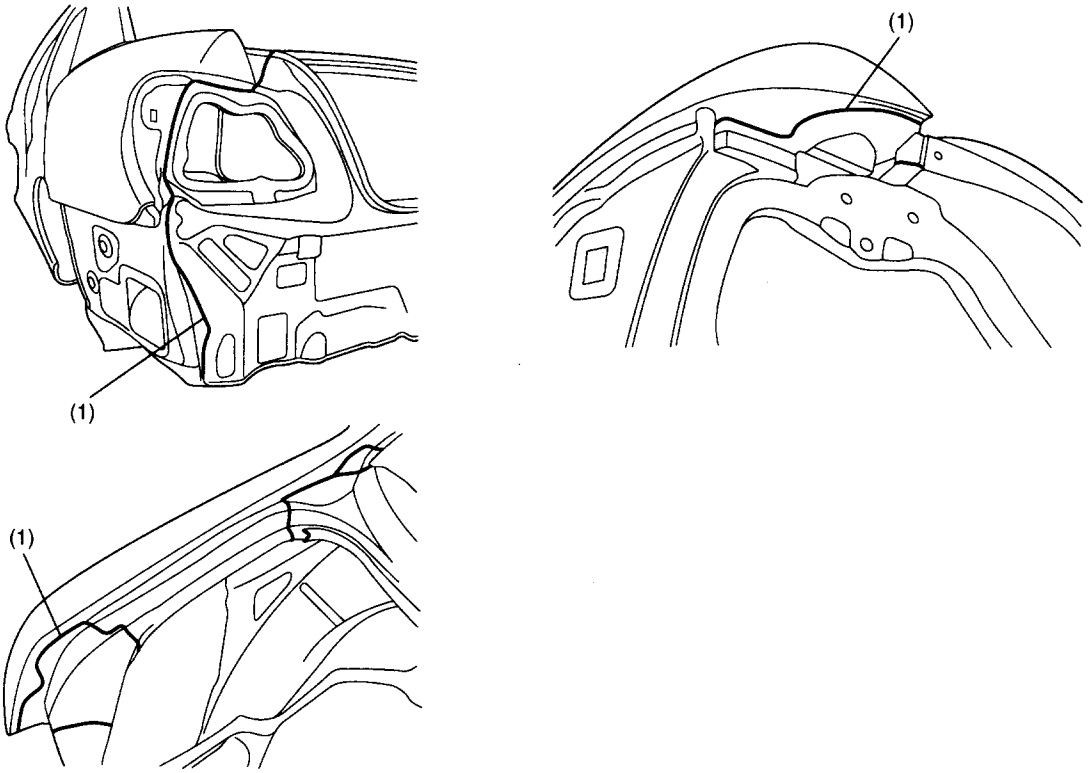

NF0507

(1) Sealer

H: ROOF PANEL

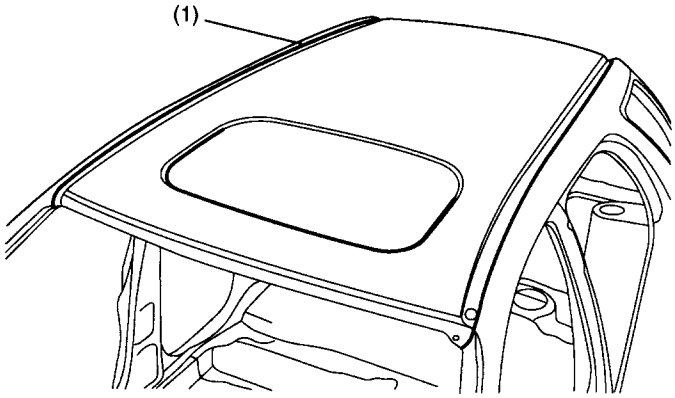

NF0508

(1) Sealer

I: FRONT FLOOR

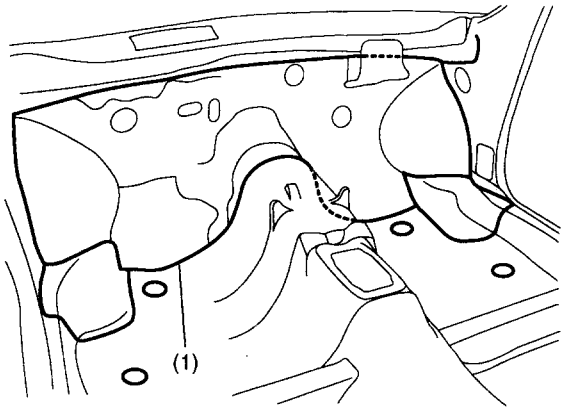

NF0509

(1) Sealer

J: REAR FLOOR (WAGON)

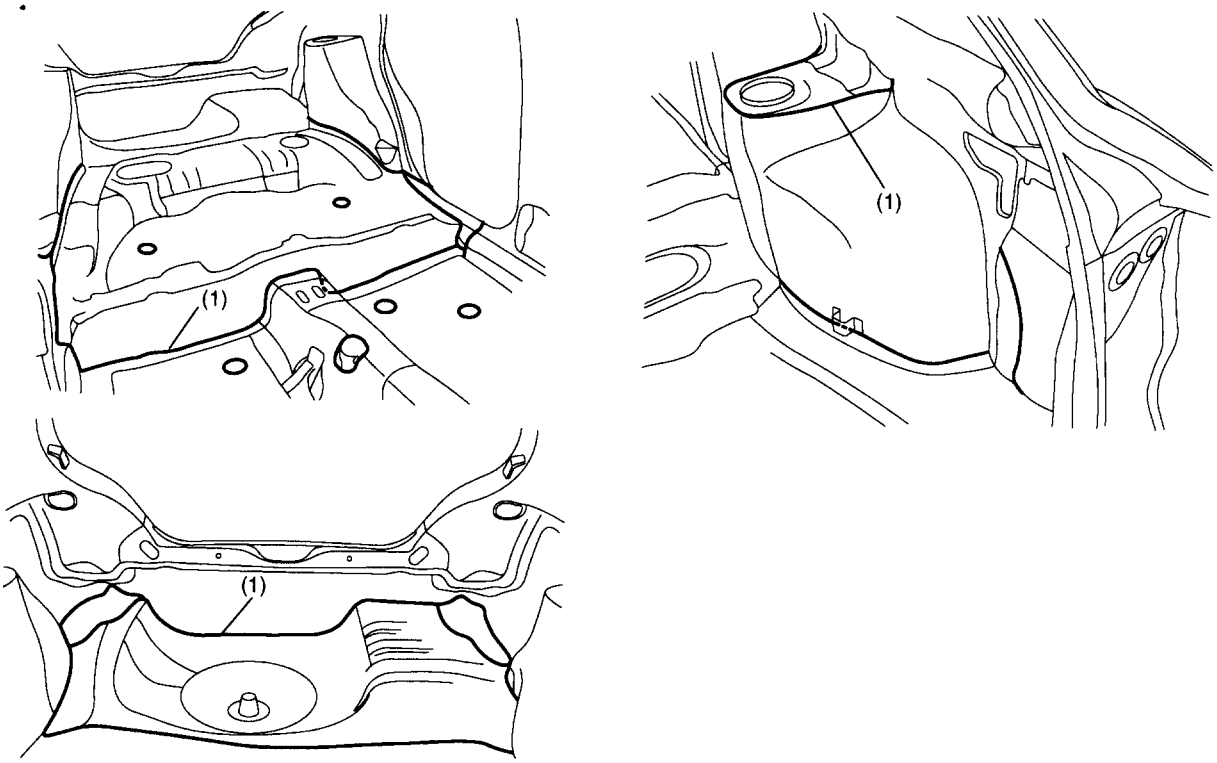

NF0510

(1) Sealer

K: REAR FLOOR (SEDAN)

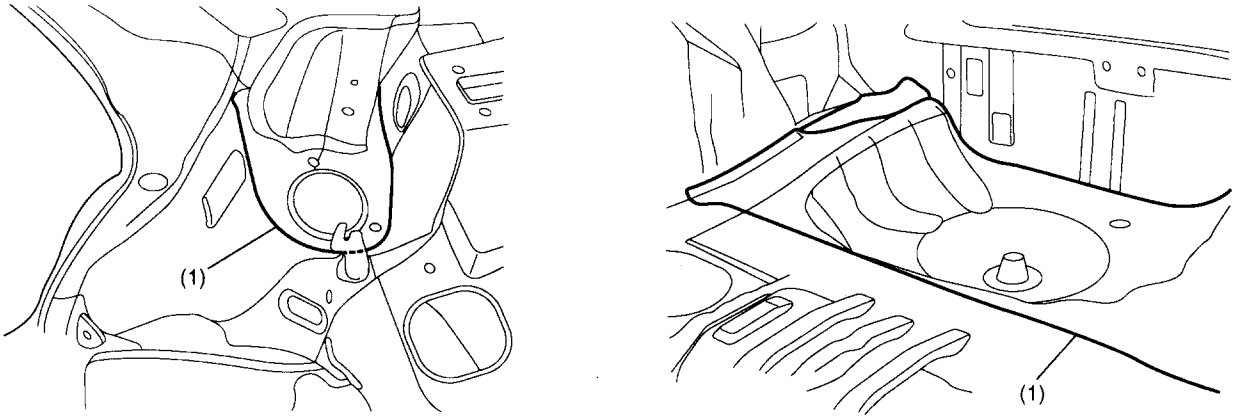

NF0511

(1) Sealer

L: UNDER BODY

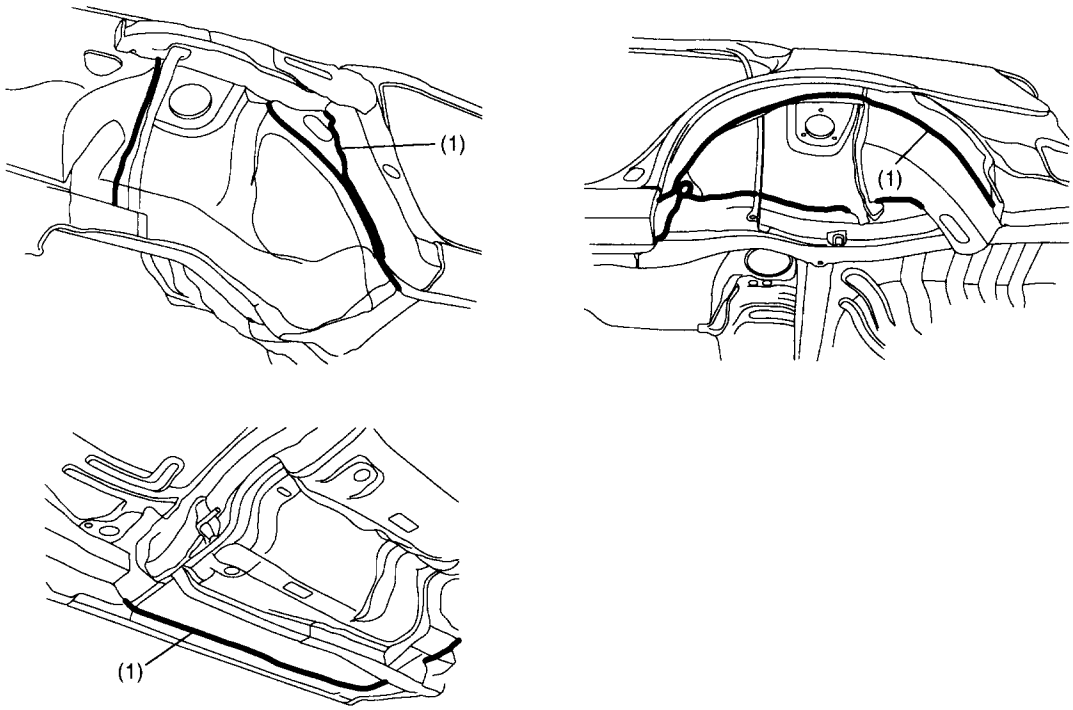

NF0524

(1) Sealer

M: FUEL LID (WAGON)

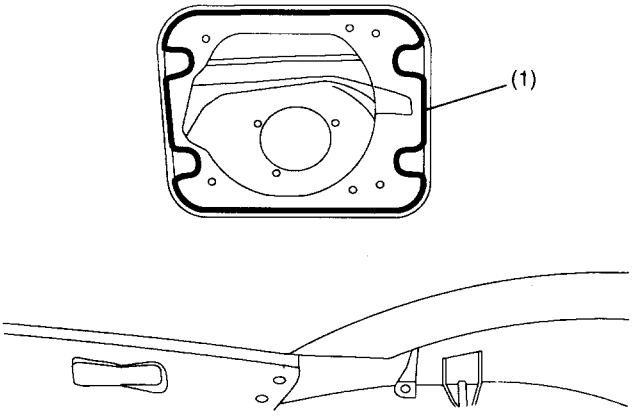

NF0525

(1) Sealer

N: FUEL LID (SEDAN)

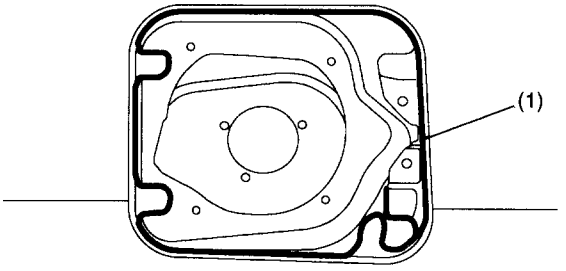

NF0526

(1) Sealer

8. Anti-rust Wax (Bitumen Wax) Application

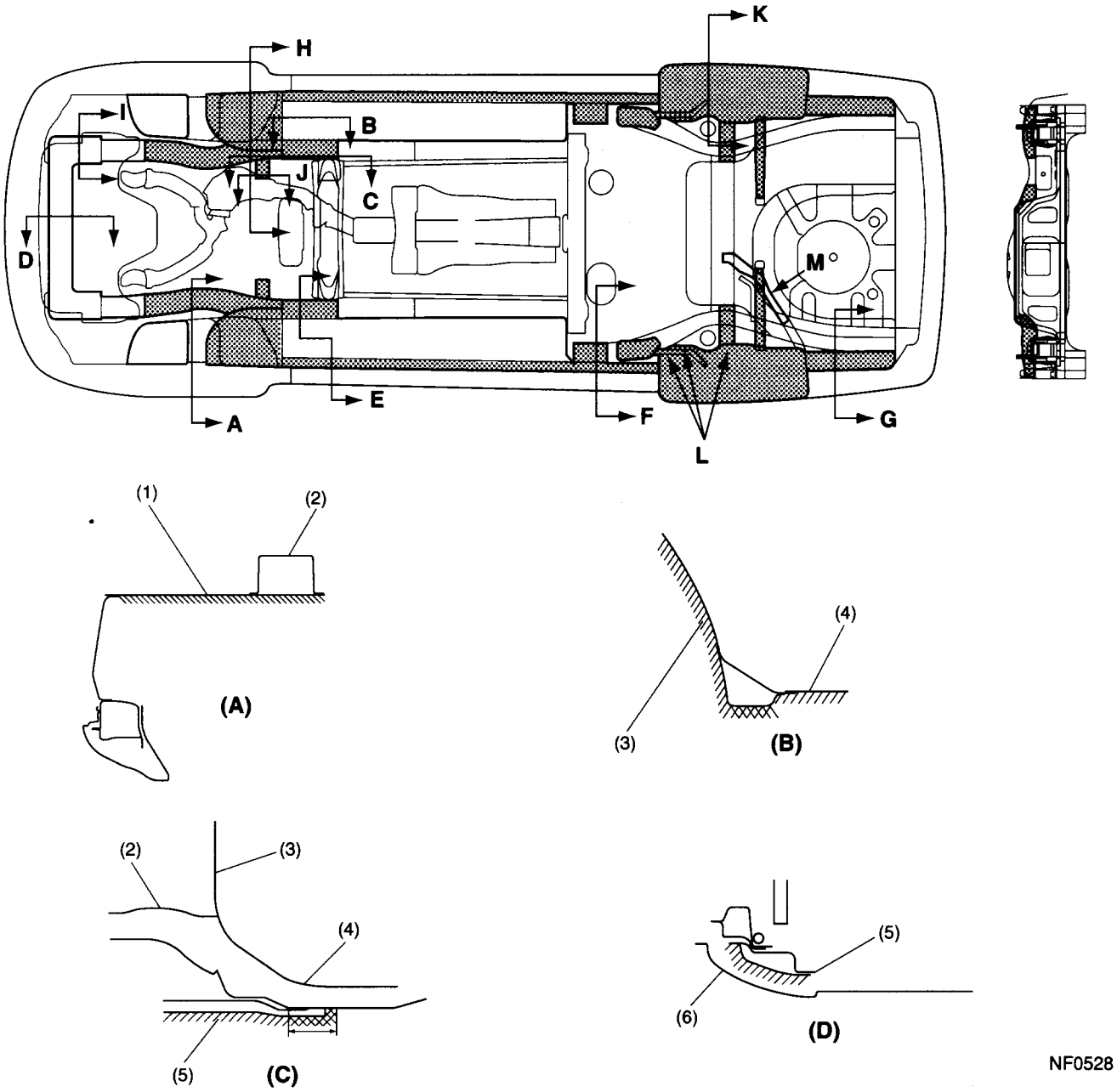

(1) Front suspension lower bracket
(2) Front side frame
(3) Toeboard
(4) Front floor pan
(5) Sub frame
(6) Under cover

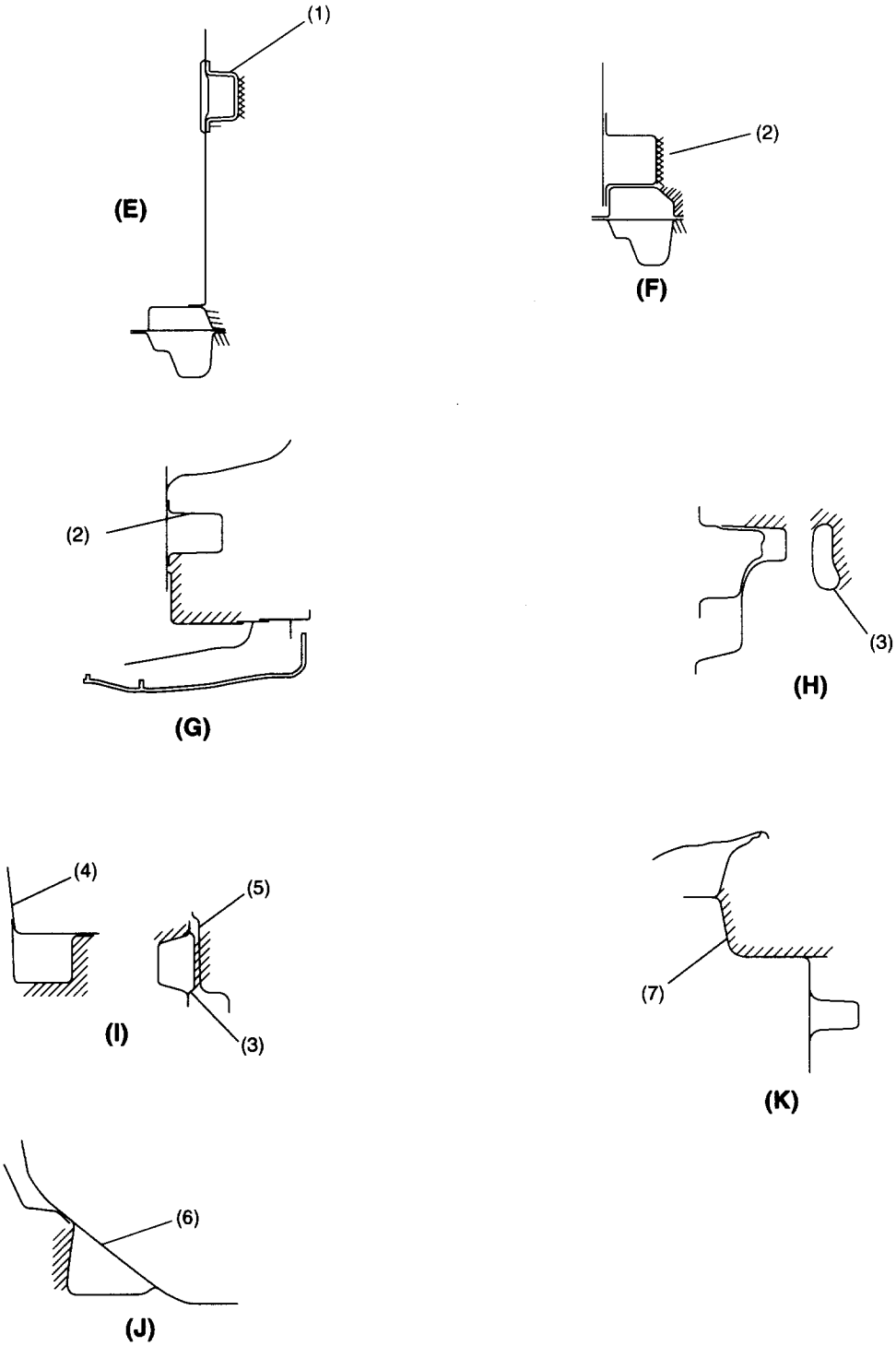

NF0529

(1) Front side frame
(2) Rear side frame
(3) Sub frame
(4) Front wheel apron
(5) Under cover
(6) Toeboard
(7) Rear wheel apron

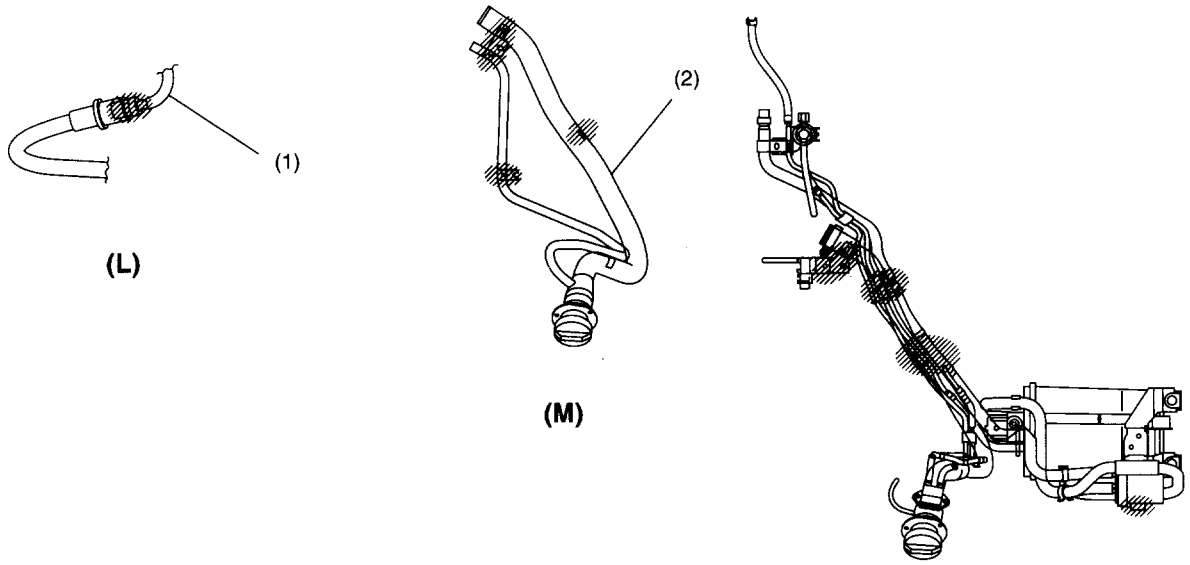

NF0532

(1) Brake pipe
(2) Filler pipe

9. Polyvinyl Chloride (PVC) Application

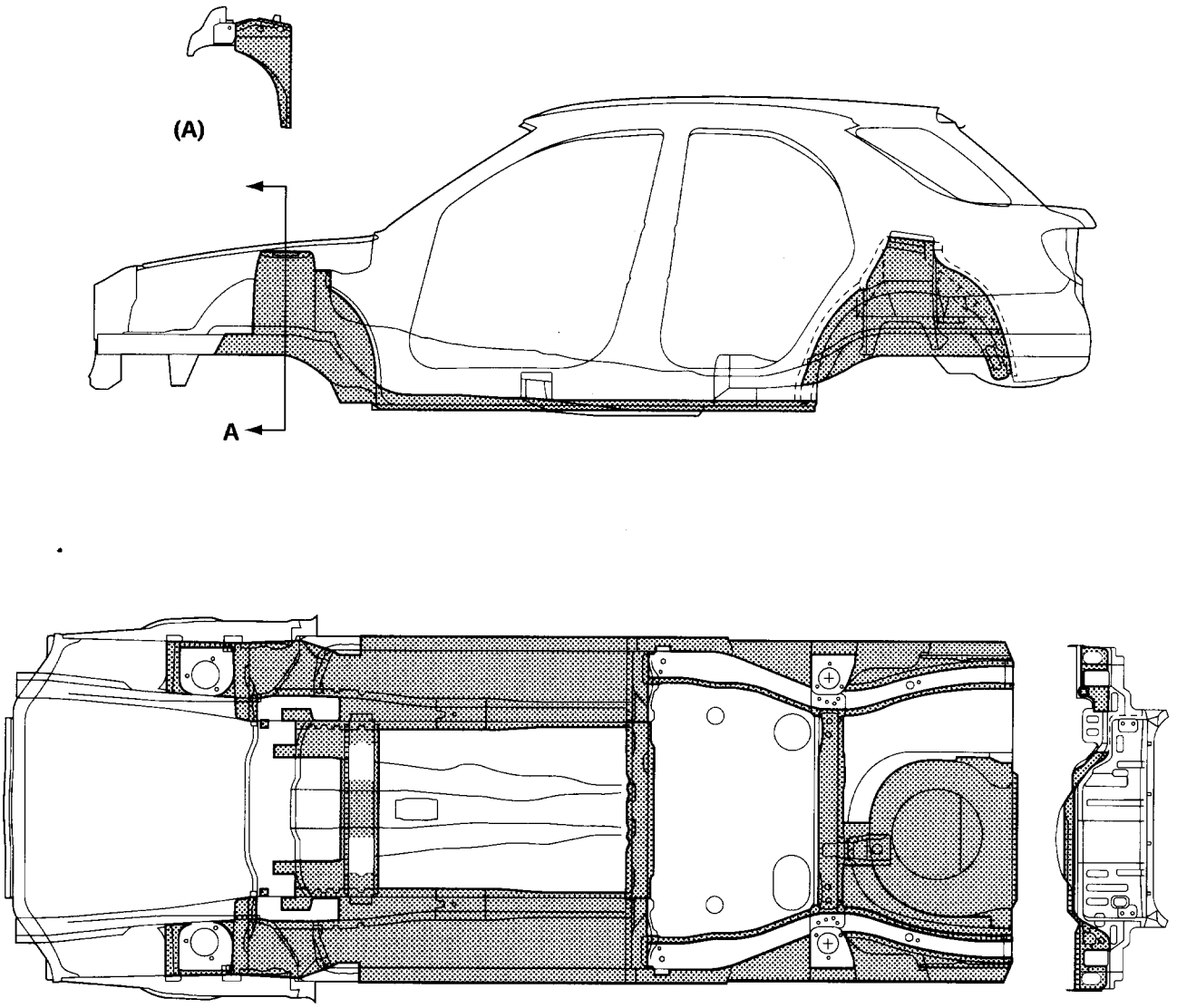

NF0514

10. Hot Wax Application

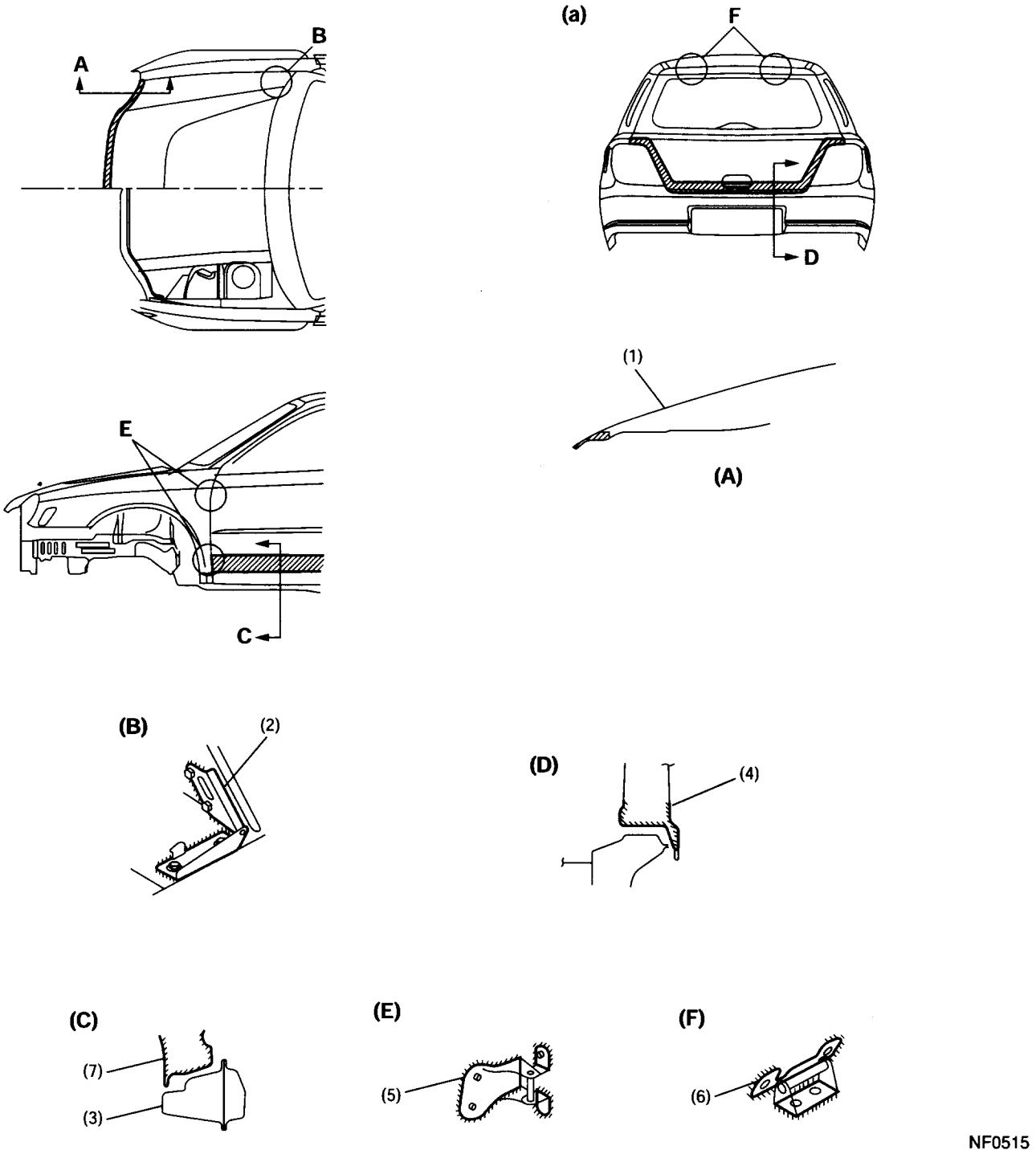

(1) Front hood panel
(2) Front hood hinge
(3) Side sill
(4) Rear gate outer panel
(5) Front and rear door hinge
(6) Rear gate hinge
(7) Side door panel (include rear door panel)

(a) WAGON

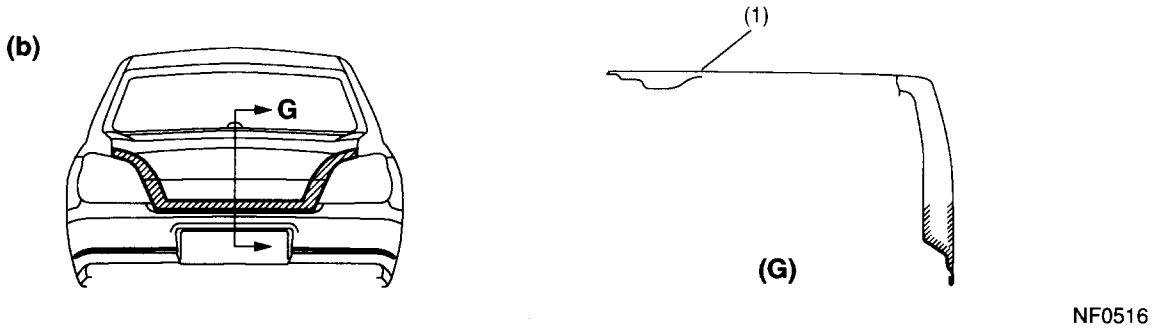

(1) Trunk lid

(b) SEDAN

11. Galvanized Sheet Metal Application

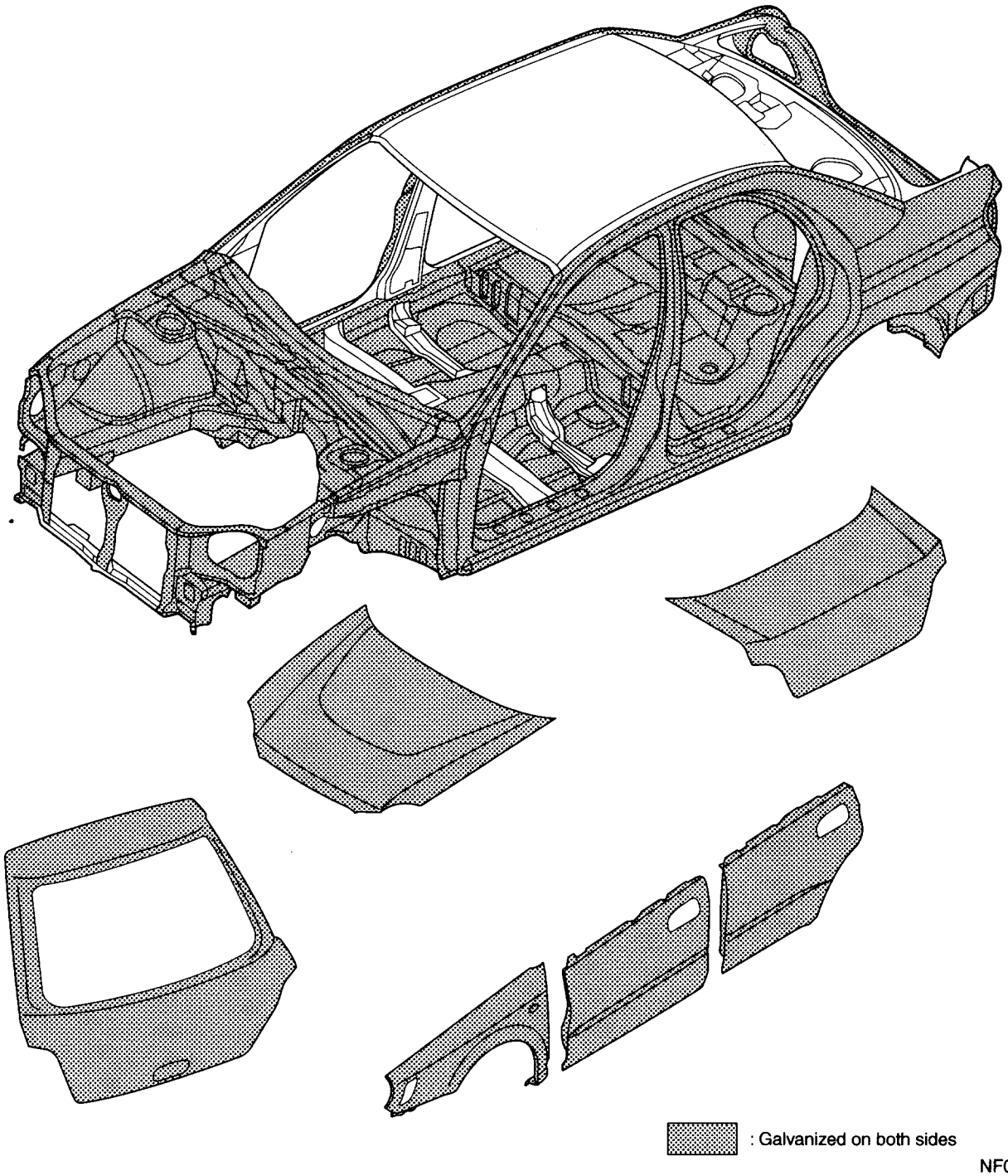

12. Aluminium Sheet Metal Application

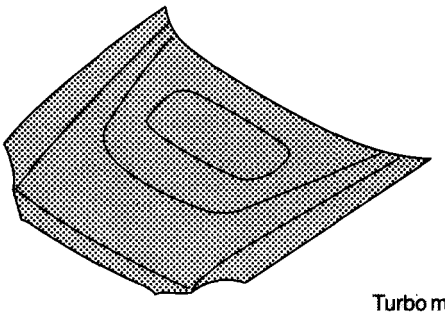

Turbo models

NF0531

13. Ventilation

A: AIR OUTLET PORT

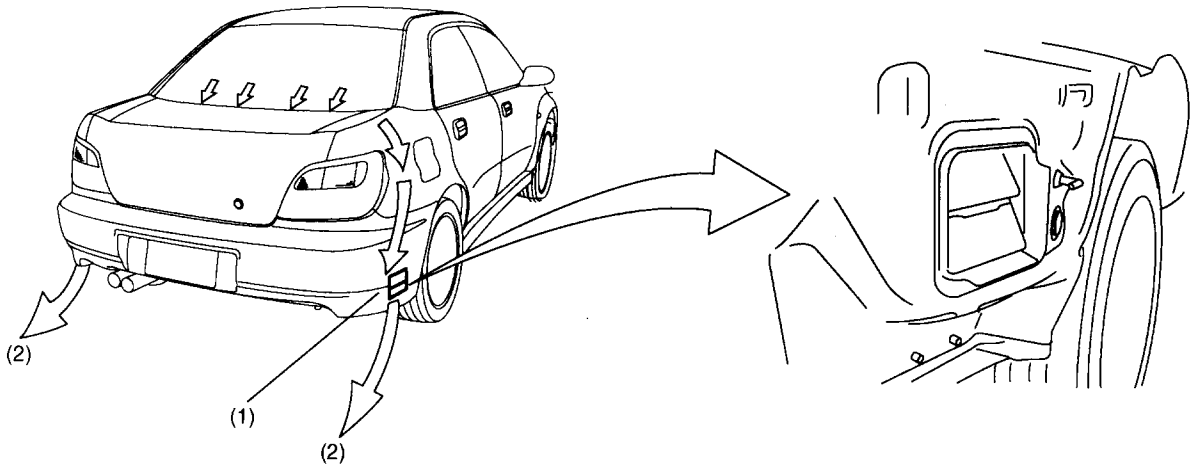

NF0518

(1) Air outlet port
(2) Air flow

14. Child Seat Anchors

Child seat anchors are added to the rear floor panel in order to conform with the FMVSS225 (ISO-FIX) requirements for child restraint anchorage systems.

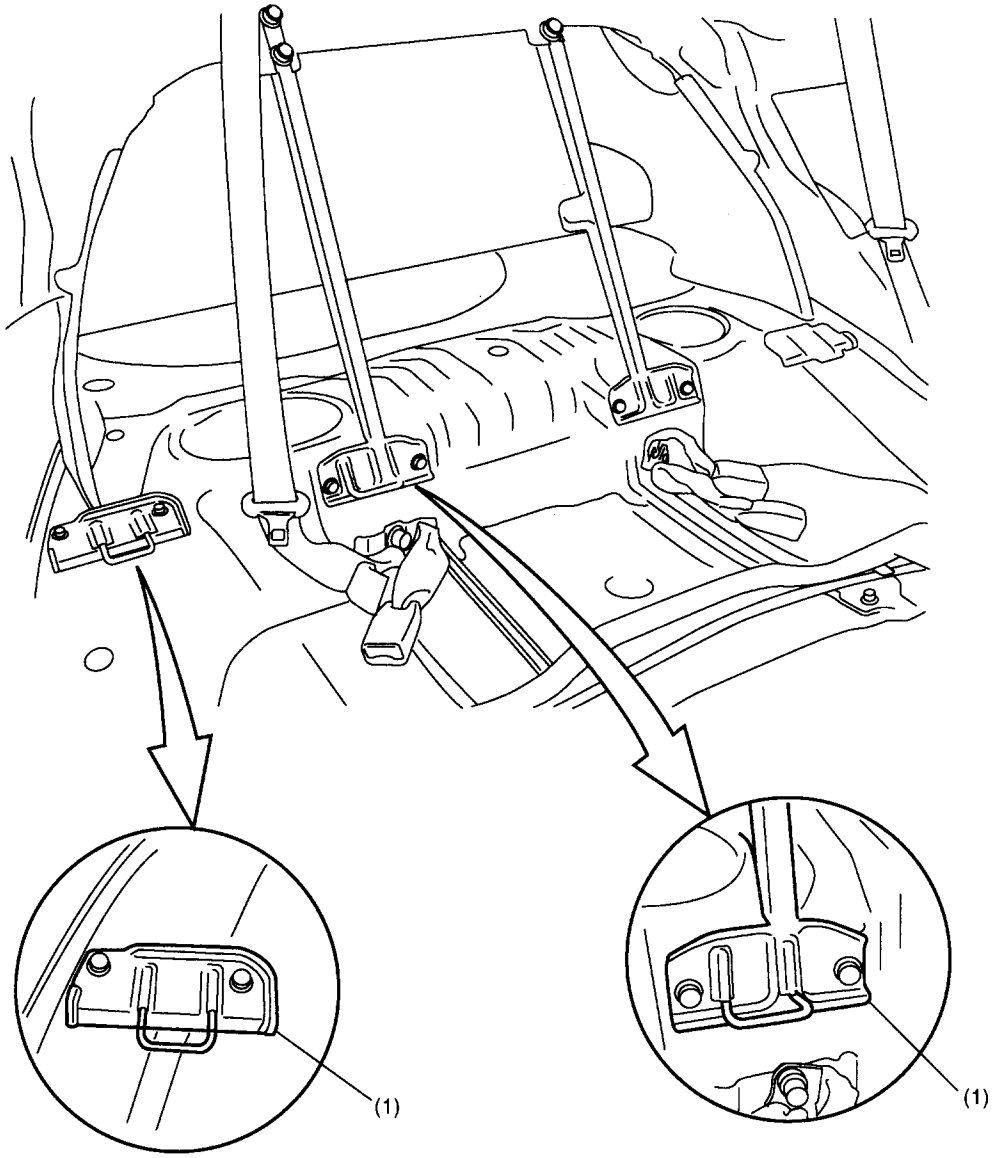

NF0519

(1) Anchor

MEMO

INSTRUMENTATION/DRIVER INFO IDI

		Page
1.	Combination Meter	2
2.	Outside Air Temperature Display	14

1. Combination Meter

A: WARNING AND INDICATOR LIGHTS

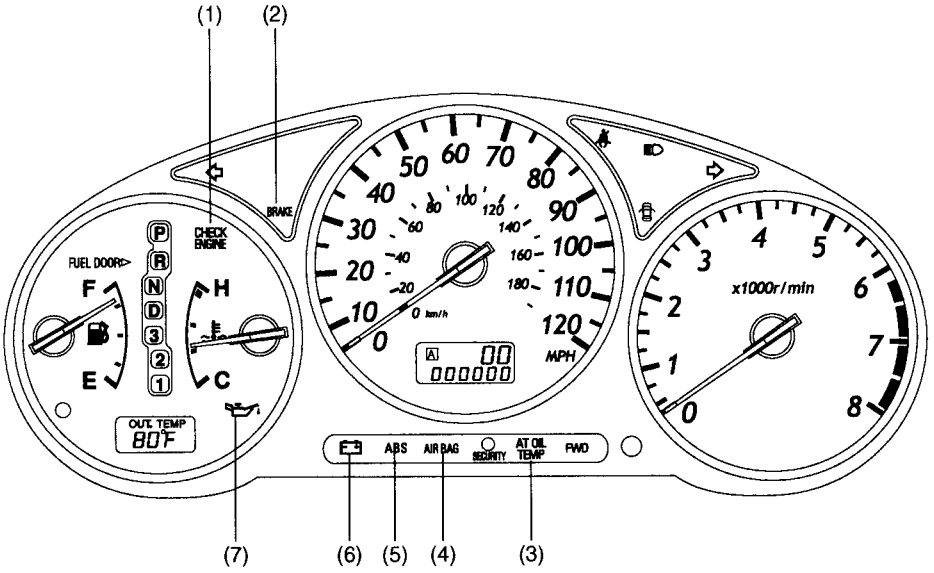

NF0442

(1) CHECK ENGINE warning light
This light illuminates when a fault occurs in the MFI (Multiple point Fuel Injection) system.

(2) Brake fluid level warning / parking brake indicator light
This light illuminates when the fluid level in the brake reservoir tank lowers below the specified level and/or when the parking brake is applied.

(3) AT oil temperature warning light
This light illuminates when the ATF temperature exceeds 150°C (302°F); it blinks when a fault occurs in the AT control system.

(4) AIR BAG system warning light
This light illuminates when a fault occurs in the airbag system.

(5) ABS warning light
This light illuminates when a fault occurs in any electrical component of the ABS (Anti-lock Brake System).

(6) Charge indicator light
This light illuminates when a fault occurs in the charging system while the engine is running.

(7) Oil pressure warning light
This light illuminates when the engine oil pressure decreases below 14.7 kPa (0.15 kg/cm^2, 2.1 psi).

If everything is normal, the warning and indicator lights should be ON or OFF as shown below according to ignition switch positions.

Warning/Indicator light	Ignition switch position			
	LOCK/ACC	ON	ST	While engine is running
(1) CHECK ENGINE	OFF	ON	ON	OFF
(2) Brake fluid level / parking brake	OFF	ON	ON	*3
(3) AT oil temperature	OFF	ON	ON	OFF
(4) AIR BAG	OFF	*1	*1	*1
(5) ABS	OFF	*2	*2	*2
(6) Charge	OFF	ON	ON	OFF
(7) Oil pressure	OFF	ON	ON	OFF

*1:This light comes ON for about 7 seconds, and then goes out.
*2:This light comes ON for about 2 seconds, and then goes out.
*3:This light comes ON when the parking brake is applied.

B: TELLTALE (GRAPHIC MONITOR)

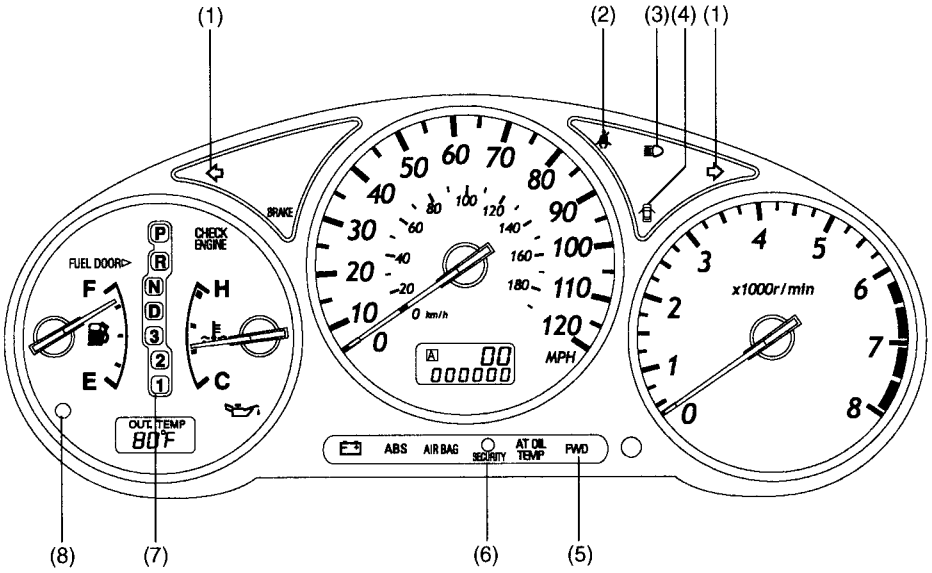

NF0443

(1) Turn signal indicator light
This light blinks in unison with the corresponding turn signal lights when the turn signal switch is operated.

(2) Seat belt warning light
This light stays illuminated for about 6 seconds after the ignition switch has been turned ON.

(3) Headlight beam indicator light
This light illuminates when the headlights are in the high-beam position.

(4) Door open warning light
This light illuminates when one or more doors and/or rear gate are not completely closed.

(5) FWD indicator light (non-turbo AT model)
This light illuminates when the drive mode is changed from AWD to FWD (with the fuse installed in the FWD switch).

(6) Security indicator light
This light illuminates when the security system is armed.

(7) AT selector lever position indicator
The light corresponding to the present AT select lever position illuminates when the ignition switch is in any position other than ACC and LOCK.

(8) Low fuel warning light
This light illuminates when the quantity of the fuel remaining in the tank has decreased to about 9 liters (2.4 US gal, 2.0 Imp gal) or smaller.

If everything is normal, the telltales should be ON, OFF or in other states as shown below according to ignition switch positions.

Telltale light		LOCK/ACC	ON	ST	While engine is running
(1) Turn signal		OFF	Blink	Blink	Blink
(2) Seat belt		OFF	*2	*2	*2
(3) Headlight beam	• High beam	OFF	ON	ON	ON
	• Low beam	OFF	OFF	OFF	OFF
(4) Door or rear gate open	• Open	ON	ON	ON	ON
	• Shut	OFF	OFF	OFF	OFF
(5) FWD	• FWD	OFF	ON	ON	ON
	• AWD	OFF	OFF	OFF	OFF
(6) Security		*3	OFF	OFF	OFF
(7) AT selector lever position		OFF	ON	ON	ON
(8) Low fuel		OFF	*1	*1	*1

*1:This light illuminates when quantity of the fuel remaining in the tank has decreased to about 9 liters (2.4 US gal, 2.0 Imp gal) or smaller.
*2:This light stays illuminated for about 6 seconds after the ignition switch has been turned ON.
*3:This light blinks when the security system is armed.

C: SPEEDOMETER

1. DESCRIPTION

- The speedometer system is an electrical type that uses electric signals from the speed sensor in the MT model or the transmission control module (TCM) in the AT model.
- The vehicle speed sensor is installed on the manual transmission.
- Since the system does not use mechanical components such as rotating cable, there are no opportunities of occurring such problems as meter needle vibration and cable disconnection. Also, it does not constitute any means of mechanical noise transmission.
- The odometer and tripmeter readings appear on a liquid crystal display (LCD).

2. OPERATION

MT model: The vehicle speed sensor sends vehicle speed signals (4 pulses per rotation of speed sensor's driven shaft) to the speedometer drive circuit and odometer/tripmeter drive circuit in the speedometer.

AT model: The TCM sends vehicle speed signals (4 pulses per rotation of output shaft) to the speedometer drive circuit and odometer/tripmeter drive circuit in the speedometer.

NOTE:
Signals from the speed sensor or TCM are also used by the engine control module, automatic transmission control module, etc.

3. SPECIFICATION

Speedometer	Type	Electric pulse type.
	Indication	Needle points to 60 km/h (37.3 miles) when 2,548 pulses are input per minute.
Odometer	Type	Pulse count type.
	Display	LCD/6 digits; 0 to 999,999 km (mile).
	Indication	Counts up 1 km per 2,548 pulses (1 mile per 4,104 pulses). (Count down is impossible.)
Tripmeter	Type	Pulse count type.
	Display	LCD/4 digits; 0 to 9999 km (mile).
	Indication	Counts up 1 km per 2,548 pulses (1 mile per 4,104 pulses). (To change the tripmeter from A to B or B to A, push the knob momentarily. To return the tripmeter to zero indication, keep the knob pushed for more than 1 second.)

4. SYSTEM DIAGRAM

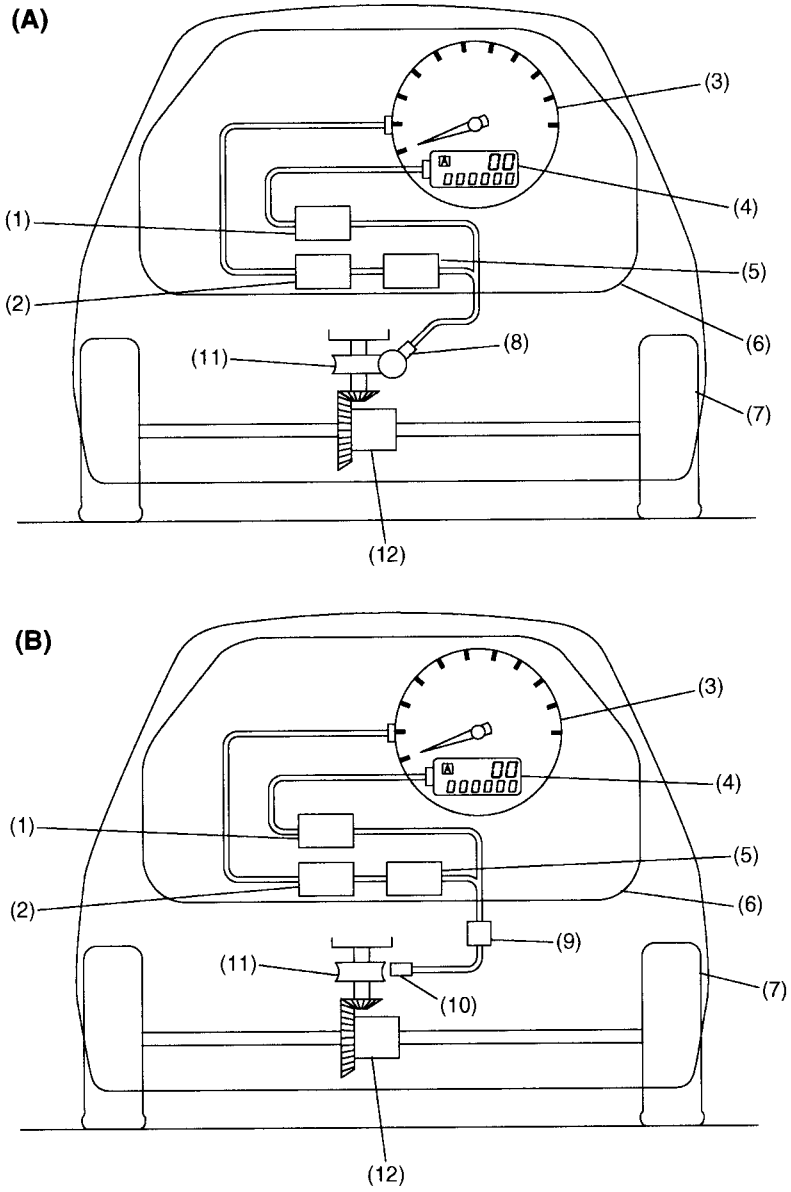

NF0484

(A) MT model
(B) AT model

(1) Odometer/tripmeter drive circuit
(2) Speedometer movement
(3) Speedometer
(4) Odometer/tripmeter
(5) Speedometer drive circuit
(6) Combination meter
(7) Front wheel
(8) Speed sensor
(9) TCM
(10) Electromagnetic pick-up
(11) Gear for the speed sensor
(12) Differential

D: VEHICLE SPEED SENSOR

The vehicle speed sensor uses a Hall IC pick-up to generate speed signals. (MT model)

This sensor is installed on the transmission case and detects rotating speed of the transmission output gear.

The sensor generates 4 pulses per rotation of the speed sensor driven shaft and send them to the speedometer.

1. CONSTRUCTION

The speed sensor mainly consists of a Hall IC, magnet ring, driven shaft and spring.

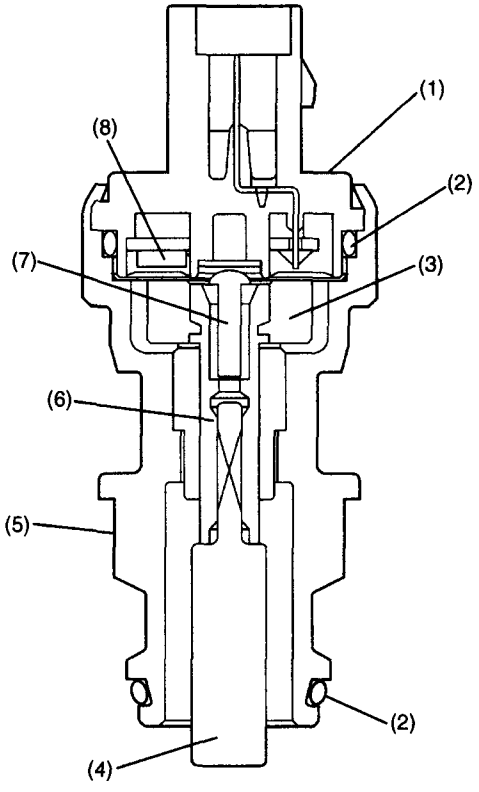

NF0267

(1) Upper case
(2) O-ring
(3) Magnet ring
(4) Driven key
(5) Lower case
(6) Driven shaft
(7) Rivet
(8) Hall IC

2. OPERATION

As the driven key rotates, the magnet turns causing the magnetic field of the Hall IC to change.

The Hall IC generates a signal that corresponds to a change in the magnetic field.

One turn of the driven key in the speed sensor sends 4 pulses to the combination meter, engine control module and cruise control module.

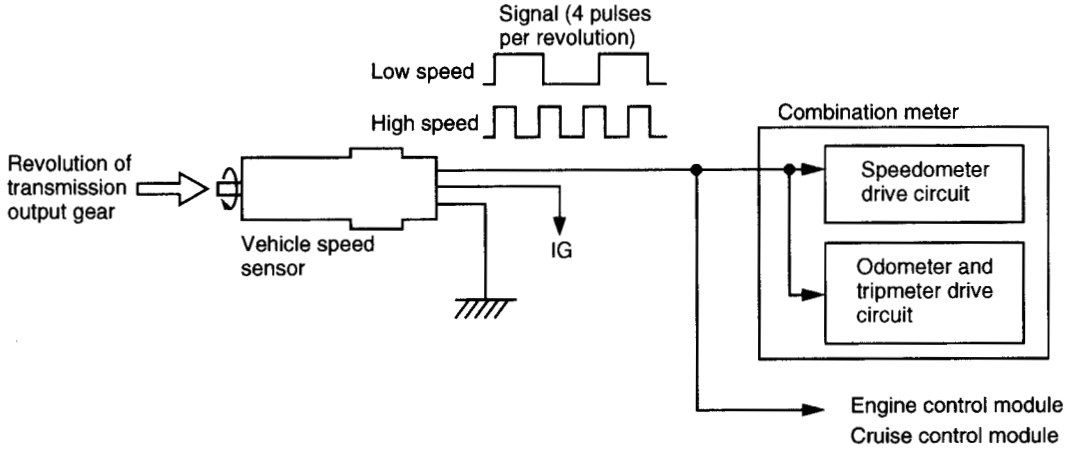

NF0268

E: TACHOMETER

The tachometer drive circuit is connected to the engine speed sensing circuit in the engine control module.

When the engine speed increases or decreases, the voltage of the circuit also increases or decreases, changing the magnetic force of the tachometer drive coil.

The tachometer needle then moves in accordance with change in the engine speed.

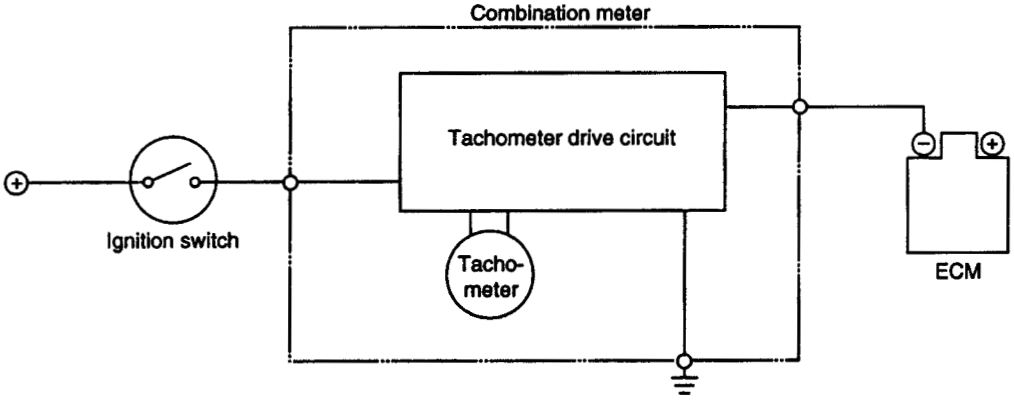

NF0269

F: WATER TEMPERATURE GAUGE

- The water temperature gauge is a cross-coil type.
- The water temperature signal is sent from the thermo gauge located on the engine.
- The resistance of the thermo gauge changes according to the engine coolant temperature. Therefore, the current sent to the water temperature gauge also changes according to the engine coolant temperature. As the change in current causes the magnetic force of the coil to change, the gauge's needle moves according to the engine coolant temperature.
- When the coolant is at a normal operating temperature of approx. 70 to 100 °C (158 to 212 °F), the gauge's needle stays in the middle of the indication range as shown below.

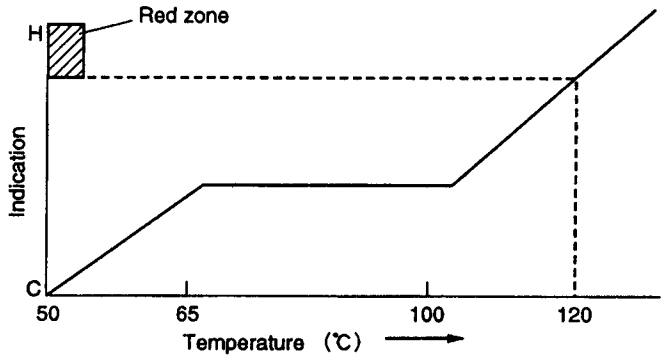

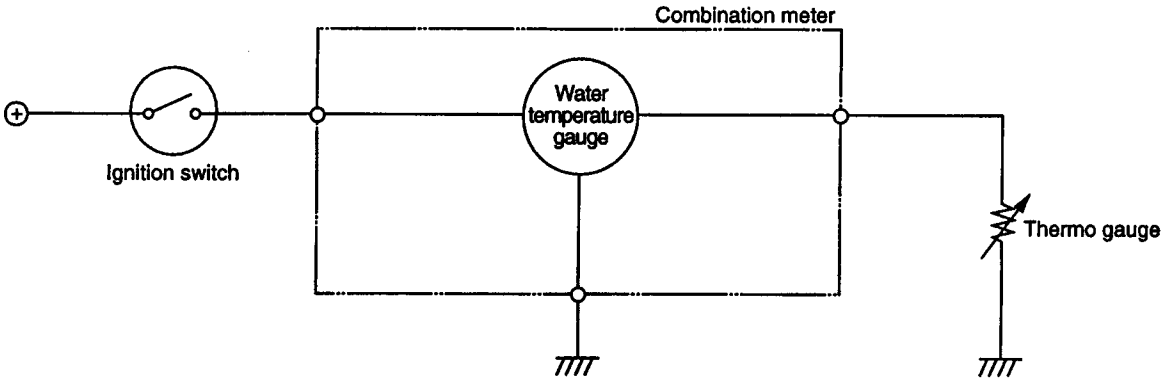

NF0270

G: FUEL GAUGE

1. GENERAL

- The fuel gauge unit consists of a float and a potentiometer whose resistance varies depending on movement of the float. It is located inside the fuel tank and forms an integral part of the fuel pump. The fuel gauge indicates the fuel level in the tank even when the ignition switch is in the LOCK position.
- All models are equipped with two fuel level sensors. These sensors are installed in the fuel tank, one on the right side and the other on the left side. Two sensors are necessary because the fuel tank is divided into main and sub tank compartments.

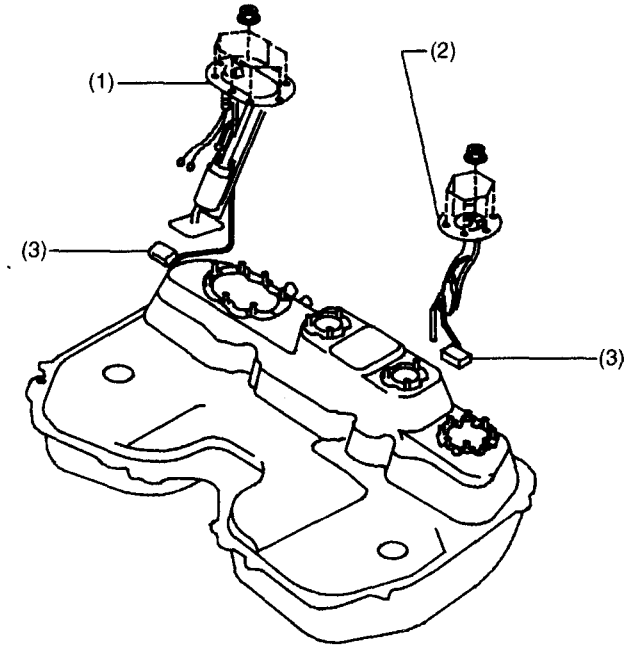

NF0362

(1) Main fuel level sensor
(2) Sub fuel level sensor
(3) Float

2. OPERATION

The low fuel warning light operates as follows:

The combination meter CPU continually monitors the resistance signal from the fuel level sensor. It turns on the low fuel warning light if a resistance value corresponding to the critical fuel level (approx. 78 Ω) is detected successively for about 10 minutes or the period spent for driving a distance of 10 km.

This monitoring time has been decided to avoid false operation of the warning light which may happen when a large part of remaining fuel is collected temporarily in the sub tank compartment.

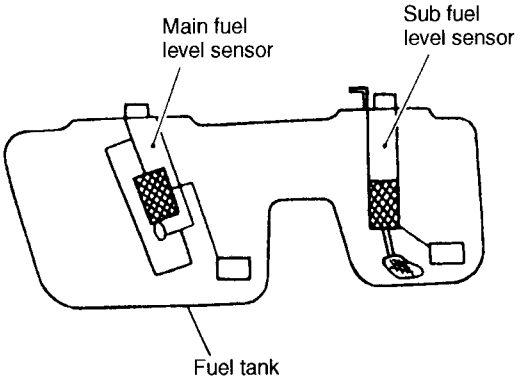

NF0273

3. SPECIFICATIONS

	Fuel amount	Resistance
Main fuel level sensor	FULL	0.5–2.5 Ω
	1/2	20.7–24.7 Ω
	EMPTY	50.0–52.0 Ω
Sub fuel level sensor	FULL	0.5–2.5 Ω
	1/2	19.5–23.5 Ω
	EMPTY	42.0–44.0 Ω

4. CIRCUIT DIAGRAM

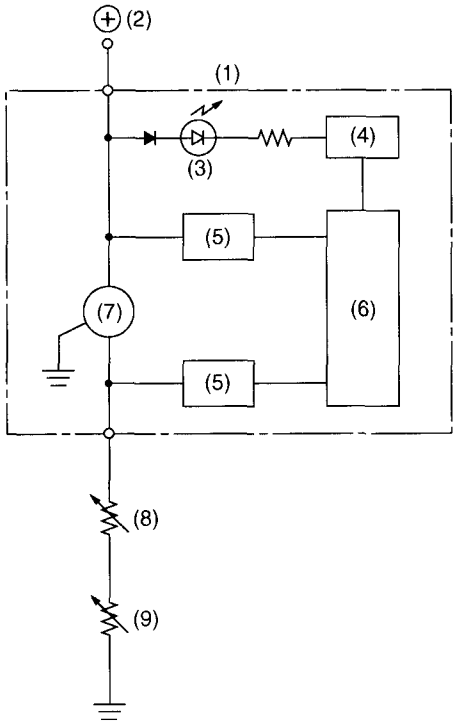

NF0485

(1) Combination meter
(2) Ignition
(3) Low fuel warning light
(4) Driver
(5) I/F
(6) CPU
(7) Fuel gauge
(8) Sub fuel level sensor
(9) Main fuel level sensor

2. Outside Air Temperature Display

A: CONSTRUCTION

The outside air temperature display system consists of an ambient sensor, the CUSTOM CPU and a liquid crystal display installed in the combination meter. The ambient sensor detects the outside air temperature using the built-in thermistor which varies its resistance according to change in ambient temperature, and sends signals to the CUSTOM CPU.
As soon as the ignition switch is turned ON, the CUSTOM CPU compares the temperature data sent from the ambient sensor with the one that was stored in its memory when the ignition switch was turned OFF last time and it causes the lower of the temperatures to be displayed. However, if 60 minutes or more time has passed between the last turning OFF and the next turning ON of the ignition switch, the temperature that is displayed is a sensor-provided temperature.
When the vehicle is running slowly, the heat released from the engine compartment raises the temperature of the air around the ambient sensor and this affects the temperature data the sensor sends to the CUSTOM CPU. The CPU then makes a special control using the vehicle speed data, i.e., when the vehicle is running at a speed slower than 10 km/h, the CPU uses the temperature that was detected during the most recent vehicle's movement at a speed exceeding 10 km/h rather than a temperature currently being provided by the ambient sensor.

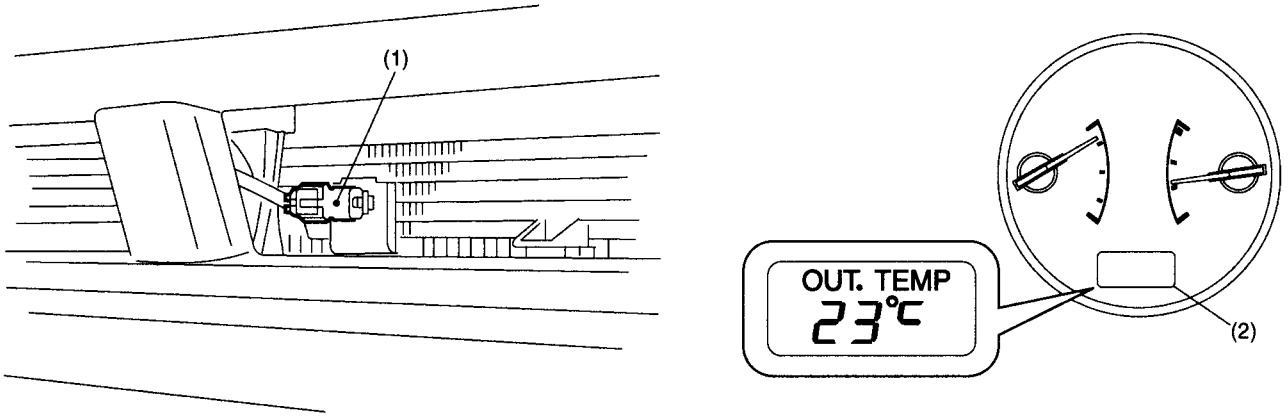

NF0140

(1) Ambient sensor
(2) Outside air temperature display

B: CIRCUIT DIAGRAM

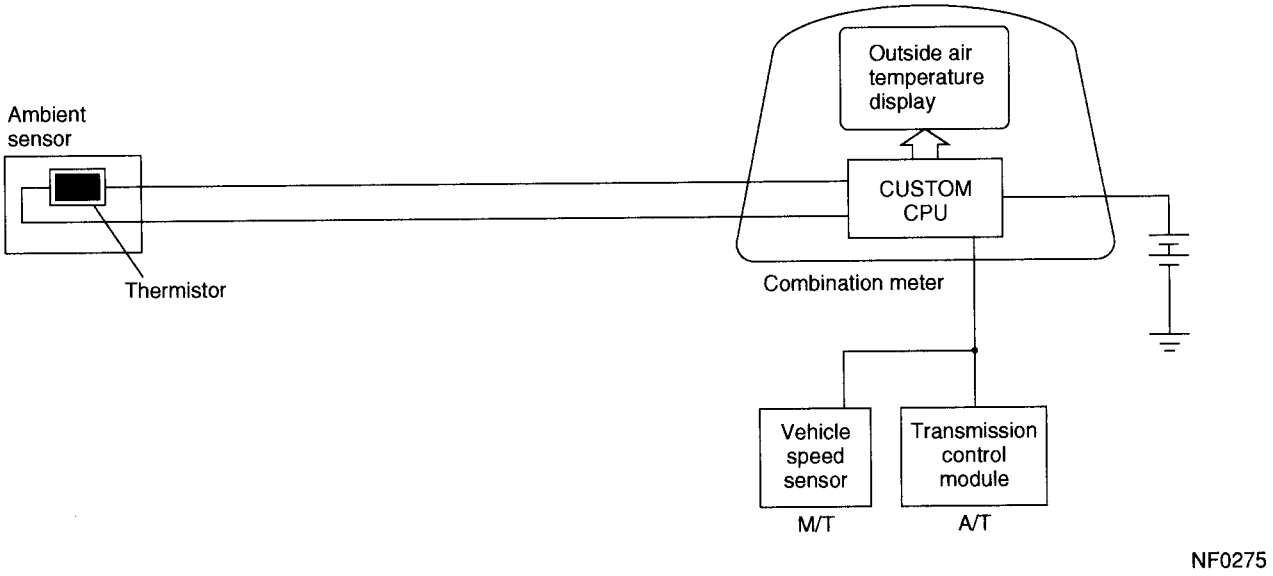

MEMO

SEATS SE

		Page
1.	Front Seat	2
2.	Rear Seat	3

1. Front Seat

A: ADJUSTMENT

- The height of each headrest is adjustable to any of the 3 positions available.
- The angle of each backrest is adjustable to any of the 32 positions available at 2° steps.
- The front seat can be slid back and forth to one of the 16 positions available at 13.5 mm (0.53 in) steps.

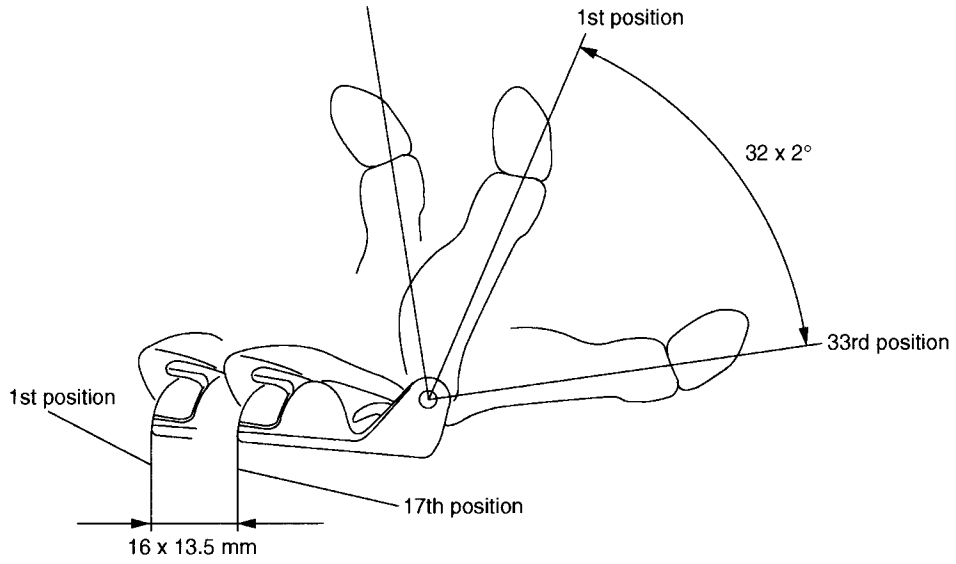

NF0486

B: HEIGHT ADJUSTER

The driver's seat is provided with a height adjuster. It allows adjusting the seat height within a range of 50 mm (2 in).
Both the seat cushion and backrest rises every time the lifter lever is pulled up; they lowers every time the lever is pushed down.

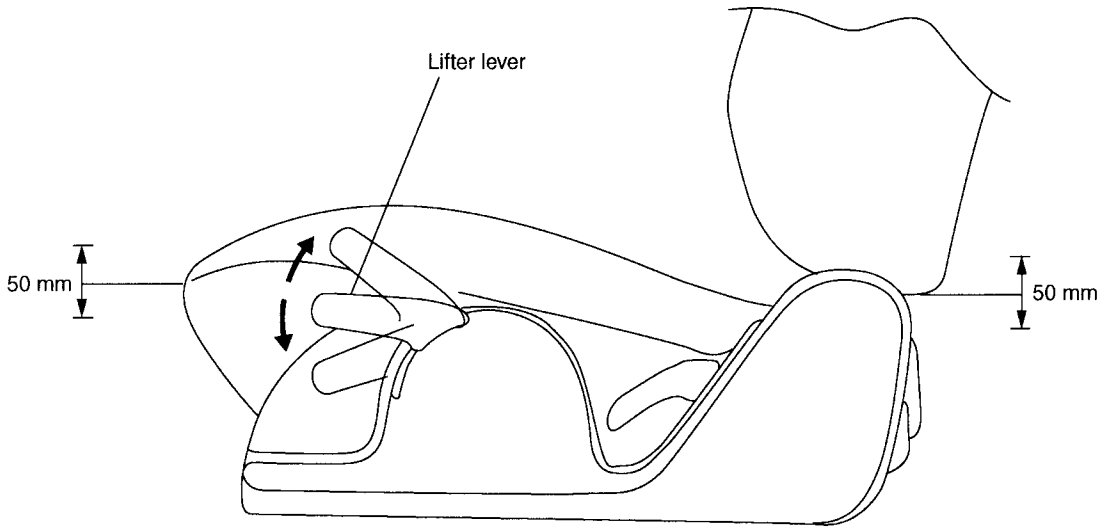

NF0146

2. Rear Seat

A: OPERATION

1. SEDAN

A trunk-through hatch is provided behind the seatback. It is accessed by folding down the central portion of the seatback which also serves as an armrest in its down position.

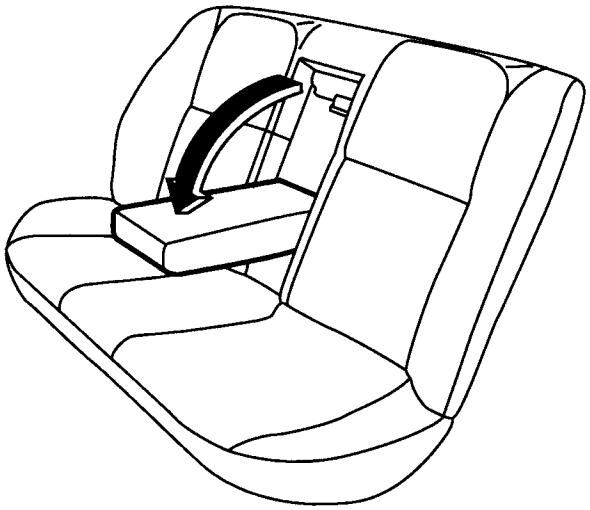

HG1008B

2. WAGON

Unlock the seatback by pulling the release knob and then fold the seatback down.

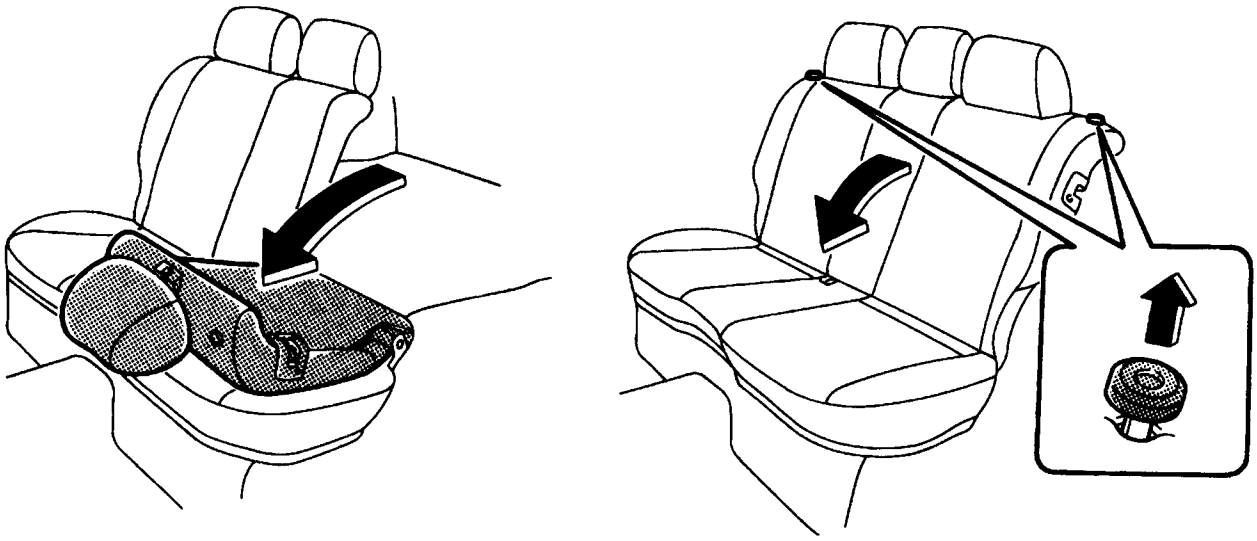

NF0147

MEMO

SECURITY AND LOCKS SL

		Page
1.	Ignition Switch	2
2.	Power Door Lock	3
3.	Keyless Entry System	4
4.	Security System	5
5.	Trunk Lid Release Handle	7

1. Ignition Switch

A: DESCRIPTION

1. IGNITION SWITCH

- The ignition switch has a function of giving the driver warning by sound if he or she opens the door with the key still in the "LOCK" or "ACC" position.
- The ignition switches on the MT models have a safety mechanism that prevents inadvertent locking of the steering wheel during driving. The driver cannot turn the ignition key from "ACC" to "LOCK" unless the key is pushed inward at the "ACC" position (arrow 1 in the drawing below).

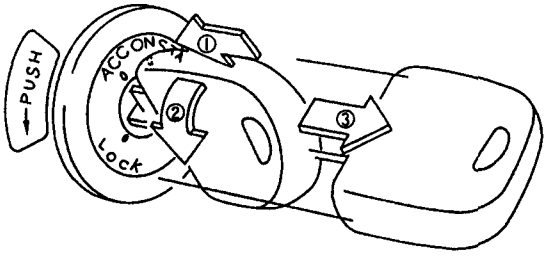

NF0491

- The ignition switches on the AT models have a key interlock mechanism to avoid locking of the steering wheel during driving. The ignition key can be turned to the "LOCK" position only when the select lever is in the P position.

NOTE:
Should the key be impossible to turn to "LOCK" when the select lever is in the P position due to failure of the key interlock mechanism, the interlocking can be cancelled by operating the release lever located on the underside of the steering column.

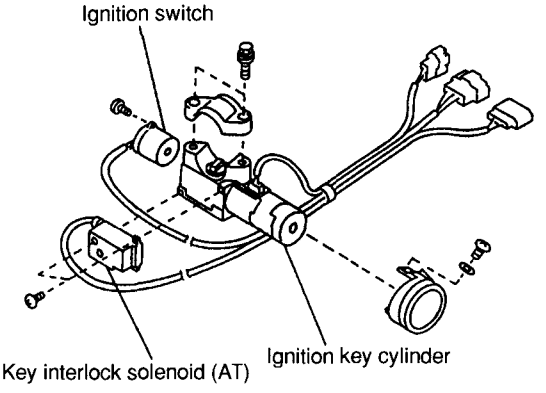

NF0492

2. KEY REMINDER CHIME

The reminder chime sounds when the driver's door opens and the ignition key is in the "LOCK" or "ACC" position. The chime stops when the key is removed from the ignition switch.

2. Power Door Lock

A: CONSTRUCTION

- The power door lock system consists of an integrated module, driver's and front passenger's door lock switches, a front door lock actuators, rear door lock actuators, and a rear gate lock actuator.
- When the driver's/front passenger's door is locked or unlocked using the door lock switch, the other doors and the rear gate are also locked or unlocked automatically.

B: CIRCUIT DIAGRAM

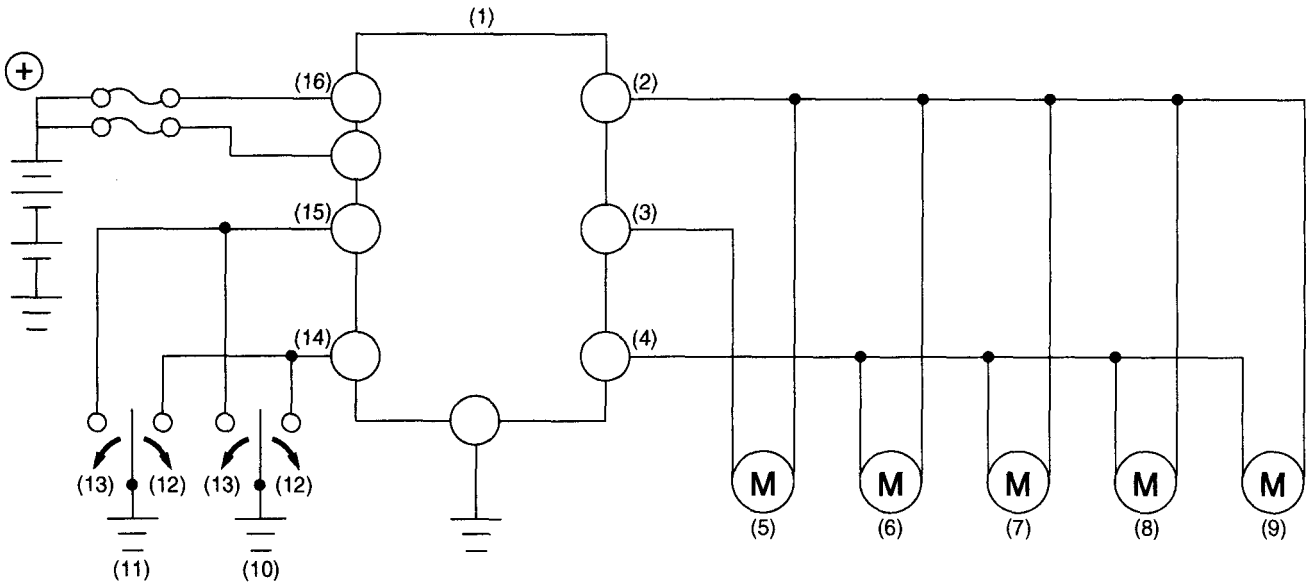

NF0444

(1) Integrated module
(2) Lock output
(3) Unlock output (Driver's door)
(4) Unlock output (Except driver's door)
(5) Front LH actuator
(6) Front RH actuator
(7) Rear LH actuator
(8) Rear RH actuator
(9) Rear gate lock actuator
(10) Front passenger's door lock switch
(11) Driver's door lock switch
(12) Unlock
(13) Lock
(14) Unlock switch
(15) Lock switch
(16) Battery

3. Keyless Entry System

A: CONSTRUCTION

- The keyless entry system consists of a transmitter, keyless entry control module (with a built-in antenna), integrated module, door lock actuators, door switches, horn and interior light.
- The keyless entry system operates on a radio frequency, so its transmitter can be used in almost all directions relative to the vehicle.

B: FUNCTION

1. DOOR LOCKING

1) Push the transmitter's LOCK button once.
2) All doors are locked.
3) Check that the horn chirps once.

2. DOOR UNLOCKING (DRIVER'S DOOR)

1) Push the transmitter's UNLOCK button once.
2) The driver's door is unlocked and the interior light turns ON (when the interior light switch is set at the DOOR position).

NOTE:
The interior light illuminates for 30 seconds and then goes out. (However, if a door locking procedure is performed again during this period, the light will go out immediately.)

3) Check that the horn chirps twice.

3. DOOR UNLOCKING (ALL DOORS)

1) Push the transmitter's UNLOCK button twice within 5 seconds.
2) All doors are unlocked.
3) No audible or visible sign is given even after all the doors are unlocked.

4. PANIC ALARM SETTING

1) Push the transmitter's LOCK button for more than 2 seconds.
2) The horn sounds continuously. To stop the horn, push any transmitter's button.

5. ANSWER BACK (HORN SIGNALING) ON/OFF SELECTION

1) Push the transmitter's UNLOCK button.
2) Push the transmitter's LOCK and UNLOCK buttons simultaneously for more than 2 seconds to activate the answer back function and push them again to deactivate it.
3) When the answer back function is activated, the horn will sound once. When it is deactivated, the horn will sound twice.

6. DOOR OPEN WARNING FUNCTION

The horn sounds three times if the transmitter's LOCK button is pressed with any door, rear gate or trunk lid opened.

4. Security System

A: FEATURES

• The security system protects the vehicle from a theft action (unauthorized entry into the vehicle). Upon detection of such an action, it gives audible and visible alarms by causing the horn to sound and the parking lights to flash. It also immobilizes the vehicle by disabling the starter circuit.

• Unauthorized entry is monitored through the switches on the doors, rear gate and trunk lid. If one of the switches is turned ON, the system interprets it as an attempt of unauthorized entry and gives alarms while disabling the starter circuit.

• Unauthorized entry is also monitored by the impact sensor. The system operates in the same manner as mentioned above whenever the sensor senses an abnormal impact on the vehicle.

1. ALARMS

• When activated, the security system causes the parking lights to flash and the horn to sound intermittently. In addition, the security indicator light on combination meter flashes fast and the starter motor circuit is disabled.

• The alarms automatically turn OFF after 30 seconds. However, they will be reactivated if the vehicle is tampered with again.

• The alarms are activated when a door, rear gate or trunk lid is opened without using the keyless entry transmitter. (When the system is armed, the alarms will be triggered even if a door is opened by releasing the inside door handle or the trunk lid is opened by operating the trunk lid release lever.)

• They are also activated when an impact on vehicle body is sensed.

2. HOW TO ARM THE SYSTEM

1) Remove the key from the ignition switch.

2) Make sure that the trunk lid is closed.

3) Close all the windows. Close and lock all the doors and rear gate.

4) Push the transmitter's LOCK button.

5) The horn will chirp once and the parking lights will flash once.

NOTE:
The system can be armed even if the windows are open.

6) Confirm that the security indicator light blinks slowly (once every two seconds). If any of the doors, rear gate or trunk lid is not properly closed, the system warns the driver of this by causing the horn to chirp three times, the parking lights to flash three times, and the security indicator to flash rapidly. When the door, rear gate or trunk lid is closed, it will be automatically locked and the security system starts working. The indicator light blinks every two seconds when the system is armed and continues to blink until the system is disarmed.

3. HOW TO DISARM THE SYSTEM

1) Push keyless entry transmitter's UNLOCK button.

2) The horn will chirp twice and the parking lights flash twice.

3) The security indicator light turns OFF.

4) The interior light will illuminate for 30 seconds and then turns OFF. (However, if a system arming procedure is performed during this period, the interior light will turn OFF.)

4. HOW TO STOP ALARMS

Push the transmitter's UNLOCK button or turn the ignition switch from "LOCK" to "ON" repeatedly three times at an interval shorter than five seconds.

5. Trunk Lid Release Handle

A: DESCRIPTION

- The trunk lid release handle is a device designed to open the trunk lid from inside the trunk.
- In the event children or adults become locked inside the trunk, the handle allows them to open the lid.
- The handle is located on the inside of the trunk lid.
- The handle is made of material that remains luminescent for approximately an hour in the dark trunk space after it is exposed to ambient light event for a short time.

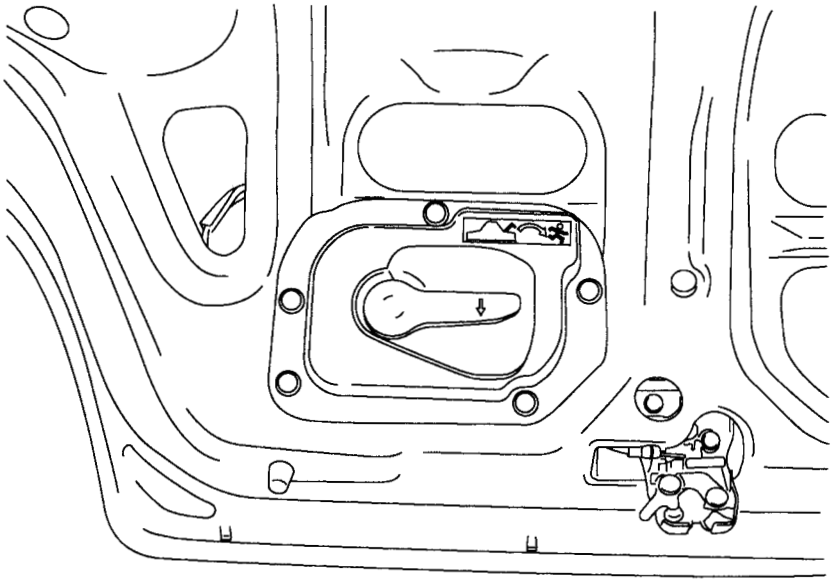

NF0479

B: OPERATION

To open the trunk lid from inside the trunk, press the yellow handle downward as indicated by the arrow on the handle, this operation unlocks the trunk lid. Then push up the lid.

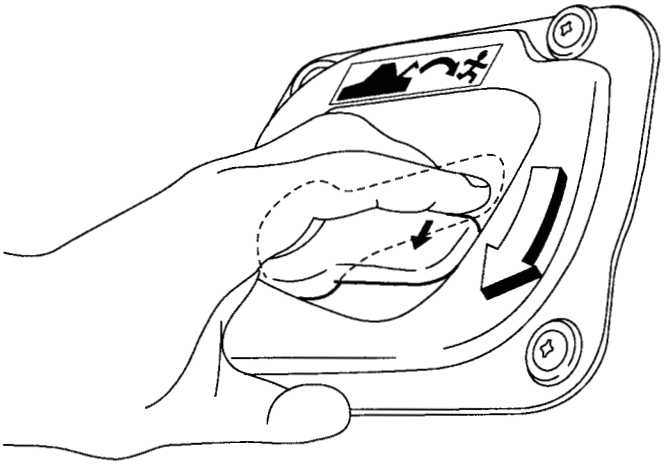

NF0480

MEMO

EXTERIOR/INTERIOR TRIM EI

Page
1. Instrument Panel 2

1. Instrument Panel

- A cup holder is provided on the dashboard.
- A coin tray is provided.
- The vent grills are barrel type.
- The dashboard lower cover is fitted with a knee cover.

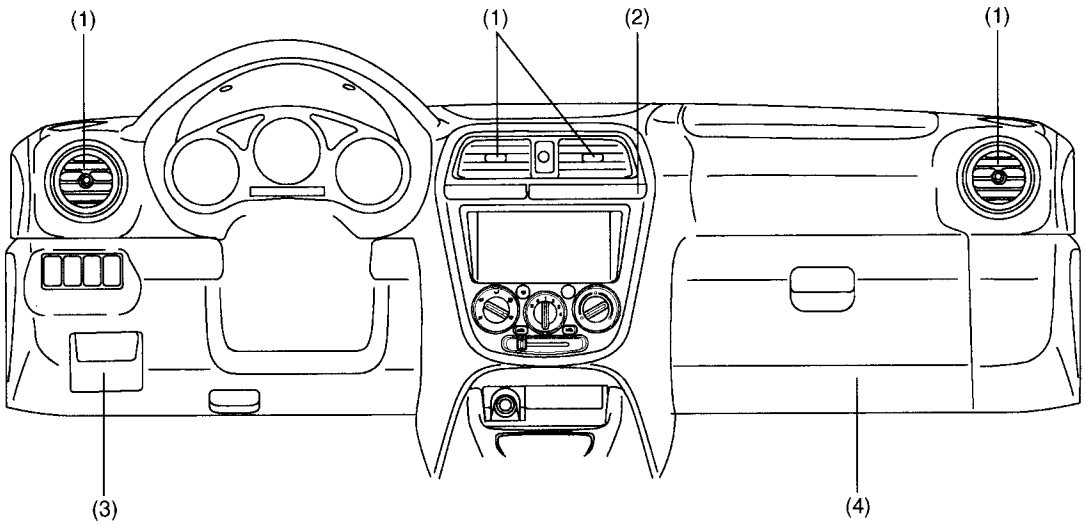

NF0458

(1) Barrel type vent grill
(2) Cup holder
(3) Coin tray
(4) Glove compartment

EXTERIOR BODY PANELS EB

Page

1. Door 2

1. Door

A: DOOR CHECKER

The door checkers are of a new type that uses a molded resin part.

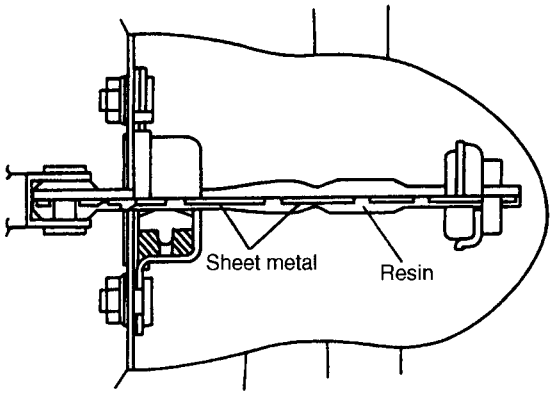

NF0216

B: DOOR CONSTRUCTION

- All the front and rear doors have in their inside side door beams, inner reinforcements and reinforcement latches.
- Tight closure at the bottom of each door is ensured by dual sealing.

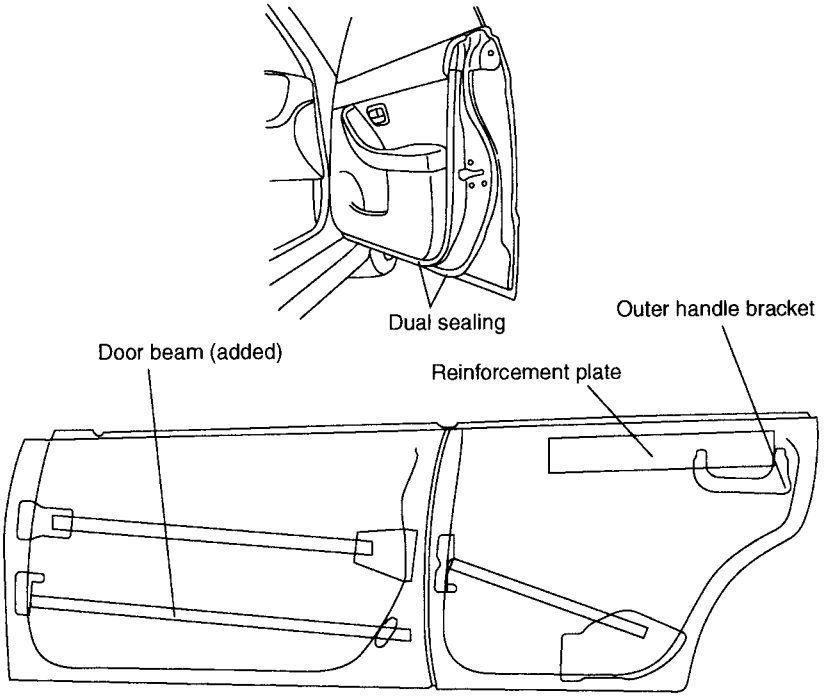

NF0144

CRUISE CONTROL SYSTEM CC

Page
1. Cruise Control 2

1. Cruise Control

A: OPERATION

- The cruise control system automatically controls the vehicle speed. It allows the vehicle to run at a constant speed without need for the driver to keep the accelerator pedal depressed.

- When the driver has activated the system and made a desired speed setting, the cruise control module compares the actual vehicle speed detected by the speed sensor (MT) or transmission control module (AT) with the preset speed in the memory, then generates a signal according to the difference between the two speeds.
This signal is transmitted to the actuator located in the engine compartment.
The actuator operates the throttle cam as necessary to keep the preset vehicle speed.

B: COMPONENT LOCATION

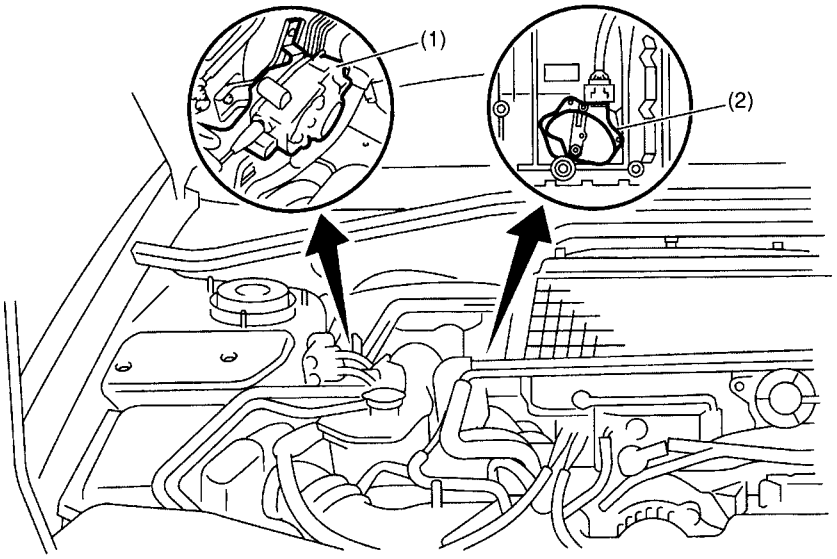

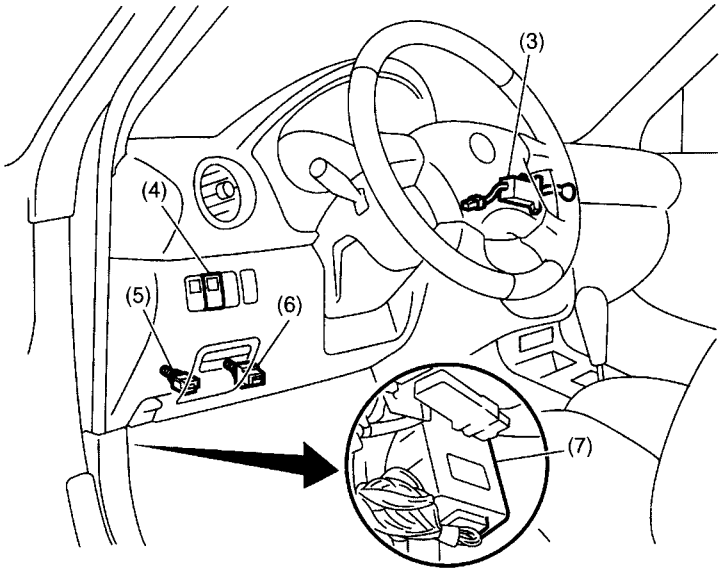

NF0462

(1) Actuator
(2) Inhibitor switch (AT)
(3) Command switch (cruise control lever)
(4) Main switch
(5) Clutch switch (MT)
(6) Stop and brake switch
(7) Control module

C: CONTROL AND OPERATION

Constant speed control	When actual vehicle speed is higher than the "set" speed, the motor in the actuator operates to move the throttle valve in the closing direction by the amount corresponding to the difference between the two speeds. When actual driving speed is lower than "set" speed, the motor operates to move the throttle valve in the opening enabling direction according to the difference in speed.
Speed setting control	When SET/COAST switch is pressed with main switch ON while the vehicle is being driven at a speed greater than 40 km/h (25 MPH), current flows to the actuator. This causes the clutch in the actuator to engage, enabling the motor to operate. The motor moves the throttle valve to the position corresponding to the accelerator pedal position. The vehicle is driven at the set speed.
Deceleration control	When SET/COAST switch is turned ON while the vehicle is cruising at a constant speed, the motor in the actuator rotates to move the throttle valve in the closing direction. This causes the vehicle to coast. When the switch is turned OFF, the vehicle speed is stored in memory and the vehicle maintains that speed thereafter.
Acceleration control	When RESUME/ACCEL switch is turned ON while the vehicle is cruising at a constant speed, the motor in the actuator rotates to move the throttle valve in the opening direction. This causes the vehicle to accelerate by a certain amount. When the switch is turned OFF, the vehicle speed is stored in memory and the vehicle maintains that speed thereafter.
Resume control	When RESUME/ACCEL switch is turned ON after the cruise control is temporarily cancelled, vehicle speed returns to that speed which was stored in memory just before the cruise control is cancelled. This occurs only when the vehicle is running at a speed greater than 32 km/h (20 MPH). In the following cases, however, the set vehicle speed is completely cleared. Therefore, no resume control is performed. (1) Ignition switch is turned OFF (2) Main switch is turned OFF
Manual cancel control	When any of the following signals is entered into the cruise control module, the clutch is disengaged and the cruise control is deactivated. (1) Stop light switch ON signal (Brake pedal depressed) (2) Brake switch OFF signal (Brake pedal depressed) (3) Clutch switch OFF signal (Clutch pedal depressed – MT) (4) Inhibitor switch ON signal (Selector lever set to "N" – AT) (5) CANCEL switch ON signal (Command switch cruise control lever pulled) (6) Ignition switch OFF signal (7) Main switch OFF signal
Low speed limit control	When the vehicle speed drops below 32 km/h (20 MPH), the cruise control is automatically cancelled. Cruise control at any speed lower than 40 km/h (25 MPH) cannot be effected.
Motor control	When the vehicle speed becomes 10 km/h (6 MPH) or more higher than the memorized speed while vehicle is running utilizing the cruise control (in a downgrade, for example), the actuator's clutch is turned OFF so that the vehicle decelerates. When the vehicle's speed becomes 8 km/h (5 MPH) or more lower than the memorized speed, the clutch is turned ON again so that the cruise control resumes.

D: SCHEMATIC

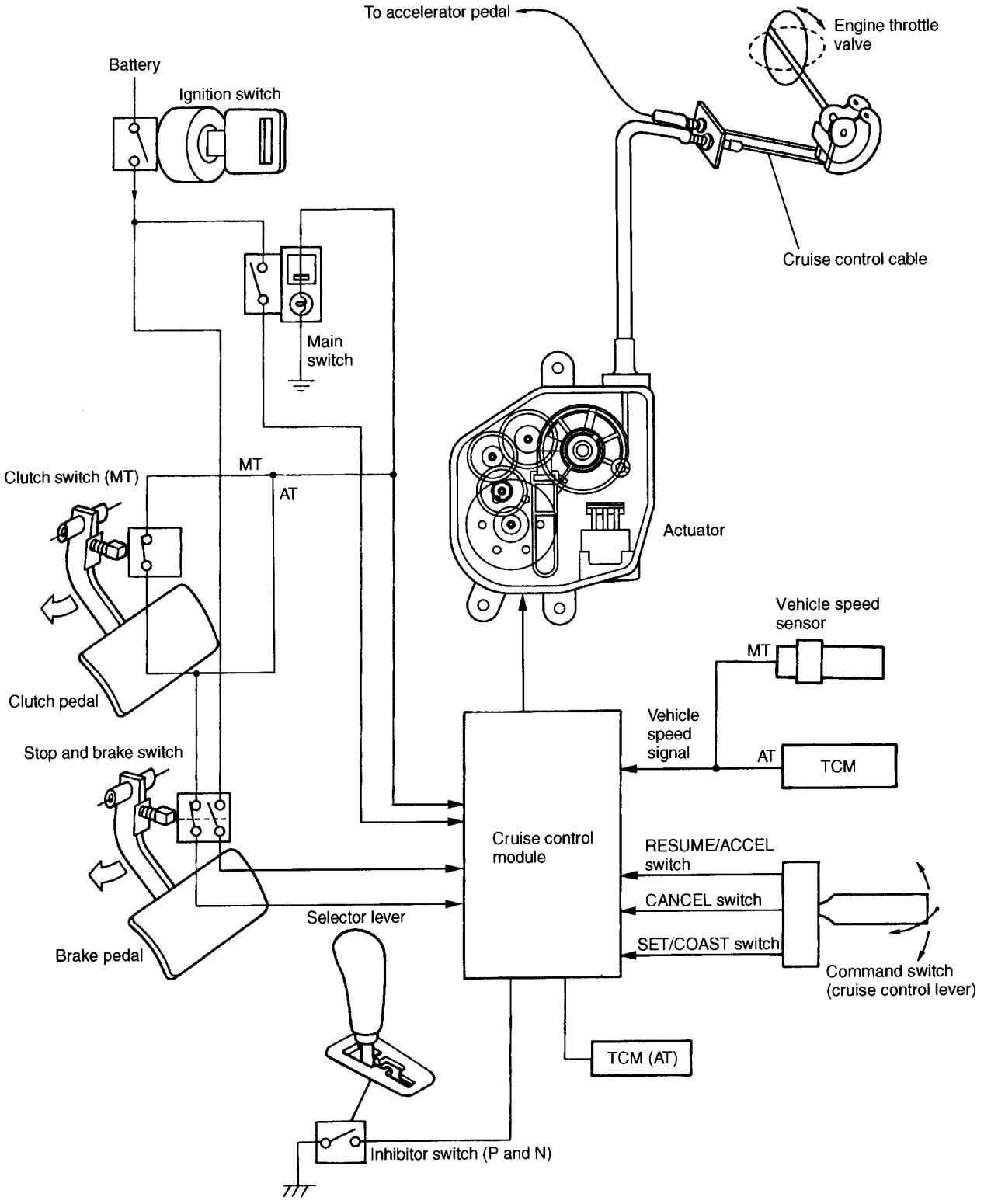

NF0258

E: SYSTEM CONSTRUCTION

Unit	Name	Function	Set	Cancel	Resume	Coast	Vehicle speed
Input signal (sensors)	Main switch	Supplies battery voltage to control module after main switch is turned ON (with ignition switch ON).	○	○	○	○	○
	SET/ COAST switch	Sends a SET/COAST signal to control module.	○			○	
	RESUME/ ACCEL switch	Sends a RESUME/ACCEL signal to control module.			○		
	CANCEL switch	Simultaneously sends SET/ COAST and RESUME/ACCEL signals to control module.		○			
	Brake switch (NC)	Disconnects power supply to clutch and stepping motor.	○	○			
	Stop light switch (NO)	Sends a cancel signal to control module.	○	○			
	Clutch switch (NC) or inhibitor switch (NO)	Sends a cancel signal to control module.	○	○			
	Vehicle speed sensor	Detects vehicle speed.	○	○	○	○	○
Control section	Built-in relay	A safety device to protect system from damage.	○	○	○	○	○
Output signal	Stepping motor (PULL)	Controls vehicle speed.	○		○		○
	Stepping motor (RELEASE)	Controls vehicle speed.		○		○	○
	Clutch	Cancels cruise control setting.	○	○	○	○	○

NC:Normally close
NO:Normally open

F: ACTUATOR

In response to a signal from the cruise control module, the clutch in the actuator is turned ON. This causes the stepping motor to operate, pulling the throttle cam for speed control.

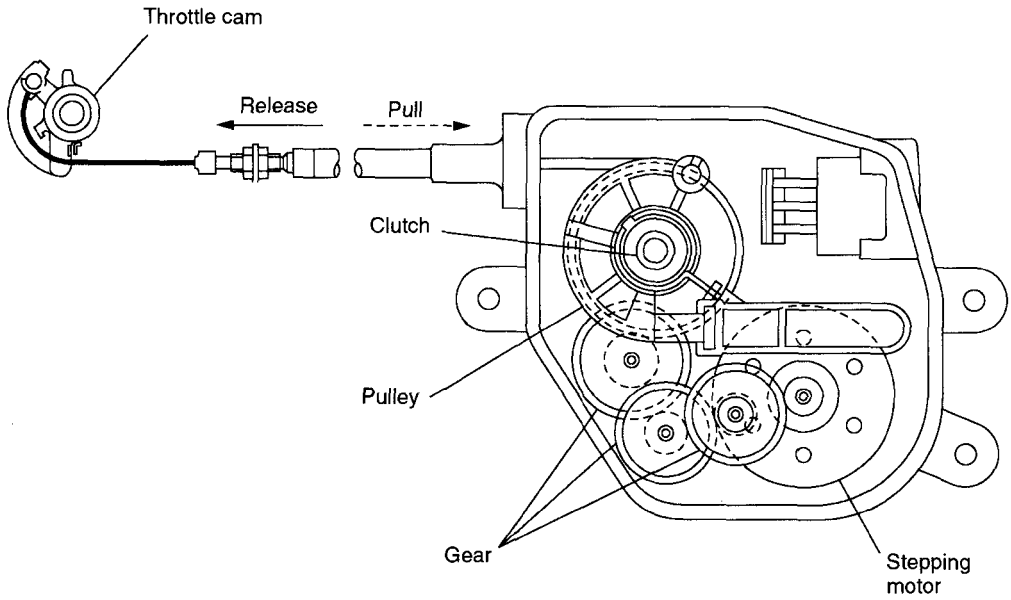

NF0260

G: MAIN SWITCH

- The main switch is the main power supply switch of the cruise control module. It has a built-in power indicator and night illumination light.
- When the ignition switch is placed in the OFF position with the main switch ON, the main switch is also turned OFF. Even if the ignition switch is turned ON again, the main switch will stay in the OFF state.

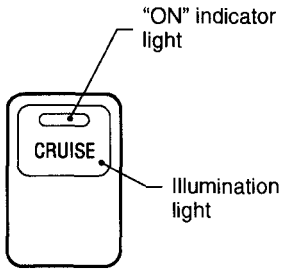

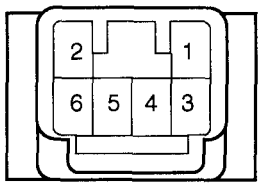

	3	5	1		6	4		2
ON	○	○						
OFF			○	○	○	○	○	○
	IG SW	Control module	Control module		Control module	Illumination power		Illumination control

NF0494

H: COMMAND SWITCH (CRUISE CONTROL LEVER)

- When the vehicle is driven with the cruise control activated, the command switch controls its operation. It inputs SET/COAST signal, ACCEL/RESUME signal or CANCEL signal to the cruise control module.

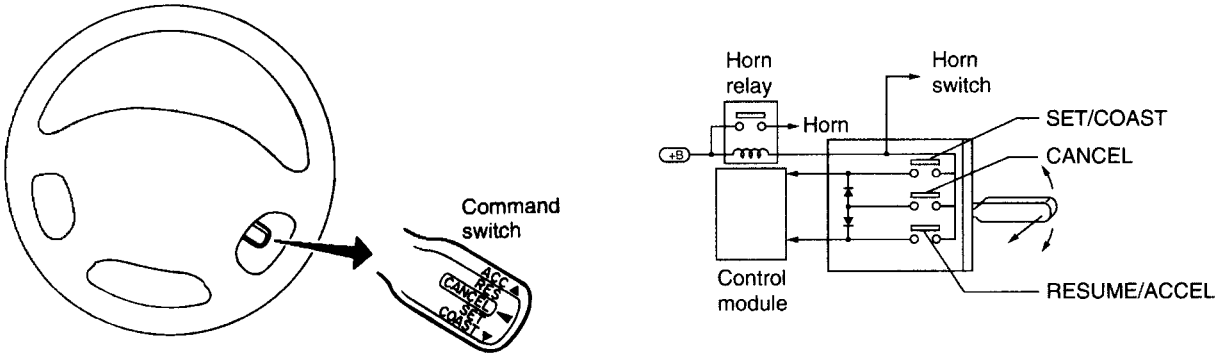

NF0262

- The command switch is located on the right side of the steering wheel, so the driver can operate it without releasing hands from the steering wheel.
- The command switch is a self-returning lever type.

1. RESUME/ACCEL AND SET/COAST SWITCH

Each switch contact is held closed as long as the lever is kept pressed in the relevant direction and resulting current is applied as a signal to the control module.

2. CANCEL SWITCH

All the switch contacts are closed as long as the lever is pulled toward the CANCEL position (toward the driver). This causes the RESUME/ACCEL and SET/COAST ON signals to be sent to the control module simultaneously.

I: CANCEL SIGNALS

The cancel signal deactivates the cruise control function. Operating any of the following switches results in generation of the cancel signal. On receiving the signal, the cruise control module cancels the cruise control function.

- Stop light switch
- Brake switch
- Clutch switch (MT model)
- Inhibitor switch (AT model)
- Main switch
- Command switch (CANCEL position)

J: VEHICLE SPEED SENSOR

Vehicle speed sensor is installed on the transmission, and sends signal to the cruise control module which uses it in controlling the cruise control function (MT model).

K: ENGINE THROTTLE

- The throttle body is equipped with two throttle cams. One is used during acceleration and the other during cruising in order to open or close the throttle valve.
- These cams operate independently of each other. In other words, when one cam operates, the other may not.

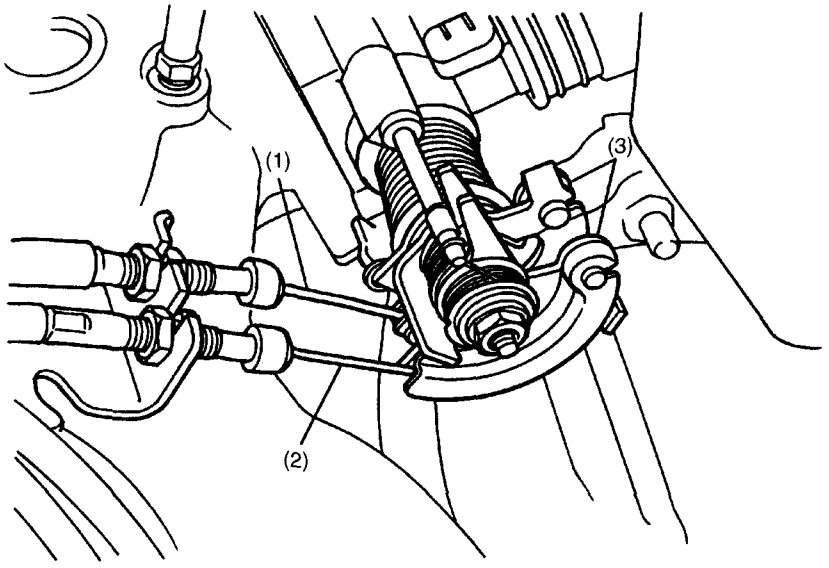

NF0263

(1) Accelerator cable
(2) Cruise control cable
(3) Throttle cam

L: CONTROL MODULE

- Based on signals from the related switches and sensors, the cruise control module controls all the following control functions:
Constant speed control; speed setting control; deceleration control; acceleration control; resume control; manual cancel control; low speed limit control; stepping motor control; clutch control
- The control module (A) is located inside of the front pillar lower portion (driver side).

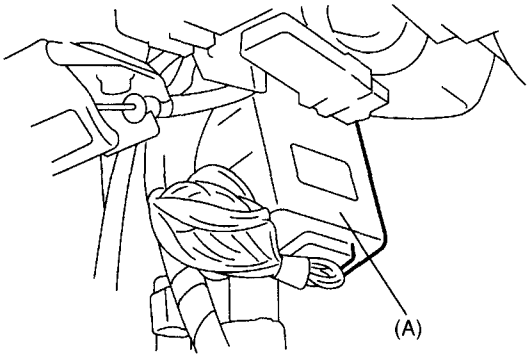

NF0463

M: FAIL-SAFE FUNCTION

The cruise control system has a fail-safe function that cancels the cruise control operation when any of the following conditions occurs.

1. CONFLICT BETWEEN CRUISE CONTROL SWITCHES AND CANCELLATION SIGNAL GENERATING SWITCHES

1) The cruise control system is deactivated if any of the cruise control switches (SET/COAST, RESUME/ACCEL, and CANCEL switches) is turned ON while any of the cancellation signal generating switches (brake, stop lamp, clutch, and inhibitor switches) is being operated. The system is re-activated when the cruise control switch is turned OFF and then turn ON again after the cancellation signal generating switch has been returned to its released position.

2) The cruise control system becomes deactivated if the ignition switch is turned ON with any of the cruise control switches (including the main switch) in the ON position. The system deactivating function is retained until the main switch is turned OFF.

2. ABNORMALITIES IN ELECTRIC CIRCUITS

The cruise control system is deactivated and the set speed is also canceled if any of the following abnormalities occurs in the system's electric circuits.

The system deactivation function is retained until the ignition switch is turned OFF.

1) The stepping motor terminal is grounded; or the stepping motor drive circuit is broken due to a short- or open-circuit.

2) The stepping motor clutch drive circuit is shorted.

3) Vehicle speed variation in a 350 ms period exceeds ±10km/h.

4) Fusion has occurred in an internal relay and is detected while the vehicle is running with the cruise control deactivated.

5) The cruise control module becomes inoperative or its operation is faulty.

6) There is discrepancy between the values stored in the two RAMs of the control module.

7) An abnormality is detected as a result of the self-diagnosis performed after turning ON of the ignition switch.

3. ABNORMALITIES IN STEPPING MOTOR

The cruise control system is deactivated if either of the following abnormalities occurs in the stepping motor.

1) The stepping motor does not operate properly.

2) The stepping motor is energized for unduly long period and too frequently.
When the system is deactivated, it cannot be reactivated for 2 – 20 minutes after detection of the abnormal condition.